CATERPILLAR®

SEBP1929-18
May 2002

RUTHZIL TRATOR COMERCIAL DE PEÇAS LTDA 11 97083-6812 ROLANDO

Parts Manual



See "General Information" for New Parts Manual Features.

966F WHEEL LOADER

3XJ1-99999 (Machine)
13Z22389-99999 (Engine)
1YX1-99999 (Transmission)
6ME1-99999 (Transmission)
2KT1-99999 (Torque Converter)
91T1-99999 (Torque Converter)

Powered By 3306 Engine

Product and Dealer Information

Note: For product identification plate locations, see the section “Product Identification Information” in the Operation and Maintenance Manual.

Delivery Date: _____

Product Information

Model: _____

Product Identification Number: _____

Engine Serial Number: _____

Transmission Serial Number: _____

Generator Serial Number: _____

Attachment Serial Numbers: _____

Attachment Information: _____

Customer Equipment Number: _____

Dealer Equipment Number: _____

Dealer Information

Name: _____ Branch: _____

Address: _____

_____

_____

	Dealer Contact	Phone Number	Hours
Sales:	_____	_____	_____
Parts:	_____	_____	_____
Service:	_____	_____	_____

Informations produit et concessionnaire

Nota: Voir l'emplacement de la plaque signalétique du produit au chapitre "Informations produit" du guide d'utilisation et d'entretien.

Date de livraison: _____

Informations produit

Modèle: _____

Numéro d'identification produit: _____

Numéro de série du moteur: _____

Numéro de série de la boîte de vitesses: _____

Numéro de série de l'alternateur: _____

Numéros de série d'équipement: _____

Informations sur l'équipement: _____

Numéro matériel client: _____

Numéro matériel concessionnaire: _____

Informations concessionnaire

Nom: _____ Agence: _____

Adresse: _____

_____

_____

	Contact concessionnaire	Numéro de téléphone	Heures
Ventes:			
Pièces:			
Service:			

Información del Producto/Distribuidor

Nota: Para saber la ubicación de las placas de identificación del producto, ver la sección “Información sobre identificación del producto” en el Manual de Operación y Mantenimiento.

Fecha de entrega: _____

Información del producto

Modelo: _____

Número de identificación del producto: _____

Número de serie del motor: _____

Número de serie de la transmisión: _____

Número de serie del generador: _____

Números de serie de los accesorios: _____

Información sobre los accesorios: _____

Número del equipo del cliente: _____

Número del equipo del distribuidor: _____

Información del distribuidor

Nombre: _____ Sucursal: _____

Dirección: _____

_____

_____

	Comunicación con el distribuidor	Número de teléfono	Horas
Ventas:	_____	_____	_____
Piezas:	_____	_____	_____
Servicio:	_____	_____	_____

Informações Sobre Produto e Revendedor

Nota: Para localizações da placa de identificação do produto, consulte a seção, “Informações Sobre Identificação do Produto” no Manual de Operação e Manutenção.

Data de Entrega: _____

Informações Sobre o Produto

Modelo: _____

Número de Identificação do Produto: _____

Número de Série do Motor: _____

Número de Série da Transmissão: _____

Número de Série do Gerador: _____

Números de Série de Acessórios: _____

Informações Sobre Acessórios: _____

Número do Equipamento do Cliente: _____

Número do Equipamento do Revendedor: _____

Informações Sobre o Revendedor

Nome: _____ Filial: _____

Endereço: _____

_____

_____

	Contato do Revendedor	Telefone	Horas
Vendas:	_____	_____	_____
Peças:	_____	_____	_____
Serviço:	_____	_____	_____

Produkt- und Händlerinformation

Anmerkung: Für die Lage der Produkt-Identnummer und Seriennummern siehe Abschnitt "Produkt-Identinformation" im Betriebs- und Wartungshandbuch.

Lieferdatum: _____

Produkt-Identinformation

Modell: _____

Produkt-Identnummer: _____

Seriennummer des Motors: _____

Seriennummer des Getriebes: _____

Seriennummer des Generators: _____

Seriennummern der Arbeitsgeräte: _____

Arbeitsgeräteinformation: _____

Kundennummer: _____

Händlernummer: _____

Händlerinformation

Name: _____ Niederlassung: _____

Adresse: _____

_____

_____

	Kontaktperson beim Händler	Telefon	Dienststunden
Verkauf:	_____	_____	_____
Ersatzteile:	_____	_____	_____
Service:	_____	_____	_____

MEMORANDA

TABLE OF CONTENTS

Name	Page
GENERAL INFORMATION	A20
SUPPLEMENTAL COOLANT ADDITIVES	A39
MAINTENANCE PARTS	A44
INDEX	A71
ENGINE ARRANGEMENT	1
ENGINE AR	1
BASIC ENGINE	4
AIR COMPRESSOR GP	4
CAMSHAFT GP	10
COVER GP-CYLINDER BLOCK	11
COVER GP-CYLINDER HEAD	12
COVER GP-FRONT HOUSING	13
COVER GP-VALVE MECHANISM	14
CRANKSHAFT AS	15
CRANKSHAFT GP	16
CYLINDER BLOCK GP	17
CYLINDER HEAD GP	22
DAMPER GP	27
DRIVE GP-FAN	28
FASTENER GP-CYLINDER HEAD	29
FASTENER GP-FRONT HOUSING	30
FASTENER GP-OIL PAN	31
FLYWHEEL GP	32
GEAR GP-FRONT	34
HOUSING GP-FLYWHEEL	35
HOUSING GP-FRONT	36
LIFTING GP-ENGINE	37
LINES GP-AIR COMPRESSOR	38
MOUNTING GP-ENGINE & TMSN	40
PAN GP-OIL	42
PISTON & ROD GP	43
PISTON GP	44
PULLEY GP-CRANKSHAFT	45
PULLEY GP-FAN DRIVE	46
SEAL GP-CRANKSHAFT	47
SUPPORT GP-ENGINE	48
TRUNNION GP-ENGINE	49
VALVE MECHANISM GP	50
LUBRICATION SYSTEM	53
BASE GP-OIL FILTER	53
BREATHER GP	54
FILLER GP-ENGINE OIL	55
FUMES DISPOSAL GP	56
GAUGE GP-OIL LEVEL (DIPSTICK)	57
LINES GP-ENGINE OIL	58
LINES GP-TURBOCHARGER OIL	62
PUMP GP-ENGINE OIL	63
COOLING SYSTEM	70
COOLER GP-FLTR BASE & ENG OIL	70
FAN GP-BLOWER	74
HOUSING & REGULATOR GP	75
LINES GP-WATER	76
PUMP GP-WATER	78
RADIATOR GP	82
REGULATOR GP-TEMPERATURE	92
AIR INLET AND EXHAUST SYSTEM	93
AIR CLEANER GP	93
CARTRIDGE GP-TURBOCHARGER	95
DUST EJECTOR GP	96
FASTENER GP-EXHAUST MANIFOLD	97
LINES GP-AIR	100
MANIFOLD GP-EXHAUST	103
MUFFLER GP	104
TURBOCHARGER GP	106
FUEL SYSTEM	108
CAMSHAFT AS	108
CAP GP-PROTECTION	109
CONTROL GP-FUEL RATIO	110
FASTENER GP-FUEL INJ PUMP	114
FILTER GP-SECONDARY FUEL	115
GOVERNOR GP	116
HOUSING GP-FUEL PUMP	121
LINES GP-FUEL	122
LINES GP-FUEL DRAIN	124
LINES GP-FUEL INJECTION	125
PUMP & MTG GP-FUEL TRANSFER	143
PUMP GP-FUEL INJECTION	144
PUMP GP-FUEL PRIMING	148
PUMP GP-FUEL PRM & PRIM FILTER	149
PUMP GP-FUEL TRANSFER	151
PUMP GP-GOV & FUEL INJ	154
TANK GP-FUEL	158
TORQUE CONTROL GP	164
ELECTRICAL AND STARTING SYSTEM	166
AIR DRYER GP	166
ALARM GP	170
ALTERNATOR GP-CHARGING	172
BATTERY & WIRING GP	190
BUFFER GP-SENSOR	209
CONVERTER GP-ELECTRICAL	210
HEATER GP-BLOCK	212
LAMP GP-FLOOD	213
LAMP GP-HEAD	215
LAMP GP-SIGNAL	217
LIGHTING GP-FLOOD & SIGNAL	222
LIGHTING GP-ROADING	226
LIGHTING GP-SIGNAL	232
LIGHTING GP-WARNING	234
RECEPTACLE GP-AUXILIARY START	236

TABLE OF CONTENTS

Name	Page
ROADING AR	238
SENSOR GP-POSITION	239
SENSOR GP-PRESSURE	241
SENSOR GP-TEMPERATURE	243
SOLENOID GP-SHUTOFF	244
STARTING AID GP-ETHER	246
STARTING MOTOR GP-ELECTRIC	248
SWITCH GP-DISCONNECT	258
SWITCH GP-START	259
WARNING GP-BACKUP	260
WIRING GP-ENGINE	262
WIRING GP-FRONT	268
WIRING GP-INSTR & IGNITION	272
WIRING GP-MONITOR	274
WIRING GP-REAR	282
WIRING GP-RELAY PANEL	284
WIRING GP-RIDE CONTROL	288
WIRING GP-SECONDARY STEERING	290
POWER TRAIN	292
BRAKE & PLANETARY GP	292
CASE & PARTS GP-PLANETARY	294
CONTROL GP-TRANSMISSION	296
CONTROL GP-TRANSMISSION HYD	298
COOLER GP-TRANSMISSION OIL	299
COVER GP-SHIPPING	300
DIFFERENTIAL AR	302
DIFFERENTIAL GP	303
DIFFERENTIAL GP-LIMITED SLIP	304
FILLER GP-POWER TRAIN OIL	305
FILTER & LINES GP-TRANSMISSION	308
FILTER GP-OIL	316
GEAR GP-BEVEL & PINION	318
GEAR GP-OUTPUT TRANSFER	320
HOUSING GP-FIXED AXLE	324
HOUSING GP-OSCILLATING AXLE	328
LINES GP-TORQUE CONV COOLER	334
NEUTRALIZER GP-TRANSMISSION	336
PLANETARY GP-TRANSMISSION	338
PUMP GP-GEAR	342
RIM GP-DEMOUNTABLE	343
SHAFT GP-DRIVE	346
SLIP JOINT GP	348
SPIDER & BEARING GP	349
TORQUE CONVERTER GP	350
TRANSMISSION AR	358
UNIVERSAL JOINT GP	360
VALVE GP-NEUTRALIZER	361
VALVE GP-RELIEF	362
FRAME AND BODY	368
CONVERSION AR-NON-ROADING	368
CONVERSION AR-ROADING	370
COUNTERWEIGHT GP	373
DOOR GP-BATTERY	376
FENDER GP	377
FIREWALL GP	382
FRAME GP-LOADER	389
FRAME GP-REAR	390
GUARD GP-BOTTOM	394
GUARD GP-CRANKCASE	395
GUARD GP-FRONT	396
GUARD GP-LINES	398
GUARD GP-POWER TRAIN	399
GUARD GP-RADIATOR	400
HITCH GP-ARTICULATING	404
HOOD & GUARD GP	406
LADDER GP	409
LINES GP-GREASE	412
LINK GP-STEERING FRAME LOCK	414
LOUVER GP	416
SUPPRESSION AR-SOUND	418
SUPPRESSION GP-SOUND	420
BRAKING SYSTEM	426
ACTUATOR GP-BRAKE	426
ACTUATOR GP-PARKING BRAKE	427
BRAKE GP-PARKING	428
CONTROL AR-STEERING & BRAKE	435
CONTROL GP-PARKING BRAKE	436
CONTROL GP-SECONDARY BRAKE	438
CONTROL GP-SERVICE BRAKE	450
CYLINDER GP-AIR/HYDRAULIC	461
VALVE GP-BRAKE CONTROL	462
VALVE GP-CHECK	464
STEERING SYSTEM	468
CONTROL GP-STEERING	468
CYLINDER & MTG GP-STEERING	469
CYLINDER & SEAL GP-STEERING	470
CYLINDER GP-STEERING	472
LINES GP-SECONDARY STEERING	476
LINES GP-STEERING	484
PUMP & MTG GP-SECONDARY STEER	488
PUMP GP-METERING	489
PUMP GP-SECONDARY STEERING	492
STEERING AR-SECONDARY	494
STEERING COLUMN GP-ADJUSTABLE	498
VALVE & MTG GP-DIVERTER	502
VALVE GP-DIVERTER	503
VALVE GP-MAKEUP	505
VALVE GP-STEERING	506
VALVE GP-STEERING NEUTRALIZER	509
HYDRAULIC SYSTEM	510
CARTRIDGE GP-VANE PUMP	510
CONTROL AR-RIDE	512

TABLE OF CONTENTS

Name	Page
CONTROL GP-PILOT OPERATED HYD	514
COVER GP-HYDRAULIC TANK CAP	526
CYLINDER GP-LIFT	528
CYLINDER GP-TILT	532
HYDRAULIC AR	536
KICKOUT & POSITIONER GP	540
LINES GP-FRONT	544
LINES GP-HYDRAULIC	548
LINES GP-HYDRAULIC OIL COOLER	554
LINES GP-LIFT CYLINDER	556
LINES GP-PILOT	558
LINES GP-RIDE CONTROL	562
LINES GP-TILT CYLINDER	570
MOUNTING GP-HYDRAULIC TANK	572
PUMP & MTG GP-HYDRAULIC	573
PUMP GP-VANE	574
TANK & FILTER GP-HYDRAULIC	576
VALVE & MTG GP-CONTROL	580
VALVE GP	585
VALVE GP-BREAKER RELIEF	586
VALVE GP-CONTROL	587
VALVE GP-DIVERTER	610
VALVE GP-PILOT	612
VALVE GP-PILOT CARTRIDGE	627
VALVE GP-RELIEF	633
VALVE GP-SELECTOR & PRESS CONT	645
VALVE GP-SHUTTLE	648
VALVE GP-SOLENOID	650
IMPLEMENTS	652
CONTROL GP-BUCKET	652
WORK TOOLS	654
BIT & CUTTING EDGE GP	654
BUCKET AS-GENERAL PURPOSE	656
BUCKET AS-PENETRATION	664
BUCKET AS-ROCK	665
BUCKET GP-GENERAL PURPOSE	667
BUCKET GP-PENETRATION	672
BUCKET GP-ROCK	673
TIP GP-LONG	675
TIP GP-SHORT	676
TOOTH GP-LONG	677
TOOTH GP-SHORT	678
OPERATOR STATION	679
AIR CONDITIONER AR	679
AIR CONDITIONER GP	680
ARMREST GP	688
CAB AR	691
CAB AR-LOW PROFILE	693
CAB GP	694
CANOPY AR-OPEN ROPS	712
CANOPY GP-SOFT	713
COMPRESSOR GP-REFRIGERANT	714
CONVERSION AR-LOW PROFILE CAB	718
CONVERSION AR-NON-ROPS	719
CONVERSION AR-NONCAB	720
CONVERSION GP-NONCAB	722
DOOR GP-AIR INLET	723
DOOR GP-CAB	724
DOOR GP-SIDE	731
EXTENSION GP-BACKREST	732
GUARD GP-VANDALISM	734
HEATER GP-CAB	736
HORN GP-AIR	738
HORN GP-ELECTRIC	741
HOUSING GP-SEAT SUSPENSION	743
INSTALLATION GP-CONTROLS	744
INSTALLATION GP-RADIO	746
LINES GP-AIR CONDITIONER	748
LINES GP-HEATER	750
MIRROR GP	752
MIRROR GP-REAR VIEW	756
MONITOR AR-PAYLOAD	761
MOUNTING GP-PLATFORM	762
OPERATOR AR	764
PAN GP-SEAT	766
PANEL GP-INSTRUMENT	768
PEDAL GP-GOVERNOR	778
PLATFORM GP	780
PRESSURIZER GP-CAB	792
ROPS GP	800
SEAT BELT GP	801
SEAT GP	802
SEAT GP-ADJUSTABLE	810
SEAT GP-SUSPENSION	814
SUPPORT GP-SEAT	818
SUPPRESSION GP-SOUND	822
SUSPENSION GP-SEAT	826
TANK GP-WINDOW WASHER	827
TETHER GP	828
VALVE GP-AIR CONTROL	829
VISOR GP-CAB	830
WASHER GP-WINDOW	832
WINDOW GP	834
WIPER GP-WINDOW	838
WIPER PIVOT GP	854
SERVICE EQUIPMENT AND SUPPLIES	855
LOCK GP-VANDALISM	855
PLATE & FILM GP	856
PART NUMBER INDEX	B1

TABLE DES MATIÈRES

Désignation	Page
GÉNÉRALITÉS	A23
ADDITIFS POUR LIQUIDE DE REFROIDISSEMENT	A40
PIÈCES DE RECHANGE	A49
INDEX	A82
MOTEUR (VERSION)	1
MOTEUR (VERSION)	1
MOTEUR STANDARD	4
COMPRESSEUR D'AIR (ASS)	4
ARBRE A CAMES (ASS)	10
BLOC-CYLINDRES - COUVERCLE (ASS)	11
COUVERCLE DE CULASSE (ASS)	12
COUVERCLE DE CARTER AV (ASS)	13
CACHE-SOUPAPES (ASS)	14
VILEBREQUIN (ENS)	15
VILEBREQUIN (ASS)	16
BLOC-CYLINDRES (ASS)	17
CULASSE (ASS)	22
AMORTISSEUR DE VIBRATIONS (ASS)	27
ENTRAÎNEMENT DE VENTILATEUR (ASS)	28
BOULONNERIE DE LA CULASSE (ASS)	29
BOULONNERIE DE CARTER AV (ASS)	30
BOULONNERIE DU CARTER D'HUILE (ASS)	31
VOLANT MOTEUR (ASS)	32
PIGNONNERIE AV (ASS)	34
CARTER DE VOLANT (ASS)	35
CARTER AV (ASS)	36
OEILLETONS DE LEVAGE MOTEUR (ASS)	37
CANALISATIONS DU COMPRESSEUR D'AIR (ASS)	38
MONTAGE DE MOTEUR ET BOÎTE (ASS)	40
HUILE MOTEUR - CARTER (ASS)	42
PISTON ET BIELLE (ASS)	43
PISTON (ASS)	44
VILEBREQUIN - POULIE (ASS)	45
POULIE D'ENTRAÎNEMENT DE VENTILATEUR (ASS)	46
JOINT DE VILEBREQUIN (ASS)	47
SUPPORT DE MOTEUR (ASS)	48
TOURILLON DE MOTEUR (ASS)	49
CULBUTERIE (ASS)	50
CIRCUIT DE GRAISSAGE	53
SUPPORT DE FILTRE À HUILE (ASS)	53
RENIFLARD (ASS)	54
BOUCHON DE REMPLISSAGE D'HUILE MOTEUR (ASS)	55
DISPOSITIF D'EVACUATION DES VAPEURS DE CARTER	56
JAUGE D'HUILE MOTEUR (BAIONNETTE) (ASS)	57
CANALISATIONS D'HUILE MOTEUR (ASS)	58
CANALISATIONS D'HUILE DE TURBOCOMPRESSEUR (ASS)	62
POMPE A HUILE MOTEUR (ASS)	63
CIRCUIT DE REFROIDISSEMENT	70
SUPPORT DE FILTRE ET REFROIDISSEUR D'HUILE MOTEUR	70
VENTILATEUR SOUFFLANT (ASS)	74
THERMOSTAT ET BOITIER (ASS)	75
CANALISATIONS D'EAU (ASS)	76
POMPE A EAU (ASS)	78
RADIATEUR (ASS)	82
RÉGULATEUR DE TEMPÉRATURE (ASS)	92
CIRCUIT D'ADMISSION D'AIR ET D'ÉCHAPPEMENT	93
FILTRE A AIR (ASS)	93
TURBOCOMPRESSEUR - CARTOUCHE (ASS)	95
ÉJECTEUR AUTOMATIQUE DE POUSSIÈRE (ASS)	96
BOULONNERIE DU COLLECTEUR D'ÉCHAPPEMENT (ASS)	97
CANALISATIONS D'AIR (ASS)	100
COLLECTEUR D'ÉCHAPPEMENT (ASS)	103
SILENCIEUX (ASS)	104
TURBOCOMPRESSEUR (ASS)	106
CIRCUIT DE CARBURANT	108
ARBRE A CAMES (ENS)	108
COUVERCLE DE PROTECTION (ASS)	109
LIMITEUR D'INJECTION (ASS)	110
BOULONNERIE - POMPE D'INJECTION DE CARB. (ASS)	114
FILTRE À CARBURANT SECONDAIRE (ASS)	115
REGULATEUR (ASS)	116
BOÎTIER DE POMPE À CARBURANT	121
CANALISATIONS DE CARBURANT (ASS)	122
CARBURANT - CANALISATIONS DE VIDANGE (ASS)	124

TABLE DES MATIÈRES

Désignation	Page
CANALISATIONS D'INJECTION DE CARBURANT (ASS)	125
POMPE D'ALIMENTATION ET MONTAGE (ASS)	143
POMPE D'INJECTION DE CARBURANT (ASS)	144
POMPE D'AMORÇAGE DE CARBURANT (ASS)	148
POMPE D'AMORÇAGE DE CARBURANT ET FILTRE PRINCIPAL	149
POMPE D'ALIMENTATION EN CARBURANT (ASS)	151
RÉGULATEUR ET POMPE D'INJECTION DE CARBURANT (ASS)	154
RÉSERVOIR DE CARBURANT (ASS)	158
BUTÉE ÉLASTIQUE (ASS)	164
CIRCUIT ELECTRIQUE ET DE DEMARRAGE	166
DESHYDRATEUR (ASS)	166
AVERTISSEUR (ASS)	170
ALTERNATEUR DE CHARGE (ASS)	172
BATTERIE ET CÂBLAGE	190
AMPLIFICATEUR - CAPTEUR (ASS)	209
TRANSFORMATION ELECTRIQUE (ASS)	210
PLAQUETTE DE CONNEXION - CHAUFFAGE (ASS)	212
LAMPE - PHARE (ASS)	213
PHARE AV (ASS)	215
LAMPE - CLIGNOTANT DE DIRECTION (ASS)	217
ÉCLAIRAGE - PROJECTEURS ET CLIGNOTANTS (ASS)	222
ÉCLAIRAGE - FEUX DE ROUTE (ASS)	226
ÉCLAIRAGE CLIGNOTANT	232
ÉCLAIRAGE - AVERTISSEUR (ASS)	234
PRISE DE BATTERIE AUXILIAIRE (ASS)	236
ÉQUIPEMENT POUR DÉPLACEMENT ROUTIER (VERSION)	238
SONDE - CIRCUIT DE CARBURANT	239
CAPTEUR DE PRESSION (ASS)	241
CAPTEUR DE TEMPERATURE (ASS)	243
SOLÉNOÏDE D'ARRÊT (ASS)	244
AUXILIAIRE DE DÉMARRAGE À L'ÉTHER	246
DÉMARREUR ÉLECTRIQUE (ASS)	248
ROBINET DE BATTERIE (ASS)	258
INTERRUPTEUR DE DÉMARRAGE (ASS)	259
AVERTISSEUR DE RECUL (ASS)	260
CABLAGE DE MOTEUR (ASS)	262
CABLAGE AV (ASS)	268
CABLAGE D'INSTRUMENTS ET ALLUMAGE (ASS)	272
CABLAGE DU PANNEAU DE COMMANDE	274
CABLAGE AR (ASS)	282
CABLAGE - PANNEAU DE RELAIS	284
CÂBLAGE DE COMMANDE DE TRANSLATION (ASS)	288
CABLAGE DE DIRECTION AUXILIAIRE (ASS)	290
TRANSMISSION	292
FREIN ET TRAINS PLANÉTAIRES (ASS)	292
TRAINS PLANÉTAIRES - CARTER ET PIÈCES	294
COMMANDE DE BOITE DE VITESSES (ASS)	296
COMMANDE HYDRAULIQUE DE BOÎTE (ASS)	298
REFROIDISSEUR D'HUILE DE BOÎTE (ASS)	299
COUVERCLES D'EXPEDITION (ASS)	300
DIFFÉRENTIEL (VERSION)	302
DIFFERENTIEL (ASS)	303
DIFFÉRENTIEL - GLISSEMENT LIMITÉ (ASS)	304
GOULOTTE DE REMPLISSAGE D'HUILE DE TRANSMISSION	305
FILTRE ET CANALISATIONS - BOÎTE DE VITESSE (ASS)	308
FILTRE A HUILE (ASS)	316
COURONNE CONIQUE ET PIGNON	318
ENGRENAGE DE TRANSFERT DE RENDEMENT (ASS)	320
CARTER D'ESSIEU FIXE	324
CARTER D'ESSIEU OSCILLANT	328
CANALIS. DE REFROIDISSEMENT DU CONV. DE COUPLE	334
NEUTRALISATEUR DE BOITE (ASS)	336
BOÎTE PLANÉTAIRE (ASS)	338
POMPE A ENGRENAGES (ASS)	342
JANTE DÉMONTABLE (ASS)	343
ARBRE D'ENTRAÎNEMENT (ASS)	346
CARDAN COULISSANT (ASS)	348
CROISILLON ET ROULEMENT	349
CONVERTISSEUR DE COUPLE (ASS)	350
BOÎTE DE VITESSES (VERSION)	358
JOINT UNIVERSEL (ASS)	360
SOUPAPE DE NEUTRALISATION (ASS)	361
CLAPET DE DECHARGE (ASS)	362

TABLE DES MATIÈRES

Désignation	Page
CHÂSSIS ET BENNE	368
VERSION DE TRANSFORMATION - DÉPLACEMENT NON ROUTIER	368
VERSION DE TRANSFORMATION POUR DÉPLACEMENT ROUTIER	370
CONTREPOIDS (ASS)	373
PORTE DE BATTERIE (ASS)	376
GARDE-BOUE (ASS)	377
CLOISON PARE-FEU (ASS)	382
BATI - CHARGEUSE (ASS)	389
BÂTI AR (ASS)	390
BLINDAGE INFÉRIEUR (ASS)	394
CARTER - BLINDAGE (ASS)	395
PROTECTION AV (ASS)	396
PROTECTEUR DES CANALISATIONS (ASS)	398
BLINDAGE DE TRANSMISSION (ASS)	399
PROTÈGE-RADIATEUR (ASS)	400
ATTELAGE D'ARTICULATION (ASS)	404
CAPOT ET PROTECTION (ASS)	406
ECHELLE (ASS)	409
CANALISATIONS DE GRAISSAGE (ASS)	412
LIAISON - VERROUILLAGE DE CHÂSSIS DE DIRECTION (ASS)	414
VOLET D'AERATION	416
INSONORISATION (VERSION)	418
INSONORISATION (ASS)	420
CIRCUIT DE FREINS	426
DISPOSITIF DE COMMANDE DE FREIN (ASS)	426
COMMANDE DE FREIN DE STATIONNEMENT (ASS)	427
FREIN DE STATIONNEMENT (ASS)	428
COMMANDE DE DIRECTION ET FREIN (VERSION)	435
COMMANDE DE FREIN DE STATIONNEMENT (ASS)	436
COMMANDE DE FREIN AUXILIAIRE (ASS)	438
FREIN DE MANOEUVRE - COMMANDE (ASS)	450
CYLINDRE OLEO-PNEUMATIQUE (ASS)	461
DISTRIBUTEUR DE FREIN (ASS)	462
CLAPET DE RETENUE (ENS)	464
CIRCUIT DE DIRECTION	468
COMMANDE DE DIRECTION (ASS)	468
VERIN DE DIRECTION ET MONTAGE (ASS)	469
VÉRIN DE DIRECTION ET JOINT (ASS)	470
VERIN DE DIRECTION (ASS)	472
CANALISATION DE DIRECTION AUXILIAIRE	476
CANALISATIONS DE DIRECTION (ASS)	484
POMPE DE DIRECTION AUXILIAIRE ET MONTAGE (ASS)	488
POMPE DE REGULARISATION DE DEBIT (ASS)	489
POMPE DE LA DIRECTION SECONDAIRE	492
DIRECTION AUXILIAIRE (VERSION)	494
COLONNE DE DIRECTION RÉGLABLE	498
SOUPAPE DE DÉRIVATION ET MONTAGE	502
SOUPAPE DE DERIVATION (ASS)	503
CLAPET DE COMPENSATION (ASS)	505
SOUPAPE DE DIRECTION (ASS)	506
SOUPAPE DE NEUTRALISATION DE DIRECTION (ASS)	509
CIRCUIT HYDRAULIQUE	510
POMPE À AILETTES - CARTOUCHE	510
COMMANDE DE TRANSLATION (VERSION)	512
COMMANDE HYDRAULIQUE PILOTE (ASS)	514
COUVERCLE DE RÉSERVOIR HYDRAULIQUE	526
VÉRIN DE LEVAGE (ASS)	528
VÉRIN D'INCLINAISON (ASS)	532
VERSION HYDRAULIQUE	536
LIMITEUR DE LEVAGE ET RETOUR À L'ANGLE DE CAVAGE	540
CANALISATIONS AV	544
CANALISATIONS HYDRAULIQUES (ASS)	548
CANALISATIONS DE REFROIDISSEUR D'HUILE HYDR. (ASS)	554
CANALISATIONS DE VÉRIN DE LEVAGE (ASS)	556
CANALISATIONS A COMMANDE PILOTE (ASS)	558
CANALISATIONS DE COMMANDE DE MARCHE	562
CANALISATIONS DU VÉRIN D'INCLINAISON (ASS)	570
RÉSERVOIR HYDRAULIQUE - MONTAGE (ASS)	572
POMPE ET MONTAGE - HYDRAULIQUE (ASS)	573
POMPE À PALETTES (ASS)	574
RÉSERVOIR HYDRAULIQUE ET FILTRE (ASS)	576
DISTRIBUTEUR ET MONTAGE (ASS)	580

TABLE DES MATIÈRES

Désignation	Page
CLAPET (ASS)	585
CLAPET DE DÉCHARGE HYDRAULIQUE (ASS)	586
DISTRIBUTEUR (ASS)	587
SOUPAPE DE DERIVATION (ASS)	610
SOUPAPE PILOTE (ASS)	612
SOUPAPE - CARTOUCHE PILOTE (ASS)	627
CLAPET DE DECHARGE (ASS)	633
SOUPAPE SELECTRICE ET REGULATRICE DE PRESSION	645
VANNE PILOTE (ASS)	648
SOUPAPE - SOLÉNOÏDE (ASS)	650
ÉQUIPEMENTS	652
COMMANDE DE GODET (ASS)	652
OUTILS DE TRAVAIL	654
EMBOUT ET LAME DE COUPE (ASS)	654
GODET NORMAL (ENS)	656
GODET-PÉNÉTRATION (ENS)	664
GODET-ROCHE (ENS)	665
GODET NORMAL (ASS)	667
GODET PÉNÉTRATION (ASS)	672
GODET-ROCHE (ASS)	673
POINTE LONGUE (ASS)	675
POINTE COURTE (ASS)	676
DENT LONGUE (ASS)	677
DENT COURTE (ASS)	678
POSTE DE CONDUITE	679
CLIMATISEUR (VERSION)	679
CLIMATISEUR (ASS)	680
ACCOUDOIR (ASS)	688
CABINE (VERSION)	691
VERSION DE CABINE-BAS PROFIL	693
CABINE (ASS)	694
VERSION DE TOIT - ROPS OUVERT	712
PAVILLON (ASS)	713
COMPRESSEUR DE REFRIGERANT (ASS)	714
VERSION DE TRANSFORMATION DE CABINE-BAS PROFIL	718
VERSION DE TRANSFORMATION - SANS ROPS	719
VERSION DE TRANSFORMATION - SANS CABINE	720
GROUPE DE TRANSFORMATION SANS ROPS	722
PORTE D'ADMISSION D'AIR	723
PORTIÈRE DE CABINE (ASS)	724
PORTE LATÉRALE (ASS)	731
RALLONGE DU DOSSIER DE SIEGE	732
PROTECTION ANTIVANDALISME (ASS)	734
CHAUFFAGE DE CABINE (ASS)	736
KLAXON PNEUMATIQUE (ASS)	738
KLAXON ÉLECTRIQUE (ASS)	741
SUSPENSION DE SIEGE - CARTER (ASS)	743
MONTAGE DES COMMANDES (ASS)	744
MONTAGE DE RADIO (ASS)	746
CANALISATIONS DE CLIMATISEUR (ASS)	748
CANALISATIONS DE CHAUFFAGE (ASS)	750
RÉTROVISEUR (ASS)	752
ELECTROMODULE DE CHARGE UTILE DE BENNE	761
MONTAGE DE PLATE-FORME (ASS)	762
POSTE DE CONDUITE (VERSION)	764
SIEGE - COUVERCLE INFERIEUR (ASS)	766
TABLEAU DE BORD (ASS)	768
RÉGULATEUR - PÉDALE (ASS)	778
PLATE-FORME (ASS)	780
SURPRESSEUR (ASS)	792
TOIT ROPS (ASS)	800
CEINTURE DE SECURITE (ASS)	801
SIÈGE (ASS)	802
SIÈGE RÉGLABLE (ASS)	810
SIÈGE AVEC SUSPENSION (ASS)	814
SUPPORT DE SIÈGE (ASS)	818
INSONORISATION (ASS)	822
SIÈGE AVEC SUSPENSION (ASS)	826
RÉSERVOIR - LAVE-GLACE (ASS)	827
ATTACHE (ASS)	828
DISTRIBUTEUR D'AIR (ASS)	829
RETROVISEUR - CABINE (ASS)	830
LAVE-GLACE - VITRE (ASS)	832
VITRE (ASS)	834
ESSUIE-GLACE (ASS)	838
PIVOT D'ESSUIE-GLACE (ASS)	854
MATÉRIEL ET FOURNITURES D'ENTRETIEN	855
VERROUILLAGE ANTI-VANDALISME (ASS)	855
PLAQUES SIGNALETIQUES ET AUTOCOLLANTS (ASS)	856
INDEX DE NUMÉROS DE PIÈCES	B1

CONTENIDO

Nombre	Página
INFORMACIÓN GENERAL	A27
ADITIVOS DE REFRIGERANTE SUPLEMENTARIOS	A41
PIEZAS DE MANTENIMIENTO	A55
INDICE	A94
CONFIGURACION DE MOTOR	1
CONFIGURACIÓN DE MOTORES	1
MOTOR BÁSICO	4
COMPRESOR DE AIRE (GR)	4
ÁRBOL DE LEVAS (GR)	10
TAPA DEL BLOQUE MOTOR (GR)	11
TAPA DE LA CULATA DE CILINDROS (GR)	12
TAPA DE LA CAJA DELANTERA (GR)	13
TAPA DEL MECANISMO DE VÁLVULAS (GR)	14
CIGÜEÑAL (CONJ)	15
CIGÜEÑAL (GR)	16
BLOQUE MOTOR (GR)	17
CULATA DE CILINDROS (GR)	22
AMORTIGUADOR DE VIBRACIONES (GR)	27
IMPULSOR DE VENTILADOR (GR)	28
CULATA DE CILINDROS - TORNILLERÍA DE LA (GR)	29
CAJA DELANTERA - TORNILLERÍA DE LA (GR)	30
TORNILLERÍA DEL COLECTOR DEL CÁRTER (GR)	31
VOLANTE (GR)	32
ENGRANAJE DELANTERO (GR)	34
VOLANTE - CAJA DE (GR)	35
CAJA DELANTERA (GR)	36
CÁNCAMOS DE LEVANTAMIENTO DEL MOTOR (GR)	37
TUBERÍAS DEL COMPRESOR DE AIRE (GR)	38
MONTAJE DEL MOTOR Y LA TRANSMISIÓN (GR)	40
CÁRTER - COLECTOR DEL (GR)	42
PISTÓN Y BIELA (GR)	43
PISTON (GR)	44
CIGÜEÑAL - POLEA DE (GR)	45
POLEA DEL MANDO DE VENTILADOR (GR)	46
SELLO DE CIGÜEÑAL (GR)	47
MOTOR - SOPORTE DEL (GR)	48
MUÑÓN DEL MOTOR (GR)	49
MECANISMO DE VÁLVULAS (GR)	50
SISTEMA DE LUBRICACIÓN	53
FILTRO DE ACEITE - BASE DEL (GR)	53
RESPIRADERO (GR)	54
TUBO DE LLENADO DE ACEITE (GR)	55
ESCAPE DE GASES (GR)	56
INDICADOR DEL NIVEL DE ACEITE (VARILLA) (GR)	57
TUBERÍAS DE ACEITE DEL MOTOR (GR)	58
TURBOCOMPRESOR - TUBERÍAS DE ACEITE DEL (GR)	62
BOMBA DE ACEITE DEL MOTOR (GR)	63
SISTEMA DE ENFRIAMIENTO	70
ENFRIADOR DE ACEITE DEL MOTOR Y BASE DEL FILTRO	70
SOPLADOR - VENTILADOR (GR)	74
REGULADOR Y CAJA (GR)	75
TUBERÍAS DEL AGUA (GR)	76
BOMBA DE AGUA (GR)	78
RADIADOR (GR)	82
TEMPERATURA - REGULADOR DE (GR)	92
SISTEMA DE AIRE DE ADMISIÓN Y ESCAPE	93
FILTRO DE AIRE (GR)	93
NÚCLEO DE TURBOCOMPRESOR (GR)	95
EXPULSOR DE POLVO (GR)	96
TORNILLERÍA DEL MÚLTIPLE DE ESCAPE (GR)	97
AIRE - TUBERÍAS DE (GR)	100
MÚLTIPLE DE ESCAPE (GR)	103
SILENCIADOR (GR)	104
TURBOCOMPRESOR (GR)	106
SISTEMA DE COMBUSTIBLE	108
ÁRBOL DE LEVAS (CONJ)	108
TAPA PROTECTORA (GR)	109
CONTROL DE LA RELACIÓN DE COMBUSTIBLE (GR)	110
TORNILLERÍA DE LA BOMBA DE INYECCIÓN DE COMB.	114
FILTRO SECUNDARIO DE COMBUSTIBLE (GR)	115
REGULADOR (GR)	116
CAJA DE LA BOMBA DE COMBUSTIBLE (GR)	121
TUBERÍAS DE COMBUSTIBLE (GR)	122
COMBUSTIBLE - TUBERÍAS DE DRENAJE DE (GR)	124
TUBERÍAS DE INYECCIÓN DE COMBUSTIBLE (GR)	125

CONTENIDO

Nombre	Página
BOMBA DE TRANSFERENCIA DE COMBUSTIBLE Y MONTAJE (GR)	143
BOMBA DE INYECCIÓN DE COMBUSTIBLE (GR)	144
BOMBA DE CEBADO DE COMBUSTIBLE (GR)	148
BOMBA DE CEBADO Y FILTRO PRIMARIO DE COMBUSTIBLE (GR)	149
BOMBA DE TRANSFERENCIA DE COMBUSTIBLE (GR)	151
REGULADOR Y BOMBA DE INYECCIÓN DE COMBUSTIBLE (GR)	154
COMBUSTIBLE - TANQUE DE (GR)	158
CONTROL DE PAR (GR)	164
SISTEMA ELECTRICO Y DE ARRANQUE	166
DESHIDRATADOR (GR)	166
ALARMA (GR)	170
CARGA - ALTERNADOR DE (GR)	172
BATERÍA Y CABLES (GR)	190
SENSOR DE AMORTIGUADOR (GR)	209
CONVERTIDOR ELÉCTRICO (GR)	210
BLOQUE DE CALENTAMIENTO (GR)	212
REFLECTOR (GR)	213
LÁMPARA DE FARO DELANTERO (GR)	215
LUZ DE SEÑAL DE GIRO (GR)	217
LUCES DE REFLECTOR Y CAMBIO DE DIRECCION (GR)	222
LUCES DE DESPLAZAMIENTO (GR)	226
LUCES DE GIRO (GR)	232
LUCES DE ADVERTENCIA (GR)	234
ENCHUFE DE ARRANQUE AUXILIAR (GR)	236
CONFIGURACIÓN PARA CARRETERA	238
DETECTOR DE POSICIÓN (SISTEMA DE COMBUST.) (GR)	239
SENSOR DE PRESIÓN (GR)	241
SENSOR DE TEMPERATURA (GR)	243
SOLENOIDE DE CORTE	244
AUXILIAR DE ARRANQUE CON ÉTER (GR)	246
MOTOR DE ARRANQUE ELÉCTRICO (GR)	248
DISYUNTOR (GR)	258
ARRANQUE - INTERRUPTOR DE (GR)	259
RETROCESO - ALARMA DE (GR)	260
CABLES DEL MOTOR (GR)	262
CABLES DELANTEROS (GR)	268
GRUPO DE CABLES DE LOS INSTRUMENTOS Y ENCENDIDO	272
CABLES DEL TABLERO MONITOR (GR)	274
CABLES POSTERIORES (GR)	282
CABLES DEL PANEL DE RELES (GR)	284
CABLES DE CONTROL DE AMORTIGUACIÓN (GR)	288
CABLES DE LA DIRECCIÓN SECUNDARIA	290
TREN DE FUERZA	292
FRENO Y PLANETARIOS (GR)	292
CAJA Y PIEZAS DE LOS PLANETARIOS	294
CONTROL DE LA TRANSMISIÓN (GR)	296
CONTROL HIDRÁULICO DE LA TRANSMISIÓN (GR)	298
ENFRIADOR DE ACEITE DE LA TRANSMISIÓN (GR)	299
TAPAS PROTECTORAS DE EMBARQUE (GR)	300
DIFERENCIAL (CONFIG)	302
DIFERENCIAL (GR)	303
DIFERENCIAL DE DESLIZAMIENTO LIMITADO (GR)	304
TUBO DE LLENADO DE ACEITE DE LA TRANSMISIÓN (GR)	305
TUBERÍAS DEL FILTRO Y LA TRANSMISIÓN (GR)	308
FILTRO DE ACEITE (GR)	316
ENGRANAJE DE CORONA Y PIÑÓN (GR)	318
ENGRANAJE DE TRANSFERENCIA DE SALIDA	320
CAJA DEL EJE OSCILANTE (GR)	324
CAJA DE EJE OSCILANTE (GR)	328
TUBERIAS DEL ENFRIADOR DEL CONVERTIDOR DE PAR	334
NEUTRALIZADOR DE LA TRANSMISIÓN (GR)	336
TRANSMISIÓN PLANETARIA (GR)	338
BOMBA DE ENGRANAJES (GR)	342
ARO DESMONTABLE (GR)	343
EJE DE MANDO (GR)	346
JUNTA DESLIZANTE (GR)	348
CRUCETA Y COJINETE (GR)	349
CONVERTIDOR DE PAR (GR)	350
TRANSMISION (CONFIG)	358
JUNTA UNIVERSAL (GR)	360
VÁLVULA NEUTRALIZADORA (GR)	361
VÁLVULA DE ALIVIO (GR)	362
BASTIDOR Y CAJA	368
CONFIGURACIÓN DE TRANSFORMACIÓN PARA OBRAS	368

CONTENIDO

Nombre	Página
CONFIGURACIÓN DE TRANSFORMACIÓN PARA CARRETERA	370
CONTRAPESO (GR)	373
TAPA DE LA BATERÍA (GR)	376
GUARDABARROS (GR)	377
MAMPARA ANTITÉRMICA (GR)	382
BASTIDOR DEL CARGADOR (GR)	389
BASTIDOR TRASERO (GR)	390
PROTECTOR INFERIOR (GR)	394
CÁRTER - PROTECTOR DEL (GR)	395
PROTECTOR DELANTERO (GR)	396
PROTECTOR DE LAS TUBERÍAS (GR)	398
PROTECTOR DEL TREN DE FUERZA (GR)	399
PROTECTOR DEL RADIADOR (GR)	400
ENGANCHE ARTICULADO (GR)	404
CAPO Y PROTECTOR (GR)	406
ESCALERILLA (GR)	409
TUBERÍAS DE ENGRASE (GR)	412
TIRANTE DE TRABA DEL BASTIDOR DE DIRECCIÓN (GR)	414
PERSIANA (GR)	416
INSONORIZADOR (CONFIG)	418
INSONORIZADOR (GR)	420
SISTEMA DE FRENOS	426
ACTIVADOR DEL FRENO (GR)	426
ACCIONADOR DEL FRENO DE ESTACIONAMIENTO (GR)	427
FRENO DE ESTACIONAMIENTO (GR)	428
CONTROL DE DIRECCION Y FRENO (CONFIG)	435
CONTROL DEL FRENO DE ESTACIONAMIENTO	436
CONTROL DEL FRENO SECUNDARIO(GR)	438
FRENO DE SERVICIO - CONTROL (GR)	450
CILINDRO DE AIRE HIDRÁULICO	461
VÁLVULA DE CONTROL DEL FRENO (GR)	462
VÁLVULA DE RETENCIÓN (GR)	464
SISTEMA DE DIRECCIÓN	468
CONTROL DE DIRECCIÓN (GR)	468
CILINDRO DE DIRECCIÓN Y MONTAJE (GR)	469
CILINDRO DE DIRECCIÓN Y SELLO (GR)	470
CILINDRO DE DIRECCIÓN (GR)	472
TUBERÍAS DE LA DIRECCIÓN SECUNDARIA (GR)	476
TUBERÍAS DE DIRECCIÓN (GR)	484
BOMBA Y MONTAJE DE LA DIRECCIÓN SECUNDARIA (GR)	488
DOSIFICACIÓN - BOMBA DE (GR)	489
BOMBA DE DIRECCIÓN SECUNDARIA (GR)	492
DIRECCIÓN SECUNDARIA (CONFIG)	494
COLUMNA DE DIRECCIÓN AJUSTABLE (GR)	498
VÁLVULA DE DERIVACIÓN Y MONTAJE (GR)	502
VÁLVULA DE DERIVACIÓN (GR)	503
VÁLVULA DE COMPENSACION (GR)	505
VÁLVULAS DE LA DIRECCIÓN (GR)	506
VÁLVULA NEUTRALIZADORA DE DIRECCIÓN (GR)	509
SISTEMA HIDRÁULICO	510
BOMBA DE PALETAS-CARTUCHO (GR)	510
CONTROL DE AMORTIGUACIÓN (CONFIG)	512
CONTROL HIDRÁULICO DE OPERACIÓN PILOTO (GR)	514
TAPA DEL TAPÓN DEL TANQUE HIDRÁULICO (GR)	526
CILINDRO DE LEVANTAMIENTO (GR)	528
INCLINACIÓN HORIZONTAL - CILINDRO DE (GR)	532
HIDRÁULICA (CONFIG)	536
POSICIONADOR DEL CUCHARÓN Y DESCONEXIÓN (GR)	540
TUBERÍAS DELANTERAS (GR)	544
TUBERÍAS HIDRÁULICAS (GR)	548
TUBERÍAS DEL ENFRIADOR DE ACEITE HIDRÁULICO (GR)	554
CILINDRO DE LEVANTAMIENTO - TUBERÍAS DEL (GR)	556
TUBERÍAS CON SERVOMANDO (GR)	558
TUBERIAS DE CONTROL DE LA SUSPENSIÓN (GR)	562
TUBERÍAS DEL CILINDRO DE INCLINACIÓN (GR)	570
MONTAJE DEL TANQUE HIDRÁULICO (GR)	572
BOMBA HIDRÁULICA Y MONTAJE (GR)	573
BOMBA DE PALETAS (GR)	574
TANQUE Y FILTRO HIDRÁULICOS (GR)	576
VÁLVULA DE CONTROL Y MONTAJE (GR)	580
GRUPO DE VÁLVULAS	585
VÁLVULA DE ALIVIO - DESCONEXIÓN (GR)	586
VÁLVULA DE CONTROL (GR)	587
VÁLVULA DE DERIVACIÓN (GR)	610
VÁLVULA PILOTO (GR)	612

CONTENIDO

Nombre	Página
VALVULA PILOTO DE CARTUCHO (GR)	627
VÁLVULA DE ALIVIO (GR)	633
VÁLVULA SELECTORA Y DE CONTROL DE PRESIÓN (GR)	645
VÁLVULA DE LANZADERA (GR)	648
VÁLVULA DE SOLENOIDE (GR)	650
IMPLEMENTOS	652
CONTROL DEL CUCHARÓN (GR)	652
HERRAMIENTAS	654
CANTONERA Y CUCHILLA (GR)	654
CUCHARÓN DE USO GENERAL (CONJ)	656
CUCHARON PARA PENETRACIÓN (CONJ)	664
CUCHARÓN PARA ROCA (CONJ)	665
CUCHARÓN DE USO GENERAL (GR)	667
PENETRACIÓN DEL CUCHARÓN	672
CUCHARÓN PARA ROCA (GR)	673
PUNTA LARGA (GR)	675
PUNTA CORTA (GR)	676
DIENTE LARGO (GR)	677
DIENTE CORTO (GR)	678
PUESTO DEL OPERADOR	679
ACONDICIONADOR DE AIRE (CONFIG)	679
ACONDICIONADOR DE AIRE (GR)	680
POSABRAZOS (GR)	688
CABINA (CONFIG)	691
CABINA DE BAJO PERFIL (CONFIG)	693
CABINA (GR)	694
TECHO ROPS ABIERTO (CONFIG)	712
TECHO TIPO TOLDO (GR)	713
COMPRESOR DE REFRIGERANTE (GR)	714
CONVERSION A CABINA DE BAJO PERFIL (CONFIG)	718
CONJUNTO DE MODIFICACIÓN (SIN ROPS)	719
CONFIGURACIÓN DE CONVERSIÓN - SIN CABINA	720
GRUPO DE CONVERSIÓN A CABINA SIN ROPS	722
GRUPO DE ENTRADA DE AIRE	723
PUERTA DE CABINA	724
PUERTA LATERAL (GR)	731
EXTENSIÓN DEL RESPALDO (GR)	732
PROTECTOR CONTRA EL VANDALISMO (GR)	734
CALEFACCIÓN DE LA CABINA (GR)	736
BOCINA DE AIRE (GR)	738
BOCINA ELÉCTRICA (GR)	741
CAJA DE LA SUSPENSIÓN DEL ASIENTO (GR)	743
INSTALACIÓN DE CONTROLES (GR)	744
INSTALACIÓN DE RADIO (GR)	746
TUBERÍAS DE ACONDICIONADOR DE AIRE (GR)	748
TUBERÍAS DE LA CALEFACCIÓN (GR)	750
ESPEJO (GR)	752
RETROVISOR (GR)	756
MONITOR DE CARGA ÚTIL (CONFIG)	761
MONTAJE DE LA PLATAFORMA (GR)	762
COMPARTIMIENTO DEL OPERADOR (CONFIG)	764
CUBIERTA INFERIOR DEL ASIENTO DEL OPERADOR (GR)	766
TABLERO DE INSTRUMENTOS (GR)	768
REGULADOR - PEDAL DEL (GR)	778
PLATAFORMA (GR)	780
PRESURIZADOR (GR)	792
ESTRUCTURA ROPS (GR)	800
CINTURÓN DE SEGURIDAD (GR)	801
ASIENTO (GR)	802
ASIENTO AJUSTABLE (GR)	810
SUSPENSIÓN - ASIENTO CON (GR)	814
SOPORTE DEL ASIENTO (GR)	818
INSONORIZADOR (GR)	822
ASIENTO CON SUSPENSIÓN (GR)	826
TANQUE DEL LAVAPARABRISAS (GR)	827
ATADURA (GR)	828
CONTROL DE AIRE-VÁLVULA	829
VISERA (GR)	830
LAVAPARABRISAS DE LA VENTANA (GR)	832
VENTANA (GR)	834
LIMPIAPARABRISAS DE LA VENTANA (GR)	838
PIVOTE DEL LIMPIADOR (GR)	854
EQUIPO DE SERVICIO Y SUMINISTROS	855
TRABA CONTRA EL VANDALISMO (GR)	855
CALCOMANÍAS Y PLACAS DE IDENTIFICACIÓN (GR)	856
INDICE DE NUMEROS DE PIEZA	B1

ÍNDICE

Designação	Página
INFORMAÇÃO GERAL	A31
ADITIVOS SUPLEMENTARES DO LÍQUIDO ARREFECEDOR	A42
PEÇAS DE MANUTENÇÃO	A61
ÍNDICE	A106
MOTOR - ARRANJO	1
MOTOR	1
MOTOR BÁSICO	4
COMPRESSOR DE AR	4
EIXO-COMANDO DE VÁLVULA	10
TAMPA - BLOCO DO MOTOR	11
TAMPA - CABEÇA DO CILINDRO	12
TAMPA - CAIXA DIANTEIRA	13
TAMPA - MECANISMO DAS VÁLVULAS	14
VIRABREQUIM	15
BLOCO DO MOTOR	17
CABEÇOTE DO MOTOR	22
AMORTECEDOR	27
COMANDO DO VENTILADOR	28
FIXADORES - CABEÇOTE DO MOTOR	29
FIXADORES - CAIXA DIANTEIRA	30
FIXADORES - CÁRTER DO ÓLEO	31
VOLANTE DO MOTOR	32
ENGRENAGENS DE DISTRIBUIÇÃO	34
CAIXA DO VOLANTE DO MOTOR	35
CAIXA DIANTEIRA	36
LEVANTAMENTO DO MOTOR	37
TUBOS - COMPRESSOR DE AR	38
MONTAGEM - MOTOR E TRANSMISSÃO	40
CÁRTER DO ÓLEO DO MOTOR	42
PISTÃO E BIELA	43
PISTÃO	44
POLIA DO VIRABREQUIM	45
POLIA - ACIONADOR DO VENTILADOR	46
RETENTOR DO VIRABREQUIM	47
SUPORTE DO MOTOR	48
MUNHÃO DO MOTOR	49
MECANISMO DAS VÁLVULAS	50
SISTEMA DE LUBRIFICAÇÃO	53
BASE DO FILTRO DE ÓLEO	53
RESPIRO	54
BOCAL DE ENCHIMENTO DE ÓLEO DO MOTOR	55
ELIMINAÇÃO DE VAPORES DO CÁRTER	56
INDICADOR - NÍVEL DO ÓLEO (VARETA)	57
TUBOS - ÓLEO DO MOTOR	58
TUBOS - ÓLEO DO TURBOALIMENTADOR	62
BOMBA DE ÓLEO - MOTOR	63
SISTEMA DE ARREFECIMENTO	70
ARREFECEDOR DE ÓLEO DO MOTOR E BASE DO FILTRO	70
VENTILADOR DE SOPRO	74
TERMOSTATO / REGULADOR DE TEMPERATURA	75
TUBOS - ÁGUA	76
BOMBA DE ÁGUA	78
RADIADOR	82
TERMOSTATO	92
SISTEMA DA ADMISSÃO DE AR E DE ESCAPE	93
PURIFICADOR DE AR	93
CARTUCHO DO TURBOALIMENTADOR	95
EJETOR DE POEIRA	96
FIXADORES - COLETOR DE ESCAPE	97
TUBOS - AR	100
COLETOR DE ESCAPE	103
SILENCIADOR	104
TURBOALIMENTADOR	106
SISTEMA DE COMBUSTÍVEL	108
EIXO-COMANDO DE VÁLVULA	108
TAMPA PROTETORA	109
LIMITADOR DE COMBUSTÍVEL	110
FIXADORES - BOMBA INJETORA DE COMBUSTÍVEL	114
FILTRO SECUNDÁRIO DE COMBUSTÍVEL	115
GOVERNADOR	116
ALOJAMENTO DA BOMBA DE COMBUSTÍVEL	121
TUBOS - COMBUSTÍVEL	122
TUBOS - DRENAGEM DO COMBUSTÍVEL	124
TUBOS - INJEÇÃO DO COMBUSTÍVEL	125
BOMBA E MONTAGEM - TRANSFERÊNCIA DE COMBUSTÍVEL	143
BOMBA DE INJEÇÃO DO COMBUSTÍVEL	144
BOMBA DE ESCORVA DO COMBUSTÍVEL	148
BOMBA DE ESCORVA DO COMBUSTÍVEL E DO FILTRO PRIMÁRIO	149

ÍNDICE

Designação	Página
BOMBA DE TRANSFERÊNCIA DO COMBUSTÍVEL	151
BOMBA DO GOVERNADOR E INJEÇÃO DE COMBUSTÍVEL	154
TANQUE DE COMBUSTÍVEL	158
MOLA DE CONTROLE DO TORQUE	164
SISTEMA ELÉTRICO E DE PARTIDA	166
SECADOR DE AR	166
ALARME	170
ALTERNADOR DE CORRENTE	172
BATERIA E CABOS / FIOS ELÉTRICOS	190
AMORTECEDOR - SENSOR	209
CONVERSOR ELÉTRICO	210
AQUECEDOR - BLOCO	212
LÂMPADA - FAROL	213
FAROL DIANTEIRO	215
LÂMPADA - SINALIZAÇÃO	217
SISTEMA DE ILUMINAÇÃO - FARÓIS E SINAL	222
ILUMINAÇÃO - RODOVIÁRIA	226
ILUMINAÇÃO - SINALIZAÇÃO	232
SISTEMA DE ILUMINAÇÃO - ADVERTÊNCIA	234
RECEPTÁCULO-PARTIDA AUXILIAR	236
ARRANJO RODOVIÁRIO	238
EMISSOR - POSIÇÃO	239
SENSOR - PRESSÃO	241
SENSOR - TEMPERATURA	243
SOLENÓIDE DE PARADA	244
AUXILIAR DE PARTIDA A ÉTER	246
MOTOR ELÉTRICO DE PARTIDA	248
CHAVE GERAL	258
INTERRUPTOR - PARTIDA	259
ALARME DE MARCHA À RÉ	260
CABOS/FIOS ELÉTRICOS - MOTOR	262
CABOS/FIOS ELÉTRICOS - DIANTEIROS	268
CABOS/FIOS ELÉTRICOS - INSTRUMENTOS E IGNICÃO	272
CABOS/FIOS ELÉTRICOS - PAINEL MONITOR	274
CABOS/FIOS ELÉTRICOS - TRASEIROS	282
CABOS/FIOS ELÉTRICOS - PAINEL DE RELÉ	284
CABOS/FIOS ELÉTRICOS - ABSORÇÃO DE IMPACTOS	288
CABOS/FIOS ELÉTRICOS - DIREÇÃO SECUNDÁRIA	290
TREM DE FORÇA	292
FREIOS E ENGRENAGENS PLANETARIAS	292
CARCAÇA DAS ENGRENAGENS PLANETÁRIAS E COMPONENTES	294
CONTROLE DA TRANSMISSÃO	296
CONTROLE HIDRÁULICO DA TRANSMISSÃO	298
ARREFECEDOR DE ÓLEO DA TRANSMISSÃO	299
TAMPA - EMBARQUE	300
DIFERENCIAL	302
DIFERENCIAL - DESLIZAMENTO LIMITADO	304
BOCAL DE ENCHIMENTO DE ÓLEO DO TREM DE FORÇA	305
FILTRO E TUBOS - TRANSMISSÃO	308
FILTRO - ÓLEO	316
ENGRENAGEM-COROA E PINHÃO	318
ENGRENAGENS DE SAÍDA DE TRANSFERÊNCIA	320
CAIXA - EIXO FIXO	324
CAIXA - EIXO OSCILANTE	328
TUBOS - ARREFECEDOR DO CONVERSOR DE TORQUE	334
NEUTRALIZADOR DA TRANSMISSÃO	336
ENGRENAGENS PLANETÁRIAS - TRANSMISSÃO	338
BOMBA DE ENGRENAGENS	342
ARO DESMONTÁVEL	343
EIXO DE TRANSMISSÃO	346
JUNTA CORREDIÇA	348
CRUZETA E MANCAL	349
CONVERSOR DE TORQUE	350
TRANSMISSÃO	358
JUNTA UNIVERSAL	360
VÁLVULA NEUTRALIZADORA	361
VÁLVULA DE ALÍVIO	362
CHASSI E CARROCERIA	368
GR. DE CONVERSÃO - ARRANJO NÃO RODOVIÁRIO	368
GRUPO DE CONVERSÃO - ARRANJO RODOVIÁRIO	370
CONTRAPESO	373
TAMPA - ACESSO À BATERIA	376
PÁRA-LAMA	377
PAINEL TRASEIRO DO MOTOR	382
CHASSI DIANTEIRO	389
CHASSI TRASEIRO	390
PROTETOR INFERIOR	394
PROTETOR - CÁRTER DO ÓLEO DO MOTOR	395
PROTETOR - DIANTEIRO	396
PROTETOR - TUBOS	398
PROTETOR - TREM DE FORÇA	399
PROTETOR - RADIADOR	400

ÍNDICE

Designação	Página
ENGATE - ARTICULAÇÃO	404
CAPÔ E PROTETOR	406
ESCADA	409
TUBOS - GRAXA	412
ELO - TRAVA DA ARMAÇÃO DA DIREÇÃO	414
PERSIANA	416
RUÍDO - ARRANJO PARA SUPRESSÃO	418
REDUÇÃO DE RUÍDO	420
SISTEMA DE FREIO	426
CONJUNTO ACIONADOR DO FREIO	426
ACIONADOR DO FREIO DE ESTACIONAMENTO	427
FREIO DE ESTACIONAMENTO	428
CONTROLE - DIREÇÃO E FREIO	435
CONTROLE DO FREIO DE ESTACIONAMENTO	436
CONTROLE DO FREIO SECUNDÁRIO	438
CONTROLE DO FREIO DE SERVIÇO	450
CILINDRO DE AR/HIDRÁULICO DOS FREIOS	461
VÁLVULA DE CONTROLE DOS FREIOS	462
VÁLVULA DE RETENÇÃO	464
SISTEMA DE DIREÇÃO	468
CONTROLE DE DIREÇÃO	468
CILINDRO DE DIREÇÃO E MONTAGEM	469
CILINDRO DE DIREÇÃO E RETENTOR	470
CILINDRO DA DIREÇÃO	472
TUBOS - DIREÇÃO SECUNDÁRIA	476
TUBOS - DIREÇÃO	484
BOMBA DA DIREÇÃO SECUNDÁRIA E MONTAGEM	488
BOMBA REGULADORA	489
BOMBA DA DIREÇÃO SECUNDÁRIA	492
DIREÇÃO SECUNDÁRIA	494
COLUNA DE DIREÇÃO AJUSTÁVEL	498
VÁLVULA DESVIADORA E MONTAGEM	502
VÁLVULA DESVIADORA	503
VÁLVULA COMPENSADORA	505
VÁLVULA DA DIREÇÃO	506
VÁLVULA - NEUTRALIZADOR DA DIREÇÃO	509
SISTEMA HIDRÁULICO	510
CARTUCHO - BOMBA DE PALHETAS	510
SISTEMA DE ABSORÇÃO DE IMPACTOS	512
CONTROLE HIDRÁULICO DE OPERAÇÃO PILOTO	514
TAMPA - TANQUE HIDRÁULICO	526
CILINDRO DE LEVANTAMENTO	528
CILINDRO DE INCLINAÇÃO	532
COMANDO HIDRÁULICO	536
DESENGATE E POSICIONADOR DA CAÇAMBA	540
TUBOS - DIANTEIROS	544
TUBOS - ÓLEO HIDRÁULICO	548
TUBOS - ARREFECEDOR DE ÓLEO HIDRÁULICO	554
TUBOS - CILINDRO DE LEVANTAMENTO	556
TUBOS - CIRCUITO PILOTO	558
TUBOS - ABSORÇÃO DE IMPACTOS	562
TUBOS - CILINDRO DE INCLINAÇÃO	570
MONTAGEM - TANQUE HIDRÁULICO	572
BOMBA HIDRÁULICA E MONTAGEM	573
BOMBA DE PALHETAS	574
TANQUE HIDRÁULICO E FILTRO	576
VÁLVULA DE CONTROLE E MONTAGEM	580
VÁLVULA	585
VÁLVULA DISJUNTORA	586
VÁLVULA DE CONTROLE	587
VÁLVULA DESVIADORA	610
VÁLVULA DE CONTROLE PILOTO	612
VÁLVULA DO CARTUCHO PILOTO	627
VÁLVULA DE ALÍVIO	633
VÁLVULA SELETORA E CONTROLE DE PRESSÃO	645
VÁLVULA DE SEPARAÇÃO	648
VÁLVULA SOLENÓIDE	650
ACESSÓRIOS	652
CONTROLE DA CAÇAMBA	652
FERRAMENTAS DE TRABALHO	654
CANTO E BORDA CORTANTE	654
CAÇAMBA PARA APLICAÇÃO GERAL	656
CAÇAMBA PARA PENETRAÇÃO	664
CAÇAMBA PARA ROCHAS	665
CAÇAMBA PARA APLICAÇÃO GERAL	667
CAÇAMBA PARA PENETRAÇÃO	672
CAÇAMBA PARA ROCHAS	673
PONTA LONGA	675
PONTA CURTA	676
DENTE LONGO	677
DENTE CURTO	678
ESTAÇÃO DO OPERADOR	679
CONDICIONADOR DE AR	679
BRAÇO DO ASSENTO	688
CABINE	691

ÍNDICE

Designação	Página
CABINE - PERFIL BAIXO	693
CABINE	694
TOLDO - ROPS ABERTA	712
TOLDO FLEXÍVEL	713
COMPRESSOR DE REFRIGERANTE	714
GR. DE CONVERSÃO - CABINE DE PERFIL BAIXO	718
CONVERSÃO PARA ESTRUTURA NÃO ROPS	719
GR. DE CONVERSÃO - SEM CABINE	720
GP. DE CONVERSÃO - SEM CABINE	722
PORTA - ENTRADA DO AR	723
PORTA DA CABINE	724
PORTA LATERAL	731
EXTENSÃO - ENCOSTO	732
PROTETOR CONTRA VANDALISMO	734
AQUECEDOR DA CABINE	736
BUZINA DE AR	738
BUZINA ELÉTRICA	741
CAIXA - SUSPENSÃO DO ASSENTO	743
INSTALAÇÃO DOS CONTROLES	744
INSTALAÇÃO DO RÁDIO	746
TUBOS - AR CONDICIONADO	748
TUBOS - AQUECEDOR	750
ESPELHO	752
ESPELHO RETROVISOR	756
PAINEL MONITOR DE CARGA ÚTIL	761
MONTAGEM - PLATAFORMA	762
CABINE	764
ASSENTO - FUNDO	766
PAINEL DE INSTRUMENTOS	768
PEDAL DO GOVERNADOR	778
PLATAFORMA	780
PRESSURIZADOR	792
ESTRUTURA ROPS	800
CINTO DE SEGURANÇA	801
ASSENTO	802
ASSENTO AJUSTÁVEL	810
ASSENTO COM SUSPENSÃO	814
SUPORTE - ASSENTO	818
REDUÇÃO DE RUÍDO	822
SUSPENSÃO - ASSENTO	826
TANQUE - LAVADOR DE JANELA	827
CABO DO CINTO DE SEGURANÇA	828
VÁLVULA DE CONTROLE DO AR	829
PÁRA-SOL DA CABINE	830
LAVADOR DO VIDRO	832
VIDRO	834
LIMPADOR DO VIDRO	838
PIVÔ DO LIMPADOR	854
EQUIPAMENTOS DE SERVIÇO E SUPRIMENTOS	855
CADEADO CONTRA VANDALISMO	855
PLACA E DECALQUE	856
ÍNDICE DE NÚMERO DE PEÇA	B1

INHALTSVERZEICHNIS

Bezeichnung	Seite
ALLGEMEINE HINWEISE	A35
KÜHLMITTELZUSATZ	A43
WARTUNGSTEILE	A66
STICHWORTVERZEICHNIS	A118
MOTOR	1
MOTORAUSFÜHRUNG	1
MOTOR (GRUNDAUSFÜHRUNG)	4
LUFTKOMPRESSOR	4
NOCKENWELLE	10
MOTORBLOCKDECKEL	11
ZYLINDERKOPFDECKEL	12
STIRNRADGEHÄUSEDECKEL	13
VENTILDECKEL	14
KURBELWELLE	15
MOTORBLOCK	17
ZYLINDERKOPF	22
DÄMPFER	27
LÜFTERANTRIEB	28
ZYLINDERKOPF-HALTETEILE	29
STIRNRADGEHÄUSE-HALTETEILE	30
ÖLWANNEN-HALTETEILE	31
SCHWUNGRAD	32
STIRNRAD	34
SCHWUNGRADGEHÄUSE	35
STIRNRADGEHÄUSE	36
MOTORHUBÖSE	37
DRUCKLUFTKOMPRESSORLEITUNGEN	38
MOTOR- UND GETRIEBEAUFLAGER	40
ÖLWANNE	42
PLEUELSTANGE UND KOLBEN	43
KOLBEN	44
KURBELWELLEN-RIEMENSCHEIBE	45
LÜFTERRIEMENSCHEIBE	46
KURBELWELLENDICHTUNG	47
MOTORAUFHÄNGUNG	48
MONTAGEZAPFEN	49
VENTILSTEUERUNG	50
SCHMIERSYSTEM	53
ÖLFILTERSOCKEL	53
ENTLÜFTER	54
MOTORÖLEINFÜLLSTUTZEN	55
ENTDUNSTER	56
ÖLMESSSTAB	57
MOTORÖLLEITUNGEN	58
TURBOLADERÖLLEITUNGEN	62
SCHMIERPUMPE	63
KÜHLSYSTEM	70
MOTORÖLKÜHLER UND FILTERSOCKEL	70
DRUCKLÜFTER	74
KÜHLWASSER-TEMPERATURREGLER UND GEHÄUSE	75
KÜHLWASSERLEITUNGEN	76
KÜHLWASSERPUMPE	78
KÜHLER	82
TEMPERATURREGLER	92
LUFTANSAUG- UND ABGASSYSTEM	93
LUFTREINIGER	93
TURBOLADEREINSATZ	95
STAUBAUSWERFER	96
AUSPUFFKRÜMMER-HALTETEILE	97
DRUCKLUFTLEITUNGEN	100
AUSPUFFKRÜMMER	103
SCHALLDÄMPFER	104
TURBOLADER	106
KRAFTSTOFFSYSTEM	108
NOCKENWELLE	108
SCHUTZKAPPE	109
KRAFTSTOFFGEMISCHREGLER	110
HALTETEILE (KRAFTSTOFFEINSPRITZPUMPE)	114
KRAFTSTOFFSICHERHEITSFILTER	115
REGLER	116
KRAFTSTOFFPUMPENGEHÄUSE	121
KRAFTSTOFFLEITUNGEN	122
KRAFTSTOFFABLASSLEITUNGEN	124
KRAFTSTOFFEINSPRITZLEITUNGEN	125
KRAFTSTOFFÖRDERPUMPE UND BEFESTIGUNGSTEILE	143
KRAFTSTOFFEINSPRITZPUMPE	144
KRAFTSTOFF-ENTLÜFTUNGSPUMPE	148
KRAFTSTOFFENTLÜFTUNGSPUMPE UND -HAUPTFILTER	149
KRAFTSTOFFÖRDERPUMPE	151
REGLER UND KRAFTSTOFFEINSPRITZPUMPE	154
KRAFTSTOFFTANK	158
DREHMOMENTSTEUERHEBEL	164
ELEKTRISCHE ANLAGE U. STARTSYSTEM	166
LUFTTROCKNER	166
WARNVORRICHTUNG	170
DREHSTROMGENERATOR	172
BATTERIE UND VERDRAHTUNG	190
PUFFER - SENSOR	209
ELEKTR. UMFORMER	210

INHALTSVERZEICHNIS

Bezeichnung	Seite
HEIZUNGSBLOCK	212
ARBEITSLEUCHTEN	213
FRONTSCHEINWERFER	215
BLINKLEUCHTE	217
ARBEITS- U. SIGNALLEUCHTE	222
BELEUCHTUNGSANLAGE (STRASSENAUSRÜSTUNG)	226
BLINKERLEUCHTEN	232
WARNLEUCHTEN	234
STARTHILFEANSCHLUSS	236
STRASSENAUSRÜSTUNG	238
STELLUNGSSENSOR	239
DRUCKSENSOR	241
TEMPERATURSENSOR	243
ABSTELLMAGNETSPULE	244
ÄTHERSTARTHILFE	246
STARTERMOTOR	248
TRENNSCHALTER	258
STARTSCHALTER	259
RÜCKFAHRWARNHORN	260
MOTORVERDRAHTUNG	262
VERDRAHTUNG, VORNE	268
INSTRUMENTEN- UND ZÜNDVERDRAHTUNG	272
ÜBERWACHUNGSTAFELVERDRAHTUNG	274
VERDRAHTUNG, HINTEN	282
RELAISTAFELVERDRAHTUNG	284
SCHWINGUNGSDÄMPFUNGSVERDRAHTUNG	288
NOTLENKUNGSVERDRAHTUNG	290
KRAFTÜBERTRAGUNG	292
BREMSE UND PLANETENGETRIEBE	292
PLANETENANTRIEBSGEHÄUSE U. TEILE	294
GETRIEBESTEUERUNG	296
GETRIEBEHYDRAULIK	298
GETRIEBEÖLKÜHLER	299
VERSANDDECKEL	300
DIFFERENTIALSATZ	302
DIFFERENTIAL	303
DIFFERENTIAL (BEGRENZTER SCHLUPF)	304
GETRIEBEÖLFÜLLSTUTZEN	305
GETRIEBEFILTER UND -LEITUNGEN	308
ÖLFILTER	316
TELLER- UND KEGELRAD	318
VERTEILERGETRIEBEANTRIEB	320
GEHÄUSE - STARRACHSE	324
GEHÄUSE - PENDELACHSE	328
DREHMOMENTWANDLER-KÜHLERLEITUNGEN	334
GETRIEBENEUTRALISIERUNG	336
PLANETENGETRIEBE	338
ZAHNRADPUMPE	342
FELGE (TEILBAR)	343
ANTRIEBSWELLE	346
ANTRIEBSWELLEN-KEILVERZAHNUNG	348
KREUZGELENK UND LAGER	349
DREHMOMENTWANDLER	350
GETRIEBE	358
KREUZGELENK	360
NEUTRALISIERVENTIL	361
ÜBERDRUCKVENTIL	362
RAHMEN UND FAHRGESTELL	368
UMBAUSATZ - NICHT FÜR STRASSENVERKEHR	368
UMBAUSATZ - FÜR STRASSENVERKEHR	370
GEGENGEWICHT	373
BATTERIEDECKEL	376
SCHUTZBLECHE	377
FEUERSCHUTZWAND	382
LADERRAHMEN	389
RAHMEN, HINTEN	390
PANZERWANNE	394
VERKLEIDUNGEN, VORN	396
LEITUNGSVERKLEIDUNG	398
ANTRIEBSSCHUTZ	399
KÜHLERSCHUTZ	400
KNICKGELENK-ANHÄNGUNG	404
MOTORHAUBE UND VERKLEIDUNG	406
STEIGLEITER	409
SCHMIERLEITUNGEN	412
KNICKGELENKSPERRE	414
LUFTAUSSTRÖMER	416
SCHALLDÄMPFUNG	418
BREMSSYSTEM	426
BREMSBETÄTIGUNG	426
FESTSTELLBREMSBETÄTIGUNG	427
FESTSTELLBREMSE	428
LENKUNGS- U. BREMSSTEUERUNG	435
FESTSTELLBREMSGESTÄNGE	436
NOTBREMSGESTÄNGE	438
BREMSGESTÄNGE	450
DRUCKLUFT/HYDRAULIKZYLINDER	461
BREMSSTEUERVENTIL	462
SPERRVENTIL	464
LENKSYSTEM	468
LENKBETÄTIGUNG	468
LENKZYLINDER UND AUFHÄNGUNG	469
LENKZYLINDER UND DICHTUNG	470
LENKZYLINDER	472
NOTLENKUNGSLEITUNGEN	476
LENKÖLLEITUNGEN	484

INHALTSVERZEICHNIS

Bezeichnung	Seite
NOTLENKUNGSPUMPE UND BEFESTIGUNGSTEILE	488
ZUMESSPUMPE	489
NOTLENKUNGSPUMPE	492
NOTLENKUNG	494
LENKSÄULE, VERSTELLBAR	498
VERTEILERVENTIL U. BEFESTIGUNGSTEILE	502
UMLEITVENTIL	503
AUSGLEICHSVENTIL	505
LENKVENTIL	506
LENKNEUTRALISIERVENTIL	509
HYDRAULIKSYSTEM	510
FLÜGELZELLENPUMPENEINSATZ	510
HYDRAULISCHE SCHWINGUNGSDÄMPFUNG	512
HYDRAULIKBEDIENUNG (MIT VORSTEUERUNG)	514
ZUGANGSKLAPPE - HYDRAULIKTANKKAPPE	526
HUBZYLINDER	528
KIPPZYLINDER	532
HYDRAULIKSYSTEM	536
SCHAUFELAUSSCHALTER UND -EINSTELLER	540
LEITUNGEN, VORNE	544
HYDRAULIKLEITUNGEN	548
HYDRAULIKÖLKÜHLERLEITUNGEN	554
HUBZYLINDERLEITUNGEN	556
VORSTEUERLEITUNGEN	558
SCHWINGUNGSDÄMPFUNGSLEITUNGEN	562
NEIGEZYLINDERLEITUNGEN	570
HYDRAULIKTANK UND ANBAUSATZ	572
HYDRAULIKPUMPE UND BEFESTIGUNGSTEILE	573
MESSERPUMPE	574
HYDRAULIKTANK UND SCHMIERFILTER	576
STEUERVENTIL UND BEFESTIGUNGSTEILE	580
VENTIL	585
RÜCKSCHLAGVENTIL (GEGEN VAKUUM)	586
STEUERVENTIL	587
UMLEITVENTIL	610
VORSTEUERVENTIL	612
EINBAUVORSTEUERVENTIL	627
ÜBERDRUCKVENTIL	633
VENTIL - SCHALT- UND DRUCKSTEUERUNG	645
PENDELVENTIL	648
MAGNETVENTIL	650
ARBEITSGERÄTE	652
SCHAUFELSTEUERUNG	652
ARBEITSGERÄTE	654
ECK- UND SCHNEIDMESSER	654
UNIVERSALSCHAUFEL	656
ERDBAUSCHAUFEL	664
FELSSCHAUFEL	665
UNIVERSALSCHAUFEL	667
ERDBAUSCHAUFEL	672
FELSSCHAUFEL	673
ZAHNSPITZE, LANG	675
ZAHNSPITZE, KURZ	676
ZAHNSPITZE, LANG	677
ZAHNSPITZE, KURZ	678
FAHRERHAUS	679
KLIMAANLAGE	679
ARMLEHNE	688
FAHRERHAUS	691
NIEDRIGES FAHRERHAUS	693
FAHRERHAUS	694
OFFENES FAHRERHAUS MIT ÜBERROLLSCHUTZ	712
WETTERDACH	713
KÄLTEMITTELKOMPRESSOR	714
UMBAUSATZ FÜR NIEDRIGES FAHRERHAUS	718
UMBAUSATZ - OHNE ÜBERROLLSCHUTZ	719
UMBAUSATZ - OHNE FAHRERHAUS	720
LUFTEINLASSKLAPPE	723
FAHRERHAUSTÜR	724
SEITENTÜR	731
RÜCKLEHNENVERLÄNGERUNG	732
SCHUTZVERKLEIDUNG	734
FAHRERHAUSHEIZUNG	736
DRUCKLUFTHUPE	738
WARNHORN, ELEKTR.	741
FAHRERSITZFEDERUNGSGEHÄUSE	743
BEDIENUNGSEINBAUSATZ	744
RADIOEINBAUSATZ	746
KLIMAANLAGENLEITUNGEN	748
HEIZUNGSLEITUNGEN	750
SPIEGEL	752
RÜCKSPIEGEL	756
WÄGEEINRICHTUNG - MONITOR	761
PLATTFORM-ANBAUSATZ	762
FAHRERHAUS	764
FAHRERSITZVERKLEIDUNG	766
INSTRUMENTENTAFEL	768
GASPEDAL	778
PLATTFORM	780
FAHRERHAUSBELÜFTUNG	792
ÜBERROLLSCHUTZ	800

INHALTSVERZEICHNIS

Bezeichnung	Seite
SICHERHEITSGURT	801
FAHRERSITZ	802
FAHRERSITZ, VERSTELLBAR	810
SCHWINGSITZ	814
SITZUNTERBAU	818
SCHALLDÄMPFUNG	822
FAHRERSITZFEDERUNG	826
SCHEIBENWASCHMITTELBEHÄLTER	827
HALTESEIL	828
DRUCKLUFT-STEUERVENTIL	829
FAHRERHAUS, SONNENBLENDE	830
SCHEIBENWASCHANLAGE	832
FAHRERHAUSFENSTER	834
SCHEIBENWISCHER	838
WISCHERARM	854
WARTUNGSAUSRÜSTUNG UND -ZUBEHÖR	855
VORHÄNGESCHLOSS	855
SCHILD UND AUFKLEBER	856
ERSATZTEILNUMMERNINDEX	B1

GENERAL INFORMATION

1. MACHINE IDENTIFICATION

Caterpillar machines are identified by Product Identification Numbers (PIN). Some components included in a machine may be identified by Serial Numbers (S/N). Typical components that will be serialized include engines, transmissions, bulldozers, and rippers. The machine and engine are further identified by arrangement numbers and in some cases modification numbers. These numbers are shown on the product identification plate(s) and on the master plate in the operator's compartment.

Caterpillar dealers need all of these numbers to determine accurate parts identification.

SIS ***New Feature***

Effective First Quarter 2001 the Caterpillar Product Identification Number (PIN) will change from 8 to 17 characters. In an effort to provide uniform equipment identification, Caterpillar and other construction equipment manufacturers are moving to comply with the latest version of the product identification numbering standard. Non-road machine PINs are defined by ISO 10261. The new PIN format will apply to all Caterpillar machines and generator sets. The PIN plates and frame marking will display the 17 character PIN. The new format will look like the following:

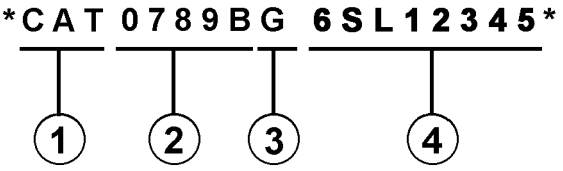

Where:

1. Caterpillar's World Manufacturing Code (characters 1-3)

2. Machine Descriptor (characters 4-8)

3. Check Character (character 9)

4. Machine Indicator Section (MIS) or Product Sequence Number (characters 10-17). These were previously referred to as the Serial Number.

Machines and generator sets produced before First Quarter 2001 will maintain their 8 character PIN format.

Components such as engines, transmissions, axles, etc. and work tools will continue to use an 8 character Serial Number (S/N).

2. ORDERING PARTS

⚠ WARNING

When replacement parts are required for this product Caterpillar recommends using Caterpillar replacement parts or parts with equivalent specifications including, but not limited to, physical dimensions, type, strength and material.

Failure to heed this warning can lead to premature failures, product damage, personal injury or death.

Quality Caterpillar replacement parts are available from Caterpillar dealers throughout the world. Their parts inventories are up to date and include all parts normally required to protect your investment in Caterpillar machines. Dealers may offer repair kits or remanufactured parts to allow selection of the most effective repair alternative for a particular situation. When ordering parts, your order should specify the quantity, part number, part name, and the serial number/product identification number of the machine for which the parts are needed.

3. PARTS MANUAL ORGANIZATION

Product information in this manual is presented as "information elements" that represent all of the components for the specific model. Engine Arrangement and Seat Group are examples of information elements. The information elements are organized alphabetically by part name and secondarily by part number within each major section of the manual.

4. TABLE OF CONTENTS

SIS ***New Feature***

A table of contents (TOC) is found at the beginning of the manual. The TOC lists each section of the manual with a complete list of all information elements organized as they appear in the manual. Page numbers are provided for quick reference to detailed parts identification illustrations and serviceable consist lists.

5. MAINTENANCE PARTS INDEX

The Maintenance Parts Index, located near the beginning of the manual, references most frequently used maintenance part numbers, providing description, quantity, usage and page number. This information is organized alphabetically by part description.

6. INDEX

The index located near the front of the manual is an alphabetical listing of all information elements included in the manual. Page numbers are provided for quick reference to detailed parts identification illustrations and serviceable consist lists.

7. PART NUMBER INDEX

A numerical index listing all part numbers and the corresponding page number(s) appears at the back of the manual.

8. CAPTIONS

Captions located at the top of each page of an information element identify the part number and part name along with additional descriptive information. PIN and S/N information found in each caption should be used to select correct information for a specific machine. Field replacement options, identification of optional attachment components, and where used ("part of") information is also provided.

SIS ***New Feature***

The first line of a caption is shown in larger type font to indicate the beginning of an information element. Captions for additional pages that may be required to illustrate an information element will be shown in standard type font and will include the term *(contd.)* .

9. NON-SERVICED PARTS

SIS ***New Feature***

In some instances it is necessary to display non-serviced parts that are a link to a lower level serviceable consist lists. These non-serviced part numbers are shown in *italic* type indicating that they are not available.

10. PARTS LIST REFERENCE NUMBERS

SIS ***New Feature***

Numbers shown in the Ref No column correspond to numbers used in the associated graphic(s). An alphabetic suffix may be added to a reference number to identify lower level consist items. Numbers shown in the Graphic Ref column refer to the graphic number identifier displayed in the lower left corner of each illustration. The Graphic Ref number may be used in combination with the item Ref No to determine the correct part number. There may be intentional omission of a Ref No in a consist list as information is updated to reflect the latest serviceable part numbers.

11. INDENTED PART NAMES

When a part name is indented in a parts list, it is part of (included in) the group or assembly under which it is indented.

12. ILLUSTRATION REFERENCE LETTERS

When necessary, illustrations contain reference letters (A, B, C etc.) that are intended to track lines and harnesses from one point to another. They are also used to show where to reconnect illustrations that have been separated.

13. ABBREVIATIONS AND SYMBOLS

O.D. – Outside Diameter
I.D. – Inside Diameter
A – Not Part Of This Group
B – Use As Required
C – Change From Previous Type
D – Order By The Meter
E – Order By The Centimeter
F – Not Shown
G – Order By The Inch
I – See Hose Fabrication Guide
M – Metric Part
R – Remfg Part May Be Available
Y – Separate Illustration
Z – Not Serviced Separately

NOTE:

Continuing improvement and advancement of product design may cause changes to your machine which may not be included in this publication. Whenever a question arises regarding your Caterpillar product or this publication, please consult your Caterpillar dealer for the latest available information.

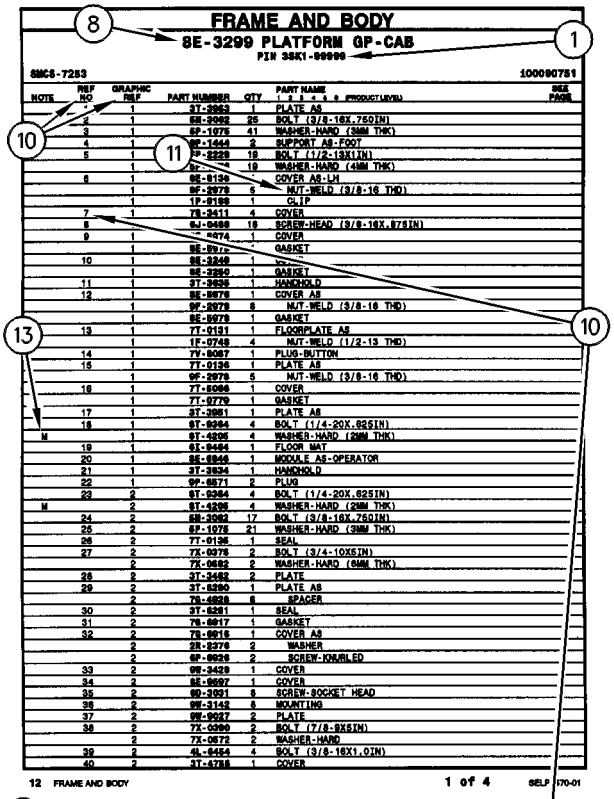

FRAME AND BODY

8E-3299 PLATFORM GP-CAB

PIN 38K1-99999

SMCS-7283 100090751

NOTE	REF NO	GRAPHIC REF	PART NUMBER	QTY	PART NAME 1 2 3 4 5 6 (PRODUCT LEVEL)	SEE PAGE
	1	1	3T-3953	1	PLATE AS	
	2	1	6B-3062	25	BOLT (3/8-16X.750IN)	
	3	1	6P-1075	41	WASHER-HARD (9MM THK)	
	4	1	9F-1444	2	SUPPORT AS-FOOT	
	5	1	7P-2229	19	BOLT (1/2-13X1IN)	
		1	6P-[illegible]	19	WASHER-HARD (4MM THK)	
	6	1	8E-8134	1	COVER AS-LH	
		1	9F-2979	5	NUT-WELD (3/8-16 THD)	
		1	1P-8188	1	CLIP	
	7	1	7S-2411	4	COVER	
	8		6J-0468	19	SCREW-HEAD (3/8-16X.875IN)	
	9	1	[illegible]-4674	1	COVER	
		1	8E-8972	1	GASKET	
	10	1	8E-3248	1	[illegible]	
		1	8E-3250	1	GASKET	
	11	1	3T-3939	1	HANDHOLD	
	12	1	8E-8978	1	COVER AS	
		1	9F-2978	8	NUT-WELD (3/8-16 THD)	
		1	8E-8978	1	GASKET	
	13	1	7T-0131	1	FLOORPLATE AS	
		1	1F-0748	4	NUT-WELD (1/2-13 THD)	
	14	1	7Y-8087	1	PLUG-BUTTON	
	15	1	7T-0136	1	PLATE AS	
		1	9F-2979	5	NUT-WELD (3/8-16 THD)	
	16	1	7T-8098	1	COVER	
		1	7T-0779	1	GASKET	
	17	1	3T-3951	1	PLATE AS	
	18	1	6T-8364	4	BOLT (1/4-20X.625IN)	
M		1	6T-4205	4	WASHER-HARD (2MM THK)	
	19	1	6J-8464	1	FLOOR MAT	
	20	1	8E-8946	1	MODULE AS-OPERATOR	
	21	1	3T-3934	1	HANDHOLD	
	22	1	9P-8871	2	PLUG	
	23	2	6T-8364	4	BOLT (1/4-20X.625IN)	
M		2	6T-4205	4	WASHER-HARD (2MM THK)	
	24	2	6B-3062	17	BOLT (3/8-16X.750IN)	
	25	2	6P-1075	21	WASHER-HARD (9MM THK)	
	26	2	7T-0136	1	SEAL	
	27	2	7X-0378	2	BOLT (3/4-10X5IN)	
		2	7X-0682	2	WASHER-HARD (6MM THK)	
	28	2	3T-3482	2	PLATE	
	29	2	3T-8290	1	PLATE AS	
		2	7S-4888	6	SPACER	
	30	2	3T-8291	1	SEAL	
	31	2	7S-8817	1	GASKET	
	32	2	7S-8916	1	COVER AS	
		2	2R-2376	2	WASHER	
		2	6P-8826	2	SCREW-KNURLED	
	33	2	9W-3429	1	COVER	
	34	2	8E-8937	1	COVER	
	35	2	9D-3931	8	SCREW-SOCKET HEAD	
	36	2	9W-3142	8	MOUNTING	
	37	2	9W-9027	2	PLATE	
	38	2	7X-0360	2	BOLT (7/8-9X6IN)	
		2	7X-0672	2	WASHER-HARD	
	39	2	6L-4454	4	BOLT (3/8-16X1.0IN)	
	40	2	3T-4788	1	COVER	

12 FRAME AND BODY 1 of 4 SELP4570-01

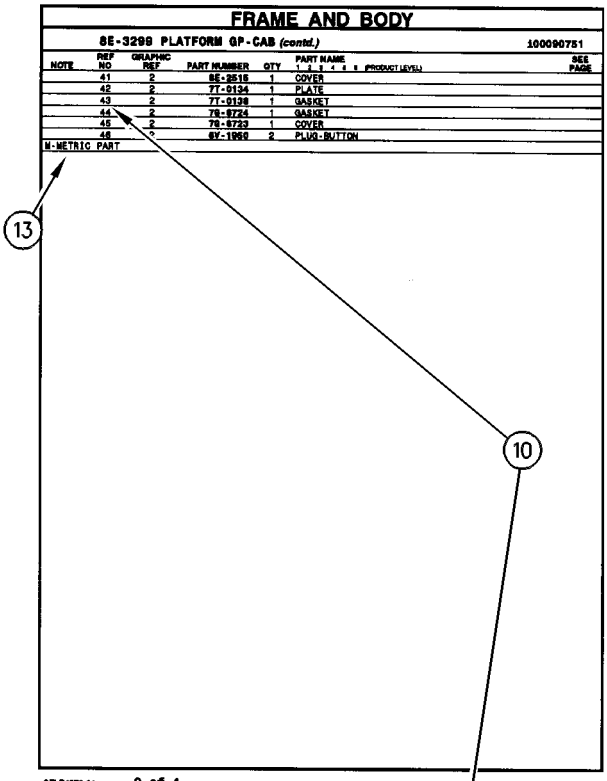

FRAME AND BODY

8E-3299 PLATFORM GP-CAB (contd.) 100090751

NOTE	REF NO	GRAPHIC REF	PART NUMBER	QTY	PART NAME 1 2 3 4 5 6 (PRODUCT LEVEL)	SEE PAGE
	41	2	8E-2515	1	COVER	
	42	2	7T-0134	1	PLATE	
	43	2	7T-0138	1	GASKET	
	44	2	7S-8724	1	GASKET	
	45	2	7S-8723	1	COVER	
	46	[illegible]	6V-1958	2	PLUG-BUTTON	
M-METRIC PART						

SELP4570-01 2 of 4 FRAME AND BODY 13

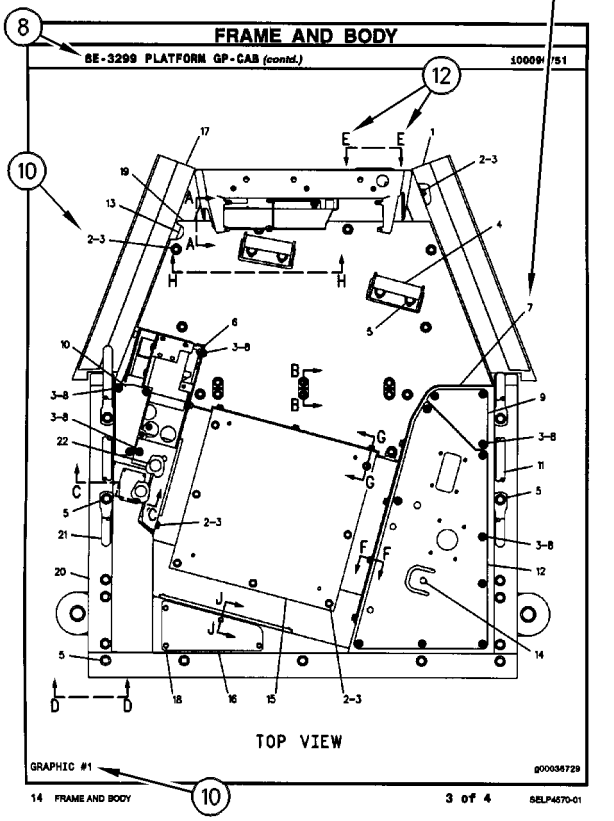

FRAME AND BODY

8E-3299 PLATFORM GP-CAB (contd.) 100090751

TOP VIEW

GRAPHIC #1 g00036729

14 FRAME AND BODY 3 of 4 SELP4570-01

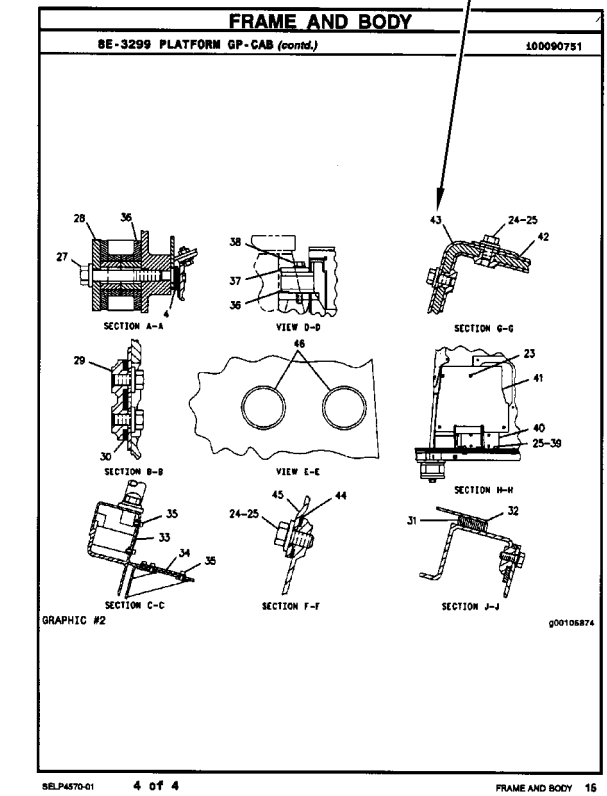

FRAME AND BODY

8E-3299 PLATFORM GP-CAB (contd.) 100090751

SECTION A-A

VIEW D-D

SECTION G-G

SECTION B-B

VIEW E-E

SECTION H-H

SECTION C-C

SECTION F-F

SECTION J-J

GRAPHIC #2 g00105874

SELP4570-01 4 of 4 FRAME AND BODY 16

1. IDENTIFICATION DE LA MACHINE

Toutes les machines Caterpillar portent un numéro d'identification (PIN). Certains composants des machines peuvent porter des numéros de série (S/N). En général, parmi les composants qui portent des numéros de série il y a les moteurs, les transmissions, les bulldozers et les rippers. En plus, la machine et le moteur peuvent recevoir des numéros de version, et dans certains cas, de modification. Ces numéros figurent sur les plaques de numéro de série et sur la plaque signalétique principale qui se trouve dans le poste de conduite.

Les concessionnaires Caterpillar doivent connaître tous ces numéros pour identifier correctement les pièces.

SIS *Nouvelle Caractéristique*

À partir du premier trimestre 2001, le numéro d'identification produit (PIN) Caterpillar passe de 8 à 17 caractères. Afin de permettre une identification uniforme des matériels, Caterpillar et d'autres constructeurs de machines de travaux publics s'efforcent de se conformer à la norme la plus récente portant sur les numéros d'identification des produits. Les numéros d'identification (PIN) de machines de chantier sont définis par la norme ISO 10261. Le nouveau format du numéro d'identification est valable pour toutes les machines et tous les groupes électrogènes Caterpillar. Le numéro d'identification produit (PIN) figurant sur la plaque et sur le châssis se composera de 17 caractères. Le nouveau format ressemblera à ceci:

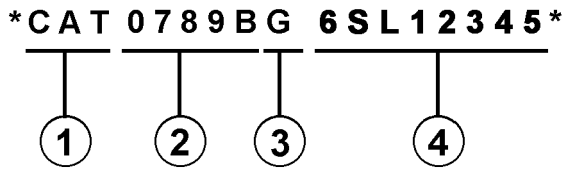

Il se décomposera de la façon suivante:

1. Code international de fabrication de Caterpillar (caractères 1 à 3)

2. Descriptif de la machine (caractères 4 à 8)

3. Contrôle (caractère 9)

4. Indicateur machine (MIS) ou numéro de séquence produit (caractères 10 à 17). Ceux-ci étaient auparavant désignés sous le terme de numéro de série.

Les machines et les groupes électrogènes construits avant le premier trimestre 2001 garderont le format à 8 caractères du numéro d'identification produit (PIN).

Les organes tels que les moteurs, les boîtes de vitesses, les essieux, etc., continueront d'être désignés par un numéro de série (S/N) à 8 caractères.

2. COMMANDE DE PIÈCES

⚠ DANGER

Lorsqu'il faut remplacer des pièces de rechange pour ce produit Caterpillar recommande d'utiliser les pièces de rechange Caterpillar ou les pièces qui ont des spécifications équivalentes dont les dimensions physiques, le type, la force et le matériau. Ces équivalences ne se limitent pas à l'énoncé précédent.

L'inobservation de cette mise en garde peut entraîner des défaillances prématurées, des dommages au produit, des blessures ou même la mort.

Les concessionnaires Caterpillar fournissent dans le monde entier des pièces de rechange de qualité Caterpillar. Leurs stocks de pièces sont constamment réapprovisionnés et comptent toutes les pièces nécessaires pour assurer la bonne marche de vos machines Caterpillar. Certains concessionnaires proposent également des kits de réparation ou des pièces rénovées, ce qui permet de choisir la solution la plus économique dans une situation donnée. Lors des commandes de pièces, mentionner la quantité, le numéro et la désignation des pièces ainsi que le numéro de série ou le numéro d'identification (PIN) de la machine pour laquelle ces pièces sont requises.

3. ORGANISATION DU CATALOGUE DE PIÈCES

Les renseignements sur les produits sont présentés sous forme de "Information element" (élément d'information) représentant tous les composants d'un modèle donné. "Engine Arrangement" (version de moteur) et "Seat Group" (assemblage de siège)" sont des exemples d'éléments d'information. Les éléments d'information sont classés par ordre alphabétique par la désignation standard des pièces et par numéros de pièces dans chaque partie importante du manuel.

4. TABLE DES MATIÈRES

Nouvelle Caractéristique

La table des matières se trouve au début du manuel. La table des matières fournit la liste de tous les chapitres du manuel avec une liste complète de tous les éléments d'information classés par ordre d'apparition dans le manuel. Les numéros de page sont fournis afin que l'utilisateur puisse trouver rapidement les illustrations détaillées concernant l'identification des pièces et les listes des pièces d'entretien.

5. INDEX DES PIÈCES D'ENTRETIEN

La rubrique "Index des pièces d'entretien" qui se trouve au début du manuel renvoie aux pièces d'entretien les plus fréquemment utilisées en précisant la désignation, la quantité, là où la pièce est utilisée et le numéro de page. Ces pièces sont classés par ordre alphabétique.

6. INDEX

L'index qui se trouve vers le début du manuel est une liste alphabétique de tous les éléments d'information du manuel. Les numéros de page sont fournis afin que l'utilisateur puisse trouver rapidement les illustrations détaillées concernant l'identification des pièces et les listes des pièces d'entretien.

7. INDEX DES NUMÉROS DE PIÈCES

Une liste numérique de tous les numéros de pièces et des pages correspondantes se trouve à la fin du manuel.

8. LÉGENDES

Les légendes qui se trouvent en haut de chaque page de chaque élément d'information fournissent le numéro de pièce, la désignation ainsi que des renseignements supplémentaires sur les pièces. Les renseignements concernant les numéros de série (S/N) qui se trouvent dans chaque légende doivent être utilisés pour sélectionner les informations correctes pour un moteur donné. Les informations concernant les options de remplacement sur le chantier, l'identification des composants des équipements offerts en option et les lieux d'application sont aussi fournies.

Nouvelle Caractéristique

Les lettres de la première ligne d'une légende sont présentées en police plus grande afin d'indiquer le début d'une unité d'information. Les légendes qui pourraient être requises pour des pages supplémentaires afin d'illustrer une unité d'information seront présentées en police standard et comprendront le terme (à suivre).

9. PIÈCES NON FOURNIES

Nouvelle Caractéristique

Dans certains cas, il est nécessaire d'indiquer les pièces non fournies qui sont en aval de la liste des pièces d'entretien. Les numéros des pièces non fournies dans la liste des pièces et les légendes seront en italique pour signaler qu'ils ne sont pas disponibles.

10. NUMÉROS DE RÉFÉRENCE DE LA LISTE DES PIÈCES

Nouvelle Caractéristique

Les numéros indiqués dans la colonne des numéros de références correspondent aux numéros utilisés dans les illustrations auxquelles ils sont associés. Un suffixe alphabétique peut être ajouté à un numéro de référence pour identifier la liste des articles en aval. Les numéros indiqués dans la colonne de référence de l'illustration renvoient à l'identification du numéro affiché dans le coin inférieur gauche de chaque illustration. Le numéro de référence de l'illustration pourrait être utilisé avec le numéro de référence de l'article pour déterminer le numéro de pièce correct. Il peut y avoir une omission intentionnelle d'un numéro de référence dans une liste de pièces suite à la mise à jour des informations en vue de refléter les numéros de pièces les plus récentes.

11. DÉSIGNATIONS DE PIÈCES EN RETRAIT

Lorsqu'une désignation de pièce est en retrait, cela veut dire que l'article en regard fait partie de l'ensemble sous lequel il figure.

12. LETTRES DE RÉFÉRENCE DES ILLUSTRATIONS

Quand cela est nécessaire, les illustrations comportent des lettres de référence (A, B, C, etc.) pour montrer le trajet des canalisations et faisceaux de câbles d'un point à l'autre. Elles sont utilisées également pour indiquer où relier les illustrations séparées auparavant.

13. ABRÉVIATIONS ET SYMBOLES

O.D. – Diamètre extérieur
I.D. – Diamètre intérieur
A – Ne fait pas partie de ce groupe
B – Utiliser selon besoin
C – Modification
D – Commander par mètre
E – Commander par centimètre
F – Non représenté
G – Commander par pouce
I – Voir "Hose Fabrication Guide"
M – Pièce métrique
R – Pièce rénovée éventuellement disponible
Y – Illustration séparée
Z – Non fourni séparément

NOTA:

En raison du progrès technique et des améliorations continuelles apportées au matériel, votre machine comporte peut-être des modifications qui n'apparaissent pas dans la présente publication. En cas de doute sur un détail de votre machine Caterpillar ou sur le texte de la présente publication, adressez-vous à votre concessionnaire Caterpillar.

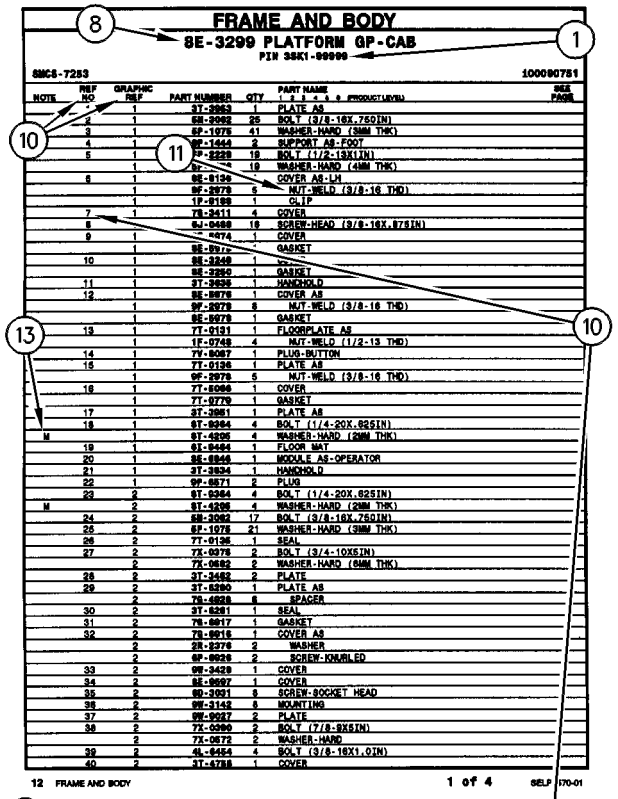

FRAME AND BODY

8E-3299 PLATFORM GP-CAB

PIN 38K1-99999

SMCS-7283 100090751

NOTE	REF NO	GRAPHIC REF	PART NUMBER	QTY	PART NAME 1 2 3 4 5 6 (PRODUCT LEVEL)	SEE PAGE
	1	1	3T-3953	1	PLATE AS	
	2	1	6B-3062	25	BOLT (3/8-16X.750IN)	
	3	1	6P-1075	41	WASHER-HARD (9MM THK)	
	4	1	9F-1444	2	SUPPORT AS-FOOT	
	5	1	7P-2229	19	BOLT (1/2-13X1IN)	
		1	6P-[illegible]	19	WASHER-HARD (4MM THK)	
	6	1	8E-8134	1	COVER AS-LH	
		1	9F-2979	5	NUT-WELD (3/8-16 THD)	
		1	1P-8188	1	CLIP	
	7	1	7S-3411	4	COVER	
	8		6J-0468	19	SCREW-HEAD (3/8-16X.875IN)	
	9	1	[illegible]-4674	1	COVER	
		1	8E-8972	1	GASKET	
	10	1	8E-3248	1	[illegible]	
		1	8E-3250	1	GASKET	
	11	1	3T-3939	1	HANDHOLD	
	12	1	8E-8978	1	COVER AS	
		1	9F-2978	8	NUT-WELD (3/8-16 THD)	
		1	8E-8978	1	GASKET	
	13	1	7T-0131	1	FLOORPLATE AS	
		1	1F-0748	4	NUT-WELD (1/2-13 THD)	
	14	1	7Y-8087	1	PLUG-BUTTON	
	15	1	7T-0136	1	PLATE AS	
		1	9F-2979	5	NUT-WELD (3/8-16 THD)	
	16	1	7T-8098	1	COVER	
		1	7T-0779	1	GASKET	
	17	1	3T-3951	1	PLATE AS	
	18	1	6T-8364	4	BOLT (1/4-20X.625IN)	
M		1	9T-4205	4	WASHER-HARD (2MM THK)	
	19	1	8S-8464	1	FLOOR MAT	
	20	1	8E-8946	1	MODULE AS-OPERATOR	
	21	1	3T-3934	1	HANDHOLD	
	22	1	9P-8871	2	PLUG	
	23	2	6T-8364	4	BOLT (1/4-20X.625IN)	
M		2	9T-4205	4	WASHER-HARD (2MM THK)	
	24	2	6B-3062	17	BOLT (3/8-16X.750IN)	
	25	2	6P-1075	21	WASHER-HARD (9MM THK)	
	26	2	7T-0136	1	SEAL	
	27	2	7X-0378	2	BOLT (3/4-10X5IN)	
		2	7X-0682	2	WASHER-HARD (6MM THK)	
	28	2	3T-3482	2	PLATE	
	29	2	3T-8290	1	PLATE AS	
		2	7S-4888	6	SPACER	
	30	2	3T-8281	1	SEAL	
	31	2	7S-8817	1	GASKET	
	32	2	7S-8916	1	COVER AS	
		2	2R-2376	2	WASHER	
		2	6P-8826	2	SCREW-KNURLED	
	33	2	9W-3429	1	COVER	
	34	2	8E-8937	1	COVER	
	35	2	6D-3091	8	SCREW-SOCKET HEAD	
	36	2	9W-3142	8	MOUNTING	
	37	2	9W-9027	2	PLATE	
	38	2	7X-0390	2	BOLT (7/8-9X6IN)	
		2	7X-0672	2	WASHER-HARD	
	39	2	6L-6454	4	BOLT (3/8-16X1.0IN)	
	40	2	3T-4788	1	COVER	

12 FRAME AND BODY 1 of 4 SELP4570-01

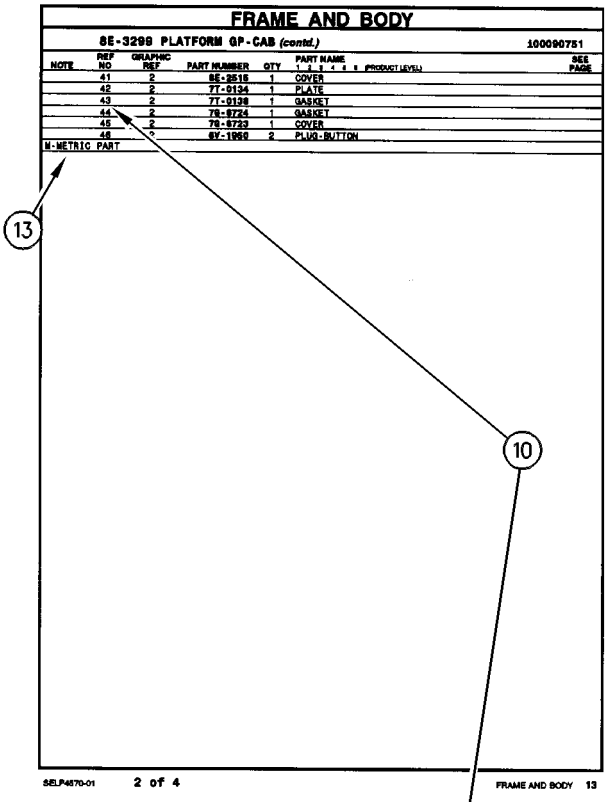

FRAME AND BODY

8E-3299 PLATFORM GP-CAB (contd.) 100090751

NOTE	REF NO	GRAPHIC REF	PART NUMBER	QTY	PART NAME 1 2 3 4 5 6 (PRODUCT LEVEL)	SEE PAGE
	41	2	8E-2515	1	COVER	
	42	2	7T-0134	1	PLATE	
	43	2	7T-0138	1	GASKET	
	44	2	7S-8724	1	GASKET	
	45	2	7S-8723	1	COVER	
	46	[illegible]	6V-1958	2	PLUG-BUTTON	
M-METRIC PART						

SELP4570-01 2 of 4 FRAME AND BODY 13

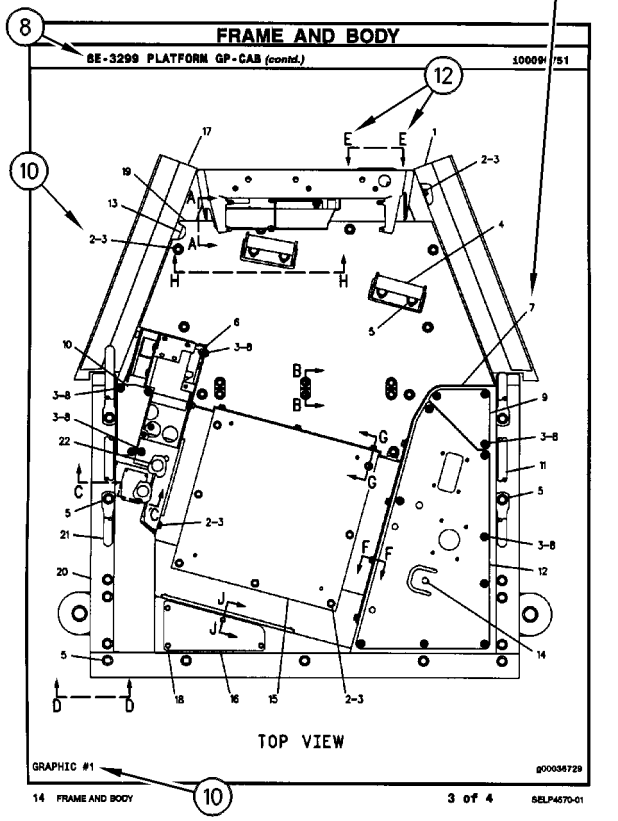

FRAME AND BODY

8E-3299 PLATFORM GP-CAB (contd.) 100090751

TOP VIEW

GRAPHIC #1 g00036729

14 FRAME AND BODY 3 of 4 SELP4570-01

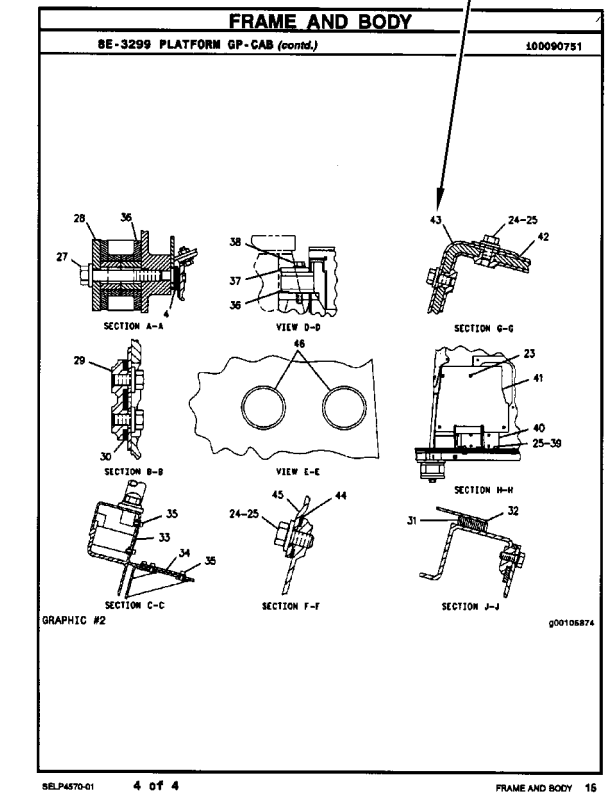

FRAME AND BODY

8E-3299 PLATFORM GP-CAB (contd.) 100090751

SECTION A-A

VIEW D-D

SECTION G-G

SECTION B-B

VIEW E-E

SECTION H-H

SECTION C-C

SECTION F-F

SECTION J-J

GRAPHIC #2 g00105874

SELP4570-01 4 of 4 FRAME AND BODY 16

1. MÁQUINAS

Las máquinas Caterpillar se identifican con Números de Identificación del Producto (PIN). Algunos componentes incluídos en la máquina pueden estar identificados con Números de Serie (N/S). Los componentes que tienen típicamente esta identificación incluyen motores, transmisiones, hojas topadoras y desgarradores. La máquina y el motor se identifican además con Números de Configuración y en algunos casos, Números de Modificación. Estos números están en las placas de identificación del producto o en la placa principal en la cabina del operador.

Los distribuidores Caterpillar necesitan estos números para identificar con exactitud los números de piezas de repuesto.

SIS *Nueva Característica*

A partir del primer trimestre del 2001, el Número de Identificación de Producto (PIN) de Caterpillar cambiará de 8 a 17 caracteres. Para hacer más uniforme el método de identificación de equipos, Caterpillar y otros fabricantes de equipo de construcción han tomado medidas para cumplir con la versión más reciente de la norma de numeración de identificación de productos. Los Números de Identificación de Producto para máquinas que no se operan en carreteras son definidos por la norma ISO 10261. El nuevo formato PIN corresponderá a todas las máquinas y grupos electrógenos Caterpillar. Las placas y los caracteres PIN estampados en el bastidor mostrarán el PIN de 17 caracteres. El nuevo formato tendrá la apariencia siguiente:

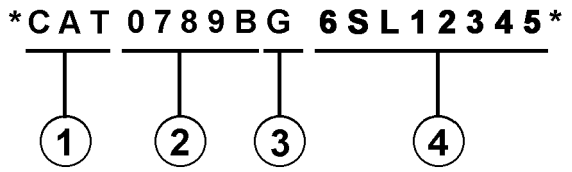

Significado de los caracteres:

1. Código de Fabricación Mundial de Caterpillar (caracteres 1-3)

2. Sección Descriptor de la Máquina (caracteres 4-8)

3. Carácter de Verificación (carácter 9)

4. Sección Indicador de la Máquina (MIS) o Número de Secuencia de Producto (caracteres 10-17). Anteriormente, estos caracteres constituían el Número de Serie.

Las máquinas y grupos electrógenos producidos antes del primer semestre del 2001 mantendrán su formato PIN de 8 caracteres.

Los componentes como motores, transmisiones, ejes, herramientas de trabajo, etc., continuarán usando un Número de Serie (S/N) de 8 caracteres.

2. COMO PEDIR REPUESTOS

⚠ ADVERTENCIA

Cuando se necesiten piezas de repuesto para este producto, Caterpillar recomienda usar piezas de repuesto Caterpillar o piezas que tengan especificaciones equivalentes incluyendo, pero sin estar limitadas a, dimensiones físicas, tipo, fortaleza y material.

El no hacer caso de esta advertencia puede llevar a fallas prematuras, daños al producto y lesiones graves o mortales.

Las piezas de repuesto Caterpillar de calidad están a la disposición de los distribuidores Caterpillar en todo el mundo. Sus existencias actualizadas incluyen todas las piezas normalmente requeridas para proteger su inversión en máquinas Caterpillar. Los distribuidores pueden tener juegos de reparación o piezas remanufacturadas para permitir la selección de la mejor alternativa de reparación en un caso en particular. Al pedir piezas de repuesto, especifique en su pedido la cantidad, el número de pieza, el nombre de la pieza y el número de serie/número de identificación del producto, de la máquina para la cual se necesitan estas piezas.

3. ORGANIZACION DEL MANUAL DE PIEZAS

La información sobre el producto, se presenta en este manual, como "elementos de información" que representan todos los componentes de un modelo específico. Las configuraciones de motores y los grupos de asientos son ejemplos de elementos de información. Los elementos de información están organizados primeramente por nombres de piezas en orden alfabético y en segundo lugar, por el número de pieza dentro de cada sección principal del manual.

4. CONTENIDO

SIS *Nueva Característica*

La página de Contenido se encuentra al principio del manual. El Contenido indica cada sección del manual con una lista completa de todos los elementos de información organizados en el orden que aparecen en el manual. Los números de página proporcionan una referencia rápida a las ilustraciones detalladas de identificación de piezas y a las listas de componentes de repuesto de dichas piezas.

5. ÍNDICE DE PIEZAS DE MANTENIMIENTO

Al principio de este catálogo se encuentra un índice de los números de piezas utilizadas más frecuentemente para el mantenimiento, que incluye descripción, cantidad necesaria, lugar de utilización y número de página. Esta información está organizada alfabéticamente, por descripción de la pieza.

6. ÍNDICE

El Índice, ubicado cerca del principio del manual, es una lista en orden alfabético de todos los elementos de información incluídos en el manual. Los números de página proporcionan una referencia rápida a las ilustraciones detalladas de identificación de piezas y a las listas de componentes de repuesto de dichas piezas.

7. INDICE NUMÉRICO DE PIEZAS

Un índice numérico de piezas con el correspondiente número de página aparece al final de este catálogo.

8. TÍTULOS

Los títulos ubicados en la parte superior de cada página de elementos de información identifican el número y el nombre de la pieza junto con información descriptiva adicional para ayudar al usuario a determinar las piezas necesarias para una máquina en particular. También se suministra información sobre las opciones de reparación en el campo, la identificación de componentes de accesorios optativos y el lugar de ubicación de la pieza ("es parte de").

SIS *Nueva Característica*

La primera línea del título se muestra con un tipo de letra más grande para indicar el comienzo de un elemento de información. Si se requieren páginas adicionales para ilustrar un elemento de información, los títulos se muestran con un tipo de letra normal y la continuación se indica entre paréntesis.

9. PIEZAS QUE NO SE SUMINISTRAN COMO REPUESTO

SIS *Nueva Característica*

En algunos casos es necesario indicar piezas que no se suministran como repuesto pero que pueden estar conectadas a listas de componentes de otras piezas de repuesto. En tal caso, dichas piezas se muestran en cursiva para indicar que no son piezas disponibles.

10. NÚMEROS DE REFERENCIA

SIS *Nueva Característica*

Los números en la columna de No. de Referencia corresponden a los números indicados en la ilustración que pertenece a ese número de pieza. Los números que tienen un sufijo alfabético identifican artículos de las listas de componentes de piezas. Los números en la columna de Referencia de la ilustración se identifican en la esquina inferior izquierda de cada ilustración. Para determinar el número de pieza correcto se puede utilizar tanto el No. de Referencia de la ilustración como el No. de Referencia del artículo. A medida que se actualiza la información para indicar los más recientes números de piezas de repuesto, puede omitirse intencionalmente un No. de Referencia en una lista de componentes de piezas.

11. NOMBRES DE PIEZA SANGRADOS

Cuando el nombre de una pieza está sangrado en una lista, significa que esta pieza forma parte del grupo o conjunto del renglón inmediatamente superior.

12. LETRAS DE REFERENCIA DE ILUSTRACIONES

Las ilustraciones contienen algunas veces letras de referencia (A, B, C etc.) cuyo propósito es seguir el trayecto de líneas y mazos de cables de un punto a otro. También se utilizan para mostrar dónde volver a unir ilustraciones que se habían separado.

13. ABREVIATURAS Y SIMBOLOS

O.D. – Diámetro exterior
I.D. – Diámetro interior
A – No es pieza de este grupo
B – Utilizado según la demanda
C – Indica cambio
D – Se pide por metro
E – Se pide por centímetro
F – No se muestra
G – Se pide por pulgada
I – Ver "Hose Fabrication Guide"
M – Pieza métrica
R – Puede estar disponible como pieza remanufacturada
Y – Ilustración separada
Z – No se suministra por separado

NOTA:

Las contínuas mejoras y adelantos en diseño podrían originar cambios a su máquina que no se incluyen en esta publicación. Cuando tenga alguna pregunta acerca de su producto Caterpillar o de esta publicación, consulte al distribuidor Caterpillar para obtener la información más reciente.

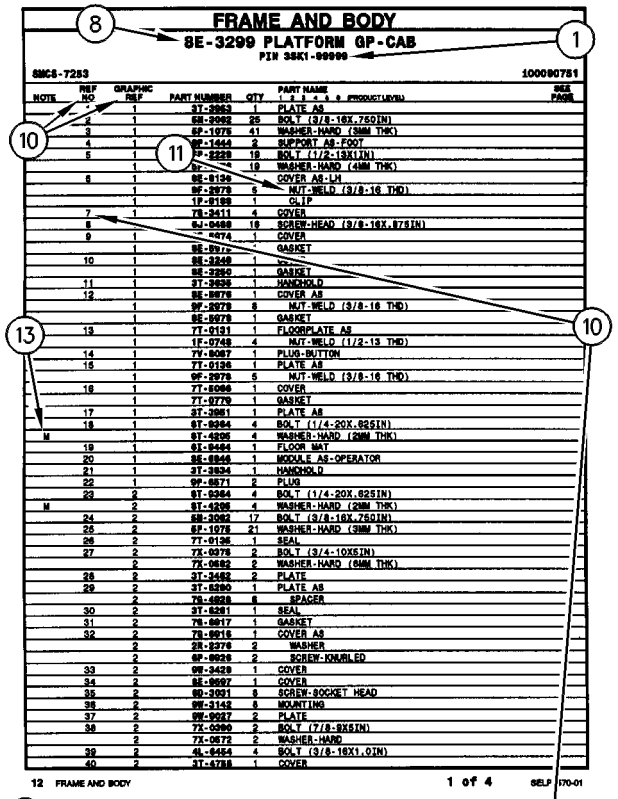

FRAME AND BODY

8E-3299 PLATFORM GP-CAB

PIN 38K1-99999

SMCS-7283 100090751

NOTE	REF NO	GRAPHIC REF	PART NUMBER	QTY	PART NAME 1 2 3 4 5 6 (PRODUCT LEVEL)	SEE PAGE
	1	1	3T-3953	1	PLATE AS	
	2	1	5B-3062	25	BOLT (3/8-16X.750IN)	
	3	1	6P-1075	41	WASHER-HARD (9MM THK)	
	4	1	9F-1444	2	SUPPORT AS-FOOT	
	5	1	7P-2229	19	BOLT (1/2-13X1IN)	
		1	5[illegible]	19	WASHER-HARD (4MM THK)	
	6	1	8E-8134	1	COVER AS-LH	
		1	9F-2979	5	NUT-WELD (3/8-16 THD)	
		1	1P-8199	1	CLIP	
	7	1	7S-3411	4	COVER	
	8		5J-0468	19	SCREW-HEAD (3/8-16X.875IN)	
	9	1	[illegible]474	1	COVER	
		1	8E-8972	[illegible]	GASKET	
	10	1	8E-3248	1	[illegible]	
		1	8E-3250	1	GASKET	
	11	1	3T-3939	1	HANDHOLD	
	12	1	8E-8978	1	COVER AS	
		1	9F-2978	8	NUT-WELD (3/8-16 THD)	
		1	8E-8978	1	GASKET	
	13	1	7T-0131	1	FLOORPLATE AS	
		1	1F-0748	4	NUT-WELD (1/2-13 THD)	
	14	1	7V-8087	1	PLUG-BUTTON	
	15	1	7T-0136	1	PLATE AS	
		1	9F-2979	5	NUT-WELD (3/8-16 THD)	
	16	1	7T-8098	1	COVER	
		1	7T-0779	1	GASKET	
	17	1	3T-3951	1	PLATE AS	
	18	1	9T-9364	4	BOLT (1/4-20X.625IN)	
M		1	9T-4205	4	WASHER-HARD (2MM THK)	
	19	1	9I-9464	1	FLOOR MAT	
	20	1	8E-8946	1	MODULE AS-OPERATOR	
	21	1	3T-3934	1	HANDHOLD	
	22	1	9P-8871	2	PLUG	
	23	2	9T-9364	4	BOLT (1/4-20X.625IN)	
M		2	9T-4205	4	WASHER-HARD (2MM THK)	
	24	2	5B-3062	17	BOLT (3/8-16X.750IN)	
	25	2	6P-1075	21	WASHER-HARD (9MM THK)	
	26	2	7T-0126	1	SEAL	
	27	2	7X-0378	2	BOLT (3/4-10X5IN)	
		2	7X-0682	2	WASHER-HARD (6MM THK)	
	28	2	3T-3482	2	PLATE	
	29	2	3T-8290	1	PLATE AS	
		2	7S-4888	6	SPACER	
	30	2	3T-8281	1	SEAL	
	31	2	7S-8017	1	GASKET	
	32	2	7S-8016	1	COVER AS	
		2	2R-2376	2	WASHER	
		2	6P-8026	2	SCREW-KNURLED	
	33	2	9W-3429	1	COVER	
	34	2	8E-8937	1	COVER	
	35	2	9D-3931	8	SCREW-SOCKET HEAD	
	36	2	9W-3142	8	MOUNTING	
	37	2	9W-9027	2	PLATE	
	38	2	7X-0360	2	BOLT (7/8-9X6IN)	
		2	7X-0672	2	WASHER-HARD	
	39	2	9L-8454	4	BOLT (3/8-16X1.0IN)	
	40	2	3T-4788	1	COVER	

12 FRAME AND BODY 1 of 4 SELP4570-01

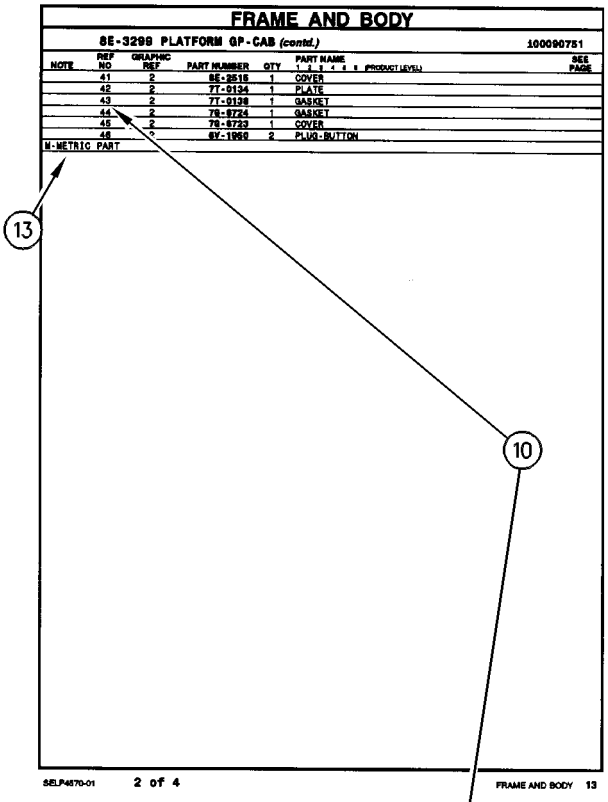

FRAME AND BODY

8E-3299 PLATFORM GP-CAB (contd.) 100090751

NOTE	REF NO	GRAPHIC REF	PART NUMBER	QTY	PART NAME 1 2 3 4 5 6 (PRODUCT LEVEL)	SEE PAGE
	41	2	8E-2515	1	COVER	
	42	2	7T-0134	1	PLATE	
	43	2	7T-0138	1	GASKET	
	44	2	7S-8724	1	GASKET	
	45	2	7S-8723	1	COVER	
	46	[illegible]	6V-1958	2	PLUG-BUTTON	
M-METRIC PART						

SELP4570-01 2 of 4 FRAME AND BODY 13

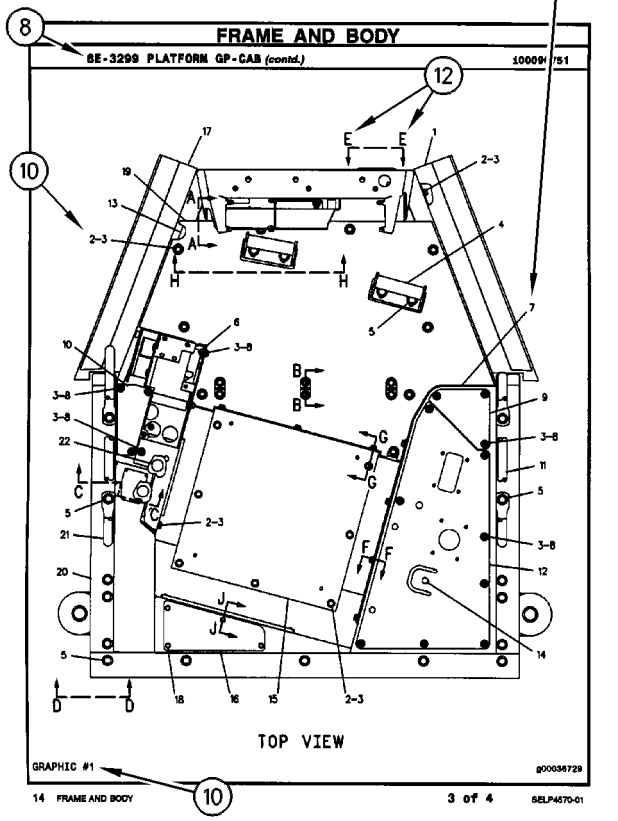

FRAME AND BODY

8E-3299 PLATFORM GP-CAB (contd.) 100090751

TOP VIEW

GRAPHIC #1 g00036729

14 FRAME AND BODY 3 of 4 SELP4570-01

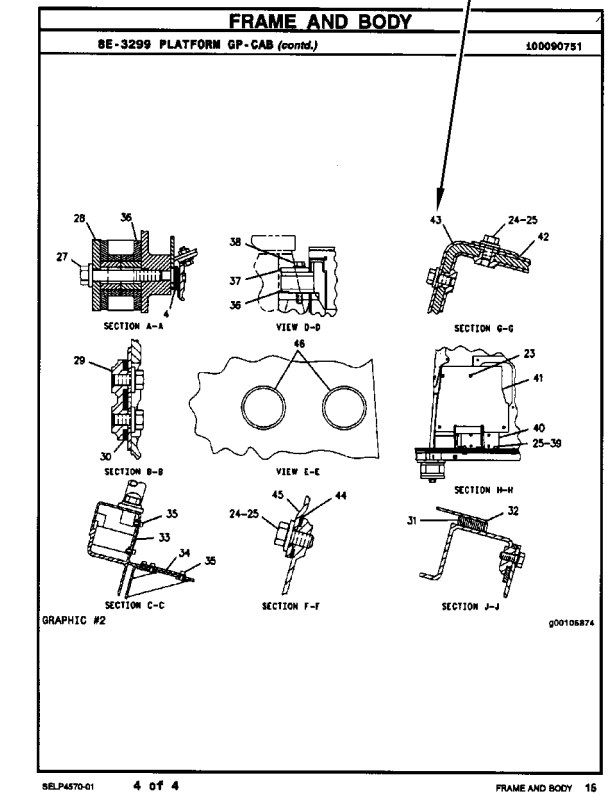

FRAME AND BODY

8E-3299 PLATFORM GP-CAB (contd.) 100090751

SECTION A-A VIEW D-D SECTION G-G

SECTION B-B VIEW E-E SECTION H-H

SECTION C-C SECTION F-F SECTION J-J

GRAPHIC #2 g00105874

SELP4570-01 4 of 4 FRAME AND BODY 16

1. IDENTIFICAÇÃO DA MÁQUINA

As máquinas Caterpillar são identificadas pelos Números de Informação do Produto (PIN). Alguns componentes incluídos numa máquina podem ser identificados por Números de Série (S/N). Componentes típicos que serão enumerados com números de série incluem motores, transmissões, lâminas e ríperes. Além do número de série, a máquina e o motor são ainda identificados por números de arranjo e, em alguns casos, números de modificações. Tais números encontram-se na(s) placa(s) de identificação do produto e na placa mestre no compartimento do operador.

Novidades

A partir do primeiro trimestre de 2001 o Número de Identificação de Produto da Caterpillar (PIN) vai mudar de 8 para 17 caracteres. Esforçando-se para fornecer uma identificação uniforme de equipamentos, a Caterpillar e outros fabricantes de equipamento de construção estão mudando para atender a versão mais atualizada do padrão de identificação de produtos. Os números de PIN para produtos de aplicações não rodoviárias são definidos pela ISO 10261. O novo formato de número PIN será adotado em todas as máquinas e grupos geradores Caterpillar. As placas e as marcações do chassi mostrarão os 17 dígitos de PIN. O novo formato terá a seguinte disposição:

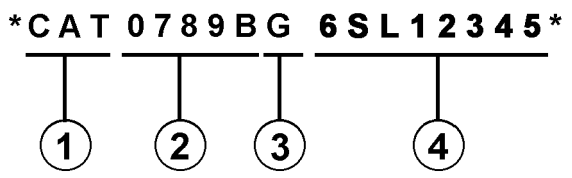

Onde:

1. Código de Fabricação Mundial da Caterpillar (dígitos 1-3)

2. Descrição da Máquina (dígitos 4-8)

3. Dígito de Verificação (dígito 9)

4. Seção de Indicador da Máquina (MIS) ou Número de Seqüência de Produto (dígitos 10-17). Estes eram anteriormente chamados de Número de Série.

Máquinas e grupos geradores produzidos antes do primeiro trimestre de 2001 manterão o formato de 8 caracteres de PIN.

Componentes como motores, transmissões, eixos, ferramentas de trabalho, etc. continuarão a usar Número de Série (S/N) com oito caracteres.

2. COMO OBTER PEÇAS

⚠ CUIDADO

Quando peças de substituição são exigidas para este produto, a Caterpillar recomenda a utilização de peças de substituição Caterpillar ou peças com as especificações equivalentes incluindo, mas não limitadas, à dimensões físicas, tipos, resistência e materiais.

A inobservância desta advertência poderá resultar em falhas prematuras, danos ao produto, ferimentos ou morte.

As Peças de Reposição de Qualidade Caterpillar encontram-se disponíveis nos revendedores Caterpillar no mundo inteiro. Seus estoques de peças são atualizados e incluem todas as peças normalmente necessárias para proteger seu investimento em máquinas Caterpillar. Alguns revendedores podem oferecer jogos de reparo ou peças de troca/remanufaturadas disponíveis como uma opção da alternativa de reparo mais eficaz para uma situação específica. Ao encomendar peças, seu pedido deve especificar a quantidade, o número e o nome da peça e o número de série/número de identificação do produto referentes à máquina para a qual as peças se destinam.

3. ORGANIZAÇÃO DO MANUAL DE PEÇAS

A informação do produto neste manual é apresentada em forma de "elementos de informação" que representam todos os componentes para o modelo específico. Arranjo de Motor e Grupo de Assento são exemplos de elementos de informação. Os elementos de informação são organizados em ordem alfabética por nome de peça ou secundariamente, por número de peça incluído em cada seção principal do manual.

4. LISTA DE CONTEÚDOS

Novidades

A Lista de Conteúdos (TOC) se encontra no princípio do manual. A Lista de Conteúdos (TOC) relaciona em cada seção do manual uma lista completa com todos os elementos de informação organizados conforme aparecem no manual. Números de página são fornecidos para que se tenha referência rápida de ilustrações de peças detalhadas e listas de conteúdos que podem receber serviço de manutenção.

5. ÍNDICE DE PEÇAS DE MANUTENÇÃO

O Índice de Peças de Manutenção, localizado perto do princípio do manual, faz referência aos números de peça de manutenção usados com maior frequência, fornecendo uma descrição, a quantidade, o uso e o número de página. Esta informação é organizada com a descrição da peça em ordem alfabética.

6. ÍNDICE

O Índice localizado perto do princípio do manual, consiste de uma lista em ordem alfabética de todos os elementos de informação incluídos no manual. Números de página são fornecidos para que se tenha referência rápida de ilustrações de peças detalhadas e listas de conteúdos que podem receber serviço de manutenção.

7. ÍNDICE DE NÚMERO DE PEÇA

Um índice numérico relacionando todos os números de peça e a(s) página(s) correspondentes, aparece no final do manual.

8. LEGENDAS

As legendas localizadas na parte de cima de cada página de um elemento de informação identifica o número de peça e o nome da peça, juntamente com informação descritiva adicional. Informações sobre o Número de Informação do Produto (PIN) e o Número de Série (S/N) encontradas em cada legenda devem ser usadas para selecionar a informação correta sobre uma máquina específica. Opções de substituição no campo, identificação de componentes de acessórios opcionais e informações sobre onde são utilizados ("parte de") são também fornecidas.

SIS ***Novidades***

A primeira linha de uma legenda é indicada em tipo maior para indicar o princípio de um elemento de informação. Legendas para páginas adicionais que podem ser necessárias para ilustrar um elemento de informação serão apresentadas em tipo padrão e incluirão o termo *(continua)* .

9. NÃO DISPONÍVEL SEPARADAMENTE

SIS ***Novidades***

Em alguns casos, é necessário mostrar peças não disponíveis separadamente que têm uma ligação com listas de conteúdos de nível inferior que podem receber serviço de manutenção. Os números de peça destes componentes não disponíveis aparecerão em *itálico* , a fim de indicar que não estão disponíveis.

10. NÙMEROS DE REFERÊNCIA À LISTA DE PEÇAS

SIS ***Novidades***

Os números indicados na coluna Ref No (No. de Referência) correspondem-se aos números usados no(s) gráfico(s) correspondente(s). Um sufixo com letras pode ser acrescentado a um número de referência para identificar itens de conteúdo de nível inferior. Os números indicados na coluna Graphic Ref (Referência de Gráfico) referem-se ao identificador de número de gráfico presente no canto esquerdo inferior de cada ilustração. O número de Referência de Gráfico pode ser usado em combinação com o item Ref No para determinar-se o número de peça correto. Poderá haver omissão intencional de um número de referência (Ref No) de uma lista de conteúdos uma vez que as informações são atualizadas para refletir os números de peça mais recentes que podem receber serviço de manutenção.

11. NOMES DE PEÇAS DESALINHADOS

Quando um nome de peça encontra-se desalinhado numa lista de peças, significa que tal item faz parte do (está incluído no) grupo ou conjunto sob o qual está relacionado.

12. LETRAS DE REFERÊNCIA NAS ILUSTRAÇÕES

Quando necessário, as ilustrações contêm letras de referência (A, B, C, etc.) que são utilizadas para seguir tubulações e cabos elétricos de um ponto a outro. Também foram utilizadas para indicar onde se pode reconectar as ilustrações que foram separadas.

13. ABREVIAÇÕES E SÍMBOLOS

O.D. – "Outside Diameter" (Diâmetro Externo)
I.D. – "Inside Diameter" (Diâmetro Interno)
A – Não faz parte deste grupo
B – Use conforme necessário
C – Indica modificação
D – Vendido por metro
E – Vendido por centímetro
F – Não ilustrado
G – Vendido por polegada
I – Consulte o seu revendedor quanto a mangueira
M – Peça métrica
R – Peça remanufaturada pode estar disponível; consulte o seu revendedor Cat
Y – Ilustração separada
Z – Não disponível separadamente

NOTA:

Os contínuos aperfeiçoamentos e avanços no projeto do produto podem ocasionar modificações em sua máquina que talvez ainda não estejam incluídas nesta publicação. Sempre que surgirem dúvidas quanto a um produto Caterpillar ou quanto à presente publicação, consulte o seu revendedor Caterpillar para obter as informações mais recentes disponíveis.

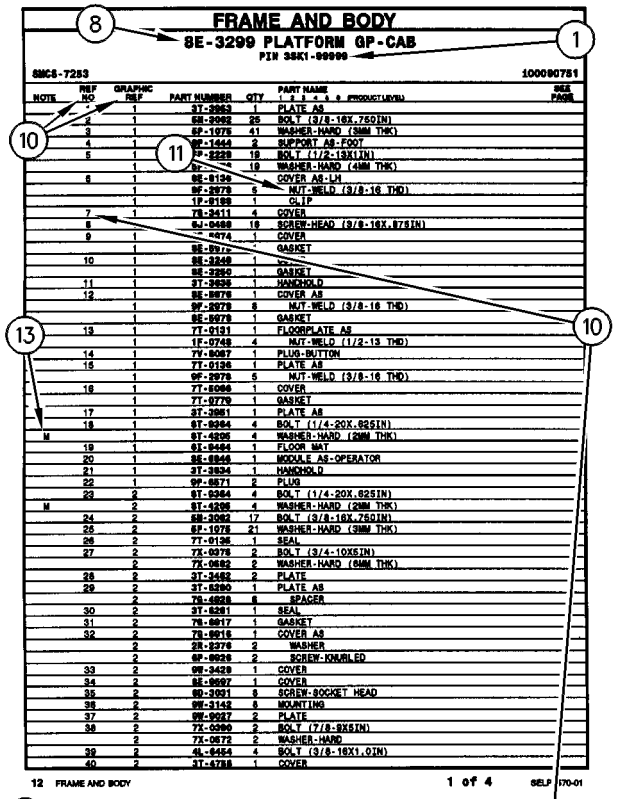

FRAME AND BODY

8E-3299 PLATFORM GP-CAB

PIN 38K1-99999

SMCS-7283 100090751

NOTE	REF NO	GRAPHIC REF	PART NUMBER	QTY	PART NAME 1 2 3 4 5 6 (PRODUCT LEVEL)	SEE PAGE
	1	1	3T-3953	1	PLATE AS	
	2	1	6B-3062	25	BOLT (3/8-16X.750IN)	
	3	1	6P-1075	41	WASHER-HARD (9MM THK)	
	4	1	9F-1444	2	SUPPORT AS-FOOT	
	5	1	7P-2229	19	BOLT (1/2-13X1IN)	
		1	6P-[illegible]	19	WASHER-HARD (4MM THK)	
	6	1	8E-8134	1	COVER AS-LH	
		1	9F-2979	5	NUT-WELD (3/8-16 THD)	
		1	1P-8199	1	CLIP	
	7	1	7S-3411	4	COVER	
	8		6J-0468	19	SCREW-HEAD (3/8-16X.875IN)	
	9	1	[illegible]474	1	COVER	
		1	8E-8972	[illegible]	GASKET	
	10	1	8E-3248	1	[illegible]	
		1	8E-3250	1	GASKET	
	11	1	3T-3939	1	HANDHOLD	
	12	1	8E-8978	1	COVER AS	
		1	9F-2978	8	NUT-WELD (3/8-16 THD)	
		1	8E-8978	1	GASKET	
	13	1	7T-0131	1	FLOORPLATE AS	
		1	1F-0748	4	NUT-WELD (1/2-13 THD)	
	14	1	7V-8087	1	PLUG-BUTTON	
	15	1	7T-0136	1	PLATE AS	
		1	9F-2979	5	NUT-WELD (3/8-16 THD)	
	16	1	7T-8098	1	COVER	
		1	7T-0779	1	GASKET	
	17	1	3T-3951	1	PLATE AS	
	18	1	6T-8364	4	BOLT (1/4-20X.625IN)	
M		1	9T-4205	4	WASHER-HARD (2MM THK)	
	19	1	8X-8464	1	FLOOR MAT	
	20	1	8E-8946	1	MODULE AS-OPERATOR	
	21	1	3T-3934	1	HANDHOLD	
	22	1	9P-8871	2	PLUG	
	23	2	6T-8364	4	BOLT (1/4-20X.625IN)	
M		2	9T-4205	4	WASHER-HARD (2MM THK)	
	24	2	6B-3062	17	BOLT (3/8-16X.750IN)	
	25	2	6P-1075	21	WASHER-HARD (9MM THK)	
	26	2	7T-0136	1	SEAL	
	27	2	7X-0378	2	BOLT (3/4-10X5IN)	
		2	7X-0682	2	WASHER-HARD (6MM THK)	
	28	2	3T-3482	2	PLATE	
	29	2	3T-8290	1	PLATE AS	
		2	7S-4838	6	SPACER	
	30	2	3T-8291	1	SEAL	
	31	2	7S-8817	1	GASKET	
	32	2	7S-8916	1	COVER AS	
		2	2R-2376	2	WASHER	
		2	6P-8826	2	SCREW-KNURLED	
	33	2	9W-3429	1	COVER	
	34	2	8E-8937	1	COVER	
	35	2	9D-3931	8	SCREW-SOCKET HEAD	
	36	2	9W-3142	8	MOUNTING	
	37	2	9W-9027	2	PLATE	
	38	2	7X-0360	2	BOLT (7/8-9X5IN)	
		2	7X-0672	2	WASHER-HARD	
	39	2	6L-6454	4	BOLT (3/8-16X1.0IN)	
	40	2	3T-4788	1	COVER	

12 FRAME AND BODY 1 of 4 SELP4570-01

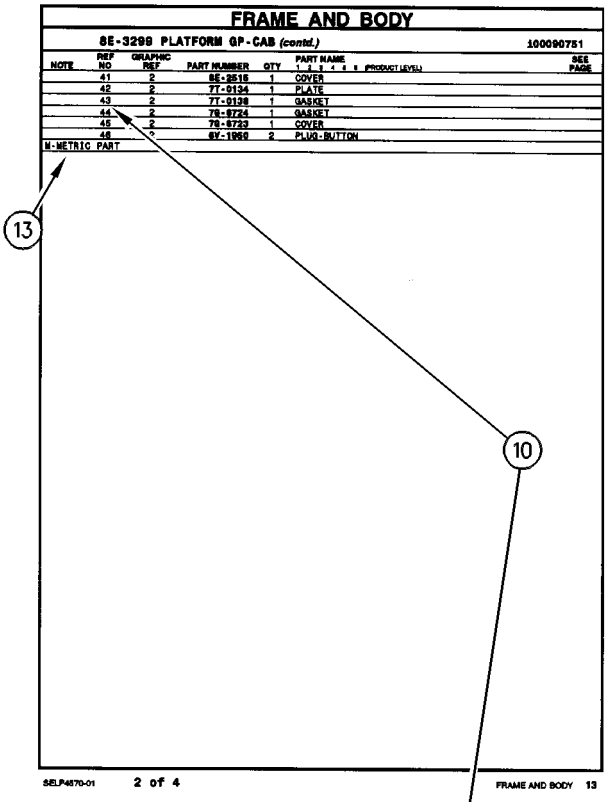

FRAME AND BODY

8E-3299 PLATFORM GP-CAB (contd.) 100090751

NOTE	REF NO	GRAPHIC REF	PART NUMBER	QTY	PART NAME 1 2 3 4 5 6 (PRODUCT LEVEL)	SEE PAGE
	41	2	8E-2515	1	COVER	
	42	2	7T-0134	1	PLATE	
	43	2	7T-0138	1	GASKET	
	44	2	7S-8724	1	GASKET	
	45	2	7S-8723	1	COVER	
	46	[illegible]	6V-1958	2	PLUG-BUTTON	
M-METRIC PART						

SELP4570-01 2 of 4 FRAME AND BODY 13

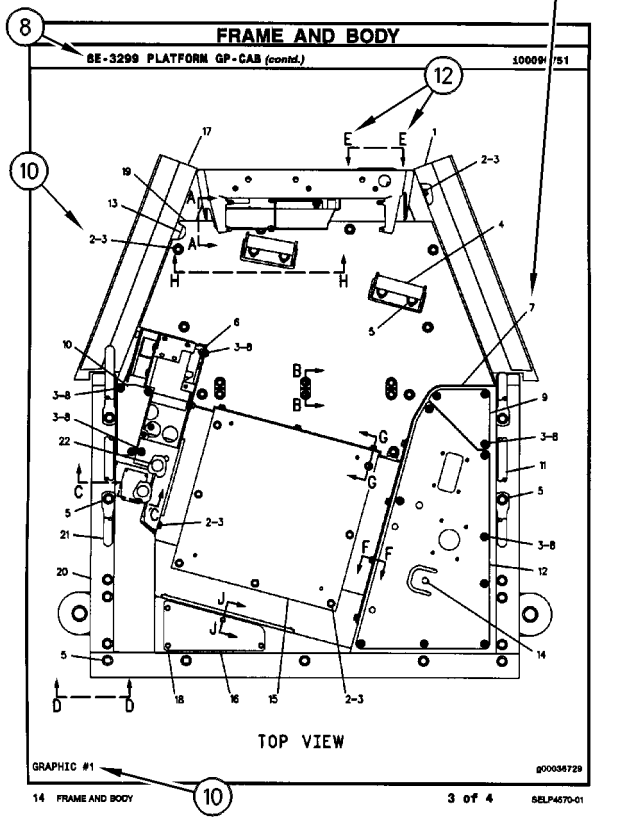

FRAME AND BODY

8E-3299 PLATFORM GP-CAB (contd.) 100090751

TOP VIEW

GRAPHIC #1 g00036729

14 FRAME AND BODY 3 of 4 SELP4570-01

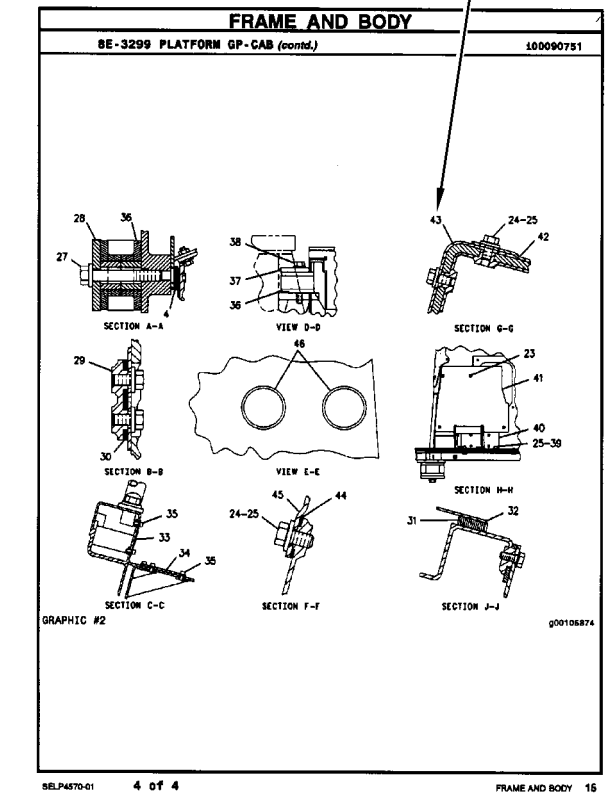

FRAME AND BODY

8E-3299 PLATFORM GP-CAB (contd.) 100090751

SECTION A-A VIEW D-D SECTION G-G

SECTION B-B VIEW E-E SECTION H-H

SECTION C-C SECTION F-F SECTION J-J

GRAPHIC #2 g00105874

SELP4570-01 4 of 4 FRAME AND BODY 16

ALLGEMEINE HINWEISE

1. MASCHINENKENNZEICHNUNG

Caterpillar-Maschinen sind mit PRODUCT IDENTIFICATION NUMBERS (PIN) (Produkt-Identnummern) gekennzeichnet. Einige Baugruppen, z.B. Motoren, Getriebe, Planierschilde und Aufreißer, sind mit SERIAL NUMBERS (S/N) (Seriennummern) gekennzeichnet. An der Maschine und am Motor befinden sich außerdem ARRANGEMENT NUMBERS (Ausrüstungsnummern) sowie in einigen Fällen MODIFICATION NUMBERS (Änderungsnummern). Sie befinden sich auf den PIN-Schildern und auf dem Typenschild im Fahrerhaus.

Bei Ersatzteilbestellungen müssen dem Händler alle diese Nummern zur Verfügung gestellt werden.

SIS ***Neu im Parts Manual***

Vom ersten Quartal 2001 ab wird die Caterpillar Produkt-Identnummer (PIN) von 8 auf 17 Zeichen geändert. Um zur Standardisierung der Produkt-Identnummer beizutragen, sind Caterpillar und andere Baumaschinenhersteller bestrebt, die aktuellste Norm zur Produkt-Identnummerierung einzuführen. Produkt-Identnummern für Baumaschinen sind durch ISO 10261 definiert. Das neue Format der Produkt-Identnummern gilt für alle Caterpillar-Maschinen und -Stromaggregate. Die Produkt-Identschilder und -Identrahmenmarkierung enthalten die aus 17 Zeichen bestehende Identnummer. Das neue Format hat folgende Abschnitte:

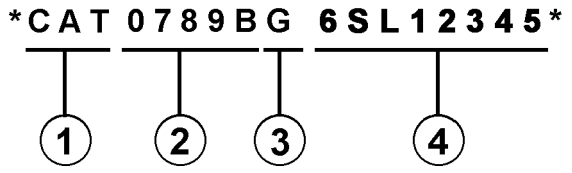

Abschnitte:

1. Caterpillars weltweiter Herstellungscode (Zeichen 1-3)

2. Modell (Zeichen 4-8)

3. Kontrollzeichen (Zeichen 9)

4. Maschinenspezifische Kennung (MIS) oder Produktsequenznummer (Zeichen 10-17). Diese wurde früher als Seriennummer bezeichnet.

Für vor dem ersten Quartal 2001 hergestellte Maschinen und Stromaggregate wird das aus 8 Zeichen bestehende PIN-Format beibehalten.

Bauteile wie z.B. Motoren, Getriebe, Achsen sowie Arbeitsgeräte werden weiterhin eine aus 8 Zeichen bestehende Seriennummer (S/N) aufweisen.

2. BESTELLEN VON ERSATZTEILEN

⚠ WARNUNG

Wenn für diese Maschine Ersatzteile benötigt werden, empfiehlt Caterpillar, ausschließlich Caterpillar-Ersatzteile oder solche zu verwenden, die die gleichen technischen Merkmale hinsichtlich Typ, Festigkeit, Werkzeugeigenschaften und die gleichen Maße aufweisen.

Bei Nichtbeachtung dieser Warnung besteht Verletzungs- oder sogar Lebensgefahr! Ferner kann Nichtbeachtung vorzeitige Ausfälle der Teile und Beschädigung der Maschine zur Folge haben.

Original Caterpillar-Ersatzteile können weltweit bei jedem Caterpillar-Händlern bestellt werden. Die umfangreichen Händlerlager enthalten normalerweise alle Teile, die Sie für Ihre Caterpillar-Maschine benötigen. Einige Händler bieten Reparatursätze, Austausch- oder werküberholte Teile an, so daß Sie eine Auswahl unter verschiedenen Reparaturmöglichkeiten treffen können. Ihre Bestellung muß folgende Angaben enthalten: Anzahl der benötigten Teile, Bestellnummer, Bezeichnung des Teils, Serien-Nr./Produkt-Ident-Nr., Ausrüstungs-Nr. und Änderungs-Nr. der Maschine, für die diese Teile benötigt werden.

3. AUFBAU DES PARTS MANUAL

Die Produktinformationen für alle Komponenten eines bestimmten Modells sind in INFORMATION ELEMENTS (Informationseinheiten) gegliedert. ENGINE ARRANGEMENT (Motorausführung) und SEAT GROUP (Fahrersitz) sind Beispiele für solche Informationseinheiten. Sie sind innerhalb jeder Gruppe alphabetisch, entsprechend der Ersatzteilbezeichnung, und zusätzlich numerisch, entsprechend der Ersatzteilnummer, geordnet.

ALLGEMEINE HINWEISE

4. INHALTSVERZEICHNIS

SIS *Neu im Parts Manual*

Das Inhaltsverzeichnis befindet sich am Anfang des Buches. Im Inhaltsverzeichnis werden die einzelnen Abschnitte des Buches aufgeführt. Die Abschnitte enthalten eine vollständige Aufstellung aller Informationseinheiten. Diese sind entsprechend ihrem Erscheinen im Buch geordnet. Das Inhaltsverzeichnis enthält Seitenangaben für Schnellverweise auf detaillierte Abbildungen und Teillisten.

5. INDEX FÜR WARTUNGSTEILE

Der Index für Wartungsteile vorn im Buch enthält die Bestellnummern, Seitenangaben, Mengenangaben und Informationen über den Einsatzbereich für die am häufigsten benötigten Ersatzteile. Die Angaben sind alphabetisch entsprechend der Teilebezeichnung geordnet.

6. INDEX

Der Index vorn im Buch enthält eine alphabetische Liste aller Informationseinheiten. Er enthält Seitenangaben für Schnellverweise auf detaillierte Abbildungen und Teillisten.

7. INDEX FÜR BESTELLNUMMERN

Hinten im Buch befindet sich ein numerischer Index, mit allen Bestellnummern und dem Hinweis auf die Seite, auf der sich die betreffende Abbildung befindet.

8. ÜBERSCHRIFTEN

Die Überschriften, die sich oben auf den Seiten der Informationseinheiten befinden, enthalten Bestellnummern, Ersatzteilbezeichnungen und zusätzliche beschreibende Informationen. Produkt-Ident- und Seriennummern in den Überschriften sollten zur Auswahl der richtigen Informationen für die betreffende Maschine verwendet werden. Die Überschriften enthalten außerdem Informationen über möglichen Außendienstersatz, mögliche Baugerätekomponenten und die Baugruppe, zu der das Teil gehört.

SIS *Neu im Parts Manual*

Die erste Zeile einer Überschrift erscheint in einer größeren Schriftart, um den Anfang einer Informationseinheit zu kennzeichnen. Überschriften für zusätzliche Seiten, die zur Erläuterung einer Informationseinheit notwendig sind, erscheinen in normaler Schriftart und enthalten den Begriff "(contd.)".

9. NICHT EINZELN LIEFERBARE TEILE

SIS *Neu im Parts Manual*

In einigen Fällen ist es notwendig nicht lieferbare Teile, die selbst mit einer eigenen Teilliste im Buch vertreten sind, aufzuführen. Die Bestellnummern dieser nicht einzeln lieferbaren Teile erscheinen kursiv, wodurch angezeigt wird, daß sie nur in Verbindung mit anderen Teilen lieferbar sind.

10. REFERENZNUMMER FÜR ERSATZTEILE

SIS *Neu im Parts Manual*

Die Zahlen, die in der Spalte "Ref No" aufgeführt sind, stimmen mit den Zahlen in den beigefügten Abbildungen überein. Ein Buchstaben-Suffix kann zu einer Referenznummer hinzugefügt werden, um zu kennzeichnen, daß das Teil mit einer eigenen Teilliste im Buch aufgeführt ist. Die in der Spalte "Graphic Ref" angeführten Zahlen verweisen auf die Identifikationsnummer der Abbildung, die sich in der linken unteren Ecke der Abbildung befindet. Diese Nummer kann zusammen mit der Referenznummer des Teils angegeben werden, um die richtige Ersatzteilnummer zu ermitteln. Referenznummern können absichtlich weggelassen werden, da die Nummern der lieferbaren Ersatzteile ständig aktualisiert werden.

11. EINGERÜCKTE BEZEICHNUNGEN

Wenn eine Bezeichnung eingerückt ist, wird dadurch angezeigt, daß das Teil zu einer Baugruppe gehört, unter deren Bezeichnung es eingerückt ist.

12. REFERENZBUCHSTABEN

Falls erforderlich sind in den Abbildungen Referenzbuchstaben enthalten (z.B. A, B, C, usw.), die Leitungen und Kabelbäume von einem Punkt zum anderen verfolgen. Außerdem geben sie die Stelle an, an der getrennte Abbildungen fortgesetzt werden.

13. ABKÜRZUNGEN UND SYMBOLE

O.D. – Außendurchmesser
I.D. – Innendurchmesser
A – kein Teil dieser Gruppe
B – nach Bedarf verwenden
C – Hinweis auf eine Änderung
D – in Meter-Länge bestellen
E – in Zentimeter-Länge bestellen
F – nicht gezeigt
G – in Zoll-Länge bestellen
I – siehe "Hose Fabrication Guide"
M – metrisches Teil
R – werküberholtes Teil unter Umständen lieferbar
Y – separate Abbildung
Z – nicht einzeln lieferbar

ANMERKUNG:

Ständig vorgenommene Verbesserungen und Weiterentwicklungen an Ihrer Maschine können Änderungen verursachen, die in der vorliegenden Ausgabe noch nicht berücksichtigt sind. Fragen zu Ihrer Caterpillar-Maschine oder diesem Ersatzteilbuch beantwortet Ihr Caterpillar-Händler.

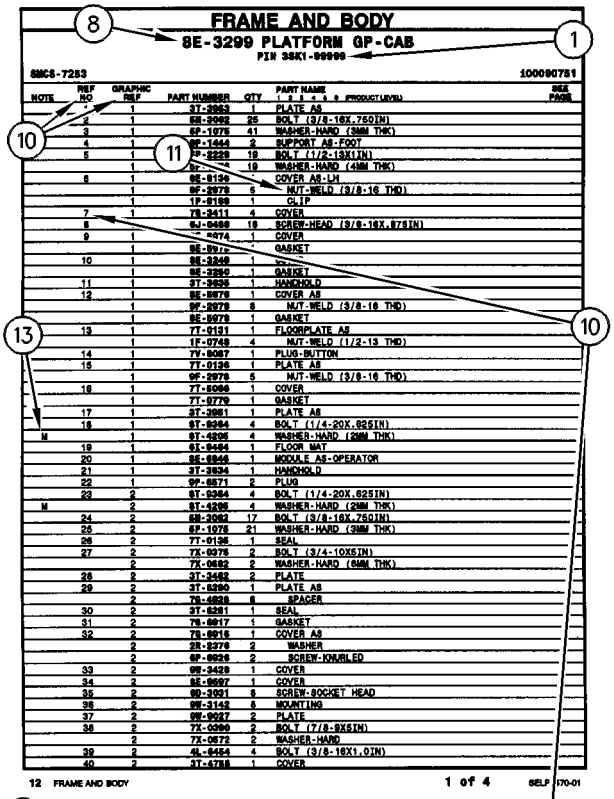

FRAME AND BODY

8E-3299 PLATFORM GP-CAB

PIN 38K1-99999

SMCS-7283 100090751

NOTE	REF NO	GRAPHIC REF	PART NUMBER	QTY	PART NAME 1 2 3 4 5 6 (PRODUCT LEVEL)	SEE PAGE
	1	1	3T-3953	1	PLATE AS	
	2	1	6B-3062	25	BOLT (3/8-16X.750IN)	
	3	1	6P-1075	41	WASHER-HARD (9MM THK)	
	4	1	9F-1444	2	SUPPORT AS-FOOT	
	5	1	7P-2229	19	BOLT (1/2-13X1IN)	
		1	6P-[illegible]	19	WASHER-HARD (4MM THK)	
	6	1	8E-8134	1	COVER AS-LH	
		1	9F-2979	5	NUT-WELD (3/8-16 THD)	
		1	1P-8188	1	CLIP	
	7	1	7S-2411	4	COVER	
	8		6J-0468	19	SCREW-HEAD (3/8-16X.875IN)	
	9	1	[illegible]-4674	1	COVER	
		1	8E-8972	1	GASKET	
	10	1	8E-3248	1	[illegible]	
		1	8E-3250	1	GASKET	
	11	1	3T-3939	1	HANDHOLD	
	12	1	8E-8978	1	COVER AS	
		1	9F-2978	8	NUT-WELD (3/8-16 THD)	
		1	8E-8978	1	GASKET	
	13	1	7T-0131	1	FLOORPLATE AS	
		1	1F-0748	4	NUT-WELD (1/2-13 THD)	
	14	1	7V-8087	1	PLUG-BUTTON	
	15	1	7T-0136	1	PLATE AS	
		1	9F-2979	5	NUT-WELD (3/8-16 THD)	
	16	1	7T-8098	1	COVER	
		1	7T-0779	1	GASKET	
	17	1	3T-3951	1	PLATE AS	
	18	1	6T-8364	4	BOLT (1/4-20X.625IN)	
M		1	6T-4205	4	WASHER-HARD (2MM THK)	
	19	1	6J-8464	1	FLOOR MAT	
	20	1	8E-8946	1	MODULE AS-OPERATOR	
	21	1	3T-3934	1	HANDHOLD	
	22	1	9P-8871	2	PLUG	
	23	2	6T-8364	4	BOLT (1/4-20X.625IN)	
M		2	6T-4205	4	WASHER-HARD (2MM THK)	
	24	2	6B-3062	17	BOLT (3/8-16X.750IN)	
	25	2	6P-1075	21	WASHER-HARD (9MM THK)	
	26	2	7T-0136	1	SEAL	
	27	2	7X-0378	2	BOLT (3/4-10X5IN)	
		2	7X-0682	2	WASHER-HARD (6MM THK)	
	28	2	3T-3482	2	PLATE	
	29	2	3T-8290	1	PLATE AS	
		2	7S-4838	6	SPACER	
	30	2	3T-8291	1	SEAL	
	31	2	7S-8817	1	GASKET	
	32	2	7S-8916	1	COVER AS	
		2	2R-2376	2	WASHER	
		2	6P-8826	2	SCREW-KNURLED	
	33	2	9W-3429	1	COVER	
	34	2	8E-8937	1	COVER	
	35	2	9D-3931	8	SCREW-SOCKET HEAD	
	36	2	9W-3142	8	MOUNTING	
	37	2	9W-9027	2	PLATE	
	38	2	7X-0360	2	BOLT (7/8-9X5IN)	
		2	7X-0672	2	WASHER-HARD	
	39	2	6L-4454	4	BOLT (3/8-16X1.0IN)	
	40	2	3T-4788	1	COVER	

12 FRAME AND BODY 1 of 4 SELP4570-01

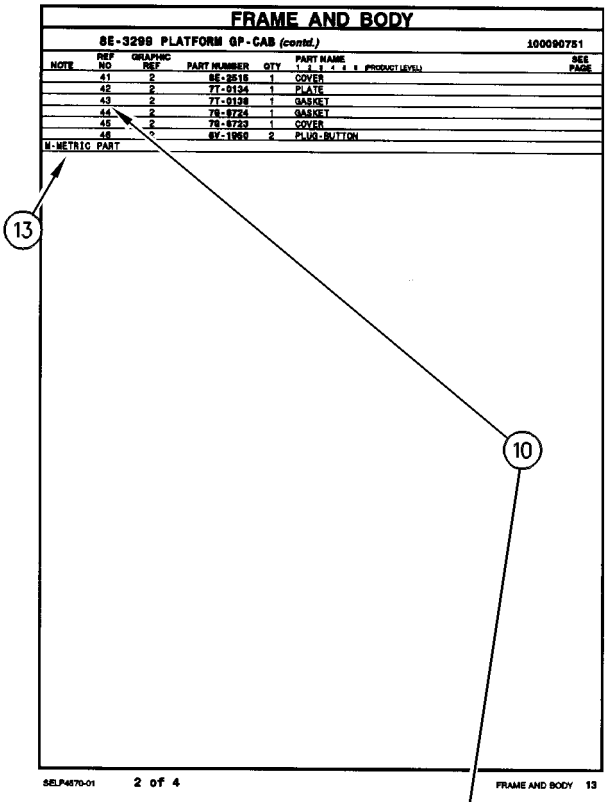

FRAME AND BODY

8E-3299 PLATFORM GP-CAB (contd.) 100090751

NOTE	REF NO	GRAPHIC REF	PART NUMBER	QTY	PART NAME 1 2 3 4 5 6 (PRODUCT LEVEL)	SEE PAGE
	41	2	8E-2515	1	COVER	
	42	2	7T-0134	1	PLATE	
	43	2	7T-0138	1	GASKET	
	44	2	7S-8724	1	GASKET	
	45	2	7S-8723	1	COVER	
	46	[illegible]	6V-1958	2	PLUG-BUTTON	
M-METRIC PART						

SELP4570-01 2 of 4 FRAME AND BODY 13

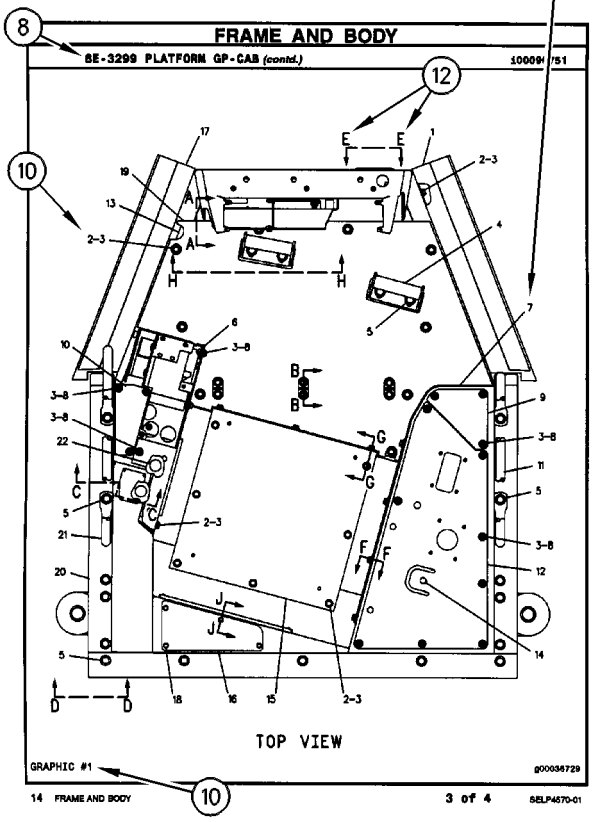

FRAME AND BODY

8E-3299 PLATFORM GP-CAB (contd.) 100090751

TOP VIEW

GRAPHIC #1 g00036729

14 FRAME AND BODY 3 of 4 SELP4570-01

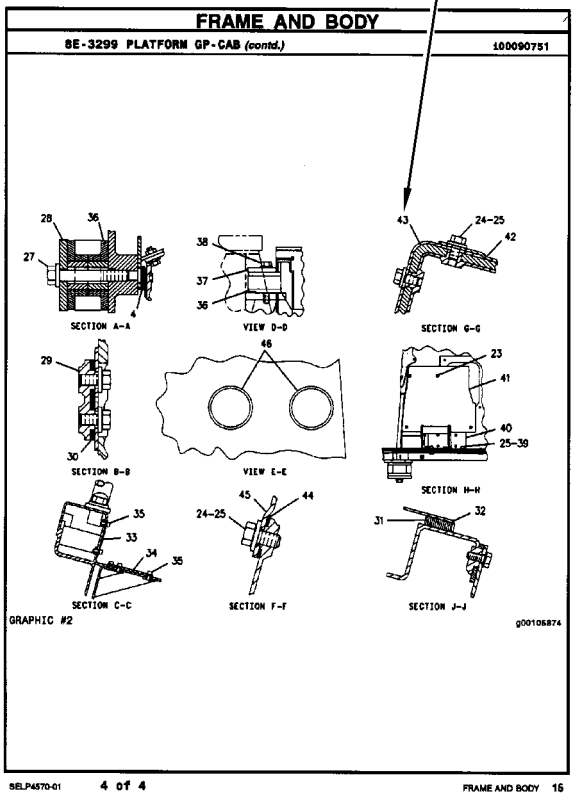

FRAME AND BODY

8E-3299 PLATFORM GP-CAB (contd.) 100090751

SECTION A-A VIEW D-D SECTION G-G

SECTION B-B VIEW E-E SECTION H-H

SECTION C-C SECTION F-F SECTION J-J

GRAPHIC #2 g00105874

SELP4570-01 4 of 4 FRAME AND BODY 16

SUPPLEMENTAL COOLANT ADDITIVES

CUSTOMER BENEFITS:

Protects against cavitation, foam, erosion, corrosion, and scale buildup in cooling systems.

- Provides measured coolant conditioner.

DESCRIPTION:

Additives deplete from the coolant with normal operation. For this reason, Supplemental Coolant Additives (SCA) must be added to all heavy duty coolants at regular intervals. In addition, when not using a fully formulated, pre-charged antifreeze, like Caterpillar's DEAC, an initial charge of SCA must be added to the cooling system. The amount of SCA added to the system is dependent on the capacity of the system.

The SCA for initial fill is provided as a liquid. SCA's for maintenance intervals are available in liquid form and as a spin-on element. (No Spin-on available for 3600 Family of Engines)

NOTE:

The amount of SCA added at initial fill is not the same as the amount added at maintenance intervals.

The coolant additive elements can be used with any ethylene or propylene glycol type antifreeze which meets ASTM D4985 or ASTM D5345 Specifications.

NOTE:

For use with standard heavy duty coolant only, not for use with Extended Life Coolant.

PARTS NEEDED:

Cooling System Capacity		Liquid SCA at Initial Fill	Liquid SCA at Maintenance*	Spin-on SCA Maintenance Element*
Liters	Gallons			
22-30	(6-8)	3P-2044 (1)	6V-3542 (1)	111-2370 (1)
30-38	(8-10)	3P-2044 (1) 6V-3542 (1)	111-2372 (1)	111-2369 (1)
38-49	(10-13)	3P-2044 (1) 8T-1589 (1)	111-2372 (1)	111-2369 (1)
49-64	(13-17)	3P-2044 (2)	8T-1589 (1)	9N-3368 (1)
64-83	(17-22)	3P-2044 (2) 8T-1589 (1)	111-2372 (1) 6V-3542 (1)	111-2371 (1)
83-114	(22-30)	3P-2044 (3) 8T-1589 (1)	3P-2044 (1)	9N-3718 (1)
114-163	(30-43)	3P-2044 (5)	3P-2044 (1) 6V-3542 (1)	111-2371 (2)
163-242	(43-64)	3P-2044 (8)	3P-2044 (2)	9N-3718 (2)

** Normal maintenance period is 250 hrs. See your Operation and Maintenance Manual for complete coolant maintenance instructions.*

( ) Indicates quantity required.

ADDITIFS POUR LIQUIDE DE REFROIDISSEMENT

AVANTAGES POUR LE CLIENT

L'additif protège contre la cavitation, la mousse, l'érosion, la corrosion et l'accumulation de dépôts dans le circuit de refroidissement.

- L'additif complémentaire fournit une quantité mesurée d'additif.

DESCRIPTION:

Les additifs s'épuisent pendant l'utilisation du moteur. C'est pourquoi l'on doit ajouter de l'additif au liquide de refroidissement/antigel pour moteurs diesel à intervalles réguliers. En plus, si l'on n'utilise pas de l'antigel entièrement formulé et pré-chargé comme le liquide de refroidissement/antigel Caterpillar pour moteurs diesel, une quantité initiale d'additif doit être ajoutée au circuit de refroidissement. La quantité d'additif à ajouter au circuit dépend de la contenance du circuit.

L'additif pour le remplissage initial est fourni sous forme liquide. L'additif pour l'entretien ultérieur est disponible sous forme liquide et sous forme d'élément à visser. (Il n'y a pas d'élément à visser pour les moteurs de la famille 3600).

NOTA:

La quantité d'additif à ajouter au remplissage initial diffère de la quantité à ajouter aux intervalles d'entretien.

Les éléments d'additif peuvent être utilisés avec tout antigel de type éthylène ou propylène-glycol conforme à la norme ASTM D4985 ou ASTM D5345.

NOTA:

A utiliser uniquement avec du liquide de refroidissement pour moteurs diesel et non avec le liquide de refroidissement longue durée.

PIÈCES NÉCESSAIRES:

Contenance du circuit de refroidissement		Additif liquide au remplissage initial	Additif liquide aux intervalles d'entretien*	Elément d'additif à visser aux intervalles d'entretien*
Litres	Gallons U.S.			
22-30	(6-8)	3P-2044 (1)	6V-3542 (1)	111-2370 (1)
30-38	(8-10)	3P-2044 (1) 6V-3542 (1)	111-2372 (1)	111-2369 (1)
38-49	(10-13)	3P-2044 (1) 8T-1589 (1)	111-2372 (1)	111-2369 (1)
49-64	(13-17)	3P-2044 (2)	8T-1589 (1)	9N-3368 (1)
64-83	(17-22)	3P-2044 (2) 8T-1589 (1)	111-2372 (1) 6V-3542 (1)	111-2371 (1)
83-114	(22-30)	3P-2044 (3) 8T-1589 (1)	3P-2044 (1)	9N-3718 (1)
114-163	(30-43)	3P-2044 (5)	3P-2044 (1) 6V-3542 (1)	111-2371 (2)
163-242	(43-64)	3P-2044 (8)	3P-2044 (2)	9N-3718 (2)

** L'intervalle d'entretien normal est de 250 heures-service. Voir le Guide d'utilisation et d'entretien pour de plus amples renseignements concernant l'entretien du circuit de refroidissement.*

( ) Indique la quantité exigée.

ADITIVOS DE REFRIGERANTE SUPLEMENTARIOS

VENTAJAS PARA EL USUARIO:

Protegen contra la cavitación, la formación de espuma, la corrosión y la acumulación de escamas en los sistemas de enfriamiento.

- Suministra un acondicionador dosificado de refrigerante.

DESCRIPCIÓN:

Los aditivos en el refrigerante se agotan con la operación normal. Por esta razón, se debe agregar Aditivo de refrigerante suplementario (SCA) a todos los refrigerantes para servicio pesado, a intervalos regulares. Además, cuando no se usa un anticongelante de precarga completo, tal como el DEAC de Caterpillar, es necesario agregar una cantidad de aditivo de refrigerante suplementario inicial al sistema de enfriamiento. La cantidad de aditivo que se debe agregar depende de la capacidad del sistema.

El SCA de llenado inicial es líquido. El que se usa para el mantenimiento está disponible tanto en líquido como en un elemento enroscable. (No hay elemento enroscable disponible para la Familia de Motores 3600).

NOTA:

La cantidad de aditivo de llenado inicial no es la misma que se agrega en los intervalos de mantenimiento.

Los elementos de aditivo de refrigerante se pueden usar con cualquier anticongelante de tipo glicol etilénico o propílico que esté de acuerdo con las especificaciones de las normas ASTM D4985 o ASTM D5345.

NOTA:

Se debe utilizar únicamente con refrigerante estándar para servicio pesado; no se debe usar con Refrigerante de Larga Duración.

PIEZAS NECESARIAS:

Capacidad del Sistema de Enfriamiento		SCA líquido de llenado inicial	SCA líquido de mantenimiento*	Elemento de mantenimiento enroscable*
litros	gal EE.UU.			
22-30	6-8	3P-2044 (1)	6V-3542 (1)	111-2370 (1)
30-38	8-10	3P-2044 (1) 6V-3542 (1)	111-2372 (1)	111-2369 (1)
38-49	10-13	3P-2044 (1) 8T-1589 (1)	111-2372 (1)	111-2369 (1)
49-64	13-17	3P-2044 (2)	8T-1589 (1)	9N-3368 (1)
64-83	17-22	3P-2044 (2) 8T-1589 (1)	111-2372 (1) 6V-3542 (1)	111-2371 (1)
83-114	22-30	3P-2044 (3) 8T-1589 (1)	3P-2044 (1)	9N-3718 (1)
114-163	30-43	3P-2044 (5)	3P-2044 (1) 6V-3542 (1)	111-2371 (2)
163-242	43-64	3P-2044 (8)	3P-2044 (2)	9N-3718 (2)

** El período normal de mantenimiento es de 250 horas. Para ver las instrucciones completas sobre el mantenimiento del refrigerante, consulte el Manual de Operación y Mantenimiento.*

( ) Indica la cantidad necesaria.

ADITIVOS SUPLEMENTARES DO LÍQUIDO ARREFECEDOR

BENEFÍCIOS PARA O CLIENTE:

Protege contra cavitação, espuma, erosão, corrosão e acúmulo de crostas nos sistemas de arrefecimento.

- Fornece uma quantidade pré-determinada de condicionador de arrefecimento.

DESCRIÇÃO:

Com a operação normal, os aditivos se esgotam do líquido arrefecedor. Por isso, Aditivos Suplementares do Líquido Arrefecedor (SCA) devem ser acrescentados a todos os líquidos arrefecedores para serviço pesado em intervalos regulares. Além disso, quando um anticongelante pré-carregado, totalmente formulado não for usado, como o DEAC Caterpillar, uma carga inicial de SCA deve ser acrescentada ao sistema de arrefecimento. A quantidade de SCA acrescentada ao sistema depende da capacidade do sistema.

O SCA para abastecimento inicial é fornecido em forma de líquido. Os aditivos suplementares (SCA) para intervalos de manutenção estão à disposição em forma líquida e como um elemento com roscas. (Exceto os Motores da Família 3600)

NOTA:

A quantidade de SCA adicionada no abastecimento inicial não é a mesma que a acrescentada nos intervalos de manutenção.

Os elementos do aditivo do líquido arrefecedor podem ser usados com qualquer tipo de anticongelante etileno ou propileno que satisfaz as Especificações ASTM D4985 ou ASTM D5345.

NOTA:

Para uso apenas com líquido arrefecedor para serviço pesado padrão, não deve ser usado com Líquido Arrefecedor de Vida Longa.

PEÇAS NECESSÁRIAS:

Capacidade do Sistema de Arrefecimento		Líquido SCA Durante Abastecimento Inicial	Líquido SCA Durante Manutenção*	Elemento de Manutenção de SCA com Roscas*
Litros	Galões			
22-30	6-8	3P-2044 (1)	6V-3542 (1)	111-2370 (1)
30-38	8-10	3P-2044 (1) 6V-3542 (1)	111-2372 (1)	111-2369 (1)
38-49	10-13	3P-2044 (1) 8T-1589 (1)	111-2372 (1)	111-2369 (1)
49-64	13-17	3P-2044 (2)	8T-1589 (1)	9N-3368 (1)
64-83	17-22	3P-2044 (2) 8T-1589 (1)	111-2372 (1) 6V-3542 (1)	111-2371 (1)
83-114	22-30	3P-2044 (3) 8T-1589 (1)	3P-2044 (1)	9N-3718 (1)
114-163	30-43	3P-2044 (5)	3P-2044 (1) 6V-3542 (1)	111-2371 (2)
163-242	43-64	3P-2044 (8)	3P-2044 (2)	9N-3718 (2)

** O período normal de manutenção é de 250 horas. Consulte o Manual de Operação e Manutenção para obter instruções completas quanto à manutenção do líquido arrefecedor.*

( ) Indica a quantidade exigida.

KÜHLMITTELZUSATZ

VORTEILE FÜR DEN KUNDEN:

Schutz gegen Kavitation, Schaumbildung, Erosion, Korrosion und Kesselsteinbildung in Kühlsystemen.

- Richtig dosierter Kühlmittelzusatz

BESCHREIBUNG:

Additive erschöpfen sich während des Motorbetriebs. Deshalb muß allen HD-Kühlmitteln regelmäßig Kühlmittelzusatz beigefügt werden. Wenn bei Erstfüllung kein vollwertiges Fertigkühlmittel, wie das Frostschutz- und Kühlmittel für Dieselmotoren von Caterpiller (DEAC), verwendet wird, muß bei Erstfüllung Kühlmittelzusatz beigefügt werden. Wieviel Kühlmittelzusatz beigefügt werden muß, hängt vom Inhalt des Kühlsystems ab.

Für Erstfüllung ist Kühlmittelzusatz nur in flüssiger Form erhältlich. Für Wartungsintervalle ist Kühlmittelzusatz in flüssiger Form und als Zusatzelement erhältlich. (Für die Motorbaureihe 3600 sind keine Zusatzelemente erhältlich.)

ANMERKUNG:

Die Kühlmittelmenge bei Erstfüllung ist nicht die gleiche Menge, die bei Wartungsintervallen beigefügt werden muß.

Die Kühlmittelzusatzelemente können mit allen Frostschutzmitteln auf Ethylen- oder Propylenglykolbasis verwendet werden, die den Standards nach ASTM D4985 oder ASTM D5345 entsprechen.

ANMERKUNG:

Den Kühlmittelzusatz nicht mit Langzeitkühlmittel (ELC) von Caterpillar verwenden. Der Kühlmittelzusatz ist nur für HD-Kühlmittel bestimmt.

TEILEBEZEICHNUNG:

Kühlsysteminhalt		Kühlmittelzusatz bei Erstfüllung	Flüssiger Kühlmittelzusatz bei Wartung*	Kühlmittelzusatzelement bei Wartung*
Liter	US-Gall.			
22-30	(6-8)	3P-2044 (1)	6V-3542 (1)	111-2370 (1)
30-38	(8-10)	3P-2044 (1) 6V-3542 (1)	111-2372 (1)	111-2369 (1)
38-49	(10-13)	3P-2044 (1) 8T-1589 (1)	111-2372 (1)	111-2369 (1)
49-64	(13-17)	3P-2044 (2)	8T-1589 (1)	9N-3368 (1)
64-83	(17-22)	3P-2044 (2) 8T-1589 (1)	111-2372 (1) 6V-3542 (1)	111-2371 (1)
83-114	(22-30)	3P-2044 (3) 8T-1589 (1)	3P-2044 (1)	9N-3718 (1)
114-163	(30-43)	3P-2044 (5)	3P-2044 (1) 6V-3542 (1)	111-2371 (2)
163-242	(43-64)	3P-2044 (8)	3P-2044 (2)	9N-3718 (2)

** Der normale Wartungsintervall beträgt 250 Betriebsstunden. Für vollständige Anweisungen zur Wartung des Kühlsystems, siehe Betriebs- und Wartungshandbuch.*

( ) Erforderliche Anzahl

MAINTENANCE PARTS

DESCRIPTION	PART NUMBER	QTY	WHERE USED	PAGE
AIR INLET AND EXHAUST SYSTEM				
ELEMENT AS-PRIMARY	7W-5317	1	AIR CLEANER GP	93
ELEMENT-FILTER	7M-1674	1	LINES GP-AIR	102
ELEMENT-SECONDARY	9S-9972	1	AIR CLEANER GP	93
GASKET	9M-8513	1	AIR CLEANER GP	93
INDICATOR-AIR FILTER SERVICE	1W-0613	1	AIR CLEANER GP	94
BASIC ENGINE				
PLUG-DRAIN	9X-6451	2	PAN GP-OIL	42
PLUG-O-RING (7/16-20 THD)	9S-4190	1	PAN GP-OIL	42
PULLEY-FAN DRIVE	2W-8493	1	PULLEY GP-FAN DRIVE	46
V-BELT SET (INCLUDES 2 BELTS)	2W-8952	1	PULLEY GP-FAN DRIVE	46
BRAKING SYSTEM				
BREATHER	9G-5127	2	CONTROL GP-SERVICE BRAKE	456
BREATHER AS	8J-5604	2	CONTROL GP-SERVICE BRAKE	450
SEAL-O-RING (34.59MM ID)	5M-2057	1	VALVE GP-BRAKE CONTROL	462
COOLING SYSTEM				
CAP-RADIATOR	6L-8617	1	RADIATOR GP	84
		1	RADIATOR GP	86
		1	RADIATOR GP	88
FILTER AS-ENGINE OIL	1R-0658	1	COOLER GP-FLTR BASE & ENG OIL	70
FILTER-WATER	4N-5834	1	PUMP GP-WATER	78
REGULATOR	111-8011	1	HOUSING & REGULATOR GP	75
REGULATOR-WATER TEMPERATURE	111-8010	1	REGULATOR GP-TEMPERATURE	92

MAINTENANCE PARTS

DESCRIPTION	PART NUMBER	QTY	WHERE USED	PAGE
ELECTRICAL AND STARTING SYSTEM				
BATTERY (12 VOLT)	9G-4232	2	BATTERY & WIRING GP	191
		2	BATTERY & WIRING GP	195
		2	BATTERY & WIRING GP	199
		2	BATTERY & WIRING GP	205
CAP	9L-6770	1	ALTERNATOR GP-CHARGING	176
		1	ALTERNATOR GP-CHARGING	184
CAP (ALTERNATOR)	9L-6770	1	ALTERNATOR GP-CHARGING	172
		1	ALTERNATOR GP-CHARGING	182
CAP-FUSE HOLDER	7N-2867	1	WIRING GP-RELAY PANEL	284
		1	WIRING GP-RELAY PANEL	286
	139-0178	1	WIRING GP-INSTR & IGNITION	272
CIRCUIT BREAKER AS (15 AMP)	6N-8589	2	WIRING GP-INSTR & IGNITION	272
CIRCUIT BREAKER AS (15 AMP) (ENGINE SHUTDOWN)	6N-8589	1	WIRING GP-RELAY PANEL	284
		1	WIRING GP-RELAY PANEL	286
CIRCUIT BREAKER AS (15 AMP) (RUNNING LIGHTS)	3T-2662	1	WIRING GP-RELAY PANEL	284
		1	WIRING GP-RELAY PANEL	286
CIRCUIT BREAKER AS (80 AMP) (ALTERNATOR)	9S-4693	1	WIRING GP-RELAY PANEL	284
		1	WIRING GP-RELAY PANEL	286
CIRCUIT BREAKER AS (80 AMP) (MAIN)	9S-4693	1	WIRING GP-RELAY PANEL	284
		1	WIRING GP-RELAY PANEL	286
ELEMENT AS-HEATER	8W-3087	1	AIR DRYER GP	166
		1	AIR DRYER GP	168
FLASHER	8D-6946	1	LIGHTING GP-SIGNAL	232
	8V-2514	1	LIGHTING GP-ROADING	226
		1	LIGHTING GP-ROADING	228
FUSE (10 AMP)	3K-8782	8	WIRING GP-INSTR & IGNITION	272
		3	WIRING GP-RELAY PANEL	284
		4	WIRING GP-RELAY PANEL	286
KEY	8H-5306	1	SWITCH GP-DISCONNECT	258
KIT-DESICCANT REFILL	8V-9258	1	AIR DRYER GP	166
		1	AIR DRYER GP	168
KIT-FILTER CARTRIDGE	8V-9257	1	AIR DRYER GP	166
		1	AIR DRYER GP	168
LAMP	9X-4492	1	LAMP GP-SIGNAL	218
		1	LAMP GP-SIGNAL	219
	9X-4493	1	LAMP GP-SIGNAL	217
	9X-4494	1	LAMP GP-SIGNAL	220
		1	LAMP GP-SIGNAL	221
	9X-7849	1	LAMP GP-HEAD	215
		1	LAMP GP-HEAD	216
LAMP (24 VOLTS)(65 WATTS)	9X-3463	1	LAMP GP-FLOOD	213
LAMP (24 VOLT)(65 WATT)	9X-3463	1	LAMP GP-FLOOD	214
LENS AS-FLOODLIGHT	9X-4174	1	LAMP GP-FLOOD	213
		1	LAMP GP-FLOOD	214
LENS-RED	9X-3065	1	LAMP GP-SIGNAL	219
FRAME AND BODY				
FITTING-GREASE (1/8-27 THD)	3B-8489	2	HITCH GP-ARTICULATING	404

MAINTENANCE PARTS

DESCRIPTION	PART NUMBER	QTY	WHERE USED	PAGE
FUEL SYSTEM				
CAP AS-FUEL TANK	7T-2036	1	TANK GP-FUEL	158
	9G-6082	1	TANK GP-FUEL	160
		1	TANK GP-FUEL	162
CAP-FUEL TANK FILLER	1P-8680	1	CAP GP-PROTECTION	109
	8P-0408	1	TANK GP-FUEL	158
		1	TANK GP-FUEL	160
		1	TANK GP-FUEL	162
ELEMENT AS-FUEL FILTER	9M-2341	1	PUMP GP-FUEL PRM & PRIM FILTER	150
ELEMENT-FILTER	4B-1663	1	TANK GP-FUEL	158
		1	TANK GP-FUEL	160
		1	TANK GP-FUEL	162
	4B-5949	1	TANK GP-FUEL	158
		1	TANK GP-FUEL	160
ELEMENT-FUEL FILTER	4B-5949	1	TANK GP-FUEL	162
FILTER AS-FUEL	1R-0750	1	FILTER GP-SECONDARY FUEL	115
FILTER-TANK CAP	5S-7657	1	CAP GP-PROTECTION	109
GASKET (FUEL PRIMING PUMP)	1P-0436	1	PUMP GP-FUEL PRIMING	148
GASKET (PRIM FUEL FILT)	8H-2778	1	PUMP GP-FUEL PRM & PRIM FILTER	150
KEY	5P-8500	2	CAP GP-PROTECTION	109
PADLOCK GP	5P-8502	1	CAP GP-PROTECTION	109
SCREEN AS	8N-6680	1	CONTROL GP-FUEL RATIO	110
STRAINER-FUEL TANK	9P-7121	1	TANK GP-FUEL	158
		1	TANK GP-FUEL	160
		1	TANK GP-FUEL	162
HYDRAULIC SYSTEM				
CAP-DUST	6V-0852	1	LINES GP-FRONT	544
		1	LINES GP-HYDRAULIC	548
		1	LINES GP-HYDRAULIC	550
		1	LINES GP-HYDRAULIC	552
	8C-3451	1	LINES GP-HYDRAULIC	548
		1	LINES GP-HYDRAULIC	550
		1	LINES GP-HYDRAULIC	552
CAP-FILLER	4J-3754	1	TANK & FILTER GP-HYDRAULIC	576
ELEMENT-FILTER	9J-5461	4	TANK & FILTER GP-HYDRAULIC	576
FILTER ELEMENT AS-OIL (HYDRAULIC)	4T-3134	4	TANK & FILTER GP-HYDRAULIC	576
KEY	5P-8500	1	COVER GP-HYDRAULIC TANK CAP	526
PADLOCK GP	5P-8502	1	COVER GP-HYDRAULIC TANK CAP	526
PLUG-DRAIN	9J-7031	1	TANK & FILTER GP-HYDRAULIC	577
STRAINER AS	3D-6678	1	TANK & FILTER GP-HYDRAULIC	577
IMPLEMENTS				
FITTING-GREASE (1/8-27 THD)	3B-8489	6	CONTROL GP-BUCKET	652
LUBRICATION SYSTEM				
BREATHER AS-CRANKCASE	2W-9162	1	BREATHER GP	54
CAP AS-OIL FILLER	7S-1803	1	FILLER GP-ENGINE OIL	55
CAP-DUST	8C-3445	1	BASE GP-OIL FILTER	53
SEAL-O-RING (81.92MM ID)	4L-9564	1	BREATHER GP	54

MAINTENANCE PARTS

DESCRIPTION	PART NUMBER	QTY	WHERE USED	PAGE
OPERATOR STATION				
BLADE AS-WIPER	6V-6864	1	WIPER GP-WINDOW	840
		1	WIPER GP-WINDOW	842
		2	WIPER GP-WINDOW	844
		2	WIPER GP-WINDOW	846
CAP	3W-6398	1	TANK GP-WINDOW WASHER	827
CAP-FUSE HOLDER	7N-2867	1	HORN GP-ELECTRIC	741
		1	SEAT GP-ADJUSTABLE	812
FILTER	7R-2258	1	PRESSURIZER GP-CAB	793
		1	PRESSURIZER GP-CAB	797
FILTER AS	2V-0036	1	PRESSURIZER GP-CAB	792
		1	PRESSURIZER GP-CAB	796
FILTER-SCREEN	8T-5913	2	TANK GP-WINDOW WASHER	827
FUSE (10 AMP)	3K-8782	1	HORN GP-ELECTRIC	741
		1	SEAT GP-ADJUSTABLE	812
KEY	5P-8500	2	CONVERSION AR-NONCAB	720
		1	GUARD GP-VANDALISM	734
		2	GUARD GP-VANDALISM	735
KEY-HANDLE	3V-7476	1	PLATFORM GP	780
		1	PLATFORM GP	782
		1	PLATFORM GP	784
KIT-MOTOR BRUSH	9G-0398	1	AIR CONDITIONER GP	681
LAMP-MINIATURE	7N-9943	1	CAB GP	694
		1	CAB GP	710
	7N-9967	3	PANEL GP-INSTRUMENT	768
LAMP-MINIATURE (28 VOLT)	7N-5876	4	PRESSURIZER GP-CAB	793
		4	PRESSURIZER GP-CAB	797
		1	SEAT GP-ADJUSTABLE	812
LAMP (28 VOLT)	7N-5876	12	PANEL GP-INSTRUMENT	776
	9W-2111	1	PANEL GP-INSTRUMENT	776
PADLOCK GP	5P-8502	1	CONVERSION AR-NONCAB	720
		1	GUARD GP-VANDALISM	734
		3	GUARD GP-VANDALISM	735
SEAT BELT GP	8Y-4030	1	TETHER GP	828
SEAT BELT GP (RETRACTABLE)	8Y-3792	1	SEAT GP-SUSPENSION	816
		1	SEAT GP-SUSPENSION	817
V-BELT	7C-8236	1	COMPRESSOR GP-REFRIGERANT	714

MAINTENANCE PARTS

DESCRIPTION	PART NUMBER	QTY	WHERE USED	PAGE
POWER TRAIN				
BREATHER (PRESSURE RELIEF)	9G-5127	1	FILLER GP-POWER TRAIN OIL	305
		1	FILLER GP-POWER TRAIN OIL	306
CAP-DUST	8C-3447	1	FILTER & LINES GP-TRANSMISSION	308
		1	FILTER & LINES GP-TRANSMISSION	310
		1	FILTER & LINES GP-TRANSMISSION	312
		1	FILTER & LINES GP-TRANSMISSION	314
CAP-OIL FILLER	6G-9333	1	FILLER GP-POWER TRAIN OIL	305
		1	FILLER GP-POWER TRAIN OIL	306
CAP-VALVE	2D-2633	1	RIM GP-DEMOUNTABLE	343
		1	RIM GP-DEMOUNTABLE	344
ELEMENT AS-HYDRAULIC	1R-0719	1	FILTER GP-OIL	316
FITTING-GREASE	027-1287	1	SPIDER & BEARING GP	349
FITTING-GREASE (1/8-27 THD)	3B-8489	1	SLIP JOINT GP	348
PLUG-DRAIN	8M-9307	1	COOLER GP-TRANSMISSION OIL	299
PLUG-MAGNETIC	5P-4484	1	HOUSING GP-FIXED AXLE	324
		1	HOUSING GP-FIXED AXLE	326
		1	HOUSING GP-OSCILLATING AXLE	328
		1	HOUSING GP-OSCILLATING AXLE	330
		1	HOUSING GP-OSCILLATING AXLE	332
PLUG-O-RING	5P-4483	1	GEAR GP-OUTPUT TRANSFER	320
SCREEN-SUCTION	4S-8598	1	GEAR GP-OUTPUT TRANSFER	320
		1	GEAR GP-OUTPUT TRANSFER	322
SEAL-O-RING (91.67MM ID)	8H-7521	1	GEAR GP-OUTPUT TRANSFER	320
SERVICE EQUIPMENT AND SUPPLIES				
KEY	5P-8500	1	LOCK GP-VANDALISM	855
PADLOCK GP	5P-8502	6	LOCK GP-VANDALISM	855
STEERING SYSTEM				
CAP-DUST	6V-0852	2	LINES GP-STEERING	484
FITTING-GREASE (1/8-27 THD)	3B-8489	2	CYLINDER & MTG GP-STEERING	469
SEAL-O-RING (94.84MM ID)	1H-8128	1	CYLINDER GP-STEERING	472

PIÈCES DE RECHANGE

DESCRIPTION	NUMÉRO DE PIECÈS	QTÉ	DOMAINE D'APPLICATION	PAGE
CHÂSSIS ET BENNE				
GRAISSEUR (FILET 1/8-27)	3B-8489	2	ATTELAGE D'ARTICULATION (ASS)	404
CIRCUIT D'ADMISSION D'AIR ET D'ÉCHAPPEMENT				
ÉLÉMENT DE FILTRE	7M-1674	1	CANALISATIONS D'AIR (ASS)	102
ÉLÉMENT PRINCIPAL (ENS)	7W-5317	1	FILTRE A AIR (ASS)	93
ELEMENT SECONDAIRE	9S-9972	1	FILTRE A AIR (ASS)	93
INDICATEUR DE COLMATAGE DE FILTRE A AIR	1W-0613	1	FILTRE A AIR (ASS)	94
JOINT PLAT	9M-8513	1	FILTRE A AIR (ASS)	93
CIRCUIT DE CARBURANT				
BOUCHON DE GOULOTTE DE RÉSERVOIR DE CARBURANT	1P-8680	1	COUVERCLE DE PROTECTION (ASS)	109
	8P-0408	1	RÉSERVOIR DE CARBURANT (ASS)	158
		1	RÉSERVOIR DE CARBURANT (ASS)	160
		1	RÉSERVOIR DE CARBURANT (ASS)	162
BOUCHON DE RÉSERVOIR DE CARBURANT (ENS)	7T-2036	1	RÉSERVOIR DE CARBURANT (ASS)	158
	9G-6082	1	RÉSERVOIR DE CARBURANT (ASS)	160
		1	RÉSERVOIR DE CARBURANT (ASS)	162
CADENAS (ASS)	5P-8502	1	COUVERCLE DE PROTECTION (ASS)	109
CLÉ	5P-8500	2	COUVERCLE DE PROTECTION (ASS)	109
ÉCRAN (ENS)	8N-6680	1	LIMITEUR D'INJECTION (ASS)	110
ÉLÉMENT - FILTRE DE CARBURANT	4B-5949	1	RÉSERVOIR DE CARBURANT (ASS)	162
ÉLÉMENT DE FILTRE	4B-1663	1	RÉSERVOIR DE CARBURANT (ASS)	158
		1	RÉSERVOIR DE CARBURANT (ASS)	160
		1	RÉSERVOIR DE CARBURANT (ASS)	162
	4B-5949	1	RÉSERVOIR DE CARBURANT (ASS)	158
		1	RÉSERVOIR DE CARBURANT (ASS)	160
ÉLÉMENT DE FILTRE À CARBURANT (ENS)	9M-2341	1	POMPE D'AMORÇAGE DE CARBURANT ET FILTRE PRINCIPAL	150
FILTRE A CARBURANT (ENS)	1R-0750	1	FILTRE À CARBURANT SECONDAIRE (ASS)	115
FILTRE DU BOUCHON DU RÉSERVOIR	5S-7657	1	COUVERCLE DE PROTECTION (ASS)	109
JOINT PLAT (FILTRE À CARBURANT PRINCIPAL)	8H-2778	1	POMPE D'AMORÇAGE DE CARBURANT ET FILTRE PRINCIPAL	150
JOINT PLAT (POMPE D'AMORÇAGE DE CARBURANT)	1P-0436	1	POMPE D'AMORÇAGE DE CARBURANT (ASS)	148
TAMIS DE RÉSERVOIR DE CARBURANT	9P-7121	1	RÉSERVOIR DE CARBURANT (ASS)	158
		1	RÉSERVOIR DE CARBURANT (ASS)	160
		1	RÉSERVOIR DE CARBURANT (ASS)	162
CIRCUIT DE DIRECTION				
GRAISSEUR (FILET 1/8-27)	3B-8489	2	VERIN DE DIRECTION ET MONTAGE (ASS)	469
JOINT TORIQUE (DIA INT 94,84MM)	1H-8128	1	VERIN DE DIRECTION (ASS)	472
PARE-POUSSIERE	6V-0852	2	CANALISATIONS DE DIRECTION (ASS)	484

PIÈCES DE RECHANGE

DESCRIPTION	NUMÉRO DE PIECÈS	QTÉ	DOMAINE D'APPLICATION	PAGE
CIRCUIT DE FREINS				
JOINT TORIQUE (DIA INT 34,59MM)	5M-2057	1	DISTRIBUTEUR DE FREIN (ASS)	462
RENIFLARD	9G-5127	2	FREIN DE MANOEUVRE - COMMANDE (ASS)	456
RENIFLARD (ENS)	8J-5604	2	FREIN DE MANOEUVRE - COMMANDE (ASS)	450
CIRCUIT DE GRAISSAGE				
BOUCHON DE GOULOTTE DE REMPLISSAGE D'HUILE MOTEUR	7S-1803	1	BOUCHON DE REMPLISSAGE D'HUILE MOTEUR (ASS)	55
JOINT TORIQUE (DIA INT 81,92MM)	4L-9564	1	RENIFLARD (ASS)	54
PARE-POUSSIERE	8C-3445	1	SUPPORT DE FILTRE À HUILE (ASS)	53
RENIFLARD DE CARTER (ENS)	2W-9162	1	RENIFLARD (ASS)	54
CIRCUIT DE REFROIDISSEMENT				
CHAPEAU - RADIATEUR	6L-8617	1	RADIATEUR (ASS)	84
		1	RADIATEUR (ASS)	86
		1	RADIATEUR (ASS)	88
FILTRE -EAU	4N-5834	1	POMPE A EAU (ASS)	78
FILTRE A HUILE MOTEUR (ENS)	1R-0658	1	SUPPORT DE FILTRE ET REFROIDISSEUR D'HUILE MOTEUR	70
REGULATEUR	111-8011	1	THERMOSTAT ET BOITIER (ASS)	75
THERMOSTAT-TEMPÉRATURE D'EAU	111-8010	1	RÉGULATEUR DE TEMPÉRATURE (ASS)	92
CIRCUIT ELECTRIQUE ET DE DEMARRAGE				
AMPOULE	9X-4492	1	LAMPE - CLIGNOTANT DE DIRECTION (ASS)	218
		1	LAMPE - CLIGNOTANT DE DIRECTION (ASS)	219
	9X-4493	1	LAMPE - CLIGNOTANT DE DIRECTION (ASS)	217
	9X-4494	1	LAMPE - CLIGNOTANT DE DIRECTION (ASS)	220
		1	LAMPE - CLIGNOTANT DE DIRECTION (ASS)	221
	9X-7849	1	PHARE AV (ASS)	215
		1	PHARE AV (ASS)	216
AMPOULE (24 VOLTS) (65 WATTS)	9X-3463	1	LAMPE - PHARE (ASS)	213
AMPOULE (24 VOLTS)(65 WATTS)	9X-3463	1	LAMPE - PHARE (ASS)	214
BATTERIE (12 VOLTS)	9G-4232	2	BATTERIE ET CÂBLAGE	191
		2	BATTERIE ET CÂBLAGE	195
		2	BATTERIE ET CÂBLAGE	199
		2	BATTERIE ET CÂBLAGE	205
CHAPEAU	9L-6770	1	ALTERNATEUR DE CHARGE (ASS)	176
		1	ALTERNATEUR DE CHARGE (ASS)	184
CHAPEAU (ALTERNATEUR)	9L-6770	1	ALTERNATEUR DE CHARGE (ASS)	172
		1	ALTERNATEUR DE CHARGE (ASS)	182
CHAPEAU (PORTE-FUSIBLES)	7N-2867	1	CABLAGE - PANNEAU DE RELAIS	284
		1	CABLAGE - PANNEAU DE RELAIS	286
	139-0178	1	CABLAGE D'INSTRUMENTS ET ALLUMAGE (ASS)	272
CLÉ	8H-5306	1	ROBINET DE BATTERIE (ASS)	258
CLIGNOTANT	8D-6946	1	ÉCLAIRAGE CLIGNOTANT	232

PIÈCES DE RECHANGE

DESCRIPTION	NUMÉRO DE PIECÈS	QTÉ	DOMAINE D'APPLICATION	PAGE
	8V-2514	1	ÉCLAIRAGE - FEUX DE ROUTE (ASS)	226
		1	ÉCLAIRAGE - FEUX DE ROUTE (ASS)	228
DISJONCTEUR (ENS) (15A)	6N-8589	2	CABLAGE D'INSTRUMENTS ET ALLUMAGE (ASS)	272
DISJONCTEUR (ENS) (15A) (ARRÊT DU MOTEUR)	6N-8589	1	CABLAGE - PANNEAU DE RELAIS	284
		1	CABLAGE - PANNEAU DE RELAIS	286
DISJONCTEUR (ENS) (15A) (FEUX DE ROUTE)	3T-2662	1	CABLAGE - PANNEAU DE RELAIS	284
		1	CABLAGE - PANNEAU DE RELAIS	286
DISJONCTEUR (ENS) (80 A) (ALTERNATEUR)	9S-4693	1	CABLAGE - PANNEAU DE RELAIS	284
		1	CABLAGE - PANNEAU DE RELAIS	286
DISJONCTEUR (ENS) (80 A) (PRINCIPAL)	9S-4693	1	CABLAGE - PANNEAU DE RELAIS	284
		1	CABLAGE - PANNEAU DE RELAIS	286
ÉLÉMENT DE RÉCHAUFFEUR (ENS)	8W-3087	1	DESHYDRATEUR (ASS)	166
		1	DESHYDRATEUR (ASS)	168
FUSIBLE (10A)	3K-8782	3	CABLAGE - PANNEAU DE RELAIS	284
		4	CABLAGE - PANNEAU DE RELAIS	286
		8	CABLAGE D'INSTRUMENTS ET ALLUMAGE (ASS)	272
KIT DE CARTOUCHE DE FILTRE	8V-9257	1	DESHYDRATEUR (ASS)	166
		1	DESHYDRATEUR (ASS)	168
KIT DE RECHANGE DE DÉSHYDRATEUR	8V-9258	1	DESHYDRATEUR (ASS)	166
		1	DESHYDRATEUR (ASS)	168
LENTILLE (ENS)-PROJECTEUR	9X-4174	1	LAMPE - PHARE (ASS)	214
		1	LAMPE - PHARE (ASS)	213
LENTILLE ROUGE	9X-3065	1	LAMPE - CLIGNOTANT DE DIRECTION (ASS)	219

PIÈCES DE RECHANGE

DESCRIPTION	NUMÉRO DE PIECÈS	QTÉ	DOMAINE D'APPLICATION	PAGE
CIRCUIT HYDRAULIQUE				
BOUCHON DE GOULOTTE DE REMPLISSAGE	4J-3754	1	RÉSERVOIR HYDRAULIQUE ET FILTRE (ASS)	576
BOUCHON DE VIDANGE	9J-7031	1	RÉSERVOIR HYDRAULIQUE ET FILTRE (ASS)	577
CADENAS (ASS)	5P-8502	1	COUVERCLE DE RÉSERVOIR HYDRAULIQUE	526
CLÉ	5P-8500	1	COUVERCLE DE RÉSERVOIR HYDRAULIQUE	526
CREPINE (ENS)	3D-6678	1	RÉSERVOIR HYDRAULIQUE ET FILTRE (ASS)	577
ÉLÉMENT DE FILTRE	9J-5461	4	RÉSERVOIR HYDRAULIQUE ET FILTRE (ASS)	576
ÉLÉMENT DE FILTRE À HUILE (ENS) (HYDRAULIQUE)	4T-3134	4	RÉSERVOIR HYDRAULIQUE ET FILTRE (ASS)	576
PARE-POUSSIERE	6V-0852	1	CANALISATIONS AV	544
		1	CANALISATIONS HYDRAULIQUES (ASS)	548
		1	CANALISATIONS HYDRAULIQUES (ASS)	550
		1	CANALISATIONS HYDRAULIQUES (ASS)	552
	8C-3451	1	CANALISATIONS HYDRAULIQUES (ASS)	548
		1	CANALISATIONS HYDRAULIQUES (ASS)	550
		1	CANALISATIONS HYDRAULIQUES (ASS)	552
ÉQUIPEMENTS				
GRAISSEUR (FILET 1/8-27)	3B-8489	6	COMMANDE DE GODET (ASS)	652
MATÉRIEL ET FOURNITURES D'ENTRETIEN				
CADENAS (ASS)	5P-8502	6	VERROUILLAGE ANTI-VANDALISME (ASS)	855
CLÉ	5P-8500	1	VERROUILLAGE ANTI-VANDALISME (ASS)	855
MOTEUR standard				
BOUCHON DE VIDANGE	9X-6451	2	HUILE MOTEUR - CARTER (ASS)	42
BOUCHON-JOINT TORIQUE (FILET 7/16-20)	9S-4190	1	HUILE MOTEUR - CARTER (ASS)	42
JEU DE COURROIES TRAPEZOIDALES (COMPREND 2 COURROIES)	2W-8952	1	POULIE D'ENTRAÎNEMENT DE VENTILATEUR (ASS)	46
POULIE D'ENTRAÎNEMENT DE VENTILATEUR	2W-8493	1	POULIE D'ENTRAÎNEMENT DE VENTILATEUR (ASS)	46

PIÈCES DE RECHANGE

DESCRIPTION	NUMÉRO DE PIECÈS	QTÉ	DOMAINE D'APPLICATION	PAGE
POSTE DE CONDUITE				
AMPOULE (28 VOLTS)	7N-5876	12	TABLEAU DE BORD (ASS)	776
	9W-2111	1	TABLEAU DE BORD (ASS)	776
BALAI D'ESSUIE-GLACE (ENS)	6V-6864	1	ESSUIE-GLACE (ASS)	840
		1	ESSUIE-GLACE (ASS)	842
		2	ESSUIE-GLACE (ASS)	844
		2	ESSUIE-GLACE (ASS)	846
CADENAS (ASS)	5P-8502	1	PROTECTION ANTIVANDALISME (ASS)	734
		3	PROTECTION ANTIVANDALISME (ASS)	735
		1	VERSION DE TRANSFORMATION - SANS CABINE	720
CEINTURE DE SECURITE (ASS)	8Y-4030	1	ATTACHE (ASS)	828
CEINTURE DE SECURITE (ASS) (RÉTRACTABLE)	8Y-3792	1	SIÈGE AVEC SUSPENSION (ASS)	816
		1	SIÈGE AVEC SUSPENSION (ASS)	817
CHAPEAU	3W-6398	1	RÉSERVOIR - LAVE-GLACE (ASS)	827
CHAPEAU (PORTE-FUSIBLES)	7N-2867	1	KLAXON ÉLECTRIQUE (ASS)	741
		1	SIÈGE RÉGLABLE (ASS)	812
CLAVETTE - POIGNÉE	3V-7476	1	PLATE-FORME (ASS)	780
		1	PLATE-FORME (ASS)	782
		1	PLATE-FORME (ASS)	784
CLÉ	5P-8500	1	PROTECTION ANTIVANDALISME (ASS)	734
		2	PROTECTION ANTIVANDALISME (ASS)	735
		2	VERSION DE TRANSFORMATION - SANS CABINE	720
COURROIE TRAPEZOIDALE	7C-8236	1	COMPRESSEUR DE REFRIGERANT (ASS)	714
FILTRE	7R-2258	1	SURPRESSEUR (ASS)	793
		1	SURPRESSEUR (ASS)	797
FILTRE (ENS)	2V-0036	1	SURPRESSEUR (ASS)	792
		1	SURPRESSEUR (ASS)	796
FUSIBLE (10A)	3K-8782	1	KLAXON ÉLECTRIQUE (ASS)	741
		1	SIÈGE RÉGLABLE (ASS)	812
KIT DE BALAIS DE MOTEUR	9G-0398	1	CLIMATISEUR (ASS)	681
LAMPE (AMPOULE MINIATURE)	7N-9943	1	CABINE (ASS)	694
		1	CABINE (ASS)	710
	7N-9967	3	TABLEAU DE BORD (ASS)	768
LAMPE (AMPOULE MINIATURE) (28 VOLTS)	7N-5876	1	SIÈGE RÉGLABLE (ASS)	812
		4	SURPRESSEUR (ASS)	793
		4	SURPRESSEUR (ASS)	797
TAMIS DE FILTRE	8T-5913	2	RÉSERVOIR - LAVE-GLACE (ASS)	827

PIÈCES DE RECHANGE

DESCRIPTION	NUMÉRO DE PIECÈS	QTÉ	DOMAINE D'APPLICATION	PAGE
TRANSMISSION				
BOUCHON AIMANTÉ	5P-4484	1	CARTER D'ESSIEU FIXE	324
		1	CARTER D'ESSIEU FIXE	326
		1	CARTER D'ESSIEU OSCILLANT	328
		1	CARTER D'ESSIEU OSCILLANT	330
		1	CARTER D'ESSIEU OSCILLANT	332
BOUCHON DE GOULOTTE DE REMPLISSAGE D'HUILE	6G-9333	1	GOULOTTE DE REMPLISSAGE D'HUILE DE TRANSMISSION	305
		1	GOULOTTE DE REMPLISSAGE D'HUILE DE TRANSMISSION	306
BOUCHON DE VIDANGE	8M-9307	1	REFROIDISSEUR D'HUILE DE BOÎTE (ASS)	299
BOUCHON-JOINT TORIQUE	5P-4483	1	ENGRENAGE DE TRANSFERT DE RENDEMENT (ASS)	320
CHAPEAU DE VALVE	2D-2633	1	JANTE DÉMONTABLE (ASS)	343
		1	JANTE DÉMONTABLE (ASS)	344
ELEMENT HYDRAULIQUE (ENS)	1R-0719	1	FILTRE A HUILE (ASS)	316
GRAISSEUR	027-1287	1	CROISILLON ET ROULEMENT	349
GRAISSEUR (FILET 1/8-27)	3B-8489	1	CARDAN COULISSANT (ASS)	348
JOINT TORIQUE (DIA INT 91,67 MM)	8H-7521	1	ENGRENAGE DE TRANSFERT DE RENDEMENT (ASS)	320
PARE-POUSSIERE	8C-3447	1	FILTRE ET CANALISATIONS - BOÎTE DE VITESSE (ASS)	308
		1	FILTRE ET CANALISATIONS - BOÎTE DE VITESSE (ASS)	310
		1	FILTRE ET CANALISATIONS - BOÎTE DE VITESSE (ASS)	312
		1	FILTRE ET CANALISATIONS - BOÎTE DE VITESSE (ASS)	314
RENIFLARD (DÉCHARGE DE PRESSION)	9G-5127	1	GOULOTTE DE REMPLISSAGE D'HUILE DE TRANSMISSION	305
		1	GOULOTTE DE REMPLISSAGE D'HUILE DE TRANSMISSION	306
TAMIS D'ASPIRATION	4S-8598	1	ENGRENAGE DE TRANSFERT DE RENDEMENT (ASS)	320
		1	ENGRENAGE DE TRANSFERT DE RENDEMENT (ASS)	322

PIEZAS DE MANTENIMIENTO

DESCRIPCION	NUMERO DE PIEZA	CANT	SE UTILIZA EN	PAGINA
BASTIDOR Y CAJA				
CONEXIÓN DE ENGRASE (ROSCA DE 1/8-27)	3B-8489	2	ENGANCHE ARTICULADO (GR)	404
EQUIPO DE SERVICIO Y SUMINISTROS				
CANDADO (GR)	5P-8502	6	TRABA CONTRA EL VANDALISMO (GR)	855
LLAVE	5P-8500	1	TRABA CONTRA EL VANDALISMO (GR)	855
IMPLEMENTOS				
CONEXIÓN DE ENGRASE (ROSCA DE 1/8-27)	3B-8489	6	CONTROL DEL CUCHARÓN (GR)	652
MOTOR BÁSICO				
JUEGO DE CORREAS TRAPEZOIDALES (INCLUYE 2 CORREAS)	2W-8952	1	POLEA DEL MANDO DE VENTILADOR (GR)	46
POLEA DEL MANDO DEL VENTILADOR	2W-8493	1	POLEA DEL MANDO DE VENTILADOR (GR)	46
TAPÓN DE DRENAJE	9X-6451	2	CÁRTER - COLECTOR DEL (GR)	42
TAPÓN (ROSCA 7/16-20)	9S-4190	1	CÁRTER - COLECTOR DEL (GR)	42

PIEZAS DE MANTENIMIENTO

DESCRIPCION	NUMERO DE PIEZA	CANT	SE UTILIZA EN	PAGINA
PUESTO DEL OPERADOR				
CANDADO (GR)	5P-8502	1	CONFIGURACIÓN DE CONVERSIÓN - SIN CABINA	720
		1	PROTECTOR CONTRA EL VANDALISMO (GR)	734
		3	PROTECTOR CONTRA EL VANDALISMO (GR)	735
CINTURÓN DE SEGURIDAD (GR)	8Y-4030	1	ATADURA (GR)	828
CINTURÓN DE SEGURIDAD (GR) (RETRACTIL)	8Y-3792	1	SUSPENSIÓN - ASIENTO CON (GR)	816
		1	SUSPENSIÓN - ASIENTO CON (GR)	817
CORREA TRAPEZOIDAL	7C-8236	1	COMPRESOR DE REFRIGERANTE (GR)	714
FILTRO	7R-2258	1	PRESURIZADOR (GR)	793
		1	PRESURIZADOR (GR)	797
FILTRO (CONJ)	2V-0036	1	PRESURIZADOR (GR)	792
		1	PRESURIZADOR (GR)	796
FUSIBLE (10 A)	3K-8782	1	ASIENTO AJUSTABLE (GR)	812
		1	BOCINA ELÉCTRICA (GR)	741
HOJA DE LIMPIAPARABRISAS (CONJ)	6V-6864	1	LIMPIAPARABRISAS DE LA VENTANA (GR)	840
		1	LIMPIAPARABRISAS DE LA VENTANA (GR)	842
		2	LIMPIAPARABRISAS DE LA VENTANA (GR)	844
		2	LIMPIAPARABRISAS DE LA VENTANA (GR)	846
JUEGO DE ESCOBILLAS	9G-0398	1	ACONDICIONADOR DE AIRE (GR)	681
LÁMPARA MINIATURA	7N-9943	1	CABINA (GR)	694
		1	CABINA (GR)	710
	7N-9967	3	TABLERO DE INSTRUMENTOS (GR)	768
LÁMPARA MINIATURA (28 VOLTIOS)	7N-5876	1	ASIENTO AJUSTABLE (GR)	812
		4	PRESURIZADOR (GR)	793
		4	PRESURIZADOR (GR)	797
LÁMPARA (28 VOLTIOS)	7N-5876	12	TABLERO DE INSTRUMENTOS (GR)	776
	9W-2111	1	TABLERO DE INSTRUMENTOS (GR)	776
LLAVE	5P-8500	2	CONFIGURACIÓN DE CONVERSIÓN - SIN CABINA	720
		1	PROTECTOR CONTRA EL VANDALISMO (GR)	734
		2	PROTECTOR CONTRA EL VANDALISMO (GR)	735
LLAVE - MANIJA	3V-7476	1	PLATAFORMA (GR)	780
		1	PLATAFORMA (GR)	782
		1	PLATAFORMA (GR)	784
REJILLA DE FILTRO	8T-5913	2	TANQUE DEL LAVAPARABRISAS (GR)	827
TAPA	3W-6398	1	TANQUE DEL LAVAPARABRISAS (GR)	827
TAPA DE PORTAFUSIBLES	7N-2867	1	ASIENTO AJUSTABLE (GR)	812
		1	BOCINA ELÉCTRICA (GR)	741

PIEZAS DE MANTENIMIENTO

DESCRIPCION	NUMERO DE PIEZA	CANT	SE UTILIZA EN	PAGINA
SISTEMA DE AIRE DE ADMISIÓN Y ESCAPE				
ELEMENTO DE FILTRO	7M-1674	1	AIRE - TUBERÍAS DE (GR)	102
ELEMENTO PRIMARIO (CONJ)	7W-5317	1	FILTRO DE AIRE (GR)	93
ELEMENTO SECUNDARIO	9S-9972	1	FILTRO DE AIRE (GR)	93
EMPAQUETADURA	9M-8513	1	FILTRO DE AIRE (GR)	93
INDICADOR DE SERVICIO DEL FILTRO DE AIRE	1W-0613	1	FILTRO DE AIRE (GR)	94
SISTEMA DE COMBUSTIBLE				
CANDADO (GR)	5P-8502	1	TAPA PROTECTORA (GR)	109
COLADOR DEL TANQUE DE COMBUSTIBLE	9P-7121	1	COMBUSTIBLE - TANQUE DE (GR)	158
		1	COMBUSTIBLE - TANQUE DE (GR)	160
		1	COMBUSTIBLE - TANQUE DE (GR)	162
ELEMENTO DE FILTRO	4B-1663	1	COMBUSTIBLE - TANQUE DE (GR)	158
		1	COMBUSTIBLE - TANQUE DE (GR)	160
		1	COMBUSTIBLE - TANQUE DE (GR)	162
	4B-5949	1	COMBUSTIBLE - TANQUE DE (GR)	158
		1	COMBUSTIBLE - TANQUE DE (GR)	160
ELEMENTO DEL FILTRO DE COMBUSTIBLE	4B-5949	1	COMBUSTIBLE - TANQUE DE (GR)	162
	9M-2341	1	BOMBA DE CEBADO Y FILTRO PRIMARIO DE COMBUSTIBLE (GR)	150
EMPAQUETADURA (BOMBA DE CEBADO DE COMBUSTIBLE)	1P-0436	1	BOMBA DE CEBADO DE COMBUSTIBLE (GR)	148
EMPAQUETADURA (FILTRO PRIMARIO DE COMBUSTIBLE)	8H-2778	1	BOMBA DE CEBADO Y FILTRO PRIMARIO DE COMBUSTIBLE (GR)	150
FILTRO DE COMBUSTIBLE (CONJ)	1R-0750	1	FILTRO SECUNDARIO DE COMBUSTIBLE (GR)	115
LLAVE	5P-8500	2	TAPA PROTECTORA (GR)	109
PANTALLA (CONJ)	8N-6680	1	CONTROL DE LA RELACIÓN DE COMBUSTIBLE (GR)	110
TAPA DEL TANQUE DE COMBUSTIBLE (CONJ)	7T-2036	1	COMBUSTIBLE - TANQUE DE (GR)	158
	9G-6082	1	COMBUSTIBLE - TANQUE DE (GR)	160
		1	COMBUSTIBLE - TANQUE DE (GR)	162
TAPA DEL TANQUE DE FILTRO	5S-7657	1	TAPA PROTECTORA (GR)	109
TAPA DEL TUBO DE LLENADO DEL TANQUE DE COMBUSTIBLE	1P-8680	1	TAPA PROTECTORA (GR)	109
	8P-0408	1	COMBUSTIBLE - TANQUE DE (GR)	158
		1	COMBUSTIBLE - TANQUE DE (GR)	160
		1	COMBUSTIBLE - TANQUE DE (GR)	162
SISTEMA DE DIRECCIÓN				
CONEXIÓN DE ENGRASE (ROSCA DE 1/8-27)	3B-8489	2	CILINDRO DE DIRECCIÓN Y MONTAJE (GR)	469
SELLO ANULAR (94,84 MM DIAMETRO INTERIOR)	1H-8128	1	CILINDRO DE DIRECCIÓN (GR)	472
TAPA CONTRA EL POLVO	6V-0852	2	TUBERÍAS DE DIRECCIÓN (GR)	484

PIEZAS DE MANTENIMIENTO

DESCRIPCION	NUMERO DE PIEZA	CANT	SE UTILIZA EN	PAGINA
SISTEMA DE ENFRIAMIENTO				
FILTRO DE ACEITE DEL MOTOR (CONJ)	1R-0658	1	ENFRIADOR DE ACEITE DEL MOTOR Y BASE DEL FILTRO	70
FILTRO DE AGUA	4N-5834	1	BOMBA DE AGUA (GR)	78
REGULADOR	111-8011	1	REGULADOR Y CAJA (GR)	75
REGULADOR DE TEMPERATURA DEL AGUA	111-8010	1	TEMPERATURA - REGULADOR DE (GR)	92
TAPA DEL RADIADOR	6L-8617	1	RADIADOR (GR)	84
		1	RADIADOR (GR)	86
		1	RADIADOR (GR)	88
SISTEMA DE FRENOS				
RESPIRADERO	9G-5127	2	FRENO DE SERVICIO - CONTROL (GR)	456
RESPIRADERO (CONJ)	8J-5604	2	FRENO DE SERVICIO - CONTROL (GR)	450
SELLO ANULAR (34,59MM DIAMETRO INTERIOR)	5M-2057	1	VÁLVULA DE CONTROL DEL FRENO (GR)	462
SISTEMA DE LUBRICACIÓN				
RESPIRADERO DEL CÁRTER (CONJ)	2W-9162	1	RESPIRADERO (GR)	54
SELLO ANULAR (81,92MM DI)	4L-9564	1	RESPIRADERO (GR)	54
TAPA CONTRA EL POLVO	8C-3445	1	FILTRO DE ACEITE - BASE DEL (GR)	53
TAPA DEL TUBO DE LLENADO DE ACEITE (CONJ)	7S-1803	1	TUBO DE LLENADO DE ACEITE (GR)	55
SISTEMA ELECTRICO Y DE ARRANQUE				
BATERÍA (12 VOLTIOS)	9G-4232	2	BATERÍA Y CABLES (GR)	191
		2	BATERÍA Y CABLES (GR)	195
		2	BATERÍA Y CABLES (GR)	199
		2	BATERÍA Y CABLES (GR)	205
CONJUNTO DE ELEMENTO DE CALEFACCION	8W-3087	1	DESHIDRATADOR (GR)	166
		1	DESHIDRATADOR (GR)	168
DESTELLADOR	8D-6946	1	LUCES DE GIRO (GR)	232
	8V-2514	1	LUCES DE DESPLAZAMIENTO (GR)	226
		1	LUCES DE DESPLAZAMIENTO (GR)	228
DISYUNTOR (CONJ) (15 A)	6N-8589	2	GRUPO DE CABLES DE LOS INSTRUMENTOS Y ENCENDIDO	272
DISYUNTOR (CONJ) (15 A) (LUCES DE TRABAJO)	3T-2662	1	CABLES DEL PANEL DE RELES (GR)	284
		1	CABLES DEL PANEL DE RELES (GR)	286
DISYUNTOR (CONJ) (15 A) (PARADA DEL MOTOR)	6N-8589	1	CABLES DEL PANEL DE RELES (GR)	284
		1	CABLES DEL PANEL DE RELES (GR)	286
DISYUNTOR (CONJ) (80 AMP) (ALTERNADOR)	9S-4693	1	CABLES DEL PANEL DE RELES (GR)	284
		1	CABLES DEL PANEL DE RELES (GR)	286
DISYUNTOR (CONJ) (80 AMP) (PRINCIPAL)	9S-4693	1	CABLES DEL PANEL DE RELES (GR)	284
		1	CABLES DEL PANEL DE RELES (GR)	286
FUSIBLE (10 A)	3K-8782	3	CABLES DEL PANEL DE RELES (GR)	284
		4	CABLES DEL PANEL DE RELES (GR)	286

PIEZAS DE MANTENIMIENTO

DESCRIPCION	NUMERO DE PIEZA	CANT	SE UTILIZA EN	PAGINA
		8	GRUPO DE CABLES DE LOS INSTRUMENTOS Y ENCENDIDO	272
JUEGO DE CARTUCHO DE FILTRO	8V-9257	1	DESHIDRATADOR (GR)	166
		1	DESHIDRATADOR (GR)	168
JUEGO DE DESECANTE	8V-9258	1	DESHIDRATADOR (GR)	166
		1	DESHIDRATADOR (GR)	168
LÁMPARA	9X-4492	1	LUZ DE SEÑAL DE GIRO (GR)	218
		1	LUZ DE SEÑAL DE GIRO (GR)	219
	9X-4493	1	LUZ DE SEÑAL DE GIRO (GR)	217
	9X-4494	1	LUZ DE SEÑAL DE GIRO (GR)	220
		1	LUZ DE SEÑAL DE GIRO (GR)	221
	9X-7849	1	LÁMPARA DE FARO DELANTERO (GR)	215
		1	LÁMPARA DE FARO DELANTERO (GR)	216
LÁMPARA (24 VOLTIOS)(65 VATIOS)	9X-3463	1	REFLECTOR (GR)	214
LÁMPARA ((24 VOLTIOS)(65 VATIOS))	9X-3463	1	REFLECTOR (GR)	213
LENTE-ROJO	9X-3065	1	LUZ DE SEÑAL DE GIRO (GR)	219
LLAVE	8H-5306	1	DISYUNTOR (GR)	258
TAPA	9L-6770	1	CARGA - ALTERNADOR DE (GR)	176
		1	CARGA - ALTERNADOR DE (GR)	184
TAPA (ALTERNADOR)	9L-6770	1	CARGA - ALTERNADOR DE (GR)	172
		1	CARGA - ALTERNADOR DE (GR)	182
TAPA DE PORTAFUSIBLES	7N-2867	1	CABLES DEL PANEL DE RELES (GR)	284
		1	CABLES DEL PANEL DE RELES (GR)	286
	139-0178	1	GRUPO DE CABLES DE LOS INSTRUMENTOS Y ENCENDIDO	272
VIDRIO DE LOS REFLECTORES (CONJ)	9X-4174	1	REFLECTOR (GR)	213
		1	REFLECTOR (GR)	214
SISTEMA HIDRÁULICO				
CANDADO (GR)	5P-8502	1	TAPA DEL TAPÓN DEL TANQUE HIDRÁULICO (GR)	526
COLADOR (CONJ)	3D-6678	1	TANQUE Y FILTRO HIDRÁULICOS (GR)	577
ELEMENTO DE FILTRO	9J-5461	4	TANQUE Y FILTRO HIDRÁULICOS (GR)	576
ELEMENTO DE FILTRO DE ACEITE (CONJ) (HIDRAULICO)	4T-3134	4	TANQUE Y FILTRO HIDRÁULICOS (GR)	576
LLAVE	5P-8500	1	TAPA DEL TAPÓN DEL TANQUE HIDRÁULICO (GR)	526
TAPA CONTRA EL POLVO	6V-0852	1	TUBERÍAS DELANTERAS (GR)	544
		1	TUBERÍAS HIDRÁULICAS (GR)	548
		1	TUBERÍAS HIDRÁULICAS (GR)	550
		1	TUBERÍAS HIDRÁULICAS (GR)	552
	8C-3451	1	TUBERÍAS HIDRÁULICAS (GR)	548
		1	TUBERÍAS HIDRÁULICAS (GR)	550
		1	TUBERÍAS HIDRÁULICAS (GR)	552
TAPA DEL TUBO DE LLENADO	4J-3754	1	TANQUE Y FILTRO HIDRÁULICOS (GR)	576
TAPÓN DE DRENAJE	9J-7031	1	TANQUE Y FILTRO HIDRÁULICOS (GR)	577

PIEZAS DE MANTENIMIENTO

DESCRIPCION	NUMERO DE PIEZA	CANT	SE UTILIZA EN	PAGINA
TREN DE FUERZA				
CONEXIÓN DE ENGRASE	027-1287	1	CRUCETA Y COJINETE (GR)	349
CONEXIÓN DE ENGRASE (ROSCA DE 1/8-27)	3B-8489	1	JUNTA DESLIZANTE (GR)	348
ELEMENTO DEL FILTRO DE ACEITE HIDRÁULICO (CONJ)	1R-0719	1	FILTRO DE ACEITE (GR)	316
REJILLA DE SUCCIÓN	4S-8598	1	ENGRANAJE DE TRANSFERENCIA DE SALIDA	320
		1	ENGRANAJE DE TRANSFERENCIA DE SALIDA	322
RESPIRADERO (ALIVIO DE LA PRESIÓN)	9G-5127	1	TUBO DE LLENADO DE ACEITE DE LA TRANSMISIÓN (GR)	305
		1	TUBO DE LLENADO DE ACEITE DE LA TRANSMISIÓN (GR)	306
SELLO ANULAR (91,67MM DI)	8H-7521	1	ENGRANAJE DE TRANSFERENCIA DE SALIDA	320
TAPA	2D-2633	1	ARO DESMONTABLE (GR)	343
		1	ARO DESMONTABLE (GR)	344
TAPA CONTRA EL POLVO	8C-3447	1	TUBERÍAS DEL FILTRO Y LA TRANSMISIÓN (GR)	308
		1	TUBERÍAS DEL FILTRO Y LA TRANSMISIÓN (GR)	310
		1	TUBERÍAS DEL FILTRO Y LA TRANSMISIÓN (GR)	312
		1	TUBERÍAS DEL FILTRO Y LA TRANSMISIÓN (GR)	314
TAPA DEL TUBO DE LLENADO DE ACEITE	6G-9333	1	TUBO DE LLENADO DE ACEITE DE LA TRANSMISIÓN (GR)	305
		1	TUBO DE LLENADO DE ACEITE DE LA TRANSMISIÓN (GR)	306
TAPÓN	5P-4483	1	ENGRANAJE DE TRANSFERENCIA DE SALIDA	320
TAPÓN DE DRENAJE	8M-9307	1	ENFRIADOR DE ACEITE DE LA TRANSMISIÓN (GR)	299
TAPÓN MAGNÉTICO	5P-4484	1	CAJA DE EJE OSCILANTE (GR)	328
		1	CAJA DE EJE OSCILANTE (GR)	330
		1	CAJA DE EJE OSCILANTE (GR)	332
		1	CAJA DEL EJE OSCILANTE (GR)	324
		1	CAJA DEL EJE OSCILANTE (GR)	326

PEÇAS DE MANUTENÇÃO

DESCRIÇÃO	NÚMERO DE PEÇA	QUANT	UTILIZADA EM	PÁGINA
ACESSÓRIOS				
GRAXEIRA (ROSCA 1/8-27 POL)	3B-8489	6	CONTROLE DA CAÇAMBA	652
CHASSI E CARROCERIA				
GRAXEIRA (ROSCA 1/8-27 POL)	3B-8489	2	ENGATE - ARTICULAÇÃO	404
EQUIPAMENTOS DE SERVIÇO E SUPRIMENTOS				
CADEADO	5P-8502	6	CADEADO CONTRA VANDALISMO	855
CHAVE	5P-8500	1	CADEADO CONTRA VANDALISMO	855
ESTAÇÃO DO OPERADOR				
CADEADO	5P-8502	1	GR. DE CONVERSÃO - SEM CABINE	720
		1	PROTETOR CONTRA VANDALISMO	734
		3	PROTETOR CONTRA VANDALISMO	735
CHAVE	5P-8500	2	GR. DE CONVERSÃO - SEM CABINE	720
		1	PROTETOR CONTRA VANDALISMO	734
		2	PROTETOR CONTRA VANDALISMO	735
CHAVE - ALAVANCA	3V-7476	1	PLATAFORMA	780
		1	PLATAFORMA	782
		1	PLATAFORMA	784
CINTO DE SEGURANÇA	8Y-4030	1	CABO DO CINTO DE SEGURANÇA	828
CINTO DE SEGURANÇA (RETRÁTIL)	8Y-3792	1	ASSENTO COM SUSPENSÃO	816
		1	ASSENTO COM SUSPENSÃO	817
CORREIA EM V	7C-8236	1	COMPRESSOR DE REFRIGERANTE	714
FILTRO	2V-0036	1	PRESSURIZADOR	792
		1	PRESSURIZADOR	796
	7R-2258	1	PRESSURIZADOR	793
		1	PRESSURIZADOR	797
FILTRO - TELA	8T-5913	2	TANQUE - LAVADOR DE JANELA	827
FUSÍVEL (10 A)	3K-8782	1	ASSENTO AJUSTÁVEL	812
		1	BUZINA ELÉTRICA	741
JOGO DE ESCOVAS DE MOTOR	9G-0398	1	CONDICIONADOR DE AR	681
LÂMINA DO LIMPADOR DE PÁRA-BRISA	6V-6864	1	LIMPADOR DO VIDRO	840
		1	LIMPADOR DO VIDRO	842
		2	LIMPADOR DO VIDRO	844
		2	LIMPADOR DO VIDRO	846
LÂMPADA - MINIATURA	7N-9943	1	CABINE	694
		1	CABINE	710
	7N-9967	3	PAINEL DE INSTRUMENTOS	768
LÂMPADA - MINIATURA (28 V)	7N-5876	1	ASSENTO AJUSTÁVEL	812
		4	PRESSURIZADOR	793
		4	PRESSURIZADOR	797
LÂMPADA (28 V)	7N-5876	12	PAINEL DE INSTRUMENTOS	776
	9W-2111	1	PAINEL DE INSTRUMENTOS	776
TAMPA	3W-6398	1	TANQUE - LAVADOR DE JANELA	827
TAMPA - PORTA-FUSÍVEL	7N-2867	1	ASSENTO AJUSTÁVEL	812
		1	BUZINA ELÉTRICA	741
MOTOR BÁSICO				
BUJÃO - ANEL O (7/16-20 THD)	9S-4190	1	CÁRTER DO ÓLEO DO MOTOR	42
BUJÃO DO DRENO	9X-6451	2	CÁRTER DO ÓLEO DO MOTOR	42
JOGO DE CORREIAS EM V (INCLUI 2 CORREIAS)	2W-8952	1	POLIA - ACIONADOR DO VENTILADOR	46
POLIA - COMANDO DO VENTILADOR	2W-8493	1	POLIA - ACIONADOR DO VENTILADOR	46

PEÇAS DE MANUTENÇÃO

DESCRIÇÃO	NÚMERO DE PEÇA	QUANT	UTILIZADA EM	PÁGINA
SISTEMA DA ADMISSÃO DE AR E DE ESCAPE				
ELEMENTO - FILTRANTE	7M-1674	1	TUBOS - AR	102
ELEMENTO - PRIMÁRIO	7W-5317	1	PURIFICADOR DE AR	93
ELEMENTO - SECUNDÁRIO	9S-9972	1	PURIFICADOR DE AR	93
INDICADOR - LIMPEZA DO FILTRO DE AR	1W-0613	1	PURIFICADOR DE AR	94
JUNTA	9M-8513	1	PURIFICADOR DE AR	93
SISTEMA DE ARREFECIMENTO				
FILTRO - ÁGUA	4N-5834	1	BOMBA DE ÁGUA	78
FILTRO - ÓLEO DO MOTOR	1R-0658	1	ARREFECEDOR DE ÓLEO DO MOTOR E BASE DO FILTRO	70
REGULADOR	111-8011	1	TERMOSTATO / REGULADOR DE TEMPERATURA	75
REGULADOR DE TEMPERATURA DA ÁGUA	111-8010	1	TERMOSTATO	92
TAMPA - RADIADOR	6L-8617	1	RADIADOR	84
		1	RADIADOR	86
		1	RADIADOR	88
SISTEMA DE COMBUSTÍVEL				
CADEADO	5P-8502	1	TAMPA PROTETORA	109
CHAVE	5P-8500	2	TAMPA PROTETORA	109
ELEMENTO - FILTRANTE	4B-1663	1	TANQUE DE COMBUSTÍVEL	158
		1	TANQUE DE COMBUSTÍVEL	160
		1	TANQUE DE COMBUSTÍVEL	162
	4B-5949	1	TANQUE DE COMBUSTÍVEL	158
		1	TANQUE DE COMBUSTÍVEL	160
ELEMENTO - FILTRO DE COMBUSTÍVEL	9M-2341	1	BOMBA DE ESCORVA DO COMBUSTÍVEL E DO FILTRO PRIMÁRIO	150
ELEMENTO DO FILTRO DE COMBUSTÍVEL	4B-5949	1	TANQUE DE COMBUSTÍVEL	162
FILTRO - COMBUSTÍVEL	1R-0750	1	FILTRO SECUNDÁRIO DE COMBUSTÍVEL	115
FILTRO - TAMPA DO TANQUE	5S-7657	1	TAMPA PROTETORA	109
JUNTA (BOMBA DE ESCORVA DE COMBUSTÍVEL)	1P-0436	1	BOMBA DE ESCORVA DO COMBUSTÍVEL	148
JUNTA (FILTRO DE COMBUSTÍVEL PRIMÁRIO)	8H-2778	1	BOMBA DE ESCORVA DO COMBUSTÍVEL E DO FILTRO PRIMÁRIO	150
PENEIRA DO TANQUE DE COMBUSTÍVEL	9P-7121	1	TANQUE DE COMBUSTÍVEL	158
		1	TANQUE DE COMBUSTÍVEL	160
		1	TANQUE DE COMBUSTÍVEL	162
TAMPA DO BOCAL DE ENCHIMENTO DO TANQUE DE COMBUSTÍVEL	1P-8680	1	TAMPA PROTETORA	109
	8P-0408	1	TANQUE DE COMBUSTÍVEL	158
		1	TANQUE DE COMBUSTÍVEL	160
		1	TANQUE DE COMBUSTÍVEL	162
TAMPA DO TANQUE DE COMBUSTÍVEL	7T-2036	1	TANQUE DE COMBUSTÍVEL	158
	9G-6082	1	TANQUE DE COMBUSTÍVEL	160
		1	TANQUE DE COMBUSTÍVEL	162
TELA FILTRANTE	8N-6680	1	LIMITADOR DE COMBUSTÍVEL	110

PEÇAS DE MANUTENÇÃO

DESCRIÇÃO	NÚMERO DE PEÇA	QUANT	UTILIZADA EM	PÁGINA
SISTEMA DE DIREÇÃO				
GRAXEIRA (ROSCA 1/8-27 POL)	3B-8489	2	CILINDRO DE DIREÇÃO E MONTAGEM	469
RETENTOR DE ANEL-O (94,84MM DE DIÂMETRO INTERNO)	1H-8128	1	CILINDRO DA DIREÇÃO	472
TAMPA CONTRA POEIRA	6V-0852	2	TUBOS - DIREÇÃO	484
SISTEMA DE FREIO				
RESPIRO	8J-5604	2	CONTROLE DO FREIO DE SERVIÇO	450
	9G-5127	2	CONTROLE DO FREIO DE SERVIÇO	456
RETENTOR DE ANEL-O (D.I. 34,59 MM)	5M-2057	1	VÁLVULA DE CONTROLE DOS FREIOS	462
SISTEMA DE LUBRIFICAÇÃO				
RESPIRO DO CÁRTER	2W-9162	1	RESPIRO	54
RETENTOR DE ANEL-O (DIÂMETRO INTERNO DE 81,92MM)	4L-9564	1	RESPIRO	54
TAMPA - BOCAL DE ENCHIMENTO DE ÓLEO	7S-1803	1	BOCAL DE ENCHIMENTO DE ÓLEO DO MOTOR	55
TAMPA CONTRA POEIRA	8C-3445	1	BASE DO FILTRO DE ÓLEO	53
SISTEMA ELÉTRICO E DE PARTIDA				
BATERIA (12 V)	9G-4232	2	BATERIA E CABOS / FIOS ELÉTRICOS	191
		2	BATERIA E CABOS / FIOS ELÉTRICOS	195
		2	BATERIA E CABOS / FIOS ELÉTRICOS	199
		2	BATERIA E CABOS / FIOS ELÉTRICOS	205
CHAVE	8H-5306	1	CHAVE GERAL	258
DISJUNTOR AUTOMÁTICO DE CIRCUITO (15 A)	6N-8589	2	CABOS/FIOS ELÉTRICOS - INSTRUMENTOS E IGNICÃO	272
DISJUNTOR AUTOMÁTICO DE CIRCUITO (15 A) (ILUMINAÇÃO DE OPERAÇÃO)	3T-2662	1	CABOS/FIOS ELÉTRICOS - PAINEL DE RELÉ	284
		1	CABOS/FIOS ELÉTRICOS - PAINEL DE RELÉ	286
DISJUNTOR AUTOMÁTICO DE CIRCUITO (15 A) (PARADA DO MOTOR)	6N-8589	1	CABOS/FIOS ELÉTRICOS - PAINEL DE RELÉ	284
		1	CABOS/FIOS ELÉTRICOS - PAINEL DE RELÉ	286
DISJUNTOR AUTOMÁTICO DE CIRCUITO (80 A) (ALTERNADOR)	9S-4693	1	CABOS/FIOS ELÉTRICOS - PAINEL DE RELÉ	284
		1	CABOS/FIOS ELÉTRICOS - PAINEL DE RELÉ	286
DISJUNTOR AUTOMÁTICO DE CIRCUITO (80 A) (PRINCIPAL)	9S-4693	1	CABOS/FIOS ELÉTRICOS - PAINEL DE RELÉ	284
		1	CABOS/FIOS ELÉTRICOS - PAINEL DE RELÉ	286
ELEMENTO - AQUECEDOR	8W-3087	1	SECADOR DE AR	166
		1	SECADOR DE AR	168
FUSÍVEL (10 A)	3K-8782	8	CABOS/FIOS ELÉTRICOS - INSTRUMENTOS E IGNICÃO	272
		3	CABOS/FIOS ELÉTRICOS - PAINEL DE RELÉ	284
		4	CABOS/FIOS ELÉTRICOS - PAINEL DE RELÉ	286

PEÇAS DE MANUTENÇÃO

DESCRIÇÃO	NÚMERO DE PEÇA	QUANT	UTILIZADA EM	PÁGINA
JOGO DE CARTUCHO DE DESSECANTE	8V-9258	1	SECADOR DE AR	166
		1	SECADOR DE AR	168
JOGO DE CARTUCHO DE FILTRO	8V-9257	1	SECADOR DE AR	166
		1	SECADOR DE AR	168
LÂMPADA	9X-4492	1	LÂMPADA - SINALIZAÇÃO	218
		1	LÂMPADA - SINALIZAÇÃO	219
	9X-4493	1	LÂMPADA - SINALIZAÇÃO	217
	9X-4494	1	LÂMPADA - SINALIZAÇÃO	220
		1	LÂMPADA - SINALIZAÇÃO	221
	9X-7849	1	FAROL DIANTEIRO	215
		1	FAROL DIANTEIRO	216
LÂMPADA (24 VOLTS)(65 WATTS)	9X-3463	1	LÂMPADA - FAROL	213
		1	LÂMPADA - FAROL	214
LENTE VERMELHA	9X-3065	1	LÂMPADA - SINALIZAÇÃO	219
LENTES - LUZES DE TRABALHO	9X-4174	1	LÂMPADA - FAROL	213
		1	LÂMPADA - FAROL	214
LUZ INTERMITENTE	8D-6946	1	ILUMINAÇÃO - SINALIZAÇÃO	232
	8V-2514	1	ILUMINAÇÃO - RODOVIÁRIA	226
		1	ILUMINAÇÃO - RODOVIÁRIA	228
TAMPA	9L-6770	1	ALTERNADOR DE CORRENTE	176
		1	ALTERNADOR DE CORRENTE	184
TAMPA - PORTA-FUSÍVEL	7N-2867	1	CABOS/FIOS ELÉTRICOS - PAINEL DE RELÉ	284
		1	CABOS/FIOS ELÉTRICOS - PAINEL DE RELÉ	286
	139-0178	1	CABOS/FIOS ELÉTRICOS - INSTRUMENTOS E IGNICÃO	272
TAMPA (ALTERNADOR)	9L-6770	1	ALTERNADOR DE CORRENTE	172
		1	ALTERNADOR DE CORRENTE	182
SISTEMA HIDRÁULICO				
BUJÃO DO DRENO	9J-7031	1	TANQUE HIDRÁULICO E FILTRO	577
CADEADO	5P-8502	1	TAMPA - TANQUE HIDRÁULICO	526
CHAVE	5P-8500	1	TAMPA - TANQUE HIDRÁULICO	526
ELEMENTO - FILTRANTE	9J-5461	4	TANQUE HIDRÁULICO E FILTRO	576
ELEMENTO FILTRANTE - ÓLEO (HIDRÁULICO)	4T-3134	4	TANQUE HIDRÁULICO E FILTRO	576
TAMPA - BOCAL DE ENCHIMENTO	4J-3754	1	TANQUE HIDRÁULICO E FILTRO	576
TAMPA CONTRA POEIRA	6V-0852	1	TUBOS - DIANTEIROS	544
		1	TUBOS - ÓLEO HIDRÁULICO	548
		1	TUBOS - ÓLEO HIDRÁULICO	550
		1	TUBOS - ÓLEO HIDRÁULICO	552
	8C-3451	1	TUBOS - ÓLEO HIDRÁULICO	548
		1	TUBOS - ÓLEO HIDRÁULICO	550
		1	TUBOS - ÓLEO HIDRÁULICO	552
TELA FILTRANTE	3D-6678	1	TANQUE HIDRÁULICO E FILTRO	577

PEÇAS DE MANUTENÇÃO

DESCRIÇÃO	NÚMERO DE PEÇA	QUANT	UTILIZADA EM	PÁGINA
TREM DE FORÇA				
BUJÃO - ANEL O	5P-4483	1	ENGRENAGENS DE SAÍDA DE TRANSFERÊNCIA	320
BUJÃO DO DRENO	8M-9307	1	ARREFECEDOR DE ÓLEO DA TRANSMISSÃO	299
BUJÃO MAGNÉTICO	5P-4484	1	CAIXA - EIXO FIXO	324
		1	CAIXA - EIXO FIXO	326
		1	CAIXA - EIXO OSCILANTE	328
		1	CAIXA - EIXO OSCILANTE	330
		1	CAIXA - EIXO OSCILANTE	332
ELEMENTO - HIDRÁULICO	1R-0719	1	FILTRO - ÓLEO	316
GRAXEIRA	027-1287	1	CRUZETA E MANCAL	349
GRAXEIRA (ROSCA 1/8-27 POL)	3B-8489	1	JUNTA CORREDIÇA	348
RESPIRO (ALÍVIO DE PRESSÃO)	9G-5127	1	BOCAL DE ENCHIMENTO DE ÓLEO DO TREM DE FORÇA	305
		1	BOCAL DE ENCHIMENTO DE ÓLEO DO TREM DE FORÇA	306
RETENTOR DE ANEL-O (91,67 MM DE DIÂMETRO INTERNO)	8H-7521	1	ENGRENAGENS DE SAÍDA DE TRANSFERÊNCIA	320
TAMPA - BOCAL DE ENCHIMENTO DE ÓLEO	6G-9333	1	BOCAL DE ENCHIMENTO DE ÓLEO DO TREM DE FORÇA	305
		1	BOCAL DE ENCHIMENTO DE ÓLEO DO TREM DE FORÇA	306
TAMPA CONTRA POEIRA	8C-3447	1	FILTRO E TUBOS - TRANSMISSÃO	308
		1	FILTRO E TUBOS - TRANSMISSÃO	310
		1	FILTRO E TUBOS - TRANSMISSÃO	312
		1	FILTRO E TUBOS - TRANSMISSÃO	314
TAMPA DA VÁLVULA	2D-2633	1	ARO DESMONTÁVEL	343
		1	ARO DESMONTÁVEL	344
TELA DE SUCÇÃO	4S-8598	1	ENGRENAGENS DE SAÍDA DE TRANSFERÊNCIA	320
		1	ENGRENAGENS DE SAÍDA DE TRANSFERÊNCIA	322

WARTUNGSTEILE

BESCHREIBUNG	ERSATZTEIL-NUMMER	MENGE	VERWENDET IN	SEITE
ARBEITSGERÄTE				
SCHMIERNIPPEL (1/8-27-GEWINDE)	3B-8489	6	SCHAUFELSTEUERUNG	652
BREMSSYSTEM				
ENTLÜFTER	8J-5604	2	BREMSGESTÄNGE	450
	9G-5127	2	BREMSGESTÄNGE	456
O-RING-DICHTUNG (34,59 MM ID)	5M-2057	1	BREMSSTEUERVENTIL	462
ELEKTRISCHE ANLAGE U. STARTSYSTEM				
ARBEITSSCHEINWERFERLINSE	9X-4174	1	ARBEITSLEUCHTEN	213
		1	ARBEITSLEUCHTEN	214
BATTERIE (12 V)	9G-4232	2	BATTERIE UND VERDRAHTUNG	191
		2	BATTERIE UND VERDRAHTUNG	195
		2	BATTERIE UND VERDRAHTUNG	199
		2	BATTERIE UND VERDRAHTUNG	205
BLINKLEUCHTEN	8D-6946	1	BLINKERLEUCHTEN	232
	8V-2514	1	BELEUCHTUNGSANLAGE (STRASSENAUSRÜSTUNG)	226
		1	BELEUCHTUNGSANLAGE (STRASSENAUSRÜSTUNG)	228
FILTEREINSATZ	8V-9257	1	LUFTTROCKNER	166
		1	LUFTTROCKNER	168
HEIZUNGSELEMENT	8W-3087	1	LUFTTROCKNER	166
		1	LUFTTROCKNER	168
KAPPE	9L-6770	1	DREHSTROMGENERATOR	176
		1	DREHSTROMGENERATOR	184
KAPPE (DREHSTROMGENERATOR)	9L-6770	1	DREHSTROMGENERATOR	172
		1	DREHSTROMGENERATOR	182
LEUCHTE	9X-4492	1	BLINKLEUCHTE	218
		1	BLINKLEUCHTE	219
	9X-4493	1	BLINKLEUCHTE	217
	9X-4494	1	BLINKLEUCHTE	220
		1	BLINKLEUCHTE	221
	9X-7849	1	FRONTSCHEINWERFER	215
		1	FRONTSCHEINWERFER	216
LEUCHTE (24 V)(65 W)	9X-3463	1	ARBEITSLEUCHTEN	213
		1	ARBEITSLEUCHTEN	214
LINSE - ROT	9X-3065	1	BLINKLEUCHTE	219
SCHLÜSSEL	8H-5306	1	TRENNSCHALTER	258
SICHERUNG (10 A)	3K-8782	8	INSTRUMENTEN- UND ZÜNDVERDRAHTUNG	272
		3	RELAISTAFELVERDRAHTUNG	284
		4	RELAISTAFELVERDRAHTUNG	286
SICHERUNGSHALTERKAPPE	7N-2867	1	RELAISTAFELVERDRAHTUNG	284
		1	RELAISTAFELVERDRAHTUNG	286
	139-0178	1	INSTRUMENTEN- UND ZÜNDVERDRAHTUNG	272
TROCKENMITTEL - FÜLLSATZ	8V-9258	1	LUFTTROCKNER	166
		1	LUFTTROCKNER	168
UNTERBRECHER (15 A)	6N-8589	2	INSTRUMENTEN- UND ZÜNDVERDRAHTUNG	272
UNTERBRECHER (15 A) (FAHRSCHEINWERFER)	3T-2662	1	RELAISTAFELVERDRAHTUNG	284
		1	RELAISTAFELVERDRAHTUNG	286

BESCHREIBUNG	ERSATZTEIL-NUMMER	MENGE	VERWENDET IN	SEITE
UNTERBRECHER (15 A) (MOTORABSTELLUNG)	6N-8589	1	RELAISTAFELVERDRAHTUNG	284
		1	RELAISTAFELVERDRAHTUNG	286
UNTERBRECHER (80 A) (DREHSTROMGENERATOR)	9S-4693	1	RELAISTAFELVERDRAHTUNG	284
		1	RELAISTAFELVERDRAHTUNG	286
UNTERBRECHER (80 A) (HAUPTUNTERBRECHER)	9S-4693	1	RELAISTAFELVERDRAHTUNG	284
		1	RELAISTAFELVERDRAHTUNG	286
FAHRERHAUS				
FILTER	7R-2258	1	FAHRERHAUSBELÜFTUNG	793
		1	FAHRERHAUSBELÜFTUNG	797
FILTERSATZ	2V-0036	1	FAHRERHAUSBELÜFTUNG	792
		1	FAHRERHAUSBELÜFTUNG	796
FILTERSIEB	8T-5913	2	SCHEIBENWASCHMITTELBEHÄLTER	827
KAPPE	3W-6398	1	SCHEIBENWASCHMITTELBEHÄLTER	827
KEILRIEMEN	7C-8236	1	KÄLTEMITTELKOMPRESSOR	714
LEUCHTE (28 V)	7N-5876	12	INSTRUMENTENTAFEL	776
	9W-2111	1	INSTRUMENTENTAFEL	776
MINIATURLEUCHTE	7N-9943	1	FAHRERHAUS	694
		1	FAHRERHAUS	710
	7N-9967	3	INSTRUMENTENTAFEL	768
MINIATURLEUCHTE (28 V)	7N-5876	4	FAHRERHAUSBELÜFTUNG	793
		4	FAHRERHAUSBELÜFTUNG	797
		1	FAHRERSITZ, VERSTELLBAR	812
MOTORBÜRSTENSATZ	9G-0398	1	KLIMAANLAGE	681
SCHEIBENWISCHERBLATT	6V-6864	1	SCHEIBENWISCHER	840
		1	SCHEIBENWISCHER	842
		2	SCHEIBENWISCHER	844
		2	SCHEIBENWISCHER	846
SCHLÜSSEL	5P-8500	1	SCHUTZVERKLEIDUNG	734
		2	SCHUTZVERKLEIDUNG	735
		2	UMBAUSATZ - OHNE FAHRERHAUS	720
SCHLÜSSELGRIFF	3V-7476	1	PLATTFORM	780
		1	PLATTFORM	782
		1	PLATTFORM	784
SICHERHEITSGURT	8Y-4030	1	HALTESEIL	828
SICHERHEITSGURT ((AUTOMATIKSICHERHEITSGURT))	8Y-3792	1	SCHWINGSITZ	816
		1	SCHWINGSITZ	817
SICHERUNG (10 A)	3K-8782	1	FAHRERSITZ, VERSTELLBAR	812
		1	WARNHORN, ELEKTR.	741
SICHERUNGSHALTERKAPPE	7N-2867	1	FAHRERSITZ, VERSTELLBAR	812
		1	WARNHORN, ELEKTR.	741
VORHÄNGESCHLOSS	5P-8502	1	SCHUTZVERKLEIDUNG	734
		3	SCHUTZVERKLEIDUNG	735
		1	UMBAUSATZ - OHNE FAHRERHAUS	720

WARTUNGSTEILE

BESCHREIBUNG	ERSATZTEIL-NUMMER	MENGE	VERWENDET IN	SEITE
HYDRAULIKSYSTEM				
ABLASSSTOPFEN	9J-7031	1	HYDRAULIKTANK UND SCHMIERFILTER	577
EINFÜLLSTUTZENKAPPE	4J-3754	1	HYDRAULIKTANK UND SCHMIERFILTER	576
FILTER	9J-5461	4	HYDRAULIKTANK UND SCHMIERFILTER	576
FILTERSIEB	3D-6678	1	HYDRAULIKTANK UND SCHMIERFILTER	577
ÖLFILTERELEMENT (HYDRAULISCH)	4T-3134	4	HYDRAULIKTANK UND SCHMIERFILTER	576
SCHLÜSSEL	5P-8500	1	ZUGANGSKLAPPE - HYDRAULIKTANKKAPPE	526
STAUBKAPPE	6V-0852	1	HYDRAULIKLEITUNGEN	548
		1	HYDRAULIKLEITUNGEN	550
		1	HYDRAULIKLEITUNGEN	552
		1	LEITUNGEN, VORNE	544
	8C-3451	1	HYDRAULIKLEITUNGEN	548
		1	HYDRAULIKLEITUNGEN	550
		1	HYDRAULIKLEITUNGEN	552
VORHÄNGESCHLOSS	5P-8502	1	ZUGANGSKLAPPE - HYDRAULIKTANKKAPPE	526
KRAFTSTOFFSYSTEM				
DICHTUNG (KRAFTSTOFFENTLÜFTUNGSPUMPE)	1P-0436	1	KRAFTSTOFF-ENTLÜFTUNGSPUMPE	148
DICHTUNG (KRAFTSTOFFHAUPTFILTER)	8H-2778	1	KRAFTSTOFFENTLÜFTUNGSPUMPE UND -HAUPTFILTER	150
FILTER	4B-1663	1	KRAFTSTOFFTANK	158
		1	KRAFTSTOFFTANK	160
		1	KRAFTSTOFFTANK	162
	4B-5949	1	KRAFTSTOFFTANK	158
		1	KRAFTSTOFFTANK	160
KRAFTSTOFFILTER	1R-0750	1	KRAFTSTOFFSICHERHEITSFILTER	115
	4B-5949	1	KRAFTSTOFFTANK	162
	9M-2341	1	KRAFTSTOFFENTLÜFTUNGSPUMPE UND -HAUPTFILTER	150
KRAFTSTOFFTANK-SIEBEINSATZ	9P-7121	1	KRAFTSTOFFTANK	158
		1	KRAFTSTOFFTANK	160
		1	KRAFTSTOFFTANK	162
KRAFTSTOFFTANKKAPPE	1P-8680	1	SCHUTZKAPPE	109
	5S-7657	1	SCHUTZKAPPE	109
	7T-2036	1	KRAFTSTOFFTANK	158
	8P-0408	1	KRAFTSTOFFTANK	158
		1	KRAFTSTOFFTANK	160
		1	KRAFTSTOFFTANK	162
	9G-6082	1	KRAFTSTOFFTANK	160
		1	KRAFTSTOFFTANK	162
SCHLÜSSEL	5P-8500	2	SCHUTZKAPPE	109
SIEB	8N-6680	1	KRAFTSTOFFGEMISCHREGLER	110
VORHÄNGESCHLOSS	5P-8502	1	SCHUTZKAPPE	109

WARTUNGSTEILE

BESCHREIBUNG	ERSATZTEIL-NUMMER	MENGE	VERWENDET IN	SEITE
KRAFTÜBERTRAGUNG				
ABLASSSTOPFEN	8M-9307	1	GETRIEBEÖLKÜHLER	299
ANSAUGSIEB	4S-8598	1	VERTEILERGETRIEBEANTRIEB	320
		1	VERTEILERGETRIEBEANTRIEB	322
ENTLÜFTER (DRUCKBEGRENZUNG)	9G-5127	1	GETRIEBEÖLFÜLLSTUTZEN	305
		1	GETRIEBEÖLFÜLLSTUTZEN	306
HYDRAULIKELEMENT	1R-0719	1	ÖLFILTER	316
MAGNETSTOPFEN	5P-4484	1	GEHÄUSE - PENDELACHSE	328
		1	GEHÄUSE - PENDELACHSE	330
		1	GEHÄUSE - PENDELACHSE	332
		1	GEHÄUSE - STARRACHSE	324
		1	GEHÄUSE - STARRACHSE	326
O-RING-DICHTUNG (91,67 MM INNENDURCHMESSER)	8H-7521	1	VERTEILERGETRIEBEANTRIEB	320
O-RING-STOPFEN	5P-4483	1	VERTEILERGETRIEBEANTRIEB	320
ÖLEINFÜLLKAPPE	6G-9333	1	GETRIEBEÖLFÜLLSTUTZEN	305
		1	GETRIEBEÖLFÜLLSTUTZEN	306
SCHMIERNIPPEL	027-1287	1	KREUZGELENK UND LAGER	349
SCHMIERNIPPEL (1/8-27-GEWINDE)	3B-8489	1	ANTRIEBSWELLEN-KEILVERZAHNUNG	348
STAUBKAPPE	8C-3447	1	GETRIEBEFILTER UND -LEITUNGEN	308
		1	GETRIEBEFILTER UND -LEITUNGEN	310
		1	GETRIEBEFILTER UND -LEITUNGEN	312
		1	GETRIEBEFILTER UND -LEITUNGEN	314
VENTILKAPPE	2D-2633	1	FELGE (TEILBAR)	343
		1	FELGE (TEILBAR)	344
KÜHLSYSTEM				
KÜHLERKAPPE	6L-8617	1	KÜHLER	84
		1	KÜHLER	86
		1	KÜHLER	88
ÖLFILTER	1R-0658	1	MOTORÖLKÜHLER UND FILTERSOCKEL	70
REGULATOR	111-8011	1	KÜHLWASSER-TEMPERATURREGLER UND GEHÄUSE	75
WASSERFILTER	4N-5834	1	KÜHLWASSERPUMPE	78
WASSERTEMPERATURREGLER	111-8010	1	TEMPERATURREGLER	92
LENKSYSTEM				
O-RING-DICHTUNG (94,84 MM ID)	1H-8128	1	LENKZYLINDER	472
SCHMIERNIPPEL (1/8-27-GEWINDE)	3B-8489	2	LENKZYLINDER UND AUFHÄNGUNG	469
STAUBKAPPE	6V-0852	2	LENKÖLLEITUNGEN	484
LUFTANSAUG- UND ABGASSYSTEM				
DICHTUNG	9M-8513	1	LUFTREINIGER	93
FILTER	7M-1674	1	DRUCKLUFTLEITUNGEN	102
HAUPTFILTER	7W-5317	1	LUFTREINIGER	93
LUFTFILTER-WARTUNGSANZEIGE	1W-0613	1	LUFTREINIGER	94
SICHERHEITSFILTER	9S-9972	1	LUFTREINIGER	93

WARTUNGSTEILE

BESCHREIBUNG	ERSATZTEIL-NUMMER	MENGE	VERWENDET IN	SEITE
MOTOR (GRUNDAUSFÜHRUNG)				
ABLASSSTOPFEN	9X-6451	2	ÖLWANNE	42
KEILRIEMENSATZ (EINSCHL. 2 RIEMEN)	2W-8952	1	LÜFTERRIEMENSCHEIBE	46
LÜFTERRIEMENSCHEIBE	2W-8493	1	LÜFTERRIEMENSCHEIBE	46
O-RING-STOPFEN (7/16-20 GEWINDE)	9S-4190	1	ÖLWANNE	42
RAHMEN UND FAHRGESTELL				
SCHMIERNIPPEL (1/8-27-GEWINDE)	3B-8489	2	KNICKGELENK-ANHÄNGUNG	404
SCHMIERSYSTEM				
KURBELGEHÄUSEENTLÜFTER	2W-9162	1	ENTLÜFTER	54
O-RING-DICHTUNG (81,92 MM ID)	4L-9564	1	ENTLÜFTER	54
ÖLEINFÜLLSTUTZEN	7S-1803	1	MOTORÖLEINFÜLLSTUTZEN	55
STAUBKAPPE	8C-3445	1	ÖLFILTERSOCKEL	53
WARTUNGSAUSRÜSTUNG UND -ZUBEHÖR				
SCHLÜSSEL	5P-8500	1	VORHÄNGESCHLOSS	855
VORHÄNGESCHLOSS	5P-8502	6	VORHÄNGESCHLOSS	855

INDEX

Name	Page
A	
ACTUATOR GP-BRAKE	426
ACTUATOR GP-PARKING BRAKE	427
AIR CLEANER GP	93
	94
AIR COMPRESSOR GP	4
	6
	8
	9
AIR CONDITIONER AR	679
AIR CONDITIONER GP	680
	684
AIR DRYER GP	166
	168
ALARM-BACKUP	260
ALARM GP–ACTION	170
ALTERNATOR GP-CHARGING	172
	176
	179
	180
	182
	184
	188
ANTENNA AS	746
ARMREST GP	690
ARMREST GP–LH	688
ARMREST GP–RH	689
ASHTRAY	768
ATOMIZER AS-ETHER	246
B	
BASE AS-INDICATOR LIGHT	776
	812
BASE GP-OIL FILTER	53
BASE-TMSN OIL FILTER	316
BATTERY & WIRING GP	190
	194
	198
	204
BATTERY (12 VOLT)	191
	195
	199
	205
BIT & CUTTING EDGE GP	654
	655
BLADE AS-WIPER	840
	842
	844
	846
BRAKE & PLANETARY GP–2 REQUIRED	292
	293
BRAKE GP-PARKING	428
	430
	432
	433
	434
BREATHER	456
BREATHER AS	450
BREATHER AS-CRANKCASE	54
BREATHER GP	54
BREATHER (PRESSURE RELIEF)	305
	306
BUCKET AS-GENERAL PURPOSE	656
	657
	658
	660
	662
	663
BUCKET AS-PENETRATION	664
BUCKET AS-ROCK	665
	666
BUCKET GP-GENERAL PURPOSE	667
	668
	669
	670
	671
BUCKET GP-PENETRATION	672
BUCKET GP-ROCK	673
	674
BUFFER GP-SENSOR	199
	205
BUFFER GP-SENSOR–FUEL LEVEL	209
C	
CAB AR	691
	692
CAB AR-LOW PROFILE	693
CAB GP	694
	696
	700
	704
	708
	710
CAMSHAFT AS	108
CAMSHAFT GP	10
CANOPY AR-OPEN ROPS	712
CANOPY GP-SOFT	713
CAP	176
	184
	827
CAP (ALTERNATOR)	172
	182
CAP AS-FUEL TANK	158
	160
	162
CAP AS-OIL FILLER	55
CAP-DUST	53

INDEX

Name	Page
	308
	310
	312
	314
	484
	544
	548
	550
	552
CAP-FILLER	576
CAP-FUEL TANK FILLER	109
	158
	160
	162
CAP-FUSE HOLDER	272
	284
	286
	741
	812
CAP GP-PROTECTION	109
	855
CAP-OIL FILLER	305
	306
CAP-RADIATOR	84
	86
	88
CAP-VALVE	343
	344
CARTRIDGE GP-TURBOCHARGER	95
CARTRIDGE GP-VANE PUMP	510
CARTRIDGE GP-VANE PUMP–FRONT	511
CASE & PARTS GP-PLANETARY	294
CIRCUIT BREAKER AS (15 AMP)	272
CIRCUIT BREAKER AS (15 AMP) (ENGINE SHUTDOWN)	284
	286
CIRCUIT BREAKER AS (15 AMP) (RUNNING LIGHTS)	284
	286
CIRCUIT BREAKER AS (80 AMP) (ALTERNATOR)	284
	286
CIRCUIT BREAKER AS (80 AMP) (MAIN)	284
	286
COMPRESSOR GP-REFRIGERANT	714
	716
CONTROL AR-RIDE	512
CONTROL AR-STEERING & BRAKE	435
CONTROL GP-BUCKET	652
CONTROL GP-BUCKET POSITIONER	540
CONTROL GP-ELECTRONIC	770
CONTROL GP-ELECTRONIC (BUCKET POSITIONER)	542
CONTROL GP-ELECTRONIC (CMS)	774
CONTROL GP-ELECTRONIC (CMSA VF DISPLAY)	775
CONTROL GP-ELECTRONIC (ENGINE SHUTDOWN)	191
	195
	199
	205
CONTROL GP-ELECTRONIC (LIFT CYLINDER PRESSURE)	274
CONTROL GP-ELECTRONIC (LIFT KICKOUT)	542
CONTROL GP-FUEL RATIO	110
	112
CONTROL GP-PARKING BRAKE–SECONDARY	436
CONTROL GP-PAYLOAD ELECTRONIC	279
CONTROL GP-PILOT OPERATED HYD	514
	516
	518
	520
	522
	524
CONTROL GP-PMS DISPLAY	708
CONTROL GP-SECONDARY BRAKE	438
	442
	446
CONTROL GP-SERVICE BRAKE	450
	456
CONTROL GP-STEERING	468
CONTROL GP-TRANSMISSION	296
CONTROL GP-TRANSMISSION HYD	298
CONVERSION AR-LOW PROFILE CAB	718
CONVERSION AR-NON-ROADING	368
CONVERSION AR-NON-ROPS	719
CONVERSION AR-NONCAB	720
	721
CONVERSION AR-ROADING	370
CONVERSION GP-NONCAB	722
CONVERTER GP-ELECTRICAL	210
	211
COOLANT HEATER LINES	750
COOLER GP-FLTR BASE & ENG OIL	70
	72
COOLER GP-TRANSMISSION OIL	299
COUNTERWEIGHT GP	373
	374
	375
COUPLING AS-REFRIGERANT	748
COVER GP-CYLINDER BLOCK	11
COVER GP-CYLINDER HEAD	12
COVER GP-FRONT HOUSING	13
COVER GP-HYDRAULIC TANK CAP	526
COVER GP-SHIPPING	300
COVER GP-VALVE MECHANISM	14
CRANKSHAFT AS	15

INDEX

Name	Page
CRANKSHAFT GP	16
CYLINDER & MTG GP-STEERING	469
CYLINDER & SEAL GP-STEERING	470
	471
CYLINDER AS (ETHER)	246
CYLINDER BLOCK GP	17
	18
	20
CYLINDER GP-AIR/HYDRAULIC	461
CYLINDER GP-LIFT	530
CYLINDER GP-LIFT–LH	528
CYLINDER GP-STEERING	472
	474
CYLINDER GP-TILT	532
	534
CYLINDER HEAD GP	22
	24
	26

D

DAMPER GP	27
DIFFERENTIAL AR	302
DIFFERENTIAL GP–OSCILLATING	303
DIFFERENTIAL GP-LIMITED SLIP	304
DOOR GP-AIR INLET	723
DOOR GP-BATTERY	376
DOOR GP-CAB	724
	728
DOOR GP-SIDE	731
DRIVE GP-FAN	28
DUST EJECTOR GP	96

E

ELEMENT AS-FUEL FILTER	150
ELEMENT AS-HEATER	166
	168
ELEMENT AS-HYDRAULIC	316
ELEMENT AS-PRIMARY	93
ELEMENT-FILTER	102
	158
	160
	162
	576
ELEMENT-FUEL FILTER	162
ELEMENT-SECONDARY	93
ENGINE AR	1
	2
EXTENSION GP-BACKREST	732
	733

F

FAN-ALTERNATOR	184
FAN GP-BLOWER	74
FASTENER GP-CYLINDER HEAD	29
FASTENER GP-EXHAUST MANIFOLD	97
	98
FASTENER GP-FRONT HOUSING	30
FASTENER GP-FUEL INJ PUMP	114
FASTENER GP-OIL PAN	31
FENDER GP	377
	378
	380
FILLER GP-ENGINE OIL	55
FILLER GP-POWER TRAIN OIL	305
	306
FILM	542
FILM-CMS	494
	495
	496
FILM-CONTROL	275
	279
FILM-HEATER	796
FILM-HEATER & A/C CONTROL	792
FILM-INSTRUCTION	856
FILM-INSTRUCTION (ALTERNATE EXIT)	696
	700
	704
FILM-WARNING (HIGH COMPRESSED SPRING)	427
FILM-WARNING (JUMPER CABLE)	856
FILTER	793
	797
FILTER & LINES GP-TRANSMISSION	308
	310
	312
	314
FILTER AS	792
	796
FILTER AS-ENGINE OIL	70
FILTER AS-FUEL	115
FILTER ELEMENT AS-OIL (HYDRAULIC)	576
FILTER GP-OIL	316
FILTER GP-OIL (POWER TRAIN)	308
	310
	312
	314
FILTER GP-SECONDARY FUEL	115
FILTER-SCREEN	827
FILTER-TANK CAP	109
FILTER-WATER	78
FIREWALL GP	382
	384
	386
	387
	388
FITTING-GREASE	349
FITTING-GREASE (1/8-27 THD)	348

INDEX

Name	Page
	404
	469
	652
FLASHER	226
	228
	232
FLOOR MAT	764
FLYWHEEL GP	32
	33
FRAME GP-LOADER	389
FRAME GP-REAR	390
	392
FUMES DISPOSAL GP	56
FUSE (10 AMP)	272
	284
	286
	741
	812

G

GASKET	93
GASKET (FUEL PRIMING PUMP)	148
GASKET (PRIM FUEL FILT)	150
GAUGE GP-OIL LEVEL (DIPSTICK)	57
GEAR GP-BEVEL & PINION–FRONT & REAR	318
GEAR GP-FRONT	34
GEAR GP-FRONT (TIMING)	2
GEAR GP-OUTPUT TRANSFER	320
	322
GLASS-SIGHT	576
GOVERNOR GP	116
GUARD GP-BOTTOM	394
GUARD GP-CRANKCASE	395
GUARD GP-FRONT	396
	397
GUARD GP-LINES	398
GUARD GP-POWER TRAIN	399
GUARD GP-RADIATOR	400
	402
GUARD GP-VANDALISM	734
	735

H

HEATER GP-BLOCK	212
HEATER GP-CAB	736
HITCH GP-ARTICULATING	404
HOLDER AS-FUSE	272
	284
	286
	741
	812
HOOD & GUARD GP	406
HORN	742
HORN AS (24 VOLT)	741
HORN GP-AIR	738
	740
HORN GP-ELECTRIC	741
	742
HOUSING & REGULATOR GP	75
HOUSING GP-FIXED AXLE–FIXED	324
	326
HOUSING GP-FLYWHEEL	35
HOUSING GP-FRONT	36
HOUSING GP-FUEL PUMP	121
HOUSING GP-OSCILLATING AXLE	328
	330
	332
HOUSING GP-SEAT SUSPENSION	743
HYDRAULIC AR	536
	537
HYDRAULIC AR–LOGGING	538

I

INDICATOR-AIR FILTER SERVICE	94
INSTALLATION GP-CONTROLS	744
INSTALLATION GP-RADIO	746

K

KEY	109
	258
	526
	720
	734
	735
	855
KEY-HANDLE	780
	782
	784
KICKOUT & POSITIONER GP	540
	542
KIT-ACCESSORY	716
KIT-ACTUATOR	428
KIT-ADJUSTER	690
	766
KIT-AIR COMPRESSOR	4
	6
KIT-BACK TILT	766
KIT-BEARING	95
	182
	248
	256
KIT-BELT TETHER	826
KIT-BOOT	428
KIT-BRAKE ACTUATOR	426
	427
KIT-BRAKE LINING	434

INDEX

Name	Page
KIT-BRUSH	248, 253, 256
KIT-BUMPER	743
KIT-BUSHING	253
KIT-CAPACITOR	188
KIT-CARTRIDGE-REAR	574
KIT-CUSHION	690, 733
KIT-DESICCANT REFILL	166, 168
KIT-DIAPHRAGM	740
KIT-DIODE JUNCTION STUD	172, 184
KIT-DIODE JUNCTION STUD (HEAT SINK-HARDWARE)	177
KIT-DISC (THICK)	304
KIT-DISC (THIN)	304
KIT-DUST SEAL	716
KIT-FILTER CARTRIDGE	166, 168
KIT-GOVERNOR OVERHAUL	38
KIT-HARDWARE	182, 248, 256
KIT-INDICATOR	743
KIT-INSULATOR	253
KIT-KNOB	743
KIT-LEVER	248, 253
KIT-MOTOR BRUSH	681
KIT-OUTPUT TERMINAL	172, 177, 184, 188
KIT-PISTON RING	44
KIT-PISTON RING (INCL PISTON RINGS)	4
KIT-PLUG	492
KIT-POSITIVE DIODE	173, 185
KIT-POSITIVE DIODE (HEAT SINK-HARDWARE)	177
KIT-RECEPTACLE (2 PIN)	708
KIT-RECEPTACLE (3 PIN)	242, 274
KIT-REFRIGERANT SEAL	716
KIT-REGULATOR	184
KIT-REGULATOR TERMINAL	188
KIT-RELAY TERMINAL	172, 176, 184, 188
KIT-RELIEF VALVE	166, 168
KIT-SEAL	248, 489, 552, 586, 631, 650
KIT-SEAT CUSHION	806, 808
KIT-SEAT TILT	766
KIT-SERVICE	346, 614, 618, 622
KIT-SERVICE METER	272
KIT-SLIDER BLOCK	816, 817
KIT-SOLENOID	248
KIT-SPRING	743
KIT-STARTING MOTOR PIN	256
KIT-STARTING MOTOR SEAL	256
KIT-SUSPENSION BOOT	826
KIT-SUSPENSION KNOB	743
KIT-SUSPENSION ROLLER	826
KIT-SUSPENSION SHAFT	826
KIT-TERMINAL GROUND	188
KIT-TERMINAL (NEG)	182
KIT-TERMINAL (POSITIVE)	182
KIT-TERMINAL (RELAY)	182
KIT-TILT PAN	806, 808
KIT-VANE	510
KIT-VANE-REAR	574
KIT-WASHER	256

L

Name	Page
LADDER GP	409, 410
LAMP	215, 216, 217, 218, 219, 220, 221
LAMP GP-DOME	694, 710
LAMP GP-FLOOD	213, 214, 222, 224, 226, 228, 712
LAMP GP-HEAD	215, 216

INDEX

Name	Page
LAMP GP-SIGNAL	217
	218
	219
	220
	221
	222
	224
LAMP GP-SIGNAL (REAR TURN AMBER-24V)	226
	228
LAMP GP-SIGNAL (STOP/TAIL RED-24V)	226
	228
LAMP-MINIATURE	694
	710
	768
LAMP-MINIATURE (28 VOLT)	793
	797
	812
LAMP (24 VOLTS)(65 WATTS)	213
LAMP (24 VOLT)(65 WATT)	214
LAMP (28 VOLT)	776
LENS	694
	710
LENS AS-FLOODLIGHT	213
	214
LENS-RED	219
LEVER	526
LIFTING GP-ENGINE	37
LIGHTER AS-CIGAR	768
LIGHTING GP-FLOOD & SIGNAL	222
	224
LIGHTING GP-ROADING	226
	228
LIGHTING GP-SIGNAL	232
LIGHTING GP-WARNING	234
LINES GP-AIR	100
	102
LINES GP-AIR COMPRESSOR	38
LINES GP-AIR CONDITIONER	748
LINES GP-ENGINE OIL	58
	60
LINES GP-FRONT	544
	546
LINES GP-FUEL	122
LINES GP-FUEL DRAIN	124
LINES GP-FUEL INJECTION	125
	126
	127
	128
	129
	130
	131
	132
	134
	136
	138
	140
	142
LINES GP-GREASE	412
LINES GP-HEATER	750
LINES GP-HYDRAULIC	548
	550
	552
LINES GP-HYDRAULIC OIL COOLER	554
LINES GP-LIFT CYLINDER	556
LINES GP-PILOT	558
	561
LINES GP-RIDE CONTROL	562
	566
LINES GP-SECONDARY STEERING	476
	480
LINES GP-STEERING	484
LINES GP-TILT CYLINDER	570
LINES GP-TORQUE CONV COOLER	334
LINES GP-TURBOCHARGER OIL	62
LINES GP-WATER	76
	77
LINK GP-STEERING FRAME LOCK	414
LOCK GP-VANDALISM	855
LOUVER GP	416

M

MANIFOLD GP-EXHAUST	103
MIRROR GP	755
MIRROR GP–LH	752
MIRROR GP–RH	753
	754
MIRROR GP-REAR VIEW	756
	757
	758
	759
MIRROR GP-REAR VIEW–LH	760
MONITOR AR-PAYLOAD	761
MOUNTING GP-ENGINE & TMSN	40
	41
MOUNTING GP-HYDRAULIC TANK	572
MOUNTING GP-PLATFORM	762
MUFFLER GP	104

N

NEUTRALIZER GP-TRANSMISSION	336

O

OPERATOR AR	764
ORIFICE-JET	58
	60

INDEX

Name	Page
P	
PADLOCK GP	109, 526, 720, 734, 735, 855
PAN GP-OIL	42
PAN GP-SEAT–BOTTOM	766
PANEL GP-INSTRUMENT	768, 770, 772, 774, 775, 776
PEDAL GP-GOVERNOR	778
PISTON & ROD GP	43
PISTON GP	44
PLANETARY GP-TRANSMISSION	338
PLATE & FILM GP	856
PLATE-INSTRUCTION (DISCONNECT SWITCH)	190, 194, 198, 204
PLATE-WARNING (MACHINE OPERATION)	857
PLATFORM GP	780, 782, 784, 786, 788, 790
PLUG-DRAIN	42, 299, 577
PLUG-MAGNETIC	324, 326, 328, 330, 332
PLUG-O-RING	320
PLUG-O-RING (7/16-20 THD)	42
PRESSURIZER GP-CAB	792, 796
PULLEY-ALTERNATOR	46
PULLEY-FAN DRIVE	46
PULLEY GP-CRANKSHAFT	45
PULLEY GP-FAN DRIVE	46
PUMP & MTG GP-FUEL TRANSFER	143
PUMP & MTG GP-HYDRAULIC	573
PUMP & MTG GP-SECONDARY STEER	488
PUMP GP-ENGINE OIL	63, 64, 65, 66, 67, 68, 69
PUMP GP-FUEL INJECTION	144, 145, 146
PUMP GP-FUEL PRIMING	148
PUMP GP-FUEL PRM & PRIM FILTER	149, 150
PUMP GP-FUEL TRANSFER	151, 152
PUMP GP-GEAR	342
PUMP GP-GOV & FUEL INJ	154, 156
PUMP GP-METERING	490
PUMP GP-METERING–STEERING	489
PUMP GP-SECONDARY STEERING	492
PUMP GP-VANE– IMPL,STEERING,PILOT & BRAKING	574
PUMP GP-WATER	78, 80
R	
RADIATOR GP	82, 84, 86, 88, 90
RECEPTACLE GP-AUXILIARY START	236
REGULATOR	75
REGULATOR GP-TEMPERATURE	92
REGULATOR-WATER TEMPERATURE	92
RIM GP-DEMOUNTABLE–4 REQUIRED	343, 344
RING-RETAINING	252, 274, 278
ROADING AR	238
ROCKER ARM GP (EXHAUST)	50
ROCKER ARM GP (INLET)	50
ROPS GP	800
S	
SCREEN AS	110
SCREEN-SUCTION	320, 322
SEAL GP	78
SEAL GP-CRANKSHAFT	47
SEAL GP-WINDOW	696, 700, 704
SEAL-O-RING (34.59MM ID)	462

INDEX

Name	Page
SEAL-O-RING (81.92MM ID)	54
SEAL-O-RING (91.67MM ID)	320
SEAL-O-RING (94.84MM ID)	472
SEALANT	324
	326
	328
	330
	332
SEAT BELT GP	801
	828
SEAT BELT GP (RETRACTABLE)	816
	817
SEAT GP	802
	803
	804
	806
	808
SEAT GP-ADJUSTABLE	810
	811
	812
	813
SEAT GP-SUSPENSION	814
	815
	816
	817
SENDER AS-FUEL LEVEL	158
	160
	162
SENSOR AS-SPEED (ENGINE)	266
SENSOR AS-SPEED (TRANSMISSION OUTPUT)	198
	322
SENSOR GP-POSITION–LIFT	239
	240
SENSOR GP-POSITION (LIFT)	239
	274
	278
SENSOR GP-PRESSURE–BRAKE AIR	241
SENSOR GP-PRESSURE–LIFT CYLINDER	242
SENSOR GP-PRESSURE (BRAKE AIR)	190
	194
	198
	204
SENSOR GP-PRESSURE (LIFT CYLINDER)	278
SENSOR GP-SPEED (ENGINE)	262
	264
SENSOR GP-SPEED (TRANSMISSION OUTPUT)	190
	194
	204
SENSOR GP-TEMPERATURE–HYDRAULIC OIL	243
SENSOR GP-TEMPERATURE (COOLANT)	264
	266
SENSOR GP-TEMPERATURE (HYDRAULIC OIL)	194
	198
	204
SENSOR GP-TEMPERATURE (TRANSMISSION OIL)	264
	266
SHAFT GP-DRIVE	346
SLEEVE-CABLE SPLICE	720
SLIP JOINT GP	348
SOLENOID	244
SOLENOID AS	256
SOLENOID AS (24 VOLT)	252
SOLENOID GP-SHUTOFF	244
SPIDER & BEARING GP	349
STARTING AID GP-ETHER	246
STARTING MOTOR GP-ELECTRIC	248
	250
	251
	252
	256
STEERING AR-SECONDARY	494
	495
	496
STEERING COLUMN GP-ADJUSTABLE	498
STRAINER	829
STRAINER AS	577
STRAINER-FUEL TANK	158
	160
	162
SUN VISOR	830
	831
SUPPORT GP-ENGINE	48
SUPPORT GP-SEAT	818
	819
	820
SUPPRESSION AR-SOUND	418
SUPPRESSION GP-SOUND	420
	422
	424
	822
	824
SUSPENSION GP-SEAT	826
SWITCH AS	708
SWITCH AS-DIMMER	229
SWITCH AS-FLOW (PRIMARY STEERING)	291
SWITCH AS-FLOW (SECONDARY STEERING)	290
	291
SWITCH AS-LIMIT (BACKUP ALARM)	336
SWITCH AS-LIMIT (BRAKE CYLINDER OVERSTROKE)	461
SWITCH AS-LIQUID LEVEL (HYDRAULIC TANK)	190
	194

INDEX

Name	Page
	198
	204
SWITCH AS-MAGNETIC (MAIN RELAY)	284
	286
SWITCH AS-MAGNETIC (24 VOLT) (START RELAY)	284
	286
SWITCH AS-PRESSURE (ENGINE OIL)	262
	264
	266
SWITCH AS-PRESSURE (PARKING BRAKE)	803
	813
SWITCH AS-PRESSURE (PARKING BRAKE AIR)	438
	442
	446
SWITCH AS-PRESSURE (STOP LIGHT)	191
	195
	199
	205
SWITCH AS-PUSH BUTTON	708
SWITCH AS-ROCKER	288
	289
	776
SWITCH AS-ROCKER (ROADING LIGHTS)	234
SWITCH AS-ROTARY (FAN SPEED)	792
	796
SWITCH AS (STARTING AID)	246
SWITCH AS-TEMPERATURE (COOLANT TEMP FOR START AID)	262
	264
	266
SWITCH AS-THERMOSTAT (REFRIGERANT)	680
	685
SWITCH AS-TURN SIG & WARNING	227
	228
	232
SWITCH AS (WIPER GP-WASHER)	768
SWITCH GP-DISCONNECT	190
	194
	198
	204
SWITCH GP-DISCONNECT–BATTERY	258
SWITCH GP-PRESSURE (PARKING BRAKE OIL)	191
	195
	199
	205
SWITCH GP-PUSH & HOLD (HORN)	741
	742
SWITCH GP-START	259
	768

T

Name	Page
TANK & FILTER GP-HYDRAULIC	576
TANK GP-FUEL	158
	160
	162
TANK GP-WINDOW WASHER	827
TERMINAL	172
TETHER GP	828
TIP GP-LONG	675
TIP GP-SHORT	676
TOOTH GP-LONG	677
TOOTH GP-SHORT	678
TORQUE CONTROL GP	164
TORQUE CONVERTER GP	350
	352
	354
	356
TRANSMISSION AR	358
	359
TRUNNION GP-ENGINE	49
TURBOCHARGER GP	106
	107

U

Name	Page
UNIVERSAL JOINT GP	346
	360

V

Name	Page
V-BELT	714
V-BELT SET (INCLUDES 2 BELTS)	46
VALVE	577
	590
	592
	600
	602
	604
	608
	633
	642
VALVE & MTG GP-CONTROL	580
	581
	583
	584
VALVE & MTG GP-CONTROL–LOGGING	582
VALVE & MTG GP-DIVERTER	502
VALVE AS-CHECK	450
	456
VALVE AS-ETHER START	246
VALVE AS (PARKING BRAKE)	436
VALVE AS (VENT)	75
	92
VALVE AS-VENT	26

INDEX

Name	Page
VALVE-EXHAUST	22
	24
VALVE-FLUID SAMPLING	53
	308
	310
	312
	314
	548
	550
	552
VALVE GP	585
VALVE GP-AIR CONTROL	438
	442
	446
	829
VALVE GP-BRAKE CONTROL– PARKING & SERVICE	462
	463
VALVE GP-BRAKE CONTROL (PARKING & SERVICE)	451
	457
VALVE GP-BREAKER RELIEF	550
	552
	586
VALVE GP-CHECK	451
	457
	464
	465
	466
	467
	558
VALVE GP-CONTROL	590
	592
	594
	596
	598
	600
	602
	604
	606
VALVE GP-CONTROL–AUXILIARY	587
VALVE GP-CONTROL–LIFT AND TILT	588
VALVE GP-CONTROL–LOGGING	608
VALVE GP-DIVERTER	504
	610
VALVE GP-DIVERTER– SECONDARY STEERING	503
VALVE GP-MAKEUP	485
	505
VALVE GP-NEUTRALIZER	361
VALVE GP-PILOT	612
	614
	616
	618
	620
	622
	624
	625
	626
VALVE GP-PILOT CARTRIDGE	628
	629
	630
	631
	632
VALVE GP-PILOT CARTRIDGE– PILOT CARTRIDGE	627
VALVE GP-RELIEF	590
	640
	642
VALVE GP-RELIEF–LINE	634
	635
	636
	639
	644
VALVE GP-RELIEF–MAIN	633
	637
	638
	641
	642
	643
VALVE GP-RELIEF– TORQUE CONVERTER OUTLET	362
	364
	366
VALVE GP-RELIEF (LINE, AUX CYL ROD END PORT)	594
	596
	598
	600
	602
	608
VALVE GP-RELIEF (MAIN)	592
	594
VALVE GP-SELECTOR & PRESS CONT	646
VALVE GP-SELECTOR & PRESS CONT– PILOT	645
VALVE GP-SHUTTLE	648
	649
VALVE GP-SOLENOID–RIDE CONTROL	650
VALVE GP-SOLENOID (RIDE CONTROL)	610
VALVE GP-STEERING	506
	508
VALVE GP-STEERING NEUTRALIZER	509
VALVE-INLET	22
	24
VALVE (MAKE UP)	594
	596
	598
	606
VALVE MECHANISM GP	50

INDEX

Name	Page	Name	Page
	51		
	52		
VALVE-SHUTOFF	42		
VALVE-WATER	736		
VISOR GP-CAB	830		
	831		

W

WARNING GP-BACKUP	260		
WASHER GP-WINDOW	832		
WINDOW GP	834		
	836		
WIPER GP-WINDOW	838		
	840		
	842		
	844		
	846		
	848		
	850		
	852		
WIPER PIVOT GP	854		
WIRING GP-ENGINE	262		
	264		
	266		
WIRING GP-FRONT	268		
	270		
WIRING GP-INSTR & IGNITION	272		
WIRING GP-MONITOR	274		
	278		
WIRING GP-REAR	282		
WIRING GP-RELAY PANEL	284		
	286		
WIRING GP-RIDE CONTROL	288		
	289		
WIRING GP-SECONDARY STEERING	290		
	291		

INDEX

Désignation	Page
A	
ACCOUDOIR (ASS)	688
	689
	690
ALLUME-CIGARE (ENS)	768
ALTERNATEUR DE CHARGE (ASS)	172
	176
	188
ALTERNATEUR DE CHARGE (ASS)	184
ALTERNATEUR DE CHARGE (ASS)	179
	180
	182
ALTERNATEUR-VENTILATEUR	184
AMORTISSEUR DE VIBRATIONS (ASS)	27
AMPLIFICATEUR - CAPTEUR (ASS)	209
AMPLIFICATEUR - CAPTEUR (ASS)	199
	205
AMPOULE	215
	216
	217
	218
	219
	220
	221
AMPOULE (24 VOLTS) (65 WATTS)	213
AMPOULE (24 VOLTS)(65 WATTS)	214
AMPOULE (28 VOLTS)	776
ANNEAU	252
	274
	278
ANTENNE (ASS)	746
ARBRE A CAMES (ASS)	10
ARBRE A CAMES (ENS)	108
ARBRE D'ENTRAÎNEMENT (ASS)	346
ATTACHE (ASS)	828
ATTELAGE D'ARTICULATION (ASS)	404
AUTOCOLLANT	494
	495
	496
	542
AUTOCOLLANT - RÉCHAUFFEUR	796
AUTOCOLLANT-COMMANDE	275
	279
AUTOCOLLANT DE MISE EN GARDE (CÂBLES VOLANTS)	856
AUTOCOLLANT DE MISE EN GARDE (RESSORT FORTEMENT COMPRIMÉ)	427
AUTOCOLLANT-RÉCHAUFFEUR ET COMMANDE DE CLIMATISEUR	792
AUXILIAIRE DE DÉMARRAGE À L'ÉTHER	246
AVERTISSEUR (ASS)	170
AVERTISSEUR DE RECUL	260
AVERTISSEUR DE RECUL (ASS)	260
AVERTISSEUR SONORE, KLAXON	742
AXE DE CULBUTEUR (ASS) (ADMISSION)	50
AXE DE CULBUTEUR (ASS) (ÉCHAPPEMENT)	50
B	
BALAI D'ESSUIE-GLACE (ENS)	840
	842
	844
	846
BASE - TÉMOIN LUMINEUX (ENS)	776
	812
BATI - CHARGEUSE (ASS)	389
BÂTI AR (ASS)	390
	392
BATTERIE ET CÂBLAGE	190
	194
	198
	204
BATTERIE (12 VOLTS)	191
	195
	199
	205
BLINDAGE DE TRANSMISSION (ASS)	399
BLINDAGE INFÉRIEUR (ASS)	394
BLOC-CYLINDRES - COUVERCLE (ASS)	11
BLOC-CYLINDRES (ASS)	17
	18
	20
BOÎTE DE VITESSES (VERSION)	358
	359
BOÎTE PLANÉTAIRE (ASS)	338
BOÎTIER DE POMPE À CARBURANT	121
BORNE	172
BOUCHON AIMANTÉ	324
	326
	328
	330
	332
BOUCHON DE GOULOTTE DE REMPLISSAGE	576
BOUCHON DE GOULOTTE DE REMPLISSAGE D'HUILE	305
	306
BOUCHON DE GOULOTTE DE REMPLISSAGE D'HUILE MOTEUR	55
BOUCHON DE GOULOTTE DE RÉSERVOIR DE CARBURANT	109
	158
	160
	162

* TRADUCTION NON DISPONIBLE AU MOMENT DE LA PUBLICATION

INDEX

Désignation	Page
BOUCHON DE REMPLISSAGE D'HUILE MOTEUR (ASS)	55
BOUCHON DE RÉSERVOIR DE CARBURANT (ENS)	158 160 162
BOUCHON DE VIDANGE	42 299 577
BOUCHON-JOINT TORIQUE	320
BOUCHON-JOINT TORIQUE (FILET 7/16-20)	42
BOULONNERIE - POMPE D'INJECTION DE CARB. (ASS)	114
BOULONNERIE DE CARTER AV (ASS)	30
BOULONNERIE DE LA CULASSE (ASS)	29
BOULONNERIE DU CARTER D'HUILE (ASS)	31
BOULONNERIE DU COLLECTEUR D'ÉCHAPPEMENT (ASS)	97 98
BUTÉE ÉLASTIQUE (ASS)	164

C

CABINE (ASS)	694 696 700 704 708 710
CABINE (VERSION)	691 692
CABLAGE - PANNEAU DE RELAIS	284 286
CABLAGE AR (ASS)	282
CABLAGE AV (ASS)	268 270
CÂBLAGE DE COMMANDE DE TRANSLATION (ASS)	288 289
CABLAGE DE DIRECTION AUXILIAIRE (ASS)	290 291
CABLAGE DE MOTEUR (ASS)	262 264 266
CABLAGE D'INSTRUMENTS ET ALLUMAGE (ASS)	272
CABLAGE DU PANNEAU DE COMMANDE	274 278
CACHE-SOUPAPES (ASS)	14
CADENAS (ASS)	109 526 720 734
	735 855
CANALIS. DE REFROIDISSEMENT DU CONV. DE COUPLE	334
CANALISATION DE DIRECTION AUXILIAIRE	476 480
CANALISATIONS A COMMANDE PILOTE (ASS)	558 561
CANALISATIONS AV	544 546
CANALISATIONS D'AIR (ASS)	100 102
CANALISATIONS DE CARBURANT (ASS)	122
CANALISATIONS DE CHAUFFAGE (ASS)	750
CANALISATIONS DE CLIMATISEUR (ASS)	748
CANALISATIONS DE COMMANDE DE MARCHE	562 566
CANALISATIONS DE DIRECTION (ASS)	484
CANALISATIONS DE GRAISSAGE (ASS)	412
CANALISATIONS DE RÉCHAUFFEUR DE LIQUIDE DE REFROIDISSEMENT	750
CANALISATIONS DE REFROIDISSEUR D'HUILE HYDR. (ASS)	554
CANALISATIONS DE VÉRIN DE LEVAGE (ASS)	556
CANALISATIONS D'EAU (ASS)	76 77
CANALISATIONS D'HUILE DE TURBOCOMPRESSEUR (ASS)	62
CANALISATIONS D'HUILE MOTEUR (ASS)	60
CANALISATIONS D'HUILE MOTEUR (ASS)	58
CANALISATIONS D'INJECTION DE CARBURANT (ASS)	125 126 127 128 129 130 131 132 134 136 138 140 142
CANALISATIONS DU COMPRESSEUR D'AIR (ASS)	38
CANALISATIONS DU VÉRIN D'INCLINAISON (ASS)	570
CANALISATIONS HYDRAULIQUES (ASS)	550
CANALISATIONS HYDRAULIQUES (ASS)	548

* TRADUCTION NON DISPONIBLE AU MOMENT DE LA PUBLICATION

INDEX

Désignation	Page
	552
CAPOT ET PROTECTION (ASS)	406
CAPTEUR DE PRESSION (ASS)	241
	242
CAPTEUR DE PRESSION (ASS) (AIR DE FREIN)	190
	194
	198
	204
CAPTEUR DE PRESSION (ASS) (LEVAGE DE VÉRIN)	278
CAPTEUR DE TEMPERATURE (ASS)	243
CAPTEUR DE TEMPERATURE (ASS) (HUILE DE BOÎTE)	264
	266
CAPTEUR DE TEMPERATURE (ASS) (HUILE HYDRAULIQUE)	194
	198
	204
CAPTEUR DE TEMPERATURE (ASS) (LIQUIDE DE REFROIDISSEMENT)	264
	266
CAPTEUR DE VITESSE (ASS) (MOTEUR)	262
	264
CAPTEUR DE VITESSE (ASS) (SORTIE DE BOÎTE DE VITESSES)	190
	194
	204
CAPTEUR DE VITESSE (MOTEUR)	266
CAPTEUR DE VITESSE (SORTIE DE BOÎTE DE VITESSES)	198
	322
CARBURANT - CANALISATIONS DE VIDANGE (ASS)	124
CARDAN COULISSANT (ASS)	348
CARTER - BLINDAGE (ASS)	395
CARTER AV (ASS)	36
CARTER DE VOLANT (ASS)	35
CARTER D'ESSIEU FIXE	324
	326
CARTER D'ESSIEU OSCILLANT	328
	330
	332
CEINTURE DE SECURITE (ASS)	828
CEINTURE DE SECURITE (ASS)	801
CEINTURE DE SECURITE (ASS) (RÉTRACTABLE)	816
	817
CENDRIER	768
CHAPEAU	176
	184
	827
CHAPEAU - RADIATEUR	84
	86
	88
CHAPEAU (ALTERNATEUR)	172
	182
CHAPEAU DE VALVE	343
	344
CHAPEAU (PORTE-FUSIBLES)	272
	284
	286
CHAPEAU (PORTE-FUSIBLES)	812
CHAPEAU (PORTE-FUSIBLES)	741
CHAUFFAGE DE CABINE (ASS)	736
CLAPET	577
	590
	592
	600
	602
	604
	608
	633
	642
CLAPET (ASS)	585
CLAPET (COMPENSER)	594
	596
	598
	606
CLAPET DE COMPENSATION (ASS)	485
CLAPET DE COMPENSATION (ASS)	505
CLAPET DE DECHARGE (ASS)	362
	364
	366
	633
	634
	635
	636
	637
	638
	639
	640
	641
	642
	643
	644
CLAPET DE DECHARGE (ASS)	590
CLAPET DE DECHARGE (ASS) (CANALISATION, ORIFICE DU CÔTÉ TIGE DU VÉRIN AUXILIAIRE)	594
	596
	598
	600
	602
	608
CLAPET DE DECHARGE (ASS) (PRINCIPAL)	592

* TRADUCTION NON DISPONIBLE AU MOMENT DE LA PUBLICATION

INDEX

Désignation	Page
	594
CLAPET DE DÉCHARGE HYDRAULIQUE (ASS)	550
	552
	586
CLAPET DE RETENUE (ENS)	450
	456
	558
CLAPET DE RETENUE (ENS)	451
	457
	464
	465
	466
	467
CLAPET (ENS) (ÉVENT)	75
	92
CLAPET (ENS) (FREIN DE STATIONNEMENT)	436
CLAVETTE - POIGNÉE	780
	782
	784
CLÉ	109
	258
	526
	720
	734
	735
	855
CLIGNOTANT	226
	228
	232
CLIMATISEUR (ASS)	680
	684
CLIMATISEUR (VERSION)	679
CLOISON PARE-FEU (ASS)	382
	384
	386
	387
	388
COLLECTEUR D'ÉCHAPPEMENT (ASS)	103
COLONNE DE DIRECTION RÉGLABLE	498
COMMANDE DE BOITE DE VITESSES (ASS)	296
COMMANDE DE DIRECTION (ASS)	468
COMMANDE DE DIRECTION ET FREIN (VERSION)	435
COMMANDE DE FREIN AUXILIAIRE (ASS)	438
	442
	446
COMMANDE DE FREIN DE STATIONNEMENT (ASS)	427
	436
COMMANDE DE GODET (ASS)	652
COMMANDE DE LIMITEUR DE GODET	540
COMMANDE DE TRANSLATION (VERSION)	512
COMMANDE ELECTRONIQUE DE BOITE (ASS)	770
COMMANDE ELECTRONIQUE DE BOITE (ASS) (AFFICHAGE CMSA VF)	775
COMMANDE ELECTRONIQUE DE BOITE (ASS) (ARRÊT MOTEUR)	191
	195
	199
	205
COMMANDE ELECTRONIQUE DE BOITE (ASS) (ÉLECTROMODULE DE SURVEILLANCE)	774
COMMANDE ELECTRONIQUE DE BOITE (ASS) (LIMITEUR DE LEVAGE)	542
COMMANDE ELECTRONIQUE DE BOITE (ASS) (POSITIONNEUR DE GODET)	542
COMMANDE ELECTRONIQUE DE BOITE (ASS) (PRESSION DE VÉRIN DE LEVAGE)	274
COMMANDE ÉLECTRONIQUE DE CHARGE UTILE (ASS)	279
COMMANDE HYDRAULIQUE DE BOÎTE (ASS)	298
COMMANDE HYDRAULIQUE PILOTE (ASS)	514
	516
	518
	520
	522
	524
COMPRESSEUR D'AIR (ASS)	6
	8
	9
COMPRESSEUR D'AIR (ASS)	4
COMPRESSEUR DE REFRIGERANT (ASS)	714
	716
CONTACTEUR DE CLIGNOTANT DE DIRECTION ET AVERTISS.	227
	228
	232
CONTACTEUR DE DEBIT (ENS) (DIRECTION AUXILIAIRE)	290
	291
CONTACTEUR DE DEBIT (ENS) (DIRECTION PRINCIPALE)	291
CONTACTEUR (ENS)	708
CONTACTEUR (ENS) (AUXILIAIRE DE DÉMARRAGE)	246
CONTACTEUR (ENS) (ESSUIE-GLACE-LAVE-VITRE (ASS))	768
CONTACTEUR MAGNETIQUE (ENS) (RELAIS PRINCIPAL)	284
	286
CONTACTEUR MAGNETIQUE (ENS) (24 VOLTS) (RELAIS DE DÉMARRAGE)	284

* TRADUCTION NON DISPONIBLE AU MOMENT DE LA PUBLICATION

INDEX

Désignation	Page
	286
CONTREPOIDS (ASS)	373
	374
	375
*CONTROL GP-PMS DISPLAY	708
CONVERTISSEUR DE COUPLE (ASS)	350
	352
	354
	356
COURONNE CONIQUE ET PIGNON	318
COURROIE TRAPEZOIDALE	714
COUVERCLE DE CARTER AV (ASS)	13
COUVERCLE DE CULASSE (ASS)	12
COUVERCLE DE PROTECTION (ASS)	109
COUVERCLE DE PROTECTION (ASS)	855
COUVERCLE DE RÉSERVOIR HYDRAULIQUE	526
COUVERCLES D'EXPEDITION (ASS)	300
CREPINE	829
CREPINE (ENS)	577
CROISILLON ET ROULEMENT	349
CULASSE (ASS)	22
	24
	26
CULBUTERIE (ASS)	50
	51
	52
CYLINDRE OLEO-PNEUMATIQUE (ASS)	461

D

DÉMARREUR ÉLECTRIQUE (ASS)	256
DÉMARREUR ÉLECTRIQUE (ASS)	248
	250
	251
	252
DENT COURTE (ASS)	678
DENT LONGUE (ASS)	677
DESHYDRATEUR (ASS)	166
	168
DIFFÉRENTIEL - GLISSEMENT LIMITÉ (ASS)	304
DIFFERENTIEL (ASS)	303
DIFFÉRENTIEL (VERSION)	302
DIRECTION AUXILIAIRE (VERSION)	494
	495
	496
DISJONCTEUR DE SECURITE (ENS) (AVERTISSEUR DE RECUL)	336
DISJONCTEUR DE SECURITE (ENS) (EXCÈS DE COURSE DE VÉRIN DE FREIN)	461
DISJONCTEUR (ENS) (15A)	272
DISJONCTEUR (ENS) (15A) (ARRÊT DU MOTEUR)	284
	286
DISJONCTEUR (ENS) (15A) (FEUX DE ROUTE)	284
	286
DISJONCTEUR (ENS) (80 A) (ALTERNATEUR)	284
	286
DISJONCTEUR (ENS) (80 A) (PRINCIPAL)	284
	286
DISPOSITIF DE COMMANDE DE FREIN (ASS)	426
DISPOSITIF D'EVACUATION DES VAPEURS DE CARTER	56
DISTRIBUTEUR (ASS)	587
	588
	590
	592
	594
	596
	598
	600
	602
	604
	606
	608
DISTRIBUTEUR D'AIR (ASS)	438
	442
	446
	829
DISTRIBUTEUR DE FREIN (ASS)	462
DISTRIBUTEUR DE FREIN (ASS)	463
DISTRIBUTEUR DE FREIN (ASS) (STATIONNEMENT ET MANOEUVRE)	451
	457
DISTRIBUTEUR ET MONTAGE (ASS)	580
	581
	582
	583
	584

E

ECHELLE (ASS)	409
	410
ÉCLAIRAGE - AVERTISSEUR (ASS)	234
ÉCLAIRAGE - FEUX DE ROUTE (ASS)	226
	228
ÉCLAIRAGE - PROJECTEURS ET CLIGNOTANTS (ASS)	222
	224
ÉCLAIRAGE CLIGNOTANT	232

* TRADUCTION NON DISPONIBLE AU MOMENT DE LA PUBLICATION

INDEX

Désignation	Page
ÉCRAN (ENS)	110
ÉJECTEUR AUTOMATIQUE DE POUSSIÈRE (ASS)	96
ELECTROMODULE DE CHARGE UTILE DE BENNE	761
ÉLÉMENT - FILTRE DE CARBURANT	162
ÉLÉMENT DE FILTRE	102
	158
	160
	162
	576
ÉLÉMENT DE FILTRE À CARBURANT (ENS)	150
ÉLÉMENT DE FILTRE À HUILE (ENS) (HYDRAULIQUE)	576
ÉLÉMENT DE RÉCHAUFFEUR (ENS)	166
	168
ELEMENT HYDRAULIQUE (ENS)	316
ÉLÉMENT PRINCIPAL (ENS)	93
ELEMENT SECONDAIRE	93
EMBOUT ET LAME DE COUPE (ASS)	654
	655
ENGRENAGE DE TRANSFERT DE RENDEMENT (ASS)	322
ENGRENAGE DE TRANSFERT DE RENDEMENT (ASS)	320
ENTRAÎNEMENT DE VENTILATEUR (ASS)	28
ÉQUIPEMENT POUR DÉPLACEMENT ROUTIER (VERSION)	238
ESSUIE-GLACE (ASS)	838
	840
	842
	844
	846
	848
	850
	852

F

FILTRE	793
	797
FILTRE -EAU	78
FILTRE A AIR (ASS)	94
FILTRE A AIR (ASS)	93
FILTRE A CARBURANT (ENS)	115
FILTRE À CARBURANT SECONDAIRE (ASS)	115
FILTRE A HUILE (ASS)	316
FILTRE A HUILE (ASS) (TRANSMISSION)	308
	310
	312
	314
FILTRE A HUILE MOTEUR (ENS)	70
FILTRE DU BOUCHON DU RÉSERVOIR	109
FILTRE (ENS)	792
	796
FILTRE ET CANALISATIONS - BOÎTE DE VITESSE (ASS)	310
	312
	314
FILTRE ET CANALISATIONS - BOÎTE DE VITESSE (ASS)	308
FREIN DE MANOEUVRE - COMMANDE (ASS)	450
FREIN DE MANOEUVRE - COMMANDE (ASS)	456
FREIN DE STATIONNEMENT (ASS)	428
	430
	432
	433
	434
FREIN ET TRAINS PLANÉTAIRES (ASS)	292
	293
FUSIBLE (10A)	272
	284
	286
	741
	812

G

GARDE-BOUE (ASS)	377
	378
	380
GICLEUR-ÉTHER (ENS)	246
GODET NORMAL (ASS)	667
	668
	669
	670
	671
GODET NORMAL (ENS)	656
	657
	658
	660
	662
	663
GODET PÉNÉTRATION (ASS)	672
GODET-PÉNÉTRATION (ENS)	664
GODET-ROCHE (ASS)	673
	674
GODET-ROCHE (ENS)	665
	666
GOULOTTE DE REMPLISSAGE D'HUILE DE TRANSMISSION	305
GOULOTTE DE REMPLISSAGE D'HUILE DE TRANSMISSION	306
GRAISSEUR	349

* TRADUCTION NON DISPONIBLE AU MOMENT DE LA PUBLICATION

INDEX

Désignation	Page
GRAISSEUR (FILET 1/8-27)	348, 404, 469, 652
GROUPE DE TRANSFORMATION SANS ROPS	722

H

HUILE MOTEUR - CARTER (ASS)	42

I

INDICATEUR DE COLMATAGE DE FILTRE A AIR	94
INSONORISATION (ASS)	420, 422, 424, 822, 824
INSONORISATION (VERSION)	418
INTERRUPTEUR - BOUTON-POUSSOIR (ENS)	708
INTERRUPTEUR (ASS)-POUSSER & RETENIR (KLAXON)	741, 742
INTERRUPTEUR BALANCIER (ENS)	288, 289
INTERRUPTEUR BALANCIER (ENS)	776
INTERRUPTEUR BALANCIER (ENS) (FEUX DE ROUTE)	234
INTERRUPTEUR DE DÉMARRAGE (ASS)	768
INTERRUPTEUR DE DÉMARRAGE (ASS)	259
INTERRUPTEUR DE NIVEAU - LIQUIDE (ENS) (RÉSERVOIR HYDRAULIQUE)	190, 194, 198, 204
INTERRUPTEUR DE THERMOSTAT (ENS) (RÉFRIGÉRANT)	680, 685
INTERRUPTEUR ROTATIF (ENS) (VITESSE DU VENTILATEUR)	792, 796
INVERSEUR D'ECLAIRAGE (ENS)	229

J

JANTE DÉMONTABLE (ASS)	343, 344
JAUGE D'HUILE MOTEUR (BAIONNETTE) (ASS)	57
JEU DE COURROIES TRAPEZOIDALES (COMPREND 2 COURROIES)	46
JOINT (ASS)	78
JOINT DE GLACE DE CABINE (ASS)	696, 700, 704
JOINT DE VILEBREQUIN (ASS)	47
JOINT PLAT	93
JOINT PLAT (FILTRE À CARBURANT PRINCIPAL)	150
JOINT PLAT (POMPE D'AMORÇAGE DE CARBURANT)	148
JOINT TORIQUE (DIA INT 34,59MM)	462
JOINT TORIQUE (DIA INT 81,92MM)	54
JOINT TORIQUE (DIA INT 91,67 MM)	320
JOINT TORIQUE (DIA INT 94,84MM)	472
JOINT UNIVERSEL (ASS)	346, 360

K

KIT - COUSSIN	690, 733
KIT D'ARBRE DE SUSPENSION	826
KIT D'ATTACHE DE CEINTURE DE SECURITE	826
KIT DE BAGUE	253
KIT DE BALAIS	248, 253, 256
KIT DE BALAIS DE MOTEUR	681
KIT DE BLOC COULISSANT	816, 817
KIT DE BORNE DE MASSE	188
KIT DE BORNE DE REGULATEUR	188
KIT DE BORNE DE RELAIS	172, 176, 184, 188
KIT DE BORNE DE SORTIE	172, 177, 184, 188
KIT DE BORNE (NEG)	182
KIT DE BORNE (POSITIF)	182
KIT DE BORNE (RELAIS)	182
KIT DE BOUCHON	492
KIT DE BOULONNERIE	182, 248, 256
KIT DE BOULONNERIE SECONDAIRE	716
KIT DE BOUTON	743
KIT DE BROCHE DE DÉMARREUR	256

* TRADUCTION NON DISPONIBLE AU MOMENT DE LA PUBLICATION

INDEX

Désignation	Page
KIT DE CARTOUCHE - AR	574
KIT DE CARTOUCHE DE FILTRE	166, 168
KIT DE CLAPET DE DECHARGE	166, 168
KIT DE COMMANDE	428
KIT DE COMPRESSEUR D'AIR	4, 6
KIT DE COMPTEUR D'ENTRETIEN	272
KIT DE CONDENSATEUR	188
KIT DE COUSSIN DE SIEGE	806, 808
KIT DE COUSSINET	95, 182, 248, 256
KIT DE DECLENCHEUR DE FREIN	426, 427
KIT DE DIAPHRAGME	740
KIT DE DIODE POSITIF	173, 185
KIT DE DIODE POSITIF (DIFFUSEUR THERMIQUE - BOULONNERIE)	177
KIT DE DISQUE (ÉPAIS)	304
KIT DE DISQUE (MINCE)	304
KIT DE GAINE	428, 826
KIT DE GARNITURE DE FREIN	434
KIT DE JOINT ANTI-POUSSIERE	716
KIT DE JOINT DE DÉMARREUR	256
KIT DE JOINT D'ÉTANCHÉITÉ DE RÉFRIGÉRANT	716
KIT DE JOINTS	248, 489, 552, 586, 631, 650
KIT DE LEVIER	248, 253
KIT DE PALETTE	510
KIT DE PALETTE AR	574
KIT DE PANNEAU DU DOSSIER DU SIEGE	806, 808
KIT DE PARE-CHOCS	743
KIT DE PLOT DE CONNEXION DE DIODE	172, 184
KIT DE PLOT DE CONNEXION DE DIODE (DIFFUSEUR THERMIQUE - BOULONNERIE)	177
KIT DE PRISE FEMELLE (2 BROCHES)	708
KIT DE PRISE FEMELLE (3 BROCHES)	242, 274
KIT DE RECHANGE DE DÉSHYDRATEUR	166, 168
KIT DE REDRESSEMENT	766
KIT DE REGLAGE	690, 766
KIT DE REGLAGE DE SIEGE - INCLINAISON	766
KIT DE RÉGULATEUR	184
KIT DE RESSORTS	743
KIT DE RONDELLE	256
KIT DE ROULEAU	826
KIT DE SEGMENT DE PISTON	44
KIT DE SEGMENT DE PISTON (COMPREND SEGMENTS DE PISTON)	4
KIT DE SOLÉNOÏDE	248
KIT DE VERIFICATION DU REGULATEUR	38
KIT D'ENTRETIEN	346, 614, 618, 622
KIT D'INDICATEUR	743
KIT D'ISOLANT	253
KLAXON ÉLECTRIQUE (ASS)	741, 742
KLAXON (ENS) (24 VOLTS)	741
KLAXON PNEUMATIQUE (ASS)	738, 740

L

Désignation	Page
LAMPE - CLIGNOTANT DE DIRECTION (ASS)	222, 224
LAMPE - CLIGNOTANT DE DIRECTION (ASS)	217, 218, 219, 220, 221
LAMPE - CLIGNOTANT DE DIRECTION (ASS) (CLIGNOTANT DE DIRECTION JAUNE 24 V AR)	226, 228
LAMPE - CLIGNOTANT DE DIRECTION (ASS) (FEU ROUGE DE STOP/AR 24 V)	226, 228
LAMPE - PHARE (ASS)	213, 222, 224, 226, 228, 712
LAMPE - PHARE (ASS)	214
LAMPE (AMPOULE MINIATURE)	694

* TRADUCTION NON DISPONIBLE AU MOMENT DE LA PUBLICATION

INDEX

Désignation	Page
	710
	768
LAMPE (AMPOULE MINIATURE) (28 VOLTS)	793
	797
	812
LAVE-GLACE - VITRE (ASS)	832
LENTILLE	694
	710
LENTILLE (ENS)-PROJECTEUR	213
	214
LENTILLE ROUGE	219
LEVIER	526
LIAISON - VERROUILLAGE DE CHÂSSIS DE DIRECTION (ASS)	414
LIMITEUR DE LEVAGE ET RETOUR À L'ANGLE DE CAVAGE	540
	542
LIMITEUR D'INJECTION (ASS)	110
	112

M

MANCHON DE JONCTION DE CABLES	720
MANOCONTACT (ENS) (AIR DES FREINS DE STATIONNEMENT)	438
	442
	446
MANOCONTACT (ENS) (FEUX D'ARRÊT)	191
	195
	199
	205
MANOCONTACT (ENS) (FREIN DE STATIONNEMENT)	803
	813
MANOCONTACT (ENS) (HUILE MOTEUR)	262
	264
	266
MANOCONTACT (HUILE DE FREIN DE STATIONNEMENT)	191
	195
	199
	205
MONTAGE DE MOTEUR ET BOÎTE (ASS)	40
	41
MONTAGE DE PLATE-FORME (ASS)	762
MONTAGE DE RADIO (ASS)	746
MONTAGE DES COMMANDES (ASS)	744
MOTEUR (VERSION)	1
	2

N

NEUTRALISATEUR DE BOITE (ASS)	336

O

OEILLETONS DE LEVAGE MOTEUR (ASS)	37
ORIFICE - CANALISATIONS D'HUILE MOTEUR	58
	60

P

PARE-POUSSIERE	53
	308
	310
	312
	314
	484
	544
	548
	550
	552
PARE-SOLEIL	830
	831
PAVILLON (ASS)	713
PHARE AV (ASS)	215
	216
PIGNONNERIE AV (ASS)	34
PIGNONNERIE AV (ASS) (CALAGE)	2
PISTON (ASS)	44
PISTON ET BIELLE (ASS)	43
PIVOT D'ESSUIE-GLACE (ASS)	854
PLAFONNIER (ASS)	694
	710
PLAQUE - AVERTISSEMENT (FONCTIONNEMENT DE LA MACHINE)	857
PLAQUE D'INSTRUCTIONS (COUPE-BATTERIE)	190
	194
	198
	204
PLAQUES SIGNALETIQUES ET AUTOCOLLANTS (ASS)	856
PLAQUETTE DE CONNEXION - CHAUFFAGE (ASS)	212
PLATE-FORME (ASS)	780
	782
	784
	786
	788
	790
POINTE COURTE (ASS)	676
POINTE LONGUE (ASS)	675
POMPE À AILETTES - CARTOUCHE	510
	511
POMPE A EAU (ASS)	78
POMPE A EAU (ASS)	80

* TRADUCTION NON DISPONIBLE AU MOMENT DE LA PUBLICATION

INDEX

Désignation	Page
POMPE A ENGRENAGES (ASS)	342
POMPE A HUILE MOTEUR (ASS)	63
	64
	65
	66
	67
	68
	69
POMPE À PALETTES (ASS)	574
POMPE D'ALIMENTATION EN CARBURANT (ASS)	151
	152
POMPE D'ALIMENTATION ET MONTAGE (ASS)	143
POMPE D'AMORÇAGE DE CARBURANT (ASS)	148
POMPE D'AMORÇAGE DE CARBURANT ET FILTRE PRINCIPAL	149
	150
POMPE DE DIRECTION AUXILIAIRE ET MONTAGE (ASS)	488
POMPE DE LA DIRECTION SECONDAIRE	492
POMPE DE REGULARISATION DE DEBIT (ASS)	489
	490
POMPE D'INJECTION DE CARBURANT (ASS)	144
	145
	146
POMPE ET MONTAGE - HYDRAULIQUE (ASS)	573
PORTE D'ADMISSION D'AIR	723
PORTE DE BATTERIE (ASS)	376
PORTE-FUSIBLES (ENS)	741
PORTE-FUSIBLES (ENS)	272
	284
	286
	812
PORTE LATÉRALE (ASS)	731
PORTIÈRE DE CABINE (ASS)	724
	728
POSTE DE CONDUITE (VERSION)	764
POULIE D'ALTERNATEUR	46
POULIE D'ENTRAÎNEMENT DE VENTILATEUR	46
POULIE D'ENTRAÎNEMENT DE VENTILATEUR (ASS)	46
PRISE DE BATTERIE AUXILIAIRE (ASS)	236
PRODUIT D'ETANCHEITE	324
	326
	328
	330
	332
PROTECTEUR DES CANALISATIONS (ASS)	398
PROTECTION ANTIVANDALISME (ASS)	734
	735
PROTECTION AV (ASS)	396
	397
PROTÈGE-RADIATEUR (ASS)	400
	402

R

RACCORD DE RÉFRIGÉRANT (ENS)	748
RADIATEUR (ASS)	82
	84
	86
	88
	90
RALLONGE DU DOSSIER DE SIEGE	732
	733
REFROIDISSEUR D'HUILE DE BOÎTE (ASS)	299
REGARD DE NIVEAU	576
REGULATEUR	75
RÉGULATEUR - PÉDALE (ASS)	778
REGULATEUR (ASS)	116
RÉGULATEUR DE TEMPÉRATURE (ASS)	92
RÉGULATEUR ET POMPE D'INJECTION DE CARBURANT (ASS)	154
	156
RENIFLARD	456
RENIFLARD (ASS)	54
RENIFLARD DE CARTER (ENS)	54
RENIFLARD (DÉCHARGE DE PRESSION)	305
	306
RENIFLARD (ENS)	450
RÉSERVOIR - LAVE-GLACE (ASS)	827
RÉSERVOIR DE CARBURANT (ASS)	158
	160
	162
RÉSERVOIR HYDRAULIQUE - MONTAGE (ASS)	572
RÉSERVOIR HYDRAULIQUE ET FILTRE (ASS)	576
RETROVISEUR - CABINE (ASS)	830
	831
RÉTROVISEUR (ASS)	752
	753
	754
	755
	756
	757
	758
	759
	760
ROBINET DE BATTERIE (ASS)	190

* TRADUCTION NON DISPONIBLE AU MOMENT DE LA PUBLICATION

INDEX

Désignation	Page
	258
ROBINET DE BATTERIE (ASS)	194
	198
	204
ROBINET-PRÉLÈVEMENT D'ÉCHANTILLON DE LIQUIDE	53
	548
	550
	552
ROBINET-PRÉLÈVEMENT D'ÉCHANTILLON DE LIQUIDE	308
	310
	312
	314
ROTATION DE LA ROUE DU VENTILATEUR SOUFFLANT	856
ROTATION DE LA ROUE DU VENTILATEUR SOUFFLANT (ISSUE DE SECOURS)	696
	700
	704

S

SIEGE - COUVERCLE INFERIEUR (ASS)	766
SIÈGE (ASS)	802
	803
	804
	806
	808
SIÈGE AVEC SUSPENSION (ASS)	814
	815
	816
SIÈGE AVEC SUSPENSION (ASS)	817
	826
SIÈGE RÉGLABLE (ASS)	810
	811
	812
	813
SILENCIEUX (ASS)	104
SOLÉNOÏDE	244
SOLÉNOÏDE D'ARRÊT (ASS)	244
SOLÉNOÏDE (ENS)	256
SOLÉNOÏDE (ENS) (24 VOLTS)	252
SONDE - CIRCUIT DE CARBURANT	239
	240
SONDE - CIRCUIT DE CARBURANT (LEVAGE)	239
	274
	278
SONDE - NIVEAU DE CARBURANT (ENS)	158
	160
	162
SOUPAPE - CARTOUCHE PILOTE (ASS)	627
	628
	629
	630
	631
	632
SOUPAPE - RENIFLARD	26
SOUPAPE - SOLÉNOÏDE (ASS)	650
SOUPAPE - SOLÉNOÏDE (ASS) (COMMANDE DE TRANSLATION)	610
SOUPAPE D'ADMISSION	22
	24
SOUPAPE D'ARRÊT	42
SOUPAPE DE DERIVATION (ASS)	503
	504
	610
SOUPAPE DE DÉRIVATION ET MONTAGE	502
SOUPAPE DE DIRECTION (ASS)	506
	508
SOUPAPE DE NEUTRALISATION (ASS)	361
SOUPAPE DE NEUTRALISATION DE DIRECTION (ASS)	509
SOUPAPE D'ÉCHAPPEMENT	22
	24
SOUPAPE-DÉMARRAGE À L'ÉTHER (ENS)	246
SOUPAPE PILOTE (ASS)	612
	614
	616
	618
	620
	622
	624
	625
	626
SOUPAPE SELECTRICE ET REGULATRICE DE PRESSION	645
	646
SUPPORT DE FILTRE À HUILE (ASS)	53
SUPPORT DE FILTRE D'HUILE DE BOÎTE	316
SUPPORT DE FILTRE ET REFROIDISSEUR D'HUILE MOTEUR	70
	72
SUPPORT DE MOTEUR (ASS)	48
SUPPORT DE SIÈGE (ASS)	818
	819
	820
SURPRESSEUR (ASS)	792
	796
SUSPENSION DE SIEGE - CARTER (ASS)	743

T

TABLEAU DE BORD (ASS)	768
	770

* TRADUCTION NON DISPONIBLE AU MOMENT DE LA PUBLICATION

INDEX

Désignation	Page
	772
	774
	775
	776
TAMIS D'ASPIRATION	320
	322
TAMIS DE FILTRE	827
TAMIS DE RÉSERVOIR DE CARBURANT	158
	160
	162
TAPIS DE PLANCHER	764
THERMOCONTACT (ENS) (TEMPÉRATURE DU RÉFRIGÉRANT POUR AUXILIAIRE DE DÉMARRAGE)	262
	264
	266
THERMOSTAT ET BOITIER (ASS)	75
THERMOSTAT-TEMPÉRATURE D'EAU	92
TOIT ROPS (ASS)	800
TOURILLON DE MOTEUR (ASS)	49
TRAINS PLANÉTAIRES - CARTER ET PIÈCES	294
TRANSFORMATION ELECTRIQUE (ASS)	210
	211
TURBOCOMPRESSEUR - CARTOUCHE (ASS)	95
TURBOCOMPRESSEUR (ASS)	106
	107

V

Désignation	Page
VANNE-EAU	736
VANNE PILOTE (ASS)	648
	649
VENTILATEUR SOUFFLANT (ASS)	74
VERIN DE DIRECTION (ASS)	472
	474
VÉRIN DE DIRECTION ET JOINT (ASS)	470
	471
VERIN DE DIRECTION ET MONTAGE (ASS)	469
VÉRIN DE LEVAGE (ASS)	528
	530
VÉRIN D'INCLINAISON (ASS)	532
	534
VERIN (ENS) (ÉTHER)	246
VERROUILLAGE ANTI-VANDALISME (ASS)	855
VERSION DE CABINE-BAS PROFIL	693
VERSION DE TOIT - ROPS OUVERT	712
VERSION DE TRANSFORMATION - DÉPLACEMENT NON ROUTIER	368
VERSION DE TRANSFORMATION - SANS CABINE	720
	721
VERSION DE TRANSFORMATION - SANS ROPS	719
VERSION DE TRANSFORMATION DE CABINE-BAS PROFIL	718
VERSION DE TRANSFORMATION POUR DÉPLACEMENT ROUTIER	370
VERSION HYDRAULIQUE	536
	537
	538
VILEBREQUIN - POULIE (ASS)	45
VILEBREQUIN (ASS)	16
VILEBREQUIN (ENS)	15
VITRE (ASS)	834
	836
VOLANT MOTEUR (ASS)	32
	33
VOLET D'AERATION	416

* TRADUCTION NON DISPONIBLE AU MOMENT DE LA PUBLICATION

INDICE

Nombre	Página
A	
ACCIONADOR DEL FRENO DE ESTACIONAMIENTO (GR)	427
ACONDICIONADOR DE AIRE (CONFIG)	679
ACONDICIONADOR DE AIRE (GR)	680
	684
ACTIVADOR DEL FRENO (GR)	426
AIRE - TUBERÍAS DE (GR)	100
	102
ALARMA DE RETROCESO	260
ALARMA (GR)	170
ALFOMBRILLA DEL PISO	764
AMORTIGUADOR DE VIBRACIONES (GR)	27
ANILLO RETEN	252
	274
	278
ANTENA (CONJ)	746
ÁRBOL DE LEVAS (CONJ)	108
ÁRBOL DE LEVAS (GR)	10
ARO DESMONTABLE (GR)	343
	344
ARRANQUE - INTERRUPTOR DE (GR)	259
	768
ASIENTO AJUSTABLE (GR)	810
	811
	812
	813
ASIENTO CON SUSPENSIÓN (GR)	826
ASIENTO (GR)	802
	803
	804
	806
	808
ATADURA (GR)	828
ATOMIZADOR DE ETER (CONJ)	246
AUXILIAR DE ARRANQUE CON ÉTER (GR)	246
B	
BALANCÍN (GR) (ADMISIÓN)	50
BALANCÍN (GR) (ESCAPE)	50
BASE DEL FILTRO DE ACEITE DE LA TRANSMISION	316
BASTIDOR DEL CARGADOR (GR)	389
BASTIDOR TRASERO (GR)	390
	392
BATERÍA Y CABLES (GR)	190
	194
	198
	204
BATERÍA (12 VOLTIOS)	191
	195
	199
	205
BLOQUE DE CALENTAMIENTO (GR)	212
BLOQUE DESLIZANTE-JUEGO	816
	817
BLOQUE MOTOR (GR)	17
	18
	20
BOCINA	742
BOCINA (CONJ) (24 VOLTIOS)	741
BOCINA DE AIRE (GR)	738
	740
BOCINA ELÉCTRICA (GR)	741
BOCINA ELÉCTRICA (GR)	742
BOMBA DE ACEITE DEL MOTOR (GR)	63
	64
	65
	66
	67
	68
	69
BOMBA DE AGUA (GR)	78
	80
BOMBA DE CEBADO DE COMBUSTIBLE (GR)	148
BOMBA DE CEBADO Y FILTRO PRIMARIO DE COMBUSTIBLE (GR)	149
	150
BOMBA DE DIRECCIÓN SECUNDARIA (GR)	492
BOMBA DE ENGRANAJES (GR)	342
BOMBA DE INYECCIÓN DE COMBUSTIBLE (GR)	144
	145
	146
BOMBA DE PALETAS-CARTUCHO (GR)	510
	511
BOMBA DE PALETAS (GR)	574
BOMBA DE TRANSFERENCIA DE COMBUSTIBLE (GR)	151
	152
BOMBA DE TRANSFERENCIA DE COMBUSTIBLE Y MONTAJE (GR)	143
BOMBA HIDRÁULICA Y MONTAJE (GR)	573
BOMBA Y MONTAJE DE LA DIRECCIÓN SECUNDARIA (GR)	488
C	
CABINA (CONFIG)	691
	692
CABINA DE BAJO PERFIL (CONFIG)	693
CABINA (GR)	694
	696
	700

* NO HAY TRADUCCION DISPONIBLE EN EL MOMENTO DE LA IMPRESION

INDICE

Nombre	Página
	704
	708
	710
CABLES DE CONTROL DE AMORTIGUACIÓN (GR)	288
	289
CABLES DE LA DIRECCIÓN SECUNDARIA	290
	291
CABLES DEL MOTOR (GR)	262
CABLES DEL MOTOR (GR)	264
	266
CABLES DEL PANEL DE RELES (GR)	284
	286
CABLES DEL TABLERO MONITOR (GR)	278
CABLES DEL TABLERO MONITOR (GR)	274
CABLES DELANTEROS (GR)	268
	270
CABLES POSTERIORES (GR)	282
CAJA DE EJE OSCILANTE (GR)	328
	330
	332
CAJA DE LA BOMBA DE COMBUSTIBLE (GR)	121
CAJA DE LA SUSPENSIÓN DEL ASIENTO (GR)	743
CAJA DEL EJE OSCILANTE (GR)	324
	326
CAJA DELANTERA - TORNILLERÍA DE LA (GR)	30
CAJA DELANTERA (GR)	36
CAJA Y PIEZAS DE LOS PLANETARIOS	294
CALCOMANÍA	542
CALCOMANÍA CMS	494
	495
	496
CALCOMANIA-CONTROL DE CALENTADOR Y ACONDICIONADOR DE AIRE	792
CALCOMANÍA DE ADVERTENCIA	856
CALCOMANÍA DE ADVERTENCIA (CABLES AUXILIARES DE ARRANQUE)	856
CALCOMANÍA DE ADVERTENCIA (RESORTE A ALTA COMPRESION)	427
CALCOMANÍA DE ADVERTENCIA (SALIDA ALTERNATIVA)	696
	700
	704
CALCOMANÍA DE LA CALEFACCIÓN	796
CALCOMANÍAS Y PLACAS DE IDENTIFICACIÓN (GR)	856
CALEFACCIÓN DE LA CABINA (GR)	736
CÁNCAMOS DE LEVANTAMIENTO DEL MOTOR (GR)	37
CANDADO (GR)	109
	526
	720
	734
	735
	855
CANTONERA Y CUCHILLA (GR)	654
	655
CAPO Y PROTECTOR (GR)	406
CARGA - ALTERNADOR DE (GR)	184
CARGA - ALTERNADOR DE (GR)	172
	176
	179
	180
	182
	188
CÁRTER - COLECTOR DEL (GR)	42
CÁRTER - PROTECTOR DEL (GR)	395
CENICERO	768
CIGÜEÑAL - POLEA DE (GR)	45
CIGÜEÑAL (CONJ)	15
CIGÜEÑAL (GR)	16
CILINDRO (CONJ) (ETER)	246
CILINDRO DE AIRE HIDRÁULICO	461
CILINDRO DE DIRECCIÓN (GR)	472
	474
CILINDRO DE DIRECCIÓN Y MONTAJE (GR)	469
CILINDRO DE DIRECCIÓN Y SELLO (GR)	470
	471
CILINDRO DE LEVANTAMIENTO - TUBERÍAS DEL (GR)	556
CILINDRO DE LEVANTAMIENTO (GR)	528
	530
CINTURÓN DE SEGURIDAD (GR)	801
	828
CINTURÓN DE SEGURIDAD (GR) (RETRACTIL)	816
	817
COLADOR	829
COLADOR (CONJ)	577
COLADOR DEL TANQUE DE COMBUSTIBLE	158
	160
	162
COLUMNA DE DIRECCIÓN AJUSTABLE (GR)	498
COMBUSTIBLE - TANQUE DE (GR)	158
	160
	162
COMBUSTIBLE - TUBERÍAS DE DRENAJE DE (GR)	124
COMPARTIMIENTO DEL OPERADOR (CONFIG)	764
COMPRESOR DE AIRE (GR)	4
	6

* NO HAY TRADUCCION DISPONIBLE EN EL MOMENTO DE LA IMPRESION

INDICE

Nombre	Página
	8
	9
COMPRESOR DE REFRIGERANTE (GR)	714
	716
CONEXIÓN DE ENGRASE	349
CONEXIÓN DE ENGRASE (ROSCA DE 1/8-27)	348
	404
	469
	652
CONFIGURACIÓN DE CONVERSIÓN - SIN CABINA	720
	721
CONFIGURACIÓN DE MOTORES	1
	2
CONFIGURACIÓN DE TRANSFORMACIÓN PARA CARRETERA	370
CONFIGURACIÓN DE TRANSFORMACIÓN PARA OBRAS	368
CONFIGURACIÓN PARA CARRETERA	238
CONJUNTO DE ELEMENTO DE CALEFACCION	166
	168
CONJUNTO DE MODIFICACIÓN (SIN ROPS)	719
CONTRAPESO (GR)	373
	374
	375
CONTROL DE AIRE-VÁLVULA	438
	442
	446
	829
CONTROL DE AMORTIGUACIÓN (CONFIG)	512
CONTROL DE DIRECCIÓN (GR)	468
CONTROL DE DIRECCION Y FRENO (CONFIG)	435
CONTROL DE LA RELACIÓN DE COMBUSTIBLE (GR)	110
	112
CONTROL DE LA TRANSMISIÓN (GR)	296
CONTROL DE PAR (GR)	164
CONTROL DEL CUCHARÓN (GR)	652
CONTROL DEL FRENO DE ESTACIONAMIENTO	436
CONTROL DEL FRENO SECUNDARIO(GR)	438
CONTROL DEL FRENO SECUNDARIO(GR)	442
	446
CONTROL ELECTRÓNICO DE CARGA ÚTIL (GR)	279
CONTROL ELECTRÓNICO (GR)	770
CONTROL ELECTRÓNICO (GR) (CMS)	774
CONTROL ELECTRÓNICO (GR) (DESCONEXIÓN DEL LEVANTAMIENTO)	542
CONTROL ELECTRÓNICO (GR) (PANTALLA DEL SISTEMA MONITOR)	775
CONTROL ELECTRÓNICO (GR) (PARADA DE MOTOR)	191
	195
	199
	205
CONTROL ELECTRÓNICO (GR) (POSICIONADOR DEL CUCHARÓN)	542
CONTROL ELECTRÓNICO (GR) (PRESION DE CILINDRO DE LEVANTAMIENTO)	274
*CONTROL GP-PMS DISPLAY	708
CONTROL HIDRÁULICO DE LA TRANSMISIÓN (GR)	298
CONTROL HIDRÁULICO DE OPERACIÓN PILOTO (GR)	514
	516
	518
	520
	522
	524
CONTROL POSICIONADOR DEL CUCHARÓN (GR)	540
CONVERSION A CABINA DE BAJO PERFIL (CONFIG)	718
CONVERTIDOR DE PAR (GR)	350
	352
	354
	356
CONVERTIDOR ELÉCTRICO (GR)	210
	211
CORREA TRAPEZOIDAL	714
CRISTAL	694
	710
CRUCETA Y COJINETE (GR)	349
CUBIERTA INFERIOR DEL ASIENTO DEL OPERADOR (GR)	766
CUCHARÓN DE USO GENERAL (CONJ)	656
	657
	658
	660
	662
	663
CUCHARÓN DE USO GENERAL (GR)	667
	668
	669
	670
	671
CUCHARON PARA PENETRACIÓN (CONJ)	664
CUCHARÓN PARA ROCA (CONJ)	665
	666
CUCHARÓN PARA ROCA (GR)	673
	674

* NO HAY TRADUCCION DISPONIBLE EN EL MOMENTO DE LA IMPRESION

INDICE

Nombre	Página
CULATA DE CILINDROS - TORNILLERÍA DE LA (GR)	29
CULATA DE CILINDROS (GR)	22, 24, 26

D

Nombre	Página
DESHIDRATADOR (GR)	166, 168
DESTELLADOR	226, 228, 232
DETECTOR DE NIVEL DEL COMBUSTIBLE	158, 160, 162
DETECTOR DE POSICIÓN (SISTEMA DE COMBUST.) (GR)	239
DETECTOR DE POSICIÓN (SISTEMA DE COMBUST.) (GR)	240
DETECTOR DE POSICIÓN (SISTEMA DE COMBUST.) (GR) (LEVANTAMIENTO)	239, 274, 278
DIENTE CORTO (GR)	678
DIENTE LARGO (GR)	677
DIFERENCIAL (CONFIG)	302
DIFERENCIAL DE DESLIZAMIENTO LIMITADO (GR)	304
DIFERENCIAL (GR)	303
DIRECCIÓN SECUNDARIA (CONFIG)	494, 495, 496
DISYUNTOR (CONJ) (15 A)	272
DISYUNTOR (CONJ) (15 A) (LUCES DE TRABAJO)	284, 286
DISYUNTOR (CONJ) (15 A) (PARADA DEL MOTOR)	284, 286
DISYUNTOR (CONJ) (80 AMP) (ALTERNADOR)	284, 286
DISYUNTOR (CONJ) (80 AMP) (PRINCIPAL)	284, 286
DISYUNTOR (GR)	190, 194, 198, 204, 258
DOSIFICACIÓN - BOMBA DE (GR)	489, 490

E

Nombre	Página
EJE DE MANDO (GR)	346
ELEMENTO DE FILTRO	102, 158, 160, 162, 576
ELEMENTO DE FILTRO DE ACEITE (CONJ) (HIDRAULICO)	576
ELEMENTO DEL FILTRO DE ACEITE HIDRÁULICO (CONJ)	316
ELEMENTO DEL FILTRO DE COMBUSTIBLE	150, 162
ELEMENTO PRIMARIO (CONJ)	93
ELEMENTO SECUNDARIO	93
EMPAQUETADURA	93
EMPAQUETADURA (BOMBA DE CEBADO DE COMBUSTIBLE)	148
EMPAQUETADURA (FILTRO PRIMARIO DE COMBUSTIBLE)	150
ENCENDEDOR DE CIGARRILLOS (CONJ)	768
ENCHUFE DE ARRANQUE AUXILIAR (GR)	236
ENFRIADOR DE ACEITE DE LA TRANSMISIÓN (GR)	299
ENFRIADOR DE ACEITE DEL MOTOR Y BASE DEL FILTRO	70, 72
ENGANCHE ARTICULADO (GR)	404
ENGRANAJE DE CORONA Y PIÑÓN (GR)	318
ENGRANAJE DE TRANSFERENCIA DE SALIDA	320, 322
ENGRANAJE DELANTERO (GR)	34
ENGRANAJE DELANTERO (GR) (SINCRONIZACION)	2
ESCALERILLA (GR)	409, 410
ESCAPE DE GASES (GR)	56
ESPEJO (GR)	752, 753, 754, 755
ESTRUCTURA ROPS (GR)	800
EXPULSOR DE POLVO (GR)	96
EXTENSIÓN DEL RESPALDO (GR)	732, 733

F

Nombre	Página
FILTRO	793, 797
FILTRO (CONJ)	792, 796

* NO HAY TRADUCCION DISPONIBLE EN EL MOMENTO DE LA IMPRESION

INDICE

Nombre	Página
FILTRO DE ACEITE - BASE DEL (GR)	53
FILTRO DE ACEITE DEL MOTOR (CONJ)	70
FILTRO DE ACEITE (GR)	316
FILTRO DE ACEITE (GR) (TREN DE FUERZA)	308
	310
	312
	314
FILTRO DE AGUA	78
FILTRO DE AIRE (GR)	94
FILTRO DE AIRE (GR)	93
FILTRO DE COMBUSTIBLE (CONJ)	115
FILTRO SECUNDARIO DE COMBUSTIBLE (GR)	115
FRENO DE ESTACIONAMIENTO (GR)	428
	430
	432
	433
	434
FRENO DE SERVICIO - CONTROL (GR)	456
FRENO DE SERVICIO - CONTROL (GR)	450
FRENO Y PLANETARIOS (GR)	292
	293
FUSIBLE (10 A)	272
	284
	286
	741
	812

G

GRUPO DE CABLES DE LOS INSTRUMENTOS Y ENCENDIDO	272
GRUPO DE CONVERSIÓN A CABINA SIN ROPS	722
GRUPO DE ENTRADA DE AIRE	723
GRUPO DE SELLO	78
GRUPO DE VÁLVULAS	585
GUARDABARROS (GR)	377
	378
	380

H

HIDRÁULICA (CONFIG)	536
	537
	538
HOJA DE LIMPIAPARABRISAS (CONJ)	840
	842
	844
	846

Nombre	Página

I

IMPULSOR DE VENTILADOR (GR)	28
INCLINACIÓN HORIZONTAL - CILINDRO DE (GR)	532
	534
INDICADOR DE SERVICIO DEL FILTRO DE AIRE	94
INDICADOR DEL NIVEL DE ACEITE (VARILLA) (GR)	57
INSONORIZADOR (CONFIG)	418
INSONORIZADOR (GR)	822
	824
INSONORIZADOR (GR)	420
	422
	424
INSTALACIÓN DE CONTROLES (GR)	744
INSTALACIÓN DE RADIO (GR)	746
INTERRUPTOR (CONJ)	708
INTERRUPTOR (CONJ) (AUXILIAR DE ARRANQUE)	246
INTERRUPTOR (CONJ) (LAVA LIMPIAPARAPRISAS (GR))	768
INTERRUPTOR DE EMPUJAR Y MANTENER (GR) (BOCINA)	741
	742
INTERRUPTOR DE FLUJO (CONJ) (DIRECCION PRINCIPAL)	291
INTERRUPTOR DE FLUJO (CONJ) (DIRECCIÓN SECUNDARIA)	290
	291
INTERRUPTOR DE LÍMITE (CONJ) (ALARMA DE RETROCESO)	336
INTERRUPTOR DE LÍMITE (CONJ) (SOBREGOLPE DEL CILINDRO DE FRENO)	461
INTERRUPTOR DE NIVEL DE LÍQUIDOS (CONJ) (ACEITE HIDRÁULICO) (TANQUE HIDRÁULICO)	190
	194
	198
	204
INTERRUPTOR DE PRESIÓN (CONJ) (ACEITE DEL MOTOR)	262
	264
	266
INTERRUPTOR DE PRESIÓN (CONJ) (AIRE DE FRENO DE ESTACIONAMIENTO)	438
	442
	446
INTERRUPTOR DE PRESIÓN (CONJ) (FRENO DE ESTACIONAMIENTO)	803
	813

* NO HAY TRADUCCION DISPONIBLE EN EL MOMENTO DE LA IMPRESION

INDICE

Nombre	Página
INTERRUPTOR DE PRESIÓN (CONJ) (LUZ DE PARADA)	191, 195, 199, 205
INTERRUPTOR DE PRESIÓN (GR) (ACEITE DE FRENO DE ESTACIONAMIENTO)	191, 195, 199, 205
INTERRUPTOR DE SEÑAL DE GIRO Y ADVERTENCIA (CONJ)	227, 228
INTERRUPTOR DE SEÑAL DE GIRO Y ADVERTENCIA (CONJ)	232
INTERRUPTOR DE TEMPERATURA (CONJ) (TEMPERATURA DE REFRIGERANTE PARA USAR AUXILIAR DE ARRANQUE)	262, 264, 266
INTERRUPTOR DE VOLQUETE (CONJ)	776
INTERRUPTOR DE VOLQUETE (CONJ)	288, 289
INTERRUPTOR DE VOLQUETE (CONJ) (LUCES DE DESPLAZAMIENTO)	234
INTERRUPTOR DEL TERMOSTATO (CONJ) (REFRIGERANTE)	680, 685
INTERRUPTOR MAGNÉTICO (CONJ) (RELE PRINCIPAL)	284, 286
INTERRUPTOR MAGNÉTICO (CONJ) (24 VOLTIOS) (RELÉ DE ARRANQUE)	284, 286
INTERRUPTOR PULSADOR (CONJ)	708
INTERRUPTOR ROTATIVO (CONJ) (VELOCIDAD DEL VENTILADOR)	792, 796

J

Nombre	Página
JUEGO (AISLADOR)	253
JUEGO DE ACCESORIOS	716
JUEGO DE ACCIONADOR	428
JUEGO DE ACTIVADOR DE FRENO	426, 427
JUEGO DE AJUSTE DEL ASIENTO	690, 766
JUEGO DE AMORTIGUADOR	690, 733
JUEGO DE ANILLO DE PISTON	44
JUEGO DE ANILLO DE PISTON (INCLUYE ANILLOS DEL PISTON)	4
JUEGO DE ARANDELA	256
JUEGO DE BOTÓN	743
JUEGO DE BUJES	253
JUEGO DE CARTUCHO DE FILTRO	166, 168
JUEGO DE COJÍN DEL ASIENTO	806, 808
JUEGO DE COJINETES	95, 182, 248, 256
JUEGO DE CORREAS TRAPEZOIDALES (INCLUYE 2 CORREAS)	46
JUEGO DE DESECANTE	166, 168
JUEGO DE DIAFRAGMA	740
JUEGO DE DIODO POSITIVO	173, 185
JUEGO DE DIODO POSITIVO (TORNILLERÍA DEL DISIPADOR DE CALOR)	177
JUEGO DE DIODOS DEL PRISIONERO DE EMPALME	172, 184
JUEGO DE DIODOS DEL PRISIONERO DE EMPALME (TORNILLERÍA DEL DISIPADOR DE CALOR)	177
JUEGO DE DISCO (DELGADO)	304
JUEGO DE DISCO (GRUESO)	304
JUEGO DE EJE	826
JUEGO DE ESCOBILLAS	248, 253, 256, 681
JUEGO DE FUNDA	428
JUEGO DE FUNDA DE LA SUSPENSIÓN DEL ASIENTO	826
JUEGO DE INCLINACIÓN DE ASIENTO	766
JUEGO DE INCLINACIÓN TRASERA	766
JUEGO DE INDICADOR	743
JUEGO DE MEDIDOR DE SERVICIO	272
JUEGO DE NÚCLEO POSTERIOR	574
JUEGO DE PALANCA	248, 253
JUEGO DE PALETA DE BOMBA	510
JUEGO DE PALETA POSTERIOR	574
JUEGO DE PANEL DEL RESPALDO DEL ASIENTO	806, 808
JUEGO DE PARAGOLPES	743
JUEGO DE PASADOR DEL MOTOR DE ARRANQUE	256
JUEGO DE REACONDICIONAMIENTO DEL REGULADOR	38

* NO HAY TRADUCCION DISPONIBLE EN EL MOMENTO DE LA IMPRESION

INDICE

Nombre	Página
JUEGO DE RECEPTÁCULO (2 CLAVIJAS)	708
JUEGO DE RECEPTÁCULO (3 CLAVIJAS)	242
	274
JUEGO DE REGULADOR	184
JUEGO DE RESISTENCIA	188
JUEGO DE RESORTES	743
JUEGO DE RESTRICCIÓN DEL CINTURÓN	826
JUEGO DE REVESTIMIENTO DE FRENO	434
JUEGO DE RODILLO	826
JUEGO DE SELLO CONTRA EL POLVO	716
JUEGO DE SELLO DE REFRIGERANTE	716
JUEGO DE SELLO DEL MOTOR DE ARRANQUE	256
JUEGO DE SELLOS	248
	489
	552
	586
	631
	650
JUEGO DE SERVICIO	346
	614
	618
	622
JUEGO DE SOLENOIDE	248
JUEGO DE TAPÓN	492
JUEGO DE TERMINAL A MASA	188
JUEGO DE TERMINAL DE REGULADOR	188
JUEGO DE TERMINAL DE RELÉ	172
	176
	184
	188
JUEGO DE TERMINAL DE SALIDA	172
	177
	184
	188
JUEGO DE TERMINAL (NEG)	182
JUEGO DE TERMINAL (POSITIVO)	182
JUEGO DE TERMINAL (RELE)	182
JUEGO DE TORNILLERÍA	182
	248
	256
JUEGO DE VÁLVULA DE ALIVIO	166
	168
JUEGO DEL COMPRESOR DE AIRE	4
	6
JUNTA DESLIZANTE (GR)	348
JUNTA UNIVERSAL (GR)	346
JUNTA UNIVERSAL (GR)	360

L

Nombre	Página
LÁMPARA	215
	216
	217
	218
	219
	220
	221
LÁMPARA DE FARO DELANTERO (GR)	215
	216
LÁMPARA DEL TECHO (GR)	694
LÁMPARA DEL TECHO (GR)	710
LÁMPARA MINIATURA	694
	710
	768
LÁMPARA MINIATURA (28 VOLTIOS)	793
	797
	812
LÁMPARA (24 VOLTIOS)(65 VATIOS)	214
LÁMPARA ((24 VOLTIOS)(65 VATIOS))	213
LÁMPARA (28 VOLTIOS)	776
LAVAPARABRISAS DE LA VENTANA (GR)	832
LENTE-ROJO	219
LIMPIAPARABRISAS DE LA VENTANA (GR)	838
	840
	842
	844
	846
	848
	850
	852
LLAVE	109
	258
	526
	720
	734
	735
	855
LLAVE - MANIJA	780
	782
	784
LUCES DE ADVERTENCIA (GR)	234
LUCES DE DESPLAZAMIENTO (GR)	226
	228
LUCES DE GIRO (GR)	232
LUCES DE REFLECTOR Y CAMBIO DE DIRECCION (GR)	222
	224
LUZ DE SEÑAL DE GIRO (GR)	217
	218
	219
	220
	221
	222
	224

* NO HAY TRADUCCION DISPONIBLE EN EL MOMENTO DE LA IMPRESION

INDICE

Nombre	Página
LUZ DE SEÑAL DE GIRO (GR) (ALTO/COLA ROJA-24 VOLTIOS)	226, 228
LUZ DE SEÑAL DE GIRO (GR) (SEÑAL DE GIRO TRASERA CON LUZ COLOR ANARANJADA-24 VOLTIOS)	226, 228
LUZ INDICADORA DE BASE (CONJ)	776
LUZ INDICADORA DE BASE (CONJ)	812

M

MAMPARA ANTITÉRMICA (GR)	382, 384, 386, 387, 388
MANGUITO DE EMPALME DE CABLE	720
MECANISMO DE VÁLVULAS (GR)	51, 52
MECANISMO DE VÁLVULAS (GR)	50
MIRILLA INDICADORA	576
MONITOR DE CARGA ÚTIL (CONFIG)	761
MONTAJE DE LA PLATAFORMA (GR)	762
MONTAJE DEL MOTOR Y LA TRANSMISIÓN (GR)	40, 41
MONTAJE DEL TANQUE HIDRÁULICO (GR)	572
MOTOR - SOPORTE DEL (GR)	48
MOTOR DE ARRANQUE ELÉCTRICO (GR)	248, 250, 251, 252
MOTOR DE ARRANQUE ELÉCTRICO (GR)	256
MÚLTIPLE DE ESCAPE (GR)	103
MUÑÓN DEL MOTOR (GR)	49

N

NEUTRALIZADOR DE LA TRANSMISIÓN (GR)	336
NÚCLEO DE TURBOCOMPRESOR (GR)	95

O

ORIFICIO DE ACEITE DE ENFRIAMIENTO	58, 60

P

PALANCA	526
PANTALLA (CONJ)	110
PENETRACIÓN DEL CUCHARÓN	672
PERSIANA (GR)	416
PISTON (GR)	44
PISTÓN Y BIELA (GR)	43
PIVOTE DEL LIMPIADOR (GR)	854
PLACA DE ADVERTENCIA (OPERACION DE LA MAQUINA)	857
PLACA DE CONTROL	275, 279
PLACA DE INSTRUCCIONES (DISYUNTOR)	190, 194, 198, 204
PLATAFORMA (GR)	780, 782, 784, 786, 788, 790
POLEA DEL ALTERNADOR	46
POLEA DEL MANDO DE VENTILADOR (GR)	46
POLEA DEL MANDO DEL VENTILADOR	46
PORTAFUSIBLE (CONJ)	741
PORTAFUSIBLE (CONJ)	272, 284, 286, 812
POSABRAZOS (GR)	688, 689, 690
POSICIONADOR DEL CUCHARÓN Y DESCONEXIÓN (GR)	540, 542
PRESURIZADOR (GR)	792, 796
PROTECTOR CONTRA EL VANDALISMO (GR)	734, 735
PROTECTOR DE LAS TUBERÍAS (GR)	398
PROTECTOR DEL RADIADOR (GR)	400, 402
PROTECTOR DEL TREN DE FUERZA (GR)	399
PROTECTOR DELANTERO (GR)	396, 397
PROTECTOR INFERIOR (GR)	394
PUERTA DE CABINA	724, 728
PUERTA LATERAL (GR)	731
PUNTA CORTA (GR)	676
PUNTA LARGA (GR)	675

R

RADIADOR (GR)	82

* NO HAY TRADUCCION DISPONIBLE EN EL MOMENTO DE LA IMPRESION

INDICE

Nombre	Página
	84
	86
	88
	90
REDUCTOR DE INTENSIDAD DE LAS LUCES (CONJ)	229
REFLECTOR (GR)	213
	222
	224
	226
	228
	712
REFLECTOR (GR)	214
REFRIGERANTE DEL ACOPLAMIENTO (CONJ)	748
REGULADOR	75
REGULADOR - PEDAL DEL (GR)	778
REGULADOR DE TEMPERATURA DEL AGUA	92
REGULADOR (GR)	116
REGULADOR Y BOMBA DE INYECCIÓN DE COMBUSTIBLE (GR)	154
	156
REGULADOR Y CAJA (GR)	75
REJILLA DE FILTRO	827
REJILLA DE SUCCIÓN	320
	322
RESPIRADERO	456
RESPIRADERO (ALIVIO DE LA PRESIÓN)	305
	306
RESPIRADERO (CONJ)	450
RESPIRADERO DEL CÁRTER (CONJ)	54
RESPIRADERO (GR)	54
RETROCESO - ALARMA DE (GR)	260
RETROVISOR (GR)	756
	757
	758
	759
	760

S

Nombre	Página
SELLANTE	324
	326
	328
	330
	332
SELLO ANULAR (34,59MM DIAMETRO INTERIOR)	462
SELLO ANULAR (81,92MM DI)	54
SELLO ANULAR (91,67MM DI)	320
SELLO ANULAR (94,84 MM DIAMETRO INTERIOR)	472
SELLO DE CIGÜEÑAL (GR)	47
SELLO DE VENTANA (GR)	696
	700
	704
SENSOR DE AMORTIGUADOR (GR)	199
	205
	209
SENSOR DE PRESIÓN (GR)	241
	242
SENSOR DE PRESIÓN (GR) (AIRE DE FRENO)	190
	194
	198
	204
SENSOR DE PRESIÓN (GR) (CILINDRO DE LEVANTAMIENTO)	278
SENSOR DE TEMPERATURA (GR)	243
SENSOR DE TEMPERATURA (GR) (ACEITE DE LA TRANSMISIÓN)	264
	266
SENSOR DE TEMPERATURA (GR) (ACEITE HIDRÁULICO)	194
	198
	204
SENSOR DE TEMPERATURA (GR) (REFRIGERANTE)	264
	266
SENSOR DE VELOCIDAD (CONJ) (MOTOR)	266
SENSOR DE VELOCIDAD (CONJ) (SALIDA DE LA TRANSMISION)	198
	322
SENSOR DE VELOCIDAD (GR) (MOTOR)	262
	264
SENSOR DE VELOCIDAD (GR) (SALIDA DE LA TRANSMISION)	190
	194
	204
SILENCIADOR (GR)	104
SOLENOIDE	244
SOLENOIDE (CONJ)	256
SOLENOIDE (CONJ) (24 VOLTIOS)	252
SOLENOIDE DE CORTE	244
SOPLADOR - VENTILADOR (GR)	74
SOPORTE DEL ASIENTO (GR)	818
	819
	820
SUSPENSIÓN - ASIENTO CON (GR)	814
	815
	816
	817

* NO HAY TRADUCCION DISPONIBLE EN EL MOMENTO DE LA IMPRESION

INDICE

Nombre	Página
T	
TABLERO DE INSTRUMENTOS (GR)	775, 776
TABLERO DE INSTRUMENTOS (GR)	768, 770, 772, 774
TANQUE DEL LAVAPARABRISAS (GR)	827
TANQUE Y FILTRO HIDRÁULICOS (GR)	576
TAPA	176, 184, 343, 344, 827
TAPA (ALTERNADOR)	172, 182
TAPA CONTRA EL POLVO	53, 308, 310, 312, 314, 484, 544, 548, 550, 552
TAPA DE LA BATERÍA (GR)	376
TAPA DE LA CAJA DELANTERA (GR)	13
TAPA DE LA CULATA DE CILINDROS (GR)	12
TAPA DE PORTAFUSIBLES	272, 284, 286, 741, 812
TAPA DEL BLOQUE MOTOR (GR)	11
TAPA DEL MECANISMO DE VÁLVULAS (GR)	14
TAPA DEL RADIADOR	84, 86, 88
TAPA DEL TANQUE DE COMBUSTIBLE (CONJ)	158, 160, 162
TAPA DEL TANQUE DE FILTRO	109
TAPA DEL TAPÓN DEL TANQUE HIDRÁULICO (GR)	526
TAPA DEL TUBO DE LLENADO	576
TAPA DEL TUBO DE LLENADO DE ACEITE	305, 306
TAPA DEL TUBO DE LLENADO DE ACEITE (CONJ)	55
TAPA DEL TUBO DE LLENADO DEL TANQUE DE COMBUSTIBLE	109
	158, 160, 162
TAPA PROTECTORA (GR)	855
TAPA PROTECTORA (GR)	109
TAPAS PROTECTORAS DE EMBARQUE (GR)	300
TAPÓN	320
TAPÓN DE DRENAJE	42, 299, 577
TAPÓN MAGNÉTICO	324, 326, 328, 330, 332
TAPÓN (ROSCA 7/16-20)	42
TECHO ROPS ABIERTO (CONFIG)	712
TECHO TIPO TOLDO (GR)	713
TEMPERATURA - REGULADOR DE (GR)	92
TERMINAL	172
TIRANTE DE TRABA DEL BASTIDOR DE DIRECCIÓN (GR)	414
TORNILLERÍA DE LA BOMBA DE INYECCIÓN DE COMB.	114
TORNILLERÍA DEL COLECTOR DEL CÁRTER (GR)	31
TORNILLERÍA DEL MÚLTIPLE DE ESCAPE (GR)	97, 98
TRABA CONTRA EL VANDALISMO (GR)	855
TRANSMISION (CONFIG)	358, 359
TRANSMISIÓN PLANETARIA (GR)	338
TUBERÍAS CON SERVOMANDO (GR)	558, 561
TUBERÍAS DE ACEITE DEL MOTOR (GR)	58, 60
TUBERÍAS DE ACONDICIONADOR DE AIRE (GR)	748
TUBERIAS DE CALEFACCION	750
TUBERÍAS DE COMBUSTIBLE (GR)	122
TUBERIAS DE CONTROL DE LA SUSPENSIÓN (GR)	562, 566
TUBERÍAS DE DIRECCIÓN (GR)	484
TUBERÍAS DE ENGRASE (GR)	412
TUBERÍAS DE INYECCIÓN DE COMBUSTIBLE (GR)	125, 126, 127, 128, 129

* NO HAY TRADUCCION DISPONIBLE EN EL MOMENTO DE LA IMPRESION

INDICE

Nombre	Página
	130
	131
	132
	134
	136
	138
	140
	142
TUBERÍAS DE LA CALEFACCIÓN (GR)	750
TUBERÍAS DE LA DIRECCIÓN SECUNDARIA (GR)	476
	480
TUBERÍAS DEL AGUA (GR)	76
	77
TUBERÍAS DEL CILINDRO DE INCLINACIÓN (GR)	570
TUBERÍAS DEL COMPRESOR DE AIRE (GR)	38
TUBERÍAS DEL ENFRIADOR DE ACEITE HIDRÁULICO (GR)	554
TUBERIAS DEL ENFRIADOR DEL CONVERTIDOR DE PAR	334
TUBERÍAS DEL FILTRO Y LA TRANSMISIÓN (GR)	308
TUBERÍAS DEL FILTRO Y LA TRANSMISIÓN (GR)	310
	312
	314
TUBERÍAS DELANTERAS (GR)	544
	546
TUBERÍAS HIDRÁULICAS (GR)	552
TUBERÍAS HIDRÁULICAS (GR)	548
	550
TUBO DE LLENADO DE ACEITE DE LA TRANSMISIÓN (GR)	305
	306
TUBO DE LLENADO DE ACEITE (GR)	55
TURBOCOMPRESOR - TUBERÍAS DE ACEITE DEL (GR)	62
TURBOCOMPRESOR (GR)	106
	107

V

Nombre	Página
VÁLVULA	577
	590
	592
	600
	602
	604
	608
	633
	642
VÁLVULA (COMPENSACION)	594
	596
	598
	606
VÁLVULA (CONJ) (FRENO DE ESTACIONAMIENTO)	436
VÁLVULA (CONJ) (RESPIRADERO)	75
	92
VÁLVULA DE ACTIVACIÓN DEL ÉTER	246
VÁLVULA DE AGUA	736
VÁLVULA DE ALIVIO - DESCONEXIÓN (GR)	550
	552
VÁLVULA DE ALIVIO - DESCONEXIÓN (GR)	586
VÁLVULA DE ALIVIO (GR)	362
	364
	366
	590
	633
	634
	635
	636
	637
	638
	639
	640
	641
	642
	643
	644
VÁLVULA DE ALIVIO (GR) (PRINCIPAL)	592
	594
VÁLVULA DE ALIVIO (GR) (TUBERIA, ORIFICIO DE CILINDRO AUXILIAR DEL EXTREMO DE VASTAGO)	594
	596
	598
	600
	602
	608
VÁLVULA DE COMPENSACION (GR)	485
	505
VÁLVULA DE CONTROL DEL FRENO (GR)	463
VÁLVULA DE CONTROL DEL FRENO (GR)	462
VÁLVULA DE CONTROL DEL FRENO (GR) (ESTACIONAMIENTO Y SERVICIO)	451
	457
VÁLVULA DE CONTROL (GR)	587
	588
	590
VÁLVULA DE CONTROL (GR)	596
	598
	600
	608
VÁLVULA DE CONTROL (GR)	592

* NO HAY TRADUCCION DISPONIBLE EN EL MOMENTO DE LA IMPRESION

INDICE

Nombre	Página
	594
	602
	604
	606
VÁLVULA DE CONTROL Y MONTAJE (GR)	580
	581
	582
	583
	584
VÁLVULA DE CORTE	42
VÁLVULA DE DERIVACIÓN (GR)	503
	504
VÁLVULA DE DERIVACIÓN (GR)	610
VÁLVULA DE DERIVACIÓN Y MONTAJE (GR)	502
VÁLVULA DE ENTRADA	22
	24
VÁLVULA DE ESCAPE	22
	24
VÁLVULA DE LANZADERA (GR)	648
	649
VÁLVULA DE MUESTREO	53
	308
	310
	312
	314
	548
	550
	552
VÁLVULA DE RETENCIÓN (CONJ)	450
	456
VÁLVULA DE RETENCIÓN (GR)	451
	457
	464
	465
	466
	467
VÁLVULA DE RETENCIÓN (GR)	558
VÁLVULA DE SOLENOIDE (GR)	650
VÁLVULA DE SOLENOIDE (GR) (CONTROL DE AMORT.)	610
VÁLVULA DEL RESPIRADERO (CONJ)	26
VÁLVULA NEUTRALIZADORA DE DIRECCIÓN (GR)	509
VÁLVULA NEUTRALIZADORA (GR)	361
VALVULA PILOTO DE CARTUCHO (GR)	627
	628
	629
	630
	631
	632
VÁLVULA PILOTO (GR)	612
	614
	616
	618
	620
	622
	624
	625
	626
VÁLVULA SELECTORA Y DE CONTROL DE PRESIÓN (GR)	645
	646
VÁLVULAS DE LA DIRECCIÓN (GR)	506
	508
VENTANA (GR)	834
	836
VENTILADOR DE ALTERNADOR	184
VIDRIO DE LOS REFLECTORES (CONJ)	214
VIDRIO DE LOS REFLECTORES (CONJ)	213
VISERA	830
	831
VISERA (GR)	830
	831
VOLANTE - CAJA DE (GR)	35
VOLANTE (GR)	32
	33

* NO HAY TRADUCCION DISPONIBLE EN EL MOMENTO DE LA IMPRESION

ÍNDICE

Designação	Página

A

ACENDEDOR DE CIGARROS 768
ACIONADOR DO FREIO DE ESTACIONAMENTO 427
ACOPLAMENTO - REFRIGERANTE 748
ALARME 170
ALARME - MARCHA À RÉ 260
ALARME DE MARCHA À RÉ 260
ALAVANCA 526
ALOJAMENTO DA BOMBA DE COMBUSTÍVEL 121
ALTERNADOR DE CORRENTE 172 176 179 180 182 184 188
AMORTECEDOR 27
AMORTECEDOR - SENSOR 199 205 209
ANEL RETENTOR 252 274 278
ANTENA 746
AQUECEDOR - BLOCO 212
AQUECEDOR DA CABINE 736
ARO DESMONTÁVEL 343 344
ARRANJO RODOVIÁRIO 238
ARREFECEDOR DE ÓLEO DA TRANSMISSÃO 299
ARREFECEDOR DE ÓLEO DO MOTOR E BASE DO FILTRO 70 72
ASSENTO 802 803 804 806 808
ASSENTO - FUNDO 766
ASSENTO AJUSTÁVEL 810 811 812 813
ASSENTO COM SUSPENSÃO 814 815 816 817
ATOMIZADOR - ÉTER 246
AUXILIAR DE PARTIDA A ÉTER 246

B

BALANCIM (ENTRADA) 50
BALANCIM (ESCAPE) 50
BASE - FILTRO DE ÓLEO DA TRANSMISSÃO . . . 316
BASE DO FILTRO DE ÓLEO 53
BATERIA E CABOS / FIOS ELÉTRICOS 190 194 198 204
BATERIA (12 V) 191 195 199 205
BLOCO DO MOTOR 17 18 20
BOCAL DE ENCHIMENTO DE ÓLEO DO MOTOR 55
BOCAL DE ENCHIMENTO DE ÓLEO DO TREM DE FORÇA 305 306
BOMBA DA DIREÇÃO SECUNDÁRIA 492
BOMBA DA DIREÇÃO SECUNDÁRIA E MONTAGEM 488
BOMBA DE ÁGUA 78 80
BOMBA DE ENGRENAGENS 342
BOMBA DE ESCORVA DO COMBUSTÍVEL 148
BOMBA DE ESCORVA DO COMBUSTÍVEL E DO FILTRO PRIMÁRIO 149 150
BOMBA DE INJEÇÃO DO COMBUSTÍVEL 144 145 146
BOMBA DE ÓLEO - MOTOR 63 64 65 66 67 68 69
BOMBA DE PALHETAS 574
BOMBA DE TRANSFERÊNCIA DO COMBUSTÍVEL 151 152
BOMBA DO GOVERNADOR E INJEÇÃO DE COMBUSTÍVEL 154 156
BOMBA E MONTAGEM - TRANSFERÊNCIA DE COMBUSTÍVEL 143
BOMBA HIDRÁULICA E MONTAGEM 573
BOMBA REGULADORA 489 490

* TRADUÇÃO NÃO DISPONÍVEL NO MOMENTO DA IMPRESSÃO

ÍNDICE

Designação	Página
BRAÇO DO ASSENTO	688
	689
	690
BUJÃO - ANEL O	320
BUJÃO - ANEL O (7/16-20 THD)	42
BUJÃO DO DRENO	42
	299
	577
BUJÃO MAGNÉTICO	324
	326
	328
	330
	332
BUZINA	742
BUZINA DE AR	738
	740
BUZINA ELÉTRICA	741
	742
BUZINA (24 V)	741

C

CABEÇOTE DO MOTOR	22
	24
	26
CABINE	691
	692
	694
	696
	700
	704
	708
	710
	764
CABINE - PERFIL BAIXO	693
CABO DO CINTO DE SEGURANÇA	828
CABOS/FIOS ELÉTRICOS - ABSORÇÃO DE IMPACTOS	288
	289
CABOS/FIOS ELÉTRICOS - DIANTEIROS	268
	270
CABOS/FIOS ELÉTRICOS - DIREÇÃO SECUNDÁRIA	290
	291
CABOS/FIOS ELÉTRICOS - INSTRUMENTOS E IGNICÃO	272
CABOS/FIOS ELÉTRICOS - MOTOR	262
	264
	266
CABOS/FIOS ELÉTRICOS - PAINEL DE RELÉ	284
	286
CABOS/FIOS ELÉTRICOS - PAINEL MONITOR	274
	278
CABOS/FIOS ELÉTRICOS - TRASEIROS	282
CAÇAMBA PARA APLICAÇÃO GERAL	656
	657
	658
	660
	662
	663
	667
	668
	669
	670
	671
CAÇAMBA PARA PENETRAÇÃO	664
	672
CAÇAMBA PARA ROCHAS	665
	666
	673
	674
CADEADO	109
	526
	720
	734
	735
	855
CADEADO CONTRA VANDALISMO	855
CAIXA - EIXO FIXO	324
	326
CAIXA - EIXO OSCILANTE	328
	330
	332
CAIXA - SUSPENSÃO DO ASSENTO	743
CAIXA DIANTEIRA	36
CAIXA DO VOLANTE DO MOTOR	35
CANTO E BORDA CORTANTE	654
	655
CAPÔ E PROTETOR	406
CARCAÇA DAS ENGRENAGENS PLANETÁRIAS E COMPONENTES	294
CÁRTER DO ÓLEO DO MOTOR	42
CARTUCHO - BOMBA DE PALHETAS	510
	511
CARTUCHO DO TURBOALIMENTADOR	95
CHASSI DIANTEIRO	389
CHASSI TRASEIRO	390
	392
CHAVE	109
	258
	526
	720
	734

* TRADUÇÃO NÃO DISPONÍVEL NO MOMENTO DA IMPRESSÃO

ÍNDICE

Designação	Página
	735
	855
CHAVE - ALAVANCA	780
	782
	784
CHAVE GERAL	190
	194
	198
	204
	258
CILINDRO DA DIREÇÃO	472
	474
CILINDRO DE AR/HIDRÁULICO DOS FREIOS	461
CILINDRO DE DIREÇÃO E MONTAGEM	469
CILINDRO DE DIREÇÃO E RETENTOR	470
	471
CILINDRO DE INCLINAÇÃO	532
	534
CILINDRO DE LEVANTAMENTO	528
	530
CILINDRO (ÉTER)	246
CINTO DE SEGURANÇA	801
	828
CINTO DE SEGURANÇA (RETRÁTIL)	816
	817
CINZEIRO	768
COLETOR DE ESCAPE	103
COLUNA DE DIREÇÃO AJUSTÁVEL	498
COMANDO DO VENTILADOR	28
COMANDO HIDRÁULICO	536
	537
	538
COMPRESSOR DE AR	4
	6
	8
	9
COMPRESSOR DE REFRIGERANTE	714
	716
CONDICIONADOR DE AR	679
	680
	684
CONJUNTO ACIONADOR DO FREIO	426
CONTRAPESO	373
	374
	375
*CONTROL GP-PMS DISPLAY	708
CONTROLE - DIREÇÃO E FREIO	435
CONTROLE - POSICIONADOR DA CAÇAMBA	540
CONTROLE DA CAÇAMBA	652
CONTROLE DA TRANSMISSÃO	296
CONTROLE DE DIREÇÃO	468
CONTROLE DO FREIO DE ESTACIONAMENTO	436
CONTROLE DO FREIO DE SERVIÇO	450
	456
CONTROLE DO FREIO SECUNDÁRIO	438
	442
	446
CONTROLE ELETRÔNICO	770
CONTROLE ELETRÔNICO - CARGA ÚTIL	279
CONTROLE ELETRÔNICO (CMS)	774
CONTROLE ELETRÔNICO (DESENGATE AUTOMÁTICO DE LEVANTAMENTO)	542
CONTROLE ELETRÔNICO (MOSTRADOR CMSA VF)	775
CONTROLE ELETRÔNICO (PARADA DO MOTOR)	191
	195
	199
	205
CONTROLE ELETRÔNICO (POSICIONADOR DA CAÇAMBA)	542
CONTROLE ELETRÔNICO (PRESSÃO DO CILINDRO DE LEVANTAMENTO)	274
CONTROLE HIDRÁULICO DA TRANSMISSÃO	298
CONTROLE HIDRÁULICO DE OPERAÇÃO PILOTO	514
	516
	518
	520
	522
	524
CONVERSÃO PARA ESTRUTURA NÃO ROPS	719
CONVERSOR DE TORQUE	350
	352
	354
	356
CONVERSOR ELÉTRICO	210
	211
CORREIA EM V	714
CRUZETA E MANCAL	349

D

DECALQUE	542
DECALQUE - ADVERTÊNCIA (CABO AUXILIAR DE PARTIDA)	856
DECALQUE - ADVERTÊNCIA (MOLA DE ALTA COMPRESSÃO)	427
DECALQUE - AQUECEDOR	796
DECALQUE - CMS	494
	495

* TRADUÇÃO NÃO DISPONÍVEL NO MOMENTO DA IMPRESSÃO

ÍNDICE

Designação	Página
	496
DECALQUE - CONTROLE	275
	279
DECALQUE - CONTROLE DO AQUECEDOR E AR CONDICIONADO	792
DECALQUE - INSTRUÇÃO	856
DECALQUE - INSTRUÇÃO (SAÍDA DE EMERGÊNCIA)	696
	700
	704
DENTE CURTO	678
DENTE LONGO	677
DESENGATE E POSICIONADOR DA CAÇAMBA	540
	542
DIFERENCIAL	302
	303
DIFERENCIAL - DESLIZAMENTO LIMITADO	304
DIREÇÃO SECUNDÁRIA	494
	495
	496
DISJUNTOR AUTOMÁTICO DE CIRCUITO (15 A)	272
DISJUNTOR AUTOMÁTICO DE CIRCUITO (15 A) (ILUMINAÇÃO DE OPERAÇÃO)	284
	286
DISJUNTOR AUTOMÁTICO DE CIRCUITO (15 A) (PARADA DO MOTOR)	284
	286
DISJUNTOR AUTOMÁTICO DE CIRCUITO (80 A) (ALTERNADOR)	284
	286
DISJUNTOR AUTOMÁTICO DE CIRCUITO (80 A) (PRINCIPAL)	284
	286

E

EIXO-COMANDO DE VÁLVULA	10
	108
EIXO DE TRANSMISSÃO	346
EJETOR DE POEIRA	96
ELEMENTO - AQUECEDOR	166
	168
ELEMENTO - FILTRANTE	102
	158
	160
	162
	576
ELEMENTO - FILTRO DE COMBUSTÍVEL	150
ELEMENTO - HIDRÁULICO	316
ELEMENTO - PRIMÁRIO	93
ELEMENTO - SECUNDÁRIO	93
ELEMENTO DO FILTRO DE COMBUSTÍVEL	162
ELEMENTO FILTRANTE - ÓLEO (HIDRÁULICO)	576
ELIMINAÇÃO DE VAPORES DO CÁRTER	56
ELO - TRAVA DA ARMAÇÃO DA DIREÇÃO	414
EMISSOR - NÍVEL DO COMBUSTÍVEL	158
	160
	162
EMISSOR - POSIÇÃO	239
	240
EMISSOR - POSIÇÃO (LEVANTAMENTO)	239
	274
	278
ENGATE - ARTICULAÇÃO	404
ENGRENAGEM-COROA E PINHÃO	318
ENGRENAGENS DE DISTRIBUIÇÃO	34
ENGRENAGENS DE DISTRIBUIÇÃO (REGULAGEM)	2
ENGRENAGENS DE SAÍDA DE TRANSFERÊNCIA	320
	322
ENGRENAGENS PLANETÁRIAS - TRANSMISSÃO	338
ESCADA	409
	410
ESPELHO	752
	753
	754
	755
ESPELHO RETROVISOR	756
	757
	758
	759
	760
ESTRUTURA ROPS	800
EXTENSÃO - ENCOSTO	732
	733

F

FAROL DIANTEIRO	215
	216
FILTRO	792
	793
	796
	797
FILTRO - ÁGUA	78
FILTRO - COMBUSTÍVEL	115
FILTRO - ÓLEO	316
FILTRO - ÓLEO DO MOTOR	70
FILTRO - ÓLEO (TREM DE FORÇA)	308
	310
	312

* TRADUÇÃO NÃO DISPONÍVEL NO MOMENTO DA IMPRESSÃO

ÍNDICE

Designação	Página
	314
FILTRO - TAMPA DO TANQUE	109
FILTRO - TELA	827
FILTRO E TUBOS - TRANSMISSÃO	308
	310
	312
	314
FILTRO SECUNDÁRIO DE COMBUSTÍVEL	115
FIXADORES - BOMBA INJETORA DE COMBUSTÍVEL	114
FIXADORES - CABEÇOTE DO MOTOR	29
FIXADORES - CAIXA DIANTEIRA	30
FIXADORES - CÁRTER DO ÓLEO	31
FIXADORES - COLETOR DE ESCAPE	97
	98
FREIO DE ESTACIONAMENTO	428
	430
	432
	433
	434
FREIOS E ENGRENAGENS PLANETARIAS	292
	293
FUSÍVEL (10 A)	272
	284
	286
	741
	812

G

GOVERNADOR	116
GP. DE CONVERSÃO - SEM CABINE	722
GR. DE CONVERSÃO - ARRANJO NÃO RODOVIÁRIO	368
GR. DE CONVERSÃO - CABINE DE PERFIL BAIXO	718
GR. DE CONVERSÃO - SEM CABINE	720
	721
GRAXEIRA	349
GRAXEIRA (ROSCA 1/8-27 POL)	348
	404
	469
	652
GRUPO DE CONVERSÃO - ARRANJO RODOVIÁRIO	370

I

ILUMINAÇÃO - RODOVIÁRIA	226
	228
ILUMINAÇÃO - SINALIZAÇÃO	232
INDICADOR - LIMPEZA DO FILTRO DE AR	94
INDICADOR - NÍVEL DO ÓLEO (VARETA)	57
INDICADOR VISUAL	576
INSTALAÇÃO DO RÁDIO	746
INSTALAÇÃO DOS CONTROLES	744
INTERRUPTOR	708
INTERRUPTOR - APERTAR E SEGURAR (BUZINA)	741
	742
INTERRUPTOR - BALANCIM	288
	289
	776
INTERRUPTOR - BALANCIM (ILUMINAÇÃO RODOVIÁRIA)	234
INTERRUPTOR - BOTÃO	708
INTERRUPTOR - FLUXO (DIREÇÃO PRIMÁRIA)	291
INTERRUPTOR - FLUXO (DIREÇÃO SECUNDÁRIA)	290
	291
INTERRUPTOR - LIMITADOR (ALARME DE MARCHA-À-RÉ)	336
INTERRUPTOR - LIMITADOR (CURSO EXCESSIVO DO CILINDRO DO FREIO)	461
INTERRUPTOR - MAGNÉTICO (RELÉ PRINCIPAL)	284
	286
INTERRUPTOR - MAGNÉTICO (24 V) (RELÉ DE PARTIDA)	284
	286
INTERRUPTOR - NÍVEL DE FLUIDO (TANQUE HIDRÁULICO)	190
	194
	198
	204
INTERRUPTOR - PARTIDA	259
	768
INTERRUPTOR - PRESSÃO (AR DO FREIO DE ESTACIONAMENTO)	438
	442
	446
INTERRUPTOR - PRESSÃO (FREIO DE ESTACIONAMENTO)	803
	813
INTERRUPTOR - PRESSÃO (LUZ DE FREIO)	191
	195
	199
	205
INTERRUPTOR - PRESSÃO (ÓLEO DO FREIO DE ESTACIONAMENTO)	191
	195
	199
	205
INTERRUPTOR - PRESSÃO (ÓLEO DO MOTOR)	262

* TRADUÇÃO NÃO DISPONÍVEL NO MOMENTO DA IMPRESSÃO

ÍNDICE

Designação	Página
	264
	266
INTERRUPTOR - REDUTOR DE LUMINOSIDADE	229
INTERRUPTOR - ROTATIVO (VELOCIDADE DO VENTILADOR)	792
	796
INTERRUPTOR - SINALIZAÇÃO DE DIREÇÃO / LUZ DE ALERTA	227
	228
	232
INTERRUPTOR - TEMPERATURA (TEMPERATURA DO LÍQUIDO ARREFECEDOR DO AUXILIAR DE PARTIDA)	262
	264
	266
INTERRUPTOR - TERMOSTATO (REFRIGERANTE)	680
	685
INTERRUPTOR (AUXILIAR DE PARTIDA)	246
INTERRUPTOR (LIMPADOR - LAVADOR)	768

J

JOGO DE ACESSÓRIOS	716
JOGO DE AJUSTADOR	690
	766
JOGO DE ALAVANCA	248
	253
JOGO DE ALMOFADA	690
	733
JOGO DE ALMOFADA DO ASSENTO	806
	808
JOGO DE ANEL DE PISTÃO	44
JOGO DE ANEL DE PISTÃO (INCLUI ANÉIS DO PISTÃO)	4
JOGO DE ARRUELA	256
JOGO DE ATIVADOR	428
JOGO DE ATIVADOR DOS FREIOS	426
	427
JOGO DE BLOCO DESLIZADOR	816
	817
JOGO DE BOTÃO DE SUSPENSÃO	743
JOGO DE BUCHA	253
JOGO DE BUJÃO	492
JOGO DE CAPACITOR	188
JOGO DE CÁRTER DE INCLINAÇÃO	806
	808
JOGO DE CARTUCHO DE DESSECANTE	166
	168
JOGO DE CARTUCHO DE FILTRO	166
	168
JOGO DE CARTUCHO TRASEIRO	574
JOGO DE COIFA	428
JOGO DE COIFA DE SUSPENSÃO	826
JOGO DE COMPRESSOR DE AR	4
	6
JOGO DE CORREIAS EM V (INCLUI 2 CORREIAS)	46
JOGO DE DIAFRAGMA	740
JOGO DE DIODO POSITIVO	173
	185
JOGO DE DIODO POSITIVO (DIFUSOR DE CALOR - FERRAGENS)	177
JOGO DE DISCO (ESPESSO)	304
JOGO DE DISCO (ESTREITO)	304
JOGO DE EIXO DE SUSPENSÃO	826
JOGO DE ESCOVA	248
	253
	256
JOGO DE ESCOVAS DE MOTOR	681
JOGO DE FIXADOR DE CORREIA	826
JOGO DE FIXADORES	182
	248
	256
JOGO DE INCLINAÇÃO DO ASSENTO	766
JOGO DE INCLINAÇÃO TRASEIRA	766
JOGO DE INDICADOR	743
JOGO DE ISOLADOR	253
JOGO DE LONA DO FREIO	434
JOGO DE MAÇANETA	743
JOGO DE MANCAL	95
	182
	248
	256
JOGO DE MANUTENÇÃO	346
	614
	618
	622
JOGO DE MARCADOR DE HORAS DE SERVIÇO	272
JOGO DE MOLA	743
JOGO DE PALHETA	510
JOGO DE PALHETA TRASEIRA	574
JOGO DE PÁRA-CHOQUE	743
JOGO DE PINO DO MOTOR DE PARTIDA	256
JOGO DE PRISIONEIRO - DIODO DE JUNÇÃO	172
	184
JOGO DE PRISIONEIRO - DIODO DE JUNÇÃO (DIFUSOR DE CALOR - FERRAGENS)	177
JOGO DE RECEPTÁCULO (2 PINOS)	708
JOGO DE RECEPTÁCULO (3 PINOS)	242
	274
JOGO DE REGULADOR	184

* TRADUÇÃO NÃO DISPONÍVEL NO MOMENTO DA IMPRESSÃO

ÍNDICE

Designação	Página
JOGO DE RETENTOR	248
	489
	552
	586
	631
	650
JOGO DE RETENTOR CONTRA POEIRA	716
JOGO DE RETENTOR DE REFRIGERANTE	716
JOGO DE RETENTOR DO MOTOR DE PARTIDA	256
JOGO DE REVISÃO - GOVERNADOR	38
JOGO DE ROLETE DE SUSPENSÃO	826
JOGO DE SOLENÓIDE	248
JOGO DE TERMINAL DE SAÍDA	172
	177
	184
	188
JOGO DE TERMINAL DO REGULADOR	188
JOGO DE TERMINAL (NEGATIVO)	182
JOGO DE TERMINAL (POSITIVO)	182
JOGO DE TERMINAL RELÉ	172
	176
	184
	188
JOGO DE TERMINAL (RELÉ)	182
JOGO DE TERMINAL TERRA	188
JOGO DE VÁLVULA DE ALÍVIO	166
	168
JUNTA	93
JUNTA (BOMBA DE ESCORVA DE COMBUSTÍVEL)	148
JUNTA CORREDIÇA	348
JUNTA (FILTRO DE COMBUSTÍVEL PRIMÁRIO)	150
JUNTA UNIVERSAL	346
	360

L

LÂMINA DO LIMPADOR DE PÁRA-BRISA	840
	842
	844
	846
LÂMPADA	215
	216
	217
	218
	219
	220
	221
LÂMPADA - FAROL	213
	214
	222
	224
	226
	228
	712
LÂMPADA - MINIATURA	694
	710
	768
LÂMPADA - MINIATURA (28 V)	793
	797
	812
LÂMPADA - SINALIZAÇÃO	217
	218
	219
	220
	221
	222
	224
LÂMPADA - SINALIZAÇÃO (LUZ VERMELHA - FREIO/TRASEIRA - 24 V)	226
	228
LÂMPADA - SINALIZAÇÃO (SETA DE DIREÇÃO TRASEIRA ÂMBAR - 24 V)	226
	228
LÂMPADA - TETO	694
	710
LÂMPADA (24 VOLTS)(65 WATTS)	213
	214
LÂMPADA (28 V)	776
LAVADOR DO VIDRO	832
LENTE	694
	710
LENTE VERMELHA	219
LENTES - LUZES DE TRABALHO	213
	214
LEVANTAMENTO DO MOTOR	37
LIMITADOR DE COMBUSTÍVEL	110
	112
LIMPADOR DO VIDRO	838
	840
	842
	844
	846
	848
	850
	852
LUVA DE JUNÇÃO DE CABO	720
LUZ INTERMITENTE	226
	228
	232

M

MECANISMO DAS VÁLVULAS	50

* TRADUÇÃO NÃO DISPONÍVEL NO MOMENTO DA IMPRESSÃO

ÍNDICE

Designação	Página
	51
	52
MOLA DE CONTROLE DO TORQUE	164
MONTAGEM - MOTOR E TRANSMISSÃO	40
	41
MONTAGEM - PLATAFORMA	762
MONTAGEM - TANQUE HIDRÁULICO	572
MOTOR	1
	2
MOTOR ELÉTRICO DE PARTIDA	248
	250
	251
	252
	256
MUNHÃO DO MOTOR	49

N

NEUTRALIZADOR DA TRANSMISSÃO	336

O

ORIFÍCIO - BICO	58
	60

P

PAINEL DE INSTRUMENTOS	768
	770
	772
	774
	775
	776
PAINEL MONITOR DE CARGA ÚTIL	761
PAINEL TRASEIRO DO MOTOR	382
	384
	386
	387
	388
PÁRA-LAMA	377
	378
	380
PÁRA-SOL	830
	831
PÁRA-SOL DA CABINE	830
	831
PEDAL DO GOVERNADOR	778
PENEIRA DO TANQUE DE COMBUSTÍVEL	158
	160
	162
PERSIANA	416
PISTÃO	44
PISTÃO E BIELA	43
PIVÔ DO LIMPADOR	854
PLACA DE ADVERTÊNCIA (OPERAÇÃO DA MÁQUINA)	857
PLACA DE INSTRUÇÃO (CHAVE GERAL)	190
	194
	198
	204
PLACA E DECALQUE	856
PLATAFORMA	780
	782
	784
	786
	788
	790
POLIA - ACIONADOR DO VENTILADOR	46
POLIA - COMANDO DO VENTILADOR	46
POLIA DO ALTERNADOR	46
POLIA DO VIRABREQUIM	45
PONTA CURTA	676
PONTA LONGA	675
PORTA - ENTRADA DO AR	723
PORTA DA CABINE	724
	728
PORTA FUSÍVEIS	272
	284
	286
	741
	812
PORTA LATERAL	731
PRESSURIZADOR	792
	796
PROTETOR - CÁRTER DO ÓLEO DO MOTOR	395
PROTETOR - DIANTEIRO	396
	397
PROTETOR - RADIADOR	400
	402
PROTETOR - TREM DE FORÇA	399
PROTETOR - TUBOS	398
PROTETOR CONTRA VANDALISMO	734
	735
PROTETOR INFERIOR	394
PURIFICADOR DE AR	93
	94

R

RADIADOR	82
	84
	86
	88
	90
RECEPTÁCULO-PARTIDA AUXILIAR	236
REDUÇÃO DE RUÍDO	420

* TRADUÇÃO NÃO DISPONÍVEL NO MOMENTO DA IMPRESSÃO

ÍNDICE

Designação	Página
	422
	424
	822
	824
REGULADOR	75
REGULADOR DE TEMPERATURA DA ÁGUA	92
RESPIRO	54
	450
	456
RESPIRO (ALÍVIO DE PRESSÃO)	305
	306
RESPIRO DO CÁRTER	54
RETENTOR - VIDRO	696
	700
	704
RETENTOR DE ANEL-O (D.I. 34,59 MM)	462
RETENTOR DE ANEL-O (DIÂMETRO INTERNO DE 81,92MM)	54
RETENTOR DE ANEL-O (91,67 MM DE DIÂMETRO INTERNO)	320
RETENTOR DE ANEL-O (94,84MM DE DIÂMETRO INTERNO)	472
RETENTOR DO VIRABREQUIM	47
RUÍDO - ARRANJO PARA SUPRESSÃO	418

S

SECADOR DE AR	166
	168
SENSOR - PRESSÃO	241
	242
SENSOR - PRESSÃO (AR DO FREIO)	190
	194
	198
	204
SENSOR - PRESSÃO (CILINDRO DE LEVANTAMENTO)	278
SENSOR - TEMPERATURA	243
SENSOR - TEMPERATURA (LÍQUIDO ARREFECEDOR)	264
	266
SENSOR - TEMPERATURA (ÓLEO DA TRANSMISSÃO)	264
	266
SENSOR - TEMPERATURA (ÓLEO HIDRÁULICO)	194
	198
	204
SENSOR - VELOCIDADE (MOTOR)	266
SENSOR - VELOCIDADE (SAÍDA DA TRANSMISSÃO)	198
	322
SENSOR DE VELOCIDADE (MOTOR)	262
	264
SENSOR DE VELOCIDADE (SAÍDA DA TRANSMISSÃO)	190
	194
	204
SILENCIADOR	104
SISTEMA DE ABSORÇÃO DE IMPACTOS	512
SISTEMA DE ILUMINAÇÃO - ADVERTÊNCIA	234
SISTEMA DE ILUMINAÇÃO - FARÓIS E SINAL	222
	224
SOLENÓIDE	244
	256
SOLENÓIDE DE PARADA	244
SOLENÓIDE (24 V)	252
SUPORTE - ASSENTO	818
	819
	820
SUPORTE DA LÂMPADA INDICADORA	776
	812
SUPORTE DO MOTOR	48
SUSPENSÃO - ASSENTO	826

T

TAMPA	176
	184
	827
TAMPA - ACESSO À BATERIA	376
TAMPA - BLOCO DO MOTOR	11
TAMPA - BOCAL DE ENCHIMENTO	576
TAMPA - BOCAL DE ENCHIMENTO DE ÓLEO	55
	305
	306
TAMPA - CABEÇA DO CILINDRO	12
TAMPA - CAIXA DIANTEIRA	13
TAMPA - EMBARQUE	300
TAMPA - MECANISMO DAS VÁLVULAS	14
TAMPA - PORTA-FUSÍVEL	272
	284
	286
	741
	812
TAMPA - RADIADOR	84
	86
	88
TAMPA - TANQUE HIDRÁULICO	526
TAMPA (ALTERNADOR)	172
	182
TAMPA CONTRA POEIRA	53
	308
	310
	312

* TRADUÇÃO NÃO DISPONÍVEL NO MOMENTO DA IMPRESSÃO

ÍNDICE

Designação	Página
	314
	484
	544
	548
	550
	552
TAMPA DA VÁLVULA	343
	344
TAMPA DO BOCAL DE ENCHIMENTO DO TANQUE DE COMBUSTÍVEL	109
	158
	160
	162
TAMPA DO TANQUE DE COMBUSTÍVEL	158
	160
	162
TAMPA PROTETORA	109
	855
TANQUE - LAVADOR DE JANELA	827
TANQUE DE COMBUSTÍVEL	158
	160
	162
TANQUE HIDRÁULICO E FILTRO	576
TAPETE	764
TELA DE SUCÇÃO	320
	322
TELA FILTRANTE	110
	577
	829
TERMINAL ELÊTRICO	172
TERMOSTATO	92
TERMOSTATO / REGULADOR DE TEMPERATURA	75
TOLDO - ROPS ABERTA	712
TOLDO FLEXÍVEL	713
TRANSMISSÃO	358
	359
TUBOS - ABSORÇÃO DE IMPACTOS	562
	566
TUBOS - ÁGUA	76
	77
TUBOS - AQUECEDOR	750
TUBOS - AR	100
	102
TUBOS - AR CONDICIONADO	748
TUBOS - ARREFECEDOR DE ÓLEO HIDRÁULICO	554
TUBOS - ARREFECEDOR DO CONVERSOR DE TORQUE	334
TUBOS - CILINDRO DE INCLINAÇÃO	570
TUBOS - CILINDRO DE LEVANTAMENTO	556
TUBOS - CIRCUITO PILOTO	558
	561
TUBOS - COMBUSTÍVEL	122
TUBOS - COMPRESSOR DE AR	38
TUBOS - DIANTEIROS	544
	546
TUBOS - DIREÇÃO	484
TUBOS - DIREÇÃO SECUNDÁRIA	476
	480
TUBOS - DRENAGEM DO COMBUSTÍVEL	124
TUBOS - GRAXA	412
TUBOS - INJEÇÃO DO COMBUSTÍVEL	125
	126
	127
	128
	129
	130
	131
	132
	134
	136
	138
	140
	142
TUBOS - ÓLEO DO MOTOR	58
	60
TUBOS - ÓLEO DO TURBOALIMENTADOR	62
TUBOS - ÓLEO HIDRÁULICO	548
	550
	552
TUBOS DO AQUECEDOR	750
TURBOALIMENTADOR	106
	107

V

VÁLVULA	577
	585
	590
	592
	600
	602
	604
	608
	633
	642
VÁLVULA - NEUTRALIZADOR DA DIREÇÃO	509
VÁLVULA - OBTENÇÃO DE AMOSTRAS DE FLUIDOS	53
	308
	310
	312
	314
	548
	550

* TRADUÇÃO NÃO DISPONÍVEL NO MOMENTO DA IMPRESSÃO

ÍNDICE

Designação	Página
	552
VÁLVULA - PARTIDA A ÉTER	246
VÁLVULA COMPENSADORA	485
	505
VÁLVULA (COMPENSADORA)	594
	596
	598
	606
VÁLVULA DA DIREÇÃO	506
	508
VÁLVULA DE ADMISSÃO	22
	24
VÁLVULA DE ÁGUA	736
VÁLVULA DE ALÍVIO	362
	364
	366
	590
	633
	634
	635
	636
	637
	638
	639
	640
	641
	642
	643
	644
VÁLVULA DE ALÍVIO (PRINCIPAL)	592
	594
VÁLVULA DE ALÍVIO (TUBULAÇÃO, ABERTURA DA ENTRADA DA HASTE DO CILINDRO AUXILIAR)	594
	596
	598
	600
	602
	608
VÁLVULA DE CONTROLE	587
	588
	590
	592
	594
	596
	598
	600
	602
	604
	606
	608
VÁLVULA DE CONTROLE DO AR	438
	442
	446
	829
VÁLVULA DE CONTROLE DOS FREIOS	462
	463
VÁLVULA DE CONTROLE DOS FREIOS (ESTACIONAMENTO E SERVIÇO)	451
	457
VÁLVULA DE CONTROLE E MONTAGEM	580
	581
	582
	583
	584
VÁLVULA DE CONTROLE PILOTO	612
	614
	616
	618
	620
	622
	624
	625
	626
VÁLVULA DE ESCAPE	22
	24
VÁLVULA DE PARADA	42
VÁLVULA DE RETENÇÃO	450
	451
	456
	457
	464
	465
	466
	467
	558
VÁLVULA DE SEPARAÇÃO	648
	649
VÁLVULA DE VENTILAÇÃO	26
VÁLVULA DESVIADORA	503
	504
	610
VÁLVULA DESVIADORA E MONTAGEM	502
VÁLVULA DISJUNTORA	550
	552
	586
VÁLVULA DO CARTUCHO PILOTO	627
	628
	629
	630
	631
	632
VÁLVULA (FREIO DE ESTACIONAMENTO)	436
VÁLVULA NEUTRALIZADORA	361
VÁLVULA (RESPIRO)	75
	92

* TRADUÇÃO NÃO DISPONÍVEL NO MOMENTO DA IMPRESSÃO

ÍNDICE

Designação	Página
VÁLVULA SELETORA E CONTROLE DE PRESSÃO	645 646
VÁLVULA SOLENÓIDE	650
VÁLVULA SOLENÓIDE (SISTEMA DE ABSORÇÃO DE IMPACTOS)	610
VEDADOR	78
VEDADOR ADESIVO ISOLANTE	324 326 328 330 332
VENTILADOR - ALTERNADOR	184
VENTILADOR DE SOPRO	74
VIDRO	834 836
VIRABREQUIM	15 16
VOLANTE DO MOTOR	32 33

* TRADUÇÃO NÃO DISPONÍVEL NO MOMENTO DA IMPRESSÃO

STICHWORTVERZEICHNIS

Bezeichnung	Seite
A	
ABBLENDSCHALTER	229
ABDECKGLAS	694 710
ABLASSSTOPFEN	42 299 577
ABSPERRVENTIL	42
ABSTELLMAGNETSPULE	244
ANSAUGSIEB	320 322
ANSCHLUSS	172
ANSCHLUSSKLEMME (MASSE)	188
ANSCHLUSSKLEMMENSATZ (B+)	182
ANSCHLUSSKLEMMENSATZ (NEGATIV)	182
ANSCHLUSSKLEMMENSATZ (RELAIS)	182
ANTENNE	746
ANTRIEBSSCHUTZ	399
ANTRIEBSWELLE	346
ANTRIEBSWELLEN-KEILVERZAHNUNG	348
ANZEIGEN-EINBAUSATZ	743
ARBEITS- U. SIGNALLEUCHTE	222 224
ARBEITSLEUCHTEN	213 214 222 224 226 228 712
ARBEITSSCHEINWERFERLINSE	213 214
ARMLEHNE	688 689 690
ASCHENBECHER	768
ÄTHERSPRÜHGERÄT	246
ÄTHERSTARTHILFE	246
ÄTHERSTARTHILFEVENTIL	246
AUFKLEBER	542
AUFKLEBER - CATERPILLAR ÜBERWACHUNGSSYSTEM	494 495 496
AUFKLEBER - HEIZUNG	796
AUFKLEBER-HEIZUNGS- U. KLIMAANLAGEN-REGELUNG	792
AUFKLEBER (KONTROLLE)	275 279
AUSGANGS-ANSCHLUSSKLEMMENSATZ	172 177 184 188
AUSGLEICHSVENTIL	485 505
AUSLASSVENTIL	22 24
AUSLÖSERSATZ	428
AUSPUFFKRÜMMER	103
AUSPUFFKRÜMMER-HALTETEILE	97 98
B	
BATTERIE UND VERDRAHTUNG	190 194 198 204
BATTERIE (12 V)	191 195 199 205
BATTERIEDECKEL	376
BEDIENUNGSEINBAUSATZ	744
BEFESTIGUNGSTEILE	182 248 256
BEILAGSCHEIBEN-SATZ	256
BELEUCHTUNGSANLAGE (STRASSENAUSRÜSTUNG)	226 228
BELÜFTUNGSVENTIL	26
BETRIEBSBREMSZYLINDERSATZ	426 427
BLINKERLEUCHTEN	232
BLINKLEUCHTE	217 218 219 220 221 222 224
BLINKLEUCHTE (BREMS-/RÜCKLEUCHTE - ROT - 24 V)	226 228
BLINKLEUCHTE (RICHTUNGSBLINKER - GELB - 24 V)	226 228
BLINKLEUCHTEN	226 228 232
BREMSBELAG-EINBAUSATZ	434
BREMSBETÄTIGUNG	426
BREMSE UND PLANETENGETRIEBE	292 293
BREMSGESTÄNGE	450

* ÜBERSETZUNG ZUM ZEITPUNKT DER DRUCKLEGUNG NICHT VORHANDEN

STICHWORTVERZEICHNIS

Bezeichnung	Seite
	456
BREMSSTEUERVENTIL	462
	463
BREMSSTEUERVENTIL (FESTSTELL- U. BETRIEBSBREMSE)	451
	457
BUCHSE - KABELSPLEISSUNG	720
BUCHSEN-EINBAUSATZ	253
BÜRSTEN-EINBAUSATZ	248
	253
	256
C	
*CONTROL GP-PMS DISPLAY	708
D	
DÄMPFER	27
DICHTMITTEL	324
	326
	328
	330
	332
DICHTUNG	78
	93
DICHTUNG (KRAFTSTOFFENTLÜFTUNGS-PUMPE)	148
DICHTUNG (KRAFTSTOFFHAUPTFILTER)	150
DICHTUNGSSATZ	248
	489
	552
	586
	631
	650
DIFFERENTIAL	303
DIFFERENTIAL (BEGRENZTER SCHLUPF)	304
DIFFERENTIALSATZ	302
DIODE (ANSCHLUSSSTEHBOLZEN)	184
DIODE (ANSCHLUSSSTEHBOLZEN)	172
DIODE (ANSCHLUSSSTEHBOLZEN) (HITZESCHILD-KLEINTEILE)	177
DREHKNOPFSCHALTER (GEBLÄSEGE-SCHWINDIGKEIT)	792
	796
DREHMOMENTSTEUERHEBEL	164
DREHMOMENTWANDLER	350
	352
	354
	356
DREHMOMENTWANDLER-KÜHLERLEITUN-GEN	334
DREHSTROMGENERATOR	172

Bezeichnung	Seite
	176
	179
	180
	182
	184
	188
DREHSTROMGENERATOR-RIEMENSCHEI-BE	46
DREHSTROMGENERATOR-VENTILATOR	184
DREHZAHLSENSOR (GETRIEBEAUSGANG)	190
	194
	198
	204
	322
DREHZAHLSENSOR (MOTOR)	262
	264
	266
DRUCKKNOPFSCHALTER	708
DRUCKLUFT-STEUERVENTIL	438
	442
	446
	829
DRUCKLÜFTER	74
DRUCKLUFTHUPE	738
	740
DRUCKLUFT/HYDRAULIKZYLINDER	461
DRUCKLUFTKOMPRESSORLEITUNGEN	38
DRUCKLUFTLEITUNGEN	100
	102
DRUCKSCHALTER (BREMSLEUCHTE)	191
	195
	199
	205
DRUCKSCHALTER (FESTSTELLBREMSE)	803
	813
DRUCKSCHALTER (FESTSTELLBREMSÖL)	191
	195
	199
	205
DRUCKSCHALTER (FÜR LUFTDRUCKFEST-STELLBREMSE)	438
	442
	446
DRUCKSCHALTER (HUPE)	741
	742
DRUCKSCHALTER (MOTORÖL)	262
	264
	266
DRUCKSENSOR	241
	242
DRUCKSENSOR (BREMSDRUCKLUFT)	190
	194
	198

* ÜBERSETZUNG ZUM ZEITPUNKT DER DRUCKLEGUNG NICHT VORHANDEN

STICHWORTVERZEICHNIS

Bezeichnung	Seite
	204
DRUCKSENSOR (HUBZYLINDER)	278
DÜSENÖFFNUNG	58
	60

E

ECK- UND SCHNEIDMESSER	654
	655
EINBAUVORSTEUERVENTIL	627
	628
	629
	630
	631
	632
EINFÜLLSTUTZENKAPPE	576
EINLASSVENTIL	22
	24
EINSTECHWINKELVORWAHLHEBEL	540
EINSTELLER-EINBAUSATZ	690
	766
ELEKTR. UMFORMER	210
	211
ENDSCHALTER (BREMSKOLBENEINFAHR-BEGRENZUNGSSCHALTER)	461
ENDSCHALTER (RÜCKFAHRALARM)	336
ENTDUNSTER	56
ENTLÜFTER	54
	450
	456
ENTLÜFTER (DRUCKBEGRENZUNG)	305
	306
ERDBAUSCHAUFEL	664
	672

F

FAHRERHAUS	691
	692
	694
	696
	700
	704
	708
	710
	764
FAHRERHAUS, SONNENBLENDE	830
	831
FAHRERHAUSBELEUCHTUNG	694
	710
FAHRERHAUSBELÜFTUNG	792
	796
FAHRERHAUSFENSTER	834
	836
FAHRERHAUSHEIZUNG	736
FAHRERHAUSTÜR	724
	728
FAHRERSITZ	802
	803
	804
	806
	808
FAHRERSITZ, KIPPVORRICHTUNG	766
FAHRERSITZ, VERSTELLBAR	810
	811
	812
	813
FAHRERSITZFEDERUNG	826
FAHRERSITZFEDERUNGSGEHÄUSE	743
FAHRERSITZVERKLEIDUNG	766
FEDER-EINBAUSATZ	743
FEDERUNGS-EINBAUSATZ (EINSTELL-KNOPF)	743
FEDERUNGS-EINBAUSATZ (MANSCHETTE)	826
FEDERUNGS-EINBAUSATZ (ROLLE)	826
FEDERUNGS-EINBAUSATZ (WELLE)	826
FELGE (TEILBAR)	343
	344
FELSSCHAUFEL	665
	666
	673
	674
FENSTERDICHTUNG	696
	700
	704
FESTSTELLBREMSBETÄTIGUNG	427
FESTSTELLBREMSE	428
	430
	432
	433
	434
FESTSTELLBREMSGESTÄNGE	436
FEUERSCHUTZWAND	382
	384
	386
	387
	388
FILTER	102
	158
	160
	162
	576
	793
	797
FILTEREINSATZ	166
	168

* ÜBERSETZUNG ZUM ZEITPUNKT DER DRUCKLEGUNG NICHT VORHANDEN

STICHWORTVERZEICHNIS

Bezeichnung	Seite
FILTERSATZ	792, 796
FILTERSIEB	577, 827
FLÜGELSATZ	510
FLÜGELZELLENPUMPENEINSATZ	510, 511
FLÜSSIGKEITSPROBEENTNAHMEVENTIL	53, 308, 310, 312, 314, 548, 550, 552
FLÜSSIGKEITSTANDSSCHALTER (HYDRAULIKTANK)	190
FLÜSSIGKEITSTANDSSCHALTER (HYDRAULIKTANK)	194, 198, 204
FRONTSCHEINWERFER	215, 216
FUSSMATTE	764

G

GASPEDAL	778
GEGENGEWICHT	373, 374, 375
GEHÄUSE - PENDELACHSE	328, 330, 332
GEHÄUSE - STARRACHSE	324, 326
GETRIEBE	358, 359
GETRIEBEFILTER UND -LEITUNGEN	308, 310, 312, 314
GETRIEBEHYDRAULIK	298
GETRIEBENEUTRALISIERUNG	336
GETRIEBEÖLFILTERSOCKEL	316
GETRIEBEÖLFÜLLSTUTZEN	305, 306
GETRIEBEÖLKÜHLER	299
GETRIEBESTEUERUNG	296
GLEITSCHIENENBLOCK-EINBAUSATZ	816, 817

H

HALTERING	252, 274, 278
HALTESEIL	828
HALTETEILE (KRAFTSTOFFEINSPRITZPUMPE)	114
HAUPTFILTER	93
HEBEL	526
HEBEL-EINBAUSATZ	248, 253
HEIZUNGSBLOCK	212
HEIZUNGSELEMENT	166, 168
HEIZUNGSLEITUNGEN	750
HUBZYLINDER	528, 530
HUBZYLINDERLEITUNGEN	556
HYDRAULIKBEDIENUNG (MIT VORSTEUERUNG)	514, 516, 518, 520, 522, 524
HYDRAULIKELEMENT	316
HYDRAULIKLEITUNGEN	548, 550, 552
HYDRAULIKÖLKÜHLERLEITUNGEN	554
HYDRAULIKPUMPE UND BEFESTIGUNGSTEILE	573
HYDRAULIKSYSTEM	536, 537, 538
HYDRAULIKTANK UND ANBAUSATZ	572
HYDRAULIKTANK UND SCHMIERFILTER	576
HYDRAULISCHE SCHWINGUNGSDÄMPFUNG	512

I

INSTRUKTIONS-AUFKLEBER	856
INSTRUKTIONS-AUFKLEBER (NOTAUSGANG)	696, 700, 704
INSTRUKTONSSCHILD (UNTERBRECHERSCHALTER)	190
INSTRUKTONSSCHILD (UNTERBRECHERSCHALTER)	194, 198, 204

* ÜBERSETZUNG ZUM ZEITPUNKT DER DRUCKLEGUNG NICHT VORHANDEN

STICHWORTVERZEICHNIS

Bezeichnung	Seite
INSTRUMENTEN- UND ZÜNDVERDRAHTUNG	272
INSTRUMENTENTAFEL	768
	770
	772
	774
	775
	776
ISOLATOR-EINBAUSATZ	253

K

KÄLTEMITTEL-DICHTUNGSSATZ	716
KÄLTEMITTELANSCHLUSS	748
KÄLTEMITTELKOMPRESSOR	714
	716
KAPPE	176
	184
	827
KAPPE (DREHSTROMGENERATOR)	172
	182
KEILRIEMEN	714
KEILRIEMENSATZ (EINSCHL. 2 RIEMEN)	46
KIPPSCHALTER	288
	289
	776
KIPPSCHALTER (FAHRLEUCHTEN)	234
KIPPVORRICHTUNG NACH HINTEN, REPARATURSATZ	766
KIPPWANNENSATZ	806
	808
KIPPZYLINDER	532
	534
KLIMAANLAGE	679
	680
	684
KLIMAANLAGENLEITUNGEN	748
KNICKGELENK-ANHÄNGUNG	404
KNICKGELENKSPERRE	414
KOLBEN	44
KOLBENRINGSATZ	44
KOLBENRINGSATZ (EINSCHL. KOLBENRINGE)	4
KONDENSATORSATZ	188
KONTROLLEUCHTENSOCKEL	776
	812
KRAFTSTOFF-ENTLÜFTUNGSPUMPE	148
KRAFTSTOFFABLASSLEITUNGEN	124
KRAFTSTOFFEINSPRITZLEITUNGEN	125
	126
	127
	128
	129
	130
	131
	132
	134
	136
	138
	140
	142
KRAFTSTOFFEINSPRITZPUMPE	144
	145
	146
KRAFTSTOFFENTLÜFTUNGSPUMPE UND -HAUPTFILTER	149
	150
KRAFTSTOFFGEMISCHREGLER	110
	112
KRAFTSTOFFILTER	115
	150
	162
KRAFTSTOFFLEITUNGEN	122
KRAFTSTOFFÖRDERPUMPE	151
	152
KRAFTSTOFFÖRDERPUMPE UND BEFESTIGUNGSTEILE	143
KRAFTSTOFFPUMPENGEHÄUSE	121
KRAFTSTOFFSICHERHEITSFILTER	115
KRAFTSTOFFSTANDGEBER	158
	160
	162
KRAFTSTOFFTANK	158
	160
	162
KRAFTSTOFFTANK-SIEBEINSATZ	158
	160
	162
KRAFTSTOFFTANKKAPPE	109
	158
	160
	162
KREUZGELENK	346
	360
KREUZGELENK UND LAGER	349
KÜHLER	82
	84
	86
	88
	90
KÜHLERKAPPE	84
	86
	88
KÜHLERSCHUTZ	400
	402

* ÜBERSETZUNG ZUM ZEITPUNKT DER DRUCKLEGUNG NICHT VORHANDEN

STICHWORTVERZEICHNIS

Bezeichnung	Seite
KÜHLWASSER-TEMPERATURREGLER UND GEHÄUSE	75
KÜHLWASSERLEITUNGEN	76
	77
KÜHLWASSERPUMPE	78
	80
KURBELGEHÄUSEENTLÜFTER	54
KURBELWELLE	15
	16
KURBELWELLEN-RIEMENSCHEIBE	45
KURBELWELLENDICHTUNG	47
L	
LADERRAHMEN	389
LAGERSATZ	95
	182
	248
	256
LEITUNGEN, VORNE	544
	546
LEITUNGSVERKLEIDUNG	398
LENKBETÄTIGUNG	468
LENKNEUTRALISIERVENTIL	509
LENKÖLLEITUNGEN	484
LENKSÄULE, VERSTELLBAR	498
LENKUNGS- U. BREMSSTEUERUNG	435
LENKVENTIL	506
	508
LENKZYLINDER	472
	474
LENKZYLINDER UND AUFHÄNGUNG	469
LENKZYLINDER UND DICHTUNG	470
	471
LEUCHTE	215
	216
	217
	218
	219
	220
	221
LEUCHTE (24 V)(65 W)	213
	214
LEUCHTE (28 V)	776
LINSE - ROT	219
LUFTAUSSTRÖMER	416
LUFTEINLASSKLAPPE	723
LÜFTERANTRIEB	28
LÜFTERRIEMENSCHEIBE	46
LUFTFILTER-WARTUNGSANZEIGE	94
LUFTKOMPRESSOR	4
	6
	8
	9
LUFTKOMPRESSOR-EINBAUSATZ	4
	6
LUFTREINIGER	93
	94
LUFTTROCKNER	166
	168
M	
MAGNETSCHALTER (HAUPTRELAIS)	284
	286
MAGNETSCHALTER (24 V) (STARTRELAIS)	284
	286
MAGNETSPULE	256
MAGNETSPULE (24 V)	252
MAGNETSTOPFEN	324
	326
	328
	330
	332
MAGNETVENTIL	650
MAGNETVENTIL (SCHWINGUNGSDÄMPFUNG)	610
MANSCHETTEN-EINBAUSATZ	428
MEMBRANESATZ	740
MESSEREINBAUSATZ, HINTEN	574
MESSERPUMPE	574
MINIATURLEUCHTE	694
	710
	768
MINIATURLEUCHTE (28 V)	793
	797
	812
MONTAGEZAPFEN	49
MOTOR- UND GETRIEBEAUFLAGER	40
	41
MOTORAUFHÄNGUNG	48
MOTORAUSFÜHRUNG	1
	2
MOTORBLOCK	17
	18
	20
MOTORBLOCKDECKEL	11
MOTORBÜRSTENSATZ	681
MOTORHAUBE UND VERKLEIDUNG	406
MOTORHUBÖSE	37
MOTORÖLEINFÜLLSTUTZEN	55
MOTORÖLKÜHLER UND FILTERSOCKEL	70
	72
MOTORÖLLEITUNGEN	58
	60
MOTORVERDRAHTUNG	262

* ÜBERSETZUNG ZUM ZEITPUNKT DER DRUCKLEGUNG NICHT VORHANDEN

STICHWORTVERZEICHNIS

Bezeichnung	Seite
	264
	266

N

NEIGEZYLINDERLEITUNGEN	570
NEUTRALISIERVENTIL	361
NIEDRIGES FAHRERHAUS	693
NOCKENWELLE	10
	108
NOTBREMSGESTÄNGE	438
	442
	446
NOTLENKUNG	494
	495
	496
NOTLENKUNGSLEITUNGEN	476
	480
NOTLENKUNGSPUMPE	492
NOTLENKUNGSPUMPE UND BEFESTIGUNGS-TEILE	488
NOTLENKUNGSVERDRAHTUNG	290
	291

O

O-RING-DICHTUNG (34,59 MM ID)	462
O-RING-DICHTUNG (81,92 MM ID)	54
O-RING-DICHTUNG (91,67 MM INNENDURCHMESSER)	320
O-RING-DICHTUNG (94,84 MM ID)	472
O-RING-STOPFEN	320
O-RING-STOPFEN (7/16-20 GEWINDE)	42
OFFENES FAHRERHAUS MIT ÜBERROLL-SCHUTZ	712
ÖLEINFÜLLKAPPE	305
	306
ÖLEINFÜLLSTUTZEN	55
ÖLFILTER	70
	316
ÖLFILTER (KRAFTÜBERTRAGUNG)	308
	310
	312
	314
ÖLFILTERELEMENT (HYDRAULISCH)	576
ÖLFILTERSOCKEL	53
ÖLMESSSTAB	57
ÖLWANNE	42
ÖLWANNEN-HALTETEILE	31

P

PANZERWANNE	394
	395
PENDELVENTIL	648
	649
PLANETENANTRIEBSGEHÄUSE U. TEILE	294
PLANETENGETRIEBE	338
PLATTFORM	780
	782
	784
	786
	788
	790
PLATTFORM-ANBAUSATZ	762
PLEUELSTANGE UND KOLBEN	43
PLUS-DIODEN-EINBAUSATZ	173
	185
PLUS-DIODEN-EINBAUSATZ (HITZESCHILD-KLEINTEILE)	177
POLSTEREINBAUSATZ	690
	733
PUFFER - SENSOR	199
	205
	209
PUMPENEINSATZ, HINTEN	574

R

RADIOEINBAUSATZ	746
RAHMEN, HINTEN	390
	392
REGLER	116
REGLER - ANSCHLUSSKLEMMENSATZ	188
REGLER-EINBAUSATZ	184
REGLER UND KRAFTSTOFFEINSPRITZPUM-PE	154
	156
REGLEREINBAUSATZ	38
REGULATOR	75
RELAISANSCHLUSSKLEMMENSATZ	172
	176
	184
	188
RELAISTAFELVERDRAHTUNG	284
	286
RICHTUNGSBLINKER- UND WARNSCHAL-TER	227
	228
	232
RÜCKFAHRWARNHORN	260
RÜCKLEHNENVERLÄNGERUNG	732
	733
RÜCKSCHLAGVENTIL (GEGEN VAKUUM)	550
	552
	586

* ÜBERSETZUNG ZUM ZEITPUNKT DER DRUCKLEGUNG NICHT VORHANDEN

STICHWORTVERZEICHNIS

Bezeichnung	Seite
RÜCKSPIEGEL	756, 757, 758, 759, 760
S	
SCHALLDÄMPFER	104
SCHALLDÄMPFUNG	418, 420, 422, 424, 822, 824
SCHALTER	708
SCHALTER (SCHEIBENWISCHER-WASCHANLAGE)	768
SCHALTER (STARTHILFE)	246
SCHALTKNOPFEINBAUSATZ	743
SCHAUFELAUSSCHALTER UND -EINSTELLER	540, 542
SCHAUFELSTEUERUNG	652
SCHAUGLAS	576
SCHEIBENSATZ (DICK)	304
SCHEIBENSATZ (DÜNN)	304
SCHEIBENWASCHANLAGE	832
SCHEIBENWASCHMITTELBEHÄLTER	827
SCHEIBENWISCHER	838, 840, 842, 844, 846, 848, 850, 852
SCHEIBENWISCHERBLATT	840, 842, 844, 846
SCHILD UND AUFKLEBER	856
SCHLÜSSEL	109, 258, 526, 720, 734, 735, 855
SCHLÜSSELGRIFF	780, 782, 784
SCHMIERLEITUNGEN	412
SCHMIERNIPPEL	349
SCHMIERNIPPEL (1/8-27-GEWINDE)	348, 404, 652
SCHMIERNIPPEL (1/8-27-GEWINDE)	469
SCHMIERPUMPE	63, 64, 65, 66, 67, 68, 69
SCHUTZBLECHE	377, 378, 380
SCHUTZKAPPE	109, 855
SCHUTZVERKLEIDUNG	734, 735
SCHWINGSITZ	814, 815, 816, 817
SCHWINGUNGSDÄMPFUNGSLEITUNGEN	562, 566
SCHWINGUNGSDÄMPFUNGSVERDRAHTUNG	288, 289
SCHWUNGRAD	32, 33
SCHWUNGRADGEHÄUSE	35
SEITENTÜR	731
SICHERHEITSFILTER	93
SICHERHEITSGURT	801, 828
SICHERHEITSGURT ((AUTOMATIKSICHERHEITSGURT))	816, 817
SICHERUNG (10 A)	272, 284, 286, 741, 812
SICHERUNGSHALTER	272, 284, 286, 741, 812
SICHERUNGSHALTERKAPPE	272, 284, 286, 741, 812

* ÜBERSETZUNG ZUM ZEITPUNKT DER DRUCKLEGUNG NICHT VORHANDEN

STICHWORTVERZEICHNIS

Bezeichnung	Seite
SIEB	110
	829
SITZGURT-HALTESEIL	826
SITZKISSENEINBAUSATZ	806
	808
SITZUNTERBAU	818
	819
	820
SOLENOID	244
SOLENOID-EINBAUSATZ	248
SONNENBLENDE	830
	831
SORTIMENTSATZ	716
SPERRVENTIL	450
	451
	456
	457
	464
	465
	466
	467
	558
SPIEGEL	752
	753
	754
	755
STARTERMOTOR	248
	250
	251
	252
	256
STARTERMOTOR-DICHTUNGSSATZ	256
STARTERMOTOR-STIFTEINBAUSATZ	256
STARTHILFEANSCHLUSS	236
STARTSCHALTER	259
	768
STAUBAUSWERFER	96
STAUBDICHTUNGSSATZ	716
STAUBKAPPE	53
	308
	310
	312
	314
	484
	544
	548
	550
	552
STECKDOSEN - EINBAUSATZ (2POLIG)	708
STECKDOSEN - EINBAUSATZ (3POLIG)	242
STECKDOSEN - EINBAUSATZ (3POLIG)	274
STEIGLEITER	409
	410
STELLUNGSSENSOR	239
	240
STELLUNGSSENSOR (HUB)	239
	274
	278
STEUERUNG, ELEKTRON.	770
STEUERUNG, ELEKTRON. (CATERPILLAR-ÜBERWACHUNGSSYSTEM)	774
STEUERUNG, ELEKTRON. (CMS LEUCHTANZEIGE)	775
STEUERUNG, ELEKTRON. (HUBENDAUS-SCHALTUNG)	542
STEUERUNG, ELEKTRON. (HUBZYLINDER-DRUCK)	274
STEUERUNG, ELEKTRON. (MOTORABSTEL-LUNG)	191
	195
	199
	205
STEUERUNG, ELEKTRON. (SCHAUFFELEIN-STELLUNG)	542
STEUERVENTIL	587
	588
	590
	592
	594
	596
	598
	600
	602
	604
	606
	608
STEUERVENTIL UND BEFESTIGUNGSTEI-LE	580
	581
	582
	583
	584
STIRNRAD	34
STIRNRAD (STIRNRAD)	2
STIRNRADGEHÄUSE	36
STIRNRADGEHÄUSE-HALTETEILE	30
STIRNRADGEHÄUSEDECKEL	13
STOPFENSATZ	492
STOSSSTANGEN-EINBAUSATZ	743
STRASSENAUSRÜSTUNG	238
STRÖMUNGSSCHALTER (HAUPTLEN-KUNG)	291
STRÖMUNGSSCHALTER (NOTLENKUNG)	290
	291

* ÜBERSETZUNG ZUM ZEITPUNKT DER DRUCKLEGUNG NICHT VORHANDEN

STICHWORTVERZEICHNIS

Bezeichnung	Seite
T	
TELLER- UND KEGELRAD	318
TEMPERATURREGLER	92
TEMPERATURSCHALTER (KÜHLMITTELTEMPERATUR FÜR STARTHILFE)	262, 264, 266
TEMPERATURSENSOR	243
TEMPERATURSENSOR (GETRIEBEÖL)	264, 266
TEMPERATURSENSOR (HYDRAULIKÖL)	194, 198, 204
TEMPERATURSENSOR (KÜHLMITTEL)	264, 266
THERMOSTATSCHALTER (KÜHLMITTEL)	680, 685
TRENNSCHALTER	190, 194, 198, 204, 258
TROCKENMITTEL - FÜLLSATZ	166, 168
TURBOLADER	106, 107
TURBOLADEREINSATZ	95
TURBOLADERÖLLEITUNGEN	62
U	
ÜBERDRUCKVENTIL	362, 364, 366, 590, 633, 634, 635, 636, 637, 638, 639, 640, 641, 642, 643, 644
ÜBERDRUCKVENTIL-EINBAUSATZ	166, 168
ÜBERDRUCKVENTIL (HAUPTUNTERBRECHER)	592, 594
ÜBERDRUCKVENTIL (LEITUNG F. STANGENENDÖFFNUNG D. ZUSATZHYDRAULIKZYLINDERS)	594, 596, 598, 600, 602, 608
ÜBERROLLSCHUTZ	800
ÜBERWACHUNGSTAFELVERDRAHTUNG	274, 278
UMBAUSATZ - FÜR STRASSENVERKEHR	370
UMBAUSATZ - NICHT FÜR STRASSENVERKEHR	368
UMBAUSATZ - OHNE FAHRERHAUS	720, 721, 722
UMBAUSATZ - OHNE ÜBERROLLSCHUTZ	719
UMBAUSATZ FÜR NIEDRIGES FAHRERHAUS	718
UMLEITVENTIL	503, 504, 610
UNIVERSALSCHAUFEL	656, 657, 658, 660, 662, 663, 667, 668, 669, 670, 671
UNTERBRECHER (15 A)	272
UNTERBRECHER (15 A) (FAHRSCHEINWERFER)	284, 286
UNTERBRECHER (15 A) (MOTORABSTELLUNG)	284, 286
UNTERBRECHER (80 A) (DREHSTROMGENERATOR)	284, 286
UNTERBRECHER (80 A) (HAUPTUNTERBRECHER)	284
UNTERBRECHER (80 A) (HAUPTUNTERBRECHER)	286
V	
VENTIL	577, 585

* ÜBERSETZUNG ZUM ZEITPUNKT DER DRUCKLEGUNG NICHT VORHANDEN

STICHWORTVERZEICHNIS

Bezeichnung	Seite
	590
	592
	600
	602
	604
	608
	633
	642
VENTIL - SCHALT- UND DRUCKSTEUERUNG	645
	646
VENTIL (ENTLÜFTER)	75
	92
VENTIL (FESTSTELLBREMSE)	436
VENTIL (NACHSAUGVENTIL)	594
	596
	598
	606
VENTILDECKEL	14
VENTILKAPPE	343
	344
VENTILKIPPHEBEL (AUSLASS)	50
VENTILKIPPHEBEL (EINLASS)	50
VENTILSTEUERUNG	50
	51
	52
VERDRAHTUNG, HINTEN	282
VERDRAHTUNG, VORNE	268
	270
VERKLEIDUNGEN, VORN	396
	397
VERSANDDECKEL	300
VERTEILERGETRIEBEANTRIEB	320
	322
VERTEILERVENTIL U. BEFESTIGUNGSTEILE	502
VORHÄNGESCHLOSS	109
	526
	720
	734
	735
	855
VORSTEUERLEITUNGEN	558
	561
VORSTEUERVENTIL	612
	614
	616
	618
	620
	622
	624
	625
	626

W

Bezeichnung	Seite
WÄGEEINRICHTUNG - MONITOR	761
WÄGEEINRICHTUNGSSTEUERUNG, ELEKTRON.	279
WARNAUFKLEBER (ÜBERBRÜCKUNGSKABEL)	856
WARNAUFKLEBER (ZUSAMMENGEDRÜCKTE FEDER)	427
WARNHORN	742
WARNHORN, ELEKTR.	741
	742
WARNHORN (24 V)	741
WARNLEUCHTEN	234
WARNSCHILD (MASCHINENBETRIEB)	857
WARNVORRICHTUNG	170
WARTUNGSMESSER	272
WARTUNGSSATZ	346
	614
	618
	622
WASSERFILTER	78
WASSERTEMPERATURREGLER	92
WASSERVENTIL	736
WETTERDACH	713
WISCHERARM	854

Z

Bezeichnung	Seite
ZAHNRADPUMPE	342
ZAHNSPITZE, KURZ	676
	678
ZAHNSPITZE, LANG	675
	677
ZIGARETTENANZÜNDER	768
ZUGANGSKLAPPE - HYDRAULIKTANKKAPPE	526
ZUMESSPUMPE	489
	490
ZYLINDER (ÄTHER)	246
ZYLINDERKOPF	22
	24
	26
ZYLINDERKOPF-HALTETEILE	29
ZYLINDERKOPFDECKEL	12

* ÜBERSETZUNG ZUM ZEITPUNKT DER DRUCKLEGUNG NICHT VORHANDEN

ENGINE ARRANGEMENT

6C-3458 ENGINE AR

S/N: 13Z22389-99999

SMCS-1000 **i00336243**

NOTE	PART NUMBER	QTY	PART NAME 1 2 3 4 5 6 (PRODUCT LEVEL)	SEE PAGE
Y	*2W-9267*	1	DRIVE GP-FAN	
Y	**7E-0082**	1	ENGINE AR	
Y	*8N-2182*	1	FUMES DISPOSAL GP	
Y	*8N-0888*	1	REGULATOR GP-TEMPERATURE	
			-OR-	
Y	*6C-8901*	1	HOUSING & REGULATOR GP	
Y	*8N-1792*	1	PULLEY GP-FAN DRIVE	

Y-SEPARATE ILLUSTRATION

ENGINE ARRANGEMENT

7E-0082 ENGINE AR

S/N: 13Z22389-99999

PART OF 6C-3458 ENGINE AR

SMCS-1000 **i01316885**

NOTE	PART NUMBER	QTY	PART NAME 1 2 3 4 5 6 (PRODUCT LEVEL)	SEE PAGE
Y	*7N-5642*	1	AIR COMPRESSOR GP	
Y	*1P-4244*	1	BREATHER GP	
Y	*1N-4406*	1	CAMSHAFT GP	
Y	*4W-1339*	1	CONTROL GP-FUEL RATIO	
Y	*7W-0219*	1	COOLER GP-FLTR BASE & ENG OIL	
Y	*7W-1470*	1	COOLER GP-TRANSMISSION OIL	
Y	*7N-1342*	1	COVER GP-CYLINDER BLOCK	
Y	*2P-6530*	1	COVER GP-CYLINDER HEAD	
Y	*1W-3792*	1	COVER GP-FRONT HOUSING	
Y	*8N-4745*	1	COVER GP-VALVE MECHANISM	
Y	*6N-8079*	1	CRANKSHAFT GP	
YR	*8N-5286*	1	CYLINDER BLOCK GP	
Y	*8N-0246*	1	CYLINDER HEAD GP	
Y	*1W-7831*	1	DAMPER GP	
Y	*7N-9536*	1	FASTENER GP-CYLINDER HEAD	
Y	*8N-1868*	1	FASTENER GP-EXHAUST MANIFOLD	
Y	*8N-0872*	1	FASTENER GP-FRONT HOUSING	
Y	*8N-2181*	1	FASTENER GP-OIL PAN	
Y	*8N-9703*	1	FILLER GP-ENGINE OIL	
Y	*2W-1011*	1	FILTER GP-SECONDARY FUEL	
Y	*2P-2505*	1	FLYWHEEL GP	
			S/N: 13Z22389-24485, 24487, 24489-24491, 24493	
Y	*6C-5917*	1	FLYWHEEL GP	
			S/N: 13Z24486, 24488, 24492, 24494-99999	
Y	*1W-4320*	1	GAUGE GP-OIL LEVEL (DIPSTICK)	
Y	*1W-5634*	1	GEAR GP-FRONT (TIMING)	
Y	*8N-0442*	1	HOUSING GP-FLYWHEEL	
Y	*8N-0303*	1	HOUSING GP-FRONT	
Y	*6N-8336*	1	LIFTING GP-ENGINE	
Y	*7E-3366*	1	LINES GP-AIR	
Y	*7E-3367*	1	LINES GP-AIR COMPRESSOR	
Y	*2P-6105*	1	LINES GP-ENGINE OIL	
Y	*2W-1605*	1	LINES GP-FUEL DRAIN	
Y	*9Y-7799*	1	LINES GP-FUEL INJECTION	
Y	*8N-2235*	1	LINES GP-TURBOCHARGER OIL	
Y	*2W-6779*	1	LINES GP-WATER	
Y	*2P-6573*	1	MANIFOLD GP-EXHAUST	
Y	*7E-4236*	1	PAN GP-OIL	
YR	*2W-1177*	6	PISTON & ROD GP	
Y	*2W-9304*	1	PULLEY GP-CRANKSHAFT	
Y	*2W-4160*	1	PUMP & MTG GP-FUEL TRANSFER	
Y	*2P-1784*	1	PUMP GP-ENGINE OIL	
Y	*1W-5374*	1	PUMP GP-FUEL PRM & PRIM FILTER	
Y	*7E-5107*	1	PUMP GP-GOV & FUEL INJ	
Y	*7N-5908*	1	PUMP GP-WATER	
Y	*2P-6224*	1	SEAL GP-CRANKSHAFT	
Y	*1W-0141*	1	SOLENOID GP-SHUTOFF	
Y	*6N-3350*	1	SUPPORT GP-ENGINE	
Y	*8N-0107*	1	TRUNNION GP-ENGINE	
Y	*7W-5785*	1	TURBOCHARGER GP	
Y	*7N-8026*	1	VALVE MECHANISM GP	
			AVAILABLE GASKET KIT(S):	
	6V-4789		KIT-GASKET (AIR COMPRESSOR)	
	6V-8023		KIT-GASKET (CENTRAL & LOWER STRUCTURE)	
	9X-8567		KIT-GASKET (FRONT STRUCTURE)	
	9X-8296		KIT-GASKET (FUEL SYSTEM)	

NOTE	PART NUMBER	QTY	PART NAME 1 2 3 4 5 6 (PRODUCT LEVEL)	SEE PAGE
	6V-3727		KIT-GASKET (OIL COOLER & LINES)	
	6V-2982		KIT-GASKET (REAR STRUCTURE)	
	9X-2518		KIT-GASKET (SINGLE CYLINDER HEAD)	
	5P-8768		KIT-GASKET (SINGLE CYLINDER LINER)	
	5P-9458		KIT-GASKET (TURBOCHARGER)	
	6V-4750		KIT-GASKET (WATER PUMP)	

R-REMFG PART MAY BE AVAILABLE
Y-SEPARATE ILLUSTRATION

BASIC ENGINE

1W-7146 AIR COMPRESSOR GP

S/N: 13Z22389-23591

PART OF 7N-5642 AIR COMPRESSOR GP

SMCS-1803, 1804 **i00259320**

NOTE	REF NO	GRAPHIC REF	PART NUMBER	QTY	PART NAME 1 2 3 4 5 6 (PRODUCT LEVEL)	SEE PAGE
	1	1	**7N-7448**	1	GASKET-AIR COMPRESSOR	
	2	1	**7N-7447**	1	HEAD AS-COMPRESSOR	
	3	1	**0S-1619**	5	BOLT (3/8-16X3IN)	
	4	1	**7N-7449**	1	ADAPTER	
		1	**1S-7107**	1	GASKET	
	5	1	**0L-1352**	1	BOLT (3/8-16X3.25IN)	
		1	**5M-2894**	1	WASHER (2.5MM THK)	
	6	1	**2B-2695**	2	BOLT (5/16-18X.875IN)	
	7	1	**3B-4505**	8	LOCKWASHER (5/16IN)	
	8	1	**7N-7450**	1	COVER-UNLOADER	
		1	**7N-7451**	1	GASKET-UNLOADER	
	9	1	**0S-1615**	2	BOLT (1/4-20X.75IN)	
		1	**5P-0537**	2	WASHER (2MM THK)	
C	10	1	**2B-0858**	2	PLUG-PIPE (1/2-14 NPTF)	
	11	1	**7N-7441**	1	COVER-AIR COMPRESSOR	
		1	**7N-7442**	1	GASKET-AIR COMPRESSOR	
	12	1	**9F-2247**	1	PLUG-PIPE	
	13	1	**034-4160**	4	BOLT-LOCKING (5/16-18X1.0IN)	
	14	1	**7N-7444**	2	ROD AS-AIR COMPRESSOR	
	15	1	**0S-1617**	6	BOLT (5/16-18X.75IN)	
	16	1	**7N-7439**	1	PLATE-COVER	
		1	**7N-7440**	1	GASKET-AIR COMPRESSOR	
	17	1	**8H-9789**	2	BALL BEARING	
	18	1	**7N-7438**	1	CRANKSHAFT-AIR COMPRESSOR	
	19	1	**7N-7443**	2	PISTON AS-COMPRESSOR	
	20	1	**1A-2029**	6	BOLT (3/8-16X1.125IN)	
		1	**3B-4506**	6	LOCKWASHER	
	21	1	**4B-4845**	1	PLUG	
	22	1	**7N-7445**	1	CYLINDER BLOCK	
		1	**7N-7446**	1	GASKET-AIR COMPRESSOR	
C	23	1	**4W-9489**	1	LOCKRING	
					AVAILABLE REPAIR KIT(S):	
			7N-7435	1	KIT-AIR COMPRESSOR	
					(INCL STOPS, SPRINGS, SEATS, GUIDES, GASKETS, SEALS, BOLTS, & WASHERS)	
			7N-7436	1	KIT-PISTON RING (INCL PISTON RINGS)	
					(INCL PISTON RINGS)	

C-CHANGE FROM PREVIOUS TYPE

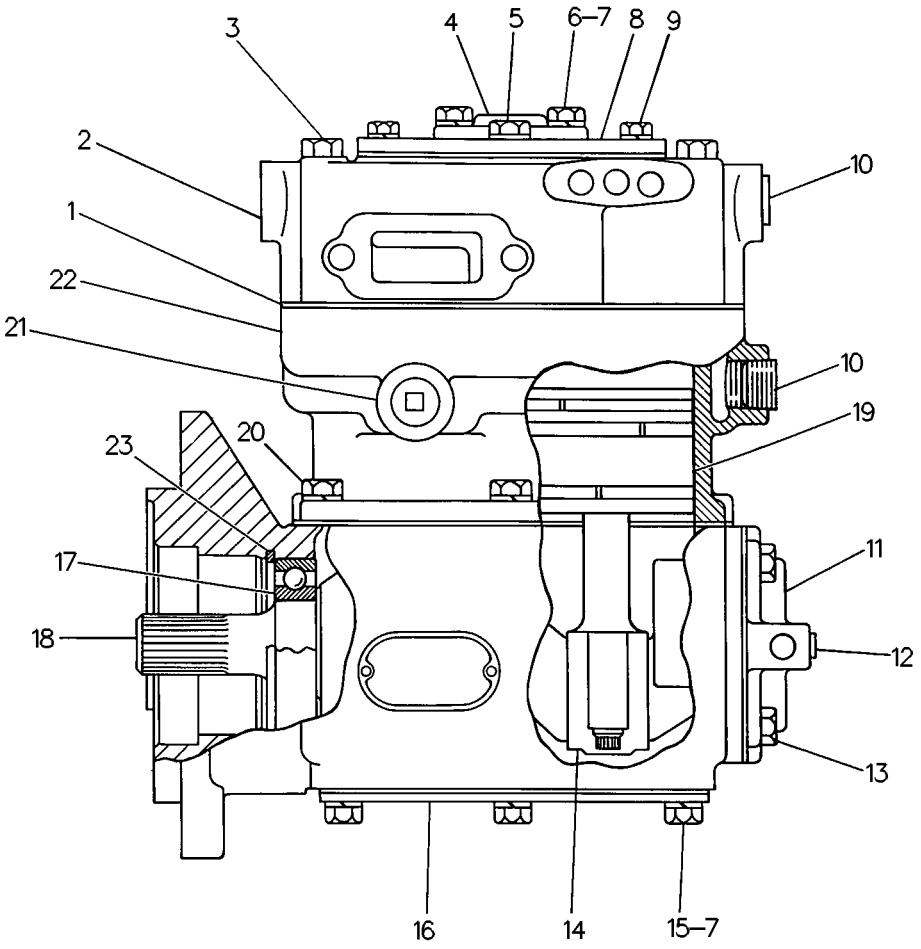

GRAPHIC #1 g00114221

BASIC ENGINE

4P-2975 AIR COMPRESSOR GP*R

S/N: 13Z23592-30499

PART OF 7N-5642 AIR COMPRESSOR GP

SMCS-1803, 1804 **i01186708**

NOTE	REF NO	GRAPHIC REF	PART NUMBER	QTY	PART NAME 1 2 3 4 5 6 (PRODUCT LEVEL)	SEE PAGE
	1	1	**7N-7448**	1	GASKET-AIR COMPRESSOR	
	2	1	**7N-7447**	1	HEAD AS-COMPRESSOR	
	3	1	**0S-1619**	5	BOLT (3/8-16X3.0IN)	
	4	1	**4W-9479**	1	MANIFOLD-EXHAUST	
		1	**1S-7107**	1	GASKET	
	5	1	**0L-1352**	1	BOLT (3/8-16X3.25IN)	
	6	1	**2B-2695**	2	BOLT (5/16-18X.875IN)	
	7	1	**9M-1974**	8	WASHER-HARD (2MM THK)	
	8	1	**7N-7450**	1	COVER-UNLOADER	
		1	**7N-7451**	1	GASKET-UNLOADER	
	9	1	**0S-1615**	2	BOLT (1/4-20X.75 IN)	
		1	**5P-0537**	2	WASHER (2MM THK)	
	10	1	**8T-6762**	2	PLUG-PIPE (1/2-14 NPTF THD)	
	11	1	**7N-7441**	1	COVER-AIR COMPRESSOR	
		1	**7N-7442**	1	GASKET-AIR COMPRESSOR	
	12	1	**8T-6757**	1	PLUG-PIPE (1/8-27 NPTF)	
	13	1	**034-4160**	4	BOLT-LOCKING (5/16-18X1.0IN)	
	14	1	**5M-2894**	7	WASHER (2.5MM THK)	
	15	1	**0S-1617**	6	BOLT (5/16-18X.75IN)	
	16	1	**7N-7439**	1	PLATE-COVER	
		1	**7N-7440**	1	GASKET-AIR COMPRESSOR	
	17	1	**8H-9789**	2	BALL BEARING	
	18	1	**4P-2974**	1	CRANKSHAFT AS	
	19	1	**1W-7147**	1	CRANKCASE-COMPRESSOR	
	20	1	**1A-2029**	6	BOLT (3/8-16X1.125IN)	
	21	1	**7X-7732**	1	PLUG-PIPE (3/8-18 NPTF THD)	
	22	1	**7N-7445**	1	CYLINDER BLOCK	
		1	**7N-7446**	1	GASKET-AIR COMPRESSOR	
	23	1	**4W-9489**	1	LOCKRING	
					AVAILABLE REPAIR KIT(S):	
			7N-7435	1	KIT-AIR COMPRESSOR	
					(INCLUDES STOPS, SPRINGS, SEATS, GUIDES, GASKETS, SEALS, BOLTS & WASHERS)	
			144-0502	1	RING KIT-PISTON	
					(INCLUDES RING ENVELOPES & PISTON RINGS)	
			144-0503	1	KIT-PISTON & RING	
					(INCLUDES PISTON, PISTON PIN, BUTTON & PISTON RING KIT)	
			138-2887	1	KIT-ROD & BEARING	
					(INCLUDES CONNECTING ROD AS & 0.010IN OS BEARING KIT)	

4P-2975 AIR COMPRESSOR GP *(contd.)* **i01186708**

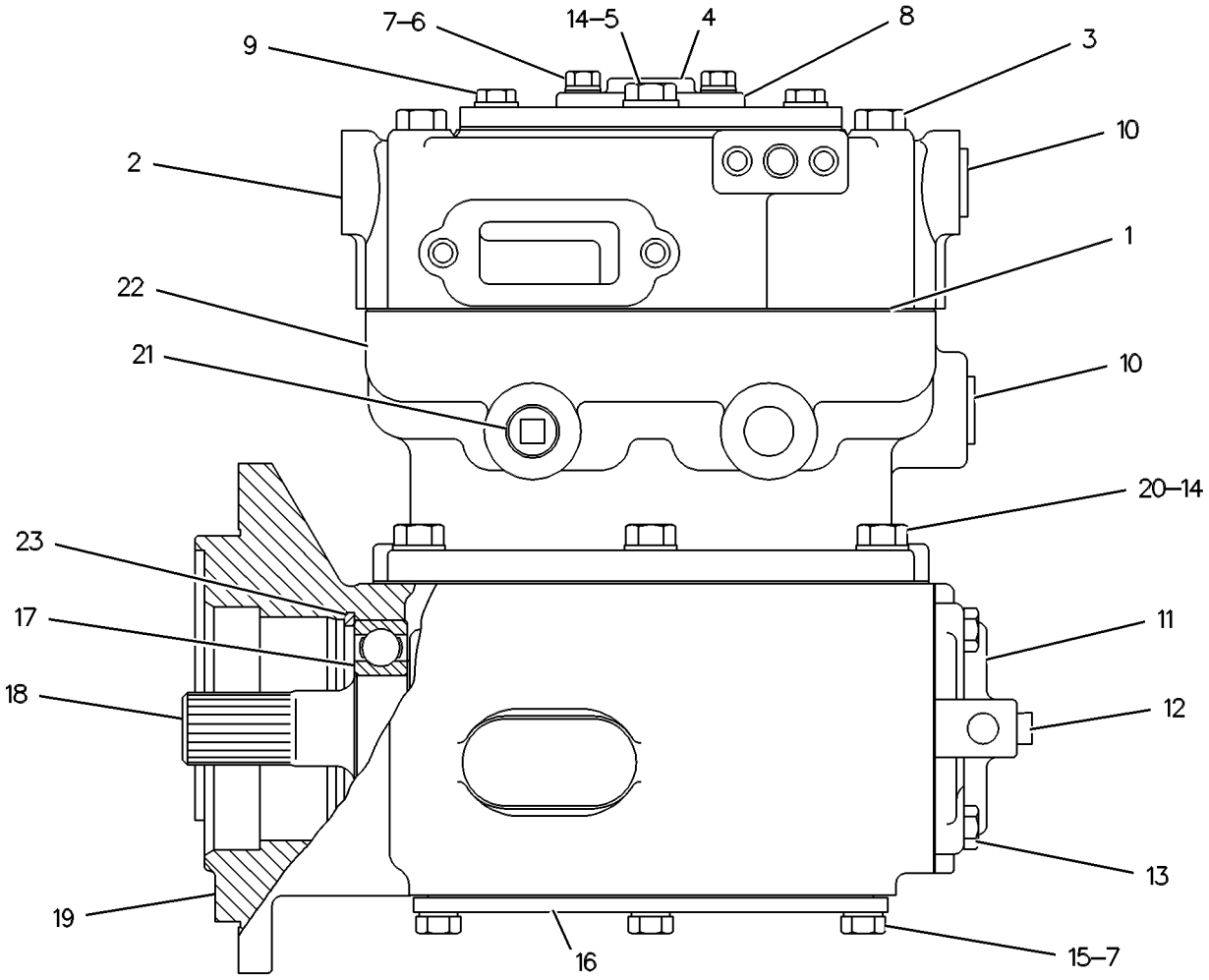

GRAPHIC #1 g00335382

BASIC ENGINE

7N-5642 AIR COMPRESSOR GP

S/N: 13Z22389-23591

PART OF 7E-0082 ENGINE AR

SMCS-1803, 1804 **i00259564**

NOTE	REF NO	GRAPHIC REF	PART NUMBER	QTY	PART NAME 1 2 3 4 5 6 (PRODUCT LEVEL)	SEE PAGE
	1	1	**0S-1589**	2	BOLT (5/8-11X1.75IN)	
	2	1	**2P-0220**	1	GASKET-PUMP	
	3	1	**3B-1915**	3	BOLT (3/8-16X1.375IN)	
	4	1	**2B-2695**	2	BOLT (5/16-18X.875IN)	
	5	1	**9M-1974**	2	WASHER-HARD (2MM THK)	
	6	1	**9M-0397**	1	ADAPTER-INLET	
		1	**8M-7065**	1	GASKET-AIR INLET	
CY	7	1	*1W-7146*	1	AIR COMPRESSOR GP	

C-CHANGE FROM PREVIOUS TYPE
Y-SEPARATE ILLUSTRATION

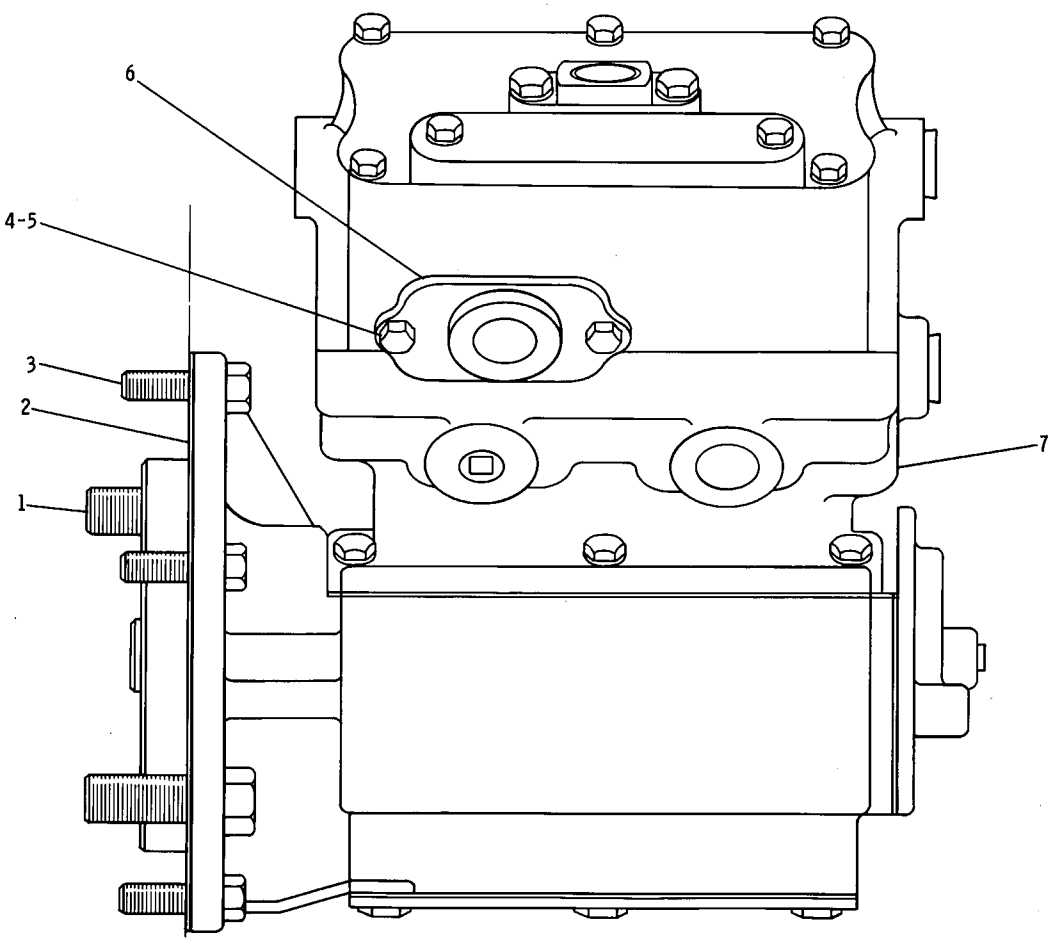

GRAPHIC #1 g00111937

BASIC ENGINE

7N-5642 AIR COMPRESSOR GP

S/N: 13Z23592-28099
PART OF 7E-0082 ENGINE AR

SMCS-1803, 1804 **i00259556**

NOTE	REF NO	GRAPHIC REF	PART NUMBER	QTY	PART NAME 1 2 3 4 5 6 (PRODUCT LEVEL)	SEE PAGE
	1	1	**0S-1589**	2	BOLT (5/8-11X1.75IN)	
	2	1	**2P-0220**	1	GASKET-PUMP	
	3	1	**3B-1915**	3	BOLT (3/8-16X1.375IN)	
	4	1	**2B-2695**	2	BOLT (5/16-18X.875IN)	
	5	1	**9M-1974**	2	WASHER-HARD (2MM THK)	
	6	1	**9M-0397**	1	ADAPTER-INLET	
		1	**8M-7065**	1	GASKET-AIR INLET	
CYR	7	1	**4P-2975**	1	AIR COMPRESSOR GP	

C-CHANGE FROM PREVIOUS TYPE
R-REMFG PART MAY BE AVAILABLE
Y-SEPARATE ILLUSTRATION

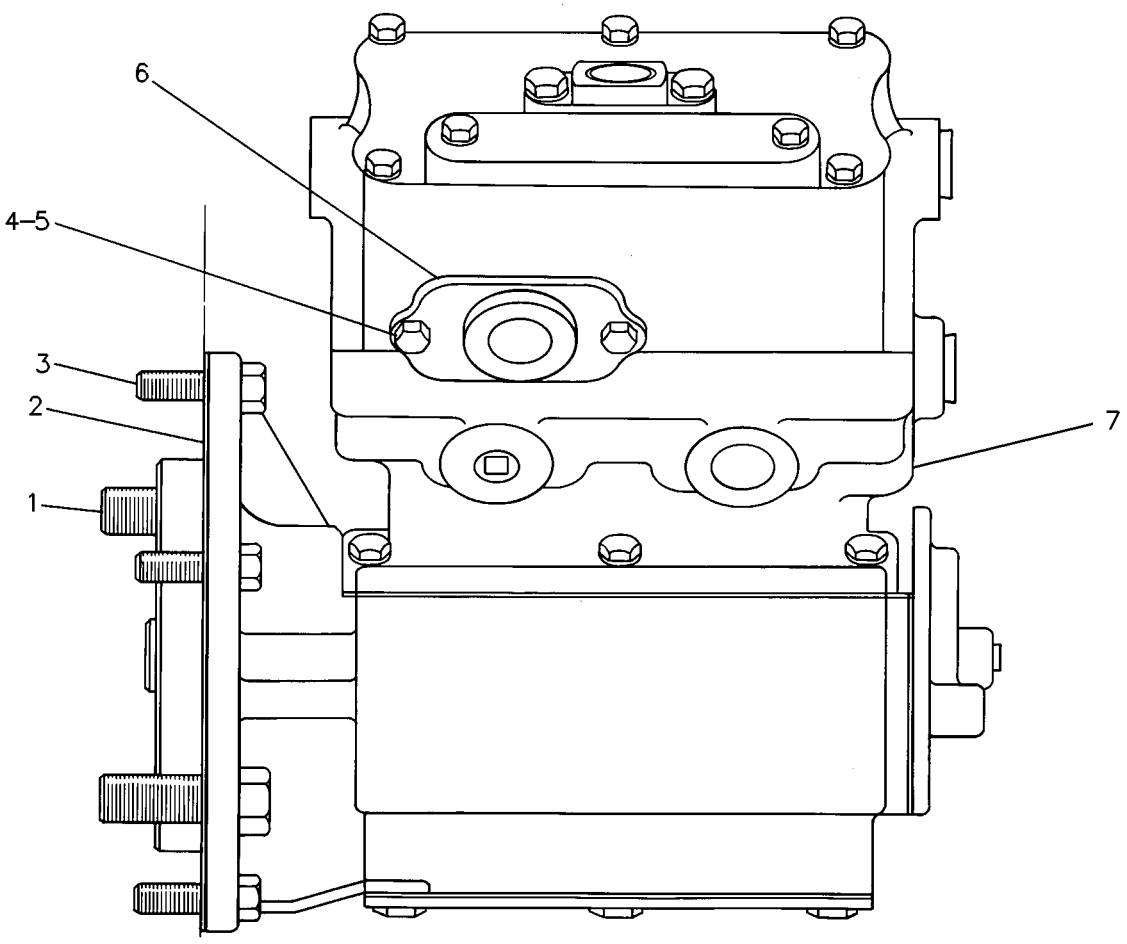

GRAPHIC #1 g00108416

1N-4406 CAMSHAFT GP

S/N: 13Z22389-28099

PART OF 7E-0082 ENGINE AR

SMCS-1210, 1211, 1212 **i00200103**

NOTE	REF NO	GRAPHIC REF	PART NUMBER	QTY	PART NAME 1 2 3 4 5 6 (PRODUCT LEVEL)	SEE PAGE
R	1	1	**4P-2942**	1	CAMSHAFT AS	
	2	1	**7S-2204**	1	WASHER-THRUST	
	3	1	**8S-1491**	1	LOCK	
	4	1	**0S-0509**	2	BOLT (3/8-16X.75IN)	

R-REMFG PART MAY BE AVAILABLE

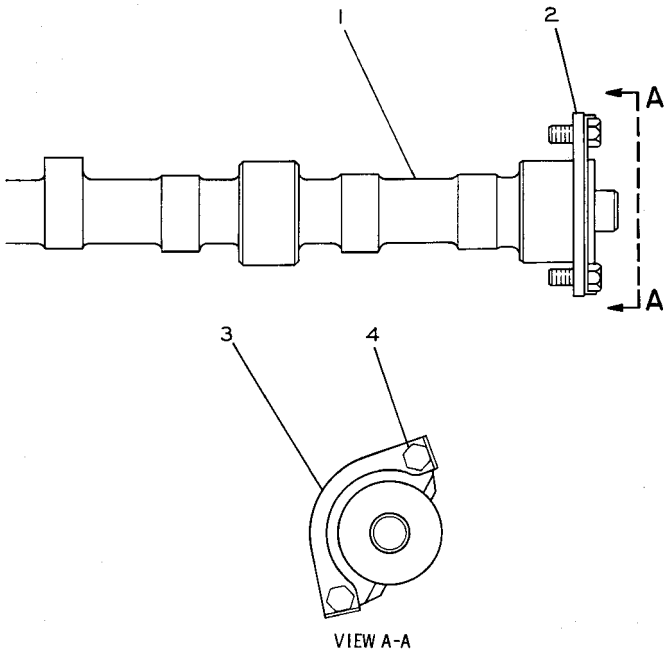

GRAPHIC #1 g00108277

BASIC ENGINE

7N-1342 COVER GP-CYLINDER BLOCK

S/N: 13Z22389-28099

PART OF 7E-0082 ENGINE AR

SMCS-1201 **i01133901**

NOTE	REF NO	GRAPHIC REF	PART NUMBER	QTY	PART NAME 1 2 3 4 5 6 (PRODUCT LEVEL)	SEE PAGE
B	1	1	**0L-1351**	2	BOLT (3/8-16X.875IN)	
B	2	1	**5M-2894**	2	WASHER (2.5MM THK)	
B	3	1	**8L-8662**	1	COVER	
B	4	1	**5S-8055**	1	GASKET	
	5	1	**4B-3938**	1	PLUG-CUP	
	6	1	**2A-3798**	2	DOWEL	
B	7	1	**8M-3267**	1	SCREW-HEX SOCKET	
B	8	1	**8T-6764**	1	PLUG-PIPE (1/8-27 NPTF THD)	

B-USE AS REQUIRED

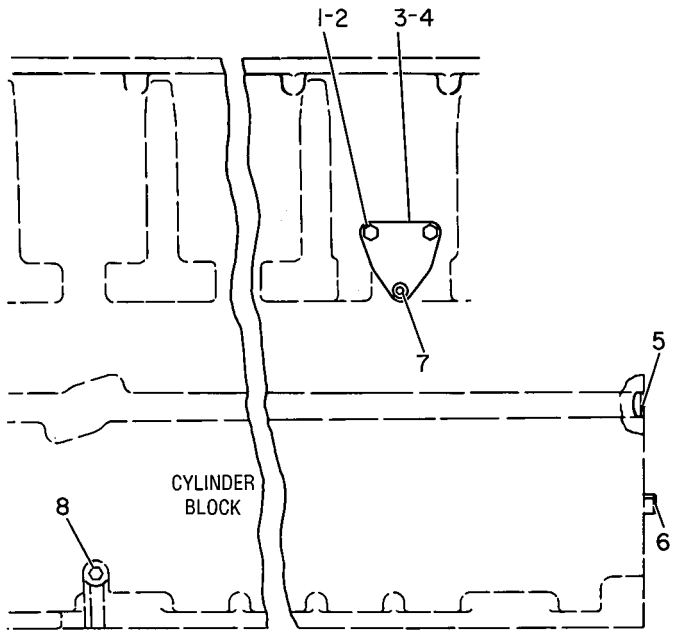

GRAPHIC #1 g00112428

BASIC ENGINE

2P-6530 COVER GP-CYLINDER HEAD

S/N: 13Z22389-28099

PART OF 7E-0082 ENGINE AR

SMCS-1100 **i01022360**

NOTE	REF NO	GRAPHIC REF	PART NUMBER	QTY	PART NAME 1 2 3 4 5 6 (PRODUCT LEVEL)	SEE PAGE
	1	1	**1P-6367**	1	COVER	
		1	**5S-6735**	1	GASKET	
	2	1	**2P-3201**	4	BOLT-WASHER HEAD (3/8-16X1.00IN)	
					-OR-	
		1	**0S-1594**	4	BOLT (3/8-16X1.0IN)	
		1	**5M-2894**	4	WASHER (2.5MM THK)	

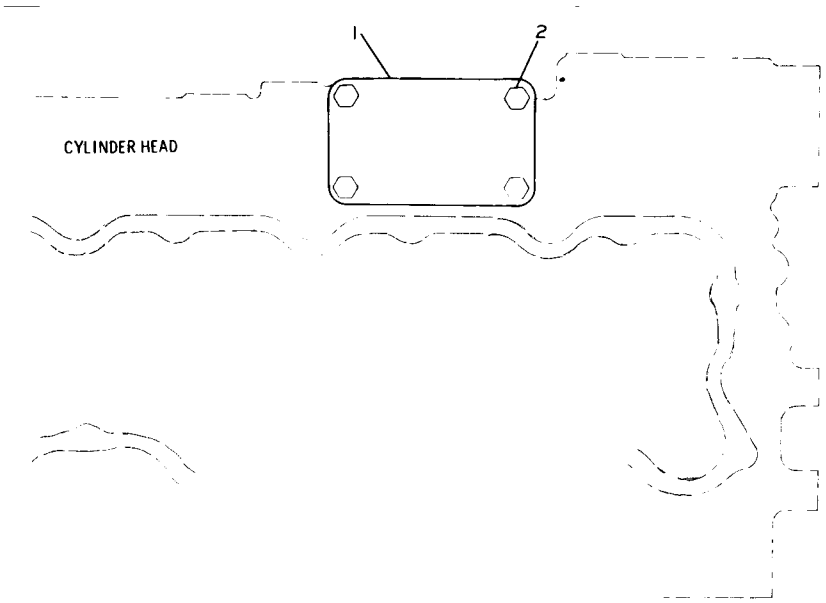

GRAPHIC #1 g00525023

BASIC ENGINE

1W-3792 COVER GP-FRONT HOUSING

S/N: 13Z22389-28099

PART OF 7E-0082 ENGINE AR

SMCS-1151, 1166 **i00259274**

NOTE	REF NO	GRAPHIC REF	PART NUMBER	QTY	PART NAME 1 2 3 4 5 6 (PRODUCT LEVEL)	SEE PAGE
	1	1	**9N-5769**	1	COVER-HOUSING	
	2	1	**6N-7887**	1	GASKET-HOUSING COVER	
	3	1	**3S-2713**	6	NUT-FULL (3/8-24 THD)	
	4	1	**8M-9024**	6	WASHER-HARD (5MM THK)	
	5	1	**2P-3200**	2	BOLT-WASHER HEAD	
	6	1	**2P-2720**	1	GASKET	
	7	1	**4N-4526**	1	COVER	

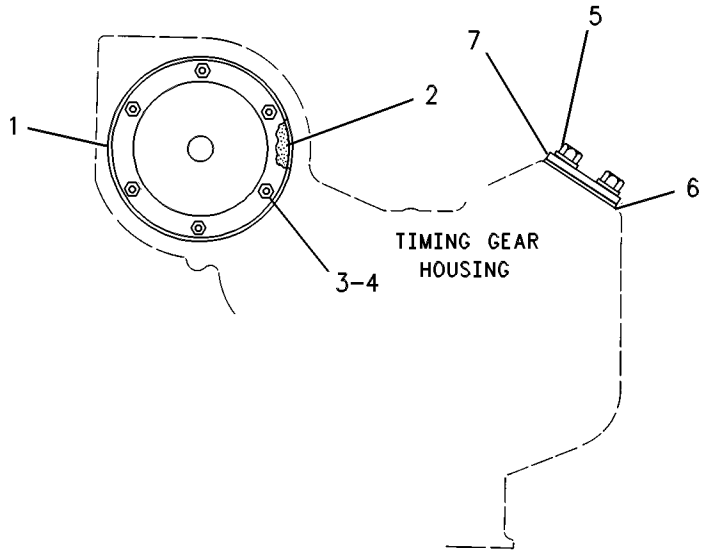

GRAPHIC #1 g00122301

8N-4745 COVER GP-VALVE MECHANISM

S/N: 13Z22389-28099

PART OF 7E-0082 ENGINE AR

SMCS-1107 **i01579996**

NOTE	REF NO	GRAPHIC REF	PART NUMBER	QTY	PART NAME 1 2 3 4 5 6 (PRODUCT LEVEL)	SEE PAGE
	1	1	**2W-1086**	1	COVER AS-CYLINDER HEAD	
	2	1	**2B-2695**	15	BOLT (5/16-18X0.875 IN)	
	3	1	**9M-1974**	15	WASHER-HARD (8.8X16X2MM THK)	
	4	1	**133-1247**	1	SEAL-INTEGRAL	

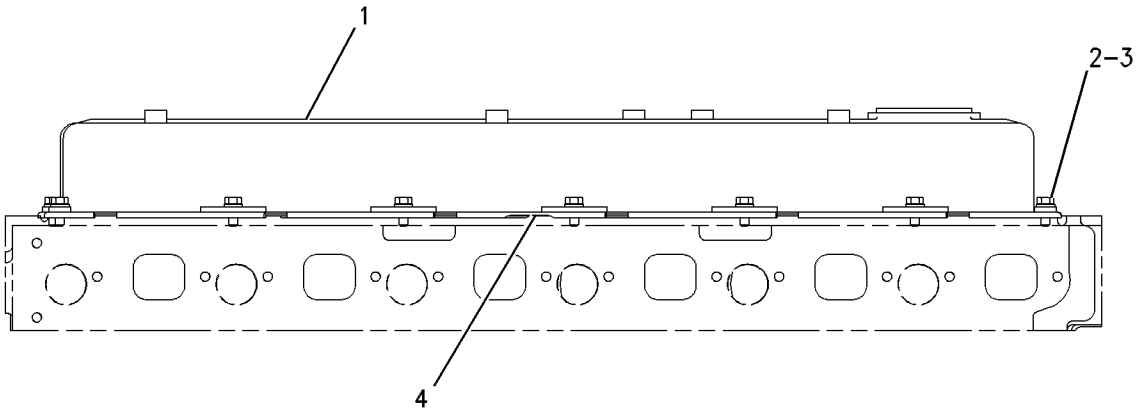

RIGHT SIDE VIEW

GRAPHIC #1 g00487370

BASIC ENGINE

2W-7458 CRANKSHAFT AS*R

S/N: 13Z22389-99999

PART OF 6N-8079 CRANKSHAFT GP

SMCS-1202 **i00935148**

NOTE	REF NO	GRAPHIC REF	PART NUMBER	QTY	PART NAME 1 2 3 4 5 6 (PRODUCT LEVEL)	SEE PAGE
	1	1	**8T-6757**	6	PLUG-PIPE (1/8-27 NPTF THD)	
	2	1	**1W-4405**	1	GEAR-CRANKSHAFT (40 TEETH)	
	3	1	**5H-2671**	1	KEY-WOODRUFF	

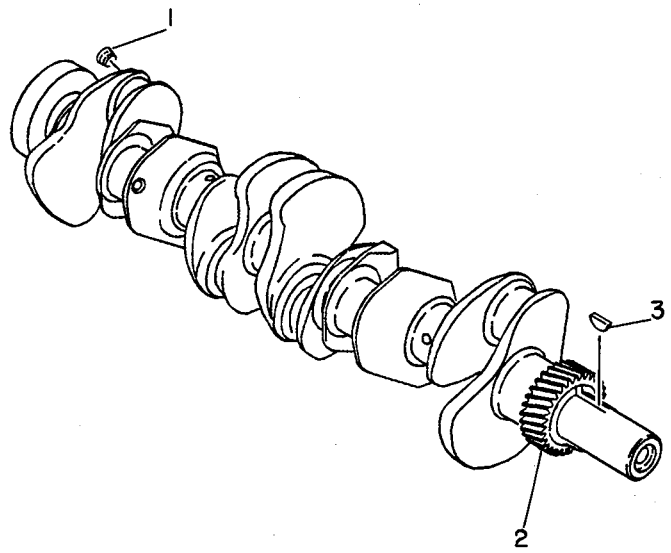

GRAPHIC #1 g00108386

BASIC ENGINE

6N-8079 CRANKSHAFT GP

S/N: 13Z22389-28099

PART OF 7E-0082 ENGINE AR

SMCS-1202 **i00684098**

NOTE	REF NO	GRAPHIC REF	PART NUMBER	QTY	PART NAME 1 2 3 4 5 6 (PRODUCT LEVEL)	SEE PAGE
	1	1	**100-3652**	2	PLATE-THRUST	
YR	2	1	**2W-7458**	1	CRANKSHAFT AS	
C	3	1	**4W-5738**	7	BEARING-MAIN (STANDARD)	
A		1	**8N-8225**	7	BEARING-MAIN (.25MM US)	
A		1	**8N-8226**	7	BEARING-MAIN (.51MM US)	
A		1	**8N-8227**	7	BEARING-MAIN (.76MM US)	
A		1	**8N-8228**	7	BEARING-MAIN (.51MM OS)	
A		1	**8N-8229**	7	BEARING-MAIN (.25MM US/.51MM OS)	
A		1	**4P-7305**	7	BEARING-MAIN (.51MM US/.51MM OS)	
A		1	**4P-7306**	7	BEARING-MAIN (.76MM US/.51MM OS)	

A-NOT PART OF THIS GROUP
C-CHANGE FROM PREVIOUS TYPE
R-REMFG PART MAY BE AVAILABLE
Y-SEPARATE ILLUSTRATION

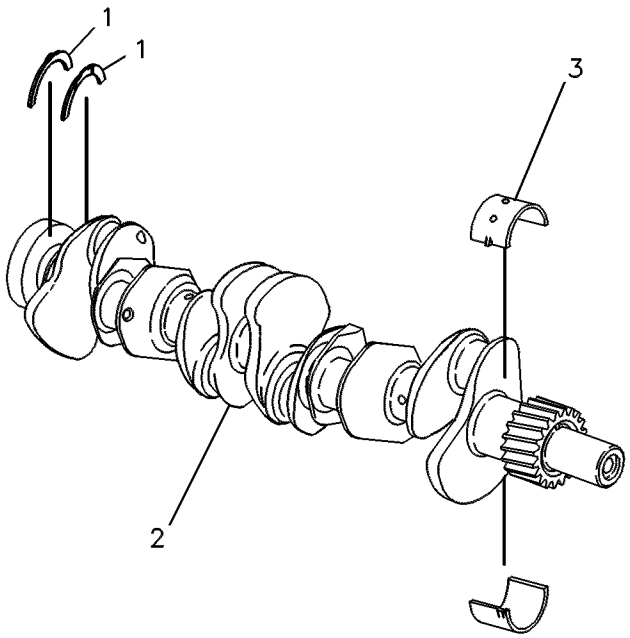

GRAPHIC #1 g00246672

BASIC ENGINE

1N-3576 CYLINDER BLOCK GP

S/N: 13Z22389-99999
FIELD REPLACEMENT FOR 7N-6550—PAGE
FIELD INSTALLATION

SMCS-1201 **i00200088**

NOTE	REF NO	GRAPHIC REF	PART NUMBER	QTY	PART NAME 1 2 3 4 5 6 (PRODUCT LEVEL)	SEE PAGE
	1	1	**7M-4046**	4	BEARING-SLEEVE	
	2	1	**3J-6019**	1	PLUG	
	3	1	**8K-1207**	2	DOWEL	
	4	1	**4B-5387**	1	PLUG-CUP	
	5	1	**1S-9540**	1	DOWEL	
	6	1	**5B-7652**	2	DOWEL	
	7	1	**6N-8003**	7	CAP-CRANKSHAFT BEARING	
	8	1	**4B-3938**	1	PLUG-CUP	
	9	1	**8B-6349**	2	DOWEL	
	10	1	**5S-8462**	1	STUD	
	11	1	**8N-4110**	1	BEARING-SLEEVE	
	12	1	**4B-9782**	1	BALL	
	13	1	**7S-3224**	14	BOLT (5/8-11X5.25IN)	
		1	**2S-5658**	14	WASHER-HARD (3.0MM THK)	

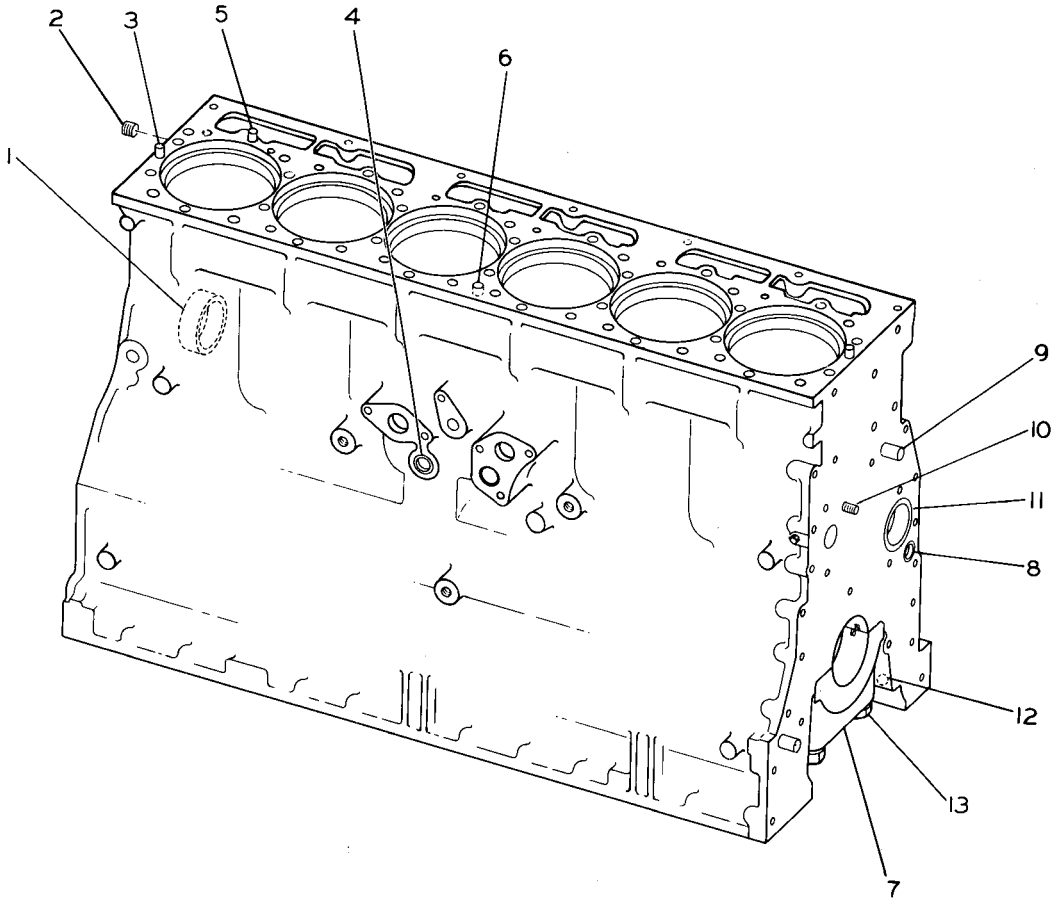

GRAPHIC #1 g00108200

7N-6550 CYLINDER BLOCK GP

S/N: 13Z22389-99999

PART OF 8N-5286 CYLINDER BLOCK GP

FIELD REPLACEMENT ORDER 1N-3576—PAGE , 6N-7727 KIT-CYLINDER BLOCK

SMCS-1201 **i01333983**

NOTE	REF NO	GRAPHIC REF	PART NUMBER	QTY	PART NAME 1 2 3 4 5 6 (PRODUCT LEVEL)	SEE PAGE
	1	1	**6N-8003**	7	CAP-CRANKSHAFT BEARING	
	3	1	**2S-5658**	14	WASHER-HARD (3.0MM THK)	
	4	1	**7S-3224**	14	BOLT (5/8-11X5.25IN)	
	5	1	**110-5800**	6	LINER-CYLINDER	
AJ		1	**104-5512**	6	INSERT-LINER SEAT (.822MM THK)	
AJ		1	**104-5518**	6	INSERT-LINER SEAT (1.605MM THK)	
AJ		1	**104-5527**	6	INSERT-LINER SEAT (2.710MM THK)	
AJ		1	**104-5530**	6	INSERT-LINER SEAT (5.210MM THK)	
	6	1	**2W-6134**	6	BAND-FILLER	
	7	1	**5S-6670**	18	SEAL-O-RING (117.1MM ID)	

A-NOT PART OF THIS GROUP
J-FOR USE WITH CYLINDER BLOCKS WITH LIGHT DAMAGE DUE TO EROSION

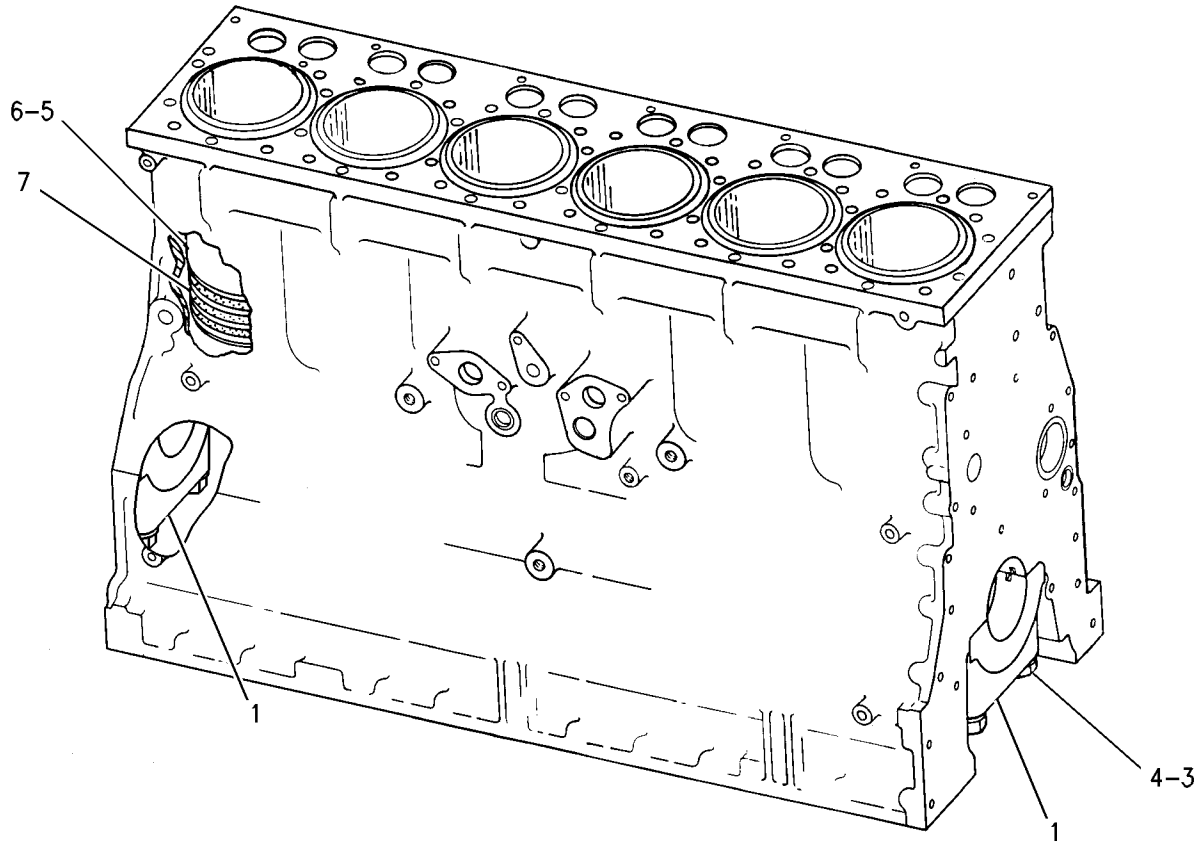

GRAPHIC #1 g00706259

MEMORANDA

BASIC ENGINE

8N-5286 CYLINDER BLOCK GP*R

S/N: 13Z22389-28099

PART OF 7E-0082 ENGINE AR

SMCS-1201 **i00962026**

NOTE	REF NO	GRAPHIC REF	PART NUMBER	QTY	PART NAME 1 2 3 4 5 6 (PRODUCT LEVEL)	SEE PAGE
Y	1	1	*7N-6550*	1	CYLINDER BLOCK GP	
	2	1	**7M-4046**	4	BEARING-SLEEVE	
	3	1	**8K-1207**	2	DOWEL	
	4	1	**3S-5496**	1	SEAL-O-RING (9.53MM ID)	
	5	1	**8B-6349**	2	DOWEL (15.88 MM X 34.92 MM)	
	6	1	**7N-7998**	1	PLATE-BLOCK	
	7	1	**115-7550**	1	GASKET-PLATE	
	8	1	**8T-6764**	1	PLUG-PIPE (1/8-27 NPTF THD)	
	9	1	**8T-6763**	1	PLUG	
	10	1	**8T-6765**	4	PLUG-PIPE (1/4-18 NPTF THD)	
	11	1	**8M-9307**	1	PLUG-DRAIN	
		1	**6F-7062**	1	WASHER	
	12	1	**8T-6762**	3	PLUG-PIPE (1/4-14 NPTF THD)	
	13	1	**5B-7652**	2	DOWEL (15.72 MM X 15.88 MM)	
	14	1	**8N-4110**	1	BEARING-SLEEVE	
	15	1	**4B-5387**	1	PLUG-CUP	
	16	1	**4B-9782**	1	BALL (9.52MM DIA)	
	17	1	**1S-9540**	1	DOWEL (30.23 MM X 9.37 MM)	
	18	1	**5S-8462**	1	STUD	
	19	1	**4B-3938**	1	PLUG-CUP	

Y-SEPARATE ILLUSTRATION

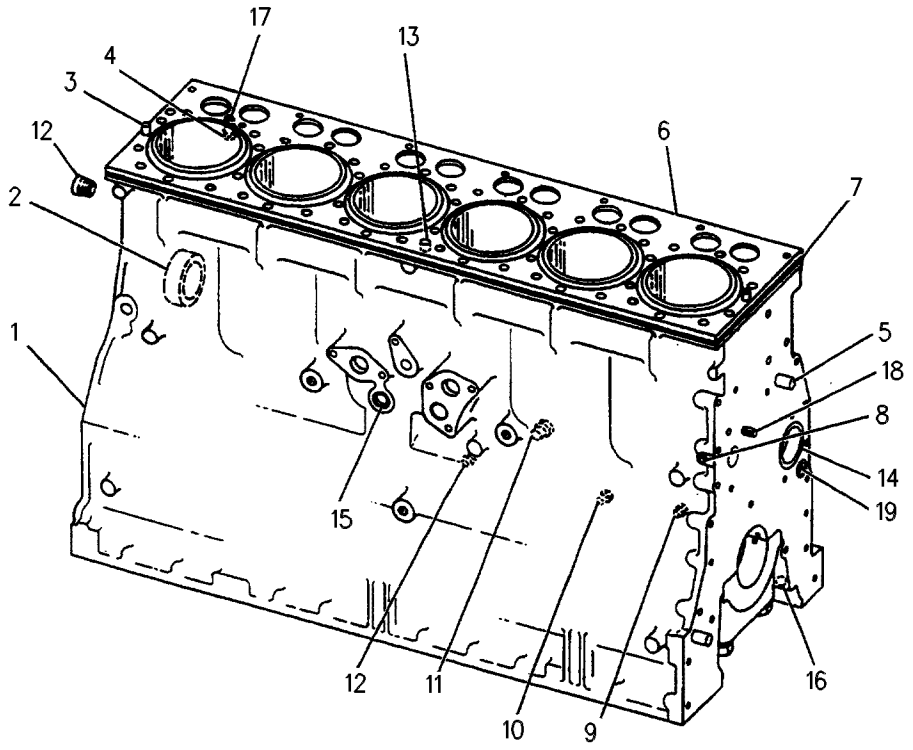

GRAPHIC #1 g00390419

BASIC ENGINE

7W-0362 CYLINDER HEAD GP

S/N: 13Z22389-99999

FIELD REPLACEMENT FOR 8N-0246—PAGE : FOR 7N-8876—PAGE

SMCS-1100 **i01647665**

NOTE	REF NO	GRAPHIC REF	PART NUMBER	QTY	PART NAME 1 2 3 4 5 6 (PRODUCT LEVEL)	SEE PAGE
	1	1	**7S-7144**	12	SPRING-VALVE	
	2	1	**1W-5300**	12	ROTOCOIL AS	
					(EACH INCLUDES)	
		1	**6N-7174**	1	SHIELD-OIL	
	3	1	**2A-4429**	24	LOCK-RETAINER	
YR	4	1	*8N-6796*	1	CYLINDER HEAD GP	
	5	1	**100-7860**	6	VALVE-INLET	
	6	1	**148-7455**	6	VALVE-EXHAUST	

R-REMFG PART MAY BE AVAILABLE
Y-SEPARATE ILLUSTRATION

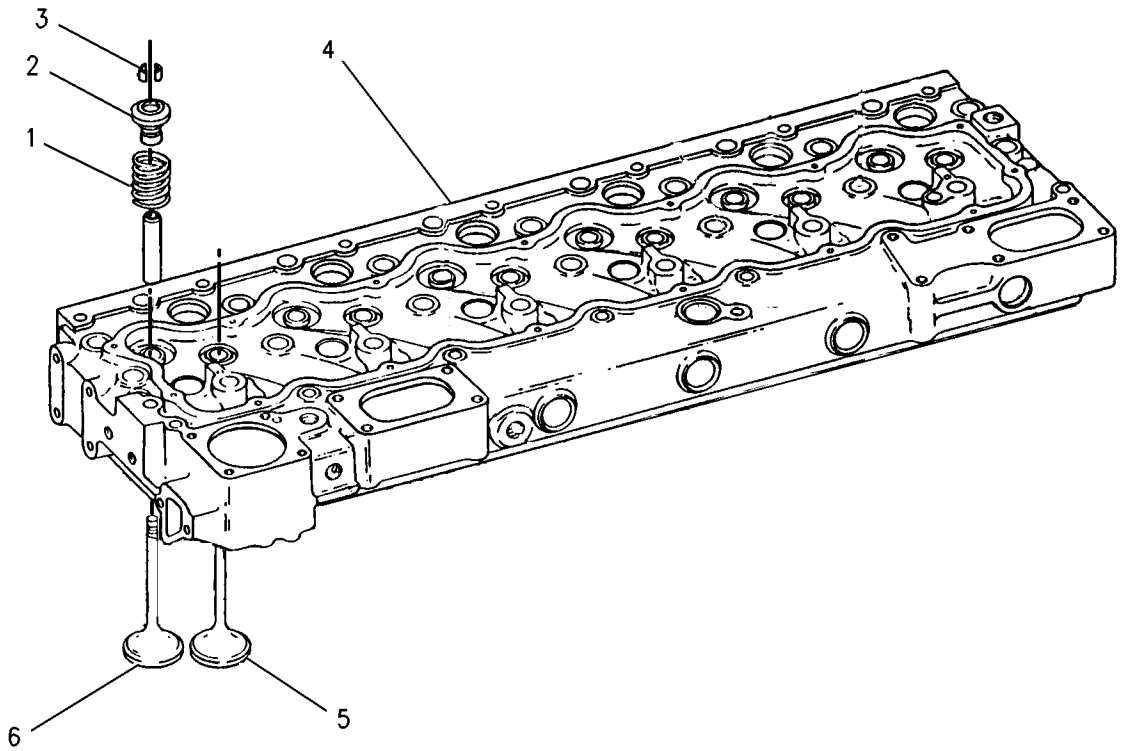

GRAPHIC #1 g00747594

MEMORANDA

8N-0246 CYLINDER HEAD GP

S/N: 13Z22389-28099

PART OF 7E-0082 ENGINE AR

FIELD REPLACEMENT ORDER 8N-6796—PAGE , 7W-0362—PAGE

SMCS-1100 **i01378842**

NOTE	REF NO	GRAPHIC REF	PART NUMBER	QTY	PART NAME 1 2 3 4 5 6 (PRODUCT LEVEL)	SEE PAGE
B	1	1	**8T-6762**	1	PLUG-PIPE (1/2-14 NPTF THD)	
	2	1	**148-7425**	12	GUIDE-VALVE	
B	3	1	**3J-5389**	2	PLUG (1/2-14 NPT THD)	
	4	1	**111-8015**	1	GASKET AS-CYLINDER HEAD	
	5	1	**8T-6763**	1	PLUG-PIPE (1/4-18 NPTF THD)	
	6	1	**1W-5300**	12	ROTOCOIL AS	
	7	1	**148-7455**	6	VALVE-EXHAUST	
	8	1	**2A-4429**	24	LOCK-RETAINER	
	9	1	**7S-7144**	12	SPRING-VALVE	
	10	1	**100-7860**	6	VALVE-INLET	
	11	1	**3S-5496**	1	SEAL-O-RING (9.53MM ID)	
	12	1	**9Y-1798**	1	SEAL-WATER	
	13	1	**7N-8018**	6	SEAL-WATER	
	14	1	*7C-4006*	1	CYLINDER HEAD AS	
	15	1	**107-0268**	6	INSERT-VALVE SEAT (INLET)	
	16	1	**107-0265**	6	INSERT-VALVE SEAT (EXHAUST)	
		1	**3B-0623**	6	PLUG-CUP (25.73MM OD)	
		1	**3P-1896**	13	PLUG-CUP (35.31MM AVG OD)	
		1	**3S-8313**	7	PLUG-CUP (32.08MM OD)	

B-USE AS REQUIRED

8N-0246 **CYLINDER HEAD GP** *(contd.)* **i01378842**

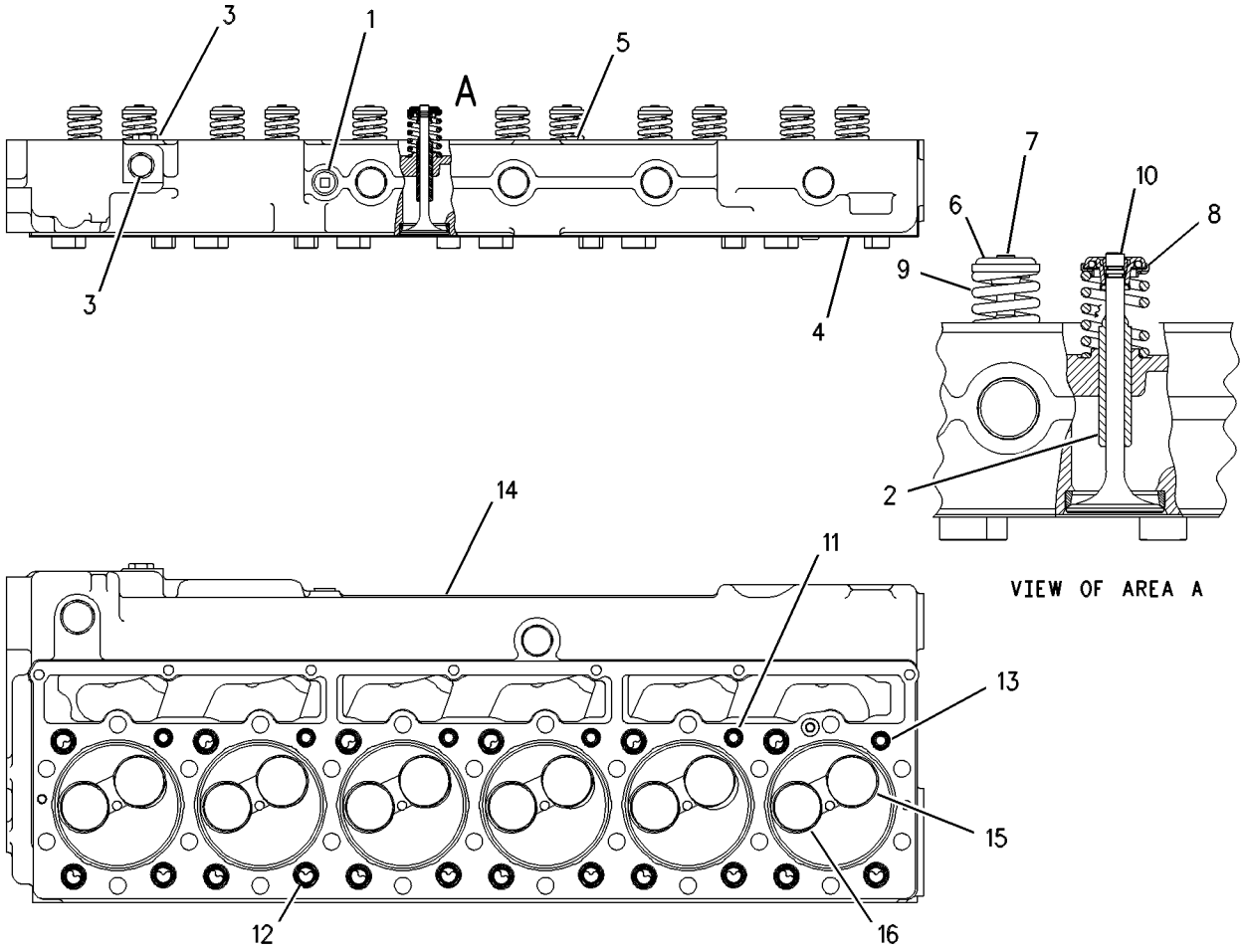

GRAPHIC #1 g00480428

8N-6796 CYLINDER HEAD GP*R

S/N: 13Z22389-99999

PART OF 7W-0362 CYLINDER HEAD GP

FIELD REPLACEMENT FOR 8N-0246—PAGE : FOR 7N-8876—PAGE

SMCS-1100 **i01379564**

NOTE	REF NO	GRAPHIC REF	PART NUMBER	QTY	PART NAME 1 2 3 4 5 6 (PRODUCT LEVEL)	SEE PAGE
	1	1	**148-7502**	12	GUIDE-VALVE	
	2	1	**5M-2894**	4	WASHER-HARD (10.2X18.5X2.5MM THK)	
	3	1	**8T-6762**	3	PLUG-PIPE (1/2-14 NPTF THD)	
	4	1	**5S-6735**	1	GASKET	
	5	1	**1P-6367**	1	COVER	
	6	1	**0S-1594**	4	BOLT (3/8-16X1 IN)	
	7	1	**8T-6763**	1	PLUG-PIPE (1/4-18 NPTF THD)	
	8	1	**8N-4485**	1	VALVE AS-VENT	
	9	1	**107-0265**	6	INSERT-VALVE SEAT (EXHAUST)	
	10	1	**107-0268**	6	INSERT-VALVE SEAT (INLET)	
	11	1	**3B-0623**	6	PLUG-CUP (25.73MM OD)	
	12	1	**3S-8313**	7	PLUG-CUP (32.08MM OD)	
	13	1	**3P-1896**	13	PLUG-CUP (35.31MM AVG OD)	

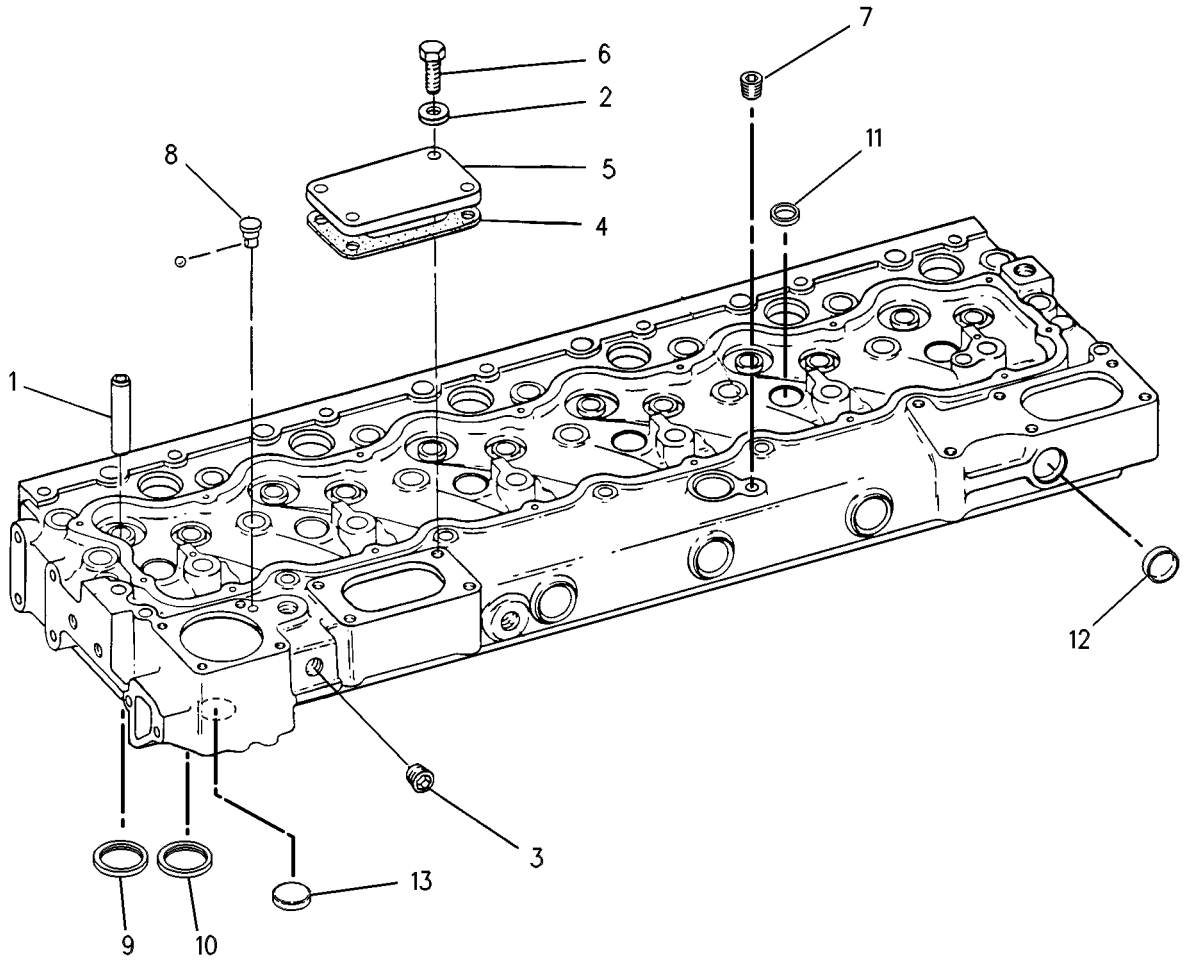

GRAPHIC #1 g00109750

BASIC ENGINE

1W-7831 DAMPER GP

S/N: 13Z22389-28099

PART OF 7E-0082 ENGINE AR

SMCS-1205 **i00259327**

NOTE	REF NO	GRAPHIC REF	PART NUMBER	QTY	PART NAME 1 2 3 4 5 6 (PRODUCT LEVEL)	SEE PAGE
	1	1	**4W-2446**	1	DAMPER AS	
	2	1	**6H-1717**	6	BOLT (1/2-13X1.125IN)	

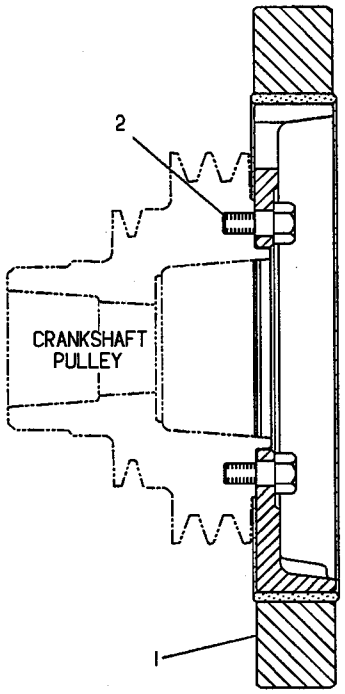

GRAPHIC #1 g00118388

BASIC ENGINE

2W-9267 DRIVE GP-FAN

S/N: 13Z22389-28099

PART OF 6C-3458 ENGINE AR

SMCS-1359 **i00286952**

NOTE	REF NO	GRAPHIC REF	PART NUMBER	QTY	PART NAME 1 2 3 4 5 6 (PRODUCT LEVEL)	SEE PAGE
	1	1	**1P-9945**	1	BRACKET AS-FAN	
		1	**5B-5812**	1	DOWEL	
	2	1	**1P-9946**	1	SHAFT-FAN	
	3	1	**5S-9062**	1	SPACER	
	4	1	**8H-9789**	1	BALL BEARING	
	5	1	**8N-5305**	1	SPACER	
	6	1	**1W-4407**	1	HUB-FAN PULLEY	
	7	1	**5S-7264**	1	WASHER-RETAINING	
	8	1	**6V-4626**	2	BOLT-LOCKING	
	9	1	**3L-1425**	1	BALL BEARING	
	10	1	**5S-2106**	1	SEAL-LIP	
	11	1	**8T-8920**	4	BOLT (1/2-13X3.25IN)	
	12	1	**9N-6612**	1	SPACER	
	13	1	**3B-8485**	1	FITTING-HYDRAULIC	

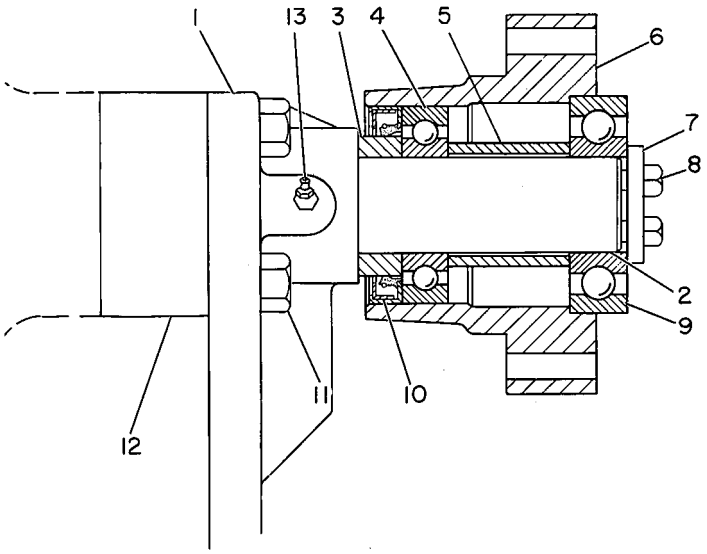

GRAPHIC #1 g00118423

BASIC ENGINE

7N-9536 FASTENER GP-CYLINDER HEAD

S/N: 13Z22389-28099

PART OF 7E-0082 ENGINE AR

SMCS-1100 **i01508789**

NOTE	REF NO	GRAPHIC REF	PART NUMBER	QTY	PART NAME 1 2 3 4 5 6 (PRODUCT LEVEL)	SEE PAGE
	1	1	**5B-9603**	6	BOLT (3/8-16X5 IN)	
	2	1	**1B-7709**	5	BOLT (5/8-11X8 IN)	
	3	1	**1D-4595**	20	BOLT (5/8-11X6 IN)	
	4	1	**2S-0736**	25	WASHER-HARD (17X27X3.5MM THK)	
B	5	1	**5B-9603**	1	BOLT (3/8-16X5 IN)	

B-USE AS REQUIRED

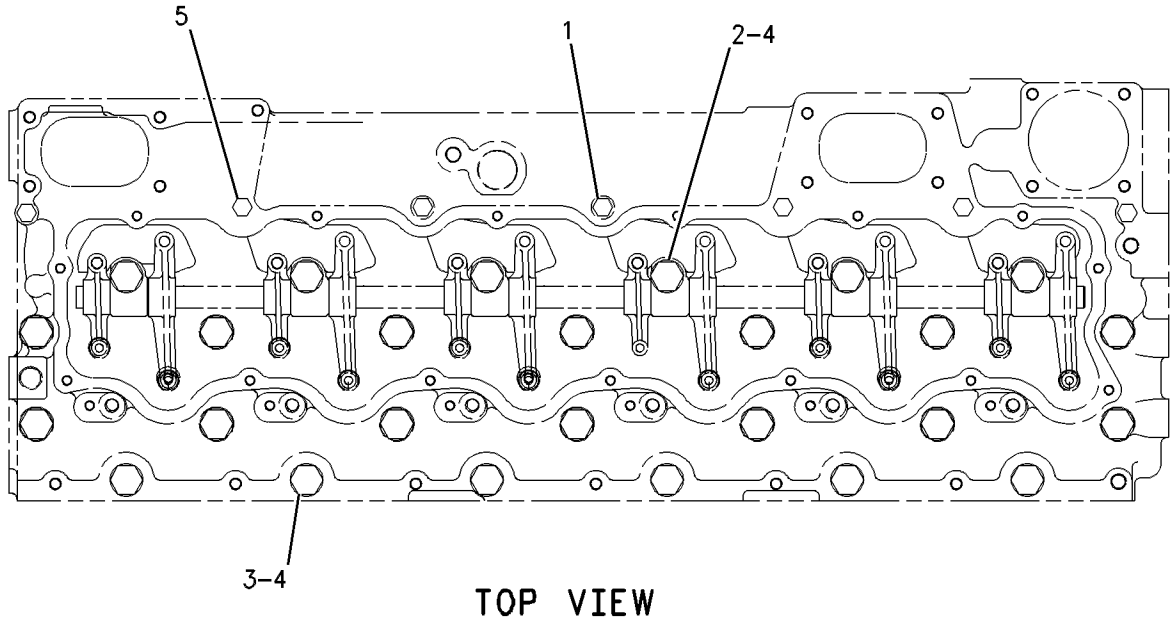

TOP VIEW

GRAPHIC #1 g00560824

8N-0872 FASTENER GP-FRONT HOUSING

S/N: 13Z22389-99999

PART OF 7E-0082 ENGINE AR

SMCS-1151, 1162 **i01090751**

NOTE	REF NO	GRAPHIC REF	PART NUMBER	QTY	PART NAME 1 2 3 4 5 6 (PRODUCT LEVEL)	SEE PAGE
	1	1	**3E-6914**	6	BOLT	
	2	1	**0L-2070**	11	BOLT (3/8-16X2.25IN)	
	3	1	**5M-2894**	3	WASHER (2.5MM THK)	
	4	1	**6V-8801**	3	NUT (3/8-16 THD)	
B	5	1	**1C-2251**	2	BOLT (3/8-16X1.87IN)	
B	6	1	**0L-2070**	9	BOLT (3/8-16X2.25IN)	
B	7	1	**5M-2894**	5	WASHER (2.5MM THK)	
B	8	1	**6V-8801**	5	NUT (3/8-16 THD)	

B-USE AS REQUIRED

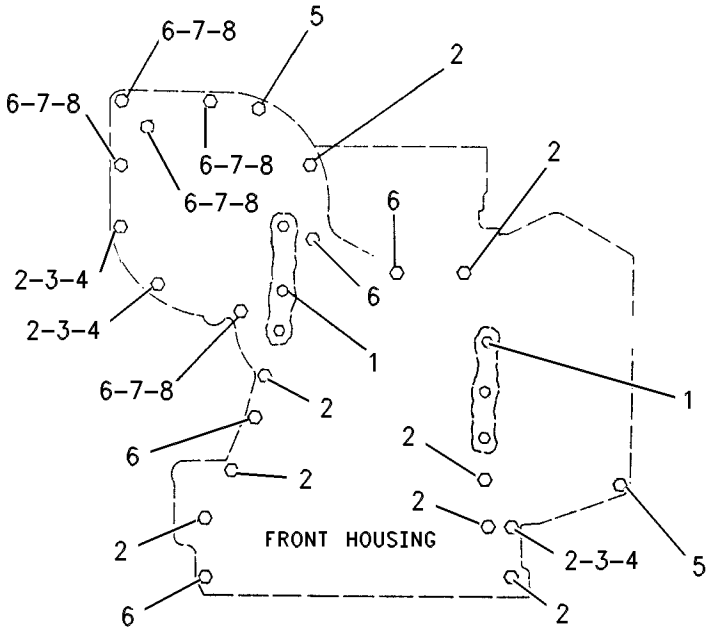

GRAPHIC #1 g00338012

BASIC ENGINE

8N-2181 FASTENER GP-OIL PAN

S/N: 13Z22389-28099
PART OF 7E-0082 ENGINE AR

SMCS-1302 **i01183393**

NOTE	REF NO	GRAPHIC REF	PART NUMBER	QTY	PART NAME 1 2 3 4 5 6 (PRODUCT LEVEL)	SEE PAGE
	1	1	**0T-0573**	5	BOLT (3/8-16X2.75IN)	
	2	1	**5M-2894**	46	WASHER (2.5MM THK)	
	3	1	**3B-1915**	18	BOLT (3/8-16X1.375IN)	
	4	1	**0S-1591**	20	BOLT (3/8-16X1.5 IN)	
	5	1	**8N-3293**	1	BRACKET	
	6	1	**0L-1352**	3	BOLT (3/8-16X3.25IN)	
	7	1	**9Y-0629**	1	PLATE	
	8	1	**9Y-0630**	2	PLATE	

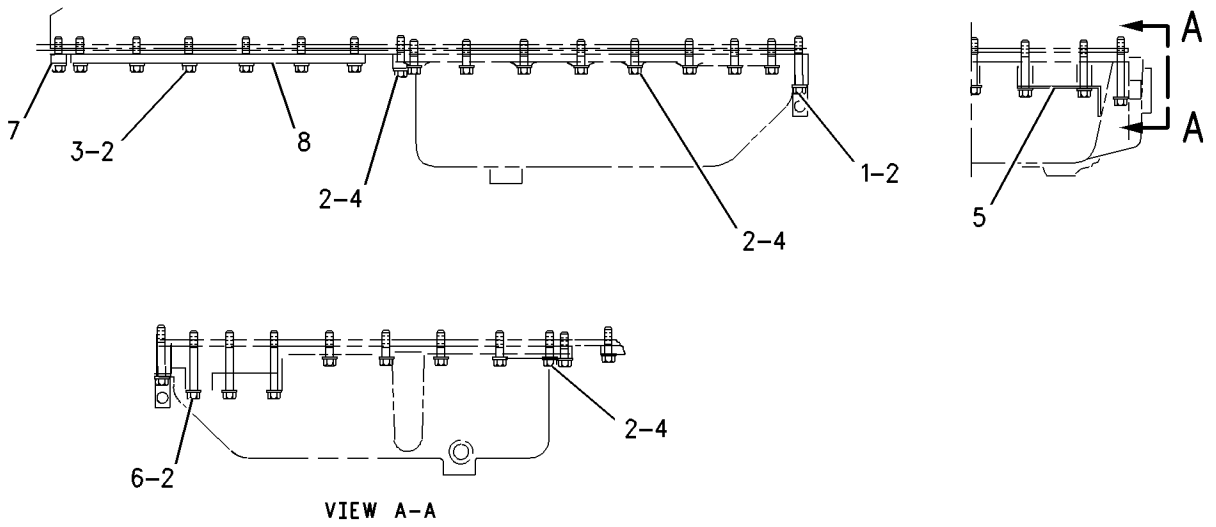

GRAPHIC #1 g00637831

BASIC ENGINE

2P-2505 FLYWHEEL GP

S/N: 13Z22389-24485

PART OF 7E-0082 ENGINE AR

SMCS-1156 **i00259337**

NOTE	REF NO	GRAPHIC REF	PART NUMBER	QTY	PART NAME 1 2 3 4 5 6 (PRODUCT LEVEL)	SEE PAGE
	1	1	**2L-1701**	9	BOLT (5/8-18X1.5IN)	
C	2	1	**1W-7609**	1	FLYWHEEL AS	
	3	1	**7N-9145**	1	GEAR (130 TEETH)	

C-CHANGE FROM PREVIOUS TYPE

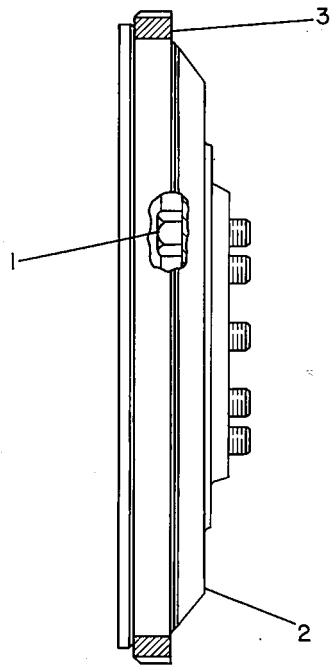

GRAPHIC #1 g00115946

BASIC ENGINE

6C-5917 FLYWHEEL GP

S/N: 13Z24486, 24488, 24492, 24494-99999

PART OF 7E-0082 ENGINE AR

SMCS-1156 **i00286981**

NOTE	REF NO	GRAPHIC REF	PART NUMBER	QTY	PART NAME 1 2 3 4 5 6 (PRODUCT LEVEL)	SEE PAGE
	1	1	**2L-1701**	9	BOLT (5/8-18X1.5IN)	
	2	1	**9Y-6439**	1	FLYWHEEL AS	
	3	1	**7N-9145**	1	GEAR (130 TEETH)	

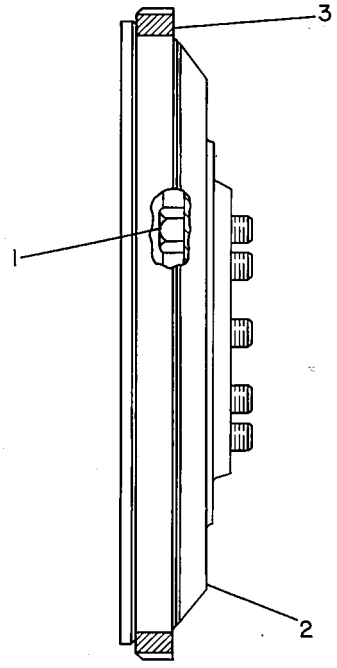

GRAPHIC #1 g00115946

BASIC ENGINE

1W-5634 GEAR GP-FRONT

S/N: 13Z22389-28099

PART OF 7E-0082 ENGINE AR

SMCS-1206 **i01573614**

NOTE	REF NO	GRAPHIC REF	PART NUMBER	QTY	PART NAME 1 2 3 4 5 6 (PRODUCT LEVEL)	SEE PAGE
	1	1	**1W-7889**	1	GEAR-FUEL PUMP DRIVE (80 TEETH)	
	2	1	**7N-2994**	1	WASHER (49.3X16.25X12.3MM THK)	
	3	1	**8N-4960**	1	PLATE-THRUST	
	4	1	**0S-1618**	2	BOLT (5/16-18X1 IN)	
	5	1	**170-7502**	1	SHAFT-DRIVE IDLER	
	6	1	**0S-1748**	4	BOLT (3/8-24X2 IN)	
	7	1	**5M-2894**	2	WASHER-HARD (10.2X18.5X2.5MM THK)	
	8	1	**196-0029**	1	GEAR AS-IDLER (57 TEETH)	
		1	**195-0302**	1	BEARING-SLEEVE	
	9	1	**1W-4402**	1	GEAR-CAMSHAFT (80 TEETH)	
	10	1	**1A-1135**	1	BOLT (5/8-11X2 IN)	
	11	1	**0S-1594**	2	BOLT (3/8-16X1 IN)	
	12	1	**196-0223**	1	GEAR AS-IDLER (60 TEETH)	
		1	**196-9988**	1	BEARING-SLEEVE	
	13	1	**5B-9079**	1	NUT-JAM (3/8-24 THD)	

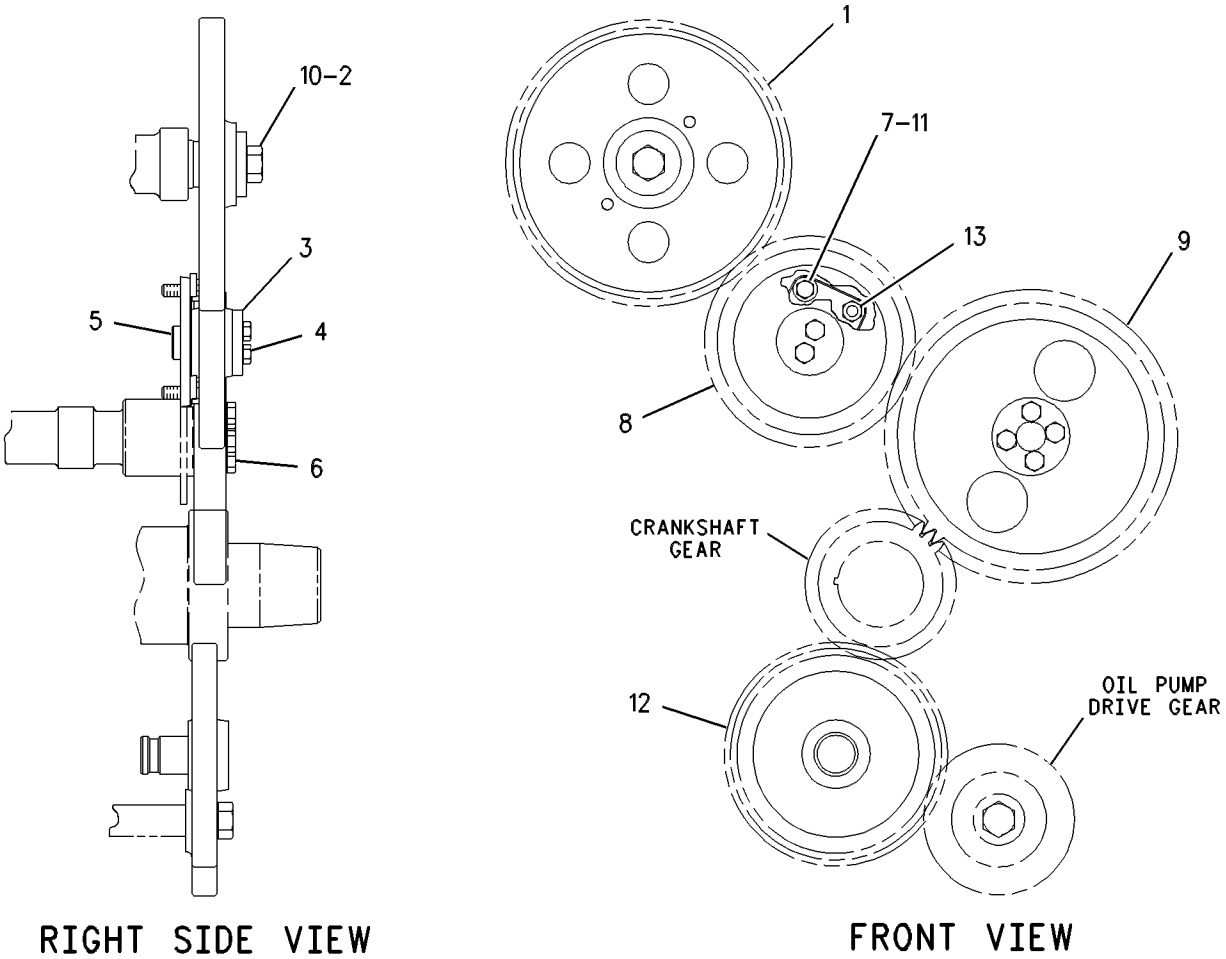

RIGHT SIDE VIEW

FRONT VIEW

GRAPHIC #1 g00650597

BASIC ENGINE

8N-0442 HOUSING GP-FLYWHEEL

S/N: 13Z22389-28099

PART OF 7E-0082 ENGINE AR

SMCS-1157 **i01064435**

NOTE	REF NO	GRAPHIC REF	PART NUMBER	QTY	PART NAME 1 2 3 4 5 6 (PRODUCT LEVEL)	SEE PAGE
	1	1	**9H-5921**	1	GASKET-FLYWHEEL HOUSING	
	2	1	**5M-6213**	1	PLUG-PIPE	
	3	1	**0S-1587**	13	BOLT (1/2-13X1.75IN)	
	4	1	**2B-0858**	1	PLUG-PIPE (1/2-14 NPTF)	
	5	1	**7W-9321**	1	HOUSING-FLYWHEEL	
B	6	1	**2A-1162**	1	GASKET	
B	7	1	**5F-0304**	1	PLUG-DRAIN	

B-USE AS REQUIRED

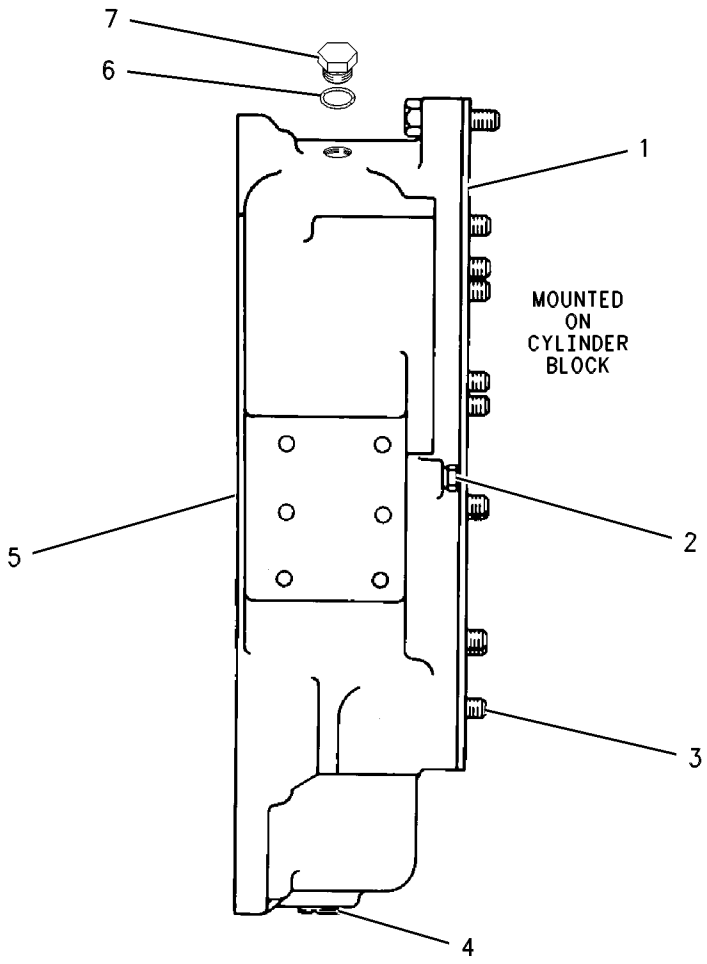

GRAPHIC #1 g00556392

8N-0303 HOUSING GP-FRONT

S/N: 13Z22389-28099

PART OF 7E-0082 ENGINE AR

SMCS-1151, 1162 **i01310409**

NOTE	REF NO	GRAPHIC REF	PART NUMBER	QTY	PART NAME 1 2 3 4 5 6 (PRODUCT LEVEL)	SEE PAGE
	1	1	**6I-0923**	1	HOUSING AS-FRONT	
	2	1	**9X-2485**	6	STUD	
	3	1	**1W-7816**	1	PLATE AS-FRONT	
		1	**5M-6214**	1	PLUG-PIPE (1/8-27 THD)	
	4	1	**6H-0192**	3	STUD	
	5	1	**8N-0110**	1	GASKET-FRONT PLATE	
	6	1	**1W-3900**	1	GASKET	

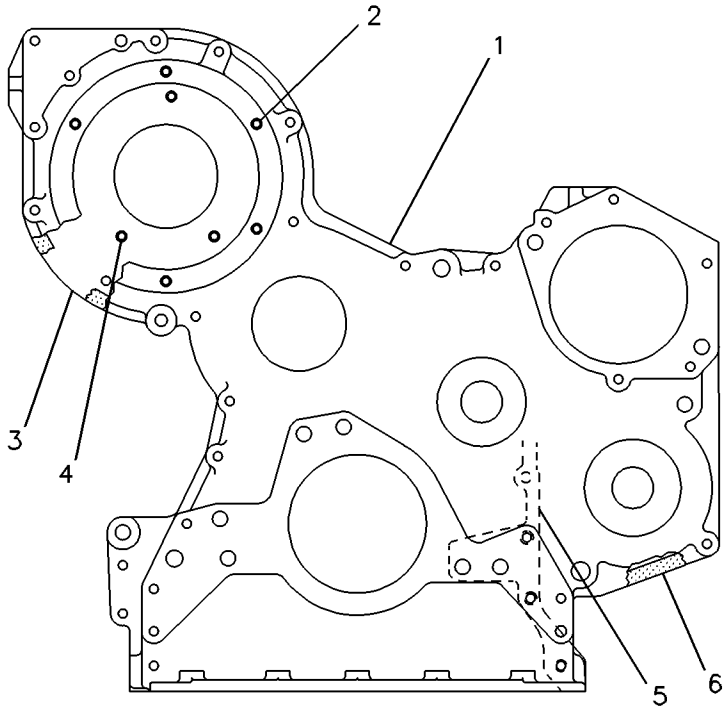

GRAPHIC #1 g00108428

BASIC ENGINE

6N-8336 LIFTING GP-ENGINE

S/N: 13Z22389-28099

PART OF 7E-0082 ENGINE AR

SMCS-1122 **i00259504**

NOTE	REF NO	GRAPHIC REF	PART NUMBER	QTY	PART NAME 1 2 3 4 5 6 (PRODUCT LEVEL)	SEE PAGE
C	1	1	**4W-8652**	1	PLATE-EYE	
	2	1	**8N-8721**	1	PLATE-LIFTING EYE	
	3	1	**6V-1999**	4	BOLT	
		1	**8D-5054**	4	WASHER-HARD	

C-CHANGE FROM PREVIOUS TYPE

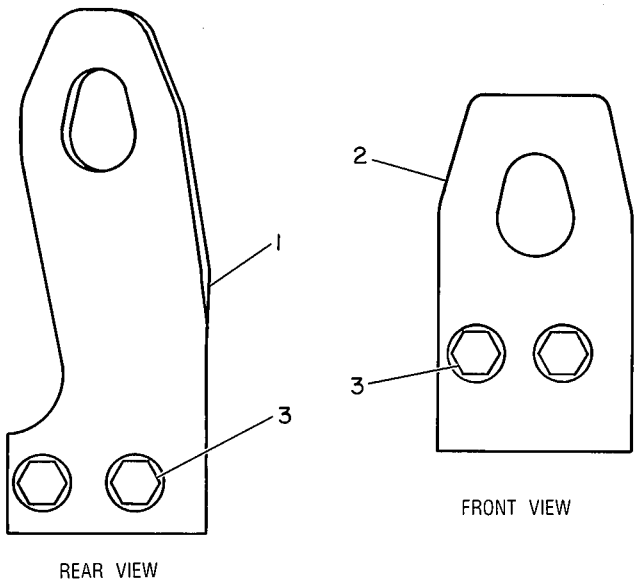

REAR VIEW

FRONT VIEW

GRAPHIC #1 g00125336

BASIC ENGINE

7E-3367 LINES GP-AIR COMPRESSOR

S/N: 13Z22389-28099

PART OF 7E-0082 ENGINE AR

SMCS-5502 **i01217665**

NOTE	REF NO	GRAPHIC REF	PART NUMBER	QTY	PART NAME 1 2 3 4 5 6 (PRODUCT LEVEL)	SEE PAGE
	1	1	**7N-5645**	1	TUBE AS-OUTLET	
	2	1	**7K-1517**	2	ELBOW	
	3	1	**2N-1287**	3	ELBOW-FLARED (90 DEGREES)	
	4	1	**1N-4458**	1	TUBE AS	
	5	1	**1W-4785**	1	TUBE AS	
	6	1	**5K-9240**	1	ELBOW-FLARED	
	7	1	**4N-9679**	1	GOVERNOR AS-AIR COMPRESSOR	
	8	1	**2S-2923**	1	COVER-GOVERNOR	
	9	1	**9F-2247**	4	PLUG-PIPE	
	10	1	**1D-4541**	2	BOLT (5/16-18X3IN)	
		1	**5S-0003**	2	NUT (5/16-18 THD)	
	11	1	**9M-1974**	5	WASHER-HARD (2MM THK)	
	12	1	**5K-9238**	1	CONNECTOR-FLARED	
	13	1	**8N-0449**	1	TUBE AS-INLET	
	14	1	**9N-0869**	1	WASHER-HARD (2MM THK)	
	15	1	**7E-5354**	1	BRACKET	
	16	1	**1A-9579**	2	BOLT (5/16-18X1.5IN)	
	17	1	**6K-1972**	1	ELBOW-FLARED (1/4 NPT)	
	18	1	**3B-7764**	1	BUSHING	
I	19	1	**9N-3040**	1	HOSE AS-END	
	20	1	**5K-9244**	1	ELBOW-FLARED	
	21	1	**3B-6552**	1	ELBOW (90 DEGREES)	
		1	**5M-6214**	1	PLUG-PIPE (1/8-27 THD)	
	22	1	**5F-5434**	1	VENT AS	
	23	1	**6K-8079**	1	CONNECTOR-FLARED	
	24	1	**3S-8536**	1	SPACER	
					AVAILABLE REPAIR KIT(S):	
			9M-0402	1	KIT-GOVERNOR OVERHAUL	
					(INCLUDES GROMMETS, SPRING, FILTERS, VALVE & COVER)	

I-SEE HOSE FABRICATION GUIDE

7E-3367 **LINES GP-AIR COMPRESSOR** *(contd.)* **i01217665**

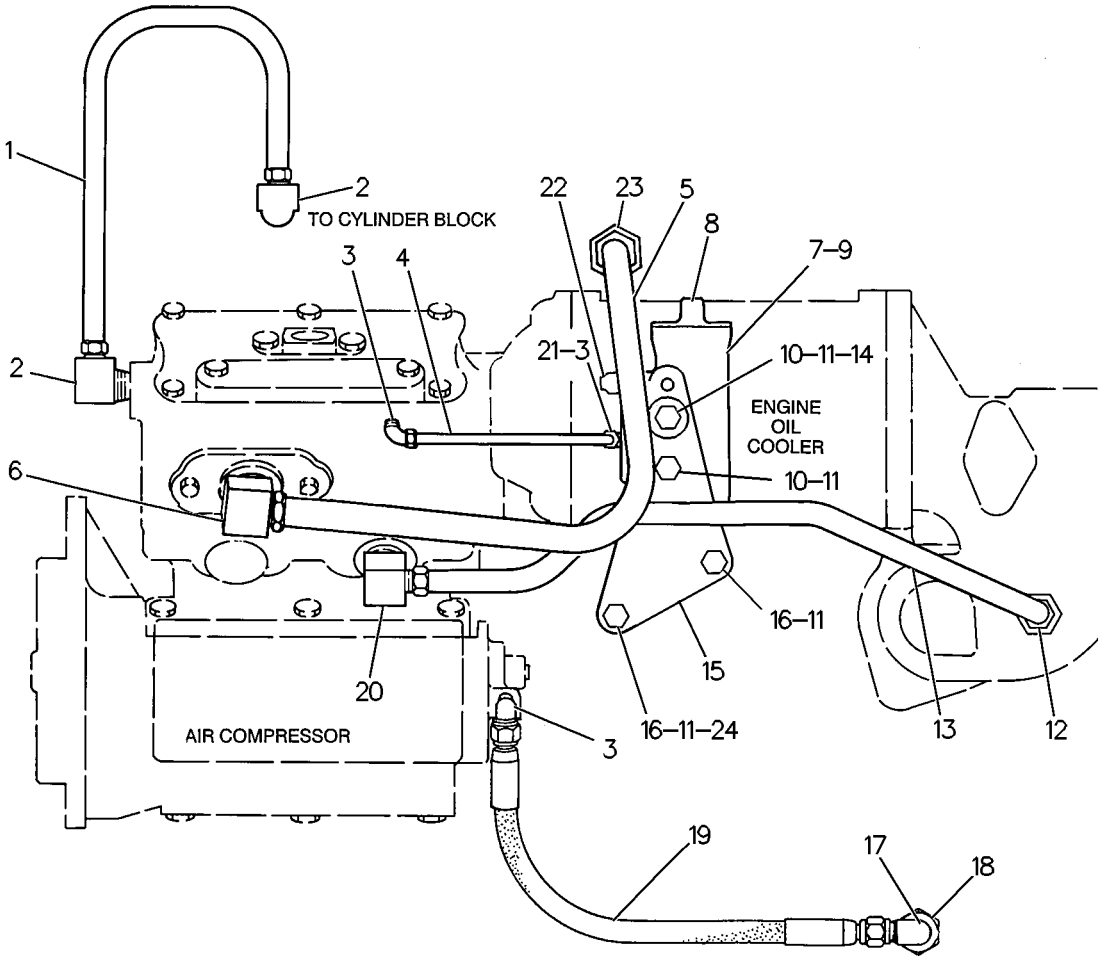

GRAPHIC #1

g00126485

1N-3641 MOUNTING GP-ENGINE & TMSN

S/N: 3XJ1647-99999
FLEXIBLE

SMCS-1152, 1154, 3082 **i00200100**

NOTE	REF NO	GRAPHIC REF	PART NUMBER	QTY	PART NAME 1 2 3 4 5 6 (PRODUCT LEVEL)	SEE PAGE
	1	1	**8N-1214**	4	MOUNT AS	
	2	1	**2A-1420**	2	BOLT (1-8X4.75IN)	
		1	**7N-5656**	2	SLEEVE	
C	3	1	**8T-2502**	12	BOLT (3/8-16X1.13IN)	
C		1	**8T-4896**	12	WASHER-HARD (2.5MM THK)	
	4	1	**7N-1164**	2	MOUNT AS	
	5	1	**1V-3995**	2	PIN	
	6	1	**4V-6430**	2	BRACKET AS	
	7	1	**2A-1538**	8	BOLT (3/4-10X2.25IN)	
		1	**5P-8248**	8	WASHER-HARD (3.5MM THK)	
	8	1	**5P-8250**	2	WASHER (5.0MM THK)	
CF		1	**2B-7559**	3	CORK ( )	
					(FOR THE LIFTING EYE HOLES ON THE TORQUE CONVERTER AND THE CYLINDER HEAD)	
CF		1	**8B-2540**	2	CORK ( )	
					(FOR THE LIFTING EYE HOLES ON THE TRANSFER CASE)	

C-CHANGE FROM PREVIOUS TYPE
F-NOT SHOWN

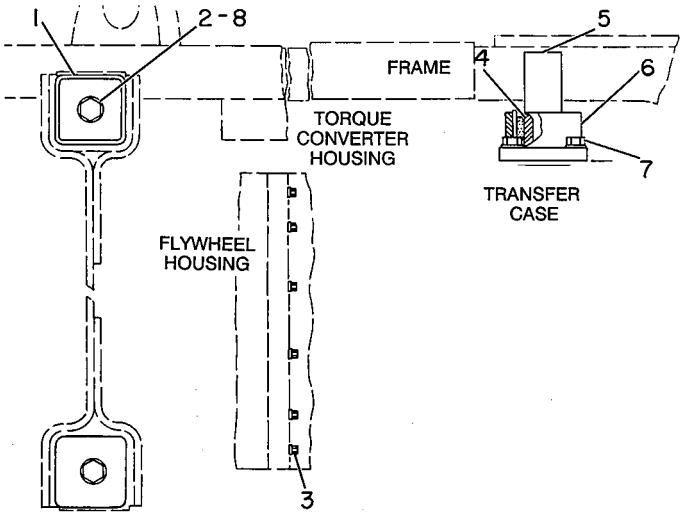

GRAPHIC #1 g00123742

7E-2925 MOUNTING GP-ENGINE & TMSN

S/N: 3XJ1-1646
FLEXIBLE

SMCS-1152, 1154, 3082 **i00286512**

NOTE	REF NO	GRAPHIC REF	PART NUMBER	QTY	PART NAME 1 2 3 4 5 6 (PRODUCT LEVEL)	SEE PAGE
	1	1	**8R-6213**	2	MOUNT AS	
	2	1	**2A-1538**	8	BOLT (3/4-10X2.25IN)	
	3	1	**5P-8248**	8	WASHER-HARD (3.5MM THK)	
	4	1	**9W-9930**	2	MOUNT AS	
	5	1	**9W-6582**	2	SLEEVE	
	6	1	**9W-6584**	2	WASHER (10MM THK)	
M	7	1	**8T-0070**	2	BOLT (M20X2.5X120MM)	
	8	1	**8T-3282**	2	WASHER-HARD (3.5MM THK)	
	9	1	**1A-2029**	12	BOLT (3/8-16X1.125IN)	
	10	1	**5M-2894**	12	WASHER (2.5MM THK)	
	11	1	**8N-1214**	4	MOUNT AS	
	12	1	**7N-5656**	2	SLEEVE	
	13	1	**2A-1420**	2	BOLT (1-8X4.75IN)	
	14	1	**5P-8250**	2	WASHER (5.0MM THK)	

M-METRIC PART

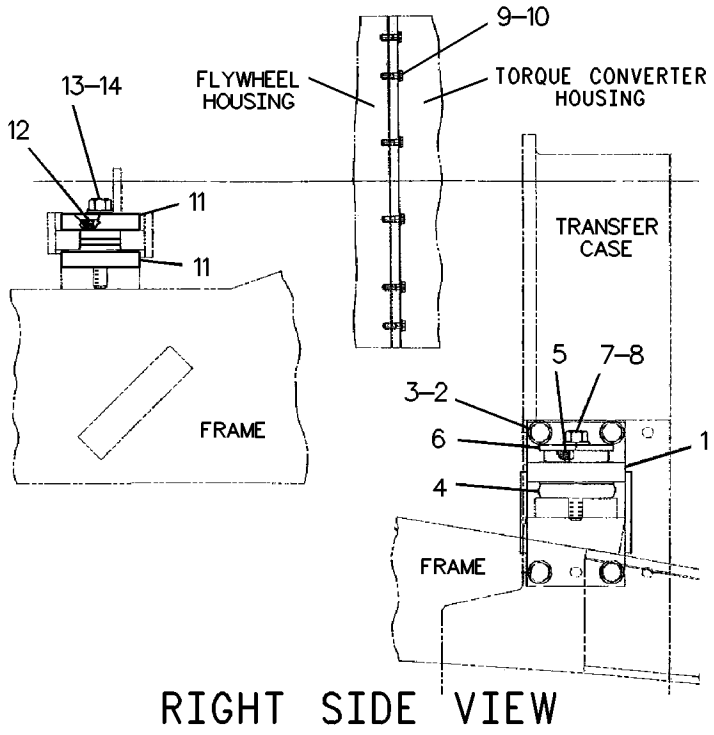

RIGHT SIDE VIEW

GRAPHIC #1 g00127914

BASIC ENGINE

7E-4236 PAN GP-OIL

S/N: 13Z22389-28099

PART OF 7E-0082 ENGINE AR

SMCS-1302 **i01240496**

NOTE	REF NO	GRAPHIC REF	PART NUMBER	QTY	PART NAME 1 2 3 4 5 6 (PRODUCT LEVEL)	SEE PAGE
	1	1	**2P-1738**	1	PLATE AS-OIL PAN	
	2	1	**7E-4237**	1	PAN-OIL	
	3	1	**169-4199**	1	GASKET-OIL PAN	
	4	1	**169-4200**	1	GASKET	
B	5	1	**7W-6492**	1	PLUG-PIPE (1/2-14 NPTF THD)	
	6	1	**9X-6451**	2	PLUG-DRAIN	
	7	1	**121-0145**	2	SEAL-O-RING (28.17MM ID)	
	8	1	**6V-7238**	1	VALVE-SHUTOFF	
	9	1	**8L-2786**	2	SEAL-O-RING (16.36MM ID)	
	10	1	**9S-4185**	1	PLUG-O-RING (3/4-16 THD)	
B	11	1	**9S-4190**	1	PLUG-O-RING (7/16-20 THD)	
B	12	1	**2M-9780**	1	SEAL-O-RING (19.18MM ID)	
B	13	1	**7W-6492**	1	PLUG-PIPE (1/2-14 NPTF THD)	

B-USE AS REQUIRED

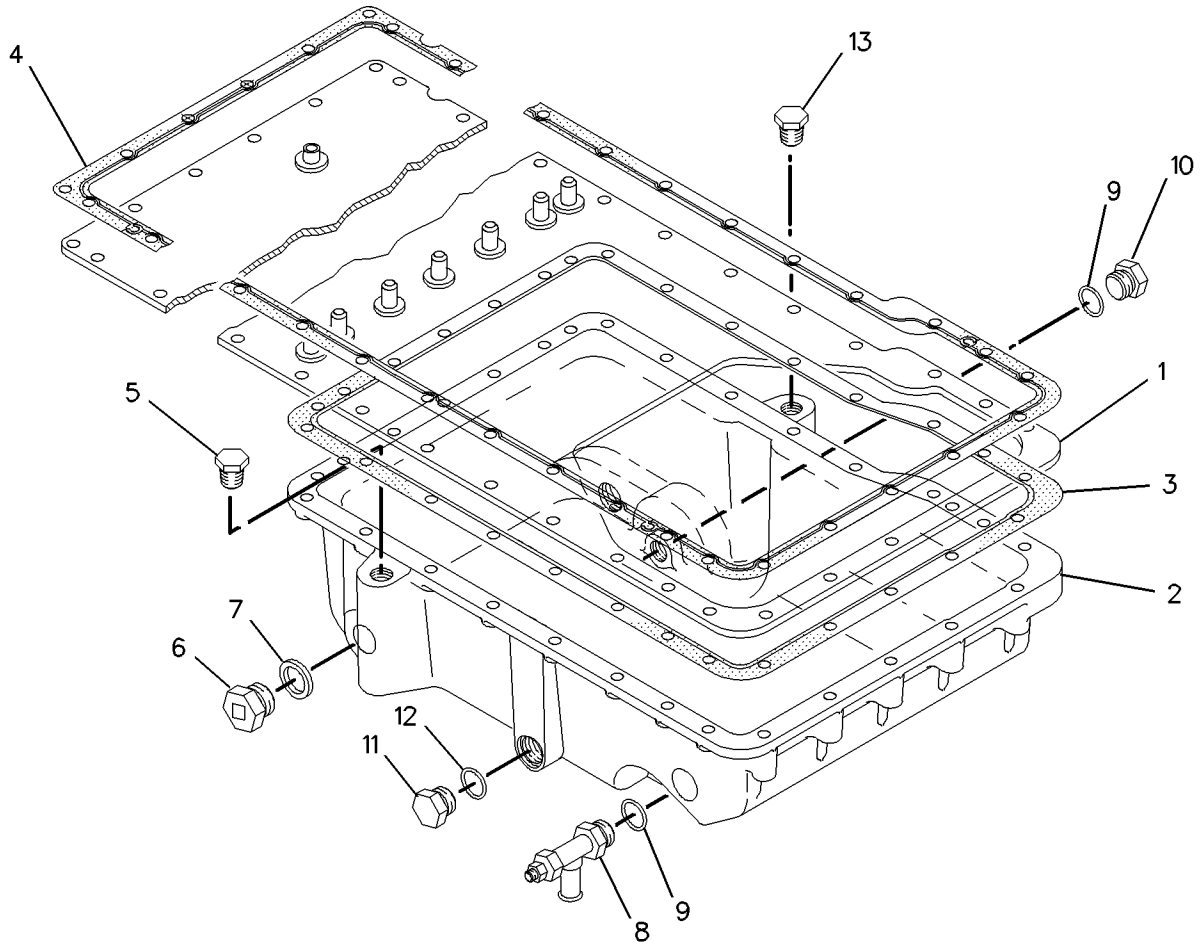

GRAPHIC #1 g00670075

BASIC ENGINE

2W-1177 PISTON & ROD GP*R

S/N: 13Z22389-28099
15:1 RATIO
PART OF 7E-0082 ENGINE AR

SMCS-1225 **i01649233**

NOTE	REF NO	GRAPHIC REF	PART NUMBER	QTY	PART NAME 1 2 3 4 5 6 (PRODUCT LEVEL)	SEE PAGE
	1	1	**7N-9805**	1	PIN-PISTON	
	2	1	**1S-9543**	2	RETAINER-PIN	
R	3	1	**8N-1721**	1	ROD AS-CONNECTING	
		1	**8N-1849**	1	BEARING-CONNECTING ROD	
	4	1	**1P-9956**	2	BOLT-CONNECTING ROD	
		1	**5S-6348**	2	NUT	
	5	1	**4W-5739**	1	BEARING-CONNECTING ROD (STANDARD)	
A		1	**8N-8221**	1	BEARING-CONNECTING ROD (.254MM US)	
A		1	**8N-8222**	1	BEARING-CONNECTING ROD (.508MM US)	
A		1	**8N-8223**	1	BEARING-CONNECTING ROD (.762MM US)	
Y	6	1	*2W-1711*	1	PISTON GP	

A-NOT PART OF THIS GROUP
R-REMFG PART MAY BE AVAILABLE
Y-SEPARATE ILLUSTRATION

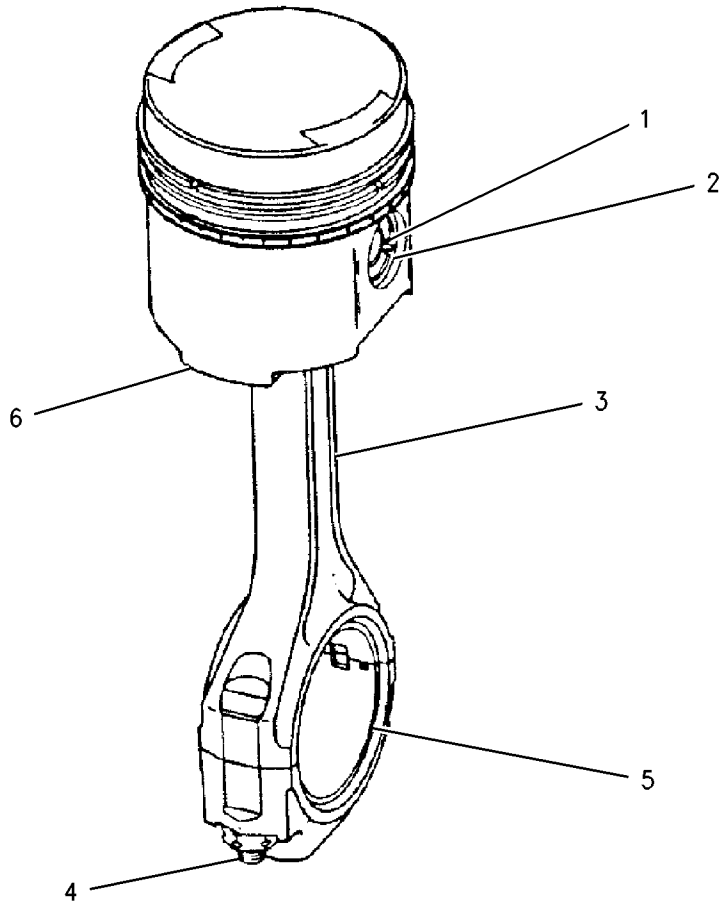

GRAPHIC #1 g00851124

2W-1711 PISTON GP

S/N: 13Z22389-99999

PART OF 2W-1177 PISTON & ROD GP

SMCS-1214 **i01655692**

NOTE	REF NO	GRAPHIC REF	PART NUMBER	QTY	PART NAME 1 2 3 4 5 6 (PRODUCT LEVEL)	SEE PAGE
	1	1	**2W-1707**	1	RING-PISTON (TOP)	
	2	1	**2W-1708**	1	RING-PISTON (INTERMEDIATE)	
	3	1	**7E-6047**	1	RING-PISTON (OIL) (3MM THICK)	
	4	1	**129-0338**	1	BODY AS-PISTON	
					AVAILABLE REPAIR KIT(S):	
			2W-1709	1	KIT-PISTON RING	
					(INCLUDES A COMPLETE SET OF RINGS FOR ONE PISTON)	

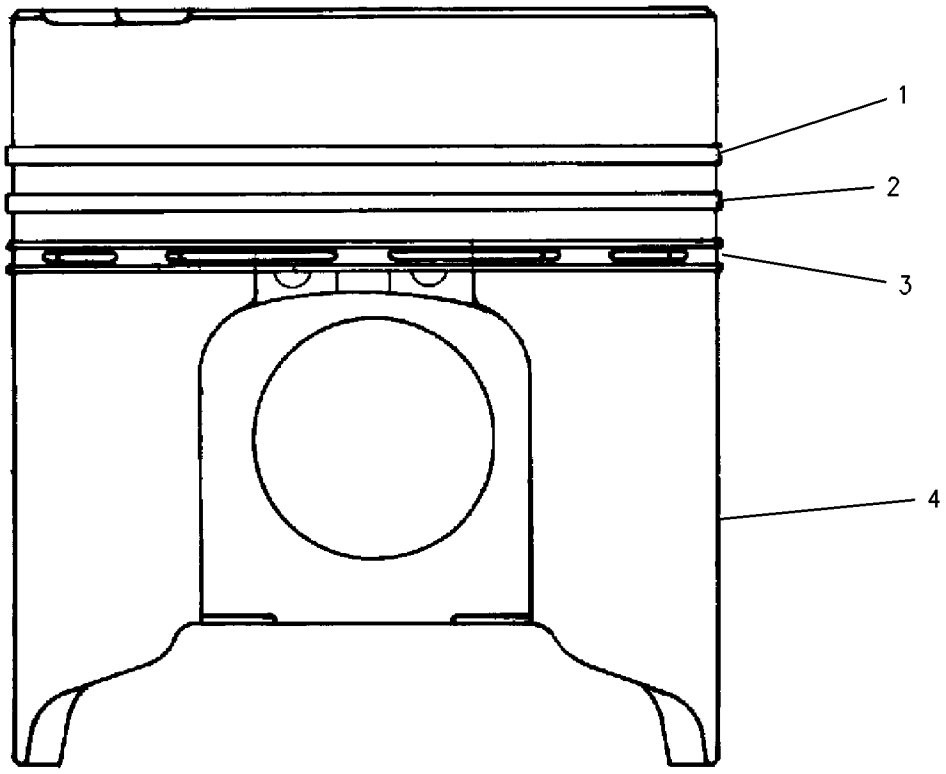

GRAPHIC #1 g00851389

BASIC ENGINE

2W-9304 PULLEY GP-CRANKSHAFT

S/N: 13Z22389-28099

PART OF 7E-0082 ENGINE AR

SMCS-1205 **i00286958**

NOTE	REF NO	GRAPHIC REF	PART NUMBER	QTY	PART NAME 1 2 3 4 5 6 (PRODUCT LEVEL)	SEE PAGE
	1	1	**7W-5699**	1	PULLEY-CRANKSHAFT	
	2	1	**7B-5163**	1	BOLT (3/4-16X4.75IN)	
		1	**5S-9948**	1	WASHER-PULLEY	

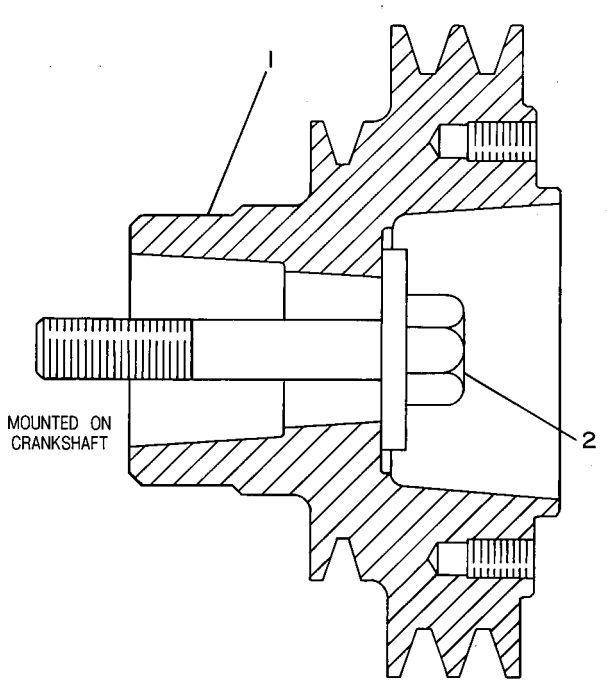

GRAPHIC #1 g00118406

8N-1792 PULLEY GP-FAN DRIVE

S/N: 13Z22389-28099
ALTERNATOR & FAN
PART OF 6C-3458 ENGINE AR

SMCS-1359 **i01217658**

NOTE	REF NO	GRAPHIC REF	PART NUMBER	QTY	PART NAME 1 2 3 4 5 6 (PRODUCT LEVEL)	SEE PAGE
C	1	1	**2W-8494**	1	PULLEY-ALTERNATOR	
	2	1	**9F-4446**	1	SEAL-O-RING (78.74MM ID)	
C	3	1	**2W-7952**	1	ADAPTER-FAN	
	4	1	**8T-9101**	6	BOLT (3/8-16X2.75IN)	
		1	**1D-4717**	6	NUT (3/8-16 THD)	
C	5	1	**2W-8493**	1	PULLEY-FAN DRIVE	
C	6	1	**2W-8952**	1	V-BELT SET (INCLUDES 2 BELTS)	
	7	1	**8T-4896**	6	WASHER-HARD (2.5MM THK)	

C-CHANGE FROM PREVIOUS TYPE

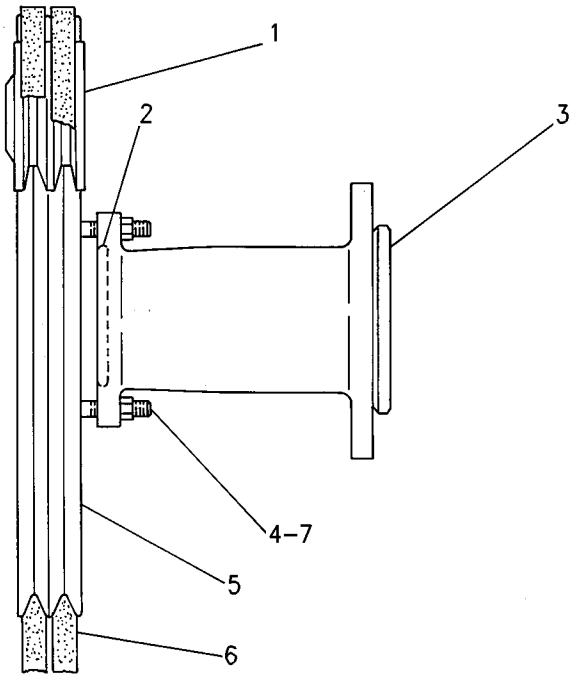

GRAPHIC #1 g00650833

BASIC ENGINE

2P-6224 SEAL GP-CRANKSHAFT

S/N: 13Z22389-28099

PART OF 7E-0082 ENGINE AR

SMCS-1160, 1161 **i01312940**

NOTE	REF NO	GRAPHIC REF	PART NUMBER	QTY	PART NAME 1 2 3 4 5 6 (PRODUCT LEVEL)	SEE PAGE
	1	1	**4W-0452**	1	SEAL GP-CRANKSHAFT	
	2	1	**9Y-9895**	1	SEAL GP-CRANKSHAFT	

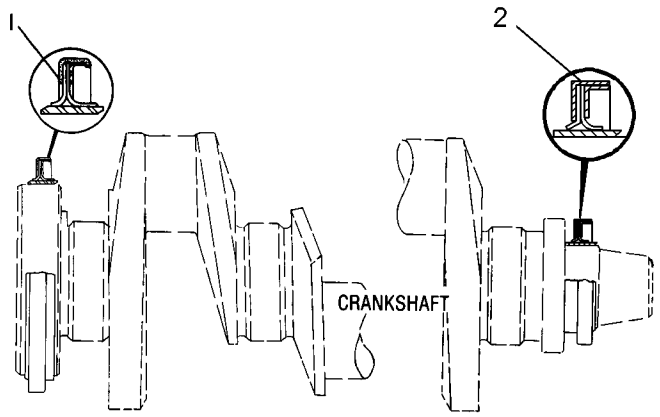

GRAPHIC #1 g00108388

6N-3350 SUPPORT GP-ENGINE

S/N: 13Z22389-28099

PART OF 7E-0082 ENGINE AR

SMCS-1154 **i00259454**

NOTE	REF NO	GRAPHIC REF	PART NUMBER	QTY	PART NAME 1 2 3 4 5 6 (PRODUCT LEVEL)	SEE PAGE
	1	1	**0S-1585**	6	BOLT (1/2-13X1.50IN)	
		1	**5P-8245**	6	WASHER (3MM THK)	
	2	1	**8N-5094**	1	SUPPORT AS-ENGINE	

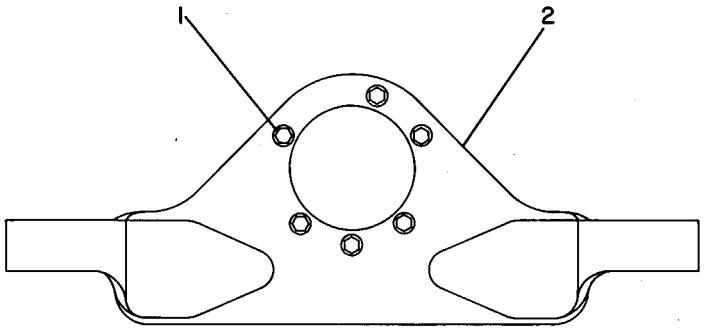

GRAPHIC #1 g00118349

8N-0107 TRUNNION GP-ENGINE

S/N: 13Z22389-28099

PART OF 7E-0082 ENGINE AR

SMCS-1152, 1153, 1154 **i00259455**

NOTE	REF NO	GRAPHIC REF	PART NUMBER	QTY	PART NAME 1 2 3 4 5 6 (PRODUCT LEVEL)	SEE PAGE
	1	1	**2W-6757**	1	TRUNNION AS	
		1	**2P-1487**	1	RING	
C	2	1	**0L-1329**	6	BOLT (1/2-13X3IN)	
	3	1	**2P-1692**	1	SEAL-O-RING	

C-CHANGE FROM PREVIOUS TYPE

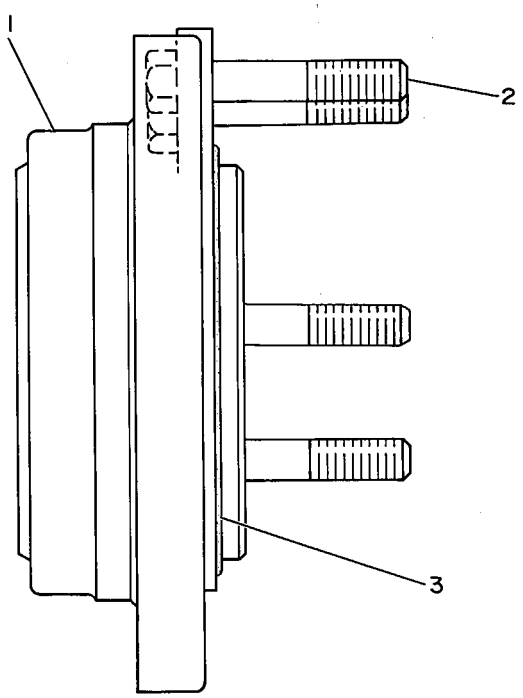

GRAPHIC #1 g00123969

7C-7013 VALVE MECHANISM GP

S/N: 13Z22440-99999

PART OF 7N-8026 VALVE MECHANISM GP

SMCS-1102, 1121, 1123 **i00311534**

NOTE	REF NO	GRAPHIC REF	PART NUMBER	QTY	PART NAME 1 2 3 4 5 6 (PRODUCT LEVEL)	SEE PAGE
	1	1	**8N-3251**	1	SHAFT-ROCKER ARM	
		1	**6V-3508**	2	PLUG-CUP	
	2	1	**3K-8460**	1	PLUG (1/2-20 THD)	
	3	1	**7C-7011**	1	BRACKET-SHAFT	
	4	1	**5M-4606**	1	DOWEL	
	5	1	**4B-4910**	5	SPRING	
	6	1	**9M-9886**	13	WASHER	
	7	1	**5S-5879**	4	BRACKET-SHAFT	
	8	1	**8N-3325**	6	ROCKER ARM GP (EXHAUST)	
	9	1	**8N-3327**	6	ROCKER ARM GP (INLET)	
					(EACH ARM INCLUDES)	
	10	1	**3S-2713**	1	NUT-FULL (3/8-24 THD)	
	11	1	**5S-5917**	1	SCREW-ROCKER ADJUSTMENT	
	12	1	**8S-1499**	1	BRACKET AS-SHAFT	
	13	1	**1L-5072**	1	DOWEL	
	14	1	**7N-0550**	2	WASHER-SPRING	
	15	1	**9H-1113**	2	RING-RETAINER	
	16	1	**8M-4448**	1	SEAL-O-RING	
	17	1	**1B-7709**	1	BOLT (5/8-11X8IN)	
		1	**2S-0736**	1	WASHER-HARD	

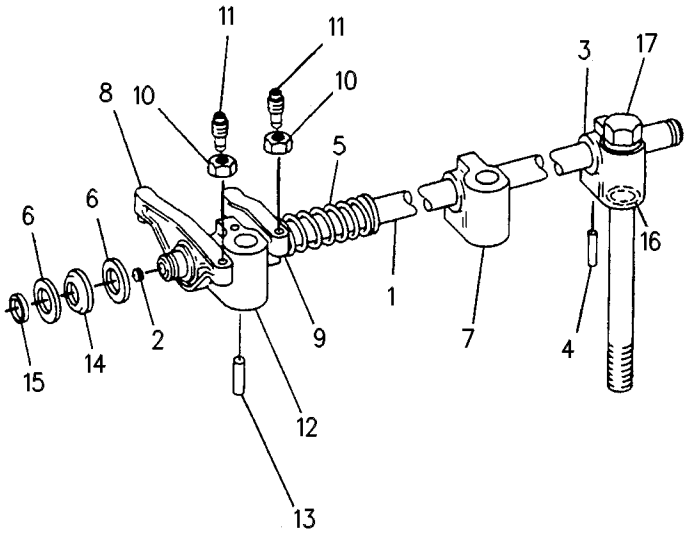

GRAPHIC #1 g00108500

7N-8026 VALVE MECHANISM GP

S/N: 13Z22389-22439

PART OF 7E-0082 ENGINE AR

SMCS-1102, 1121, 1123 **i00259590**

NOTE	REF NO	GRAPHIC REF	PART NUMBER	QTY	PART NAME 1 2 3 4 5 6 (PRODUCT LEVEL)	SEE PAGE
C	1	1	**8N-3252**	1	SHAFT AS-ROCKER ARM	
		1	**0L-1026**	2	PLUG-CUP	
	2	1	**7N-8015**	1	BRACKET-ROCKER ARM SHAFT	
		1	**5M-4606**	1	DOWEL	
	3	1	**4B-4910**	5	SPRING	
	4	1	**9H-1110**	12	WASHER	
	5	1	**5S-5879**	4	BRACKET-SHAFT	
	6	1	**8N-3324**	6	ROCKER ARM AS (EXHAUST)	
	7	1	**8N-3326**	6	ROCKER ARM AS (INLET)	
	8	1	**8S-1499**	1	BRACKET AS-SHAFT	
		1	**3F-6795**	1	DOWEL	
B	9	1	**9M-9886**	2	WASHER	
		1	**9H-1112**	2	SPRING	
		1	**9H-1113**	2	RING-RETAINER	
	10	1	**1B-4203**	12	NUT-FULL (3/8-24 THD)	
	11	1	**5S-5917**	12	SCREW-ROCKER ADJUSTMENT	
	12	1	**5S-5918**	12	PUSHROD-VALVE	
	13	1	**7S-3161**	12	LIFTER-VALVE	
	14	1	**5P-5598**	1	SEAL-O-RING (15.47MM ID)	
C	15	1	**1B-7709**	1	BOLT (5/8-11X8IN)	
C		1	**2S-0736**	1	WASHER-HARD	

B-USE AS REQUIRED
C-CHANGE FROM PREVIOUS TYPE

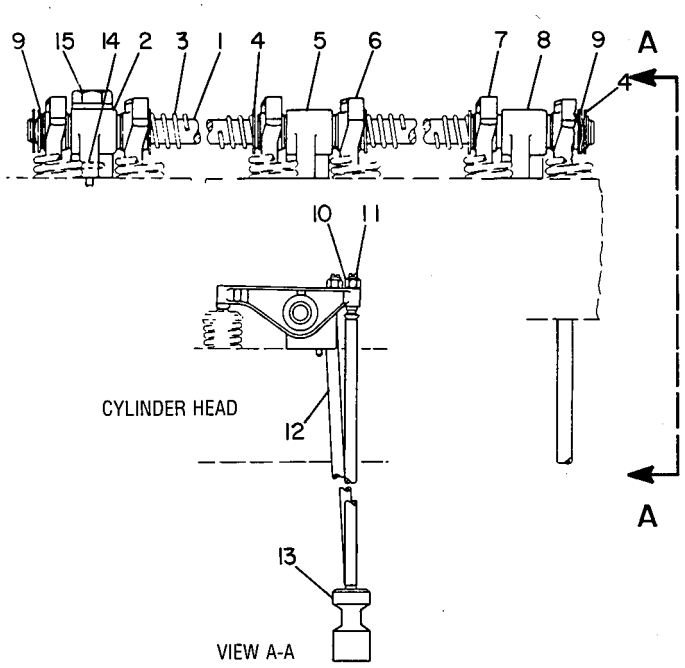

GRAPHIC #1 g00112042

7N-8026 VALVE MECHANISM GP

S/N: 13Z22440-28099

PART OF 7E-0082 ENGINE AR

SMCS-1102, 1121, 1123 **i01624149**

NOTE	REF NO	GRAPHIC REF	PART NUMBER	QTY	PART NAME 1 2 3 4 5 6 (PRODUCT LEVEL)	SEE PAGE
Y	1	1	*7C-7013*	1	VALVE MECHANISM GP	
	2	1	**7S-3161**	12	LIFTER-VALVE	
	3	1	**5S-5918**	12	PUSHROD-VALVE	

Y-SEPARATE ILLUSTRATION

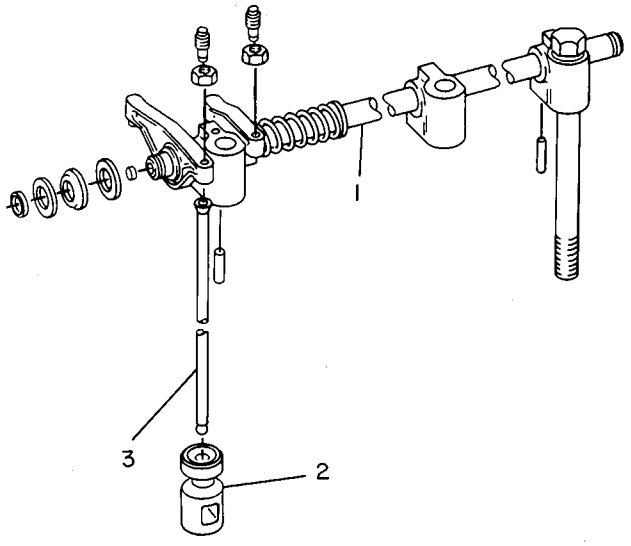

GRAPHIC #1 g00108367

8N-4457 BASE GP-OIL FILTER

S/N: 13Z22389-30333

PART OF 7W-1471 COOLER GP-FLTR BASE & ENG OIL

SMCS-1306 **i00259653**

NOTE	REF NO	GRAPHIC REF	PART NUMBER	QTY	PART NAME 1 2 3 4 5 6 (PRODUCT LEVEL)	SEE PAGE
C	1	1	**9Y-7149**	1	BASE AS-OIL FILTER	
	2	1	**2B-0858**	1	PLUG-PIPE (1/2-14 NPTF)	
	3	1	**2P-2537**	1	STUD-HOLLOW	
	4	1	**1P-1367**	2	PLUNGER	
C	5	1	**0S-1618**	1	BOLT (5/16X18X1IN)	
	6	1	**9M-1974**	3	WASHER-HARD (2MM THK)	
C	7	1	**9Y-6859**	1	COVER	
C		1	**9Y-6860**	1	GASKET	
C	8	1	**1B-2790**	2	BOLT (5/16-18X1.375IN)	
	9	1	**8M-3182**	2	SPRING	
B	10	1	**0S-1618**	1	BOLT (5/16X18X1IN)	
B		1	**9M-1974**	1	WASHER-HARD (2MM THK)	
C	11	1	**8C-3445**	1	CAP-DUST	
C		1	**3J-7354**	1	SEAL-O-RING (8.92MM ID)	
C		1	**8C-3446**	1	VALVE-FLUID SAMPLING	

B-USE AS REQUIRED
C-CHANGE FROM PREVIOUS TYPE

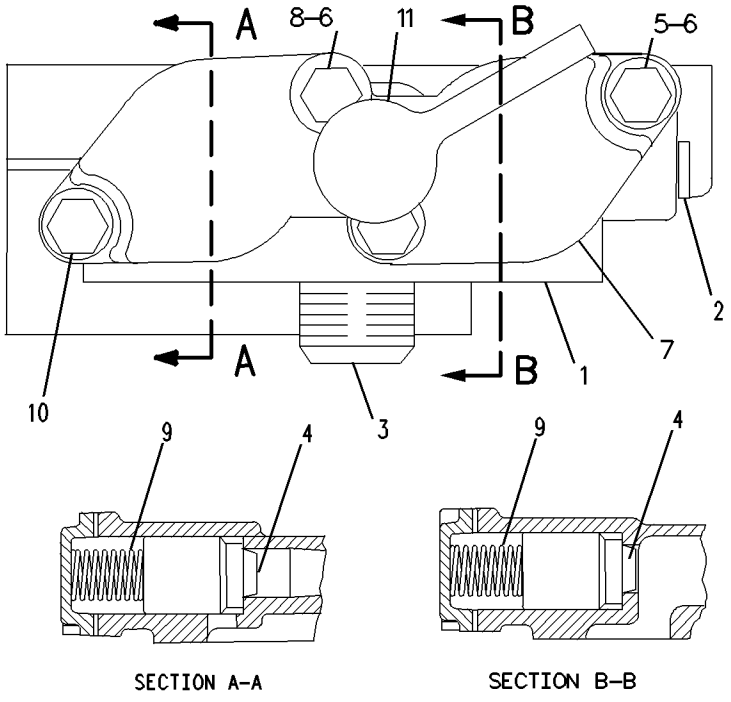

GRAPHIC #1 g00108368

LUBRICATION SYSTEM

1P-4244 BREATHER GP

S/N: 13Z22389-28099

PART OF 7E-0082 ENGINE AR

SMCS-1317 **i00961948**

NOTE	REF NO	GRAPHIC REF	PART NUMBER	QTY	PART NAME 1 2 3 4 5 6 (PRODUCT LEVEL)	SEE PAGE
	1	1	**3H-3243**	1	BOLT (5/16-18X4.75IN)	
	2	1	**9N-0869**	1	WASHER (2MM THK)	
	3	1	**2W-9162**	1	BREATHER AS-CRANKCASE	
	4	1	**4L-9564**	1	SEAL-O-RING (81.92MM ID)	

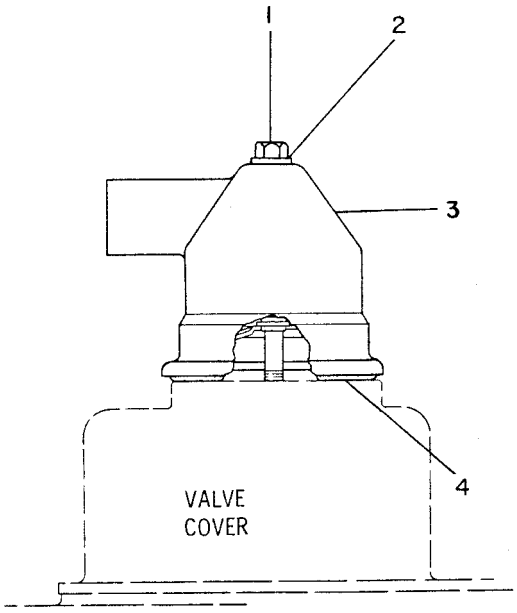

GRAPHIC #1 g00108276

8N-9703 FILLER GP-ENGINE OIL

S/N: 13Z22389-28099

PART OF 7E-0082 ENGINE AR

SMCS-1316 **i00782596**

NOTE	REF NO	GRAPHIC REF	PART NUMBER	QTY	PART NAME 1 2 3 4 5 6 (PRODUCT LEVEL)	SEE PAGE
	1	1	**1W-4928**	1	PIPE-OIL FILLER	
		1	**7S-1801**	1	ANCHOR-CHAIN	
	2	1	**7S-1803**	1	CAP AS-OIL FILLER	
	3	1	**5F-3106**	1	SEAL-O-RING (126.59MM ID)	
	4	1	**0S-1566**	2	BOLT (5/8-11X1.5IN)	

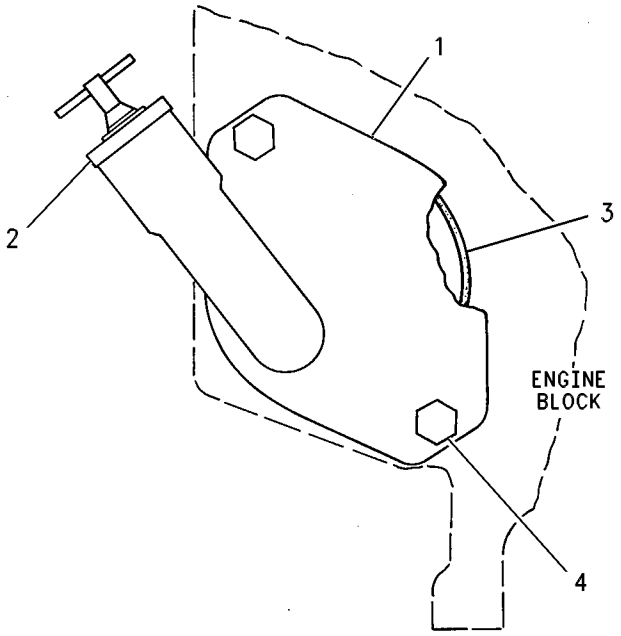

GRAPHIC #1 g00352567

8N-2182 FUMES DISPOSAL GP

S/N: 13Z22389-28099
PART OF 6C-3458 ENGINE AR

SMCS-1317 **i00259623**

NOTE	REF NO	GRAPHIC REF	PART NUMBER	QTY	PART NAME 1 2 3 4 5 6 (PRODUCT LEVEL)	SEE PAGE
	1	1	**8N-1965**	1	TUBE-DISPOSAL	
BE	2	1	**5P-1254**		HOSE (8.26CM)	
	3	1	**9M-2904**	2	CLAMP-HOSE	
	4	1	**8N-4247**	2	CLIP	
	5	1	**5P-2228**	1	BOLT (1/2-13X1IN)	
		1	**6V-8188**	1	NUT (1/2-13 THD)	
		1	**8T-4223**	2	WASHER-HARD (3MM THK)	
BC	6	1	**5B-0546**	1	SPACER	
BC	7	1	**3P-2404**	1	CLIP (28.58MM ID)	
BC	8	1	**8B-9725**	1	BOSS	

B-USE AS REQUIRED
C-CHANGE FROM PREVIOUS TYPE
E-ORDER BY THE CENTIMETER

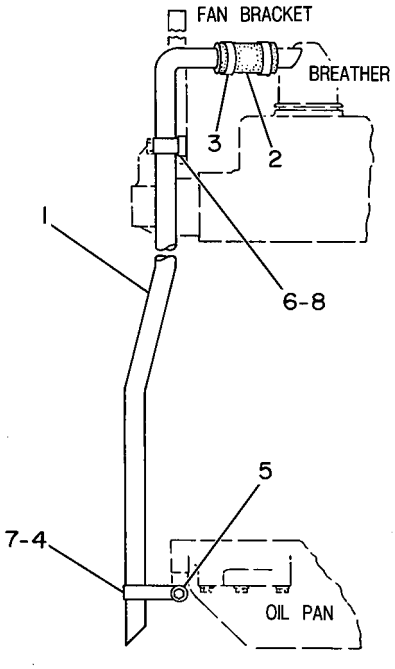

GRAPHIC #1 g00118433

LUBRICATION SYSTEM

1W-4320 GAUGE GP-OIL LEVEL (DIPSTICK)

S/N: 13Z22389-28099

PART OF 7E-0082 ENGINE AR

SMCS-1326 **i00259281**

NOTE	REF NO	GRAPHIC REF	PART NUMBER	QTY	PART NAME 1 2 3 4 5 6 (PRODUCT LEVEL)	SEE PAGE
	1	1	**5K-9243**	2	ELBOW-FLARED	
	2	1	**2P-2697**	1	TUBE AS-AIR VENT	
	3	1	**1W-4321**	1	GAUGE AS-OIL LEVEL (DIPSTICK)	
	4	1	**1W-4323**	1	TUBE AS	
	5	1	**8S-1326**	1	CONNECTOR AS	
		1	**5P-4443**	1	SLEEVE-AIR BRAKE	
	6	1	**5P-4448**	1	NUT-AIR BRAKE	
	7	1	**100-4317**	1	STRAP	
	8	1	**4B-0418**	1	CLIP (12.7MM ID)	
	9	1	**0S-0509**	1	BOLT (3/8-16X.75IN)	
		1	**1D-4717**	1	NUT (3/8-16 THD)	
		1	**5M-2894**	2	WASHER (2.5MM THK)	

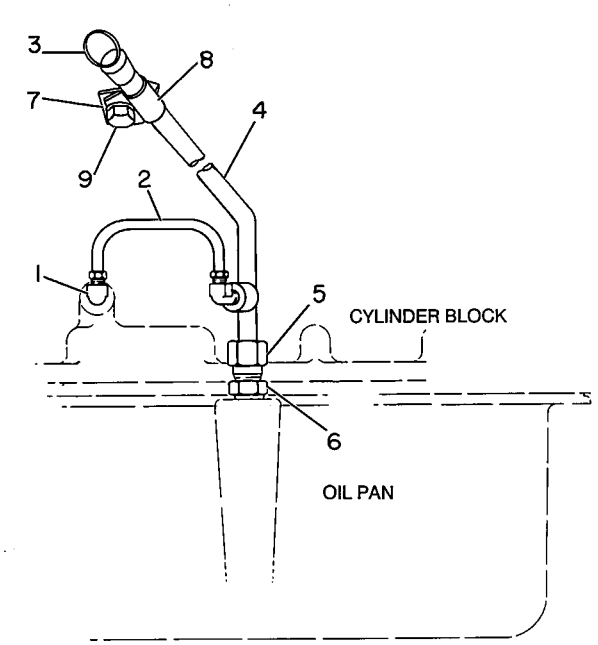

GRAPHIC #1 g00118359

LUBRICATION SYSTEM

2P-6105 LINES GP-ENGINE OIL

S/N: 13Z22389-23662

PART OF 7E-0082 ENGINE AR

SMCS-1307 **i00259350**

NOTE	REF NO	GRAPHIC REF	PART NUMBER	QTY	PART NAME 1 2 3 4 5 6 (PRODUCT LEVEL)	SEE PAGE
	1	1	**8N-7318**	1	TUBE AS-INLET	
	2	1	**5M-6213**	1	PLUG	
	3	1	**9M-4849**	3	SEAL-O-RING (23.16 ID)	
	4	1	**8N-7315**	1	TUBE AS-OUTLET	
		1	**2P-2458**	1	TUBE-OUTLET	
	5	1	**0S-1594**	3	BOLT (3/8-16X1IN)	
	6	1	**7F-7590**	1	GASKET	
	7	1	**0S-1571**	1	BOLT (3/8-16X1.75IN)	
		1	**1L-5081**	1	SPACER (9/16IN THK) ( )	
					-OR-	
		1	**1C-2251**	1	BOLT (3/8-16X1.87IN)	
		1	**6B-7469**	1	SPACER (.875IN THK)	
	8	1	**4L-3641**	1	CLIP	
	9	1	**2P-1739**	1	TUBE AS-PUMP	
	10	1	**0T-0102**	2	BOLT (3/8-16X0.625IN)	
		1	**0L-0364**	2	LOCK	
C	11	1	**7W-9020**	1	BELL AS-PUMP SUCTION	
	12	1	**8S-8874**	1	LOCK-NUT	
	13	1	**8M-0904**	1	GASKET	
	14	1	**0L-2070**	1	BOLT (3/8-16X2.25IN)	
	15	1	**2S-1541**	6	ORIFICE-JET	
	16	1	**1A-2029**	1	BOLT (3/8-16X1.125IN)	
	17	1	**2M-5407**	1	GASKET	
	18	1	**5M-2894**	1	WASHER (2.5MM THK)	

C-CHANGE FROM PREVIOUS TYPE

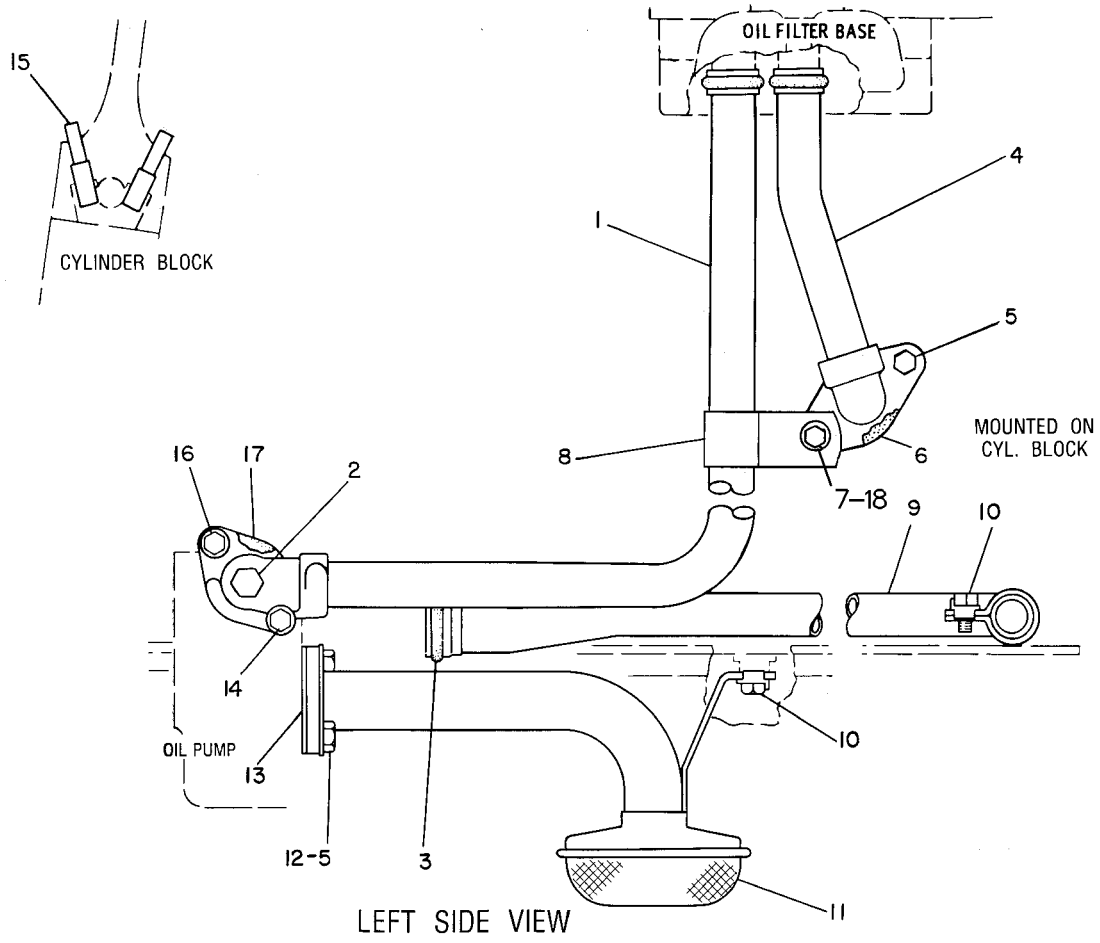

GRAPHIC #1

g00126279

LUBRICATION SYSTEM

2P-6105 LINES GP-ENGINE OIL

S/N: 13Z23663-28099

PART OF 7E-0082 ENGINE AR

SMCS-1307 **i01013953**

NOTE	REF NO	GRAPHIC REF	PART NUMBER	QTY	PART NAME 1 2 3 4 5 6 (PRODUCT LEVEL)	SEE PAGE
C	1	1	**6C-5381**	1	TUBE AS	
	2	1	**5M-6213**	1	PLUG-PIPE	
	3	1	**114-2687**	3	SEAL-O-RING (23.16MM ID)	
	4	1	**126-7010**	1	TUBE AS	
	5	1	**0S-1594**	3	BOLT (3/8-16X1.0IN)	
	6	1	**4J-8997**	1	SEAL-O-RING (28.17MM ID)	
	7	1	**0S-1571**	1	BOLT (3/8-16X1.75IN)	
		1	**1L-5081**	1	SPACER (9/16IN THK)	
	8	1	**4L-3641**	1	CLIP	
	9	1	**2P-1739**	1	TUBE AS-PUMP	
	10	1	**0T-0102**	2	BOLT (3/8-16X0.625IN)	
C	11	1	**7W-9020**	1	BELL AS-PUMP SUCTION	
	12	1	**8S-8874**	1	LOCK-NUT	
	13	1	**8M-0904**	1	GASKET	
	14	1	**0L-2070**	1	BOLT (3/8-16X2.25IN)	
	15	1	**2S-1541**	6	ORIFICE-JET	
	16	1	**1A-2029**	1	BOLT (3/8-16X1.125IN)	
	17	1	**2M-5407**	1	GASKET	
	18	1	**5M-2894**	1	WASHER (2.5MM THK)	
	19	1	**0L-0364**	1	LOCK	
	20	1	**5H-3204**	1	LOCK (T-SHAPED)	

C-CHANGE FROM PREVIOUS TYPE

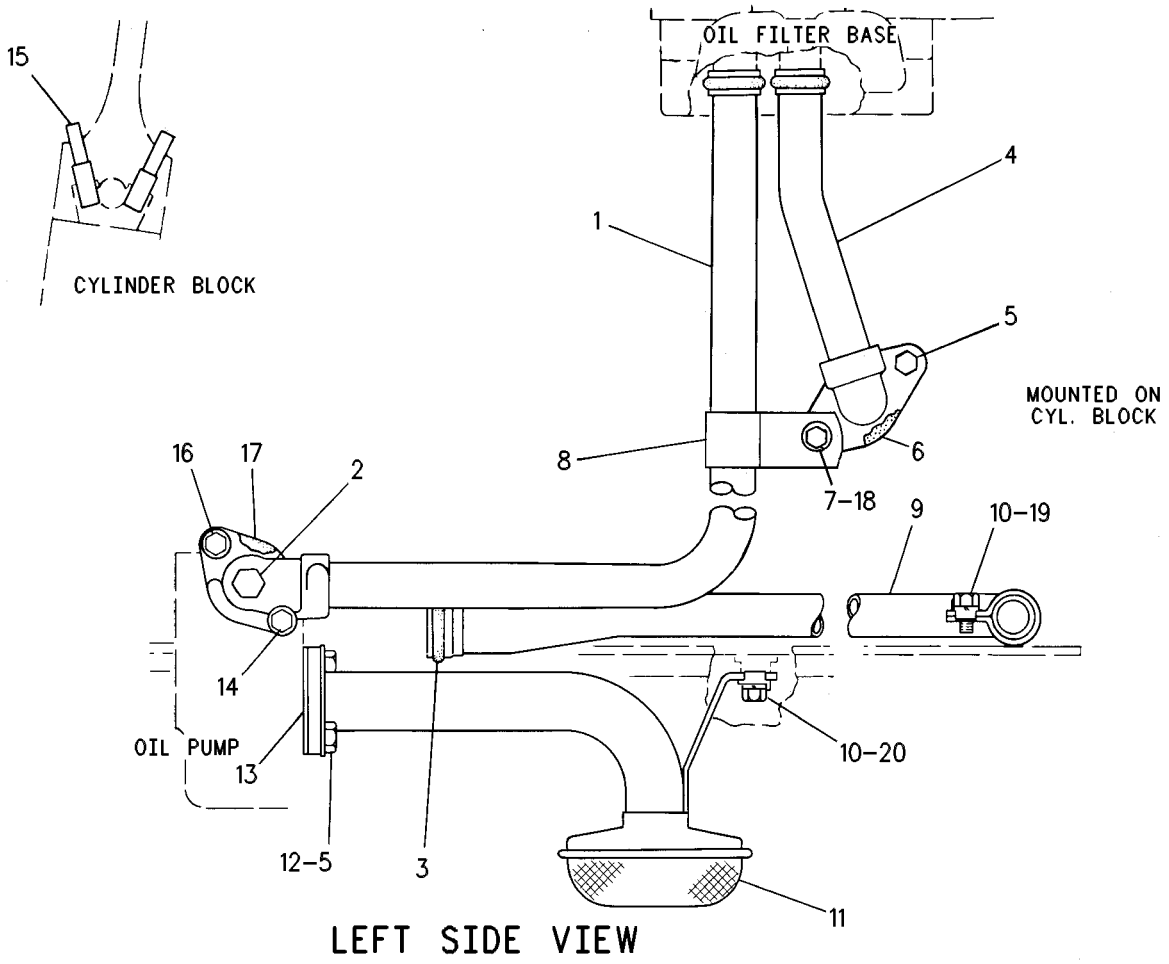

LEFT SIDE VIEW

GRAPHIC #1

g00130226

LUBRICATION SYSTEM

8N-2235 LINES GP-TURBOCHARGER OIL

S/N: 13Z22389-28099

PART OF 7E-0082 ENGINE AR

SMCS-1052, 1307 **i00635700**

NOTE	REF NO	GRAPHIC REF	PART NUMBER	QTY	PART NAME 1 2 3 4 5 6 (PRODUCT LEVEL)	SEE PAGE
	1	1	**3B-1915**	2	BOLT (3/8-16X1.375IN)	
	2	1	**1S-6595**	1	GASKET	
	3	1	**1N-2909**	1	TUBE AS-OIL	
	4	1	**1S-4810**	1	GASKET-OIL DRAIN	
C	5	1	**1A-2029**	5	BOLT (3/8-16X1.125IN)	
C	6	1	**5M-2894**	4	WASHER (2.5MM THK)	
C	7	1	**6N-6033**	2	CLIP	
C	8	1	**1D-4716**	1	NUT-FULL (5/16-18 THD)	
	9	1	**8M-0505**	1	CONNECTOR	
	10	1	**3K-0360**	2	SEAL-O-RING (16.36MM ID)	
	11	1	**8M-5253**	1	SEAL (18.72MM ID)	
	12	1	**5M-6213**	1	PLUG	
	13	1	**4W-1512**	1	SUPPORT AS-PUMP	
		1	**5H-4279**	1	PLUG-CUP	
	14	1	**8M-5248**	2	SEAL-O-RING (28.17 ID)	
	15	1	**9S-8002**	1	PLUG-O-RING (7/16-20 THD)	
		1	**3J-7354**	1	SEAL-O-RING (8.92MM ID)	
	16	1	**4M-6480**	1	GASKET	
	17	1	**0L-2070**	1	BOLT (3/8-16X2.25IN)	
	18	1	**8N-1149**	1	ELBOW	
		1	**9M-4849**	1	SEAL-O-RING (23.16 ID)	
	19	1	**9S-4185**	1	PLUG-O-RING (3/4-16 THD)	
	20	1	**1N-2911**	1	TUBE AS-OIL DRAIN	
C	21	1	**0S-1617**	1	BOLT (5/16-18X.75IN)	
C	22	1	**9M-1974**	2	WASHER-HARD (2MM THK)	

C-CHANGE FROM PREVIOUS TYPE

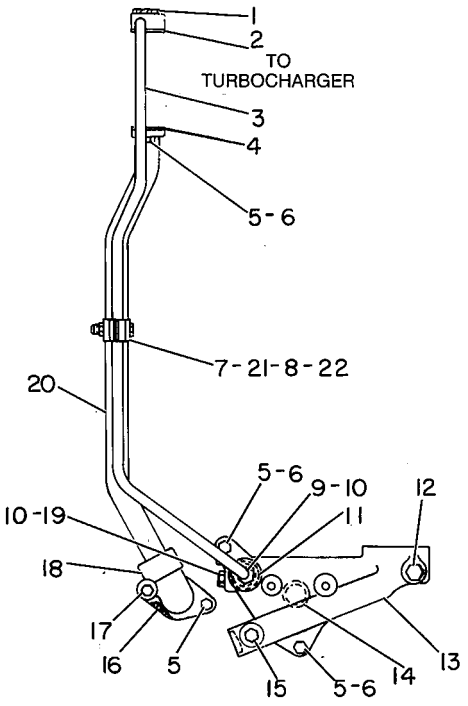

GRAPHIC #1 g00124734

LUBRICATION SYSTEM

2P-1784 PUMP GP-ENGINE OIL

S/N: 13Z22389-28099
PART OF 7E-0082 ENGINE AR

SMCS-1304, 1315 **i00259332**

NOTE	REF NO	GRAPHIC REF	PART NUMBER	QTY	PART NAME 1 2 3 4 5 6 (PRODUCT LEVEL)	SEE PAGE
	1	1	**3B-1915**	2	BOLT (3/8-16X1.375IN)	
	2	1	**0S-1619**	1	BOLT (3/8-16X3IN)	
	3	1	**4N-5353**	1	ELBOW-LINE	
		1	**2P-8746**	1	GASKET	
	4	1	**0S-1590**	3	BOLT (3/8-16X2IN)	
CY	5	1	*6N-2642*	1	PUMP GP-ENGINE OIL	
	6	1	**5M-2894**	4	WASHER (2.5MM THK)	

C-CHANGE FROM PREVIOUS TYPE
Y-SEPARATE ILLUSTRATION

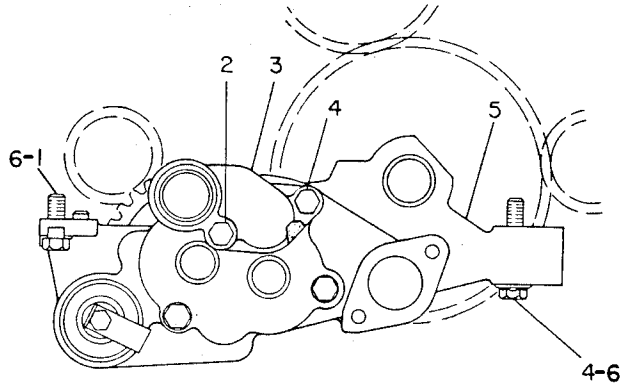

GRAPHIC #1 g00108458

4P-4020 PUMP GP-ENGINE OIL

S/N: 13Z24636-99999
TWO SECTION GEAR
PART OF 6N-2642 PUMP GP-ENGINE OIL

SMCS-1304, 1315 **i00286547**

NOTE	REF NO	GRAPHIC REF	PART NUMBER	QTY	PART NAME 1 2 3 4 5 6 (PRODUCT LEVEL)	SEE PAGE
	1	1	**4W-2322**	1	BODY AS-OIL PUMP	
	2	1	**2P-1170**	1	SHAFT AS-GEAR	
	3	1	**4B-9782**	1	BALL	
	4	1	**4B-9880**	1	BALL	
	5	1	**1F-1006**	1	DOWEL	
	6	1	**8S-6511**	2	BEARING-SLEEVE (.8775IN ID)	
	7	1	**2P-1781**	1	SPACER-OIL PUMP	
	8	1	**4P-3546**	1	VALVE AS-RELIEF	
	9	1	**2B-2694**	1	BOLT (5/16-18X2IN)	
		1	**9M-1974**	1	WASHER-HARD (2MM THK)	
	10	1	**4N-3732**	1	COVER-VALVE	
	11	1	**6N-1036**	2	GEAR-OIL PUMP (8 TEETH)	
	12	1	**0T-0065**	3	BOLT (3/8-16X3.5IN)	
	13	1	**8S-0493**	1	SHAFT AS-PUMP	
	14	1	**6I-1345**	1	SHAFT AS-OIL PUMP	
	15	1	**4W-2321**	1	BODY AS-PUMP	
	16	1	**8S-6511**	2	BEARING-SLEEVE (.8775IN ID)	
	17	1	**1B-8709**	1	KEY-WOODRUFF	

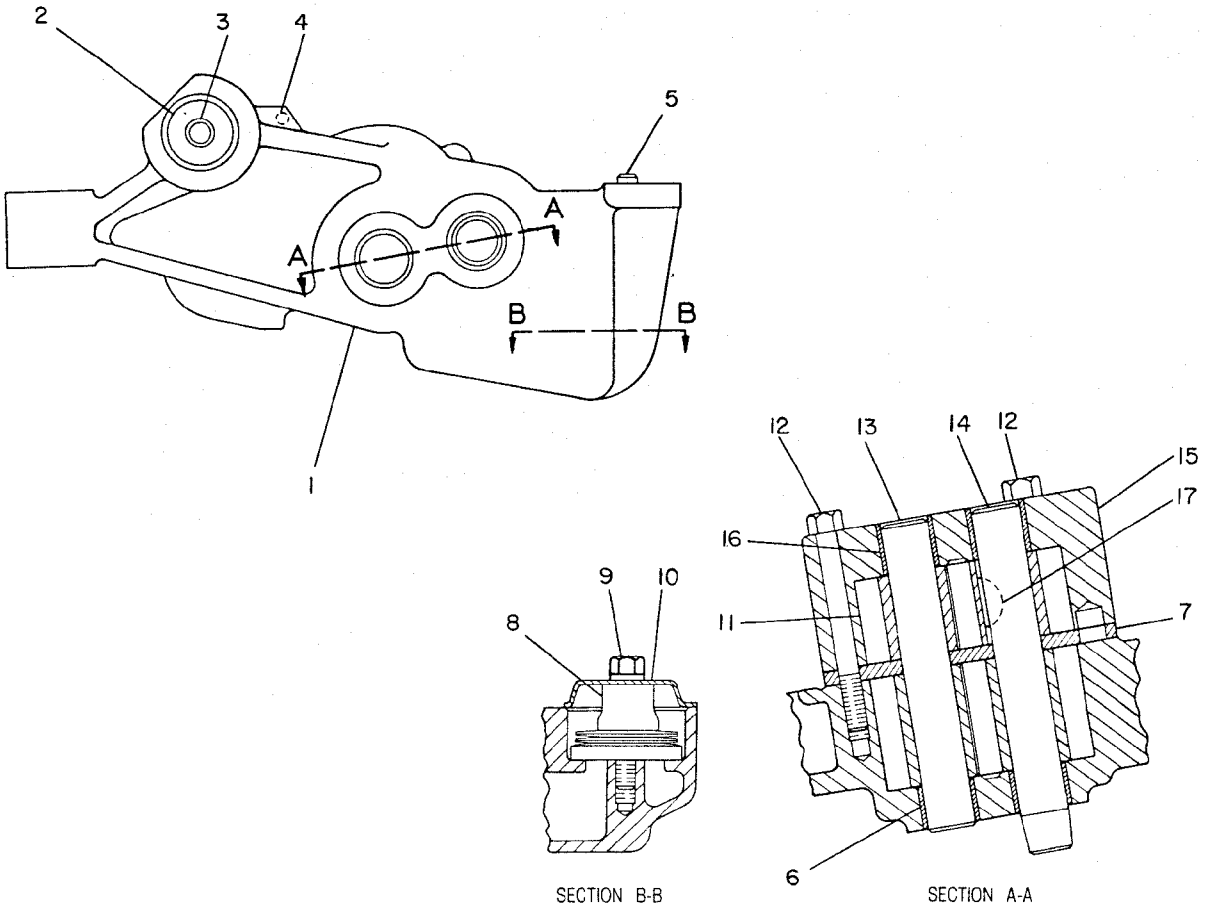

GRAPHIC #1 g00108222

LUBRICATION SYSTEM

4W-2448 PUMP GP-ENGINE OIL

S/N: 13Z22389-24635

PART OF 6N-2642 PUMP GP-ENGINE OIL

SMCS-1304, 1315 **i00309059**

NOTE	REF NO	GRAPHIC REF	PART NUMBER	QTY	PART NAME 1 2 3 4 5 6 (PRODUCT LEVEL)	SEE PAGE
	1	1	**4W-2322**	1	BODY AS-OIL PUMP	
	2	1	**2P-1170**	1	SHAFT AS-GEAR	
	3	1	**6F-7172**	1	DOWEL	
	4	1	**4B-9880**	1	BALL	
	5	1	**1F-1006**	1	DOWEL	
	6	1	**8S-6511**	2	BEARING-SLEEVE (.8775IN ID)	
	7	1	**2P-1781**	1	SPACER-OIL PUMP	
	8	1	**4N-8385**	1	VALVE AS-RELIEF	
	9	1	**2B-2694**	1	BOLT (5/16-18X2IN)	
		1	**9M-1974**	1	WASHER-HARD (2MM THK)	
	10	1	**4N-3732**	1	COVER-VALVE	
	11	1	**6N-1036**	2	GEAR-OIL PUMP (8 TEETH)	
	12	1	**0T-0065**	3	BOLT (3/8-16X3.5IN)	
	13	1	**8S-0493**	1	SHAFT AS-PUMP	
	14	1	**2P-6245**	1	SHAFT AS-PUMP	
	15	1	**4W-2321**	1	BODY AS-PUMP	
	16	1	**8S-6511**	2	BEARING-SLEEVE (.8775IN ID)	
	17	1	**1B-8709**	1	KEY-WOODRUFF	

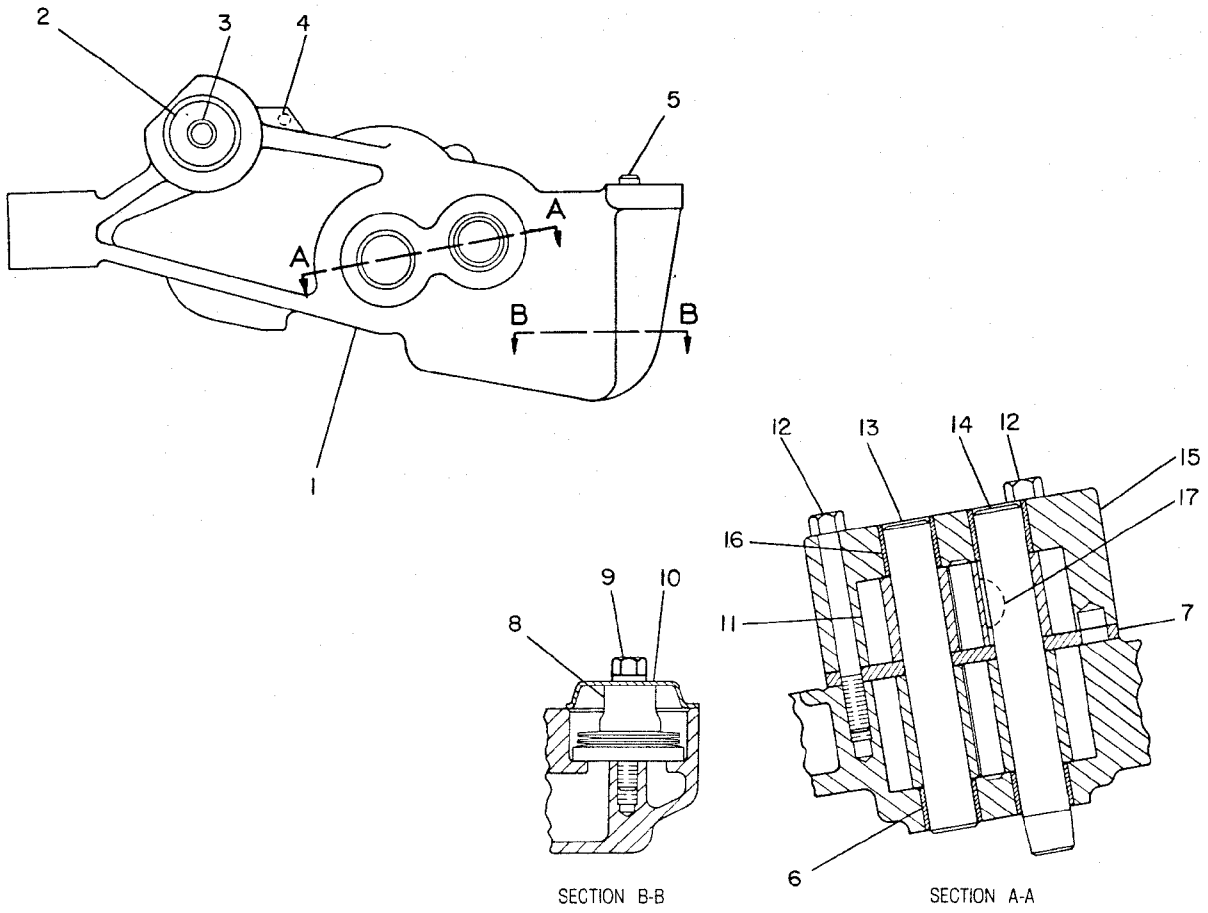

GRAPHIC #1 g00108222

6I-1346 PUMP GP-ENGINE OIL

S/N: 13Z24636-99999
TWO SECTION GEAR
PART OF 6N-2642 PUMP GP-ENGINE OIL

SMCS-1304, 1315 **i00259408**

NOTE	REF NO	GRAPHIC REF	PART NUMBER	QTY	PART NAME 1 2 3 4 5 6 (PRODUCT LEVEL)	SEE PAGE
	1	1	**4W-2322**	1	BODY AS-OIL PUMP	
	2	1	**2P-1170**	1	SHAFT AS-GEAR	
	3	1	**4B-9782**	1	BALL	
	4	1	**4B-9880**	1	BALL	
	5	1	**1F-1006**	1	DOWEL	
	6	1	**8S-6511**	2	BEARING-SLEEVE (.8775IN ID)	
	7	1	**2P-1781**	1	SPACER-OIL PUMP	
	8	1	**4P-3546**	1	VALVE AS-RELIEF	
	9	1	**2B-2694**	1	BOLT (5/16-18X2IN)	
		1	**9M-1974**	1	WASHER-HARD (2MM THK)	
	10	1	**4N-3732**	1	COVER-VALVE	
	11	1	**6N-1036**	2	GEAR-OIL PUMP (8 TEETH)	
	12	1	**0T-0065**	3	BOLT (3/8-16X3.5IN)	
	13	1	**8S-0493**	1	SHAFT AS-PUMP	
	14	1	**6I-1345**	1	SHAFT AS-OIL PUMP	
	15	1	**4W-2321**	1	BODY AS-PUMP	
	16	1	**8S-6511**	2	BEARING-SLEEVE (.8775IN ID)	
	17	1	**1B-8709**	1	KEY-WOODRUFF	

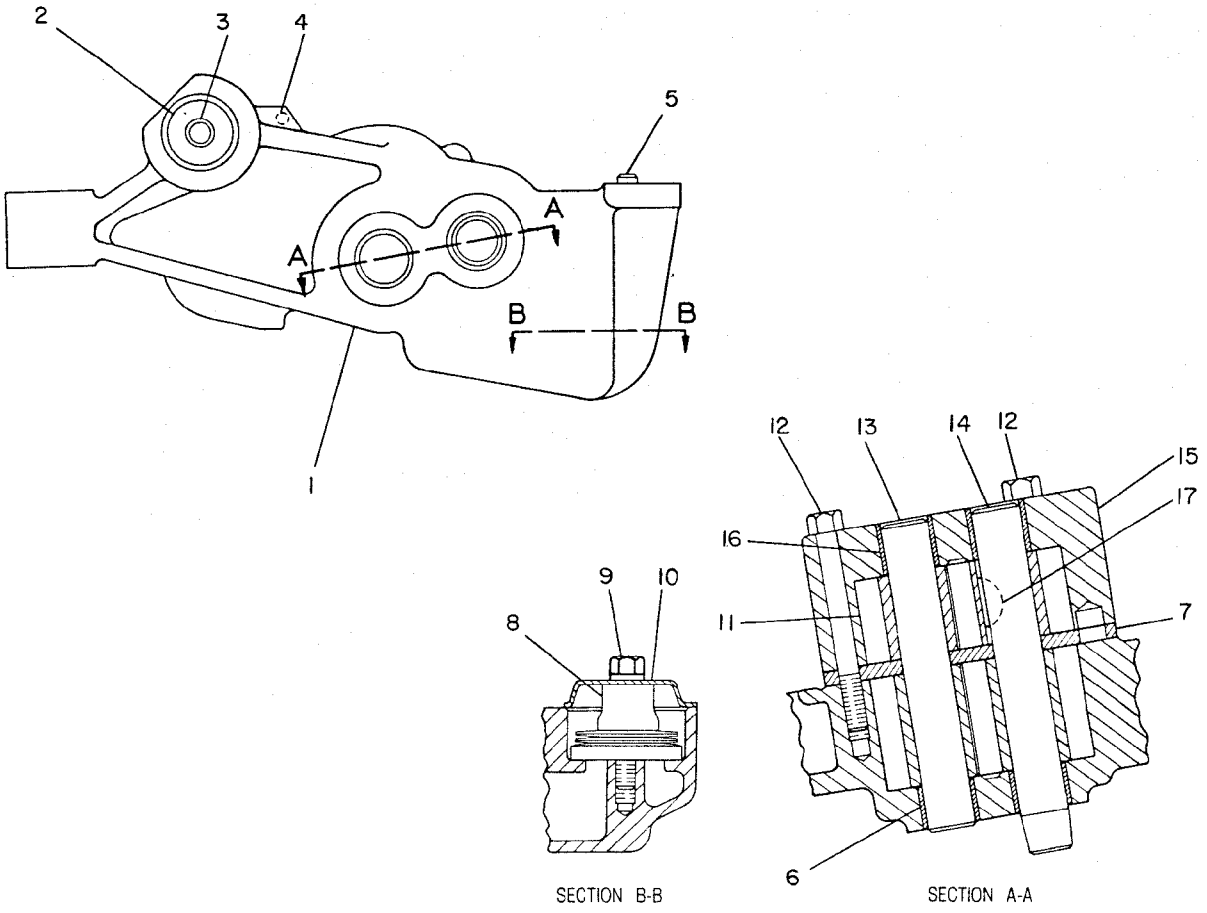

GRAPHIC #1 g00108222

LUBRICATION SYSTEM

6N-2642 PUMP GP-ENGINE OIL

S/N: 13Z22389-24635

PART OF 2P-1784 PUMP GP-ENGINE OIL

SMCS-1304, 1315 **i00310866**

NOTE	REF NO	GRAPHIC REF	PART NUMBER	QTY	PART NAME 1 2 3 4 5 6 (PRODUCT LEVEL)	SEE PAGE
YR	1	1	**4W-2448**	1	PUMP GP-ENGINE OIL	
	2	1	**8S-0497**	1	GEAR-OIL PUMP INPUT	
	3	1	**0S-1590**	1	BOLT (3/8-16X2IN)	
	4	1	**1P-7346**	1	WASHER (6.0MM THK)	
	5	1	**8M-5599**	1	KEY-WOODRUFF	

R-REMFG PART MAY BE AVAILABLE
Y-SEPARATE ILLUSTRATION

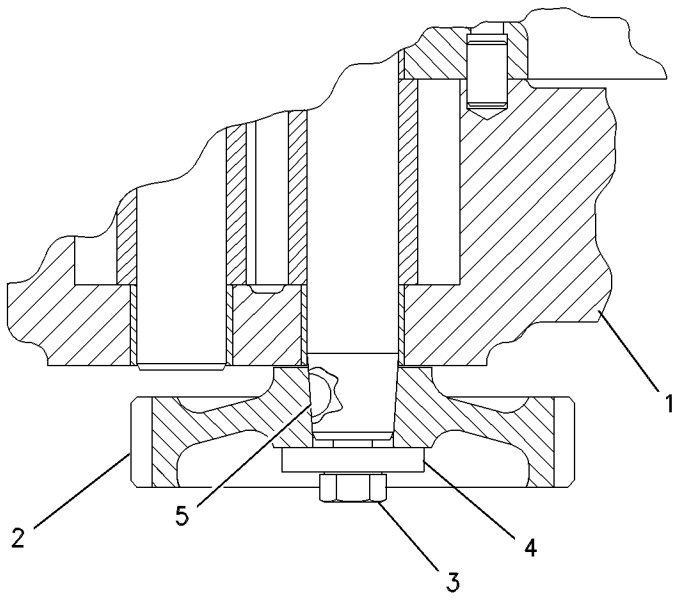

GRAPHIC #1 g00274310

LUBRICATION SYSTEM

6N-2642 PUMP GP-ENGINE OIL

S/N: 13Z24636-99999
PART OF 2P-1784 PUMP GP-ENGINE OIL
TYPE 1

SMCS-1304, 1315 **i01217656**

NOTE	REF NO	GRAPHIC REF	PART NUMBER	QTY	PART NAME 1 2 3 4 5 6 (PRODUCT LEVEL)	SEE PAGE
Y	1	1	**4P-4020**	1	PUMP GP-ENGINE OIL	
	2	1	**8S-0497**	1	GEAR-OIL PUMP INPUT (40 TEETH)	
	3	1	**0S-1590**	1	BOLT (3/8-16X2 IN)	
	4	1	**1P-7346**	1	WASHER (6.0MM THK)	
	5	1	**8M-5599**	1	KEY-WOODRUFF	

Y-SEPARATE ILLUSTRATION

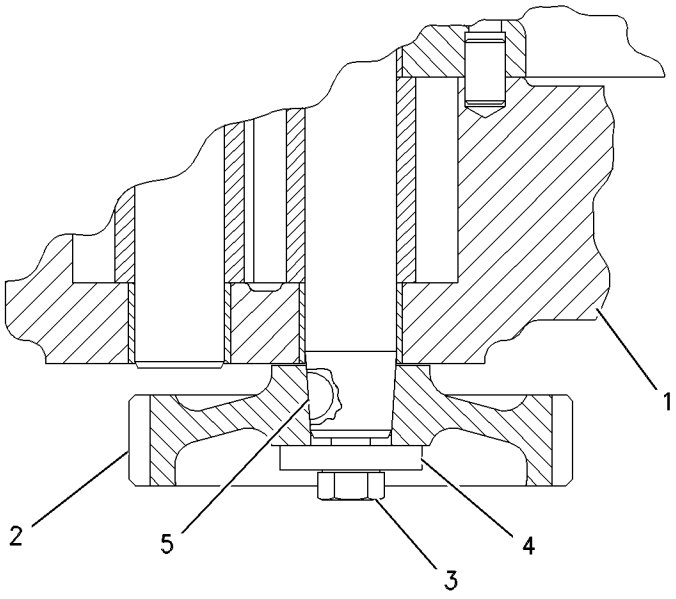

GRAPHIC #1 g00274314

LUBRICATION SYSTEM

6N-2642 PUMP GP-ENGINE OIL

S/N: 13Z24636-99999
PART OF 2P-1784 PUMP GP-ENGINE OIL
TYPE 2

SMCS-1304, 1315 **i00456931**

NOTE	REF NO	GRAPHIC REF	PART NUMBER	QTY	PART NAME 1 2 3 4 5 6 (PRODUCT LEVEL)	SEE PAGE
YR	1	1	**6I-1346**	1	PUMP GP-ENGINE OIL	
	2	1	**7W-0507**	1	GEAR-OIL PUMP DRIVE (40 TEETH)	
	3	1	**0S-1590**	1	BOLT (3/8-16X2IN)	
	4	1	**1P-7346**	1	WASHER (6.0MM THK)	

R-REMFG PART MAY BE AVAILABLE
Y-SEPARATE ILLUSTRATION

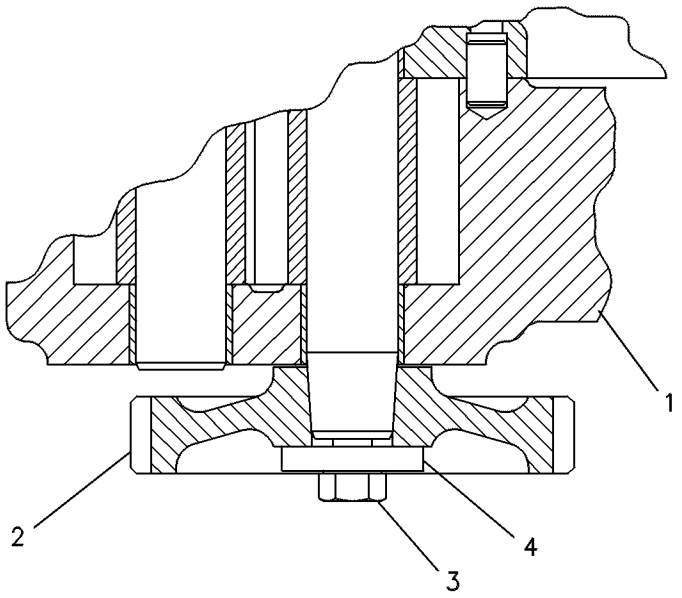

GRAPHIC #1 g00108503

COOLING SYSTEM

7W-0219 COOLER GP-FLTR BASE & ENG OIL

S/N: 13Z22389-28099

PART OF 7E-0082 ENGINE AR

SMCS-1306, 1378 **i00259681**

NOTE	REF NO	GRAPHIC REF	PART NUMBER	QTY	PART NAME 1 2 3 4 5 6 (PRODUCT LEVEL)	SEE PAGE
Y	1	1	*7W-1471*	1	COOLER GP-FLTR BASE & ENG OIL	
	2	1	**0T-0573**	1	BOLT (3/8-16X2.75IN)	
	3	1	**0L-2070**	1	BOLT (3/8-16X2.25IN)	
	4	1	**2W-4561**	1	GASKET	
	5	1	**1R-0658**	1	FILTER AS-ENGINE OIL	
	6	1	**0S-1588**	1	BOLT (3/8-16X1.25IN)	
					-OR-	
C		1	**3B-1915**	1	BOLT (3/8-16X1.375IN)	
C		1	**5M-2894**	1	WASHER (2.5MM THK)	

C-CHANGE FROM PREVIOUS TYPE
Y-SEPARATE ILLUSTRATION

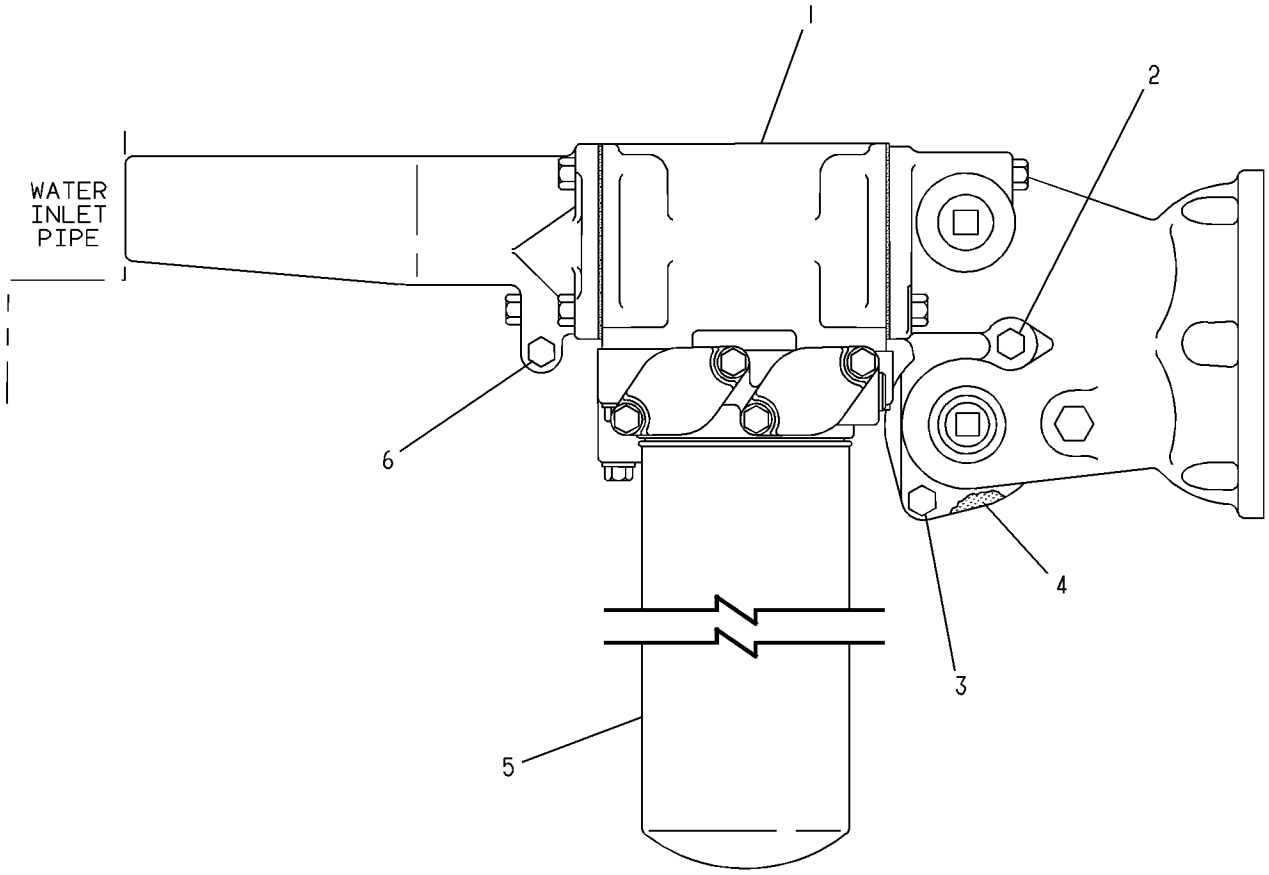

GRAPHIC #1 g00118552

MEMORANDA

7W-1471 COOLER GP-FLTR BASE & ENG OIL

S/N: 13Z22389-30333

PART OF 7W-0219 COOLER GP-FLTR BASE & ENG OIL

SMCS-1306, 1378 **i00259700**

NOTE	REF NO	GRAPHIC REF	PART NUMBER	QTY	PART NAME 1 2 3 4 5 6 (PRODUCT LEVEL)	SEE PAGE
R	1	1	**7N-0165**	1	CORE AS-OIL COOLER	
	2	1	**5S-6051**	2	GASKET	
	3	1	**3B-0551**	1	PLUG-PIPE (1-11 1/2 NPTF THD)	
	4	1	**0L-1352**	1	BOLT (3/8-16X3.25IN)	
	5	1	**7N-2705**	1	BONNET-OIL COOLER	
	6	1	**3J-5390**	1	PLUG (3/8-18 THD)	
	7	1	**1B-5174**	1	PLUG-PIPE (3/4-14 NPTF)	
	8	1	**8M-4432**	2	SEAL-O-RING	
Y	9	1	*8N-4457*	1	BASE GP-OIL FILTER	
	10	1	**1D-4540**	1	BOLT (5/16-18X2.75IN)	
	11	1	**9M-1974**	4	WASHER-HARD (2MM THK)	
	12	1	**1H-5514**	3	BOLT (5/16-18X1.625IN)	
C	13	1	**1A-2029**	2	BOLT (3/8-16X1.125IN)	
	14	1	**0L-2070**	1	BOLT (3/8-16X2.25IN)	
C	15	1	**2W-5240**	1	PIPE-PUMP OUTLET	
	16	1	**1T-0765**	1	BOLT (3/8-16X1.00IN)	
C	17	1	**0S-1588**	3	BOLT (3/8-16X1.25IN)	
C	18	1	**5M-2894**	4	WASHER (2.5MM THK)	

C-CHANGE FROM PREVIOUS TYPE
R-REMFG PART MAY BE AVAILABLE
Y-SEPARATE ILLUSTRATION

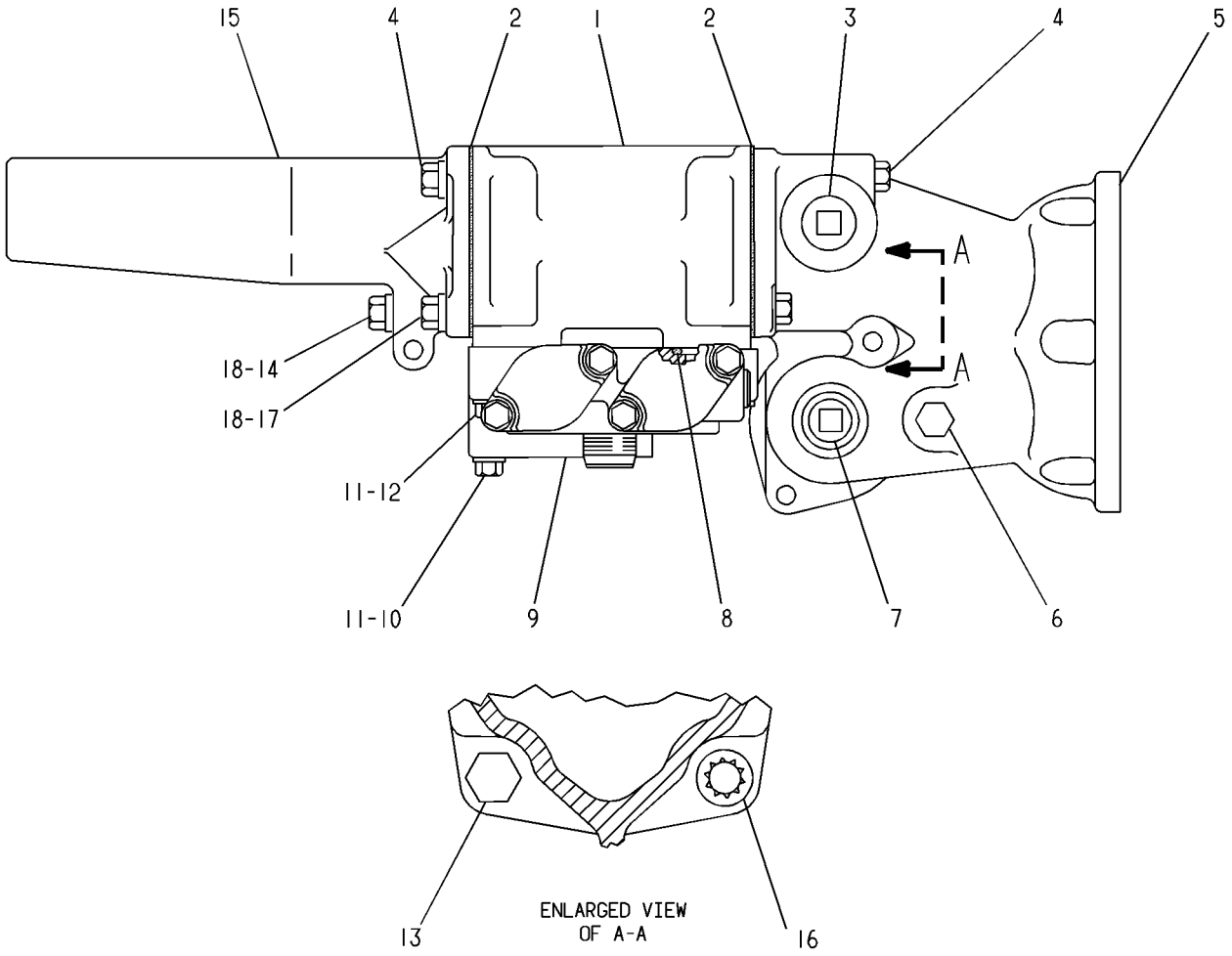

GRAPHIC #1 g00118534

COOLING SYSTEM

7E-2926 FAN GP-BLOWER

S/N: 3XJ1-99999

SMCS-1356, 1360 **i00286517**

NOTE	REF NO	GRAPHIC REF	PART NUMBER	QTY	PART NAME 1 2 3 4 5 6 (PRODUCT LEVEL)	SEE PAGE
	1	1	**7E-3557**	1	SPIDER AS-FAN	
M	2	1	**8T-4136**	8	BOLT (M10X1.50X25MM)	
					–OR–	
M		1	**8T-4133**	8	NUT (M10X1.50 THD)	
	3	1	**5P-1075**	20	WASHER-HARD (3MM THK)	
					–OR–	
		1	**8T-4121**	20	WASHER (2.5MM THK)	
	4	1	**4L-9337**	8	BOLT (3/8-16X1.50IN)	
	5	1	**7C-3093**	2	GUARD AS	
					(EACH INCLUDES)	
		1	**9F-2978**	2	NUT-WELD (3/8-16 THD)	
		1	**6N-8599**	4	CLIP	
M	6	1	**8T-4136**	4	BOLT (M10X1.50X25MM)	

M-METRIC PART

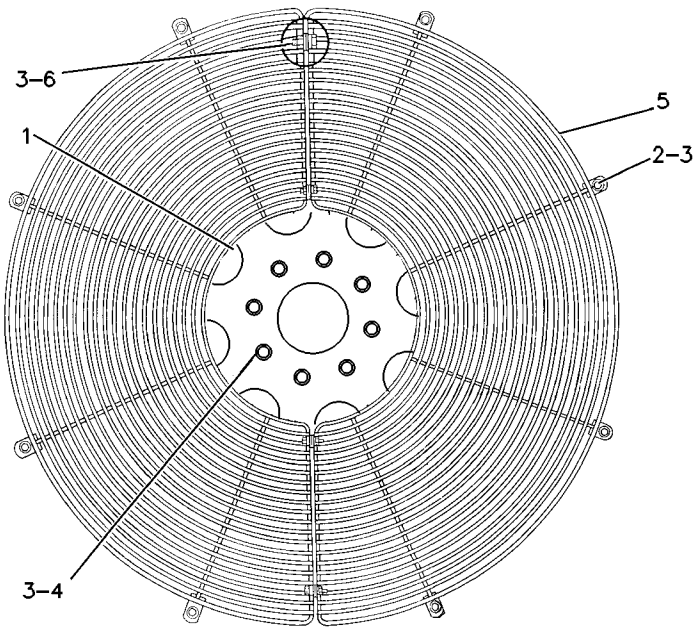

GRAPHIC #1 g00118762

COOLING SYSTEM

6C-8901 HOUSING & REGULATOR GP

S/N: 13Z22389-99999

PART OF 6C-3458 ENGINE AR

SMCS-1355, 1393 **i00259391**

NOTE	REF NO	GRAPHIC REF	PART NUMBER	QTY	PART NAME 1 2 3 4 5 6 (PRODUCT LEVEL)	SEE PAGE
	1	1	**1W-6810**	1	PIPE-OUTLET	
	2	1	**7H-3171**	1	PLUG-PIPE (1/4-18 NPTF)	
	3	1	**7N-0944**	1	GASKET	
	4	1	**111-8011**	1	REGULATOR	
	5	1	**5S-7382**	4	BOLT (3/8-16X1.375IN)	
		1	**8T-4896**	4	WASHER-HARD (2.5MM THK)	
	6	1	**8N-4485**	1	VALVE AS (VENT)	

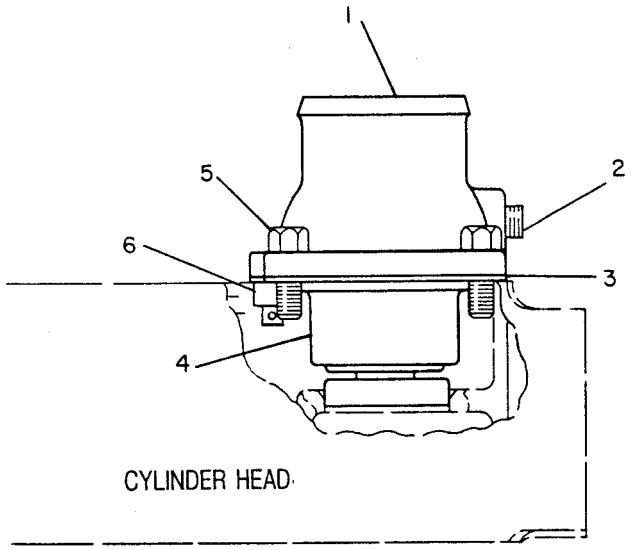

GRAPHIC #1 g00125171

COOLING SYSTEM

2W-6779 LINES GP-WATER

S/N: 13Z22389-28099

PART OF 7E-0082 ENGINE AR

SMCS-1380 **i01048814**

NOTE	REF NO	GRAPHIC REF	PART NUMBER	QTY	PART NAME 1 2 3 4 5 6 (PRODUCT LEVEL)	SEE PAGE
	1	1	**0T-0065**	1	BOLT (3/8-16X3.5IN)	
	2	1	**2P-6132**	1	GASKET-ELBOW	
	3	1	**8T-4984**	2	CLAMP-HOSE	
	4	1	**0S-1590**	1	BOLT (3/8-16X2IN)	
	5	1	**0S-1619**	2	BOLT (3/8X3.0IN)	
	6	1	**131-6645**	1	HOSE	
Y	7	1	*8N-4112*	1	LINES GP-WATER	
	8	1	**7N-0200**	1	GASKET	

Y-SEPARATE ILLUSTRATION

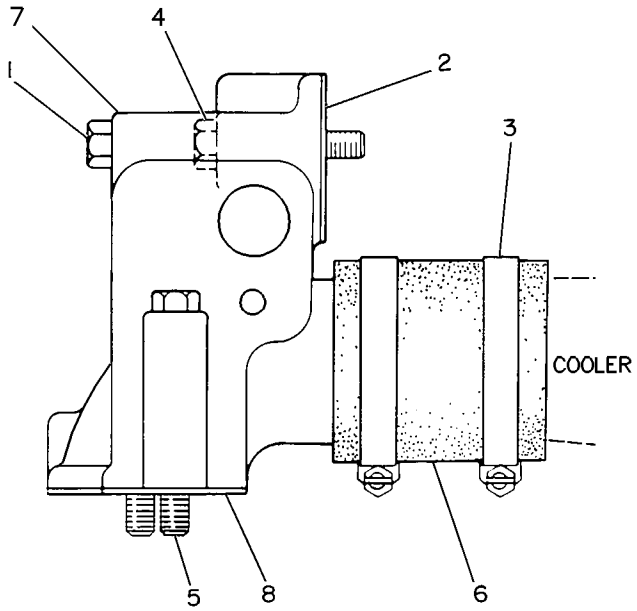

GRAPHIC #1 g00117182

COOLING SYSTEM

8N-4112 LINES GP-WATER

S/N: 13Z22389-99999
BY-PASS & OUTLET ELBOW
PART OF 2W-6779 LINES GP-WATER

SMCS-1380 **i00259640**

NOTE	REF NO	GRAPHIC REF	PART NUMBER	QTY	PART NAME 1 2 3 4 5 6 (PRODUCT LEVEL)	SEE PAGE
B	1	1	**3J-5390**	1	PLUG (3/8-18 THD)	
	2	1	**7N-0172**	1	ELBOW	
B	3	1	**1B-5174**	3	PLUG-PIPE (3/4-14 NPTF)	
B	4	1	**5M-6213**	2	PLUG	

B-USE AS REQUIRED

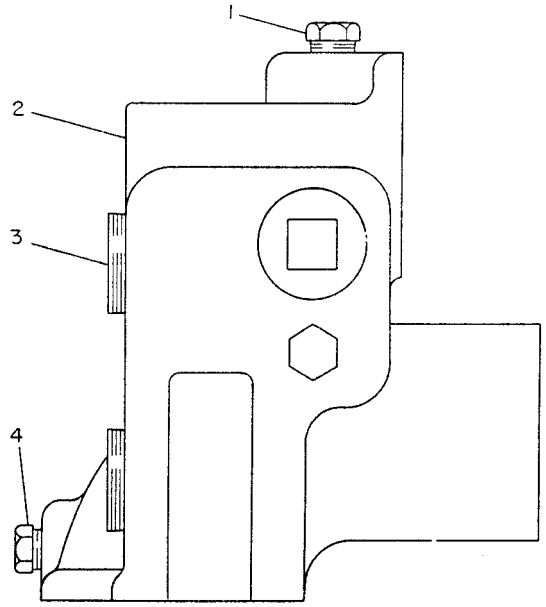

GRAPHIC #1 g00112429

COOLING SYSTEM

2W-8002 PUMP GP-WATER*R

S/N: 13Z22389-30499

PART OF 7N-5908 PUMP GP-WATER

SMCS-1361 **i01137389**

NOTE	REF NO	GRAPHIC REF	PART NUMBER	QTY	PART NAME 1 2 3 4 5 6 (PRODUCT LEVEL)	SEE PAGE
	1	1	**8N-5929**	1	COVER-WATER PUMP	
	2	1	**4W-3864**	1	SEAL GP	
	3	1	**7N-5910**	1	IMPELLER-PUMP	
	4	1	**0L-1351**	1	BOLT (3/8-16X.875IN)	
	5	1	**1W-4619**	1	HOUSING-PUMP	
	6	1	**8C-5210**	1	SEAL-LIP	
J	7	1	**1K-6985**	1	RING-RETAINING	
J	8	1	**6K-3771**	1	BOLT-12 POINT HEAD (7/16-14X1.5 IN)	
J	9	1	**6H-3957**	2	BALL BEARING	
	10	1	**2W-7255**	1	SHAFT-WATER PUMP	
	11	1	**5M-2894**	2	WASHER (2.5MM THK)	
	12	1	**4L-6454**	1	BOLT (3/8-16X1.0IN)	
	13	1	**5M-6213**	1	PLUG-PIPE (1/4-18 NPTF THD)	
	14	1	**2W-7678**	1	GEAR AS (40 TEETH)	
	15	1	**8N-5928**	1	GASKET	
J	16	1	**4N-5834**	1	FILTER-WATER	
	17	1	**9M-6527**	1	WASHER-HARD (5.0MM THK)	
					AVAILABLE REPAIR KIT(S):	
J			**170-0560**	1	KIT-PUMP REBUILD	

J-KIT MARKED J INCLUDES PART(S) MARKED J

2W-8002 PUMP GP-WATER ***(contd.)*** **i01137389**

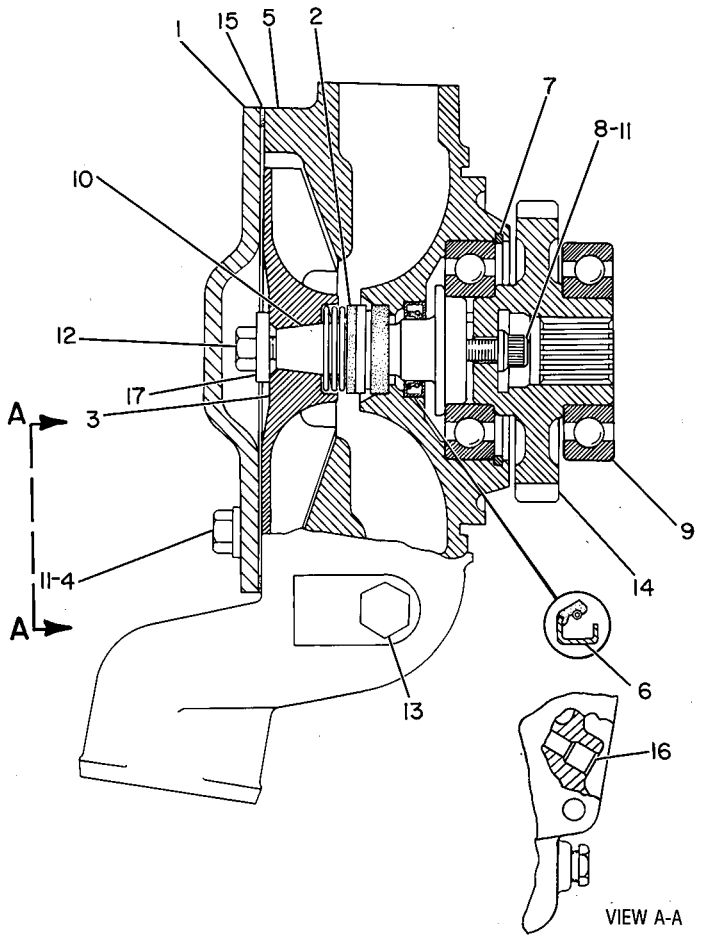

GRAPHIC #1 g00125209

COOLING SYSTEM

7N-5908 PUMP GP-WATER

S/N: 13Z22389-99999

PART OF 7E-0082 ENGINE AR

SMCS-1361 **i00259568**

NOTE	REF NO	GRAPHIC REF	PART NUMBER	QTY	PART NAME 1 2 3 4 5 6 (PRODUCT LEVEL)	SEE PAGE
	1	1	**5F-3106**	1	SEAL-O-RING (126.59MM ID)	
	2	1	**1A-5964**	2	BOLT (3/8-16X4.5IN)	
		1	**5M-2894**	2	WASHER (2.5MM THK)	
CYR	3	1	**2W-8002**	1	PUMP GP-WATER	

C-CHANGE FROM PREVIOUS TYPE
R-REMFG PART MAY BE AVAILABLE
Y-SEPARATE ILLUSTRATION

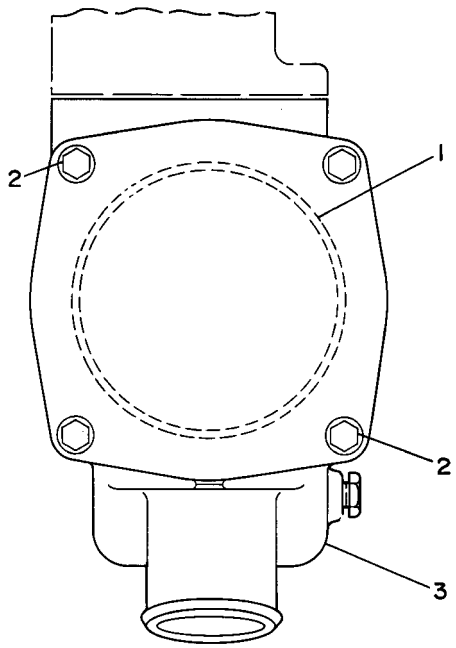

GRAPHIC #1 g00115819

MEMORANDA

COOLING SYSTEM

4P-6564 RADIATOR GP

S/N: 3XJ1417-99999
MULTI-ROW MODULE
PART OF 7E-2927 RADIATOR GP

SMCS-1353 **i00286571**

NOTE	REF NO	GRAPHIC REF	PART NUMBER	QTY	PART NAME 1 2 3 4 5 6 (PRODUCT LEVEL)	SEE PAGE
	1	1	**7E-3546**	1	TANK AS-RADIATOR	
	2	1	**4P-9943**	6	SEAL-END TANK	
	3	1	**4P-0897**	6	CORE AS-RADIATOR	
	4	1	**4P-9942**	6	SEAL-END TANK	
	5	1	**5P-4116**	24	WASHER (2MM THK)	
	6	1	**7E-7754**	8	STRAP AS	
					(EACH INCLUDES)	
M		1	**8T-3490**	2	NUT-WELD (M10X1.5 THD)	
	7	1	**8T-6764**	1	PLUG-PIPE (1/8-27 NPTF THD)	
	8	1	**7E-3547**	1	TANK AS-RADIATOR	
M	9	1	**8T-4196**	16	BOLT (M10X1.50X35MM)	
	10	1	**7E-7760**	3	CORE AS-OIL COOLER	
	11	1	**8T-2561**	16	WASHER (5.0MM THK)	
M	12	1	**8T-4136**	20	BOLT (M10X1.50X25MM)	
	13	1	**8T-4121**	20	WASHER (2.5MM THK)	
	14	1	**7E-3549**	1	CHANNEL AS-RH	
	15	1	**7E-3548**	1	CHANNEL AS-LH	
M	16	1	**7X-2537**	12	BOLT (M8X1.25X35MM)	
	17	1	**4W-2357**	12	MOUNT AS	
M	18	1	**8T-4908**	12	BOLT (M8X1.25X25MM)	

M-METRIC PART

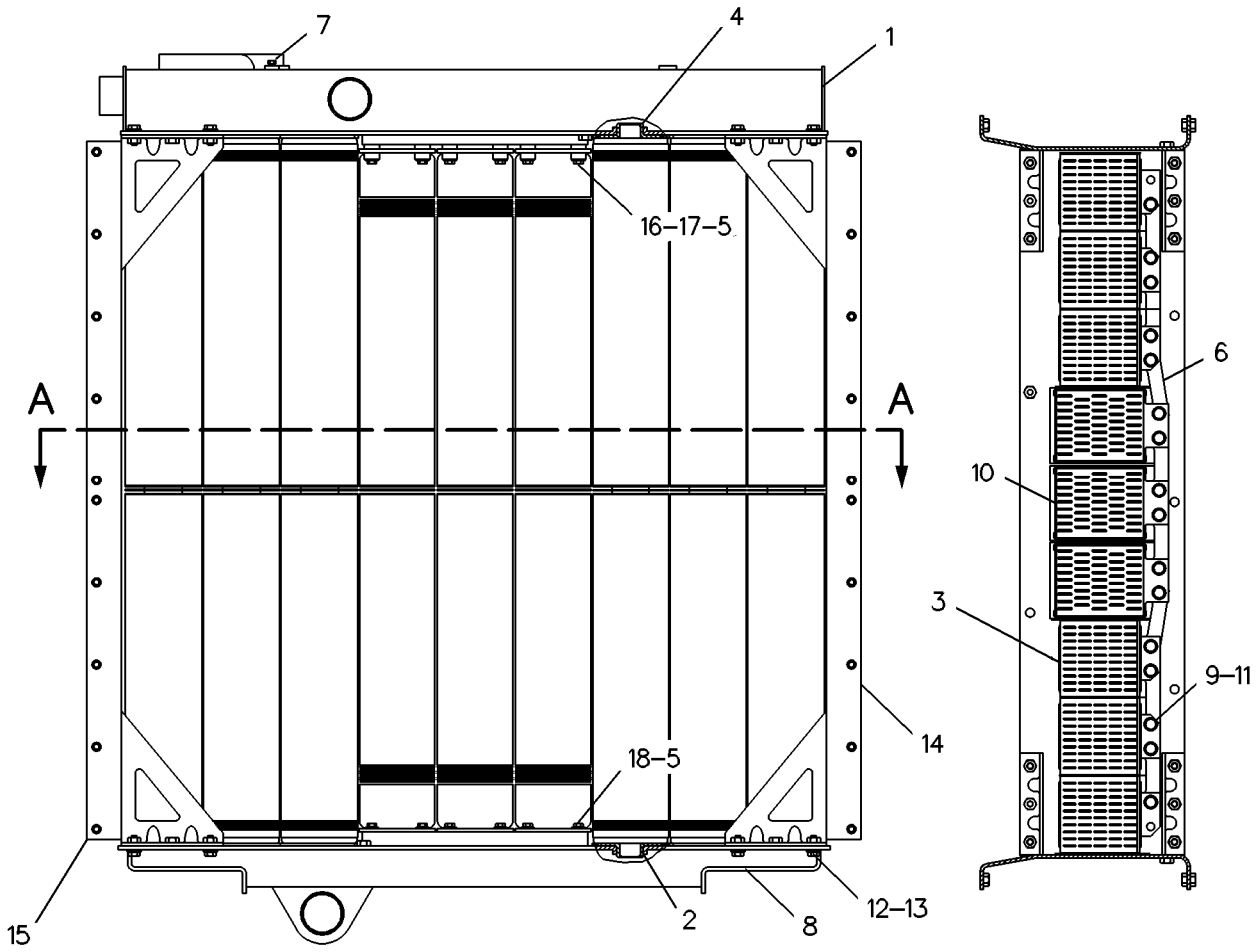

GRAPHIC #1

g00119804

COOLING SYSTEM

7E-2927 RADIATOR GP

S/N: 3XJ1-1416
MULT-ROW MODULE

SMCS-1353 **i00286539**

NOTE	REF NO	GRAPHIC REF	PART NUMBER	QTY	PART NAME 1 2 3 4 5 6 (PRODUCT LEVEL)	SEE PAGE
	1	1	**1P-3381**	1	BRACKET	
	2	1	**1W-3601**	1	GASKET	
	3	1	**021-7941**	4	BOLT-SOCKET HEAD	
E	4	1	**5P-1262**		HOSE (63.5MM ID)	
E	5	1	**5P-1420**		HOSE (28CM)	
	6	1	**5P-4868**	8	CLAMP	
	7	1	**6L-8617**	1	CAP-RADIATOR	
	8	1	**7C-4515**	1	INDICATOR GP-LIQUID LEVEL	
	9	1	**7E-3550**	2	PLATE AS	
	10	1	**7E-3551**	2	SHIELD AS	
	11	1	**7E-3552**	2	SHIELD AS	
	12	1	**7E-3553**	1	TUBE	
	13	1	**7E-3554**	1	TUBE AS	
	14	1	**7E-3555**	2	SUPPORT	
	15	1	**7E-3556**	2	SUPPORT	
Y	16	1	*7E-7759*	1	RADIATOR GP	
	17	1	**8C-4436**	8	BOLT (1/2-13X1.375IN)	
	18	1	**8F-8151**	1	COCK-SHUTOFF	
	19	1	**8T-4121**	52	WASHER (2.5MM THK)	
M	20	1	**8T-4133**	1	NUT (M10X1.50 THD)	
M	21	1	**8T-4136**	24	BOLT (M10X1.50X25MM)	
M	22	1	**8T-4186**	12	BOLT (M10X1.50X40MM)	
M	23	1	**8T-4195**	14	BOLT (M10X1.50X30MM)	
	24	1	**8T-4205**	4	WASHER-HARD (2MM THK)	
	25	1	**8T-4223**	8	WASHER-HARD (3MM THK)	
	26	1	**9F-2947**	1	CLIP	
M	27	1	**8T-4137**	1	BOLT (M10X1.50X20MM)	
	28	1	**003-2143**	1	ELBOW	

E-ORDER BY THE CENTIMETER
M-METRIC PART
Y-SEPARATE ILLUSTRATION

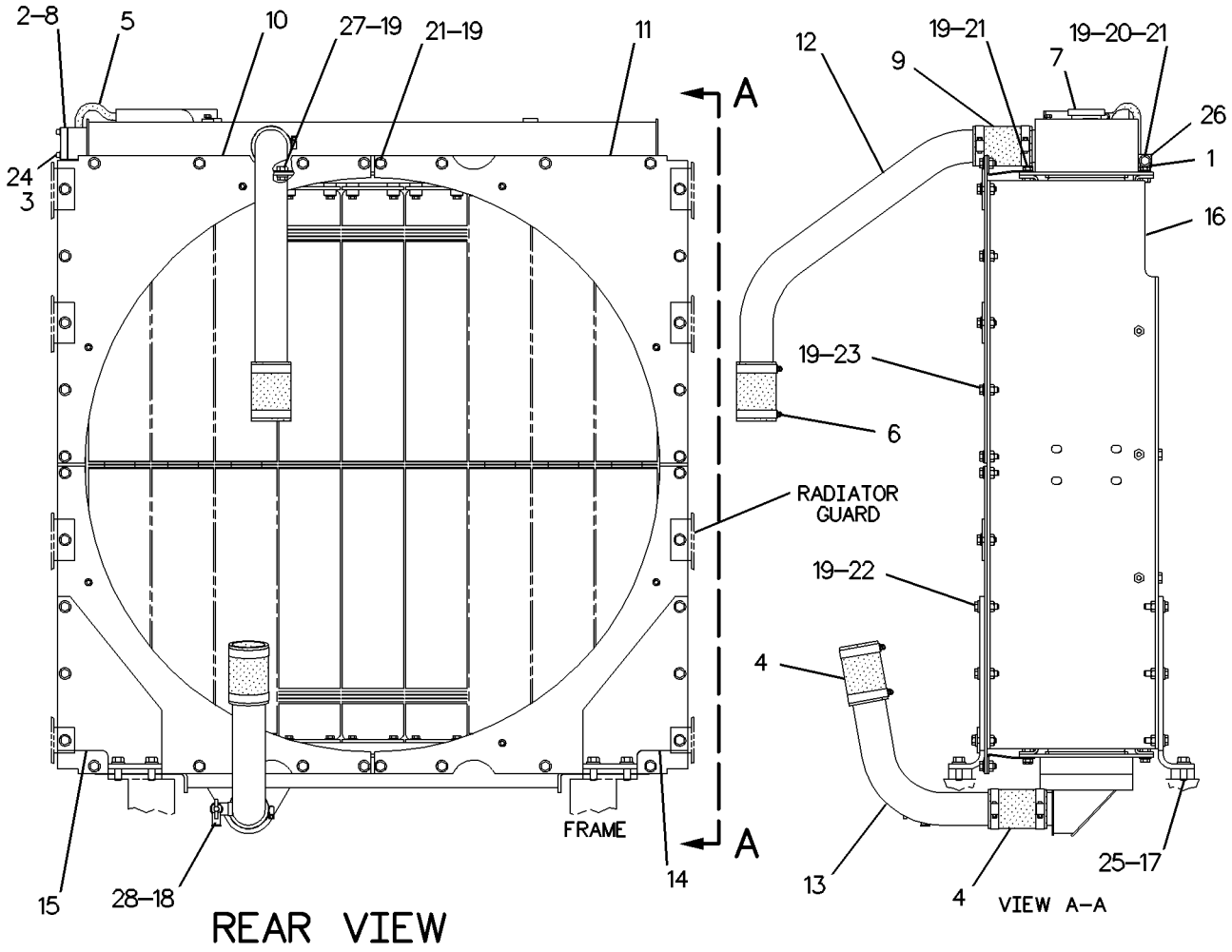

GRAPHIC #1

g00119005

COOLING SYSTEM

7E-2927 RADIATOR GP

S/N: 3XJ1417-2011
MULT-ROW MODULE

SMCS-1353 **i00286548**

NOTE	REF NO	GRAPHIC REF	PART NUMBER	QTY	PART NAME 1 2 3 4 5 6 (PRODUCT LEVEL)	SEE PAGE
	1	1	**1P-3381**	1	BRACKET	
	2	1	**1W-3601**	1	GASKET	
	3	1	**021-7941**	4	BOLT-SOCKET HEAD	
BE	4	1	**5P-1262**		HOSE (63.5MM ID) (114.3CM)	
BE	5	1	**5P-1420**		HOSE (28CM)	
	6	1	**5P-4868**	8	CLAMP	
	7	1	**6L-8617**	1	CAP-RADIATOR	
	8	1	**7C-4515**	1	INDICATOR GP-LIQUID LEVEL	
	9	1	**7E-3550**	2	PLATE AS	
	10	1	**7E-3551**	2	SHIELD AS	
	11	1	**7E-3552**	2	SHIELD AS	
	12	1	**7E-3553**	1	TUBE	
	13	1	**7E-3554**	1	TUBE AS	
	14	1	**7E-3555**	2	SUPPORT	
	15	1	**7E-3556**	2	SUPPORT	
Y	16	1	*4P-6564*	1	RADIATOR GP	
	17	1	**8C-4436**	8	BOLT (1/2-13X1.375IN)	
	18	1	**8F-8151**	1	COCK-SHUTOFF	
	19	1	**8T-4121**	52	WASHER (2.5MM THK)	
M	20	1	**8T-4133**	1	NUT (M10X1.50 THD)	
M	21	1	**8T-4136**	24	BOLT (M10X1.50X25MM)	
M	22	1	**8T-4186**	12	BOLT (M10X1.50X40MM)	
M	23	1	**8T-4195**	14	BOLT (M10X1.50X30MM)	
	24	1	**8T-4205**	4	WASHER-HARD (2MM THK)	
	25	1	**8T-4223**	8	WASHER-HARD (3MM THK)	
	26	1	**9F-2947**	1	CLIP	
M	27	1	**8T-4137**	1	BOLT (M10X1.50X20MM)	
	28	1	**003-2143**	1	ELBOW	

B-USE AS REQUIRED
E-ORDER BY THE CENTIMETER
M-METRIC PART
Y-SEPARATE ILLUSTRATION

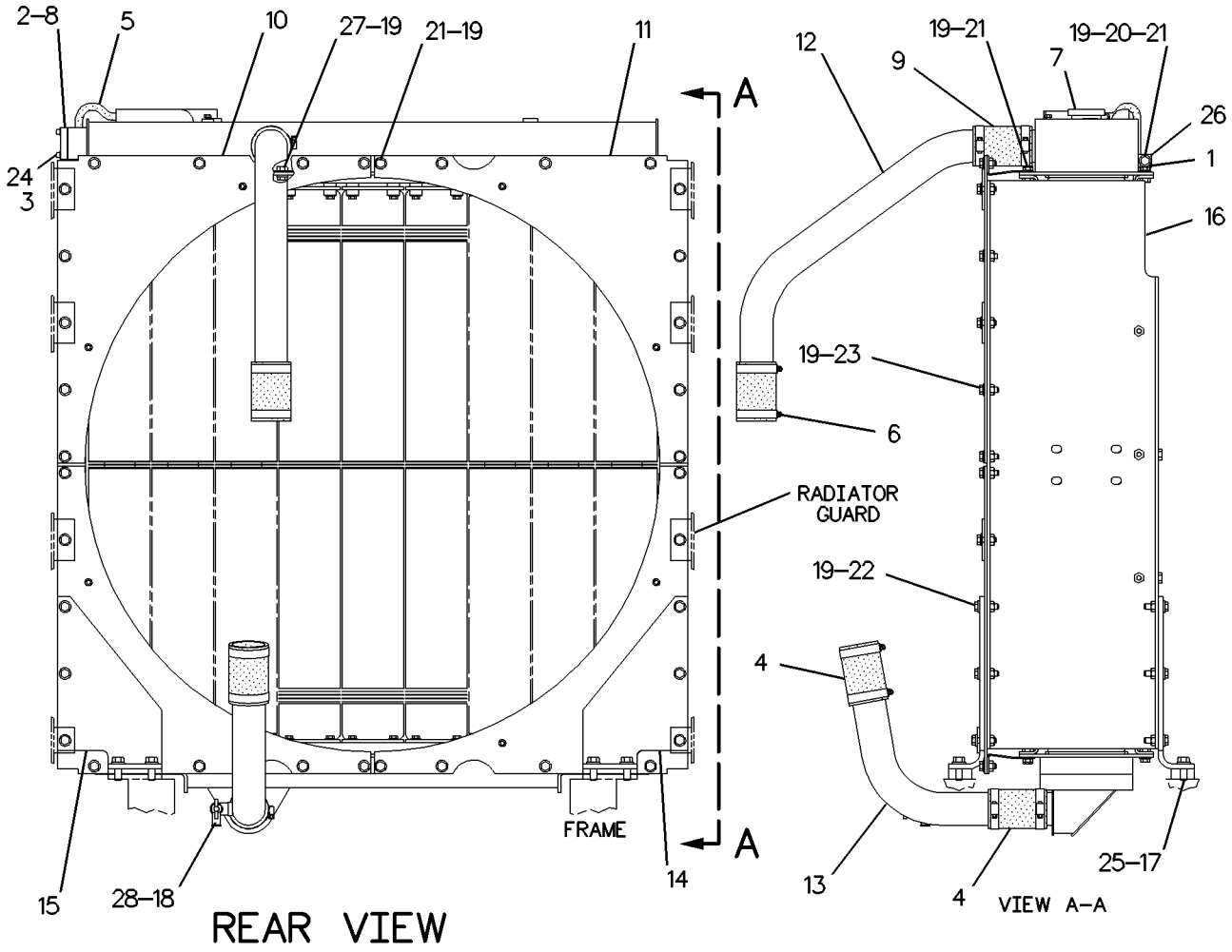

GRAPHIC #1

g00119005

COOLING SYSTEM

7E-2927 RADIATOR GP

S/N: 3XJ2012-99999

MULT-ROW MODULE

SMCS-1353 **i00259381**

NOTE	REF NO	GRAPHIC REF	PART NUMBER	QTY	PART NAME 1 2 3 4 5 6 (PRODUCT LEVEL)	SEE PAGE
	1	1	**1P-3381**	1	BRACKET	
	2	1	**1W-3601**	1	GASKET	
	3	1	**021-7941**	4	BOLT-SOCKET HEAD	
E	4	1	**5P-1262**	4	HOSE (63.5MM ID)	
EC	5	1	**8C-3681**		HOSE (200CM)	
	6	1	**5P-4868**	8	CLAMP	
	7	1	**6L-8617**	1	CAP-RADIATOR	
	8	1	**7C-4515**	1	INDICATOR GP-LIQUID LEVEL	
	9	1	**7E-3550**	2	PLATE AS	
C	10	1	**6I-1566**	2	SHIELD AS	
C	11	1	**6I-1567**	2	SHIELD AS	
	12	1	**7E-3553**	1	TUBE	
	13	1	**7E-3554**	1	TUBE AS	
	14	1	**7E-3555**	2	SUPPORT	
	15	1	**7E-3556**	2	SUPPORT	
Y	16	1	*4P-6564*	1	RADIATOR GP	
	17	1	**8C-4436**	8	BOLT (1/2-13X1.375IN)	
	18	1	**8F-8151**	1	COCK-SHUTOFF	
C	19	1	**8T-4121**	22	WASHER (2.5MM THK)	
M	20	1	**8T-4133**	1	NUT (M10X1.50 THD)	
M	21	1	**8T-4136**	24	BOLT (M10X1.50X25MM)	
M	22	1	**8T-4186**	12	BOLT (M10X1.50X40MM)	
M	23	1	**8T-4195**	14	BOLT (M10X1.50X30MM)	
	24	1	**8T-4205**	4	WASHER-HARD (2MM THK)	
	25	1	**8T-4223**	8	WASHER-HARD (3MM THK)	
C	26	1	**4D-7794**	1	CLIP (10.0MM ID)	
M	27	1	**8T-4137**	1	BOLT (M10X1.50X20MM)	
	28	1	**003-2143**	1	ELBOW	
EC	29	1	**5P-0767**		HOSE (328CM)	
C	30	1	**5D-1026**	1	CLAMP-HOSE	
C	31	1	**7B-1597**	1	CLIP (9.52MM ID)	
C	32	1	**3S-2093**	2	STRAP-CABLE (1.75IN DIA)	
C	33	1	**7X-7729**	30	WASHER (3MM THK)	

C-CHANGE FROM PREVIOUS TYPE
E-ORDER BY THE CENTIMETER
M-METRIC PART
Y-SEPARATE ILLUSTRATION

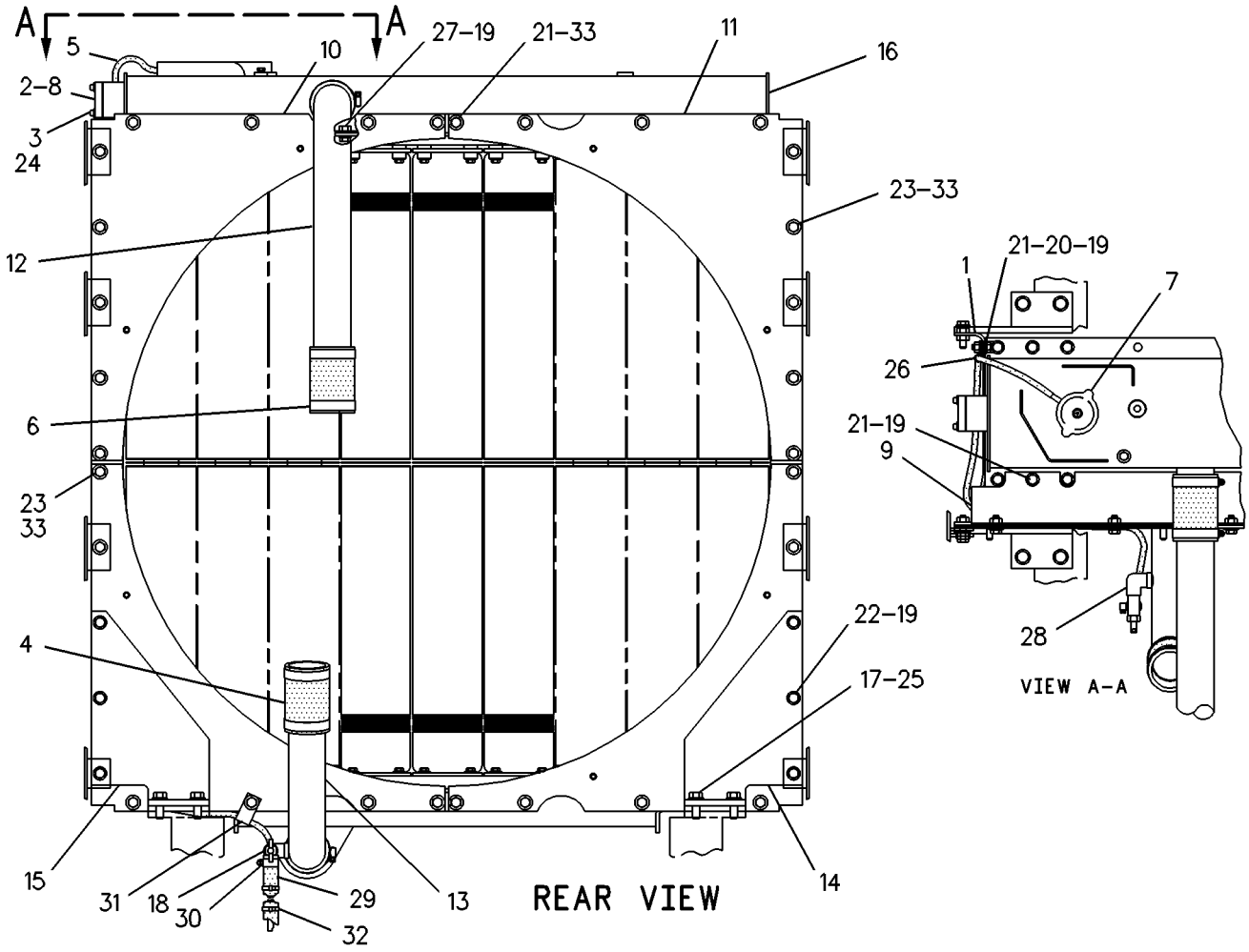

GRAPHIC #1

g00119567

COOLING SYSTEM

7E-7759 RADIATOR GP

S/N: 3XJ1-1416
MULTIPLE ROW MODULE
PART OF 7E-2927 RADIATOR GP

SMCS-1353 **i00259499**

NOTE	REF NO	GRAPHIC REF	PART NUMBER	QTY	PART NAME 1 2 3 4 5 6 (PRODUCT LEVEL)	SEE PAGE
	1	1	**7E-3546**	1	TANK AS-RADIATOR	
	2	1	**9Y-1654**	6	SEAL-END TANK	
	3	1	**7E-6565**	6	CORE AS-RADIATOR	
	4	1	**9Y-1655**	6	SEAL-END TANK	
	5	1	**7E-2308**	6	SUPPORT	
	6	1	**7E-7754**	8	STRAP AS	
					(EACH INCLUDES)	
M		1	**8T-3490**	2	NUT-WELD (M10X1.5 THD)	
	7	1	**5M-6214**	1	PLUG-PIPE (1/8-27 THD)	
	8	1	**7E-3547**	1	TANK AS-RADIATOR	
M	9	1	**8T-4196**	16	BOLT (M10X1.50X35MM)	
	10	1	**7E-7760**	3	CORE AS-OIL COOLER	
	11	1	**8T-7934**	16	WASHER-HARD (5.0MM THK)	
M	12	1	**8T-4136**	20	BOLT (M10X1.50X25MM)	
	13	1	**8T-4121**	20	WASHER (2.5MM THK)	
	14	1	**7E-3549**	1	CHANNEL AS-RH	
	15	1	**7E-3548**	1	CHANNEL AS-LH	
M	16	1	**7X-2537**	12	BOLT (M8X1.25X35MM)	
	17	1	**4W-2357**	12	MOUNT AS	
M	18	1	**8T-4908**	12	BOLT (M8X1.25X25MM)	
	19	1	**5P-4116**	24	WASHER (2MM THK)	

M-METRIC PART

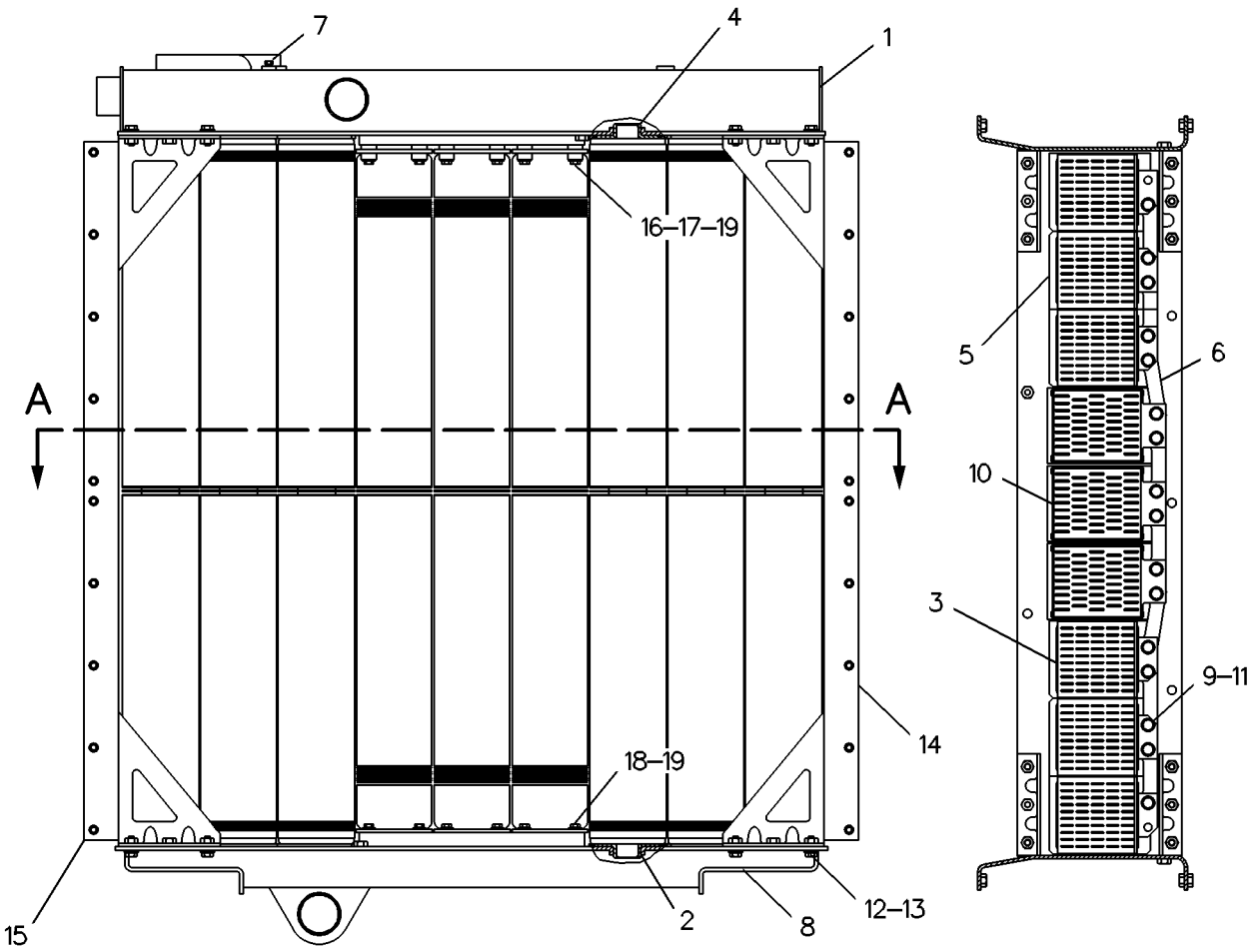

GRAPHIC #1 g00119196

8N-0888 REGULATOR GP-TEMPERATURE

S/N: 13Z22389-99999

PART OF 6C-3458 ENGINE AR

SMCS-1355 **i00962024**

NOTE	REF NO	GRAPHIC REF	PART NUMBER	QTY	PART NAME 1 2 3 4 5 6 (PRODUCT LEVEL)	SEE PAGE
	1	1	**1W-6810**	1	PIPE-OUTLET	
	2	1	**8T-6763**	1	PLUG	
	3	1	**7N-0944**	1	GASKET	
	4	1	**111-8010**	1	REGULATOR-WATER TEMPERATURE	
	5	1	**5S-7382**	4	BOLT (3/8-16X34.92)	
	6	1	**8N-4485**	1	VALVE AS (VENT)	
	7	1	**8T-4896**	4	WASHER-HARD (2.5MM THK)	

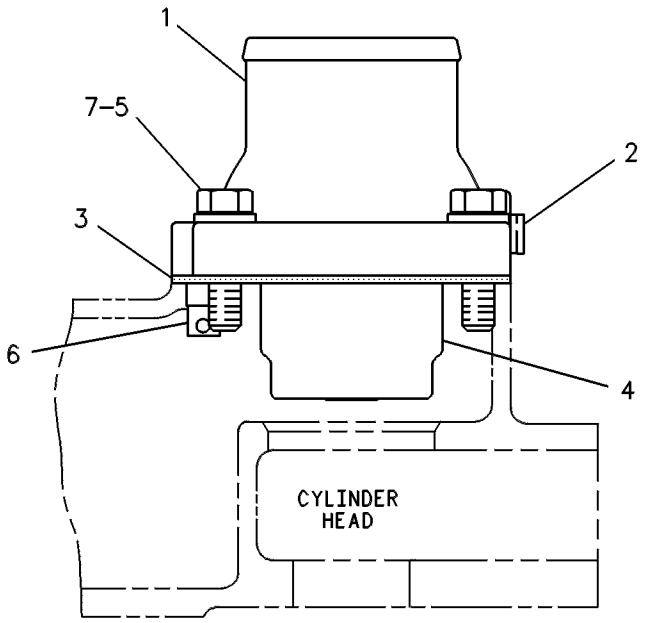

RIGHT SIDE VIEW

GRAPHIC #1 g00108750

AIR INLET AND EXHAUST SYSTEM

4W-9079 AIR CLEANER GP

S/N: 3XJ1-99999

PART OF 7C-5732 AIR CLEANER GP

SMCS-1051, 1054 **i00309071**

NOTE	REF NO	GRAPHIC REF	PART NUMBER	QTY	PART NAME 1 2 3 4 5 6 (PRODUCT LEVEL)	SEE PAGE
	1	1	**9M-3695**	2	ROD AS	
	2	1	**1S-4392**	1	CUP AS-AIR CLEANER	
		1	**9M-8513**	1	GASKET	
	3	1	**7W-5317**	1	ELEMENT AS-PRIMARY	
	4	1	**9S-9972**	1	ELEMENT-SECONDARY	

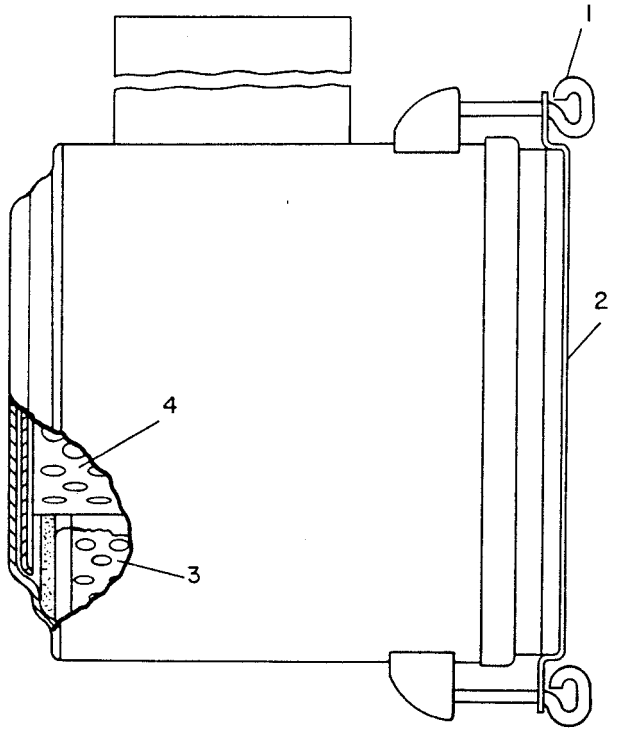

GRAPHIC #1 g00118554

AIR INLET AND EXHAUST SYSTEM

7C-5732 AIR CLEANER GP

S/N: 3XJ1-99999

SMCS-1051, 1054 **i00259882**

NOTE	REF NO	GRAPHIC REF	PART NUMBER	QTY	PART NAME 1 2 3 4 5 6 (PRODUCT LEVEL)	SEE PAGE
	1	1	**2K-4973**	8	LOCKNUT (3/8-16 THD)	
	2	1	**9S-1274**	1	GASKET	
	3	1	**1W-0613**	1	INDICATOR-AIR FILTER SERVICE	
	4	1	**6V-1813**	1	NIPPLE-CLOSE	
	5	1	**1T-0822**	2	BOLT-12 POINT HEAD (3/8-16X.75IN)	
		1	**8T-4896**	2	WASHER-HARD (2.5MM THK)	
	6	1	**4W-2275**	1	PRECLEANER AS	
		1	**4W-2238**	1	BODY AS-PRECLEANER	
	7	1	**4S-8472**	1	HOOD AS	
	8	1	**0S-1591**	1	BOLT (3/8-16X1.5IN)	
		1	**1D-4717**	1	NUT (3/8-16 THD)	
Y	9	1	**4W-9079**	1	AIR CLEANER GP	

Y-SEPARATE ILLUSTRATION

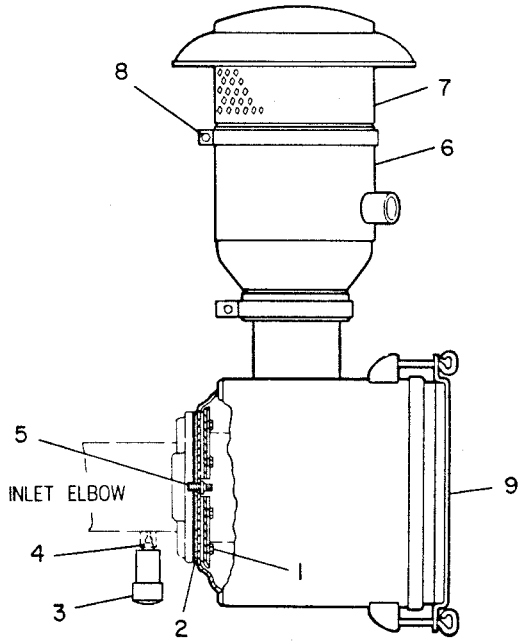

GRAPHIC #1 g00118553

AIR INLET AND EXHAUST SYSTEM

7C-7596 CARTRIDGE GP-TURBOCHARGER*R

S/N: 13Z22389-99999

PART OF 7C-7579 TURBOCHARGER GP

SMCS-1053 **i01022365**

NOTE	REF NO	GRAPHIC REF	PART NUMBER	QTY	PART NAME 1 2 3 4 5 6 (PRODUCT LEVEL)	SEE PAGE
	1	1	**4W-7342**	1	NUT	
	2	1	**4W-7350**	1	WHEEL-COMPRESSOR	
	3	1	**5S-4556**	1	INSERT	
	4	1	**5S-4546**	1	RING-RETAINING	
	5	1	**7C-7611**	1	HOUSING AS-BEARING	
		1	**5S-5199**	1	PIN-GROOVED	
	6	1	**5P-5757**	1	SEAL-O-RING	
	7	1	**4N-7597**	1	BEARING AS (THRUST)	
	8	1	**4W-7352**	1	SLEEVE-SPACER	
	9	1	**4W-7355**	1	PLATE-BACKING	
	10	1	**4W-7351**	1	WHEEL & SHAFT AS	
	11	1	**4W-7354**	1	RING-SEAL	
	12	1	**4W-7349**	1	SLEEVE-FLINGER	
	13	1	**4M-8013**	1	RING-PISTON	
	14	1	**4W-7346**	2	RING-THRUST	
	15	1	**5S-4549**	1	DEFLECTOR-OIL	
					AVAILABLE REPAIR KIT(S):	
			4W-7344	2	KIT-BEARING	

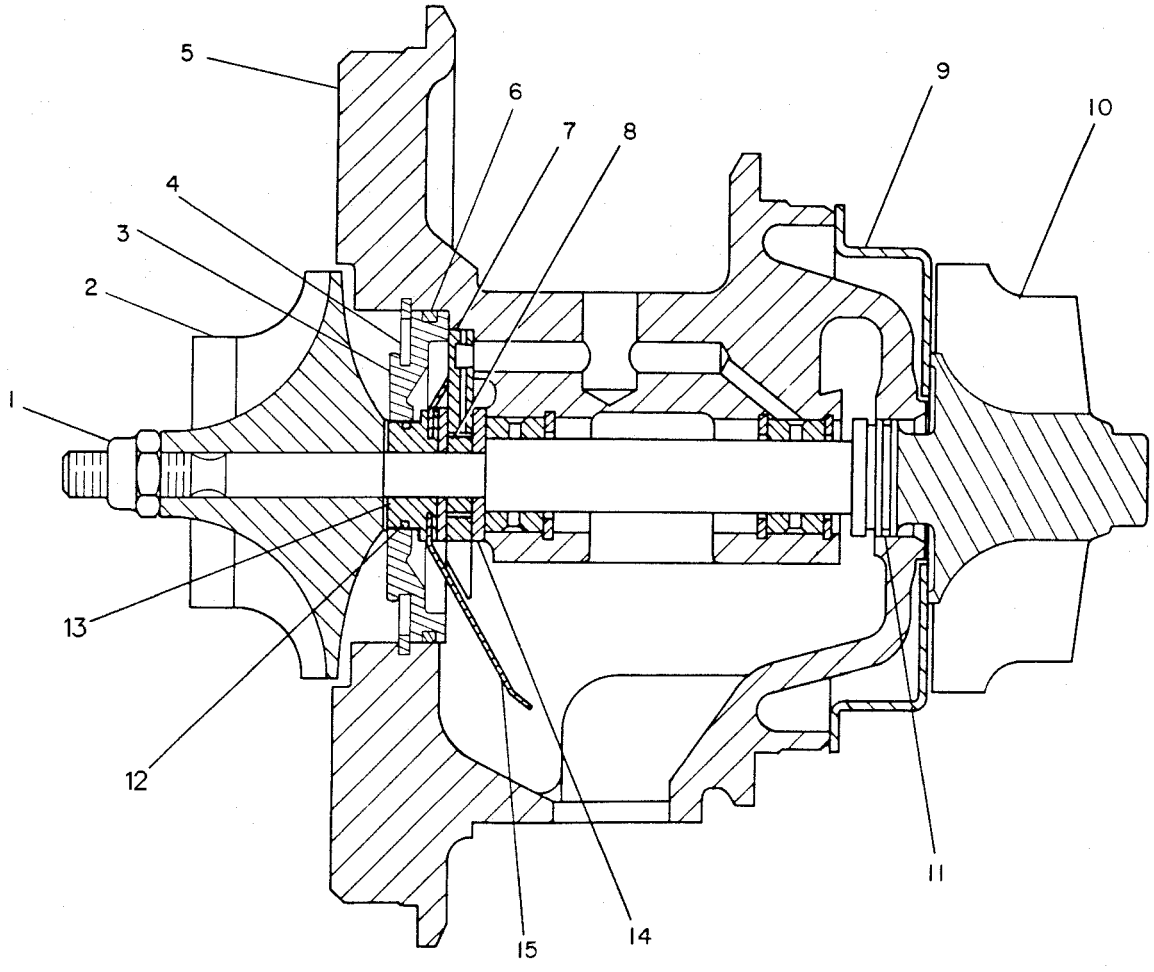

GRAPHIC #1 g00114460

AIR INLET AND EXHAUST SYSTEM

7E-4350 DUST EJECTOR GP

S/N: 3XJ1-99999

SMCS-1068 **i00259479**

NOTE	REF NO	GRAPHIC REF	PART NUMBER	QTY	PART NAME 1 2 3 4 5 6 (PRODUCT LEVEL)	SEE PAGE
	1	1	**7W-2230**	1	HOSE	
	2	1	**5P-0597**	2	CLAMP	
	3	1	**4P-6590**	1	TUBE AS	
	4	1	**7L-6326**	1	CLIP	
	5	1	**0S-1594**	2	BOLT (3/8-16X1IN)	

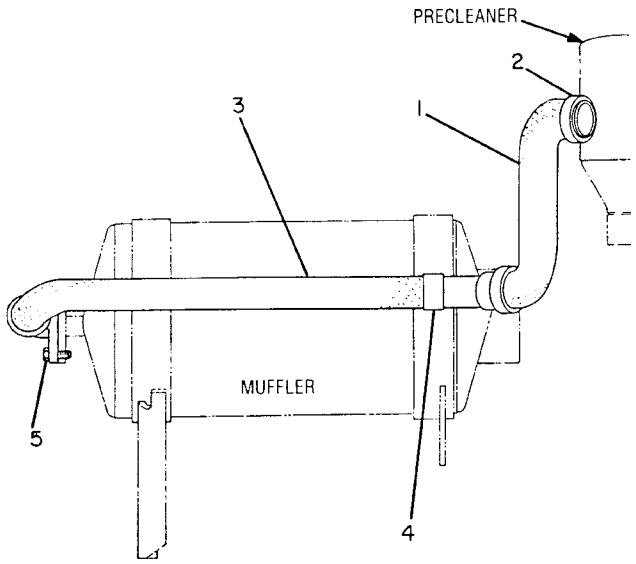

LEFT SIDE VIEW

GRAPHIC #1 g00118555

AIR INLET AND EXHAUST SYSTEM

8N-1868 FASTENER GP-EXHAUST MANIFOLD

S/N: 13Z22389-23654

PART OF 7E-0082 ENGINE AR

SMCS-1059 **i01022411**

NOTE	REF NO	GRAPHIC REF	PART NUMBER	QTY	PART NAME 1 2 3 4 5 6 (PRODUCT LEVEL)	SEE PAGE
	1	1	**2N-2766**	12	LOCKNUT (3/8-16 THD)	
	2	1	**2S-6160**	11	WASHER-HARD (5MM THK)	
C	3	1	**6V-1426**	9	STUD-TAPERLOCK	
	4	1	**6V-1427**	2	STUD-TAPERLOCK	
	5	1	**5M-2894**	2	WASHER (2.5MM THK)	
	6	1	**1M-7643**	1	SPACER	
	7	1	**6B-7469**	1	SPACER	
	8	1	**9L-1658**	1	STUD-TAPERLOCK	
	9	1	**134-0641**	1	WASHER-HARD	
C	10	1	**4P-3306**	1	SHIELD-HEAT	

C-CHANGE FROM PREVIOUS TYPE

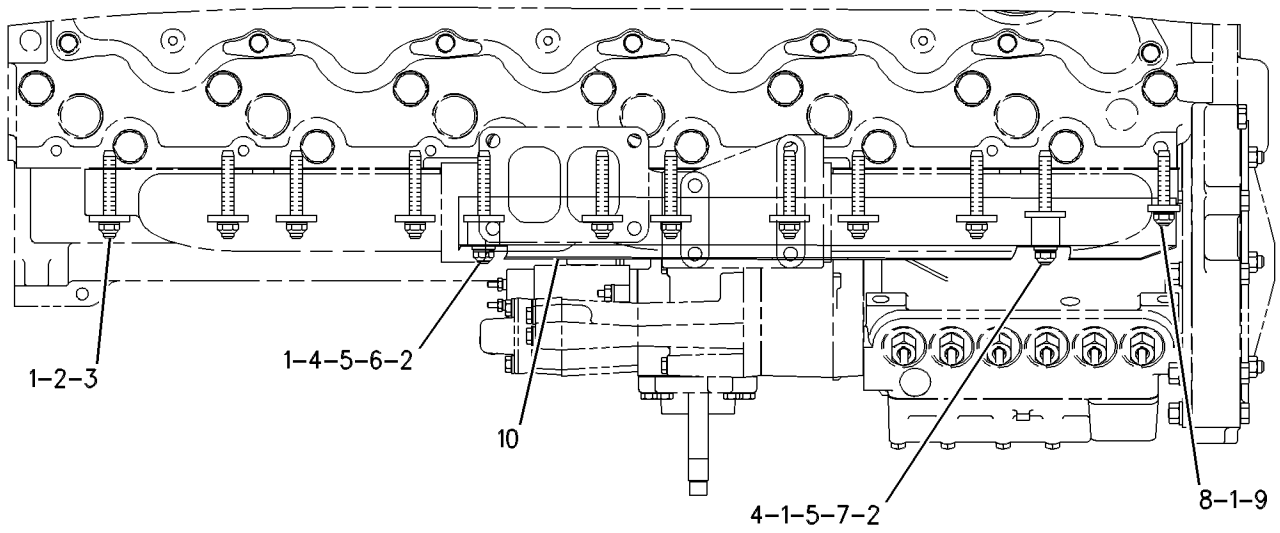

TOP VIEW

GRAPHIC #1 g00525723

AIR INLET AND EXHAUST SYSTEM

8N-1868 FASTENER GP-EXHAUST MANIFOLD

S/N: 13Z23655-99999

PART OF 7E-0082 ENGINE AR

SMCS-1059 **i00259580**

NOTE	REF NO	GRAPHIC REF	PART NUMBER	QTY	PART NAME 1 2 3 4 5 6 (PRODUCT LEVEL)	SEE PAGE
C	1	1	**4P-3306**	1	SHIELD-HEAT	
	2	1	**6V-1426**	9	STUD-TAPERLOCK	
	3	1	**6V-1427**	2	STUD-TAPERLOCK	
C	4	1	**6B-7469**	1	SPACER	
	5	1	**5M-2894**	2	WASHER (2.5MM THK)	
	6	1	**9M-6527**	1	WASHER-HARD (5.0MM THK)	
	7	1	**2N-2766**	12	LOCKNUT (3/8-16 NPTF THD)	
	8	1	**2S-6160**	11	WASHER-HARD (5MM THK)	
	9	1	**1M-7643**	1	SPACER	
	10	1	**106-1793**	1	STUD-TAPERLOCK	

C-CHANGE FROM PREVIOUS TYPE

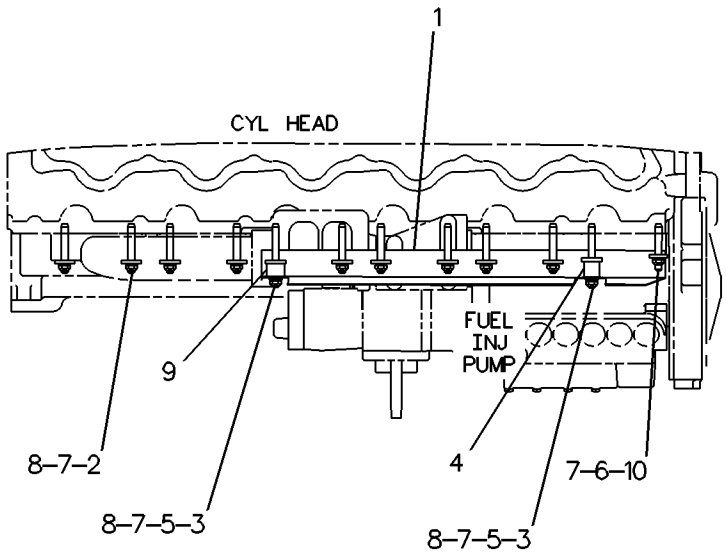

GRAPHIC #1 g00114198

MEMORANDA

AIR INLET AND EXHAUST SYSTEM

7E-3366 LINES GP-AIR

S/N: 13Z22389-28099
ENGINE
PART OF 7E-0082 ENGINE AR

SMCS-1071 **i00259387**

NOTE	REF NO	GRAPHIC REF	PART NUMBER	QTY	PART NAME 1 2 3 4 5 6 (PRODUCT LEVEL)	SEE PAGE
	1	1	**8N-8194**	1	ELBOW-AIR TRANSFER	
	2	1	**8N-8196**	1	ADAPTER-EXHAUST MANIFOLD	
	3	1	**1H-7666**	1	GASKET	
	4	1	**8L-6557**	1	CONNECTOR	
	5	1	**0S-1591**	2	BOLT (3/8-16X1.5IN)	
	6	1	**5S-6735**	1	GASKET	
	7	1	**4L-8337**	4	SEAL-O-RING (81MM ID)	
	8	1	**4W-0951**	1	COUPLER-O-RING (94MM OD)	
	9	1	**7E-3365**	1	ELBOW	
	10	1	**1A-2029**	6	BOLT (3/8-16X1.125IN)	
	11	1	**7L-3195**	4	BOLT (3/8-16X1-3/4)	
	12	1	**2N-2766**	4	LOCKNUT (3/8-16 NPTF THD)	
	13	1	**1S-4295**	1	GASKET-TURBOCHARGER	
	14	1	**6C-5501**	1	TUBE AS	
	15	1	**2B-2404**	2	CLIP (6.35MM ID)	
	16	1	**0S-1618**	2	BOLT (5/16X18X1IN)	
	17	1	**9M-1974**	2	WASHER-HARD (2MM THK)	
	18	1	**3J-7352**	1	CONNECTOR (7/16-20 STR THD)	
	19	1	**3J-7354**	1	SEAL-O-RING (8.92MM ID)	
	20	1	**6B-2882**	2	SPACER	

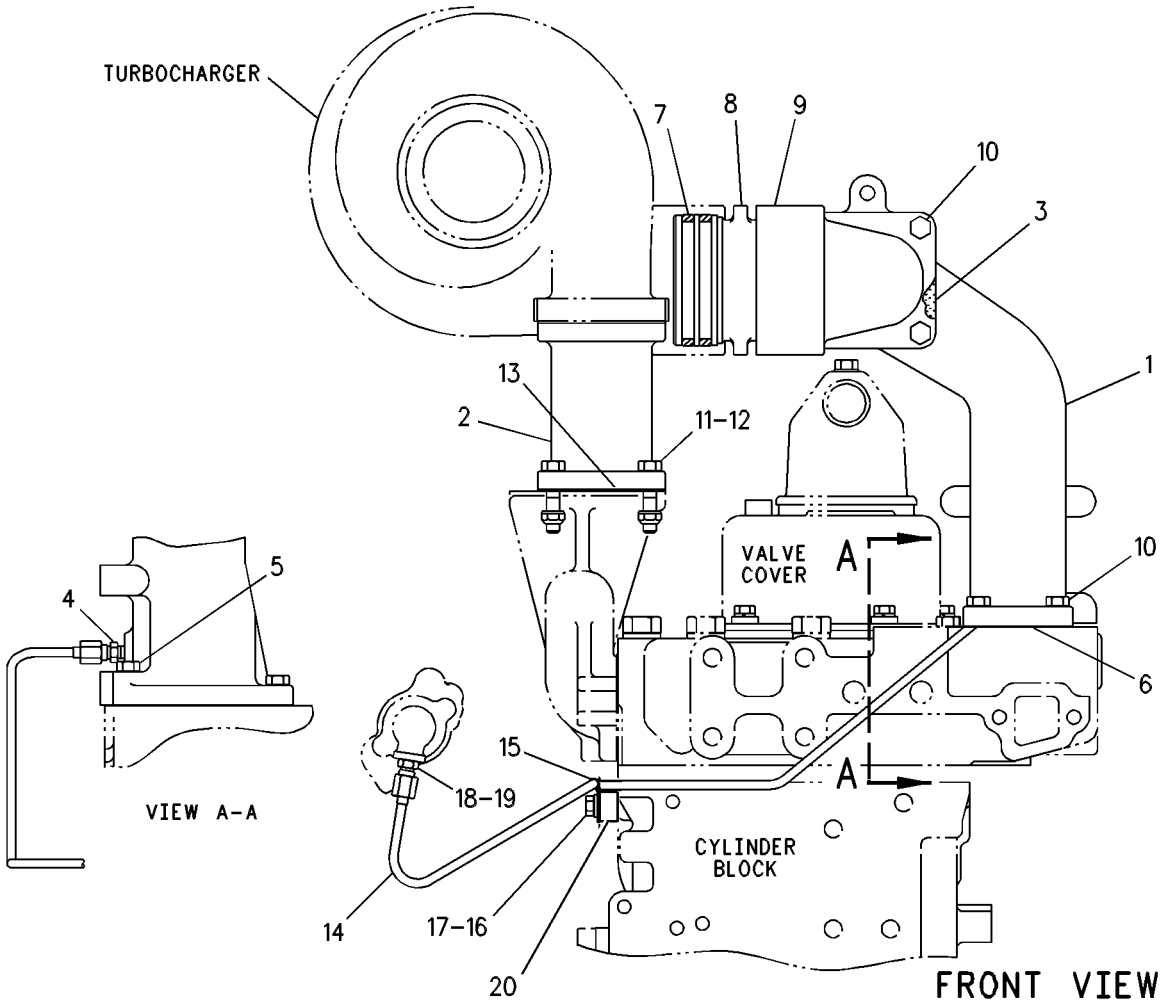

GRAPHIC #1

g00129684

AIR INLET AND EXHAUST SYSTEM

7E-3543 LINES GP-AIR

S/N: 3XJ1-99999

SMCS-1071 **i00259406**

NOTE	REF NO	GRAPHIC REF	PART NUMBER	QTY	PART NAME 1 2 3 4 5 6 (PRODUCT LEVEL)	SEE PAGE
	1	1	**8T-2502**	2	BOLT (3/8-16X1.13IN)	
	2	1	**8N-8261**	1	ELBOW AS	
		1	**7M-1674**	1	ELEMENT-FILTER	
	3	1	**9M-2151**	8	STUD-TAPERLOCK (3/8-16X1.38IN)	
	4	1	**7X-0293**	1	BOLT (3/8-16X4.75IN)	
	5	1	**5P-0598**	1	CLAMP	
BE	6	1	**7E-3558**	1	HOSE	
	7	1	**5L-8855**	1	RING-METAL SEAL	
	8	1	**6N-5978**	1	COUPLING-EXHAUST	
	9	1	**5L-8854**	1	RING-SEALING	
	10	1	**5P-0599**	1	CLAMP	

B-USE AS REQUIRED
E-ORDER BY THE CENTIMETER

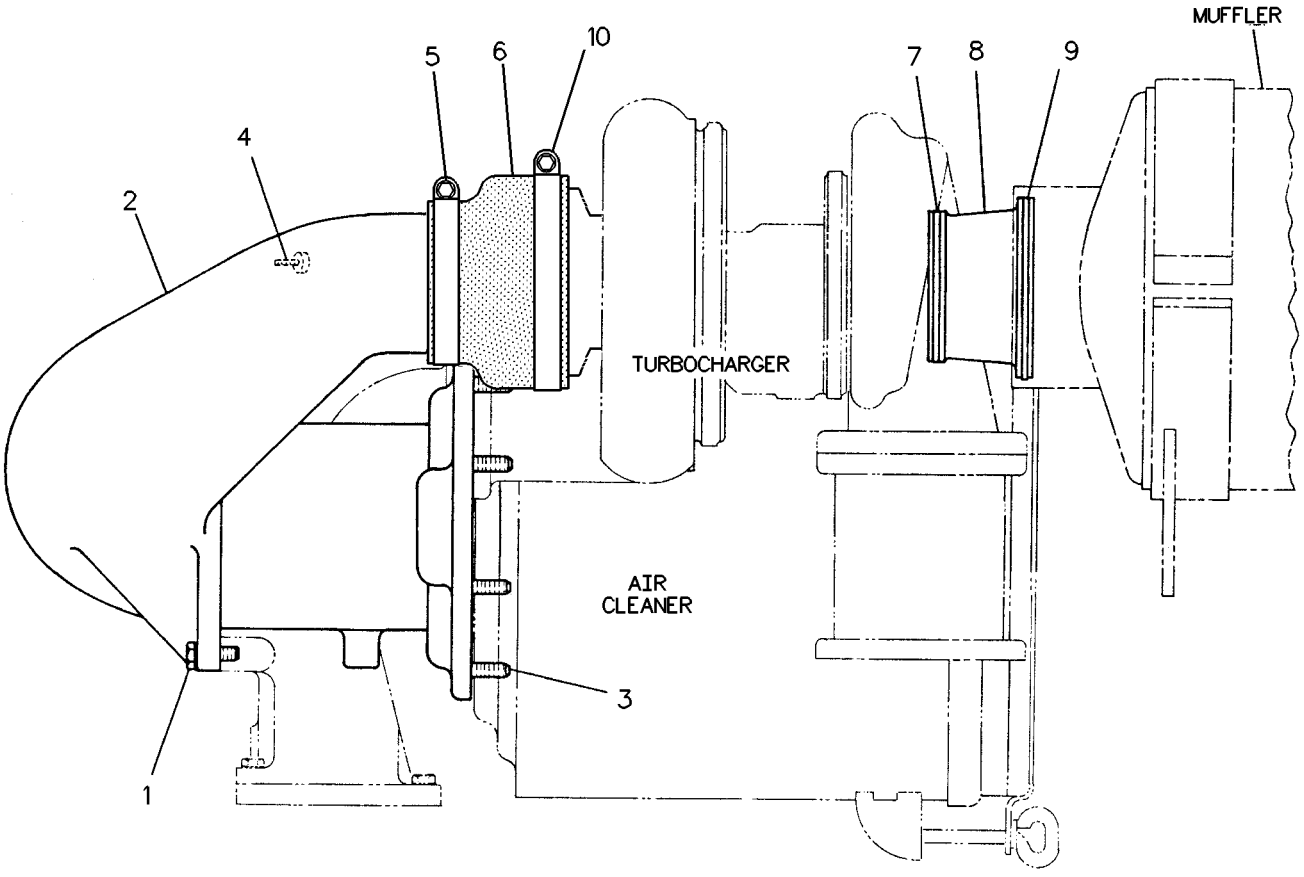

RIGHT SIDE VIEW

GRAPHIC #1 g00118763

AIR INLET AND EXHAUST SYSTEM

2P-6573 MANIFOLD GP-EXHAUST

S/N: 13Z22389-28099

PART OF 7E-0082 ENGINE AR

SMCS-1059 **i00259531**

NOTE	REF NO	GRAPHIC REF	PART NUMBER	QTY	PART NAME 1 2 3 4 5 6 (PRODUCT LEVEL)	SEE PAGE
	1	1	**9S-2354**	1	MANIFOLD-EXHAUST	
	2	1	**9Y-1979**	3	GASKET-MANIFOLD	

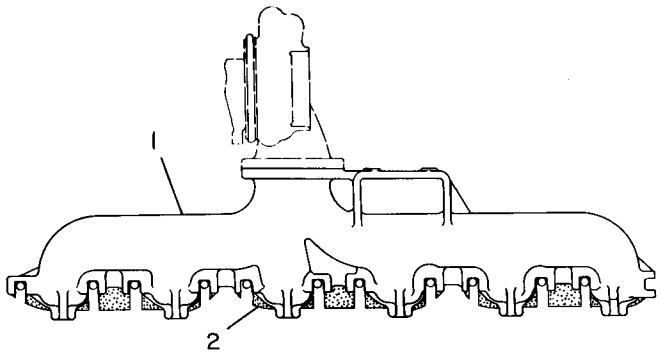

GRAPHIC #1 g00118665

AIR INLET AND EXHAUST SYSTEM

7E-3544 MUFFLER GP

S/N: 3XJ1-99999

SMCS-1062 **i00259439**

NOTE	REF NO	GRAPHIC REF	PART NUMBER	QTY	PART NAME 1 2 3 4 5 6 (PRODUCT LEVEL)	SEE PAGE
	1	1	**7E-3559**	1	MUFFLER AS	
	2	1	**7E-3693**	1	SUPPORT AS	
	3	1	**0S-1571**	3	BOLT (3/8-16X1.75IN)	
	4	1	**5M-2894**	21	WASHER (2.5MM THK)	
	5	1	**1B-5355**	12	NUT-FULL (3/8-16THD)	
	6	1	**4W-1665**	1	SUPPORT AS (REAR MUFFLER)	
	7	1	**3B-1915**	2	BOLT (3/8-16X1.375IN)	
	8	1	**0S-1590**	2	BOLT (3/8-16X2IN)	
	9	1	**1A-2029**	1	BOLT (3/8-16X1.125IN)	
	10	1	**4L-9337**	2	BOLT (3/8-16X1.50IN)	
	11	1	**4W-1667**	1	SUPPORT AS (FRONT MUFFLER)	
	12	1	**8T-8919**	4	BOLT (1/2-13X1.75IN)	
	13	1	**8T-4223**	4	WASHER-HARD (3MM THK)	
	14	1	**6V-8188**	4	NUT (1/2-13 THD)	
	15	1	**7N-2450**	2	STRAP-MUFFLER	
	16	1	**0L-2070**	4	BOLT (3/8-16X2.25IN)	
	17	1	**7E-1347**	1	SUPPORT-EXHAUST PIPE	
	18	1	**8S-6783**	1	CLAMP	
	19	1	**4P-5547**	1	PIPE AS	
	20	1	**2P-7806**	1	CLAMP	
	21	1	**8T-4896**	2	WASHER-HARD (2.5MM THK)	

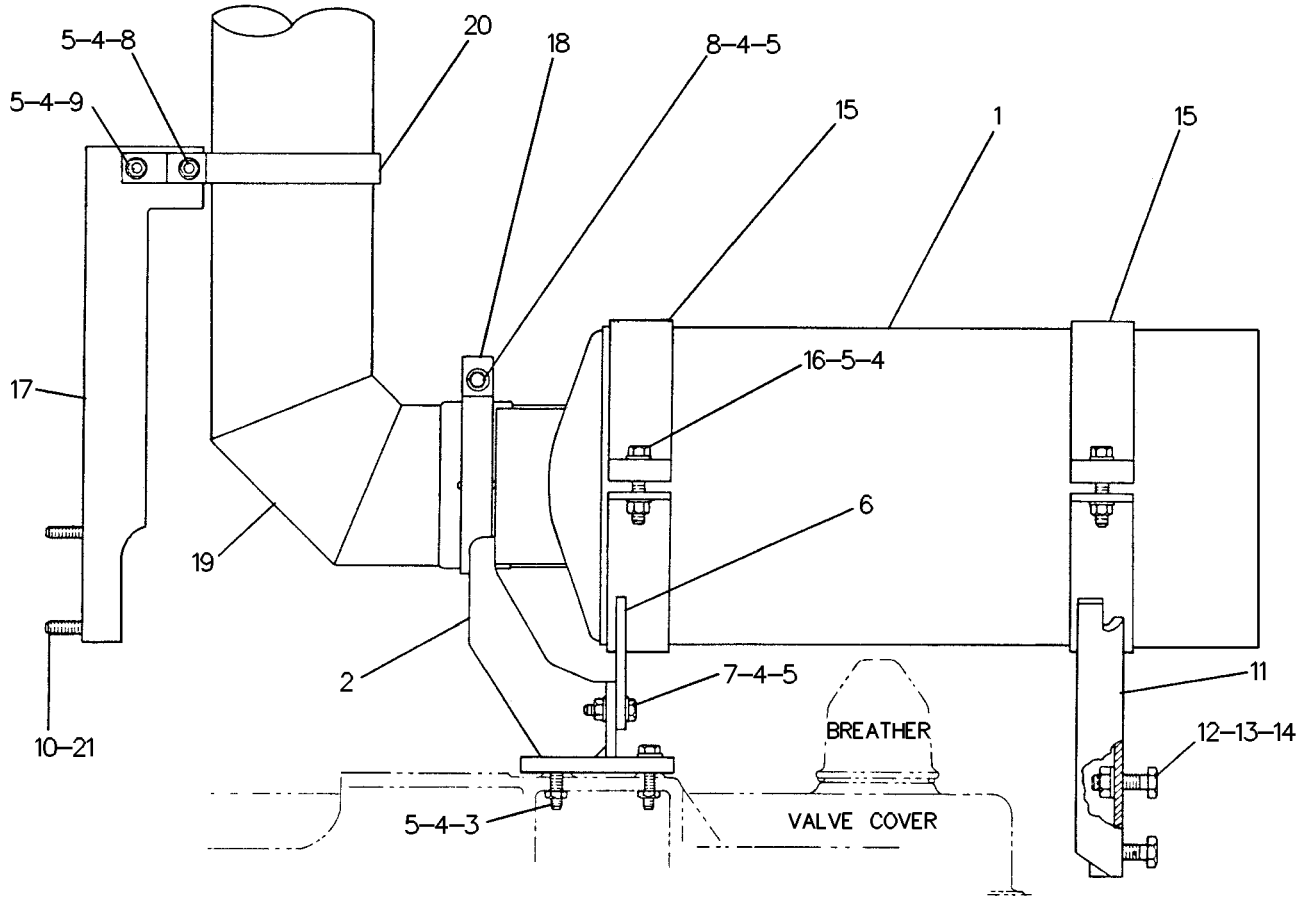

GRAPHIC #1

g00118764

AIR INLET AND EXHAUST SYSTEM

7C-7579 TURBOCHARGER GP*R

S/N: 13Z22389-99999

PART OF 7W-5785 TURBOCHARGER GP

SMCS-1052, 1053 **i01022366**

NOTE	REF NO	GRAPHIC REF	PART NUMBER	QTY	PART NAME 1 2 3 4 5 6 (PRODUCT LEVEL)	SEE PAGE
YR	1	1	**7C-7596**	1	CARTRIDGE GP-TURBOCHARGER	
	2	1	**4W-7353**	1	HOUSING-COMPRESSOR	
	3	1	**4W-7339**	1	HOUSING-TURBINE	
	4	1	**7W-7778**	1	CLAMP AS (COMPRESSOR)	
	5	1	**5S-4517**	1	CLAMP AS (HOUSING)	
					(EACH CLAMP AS INCLUDES)	
		1	**7M-9918**	1	LOCKNUT	

R-REMFG PART MAY BE AVAILABLE
Y-SEPARATE ILLUSTRATION

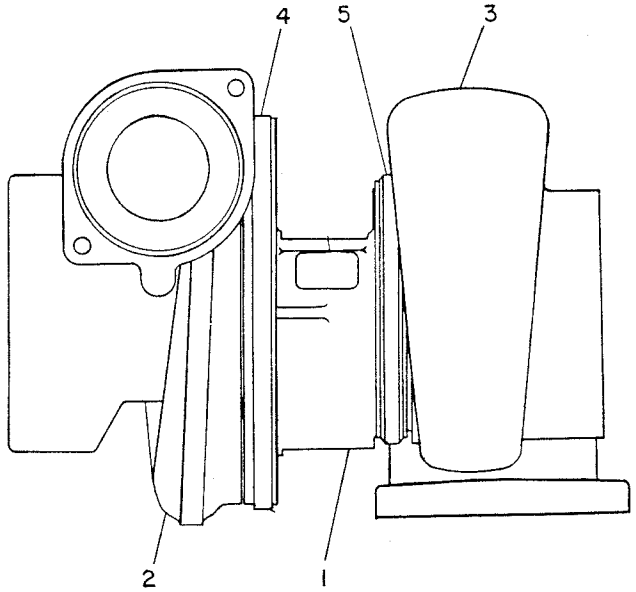

GRAPHIC #1 g00525025

AIR INLET AND EXHAUST SYSTEM

7W-5785 TURBOCHARGER GP

S/N: 13Z22389-28099

PART OF 7E-0082 ENGINE AR

SMCS-1052, 1053 **i00259724**

NOTE	REF NO	GRAPHIC REF	PART NUMBER	QTY	PART NAME 1 2 3 4 5 6 (PRODUCT LEVEL)	SEE PAGE
YR	1	1	**7C-7579**	1	TURBOCHARGER GP	
	2	1	**1S-4295**	1	GASKET-TURBOCHARGER	
	3	1	**7L-3195**	4	BOLT (3/8-16X1-3/4)	
	4	1	**2N-2766**	4	LOCKNUT (3/8-16 NPTF THD)	

R-REMFG PART MAY BE AVAILABLE
Y-SEPARATE ILLUSTRATION

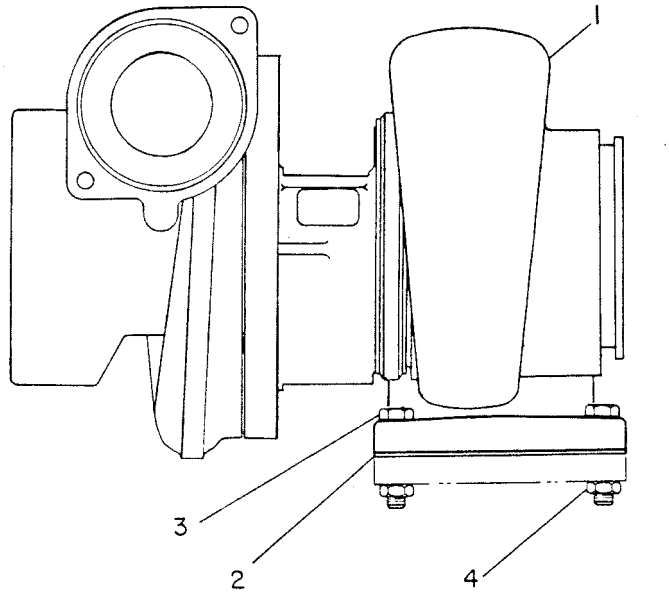

GRAPHIC #1 g00118513

2W-0255 CAMSHAFT AS

S/N: 13Z22389-99999

PART OF 2W-0256 PUMP GP-FUEL INJECTION

SMCS-1292 **i00259851**

NOTE	REF NO	GRAPHIC REF	PART NUMBER	QTY	PART NAME 1 2 3 4 5 6 (PRODUCT LEVEL)	SEE PAGE
	1	1	**8N-2510**	1	SHAFT-WEIGHT CARRIER	
	2	1	**7N-7264**	4	WEIGHT-GOVERNOR	
	3	1	**9Y-7037**	4	BOLT	
	4	1	**1S-5440**	4	DOWEL	
	5	1	**4N-9019**	1	DOWEL	
	6	1	**8N-2511**	1	CARRIER-WEIGHT	
	7	1	**2W-0254**	1	CAMSHAFT-FUEL PUMP	
	8	1	**7N-7166**	2	RACE-THRUST BEARING	
	9	1	**7L-3326**	1	BEARING-THRUST	
	10	1	**7N-7265**	1	SHIELD-WEIGHT CARRIER	

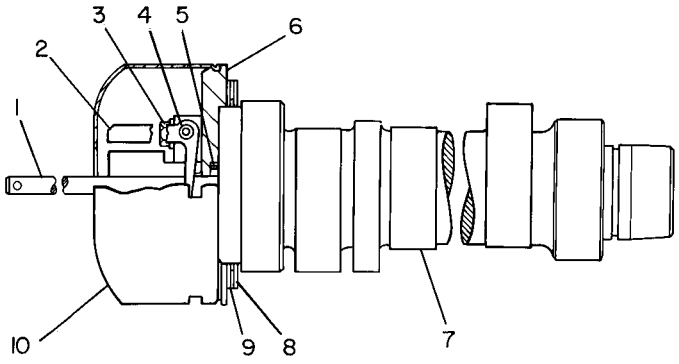

GRAPHIC #1 g00108352

5G-3612 CAP GP-PROTECTION

S/N: 3XJ1-99999
FUEL TANK
PART OF 8R-6167 LOCK GP-VANDALISM
AN ATTACHMENT

SMCS-7315 **i01217630**

NOTE	REF NO	GRAPHIC REF	PART NUMBER	QTY	PART NAME 1 2 3 4 5 6 (PRODUCT LEVEL)	SEE PAGE
	1	1	**5P-8502**	1	PADLOCK GP	
A		1	**5P-8500**	2	KEY	
A		1	**6V-5874**	1	COVER	
	2	1	**5S-7657**	1	FILTER-TANK CAP	
C	3	1	**7T-2037**	1	GASKET	
B	4	1	**4J-1105**	2	SHIM (0.79 MM THK)	
	5	1	**3B-4615**	2	PIN-COTTER	
	6	1	**5F-9144**	1	SEAL-O-RING (7.65MM ID)	
	7	1	**1P-8680**	1	CAP-FUEL TANK FILLER	
	8	1	**5S-7646**	1	LID-TANK CAP	
	9	1	**8P-0668**	1	COVER AS-TANK CAP	
	10	1	**8F-9538**	1	SEAL-O-RING	

A-NOT PART OF THIS GROUP
B-USE AS REQUIRED
C-CHANGE FROM PREVIOUS TYPE

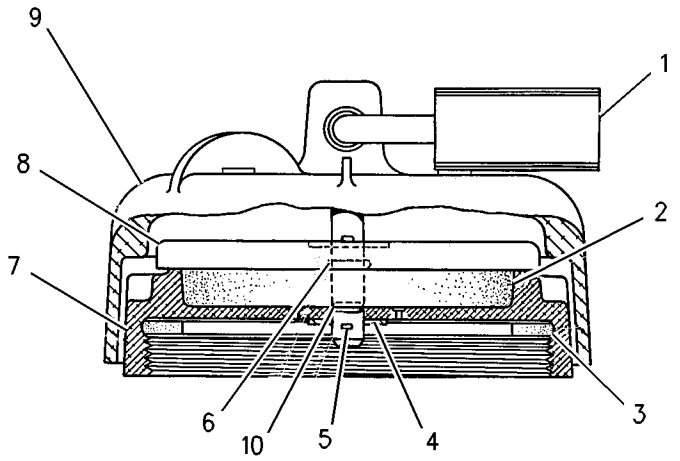

GRAPHIC #1 g00650802

4W-1339 CONTROL GP-FUEL RATIO

S/N: 13Z22389-28099

PART OF 7E-0082 ENGINE AR

SMCS-1278 **i00308684**

NOTE	REF NO	GRAPHIC REF	PART NUMBER	QTY	PART NAME 1 2 3 4 5 6 (PRODUCT LEVEL)	SEE PAGE
	1	1	**6V-5894**	2	BOLT	
	2	1	**5P-0537**	2	WASHER (2MM THK)	
CY	3	1	**7W-2830**	1	CONTROL GP-FUEL RATIO	
	4	1	**2D-6392**	1	SEAL-O-RING (6.07MM ID)	
	5	1	**8N-6680**	1	SCREEN AS	

C-CHANGE FROM PREVIOUS TYPE
Y-SEPARATE ILLUSTRATION

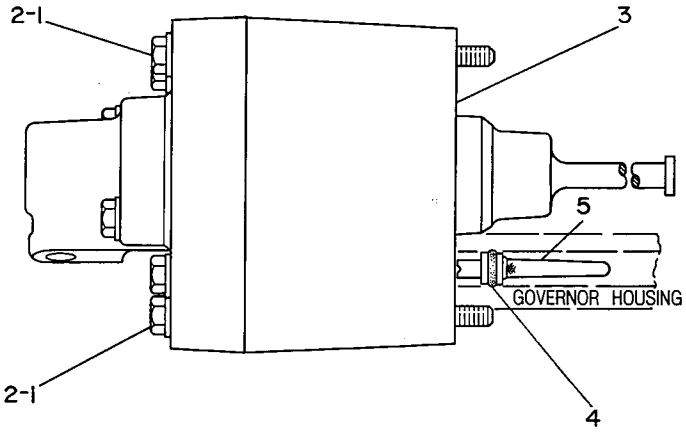

GRAPHIC #1 g00108227

MEMORANDA

7W-2830 CONTROL GP-FUEL RATIO

S/N: 13Z22389-99999

PART OF 4W-1339 CONTROL GP-FUEL RATIO

SMCS-1278 **i01217622**

NOTE	REF NO	GRAPHIC REF	PART NUMBER	QTY	PART NAME 1 2 3 4 5 6 (PRODUCT LEVEL)	SEE PAGE
	1	1	**9S-8748**	1	NUT-FULL (1/4-28 THD)	
	2	1	**2W-9315**	2	WASHER-SPRING	
	3	1	**4W-0924**	1	RETAINER	
	4	1	**5P-8210**	1	SEAL-O-RING (31.34MM ID)	
	5	1	**7W-2826**	1	SPRING	
	6	1	**4P-7275**	1	COVER	
	7	1	**106-6493**	1	WASHER (35MM OD)	
	8	1	**7N-9062**	1	HOUSING	
	9	1	**8N-5763**	1	SEAL	
	10	1	**8N-5764**	1	PISTON	
	11	1	**8F-4610**	1	RING-RETAINING	
	12	1	**2A-5546**	2	BOLT (1/4-20X1.375IN)	
	13	1	**5P-0537**	4	WASHER (2MM THK)	
	14	1	**5P-6945**	2	BOLT (1/4-20X1.25IN)	
	15	1	**4P-7274**	1	COVER	
	16	1	**2W-9316**	1	VALVE AS	
	17	1	**7N-9036**	1	VALVE-INTERNAL	
	18	1	**8N-5765**	1	SPRING	
	19	1	**7N-9035**	1	RETAINER	
	20	1	**7W-2015**	1	EXTENSION-VALVE	
	21	1	**7W-2827**	1	SPRING	
	22	1	**9N-1754**	1	SPRING	
	23	1	**151-4552**	1	DIAPHRAGM	
	24	1	**3E-6760**	1	SEAL-O-RING (7.65MM ID)	
	25	1	**115-3358**	1	WASHER (12.7MM OD)	

7W-2830 CONTROL GP-FUEL RATIO *(contd.)* i01217622

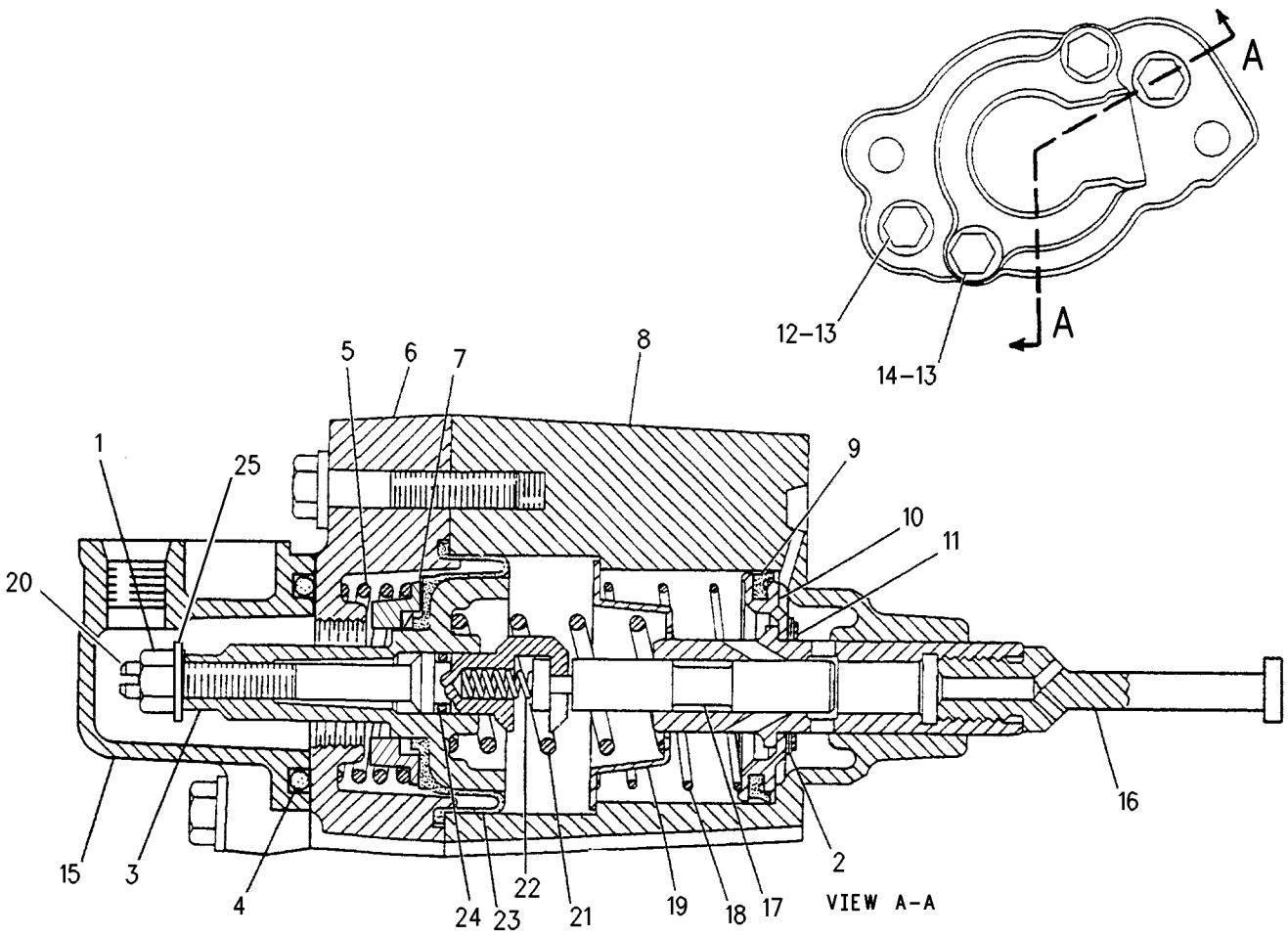

GRAPHIC #1 g00650794

7C-8993 FASTENER GP-FUEL INJ PUMP

S/N: 13Z22389-99999

PART OF 7E-5107 PUMP GP-GOV & FUEL INJ

SMCS-1251 **i01012737**

NOTE	REF NO	GRAPHIC REF	PART NUMBER	QTY	PART NAME 1 2 3 4 5 6 (PRODUCT LEVEL)	SEE PAGE
	1	1	**8B-2377**	4	BOLT (1/4-20X2IN)	
	2	1	**4N-1761**	4	BOLT (1/4-20X6.5IN)	
	3	1	**9S-4191**	1	PLUG-O-RING (9/16-18 THD)	
	4	1	**0S-1614**	3	BOLT (1/4X.50 IN)	
	5	1	**4F-7957**	8	BOLT (1/4-20X.875IN)	
	6	1	**2S-7383**	1	BOLT	
	7	1	**8F-8178**	2	BOLT (1/4-20X3.25IN)	
	8	1	**6B-4198**	2	BOLT (1/4-20X4.19IN)	

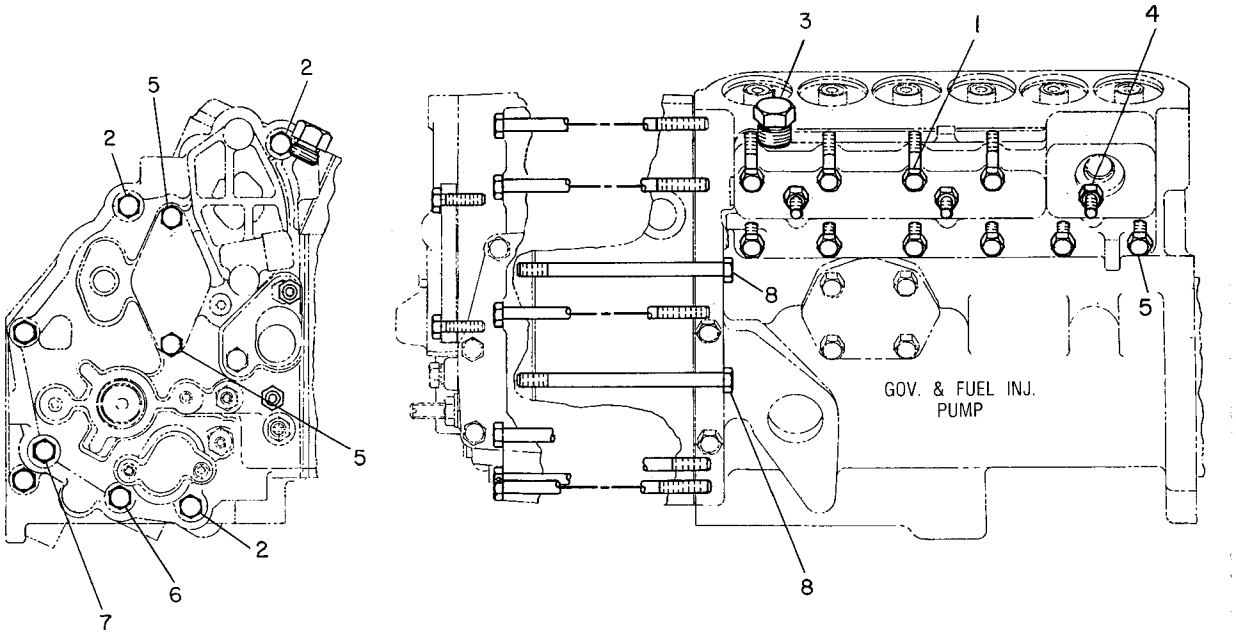

GRAPHIC #1 g00108338

FUEL SYSTEM

2W-1011 FILTER GP-SECONDARY FUEL

S/N: 13Z22389-28099
PART OF 7E-0082 ENGINE AR

SMCS-1261 **i00978161**

NOTE	REF NO	GRAPHIC REF	PART NUMBER	QTY	PART NAME 1 2 3 4 5 6 (PRODUCT LEVEL)	SEE PAGE
	1	1	**7N-9519**	1	BASE AS-FUEL FILTER	
	2	1	**5M-6214**	1	PLUG-PIPE (1/8-27 THD)	
	3	1	**9S-4167**	1	STUD-HOLLOW	
	4	1	**9S-4191**	1	PLUG-O-RING (9/16-18 THD)	
		1	**3J-1907**	1	SEAL-O-RING (11.89MM ID)	
C	5	1	**4W-9057**	1	TUBE AS (SECONDARY FUEL FILTER)	
	6	1	**030-7947**	2	ELBOW (9/16-18 STR THD)	
		1	**3J-1907**	2	SEAL-O-RING (11.89MM ID)	
	7	1	**6B-4198**	2	BOLT (1/4-20X4.19IN)	
		1	**5P-0537**	2	WASHER (2MM THK)	
	8	1	**7N-9520**	1	GASKET-FILTER BASE	
	9	1	**1R-0750**	1	FILTER AS-FUEL	

C-CHANGE FROM PREVIOUS TYPE

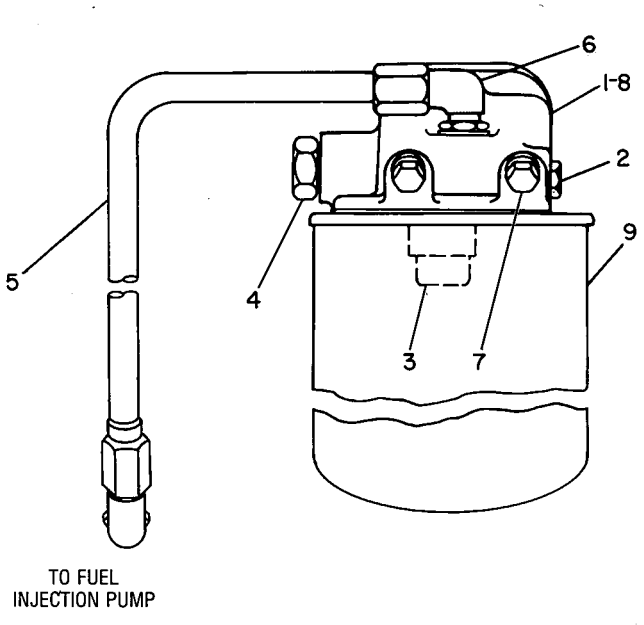

GRAPHIC #1 g00115911

FUEL SYSTEM

2W-2410 GOVERNOR GP

S/N: 13Z22389-99999

PART OF 7E-5107 PUMP GP-GOV & FUEL INJ

SMCS-1264 **i01090169**

NOTE	REF NO	GRAPHIC REF	PART NUMBER	QTY	PART NAME 1 2 3 4 5 6 (PRODUCT LEVEL)	SEE PAGE
C	1	1	**1W-6523**	1	PLUG-O-RING	
C	2	1	**8N-3259**	1	COVER-HIGH IDLE	
C		1	**6I-2003**	1	GASKET	
C	3	1	**7N-2594**	1	SETSCREW-SLOTTED	
C		1	**7N-8775**	1	NUT-HIGH IDLE	
C	4	1	**5P-6945**	2	BOLT (1/4-20X1.25IN)	
		1	**5P-0537**	2	WASHER (2MM THK)	
C	5	1	**3J-7354**	1	SEAL-O-RING (8.92MM ID)	
C	6	1	**4N-5485**	1	BODY-VALVE	
C		1	**5F-9144**	1	SEAL-O-RING (7.65MM ID)	
C	7	1	**4N-5484**	1	VALVE-NEEDLE	
C		1	**6H-9691**	1	SEAL-O-RING (2.9MM ID)	
C	8	1	**0S-1616**	6	BOLT (1/4-20X1 IN)	
C	9	1	**7N-8780**	1	COVER AS-CONTROL	
C	10	1	**138-9507**	1	SEAL-LIP TYPE	
C	11	1	**150-3728**	1	GASKET-GOVERNOR	
C	12	1	**3P-0009**	1	INSULATOR-STUD	
C	13	1	**1P-2497**	2	BOLT-HEAD	
		1	**8T-0328**	2	WASHER-HARD (1MM THK)	
C	14	1	**8N-3258**	1	COVER-LOAD STOP	
C		1	**6I-2004**	1	GASKET	
	15	1	**6D-3897**	1	BOLT	
	16	1	**6L-5897**	2	BOLT (1/4-20X7/8IN)	
	17	1	**2W-6104**	1	BLOCK AS-STOP	
		1	**2W-6103**	1	DOWEL	
	18	1	**1W-4243**	1	SPRING-BUMPER	
	19	1	**8N-2488**	1	BOLT-LOAD STOP	
	20	1	**8N-3256**	1	COLLAR-LOAD STOP	
	21	1	**8L-5832**	1	NUT-HEX (10-32 THD)	
	22	1	**9Y-4701**	1	SETSCREW-SOCKET (34.92MM LG)	
	23	2	**2P-9556**	1	WASHER	
	24	2	**1N-3800**	1	SLEEVE-RACK CONTROL	
	25	2	**6N-3504**	1	SEAT-GOVERNOR SPRING	
	26	2	**2W-2216**	1	SPRING-LINK	
	27	2	**2M-7819**	2	RING-RETAINING	
	28	2	**1N-3802**	1	SEAT-SPRING	
	29	2	**8N-2507**	1	PISTON AS-SERVO	
		2	**7C-0791**	1	CYLINDER AS	
	30	2	**8N-2505**	1	VALVE-GOVERNOR SERVO	
C	31	2	**7W-0250**	1	SLEEVE	
	32	2	**5P-9757**	1	SEAL-O-RING (18.77MM ID)	
	33	2	**031-0216**	3	BOLT (1/4-20X.75IN)	
	34	2	**4N-2953**	1	LOCKRING	
	35	2	**7E-4892**	2	RACE-THRUST BEARING	
	36	2	**7M-7219**	1	BEARING-THRUST	
	37	2	**4W-6868**	1	RISER-GOVERNOR	
	38	2	**2N-0828**	2	WASHER	
	39	2	**8N-2495**	1	HOUSING AS-GOVERNOR	
		2	**8S-6814**	4	PIN	
		2	**4F-6024**	2	PIN	
	40	2	**8N-2503**	1	DASHPOT AS-GOVERNOR	
		2	**7N-7268**	1	SEAT-SPRING	
	40A	2	**4N-6410**	1	SPRING-DASHPOT	
	41	2	**4N-6408**	1	PISTON AS	
	41A	2	**4N-6404**	1	RING-RETAINING	
	41B	2	**4N-6406**	1	RING-SPACER	

2W-2410 GOVERNOR GP *(contd.)*

i01090169

NOTE	REF NO	GRAPHIC REF	PART NUMBER	QTY	PART NAME 1 2 3 4 5 6 (PRODUCT LEVEL)	SEE PAGE
	41C	2	**4N-6407**	1	SPOOL-DASHPOT	
C	42	3	**7N-8785**	1	SHAFT-PIVOT	
C	43	3	**150-3730**	1	GASKET-GOVERNOR	
C	44	3	**7N-7270**	2	SLEEVE-SPRING	
C	45	3	**7N-8821**	3	RING-RETAINING	
C	46	3	**3K-5733**	1	SPRING	
C	47	3	**8N-2501**	1	HOUSING AS-GOVERNOR	
		3	**8N-3945**	1	BUSHING-TERMINAL	
		3	**7E-5346**	1	VALVE AS	
C	48	3	**8N-2499**	1	SPRING-GUIDE	
C	49	3	**3D-8317**	1	RING-RETAINING	
C	50	3	**4N-0260**	1	SEAL-LIP	
C	51	3	**2F-2290**	1	PLUG-CORE	
C	52	3	**2W-9305**	2	PLATE-THROTTLE	
C	53	3	**4N-0432**	1	BALL BEARING	
C	54	3	**7N-2594**	1	SETSCREW-SLOTTED	
C		3	**7W-4272**	1	NUT-SEALING	
C	55	3	**7N-2171**	4	RING-RETAINING	
C	56	3	**7N-2172**	2	PIN	
C	57	3	**8N-3087**	1	STOP-IDLE DETENT	
C	58	3	**2W-7400**	1	SPRING	
C	59	3	**2W-6102**	1	LEVER-SPRING SEAT	
C	60	3	**8N-3168**	1	LEVER-THROTTLE	

C-CHANGE FROM PREVIOUS TYPE

2W-2410 GOVERNOR GP *(contd.)* i01090169

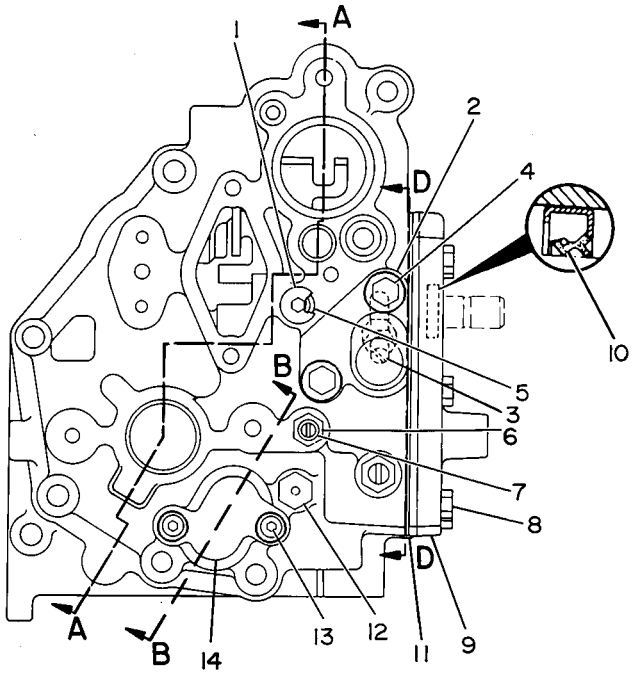

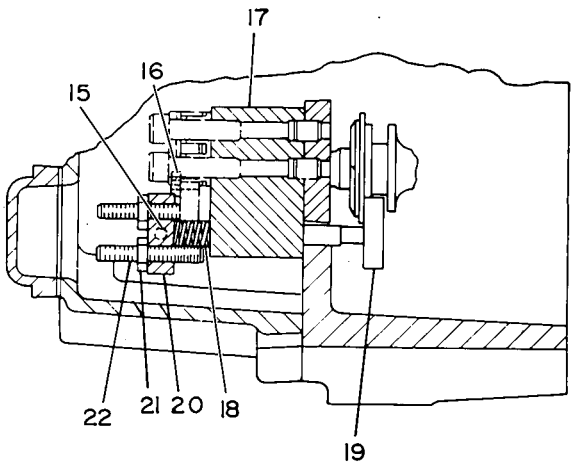

VIEW B-B

REFER TO ALL ILLUSTRATIONS OF THIS GROUP FOR AUXILIARY VIEWS

GRAPHIC #1 g00108435

2W-2410 GOVERNOR GP *(contd.)* **i01090169**

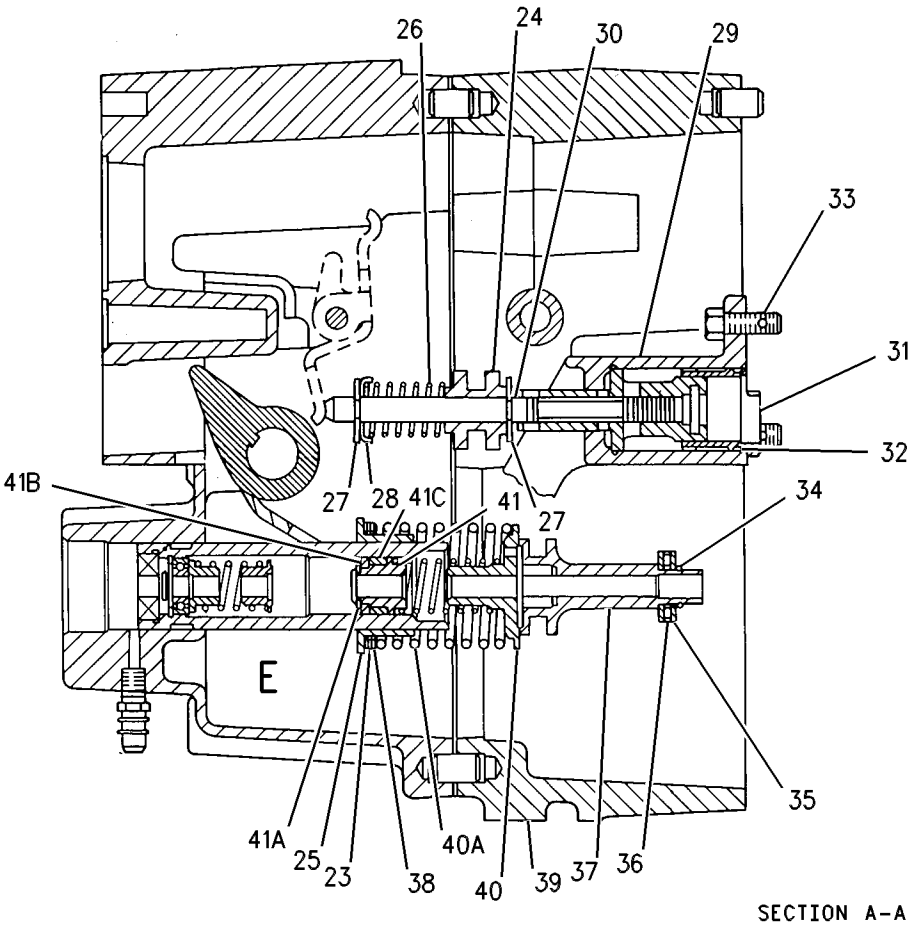

GRAPHIC #2 g00564633

2W-2410 GOVERNOR GP *(contd.)* **i01090169**

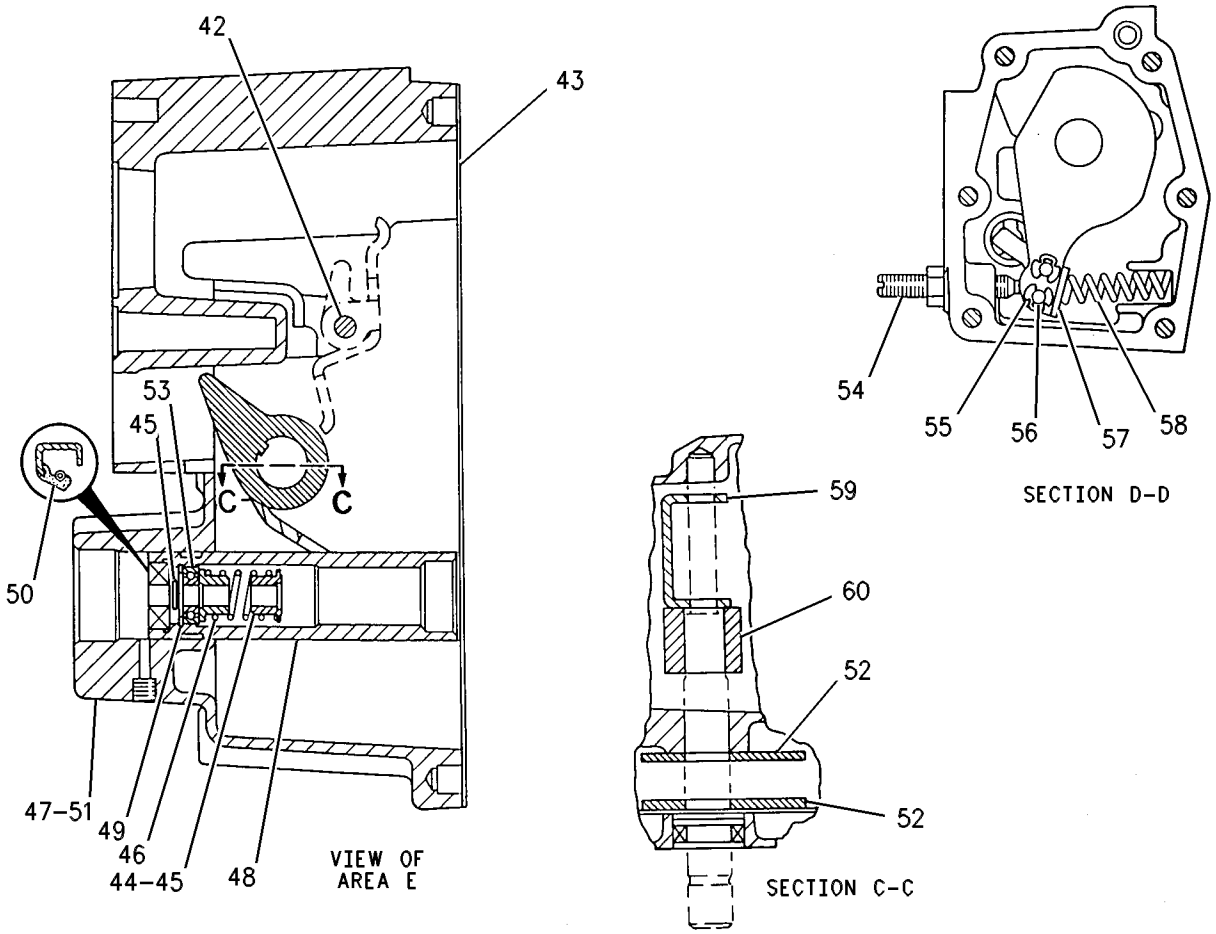

GRAPHIC #3 g00353652

1W-3487 HOUSING GP-FUEL PUMP

S/N: 13Z22389-99999

PART OF 2W-0256 PUMP GP-FUEL INJECTION

SMCS-1253 **i00259270**

NOTE	REF NO	GRAPHIC REF	PART NUMBER	QTY	PART NAME 1 2 3 4 5 6 (PRODUCT LEVEL)	SEE PAGE
	1	1	**8N-2518**	1	BEARING-SLEEVE	
	2	1	**1S-1953**	1	BEARING-RACK	
	3	1	**7N-7969**	6	DOWEL	
	4	1	**1W-3285**	1	BEARING-RACK	
	5	1	**4P-8480**	6	PIN-PUMP GUIDE	
	6	1	**7N-7970**	1	BEARING-SLEEVE	

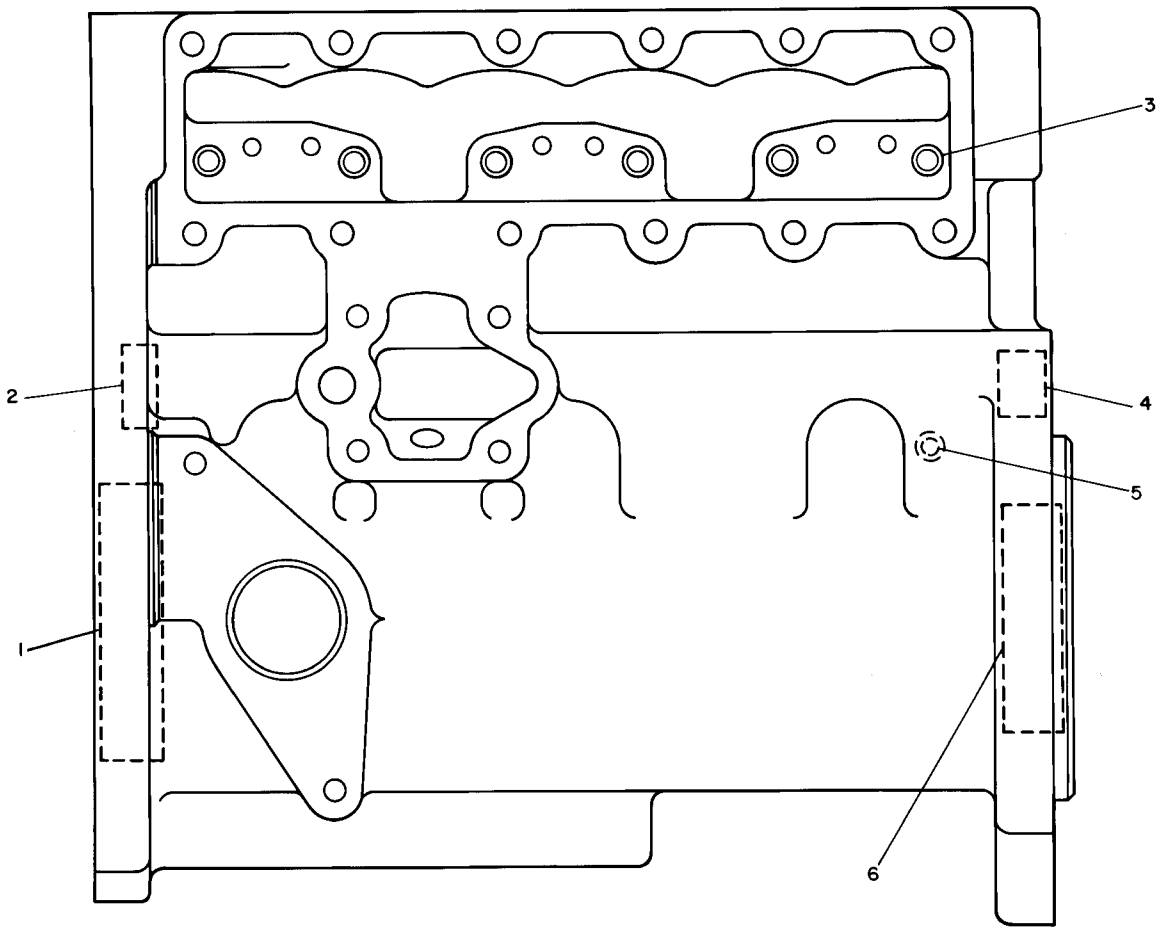

GRAPHIC #1 g00114014

FUEL SYSTEM

2V-4232 LINES GP-FUEL

S/N: 3XJ1-99999

SMCS-1274 **i00259616**

NOTE	REF NO	GRAPHIC REF	PART NUMBER	QTY	PART NAME 1 2 3 4 5 6 (PRODUCT LEVEL)	SEE PAGE
I	1	1	**4V-7700**	1	HOSE AS	
	2	1	**4V-7698**	1	TUBE AS	
	3	1	**2P-0449**	2	CLIP (9.52MM ID)	
	4	1	**3L-2875**	1	CLIP (6.35MM ID)	
	5	1	**005-4362**	1	ELBOW	
		1	**3K-0360**	1	SEAL-O-RING (16.36MM ID)	
	6	1	**9V-8011**	1	TUBE AS	
C	7	1	**3J-7352**	2	CONNECTOR (7/16-20 STR THD)	
C		1	**3J-7354**	2	SEAL-O-RING (8.92MM ID)	
	8	1	**4K-8179**	2	CLIP (6.35MM ID)	
	9	1	**3J-7355**	1	UNION-FLARED	
	10	1	**4V-7697**	1	TUBE AS	
I	11	1	**4V-7699**	1	HOSE AS	
		1	**2R-6806**	1	CONNECTOR (9/16-18 STR THD)	
C		1	**3J-1907**	1	SEAL-O-RING (11.89MM ID)	
	12	1	**9U-0421**	2	BRACKET	
	13	1	**5S-7379**	2	BOLT (3/8-16X.875IN)	
		1	**6V-8801**	2	NUT (3/8-16 THD)	
		1	**8T-4896**	2	WASHER-HARD (2.5MM THK)	
	14	1	**2B-2404**	2	CLIP (6.35MM ID)	
	15	1	**7H-7055**	2	CLIP (9.52MM ID)	

C-CHANGE FROM PREVIOUS TYPE
I-SEE HOSE FABRICATION GUIDE

2V-4232 **LINES GP-FUEL** *(contd.)* **i00259616**

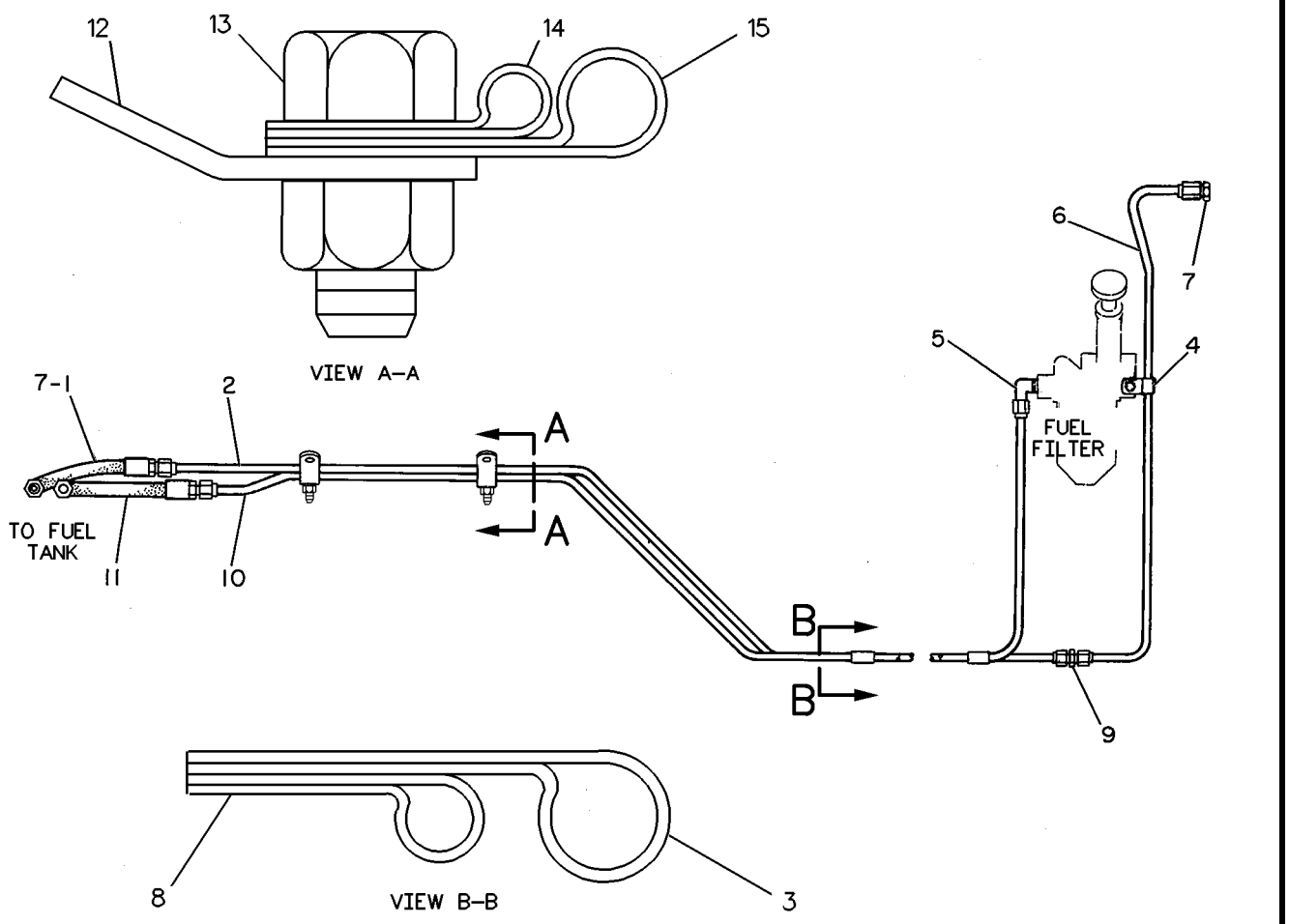

GRAPHIC #1 g00127719

FUEL SYSTEM

2W-1605 LINES GP-FUEL DRAIN

S/N: 13Z22389-28099

PART OF 7E-0082 ENGINE AR

SMCS-1274 **i01217414**

NOTE	REF NO	GRAPHIC REF	PART NUMBER	QTY	PART NAME 1 2 3 4 5 6 (PRODUCT LEVEL)	SEE PAGE
	1	1	**1W-6629**	1	TUBE AS-FUEL FILTER	
	2	1	**4W-7629**	1	COVER	
	3	1	**4M-8303**	1	SEAL-O-RING (20.29MM ID)	
	4	1	**5P-0537**	2	WASHER (2MM THK)	
	5	1	**0S-1615**	2	BOLT (1/4-20X.75 IN)	
	6	1	**030-7946**	1	ELBOW (7/16-20 STR THD)	
	7	1	**3J-1907**	1	SEAL-O-RING (11.89MM ID)	
	8	1	**3J-7354**	1	SEAL-O-RING (8.92MM ID)	
	9	1	**030-7947**	1	ELBOW (9/16-18 STR THD)	

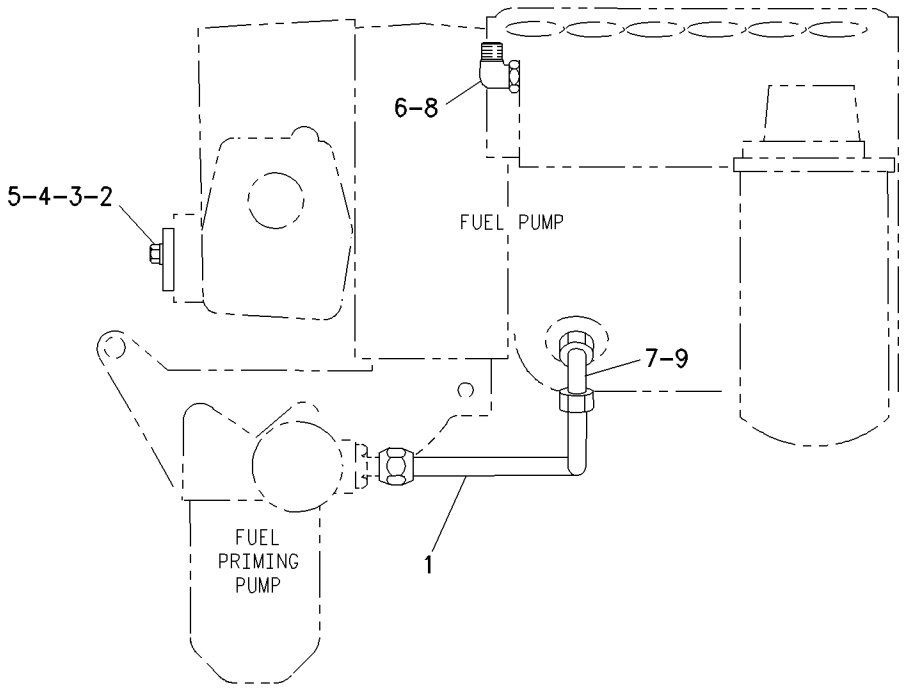

GRAPHIC #1 g00650738

FUEL SYSTEM

4P-1892 LINES GP-FUEL INJECTION

S/N: 13Z25278-26454

PART OF 9Y-7563 LINES GP-FUEL INJECTION

SMCS-1252, 1254 **i00259448**

NOTE	REF NO	GRAPHIC REF	PART NUMBER	QTY	PART NAME 1 2 3 4 5 6 (PRODUCT LEVEL)	SEE PAGE
	1	1	**4P-1831**	1	LINE AS-FUEL INJ	
	2	1	**4P-1832**	1	LINE AS-FUEL INJ	
	3	1	**4P-1833**	1	LINE AS-FUEL INJ	
	4	1	**4P-1834**	1	LINE AS-FUEL INJ	
	5	1	**1W-9169**	10	CLAMP (TAPPED)	
	6	1	**1W-9168**	7	CLAMP (UNTAPPED) ( )	
	7	1	**5P-4939**	7	SCREW AS-MACHINE	
	8	1	**9N-3388**	3	LOCKSCREW	
	9	1	**1W-9167**	3	CLAMP AS-FUEL LINE (W/SPACER)	
	10	1	**7C-7614**	1	BRACKET AS	
	11	1	**9Y-7524**	1	PLATE	
	12	1	**4B-4274**	2	WASHER (1.2MM THK)	

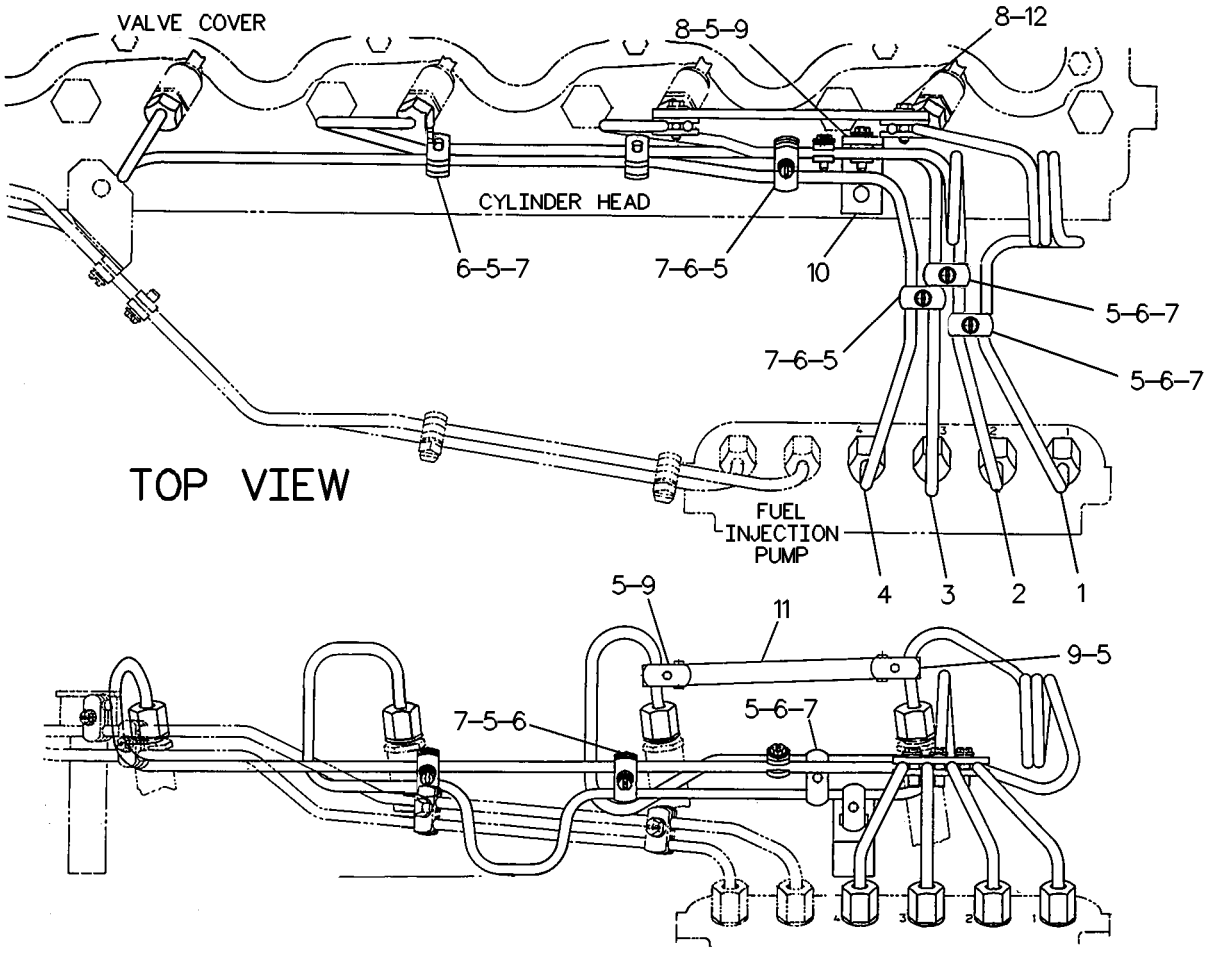

GRAPHIC #1 g00114292

4P-4195 LINES GP-FUEL INJECTION

S/N: 13Z22916-26025

PART OF 9Y-7563 LINES GP-FUEL INJECTION

SMCS-1252, 1254 **i00286560**

NOTE	REF NO	GRAPHIC REF	PART NUMBER	QTY	PART NAME 1 2 3 4 5 6 (PRODUCT LEVEL)	SEE PAGE
	1	1	**7C-5555**	1	LINE AS-FUEL INJ	
	2	1	**4P-1376**	1	LINE AS-FUEL INJ	
	3	1	**2W-0745**	1	BRACKET AS	
	4	1	**1W-9169**	3	CLAMP (TAPPED)	
	5	1	**1W-9168**	4	CLAMP (UNTAPPED)	
	6	1	**5P-4939**	3	SCREW AS-MACHINE	
	7	1	**9N-3388**	1	LOCKSCREW	
	8	1	**1W-9167**	1	CLAMP AS-FUEL LINE (W/SPACER)	

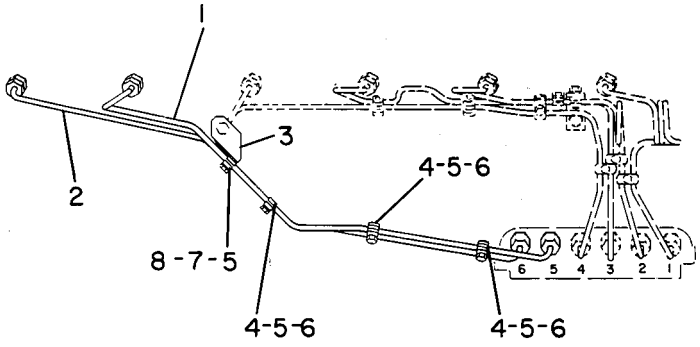

GRAPHIC #1 g00113297

FUEL SYSTEM

4P-9330 LINES GP-FUEL INJECTION

S/N: 13Z26455-99999
PART OF 9Y-7563 LINES GP-FUEL INJECTION
TYPE 1

SMCS-1252, 1254 **i00286579**

NOTE	REF NO	GRAPHIC REF	PART NUMBER	QTY	PART NAME 1 2 3 4 5 6 (PRODUCT LEVEL)	SEE PAGE
	1	1	**4P-9381**	1	LINE AS-FUEL INJ	
	2	1	**4P-9382**	1	LINE AS-FUEL INJ	
C	3	1	**104-4253**	1	LINE AS-FUEL INJ	
C	4	1	**104-4254**	1	LINE AS-FUEL INJ	
	5	1	**1W-9169**	9	CLAMP (TAPPED)	
	6	1	**1W-9168**	7	CLAMP (UNTAPPED)	
	7	1	**5P-4939**	6	SCREW AS-MACHINE	
	8	1	**9N-3388**	3	LOCKSCREW	
C	9	1	**1W-9167**	2	CLAMP AS-FUEL LINE (W/SPACER)	
	10	1	**7C-7614**	1	BRACKET AS	
	11	1	**4B-4274**	3	WASHER (1.2MM THK)	
	12	1	**9Y-7524**	1	PLATE	

C-CHANGE FROM PREVIOUS TYPE

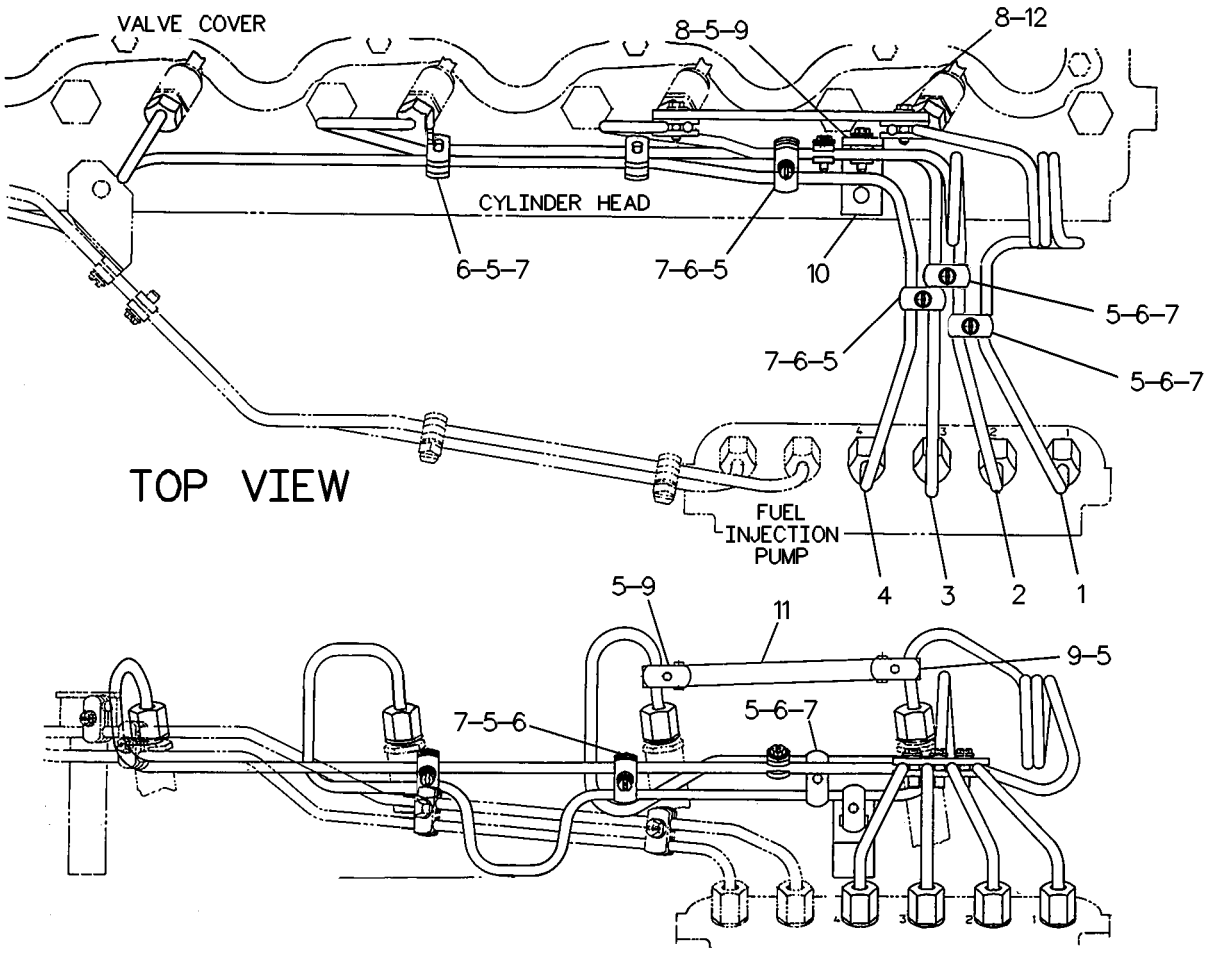

GRAPHIC #1 g00114292

4P-9330 LINES GP-FUEL INJECTION

S/N: 13Z26455-99999

PART OF 9Y-7563 LINES GP-FUEL INJECTION

TYPE 2

SMCS-1252, 1254 **i00311047**

NOTE	REF NO	GRAPHIC REF	PART NUMBER	QTY	PART NAME 1 2 3 4 5 6 (PRODUCT LEVEL)	SEE PAGE
	1	1	**4P-9381**	1	LINE AS-FUEL INJ	
	2	1	**4P-9382**	1	LINE AS-FUEL INJ	
C	3	1	**104-4253**	1	LINE AS-FUEL INJ	
C	4	1	**104-4254**	1	LINE AS-FUEL INJ	
	5	1	**1W-9169**	9	CLAMP (TAPPED)	
	6	1	**1W-9168**	7	CLAMP (UNTAPPED)	
	7	1	**5P-4939**	6	SCREW AS-MACHINE	
	8	1	**9N-3388**	3	LOCKSCREW	
C	9	1	**1W-9167**	2	CLAMP AS-FUEL LINE (W/SPACER)	
	10	1	**7C-7614**	1	BRACKET AS	
	11	1	**4B-4274**	3	WASHER (1.2MM THK)	
	12	1	**9Y-7524**	1	PLATE	

C-CHANGE FROM PREVIOUS TYPE

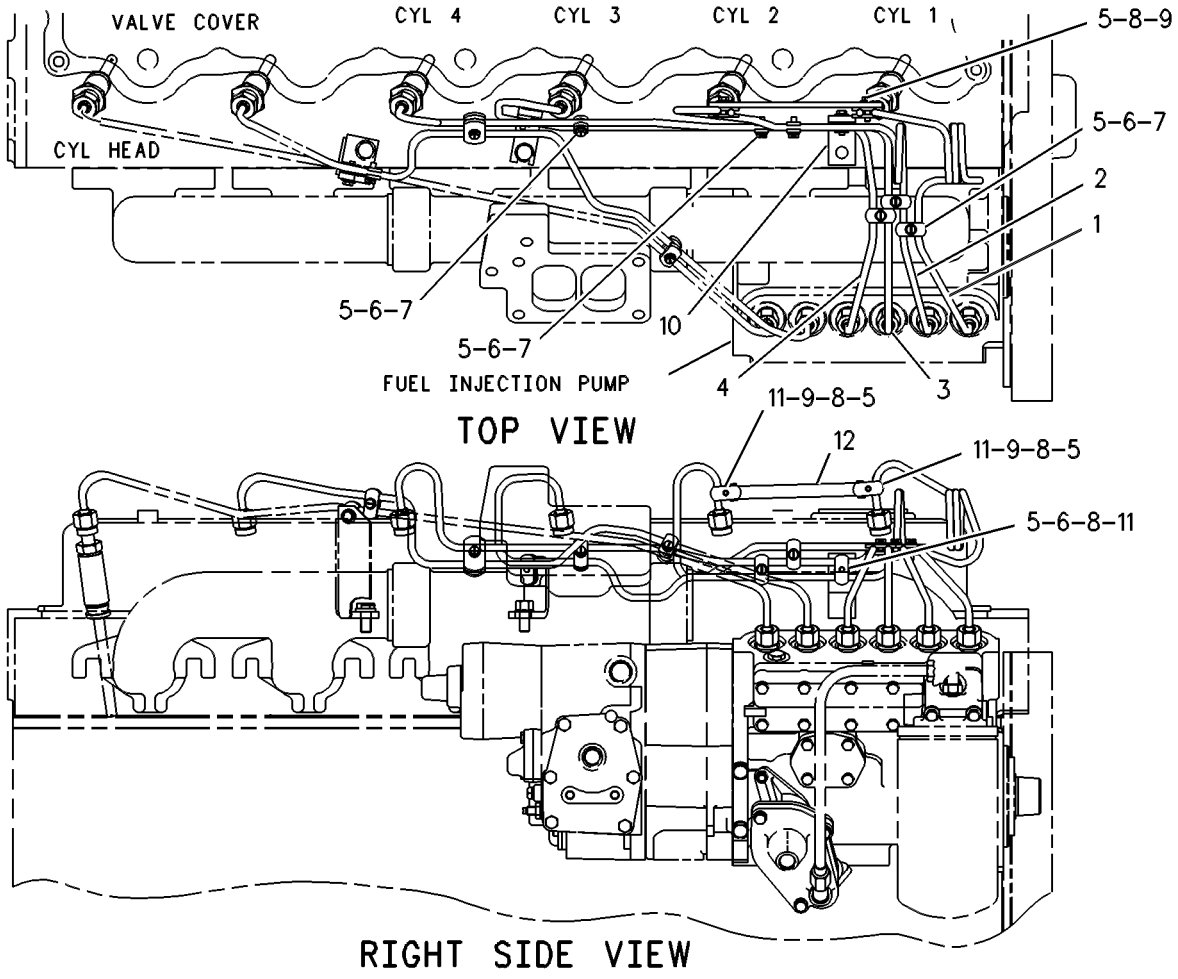

GRAPHIC #1 g00109537

4P-9331 LINES GP-FUEL INJECTION

S/N: 13Z26026-99999

PART OF 9Y-7563 LINES GP-FUEL INJECTION

SMCS-1252, 1254 **i00758118**

NOTE	REF NO	GRAPHIC REF	PART NUMBER	QTY	PART NAME 1 2 3 4 5 6 (PRODUCT LEVEL)	SEE PAGE
	1	1	**4P-9385**	1	LINE AS-FUEL INJ	
	2	1	**4P-9386**	1	LINE AS-FUEL INJ	
	3	1	**122-9405**	1	BRACKET AS	
	4	1	**1W-9169**	2	CLAMP (TAPPED)	
	5	1	**1W-9168**	4	CLAMP (UNTAPPED)	
	6	1	**5P-4939**	2	SCREW-MACHINE	
	7	1	**9N-3388**	1	LOCKSCREW	

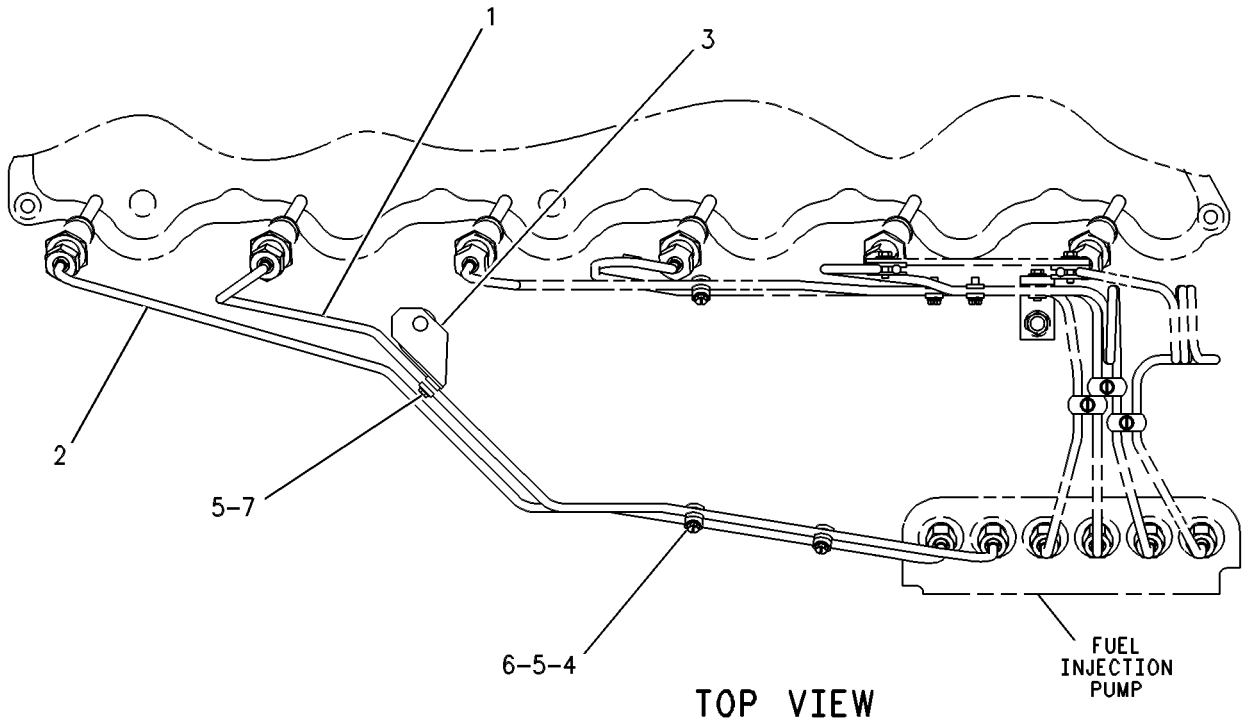

GRAPHIC #1 g00323282

7C-5551 LINES GP-FUEL INJECTION

S/N: 13Z22389-22915

PART OF 9Y-7563 LINES GP-FUEL INJECTION

SMCS-1252, 1254 **i00259879**

NOTE	REF NO	GRAPHIC REF	PART NUMBER	QTY	PART NAME 1 2 3 4 5 6 (PRODUCT LEVEL)	SEE PAGE
	1	1	**7C-5555**	1	LINE AS-FUEL INJ	
	2	1	**7C-5556**	1	LINE AS-FUEL INJ	
	3	1	**2W-0745**	1	BRACKET AS	
	4	1	**1W-9169**	3	CLAMP (TAPPED)	
	5	1	**1W-9168**	4	CLAMP (UNTAPPED)	
	6	1	**5P-4939**	3	SCREW AS-MACHINE	
	7	1	**9N-3388**	1	LOCKSCREW	
	8	1	**1W-9167**	1	CLAMP AS-FUEL LINE (W/SPACER)	

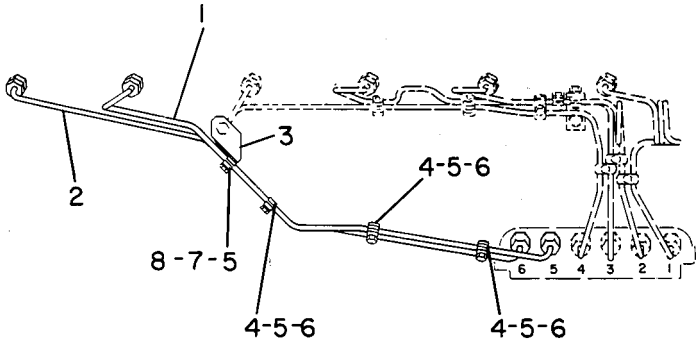

GRAPHIC #1 g00113297

FUEL SYSTEM

9Y-7562 LINES GP-FUEL INJECTION

S/N: 13Z22389-25277

PART OF 9Y-7563 LINES GP-FUEL INJECTION

SMCS-1252, 1254 **i00286645**

NOTE	REF NO	GRAPHIC REF	PART NUMBER	QTY	PART NAME 1 2 3 4 5 6 (PRODUCT LEVEL)	SEE PAGE
	1	1	**7C-5561**	1	LINE AS-FUEL INJ	
	2	1	**7C-5562**	1	LINE AS-FUEL INJ	
	3	1	**7C-5563**	1	LINE AS-FUEL INJ	
	4	1	**7C-5564**	1	LINE AS-FUEL INJ	
	5	1	**1W-9169**	10	CLAMP (TAPPED)	
	6	1	**1W-9168**	7	CLAMP (UNTAPPED)	
	7	1	**5P-4939**	7	SCREW AS-MACHINE	
C	8	1	**9N-3388**	3	LOCKSCREW	
	9	1	**1W-9167**	3	CLAMP AS-FUEL LINE (W/SPACER) (SINGLE LINE)	
	10	1	**7C-7614**	1	BRACKET AS	
	11	1	**9Y-7524**	1	PLATE	
	12	1	**4B-4274**	2	WASHER (1.2MM THK)	

C-CHANGE FROM PREVIOUS TYPE

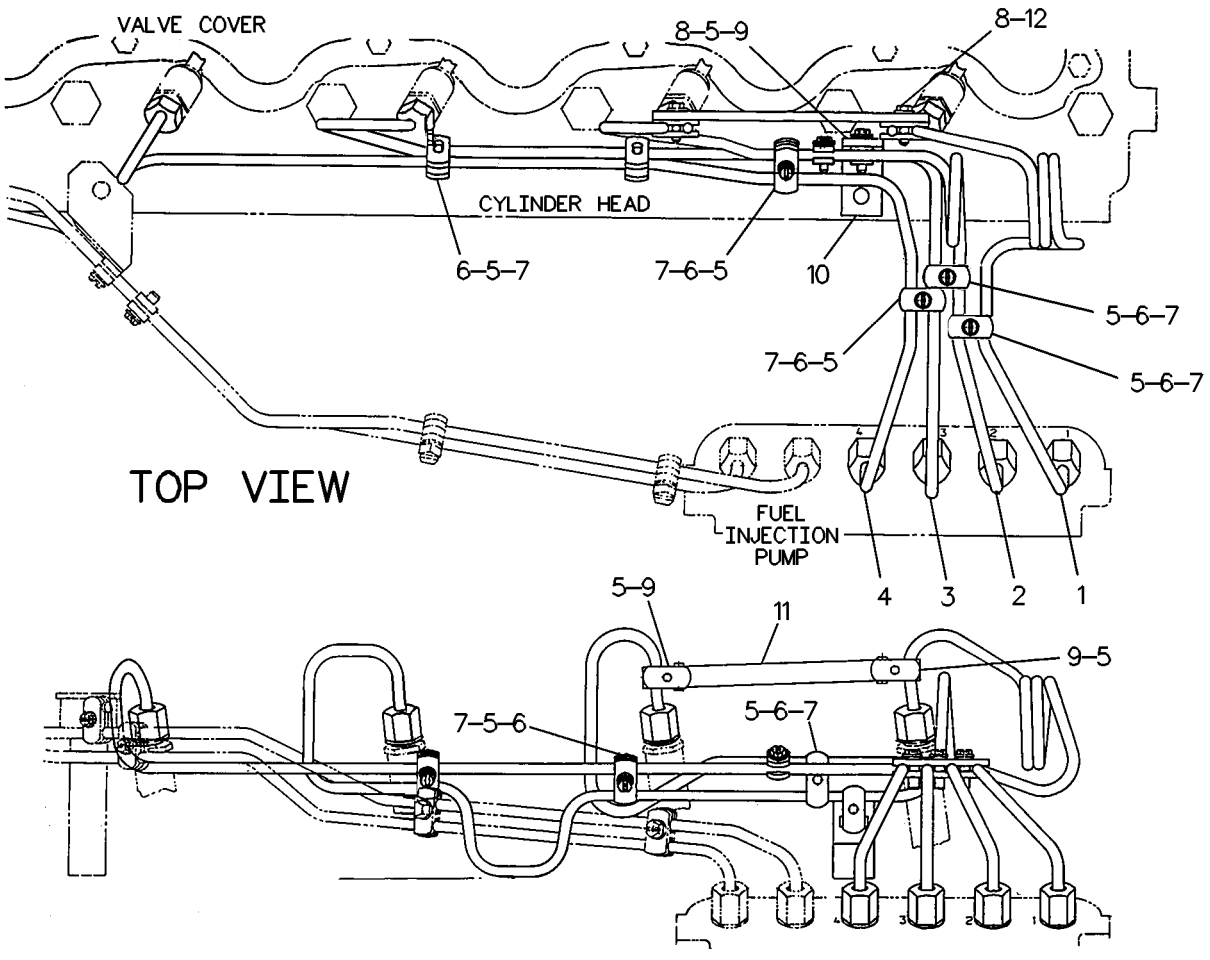

GRAPHIC #1 g00114292

FUEL SYSTEM

9Y-7563 LINES GP-FUEL INJECTION

S/N: 13Z22389-22915

PART OF 9Y-7799 LINES GP-FUEL INJECTION

SMCS-1252, 1254 **i00286657**

NOTE	REF NO	GRAPHIC REF	PART NUMBER	QTY	PART NAME 1 2 3 4 5 6 (PRODUCT LEVEL)	SEE PAGE
R	1	1	**8N-7005**	6	NOZZLE AS-FUEL VALVE	
					(EACH INCLUDES)	
		1	**8C-3234**	1	SCREW-BUTTON HEAD	
		1	**8T-0659**	1	WASHER-SEAL	
	2	1	**7W-4486**	1	WASHER	
	3	1	**9L-9098**	1	SEAL-CARBON STOP (3/8 IN OD)	
	4	1	**1T-0416**	6	BOLT (5/16-18X.75IN)	
	5	1	**8N-5132**	6	CLAMP-NOZZLE	
	6	1	**1A-5183**	1	BOLT (3/8-16X4.75IN)	
	7	1	**5M-2894**	2	WASHER (2.5MM THK)	
Y	8	1	*7C-5551*	1	LINES GP-FUEL INJECTION	
Y	9	1	*9Y-7562*	1	LINES GP-FUEL INJECTION	
	10	1	**0S-1591**	1	BOLT (3/8-16X1.5IN)	
	11	1	**8H-9204**	6	WASHER-FELT	
	12	1	**0S-0509**	1	BOLT (3/8-16X.75IN)	
		1	**5P-1075**	1	WASHER-HARD (3MM THK)	

R-REMFG PART MAY BE AVAILABLE
Y-SEPARATE ILLUSTRATION

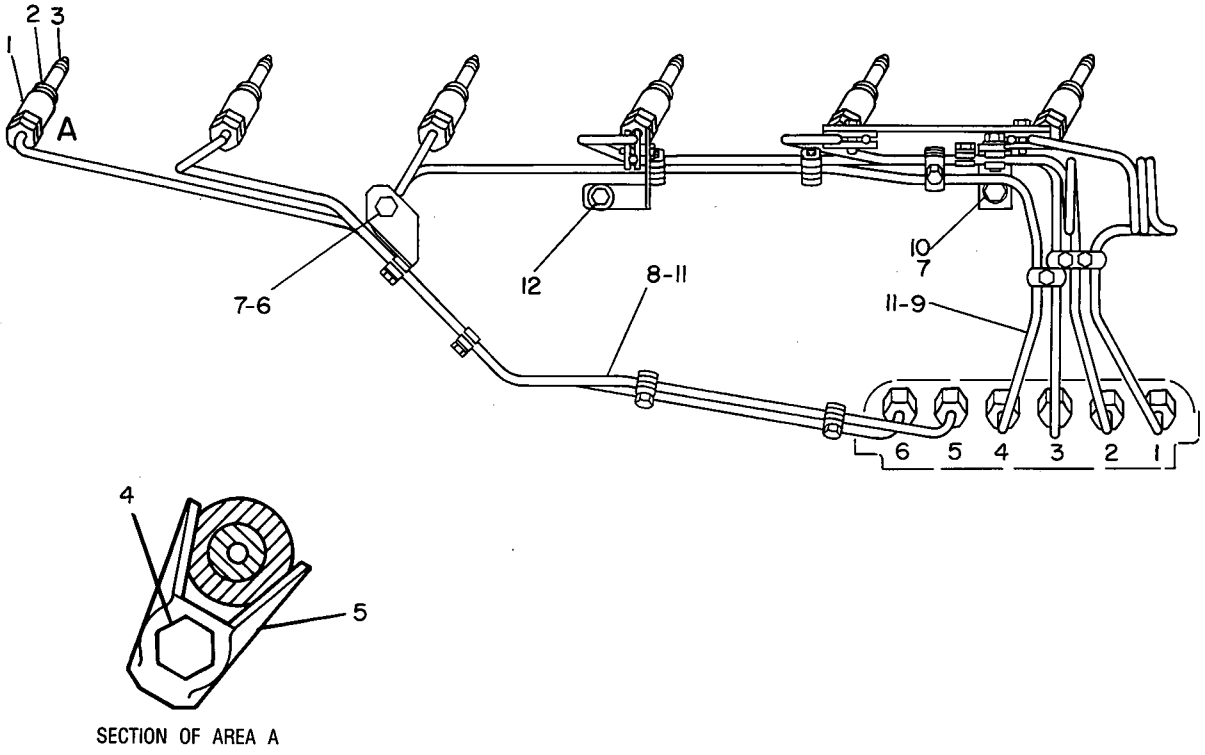

GRAPHIC #1 g00118637

MEMORANDA

9Y-7563 LINES GP-FUEL INJECTION

S/N: 13Z22916-25277

PART OF 9Y-7799 LINES GP-FUEL INJECTION

SMCS-1252, 1254 **i00286681**

NOTE	REF NO	GRAPHIC REF	PART NUMBER	QTY	PART NAME 1 2 3 4 5 6 (PRODUCT LEVEL)	SEE PAGE
R	1	1	**8N-7005**	6	NOZZLE AS-FUEL VALVE	
					(EACH INCLUDES)	
		1	**8C-3234**	1	SCREW-BUTTON HEAD	
		1	**8T-0659**	1	WASHER-SEAL	
	2	1	**7W-4486**	1	WASHER	
	3	1	**9L-9098**	1	SEAL-CARBON STOP (3/8 IN OD)	
	4	1	**1T-0416**	6	BOLT (5/16-18X.75IN)	
	5	1	**8N-5132**	6	CLAMP-NOZZLE	
	6	1	**1A-5183**	1	BOLT (3/8-16X4.75IN)	
	7	1	**5M-2894**	2	WASHER (2.5MM THK)	
YC	8	1	*4P-4195*	1	LINES GP-FUEL INJECTION	
Y	9	1	*9Y-7562*	1	LINES GP-FUEL INJECTION	
	10	1	**0S-1591**	1	BOLT (3/8-16X1.5IN)	
	11	1	**8H-9204**	6	WASHER-FELT	
C	12	1	**2P-3200**	1	BOLT-WASHER HEAD	
C	13	1	**4P-2578**	1	BRACKET	
C	14	1	**4B-4274**	1	WASHER (1.2MM THK)	
C	15	1	**1W-9167**	1	CLAMP AS-FUEL LINE (W/SPACER)	
C		1	**9L-9159**	1	SPACER	
C	16	1	**1W-9169**	1	CLAMP (TAPPED)	
C	17	1	**9N-3388**	1	LOCKSCREW	

C-CHANGE FROM PREVIOUS TYPE
R-REMFG PART MAY BE AVAILABLE
Y-SEPARATE ILLUSTRATION

9Y-7563 **LINES GP-FUEL INJECTION** ***(contd.)*** **i00286681**

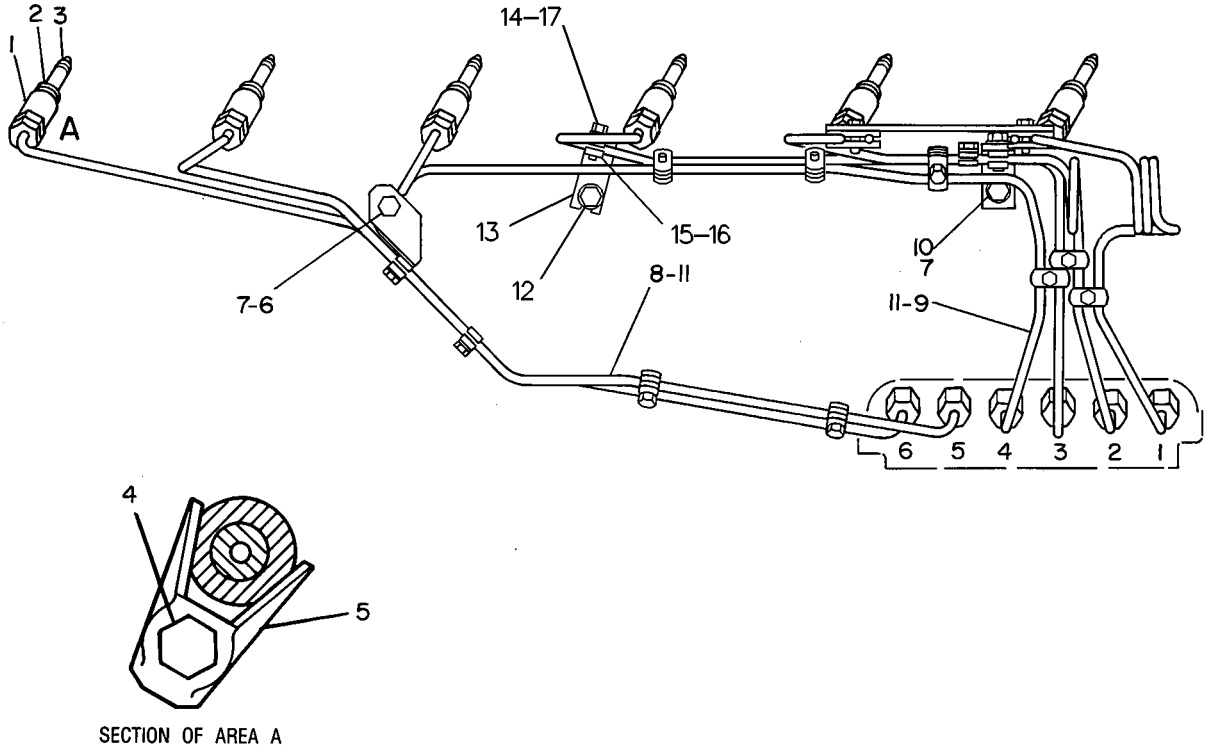

GRAPHIC #1 g00117112

9Y-7563 LINES GP-FUEL INJECTION

S/N: 13Z25278-26025

PART OF 9Y-7799 LINES GP-FUEL INJECTION

SMCS-1252, 1254 **i00286725**

NOTE	REF NO	GRAPHIC REF	PART NUMBER	QTY	PART NAME 1 2 3 4 5 6 (PRODUCT LEVEL)	SEE PAGE
R	1	1	**8N-7005**	6	NOZZLE AS-FUEL VALVE	
					(EACH INCLUDES)	
		1	**8C-3234**	1	SCREW-BUTTON HEAD	
		1	**8T-0659**	1	WASHER-SEAL	
	2	1	**7W-4486**	1	WASHER	
	3	1	**9L-9098**	1	SEAL-CARBON STOP (3/8 IN OD)	
	4	1	**1T-0416**	6	BOLT (5/16-18X.75IN)	
	5	1	**8N-5132**	6	CLAMP-NOZZLE	
	6	1	**1A-5183**	1	BOLT (3/8-16X4.75IN)	
	7	1	**5M-2894**	2	WASHER (2.5MM THK)	
CY	8	1	*4P-4195*	1	LINES GP-FUEL INJECTION	
CY	9	1	*4P-1892*	1	LINES GP-FUEL INJECTION	
	10	1	**0S-1591**	1	BOLT (3/8-16X1.5IN)	
	11	1	**8H-9204**	6	WASHER-FELT	
C	12	1	**2P-3200**	1	BOLT-WASHER HEAD	
C	13	1	**4P-2578**	1	BRACKET	
C	14	1	**4B-4274**	1	WASHER (1.2MM THK)	
C	15	1	**1W-9167**	1	CLAMP AS-FUEL LINE (W/SPACER)	
C		1	**9L-9159**	1	SPACER	
C	16	1	**1W-9169**	1	CLAMP (TAPPED)	
C	17	1	**9N-3388**	1	LOCKSCREW	

C-CHANGE FROM PREVIOUS TYPE
R-REMFG PART MAY BE AVAILABLE
Y-SEPARATE ILLUSTRATION

9Y-7563 LINES GP-FUEL INJECTION *(contd.)* i00286725

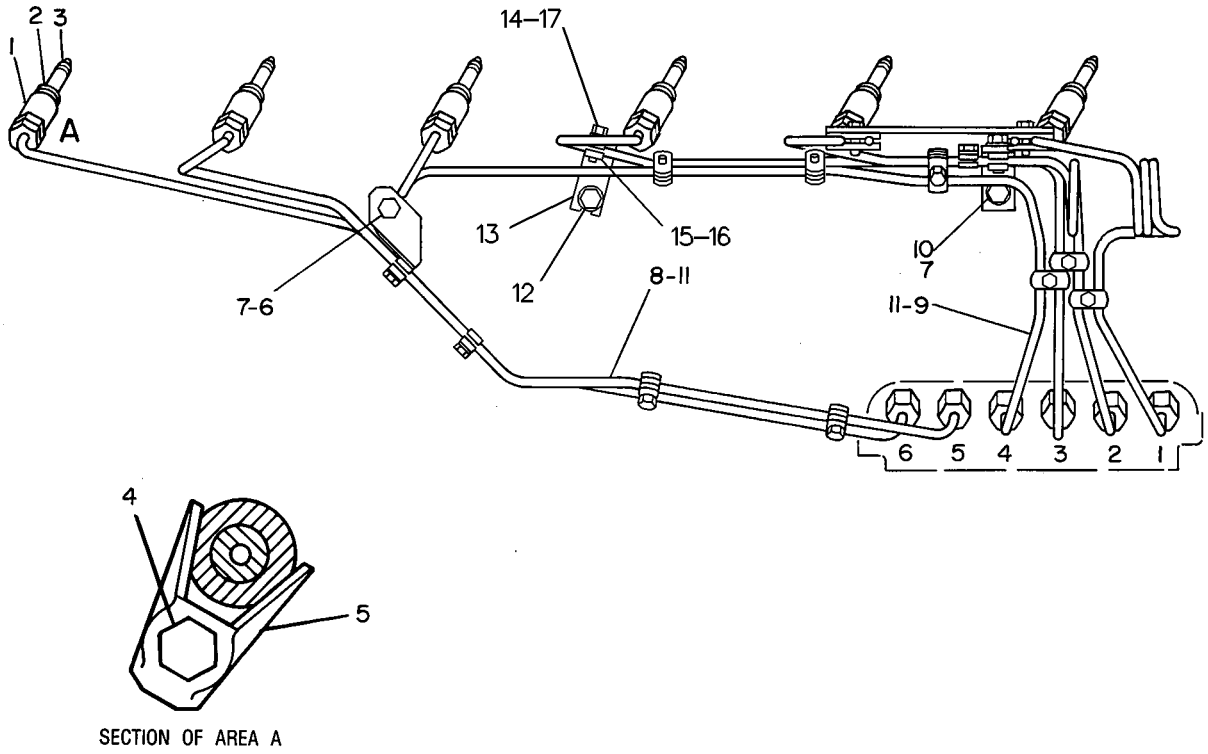

GRAPHIC #1 g00117112

9Y-7563 LINES GP-FUEL INJECTION

S/N: 13Z26026-26454

PART OF 9Y-7799 LINES GP-FUEL INJECTION

SMCS-1252, 1254 **i00286744**

NOTE	REF NO	GRAPHIC REF	PART NUMBER	QTY	PART NAME 1 2 3 4 5 6 (PRODUCT LEVEL)	SEE PAGE
R	1	1	**8N-7005**	6	NOZZLE AS-FUEL VALVE	
					(EACH INCLUDES)	
		1	**8C-3234**	1	SCREW-BUTTON HEAD	
		1	**8T-0659**	1	WASHER-SEAL	
	2	1	**7W-4486**	1	WASHER	
	3	1	**9L-9098**	1	SEAL-CARBON STOP (3/8 IN OD)	
	4	1	**1T-0416**	6	BOLT (5/16-18X.75IN)	
	5	1	**8N-5132**	6	CLAMP-NOZZLE	
	6	1	**1A-5183**	1	BOLT (3/8-16X4.75IN)	
	7	1	**5M-2894**	2	WASHER (2.5MM THK)	
CY	8	1	**4P-9331**	1	LINES GP-FUEL INJECTION	
CY	9	1	*4P-1892*	1	LINES GP-FUEL INJECTION	
	10	1	**0S-1591**	1	BOLT (3/8-16X1.5IN)	
	11	1	**8H-9204**	6	WASHER-FELT	
C	12	1	**2P-3200**	1	BOLT-WASHER HEAD	
C	13	1	**4P-2578**	1	BRACKET	
C	14	1	**4B-4274**	1	WASHER (1.2MM THK)	
C	15	1	**1W-9167**	1	CLAMP AS-FUEL LINE (W/SPACER)	
C		1	**9L-9159**	1	SPACER	
C	16	1	**1W-9169**	1	CLAMP (TAPPED)	
C	17	1	**9N-3388**	1	LOCKSCREW	

C-CHANGE FROM PREVIOUS TYPE
R-REMFG PART MAY BE AVAILABLE
Y-SEPARATE ILLUSTRATION

9Y-7563 **LINES GP-FUEL INJECTION** *(contd.)* **i00286744**

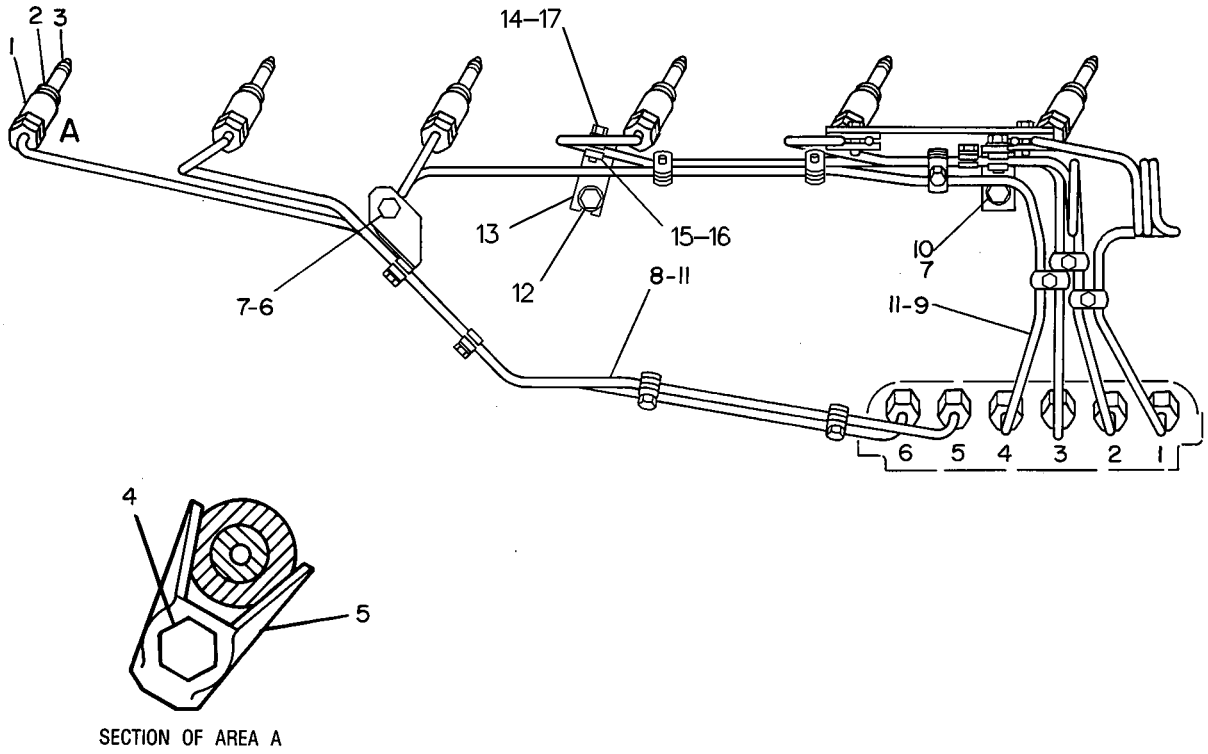

GRAPHIC #1 g00117112

9Y-7563 LINES GP-FUEL INJECTION

S/N: 13Z26455-99999

PART OF 9Y-7799 LINES GP-FUEL INJECTION

SMCS-1252, 1254 **i01217411**

NOTE	REF NO	GRAPHIC REF	PART NUMBER	QTY	PART NAME 1 2 3 4 5 6 (PRODUCT LEVEL)	SEE PAGE
R	1	1	**8N-7005**	6	NOZZLE AS-FUEL VALVE	
					(EACH INCLUDES)	
		1	**8C-3234**	1	SCREW-BUTTON HEAD	
		1	**8T-0659**	1	WASHER-SEAL	
	2	1	**7W-4486**	1	WASHER	
	3	1	**9L-9098**	1	SEAL-CARBON STOP (3/8 IN OD)	
	4	1	**1T-0416**	6	BOLT (5/16-18X.75IN)	
	5	1	**8N-5132**	6	CLAMP-NOZZLE	
	6	1	**0T-0055**	1	BOLT (3/8-16X4.25IN)	
	7	1	**5M-2894**	2	WASHER (2.5MM THK)	
CY	8	1	**4P-9331**	1	LINES GP-FUEL INJECTION	
CY	9	1	**4P-9330**	1	LINES GP-FUEL INJECTION	
	10	1	**0S-1591**	1	BOLT (3/8-16X1.5 IN)	
	11	1	**8H-9204**	6	WASHER-FELT	
C	12	1	**2P-3200**	1	BOLT-WASHER HEAD	
C	13	1	**4P-2578**	1	BRACKET	
C	14	1	**4B-4274**	1	WASHER (1.2MM THK)	
C	15	1	**1W-9167**	1	CLAMP AS-FUEL LINE	
C	16	1	**1W-9169**	1	CLAMP (TAPPED)	
C	17	1	**9N-3388**	1	LOCKSCREW	

C-CHANGE FROM PREVIOUS TYPE
R-REMFG PART MAY BE AVAILABLE
Y-SEPARATE ILLUSTRATION

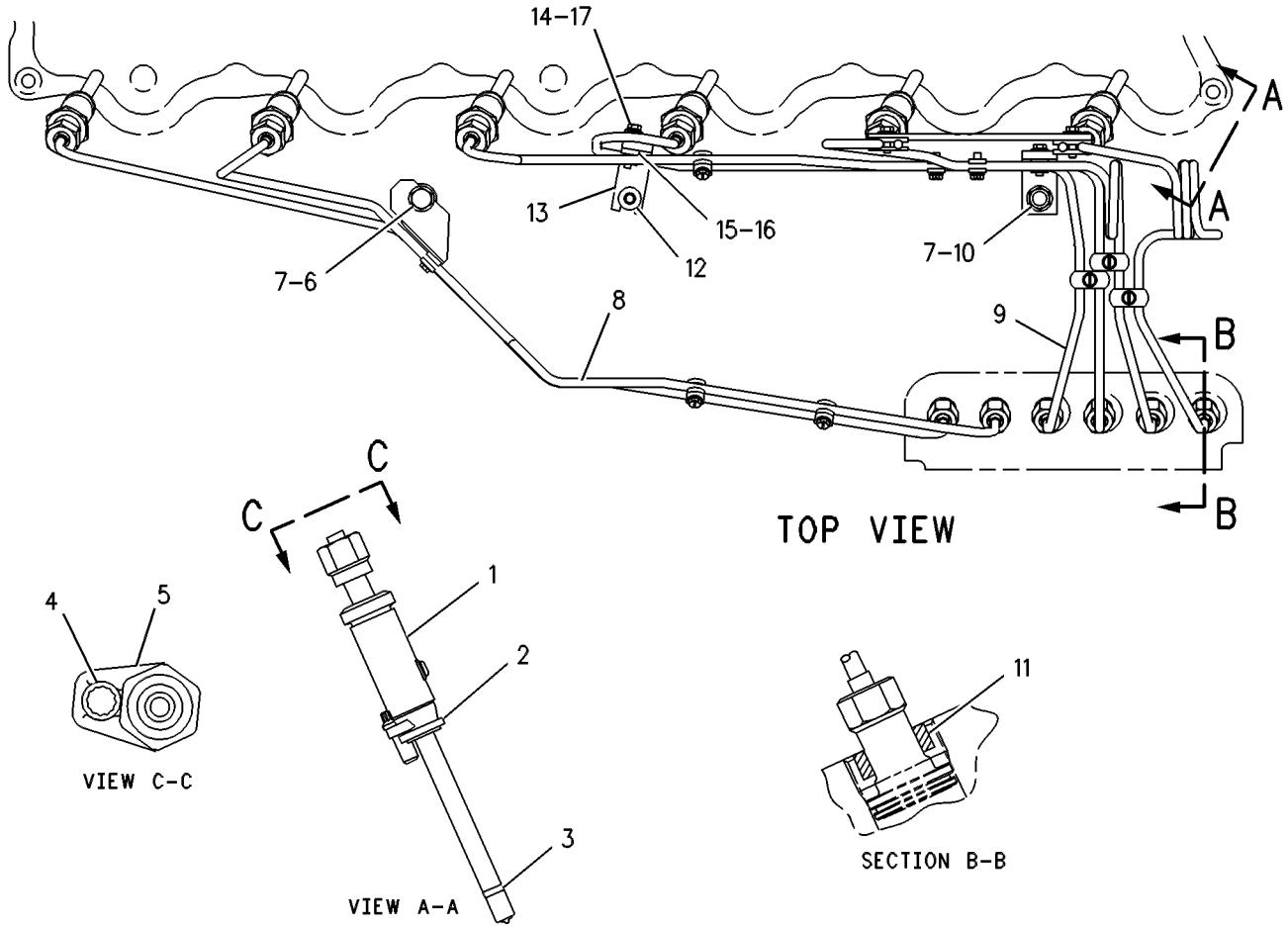

GRAPHIC #1 g00278273

FUEL SYSTEM

9Y-7799 LINES GP-FUEL INJECTION

S/N: 13Z22389-28099

PART OF 7E-0082 ENGINE AR

SMCS-1252, 1254 **i00286754**

NOTE	REF NO	GRAPHIC REF	PART NUMBER	QTY	PART NAME 1 2 3 4 5 6 (PRODUCT LEVEL)	SEE PAGE
Y	1	1	*9Y-7563*	1	LINES GP-FUEL INJECTION	
	2	1	**3S-2713**	3	NUT-FULL (3/8-24 THD)	
	3	1	**6V-6921**	1	SEAL-RING (20.32MM OD)	
	4	1	**2H-3934**	1	SEAL (98.02MM ID)	
	5	1	**5F-7054**	1	SEAL-O-RING (18.6MM ID)	
	6	1	**2H-3932**	1	SEAL (28.17MM ID)	
	7	1	**0L-2070**	2	BOLT (3/8-16X2.25IN)	
		1	**5M-2894**	2	WASHER (2.5MM THK)	

Y-SEPARATE ILLUSTRATION

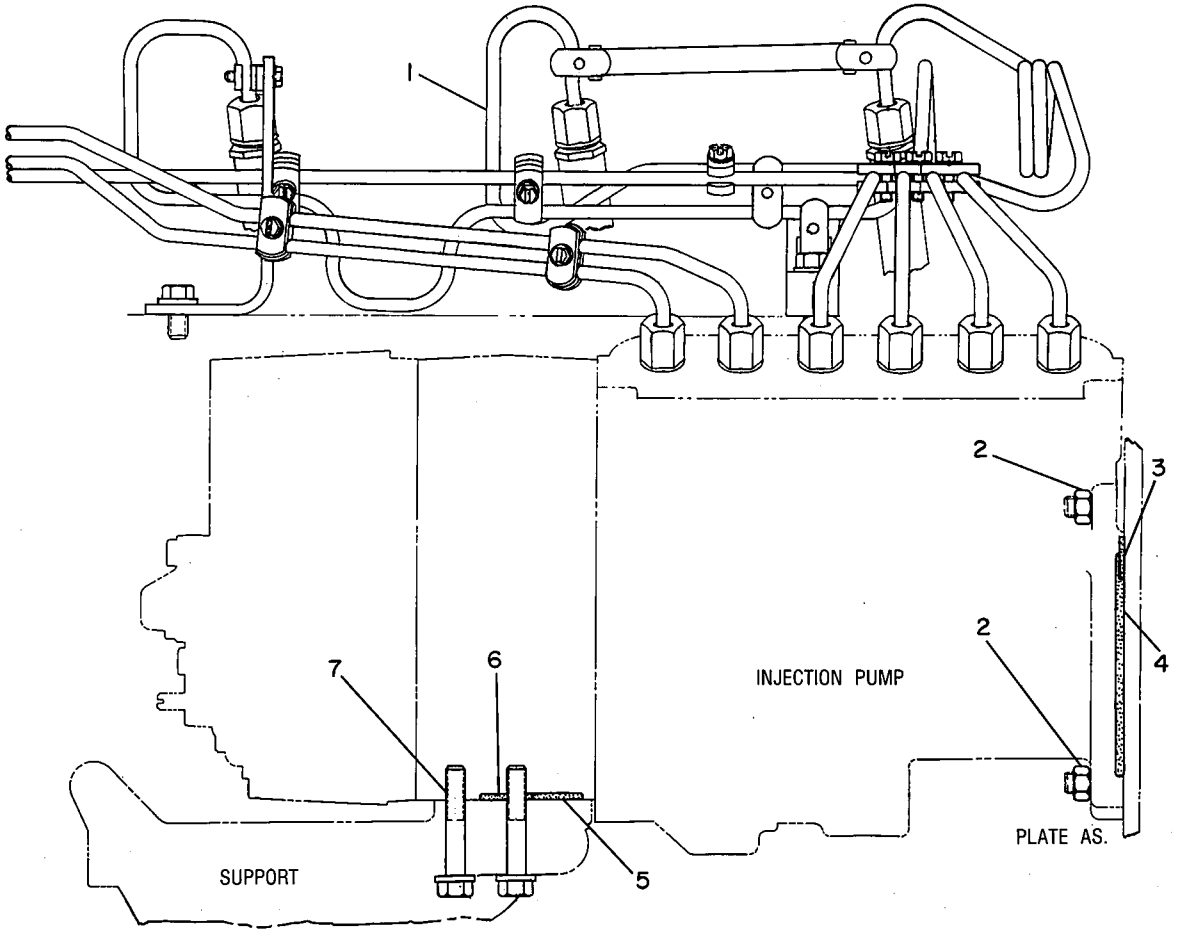

GRAPHIC #1 g00116723

2W-4160 PUMP & MTG GP-FUEL TRANSFER

S/N: 13Z22389-28099
PART OF 7E-0082 ENGINE AR

SMCS-1256 **i00962179**

NOTE	REF NO	GRAPHIC REF	PART NUMBER	QTY	PART NAME 1 2 3 4 5 6 (PRODUCT LEVEL)	SEE PAGE
	1	1	**4F-7957**	1	BOLT (1/4-20X.875IN)	
YR	2	1	**1W-1695**	1	PUMP GP-FUEL TRANSFER	
	3	1	**4B-9365**	1	BOLT (1/4-20X3IN)	
	4	1	**4J-8997**	1	SEAL-O-RING (28.17MM ID)	
	5	1	**5P-0537**	2	WASHER (2MM THK)	

R-REMFG PART MAY BE AVAILABLE
Y-SEPARATE ILLUSTRATION

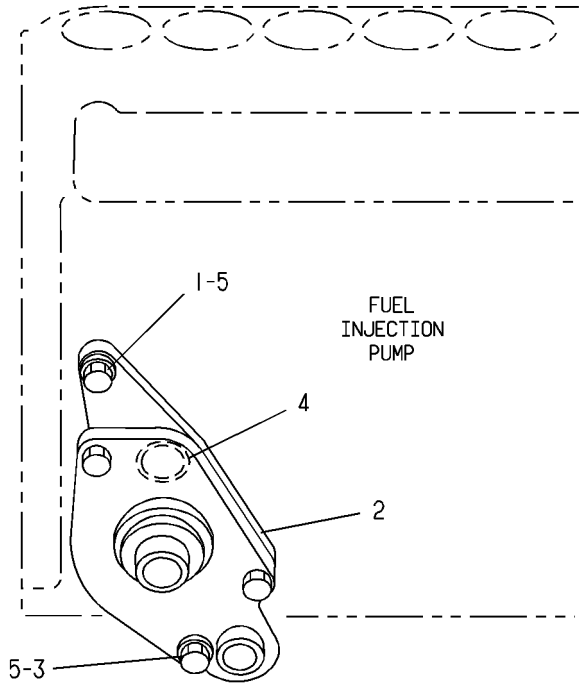

GRAPHIC #1 g00108230

1W-6539 PUMP GP-FUEL INJECTION

S/N: 13Z22389-99999

PART OF 2W-0256, 6I-2834 PUMP GP-FUEL INJECTION

SMCS-1251 **i00259292**

NOTE	REF NO	GRAPHIC REF	PART NUMBER	QTY	PART NAME 1 2 3 4 5 6 (PRODUCT LEVEL)	SEE PAGE
	1	1	**7W-1927**	1	RING-RETAINER	
	2	1	**8N-1415**	1	SPRING-CHECK	
	3	1	**1W-9171**	1	BONNET-VALVE	
	4	1	**1W-6987**	1	VALVE AS-CHECK	
	5	1	**1W-6541**	1	PLUNGER AS	
	6	1	**7N-1067**	1	SPRING-LIFTER	
	7	1	**7W-2808**	1	WASHER-RETAINER	
	8	1	**8H-9299**	1	SCREW-PLUNGER GEAR (11.1MM LG)	
					-OR-	
C		1	**7C-5278**	1	BOLT-GEAR (12.1MM LG)	

C-CHANGE FROM PREVIOUS TYPE

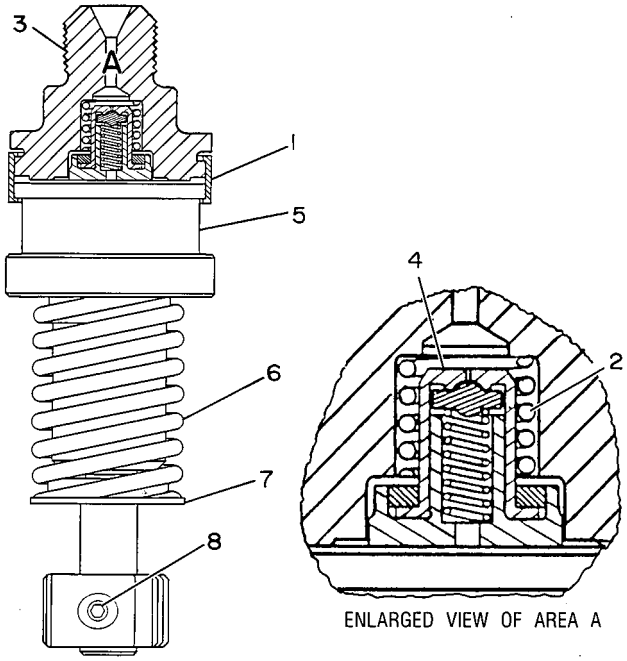

GRAPHIC #1 g00108358

FUEL SYSTEM

2W-0256 PUMP GP-FUEL INJECTION

S/N: 13Z22389-99999

PART OF 7E-5107 PUMP GP-GOV & FUEL INJ

SMCS-1251 **i00259862**

NOTE	REF NO	GRAPHIC REF	PART NUMBER	QTY	PART NAME 1 2 3 4 5 6 (PRODUCT LEVEL)	SEE PAGE
	1	1	**9S-4180**	2	PLUG-O-RING (5/16-24 THD)	
		1	**4J-7533**	2	SEAL-O-RING (6.07MM ID)	
	2	1	**1W-3286**	1	RACK-REGULATOR	
Y	3	1	*1W-3487*	1	HOUSING GP-FUEL PUMP	
Y	4	1	**1W-6539**	6	PUMP GP-FUEL INJECTION	
	5	1	**8N-5117**	6	BUSHING-TERMINAL	
	6	1	**3D-2992**	6	SEAL	
	7	1	**7N-1053**	6	SPACER-FUEL PUMP	
Y	8	1	*2W-0255*	1	CAMSHAFT AS	
	9	1	**7N-8421**	1	RING-RETAINING	
	10	1	**8N-2487**	1	WASHER-THRUST	
	11	1	**8N-2489**	6	LIFTER AS	
	12	1	**0S-1615**	4	BOLT (1/4-20X.75IN)	
	13	1	**7N-1047**	1	COVER-TIMING	
		1	**7N-1046**	1	GASKET-COVER	

Y-SEPARATE ILLUSTRATION

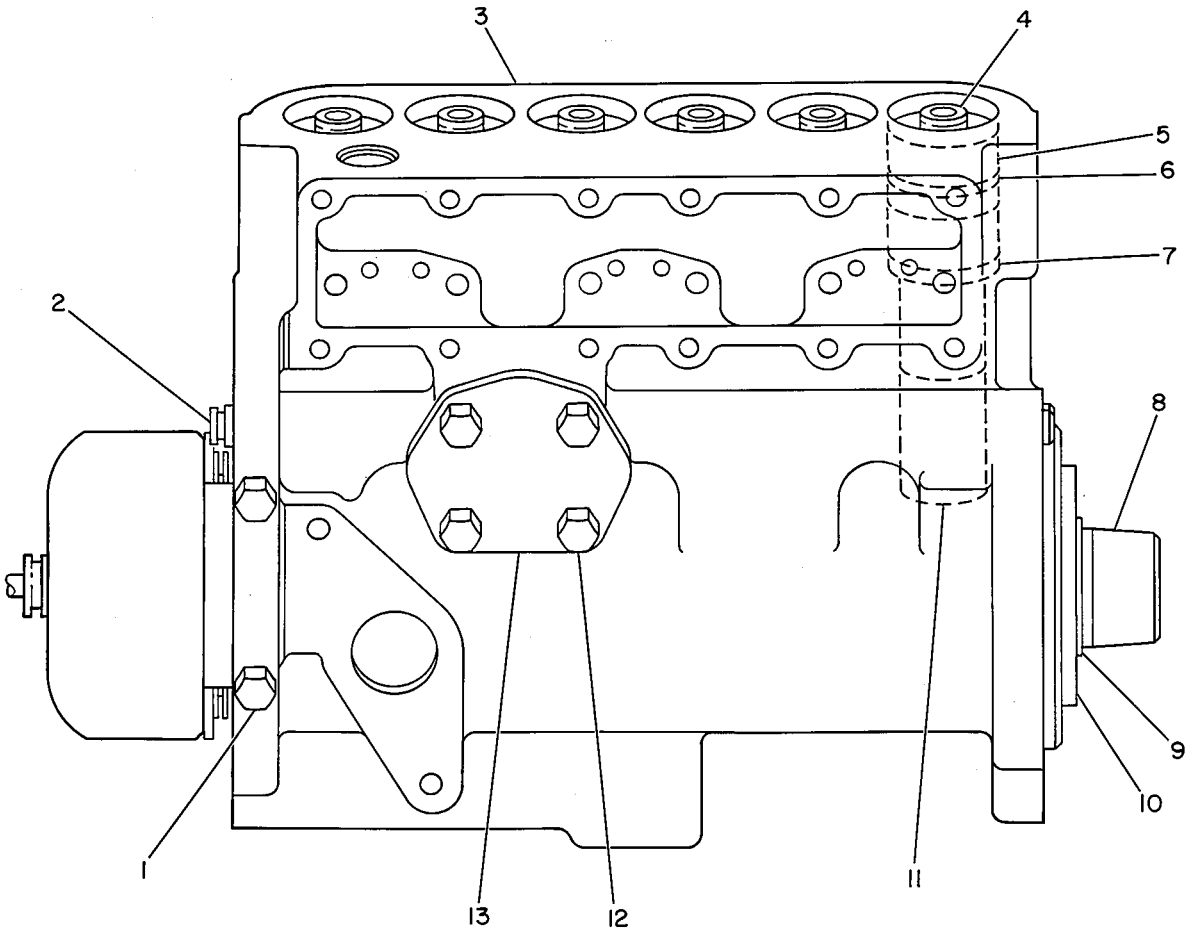

GRAPHIC #1 g00113639

6I-2834 PUMP GP-FUEL INJECTION

S/N: 13Z22389-99999

PART OF 7E-5107 PUMP GP-GOV & FUEL INJ

SMCS-1251 **i00314675**

NOTE	REF NO	GRAPHIC REF	PART NUMBER	QTY	PART NAME 1 2 3 4 5 6 (PRODUCT LEVEL)	SEE PAGE
	1	1	**9S-4180**	2	PLUG-O-RING (5/16-24 THD)	
		1	**4J-7533**	2	SEAL-O-RING (6.07MM ID)	
	2	1	**1W-3286**	1	RACK-REGULATOR	
	3	1	**0S-1615**	4	BOLT (1/4-20X.75IN)	
Y	4	1	**1W-6539**	6	PUMP GP-FUEL INJECTION	
	5	1	**8N-5117**	6	BUSHING-TERMINAL	
	6	1	**114-8718**	6	SEAL-O-RING (26.64MM ID)	
	7	1	**4W-6869**	6	SPACER-FUEL PUMP	
	8	1	**7N-1047**	1	COVER-TIMING	
		1	**7N-1046**	1	GASKET-COVER	
	9	1	**7N-8421**	1	RING-RETAINING	
	10	1	**8N-2487**	1	WASHER-THRUST	
	11	1	**4P-9832**	6	LIFTER AS	
	12	1	**4P-9840**	1	HOUSING AS	
	13	1	**1S-1953**	1	BEARING-RACK	
	14	1	**1W-3285**	1	BEARING-RACK	
	15	1	**4P-8480**	6	PIN-PUMP GUIDE	
	16	1	**6I-0979**	6	DOWEL	
	17	1	**4P-9828**	1	BEARING-SLEEVE	
	18	1	**7N-7970**	1	BEARING-SLEEVE	
	19	1	**4P-9028**	1	CAMSHAFT AS	
		1	**6I-2842**	1	CAMSHAFT-FUEL PUMP	
	20	1	**7N-7264**	4	WEIGHT-GOVERNOR	
	21	1	**9Y-7037**	4	BOLT	
	22	1	**1S-5440**	4	DOWEL	
	23	1	**4N-9019**	1	DOWEL	
	24	1	**7E-3986**	1	CARRIER-WEIGHT	
	25	1	**7L-3326**	1	BEARING-THRUST	
	26	1	**8N-2510**	1	SHAFT-WEIGHT CARRIER	
	27	1	**7N-7166**	2	RACE-THRUST BEARING	

Y-SEPARATE ILLUSTRATION

6I-2834 PUMP GP-FUEL INJECTION *(contd.)* i00314675

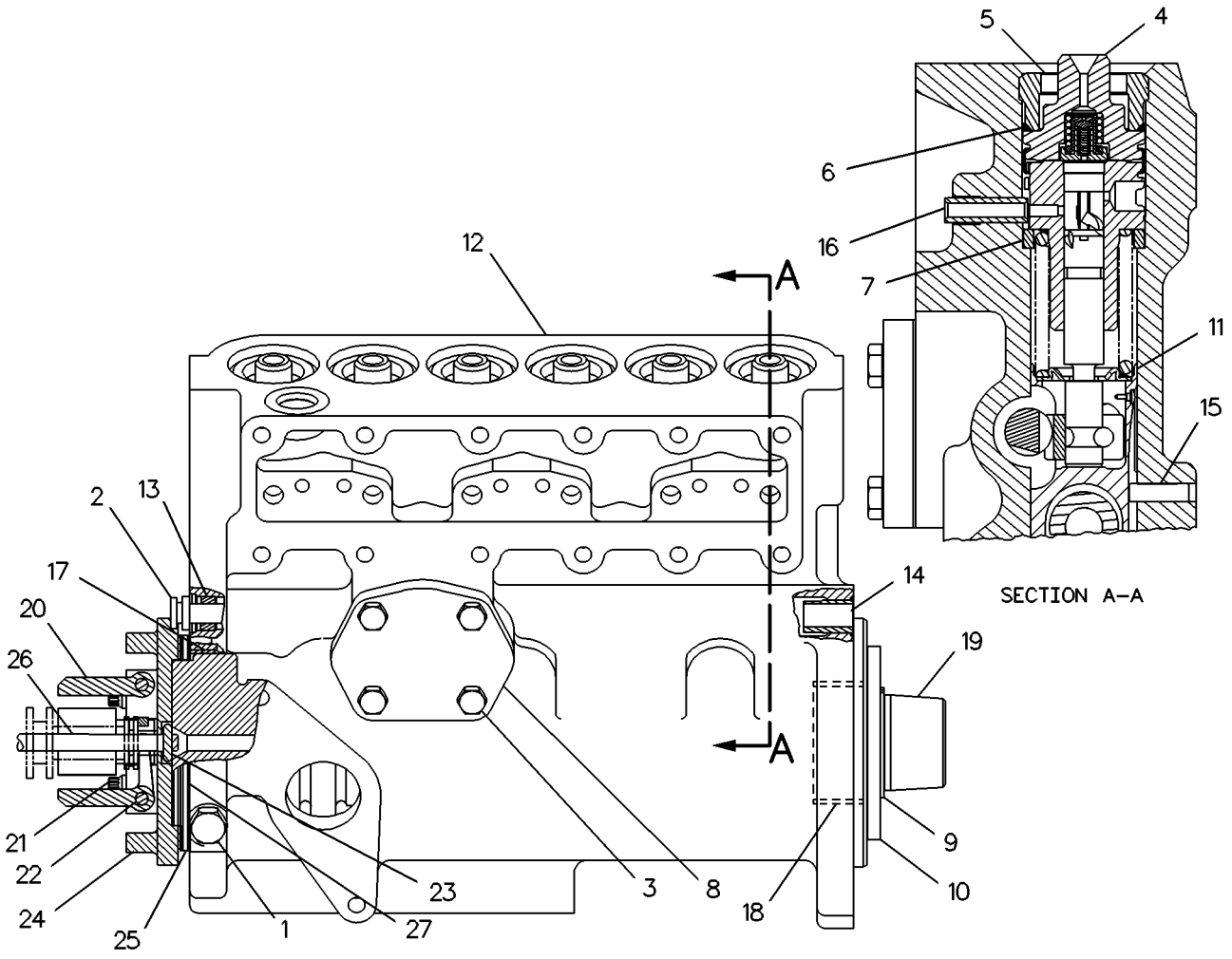

GRAPHIC #1 g00108452

8N-6200 PUMP GP-FUEL PRIMING

S/N: 13Z22389-99999

PART OF 8N-6201 PUMP GP-FUEL PRM & PRIM FILTER

SMCS-1258 **i01632847**

NOTE	REF NO	GRAPHIC REF	PART NUMBER	QTY	PART NAME 1 2 3 4 5 6 (PRODUCT LEVEL)	SEE PAGE
	1	1	**105-2508**	1	PUMP AS-FUEL PRIMING	
	2	1	**1B-7182**	1	BOLT (5/16-18X1.25 IN)	
	3	1	**9M-1974**	1	WASHER-HARD (8.8X16X2MM THK)	
	4	1	**2W-6688**	1	BASE AS-FUEL FILTER	
		1	**8N-6199**	1	BASE-PUMP & FILTER	
	5	1	**7E-5346**	1	VALVE AS	
	6	1	**1P-0436**	1	GASKET (FUEL PRIMING PUMP)	
	7	1	**5P-0537**	1	WASHER-HARD (7.2X14.5X2MM THK)	
	8	1	**7B-2742**	1	BOLT (1/4-20X1.25 IN)	

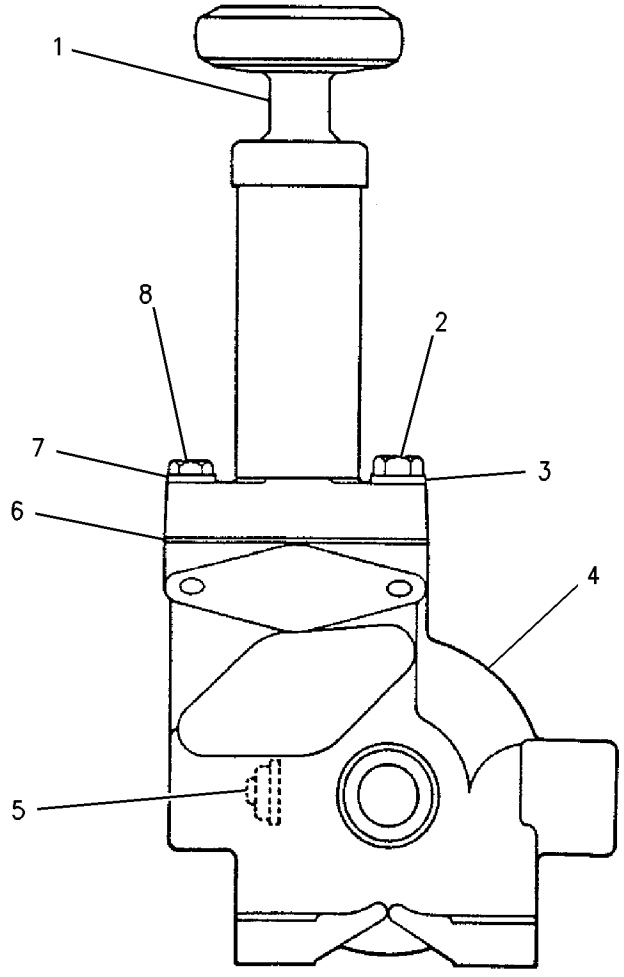

GRAPHIC #1 g00647693

FUEL SYSTEM

1W-5374 PUMP GP-FUEL PRM & PRIM FILTER

S/N: 13Z22389-28099
PART OF 7E-0082 ENGINE AR

SMCS-1258, 1260 **i01013963**

NOTE	REF NO	GRAPHIC REF	PART NUMBER	QTY	PART NAME 1 2 3 4 5 6 (PRODUCT LEVEL)	SEE PAGE
	1	1	**8S-9191**	1	BOLT (3/8-16X4IN)	
					-OR-	
C		1	**0T-0055**	1	BOLT (3/8-16X4.25IN)	
	2	1	**0S-1588**	1	BOLT (3/8X1.25)	
	3	1	**5M-2894**	2	WASHER (2.5MM THK)	
	4	1	**030-8194**	1	CONNECTOR-FLARED	
		1	**2M-9780**	1	SEAL-O-RING (19.18MM ID)	
Y	5	1	*8N-6201*	1	PUMP GP-FUEL PRM & PRIM FILTER	

C-CHANGE FROM PREVIOUS TYPE
Y-SEPARATE ILLUSTRATION

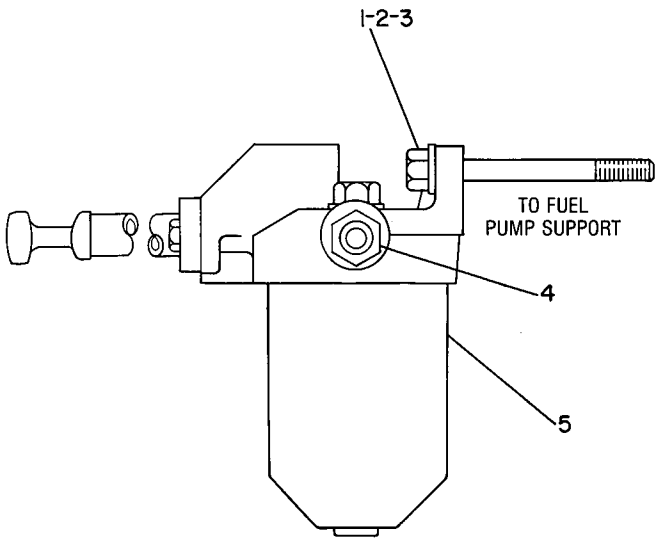

GRAPHIC #1 g00124276

8N-6201 PUMP GP-FUEL PRM & PRIM FILTER

S/N: 13Z22389-99999

PART OF 1W-5374 PUMP GP-FUEL PRM & PRIM FILTER

SMCS-1258, 1260 **i00259688**

NOTE	REF NO	GRAPHIC REF	PART NUMBER	QTY	PART NAME 1 2 3 4 5 6 (PRODUCT LEVEL)	SEE PAGE
	1	1	**8H-2807**	1	NUT	
	2	1	**2J-0157**	1	SEAL-O-RING (15.47MM ID)	
Y	3	1	*8N-6200*	1	PUMP GP-FUEL PRIMING	
	4	1	**1L-3769**	1	RING-RETAINING	
	5	1	**8H-2778**	1	GASKET (PRIM FUEL FILT)	
	6	1	**9M-2341**	1	ELEMENT AS-FUEL FILTER	
	7	1	**8H-2810**	1	CASE AS-FILTER	
	8	1	**7H-9678**	1	RETAINER-ELEMENT	
	9	1	**2H-3429**	1	RING-RETAINING	
	10	1	**7S-9323**	1	SPRING	

Y-SEPARATE ILLUSTRATION

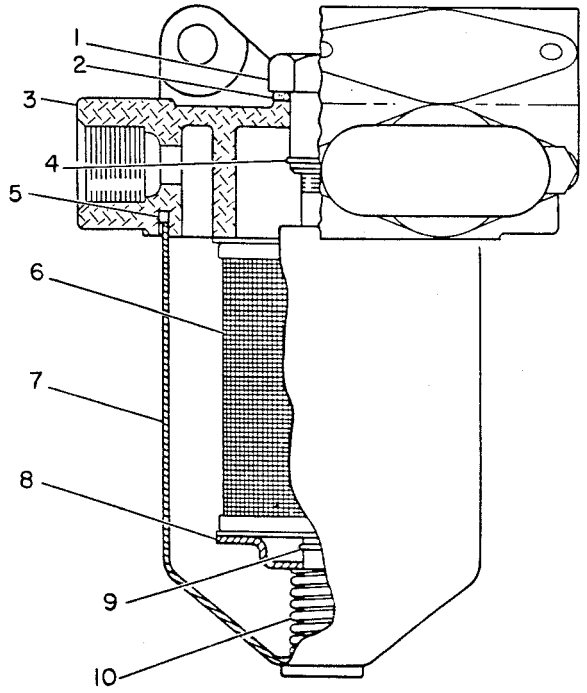

GRAPHIC #1 g00108197

1W-1695 PUMP GP-FUEL TRANSFER

S/N: 13Z22389-99999
PART OF 2W-4160 PUMP & MTG GP-FUEL TRANSFER
TYPE 1

SMCS-1256 **i00347897**

NOTE	REF NO	GRAPHIC REF	PART NUMBER	QTY	PART NAME 1 2 3 4 5 6 (PRODUCT LEVEL)	SEE PAGE
	1	1	**1W-1698**	1	HOUSING-TRANSFER PUMP	
	2	1	**1W-1699**	1	COVER	
	3	1	**1W-5912**	1	GUIDE & TAPPET AS	
		1	**7N-8821**	1	RING-RETAINING	
	4	1	**6J-2419**	1	SEAL-O-RING (36.17MM ID)	
	5	1	**7E-2464**	3	VALVE AS	
	6	1	**3D-2824**	1	SEAL-O-RING (23.47MM ID)	
	7	1	**6F-6672**	1	SEAL-O-RING (17.12MM ID)	
	8	1	**3D-2898**	1	SEAL-O-RING	
	9	1	**5P-8215**	1	SEAL-O-RING (39.34MM ID)	
	10	1	**7W-0134**	1	SPRING-PUMP	
	11	1	**8N-2637**	1	WASHER	
	12	1	**7E-3667**	1	SPACER	
	13	1	**8N-2641**	1	SLEEVE	
	14	1	**1W-1669**	1	PISTON	
	15	1	**0S-1615**	2	BOLT (1/4-20X.75IN)	
	16	1	**6D-8498**	2	SCREW-HEAD	
	17	1	**8N-2640**	1	COVER	
	18	1	**7E-4656**	1	RETAINER	

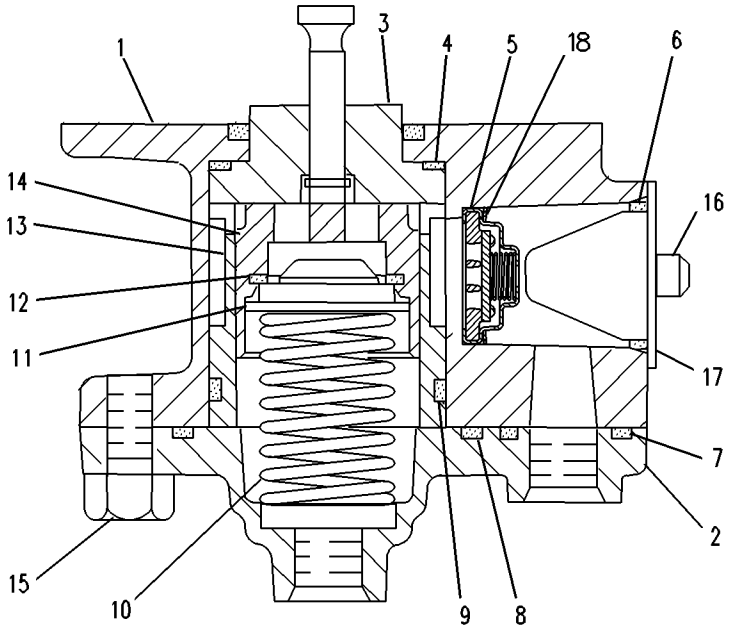

GRAPHIC #1 g00108374

1W-1695 PUMP GP-FUEL TRANSFER

S/N: 13Z22389-99999

PART OF 2W-4160 PUMP & MTG GP-FUEL TRANSFER

TYPE 2

SMCS-1256 **i00259266**

NOTE	REF NO	GRAPHIC REF	PART NUMBER	QTY	PART NAME 1 2 3 4 5 6 (PRODUCT LEVEL)	SEE PAGE
	1	1	**1W-1698**	1	HOUSING-TRANSFER PUMP	
	2	1	**1W-1699**	1	COVER	
	3	1	**1W-5912**	1	GUIDE & TAPPET AS	
	4	1	**6J-2419**	1	SEAL-O-RING (36.17MM ID)	
	5	1	**7W-8412**	3	VALVE AS	
	6	1	**3D-2824**	1	SEAL-O-RING (23.47MM ID)	
	7	1	**6F-6672**	1	SEAL-O-RING (17.12MM ID)	
	8	1	**3D-2898**	1	SEAL-O-RING	
	9	1	**5P-8215**	1	SEAL-O-RING (39.34MM ID)	
	10	1	**7W-0134**	1	SPRING-PUMP	
	11	1	**8N-2637**	1	WASHER	
	12	1	**7C-0396**	1	SPACER	
	13	1	**8N-2641**	1	SLEEVE	
	14	1	**1W-1669**	1	PISTON	
	15	1	**0S-1615**	2	BOLT (1/4-20X.75IN)	
	16	1	**6D-8498**	2	SCREW-HEAD	
	17	1	**8N-2640**	1	COVER	
	18	1	**7E-4656**	1	RETAINER	

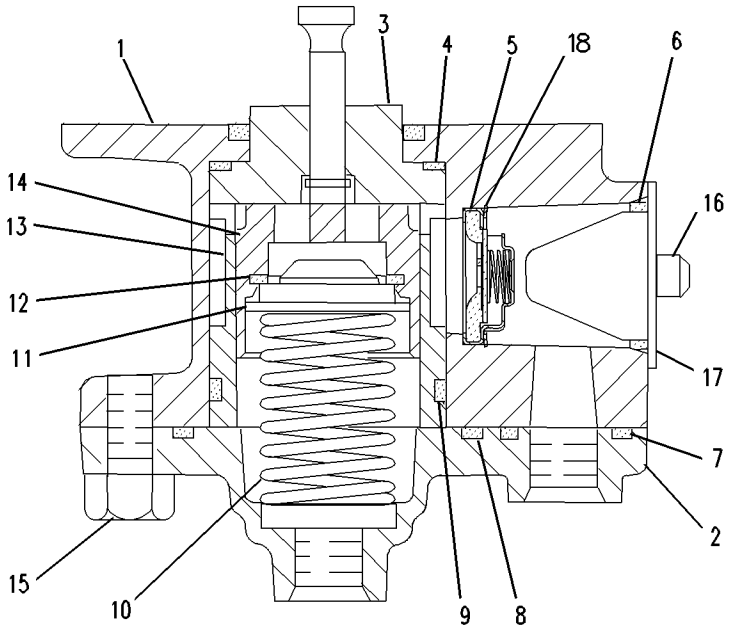

GRAPHIC #1 g00114104

MEMORANDA

7E-5107 PUMP GP-GOV & FUEL INJ

S/N: 13Z22389-99999
PART OF 7E-0082 ENGINE AR
TYPE 1

SMCS-1286 **i00259492**

NOTE	REF NO	GRAPHIC REF	PART NUMBER	QTY	PART NAME 1 2 3 4 5 6 (PRODUCT LEVEL)	SEE PAGE
	1	1	**7N-9907**	1	COVER	
		1	**7N-9554**	1	GASKET	
	2	1	**033-5879**	1	SEAL-O-RING (11.12MM ID)	
	3	1	**8J-8343**	1	SEAL-O-RING (6.02MM ID)	
	4	1	**8L-5832**	1	NUT-HEX (10-32 THD)	
	5	1	*3J-1907*	1	SEAL-O-RING (11.89MM ID)	
	6	1	**8N-3088**	1	SHAFT AS-THROTTLE	
	7	1	**5H-6552**	1	SETSCREW-SOCKET (31.75MM LG)	
	8	1	**8M-9140**	1	SPRING-GOVERNOR	
	9	1	**7N-2176**	1	PIN-DETENT	
	10	1	**2W-9657**	1	SPRING-DETENT	
	11	1	**7N-1052**	1	DOWEL	
Y	12	1	**8N-7276**	1	TORQUE CONTROL GP	
	13	1	**8M-8515**	1	SEAL-O-RING (32.99MM ID)	
	14	1	**2W-5448**	1	COVER	
		1	**7E-6785**	1	GASKET	
Y	15	1	**2W-2410**	1	GOVERNOR GP	
	16	1	**5P-6620**	1	SEAL-O-RING (14MM ID)	
	17	1	**7N-8768**	1	GASKET	
Y	18	1	*7C-8993*	1	FASTENER GP-FUEL INJ PUMP	
	19	1	**8N-5784**	1	DEFLECTOR-PULSE	
	20	1	**4W-5735**	1	LEVER AS-PIVOT	
		1	**4W-5734**	1	LEVER AS	
		1	**8L-5832**	1	NUT-HEX (10-32 THD)	
		1	**6V-6835**	1	SETSCREW-SOCKET	
Y	21	1	**2W-0256**	1	PUMP GP-FUEL INJECTION	

Y-SEPARATE ILLUSTRATION

7E-5107 **PUMP GP-GOV & FUEL INJ** *(contd.)* **i00259492**

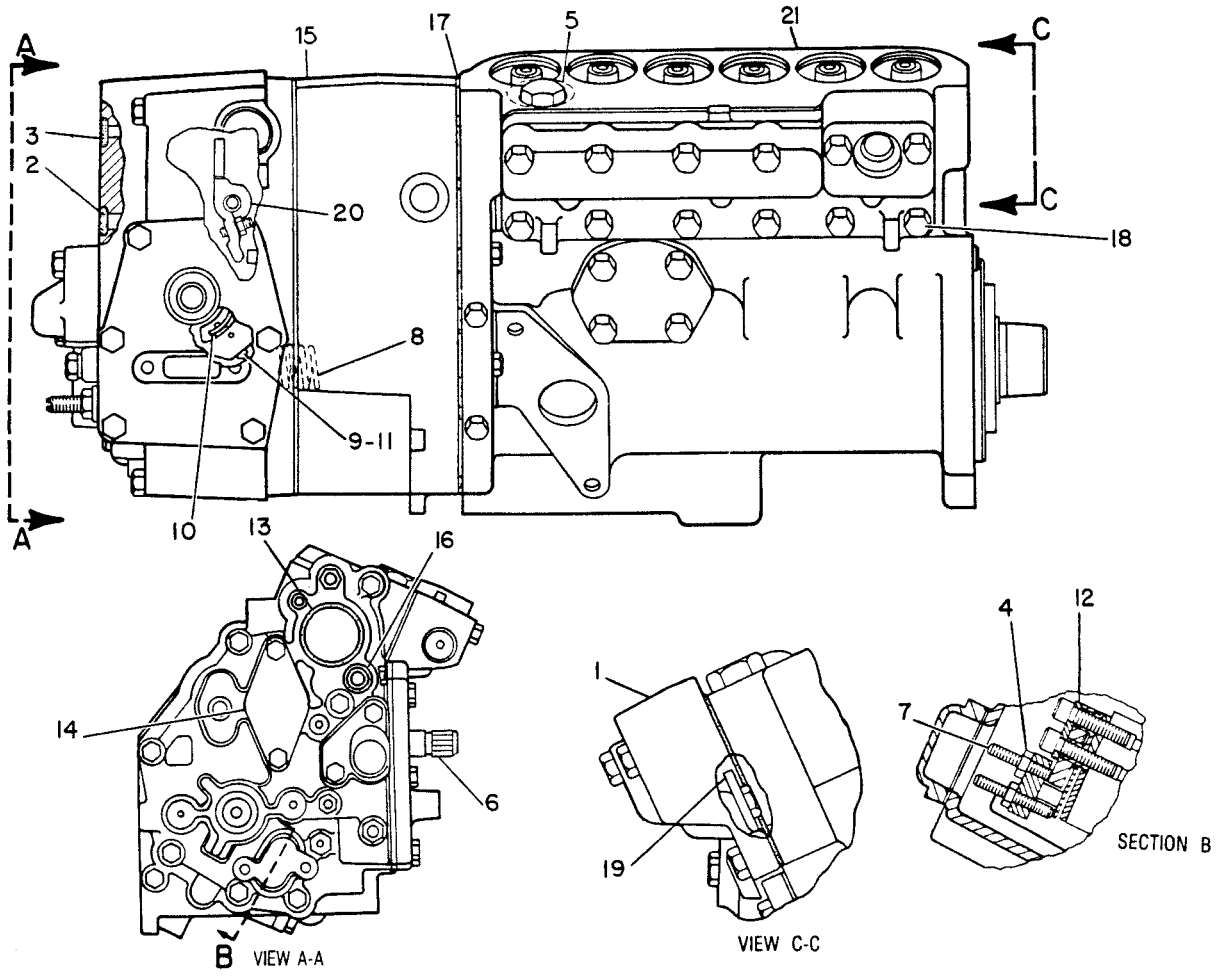

GRAPHIC #1 g00118768

7E-5107 PUMP GP-GOV & FUEL INJ

S/N: 13Z22389-99999
PART OF 7E-0082 ENGINE AR
TYPE 2

SMCS-1286 **i00312747**

NOTE	REF NO	GRAPHIC REF	PART NUMBER	QTY	PART NAME 1 2 3 4 5 6 (PRODUCT LEVEL)	SEE PAGE
	1	1	**7N-9907**	1	COVER	
		1	**7N-9554**	1	GASKET	
	2	1	**033-5879**	1	SEAL-O-RING (11.12MM ID)	
	3	1	**8J-8343**	1	SEAL-O-RING (6.02MM ID)	
	4	1	**8L-5832**	1	NUT-HEX (10-32 THD)	
	5	1	**3J-1907**	1	SEAL-O-RING (11.89MM ID)	
	6	1	**8N-3088**	1	SHAFT AS-THROTTLE	
	7	1	**5H-6552**	1	SETSCREW-SOCKET (31.75MM LG)	
	8	1	**8M-9140**	1	SPRING-GOVERNOR	
	9	1	**7N-2176**	1	PIN-DETENT	
	10	1	**2W-9657**	1	SPRING-DETENT	
	11	1	**7N-1052**	1	DOWEL	
Y	12	1	**8N-7276**	1	TORQUE CONTROL GP	
	13	1	**8M-8515**	1	SEAL-O-RING (32.99MM ID)	
	14	1	**2W-5448**	1	COVER	
		1	**7E-6785**	1	GASKET	
Y	15	1	**2W-2410**	1	GOVERNOR GP	
	16	1	**5P-6620**	1	SEAL-O-RING (14MM ID)	
	17	1	**7N-8768**	1	GASKET	
Y	18	1	*7C-8993*	1	FASTENER GP-FUEL INJ PUMP	
	19	1	**8N-5784**	1	DEFLECTOR-PULSE	
	20	1	**4W-5735**	1	LEVER AS-PIVOT	
		1	**4W-5734**	1	LEVER AS	
		1	**8L-5832**	1	NUT-HEX (10-32 THD)	
		1	**6V-6835**	1	SETSCREW-SOCKET	
YC	21	1	**6I-2834**	1	PUMP GP-FUEL INJECTION	

C-CHANGE FROM PREVIOUS TYPE
Y-SEPARATE ILLUSTRATION

7E-5107 **PUMP GP-GOV & FUEL INJ** *(contd.)* **i00312747**

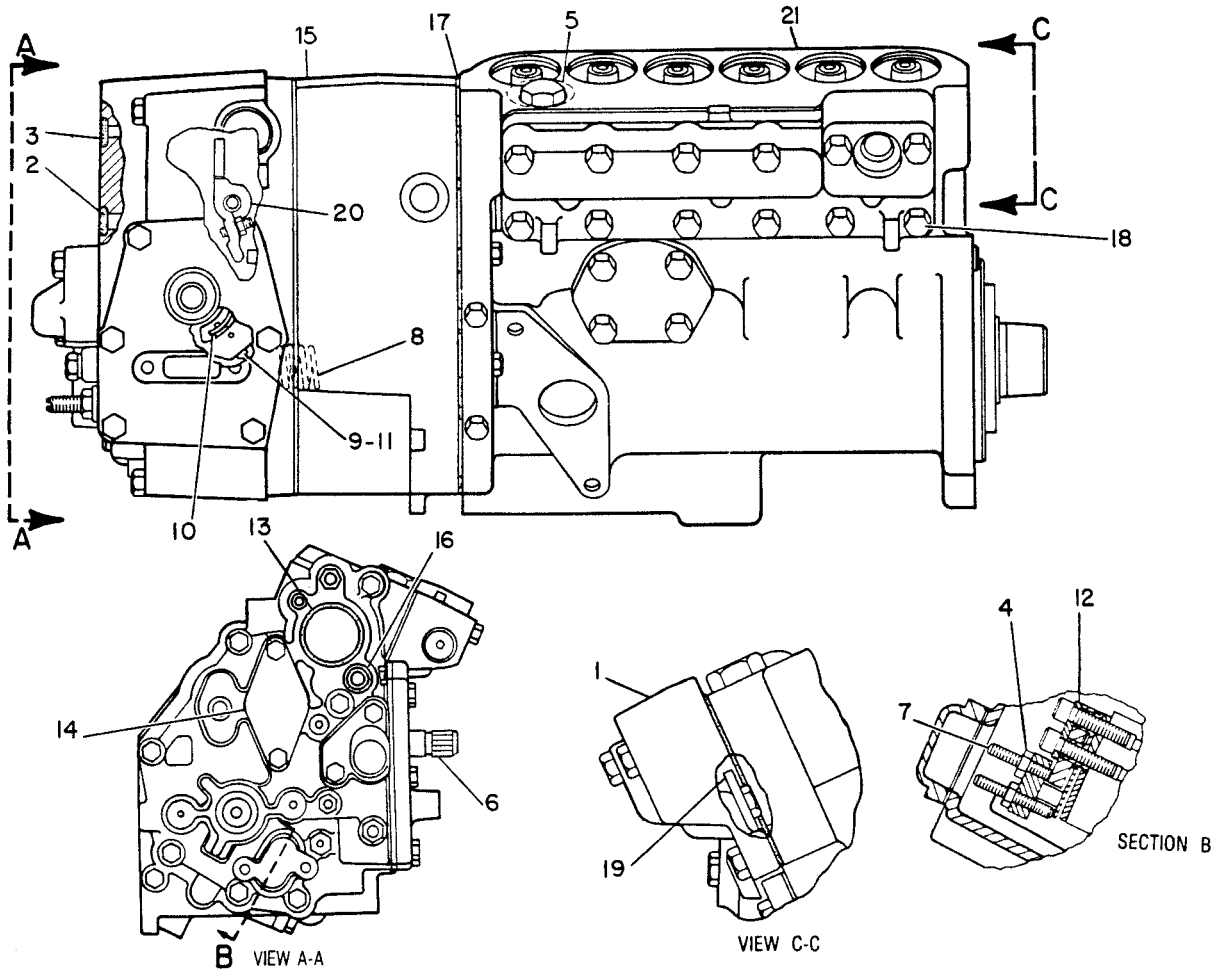

GRAPHIC #1 g00118768

FUEL SYSTEM

8R-8652 TANK GP-FUEL

S/N: 3XJ1-773

SMCS-1273 **i00259809**

NOTE	REF NO	GRAPHIC REF	PART NUMBER	QTY	PART NAME 1 2 3 4 5 6 (PRODUCT LEVEL)	SEE PAGE
	1	1	**9P-7121**	1	STRAINER-FUEL TANK	
	2	1	**6C-3060**	1	GASKET (62MM ID)	
	3	1	**7V-5323**	1	PLUNGER-LEVEL GAUGE	
	4	1	**8T-8917**	6	BOLT (1/2-13X1.25IN)	
	5	1	**5P-1076**	6	WASHER-HARD (4MM THK)	
	6	1	**3K-0360**	1	SEAL-O-RING (16.36MM ID)	
	7	1	**8T-0081**	1	VALVE-BALL	
	8	1	**8R-8653**	1	TANK AS	
M	9	1	**6V-7727**	6	BOLT (M6X1.0X16MM)	
	10	1	**8T-4205**	6	WASHER-HARD (2MM THK)	
	11	1	**9X-4941**	1	SENDER AS-FUEL LEVEL	
	12	1	**7T-2036**	1	CAP AS-FUEL TANK	
	13	1	**4B-1663**	1	ELEMENT-FILTER	
	14	1	**4B-5949**	1	ELEMENT-FILTER	
	15	1	**4B-5423**	1	GASKET-BAFFLE	
	16	1	**8P-0408**	1	CAP-FUEL TANK FILLER	
	17	1	**3F-4134**	1	BAFFLE-CAP	
	18	1	**7B-2002**	1	WASHER	
	19	1	**7T-2009**	1	VALVE AS	
	20	1	**7T-2037**	1	GASKET	

M-METRIC PART

8R-8652 **TANK GP-FUEL** *(contd.)* **i00259809**

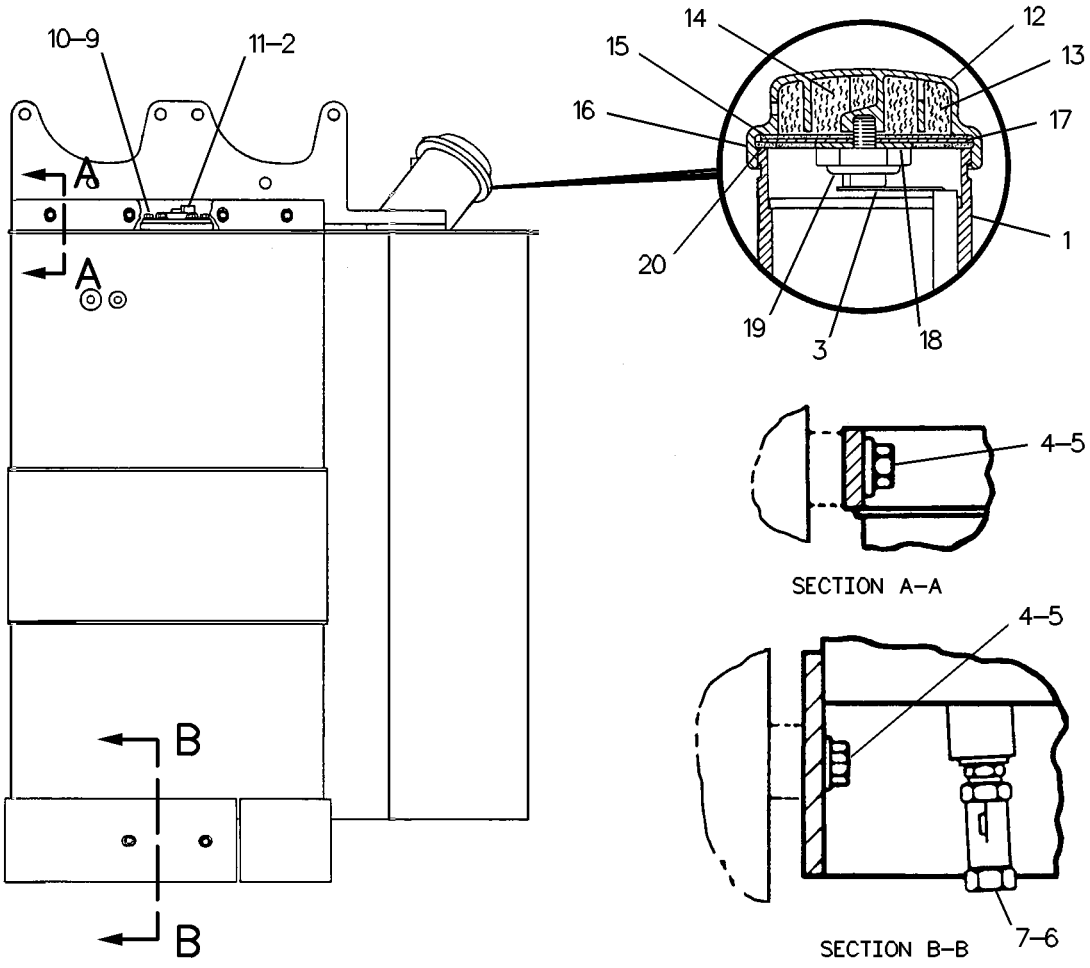

GRAPHIC #1

g00118802

FUEL SYSTEM

8R-8652 TANK GP-FUEL

S/N: 3XJ774-1506

SMCS-1273 **i00259814**

NOTE	REF NO	GRAPHIC REF	PART NUMBER	QTY	PART NAME 1 2 3 4 5 6 (PRODUCT LEVEL)	SEE PAGE
	1	1	**9P-7121**	1	STRAINER-FUEL TANK	
	2	1	**6C-3060**	1	GASKET (62MM ID)	
	3	1	**7V-5323**	1	PLUNGER-LEVEL GAUGE	
	4	1	**8T-8917**	6	BOLT (1/2-13X1.25IN)	
	5	1	**5P-1076**	6	WASHER-HARD (4MM THK)	
	6	1	**3K-0360**	1	SEAL-O-RING (16.36MM ID)	
	7	1	**8T-0081**	1	VALVE-BALL	
	8	1	**8R-8653**	1	TANK AS	
M	9	1	**6V-7727**	6	BOLT (M6X1.0X16MM)	
	10	1	**8T-4205**	6	WASHER-HARD (2MM THK)	
	11	1	**9X-4941**	1	SENDER AS-FUEL LEVEL	
C	12	1	**9G-6082**	1	CAP AS-FUEL TANK	
	13	1	**4B-1663**	1	ELEMENT-FILTER	
	14	1	**4B-5949**	1	ELEMENT-FILTER	
	15	1	**4B-5423**	1	GASKET-BAFFLE	
	16	1	**8P-0408**	1	CAP-FUEL TANK FILLER	
	17	1	**3F-4134**	1	BAFFLE-CAP	
	18	1	**7B-2002**	1	WASHER	
	19	1	**3H-8389**	1	SCREW-FILLER CAP	
	20	1	**7T-2037**	1	GASKET	

C-CHANGE FROM PREVIOUS TYPE
M-METRIC PART

8R-8652 **TANK GP-FUEL** *(contd.)* **i00259814**

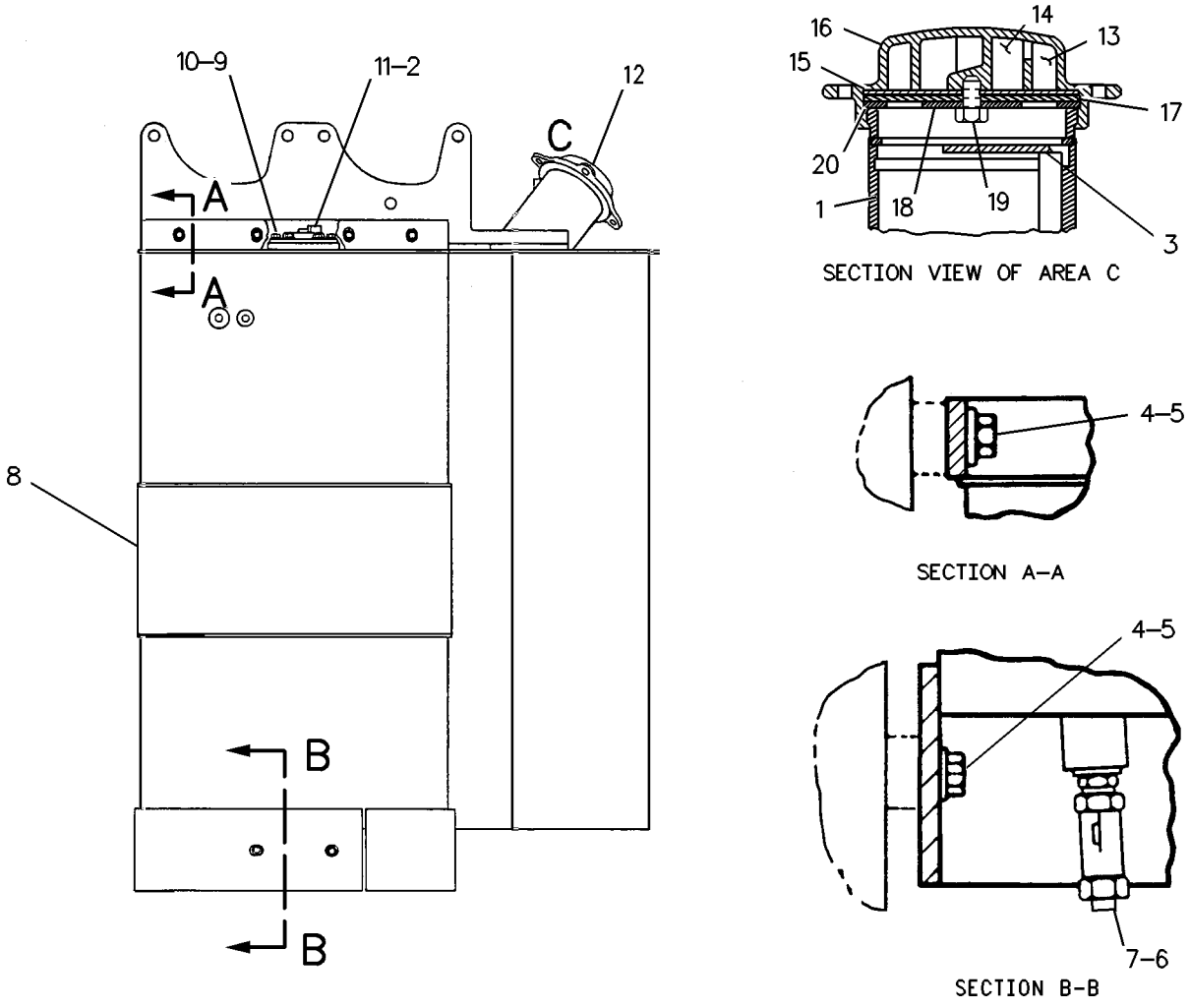

GRAPHIC #1

g00127915

FUEL SYSTEM

8R-8652 TANK GP-FUEL

S/N: 3XJ1507-99999

SMCS-1273 **i01334389**

NOTE	REF NO	GRAPHIC REF	PART NUMBER	QTY	PART NAME 1 2 3 4 5 6 (PRODUCT LEVEL)	SEE PAGE
	1	1	**9P-7121**	1	STRAINER-FUEL TANK	
	2	1	**6C-3060**	1	GASKET (62MM ID)	
	3	1	**7V-5323**	1	PLUNGER-LEVEL GAUGE	
	4	1	**8T-8917**	6	BOLT (1/2-13X1.25 IN)	
	5	1	**5P-1076**	6	WASHER-HARD (4MM THK)	
C	6	1	**3K-0360**	2	SEAL-O-RING (16.36MM ID)	
	7	1	**8T-0081**	1	VALVE-BALL	
C	8	1	**4E-8702**	1	TANK AS	
M	9	1	**8T-4970**	6	BOLT (M6X1X14MM)	
	10	1	**8T-4205**	6	WASHER-HARD (2MM THK)	
	11	1	**9X-4941**	1	SENDER AS-FUEL LEVEL	
C	12	1	**9S-4185**	1	PLUG-O-RING (3/4-16 THD)	
C	13	1	**8H-3497**	1	RING-RETAINING	
	14	1	**9G-6082**	1	CAP AS-FUEL TANK	
	15	1	**4B-1663**	1	ELEMENT-FILTER	
	16	1	**4B-5949**	1	ELEMENT-FUEL FILTER	
	17	1	**4B-5423**	1	GASKET-BAFFLE	
	18	1	**8P-0408**	1	CAP-FUEL TANK FILLER	
	19	1	**3F-4134**	1	BAFFLE-CAP	
	20	1	**7B-2002**	1	WASHER (3.0MM THK)	
	21	1	**3H-8389**	1	SCREW-FILLER CAP	
	22	1	**7T-2037**	1	GASKET	

C-CHANGE FROM PREVIOUS TYPE
M-METRIC PART

8R-8652 **TANK GP-FUEL** *(contd.)* **i01334389**

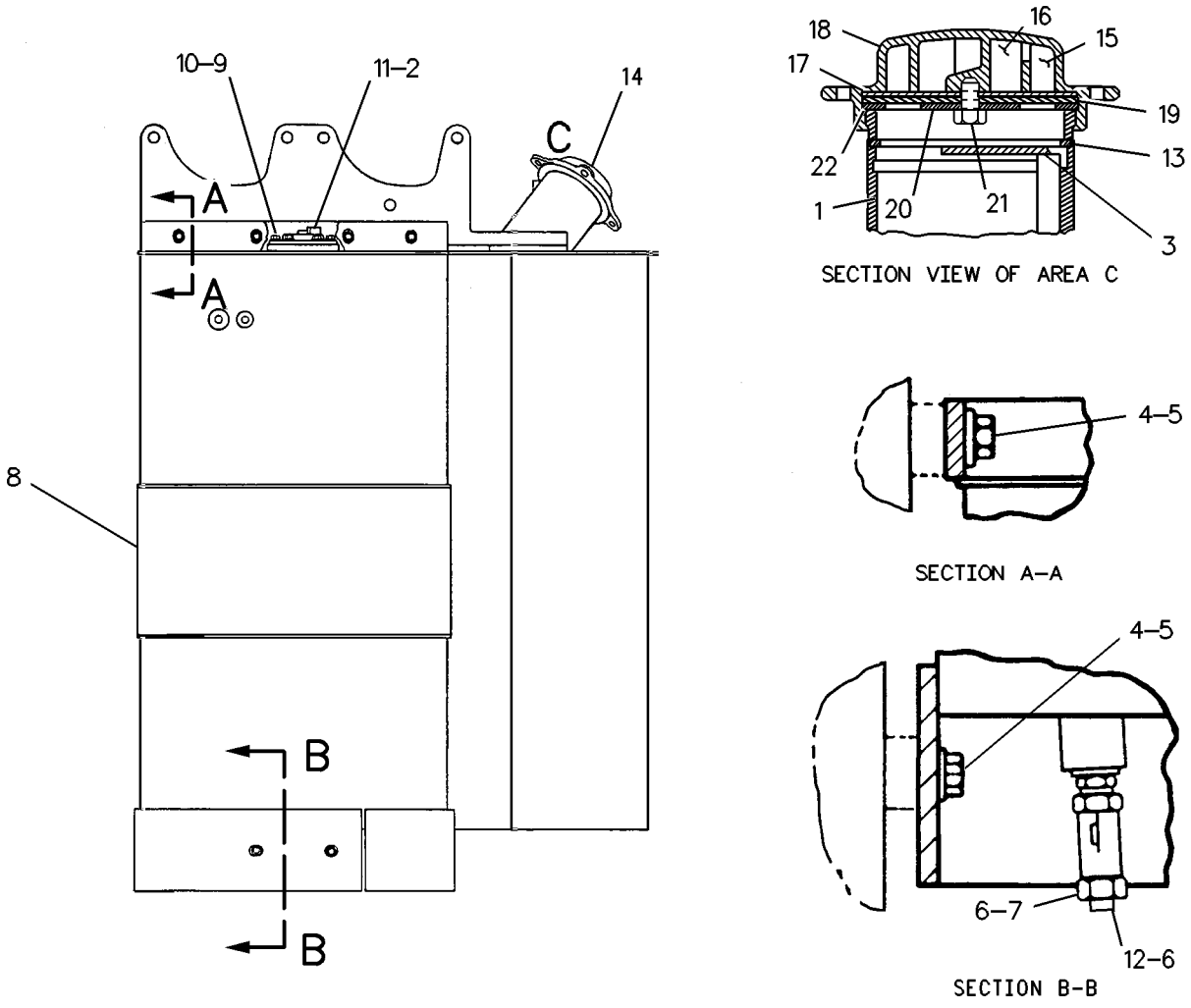

GRAPHIC #1 g00127916

8N-7276 TORQUE CONTROL GP

S/N: 13Z22389-99999

PART OF 7E-5107 PUMP GP-GOV & FUEL INJ

SMCS-1257 **i00962181**

NOTE	REF NO	GRAPHIC REF	PART NUMBER	QTY	PART NAME 1 2 3 4 5 6 (PRODUCT LEVEL)	SEE PAGE
	1	1	**7N-1796**	1	SPACER (1.549MM THK)	
	2	1	**8N-7519**	1	SPRING-TORQUE (.635MM THK)	
	3	1	**2W-7234**	1	BAR-LOAD STOP (4.0MM THK)	
	4	1	**6L-5897**	2	BOLT (1/4-20X7/8IN)	
	5	1	**8M-9062**	1	RETAINER-SPRING (3.05MM THK)	
	6	1	**2P-2685**	1	SPACER (.635MM THK)	
	7	1	**1P-6452**	1	INSULATOR	
	8	1	**7W-5700**	1	CONTACT	

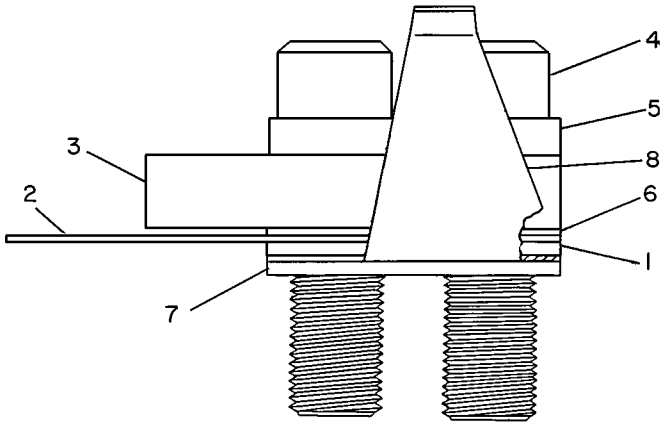

GRAPHIC #1 g00108387

MEMORANDA

8R-3954 AIR DRYER GP

S/N: 3XJ1-1682
AN ATTACHMENT

SMCS-4285 **i01334391**

NOTE	REF NO	GRAPHIC REF	PART NUMBER	QTY	PART NAME 1 2 3 4 5 6 (PRODUCT LEVEL)	SEE PAGE
	1	1	**8J-8197**	1	CLIP (23.8MM ID)	
M	2	1	**8T-4137**	3	BOLT (M10X1.50X20MM)	
	3	1	**061-6717**	2	ELBOW-FLARED (3/4-14 NPTF)	
	4	1	**3B-7729**	1	ELBOW (90 DEGREE) (1/4-18 NPT THD)	
	5	1	**9M-6522**	1	CONNECTOR-FLARED	
	6	1	**6C-5386**	1	HOSE AS	
I	7	1	**6C-5387**	1	HOSE AS	
	8	1	**8D-0071**	1	TEE-FLARED	
	9	1	**6V-8801**	1	NUT (3/8-16 THD)	
	10	1	**5P-1075**	4	WASHER-HARD (3MM THK)	
J	11	1	**8V-9101**	1	AIR DRYER GP	
	12	1	**3B-7262**	1	NIPPLE-PIPE	
	13	1	**8T-4896**	6	WASHER-HARD (10.2X18.5X2.5MM THK)	
	14	1	**5M-3062**	1	BOLT (3/8-16X.75 IN)	
	15	1	**6K-8178**	2	CLIP (15.88MM ID)	
	16	1	**8S-0948**	2	CLIP (20.64MM ID)	
	17	1	**4E-2129**	1	BRACKET AS	
M		1	**8T-3490**	1	NUT-WELD (M10X1.5 THD)	
	18	1	**7J-6420**	1	ELBOW-FLARED	
	19	1	**3B-7273**	1	NIPPLE-PIPE (1/4-18 NPT)	
	20	1	**8W-3087**	1	ELEMENT AS-HEATER	
	21	1	**7N-9737**	1	HOUSING-PLUG	
		1	**7N-7779**	1	SOCKET-CONNECTOR	
		1	**7N-7780**	1	PIN-CONNECTOR (BLADE)	
	22	1	**9S-7706**	1	ELBOW-FLARED	
	23	1	**5P-9299**	1	CLIP (12.7MM ID)	
	24	1	**5K-9245**	1	CONNECTOR-FLARED	
	25	1	**6C-5299**	1	TUBE AS	
	26	1	**8R-0040**	1	ANGLE	
	27	1	**7B-3235**	1	BOLT (1/2-13X1.375 IN)	
	28	1	**8R-3956**	1	HOSE AS	
	29	1	**4L-6454**	1	BOLT (3/8-16X1 IN)	
					AVAILABLE REPAIR KIT(S):	
J			**8V-9174**	1	KIT-RELIEF VALVE	
J			**8V-9257**	1	KIT-FILTER CARTRIDGE	
J			**8V-9258**	1	KIT-DESICCANT REFILL	
J			**152-8245**	1	KIT-MOUNTING	

I-SEE HOSE FABRICATION GUIDE
J-PART MARKED J INCLUDES KITS MARKED J
M-METRIC PART

8R-3954 **AIR DRYER GP** ***(contd.)*** **i01334391**

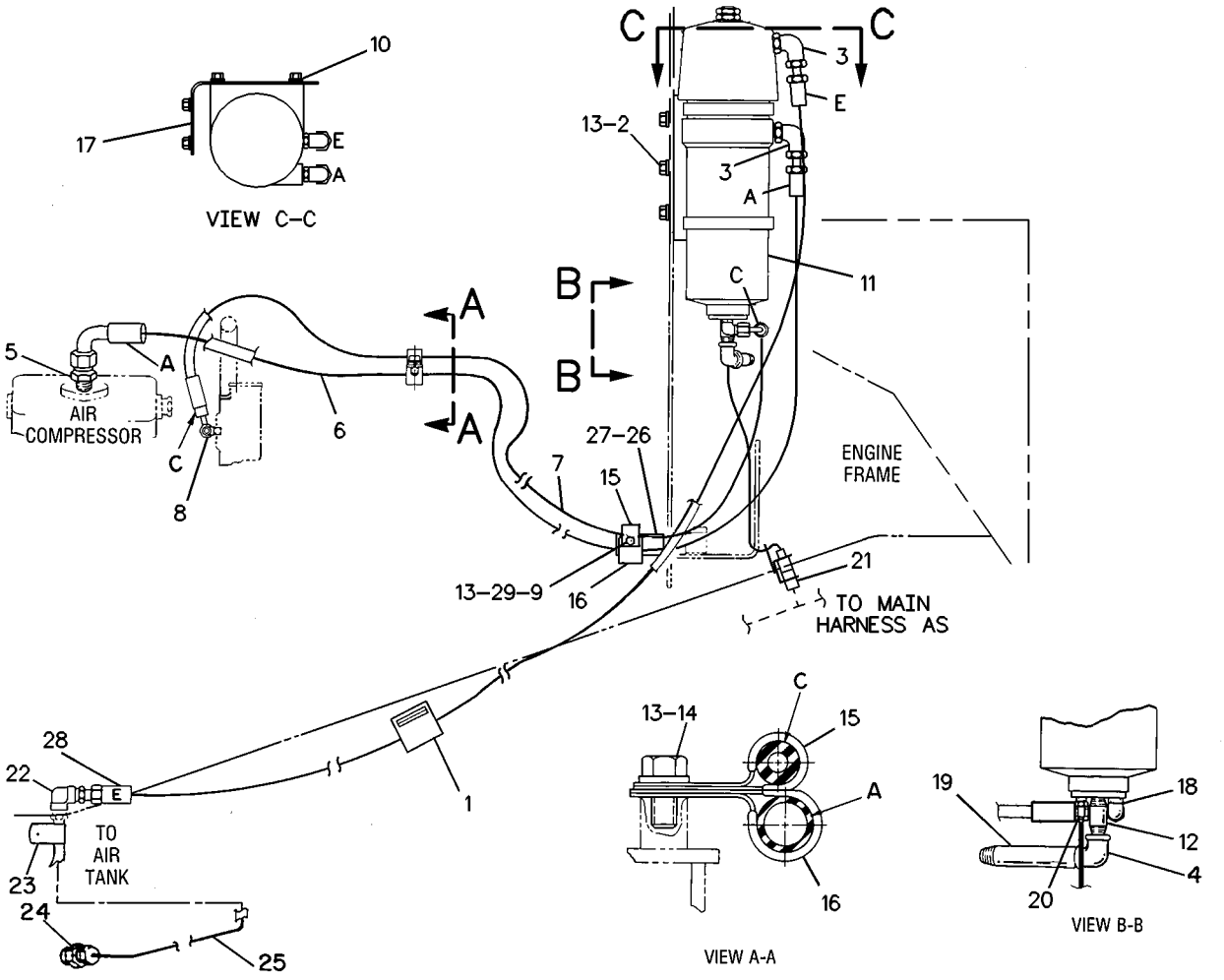

GRAPHIC #1 g00126571

8R-3954 AIR DRYER GP

S/N: 3XJ1683-99999

AN ATTACHMENT

SMCS-4285 **i01334394**

NOTE	REF NO	GRAPHIC REF	PART NUMBER	QTY	PART NAME 1 2 3 4 5 6 (PRODUCT LEVEL)	SEE PAGE
	1	1	**8J-8197**	1	CLIP (23.8MM ID)	
M	2	1	**8T-4137**	3	BOLT (M10X1.50X20MM)	
	3	1	**061-6717**	2	ELBOW-FLARED (3/4-14 NPTF)	
C	4	1	**5D-1026**	1	CLAMP-HOSE	
	5	1	**9M-6522**	1	CONNECTOR-FLARED	
	6	1	**6C-5386**	1	HOSE AS	
I	7	1	**6C-5387**	1	HOSE AS	
	8	1	**8D-0071**	1	TEE-FLARED	
	9	1	**6V-8801**	1	NUT (3/8-16 THD)	
	10	1	**5P-1075**	4	WASHER-HARD (3MM THK)	
J	11	1	**8V-9101**	1	AIR DRYER GP	
C	12	1	**3B-7276**	1	NIPPLE-PIPE	
	13	1	**8T-4896**	6	WASHER-HARD (10.2X18.5X2.5MM THK)	
	14	1	**5M-3062**	1	BOLT (3/8-16X.75 IN)	
	15	1	**6K-8178**	2	CLIP (15.88MM ID)	
	16	1	**8S-0948**	2	CLIP (20.64MM ID)	
C	17	1	**6C-8421**	1	BRACKET AS	
CM		1	**8T-3490**	3	NUT-WELD (M10X1.5 THD)	
	18	1	**7J-6420**	1	ELBOW-FLARED	
C	19	1	**5P-4295**	2	CLIP (19.05MM ID)	
	20	1	**8W-3087**	1	ELEMENT AS-HEATER	
	21	1	**7N-9737**	1	HOUSING-PLUG	
		1	**7N-7779**	1	SOCKET-CONNECTOR	
		1	**7N-7780**	1	PIN-CONNECTOR (BLADE)	
	22	1	**9S-7706**	1	ELBOW-FLARED	
	23	1	**5P-9299**	1	CLIP (12.7MM ID)	
	24	1	**5K-9245**	1	CONNECTOR-FLARED	
	25	1	**6C-5299**	1	TUBE AS	
	26	1	**8R-0040**	1	ANGLE	
	27	1	**7B-3235**	1	BOLT (1/2-13X1.375 IN)	
	28	1	**8R-3956**	1	HOSE AS	
	29	1	**4L-6454**	1	BOLT (3/8-16X1 IN)	
BCE	30	1	**5P-1505**		HOSE (130CM)	
					AVAILABLE REPAIR KIT(S):	
J			**8V-9174**	1	KIT-RELIEF VALVE	
J			**8V-9257**	1	KIT-FILTER CARTRIDGE	
J			**8V-9258**	1	KIT-DESICCANT REFILL	
J			**152-8245**	1	KIT-MOUNTING	

B-USE AS REQUIRED
C-CHANGE FROM PREVIOUS TYPE
E-ORDER BY THE CENTIMETER
I-SEE HOSE FABRICATION GUIDE
J-PART MARKED J INCLUDES KITS MARKED J
M-METRIC PART

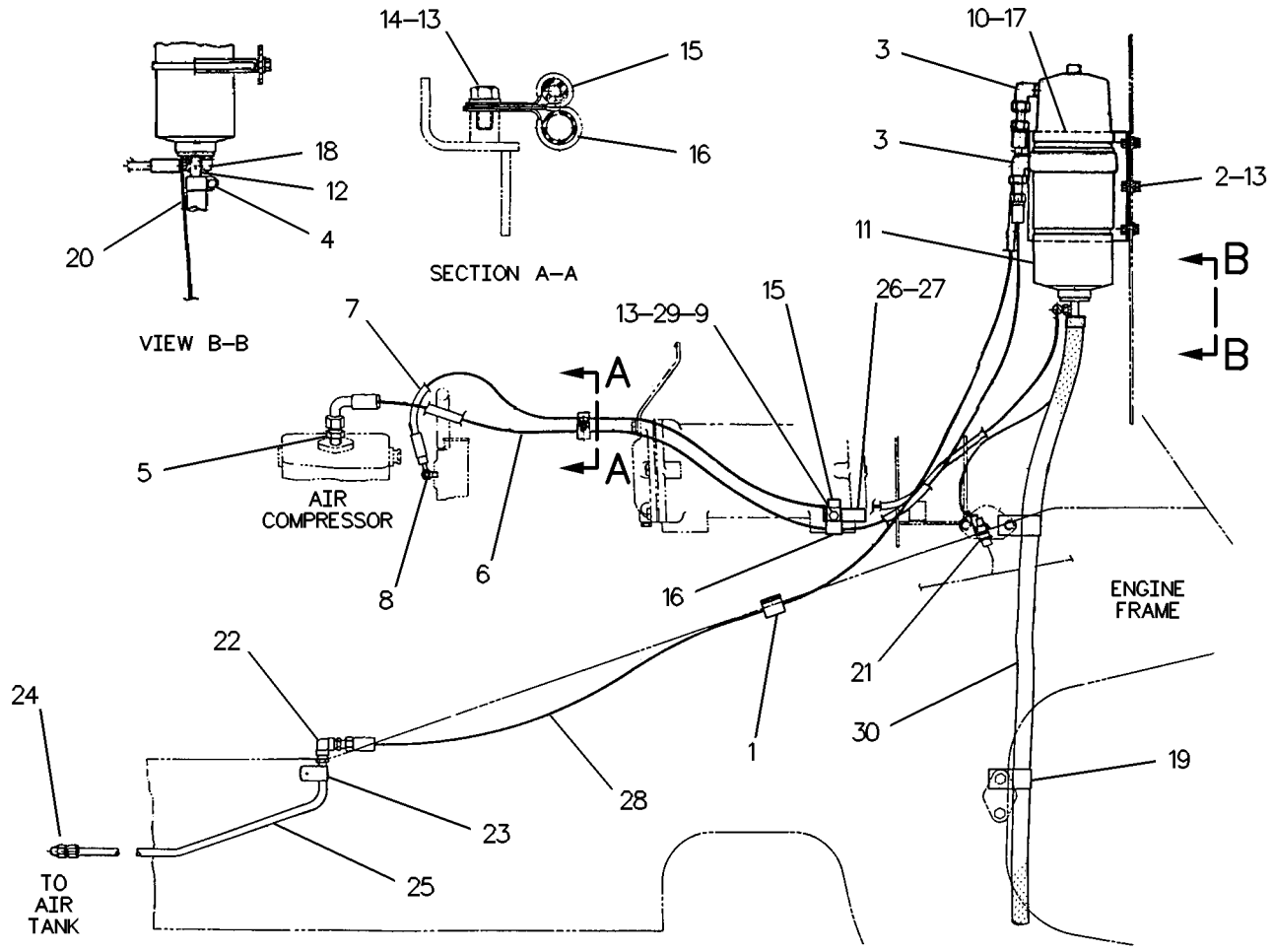

GRAPHIC #1

g00127725

9G-9813 ALARM GP–ACTION

S/N: 3XJ1-99999
24 VOLT
PART OF 6C-5238 SEAT GP-ADJUSTABLE, 8R-5344 WIRING GP-INSTR & IGNITION
ALSO AN ATTACHMENT

SMCS-7406, 7407 **i01326515**

NOTE	REF NO	GRAPHIC REF	PART NUMBER	QTY	PART NAME 1 2 3 4 5 6 (PRODUCT LEVEL)	SEE PAGE
	1	1	**7N-9737**	1	HOUSING-PLUG	
	2	1	**7N-7779**	1	SOCKET-CONNECTOR	
	3	1	**7N-7780**	1	PIN-CONNECTOR (BLADE)	

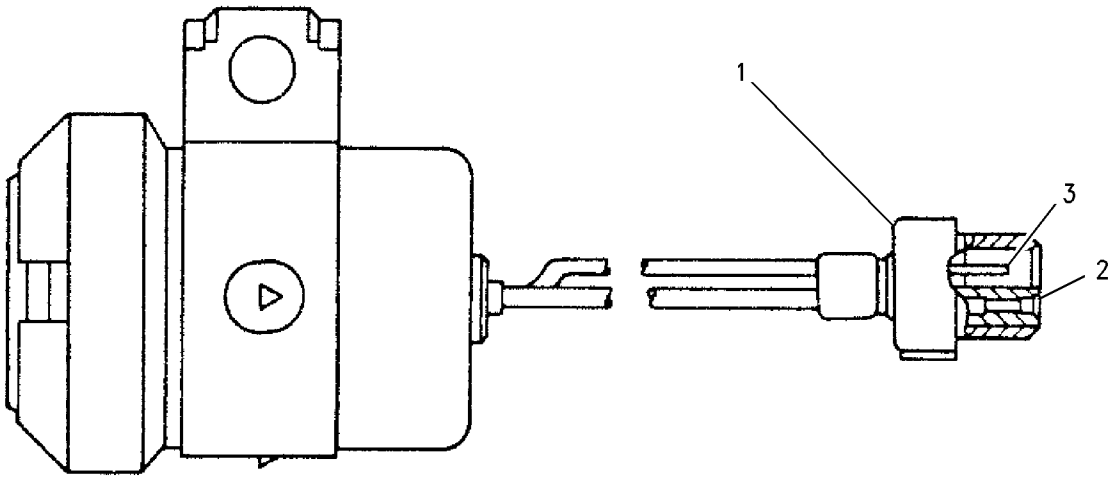

GRAPHIC #1 g00701923

MEMORANDA

ELECTRICAL AND STARTING SYSTEM

3E-7578 ALTERNATOR GP-CHARGING*R

S/N: 3XJ1-99999
24 VOLT, 50 AMPERE
PART OF 5S-9088 ALTERNATOR GP-CHARGING

SMCS-1405 **i01217301**

NOTE	REF NO	GRAPHIC REF	PART NUMBER	QTY	PART NAME 1 2 3 4 5 6 (PRODUCT LEVEL)	SEE PAGE
	1	1	**9S-2011**	1	SCREW-MACHINE	
	2	1	**1H-3244**	1	LOCKWASHER (NO.14)	
	3	1	**2K-4821**	1	LOCKNUT (5/8-18 THD)	
	4	1	**7F-7621**	1	WASHER	
	5	1	**9S-2260**	1	PLATE-COVER	
	6	1	**9S-2255**	1	COVER	
	7	1	**9S-2262**	1	GASKET	
	8	1	**9S-2544**	6	SCREW-HEX HEAD	
	9	1	**9B-7233**	10	LOCKWASHER (NO.8)	
	10	1	**9S-2437**	5	SCREW-TAPPING	
	11	1	**8F-1434**	5	LOCKWASHER (5.07MM ID)	
	12	1	**5P-3418**	1	BEARING-ROLLER	
	13	1	**5P-3419**	1	RACE-BEARING INNER	
	14	1	**9S-2396**	1	BUSHING-TERMINAL	
	15	1	**9S-2393**	3	DIODE-NEGATIVE	
	16	1	**9N-0943**	1	PLUG-BEARING WELL	
	17	1	**9F-2247**	1	PLUG-PIPE	
J	18	1	**9S-2292**	1	HEAT SINK AS	
	19	1	**100-6656**	1	DIODE AS-ALTERNATOR	
	20	1	**9S-9830**	4	SCREW-FORMING	
	21	1	**8C-9660**	4	WASHER (0.8MM THK)	
	22	1	**9S-2300**	4	INSULATOR	
	23	1	**9S-2301**	1	INSULATION	
	24	1	**9S-2248**	1	COIL & SUPPORT AS	
	25	1	**9N-3388**	3	LOCKSCREW	
	26	1	**3T-6354**	1	REGULATOR AS	
	27	1	**7N-9023**	1	SCREW AS	
	28	1	**6N-1872**	2	SCREW AS	
	29	1	**4B-2043**	4	NUT (8-32 THD)	
	30	1	**100-6657**	1	PLATE-ALTERNATOR	
	31	1	**9S-2302**	1	ROTOR AS	
	32	1	**9S-2004**	1	STATOR AS	
		1	**9S-2005**	1	GROMMET	
		1	**9S-2006**	1	INSULATOR	
		1	**9S-2014**	3	CLIP	
	33	1	**9S-2005**	1	GROMMET	
	34	1	**2L-8075**	3	TERMINAL	
	35	1	**9S-2013**	1	KIT-RELAY TERMINAL	
					(INCLUDES BUSHINGS, STUD, NUT AS & WASHER)	
	36	1	**100-6658**	1	WIRE AS-ALTERNATOR	
	37	1	**9S-2012**	1	KIT-OUTPUT TERMINAL	
					(INCLUDES GASKETS, NUT AS & TERMINAL)	
	38	1	**9S-2389**	1	STUD AS	
	39	1	**9L-6770**	1	CAP (ALTERNATOR)	
	40	1	**2P-5616**	1	FRAME-DRIVE END	
	41	1	**9S-2390**	1	RETAINER	
	42	1	**9X-2500**	4	SCREW-HEX FLANGE	
	43	1	**9S-2009**	4	SCREW-HEAD	
	44	1	**100-6532**	1	COLLAR-ALTERNATOR	
	45	1	**5P-7807**	1	BALL BEARING	
	46	1	**100-6531**	1	FAN-ALTERNATOR	
					AVAILABLE REPAIR KIT(S):	
J			**9S-2290**	3	KIT-DIODE JUNCTION STUD	
					(INCLUDES INSULATOR & STUD)	

3E-7578 **ALTERNATOR GP-CHARGING** *(contd.)* **i01217301**

NOTE	REF NO	GRAPHIC REF	PART NUMBER	QTY	PART NAME 1 2 3 4 5 6 (PRODUCT LEVEL)	SEE PAGE
J			**9S-2291**	3	KIT-POSITIVE DIODE	
					(INCLUDES DIODE)	

J-PART MARKED J INCLUDES KIT MARKED J

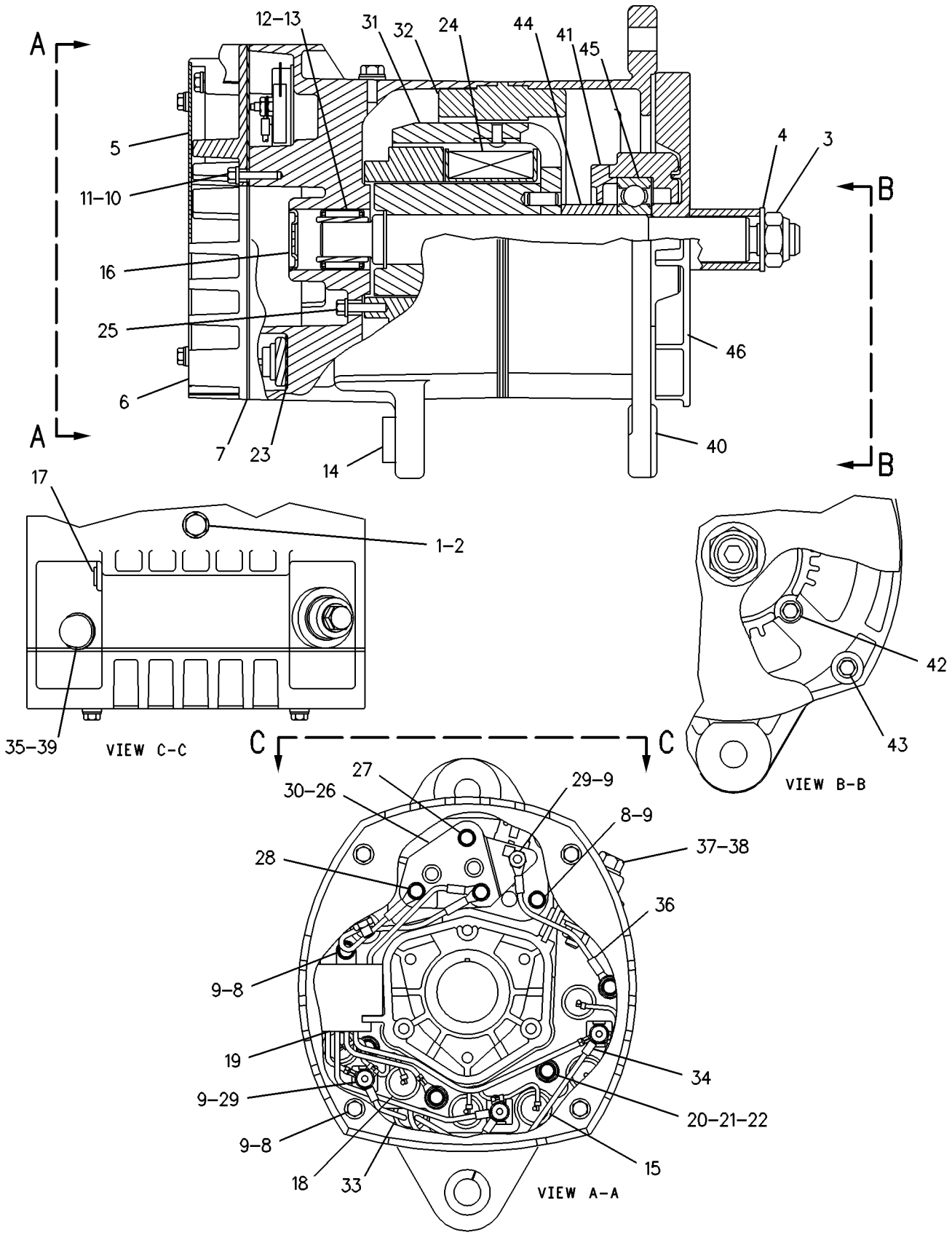

GRAPHIC #1 g00105995

MEMORANDA

ELECTRICAL AND STARTING SYSTEM

3T-1888 ALTERNATOR GP-CHARGING

S/N: 3XJ1-99999
24 VOLT, 50 AMPERE
PART OF 5S-9088 ALTERNATOR GP-CHARGING

SMCS-1405 **i01334467**

NOTE	REF NO	GRAPHIC REF	PART NUMBER	QTY	PART NAME 1 2 3 4 5 6 (PRODUCT LEVEL)	SEE PAGE
	1	1	**9S-2438**	2	SCREW-TAPPING	
	2	1	**7H-2079**	7	LOCKWASHER	
	3	1	**9S-2255**	1	COVER	
	4	1	**9S-2262**	1	GASKET	
	5	1	**9S-9830**	6	SCREW-FORMING	
	6	1	**8H-0878**	6	LOCKWASHER	
	7	1	**8F-1326**	3	WASHER (0.8MM THK)	
	8	1	**9B-7233**	2	LOCKWASHER (NO.8)	
	9	1	**7N-0129**	1	REGULATOR AS	
	10	1	**9S-2250**	1	GROMMET	
	11	1	**9S-2542**	1	SCREW-TAPPING	
C	12	1	**9L-6770**	1	CAP	
	13	1	**9S-2011**	1	SCREW-MACHINE	
		1	**1L-4789**	1	LOCKWASHER	
	14	1	**9S-9829**	1	SCREW AS	
	15	1	**9S-2246**	1	LEAD AS	
	16	1	**4B-2043**	4	NUT (8-32 THD)	
	17	1	**9S-2389**	1	STUD AS	
	18	1	**7N-0174**	1	HOUSING AS	
	19	1	**9N-0943**	1	PLUG-BEARING WELL	
	20	1	**5P-3418**	1	BEARING-ROLLER	
	21	1	**9S-2396**	1	BUSHING-TERMINAL	
	22	1	**9S-2007**	3	LOCKSCREW	
	23	1	**9S-2301**	1	INSULATION	
	24	1	**9S-2292**	1	HEAT SINK AS	
	25	1	**9S-2300**	4	INSULATOR	
	26	1	**9S-2247**	4	WASHER-SPRING	
		1	**4B-4863**	4	WASHER (1.2MM THK)	
	27	1	**9S-2437**	5	SCREW-TAPPING	
	28	1	**9S-2544**	4	SCREW-HEX HEAD	
	29	1	**9S-2260**	1	PLATE-COVER	
	30	1	**5P-3419**	1	RACE-BEARING INNER	
	31	1	**9S-2004**	1	STATOR AS	
	32	1	**9S-2006**	1	INSULATOR	
	33	1	**9S-2005**	1	GROMMET	
	34	1	**9S-2014**	3	CLIP	
	35	1	**9S-2248**	1	COIL & SUPPORT AS	
	36	1	**9S-2302**	1	ROTOR AS	
	37	1	**9S-2390**	1	RETAINER	
	38	1	**9S-2256**	1	GASKET	
	39	1	**9S-2261**	1	COLLAR-SHAFT	
	40	1	**9S-2008**	4	SCREW-HEAD	
	41	1	**9S-2258**	1	FAN & BAFFLE AS	
	42	1	**7F-7621**	1	WASHER	
	43	1	**2K-4821**	1	LOCKNUT (5/8-18 THD)	
	44	1	**9S-2254**	1	COLLAR-SHAFT	
	45	1	**9S-2252**	1	SLINGER	
	46	1	**9S-2009**	4	SCREW-HEAD	
	47	1	**3B-4502**	4	LOCKWASHER (1.19MM THK)	
	48	1	**2P-5616**	1	FRAME-DRIVE END	
C	49	1	**5P-7807**	1	BALL BEARING	
					AVAILABLE REPAIR KIT(S):	
			9S-2013	1	KIT-RELAY TERMINAL	
					(INCLUDES BUSHING, O-RING & HARDWARE)	

3T-1888 **ALTERNATOR GP-CHARGING** *(contd.)* **i01334467**

NOTE	REF NO	GRAPHIC REF	PART NUMBER	QTY	PART NAME 1 2 3 4 5 6 (PRODUCT LEVEL)	SEE PAGE
			9S-2012	1	KIT-OUTPUT TERMINAL	
					(INCLUDES GASKETS, TERMINALS & HARDWARE)	
			9S-2290	3	KIT-DIODE JUNCTION STUD (HEAT SINK-HARDWARE)	
			9S-2291	3	KIT-POSITIVE DIODE (HEAT SINK-HARDWARE)	
C-CHANGE FROM PREVIOUS TYPE						

3T-1888 **ALTERNATOR GP-CHARGING** *(contd.)* **i01334467**

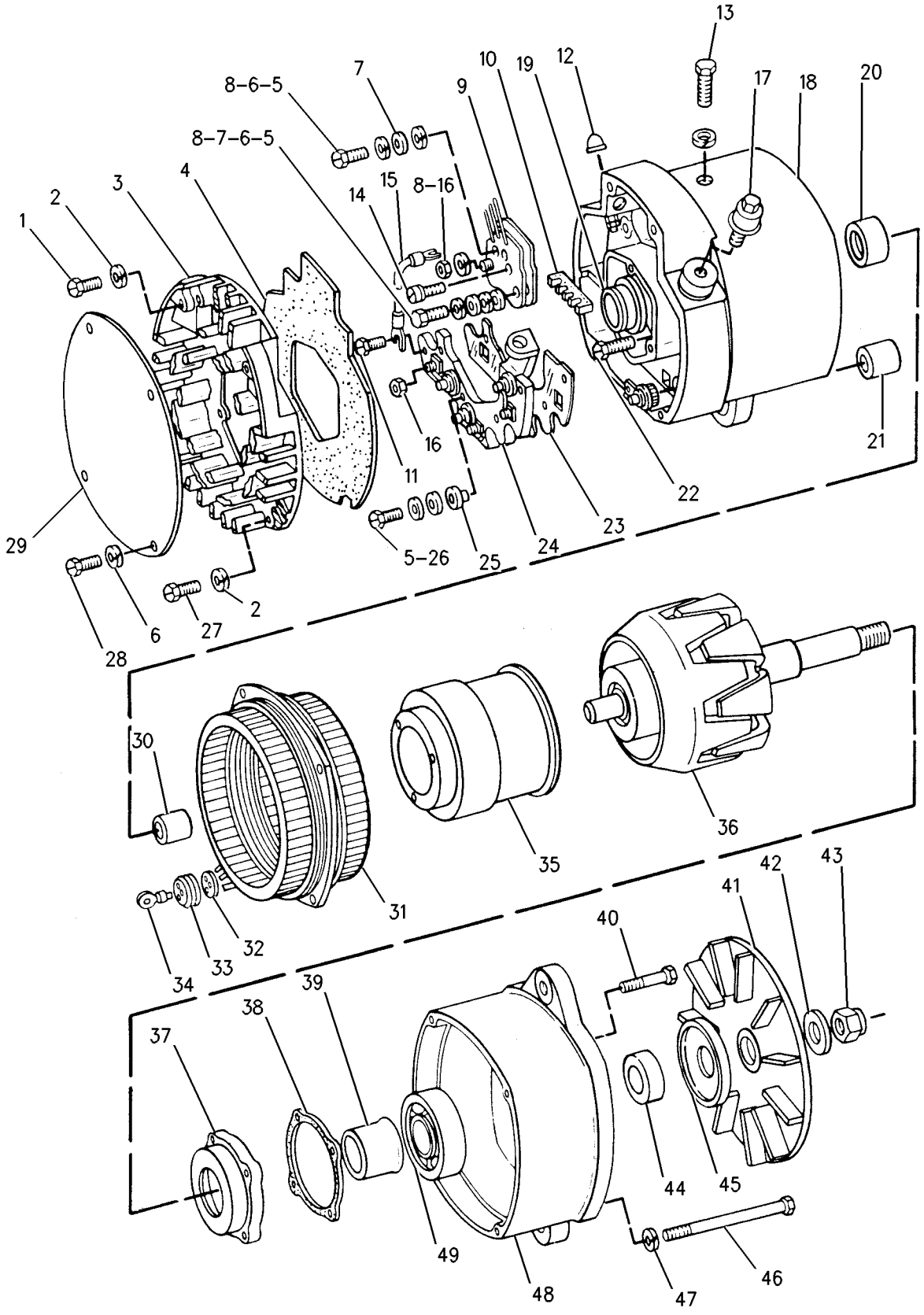

GRAPHIC #1 g00705715

ELECTRICAL AND STARTING SYSTEM

4W-2239 ALTERNATOR GP-CHARGING

S/N: 3XJ1-99999
24 VOLT, 50 AMP

SMCS-1405 **i01334453**

NOTE	REF NO	GRAPHIC REF	PART NUMBER	QTY	PART NAME 1 2 3 4 5 6 (PRODUCT LEVEL)	SEE PAGE
	1	1	**9L-6371**	1	ROD-ALTERNATOR ADJUSTMENT	
	2	1	**9S-5585**	2	NUT-FULL (1/2-20 THD)	
	3	1	**6C-7482**	1	BLOCK	
	4	1	**5P-2566**	2	BOLT (1/2-13X1.50 IN)	
	5	1	**8T-4223**	3	WASHER-HARD (3MM THK)	
	6	1	**8T-9378**	3	BOLT (3/8-16X4 IN)	
	7	1	**1D-4717**	4	NUT (3/8-16 THD)	
		1	**8T-4896**	4	WASHER-HARD (10.2X18.5X2.5MM THK)	
	8	1	**1W-4972**	1	BRACKET	
	9	1	**7X-0338**	1	BOLT (1/2-13X6IN)	
	10	1	**9S-1240**	1	NUT AS	
		1	**1F-0748**	1	NUT-WELD (1/2-13 THD)	
YR	11	1	*5S-9088*	1	ALTERNATOR GP-CHARGING	
	12	1	**2W-8662**	1	WIRE AS	
	13	1	**8T-7008**	1	BOLT (3/8-16X3 IN)	

R-REMFG PART MAY BE AVAILABLE
Y-SEPARATE ILLUSTRATION

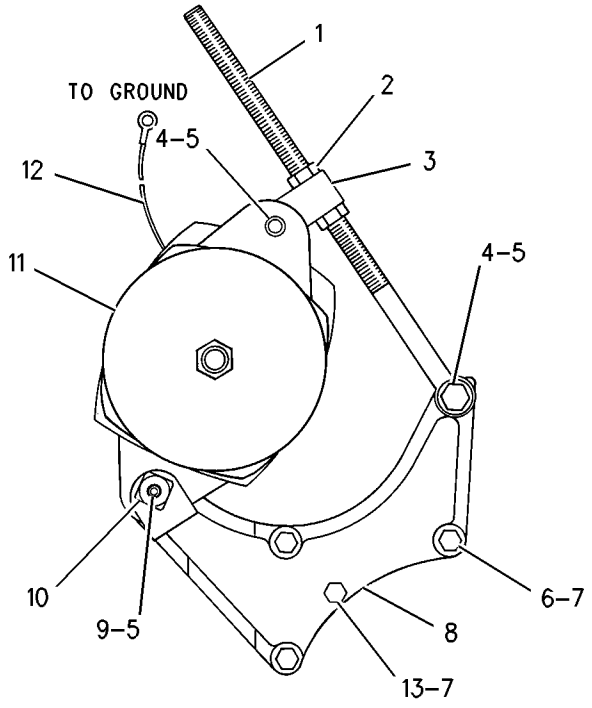

GRAPHIC #1 g00705695

5S-9088 ALTERNATOR GP-CHARGING*R

S/N: 3XJ1-99999
24 VOLT, 50 AMPERE
PART OF 4W-2239 ALTERNATOR GP-CHARGING
FIELD REPLACEMENT ORDER 100-5047—PAGE

SMCS-1405 **i01217289**

NOTE	PART NUMBER	QTY	PART NAME 1 2 3 4 5 6 (PRODUCT LEVEL)	SEE PAGE
Y	*9G-9538*	1	ALTERNATOR GP-CHARGING	
			—OR—	
Y	*3T-1888*	1	ALTERNATOR GP-CHARGING (50 AMPERE)	
			—OR—	
YR	*3E-7578*	1	ALTERNATOR GP-CHARGING	
			—OR—	
Y	*6T-7223*	1	ALTERNATOR GP-CHARGING	

R-REMFG PART MAY BE AVAILABLE
Y-SEPARATE ILLUSTRATION

MEMORANDA

6T-7223 ALTERNATOR GP-CHARGING

S/N: 3XJ1-99999
24 VOLT, 50 AMPERE
PART OF 5S-9088 ALTERNATOR GP-CHARGING

SMCS-1405 **i01334406**

NOTE	REF NO	GRAPHIC REF	PART NUMBER	QTY	PART NAME 1 2 3 4 5 6 (PRODUCT LEVEL)	SEE PAGE
	1	1	**2K-4821**	1	LOCKNUT (5/8-18 THD)	
		1	**5P-8247**	1	WASHER-HARD (3.5MM THK)	
	2	1	**1B-8705**	1	KEY-WOODRUFF	
	3	1	**7T-2793**	1	FAN AS	
	4	1	**7T-2792**	1	FRAME AS	
	5	1	**7T-6418**	1	STATOR AS	
	6	1	**7T-2790**	1	ROTOR AS	
	7	1	**7T-6417**	1	COIL AS	
	8	1	**7T-2798**	1	REGULATOR AS	
	9	1	**7T-2797**	1	COVER	
	10	1	**7T-6416**	1	HOLDER AS	
	11	1	**7T-2795**	1	FRAME AS	
	12	1	**7T-2801**	1	CONDENSER	
	13	1	**9L-6770**	1	CAP (ALTERNATOR)	
	14	1	**7T-2802**	1	WIRE AS	
	15	1	**7X-0447**	1	NUT (7/16-14 THD)	
		1	**2H-3920**	1	LOCKWASHER (11.38MM ID)	
	16	1	**6V-8185**	1	NUT (1/4-20 THD)	
		1	**1H-3244**	1	LOCKWASHER (NO.14)	
					AVAILABLE REPAIR KIT(S):	
			7T-2800	1	KIT-TERMINAL (POSITIVE)	
					(INCLUDES INSULATORS, NUTS, LOCKWASHERS & WASHERS)	
			7T-2804	1	KIT-TERMINAL (RELAY)	
					(INCLUDES WIRE AS, CAP, BOLT & INSULATOR)	
			7T-2805	1	KIT-TERMINAL (NEG)	
					(INCLUDES INSULATORS, NUTS, WASHERS & LOCKWASHERS)	
			7T-2799	1	KIT-BEARING	
					(INCLUDES BEARINGS)	
			7T-2803	1	KIT-HARDWARE	
					(INCL SCREW AS AND BOLT AS)	
			7T-2816	1	KIT-HARDWARE	
					(INCLUDES PLATE AS, PLATE, BOLT AS, WASHERS, SPACERS & RING)	

6T-7223 **ALTERNATOR GP-CHARGING** *(contd.)* **i01334406**

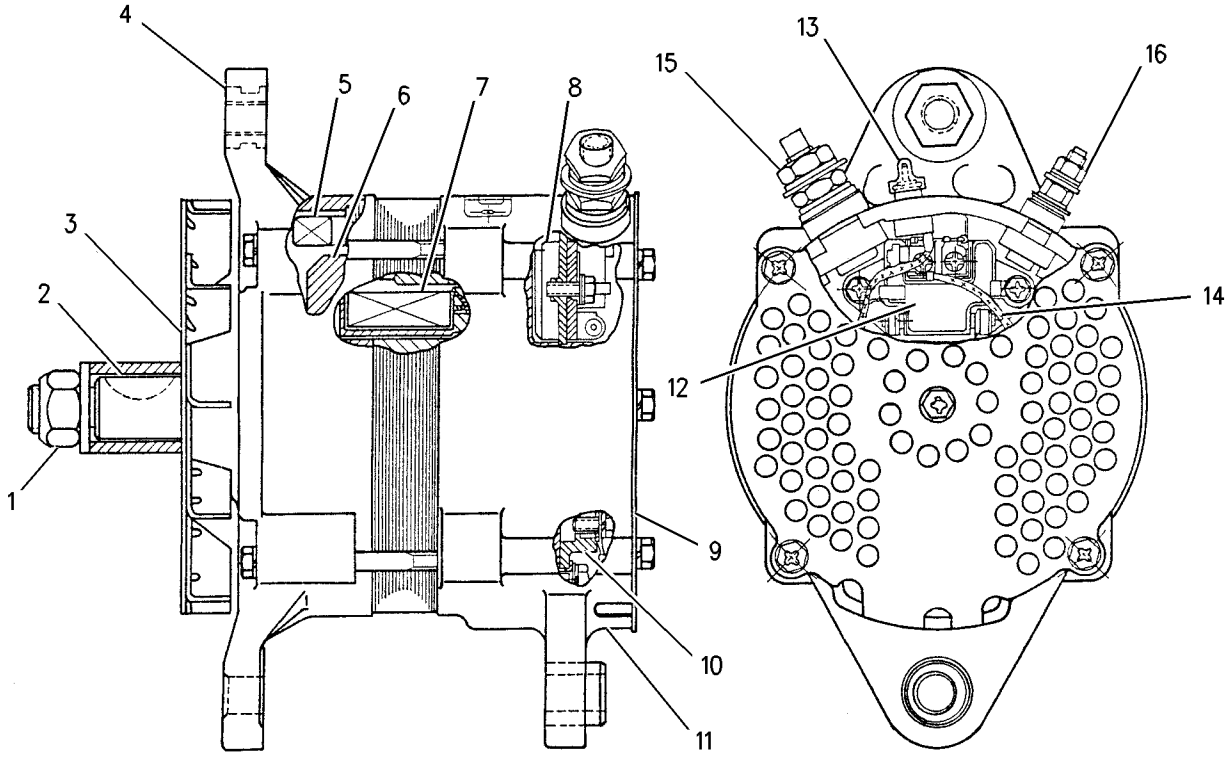

GRAPHIC #1 g00705662

8N-0999 ALTERNATOR GP-CHARGING*R

S/N: 3XJ1-99999
24 VOLT, 75 AMP
PART OF 8R-6206 AIR CONDITIONER AR
AN ATTACHMENT

SMCS-1405 **i01334409**

NOTE	REF NO	GRAPHIC REF	PART NUMBER	QTY	PART NAME 1 2 3 4 5 6 (PRODUCT LEVEL)	SEE PAGE
	1	1	**9S-2438**	2	SCREW-TAPPING	
	2	1	**8F-1434**	7	LOCKWASHER (0.51MM THK)	
	3	1	**9S-2255**	1	COVER	
	4	1	**9S-2262**	1	GASKET	
	5	1	**9S-9830**	6	SCREW-FORMING	
	6	1	**8C-9660**	4	WASHER (0.8MM THK)	
	7	1	**8F-1326**	2	WASHER (0.8MM THK)	
	8	1	**9B-7233**	5	LOCKWASHER (NO.8) (SHAKEPROOF)	
	9	1	**100-6534**	1	KIT-REGULATOR	
					(INCLUDES REGULATOR, SPACER,NUTS,SCREW ASSEMBLIES & SCREWS)	
	10	1	**9S-2250**	1	GROMMET	
	11	1	**9S-2009**	4	SCREW-HEAD	
C	12	1	**9L-6770**	1	CAP	
	13	1	**9S-2011**	1	SCREW-MACHINE	
		1	**1H-3244**	1	LOCKWASHER (NO.14)	
	14	1	**9S-9829**	1	SCREW AS	
	15	1	**9S-2246**	1	LEAD AS	
	16	1	**4B-2043**	4	NUT (8-32 THD)	
	17	1	**9S-2389**	1	STUD AS	
	18	1	**7N-0174**	1	HOUSING AS	
	19	1	**9N-0943**	1	PLUG-BEARING WELL	
	20	1	**5P-3418**	1	BEARING-ROLLER	
	21	1	**9S-2396**	1	BUSHING-TERMINAL	
	22	1	**9N-3388**	3	LOCKSCREW	
	23	1	**9S-2301**	1	INSULATION	
J	24	1	**9S-2292**	1	HEAT SINK AS	
	25	1	**9S-2300**	4	INSULATOR	
	26	1	**2P-5616**	1	FRAME-DRIVE END	
	27	1	**9S-2437**	5	SCREW-TAPPING	
	28	1	**9S-2544**	4	SCREW-HEX HEAD	
	29	1	**9S-2260**	1	PLATE-COVER	
	30	1	**5P-3419**	1	RACE-BEARING INNER	
	31	1	**9S-3451**	1	STATOR AS	
	32	1	**9S-2006**	1	INSULATOR	
	33	1	**9S-2005**	1	GROMMET	
	34	1	**9S-2014**	3	CLIP	
	35	1	**9S-2248**	1	COIL & SUPPORT AS	
	36	1	**9S-2302**	1	ROTOR AS	
	37	1	**9S-2390**	1	RETAINER	
C	38	1	**5P-7807**	1	BALL BEARING	
	39	1	**100-6532**	1	COLLAR-ALTERNATOR	
	40	1	**9X-2500**	4	SCREW-HEX FLANGE	
	41	1	**100-6531**	1	FAN-ALTERNATOR	
	42	1	**7F-7621**	1	WASHER	
	43	1	**2K-4821**	1	LOCKNUT (5/8-18 THD)	
	44	1	**9S-2393**	3	DIODE-NEGATIVE	
					AVAILABLE REPAIR KIT(S):	
			9S-2013	1	KIT-RELAY TERMINAL	
					(INCL BUSHING, O-RING AND HARDWARE)	
			9S-2012	1	KIT-OUTPUT TERMINAL	
					(INCLUDES GASKETS TERMINALS & HRDW)	
J			**9S-2290**	3	KIT-DIODE JUNCTION STUD	
					(INCLUDES INSULATOR & STUD)	

8N-0999 **ALTERNATOR GP-CHARGING** *(contd.)* **i01334409**

NOTE	REF NO	GRAPHIC REF	PART NUMBER	QTY	PART NAME 1 2 3 4 5 6 (PRODUCT LEVEL)	SEE PAGE
J			**9S-2291**	3	KIT-POSITIVE DIODE	
					(INCLUDES DIODE)	

C-CHANGE FROM PREVIOUS TYPE
J-KIT(S) MARKED J ARE AVAILABLE FOR PART(S) MARKED J

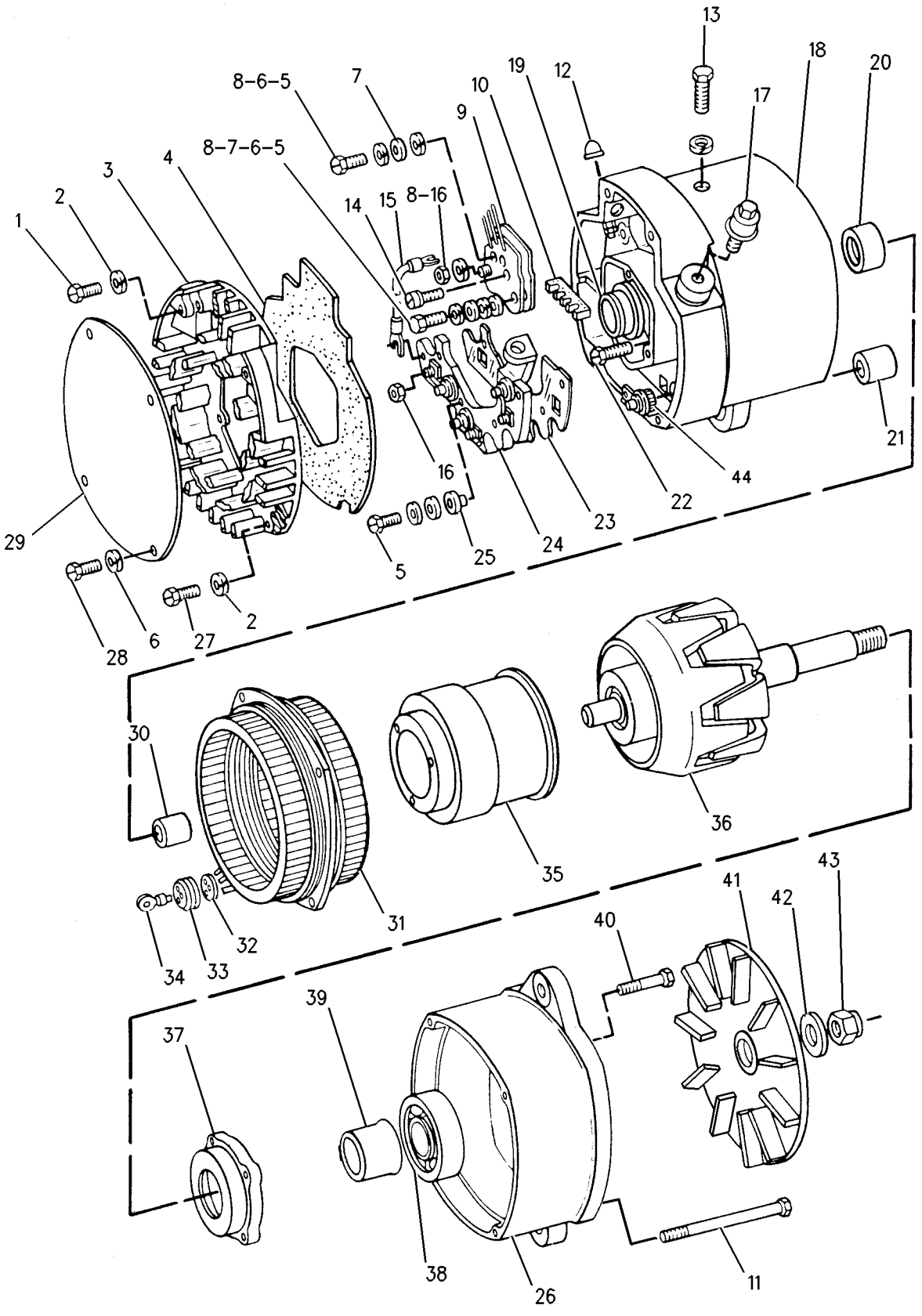

GRAPHIC #1 g00705658

MEMORANDA

9G-9538 ALTERNATOR GP-CHARGING

S/N: 3XJ1-99999
24 VOLT, 50 AMPERE
PART OF 5S-9088 ALTERNATOR GP-CHARGING

SMCS-1405 **i01003127**

NOTE	REF NO	GRAPHIC REF	PART NUMBER	QTY	PART NAME 1 2 3 4 5 6 (PRODUCT LEVEL)	SEE PAGE
	1	1	**9G-7551**	1	BEARING	
	2	1	**9G-7548**	1	RING	
	3	1	**3T-1885**	1	COIL AS-FIELD	
	4	1	**9G-7560**	1	ROTOR AS	
	5	1	**9G-7553**	1	RING-COVER	
	6	1	**9G-7562**	1	COVER AS	
	7	1	**9G-7567**	1	REGULATOR AS	
	8	1	**9G-7552**	1	BEARING	
M	9	1	**9X-6001**	4	BOLT-HEX HEAD	
		1	**8T-0328**	4	WASHER-HARD (1MM THK)	
	10	1	**9G-7568**	1	FRAME AS-REAR	
	11	1	**3T-1887**	1	DIODE AS	
	12	1	**3T-1886**	1	STATOR AS	
	13	1	**9G-7566**	1	FRAME-DRIVE END	
	14	1	**9G-7564**	1	FAN	
	15	1	**9G-7549**	1	SPACER	
	16	1	**2K-4821**	1	LOCKNUT (5/8-18 THD)	
	17	1	**5P-8247**	1	WASHER-HARD (3.5MM THK)	
	18	1	**7X-0447**	1	NUT (7/16-14 THD)	
		1	**8T-5360**	1	WASHER (2.5MM THK)	
	19	1	**9L-6770**	1	CAP	
	20	1	**1B-8705**	1	KEY-WOODRUFF	
M	21	1	**5C-2874**	1	NUT (M5X.8 THD)	
		1	**7X-0620**	1	WASHER-HARD (1.6MM THK)	
		1	**8F-1434**	1	LOCKWASHER (0.51MM THK)	
					AVAILABLE REPAIR KIT(S):	
			9G-7554	1	KIT-TERMINAL GROUND	
					(INCLUDES NUTS AND LOCKWASHERS)	
			9G-7555	1	KIT-OUTPUT TERMINAL	
					(INCLUDES NUTS, WASHERS AND BUSHINGS)	
			9G-7556	1	KIT-CAPACITOR	
					(INCLUDES CAPACITOR, SCREW, LOCKWASHER AND WASHER)	
			9G-7559	1	KIT-RELAY TERMINAL	
					(INCLUDES SPLICE, TUBE, NUT, TERMINAL, WASHERS AND BUSHINGS)	
			9G-7565	1	KIT-REGULATOR TERMINAL	
					(INCLUDES NUTS, WASHERS AND BUSHING)	

M-METRIC PART

9G-9538 **ALTERNATOR GP-CHARGING** *(contd.)* **i01003127**

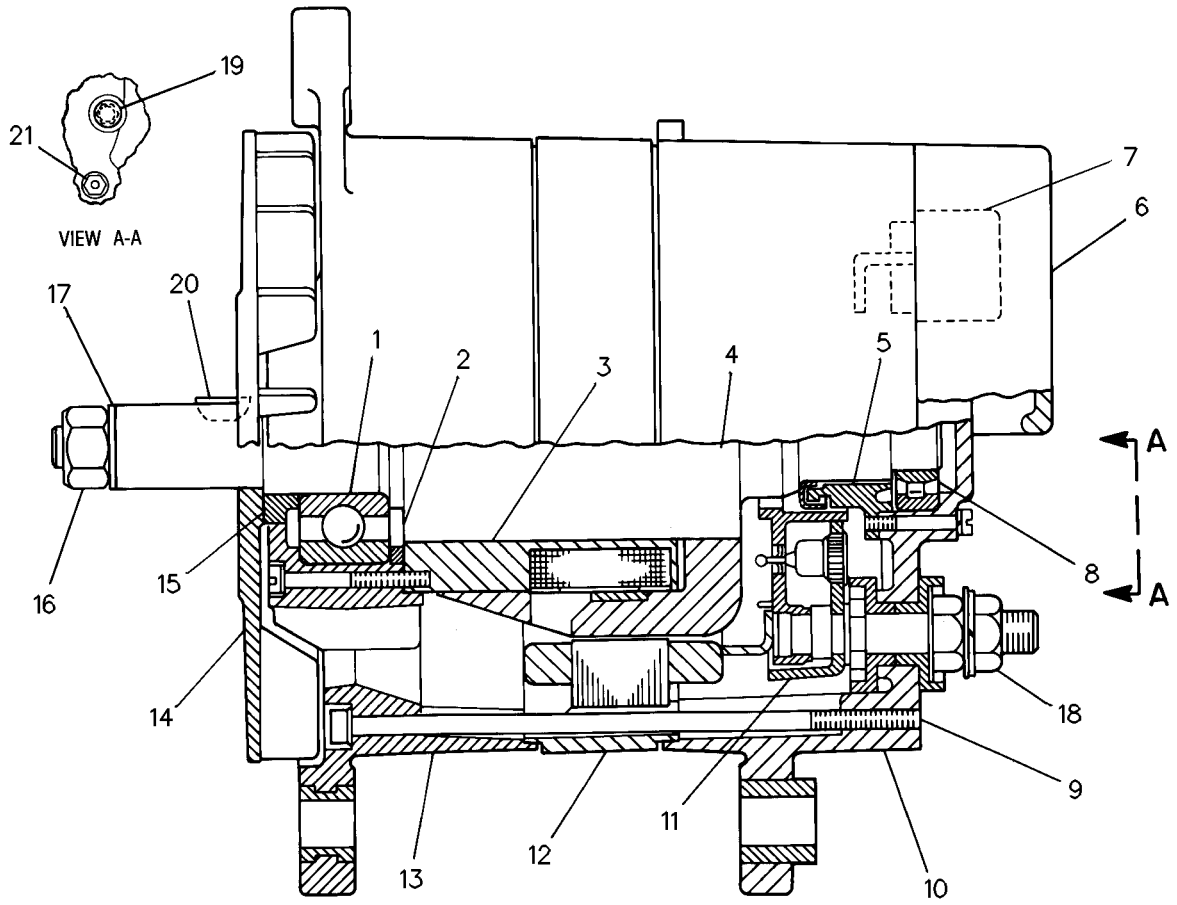

GRAPHIC #1

g00105276

ELECTRICAL AND STARTING SYSTEM

8R-5053 BATTERY & WIRING GP

S/N: 3XJ1-1323

SMCS-1401, 1408 **i01336093**

NOTE	REF NO	GRAPHIC REF	PART NUMBER	QTY	PART NAME 1 2 3 4 5 6 (PRODUCT LEVEL)	SEE PAGE
Y	1	1	**7N-0718**	1	SWITCH GP-DISCONNECT	
	2	1	**8V-0615**	1	CABLE AS	
E		1	**5P-0747**		CABLE-STARTER (00GA) (213CM)	
		1	**1S-7251**	1	TERMINAL-RING (FOR 1/2 IN BOLT)	
	4	1	**8N-1725**	1	COVER (RED)	
		1	**3S-6049**	1	TERMINAL AS-BATTERY (POSITIVE)	
		1	**1M-6119**	1	BOLT-BATTERY TERM (5/16-18X1.375 IN)	
		1	**1M-6120**	1	NUT-BATTERY TERMINAL (5/16-18 THD)	
	5	1	**8R-8165**	1	HARNESS AS	
	6	1	**5V-3887**	1	CABLE AS	
E		1	**5P-0747**		CABLE-STARTER (00GA) (140CM)	
	7	1	**9G-8909**	1	COVER (BLACK)	
		1	**1S-7252**	1	TERMINAL-RING (FOR 3/8IN BOLT)	
	8	1	**7N-5274**	1	COVER (BLACK)	
		1	**3S-6050**	1	TERMINAL AS-BATTERY (NEGATIVE)	
		1	**1M-6119**	1	BOLT-BATTERY TERM (5/16-18X1.375 IN)	
		1	**1M-6120**	1	NUT-BATTERY TERMINAL (5/16-18 THD)	
	9	1	**7Y-3195**	4	GROMMET	
	10	1,2	**8M-2770**	7	CLIP (12.7MM ID)	
	11	1	**7E-0802**	1	BRACKET	
	12	1,2	**8T-4896**	28	WASHER-HARD (10.2X18.5X2.5MM THK)	
	13	1	**5P-8167**	1	BOLT (3/8-16X.625 IN)	
	14	1,2	**6K-8178**	2	CLIP (15.88MM ID)	
	15	1,2	**3S-2093**	12	STRAP-CABLE (1.75 IN DIA)	
	16	1,2	**9M-8406**	11	CLIP (15.8MM ID)	
	17	1,2	**6V-8801**	15	NUT (3/8-16 THD)	
	18	1,2	**5M-3062**	6	BOLT (3/8-16X.75 IN)	
	19	1,2	**5N-2840**	2	CLIP (31.75MM ID)	
	20	1	**2M-9780**	1	SEAL-O-RING (19.18MM ID)	
	21	1	**7T-8530**	1	SWITCH AS-LIQUID LEVEL (HYDRAULIC TANK)	
		1	**7N-7779**	1	SOCKET-CONNECTOR	
		1	**7N-7780**	1	PIN-CONNECTOR (BLADE)	
		1	**7N-9737**	1	HOUSING-PLUG	
	22	1	**7C-1897**	1	SENSOR GP-SPEED (TRANSMISSION OUTPUT)	
E		1	**9X-1386**		SLEEVE (14CM)	
		1	**171-5349**	1	STRAP-MARKER	
		1	**7N-7779**	1	SOCKET-CONNECTOR	
		1	**7N-7780**	1	PIN-CONNECTOR (BLADE)	
		1	**7N-9738**	1	HOUSING-RECEPTACLE	
	23	1	**3T-3047**	1	CLIP AS (20MM ID)	
Y	24	1	**9X-5272**	1	SENSOR GP-PRESSURE (BRAKE AIR)	
	25	1	**9X-0261**	1	ADAPTER (19.05MM HEX)	
		1	**3J-7354**	1	SEAL-O-RING (8.92MM ID)	
	26	1	**8R-9526**	1	WIRE AS	
	27	1	**4E-2242**	2	PLATE	
Y	28	1	**9X-0377**	1	SENSOR GP-TEMPERATURE (HYDRAULIC OIL)	
	29	1	**8H-8648**	1	PLATE-INSTRUCTION (DISCONNECT SWITCH)	
	30	1	**8T-2501**	2	BOLT (3/8-16X2.0 IN)	
		1	**6G-2263**	2	SPACER (28.5MM THK)	
	31	1	**5V-3885**	1	CABLE AS	
E		1	**5P-0747**		CABLE-STARTER (00GA) (160CM)	
	32	1	**7N-5274**	2	COVER (BLACK)	
	33	1	**1M-4969**	1	TERMINAL-BATTERY	
	34	1	**3S-6049**	1	TERMINAL AS-BATTERY (POSITIVE)	
		1	**1M-6119**	1	BOLT-BATTERY TERM (5/16-18X1.375 IN)	
		1	**1M-6120**	1	NUT-BATTERY TERMINAL (5/16-18 THD)	
	35	1	**8R-2649**	1	WIRE AS	

8R-5053 **BATTERY & WIRING GP** ***(contd.)*** **i01336093**

NOTE	REF NO	GRAPHIC REF	PART NUMBER	QTY	PART NAME 1 2 3 4 5 6 (PRODUCT LEVEL)	SEE PAGE
	36	1	**1S-0994**	4	CLIP (20.64MM ID)	
	37	1	**8R-8164**	1	HARNESS AS	
Y	38	1	**9X-3252**	1	BUFFER GP-SENSOR	
		1	**8C-8977**	1	CLIP	
	39	1	**6D-4636**	1	CLIP (23.81MM ID)	
	40	1	**4E-1286**	1	HARNESS AS	
		1	**3T-3048**	1	CLIP AS (10.2MM ID)	
	41	1	**6G-2256**	2	CLAMP	
	42	1	**2G-8767**	4	WASHER (3MM THK)	
	43	1	**6W-8946**	1	STRIP AS	
		1	**9F-2978**		NUT-WELD (3/8-16 THD)	
	44	1	**9G-9150**	1	CLIP (10.2MM ID)	
	45	1	**5P-9085**	2	CLIP (7.94MM ID)	
	46	1	**3B-7764**	1	BUSHING	
	47	1,2	**4D-7794**	8	CLIP (10.0MM ID)	
	48	1	**9X-3210**	1	SWITCH GP-PRESSURE (PARKING BRAKE OIL)	
		1	**7N-7779**	1	SOCKET-CONNECTOR	
		1	**7N-7780**	1	PIN-CONNECTOR (BLADE)	
		1	**7N-7738**	1	HOUSING-RECEPTACLE	
	49	1	**3J-1907**	3	SEAL-O-RING (11.89MM ID)	
	50	1	**4E-3188**	1	WIRE AS	
	51	1	**6C-5213**	1	HARNESS AS	
Y	52	2	*8R-9426*	1	WIRING GP-RELAY PANEL	
M	53	2	**8T-4137**	7	BOLT (M10X1.50X20MM)	
		2	**8T-4121**	7	WASHER-HARD (2.5MM THK)	
	54	2	**9G-4232**	2	BATTERY (12 VOLT)	
M	55	2	**8T-4200**	2	BOLT (M8X1.25X16MM)	
	56	2	**7P-6682**	1	CABLE AS	
		2	**1S-7251**	2	TERMINAL-RING (FOR 1/2 IN BOLT)	
E		2	**5P-0747**		CABLE-STARTER (00GA) (40CM)	
	57	2	**2V-6491**	2	HOLD-DOWN AS-BATTERY	
	58	2	**9G-9287**	1	CONTROL GP-ELECTRONIC (ENGINE SHUTDOWN)	
	59	2	**4S-4455**	2	CLIP (31.75MM ID)	
	60	2	**5V-0625**	8	BOLT (1/4-20X1.18IN)	
		2	**8T-4205**	8	WASHER-HARD (2MM THK)	
		2	**6V-8185**	8	NUT (1/4-20 THD)	
	61	2	**6C-5248**	1	HARNESS AS	
	62	2	**5S-7379**	7	BOLT (3/8-16X.875 IN)	
	63	2	**4D-1212**	2	GROMMET	
	64	2	**8R-8161**	1	HARNESS AS	
	65	2	**9X-3495**	1	CLIP AS (21.8MM ID)	
	66	2	**6D-4246**	2	CLIP (19.05MM ID)	
	67	2	**8T-4224**	3	WASHER-HARD (8.8X16X2MM THK)	
	68	2	**8T-4223**	1	WASHER-HARD (3MM THK)	
		2	**6V-8188**	1	NUT (1/2-13 THD)	
	69	2	**3K-3147**	1	CABLE AS	
		2	**2M-0913**	2	TERMINAL	
	70	1	**2M-9346**	1	SWITCH AS-PRESSURE (STOP LIGHT)	
		1	**6V-8378**	2	NUT (10-32 THD)	
		1	**8F-1434**	2	LOCKWASHER (0.51MM THK)	

E-ORDER BY THE CENTIMETER
M-METRIC PART
Y-SEPARATE ILLUSTRATION

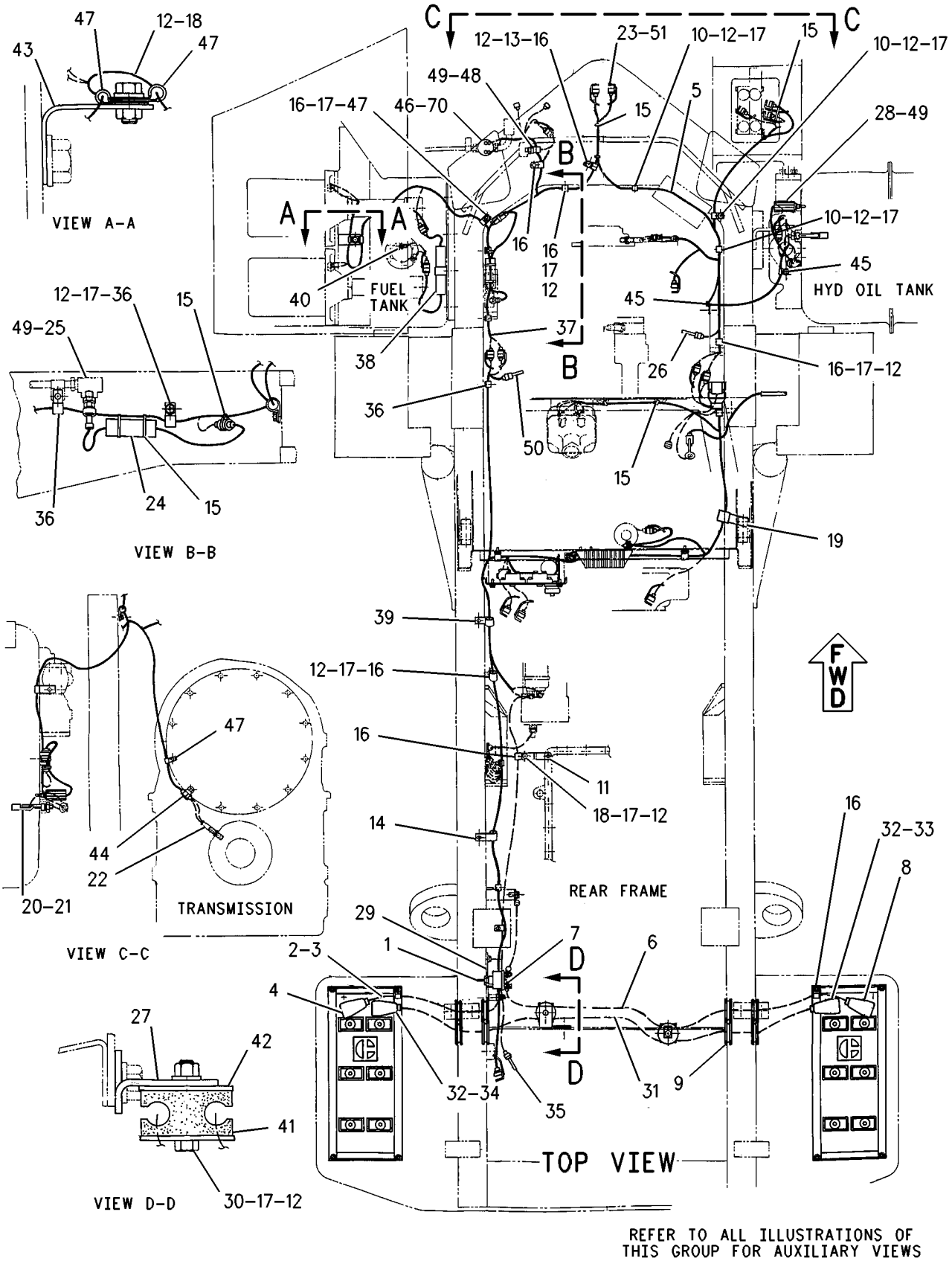

GRAPHIC #1 g00695484

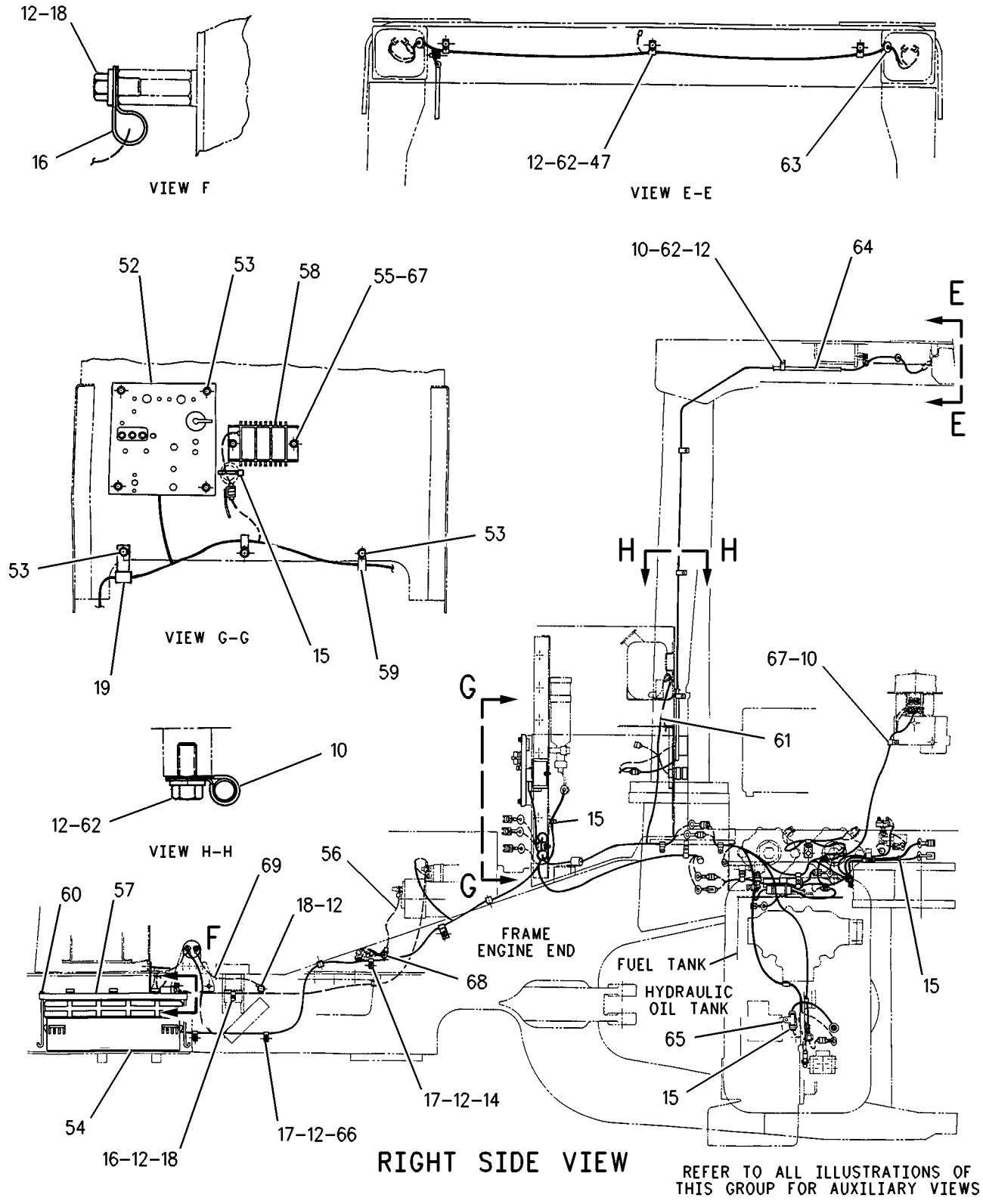

GRAPHIC #2 g00695485

ELECTRICAL AND STARTING SYSTEM

8R-5053 BATTERY & WIRING GP

S/N: 3XJ1324-2067

SMCS-1401, 1408 **i01336098**

NOTE	REF NO	GRAPHIC REF	PART NUMBER	QTY	PART NAME 1 2 3 4 5 6 (PRODUCT LEVEL)	SEE PAGE
Y	1	1	**7N-0718**	1	SWITCH GP-DISCONNECT	
	2	1	**8V-0615**	1	CABLE AS	
E		1	**5P-0747**		CABLE-STARTER (00GA) (213CM)	
		1	**1S-7251**	1	TERMINAL-RING (FOR 1/2 IN BOLT)	
	4	1	**8N-1725**	1	COVER (RED)	
		1	**3S-6049**	1	TERMINAL AS-BATTERY (POSITIVE)	
		1	**1M-6119**	1	BOLT-BATTERY TERM (5/16-18X1.375 IN)	
		1	**1M-6120**	1	NUT-BATTERY TERMINAL (5/16-18 THD)	
	5	1	**8R-8165**	1	HARNESS AS	
	6	1	**5V-3887**	1	CABLE AS	
E		1	**5P-0747**		CABLE-STARTER (00GA) (140CM)	
	7	1	**9G-8909**	1	COVER (BLACK)	
		1	**1S-7252**	1	TERMINAL-RING (FOR 3/8IN BOLT)	
	8	1	**7N-5274**	1	COVER (BLACK)	
		1	**3S-6050**	1	TERMINAL AS-BATTERY (NEGATIVE)	
		1	**1M-6119**	1	BOLT-BATTERY TERM (5/16-18X1.375 IN)	
		1	**1M-6120**	1	NUT-BATTERY TERMINAL (5/16-18 THD)	
	9	1	**7Y-3195**	4	GROMMET	
	10	1,2	**8M-2770**	7	CLIP (12.7MM ID)	
	11	1	**7E-0802**	1	BRACKET	
	12	1,2	**8T-4896**	28	WASHER-HARD (10.2X18.5X2.5MM THK)	
	13	1	**5P-8167**	1	BOLT (3/8-16X.625 IN)	
	14	1,2	**6K-8178**	2	CLIP (15.88MM ID)	
	15	1,2	**3S-2093**	12	STRAP-CABLE (1.75 IN DIA)	
	16	1,2	**9M-8406**	11	CLIP (15.8MM ID)	
	17	1,2	**6V-8801**	15	NUT (3/8-16 THD)	
	18	1,2	**5M-3062**	6	BOLT (3/8-16X.75 IN)	
	19	1,2	**5N-2840**	2	CLIP (31.75MM ID)	
	20	1	**2M-9780**	1	SEAL-O-RING (19.18MM ID)	
	21	1	**7T-8530**	1	SWITCH AS-LIQUID LEVEL (HYDRAULIC TANK)	
		1	**7N-7779**	1	SOCKET-CONNECTOR	
		1	**7N-7780**	1	PIN-CONNECTOR (BLADE)	
		1	**7N-9737**	1	HOUSING-PLUG	
	22	1	**7C-1897**	1	SENSOR GP-SPEED (TRANSMISSION OUTPUT)	
E		1	**9X-1386**		SLEEVE (14CM)	
		1	**171-5349**	1	STRAP-MARKER	
		1	**7N-7779**	1	SOCKET-CONNECTOR	
		1	**7N-7780**	1	PIN-CONNECTOR (BLADE)	
		1	**7N-9738**	1	HOUSING-RECEPTACLE	
	23	1	**3T-3047**	1	CLIP AS (20MM ID)	
Y	24	1	**9X-5272**	1	SENSOR GP-PRESSURE (BRAKE AIR)	
	25	1	**9X-0261**	1	ADAPTER (19.05MM HEX)	
		1	**3J-7354**	1	SEAL-O-RING (8.92MM ID)	
	26	1	**8R-9526**	1	WIRE AS	
	27	1	**4E-2242**	2	PLATE	
C	28	1	**3E-5370**	1	SENSOR GP-TEMPERATURE (HYDRAULIC OIL)	
E		1	**8T-6342**		TUBE (3.18MM ID) (8CM)	
		1	**8T-8730**	3	SOCKET-CONNECTOR	
		1	**8T-8731**	1	PLUG-CONNECTOR	
	29	1	**8H-8648**	1	PLATE-INSTRUCTION (DISCONNECT SWITCH)	
	30	1	**8T-2501**	2	BOLT (3/8-16X2.0 IN)	
		1	**6G-2263**	2	SPACER (28.5MM THK)	
	31	1	**5V-3885**	1	CABLE AS	
E		1	**5P-0747**		CABLE-STARTER (00GA) (160CM)	
	32	1	**7N-5274**	2	COVER (BLACK)	
	33	1	**1M-4969**	1	TERMINAL-BATTERY	
	34	1	**3S-6049**	1	TERMINAL AS-BATTERY (POSITIVE)	

8R-5053 BATTERY & WIRING GP *(contd.)* i01336098

NOTE	REF NO	GRAPHIC REF	PART NUMBER	QTY	PART NAME 1 2 3 4 5 6 (PRODUCT LEVEL)	SEE PAGE
		1	**1M-6119**	1	BOLT-BATTERY TERM (5/16-18X1.375 IN)	
		1	**1M-6120**	1	NUT-BATTERY TERMINAL (5/16-18 THD)	
	35	1	**8R-2649**	1	WIRE AS	
	36	1	**1S-0994**	4	CLIP (20.64MM ID)	
	37	1	**8R-8164**	1	HARNESS AS	
Y	38	1	**9X-3252**	1	BUFFER GP-SENSOR	
		1	**8C-8977**	1	CLIP	
	39	1	**6D-4636**	1	CLIP (23.81MM ID)	
	40	1	**4E-1286**	1	HARNESS AS	
		1	**3T-3048**	1	CLIP AS (10.2MM ID)	
	41	1	**6G-2256**	2	CLAMP	
	42	1	**2G-8767**	4	WASHER (3MM THK)	
	43	1	**6W-8946**	1	STRIP AS	
		1	**9F-2978**		NUT-WELD (3/8-16 THD)	
	44	1	**9G-9150**	1	CLIP (10.2MM ID)	
	45	1	**5P-9085**	2	CLIP (7.94MM ID)	
	46	1	**3B-7764**	1	BUSHING	
	47	1,2	**4D-7794**	8	CLIP (10.0MM ID)	
	48	1	**9X-3210**	1	SWITCH GP-PRESSURE (PARKING BRAKE OIL)	
		1	**7N-7779**	1	SOCKET-CONNECTOR	
		1	**7N-7780**	1	PIN-CONNECTOR (BLADE)	
		1	**7N-9738**	1	HOUSING-RECEPTACLE	
	49	1	**3J-1907**	3	SEAL-O-RING (11.89MM ID)	
	50	1	**4E-3188**	1	WIRE AS	
	51	1	**6C-5213**	1	HARNESS AS	
Y	52	2	*8R-9426*	1	WIRING GP-RELAY PANEL	
M	53	2	**8T-4137**	7	BOLT (M10X1.50X20MM)	
		2	**8T-4121**	7	WASHER-HARD (2.5MM THK)	
	54	2	**9G-4232**	2	BATTERY (12 VOLT)	
M	55	2	**8T-4200**	2	BOLT (M8X1.25X16MM)	
	56	2	**7P-6682**	1	CABLE AS	
		2	**1S-7251**	2	TERMINAL-RING (FOR 1/2 IN BOLT)	
E		2	**5P-0747**		CABLE-STARTER (00GA) (40CM)	
	57	2	**2V-6491**	2	HOLD-DOWN AS-BATTERY	
	58	2	**9G-9287**	1	CONTROL GP-ELECTRONIC (ENGINE SHUTDOWN)	
	59	2	**4S-4455**	2	CLIP (31.75MM ID)	
	60	2	**5V-0625**	8	BOLT (1/4-20X1.18IN)	
		2	**8T-4205**	8	WASHER-HARD (2MM THK)	
		2	**6V-8185**	8	NUT (1/4-20 THD)	
	61	2	**6C-5248**	1	HARNESS AS	
	62	2	**5S-7379**	7	BOLT (3/8-16X.875 IN)	
	63	2	**4D-1212**	2	GROMMET	
	64	2	**8R-8161**	1	HARNESS AS	
	65	2	**9X-3495**	1	CLIP AS (21.8MM ID)	
	66	2	**6D-4246**	2	CLIP (19.05MM ID)	
	67	2	**8T-4224**	3	WASHER-HARD (8.8X16X2MM THK)	
	68	2	**8T-4223**	1	WASHER-HARD (3MM THK)	
		2	**6V-8188**	1	NUT (1/2-13 THD)	
	69	2	**3K-3147**	1	CABLE AS	
		2	**2M-0913**	2	TERMINAL	
	70	1	**2M-9346**	1	SWITCH AS-PRESSURE (STOP LIGHT)	
		1	**6V-8378**	2	NUT (10-32 THD)	
		1	**8F-1434**	2	LOCKWASHER (0.51MM THK)	

C-CHANGE FROM PREVIOUS TYPE
E-ORDER BY THE CENTIMETER
M-METRIC PART
Y-SEPARATE ILLUSTRATION

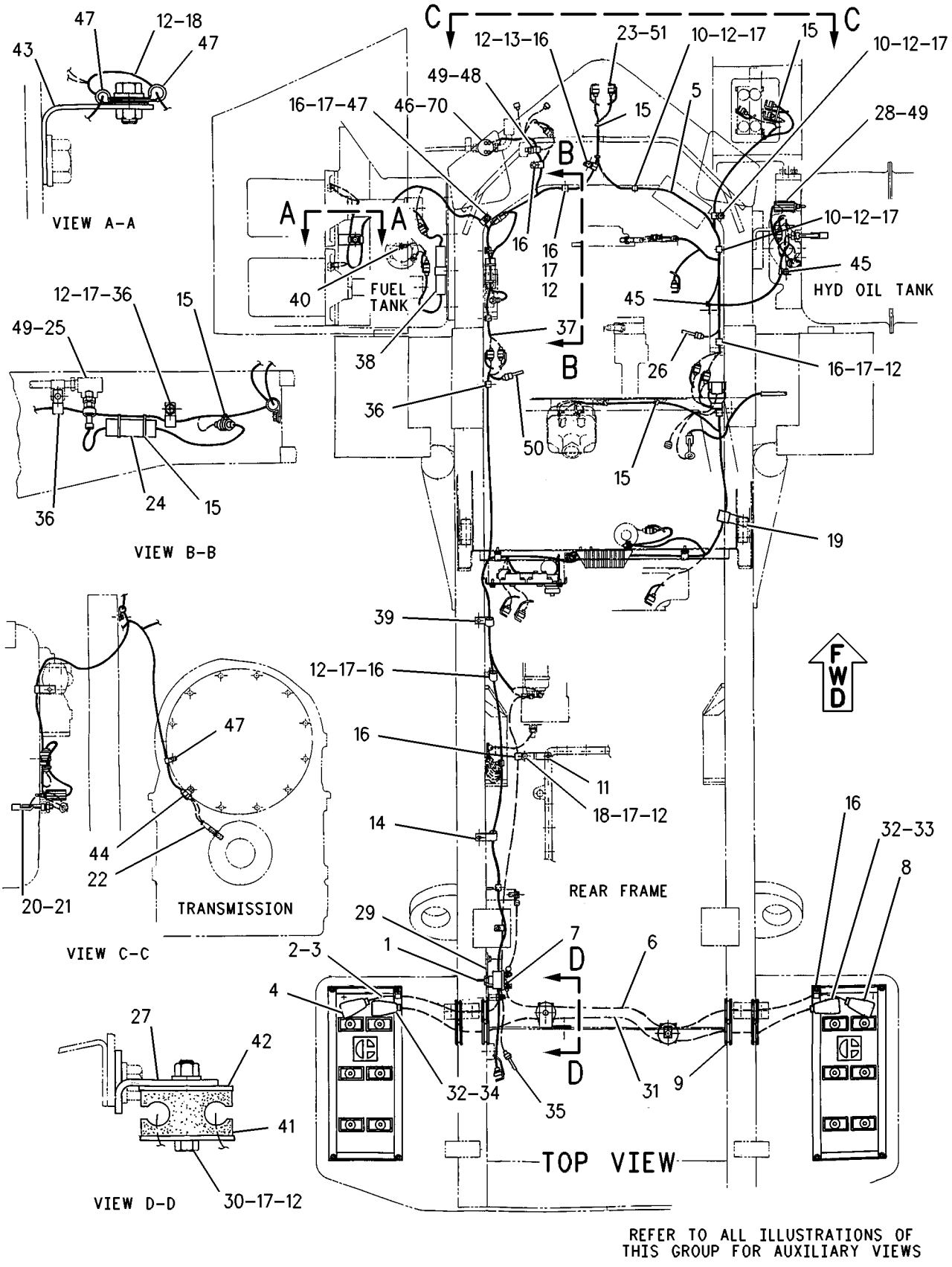

GRAPHIC #1 g00695484

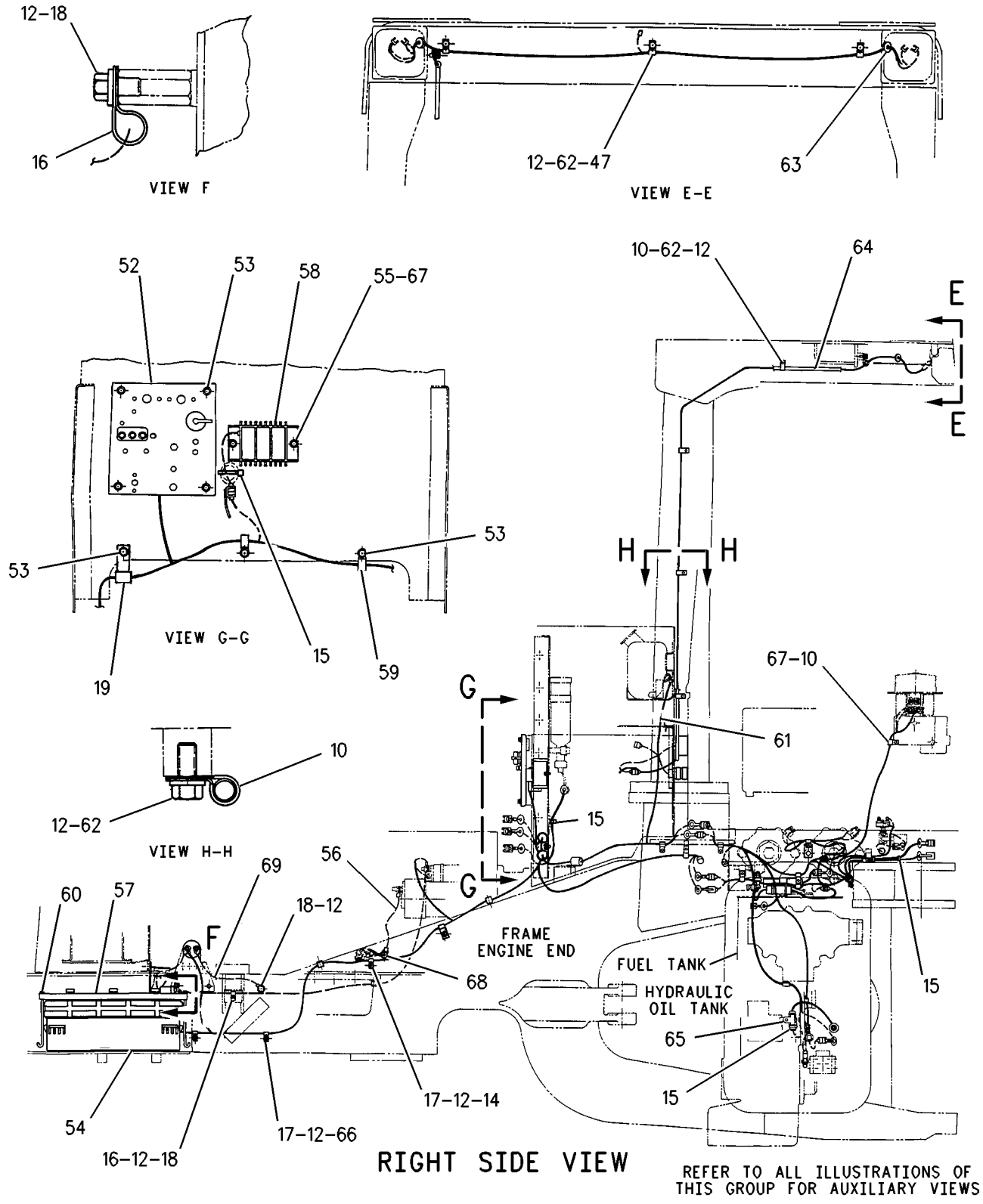

GRAPHIC #2 g00695485

ELECTRICAL AND STARTING SYSTEM

8R-5053 BATTERY & WIRING GP

S/N: 3XJ2068-2209

SMCS-1401, 1408 **i01336105**

NOTE	REF NO	GRAPHIC REF	PART NUMBER	QTY	PART NAME 1 2 3 4 5 6 (PRODUCT LEVEL)	SEE PAGE
Y	1	1	**7N-0718**	1	SWITCH GP-DISCONNECT	
	2	1	**8V-0615**	1	CABLE AS	
E		1	**5P-0747**		CABLE-STARTER (00GA) (213CM)	
		1	**1S-7251**	1	TERMINAL-RING (FOR 1/2 IN BOLT)	
	4	1	**8N-1725**	1	COVER (RED)	
		1	**3S-6049**	1	TERMINAL AS-BATTERY (POSITIVE)	
		1	**1M-6119**	1	BOLT-BATTERY TERM (5/16-18X1.375 IN)	
		1	**1M-6120**	1	NUT-BATTERY TERMINAL (5/16-18 THD)	
	5	1	**8R-8165**	1	HARNESS AS	
	6	1	**5V-3887**	1	CABLE AS	
E		1	**5P-0747**		CABLE-STARTER (00GA) (140CM)	
	7	1	**9G-8909**	1	COVER (BLACK)	
		1	**1S-7252**	1	TERMINAL-RING (FOR 3/8IN BOLT)	
	8	1	**7N-5274**	1	COVER (BLACK)	
		1	**3S-6050**	1	TERMINAL AS-BATTERY (NEGATIVE)	
		1	**1M-6119**	1	BOLT-BATTERY TERM (5/16-18X1.375 IN)	
		1	**1M-6120**	1	NUT-BATTERY TERMINAL (5/16-18 THD)	
	9	1	**7Y-3195**	4	GROMMET	
	10	1,2	**8M-2770**	7	CLIP (12.7MM ID)	
	11	1	**7E-0802**	1	BRACKET	
	12	1,2	**8T-4896**	28	WASHER-HARD (10.2X18.5X2.5MM THK)	
	13	1	**5P-8167**	1	BOLT (3/8-16X.625 IN)	
	14	1,2	**6K-8178**	2	CLIP (15.88MM ID)	
	15	1,2	**3S-2093**	12	STRAP-CABLE (1.75 IN DIA)	
	16	1,2	**9M-8406**	11	CLIP (15.8MM ID)	
	17	1,2	**6V-8801**	15	NUT (3/8-16 THD)	
	18	1,2	**5M-3062**	6	BOLT (3/8-16X.75 IN)	
C	19	1,2	**5N-2840**	3	CLIP (31.75MM ID)	
	20	1	**2M-9780**	1	SEAL-O-RING (19.18MM ID)	
C	21	1	**3E-9342**	1	SWITCH AS-LIQUID LEVEL (HYDRAULIC TANK)	
		1	**7N-7779**	1	SOCKET-CONNECTOR	
		1	**7N-7780**	1	PIN-CONNECTOR (BLADE)	
		1	**7N-9737**	1	HOUSING-PLUG	
C	22	1	**3E-7886**	1	SENSOR AS-SPEED (TRANSMISSION OUTPUT)	
E		1	**9X-1386**		SLEEVE (14CM)	
		1	**171-5349**	1	STRAP-MARKER	
		1	**7N-7779**	1	SOCKET-CONNECTOR	
		1	**7N-7780**	1	PIN-CONNECTOR (BLADE)	
		1	**7N-9738**	1	HOUSING-RECEPTACLE	
	23	1	**3T-3047**	1	CLIP AS (20MM ID)	
Y	24	1	**9X-5272**	1	SENSOR GP-PRESSURE (BRAKE AIR)	
	25	1	**9X-0261**	1	ADAPTER (19.05MM HEX)	
		1	**3J-7354**	1	SEAL-O-RING (8.92MM ID)	
	26	1	**8R-9526**	1	WIRE AS	
	27	1	**4E-2242**	2	PLATE	
C	28	1	**3E-5370**	1	SENSOR GP-TEMPERATURE (HYDRAULIC OIL)	
E		1	**8T-6342**		TUBE (3.18MM ID) (8CM)	
		1	**8T-8730**	3	SOCKET-CONNECTOR	
		1	**8T-8731**	1	PLUG-CONNECTOR	
	29	1	**8H-8648**	1	PLATE-INSTRUCTION (DISCONNECT SWITCH)	
	30	1	**8T-2501**	2	BOLT (3/8-16X2.0 IN)	
		1	**6G-2263**	2	SPACER (28.5MM THK)	
	31	1	**5V-3885**	1	CABLE AS	
E		1	**5P-0747**		CABLE-STARTER (00GA) (160CM)	
	32	1	**7N-5274**	2	COVER (BLACK)	
	33	1	**1M-4969**	1	TERMINAL-BATTERY	
	34	1	**3S-6049**	1	TERMINAL AS-BATTERY (POSITIVE)	

8R-5053 BATTERY & WIRING GP *(contd.)* i01336105

NOTE	REF NO	GRAPHIC REF	PART NUMBER	QTY	PART NAME 1 2 3 4 5 6 (PRODUCT LEVEL)	SEE PAGE
		1	**1M-6119**	1	BOLT-BATTERY TERM (5/16-18X1.375 IN)	
		1	**1M-6120**	1	NUT-BATTERY TERMINAL (5/16-18 THD)	
	35	1	**8R-2649**	1	WIRE AS	
	36	1	**1S-0994**	4	CLIP (20.64MM ID)	
	37	1	**8R-8164**	1	HARNESS AS	
C	38	1	**3E-6172**	1	BUFFER GP-SENSOR	
		1	**7N-7779**	3	SOCKET-CONNECTOR	
		1	**7N-7780**	2	PIN-CONNECTOR (BLADE)	
		1	**7N-7782**	1	HOUSING-PLUG (1 PIN, 2 SOCKET)	
		1	**7N-9738**	1	HOUSING-RECEPTACLE	
		1	**8C-8977**	1	CLIP	
	39	1	**6D-4636**	1	CLIP (23.81MM ID)	
	40	1	**4E-1286**	1	HARNESS AS	
		1	**3T-3048**	1	CLIP AS (10.2MM ID)	
	41	1	**6G-2256**	2	CLAMP	
	42	1	**2G-8767**	4	WASHER (3MM THK)	
	43	1	**6W-8946**	1	STRIP AS	
		1	**9F-2978**		NUT-WELD (3/8-16 THD)	
	44	1	**9G-9150**	1	CLIP (10.2MM ID)	
	45	1	**5P-9085**	2	CLIP (7.94MM ID)	
	46	1	**3B-7764**	1	BUSHING	
	47	1,2	**4D-7794**	8	CLIP (10.0MM ID)	
	48	1	**9X-3210**	1	SWITCH GP-PRESSURE (PARKING BRAKE OIL)	
		1	**7N-7779**	1	SOCKET-CONNECTOR	
		1	**7N-7780**	1	PIN-CONNECTOR (BLADE)	
		1	**7N-9738**	1	HOUSING-RECEPTACLE	
	49	1	**3J-1907**	3	SEAL-O-RING (11.89MM ID)	
	50	1	**4E-3188**	1	WIRE AS	
	51	1	**6C-5213**	1	HARNESS AS	
Y	52	2	*8R-9426*	1	WIRING GP-RELAY PANEL	
M	53	2	**8T-4137**	7	BOLT (M10X1.50X20MM)	
		2	**8T-4121**	7	WASHER-HARD (2.5MM THK)	
	54	2	**9G-4232**	2	BATTERY (12 VOLT)	
M	55	2	**8T-4200**	2	BOLT (M8X1.25X16MM)	
	56	2	**7P-6682**	1	CABLE AS	
		2	**1S-7251**	2	TERMINAL-RING (FOR 1/2 IN BOLT)	
E		2	**5P-0747**		CABLE-STARTER (00GA) (40CM)	
	57	2	**2V-6491**	2	HOLD-DOWN AS-BATTERY	
	58	2	**9G-9287**	1	CONTROL GP-ELECTRONIC (ENGINE SHUTDOWN)	
C	59	2	**4S-4455**	1	CLIP (31.75MM ID)	
	60	2	**5V-0625**	8	BOLT (1/4-20X1.18IN)	
		2	**8T-4205**	8	WASHER-HARD (2MM THK)	
		2	**6V-8185**	8	NUT (1/4-20 THD)	
	61	2	**6C-5248**	1	HARNESS AS	
	62	2	**5S-7379**	7	BOLT (3/8-16X.875 IN)	
	63	2	**4D-1212**	2	GROMMET	
	64	2	**8R-8161**	1	HARNESS AS	
	65	2	**9X-3495**	1	CLIP AS (21.8MM ID)	
	66	2	**6D-4246**	2	CLIP (19.05MM ID)	
	67	2	**8T-4224**	3	WASHER-HARD (8.8X16X2MM THK)	
	68	2	**8T-4223**	1	WASHER-HARD (3MM THK)	
		2	**6V-8188**	1	NUT (1/2-13 THD)	
	69	2	**3K-3147**	1	CABLE AS	
		2	**2M-0913**	2	TERMINAL	
	70	1	**2M-9346**	1	SWITCH AS-PRESSURE (STOP LIGHT)	
		1	**6V-8378**	2	NUT (10-32 THD)	
		1	**8F-1434**	2	LOCKWASHER (0.51MM THK)	

C-CHANGE FROM PREVIOUS TYPE
E-ORDER BY THE CENTIMETER
M-METRIC PART
Y-SEPARATE ILLUSTRATION

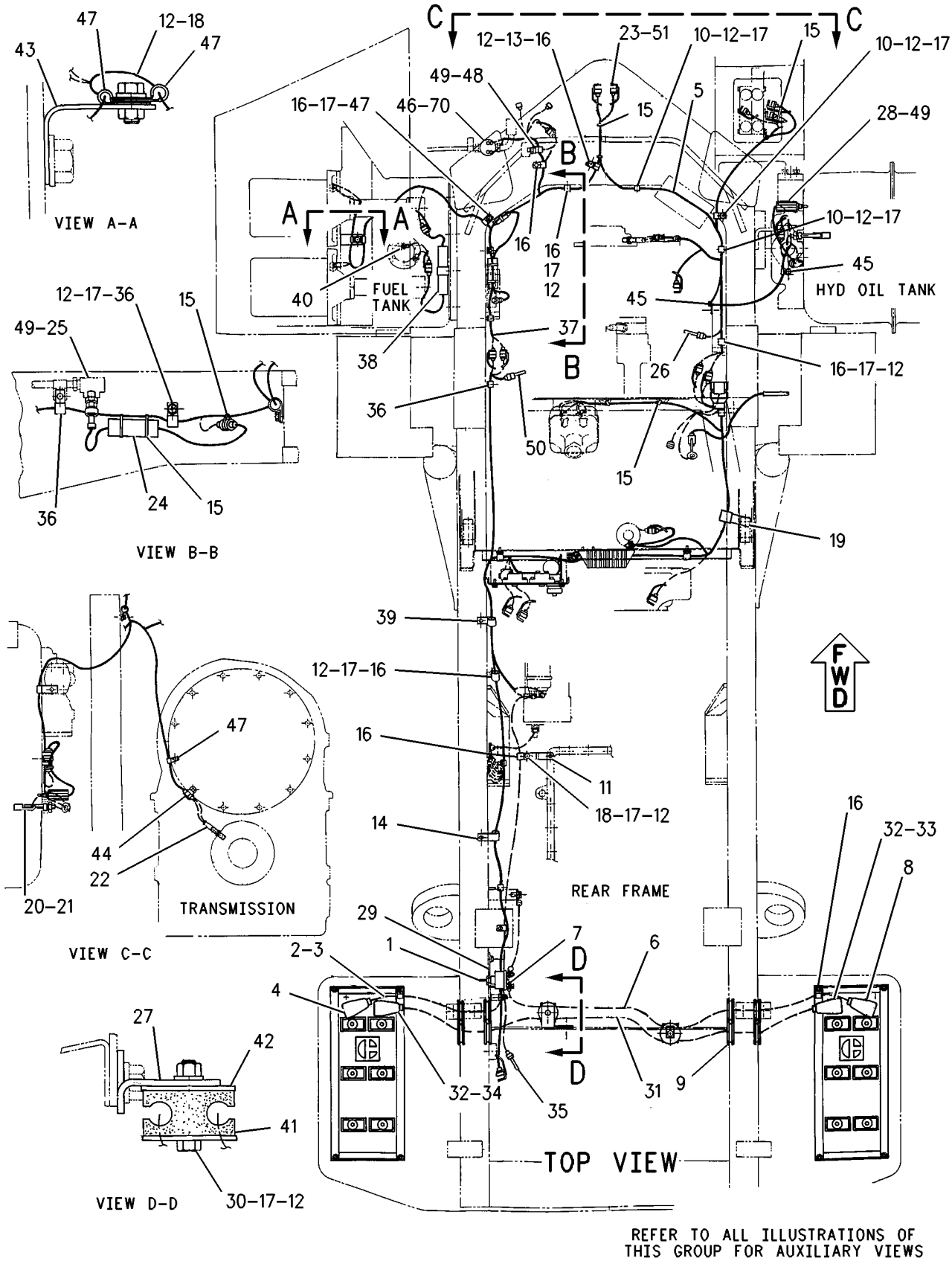

GRAPHIC #1 g00695484

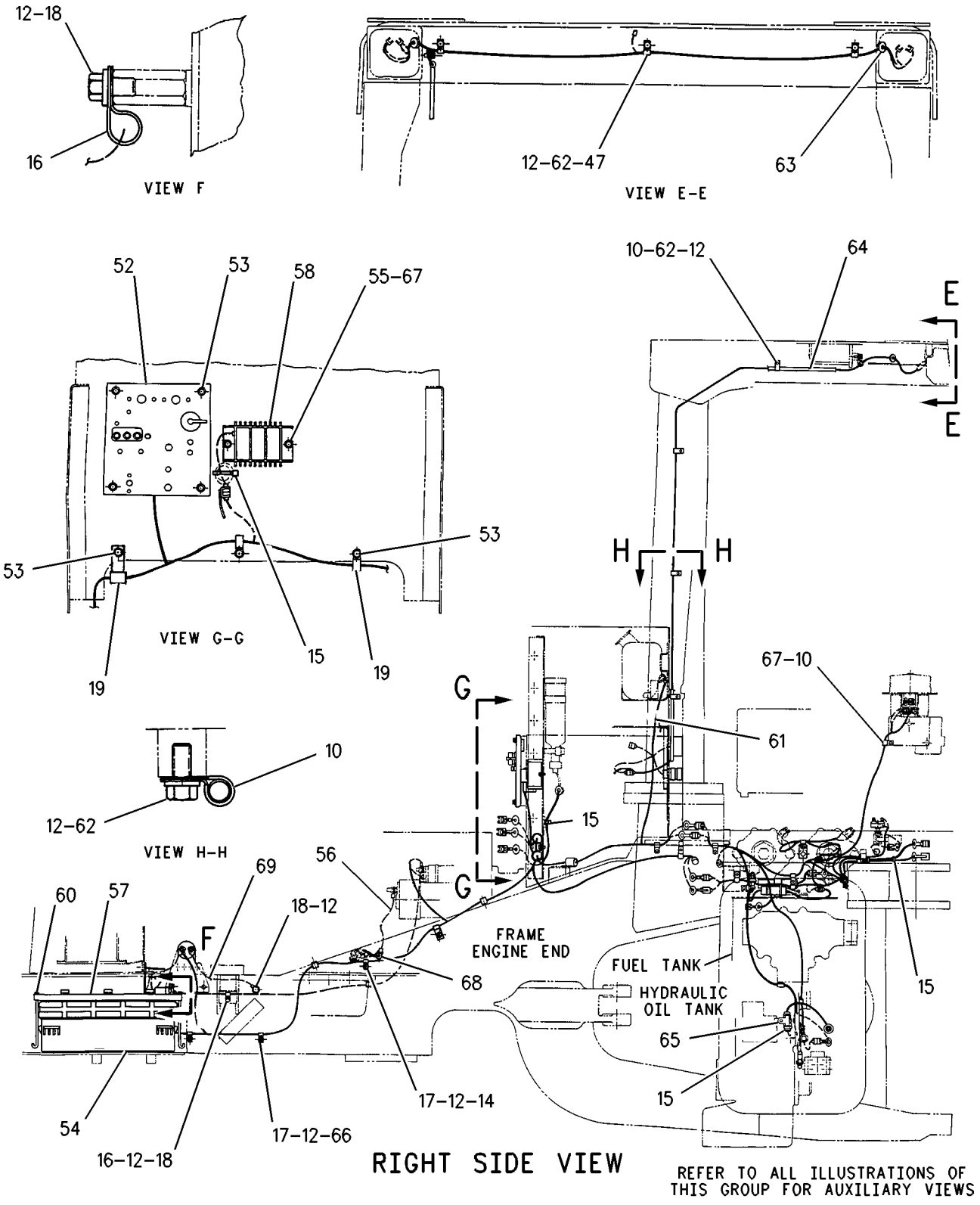

GRAPHIC #2 g00695693

MEMORANDA

ELECTRICAL AND STARTING SYSTEM

8R-5053 BATTERY & WIRING GP

S/N: 3XJ2210-99999

SMCS-1401, 1408 **i01336102**

NOTE	REF NO	GRAPHIC REF	PART NUMBER	QTY	PART NAME 1 2 3 4 5 6 (PRODUCT LEVEL)	SEE PAGE
Y	1	1	**7N-0718**	1	SWITCH GP-DISCONNECT	
	2	1	**8V-0615**	1	CABLE AS	
E		1	**5P-0747**		CABLE-STARTER (00GA) (213CM)	
		1	**1S-7251**	1	TERMINAL-RING (FOR 1/2 IN BOLT)	
	4	1	**8N-1725**	1	COVER (RED)	
		1	**3S-6049**	1	TERMINAL AS-BATTERY (POSITIVE)	
		1	**1M-6119**	1	BOLT-BATTERY TERM (5/16-18X1.375 IN)	
		1	**1M-6120**	1	NUT-BATTERY TERMINAL (5/16-18 THD)	
	5	1	**8R-8165**	1	HARNESS AS	
	6	1	**5V-3887**	1	CABLE AS	
E		1	**5P-0747**		CABLE-STARTER (00GA) (140CM)	
	7	1	**9G-8909**	1	COVER (BLACK)	
		1	**1S-7252**	1	TERMINAL-RING (FOR 3/8IN BOLT)	
	8	1	**7N-5274**	1	COVER (BLACK)	
		1	**3S-6050**	1	TERMINAL AS-BATTERY (NEGATIVE)	
		1	**1M-6119**	1	BOLT-BATTERY TERM (5/16-18X1.375 IN)	
		1	**1M-6120**	1	NUT-BATTERY TERMINAL (5/16-18 THD)	
	9	1	**7Y-3195**	4	GROMMET	
	10	1,2	**8M-2770**	7	CLIP (12.7MM ID)	
	11	1	**7E-0802**	1	BRACKET	
	12	1,2	**8T-4896**	28	WASHER-HARD (10.2X18.5X2.5MM THK)	
	13	1	**5P-8167**	1	BOLT (3/8-16X.625 IN)	
	14	1,2	**6K-8178**	2	CLIP (15.88MM ID)	
	15	1,2	**3S-2093**	12	STRAP-CABLE (1.75 IN DIA)	
	16	1,2	**9M-8406**	11	CLIP (15.8MM ID)	
	17	1,2	**6V-8801**	15	NUT (3/8-16 THD)	
	18	1,2	**5M-3062**	6	BOLT (3/8-16X.75 IN)	
C	19	1,2	**5N-2840**	3	CLIP (31.75MM ID)	
	20	1	**2M-9780**	1	SEAL-O-RING (19.18MM ID)	
C	21	1	**3E-9342**	1	SWITCH AS-LIQUID LEVEL (HYDRAULIC TANK)	
		1	**7N-7779**	1	SOCKET-CONNECTOR	
		1	**7N-7780**	1	PIN-CONNECTOR (BLADE)	
		1	**7N-9737**	1	HOUSING-PLUG	
	22	1	**7C-1897**	1	SENSOR GP-SPEED (TRANSMISSION OUTPUT)	
E		1	**9X-1386**		SLEEVE (14CM)	
		1	**171-5349**	1	STRAP-MARKER	
		1	**7N-7779**	1	SOCKET-CONNECTOR	
		1	**7N-7780**	1	PIN-CONNECTOR (BLADE)	
		1	**7N-9738**	1	HOUSING-RECEPTACLE	
	23	1	**3T-3047**	1	CLIP AS (20MM ID)	
Y	24	1	**9X-5272**	1	SENSOR GP-PRESSURE (BRAKE AIR)	
	25	1	**9X-0261**	1	ADAPTER (19.05MM HEX)	
		1	**3J-7354**	1	SEAL-O-RING (8.92MM ID)	
	26	1	**8R-9526**	1	WIRE AS	
	27	1	**4E-2242**	2	PLATE	
C	28	1	**3E-5370**	1	SENSOR GP-TEMPERATURE (HYDRAULIC OIL)	
E		1	**8T-6342**		TUBE (3.18MM ID) (8CM)	
		1	**8T-8730**	3	SOCKET-CONNECTOR	
		1	**8T-8731**	1	PLUG-CONNECTOR	
	29	1	**8H-8648**	1	PLATE-INSTRUCTION (DISCONNECT SWITCH)	
	30	1	**8T-2501**	2	BOLT (3/8-16X2.0 IN)	
		1	**6G-2263**	2	SPACER (28.5MM THK)	
	31	1	**5V-3885**	1	CABLE AS	
E		1	**5P-0747**		CABLE-STARTER (00GA) (160CM)	
	32	1	**7N-5274**	2	COVER (BLACK)	
	33	1	**1M-4969**	1	TERMINAL-BATTERY	
	34	1	**3S-6049**	1	TERMINAL AS-BATTERY (POSITIVE)	

8R-5053 BATTERY & WIRING GP *(contd.)* i01336102

NOTE	REF NO	GRAPHIC REF	PART NUMBER	QTY	PART NAME 1 2 3 4 5 6 (PRODUCT LEVEL)	SEE PAGE
		1	**1M-6119**	1	BOLT-BATTERY TERM (5/16-18X1.375 IN)	
		1	**1M-6120**	1	NUT-BATTERY TERMINAL (5/16-18 THD)	
	35	1	**8R-2649**	1	WIRE AS	
	36	1	**1S-0994**	4	CLIP (20.64MM ID)	
	37	1	**8R-8164**	1	HARNESS AS	
C	38	1	**3E-6172**	1	BUFFER GP-SENSOR	
		1	**7N-7779**	3	SOCKET-CONNECTOR	
		1	**7N-7780**	2	PIN-CONNECTOR (BLADE)	
		1	**7N-7782**	1	HOUSING-PLUG (1 PIN, 2 SOCKET)	
		1	**7N-9738**	1	HOUSING-RECEPTACLE	
		1	**8C-8977**	1	CLIP	
	39	1	**6D-4636**	1	CLIP (23.81MM ID)	
	40	1	**4E-1286**	1	HARNESS AS	
		1	**3T-3048**	1	CLIP AS (10.2MM ID)	
	41	1	**6G-2256**	2	CLAMP	
	42	1	**2G-8767**	4	WASHER (3MM THK)	
	43	1	**6W-8946**	1	STRIP AS	
		1	**9F-2978**		NUT-WELD (3/8-16 THD)	
	44	1	**9G-9150**	1	CLIP (10.2MM ID)	
	45	1	**5P-9085**	2	CLIP (7.94MM ID)	
	46	1	**3B-7764**	1	BUSHING	
	47	1,2	**4D-7794**	8	CLIP (10.0MM ID)	
	48	1	**9X-3210**	1	SWITCH GP-PRESSURE (PARKING BRAKE OIL)	
		1	**7N-7779**	1	SOCKET-CONNECTOR	
		1	**7N-7780**	1	PIN-CONNECTOR (BLADE)	
		1	**7N-9738**	1	HOUSING-RECEPTACLE	
	49	1	**3J-1907**	3	SEAL-O-RING (11.89MM ID)	
	50	1	**4E-3188**	1	WIRE AS	
	51	1	**6C-5213**	1	HARNESS AS	
Y	52	2	*8R-9426*	1	WIRING GP-RELAY PANEL	
M	53	2	**8T-4137**	7	BOLT (M10X1.50X20MM)	
		2	**8T-4121**	7	WASHER-HARD (2.5MM THK)	
	54	2	**9G-4232**	2	BATTERY (12 VOLT)	
M	55	2	**8T-4200**	2	BOLT (M8X1.25X16MM)	
	56	2	**7P-6682**	1	CABLE AS	
		2	**1S-7251**	2	TERMINAL-RING (FOR 1/2 IN BOLT)	
E		2	**5P-0747**		CABLE-STARTER (00GA) (40CM)	
	57	2	**2V-6491**	2	HOLD-DOWN AS-BATTERY	
	58	2	**9G-9287**	1	CONTROL GP-ELECTRONIC (ENGINE SHUTDOWN)	
C	59	2	**4S-4455**	1	CLIP (31.75MM ID)	
	60	2	**5V-0625**	8	BOLT (1/4-20X1.18IN)	
		2	**8T-4205**	8	WASHER-HARD (2MM THK)	
		2	**6V-8185**	8	NUT (1/4-20 THD)	
	61	2	**6C-5248**	1	HARNESS AS	
	62	2	**5S-7379**	7	BOLT (3/8-16X.875 IN)	
	63	2	**4D-1212**	2	GROMMET	
	64	2	**8R-8161**	1	HARNESS AS	
	65	2	**9X-3495**	1	CLIP AS (21.8MM ID)	
	66	2	**6D-4246**	2	CLIP (19.05MM ID)	
	67	2	**8T-4224**	3	WASHER-HARD (8.8X16X2MM THK)	
	68	2	**8T-4223**	1	WASHER-HARD (3MM THK)	
		2	**6V-8188**	1	NUT (1/2-13 THD)	
	69	2	**3K-3147**	1	CABLE AS	
		2	**2M-0913**	2	TERMINAL	
	70	1	**2M-9346**	1	SWITCH AS-PRESSURE (STOP LIGHT)	
		1	**6V-8378**	2	NUT (10-32 THD)	
		1	**8F-1434**	2	LOCKWASHER (0.51MM THK)	

C-CHANGE FROM PREVIOUS TYPE
E-ORDER BY THE CENTIMETER
M-METRIC PART
Y-SEPARATE ILLUSTRATION

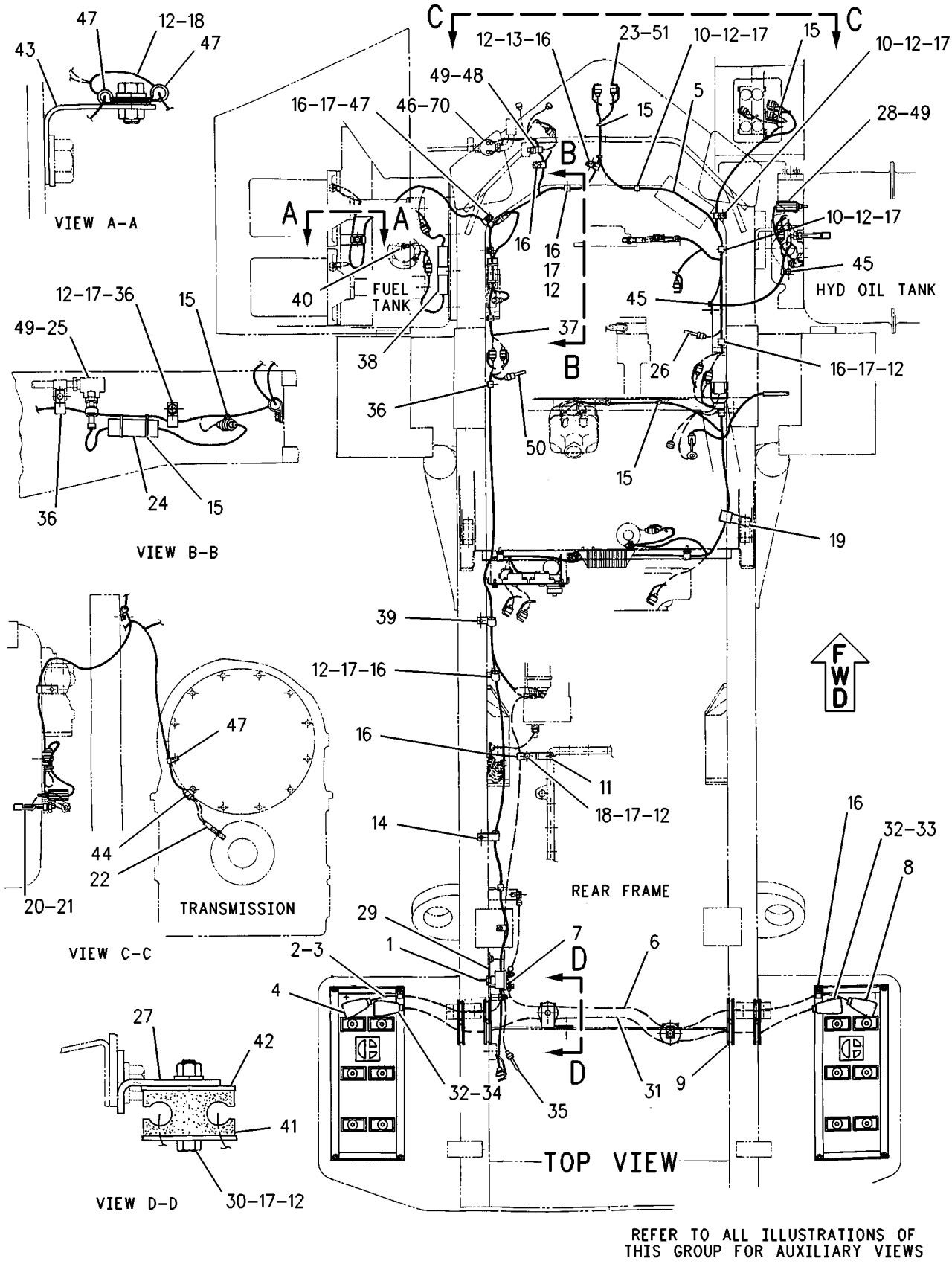

GRAPHIC #1 g00695484

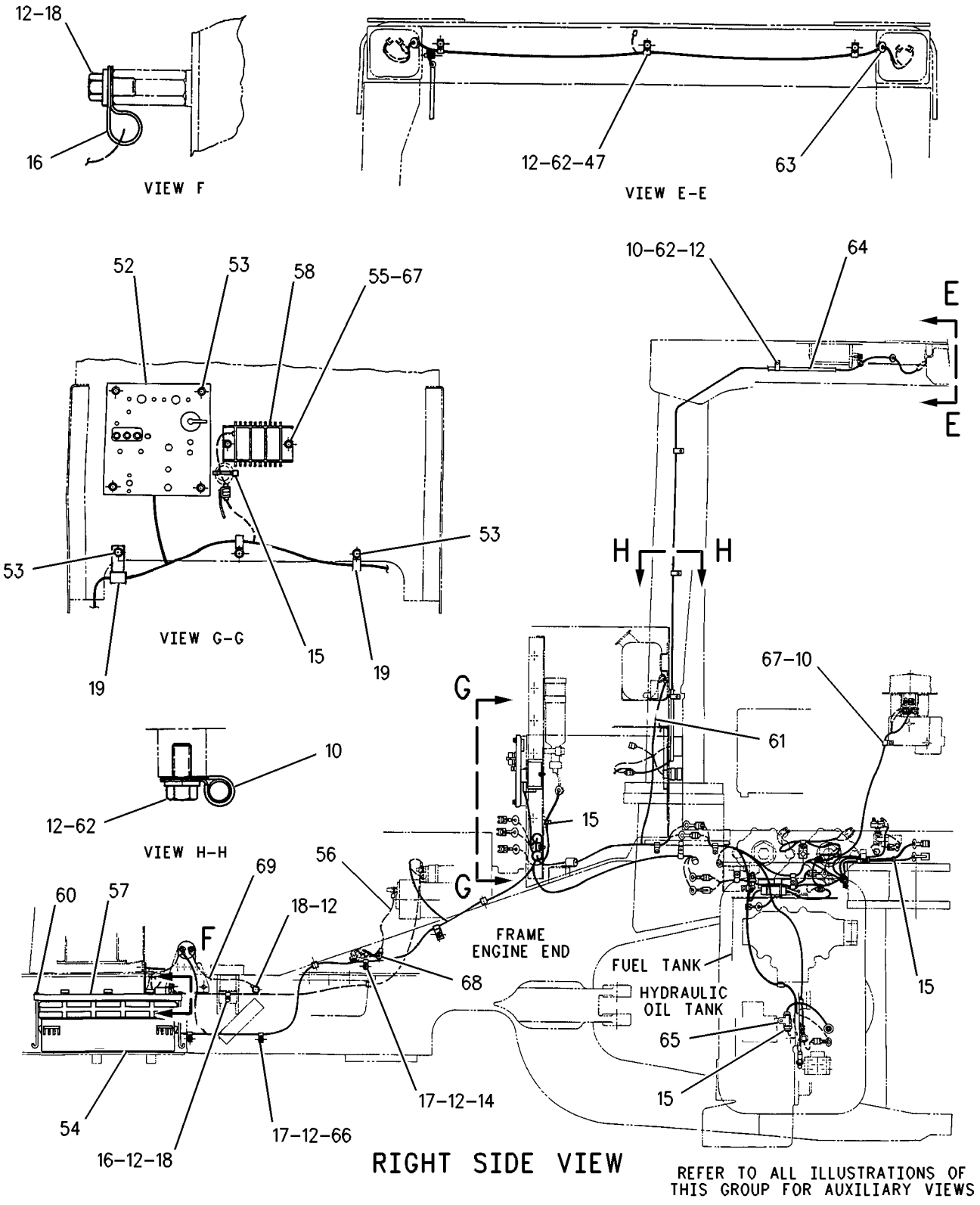

GRAPHIC #2 g00695693

9X-3252 BUFFER GP-SENSOR–FUEL LEVEL

S/N: 3XJ1-2209

PART OF 8R-5053 BATTERY & WIRING GP

SMCS-1408 **i00286550**

NOTE	REF NO	GRAPHIC REF	PART NUMBER	QTY	PART NAME 1 2 3 4 5 6 (PRODUCT LEVEL)	SEE PAGE
	1	1	**7N-7782**	1	HOUSING-PLUG	
	2	1	**7N-7779**	3	SOCKET	
	3	1	**7N-9738**	1	HOUSING-RECEPTACLE	
	4	1	**7N-7780**	2	PIN-CONNECTOR (BLADE)	

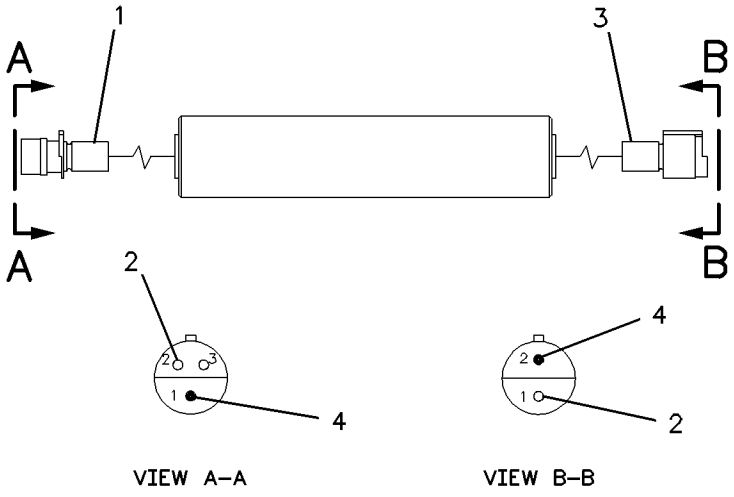

GRAPHIC #1 g00119035

7T-8000 CONVERTER GP-ELECTRICAL

S/N: 3XJ1-99999
24 TO 12 VOLT, 2.5 AMPERE
PART OF 8R-2950 CONVERTER GP-ELECTRICAL
AN ATTACHMENT

SMCS-1421 **i00259610**

NOTE	REF NO	GRAPHIC REF	PART NUMBER	QTY	PART NAME 1 2 3 4 5 6 (PRODUCT LEVEL)	SEE PAGE
	1	1	**7N-9737**	1	HOUSING-PLUG	
	2	1	**7N-7780**	2	PIN-CONNECTOR (BLADE)	
		1	**7N-7779**	2	SOCKET	
	3	1	**7N-7781**	1	HOUSING-RECEPTACLE	
	4	1	**9G-3695**	1	PLUG-SEAL	

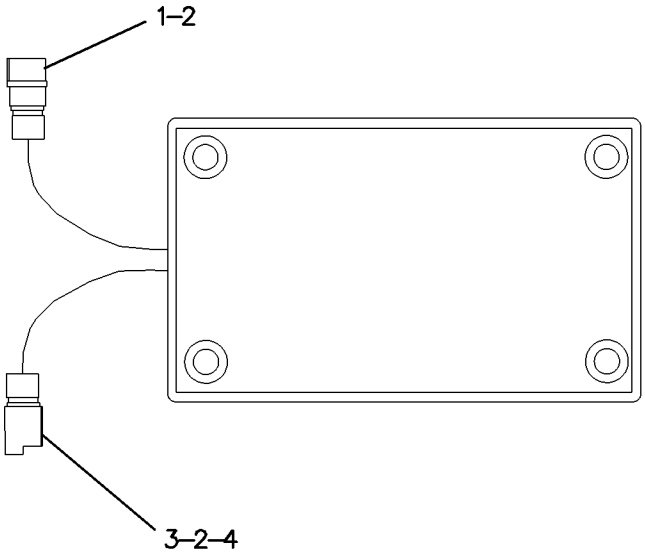

GRAPHIC #1 g00118646

8R-2950 CONVERTER GP-ELECTRICAL

S/N: 3XJ1-99999
PART OF 6C-4057 INSTALLATION GP-RADIO
AN ATTACHMENT

SMCS-1421 **i00562436**

NOTE	PART NUMBER	QTY	PART NAME 1 2 3 4 5 6 (PRODUCT LEVEL)	SEE PAGE
Y	**7T-8000**	1	CONVERTER GP-ELECTRICAL	
M	**8T-2947**	4	BOLT (M6X1.0X45MM)	
	8T-4205	4	WASHER-HARD (2MM THK)	

M-METRIC PART
Y-SEPARATE ILLUSTRATION

ELECTRICAL AND STARTING SYSTEM

6C-5170 HEATER GP-BLOCK

S/N: 3XJ1-99999
AN ATTACHMENT

SMCS-1383 **i00259800**

NOTE	REF NO	GRAPHIC REF	PART NUMBER	QTY	PART NAME 1 2 3 4 5 6 (PRODUCT LEVEL)	SEE PAGE
	1	1	**6C-5697**	1	PANEL AS-RH	
M		1	**8T-3490**	16	NUT-WELD (M10X1.5 THD)	
M		1	**8T-4219**	4	STUD-WELD (M10X1.5X17.5 MM)	
	2	1	**2Y-5429**	1	GROMMET	
	3	1	**6C-4044**	1	HEATER AS	
	4	1	**6C-4085**	1	CABLE	
	5	1	**6C-4086**	1	CABLE	
	6	1	**6V-6717**	2	SCREW-WASHER HEAD	
	7	1	**9M-8406**	1	CLIP (15.8MM ID)	
	8	1	**7K-1181**	2	STRAP-CABLE (4.00IN DIA)	

M-METRIC PART

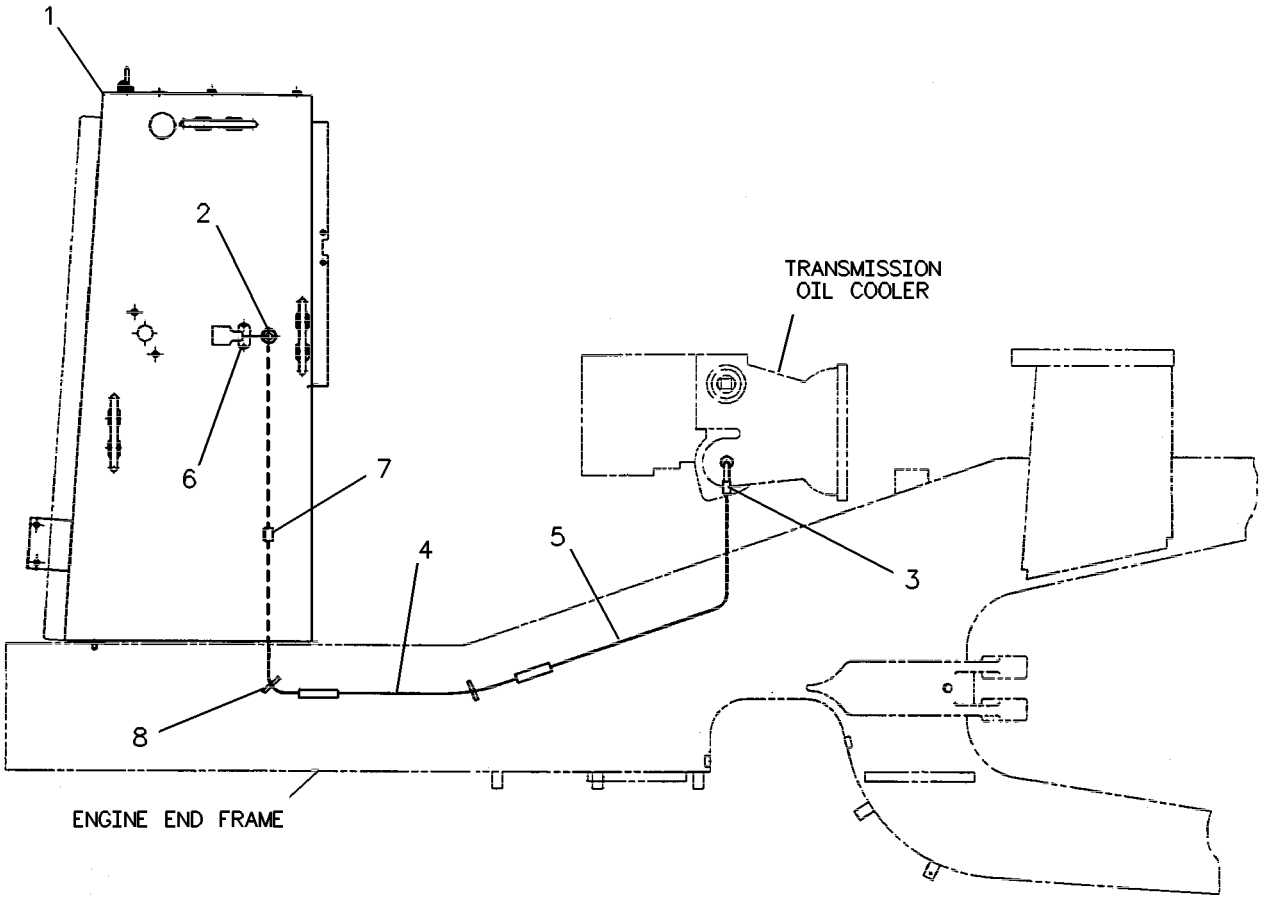

GRAPHIC #1 g00127120

9X-1439 LAMP GP-FLOOD

S/N: 3XJ1-99999
24 VOLT
PART OF 6C-4050 CANOPY AR-OPEN ROPS, 8R-5052 LIGHTING GP-FLOOD & SIGNAL, 8R-9537 LIGHTING GP-ROADING
FIELD REPLACEMENT FOR 9X-6774—PAGE , 9X-6775—PAGE , 9X-4381—PAGE
ALSO AN ATTACHMENT

SMCS-1434 **i01177991**

NOTE	REF NO	GRAPHIC REF	PART NUMBER	QTY	PART NAME 1 2 3 4 5 6 (PRODUCT LEVEL)	SEE PAGE
	1	1	**9X-4244**	4	SCREW	
	2	1	**9X-4174**	1	LENS AS-FLOODLIGHT	
		1	**9X-4243**	1	SEAL	
M	3	1	**8T-0337**	2	SCREW-MACHINE (M4X0.7X12MM)	
	4	1	**9X-3455**	1	BODY AS-LAMP	
	5	1	**9X-3463**	1	LAMP (24 VOLTS)(65 WATTS)	

M-METRIC PART

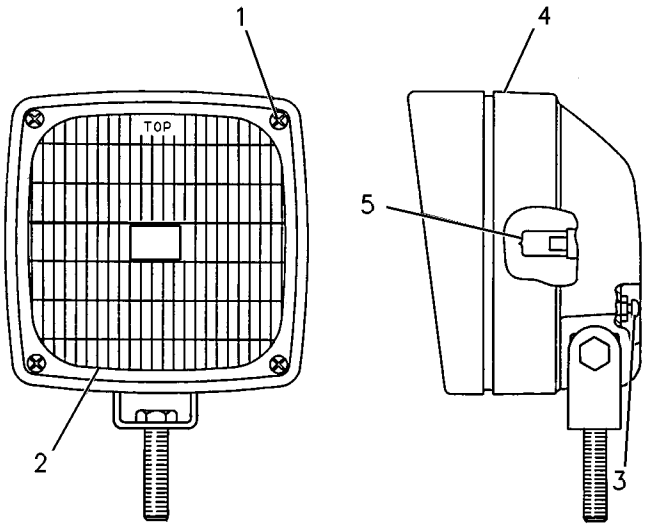

GRAPHIC #1 g00084678

9X-6774 LAMP GP-FLOOD

S/N: 3XJ897-99999

PART OF 8R-5052 LIGHTING GP-FLOOD & SIGNAL

FIELD REPLACEMENT ORDER 9X-1439—PAGE , 1-8T-4133 NUT, 1-8T-4121 WASHER

SMCS-1434 **i01334190**

NOTE	REF NO	GRAPHIC REF	PART NUMBER	QTY	PART NAME 1 2 3 4 5 6 (PRODUCT LEVEL)	SEE PAGE
	1	1	**9X-4244**	4	SCREW	
	2	1	**9X-4174**	1	LENS AS-FLOODLIGHT	
		1	**9X-4243**	1	SEAL	
M	3	1	**8T-0337**	2	SCREW-MACHINE (M4X0.7X12MM)	
	4	1	**9X-3455**	1	BODY AS-LAMP (SINGLE BEAM)	
		1	**8T-4121**	1	WASHER-HARD (2.5MM THK)	
M		1	**8T-4133**	1	NUT (M10X1.50 THD)	
	5	1	**9X-3463**	1	LAMP (24 VOLT)(65 WATT)	

M-METRIC PART

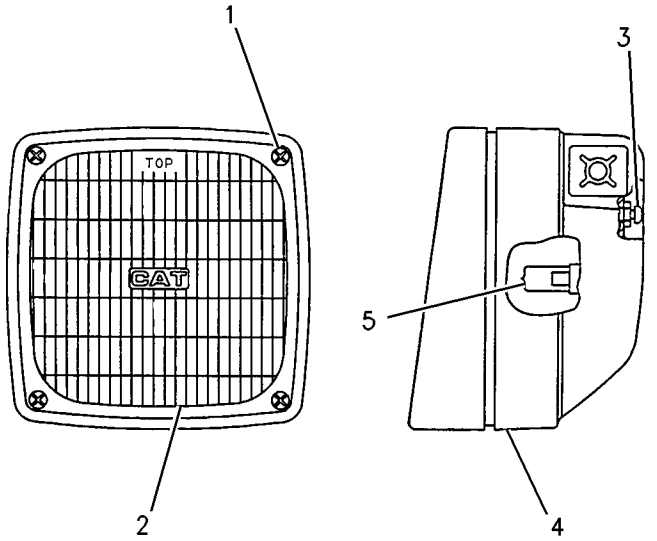

GRAPHIC #1 g00705436

9X-1440 LAMP GP-HEAD

S/N: 3XJ1-99999
24 VOLT. HIGH
PART OF 8R-9537 LIGHTING GP-ROADING
AN ATTACHMENT

SMCS-1429 **i00286515**

NOTE	REF NO	GRAPHIC REF	PART NUMBER	QTY	PART NAME 1 2 3 4 5 6 (PRODUCT LEVEL)	SEE PAGE
	1	1	**9X-4244**	4	SCREW	
	2	1	**9X-4175**	1	LENS AS	
		1	**9X-9865**	1	SEAL	
M	3	1	**8T-0337**	2	SCREW-MACHINE	
	4	1	**9X-7849**	1	LAMP	
	5	1	**9X-7848**	1	BODY AS-LAMP	

M-METRIC PART

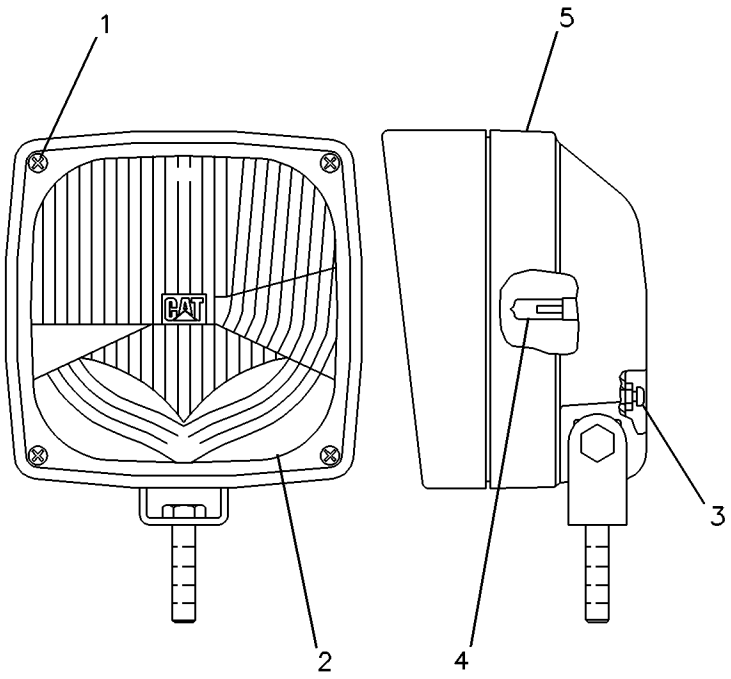

GRAPHIC #1 g00108445

9X-1441 LAMP GP-HEAD

S/N: 3XJ1-99999
24 VOLT. LOW
PART OF 8R-9537 LIGHTING GP-ROADING
AN ATTACHMENT

SMCS-1429 **i00286540**

NOTE	REF NO	GRAPHIC REF	PART NUMBER	QTY	PART NAME 1 2 3 4 5 6 (PRODUCT LEVEL)	SEE PAGE
	1	1	**9X-4244**	4	SCREW	
	2	1	**9X-4176**	1	LENS AS	
		1	**9X-9865**	1	SEAL	
M	3	1	**8T-0337**	2	SCREW-MACHINE	
	4	1	**9X-7848**	1	BODY AS-LAMP	
	5	1	**9X-7849**	1	LAMP	

M-METRIC PART

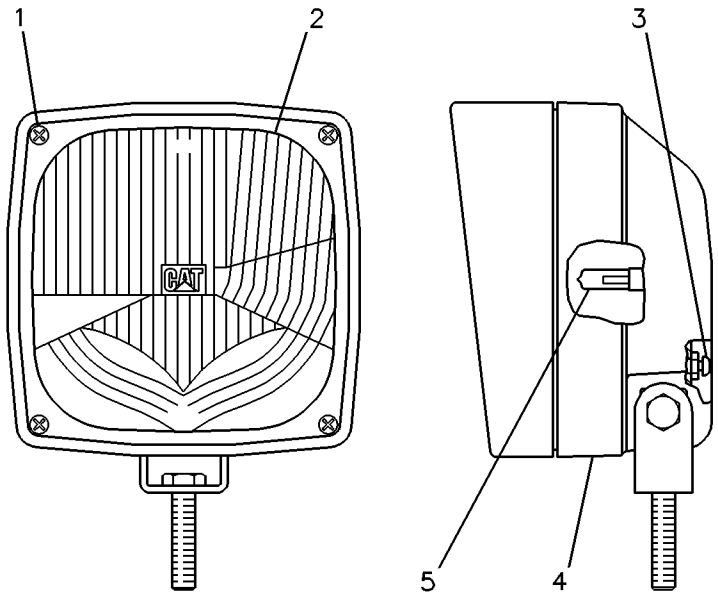

GRAPHIC #1 g00127405

7X-6066 LAMP GP-SIGNAL

S/N: 3XJ1-99999

PART OF 8R-9537 LIGHTING GP-ROADING, 8R-8393 LIGHTING GP-SIGNAL AN ATTACHMENT

SMCS-1430 **i00259751**

NOTE	REF NO	GRAPHIC REF	PART NUMBER	QTY	PART NAME 1 2 3 4 5 6 (PRODUCT LEVEL)	SEE PAGE
C	1	1	**9X-4493**	1	LAMP	
	2	1	**7N-9737**	1	HOUSING-PLUG	
		1	**7N-7780**	1	PIN-CONNECTOR (BLADE)	
		1	**7N-7779**	1	SOCKET	
C	3	1	**9X-3066**	1	LENS-AMBER	

C-CHANGE FROM PREVIOUS TYPE

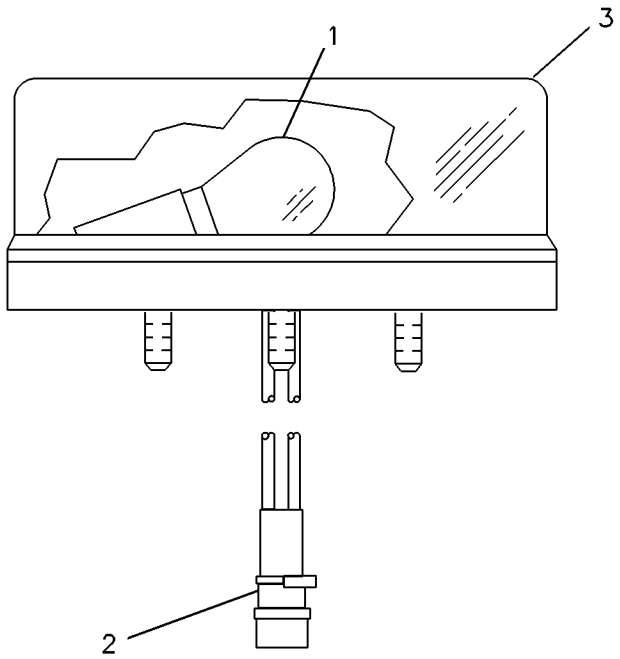

GRAPHIC #1 g00082524

8C-6207 LAMP GP-SIGNAL

S/N: 3XJ1-99999
24 VOLT. STOP/TAIL - RED
PART OF 8R-5052 LIGHTING GP-FLOOD & SIGNAL

SMCS-1430 **i01326594**

NOTE	REF NO	GRAPHIC REF	PART NUMBER	QTY	PART NAME 1 2 3 4 5 6 (PRODUCT LEVEL)	SEE PAGE
	1	1	**9X-3064**	1	LENS-RED	
	2	1	**9X-4492**	1	LAMP	
	3	1	**7N-7782**	1	HOUSING-PLUG (1 PIN, 2 SOCKET)	
	4	1	**7N-7779**	2	SOCKET-CONNECTOR	
	5	1	**7N-7780**	1	PIN-CONNECTOR (BLADE)	

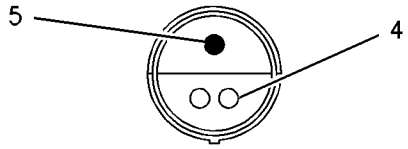

VIEW B-B

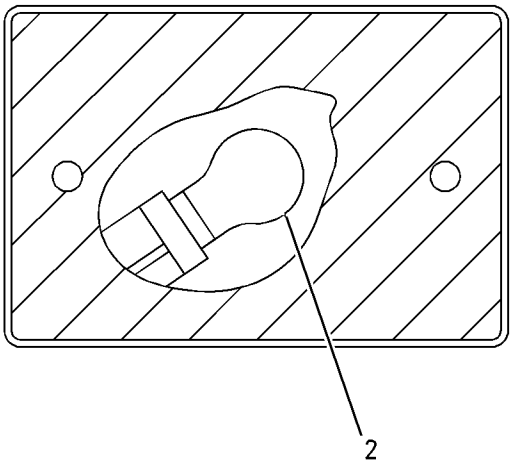

VIEW A-A

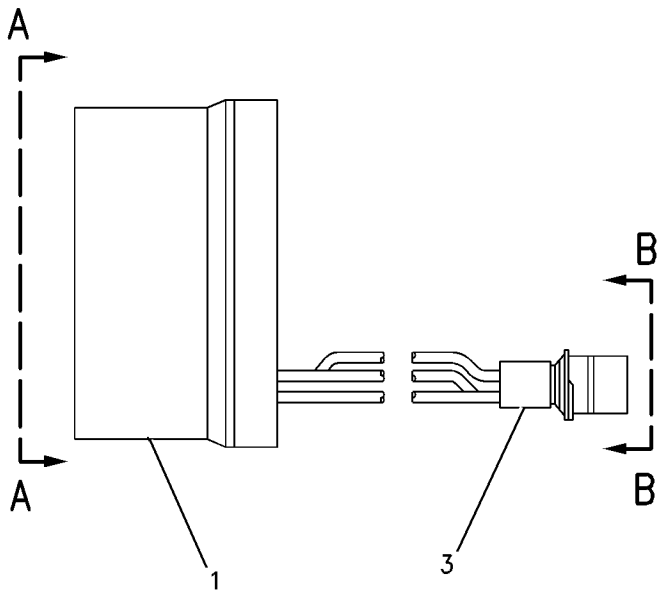

GRAPHIC #1 g00701949

9X-1404 LAMP GP-SIGNAL

S/N: 3XJ1-99999
24 VOLT. STOP/TAIL - RED
PART OF 8R-9537 LIGHTING GP-ROADING
AN ATTACHMENT

SMCS-1430 **i01328749**

NOTE	REF NO	GRAPHIC REF	PART NUMBER	QTY	PART NAME 1 2 3 4 5 6 (PRODUCT LEVEL)	SEE PAGE
	1	1	**9X-3065**	1	LENS-RED	
	2	1	**9X-4492**	1	LAMP	
	3	1	**7N-7782**	1	HOUSING-PLUG (1 PIN, 2 SOCKET)	
	4	1	**7N-7779**	2	SOCKET-CONNECTOR	
	5	1	**7N-7780**	1	PIN-CONNECTOR (BLADE)	
F		1	**8T-4205**	3	WASHER-HARD (2MM THK)	
FM		1	**5C-2890**	3	NUT (M6X1.00 THD)	

F-NOT SHOWN
M-METRIC PART

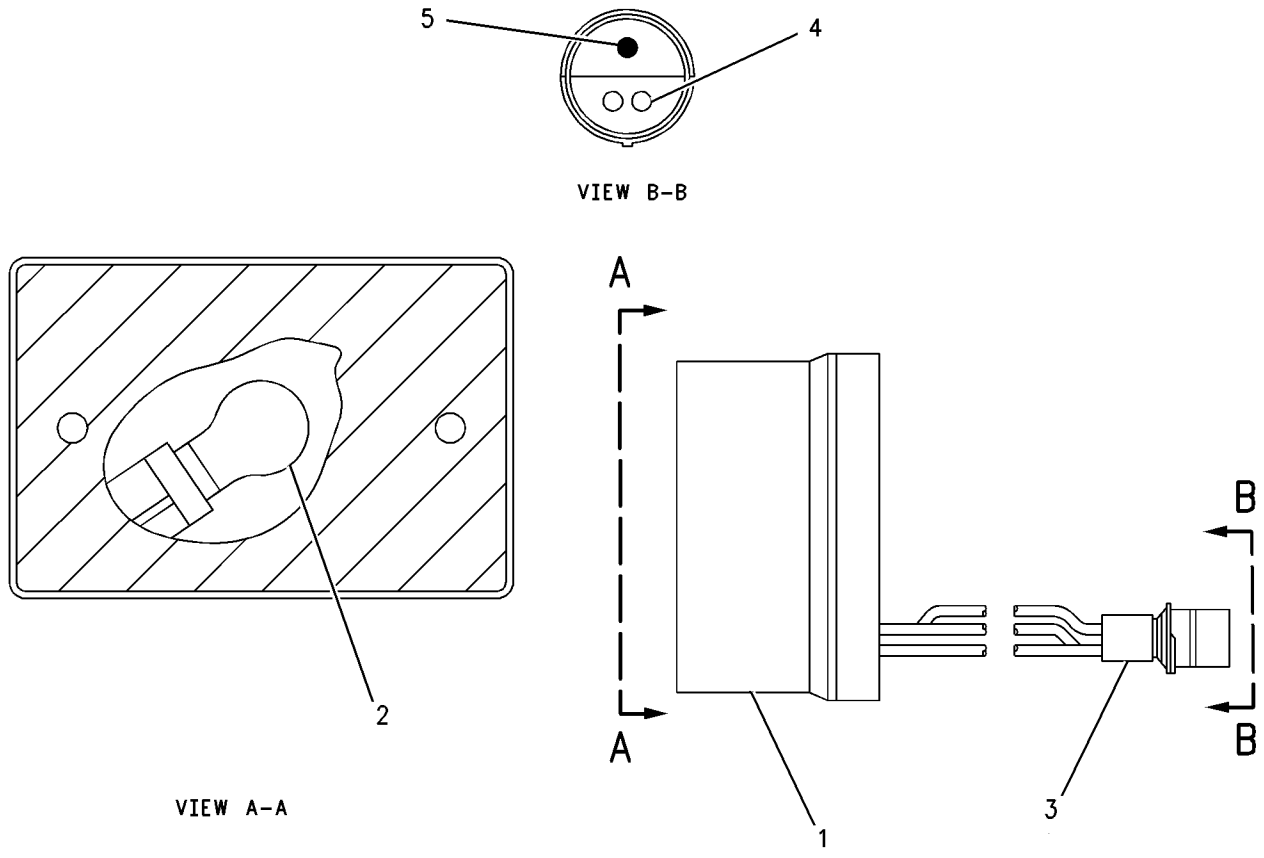

GRAPHIC #1 g00702755

9X-1406 LAMP GP-SIGNAL

S/N: 3XJ1-99999
24 VOLT. REAR TURN-AMBER
PART OF 8R-9537 LIGHTING GP-ROADING
AN ATTACHMENT

SMCS-1430 **i01002808**

NOTE	REF NO	GRAPHIC REF	PART NUMBER	QTY	PART NAME 1 2 3 4 5 6 (PRODUCT LEVEL)	SEE PAGE
	1	1	**9X-4494**	1	LAMP	
	2	1	**7N-9737**	1	HOUSING-PLUG (1 PIN,1 SOCKET)	
		1	**7N-7780**	1	PIN-CONNECTOR (BLADE)	
		1	**7N-7779**	1	SOCKET	
	3	1	**9X-3067**	1	LENS-AMBER	
F		1	**8T-4205**	3	WASHER-HARD (2MM THK)	
FM		1	**5C-2890**	3	NUT (M6X1.00 THD)	

F-NOT SHOWN
M-METRIC PART

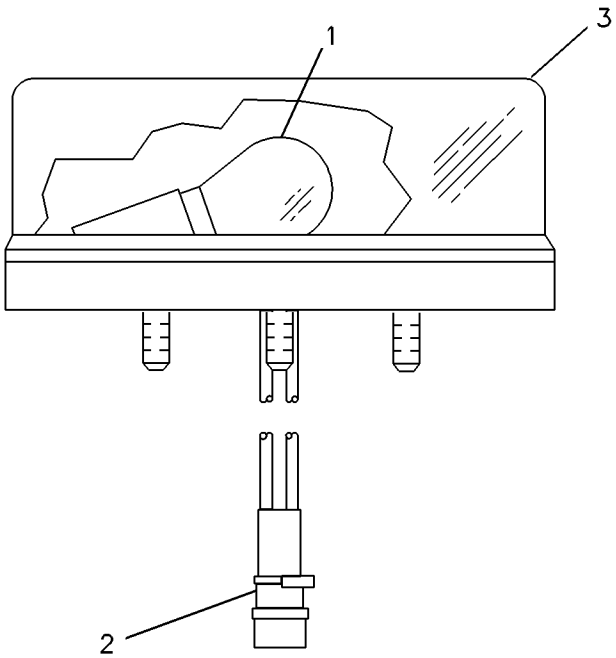

GRAPHIC #1 g00082524

9X-1407 LAMP GP-SIGNAL

S/N: 3XJ1-99999
24 VOLT. FRONT-CLEAR
PART OF 8R-9537 LIGHTING GP-ROADING
AN ATTACHMENT

SMCS-1430 **i00259897**

NOTE	REF NO	GRAPHIC REF	PART NUMBER	QTY	PART NAME 1 2 3 4 5 6 (PRODUCT LEVEL)	SEE PAGE
	1	1	**9X-4494**	1	LAMP	
	2	1	**7N-9738**	1	HOUSING-RECEPTACLE	
		1	**7N-7780**	1	PIN-CONNECTOR (BLADE)	
		1	**7N-7779**	1	SOCKET	
	3	1	**9X-3068**	1	LENS-CLEAR	

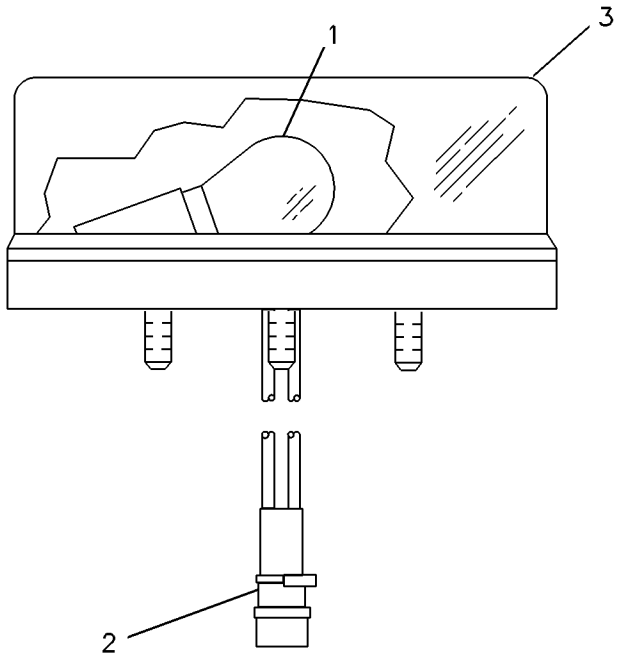

GRAPHIC #1 g00082524

ELECTRICAL AND STARTING SYSTEM

8R-5052 LIGHTING GP-FLOOD & SIGNAL

S/N: 3XJ1-896

SMCS-1430, 1434 **i01329094**

NOTE	REF NO	GRAPHIC REF	PART NUMBER	QTY	PART NAME 1 2 3 4 5 6 (PRODUCT LEVEL)	SEE PAGE
	1	1	**8R-7913**	2	BRACKET	
	2	1	**6V-8801**	6	NUT (3/8-16 THD)	
	3	1	**4L-9337**	6	BOLT (3/8-16X1.5 IN)	
	4	1	**8T-4896**	6	WASHER-HARD (10.2X18.5X2.5MM THK)	
	5	1	**8T-4121**	14	WASHER-HARD (2.5MM THK)	
M	6	1	**8T-4133**	6	NUT (M10X1.50 THD)	
M	7	1	**8T-4200**	4	BOLT (M8X1.25X16MM)	
	8	1	**8R-7911**	4	COVER AS	
					(EACH INCLUDES)	
M		1	**8C-8778**	4	STUD-WELD (M8X1.25X25MM OAL)	
Y	9	1	**9X-1439**	6	LAMP GP-FLOOD	
	10	1	**4E-1387**	1	COVER AS-LH	
	11	1	**4E-1385**	2	BRACKET AS	
Y	12	1	**8C-6207**	2	LAMP GP-SIGNAL	
	13	1	**8R-5817**	2	SHEET	
	14	1	**8R-7909**	2	HOUSING AS	
M	15	1	**8T-4136**	8	BOLT (M10X1.50X25MM)	
M	16	1	**8T-4171**	8	BOLT (M6X1.0X12MM)	
	17	1	**8T-4205**	14	WASHER-HARD (2MM THK)	
	18	1	**8R-3051**	2	SHEET	
M	19	1	**5C-7261**	8	NUT (M8X1.25 THD)	
	20	1	**8T-4224**	12	WASHER-HARD (8.8X16X2MM THK)	
M	21	1	**8T-4134**	6	NUT (M6X1 THD)	
	22	1	**6C-5052**	1	COVER AS-RH	

M-METRIC PART
Y-SEPARATE ILLUSTRATION

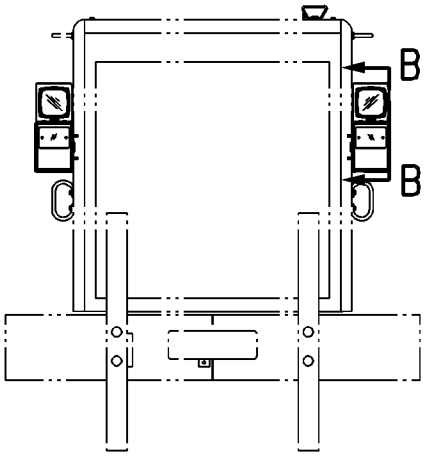

REAR VIEW OF MACHINE

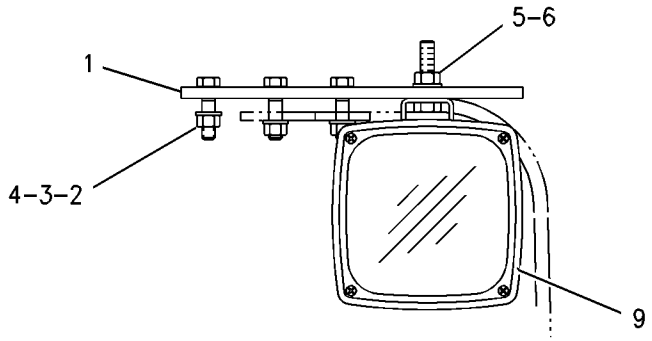

VIEW OF AREA C

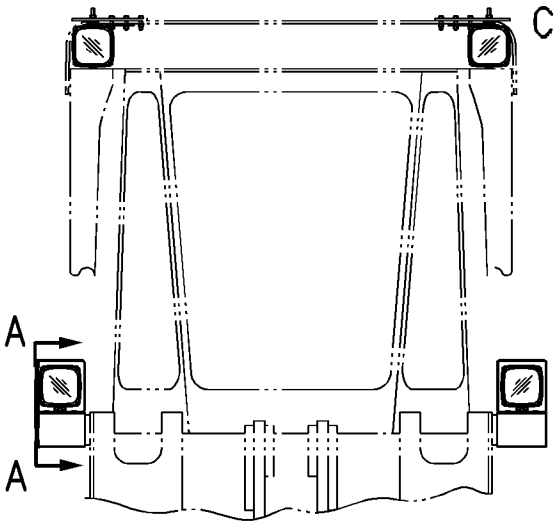

FRONT VIEW OF MACHINE

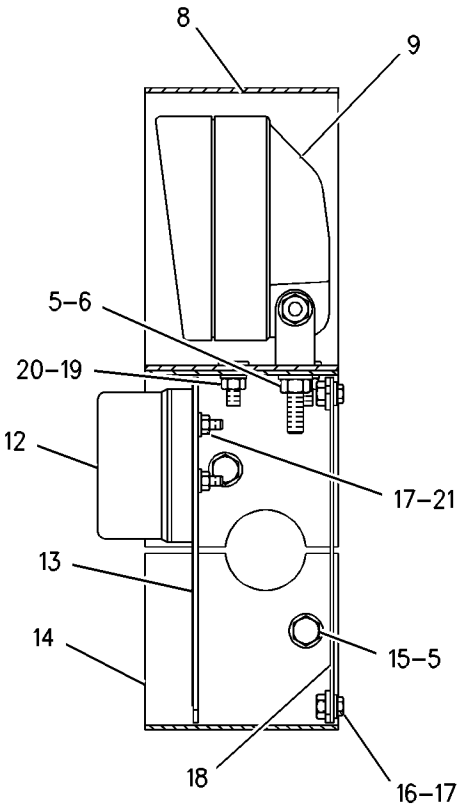

SECTION B-B

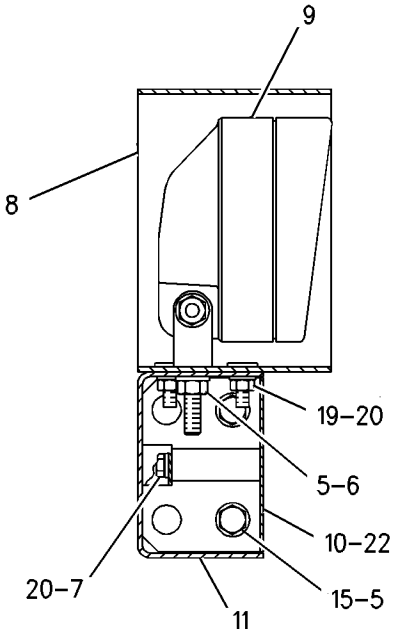

SECTION A-A

GRAPHIC #1 g00703324

ELECTRICAL AND STARTING SYSTEM

8R-5052 LIGHTING GP-FLOOD & SIGNAL

S/N: 3XJ897-99999

SMCS-1430, 1434 **i01329095**

NOTE	REF NO	GRAPHIC REF	PART NUMBER	QTY	PART NAME 1 2 3 4 5 6 (PRODUCT LEVEL)	SEE PAGE
	1	1	**8R-7913**	2	BRACKET	
	2	1	**6V-8801**	6	NUT (3/8-16 THD)	
	3	1	**4L-9337**	6	BOLT (3/8-16X1.5 IN)	
	4	1	**8T-4896**	6	WASHER-HARD (10.2X18.5X2.5MM THK)	
	5	1	**8T-4121**	14	WASHER-HARD (2.5MM THK)	
CM	6	1	**8T-4133**	4	NUT (M10X1.50 THD)	
M	7	1	**8T-4200**	4	BOLT (M8X1.25X16MM)	
C	8	1	**8R-7912**	4	PLATE	
Y	9	1	**9X-1439**	4	LAMP GP-FLOOD	
	10	1	**4E-1387**	1	COVER AS-LH	
	11	1	**4E-1385**	2	BRACKET AS	
Y	12	1	**8C-6207**	2	LAMP GP-SIGNAL	
C	13	1	**6C-7022**	2	SHEET	
	14	1	**8R-7909**	2	HOUSING AS	
M	15	1	**8T-4136**	8	BOLT (M10X1.50X25MM)	
M	16	1	**8T-4171**	8	BOLT (M6X1.0X12MM)	
C	17	1	**8T-4205**	16	WASHER-HARD (2MM THK)	
C	18	1	**6C-7003**	2	SHEET	
CM	19	1	**8T-4189**	8	BOLT (M8X1.25X20MM)	
	20	1	**8T-4224**	12	WASHER-HARD (8.8X16X2MM THK)	
M	21	1	**8T-4134**	6	NUT (M6X1 THD)	
	22	1	**6C-5052**	1	COVER AS-RH	
CM	23	1	**8T-3992**	2	SCREW (M6X1X12MM)	
CM	24	1	**5C-2890**	2	NUT (M6X1.00 THD)	
C	25	1	**5S-7379**	2	BOLT (3/8-16X.875 IN)	
CM	26	1	**8T-6912**	2	BOLT (M8X1.25X50MM)	
CM		1	**5C-7261**	2	NUT (M8X1.25 THD)	
C	27	1	**8E-1550**	2	BRACKET AS	
Y	28	1	*9X-6774*	2	LAMP GP-FLOOD	

C-CHANGE FROM PREVIOUS TYPE
M-METRIC PART
Y-SEPARATE ILLUSTRATION

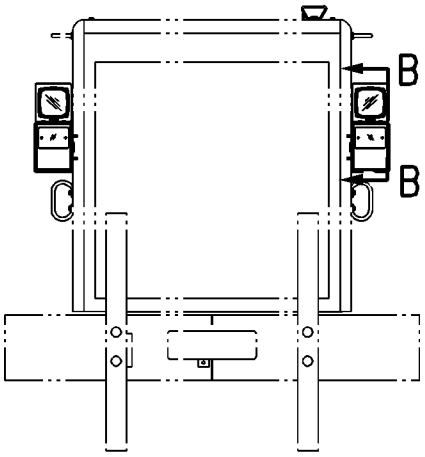

REAR VIEW OF MACHINE

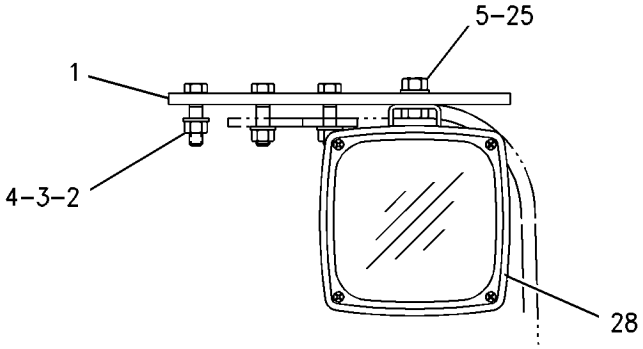

VIEW OF AREA C

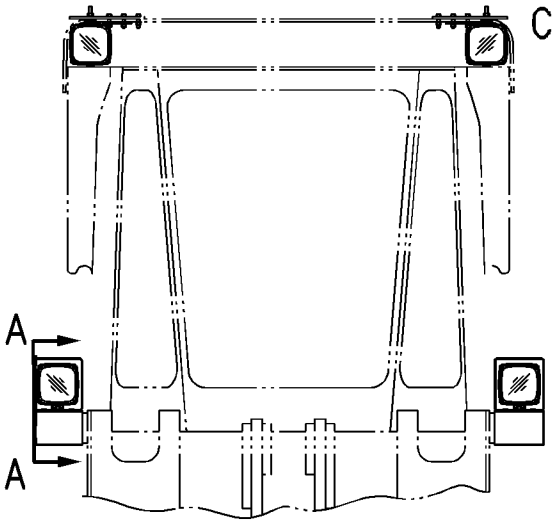

FRONT VIEW OF MACHINE

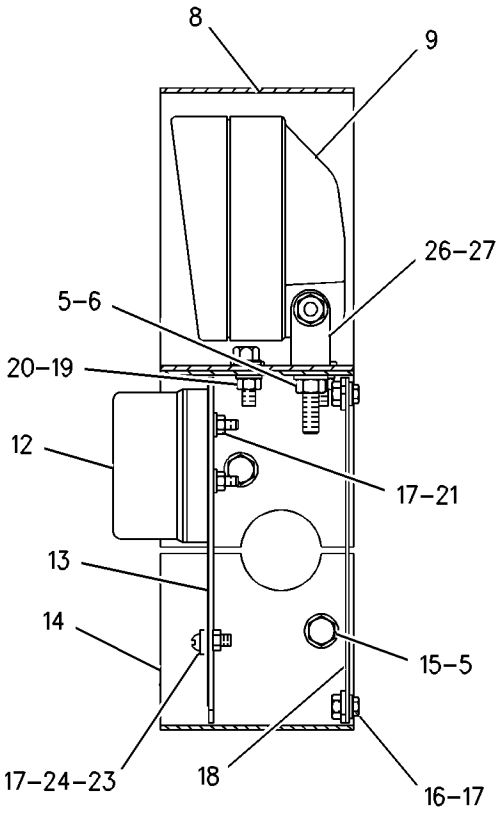

SECTION B-B

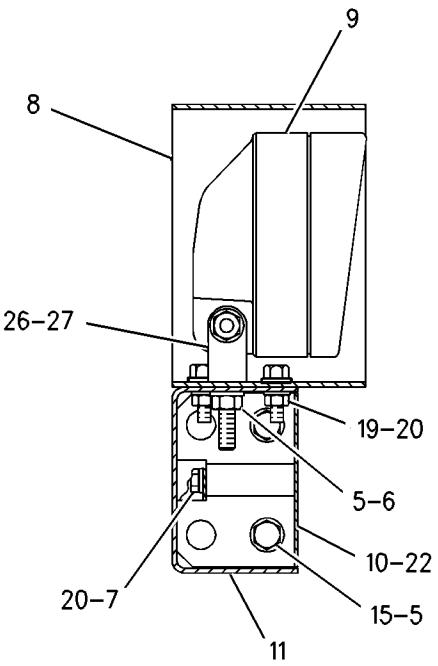

SECTION A-A

GRAPHIC #1

g00703304

ELECTRICAL AND STARTING SYSTEM

8R-9537 LIGHTING GP-ROADING

S/N: 3XJ1-99999
PART OF 6C-4043 ROADING AR
AN ATTACHMENT

SMCS-1429 **i01343550**

NOTE	PART NUMBER	QTY	PART NAME 1 2 3 4 5 6 (PRODUCT LEVEL)	SEE PAGE
Y	**9X-1439**	6	LAMP GP-FLOOD	
Y	**7X-6066**	2	LAMP GP-SIGNAL	
Y	**9X-1404**	2	LAMP GP-SIGNAL (STOP/TAIL RED-24V)	
Y	**9X-1406**	2	LAMP GP-SIGNAL (REAR TURN AMBER-24V)	
Y	**9X-1407**	2	LAMP GP-SIGNAL	
Y	**9X-1441**	2	LAMP GP-HEAD	
			S/N: 3XJ897-99999	
	4E-1455	1	ARM AS-LH	
	5C-9563	1	SPACER (55MM THK)	
M	**8T-3490**	3	NUT-WELD (M10X1.5 THD)	
	4E-1457	1	ARM AS-RH	
	5C-9563	1	SPACER (55MM THK)	
M	**8T-3490**	3	NUT-WELD (M10X1.5 THD)	
	6W-2955	2	BLOCK	
M	**6V-6317**	4	BOLT (M10X1.5X20MM)	
M	**8T-4136**	6	BOLT (M10X1.50X25MM)	
M	**8T-4182**	8	BOLT (M10X1.5X45MM)	
M	**8T-4191**	2	BOLT (M10X1.50X16MM)	
M	**8T-4200**	4	BOLT (M8X1.25X16MM)	
	4E-1459	2	BRACKET AS	
	7V-7832	1	BRACKET AS-LH	
	7V-7829	1	BRACKET AS-RH	
	5G-0817	4	BUMPER-CONICAL	
	5P-9297	2	CLIP (9.52MM ID)	
	3T-0049	1	CLIP (23MM ID)	
	9G-9155	1	CLIP (20MM ID)	
	9G-9151	1	CLIP (10.20MM ID)	
	9G-9153	1	CLIP (12.00MM ID)	
	3T-3047	2	CLIP AS (20MM ID)	
	3T-3045	2	CLIP AS (12MM ID)	
	3T-3048	7	CLIP AS (10.2MM ID)	
	3T-3046	1	CLIP AS (23.0MM ID)	
	3B-4617	2	COTTER	
	4E-1463	2	COVER AS	
	8R-7911	4	COVER AS	
			(EACH INCLUDES)	
M	**8C-8778**	2	STUD-WELD (M8X1.25X25MM OAL)	
	8R-7912	1	PLATE	
	8V-2514	1	FLASHER	
	6K-9555	2	GROMMET	
	9M-5870	2	GROMMET (11.11MM ID)	
	9D-3769	2	GROMMET	
	3F-1688	2	GROMMET	
	8R-8166	1	HARNESS AS	
	8R-8167	1	HARNESS AS	
	8R-8169	1	HARNESS AS	
	8R-8181	1	HARNESS AS	
	8N-2622	1	LEVER	
	6V-8185	2	NUT (1/4-20 THD)	
M	**5C-7261**	12	NUT (M8X1.25 THD)	
M	**8T-4133**	6	NUT (M10X1.50 THD)	
	4B-2049	2	NUT (10-32 THD)	
M	**8T-4134**	28	NUT (M6X1 THD)	
	5C-9342	2	PIN	
	6H-3956	2	PIN	

8R-9537 **LIGHTING GP-ROADING** ***(contd.)*** **i01343550**

NOTE	PART NUMBER	QTY	PART NAME 1 2 3 4 5 6 (PRODUCT LEVEL)	SEE PAGE
	5V-2998	1	PLATE	
	4E-1486	2	PLATE	
	7V-7834	2	ROD	
	4V-6981	6	SCREW-BUTTON HEAD (1/4-20X.75IN)	
	4V-7740	2	SCREW-BUTTON HEAD	
	4E-1495	2	SHEET AS	
M	**8T-3562**	2	STUD-WELD	
	4E-1686	1	SHROUD	
	9V-9547	1	SHROUD	
	9S-1316	2	SPRING	
	9G-5589	1	SWITCH AS-TURN SIG & WARNING	
	5L-7200	1	SCREW (8-32X.375 IN)	
	9B-7233	1	LOCKWASHER (NO.8)	
	8T-4121	2	WASHER-HARD (2.5MM THK)	
	7K-1977	4	WASHER (19.8MM ID))	
	8T-4121	26	WASHER-HARD (2.5MM THK)	
	8T-4897	4	WASHER (6MM THK)	
	8T-4223	2	WASHER-HARD (3MM THK)	
	8T-4224	12	WASHER-HARD (8.8X16X2MM THK)	
	8T-4205	28	WASHER-HARD (2MM THK)	

M-METRIC PART
Y-SEPARATE ILLUSTRATION

ELECTRICAL AND STARTING SYSTEM

8R-9537 LIGHTING GP-ROADING

S/N: 3XJ1254-99999

AN ATTACHMENT

SMCS-1429 **i01217204**

NOTE	REF NO	GRAPHIC REF	PART NUMBER	QTY	PART NAME 1 2 3 4 5 6 (PRODUCT LEVEL)	SEE PAGE
Y	1	1	**9X-1439**	2	LAMP GP-FLOOD	
	2	1	**6C-7002**	2	SHEET	
M	3	1	**8T-4133**	2	NUT (M10X1.50 THD)	
	4	1	**8T-4121**	10	WASHER-HARD (2.5MM THK)	
M	5	1	**8T-4137**	4	BOLT (M10X1.50X20MM)	
M	6	1	**8T-3992**	4	SCREW (M6X1X12MM)	
	7	1	**8T-4205**	7	WASHER-HARD (2MM THK)	
M	8	1	**5C-2890**	4	NUT (M6X1.00 THD)	
	9	1	**8R-8167**	1	HARNESS AS	
	10	1	**3T-3048**	1	CLIP AS (10.2MM ID)	
	11	1	**3T-3047**	1	CLIP AS (20MM ID)	
	12	1	**8R-8169**	1	HARNESS AS	
	13	1	**4V-6981**	4	SCREW-BUTTON HEAD (1/4-20X.75IN)	
	14	1	**4V-8182**	1	SHROUD	
	15	1	**4E-1686**	1	SHROUD	
	16	1	**4E-1455**	1	ARM AS-LH	
		1	**5C-9563**	1	SPACER (55MM THK)	
M		1	**8T-3490**	3	NUT-WELD (M10X1.5 THD)	
	17	1	**6C-5234**	1	BRACKET AS-LH	
M		1	**8T-3490**	2	NUT-WELD (M10X1.5 THD)	
Y	18	1	**9X-1406**	2	LAMP GP-SIGNAL (REAR TURN AMBER-24V)	
	19	1	**4D-7794**	6	CLIP (10.0MM ID)	
	20	1	**4H-3539**	2	GROMMET	
	21	1	**8R-8181**	1	HARNESS AS	
M	22	1	**8T-4195**	4	BOLT (M10X1.50X30MM)	
	23	1	**5G-0817**	4	BUMPER-CONICAL	
	24	1	**8T-4897**	4	WASHER (6MM THK)	
M	25	1	**5C-7261**	4	NUT (M8X1.25 THD)	
	26	1	**6C-5233**	1	BRACKET AS-RH	
M		1	**8T-3490**	2	NUT-WELD (M10X1.5 THD)	
	27	1	**4E-1457**	1	ARM AS-RH	
		1	**5C-9563**	1	SPACER (55MM THK)	
M		1	**8T-3490**	3	NUT-WELD (M10X1.5 THD)	
Y	28	1	**9X-1404**	2	LAMP GP-SIGNAL (STOP/TAIL RED-24V)	
Y	29	2	**9X-1441**	2	LAMP GP-HEAD	
Y	30	2	**9X-1440**	2	LAMP GP-HEAD	
	31	2	**2Y-5429**	2	GROMMET	
Y	32	2	**7X-6066**	2	LAMP GP-SIGNAL	
Y	33	2	**9X-1407**	2	LAMP GP-SIGNAL	
	34	2	**6C-4463**	1	BRACKET AS-RH	
M		2	**8T-3612**	2	NUT-WELD (M8X1.25 THD)	
	35	2	**7X-7729**	6	WASHER (3MM THK)	
M	36	2	**8T-4136**	6	BOLT (M10X1.50X25MM)	
	37	2	**8L-5831**	4	GROMMET	
	38	2	**6C-4461**	1	BRACKET AS-LH	
M		2	**8T-3612**	2	NUT-WELD (M8X1.25 THD)	
	39	2	**6C-5875**	1	HARNESS AS	
	40	2	**6D-4246**	4	CLIP (19.05MM ID)	
	41	2	**8M-2773**	4	CLIP (17.46MM ID)	
	42	2	**6V-8185**	2	NUT (1/4-20 THD)	
	43	2	**4V-6981**	2	SCREW-BUTTON HEAD (1/4-20X.75IN)	
	44	2	**9G-5589**	1	SWITCH AS-TURN SIG & WARNING	
		2	**5L-7200**	1	SCREW (8-32X.375IN)	
		2	**9B-7233**	1	LOCKWASHER (NO.8)	
	45	2	**8V-2514**	1	FLASHER	
	46	2	**4V-7740**	3	SCREW-BUTTON HEAD	

8R-9537 **LIGHTING GP-ROADING** *(contd.)* **i01217204**

NOTE	REF NO	GRAPHIC REF	PART NUMBER	QTY	PART NAME 1 2 3 4 5 6 (PRODUCT LEVEL)	SEE PAGE
	47	2	**9F-8125**	3	LOCKWASHER (#10-EXT.)	
	48	2	**4B-2049**	3	NUT (10-32 THD)	
	49	2	**5V-2998**	1	PLATE	
	50	2	**8N-2622**	1	LEVER	
M	51	2	**8T-4189**	4	BOLT (M8X1.25X20MM)	
	52	2	**8T-4224**	8	WASHER-HARD (2MM THK)	
	53	2	**4E-1463**	2	COVER AS	
M	54	2	**8T-4133**	4	NUT (M10X1.50 THD)	
	55	2	**8T-4121**	6	WASHER-HARD (2.5MM THK)	
M	56	2	**8T-4200**	4	BOLT (M8X1.25X16MM)	
M	57	2	**8T-4134**	24	NUT (M6X1 THD)	
	58	2	**8T-4205**	23	WASHER-HARD (2MM THK)	
	59	2	**3T-3048**	6	CLIP AS (10.2MM ID)	
	60	2	**3T-3045**	2	CLIP AS (12MM ID)	
	61	2	**4E-1486**	2	PLATE	
	62	2	**7K-1977**	4	WASHER (19.8MM ID))	
	63	2	**5C-9342**	2	PIN	
	64	2	**8T-4122**	2	WASHER (3.5MM THK)	
	65	2	**3B-4617**	2	COTTER	
	66	2	**7V-7834**	2	ROD	
	67	2	**9S-1316**	2	SPRING	
	68	2	**8T-4223**	2	WASHER-HARD (3MM THK)	
	69	2	**6H-3956**	2	PIN	
	70	2	**5P-9297**	2	CLIP (9.52MM ID)	
M	71	2	**8T-4191**	2	BOLT (M10X1.50X16MM)	
	72	2	**5S-7349**	2	BOLT (1/4-20X0.5IN)	
	73	2	**2H-1855**	1	SWITCH AS-DIMMER	
		2	**6V-8362**	3	SCREW-MACHINE (8-32X.31IN)	
		2	**9B-7233**	3	LOCKWASHER (NO.8)	

M-METRIC PART
Y-SEPARATE ILLUSTRATION

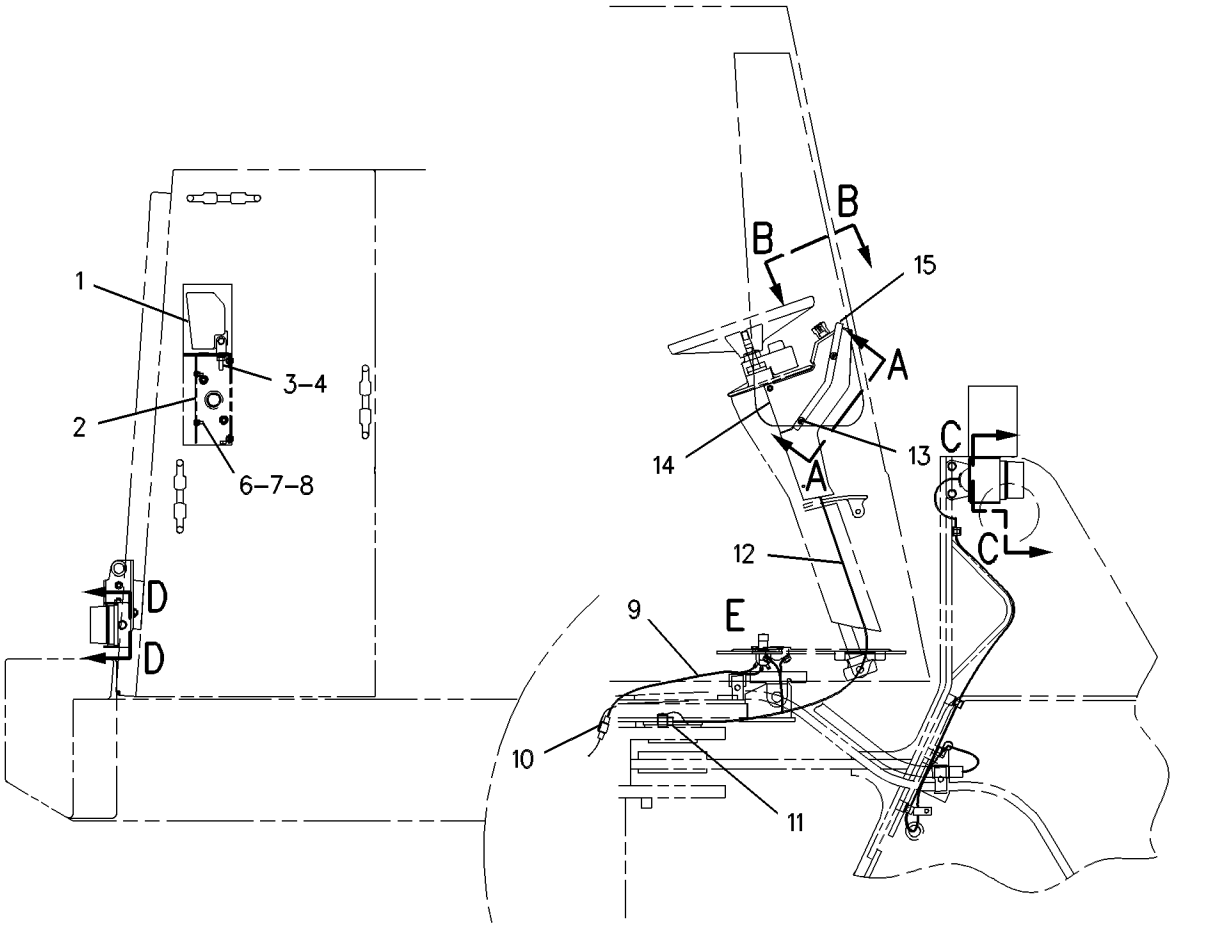

RIGHT SIDE VIEW

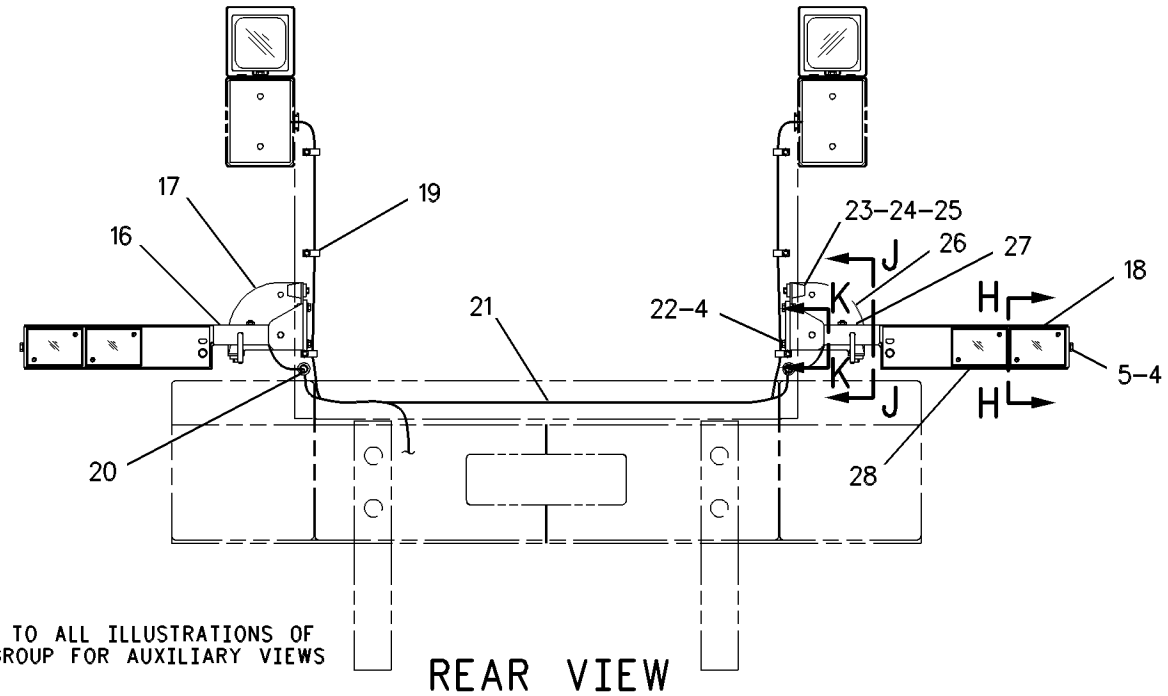

REFER TO ALL ILLUSTRATIONS OF THIS GROUP FOR AUXILIARY VIEWS

REAR VIEW

GRAPHIC #1 g00385945

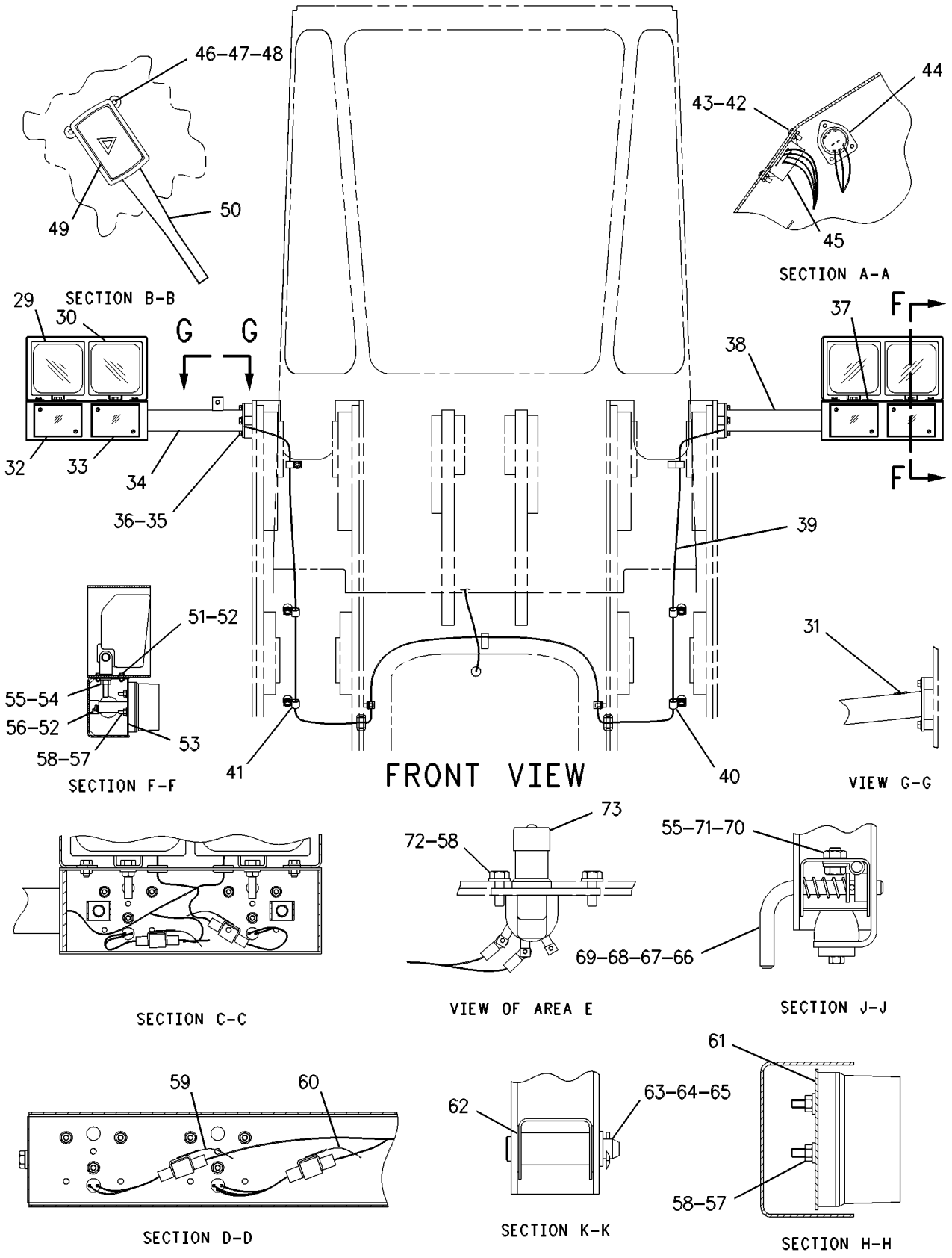

GRAPHIC #2 g00385946

8R-8393 LIGHTING GP-SIGNAL

S/N: 3XJ1-99999
PART OF 6C-5683 CONVERSION AR-NON-ROADING
AN ATTACHMENT

SMCS-1430 **i01022412**

NOTE	REF NO	GRAPHIC REF	PART NUMBER	QTY	PART NAME 1 2 3 4 5 6 (PRODUCT LEVEL)	SEE PAGE
	1	1	**3T-3048**	4	CLIP AS (10.2MM ID)	
	2	1	**4B-2049**	5	NUT (10-32 THD)	
	3	1	**9F-8125**	3	LOCKWASHER (#10-EXT.)	
	4	1	**4V-7740**	5	SCREW-BUTTON HEAD	
	5	1	**5V-2998**	1	PLATE	
	6	1	**8N-2622**	1	LEVER	
	7	1	**9G-5589**	1	SWITCH AS-TURN SIG & WARNING	
	8	1	**8D-6946**	1	FLASHER	
	9	1	**6C-5868**	1	HARNESS AS	
M	10	1	**8T-4134**	12	NUT (M6X1 THD)	
	11	1	**8T-4205**	12	WASHER-HARD (2MM THK)	
	12	1	**4E-0538**	2	COVER AS-LH	
Y	13	1	**7X-6066**	4	LAMP GP-SIGNAL	
	14	1	**4E-1686**	1	SHROUD	
	15	1	**4V-8182**	1	SHROUD	
	16	1	**4V-6981**	4	SCREW-BUTTON HEAD (1/4-20X.75IN)	
	17	1	**6C-5807**	1	HARNESS AS	

M-METRIC PART
Y-SEPARATE ILLUSTRATION

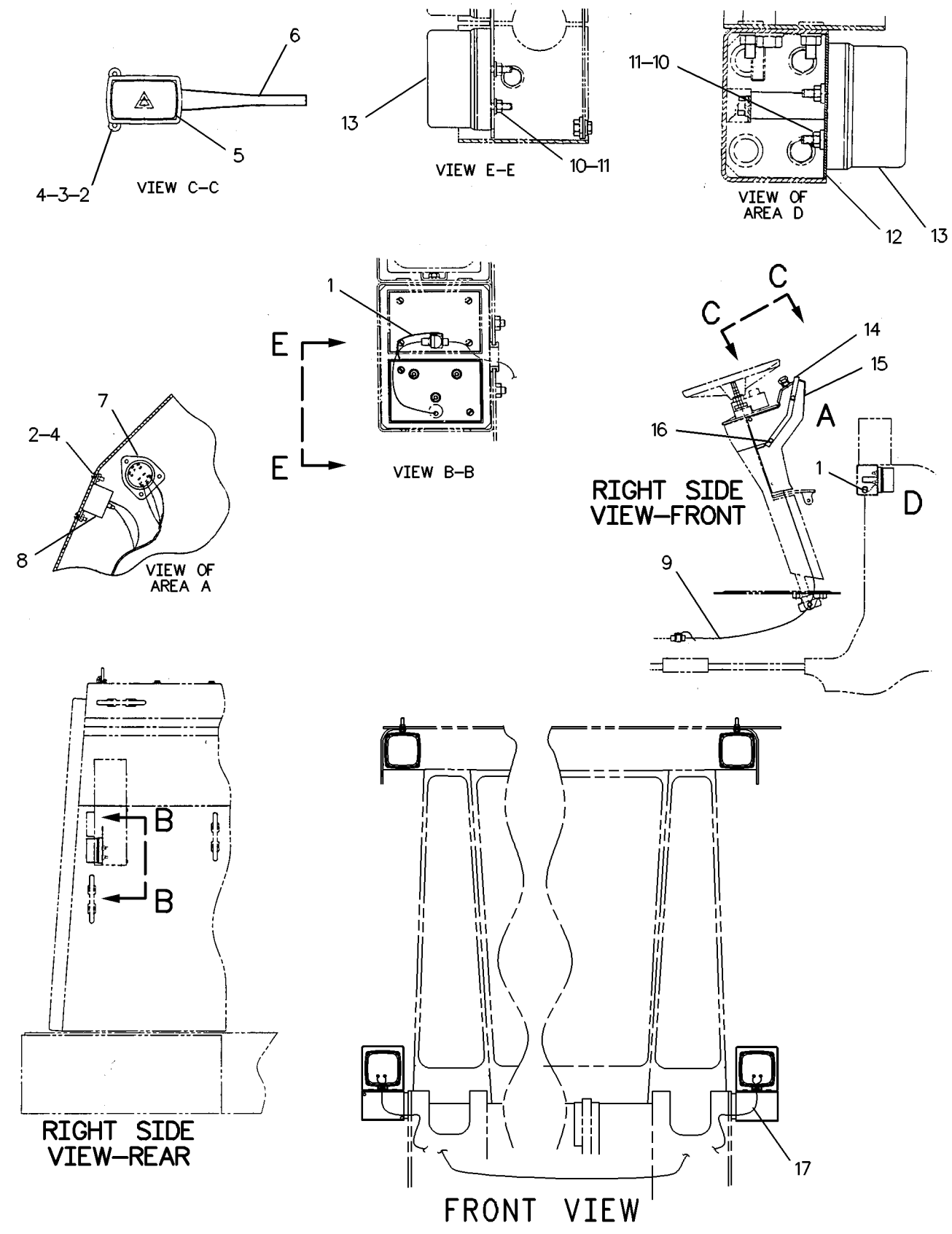

GRAPHIC #1 g00128135

ELECTRICAL AND STARTING SYSTEM

6C-4315 LIGHTING GP-WARNING

S/N: 3XJ1-99999

BEACON

AN ATTACHMENT

SMCS-1431 **i01335349**

NOTE	REF NO	GRAPHIC REF	PART NUMBER	QTY	PART NAME 1 2 3 4 5 6 (PRODUCT LEVEL)	SEE PAGE
	1	1	**6T-3990**	1	SWITCH AS-ROCKER (ROADING LIGHTS)	
		1	**3L-8187**	2	LOCKWASHER (NO.6-INT)	
		1	**6V-8374**	2	SCREW-MACHINE (6-32X.25 IN)	
	2	1	**6V-8927**	2	BOLT-SOCKET HEAD (6-32X.50IN)	
	3	1	**6T-6329**	1	BEZEL-ROCKER SWITCH	
	4	1	**3T-3048**	1	CLIP AS (10.2MM ID)	
	5	1	**4D-7794**	4	CLIP (10.0MM ID)	
	6	1	**5S-7379**	4	BOLT (3/8-16X.875 IN)	
	7	1	**6C-4428**	1	HARNESS AS	
	8	1	**8T-4896**	4	WASHER-HARD (10.2X18.5X2.5MM THK)	

6C-4315 **LIGHTING GP-WARNING** ***(contd.)*** **i01335349**

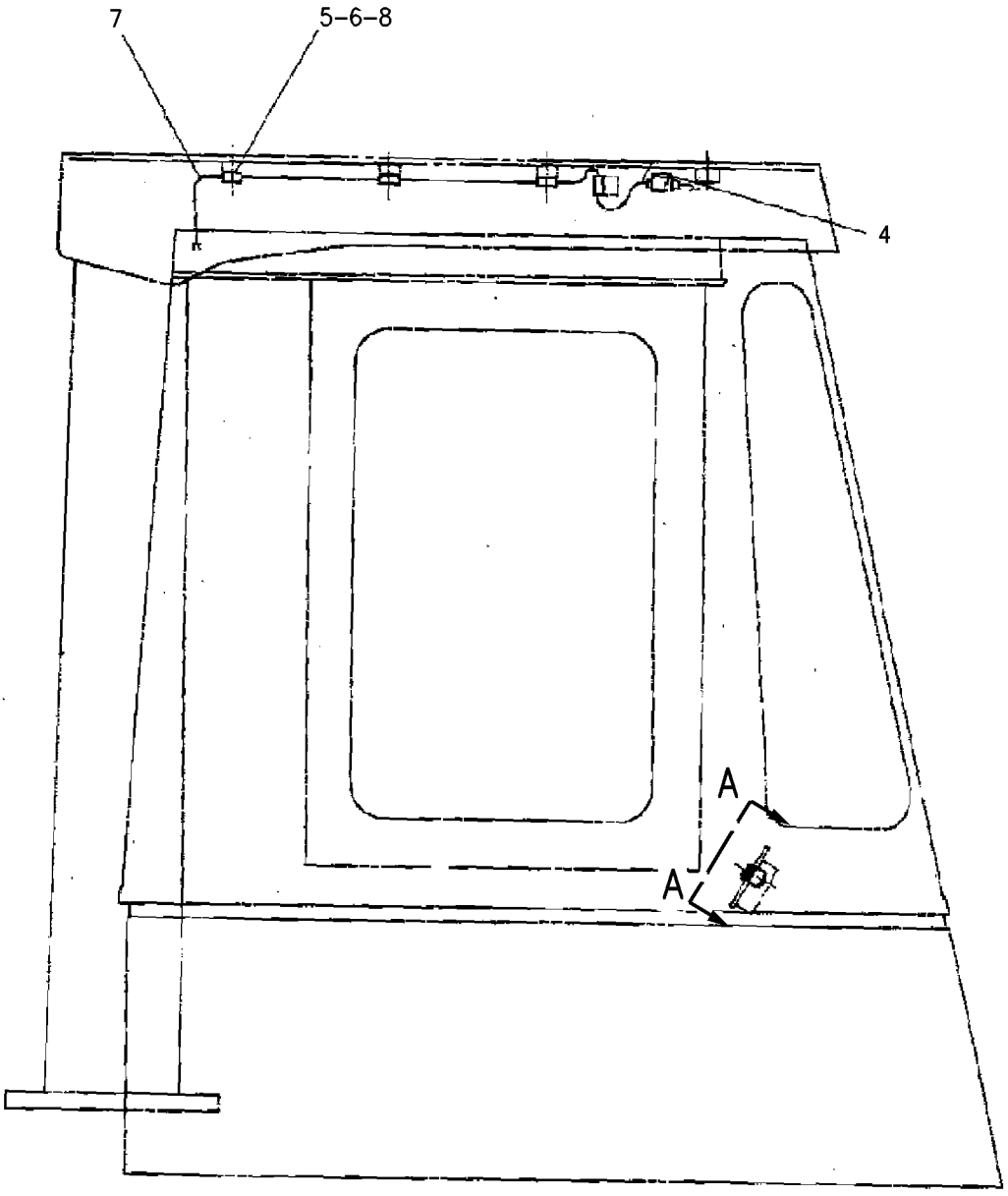

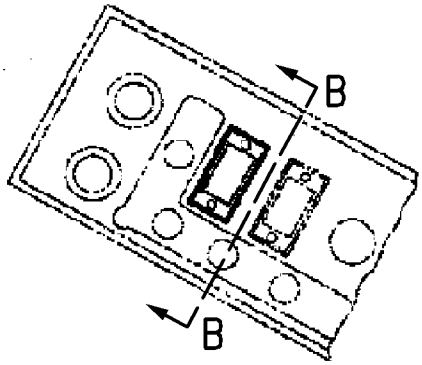

VIEW A-A

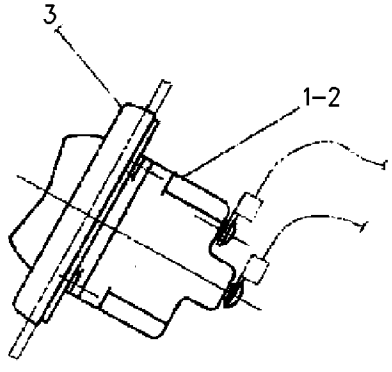

VIEW B-B

GRAPHIC #1 g00709252

4E-1669 RECEPTACLE GP-AUXILIARY START

S/N: 3XJ1-99999
AN ATTACHMENT

SMCS-1463 **i00684854**

NOTE	REF NO	GRAPHIC REF	PART NUMBER	QTY	PART NAME 1 2 3 4 5 6 (PRODUCT LEVEL)	SEE PAGE
	1	1	**8S-2634**	1	COVER AS	
		1	**2P-2975**	2	SEAL-O-RING (17.17MM ID)	
	2	1	**3S-2093**	2	STRAP-CABLE (1.75IN DIA)	
	3	1	**4L-6454**	4	BOLT (3/8-16X1.0IN)	
	4	1	**8T-4896**	7	WASHER-HARD (2.5MM THK)	
	5	1	**8S-4211**	2	PLATE	
	6	1	**9C-8285**	1	BRACKET	
	7	1	**9M-8406**	1	CLIP (15.8MM ID)	
	8	1	**6G-2256**	1	CLAMP	
	9	1	**2G-8767**	2	WASHER (3MM THK)	
	10	1	**6G-2263**	1	SPACER (28.5MM THK)	
	11	1	**8T-2501**	1	BOLT (3/8-16X2IN)	
	12	1	**4E-4741**	1	GUARD	
	13	1	**9X-5630**	1	RECEPTACLE AS	
	14	1	**1S-7251**	2	TERMINAL (FOR 1/2IN BOLT)	
E	15	1	**5P-0747**		CABLE (BLACK) (00 GA 55 CM)	
E	16	1	**5P-0761**		CABLE-STARTING MOTOR (RED) (00 GA 170 CM)	
BD	17	1	**6V-2722**		TUBE-SHRINKABLE	
	18	1	**9B-7237**	1	BOLT (3/8-16X1.25IN)	
		1	**6V-8801**	1	NUT (3/8-16 THD)	

B-USE AS REQUIRED
D-ORDER BY THE METER
E-ORDER BY THE CENTIMETER

4E-1669 **RECEPTACLE GP-AUXILIARY START** ***(contd.)*** **i00684854**

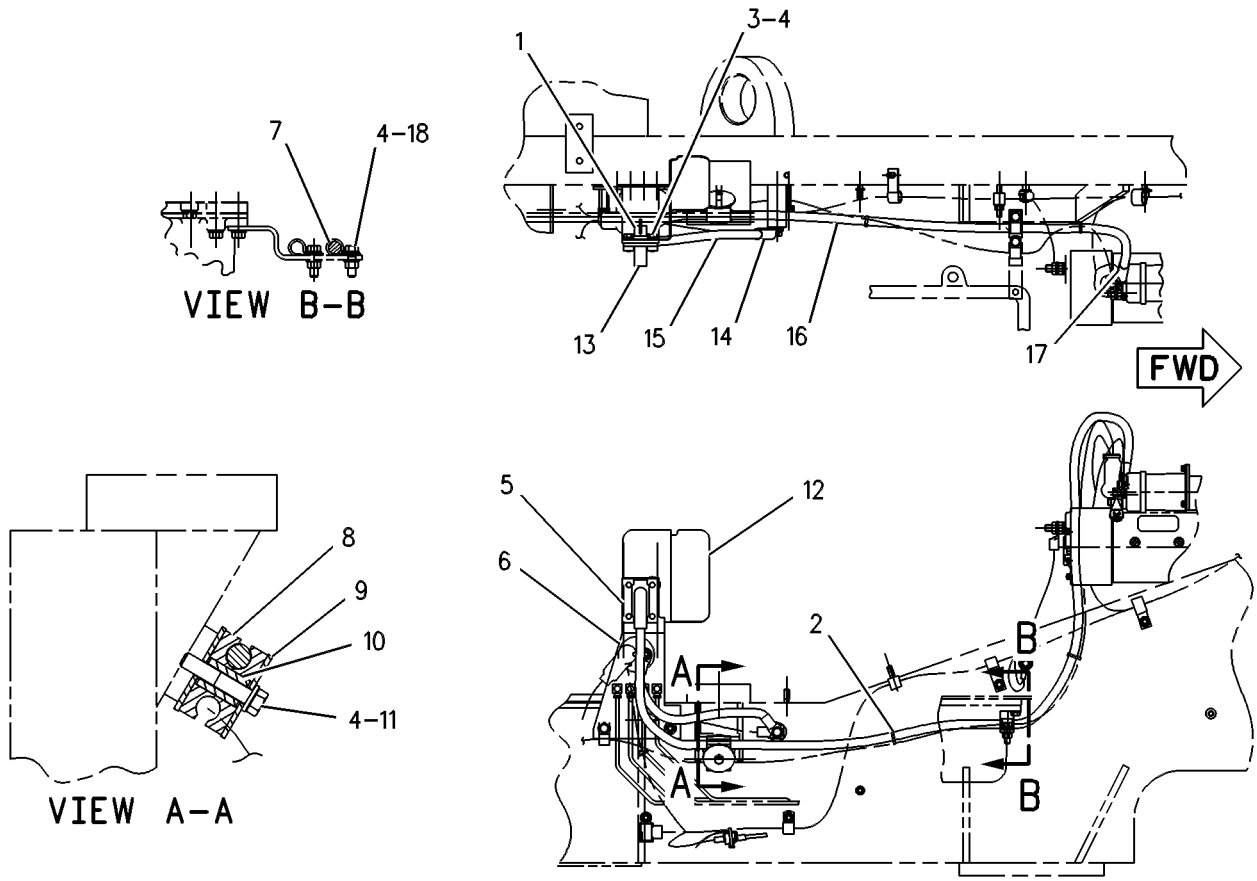

GRAPHIC #1 g00283908

ELECTRICAL AND STARTING SYSTEM

6C-4043 ROADING AR

S/N: 3XJ1-99999

AN ATTACHMENT

SMCS-1408, 1429 **i00286917**

NOTE	PART NUMBER	QTY	PART NAME 1 2 3 4 5 6 (PRODUCT LEVEL)	SEE PAGE
Y	*8R-9537*	1	LIGHTING GP-ROADING	
Y	*7V-8703*	1	MIRROR GP-REAR VIEW	

Y-SEPARATE ILLUSTRATION

3E-5400 SENSOR GP-POSITION–LIFT

S/N: 3XJ1-99999
PART OF 6C-8494 WIRING GP-MONITOR
AN ATTACHMENT

SMCS-4269, 5702, 5736, 5737, 7494 **i01336578**

NOTE	REF NO	GRAPHIC REF	PART NUMBER	QTY	PART NAME 1 2 3 4 5 6 (PRODUCT LEVEL)	SEE PAGE
Y	1	1	**110-8190**	1	SENSOR GP-POSITION (LIFT)	

Y-SEPARATE ILLUSTRATION

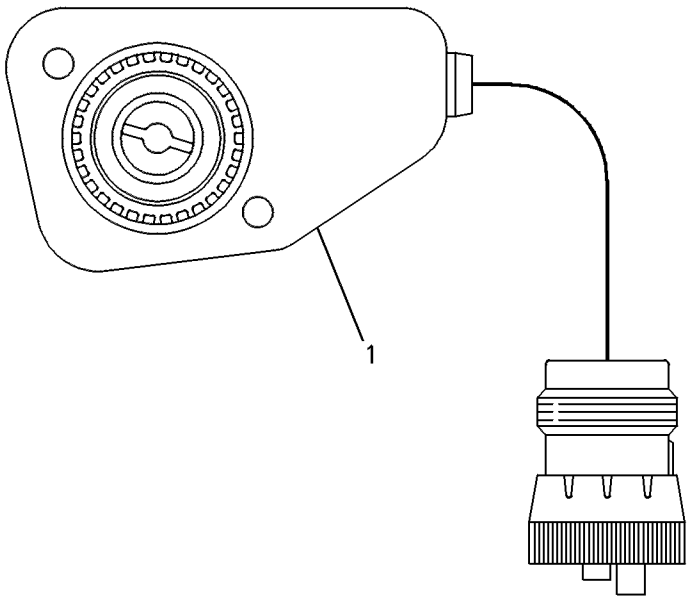

GRAPHIC #1 g00084952

110-8190 SENSOR GP-POSITION–LIFT

S/N: 3XJ1-99999
PART OF 3E-5400 SENSOR GP-POSITION
AN ATTACHMENT

SMCS-4269, 5702, 5736, 5737, 7494 **i00286806**

NOTE	REF NO	GRAPHIC REF	PART NUMBER	QTY	PART NAME 1 2 3 4 5 6 (PRODUCT LEVEL)	SEE PAGE
	1	1	**8T-8731**	1	PLUG-CONNECTOR	
	2	1	**8T-8730**	3	SOCKET-CONNECTOR	

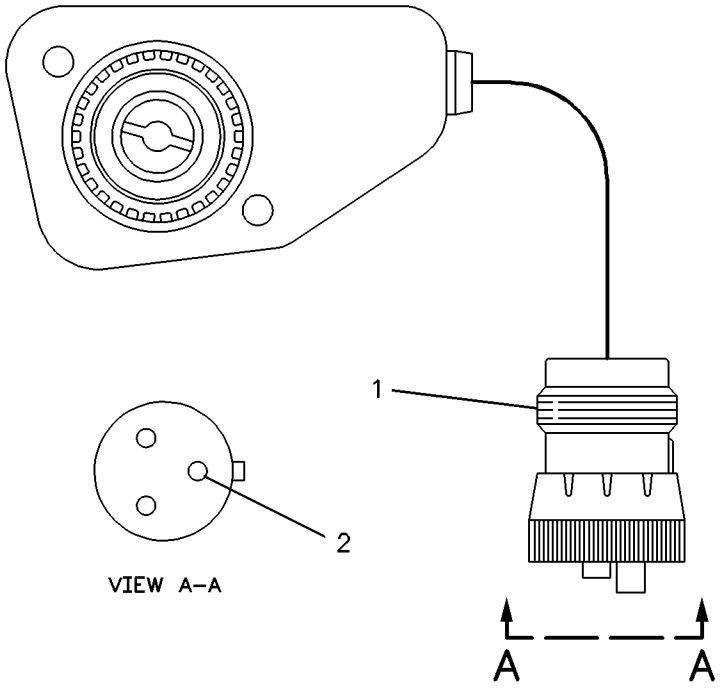

GRAPHIC #1 g00083170

9X-5272 SENSOR GP-PRESSURE–BRAKE AIR

S/N: 3XJ1-99999

PART OF 8R-5053 BATTERY & WIRING GP

SMCS-7494 **i01329092**

NOTE	REF NO	GRAPHIC REF	PART NUMBER	QTY	PART NAME 1 2 3 4 5 6 (PRODUCT LEVEL)	SEE PAGE
	1	1	**8T-8731**	1	PLUG-CONNECTOR	
	2	1	**8T-8730**	3	SOCKET-CONNECTOR	

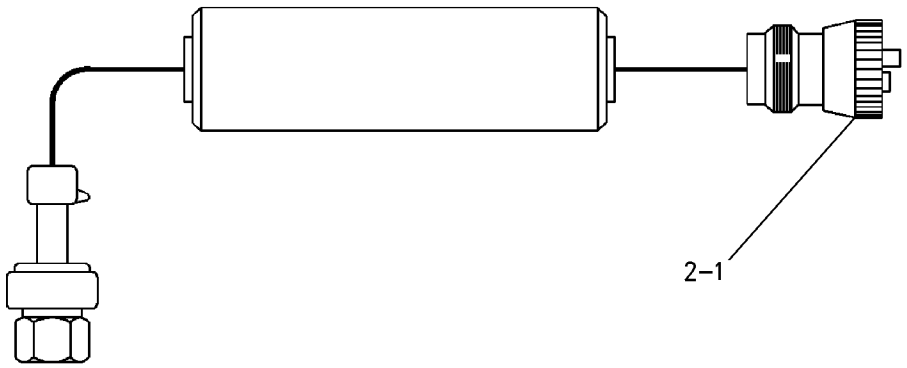

GRAPHIC #1 g00703285

103-2040 SENSOR GP-PRESSURE–LIFT CYLINDER

S/N: 3XJ1-99999
PART OF 6C-8494 WIRING GP-MONITOR
AN ATTACHMENT

SMCS-7494 **i01334599**

NOTE	REF NO	GRAPHIC REF	PART NUMBER	QTY	PART NAME 1 2 3 4 5 6 (PRODUCT LEVEL)	SEE PAGE
	1	1	**3E-3371**	1	WEDGE-RECEPTACLE LOCK	
BE	2	1	**9X-1813**		SLEEVE	
	3	1	**3E-3370**	1	RECEPTACLE AS	
	4	1	**8T-8729**	3	PIN-CONNECTOR	
					AVAILABLE REPAIR KIT(S):	
			102-8803		KIT-RECEPTACLE (3 PIN)	
					(INCLUDES RECEPTACLE AS AND WEDGE)	

B-USE AS REQUIRED
E-ORDER BY THE CENTIMETER

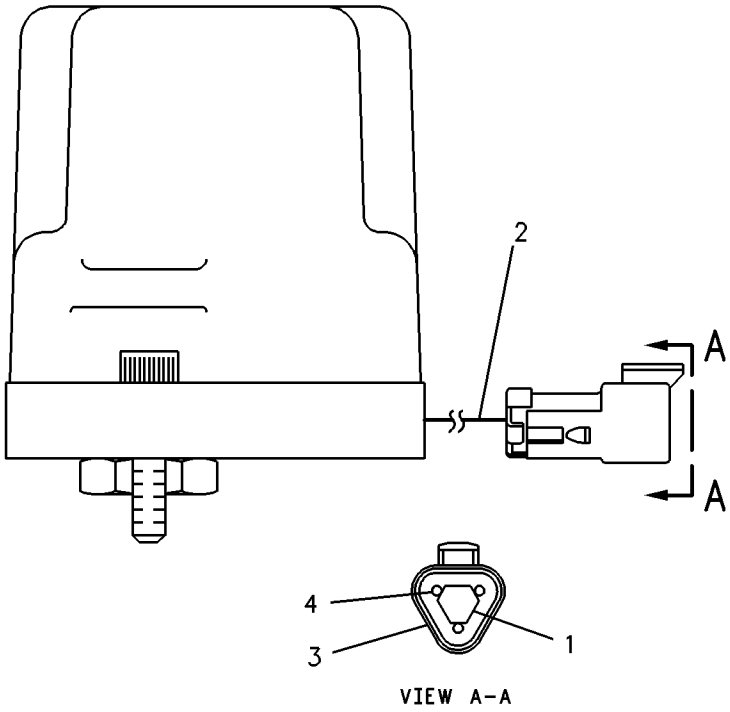

GRAPHIC #1 g00108465

9X-0377 SENSOR GP-TEMPERATURE–HYDRAULIC OIL

S/N: 3XJ1-1323

PART OF 8R-5053 BATTERY & WIRING GP, 8R-5054 WIRING GP-ENGINE

SMCS-1408, 1906, 1921, 1922, 301T, 429T, 509T **i01328739**

NOTE	REF NO	GRAPHIC REF	PART NUMBER	QTY	PART NAME 1 2 3 4 5 6 (PRODUCT LEVEL)	SEE PAGE
	1	1	**8T-8730**	3	SOCKET-CONNECTOR	
	2	1	**8T-8731**	1	PLUG-CONNECTOR	

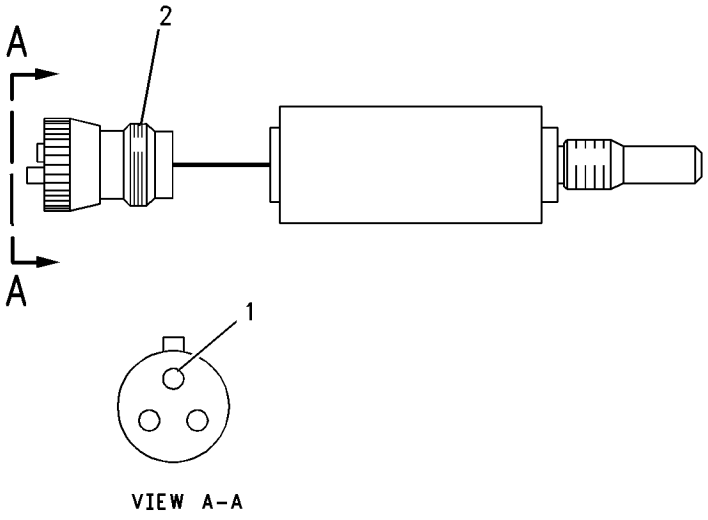

GRAPHIC #1 g00702770

1W-0141 SOLENOID GP-SHUTOFF

S/N: 13Z22389-28099
PART OF 7E-0082 ENGINE AR

SMCS-1259 **i00972379**

NOTE	REF NO	GRAPHIC REF	PART NUMBER	QTY	PART NAME 1 2 3 4 5 6 (PRODUCT LEVEL)	SEE PAGE
C	1	1	**110-6465**	1	SOLENOID	
	2	1	**7B-2742**	2	BOLT (1/4X1.25IN)	
		1	**5G-2003**	2	SPACER	
	3	1	**6I-2002**	1	GASKET	
AB		1	**9S-3263**		COMPOUND-THREAD LOCK	

A-NOT PART OF THIS GROUP
B-USE AS REQUIRED
C-CHANGE FROM PREVIOUS TYPE

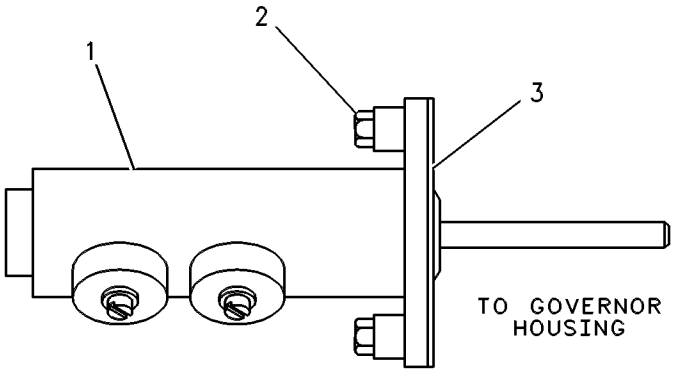

GRAPHIC #1 g00111317

MEMORANDA

8R-3959 STARTING AID GP-ETHER

S/N: 3XJ1-99999

AN ATTACHMENT

SMCS-1456 **i01336086**

NOTE	REF NO	GRAPHIC REF	PART NUMBER	QTY	PART NAME 1 2 3 4 5 6 (PRODUCT LEVEL)	SEE PAGE
	1	1	**7V-6614**	1	TUBE	
	2	1	**6K-8179**	1	CLIP (4.76MM ID)	
	3	1	**7N-0140**	1	TUBE AS-COIL	
	4	1	**2D-9535**	1	GROMMET	
	5	1	**8R-3960**	1	TUBE	
	6	1	**5P-2948**	1	CONNECTOR-TUBE	
M	7	1	**8T-4189**	4	BOLT (M8X1.25X20MM)	
		1	**8T-4224**	4	WASHER-HARD (8.8X16X2MM THK)	
	8	1	**6N-9995**	1	ATOMIZER AS-ETHER	
	9	1	**7N-2059**	1	CLAMP AS-CYLINDER	
	10	1	**9G-4365**	1	VALVE AS-ETHER START	
		1	**7N-9801**	1	GASKET	
	11	1	**7N-9737**	1	HOUSING-PLUG	
		1	**7N-7779**	1	SOCKET-CONNECTOR	
		1	**7N-7780**	1	PIN-CONNECTOR (BLADE)	
	12	1	**3T-3453**	1	SWITCH AS (STARTING AID)	
		1	**9X-0199**	1	BOOT-SWITCH	
		1	**6V-8363**	2	SCREW (10-32X.312 IN)	
		1	**8F-1434**	2	LOCKWASHER (0.51MM THK)	
		1	**7T-9517**	1	KNOB	
		1	**5L-7200**	1	SCREW (8-32X.375 IN)	
		1	**3B-4501**	1	LOCKWASHER (NO.8)	
		1	**6V-8370**	1	NUT-HEX (3/4-32 THD)	
		1	**2H-3922**	1	LOCKWASHER (19.9X31.3X1.3MM THK)	
A		1	**7N-0296**	1	CYLINDER AS (ETHER)	

A-NOT PART OF THIS GROUP
M-METRIC PART

8R-3959 **STARTING AID GP-ETHER** ***(contd.)*** **i01336086**

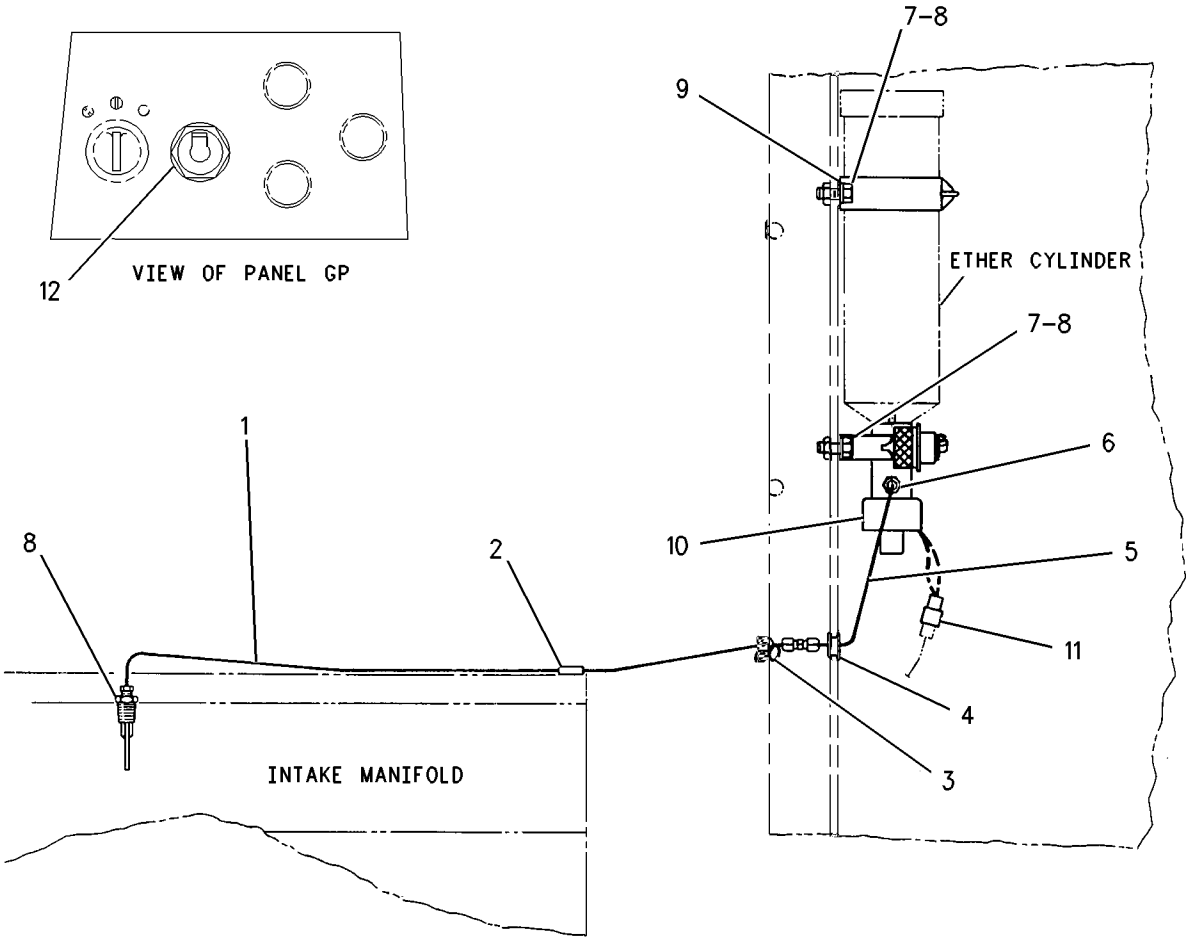

GRAPHIC #1 g00702744

3T-6305 STARTING MOTOR GP-ELECTRIC

S/N: 3XJ1-99999
24 VOLT
PART OF 4N-3181 STARTING MOTOR GP-ELECTRIC
FIELD REPLACEMENT ORDER 4N-3181—PAGE

SMCS-1453 **i01217038**

NOTE	REF NO	GRAPHIC REF	PART NUMBER	QTY	PART NAME 1 2 3 4 5 6 (PRODUCT LEVEL)	SEE PAGE
	1	1	**3T-7022**	1	HOUSING AS-DRIVE	
C	2	1	**8T-4205**	4	WASHER-HARD (2MM THK)	
	3	1	**3T-0863**	1	LEVER-SHIFT	
	4	1	**3T-0864**	1	HOUSING AS-LEVER	
		1	**3T-0842**	1	BEARING AS	
C	5	1	**9X-0332**	1	KIT-SOLENOID	
CM	6	1	**8T-4244**	4	NUT (M12X1.75 THD)	
	7	1	**3T-4716**	1	WIRE AS	
	8	1	**3T-7020**	1	WASHER	
	9	1	**3T-0847**	4	SCREW	
	10	1	**3T-0867**	1	ARMATURE AS	
	11	1	**3T-0865**	1	COIL AS-FIELD	
	12	1	**3T-7021**	1	PLATE-BRAKE	
M	13	1	**3T-0850**	8	SCREW	
M	14	1	**3T-0849**	12	BOLT-SOCKET HEAD (M6X1X25MM)	
CM	15	1	**5C-2874**	6	NUT (M5X.8 THD)	
	16	1	**3T-0858**	4	SPRING-BRUSH	
CM	17	1	**6V-9673**	4	SCREW-MACHINE (M5X0.8X12MM)	
	18	1	**3T-0862**	1	PLATE AS-BRUSH	
	19	1	**8T-0328**	6	WASHER-HARD (1MM THK)	
C	20	1	**7X-0562**	4	WASHER-HARD (0.8MM THK)	
	21	1	**4N-4517**	1	DRIVE AS-MOTOR	
CM	22	1	**8T-4970**	4	BOLT (M6X1X14MM)	
	23	1	**3T-7025**	1	COVER-END	
C	24	1	**8F-1434**	2	LOCKWASHER (5.07MM ID)	
					AVAILABLE REPAIR KIT(S):	
			3T-0844	1	KIT-BRUSH	
					(INCLUDES BRUSHES)	
			3T-2768	1	KIT-SEAL	
					(INCLUDES SEALS & RING)	
			3T-2769	1	KIT-HARDWARE	
					(INCLUDES WIRE AS, NUTS, WASHERS, LOCKWASHERS, BUSHING & BAR)	
			3T-7017	1	KIT-BEARING	
					(INCLUDES BEARINGS, SEAL, & SPACERS)	
			7T-2339	1	KIT-LEVER	
					(INCLUDES LEVER, CLIP & SEALS)	

C-CHANGE FROM PREVIOUS TYPE
M-METRIC PART

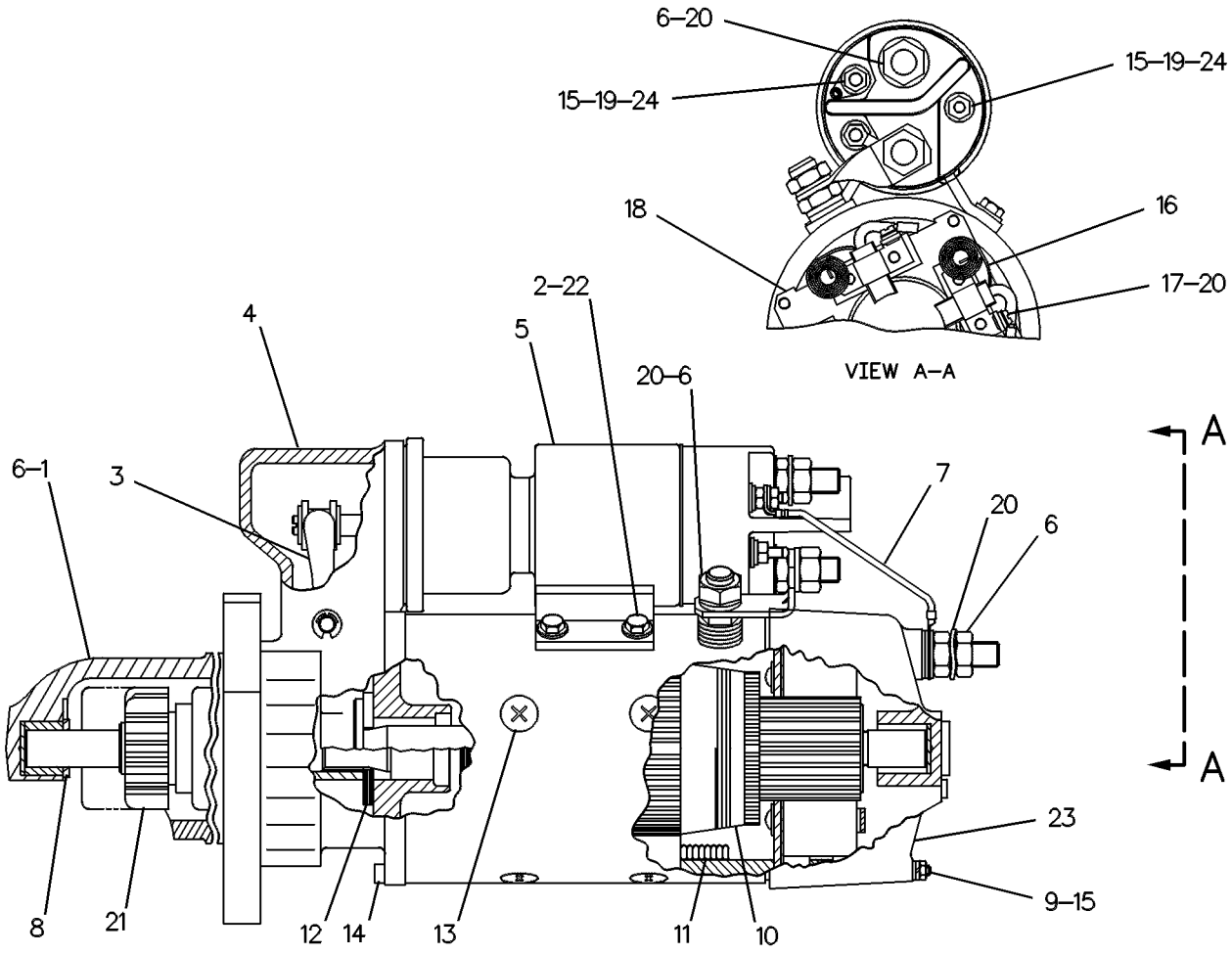

GRAPHIC #1

g00114652

4N-3181 STARTING MOTOR GP-ELECTRIC*R

S/N: 3XJ1-99999
24 VOLT
PART OF 4P-0915 STARTING MOTOR GP-ELECTRIC
FIELD REPLACEMENT ORDER 6V-5227—PAGE . FIELD REPLACEMENT FOR 3T-4586—PAGE : FOR 3T-2652—PAGE : FOR 8C-3597—PAGE : FOR 7T-0798—PAGE
ALSO FIELD INSTALLATION

SMCS-1453 **i00692889**

NOTE	PART NUMBER	QTY	PART NAME 1 2 3 4 5 6 (PRODUCT LEVEL)	SEE PAGE
Y	*4N-3182*	1	STARTING MOTOR GP-ELECTRIC	
			—OR—	
Y	*3T-2647*	1	STARTING MOTOR GP-ELECTRIC	
			—OR—	
Y	*4N-7752*	1	STARTING MOTOR GP-ELECTRIC	
			—OR—	
Y	*9G-4338*	1	STARTING MOTOR GP-ELECTRIC	
			—OR—	
Y	*3T-6305*	1	STARTING MOTOR GP-ELECTRIC	
			—OR—	
Y	*8C-3651*	1	STARTING MOTOR GP-ELECTRIC	
			—OR—	
Y	*9X-4447*	1	STARTING MOTOR GP-ELECTRIC	

Y-SEPARATE ILLUSTRATION

ELECTRICAL AND STARTING SYSTEM

4P-0915 STARTING MOTOR GP-ELECTRIC

S/N: 3XJ1-99999
24 VOLT

SMCS-1453 **i00259440**

NOTE	REF NO	GRAPHIC REF	PART NUMBER	QTY	PART NAME 1 2 3 4 5 6 (PRODUCT LEVEL)	SEE PAGE
YR	1	1	*4N-3181*	1	STARTING MOTOR GP-ELECTRIC	
	2	1	**3E-8034**	3	BOLT	
		1	**7X-0591**	3	WASHER-HARD (3.0MM THK)	
	3	1	**4H-7869**	1	GASKET	
	4	1	**5R-7755**	1	WIRE AS	
	5	1	**8T-5391**	1	BOLT (5/16-18X.5IN)	
		1	**8T-4224**	1	WASHER-HARD (2MM THK)	

R-REMFG PART MAY BE AVAILABLE
Y-SEPARATE ILLUSTRATION

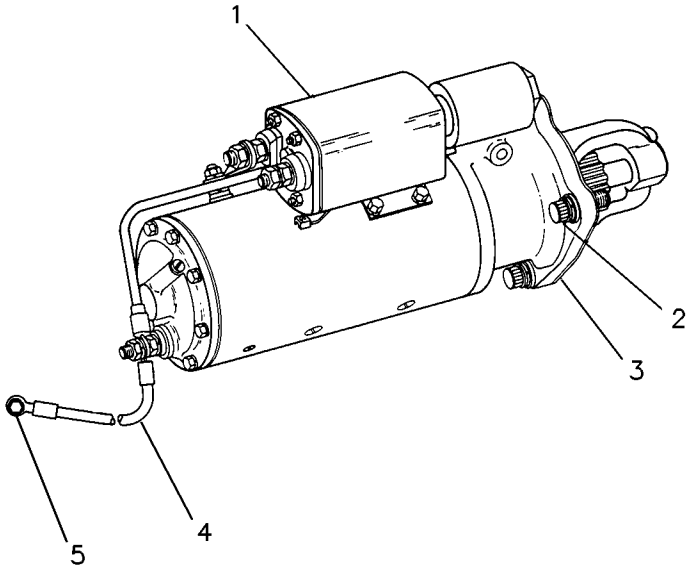

GRAPHIC #1 g00118759

ELECTRICAL AND STARTING SYSTEM

8C-3651 STARTING MOTOR GP-ELECTRIC

S/N: 3XJ1-99999

24 VOLT

PART OF 4N-3181 STARTING MOTOR GP-ELECTRIC

SMCS-1453 **i01334601**

NOTE	REF NO	GRAPHIC REF	PART NUMBER	QTY	PART NAME 1 2 3 4 5 6 (PRODUCT LEVEL)	SEE PAGE
	1	1	**5S-7349**	4	BOLT (1/4-20X0.5 IN)	
NP	2	1	**7L-2894**	1	GASKET	
	3	1	**2H-3429**	1	RING-RETAINING	
	4	1	**4B-2049**	2	NUT (10-32 THD)	
	5	1	**8F-1434**	2	LOCKWASHER (0.51MM THK)	
	6	1	**7T-3271**	1	CONNECTOR	
	7	1	**8T-4205**	4	WASHER-HARD (2MM THK)	
	8	1	**036-9823**	5	BOLT	
	9	1	**7T-3277**	1	COIL AS-FIELD	
	10	1	**3F-0379**	8	SCREW-POLE SHOE	
	11	1	**7T-3276**	1	ARMATURE AS (24 VOLT)	
	12	1	**8H-1141**	4	SHOE-POLE	
	13	1	**7T-3454**	1	INSULATOR	
	14	1	**7T-3279**	1	HOUSING AS	
	15	1	**7T-3278**	1	HOLDER AS-BRUSH	
	16	1	**3T-3422**	1	WIRE AS	
	17	1	**8T-8566**	1	TERMINAL AS	
	18	1	**8T-0328**	2	WASHER-HARD (1MM THK)	
	19	1	**6V-8188**	4	NUT (1/2-13 THD)	
	20	1	**7X-0562**	4	WASHER-HARD (0.8MM THK)	
	21	1	**7X-3373**	6	BOLT (5/16-18X.88 IN)	
	22	1	**7T-3451**	1	INSULATOR-TERMINAL	
	23	1	**8T-8569**	1	INSULATOR-TERMINAL	
	24	1	**9X-9511**	1	SOLENOID AS (24 VOLT)	
	25	1	**036-9821**	1	WASHER	
	26	1	**7T-3269**	1	BOOT	
	27	1	**7T-3270**	1	PLUNGER AS	
	28	1	**9M-7609**	1	SPRING	
	29	1	**4M-1828**	1	RETAINER-SPRING	
	30	1	**4M-1827**	1	RETAINER-SPRING	
	31	1	**4M-1831**	1	PLUG-LEVER HOUSING	
	32	1	**7T-3973**	1	HOUSING AS-LEVER	
	33	1	**7T-3974**	1	HOUSING AS-DRIVE	
	34	1	**3T-3434**	6	PLUG (12.7MM OD SPHERE)	
	35	1	**6N-3827**	1	DRIVE AS-MOTOR	
	36	1	**1H-2629**	2	STRIP-INSULATION	
JZ	37	1		4	SPRING	
JZ	38	1		4	BRUSH	
JZ	39	1		4	SCREW	
JPZ	40	1		6	SCREW AS	
JPZ	41	1		1	SEAL-O-RING	
LZ	42	1		3	INSULATOR	
LZ		1		1	BUSHING	
NZ	43	1		1	LEVER AS	
NZ	44	1		1	LEVER AS	
NPZ	45	1		1	NUT	
NPZ	46	1		1	SEAL-O-RING	
PZ	47	1		1	SEAL-O-RING	
NZ	48	1		1	RETAINER	
PZ	49	1		1	GASKET-WASHER	
PZ	50	1		1	BUSHING	
PZ	51	1		2	PLUG-CUP	
PZ	52	1		1	PLUG-CUP	
PZ	53	1		1	PLUG	
PZ	54	1		1	PLUG	

8C-3651 **STARTING MOTOR GP-ELECTRIC** ***(contd.)*** **i01334601**

NOTE	REF NO	GRAPHIC REF	PART NUMBER	QTY	PART NAME 1 2 3 4 5 6 (PRODUCT LEVEL)	SEE PAGE
PZ	55	1		1	PLUG	
PZ	56	1		1	BUSHING	
PZ	57	1		1	WASHER	
NZ	58	1		1	SEAL-O-RING	
NZ	59	1		1	SEAL-O-RING	
PZ	60	1		1	RETAINER-SEAL	
PZ	61	1		1	SPACER	
PZ	62	1		1	BUSHING	
Z	63	1		1	HOUSING	
					AVAILABLE REPAIR KIT(S):	
J			**8C-3655**	1	KIT-BRUSH	
P			**7T-3267**	1	KIT-BUSHING	
N			**7T-3268**	1	KIT-LEVER	
L			**8T-9884**	1	KIT-INSULATOR	

J-KIT MARKED J INCLUDES PART(S) MARKED J
L-KIT MARKED L INCLUDES PART(S) MARKED L
N-KIT MARKED N INCLUDES PART(S) MARKED N
P-KIT MARKED P INCLUDES PART(S) MARKED P
Z-NOT SERVICED SEPARATELY

8C-3651 **STARTING MOTOR GP-ELECTRIC** *(contd.)* **i01334601**

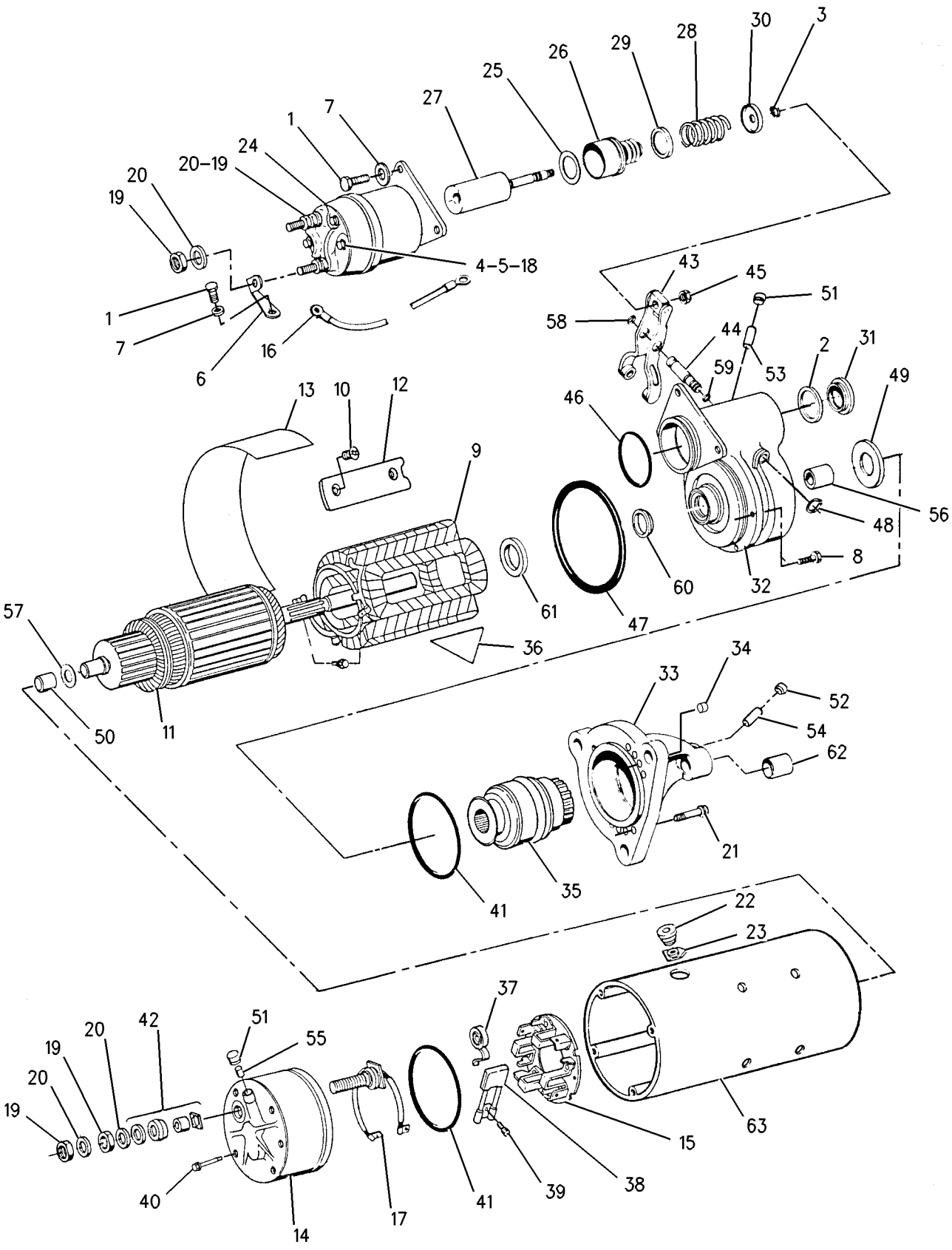

GRAPHIC #1 g00705665

MEMORANDA

9X-4447 STARTING MOTOR GP-ELECTRIC

S/N: 3XJ1-99999

24 VOLT

PART OF 4N-3181 STARTING MOTOR GP-ELECTRIC

SMCS-1453 **i01022417**

NOTE	REF NO	GRAPHIC REF	PART NUMBER	QTY	PART NAME 1 2 3 4 5 6 (PRODUCT LEVEL)	SEE PAGE
	1	1	**6V-8188**	3	NUT (1/2-13 THD)	
	2	1	**7X-0562**	3	WASHER-HARD (0.8MM THK)	
	3	1	**4B-2049**	1	NUT (10-32 THD)	
	4	1	**8F-1434**	1	LOCKWASHER (0.51MM THK)	
	5	1	**8T-0328**	1	WASHER-HARD (1MM THK)	
M	6	1	**8T-4133**	1	NUT (M10X1.50 THD)	
	7	1	**8T-4121**	1	WASHER (2.5MM THK)	
	8	1	**3E-0142**	1	HOUSING AS	
	9	1	**3E-0141**	1	STOP-STARTING MOTOR	
	10	1	**4N-7521**	1	LOCKRING	
	11	1	**3E-0143**	1	DRIVE AS-STARTING MOTOR	
	12	1	**3E-0144**	1	HOUSING AS	
	13	1	**3E-0140**	1	LEVER AS-STARTER	
	14	1	**3E-0139**	1	HOUSING AS	
	15	1	**3E-0138**	1	ARMATURE AS	
	16	1	**3E-0137**	1	HOLDER AS	
	17	1	**3E-0136**	1	HOUSING AS	
	18	1	**3E-0133**	1	WIRE AS-STARTING MOTOR	
	19	1	**3E-0135**	1	SOLENOID AS	
	20	1	**3E-0132**	1	CONNECTOR	
	21	1	**3E-0134**	1	COVER-PLUNGER	
					AVAILABLE REPAIR KIT(S):	
			3E-0128	1	KIT-BRUSH	
					(INCLUDES BRUSHES)	
			3E-0130	1	KIT-STARTING MOTOR SEAL	
					(INCLUDES SEAL & RINGS)	
			3E-0129	1	KIT-HARDWARE	
					(INCLUDES WIRE AS, NUTS, WASHERS, LOCKWASHERS, BUSHING & BAR)	
			3E-0127	1	KIT-BEARING	
					(INCLUDES BEARING SEALS & SPACERS)	
			3E-0131	1	KIT-WASHER	
			3E-0145	1	KIT-STARTING MOTOR PIN	

M-METRIC PART

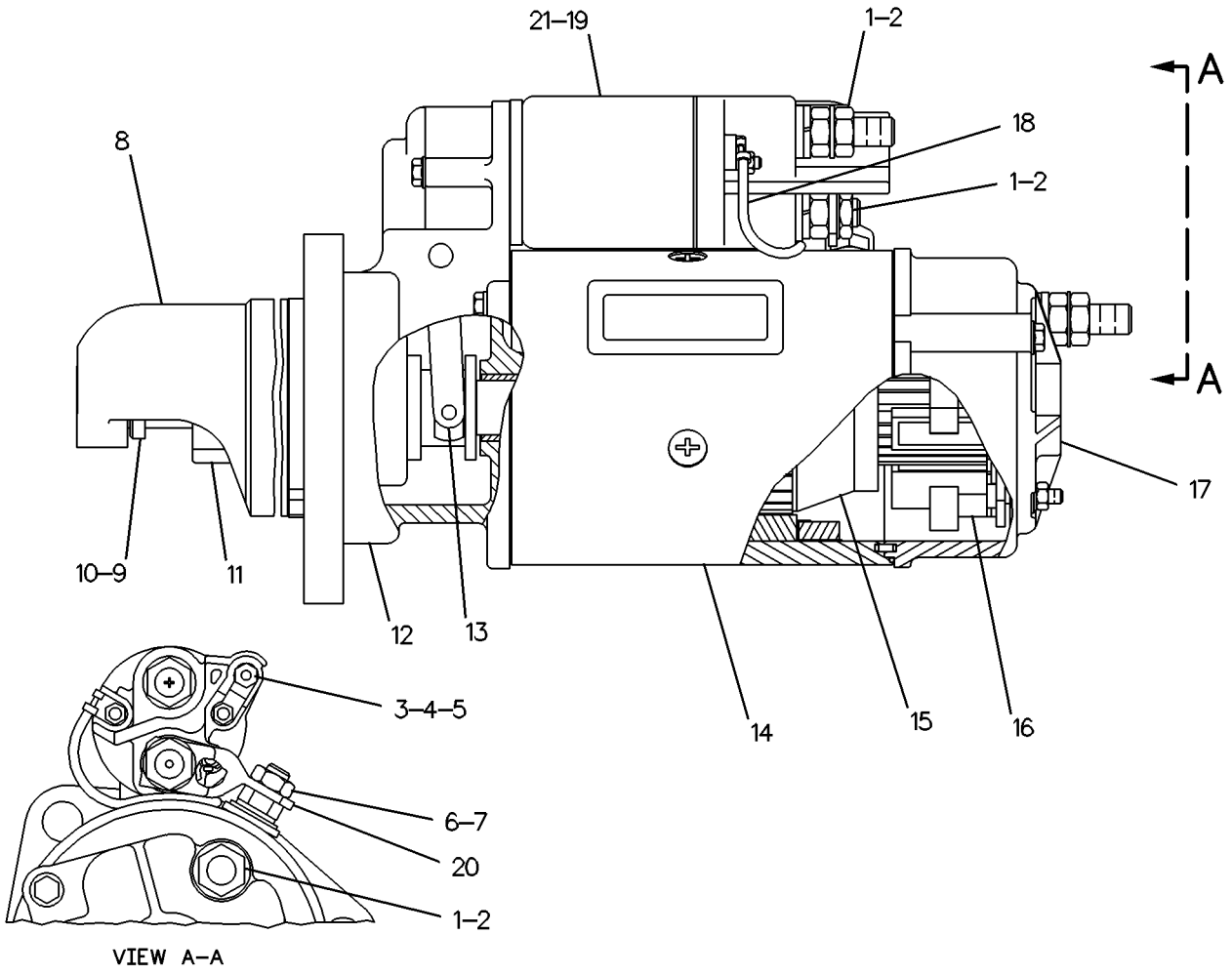

GRAPHIC #1 g00114256

7N-0718 SWITCH GP-DISCONNECT–BATTERY

S/N: 3XJ1-99999

PART OF 8R-5053 BATTERY & WIRING GP

SMCS-1411 **i01321692**

NOTE	REF NO	GRAPHIC REF	PART NUMBER	QTY	PART NAME 1 2 3 4 5 6 (PRODUCT LEVEL)	SEE PAGE
	1	1	**8H-5306**	1	KEY	
	2	1	**8H-5303**	1	NUT (3/4-16-2A THD)	
	3	1	**2H-3922**	2	LOCKWASHER (19.9X31.3X1.3MM THK)	
	4	1	**9F-5644**	2	LOCKWASHER (9.93X17.3X.9MM THK)	
	5	1	**6F-7045**	2	NUT-FULL (3/8X24 THD)	

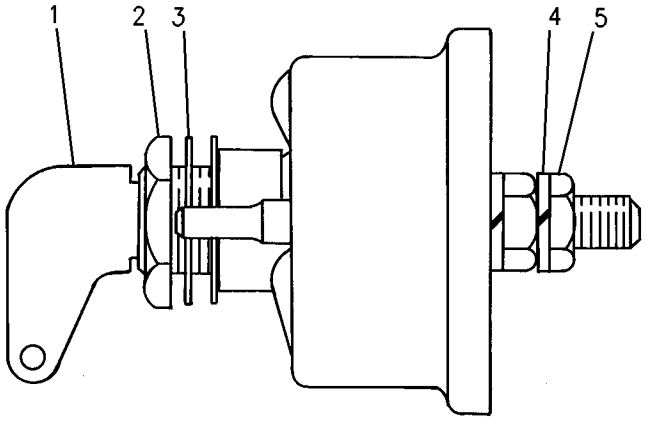

GRAPHIC #1 g00699216

9G-7641 SWITCH GP-START

S/N: 3XJ1-99999

PART OF 8R-5346 PANEL GP-INSTRUMENT

SMCS-1416 **i01321802**

NOTE	REF NO	GRAPHIC REF	PART NUMBER	QTY	PART NAME 1 2 3 4 5 6 (PRODUCT LEVEL)	SEE PAGE
	1	1	**6V-8362**	4	SCREW-MACHINE (8-32X.31 IN)	
	2	1	**9B-7233**	4	LOCKWASHER (NO.8)	
	3	1	**7T-6799**	1	NUT-MOUNTING	

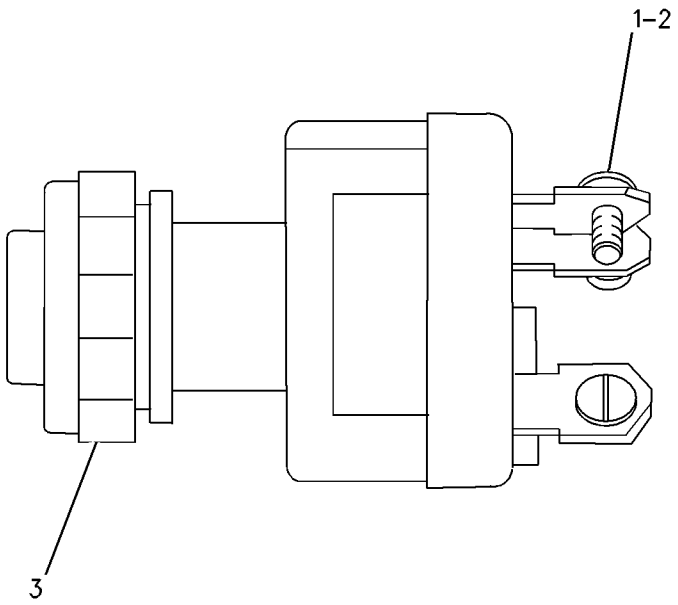

GRAPHIC #1 g00699802

8R-9712 WARNING GP-BACKUP

S/N: 3XJ1-99999
AN ATTACHMENT

SMCS-7406 **i01022419**

NOTE	REF NO	GRAPHIC REF	PART NUMBER	QTY	PART NAME 1 2 3 4 5 6 (PRODUCT LEVEL)	SEE PAGE
	1	1	**3T-1815**	1	ALARM-BACKUP	
M	2	1	**7X-2538**	2	BOLT (M8X1.25X100MM)	
M	3	1	**5C-7261**	2	NUT (M8X1.25 THD)	
	4	1	**8T-4224**	4	WASHER-HARD (2MM THK)	
	5	1	**8R-9602**	1	PLATE	
M	6	1	**8T-4136**	2	BOLT (M10X1.50X25MM)	
M	7	1	**8T-4133**	2	NUT (M10X1.50 THD)	
	8	1	**8T-4121**	4	WASHER (2.5MM THK)	
	9	1	**4N-9170**	1	CLIP	

M-METRIC PART

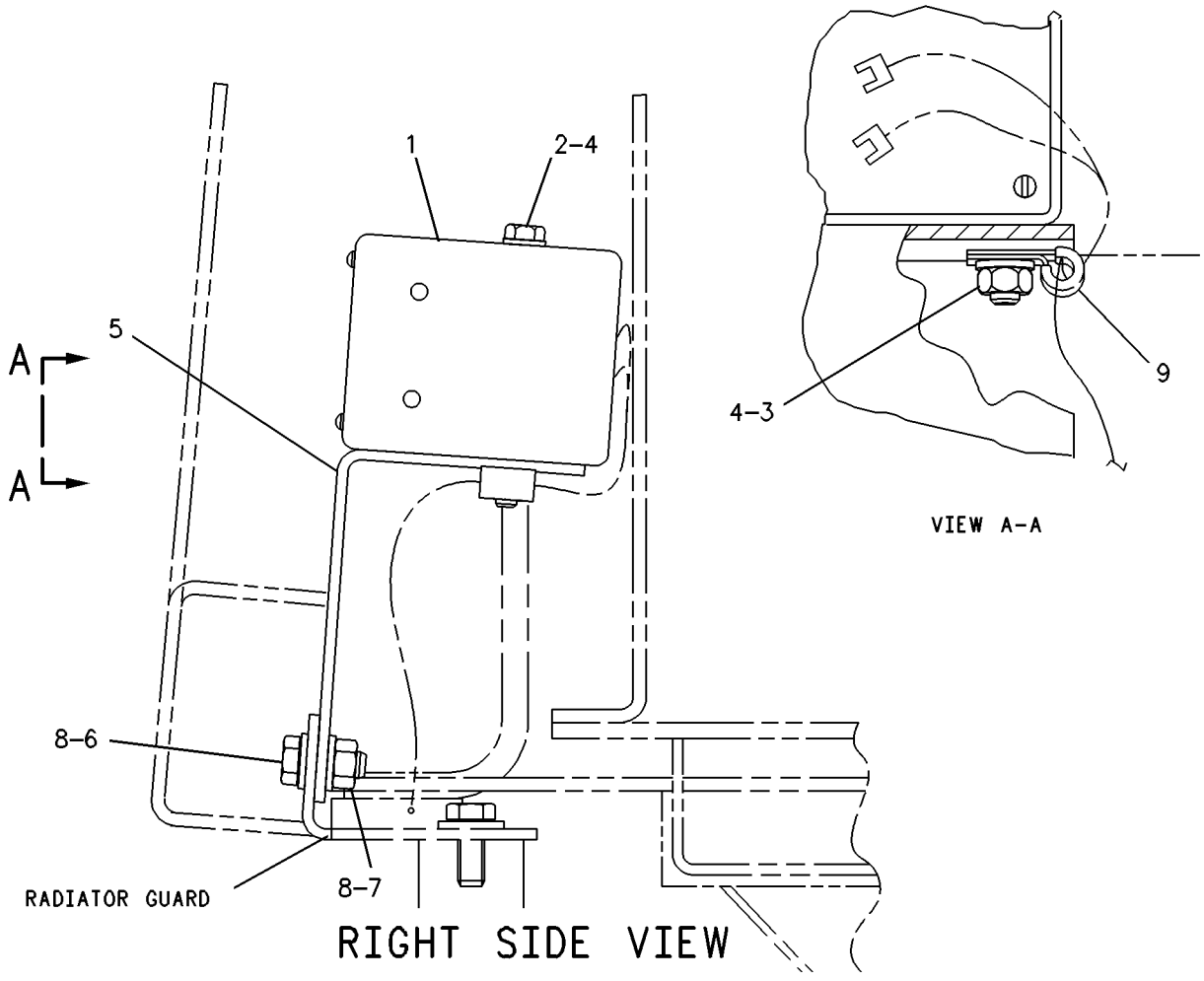

GRAPHIC #1 g00119606

MEMORANDA

8R-5054 WIRING GP-ENGINE

S/N: 3XJ1-1323

SMCS-1403, 1408 **i01322470**

NOTE	REF NO	GRAPHIC REF	PART NUMBER	QTY	PART NAME 1 2 3 4 5 6 (PRODUCT LEVEL)	SEE PAGE
	1	1	**8N-1693**	1	SWITCH AS-TEMPERATURE (COOLANT TEMP FOR START AID)	
		1	**6V-8376**	2	SCREW-MACHINE (8-32X.25 IN)	
		1	**9B-7233**	2	LOCKWASHER (NO.8)	
	2	1	**5P-4115**	1	WASHER (2MM THK)	
Y	3	1	*9X-0377*	1	SENSOR GP-TEMPERATURE (COOLANT)	
	4	1	**3J-1907**	2	SEAL-O-RING (11.89MM ID)	
	5	1	**8T-3285**	1	ADAPTER	
Y	6	1	*9X-0377*	1	SENSOR GP-TEMPERATURE (TRANSMISSION OIL)	
	7	1	**8R-8163**	1	HARNESS AS-ENGINE	
	8	1	**3S-2093**	4	STRAP-CABLE (1.75 IN DIA)	
	9	1	**7T-0988**	1	SWITCH AS-PRESSURE (ENGINE OIL)	
		1	**6V-8376**	2	SCREW-MACHINE (8-32X.25 IN)	
		1	**9B-7233**	2	LOCKWASHER (NO.8)	
	10	1	**9S-9370**	1	BUSHING-REDUCER	
	11	1	**9M-8406**	4	CLIP (15.8MM ID)	
	12	1	**5K-0906**	2	BOLT (5/16-18X0.63IN)	
	13	1	**8T-4224**	2	WASHER-HARD (8.8X16X2MM THK)	
	14	1	**7C-1897**	1	SENSOR GP-SPEED (ENGINE)	
		1	**7N-7779**	1	SOCKET-CONNECTOR	
		1	**7N-7780**	1	PIN-CONNECTOR (BLADE)	
		1	**7N-9738**	1	HOUSING-RECEPTACLE	
	15	1	**9G-9150**	1	CLIP (10.2MM ID)	
	16	1	**7N-3718**	1	CLIP (9.52MM ID)	
	17	1	**4D-7794**	4	CLIP (10.0MM ID)	
	18	1	**6D-4246**	2	CLIP (19.05MM ID)	
	19	1	**6T-2217**	1	RESISTOR AS (STARTER SYSTEM DIAGNOSTIC)	
		1	**7N-7779**	1	SOCKET-CONNECTOR	
		1	**7N-7780**	1	PIN-CONNECTOR (BLADE)	
		1	**7N-9737**	1	HOUSING-PLUG	
	20	1	**8R-8162**	1	HARNESS AS-ENGINE	

Y-SEPARATE ILLUSTRATION

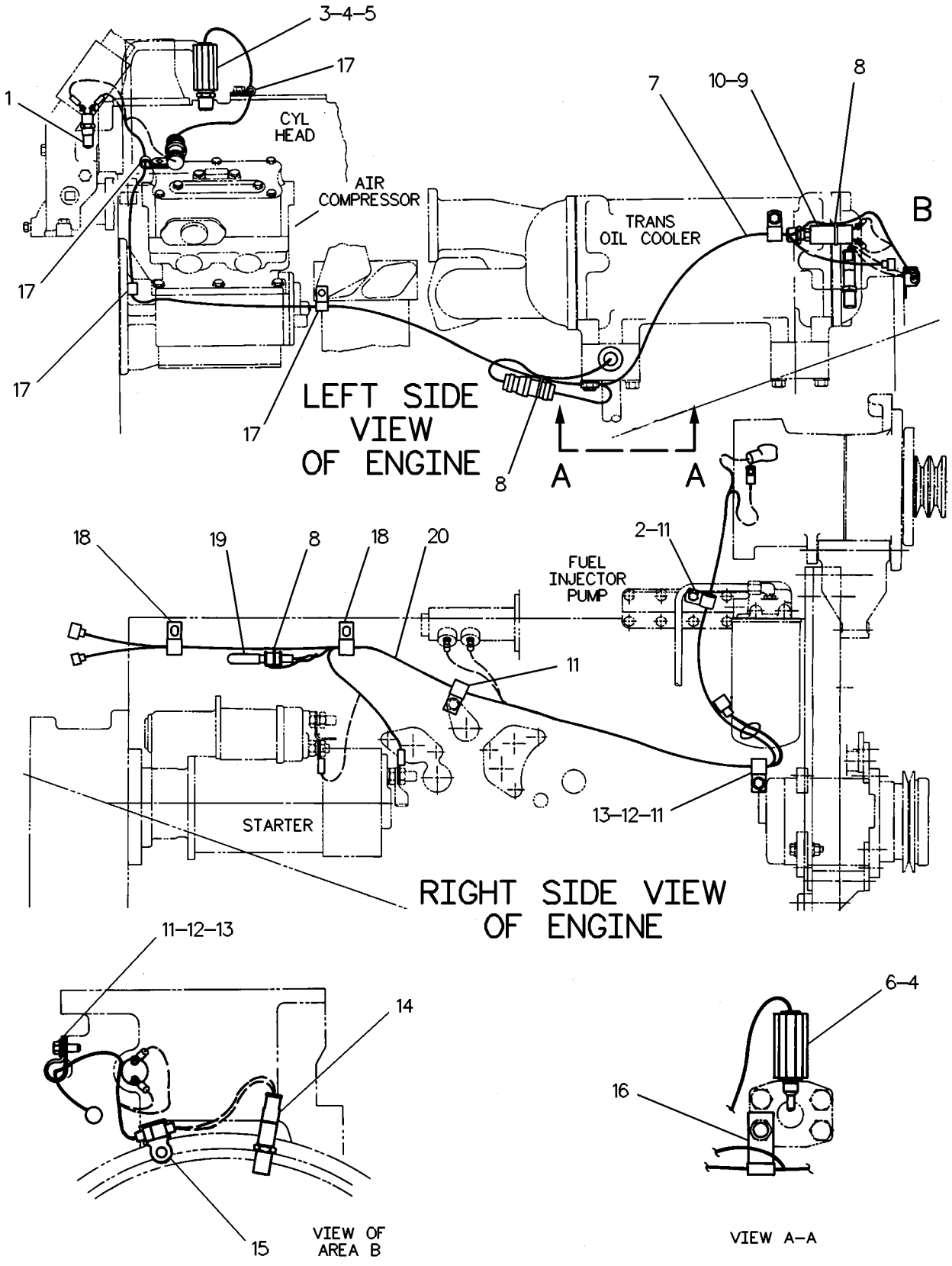

GRAPHIC #1 g00126746

8R-5054 WIRING GP-ENGINE

S/N: 3XJ1324-2067

SMCS-1403, 1408 **i01322496**

NOTE	REF NO	GRAPHIC REF	PART NUMBER	QTY	PART NAME 1 2 3 4 5 6 (PRODUCT LEVEL)	SEE PAGE
	1	1	**8N-1693**	1	SWITCH AS-TEMPERATURE (COOLANT TEMP FOR START AID)	
		1	**6V-8376**	2	SCREW-MACHINE (8-32X.25 IN)	
		1	**9B-7233**	2	LOCKWASHER (NO.8)	
	2	1	**5P-4115**	1	WASHER (2MM THK)	
C	3	1	**3E-5370**	1	SENSOR GP-TEMPERATURE (COOLANT)	
E		1	**8T-6342**		TUBE (3.18MM ID) (8 CM)	
		1	**8T-8730**	3	SOCKET-CONNECTOR	
		1	**8T-8731**	1	PLUG-CONNECTOR	
	4	1	**3J-1907**	2	SEAL-O-RING (11.89MM ID)	
	5	1	**8T-3285**	1	ADAPTER	
C	6	1	**3E-5370**	1	SENSOR GP-TEMPERATURE (TRANSMISSION OIL)	
E		1	**8T-6342**		TUBE (3.18MM ID) (8 CM)	
		1	**8T-8730**	3	SOCKET-CONNECTOR	
		1	**8T-8731**	1	PLUG-CONNECTOR	
	7	1	**8R-8163**	1	HARNESS AS-ENGINE	
	8	1	**3S-2093**	4	STRAP-CABLE (1.75 IN DIA)	
	9	1	**7T-0988**	1	SWITCH AS-PRESSURE (ENGINE OIL)	
		1	**6V-8376**	2	SCREW-MACHINE (8-32X.25 IN)	
		1	**9B-7233**	2	LOCKWASHER (NO.8)	
	10	1	**9S-9370**	1	BUSHING-REDUCER	
	11	1	**9M-8406**	4	CLIP (15.8MM ID)	
	12	1	**5K-0906**	2	BOLT (5/16-18X0.63IN)	
	13	1	**8T-4224**	2	WASHER-HARD (8.8X16X2MM THK)	
	14	1	**7C-1897**	1	SENSOR GP-SPEED (ENGINE)	
		1	**7N-7779**	1	SOCKET-CONNECTOR	
		1	**7N-7780**	1	PIN-CONNECTOR (BLADE)	
		1	**7N-9738**	1	HOUSING-RECEPTACLE	
	15	1	**9G-9150**	1	CLIP (10.2MM ID)	
	16	1	**7N-3718**	1	CLIP (9.52MM ID)	
	17	1	**4D-7794**	4	CLIP (10.0MM ID)	
	18	1	**6D-4246**	2	CLIP (19.05MM ID)	
	19	1	**6T-2217**	1	RESISTOR AS (STARTER SYSTEM DIAGNOSTIC)	
		1	**7N-7779**	1	SOCKET-CONNECTOR	
		1	**7N-7780**	1	PIN-CONNECTOR (BLADE)	
		1	**7N-9737**	1	HOUSING-PLUG	
	20	1	**8R-8162**	1	HARNESS AS-ENGINE	

C-CHANGE FROM PREVIOUS TYPE
E-ORDER BY THE CENTIMETER

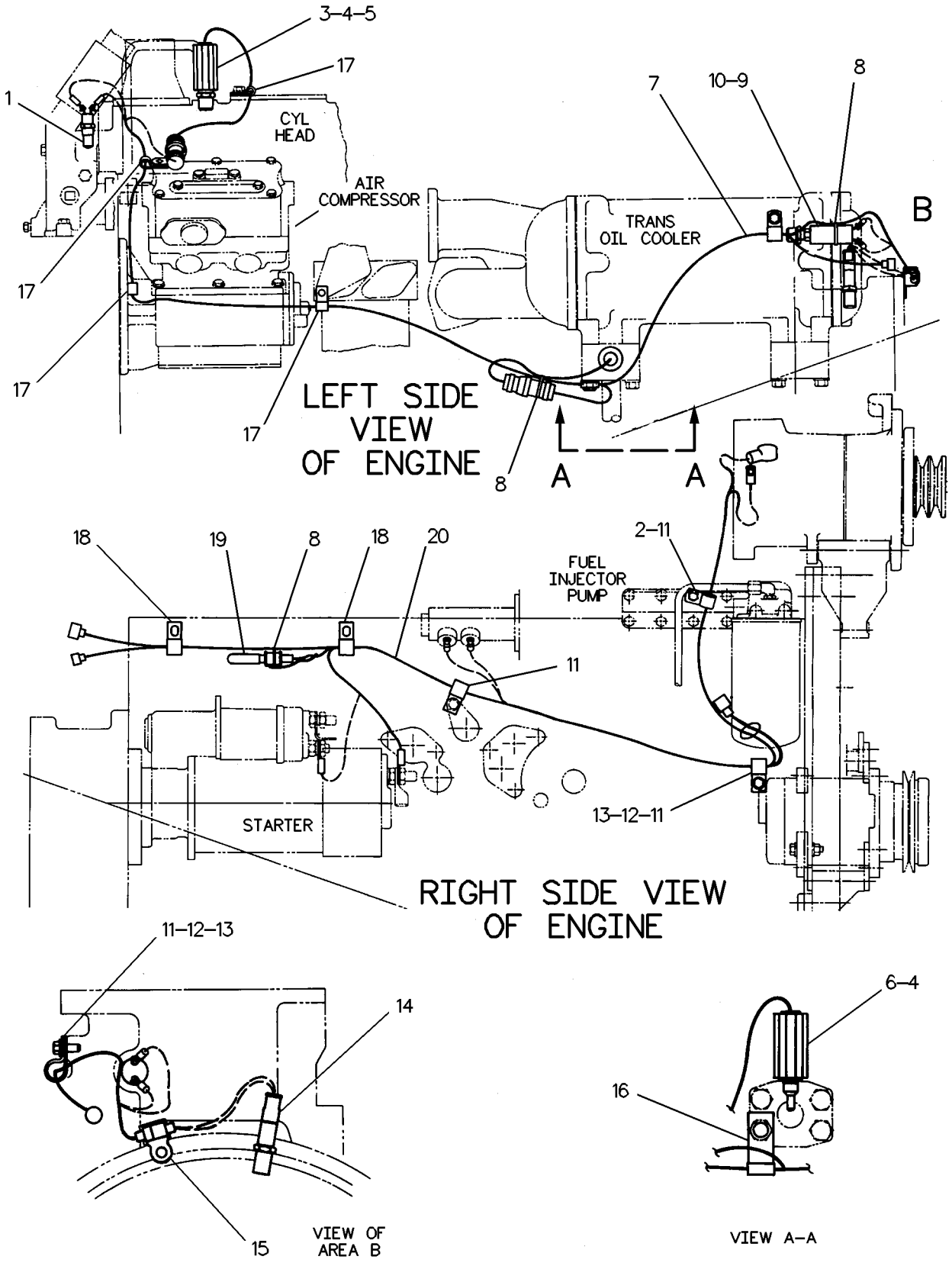

GRAPHIC #1 g00126746

8R-5054 WIRING GP-ENGINE

S/N: 3XJ2068-99999

SMCS-1403, 1408 **i01322501**

NOTE	REF NO	GRAPHIC REF	PART NUMBER	QTY	PART NAME 1 2 3 4 5 6 (PRODUCT LEVEL)	SEE PAGE
	1	1	**8N-1693**	1	SWITCH AS-TEMPERATURE (COOLANT TEMP FOR START AID)	
		1	**6V-8376**	2	SCREW-MACHINE (8-32X.25 IN)	
		1	**9B-7233**	2	LOCKWASHER (NO.8)	
	2	1	**5P-4115**	1	WASHER (2MM THK)	
	3	1	**3E-5370**	1	SENSOR GP-TEMPERATURE (COOLANT)	
B		1	**8T-6342**		TUBE (3.18MM ID) (8 CM)	
		1	**8T-8730**	3	SOCKET-CONNECTOR	
		1	**8T-8731**	1	PLUG-CONNECTOR	
	4	1	**3J-1907**	2	SEAL-O-RING (11.89MM ID)	
	5	1	**8T-3285**	1	ADAPTER	
	6	1	**3E-5370**	1	SENSOR GP-TEMPERATURE (TRANSMISSION OIL)	
B		1	**8T-6342**		TUBE (3.18MM ID) (8 CM)	
		1	**8T-8730**	3	SOCKET-CONNECTOR	
		1	**8T-8731**	1	PLUG-CONNECTOR	
	7	1	**8R-8163**	1	HARNESS AS-ENGINE	
	8	1	**3S-2093**	4	STRAP-CABLE (1.75 IN DIA)	
	9	1	**7T-0988**	1	SWITCH AS-PRESSURE (ENGINE OIL)	
		1	**6V-8376**	2	SCREW-MACHINE (8-32X.25 IN)	
		1	**9B-7233**	2	LOCKWASHER (NO.8)	
	10	1	**9S-9370**	1	BUSHING-REDUCER	
	11	1	**9M-8406**	4	CLIP (15.8MM ID)	
	12	1	**5K-0906**	2	BOLT (5/16-18X0.63IN)	
	13	1	**8T-4224**	2	WASHER-HARD (8.8X16X2MM THK)	
C	14	1	**3E-7886**	1	SENSOR AS-SPEED (ENGINE)	
		1	**7N-7779**	1	SOCKET-CONNECTOR	
		1	**7N-7780**	1	PIN-CONNECTOR (BLADE)	
		1	**7N-9738**	1	HOUSING-RECEPTACLE	
B		1	**9X-1386**		SLEEVE	
	15	1	**9G-9150**	1	CLIP (10.2MM ID)	
	16	1	**7N-3718**	1	CLIP (9.52MM ID)	
	17	1	**4D-7794**	4	CLIP (10.0MM ID)	
	18	1	**6D-4246**	2	CLIP (19.05MM ID)	
	19	1	**6T-2217**	1	RESISTOR AS (STARTER SYSTEM DIAGNOSTIC)	
		1	**7N-7779**	1	SOCKET-CONNECTOR	
		1	**7N-7780**	1	PIN-CONNECTOR (BLADE)	
		1	**7N-9737**	1	HOUSING-PLUG	
	20	1	**8R-8162**	1	HARNESS AS-ENGINE	

B-USE AS REQUIRED
C-CHANGE FROM PREVIOUS TYPE

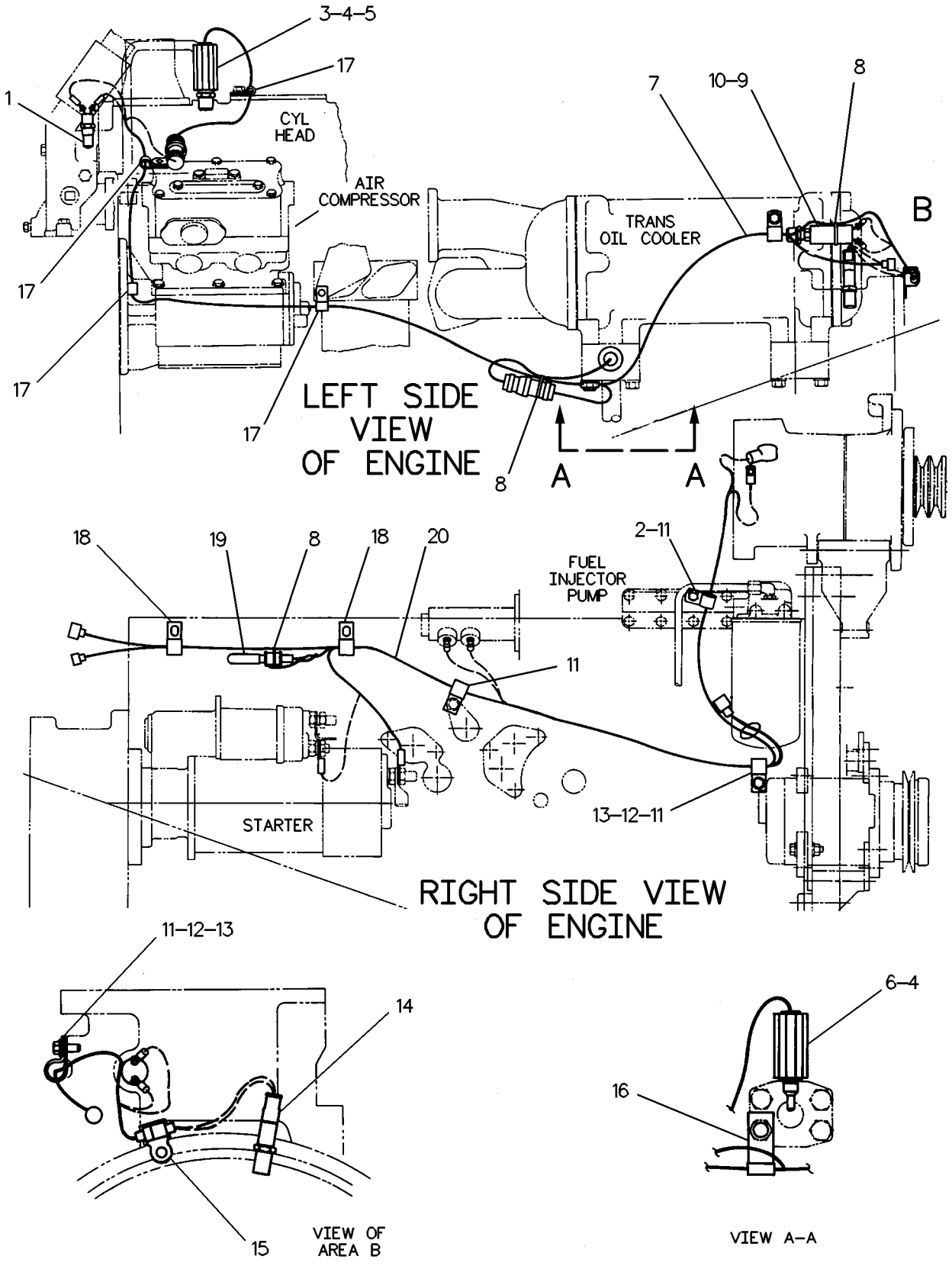

GRAPHIC #1 g00126746

8R-5055 WIRING GP-FRONT

S/N: 3XJ1-1253

SMCS-5734 **i00259618**

NOTE	REF NO	GRAPHIC REF	PART NUMBER	QTY	PART NAME 1 2 3 4 5 6 (PRODUCT LEVEL)	SEE PAGE
	1	1	**9D-3769**	2	GROMMET	
	2	1	**5P-7648**	2	GROMMET	
	3	1	**6C-5031**	1	HARNESS AS	
	4	1	**5M-3062**	3	BOLT (3/8-16X.750IN)	
	5	1	**8T-4896**	11	WASHER-HARD (2.5MM THK)	
	6	1	**6D-4246**	1	CLIP (19.05MM ID)	
	7	1	**9M-8406**	6	CLIP (15.8MM ID)	
	8	1	**9K-0700**	2	GROMMET	
	9	1	**6V-8801**	8	NUT (3/8-16 THD)	
	10	1	**9G-9152**	1	CLIP (10.5MM ID)	
	11	1	**5P-2675**	4	BOLT (1/4-20X1.75IN)	
	12	1	**5V-6439**	2	PLATE	
	13	1	**4V-1939**	4	CLAMP	
	14	1	**4V-0968**	2	LOCK	
	15	1	**7V-6659**	4	CLAMP-DOUBLE	
	16	1	**4V-0612**	2	PLATE	
	17	1	**8T-8911**	2	BOLT (5/16-18X2IN)	
	18	1	**8R-8139**	1	HARNESS AS	
	19	1	**3T-3045**	2	CLIP AS (12MM ID)	
	20	1	**4D-7794**	4	CLIP (10.0MM ID)	

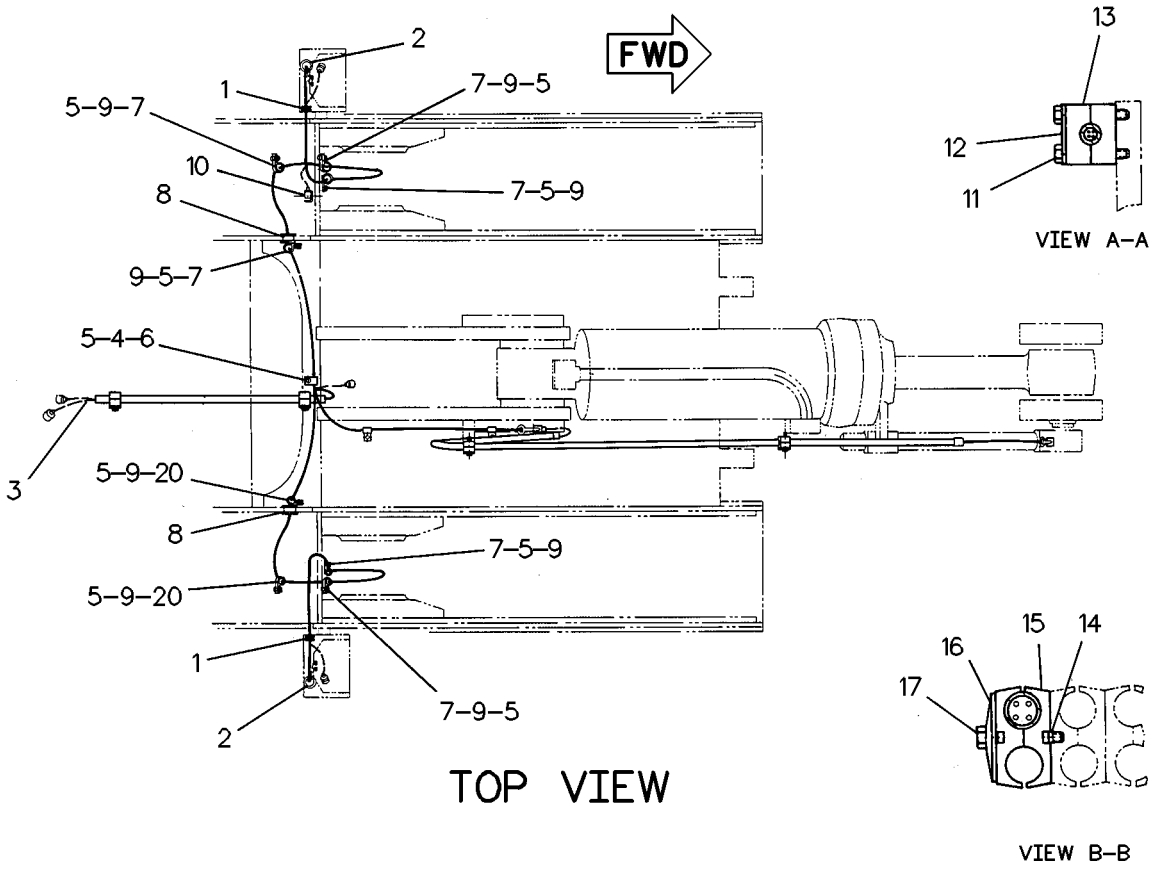

TOP VIEW

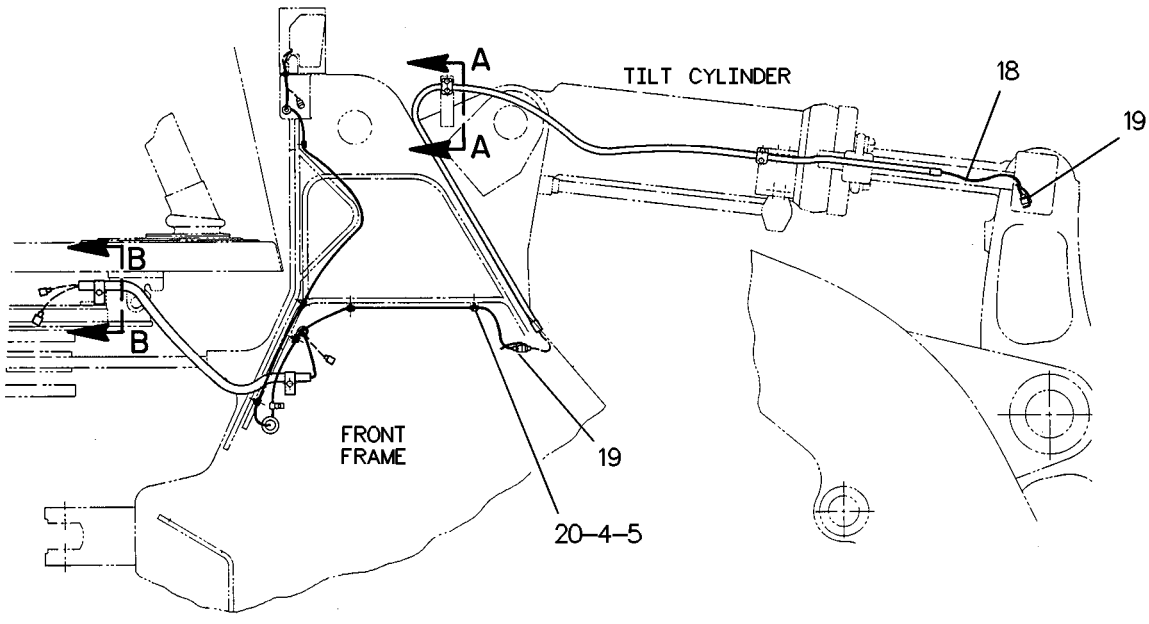

RIGHT SIDE VIEW

GRAPHIC #1 g00126655

ELECTRICAL AND STARTING SYSTEM

8R-5055 WIRING GP-FRONT

S/N: 3XJ1254-99999

SMCS-5734 **i00259634**

NOTE	REF NO	GRAPHIC REF	PART NUMBER	QTY	PART NAME 1 2 3 4 5 6 (PRODUCT LEVEL)	SEE PAGE
	1	1	**9D-3769**	2	GROMMET	
C	2	1	**092-9741**	2	GROMMET	
C	3	1	**6C-5958**	1	HARNESS AS	
	4	1	**5M-3062**	3	BOLT (3/8-16X.750IN)	
	5	1	**8T-4896**	11	WASHER-HARD (2.5MM THK)	
	6	1	**6D-4246**	1	CLIP (19.05MM ID)	
C	7	1	**9M-8406**	3	CLIP (15.8MM ID)	
	8	1	**9K-0700**	2	GROMMET	
	9	1	**6V-8801**	8	NUT (3/8-16 THD)	
	10	1	**9G-9152**	1	CLIP (10.5MM ID)	
	11	1	**5P-2675**	4	BOLT (1/4-20X1.75IN)	
	12	1	**5V-6439**	2	PLATE	
	13	1	**4V-1939**	4	CLAMP	
	14	1	**4V-0968**	2	LOCK	
	15	1	**7V-6659**	4	CLAMP-DOUBLE	
	16	1	**4V-0612**	2	PLATE	
	17	1	**8T-8911**	2	BOLT (5/16-18X2IN)	
	18	1	**8R-8139**	1	HARNESS AS	
	19	1	**3T-3045**	2	CLIP AS (12MM ID)	
	20	1	**4D-7794**	6	CLIP (10.0MM ID)	
C	21	1	**6K-8178**	1	CLIP (15.88MM ID)	

C-CHANGE FROM PREVIOUS TYPE

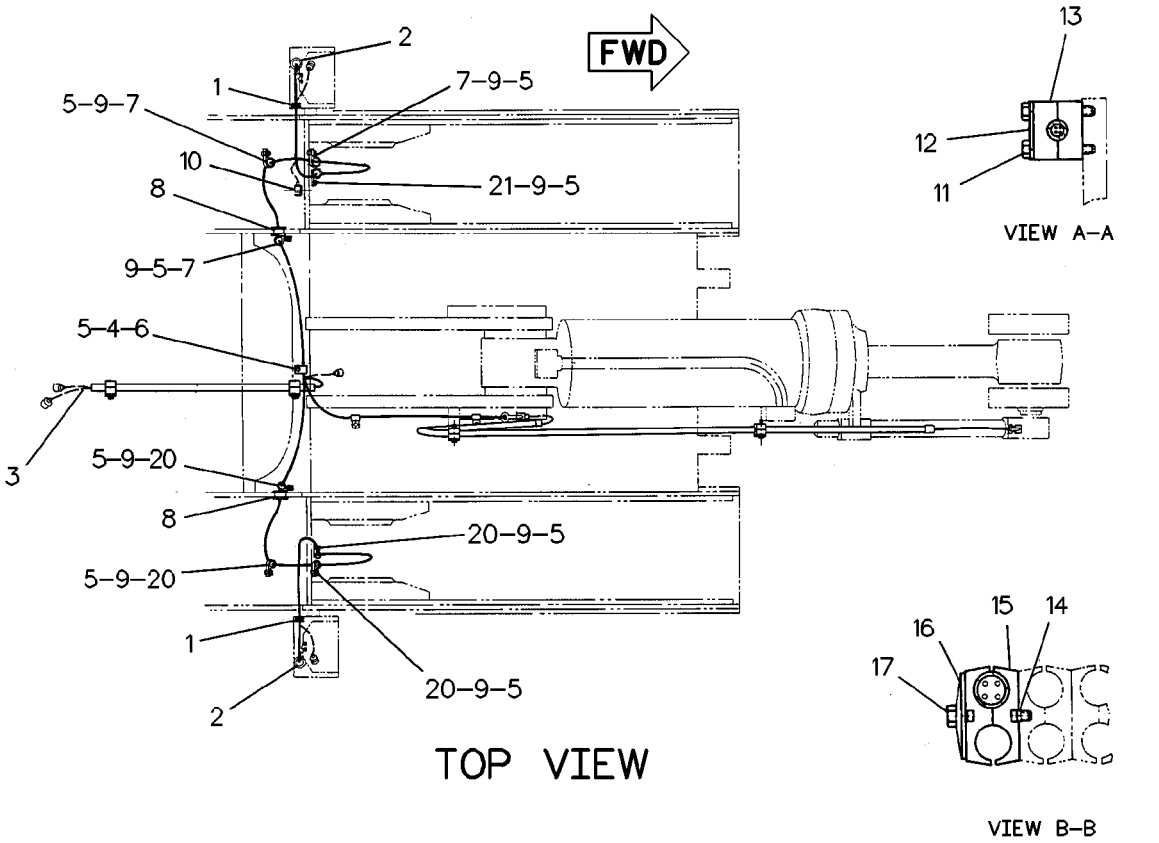

TOP VIEW

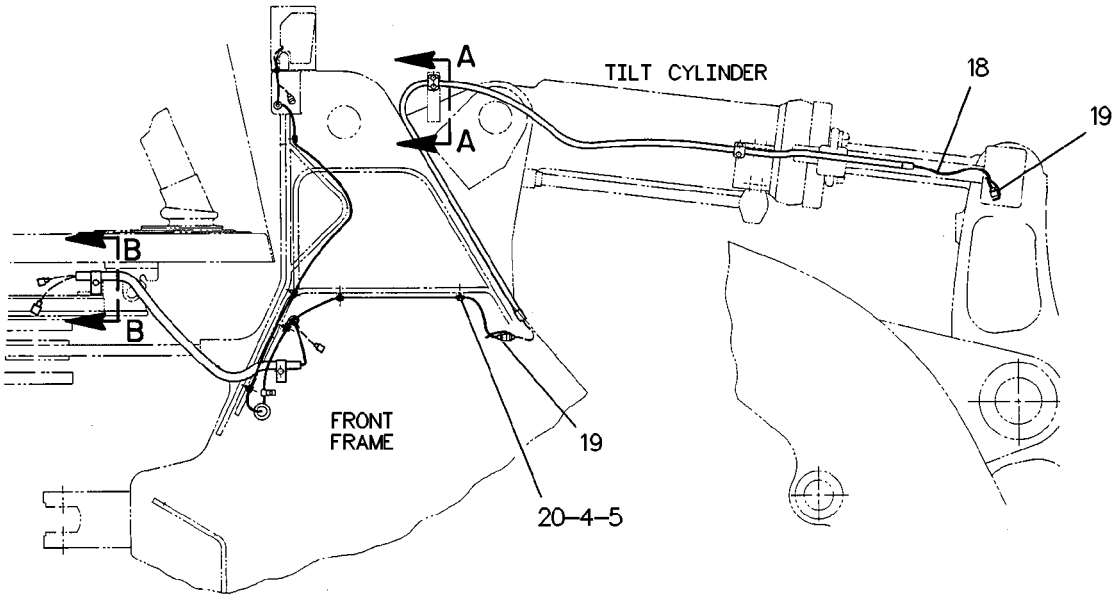

RIGHT SIDE VIEW

GRAPHIC #1 g00127410

ELECTRICAL AND STARTING SYSTEM

8R-5344 WIRING GP-INSTR & IGNITION

S/N: 3XJ1-99999

PART OF 8R-5041 OPERATOR AR

SMCS-1408, 7451 **i01322380**

NOTE	PART NUMBER	QTY	PART NAME 1 2 3 4 5 6 (PRODUCT LEVEL)	SEE PAGE
Y	**9G-9813**	1	ALARM GP (ACTION)	
	9G-8451	1	BLOCK AS	
	1H-3244	1	LOCKWASHER (NO.14)	
	4B-4276	2	WASHER (1.6MM THK)	
	4L-7124	1	BOLT (1/4-20X1.25IN)	
	6V-8185	1	NUT (1/4-20 THD)	
M	**5C-9553**	2	BOLT (M6X1.0X16MM)	
	5S-7349	3	BOLT (1/4-20X0.5 IN)	
	8R-7194	1	BRACKET	
	6N-8589	2	CIRCUIT BREAKER AS (15 AMP)	
	9G-9154	1	CLIP (10.5MM ID)	
	9G-9152	1	CLIP (10.5MM ID)	
	6D-4246	3	CLIP (19.05MM ID)	
	4S-1962	1	CLIP (25.4MM ID)	
	4S-4455	2	CLIP (31.75MM ID)	
	6D-3479	3	CLIP (14.29MM ID)	
	4D-7794	1	CLIP (10.0MM ID)	
	9G-9150	1	CLIP (10.2MM ID)	
	3K-8782	8	FUSE (10 AMP)	
	8R-7198	1	GASKET	
	5P-9135	1	GROMMET (15.80MM ID)	
	5P-8438	1	GROMMET	
	2D-0388	1	GROMMET	
	6C-5854	1	HARNESS AS	
	8R-9296	1	HARNESS AS	
	6C-4237	1	HARNESS AS	
	4K-5122	9	HOLDER AS-FUSE	
			(EACH INCLUDES)	
	139-0178	1	CAP-FUSE HOLDER	
	8R-7200	1	INLAY	
	9W-1494	1	KIT-SERVICE METER	
	1H-4393	8	LOCKWASHER (NO.8)	
	6V-8801	13	NUT (3/8-16 THD)	
	1B-2578	4	NUT (3/8-16 THD)	
	4B-2043	4	NUT (8-32 THD)	
M	**5C-2890**	2	NUT (M6X1.00 THD)	
	6W-8944	1	RECEPTACLE AS	
	7N-7779	1	SOCKET-CONNECTOR	
	7N-7780	1	PIN-CONNECTOR (BLADE)	
	7N-9738	1	HOUSING-RECEPTACLE	
BD	**5P-5623**		WIRE (16 GA)	
	6J-0488	2	SCREW-HEAD (3/8-16X.875 IN)	
	7S-4338	8	SCREW-MACHINE (8-32X.75IN)	
	8R-7193	1	STRIP	
	8T-4205	5	WASHER-HARD (2MM THK)	
	8T-4896	11	WASHER-HARD (10.2X18.5X2.5MM THK)	
	6C-4234	2	WIRE AS	

B-USE AS REQUIRED
D-ORDER BY THE METER
M-METRIC PART
Y-SEPARATE ILLUSTRATION

MEMORANDA

6C-8494 WIRING GP-MONITOR

S/N: 3XJ1-99999
PART OF 6C-5342 MONITOR AR-PAYLOAD
AN ATTACHMENT
TYPE 1

SMCS-1408, 7490, 7494 **i01328853**

NOTE	REF NO	GRAPHIC REF	PART NUMBER	QTY	PART NAME 1 2 3 4 5 6 (PRODUCT LEVEL)	SEE PAGE
	1	1	**6V-8188**	3	NUT (1/2-13 THD)	
	2	1	**8T-4223**	5	WASHER-HARD (3MM THK)	
	3	1	**8T-4224**	2	WASHER-HARD (8.8X16X2MM THK)	
	4	1	**3D-8752**	1	LOCKNUT (5/16-24 THD)	
	5	1	**8K-1253**	2	ROD END	
M	6	1	**6V-2313**	2	BOLT (M5X0.8X30MM)	
		1	**4B-4274**	2	WASHER (1.2MM THK)	
M	7	1	**9X-2480**	3	BOLT (M6X1.0X45MM)	
M		1	**5C-2890**	3	NUT (M6X1.00 THD)	
		1	**9X-8256**	3	WASHER (2MM THK)	
		1	**8C-5607**	6	MOUNT (ISOLATION)	
	8	1	**8C-5608**	3	SPACER (25.4MM THK)	
	9	1	**4E-2453**	1	SHAFT-GOVERNOR CONTROL	
Y	10	1	**3E-5400**	1	SENSOR GP-POSITION (LIFT)	
	11	1	**6D-3025**	2	BALL BEARING	
	12	1	**2L-6726**	2	RING-RETAINING	
	13	1	**2H-3429**	1	RING-RETAINING	
	14	1	**6C-8636**	1	COVER	
	15	1	**4M-5281**	2	BOLT (1/4-20X.750 IN)	
		1	**8T-4205**	2	WASHER-HARD (2MM THK)	
	16	1	**2M-2292**	1	ROD	
	17	1	**4F-2294**	2	NUT-JAM (5/16-24 THD)	
	18	1	**6S-4868**	1	LEVER	
	19	1	**8T-2502**	1	BOLT (3/8-16X1.125 IN) (SLOT)	
		1	**8T-4896**	1	WASHER-HARD (10.2X18.5X2.5MM THK) (18.5MM OD)	
	20	1	**4E-2250**	1	HOUSING	
	21	1	**5P-2424**	2	BOLT (1/2-13X2.25 IN)	
	22	1	**4E-2452**	1	ARM-BAIL	
	23	1	**3T-7567**	1	BAR	
	24	1	**8C-3678**	3	STUD-WELD (1/2-13 X 1.25IN OAL)	
	25	1	**4K-8479**	4	STUD-WELD (3/8-16X1.25IN OAL)	
	26	2	**6V-8188**	2	NUT (1/2-13 THD)	
		2	**8T-4223**	2	WASHER-HARD (3MM THK)	
		2	**8C-3678**	2	STUD-WELD (1/2-13 X 1.25IN OAL)	
M	27	2	**8T-4908**	1	BOLT (M8X1.25X25MM)	
		2	**8T-4224**	1	WASHER-HARD (8.8X16X2MM THK)	
M		2	**5C-7261**	1	NUT (M8X1.25 THD)	
		2	**4S-4455**	1	CLIP (31.75MM ID)	
	28	2	**4E-2448**	1	BRACKET	
	29	2	**8T-4896**	8	WASHER-HARD (10.2X18.5X2.5MM THK) (18.5MM OD)	
	30	2	**6V-8397**	2	SEAL-O-RING (9.27MM ID)	
I	31	2	**9R-2152**	1	HOSE AS	
	32	2	**8R-7723**	1	ADAPTER	
		2	**1P-3703**	1	SEAL-RECTANGULAR (31.86MM ID)	
	33	2	**8T-9101**	4	BOLT (3/8-16X2.75 IN)	
	34	2	**6V-9200**	1	ELBOW-FACE SEAL (90 DEGREES)	
		2	**3J-7354**	1	SEAL-O-RING (8.92MM ID)	
	35	2	**6V-8636**	1	CONNECTOR-SEAL	
		2	**3J-1907**	1	SEAL-O-RING (11.89MM ID)	
	36	2	**8C-5586**	1	CONTROL GP-ELECTRONIC (LIFT CYLINDER PRESSURE)	
		2	**102-8803**	1	KIT-RECEPTACLE (3 PIN)	
					(INCLUDES RECEPTACLE AS AND WEDGE)	
		2	**3E-3371**	1	WEDGE-RECEPTACLE LOCK	
E		2	**8T-6342**		TUBE (3.18MM ID) (8CM)	

6C-8494 **WIRING GP-MONITOR** ***(contd.)*** **i01328853**

NOTE	REF NO	GRAPHIC REF	PART NUMBER	QTY	PART NAME 1 2 3 4 5 6 (PRODUCT LEVEL)	SEE PAGE
		2	**8T-8729**	3	PIN-CONNECTOR	
	37	2	**8N-4326**	1	BRACE	
M	38	2	**8T-4182**	4	BOLT (M10X1.5X45MM)	
		2	**8T-4121**	4	WASHER-HARD (2.5MM THK) (21MM OD)	
	39	2	**5M-3062**	4	BOLT (3/8-16X.75 IN)	
	40	2	**3E-5269**	1	CONTROL GP-PAYLOAD ELECTRONIC	
		2	**9W-0202**	1	FILM-CONTROL	
	41	2	**6C-8422**	1	PLATE AS	
	42	2	**4E-2460**	1	HARNESS AS	
	43	2	**4E-9687**	1	HARNESS AS	
	44	2	**033-8248**	4	CLIP (11.11MM ID)	
		2	**6V-8801**	4	NUT (3/8-16 THD)	
	45	2	**6C-8640**	1	SUPPORT AS	
	46	2	**7K-1181**	12	STRAP-CABLE (4IN DIA)	

E-ORDER BY THE CENTIMETER
I-SEE HOSE FABRICATION GUIDE
M-METRIC PART
Y-SEPARATE ILLUSTRATION

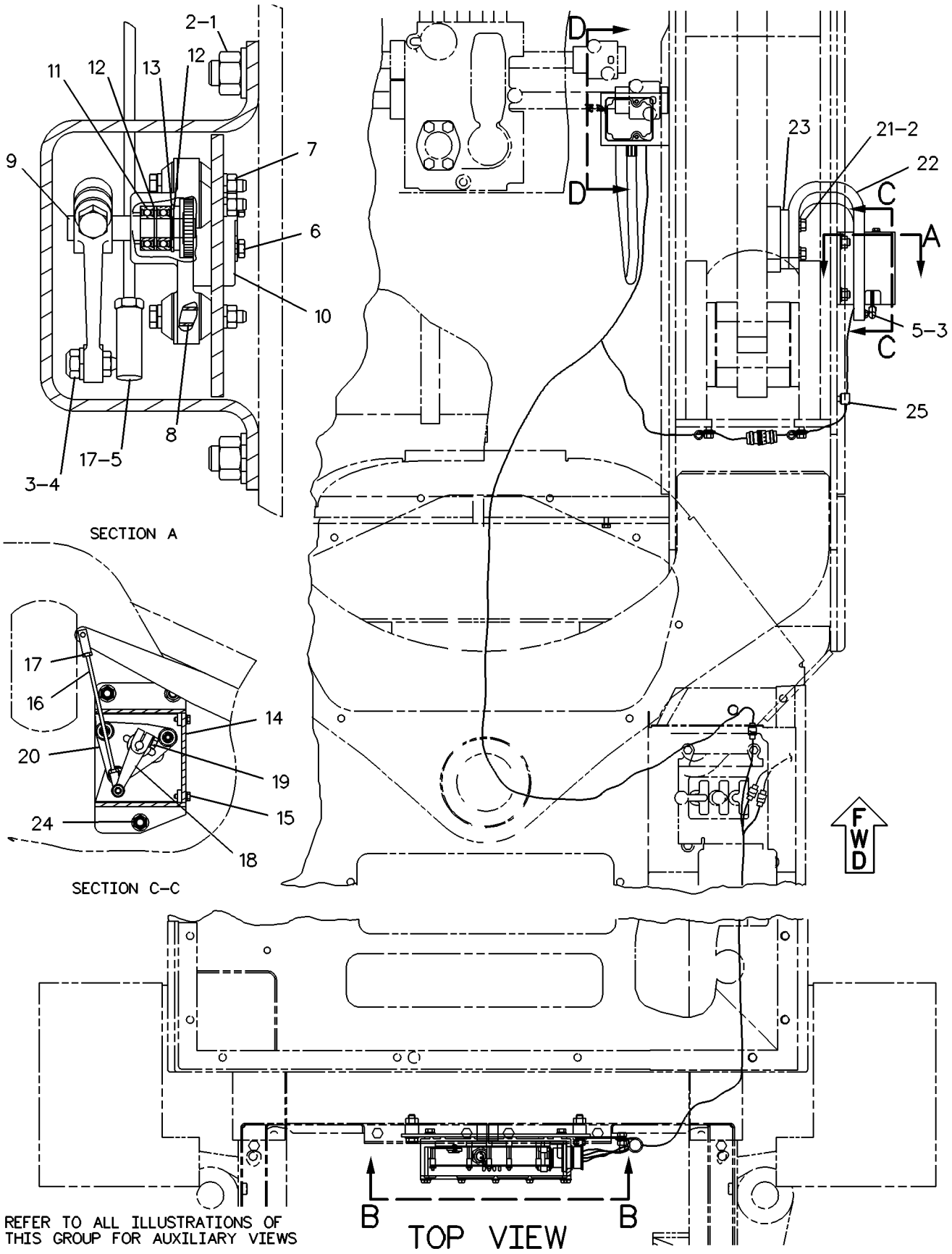

GRAPHIC #1 g00127743

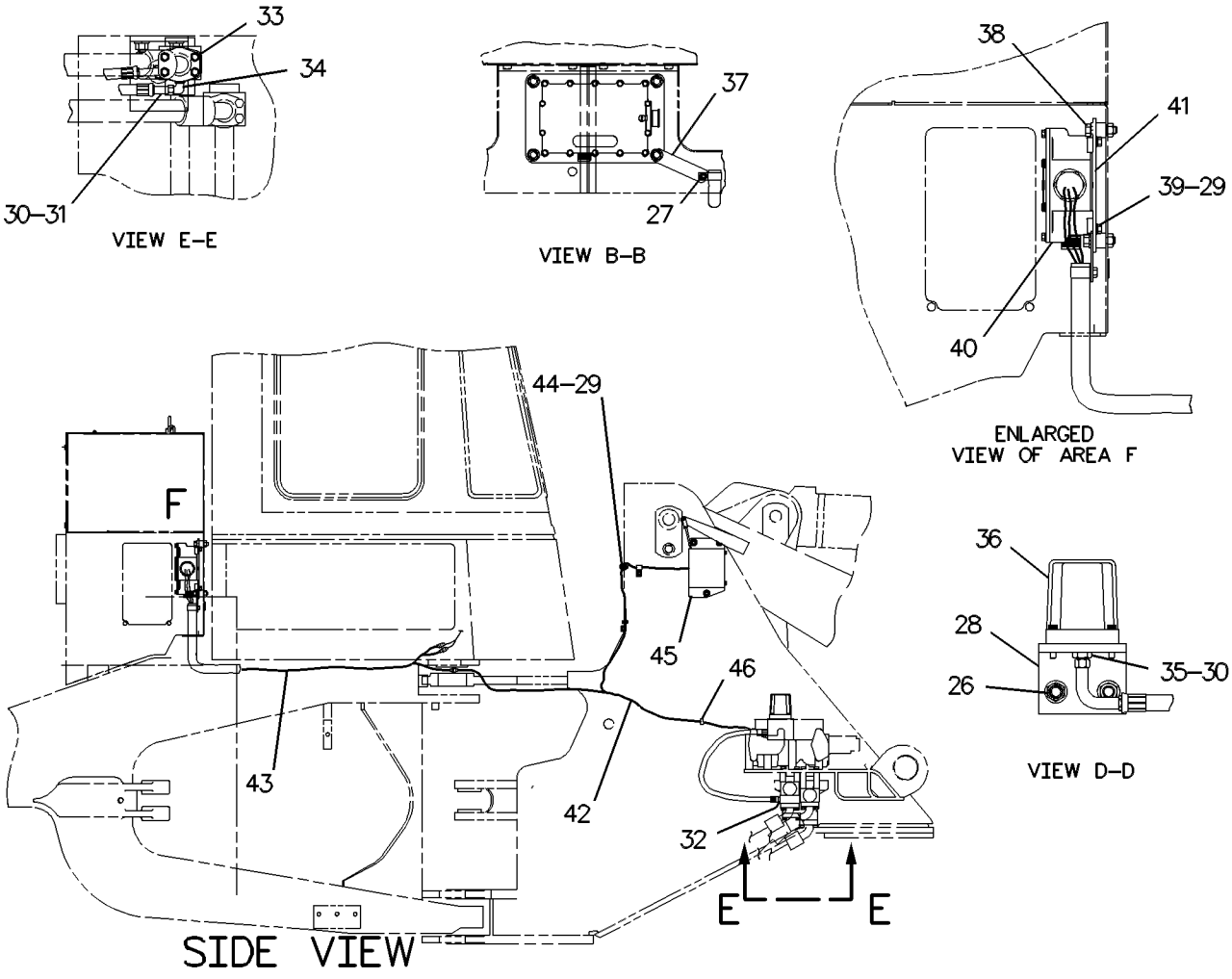

GRAPHIC #2 g00452765

6C-8494 WIRING GP-MONITOR

S/N: 3XJ1-99999
PART OF 6C-5342 MONITOR AR-PAYLOAD
AN ATTACHMENT
TYPE 2

SMCS-1408, 7490, 7494 **i01216998**

NOTE	REF NO	GRAPHIC REF	PART NUMBER	QTY	PART NAME 1 2 3 4 5 6 (PRODUCT LEVEL)	SEE PAGE
	1	1	**6V-8188**	3	NUT (1/2-13 THD)	
	2	1	**8T-4223**	5	WASHER-HARD (3MM THK)	
	3	1	**8T-4224**	2	WASHER-HARD (2MM THK)	
	4	1	**3D-8752**	1	LOCKNUT (5/16-24 THD)	
	5	1	**8K-1253**	2	ROD END	
M	6	1	**6V-2313**	2	BOLT (M5X0.8X30MM)	
		1	**4B-4274**	2	WASHER (1.2MM THK)	
M	7	1	**9X-2480**	3	BOLT (M6X1.0X45MM)	
M		1	**5C-2890**	3	NUT (M6X1.00 THD)	
		1	**9X-8256**	3	WASHER (2MM THK)	
		1	**8C-5607**	6	MOUNT	
	8	1	**8C-5608**	3	SPACER (25.4MM THK)	
	9	1	**4E-2453**	1	SHAFT-GOVERNOR CONTROL	
	10	1	**3E-5400**	1	SENSOR GP-POSITION (LIFT)	
		1	**8T-8730**	3	SOCKET-CONNECTOR	
		1	**8T-8731**	1	PLUG-CONNECTOR	
		1	**9X-1813**		SLEEVE (72CM)	
	11	1	**6D-3025**	2	BALL BEARING	
	12	1	**2L-6726**	2	RING-RETAINING	
	13	1	**2H-3429**	1	RING-RETAINING	
	14	1	**6C-8636**	1	COVER	
	15	1	**4M-5281**	2	BOLT (1/4-20X.750IN)	
		1	**8T-4205**	2	WASHER-HARD (2MM THK)	
	16	1	**2M-2292**	1	ROD	
	17	1	**4F-2294**	2	NUT-JAM (5/16-24 THD)	
	18	1	**6S-4868**	1	LEVER	
	19	1	**8T-2502**	1	BOLT (3/8-16X1.125IN) (SLOT)	
		1	**8T-4896**	1	WASHER-HARD (2.5MM THK)	
	20	1	**4E-2250**	1	HOUSING	
	21	1	**5P-2424**	2	BOLT (1/2-13X2.25IN)	
	22	1	**4E-2452**	1	ARM-BAIL	
	23	1	**3T-7567**	1	BAR	
	24	1	**8C-3678**	3	STUD-WELD (1/2-13 X 1.25IN OAL)	
	25	1	**4K-8479**	4	STUD-WELD (3/8-16X1.25IN OAL)	
	26	2	**6V-8188**	2	NUT (1/2-13 THD)	
		2	**8T-4223**	2	WASHER-HARD (3MM THK)	
		2	**8C-3678**	2	STUD-WELD (1/2-13 X 1.25IN OAL)	
M	27	2	**8T-4908**	1	BOLT (M8X1.25X25MM)	
		2	**8T-4224**	1	WASHER-HARD (2MM THK)	
M		2	**5C-7261**	1	NUT (M8X1.25 THD)	
		2	**4S-4455**	1	CLIP (31.75MM ID)	
	28	2	**4E-2448**	1	BRACKET	
	29	2	**8T-4896**	8	WASHER-HARD (2.5MM THK)	
	30	2	**6V-8397**	2	SEAL-O-RING (9.27MM ID)	
I	31	2	**9R-2152**	1	HOSE AS	
	32	2	**8R-7723**	1	ADAPTER	
		2	**1P-3703**	1	SEAL-RECTANGULAR (31.86MM ID)	
	33	2	**8T-9101**	4	BOLT (3/8-16X2.75IN)	
	34	2	**6V-9200**	1	ELBOW-FACE SEAL (90 DEGREES)	
		2	**3J-7354**	1	SEAL-O-RING (8.92MM ID)	
	35	2	**6V-8636**	1	CONNECTOR	
		2	**3J-1907**	1	SEAL-O-RING (11.89MM ID)	
CY	36	2	*103-2040*	1	SENSOR GP-PRESSURE (LIFT CYLINDER)	
	37	2	**8N-4326**	1	BRACE	

6C-8494 **WIRING GP-MONITOR** ***(contd.)*** **i01216998**

NOTE	REF NO	GRAPHIC REF	PART NUMBER	QTY	PART NAME 1 2 3 4 5 6 (PRODUCT LEVEL)	SEE PAGE
M	38	2	**8T-4182**	4	BOLT (M10X1.5X45MM)	
		2	**8T-4121**	4	WASHER-HARD (2.5MM THK)	
	39	2	**5M-3062**	4	BOLT (3/8-16X.75IN)	
CR	40	2	**3E-9293**	1	CONTROL GP-PAYLOAD ELECTRONIC	
		2	**9W-0202**	1	FILM-CONTROL	
	41	2	**6C-8422**	1	PLATE AS	
	42	2	**4E-2460**	1	HARNESS AS	
	43	2	**4E-9687**	1	HARNESS AS	
	44	2	**033-8248**	4	CLIP (11.11MM ID)	
		2	**6V-8801**	4	NUT (3/8-16 THD)	
	45	2	**6C-8640**	1	SUPPORT AS	
	46	2	**7K-1181**	12	STRAP-CABLE (4IN DIA)	

C-CHANGE FROM PREVIOUS TYPE
I-SEE HOSE FABRICATION GUIDE
M-METRIC PART
R-REMFG PART MAY BE AVAILABLE
Y-SEPARATE ILLUSTRATION

6C-8494 **WIRING GP-MONITOR** ***(contd.)*** **i01216998**

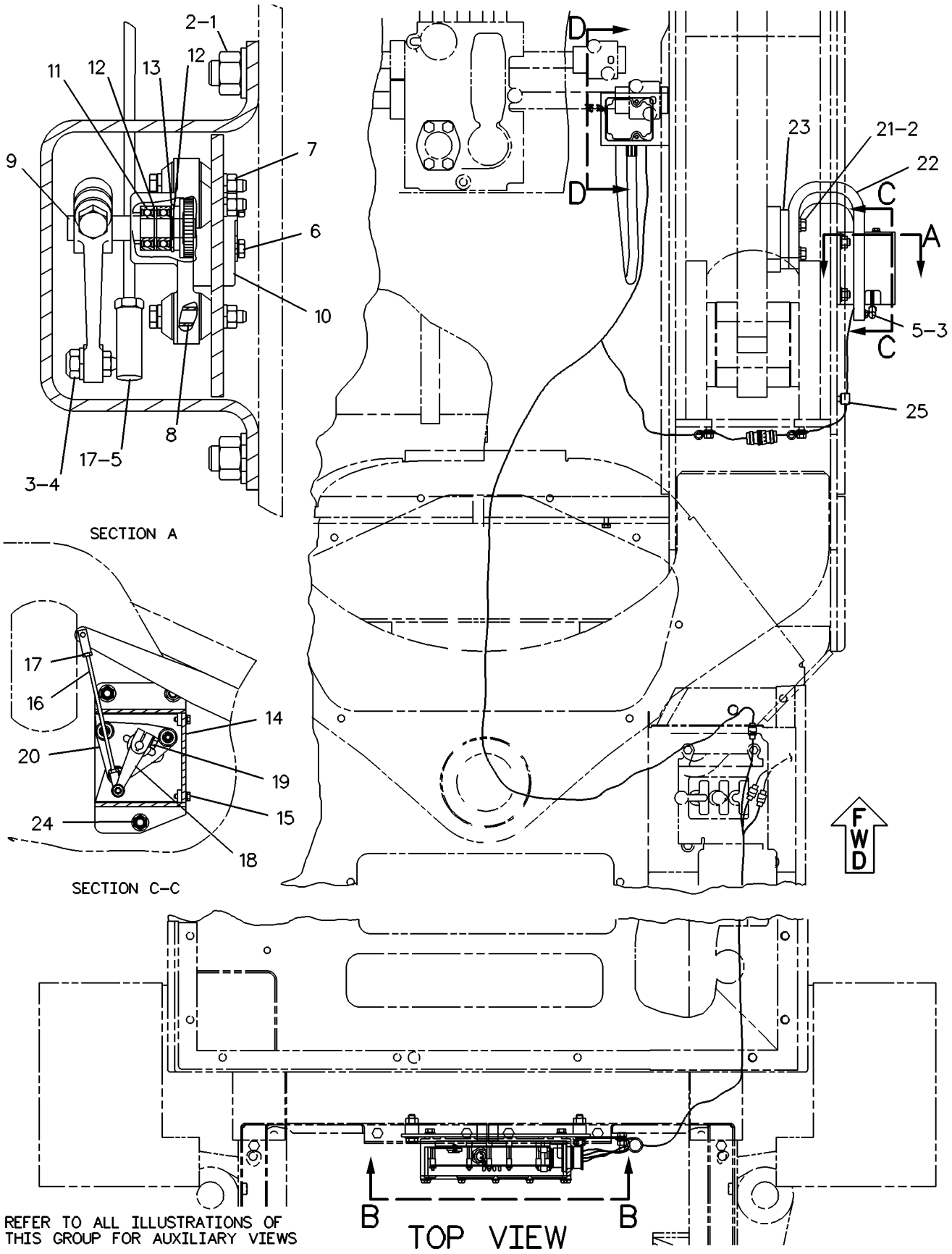

GRAPHIC #1 g00127743

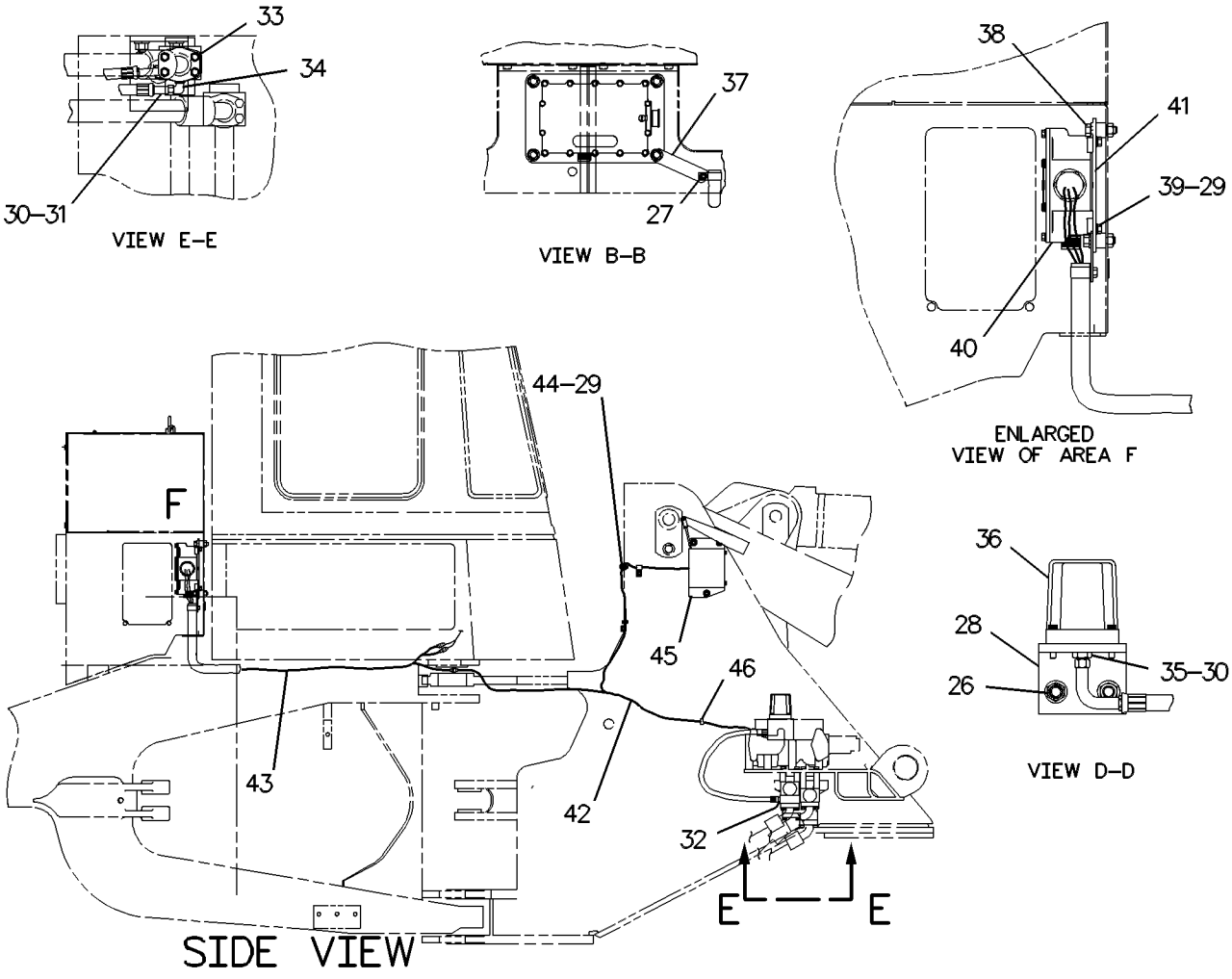

GRAPHIC #2 g00452765

4E-0048 WIRING GP-REAR

S/N: 3XJ1-99999

SMCS-1408 **i00259290**

NOTE	REF NO	GRAPHIC REF	PART NUMBER	QTY	PART NAME 1 2 3 4 5 6 (PRODUCT LEVEL)	SEE PAGE
	1	1	**8T-4896**	5	WASHER-HARD (2.5MM THK)	
	2	1	**8M-2770**	5	CLIP (12.7MM ID)	
	3	1	**8C-5227**	2	PLUG-SEAL	
	4	1	**6V-8801**	1	NUT (3/8-16 THD)	
	5	1	**4K-8302**	2	CLIP (15.88MM ID)	
	6	1	**092-9741**	2	GROMMET	
	7	1	**7M-3361**	2	GROMMET	
	8	1	**3T-3045**	2	CLIP AS (12MM ID)	
	9	1	**8R-8185**	1	HARNESS AS	
M	10	1	**8T-4137**	4	BOLT (M10X1.50X20MM)	
	11	1	**5K-3294**	1	CLIP (12.7MM ID)	

M-METRIC PART

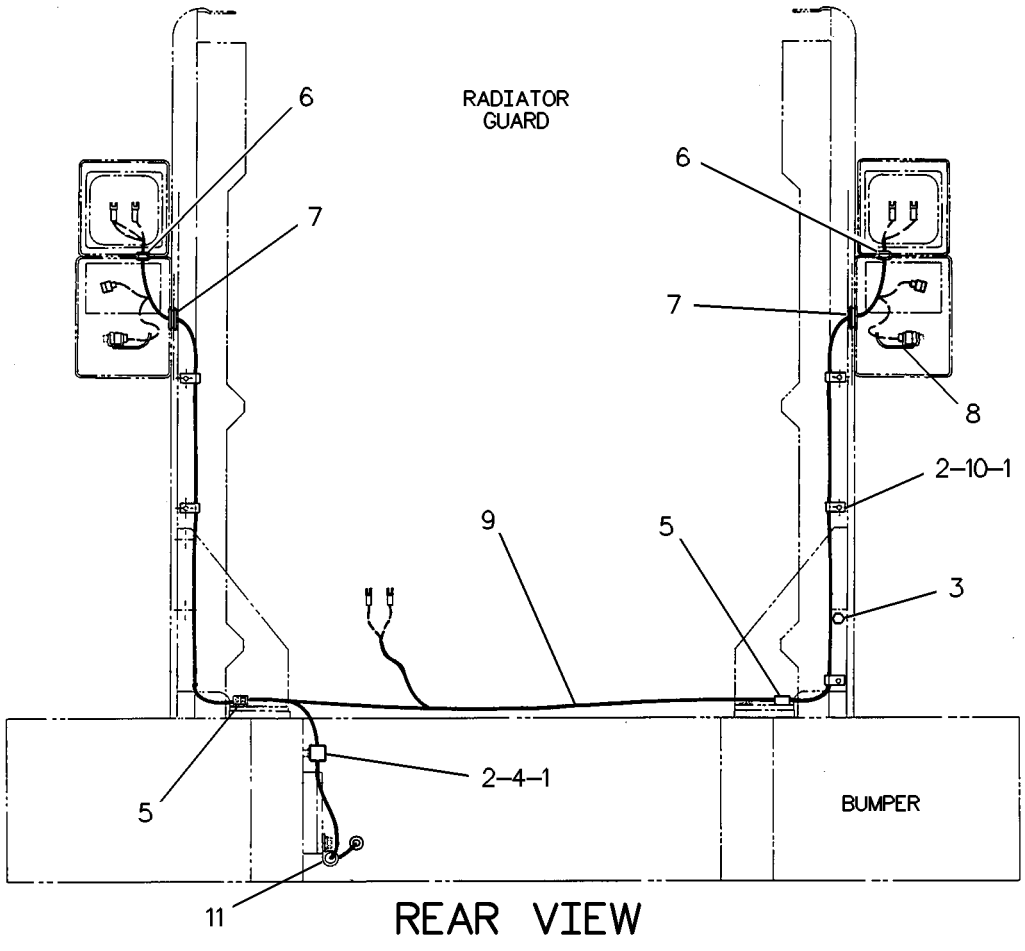

GRAPHIC #1 g00127621

MEMORANDA

8R-9426 WIRING GP-RELAY PANEL

S/N: 3XJ1-199

RELAY PANEL

PART OF 8R-5053 BATTERY & WIRING GP

SMCS-1408, 1422 **i01343493**

NOTE	REF NO	GRAPHIC REF	PART NUMBER	QTY	PART NAME 1 2 3 4 5 6 (PRODUCT LEVEL)	SEE PAGE
	1	1	**5L-4507**	4	SCREW-MACHINE (10-32X.875IN)	
		1	**4B-4274**	4	WASHER (1.2MM THK)	
	2	1	**8R-7931**	1	PLATE AS	
M	3	1	**8T-3490**	2	NUT-WELD (M10X1.5 THD)	
M	4	1	**8T-3612**	1	NUT-WELD (M8X1.25 THD)	
M	5	1	**6V-9632**	2	NUT-WELD (M6X1 THD)	
	6	1	**9G-4360**	1	CAP-CONNECTOR	
	7	1	**9S-4693**	1	CIRCUIT BREAKER AS (80 AMP) (MAIN)	
	7A	1	**9S-4693**	1	CIRCUIT BREAKER AS (80 AMP) (ALTERNATOR)	
					(EACH CIRCUIT BREAKER AS INCLUDES)	
	8	1	**7X-3182**	2	BOLT (1/4-28X.5IN)	
		1	**8T-4205**	2	WASHER-HARD (2MM THK)	
		1	**1H-3244**	2	LOCKWASHER (NO.14)	
	9	1	**7V-9275**	1	STRAP	
	10	1	**3T-2662**	1	CIRCUIT BREAKER AS (15 AMP) (RUNNING LIGHTS)	
	11	1	**6V-8376**	2	SCREW-MACHINE (8-32X.25 IN)	
		1	**9B-7233**	2	LOCKWASHER (NO.8)	
	12	1	**6N-8589**	1	CIRCUIT BREAKER AS (15 AMP) (ENGINE SHUTDOWN)	
	13	1	**6V-8376**	2	SCREW-MACHINE (8-32X.25 IN)	
		1	**9B-7233**	2	LOCKWASHER (NO.8)	
	14	1	**8R-8159**	1	HARNESS AS-MAIN	
M	15	1	**8T-4191**	2	BOLT (M10X1.50X16MM)	
		1	**8T-4121**	2	WASHER-HARD (2.5MM THK)	
		1	**4S-1962**	2	CLIP (25.4MM ID)	
	16	1	**6T-2217**	1	RESISTOR AS	
		1	**7N-9737**	1	HOUSING-PLUG	
		1	**7N-7780**	1	PIN-CONNECTOR (BLADE)	
		1	**7N-7779**	1	SOCKET-CONNECTOR	
M	17	1	**8T-4200**	3	BOLT (M8X1.25X16MM)	
		1	**8T-4224**	3	WASHER-HARD (8.8X16X2MM THK)	
	18	1	**9G-9150**	1	CLIP (10.2MM ID)	
	19	1	**3K-8782**	3	FUSE (10 AMP)	
	20	1	**4K-5122**	3	HOLDER AS-FUSE	
					(EACH INCLUDES)	
		1	**7N-2867**	1	CAP-FUSE HOLDER	
	21	1	**8R-7933**	1	PLATE AS	
M	22	1	**6V-9632**	2	NUT-WELD (M6X1 THD)	
M	23	1	**8T-3612**	2	NUT-WELD (M8X1.25 THD)	
M	24	1	**8T-4970**	4	BOLT (M6X1X14MM)	
		1	**8T-4205**	4	WASHER-HARD (2MM THK)	
	25	1	**3T-0376**	1	SWITCH AS-MAGNETIC (MAIN RELAY)	
	26	1	**4F-2294**	2	NUT-JAM (5/16-24 THD)	
	27	1	**6V-8378**	2	NUT (10-32 THD)	
	28	1	**9F-3099**	1	SWITCH AS-MAGNETIC (24 VOLT) (START RELAY)	
	29	1	**6V-8377**	2	NUT (8-32 THD)	
		1	**3B-4501**	2	LOCKWASHER (NO.8)	
	30	1	**6V-8186**	2	NUT-FULL (5/16-24 THD)	
		1	**3F-9556**	2	LOCKWASHER (8.4MM ID)	
	31	1	**5M-6668**	4	SCREW-MACHINE (8-32X.75IN)	
		1	**4B-4863**	4	WASHER (1.2MM THK)	

M-METRIC PART

8R-9426 **WIRING GP-RELAY PANEL** ***(contd.)*** **i01343493**

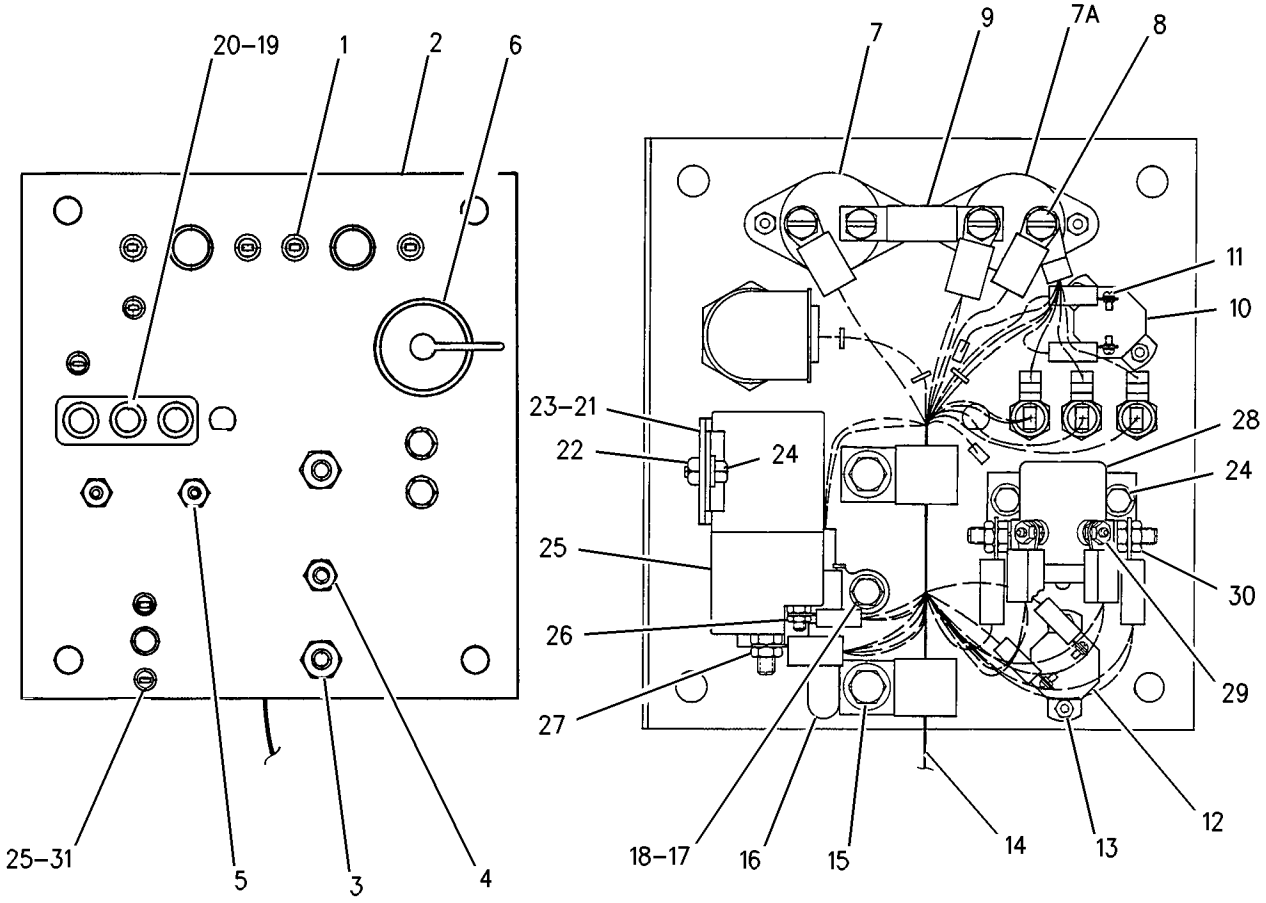

GRAPHIC #1

g00700076

8R-9426 WIRING GP-RELAY PANEL

S/N: 3XJ200-99999

RELAY PANEL

PART OF 8R-5053 BATTERY & WIRING GP

SMCS-1408, 1422 **i01336577**

NOTE	REF NO	GRAPHIC REF	PART NUMBER	QTY	PART NAME 1 2 3 4 5 6 (PRODUCT LEVEL)	SEE PAGE
	1	1	**5L-4507**	4	SCREW-MACHINE (10-32X.875IN)	
		1	**4B-4274**	4	WASHER (1.2MM THK)	
	2	1	**8R-7931**	1	PLATE AS	
M	3	1	**8T-3490**	2	NUT-WELD (M10X1.5 THD)	
M	4	1	**8T-3612**	1	NUT-WELD (M8X1.25 THD)	
M	5	1	**6V-9632**	2	NUT-WELD (M6X1 THD)	
	6	1	**9G-4360**	1	CAP-CONNECTOR	
	7	1	**9S-4693**	1	CIRCUIT BREAKER AS (80 AMP) (MAIN)	
	7A	1	**9S-4693**	1	CIRCUIT BREAKER AS (80 AMP) (ALTERNATOR)	
					(EACH INCLUDES)	
	8	1	**6V-8365**	2	SCREW-MACHINE (1/4-28X.5IN)	
		1	**1H-3244**	2	LOCKWASHER (NO.14)	
	9	1	**7V-9275**	1	STRAP	
	10	1	**3T-2662**	1	CIRCUIT BREAKER AS (15 AMP) (RUNNING LIGHTS)	
	11	1	**6V-8376**	2	SCREW-MACHINE (8-32X.25 IN)	
		1	**9B-7233**	2	LOCKWASHER (NO.8)	
	12	1	**6N-8589**	1	CIRCUIT BREAKER AS (15 AMP) (ENGINE SHUTDOWN)	
	13	1	**6V-8376**	2	SCREW-MACHINE (8-32X.25 IN)	
		1	**9B-7233**	2	LOCKWASHER (NO.8)	
	14	1	**6C-5246**	1	HARNESS AS	
M	15	1	**8T-4191**	2	BOLT (M10X1.50X16MM)	
		1	**8T-4121**	2	WASHER-HARD (2.5MM THK)	
		1	**7D-7233**	2	CLIP (38.1MM ID)	
	16	1	**6T-2217**	1	RESISTOR AS (STARTING SYSTEM DIAGNOSTIC)	
		1	**7N-9737**	1	HOUSING-PLUG	
		1	**7N-7780**	1	PIN-CONNECTOR (BLADE)	
		1	**7N-7779**	1	SOCKET-CONNECTOR	
M	17	1	**8T-4200**	3	BOLT (M8X1.25X16MM)	
		1	**8T-4224**	3	WASHER-HARD (8.8X16X2MM THK)	
	18	1	**9G-9150**	1	CLIP (10.2MM ID)	
	19	1	**3K-8782**	4	FUSE (10 AMP)	
	20	1	**4K-5122**	4	HOLDER AS-FUSE	
					(EACH INCLUDES)	
		1	**7N-2867**	1	CAP-FUSE HOLDER	
	21	1	**8R-7933**	1	PLATE AS	
M	22	1	**6V-9632**	2	NUT-WELD (M6X1 THD)	
M	23	1	**8T-3612**	2	NUT-WELD (M8X1.25 THD)	
M	24	1	**8T-4970**	4	BOLT (M6X1X14MM)	
		1	**8T-4205**	4	WASHER-HARD (2MM THK)	
	25	1	**3T-0376**	1	SWITCH AS-MAGNETIC (MAIN RELAY)	
	26	1	**4F-2294**	2	NUT-JAM (5/16-24 THD)	
	27	1	**6V-8378**	2	NUT (10-32 THD)	
	28	1	**9F-3099**	1	SWITCH AS-MAGNETIC (24 VOLT) (START RELAY)	
	29	1	**6V-8377**	2	NUT (8-32 THD)	
		1	**3B-4501**	2	LOCKWASHER (NO.8)	
	30	1	**6V-8186**	2	NUT-FULL (5/16-24 THD)	
		1	**3F-9556**	2	LOCKWASHER (8.4MM ID)	
	31	1	**5M-6668**	4	SCREW-MACHINE (8-32X.75IN)	
		1	**4B-4863**	4	WASHER (1.2MM THK)	
	32	1	**4E-2355**	1	INLAY	

M-METRIC PART

8R-9426 **WIRING GP-RELAY PANEL** *(contd.)* **i01336577**

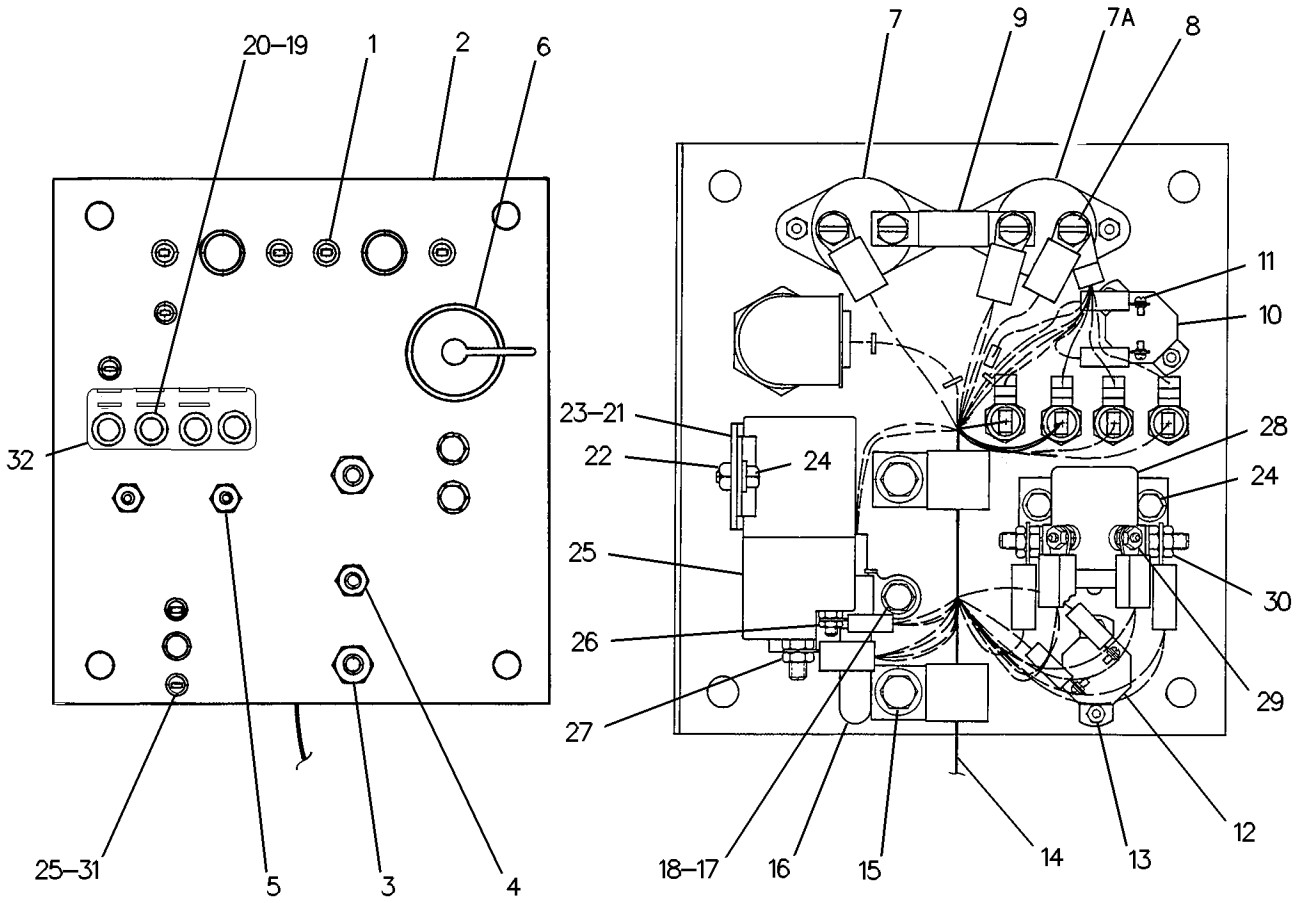

GRAPHIC #1 g00699427

6C-8032 WIRING GP-RIDE CONTROL

S/N: 3XJ1-99999
PART OF 6C-4389 CONTROL AR-RIDE
AN ATTACHMENT

SMCS-5004, 5734 **i00636516**

NOTE	PART NUMBER	QTY	PART NAME 1 2 3 4 5 6 (PRODUCT LEVEL)	SEE PAGE
	6T-6329	1	BEZEL-ROCKER SWITCH	
	6V-8927	2	BOLT-SOCKET HEAD (6-32X.50IN)	
	3S-2093	5	STRAP-CABLE (1.75IN DIA)	
	6T-3990	1	SWITCH AS-ROCKER	

8R-5802 WIRING GP-RIDE CONTROL

S/N: 3XJ1-99999
PART OF 6C-4389 CONTROL AR-RIDE
AN ATTACHMENT

SMCS-5004, 5734 **i00636491**

NOTE	PART NUMBER	QTY	PART NAME 1 2 3 4 5 6 (PRODUCT LEVEL)	SEE PAGE
	6T-6329	1	BEZEL-ROCKER SWITCH	
	6V-8927	2	BOLT-SOCKET HEAD (6-32X.50IN)	
	9U-3218	1	HARNESS AS	
	3L-8187	2	LOCKWASHER (3.7MM ID)	
	6V-8374	2	SCREW-MACHINE (6-32X.25IN)	
	3S-2093	5	STRAP-CABLE (1.75IN DIA)	
	6T-3990	1	SWITCH AS-ROCKER	

8R-9524 WIRING GP-SECONDARY STEERING

S/N: 3XJ1-99999
SUPPLEMENTAL STEERING
PART OF 8R-8392, 9U-4714 STEERING AR-SECONDARY
AN ATTACHMENT

SMCS-1408, 4334 **i01216905**

NOTE	REF NO	GRAPHIC REF	PART NUMBER	QTY	PART NAME 1 2 3 4 5 6 (PRODUCT LEVEL)	SEE PAGE
	1	1	**9X-1159**	1	SWITCH AS-FLOW (SECONDARY STEERING)	
	2	1	**7N-9738**	1	HOUSING-RECEPTACLE	
		1	**7N-7780**	1	PIN-CONNECTOR (BLADE)	
		1	**7N-7779**	1	SOCKET	
	3	1	**3K-0360**	1	SEAL-O-RING (16.36MM ID)	
	4	1	**8R-8170**	1	HARNESS AS	
	5	1	**4P-7428**	1	CLIP (13.5MM ID)	
	6	1	**3S-2093**	2	STRAP-CABLE	

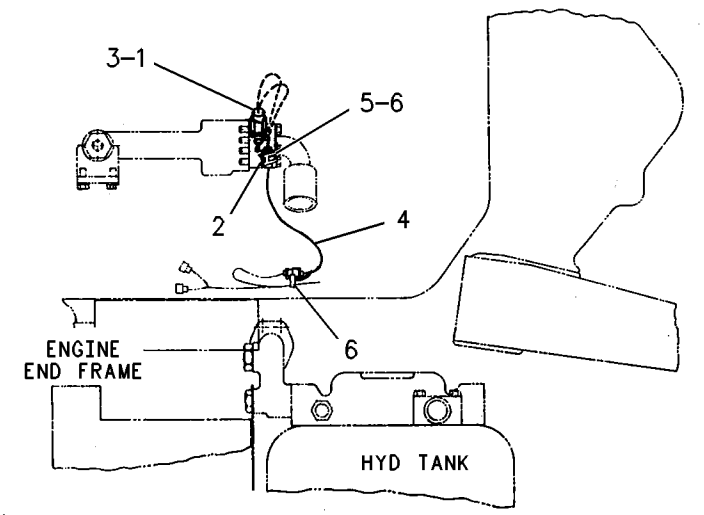

TOP VIEW

GRAPHIC #1 g00119609

8R-9525 WIRING GP-SECONDARY STEERING

S/N: 3XJ1-99999
PART OF 8R-9522 STEERING AR-SECONDARY
AN ATTACHMENT

SMCS-1408, 4334 **i01328780**

NOTE	REF NO	GRAPHIC REF	PART NUMBER	QTY	PART NAME 1 2 3 4 5 6 (PRODUCT LEVEL)	SEE PAGE
	1	1	**134-6547**	1	SWITCH AS-FLOW (SECONDARY STEERING)	
		1	**7N-7779**	1	SOCKET-CONNECTOR	
		1	**7N-7780**	1	PIN-CONNECTOR (BLADE)	
		1	**7N-9738**	1	HOUSING-RECEPTACLE	
	2	1	**3K-0360**	2	SEAL-O-RING (16.36MM ID)	
	3	1	**8R-8171**	1	HARNESS AS-SECONDARY STEERING	
	4	1	**5P-8905**	1	ADAPTER-O-RING	
	5	1	**2S-4078**	1	SEAL-O-RING (37.46MM ID)	
	6	1	**3S-2093**	5	STRAP-CABLE (1.75 IN DIA)	
	7	1	**9X-1035**	1	SWITCH AS-FLOW (PRIMARY STEERING)	
		1	**7N-7779**	1	SOCKET-CONNECTOR	
		1	**7N-7780**	1	PIN-CONNECTOR (BLADE)	
		1	**7N-9738**	1	HOUSING-RECEPTACLE	

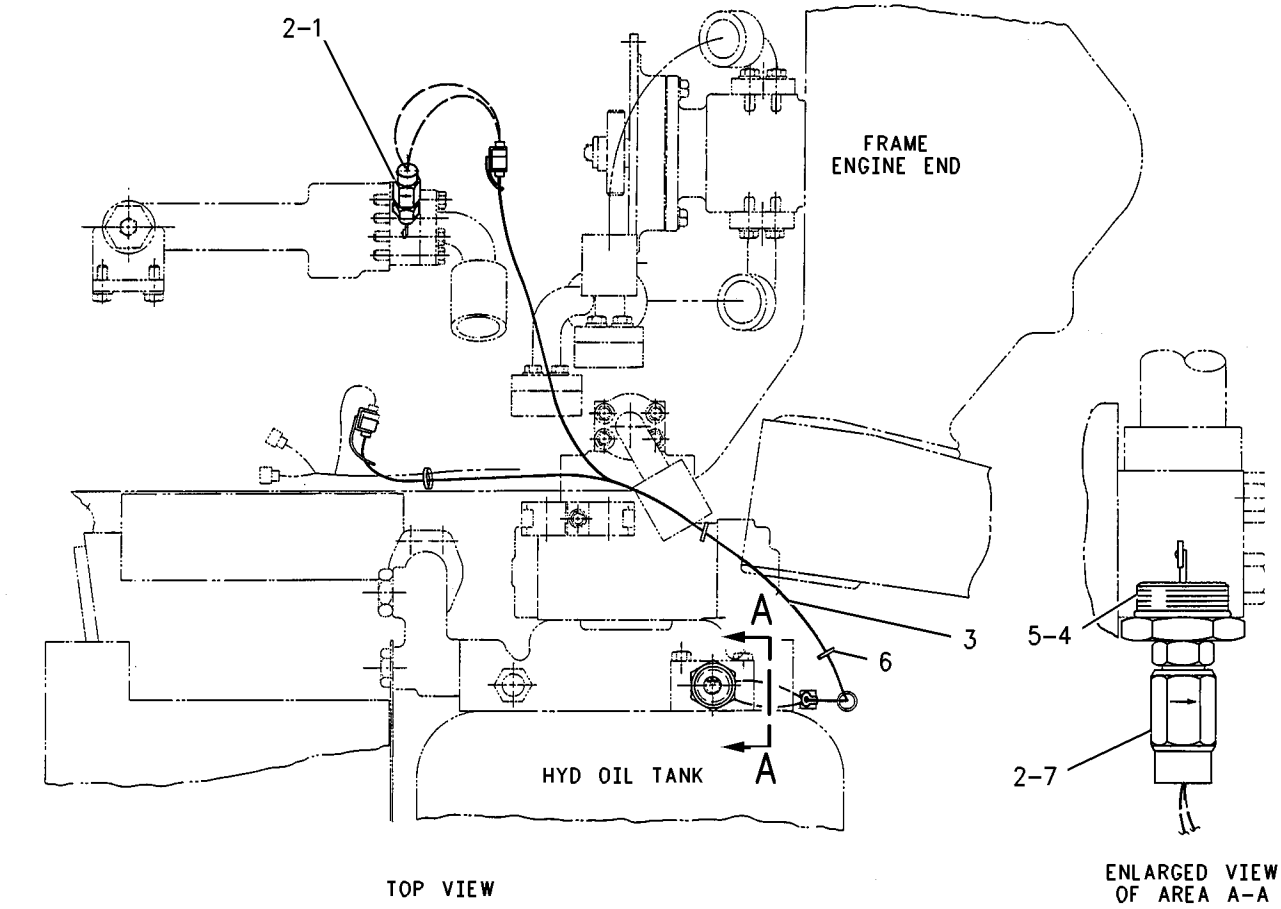

GRAPHIC #1 g00702750

9C-8185 BRAKE & PLANETARY GP–2 REQUIRED

S/N: 3XJ1-1956
OSCILLATING AXLE

SMCS-4011, 4255 **i00259654**

NOTE	REF NO	GRAPHIC REF	PART NUMBER	QTY	PART NAME 1 2 3 4 5 6 (PRODUCT LEVEL)	SEE PAGE
	1	1	**8R-0941**	1	PISTON	
	2	1	**9M-4335**	7	DOWEL-REACTION	
	3	1	**8R-0923**	3	SPRING	
	4	1	**8R-0942**	1	PLATE-REACTION	
	5	1	**9C-6027**	1	CARRIER-PLANETARY	
	6	1	**9C-6032**	3	GEAR-PLANETARY (30 TEETH)	
	7	1	**9C-6029**	3	BEARING-PLANETARY	
	8	1	**9C-6030**	6	WASHER-THRUST	
	9	1	**8T-2925**	3	PIN-SPRING	
	10	1	**6Y-2089**	1	DISC-FRICTION	
	11	1	**8R-1890**	1	GEAR-RING (81 TEETH)	
	12	1	**8R-3252**	3	SHAFT-PLANETARY	
	13	1	**8R-8340**	1	GEAR-SUN (18 TEETH)	
	14	1	**8R-9809**	1	SEAL	
	15	1	**8R-9810**	1	SEAL AS	

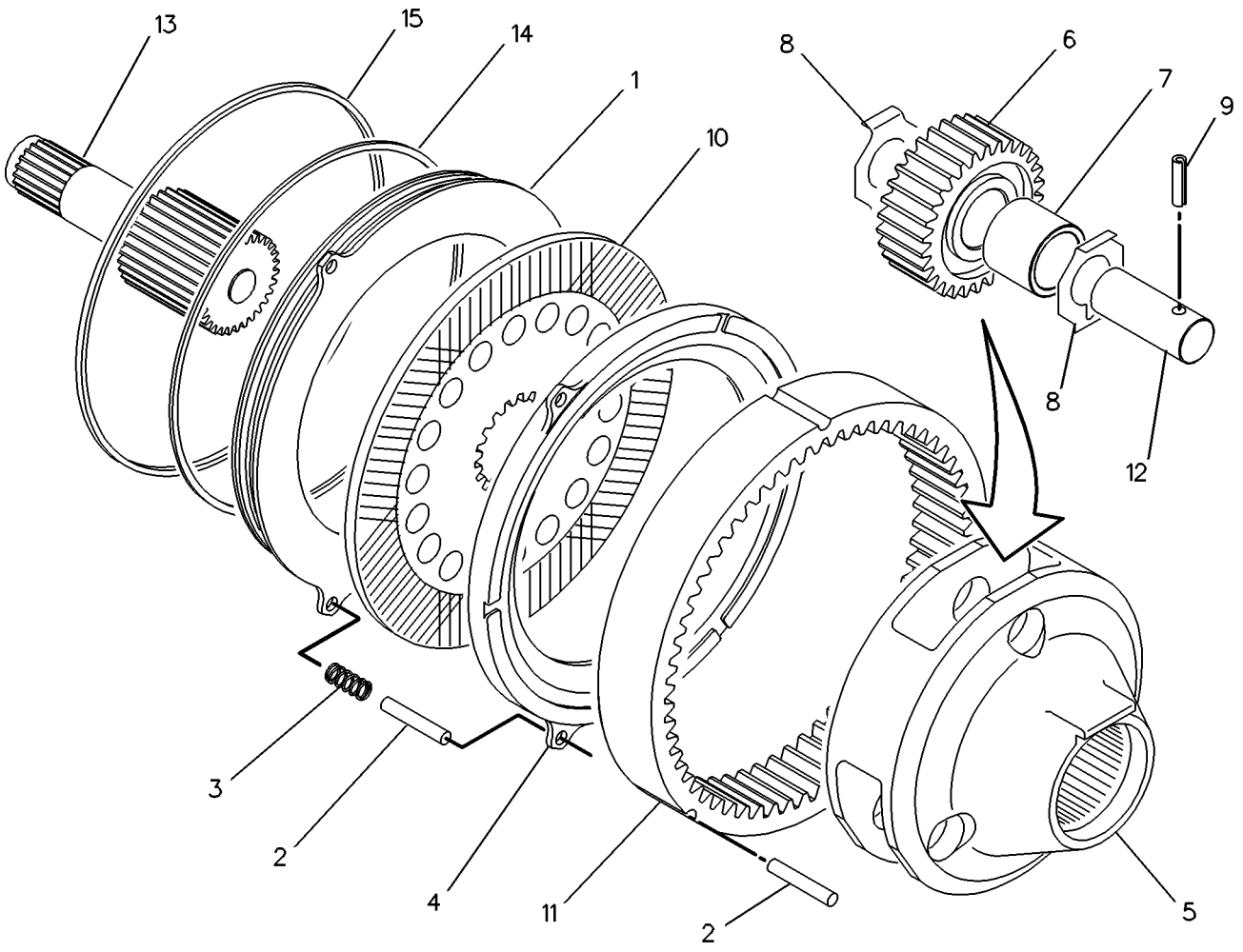

GRAPHIC #1 g00118758

9C-8185 BRAKE & PLANETARY GP–2 REQUIRED

S/N: 3XJ1957-2556
OSCILLATING AXLE

SMCS-4011, 4255 **i00287134**

NOTE	REF NO	GRAPHIC REF	PART NUMBER	QTY	PART NAME 1 2 3 4 5 6 (PRODUCT LEVEL)	SEE PAGE
	1	1	**8R-0941**	1	PISTON	
	2	1	**9M-4335**	7	DOWEL-REACTION	
	3	1	**8R-0923**	3	SPRING	
	4	1	**8R-0942**	1	PLATE-REACTION	
	5	1	**9C-6027**	1	CARRIER-PLANETARY	
	6	1	**9C-6032**	3	GEAR-PLANETARY (30 TEETH)	
	7	1	**9C-6029**	3	BEARING-PLANETARY	
	8	1	**9C-6030**	6	WASHER-THRUST	
	9	1	**8T-2925**	3	PIN-SPRING	
	10	1	**6Y-2089**	1	DISC-FRICTION	
C	11	1	**110-1488**	1	GEAR-RING (81 TEETH)	
	12	1	**8R-3252**	3	SHAFT-PLANETARY	
	13	1	**8R-8340**	1	GEAR-SUN (18 TEETH)	
	14	1	**8R-9810**	1	SEAL AS	
	15	1	**8R-9809**	1	SEAL	

C-CHANGE FROM PREVIOUS TYPE

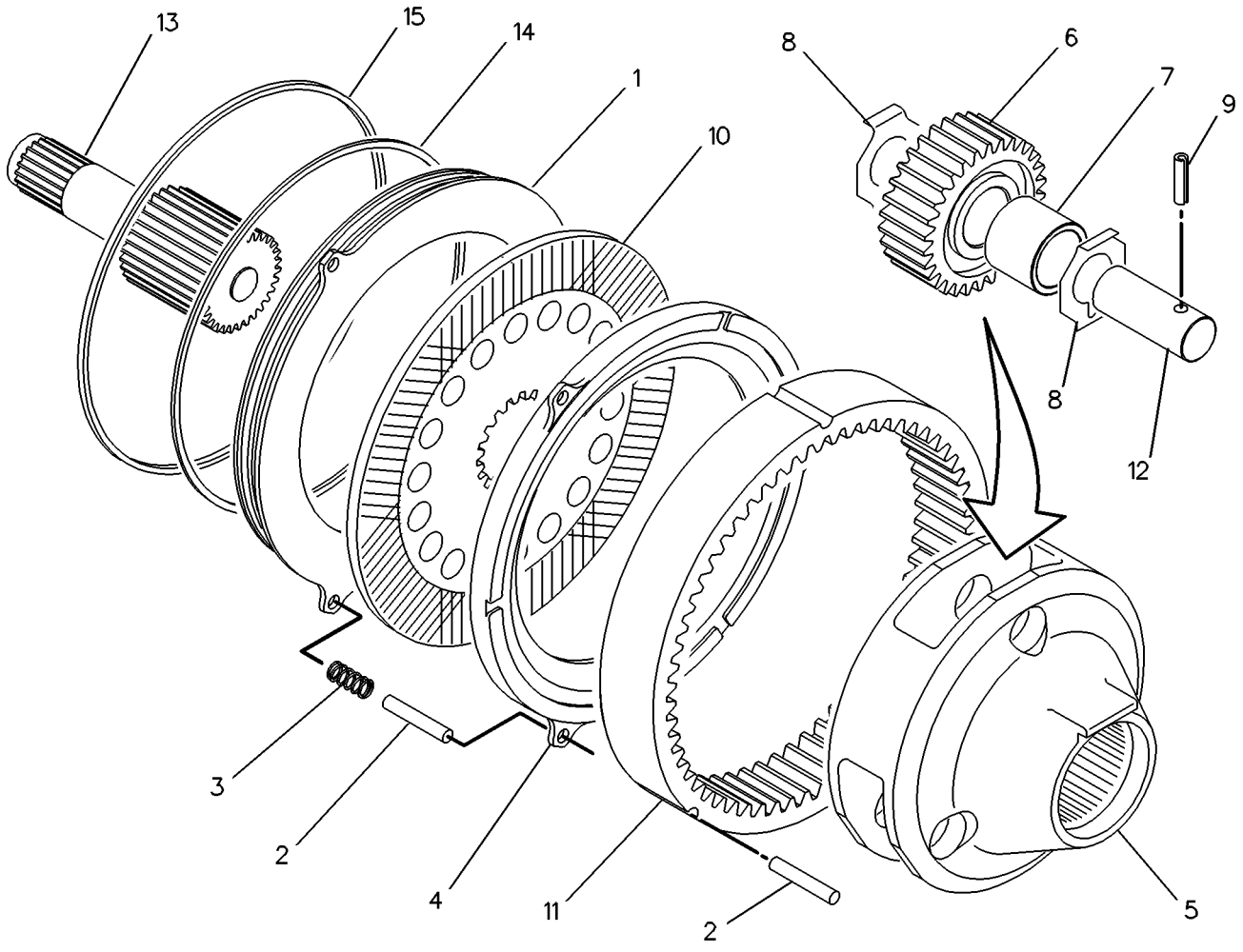

GRAPHIC #1 g00118758

8P-2018 CASE & PARTS GP-PLANETARY

S/N: 6ME1-99999; 1YX1-99999

PART OF 6Y-9714, 8E-9391 TRANSMISSION AR

SMCS-3064 **i01334283**

NOTE	REF NO	GRAPHIC REF	PART NUMBER	QTY	PART NAME 1 2 3 4 5 6 (PRODUCT LEVEL)	SEE PAGE
	1	1	**0L-1351**	20	BOLT (3/8-16X.875 IN)	
	2	1	**5M-6213**	1	PLUG-PIPE (1/4-18 NPTF THD)	
	3	1	**1D-4717**	4	NUT (3/8-16 THD)	
C	4	1	**5M-2894**	24	WASHER-HARD (2.5MM THK)	
	5	1	**8K-4909**	1	PLATE	
		1	**7G-3737**	1	GASKET	
	6	1	**3T-3935**	1	COVER AS-TRANSMISSION	
		1	**7M-7794**	4	STUD-WELD	
		1	**5P-3494**	1	BOSS-PIPE	
	7	1	**3P-3461**	1	GASKET-COVER	
	8	1	**0S-1588**	6	BOLT (3/8-16X1.25 IN)	
	9	1	**7F-8267**	1	SEAL-O-RING (47.2MM ID)	
	10	1	**0S-1566**	2	BOLT (5/8-11X1.5IN)	
		1	**4D-3704**	2	WASHER-HARD (5MM THK)	
	11	1	**1J-2176**	1	SEAL-O-RING (202.79MM ID)	
	12	1	**1H-8171**	1	SEAL-O-RING (20.2MM ID)	
C	13	1	**0L-2070**	13	BOLT (3/8-16X2.25 IN)	
	14	1	**8T-6762**	1	PLUG-PIPE (1/2-14 NPTF THD)	
	15	1	**5P-3456**	2	SEAL-O-RING (25.07MM ID)	
	16	1	**6T-8666**	1	TUBE AS	
		1	**1P-3707**	1	SEAL-RECTANGULAR (54.2MM ID)	
	17	1	**1D-4566**	1	BOLT (1/2-13X3.5IN)	
	18	1	**7F-8268**	1	SEAL-O-RING (53.57MM ID)	
C	19	1	**0S-1590**	9	BOLT (3/8-16X2 IN)	
	20	1	**1S-5549**	1	SLEEVE	
	21	1	**5P-9806**	1	SEAL-O-RING (430.66MM ID)	
	22	1	**0S-1619**	5	BOLT (3/8-16X3.0 IN)	
	23	1	**0S-1573**	1	BOLT (1/2-13X4IN)	
	24	1	**5P-8245**	13	WASHER-HARD (3MM THK)	
	25	1	**9P-9083**	1	ELBOW	
		1	**3H-1461**	1	SEAL-O-RING (34.52MM ID)	
	26	1	**2B-0947**	13	BOLT (1/2-13X2.25IN)	
	27	1	**9P-8517**	1	CASE-TRANSMISSION	
	28	1	**4F-8946**	1	SEAL-O-RING (26.57MM ID)	
	29	1	**4F-7389**	2	SEAL-O-RING (37.47MM ID)	

C-CHANGE FROM PREVIOUS TYPE

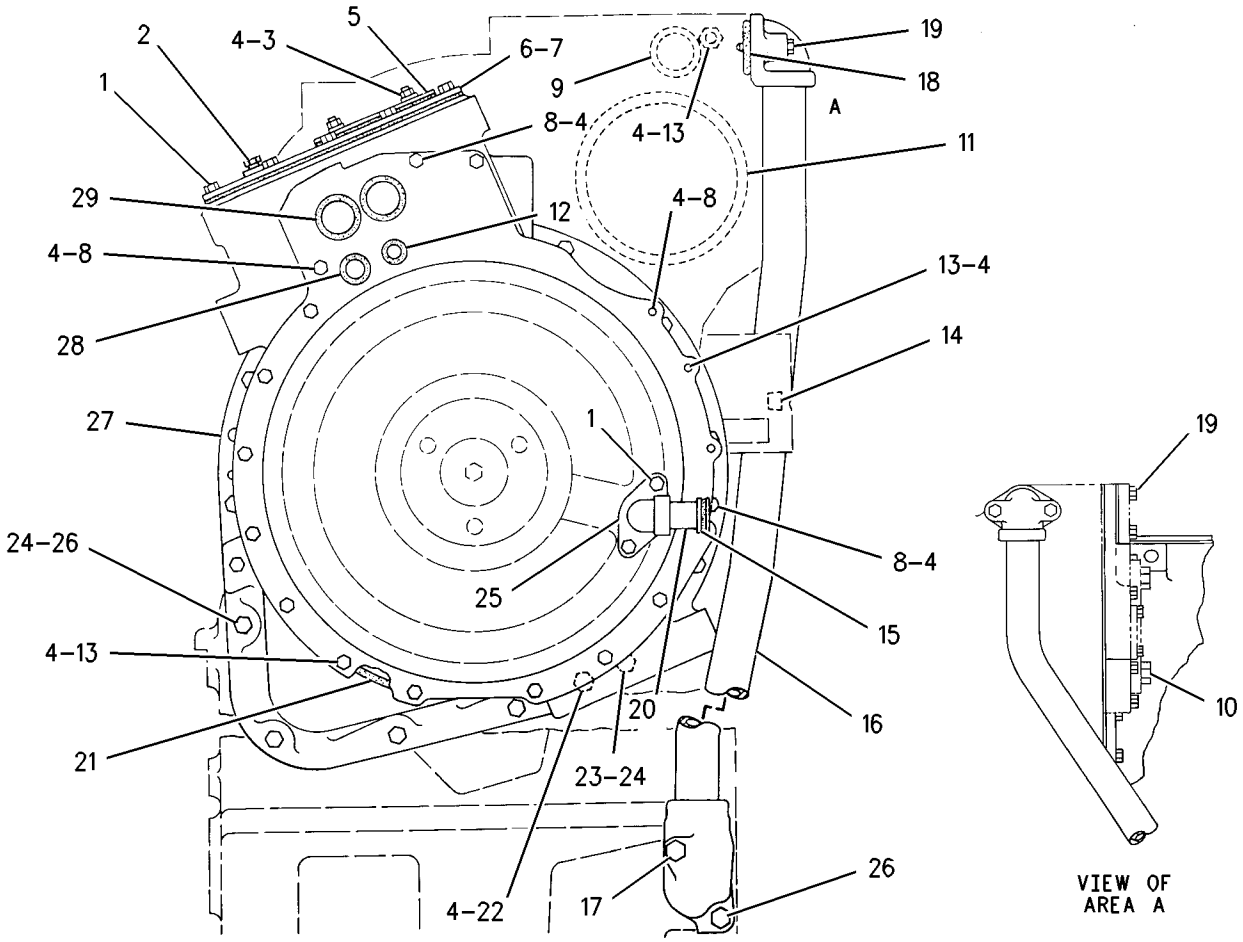

GRAPHIC #1 g00705517

8R-8784 CONTROL GP-TRANSMISSION

S/N: 3XJ1-99999

PART OF 8R-5041 OPERATOR AR

SMCS-3065, 3168 **i00259828**

NOTE	REF NO	GRAPHIC REF	PART NUMBER	QTY	PART NAME 1 2 3 4 5 6 (PRODUCT LEVEL)	SEE PAGE
	1	1	**4V-3693**	1	PIN	
	2	1	**010-2571**	6	SETSCREW-SOCKET	
	3	1	**1V-6342**	1	GEAR AS	
		1	**1V-5326**	1	BEARING	
	4	1	**5S-7046**	1	RING-RETAINING	
	5	1	**1V-9809**	1	RETAINER	
	6	1	**9K-6605**	1	SPACER	
	7	1	**1V-6346**	1	COLLAR-INDICATOR	
	8	1	**4V-2518**	1	SHAFT-GOVERNOR CONTROL	
	9	1	**8R-8440**	1	HANDLE-SHIFT	
	10	1	**3K-1644**	1	SCREW (5/16-18X2 1/4 IN)	
	11	1	**8T-5069**	1	SETSCREW-SOCKET	
	12	1	**3V-6905**	1	PIN	
B	13	1	**7X-0562**	1	WASHER-HARD (0.8MM THK)	
B		1	**3V-6904**	4	WASHER (BRASS)	
	14	1	**6W-5796**	1	ADAPTER	
	15	1	**4V-3680**	1	BELLCRANK	
	16	1	**8T-4205**	1	WASHER-HARD (2MM THK)	
	17	1	**8S-7048**	2	ROD END	
	18	1	**8R-7075**	1	RACK	
	19	1	**4E-3456**	1	LEVER AS	
	20	1	**1V-5326**	2	BEARING	
	21	1	**2M-2489**	1	SEAL-LIP	

B-USE AS REQUIRED

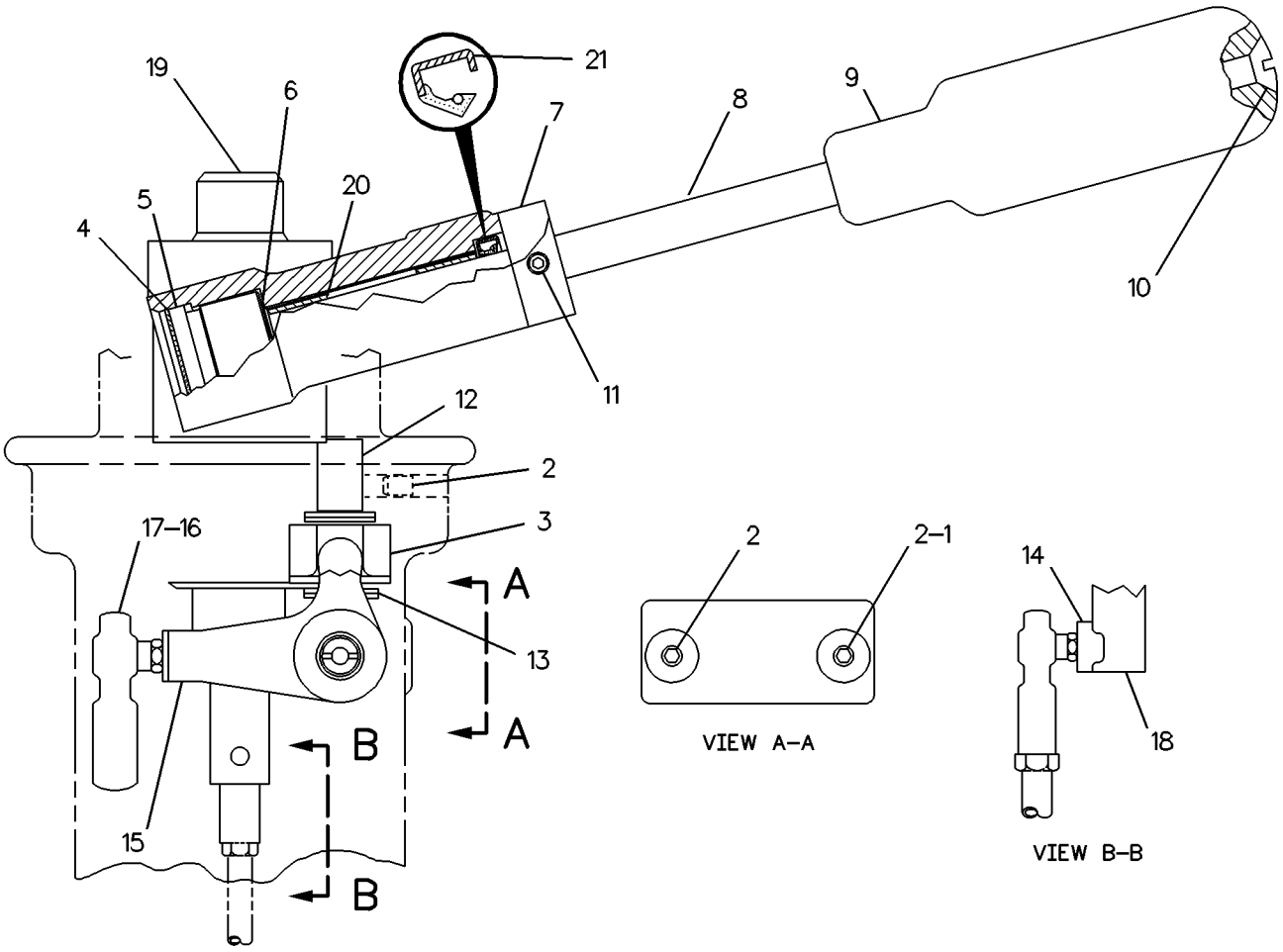

GRAPHIC #1 g00119145

8P-8977 CONTROL GP-TRANSMISSION HYD

S/N: 6ME1-99999; 1YX1-99999

PART OF 6Y-9714, 8E-9391 TRANSMISSION AR

SMCS-3073, 3167 **i01318916**

NOTE	REF NO	GRAPHIC REF	PART NUMBER	QTY	PART NAME 1 2 3 4 5 6 (PRODUCT LEVEL)	SEE PAGE
	1	1	**8M-4432**	4	SEAL-O-RING (26.57MM ID)	
	2	1	**6P-4977**	2	SLEEVE	
	3	1	**8L-5922**	1	BOLT-LOCKING (5/16-18X.563IN)	
	4	1	**4F-3714**	1	WASHER	
Y	5	1	*3T-5815*	1	VALVE GP	
	6	1	**5F-4899**	4	BOLT (3/8-16X5.5IN)	
	7	1	**5M-2894**	4	WASHER-HARD (2.5MM THK)	
	8	1	**5P-9186**	2	SEAL-O-RING (20.30MM ID)	
	9	1	**3T-0810**	1	SLEEVE	
	10	1	**3T-0811**	1	ADAPTER-O-RING	
	11	1	**7M-8485**	1	SEAL-O-RING (29.74MM ID)	
	12	1	**5M-6213**	1	PLUG-PIPE (1/4-18 NPTF THD)	
	13	1	**2H-4406**	1	SPRING	

Y-SEPARATE ILLUSTRATION

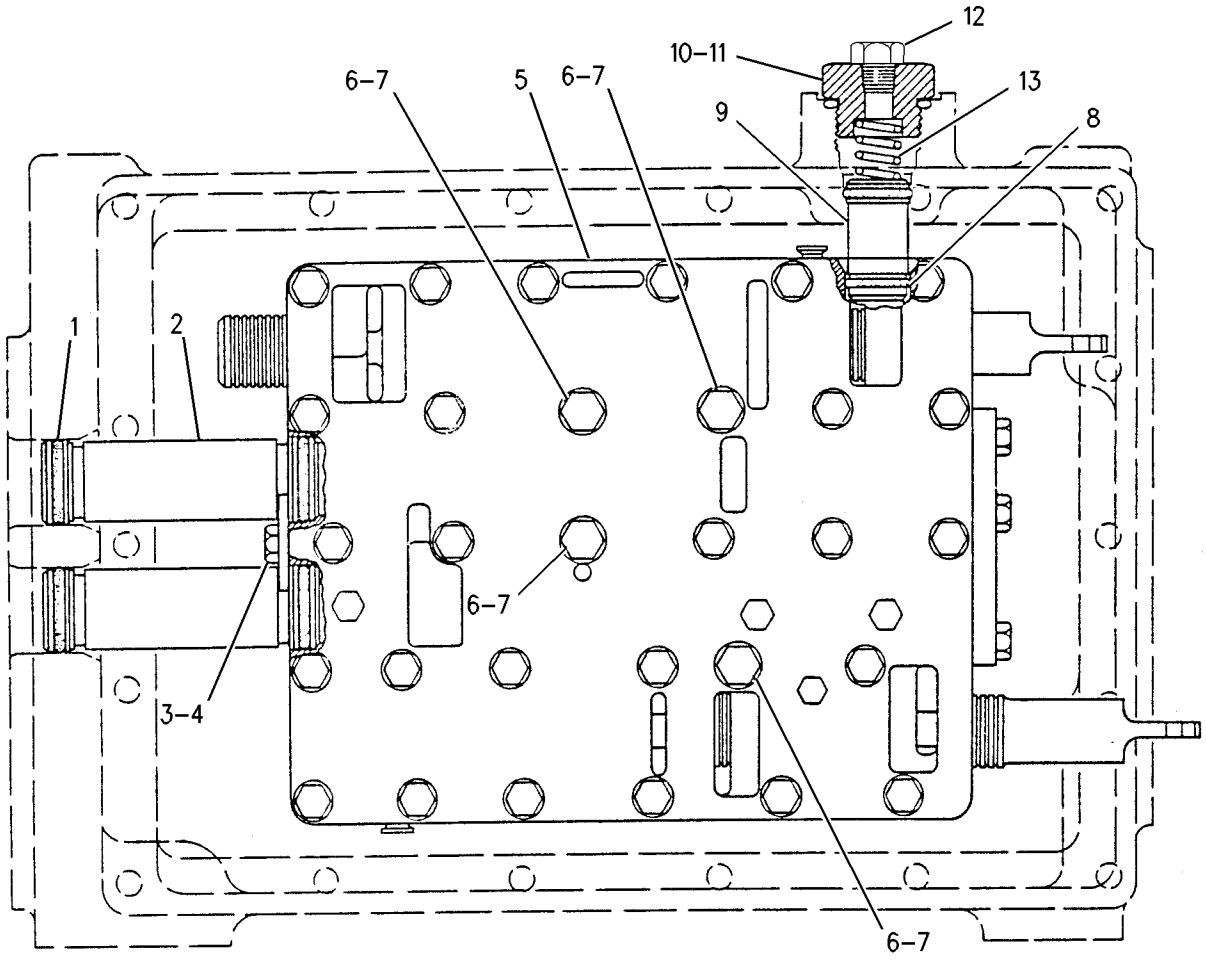

GRAPHIC #1 g00695873

7W-1470 COOLER GP-TRANSMISSION OIL

S/N: 13Z22389-28099
PART OF 7E-0082 ENGINE AR

SMCS-1375 **i01334276**

NOTE	REF NO	GRAPHIC REF	PART NUMBER	QTY	PART NAME 1 2 3 4 5 6 (PRODUCT LEVEL)	SEE PAGE
	1	1	**8S-4304**	1	BONNET-TMSN OIL COOLER	
	2	1	**2S-0795**	2	GASKET	
	3	1	**127-5537**	1	CORE AS	
	4	1	**0S-1595**	10	BOLT (1/2-13X1.25 IN)	
	5	1	**0L-1351**	2	BOLT (3/8-16X.875 IN)	
		1	**5M-2894**	2	WASHER-HARD (2.5MM THK)	
	6	1	**7N-2790**	1	BRACKET	
	7	1	**1A-1460**	2	BOLT (1/2-13X2 IN)	
		1	**5P-8245**	2	WASHER-HARD (3MM THK)	
	8	1	**8M-9307**	1	PLUG-DRAIN	
		1	**6F-7062**	1	WASHER (1.83MM THK)	

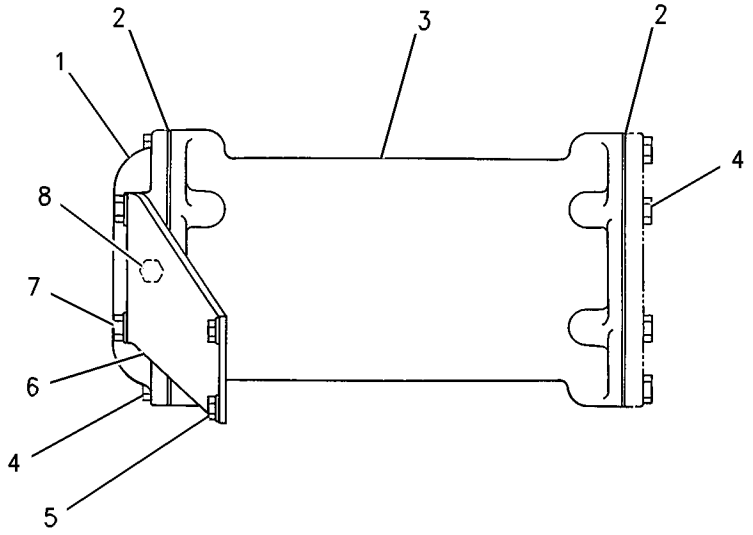

GRAPHIC #1 g00705524

3T-1872 COVER GP-SHIPPING

S/N: 6ME1-99999; 1YX1-99999

PART OF 6Y-9714, 8E-9391 TRANSMISSION AR

SMCS-3064 **i01328425**

NOTE	REF NO	GRAPHIC REF	PART NUMBER	QTY	PART NAME 1 2 3 4 5 6 (PRODUCT LEVEL)	SEE PAGE
	1	1	**1D-4717**	12	NUT (3/8-16 THD)	
		1	**0L-2070**	12	BOLT (3/8-16X2.25 IN)	
		1	**0T-0431**	12	WASHER (10.6X19X2.5MM THK)	
	2	1	**0S-0509**	16	BOLT (3/8-16X.75 IN)	
	3	1	**1S-2176**	2	COVER	
		1	**9M-6974**	2	GASKET	
	4	1	**7F-8268**	1	SEAL-O-RING (53.57MM ID)	
	5	1	**0L-1351**	2	BOLT (3/8-16X.875 IN)	
	6	1	**4S-5971**	1	COVER	
	7	1	**9P-4749**	2	COVER	
	8	1	**9P-4748**	2	GASKET	
	9	1	**3F-5792**	1	SEAL-O-RING (129.77MM ID)	
	10	1	**5M-1152**	1	COVER	
	11	1	**0T-0318**	4	BOLT (7/16-14X1IN)	
	12	1	**1S-3725**	1	COVER	
		1	**3J-5554**	1	GASKET	
	13	1	**3J-5390**	1	PLUG (3/8-18 THD)	
	14	1	**6N-7082**	1	COVER	
		1	**9M-8443**	1	GASKET	
	15	1	**7G-2132**	1	COVER	
	16	1	**5M-3154**	1	COVER	
		1	**7H-3270**	1	GASKET	

3T-1872 **COVER GP-SHIPPING** *(contd.)* **i01328425**

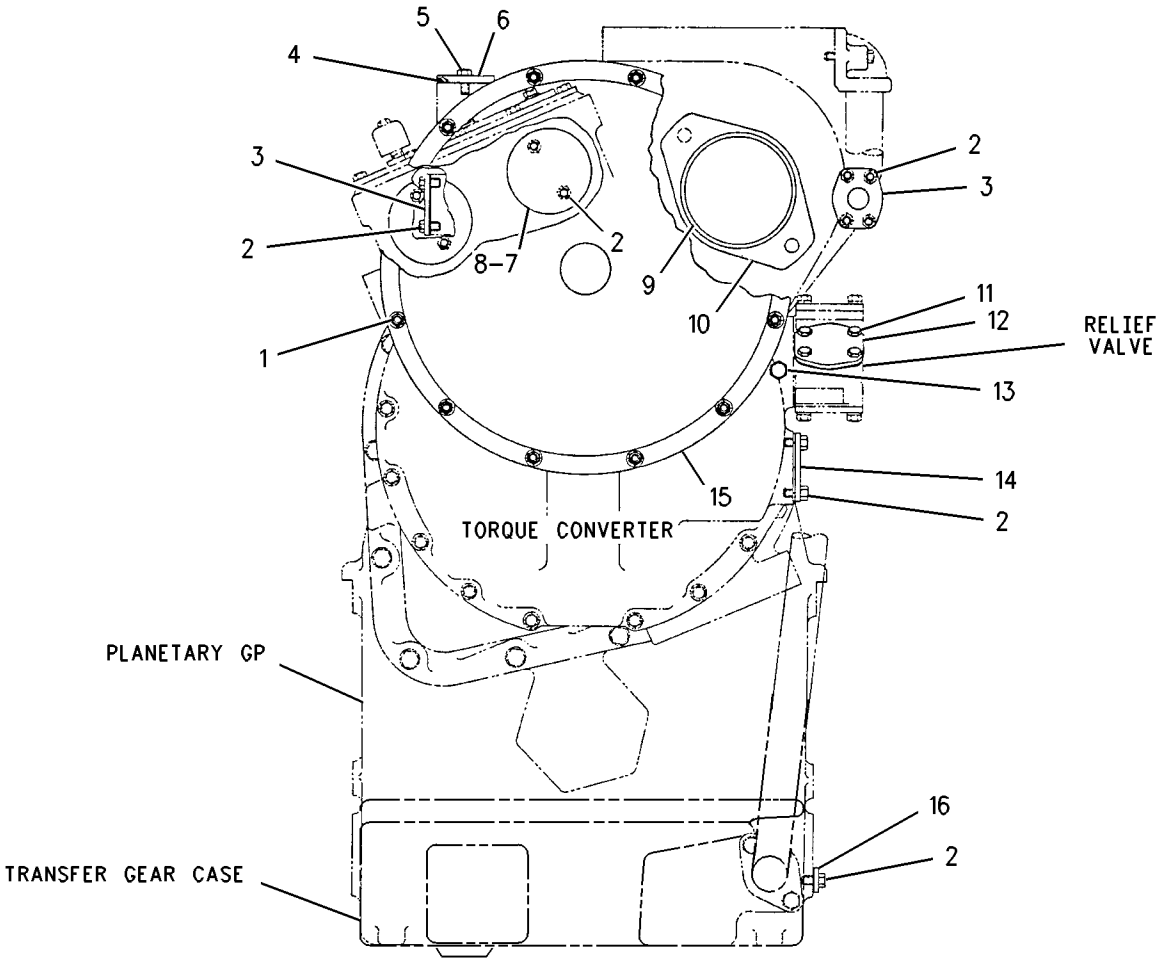

GRAPHIC #1 g00702672

4E-3941 DIFFERENTIAL AR

S/N: 3XJ1-99999
LIMITED SLIP-FRONT & REAR
AN ATTACHMENT

SMCS-3258 **i01744079**

NOTE	PART NUMBER	QTY	PART NAME 1 2 3 4 5 6 (PRODUCT LEVEL)	SEE PAGE
Y	**142-0444**	2	DIFFERENTIAL GP-LIMITED SLIP	

Y-SEPARATE ILLUSTRATION

9C-8184 DIFFERENTIAL GP—OSCILLATING

S/N: 3XJ1-99999

FIELD REPLACEMENT ORDER 151-4836—PAGE

SMCS-3258 **i00259647**

NOTE	REF NO	GRAPHIC REF	PART NUMBER	QTY	PART NAME 1 2 3 4 5 6 (PRODUCT LEVEL)	SEE PAGE
	1	1	**8R-8336**	1	CASE AS-DIFFERENTIAL	
	2	1	**6V-8236**	1	PIN-SPRING	
	3	1	**4V-5397**	4	WASHER-THRUST	
	4	1	**4V-5392**	1	SPIDER	
	5	1	**6W-8277**	2	WASHER-THRUST	
	6	1	**9C-6016**	4	PINION-DIFFERENTIAL BEVEL (11 TEETH)	
	7	1	**9C-9748**	2	GEAR-DIFFERENTIAL BEVEL (16 TEETH)	
	8	1	**8R-1088**	4	BEARING-SLEEVE	

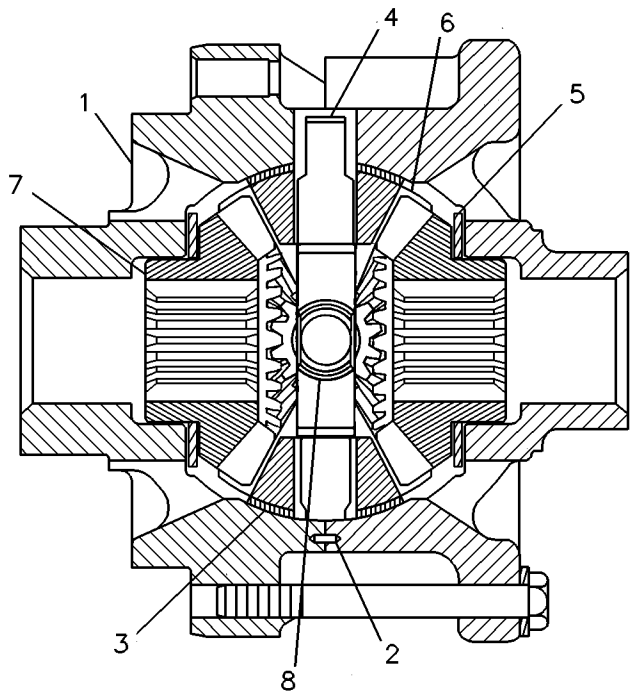

GRAPHIC #1 g00126446

142-0444 DIFFERENTIAL GP-LIMITED SLIP

S/N: 3XJ1-99999
PART OF 4E-3941 DIFFERENTIAL AR
AN ATTACHMENT

SMCS-3263 **i01662510**

NOTE	REF NO	GRAPHIC REF	PART NUMBER	QTY	PART NAME 1 2 3 4 5 6 (PRODUCT LEVEL)	SEE PAGE
	1	1	**102-7508**	2	WASHER-THRUST	
	2	1	**102-7509**	2	HOUSING-ACTUATOR	
	3	1	**102-7510**	4	PINION-DIFFERENTIAL BEVEL (11 TEETH)	
	4	1	**102-7511**	2	SHAFT-PINION	
	5	1	**102-7512**	2	GEAR-DIFFERENTIAL BEVEL (16 TEETH)	
B	6	1	**135-7494**	2	KIT-DISC (THIN)	
B		1	**135-7495**	2	KIT-DISC (THICK)	
	7	1	**102-7519**	1	CASE AS	
JM	7A	1	**8T-9515**	2	BOLT-SOCKET HEAD (M10X1.5X40MM)	

B-USE AS REQUIRED
J-PARTS MARKED J ARE FOR SHIPPING & STORAGE ONLY, REMOVE BEFORE INSTALLATION INTO AXLE
M-METRIC PART

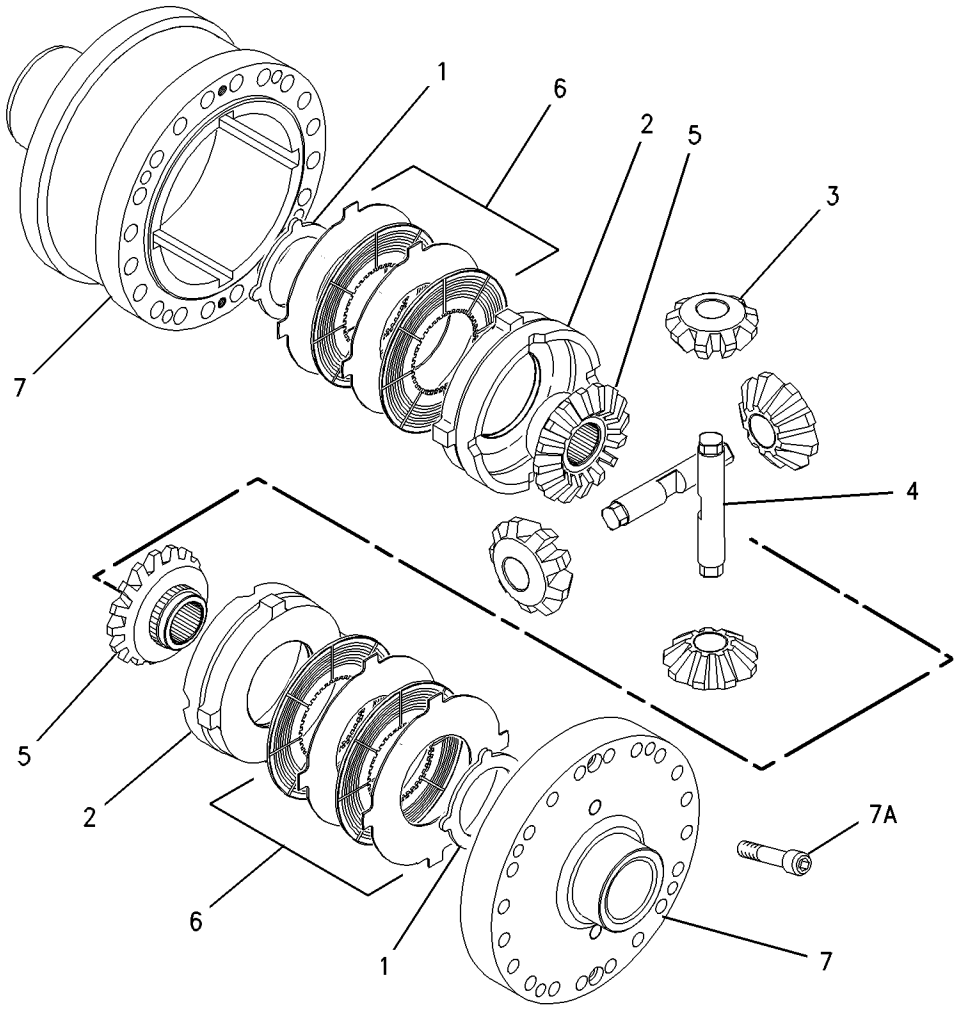

GRAPHIC #1 g00858057

8R-3947 FILLER GP-POWER TRAIN OIL

S/N: 3XJ1-1855

SMCS-3005, 3081 **i00286590**

NOTE	REF NO	GRAPHIC REF	PART NUMBER	QTY	PART NAME 1 2 3 4 5 6 (PRODUCT LEVEL)	SEE PAGE
	1	1	**8R-3948**	1	TUBE AS	
	2	1	**3K-6905**	1	VALVE-BREATHER	
	3	1	**5V-1471**	1	TUBE AS	
	4	1	**5K-0461**	1	CLIP	
	5	1	**5V-1475**	1	PLUNGER AS	
	6	1	**6G-9333**	1	CAP-OIL FILLER	
	7	1	**6V-1322**	1	BOLT (1/4-20X.375 IN)	
	8	1	**8T-4205**	1	WASHER-HARD (2MM THK)	
	9	1	**9G-5127**	1	BREATHER (PRESSURE RELIEF)	
	10	1	**7K-1401**	1	CLIP	
	11	1	**7K-1402**	1	BRACKET	
	12	1	**9B-7237**	1	BOLT (3/8-16X1.25IN)	
	13	1	**7J-8611**	1	ELBOW	
	14	1	**6V-8801**	1	NUT (3/8-16 THD)	
	15	1	**7X-3186**	4	BOLT	
	16	1	**8T-4896**	6	WASHER-HARD (2.5MM THK)	
	17	1	**4K-5537**	1	GASKET	
	18	1	**5M-6213**	1	PLUG	
	19	1	**1P-3707**	1	SEAL-RECTANGULAR (54.2MM ID)	

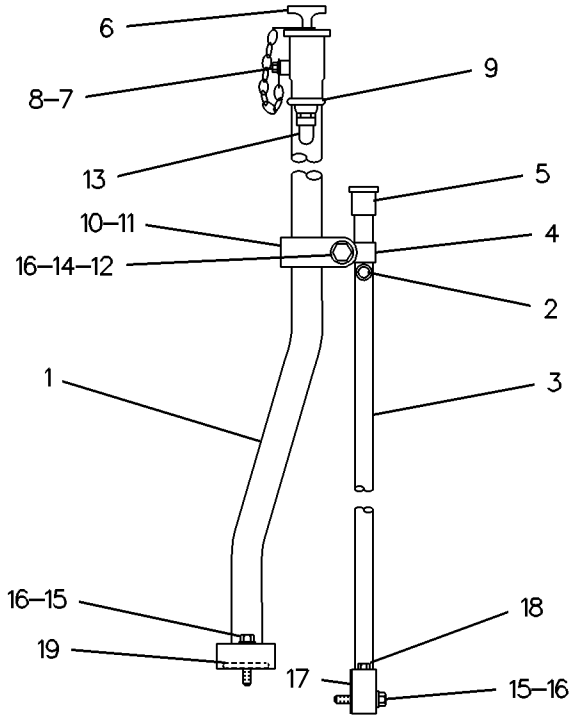

GRAPHIC #1 g00118754

8R-3947 FILLER GP-POWER TRAIN OIL

S/N: 3XJ1856-99999

SMCS-3005, 3081 **i00286602**

NOTE	REF NO	GRAPHIC REF	PART NUMBER	QTY	PART NAME 1 2 3 4 5 6 (PRODUCT LEVEL)	SEE PAGE
	1	1	**8R-3948**	1	TUBE AS	
	2	1	**3K-6905**	1	VALVE-BREATHER	
C	3	1	**9U-0764**	1	TUBE AS	
	4	1	**5K-0461**	1	CLIP	
C	5	1	**9U-0767**	1	PLUNGER AS	
	6	1	**6G-9333**	1	CAP-OIL FILLER	
	7	1	**6V-1322**	1	BOLT (1/4-20X.375 IN)	
	8	1	**8T-4205**	1	WASHER-HARD (2MM THK)	
	9	1	**9G-5127**	1	BREATHER (PRESSURE RELIEF)	
	10	1	**7K-1401**	1	CLIP	
	11	1	**7K-1402**	1	BRACKET	
	12	1	**9B-7237**	1	BOLT (3/8-16X1.25IN)	
	13	1	**7J-8611**	1	ELBOW	
	14	1	**6V-8801**	1	NUT (3/8-16 THD)	
C	15	1	**7X-3186**	2	BOLT	
C	16	1	**8T-4896**	4	WASHER-HARD (2.5MM THK)	
	17	1	**4K-5537**	1	GASKET	
	18	1	**5M-6213**	1	PLUG	
	19	1	**1P-3707**	1	SEAL-RECTANGULAR (54.2MM ID)	
C	20	1	**5S-7383**	2	BOLT (3/8-16X1.75IN)	
C	21	1	**5P-1075**	2	WASHER-HARD (3MM THK)	

C-CHANGE FROM PREVIOUS TYPE

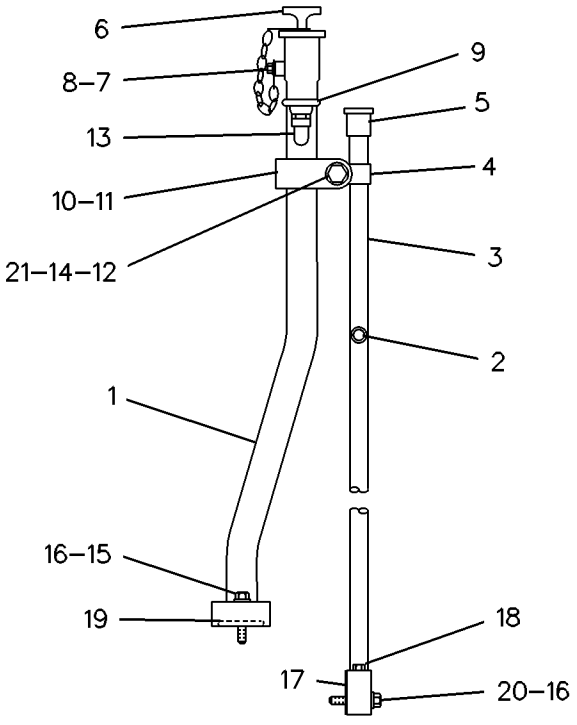

GRAPHIC #1 g00127726

MEMORANDA

8R-4786 FILTER & LINES GP-TRANSMISSION

S/N: 3XJ1-278

SMCS-3067, 3154 **i01328593**

NOTE	REF NO	GRAPHIC REF	PART NUMBER	QTY	PART NAME 1 2 3 4 5 6 (PRODUCT LEVEL)	SEE PAGE
	1	1	**4L-6459**	4	BOLT (3/8-16X2.5IN)	
	2	1	**8T-4896**	12	WASHER-HARD (10.2X18.5X2.5MM THK)	
	3	1	**7T-8593**	1	BLOCK	
	4	1	**1P-4577**	4	FLANGE-HALF	
	5	1	**4J-0520**	3	SEAL-O-RING (32.92MM ID)	
M	6	1	**8T-4133**	1	NUT (M10X1.50 THD)	
	7	1	**7D-7233**	1	CLIP (38.1MM ID)	
	8	1	**5S-7382**	4	BOLT (3/8-16X1.375 IN)	
I	9	1	**8R-4297**	1	HOSE AS	
I	10	1	**8R-4298**	1	HOSE AS	
	11	1	**9V-1832**	2	CLAMP	
		1	**8V-5719**	1	BOLT	
		1	**4V-0968**	1	LOCK	
	12	1	**9B-7237**	3	BOLT (3/8-16X1.25 IN)	
Y	13	1	*6P-4603*	1	FILTER GP-OIL (POWER TRAIN)	
	14	1	**1P-4578**	4	FLANGE-HALF	
	15	1	**4J-0522**	2	SEAL-O-RING (37.69MM ID)	
	16	1	**8T-8916**	8	BOLT (7/16-14X1.5 IN)	
		1	**8T-5360**	8	WASHER (2.5MM THK)	
	17	1	**8C-6712**	1	ELBOW	
	18	1	**3J-1907**	1	SEAL-O-RING (11.89MM ID)	
	19	1	**8C-3446**	1	VALVE-FLUID SAMPLING	
	20	1	**3J-7354**	1	SEAL-O-RING (8.92MM ID)	
	21	1	**8C-3447**	1	CAP-DUST	

I-SEE HOSE FABRICATION GUIDE
M-METRIC PART
Y-SEPARATE ILLUSTRATION

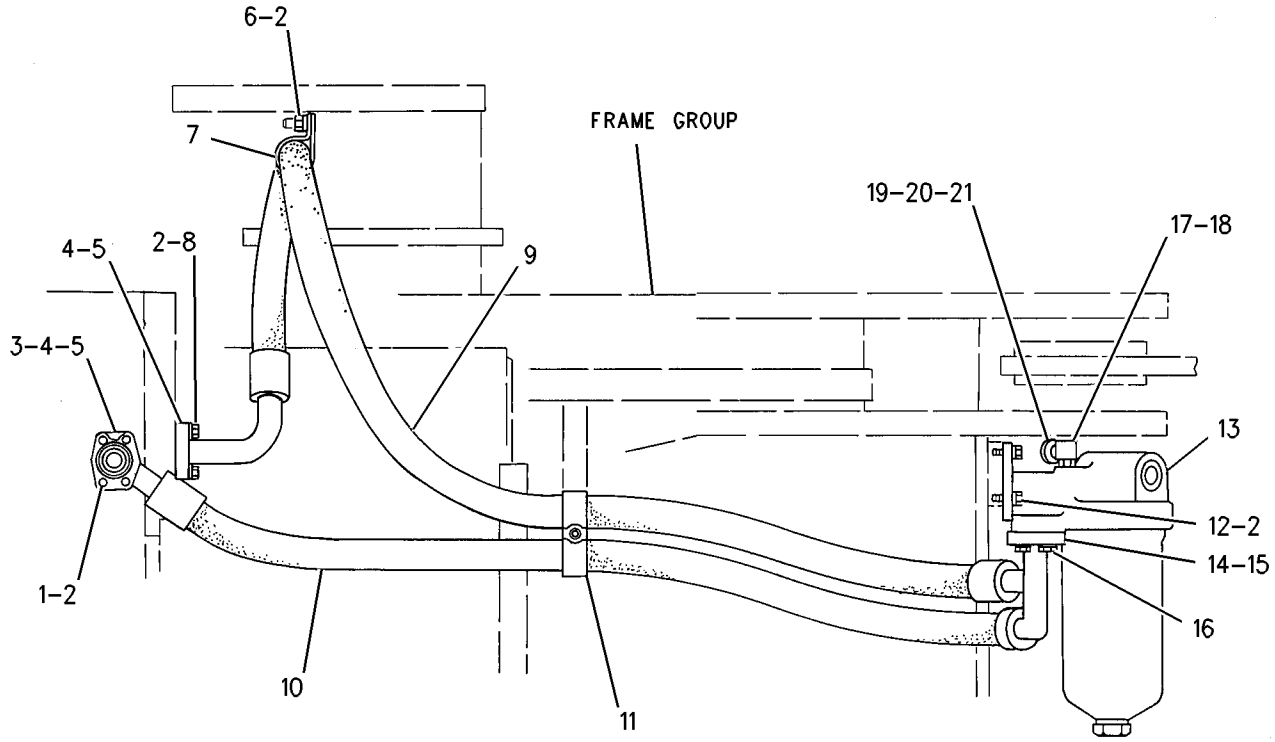

RIGHT SIDE VIEW

GRAPHIC #1

g00702703

8R-4786 FILTER & LINES GP-TRANSMISSION

S/N: 3XJ279-449, 451-460, 464, 468, 482

SMCS-3067, 3154 **i01328556**

NOTE	REF NO	GRAPHIC REF	PART NUMBER	QTY	PART NAME 1 2 3 4 5 6 (PRODUCT LEVEL)	SEE PAGE
	1	1	**4L-6459**	4	BOLT (3/8-16X2.5IN)	
	2	1	**8T-4896**	12	WASHER-HARD (10.2X18.5X2.5MM THK)	
	3	1	**7T-8593**	1	BLOCK	
	4	1	**1P-4577**	4	FLANGE-HALF	
	5	1	**4J-0520**	3	SEAL-O-RING (32.92MM ID)	
M	6	1	**8T-4133**	1	NUT (M10X1.50 THD)	
	7	1	**7D-7233**	1	CLIP (38.1MM ID)	
	8	1	**5S-7382**	4	BOLT (3/8-16X1.375 IN)	
I	9	1	**8R-4297**	1	HOSE AS	
I	10	1	**8R-4298**	1	HOSE AS	
C		1	**9V-1832**	2	CLAMP	
C		1	**7V-6234**	2	PLATE	
C		1	**4M-6424**	1	BOLT (3/8-16X.750IN)	
C		1	**6V-8189**	1	NUT (5/16-18 THD)	
	11	1	**9V-1832**	2	CLAMP	
		1	**8V-5719**	1	BOLT	
		1	**4V-0968**	1	LOCK	
	12	1	**9B-7237**	3	BOLT (3/8-16X1.25 IN)	
Y	13	1	*6P-4603*	1	FILTER GP-OIL (POWER TRAIN)	
	14	1	**1P-4578**	4	FLANGE-HALF	
	15	1	**4J-0522**	2	SEAL-O-RING (37.69MM ID)	
	16	1	**8T-8916**	8	BOLT (7/16-14X1.5 IN)	
		1	**8T-5360**	8	WASHER (2.5MM THK)	
	17	1	**8C-6712**	1	ELBOW	
	18	1	**3J-1907**	1	SEAL-O-RING (11.89MM ID)	
	19	1	**8C-3446**	1	VALVE-FLUID SAMPLING	
	20	1	**3J-7354**	1	SEAL-O-RING (8.92MM ID)	
	21	1	**8C-3447**	1	CAP-DUST	

C-CHANGE FROM PREVIOUS TYPE
I-SEE HOSE FABRICATION GUIDE
M-METRIC PART
Y-SEPARATE ILLUSTRATION

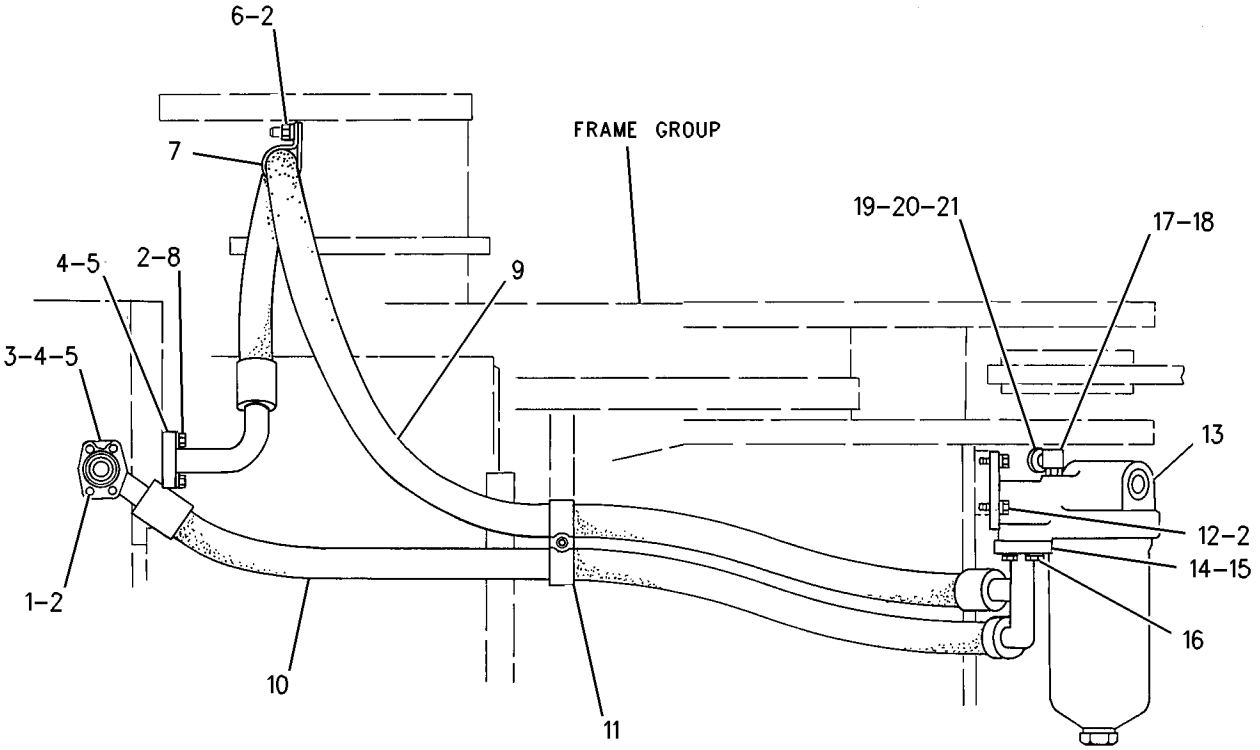

RIGHT SIDE VIEW

GRAPHIC #1 g00702708

8R-4786 FILTER & LINES GP-TRANSMISSION

S/N: 3XJ450, 461-463, 465-467, 469-481, 483-1404

SMCS-3067, 3154 **i01330072**

NOTE	REF NO	GRAPHIC REF	PART NUMBER	QTY	PART NAME 1 2 3 4 5 6 (PRODUCT LEVEL)	SEE PAGE
	1	1	**4L-6459**	4	BOLT (3/8-16X2.5IN)	
	2	1	**8T-4896**	12	WASHER-HARD (10.2X18.5X2.5MM THK)	
	3	1	**7T-8593**	1	BLOCK	
	4	1	**1P-4577**	4	FLANGE-HALF	
	5	1	**4J-0520**	3	SEAL-O-RING (32.92MM ID)	
M	6	1	**8T-4133**	1	NUT (M10X1.50 THD)	
	7	1	**7D-7233**	1	CLIP (38.1MM ID)	
	8	1	**5S-7382**	4	BOLT (3/8-16X1.375 IN)	
I	9	1	**8R-4297**	1	HOSE AS	
I	10	1	**8R-4298**	1	HOSE AS	
	11	1	**9V-1832**	2	CLAMP	
		1	**8V-5719**	1	BOLT	
		1	**4V-0968**	1	LOCK	
	12	1	**9B-7237**	3	BOLT (3/8-16X1.25 IN)	
Y	13	1	*6P-4603*	1	FILTER GP-OIL (POWER TRAIN)	
	14	1	**1P-4578**	4	FLANGE-HALF	
	15	1	**4J-0522**	2	SEAL-O-RING (37.69MM ID)	
	16	1	**8T-8916**	8	BOLT (7/16-14X1.5 IN)	
		1	**8T-5360**	8	WASHER (2.5MM THK)	
	17	1	**8C-6712**	1	ELBOW	
	18	1	**3J-1907**	1	SEAL-O-RING (11.89MM ID)	
	19	1	**8C-3446**	1	VALVE-FLUID SAMPLING	
	20	1	**3J-7354**	1	SEAL-O-RING (8.92MM ID)	
	21	1	**8C-3447**	1	CAP-DUST	

I-SEE HOSE FABRICATION GUIDE
M-METRIC PART
Y-SEPARATE ILLUSTRATION

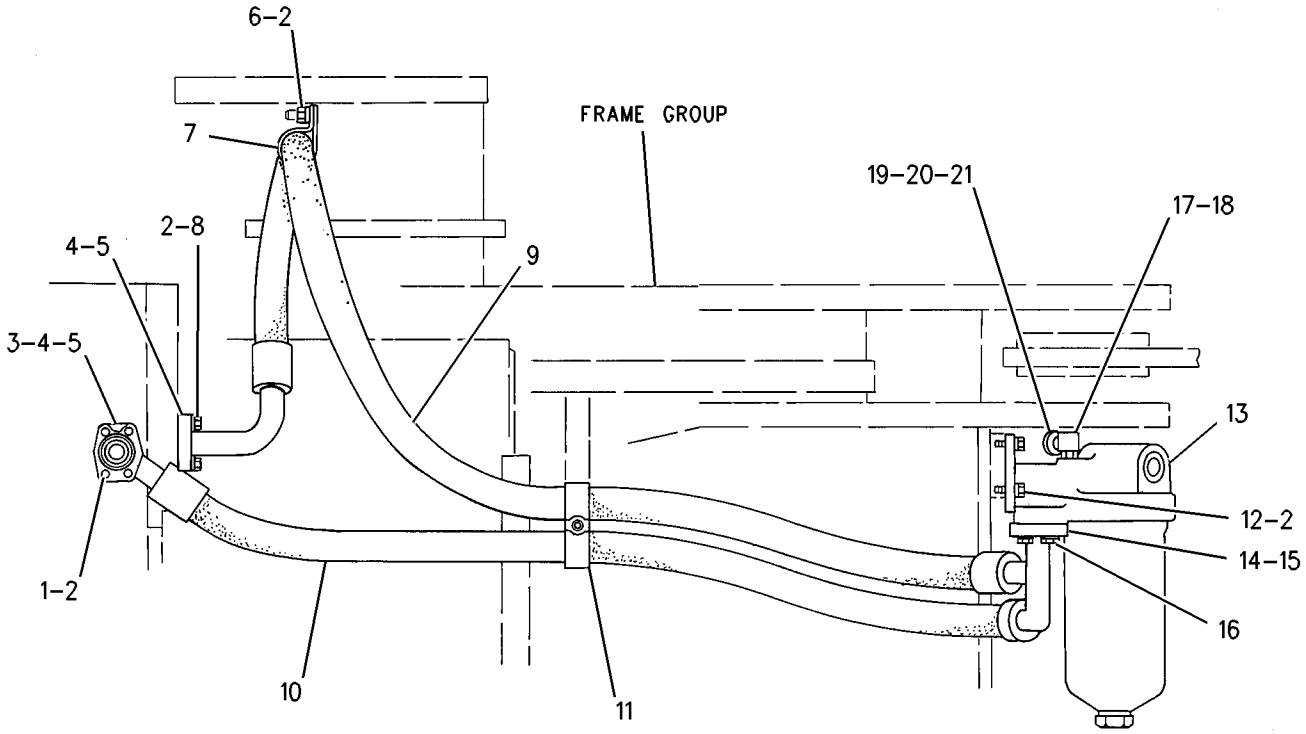

RIGHT SIDE VIEW

GRAPHIC #1 g00703771

8R-4786 FILTER & LINES GP-TRANSMISSION

S/N: 3XJ1405-99999

SMCS-3067, 3154 **i01328468**

NOTE	REF NO	GRAPHIC REF	PART NUMBER	QTY	PART NAME 1 2 3 4 5 6 (PRODUCT LEVEL)	SEE PAGE
	1	1	**4L-6459**	4	BOLT (3/8-16X2.5IN)	
	2	1	**8T-4896**	12	WASHER-HARD (10.2X18.5X2.5MM THK)	
	3	1	**7T-8593**	1	BLOCK	
	4	1	**1P-4577**	4	FLANGE-HALF	
	5	1	**4J-0520**	3	SEAL-O-RING (32.92MM ID)	
M	6	1	**8T-4133**	1	NUT (M10X1.50 THD)	
	7	1	**7D-7233**	1	CLIP (38.1MM ID)	
	8	1	**5S-7382**	4	BOLT (3/8-16X1.375 IN)	
I	9	1	**8R-4297**	1	HOSE AS	
CI	10	1	**4E-9822**	1	HOSE AS	
	11	1	**9V-1832**	2	CLAMP	
		1	**8V-5719**	1	BOLT	
		1	**4V-0968**	1	LOCK	
	12	1	**9B-7237**	3	BOLT (3/8-16X1.25 IN)	
Y	13	1	*6P-4603*	1	FILTER GP-OIL (POWER TRAIN)	
	14	1	**1P-4578**	4	FLANGE-HALF	
C	15	1	**4J-0522**	3	SEAL-O-RING (37.69MM ID)	
C	16	1	**8T-8916**	4	BOLT (7/16-14X1.5 IN)	
	17	1	**8C-6712**	1	ELBOW	
	18	1	**3J-1907**	1	SEAL-O-RING (11.89MM ID)	
	19	1	**8C-3446**	1	VALVE-FLUID SAMPLING	
	20	1	**3J-7354**	1	SEAL-O-RING (8.92MM ID)	
	21	1	**8C-3447**	1	CAP-DUST	
C	22	1	**7X-0315**	4	BOLT (7/16-14X3.25IN)	
C	23	1	**4E-9821**	1	SPACER	
	24	1	**8T-5360**	8	WASHER (2.5MM THK)	

C-CHANGE FROM PREVIOUS TYPE
I-SEE HOSE FABRICATION GUIDE
M-METRIC PART
Y-SEPARATE ILLUSTRATION

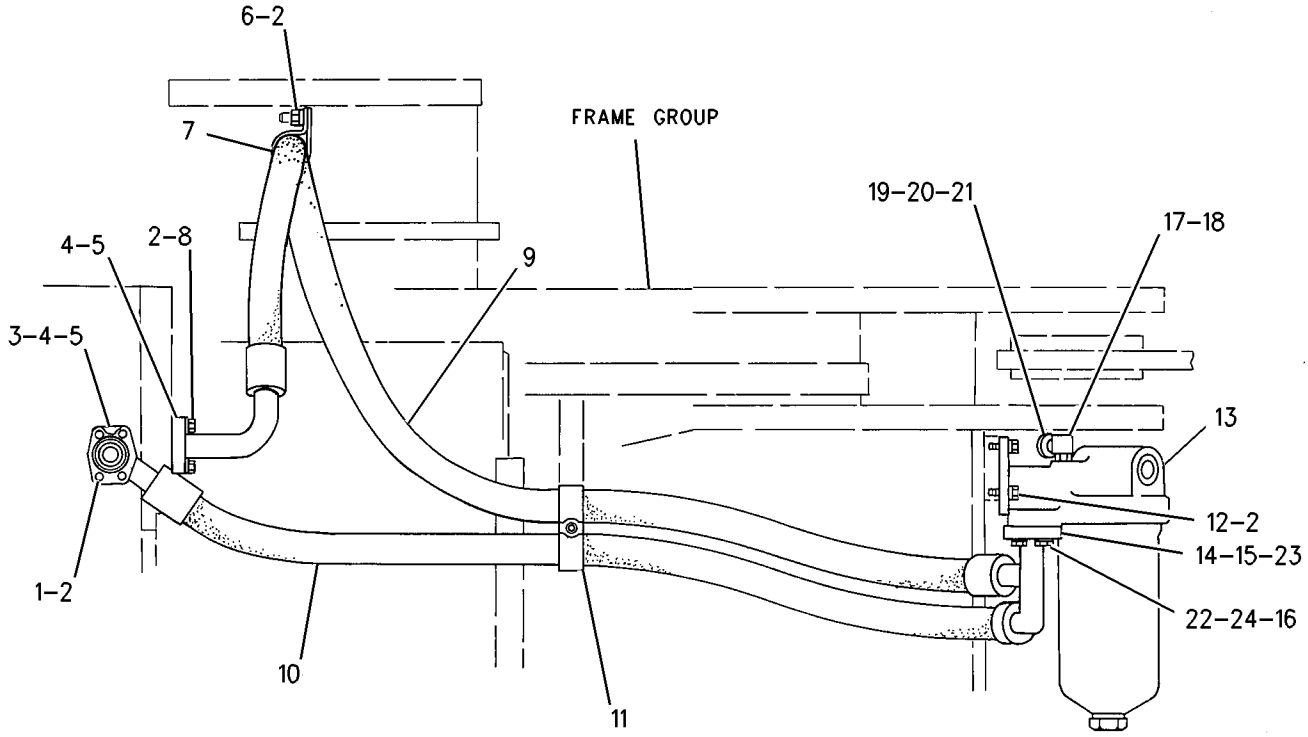

RIGHT SIDE VIEW

GRAPHIC #1 g00702712

6P-4603 FILTER GP-OIL

S/N: 3XJ1-99999
WITH HOUSING
PART OF 8R-4786 FILTER & LINES GP-TRANSMISSION

SMCS-3004, 3067 **i01258341**

NOTE	REF NO	GRAPHIC REF	PART NUMBER	QTY	PART NAME 1 2 3 4 5 6 (PRODUCT LEVEL)	SEE PAGE
	1	1	**3D-2824**	1	SEAL-O-RING (23.47MM ID)	
	2	1	**3T-0688**	1	SPOOL	
	3	1	**9M-1986**	1	SPRING	
	4	1	**9S-4191**	3	PLUG-O-RING (9/16-18 THD)	
	5	1	**6P-4227**	1	BASE-TMSN OIL FILTER	
	6	1	**1R-0719**	1	ELEMENT AS-HYDRAULIC	
	7	1	**2J-6356**	1	RING-RETAINING	
	8	1	**7S-6745**	1	RETAINER	
	9	1	**3S-8652**	1	SPRING	
	10	1	**3P-0887**	1	HOUSING AS	
	11	1	**2S-8439**	1	SEAL-O-RING (123.19MM ID)	
	12	1	**9S-8008**	1	PLUG-O-RING (1 1/16-12 THD)	
	13	1	**3J-1907**	3	SEAL-O-RING (11.89MM ID)	

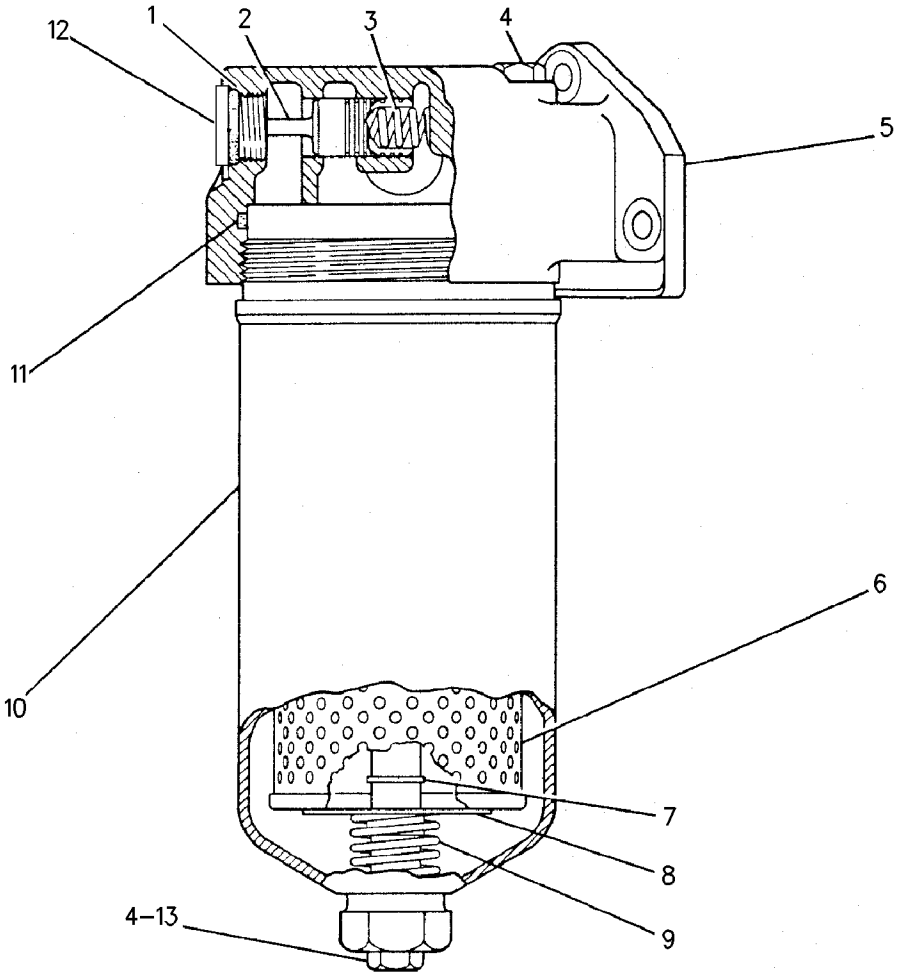

GRAPHIC #1 g00670002

MEMORANDA

9C-8183 GEAR GP-BEVEL & PINION—FRONT & REAR

S/N: 3XJ1-99999
OSCILLATING AXLE

SMCS-3254, 3256 **i00259641**

NOTE	REF NO	GRAPHIC REF	PART NUMBER	QTY	PART NAME 1 2 3 4 5 6 (PRODUCT LEVEL)	SEE PAGE
	1	1	**9C-8669**	1	SHAFT-BEVEL PINION	
	2	1	**8F-4452**	1	CONE-ROLLER BEARING	
	3	1	**3F-5920**	1	CUP-ROLLER BEARING	
	4	1	**2K-5103**	1	CONE-ROLLER BEARING	
	5	1	**1J-2860**	1	CUP-ROLLER BEARING	
	6	1	**8R-0934**	1	WASHER	
M	7	1	**8R-0935**	1	NUT-STAKE	
	8	1	**4B-9373**	1	CONE-ROLLER BEARING	
	9	1	**9U-1915**	1	SLEEVE AS	
	10	1	**6D-7690**	1	CUP-ROLLER BEARING	
	11	1	**5P-3723**	1	CONE-ROLLER BEARING	
	12	1	**9X-2617**	4	PIN-SPRING	
	13	1	**9X-2618**	4	PIN-SPRING	
	14	1	**8R-8335**	1	GEAR-BEVEL (45 TEETH)	
M	15	1	**9X-6494**	16	BOLT	
M	16	1	**4E-3896**	2	BOLT (M6X1X14MM)	
	17	1	**4E-3897**	2	LOCK	
	18	1	**6T-5532**	2	PIN	
	19	1	**9U-1914**	1	SLEEVE AS	
	20	1	**4B-9374**	1	CUP-ROLLER BEARING	
	21	1	**4E-3644**	1	NUT-ADJUSTMENT	
	22	1	**4E-3645**	1	NUT-ADJUSTMENT	

M-METRIC PART

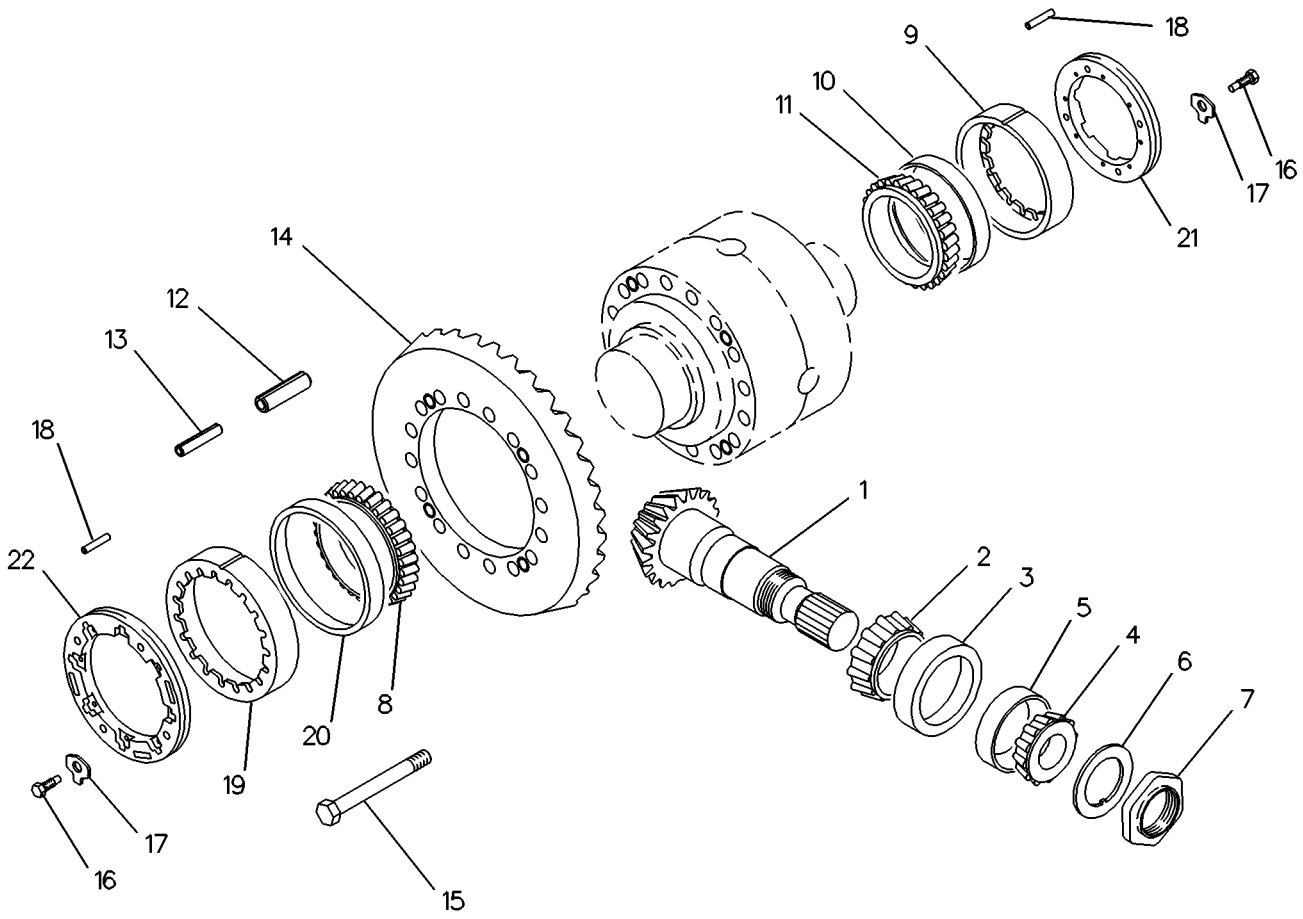

GRAPHIC #1 g00119260

POWER TRAIN

6Y-9717 GEAR GP-OUTPUT TRANSFER

S/N: 6ME1-99999; 1YX1-692

PART OF 6Y-9714, 8E-9391 TRANSMISSION AR

SMCS-3075, 3159 **i01329400**

NOTE	REF NO	GRAPHIC REF	PART NUMBER	QTY	PART NAME 1 2 3 4 5 6 (PRODUCT LEVEL)	SEE PAGE
	1	1	**5P-2526**	2	CUP-ROLLER BEARING	
		1	**2K-5065**	2	CONE-ROLLER BEARING	
	2	1	**8P-1438**	1	COVER	
		1	**8M-1280**	1	GASKET	
	3	1	**7B-3235**	2	BOLT (1/2-13X1.375 IN)	
B	4	1	**9P-7766**	2	SHIM PACK (EACH INCL 12 SHIMS)	
	5	1	**0S-1588**	8	BOLT (3/8-16X1.25 IN)	
	6	1	**5M-2894**	30	WASHER-HARD (2.5MM THK)	
	7	1	**1F-7958**	8	NUT-FULL (1/2-13 THD)	
		1	**5P-8245**	8	WASHER-HARD (3MM THK)	
	8	1	**0L-1558**	2	BOLT (1/2-20X3.25IN)	
	9	1	**4S-5824**	2	RETAINER	
	10	1	**2H-3088**	2	SEAL-O-RING (50.17MM ID)	
	11	1	**9P-8866**	1	GEAR-TRANSFER (61 TEETH)	
	12	1	**8P-1717**	1	CAGE-BEARING	
	13	1	**8P-1715**	1	RETAINER-BEARING	
	14	1	**0S-1608**	6	BOLT (3/8-16X3.75IN)	
	15	1	**9P-9790**	1	SHAFT-OUTPUT	
	16	1	**6Y-9716**	1	ROTOR	
	17	1	**7B-3642**	1	BEARING-INNER	
	18	1	**5P-5411**	1	RACE-BEARING OUTER	
	19	1	**2H-9247**	1	SEAL-O-RING (132.94MM ID)	
	20	1	**6Y-9715**	1	CAGE-BEARING	
	21	1	**8T-4977**	2	SEAL-LIP	
	22	1	**5H-6734**	2	SEAL-O-RING (113.89MM ID)	
	23	1	**2P-8986**	2	CUP-ROLLER BEARING	
		1	**2P-8987**	2	CONE-ROLLER BEARING	
	24	1	**5P-4483**	1	PLUG-O-RING	
		1	**7M-8485**	1	SEAL-O-RING (29.74MM ID)	
	25	1	**9P-8310**	1	CAGE-BEARING	
	26	1	**8M-3107**	2	COVER	
		1	**2S-4750**	2	GASKET	
	27	1	**0S-1594**	12	BOLT (3/8-16X1 IN)	
	28	1	**4S-8603**	1	TUBE AS-MAGNETIC SCREEN	
	29	1	**4S-8598**	1	SCREEN-SUCTION	
	30	1	**8H-7521**	1	SEAL-O-RING (91.67MM ID)	
	31	1	**8P-3251**	1	COVER AS	
	32	1	**7B-3028**	2	SCREW-DRIVE (NO 4X3/16 IN)	
		1	**7S-2962**	1	WASHER-SPRING	
	33	1	**7T-3370**	2	YOKE AS	
					(EACH INCLUDES)	
	34	1	**3K-0196**	1	GUARD-DIRT	
	35	1	**9P-8865**	1	CASE-TRANSFER GEAR	
		1	**3D-0490**	8	STUD-TAPERLOCK (1/2-13 X 2.0 IN OAL)	
	36	1	**9P-8261**	1	GEAR-TRANSFER (67 TEETH)	
	37	1	**3T-6965**	2	PLATE-EYE	
	38	1	**2A-4639**	4	BOLT (3/8-16X1.625IN)	
	39	1	**4D-1577**	1	SEAL-O-RING (380.59MM ID)	

B-USE AS REQUIRED

6Y-9717 **GEAR GP-OUTPUT TRANSFER** ***(contd.)*** **i01329400**

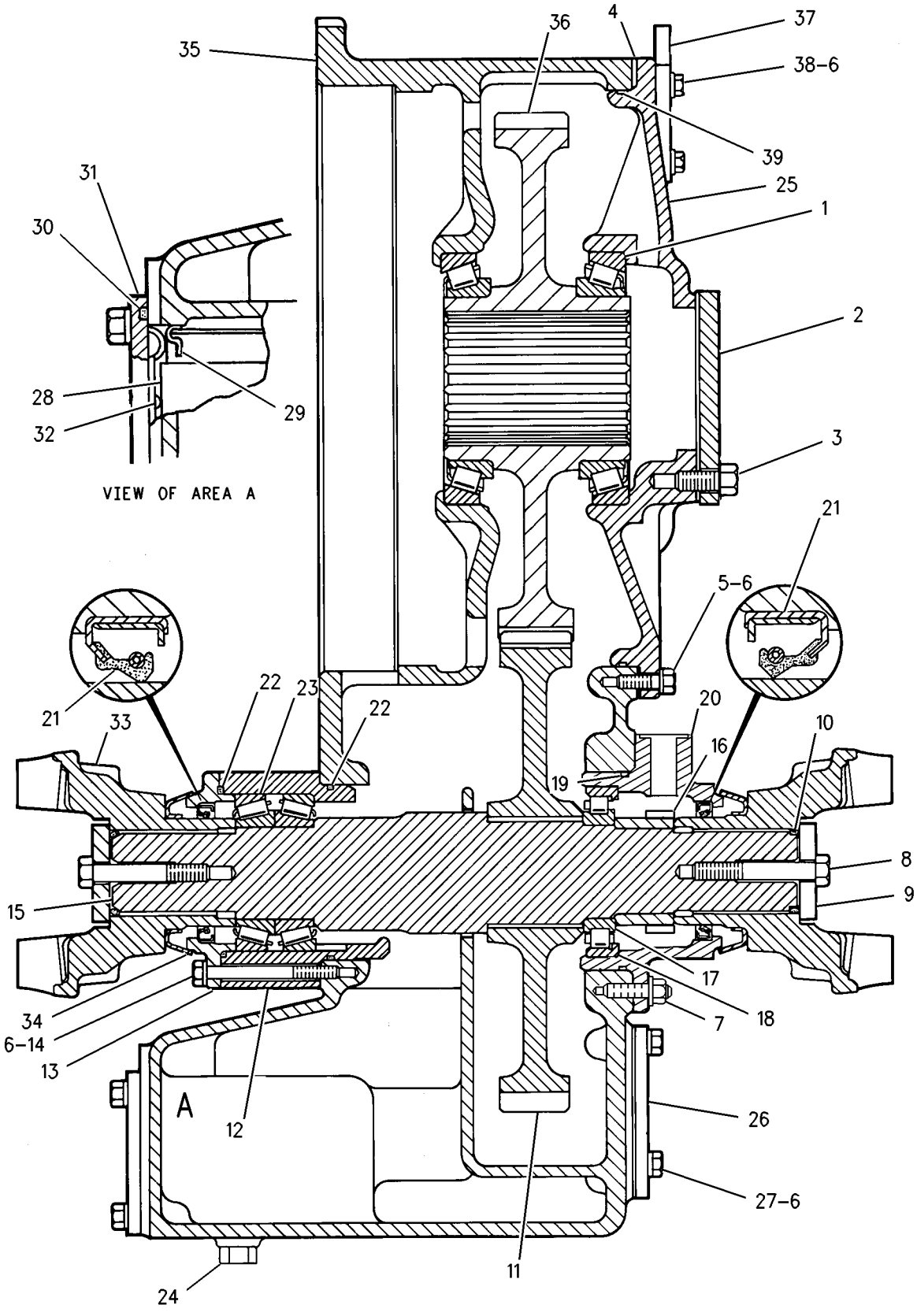

GRAPHIC #1 g00702730

8E-9105 GEAR GP-OUTPUT TRANSFER

S/N: 1YX693-99999

PART OF 8E-9391 TRANSMISSION AR

SMCS-3075, 3159 **i01329675**

NOTE	REF NO	GRAPHIC REF	PART NUMBER	QTY	PART NAME 1 2 3 4 5 6 (PRODUCT LEVEL)	SEE PAGE
	1	1	**5P-2526**	2	CUP-ROLLER BEARING	
		1	**2K-5065**	2	CONE-ROLLER BEARING	
	2	1	**8P-1438**	1	COVER	
B		1	**6V-6640**		SEALANT (5 ML)	
	3	1	**7B-3235**	2	BOLT (1/2-13X1.375 IN)	
B	4	1	**9P-7766**	2	SHIM PACK (EACH INCL 12 SHIMS)	
	5	1	**0S-1588**	8	BOLT (3/8-16X1.25 IN)	
	6	1	**5M-2894**	30	WASHER-HARD (2.5MM THK)	
	7	1	**1F-7958**	8	NUT-FULL (1/2-13 THD)	
		1	**5P-8245**	8	WASHER-HARD (3MM THK)	
	8	1	**0L-1558**	2	BOLT (1/2-20X3.25IN)	
	9	1	**4S-5824**	2	RETAINER	
	10	1	**2H-3088**	2	SEAL-O-RING (50.17MM ID)	
	11	1	**6I-9697**	1	GEAR-OUTPUT TRANSFER (58 TEETH)	
	12	1	**8P-1717**	1	CAGE-BEARING	
	13	1	**8P-1715**	1	RETAINER-BEARING	
	14	1	**0S-1608**	6	BOLT (3/8-16X3.75IN)	
	15	1	**9P-9790**	1	SHAFT-OUTPUT	
	16	1	**8P-2155**	1	SPACER (43.0MM THK)	
	17	1	**7B-3642**	1	BEARING-INNER	
	18	1	**5P-5411**	1	RACE-BEARING OUTER	
	19	1	**2H-9247**	1	SEAL-O-RING (132.94MM ID)	
	20	1	**9G-5867**	1	CAGE-BEARING	
	21	1	**8T-4977**	2	SEAL-LIP	
	22	1	**5H-6734**	2	SEAL-O-RING (113.89MM ID)	
	23	1	**2P-8986**	2	CUP-ROLLER BEARING	
		1	**2P-8987**	2	CONE-ROLLER BEARING	
	24	1	**5P-4483**	1	PLUG-O-RING	
		1	**7M-8485**	1	SEAL-O-RING (29.74MM ID)	
	25	1	**9P-8310**	1	CAGE-BEARING	
	26	1	**8M-3107**	2	COVER	
		1	**2S-4750**	2	GASKET	
	27	1	**0S-1594**	12	BOLT (3/8-16X1 IN)	
	28	1	**4S-8603**	1	TUBE AS-MAGNETIC SCREEN	
	29	1	**4S-8598**	1	SCREEN-SUCTION	
	30	1	**8H-7521**	1	SEAL-O-RING (91.67MM ID)	
	31	1	**8P-3251**	1	COVER AS	
	32	1	**7B-3028**	2	SCREW-DRIVE (NO 4X3/16 IN)	
		1	**7S-2962**	1	WASHER-SPRING	
	33	1	**7T-3370**	2	YOKE AS	
					(EACH INCLUDES)	
		1	**6T-8409**	1	YOKE	
	34	1	**3K-0196**	1	GUARD-DIRT	
	35	1	**8E-6667**	1	CASE AS-TRANSFER	
		1	**3D-0490**	8	STUD-TAPERLOCK (1/2-13 X 2.0 IN OAL)	
	36	1	**6I-9696**	1	GEAR-OUTPUT TRANSFER (64 TEETH)	
	37	1	**3T-6965**	2	PLATE-EYE	
	38	1	**2A-4639**	4	BOLT (3/8-16X1.625IN)	
	39	1	**4D-1577**	1	SEAL-O-RING (380.59MM ID)	
	40	1	**3E-7886**	1	SENSOR AS-SPEED (TRANSMISSION OUTPUT)	

B-USE AS REQUIRED

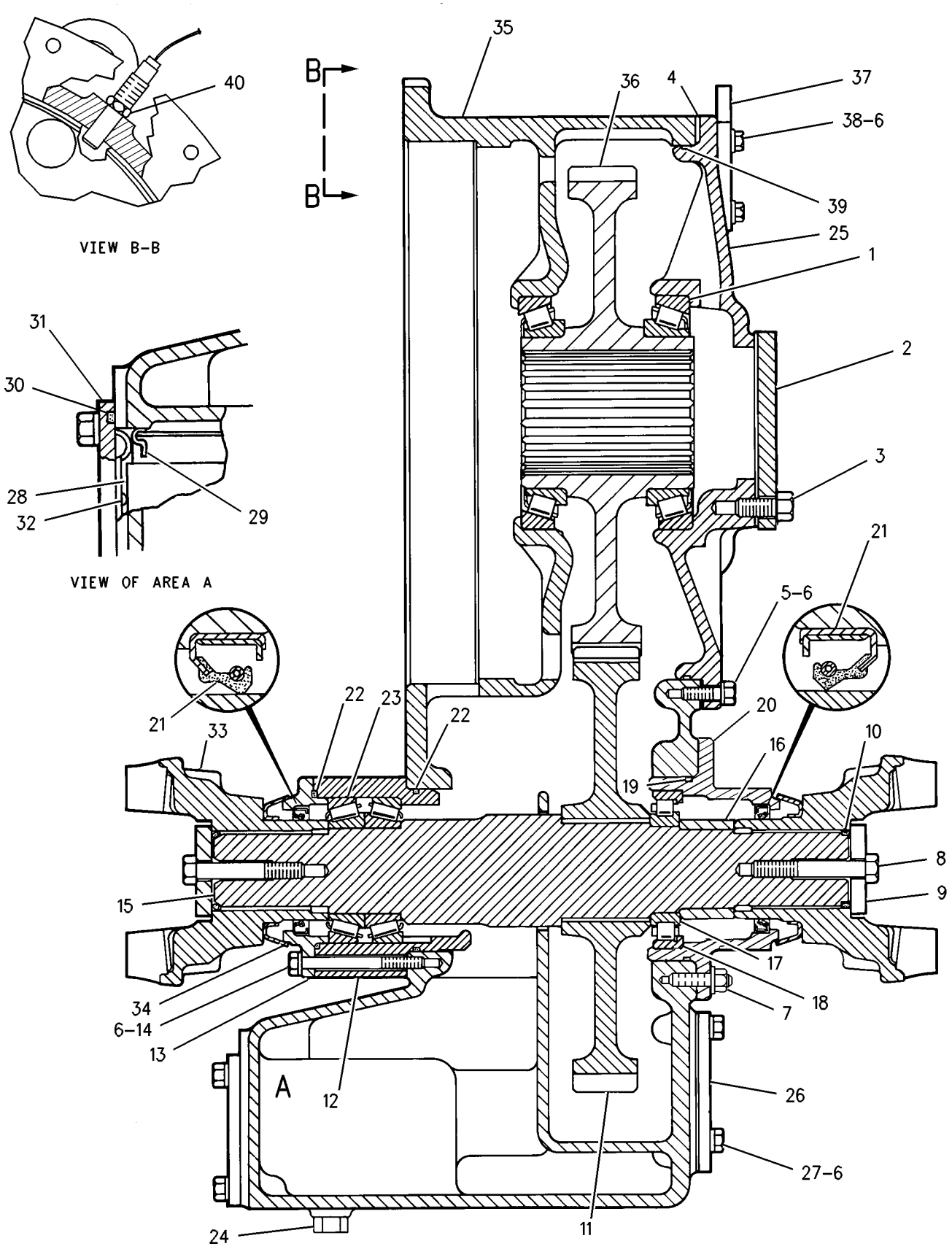

GRAPHIC #1

g00703580

9C-8187 HOUSING GP-FIXED AXLE—FIXED

S/N: 3XJ1-796

SMCS-3260 **i01329705**

NOTE	REF NO	GRAPHIC REF	PART NUMBER	QTY	PART NAME 1 2 3 4 5 6 (PRODUCT LEVEL)	SEE PAGE
	1	1	**8R-0931**	1	HOUSING-PINION	
M	2	1	**6V-5686**	12	BOLT (M16X2.0X50MM)	
	3	1	**5P-8247**	64	WASHER-HARD (3.5MM THK)	
	4	1	**4B-4550**	1	FITTING-RELIEF (1/8-27 PTF)	
M	5	1	**9X-6385**	8	BOLT (M30X3.5X200MM)	
	6	1	**7X-0593**	8	WASHER-HARD (6.0MM THK)	
	7	1	**8R-0925**	1	HOUSING AS	
	8	1	**4E-2613**	2	SCREW-PURGE	
	9	1	**2D-9453**	2	CONE-ROLLER BEARING	
	10	1	**6B-4370**	2	CUP-ROLLER BEARING	
	11	1	**9W-6684**	2	SEAL GP-DUO-CONE	
	12	1	**9C-6327**	1	GAUGE AS-OIL LEVEL (DIPSTICK)	
	13	1	**9C-6039**	2	SHAFT-AXLE	
M	14	1	**6C-3522**	26	BOLT	
	15	1	**9C-6038**	1	HOUSING-AXLE SHAFT	
B	16	1	**1U-8846**		SEALANT	
	17	1	**6Y-2546**	2	CONE-ROLLER BEARING	
	18	1	**6Y-2547**	2	CUP-ROLLER BEARING	
	19	1	**4E-2240**	2	NUT-BEARING	
	20	1	**5H-5012**	2	RING-RETAINING	
	21	1	**9C-6037**	1	HOUSING-AXLE SHAFT	
M	22	1	**6C-5303**	26	BOLT	
	23	1	**4K-6804**	1	SEAL-O-RING (215.49MM ID)	
B	24	1	**8R-0932**	1	SHIM PACK (INCLUDES 15 SHIMS)	
M	25	1	**6V-7732**	6	BOLT (M10X1.5X25MM)	
	26	1	**9X-2027**	6	WASHER (2MM THK)	
	27	1	**8R-0933**	1	RETAINER-SEAL	
	28	1	**5K-2595**	1	SEAL-LIP	
	29	1	**9C-6041**	3	DOWEL	
	30	1	**5P-4484**	1	PLUG-MAGNETIC	
	31	1	**7M-8485**	3	SEAL-O-RING (29.74MM ID)	
	32	1	**9S-4181**	2	PLUG-STRAIGHT THREAD (1-5/16-12 THD)	

B-USE AS REQUIRED
M-METRIC PART

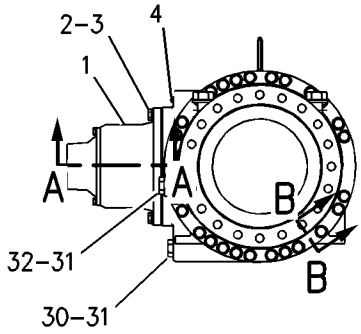

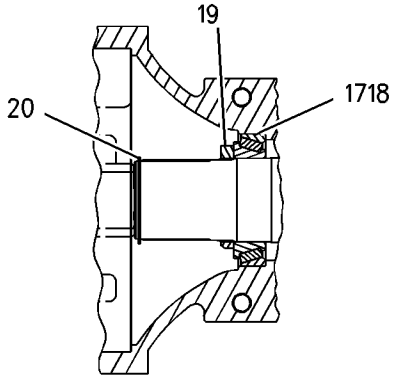

SECTION C-C

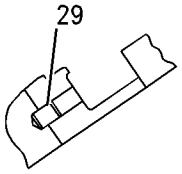

SECTION B-B

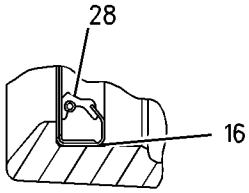

VIEW OF AREA D

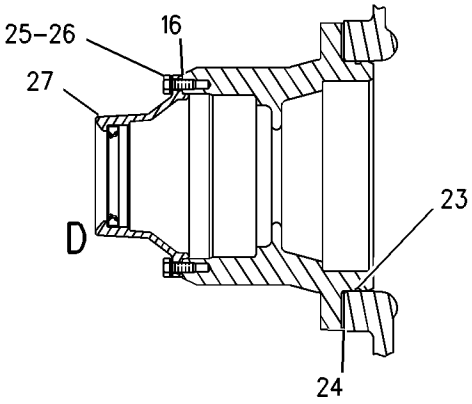

SECTION A-A

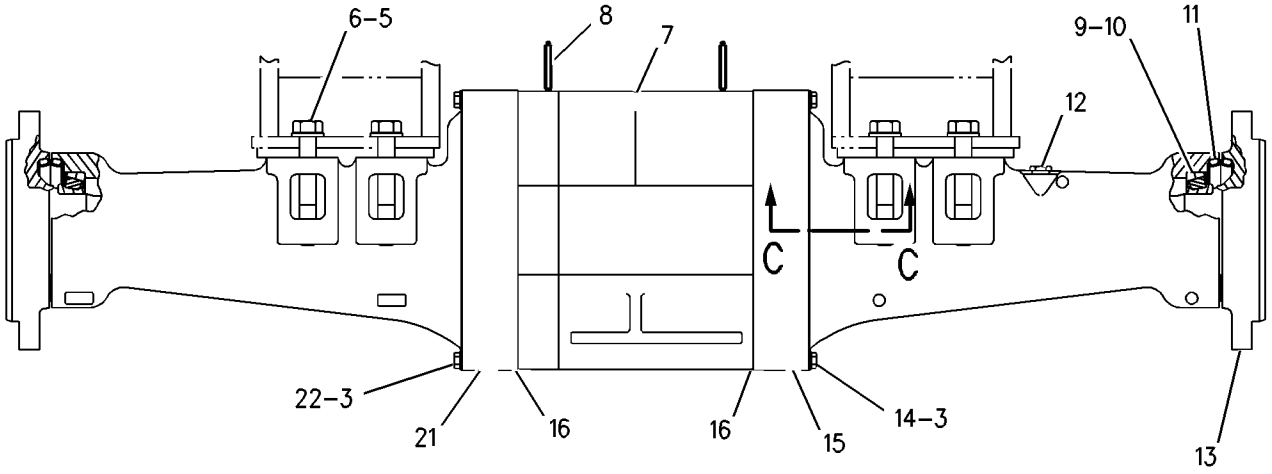

GRAPHIC #1 g00702652

9C-8187 HOUSING GP-FIXED AXLE—FIXED

S/N: 3XJ797-99999

SMCS-3260 **i01330518**

NOTE	REF NO	GRAPHIC REF	PART NUMBER	QTY	PART NAME 1 2 3 4 5 6 (PRODUCT LEVEL)	SEE PAGE
	1	1	**8R-0931**	1	HOUSING-PINION	
M	2	1	**6V-5686**	12	BOLT (M16X2.0X50MM)	
	3	1	**5P-8247**	64	WASHER-HARD (3.5MM THK)	
	4	1	**8T-0336**	1	FITTING-RELIEF	
M	5	1	**9X-6385**	8	BOLT (M30X3.5X200MM)	
	6	1	**7X-0593**	8	WASHER-HARD (6.0MM THK)	
	7	1	**8R-0925**	1	HOUSING AS	
M		1	**8C-8729**	4	BOLT-SOCKET HEAD (M12X1.75X80MM)	
	8	1	**5H-3701**	2	SCREW-PURGE	
	9	1	**2D-9453**	2	CONE-ROLLER BEARING	
	10	1	**6B-4370**	2	CUP-ROLLER BEARING	
	11	1	**9W-6684**	2	SEAL GP-DUO-CONE	
	12	1	**9C-6327**	1	GAUGE AS-OIL LEVEL (DIPSTICK)	
	13	1	**9C-6039**	2	SHAFT-AXLE	
M	14	1	**6C-3522**	26	BOLT	
	15	1	**7I-4150**	1	HOUSING-AXLE SHAFT	
B	16	1	**1U-8846**		SEALANT	
	17	1	**6Y-2546**	2	CONE-ROLLER BEARING	
	18	1	**6Y-2547**	2	CUP-ROLLER BEARING	
	19	1	**4E-2240**	2	NUT-BEARING	
	20	1	**5H-5012**	2	RING-RETAINING	
	21	1	**7I-4149**	1	HOUSING-AXLE SHAFT	
M	22	1	**6C-5303**	26	BOLT	
	23	1	**4K-6804**	1	SEAL-O-RING (215.49MM ID)	
B	24	1	**8R-0932**	1	SHIM PACK (INCLUDES 15 SHIMS)	
M	25	1	**6V-7732**	6	BOLT (M10X1.5X25MM)	
	26	1	**9X-2027**	6	WASHER (2MM THK)	
C	27	1	**4E-8535**	1	RETAINER-SEAL	
C	28	1	**9X-7546**	1	SEAL-LIP (76.2MM ID)	
	29	1	**9C-6041**	3	DOWEL	
	30	1	**5P-4484**	1	PLUG-MAGNETIC	
	31	1	**7M-8485**	3	SEAL-O-RING (29.74MM ID)	
	32	1	**9S-4181**	2	PLUG-STRAIGHT THREAD (1-5/16-12 THD)	

B-USE AS REQUIRED
C-CHANGE FROM PREVIOUS TYPE
M-METRIC PART

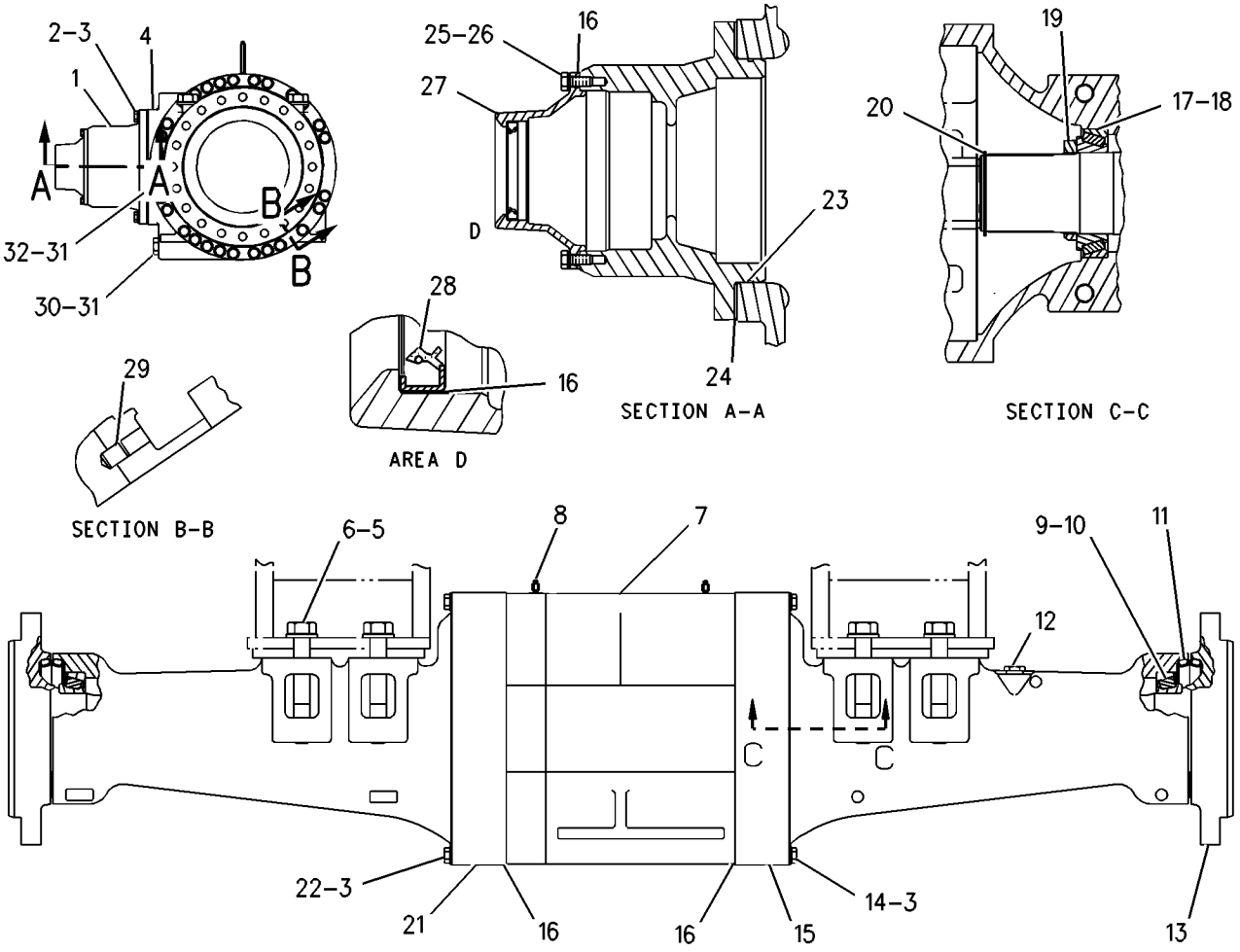

GRAPHIC #1 g00703432

POWER TRAIN

9C-8182 HOUSING GP-OSCILLATING AXLE

S/N: 3XJ1-796

SMCS-3260, 3268 **i01329487**

NOTE	REF NO	GRAPHIC REF	PART NUMBER	QTY	PART NAME 1 2 3 4 5 6 (PRODUCT LEVEL)	SEE PAGE
	1	1	**2B-2994**	2	DOWEL	
	2	1	**4K-7270**	1	SUPPORT-TRUNNION	
	3	1	**8R-1015**	1	SUPPORT-TRUNNION	
	4	1	**6Y-7732**	6	PLATE-LH	
	5	1	**9X-2027**	6	WASHER (2MM THK)	
	6	1	**8R-0933**	1	RETAINER-SEAL	
B	7	1	**1U-8846**		SEALANT	
	8	1	**5H-3701**	2	SCREW-PURGE	
	9	1	**4B-4550**	1	FITTING-RELIEF (1/8-27 PTF)	
	10	1	**5P-4484**	1	PLUG-MAGNETIC	
	11	1	**7M-8485**	3	SEAL-O-RING (29.74MM ID)	
	12	1	**9S-4181**	2	PLUG-STRAIGHT THREAD (1-5/16-12 THD)	
	13	1	**9C-6041**	3	DOWEL	
	14	1	**7X-0374**	8	BOLT (3/4-10X5.75IN)	
	15	1	**8T-4994**	16	WASHER-HARD (5MM THK)	
	16	1	**6V-8182**	8	NUT (3/4-10 THD)	
	17	1	**8R-1014**	1	HOUSING-AXLE SHAFT	
	18	1	**9C-6327**	1	GAUGE AS-OIL LEVEL (DIPSTICK)	
M	19	1	**6C-3522**	26	BOLT	
	20	1	**5P-8247**	82	WASHER-HARD (3.5MM THK)	
M	21	1	**6V-5686**	24	BOLT (M16X2.0X50MM)	
	22	1	**4K-6804**	1	SEAL-O-RING (215.49MM ID)	
	23	1	**8R-0931**	1	HOUSING-PINION	
B	24	1	**8R-0932**	1	SHIM PACK (INCLUDES 15 SHIMS)	
	25	1	**5K-2595**	1	SEAL-LIP	
	26	1	**5P-7456**	2	SEAL-LIP (209.55MM ID)	
	27	1	**7X-2623**	1	RING-RETAINING	
	28	1	**8R-1016**	1	BEARING-SLEEVE	
M	29	1	**6C-5303**	26	BOLT	
	30	1	**8R-1013**	1	HOUSING-AXLE SHAFT	
	31	1	**9C-6039**	2	SHAFT-AXLE	
	32	1	**9W-6684**	2	SEAL GP-DUO-CONE	
	33	1	**2D-9453**	2	CONE-ROLLER BEARING	
	34	1	**6B-4370**	2	CUP-ROLLER BEARING	
	35	1	**6Y-2546**	2	CONE-ROLLER BEARING	
	36	1	**6Y-2547**	2	CUP-ROLLER BEARING	
	37	1	**4E-2240**	2	NUT-BEARING	
	38	1	**5H-5012**	2	RING-RETAINING	
	39	1	**9C-9191**	1	TRUNNION	
	40	1	**8T-3282**	4	WASHER-HARD (3.5MM THK)	
M	41	1	**6V-3531**	4	BOLT (M20X2.5X50MM)	
	42	1	**4V-5099**	1	COVER	
	43	1	**1A-1135**	6	BOLT (5/8-11X2 IN)	
	44	1	**8R-0928**	1	HOUSING AS	
M		1	**8C-8729**	4	BOLT-SOCKET HEAD (M12X1.75X80MM)	
	45	1	**2K-0715**	2	WASHER-THRUST (6.35MM THK)	
	46	1	**9C-6306**	1	PLATE	
	47	1	**2K-0713**	1	BEARING-SLEEVE	
	48	1	**6K-2430**	1	SEAL-LIP (127MM ID)	

B-USE AS REQUIRED
M-METRIC PART

9C-8182 **HOUSING GP-OSCILLATING AXLE** *(contd.)* **i01329487**

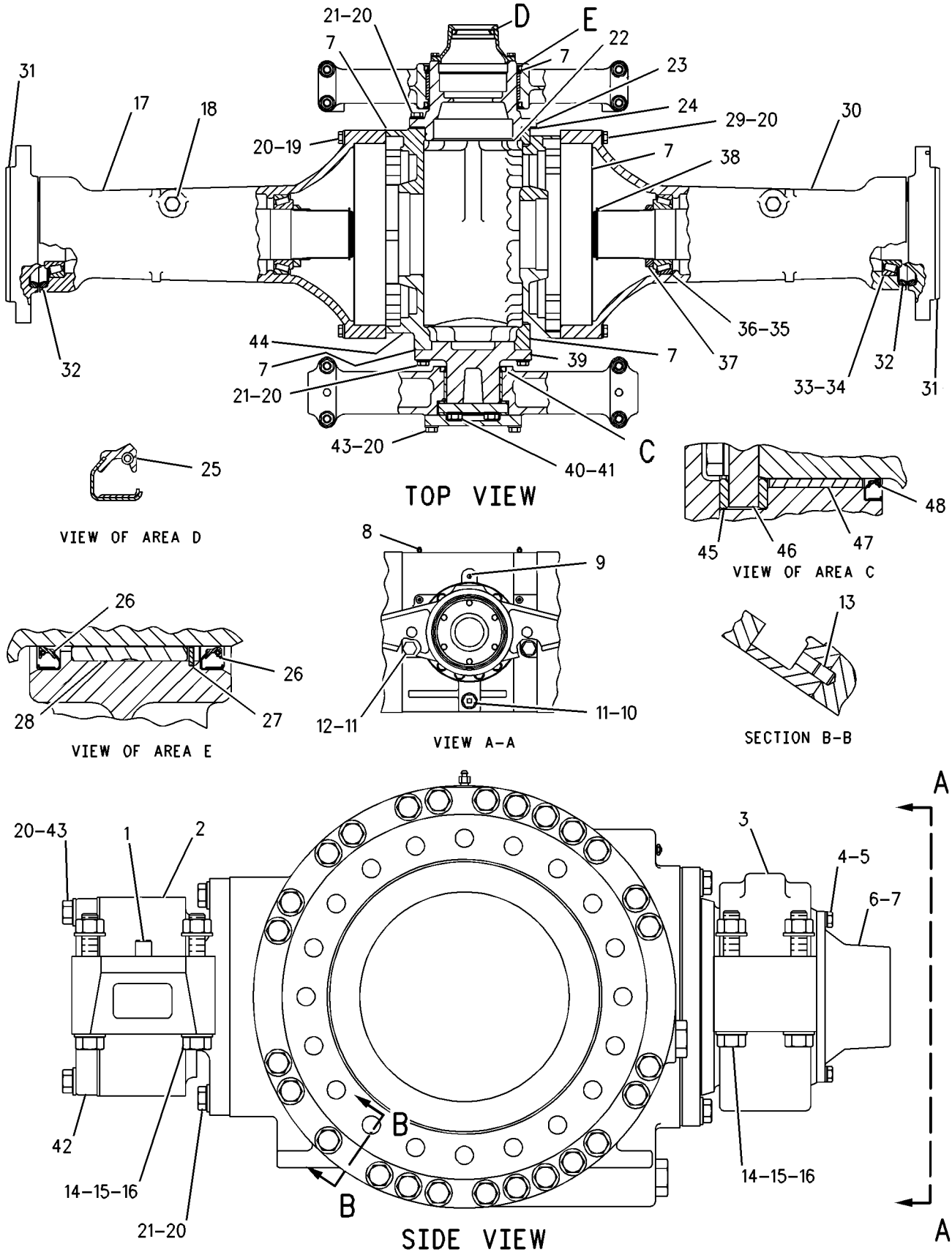

GRAPHIC #1 g00702637

POWER TRAIN

9C-8182 HOUSING GP-OSCILLATING AXLE

S/N: 3XJ797-1956

SMCS-3260, 3268 **i01343479**

NOTE	REF NO	GRAPHIC REF	PART NUMBER	QTY	PART NAME 1 2 3 4 5 6 (PRODUCT LEVEL)	SEE PAGE
	1	1	**2B-2994**	2	DOWEL	
	2	1	**4K-7270**	1	SUPPORT-TRUNNION	
	3	1	**8R-1015**	1	SUPPORT-TRUNNION	
	4	1	**6Y-7732**	6	PLATE-LH	
	5	1	**9X-2027**	6	WASHER (2MM THK)	
C	6	1	**4E-8535**	1	RETAINER-SEAL	
B	7	1	**1U-8846**		SEALANT	
	8	1	**5H-3701**	2	SCREW-PURGE	
	9	1	**4B-4550**	1	FITTING-RELIEF (1/8-27 PTF)	
	10	1	**5P-4484**	1	PLUG-MAGNETIC	
	11	1	**7M-8485**	3	SEAL-O-RING (29.74MM ID)	
	12	1	**9S-4181**	2	PLUG-STRAIGHT THREAD (1-5/16-12 THD)	
	13	1	**9C-6041**	3	DOWEL	
	14	1	**7X-0374**	8	BOLT (3/4-10X5.75IN)	
	15	1	**8T-4994**	16	WASHER-HARD (5MM THK)	
	16	1	**6V-8182**	8	NUT (3/4-10 THD)	
	17	1	**8R-1014**	1	HOUSING-AXLE SHAFT	
	18	1	**9C-6327**	1	GAUGE AS-OIL LEVEL (DIPSTICK)	
M	19	1	**6C-3522**	26	BOLT	
	20	1	**5P-8247**	82	WASHER-HARD (3.5MM THK)	
M	21	1	**6V-5686**	24	BOLT (M16X2.0X50MM)	
	22	1	**4K-6804**	1	SEAL-O-RING (215.49MM ID)	
	23	1	**8R-0931**	1	HOUSING-PINION	
B	24	1	**8R-0932**	1	SHIM PACK (INCLUDES 15 SHIMS)	
C	25	1	**9X-7546**	1	SEAL-LIP (76.2MM ID)	
	26	1	**5P-7456**	2	SEAL-LIP (209.55MM ID)	
	27	1	**7X-2623**	1	RING-RETAINING	
	28	1	**8R-1016**	1	BEARING-SLEEVE	
M	29	1	**6C-5303**	26	BOLT	
	30	1	**8R-1013**	1	HOUSING-AXLE SHAFT	
	31	1	**9C-6039**	2	SHAFT-AXLE	
	32	1	**9W-6684**	2	SEAL GP-DUO-CONE	
	33	1	**2D-9453**	2	CONE-ROLLER BEARING	
	34	1	**6B-4370**	2	CUP-ROLLER BEARING	
	35	1	**6Y-2546**	2	CONE-ROLLER BEARING	
	36	1	**6Y-2547**	2	CUP-ROLLER BEARING	
	37	1	**4E-2240**	2	NUT-BEARING	
	38	1	**5H-5012**	2	RING-RETAINING	
	39	1	**9C-9191**	1	TRUNNION	
	40	1	**8T-3282**	4	WASHER-HARD (3.5MM THK)	
M	41	1	**6V-3531**	4	BOLT (M20X2.5X50MM)	
	42	1	**4V-5099**	1	COVER	
	43	1	**1A-1135**	6	BOLT (5/8-11X2 IN)	
	44	1	**8R-0928**	1	HOUSING AS	
M		1	**8C-8729**	4	BOLT-SOCKET HEAD (M12X1.75X80MM)	
	45	1	**2K-0715**	2	WASHER-THRUST (6.35MM THK)	
	46	1	**9C-6306**	1	PLATE	
	47	1	**2K-0713**	1	BEARING-SLEEVE	
	48	1	**6K-2430**	1	SEAL-LIP (127MM ID)	
C	49	1	**6C-5198**	2	PLATE	
C	50	1	**6C-2637**	2	PLATE	

B-USE AS REQUIRED
C-CHANGE FROM PREVIOUS TYPE
M-METRIC PART

9C-8182 **HOUSING GP-OSCILLATING AXLE** *(contd.)* **i01343479**

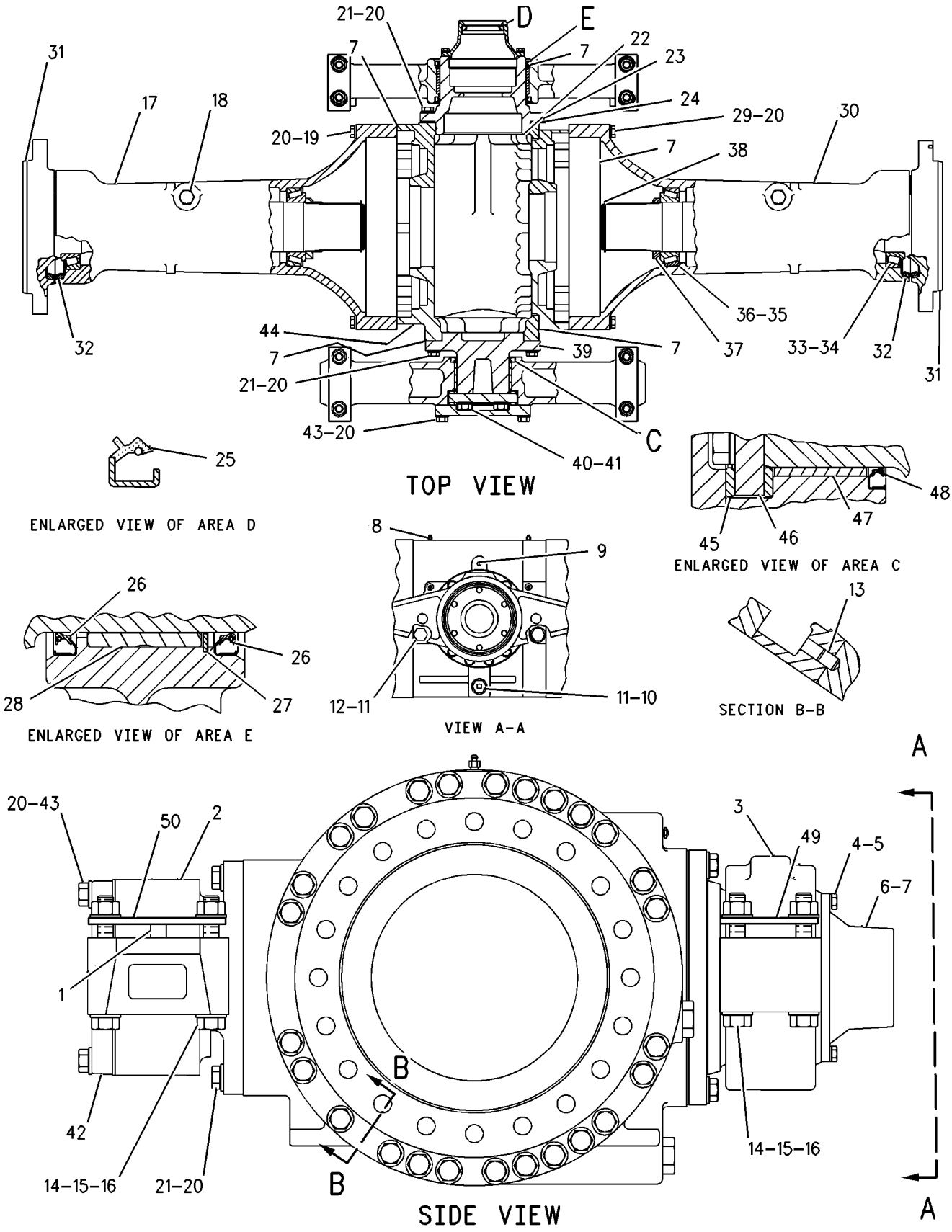

GRAPHIC #1 g00702625

9C-8182 HOUSING GP-OSCILLATING AXLE

S/N: 3XJ1957-99999

SMCS-3260, 3268 **i01343474**

NOTE	REF NO	GRAPHIC REF	PART NUMBER	QTY	PART NAME 1 2 3 4 5 6 (PRODUCT LEVEL)	SEE PAGE
	1	1	**6C-2356**	2	DOWEL	
	2	1	**4K-7270**	1	SUPPORT-TRUNNION	
	3	1	**6C-3617**	1	SUPPORT-TRUNNION	
	4	1	**6Y-7732**	6	PLATE-LH	
	5	1	**9X-2027**	6	WASHER (2MM THK)	
	6	1	**4E-8535**	1	RETAINER-SEAL	
B	7	1	**1U-8846**		SEALANT	
	8	1	**5H-3701**	2	SCREW-PURGE	
	9	1	**8T-0336**	1	FITTING-RELIEF	
	10	1	**5P-4484**	1	PLUG-MAGNETIC	
	11	1	**7M-8485**	3	SEAL-O-RING (29.74MM ID)	
	12	1	**9S-4181**	2	PLUG-STRAIGHT THREAD (1-5/16-12 THD)	
	13	1	**9C-6041**	3	DOWEL	
	14	1	**7X-0374**	8	BOLT (3/4-10X5.75IN)	
	15	1	**8T-4994**	16	WASHER-HARD (5MM THK)	
	16	1	**6V-8182**	8	NUT (3/4-10 THD)	
C	17	1	**7I-4148**	1	HOUSING-AXLE SHAFT	
	18	1	**9C-6327**	1	GAUGE AS-OIL LEVEL (DIPSTICK)	
M	19	1	**6C-3522**	26	BOLT	
	20	1	**5P-8247**	82	WASHER-HARD (3.5MM THK)	
M	21	1	**6V-5686**	24	BOLT (M16X2.0X50MM)	
	22	1	**4K-6804**	1	SEAL-O-RING (215.49MM ID)	
	23	1	**8R-0931**	1	HOUSING-PINION	
B	24	1	**8R-0932**	1	SHIM PACK (INCLUDES 15 SHIMS)	
	25	1	**9X-7546**	1	SEAL-LIP (76.2MM ID)	
	26	1	**5P-7456**	2	SEAL-LIP (209.55MM ID)	
	27	1	**7X-2623**	1	RING-RETAINING	
	28	1	**8R-1016**	1	BEARING-SLEEVE	
M	29	1	**6C-5303**	26	BOLT	
C	30	1	**7I-4147**	1	HOUSING-AXLE SHAFT	
	31	1	**9C-6039**	2	SHAFT-AXLE	
	32	1	**9W-6684**	2	SEAL GP-DUO-CONE	
	33	1	**2D-9453**	2	CONE-ROLLER BEARING	
	34	1	**6B-4370**	2	CUP-ROLLER BEARING	
	35	1	**6Y-2546**	2	CONE-ROLLER BEARING	
	36	1	**6Y-2547**	2	CUP-ROLLER BEARING	
	37	1	**4E-2240**	2	NUT-BEARING	
	38	1	**5H-5012**	2	RING-RETAINING	
	39	1	**9C-9191**	1	TRUNNION	
	40	1	**8T-3282**	4	WASHER-HARD (3.5MM THK)	
M	41	1	**6V-3531**	4	BOLT (M20X2.5X50MM)	
	42	1	**4V-5099**	1	COVER	
	43	1	**1A-1135**	6	BOLT (5/8-11X2 IN)	
	44	1	**8R-0928**	1	HOUSING AS	
M		1	**8C-8729**	4	BOLT-SOCKET HEAD (M12X1.75X80MM)	
	45	1	**2K-0715**	2	WASHER-THRUST (6.35MM THK)	
	46	1	**9C-6306**	1	PLATE	
	47	1	**2K-0713**	1	BEARING-SLEEVE	
	48	1	**6K-2430**	1	SEAL-LIP (127MM ID)	
	49	1	**6C-5198**	2	PLATE	
	50	1	**6C-2637**	2	PLATE	

B-USE AS REQUIRED
C-CHANGE FROM PREVIOUS TYPE
M-METRIC PART

9C-8182 **HOUSING GP-OSCILLATING AXLE** *(contd.)* **i01343474**

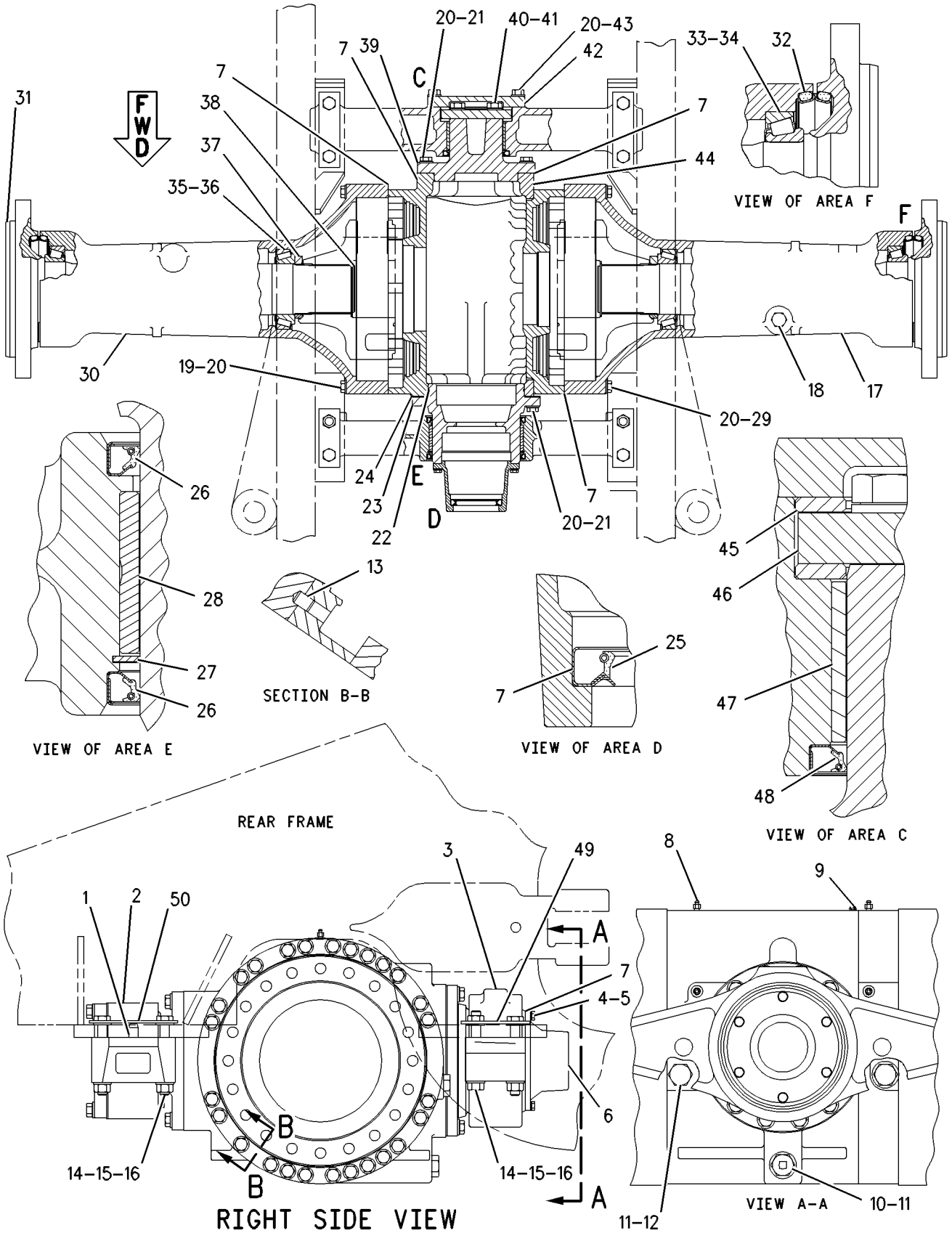

GRAPHIC #1

g00320594

5V-4110 LINES GP-TORQUE CONV COOLER

S/N: 3XJ1-99999

SMCS-1375, 3016 **i01334241**

NOTE	REF NO	GRAPHIC REF	PART NUMBER	QTY	PART NAME 1 2 3 4 5 6 (PRODUCT LEVEL)	SEE PAGE
	1	1	**1P-3704**	3	SEAL-RECTANGULAR (38.2MM ID)	
	2	1	**7X-0313**	8	BOLT (7/16-14X2.75IN)	
	3	1	**8T-5360**	12	WASHER (2.5MM THK)	
	4	1	**8C-6877**	4	BOLT (7/16-14X1.75 IN)	
	5	1	**2V-9490**	1	FLANGE	
	6	1	**8B-4967**	2	SEAL-O-RING (24.77MM ID)	
	7	1	**2V-9489**	1	FLANGE	
	8	1	**6K-2172**	1	ELBOW-OIL COOLER	
		1	**3H-1461**	1	SEAL-O-RING (34.52MM ID)	
	9	1	**8T-2502**	4	BOLT (3/8-16X1.125 IN)	
		1	**8T-4896**	4	WASHER-HARD (10.2X18.5X2.5MM THK)	
	10	1	**6K-2171**	1	FLANGE	
	11	1	**5V-4362**	1	TUBE AS	
	12	1	**5V-4380**	1	TUBE AS	
					(EACH INCLUDES)	
	13	1	**9S-4191**	1	PLUG-O-RING (9/16-18 THD)	
		1	**3J-1907**	1	SEAL-O-RING (11.89MM ID)	

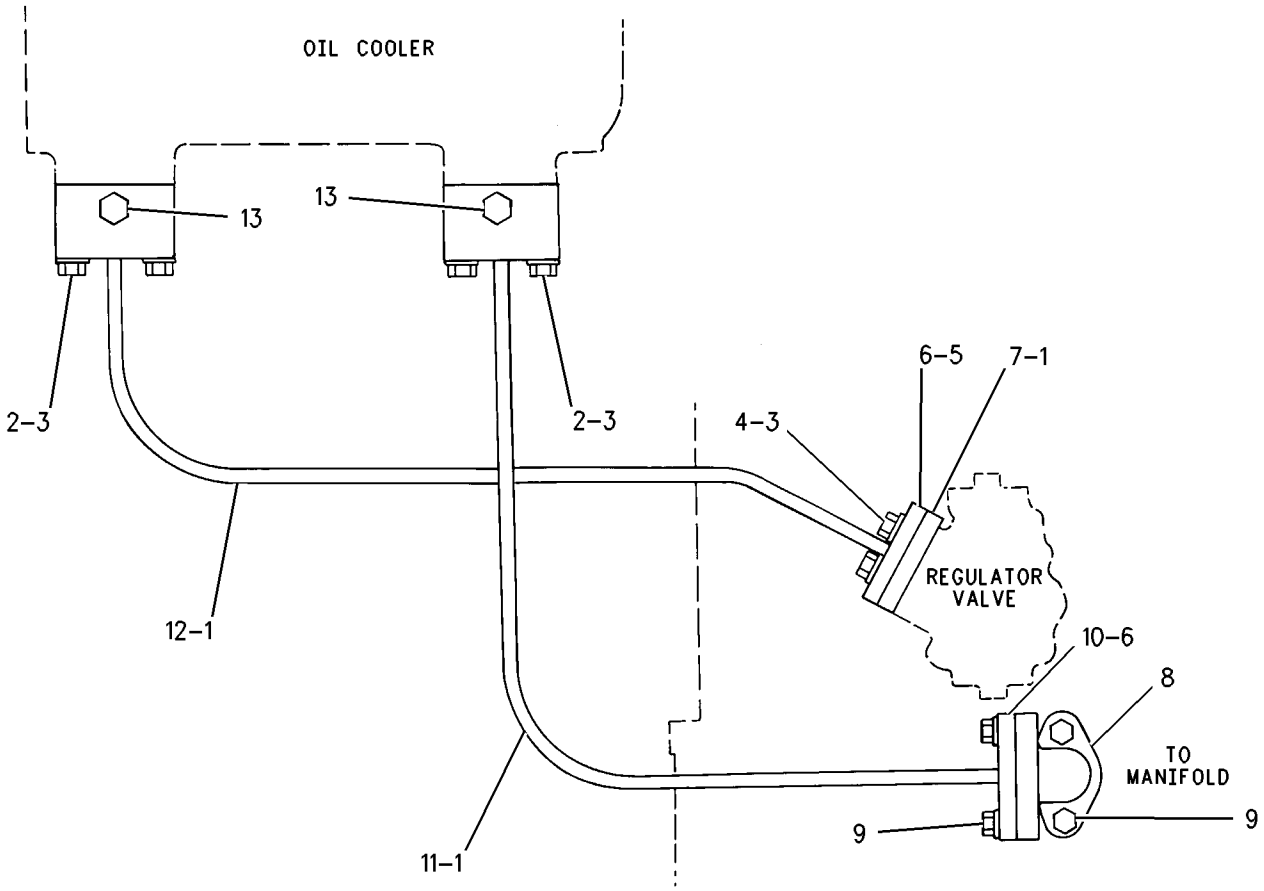

GRAPHIC #1 g00705528

MEMORANDA

6W-8244 NEUTRALIZER GP-TRANSMISSION

S/N: 3XJ1-99999

PART OF 8R-5041 OPERATOR AR

SMCS-3181, 3191 **i01306034**

NOTE	REF NO	GRAPHIC REF	PART NUMBER	QTY	PART NAME 1 2 3 4 5 6 (PRODUCT LEVEL)	SEE PAGE
	1	1	**7V-4395**	1	HOUSING AS	
		1	**9S-5096**	1	INSERT-FLARED	
	2	1	**9V-6374**	1	ROD	
	3	1	**6F-0711**	1	SEAL-O-RING	
	4	1	**5H-9241**	5	SCREW-MACHINE	
	5	1	**1H-4393**	5	LOCKWASHER (NO.8)	
	6	1	**5P-9040**	1	SEAL-QUAD RING	
	7	1	**9V-1287**	1	PISTON	
	8	1	**5D-6574**	1	PIN	
		1	**2M-7819**	1	RING-RETAINING	
	9	1	**6V-6845**	4	BOLT-LOCKING (1/4-20X1.25)	
	10	1	**4V-5469**	2	SPACER	
	11	1	**4V-5472**	2	LEVER	
	12	1	**2S-1381**	1	SPRING	
	13	1	**4V-5471**	1	PLATE	
	14	1	**9V-1240**	1	PLATE	
	15	1	**5B-9324**	2	SETSCREW	
	16	1	**4V-5503**	1	CAMSHAFT	
	17	1	**9V-5243**	1	HOUSING	
	18	1	**6W-8227**	1	HARNESS AS	
	19	1	**5S-7347**	4	SCREW-MACHINE (4-40 THD)	
		1	**6D-3982**	4	NUT (4-40 THD)	
		1	**5P-9592**	4	WASHER	
	20	1	**9N-1750**	2	SWITCH AS-LIMIT (BACKUP ALARM)	
					(EACH INCLUDES)	
	21	1	**6V-8818**	3	SCREW-MACHINE (4-40 THD)	
		1	**5S-4246**	3	LOCKWASHER (NO.4-INT)	
	22	1	**5V-1063**	2	INSULATION-SWITCH	
	23	1	**4L-6454**	2	BOLT (3/8-16X1 IN)	
		1	**5P-1075**	2	WASHER-HARD (3MM THK)	
	24	1	**4V-8819**	1	GASKET	
	25	1	**9V-6375**	1	SEAL	
	26	1	**5P-8907**	1	SEAL-O-RING (47.35MM ID)	
	27	1	**5P-4932**	1	SEAL-O-RING (34.65MM ID)	

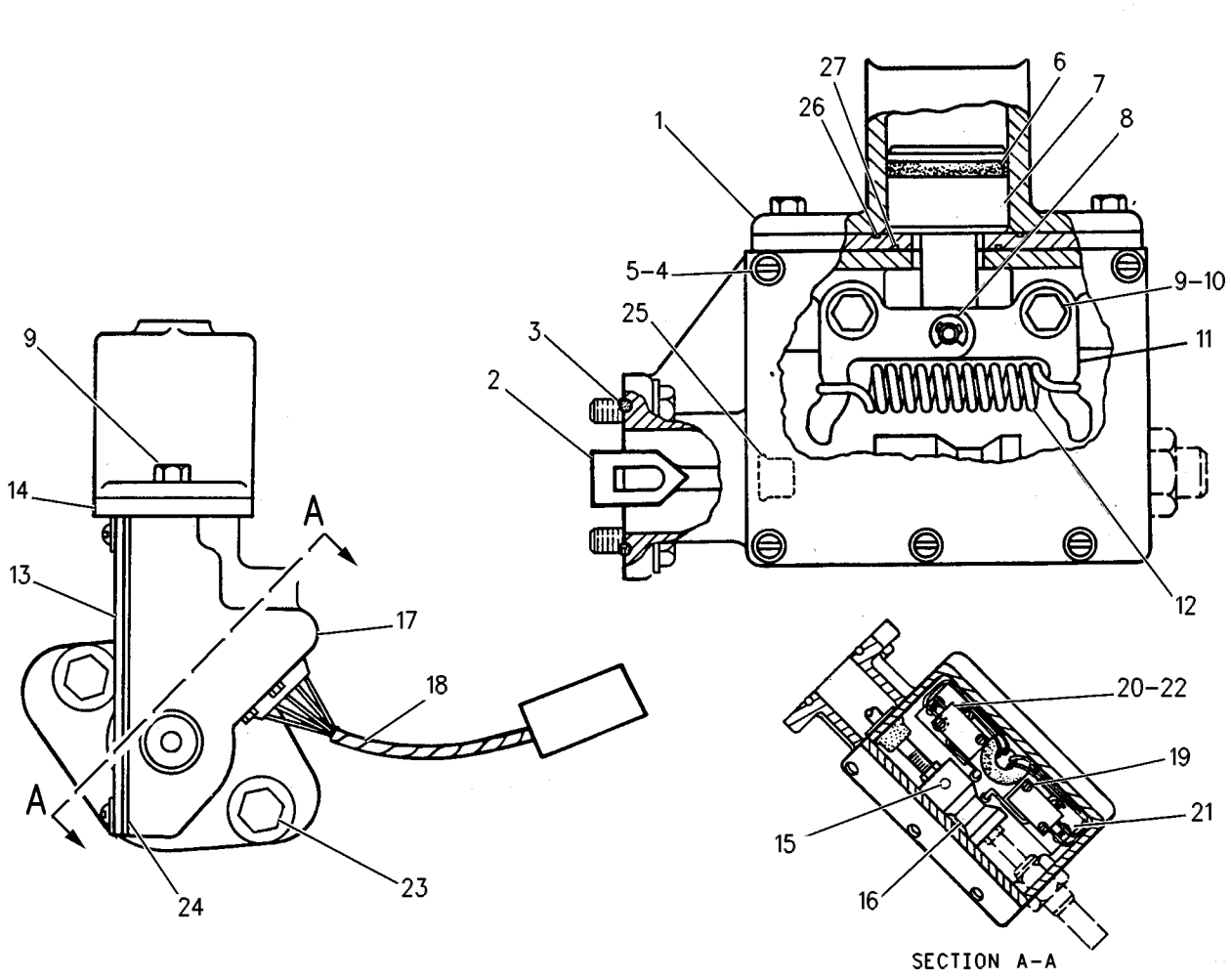

GRAPHIC #1

g00535834

POWER TRAIN

8P-2017 PLANETARY GP-TRANSMISSION

S/N: 6ME1-99999; 1YX1-99999

PART OF 6Y-9714, 8E-9391 TRANSMISSION AR

SMCS-3160 **i01521007**

NOTE	REF NO	GRAPHIC REF	PART NUMBER	QTY	PART NAME 1 2 3 4 5 6 (PRODUCT LEVEL)	SEE PAGE
	1	1	**9P-7757**	1	GEAR-SUN (42 TEETH)	
	2	1	**061-6711**	1	RING-RETAINING	
	3	1	**5P-5296**	2	RING-RETAINING	
	4	1	**9P-8626**	1	GEAR-SUN (42 TEETH)	
C	5	1,2	**7T-8816**	3	BALL BEARING	
	6	1,2	**6V-0473**	3	RING-RETAINING	
	7	1,2	**3K-2511**	10	DOWEL-REACTION	
	8	1	**9M-4355**	10	DAMPER-BOLT	
	9	1	**8P-2049**	1	HOUSING AS-CLUTCH	
		1	**1A-2223**	4	DOWEL	
	10	1,2	**8P-2019**	2	RING-SEAL	
	11	1,2	**8P-2022**	5	RING-SEAL	
	12	1,2	**4M-9592**	30	SPRING	
	13	1	**8P-1892**	1	PISTON-CLUTCH	
C	14	1	**9W-8433**	1	SHAFT AS-OUTPUT	
	15	1	**9G-6744**	1	BEARING-SLEEVE (64.71MM OD)	
	16	1	**9G-6743**	1	BEARING-SLEEVE	
	17	1,2	**5M-3038**	2	SEAL-O-RING	
	18	1	**8E-8299**	12	DISC-THRUST	
	19	1	**8P-1916**	3	GEAR-PLANETARY (20 TEETH)	
	20	1	**5P-3930**	3	BEARING AS-ROLLER	
C	21	1,2	**3S-2708**	13	PIN-SPRING	
	22	1	**9G-0289**	3	SHAFT-PLANETARY	
	23	1,2	**8P-2047**	3	LOCK RING	
	24	1	**7G-7218**	1	CARRIER-PLANETARY	
	25	1	**7T-9370**	1	GEAR-SUN (51 TEETH)	
R	26	1,2	**8P-2051**	9	PLATE-CLUTCH	
	27	1,2	**6Y-5911**	8	DISC-FRICTION	
	28	1	**9G-0291**	1	GEAR-RING (90 TEETH)	
	29	1	**9P-8283**	1	PLATE-CLUTCH	
	30	1	**9G-0290**	1	HUB-CLUTCH	
	31	1	**6Y-5912**	3	DISC-FRICTION	
	32	1	**8P-1964**	2	PLATE-CLUTCH	
	33	1	**6V-2478**	1	RING-RETAINING	
	34	1	**9G-8020**	1	PLATE-RETAINER	
	35	1	**7G-2343**	3	SPRING-DISC	
	36	1	**7G-7724**	1	PISTON-CLUTCH	
	37	1	**8P-2023**	1	RING-SEAL	
	38	1	**8D-9739**	1	SEAL-RING	
	39	1	**9G-0293**	1	HOUSING AS-CLUTCH	
	40	1	**4S-8537**	1	DOWEL	
	41	1	**6P-7704**	1	CARRIER-RING	
	42	1	**6B-6863**	1	PIN-SPRING	
	43	1	**7G-3975**	1	RING-RETAINING	
	44	1	**5P-8194**	1	RING-RETAINING	
	45	1	**7G-2830**	2	RING-SEAL	
	46	1	**5P-9806**	1	SEAL-O-RING	
	47	1	**7G-5618**	1	MANIFOLD AS	
	48	1	**4L-9564**	2	SEAL-O-RING	
	49	1	**3S-9896**	1	SEAL-O-RING	
	50	1	**5P-5045**	1	BALL BEARING	
	51	1	**1L-7388**	1	RING-RETAINING	
	52	1	**5P-5297**	1	RING-RETAINING	
	53	1	**9P-9031**	1	GEAR-SUN (47 TEETH)	
	54	1	**9P-3731**	1	CARRIER-PLANETARY	
	55	1	**8P-1918**	3	GEAR-PLANETARY (20 TEETH)	

8P-2017 PLANETARY GP-TRANSMISSION *(contd.)* i01521007

NOTE	REF NO	GRAPHIC REF	PART NUMBER	QTY	PART NAME 1 2 3 4 5 6 (PRODUCT LEVEL)	SEE PAGE
	56	1	**2S-0669**	6	BEARING	
	57	1	**8P-2042**	3	SHAFT-PLANETARY	
	58	1	**7J-6580**	1	RING-RETAINING	
	59	1	**9P-8516**	1	GEAR-RING (85 TEETH)	
	60	1,2	**9G-0280**	2	PISTON-CLUTCH	
	61	1,2	**9G-0281**	2	RING-SEAL	
	62	1	**9M-4335**	5	DOWEL-REACTION	
	63	1	**3T-4384**	1	HOUSING AS-CLUTCH	
		1	**1A-2223**	2	DOWEL	
	64	1	**5P-8245**	10	WASHER-HARD (13.5X25.5X3MM THK)	
	65	1	**6J-6721**	10	BOLT (1/2-13X19.25 IN)	
	66	1	**7G-5670**	1	SEAL-RING	
	67	2	**1A-1952**	1	BOLT (1/2-20X3.75IN)	
	68	2	**8E-3472**	1	RETAINER	
	69	2	**3T-3203**	1	GEAR	
	70	2	**6V-4351**	1	PLATE-INNER RACE	
	71	2	**067-3161**	1	RING-RETAINING	
	72	2	**5K-8591**	1	BEARING-OUTER	
	73	2	**6V-4350**	1	RACE-ROLLER BEARING	
	74	2	**6Y-4767**	1	HOUSING AS	
	75	2	**3P-7009**	1	PLUG-CUP	
	76	2	**6H-7201**	2	RING-METAL SEAL	
C	77	2	**9W-3605**	1	CARRIER-RING	
	78	2	**9P-7390**	6	DISC AS-FRICTION	
	79	2	**6Y-4843**	1	COUPLING	
C	80	2	**9W-9069**	1	SHAFT-INPUT	
C	81	2	**8M-5010**	1	SEAL-O-RING	
	82	2	**068-8093**	1	RING-RETAINING	
C	83	2	**8H-5352**	1	BALL BEARING	
	84	2	**8P-2052**	1	SEAL-RING	
	85	2	**6Y-4819**	1	CARRIER-PLANETARY	
	86	2	**8E-8305**	6	DISC-THRUST	
	87	2	**8P-1919**	3	GEAR-PLANETARY (20 TEETH)	
	88	2	**5D-2989**	3	BEARING	
	89	2	**9P-8623**	3	SHAFT-PLANETARY	
	90	2	**8P-1948**	1	GEAR-RING (88 TEETH)	
	91	2	**6Y-4840**	1	PLATE AS	
		2	**5H-6202**	2	PIN	
C	92	2	**9W-8437**	1	GEAR-SUN (32 TEETH)	
	93	2	**8E-8304**	12	DISC-THRUST	
	94	2	**7G-2516**	6	GEAR-PLANETARY (24 TEETH)	
	95	2	**5M-6126**	6	BEARING	
	96	2	**9P-8624**	3	SHAFT-PLANETARY	
	97	2	**9P-3713**	1	CARRIER-PLANETARY	
	98	2	**8P-2053**	1	SEAL-RING	
	99	2	**9P-8521**	1	GEAR-RING (90 TEETH)	
	100	2	**7H-7658**	10	SPRING	
	101	2	**9G-0285**	1	PISTON-CLUTCH	
	102	2	**9G-0286**	1	RING-SEAL	
	103	2	**9G-0284**	1	HOUSING-CLUTCH	
	104	2	**1A-5183**	2	BOLT (3/8-16X4.75 IN)	
	105	2	**9P-8614**	1	GEAR-RING (90 TEETH)	
	106	2	**8P-9507**	1	PISTON-CLUTCH	

C-CHANGE FROM PREVIOUS TYPE
R-REMFG PART MAY BE AVAILABLE

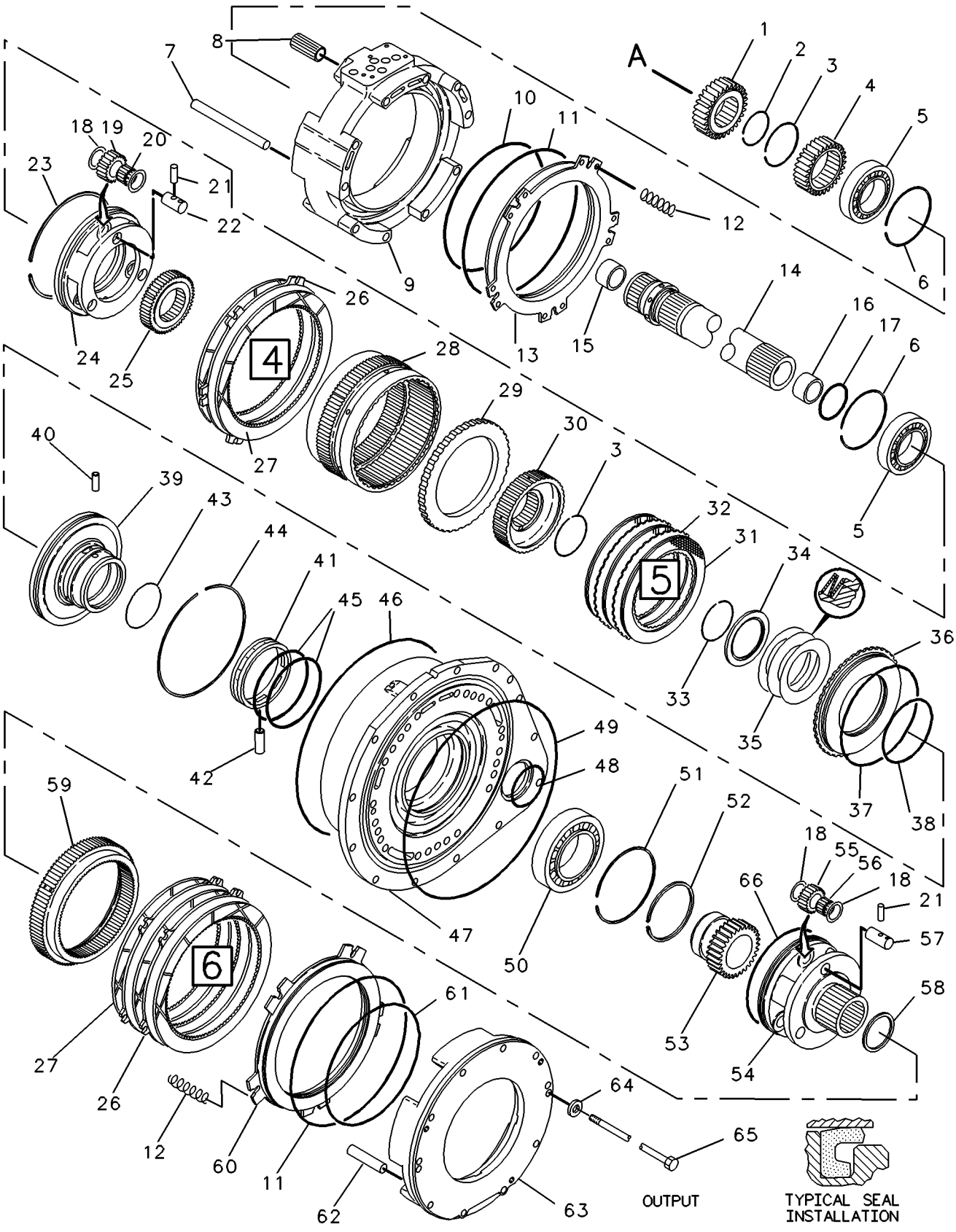

GRAPHIC #1 g00118731

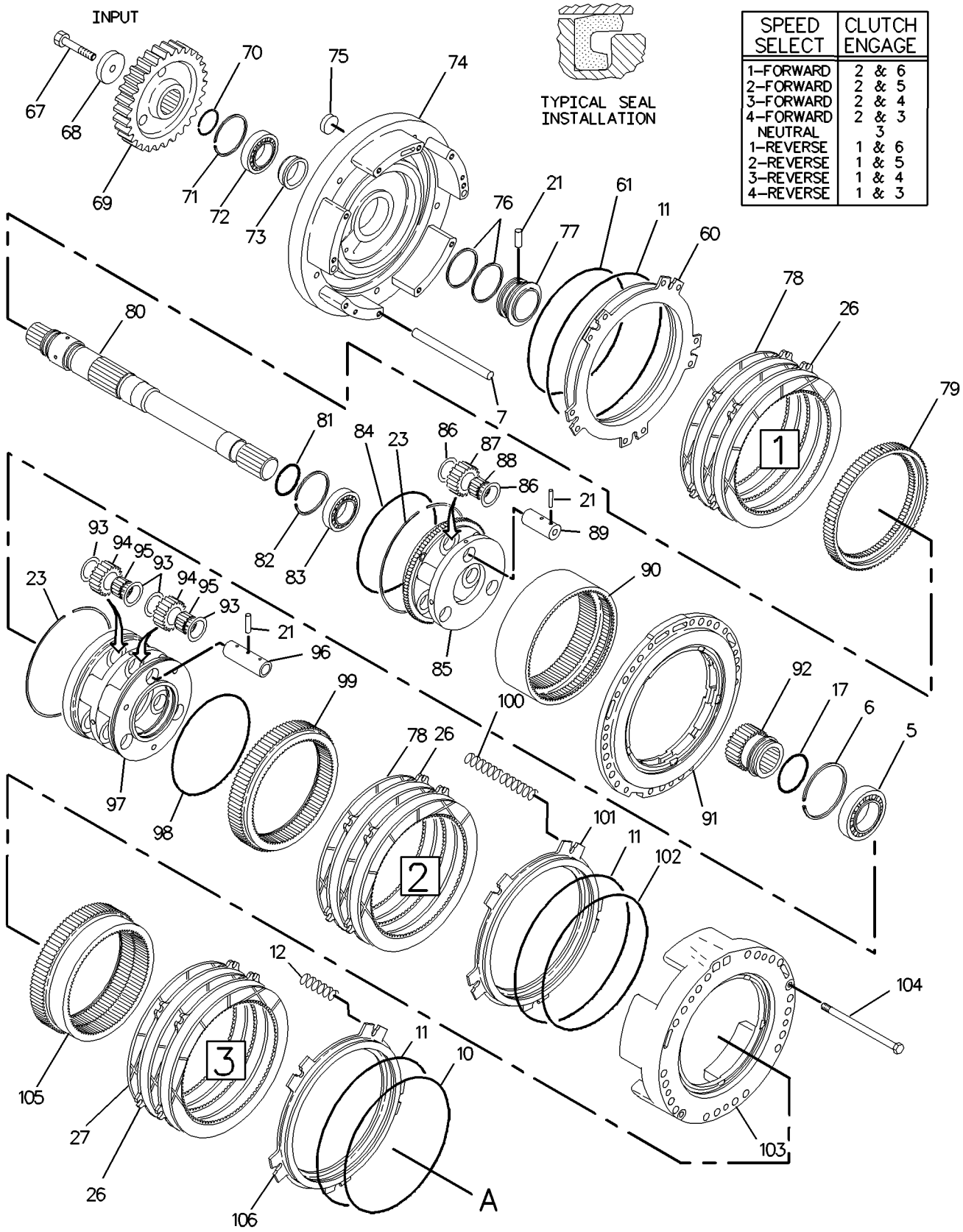

GRAPHIC #2 g00789935

9P-9610 PUMP GP-GEAR

S/N: 6ME1-99999; 1YX1-99999
PART OF 6Y-9714, 8E-9391 TRANSMISSION AR

SMCS-3066, 5073 **i01327317**

NOTE	REF NO	GRAPHIC REF	PART NUMBER	QTY	PART NAME 1 2 3 4 5 6 (PRODUCT LEVEL)	SEE PAGE
	1	1	**9G-7412**	1	GEAR AS-OIL PUMP (17 TEETH)	
	2	1	**0T-0573**	6	BOLT (3/8-16X2.75 IN)	
		1	**5M-2894**	6	WASHER-HARD (2.5MM THK)	
	3	1	**8P-1812**	1	COVER AS-OIL PUMP	
	4	1	**3P-7899**	2	BEARING	
	5	1	**9G-7414**	1	BODY AS-OIL PUMP	
	6	1	**8M-8489**	4	DOWEL	
	7	1	**8P-1807**	1	MANIFOLD AS-PUMP	
	8	1	**3P-7899**	2	BEARING	
	9	1	**9G-7411**	1	GEAR-OIL PUMP DRIVE (17 TEETH)	

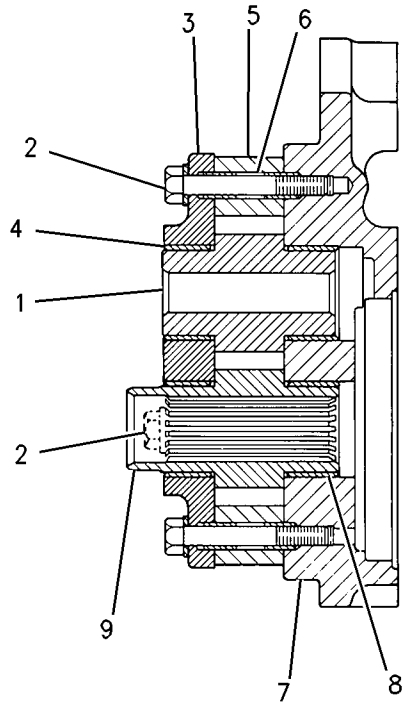

GRAPHIC #1 g00702236

8R-1885 RIM GP-DEMOUNTABLE–4 REQUIRED

S/N: 3XJ1-99999

26.5 X 25 TUBELESS TIRES

SMCS-4209 **i00684976**

NOTE	REF NO	GRAPHIC REF	PART NUMBER	QTY	PART NAME 1 2 3 4 5 6 (PRODUCT LEVEL)	SEE PAGE
	1	1	**6C-3292**	1	RIM AS	
	2	1	**4F-8925**	2	FLANGE	
	3	1	**2D-2443**	1	SEAL-O-RING	
	4	1	**7D-7469**	1	LOCKRING	
	5	1	**8W-9602**	1	BAND AS	
	6	1	**5T-5682**	1	DRIVER	
	7	1	**6K-0248**	1	VALVE AS	
	8	1	**2D-2629**	1	GROMMET	
	9	1	**2D-2630**	1	WASHER-RING	
	10	1	**2D-2631**	1	NUT (.482-26 THD)	
	11	1	**6D-0443**	1	HOUSING AS-CORE	
	12	1	**2D-2633**	1	CAP-VALVE	
	13	1	**2D-2628**	1	CORE-VALVE	
AM	14	1	**8T-0380**	80	BOLT (M24X3X60MM)	
A		1	**6V-8237**	80	WASHER (4.0MM THK)	

A-NOT PART OF THIS GROUP
M-METRIC PART

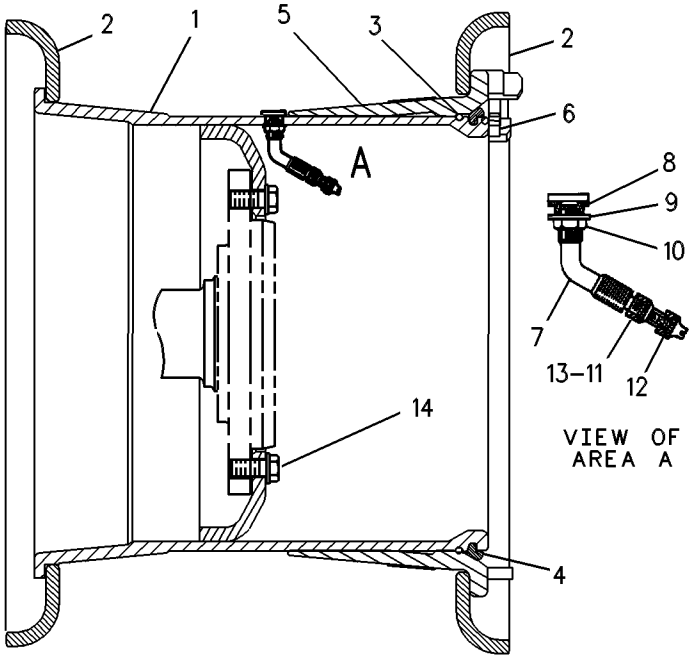

GRAPHIC #1 g00283486

8R-4310 RIM GP-DEMOUNTABLE–4 REQUIRED

S/N: 3XJ1-99999
23.5 X 25 TUBELESS TIRES
AN ATTACHMENT

SMCS-4209 **i00286659**

NOTE	REF NO	GRAPHIC REF	PART NUMBER	QTY	PART NAME 1 2 3 4 5 6 (PRODUCT LEVEL)	SEE PAGE
	1	1	**6C-3483**	1	RIM AS	
	2	1	**1J-8387**	2	FLANGE	
	3	1	**2D-2443**	1	SEAL-O-RING	
	4	1	**7D-7469**	1	LOCKRING	
	5	1	**8W-9602**	1	BAND AS	
	6	1	**5T-5682**	1	DRIVER	
	7	1	**6K-0248**	1	VALVE AS	
	8	1	**2D-2629**	1	GROMMET	
	9	1	**2D-2630**	1	WASHER-RING	
	10	1	**2D-2631**	1	NUT (.482-26 THD)	
	11	1	**6D-0443**	1	HOUSING AS-CORE	
	12	1	**2D-2633**	1	CAP-VALVE	
	13	1	**2D-2628**	1	CORE-VALVE	

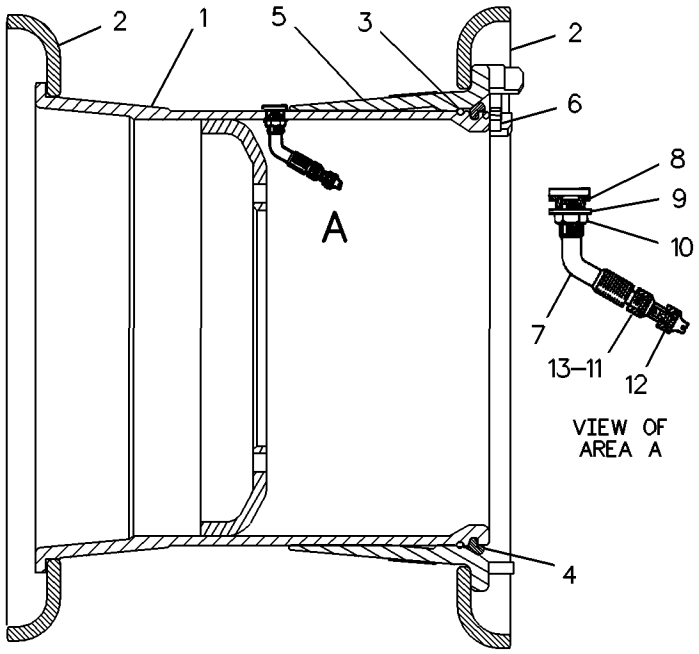

GRAPHIC #1 g00126509

MEMORANDA

2V-4226 SHAFT GP-DRIVE

S/N: 3XJ1-99999

SMCS-3253 **i01328653**

NOTE	REF NO	GRAPHIC REF	PART NUMBER	QTY	PART NAME 1 2 3 4 5 6 (PRODUCT LEVEL)	SEE PAGE
	1	1	**2H-3088**	1	SEAL-O-RING (50.17MM ID)	
	2	1	**0L-2315**	1	BOLT (1/2 X 20 X 3.5IN)	
	3	1	**9V-2429**	1	RETAINER	
	4	1	**2B-7559**	2	CORK	
	5	1	**9V-2411**	1	HOUSING-BEARING	
	6	1	**8T-0392**	2	SEAL-LIP	
	7	1	**5F-3144**	1	SEAL-O-RING (120.24MM ID)	
	8	1	**8F-3170**	1	BEARING-ROLLER	
	9	1	**9V-2410**	1	HOUSING-BEARING	
	10	1	**4L-9337**	2	BOLT (3/8-16X1.5 IN)	
		1	**8T-4896**	2	WASHER-HARD (10.2X18.5X2.5MM THK)	
	11	1	**4V-7080**	20	BOLT	
C	12	1	**160-1400**	2	YOKE AS	
					(EACH INCLUDES)	
		1	**7V-3791**	1	GUARD	
		1	**156-1153**	1	KIT-SERVICE	
					(INCLUDES CAP-DUST, SEAL & RING-SNAP)	
	13	1	**8T-0336**	1	FITTING-RELIEF	
Y	14	1	**4V-7082**	1	SLIP JOINT GP	
	15	1	**4V-7081**	10	STRAP	
	16	1	**8V-0003**	1	GUARD	
	17	1	**5P-8247**	6	WASHER-HARD (3.5MM THK)	
	18	1	**1A-8537**	6	BOLT (5/8-11X2.75IN)	
	19	1	**9C-4080**	1	YOKE-BRAKE	
	20	1	**4V-7079**	1	UNIVERSAL JOINT GP	
Y	21	1	**7V-3842**	2	SPIDER & BEARING GP	
Y	22	1	**9V-5174**	1	UNIVERSAL JOINT GP	
Y	23	1	**7V-3842**	1	SPIDER & BEARING GP	

C-CHANGE FROM PREVIOUS TYPE
Y-SEPARATE ILLUSTRATION

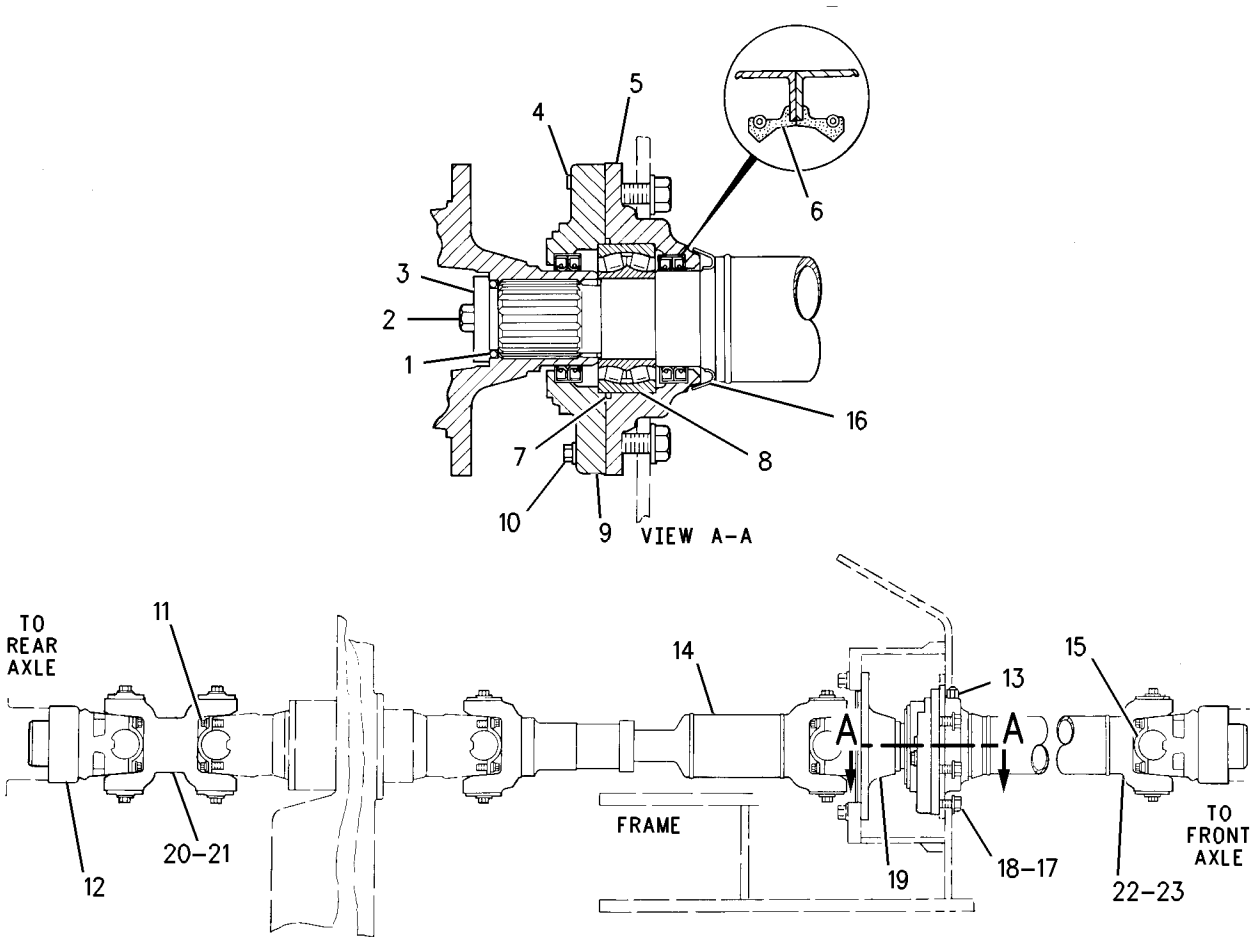

GRAPHIC #1 g00702696

4V-7082 SLIP JOINT GP

S/N: 3XJ1-99999

PART OF 2V-4226 SHAFT GP-DRIVE

SMCS-3251 **i01328629**

NOTE	REF NO	GRAPHIC REF	PART NUMBER	QTY	PART NAME 1 2 3 4 5 6 (PRODUCT LEVEL)	SEE PAGE
	1	1	**8V-1412**	1	RETAINER	
Y	2	1	**7V-3842**	2	SPIDER & BEARING GP	
	3	1	**3B-8489**	1	FITTING-GREASE (1/8-27 THD)	
	4	1	**4K-9477**	1	FITTING-RELIEF	

Y-SEPARATE ILLUSTRATION

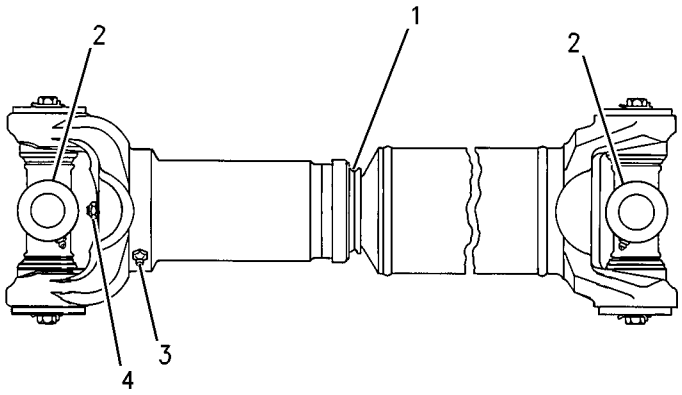

GRAPHIC #1 g00702683

7V-3842 SPIDER & BEARING GP

S/N: 3XJ1-99999

PART OF 2V-4226 SHAFT GP-DRIVE, 4V-7082 SLIP JOINT GP, 9V-5174 UNIVERSAL JOINT GP

SMCS-3251, 3253 **i01328645**

NOTE	REF NO	GRAPHIC REF	PART NUMBER	QTY	PART NAME 1 2 3 4 5 6 (PRODUCT LEVEL)	SEE PAGE
	1	1	**6W-4181**	2	STRAP-LOCKING	
	2	1	**0L-1138**	4	BOLT (3/8-24X.5IN)	
	3	1	**9C-9159**	2	PLATE	
	4	1	**027-1287**	1	FITTING-GREASE	

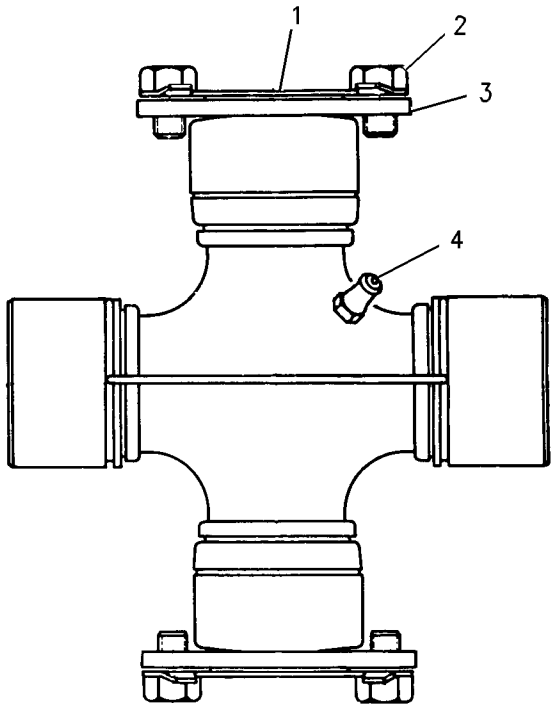

GRAPHIC #1 g00702674

6T-1169 TORQUE CONVERTER GP

S/N: 91T1-99999

PART OF 6Y-1731 TORQUE CONVERTER GP

SMCS-3101 **i00259572**

NOTE	REF NO	GRAPHIC REF	PART NUMBER	QTY	PART NAME 1 2 3 4 5 6 (PRODUCT LEVEL)	SEE PAGE
	1	1	**8P-0953**	1	TURBINE-CONVERTER	
	2	1	**1T-1282**	4	RACE-THRUST BEARING	
C	3	1	**0S-1594**	36	BOLT (3/8-16X1IN)	
	4	1	**1T-0689**	52	WASHER	
	5	1	**9P-9517**	1	STATOR-CONVERTER	
	6	1	**8P-8677**	1	HUB-IMPELLER	
	7	1	**5P-0076**	8	BOLT-12 POINT HEAD (3/8-16X1.50IN)	
	8	1	**5P-5167**	1	RACE-BEARING OUTER	
	9	1	**5P-5168**	1	BEARING-INNER	
	10	1	**3N-8506**	1	RING-PISTON	
	11	1	**5P-6414**	1	RING-RETAINING (125.4MM OD)	
	12	1	**9G-2413**	1	SHAFT-OUTPUT	
	13	1	**3T-2145**	1	CARRIER AS	
	14	1	**9U-9658**	1	BALL BEARING	
	15	1	**8P-1636**	1	GEAR-PUMP DRIVE (58 TEETH)	
	16	1	**9F-3788**	1	RING-METAL SEAL	
C	17	1	**6Y-1690**	1	CARRIER-RING	
	18	1	**5P-5072**	1	RING-RETAINING	
	19	1	**6V-6775**	2	RING-RETAINING	
	20	1	**8P-0960**	1	IMPELLER-CONVERTER	
	21	1	**9P-9509**	1	ADAPTER-SPLINED	
	22	1	**5P-7074**	2	RING-RETAINING	
	23	1	**1T-1278**	3	BEARING-THRUST	
	24	1	**0L-1351**	16	BOLT (3/8-16X.875IN)	
	25	1	**1T-1281**	2	RETAINER-BEARING	
	26	1	**9P-9507**	2	RACE-THRUST	
	27	1	**9W-8384**	1	HUB	
C	28	1	**7T-5038**	1	HOUSING AS	
		1	**1T-0767**	1	BEARING-SLEEVE	

C-CHANGE FROM PREVIOUS TYPE

6T-1169 TORQUE CONVERTER GP *(contd.)* i00259572

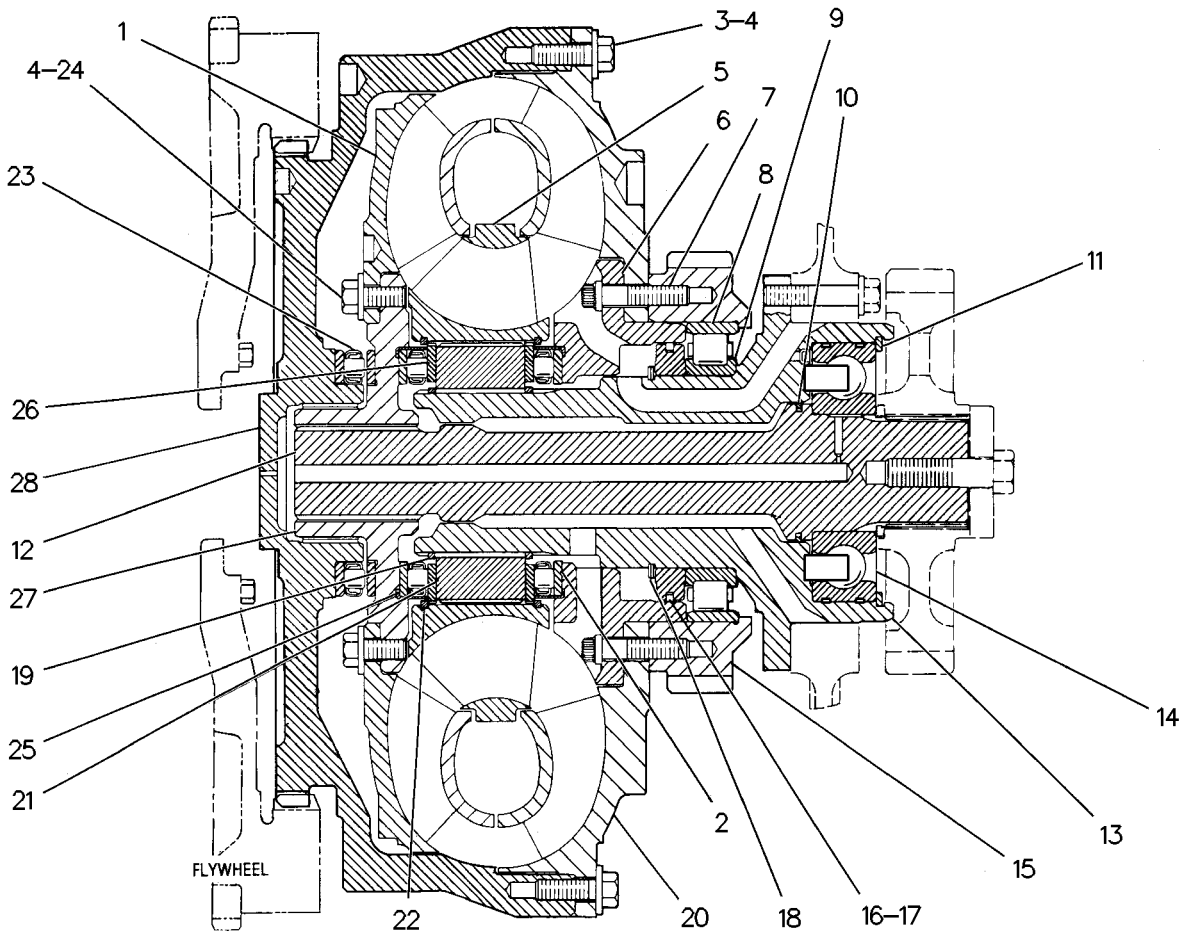

GRAPHIC #1 g00119386

6Y-1731 TORQUE CONVERTER GP

S/N: 6ME1-99999
WITH HOUSING
PART OF 6Y-9714 TRANSMISSION AR

SMCS-3101 **i00988333**

NOTE	REF NO	GRAPHIC REF	PART NUMBER	QTY	PART NAME 1 2 3 4 5 6 (PRODUCT LEVEL)	SEE PAGE
Y	1	1	**6T-1169**	1	TORQUE CONVERTER GP	
	2	1	**5M-2894**	14	WASHER (2.5MM THK)	
	3	1	**6T-1705**	1	SHAFT-PUMP DRIVE	
	4	1	**5P-4992**	1	BALL BEARING	
	5	1	**6T-1706**	1	GEAR-PUMP DRIVE (61 TEETH)	
	6	1	**8P-1758**	1	RETAINER-BEARING	
	7	1	**0S-1590**	14	BOLT (3/8-16X2IN)	
	8	1	**035-3360**	1	RING-RETAINING	
	10	1	**2B-2404**	1	CLIP (6.35MM ID)	
	11	1	**144-8299**	1	SEAL-O-RING (422MM ID)	
	12	1	**1S-5596**	1	RETAINER	
	13	1	**0S-1579**	1	BOLT (1/2-20X2IN)	
	14	1	**8E-3471**	1	GEAR (41 TEETH)	
	15	1	**8P-2196**	1	TUBE AS	
	16	1	**5K-9243**	1	ELBOW-FLARED	
	17	1	**9P-9510**	1	HOUSING AS-TORQUE CONVERTER	
	18	1	**8S-6814**	1	PIN	
	19	1	**9S-8009**	2	PLUG-O-RING (1 3/16-12 THD)	
		1	**4K-1388**	2	SEAL-O-RING (26.59MM ID)	
	20	1	**1T-1639**	1	RING	

Y-SEPARATE ILLUSTRATION

6Y-1731 **TORQUE CONVERTER GP** ***(contd.)*** **i00988333**

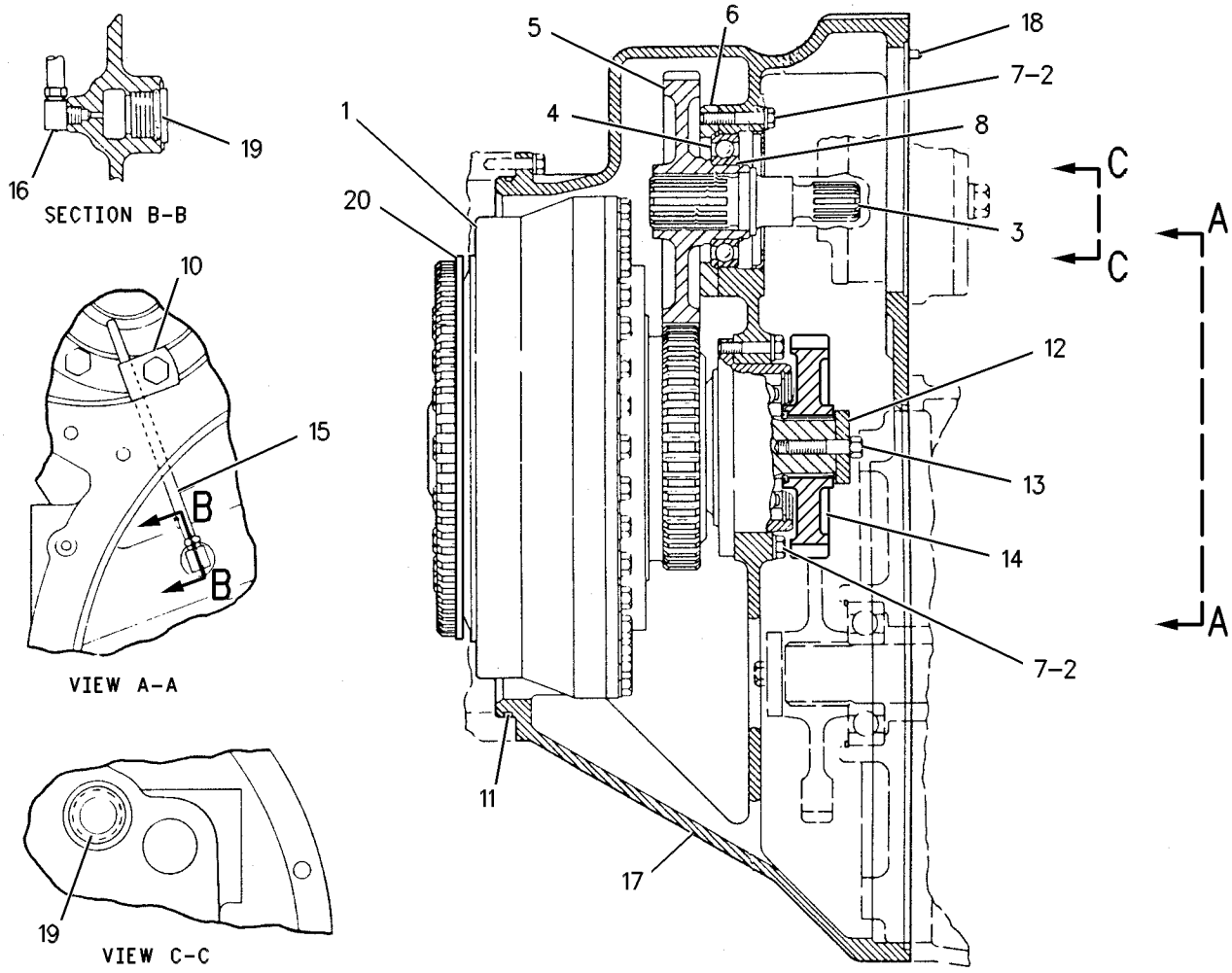

GRAPHIC #1

g00503411

8E-9312 TORQUE CONVERTER GP

S/N: 2KT1-99999

PART OF 8E-9390 TORQUE CONVERTER GP

SMCS-3101 **i00259405**

NOTE	REF NO	GRAPHIC REF	PART NUMBER	QTY	PART NAME 1 2 3 4 5 6 (PRODUCT LEVEL)	SEE PAGE
	1	1	**9G-2413**	1	SHAFT-OUTPUT	
	2	1	**9U-9658**	1	BALL BEARING	
	3	1	**3T-2145**	1	CARRIER AS	
	4	1	**1P-0604**	1	PLUG-CUP	
	5	1	**6Y-1690**	1	CARRIER-RING	
	6	1	**9F-3788**	1	RING-METAL SEAL	
	7	1	**8P-1636**	1	GEAR-PUMP DRIVE	
	8	1	**1T-1282**	4	RACE-THRUST BEARING	
	9	1	**9P-9507**	2	RACE-THRUST	
	10	1	**8P-0960**	1	IMPELLER-CONVERTER	
	11	1	**5P-7074**	2	RING-RETAINING	
	12	1	**0S-1594**	36	BOLT (3/8-16X1IN)	
	13	1	**1T-0689**	52	WASHER	
	14	1	**1T-1281**	2	RETAINER-BEARING	
	15	1	**8P-0953**	1	TURBINE-CONVERTER	
	16	1	**0L-1351**	16	BOLT (3/8-16X.875IN)	
	17	1	**8E-9311**	1	HOUSING AS	
	18	1	**1T-0767**	1	BEARING-SLEEVE	
	19	1	**9W-8384**	1	HUB	
	20	1	**9P-9509**	1	ADAPTER-SPLINED	
	21	1	**6V-6775**	2	RING-RETAINING	
	22	1	**1T-1278**	3	BEARING-THRUST	
	23	1	**9P-9517**	1	STATOR-CONVERTER	
	24	1	**5P-0076**	8	BOLT-12 POINT HEAD (3/8-16X1.50)	
	25	1	**8P-8677**	1	HUB-IMPELLER	
	26	1	**5P-5072**	1	RING-RETAINING	
	27	1	**5P-5167**	1	RACE-BEARING OUTER	
	28	1	**5P-5168**	1	BEARING-INNER	
	29	1	**3N-8506**	1	RING-PISTON	
	30	1	**5P-6414**	1	RING-RETAINING (125.4MM OD)	

8E-9312 TORQUE CONVERTER GP *(contd.)* i00259405

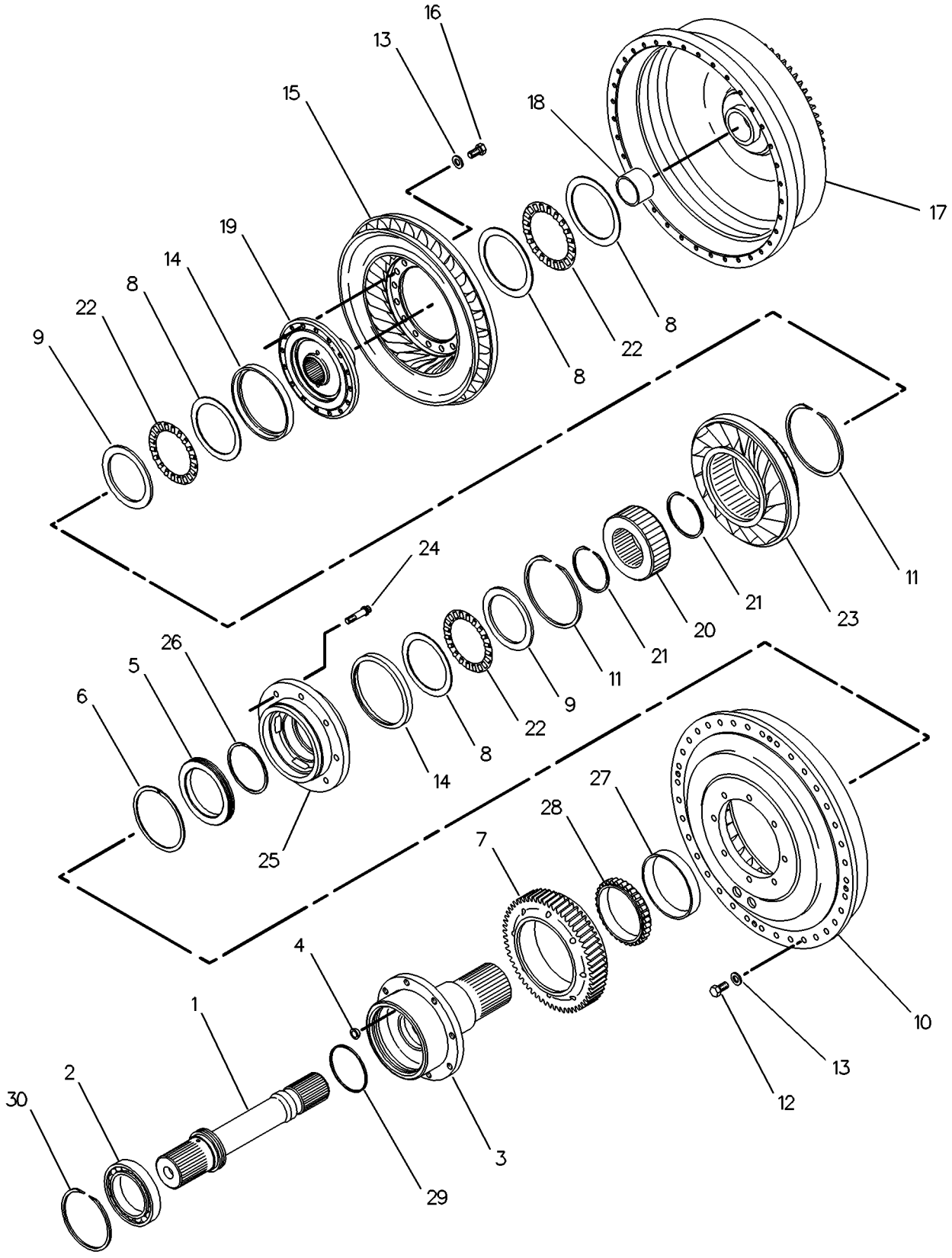

GRAPHIC #1 g00127425

8E-9390 TORQUE CONVERTER GP

S/N: 1YX1-99999
WITH HOUSING
PART OF 8E-9391 TRANSMISSION AR

SMCS-3101 **i01310590**

NOTE	REF NO	GRAPHIC REF	PART NUMBER	QTY	PART NAME 1 2 3 4 5 6 (PRODUCT LEVEL)	SEE PAGE
	1	1	**144-8299**	1	SEAL-O-RING (422MM ID)	
	2	1	**9P-9510**	1	HOUSING AS-TORQUE CONVERTER	
		1	**6P-5075**	1	BAFFLE	
	3	1	**4K-1388**	2	SEAL-O-RING (26.59MM ID)	
	4	1	**8S-6814**	1	PIN	
	5	1	**9S-8009**	2	PLUG-O-RING (1 3/16-12 THD)	
Y	6	1	**8E-9312**	1	TORQUE CONVERTER GP	
	7	1	**5M-2894**	14	WASHER (2.5MM THK)	
	8	1	**6T-1705**	1	SHAFT-PUMP DRIVE	
	9	1	**5P-4992**	1	BALL BEARING	
	10	1	**6T-1706**	1	GEAR-PUMP DRIVE (61 TEETH)	
	11	1	**8P-1758**	1	RETAINER-BEARING	
	12	1	**035-3360**	1	RING-RETAINING	
	13	1	**0S-1590**	14	BOLT (3/8-16X2 IN)	
	14	1	**1S-5596**	1	RETAINER	
	15	1	**0S-1579**	1	BOLT (1/2-20X2IN)	
	16	1	**8E-3471**	1	GEAR (41 TEETH)	
	17	1	**1T-1639**	1	RING	
	18	1	**5K-9243**	1	ELBOW-FLARED (90 DEGREES)	
	19	1	**8P-2196**	1	TUBE AS	
	20	1	**2B-2404**	1	CLIP (6.35MM ID)	

Y-SEPARATE ILLUSTRATION

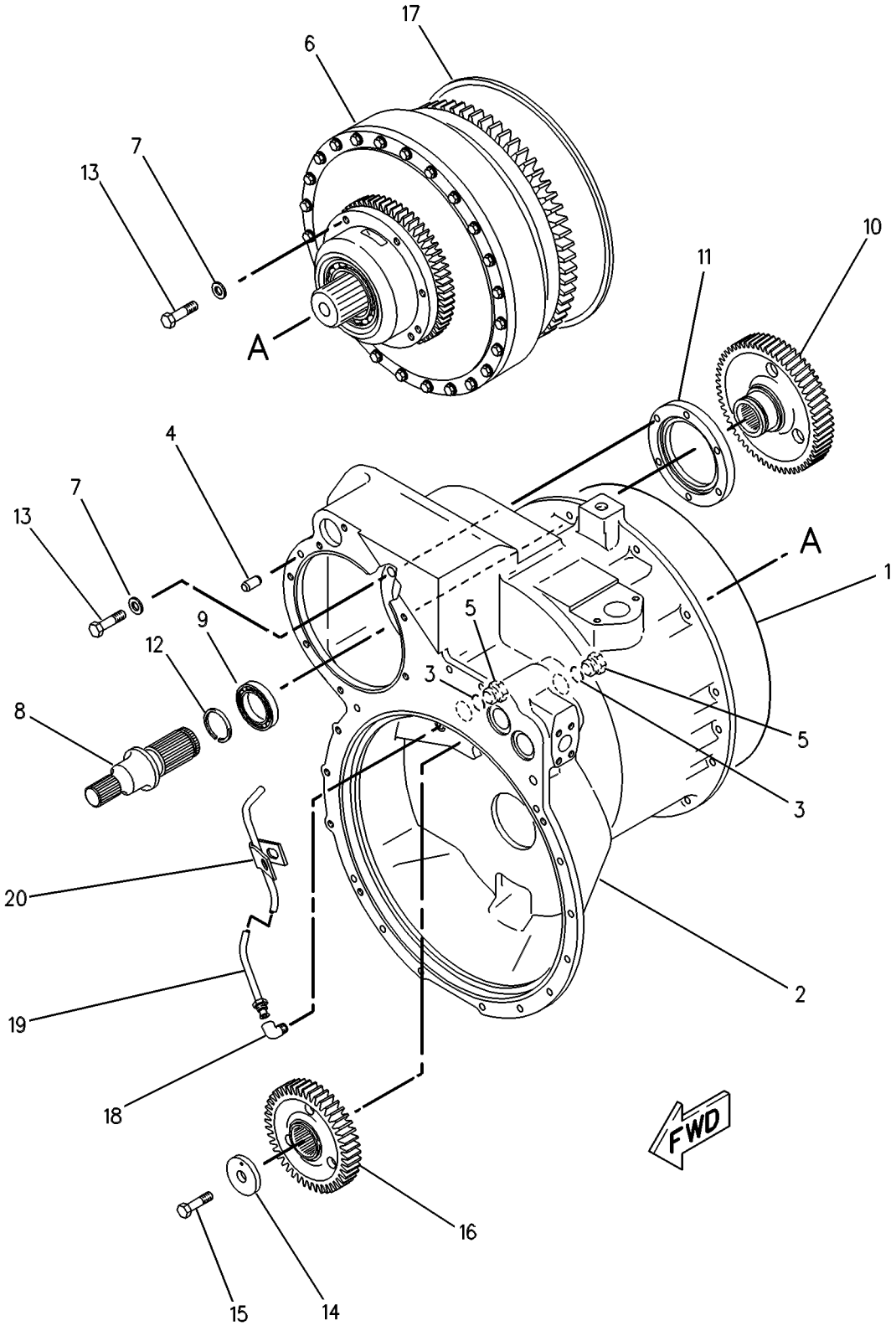

GRAPHIC #1 g00293783

6Y-9714 TRANSMISSION AR

S/N: 6ME1-99999

SMCS-3030 **i01322615**

NOTE	PART NUMBER	QTY	PART NAME 1 2 3 4 5 6 (PRODUCT LEVEL)	SEE PAGE
Y	*8P-2018*	1	CASE & PARTS GP-PLANETARY	
Y	*8P-8977*	1	CONTROL GP-TRANSMISSION HYD	
Y	*3T-1872*	1	COVER GP-SHIPPING	
Y	*6Y-9717*	1	GEAR GP-OUTPUT TRANSFER	
Y	*8P-2017*	1	PLANETARY GP-TRANSMISSION	
Y	**9P-9610**	1	PUMP GP-GEAR	
Y	*6Y-1731*	1	TORQUE CONVERTER GP	
Y	*3S-2695*	1	VALVE GP-RELIEF (TORQUE CONVERTER OUTLET)	
			AVAILABLE GASKET KIT(S):	
	6V-4710	1	KIT-GASKET (HYDRAULIC CONTROL)	
	7X-2832	1	KIT-GASKET (PARTS & CASE)	
	6V-4713	1	KIT-GASKET (PLANETARY)	
	3E-3274	1	KIT-GASKET (TORQUE CONVERTER)	
	8C-8555	1	KIT-GASKET (TRANSFER GEAR-OUTPUT)	
	6V-4708	1	KIT-GASKET (TRANSMISSION FILTER)	

Y-SEPARATE ILLUSTRATION

8E-9391 TRANSMISSION AR

S/N: 1YX1-99999

SMCS-3030 **i01322620**

NOTE	PART NUMBER	QTY	PART NAME 1 2 3 4 5 6 (PRODUCT LEVEL)	SEE PAGE
Y	*8P-2018*	1	CASE & PARTS GP-PLANETARY	
Y	*8P-8977*	1	CONTROL GP-TRANSMISSION HYD	
Y	*8E-9105*	1	GEAR GP-OUTPUT TRANSFER	
Y	*8P-2017*	1	PLANETARY GP-TRANSMISSION	
Y	**9P-9610**	1	PUMP GP-GEAR	
Y	*8E-9390*	1	TORQUE CONVERTER GP	
Y	*3S-2695*	1	VALVE GP-RELIEF (TORQUE CONVERTER OUTLET)	
			AVAILABLE REPAIR KIT(S):	
	8C-8556		KIT-GASKET	
	6V-4710		KIT-GASKET	
	6V-4713		KIT-GASKET	
	8C-8555		KIT-GASKET	

Y-SEPARATE ILLUSTRATION

POWER TRAIN

9V-5174 UNIVERSAL JOINT GP

S/N: 3XJ1-99999

PART OF 2V-4226 SHAFT GP-DRIVE

SMCS-3251, 3253 **i01105059**

NOTE	PART NUMBER	QTY	PART NAME 1 2 3 4 5 6 (PRODUCT LEVEL)	SEE PAGE
Y	**7V-3842**	1	SPIDER & BEARING GP	

Y-SEPARATE ILLUSTRATION

8P-3040 VALVE GP-NEUTRALIZER

S/N: 6ME1-99999; 1YX1-99999

PART OF 3T-5815 VALVE GP

SMCS-3181 **i01327160**

NOTE	REF NO	GRAPHIC REF	PART NUMBER	QTY	PART NAME 1 2 3 4 5 6 (PRODUCT LEVEL)	SEE PAGE
	1	1	**9G-8548**	1	MANIFOLD-BOTTOM	
	2	1	**8H-9189**	1	DOWEL	
	3	1	**3T-0809**	1	SPOOL-NEUTRAL	
	4	1	**8P-1556**	1	SPRING	

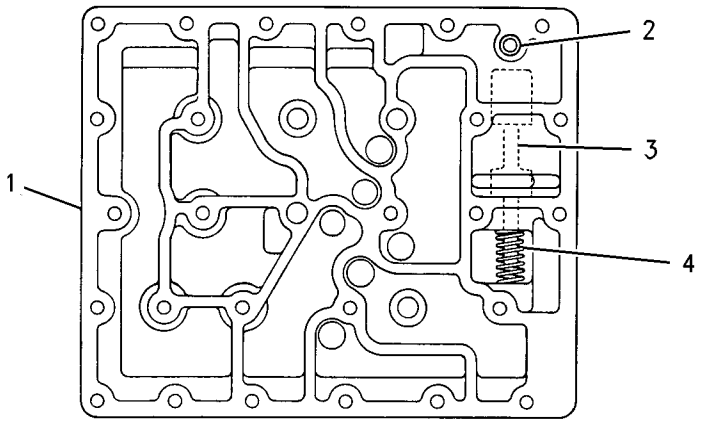

GRAPHIC #1 g00702105

2P-3675 VALVE GP-RELIEF–TORQUE CONVERTER OUTLET

S/N: 6ME1-99999
FIELD REPLACEMENT FOR 3S-2695–PAGE
FIELD INSTALLATION

SMCS-3133, 3182, 3210, 3213 **i01325651**

NOTE	REF NO	GRAPHIC REF	PART NUMBER	QTY	PART NAME 1 2 3 4 5 6 (PRODUCT LEVEL)	SEE PAGE
	1	1	**2S-1384**	1	SPOOL AS-RELIEF	
	2	1	**8M-2538**	1	POPPET	
	3	1	**5M-9548**	1	SPRING	
	4	1	**8M-4409**	1	RETAINER	
	5	1	**7M-8592**	1	RING-RETAINING	
	6	1	**8T-6764**	1	PLUG-PIPE (1/8-27 NPTF THD)	
	9	1	**0S-1594**	4	BOLT (3/8-16X1 IN)	
		1	**3B-4506**	4	LOCKWASHER (9.78MM X17.14MM X2.92MM THK)	
	10	1	**4M-8239**	2	COVER	
	11	1	**2S-1382**	1	SPRING (11 COILS)	
C	12	1	**061-7540**	1	SEAL-O-RING (37.69MM ID)	
C	13	1	**6V-4365**	1	SEAL-O-RING (9.19MM ID)	
B	14	1	**4M-1751**	1	SPACER (0.40MM THK)	
B		1	**5S-7001**	3	SPACER (.91MM THK)	
C	15	1	**8M-4986**	2	SEAL-O-RING (37.69MM ID)	
	16	1	**6C-5340**	1	COVER	
		1	**6C-5341**	1	GASKET	
	17	1	**3L-0526**	1	BOLT (7/16-14X.875IN)	
	18	1	**0T-0573**	3	BOLT (3/8-16X2.75 IN)	
	19	1	**9S-8752**	3	NUT-FULL (3/8-16 THD)	
	20	1	**3J-5554**	1	GASKET	

B-USE AS REQUIRED
C-CHANGE FROM PREVIOUS TYPE

2P-3675 VALVE GP-RELIEF *(contd.)* i01325651

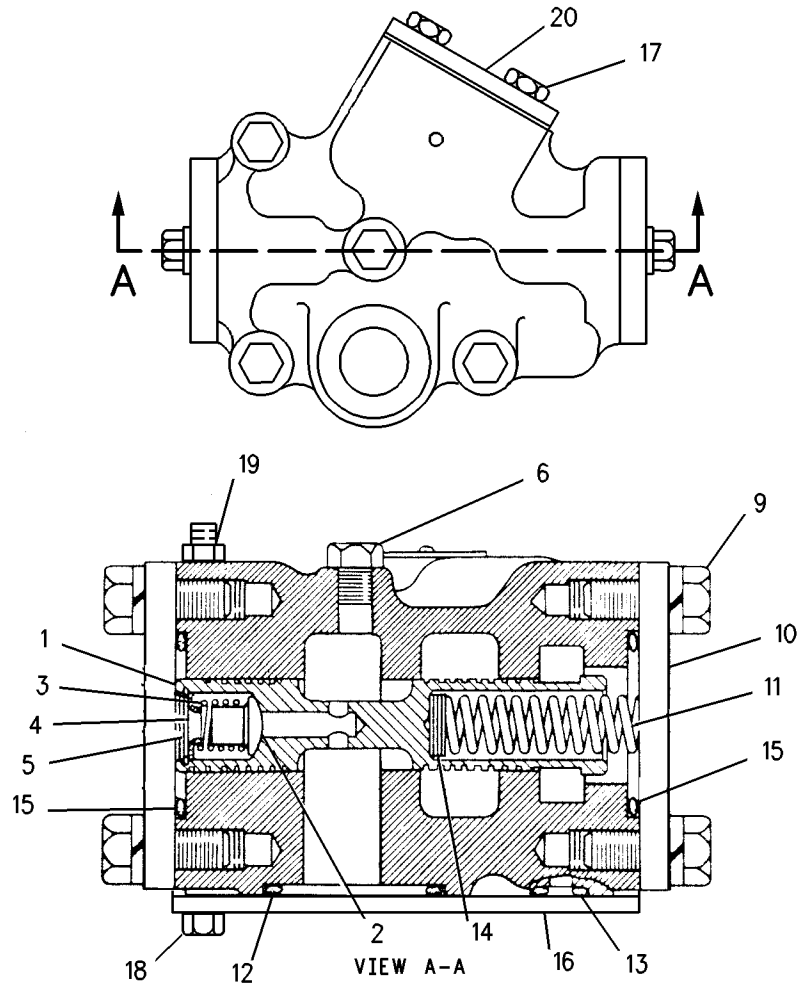

GRAPHIC #1 g00650426

3S-2695 VALVE GP-RELIEF–TORQUE CONVERTER OUTLET

S/N: 6ME1-985
PART OF 6Y-9714 TRANSMISSION AR
FIELD REPLACEMENT ORDER 2P-3675–PAGE

SMCS-3133, 3182, 3210, 3213 **i01328688**

NOTE	REF NO	GRAPHIC REF	PART NUMBER	QTY	PART NAME 1 2 3 4 5 6 (PRODUCT LEVEL)	SEE PAGE
	1	1	**2S-1384**	1	SPOOL AS-RELIEF	
	2	1	**8M-2538**	1	POPPET	
	3	1	**5M-9548**	1	SPRING	
	4	1	**8M-4409**	1	RETAINER	
	5	1	**7M-8592**	1	RING-RETAINING	
	6	1	**8T-6764**	1	PLUG-PIPE (1/8-27 NPTF THD)	
	9	1	**0S-1594**	4	BOLT (3/8-16X1 IN)	
		1	**3B-4506**	4	LOCKWASHER (9.78MM X17.14MM X2.92MM THK)	
	10	1	**4M-8239**	2	COVER	
	11	1	**2S-1382**	1	SPRING (11 COILS)	
	12	1	**061-7540**	1	SEAL-O-RING (37.69MM ID)	
	13	1	**6V-4365**	1	SEAL-O-RING (9.19MM ID)	
B	14	1	**4M-1751**	3	SPACER (0.40MM THK)	
B		1	**5S-7001**	5	SPACER (.91MM THK)	
	15	1	**8M-4986**	2	SEAL-O-RING (37.69MM ID)	

B-USE AS REQUIRED

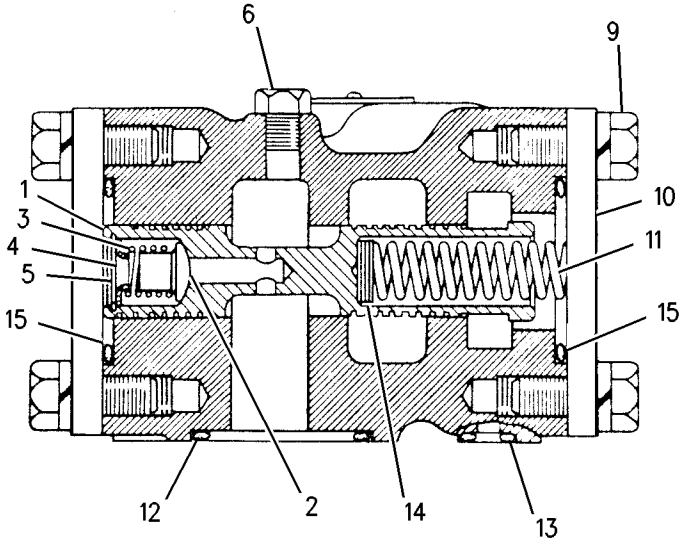

GRAPHIC #1 g00702715

MEMORANDA

3S-2695 VALVE GP-RELIEF–TORQUE CONVERTER OUTLET

S/N: 6ME986-99999; 1YX1-99999
PART OF 6Y-9714, 8E-9391 TRANSMISSION AR
FIELD REPLACEMENT ORDER 2P-3675–PAGE

SMCS-3133, 3182, 3210, 3213 **i00675775**

NOTE	REF NO	GRAPHIC REF	PART NUMBER	QTY	PART NAME 1 2 3 4 5 6 (PRODUCT LEVEL)	SEE PAGE
	1	1	**2S-1384**	1	SPOOL AS-RELIEF	
	2	1	**8M-2538**	1	POPPET	
	3	1	**5M-9548**	1	SPRING	
	4	1	**8M-4409**	1	RETAINER	
	5	1	**7M-8592**	1	RING-RETAINING	
	6	1	**8T-6764**	1	PLUG-PIPE (1/8-27 NPTF THD)	
	7	1	**5M-2894**	3	WASHER (2.5MM THK)	
	8	1	**0S-1619**	3	BOLT (3/8-16X3IN)	
	9	1	**0S-1594**	4	BOLT (3/8-16X1IN)	
		1	**3B-4506**	4	LOCKWASHER	
	10	1	**4M-8239**	2	COVER	
	11	1	**2S-1382**	1	SPRING	
	12	1	**141-1546**	1	PLUG-PIPE	
	13	1	**6V-4365**	1	SEAL-O-RING (9.19MM ID)	
B	14	1	**4M-1751**	3	SPACER	
B		1	**5S-7001**	5	SPACER (.91MM THK)	
	15	1	**8M-4986**	3	SEAL-O-RING (37.69MM ID)	

B-USE AS REQUIRED

3S-2695 **VALVE GP-RELIEF** *(contd.)* **i00675775**

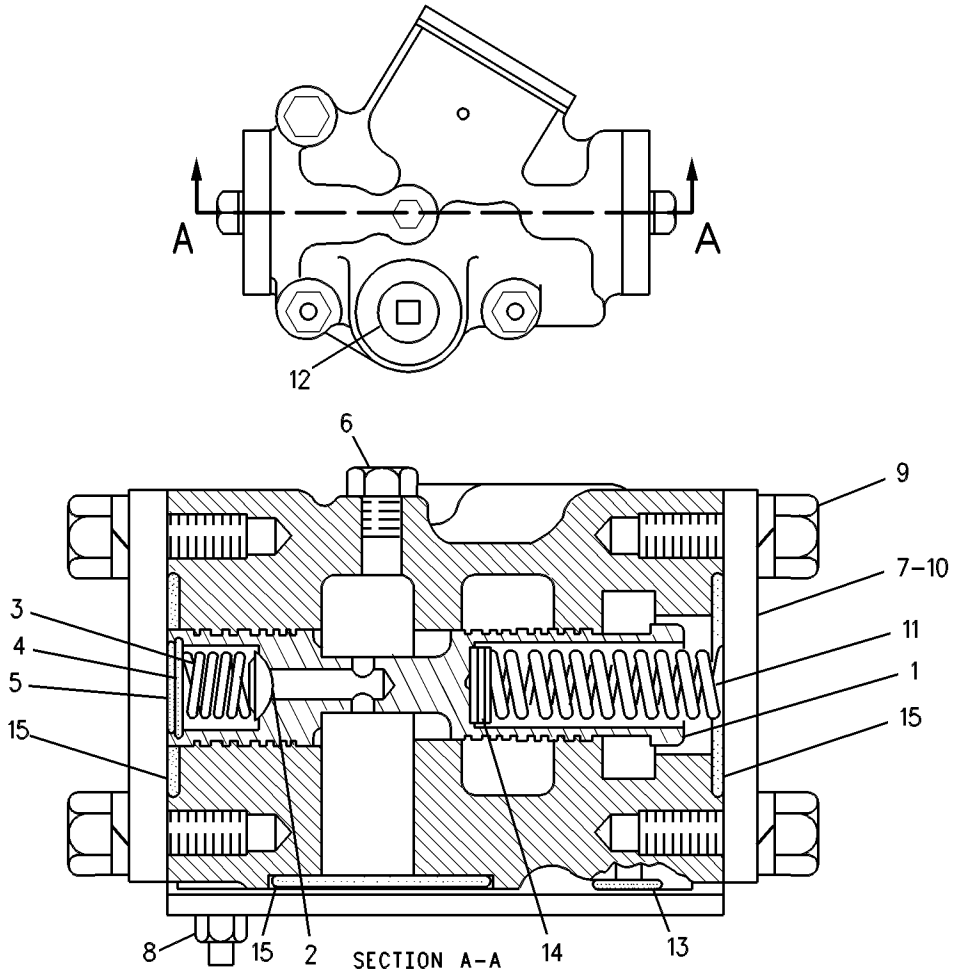

GRAPHIC #1 g00294013

FRAME AND BODY

6C-5683 CONVERSION AR-NON-ROADING

S/N: 3XJ1-99999
GERMAN MARKET
AN ATTACHMENT

SMCS-7000 **i01309716**

NOTE	REF NO	GRAPHIC REF	PART NUMBER	QTY	PART NAME 1 2 3 4 5 6 (PRODUCT LEVEL)	SEE PAGE
	1	1	**6C-5685**	1	PLATE	
	2	1	**6C-5711**	1	CABLE AS	
Y	3	1	*8R-8393*	1	LIGHTING GP-SIGNAL	
	4	1	**9X-8937**	28	TACK-FASTENER	
	5	1	**6C-5735**	1	PLATE	
	6	1	**6C-5739**	4	PLATE	
	7	1	**6C-5738**	2	PLATE	
	8	1	**103-4816**	1	PIN AS	
		1	**6C-5575**	1	CABLE	
Y	9	1	*103-5405*	1	MIRROR GP	
	10	1	**6K-3273**	2	RIVET-POP	
	11	1	**6C-5801**	1	PLATE	
	12	1	**6C-5802**	1	RUBBER	

Y-SEPARATE ILLUSTRATION

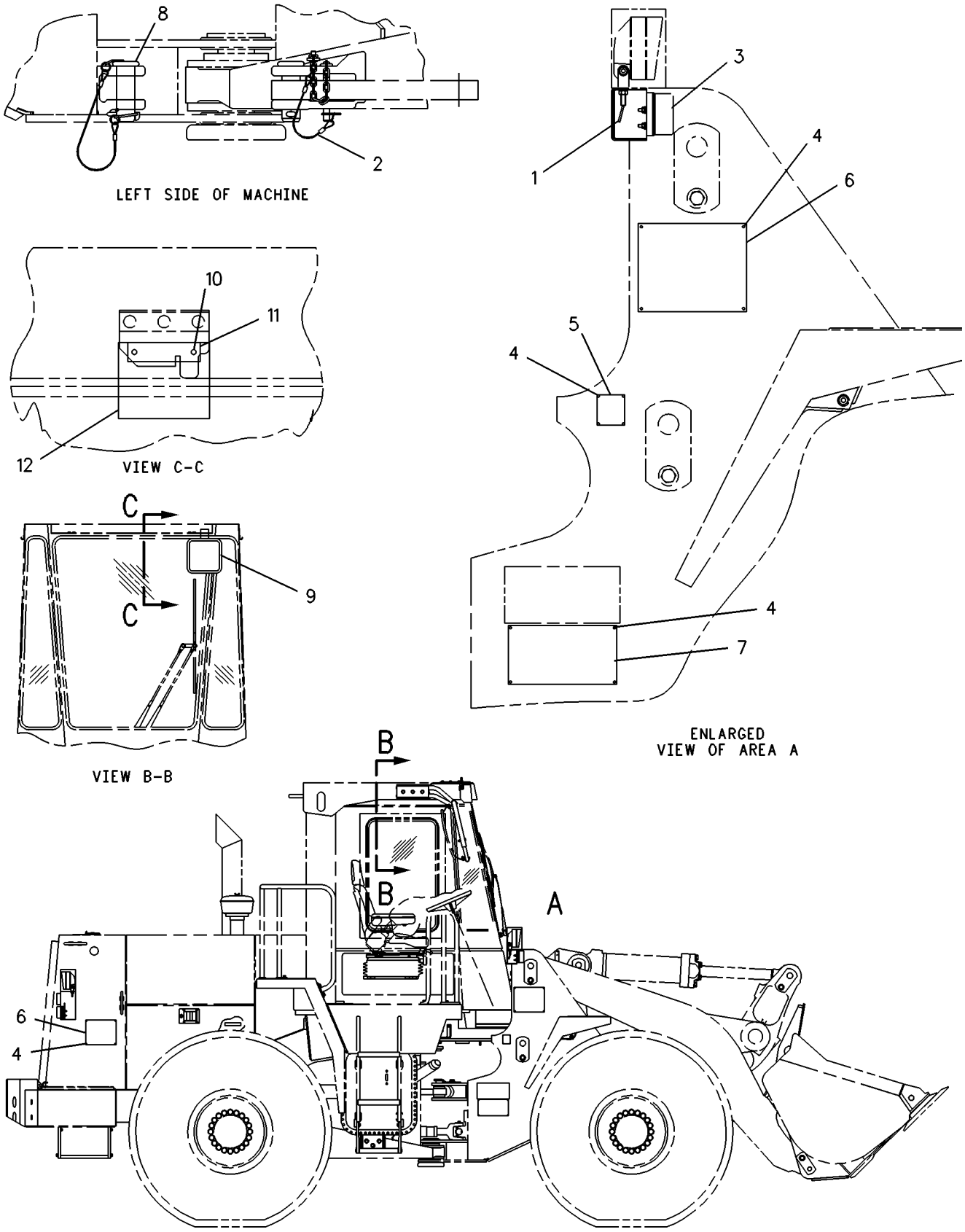

GRAPHIC #1 g00128142

FRAME AND BODY

6C-5684 CONVERSION AR-ROADING

S/N: 3XJ1-99999
GERMAN MARKET
AN ATTACHMENT

SMCS-7000, 7153 **i01309869**

NOTE	REF NO	GRAPHIC REF	PART NUMBER	QTY	PART NAME 1 2 3 4 5 6 (PRODUCT LEVEL)	SEE PAGE
	1	1	**2T-1636**	2	TREAD-NONSKID	
	2	1	**9X-8937**	28	TACK-FASTENER	
	3	1	**6C-7224**	2	BRACKET AS	
	4	1	**6C-5739**	4	PLATE	
	5	1	**6C-5738**	2	PLATE	
	6	1	**6C-3681**	16	RIVET-POP	
	7	1	**6C-5712**	6	REFLECTOR	
	8	1	**6C-7227**	2	CHOCK-WHEEL	
	9	1	**6C-8029**	1	PLATE	
	10	2	**6C-5711**	1	CABLE AS	
	11	2	**103-4816**	1	PIN AS	
		2	**6C-5575**	1	CABLE	
	12	2	**6C-7232**	2	BRACKET	
	13	2	**6V-7697**	2	SCREW-MACHINE (8-32X1.25IN)	
	14	2	**6C-7158**	1	HARNESS AS	
Y	15	2	*103-5405*	1	MIRROR GP	
	16	2	**6K-3273**	2	RIVET-POP	
	17	2	**6C-5801**	1	PLATE	
	18	2	**6C-5802**	1	RUBBER	
M	19	2	**8T-4195**	2	BOLT (M10X1.50X30MM)	
	20	2	**6C-5828**	2	BRACKET	
	21	2	**6C-5736**	4	REFLECTOR	
	22	2	**4D-7794**	1	CLIP (10.0MM ID)	
	23	2	**3S-2093**	2	STRAP-CABLE (1.75IN DIA)	
	24	2	**6C-7041**	1	HARNESS AS	
	25	2	**9G-2264**	1	CLIP-CONNECTOR	
	26	2	**6C-7040**	2	LAMP GP	
	27	2	**6C-5925**	1	GRILL AS	
		2	**7W-6333**	1	SPACER (10.7MM THK)	
		2	**9V-0979**	1	TUBE	
		2	**2J-5638**	1	WASHER	
		2	**8G-0871**	1	HANDLE	
		2	**9V-0334**	1	ANGLE	
		2	**9V-0453**	1	BUSHING-TERMINAL	
	28	2	**7X-0334**	2	BOLT (1/2-13X5IN)	
	29	2	**8T-4223**	2	WASHER-HARD (3MM THK)	
	30	2	**6C-7159**	1	PLATE	
	31	2	**103-5756**	2	PLATE	

M-METRIC PART
Y-SEPARATE ILLUSTRATION

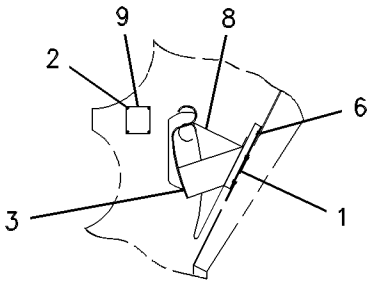

AREA C

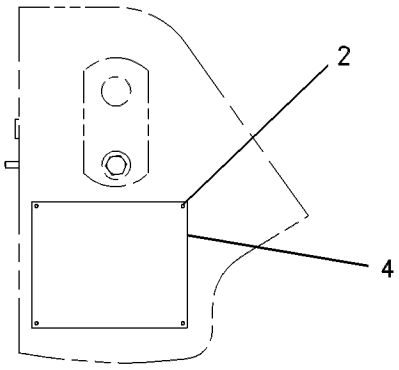

AREA D

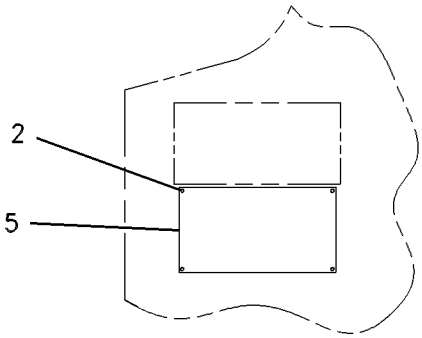

AREA E

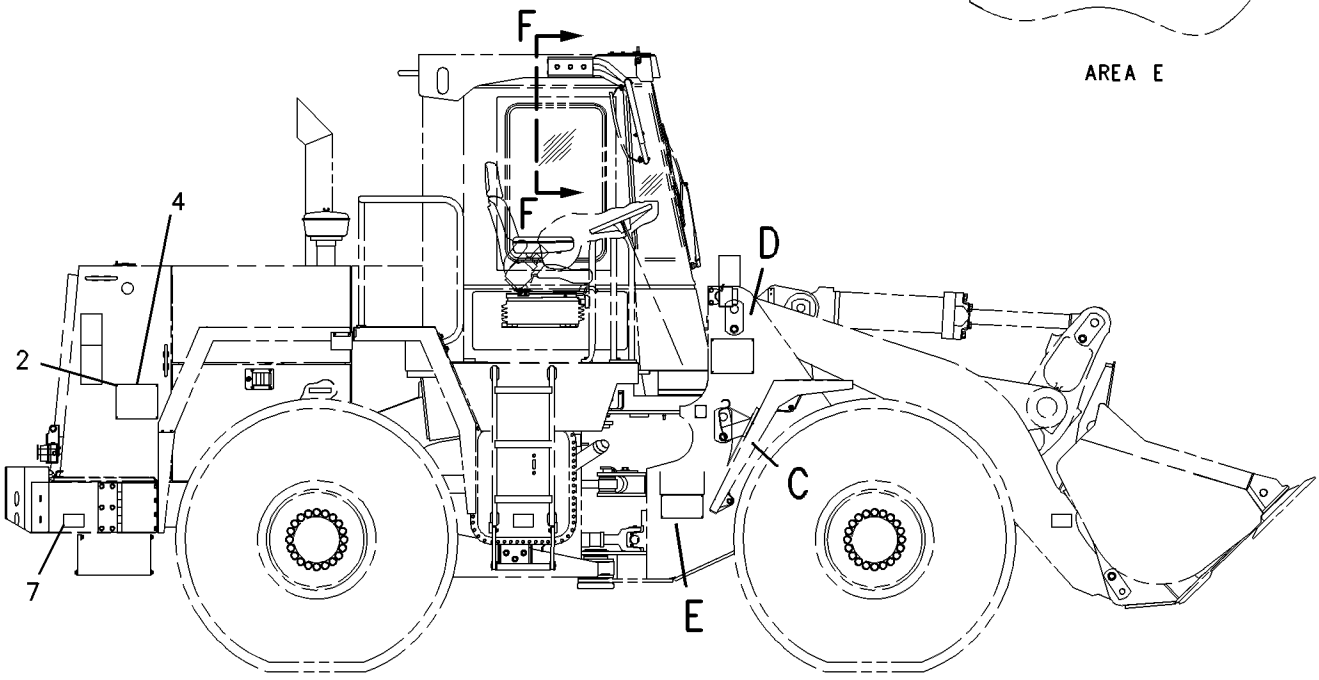

REFER TO ALL ILLUSTRATIONS OF THIS GROUP FOR AUXILIARY VIEWS

GRAPHIC #1 g00281738

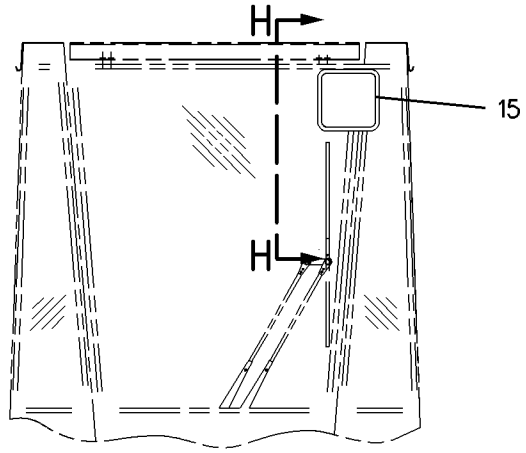

VIEW F-F

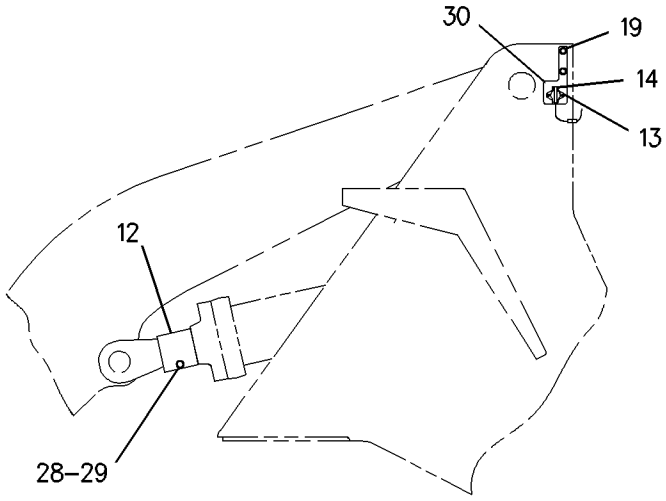

VIEW L-L

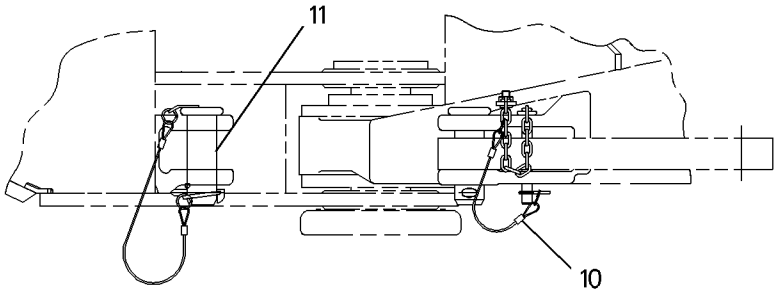

VIEW B-B

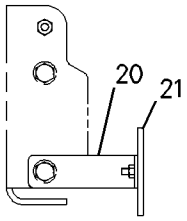

VIEW A

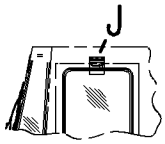

VIEW H-H

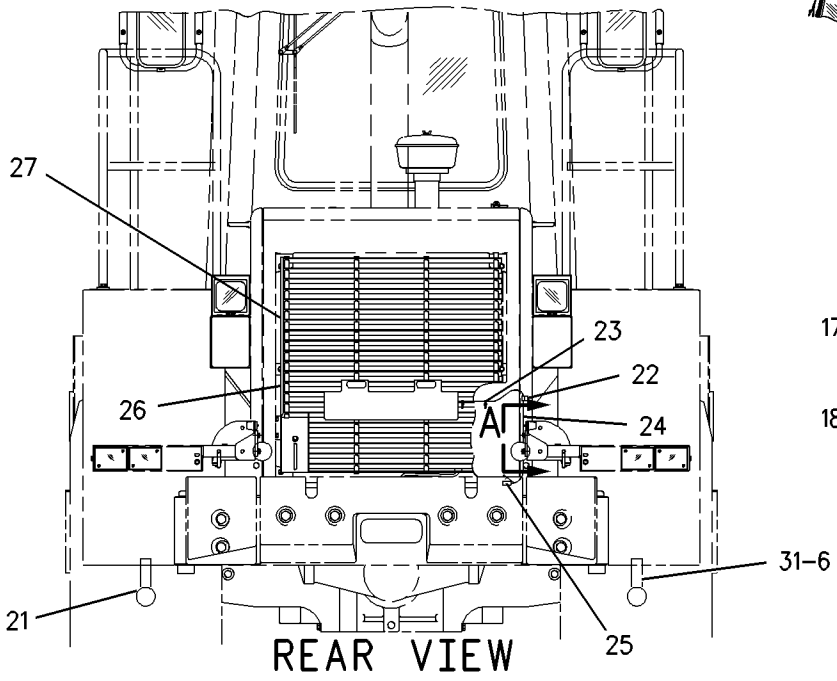

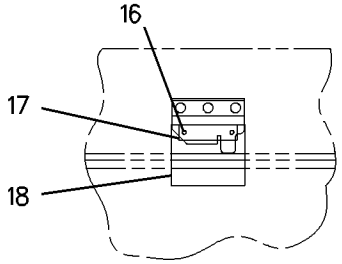

AREA J

GRAPHIC #2

g00693961

6C-3602 COUNTERWEIGHT GP

S/N: 3XJ1-99999
ALSO AN ATTACHMENT
TYPE 1

SMCS-7056 **i00259604**

NOTE	REF NO	GRAPHIC REF	PART NUMBER	QTY	PART NAME 1 2 3 4 5 6 (PRODUCT LEVEL)	SEE PAGE
	1	1	**8V-2841**	1	COUNTERWEIGHT AS	
		1	**1J-5267**	6	WASHER	
	2	1	**7X-0349**	6	BOLT (5/8-11X3IN)	

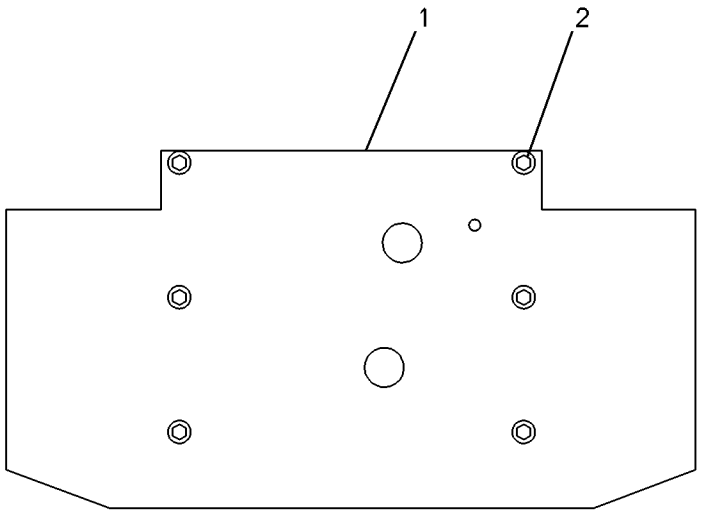

GRAPHIC #1 g00126584

6C-3602 COUNTERWEIGHT GP

S/N: 3XJ1-99999
TYPE 2

SMCS-7056 **i00259606**

NOTE	PART NUMBER	QTY	PART NAME 1 2 3 4 5 6 (PRODUCT LEVEL)	SEE PAGE
	7X-0349	6	BOLT (5/8-11X3IN)	
	5D-1026	1	CLAMP-HOSE	
	8V-2841	1	COUNTERWEIGHT AS	
	1J-5267	5	WASHER	
E	**5P-0767**	28	HOSE (328CM)	
D	**5P-5643**		SEAL (.6M)	

D-ORDER BY THE METER
E-ORDER BY THE CENTIMETER

6C-7573 COUNTERWEIGHT GP

S/N: 3XJ1680-99999
PART OF 6C-5338 CONVERSION AR-NONCAB
AN ATTACHMENT

SMCS-7056 **i00287023**

NOTE	PART NUMBER	QTY	PART NAME 1 2 3 4 5 6 (PRODUCT LEVEL)	SEE PAGE
	7X-0357	6	BOLT (5/8-11X5.25IN)	
	5D-1026	1	CLAMP-HOSE	
	6C-7239	1	COUNTERWEIGHT	
BE	**5P-0767**		HOSE (328CM)	
	7X-0583	6	WASHER-HARD (5MM THK)	

B-USE AS REQUIRED
E-ORDER BY THE CENTIMETER

FRAME AND BODY

4E-2091 DOOR GP-BATTERY

S/N: 3XJ1-99999

SMCS-7273 **i00259348**

NOTE	REF NO	GRAPHIC REF	PART NUMBER	QTY	PART NAME 1 2 3 4 5 6 (PRODUCT LEVEL)	SEE PAGE
	1	1	**6W-7077**	1	DOOR AS-LH	
	2	1	**6W-5804**	1	TREAD-LH	
	3	1	**6C-7875**	5	RIVET-POP	
	4	1	**6C-7390**	1	RIVET-POP	
	5	1	**9V-1820**	1	SPACER	
	6	1	**9V-1777**	1	CABLE	
	7	1	**6W-7076**	1	DOOR AS-RH	
	8	1	**6W-5799**	1	TREAD-RH	
	9	1	**6C-7875**	5	RIVET-POP	
	10	1	**6C-7390**	1	RIVET-POP	
	11	1	**9V-1777**	1	CABLE	
	12	1	**9V-1820**	1	SPACER	
	13	1	**6V-8801**	2	NUT (3/8-16 THD)	
	14	1	**8C-0566**	8	WASHER (2.5MM THK)	
	15	1	**8T-4223**	2	WASHER-HARD (3MM THK)	
	16	1	**5M-3062**	4	BOLT (3/8-16X.750IN)	
	17	1	**8T-9371**	2	BOLT (3/8-16X0.5IN)	
	18	1	**5P-1075**	2	WASHER-HARD (3MM THK)	
	19	1	**6W-5803**	2	PLATE	
	20	1	**4L-9337**	2	BOLT (3/8-16X1.50IN)	

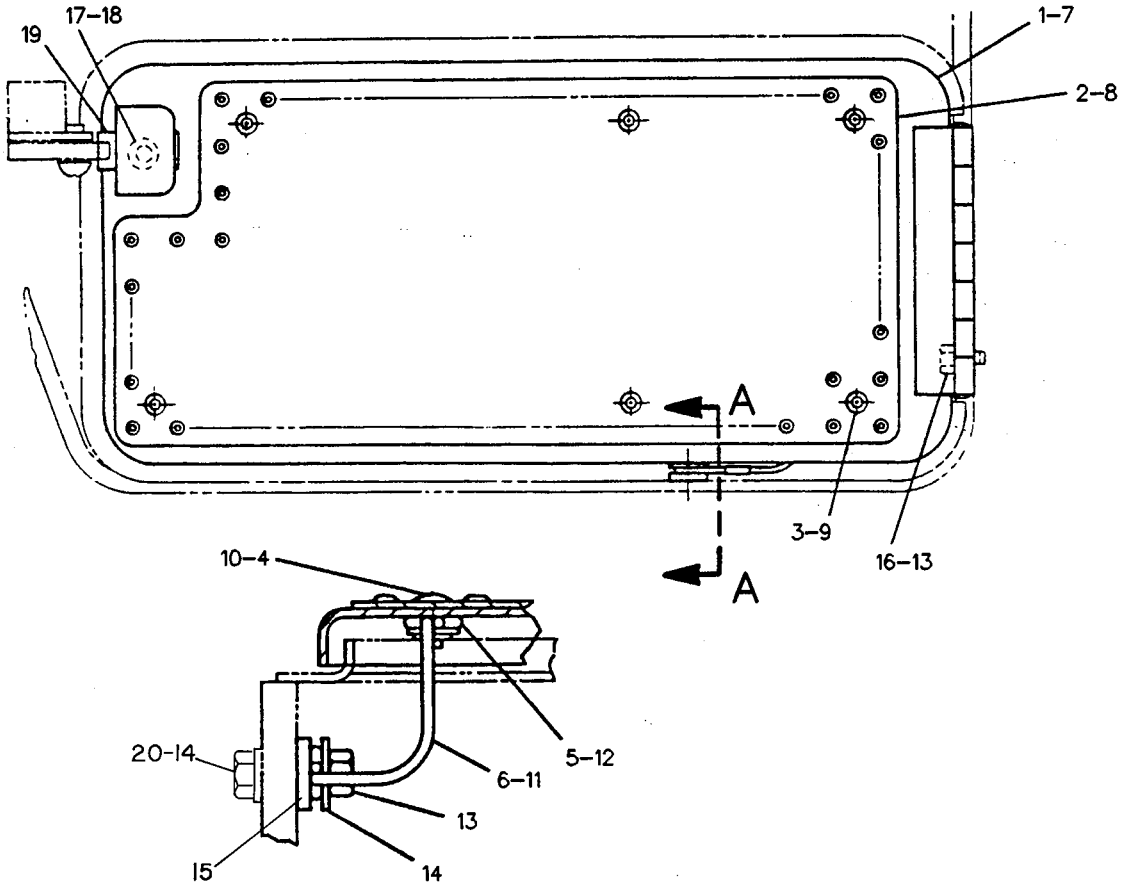

SECTION A–A

GRAPHIC #1 g00126512

FRAME AND BODY

8R-1204 FENDER GP

S/N: 3XJ1-99999

SMCS-7252 **i00259561**

NOTE	REF NO	GRAPHIC REF	PART NUMBER	QTY	PART NAME 1 2 3 4 5 6 (PRODUCT LEVEL)	SEE PAGE
	1	1	**8R-1287**	1	PLATE	
	2	1	**5M-3062**	5	BOLT (3/8-16X.750IN)	
	3	1	**8T-4896**	5	WASHER-HARD (2.5MM THK)	
	4	1	**3H-3681**	8	NUT-FULL (1/2-13 THD)	
	5	1	**8T-4223**	14	WASHER-HARD (3MM THK)	
	6	1	**8R-1206**	1	FENDER AS-LH	
		1	**9F-2978**	4	NUT-WELD (3/8-16 THD)	
	7	1	**5C-6565**	6	BOLT (1/2-13X1.25IN)	
	8	1	**8R-1205**	1	FENDER AS-RH	
		1	**9F-2978**	5	NUT-WELD (3/8-16 THD)	
	9	1	**4E-0782**	1	FENDER AS-LH	
	10	1	**4E-0780**	1	FENDER AS-RH	
	11	1	**8R-3462**	1	PLATE	

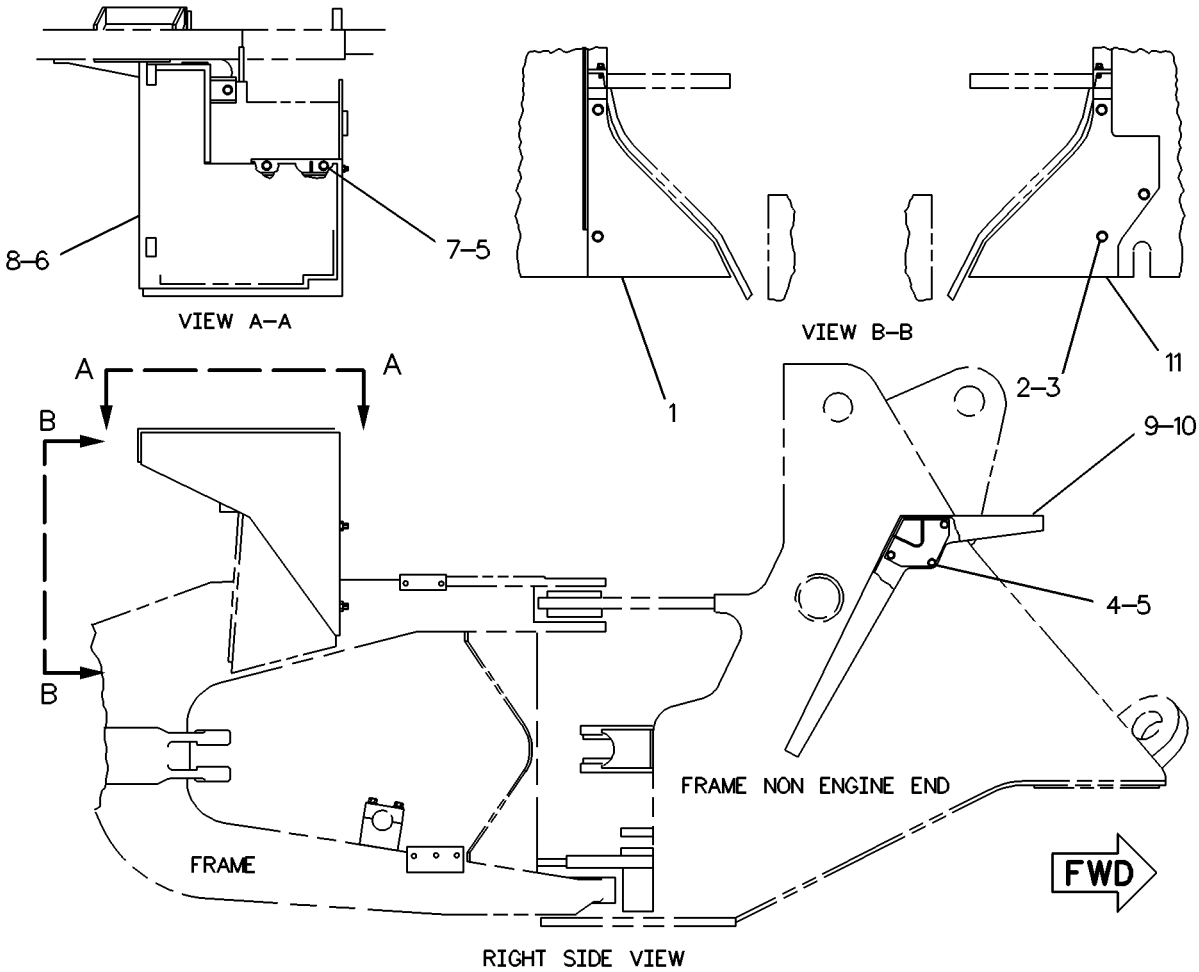

GRAPHIC #1 g00118794

9C-8672 FENDER GP

S/N: 3XJ1-353
ROADING
AN ATTACHMENT

SMCS-7252 **i01310013**

NOTE	REF NO	GRAPHIC REF	PART NUMBER	QTY	PART NAME 1 2 3 4 5 6 (PRODUCT LEVEL)	SEE PAGE
	1	1	**9C-3199**	1	FENDER AS-RH	
	2	1	**9C-3201**	1	FENDER AS-LH	
	3	1	**6C-0302**	1	FENDER AS-RH	
	4	1	**6C-0301**	1	FENDER AS-LH	
	5	1	**8T-8917**	8	BOLT (1/2-13X1.25IN)	
	6	1	**8T-4223**	16	WASHER-HARD (3MM THK)	
	7	1	**8V-1223**	1	FENDER AS (RH)	
	8	1	**8V-1239**	1	FENDER AS (LH)	
	9	1	**7V-3509**	2	ROD	
	10	1	**3H-3681**	2	NUT-FULL (1/2-13 THD)	
	11	1	**037-7388**	2	KNOB	
	12	1	**1M-0313**	2	SPRING	
	13	1	**4B-5059**	2	WASHER (2.5MM THK)	
	14	1	**3B-4617**	2	COTTER	
	15	1	**8V-1259**	1	BRACKET AS	
	16	1	**8V-1256**	1	BRACKET AS	
	17	1	**4L-6454**	8	BOLT (3/8-16X1 IN)	
	18	1	**8T-4896**	10	WASHER-HARD (2.5MM THK)	
	19	1	**8V-1254**	2	BRACKET AS	
	20	1	**5M-3062**	10	BOLT (3/8-16X.75 IN)	
	21	1	**9F-2289**	2	SPACER	
	22	1	**8V-1252**	1	BRACKET AS	
	23	1	**8V-1250**	1	BRACKET AS	
	24	1	**8T-4821**	6	WASHER-PLATED (3MM THK)	
	25	1	**8V-1248**	1	DEFLECTOR	
	26	1	**8V-1249**	1	DEFLECTOR	
	27	1	**6C-0746**	1	LATCH	
	28	1	**6C-0745**	2	PLATE	
	29	1	**1A-8827**	2	PIN	
	30	1	**3B-4615**	2	PIN-COTTER	
	31	1	**6C-0747**	1	LATCH	
	32	1	**5P-2228**	2	BOLT (1/2-13X1.0 IN)	
	33	1	**9V-0276**	1	COVER AS	
		1	**9F-2978**	2	NUT-WELD (3/8-16 THD)	
	34	1	**7V-5656**	2	PLATE	

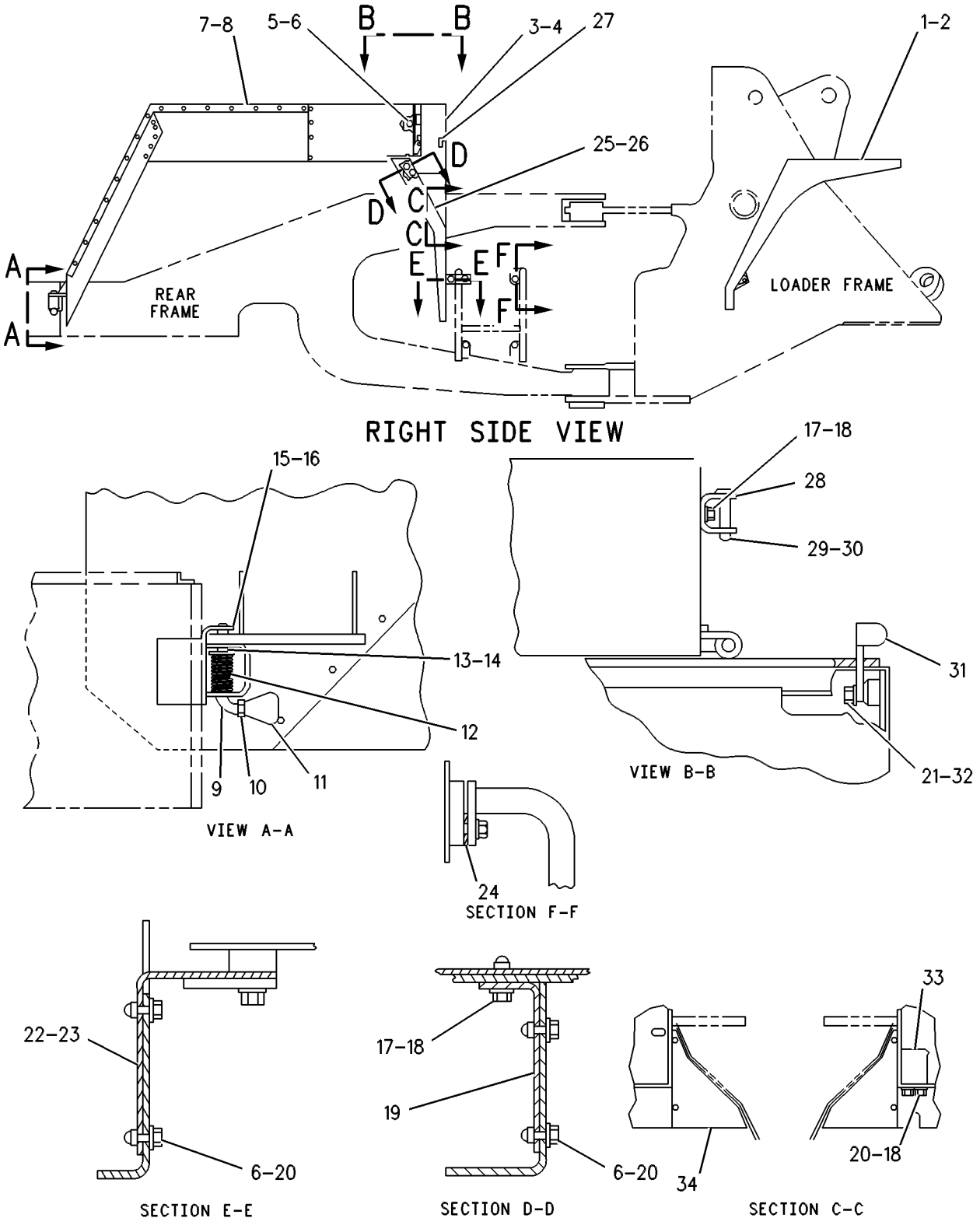

GRAPHIC #1 g00277061

9C-8672 FENDER GP

S/N: 3XJ354-99999
ROADING
AN ATTACHMENT

SMCS-7252 **i01204449**

NOTE	REF NO	GRAPHIC REF	PART NUMBER	QTY	PART NAME 1 2 3 4 5 6 (PRODUCT LEVEL)	SEE PAGE
	1	1	**9C-3199**	1	FENDER AS-RH	
	2	1	**9C-3201**	1	FENDER AS-LH	
	3	1	**6C-0302**	1	FENDER AS-RH	
	4	1	**6C-0301**	1	FENDER AS-LH	
	5	1	**8T-8917**	8	BOLT (1/2-13X1.25IN)	
	6	1	**8T-4223**	16	WASHER-HARD (3MM THK) (25.5MM OD)	
	7	1	**8V-1223**	1	FENDER AS (RH)	
		1	**4B-4274**	56	WASHER (1.2MM THK)	
		1	**6C-3678**	28	RIVET	
		1	**6V-2370**	4	RIVET-POP	
	8	1	**8V-1239**	1	FENDER AS (LH)	
		1	**9X-6165**	28	WASHER (2.5MM THK)	
		1	**6V-1634**	28	RIVET-POP	
		1	**6V-2370**	4	RIVET-POP	
		1	**8V-1240**	1	DEFLECTOR-LH	
		1	**8V-1241**	1	DEFLECTOR-LH	
	9	1	**7V-3509**	2	ROD	
	10	1	**3H-3681**	2	NUT-FULL (1/2-13 THD)	
	11	1	**037-7388**	2	KNOB	
	12	1	**1M-0313**	2	SPRING	
	13	1	**4B-5059**	2	WASHER (2.5MM THK)	
	14	1	**3B-4617**	2	COTTER	
	15	1	**8V-1259**	1	BRACKET AS (RH)	
	16	1	**8V-1256**	1	BRACKET AS (LH)	
	17	1	**4L-6454**	8	BOLT (3/8-16X1 IN)	
	18	1	**8T-4896**	10	WASHER-HARD (2.5MM THK) (18.5MM OD)	
	19	1	**8V-1254**	2	BRACKET AS	
					(EACH INCLUDES)	
		1	**1F-0750**	2	NUT-WELD (3/8-16 THD)	
	20	1	**5M-3062**	10	BOLT (3/8-16X.75IN)	
	21	1	**9V-0276**	1	COVER AS	
		1	**1F-0750**	2	NUT-WELD (3/8-16 THD)	
	22	1	**8V-1252**	1	BRACKET AS (LH)	
	23	1	**8V-1250**	1	BRACKET AS (RH)	
					(EACH BRACKET AS INCLUDES)	
		1	**1F-0750**	2	NUT-WELD (3/8-16 THD)	
C	24	1	**8T-4821**	6	WASHER-PLATED (3MM THK)	
	25	1	**8V-1248**	1	DEFLECTOR	
	26	1	**8V-1249**	1	DEFLECTOR	
	27	1	**6C-0746**	1	LATCH	
	28	1	**6C-0745**	2	PLATE	
	29	1	**1A-8827**	2	PIN	
	30	1	**3B-4615**	2	PIN-COTTER	
	31	1	**6C-0747**	1	LATCH	
	32	1	**5P-2228**	2	BOLT (1/2-13X1.0 IN)	
	33	1	**9F-2289**	2	SPACER	
	34	1	**8R-1287**	1	PLATE	

C-CHANGE FROM PREVIOUS TYPE

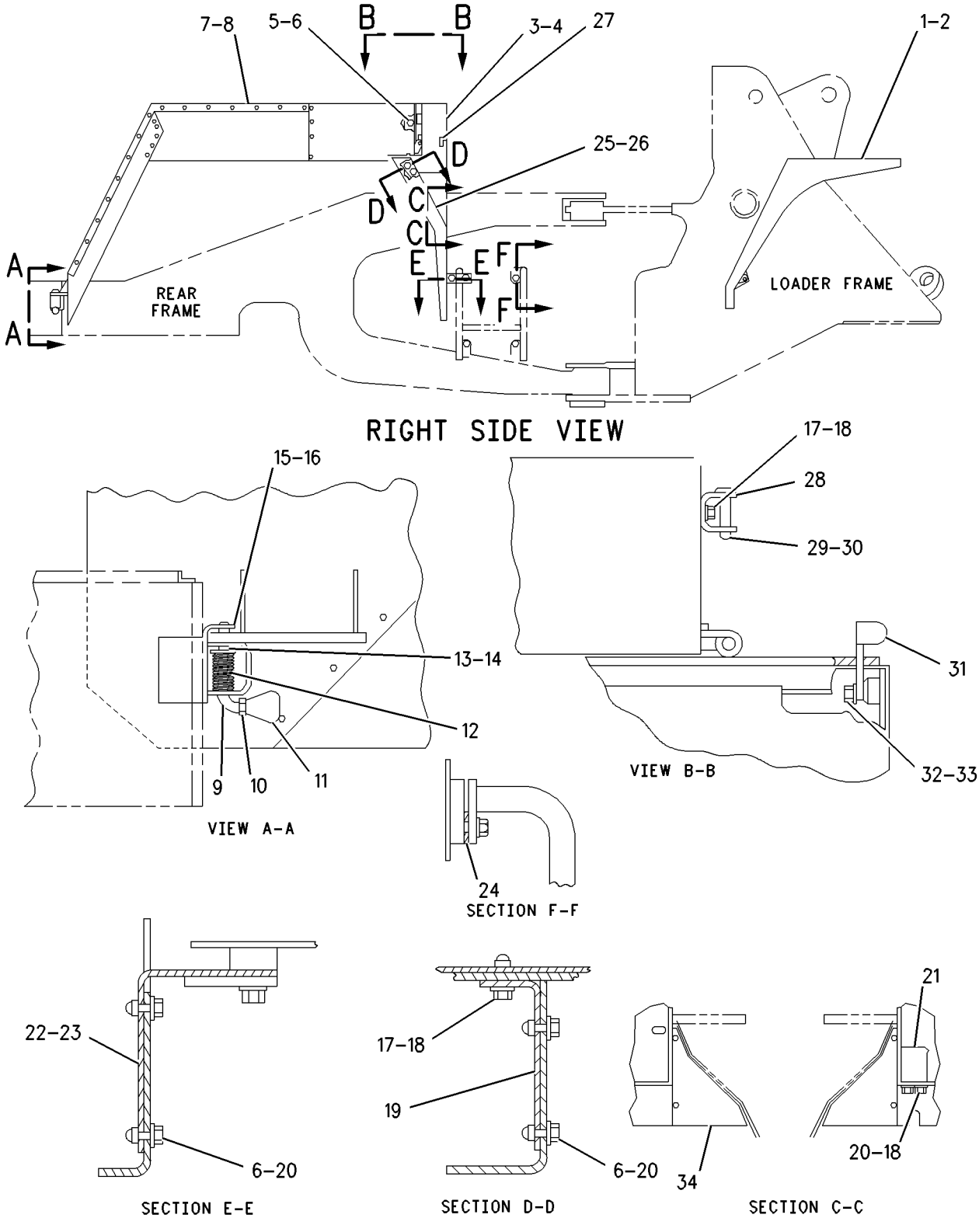

GRAPHIC #1 g00644101

FRAME AND BODY

6C-3561 FIREWALL GP

S/N: 3XJ1-199

PART OF 8R-5050 FIREWALL GP

SMCS-7262 **i00259585**

NOTE	REF NO	GRAPHIC REF	PART NUMBER	QTY	PART NAME 1 2 3 4 5 6 (PRODUCT LEVEL)	SEE PAGE
	1	1	**6C-4374**	1	COVER AS	
	2	1	**4E-2471**	1	BRACKET AS	
	3	1	**9F-2978**	1	NUT-WELD (3/8-16 THD)	
	4	1	**7T-1099**	3	LINK	
M	5	1	**8T-3490**	4	NUT-WELD (M10X1.5 THD)	
	6	1	**8T-4121**	20	WASHER (2.5MM THK)	
M	7	1	**8T-4136**	16	BOLT (M10X1.50X25MM)	
	8	1	**6C-4371**	1	DOOR AS	
	9	1	**8R-2566**	2	HINGE	
	10	1	**8V-6072**	1	LATCH AS	
	11	1	**0T-0102**	1	BOLT (3/8-16X0.625IN)	
		1	**5M-2894**	1	WASHER (2.5MM THK)	
M	12	1	**8T-4137**	4	BOLT (M10X1.50X20MM)	
	13	1	**8R-8489**	1	FIREWALL AS	
M	14	1	**8T-3490**	39	NUT-WELD (M10X1.5 THD)	
M	15	1	**8T-3612**	6	NUT-WELD (M8X1.25 THD)	
	16	1	**7T-1099**	2	LINK	
M	17	1	**8T-5413**	2	STUD-WELD (M10X1.5X25MM OAL)	

M-METRIC PART

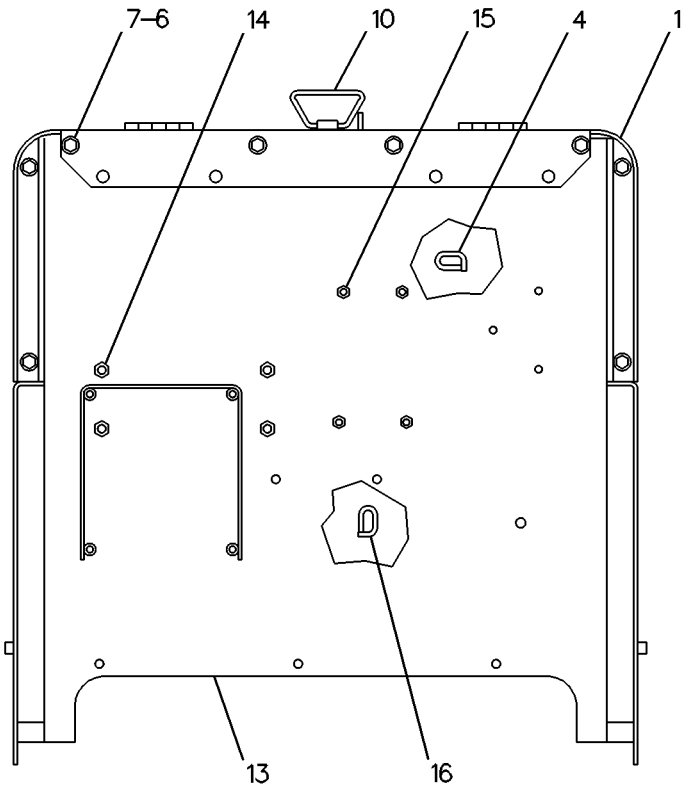

REAR VIEW

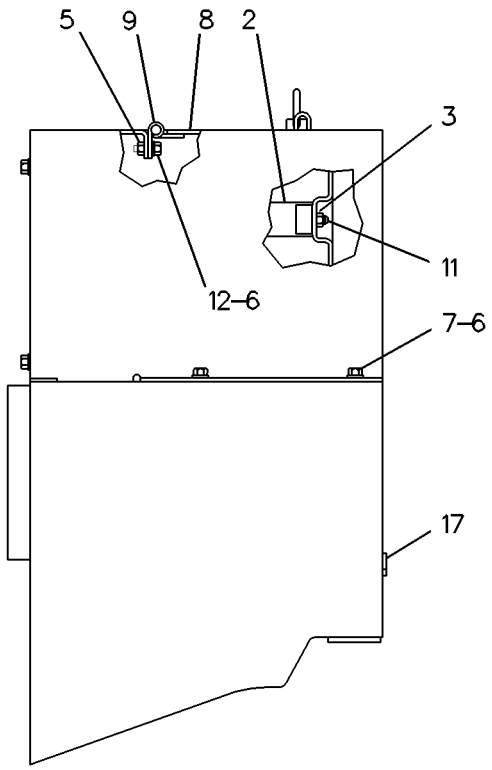

RIGHT SIDE VIEW

GRAPHIC #1 g00126526

MEMORANDA

6C-3561 FIREWALL GP

S/N: 3XJ200-670

PART OF 8R-5050 FIREWALL GP

SMCS-7262 **i00259591**

NOTE	REF NO	GRAPHIC REF	PART NUMBER	QTY	PART NAME 1 2 3 4 5 6 (PRODUCT LEVEL)	SEE PAGE
C	1	1	**6C-5314**	1	COVER AS	
	2	1	**4E-2471**	1	BRACKET AS	
	3	1	**7T-1099**	3	LINK	
M	4	1	**8T-3490**	4	NUT-WELD (M10X1.5 THD)	
C	5	1	**6C-5275**	2	COVER AS	
C	6	1	**8T-4121**	24	WASHER (2.5MM THK)	
M	7	1	**8T-4136**	16	BOLT (M10X1.50X25MM)	
C	8	1	**6C-5313**	1	DOOR AS	
	9	1	**8R-2566**	2	HINGE	
	10	1	**8V-6072**	1	LATCH AS	
	11	1	**0T-0102**	1	BOLT (3/8-16X0.625IN)	
		1	**5M-2894**	1	WASHER (2.5MM THK)	
CM	12	1	**8T-4137**	8	BOLT (M10X1.50X20MM)	
C	13	1	**6C-5305**	1	FIREWALL AS	
CM	14	1	**8T-3490**	1	NUT-WELD (M10X1.5 THD)	
M	15	1	**8T-3612**	6	NUT-WELD (M8X1.25 THD)	
	16	1	**7T-1099**	2	LINK	
M	17	1	**8T-5413**	2	STUD-WELD (M10X1.5X25MM OAL)	

C-CHANGE FROM PREVIOUS TYPE
M-METRIC PART

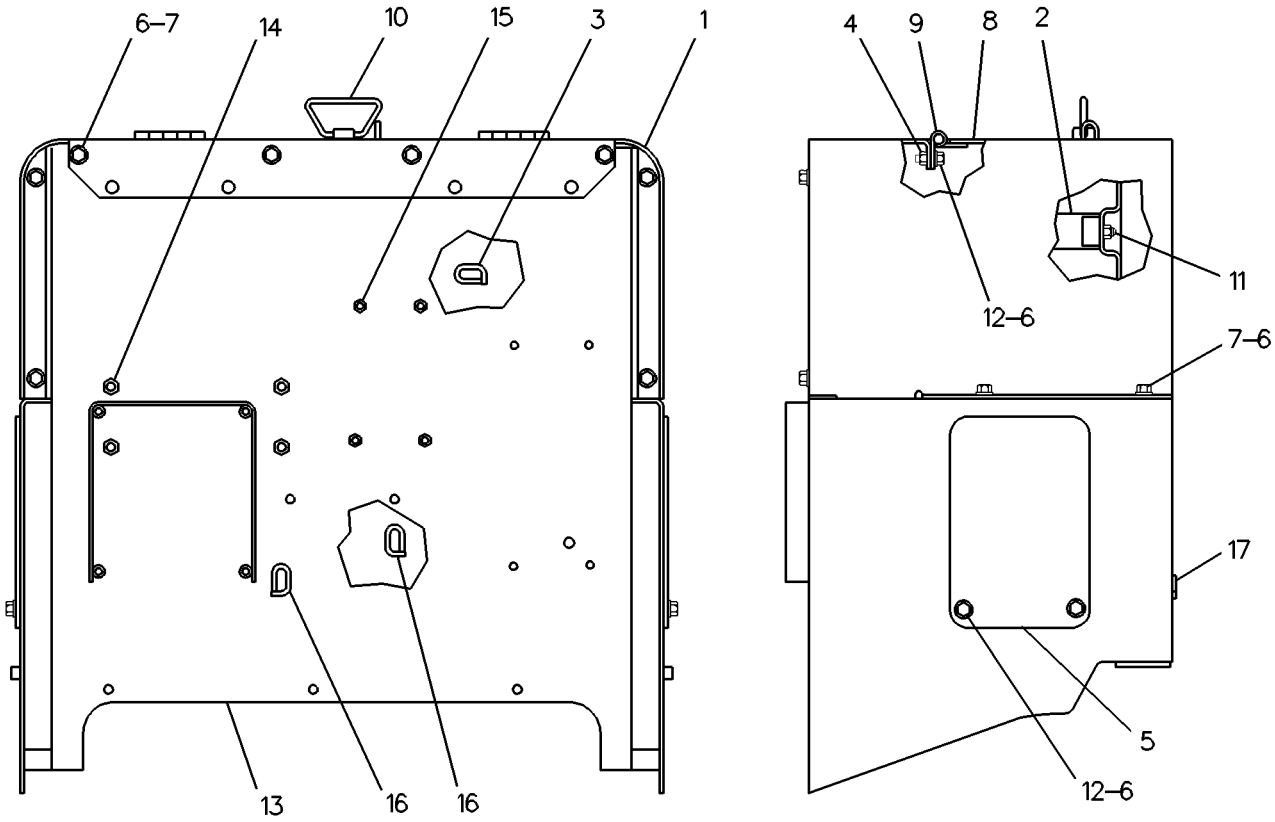

GRAPHIC #1 g00126933

FRAME AND BODY

6C-3561 FIREWALL GP

S/N: 3XJ671-99999

PART OF 8R-5050 FIREWALL GP

SMCS-7262 **i00259595**

NOTE	REF NO	GRAPHIC REF	PART NUMBER	QTY	PART NAME 1 2 3 4 5 6 (PRODUCT LEVEL)	SEE PAGE
	1	1	**6C-5314**	1	COVER AS	
	2	1	**4E-2471**	1	BRACKET AS	
	3	1	**7T-1099**	3	LINK	
M	4	1	**8T-3490**	4	NUT-WELD (M10X1.5 THD)	
	5	1	**5M-2894**	1	WASHER (2.5MM THK)	
C	6	1	**8T-4121**	20	WASHER (2.5MM THK)	
M	7	1	**8T-4136**	16	BOLT (M10X1.50X25MM)	
	8	1	**6C-5313**	1	DOOR AS	
	9	1	**8R-2566**	2	HINGE	
	10	1	**8V-6072**	1	LATCH AS	
	11	1	**0T-0102**	1	BOLT (3/8-16X0.625IN)	
CM	12	1	**8T-4137**	4	BOLT (M10X1.50X20MM)	
	13	1	**6C-5305**	1	FIREWALL AS	
M	14	1	**8T-3490**	47	NUT-WELD (M10X1.5 THD)	
M	15	1	**8T-3612**	6	NUT-WELD (M8X1.25 THD)	
	16	1	**7T-1099**	2	LINK	
M	17	1	**8T-5413**	2	STUD-WELD (M10X1.5X25MM OAL)	

C-CHANGE FROM PREVIOUS TYPE
M-METRIC PART

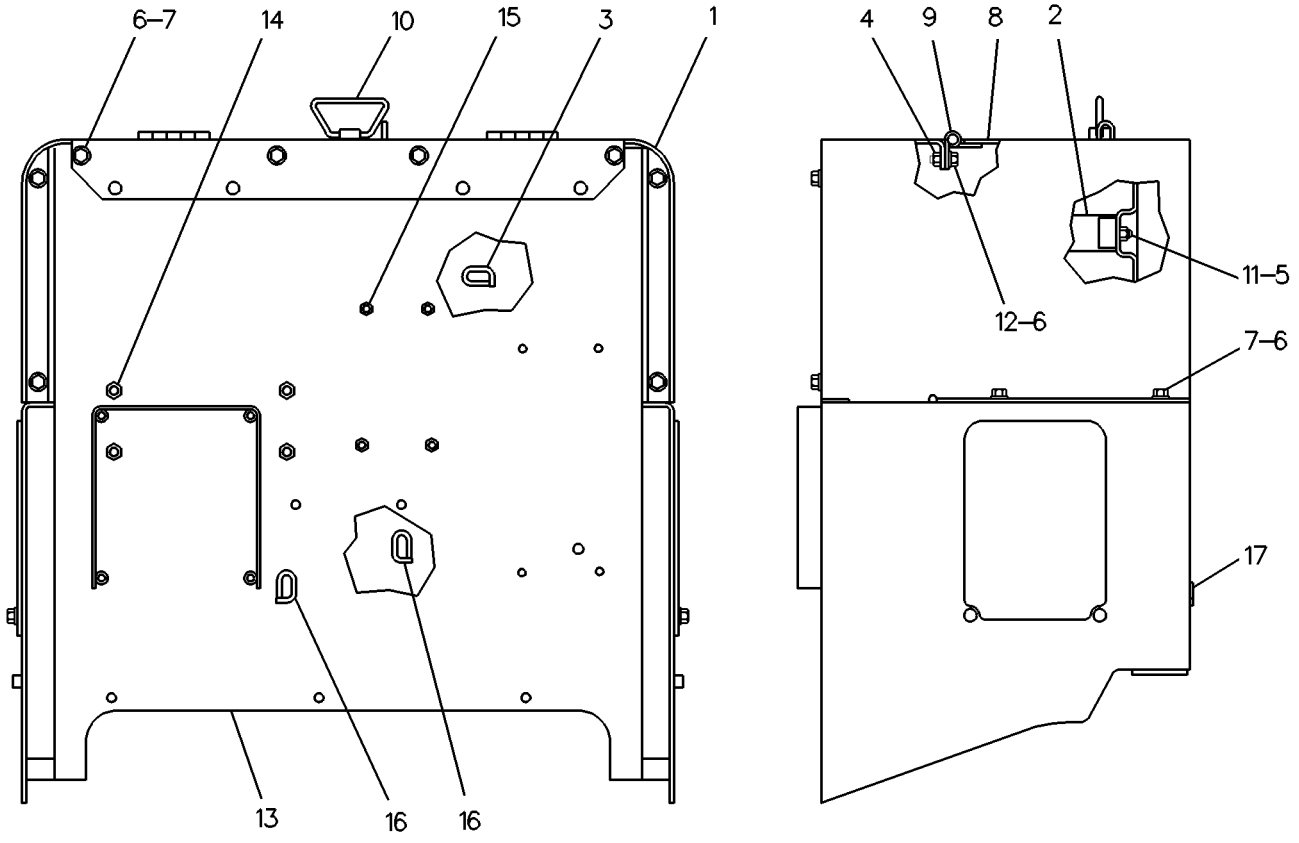

GRAPHIC #1 g00127174

FRAME AND BODY

8R-5050 FIREWALL GP

S/N: 3XJ1-670

SMCS-7262 **i00286836**

NOTE	REF NO	GRAPHIC REF	PART NUMBER	QTY	PART NAME 1 2 3 4 5 6 (PRODUCT LEVEL)	SEE PAGE
Y	1	1	*6C-3561*	1	FIREWALL GP	
	2	1	**5P-2228**	8	BOLT (1/2-13X1IN)	
		1	**8T-4223**	8	WASHER-HARD (3MM THK)	

Y-SEPARATE ILLUSTRATION

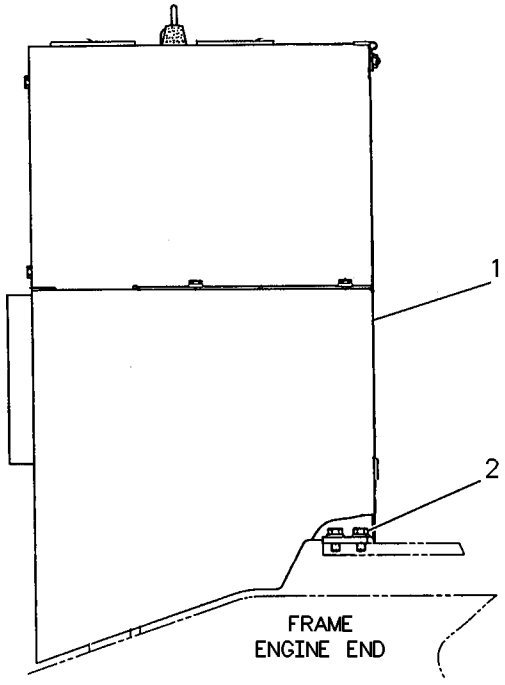

GRAPHIC #1 g00126932

FRAME AND BODY

8R-5050 FIREWALL GP

S/N: 3XJ671-99999

SMCS-7262 **i00286859**

NOTE	REF NO	GRAPHIC REF	PART NUMBER	QTY	PART NAME 1 2 3 4 5 6 (PRODUCT LEVEL)	SEE PAGE
Y	1	1	*6C-3561*	1	FIREWALL GP	
	2	1	**5P-2228**	8	BOLT (1/2-13X1IN)	
		1	**8T-4223**	8	WASHER-HARD (3MM THK)	
C	3	1	**6C-5275**	2	COVER AS	
C	4	1	**8T-4121**	4	WASHER (2.5MM THK)	
CM		1	**8T-4137**	4	BOLT (M10X1.50X20MM)	

C-CHANGE FROM PREVIOUS TYPE
M-METRIC PART
Y-SEPARATE ILLUSTRATION

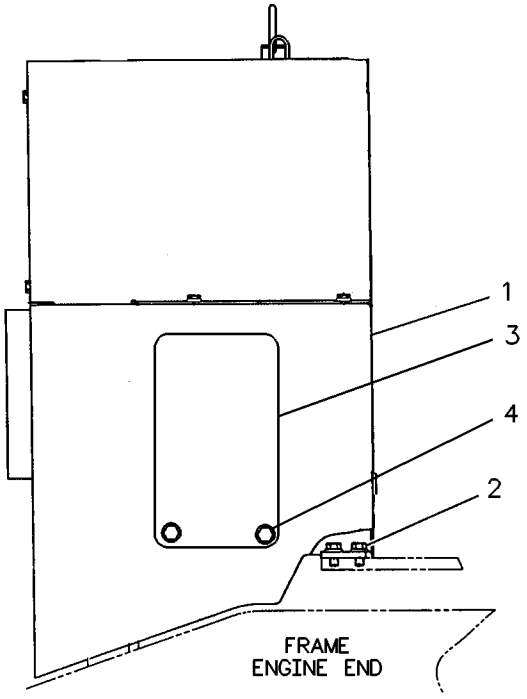

GRAPHIC #1 g00127176

FRAME AND BODY

8R-5048 FRAME GP-LOADER

S/N: 3XJ1-99999

SMCS-7054 **i01334597**

NOTE	REF NO	GRAPHIC REF	PART NUMBER	QTY	PART NAME 1 2 3 4 5 6 (PRODUCT LEVEL)	SEE PAGE
	1	1	**8R-3798**	1	FRAME AS-LOADER	
	2	1	**068-4183**	2	STUD-WELD (3/8-16 X 1.50IN OAL)	
	3	1	**4K-8479**	15	STUD-WELD (3/8-16X1.25IN OAL)	
	4	1	**8C-3678**	10	STUD-WELD (1/2-13 X 1.25IN OAL)	
	5	1	**8C-3679**	4	STUD-WELD (3/8-16 X1.0IN OAL)	
	6	1	**7V-0428**	2	BLOCK	
	7	1	**7V-4655**	5	BLOCK	
	8	1	**7V-5793**	1	BAR	
	9	1	**8P-3442**	1	STRIP	
	10	1	**7T-1099**	2	LINK	
	11	1	**9V-4892**	1	BLOCK	
	12	1	**9G-9150**	1	CLIP (10.2MM ID)	
	13	1	**9G-9152**	1	CLIP (10.5MM ID)	
	14	1	**4L-6454**	4	BOLT (3/8-16X1 IN)	
		1	**8M-7145**	4	WASHER (5MM THK)	
	15	1	**9C-6572**	2	PLATE	

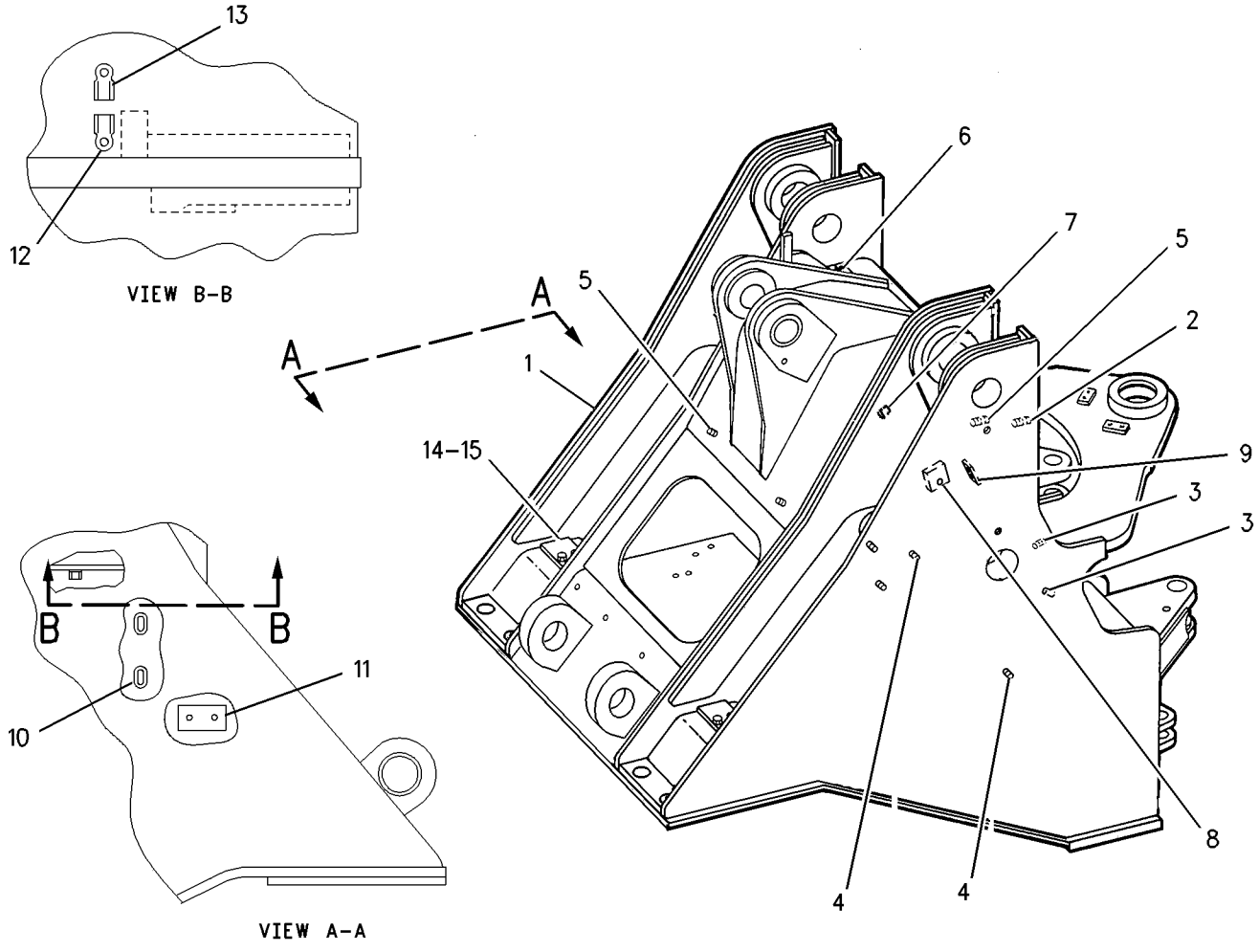

GRAPHIC #1 g00705689

FRAME AND BODY

8R-1896 FRAME GP-REAR

S/N: 3XJ1-1646

SMCS-7051 **i01327944**

NOTE	REF NO	GRAPHIC REF	PART NUMBER	QTY	PART NAME 1 2 3 4 5 6 (PRODUCT LEVEL)	SEE PAGE
	1	1	**8C-8842**	6	BOLT (3/4-10X4.0 IN)	
		1	**8T-4994**	6	WASHER-HARD (5MM THK)	
	2	1	**4E-1478**	1	BRACKET AS-LH	
		1	**5P-1075**	1	WASHER-HARD (3MM THK)	
		1	**6V-8801**	1	NUT (3/8-16 THD)	
		1	**5G-2514**	1	TUBE	
	3	1	**4E-1477**	1	BRACKET AS-RH	
	4	1	**6W-5427**	1	PIN AS	
		1	**2K-3549**	1	PIN-SPRING	
	5	1	**9C-4197**	1	LATCH	
	6	1	**5S-7382**	1	BOLT (3/8-16X1.375 IN)	
	7	1	**8R-1897**	1	FRAME AS-REAR	
	8	1	**8J-8230**	1	STUD (3/8-16 X 2.5IN OAL)	
	9	1	**9K-3050**	1	STUD-WELD (1/2-13X1.38 IN)	
	10	1	**5P-8899**	5	STUD-WELD (3/8-16 X 1.79IN OAL)	
	11	1	**5V-7003**	4	BOSS-WELD (23.9MM LONG)	
	12	1	**5P-8482**	5	STUD-WELD (3/8-16 X 1.75IN OAL)	
	13	1	**4K-8479**	27	STUD-WELD (3/8-16X1.25IN OAL)	
	14	1	**5P-5014**	8	STUD-WELD (3/8X16X.874IN OAL)	
M	15	1	**7X-0750**	1	BOSS-WELD	
	16	1	**8T-9530**	2	TACK-FASTENER	
	17	1	**1P-1413**	1	BOSS (5/8-11X1.0IN OAL)	
	18	1	**4V-6469**	1	BRACKET AS-LH	
	19	1	**4V-6468**	1	BRACKET AS-RH	
	20	1	**6W-5810**	1	LATCH AS-LH	
		1	**4H-8380**	1	PIN-SPRING	
	21	1	**9V-4469**	1	PLATE	
	22	1	**4V-6692**	2	BAR	
	23	1	**5V-8280**	1	BUMPER AS	
	24	1	**4V-1584**	2	BLOCK	
	25	1	**7V-0008**	1	BLOCK	
	26	1	**6W-5807**	1	LATCH AS-RH	
		1	**4H-8380**	1	PIN-SPRING	
	27	1	**4V-0301**	1	BOLT-STOP (5/8-11X1.25IN)	
	28	1	**9V-0246**	4	BLOCK	
	29	1	**4K-8190**	1	BLOCK	
	30	1	**2V-7402**	1	BOSS (35.0CM LG)	
	31	1	**7K-1972**	1	EYE	
	32	1	**8V-1781**	3	BAR	
	33	1	**8G-0851**	2	BLOCK	

M-METRIC PART

8R-1896 **FRAME GP-REAR** *(contd.)* **i01327944**

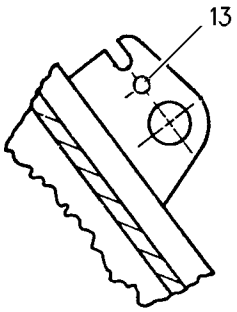

SECTION C-C

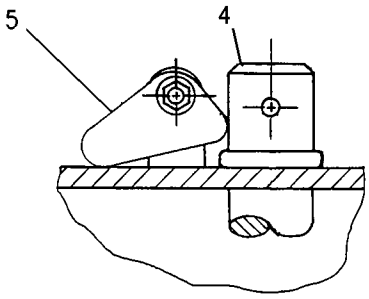

SECTION A-A

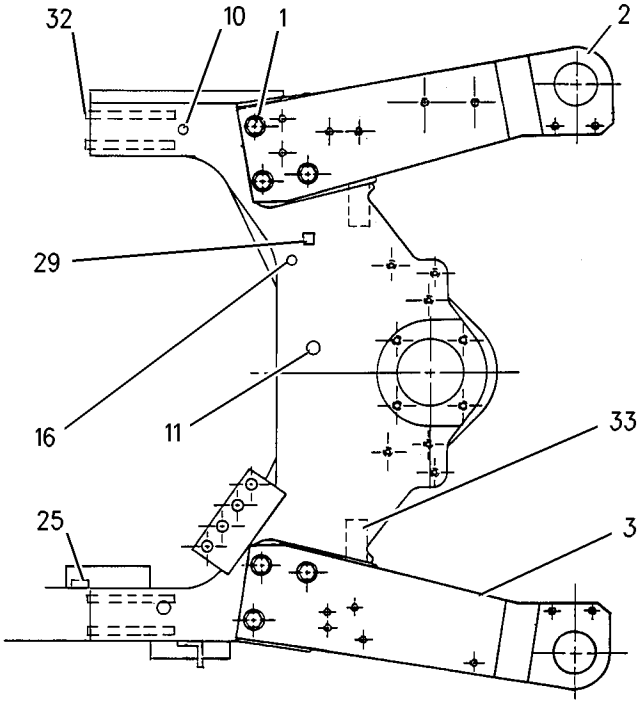

VIEW B-B

FWD

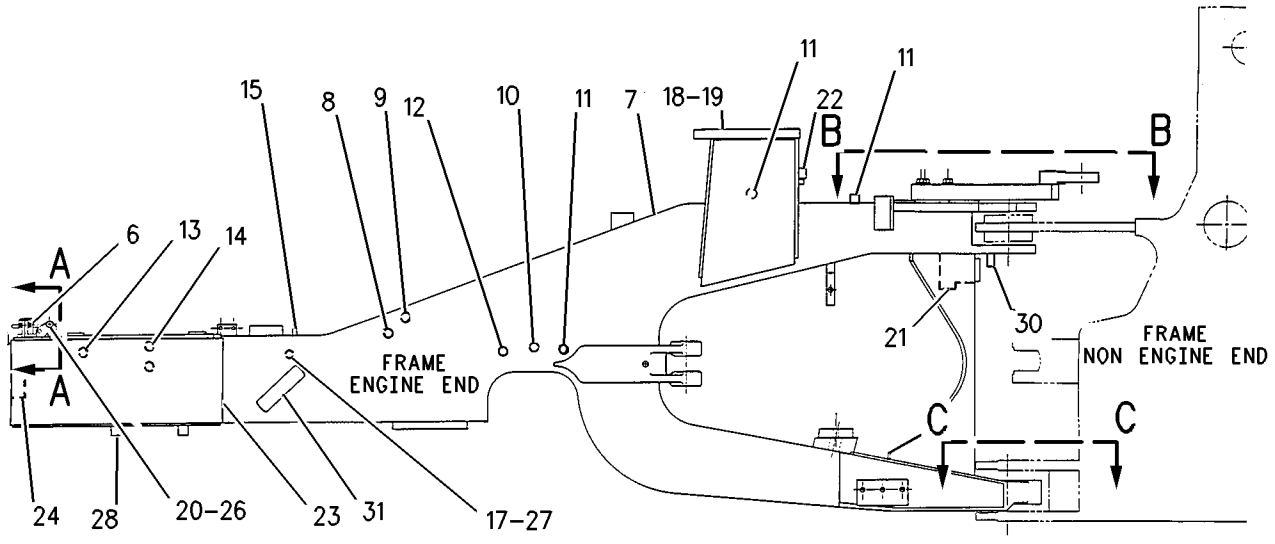

RIGHT SIDE VIEW

GRAPHIC #1 g00702489

FRAME AND BODY

8R-1896 FRAME GP-REAR

S/N: 3XJ1647-99999

SMCS-7051 **i01313614**

NOTE	REF NO	GRAPHIC REF	PART NUMBER	QTY	PART NAME 1 2 3 4 5 6 (PRODUCT LEVEL)	SEE PAGE
	1	1	**8C-8842**	6	BOLT (3/4-10X4.0IN)	
		1	**8T-4994**	6	WASHER-HARD (5MM THK)	
	2	1	**4E-1478**	1	BRACKET AS-LH	
		1	**5P-1075**	1	WASHER-HARD (3MM THK)	
		1	**6V-8801**	1	NUT (3/8-16 THD)	
		1	**5G-2514**	1	TUBE	
	3	1	**4E-1477**	1	BRACKET AS-RH	
	4	1	**6W-5427**	1	PIN AS	
		1	**2K-3549**	1	PIN-SPRING	
	5	1	**9C-4197**	1	LATCH	
	6	1	**5S-7382**	1	BOLT (3/8-16X1.375 IN)	
C	7	1	**6C-8067**	1	FRAME AS	
	8	1	**8J-8230**	1	STUD (3/8-16 X 2.5IN OAL)	
	9	1	**9K-3050**	1	STUD-WELD (1/2-13X1.38IN OAL)	
	10	1	**5P-8899**	5	STUD-WELD (3/8-16 X 1.79IN OAL)	
	11	1	**5V-7003**	4	BOSS-WELD (23.9MM LONG)	
	12	1	**5P-8482**	5	STUD-WELD (3/8-16 X 1.75IN OAL)	
	13	1	**4K-8479**	24	STUD-WELD (3/8-16X1.25IN OAL)	
	14	1	**8C-3679**	8	STUD-WELD (3/8-16 X1.0IN OAL)	
	15	1	**6V-3233**	1	BOSS-WELD ((58.4MM)LONG)	
		1	**8S-1783**	1	PLATE-GROUNDING	
	16	1	**7K-1972**	2	EYE	
	17	1	**1P-1413**	2	BOSS (5/8-11X1.0IN OAL)	
	18	1	**4V-6469**	1	BRACKET AS-LH	
	19	1	**4V-6468**	1	BRACKET AS-RH	
	20	1	**6W-5810**	1	LATCH AS-LH	
		1	**4H-8380**	1	PIN-SPRING	
	21	1	**9V-4469**	1	PLATE	
	22	1	**8G-0851**	2	BLOCK	
	23	1	**5V-8280**	1	BUMPER AS	
	24	1	**4V-1584**	2	BLOCK	
	25	1	**7V-0008**	1	BLOCK	
	26	1	**6W-5807**	1	LATCH AS-RH	
		1	**4H-8380**	1	PIN-SPRING	
	27	1	**4V-0301**	1	BOLT-STOP (5/8-11X1.25IN)	
	28	1	**9V-0246**	4	BLOCK	
	29	1	**8V-1781**	4	BAR	
	30	1	**2V-7402**	1	BOSS (35.0CM LG)	
	31	1	**6C-1810**	1	CAP	
	32	1	**8C-6362**	2	BOLT (5/8-11X2.75IN)	
		1	**8T-4122**	2	WASHER (3.5MM THK)	
M		1	**8T-3490**	1	NUT-WELD (M10X1.5 THD)	

C-CHANGE FROM PREVIOUS TYPE
M-METRIC PART

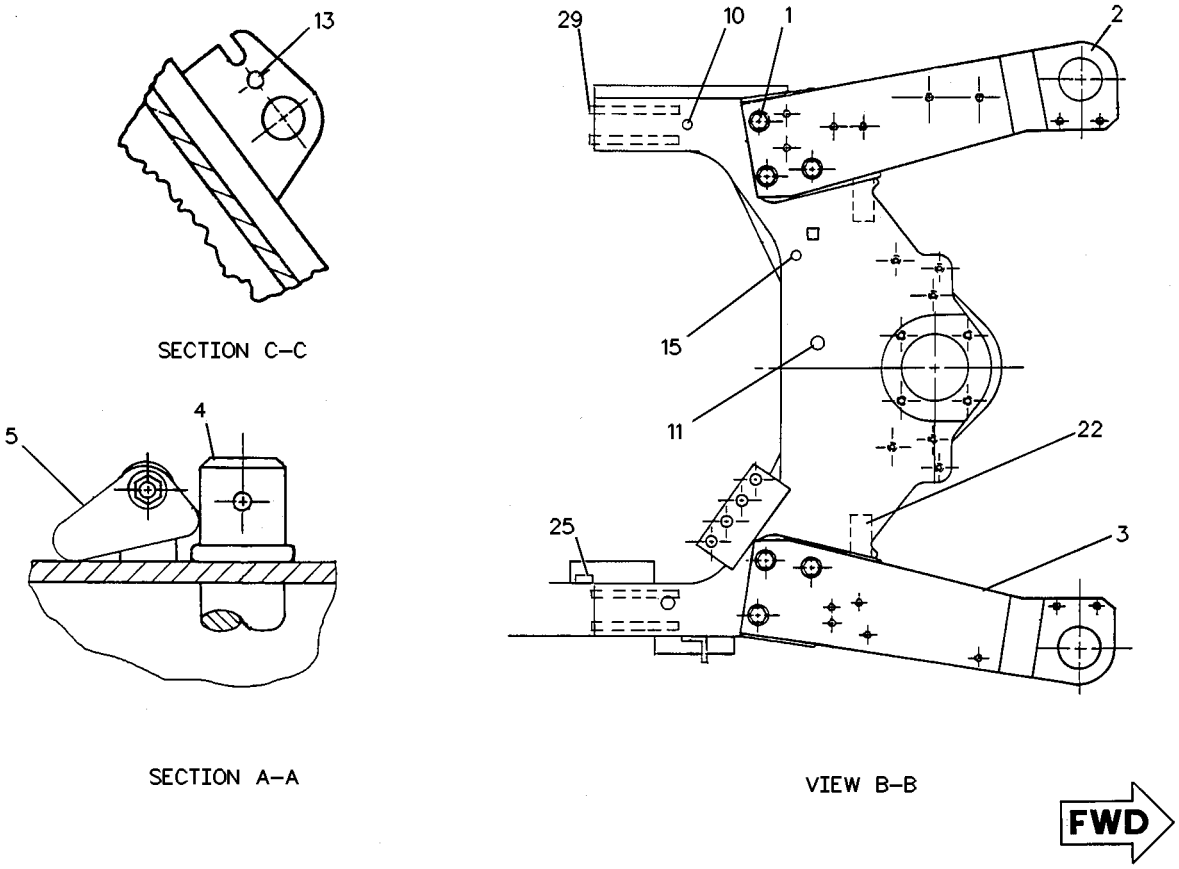

RIGHT SIDE VIEW

GRAPHIC #1 g00127671

8V-3195 GUARD GP-BOTTOM

S/N: 3XJ1504-1679
PART OF 6C-5338 CONVERSION AR-NONCAB
AN ATTACHMENT

SMCS-7153 **i01327234**

NOTE	REF NO	GRAPHIC REF	PART NUMBER	QTY	PART NAME 1 2 3 4 5 6 (PRODUCT LEVEL)	SEE PAGE
	1	1	**8V-3205**	1	PLATE AS	
	2	1	**8T-9393**	6	BOLT (5/8-11X1.50 IN)	
	3	1	**8T-4122**	6	WASHER (3.5MM THK)	
	4	1	**5D-1026**	1	CLAMP-HOSE	
CE	5	1	**5P-0767**		HOSE	

C-CHANGE FROM PREVIOUS TYPE
E-ORDER BY THE CENTIMETER

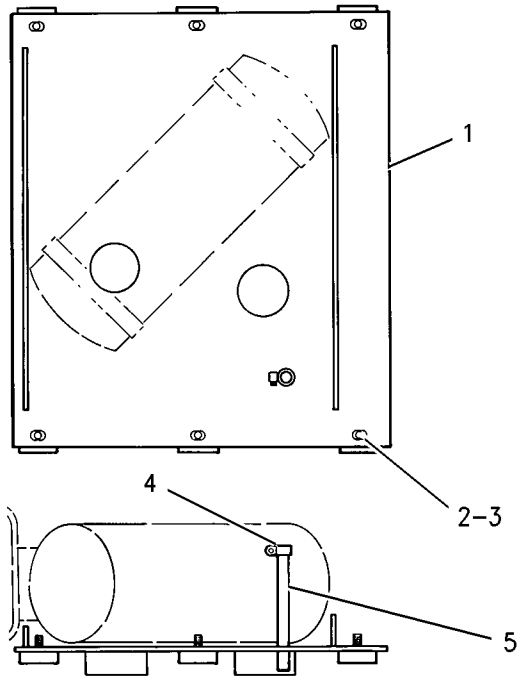

GRAPHIC #1 g00702101

8R-4869 GUARD GP-CRANKCASE

S/N: 3XJ1-99999
PART OF 4E-0526 SUPPRESSION AR-SOUND
AN ATTACHMENT

SMCS-7151 **i00286751**

NOTE	REF NO	GRAPHIC REF	PART NUMBER	QTY	PART NAME 1 2 3 4 5 6 (PRODUCT LEVEL)	SEE PAGE
	1	1	**8R-4136**	1	PLATE AS	
M		1	**8T-3597**	2	NUT-WELD (M12X1.75 THD)	
	2	1	**5D-1026**	1	CLAMP-HOSE	
M	3	1	**8T-4139**	2	BOLT (M12X1.75X30MM)	
		1	**8T-4223**	2	WASHER-HARD (3MM THK)	
	4	1	**8T-9393**	4	BOLT (5/8-11X1.50IN)	
		1	**8T-4122**	4	WASHER (3.5MM THK)	
	5	1	**129-8086**	1	COVER	
BE	6	1	**5P-0767**		HOSE (328CM)	

B-USE AS REQUIRED
E-ORDER BY THE CENTIMETER
M-METRIC PART

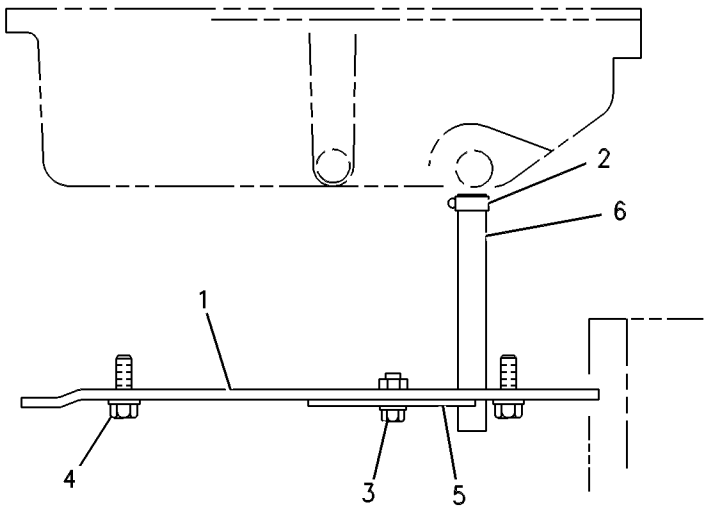

GRAPHIC #1 g00130383

8R-5049 GUARD GP-FRONT

S/N: 3XJ1-99999

SMCS-7167 **i01327110**

NOTE	REF NO	GRAPHIC REF	PART NUMBER	QTY	PART NAME 1 2 3 4 5 6 (PRODUCT LEVEL)	SEE PAGE
	1	1	**9C-6570**	1	PLATE	
	2	1	**6V-8801**	2	NUT (3/8-16 THD)	
	3	1	**8T-2561**	6	WASHER (5MM THK)	
	4	1	**4L-6454**	4	BOLT (3/8-16X1 IN)	

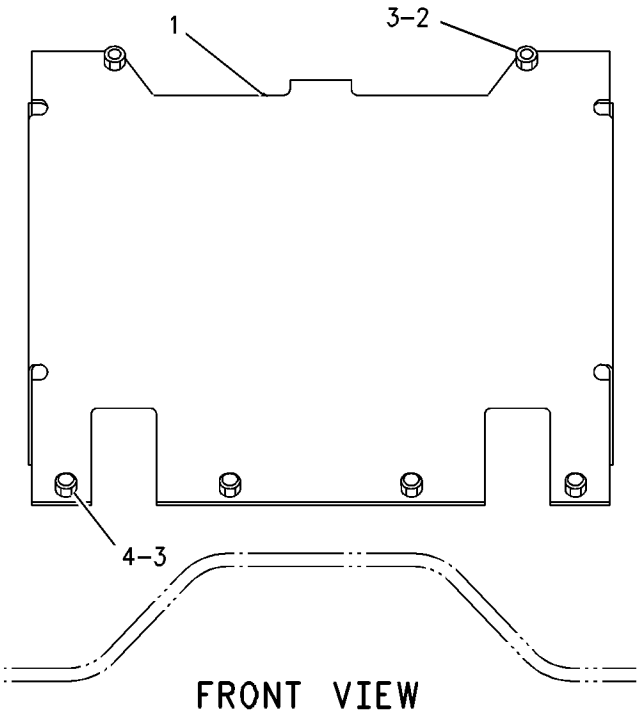

GRAPHIC #1 g00702094

FRAME AND BODY

8R-9963 GUARD GP-FRONT

S/N: 3XJ1-99999
PART OF 4E-6083, 6C-7857, 8R-9463 HYDRAULIC AR
AN ATTACHMENT

SMCS-7167 **i00259669**

NOTE	REF NO	GRAPHIC REF	PART NUMBER	QTY	PART NAME 1 2 3 4 5 6 (PRODUCT LEVEL)	SEE PAGE
	1	1	**9C-6571**	1	PLATE	
	2	1	**6V-8801**	6	NUT (3/8-16 THD)	
		1	**8T-2561**	6	WASHER (5.0MM THK)	

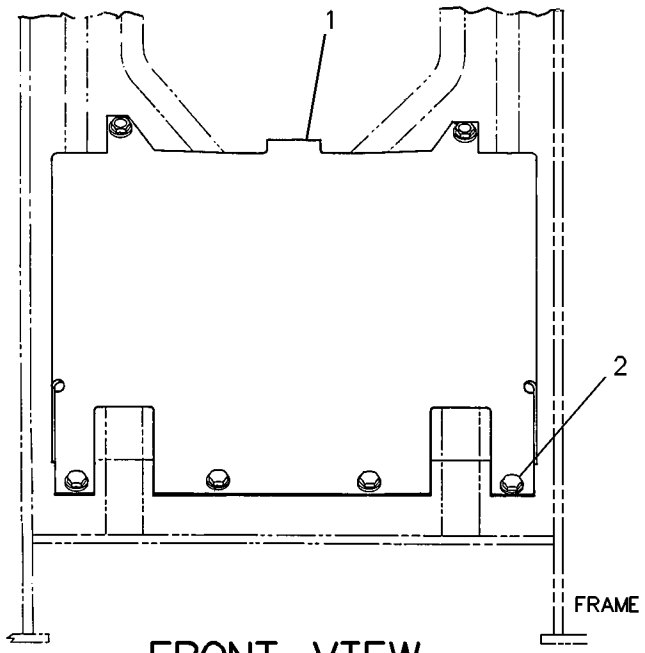

FRONT VIEW

GRAPHIC #1 g00126556

4E-3731 GUARD GP-LINES

S/N: 3XJ1-432
TILT
PART OF 6C-4048 CONVERSION AR-NONCAB
AN ATTACHMENT

SMCS-7167 **i00259378**

NOTE	REF NO	GRAPHIC REF	PART NUMBER	QTY	PART NAME 1 2 3 4 5 6 (PRODUCT LEVEL)	SEE PAGE
	1	1	**4E-4822**	1	PLATE	
	2	1	**4E-4820**	2	CLAMP AS	
	3	1	**8R-8456**	2	CLAMP	
	4	1	**5P-2228**	8	BOLT (1/2-13X1IN)	
	5	1	**7X-0325**	4	BOLT (1/2-13X2.50IN)	
	6	1	**8T-4223**	16	WASHER-HARD (3MM THK)	
	7	1	**6V-8188**	4	NUT (1/2-13 THD)	
	8	1	**4E-5118**	1	PLATE-LH	
	9	1	**4E-4821**	1	PLATE-RH	

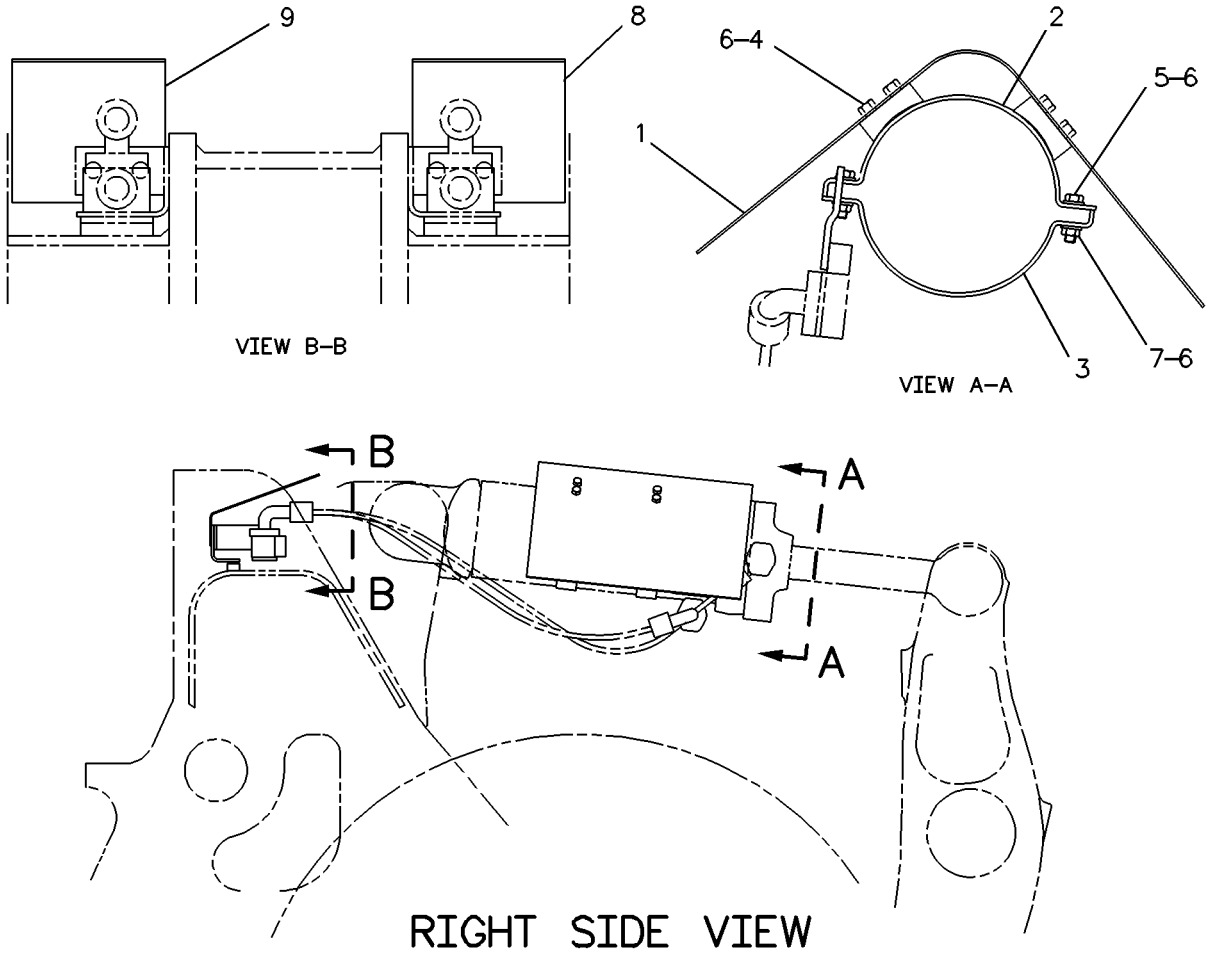

GRAPHIC #1 g00118870

8R-4868 GUARD GP-POWER TRAIN

S/N: 3XJ1-99999
PART OF 4E-0526 SUPPRESSION AR-SOUND
AN ATTACHMENT

SMCS-7153 **i00286745**

NOTE	REF NO	GRAPHIC REF	PART NUMBER	QTY	PART NAME 1 2 3 4 5 6 (PRODUCT LEVEL)	SEE PAGE
	1	1	**8V-2843**	1	PLATE	
	2	1	**5P-2566**	4	BOLT (1/2-13X1.50IN)	
		1	**8T-4223**	4	WASHER-HARD (3MM THK)	
	3	1	**7X-0344**	2	BOLT (5/8-11X1.375IN)	
	4	1	**8T-4122**	6	WASHER (3.5MM THK)	
	5	1	**6C-3573**	1	PLATE AS	
		1	**1F-0748**	4	NUT-WELD (1/2-13 THD)	
	6	1	**6K-0137**	2	BOLT-LOCKING	
	7	1	**7X-0362**	2	BOLT	

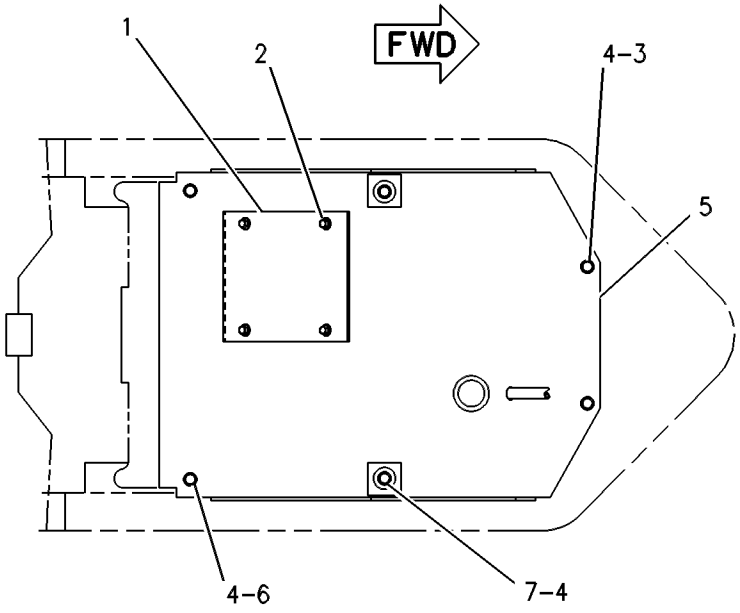

BOTTOM VIEW

GRAPHIC #1 g00130163

8R-5051 GUARD GP-RADIATOR

S/N: 3XJ1-99999

TYPE 1

SMCS-7155 **i01328043**

NOTE	REF NO	GRAPHIC REF	PART NUMBER	QTY	PART NAME 1 2 3 4 5 6 (PRODUCT LEVEL)	SEE PAGE
	1	1	**4F-8711**	1	PLUG (39.69MM DIA)	
	2	1	**8R-7974**	1	COVER AS	
M		1	**8T-3490**	4	NUT-WELD (M10X1.5 THD)	
		1	**7V-5607**	1	DOOR AS	
		1	**8V-6072**	1	LATCH AS	
	3	1	**4E-2436**	1	CLAMP	
M	4	1	**8T-4136**	45	BOLT (M10X1.50X25MM)	
	5	1	**8T-4121**	44	WASHER-HARD (2.5MM THK)	
	6	1	**4E-2420**	1	FRAME AS-GRILL	
M		1	**8T-3490**	3	NUT-WELD (M10X1.5 THD)	
	7	1	**8R-7964**	1	PANEL AS-RH	
M		1	**8T-3490**	16	NUT-WELD (M10X1.5 THD)	
M		1	**8T-4967**	4	STUD (M10X1.5X23MM)	
	8	1	**7P-8992**	6	HANDHOLD	
	9	1	**4E-2424**	1	GRILL AS	
		1	**2J-5638**	1	WASHER	
		1	**7W-6333**	1	SPACER (10.7MM THK)	
		1	**9V-0334**	1	ANGLE	
		1	**9V-0453**	1	BUSHING-TERMINAL	
		1	**9V-0979**	1	TUBE	
	10	1	**8G-0871**	1	HANDLE	
	11	1	**3B-4615**	2	PIN-COTTER	
	12	1	**4E-2686**	1	ROD AS	
		1	**8T-4121**	2	WASHER-HARD (2.5MM THK)	
	13	1	**8R-7969**	1	PANEL AS-LH	
M	14	1	**8T-3490**	16	NUT-WELD (M10X1.5 THD)	
M	15	1	**8T-4967**	4	STUD (M10X1.5X23MM)	
	16	1	**4E-2433**	1	STRIKER AS	
	17	1	**7X-7729**	2	WASHER (3MM THK)	
	18	1	**4E-2489**	1	SUPPORT AS-RH	
M	19	1	**8T-6462**	2	BOSS-WELD	
M	20	1	**8T-3490**	3	NUT-WELD (M10X1.5 THD)	
	21	1	**6W-5818**	1	LATCH	
	22	1	**6W-5817**	1	SPRING	
	23	1	**8R-7986**	1	ANGLE	
	24	1	**5V-3854**	2	BUMPER	
	25	1	**4E-2228**	1	SUPPORT AS-LH	
M	26	1	**8T-3490**	3	NUT-WELD (M10X1.5 THD)	
	27	1	**3B-2062**	1	PIN (3/8IN OD)	
	28	1	**9V-0450**	1	PIN (15MM OD)	

M-METRIC PART

8R-5051 **GUARD GP-RADIATOR** *(contd.)* **i01328043**

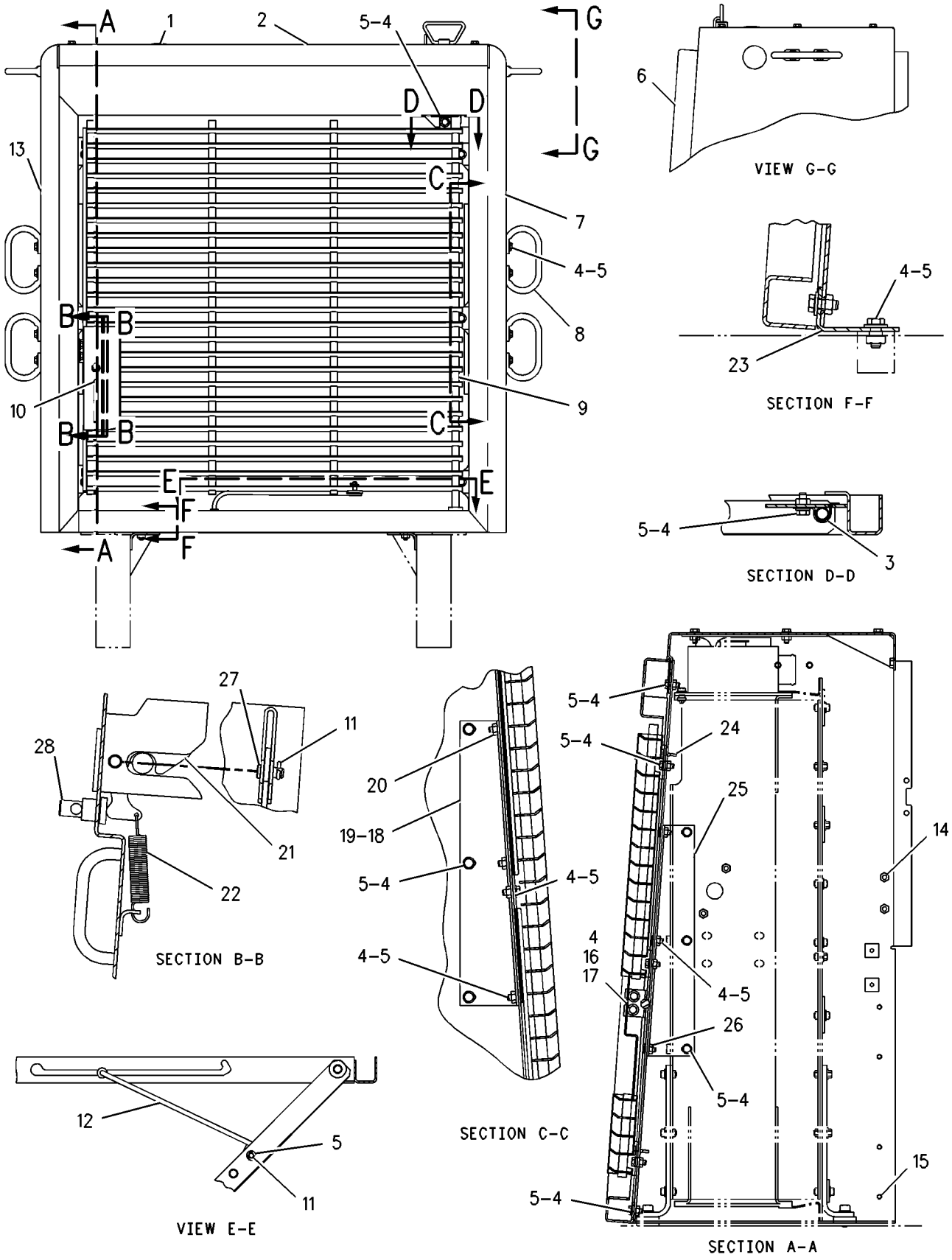

GRAPHIC #1 g00702313

8R-5051 GUARD GP-RADIATOR

S/N: 3XJ1-99999
TYPE 2

SMCS-7155 **i01328884**

NOTE	REF NO	GRAPHIC REF	PART NUMBER	QTY	PART NAME 1 2 3 4 5 6 (PRODUCT LEVEL)	SEE PAGE
	1	1	**4F-8711**	1	PLUG (39.69MM DIA)	
	2	1	**8R-7974**	1	COVER AS	
M		1	**8T-3490**	4	NUT-WELD (M10X1.5 THD)	
		1	**7V-5607**	1	DOOR AS	
		1	**8V-6072**	1	LATCH AS	
	3	1	**4E-2436**	1	CLAMP	
CM	4	1	**8T-4136**	43	BOLT (M10X1.50X25MM)	
C	5	1	**8T-4121**	42	WASHER-HARD (2.5MM THK)	
	6	1	**4E-2420**	1	FRAME AS-GRILL	
M		1	**8T-3490**	3	NUT-WELD (M10X1.5 THD)	
	7	1	**8R-7964**	1	PANEL AS-RH	
M		1	**8T-3490**	16	NUT-WELD (M10X1.5 THD)	
M		1	**8T-4967**	4	STUD (M10X1.5X23MM)	
	8	1	**7P-8992**	6	HANDHOLD	
	9	1	**4E-2424**	1	GRILL AS	
		1	**2J-5638**	1	WASHER	
		1	**7W-6333**	1	SPACER (10.7MM THK)	
		1	**9V-0334**	1	ANGLE	
		1	**9V-0453**	1	BUSHING-TERMINAL	
		1	**9V-0979**	1	TUBE	
	10	1	**8G-0871**	1	HANDLE	
	11	1	**3B-4615**	2	PIN-COTTER	
	12	1	**4E-2686**	1	ROD AS	
		1	**8T-4121**	2	WASHER-HARD (2.5MM THK)	
	13	1	**8R-7969**	1	PANEL AS-LH	
M	14	1	**8T-3490**	16	NUT-WELD (M10X1.5 THD)	
M	15	1	**8T-4967**	4	STUD (M10X1.5X23MM)	
	16	1	**4E-2433**	1	STRIKER AS	
	17	1	**7X-7729**	2	WASHER (3MM THK)	
C	18	1	**103-6258**	1	SUPPORT AS-RH	
	19	1	**3B-2062**	1	PIN (3/8IN OD)	
	20	1	**9V-0450**	1	PIN (15MM OD)	
	21	1	**6W-5818**	1	LATCH	
	22	1	**6W-5817**	1	SPRING	
	23	1	**8R-7986**	1	ANGLE	
	24	1	**5V-3854**	2	BUMPER	
C	25	1	**103-6259**	1	SUPPORT AS-LH	

C-CHANGE FROM PREVIOUS TYPE
M-METRIC PART

8R-5051 **GUARD GP-RADIATOR** *(contd.)* **i01328884**

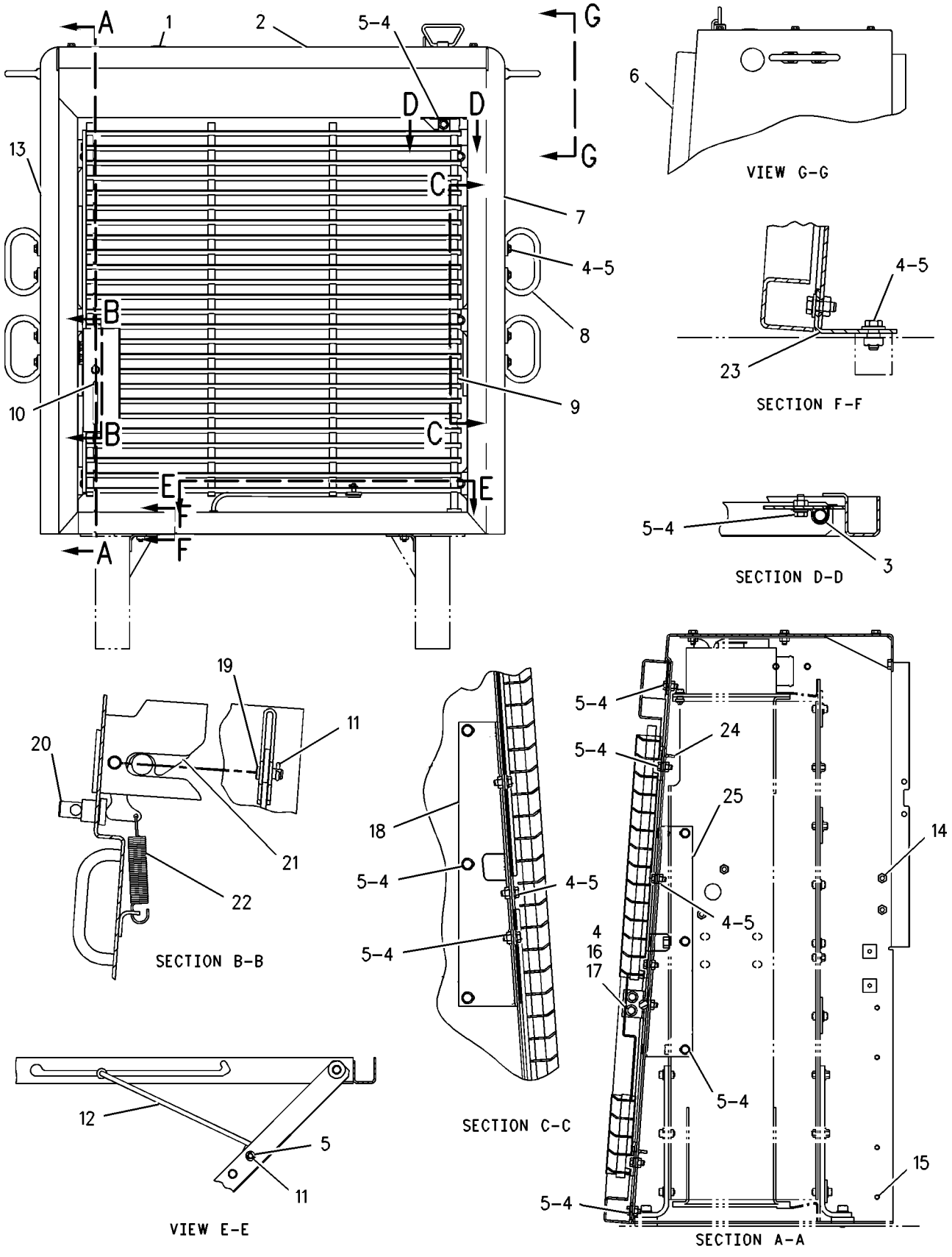

GRAPHIC #1 g00702310

FRAME AND BODY

9V-6537 HITCH GP-ARTICULATING

S/N: 3XJ1-99999

SMCS-7057, 7100 **i01327367**

NOTE	REF NO	GRAPHIC REF	PART NUMBER	QTY	PART NAME 1 2 3 4 5 6 (PRODUCT LEVEL)	SEE PAGE
C	1	1	**1B-3934**	2	CUP-ROLLER BEARING	
	2	1	**8T-4223**	20	WASHER-HARD (3MM THK)	
C	3	1	**7X-0325**	2	BOLT (1/2-13X0.75 IN)	
	4	1	**8T-8919**	2	BOLT (1/2-13X1.75 IN)	
C	5	1	**7X-0328**	2	BOLT (1/2-13X3.50 IN)	
	6	1	**5K-3493**	1	COVER	
	7	1	**9V-3829**	1	COLLAR	
	8	1	**9V-6523**	1	CAP	
B	9	1	**9V-6525**	1	SHIM PACK (INCL 20 SHIMS)	
	10	1	**7D-8348**	2	CUP-ROLLER BEARING	
	11	1	**7D-8349**	2	CONE-ROLLER BEARING	
	12	1	**3B-8489**	2	FITTING-GREASE (1/8-27 THD)	
	13	1	**3K-2876**	2	SEAL-LIP	
	14	1	**4K-6558**	1	PIN-LOWER	
	15	1	**4K-6780**	1	SPACER	
	16	1	**4K-6761**	1	CAP-UPPER	
B	17	1	**4K-7465**	1	SHIM PACK (INCL 19 SHIMS)	
C	18	1	**3F-7183**	2	CONE-ROLLER BEARING	
	19	1	**4K-6760**	1	CAP-LOWER	
	20	1	**5P-2566**	6	BOLT (1/2-13X1.50 IN)	
B	21	1	**4K-7464**	1	SHIM PACK (INCL 19 SHIMS)	
	22	1	**4V-0015**	1	PLATE-LOCKING	
	23	1	**7X-0345**	4	BOLT (5/8-11X1.75 IN)	
	24	1	**8T-4122**	4	WASHER (3.5MM THK)	
	25	1	**4K-6781**	1	SPACER	
	26	1	**4K-7462**	1	SEAL-LIP	
	27	1	**7X-0333**	8	BOLT (1/2-13X4.75IN)	
	28	1	**4K-7461**	1	SEAL-LIP	
	29	1	**9V-3853**	1	PIN	
	30	1	**9V-3852**	1	BEARING-SLEEVE	
	31	1	**9V-6524**	1	CAP	
	32	1	**8T-5360**	6	WASHER (2.5MM THK)	
	33	1	**7X-0316**	6	BOLT (7/16-14X3.50 IN)	

B-USE AS REQUIRED
C-CHANGE FROM PREVIOUS TYPE

9V-6537 **HITCH GP-ARTICULATING** ***(contd.)*** **i01327367**

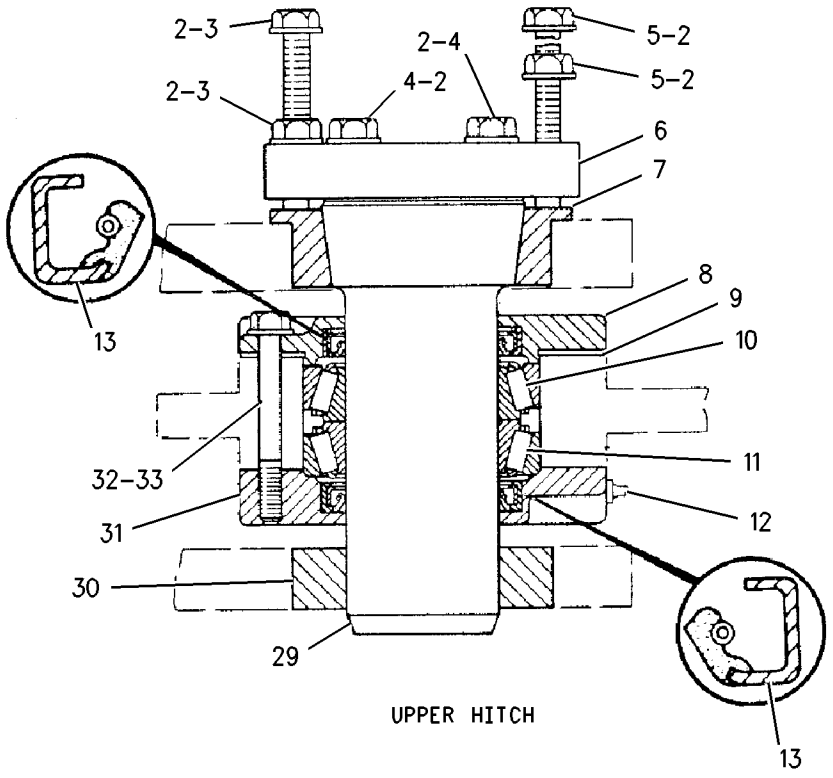

UPPER HITCH

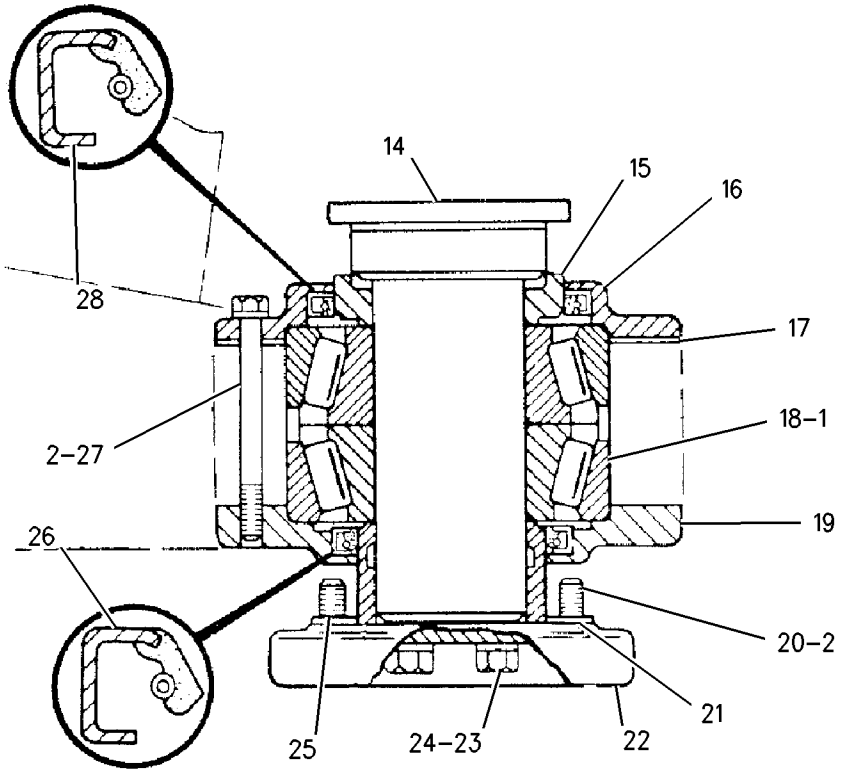

LOWER HITCH

GRAPHIC #1 g00702306

FRAME AND BODY

8R-5056 HOOD & GUARD GP

S/N: 3XJ1-99999

SMCS-7251 **i00259643**

NOTE	REF NO	GRAPHIC REF	PART NUMBER	QTY	PART NAME 1 2 3 4 5 6 (PRODUCT LEVEL)	SEE PAGE
	1	1	**8T-4121**	26	WASHER (2.5MM THK)	
M	2	1	**8T-4136**	20	BOLT (M10X1.50X25MM)	
	3	1	**8R-9230**	1	DOOR AS-RH	
M		1	**8T-3612**	4	NUT-WELD (M8X1.25 THD)	
		1	**8R-9238**	1	HINGE-RH	
		1	**8R-9237**	1	HINGE	
		1	**9C-3861**	1	PIN	
	4	1	**8R-9239**	1	DOOR AS-LH	
M		1	**8T-3612**	4	NUT-WELD (M8X1.25 THD)	
		1	**4E-6520**	1	HINGE-LH	
		1	**8R-9238**	1	HINGE-RH	
		1	**9C-3861**	1	PIN	
	5	1	**8R-9252**	2	STRIP	
	6	1	**8R-9251**	2	PLATE	
	7	1	**8R-9223**	1	PANEL AS-RH	
	8	1	**8R-9227**	1	PANEL AS-LH	
	9	1	**9M-5733**	2	RIVET-POP (4.78MM DIA)	
		1	**8V-1026**	2	PIN	
	10	1	**4E-2399**	1	ROD-LH	
	11	1	**8R-9243**	1	DOOR AS-RH	
		1	**068-5963**	2	SCREW-DRIVE	
		1	**8R-9245**	1	HINGE	
		1	**9C-3293**	1	PIN	
	12	1	**8R-9246**	1	DOOR AS-LH	
		1	**068-5963**	2	SCREW-DRIVE	
		1	**8R-9245**	1	HINGE	
		1	**9C-3293**	1	PIN	
	13	1	**8R-9250**	2	STRIP	
	14	1	**8P-8540**	2	GROMMET (9.52MM ID)	
	15	1	**2P-9347**	2	SPRING	
	16	1	**7X-1387**	4	WASHER (1.9MM THK)	
	17	1	**3B-4615**	6	PIN-COTTER	
	18	1	**7X-0608**	4	WASHER-HARD (2.0MM THK)	
	19	1	**6V-8183**	2	NUT-FULL (3/8-24 THD)	
	20	1	**1B-0676**	2	PIN	
	21	1	**1M-1341**	2	END-YOKE ROD	
	22	1	**3B-2062**	2	PIN (3/8IN OD)	
	23	1	**9V-0354**	2	LATCH	
	24	1	**9V-0350**	1	BRACKET AS-RH	
	25	1	**9V-0353**	1	BRACKET AS-LH	
	26	1	**8R-9220**	1	ROD-RH	
	27	1	**5M-8500**	2	KNOB	
	28	1	**8T-4222**	2	WASHER-PLATED (2.5MM THK)	
M	29	1	**5C-7261**	8	NUT (M8X1.25 THD)	
		1	**5P-4116**	8	WASHER (2MM THK)	
M		1	**8T-4189**	8	BOLT (M8X1.25X20MM)	
	30	1	**8R-9260**	1	SUPPORT AS	
	31	1	**5P-1076**	2	WASHER-HARD (4MM THK)	
		1	**6V-8188**	2	NUT (1/2-13 THD)	
		1	**9V-0344**	2	PIN (LATCH STRIKER)	
	32	1	**8R-9248**	2	ANGLE	
	33	1	**8R-9249**	2	ANGLE	
M	34	1	**9X-2043**	8	SCREW-TRUSS HEAD (M6X1X14MM)	
		1	**8T-4205**	8	WASHER-HARD (2MM THK)	
M		1	**6V-7743**	8	LOCKNUT (M6X1.00 THD)	
	35	1	**4L-6454**	2	BOLT (3/8-16X1.0IN)	
	36	1	**5B-0486**	2	SPACER	

8R-5056 **HOOD & GUARD GP** ***(contd.)*** **i00259643**

NOTE	REF NO	GRAPHIC REF	PART NUMBER	QTY	PART NAME 1 2 3 4 5 6 (PRODUCT LEVEL)	SEE PAGE
	37	1	**9X-2299**	2	LATCH-HANDLE	
	38	1	**9V-5954**	2	ROD AS	
	39	1	**4M-7470**	2	GROMMET (11MM ID)	
	40	1	**3B-4611**	2	PIN-COTTER	
	41	1	**8R-9253**	1	SUPPORT AS-RH	
	42	1	**8R-9257**	1	SUPPORT AS-LH	
BD	43	1	**5P-7483**		SEAL	
	44	1	**3P-5414**	2	GROMMET	
	45	1	**8R-9221**	2	ANGLE-RH	
	46	1	**8R-9222**	2	ANGLE-LH	
	47	1	**9C-4582**	1	ANGLE-RH	
	48	1	**9C-3391**	1	ANGLE-LH	
	49	1	**6V-8801**	6	NUT (3/8-16 THD)	
M	50	1	**8T-4133**	12	NUT (M10X1.50 THD)	
	51	1	**4E-8481**	1	HOOD AS	
	52	1	**2R-1498**	4	GROMMET	
	53	1	**3P-9900**	4	WASHER (3MM THK)	
M	54	1	**8T-4137**	12	BOLT (M10X1.50X20MM)	
	55	1	**7X-7729**	12	WASHER (3MM THK)	
	56	1	**7X-0507**	8	WASHER-HARD	

B-USE AS REQUIRED
D-ORDER BY THE METER
M-METRIC PART

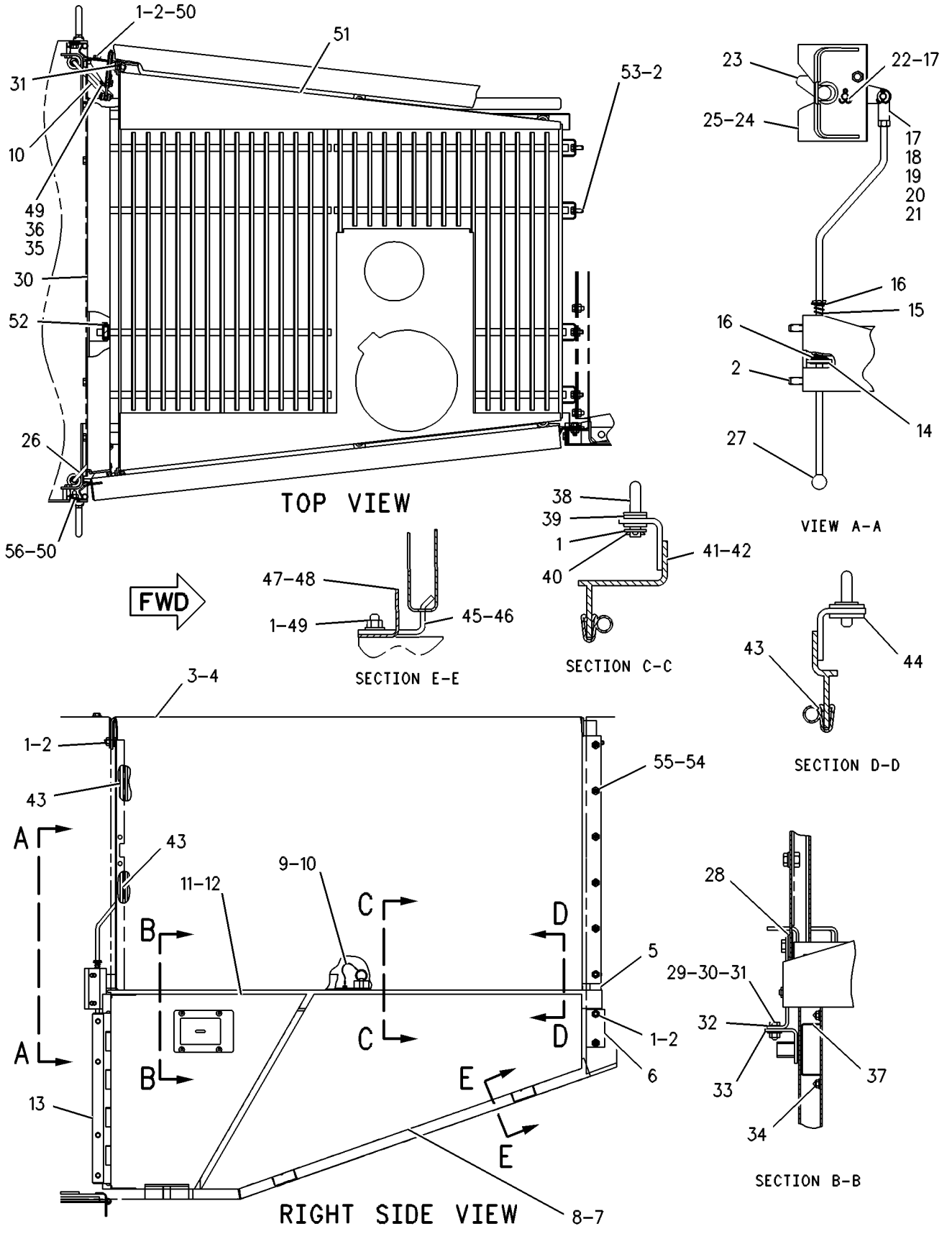

GRAPHIC #1 g00130055

FRAME AND BODY

8R-1200 LADDER GP

S/N: 3XJ1-461

SMCS-7254 **i01334378**

NOTE	REF NO	GRAPHIC REF	PART NUMBER	QTY	PART NAME 1 2 3 4 5 6 (PRODUCT LEVEL)	SEE PAGE
	1	1	**4V-0041**	1	HANDHOLD AS-RH	
	2	1	**4V-0060**	1	HANDHOLD AS-LH	
	3	1	**4V-0081**	1	HANDHOLD AS-RH	
	4	1	**6C-3914**	1	HANDHOLD AS-LH	
	5	1	**8T-8917**	29	BOLT (1/2-13X1.25 IN)	
		1	**8T-4223**	29	WASHER-HARD (3MM THK)	
	6	1	**5G-0817**	1	BUMPER-CONICAL	
	7	1	**6C-3671**	2	LADDER AS	
	8	1	**4L-9337**	32	BOLT (3/8-16X1.5 IN)	
		1	**8T-4896**	32	WASHER-HARD (10.2X18.5X2.5MM THK)	
		1	**7W-8106**	32	SPACER (15MM THK)	
	9	1	**8T-4224**	1	WASHER-HARD (8.8X16X2MM THK)	
		1	**4F-2294**	1	NUT-JAM (5/16-24 THD)	
	10	1	**9V-0247**	16	PLATE	
	11	1	**6C-4029**	4	STEP AS	
	12	1	**9V-0251**	8	BELT	

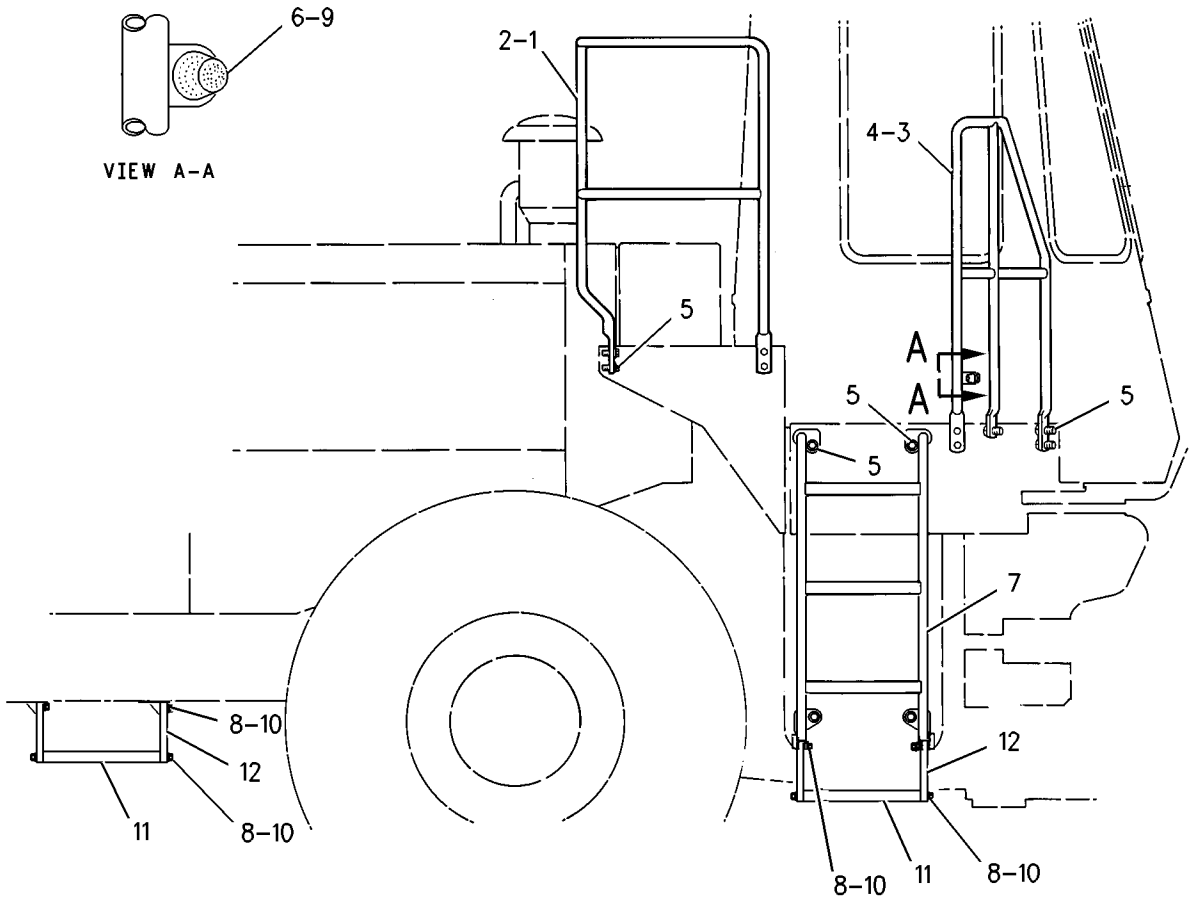

GRAPHIC #1 g00705535

FRAME AND BODY

8R-1200 LADDER GP

S/N: 3XJ462-99999

SMCS-7254 **i01313609**

NOTE	REF NO	GRAPHIC REF	PART NUMBER	QTY	PART NAME 1 2 3 4 5 6 (PRODUCT LEVEL)	SEE PAGE
	1	1	**4V-0041**	1	HANDHOLD AS-RH	
	2	1	**4V-0060**	1	HANDHOLD AS-LH	
	3	1	**4V-0081**	1	HANDHOLD AS-RH	
	4	1	**6C-3914**	1	HANDHOLD AS-LH	
	5	1	**8T-8917**	29	BOLT (1/2-13X1.25IN)	
		1	**8T-4223**	29	WASHER-HARD (3MM THK)	
	6	1	**5G-0817**	3	BUMPER-CONICAL	
	7	1	**6C-3671**	2	LADDER AS	
	8	1	**4L-9337**	32	BOLT (3/8-16X1.5 IN)	
		1	**8T-4896**	32	WASHER-HARD (10.2 X 18.5 X 2.5MM THK)	
		1	**7W-8106**	32	SPACER (15MM THK)	
	9	1	**8T-4224**	3	WASHER-HARD (8.8X16X2MM THK)	
		1	**4F-2294**	3	NUT-JAM (5/16-24 THD)	
	10	1	**9V-0247**	16	PLATE	
	11	1	**6C-4029**	4	STEP AS	
					(EACH INCLUDES)	
		1	**1F-0750**	4	NUT-WELD (3/8-16 THD)	
	12	1	**9V-0251**	8	BELT	

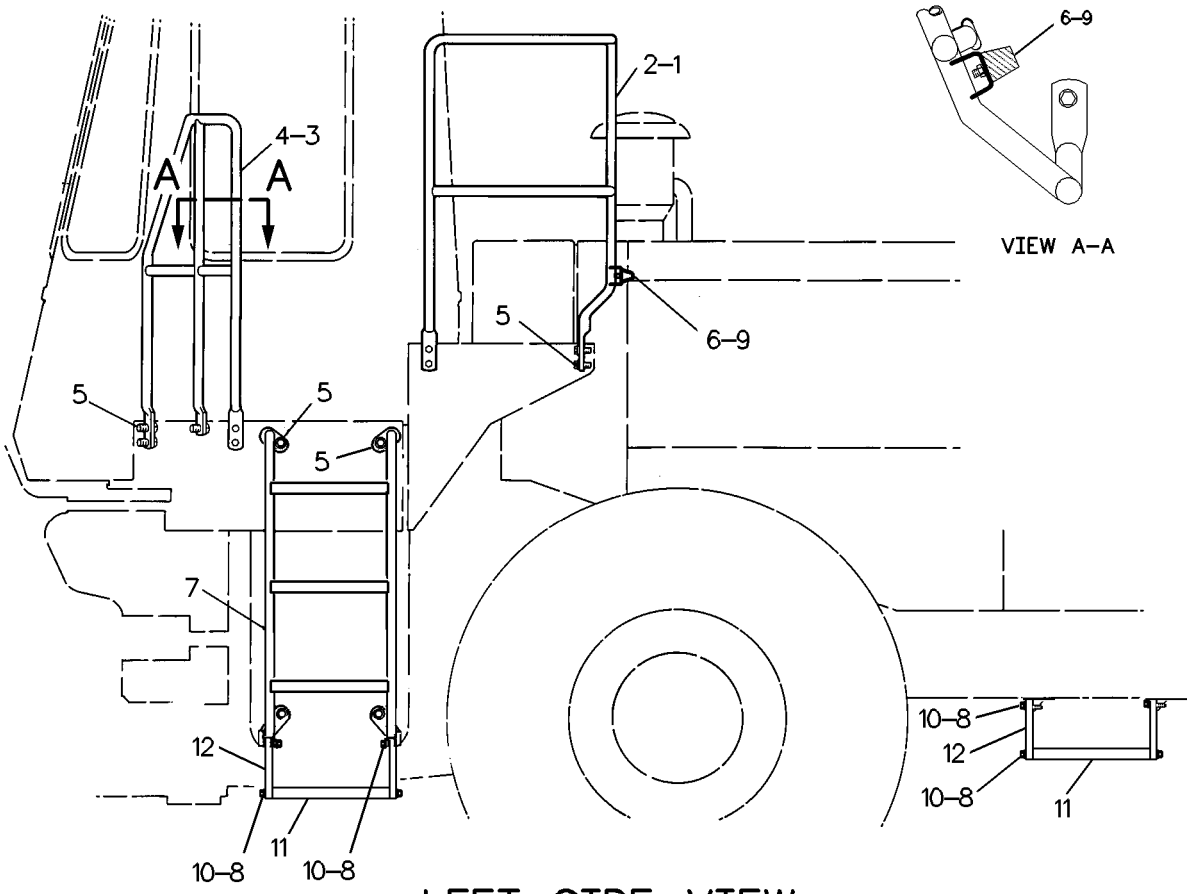

LEFT SIDE VIEW

GRAPHIC #1 g00127109

MEMORANDA

8R-3530 LINES GP-GREASE

S/N: 3XJ1-99999

SMCS-7510 **i00286574**

NOTE	REF NO	GRAPHIC REF	PART NUMBER	QTY	PART NAME 1 2 3 4 5 6 (PRODUCT LEVEL)	SEE PAGE
	1	1	**5P-5461**	4	NUT (1/8-27 THD)	
	2	1	**5P-1075**	13	WASHER-HARD (3MM THK)	
	3	1	**9C-8052**	1	PLATE	
	4	1	**5B-0935**	4	FITTING (STRAIGHT)	
					—OR—	
		1	**5P-8334**	4	FITTING-HYDRAULIC (65 DEGREE ANGLE)	
	5	1	**5K-2298**	5	CLIP	
	6	1	**6V-8801**	10	NUT (3/8-16 THD)	
	7	1	**8R-5123**	1	TUBE AS	
	8	1	**6L-3616**	2	CONNECTOR-FLARED	
	9	1	**9S-7720**	1	ELBOW-FLARED	
	10	1	**8R-5124**	1	TUBE AS	
	11	1	**5K-9242**	2	UNION-FLARED	
	12	1	**4H-8878**	5	CLIP	
	13	1	**8R-5127**	1	TUBE AS	
	14	1	**5K-9243**	11	ELBOW-FLARED	
	15	1	**3B-8686**	4	FITTING-HYDRAULIC (1/8 NPTF)(30 DEG)	
	16	1	**4L-1263**	1	SPACER-NUT	
	17	1	**9V-1066**	1	TUBE AS	
	18	1	**9V-1064**	1	TUBE AS	
	19	1	**9V-1065**	1	TUBE AS	
	20	1	**6V-2383**	1	CLIP (7.94MM ID)	
	21	1	**8R-5126**	1	TUBE AS	
	22	1	**8R-5128**	1	TUBE AS	
	23	1	**6K-9793**	1	CLIP	
	24	1	**8R-5125**	1	TUBE AS	
	25	1	**3V-4943**	1	HOSE AS	
	26	1	**9V-9157**	1	TUBE AS	
	27	1	**9V-9158**	1	TUBE AS	
	28	1	**9S-7703**	1	ELBOW-FLARED	
	29	1	**2V-8555**	1	HOSE AS	
	30	1	**5P-5463**	4	ADAPTER-LUBRICATION	
	31	1	**5K-9979**	2	CONNECTOR-FLARED	

8R-3530 **LINES GP-GREASE** *(contd.)* **i00286574**

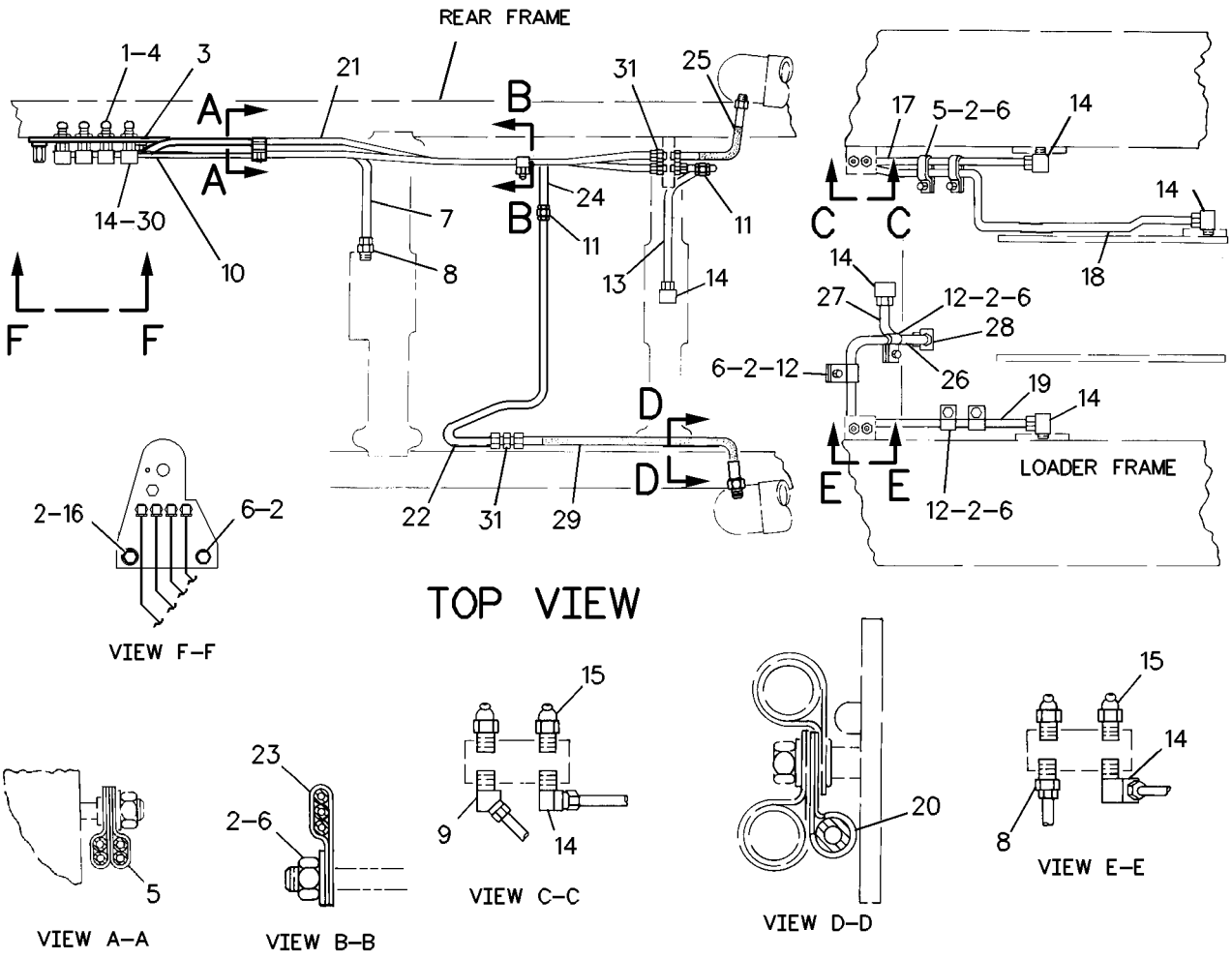

GRAPHIC #1 g00130382

7V-2888 LINK GP-STEERING FRAME LOCK

S/N: 3XJ1-99999

SMCS-7506 **i00259658**

NOTE	REF NO	GRAPHIC REF	PART NUMBER	QTY	PART NAME 1 2 3 4 5 6 (PRODUCT LEVEL)	SEE PAGE
	1	1	**8D-3791**	1	PIN	
	2	1	**5V-6380**	2	PIN	
	3	1	**5V-7076**	1	LINK	
	4	1	**5V-7654**	1	PIN AS	
	5	1	**2K-4973**	1	LOCKNUT (3/8-16 THD)	
	6	1	**008-3843**	1	PIN	
	7	1	**3B-5316**	1	COTTER (PIN)	

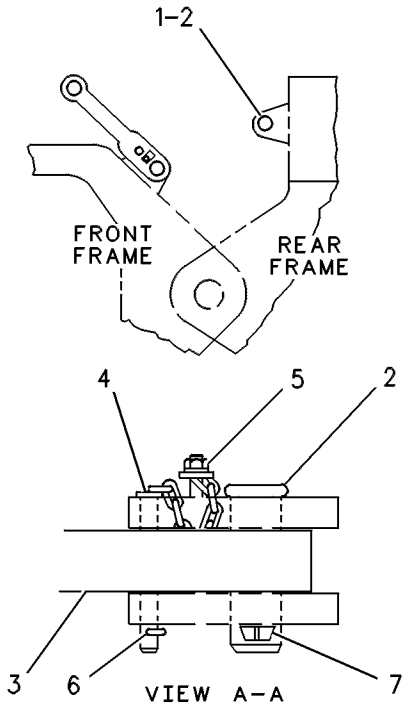

GRAPHIC #1 g00129008

MEMORANDA

FRAME AND BODY

101-8686 LOUVER GP

S/N: 3XJ1-99999

AN ATTACHMENT

SMCS-7155 **i01309953**

NOTE	REF NO	GRAPHIC REF	PART NUMBER	QTY	PART NAME 1 2 3 4 5 6 (PRODUCT LEVEL)	SEE PAGE
M	1	1	**8T-4136**	4	BOLT (M10X1.50X25MM)	
		1	**5P-1075**	4	WASHER-HARD (3MM THK)	
	2	1	**5S-7379**	10	BOLT (3/8-16X.875 IN)	
		1	**8T-4896**	10	WASHER-HARD (2.5MM THK)	
	3	1	**6C-8606**	2	SUPPORT	
	4	1	**6C-8607**	2	PIN	
		1	**6B-4196**	2	WASHER-THRUST	
		1	**4B-4278**	2	WASHER (1.6MM THK)	
	5	1	**6C-8608**	2	PIN	
		1	**3B-4611**	2	PIN-COTTER	
		1	**4B-4276**	4	WASHER (1.6MM THK)	
	6	1	**6C-3679**	1	RIVET-POP	
		1	**4B-4274**	1	WASHER (1.2MM THK)	
	7	1	**5P-7921**	4	SCREW-WASHER HEAD	
	8	1	**4D-2303**	8	WASHER	
	9	1	**5V-3854**	2	BUMPER	
	10	1	**6C-8609**	1	SHEET	
	11	1	**101-8331**	7	LOUVER AS	
					(EACH INCLUDES)	
		1	**6C-3677**	3	RIVET-POP	
		1	**101-8337**	1	INSULATION	
	12	1	**101-8330**	3	LOUVER AS	
					(EACH INCLUDES)	
		1	**6C-3677**	3	RIVET-POP	
		1	**101-8336**	1	INSULATION	
	13	1	**101-8329**	1	LOUVER AS	
		1	**6C-3677**	3	RIVET-POP	
		1	**101-8335**	1	INSULATION	
	14	1	**9V-0450**	1	PIN (15MM OD)	
	15	1	**3B-2062**	1	PIN (3/8IN OD)	
	16	1	**3B-4615**	3	PIN-COTTER	
	17	1	**6W-5817**	1	SPRING	
	18	1	**6W-5818**	1	LATCH	
	19	1	**6C-8602**	1	FRAME AS	
		1	**6C-8603**	1	HINGE	
		1	**8G-0871**	1	HANDLE	
		1	**9V-0334**	1	ANGLE	
		1	**9V-0453**	2	BUSHING-TERMINAL	
		1	**7D-8627**	10	LUG	
	20	1	**101-7406**	1	STRIP	
	21	1	**101-7407**	1	STRIP	
	22	1	**101-7408**	1	STRIP	
	23	1	**101-7409**	1	STRIP	

M-METRIC PART

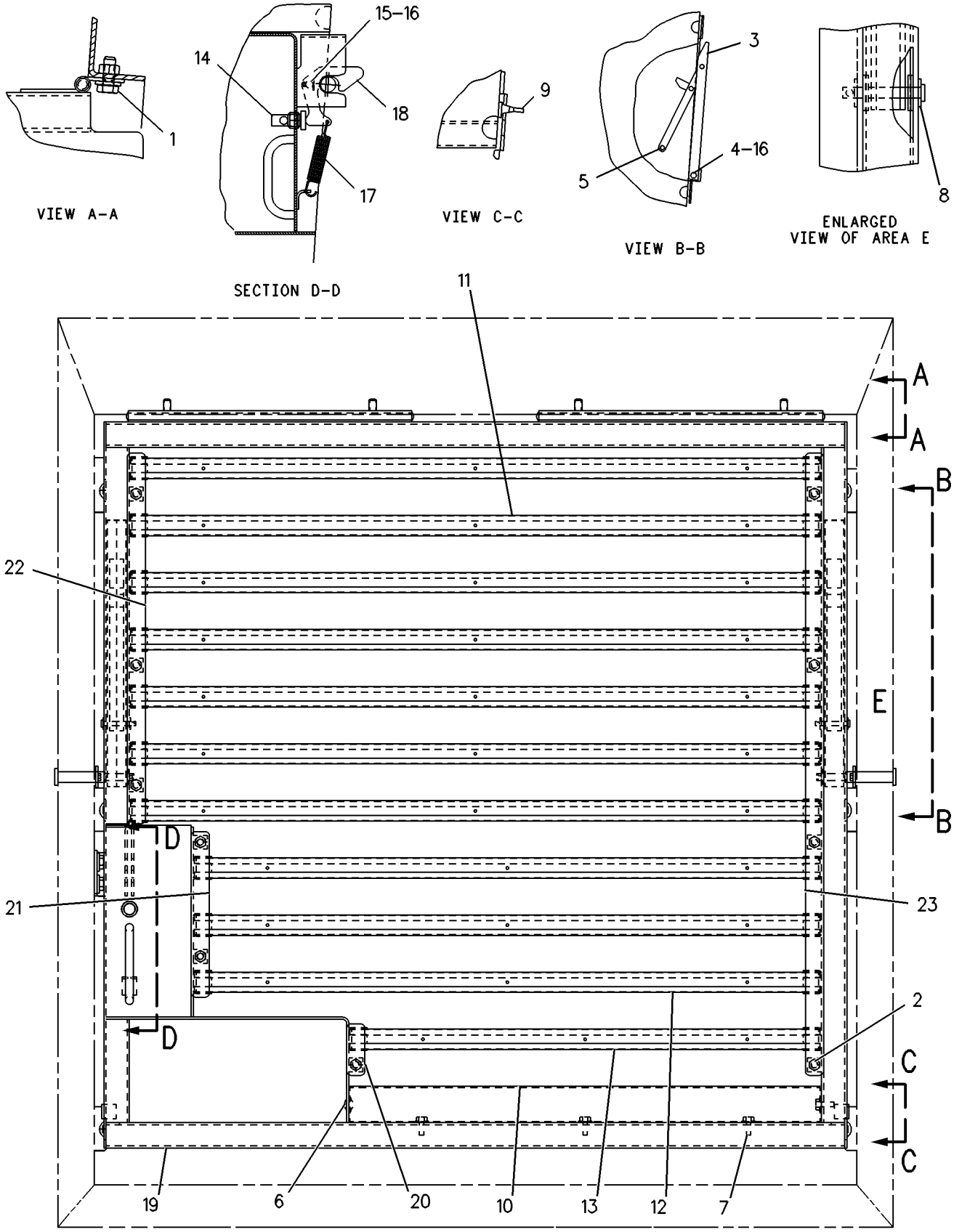

GRAPHIC #1 g00128133

4E-0526 SUPPRESSION AR-SOUND

S/N: 3XJ1-99999

AN ATTACHMENT

SMCS-7261 **i01333490**

NOTE	PART NUMBER	QTY	PART NAME 1 2 3 4 5 6 (PRODUCT LEVEL)	SEE PAGE
Y	*8R-4869*	1	GUARD GP-CRANKCASE	
Y	*8R-4868*	1	GUARD GP-POWER TRAIN	
	7X-0990	1	PLATE GP-CERTIFICATION (OPERATOR SOUND)	
	7X-0977	1	PLATE GP-SOUND SUPPRESSION	
Y	*4E-0527*	1	SUPPRESSION GP-SOUND	
Y	*8R-9713*	1	SUPPRESSION GP-SOUND	

Y-SEPARATE ILLUSTRATION

MEMORANDA

4E-0527 SUPPRESSION GP-SOUND

S/N: 3XJ1-99999
PART OF 4E-0526 SUPPRESSION AR-SOUND
AN ATTACHMENT

SMCS-7076, 7261 **i00866145**

NOTE	REF NO	GRAPHIC REF	PART NUMBER	QTY	PART NAME 1 2 3 4 5 6 (PRODUCT LEVEL)	SEE PAGE
	1	1	**8R-9561**	4	LINER	
	2	1	**8R-9564**	2	STRIP	
M	3	1	**8T-4189**	8	BOLT (M8X1.25X20MM)	
		1	**5P-4116**	8	WASHER (2MM THK)	
	4	1	**8R-9566**	2	ANGLE	
	5	1	**8R-9562**	1	LINER-RH	
		1	**8R-9567**	1	LINER-LH	
	6	1	**8R-9565**	6	RETAINER	
BD	7	1	**5P-7483**		SEAL	
	8	1	**8R-9805**	1	LINER-LH	
		1	**8R-9563**	1	LINER-RH	
	9	1	**9M-5733**	16	RIVET-POP (4.78MM DIA)	
	10	1	**151-2860**	1	BAFFLE	
	11	1	**151-2861**	1	STRIP	
M	12	1	**6V-7357**	3	BOLT (M6X1MM THD)	
M	13	1	**112-6646**	3	LOCKNUT (M6X1 THD)	
	14	1	**157-1686**	1	SHEET	
	15	1	**8B-9725**	2	BOSS	
	16	1	**7X-0578**	2	WASHER-HARD (2.5MM THK)	

B-USE AS REQUIRED
D-ORDER BY THE METER
M-METRIC PART

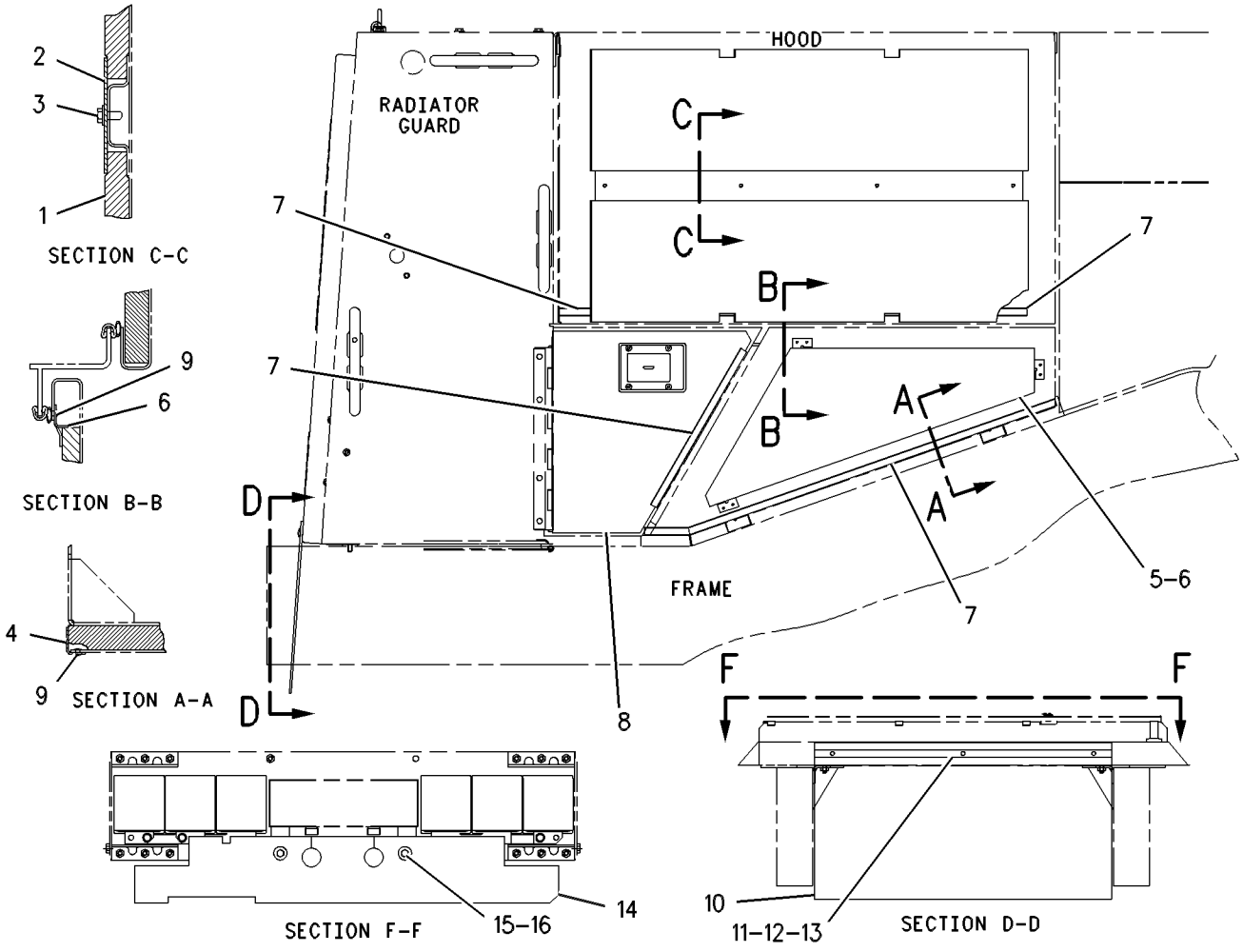

GRAPHIC #1

g00447885

8R-9713 SUPPRESSION GP-SOUND

S/N: 3XJ1-99999
PART OF 4E-0526 SUPPRESSION AR-SOUND
AN ATTACHMENT
TYPE 1

SMCS-7076, 7261 **i01329246**

NOTE	REF NO	GRAPHIC REF	PART NUMBER	QTY	PART NAME 1 2 3 4 5 6 (PRODUCT LEVEL)	SEE PAGE
	1	1	**0L-1006**	2	PLATE-SPACER	
	2	1	**5S-7379**	28	BOLT (3/8-16X.875 IN)	
	3	1	**8T-4896**	22	WASHER-HARD (10.2X18.5X2.5MM THK)	
	4	1	**4E-0127**	1	STRIP	
	5	1	**7X-0632**	6	WASHER-HARD (6 MM THK)	
	6	1	**4E-0120**	1	BAFFLE	
	7	1	**6C-5088**	1	GUARD AS-RH	
	8	1	**6C-5085**	1	GUARD AS-LH	
	9	1	**4E-0121**	2	PLATE AS	
					(EACH INCLUDES)	
		1	**5B-1983**	2	BOSS (3/8-16 THD)	
	10	1	**4E-0123**	2	PLATE AS	
					(EACH INCLUDES)	
		1	**5B-1983**	1	BOSS (3/8-16 THD)	
	11	1	**4E-0126**	1	ANGLE	
E	12	1	**5P-7211**		SEAL (300 CM)	
	13	1	**6C-5700**	2	LINER	

E-ORDER BY THE CENTIMETER

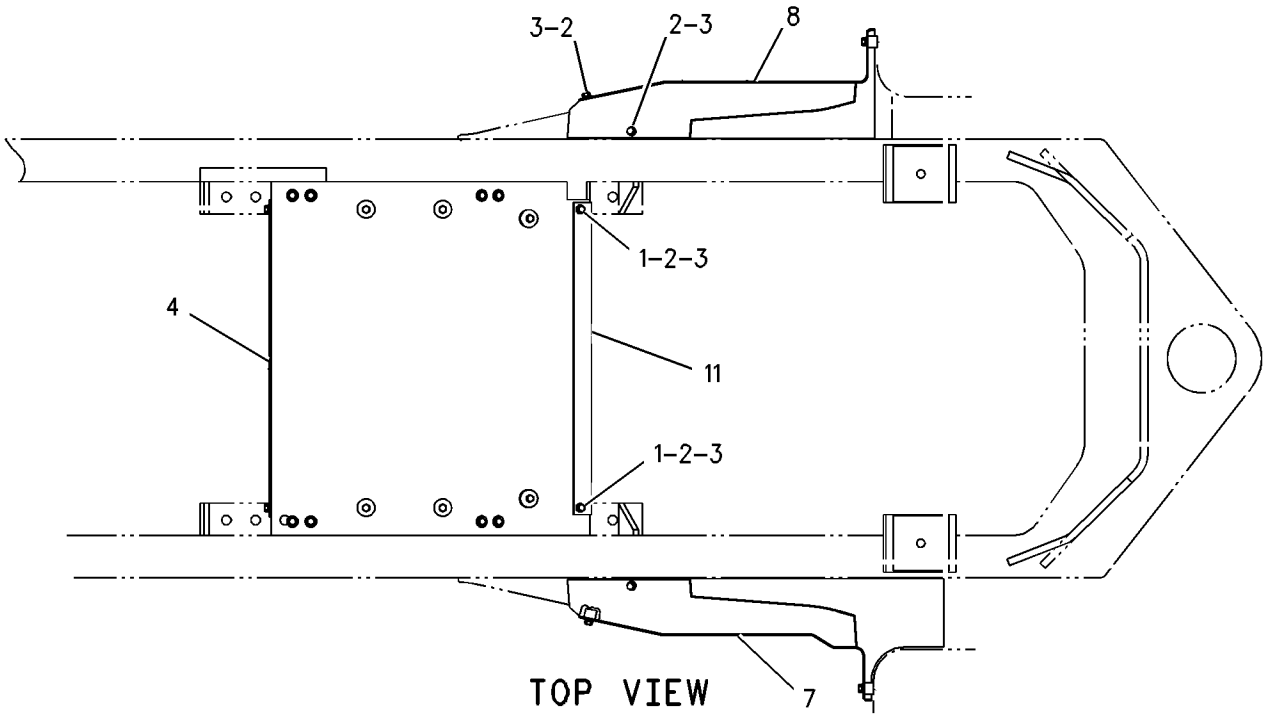

TOP VIEW

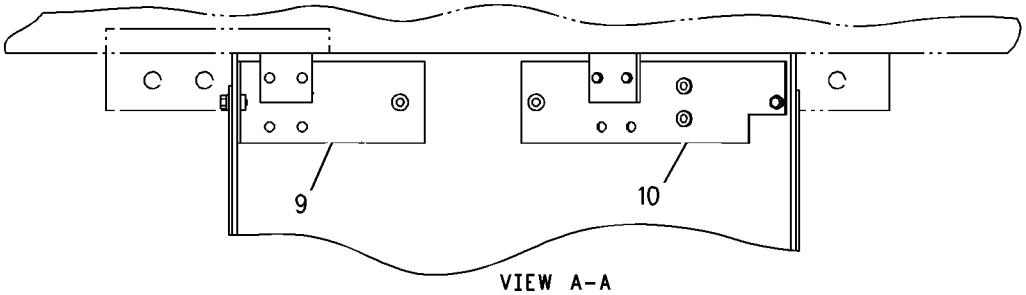

VIEW A–A

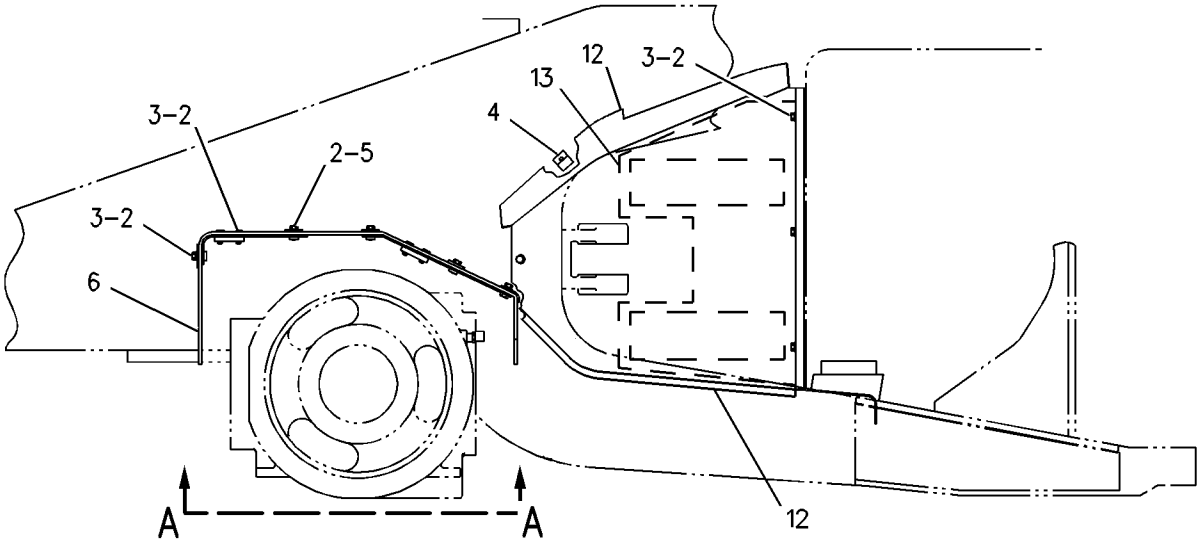

RIGHT SIDE VIEW

GRAPHIC #1 g00703414

8R-9713 SUPPRESSION GP-SOUND

S/N: 3XJ1-99999
PART OF 4E-0526 SUPPRESSION AR-SOUND
AN ATTACHMENT
TYPE 2

SMCS-7076, 7261 **i01328120**

NOTE	REF NO	GRAPHIC REF	PART NUMBER	QTY	PART NAME 1 2 3 4 5 6 (PRODUCT LEVEL)	SEE PAGE
	1	1	**0L-1006**	2	PLATE-SPACER	
	2	1	**5S-7379**	28	BOLT (3/8-16X.875 IN)	
	3	1	**8T-4896**	22	WASHER-HARD (10.2X18.5X2.5MM THK)	
	4	1	**4E-0127**	1	STRIP	
	5	1	**7X-0632**	6	WASHER-HARD (6 MM THK)	
	6	1	**4E-0120**	1	BAFFLE	
	7	1	**6C-5088**	1	GUARD AS-RH	
	8	1	**6C-5085**	1	GUARD AS-LH	
C	9	1	**6C-8604**	2	PLATE AS	
	10	1	**4E-0123**	2	PLATE AS	
					(EACH INCLUDES)	
		1	**5B-1983**	1	BOSS (3/8-16 THD)	
	11	1	**4E-0126**	1	ANGLE	
D	12	1	**5P-7211**		SEAL	
	13	1	**6C-5700**	2	LINER	

C-CHANGE FROM PREVIOUS TYPE
D-ORDER BY THE METER

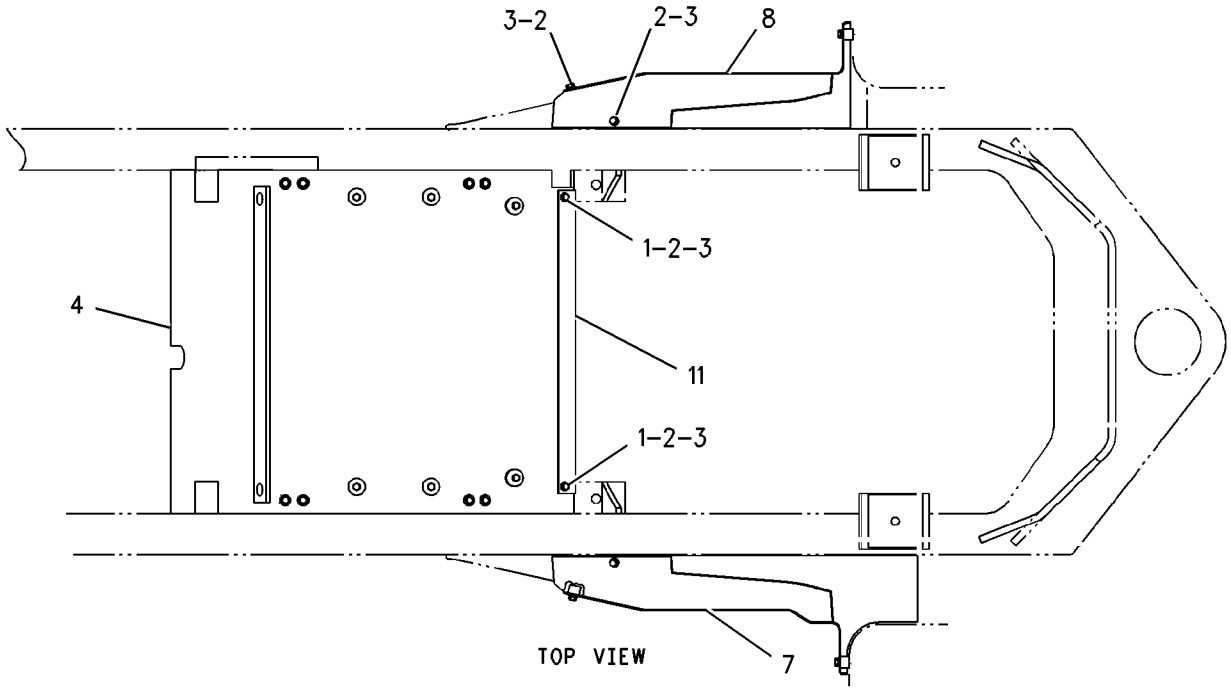

TOP VIEW

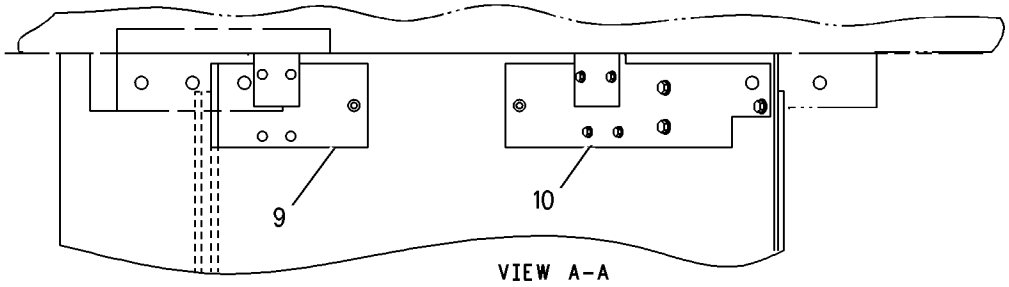

VIEW A-A

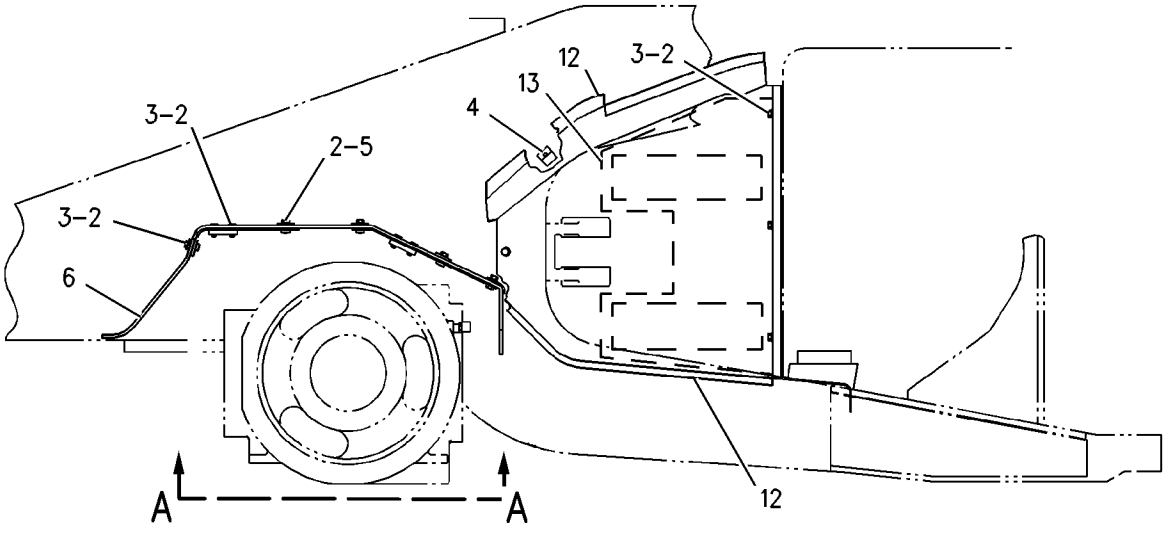

RIGHT SIDE VIEW

GRAPHIC #1 g00702409

BRAKING SYSTEM

8R-2491 ACTUATOR GP-BRAKE

S/N: 3XJ1-1699

PART OF 4V-7171 BRAKE GP-PARKING

SMCS-4262, 4265 **i01326269**

NOTE	REF NO	GRAPHIC REF	PART NUMBER	QTY	PART NAME 1 2 3 4 5 6 (PRODUCT LEVEL)	SEE PAGE
	1	1	**5K-5922**	8	BOLT (5/16-24 X 0.375 IN)	
	2	1	**7V-0122**	1	PUSHROD	
	3	1	**9S-1354**	2	NUT (5/8-18 THD)	
	4	1	**5K-5923**	2	NUT-FLANGE (5/8-18 THD)	
	5	1	**8R-2492**	1	PISTON AS	
	6	1	**9K-0384**	1	CYLINDER AS	
	7	1	**8K-8467**	1	SPRING	
	8	1	**8K-8468**	1	SUPPORT-SPRING	
	9	1	**6W-3004**	1	PLUG	
A	10	1	**6K-2643**	1	BOOT-DUST	
A	11	1	**6K-2644**	1	RETAINER-BOOT	
F		1	**8T-1363**	1	FILM-WARNING (HIGH COMPRESSED SPRING)	
					AVAILABLE REPAIR KIT(S):	
			8R-2487	1	KIT-BRAKE ACTUATOR	
					(INCLUDES BUSHINGS, SEALS, PLUGS, WIPER, AND LUBRICANT)	

A-NOT PART OF THIS GROUP
F-NOT SHOWN

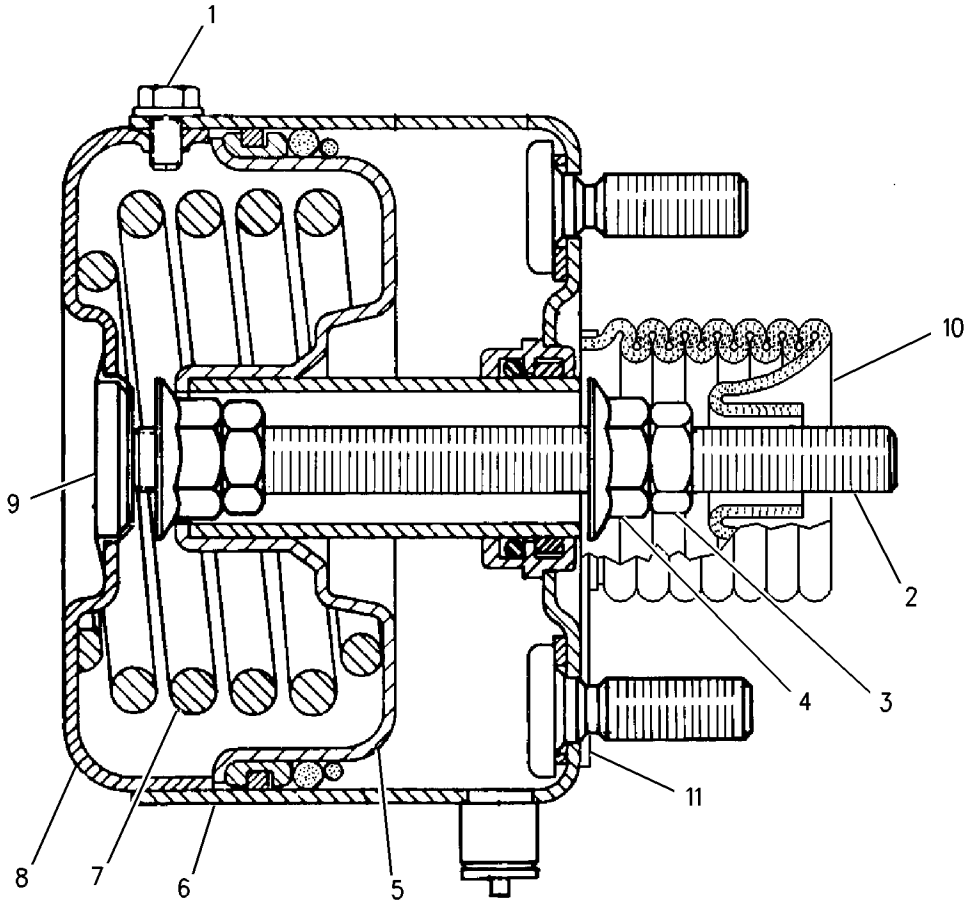

GRAPHIC #1 g00701846

9V-8736 ACTUATOR GP-PARKING BRAKE

S/N: 3XJ1700-99999

PART OF 4V-7171 BRAKE GP-PARKING

SMCS-4262, 4267 **i01072551**

NOTE	REF NO	GRAPHIC REF	PART NUMBER	QTY	PART NAME 1 2 3 4 5 6 (PRODUCT LEVEL)	SEE PAGE
	1	1	**5K-5922**	8	BOLT	
	2	1	**7V-0122**	1	PUSHROD	
	3	1	**9S-1354**	2	NUT (5/8-18 THD)	
	4	1	**5K-5923**	2	NUT-FLANGE	
	5	1	**8K-8469**	1	PISTON AS	
	6	1	**9K-0384**	1	CYLINDER AS	
	7	1	**8K-8467**	1	SPRING	
	8	1	**8K-8468**	1	SUPPORT-SPRING	
	9	1	**6W-3004**	1	PLUG	
	10	1	**6K-2643**	1	BOOT-DUST	
	11	1	**6K-2644**	1	RETAINER-BOOT	
F		1	**8T-1363**	1	FILM-WARNING (HIGH COMPRESSED SPRING)	
					AVAILABLE REPAIR KIT(S):	
			7K-9680	1	KIT-BRAKE ACTUATOR	

F-NOT SHOWN

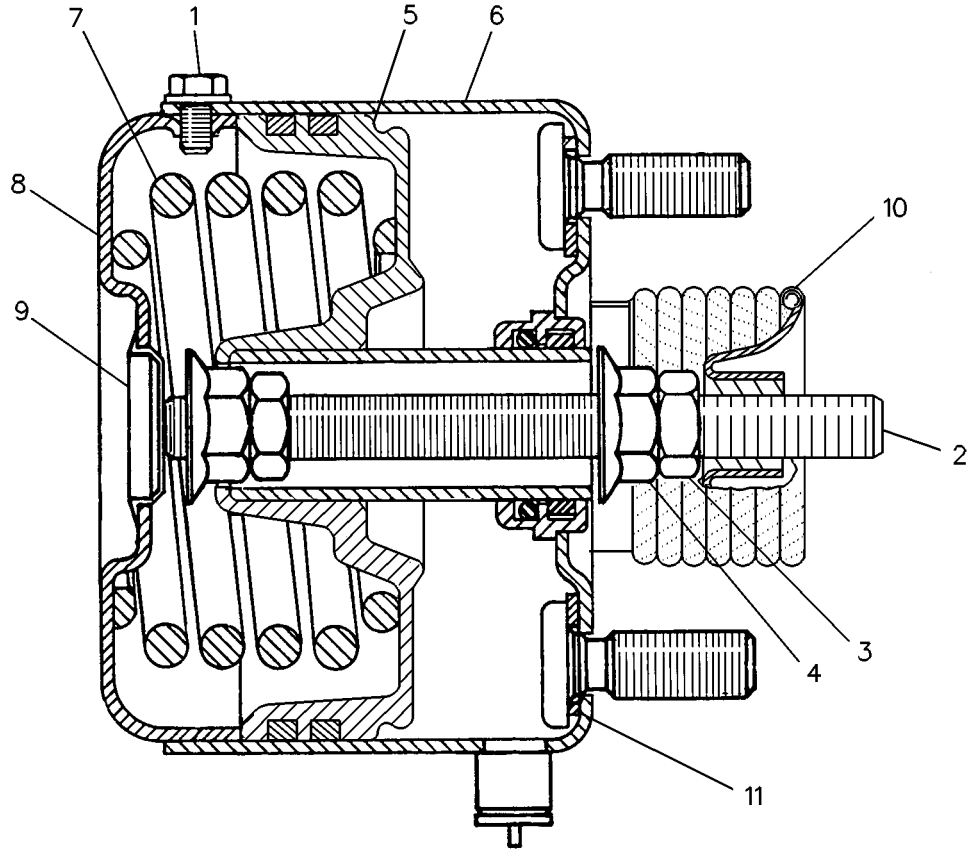

GRAPHIC #1 g00127665

BRAKING SYSTEM

4V-7171 BRAKE GP-PARKING

S/N: 3XJ1-1699

SMCS-4267 **i00287183**

NOTE	REF NO	GRAPHIC REF	PART NUMBER	QTY	PART NAME 1 2 3 4 5 6 (PRODUCT LEVEL)	SEE PAGE
Y	1	1	*8R-2491*	1	ACTUATOR GP-BRAKE	
	2	1	**8R-2492**	1	PISTON AS	
	3	1	**5P-8247**	4	WASHER-HARD (3.5MM THK)	
	4	1	**9S-1354**	1	NUT (5/8-18 THD)	
	5	1	**9D-8632**	1	END-YOKE ROD	
	6	1	**4K-1540**	1	PIN-CLEVIS	
		1	**3B-4617**	1	COTTER	
	7	1	**7V-1881**	1	LEVER	
	8	1	**4V-3360**	1	GUARD AS	
	9	1	**9B-7237**	1	BOLT (3/8-16X1.25IN)	
	10	1	**5M-3062**	4	BOLT (3/8-16X.750IN)	
		1	**8T-4896**	4	WASHER-HARD (2.5MM THK)	
	11	1	**0S-1587**	8	BOLT (1/2-13X1.75IN)	
	12	1	**5P-8245**	3	WASHER (3MM THK)	
	13	1	**4V-3253**	1	WASHER	
CY	14	1	**9C-9840**	1	BRAKE GP-PARKING	
	15	1	**5C-9207**	1	DRUM	
	16	1	**0S-1589**	4	BOLT (5/8-11X1.75IN)	
	17	1	**0S-1621**	3	BOLT (1/2-13X1.0IN)	
	18	1	**6C-1029**	1	BRACKET AS	
	19	1	**7X-0588**	2	WASHER-HARD	
	20	1	**1K-6776**	2	PLUG-PROTECTION	
	21	1	**6V-8181**	2	NUT-FULL	
	22	1	**8T-4223**	8	WASHER-HARD (3MM THK)	
					AVAILABLE REPAIR KIT(S):	
			9V-8698	1	KIT-BOOT	
					(INCLUDES BOOT, RETAINER, SLEEVE & STRAP)	
			8R-2487	1	KIT-ACTUATOR	
					(INCLUDES WIPER, PLUGS, SEALS, BUSHINGS & BEARING)	

C-CHANGE FROM PREVIOUS TYPE
Y-SEPARATE ILLUSTRATION

4V-7171 **BRAKE GP-PARKING** *(contd.)* **i00287183**

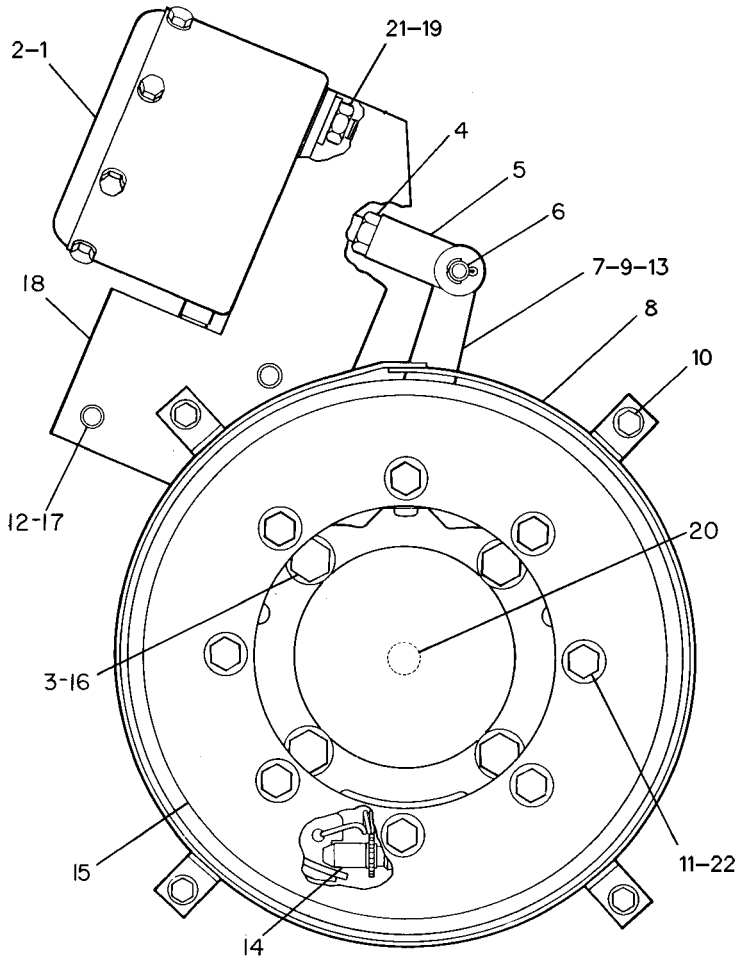

GRAPHIC #1 g00126654

BRAKING SYSTEM

4V-7171 BRAKE GP-PARKING

S/N: 3XJ1700-99999

SMCS-4267 **i00287192**

NOTE	REF NO	GRAPHIC REF	PART NUMBER	QTY	PART NAME 1 2 3 4 5 6 (PRODUCT LEVEL)	SEE PAGE
CY	1	1	**9V-8736**	1	ACTUATOR GP-PARKING BRAKE	
	2	1	**8T-4223**	8	WASHER-HARD (3MM THK)	
	3	1	**5P-8247**	4	WASHER-HARD (3.5MM THK)	
	4	1	**9S-1354**	1	NUT (5/8-18 THD)	
	5	1	**9D-8632**	1	END-YOKE ROD	
	6	1	**4K-1540**	1	PIN-CLEVIS	
		1	**3B-4617**	1	COTTER	
	7	1	**7V-1881**	1	LEVER	
	8	1	**4V-3360**	1	GUARD AS	
	9	1	**9B-7237**	1	BOLT (3/8-16X1.25IN)	
	10	1	**5M-3062**	4	BOLT (3/8-16X.750IN)	
		1	**8T-4896**	4	WASHER-HARD (2.5MM THK)	
	11	1	**0S-1587**	8	BOLT (1/2-13X1.75IN)	
	12	1	**5P-8245**	3	WASHER (3MM THK)	
	13	1	**4V-3253**	1	WASHER	
Y	14	1	**9C-9840**	1	BRAKE GP-PARKING	
	15	1	**5C-9207**	1	DRUM	
	16	1	**0S-1589**	4	BOLT (5/8-11X1.75IN)	
	17	1	**0S-1621**	3	BOLT (1/2-13X1.0IN)	
	18	1	**6C-1029**	1	BRACKET AS	
	19	1	**7X-0588**	2	WASHER-HARD	
	20	1	**1K-6776**	2	PLUG-PROTECTION	
	21	1	**6V-8181**	2	NUT-FULL	

C-CHANGE FROM PREVIOUS TYPE
Y-SEPARATE ILLUSTRATION

4V-7171 **BRAKE GP-PARKING** *(contd.)* **i00287192**

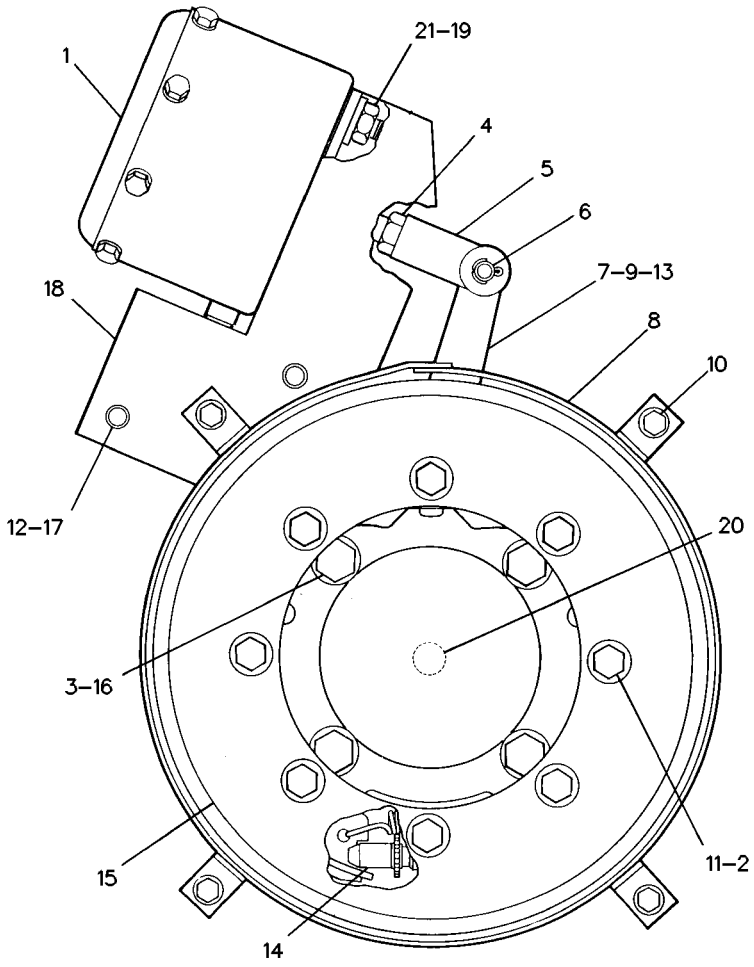

GRAPHIC #1 g00127666

9C-5953 BRAKE GP-PARKING

S/N: 3XJ1-99999
SOURCED FROM JAPAN
PART OF 9C-9840 BRAKE GP-PARKING

SMCS-4267 **i00286719**

NOTE	REF NO	GRAPHIC REF	PART NUMBER	QTY	PART NAME 1 2 3 4 5 6 (PRODUCT LEVEL)	SEE PAGE
	1	1	**8R-0377**	2	SPRING	
	2	1	**8R-0381**	1	BRACE-ANCHOR PIN	
	3	1	**8R-0379**	1	PLATE AS	
	4	1	**8R-0378**	1	SPRING-SHOE	
	5	1	**8R-0382**	1	ADJUSTER AS	
	6	1	**9C-4304**	2	SHOE & LINING AS	
	7	1	**8R-0380**	1	CAMSHAFT	
					AVAILABLE REPAIR KIT(S):	
			9C-5951	1	KIT-BRAKE LINING	

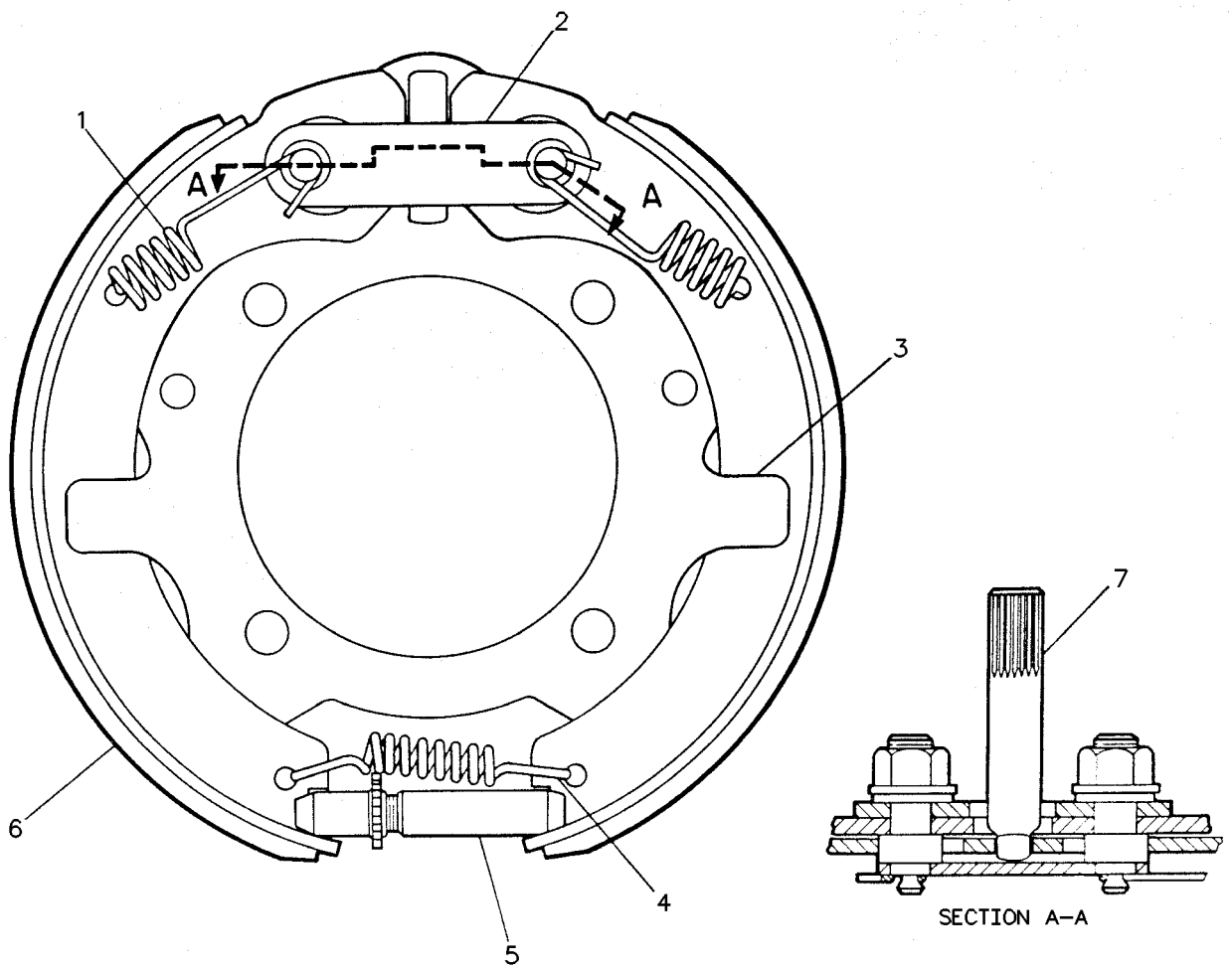

GRAPHIC #1 g00118685

9C-9840 BRAKE GP-PARKING

S/N: 3XJ1-99999

PART OF 4V-7171 BRAKE GP-PARKING

SMCS-4267 **i00259740**

NOTE	PART NUMBER	QTY	PART NAME 1 2 3 4 5 6 (PRODUCT LEVEL)	SEE PAGE
Y	*9C-5953*	1	BRAKE GP-PARKING	
			-OR-	
Y	*9C-9841*	1	BRAKE GP-PARKING	

Y-SEPARATE ILLUSTRATION

9C-9841 BRAKE GP-PARKING

S/N: 3XJ1-99999
U.S. SOURCED
PART OF 9C-9840 BRAKE GP-PARKING

SMCS-4267 **i00259765**

NOTE	REF NO	GRAPHIC REF	PART NUMBER	QTY	PART NAME 1 2 3 4 5 6 (PRODUCT LEVEL)	SEE PAGE
	1	1	**9M-5139**	2	SPRING	
	2	1	**9M-5137**	1	BRACE-ANCHOR PIN	
	3	1	**9M-5140**	1	PLATE AS	
	4	1	**7F-9578**	1	SPRING	
	5	1	**7F-9572**	1	NUT	
	6	1	**7F-9571**	1	SCREW-ADJUSTMENT	
	7	1	**7F-9579**	1	SOCKET	
	8	1	**9C-9842**	2	SHOE AS-LINED	
	9	1	**9M-5138**	2	PIN-ANCHOR	
	10	1	**4V-3514**	1	CAMSHAFT	
	11	1	**1B-4207**	2	NUT-FULL (3/4-16 THD)	
	12	1	**5P-8248**	4	WASHER-HARD (3.5MM THK)	
					AVAILABLE REPAIR KIT(S):	
			9C-9843	1	KIT-BRAKE LINING	

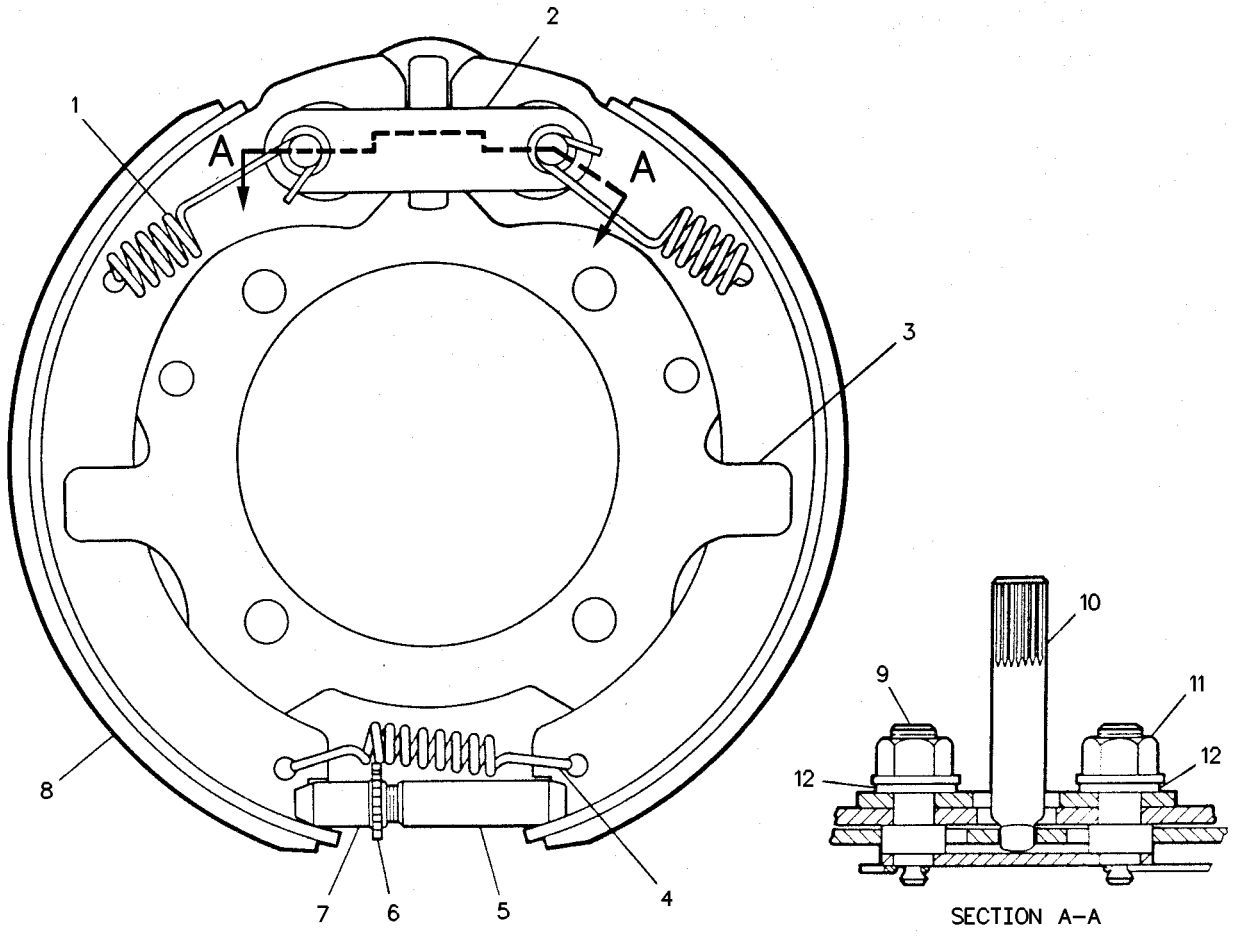

GRAPHIC #1 g00118486

BRAKING SYSTEM

6C-3651 CONTROL AR-STEERING & BRAKE

S/N: 3XJ1-99999
BRAKING & STEERING
AN ATTACHMENT

SMCS-4265 **i01309907**

NOTE	PART NUMBER	QTY	PART NAME 1 2 3 4 5 6 (PRODUCT LEVEL)	SEE PAGE
Y	*8R-9121*	1	CONTROL GP-SECONDARY BRAKE	
Y	*8R-9522*	1	STEERING AR-SECONDARY	

Y-SEPARATE ILLUSTRATION

BRAKING SYSTEM

6W-0468 CONTROL GP-PARKING BRAKE–SECONDARY

S/N: 3XJ1-99999

PART OF 8R-5041 OPERATOR AR

SMCS-4282, 4284 **i01326270**

NOTE	REF NO	GRAPHIC REF	PART NUMBER	QTY	PART NAME 1 2 3 4 5 6 (PRODUCT LEVEL)	SEE PAGE
	1	1	**9K-6765**	1	KNOB	
	2	1	**9M-1311**	1	NUT-JAM (1/4-28 THD)	
	3	1	**8V-1416**	1	BOLT-GUIDE	
C	4	1	**8S-5278**	2	PIN-CLEVIS	
	5	1	**9V-1466**	1	TUBE	
	6	1	**3V-8313**	1	VALVE AS (PARKING BRAKE)	
	7	1	**8K-6474**	1	NUT AS-SEALING	
	8	1	**5K-6077**	1	RING-SEALING	
	9	1	**4K-2039**	1	SEAL-O-RING (12.42MM ID)	
	10	1	**1D-5118**	1	NUT-JAM (5/8-11 THD)	
	11	1	**9V-1467**	1	ROD	
	12	1	**9V-3287**	1	PLATE	
	13	1	**5S-7379**	2	BOLT (3/8-16X.875 IN)	
		1	**8T-4896**	2	WASHER-HARD (10.2X18.5X2.5MM THK)	
C	14	1	**3B-4605**	2	COTTER	

C-CHANGE FROM PREVIOUS TYPE

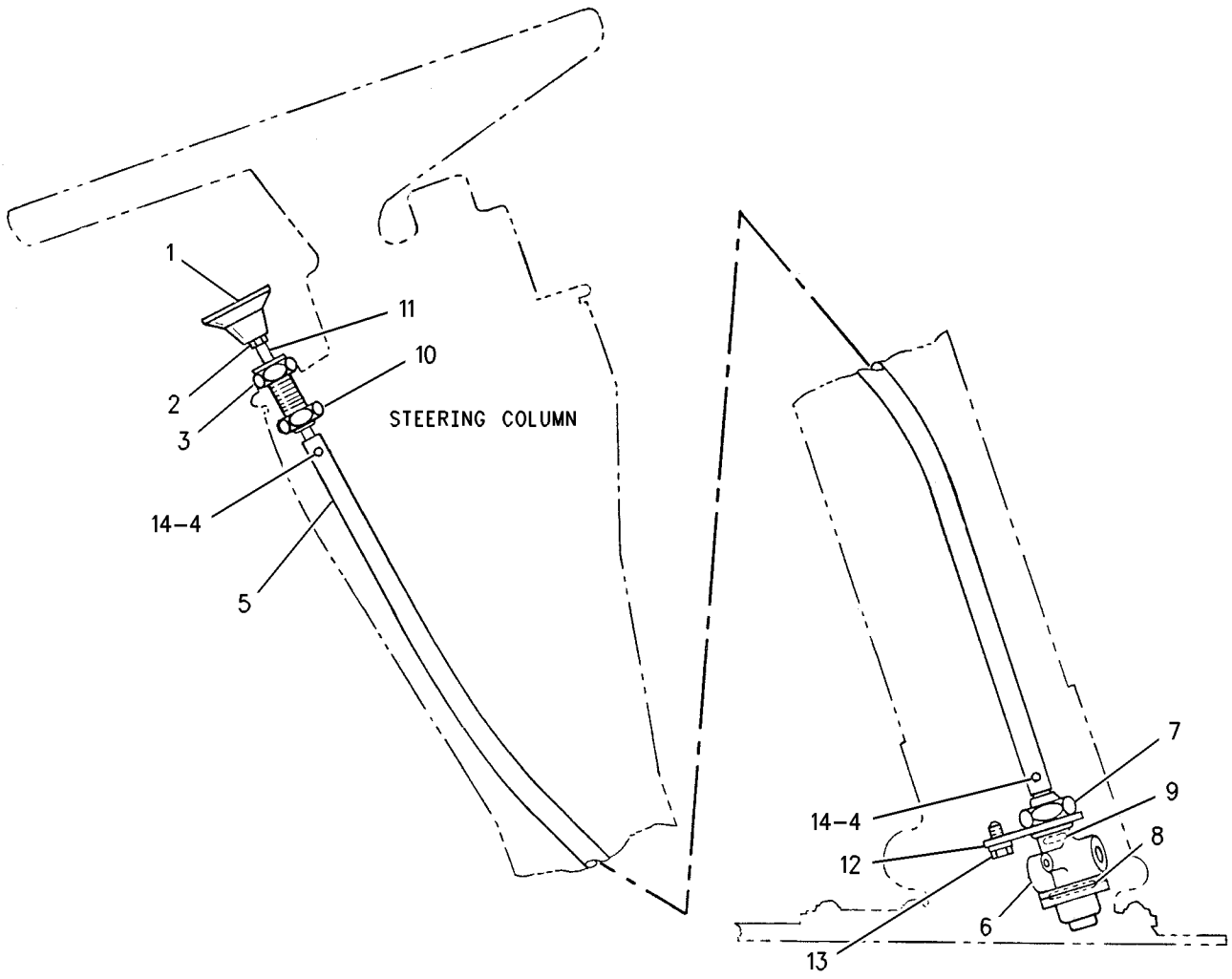

GRAPHIC #1 g00701861

MEMORANDA

BRAKING SYSTEM

8R-9121 CONTROL GP-SECONDARY BRAKE

S/N: 3XJ1-199

PART OF 6C-3651 CONTROL AR-STEERING & BRAKE

AN ATTACHMENT

SMCS-4282 **i01329085**

NOTE	REF NO	GRAPHIC REF	PART NUMBER	QTY	PART NAME 1 2 3 4 5 6 (PRODUCT LEVEL)	SEE PAGE
	1	1	**7X-0347**	6	BOLT (5/8-11X2.25 IN)	
	2	1	**5K-9246**	3	CONNECTOR-FLARED	
I	3	1	**7V-8825**	1	HOSE AS	
	4	1	**7K-1456**	1	UNION-FLARED	
	5	1	**1D-4717**	2	NUT (3/8-16 THD)	
	6	1	**8T-4896**	18	WASHER-HARD (10.2X18.5X2.5MM THK)	
	7	1	**9S-1350**	3	CLIP (SLOT)	
	8	1	**7V-8657**	1	TUBE AS	
	9	1	**9S-7744**	1	TEE-FLARED	
I	10	1	**7V-8826**	1	HOSE AS	
	11	1	**3S-8664**	1	CLIP (19.05MM ID)	
	12	1	**5K-3546**	1	PLUG-BUTTON	
	13	1	**6V-5512**	1	TEE	
	14	1	**6V-5511**	3	ADAPTER	
	15	1	**6B-9186**	5	GASKET	
	16	1	**5V-1321**	3	FITTING	
	17	1	**5M-6213**	4	PLUG-PIPE (1/4-18 NPTF THD)	
	18	1	**7V-5179**	1	HOUSING	
	19	1	**5C-9841**	1	SHROUD	
	20	1	**5V-1042**	1	VALVE GP-AIR CONTROL	
		1	**4B-1284**	2	SCREW-MACHINE	
	21	1	**5C-9838**	1	SHROUD	
	22	1	**6V-3884**	3	SCREW-HEX SOCKET (1/4-20X0.5 IN)	
	23	1	**9L-8492**	1	PLUG	
	24	1	**9X-2526**	1	TEE-O-RING	
	25	1	**8T-9792**	1	SWITCH AS-PRESSURE (PARKING BRAKE AIR)	
	26	1	**4E-2385**	1	TUBE AS	
	27	1	**5C-9280**	2	CLAMP AS	
	28	1	**4L-6454**	10	BOLT (3/8-16X1 IN)	
	29	1	**5V-0612**	2	CLAMP	
	30	1	**5K-9235**	2	ELBOW-FLARED (90 DEGREE)	
	31	1	**5C-9031**	1	TANK AS	
	32	1	**7V-8646**	1	STRIP	
	33	1	**5K-9248**	3	CONNECTOR-FLARED	
	34	1	**7V-2839**	2	CONNECTOR	
	35	1	**7V-8655**	1	TUBE AS	
	36	1	**9M-8406**	1	CLIP (15.8MM ID)	
	37	1	**5V-7627**	1	VALVE AS (OVERFLOW)	
	38	1	**5C-9418**	1	TUBE AS	
	39	1	**5C-9413**	1	TUBE AS	
	40	1	**5K-9241**	1	ELBOW (90 DEGREE)	
	41	1	**5K-9239**	4	CONNECTOR	
	42	1	**9M-7357**	2	COUPLING AS	
	43	1	**7V-5163**	1	BRACKET AS	
	44	1	**6B-5072**	1	BUSHING-TERMINAL	
	45	1	**4V-6981**	1	SCREW-BUTTON HEAD (1/4-20X.75IN)	
	46	1	**8R-9122**	1	HOSE AS	
	47	1	**6A-3304**	1	TANK AS	
	48	1	**3J-5390**	2	PLUG (3/8-18 THD)	
	49	1	**5K-9240**	1	ELBOW-FLARED	
	50	1	**5S-7382**	4	BOLT (3/8-16X1.375 IN)	
	51	1	**5C-9616**	2	CLAMP	
	52	1	**8T-9378**	2	BOLT (3/8-16X4 IN)	
	53	1	**5C-9612**	1	CLAMP AS	
	54	1	**6K-5741**	1	VALVE-DRAIN	

8R-9121 CONTROL GP-SECONDARY BRAKE *(contd.)* i01329085

NOTE	REF NO	GRAPHIC REF	PART NUMBER	QTY	PART NAME 1 2 3 4 5 6 (PRODUCT LEVEL)	SEE PAGE
	55	1	**5C-9613**	1	CLAMP AS	
	56	1	**9S-7738**	1	TEE-INVERTED FLARED	
	57	1	**8T-9043**	1	BOLT (5/16-18X.875 IN)	
		1	**7H-4412**	1	SPACER	
	58	1	**5C-9873**	1	SHROUD	
	59	1	**5C-9603**	1	BRACKET	
	60	1	**5C-7617**	2	CONNECTOR	
		1	**5B-5689**	2	GASKET	
	61	1	**3B-7762**	1	TEE	
	62	1	**7V-0530**	1	YOKE AS	
		1	**7V-1940**	2	RETAINER	
	63	1	**5C-9951**	1	PLATE AS	
	64	1	**5M-6214**	1	PLUG-PIPE (1/8-27 THD)	

I-SEE HOSE FABRICATION GUIDE

8R-9121 CONTROL GP-SECONDARY BRAKE *(contd.)* i01329085

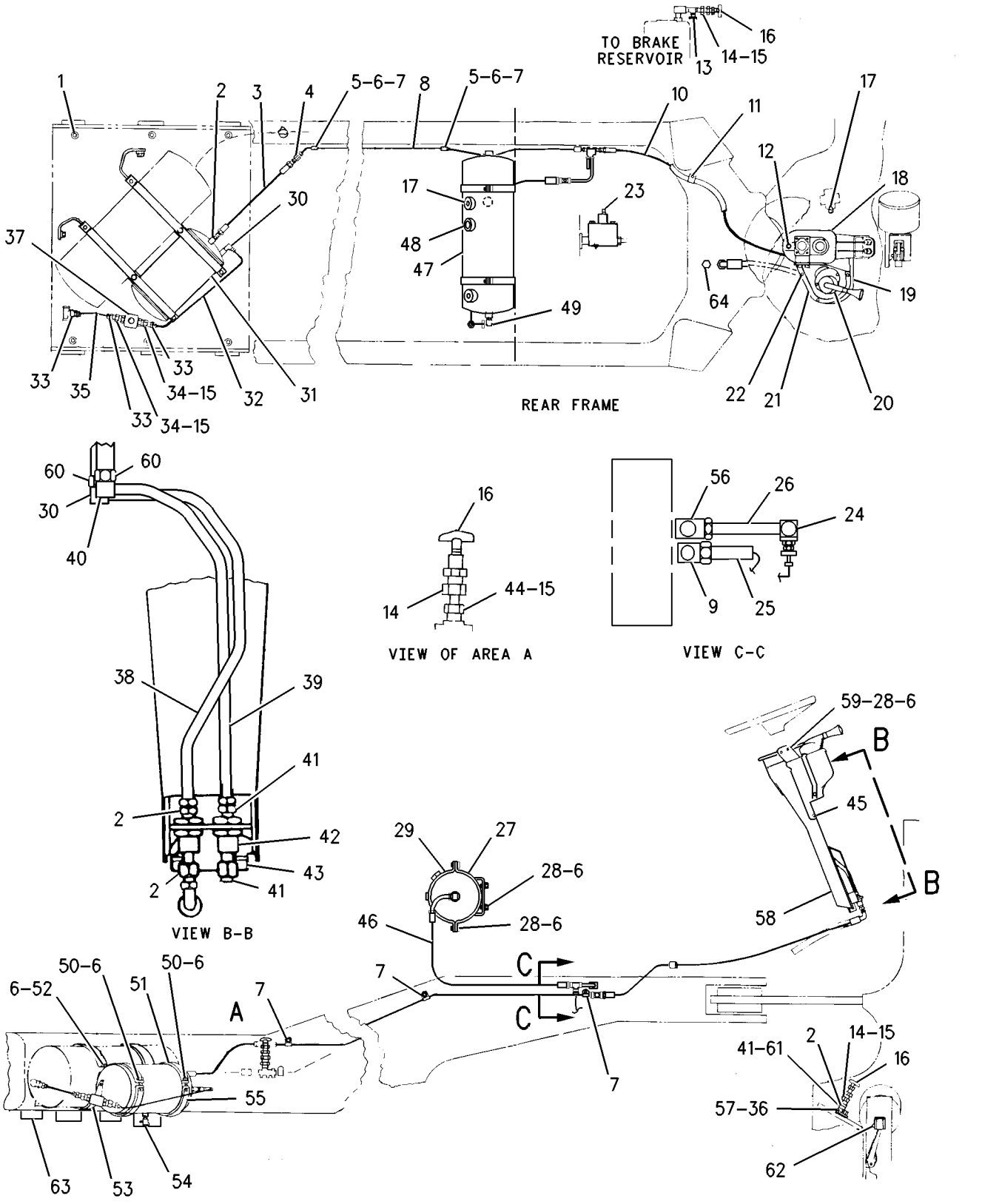

GRAPHIC #1 g00702388

MEMORANDA

BRAKING SYSTEM

8R-9121 CONTROL GP-SECONDARY BRAKE

S/N: 3XJ200-1629

PART OF 6C-3651 CONTROL AR-STEERING & BRAKE

AN ATTACHMENT

SMCS-4282 **i01323129**

NOTE	REF NO	GRAPHIC REF	PART NUMBER	QTY	PART NAME 1 2 3 4 5 6 (PRODUCT LEVEL)	SEE PAGE
C	1	1	**7J-8611**	1	ELBOW (1/4-18 NPTF)	
C	2	1	**5K-9246**	7	CONNECTOR-FLARED	
I	3	1	**7V-8825**	1	HOSE AS	
	4	1	**7K-1456**	1	UNION-FLARED	
	5	1	**1D-4717**	2	NUT (3/8-16 THD)	
C	6	1	**8T-4896**	19	WASHER-HARD (10.2X18.5X2.5MM THK)	
	7	1	**9S-1350**	3	CLIP (SLOT)	
	8	1	**7V-8657**	1	TUBE AS	
	9	1	**9S-7744**	1	TEE-FLARED	
I	10	1	**7V-8826**	1	HOSE AS	
	11	1	**3S-8664**	1	CLIP (19.05MM ID)	
	12	1	**5K-3546**	1	PLUG-BUTTON	
C	13	1	**3B-7273**	1	NIPPLE-PIPE (1/4-18 NPT)	
C		1	**3B-7729**	1	ELBOW (90 DEGREE) (1/4-18 NPT THD)	
C		1	**6C-2306**	1	TEE	
	14	1	**6V-5511**	3	ADAPTER	
	15	1	**6B-9186**	5	GASKET	
	16	1	**5V-1321**	3	FITTING	
	17	1	**5M-6213**	4	PLUG-PIPE (1/4-18 NPTF THD)	
	18	1	**7V-5179**	1	HOUSING	
C	19	1	**9V-8971**	1	COVER	
C	20	1	**8V-4967**	1	VALVE GP-AIR CONTROL	
C	21	1	**3F-1240**	2	GROMMET	
C	22	1	**4V-4018**	1	FILM	
	23	1	**9L-8492**	1	PLUG	
	24	1	**9X-2526**	1	TEE-O-RING	
	25	1	**8T-9792**	1	SWITCH AS-PRESSURE (PARKING BRAKE AIR)	
	26	1	**4E-2385**	1	TUBE AS	
	27	1	**5C-9280**	2	CLAMP AS	
	28	1	**4L-6454**	10	BOLT (3/8-16X1 IN)	
	29	1	**5V-0612**	2	CLAMP	
C	30	1	**5K-9235**	3	ELBOW-FLARED (90 DEGREE)	
	31	1	**5C-9031**	1	TANK AS	
	32	1	**7V-8646**	1	STRIP	
	33	1	**5K-9248**	3	CONNECTOR-FLARED	
	34	1	**7V-2839**	2	CONNECTOR	
	35	1	**7V-8655**	1	TUBE AS	
C	36	1	**5P-9297**	1	CLIP (9.52MM ID)	
	37	1	**5V-7627**	1	VALVE AS (OVERFLOW)	
C	38	1	**6W-0303**	1	TUBE AS	
C	39	1	**6W-0302**	1	TUBE AS	
CM	40	1	**6V-3940**	2	BOLT (M8X1.25X25MM)	
C		1	**5P-1075**	2	WASHER-HARD (3MM THK)	
	41	1	**5M-6214**	1	PLUG-PIPE (1/8-27 THD)	
	42	1	**9M-7357**	2	COUPLING AS	
C	43	1	**9V-3286**	1	PLATE	
	44	1	**6B-5072**	1	BUSHING-TERMINAL	
C	45	1	**4V-6981**	3	SCREW-BUTTON HEAD (1/4-20X.75IN)	
C	46	1	**5V-2747**	1	HOSE AS	
	47	1	**6A-3304**	1	TANK AS	
	48	1	**3J-5390**	2	PLUG (3/8-18 THD)	
	49	1	**5K-9240**	1	ELBOW-FLARED	
	50	1	**5S-7382**	4	BOLT (3/8-16X1.375 IN)	
	51	1	**5C-9616**	2	CLAMP	
	52	1	**8T-9378**	2	BOLT (3/8-16X4IN)	

8R-9121 CONTROL GP-SECONDARY BRAKE *(contd.)* i01323129

NOTE	REF NO	GRAPHIC REF	PART NUMBER	QTY	PART NAME 1 2 3 4 5 6 (PRODUCT LEVEL)	SEE PAGE
	53	1	**5C-9612**	1	CLAMP AS	
C	54	1	**4E-4789**	1	VALVE-DRAIN	
	55	1	**5C-9613**	1	CLAMP AS	
	56	1	**9S-7738**	1	TEE-INVERTED FLARED	
C	57	1	**5S-7379**	1	BOLT (3/8-16X.875 IN)	
C		1	**6V-8801**	1	NUT (3/8-16 THD)	
C	58	1	**9V-6729**	1	SHROUD	
C	59	1	**9V-8974**	1	BRACKET AS	
C		1	**9F-6445**	3	NUT-WELD (1/4-20 THD)	
C	60	1	**7V-5161**	2	CONNECTOR	
		1	**5B-5689**	2	GASKET	
	61	1	**3B-7762**	1	TEE	
	62	1	**7V-0530**	1	YOKE AS	
		1	**7V-1940**	2	RETAINER	

C-CHANGE FROM PREVIOUS TYPE
I-SEE HOSE FABRICATION GUIDE
M-METRIC PART

8R-9121 **CONTROL GP-SECONDARY BRAKE** *(contd.)* **i01323129**

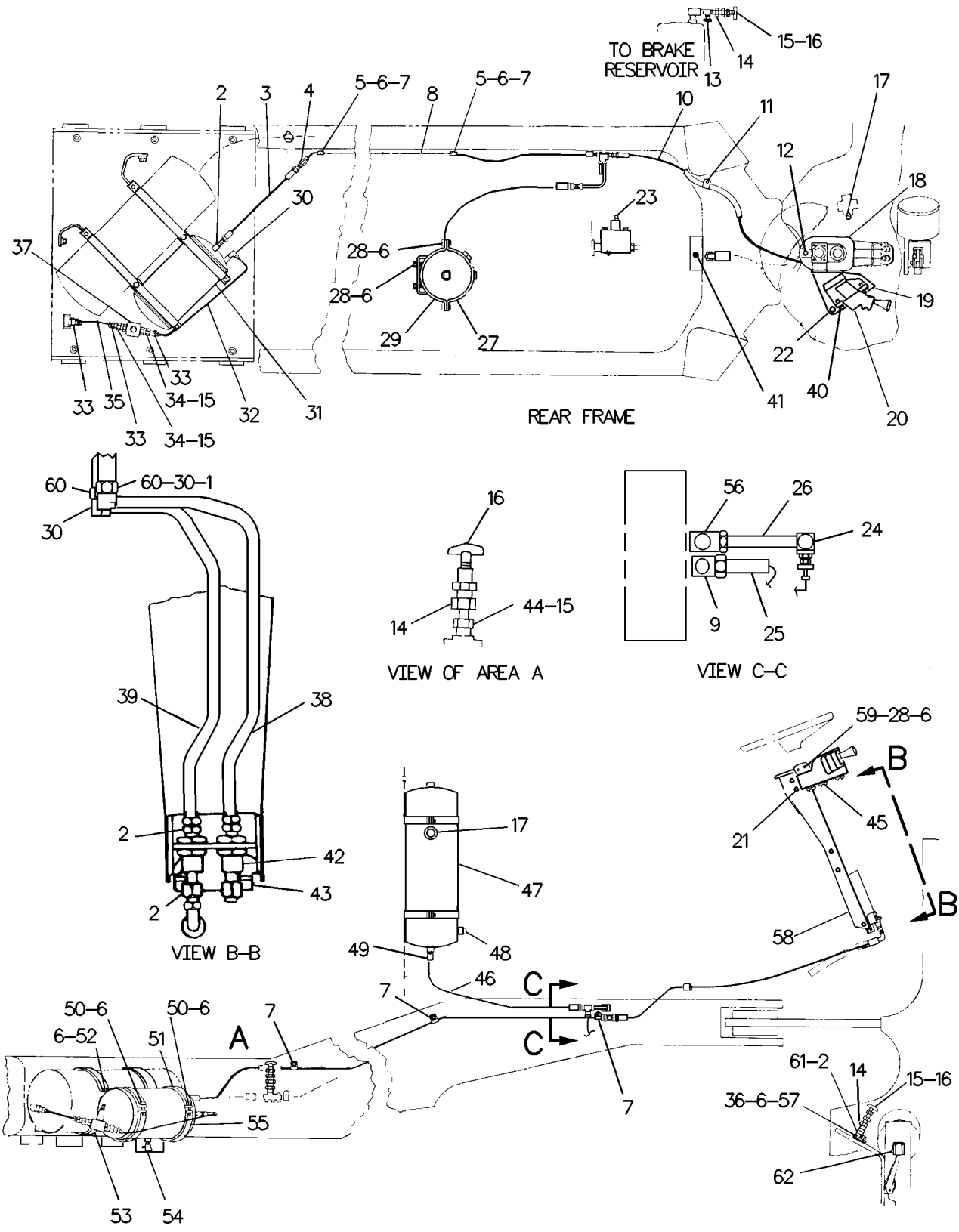

GRAPHIC #1 g00126995

MEMORANDA

BRAKING SYSTEM

8R-9121 CONTROL GP-SECONDARY BRAKE

S/N: 3XJ1630-99999

PART OF 6C-3651 CONTROL AR-STEERING & BRAKE

AN ATTACHMENT

SMCS-4282 **i01323133**

NOTE	REF NO	GRAPHIC REF	PART NUMBER	QTY	PART NAME 1 2 3 4 5 6 (PRODUCT LEVEL)	SEE PAGE
	1	1	**7J-8611**	1	ELBOW (1/4-18 NPTF)	
	2	1	**5K-9246**	7	CONNECTOR-FLARED	
I	3	1	**7V-8825**	1	HOSE AS	
	4	1	**7K-1456**	1	UNION-FLARED	
	5	1	**1D-4717**	2	NUT (3/8-16 THD)	
	6	1	**8T-4896**	19	WASHER-HARD (10.2X18.5X2.5MM THK)	
	7	1	**9S-1350**	3	CLIP (SLOT)	
	8	1	**7V-8657**	1	TUBE AS	
	9	1	**9S-7744**	1	TEE-FLARED	
I	10	1	**7V-8826**	1	HOSE AS	
	11	1	**3S-8664**	1	CLIP (19.05MM ID)	
	12	1	**5K-3546**	1	PLUG-BUTTON	
	13	1	**3B-7273**	1	NIPPLE-PIPE (1/4-18 NPT)	
		1	**3B-7729**	1	ELBOW (90 DEGREE) (1/4-18 NPT THD)	
		1	**6C-2306**	1	TEE	
	14	1	**6V-5511**	3	ADAPTER	
	15	1	**6B-9186**	5	GASKET	
	16	1	**5V-1321**	3	FITTING	
C	17	1	**5M-6213**	5	PLUG-PIPE (1/4-18 NPTF THD)	
	18	1	**7V-5179**	1	HOUSING	
	19	1	**9V-8971**	1	COVER	
	20	1	**8V-4967**	1	VALVE GP-AIR CONTROL	
	21	1	**3F-1240**	2	GROMMET	
	22	1	**4V-4018**	1	FILM	
	23	1	**9L-8492**	1	PLUG	
	24	1	**9X-2526**	1	TEE-O-RING	
	25	1	**8T-9792**	1	SWITCH AS-PRESSURE (PARKING BRAKE AIR)	
	26	1	**4E-2385**	1	TUBE AS	
	27	1	**5C-9280**	2	CLAMP AS	
	28	1	**4L-6454**	10	BOLT (3/8-16X1 IN)	
	29	1	**5V-0612**	2	CLAMP	
	30	1	**5K-9235**	3	ELBOW-FLARED (90 DEGREE)	
	31	1	**5C-9031**	1	TANK AS	
	32	1	**7V-8646**	1	STRIP	
	33	1	**5K-9248**	3	CONNECTOR-FLARED	
	34	1	**7V-2839**	2	CONNECTOR	
	35	1	**7V-8655**	1	TUBE AS	
	36	1	**5P-9297**	1	CLIP (9.52MM ID)	
	37	1	**5V-7627**	1	VALVE AS (OVERFLOW)	
	38	1	**6W-0303**	1	TUBE AS	
	39	1	**6W-0302**	1	TUBE AS	
M	40	1	**6V-3940**	2	BOLT (M8X1.25X25MM)	
		1	**5P-1075**	2	WASHER-HARD (3MM THK)	
	41	1	**5M-6214**	1	PLUG-PIPE (1/8-27 THD)	
	42	1	**9M-7357**	2	COUPLING AS	
	43	1	**9V-3286**	1	PLATE	
	44	1	**6B-5072**	1	BUSHING-TERMINAL	
	45	1	**4V-6981**	3	SCREW-BUTTON HEAD (1/4-20X.75IN)	
	46	1	**5V-2747**	1	HOSE AS	
	47	1	**6A-3304**	1	TANK AS	
	48	1	**3J-5390**	2	PLUG (3/8-18 THD)	
C	49	1	**5K-9240**	2	ELBOW-FLARED	
	50	1	**5S-7382**	4	BOLT (3/8-16X1.375 IN)	
	51	1	**5C-9616**	2	CLAMP	
	52	1	**8T-9378**	2	BOLT (3/8-16X4IN)	

8R-9121 CONTROL GP-SECONDARY BRAKE *(contd.)* i01323133

NOTE	REF NO	GRAPHIC REF	PART NUMBER	QTY	PART NAME 1 2 3 4 5 6 (PRODUCT LEVEL)	SEE PAGE
	53	1	**5C-9612**	1	CLAMP AS	
	54	1	**4E-4789**	1	VALVE-DRAIN	
	55	1	**5C-9613**	1	CLAMP AS	
C	56	1	**9S-7747**	1	TEE-FLARED	
	57	1	**5S-7379**	1	BOLT (3/8-16X.875 IN)	
		1	**6V-8801**	1	NUT (3/8-16 THD)	
	58	1	**9V-6729**	1	SHROUD	
	59	1	**9V-8974**	1	BRACKET AS	
		1	**9F-6445**	3	NUT-WELD (1/4-20 THD)	
	60	1	**7V-5161**	2	CONNECTOR	
		1	**5B-5689**	2	GASKET	
	61	1	**3B-7762**	1	TEE	
	62	1	**7V-0530**	1	YOKE AS	
		1	**7V-1940**	2	RETAINER	
C	63	1	**033-2177**	1	TEE-PIPE	
C	64	1	**8T-6756**	1	ELBOW	
C	65	1	**3B-7764**	1	BUSHING	

C-CHANGE FROM PREVIOUS TYPE
I-SEE HOSE FABRICATION GUIDE
M-METRIC PART

8R-9121 CONTROL GP-SECONDARY BRAKE *(contd.)* i01323133

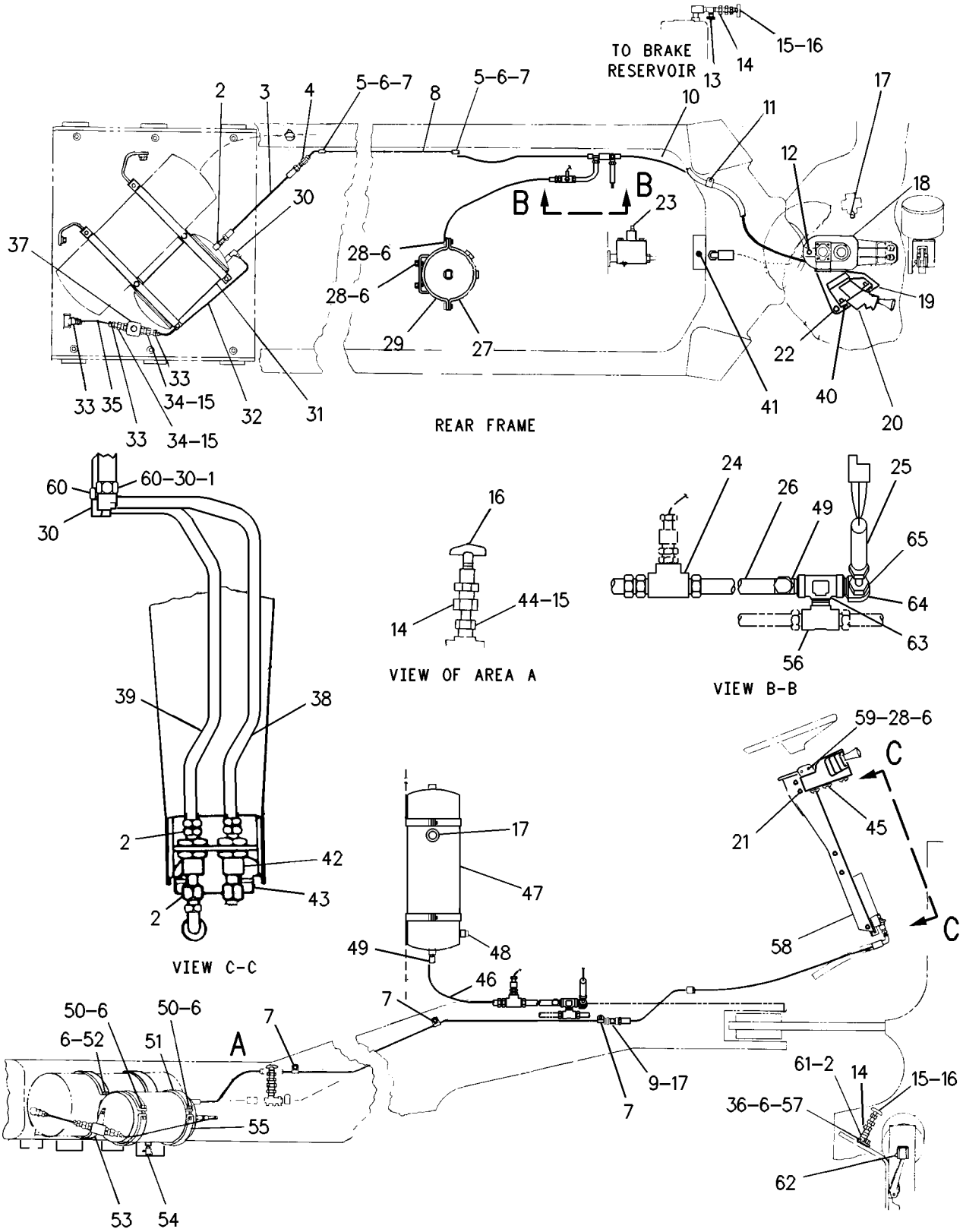

GRAPHIC #1 g00127955

MEMORANDA

BRAKING SYSTEM

8R-3529 CONTROL GP-SERVICE BRAKE

S/N: 3XJ1-2284

SMCS-4257, 4258, 4265, 4269, 4280 **i01336107**

NOTE	REF NO	GRAPHIC REF	PART NUMBER	QTY	PART NAME 1 2 3 4 5 6 (PRODUCT LEVEL)	SEE PAGE
	1	2	**7J-8611**	1	ELBOW (1/4-18 NPTF)	
	2	2	**2D-7325**	1	TEE-PIPE	
	3	2	**5K-9239**	1	CONNECTOR	
	4	2	**9L-3560**	1	ELBOW	
	5	2	**3Y-9065**	1	VALVE	
	6	2	**3B-7866**	1	NIPPLE-PIPE	
	7	2	**2L-0332**	1	TEE-PIPE REDUCING	
	8	2	**3J-5390**	1	PLUG (3/8-18 THD)	
	9	2	**000-7244**	1	ELBOW-PIPE	
	10	2	**7D-6936**	1	VALVE AS-CHECK	
	11	2	**6C-0090**	1	BRACKET AS	
	12	2	**8T-8917**	4	BOLT (1/2-13X1.25 IN)	
		2	**7X-0550**	4	WASHER-HARD (13.5 X 32.0 X 5.0MM THK)	
	13	2	**6C-0089**	1	BRACKET AS	
	14	2	**5C-8240**	1	RESERVOIR	
	15	2	**9S-7724**	1	ELBOW-FLARED	
	16	2	**6A-3488**	2	CLAMP	
	17	2	**4L-9337**	4	BOLT (3/8-16X1.5 IN)	
	18	2	**8T-4896**	30	WASHER-HARD (10.2X18.5X2.5MM THK)	
	19	2	**3B-7722**	1	BUSHING-PIPE	
	20	2	**4E-4789**	1	VALVE-DRAIN	
	21	2	**5V-1846**	1	HOSE AS	
	22	2	**5K-9249**	1	UNION-FLARED	
	23	2	**9C-2982**	1	TUBE AS	
	24	2	**4B-9302**	3	CLIP (15.88MM ID)	
	25	2	**6V-8801**	10	NUT (3/8-16 THD)	
I	26	2	**9C-0504**	1	HOSE AS	
	27	2	**9V-6557**	1	HOSE AS	
	28	2	**8M-2773**	2	CLIP (17.46MM ID)	
	29	2	**5K-8451**	1	CLIP (15.88MM ID)	
	30	2	**5K-9245**	1	CONNECTOR-FLARED	
	31	2	**9S-7720**	1	ELBOW-FLARED	
	32	2	**5P-2937**	2	ADAPTER-O-RING	
		2	**3J-7354**	2	SEAL-O-RING (8.92MM ID)	
	33	2	**5K-9235**	4	ELBOW-FLARED (90 DEGREE)	
	34	2	**8R-7052**	1	TUBE AS	
	35	2	**8R-7051**	1	TUBE AS	
	36	2	**5K-9988**	1	TEE-INVERTED FLARED	
I	37	2	**8R-1522**	1	HOSE AS	
	38	2	**4L-6454**	2	BOLT (3/8-16X1 IN)	
	39	2	**5P-9297**	3	CLIP (9.52MM ID)	
	40	2	**7K-1456**	1	UNION-FLARED	
	41	2	**5M-3062**	9	BOLT (3/8-16X.75 IN)	
	42	2	**8R-4561**	1	TUBE AS	
	43	2	**5K-9240**	1	ELBOW-FLARED	
	44	2	**9V-4877**	1	HOSE AS	
	45	2	**9S-7731**	1	TEE-FLARED	
	46	2	**6V-0678**	2	NIPPLE-PIPE	
	47	2	**7B-1480**	2	ELBOW-REDUCING	
	48	2	**8J-5604**	2	BREATHER AS	
	49	2	**8R-0859**	2	RESERVOIR AS	
		2	**8R-2095**	1	COVER	
		2	**9C-5790**	1	DIAPHRAGM	
	50	2	**5V-4907**	1	RETAINER	
	51	2	**8R-3952**	1	BRACKET AS	
M	52	2	**8T-4137**	5	BOLT (M10X1.50X20MM)	
	53	2	**5K-9248**	4	CONNECTOR-FLARED	

8R-3529 CONTROL GP-SERVICE BRAKE *(contd.)* i01336107

NOTE	REF NO	GRAPHIC REF	PART NUMBER	QTY	PART NAME 1 2 3 4 5 6 (PRODUCT LEVEL)	SEE PAGE
	54	2	**4D-7735**	4	CLIP (18.29MM ID)	
	55	2	**7P-9231**	1	BRACKET	
I	56	2	**8R-3950**	1	HOSE AS	
I	57	2	**8R-3951**	1	HOSE AS	
Y	58	2	*8R-0862*	2	CYLINDER GP-AIR/HYDRAULIC	
	59	2	**7X-3352**	6	BOLT	
		2	**8T-4122**	6	WASHER (3.5MM THK)	
	60	2	**6W-8923**	1	TUBE AS	
	61	2	**9M-8406**	1	CLIP (15.8MM ID)	
	62	2	**5S-7382**	1	BOLT (3/8-16X1.375 IN)	
	63	2	**4S-5719**	1	SPACER (12.7MM THK)	
	64	2	**9S-7747**	1	TEE-FLARED	
	65	2	**9X-2526**	1	TEE-O-RING	
	66	2	**3P-0764**	2	PLUG (7/8-14 THD)	
	67	2	**2M-9780**	2	SEAL-O-RING (19.18MM ID)	
	68	2	**8R-4559**	1	TUBE AS	
	69	2	**4D-8948**	1	CLIP (1/4IN X17/32IN SLOT)	
	70	2	**6K-8178**	2	CLIP (15.88MM ID)	
	71	3	**5K-9241**	1	ELBOW (90 DEGREE)	
	72	3	**3V-0053**	1	HOSE AS	
	73	3	**8L-8413**	3	STRAP-CABLE (1.12IN DIA)	
	74	3	**5V-2747**	1	HOSE AS	
	75	3	**3V-7429**	2	CLAMP	
	76	3	**4L-6459**	2	BOLT (3/8-16X2.5IN)	
		3	**5P-1075**	2	WASHER-HARD (3MM THK)	
	77	3	**5V-2748**	1	HOSE AS	
		3	**1P-0210**	1	ELBOW-FLARED	
	78	3	**6K-6826**	1	ELBOW (45 DEG)	
		3	**3B-7255**	1	BUSHING-REDUCING	
	79	3	**5K-9243**	2	ELBOW-FLARED (90 DEGREES)	
	80	3	**2H-5547**	1	BUSHING-REDUCER	
Y	81	3	*4V-4154*	2	VALVE GP-BRAKE CONTROL (PARKING & SERVICE)	
	82	3	**4M-6425**	6	BOLT (5/16-18X1 IN)	
	83	3	**5K-9240**	1	ELBOW-FLARED	
	84	3	**5K-9235**	3	ELBOW-FLARED (90 DEGREE)	
	85	3	**7H-3171**	1	PLUG-PIPE (1/4-18 NPTF)	
	86	3	**3V-0037**	1	HOSE AS	
	87	3	**2B-0858**	6	PLUG-PIPE (1/2-14 NPTF)	
	88	3	**5M-6213**	3	PLUG-PIPE (1/4-18 NPTF THD)	
	89	3	**3J-5390**	1	PLUG (3/8-18 THD)	
Y	90	3	*4K-9714*	1	VALVE GP-CHECK	
	91	3	**1H-1363**	1	ELBOW-REDUCING	
Y	92	3	*4V-3126*	1	VALVE GP-CHECK	
	93	3	**5K-9245**	1	CONNECTOR-FLARED	
	94	3	**3V-0036**	1	TUBE AS	
		3	**6K-8079**	2	CONNECTOR-FLARED	
	95	3	**5K-9239**	2	CONNECTOR	
I	96	3	**3V-5598**	1	HOSE AS	
I	97	3	**9V-2665**	1	HOSE AS	
	98	3	**9X-2525**	1	TEE-O-RING	
	99	3	**6V-3265**	1	CLIP (9.52MM ID)	
M		3	**8T-4191**	1	BOLT (M10X1.50X16MM)	
					—OR—	
		3	**5P-8167**	1	BOLT (3/8-16X.625 IN)	
	100	3	**8T-4896**	6	WASHER-HARD (10.2X18.5X2.5MM THK)	
	101	3	**9C-0595**	1	TUBE AS	
	102	3	**8R-4560**	1	TUBE AS	
	103	3	**5V-1842**	1	HOSE AS	
	104	3	**6V-8801**	4	NUT (3/8-16 THD)	

8R-3529 **CONTROL GP-SERVICE BRAKE** *(contd.)* **i01336107**

NOTE	REF NO	GRAPHIC REF	PART NUMBER	QTY	PART NAME 1 2 3 4 5 6 (PRODUCT LEVEL)	SEE PAGE
	105	3	**5P-9297**	2	CLIP (9.52MM ID)	
	106	3	**7K-1456**	2	UNION-FLARED	
I	107	3	**8R-1523**	1	HOSE AS	
	108	3	**6V-8189**	1	NUT (5/16-18 THD)	
		3	**4M-0061**	1	BOLT (5/16-18X.750 IN)	
	109	3	**8T-4224**	3	WASHER-HARD (8.8X16X2MM THK)	
	110	3	**6V-3293**	1	TEE AS-FRAME	
I	111	3	**9C-0572**	1	HOSE AS	
	112	3	**9C-0148**	1	TUBE AS	
	113	3	**5M-3062**	1	BOLT (3/8-16X.75 IN)	
	114	3	**6W-8960**	1	BRACKET	
	115	3	**8T-9043**	2	BOLT (5/16-18X.875 IN)	
	116	3	**6M-7504**	1	BRACKET	
	117	3	**8M-2773**	2	CLIP (17.46MM ID)	
	118	3	**6K-8498**	1	TEE-FLARED	
	119	3	**5P-2937**	2	ADAPTER-O-RING	
	120	3	**3J-7354**	2	SEAL-O-RING (8.92MM ID)	
	121	3	**5S-7379**	1	BOLT (3/8-16X.875 IN)	

I-SEE HOSE FABRICATION GUIDE
M-METRIC PART
Y-SEPARATE ILLUSTRATION

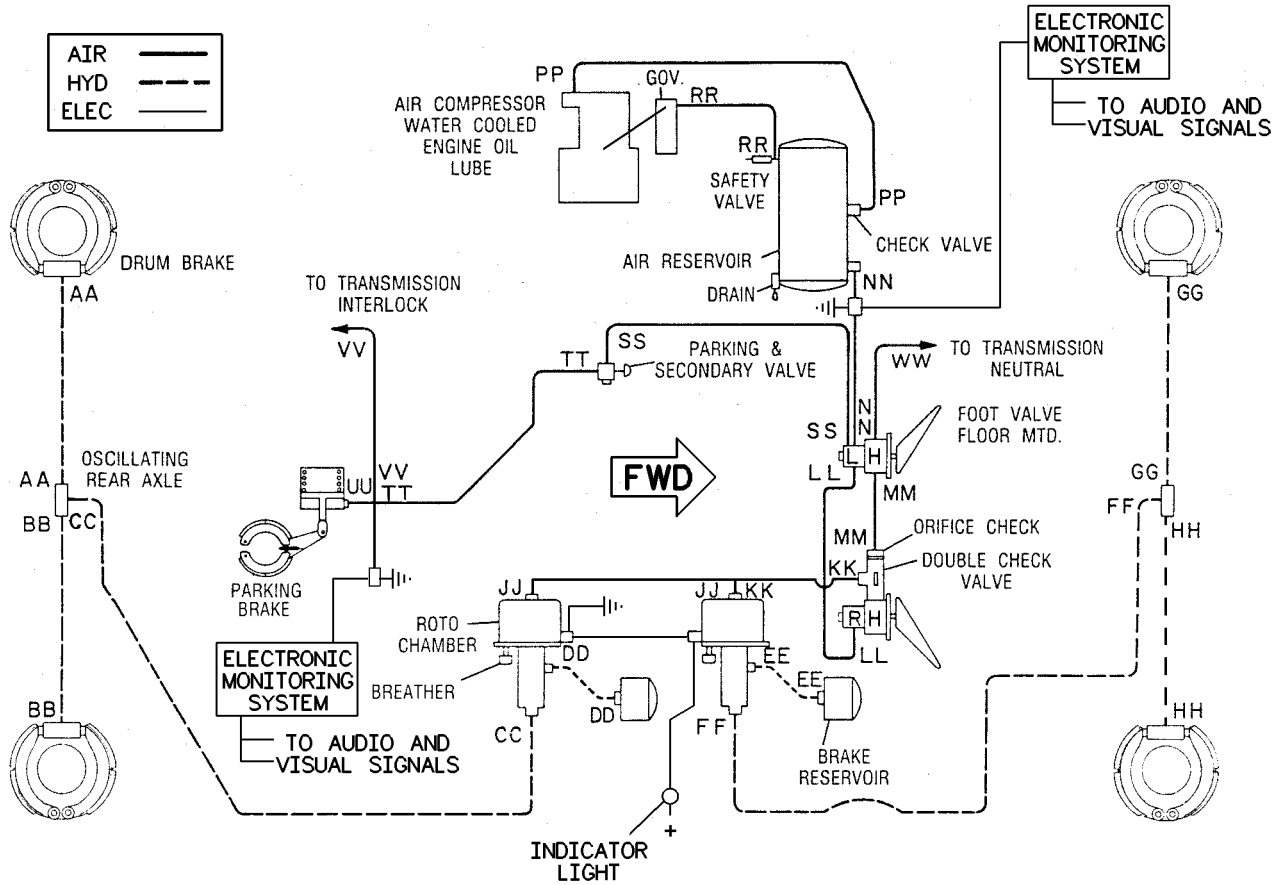

TOP VIEW SCHEMATIC

GRAPHIC #1 g00126528

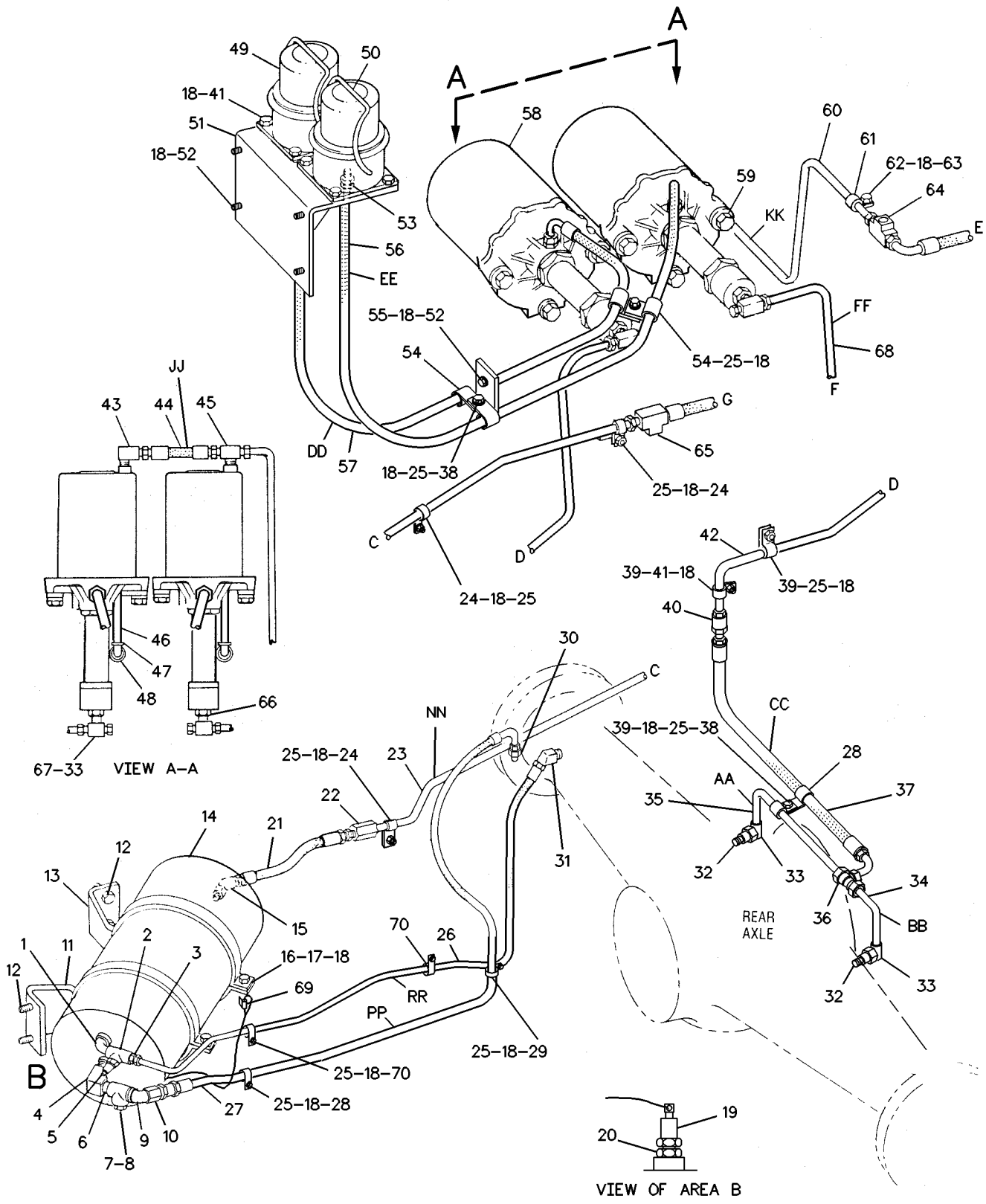

GRAPHIC #2 g00126664

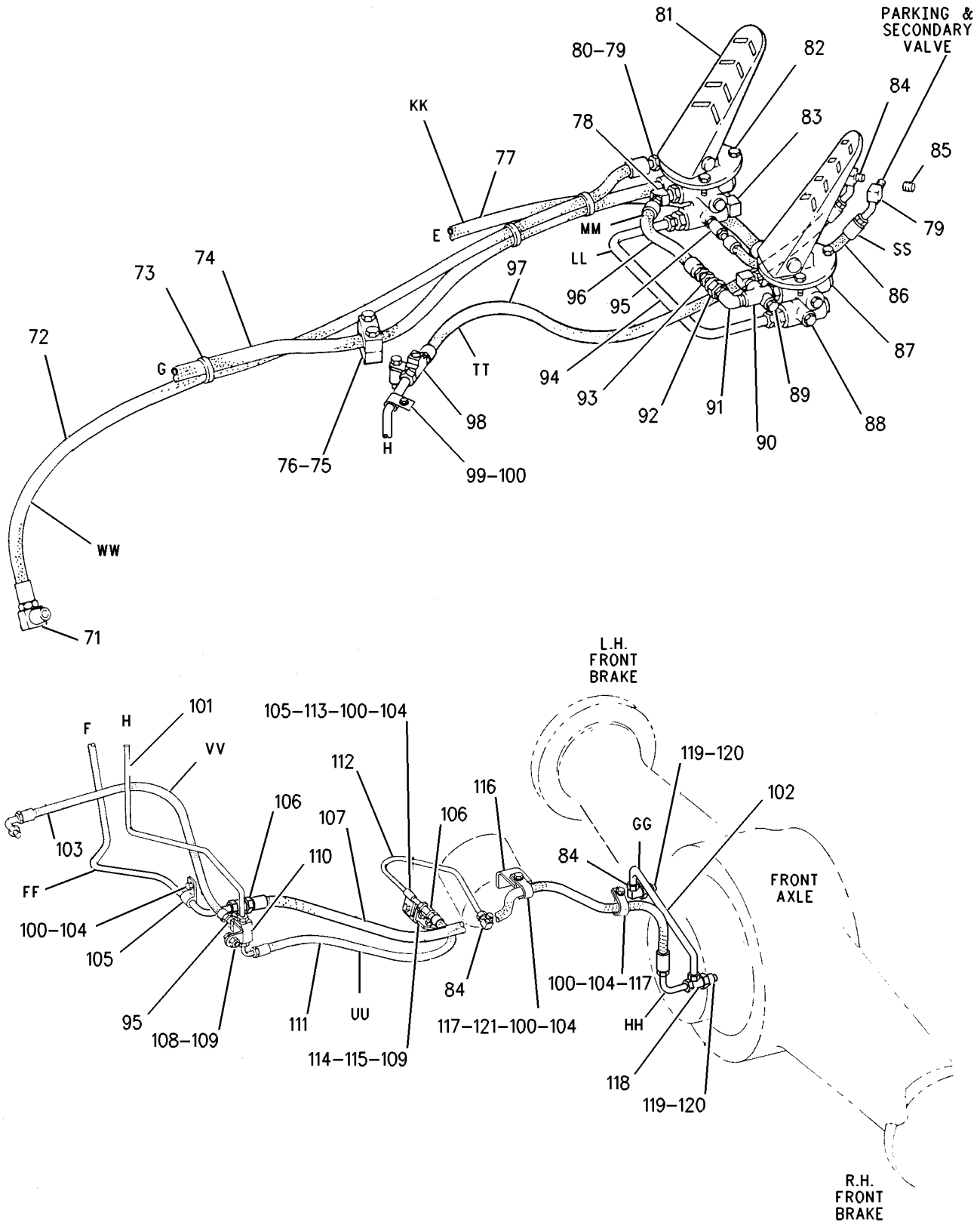

GRAPHIC #3 g00705701

MEMORANDA

BRAKING SYSTEM

8R-3529 CONTROL GP-SERVICE BRAKE

S/N: 3XJ2285-99999

SMCS-4257, 4258, 4265, 4269, 4280 **i01336110**

NOTE	REF NO	GRAPHIC REF	PART NUMBER	QTY	PART NAME 1 2 3 4 5 6 (PRODUCT LEVEL)	SEE PAGE
	1	2	**7J-8611**	1	ELBOW (1/4-18 NPTF)	
	2	2	**2D-7325**	1	TEE-PIPE	
	3	2,3	**5K-9239**	3	CONNECTOR	
	4	2	**9L-3560**	1	ELBOW	
	5	2	**3Y-9065**	1	VALVE	
	6	2	**3B-7866**	1	NIPPLE-PIPE	
	7	2	**2L-0332**	1	TEE-PIPE REDUCING	
	8	2,3	**3J-5390**	2	PLUG (3/8-18 THD)	
	9	2	**000-7244**	1	ELBOW-PIPE	
	10	2	**7D-6936**	1	VALVE AS-CHECK	
	11	2	**6C-0090**	1	BRACKET AS	
	12	2	**8T-8917**	4	BOLT (1/2-13X1.25 IN)	
		2	**7X-0550**	4	WASHER-HARD (13.5 X 32.0 X 5.0MM THK)	
	13	2	**6C-0089**	1	BRACKET AS	
	14	2	**5C-8240**	1	RESERVOIR	
	15	2	**9S-7724**	1	ELBOW-FLARED	
	16	2	**6A-3488**	2	CLAMP	
	17	2	**4L-9337**	4	BOLT (3/8-16X1.5 IN)	
	18	2,3	**8T-4896**	35	WASHER-HARD (10.2X18.5X2.5MM THK)	
	19	2	**3B-7722**	1	BUSHING-PIPE	
	20	2	**4E-4789**	1	VALVE-DRAIN	
	21	2	**5V-1846**	1	HOSE AS	
	22	2	**5K-9249**	1	UNION-FLARED	
	23	2	**9C-2982**	1	TUBE AS	
	24	2	**4B-9302**	3	CLIP (15.88MM ID)	
	25	2,3	**6V-8801**	13	NUT (3/8-16 THD)	
I	26	2	**9C-0504**	1	HOSE AS	
	27	2	**9V-6557**	1	HOSE AS	
	28	2,3	**8M-2773**	4	CLIP (17.46MM ID)	
	29	2	**5K-8451**	1	CLIP (15.88MM ID)	
	30	2,3	**5K-9245**	2	CONNECTOR-FLARED	
	31	2	**9S-7720**	1	ELBOW-FLARED	
	32	2,3	**5P-2937**	4	ADAPTER-O-RING	
	33	2,3	**5K-9235**	7	ELBOW-FLARED (90 DEGREE)	
	34	2	**8R-7052**	1	TUBE AS	
	35	2	**8R-7051**	1	TUBE AS	
	36	2	**5K-9988**	1	TEE-INVERTED FLARED	
I	37	2	**8R-1522**	1	HOSE AS	
	38	2	**4L-6454**	2	BOLT (3/8-16X1 IN)	
	39	2,3	**5P-9297**	5	CLIP (9.52MM ID)	
	40	2,3	**7K-1456**	3	UNION-FLARED	
	41	2,3	**5M-3062**	10	BOLT (3/8-16X.75 IN)	
	42	2	**8R-4561**	1	TUBE AS	
	43	2,3	**5K-9240**	2	ELBOW-FLARED	
	44	2	**9V-4877**	1	HOSE AS	
	45	2	**9S-7731**	1	TEE-FLARED	
	46	2	**6V-0678**	2	NIPPLE-PIPE	
	47	2	**7B-1480**	2	ELBOW-REDUCING	
	48	2	**9G-5127**	2	BREATHER	
	49	2	**8R-0859**	2	RESERVOIR AS	
					(EACH INCLUDES)	
		2	**8R-2095**	1	COVER	
		2	**9C-5790**	1	DIAPHRAGM	
	50	2	**5V-4907**	1	RETAINER	
	51	2	**8R-3952**	1	BRACKET AS	
M	52	2	**8T-4137**	5	BOLT (M10X1.50X20MM)	
	53	2	**5K-9248**	4	CONNECTOR-FLARED	

8R-3529 CONTROL GP-SERVICE BRAKE *(contd.)* i01336110

NOTE	REF NO	GRAPHIC REF	PART NUMBER	QTY	PART NAME 1 2 3 4 5 6 (PRODUCT LEVEL)	SEE PAGE
	54	2	**4D-7735**	4	CLIP (18.29MM ID)	
	55	2	**7P-9231**	1	BRACKET	
I	56	2	**8R-3950**	1	HOSE AS	
I	57	2	**8R-3951**	1	HOSE AS	
Y	58	2	**8R-0862**	2	CYLINDER GP-AIR/HYDRAULIC	
	59	2	**7X-3352**	6	BOLT	
		2	**8T-4122**	6	WASHER (3.5MM THK)	
	60	2	**9U-2385**	1	TUBE AS	
	61	2	**9M-8406**	1	CLIP (15.8MM ID)	
	62	2	**5S-7382**	1	BOLT (3/8-16X1.375 IN)	
	63	2	**4S-5719**	1	SPACER (12.7MM THK)	
	64	2	**9S-7747**	1	TEE-FLARED	
	65	2	**9X-2526**	1	TEE-O-RING	
	66	2	**3P-0764**	2	PLUG (7/8-14 THD)	
	67	2	**2M-9780**	2	SEAL-O-RING (19.18MM ID)	
	68	2	**8R-4559**	1	TUBE AS	
	69	2	**4D-8948**	1	CLIP (1/4IN X17/32IN SLOT)	
	70	2	**6K-8178**	2	CLIP (15.88MM ID)	
	71	3	**5K-9241**	1	ELBOW (90 DEGREE)	
	72	3	**3V-0053**	1	HOSE AS	
	73	3	**8L-8413**	3	STRAP-CABLE (1.12IN DIA)	
	74	3	**5V-2747**	1	HOSE AS	
	75	3	**3V-7429**	2	CLAMP	
	76	3	**4L-6459**	2	BOLT (3/8-16X2.5IN)	
		3	**5P-1075**	2	WASHER-HARD (3MM THK)	
	77	3	**9U-4377**	1	HOSE AS	
		3	**1P-0210**	1	ELBOW-FLARED	
	78	3	**6K-6826**	1	ELBOW (45 DEG)	
		3	**3B-7255**	1	BUSHING-REDUCING	
	79	3	**5K-9243**	2	ELBOW-FLARED (90 DEGREES)	
	80	3	**2H-5547**	1	BUSHING-REDUCER	
Y	81	3	**4V-4154**	2	VALVE GP-BRAKE CONTROL (PARKING & SERVICE)	
	82	3	**4M-6425**	6	BOLT (5/16-18X1 IN)	
	83	3	**7H-3171**	1	PLUG-PIPE (1/4-18 NPTF)	
	84	3	**3V-0037**	1	HOSE AS	
	85	3	**2B-0858**	6	PLUG-PIPE (1/2-14 NPTF)	
	86	3	**5M-6213**	3	PLUG-PIPE (1/4-18 NPTF THD)	
Y	87	3	**4K-9714**	1	VALVE GP-CHECK	
	88	3	**1H-1363**	1	ELBOW-REDUCING	
Y	89	3	**4V-3126**	1	VALVE GP-CHECK	
CI	90	3	**6W-5875**	1	HOSE AS	
		3	**6K-8079**	2	CONNECTOR-FLARED	
I	91	3	**3V-5598**	1	HOSE AS	
I	92	3	**9V-2665**	1	HOSE AS	
	93	3	**9X-2525**	1	TEE-O-RING	
	94	3	**6V-3265**	1	CLIP (9.52MM ID)	
		3	**5P-8167**	1	BOLT (3/8-16X.625 IN)	
	95	3	**9C-0595**	1	TUBE AS	
	96	3	**8R-4560**	1	TUBE AS	
	97	3	**5V-1842**	1	HOSE AS	
I	98	3	**8R-1523**	1	HOSE AS	
	99	3	**6V-8189**	1	NUT (5/16-18 THD)	
		3	**4M-0061**	1	BOLT (5/16-18X.750 IN)	
	100	3	**8T-4224**	3	WASHER-HARD (8.8X16X2MM THK)	
	101	3	**6V-3293**	1	TEE AS-FRAME	
I	102	3	**9C-0572**	1	HOSE AS	
	103	3	**9C-0148**	1	TUBE AS	
	104	3	**6W-8960**	1	BRACKET	
	105	3	**8T-9043**	2	BOLT (5/16-18X.875 IN)	

8R-3529 **CONTROL GP-SERVICE BRAKE** *(contd.)* **i01336110**

NOTE	REF NO	GRAPHIC REF	PART NUMBER	QTY	PART NAME 1 2 3 4 5 6 (PRODUCT LEVEL)	SEE PAGE
	106	3	**6M-7504**	1	BRACKET	
	107	3	**6K-8498**	1	TEE-FLARED	
	108	2,3	**3J-7354**	4	SEAL-O-RING (8.92MM ID)	
	109	3	**5S-7379**	1	BOLT (3/8-16X.875 IN)	

C-CHANGE FROM PREVIOUS TYPE
I-SEE HOSE FABRICATION GUIDE
M-METRIC PART
Y-SEPARATE ILLUSTRATION

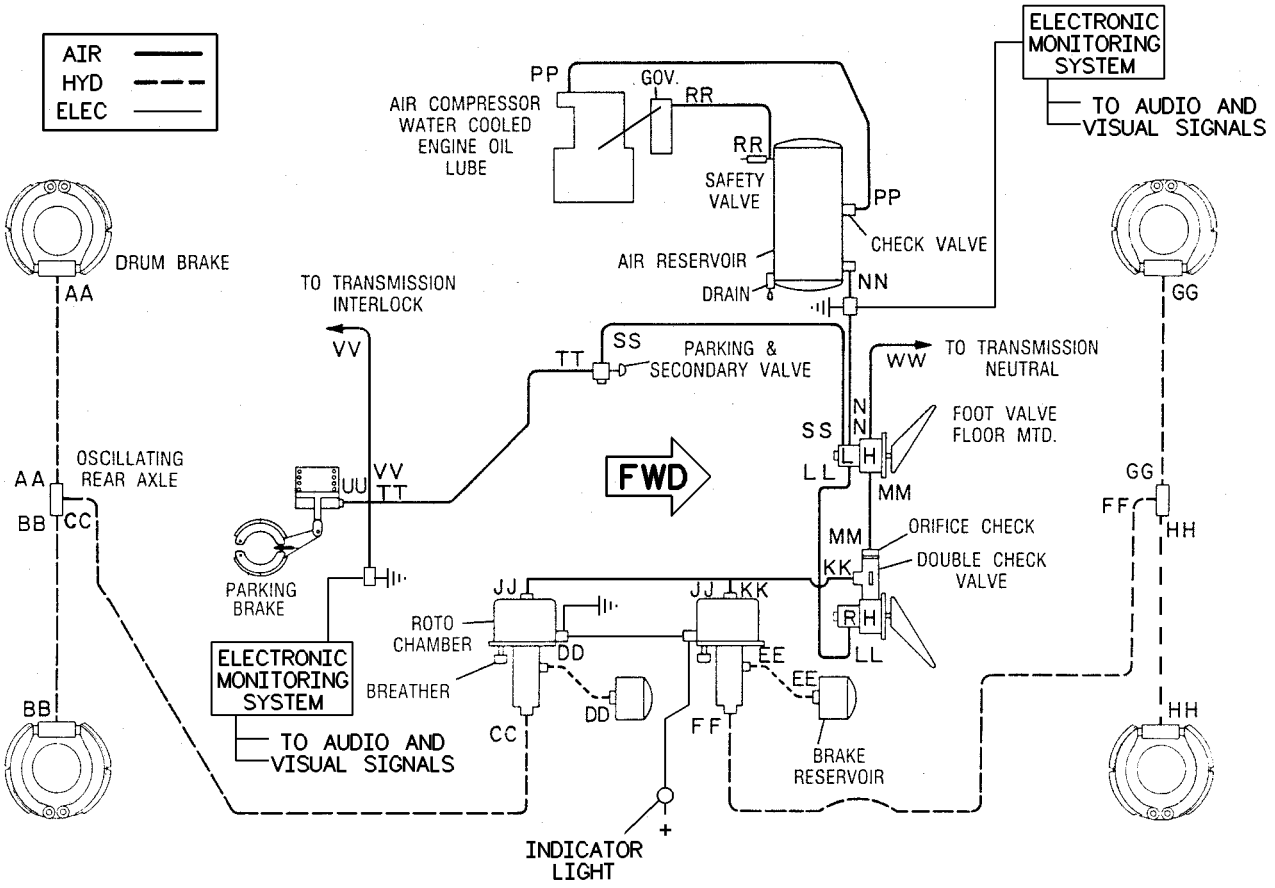

TOP VIEW SCHEMATIC

GRAPHIC #1 g00126528

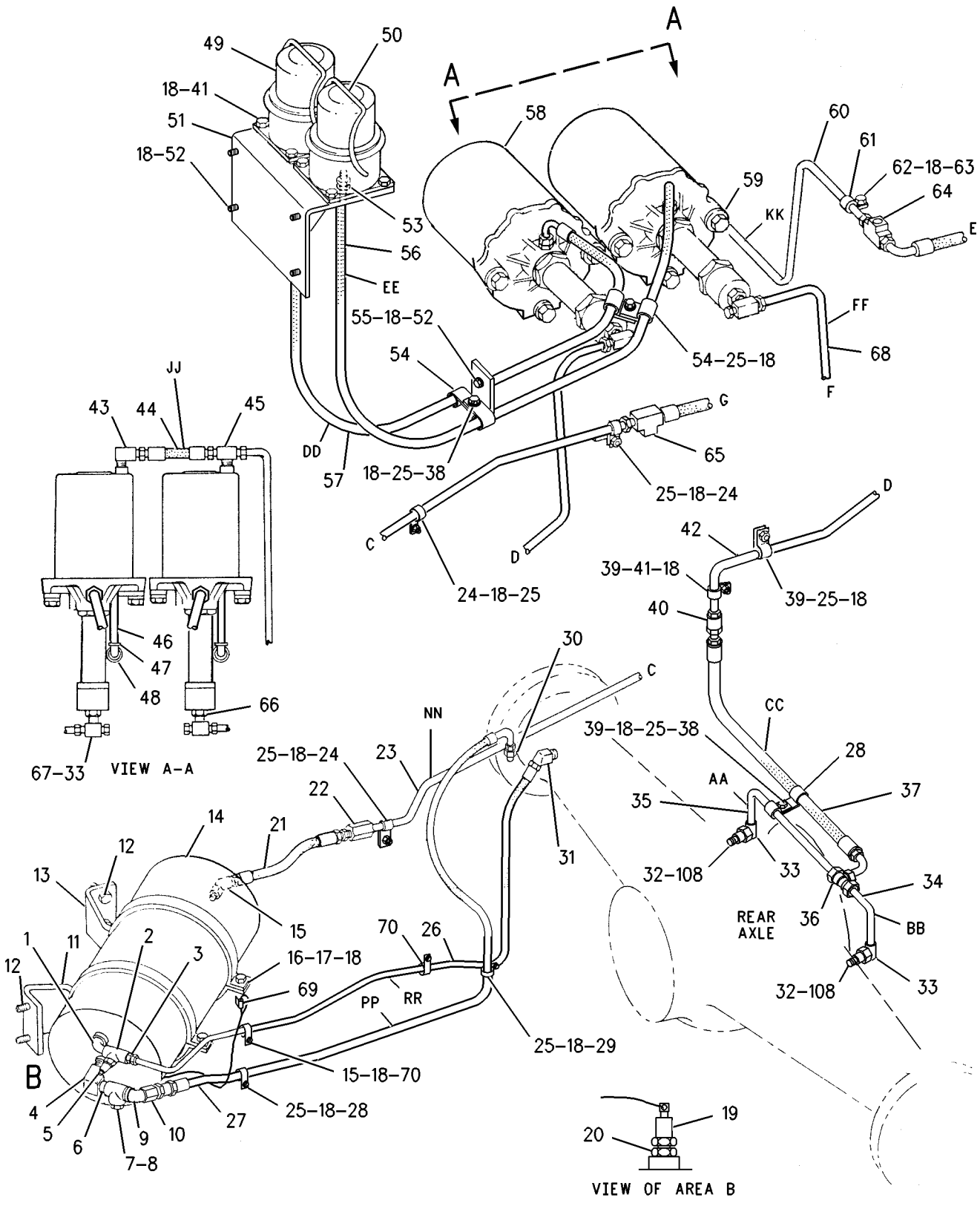

GRAPHIC #2 g00695210

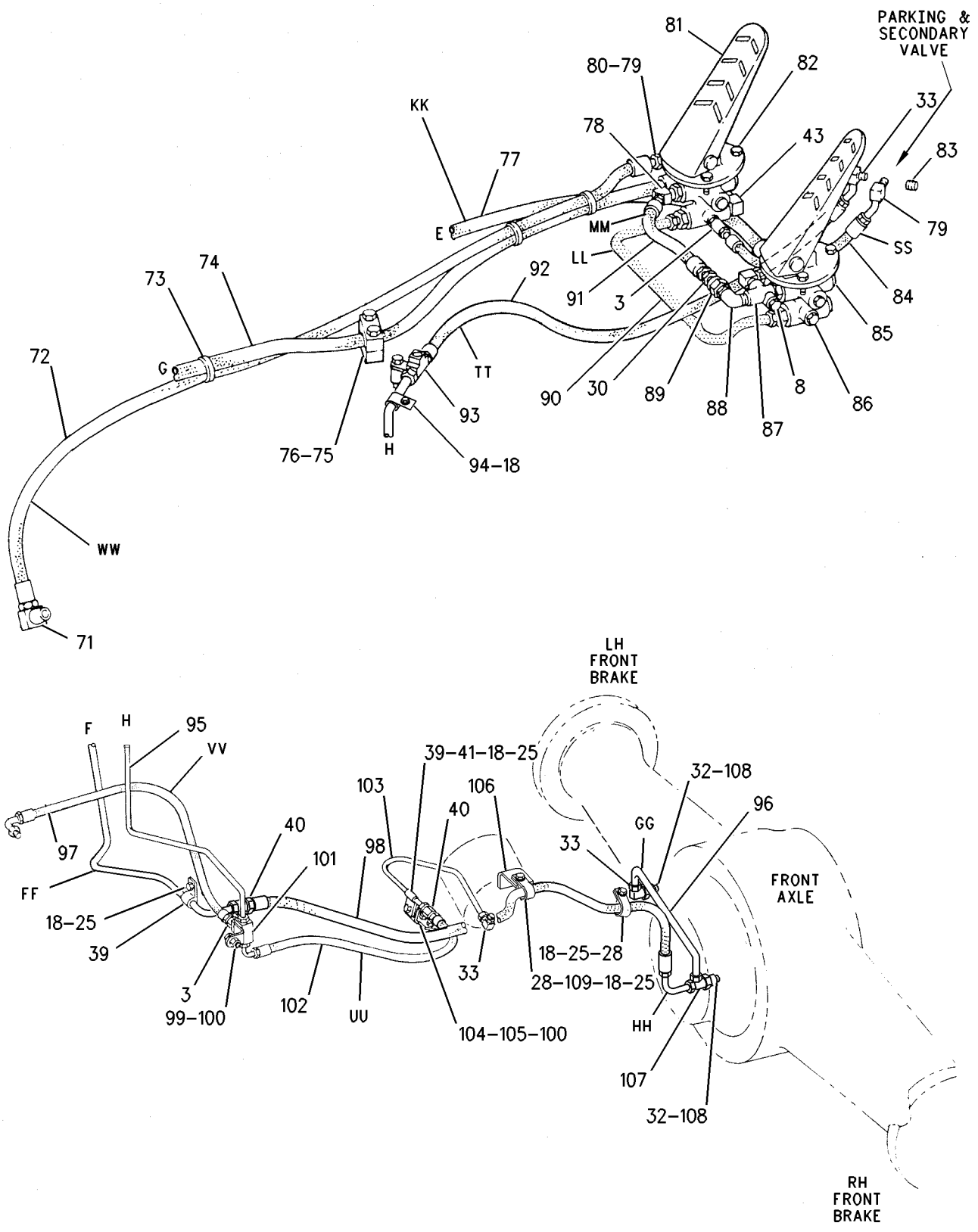

GRAPHIC #3 g00695211

BRAKING SYSTEM

8R-0862 CYLINDER GP-AIR/HYDRAULIC

S/N: 3XJ1-99999

PART OF 8R-3529 CONTROL GP-SERVICE BRAKE

SMCS-4277 **i01328398**

NOTE	REF NO	GRAPHIC REF	PART NUMBER	QTY	PART NAME 1 2 3 4 5 6 (PRODUCT LEVEL)	SEE PAGE
	1	1	**9F-2167**	1	SCREW-PURGE	
	2	1	**7V-5646**	1	SEAL-O-RING	
	3	1	**7V-5647**	1	SWITCH AS-LIMIT (BRAKE CYLINDER OVERSTROKE)	
		1	**6V-8376**	2	SCREW-MACHINE (8-32X.25 IN)	
		1	**9B-7233**	2	LOCKWASHER (NO.8)	
	4	1	**7V-2131**	1	ROD-INDICATOR	
	5	1	**6W-7305**	1	SPRING	
	6	1	**9V-6526**	1	RING-RETAINING	
	7	1	**8W-1150**	1	VALVE	
	8	1	**8W-1151**	1	BODY-PISTON	
					AVAILABLE REPAIR KIT(S):	
			8R-0863	1	KIT-CYLINDER	
					(INCLUDES SEALS,SPRING INSERT,FELT,RING & GASKET)	

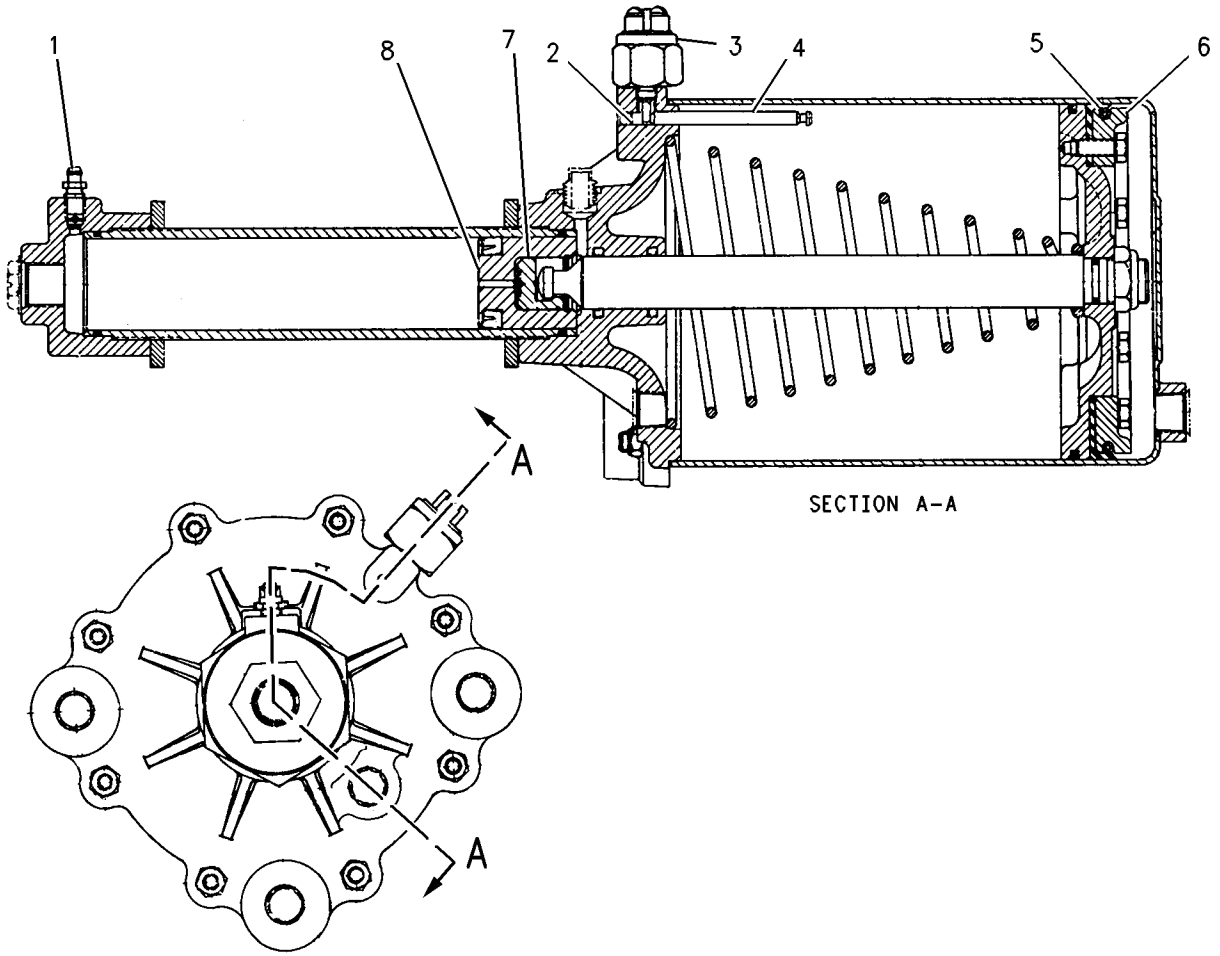

GRAPHIC #1 g00702613

BRAKING SYSTEM

4D-2287 VALVE GP-BRAKE CONTROL—PARKING & SERVICE

S/N: 3XJ1-99999

PART OF 4V-4154 VALVE GP-BRAKE CONTROL

SMCS-4265, 4282 **i01326266**

NOTE	REF NO	GRAPHIC REF	PART NUMBER	QTY	PART NAME 1 2 3 4 5 6 (PRODUCT LEVEL)	SEE PAGE
	1	1	**4D-2289**	1	VALVE AS	
	2	1	**1S-3612**	1	RETAINER-VALVE	
	3	1	**4D-2298**	1	SPRING	
	4	1	**4D-2297**	1	SEAL-O-RING (15.60MM ID)	
	5	1	**5D-8412**	1	SCREW-ROUND HEAD (8-32 THD)	
	6	1	**5D-9702**	1	SEAT	
	7	1	**4D-2293**	1	WASHER	
	8	1	**4D-2292**	1	DIAPHRAGM	
	9	1	**5M-2057**	1	SEAL-O-RING (34.59MM ID)	
C	10	1	**004-1683**	1	RING-SNAP	
	11	1	**4D-2634**	1	SPRING	
	12	1	**5D-0767**	1	PISTON AS	
C	13	1	**031-0215**	1	BOLT-LOCKING	
	14	1	**4D-2303**	1	WASHER	
	15	1	**4D-2302**	1	SEAT	
	16	1	**5D-0768**	1	SPRING (RUBBER)	
	17	1	**7F-8268**	1	SEAL-O-RING (53.57MM ID)	
	18	1	**4D-2305**	1	RETAINER	

C-CHANGE FROM PREVIOUS TYPE

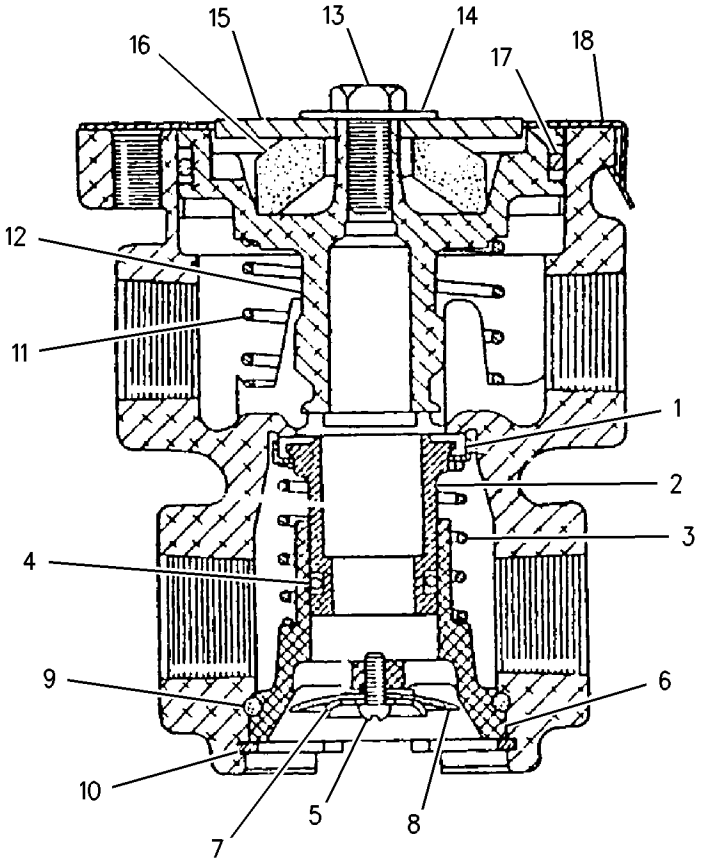

GRAPHIC #1 g00701817

BRAKING SYSTEM

4V-4154 VALVE GP-BRAKE CONTROL—PARKING & SERVICE

S/N: 3XJ1-99999

PART OF 8R-3529 CONTROL GP-SERVICE BRAKE

SMCS-4265, 4282 **i01336295**

NOTE	REF NO	GRAPHIC REF	PART NUMBER	QTY	PART NAME 1 2 3 4 5 6 (PRODUCT LEVEL)	SEE PAGE
	1	1	**0S-1617**	3	BOLT (5/16-18X.75 IN)	
		1	**3B-4505**	3	LOCKWASHER (5/16IN)	
	2	1	**2R-0695**	1	PIN	
		1	**1H-3937**	1	PIN	
	3	1	**4V-6441**	1	TREADLE AS	
	4	1	**4K-7334**	1	ROLLER	
	5	1	**3B-4607**	1	COTTER	
	6	1	**2R-0720**	1	PIN-STRAIGHT	
	7	1	**4V-6443**	1	PLUNGER	
	8	1	**5D-3636**	1	BOOT	
	9	1	**4V-6442**	1	PLATE	
Y	10	1	**4D-2287**	1	VALVE GP-BRAKE CONTROL (PARKING & SERVICE)	
	11	1	**2R-0724**	1	BUTTON-STOP	

Y-SEPARATE ILLUSTRATION

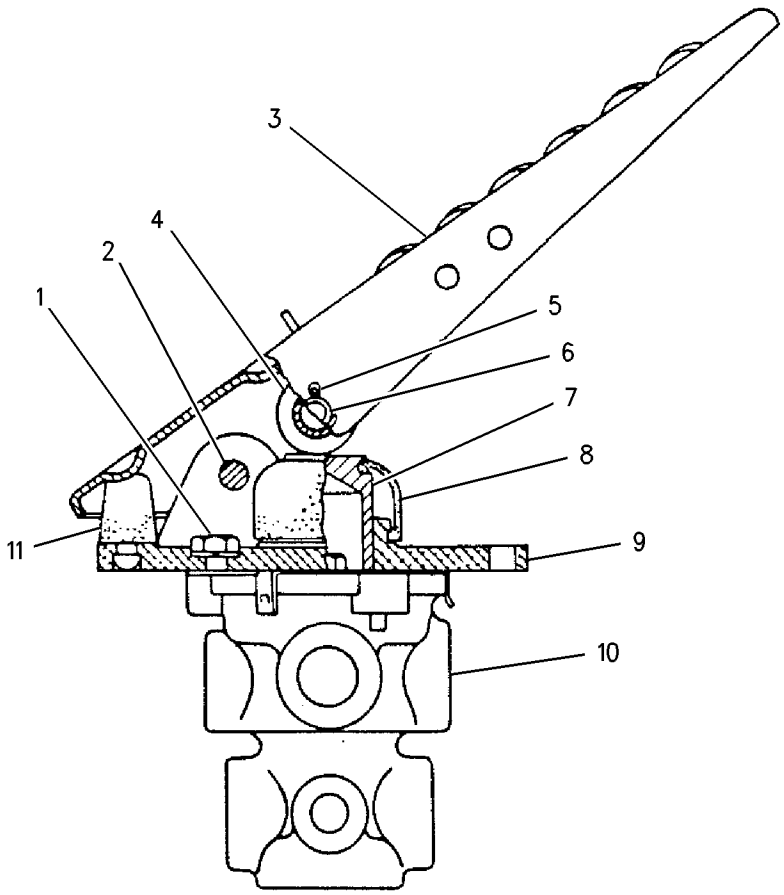

GRAPHIC #1 g00701774

4K-9714 VALVE GP-CHECK

S/N: 3XJ1-99999

PART OF 8R-3529 CONTROL GP-SERVICE BRAKE

SMCS-4275, 5067 **i00259412**

NOTE	PART NUMBER	QTY	PART NAME 1 2 3 4 5 6 (PRODUCT LEVEL)	SEE PAGE
Y	*9V-0476*	1	VALVE GP-CHECK	
			—OR—	
Y	*9V-1541*	1	VALVE GP-CHECK	

Y-SEPARATE ILLUSTRATION

BRAKING SYSTEM

4V-3126 VALVE GP-CHECK

S/N: 3XJ1-99999

PART OF 8R-3529 CONTROL GP-SERVICE BRAKE

SMCS-4275, 5067 **i01328386**

NOTE	REF NO	GRAPHIC REF	PART NUMBER	QTY	PART NAME 1 2 3 4 5 6 (PRODUCT LEVEL)	SEE PAGE
	1	1	**3K-5656**	1	BODY-VALVE	
	2	1	**3K-5668**	1	WASHER	
	3	1	**3K-5669**	1	SEAT	
	4	1	**4V-3125**	1	DISC-VALVE	
	5	1	**3K-5670**	1	SPRING	
	6	1	**3K-5672**	1	CAP-VALVE	

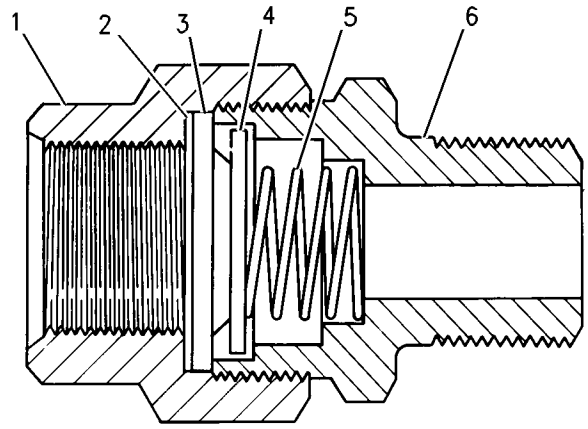

GRAPHIC #1 g00702552

BRAKING SYSTEM

9V-0476 VALVE GP-CHECK

S/N: 3XJ1-99999

PART OF 4K-9714 VALVE GP-CHECK

SMCS-4275, 5067 **i01326264**

NOTE	REF NO	GRAPHIC REF	PART NUMBER	QTY	PART NAME 1 2 3 4 5 6 (PRODUCT LEVEL)	SEE PAGE
	1	1	**5K-1065**	1	SEAL & RETAINER AS	
	2	1	**5K-1063**	1	GASKET	

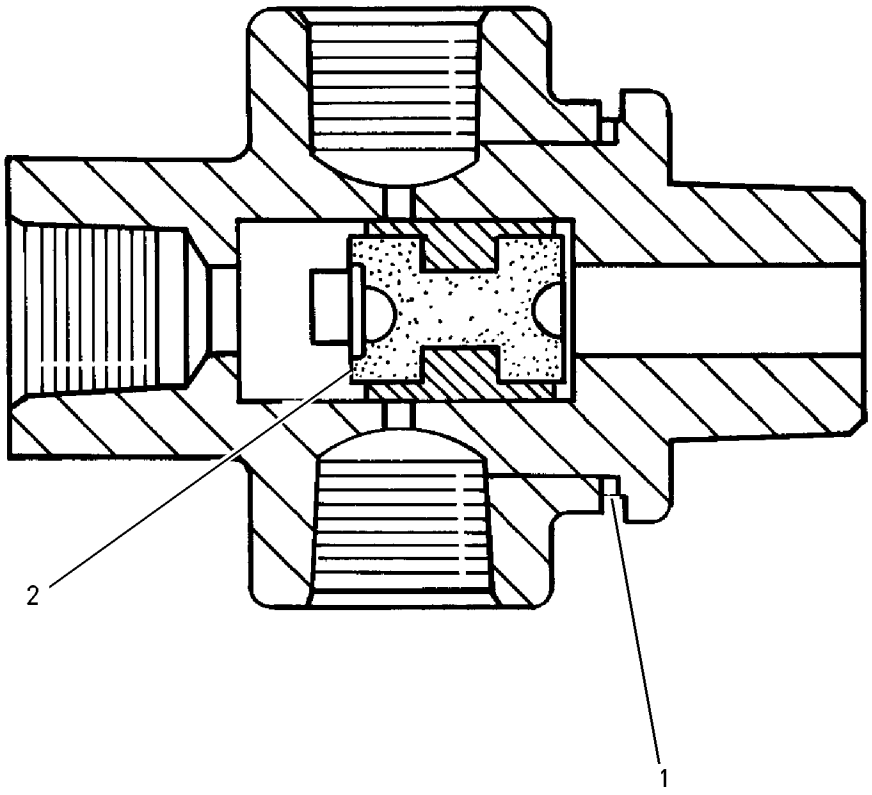

GRAPHIC #1 g00701801

9V-1541 VALVE GP-CHECK

S/N: 3XJ1-99999

PART OF 4K-9714 VALVE GP-CHECK

SMCS-4275, 5067 **i01326262**

NOTE	REF NO	GRAPHIC REF	PART NUMBER	QTY	PART NAME 1 2 3 4 5 6 (PRODUCT LEVEL)	SEE PAGE
	1	1	**2R-1532**	1	GUIDE-SHUTTLE	
	2	1	**4M-5281**	2	BOLT (1/4-20X.750 IN)	
	3	1	**2R-9614**	1	CAP	
	4	1	**3D-4869**	1	SHUTTLE	
	5	1	**3D-4245**	1	SEAL-O-RING (25.07MM ID)	

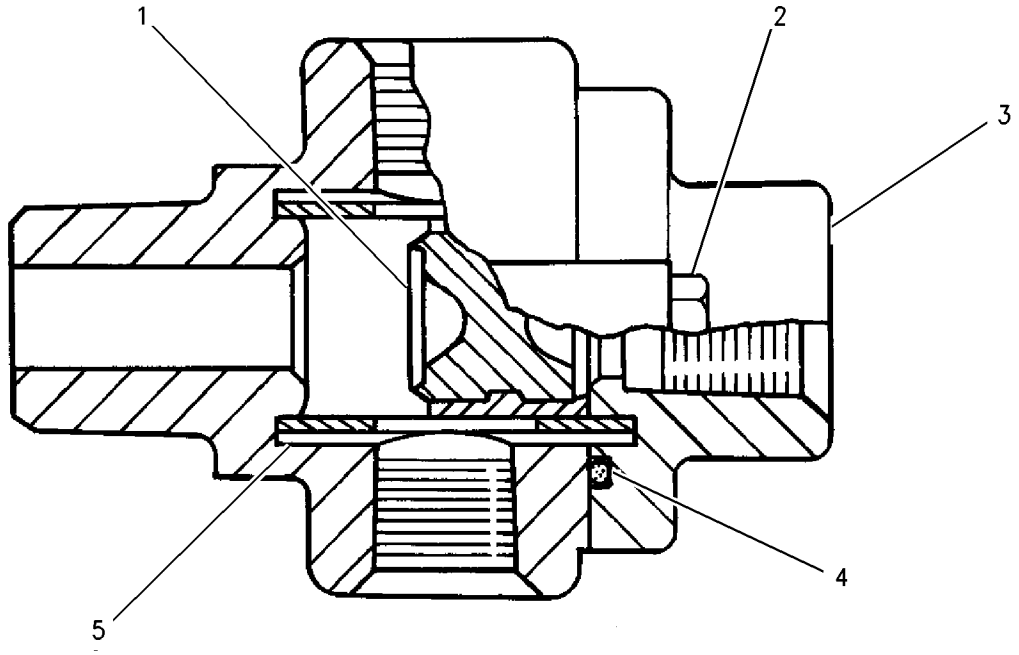

GRAPHIC #1 g00701794

STEERING SYSTEM

8R-8785 CONTROL GP-STEERING

S/N: 3XJ1-99999

PART OF 8R-5041 OPERATOR AR

SMCS-4304, 4309, 4310, 4338 **i01334332**

NOTE	REF NO	GRAPHIC REF	PART NUMBER	QTY	PART NAME 1 2 3 4 5 6 (PRODUCT LEVEL)	SEE PAGE
Y	1	1	*9T-0153*	1	PUMP GP-METERING	
	2	1	**2V-7990**	1	TUBE AS	
	3	1	**5H-6480**	1	RING-RETAINING	
	4	1	**5P-8247**	1	WASHER-HARD (3.5MM THK)	
	5	1	**5S-7383**	4	BOLT (3/8-16X1.75 IN)	
	6	1	**6F-0253**	1	LOCKWASHER (16.26MM ID)	
	7	1	**6K-8161**	1	BALL BEARING	
	8	1	**6K-8162**	1	RING-RETAINING	
	9	1	**8R-2916**	1	BUTTON AS	
	10	1	**8R-2918**	1	KNOB AS	
	11	1	**8R-8438**	1	STEERING WHEEL	
	12	1	**8T-4896**	4	WASHER-HARD (10.2X18.5X2.5MM THK)	
	13	1	**9S-1354**	1	NUT (5/8-18 THD)	

Y-SEPARATE ILLUSTRATION

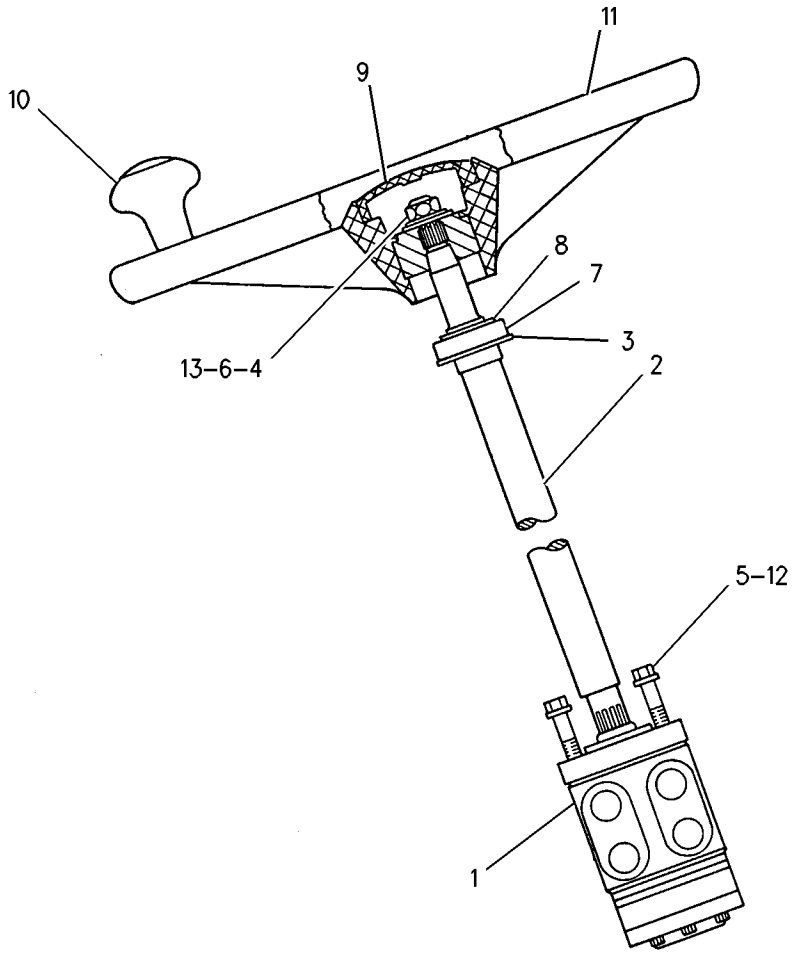

GRAPHIC #1 g00705539

8V-5217 CYLINDER & MTG GP-STEERING

S/N: 3XJ1-99999

SMCS-4303 **i01326267**

NOTE	REF NO	GRAPHIC REF	PART NUMBER	QTY	PART NAME 1 2 3 4 5 6 (PRODUCT LEVEL)	SEE PAGE
C	1	1	**7X-0366**	2	BOLT (3/4-10X2 IN)	
C		1	**6W-2342**	2	SPACER	
	2	1	**7X-0564**	4	WASHER-HARD (3MM THK)	
C	3	1	**8V-7659**	4	PIN AS	
	4	1	**3B-8489**	2	FITTING-GREASE (1/8-27 THD)	
Y	5	1	*8V-5216*	2	CYLINDER & SEAL GP-STEERING	
	6	1	**8T-9398**	2	BOLT (3/4-10X1.75 IN)	
		1	**9K-9731**	2	SPACER (14.22MM THK)	
	7	1	**2K-4160**	8	WASHER	

C-CHANGE FROM PREVIOUS TYPE
Y-SEPARATE ILLUSTRATION

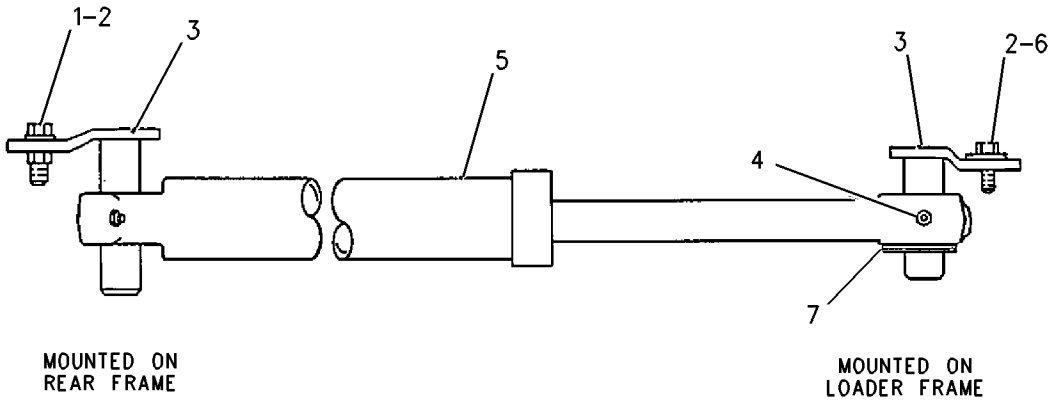

GRAPHIC #1 g00701822

8V-5216 CYLINDER & SEAL GP-STEERING

S/N: 3XJ1-1979

PART OF 8V-5217 CYLINDER & MTG GP-STEERING

SMCS-4303 **i01326268**

NOTE	REF NO	GRAPHIC REF	PART NUMBER	QTY	PART NAME 1 2 3 4 5 6 (PRODUCT LEVEL)	SEE PAGE
	1	1	**7K-9203**	4	SEAL-LIP (50.8MM ID)	
Y	2	1	*4T-1574*	1	CYLINDER GP-STEERING	

Y-SEPARATE ILLUSTRATION

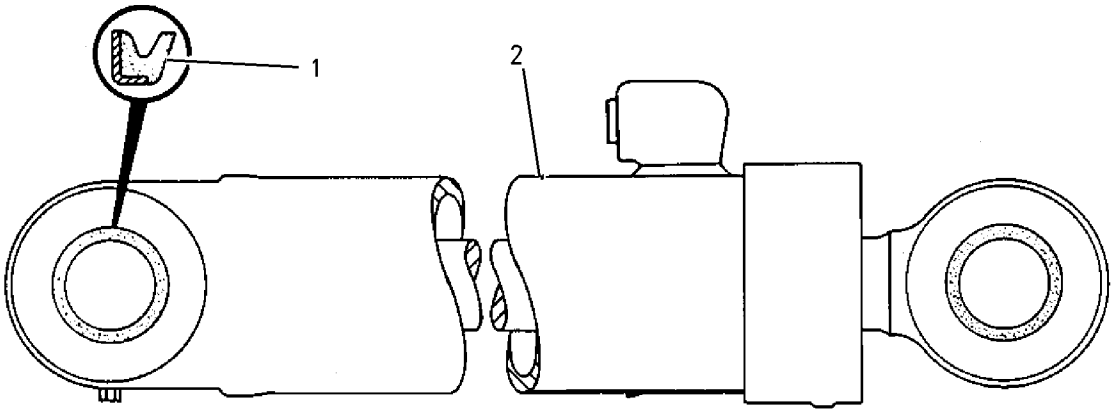

GRAPHIC #1 g00701838

8V-5216 CYLINDER & SEAL GP-STEERING

S/N: 3XJ1980-99999

PART OF 8V-5217 CYLINDER & MTG GP-STEERING

SMCS-4303 **i01326371**

NOTE	REF NO	GRAPHIC REF	PART NUMBER	QTY	PART NAME 1 2 3 4 5 6 (PRODUCT LEVEL)	SEE PAGE
	1	1	**7K-9203**	4	SEAL-LIP (50.8MM ID)	
CY	2	1	**6E-5024**	1	CYLINDER GP-STEERING	

C-CHANGE FROM PREVIOUS TYPE
Y-SEPARATE ILLUSTRATION

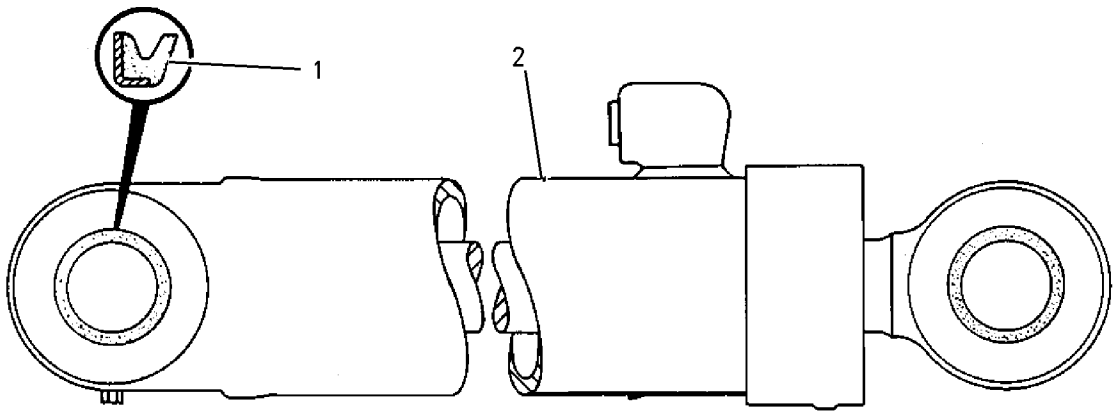

GRAPHIC #1 g00701838

4T-1574 CYLINDER GP-STEERING

S/N: 3XJ1-1979
102 MM (4 IN) BORE X 597 MM (24 IN) STROKE
PART OF 8V-5216 CYLINDER & SEAL GP-STEERING

SMCS-4303 **i01310523**

NOTE	REF NO	GRAPHIC REF	PART NUMBER	QTY	PART NAME 1 2 3 4 5 6 (PRODUCT LEVEL)	SEE PAGE
R	1	1	**4T-1580**	1	CYLINDER AS	
		1	**7J-9682**	1	BEARING-SLEEVE	
	2	1	**7J-5639**	1	BOLT-LOCKING (1-14X2.5IN)	
		1	**8J-7415**	1	WASHER-HARD	
	3	1	**6J-2797**	1	RING-WEAR	
	4	1	**5J-5402**	1	SEAL AS	
		1	**5J-5400**	1	SEAL	
	5	1	**8C-9124**	1	SEAL AS (50.8MM ID)	
	6	1	**5J-8200**	1	SEAL-U-CUP	
	7	1	**8C-9133**	1	SEAL	
R	8	1	**9J-7084**	1	ROD AS	
		1	**7J-9682**	1	BEARING-SLEEVE	
	9	1	**7J-6461**	1	CROWN	
	10	1	**5M-6214**	1	PLUG-PIPE (1/8-27 THD)	
	11	1	**1H-8128**	1	SEAL-O-RING (94.84MM ID)	
		1	**2K-6830**	1	RING-BACKUP	
C	12	1	**9T-3964**	1	HEAD	
	13	1	**7J-6469**	1	PISTON	
C	14	1	**4T-5613**	1	RING-WEAR	

C-CHANGE FROM PREVIOUS TYPE
R-REMFG PART MAY BE AVAILABLE

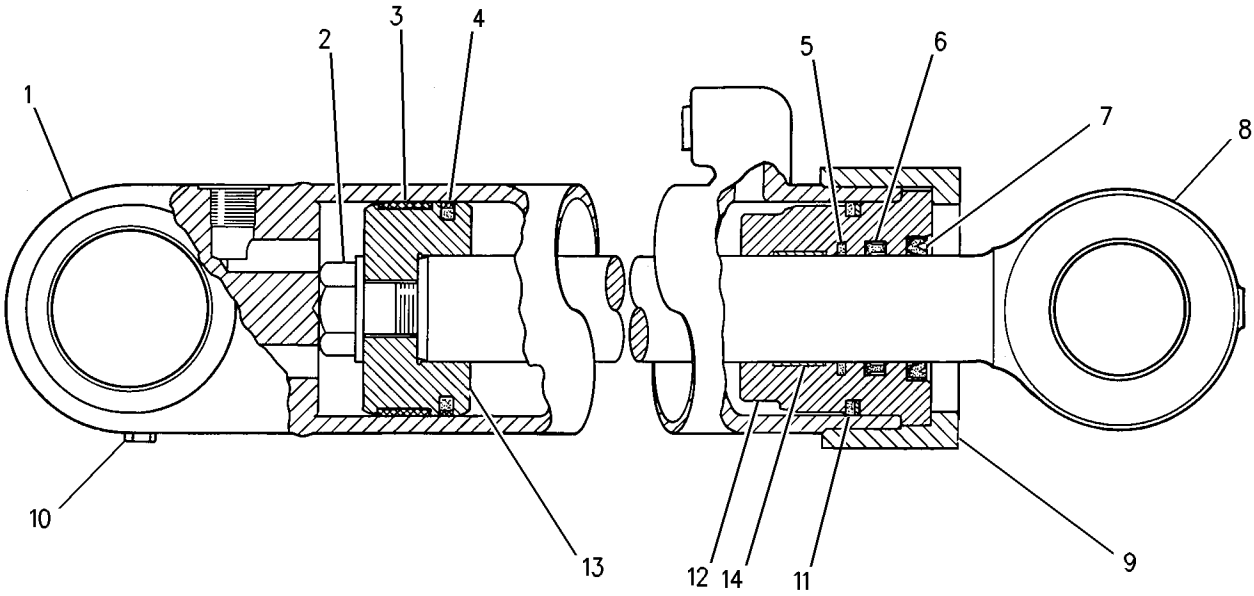

GRAPHIC #1 g00694579

6E-5024 CYLINDER GP-STEERING

S/N: 3XJ1980-99999
101.6 MM BORE X 597 MM STROKE
PART OF 8V-5216 CYLINDER & SEAL GP-STEERING

SMCS-4303 **i01326243**

NOTE	REF NO	GRAPHIC REF	PART NUMBER	QTY	PART NAME 1 2 3 4 5 6 (PRODUCT LEVEL)	SEE PAGE
R	1	1	**6E-5025**	1	CYLINDER AS	
		1	**7J-9682**	1	BEARING-SLEEVE	
M	2	1	**8C-3411**	1	BOLT (M30X3.5X90MM)	
	3	1	**6J-2797**	1	RING-WEAR	
	4	1	**8C-9160**	1	SEAL AS	
	5	1	**8C-9124**	1	SEAL AS (50.8MM ID)	
	6	1	**5J-8200**	1	SEAL-U-CUP	
	7	1	**8C-9133**	1	SEAL	
R	8	1	**6E-5028**	1	ROD AS	
		1	**7J-9682**	1	BEARING-SLEEVE	
	9	1	**9T-3133**	1	PISTON	
	10	1	**4T-5613**	1	RING-WEAR	
	11	1	**9X-4611**	1	SEAL-O-RING (98.02MM ID)	
	12	1	**6E-0775**	1	HEAD	
	13	1	**2K-6830**	1	RING-BACKUP	
	14	1	**3S-7023**	1	WASHER (6.0MM THK)	
	15	1	**8J-0484**	1	RING-RETAINING	

M-METRIC PART
R-REMFG PART MAY BE AVAILABLE

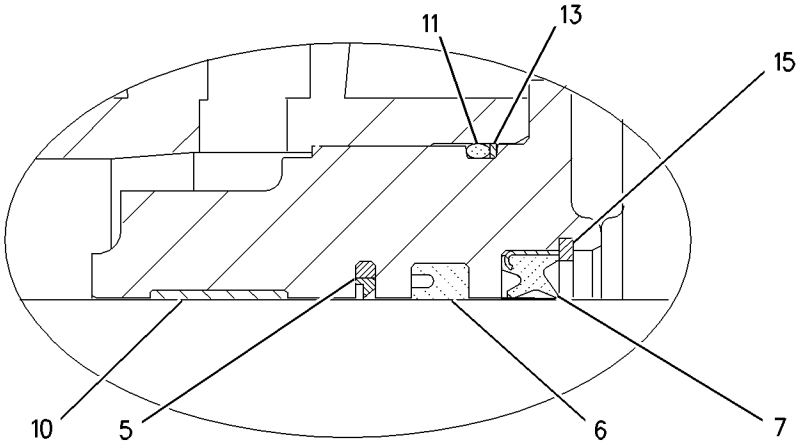

VIEW OF AREA A

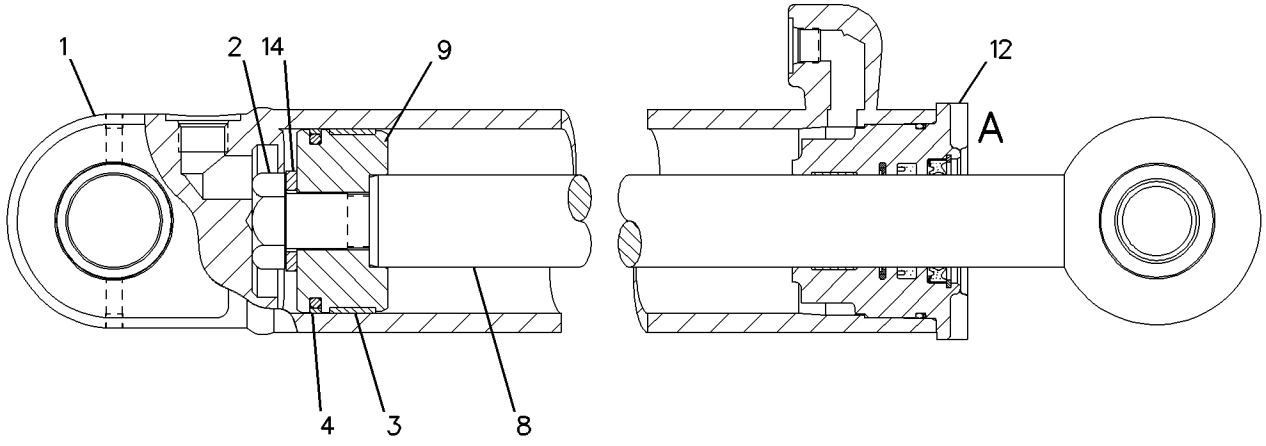

GRAPHIC #1 g00701781

STEERING SYSTEM

9C-1085 LINES GP-SECONDARY STEERING

S/N: 3XJ1-99999

PART OF 8R-8392, 8R-9522 STEERING AR-SECONDARY

AN ATTACHMENT

SMCS-4304 **i01204758**

NOTE	REF NO	GRAPHIC REF	PART NUMBER	QTY	PART NAME 1 2 3 4 5 6 (PRODUCT LEVEL)	SEE PAGE
	1	1	**5H-2068**	1	COVER	
	3	1	**8T-9382**	4	BOLT (7/16-14X1.25IN)	
	5	1	**7X-0313**	6	BOLT (7/16-14X2.75IN)	
	7	1	**8T-6703**	2	CLAMP-HOSE	
E	8	1	**5K-0309**		HOSE (10.16 CM)	
	9	1	**5V-0783**	1	TUBE AS	
	10	1	**6C-0141**	1	TUBE AS	
	11	1	**9C-2420**	1	TUBE AS	
	12	1	**8T-8920**	4	BOLT (1/2-13X3.25IN)	
	14	1	**7X-0331**	4	BOLT (1/2-13X4.25IN)	
	15	1	**5V-0780**	1	TUBE AS	
	16	1	**8T-4983**	2	CLAMP-HOSE	
E	17	1	**5K-4725**		HOSE (8.89 CM)	
	18	1	**7X-0322**	2	BOLT (7/16-14X6IN)	
	19	1	**6V-8635**	1	CONNECTOR-SEAL	
		1	**7M-8485**	1	SEAL-O-RING (29.74MM ID)	
		1	**5K-9090**	1	SEAL-O-RING (23.52MM ID)	
	20	1,2	**1P-4578**	14	FLANGE-HALF	
	21	2	**8T-8916**	20	BOLT (7/16-14X1.5IN)	
	22	1,2	**8T-5360**	32	WASHER (2.5MM THK)	
I	23	2	**5V-0776**	1	HOSE AS	
	24	2	**7X-0317**	4	BOLT (7/16-14X3.75IN)	
	25	2	**6W-0147**	1	SPACER	
	26	2	**5V-0779**	1	TUBE AS	
	27	1,2	**4J-0522**	9	SEAL-O-RING (37.69MM ID)	
I	28	2	**5V-0775**	1	HOSE AS	
	29	2	**8R-3462**	1	PLATE	
		2	**2B-0941**	3	SPACER (19MM THK)	
I	30	2	**6W-4798**	1	HOSE AS	
I	31	2	**5V-0791**	1	HOSE AS	
	32	2	**7F-1866**	1	BOLT (3/8-16X3.0IN)	
		2	**6N-8182**	1	WASHER	
		2	**9V-8307**	1	BOSS	
	33	2	**7S-8920**	2	CLIP (SLOT)	
		2	**7S-8921**	2	CLIP (TAB)	
	34	2	**7V-8532**	1	SPACER	
	35	2	**4J-0524**	1	SEAL-O-RING (47.22MM ID)	
	36	2	**5P-2566**	4	BOLT (1/2-13X1.50 IN)	
	37	2	**8T-4223**	8	WASHER-HARD (3MM THK)	
	38	2	**1P-4579**	2	FLANGE-HALF	
	39	2	**5V-0781**	1	TUBE AS	
	40	2	**7X-0326**	8	BOLT (1/2-13X3IN)	
	41	1,2	**1P-3705**	6	SEAL-RECTANGULAR (44.7MM ID)	
	42	2	**5V-0782**	1	TUBE AS	
	43	2	**8T-8919**	4	BOLT (1/2-13X1.75IN)	
	44	2	**1P-3704**	1	SEAL-RECTANGULAR (38.2MM ID)	
	45	2	**6C-1276**	1	SPACER (30.0MM THK)	
		2	**1P-3708**	1	SEAL-RECTANGULAR (57.4MM ID)	
	46	2	**7X-0351**	4	BOLT (5/8-11X3.75IN)	

E-ORDER BY THE CENTIMETER
I-SEE HOSE FABRICATION GUIDE

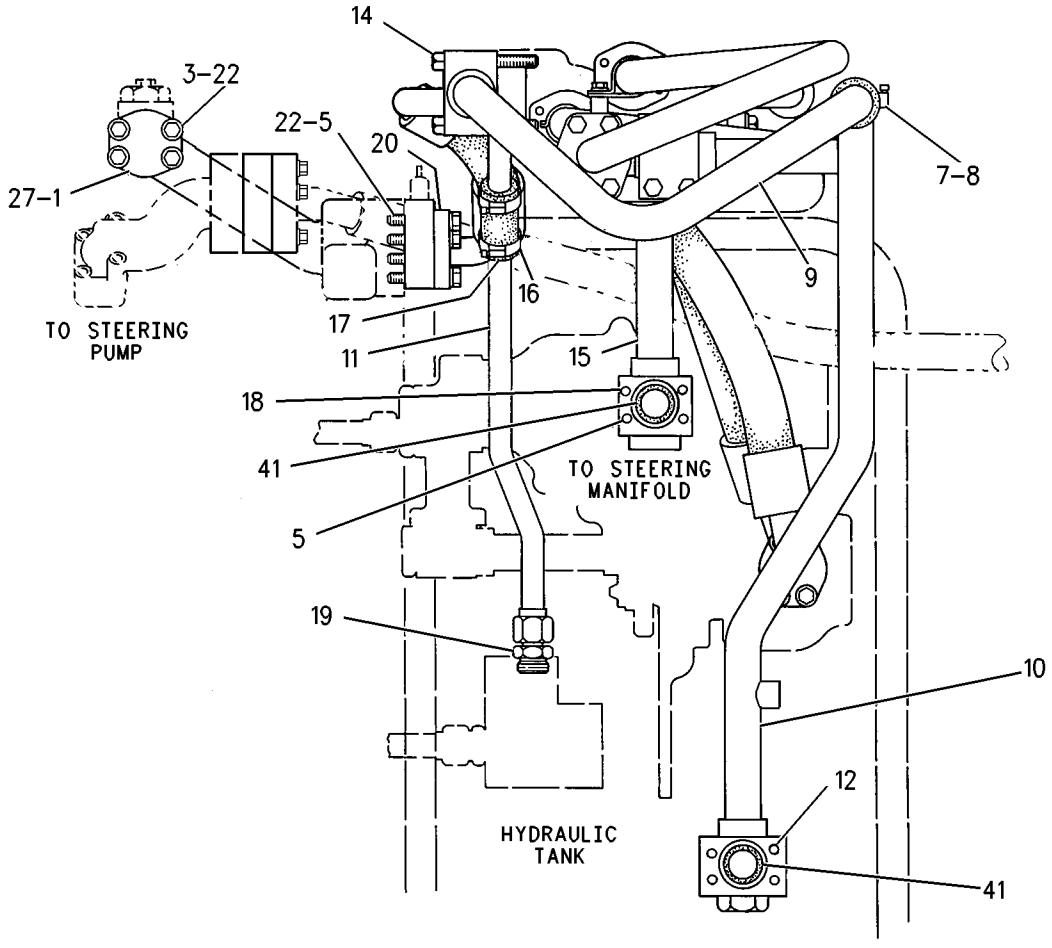

RIGHT SIDE VIEW

GRAPHIC #1 g00644227

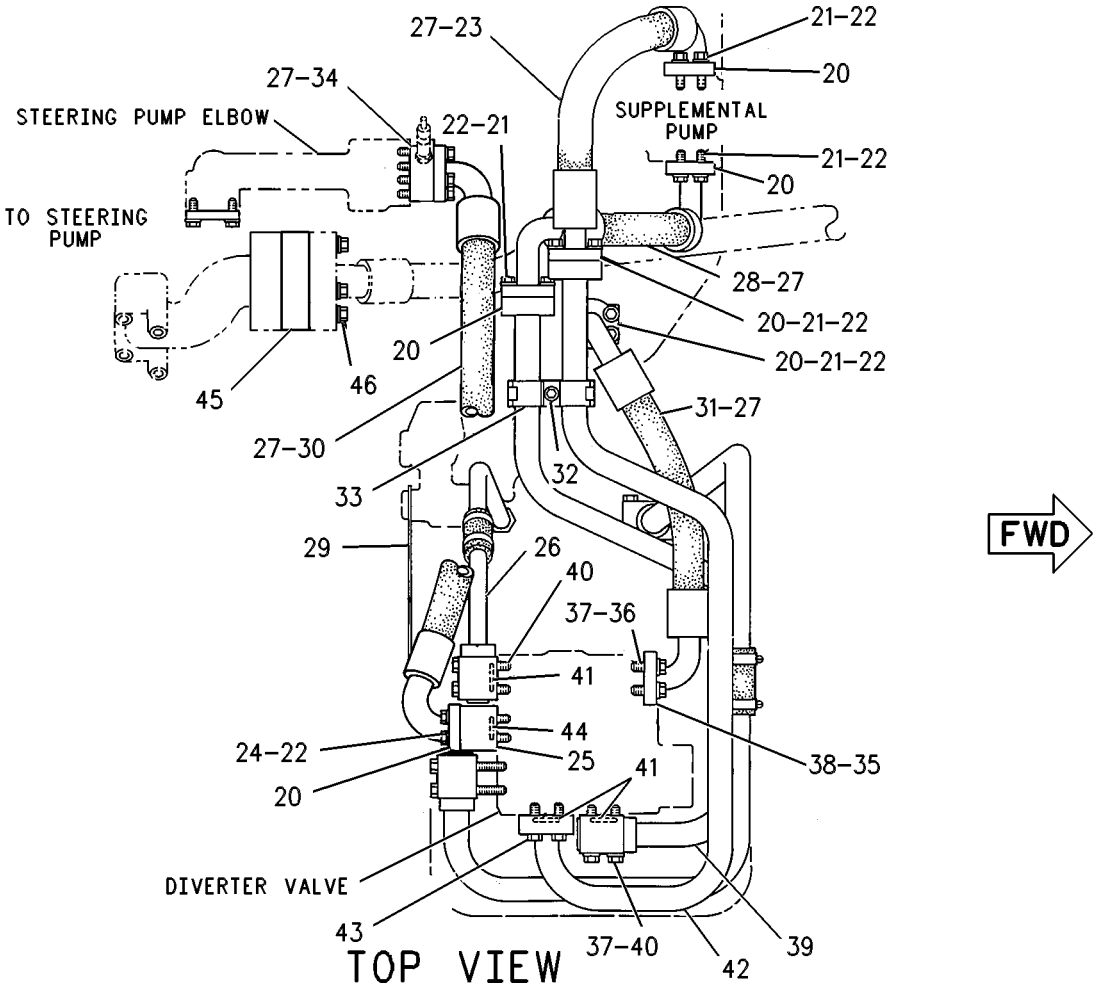

GRAPHIC #2

g00396617

MEMORANDA

STEERING SYSTEM

9U-2112 LINES GP-SECONDARY STEERING

S/N: 3XJ1-99999

PART OF 9U-4714 STEERING AR-SECONDARY

AN ATTACHMENT

SMCS-4304 **i01047368**

NOTE	REF NO	GRAPHIC REF	PART NUMBER	QTY	PART NAME 1 2 3 4 5 6 (PRODUCT LEVEL)	SEE PAGE
	1	1	**5H-2068**	1	COVER	
	2	1	**4J-0522**	1	SEAL-O-RING (37.69MM ID)	
	3	1	**8T-9382**	4	BOLT (7/16-14X1.25IN)	
	4	1	**8T-5360**	8	WASHER (2.5MM THK)	
	5	1	**7X-0313**	6	BOLT (7/16-14X2.75IN)	
	6	1	**1P-4578**	2	FLANGE-HALF	
	7	1	**8T-6703**	2	CLAMP-HOSE	
E	8	1	**5P-1291**		HOSE (11CM)	
	9	1	**6C-8863**	1	TUBE AS	
		1	**9S-8010**	1	PLUG-O-RING (1 5/8-12 THD)	
		1	**2S-4078**	1	SEAL-O-RING (37.46MM ID)	
	10	1	**137-1727**	1	TUBE AS	
	11	1	**9S-6130**	1	PLUG-O-RING (1-5/8-12 THD)	
		1	**2S-4078**	1	SEAL-O-RING (37.46MM ID)	
	12	1	**8T-8920**	4	BOLT (1/2-13X3.25IN)	
	13	1	**1P-3705**	3	SEAL-RECTANGULAR (44.7MM ID)	
	14	1	**6V-4432**	4	BOLT (1/2-13X4IN)	
	15	1	**5V-0780**	1	TUBE AS	
		1	**6V-0423**	1	PLUG	
	16	1	**8T-4983**	2	CLAMP-HOSE	
E	17	1	**5P-2094**		HOSE (9CM)	
	18	1	**7X-0322**	2	BOLT (7/16-14X6IN)	
	19	1	**6V-8635**	1	CONNECTOR-SEAL	
		1	**7M-8485**	1	SEAL-O-RING (29.74MM ID)	
		1	**5K-9090**	1	SEAL-O-RING (23.52MM ID)	
	20	1	**9C-2420**	1	TUBE AS	
	21	1	**9S-4185**	1	PLUG-O-RING (3/4-16 THD)	
		1	**3K-0360**	1	SEAL-O-RING (16.36MM ID)	
	22	1	**6D-4246**	1	CLIP	
	23	2	**1P-4578**	12	FLANGE-HALF	
	24	2	**8T-8916**	20	BOLT (7/16-14X1.5IN)	
	25	2	**8T-5360**	24	WASHER (2.5MM THK)	
I	26	2	**5V-0776**	1	HOSE AS	
	27	2	**7X-0317**	4	BOLT (7/16-14X3.75IN)	
	28	2	**6W-0147**	1	SPACER	
	29	2	**5V-0779**	1	TUBE AS	
		2	**9S-8008**	1	PLUG-O-RING (1 1/16-12 THD)	
		2	**3D-2824**	1	SEAL-O-RING (23.47MM ID)	
	30	2	**4J-0522**	8	SEAL-O-RING (37.69MM ID)	
I	31	2	**7I-3415**	1	HOSE AS	
	32	2	**1P-3704**	1	SEAL-RECTANGULAR (38.2MM ID)	
I	33	2	**107-2435**	1	HOSE AS	
I	34	2	**5V-0791**	1	HOSE AS	
	35	2	**4L-9337**	1	BOLT (3/8-16X1.5IN)	
		2	**8T-4896**	1	WASHER-HARD (2.5MM THK)	
		2	**1L-1486**	1	SPACER	
	36	2	**7S-8920**	2	CLIP (SLOT)	
		2	**7S-8921**	2	CLIP (TAB)	
	37	2	**7V-8532**	1	SPACER	
	38	2	**4J-0524**	1	SEAL-O-RING (47.22MM ID)	
	39	2	**5P-2566**	4	BOLT (1/2-13X1.50IN)	
	40	2	**8T-4223**	8	WASHER-HARD (3MM THK)	
	41	2	**1P-4579**	2	FLANGE-HALF	
	42	2	**9U-2113**	1	TUBE AS	
		2	**9S-8010**	1	PLUG-O-RING (1 5/8-12 THD)	

9U-2112 LINES GP-SECONDARY STEERING *(contd.)* i01047368

NOTE	REF NO	GRAPHIC REF	PART NUMBER	QTY	PART NAME 1 2 3 4 5 6 (PRODUCT LEVEL)	SEE PAGE
		2	**2S-4078**	1	SEAL-O-RING (37.46MM ID)	
	43	2	**7X-0326**	8	BOLT	
	44	2	**1P-3705**	3	SEAL-RECTANGULAR (44.7MM ID)	
	45	2	**6C-8865**	1	TUBE AS	
	46	2	**8T-8919**	4	BOLT (1/2-13X1.75IN)	

E-ORDER BY THE CENTIMETER
I-SEE HOSE FABRICATION GUIDE

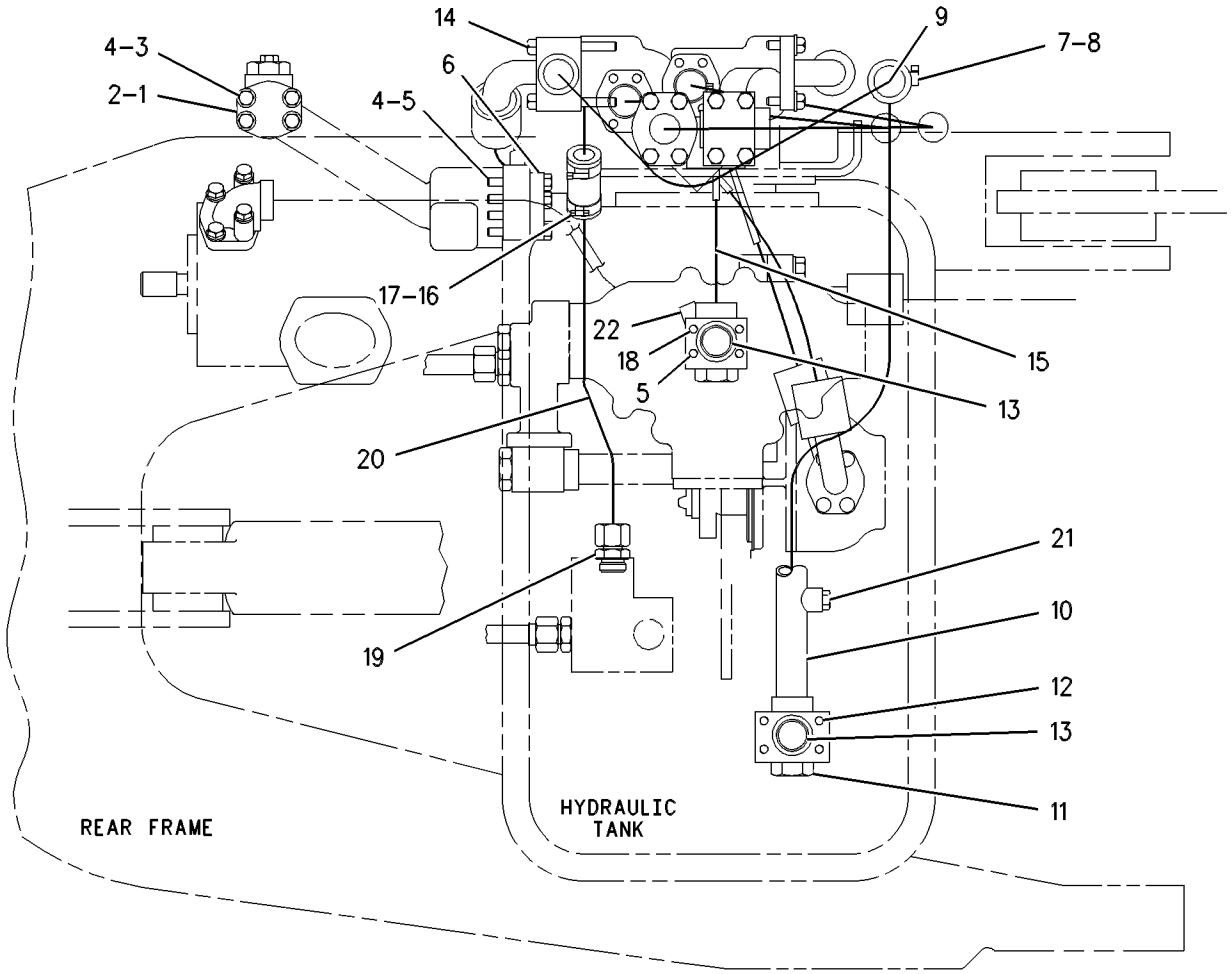

RIGHT SIDE VIEW

GRAPHIC #1 g00399330

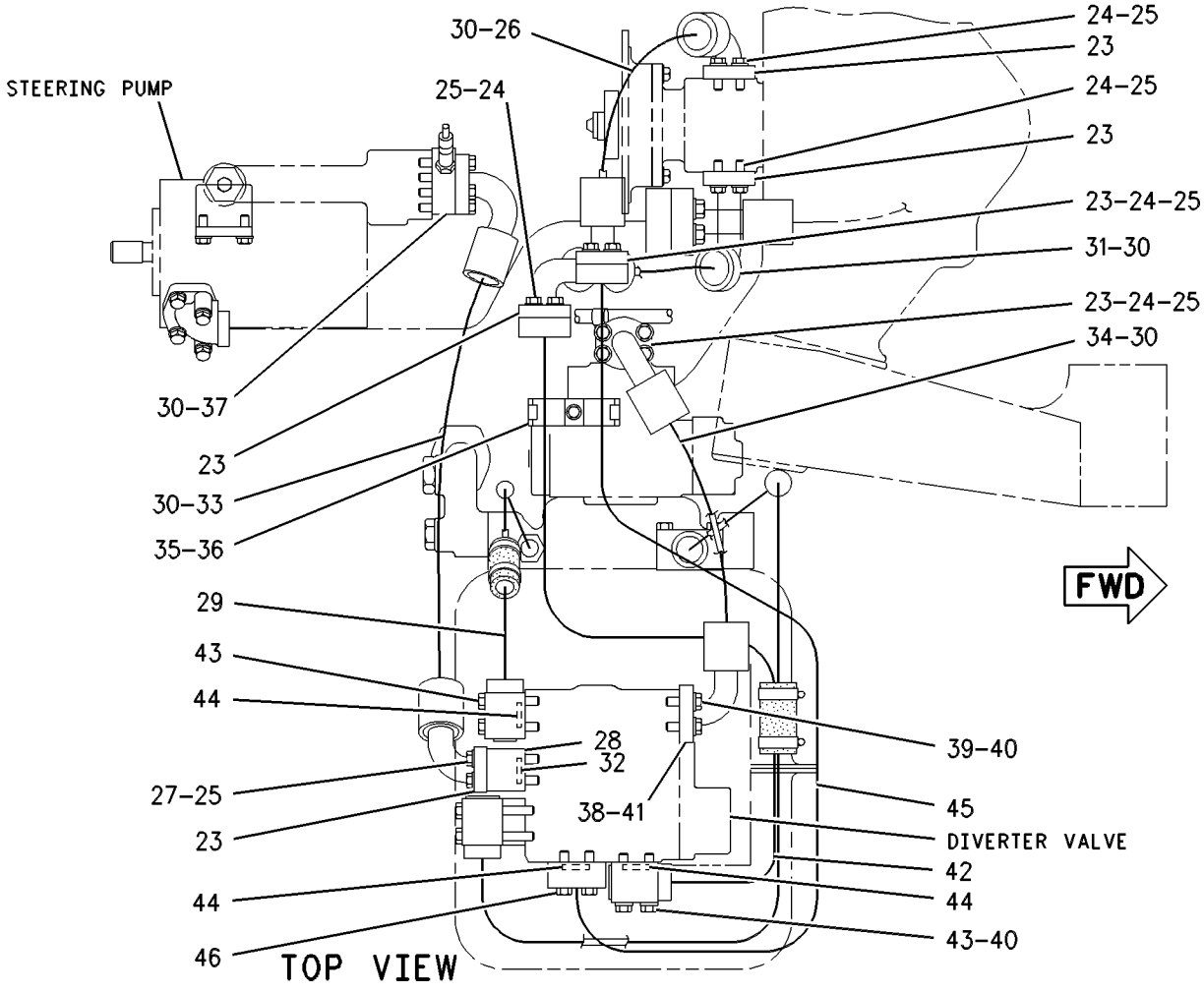

GRAPHIC #2 g00399331

MEMORANDA

STEERING SYSTEM

4E-5826 LINES GP-STEERING

S/N: 3XJ1-99999

SMCS-4304 **i01315826**

NOTE	REF NO	GRAPHIC REF	PART NUMBER	QTY	PART NAME 1 2 3 4 5 6 (PRODUCT LEVEL)	SEE PAGE
	1	1,2	**3K-0360**	7	SEAL-O-RING (16.36MM ID)	
	2	1,2	**6V-8397**	16	SEAL-O-RING (9.27MM ID)	
	3	1	**6V-8634**	4	CONNECTOR-SEAL (ORFS 11/16-16; PORT 9/16-18)	
I	4	1	**9C-2365**	2	HOSE AS	
I	5	1	**9C-2362**	1	HOSE AS	
	6	1	**4L-6454**	2	BOLT (3/8-16X1 IN)	
	7	1,2	**8T-4896**	28	WASHER-HARD (10.2X18.5X2.5MM THK)	
I	8	1	**9C-2361**	1	HOSE AS	
	9	1	**7X-0820**	1	TEE-UNION ORIFICE	
	10	1,2	**6V-9168**	4	NUT (11/16-16 THD)	
	11	1,2	**8T-9358**	1	CONNECTOR	
	12	1	**3J-1907**	9	SEAL-O-RING (11.89MM ID)	
	13	1	**6V-0852**	2	CAP-DUST	
	14	1	**6V-3965**	2	FITTING AS	
	15	1,2	**6V-8724**	2	ELBOW-90 DEGREE (9/16-18 THD)	
I	16	1	**9C-2355**	2	HOSE AS	
	17	1	**9C-2372**	1	PLATE	
Y	18	1	**9J-9330**	1	VALVE GP-STEERING	
	19	1	**7X-0319**	3	BOLT (7/16 X 14 X 4.25IN)	
	20	1,2	**8T-5360**	19	WASHER (2.5MM THK)	
	21	1	**9C-2367**	1	TUBE AS	
	22	1	**6V-9849**	2	ELBOW-SWIVEL (9/16-18 THD)	
	23	1	**1J-9671**	3	SEAL-O-RING (10.52MM ID)	
	24	1	**8T-6988**	3	CONNECTOR	
	25	1,2	**4J-5477**	10	SEAL-O-RING (8.61MM ID)	
	26	1,2	**7X-0326**	8	BOLT (1/2-13X3IN)	
	27	1	**8T-4223**	4	WASHER-HARD (3MM THK)	
	28	1,2	**1P-3705**	3	SEAL-RECTANGULAR (44.7MM ID)	
	29	1	**5P-5777**	1	ADAPTER-O-RING	
		1	**7M-8485**	1	SEAL-O-RING (29.74MM ID)	
	30	1,2	**6V-8625**	2	ELBOW-90 DEGREE (3/4-16 THD)	
	31	1,2	**6V-8398**	11	SEAL-O-RING (12.47MM ID)	
I	32	1	**9C-2363**	1	HOSE AS	
	33	1	**6V-9746**	4	SEAL-O-RING (18.94MM ID)	
	34	1,2	**3D-2824**	5	SEAL-O-RING (23.47MM ID)	
	35	1	**6V-9007**	2	ELBOW-90 DEGREE (1 1/16-12 THD)	
I	36	1	**9C-2358**	1	HOSE AS	
I	37	1	**4E-5786**	1	HOSE AS	
I	38	1	**4V-7472**	1	HOSE AS	
	39	1,2	**7X-0308**	6	BOLT (7/16-14X1.375IN)	
	40	1,2	**1P-4578**	4	FLANGE-HALF	
	41	1,2	**4J-0522**	4	SEAL-O-RING (37.69MM ID)	
	42	1	**8J-5914**	1	PLUG-O-RING (9/16-18 THD)	
		1	**2S-4078**	1	SEAL-O-RING (37.46MM ID)	
	43	1	**7V-1779**	1	ELBOW	
		1	**4J-5573**	1	SEAL-O-RING (40.87MM ID)	
	44	1	**7X-0315**	4	BOLT (7/16-14X3.25IN)	
	45	1	**5H-2068**	1	COVER	
	46	1	**8T-9382**	4	BOLT (7/16-14X1.25IN)	
	47	1	**8T-6895**	1	TEE-UNION ORIFICE	
	48	1	**6V-8936**	1	REDUCER	
	49	1	**8T-0130**	2	ELBOW-BULKHEAD	
	50	1	**9C-2366**	1	TUBE AS	
	51	1	**9C-2370**	1	TUBE AS	
	52	1	**6V-9835**	1	TEE	
	53	1	**9C-2368**	1	TUBE AS	
	54	1	**9C-2369**	1	TUBE AS	

4E-5826 LINES GP-STEERING *(contd.)* i01315826

NOTE	REF NO	GRAPHIC REF	PART NUMBER	QTY	PART NAME 1 2 3 4 5 6 (PRODUCT LEVEL)	SEE PAGE
	55	1	**5P-2955**	1	BOLT (5/16-18X2.50 IN)	
		1	**7V-6234**	2	PLATE	
		1	**9V-8409**	4	CLAMP	
I	56	1	**9C-2359**	1	HOSE AS	
I	57	1	**9C-2360**	1	HOSE AS	
	58	1	**6V-8637**	2	CONNECTOR-SEAL	
	59	1	**4L-6459**	6	BOLT (3/8-16X2.5IN)	
Y	60	1	**8J-1553**	2	VALVE GP-STEERING NEUTRALIZER	
	61	1	**9X-2399**	2	BOLT-FLAT HEAD (1/2-13X3.14IN)	
	63	1	**1D-5117**	2	NUT-JAM (1/2-13 THD)	
I	64	1	**9C-2364**	1	HOSE AS	
	65	1	**8T-6876**	2	ELBOW-ORFS (9/16-18 THD)	
	66	1	**8T-1905**	2	ELBOW-90 DEGREE (11/16-18 THD)	
	67	1	**8T-0788**	1	ELBOW-90 DEGREE	
	68	1	**8T-6663**	1	ADAPTER-PORT	
	69	1	**4M-6424**	1	BOLT (3/8-16X.750IN)	
Y	70	2	**9T-1206**	1	VALVE GP-MAKEUP	
	71	2	**8T-9101**	8	BOLT (3/8-16X2.75IN)	
	72	2	**9S-4183**	1	PLUG (1 1/16-12 THD)	
	73	2	**7H-3472**	2	BOLT (7/16-14X4.75IN)	
	74	2	**6V-9169**	1	NUT-BULKHEAD (13/16-16 THD)	
	75	2	**6V-8639**	1	CONNECTOR-SEAL	
I	76	2	**9C-2356**	1	HOSE AS	
	77	2	**6V-8787**	1	TEE-FACE SEAL	
	78	2	**6V-9851**	1	ELBOW-90 DEGREE SWIVEL (13/16-16 THD)	
	79	2	**7X-0314**	4	BOLT (7/16-14X3IN)	
	80	2	**4V-7476**	1	TUBE AS	
I	81	2	**9C-2371**	1	HOSE AS	
	82	2	**1P-4576**	8	FLANGE	
	83	2	**4J-5267**	6	SEAL-O-RING (24.99MM ID)	
	84	2	**4V-7478**	1	ELBOW	
	85	2	**4V-2475**	1	MANIFOLD	
		2	**4J-0519**	2	SEAL-O-RING (31.34MM ID)	
	86	2	**5S-7382**	8	BOLT (3/8-16X1.375 IN)	
	92	2	**7X-0290**	4	BOLT (3/8-16X3.50IN)	

I-SEE HOSE FABRICATION GUIDE
Y-SEPARATE ILLUSTRATION

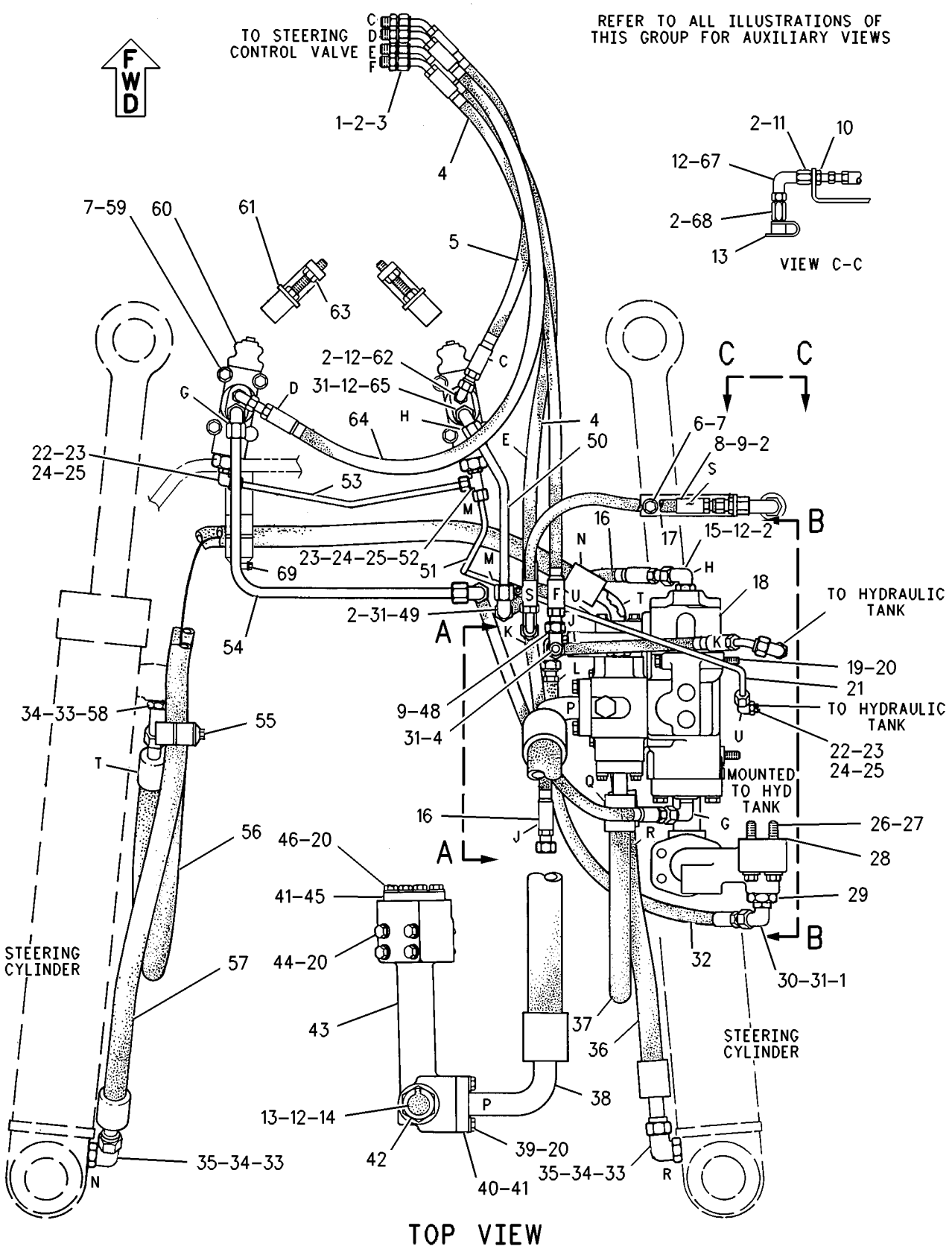

TOP VIEW

GRAPHIC #1 g00697098

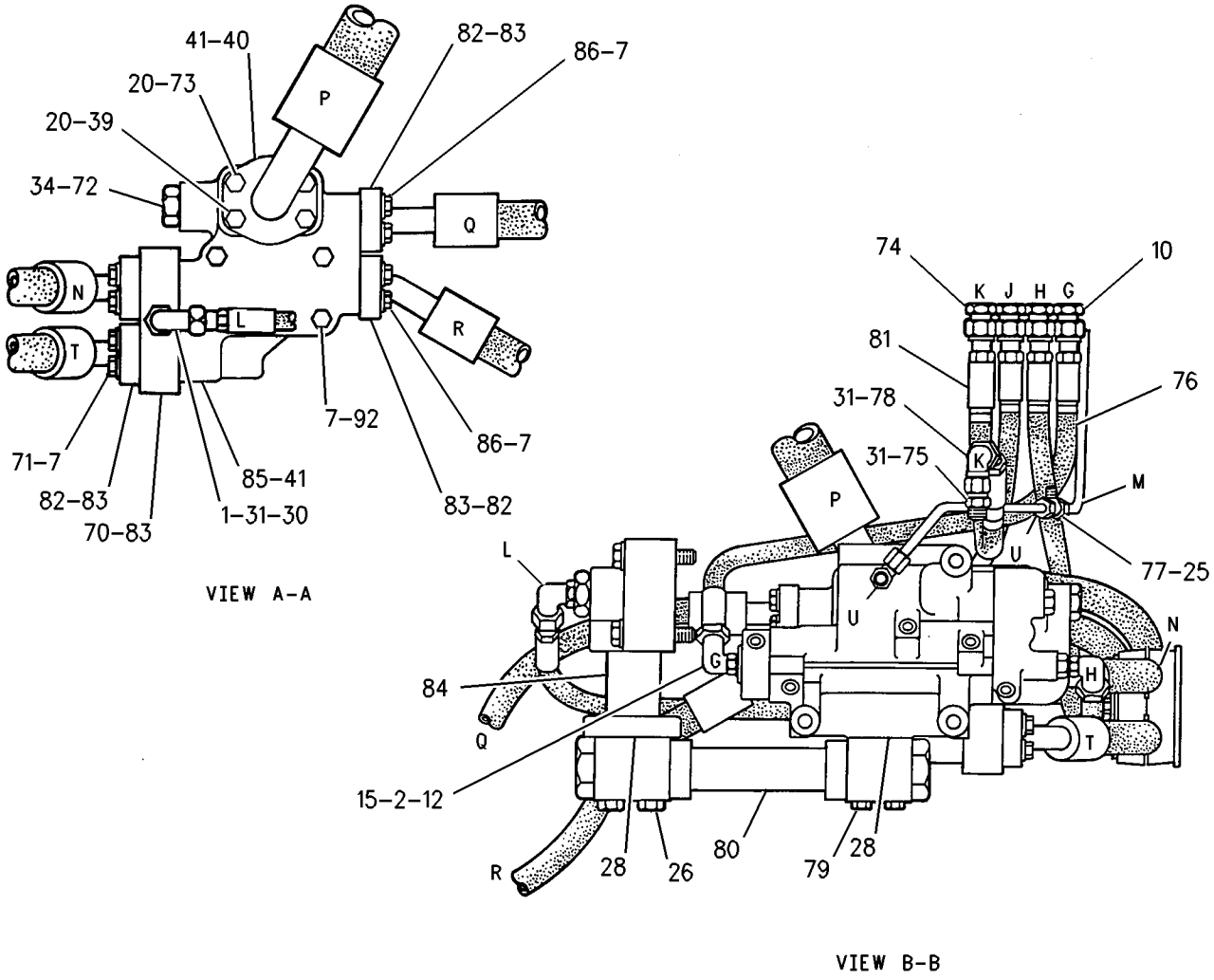

GRAPHIC #2 g00697101

5V-0397 PUMP & MTG GP-SECONDARY STEER

S/N: 3XJ1-99999

PART OF 8R-8392, 8R-9522, 9U-4714 STEERING AR-SECONDARY

AN ATTACHMENT

SMCS-4324 **i01328200**

NOTE	REF NO	GRAPHIC REF	PART NUMBER	QTY	PART NAME 1 2 3 4 5 6 (PRODUCT LEVEL)	SEE PAGE
	1	1	**8T-2502**	1	BOLT (3/8-16X1.125 IN)	
		1	**9L-4685**	1	LOCK	
		1	**8T-4896**	1	WASHER-HARD (10.2X18.5X2.5MM THK)	
	2	1	**5V-0575**	1	COUPLING	
	3	1	**8M-1280**	1	GASKET	
Y	4	1	**3G-9891**	1	PUMP GP-SECONDARY STEERING	
	5	1	**8C-4436**	2	BOLT (1/2-13X1.375 IN)	
		1	**7X-0584**	2	WASHER-HARD (2MM THK)	

Y-SEPARATE ILLUSTRATION

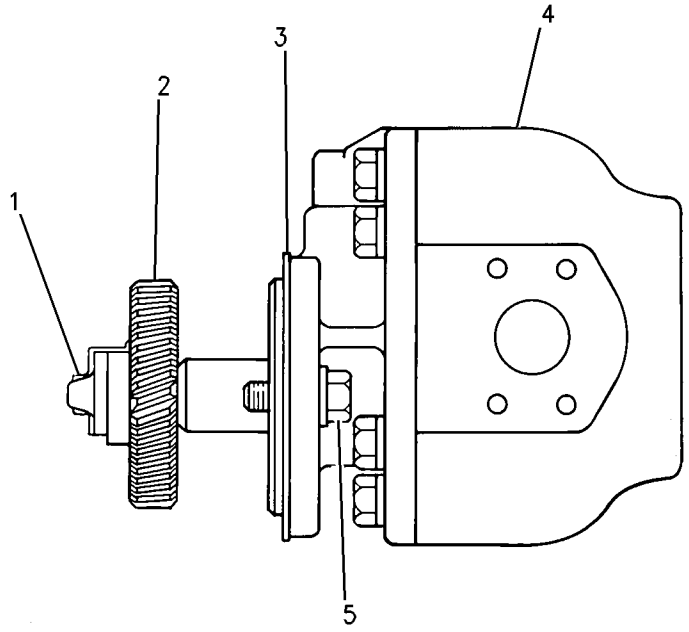

GRAPHIC #1 g00702530

6C-0570 PUMP GP-METERING—STEERING

S/N: 3XJ1-99999

PART OF 9T-0153 PUMP GP-METERING

SMCS-4312 **i01326271**

NOTE	REF NO	GRAPHIC REF	PART NUMBER	QTY	PART NAME 1 2 3 4 5 6 (PRODUCT LEVEL)	SEE PAGE
	1	1	**6C-0019**	1	PIN-ROLL	
	2	1	**6C-0022**	1	BUSHING-TERMINAL	
	3	1	**6C-0018**	1	BOLT	
	4	1	**6C-0023**	1	CAP	
	5	1	**6C-0016**	1	SPACER	
	6	1	**6C-0012**	1	DRIVE-CONTROL	
	7	1	**6C-0017**	6	BOLT	
	8	1	**6C-0020**	7	WASHER	
	9	1	**6C-0024**	1	GEROTOR AS	
	10	1	**6C-0011**	1	SPACER	
	11	1	**6C-0014**	1	PIN	
	12	1	**6C-0015**	1	BEARING	
	13	1	**6C-0021**	1	BALL	
					AVAILABLE REPAIR KIT(S):	
C			**6C-0025**	1	KIT-SEAL	
					(INCLUDES SEALS AND SPRINGS)	

C-CHANGE FROM PREVIOUS TYPE

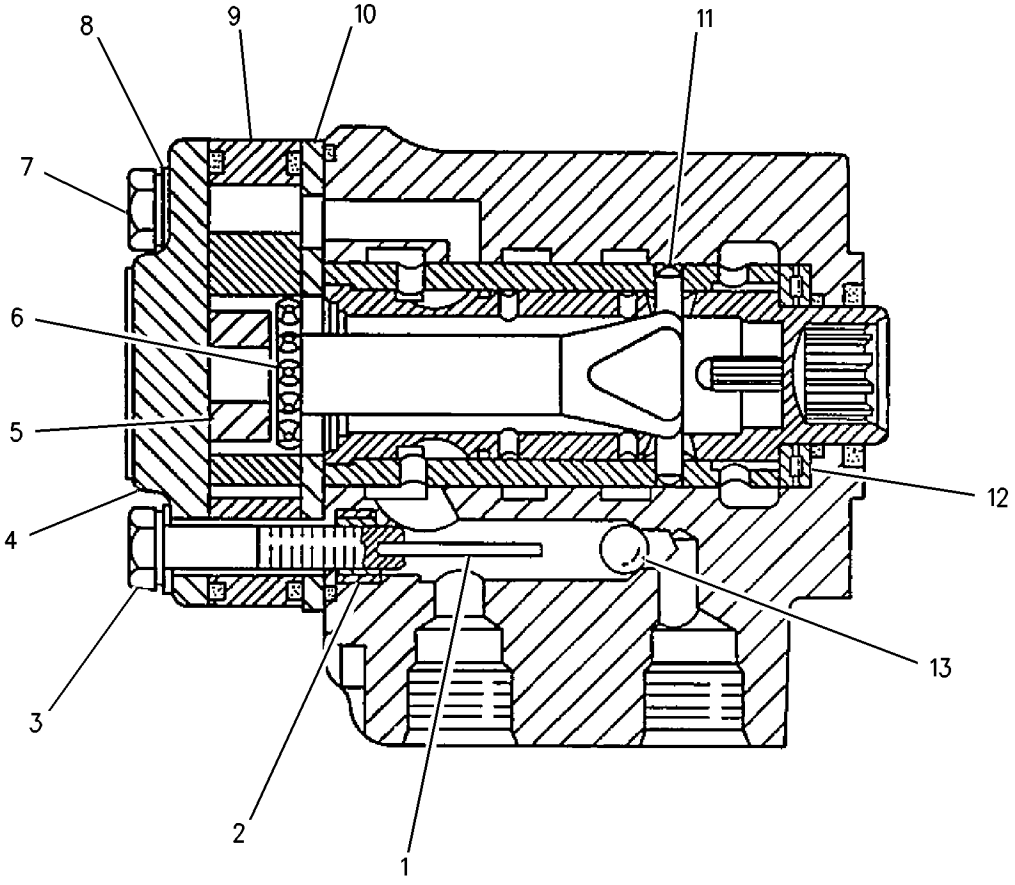

GRAPHIC #1 g00701870

STEERING SYSTEM

9T-0153 PUMP GP-METERING

S/N: 3XJ1-99999

PART OF 8R-8785 CONTROL GP-STEERING

SMCS-4312 **i00259863**

NOTE	PART NUMBER	QTY	PART NAME 1 2 3 4 5 6 (PRODUCT LEVEL)	SEE PAGE
	030-8188	4	CONNECTOR-FLARED	
Y	**6C-0570**	1	PUMP GP-METERING	
	3K-0360	4	SEAL-O-RING (16.36MM ID)	

Y-SEPARATE ILLUSTRATION

MEMORANDA

3G-9891 PUMP GP-SECONDARY STEERING

S/N: 3XJ1-99999

PART OF 5V-0397 PUMP & MTG GP-SECONDARY STEER

AN ATTACHMENT

SMCS-4324 **i01326899**

NOTE	REF NO	GRAPHIC REF	PART NUMBER	QTY	PART NAME 1 2 3 4 5 6 (PRODUCT LEVEL)	SEE PAGE
	1	1	**9T-1257**	1	SHAFT-DRIVE	
	2	1	**008-3214**	1	RING-RETAINING (INTERNAL)	
	3	1	**3J-1907**	1	SEAL-O-RING (11.89MM ID)	
	4	1	**4T-9218**	1	GEAR (14 TEETH)	
	5	1	**6J-2386**	2	DOWEL	
	6	1	**9T-2842**	1	FLANGE AS	
	7	1	**9T-1277**	2	PLATE-PRESSURE	
	8	1	**9T-1280**	1	BODY AS	
	9	1	**4T-9298**	4	BUSHING-TERMINAL	
	10	1	**9T-1297**	2	PLATE-ISOLATION	
	11	1	**9S-4191**	1	PLUG-O-RING (9/16-18 THD)	
	12	1	**6V-1899**	2	SEAL-LIP	
	13	1	**077-4643**	2	PLATE-ISOLATION	
	14	1	**0S-1595**	8	BOLT (1/2-13X1.25 IN)	
		1	**5P-7213**	8	WASHER-HARD (2MM THK)	
	15	1	**9T-1437**	1	KIT-PLUG	
					AVAILABLE REPAIR KIT(S):	
			1U-2772	1	KIT-SEAL	
					(INCLUDES RINGS, SEALS, PLUG & SEPARATORS)	

3G-9891 PUMP GP-SECONDARY STEERING *(contd.)* i01326899

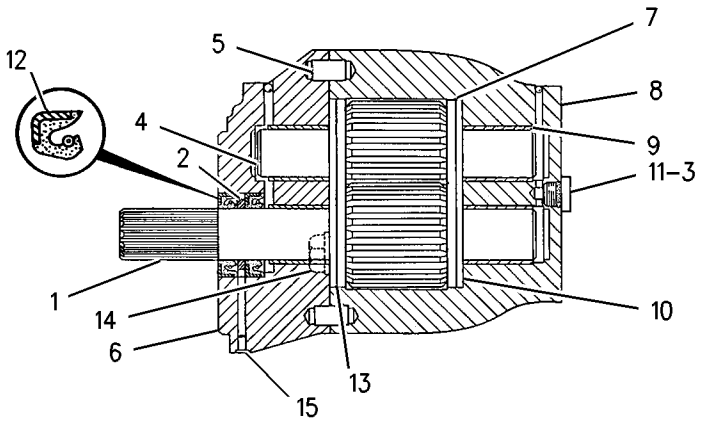

GRAPHIC #1 g00702002

STEERING SYSTEM

8R-8392 STEERING AR-SECONDARY

S/N: 3XJ1-99999

AN ATTACHMENT

SMCS-4300 **i00259750**

NOTE	PART NUMBER	QTY	PART NAME 1 2 3 4 5 6 (PRODUCT LEVEL)	SEE PAGE
	9X-5682	1	FILM	
			-OR-	
	3E-5201	1	FILM-CMS	
Y	*9C-1085*	1	LINES GP-SECONDARY STEERING	
Y	*5V-0397*	1	PUMP & MTG GP-SECONDARY STEER	
Y	*5V-0820*	1	VALVE & MTG GP-DIVERTER	
Y	*8R-9524*	1	WIRING GP-SECONDARY STEERING	

Y-SEPARATE ILLUSTRATION

STEERING SYSTEM

8R-9522 STEERING AR-SECONDARY

S/N: 3XJ1-99999
GERMAN MARKET
PART OF 6C-3651 CONTROL AR-STEERING & BRAKE
AN ATTACHMENT

SMCS-4300 **i01309909**

NOTE	PART NUMBER	QTY	PART NAME 1 2 3 4 5 6 (PRODUCT LEVEL)	SEE PAGE
	5P-4588	1	ADAPTER-O-RING	
	8T-6663	1	ADAPTER-PORT	
	5P-9808	1	ELBOW-O-RING	
	3E-5204	1	FILM-CMS	
Y	*9C-1085*	1	LINES GP-SECONDARY STEERING	
Y	*5V-0397*	1	PUMP & MTG GP-SECONDARY STEER	
	3J-1907	1	SEAL-O-RING (11.89MM ID)	
Y	*5V-0820*	1	VALVE & MTG GP-DIVERTER	
	8J-8796	1	VALVE GP-CHECK	
Y	*8R-9525*	1	WIRING GP-SECONDARY STEERING	

Y-SEPARATE ILLUSTRATION

9U-4714 STEERING AR-SECONDARY

S/N: 3XJ1-99999

AN ATTACHMENT

SMCS-4300 **i01320602**

NOTE	PART NUMBER	QTY	PART NAME 1 2 3 4 5 6 (PRODUCT LEVEL)	SEE PAGE
	3E-5201	1	FILM-CMS	
Y	*9U-2112*	1	LINES GP-SECONDARY STEERING	
Y	*5V-0397*	1	PUMP & MTG GP-SECONDARY STEER	
Y	*5V-0820*	1	VALVE & MTG GP-DIVERTER	
Y	*8R-9524*	1	WIRING GP-SECONDARY STEERING	

Y-SEPARATE ILLUSTRATION

MEMORANDA

STEERING SYSTEM

6C-4303 STEERING COLUMN GP-ADJUSTABLE

S/N: 3XJ1-99999

PART OF 8R-5041 OPERATOR AR

SMCS-4338 **i01190907**

NOTE	REF NO	GRAPHIC REF	PART NUMBER	QTY	PART NAME 1 2 3 4 5 6 (PRODUCT LEVEL)	SEE PAGE
	1	1	**4V-6389**	1	PLATE AS	
		1	**1M-1744**	1	SPACER	
		1	**9F-2978**	2	NUT-WELD (3/8-16 THD)	
	2	1	**4V-6393**	1	SUPPORT	
	3	1,2	**6J-0488**	4	SCREW-HEAD (3/8-16X.875IN)	
	4	1	**2S-0987**	2	DOWEL	
	5	1	**4V-6394**	1	LEVER	
	6	1	**0T-0278**	1	SPRING	
	7	1	**4V-5102**	1	SHAFT-GOVERNOR CONTROL	
	9	1	**4V-6391**	1	BOSS	
	10	1	**7V-2744**	1	CAP	
	11	1	**3V-0356**	1	HOUSING	
	12	1	**3V-0170**	1	SHROUD	
	13	1	**5S-7382**	1	BOLT (3/8 X 16 X 1.375 IN)	
	14	1	**8V-1190**	1	PLATE AS	
		1	**9F-6445**	2	NUT-WELD (1/4-20 THD)	
	15	1	**4V-1486**	1	PLATE	
	16	1	**8T-2501**	2	BOLT (3/8-16X2.0IN)	
	17	1	**8T-4896**	4	WASHER-HARD (2.5MM THK)	
	18	1	**3V-7690**	1	BRACKET AS	
	19	1	**3V-0417**	1	SHROUD	
	20	1	**5P-4115**	2	WASHER (2MM THK)	
	21	1,2	**6V-8801**	3	NUT (3/8-16 THD)	
	22	2	**8F-7702**	1	SEAL-LIP (19.05MM ID)	
	23	2	**9F-7882**	1	PIN-SPRING	
	24	1	**8K-4112**	4	NUT-RETAINER	
	25	1	**1H-3337**	4	BOLT (1/4-20X.875IN)	
	26	1	**3V-0582**	1	BOOT	
	27	1	**4L-6454**	6	BOLT (3/8-16X1 IN)	
	28	1	**5P-1075**	12	WASHER-HARD (3MM THK)	
	29	1	**2V-9174**	2	BRACKET	
	30	1	**1K-6872**	4	LOCKNUT (1/2-13 THD)	
	31	1	**8T-4223**	4	WASHER-HARD (3MM THK)	
	32	1	**5V-1202**	2	BEARING	
	33	1	**4L-9337**	4	BOLT (3/8-16X1.5IN)	
	34	1	**4B-4276**	4	WASHER (1.6MM THK)	
	35	1	**3V-8686**	2	PLATE	
	36	1	**3V-0153**	1	SHROUD	
	37	1	**5S-7383**	2	BOLT (3/8-16X1.75IN)	
	38	1	**4M-5281**	2	BOLT (1/4-20X.750IN)	
	39	1	**6W-0251**	1	COLUMN AS	
	40	1	**5V-7610**	1	NUT (3/8-16 THD)	
BD	41	2	**5P-5901**		SEAL	
	42	2	**5L-4041**	4	BOLT-12 POINT HEAD (1/4-20X1.5IN)	
	43	1	**6C-3956**	1	SHEET AS	
		1	**8W-4677**	1	BLOCK	
		1	**1F-0750**	6	NUT-WELD (3/8-16 THD)	
		1	**4M-1217**	4	STUD-WELD	
		1	**6K-2198**	4	BOSS	
		1	**9F-6445**	6	NUT-WELD (1/4-20 THD)	
		1	**4K-9097**	6	NUT-WELD (5/16-18 THD)	
		1	**7T-1099**	2	LINK	
	44	1,2	**4V-6981**	9	SCREW-BUTTON HEAD (1/4-20X.75IN)	
	45	2	**7X-0772**	2	WASHER-HARD (2.5MM THK)	
	46	2	**8T-5070**	1	SETSCREW-SOCKET	
	47	2	**7V-3827**	1	SPRING	

6C-4303 STEERING COLUMN GP-ADJUSTABLE *(contd.)* i01190907

NOTE	REF NO	GRAPHIC REF	PART NUMBER	QTY	PART NAME 1 2 3 4 5 6 (PRODUCT LEVEL)	SEE PAGE
	48	2	**2D-6642**	1	BALL	
	49	2	**9K-6764**	1	KNOB	
	50	2	**5B-9079**	1	NUT-JAM (3/8-24 THD)	
	51	2	**7V-2377**	1	PIN	

B-USE AS REQUIRED
D-ORDER BY THE METER

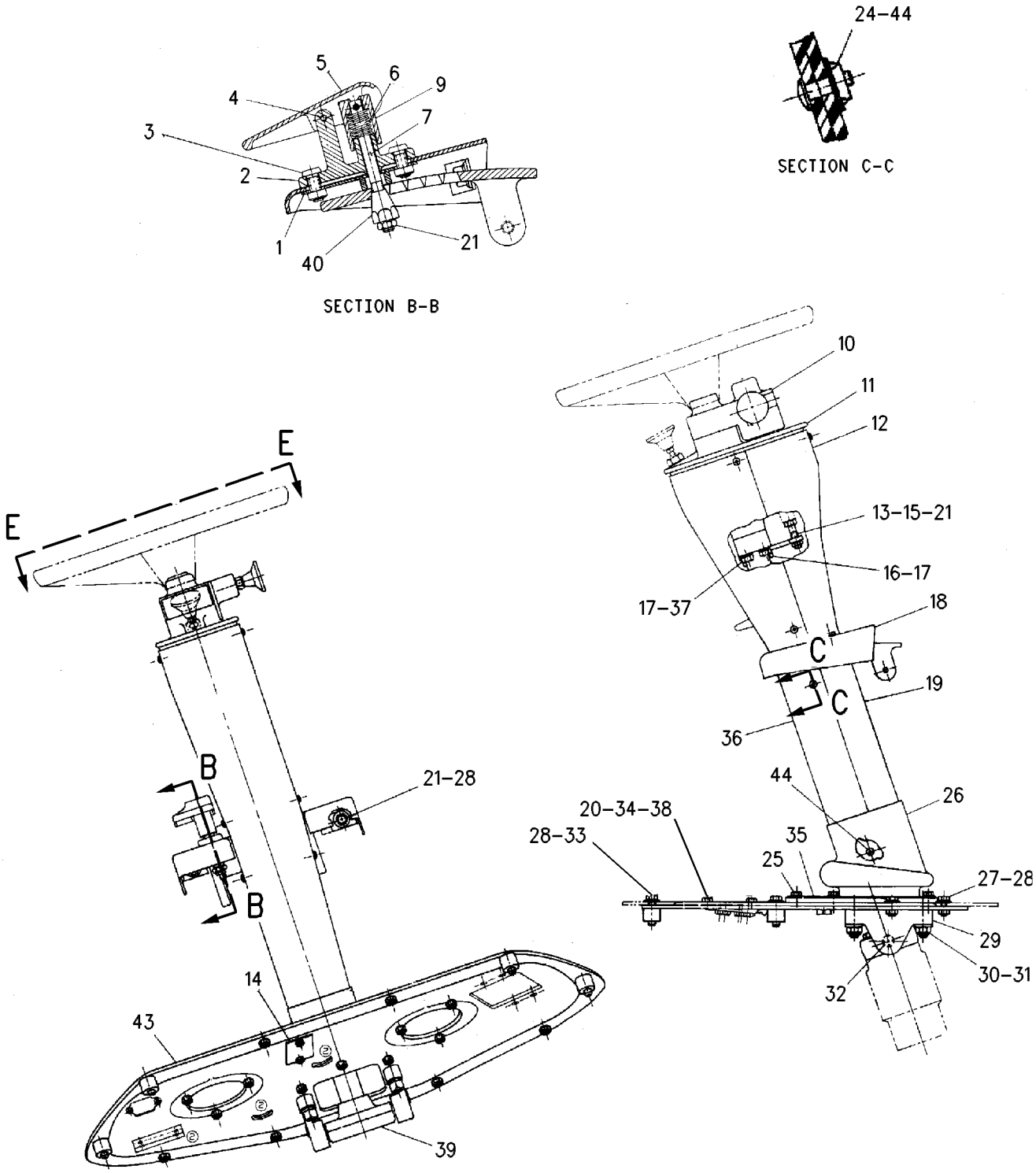

GRAPHIC #1 g00638213

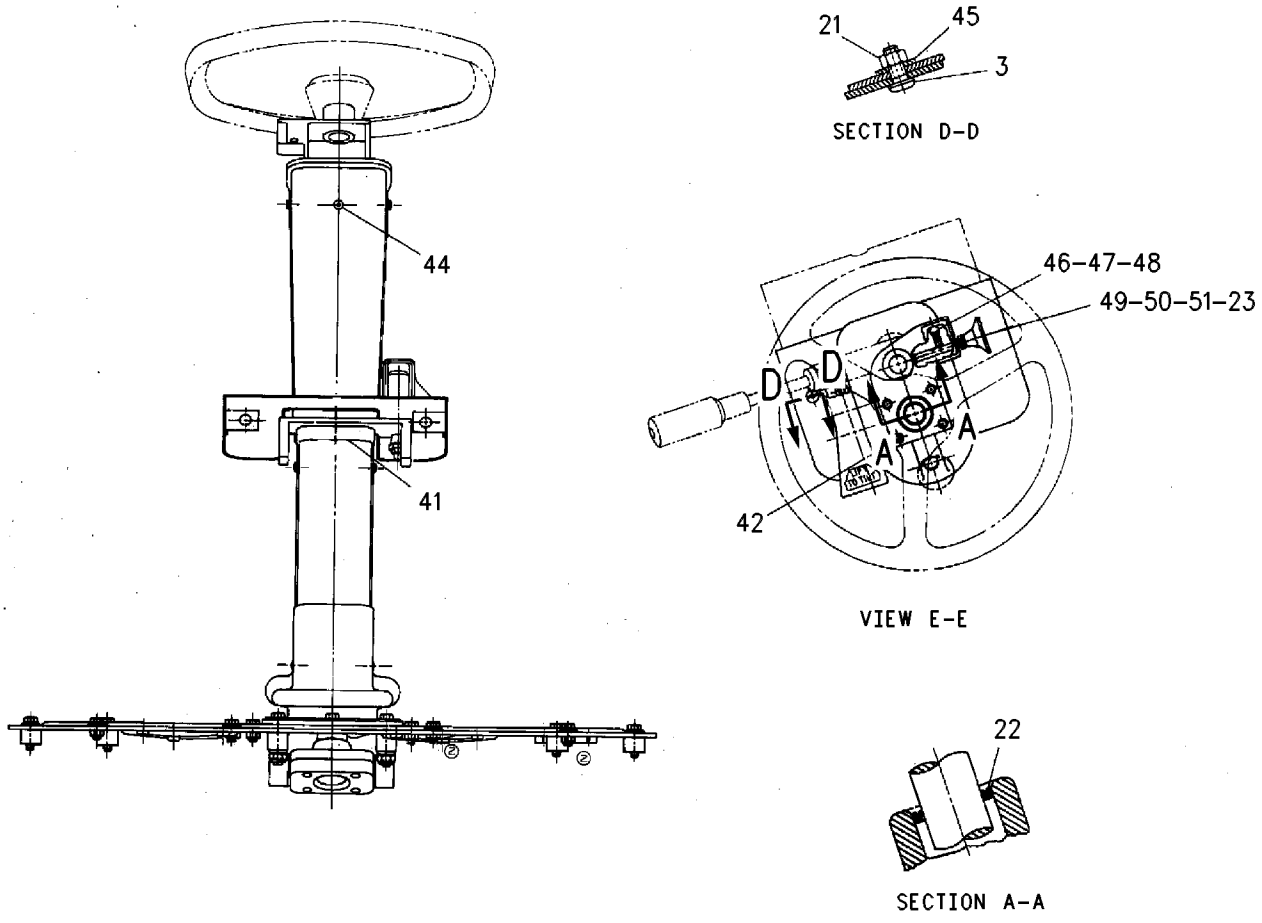

GRAPHIC #2

g00638214

STEERING SYSTEM

5V-0820 VALVE & MTG GP-DIVERTER

S/N: 3XJ1-99999

PART OF 8R-8392, 8R-9522, 9U-4714 STEERING AR-SECONDARY

AN ATTACHMENT

SMCS-4339 **i01328187**

NOTE	REF NO	GRAPHIC REF	PART NUMBER	QTY	PART NAME 1 2 3 4 5 6 (PRODUCT LEVEL)	SEE PAGE
	1	1	**7X-0339**	3	BOLT (1/2-13X6.25 IN)	
		1	**6V-8188**	3	NUT (1/2-13 THD)	
		1	**7X-0584**	3	WASHER-HARD (2MM THK)	
	2	1	**8T-4223**	6	WASHER-HARD (3MM THK)	
	3	1	**3V-7893**	1	PLATE AS	
	4	1	**8T-4835**	3	BOLT (1/2-13X2.0 IN)	
Y	5	1	**9J-9380**	1	VALVE GP-DIVERTER (SECONDARY STEERING)	

Y-SEPARATE ILLUSTRATION

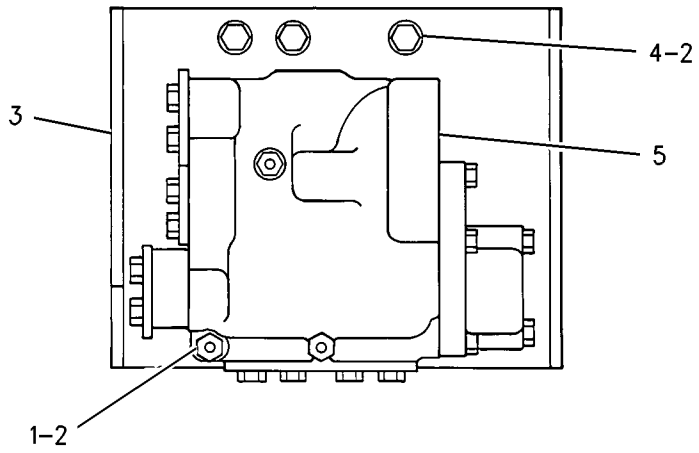

GRAPHIC #1 g00702518

9J-9380 VALVE GP-DIVERTER–SECONDARY STEERING

S/N: 3XJ1-99999
PART OF 5V-0820 VALVE & MTG GP-DIVERTER
AN ATTACHMENT

SMCS-4339 **i01217761**

NOTE	REF NO	GRAPHIC REF	PART NUMBER	QTY	PART NAME 1 2 3 4 5 6 (PRODUCT LEVEL)	SEE PAGE
C	1	1	**0S-1587**	1	BOLT (1/2-13X1.75IN)	
	3	1	**1J-8945**	2	VALVE	
	4	1	**1J-9533**	2	SPRING	
C	5	1	**4J-0525**	3	SEAL-O-RING (50.39MM ID)	
C	6	1	**4J-8997**	1	SEAL-O-RING (28.17MM ID)	
	7	1	**9S-8411**	1	SPRING	
	8	1	**1J-9914**	4	RETAINER-SPRING	
	9	1	**1D-4566**	2	BOLT (1/2-13X3.5IN)	
	10	1	**8J-1701**	1	COVER	
C	11	1	**4J-0524**	2	SEAL-O-RING (47.22MM ID)	
	12	1	**8J-1702**	1	RETAINER	
Y	13	1	*9J-9776*	1	VALVE GP-DIVERTER	
	14	1	**0S-1585**	6	BOLT (1/2-13X1.50IN)	

C-CHANGE FROM PREVIOUS TYPE
Y-SEPARATE ILLUSTRATION

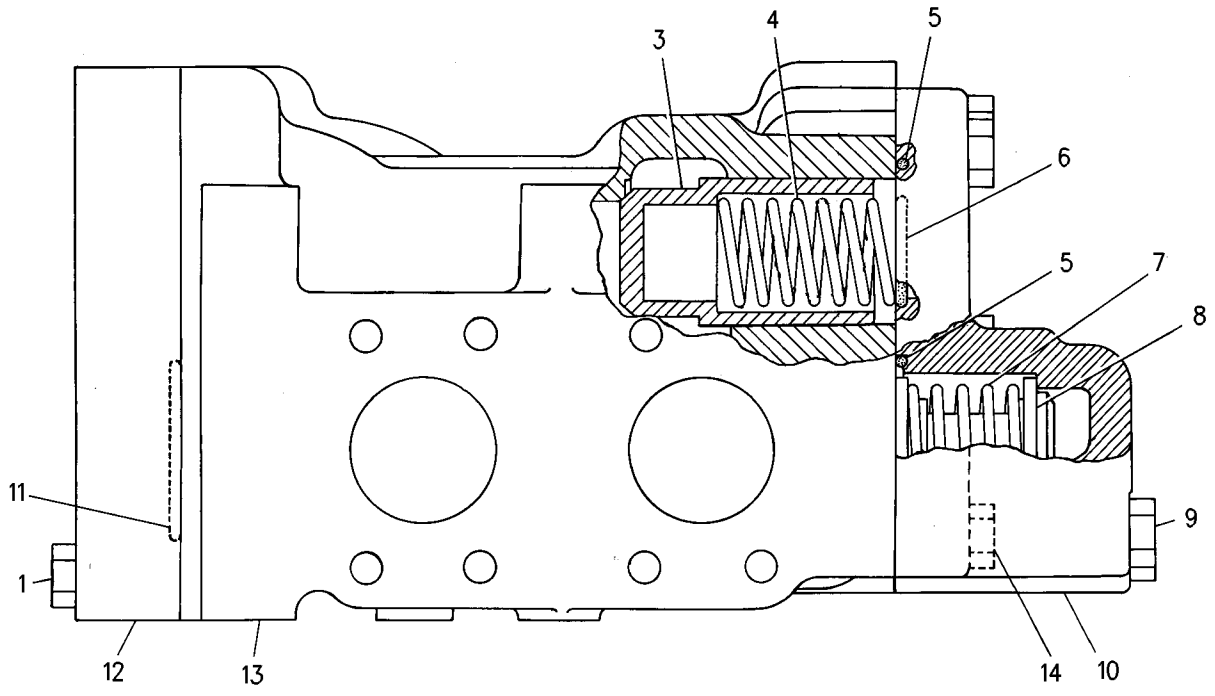

GRAPHIC #1 g00650879

9J-9776 VALVE GP-DIVERTER

S/N: 3XJ1-99999
PART OF 9J-9380 VALVE GP-DIVERTER
AN ATTACHMENT

SMCS-4339 **i01327350**

NOTE	REF NO	GRAPHIC REF	PART NUMBER	QTY	PART NAME 1 2 3 4 5 6 (PRODUCT LEVEL)	SEE PAGE
	1	1	**8J-1705**	1	SPRING	
	2	1	**9S-8010**	2	PLUG-O-RING (1 5/8-12 THD)	
		1	**2S-4078**	2	SEAL-O-RING (37.46MM ID)	
	3	1	**9S-8001**	3	PLUG-O-RING (5/16-24 THD)	
		1	**4J-7533**	3	SEAL-O-RING (6.07MM ID)	

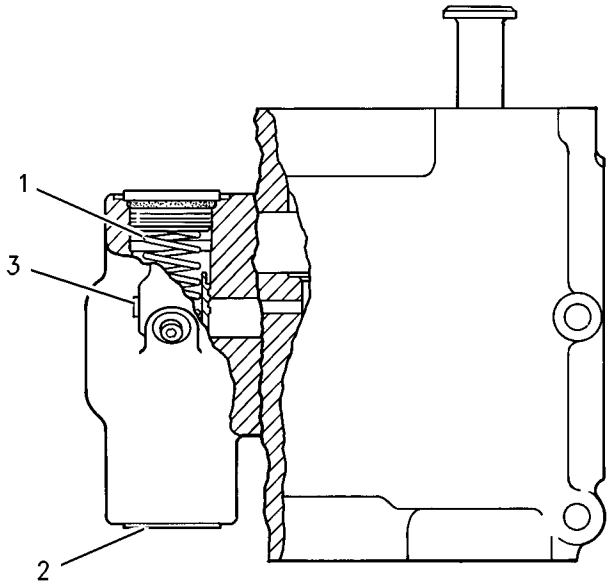

GRAPHIC #1 g00702267

STEERING SYSTEM

9T-1206 VALVE GP-MAKEUP

S/N: 3XJ1-99999

PART OF 4E-5826 LINES GP-STEERING

SMCS-5080 **i01328356**

NOTE	REF NO	GRAPHIC REF	PART NUMBER	QTY	PART NAME 1 2 3 4 5 6 (PRODUCT LEVEL)	SEE PAGE
	1	1	**9S-8001**	2	PLUG-O-RING (5/16-24 THD)	
		1	**4J-7533**	2	SEAL-O-RING (6.07MM ID)	
	2	1	**9S-6154**	2	PLUG AS-O-RING	
		1	**3J-1907**	2	SEAL-O-RING (11.89MM ID)	
	3	1	**9H-2367**	2	SPRING-VALVE	
	4	1	**4B-9782**	2	BALL (9.52MM DIA)	

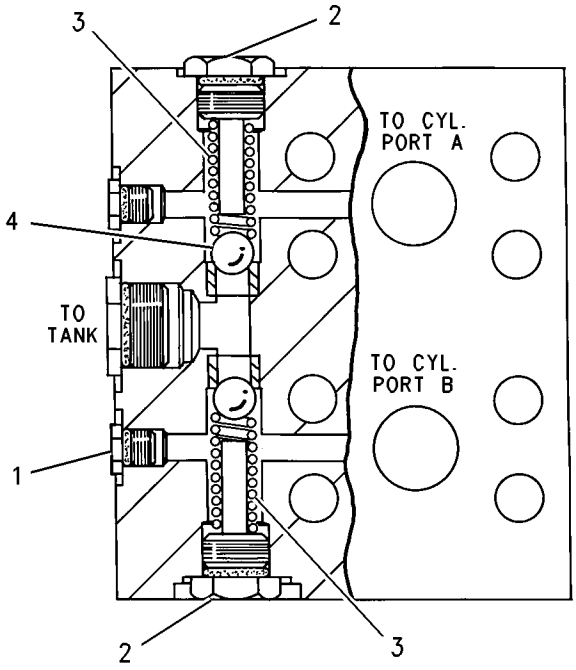

GRAPHIC #1 g00702547

9J-9330 VALVE GP-STEERING

S/N: 3XJ1-99999

PART OF 4E-5826 LINES GP-STEERING

SMCS-4307 **i01328314**

NOTE	REF NO	GRAPHIC REF	PART NUMBER	QTY	PART NAME 1 2 3 4 5 6 (PRODUCT LEVEL)	SEE PAGE
CY	1	1	*9T-6877*	1	VALVE GP-STEERING	
	2	1	**9S-8001**	2	PLUG-O-RING (5/16-24 THD)	
		1	**4J-7533**	2	SEAL-O-RING (6.07MM ID)	
	3	1	**8J-8451**	1	COVER	
	4	1	**4J-5309**	6	SEAL-O-RING (9.19MM ID)	
C	5	1	**4J-0523**	3	SEAL-O-RING (44.04MM ID)	
	6	1	**0L-1329**	2	BOLT (1/2-13X3 IN)	
		1	**9S-1366**	2	BOLT (1/2-13X2.5 IN)	
	7	1	**0S-1587**	2	BOLT (1/2-13X1.75 IN)	
	8	1	**9S-4187**	1	PLUG-O-RING (3/4-16THD)	
		1	**3K-0360**	1	SEAL-O-RING (16.36MM ID)	
B	9	1	**3H-2549**	14	SHIM (0.254MM THK)	
	10	1	**2J-6089**	1	SPRING	
	11	1	**9J-7795**	1	VALVE GP-STEERING	
	12	1	**4J-0519**	1	SEAL-O-RING (31.34MM ID)	
	13	1	**2J-6088**	1	SPRING (OUTER)	
	14	1	**4J-7490**	1	SPRING (INNER)	
	15	1	**8J-8450**	1	COVER	
	16	1	**8J-8466**	1	STOP	
		1	**2M-9780**	1	SEAL-O-RING (19.18MM ID)	

B-USE AS REQUIRED
C-CHANGE FROM PREVIOUS TYPE
Y-SEPARATE ILLUSTRATION

9J-9330 VALVE GP-STEERING *(contd.)* **i01328314**

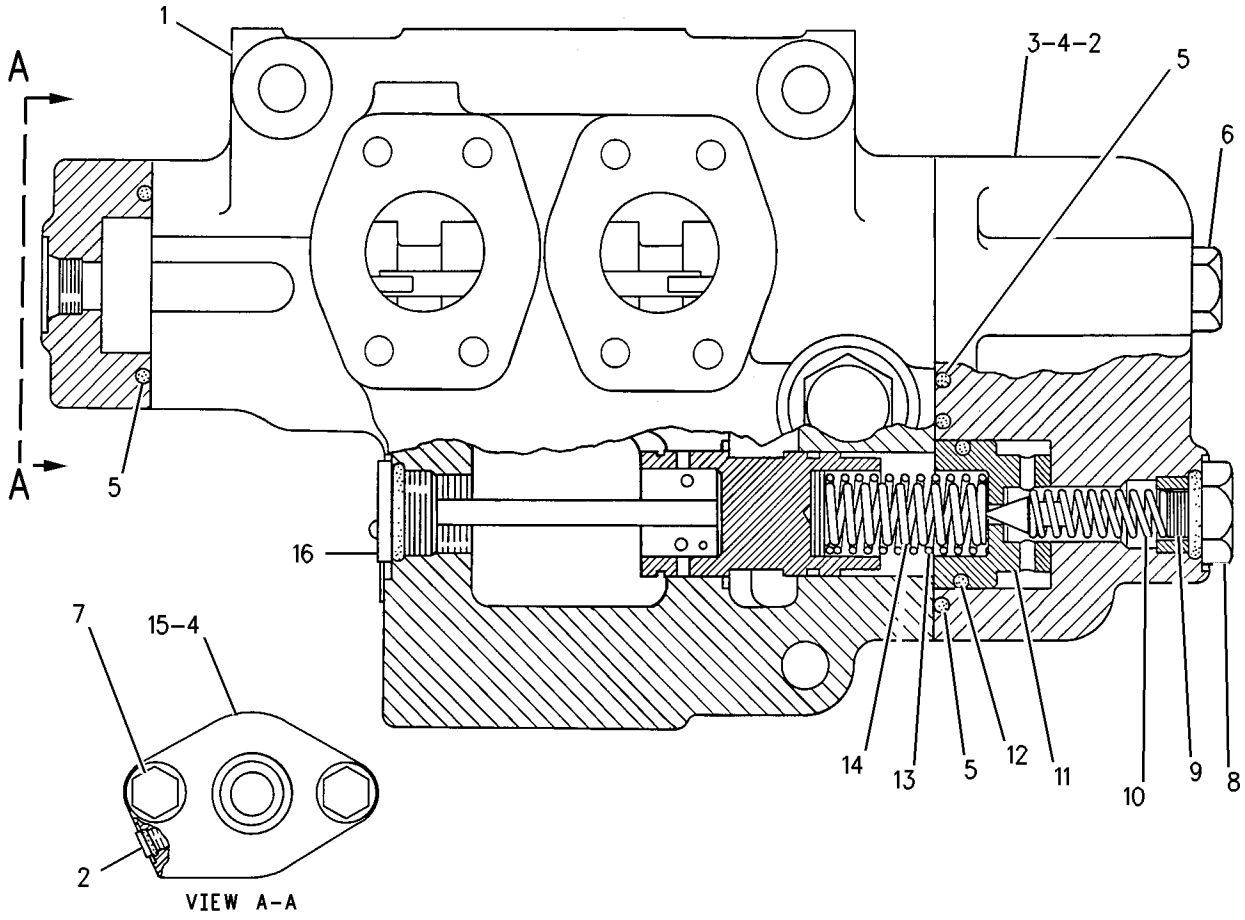

GRAPHIC #1 g00702540

STEERING SYSTEM

9T-6877 VALVE GP-STEERING

S/N: 3XJ1-99999

PART OF 9J-9330 VALVE GP-STEERING

SMCS-4307 **i01328223**

NOTE	REF NO	GRAPHIC REF	PART NUMBER	QTY	PART NAME 1 2 3 4 5 6 (PRODUCT LEVEL)	SEE PAGE
B	1	1	**5J-4776**	1	SHIM (.127MM THK)	
B	2	1	**4J-8224**	3	SHIM (.254MM THK)	
	3	1	**4T-2607**	1	SPACER (3MM THK)	
	4	1	**9J-5714**	1	SPRING	
	5	1	**8J-8473**	1	RETAINER	
	6	1	**2L-3793**	1	BOLT (3/8-16X2.25IN)	
	7	1	**1T-0689**	2	WASHER (2.54MM THK)	
	8	1	**4T-0318**	1	SEAT	
	9	1	**3J-1907**	1	SEAL-O-RING (11.89MM ID)	
	10	1	**9S-4185**	1	PLUG-O-RING	
	11	1	**3K-0360**	1	SEAL-O-RING (16.36MM ID)	
	12	1	**4B-9782**	1	BALL (9.52MM DIA)	
	13	1	**4T-0317**	1	SEAT	
	14	1	**1J-9671**	1	SEAL-O-RING (10.52MM ID)	
	15	1	**9S-8001**	6	PLUG-O-RING (5/16-24 THD)	
	16	1	**4J-7533**	6	SEAL-O-RING (6.07MM ID)	
	17	1	**8J-8472**	1	RETAINER	
B	18	1	**4J-6806**	3	SHIM (1.2MM THK)	

B-USE AS REQUIRED

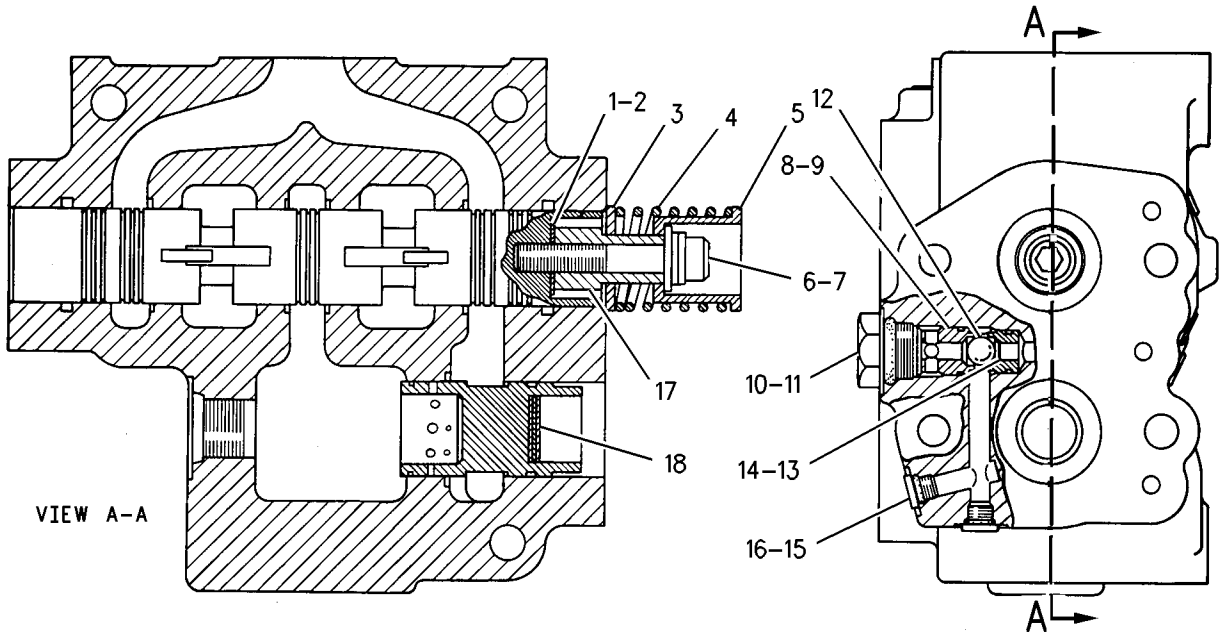

GRAPHIC #1 g00702536

STEERING SYSTEM

8J-1553 VALVE GP-STEERING NEUTRALIZER

S/N: 3XJ1-99999

PART OF 4E-5826 LINES GP-STEERING

SMCS-4330 **i01147334**

NOTE	REF NO	GRAPHIC REF	PART NUMBER	QTY	PART NAME 1 2 3 4 5 6 (PRODUCT LEVEL)	SEE PAGE
	1	1	**1U-3142**	1	BOOT	
	2	1	**9S-6155**	1	PLUG AS-O-RING	
		1	**1J-9671**	1	SEAL-O-RING (10.52MM ID)	
	3	1	**1A-8096**	1	SPRING-VALVE	
	4	1	**4B-9782**	1	BALL (9.52MM DIA)	
	5	1	**7B-8194**	1	SPRING	
	6	1	**9J-0477**	1	PLUG	
		1	**4K-1388**	1	SEAL-O-RING (26.59MM ID)	
	7	1	**8J-1552**	1	VALVE GP-STEERING NEUTRALIZER	
	8	1	**3J-4407**	1	SEAL-LIP	
	9	1	**6J-4608**	1	BOLT-SOCKET HEAD	
		1	**3B-4505**	1	LOCKWASHER (5/16IN)	
		1	**6B-6122**	1	WASHER	

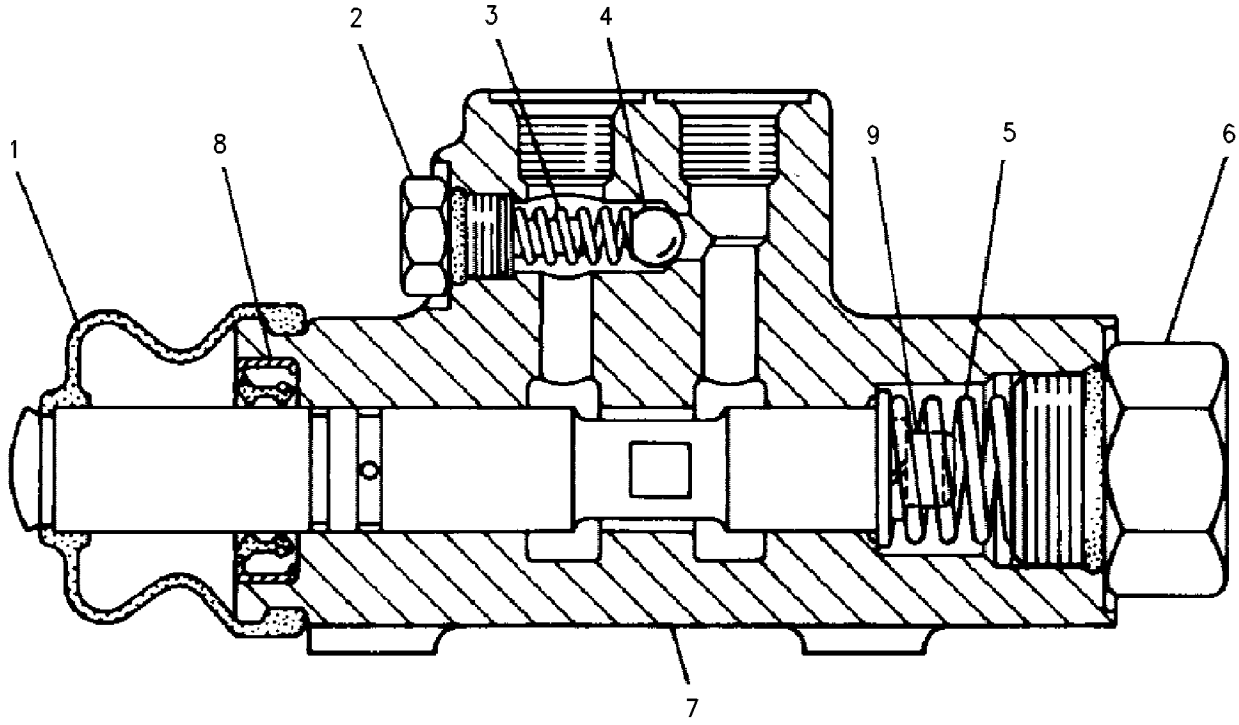

GRAPHIC #1 g00430859

HYDRAULIC SYSTEM

1U-2667 CARTRIDGE GP-VANE PUMP*R

S/N: 3XJ1-99999
114 L/MIN (30 GPM). REAR
PART OF 6E-2064 PUMP GP-VANE

SMCS-5055 **i01324081**

NOTE	REF NO	GRAPHIC REF	PART NUMBER	QTY	PART NAME 1 2 3 4 5 6 (PRODUCT LEVEL)	SEE PAGE
	1	1	**8C-3079**	4	SEAL-O-RING	
	2	1	**3G-1264**	4	RETAINER-SEAL	
	3	1	**9T-5042**	2	DOWEL	
	4	1	**9T-5049**	1	PLATE-INLET	
	5	1	**9T-5057**	1	KIT-VANE	
	6	1	**9T-5075**	1	RING	
	7	1	**5D-5958**	1	SEAL-O-RING	
	8	1	**061-9457**	1	SEAL-O-RING (63.09MM ID)	
	9	1	**9T-5087**	1	RING	
	10	1	**9T-5093**	1	PLATE-OUTLET	
	11	1	**3G-1820**	1	RING-SEAL	
	12	1	**9T-5100**	2	PLATE-FLEX	
	13	1	**9T-5107**	1	ROTOR	
	14	1	**9T-5112**	2	SCREW	

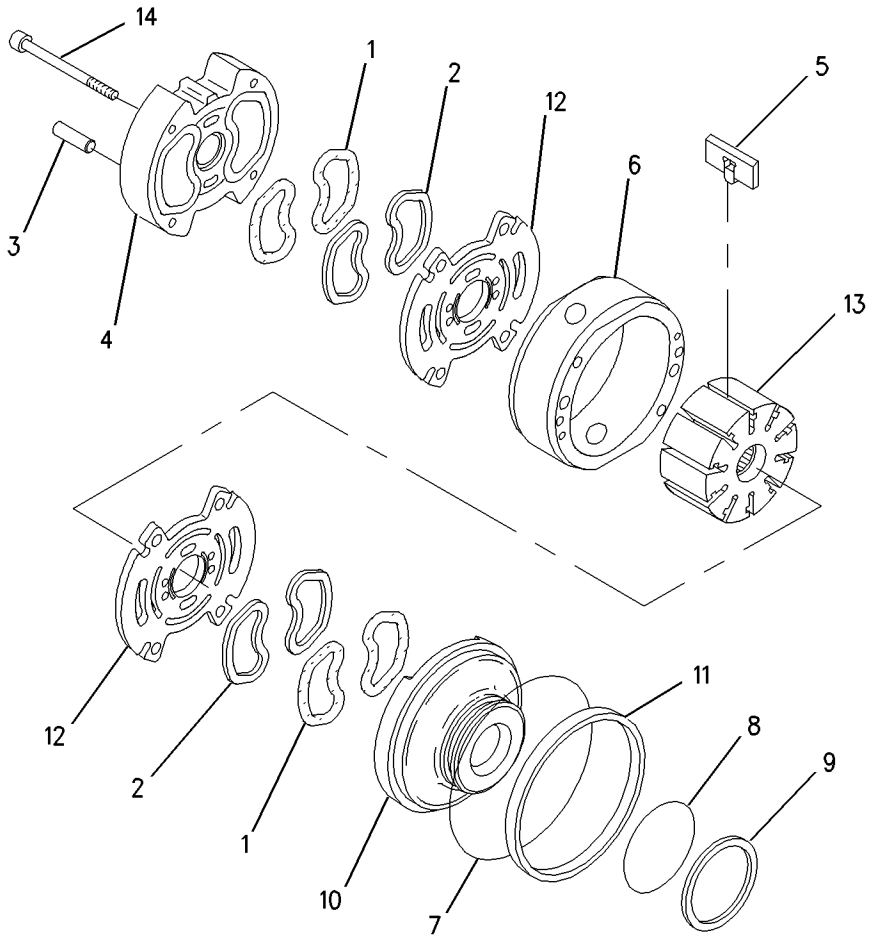

GRAPHIC #1 g00700609

HYDRAULIC SYSTEM

6E-2387 CARTRIDGE GP-VANE PUMP–FRONT*R

S/N: 3XJ1-99999
189 L/MIN (50 GPM)
PART OF 6E-2064 PUMP GP-VANE

SMCS-5055 **i01343204**

NOTE	REF NO	GRAPHIC REF	PART NUMBER	QTY	PART NAME 1 2 3 4 5 6 (PRODUCT LEVEL)	SEE PAGE
	1	1	**009-2062**	4	SEAL-O-RING (63.17MM ID)	
	2	1	**3G-2241**	4	RETAINER-SEAL	
	3	1	**9T-5044**	2	DOWEL	
	4	1	**6E-2389**	1	PLATE-INLET	
	5	1	**6E-2390**	1	KIT-VANE	
	6	1	**6E-2391**	1	RING	
	7	1	**6V-1195**	1	SEAL-O-RING (136.12MM ID)	
	8	1	**6V-1179**	1	SEAL-O-RING (76.62MM ID)	
	9	1	**9T-5088**	1	RING	
	10	1	**6E-2392**	1	PLATE-OUTLET	
	11	1	**3G-2242**	1	RING-SEAL	
	12	1	**6E-2393**	1	PLATE-FLEX	
	13	1	**6E-2395**	1	ROTOR	
	14	1	**9T-5114**	2	SCREW	
	15	1	**6E-2394**	1	PLATE-FLEX	

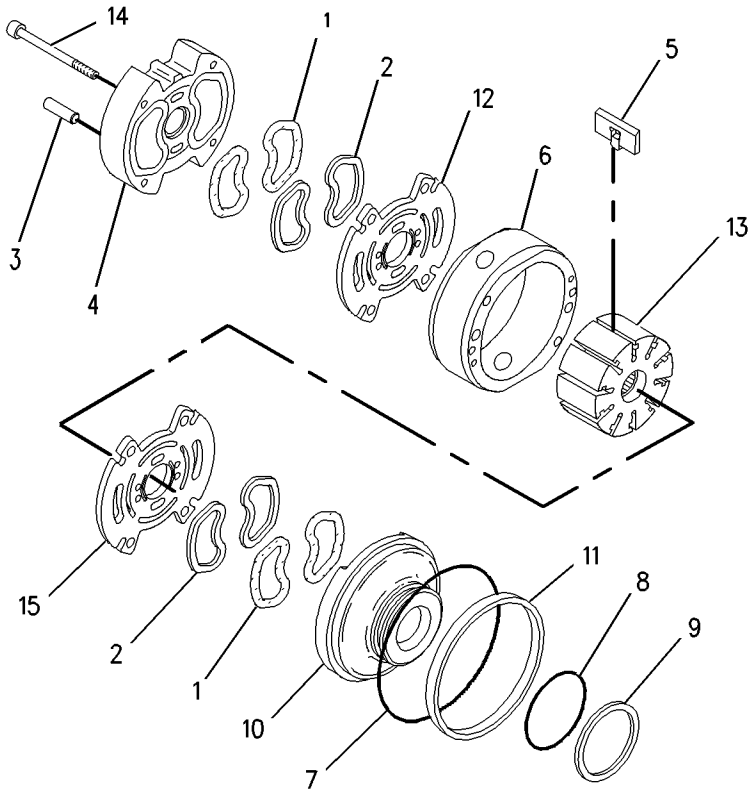

GRAPHIC #1 g00709857

HYDRAULIC SYSTEM

6C-4389 CONTROL AR-RIDE

S/N: 3XJ1-99999

AN ATTACHMENT

SMCS-5004 **i01309908**

NOTE	PART NUMBER	QTY	PART NAME 1 2 3 4 5 6 (PRODUCT LEVEL)	SEE PAGE
Y	*6C-4401*	1	LINES GP-RIDE CONTROL	
Y	*8R-5802*	1	WIRING GP-RIDE CONTROL	
			—OR—	
Y	*6C-8032*	1	WIRING GP-RIDE CONTROL	

Y-SEPARATE ILLUSTRATION

MEMORANDA

HYDRAULIC SYSTEM

8R-8119 CONTROL GP-PILOT OPERATED HYD

S/N: 3XJ1-486

3 VALVE

PART OF 8R-5041 OPERATOR AR

SMCS-5063 **i01335641**

NOTE	REF NO	GRAPHIC REF	PART NUMBER	QTY	PART NAME 1 2 3 4 5 6 (PRODUCT LEVEL)	SEE PAGE
	1	1	**8R-6701**	1	BOSS	
	2	1	**4B-9806**	1	SETSCREW-SOCKET (1/4 THD)	
	3	1	**2V-7859**	1	BEARING	
	4	1	**4L-6454**	8	BOLT (3/8-16X1 IN)	
	5	1	**4E-7928**	2	KNOB	
	6	1	**5B-9079**	2	NUT-JAM (3/8-24 THD)	
	7	1	**9C-2639**	1	ROD	
	8	1	**9S-5585**	2	NUT-FULL (1/2-20 THD)	
	9	1	**8R-8383**	1	SUPPORT AS	
	10	1	**9C-4553**	1	GATE	
	11	1	**6W-9580**	1	PANEL	
Y	12	1	**9T-6061**	1	VALVE GP-PILOT	
	13	1	**5P-1075**	4	WASHER-HARD (3MM THK)	
	14	1	**9C-4555**	1	SPRING (INNER)	
	15	1	**9C-4554**	1	SPRING (OUTER)	
	16	1	**8R-8381**	1	SHAFT AS	
		1	**5H-9809**	1	PIN	
	17	1	**4E-1487**	1	KNOB	
	18	1	**8R-5003**	1	ROD	
	19	1	**6V-8185**	2	NUT (1/4-20 THD)	
	20	1	**9C-2640**	1	ROD	

Y-SEPARATE ILLUSTRATION

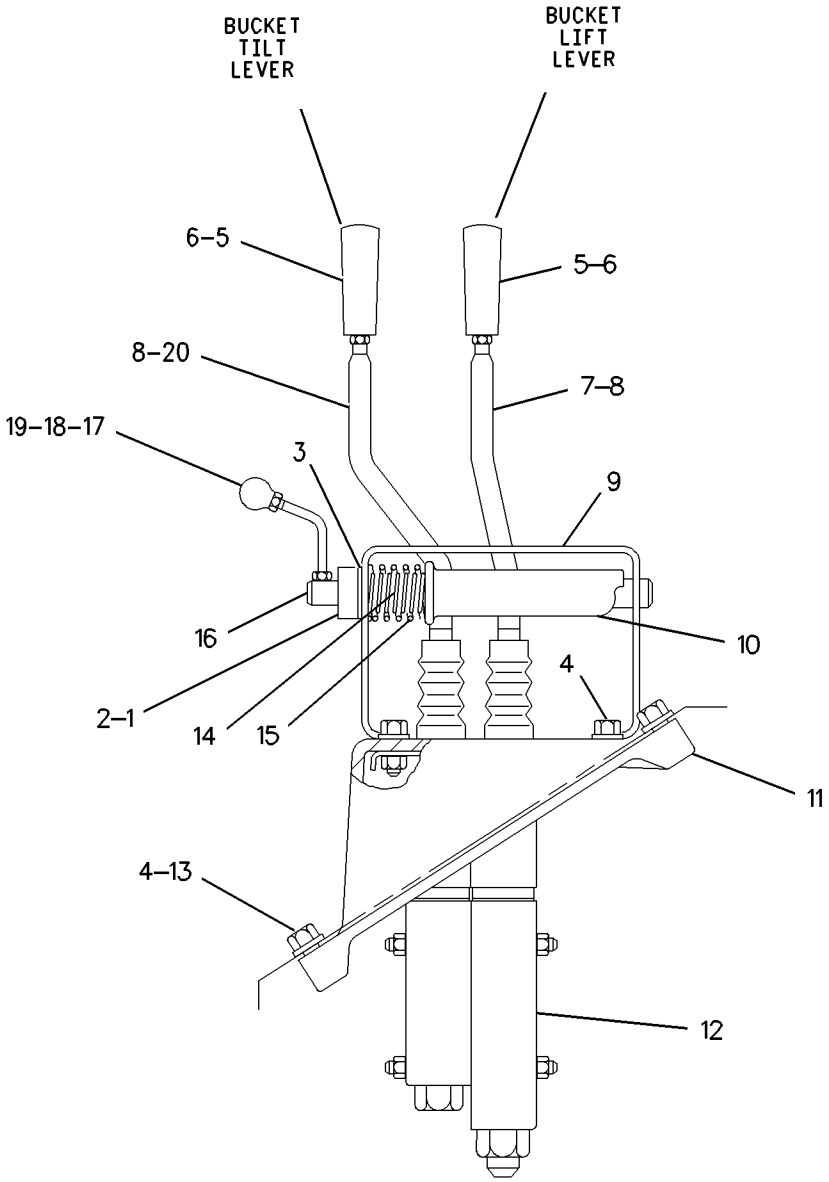

GRAPHIC #1 g00706186

HYDRAULIC SYSTEM

8R-8119 CONTROL GP-PILOT OPERATED HYD

S/N: 3XJ487-1085

3 VALVE

PART OF 8R-5041 OPERATOR AR

SMCS-5063 **i01335664**

NOTE	REF NO	GRAPHIC REF	PART NUMBER	QTY	PART NAME 1 2 3 4 5 6 (PRODUCT LEVEL)	SEE PAGE
	1	1	**8R-6701**	1	BOSS	
	2	1	**4B-9806**	1	SETSCREW-SOCKET (1/4 THD)	
	3	1	**2V-7859**	1	BEARING	
	4	1	**4L-6454**	8	BOLT (3/8-16X1 IN)	
	5	1	**4E-7928**	2	KNOB	
	6	1	**5B-9079**	2	NUT-JAM (3/8-24 THD)	
	7	1	**9C-2639**	1	ROD	
	8	1	**9S-5585**	2	NUT-FULL (1/2-20 THD)	
	9	1	**8R-8383**	1	SUPPORT AS	
	10	1	**9C-4553**	1	GATE	
	11	1	**6W-9580**	1	PANEL	
Y	12	1	*6E-3134*	1	VALVE GP-PILOT	
	13	1	**5P-1075**	4	WASHER-HARD (3MM THK)	
	14	1	**9C-4555**	1	SPRING (INNER)	
	15	1	**9C-4554**	1	SPRING (OUTER)	
	16	1	**8R-8381**	1	SHAFT AS	
		1	**5H-9809**	1	PIN	
	17	1	**4E-1487**	1	KNOB	
	18	1	**8R-5003**	1	ROD	
	19	1	**6V-8185**	2	NUT (1/4-20 THD)	
	20	1	**9C-2640**	1	ROD	

Y-SEPARATE ILLUSTRATION

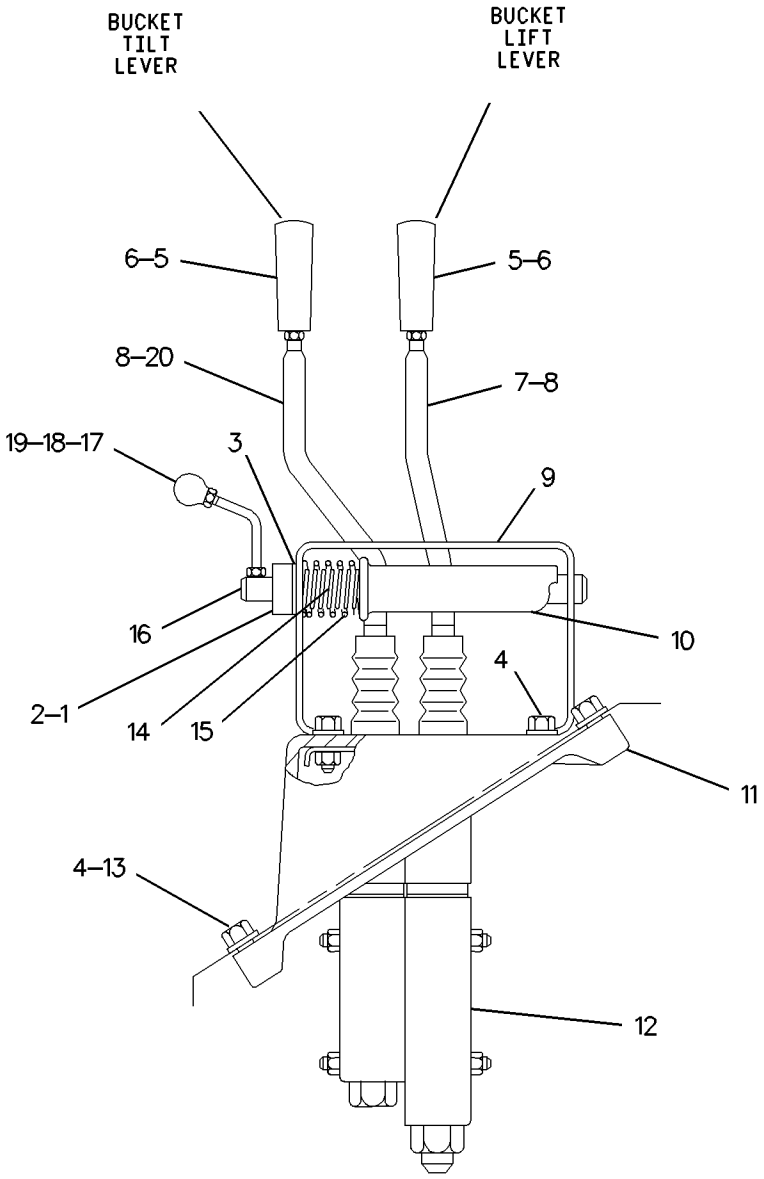

GRAPHIC #1

g00706202

HYDRAULIC SYSTEM

8R-8119 CONTROL GP-PILOT OPERATED HYD

S/N: 3XJ1086-99999

3 VALVE

PART OF 8R-5041 OPERATOR AR

SMCS-5063 **i01335833**

NOTE	REF NO	GRAPHIC REF	PART NUMBER	QTY	PART NAME 1 2 3 4 5 6 (PRODUCT LEVEL)	SEE PAGE
	1	1	**8R-6701**	1	BOSS	
	2	1	**4B-9806**	1	SETSCREW-SOCKET (1/4 THD)	
	3	1	**2V-7859**	1	BEARING	
	4	1	**4L-6454**	8	BOLT (3/8-16X1 IN)	
	5	1	**4E-7928**	2	KNOB	
	6	1	**5B-9079**	2	NUT-JAM (3/8-24 THD)	
	7	1	**9C-2639**	1	ROD	
	8	1	**9S-5585**	2	NUT-FULL (1/2-20 THD)	
	9	1	**8R-8383**	1	SUPPORT AS	
	10	1	**9C-4553**	1	GATE	
	11	1	**6W-9580**	1	PANEL	
YC	12	1	**6E-4020**	1	VALVE GP-PILOT	
	13	1	**5P-1075**	4	WASHER-HARD (3MM THK)	
	14	1	**9C-4555**	1	SPRING (INNER)	
	15	1	**9C-4554**	1	SPRING (OUTER)	
	16	1	**8R-8381**	1	SHAFT AS	
		1	**5H-9809**	1	PIN	
	17	1	**4E-1487**	1	KNOB	
	18	1	**8R-5003**	1	ROD	
	19	1	**6V-8185**	2	NUT (1/4-20 THD)	
	20	1	**9C-2640**	1	ROD	

C-CHANGE FROM PREVIOUS TYPE
Y-SEPARATE ILLUSTRATION

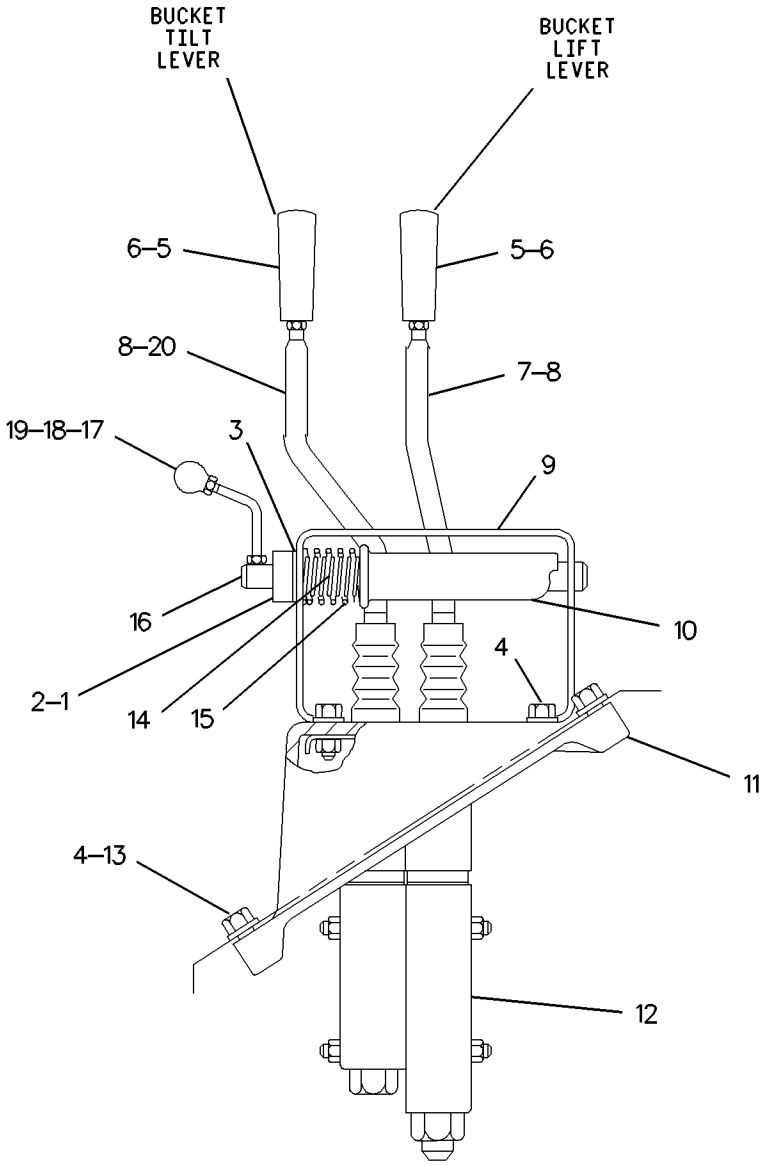

GRAPHIC #1 g00706311

HYDRAULIC SYSTEM

8R-8397 CONTROL GP-PILOT OPERATED HYD

S/N: 3XJ1-99999
3RD VALVE
PART OF 4E-6083, 8R-9463 HYDRAULIC AR
AN ATTACHMENT
TYPE 1

SMCS-5063 **i01329340**

NOTE	REF NO	GRAPHIC REF	PART NUMBER	QTY	PART NAME 1 2 3 4 5 6 (PRODUCT LEVEL)	SEE PAGE
	1	1	**4L-6454**	8	BOLT (3/8-16X1 IN)	
	2	1	**5P-1075**	4	WASHER-HARD (3MM THK)	
	3	1	**4V-4353**	1	PLATE-INSTRUCTION	
		1	**4B-4158**	4	SCREW-DRIVE	
	4	1	**9C-4555**	1	SPRING (INNER)	
	5	1	**9C-4554**	1	SPRING (OUTER)	
	6	1	**4E-1487**	1	KNOB	
		1	**8R-5003**	1	ROD	
		1	**6V-8185**	2	NUT (1/4-20 THD)	
	7	1	**4B-9806**	1	SETSCREW-SOCKET (1/4 THD)	
		1	**8R-6701**	1	BOSS	
		1	**2V-7859**	1	BEARING	
	8	1	**9C-2640**	2	ROD	
	9	1	**9S-5585**	3	NUT-FULL (1/2-20 THD)	
	10	1	**4E-7928**	3	KNOB	
		1	**5B-9079**	3	NUT-JAM (3/8-24 THD)	
	11	1	**9C-2639**	1	ROD	
	12	1	**9C-2640**	1	ROD	
	13	1	**8R-8383**	1	SUPPORT AS	
	14	1	**9C-4553**	1	GATE	
	15	1	**8R-8381**	1	SHAFT AS	
		1	**5H-9809**	1	PIN	
	16	1	**6W-9580**	1	PANEL	
Y	17	1	*9T-6062*	1	VALVE GP-PILOT	

Y-SEPARATE ILLUSTRATION

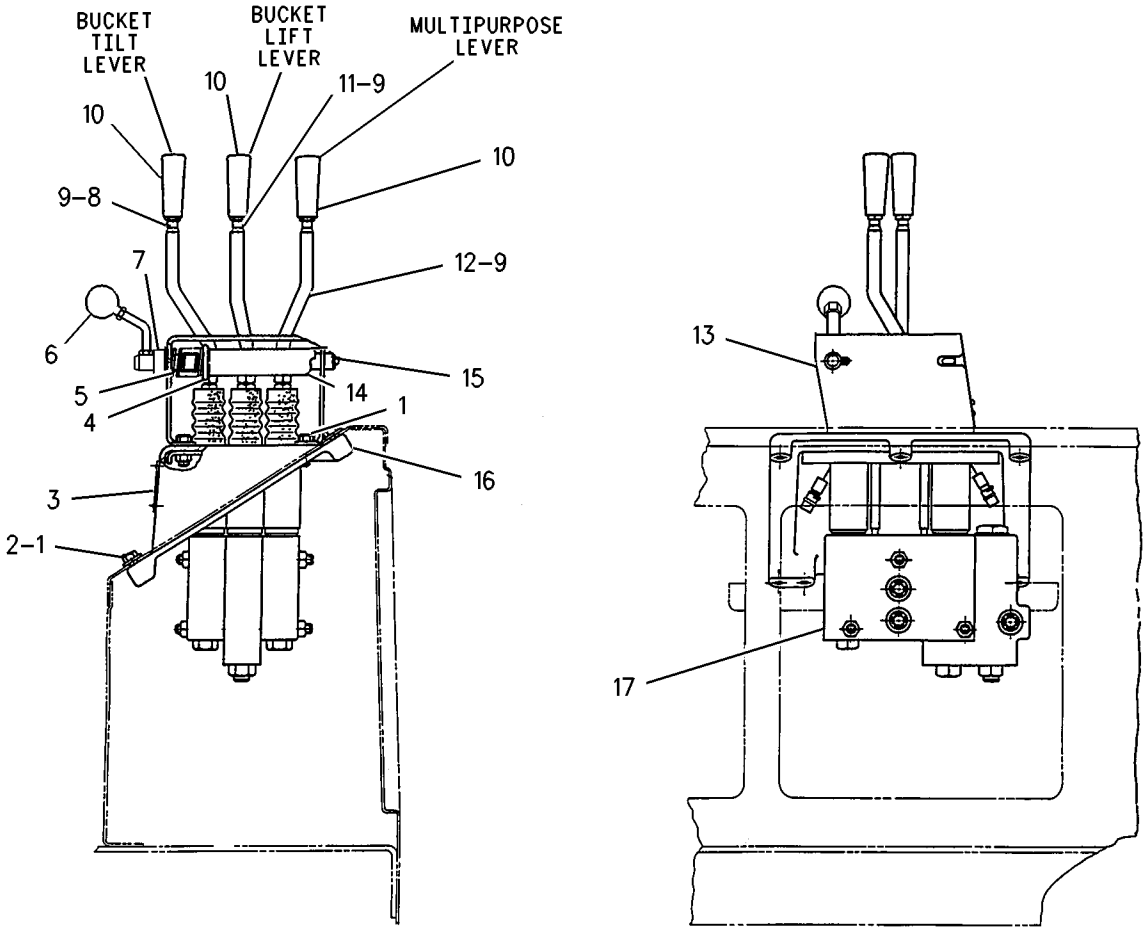

GRAPHIC #1 g00703425

8R-8397 CONTROL GP-PILOT OPERATED HYD

S/N: 3XJ1-99999
3RD VALVE
PART OF 4E-6083, 8R-9463 HYDRAULIC AR
AN ATTACHMENT
TYPE 2

SMCS-5063 **i01329249**

NOTE	REF NO	GRAPHIC REF	PART NUMBER	QTY	PART NAME 1 2 3 4 5 6 (PRODUCT LEVEL)	SEE PAGE
	1	1	**4L-6454**	8	BOLT (3/8-16X1 IN)	
	2	1	**5P-1075**	4	WASHER-HARD (3MM THK)	
	3	1	**4V-4353**	1	PLATE-INSTRUCTION	
		1	**4B-4158**	4	SCREW-DRIVE	
	4	1	**9C-4555**	1	SPRING (INNER)	
	5	1	**9C-4554**	1	SPRING (OUTER)	
	6	1	**4E-1487**	1	KNOB	
		1	**8R-5003**	1	ROD	
		1	**6V-8185**	2	NUT (1/4-20 THD)	
	7	1	**4B-9806**	1	SETSCREW-SOCKET (1/4 THD)	
		1	**8R-6701**	1	BOSS	
		1	**2V-7859**	1	BEARING	
	8	1	**9C-2640**	2	ROD	
	9	1	**9S-5585**	3	NUT-FULL (1/2-20 THD)	
	10	1	**4E-7928**	3	KNOB	
		1	**5B-9079**	3	NUT-JAM (3/8-24 THD)	
	11	1	**9C-2639**	1	ROD	
	12	1	**9C-2640**	1	ROD	
	13	1	**8R-8383**	1	SUPPORT AS	
	14	1	**9C-4553**	1	GATE	
	15	1	**8R-8381**	1	SHAFT AS	
		1	**5H-9809**	1	PIN	
	16	1	**6W-9580**	1	PANEL	
YC	17	1	*6E-3135*	1	VALVE GP-PILOT	

C-CHANGE FROM PREVIOUS TYPE
Y-SEPARATE ILLUSTRATION

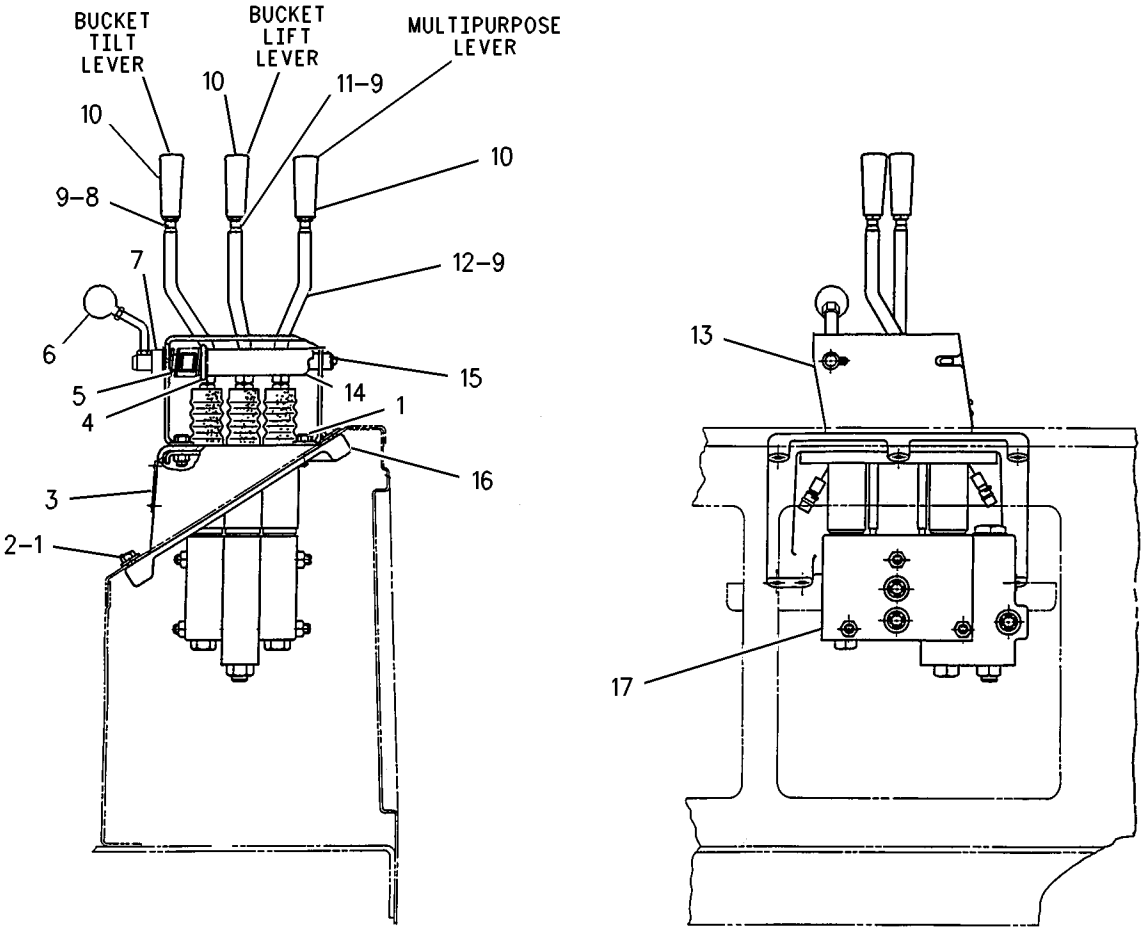

GRAPHIC #1 g00703425

HYDRAULIC SYSTEM

8R-8397 CONTROL GP-PILOT OPERATED HYD

S/N: 3XJ1-99999
3RD VALVE
PART OF 4E-6083, 6C-7857, 8R-9463 HYDRAULIC AR
AN ATTACHMENT
TYPE 3

SMCS-5063 **i01329303**

NOTE	REF NO	GRAPHIC REF	PART NUMBER	QTY	PART NAME 1 2 3 4 5 6 (PRODUCT LEVEL)	SEE PAGE
	1	1	**4L-6454**	8	BOLT (3/8-16X1 IN)	
	2	1	**5P-1075**	4	WASHER-HARD (3MM THK)	
	3	1	**4V-4353**	1	PLATE-INSTRUCTION	
		1	**4B-4158**	4	SCREW-DRIVE	
	4	1	**9C-4555**	1	SPRING (INNER)	
	5	1	**9C-4554**	1	SPRING (OUTER)	
	6	1	**4E-1487**	1	KNOB	
		1	**8R-5003**	1	ROD	
		1	**6V-8185**	2	NUT (1/4-20 THD)	
	7	1	**4B-9806**	1	SETSCREW-SOCKET (1/4 THD)	
		1	**8R-6701**	1	BOSS	
		1	**2V-7859**	1	BEARING	
	8	1	**9C-2640**	1	ROD (TILT)	
	9	1	**9S-5585**	3	NUT-FULL (1/2-20 THD)	
	10	1	**4E-7928**	3	KNOB	
		1	**5B-9079**	3	NUT-JAM (3/8-24 THD)	
	11	1	**9C-2639**	1	ROD (LIFT)	
	12	1	**9C-2640**	1	ROD (MULTI-PURPOSE)	
	13	1	**8R-8383**	1	SUPPORT AS	
	14	1	**9C-4553**	1	GATE	
	15	1	**8R-8381**	1	SHAFT AS	
		1	**5H-9809**	1	PIN	
	16	1	**6W-9580**	1	PANEL	
CY	17	1	**6E-4021**	1	VALVE GP-PILOT	

C-CHANGE FROM PREVIOUS TYPE
Y-SEPARATE ILLUSTRATION

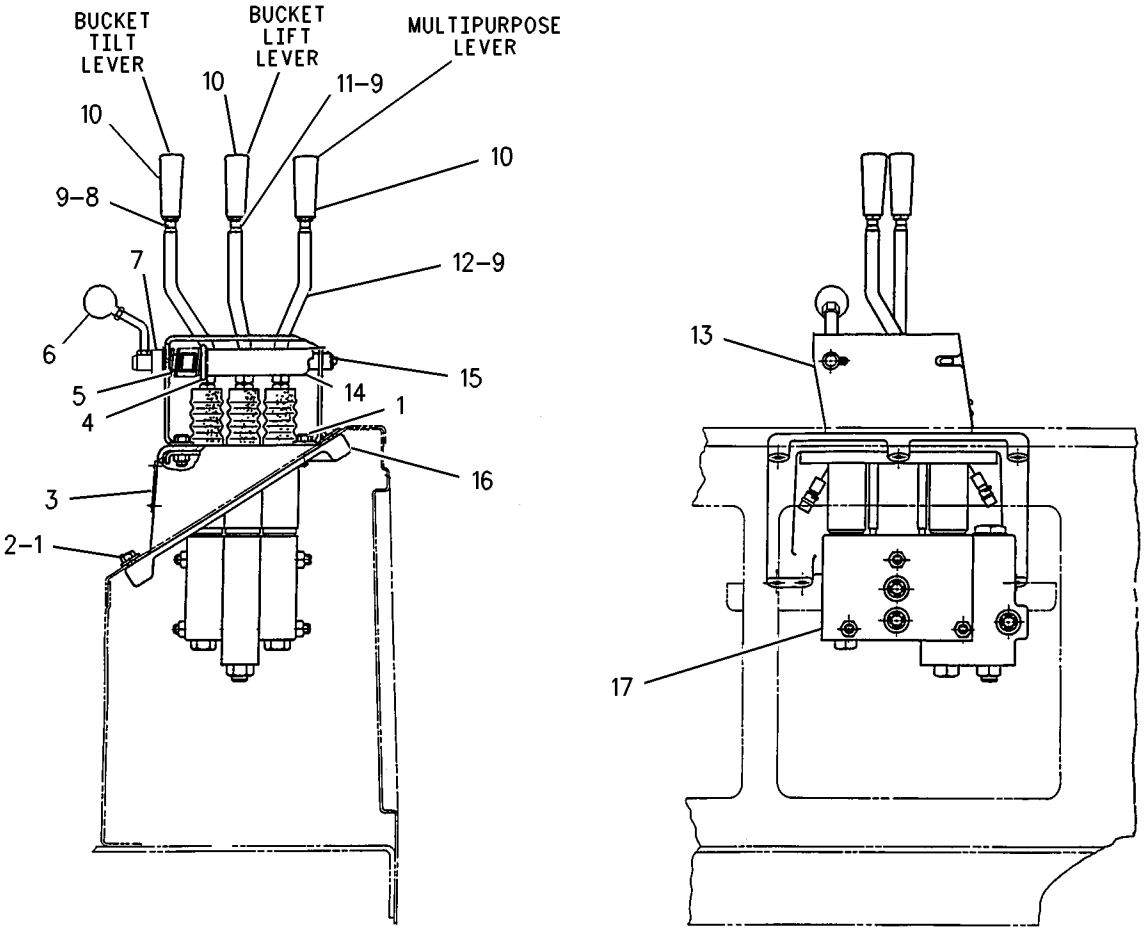

GRAPHIC #1 g00703425

6G-8390 COVER GP-HYDRAULIC TANK CAP

S/N: 3XJ1-99999
PART OF 8R-6167 LOCK GP-VANDALISM
AN ATTACHMENT

SMCS-5056, 7315 **i01217852**

NOTE	REF NO	GRAPHIC REF	PART NUMBER	QTY	PART NAME 1 2 3 4 5 6 (PRODUCT LEVEL)	SEE PAGE
	1	1	**1M-8649**	1	RING-RETAINING	
	2	1	**5D-1901**	1	WASHER (0.105MM THK)	
	3	1	**5P-8502**	1	PADLOCK GP	
A		1	**8Y-6364**	1	SLEEVE	
A		1	**5P-8500**	1	KEY	
	4	1	**1L-5072**	1	DOWEL	
	5	1	**9M-7394**	1	LEVER	
	6	1	**116-4681**	1	COVER-HYDRAULIC CAP	

A-NOT PART OF THIS GROUP

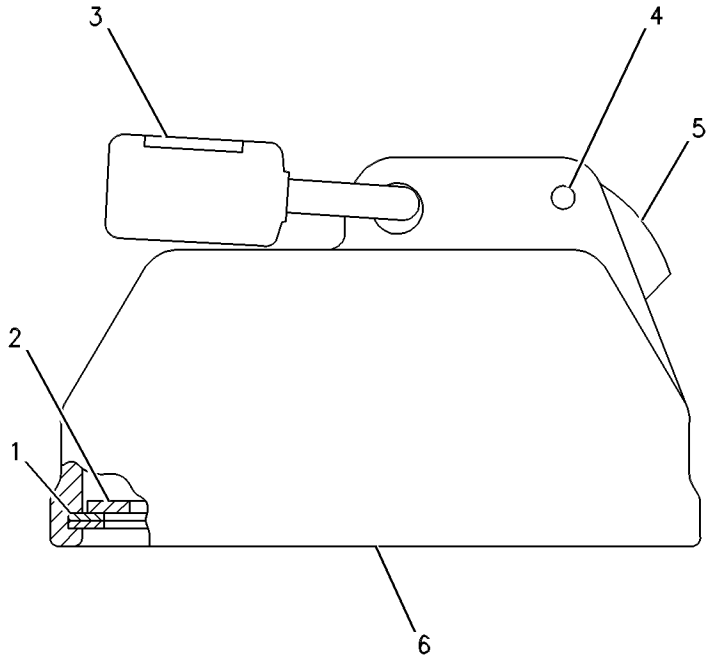

GRAPHIC #1 g00130295

MEMORANDA

3G-5495 CYLINDER GP-LIFT–LH

S/N: 3XJ1-99999

177.8 MM BORE X 759 MM STROKE

SMCS-5102 **i00286773**

NOTE	REF NO	GRAPHIC REF	PART NUMBER	QTY	PART NAME 1 2 3 4 5 6 (PRODUCT LEVEL)	SEE PAGE
R	1	1	**3G-5502**	1	CYLINDER AS	
C	2	1	**9T-8676**	1	BEARING-SLEEVE	
	3	1	**3J-9449**	1	LOCKNUT (2 1/2-12 THD)	
C	4	1	**8M-4228**	1	RING-WEAR	
C	5	1	**6E-1440**	1	PISTON	
	6	1	**8T-1789**	1	SEAL AS	
	7	1	**4J-9218**	1	RING-BACKUP	
	8	1	**9F-1399**	1	SEAL-O-RING (171.04MM ID)	
	9	1	**124-2726**	1	HEAD	
	10	1	**1D-4628**	6	BOLT (7/8-9X3.25IN)	
	11	1	**5P-8249**	8	WASHER (4.0MM THK)	
C	12	1	**8C-9121**	1	SEAL AS	
	13	1	**5J-8325**	1	SEAL-U-CUP (80.7MM ID)	
C	14	1	**8T-8389**	1	SEAL (81MM ID)	
R	15	1	**3G-5492**	1	ROD AS	
	16	1	**1A-5576**	2	BOLT (7/8-9X4.5IN)	
	17	1	**9T-2584**	1	RING-RETAINING	
	18	1	**8T-6745**	1	RING-WEAR	

C-CHANGE FROM PREVIOUS TYPE
R-REMFG PART MAY BE AVAILABLE

3G-5495 CYLINDER GP-LIFT *(contd.)* **i00286773**

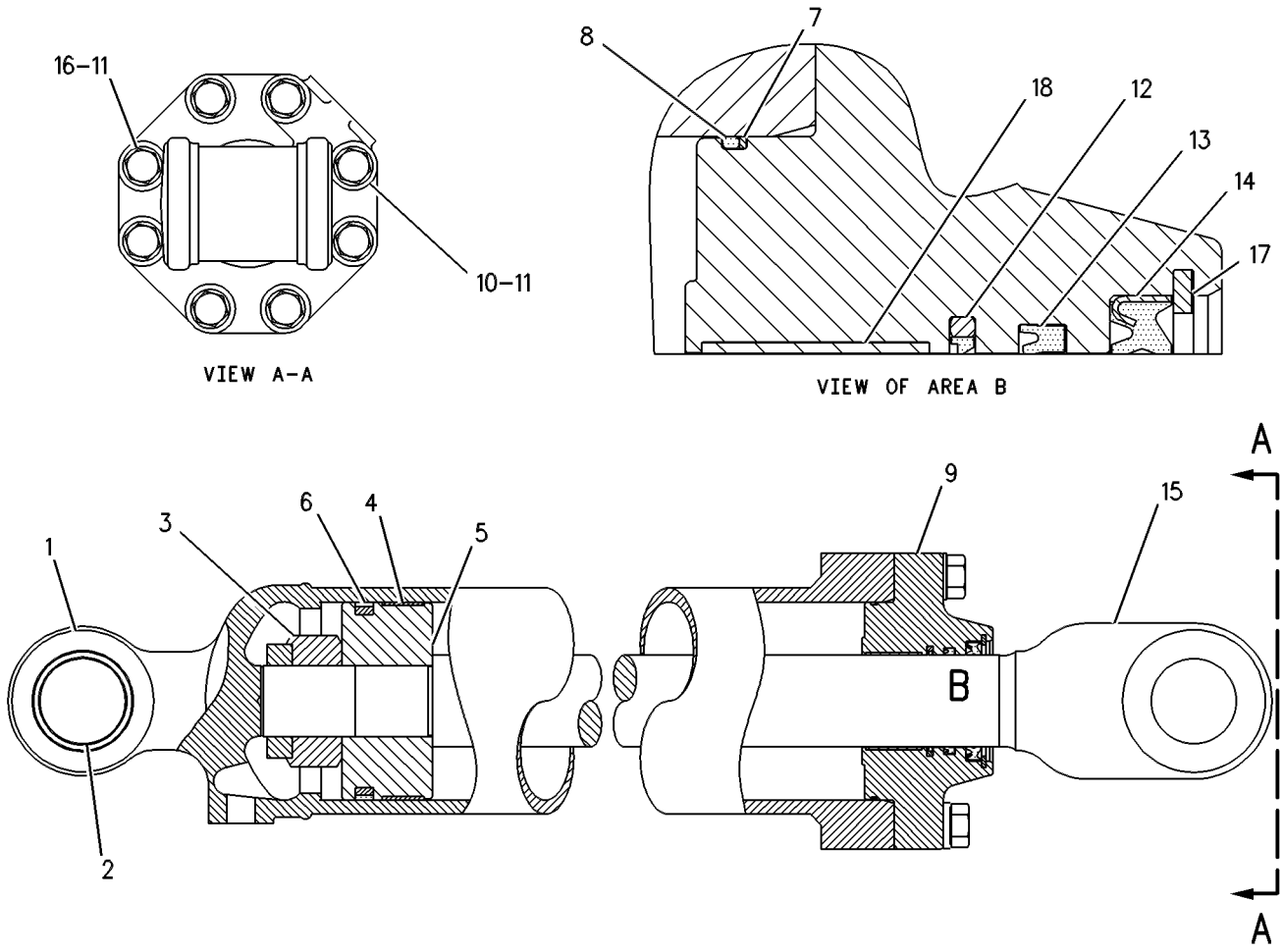

GRAPHIC #1 g00130201

HYDRAULIC SYSTEM

3G-5496 CYLINDER GP-LIFT

S/N: 3XJ1-99999

177.8 MM BORE X 759 MM STROKE

SMCS-5102 **i00286801**

NOTE	REF NO	GRAPHIC REF	PART NUMBER	QTY	PART NAME 1 2 3 4 5 6 (PRODUCT LEVEL)	SEE PAGE
R	1	1	**3G-5502**	1	CYLINDER AS	
C	2	1	**9T-8676**	1	BEARING-SLEEVE	
	3	1	**3J-9449**	1	LOCKNUT (2 1/2-12 THD)	
C	4	1	**8M-4228**	1	RING-WEAR	
C	5	1	**6E-1440**	1	PISTON	
	6	1	**8T-1789**	1	SEAL AS	
	7	1	**4J-9218**	1	RING-BACKUP	
	8	1	**9F-1399**	1	SEAL-O-RING (171.04MM ID)	
	9	1	**9T-3503**	1	HEAD	
	10	1	**1D-4628**	6	BOLT (7/8-9X3.25IN)	
	11	1	**5P-8249**	8	WASHER (4.0MM THK)	
C	12	1	**8C-9121**	1	SEAL AS	
	13	1	**5J-8325**	1	SEAL-U-CUP (80.7MM ID)	
C	14	1	**8T-8389**	1	SEAL (81MM ID)	
R	15	1	**3G-5492**	1	ROD AS	
	16	1	**1A-5576**	2	BOLT (7/8-9X4.5IN)	
A	17	1	**7K-9209**	2	SEAL-LIP (76.20MM ID)	
	18	1	**8T-6745**	1	RING-WEAR	
	19	1	**2H-3755**	4	BOLT (5/16-18X.625IN)	
	20	1	**7S-6369**	4	WASHER (4.8MM THK)	

A-NOT PART OF THIS GROUP
C-CHANGE FROM PREVIOUS TYPE
R-REMFG PART MAY BE AVAILABLE

3G-5496 CYLINDER GP-LIFT ***(contd.)*** **i00286801**

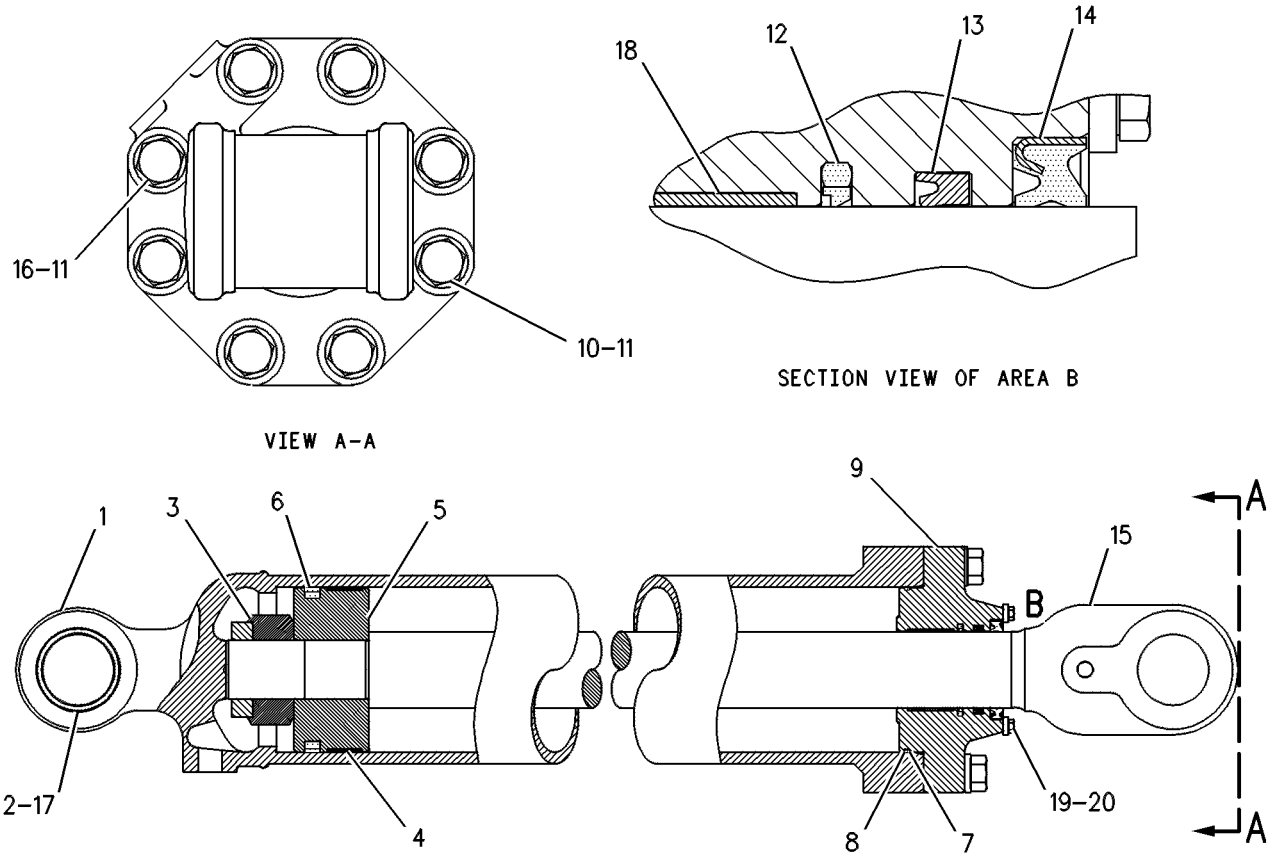

GRAPHIC #1 g00129351

HYDRAULIC SYSTEM

3G-5497 CYLINDER GP-TILT

S/N: 3XJ1-99999

209.6 MM BORE X 535 MM STROKE

SMCS-5104 **i01525764**

NOTE	REF NO	GRAPHIC REF	PART NUMBER	QTY	PART NAME 1 2 3 4 5 6 (PRODUCT LEVEL)	SEE PAGE
R	1	1	**3G-5264**	1	CYLINDER AS	
	2	1	**9J-7100**	1	BEARING-SLEEVE	
	3	1	**2J-7686**	1	LOCKNUT	
	4	1	**8J-8375**	1	RING-WEAR	
	5	1	**8T-1793**	1	SEAL AS	
	6	1	**9T-9940**	1	PISTON	
	7	1	**1J-2176**	1	SEAL-O-RING	
	8	1	**2J-0744**	1	RING-BACKUP	
	9	1	**8H-5772**	6	BOLT (1-8X3.75 IN)	
	10	1	**5P-8250**	8	WASHER (28X49X5MM THK)	
	11	1	**167-2209**	1	SEAL AS-BUFFER	
	12	1	**167-2320**	1	SEAL-U-CUP	
	13	1	**167-2471**	1	SEAL-WIPER	
R	14	1	**9T-8994**	1	ROD AS	
	15	1	**9J-7099**	1	BEARING-SLEEVE	
A	16	1	**7K-9211**	4	SEAL-LIP	
	17	1	**1D-4640**	2	BOLT (1-8X4.25 IN)	
C	18	1	**9T-3502**	1	HEAD	
C	19	1	**8T-6744**	1	RING-WEAR	

A-NOT PART OF THIS GROUP
C-CHANGE FROM PREVIOUS TYPE
R-REMFG PART MAY BE AVAILABLE

3G-5497 CYLINDER GP-TILT *(contd.)*

i01525764

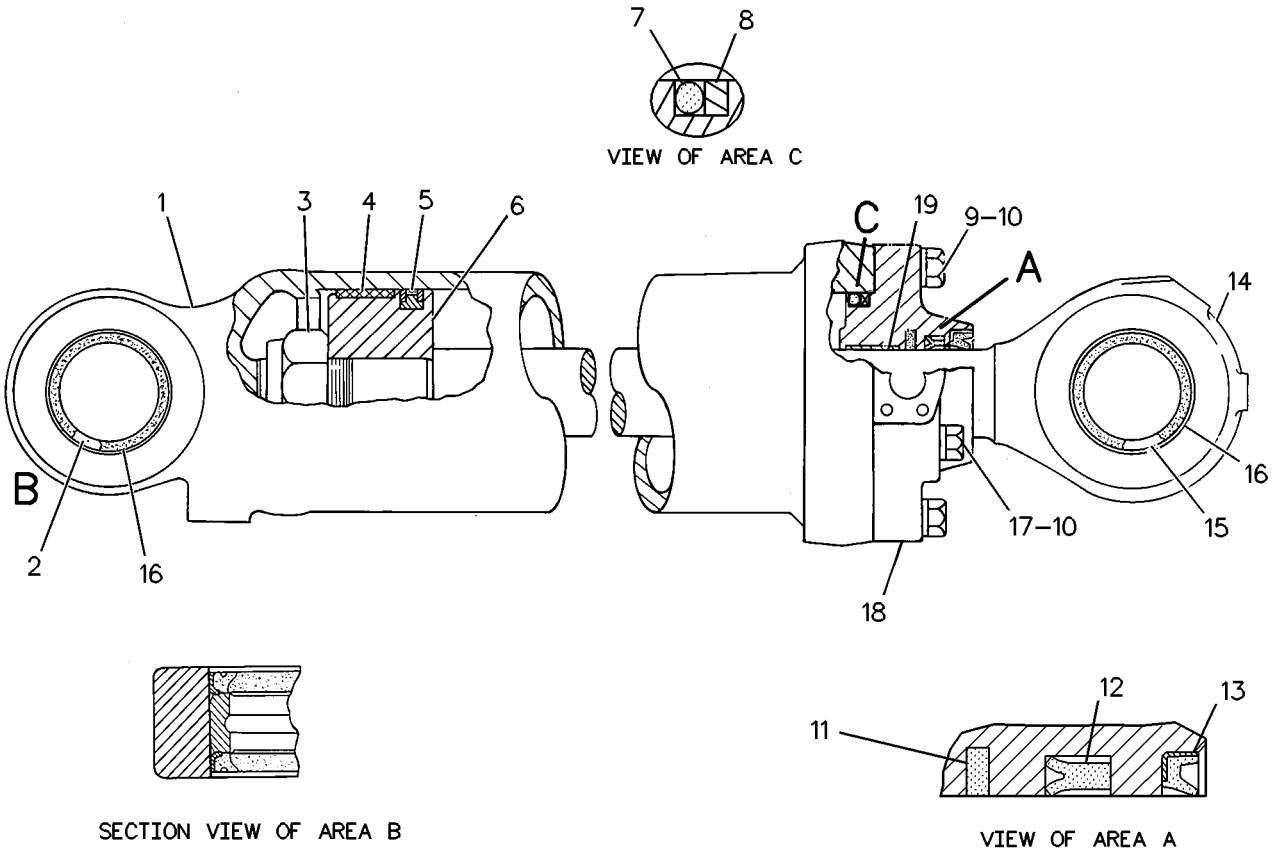

GRAPHIC #1

g00127741

6C-5365 CYLINDER GP-TILT

S/N: 3XJ1-99999
210 MM (8 IN) BORE X 510 MM (20 IN) STROKE
PART OF 6C-5338 CONVERSION AR-NONCAB
AN ATTACHMENT

SMCS-5104 **i00286766**

NOTE	REF NO	GRAPHIC REF	PART NUMBER	QTY	PART NAME 1 2 3 4 5 6 (PRODUCT LEVEL)	SEE PAGE
R	1	1	**3G-5264**	1	CYLINDER AS	
	2	1	**9J-7100**	1	BEARING-SLEEVE	
	3	1	**2J-7686**	1	LOCKNUT	
	4	1	**8J-8375**	1	RING-WEAR	
	5	1	**8T-1793**	1	SEAL AS	
	6	1	**9T-9940**	1	PISTON	
	7	1	**1J-2176**	1	SEAL-O-RING	
	8	1	**2J-0744**	1	RING-BACKUP	
	9	1	**8H-5772**	6	BOLT (1-8X3.75IN)	
	10	1	**5P-8250**	8	WASHER (5.0MM THK)	
	11	1	**8C-9121**	1	SEAL AS	
	12	1	**5J-8325**	1	SEAL-U-CUP (80.7MM ID)	
	13	1	**8T-8389**	1	SEAL (81MM ID)	
	14	1	**6C-5366**	1	ROD AS	
	15	1	**9J-7099**	1	BEARING-SLEEVE	
A	16	1	**7K-9211**	4	SEAL-LIP (88.9 ID)	
	17	1	**1D-4640**	2	BOLT (1-8X4.25IN)	
	18	1	**9T-3502**	1	HEAD	
	19	1	**8T-6744**	1	RING-WEAR	

A-NOT PART OF THIS GROUP
R-REMFG PART MAY BE AVAILABLE

6C-5365 CYLINDER GP-TILT *(contd.)* i00286766

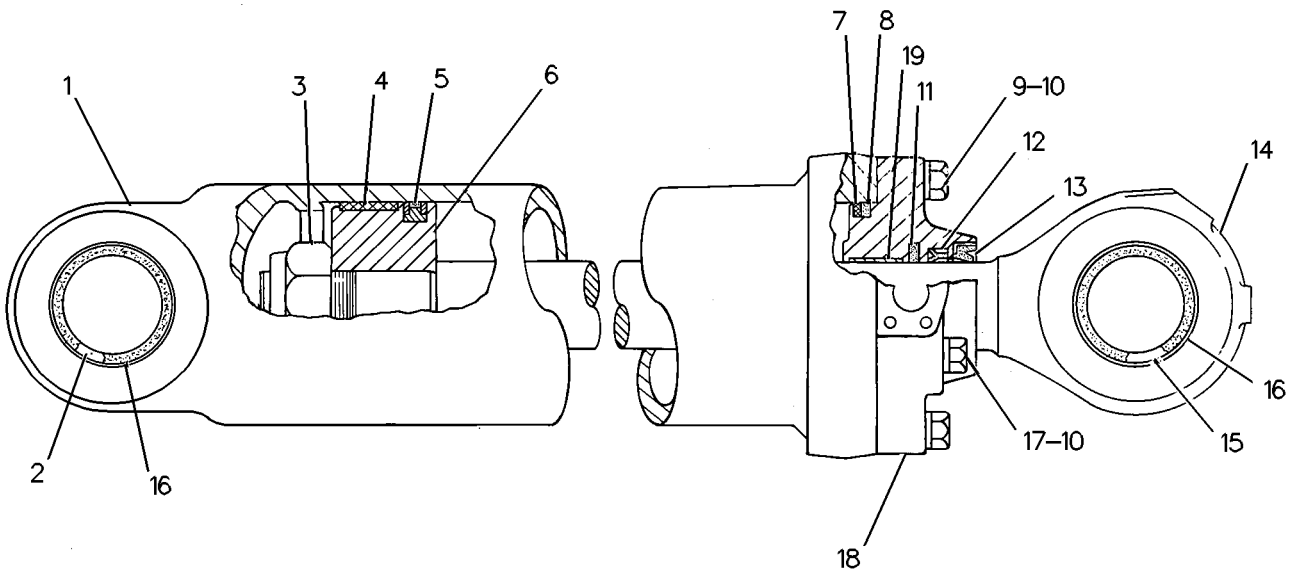

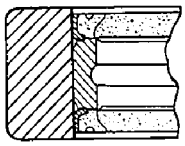

TYPICAL SEAL INSTALLATION

GRAPHIC #1 g00127229

HYDRAULIC SYSTEM

4E-6083 HYDRAULIC AR

S/N: 3XJ1-99999
NON-LOGGER
CANNOT BE USED WITH 6C-5338 CONVERSION AR
AN ATTACHMENT

SMCS-5051 **i00705148**

NOTE	PART NUMBER	QTY	PART NAME 1 2 3 4 5 6 (PRODUCT LEVEL)	SEE PAGE
Y	*8R-8397*	1	CONTROL GP-PILOT OPERATED HYD	
Y	*8R-9963*	1	GUARD GP-FRONT	
Y	**4V-9656**	1	LINES GP-FRONT	
Y	*9C-4615*	1	LINES GP-PILOT	
Y	*4E-8598*	1	VALVE & MTG GP-CONTROL	
			S/N: 3XJ1-1739	
Y	*9U-4736*	1	VALVE & MTG GP-CONTROL	
			S/N: 3XJ1740-99999	

Y-SEPARATE ILLUSTRATION

HYDRAULIC SYSTEM

6C-7857 HYDRAULIC AR

S/N: 3XJ1-99999
QUANTUM
AN ATTACHMENT

SMCS-5051 **i00635677**

NOTE	PART NUMBER	QTY	PART NAME 1 2 3 4 5 6 (PRODUCT LEVEL)	SEE PAGE
Y	*8R-8397*	1	CONTROL GP-PILOT OPERATED HYD	
Y	*8R-9963*	1	GUARD GP-FRONT	
Y	*6C-7856*	1	LINES GP-FRONT	
Y	*9C-4615*	1	LINES GP-PILOT	
Y	*4E-8598*	1	VALVE & MTG GP-CONTROL	

Y-SEPARATE ILLUSTRATION

HYDRAULIC SYSTEM

8R-9463 HYDRAULIC AR—LOGGING

S/N: 3XJ1-99999

AN ATTACHMENT

SMCS-5051 **i01338137**

NOTE	PART NUMBER	QTY	PART NAME 1 2 3 4 5 6 (PRODUCT LEVEL)	SEE PAGE
Y	*8R-8397*	1	CONTROL GP-PILOT OPERATED HYD	
Y	*8R-9963*	1	GUARD GP-FRONT	
Y	**4V-9656**	1	LINES GP-FRONT	
Y	*9C-4615*	1	LINES GP-PILOT	
Y	*4V-9655*	1	VALVE & MTG GP-CONTROL (LOGGING)	

Y-SEPARATE ILLUSTRATION

MEMORANDA

HYDRAULIC SYSTEM

9C-9751 KICKOUT & POSITIONER GP

S/N: 3XJ1-697, 699-740

SMCS-5109, 5112 **i01324579**

NOTE	REF NO	GRAPHIC REF	PART NUMBER	QTY	PART NAME 1 2 3 4 5 6 (PRODUCT LEVEL)	SEE PAGE
	1	1	**6V-8801**	2	NUT (3/8-16 THD)	
		1	**7X-0515**	2	WASHER (5MM THK)	
	2	1	**5P-1075**	4	WASHER-HARD (3MM THK)	
	3	1	**5V-1410**	1	HOLDER-SWITCH	
	4	1	**4M-6425**	2	BOLT (5/16-18X1 IN)	
	5	1	**5P-4116**	4	WASHER (2MM THK)	
	6	1	**8C-5434**	1	CONTROL GP-LIFT KICKOUT	
		1	**7N-7779**	1	SOCKET-CONNECTOR	
		1	**7N-7780**	2	PIN-CONNECTOR (BLADE)	
		1	**7N-7781**	1	HOUSING-RECEPTACLE	
	7	1	**5V-2787**	1	MAGNET AS	
	8	1	**4L-6454**	4	BOLT (3/8-16X1 IN)	
	9	1	**8T-4896**	4	WASHER-HARD (10.2X18.5X2.5MM THK)	
	10	1	**3K-7092**	2	NUT AS-SPRING	
	11	1	**8C-8844**	2	BOLT (1-8X5IN)	
	12	1	**8T-5361**	2	WASHER-HARD (5MM THK)	
	13	1	**9C-7459**	1	TUBE AS	
	14	1	**5V-1413**	1	BRACKET	
	15	1	**8T-9415**	1	SETSCREW-SQUARE HEAD	
	16	1	**4L-9337**	2	BOLT (3/8-16X1.5 IN)	
	17	1	**8T-3601**	4	SETSCREW-SOCKET (1/4-20 THD)	
	18	1	**4V-4840**	1	MAGNET AS	
	19	1	**3V-6909**	1	BLOCK	
	20	1	**8T-8912**	2	BOLT (5/16-18X2.25 IN)	
	21	1	**4V-4760**	1	COVER	
	22	1	**3E-5493**	1	CONTROL GP-BUCKET POSITIONER	
	23	1	**8M-7145**	4	WASHER (5MM THK)	
	24	1	**8C-0566**	4	WASHER (2.5MM THK)	

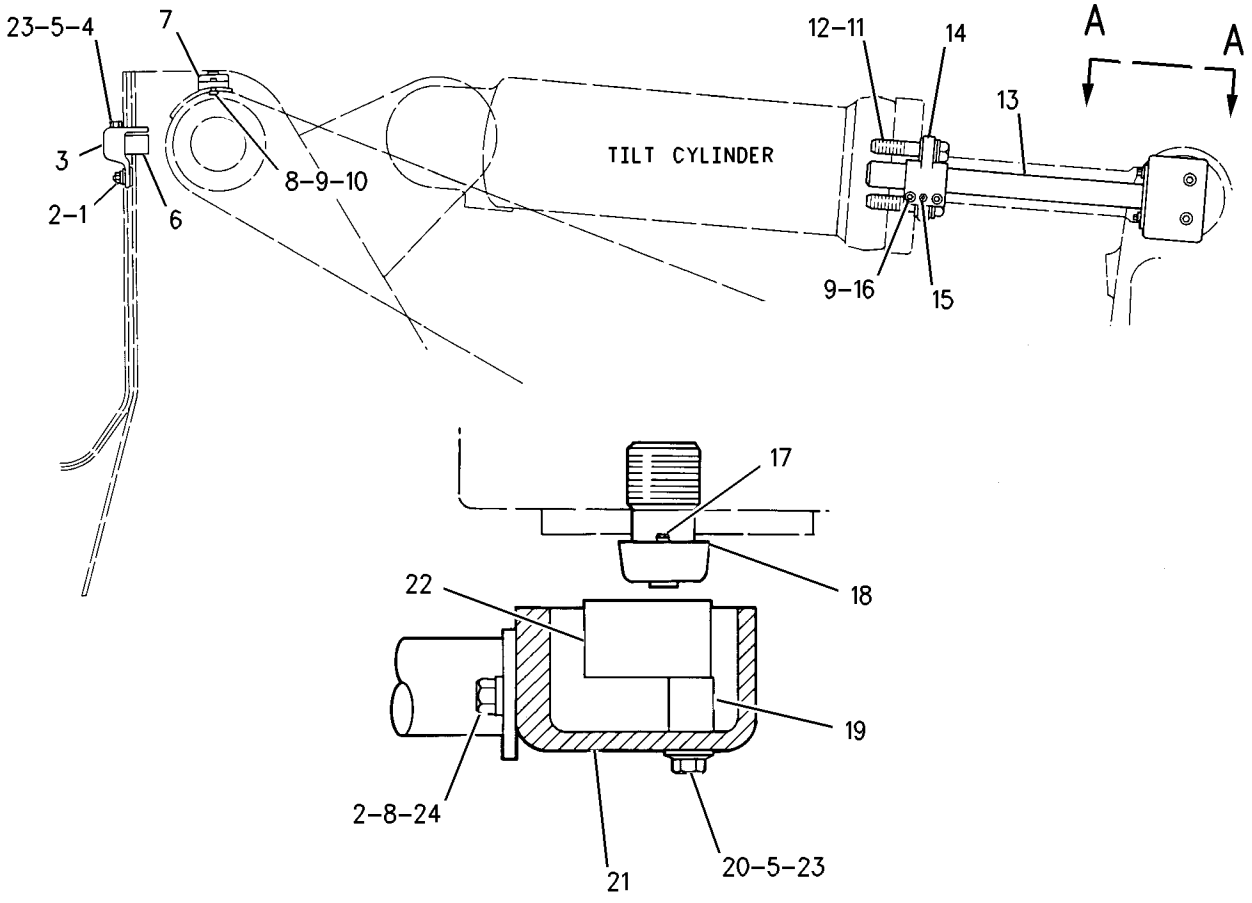

VIEW A-A

GRAPHIC #1 g00701000

HYDRAULIC SYSTEM

9C-9751 KICKOUT & POSITIONER GP

S/N: 3XJ698, 741-99999

SMCS-5109, 5112 **i00994658**

NOTE	REF NO	GRAPHIC REF	PART NUMBER	QTY	PART NAME 1 2 3 4 5 6 (PRODUCT LEVEL)	SEE PAGE
	1	1	**6V-8801**	2	NUT (3/8-16 THD)	
		1	**7X-0515**	2	WASHER (5MM THK)	
	2	1	**5P-1075**	2	WASHER-HARD (3MM THK)	
	3	1	**5V-1410**	1	HOLDER-SWITCH	
	4	1	**4M-6425**	2	BOLT (5/16-18X1IN)	
C	5	1	**8C-3121**	2	BOLT (5/16-18X1.50IN)	
C	6	1	**9X-9509**	1	CONTROL GP-ELECTRONIC (LIFT KICKOUT)	
		1	**9X-5617**	1	FILM	
		1	**7N-7779**	1	SOCKET	
		1	**7N-7780**	2	PIN-CONNECTOR (BLADE)	
		1	**7N-7781**	1	HOUSING-RECEPTACLE	
	7	1	**5V-2787**	1	MAGNET AS	
C	8	1	**4L-6454**	2	BOLT (3/8-16X1.0IN)	
	9	1	**8T-4896**	4	WASHER-HARD (2.5MM THK)	
	10	1	**3K-7092**	2	NUT AS-SPRING	
	11	1	**7X-0412**	2	BOLT (1-8X4.75IN)	
C	12	1	**8T-4223**	2	WASHER-HARD (3MM THK)	
C	13	1	**4E-5210**	1	TUBE AS	
C	14	1	**4E-5208**	1	BRACKET	
C	15	1	**8T-9404**	1	SETSCREW-SQUARE HEAD	
C	16	1	**5S-7383**	2	BOLT (3/8-16X1.75IN)	
	17	1	**8T-3601**	4	SETSCREW-SOCKET (1/4-20 THD)	
	18	1	**4V-4840**	1	MAGNET AS	
C	19	1	**7X-0579**	4	WASHER-HARD (2.0MM THK)	
C	20	1	**8T-8917**	2	BOLT (1/2-13X1.25IN)	
C	21	1	**4E-5213**	1	COVER AS	
C		1	**1F-0748**	2	NUT-WELD (1/2-13 THD)	
C	22	1	**3E-5493**	1	CONTROL GP-ELECTRONIC (BUCKET POSITIONER)	
		1	**9X-5617**	1	FILM	
		1	**7N-7779**	2	SOCKET	
		1	**7N-7780**	1	PIN-CONNECTOR (BLADE)	
		1	**7N-7782**	1	HOUSING-PLUG (1 PIN, 2 SOCKET)	
C	23	1	**8M-7145**	2	WASHER (5MM THK)	
C	24	1	**8C-0566**	2	WASHER (2.5MM THK)	

C-CHANGE FROM PREVIOUS TYPE

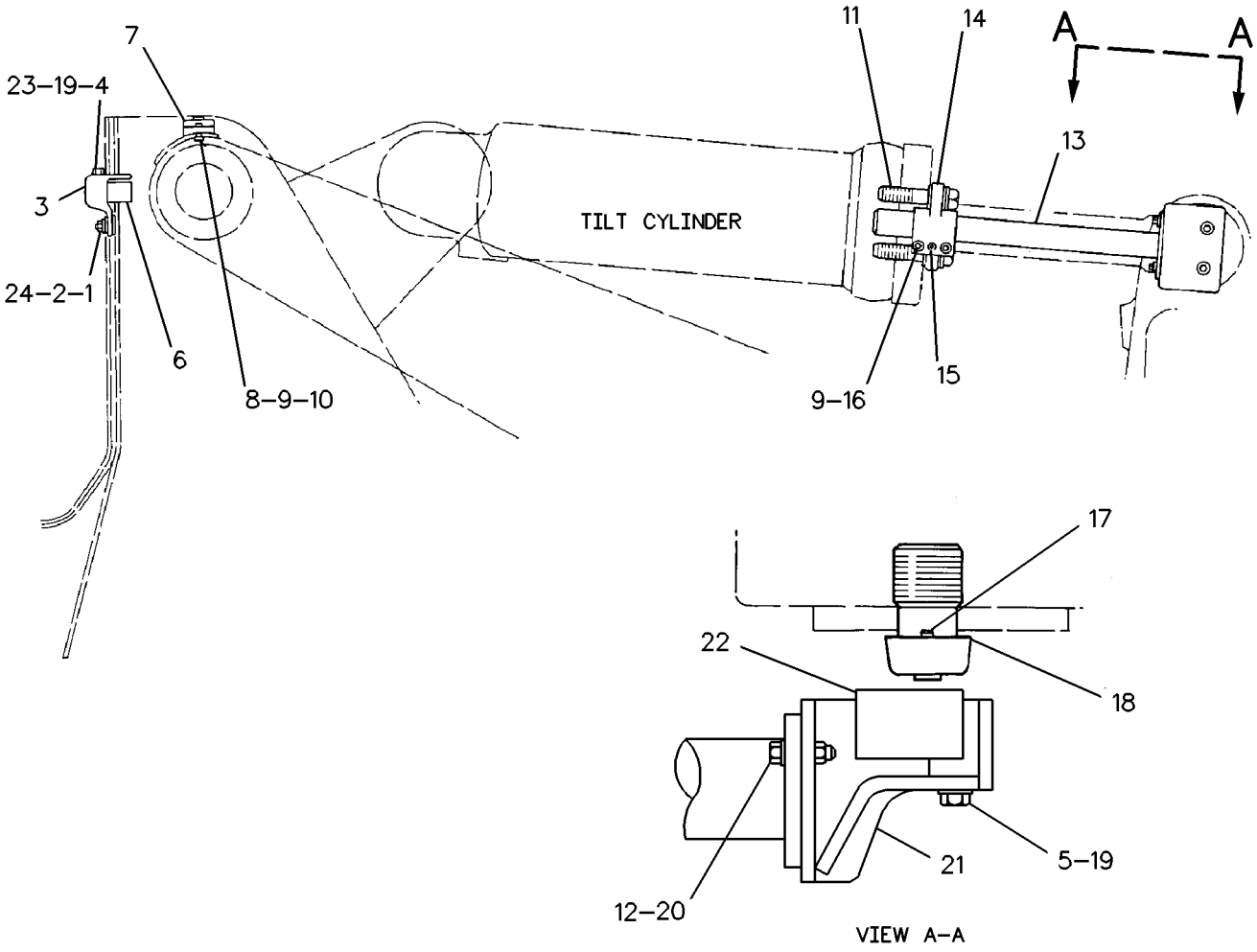

GRAPHIC #1

g00128067

HYDRAULIC SYSTEM

4V-9656 LINES GP-FRONT

S/N: 3XJ1-99999
PART OF 4E-6083, 8R-9463 HYDRAULIC AR
AN ATTACHMENT

SMCS-5057 **i00997548**

NOTE	REF NO	GRAPHIC REF	PART NUMBER	QTY	PART NAME 1 2 3 4 5 6 (PRODUCT LEVEL)	SEE PAGE
C	1	1	**8R-8374**	2	BRACKET	
	2	1	**8T-9380**	4	BOLT (7/16-14X1IN)	
	3	1	**8T-5360**	28	WASHER (2.5MM THK)	
	4	1	**8T-7212**	6	SEAL (44.92MM ID)	
I	5	1	**7V-2755**	2	HOSE AS	
	6	1	**1P-5761**	4	FLANGE-HALF	
	7	1	**9V-7713**	1	TUBE AS	
	8	1	**6V-0422**	1	PLUG	
	9	1	**8T-8916**	8	BOLT (7/16-14X1.5IN)	
	10	1	**1P-4578**	8	FLANGE-HALF	
	11	1	**8V-2466**	4	BAR	
	12	1	**8T-4223**	4	WASHER-HARD (3MM THK)	
	13	1	**8J-5914**	1	PLUG-O-RING (9/16-18 THD)	
		1	**2S-4078**	1	SEAL-O-RING (37.46MM ID)	
	14	1	**5H-2068**	2	COVER	
	15	1	**7X-0311**	8	BOLT (7/16-14X2.25IN)	
	16	1	**7X-0310**	12	BOLT	
	17	1	**7X-0447**	12	NUT (7/16-14 THD)	
	18	1	**1P-3705**	1	SEAL-RECTANGULAR (44.7MM ID)	
	19	1	**8V-2486**	2	PLATE	
	20	1	**9V-7714**	1	TUBE AS	
	21	1	**6V-0422**	1	PLUG	
	22	1	**1P-3704**	2	SEAL-RECTANGULAR (38.2MM ID)	
	23	1	**9V-4468**	1	ELBOW	
	24	1	**8T-4835**	2	BOLT (1/2X2.0 IN)	
	25	1	**7X-0326**	2	BOLT	
	26	1	**7X-0507**	8	WASHER-HARD (5.0MM THK)	
	27	1	**6V-0852**	1	CAP-DUST	
		1	**6V-3965**	1	NIPPLE AS	
	28	1	**3J-1907**	1	SEAL-O-RING (11.89MM ID)	
C	29	1	**8T-9382**	4	BOLT (7/16-14X1.25IN)	
C		1	**3S-1546**	4	NUT-FULL (7/16-14 THD)	
C	30	1	**7X-7729**	8	WASHER (3MM THK)	
C	31	1	**8R-8372**	1	BRACKET-RH	
C	32	1	**8R-8373**	1	BRACKET-LH	

C-CHANGE FROM PREVIOUS TYPE
I-SEE HOSE FABRICATION GUIDE

4V-9656 LINES GP-FRONT *(contd.)* **i00997548**

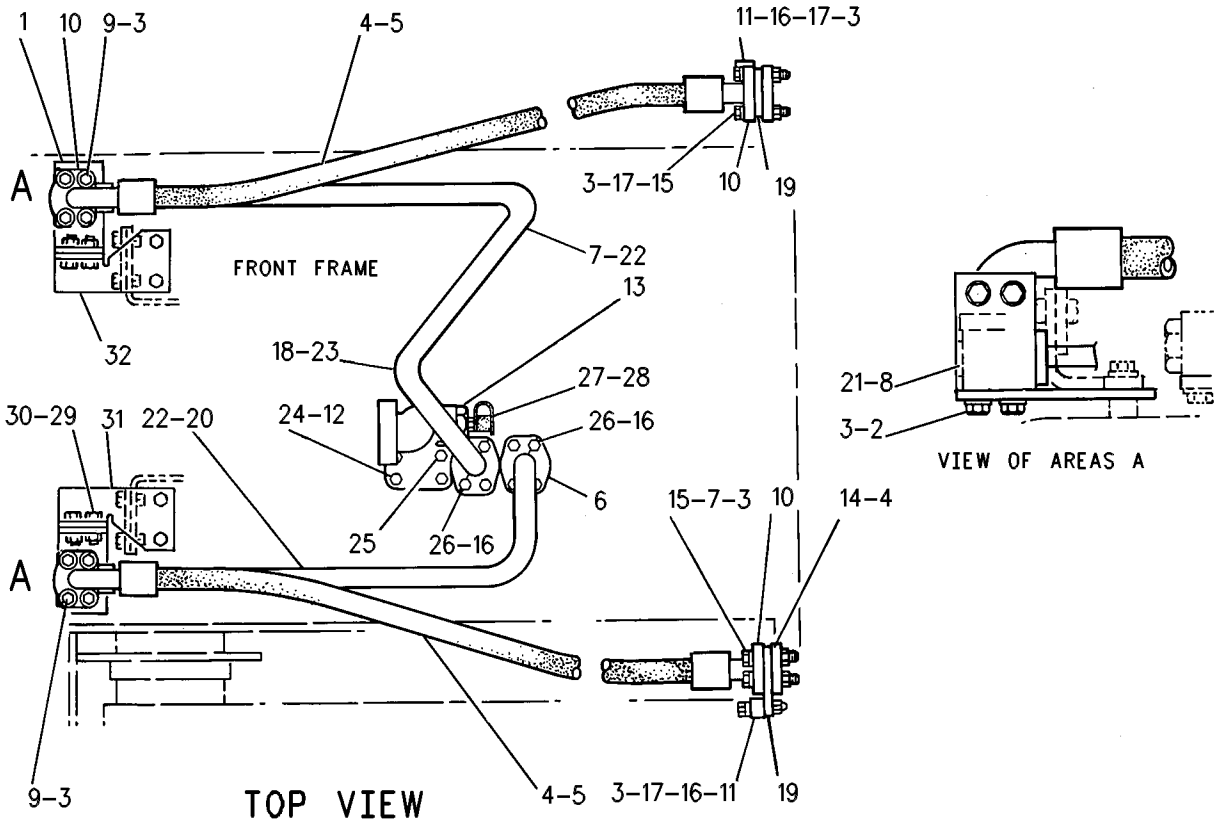

GRAPHIC #1 g00513650

HYDRAULIC SYSTEM

6C-7856 LINES GP-FRONT

S/N: 3XJ1-99999
PART OF 6C-7857 HYDRAULIC AR
AN ATTACHMENT

SMCS-5057 **i00286987**

NOTE	REF NO	GRAPHIC REF	PART NUMBER	QTY	PART NAME 1 2 3 4 5 6 (PRODUCT LEVEL)	SEE PAGE
	1	1	**8R-8374**	2	BRACKET	
	2	1	**8T-9380**	4	BOLT (7/16-14X1IN)	
	3	1	**8T-5360**	20	WASHER (2.5MM THK)	
	4	1	**8R-8373**	1	BRACKET-LH	
	5	1	**8R-8372**	1	BRACKET-RH	
	6	1	**1P-5761**	4	FLANGE-HALF	
	7	1	**9V-7713**	1	TUBE AS	
	8	1	**6V-0422**	1	PLUG	
	9	1	**7X-7729**	8	WASHER (3MM THK)	
	10	1	**8T-9382**	12	BOLT (7/16-14X1.25IN)	
		1	**3S-1546**	4	NUT-FULL (7/16-14 THD)	
	11	1	**3J-1907**	1	SEAL-O-RING (11.89MM ID)	
	12	1	**8T-4223**	4	WASHER-HARD (3MM THK)	
	13	1	**8J-5914**	1	PLUG-O-RING	
		1	**2S-4078**	1	SEAL-O-RING (37.46MM ID)	
	14	1	**5H-2068**	2	COVER	
		1	**4J-0522**	2	SEAL-O-RING (37.69MM ID)	
	15	1	**6V-0852**	1	CAP-DUST	
		1	**6V-3965**	1	NIPPLE AS	
	16	1	**8C-6877**	8	BOLT (7/16-14X1.75IN)	
	17	1	**7X-0326**	2	BOLT (1/2-13X3IN)	
	18	1	**1P-3705**	1	SEAL (44.7MM ID)	
	19	1	**8T-4835**	2	BOLT (1/2-13X2IN)	
	20	1	**9V-7714**	1	TUBE AS	
	21	1	**6V-0422**	1	PLUG	
	22	1	**1P-3704**	2	SEAL-RECTANGULAR (38.2MM ID)	
	23	1	**9V-4468**	1	ELBOW	

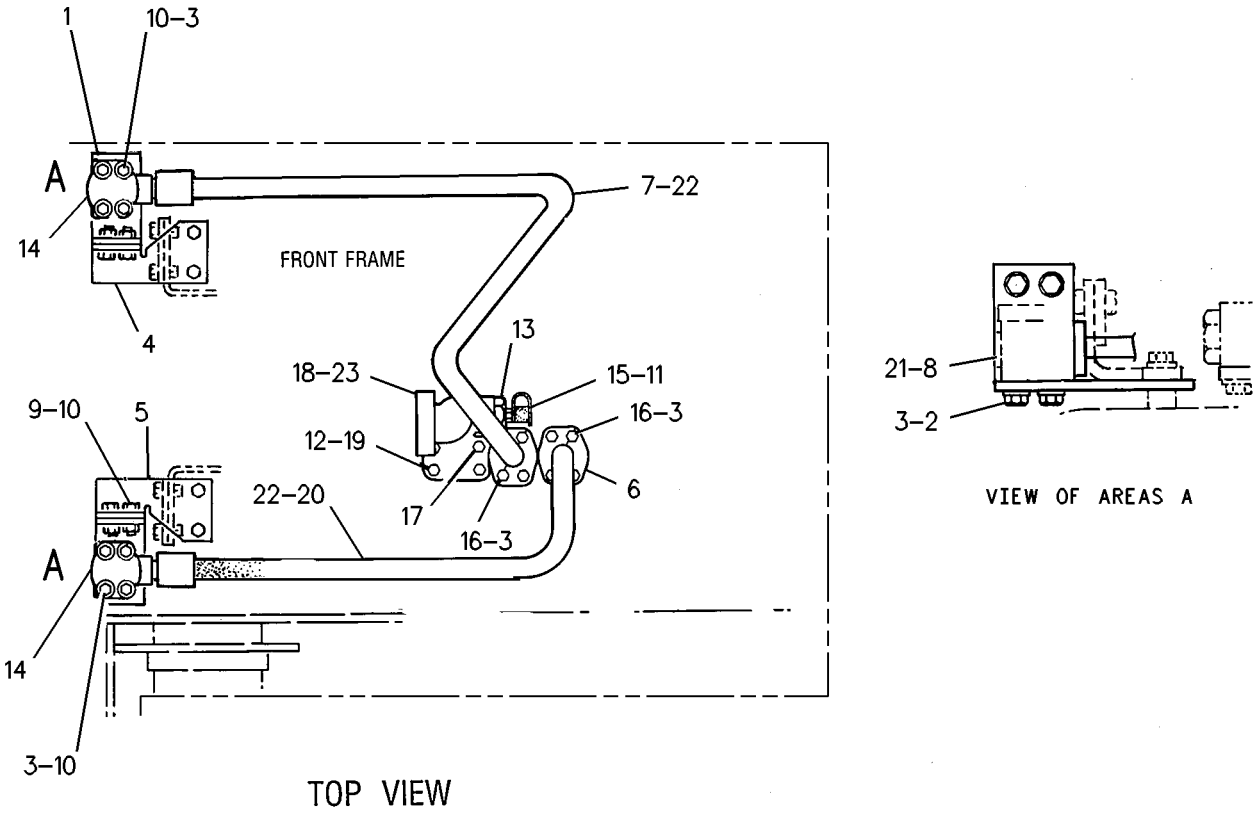

GRAPHIC #1 g00127795

HYDRAULIC SYSTEM

2V-4248 LINES GP-HYDRAULIC

S/N: 3XJ1-2048

SMCS-5057 **i01313642**

NOTE	REF NO	GRAPHIC REF	PART NUMBER	QTY	PART NAME 1 2 3 4 5 6 (PRODUCT LEVEL)	SEE PAGE
	1	1	**7X-0346**	4	BOLT (5/8-11X2IN)	
	2	1	**8T-4122**	12	WASHER (3.5MM THK)	
	3	1	**4V-8316**	1	ELBOW	
		1	**7S-1156**	1	SEAL-O-RING (113.66MM ID)	
	4	1	**9X-2201**	3	CLAMP-HOSE	
	5	1	**5P-1296**	1	HOSE	
C	6	1	**4F-7387**	1	SEAL-O-RING (100.97MM ID)	
	7	1	**4V-8318**	1	TUBE AS	
	8	1	**7X-0337**	2	BOLT (1/2-13X5.75IN)	
	9	1	**8T-4835**	2	BOLT (1/2-13X2.0 IN)	
	10	1	**1P-4579**	4	FLANGE-HALF	
	11	1	**8T-8919**	4	BOLT (1/2-13X1.75 IN)	
C	12	1	**8T-4223**	20	WASHER-HARD (3MM THK)	
I	13	1	**6W-7295**	1	HOSE AS	
	14	1	**6W-7292**	1	ELBOW	
	15	1	**5P-8077**	4	FLANGE-HALF	
	16	1	**9V-4466**	1	ELBOW	
	17	1	**8J-5914**	1	PLUG-O-RING (9/16-18 THD)	
C	18	1	**2S-4078**	1	SEAL-O-RING (37.46MM ID)	
	19	1	**6V-3965**	1	FITTING AS	
		1	**6V-0852**	1	CAP-DUST	
		1	**3J-1907**	1	SEAL-O-RING (11.89MM ID)	
C	20	1	**6C-1039**	1	CLIP AS	
	21	1	**8T-8920**	6	BOLT (1/2-13X3.25IN)	
	22	1	**5P-2424**	2	BOLT (1/2-13X2.25IN)	
C	23	1	**7X-0328**	2	BOLT (1/2-13X3.50IN)	
C	24	1	**6V-1573**	1	CLIP (TAB)	
C	25	1	**1P-3705**	3	SEAL-RECTANGULAR (44.7MM ID)	
CI	26	1	**6W-9735**	1	HOSE AS	
	27	1	**8T-9375**	1	BOLT (3/8-16X1.75 IN)	
	28	1	**7X-0325**	2	BOLT (1/2-13X0.75IN)	
	29	1	**8T-4896**	4	WASHER-HARD (10.2 X 18.5 X 2.5MM THK)	
	30	1	**4L-9337**	1	BOLT (3/8-16X1.5 IN)	
	31	1	**6V-1572**	2	CLIP (SLOT)	
	32	1	**8T-6871**	8	BOLT (5/8-11X2.50 IN)	
C	33	1	**4J-0524**	4	SEAL-O-RING (47.22MM ID)	
	34	1	**3K-6060**	2	LOCKNUT (3/8-16 THD)	
	35	1	**6V-1574**	2	GROMMET	
	36	1	**8C-3451**	1	CAP-DUST	
		1	**8C-3446**	1	VALVE-FLUID SAMPLING	
		1	**3J-7354**	1	SEAL-O-RING (8.92MM ID)	
	37	1	**8R-0752**	1	ADAPTER	

C-CHANGE FROM PREVIOUS TYPE
I-SEE HOSE FABRICATION GUIDE

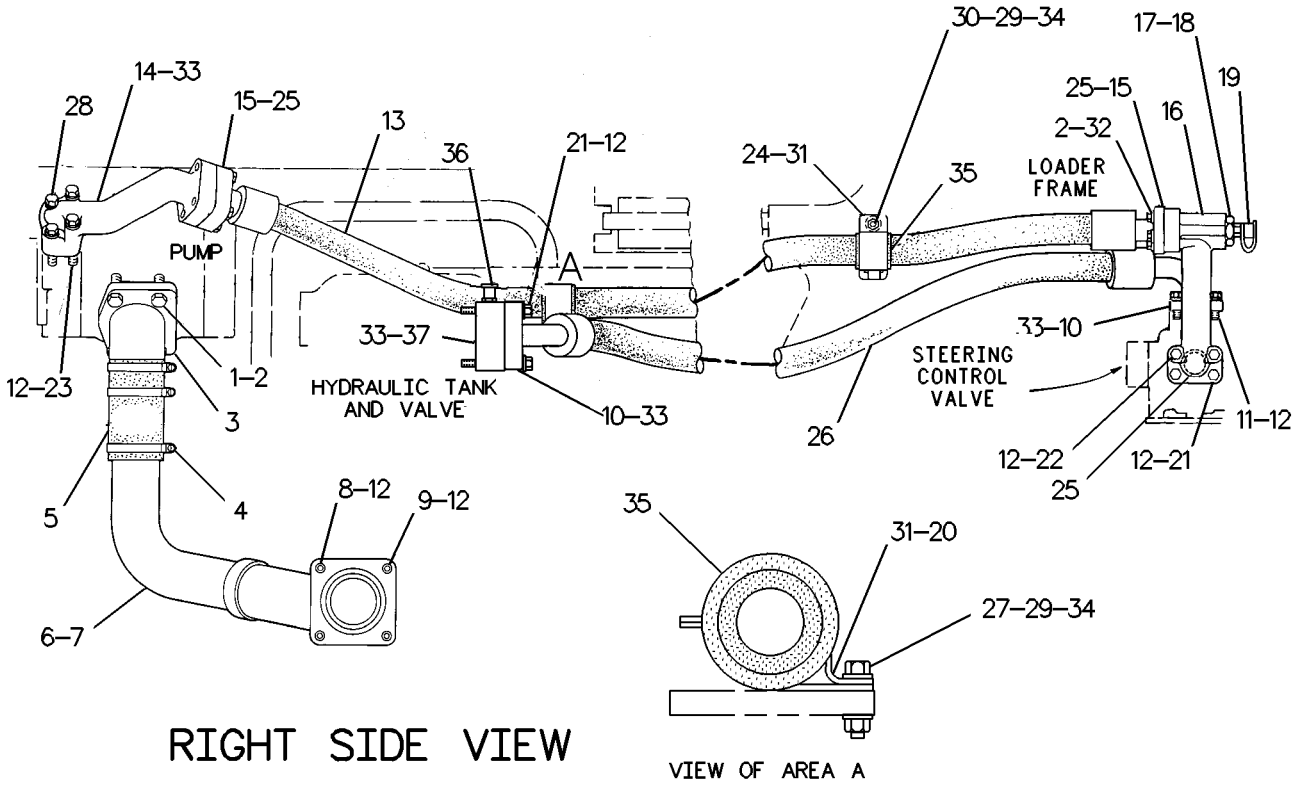

GRAPHIC #1 g00283487

HYDRAULIC SYSTEM

2V-4248 LINES GP-HYDRAULIC

S/N: 3XJ2049-2405

SMCS-5057 **i01313647**

NOTE	REF NO	GRAPHIC REF	PART NUMBER	QTY	PART NAME 1 2 3 4 5 6 (PRODUCT LEVEL)	SEE PAGE
	1	1	**7X-0346**	4	BOLT (5/8-11X2IN)	
	2	1	**8T-4122**	12	WASHER (3.5MM THK) (21MM OD)	
	3	1	**4V-8316**	1	ELBOW	
		1	**7S-1156**	1	SEAL-O-RING (113.66MM ID)	
	4	1	**9X-2201**	3	CLAMP-HOSE	
	5	1	**5P-1296**	1	HOSE	
	6	1	**4F-7387**	1	SEAL-O-RING (100.97MM ID)	
	7	1	**4V-8318**	1	TUBE AS	
	8	1	**7X-0337**	2	BOLT (1/2-13X5.75IN)	
	9	1	**8T-4835**	2	BOLT (1/2-13X2.0 IN)	
	10	1	**1P-4579**	4	FLANGE-HALF	
	11	1	**8T-8919**	4	BOLT (1/2-13X1.75 IN)	
	12	1	**8T-4223**	20	WASHER-HARD (3MM THK)	
I	13	1	**6W-7295**	1	HOSE AS	
	14	1	**6W-7292**	1	ELBOW	
	15	1	**5P-8077**	4	FLANGE-HALF	
	16	1	**9V-4466**	1	ELBOW	
	17	1	**8J-5914**	1	PLUG-O-RING (9/16-18 THD)	
	18	1	**2S-4078**	1	SEAL-O-RING (37.46MM ID)	
	19	1	**6V-3965**	1	FITTING AS	
		1	**6V-0852**	1	CAP-DUST	
		1	**3J-1907**	1	SEAL-O-RING (11.89MM ID)	
	20	1	**6C-1039**	1	CLIP AS	
	21	1	**8T-8920**	2	BOLT (1/2-13X3.25IN)	
	22	1	**5P-2424**	2	BOLT (1/2-13X2.25IN)	
	23	1	**7X-0328**	2	BOLT (1/2-13X3.50IN)	
	24	1	**6V-1573**	1	CLIP (TAB)	
	25	1	**1P-3705**	3	SEAL-RECTANGULAR (44.7MM ID)	
CI	26	1	**9U-2393**	1	HOSE AS	
	27	1	**8T-9375**	1	BOLT (3/8-16X1.75 IN)	
	28	1	**7X-0325**	2	BOLT (1/2-13X0.75IN)	
	29	1	**8T-4896**	4	WASHER-HARD (10.2 X 18.5 X 2.5MM THK)	
	30	1	**4L-9337**	1	BOLT (3/8-16X1.5 IN)	
	31	1	**6V-1572**	2	CLIP (SLOT)	
	32	1	**8T-6871**	8	BOLT (5/8-11X2.50 IN)	
	33	1	**4J-0524**	4	SEAL-O-RING (47.22MM ID)	
	34	1	**3K-6060**	2	LOCKNUT (3/8-16 THD)	
	35	1	**6V-1574**	2	GROMMET (56MM ID)	
	36	1	**8C-3451**	1	CAP-DUST	
		1	**8C-3446**	1	VALVE-FLUID SAMPLING	
		1	**3J-7354**	1	SEAL-O-RING (8.92MM ID)	
	37	1	**8R-0752**	1	ADAPTER	
CY	38	1	**6E-3528**	1	VALVE GP-BREAKER RELIEF	
C		1	**3D-2824**	1	SEAL-O-RING (23.47MM ID)	
C	39	1	**8T-9389**	4	BOLT (1/2-13X2.75IN)	

C-CHANGE FROM PREVIOUS TYPE
I-SEE HOSE FABRICATION GUIDE
Y-SEPARATE ILLUSTRATION

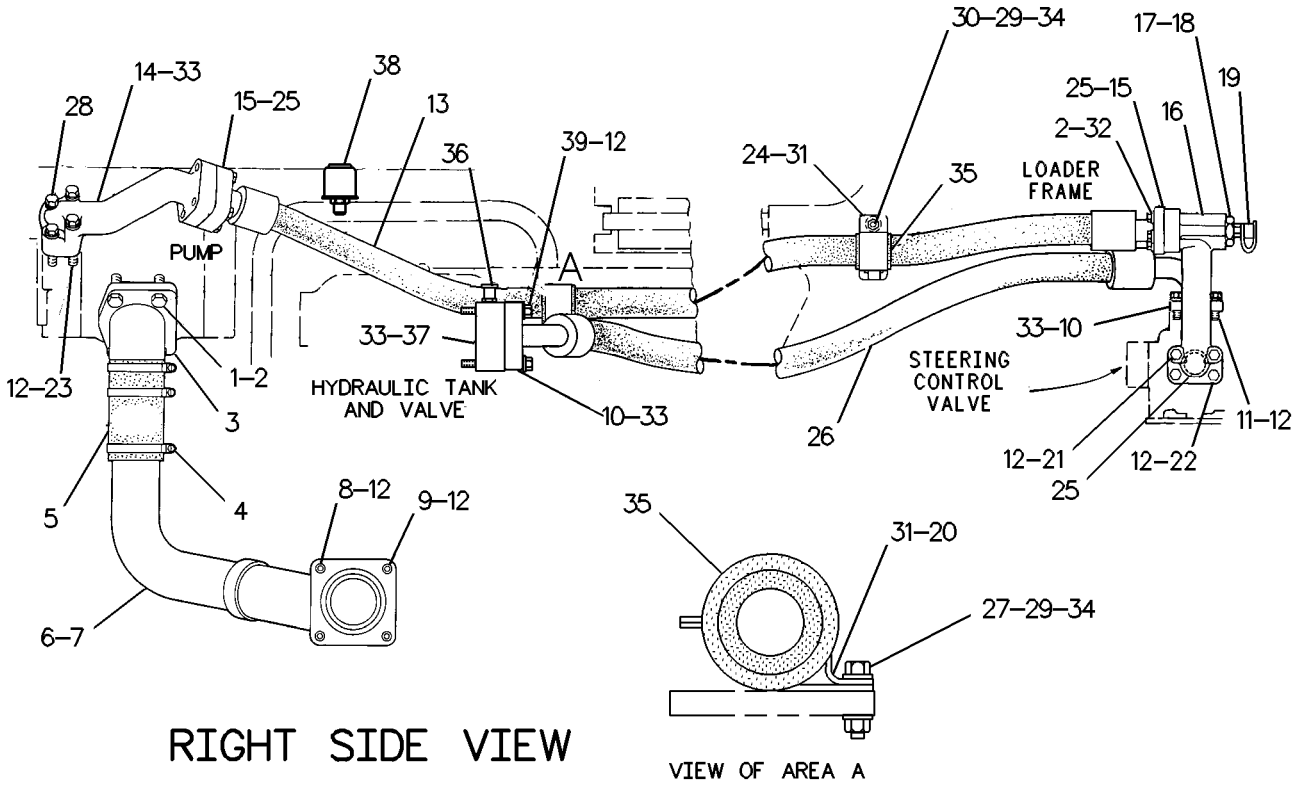

GRAPHIC #1 g00283488

HYDRAULIC SYSTEM

2V-4248 LINES GP-HYDRAULIC

S/N: 3XJ2406-99999

SMCS-5057 **i01217857**

NOTE	REF NO	GRAPHIC REF	PART NUMBER	QTY	PART NAME 1 2 3 4 5 6 (PRODUCT LEVEL)	SEE PAGE
	1	1	**7X-0346**	4	BOLT (5/8-11X2IN)	
	2	1	**8T-4122**	12	WASHER (3.5MM THK)	
	3	1	**4V-8316**	1	ELBOW	
		1	**7S-1156**	1	SEAL-O-RING (113.66MM ID)	
	4	1	**9X-2201**	3	CLAMP-HOSE	
BE	5	1	**5P-1296**		HOSE	
	6	1	**4F-7387**	1	SEAL-O-RING (100.97MM ID)	
	7	1	**4V-8318**	1	TUBE AS	
	8	1	**7X-0337**	2	BOLT (1/2-13X5.75IN)	
	9	1	**8T-4835**	2	BOLT (1/2-13X2.0 IN)	
	10	1	**1P-4579**	4	FLANGE-HALF	
	11	1	**8T-8919**	4	BOLT (1/2-13X1.75IN)	
	12	1	**8T-4223**	20	WASHER-HARD (3MM THK)	
CI	13	1	**6W-0328**	1	HOSE AS	
C	14	1	**9V-4465**	1	ELBOW	
	15	1	**5P-8077**	4	FLANGE-HALF	
	16	1	**9V-4466**	1	ELBOW	
	17	1	**8J-5914**	1	PLUG-O-RING (9/16-18 THD)	
	18	1	**2S-4078**	1	SEAL-O-RING (37.46MM ID)	
	19	1	**6V-3965**	1	FITTING AS	
		1	**6V-0852**	1	CAP-DUST	
		1	**3J-1907**	1	SEAL-O-RING (11.89MM ID)	
	20	1	**6C-1039**	1	CLIP AS	
	21	1	**8T-8920**	2	BOLT (1/2-13X3.25IN)	
	22	1	**5P-2424**	2	BOLT (1/2-13X2.25IN)	
	23	1	**7X-0328**	2	BOLT (1/2-13X3.50IN)	
C	24	1	**6V-1573**	4	CLIP (TAB)	
	25	1	**1P-3705**	3	SEAL-RECTANGULAR (44.7MM ID)	
I	26	1	**107-5609**	1	HOSE AS	
C	27	1	**8T-9375**	1	BOLT (3/8-16X1.75)	
	28	1	**7X-0325**	2	BOLT (1/2-13X0.75IN)	
C	29	1	**8T-4896**	8	WASHER-HARD (2.5MM THK)	
	30	1	**4L-9337**	3	BOLT (3/8-16X1.5IN)	
C	31	1	**6V-1572**	5	CLIP (SLOT)	
	32	1	**8T-6871**	4	BOLT (5/8-11X2.50IN)	
	33	1	**4J-0524**	4	SEAL-O-RING (47.22MM ID)	
C	34	1	**3K-6060**	4	LOCKNUT (3/8-16 THD)	
C	35	1	**6V-1574**	5	GROMMET	
	36	1	**8C-3451**	1	CAP-DUST	
		1	**8C-3446**	1	VALVE-FLUID SAMPLING	
		1	**3J-7354**	1	SEAL-O-RING (8.92MM ID)	
	37	1	**8R-0752**	1	ADAPTER	
Y	38	1	**6E-3528**	1	VALVE GP-BREAKER RELIEF	
		1	**3D-2824**	1	SEAL-O-RING (23.47MM ID)	
	39	1	**8T-9389**	4	BOLT (1/2-13X2.75IN)	
C	40	1	**6C-1276**	1	SPACER (30.0MM THK)	
C		1	**1P-3708**	1	SEAL-RECTANGULAR (57.4MM ID)	
C	41	1	**7X-0351**	4	BOLT (5/8-11X3.75IN)	
	42	1	**107-4862**	1	PLATE	
					AVAILABLE REPAIR KIT(S):	
			1U-0367	1	KIT-SEAL	
					(INCLUDES RING & SEAL)	

B-USE AS REQUIRED
C-CHANGE FROM PREVIOUS TYPE
E-ORDER BY THE CENTIMETER
I-SEE HOSE FABRICATION GUIDE
Y-SEPARATE ILLUSTRATION

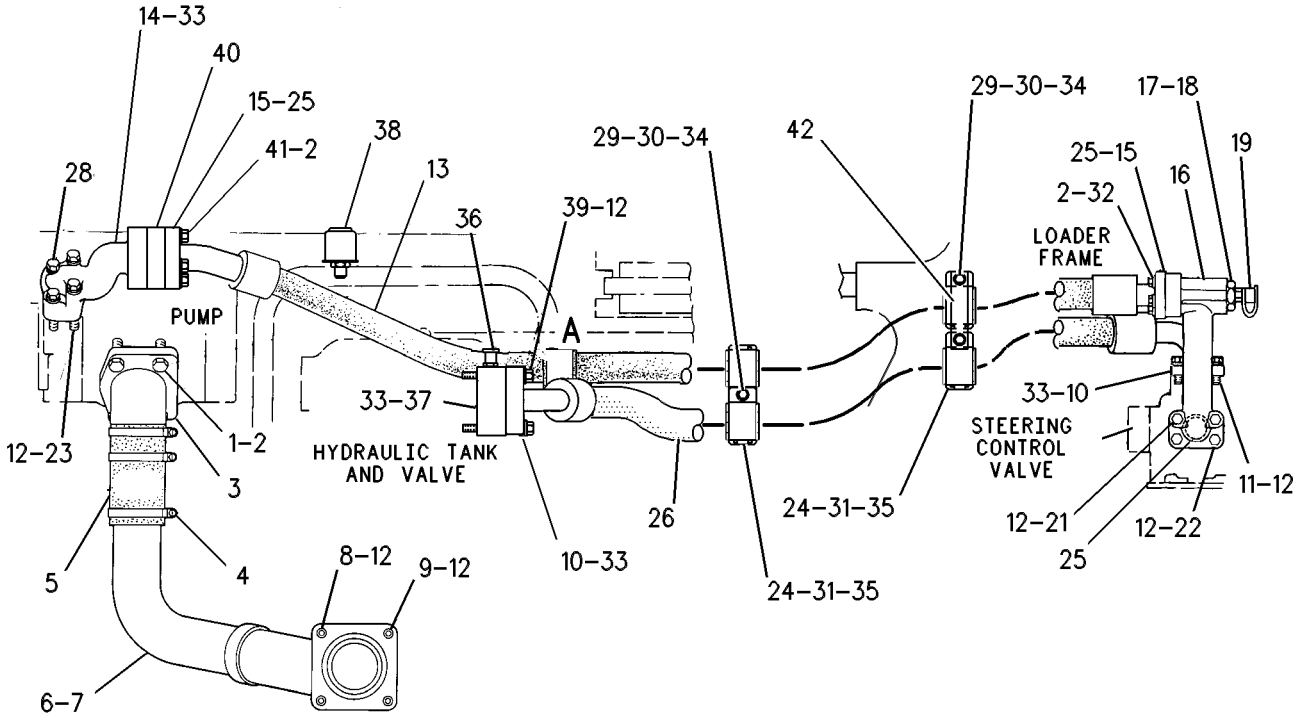

RIGHT SIDE VIEW

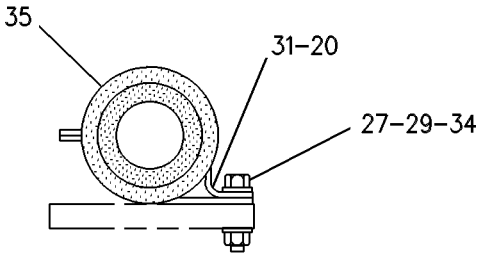

VIEW OF AREA A

GRAPHIC #1 g00283489

HYDRAULIC SYSTEM

8R-8394 LINES GP-HYDRAULIC OIL COOLER

S/N: 3XJ1-99999

SMCS-1374, 5057 **i01335591**

NOTE	REF NO	GRAPHIC REF	PART NUMBER	QTY	PART NAME 1 2 3 4 5 6 (PRODUCT LEVEL)	SEE PAGE
	1	1	**6D-4246**	2	CLIP (19.05MM ID)	
	2	1	**5M-2894**	6	WASHER-HARD (2.5MM THK)	
	3	1	**9S-8752**	4	NUT-FULL (3/8-16 THD)	
	4	1	**5K-9090**	1	SEAL-O-RING (23.52MM ID)	
E	5	1	**5P-0742**	5	HOSE (10.0 CM EA)	
	6	1	**7X-7958**	10	CLAMP-HOSE	
	7	1	**7X-0328**	4	BOLT (1/2-13X3.50 IN)	
	8	1	**4D-9164**	7	CLIP	
	9	1	**9S-4181**	1	PLUG-STRAIGHT THREAD (1-5/16-12 THD)	
	10	1	**7M-8485**	2	SEAL-O-RING (29.74MM ID)	
	11	1	**6C-0606**	1	BLOCK	
	12	1	**1P-3705**	1	SEAL-RECTANGULAR (44.7MM ID)	
	13	1	**6V-8716**	1	CONNECTOR-SEAL	
	14	1	**8R-8820**	1	TUBE AS	
	15	1	**4E-4495**	1	TUBE	
	16	1	**8R-8818**	1	TUBE AS	
	17	1	**9V-6392**	1	TUBE	
	18	1	**8R-8823**	1	TUBE AS	
	19	1	**4E-4493**	2	TUBE AS	
	20	1	**6V-9875**	1	CONNECTOR	
	21	1	**2S-4078**	1	SEAL-O-RING (37.46MM ID)	
	22	1	**6V-9746**	5	SEAL-O-RING (18.94MM ID)	
	23	1	**4E-4494**	1	TUBE AS	
	24	1	**4E-4531**	2	TEE	
E	25	1	**5P-1424**	4	HOSE (9.0 CM EA)	
	26	1	**4E-4532**	4	ELBOW	
	27	1	**9X-2488**	8	CLAMP-HOSE	
	28	1	**6V-8398**	6	SEAL-O-RING (12.47MM ID)	
	29	1	**2P-1293**	1	LOCKNUT-BULKHEAD (1 3/16-12 THD)	
	30	1	**6V-8997**	1	UNION	
M	31	1	**6V-8212**	2	BOLT (M10X1.50X16MM)	

E-ORDER BY THE CENTIMETER
M-METRIC PART

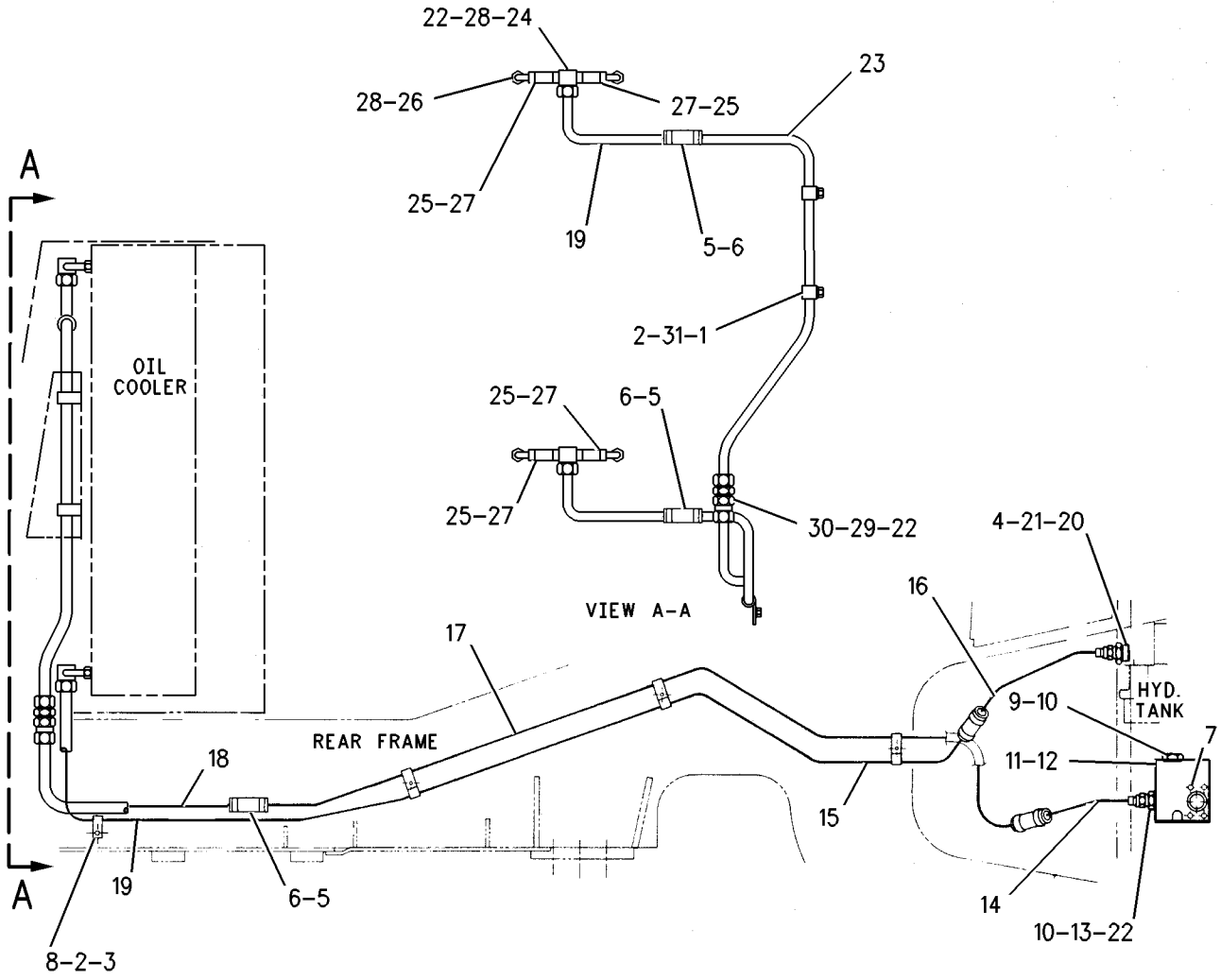

GRAPHIC #1 g00705730

HYDRAULIC SYSTEM

9C-8381 LINES GP-LIFT CYLINDER

S/N: 3XJ1-99999

SMCS-5057, 5102 **i01336292**

NOTE	REF NO	GRAPHIC REF	PART NUMBER	QTY	PART NAME 1 2 3 4 5 6 (PRODUCT LEVEL)	SEE PAGE
I	1	1	**6W-9687**	1	HOSE AS	
I	2	1	**6W-9686**	1	HOSE AS	
	3	1	**4J-0520**	8	SEAL-O-RING (32.92MM ID)	
	4	1	**1P-4577**	16	FLANGE-HALF	
	5	1	**4L-9337**	32	BOLT (3/8-16X1.5 IN)	
	6	1	**8T-4896**	50	WASHER-HARD (10.2X18.5X2.5MM THK)	
	7	1	**7X-0290**	2	BOLT (3/8-16X3.50 IN)	
	8	1	**1V-7801**	2	SPACER (2.38IN THK)	
	9	1	**9C-8718**	1	TUBE AS	
	11	1	**9C-8719**	1	TUBE AS	
	13	1	**4L-6459**	2	BOLT (3/8-16X2.5IN)	
	14	1	**2J-1020**	2	SPACER	
	15	1	**5S-7383**	8	BOLT (3/8-16X1.75 IN)	
	16	1	**6W-9737**	1	ELBOW-RH	
I	17	1	**9C-4215**	1	HOSE AS	
	18	1	**8T-4223**	8	WASHER-HARD (3MM THK)	
	19	1	**1P-3704**	8	SEAL-RECTANGULAR (38.2MM ID)	
	20	1	**6W-9738**	1	ELBOW-LH	
	21	1	**8T-2501**	8	BOLT (3/8-16X2.0 IN)	
	22	1	**6W-9678**	1	TUBE AS-LH	
	23	1	**1P-3705**	2	SEAL-RECTANGULAR (44.7MM ID)	
	24	1	**7X-0326**	8	BOLT (1/2-13X3IN)	
	25	1	**9C-8722**	2	TUBE AS	
	26	1	**7X-0310**	16	BOLT (7/16-14 THD)	
	27	1	**8T-5360**	16	WASHER (2.5MM THK)	
I	28	1	**9C-4214**	1	HOSE AS	
Y	29	1	**9T-7272**	1	VALVE GP-SHUTTLE (RESOLVER)	
	30	1	**1P-5761**	8	FLANGE-HALF	
	31	1	**6W-9677**	1	TUBE AS-RH	
	32	1	**4L-6454**	2	BOLT (3/8-16X1 IN)	
	33	1	**7X-0772**	4	WASHER-HARD (2.5MM THK)	

I-SEE HOSE FABRICATION GUIDE
Y-SEPARATE ILLUSTRATION

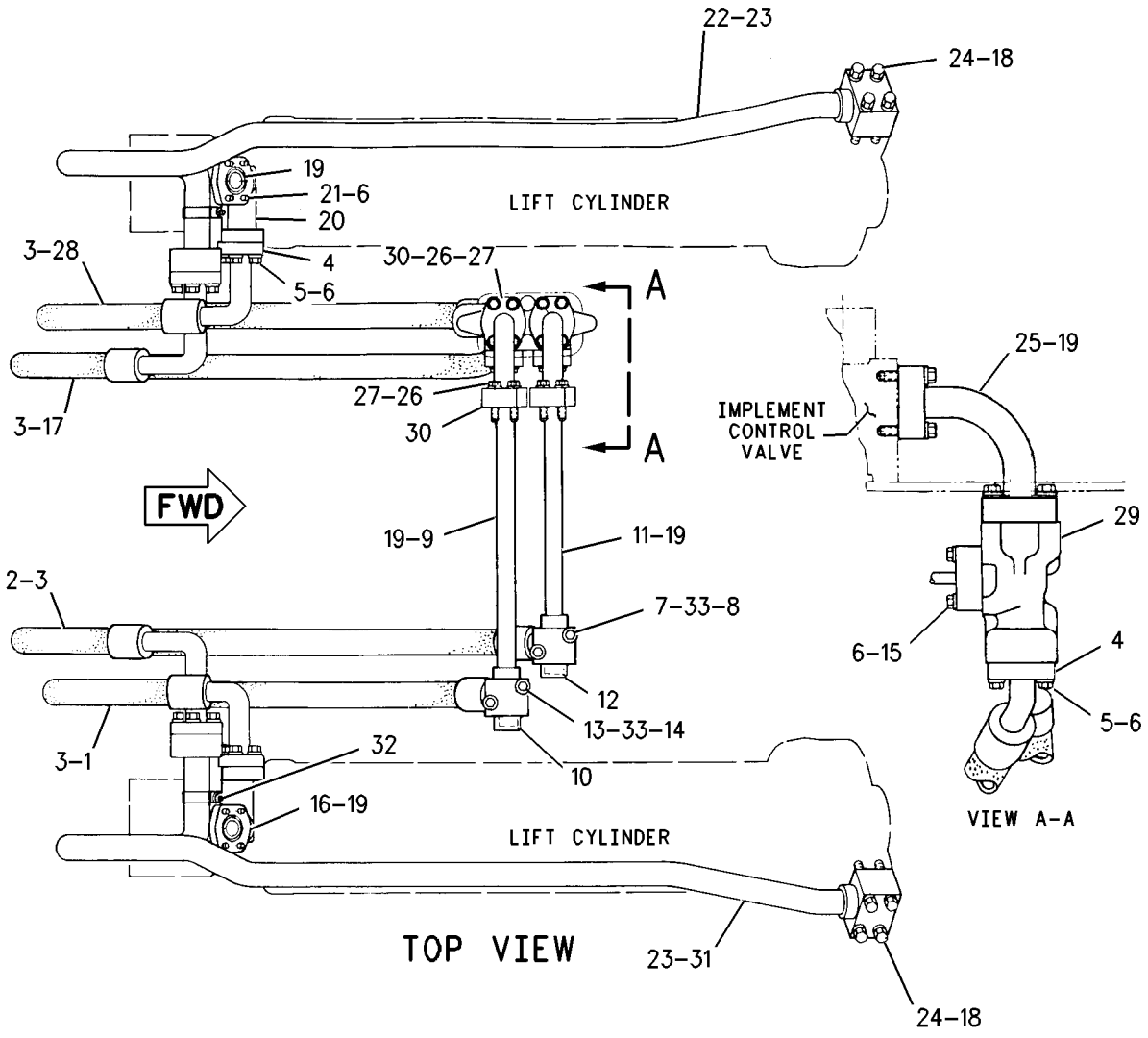

GRAPHIC #1 g00700797

HYDRAULIC SYSTEM

9C-1084 LINES GP-PILOT

S/N: 3XJ1-99999

SMCS-5057, 5059 **i01310463**

NOTE	REF NO	GRAPHIC REF	PART NUMBER	QTY	PART NAME 1 2 3 4 5 6 (PRODUCT LEVEL)	SEE PAGE
	1	1	**4V-0611**	4	CLAMP	
	2	1	**7V-6659**	8	CLAMP-DOUBLE	
		1	**4V-0939**	6	BOLT (5/16-18X1.73 IN)	
		1	**4V-0968**	4	LOCK	
	3	1	**7V-6571**	8	GROMMET	
	4	1	**6V-8625**	1	ELBOW-90 DEGREE (3/4-16 THD)	
	5	1,2	**3K-0360**	3	SEAL-O-RING (16.36MM ID)	
	6	1,2	**6V-8398**	3	SEAL-O-RING (12.47MM ID)	
	7	1,2	**6V-8397**	18	SEAL-O-RING (9.27MM ID)	
	8	1,2	**3J-1907**	18	SEAL-O-RING (11.89MM ID)	
	9	1	**6V-8636**	7	ADAPTER-SEAL (ORFS 11/16-16; PORT 9/16-18)	
	10	1	**8C-0564**	1	CONNECTOR-O-RING	
	11	1	**5P-8167**	2	BOLT (3/8-16X.625IN)	
I	12	2	**9C-2630**	1	HOSE AS	
I	13	1	**9C-2632**	1	HOSE AS	
	14	1,2	**6V-9001**	3	ELBOW-45 DEGREE (9/16-18 THD)	
	15	1	**6V-8724**	3	ELBOW-90 DEGREE (9/16-18 THD)	
I	16	1	**091-9120**	1	HOSE AS	
I	17	2	**9C-2631**	1	HOSE AS	
	18	1	**8V-0603**	1	BRACKET AS	
	19	1	**9C-2439**	1	TUBE AS	
	20	1	**6V-9850**	1	ELBOW-SWIVEL (11/16-16 THD)	
	21	1	**2P-8421**	1	ADAPTER-O-RING	
	22	1	**3D-2824**	1	SEAL-O-RING (23.47MM ID)	
	23	1	**6V-8781**	1	TEE-FACE SEAL	
I	24	1	**9C-2440**	1	HOSE AS	
	25	1	**8W-2756**	1	ADAPTER-STRAIGHT THREAD	
I	26	2	**9C-2633**	1	HOSE AS	
	27	1	**9T-4543**	1	VALVE GP-CHECK	
	28	1	**8T-2335**	1	ELBOW-45 DEGREE	
I	29	1	**9C-8605**	1	HOSE AS	
Y	30	1	**1U-2226**	1	VALVE GP-SELECTOR & PRESS CONT (PILOT)	
	31	1	**6V-8641**	1	CONNECTOR	
		1	**4J-5477**	1	SEAL-O-RING (8.61MM ID)	
I	32	1	**9C-2635**	1	HOSE AS	
	33	2	**9T-3096**	1	VALVE GP-CHECK	
	34	2	**6V-8723**	1	ELBOW-90 DEGREE (3/4-16 THD)	
I	35	2	**8W-2959**	1	HOSE AS	
	36	2	**1S-0994**	2	CLIP (20.64MM ID)	
I	37	2	**9C-2441**	1	HOSE AS	
	38	2	**8T-2501**	2	BOLT (3/8-16X2.0IN)	
	39	2	**6V-9851**	1	ELBOW-90 DEGREE SWIVEL (13/16-16 THD)	
	40	2	**8V-0717**	1	BRACKET AS	
	41	2	**4D-5371**	1	CLIP	
	42	2	**8T-9377**	1	BOLT (3/8-16X2.25IN)	
		2	**0S-2307**	1	SPACER-PAWL	
	43	1,2	**8T-4896**	4	WASHER-HARD (2.5MM THK)	

I-SEE HOSE FABRICATION GUIDE
Y-SEPARATE ILLUSTRATION

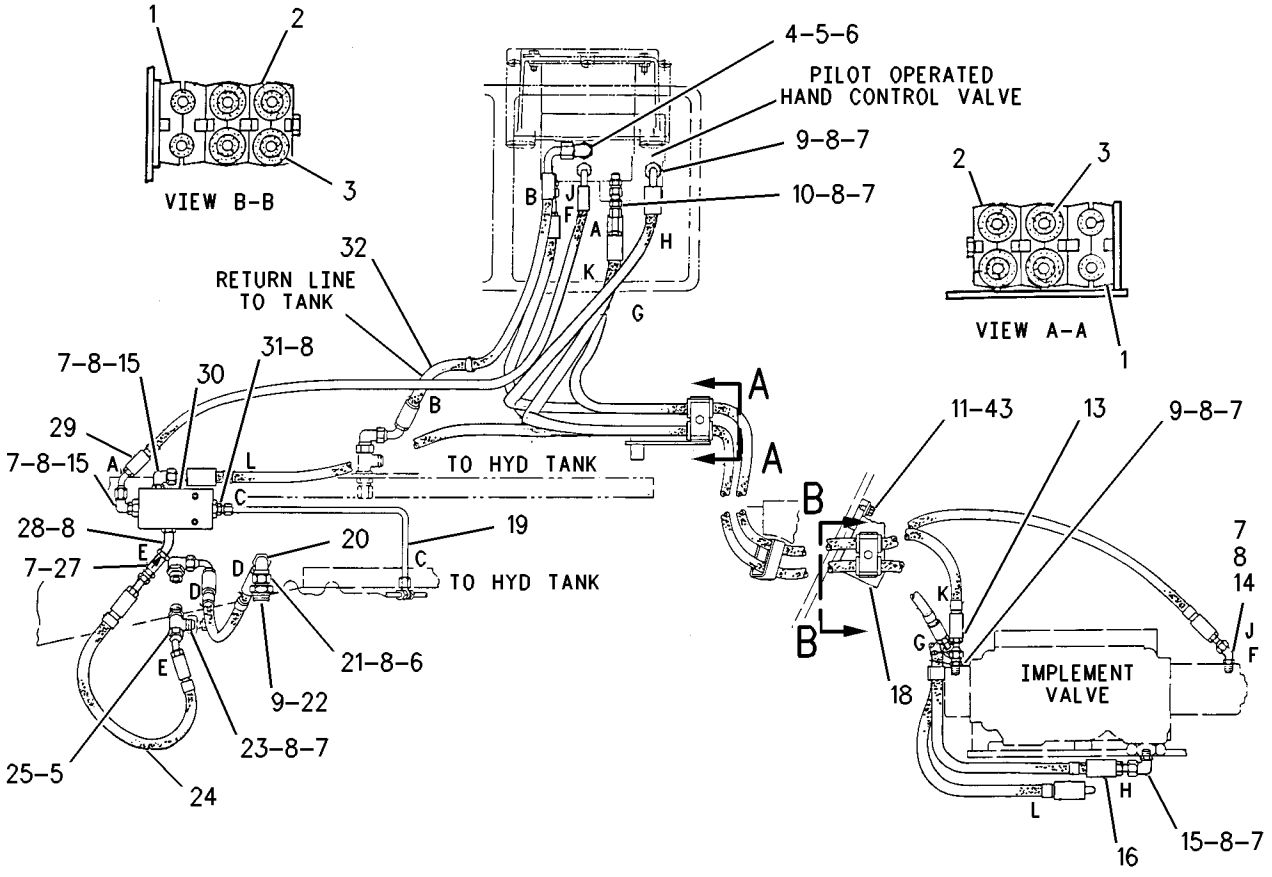

GRAPHIC #1 g00694512

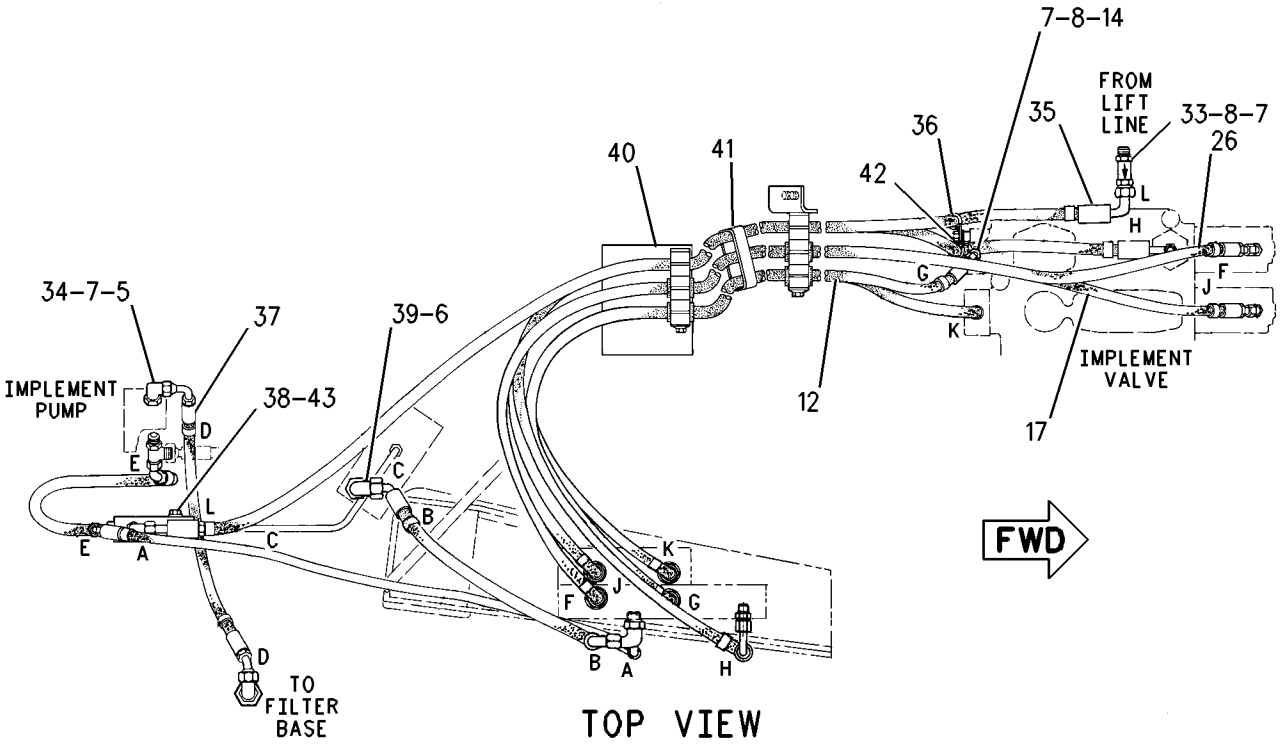

GRAPHIC #2 g00694513

HYDRAULIC SYSTEM

9C-4615 LINES GP-PILOT

S/N: 3XJ1-99999
PART OF 4E-6083, 6C-7857, 8R-9463 HYDRAULIC AR
AN ATTACHMENT

SMCS-5057, 5059 **i01324369**

NOTE	REF NO	GRAPHIC REF	PART NUMBER	QTY	PART NAME 1 2 3 4 5 6 (PRODUCT LEVEL)	SEE PAGE
C	1	1	**6V-8724**	1	ELBOW-90 DEGREE	
I	2	1	**9C-2716**	1	HOSE AS	
I	5	1	**9C-2773**	1	HOSE AS	
	6	1	**4V-0968**	2	LOCK	
	7	1	**7V-6659**	4	CLAMP-DOUBLE	
	8	1	**4V-0939**	2	BOLT (5/16-18X1.73 IN)	
	9	1	**7V-6571**	4	GROMMET	
C	10	1	**6V-8636**	3	CONNECTOR-SEAL	
C	11	1	**6V-8397**	4	SEAL-O-RING (9.27MM ID)	
C	12	1	**3J-1907**	4	SEAL-O-RING (11.89MM ID)	

C-CHANGE FROM PREVIOUS TYPE
I-SEE HOSE FABRICATION GUIDE

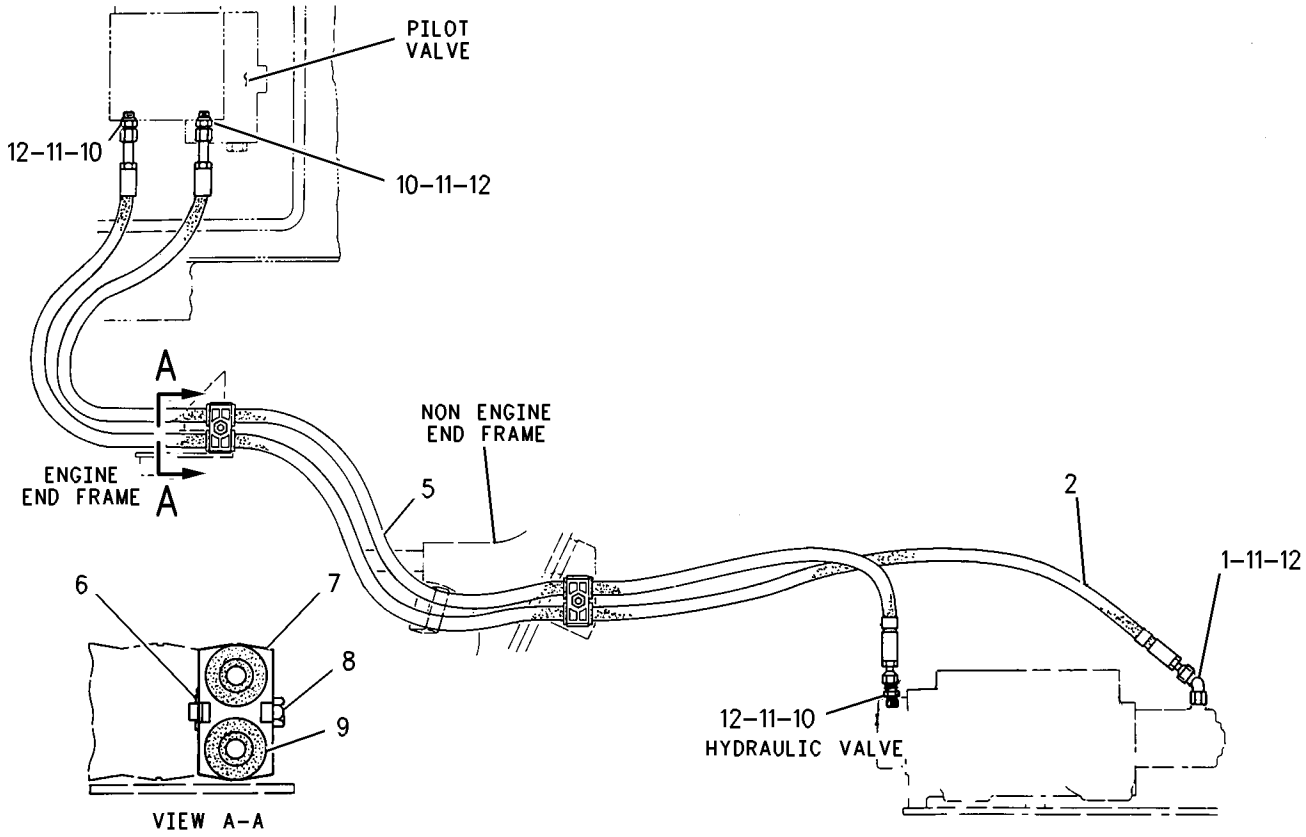

GRAPHIC #1 g00700751

HYDRAULIC SYSTEM

6C-4401 LINES GP-RIDE CONTROL

S/N: 3XJ1-775
RIDE CONTROL
PART OF 6C-4389 CONTROL AR-RIDE
AN ATTACHMENT

SMCS-5057, 5077 **i01323917**

NOTE	REF NO	GRAPHIC REF	PART NUMBER	QTY	PART NAME 1 2 3 4 5 6 (PRODUCT LEVEL)	SEE PAGE
	1	1	**6V-5782**	3	BOLT (5/16-18X1.125IN)	
	2	1	**5P-4116**	3	WASHER (2MM THK)	
	3	1	**6C-4419**	1	PLATE	
	4	1	**6C-4400**	1	TUBE AS	
	5	1	**6V-8647**	1	CONNECTOR-SEAL (7/16-20 THD)	
	6	1,2	**4J-5477**	2	SEAL-O-RING (8.61MM ID)	
	7	1,2	**3J-7354**	2	SEAL-O-RING (8.92MM ID)	
	8	1,2	**6V-9850**	2	ELBOW-SWIVEL	
	9	1,2	**6V-8397**	8	SEAL-O-RING (9.27MM ID)	
	10	1	**6C-4414**	1	BRACKET AS	
I	11	1	**9C-2630**	1	HOSE AS	
	12	1	**6V-8781**	1	TEE-FACE SEAL	
	13	1,2	**3J-1907**	4	SEAL-O-RING (11.89MM ID)	
	14	1	**8T-5391**	4	BOLT (5/16-18X.5IN)	
	15	1,2	**6V-9008**	2	ELBOW-90 DEGREE	
	16	1,2	**7M-8485**	4	SEAL-O-RING (29.74MM ID)	
	17	1,2	**5K-9090**	4	SEAL-O-RING (23.52MM ID)	
	18	1	**6C-4418**	2	CLAMP	
	19	1	**7V-6571**	1	GROMMET	
	20	1	**6C-4417**	1	ACCUMULATOR	
	21	1	**8T-4224**	4	WASHER-HARD (8.8X16X2MM THK)	
Y	22	2	**4T-5541**	1	VALVE GP-DIVERTER	
	23	2	**8T-1905**	1	ELBOW-90 DEGREE	
	24	2	**8M-5661**	1	SEAL-O-RING (47.22MM ID)	
	25	2	**6C-4412**	1	BLOCK	
	26	2	**1P-4577**	12	FLANGE-HALF	
	27	2	**4J-0520**	11	SEAL-O-RING (32.92MM ID)	
	28	2	**8T-4896**	36	WASHER-HARD (10.2X18.5X2.5MM THK)	
	29	2	**5S-7382**	16	BOLT (3/8-16X1.375 IN)	
	30	2	**5H-4019**	2	COVER	
	31	2	**6C-4398**	1	ADAPTER	
	32	2	**4L-6459**	8	BOLT (3/8-16X2.5IN)	
I	33	2	**6C-4399**	1	HOSE AS	
	34	2	**6V-8774**	1	TEE	
	35	2	**8T-9391**	4	BOLT (1/2-13X3.75IN)	
I	36	2	**6C-4416**	1	HOSE AS	
I	37	2	**6C-4409**	1	ADAPTER	
	38	2	**6V-8628**	1	ELBOW-90 DEGREE	
I	39	2	**6C-4411**	1	HOSE AS	
I	40	2	**6C-4410**	1	HOSE AS	
	41	2	**6V-8724**	2	ELBOW-90 DEGREE	
	42	2	**7X-0331**	2	BOLT (1/2-13X4.25IN)	
I	43	2	**6C-4413**	1	HOSE AS	
I	44	2	**6C-4408**	1	HOSE AS	
	45	2	**8T-4223**	6	WASHER-HARD (3MM THK)	
	46	2	**6V-9005**	2	ELBOW-45 DEGREE	
	47	2	**6C-4407**	2	BLOCK	
	48	2	**8T-8915**	12	BOLT (3/8-16X3.25 IN)	
	49	2	**8W-0580**	1	BLOCK	

I-SEE HOSE FABRICATION GUIDE
Y-SEPARATE ILLUSTRATION

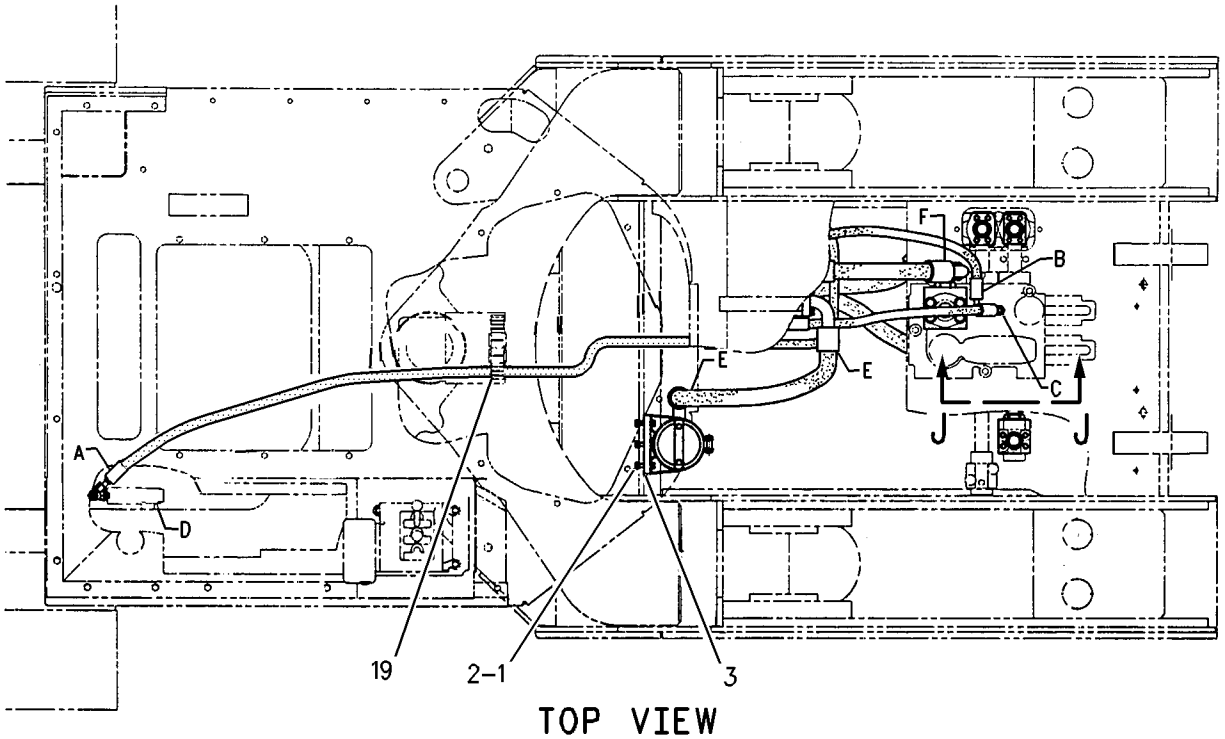

TOP VIEW

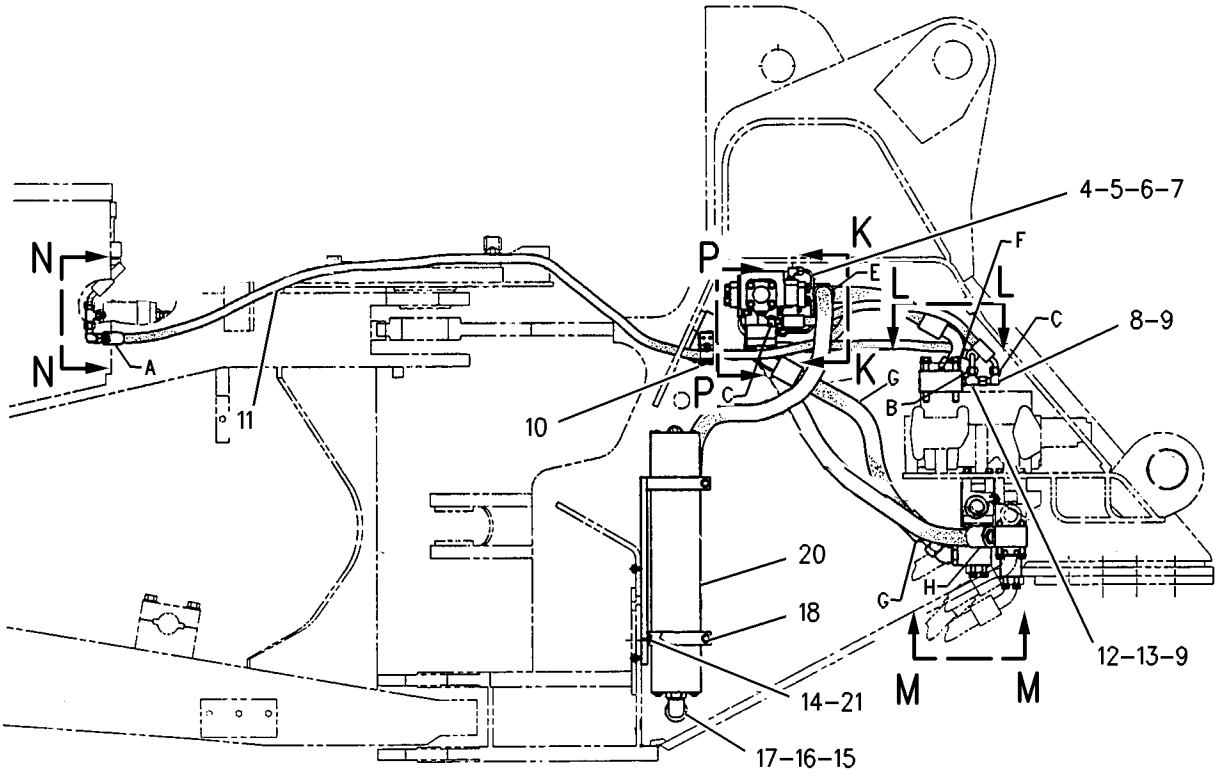

RIGHT SIDE VIEW

REFER TO ALL ILLUSTRATIONS OF THIS GROUP FOR AUXILIARY VIEWS

GRAPHIC #1 g00700423

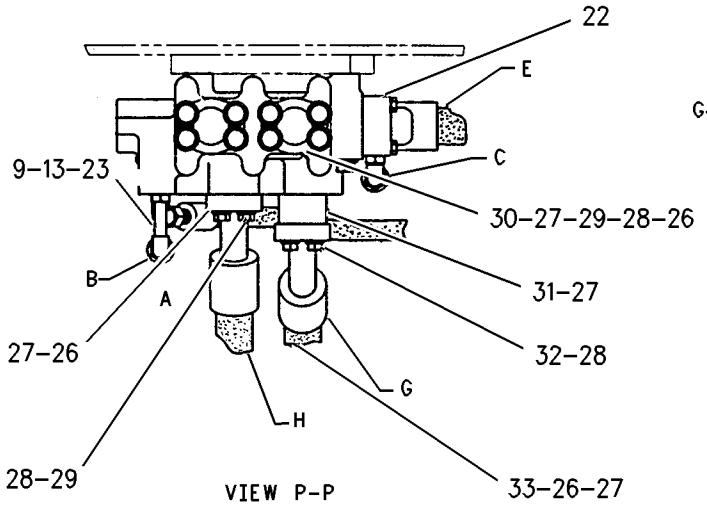

VIEW P-P

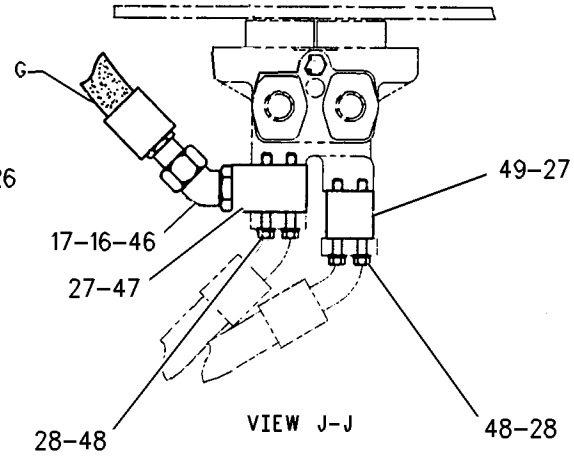

VIEW J-J

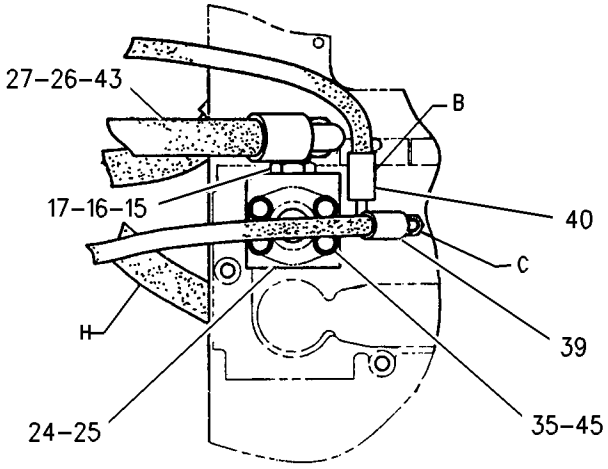

VIEW L-L

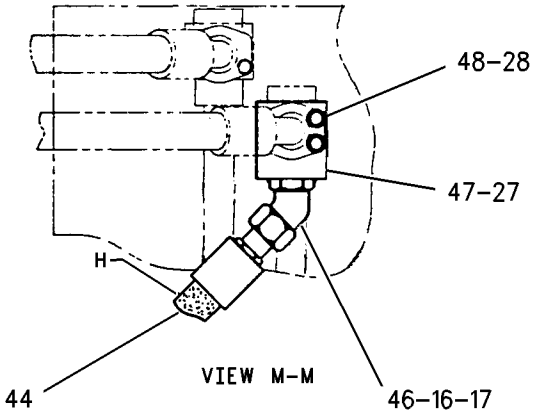

VIEW M-M

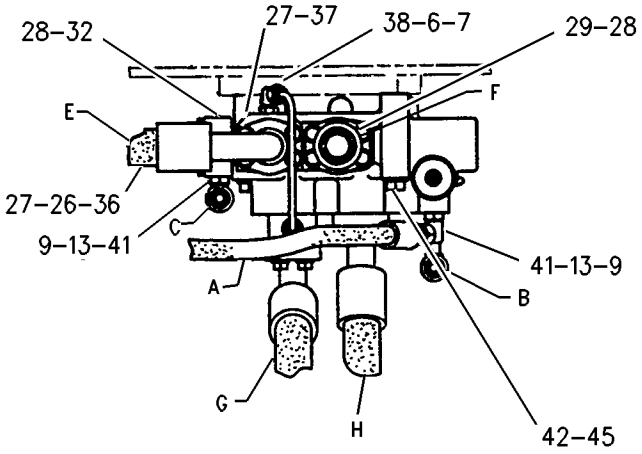

VIEW K-K

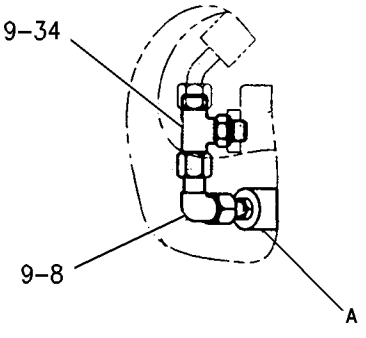

VIEW N-N

REFER TO ALL ILLUSTRATIONS OF THIS GROUP FOR AUXILIARY VIEWS

GRAPHIC #2 g00700422

MEMORANDA

HYDRAULIC SYSTEM

6C-4401 LINES GP-RIDE CONTROL

S/N: 3XJ776-99999
RIDE CONTROL
PART OF 6C-4389 CONTROL AR-RIDE
AN ATTACHMENT

SMCS-5057, 5077 **i01323940**

NOTE	REF NO	GRAPHIC REF	PART NUMBER	QTY	PART NAME 1 2 3 4 5 6 (PRODUCT LEVEL)	SEE PAGE
	1	1	**6V-5782**	3	BOLT (5/16-18X1.125IN)	
	2	1	**5P-4116**	3	WASHER (2MM THK)	
	3	1	**6C-4419**	1	PLATE	
	4	1	**6C-4400**	1	TUBE AS	
	5	1	**6V-8647**	1	CONNECTOR-SEAL (7/16-20 THD)	
	6	1	**4J-5477**	1	SEAL-O-RING (8.61MM ID)	
	7	1	**3J-7354**	1	SEAL-O-RING (8.92MM ID)	
	8	1	**6V-9850**	1	ELBOW-SWIVEL	
	9	1	**6V-8397**	3	SEAL-O-RING (9.27MM ID)	
	10	1	**6C-4414**	1	BRACKET AS	
I	11	1	**9C-2630**	1	HOSE AS	
	12	1	**6V-8781**	1	TEE-FACE SEAL	
	13	1	**3J-1907**	1	SEAL-O-RING (11.89MM ID)	
	14	1	**8T-5391**	4	BOLT (5/16-18X.5IN)	
	15	1	**6V-9008**	1	ELBOW-90 DEGREE	
	16	1	**7M-8485**	1	SEAL-O-RING (29.74MM ID)	
	17	1	**5K-9090**	1	SEAL-O-RING (23.52MM ID)	
	18	1	**6C-4418**	2	CLAMP	
	19	1	**7V-6571**	1	GROMMET	
	20	1	**106-1279**	1	ACCUMULATOR	
	21	1	**8T-4224**	4	WASHER-HARD (8.8X16X2MM THK)	
Y	22	2	**4T-5541**	1	VALVE GP-DIVERTER	
	23	2	**8T-1905**	1	ELBOW-90 DEGREE	
	24	2	**3J-1907**	3	SEAL-O-RING (11.89MM ID)	
	25	2	**6V-8397**	5	SEAL-O-RING (9.27MM ID)	
	26	2	**1P-4577**	12	FLANGE-HALF	
C	27	2	**4J-0520**	12	SEAL-O-RING (32.92MM ID)	
	28	2	**8T-4896**	36	WASHER-HARD (10.2X18.5X2.5MM THK)	
C	29	2	**5S-7382**	12	BOLT (3/8-16X1.375 IN)	
	30	2	**5H-4019**	2	COVER	
	31	2	**6C-4398**	1	ADAPTER	
C	32	2	**8T-9101**	4	BOLT (3/8-16X2.75IN)	
I	33	2	**6C-4399**	1	HOSE AS	
	34	2	**6V-8774**	1	TEE	
	35	2	**6V-9850**	1	ELBOW-SWIVEL	
I	36	2	**6C-4416**	1	HOSE AS	
C	37	2	**6C-5707**	1	MANIFOLD	
	38	2	**6V-8628**	1	ELBOW-90 DEGREE	
	39	2	**4J-5477**	1	SEAL-O-RING (8.61MM ID)	
	40	2	**3J-7354**	1	SEAL-O-RING (8.92MM ID)	
	41	2	**6V-8724**	2	ELBOW-90 DEGREE	
	42	2	**7X-0331**	2	BOLT (1/2-13X4.25IN)	
I	43	2	**6C-4413**	1	HOSE AS	
	44	2	**5K-9090**	3	SEAL-O-RING (23.52MM ID)	
C	45	2	**7M-8485**	4	SEAL-O-RING (29.74MM ID)	
	46	2	**6V-9005**	2	ELBOW-45 DEGREE	
	47	2	**6C-4407**	2	BLOCK	
C	48	2	**8T-8915**	20	BOLT (3/8-16X3.25 IN)	
	49	2	**8W-0580**	1	BLOCK	
	50	2	**6V-9008**	1	ELBOW-90 DEGREE	
	51	2	**8M-5661**	1	SEAL-O-RING (47.22MM ID)	
	52	2	**6C-4412**	1	BLOCK	
	53	2	**8T-9391**	4	BOLT (1/2-13X3.75IN)	
I	54	2	**6C-4411**	1	HOSE AS	

6C-4401 LINES GP-RIDE CONTROL *(contd.)*

i01323940

NOTE	REF NO	GRAPHIC REF	PART NUMBER	QTY	PART NAME 1 2 3 4 5 6 (PRODUCT LEVEL)	SEE PAGE
I	55	2	**6C-4410**	1	HOSE AS	
I	56	2	**6C-4408**	1	HOSE AS	
	57	2	**8T-4223**	6	WASHER-HARD (3MM THK)	
C	58	2	**9S-9334**	1	PLUG (1 5/16-12 THD)	
C	59	2	**9S-4185**	1	PLUG-O-RING (3/4-16 THD)	
C		2	**3K-0360**	1	SEAL-O-RING (16.36MM ID)	
CY	60	2	**4T-2742**	1	VALVE GP-RELIEF (LINE)	

C-CHANGE FROM PREVIOUS TYPE
I-SEE HOSE FABRICATION GUIDE
Y-SEPARATE ILLUSTRATION

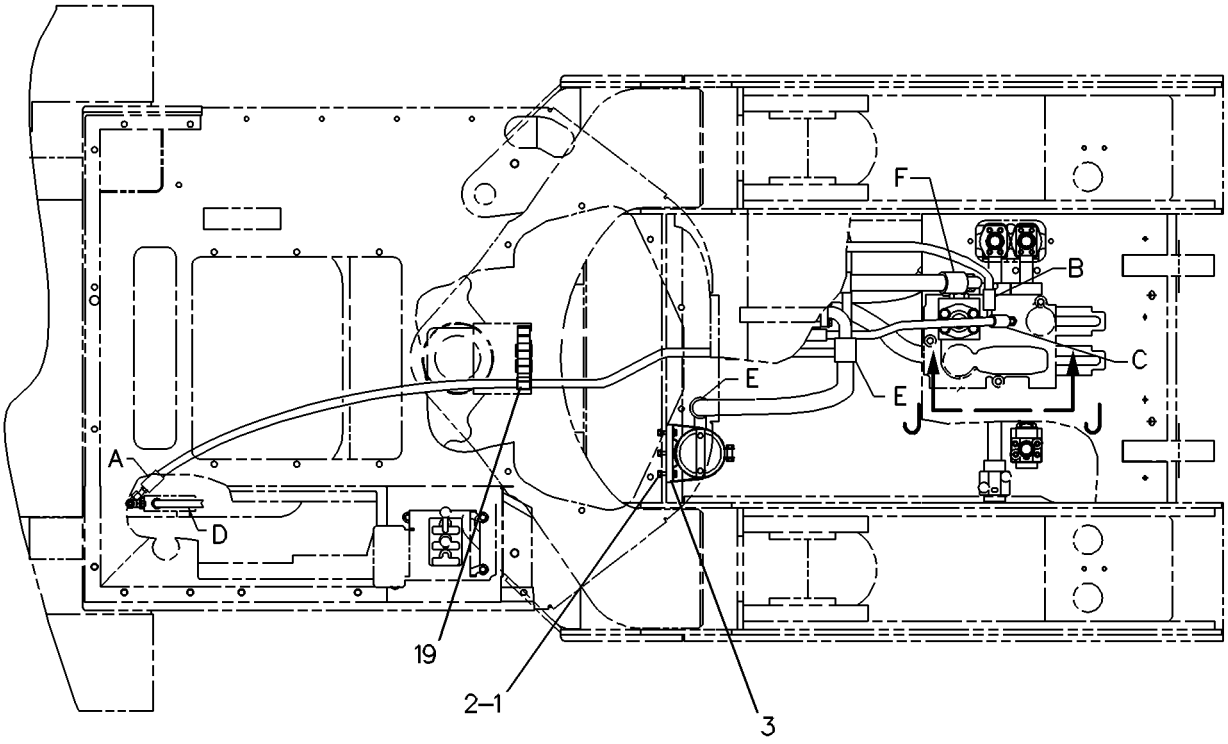

TOP VIEW

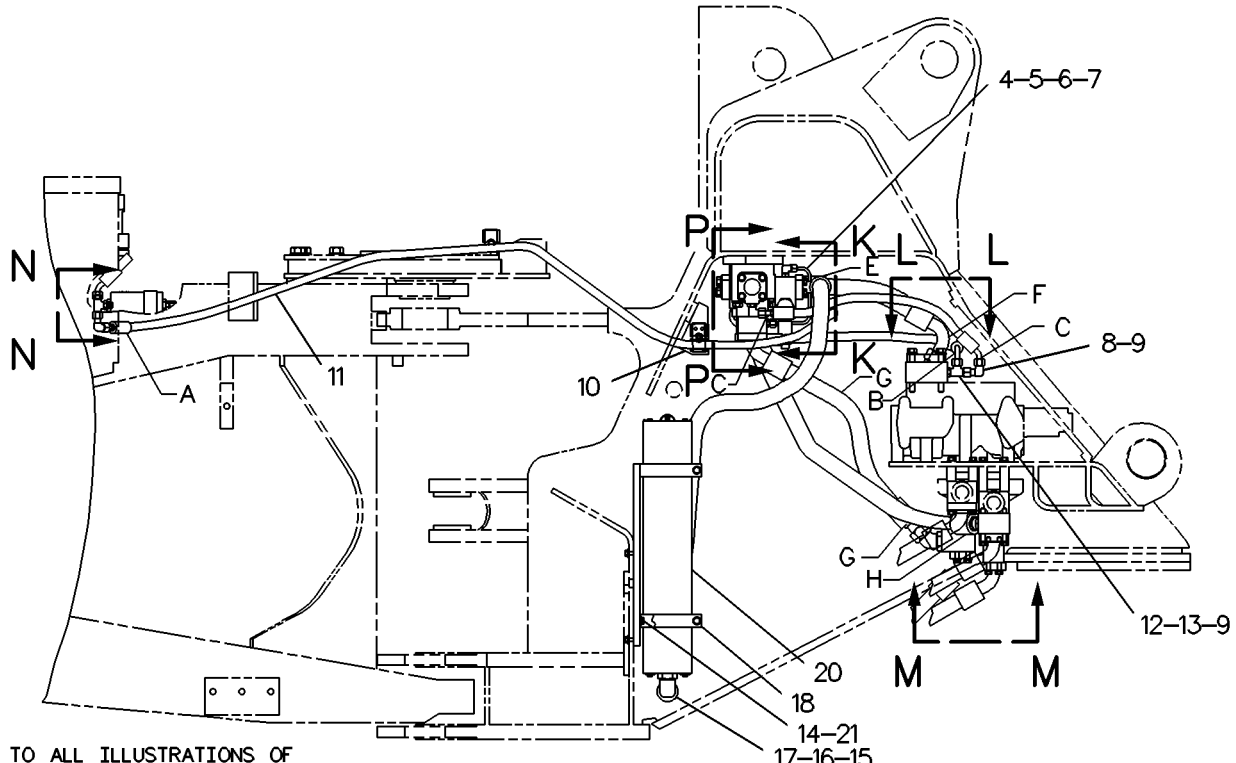

REFER TO ALL ILLUSTRATIONS OF THIS GROUP FOR AUXILIARY VIEWS

RIGHT SIDE VIEW

GRAPHIC #1 g00127216

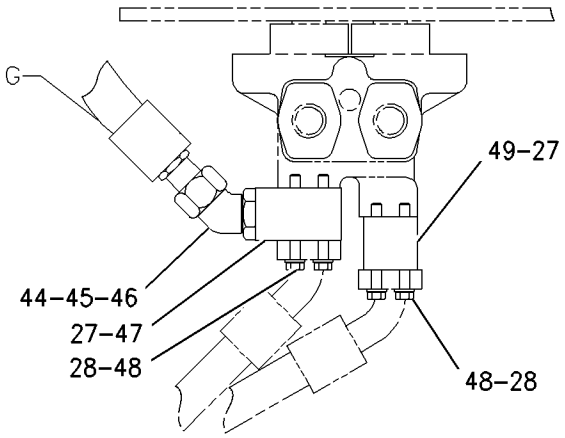

ENLARGED VIEW
OF AREA J-J

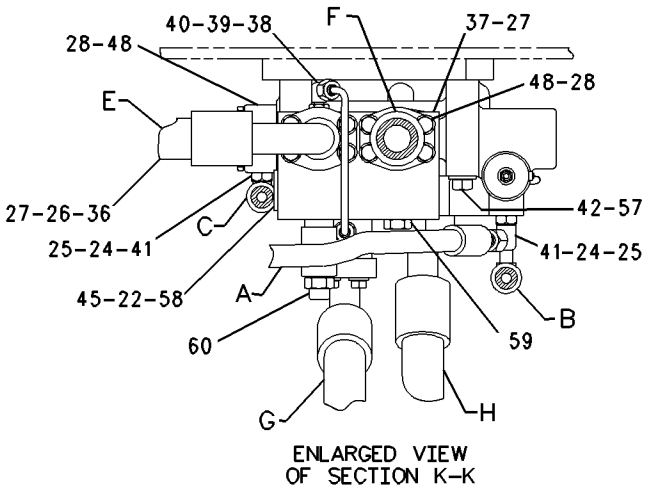

ENLARGED VIEW
OF SECTION K-K

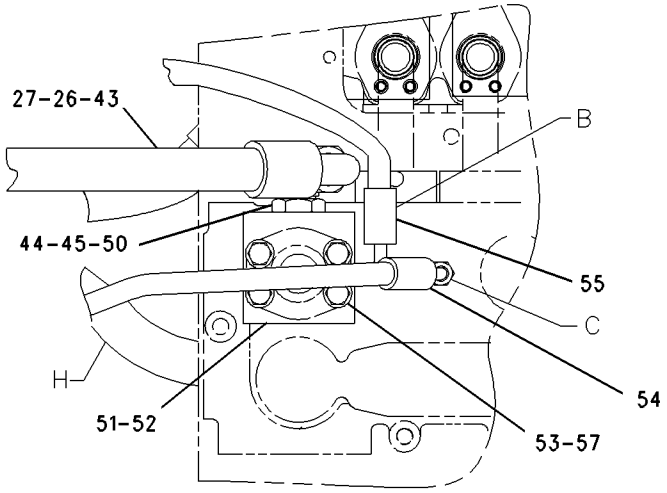

ENLARGED VIEW
OF AREA L-L

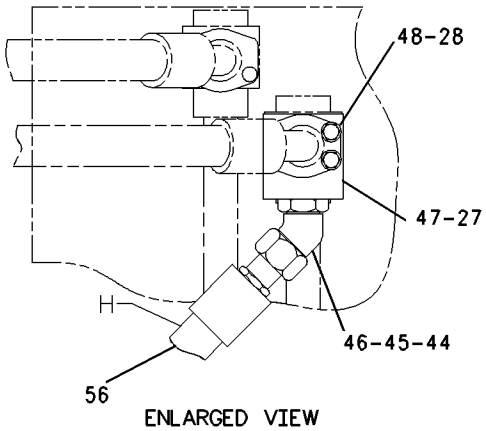

ENLARGED VIEW
OFAREA M-M

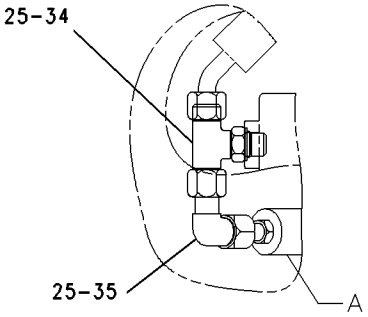

ENLARGED VIEW
OF AREA N-N

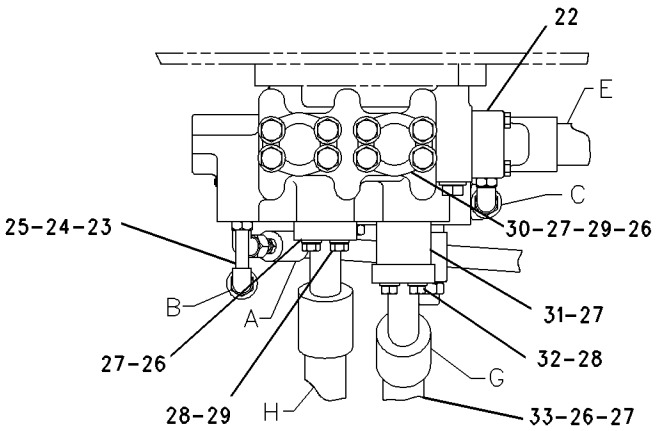

ENLARGED VIEW
OF AREA P-P

GRAPHIC #2

g00700466

HYDRAULIC SYSTEM

2V-4257 LINES GP-TILT CYLINDER

S/N: 3XJ1-99999

SMCS-5057, 5104 **i01084218**

NOTE	REF NO	GRAPHIC REF	PART NUMBER	QTY	PART NAME 1 2 3 4 5 6 (PRODUCT LEVEL)	SEE PAGE
	1	1	**8C-6877**	2	BOLT (7/16-14X1.75IN)	
	2	1	**7X-0507**	32	WASHER-HARD (5.0MM THK)	
	3	1	**7X-0310**	12	BOLT (7/16-14 THD)	
	4	1	**1P-4578**	8	FLANGE	
	5	1	**7X-0313**	4	BOLT (7/16-14X2.75IN)	
	6	1	**8T-9382**	6	BOLT (7/16-14X1.25IN)	
	7	1	**8V-9728**	1	BRACKET AS	
I	8	1	**9C-6939**	1	HOSE AS	
	9	1	**4J-0522**	5	SEAL-O-RING (37.69MM ID)	
	10	1	**7V-0554**	1	TUBE AS	
	11	1	**9S-4181**	1	PLUG-STRAIGHT THREAD (1-5/16-12 THD)	
		1	**7M-8485**	1	SEAL-O-RING (29.74MM ID)	
	12	1	**9C-6936**	1	TUBE AS	
I	13	1	**9C-6937**	1	HOSE AS	
	14	1	**9C-6935**	1	TUBE AS	
C	15	1	**8R-8371**	2	BRACKET	
C	16	1	**7X-7729**	16	WASHER (3MM THK)	
C	17	1	**3S-1546**	4	NUT-FULL (7/16-14 THD)	
	18	1	**8V-2080**	1	PLATE	
	19	1	**8T-8916**	4	BOLT (7/16-14X1.5IN)	
	20	1	**1P-5761**	4	FLANGE-HALF	
	21	1	**7X-0308**	8	BOLT (7/16-14X1.375IN)	
	22	1	**8T-6973**	4	BOLT (7/16-14X1.125IN)	
	23	1	**1P-3704**	3	SEAL-RECTANGULAR (38.2MM ID)	
C	24	1	**8R-8369**	1	BRACKET-RH	
C	25	1	**8R-8370**	1	BRACKET-LH	
C	26	1	**8T-9380**	4	BOLT (7/16-14X1IN)	
	27	1	**7X-0632**	4	WASHER-HARD (6 MM THK)	

C-CHANGE FROM PREVIOUS TYPE
I-SEE HOSE FABRICATION GUIDE

2V-4257 **LINES GP-TILT CYLINDER** *(contd.)* **i01084218**

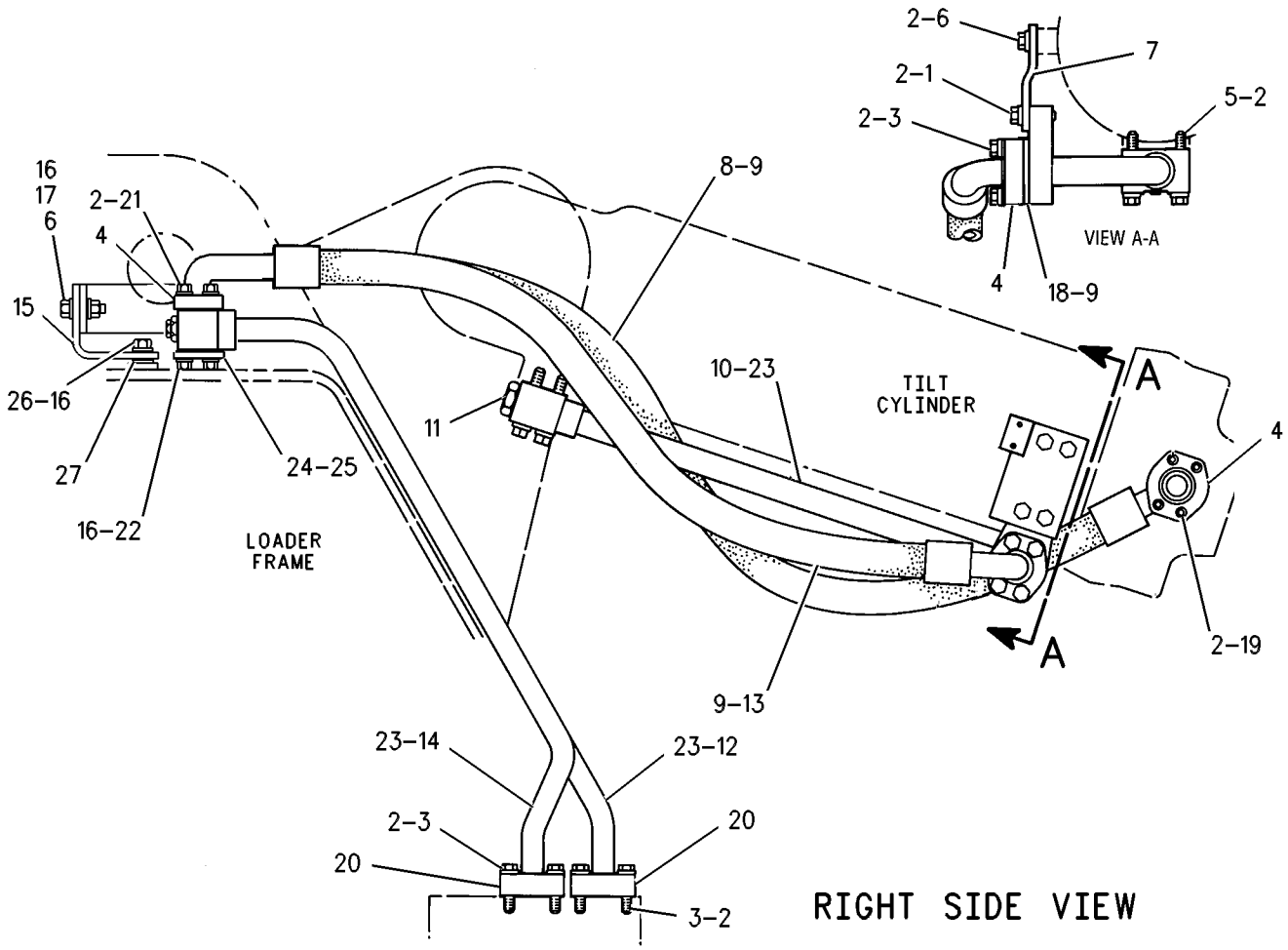

GRAPHIC #1 g00567610

HYDRAULIC SYSTEM

2V-4233 MOUNTING GP-HYDRAULIC TANK

S/N: 3XJ1-99999

SMCS-5056 **i01327252**

NOTE	REF NO	GRAPHIC REF	PART NUMBER	QTY	PART NAME 1 2 3 4 5 6 (PRODUCT LEVEL)	SEE PAGE
C	1	1	**8T-8917**	3	BOLT (1/2-13X1.25 IN)	
	2	1	**5P-1076**	9	WASHER-HARD (4MM THK)	
C	3	1	**9V-8133**	1	BRACKET AS	
C		1	**1F-0748**	2	NUT-WELD (1/2-13 THD)	
C	4	1	**8T-9393**	3	BOLT (5/8-11X1.50 IN)	
C		1	**7X-0515**	3	WASHER (5MM THK)	
	5	1	**9V-1452**	1	BRACKET AS	
C	6	1	**5P-2566**	4	BOLT (1/2-13X1.50 IN)	
C	7	1	**8T-9389**	2	BOLT (1/2-13X2.75 IN)	
C	8	1	**1K-4649**	2	SPACER (1.0IN THK)	

C-CHANGE FROM PREVIOUS TYPE

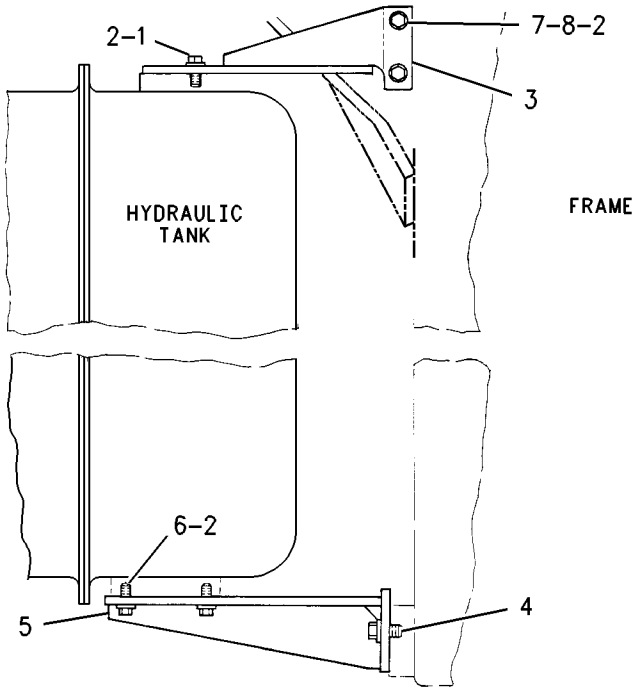

GRAPHIC #1 g00702219

HYDRAULIC SYSTEM

4E-2468 PUMP & MTG GP-HYDRAULIC

S/N: 3XJ1-99999

SMCS-5055, 5070, 5073, 5084 **i01334311**

NOTE	REF NO	GRAPHIC REF	PART NUMBER	QTY	PART NAME 1 2 3 4 5 6 (PRODUCT LEVEL)	SEE PAGE
Y	1	1	*6E-2064*	1	PUMP GP-VANE (IMPL,STEERING,PILOT,& BRAKING)	
	2	1	**5F-3106**	1	SEAL-O-RING (126.59MM ID)	
	3	1	**7X-0345**	2	BOLT (5/8-11X1.75 IN)	
	4	1	**8T-4122**	2	WASHER (3.5MM THK)	

Y-SEPARATE ILLUSTRATION

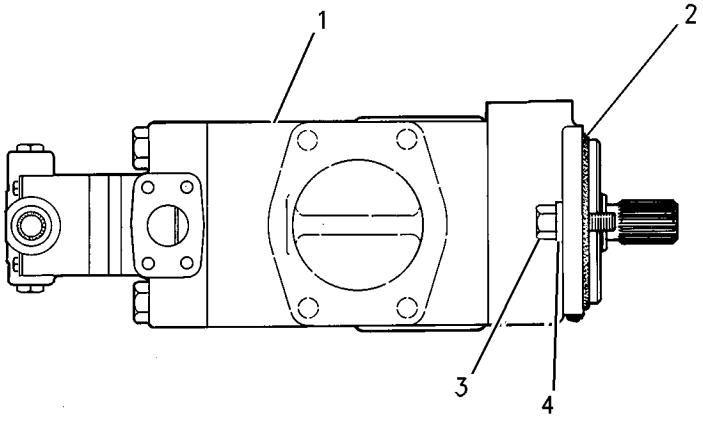

GRAPHIC #1 g00705541

HYDRAULIC SYSTEM

6E-2064 PUMP GP-VANE—IMPL,STEERING,PILOT & BRAKING

S/N: 3XJ1-99999

PART OF 4E-2468 PUMP & MTG GP-HYDRAULIC

FIELD REPLACEMENT FOR 4T-6847—PAGE T247

SMCS-5055 **i00259574**

NOTE	REF NO	GRAPHIC REF	PART NUMBER	QTY	PART NAME 1 2 3 4 5 6 (PRODUCT LEVEL)	SEE PAGE
	1	1	**1U-2816**	1	SPRING	
	2	1	**1U-3508**	1	PLATE	
	3	1	**1U-3509**	1	ROTOR	
	4	1	**1U-3513**	1	ADAPTER	
	5	1	**009-2062**	3	SEAL-O-RING (63.17MM ID)	
	6	1	**1J-6474**	1	RING-RETAINING	
	7	1	**3J-7719**	1	RING-RETAINING	
	8	1	**3L-1425**	1	BALL BEARING	
	9	1	**2J-7763**	1	WASHER	
	10	1	**5P-0904**	1	SEAL-LIP	
	11	1	**6V-2318**	1	SEAL-LIP	
	12	1	**6E-3651**	1	SHAFT-GOVERNOR CONTROL	
	13	1	**065-3550**	1	SPRING-VALVE	
	14	1	**9S-4187**	2	PLUG-O-RING (3/4-16THD)	
		1	**3K-0360**	2	SEAL-O-RING (16.36MM ID)	
	15	1	**3J-6008**	1	RING-SNAP	
	16	1	**4T-9359**	1	VALVE	
	17	1	**9T-5337**	1	BODY	
	18	1	**4T-9358**	1	SCREEN	
YR	19	1	**6E-2387**	1	CARTRIDGE GP-VANE PUMP	
	20	1	**1U-3511**	1	COVER GP	
		1	**7J-8080**	8	DAMPER-BOLT	
YR	21	1	**1U-2667**	1	CARTRIDGE GP-VANE PUMP	
	22	1	**1U-3517**	1	COVER	
		1	**4J-7945**	4	BOLT (5/8-11X11.5IN)	
	23	1	**1U-3867**	2	PIN	
	24	1	**1U-3514**	1	RING	
	25	1	**1U-3515**	1	COVER	
		1	**0L-1352**	4	BOLT (3/8-16X3.25IN)	
	26	1	**6E-2943**	1	PLUG	
					AVAILABLE REPAIR KIT(S):	
			1U-3505	1	KIT-CARTRIDGE-REAR	
			1U-3507	1	KIT-VANE-REAR	

R-REMFG PART MAY BE AVAILABLE
Y-SEPARATE ILLUSTRATION

6E-2064 **PUMP GP-VANE** *(contd.)* **i00259574**

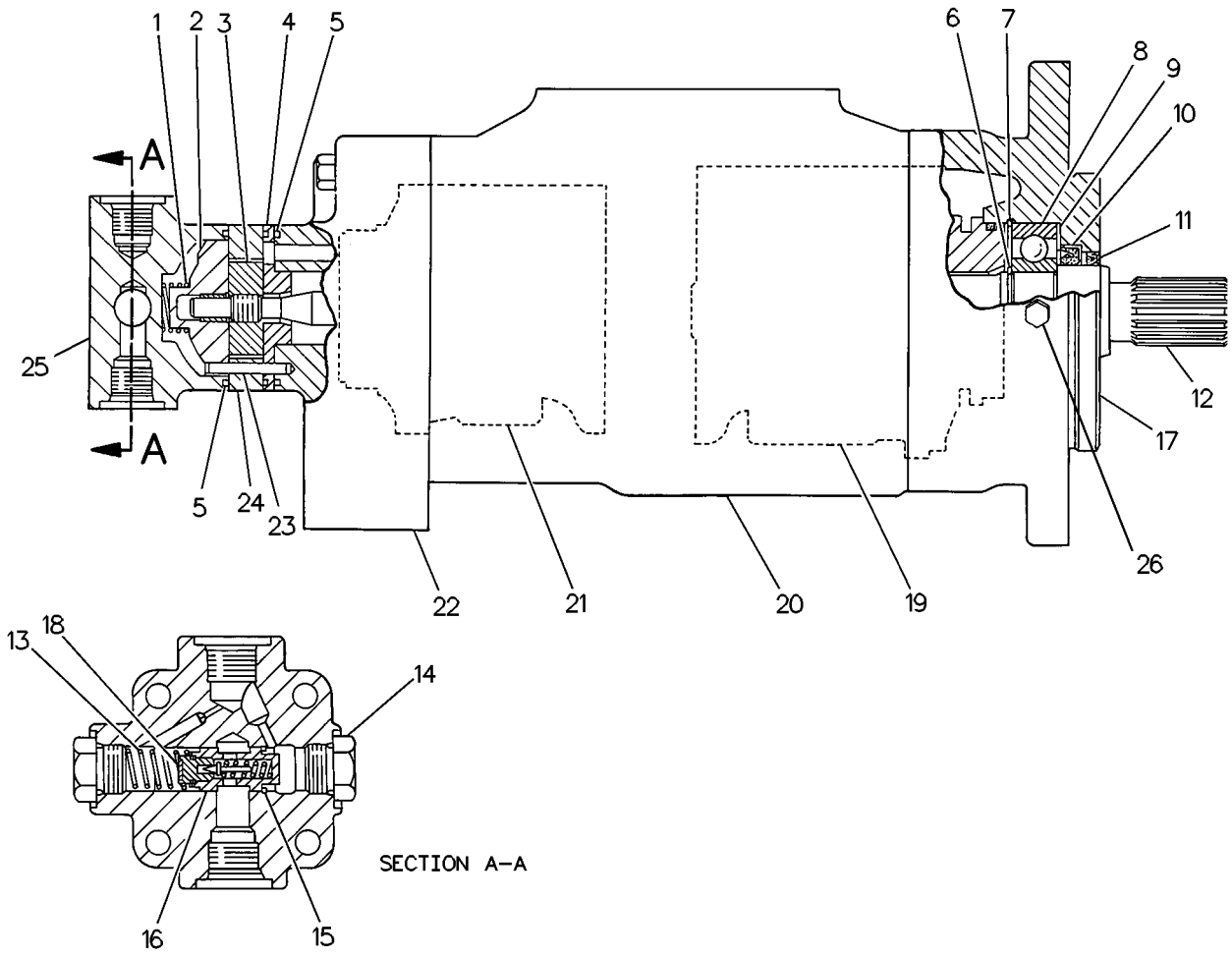

GRAPHIC #1 g00118896

HYDRAULIC SYSTEM

6E-3117 TANK & FILTER GP-HYDRAULIC

S/N: 3XJ1-99999

SMCS-5056, 5068 **i01310532**

NOTE	REF NO	GRAPHIC REF	PART NUMBER	QTY	PART NAME 1 2 3 4 5 6 (PRODUCT LEVEL)	SEE PAGE
	1	1	**9J-8243**	1	RETAINER	
	2	1	**3G-6455**	1	PLATE	
	3	1	**6J-1080**	1	GROMMET	
		1	**6J-1081**	1	GLASS-SIGHT	
	4	1	**5D-0353**	4	BOLT-LOCKING (3/8-16X1IN)	
	5	1	**5H-6005**	16	SEAL-O-RING (10.77MM ID)	
	6	1	**9J-5461**	4	ELEMENT-FILTER	
					—OR—	
A		1	**4T-3134**	4	FILTER ELEMENT AS-OIL (HYDRAULIC) (FIRE RESISTANT)	
	7	1	**9J-6381**	2	SPACER	
		1	**9H-7759**	2	RING-RETAINING	
	8	1	**3G-2839**	1	GASKET	
	9	1	**9J-6379**	12	SPRING-DISC	
	10	1	**9J-9842**	2	BOLT-FILTER	
		1	**8T-4994**	2	WASHER-HARD (5MM THK)	
	11	1	**2M-4453**	2	SEAL-O-RING (12.29MM ID)	
	12	1	**9F-6656**	2	RING-RETAINING	
	13	1	**3G-2665**	2	COVER	
	14	1	**6D-9157**	4	SEAL-O-RING (142.24MM ID)	
	15	1	**3G-2815**	2	STUD-FILTER	
	16	1,2	**2J-3118**	8	BOLT-LOCKING (3/8-16X1.25IN)	
	17	1	**3G-2814**	1	BAFFLE AS	
	18	1,2	**2K-4973**	76	LOCKNUT (3/8-16 THD)	
	19	1	**6E-1767**	1	TANK AS	
	20	1	**8J-6910**	6	STUD-WELD (3/8-16 X 1.25IN OAL)	
	21	1	**9S-4183**	1	PLUG (1 1/16-12 THD)	
		1	**3D-2824**	1	SEAL-O-RING (23.47MM ID)	
	22	1	**8F-8882**	1	SEAL-O-RING (66.27MM ID)	
	23	1	**9S-8005**	1	PLUG-O-RING (3/4-16 THD)	
		1	**3K-0360**	1	SEAL-O-RING (16.36MM ID)	
	24	1	**2J-2864**	1	PLUG-DRAIN	
		1	**6F-5559**	1	SEAL-O-RING (9.19MM ID)	
	25	1	**3G-2725**	1	BASE-FILTER	
	26	1	**6F-0711**	1	SEAL-O-RING	
	27	1	**6E-1203**	1	COVER AS	
		1	**7J-5225**	1	FITTING (1 1/16X12 THD)	
	28	1	**3G-2754**	1	VALVE	
	29	1	**3S-9733**	1	SPRING-GOVERNOR	
	30	1	**9J-6382**	1	COVER	
	31	1	**5S-7382**	2	BOLT (3/8-16X1.375 IN)	
	32	1	**9S-4191**	1	PLUG-O-RING (9/16-18 THD)	
		1	**3J-1907**	1	SEAL-O-RING (11.89MM ID)	
	33	1	**4L-6454**	74	BOLT (3/8-16X1 IN)	
	34	1,2	**8T-4896**	8	WASHER-HARD (2.5MM THK)	
	35	1	**1H-9696**	3	SEAL-O-RING (44.0MM ID)	
	36	1	**8T-8919**	4	BOLT (1/2-13X1.75 IN)	
	37	1	**6F-4855**	12	SEAL-O-RING (13.94MM ID)	
	38	1	**5D-6176**	1	COVER	
	39	1	**2H-3927**	1	SEAL-O-RING (40.64MM ID)	
	40	1	**2H-3928**	1	SEAL-O-RING (107.54MM ID)	
D	41	2	**5P-9119**		SEALANT (3.8M)	
	43	2	**3G-2817**	1	BLOCK-SUCTION	
	44	2	**4J-3815**	1	GASKET	
	45	2	**4J-3816**	1	PLATE	
	46	2	**8T-2275**	1	BALL	
	47	2	**4J-3754**	1	CAP-FILLER	

6E-3117 **TANK & FILTER GP-HYDRAULIC** *(contd.)* **i01310532**

NOTE	REF NO	GRAPHIC REF	PART NUMBER	QTY	PART NAME 1 2 3 4 5 6 (PRODUCT LEVEL)	SEE PAGE
	48	2	**8J-8782**	1	BODY-DRAIN VALVE	
	49	2	**3D-6678**	1	STRAINER AS	
	50	2	**9T-7842**	1	FILLER	
	51	2	**9J-7031**	1	PLUG-DRAIN	
		2	**5M-2057**	1	SEAL-O-RING (34.59MM ID)	
	53	2	**8F-8733**	1	SEAL-O-RING (151.99MM ID)	
	55	2	**3G-2818**	1	BLOCK-SUCTION	
	56	2	**7B-3039**	1	SPRING	
	57	2	**1U-2827**	1	GUIDE-VALVE	
	58	2	**8J-8783**	1	VALVE	
	59	2	**8T-3298**	1	SEAL-RECTANGULAR (51.7MM ID)	
	60	2	**3G-2689**	1	TUBE AS-BAFFLE	
	61	2	**6V-1270**	2	BOLT-12 POINT HEAD	

A-NOT PART OF THIS GROUP
D-ORDER BY THE METER

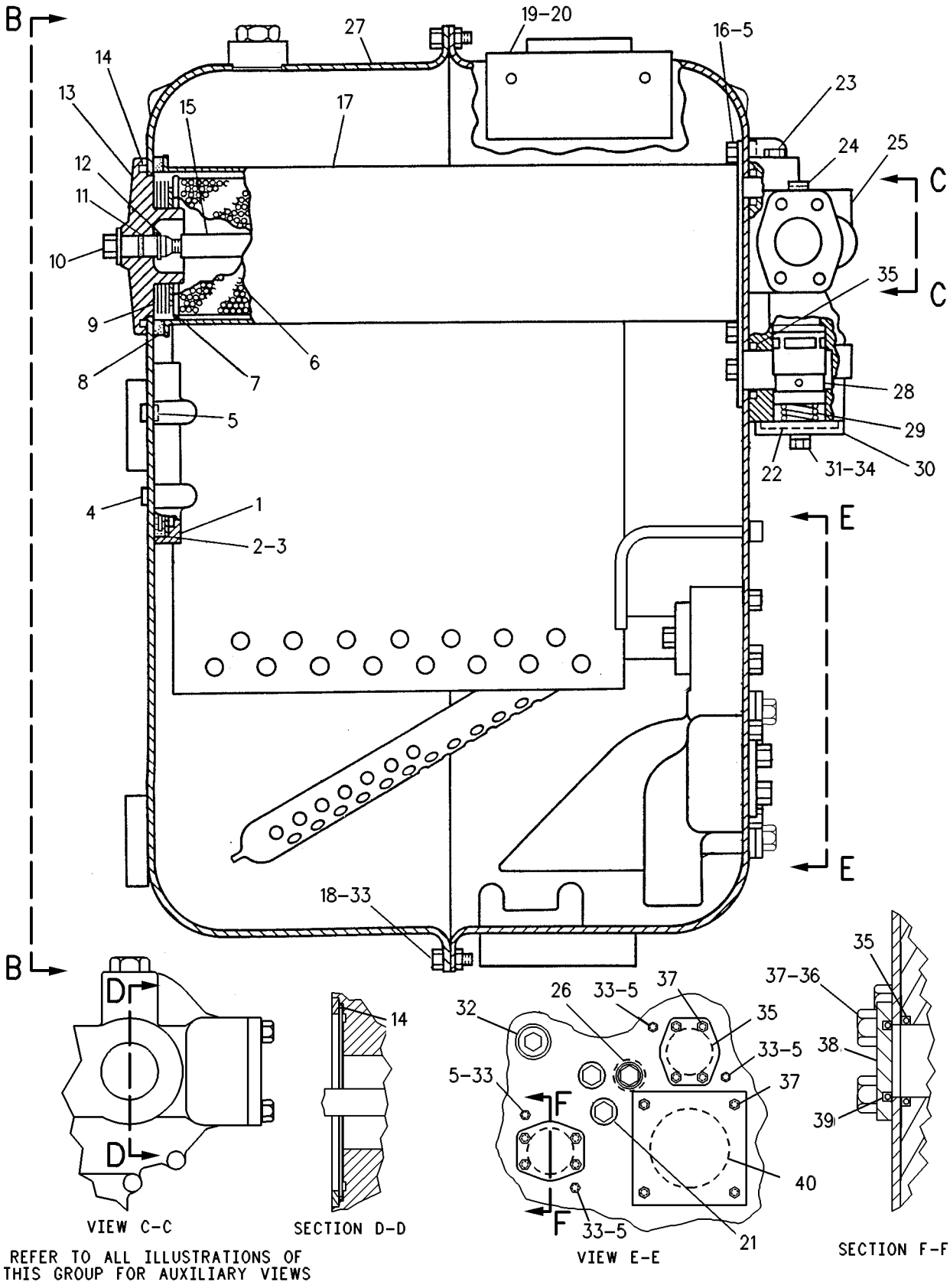

GRAPHIC #1 g00380623

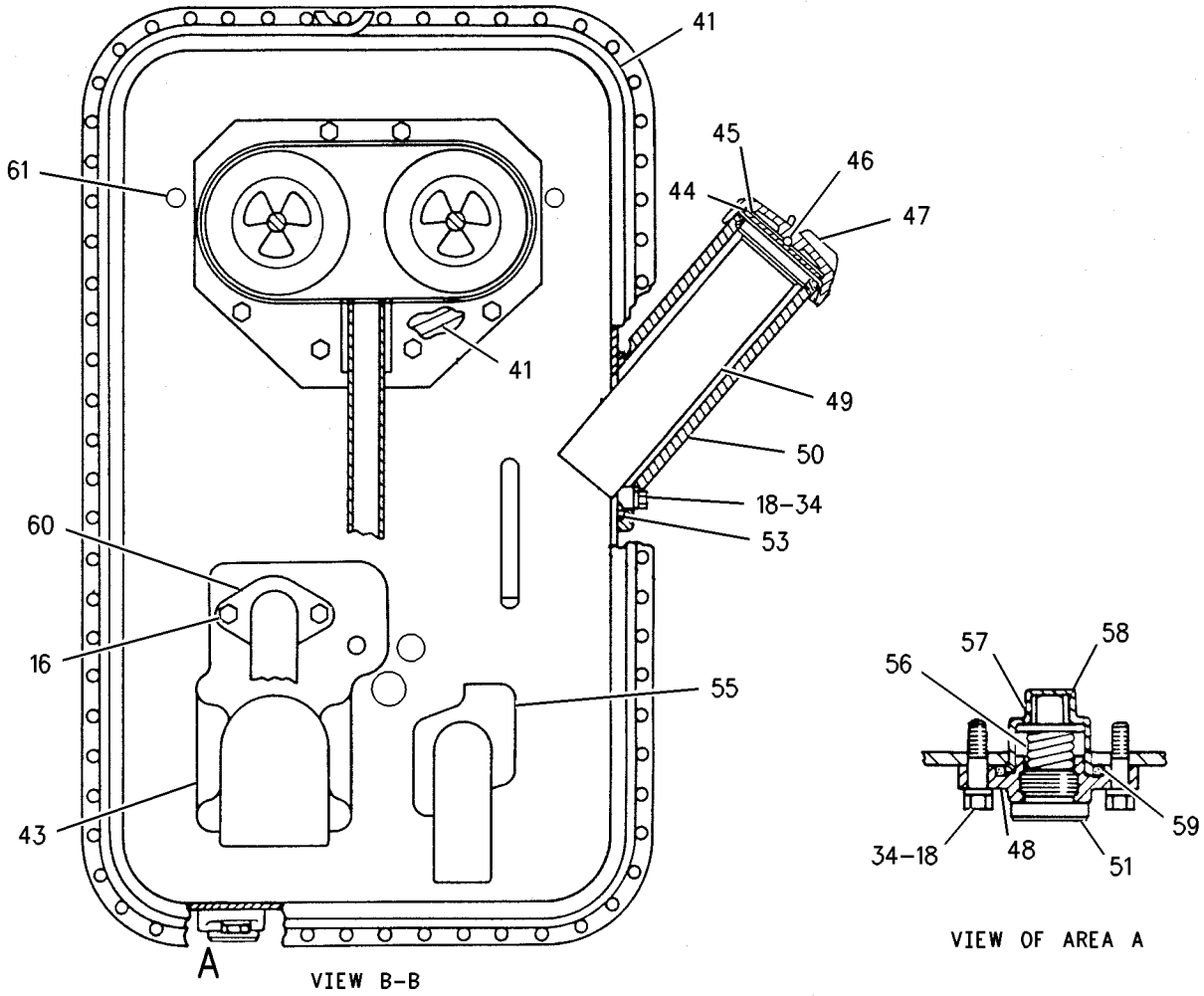

GRAPHIC #2

g00694631

HYDRAULIC SYSTEM

4E-3169 VALVE & MTG GP-CONTROL

S/N: 3XJ1-1739

SMCS-5051 **i01328176**

NOTE	REF NO	GRAPHIC REF	PART NUMBER	QTY	PART NAME 1 2 3 4 5 6 (PRODUCT LEVEL)	SEE PAGE
Y	1	1	**6E-2378**	1	VALVE GP-CONTROL	
	2	1	**7X-0340**	2	BOLT (1/2-13X6.5IN)	
	3	1	**6V-8188**	3	NUT (1/2-13 THD)	
	4	1	**8T-4223**	3	WASHER-HARD (3MM THK)	
	5	1	**7X-0337**	1	BOLT (1/2-13X5.75IN)	

Y-SEPARATE ILLUSTRATION

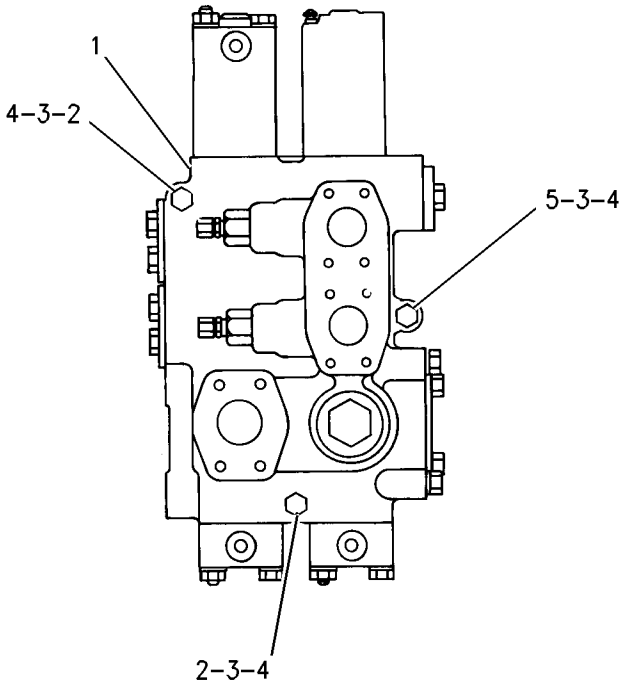

GRAPHIC #1 g00702497

HYDRAULIC SYSTEM

4E-8598 VALVE & MTG GP-CONTROL

S/N: 3XJ1-99999
PART OF 4E-6083, 6C-7857 HYDRAULIC AR
AN ATTACHMENT

SMCS-5051 **i01045439**

NOTE	REF NO	GRAPHIC REF	PART NUMBER	QTY	PART NAME 1 2 3 4 5 6 (PRODUCT LEVEL)	SEE PAGE
Y	1	1	**6E-3737**	1	VALVE GP-CONTROL	
	2	1	**7X-0340**	2	BOLT (1/2-13X6.5IN)	
	3	1	**6V-8188**	3	NUT (1/2-13 THD)	
		1	**8T-4223**	3	WASHER-HARD (3MM THK)	
	4	1	**7X-0337**	1	BOLT (1/2-13X5.75IN)	
	5	1	**6C-0143**	1	BRACKET AS	
	6	1	**8T-2502**	2	BOLT (3/8-16X1.125IN)	
	7	1	**5S-7379**	2	BOLT (3/8-16X.875IN)	
		1	**8T-4896**	2	WASHER-HARD (2.5MM THK)	

Y-SEPARATE ILLUSTRATION

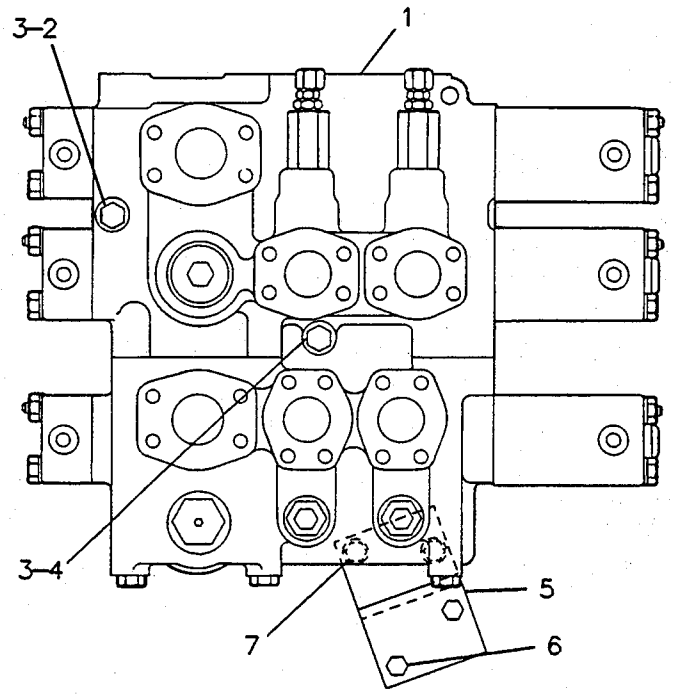

GRAPHIC #1 g00127215

4V-9655 VALVE & MTG GP-CONTROL–LOGGING

S/N: 3XJ1-99999
PART OF 8R-9463 HYDRAULIC AR
AN ATTACHMENT

SMCS-5051 **i01338135**

NOTE	REF NO	GRAPHIC REF	PART NUMBER	QTY	PART NAME 1 2 3 4 5 6 (PRODUCT LEVEL)	SEE PAGE
CY	1	1	**9T-8489**	1	VALVE GP-CONTROL (LOGGING)	
C	2	1	**7X-0340**	2	BOLT (1/2-13X6.5IN)	
	3	1	**6C-0143**	1	BRACKET AS	
C	4	1	**8T-2502**	2	BOLT (3/8-16X1.125 IN)	
C	5	1	**5S-7379**	2	BOLT (3/8-16X.875 IN)	
C		1	**8T-4896**	2	WASHER-HARD (10.2X18.5X2.5MM THK)	
C	6	1	**7X-0337**	1	BOLT (1/2-13X5.75IN)	
C	7	1	**6V-8188**	3	NUT (1/2-13 THD)	

C-CHANGE FROM PREVIOUS TYPE
Y-SEPARATE ILLUSTRATION

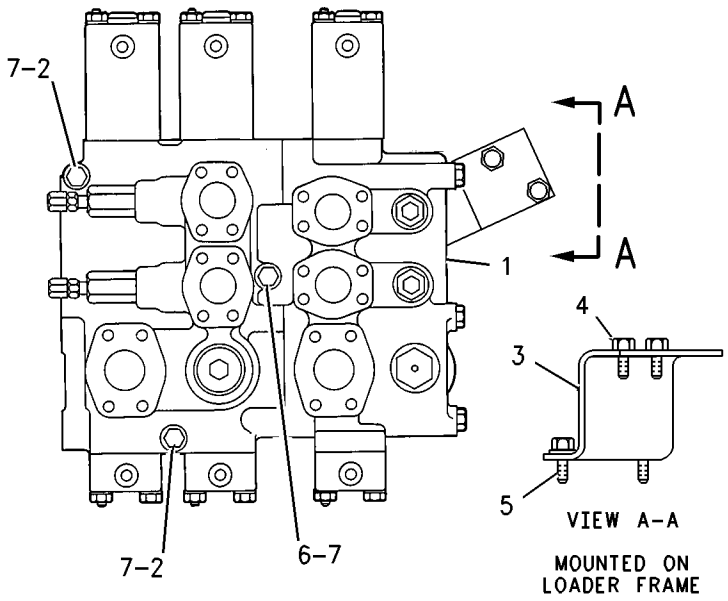

GRAPHIC #1 g00700775

HYDRAULIC SYSTEM

9U-4735 VALVE & MTG GP-CONTROL

S/N: 3XJ1740-99999

SMCS-5051 **i00259692**

NOTE	REF NO	GRAPHIC REF	PART NUMBER	QTY	PART NAME 1 2 3 4 5 6 (PRODUCT LEVEL)	SEE PAGE
	1	1	**7X-0340**	2	BOLT (1/2-13X6.5IN)	
	2	1	**7X-0337**	1	BOLT (1/2-13X5.75IN)	
Y	3	1	**6E-5864**	1	VALVE GP-CONTROL	
	4	1	**6V-8188**	3	NUT (1/2-13 THD)	
		1	**8T-4223**	3	WASHER-HARD (3MM THK)	

Y-SEPARATE ILLUSTRATION

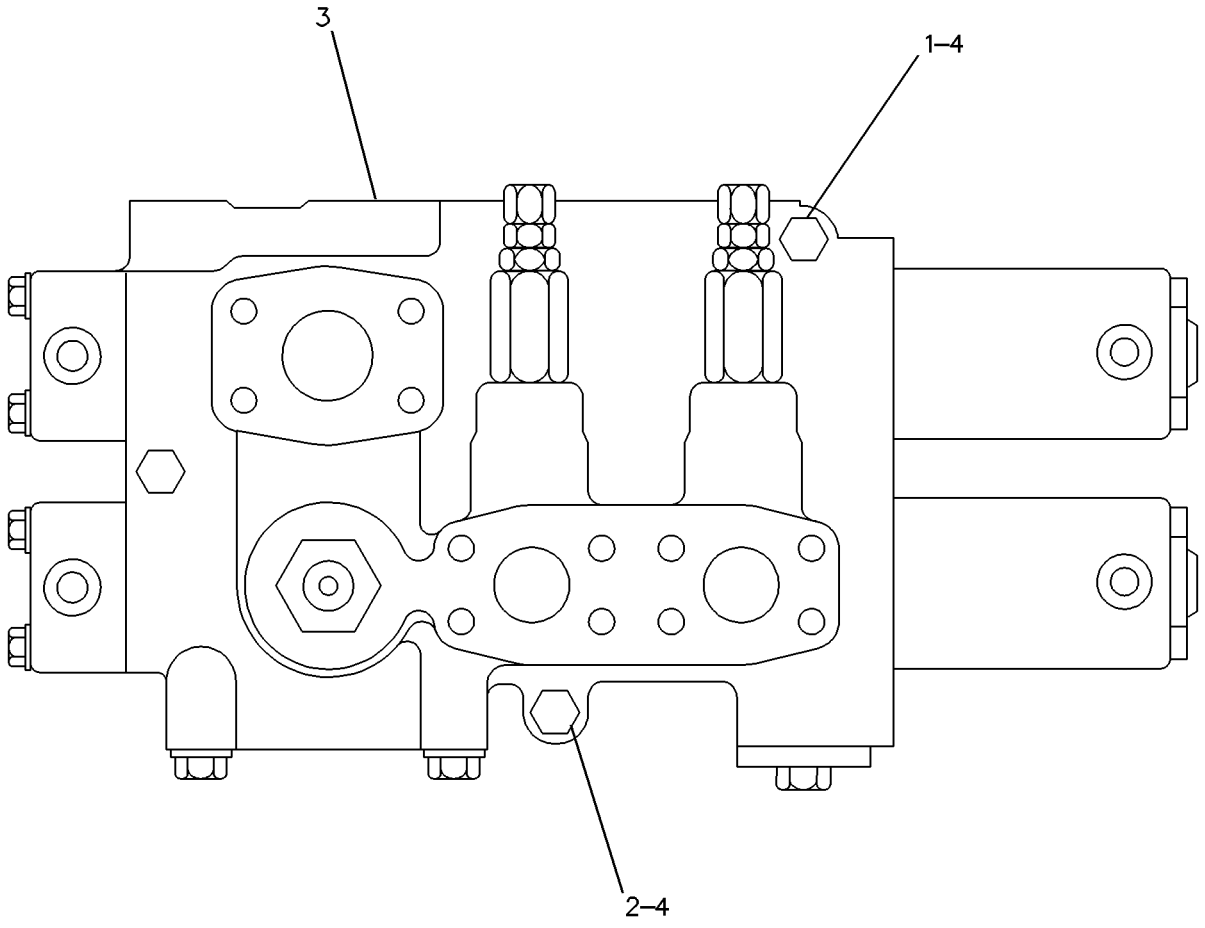

GRAPHIC #1 g00119420

HYDRAULIC SYSTEM

9U-4736 VALVE & MTG GP-CONTROL

S/N: 3XJ1740-99999
PART OF 4E-6083 HYDRAULIC AR
AN ATTACHMENT

SMCS-5051 **i01357410**

NOTE	REF NO	GRAPHIC REF	PART NUMBER	QTY	PART NAME 1 2 3 4 5 6 (PRODUCT LEVEL)	SEE PAGE
Y	1	1	**6E-5863**	1	VALVE GP-CONTROL (LIFT, TILT & AUXILIARY)	
	2	1	**7X-0340**	2	BOLT (1/2-13X6.5IN)	
	3	1	**6V-8188**	3	NUT (1/2-13 THD)	
		1	**8T-4223**	3	WASHER-HARD (3MM THK)	
	4	1	**7X-0337**	1	BOLT (1/2-13X5.75IN)	
	5	1	**6C-0143**	1	BRACKET AS	
	6	1	**8T-2502**	2	BOLT (3/8-16X1.125 IN)	
	7	1	**5S-7379**	2	BOLT (3/8-16X.875 IN)	
		1	**8T-4896**	2	WASHER-HARD (10.2X18.5X2.5MM THK)	

Y-SEPARATE ILLUSTRATION

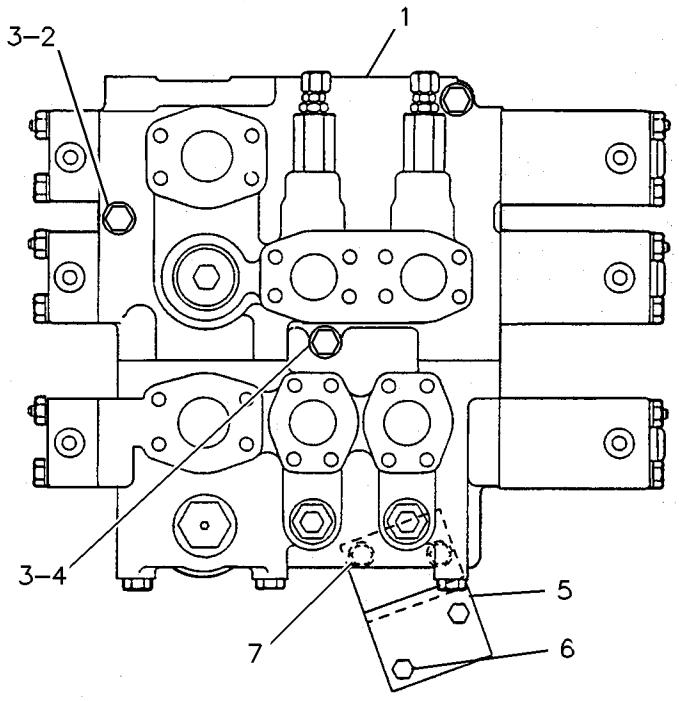

GRAPHIC #1 g00127727

HYDRAULIC SYSTEM

3T-5815 VALVE GP

S/N: 6ME1-99999; 1YX1-99999
SELECTOR & PRESSURE CONTROL
PART OF 8P-8977 CONTROL GP-TRANSMISSION HYD

SMCS-5051 **i01327187**

NOTE	REF NO	GRAPHIC REF	PART NUMBER	QTY	PART NAME 1 2 3 4 5 6 (PRODUCT LEVEL)	SEE PAGE
	1	1	**5M-6214**	4	PLUG-PIPE (1/8-27 THD)	
	2	1	**4B-0831**	26	BOLT (5/16-18X3.75IN)	
		1	**9M-1974**	26	WASHER-HARD (2MM THK)	
	3	1	**9P-5928**	1	PLATE-TOP	
Y	4	1	**3T-5816**	1	VALVE GP-SELECTOR & PRESS CONT	
	5	1	**9G-8551**	1	PLATE	
Y	6	1	**8P-3040**	1	VALVE GP-NEUTRALIZER	

Y-SEPARATE ILLUSTRATION

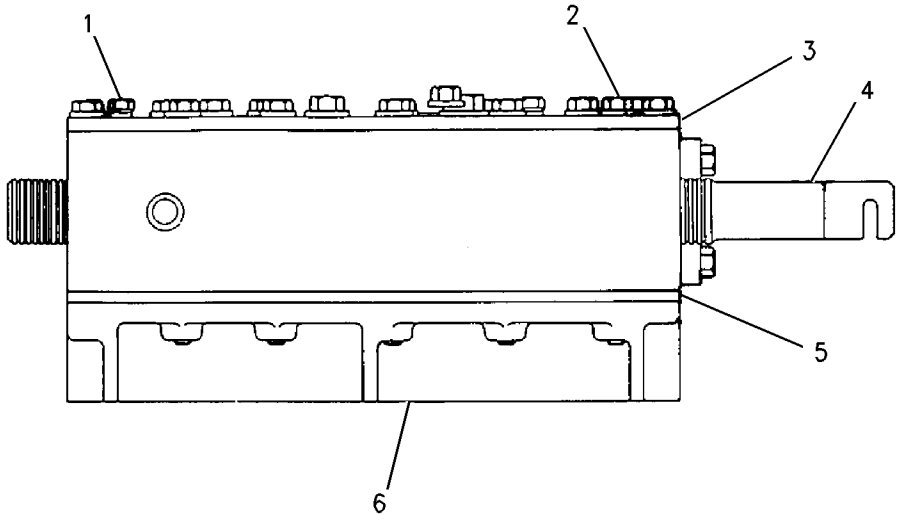

GRAPHIC #1 g00702227

6E-3528 VALVE GP-BREAKER RELIEF

S/N: 3XJ2049-99999

PART OF 2V-4248 LINES GP-HYDRAULIC

SMCS-5118 **i01306516**

NOTE	REF NO	GRAPHIC REF	PART NUMBER	QTY	PART NAME 1 2 3 4 5 6 (PRODUCT LEVEL)	SEE PAGE
	1	1	**5P-8132**	1	RING-RETAINING (23.47MM ID)	
	2	1	**2S-4663**	2	SEAL-O-RING (31.42MM ID)	
					AVAILABLE REPAIR KIT(S):	
			1U-0367	1	KIT-SEAL	
					(INCLUDES POPPET SEAL, SLEEVE SEAL, LOCK RING & FILTER SEAL)	

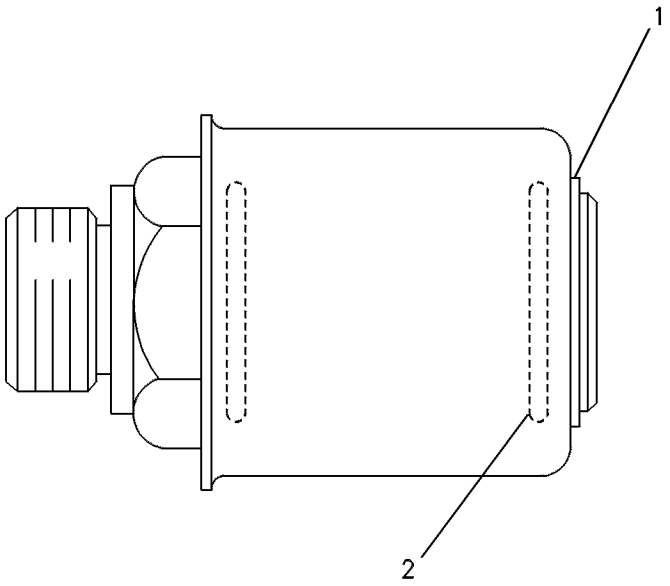

GRAPHIC #1 g00085014

4T-2745 VALVE GP-CONTROL–AUXILIARY

S/N: 3XJ1-99999
AUXILIARY
PART OF 6E-3737, 6E-5863, 9T-8489 VALVE GP-CONTROL
AN ATTACHMENT

SMCS-5051 **i01323812**

NOTE	REF NO	GRAPHIC REF	PART NUMBER	QTY	PART NAME 1 2 3 4 5 6 (PRODUCT LEVEL)	SEE PAGE
	1	1	**7K-0734**	1	BOLT-LOCKING	
	2	1	**4D-6433**	1	WASHER-HARD (1.98MM THK)	
B	3	1	**8J-1898**	8	SHIM (.010 IN THK)	
	4	1	**4T-4267**	2	RETAINER	
B	5	1	**1U-0471**	5	SHIM (.25MM THK)	
	6	1	**104-6183**	1	SPRING (OUTER)	
	7	1	**3G-8991**	1	SPRING (INNER)	
B	8	1	**1U-0470**	2	SHIM (.178MM THK)	

B-USE AS REQUIRED

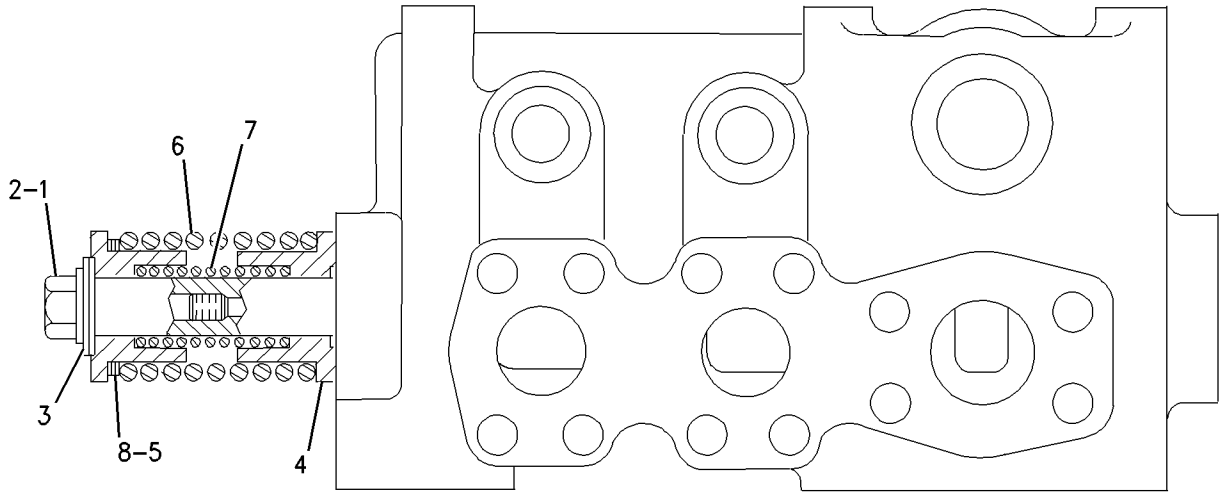

GRAPHIC #1 g00700349

4T-2746 VALVE GP-CONTROL–LIFT AND TILT

S/N: 3XJ1-99999

PART OF 6E-2378, 6E-3737, 6E-5863, 6E-5864, 9T-8489 VALVE GP-CONTROL

ALSO AN ATTACHMENT

SMCS-5051 **i01323926**

NOTE	REF NO	GRAPHIC REF	PART NUMBER	QTY	PART NAME 1 2 3 4 5 6 (PRODUCT LEVEL)	SEE PAGE
	1	1	**7K-0734**	2	BOLT-LOCKING	
	2	1	**4D-6433**	2	WASHER-HARD (1.98MM THK)	
B	3	1	**8J-1898**	6	SHIM (.010 IN THK)	
B	4	1	**1U-0471**	10	SHIM (.25MM THK)	
B	5	1	**1U-0470**	4	SHIM (.178MM THK)	
	6	1	**104-6183**	2	SPRING (OUTER)	
	7	1	**3G-8991**	2	SPRING (INNER)	
	8	1	**4T-4267**	4	RETAINER	

B-USE AS REQUIRED

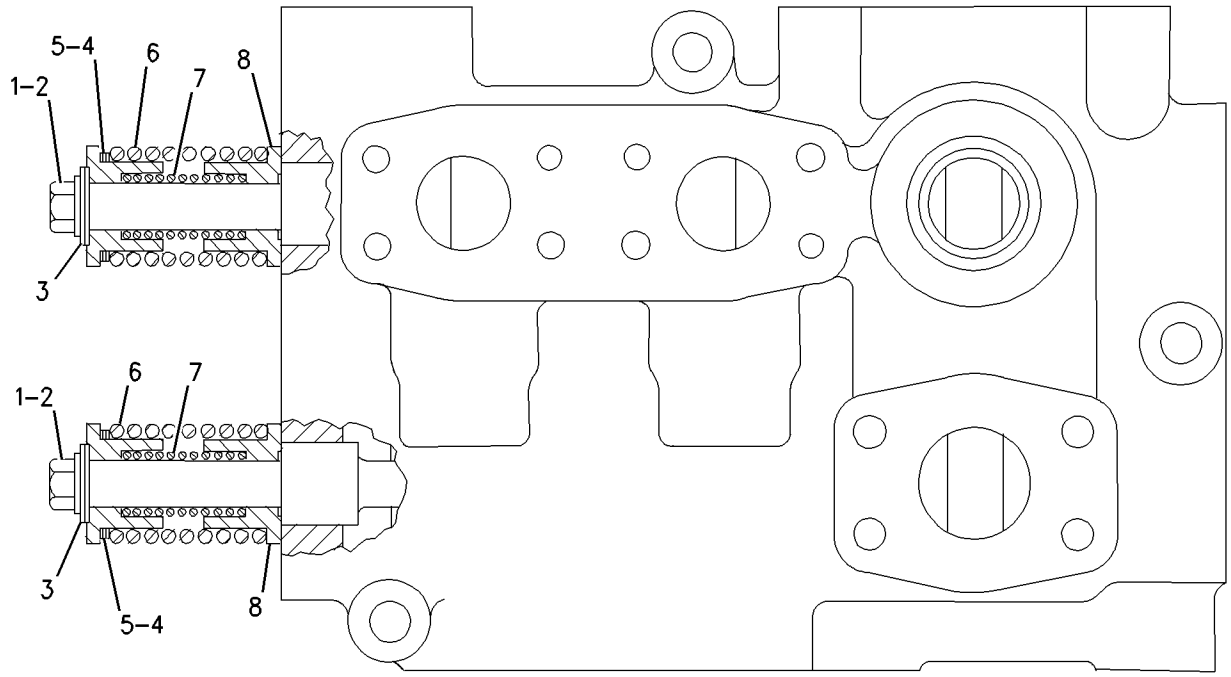

GRAPHIC #1 g00700428

MEMORANDA

HYDRAULIC SYSTEM

6E-2378 VALVE GP-CONTROL

S/N: 3XJ1-302
PILOT OPERATED
PART OF 4E-3169 VALVE & MTG GP-CONTROL

SMCS-5051 **i01336281**

NOTE	REF NO	GRAPHIC REF	PART NUMBER	QTY	PART NAME 1 2 3 4 5 6 (PRODUCT LEVEL)	SEE PAGE
Y	1	1	**4T-2746**	1	VALVE GP-CONTROL (LIFT AND TILT)	
Y	2	1	**6E-2377**	1	VALVE GP-RELIEF (LINE,TILT CYL ROD END PORT)	
	3	1	**1H-9696**	2	SEAL-O-RING (44.0MM ID)	
	4	1	**9S-8005**	1	PLUG-O-RING (3/4-16 THD)	
		1	**3K-0360**	1	SEAL-O-RING (16.36MM ID)	
	5	1	**1U-1578**	1	VALVE	
	6	1	**0S-1621**	2	BOLT (1/2-13X1 IN)	
	7	1	**3G-4117**	1	COVER	
		1	**4J-0522**	1	SEAL-O-RING (37.69MM ID)	
Y	8	1	*6E-1148*	1	VALVE GP-RELIEF	
	9	1	**8S-9191**	4	BOLT (3/8-16X4 IN)	
	10	1	**5M-2894**	8	WASHER-HARD (2.5MM THK)	
	11	1	**4T-9311**	2	HOUSING	
	12	1	**004-1963**	2	SEAL-O-RING (55.24MM ID)	
Y	13	1	**6E-2377**	1	VALVE GP-RELIEF (LINE,TILT CYL HEAD END PORT)	
	14	1	**1J-8960**	1	SPRING	
	15	1	**1U-1577**	1	PLUG	
		1	**6K-6307**	1	SEAL-O-RING (43.69MM ID)	
	16	1	**4T-9312**	2	HOUSING	
	17	1	**0S-1571**	4	BOLT (3/8-16X1.75 IN)	
	18	1	**1K-6705**	3	BOLT (1/2-13X1/2IN)	
		1	**5P-8245**	3	WASHER-HARD (3MM THK)	
	19	1	**1U-0323**	3	PLUG AS	
					(EACH INCLUDES)	
		1	**1U-0322**	1	BEARING-SLEEVE (12.65MM ID)	
	20	1	**2S-4078**	3	SEAL-O-RING (37.46MM ID)	
	21	1	**7S-8491**	3	SPRING	
	22	1	**7J-7423**	3	VALVE	

Y-SEPARATE ILLUSTRATION

6E-2378 VALVE GP-CONTROL *(contd.)* i01336281

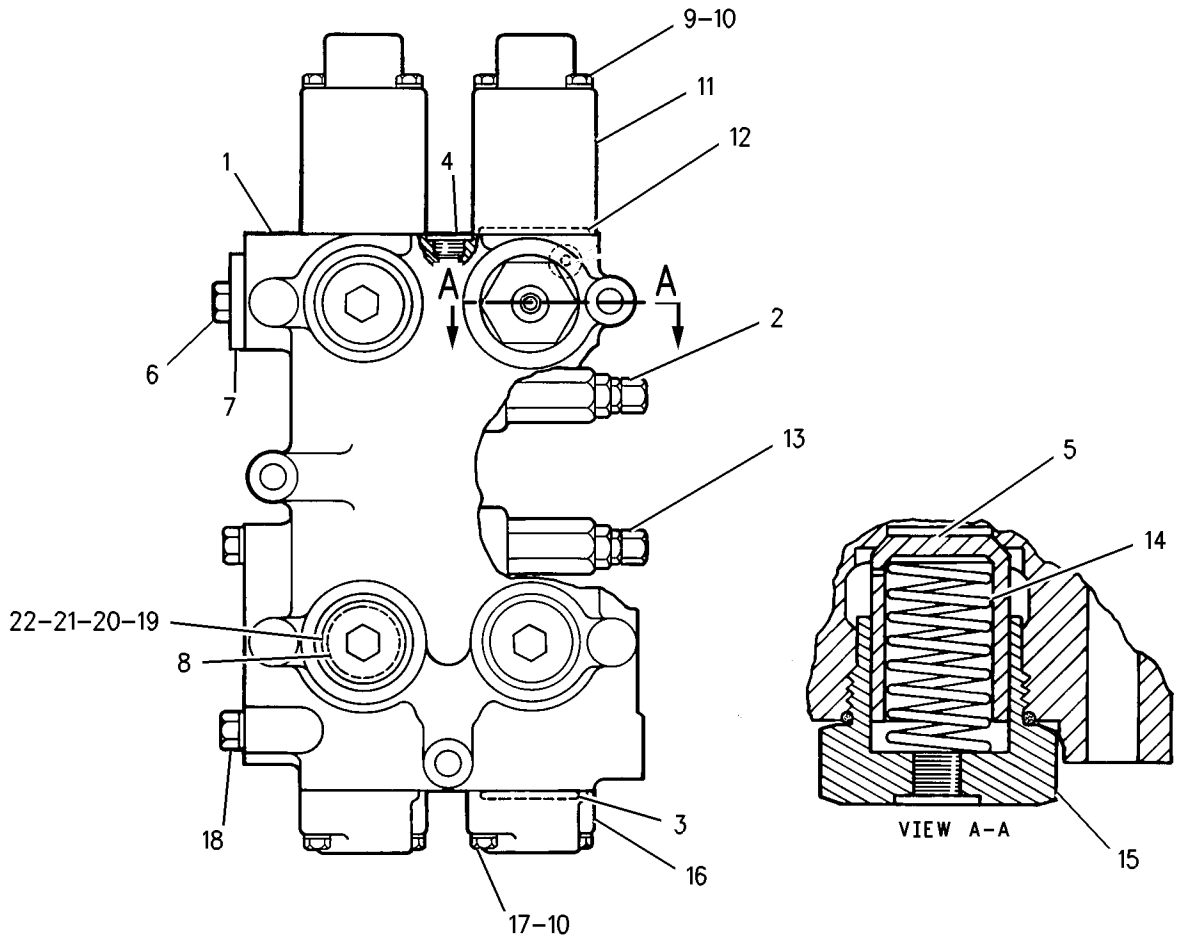

GRAPHIC #1 g00706586

HYDRAULIC SYSTEM

6E-2378 VALVE GP-CONTROL

S/N: 3XJ303-1739
PILOT OPERATED
PART OF 4E-3169 VALVE & MTG GP-CONTROL

SMCS-5051 **i01336291**

NOTE	REF NO	GRAPHIC REF	PART NUMBER	QTY	PART NAME 1 2 3 4 5 6 (PRODUCT LEVEL)	SEE PAGE
Y	1	1	**4T-2746**	1	VALVE GP-CONTROL (LIFT AND TILT)	
Y	2	1	**6E-2377**	1	VALVE GP-RELIEF (LINE, TILT CYL ROD END PORT)	
	3	1	**1H-9696**	2	SEAL-O-RING (44.0MM ID)	
	4	1	**9S-8005**	1	PLUG-O-RING (3/4-16 THD)	
		1	**3K-0360**	1	SEAL-O-RING (16.36MM ID)	
	5	1	**1U-1578**	1	VALVE	
	6	1	**0S-1621**	2	BOLT (1/2-13X1 IN)	
	7	1	**3G-4117**	1	COVER	
		1	**4J-0522**	1	SEAL-O-RING (37.69MM ID)	
Y	8	1	**6E-1148**	1	VALVE GP-RELIEF (MAIN)	
	9	1	**8S-9191**	4	BOLT (3/8-16X4 IN)	
	10	1	**5M-2894**	8	WASHER-HARD (2.5MM THK)	
	11	1	**4T-9311**	2	HOUSING	
	12	1	**004-1963**	2	SEAL-O-RING (55.24MM ID)	
Y	13	1	**6E-2377**	1	VALVE GP-RELIEF (LINE, TILT CYL HEAD END PORT)	
	14	1	**1J-8960**	1	SPRING	
	15	1	**1U-1577**	1	PLUG	
		1	**6K-6307**	1	SEAL-O-RING (43.69MM ID)	
	16	1	**4T-9312**	2	HOUSING	
	17	1	**0S-1571**	4	BOLT (3/8-16X1.75 IN)	
	18	1	**1K-6705**	3	BOLT (1/2-13X1/2IN)	
		1	**5P-8245**	3	WASHER-HARD (3MM THK)	
	19	1	**1U-0323**	3	PLUG AS	
					(EACH INCLUDES)	
		1	**1U-0322**	1	BEARING-SLEEVE (12.65MM ID)	
	20	1	**2S-4078**	3	SEAL-O-RING (37.46MM ID)	
	21	1	**7S-8491**	3	SPRING	
	22	1	**7J-7423**	3	VALVE	

Y-SEPARATE ILLUSTRATION

6E-2378 VALVE GP-CONTROL *(contd.)*

i01336291

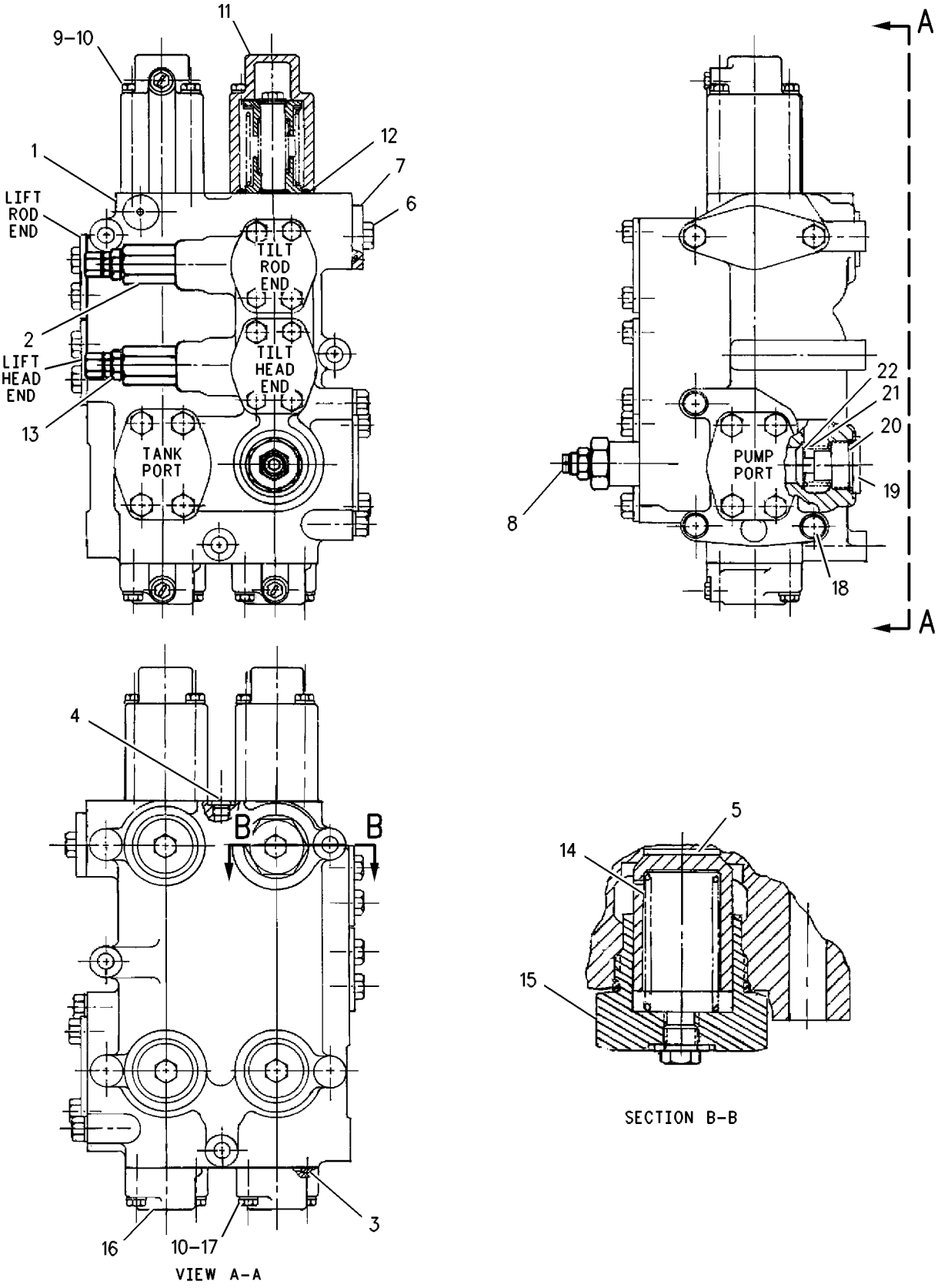

GRAPHIC #1

g00638185

HYDRAULIC SYSTEM

6E-3737 VALVE GP-CONTROL

S/N: 3XJ1-99999
PILOT OPERATED
PART OF 4E-8598 VALVE & MTG GP-CONTROL
AN ATTACHMENT
TYPE 1

SMCS-5051 **i01336272**

NOTE	REF NO	GRAPHIC REF	PART NUMBER	QTY	PART NAME 1 2 3 4 5 6 (PRODUCT LEVEL)	SEE PAGE
	1	1	**8S-9191**	6	BOLT (3/8-16X4 IN)	
	2	1	**5M-2894**	12	WASHER-HARD (2.5MM THK)	
	3	1	**4T-9311**	3	HOUSING	
Y	4	1	**4T-2746**	1	VALVE GP-CONTROL (LIFT AND TILT)	
	5	1	**4J-0522**	2	SEAL-O-RING (37.69MM ID)	
	6	1	**4J-0523**	1	SEAL-O-RING (44.04MM ID)	
Y	7	1	**6E-2377**	1	VALVE GP-RELIEF (LINE,TILT CYL HEAD END PORT)	
Y	8	1	**4T-2742**	1	VALVE GP-RELIEF (LINE, AUX CYL HEAD END PORT)	
Y	9	1	**6E-2377**	1	VALVE GP-RELIEF (LINE, TILT CYL ROD END PORT)	
	10	1	**1H-9696**	3	SEAL-O-RING (44.0MM ID)	
	11	1	**3K-0360**	1	SEAL-O-RING (16.36MM ID)	
	12	1	**0S-1571**	6	BOLT (3/8-16X1.75 IN)	
	13	1	**3G-4135**	1	PLUG-O-RING (1 5/16-12 THD)	
	14	1	**4T-9312**	3	HOUSING	
	15	1	**3D-9348**	5	BOLT (1/2-13X7.75IN)	
	16	1	**1U-0323**	4	PLUG AS	
					(EACH INCLUDES)	
		1	**1U-0322**	1	BEARING-SLEEVE (12.65MM ID)	
	17	1	**7S-8491**	4	SPRING	
Y	18	1	**6E-1148**	1	VALVE GP-RELIEF (MAIN)	
	19	1	**9S-4182**	1	PLUG (7/16-20 THD)	
	20	1	**1U-1578**	1	VALVE	
	21	1	**1J-8960**	1	SPRING	
	22	1	**1U-1577**	1	PLUG	
Y	23	1	**4T-2745**	1	VALVE GP-CONTROL (AUXILIARY)	
	24	1	**004-1963**	3	SEAL-O-RING (55.24MM ID)	
	25	1	**2S-4078**	4	SEAL-O-RING (37.46MM ID)	
	26	1	**9S-8005**	1	PLUG-O-RING (3/4-16 THD)	
Y	27	1	**4T-4162**	1	VALVE GP-RELIEF (LINE, AUX CYL ROD END PORT)	
	28	1	**7M-8485**	1	SEAL-O-RING (29.74MM ID)	
	29	1	**7J-7423**	4	VALVE (MAKE UP)	
	30	1	**3J-7354**	1	SEAL-O-RING (8.92MM ID)	
	31	1	**6K-6307**	1	SEAL-O-RING (43.69MM ID)	

Y-SEPARATE ILLUSTRATION

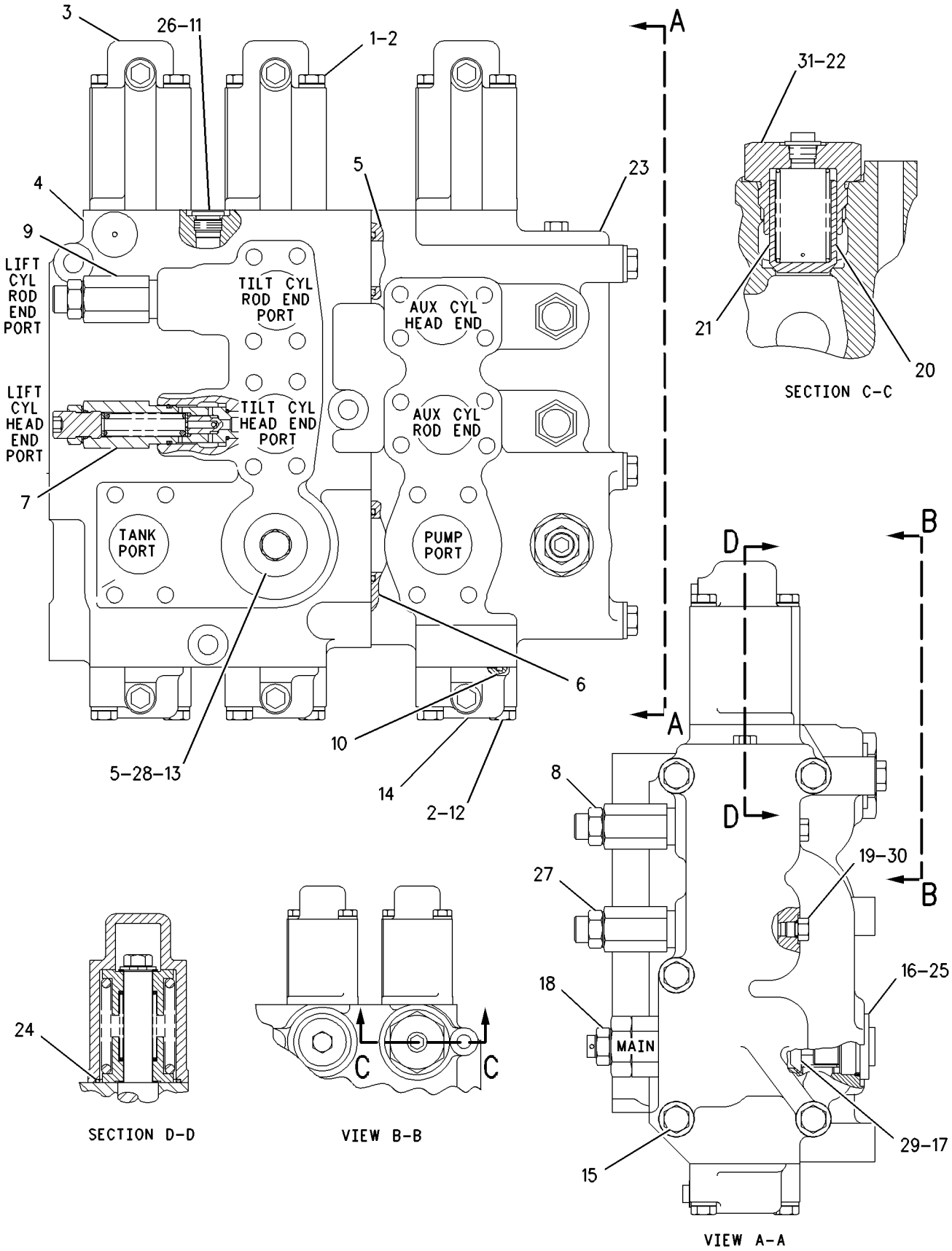

GRAPHIC #1 g00692358

6E-3737 VALVE GP-CONTROL

S/N: 3XJ1-99999
PILOT OPERATED
PART OF 4E-8598 VALVE & MTG GP-CONTROL
AN ATTACHMENT
TYPE 2

SMCS-5051 **i01336270**

NOTE	REF NO	GRAPHIC REF	PART NUMBER	QTY	PART NAME 1 2 3 4 5 6 (PRODUCT LEVEL)	SEE PAGE
	1	1	**8T-9378**	6	BOLT (3/8-16X4 IN)	
	2	1	**8T-4896**	12	WASHER-HARD (10.2X18.5X2.5MM THK)	
	3	1	**4T-9311**	3	HOUSING	
Y	4	1	**4T-2746**	1	VALVE GP-CONTROL (LIFT AND TILT)	
	5	1	**4J-0522**	2	SEAL-O-RING (37.69MM ID)	
	6	1	**4J-0523**	1	SEAL-O-RING (44.04MM ID)	
Y	7	1	**6E-2377**	1	VALVE GP-RELIEF (LINE, TILT CYL HEAD END PORT)	
Y	8	1	**4T-2742**	1	VALVE GP-RELIEF (LINE, AUX CYL HEAD END PORT)	
Y	9	1	**6E-2377**	1	VALVE GP-RELIEF (LINE, TILT CYL ROD END PORT)	
	10	1	**1H-9696**	3	SEAL-O-RING (44.0MM ID)	
	11	1	**3K-0360**	1	SEAL-O-RING (16.36MM ID)	
	12	1	**5S-7383**	6	BOLT (3/8-16X1.75 IN)	
	13	1	**3G-4135**	1	PLUG-O-RING (1 5/16-12 THD)	
	14	1	**4T-9312**	3	HOUSING	
	15	1	**3D-9348**	5	BOLT (1/2-13X7.75IN)	
	16	1	**1U-0323**	4	PLUG AS	
					(EACH INCLUDES)	
		1	**1U-0322**	1	BEARING-SLEEVE (12.65MM ID)	
	17	1	**7S-8491**	4	SPRING	
CY	18	1	**6E-5861**	1	VALVE GP-RELIEF (MAIN)	
	19	1	**9S-4182**	1	PLUG (7/16-20 THD)	
	20	1	**1U-1578**	1	VALVE	
	21	1	**1J-8960**	1	SPRING	
	22	1	**1U-1577**	1	PLUG	
Y	23	1	**4T-2745**	1	VALVE GP-CONTROL (AUXILIARY)	
	24	1	**004-1963**	3	SEAL-O-RING (55.24MM ID)	
	25	1	**2S-4078**	4	SEAL-O-RING (37.46MM ID)	
	26	1	**9S-8005**	1	PLUG-O-RING (3/4-16 THD)	
Y	27	1	**4T-4162**	1	VALVE GP-RELIEF (LINE, AUX CYL ROD END PORT)	
	28	1	**7M-8485**	1	SEAL-O-RING (29.74MM ID)	
	29	1	**7J-7423**	4	VALVE (MAKE UP)	
	30	1	**3J-7354**	1	SEAL-O-RING (8.92MM ID)	
	31	1	**6K-6307**	1	SEAL-O-RING (43.69MM ID)	

C-CHANGE FROM PREVIOUS TYPE
Y-SEPARATE ILLUSTRATION

6E-3737 VALVE GP-CONTROL *(contd.)* i01336270

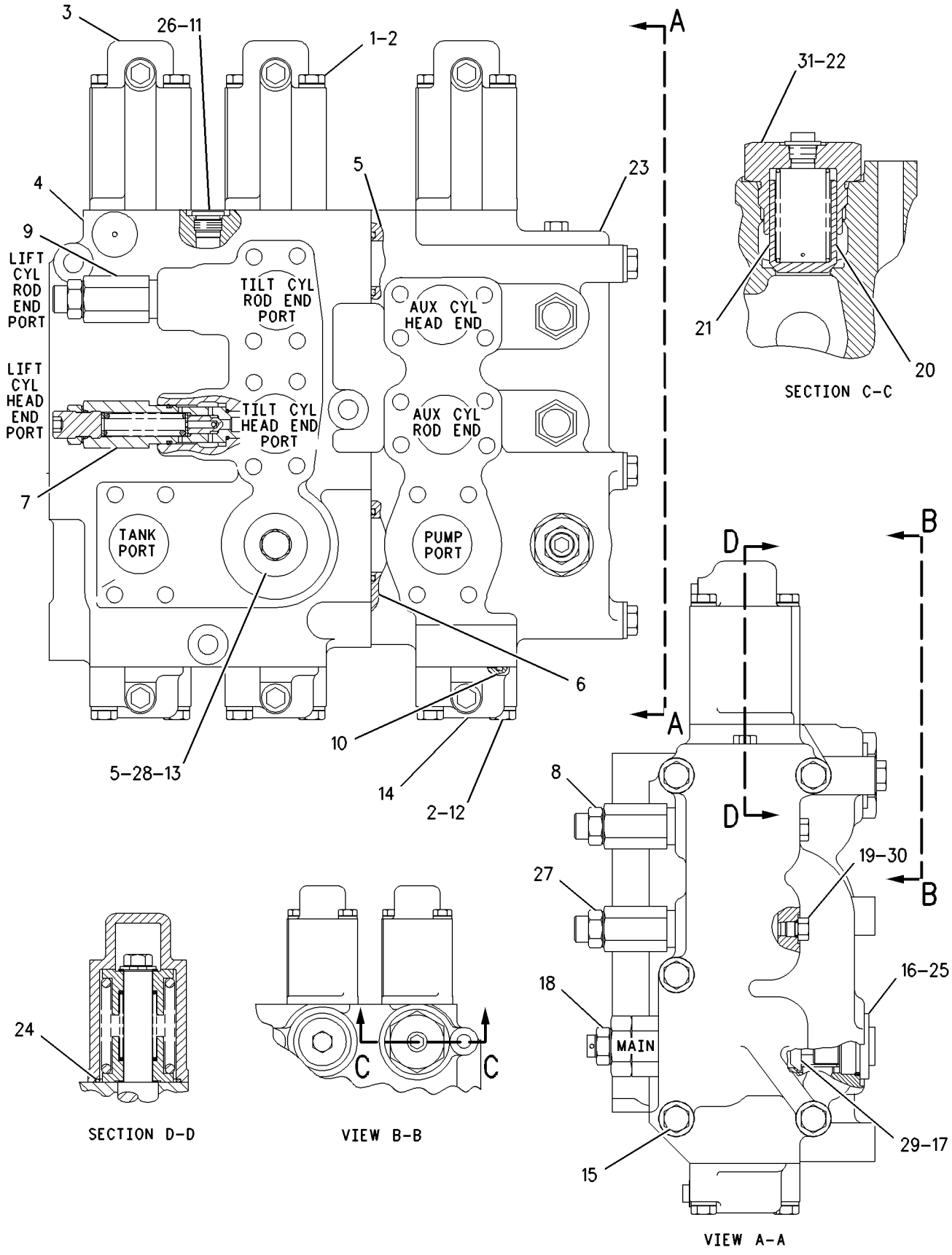

GRAPHIC #1 g00692373

HYDRAULIC SYSTEM

6E-3737 VALVE GP-CONTROL

S/N: 3XJ1-99999
PILOT OPERATED
PART OF 4E-8598 VALVE & MTG GP-CONTROL
AN ATTACHMENT
TYPE 3

SMCS-5051 **i01336275**

NOTE	REF NO	GRAPHIC REF	PART NUMBER	QTY	PART NAME 1 2 3 4 5 6 (PRODUCT LEVEL)	SEE PAGE
	1	1	**8T-9378**	6	BOLT (3/8-16X4 IN)	
	2	1	**8T-4896**	12	WASHER-HARD (10.2X18.5X2.5MM THK)	
	3	1	**4T-9311**	3	HOUSING	
Y	4	1	**4T-2746**	1	VALVE GP-CONTROL (LIFT AND TILT)	
	5	1	**4J-0522**	2	SEAL-O-RING (37.69MM ID)	
	6	1	**4J-0523**	1	SEAL-O-RING (44.04MM ID)	
Y	7	1	**6E-2377**	1	VALVE GP-RELIEF (LINE,TILT CYL HEAD END PORT)	
Y	8	1	**4T-2742**	1	VALVE GP-RELIEF (LINE, AUX CYL HEAD END PORT)	
Y	9	1	**6E-2377**	1	VALVE GP-RELIEF (LINE, TILT CYL ROD END PORT)	
	10	1	**1H-9696**	3	SEAL-O-RING (44.0MM ID)	
	11	1	**3K-0360**	1	SEAL-O-RING (16.36MM ID)	
	12	1	**5S-7383**	6	BOLT (3/8-16X1.75 IN)	
	13	1	**3G-4135**	1	PLUG-O-RING (1 5/16-12 THD)	
	14	1	**4T-9312**	3	HOUSING	
	15	1	**3D-9348**	5	BOLT (1/2-13X7.75IN)	
	16	1	**1U-0323**	4	PLUG AS	
					(EACH INCLUDES)	
		1	**1U-0322**	1	BEARING-SLEEVE (12.65MM ID)	
	17	1	**7S-8491**	4	SPRING	
CY	18	1	**6E-6256**	1	VALVE GP-RELIEF (MAIN)	
	19	1	**9S-4182**	1	PLUG (7/16-20 THD)	
	20	1	**1U-1578**	1	VALVE	
	21	1	**1J-8960**	1	SPRING	
	22	1	**1U-1577**	1	PLUG	
Y	23	1	**4T-2745**	1	VALVE GP-CONTROL (AUXILIARY)	
	24	1	**004-1963**	3	SEAL-O-RING (55.24MM ID)	
	25	1	**2S-4078**	4	SEAL-O-RING (37.46MM ID)	
	26	1	**9S-8005**	1	PLUG-O-RING (3/4-16 THD)	
Y	27	1	**4T-4162**	1	VALVE GP-RELIEF (LINE, AUX CYL ROD END PORT)	
	28	1	**7M-8485**	1	SEAL-O-RING (29.74MM ID)	
	29	1	**7J-7423**	4	VALVE (MAKE UP)	
	30	1	**3J-7354**	1	SEAL-O-RING (8.92MM ID)	
	31	1	**6K-6307**	1	SEAL-O-RING (43.69MM ID)	

C-CHANGE FROM PREVIOUS TYPE
Y-SEPARATE ILLUSTRATION

6E-3737 VALVE GP-CONTROL *(contd.)*

i01336275

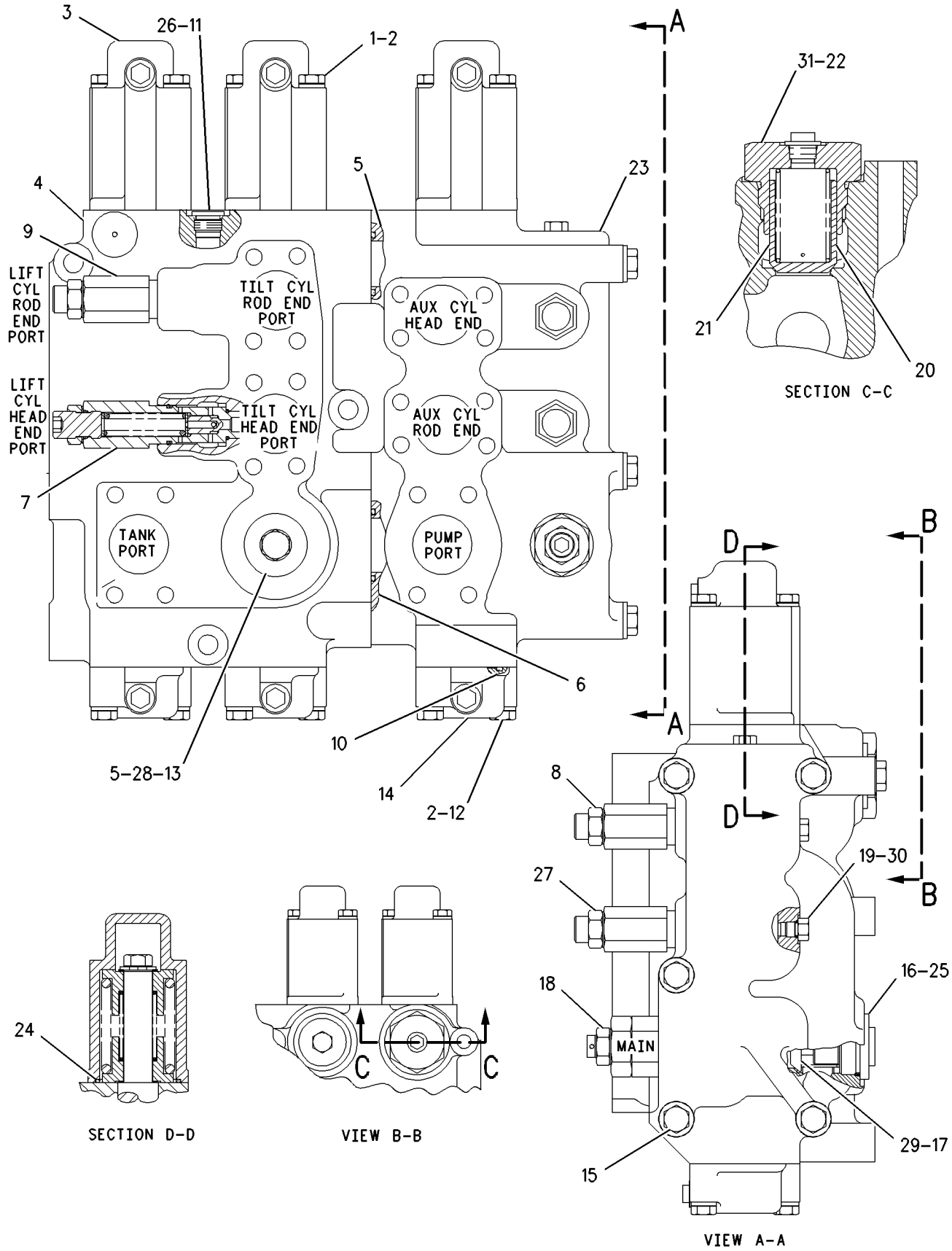

GRAPHIC #1

g00692383

HYDRAULIC SYSTEM

6E-5863 VALVE GP-CONTROL

S/N: 3XJ1740-2153
LIFT, TILT & AUXILIARY, PILOT OPERATED
PART OF 9U-4736 VALVE & MTG GP-CONTROL
AN ATTACHMENT

SMCS-5051 **i01336266**

NOTE	REF NO	GRAPHIC REF	PART NUMBER	QTY	PART NAME 1 2 3 4 5 6 (PRODUCT LEVEL)	SEE PAGE
	1	1	**8S-9191**	6	BOLT (3/8-16X4 IN)	
	2	1	**5M-2894**	12	WASHER-HARD (2.5MM THK)	
	3	1	**4T-9311**	3	HOUSING	
Y	4	1	**4T-2746**	1	VALVE GP-CONTROL (LIFT AND TILT)	
	5	1	**4J-0522**	2	SEAL-O-RING (37.69MM ID)	
	6	1	**4J-0523**	1	SEAL-O-RING (44.04MM ID)	
Y	7	1	**6E-2377**	1	VALVE GP-RELIEF (LINE, TILT CYL HEAD END PORT)	
Y	8	1	**4T-2742**	1	VALVE GP-RELIEF (LINE, AUX CYL HEAD END PORT)	
Y	9	1	**6E-2377**	1	VALVE GP-RELIEF (LINE, TILT CYL HEAD END PORT)	
	10	1	**1H-9696**	3	SEAL-O-RING (44.0MM ID)	
	12	1	**0S-1571**	6	BOLT (3/8-16X1.75 IN)	
	13	1	**3G-4135**	1	PLUG-O-RING (1 5/16-12 THD)	
		1	**7M-8485**	1	SEAL-O-RING (29.74MM ID)	
	14	1	**4T-9312**	3	HOUSING	
	15	1	**3D-9348**	5	BOLT (1/2-13X7.75IN)	
	16	1	**1U-0323**	4	PLUG AS	
					(EACH INCLUDES)	
		1	**1U-0322**	1	BEARING-SLEEVE (12.65MM ID)	
	17	1	**7S-8491**	4	SPRING	
		1	**7J-7423**	4	VALVE	
Y	18	1	*6E-5862*	1	VALVE GP-RELIEF (MAIN)	
	19	1	**9S-4182**	1	PLUG (7/16-20 THD)	
		1	**3J-7354**	1	SEAL-O-RING (8.92MM ID)	
	20	1	**1U-1578**	1	VALVE	
	21	1	**1J-8960**	1	SPRING	
	22	1	**1U-1577**	1	PLUG	
		1	**6K-6307**	1	SEAL-O-RING (43.69MM ID)	
Y	23	1	**4T-2745**	1	VALVE GP-CONTROL (AUXILIARY)	
	24	1	**004-1963**	3	SEAL-O-RING (55.24MM ID)	
	25	1	**2S-4078**	4	SEAL-O-RING (37.46MM ID)	
	26	1	**9S-8005**	1	PLUG-O-RING (3/4-16 THD)	
		1	**3K-0360**	1	SEAL-O-RING (16.36MM ID)	
Y	27	1	**4T-4162**	1	VALVE GP-RELIEF (LINE, AUX CYL ROD END PORT)	

Y-SEPARATE ILLUSTRATION

6E-5863 VALVE GP-CONTROL *(contd.)* i01336266

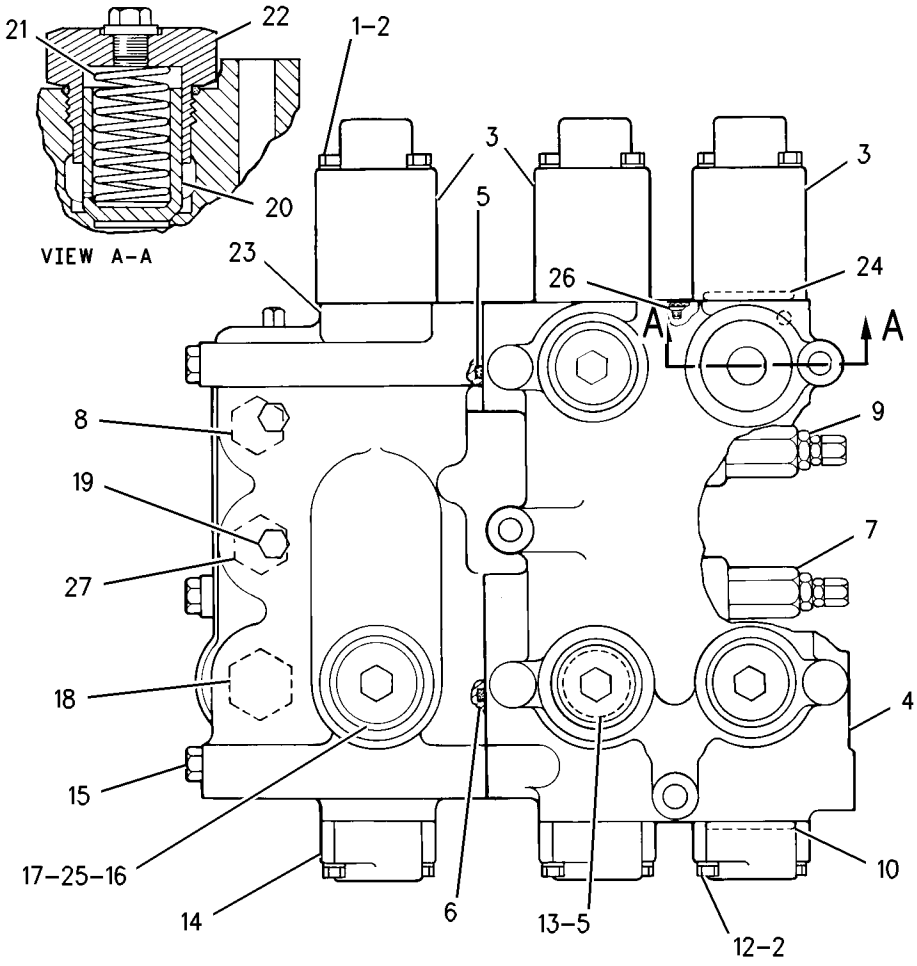

GRAPHIC #1 g00702356

HYDRAULIC SYSTEM

6E-5863 VALVE GP-CONTROL

S/N: 3XJ2154-99999
LIFT, TILT & AUXILIARY, PILOT OPERATED
PART OF 9U-4736 VALVE & MTG GP-CONTROL
AN ATTACHMENT

SMCS-5051 **i01336268**

NOTE	REF NO	GRAPHIC REF	PART NUMBER	QTY	PART NAME 1 2 3 4 5 6 (PRODUCT LEVEL)	SEE PAGE
	1	1	**8T-9378**	6	BOLT (3/8-16X4 IN)	
	2	1	**8T-4896**	12	WASHER-HARD (10.2X18.5X2.5MM THK)	
	3	1	**4T-9311**	3	HOUSING	
Y	4	1	**4T-2746**	1	VALVE GP-CONTROL (LIFT AND TILT)	
	5	1	**4J-0522**	2	SEAL-O-RING (37.69MM ID)	
	6	1	**4J-0523**	1	SEAL-O-RING (44.04MM ID)	
Y	7	1	**6E-2377**	1	VALVE GP-RELIEF (LINE, TILT CYL HEAD END PORT)	
Y	8	1	**4T-2742**	1	VALVE GP-RELIEF (LINE, AUX CYL HEAD END PORT)	
Y	9	1	**6E-2377**	1	VALVE GP-RELIEF (LINE, TILT CYL HEAD END PORT)	
	10	1	**1H-9696**	3	SEAL-O-RING (44.0MM ID)	
	11	1	**2S-4078**	4	SEAL-O-RING (37.46MM ID)	
	12	1	**5S-7383**	6	BOLT (3/8-16X1.75 IN)	
	13	1	**3G-4135**	1	PLUG-O-RING (1 5/16-12 THD)	
		1	**7M-8485**	1	SEAL-O-RING (29.74MM ID)	
	14	1	**4T-9312**	3	HOUSING	
	15	1	**3D-9348**	5	BOLT (1/2-13X7.75IN)	
	16	1	**1U-0323**	4	PLUG AS	
					(EACH INCLUDES)	
		1	**1U-0322**	1	BEARING-SLEEVE (12.65MM ID)	
	17	1	**7S-8491**	4	SPRING	
		1	**7J-7423**	4	VALVE	
Y	18	1	**6E-6257**	1	VALVE GP-RELIEF (MAIN)	
	19	1	**9S-4182**	1	PLUG (7/16-20 THD)	
		1	**3J-7354**	1	SEAL-O-RING (8.92MM ID)	
	20	1	**1U-1578**	1	VALVE	
	21	1	**1J-8960**	1	SPRING	
	22	1	**1U-1577**	1	PLUG	
		1	**6K-6307**	1	SEAL-O-RING (43.69MM ID)	
Y	23	1	**4T-2745**	1	VALVE GP-CONTROL	
	24	1	**004-1963**	3	SEAL-O-RING (55.24MM ID)	
Y	25	1	**4T-4162**	1	VALVE GP-RELIEF (LINE, AUX CYL ROD END PORT)	
	26	1	**9S-8005**	1	PLUG-O-RING (3/4-16 THD)	
		1	**3K-0360**	1	SEAL-O-RING (16.36MM ID)	

Y-SEPARATE ILLUSTRATION

6E-5863 VALVE GP-CONTROL *(contd.)* i01336268

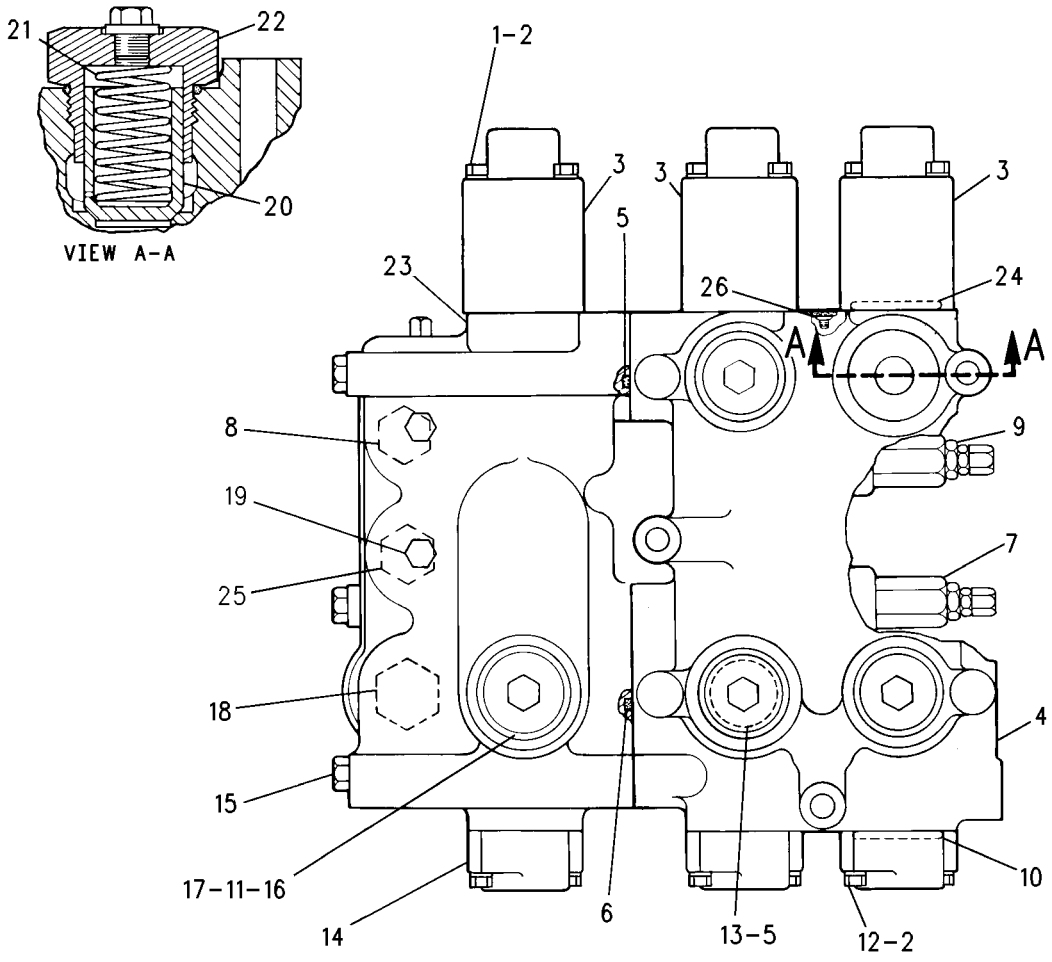

GRAPHIC #1 g00119728

HYDRAULIC SYSTEM

6E-5864 VALVE GP-CONTROL

S/N: 3XJ1740-2153

PART OF 9U-4735 VALVE & MTG GP-CONTROL

SMCS-5051 **i01327475**

NOTE	REF NO	GRAPHIC REF	PART NUMBER	QTY	PART NAME 1 2 3 4 5 6 (PRODUCT LEVEL)	SEE PAGE
Y	1	1	**4T-2746**	1	VALVE GP-CONTROL (LIFT AND TILT)	
Y	2	1	*6E-5862*	1	VALVE GP-RELIEF (MAIN)	
	3	1	**4T-9311**	2	HOUSING	
	4	1	**8S-9191**	4	BOLT (3/8-16X4 IN)	
	5	1	**004-1963**	2	SEAL-O-RING (55.24MM ID)	
	6	1	**3G-4117**	1	COVER	
	7	1	**0S-1621**	2	BOLT (1/2-13X1 IN)	
	8	1	**4J-0522**	1	SEAL-O-RING (37.69MM ID)	
	9	1	**0S-1571**	4	BOLT (3/8-16X1.75 IN)	
	10	1	**5M-2894**	8	WASHER-HARD (2.5MM THK)	
	11	1	**9S-8005**	1	PLUG-O-RING (3/4-16 THD)	
		1	**3K-0360**	1	SEAL-O-RING (16.36MM ID)	
	12	1	**7J-7423**	3	VALVE	
	13	1	**7S-8491**	3	SPRING	
	14	1	**2S-4078**	3	SEAL-O-RING (37.46MM ID)	
	15	1	**1U-0323**	3	PLUG AS	
					(EACH INCLUDES)	
		1	**1U-0322**	1	BEARING-SLEEVE (12.65MM ID)	
	16	1	**1K-6705**	3	BOLT (1/2-13X1/2IN)	
		1	**5P-8245**	3	WASHER-HARD (3MM THK)	
	17	1	**1U-1578**	1	VALVE	
	18	1	**1J-8960**	1	SPRING	
	19	1	**1U-1577**	1	PLUG	
		1	**6K-6307**	1	SEAL-O-RING (43.69MM ID)	
	20	1	**4T-9312**	2	HOUSING	
	21	1	**1H-9696**	2	SEAL-O-RING (44.0MM ID)	
Y	22	1	**6E-2377**	2	VALVE GP-RELIEF (LINE)	

Y-SEPARATE ILLUSTRATION

6E-5864 VALVE GP-CONTROL *(contd.)* i01327475

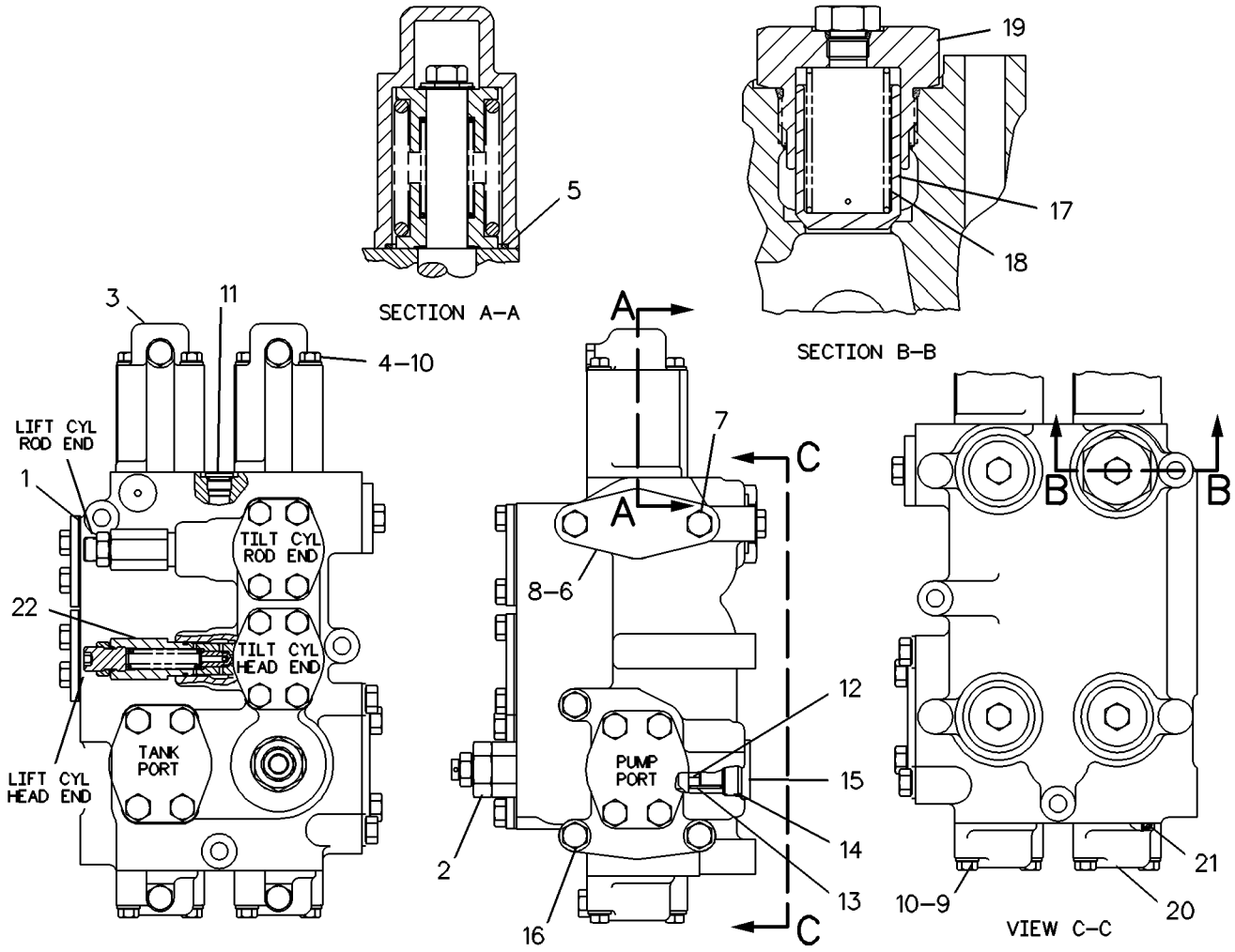

GRAPHIC #1 g00127730

HYDRAULIC SYSTEM

6E-5864 VALVE GP-CONTROL

S/N: 3XJ2154-99999

PART OF 9U-4735 VALVE & MTG GP-CONTROL

SMCS-5051 **i01327478**

NOTE	REF NO	GRAPHIC REF	PART NUMBER	QTY	PART NAME 1 2 3 4 5 6 (PRODUCT LEVEL)	SEE PAGE
Y	1	1	**4T-2746**	1	VALVE GP-CONTROL (LIFT AND TILT)	
	2	1	**7J-7423**	3	VALVE (MAKE UP)	
	3	1	**1H-9696**	2	SEAL-O-RING (44.0MM ID)	
	4	1	**9S-8005**	1	PLUG-O-RING (3/4-16 THD)	
		1	**3K-0360**	1	SEAL-O-RING (16.36MM ID)	
	5	1	**1U-1578**	1	VALVE	
	6	1	**0S-1621**	2	BOLT (1/2-13X1 IN)	
	7	1	**3G-4117**	1	COVER	
		1	**4J-0522**	1	SEAL-O-RING (37.69MM ID)	
Y	8	1	**6E-6257**	1	VALVE GP-RELIEF (MAIN)	
	9	1	**8S-9191**	4	BOLT (3/8-16X4 IN)	
	10	1	**5M-2894**	8	WASHER-HARD (2.5MM THK)	
	11	1	**4T-9311**	2	HOUSING	
	12	1	**004-1963**	2	SEAL-O-RING (55.24MM ID)	
Y	13	1	**6E-2377**	2	VALVE GP-RELIEF (LINE)	
	14	1	**1J-8960**	1	SPRING	
	15	1	**1U-1577**	1	PLUG	
		1	**6K-6307**	1	SEAL-O-RING (43.69MM ID)	
	16	1	**4T-9312**	2	HOUSING	
	17	1	**0S-1571**	4	BOLT (3/8-16X1.75 IN)	
	18	1	**1K-6705**	3	BOLT (1/2-13X1/2IN)	
		1	**5P-8245**	3	WASHER-HARD (3MM THK)	
	19	1	**1U-0323**	3	PLUG AS	
					(EACH INCLUDES)	
		1	**1U-0322**	1	BEARING-SLEEVE (12.65MM ID)	
	20	1	**2S-4078**	3	SEAL-O-RING (37.46MM ID)	
	21	1	**7S-8491**	3	SPRING	

Y-SEPARATE ILLUSTRATION

6E-5864 VALVE GP-CONTROL *(contd.)* i01327478

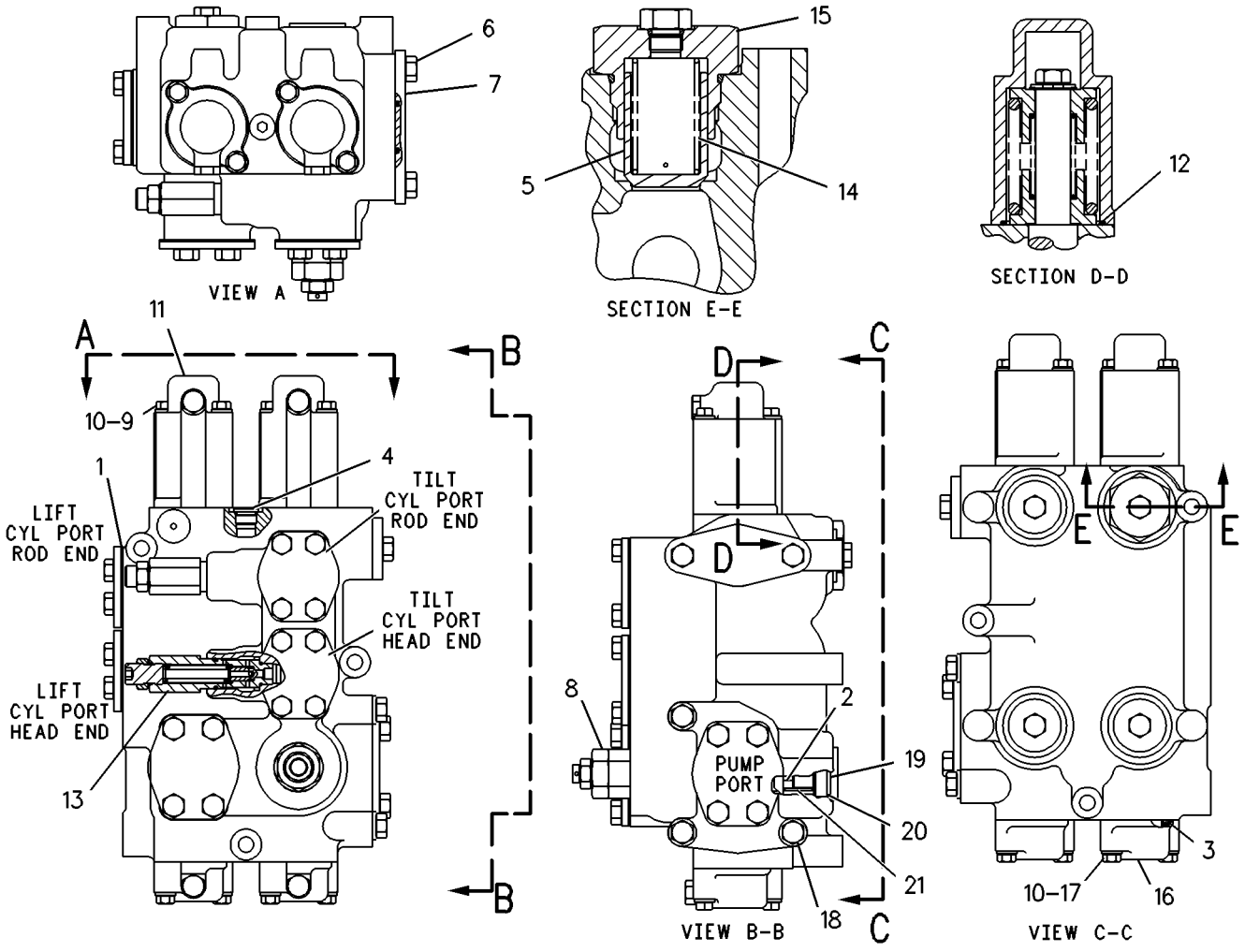

GRAPHIC #1 g00119603

9T-8489 VALVE GP-CONTROL—LOGGING

S/N: 3XJ1-99999
PILOT OPERATED
PART OF 4V-9655 VALVE & MTG GP-CONTROL
AN ATTACHMENT

SMCS-5051 **i01332074**

NOTE	REF NO	GRAPHIC REF	PART NUMBER	QTY	PART NAME 1 2 3 4 5 6 (PRODUCT LEVEL)	SEE PAGE
	1	1	**8S-9191**	6	BOLT (3/8-16X4 IN)	
	2	1	**5M-2894**	12	WASHER-HARD (2.5MM THK)	
	3	1	**4T-9311**	3	HOUSING	
Y	4	1	**4T-2746**	1	VALVE GP-CONTROL (LIFT AND TILT)	
	5	1	**4J-0522**	2	SEAL-O-RING (37.69MM ID)	
	6	1	**4J-0523**	1	SEAL-O-RING (44.04MM ID)	
Y	7	1	**4T-2764**	1	VALVE GP-RELIEF (LINE, TILT CYL HEAD END PORT)	
Y	8	1	**9T-8488**	1	VALVE GP-RELIEF (LINE, TILT CYL ROD END PORT)	
	9	1	**6J-1038**	1	SEAL-O-RING (15.47MM ID)	
	10	1	**1H-9696**	3	SEAL-O-RING (44.0MM ID)	
	12	1	**0S-1571**	6	BOLT (3/8-16X1.75 IN)	
	13	1	**3G-4135**	1	PLUG-O-RING (1 5/16-12 THD)	
		1	**7M-8485**	1	SEAL-O-RING (29.74MM ID)	
	14	1	**4T-9312**	3	HOUSING	
	15	1	**3D-9348**	5	BOLT (1/2-13X7.75IN)	
	16	1	**1U-0323**	4	PLUG AS	
					(EACH INCLUDES)	
		1	**1U-0322**	1	BEARING-SLEEVE (12.65MM ID)	
	17	1	**7S-8491**	4	SPRING	
		1	**7J-7423**	4	VALVE	
Y	18	1	*3G-4459*	1	VALVE GP-RELIEF (MAIN)	
	19	1	**9S-4182**	1	PLUG (7/16-20 THD)	
		1	**3J-7354**	1	SEAL-O-RING (8.92MM ID)	
	20	1	**1U-1578**	1	VALVE	
	21	1	**1J-8960**	1	SPRING	
	22	1	**1U-1577**	1	PLUG	
		1	**6K-6307**	1	SEAL-O-RING (43.69MM ID)	
Y	23	1	**4T-2745**	1	VALVE GP-CONTROL (AUXILIARY)	
	24	1	**004-1963**	3	SEAL-O-RING (55.24MM ID)	
	25	1	**2S-4078**	4	SEAL-O-RING (37.46MM ID)	
	26	1	**9S-8005**	1	PLUG-O-RING (3/4-16 THD)	
		1	**3K-0360**	1	SEAL-O-RING (16.36MM ID)	
Y	27	1	**4T-4162**	1	VALVE GP-RELIEF (LINE, AUX CYL ROD END PORT)	
Y	28	1	**4T-2742**	1	VALVE GP-RELIEF (LINE, AUX CYL HEAD END PORT)	

Y-SEPARATE ILLUSTRATION

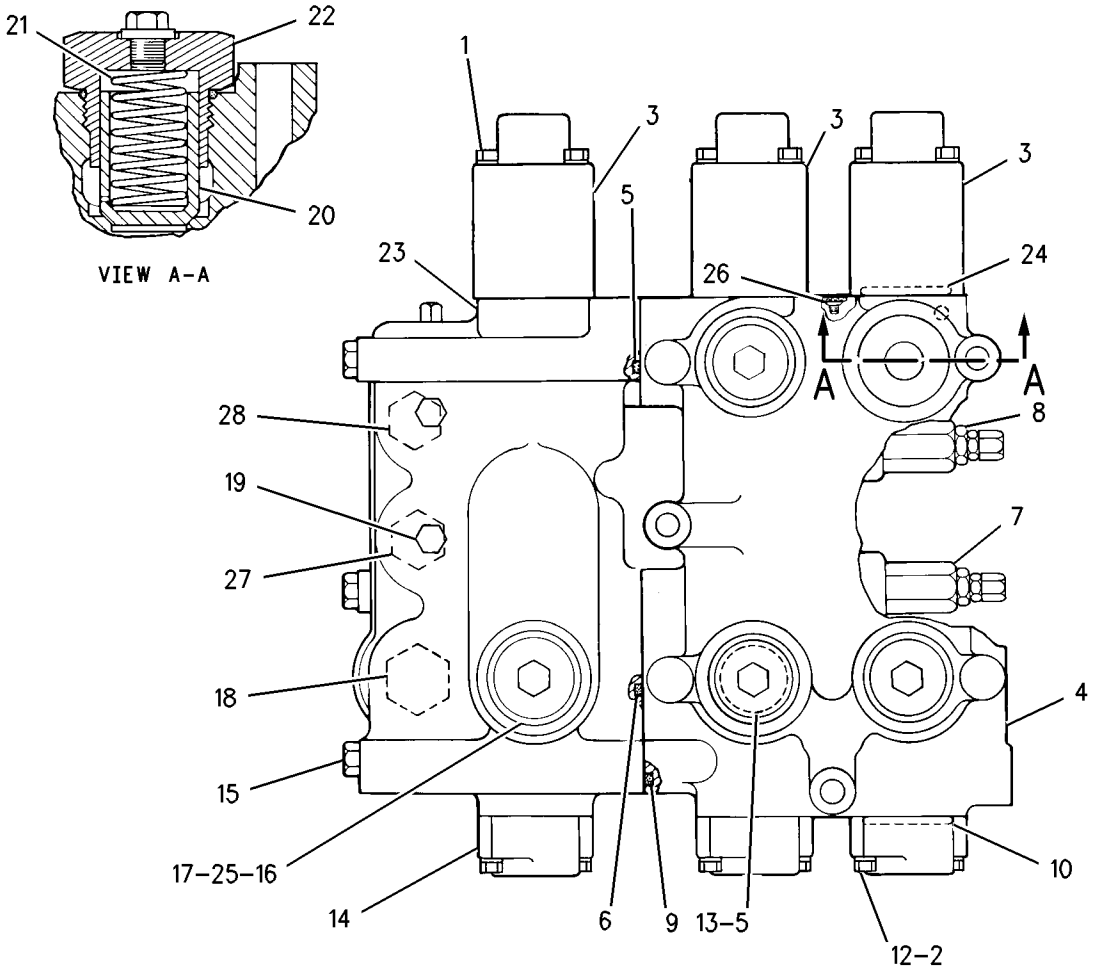

GRAPHIC #1 g00704852

HYDRAULIC SYSTEM

4T-5541 VALVE GP-DIVERTER

S/N: 3XJ1-99999
IMPLEMENT
PART OF 6C-4401 LINES GP-RIDE CONTROL
AN ATTACHMENT

SMCS-5066 **i01217918**

NOTE	REF NO	GRAPHIC REF	PART NUMBER	QTY	PART NAME 1 2 3 4 5 6 (PRODUCT LEVEL)	SEE PAGE
	1	1	**9S-9334**	1	PLUG (1 5/16-12 THD)	
	2	1	**7M-8485**	1	SEAL-O-RING (29.74MM ID)	
	3	1	**9S-8001**	1	PLUG-O-RING (5/16-24 THD)	
	4	1	**4J-7533**	1	SEAL-O-RING (6.07MM ID)	
	5	1	**3G-7242**	1	PLUG	
	6	1	**5F-1678**	2	SEAL-O-RING (24.99MM ID)	
	7	1	**8C-6876**	4	BOLT (5/16-18X1.625)	
	8	1	**4T-6820**	1	HOUSING-SPRING	
Y	9	1	*6T-5859*	1	VALVE GP-SOLENOID (RIDE CONTROL)	
	10	1	**4T-6821**	2	RETAINER	
	11	1	**6J-2419**	1	SEAL-O-RING (36.17MM ID)	
	12	1	**8J-2095**	1	SPRING	

Y-SEPARATE ILLUSTRATION

4T-5541 VALVE GP-DIVERTER *(contd.)*

i01217918

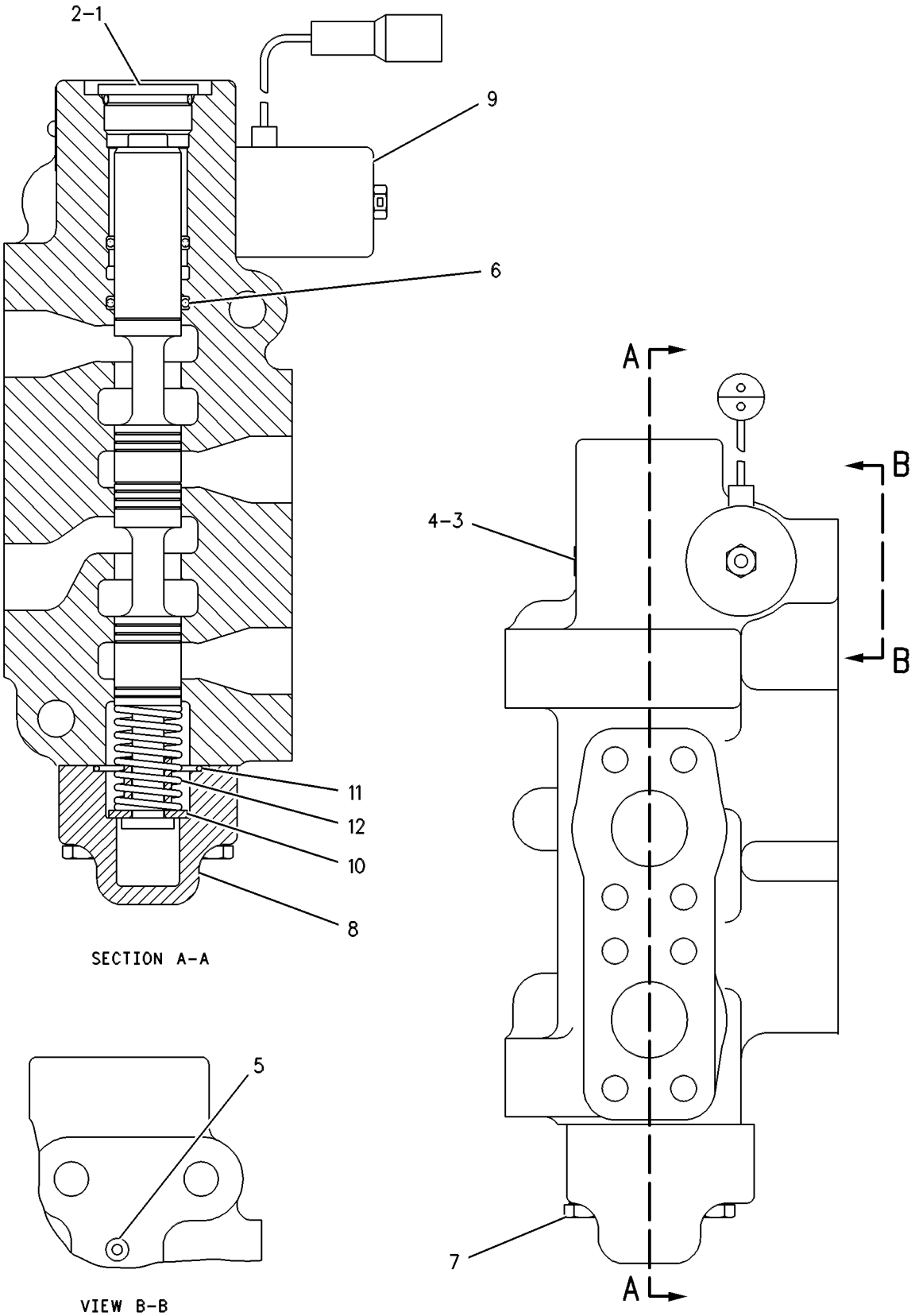

GRAPHIC #1

g00274101

HYDRAULIC SYSTEM

6E-3134 VALVE GP-PILOT

S/N: 3XJ487-1085

TWO FUNCTION

PART OF 8R-8119 CONTROL GP-PILOT OPERATED HYD

SMCS-5059 **i01329406**

NOTE	REF NO	GRAPHIC REF	PART NUMBER	QTY	PART NAME 1 2 3 4 5 6 (PRODUCT LEVEL)	SEE PAGE
	1	1	**6E-0737**	3	ROD	
		1	**6V-8189**	6	NUT (5/16-18 THD)	
	2	1	**5P-6718**	1	SEAL-O-RING (18.64MM ID)	
Y	3	1	**9T-6648**	1	VALVE GP-PILOT (TILT)	
	4	1	**6V-3683**	1	SEAL-O-RING (23.39MM ID)	
Y	5	1	**9T-6649**	1	VALVE GP-PILOT (LIFT)	
	6	1	**6E-0742**	4	BODY-MAGNET	
	7	1	**6E-0740**	1	PLATE AS-MOUNTING	
	8	1	**6E-0747**	2	BOOT	
	9	1	**6E-0741**	4	SPRING	
	10	1	**8C-9682**	4	CLAPPER	
	11	1	**6E-0739**	2	CLAMP-BOOT	
	12	1	**8C-9635**	2	COIL AS	
					(EACH INCLUDES)	
		1	**1S-9593**	2	STRAP-CABLE (0.62IN DIA)	
	13	1	**7N-9738**	1	HOUSING-RECEPTACLE	
		1	**7N-7780**	1	PIN-CONNECTOR (BLADE)	
		1	**7N-7779**	1	SOCKET-CONNECTOR	
	14	1	**5B-2183**	2	NUT-JAM (9/16-18 THD)	
	15	1	**6E-3412**	2	BOLT-PIVOT	
	16	1	**6E-3413**	2	NUT	
	17	1	**6E-0750**	2	BRACKET-PIVOT	
	18	1	**6E-3411**	2	PLATE-PIVOT	
	19	1	**6E-0746**	1	SLEEVE	
	20	1	**8C-9683**	4	PLUNGER AS	
	21	1	**9X-5993**	4	BOLT-SOCKET HEAD (5/16-18X4 IN)	
	22	1	**8C-9634**	1	COIL AS	
		1	**1S-9593**	1	STRAP-CABLE (0.62IN DIA)	
	23	1	**7N-9737**	1	HOUSING-PLUG	
		1	**7N-7780**	1	PIN-CONNECTOR (BLADE)	
		1	**7N-7779**	1	SOCKET-CONNECTOR	
	24	1	**6E-0755**	2	PIN-PIVOT	
		1	**7S-9930**	4	RING-RETAINING	
	25	1	**6E-2464**	4	GASKET	
	26	1	**6E-2465**	4	GASKET	
	27	1	**6E-2466**	4	WASHER	

Y-SEPARATE ILLUSTRATION

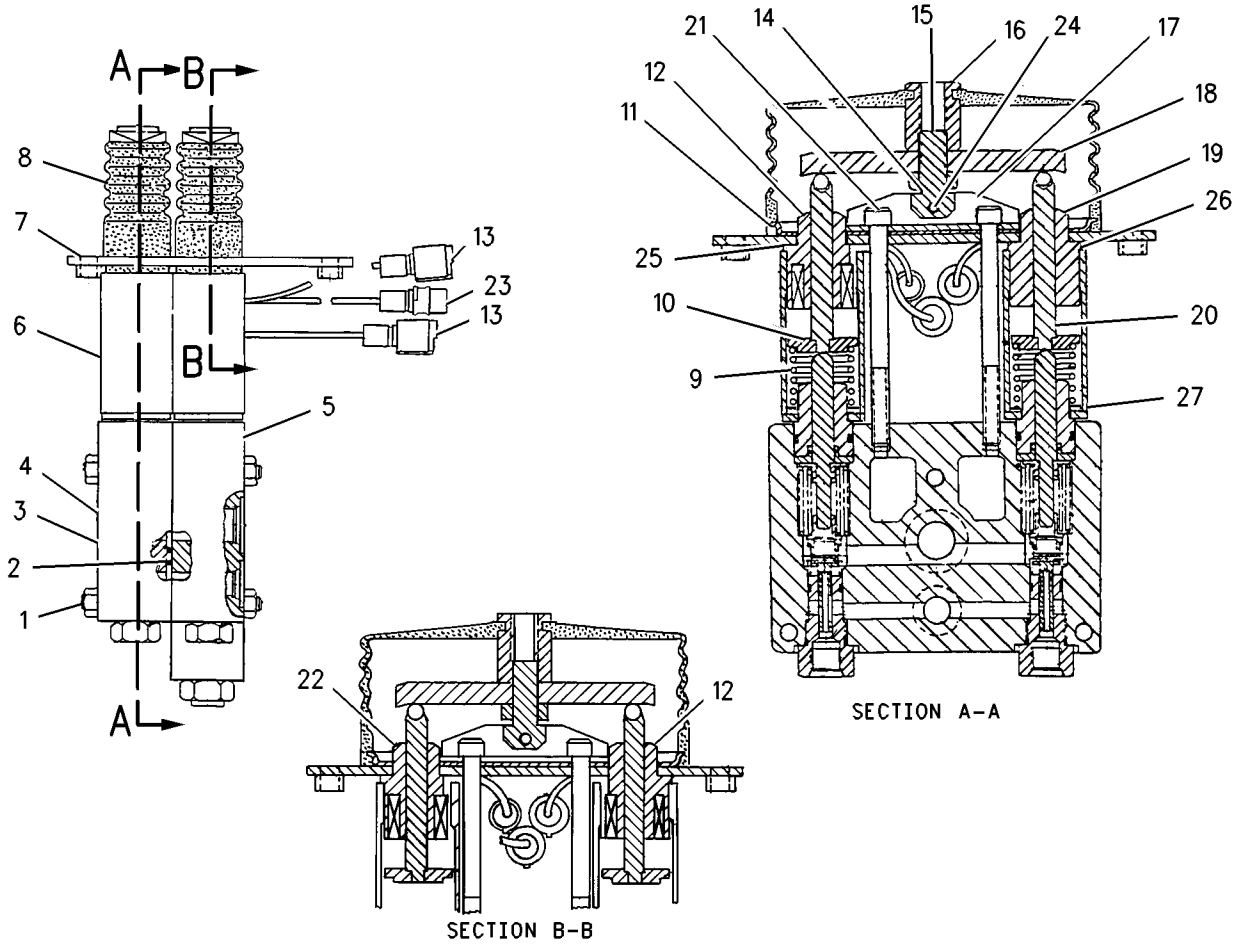

GRAPHIC #1 g00702806

HYDRAULIC SYSTEM

6E-3135 VALVE GP-PILOT

S/N: 3XJ1-99999
THREE FUNCTION
PART OF 8R-8397 CONTROL GP-PILOT OPERATED HYD
AN ATTACHMENT

SMCS-5059 **i01329298**

NOTE	REF NO	GRAPHIC REF	PART NUMBER	QTY	PART NAME 1 2 3 4 5 6 (PRODUCT LEVEL)	SEE PAGE
	1	1	**6E-0738**	3	ROD	
		1	**6V-8189**	6	NUT (5/16-18 THD)	
	2	1	**5P-6718**	2	SEAL-O-RING (18.64MM ID)	
Y	3	1	**9T-6648**	1	VALVE GP-PILOT (TILT)	
	4	1	**6V-3683**	2	SEAL-O-RING (23.39MM ID)	
Y	5	1	**9T-6650**	1	VALVE GP-PILOT (AUXILIARY)	
Y	6	1	**9T-6649**	1	VALVE GP-PILOT (LIFT)	
	7	1	**6E-0742**	6	BODY-MAGNET	
	8	1	**6E-0756**	1	PLATE AS-MOUNTING	
	9	1	**6E-0747**	3	BOOT	
	10	1	**6E-0741**	6	SPRING	
	11	1	**8C-9682**	6	CLAPPER	
	12	1	**6E-0739**	3	CLAMP-BOOT	
	13	1	**8C-9635**	2	COIL AS	
					(EACH INCLUDES)	
		1	**1S-9593**	2	STRAP-CABLE (0.62IN DIA)	
	14	1	**7N-9738**	1	HOUSING-RECEPTACLE	
		1	**7N-7780**	1	PIN-CONNECTOR (BLADE)	
		1	**7N-7779**	1	SOCKET-CONNECTOR	
	15	1	**9X-5993**	6	BOLT-SOCKET HEAD (5/16-18X4 IN)	
	16	1	**5B-2183**	3	NUT-JAM (9/16-18 THD)	
	17	1	**6E-3412**	3	BOLT-PIVOT	
	18	1	**6E-3413**	3	NUT	
	19	1	**6E-0755**	3	PIN-PIVOT	
		1	**7S-9930**	6	RING-RETAINING	
	20	1	**6E-0750**	3	BRACKET-PIVOT	
	21	1	**6E-3411**	3	PLATE-PIVOT	
	22	1	**6E-0746**	3	SLEEVE	
	23	1	**8C-9683**	6	PLUNGER AS	
	24	1	**8C-9634**	1	COIL AS	
		1	**1S-9593**	2	STRAP-CABLE (0.62IN DIA)	
	25	1	**7N-9737**	1	HOUSING-PLUG	
		1	**7N-7780**	1	PIN-CONNECTOR (BLADE)	
		1	**7N-7779**	1	SOCKET-CONNECTOR	
	26	1	**6E-2464**	6	GASKET	
	27	1	**6E-2465**	6	GASKET	
	28	1	**6E-2466**	6	WASHER	
					AVAILABLE REPAIR KIT(S):	
			6E-2526	1	KIT-SERVICE	
					(PROVIDES OPTIONAL INSTALLATION OF A DETENT IN THE PILOT VALVE	

Y-SEPARATE ILLUSTRATION

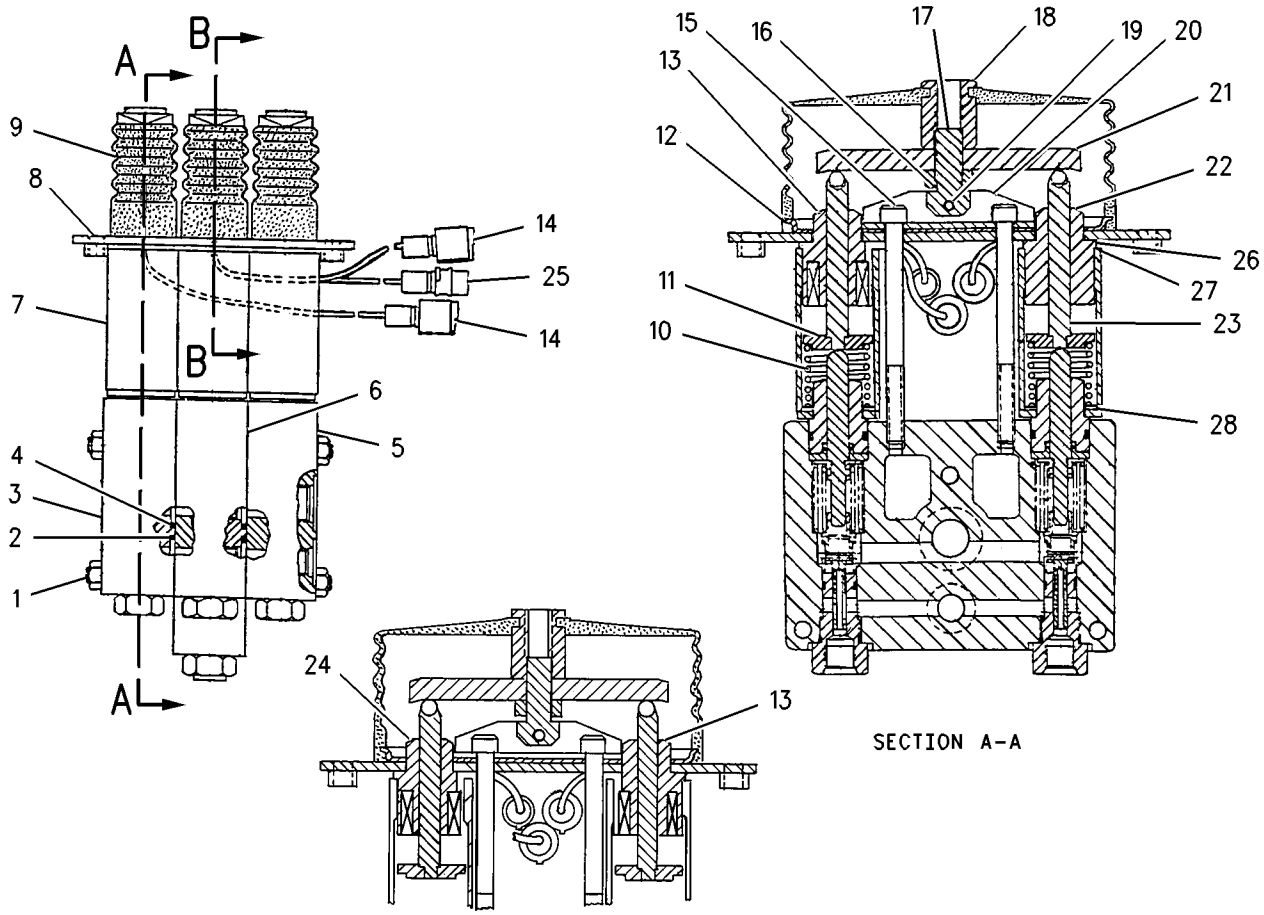

GRAPHIC #1 g00703287

HYDRAULIC SYSTEM

6E-4020 VALVE GP-PILOT

S/N: 3XJ1086-99999

TWO FUNCTION

PART OF 8R-8119 CONTROL GP-PILOT OPERATED HYD

SMCS-5059 **i01329504**

NOTE	REF NO	GRAPHIC REF	PART NUMBER	QTY	PART NAME 1 2 3 4 5 6 (PRODUCT LEVEL)	SEE PAGE
	1	1	**6E-0737**	3	ROD	
		1	**6V-8189**	6	NUT (5/16-18 THD)	
	2	1	**5P-6718**	1	SEAL-O-RING (18.64MM ID)	
Y	3	1	**9T-6648**	1	VALVE GP-PILOT (TILT)	
	4	1	**6V-3683**	1	SEAL-O-RING (23.39MM ID)	
Y	5	1	**9T-6649**	1	VALVE GP-PILOT (LIFT)	
	6	1	**6E-0742**	4	BODY-MAGNET	
	7	1	**6E-0740**	1	PLATE AS-MOUNTING	
	8	1	**6E-5237**	2	BOOT	
	9	1	**107-4430**	4	SPRING	
	10	1	**8C-9682**	4	CLAPPER	
	11	1	**6E-5238**	2	CLAMP-BOOT	
	12	1	**8C-9635**	2	COIL AS	
					(EACH INCLUDES)	
		1	**1S-9593**	2	STRAP-CABLE (0.62IN DIA)	
	13	1	**7N-9738**	1	HOUSING-RECEPTACLE	
		1	**7N-7780**	1	PIN-CONNECTOR (BLADE)	
		1	**7N-7779**	1	SOCKET-CONNECTOR	
	14	1	**5B-2183**	2	NUT-JAM (9/16-18 THD)	
	15	1	**6E-3412**	2	BOLT-PIVOT	
	16	1	**6E-3413**	2	NUT	
	17	1	**6E-0750**	2	BRACKET-PIVOT	
	18	1	**6E-3411**	2	PLATE-PIVOT	
	19	1	**6E-0746**	1	SLEEVE	
	20	1	**8C-9683**	4	PLUNGER AS	
	21	1	**9X-5993**	4	BOLT-SOCKET HEAD (5/16-18X4 IN)	
	22	1	**8C-9634**	1	COIL AS	
		1	**1S-9593**	1	STRAP-CABLE (0.62IN DIA)	
	23	1	**7N-9737**	1	HOUSING-PLUG	
		1	**7N-7780**	1	PIN-CONNECTOR (BLADE)	
		1	**7N-7779**	1	SOCKET-CONNECTOR	
	24	1	**6E-0755**	2	PIN-PIVOT	
		1	**7S-9930**	4	RING-RETAINING	
	25	1	**6E-2464**	4	GASKET	
	26	1	**6E-2465**	4	GASKET	
	27	1	**6E-2466**	4	WASHER	

Y-SEPARATE ILLUSTRATION

6E-4020 VALVE GP-PILOT *(contd.)* i01329504

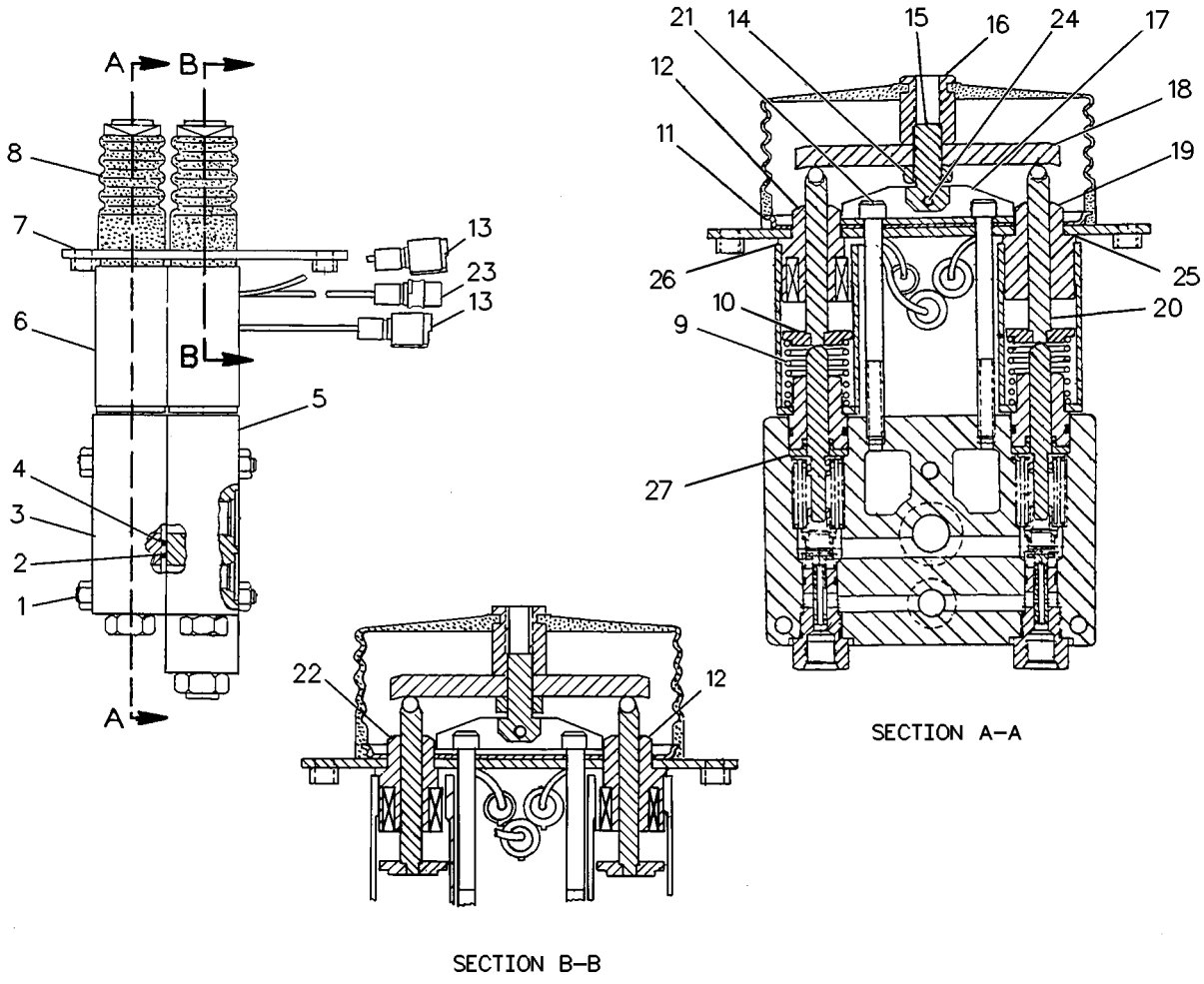

GRAPHIC #1 g00119079

HYDRAULIC SYSTEM

6E-4021 VALVE GP-PILOT

S/N: 3XJ1-99999
THREE FUNCTION
PART OF 8R-8397 CONTROL GP-PILOT OPERATED HYD
AN ATTACHMENT

SMCS-5059 **i01329208**

NOTE	REF NO	GRAPHIC REF	PART NUMBER	QTY	PART NAME 1 2 3 4 5 6 (PRODUCT LEVEL)	SEE PAGE
	1	1	**6E-0738**	3	ROD	
		1	**6V-8189**	6	NUT (5/16-18 THD)	
	2	1	**5P-6718**	2	SEAL-O-RING (18.64MM ID)	
Y	3	1	**9T-6648**	1	VALVE GP-PILOT (TILT)	
	4	1	**6V-3683**	2	SEAL-O-RING (23.39MM ID)	
Y	5	1	**9T-6650**	1	VALVE GP-PILOT (AUXILIARY)	
Y	6	1	**9T-6649**	1	VALVE GP-PILOT (LIFT)	
	7	1	**6E-0742**	6	BODY-MAGNET	
	8	1	**6E-0756**	1	PLATE AS-MOUNTING	
	9	1	**6E-5237**	3	BOOT	
	10	1	**107-4430**	6	SPRING	
	11	1	**8C-9682**	6	CLAPPER	
	12	1	**6E-5238**	3	CLAMP-BOOT	
	13	1	**8C-9635**	2	COIL AS	
					(EACH INCLUDES)	
		1	**1S-9593**	2	STRAP-CABLE (0.62IN DIA)	
	14	1	**7N-9738**	1	HOUSING-RECEPTACLE	
		1	**7N-7780**	1	PIN-CONNECTOR (BLADE)	
		1	**7N-7779**	1	SOCKET-CONNECTOR	
	15	1	**9X-5993**	6	BOLT-SOCKET HEAD (5/16-18X4 IN)	
	16	1	**5B-2183**	3	NUT-JAM (9/16-18 THD)	
	17	1	**6E-3412**	3	BOLT-PIVOT	
	18	1	**6E-3413**	3	NUT	
	19	1	**6E-0755**	3	PIN-PIVOT	
		1	**7S-9930**	6	RING-RETAINING	
	20	1	**6E-0750**	3	BRACKET-PIVOT	
	21	1	**6E-3411**	3	PLATE-PIVOT	
	22	1	**6E-0746**	3	SLEEVE	
	23	1	**8C-9683**	6	PLUNGER AS	
	24	1	**8C-9634**	1	COIL AS	
		1	**1S-9593**	2	STRAP-CABLE (0.62IN DIA)	
	25	1	**7N-9737**	1	HOUSING-PLUG	
		1	**7N-7780**	1	PIN-CONNECTOR (BLADE)	
		1	**7N-7779**	1	SOCKET-CONNECTOR	
	26	1	**6E-2464**	6	GASKET	
	27	1	**6E-2465**	6	GASKET	
	28	1	**6E-2466**	6	WASHER	
					AVAILABLE REPAIR KIT(S):	
			6E-2526	1	KIT-SERVICE	
					(PROVIDES OPTIONAL INSTALLATION	
					OF A DETENT IN THE PILOT VALVE.)	

Y-SEPARATE ILLUSTRATION

6E-4021 VALVE GP-PILOT *(contd.)* i01329208

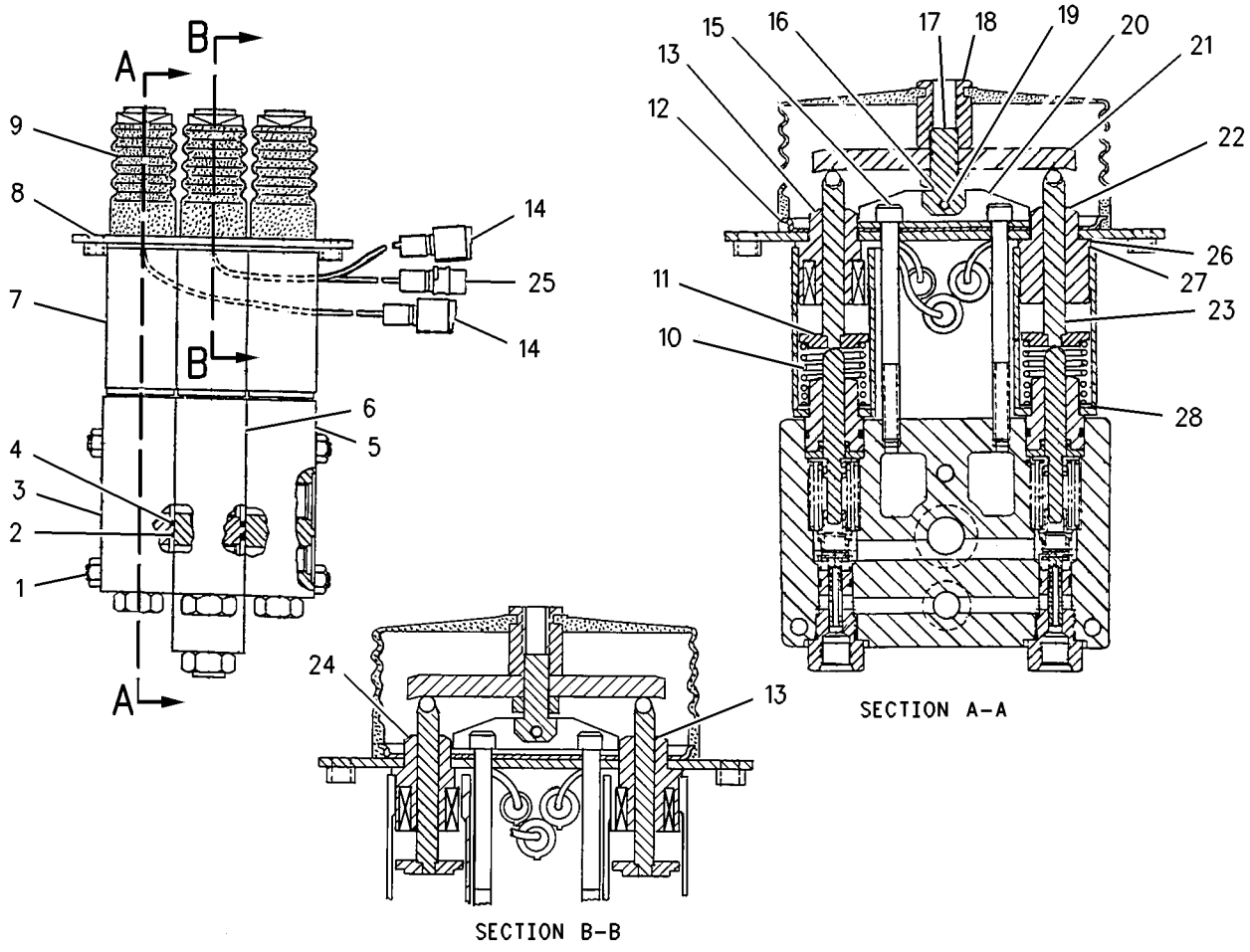

GRAPHIC #1 g00702789

HYDRAULIC SYSTEM

9T-6061 VALVE GP-PILOT

S/N: 3XJ1-486
TWO FUNCTION
PART OF 8R-8119 CONTROL GP-PILOT OPERATED HYD
FOR USAGE REFER TO CHART 6E-0649—PAGE

SMCS-5059 **i01329440**

NOTE	REF NO	GRAPHIC REF	PART NUMBER	QTY	PART NAME 1 2 3 4 5 6 (PRODUCT LEVEL)	SEE PAGE
	1	1	**6E-0737**	3	ROD	
		1	**6V-8189**	6	NUT (5/16-18 THD)	
	2	1	**5P-6718**	1	SEAL-O-RING (18.64MM ID)	
Y	3	1	**9T-6648**	1	VALVE GP-PILOT (TILT)	
	4	1	**6V-3683**	1	SEAL-O-RING (23.39MM ID)	
Y	5	1	**9T-6649**	1	VALVE GP-PILOT (LIFT)	
	6	1	**6E-0742**	4	BODY-MAGNET	
	7	1	**6E-0740**	1	PLATE AS-MOUNTING	
	8	1	**6E-0747**	2	BOOT	
	9	1	**6E-0741**	4	SPRING	
	10	1	**8C-9682**	4	CLAPPER	
	11	1	**6E-0739**	2	CLAMP-BOOT	
	12	1	**8C-9635**	2	COIL AS	
					(EACH INCLUDES)	
		1	**1S-9593**	2	STRAP-CABLE (0.62IN DIA)	
	13	1	**7N-9738**	1	HOUSING-RECEPTACLE	
		1	**7N-7780**	1	PIN-CONNECTOR (BLADE)	
		1	**7N-7779**	1	SOCKET-CONNECTOR	
	14	1	**1B-4430**	2	NUT-JAM (1/2-20 THD)	
	15	1	**6E-0751**	2	BOLT-PIVOT	
	16	1	**6E-0752**	2	NUT	
	17	1	**6E-0750**	2	BRACKET-PIVOT	
	18	1	**6E-0749**	2	PLATE-PIVOT	
	19	1	**6E-0746**	1	SLEEVE	
	20	1	**8C-9683**	4	PLUNGER AS	
	21	1	**9X-5993**	4	BOLT-SOCKET HEAD (5/16-18X4 IN)	
	22	1	**8C-9634**	1	COIL AS	
		1	**1S-9593**	1	STRAP-CABLE (0.62IN DIA)	
	23	1	**7N-9737**	1	HOUSING-PLUG	
		1	**7N-7780**	1	PIN-CONNECTOR (BLADE)	
		1	**7N-7779**	1	SOCKET-CONNECTOR	
	24	1	**6E-0755**	2	PIN-PIVOT	
		1	**7S-9930**	4	RING-RETAINING	

Y-SEPARATE ILLUSTRATION

9T-6061 VALVE GP-PILOT *(contd.)* i01329440

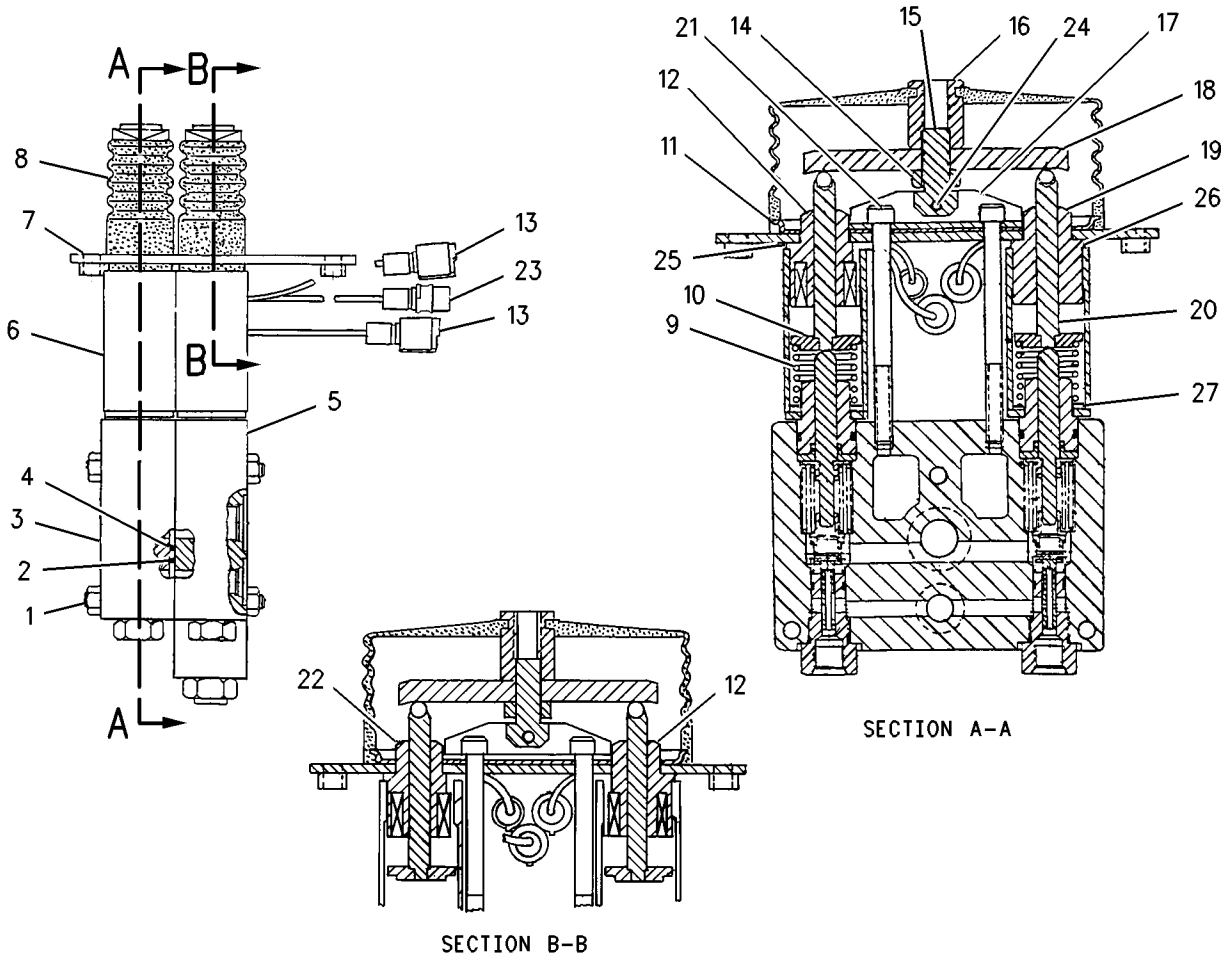

GRAPHIC #1 g00702823

HYDRAULIC SYSTEM

9T-6062 VALVE GP-PILOT

S/N: 3XJ1-99999
THREE FUNCTION
PART OF 8R-8397 CONTROL GP-PILOT OPERATED HYD
AN ATTACHMENT

SMCS-5059 **i01329455**

NOTE	REF NO	GRAPHIC REF	PART NUMBER	QTY	PART NAME 1 2 3 4 5 6 (PRODUCT LEVEL)	SEE PAGE
	1	1	**6E-0738**	3	ROD	
		1	**6V-8189**	6	NUT (5/16-18 THD)	
	2	1	**5P-6718**	2	SEAL-O-RING (18.64MM ID)	
Y	3	1	**9T-6648**	1	VALVE GP-PILOT (TILT)	
	4	1	**6V-3683**	2	SEAL-O-RING (23.39MM ID)	
Y	5	1	**9T-6650**	1	VALVE GP-PILOT (AUXILIARY)	
Y	6	1	**9T-6649**	1	VALVE GP-PILOT (LIFT)	
	7	1	**6E-0742**	6	BODY-MAGNET	
	8	1	**6E-0756**	1	PLATE AS-MOUNTING	
	9	1	**6E-0747**	3	BOOT	
	10	1	**6E-0741**	6	SPRING	
	11	1	**8C-9682**	6	CLAPPER	
	12	1	**6E-0739**	3	CLAMP-BOOT	
	13	1	**8C-9635**	2	COIL AS	
					(EACH INCLUDES)	
		1	**1S-9593**	2	STRAP-CABLE (0.62IN DIA)	
	14	1	**7N-9738**	1	HOUSING-RECEPTACLE	
		1	**7N-7780**	1	PIN-CONNECTOR (BLADE)	
		1	**7N-7779**	1	SOCKET-CONNECTOR	
	15	1	**9X-5993**	6	BOLT-SOCKET HEAD (5/16-18X4 IN)	
	16	1	**1B-4430**	3	NUT-JAM (1/2-20 THD)	
	17	1	**6E-0751**	3	BOLT-PIVOT	
	18	1	**6E-0752**	3	NUT	
	19	1	**6E-0755**	3	PIN-PIVOT	
		1	**7S-9930**	6	RING-RETAINING	
	20	1	**6E-0750**	3	BRACKET-PIVOT	
	21	1	**6E-0749**	3	PLATE-PIVOT	
	22	1	**6E-0746**	3	SLEEVE	
	23	1	**8C-9683**	6	PLUNGER AS	
	24	1	**8C-9634**	1	COIL AS	
		1	**1S-9593**	2	STRAP-CABLE (0.62IN DIA)	
	25	1	**7N-9737**	1	HOUSING-PLUG	
		1	**7N-7780**	1	PIN-CONNECTOR (BLADE)	
		1	**7N-7779**	1	SOCKET-CONNECTOR	
	26	1	**6E-2464**	6	GASKET	
	27	1	**6E-2465**	6	GASKET	
	28	1	**6E-2466**	6	WASHER	
					AVAILABLE REPAIR KIT(S):	
			6E-2526	1	KIT-SERVICE	
					(PROVIDES OPTIONAL INSTALLATION OF A DETENT IN THE PILOT VALVE.)	

Y-SEPARATE ILLUSTRATION

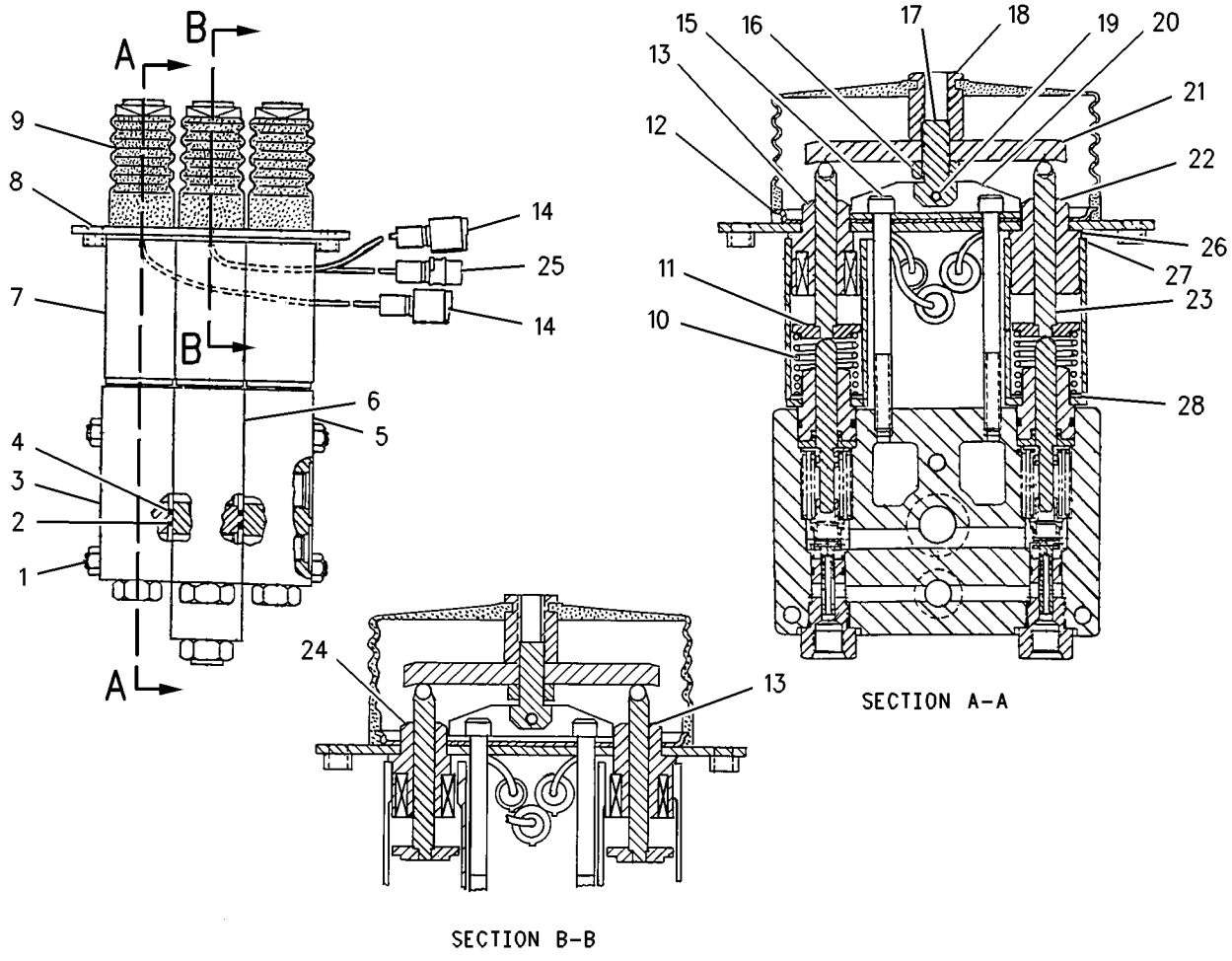

GRAPHIC #1 g00702793

9T-6648 VALVE GP-PILOT

S/N: 3XJ1-99999

PART OF 6E-3134, 6E-3135, 6E-4020, 6E-4021, 9T-6061, 9T-6062 VALVE GP-PILOT

ALSO AN ATTACHMENT

SMCS-5059 **i00286615**

NOTE	REF NO	GRAPHIC REF	PART NUMBER	QTY	PART NAME 1 2 3 4 5 6 (PRODUCT LEVEL)	SEE PAGE
	1	1	**6E-0743**	2	SPACER	
Y	2	1	**6E-0733**	2	VALVE GP-PILOT CARTRIDGE	
	3	1	**5P-6718**	1	SEAL-O-RING (18.64MM ID)	
Y	4	1	**6E-0732**	2	VALVE GP-PILOT CARTRIDGE	
	5	1	**6E-2464**	4	GASKET	
	6	1	**6V-3683**	1	SEAL-O-RING (23.39MM ID)	

Y-SEPARATE ILLUSTRATION

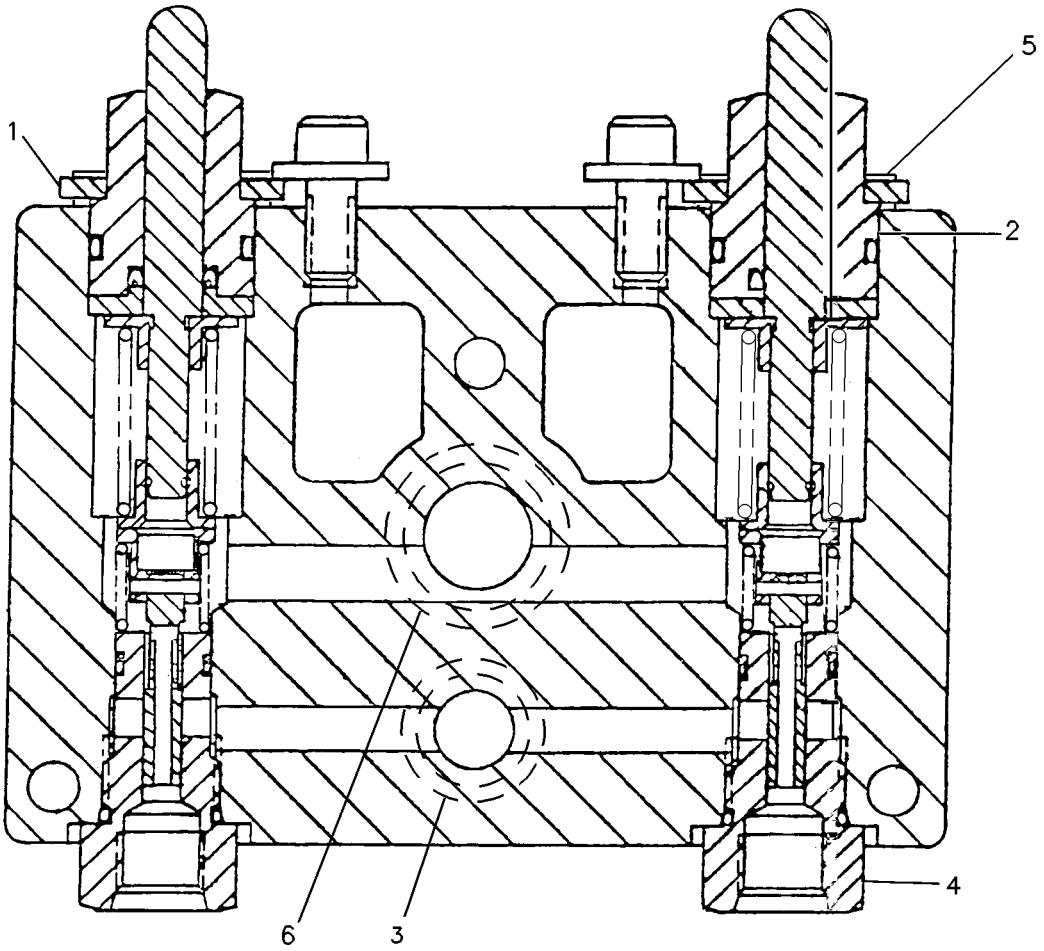

GRAPHIC #1 g00118881

9T-6649 VALVE GP-PILOT

S/N: 3XJ1-99999

PART OF 6E-3134, 6E-3135, 6E-4020, 6E-4021, 9T-6061, 9T-6062 VALVE GP-PILOT

ALSO AN ATTACHMENT

SMCS-5059 **i01328723**

NOTE	REF NO	GRAPHIC REF	PART NUMBER	QTY	PART NAME 1 2 3 4 5 6 (PRODUCT LEVEL)	SEE PAGE
Y	1	1	**6E-0735**	1	VALVE GP-PILOT CARTRIDGE	
	2	1	**6E-0754**	1	TUBE-SPACER	
	3	1	**6E-0753**	1	SPRING	
	4	1	**033-6036**	1	SEAL-O-RING (23.47MM ID)	
	5	1	**5P-9436**	1	PLUG-THREADED O-RING	
	6	1	**6E-0743**	2	SPACER	
Y	7	1	**6E-0734**	2	VALVE GP-PILOT CARTRIDGE	
Y	8	1	**6E-0732**	1	VALVE GP-PILOT CARTRIDGE	
Y	9	1	**6E-0736**	1	VALVE GP-PILOT CARTRIDGE	
	10	1	**6E-2464**	4	GASKET	
	11	1	**6V-3683**	1	SEAL-O-RING (23.39MM ID)	
	12	1	**5P-6718**	1	SEAL-O-RING (18.64MM ID)	

Y-SEPARATE ILLUSTRATION

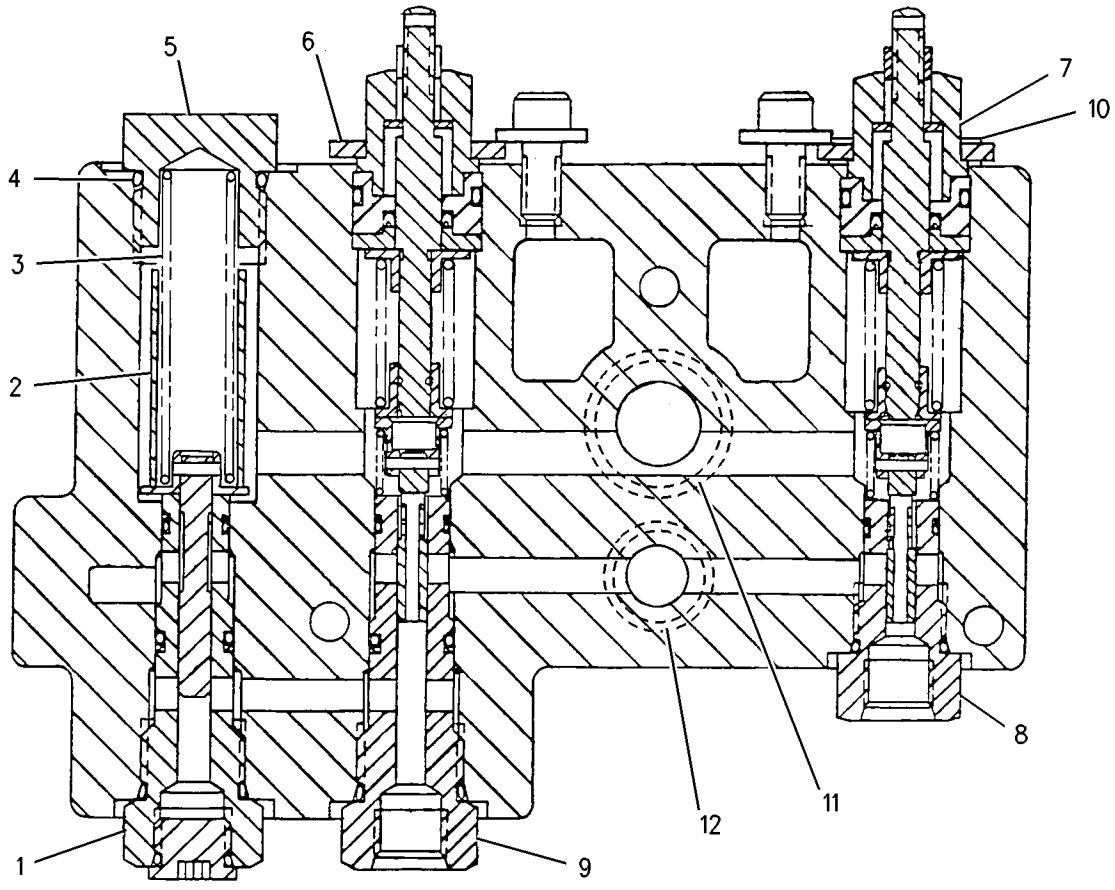

GRAPHIC #1 g00702800

9T-6650 VALVE GP-PILOT

S/N: 3XJ1-99999

PART OF 6E-3135, 6E-4021, 9T-6062 VALVE GP-PILOT

AN ATTACHMENT

SMCS-5059 **i00286625**

NOTE	REF NO	GRAPHIC REF	PART NUMBER	QTY	PART NAME 1 2 3 4 5 6 (PRODUCT LEVEL)	SEE PAGE
	1	1	**6E-0743**	2	SPACER	
Y	2	1	**6E-0733**	2	VALVE GP-PILOT CARTRIDGE	
	3	1	**6E-0744**	2	SPRING (OUTER)	
Y	4	1	**6E-0732**	2	VALVE GP-PILOT CARTRIDGE	
	5	1	**6E-2464**	4	GASKET	
	6	1	**6V-3683**	1	SEAL-O-RING (23.39MM ID)	
	7	1	**5P-6718**	1	SEAL-O-RING (18.64MM ID)	

Y-SEPARATE ILLUSTRATION

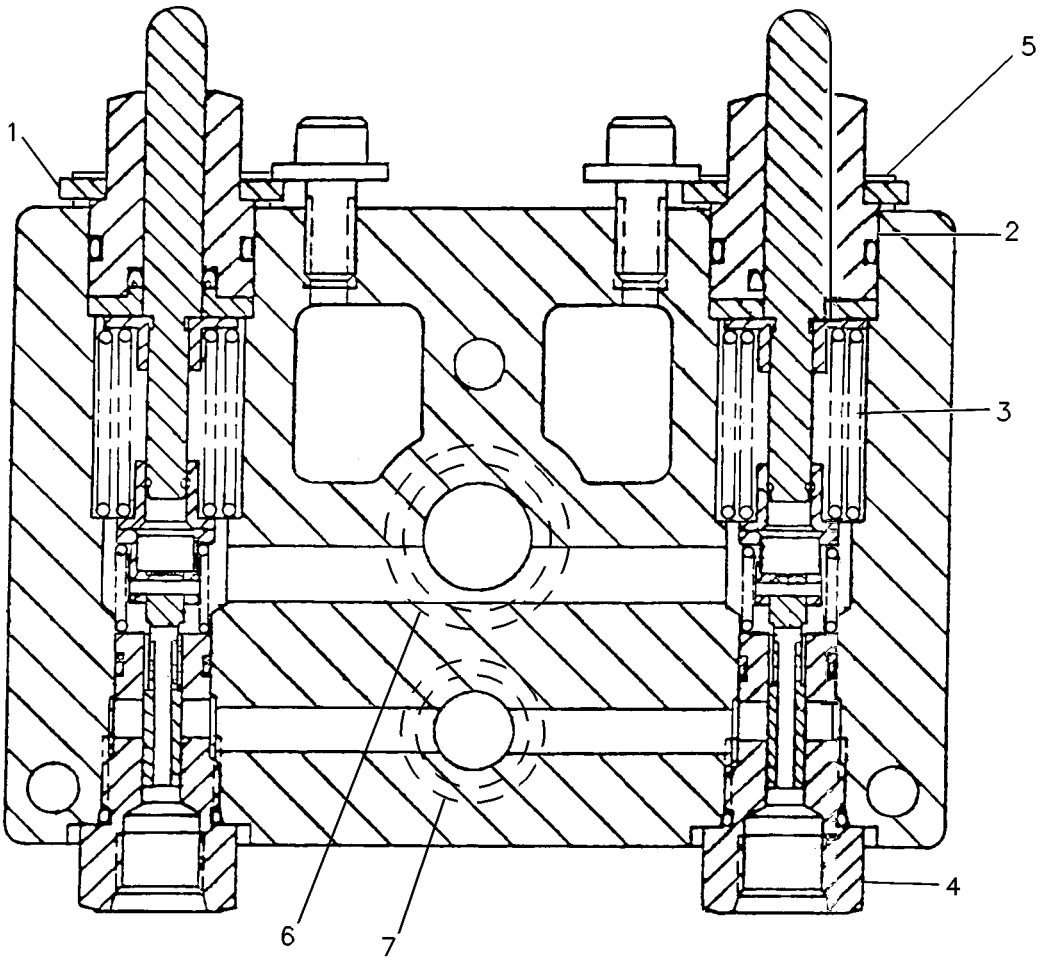

GRAPHIC #1 g00126471

6E-0732 VALVE GP-PILOT CARTRIDGE–PILOT CARTRIDGE

S/N: 3XJ1-99999

PART OF 9T-6648, 9T-6649, 9T-6650 VALVE GP-PILOT

ALSO AN ATTACHMENT

SMCS-5059 **i01327134**

NOTE	REF NO	GRAPHIC REF	PART NUMBER	QTY	PART NAME 1 2 3 4 5 6 (PRODUCT LEVEL)	SEE PAGE
	1	1	**033-6028**	1	SEAL-O-RING (16.36MM ID)	
	2	1	**6V-5758**	1	SEAL-O-RING (12.42MM ID)	
	3	1	**6E-0770**	1	RING-BACKUP	
	4	1	**6E-3767**	1	SPRING	
	5	1	**6E-3768**	1	SEAT	
	6	1	**6E-3769**	1	PIN	

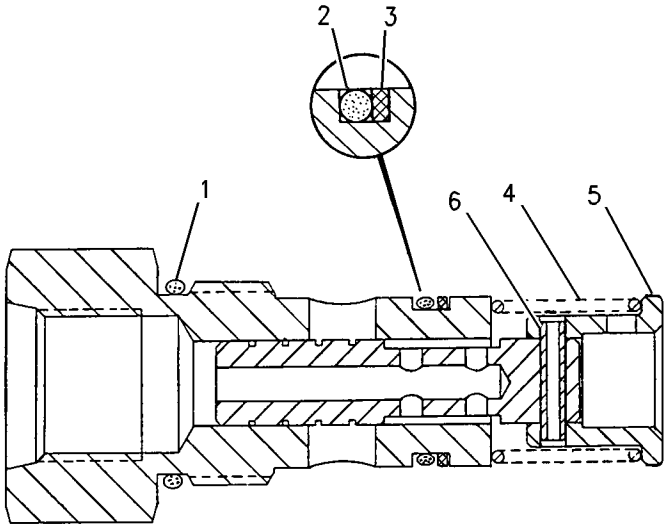

GRAPHIC #1 g00702089

6E-0733 VALVE GP-PILOT CARTRIDGE

S/N: 3XJ1-99999
PART OF 9T-6648, 9T-6650 VALVE GP-PILOT
ALSO AN ATTACHMENT

SMCS-5059 **i01327327**

NOTE	REF NO	GRAPHIC REF	PART NUMBER	QTY	PART NAME 1 2 3 4 5 6 (PRODUCT LEVEL)	SEE PAGE
	1	1	**6E-0769**	1	PLUNGER	
	2	1	**5P-8356**	1	SEAL-O-RING (21.89MM ID)	
	3	1	**6E-0762**	1	SEAL-U-CUP WIPER	
	4	1	**6E-0763**	1	RETAINER	
	5	1	**6E-0766**	2	RING-RETAINING	
	6	1	**6E-0767**	1	SEAT-SPRING	
	7	1	**6E-0765**	1	SPRING	
	8	1	**6E-0764**	1	SEAT-SPRING	
	9	1	**6E-0768**	1	CAP	

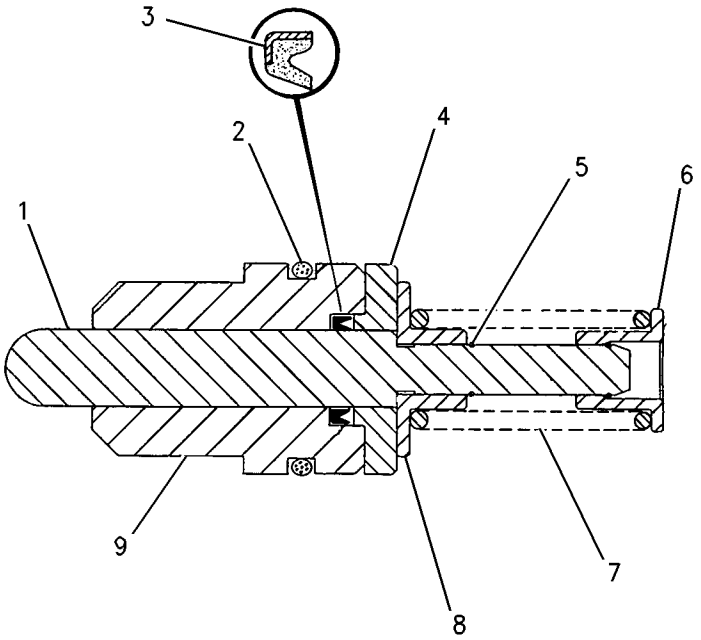

GRAPHIC #1 g00702260

HYDRAULIC SYSTEM

6E-0734 VALVE GP-PILOT CARTRIDGE

S/N: 3XJ1-99999
PART OF 9T-6649 VALVE GP-PILOT
ALSO AN ATTACHMENT

SMCS-5059 **i01327292**

NOTE	REF NO	GRAPHIC REF	PART NUMBER	QTY	PART NAME 1 2 3 4 5 6 (PRODUCT LEVEL)	SEE PAGE
	1	1	**6E-0757**	1	PLUNGER	
	2	1	**8H-5505**	1	WASHER-PLATED	
	3	1	**5P-8356**	1	SEAL-O-RING (21.89MM ID)	
	4	1	**6E-0763**	1	RETAINER	
	5	1	**6E-0766**	2	RING-RETAINING	
	6	1	**6E-0767**	1	SEAT-SPRING	
	7	1	**6E-0765**	1	SPRING	
	8	1	**6E-0764**	1	SEAT-SPRING	
	9	1	**6E-0762**	1	SEAL-U-CUP WIPER	
	10	1	**6E-0761**	1	RETAINER	
	11	1	**6E-0760**	1	SPRING	
	12	1	**6E-0759**	1	CAP	
	13	1	**6E-0758**	1	NUT	

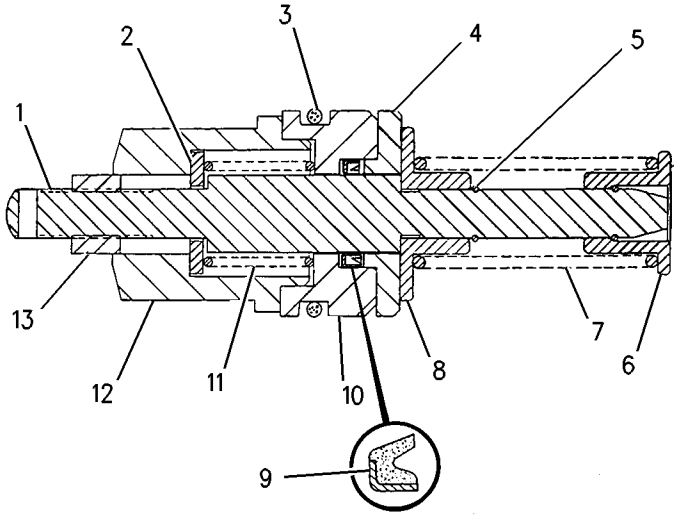

GRAPHIC #1 g00702226

6E-0735 VALVE GP-PILOT CARTRIDGE

S/N: 3XJ1-99999
PART OF 9T-6649 VALVE GP-PILOT
ALSO AN ATTACHMENT
TYPE 1

SMCS-5059 **i01327762**

NOTE	REF NO	GRAPHIC REF	PART NUMBER	QTY	PART NAME 1 2 3 4 5 6 (PRODUCT LEVEL)	SEE PAGE
	1	1	**033-6042**	1	SEAL-O-RING (11.89MM ID)	
	2	1	**033-6027**	1	SEAL-O-RING (19.18MM ID)	
	3	1	**6E-0771**	1	RING-BACKUP	
	4	1	**6V-5142**	1	SEAL-O-RING (15.6MM ID)	
	5	1	**6V-5758**	1	SEAL-O-RING (12.42MM ID)	
	6	1	**6E-0770**	1	RING-BACKUP	
	7	1	**9S-8004**	1	PLUG-O-RING (9/16-18 THD)	
	8	1	**6E-3765**	1	SEAT	
	9	1	**6E-3766**	1	PIN	

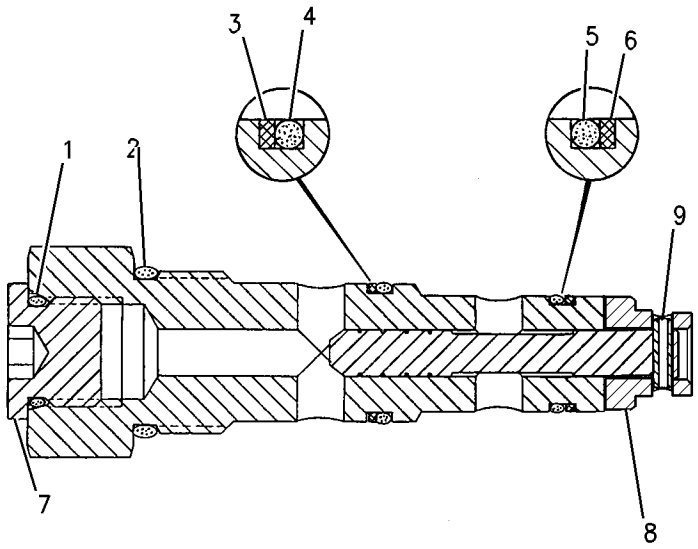

GRAPHIC #1 g00702398

6E-0735 VALVE GP-PILOT CARTRIDGE

S/N: 3XJ1-99999
PART OF 9T-6649 VALVE GP-PILOT
ALSO AN ATTACHMENT
TYPE 2

SMCS-5059 **i01327799**

NOTE	REF NO	GRAPHIC REF	PART NUMBER	QTY	PART NAME 1 2 3 4 5 6 (PRODUCT LEVEL)	SEE PAGE
	1	1	**033-6042**	1	SEAL-O-RING (11.89MM ID)	
	2	1	**033-6027**	1	SEAL-O-RING (19.18MM ID)	
	3	1	**6E-0771**	1	RING-BACKUP	
	4	1	**6V-5142**	1	SEAL-O-RING (15.6MM ID)	
	5	1	**6V-5758**	1	SEAL-O-RING (12.42MM ID)	
	6	1	**6E-0770**	1	RING-BACKUP	
	7	1	**9S-8004**	1	PLUG-O-RING (9/16-18 THD)	
	8	1	**6E-4949**	1	SEAT	
	9	1	**6E-3766**	1	PIN	
					AVAILABLE REPAIR KIT(S):	
			105-3037	1	KIT-SEAL	

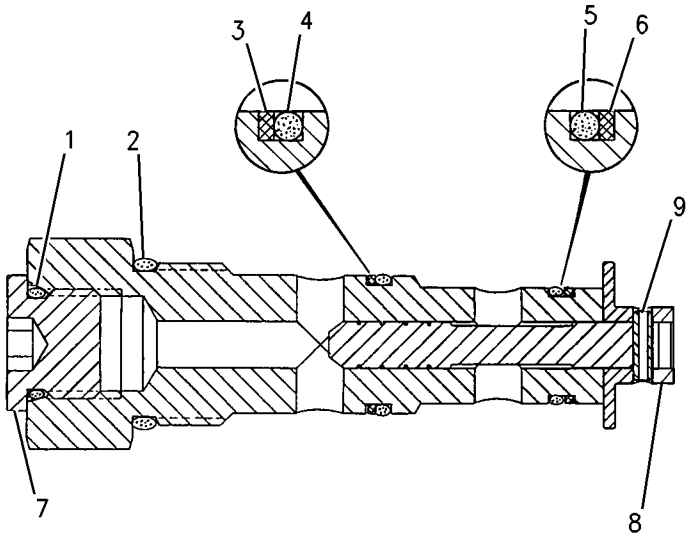

GRAPHIC #1 g00702396

6E-0736 VALVE GP-PILOT CARTRIDGE

S/N: 3XJ1-99999
PART OF 9T-6649 VALVE GP-PILOT
ALSO AN ATTACHMENT

SMCS-5059 **i01217926**

NOTE	REF NO	GRAPHIC REF	PART NUMBER	QTY	PART NAME 1 2 3 4 5 6 (PRODUCT LEVEL)	SEE PAGE
	1	1	**033-6027**	1	SEAL-O-RING (19.18MM ID)	
	2	1	**6E-0771**	1	RING-BACKUP	
	3	1	**6V-5142**	1	SEAL-O-RING (15.6MM ID)	
	4	1	**6V-5758**	1	SEAL-O-RING (12.42MM ID)	
	5	1	**6E-0770**	1	RING-BACKUP	
	6	1	**6E-3767**	1	SPRING	
	7	1	**6E-3768**	1	SEAT	
	8	1	**6E-3769**	1	PIN	

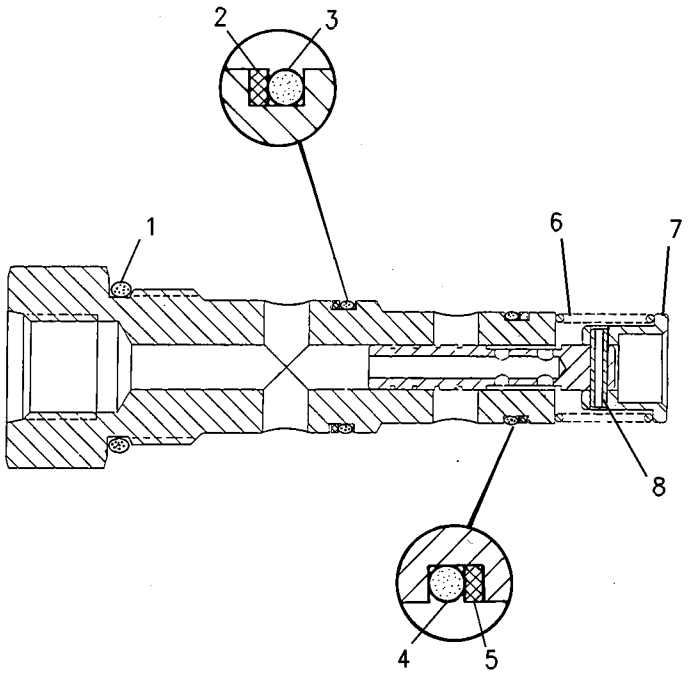

GRAPHIC #1 g00650933

3G-4459 VALVE GP-RELIEF–MAIN

S/N: 3XJ1-99999
PILOT OPERATED
PART OF 9T-8489 VALVE GP-CONTROL
AN ATTACHMENT

SMCS-5069, 5117 **i01323921**

NOTE	REF NO	GRAPHIC REF	PART NUMBER	QTY	PART NAME 1 2 3 4 5 6 (PRODUCT LEVEL)	SEE PAGE
	1	1	**7M-8485**	2	SEAL-O-RING (29.74MM ID)	
	2	1	**3G-1793**	1	VALVE GP	
		1	**8H-3532**	1	SPRING-VALVE	
	3	1	**4J-0522**	1	SEAL-O-RING (37.69MM ID)	
	4	1	**9S-8005**	1	PLUG-O-RING (3/4-16 THD)	
	5	1	**3K-0360**	1	SEAL-O-RING (16.36MM ID)	
	6	1	**8J-4376**	1	SPACER	
	7	1	**8J-0331**	1	VALVE	
	8	1	**8J-0322**	1	SPRING	
	9	1	**9J-5778**	1	PLUNGER	
	10	1	**9J-5777**	1	CAP	
C	11	1	**7N-5352**	1	DOWEL	

C-CHANGE FROM PREVIOUS TYPE

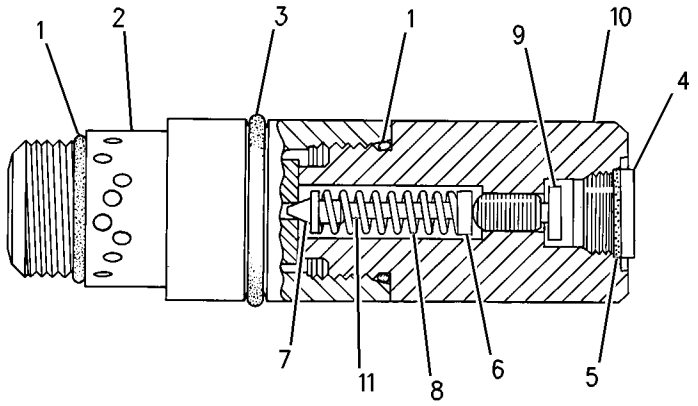

GRAPHIC #1 g00700849

HYDRAULIC SYSTEM

4T-2742 VALVE GP-RELIEF–LINE

S/N: 3XJ1-99999

PART OF 6C-4401 LINES GP-RIDE CONTROL, 6E-3737, 6E-5863, 9T-8489 VALVE GP-CONTROL

AN ATTACHMENT

SMCS-5069, 5117 **i00286658**

NOTE	REF NO	GRAPHIC REF	PART NUMBER	QTY	PART NAME 1 2 3 4 5 6 (PRODUCT LEVEL)	SEE PAGE
	1	1	**6E-1835**	1	RETAINER AS	
	2	1	**9X-6395**	1	NUT-ORFS (3/4-16 THD)	
	3	1	**3K-0360**	2	SEAL-O-RING (16.36MM ID)	
	4	1	**9M-1974**	2	WASHER-HARD (2MM THK)	
	5	1	**4T-2741**	1	SPRING	
	6	1	**7J-9933**	1	SEAL-O-RING (21.89MM ID)	
	7	1	**4T-7571**	1	PLATE	
	8	1	**6J-6439**	1	VALVE	

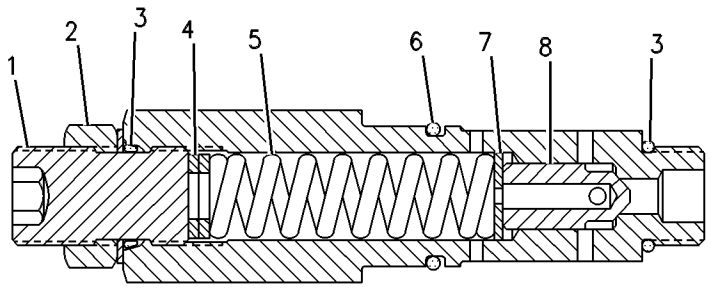

GRAPHIC #1 g00130261

HYDRAULIC SYSTEM

4T-2764 VALVE GP-RELIEF–LINE

S/N: 3XJ1-99999
PART OF 9T-8489 VALVE GP-CONTROL
AN ATTACHMENT

SMCS-5069, 5117 **i00286991**

NOTE	REF NO	GRAPHIC REF	PART NUMBER	QTY	PART NAME 1 2 3 4 5 6 (PRODUCT LEVEL)	SEE PAGE
	1	1	**6J-6439**	1	VALVE	
	2	1	**9X-6395**	1	NUT-ORFS (3/4-16 THD)	
	3	1	**4T-7571**	1	PLATE	
	4	1	**7J-9933**	1	SEAL-O-RING (21.89MM ID)	
	5	1	**4T-2741**	1	SPRING	
	6	1	**3K-0360**	2	SEAL-O-RING (16.36MM ID)	
	7	1	**6E-1835**	1	RETAINER AS	
	8	1	**9M-1974**	2	WASHER-HARD (2MM THK)	

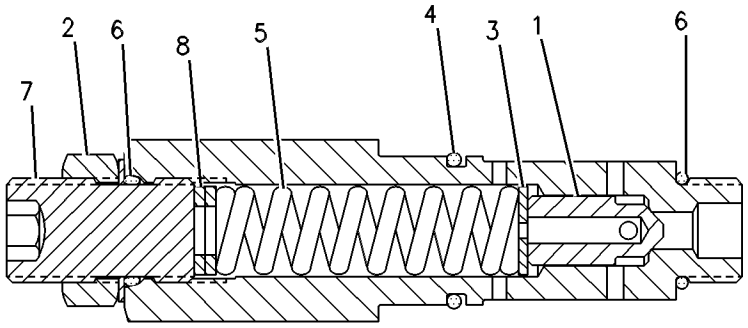

GRAPHIC #1 g00130263

4T-4162 VALVE GP-RELIEF–LINE

S/N: 3XJ1-99999
PART OF 6E-3737, 6E-5863, 9T-8489 VALVE GP-CONTROL
AN ATTACHMENT

SMCS-5069, 5117 **i00287020**

NOTE	REF NO	GRAPHIC REF	PART NUMBER	QTY	PART NAME 1 2 3 4 5 6 (PRODUCT LEVEL)	SEE PAGE
	1	1	**6J-6439**	1	VALVE	
	2	1	**9X-6395**	1	NUT-ORFS (3/4-16 THD)	
	3	1	**4T-7571**	1	PLATE	
	4	1	**7J-9933**	1	SEAL-O-RING (21.89MM ID)	
	5	1	**4T-2741**	1	SPRING	
	6	1	**3K-0360**	2	SEAL-O-RING (16.36MM ID)	
	7	1	**6E-1835**	1	RETAINER AS	
	8	1	**9M-1974**	1	WASHER-HARD (2MM THK)	

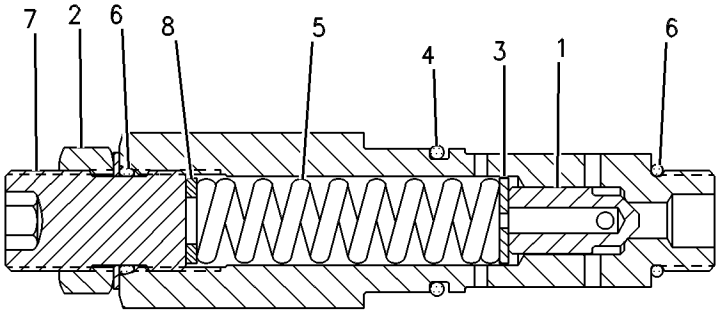

GRAPHIC #1 g00130262

6E-1148 VALVE GP-RELIEF–MAIN

S/N: 3XJ1-1637
PILOT OPERATED
PART OF 6E-2378, 6E-3737 VALVE GP-CONTROL
ALSO AN ATTACHMENT

SMCS-5069, 5117 **i00259500**

NOTE	REF NO	GRAPHIC REF	PART NUMBER	QTY	PART NAME 1 2 3 4 5 6 (PRODUCT LEVEL)	SEE PAGE
	1	1	**7M-8485**	2	SEAL-O-RING (29.74MM ID)	
	2	1	**4J-0522**	1	SEAL-O-RING (37.69MM ID)	
	3	1	**3G-1793**	1	VALVE GP	
		1	**8H-3532**	1	SPRING-VALVE	
	4	1	**8J-0322**	1	SPRING	
	5	1	**3K-0360**	1	SEAL-O-RING (16.36MM ID)	
	6	1	**8J-4376**	1	SPACER	
	7	1	**9T-7202**	1	RETAINER AS	
	8	1	**9X-6395**	1	NUT-ORFS (3/4-16 THD)	
	9	1	**6E-1127**	1	CAP	
	10	1	**8J-0331**	1	VALVE	

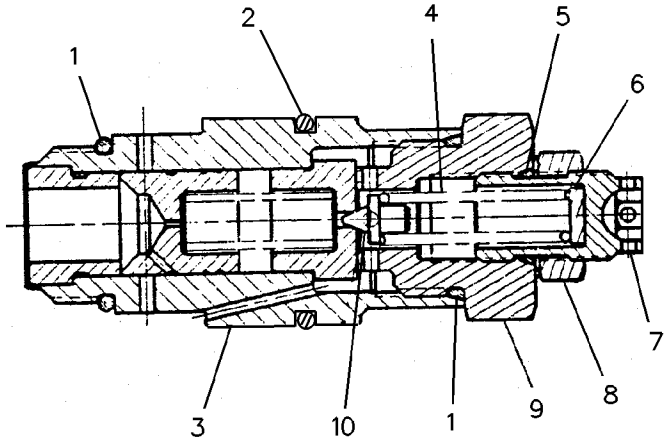

GRAPHIC #1 g00119073

6E-1148 VALVE GP-RELIEF–MAIN

S/N: 3XJ1638-1739
PILOT OPERATED
PART OF 6E-2378, 6E-3737 VALVE GP-CONTROL
ALSO AN ATTACHMENT

SMCS-5069, 5117 **i00259508**

NOTE	REF NO	GRAPHIC REF	PART NUMBER	QTY	PART NAME 1 2 3 4 5 6 (PRODUCT LEVEL)	SEE PAGE
	1	1	**7M-8485**	2	SEAL-O-RING (29.74MM ID)	
	2	1	**4J-0522**	1	SEAL-O-RING (37.69MM ID)	
	3	1	**3G-1793**	1	VALVE GP	
		1	**8H-3532**	1	SPRING-VALVE	
	4	1	**8J-0322**	1	SPRING	
	5	1	**3K-0360**	1	SEAL-O-RING (16.36MM ID)	
C	6	1	**4Y-5812**	1	PLATE	
C	7	1	**6E-5510**	1	RETAINER AS	
	8	1	**9X-6395**	1	NUT-ORFS (3/4-16 THD)	
	9	1	**6E-1127**	1	CAP	
	10	1	**8J-0331**	1	VALVE	

C-CHANGE FROM PREVIOUS TYPE

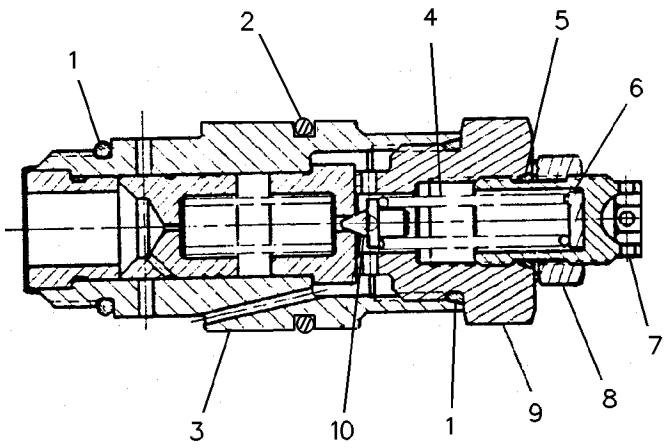

GRAPHIC #1 g00119073

6E-2377 VALVE GP-RELIEF–LINE

S/N: 3XJ1-99999

PART OF 6E-2378, 6E-3737, 6E-5863, 6E-5864 VALVE GP-CONTROL

ALSO AN ATTACHMENT

SMCS-5069, 5117 **i01197967**

NOTE	REF NO	GRAPHIC REF	PART NUMBER	QTY	PART NAME 1 2 3 4 5 6 (PRODUCT LEVEL)	SEE PAGE
	1	1	**6E-1835**	1	RETAINER AS	
	2	1	**9X-6395**	1	NUT-ORFS (3/4-16 THD)	
	3	1	**6J-6439**	1	VALVE-POPPET	
	4	1	**4T-7571**	1	PLATE	
	5	1	**9M-1974**	1	WASHER-HARD (2MM THK)	
	6	1	**3K-0360**	2	SEAL-O-RING (16.36MM ID)	
	7	1	**4T-2741**	1	SPRING	
	8	1	**7J-9933**	1	SEAL-O-RING (21.89MM ID)	

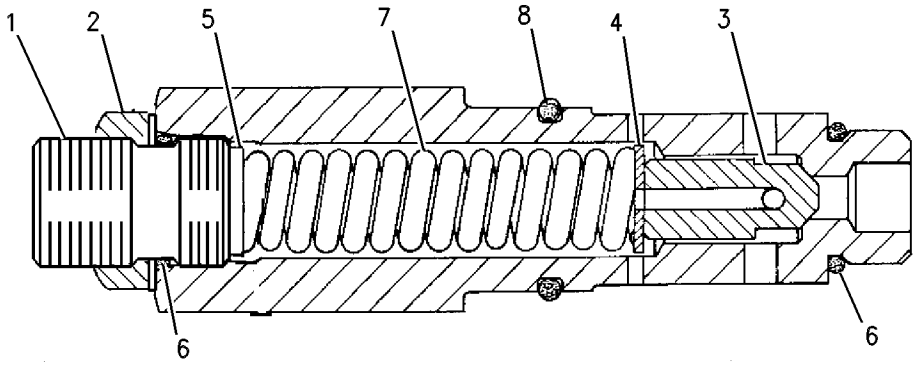

GRAPHIC #1 g00640535

HYDRAULIC SYSTEM

6E-5861 VALVE GP-RELIEF

S/N: 3XJ1-99999
PART OF 6E-3737 VALVE GP-CONTROL
AN ATTACHMENT

SMCS-5069, 5117 **i00259884**

NOTE	REF NO	GRAPHIC REF	PART NUMBER	QTY	PART NAME 1 2 3 4 5 6 (PRODUCT LEVEL)	SEE PAGE
	1	1	**7M-8485**	2	SEAL-O-RING (29.74MM ID)	
	2	1	**4J-0522**	1	SEAL-O-RING (37.69MM ID)	
	3	1	**3G-1793**	1	VALVE GP	
		1	**8H-3532**	1	SPRING-VALVE	
	4	1	**8J-0322**	1	SPRING	
	5	1	**3K-0360**	1	SEAL-O-RING (16.36MM ID)	
	6	1	**4Y-5812**	1	PLATE	
	7	1	**6E-5510**	1	RETAINER AS	
	8	1	**9X-6395**	1	NUT-ORFS (3/4-16 THD)	
	9	1	**6E-1127**	1	CAP	
	10	1	**8J-0331**	1	VALVE	

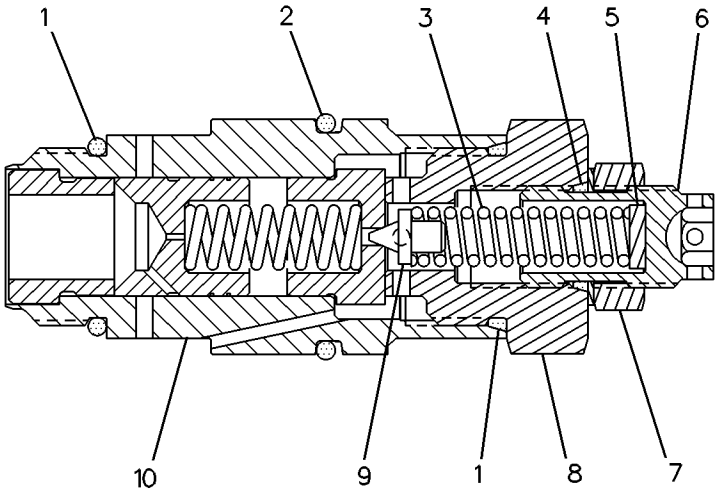

GRAPHIC #1 g00128118

HYDRAULIC SYSTEM

6E-5862 VALVE GP-RELIEF–MAIN

S/N: 3XJ1740-2153
PILOT OPERATED
PART OF 6E-5863, 6E-5864 VALVE GP-CONTROL
ALSO AN ATTACHMENT

SMCS-5069, 5117 **i00286501**

NOTE	REF NO	GRAPHIC REF	PART NUMBER	QTY	PART NAME 1 2 3 4 5 6 (PRODUCT LEVEL)	SEE PAGE
	1	1	**7M-8485**	2	SEAL-O-RING (29.74MM ID)	
	2	1	**4J-0522**	1	SEAL-O-RING (37.69MM ID)	
	3	1	**3G-1793**	1	VALVE GP	
		1	**8H-3532**	1	SPRING-VALVE	
	4	1	**8J-0322**	1	SPRING	
	5	1	**3K-0360**	1	SEAL-O-RING (16.36MM ID)	
	6	1	**4Y-5812**	1	PLATE	
	7	1	**6E-5510**	1	RETAINER AS	
	8	1	**9X-6395**	1	NUT-ORFS (3/4-16 THD)	
	9	1	**6E-1127**	1	CAP	
	10	1	**8J-0331**	1	VALVE	

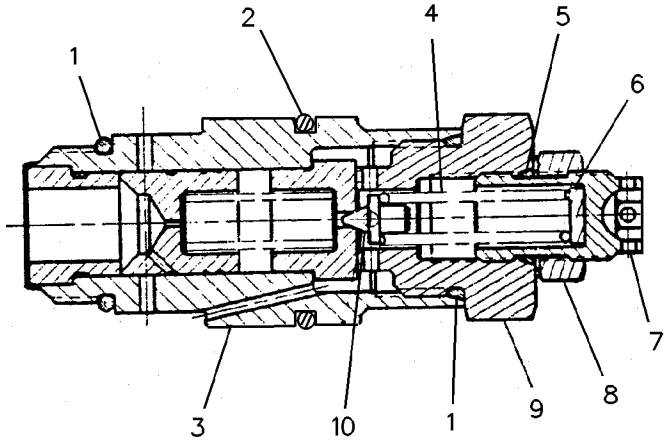

GRAPHIC #1 g00119073

HYDRAULIC SYSTEM

6E-6256 VALVE GP-RELIEF–MAIN

S/N: 3XJ1-99999
PART OF 6E-3737 VALVE GP-CONTROL
AN ATTACHMENT

SMCS-5069, 5117 **i01307458**

NOTE	REF NO	GRAPHIC REF	PART NUMBER	QTY	PART NAME 1 2 3 4 5 6 (PRODUCT LEVEL)	SEE PAGE
	1	1	**7M-8485**	2	SEAL-O-RING (29.74MM ID)	
	2	1	**4J-0522**	1	SEAL-O-RING (37.69MM ID)	
	3	1	**8J-0322**	1	SPRING	
	4	1	**3K-0360**	1	SEAL-O-RING (16.36MM ID)	
	5	1	**4Y-5812**	1	PLATE	
	6	1	**6E-5510**	1	RETAINER AS	
	7	1	**9X-6395**	1	NUT-ORFS (3/4-16 THD)	
	8	1	**6E-1127**	1	CAP	
	9	1	**8J-0331**	1	VALVE	
	10	1	**6E-6138**	1	VALVE GP-RELIEF	
		1	**8H-3532**	1	SPRING-VALVE	
	11	1	**118-5615**	1	DOWEL	

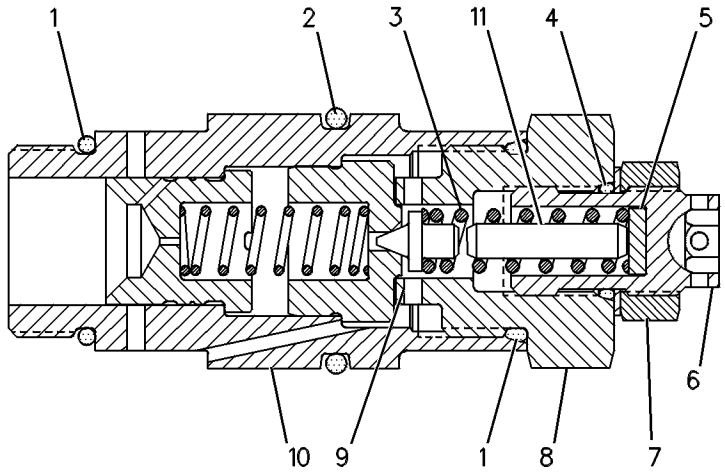

GRAPHIC #1 g00128889

6E-6257 VALVE GP-RELIEF–MAIN

S/N: 3XJ2154-99999
PART OF 6E-5863, 6E-5864 VALVE GP-CONTROL
ALSO AN ATTACHMENT

SMCS-5069, 5117 **i00286575**

NOTE	REF NO	GRAPHIC REF	PART NUMBER	QTY	PART NAME 1 2 3 4 5 6 (PRODUCT LEVEL)	SEE PAGE
	1	1	**7M-8485**	2	SEAL-O-RING (29.74MM ID)	
	2	1	**6E-6138**	1	VALVE GP	
		1	**8H-3532**	1	SPRING-VALVE	
	3	1	**4J-0522**	1	SEAL-O-RING (37.69MM ID)	
	4	1	**6E-5510**	1	RETAINER AS	
	5	1	**3K-0360**	1	SEAL-O-RING (16.36MM ID)	
	6	1	**4Y-5812**	1	PLATE	
	7	1	**8J-0331**	1	VALVE	
	8	1	**8J-0322**	1	SPRING	
	9	1	**9X-6395**	1	NUT-ORFS (3/4-16 THD)	
	10	1	**6E-1127**	1	CAP	
	11	1	**7N-5352**	1	DOWEL	

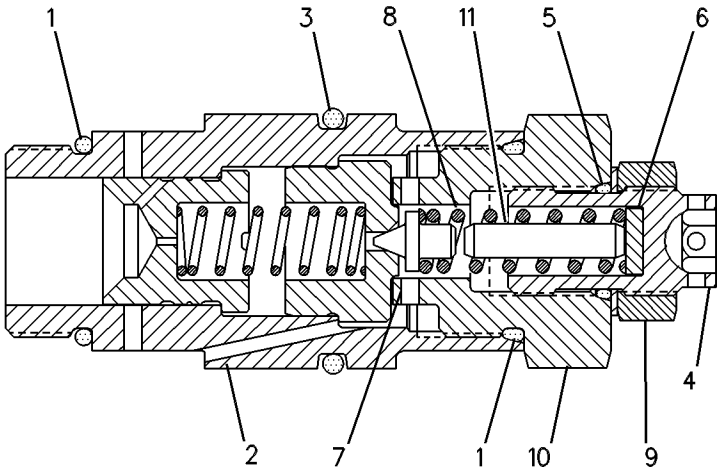

GRAPHIC #1 g00121868

9T-8488 VALVE GP-RELIEF–LINE

S/N: 3XJ1-99999
DIRECT OPERATED
PART OF 9T-8489 VALVE GP-CONTROL
AN ATTACHMENT

SMCS-5069, 5117 **i01323923**

NOTE	REF NO	GRAPHIC REF	PART NUMBER	QTY	PART NAME 1 2 3 4 5 6 (PRODUCT LEVEL)	SEE PAGE
	1	1	**6J-6439**	1	VALVE-POPPET	
	2	1	**9X-6395**	1	NUT-ORFS (3/4-16 THD)	
	3	1	**4T-7571**	1	PLATE	
	4	1	**7J-9933**	1	SEAL-O-RING (21.89MM ID)	
	5	1	**4T-2741**	1	SPRING	
	6	1	**3K-0360**	2	SEAL-O-RING (16.36MM ID)	
	7	1	**6E-1835**	1	RETAINER AS	

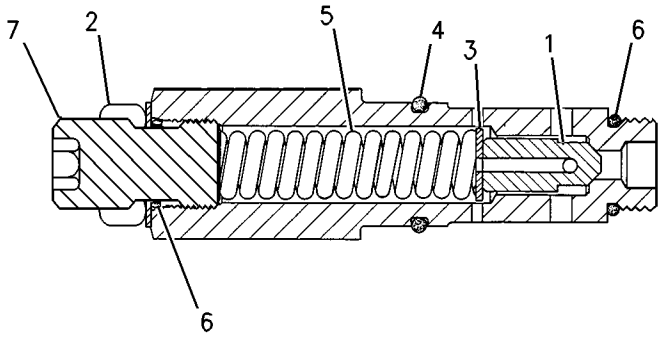

GRAPHIC #1 g00700863

1U-2226 VALVE GP-SELECTOR & PRESS CONT–PILOT

S/N: 3XJ1-99999

PART OF 9C-1084 LINES GP-PILOT

SMCS-5065, 5117 **i00862839**

NOTE	REF NO	GRAPHIC REF	PART NUMBER	QTY	PART NAME 1 2 3 4 5 6 (PRODUCT LEVEL)	SEE PAGE
	1	1	**7S-8553**	1	SPRING	
B	2	1	**5S-7001**	4	SPACER (.91MM THK)	
B		1	**5S-7018**	6	SPACER (.25MM THK)	
	3	1	**1U-2228**	1	VALVE GP	
	4	1	**6V-2606**	2	ADAPTER-STRAIGHT THREAD	
		1	**2M-9780**	2	SEAL-O-RING (19.18MM ID)	

B-USE AS REQUIRED

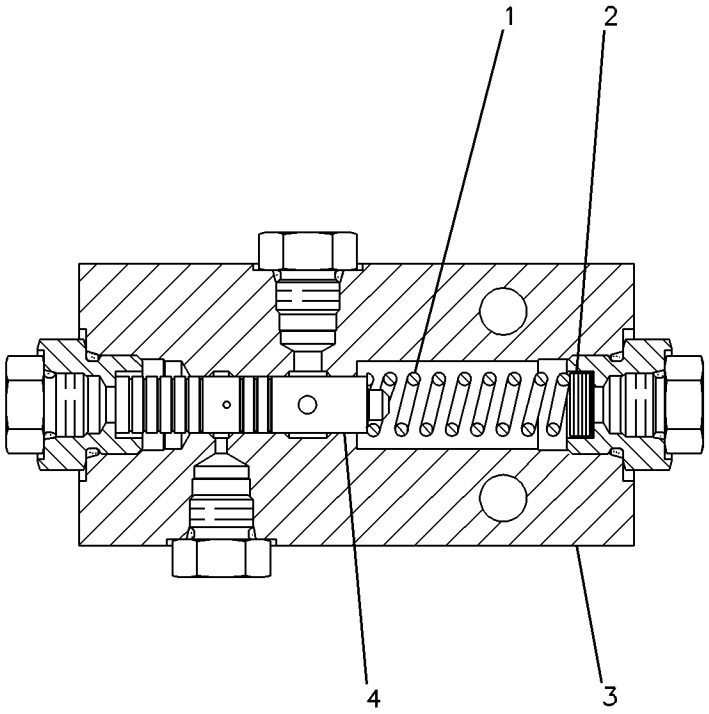

GRAPHIC #1 g00083304

HYDRAULIC SYSTEM

3T-5816 VALVE GP-SELECTOR & PRESS CONT

S/N: 6ME1-99999; 1YX1-99999

PART OF 3T-5815 VALVE GP

SMCS-5065, 5117 **i01326646**

NOTE	REF NO	GRAPHIC REF	PART NUMBER	QTY	PART NAME 1 2 3 4 5 6 (PRODUCT LEVEL)	SEE PAGE
	1	1	**7G-9565**	1	BODY AS	
		1	**3T-8269**	1	PLUG-ORIFICE	
C	2	1	**9W-7023**	1	SPOOL-SELECTOR	
	3	1	**2M-7041**	1	SLUG	
	4	1	**7G-4291**	1	SPOOL AS-RELIEF	
	5	1	**3D-8317**	1	RING-RETAINING	
		1	**8M-1013**	1	RETAINER	
	6	1	**4M-2381**	1	SPRING	
	7	1	**4B-9880**	1	BALL (7.94MM DIA)	
	8	1	**7G-4842**	1	SPRING	
	9	1	**6P-4971**	2	STOP	
	10	1	**7S-4607**	4	DETENT AS	
		1	**1P-8116**	4	SEAL-O-RING	
	11	1	**9G-5301**	1	PISTON-LOAD	
	12	1	**9P-3041**	1	SPRING	
B	13	1	**5M-9622**	1	SPACER (1.6MM THK)	
B		1	**5M-9623**	1	SPACER (0.9MM THK)	
B		1	**5M-9624**	3	SPACER (0.25MM THK)	
C	14	1	**8T-7258**	2	SEAL-O-RING (38.54MM ID)	
C	15	1	**9W-9831**	1	ORIFICE-SCREEN	
		1	**5H-8853**	1	SEAL-O-RING (9.3MM ID)	
	16	1	**6P-4938**	1	COVER	
	17	1	**6P-9785**	1	SPRING	
	18	1	**6P-9786**	1	RETAINER	
		1	**3P-8485**	1	RING-RETAINING	
	19	1	**7G-9563**	1	SPOOL	
	20	1	**6P-9784**	1	SPRING (OUTER)	
		1	**6P-9783**	1	SPRING (INNER)	
	21	1	**9G-3251**	1	SPOOL-SELECTOR	
	22	1	**2S-4872**	1	STOP	
	23	1	**2S-0696**	2	DOWEL	
	24	1	**5S-7816**	1	SLUG	
	25	1	**6P-4978**	1	SPRING	
	26	1	**6P-4943**	1	SPOOL-RATIO	
	27	1	**8P-6321**	11	DOWEL	
	28	1	**1J-5353**	2	PIN-SPRING	
	29	1	**6P-4940**	1	STOP	
	30	1	**2H-2995**	1	SETSCREW (10-24THD X 7/16)	
	31	1	**2B-2695**	3	BOLT (5/16-18X.875 IN)	

B-USE AS REQUIRED
C-CHANGE FROM PREVIOUS TYPE

3T-5816 VALVE GP-SELECTOR & PRESS CONT *(contd.)* i01326646

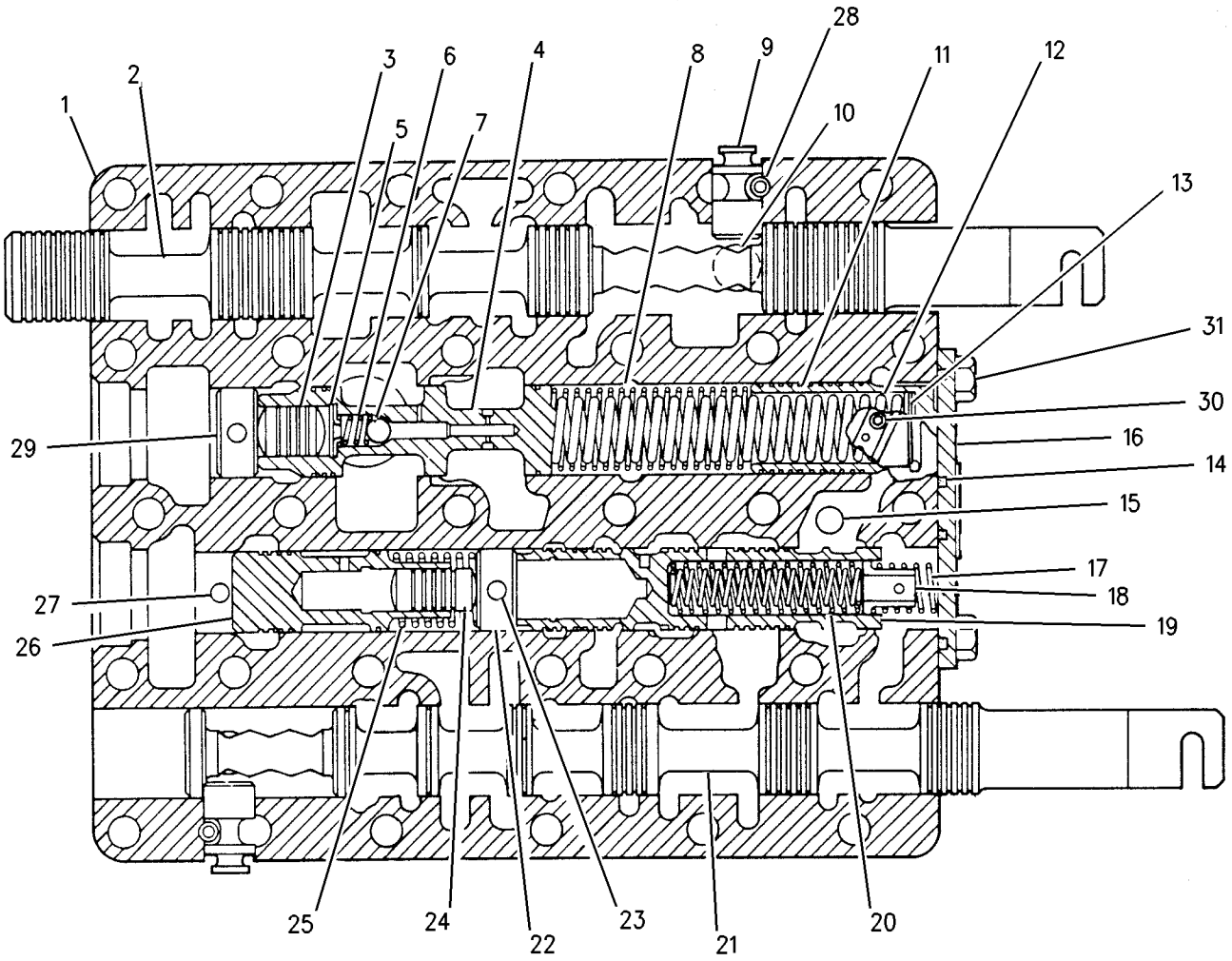

GRAPHIC #1 g00701966

4T-1860 VALVE GP-SHUTTLE

S/N: 3XJ1-99999
BALL RESOLVER
PART OF 9T-7272 VALVE GP-SHUTTLE

SMCS-5079 **i01373530**

NOTE	REF NO	GRAPHIC REF	PART NUMBER	QTY	PART NAME 1 2 3 4 5 6 (PRODUCT LEVEL)	SEE PAGE
	1	1	**6V-5586**	1	SEAL-O-RING (6.07MM ID)	
	2	1	**4T-5070**	2	RING-BACKUP	
	3	1	**4T-5071**	2	RING-BACKUP	
	4	1	**8C-3085**	1	SEAL-O-RING (7.65MM ID)	
	5	1	**3J-1907**	1	SEAL-O-RING (11.89MM ID)	
	6	1	**1M-6718**	1	BALL	

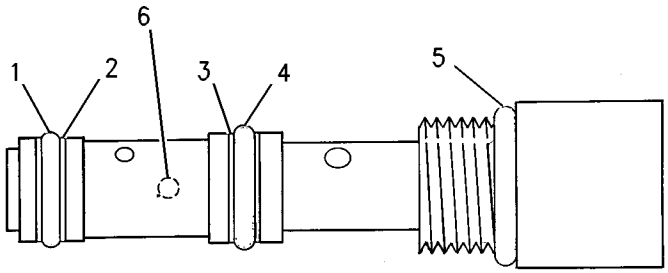

GRAPHIC #1 g00725022

9T-7272 VALVE GP-SHUTTLE

S/N: 3XJ1-99999

RESOLVER

PART OF 9C-8381 LINES GP-LIFT CYLINDER

SMCS-5079 **i01324006**

NOTE	REF NO	GRAPHIC REF	PART NUMBER	QTY	PART NAME 1 2 3 4 5 6 (PRODUCT LEVEL)	SEE PAGE
Y	1	1	**4T-1860**	1	VALVE GP-SHUTTLE (RESOLVER)	
	2	1	**9S-8001**	1	PLUG-O-RING (5/16-24 THD)	
	3	1	**4J-7533**	1	SEAL-O-RING (6.07MM ID)	

Y-SEPARATE ILLUSTRATION

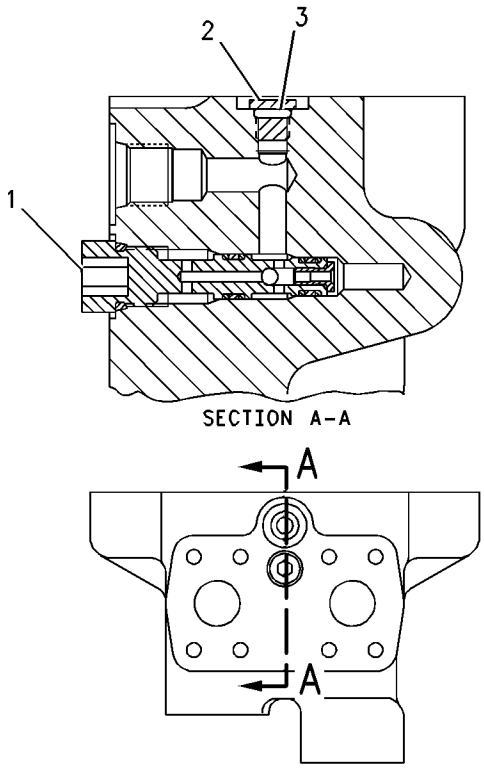

GRAPHIC #1 g00700782

HYDRAULIC SYSTEM

6T-5859 VALVE GP-SOLENOID—RIDE CONTROL

S/N: 3XJ1-99999
24 VOLT
PART OF 4T-5541 VALVE GP-DIVERTER
AN ATTACHMENT

SMCS-4805, 5132, 5479 **i00978389**

NOTE	REF NO	GRAPHIC REF	PART NUMBER	QTY	PART NAME 1 2 3 4 5 6 (PRODUCT LEVEL)	SEE PAGE
C	1	1	**6T-8500**	1	COIL AS	
	2	1	**1S-9593**	2	STRAP-CABLE (0.62IN DIA)	
	3	1	**7N-9737**	1	HOUSING-PLUG (1 PIN,1 SOCKET)	
	4	1	**7N-7780**	1	PIN-CONNECTOR (BLADE)	
	5	1	**7N-7779**	1	SOCKET	
C	6	1	**6T-8084**	1	CARTRIDGE	
	7	1	**104-5970**	1	LOCKNUT	
	8	1	**4B-4276**	1	WASHER (1.6MM THK)	
					AVAILABLE REPAIR KIT(S):	
			8J-9348	1	KIT-SEAL	
					(INCLUDES RINGS & SEALS)	

C-CHANGE FROM PREVIOUS TYPE

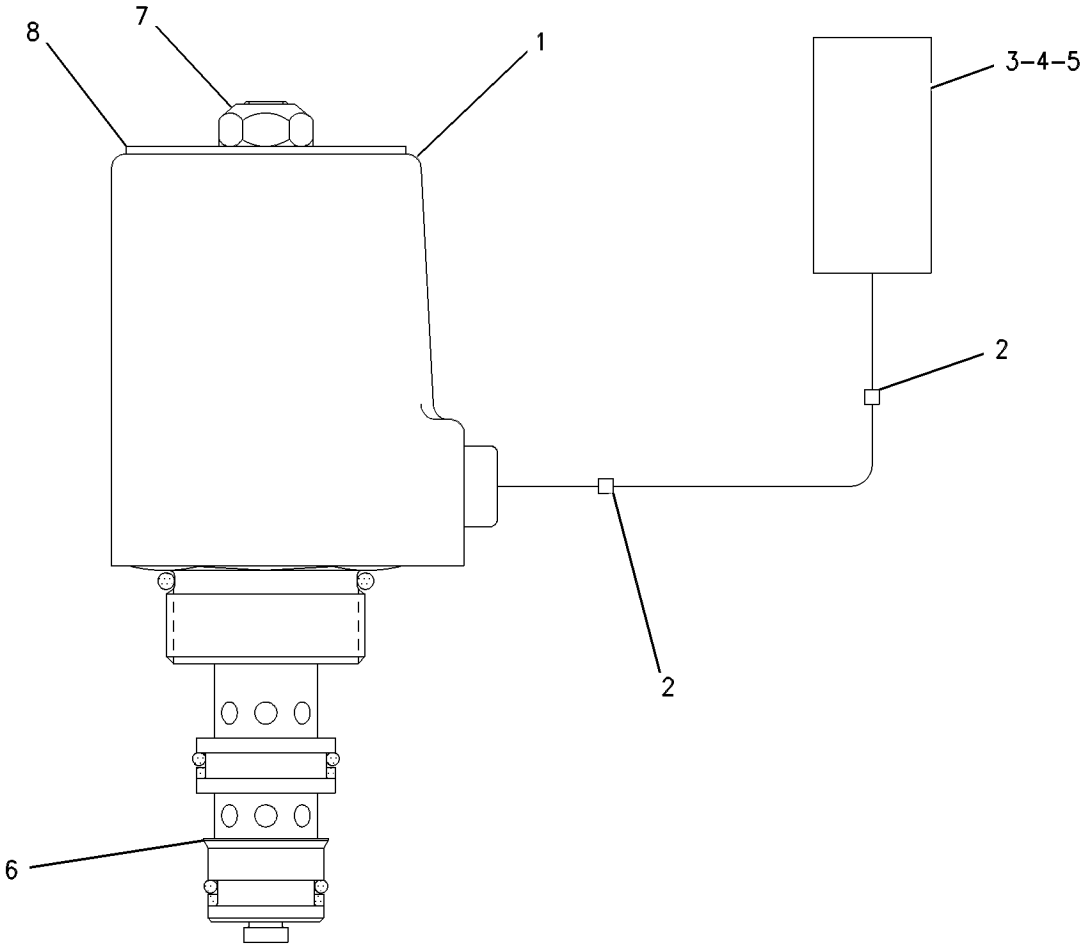

GRAPHIC #1 g00499824

MEMORANDA

IMPLEMENTS

4V-5177 CONTROL GP-BUCKET

S/N: 3XJ1-99999

SMCS-6107 **i00287171**

NOTE	REF NO	GRAPHIC REF	PART NUMBER	QTY	PART NAME 1 2 3 4 5 6 (PRODUCT LEVEL)	SEE PAGE
C	1	1	**6W-2950**	1	ARM AS-LIFT	
	2	1	**4V-8687**	2	BOSS (91.1MM ID)	
		1	**4V-8673**	2	BEARING-SLEEVE	
	3	1	**4V-8688**	2	BOSS	
		1	**4V-8674**	2	BEARING-BUSHING	
	4	1	**4V-8690**	2	BOSS (60.7MM ID)	
		1	**4V-8675**	2	BEARING-SLEEVE	
	5	1	**6W-8304**	1	CROSSMEMBER	
	6	1	**5V-2798**	1	PLATE	
	7	1	**8T-9530**	2	TACK-FASTENER	
	8	1	**4V-6421**	2	PIN AS	
	9	1	**9C-3581**	1	PIN AS	
	10	1	**3B-8489**	6	FITTING-GREASE (1/8-27 THD)	
	11	1	**4V-7099**	2	PIN AS	
	12	1	**7X-0366**	5	BOLT (3/4-10X2IN)	
	13	1	**7X-0582**	12	WASHER-HARD (6MM THK)	
		1	**9K-9731**	12	SPACER (14.22MM THK)	
C	14	1	**5P-0068**	2	SEAL-LIP	
	15	1	**4V-7101**	1	PIN AS	
	16	1	**2H-3743**	1	BOLT (1-14X2IN)	
		1	**4F-6464**	1	WASHER	
		1	**3V-9535**	1	SPACER (23.0MM THK)	
	17	1	**8T-9398**	2	BOLT (3/4-10X1.75IN)	
	18	1	**7V-6716**	1	PIN AS	
	19	1	**7K-9212**	8	SEAL-LIP (88.9MM ID)	
	20	1	**4V-8518**	1	LINK & BEARING AS	
	21	1	**4V-8520**	2	BEARING-SLEEVE	
	22	1	**4E-3119**	1	LEVER AS	
		1	**4V-8519**	1	BEARING-SLEEVE	
	23	1	**2D-4867**	2	FITTING-HYDRAULIC	
	24	1	**7V-6715**	2	PIN AS	
		1	**7K-9205**	4	SEAL-LIP (63.5MM ID)	
	25	1	**5V-0353**	4	WASHER (1.6MM THK)	
		1	**5V-0354**	4	WASHER (3MM THK)	
	26	1	**3B-8491**	2	FITTING-STRAIGHT	
	27	1	**4E-3196**	2	PIN AS	
		1	**7K-9209**	4	SEAL-LIP (76.20MM ID)	
	28	1	**7X-0365**	5	BOLT (3/4-10X1.50IN)	
C	29	1	**9C-1484**	2	PIN AS	

C-CHANGE FROM PREVIOUS TYPE

4V-5177 **CONTROL GP-BUCKET** *(contd.)* **i00287171**

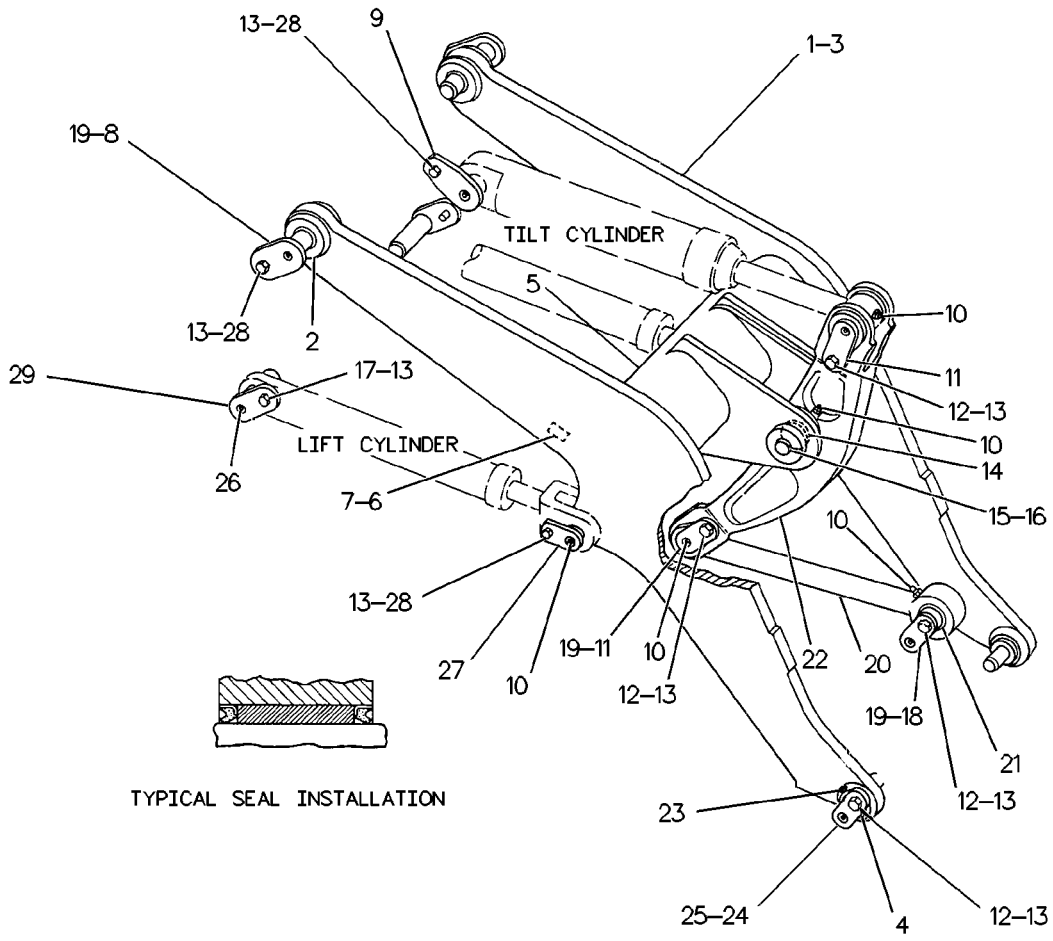

GRAPHIC #1 g00127740

3G-8956 BIT & CUTTING EDGE GP

S/N: 3XJ1-99999

FOR USE WITH 7V-1474–PAGE , 7V-1784–PAGE , 146-9625–PAGE , 146-9627–PAGE , 146-9628–PAGE , 146-9626–PAGE . CANNOT BE USED WITH 147-0156–PAGE , 147-5930–PAGE , 147-5929–PAGE , 147-0153–PAGE , 147-0154–PAGE , 147-0157–PAGE , 147-0130–PAGE , 147-0131–PAGE , 147-0155–PAGE , 147-0152–PAGE AN ATTACHMENT

SMCS-6801 **i01321934**

NOTE	REF NO	GRAPHIC REF	PART NUMBER	QTY	PART NAME 1 2 3 4 5 6 (PRODUCT LEVEL)	SEE PAGE
	1	1	**5P-8823**	12	BOLT-PLOW (1 1/4-7X4.13IN)	
		1	**3K-9770**	12	NUT-FULL (1-1/4-7 THD)	
	2	1	**1U-0593**	2	EDGE-CUTTING	
	3	1	**3G-6395**	2	EDGE-END	

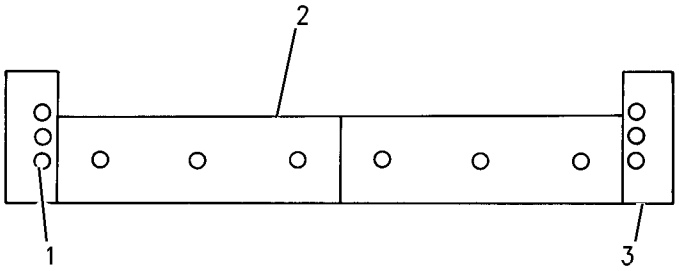

GRAPHIC #1 g00699804

9W-0817 BIT & CUTTING EDGE GP

S/N: 3XJ1-99999

FOR USE WITH 133-1690–PAGE , 146-9625–PAGE , 146-9627–PAGE , 146-9628–PAGE , 146-9626–PAGE . CANNOT BE USED WITH 147-5930–PAGE , 147-5929–PAGE , 147-0156–PAGE , 147-0153–PAGE , 147-0154–PAGE , 147-0157–PAGE , 147-0130–PAGE , 147-0131–PAGE , 147-0155–PAGE , 147-0152–PAGE

AN ATTACHMENT

SMCS-6801 **i00259844**

NOTE	PART NUMBER	QTY	PART NAME 1 2 3 4 5 6 (PRODUCT LEVEL)	SEE PAGE
	5P-8823	14	BOLT-PLOW (1-1/4-7X105MM)	
	4T-6699	7	EDGE-SEGMENT	
	3K-9770	14	NUT-FULL (1-1/4-7 THD)	

6C-5178 BUCKET AS-GENERAL PURPOSE

S/N: 3XJ1-99999
4.3 CU M (3.0 CU YD)
PART OF 6C-5339 BUCKET GP-GENERAL PURPOSE
AN ATTACHMENT

SMCS-6101 **i01585566**

NOTE	REF NO	GRAPHIC REF	PART NUMBER	QTY	PART NAME 1 2 3 4 5 6 (PRODUCT LEVEL)	SEE PAGE
	1	1	**6C-5193**	1	EDGE-CUTTING	
	2	1	**5V-0746**	1	HINGE AS (LIFT-LH-OUTER)	
	3	1	**5V-0747**	1	HINGE AS (LIFT-LH-INNER)	
	4	1	**5V-0750**	1	HINGE AS (LIFT-RH-INNER)	
	5	1	**5V-0751**	1	HINGE AS (LIFT-RH-OUTER)	
	6	1	**5V-0748**	1	HINGE AS (TILT-LH)	
	7	1	**5V-0749**	1	HINGE AS (TILT-RH)	
	8	1	**6C-5184**	4	PLATE	
	9	1	**4V-7174**	1	CORNER	
	10	1	**6C-5189**	1	BAR (LH)	
	11	1	**6C-5190**	1	BAR (RH)	
	12	1	**4V-7175**	1	CORNER	
	13	1	**114-0201**	2	PLATE-WEAR	

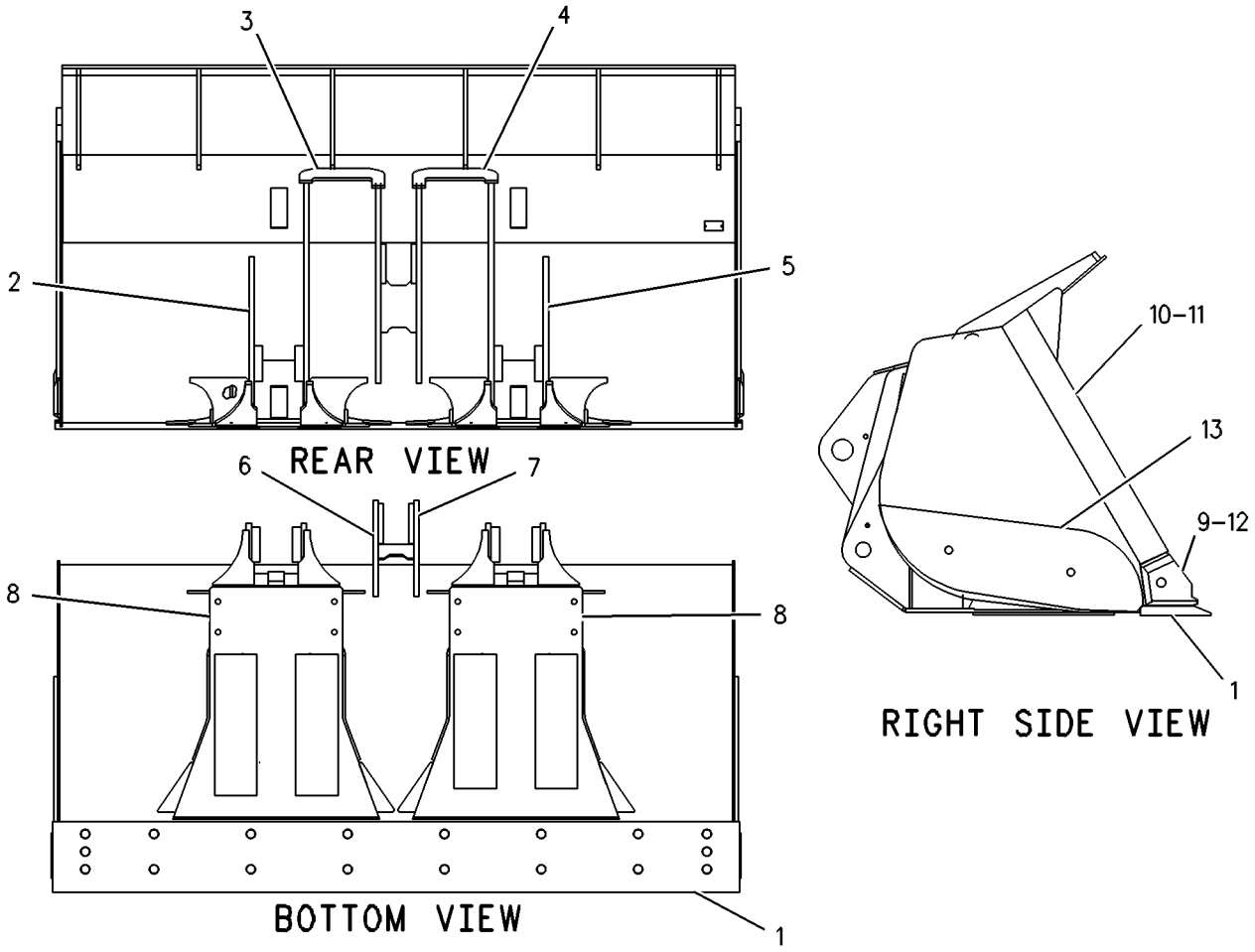

GRAPHIC #1 g00278014

8R-8204 BUCKET AS-GENERAL PURPOSE

S/N: 3XJ1-99999
3.5 CU M(4.5 CU YD)
PART OF 8R-8201 BUCKET GP-GENERAL PURPOSE
FIELD REPLACEMENT FOR 6W-7793—PAGE
AN ATTACHMENT

SMCS-6101 **i01217980**

NOTE	REF NO	GRAPHIC REF	PART NUMBER	QTY	PART NAME 1 2 3 4 5 6 (PRODUCT LEVEL)	SEE PAGE
	1	1	**9V-0166**	4	PLATE	
	2	1	**4V-7175**	1	CORNER	
		1	**4V-7174**	1	CORNER	
	3	1	**8R-8214**	1	BAR-RH	
		1	**8R-8215**	1	BAR-LH	
	4	1	**9V-6575**	1	EDGE-CUTTING	
	5	1	**5V-0746**	1	HINGE AS (LIFT-LH-OUTER)	
	6	1	**5V-0747**	1	HINGE AS (LIFT-LH-INNER)	
	7	1	**5V-0748**	1	HINGE AS (TILT-LH)	
	8	1	**5V-0749**	1	HINGE AS (TILT-RH)	
	9	1	**5V-0750**	1	HINGE AS (LIFT-RH-INNER)	
	10	1	**5V-0751**	1	HINGE AS (LIFT-RH-OUTER)	

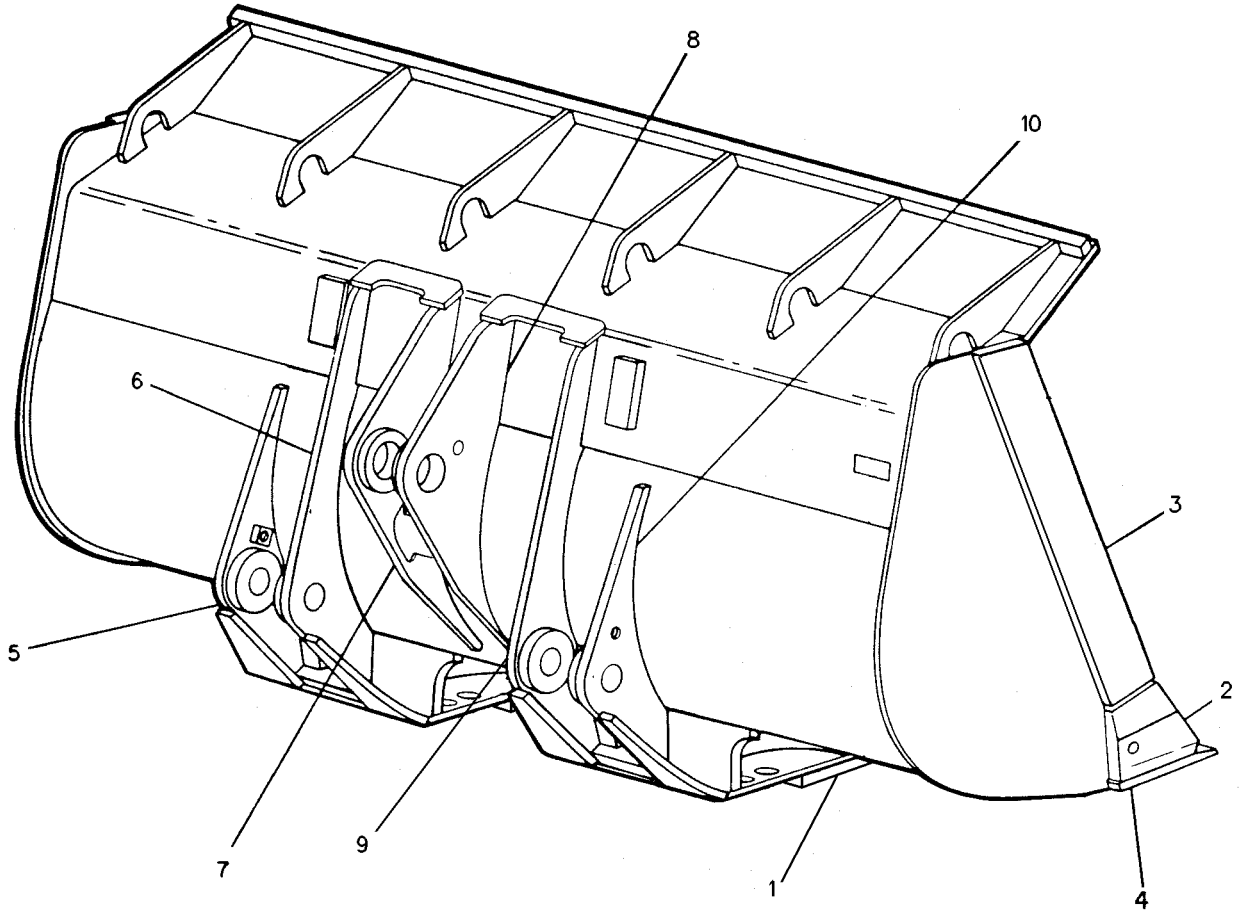

GRAPHIC #1 g00126595

WORK TOOLS

8R-8205 BUCKET AS-GENERAL PURPOSE

S/N: 3XJ1-99999
3.5 CU M(4.5 CU YD). GENERAL PURPOSE-LOOSE MATERIAL
PART OF 8R-8202 BUCKET GP-GENERAL PURPOSE
FIELD REPLACEMENT FOR 8R-6172—PAGE
AN ATTACHMENT

SMCS-6101 **i01217966**

NOTE	REF NO	GRAPHIC REF	PART NUMBER	QTY	PART NAME 1 2 3 4 5 6 (PRODUCT LEVEL)	SEE PAGE
	1	1	**9V-0166**	4	PLATE	
	2	1	**4V-7175**	1	CORNER	
		1	**4V-7174**	1	CORNER	
	3	1	**8R-8477**	1	BAR (RH)	
		1	**8R-8476**	1	BAR (LH)	
	4	1	**9V-6575**	1	EDGE-CUTTING	
	5	1	**5V-0746**	1	HINGE AS (LIFT-LH-OUTER)	
	6	1	**5V-0747**	1	HINGE AS (LIFT-LH-INNER)	
	7	1	**5V-0748**	1	HINGE AS (TILT-LH)	
	8	1	**5V-0749**	1	HINGE AS (TILT-RH)	
	9	1	**5V-0750**	1	HINGE AS (LIFT-RH-INNER)	
	10	1	**5V-0751**	1	HINGE AS (LIFT-RH-OUTER)	

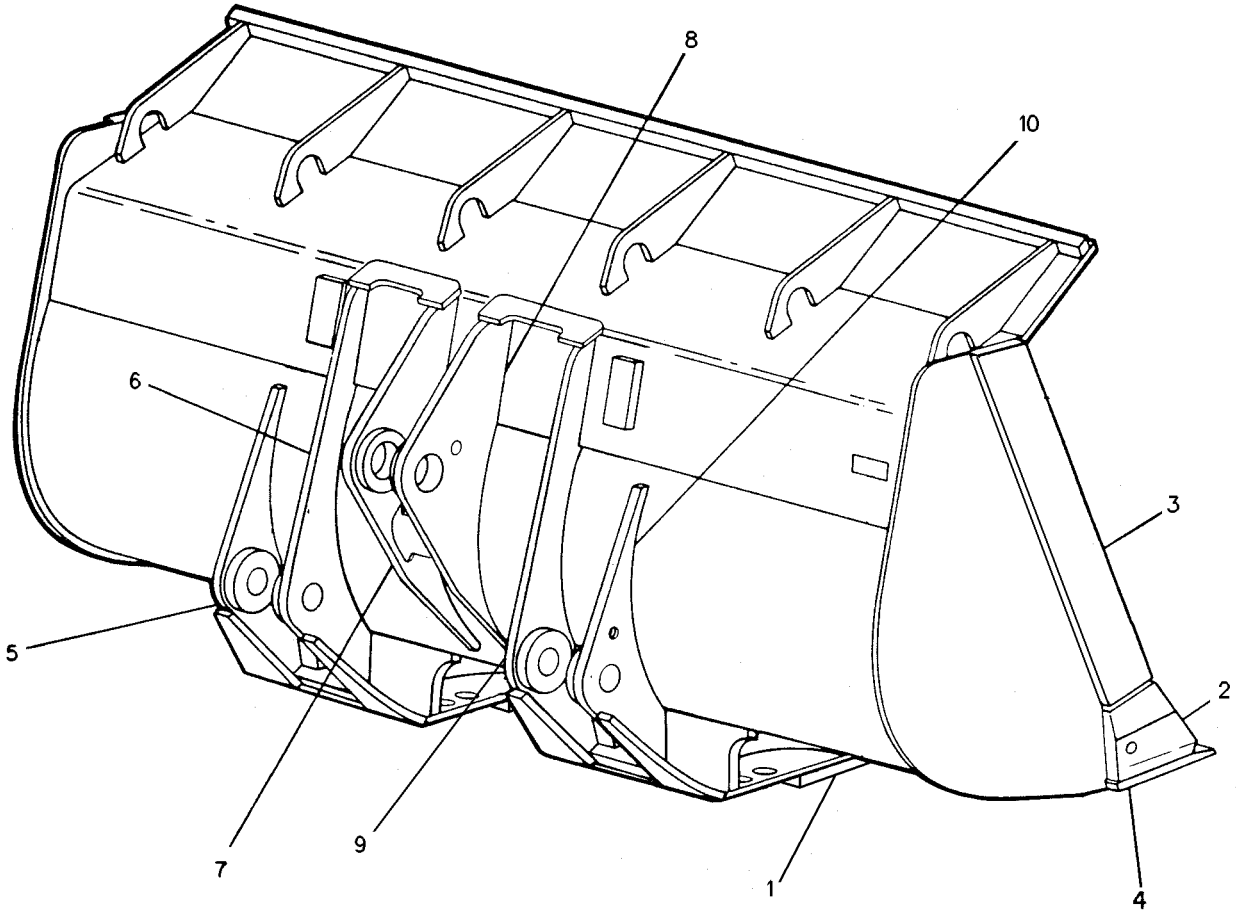

GRAPHIC #1 g00126593

MEMORANDA

8R-8209 BUCKET AS-GENERAL PURPOSE

S/N: 3XJ1-99999
3.6 CU M(4.75 CU YD). LOOSE MATERIAL
PART OF 8R-8203 BUCKET GP-GENERAL PURPOSE
FIELD REPLACEMENT FOR 8R-6173—PAGE
AN ATTACHMENT

SMCS-6101 **i01217993**

NOTE	REF NO	GRAPHIC REF	PART NUMBER	QTY	PART NAME 1 2 3 4 5 6 (PRODUCT LEVEL)	SEE PAGE
	1	1	**9V-6575**	1	EDGE-CUTTING	
	2	1	**5V-0746**	1	HINGE AS (LIFT-LH-OUTER)	
	3	1	**5V-0747**	1	HINGE AS (LIFT-LH-INNER)	
	4	1	**5V-0750**	1	HINGE AS (LIFT-RH-INNER)	
	5	1	**5V-0751**	1	HINGE AS (LIFT-RH-OUTER)	
	6	1	**5V-0748**	1	HINGE AS (TILT-LH)	
	7	1	**5V-0749**	1	HINGE AS (TILT-RH)	
	8	1	**9V-0166**	4	PLATE	
	9	1	**4V-7174**	1	CORNER	
	10	1	**8R-8485**	1	BAR (LH)	
	11	1	**8R-8486**	1	BAR (RH)	
	12	1	**4V-7175**	1	CORNER	

8R-8209 BUCKET AS-GENERAL PURPOSE *(contd.)* i01217993

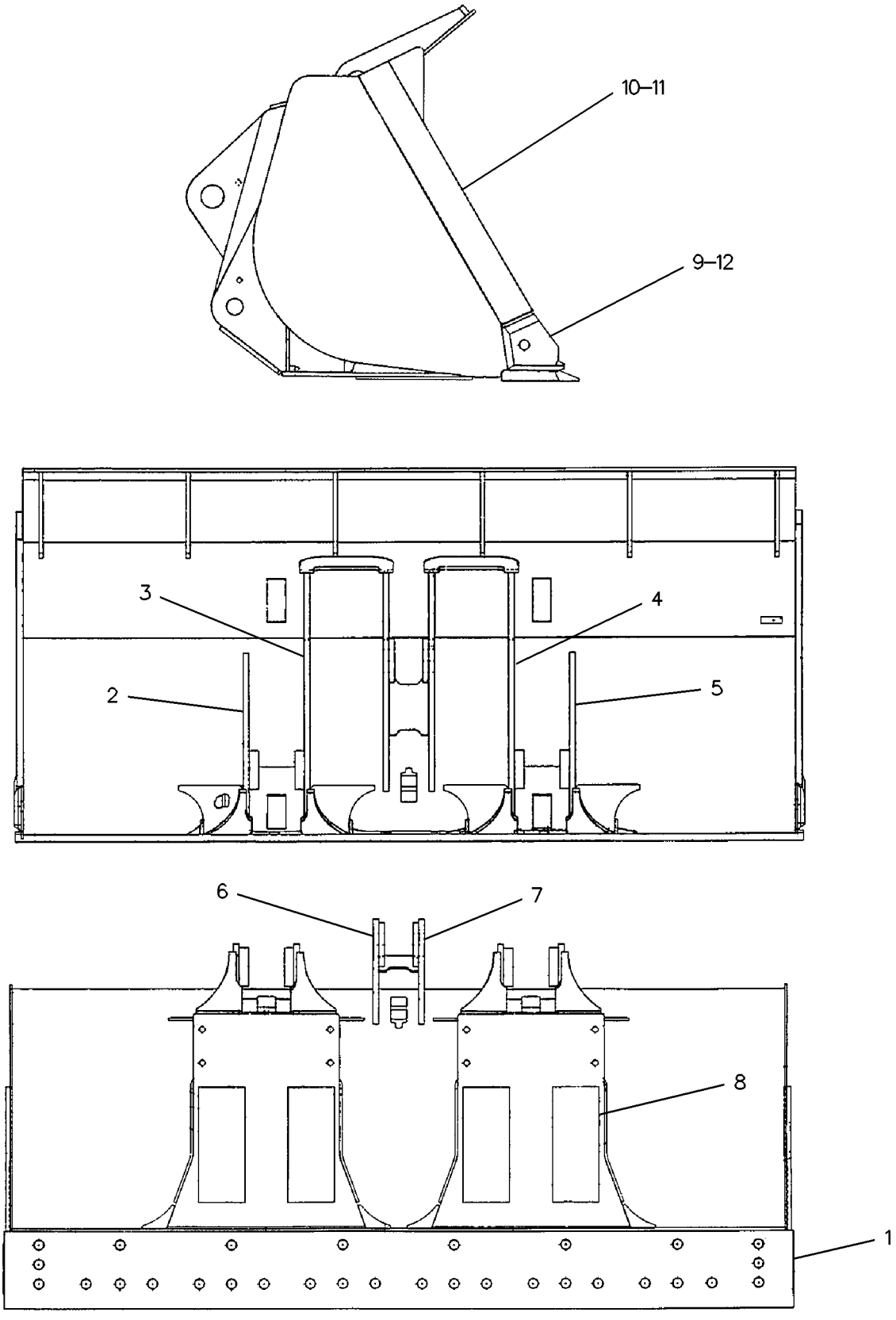

GRAPHIC #1 g00118856

9C-8299 BUCKET AS-GENERAL PURPOSE

S/N: 3XJ1-99999
3.8 CU. M (5 CU. YD). LOOSE MATERIAL
PART OF 6C-2464 BUCKET GP-GENERAL PURPOSE
AN ATTACHMENT
TYPE 1

SMCS-6101 **i01323353**

NOTE	REF NO	GRAPHIC REF	PART NUMBER	QTY	PART NAME 1 2 3 4 5 6 (PRODUCT LEVEL)	SEE PAGE
	1	1	**4K-4345**	2	PLATE	
	2	1	**4V-7175**	1	CORNER	
		1	**4V-7174**	1	CORNER	
	3	1	**5V-0751**	1	HINGE AS (LIFT-RH-OUTER)	
	4	1	**7V-1490**	1	EDGE-CUTTING	
	5	1	**5V-0746**	1	HINGE AS (LIFT-LH-OUTER)	
	6	1	**5V-0747**	1	HINGE AS (LIFT-LH-INNER)	
	7	1	**5V-0748**	1	HINGE AS (TILT-LH)	
	8	1	**5V-0749**	1	HINGE AS (TILT-RH)	
	9	1	**5V-0750**	1	HINGE AS (LIFT-RH-INNER)	

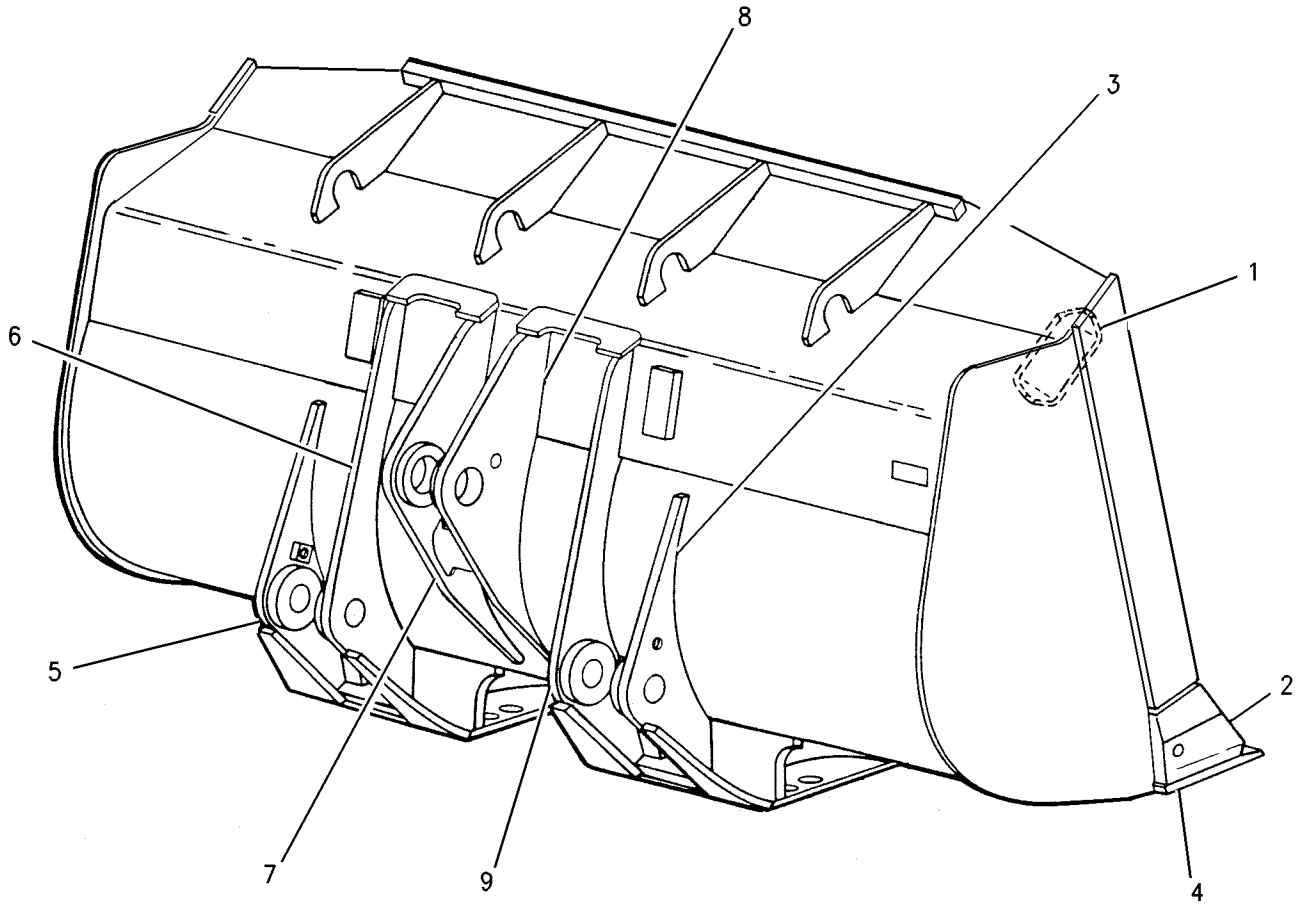

GRAPHIC #1 g00699989

9C-8299 BUCKET AS-GENERAL PURPOSE

S/N: 3XJ1-99999
3.8 CU. M (5 CU. YD). LOOSE MATERIAL
PART OF 6C-2464 BUCKET GP-GENERAL PURPOSE
AN ATTACHMENT
TYPE 2

SMCS-6101 **i01323993**

NOTE	REF NO	GRAPHIC REF	PART NUMBER	QTY	PART NAME 1 2 3 4 5 6 (PRODUCT LEVEL)	SEE PAGE
C	1	1	**9V-0166**	4	PLATE	
	2	1	**4V-7175**	1	CORNER	
		1	**4V-7174**	1	CORNER	
	3	1	**5V-0751**	1	HINGE AS (LIFT-RH-OUTER)	
C	4	1	**9V-6575**	1	EDGE-CUTTING	
	5	1	**5V-0746**	1	HINGE AS (LIFT-LH-OUTER)	
	6	1	**5V-0747**	1	HINGE AS (LIFT-LH-INNER)	
	7	1	**5V-0748**	1	HINGE AS (TILT-LH)	
	8	1	**5V-0749**	1	HINGE AS (TILT-RH)	
	9	1	**5V-0750**	1	HINGE AS (LIFT-RH-INNER)	
	10	1	**113-4404**	2	PLATE-WEAR	
	11	1	**121-7907**	2	PLATE	

C-CHANGE FROM PREVIOUS TYPE

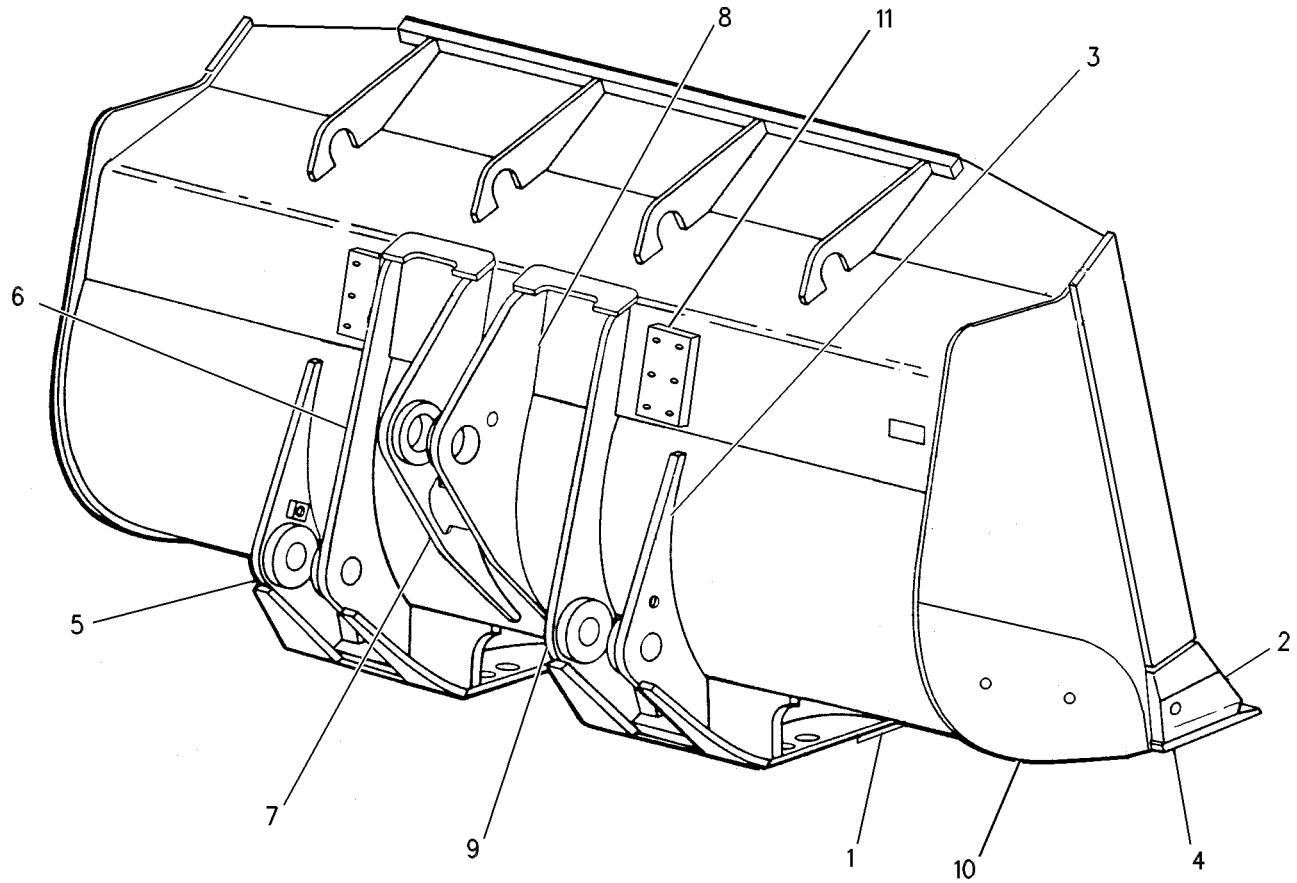

GRAPHIC #1 g00130380

8R-8206 BUCKET AS-PENETRATION

S/N: 3XJ1-99999
3.6 CU M(4.75 CU YD). PENETRATION
PART OF 8R-0231 BUCKET GP-PENETRATION
FIELD REPLACEMENT FOR 6W-5352—PAGE
AN ATTACHMENT

SMCS-6131 **i01334187**

NOTE	REF NO	GRAPHIC REF	PART NUMBER	QTY	PART NAME 1 2 3 4 5 6 (PRODUCT LEVEL)	SEE PAGE
	1	1	**6W-5500**	2	PLATE-WEAR	
		1	**8R-0319**	2	PLATE	
	2	1	**6W-5496**	1	PLATE-WEAR	
	3	1	**8T-9530**	2	TACK-FASTENER	
	4	1	**1U-1354**	8	ADAPTER	
	5	1	**8R-8537**	1	HINGE AS (LIFT-RH-OUTER)	
	6	1	**8R-8539**	1	HINGE AS (LIFT-RH-INNER)	
	7	1	**6W-5515**	1	HINGE AS (TILT-RH)	
	8	1	**6W-5510**	1	HINGE AS (TILT-LH)	
	9	1	**8R-8540**	1	HINGE AS (LIFT-LH-INNER)	
	10	1	**8R-8536**	1	HINGE AS (LIFT-LH-OUTER)	

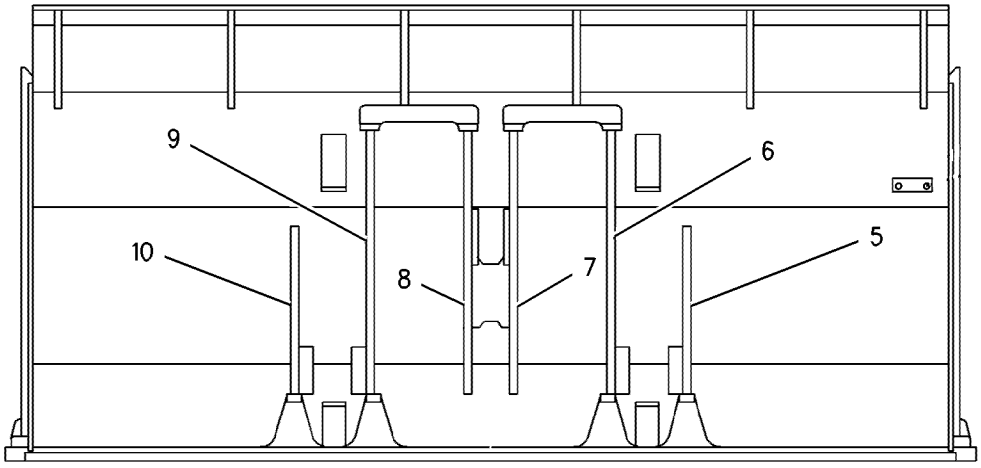

REAR VIEW

SIDE VIEW

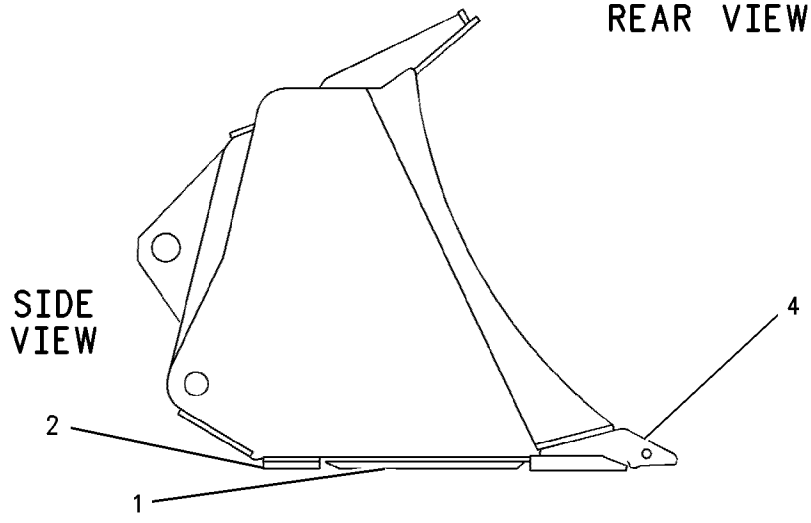

GRAPHIC #1 g00705504

8R-8207 BUCKET AS-ROCK

S/N: 3XJ1-99999
3.5 CU M(4.5 CU YD)
PART OF 8R-8197 BUCKET GP-ROCK
FIELD REPLACEMENT FOR 9V-0954—PAGE
AN ATTACHMENT

SMCS-6102 **i01218017**

NOTE	REF NO	GRAPHIC REF	PART NUMBER	QTY	PART NAME 1 2 3 4 5 6 (PRODUCT LEVEL)	SEE PAGE
	1	1	**8P-9770**	1	PLATE	
	2	1	**5V-0746**	1	HINGE AS (LIFT-LH-OUTER)	
	3	1	**5V-0747**	1	HINGE AS (LIFT-LH-INNER)	
	4	1	**5V-0748**	1	HINGE AS (TILT-LH)	
	5	1	**5V-0749**	1	HINGE AS (TILT-RH)	
	6	1	**5V-0750**	1	HINGE AS (LIFT-RH-INNER)	
	7	1	**5V-0751**	1	HINGE AS (LIFT-RH-OUTER)	
	8	1	**9V-0170**	1	EDGE-CUTTING	
	9	1	**1U-1351**	3	ADAPTER-TIP	
	10	1	**1U-1350**	2	ADAPTER-TIP	
	11	1	**1U-1352**	3	ADAPTER-TIP	
	12	1	**8K-7525**	1	CORNER-RH	
	13	1	**8K-7526**	1	CORNER-LH	
	14	1	**8R-8567**	2	BAR	

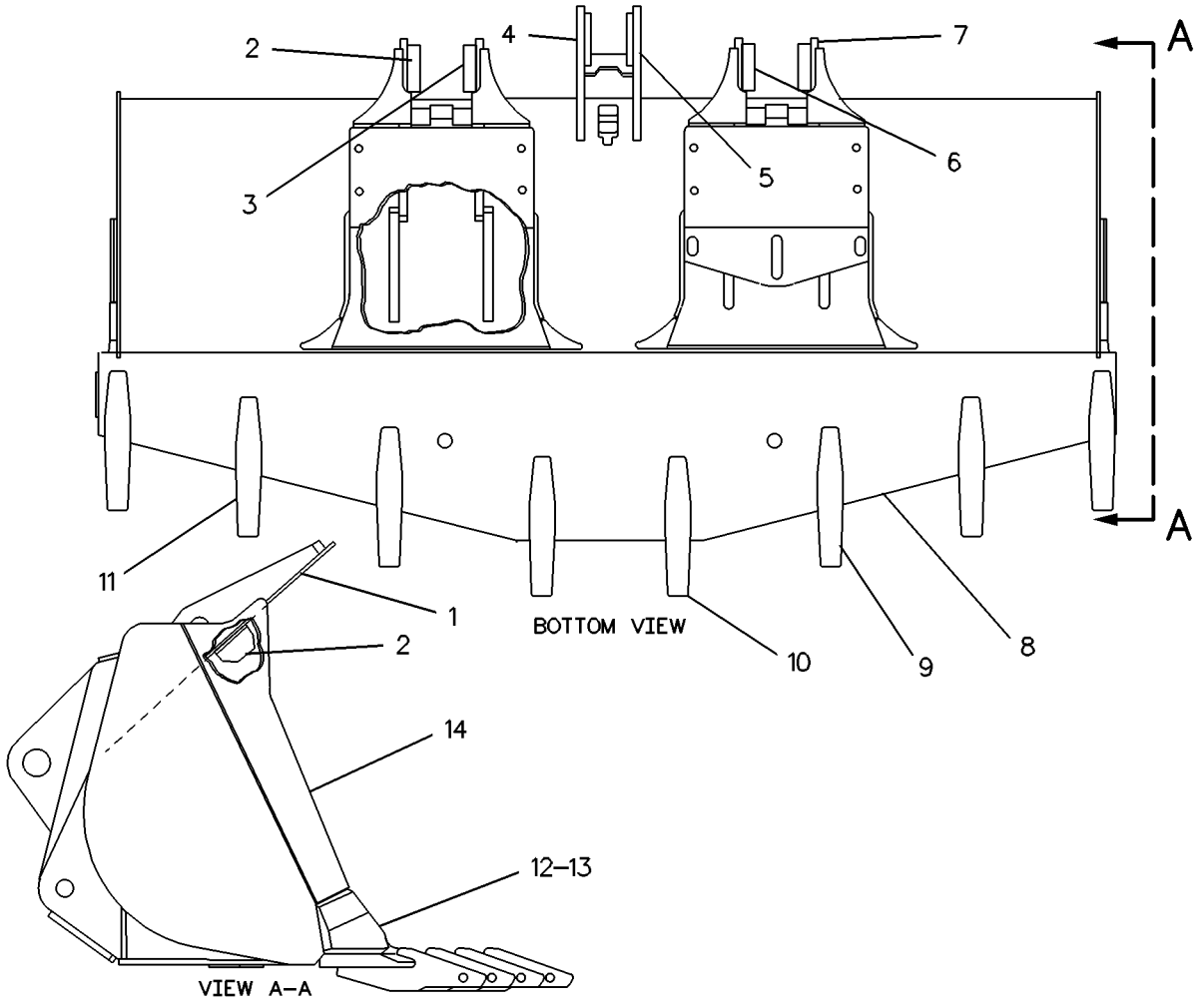

GRAPHIC #1 g00126599

8R-8208 BUCKET AS-ROCK

S/N: 3XJ1-99999
3.5 CU M(4.5 CU YD)
PART OF 8R-8198 BUCKET GP-ROCK
FIELD REPLACEMENT FOR 9V-0963—PAGE
AN ATTACHMENT

SMCS-6102 **i01218020**

NOTE	REF NO	GRAPHIC REF	PART NUMBER	QTY	PART NAME 1 2 3 4 5 6 (PRODUCT LEVEL)	SEE PAGE
	1	1	**9V-0170**	1	EDGE-CUTTING	
	2	1	**5V-0746**	1	HINGE AS (LIFT-LH-OUTER)	
	3	1	**5V-0747**	1	HINGE AS (LIFT-LH-INNER)	
	4	1	**5V-0748**	1	HINGE AS (TILT-LH)	
	5	1	**5V-0749**	1	HINGE AS (TILT-RH)	
	6	1	**5V-0750**	1	HINGE AS (LIFT-RH-INNER)	
	7	1	**5V-0751**	1	HINGE AS (LIFT-RH-OUTER)	
	8	1	**8R-8567**	2	BAR	
	9	1	**8K-7525**	1	CORNER-RH	
	10	1	**8K-7526**	1	CORNER-LH	

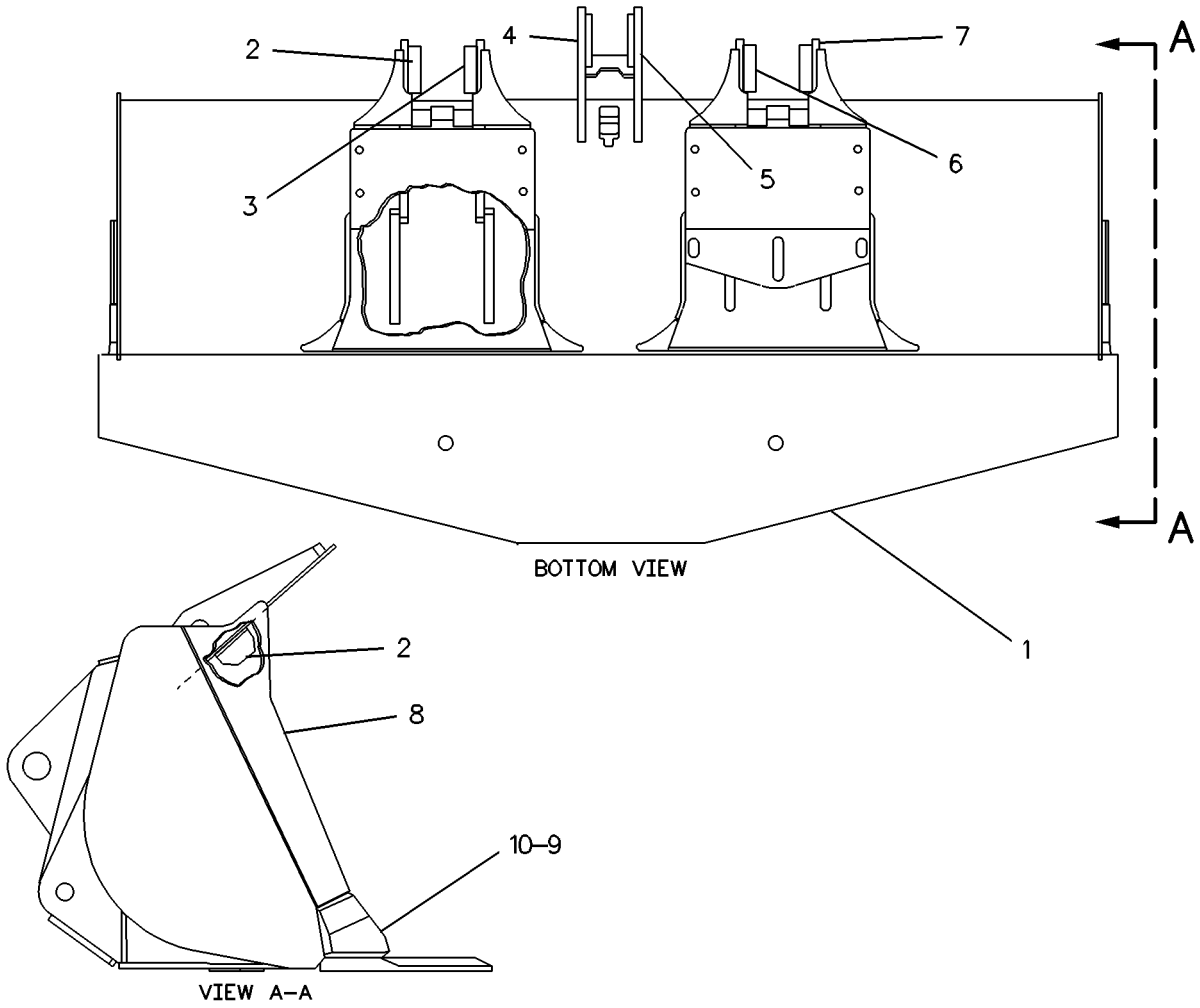

GRAPHIC #1 g00126591

WORK TOOLS

6C-2464 BUCKET GP-GENERAL PURPOSE

S/N: 3XJ1-99999
3.8 CU M (5 CU YD). LOOSE MATERIAL-WITH TEETH
AN ATTACHMENT

SMCS-6101 **i00996618**

NOTE	PART NUMBER	QTY	PART NAME 1 2 3 4 5 6 (PRODUCT LEVEL)	SEE PAGE
M	**7X-2548**	12	BOLT (M12X1.75X16MM)	
	5J-4773	8	BOLT-PLOW (3/4-10X2.5IN)	
Y	**9C-8299**	1	BUCKET AS-GENERAL PURPOSE	
	119-9027	2	BUMPER	
	6V-8182	8	NUT (3/4-10 THD)	
	9W-6749	2	PLATE-WEAR	
	8T-4994	8	WASHER (5MM THK)	
	8T-4223	12	WASHER-HARD (3MM THK)	

M-METRIC PART
Y-SEPARATE ILLUSTRATION

WORK TOOLS

6C-5339 BUCKET GP-GENERAL PURPOSE

S/N: 3XJ1-99999
4.3 CU M (3.0 CU YD) CAPACITY. LOOSE MATERIAL
FOR USE WITH 6C5338 CONVERSION AR
AN ATTACHMENT

SMCS-6101 **i01324601**

NOTE	REF NO	GRAPHIC REF	PART NUMBER	QTY	PART NAME 1 2 3 4 5 6 (PRODUCT LEVEL)	SEE PAGE
	1	1	**9W-6749**	2	PLATE-WEAR	
	2	1	**5J-4773**	8	BOLT-PLOW (3/4-10X2.5 IN)	
		1	**8T-4994**	8	WASHER-HARD (5MM THK)	
		1	**6V-8182**	8	NUT (3/4-10 THD)	
Y	3	1	**6C-5178**	1	BUCKET AS-GENERAL PURPOSE	

Y-SEPARATE ILLUSTRATION

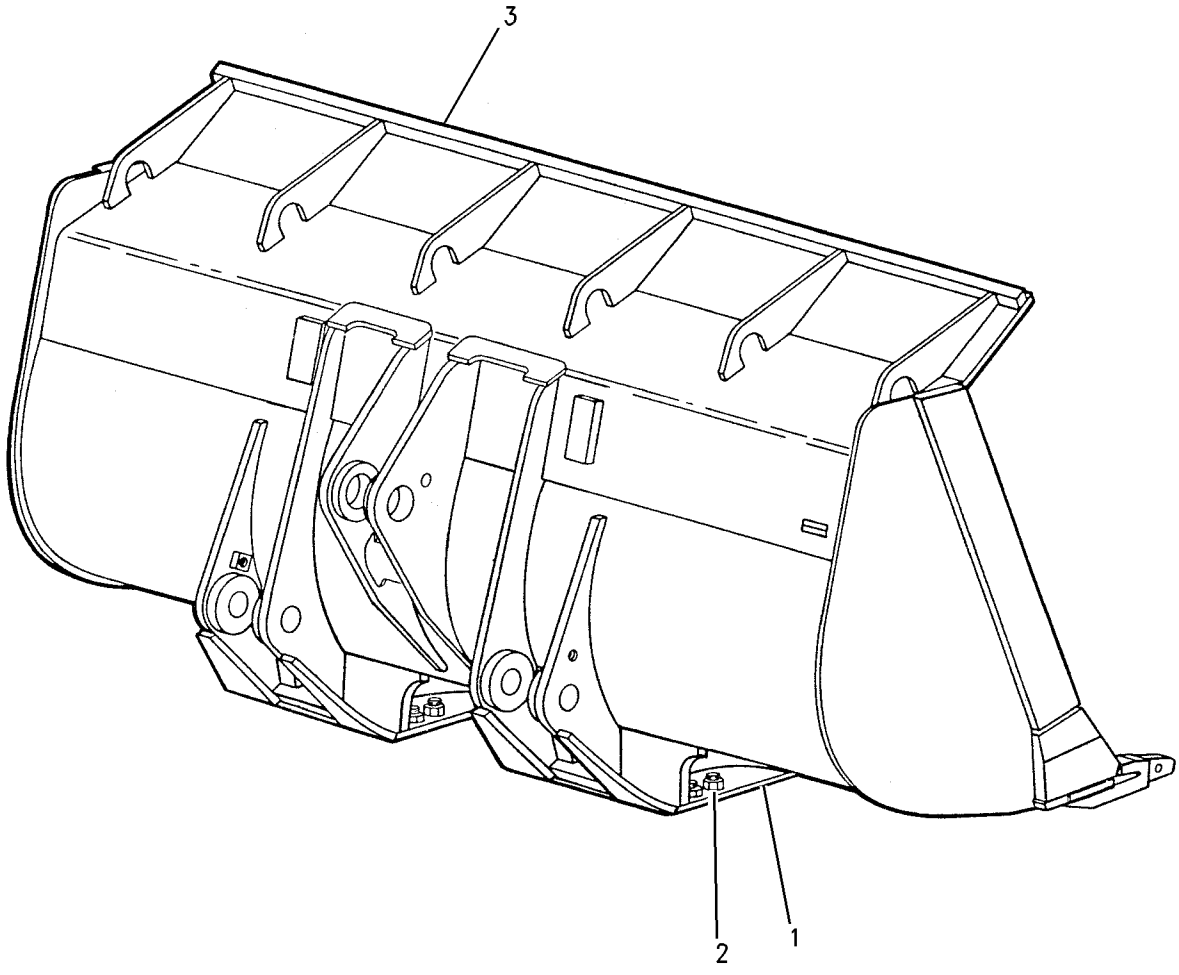

GRAPHIC #1 g00701069

WORK TOOLS

8R-8201 BUCKET GP-GENERAL PURPOSE

S/N: 3XJ1-99999
3.5 CU M(4.5 CU YD)
AN ATTACHMENT

SMCS-6101 **i01324606**

NOTE	REF NO	GRAPHIC REF	PART NUMBER	QTY	PART NAME 1 2 3 4 5 6 (PRODUCT LEVEL)	SEE PAGE
	1	1	**9W-6749**	2	PLATE-WEAR	
	2	1	**6V-8182**	8	NUT (3/4-10 THD)	
		1	**5J-4773**	8	BOLT-PLOW (3/4-10X2.5 IN)	
		1	**8T-4994**	8	WASHER-HARD (5MM THK)	
Y	3	1	**8R-8204**	1	BUCKET AS-GENERAL PURPOSE	

Y-SEPARATE ILLUSTRATION

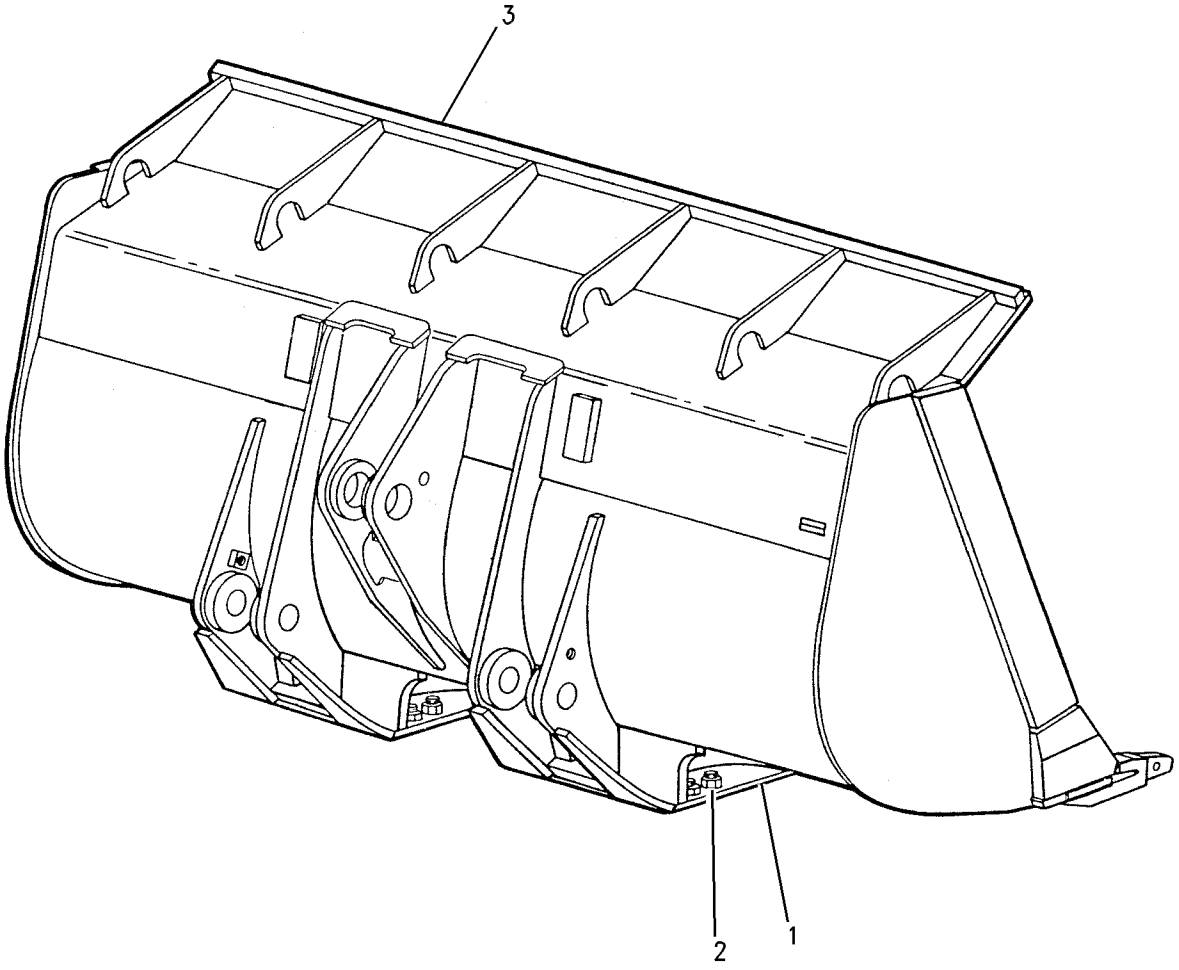

GRAPHIC #1 g00701069

WORK TOOLS

8R-8202 BUCKET GP-GENERAL PURPOSE

S/N: 3XJ1-99999
3.5 CU M (4.5 CU YD). LOOSE MATERIAL
AN ATTACHMENT

SMCS-6101 **i01324603**

NOTE	REF NO	GRAPHIC REF	PART NUMBER	QTY	PART NAME 1 2 3 4 5 6 (PRODUCT LEVEL)	SEE PAGE
	1	1	**9W-6749**	2	PLATE-WEAR	
	2	1	**6V-8182**	8	NUT (3/4-10 THD)	
		1	**5J-4773**	8	BOLT-PLOW (3/4-10X2.5 IN)	
		1	**8T-4994**	8	WASHER-HARD (5MM THK)	
Y	3	1	**8R-8205**	1	BUCKET AS-GENERAL PURPOSE	

Y-SEPARATE ILLUSTRATION

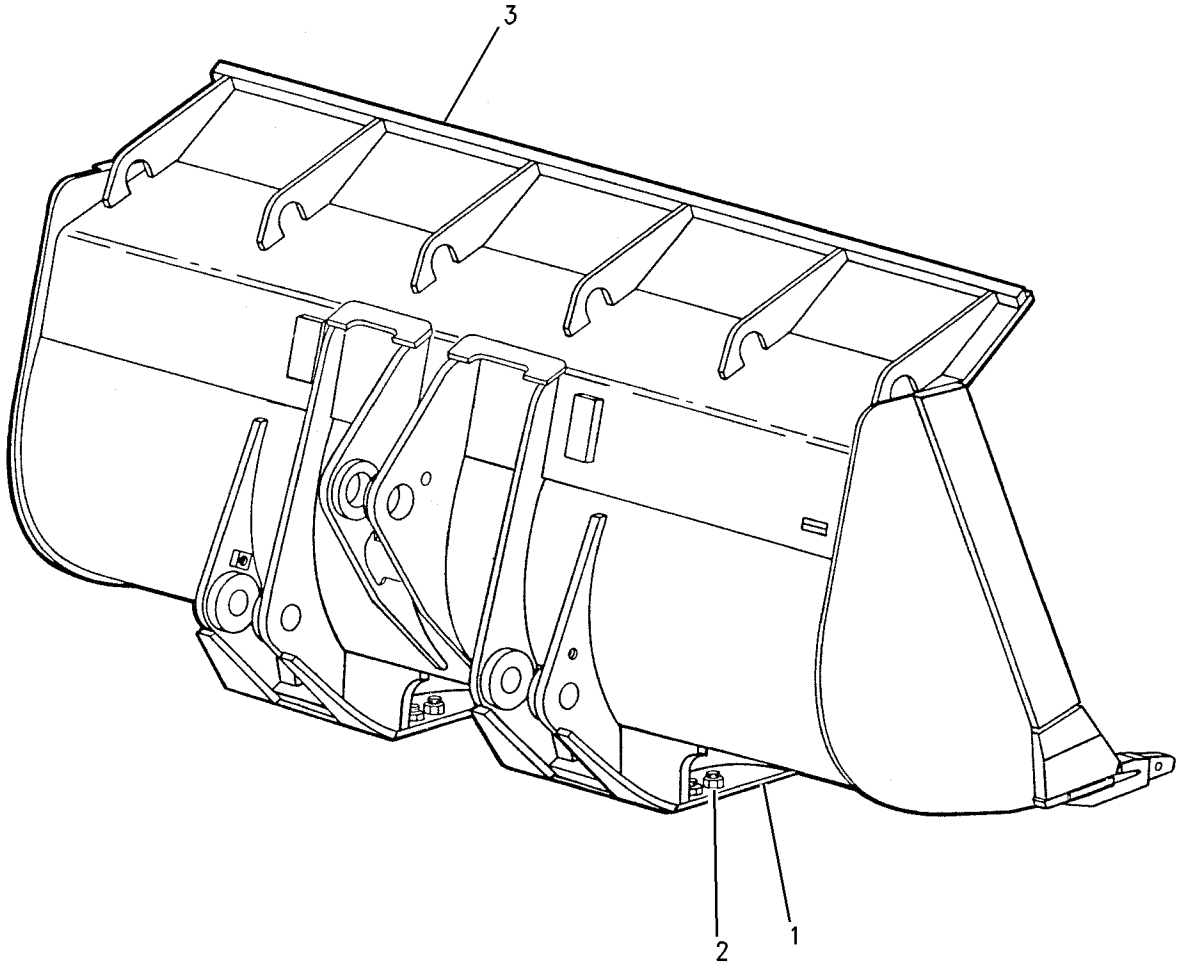

GRAPHIC #1 g00701069

WORK TOOLS

8R-8203 BUCKET GP-GENERAL PURPOSE

S/N: 3XJ1-99999
3.6 CU M(4.75 CU YD). LOOSE MATERIAL
AN ATTACHMENT

SMCS-6101 **i01324602**

NOTE	REF NO	GRAPHIC REF	PART NUMBER	QTY	PART NAME 1 2 3 4 5 6 (PRODUCT LEVEL)	SEE PAGE
	1	1	**9W-6749**	2	PLATE-WEAR	
	2	1	**6V-8182**	8	NUT (3/4-10 THD)	
		1	**5J-4773**	8	BOLT-PLOW (3/4-10X2.5 IN)	
		1	**8T-4994**	8	WASHER-HARD (5MM THK)	
Y	3	1	**8R-8209**	1	BUCKET AS-GENERAL PURPOSE	

Y-SEPARATE ILLUSTRATION

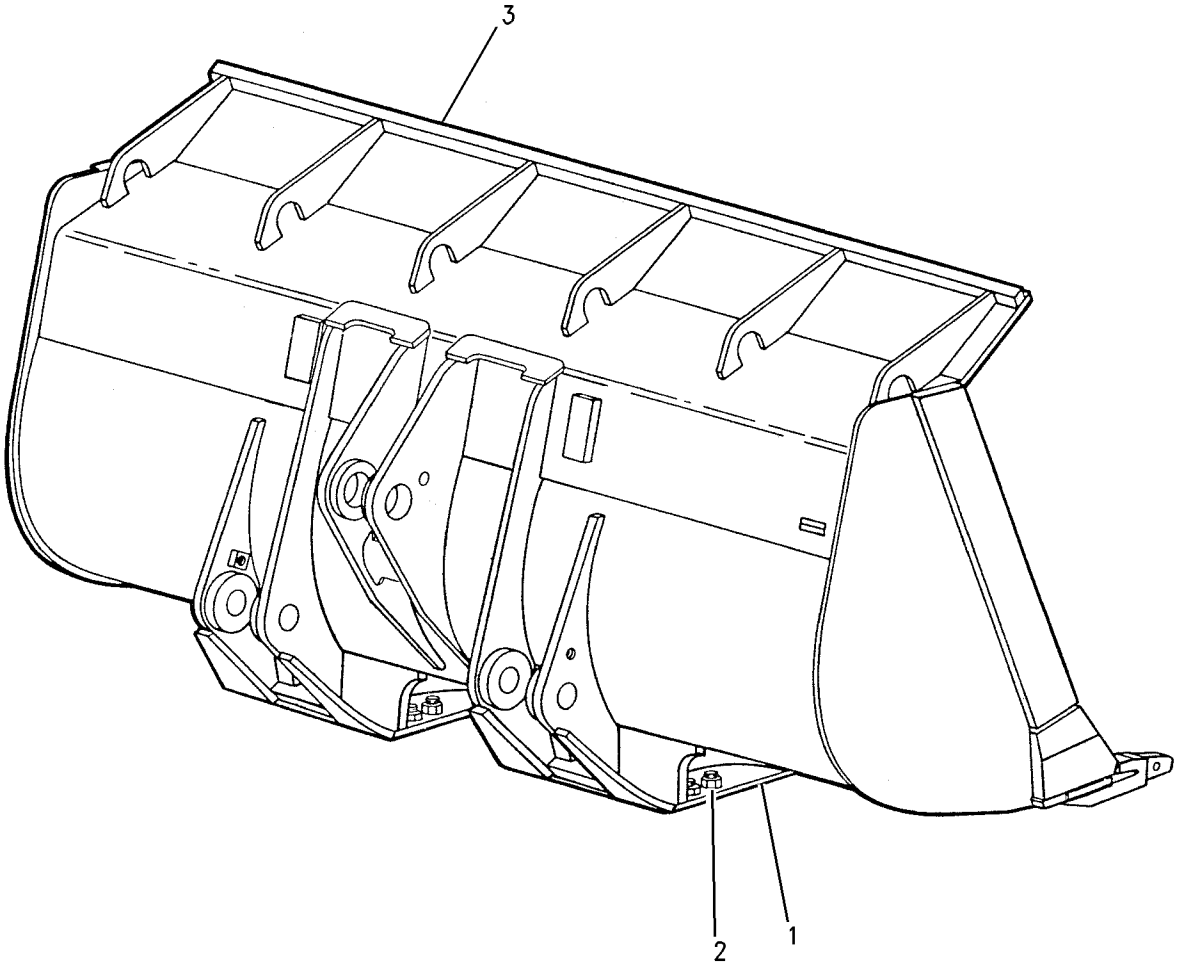

GRAPHIC #1 g00701069

WORK TOOLS

8R-0231 BUCKET GP-PENETRATION

S/N: 3XJ1-99999
3.6 CU M (4.75 CU YD). FLUSH MOUNTED TEETH
AN ATTACHMENT

SMCS-6131 **i00259756**

NOTE	PART NUMBER	QTY	PART NAME 1 2 3 4 5 6 (PRODUCT LEVEL)	SEE PAGE
Y	**8R-8206**	1	BUCKET AS-PENETRATION	
Y	*8J-4955*	8	TIP GP-LONG	

Y-SEPARATE ILLUSTRATION

WORK TOOLS

8R-8197 BUCKET GP-ROCK

S/N: 3XJ1-99999
3.5 CU M(4.5 CU YD). BOTTOM STRAP TEETH
AN ATTACHMENT

SMCS-6102 **i01324600**

NOTE	REF NO	GRAPHIC REF	PART NUMBER	QTY	PART NAME 1 2 3 4 5 6 (PRODUCT LEVEL)	SEE PAGE
	1	1	**9W-6749**	2	PLATE-WEAR	
	2	1	**6V-8182**	8	NUT (3/4-10 THD)	
		1	**5J-4773**	8	BOLT-PLOW (3/4-10X2.5 IN)	
		1	**8T-4994**	8	WASHER-HARD (5MM THK)	
Y	3	1	**8R-8207**	1	BUCKET AS-ROCK	

Y-SEPARATE ILLUSTRATION

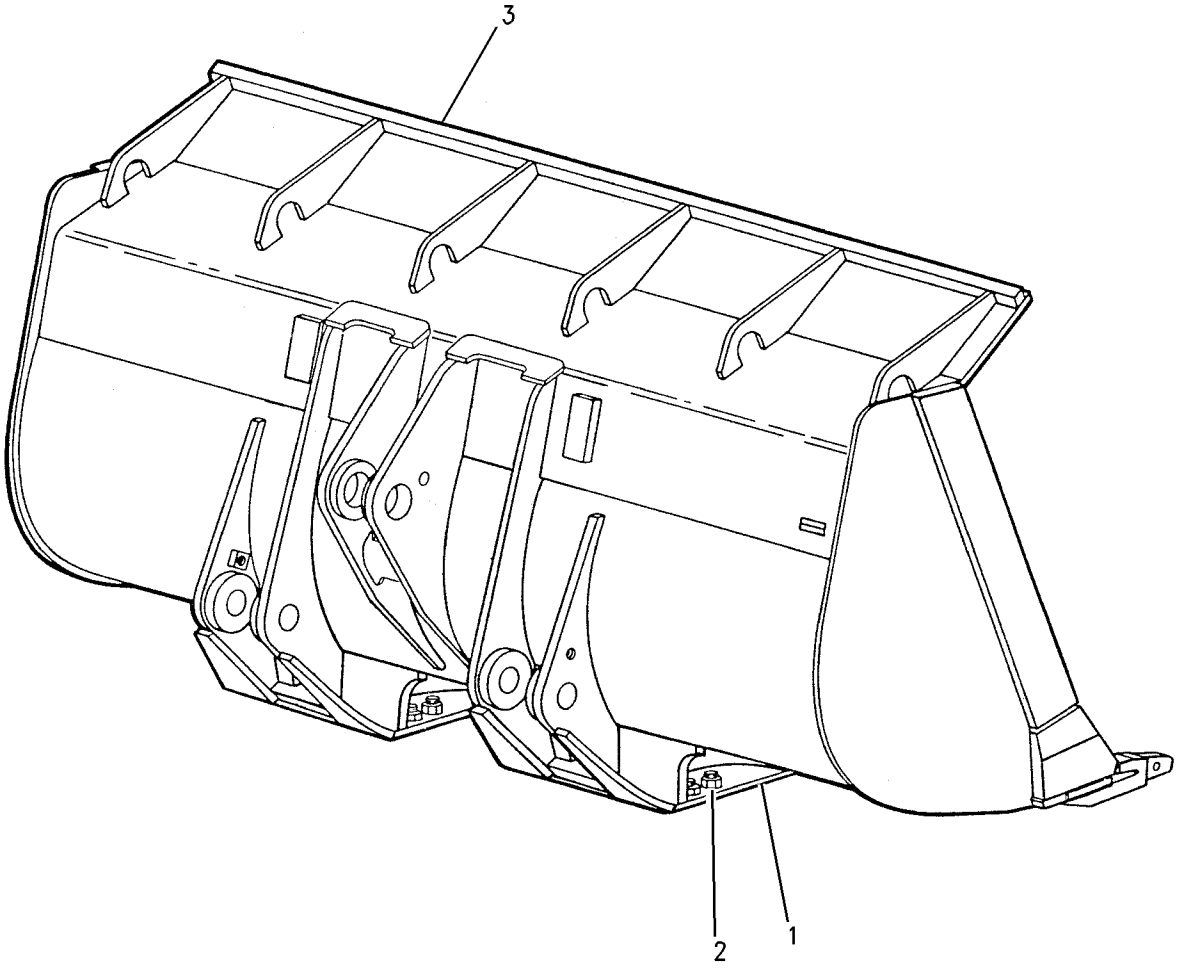

GRAPHIC #1 g00701069

WORK TOOLS

8R-8198 BUCKET GP-ROCK

S/N: 3XJ1-99999
3.5 CU M(4.5 CU YD). NO TEETH
AN ATTACHMENT

SMCS-6102 **i01324599**

NOTE	REF NO	GRAPHIC REF	PART NUMBER	QTY	PART NAME 1 2 3 4 5 6 (PRODUCT LEVEL)	SEE PAGE
	1	1	**9W-6749**	2	PLATE-WEAR	
	2	1	**6V-8182**	8	NUT (3/4-10 THD)	
		1	**5J-4773**	8	BOLT-PLOW (3/4-10X2.5 IN)	
		1	**8T-4994**	8	WASHER-HARD (5MM THK)	
Y	3	1	**8R-8208**	1	BUCKET AS-ROCK	

Y-SEPARATE ILLUSTRATION

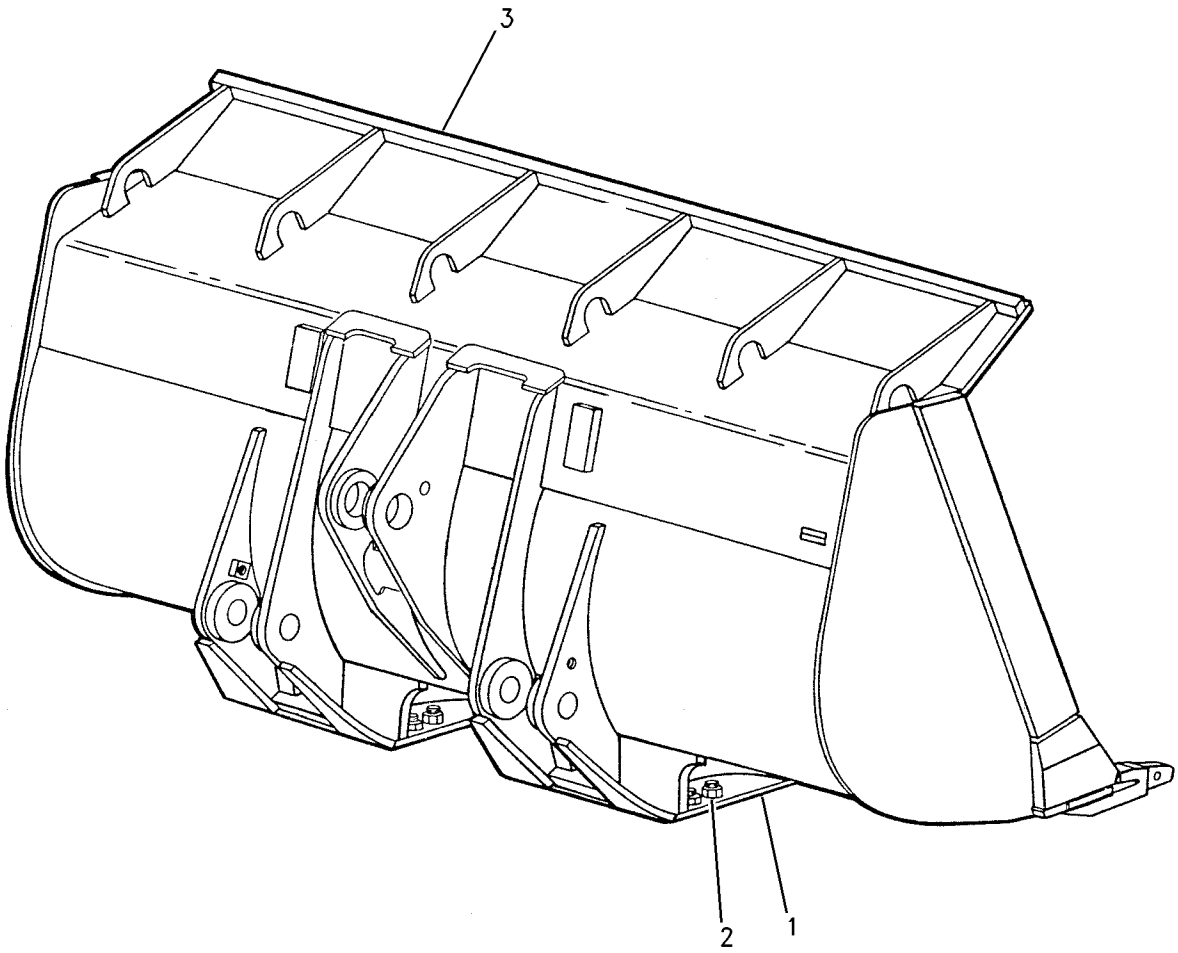

GRAPHIC #1 g00701065

WORK TOOLS

8J-4955 TIP GP-LONG

S/N: 3XJ1-99999

PART OF 8R-0231 BUCKET GP-PENETRATION, 3G-4055 TOOTH GP-LONG

AN ATTACHMENT

SMCS-6805 **i01492782**

NOTE	REF NO	GRAPHIC REF	PART NUMBER	QTY	PART NAME 1 2 3 4 5 6 (PRODUCT LEVEL)	SEE PAGE
	1	1	**114-0359**	1	RETAINER AS-G.E.T.	
	2	1	**1U-3352**	1	TIP-LONG	
	3	1	**114-0358**	1	PIN-G.E.T.	

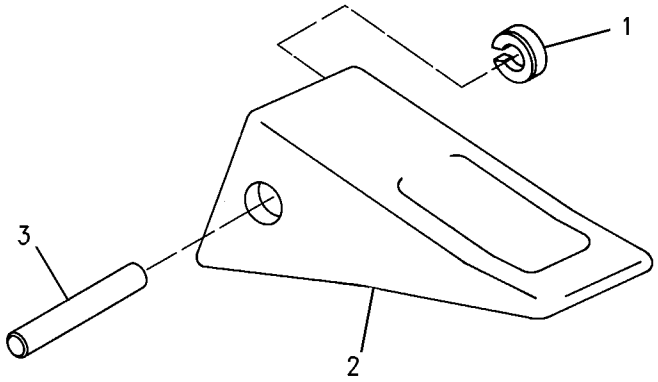

GRAPHIC #1 g00699807

8J-4954 TIP GP-SHORT

S/N: 3XJ1-99999
PART OF 3G-4056 TOOTH GP-SHORT
AN ATTACHMENT

SMCS-6805 **i01492772**

NOTE	REF NO	GRAPHIC REF	PART NUMBER	QTY	PART NAME 1 2 3 4 5 6 (PRODUCT LEVEL)	SEE PAGE
	1	1	**114-0358**	1	PIN-G.E.T.	
	2	1	**114-0359**	1	RETAINER AS-G.E.T.	
	3	1	**1U-3351**	1	TIP-SHORT	

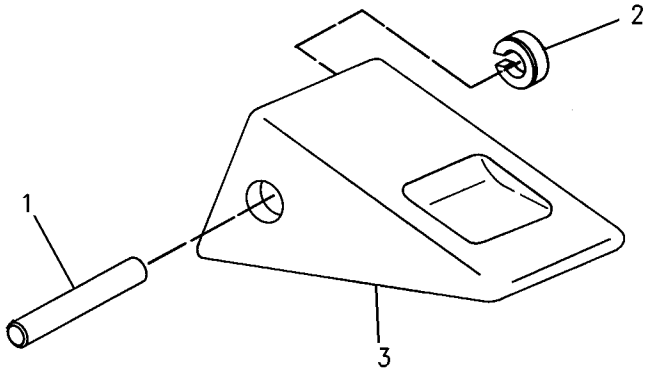

GRAPHIC #1 g00699806

WORK TOOLS

3G-4055 TOOTH GP-LONG

S/N: 3XJ1-99999
FOR USE WITH MULTI-PURPOSE BUCKET
AN ATTACHMENT

SMCS-6822 **i01324597**

NOTE	REF NO	GRAPHIC REF	PART NUMBER	QTY	PART NAME 1 2 3 4 5 6 (PRODUCT LEVEL)	SEE PAGE
	1	1	**5P-8823**	2	BOLT-PLOW (1 1/4-7X4.13IN)	
	2	1	**5P-8362**	14	NUT (1 1/4-7 THD)	
	3	1	**3G-5359**	1	ADAPTER-STRAP-RH	
		1	**3G-5358**	1	ADAPTER-STRAP-LH	
Y	4	1	*8J-4955*	8	TIP GP-LONG	
	5	1	**3G-3357**	6	ADAPTER	
	6	1	**5P-8361**	12	BOLT-PLOW (1 1/4-7X4.92IN)	

Y-SEPARATE ILLUSTRATION

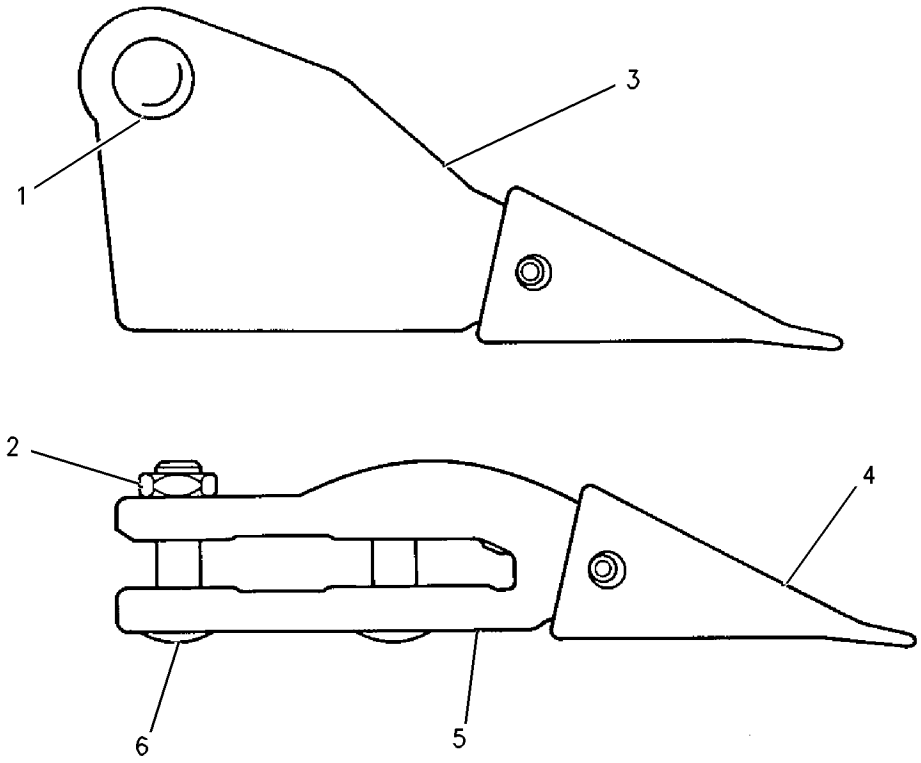

GRAPHIC #1 g00701054

WORK TOOLS

3G-4056 TOOTH GP-SHORT

S/N: 3XJ1-99999
FOR USE WITH MULTI-PURPOSE BUCKET
AN ATTACHMENT

SMCS-6822 **i01324595**

NOTE	REF NO	GRAPHIC REF	PART NUMBER	QTY	PART NAME 1 2 3 4 5 6 (PRODUCT LEVEL)	SEE PAGE
	1	1	**5P-8823**	2	BOLT-PLOW (1 1/4-7X4.13IN)	
	2	1	**5P-8362**	14	NUT (1 1/4-7 THD)	
	3	1	**3G-5359**	1	ADAPTER-STRAP-RH	
		1	**3G-5358**	1	ADAPTER-STRAP-LH	
Y	4	1	*8J-4954*	8	TIP GP-SHORT	
	5	1	**3G-3357**	6	ADAPTER	
	6	1	**5P-8361**	12	BOLT-PLOW (1 1/4-7X4.92IN)	

Y-SEPARATE ILLUSTRATION

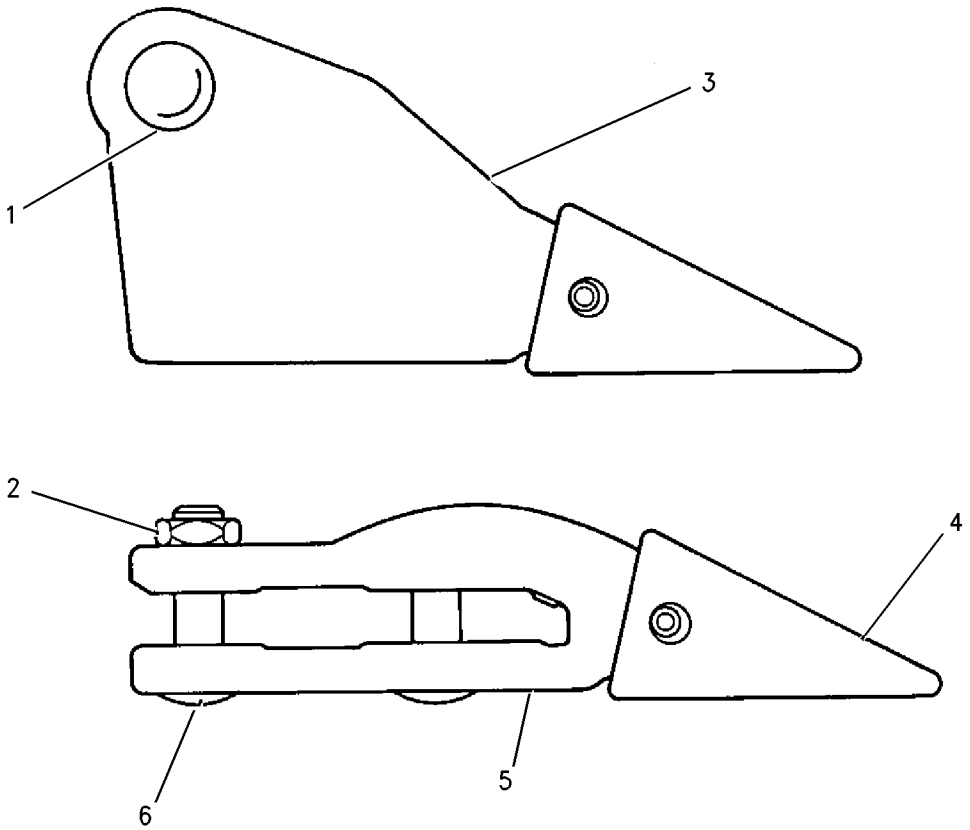

GRAPHIC #1 g00701051

OPERATOR STATION

8R-6206 AIR CONDITIONER AR

S/N: 3XJ1-99999
AN ATTACHMENT

SMCS-7320 **i00259838**

NOTE	PART NUMBER	QTY	PART NAME 1 2 3 4 5 6 (PRODUCT LEVEL)	SEE PAGE
Y	*8R-8226*	1	AIR CONDITIONER GP	
YR	*8N-0999*	1	ALTERNATOR GP-CHARGING	
Y	*7C-8433*	1	COMPRESSOR GP-REFRIGERANT	
Y	*3V-0390*	1	LINES GP-AIR CONDITIONER	
	2W-8715	1	WIRE AS	

R-REMFG PART MAY BE AVAILABLE
Y-SEPARATE ILLUSTRATION

OPERATOR STATION

8R-8226 AIR CONDITIONER GP

S/N: 3XJ1-99999
PART OF 8R-6206 AIR CONDITIONER AR
AN ATTACHMENT
TYPE 1

SMCS-7320 **i01323495**

NOTE	REF NO	GRAPHIC REF	PART NUMBER	QTY	PART NAME 1 2 3 4 5 6 (PRODUCT LEVEL)	SEE PAGE
	1	1	**7K-3304**	1	NUT-JAM (1-20 THD)	
		1	**2H-3924**	1	LOCKWASHER (INT TOOTH)	
		1	**7K-3176**	1	COUPLING AS	
		1	**1S-8947**	1	SEAL-O-RING (17.17MM ID)	
	2	1	**6V-8801**	17	NUT (3/8-16 THD)	
	3	1	**8M-2772**	1	CLIP (6.35MM ID)	
	4	1	**6K-9555**	2	GROMMET	
	5	1	**3E-5464**	1	SWITCH AS-THERMOSTAT (REFRIGERANT)	
	6	1	**6L-7159**	2	SCREW-MACHINE (8-32X.313 IN)	
BD	7	1	**5P-5921**		SEAL	
BD	8	1	**5P-5643**		SEAL	
	9	1	**6T-1483**	1	COIL AS-EVAPORATOR	
	10	1	**5S-7379**	2	BOLT (3/8-16X.875 IN)	
	11	1	**8T-4896**	19	WASHER-HARD (10.2X18.5X2.5MM THK)	
	12	1	**6M-5062**	2	SEAL-O-RING (10.82MM ID)	
BD	13	1	**6V-0352**		SEAL	
J	14	1	**7X-6279**	2	MOTOR AS	
					(EACH INCLUDES)	
	15	1	**7N-9737**	1	HOUSING-PLUG	
		1	**7N-7779**	1	SOCKET-CONNECTOR	
		1	**7N-7780**	1	PIN-CONNECTOR (BLADE)	
	16	1	**4E-1903**	4	GUARD AS	
					(EACH INCLUDES)	
		1	**6W-4161**	1	BRACKET AS-FAN	
		1	**7T-5856**	1	CLAMP	
BD		1	**5P-5908**		SEAL	
	17	1	**6W-4162**	2	ROD	
	18	1	**2V-9166**	2	WASHER (1.5MM THK)	
	19	1	**8R-9297**	1	HARNESS AS	
	20	1	**4D-7794**	1	CLIP (10.0MM ID)	
	21	1	**3T-2170**	1	RELAY AS	
M		1	**5C-2890**	2	NUT (M6X1.00 THD)	
M	22	1	**8T-4195**	1	BOLT (M10X1.50X30MM)	
		1	**8T-4121**	1	WASHER-HARD (2.5MM THK)	
	23	1	**8R-9403**	1	BRACKET	
	24	1	**5P-9888**	1	ADAPTER-UNION WITH SIGHT GLASS	
BD	25	1	**5P-5655**		SEAL	
	26	1	**6H-4005**	2	GROMMET	
	27	1	**4E-2039**	1	TUBE AS	
	28	1	**5F-9144**	4	SEAL-O-RING (7.65MM ID)	
	29	1	**3V-0258**	1	VALVE AS-EXPANSION	
	30	1	**5L-4758**	1	SEAL-O-RING (14.0MM ID)	
	31	1	**3V-6896**	1	TUBE AS	
	32	1	**3V-6894**	1	TUBE AS-SUCTION	
	33	1	**5P-4106**	1	NUT (1-7/16X16 THD)	
		1	**5P-4107**	1	WASHER (1.19MM THK)	
		1	**5P-3928**	1	COUPLING-SEALING	
		1	**5P-3944**	1	SEAL-O-RING (26.7MM ID)	
	34	1	**8F-3590**	2	LOCKWASHER	
	35	1	**3B-4501**	2	LOCKWASHER (NO.8)	
	36	2	**6H-4006**	2	GROMMET	
	37	2	**5S-7379**	9	BOLT (3/8-16X.875 IN)	
	38	2	**6V-8801**	11	NUT (3/8-16 THD)	
	39	2	**7X-0578**	8	WASHER-HARD (2.5MM THK)	

8R-8226 **AIR CONDITIONER GP** *(contd.)*

i01323495

NOTE	REF NO	GRAPHIC REF	PART NUMBER	QTY	PART NAME 1 2 3 4 5 6 (PRODUCT LEVEL)	SEE PAGE
	40	2	**3P-7995**	2	FAN	
	41	2	**7V-7700**	1	GUARD AS-FAN	
Y	42	2	**6W-4703**	1	DOOR GP-AIR INLET	
	43	2	**6J-0488**	3	SCREW-HEAD (3/8-16X.875 IN)	
	44	2	**8T-4896**	12	WASHER-HARD (10.2X18.5X2.5MM THK)	
	45	2	**2V-9682**	1	COIL AS-CONDENSER	
	46	2	**8L-8413**	1	STRAP-CABLE (1.12IN DIA)	
BD	47	2	**5P-5643**		SEAL	
	48	2	**4D-7794**	1	CLIP (10.0MM ID)	
M	49	2	**8T-4200**	2	BOLT (M8X1.25X16MM)	
	50	2	**8T-4224**	2	WASHER-HARD (8.8X16X2MM THK)	
	51	2	**5F-9144**	1	SEAL-O-RING (7.65MM ID)	
	52	2	**5P-2493**	3	COUPLING	
BD	53	2	**5P-5921**		SEAL	
	54	2	**8R-9399**	1	BRACKET AS	
M		2	**8T-4130**	2	STUD (M6X1X18 MM)	
M		2	**8T-3612**	2	NUT-WELD (M8X1.25 THD)	
	55	2	**6M-5062**	1	SEAL-O-RING (10.82MM ID)	
	56	2	**5V-5698**	1	RECEIVER-DEHYDRATOR	
	57	2	**9D-4507**	1	COUPLING	
D	58	2	**5P-5664**	2	HOSE (.3M EACH)	
					AVAILABLE REPAIR KIT(S):	
J			**9G-0398**	1	KIT-MOTOR BRUSH	
					(INCLUDES BRUSHES & BRUSH CAP)	

B-USE AS REQUIRED
D-ORDER BY THE METER
J-PART MARKED J INCLUDES KIT MARKED J
M-METRIC PART
Y-SEPARATE ILLUSTRATION

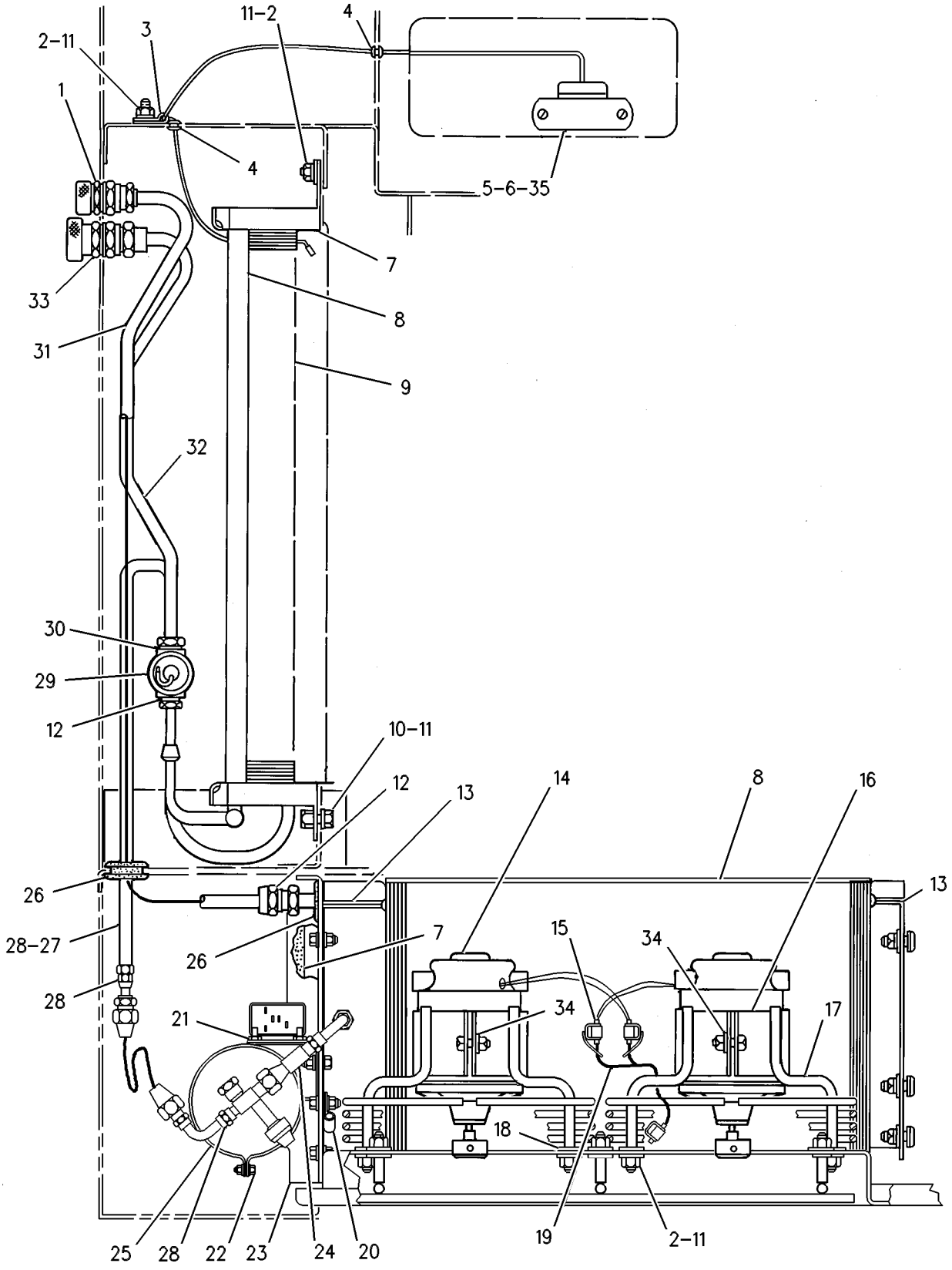

GRAPHIC #1 g00393592

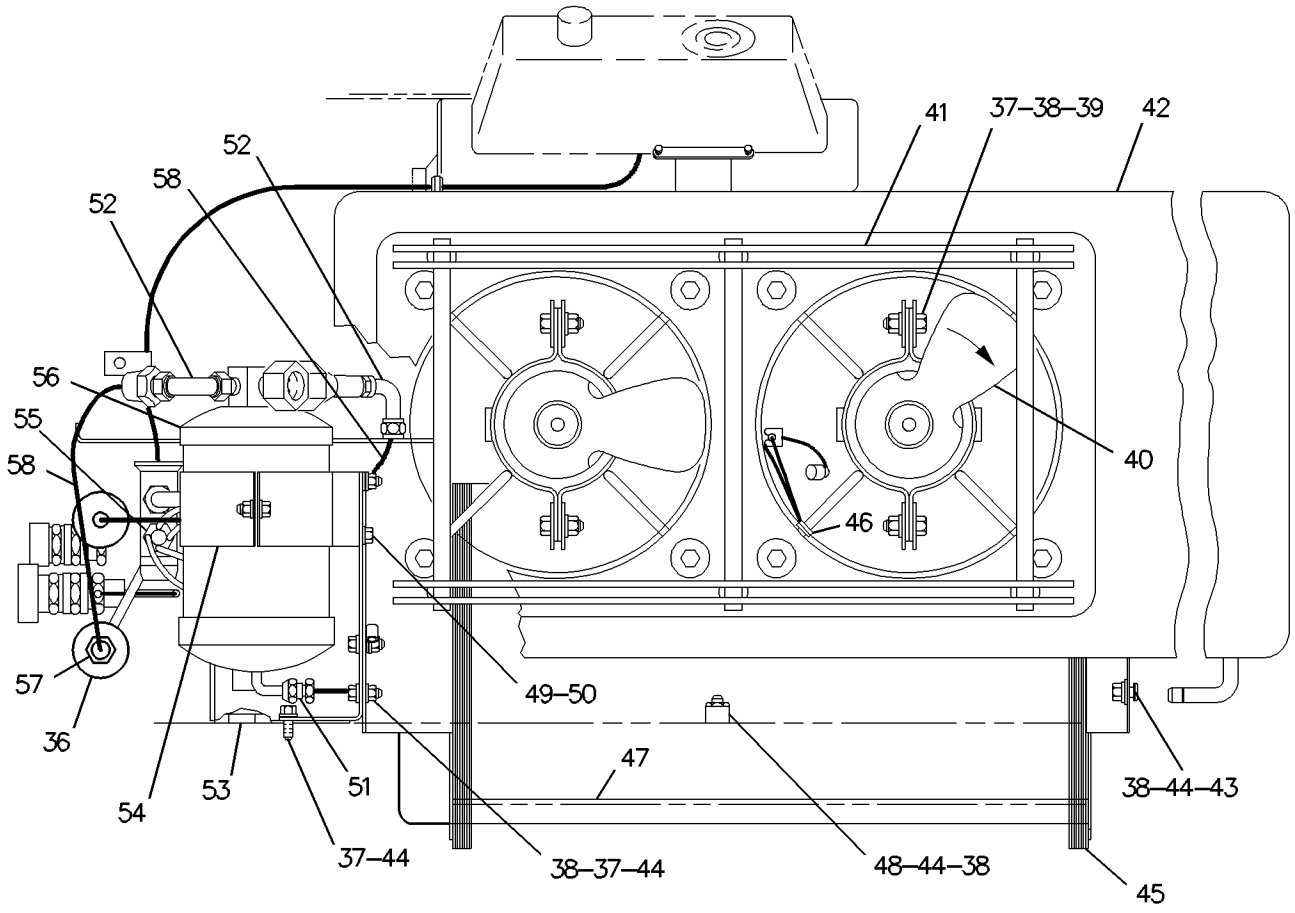

GRAPHIC #2 g00693026

OPERATOR STATION

8R-8226 AIR CONDITIONER GP

S/N: 3XJ1-99999
PART OF 8R-6206 AIR CONDITIONER AR
AN ATTACHMENT
TYPE 2

SMCS-7320 **i01323496**

NOTE	REF NO	GRAPHIC REF	PART NUMBER	QTY	PART NAME 1 2 3 4 5 6 (PRODUCT LEVEL)	SEE PAGE
	1	1	**5S-7379**	2	BOLT (3/8-16X.875 IN)	
C	2	1	**6V-8801**	16	NUT (3/8-16 THD) (3MM THK)	
C	3	1	**8T-4896**	18	WASHER-HARD (10.2X18.5X2.5MM THK)	
D	4	1	**5P-5643**		SEAL (.938 M)	
	5	1	**4D-7794**	1	CLIP (10.0MM ID) (10MM OD)	
	6	1	**5F-9144**	1	SEAL-O-RING (7.65MM ID)	
D	7	1	**5P-5921**		SEAL (.300 M)	
C	8	1	**6C-5027**	1	BRACKET AS	
		1	**9F-2978**	1	NUT-WELD (3/8-16 THD)	
	9	1	**6M-5062**	2	SEAL-O-RING (10.82MM ID)	
C	10	1	**6K-9555**	1	GROMMET	
	11	1	**6T-1483**	1	COIL AS-EVAPORATOR	
D	12	1	**6V-0352**		SEAL (.261 M)	
	13	1	**4E-1903**	4	GUARD AS	
					(EACH INCLUDES)	
		1	**6W-4161**	1	BRACKET AS-FAN	
		1	**2V-9166**	2	WASHER (1.5MM THK)	
		1	**6W-4162**	2	ROD	
		1	**7T-5856**	1	CLAMP	
D		1	**5P-5908**		SEAL (.100 M)	
J	14	1	**7X-6279**	2	MOTOR AS	
					(EACH INCLUDES)	
		1	**7N-7779**	1	SOCKET-CONNECTOR	
		1	**7N-7780**	1	PIN-CONNECTOR (BLADE)	
		1	**7N-9737**	1	HOUSING-PLUG	
	15	1	**8R-9297**	1	HARNESS AS	
	16	1	**7K-3304**	1	NUT-JAM (1-20 THD)	
		1	**7K-3176**	1	COUPLING AS	
		1	**1S-8947**	1	SEAL-O-RING (17.17MM ID)	
		1	**2H-3924**	1	LOCKWASHER (INT TOOTH)	
C	17	1	**6C-5442**	1	BRACKET	
CM	18	1	**8T-4195**	1	BOLT (M10X1.50X30MM)	
C		1	**8T-4121**	1	WASHER-HARD (2.5MM THK) (21MM OD)	
D	19	1	**5P-5655**		SEAL (.220 M)	
M	20	1	**5C-2890**	2	NUT (M6X1.00 THD)	
CM		1	**8T-4970**	2	BOLT (M6X1X14MM)	
	21	1	**6H-4005**	2	GROMMET	
C	22	1	**6C-4294**	1	TUBE AS	
	23	1	**3V-0258**	1	VALVE AS-EXPANSION	
	24	1	**5L-4758**	1	SEAL-O-RING (14.0MM ID)	
	25	1	**3V-6894**	1	TUBE AS-SUCTION	
	26	1	**3V-6896**	1	TUBE AS	
	27	1	**5P-4106**	1	NUT (1-7/16X16 THD)	
		1	**5P-3928**	1	COUPLING-SEALING	
		1	**5P-3944**	1	SEAL-O-RING (26.7MM ID)	
		1	**5P-4107**	1	WASHER (1.19MM THK)	
	28	2	**6H-4006**	2	GROMMET	
	29	2	**5S-7379**	9	BOLT (3/8-16X.875 IN)	
	30	2	**6V-8801**	11	NUT (3/8-16 THD) (3MM THK)	
	31	2	**7X-0578**	8	WASHER-HARD (2.5MM THK)	
	32	2	**3P-7995**	2	FAN	
	33	2	**7V-7700**	1	GUARD AS-FAN	
		2	**2V-9959**	2	ROD	
		2	**5F-0548**	2	WASHER (2.42MM THK)	

8R-8226 **AIR CONDITIONER GP** ***(contd.)*** **i01323496**

NOTE	REF NO	GRAPHIC REF	PART NUMBER	QTY	PART NAME 1 2 3 4 5 6 (PRODUCT LEVEL)	SEE PAGE
Y	34	2	*6W-4703*	1	DOOR GP-AIR INLET	
	35	2	**6J-0488**	3	SCREW-HEAD (3/8-16X.875 IN)	
	36	2	**8T-4896**	12	WASHER-HARD (10.2X18.5X2.5MM THK)	
	37	2	**2V-9682**	1	COIL AS-CONDENSER	
	38	2	**8L-8413**	1	STRAP-CABLE (1.12IN DIA)	
D	39	2	**5P-5643**		SEAL (.430 M)	
	40	2	**4D-7794**	1	CLIP (10.0MM ID)	
C	41	2	**5F-9144**	4	SEAL-O-RING (7.65MM ID)	
CI	42	2	**4E-2042**	2	HOSE AS-AIR CONDITIONER	
	43	2	**6M-5062**	1	SEAL-O-RING (10.82MM ID)	
	44	2	**5V-5698**	1	RECEIVER-DEHYDRATOR	
C	45	2	**3P-9554**	1	GROMMET	
C	46	2	**9S-2544**	2	SCREW-HEX HEAD	
C		2	**3B-4501**	2	LOCKWASHER (NO.8) (4.5MM ID)	
C	47	2	**3E-5464**	1	SWITCH AS-THERMOSTAT (REFRIGERANT)	
C	48	2	**3T-2170**	1	RELAY AS	
D	49	2	**5P-5921**		SEAL (.508 M)	
	50	2	**5P-9888**	1	ADAPTER-UNION WITH SIGHT GLASS	
					AVAILABLE REPAIR KIT(S):	
J				1	KIT-MOTOR BRUSH	
					(INCLUDES BRUSHES & BRUSH CAPS)	

C-CHANGE FROM PREVIOUS TYPE
D-ORDER BY THE METER
I-SEE HOSE FABRICATION GUIDE
J-PART MARKED J INCLUDES KIT MARKED J
M-METRIC PART
Y-SEPARATE ILLUSTRATION

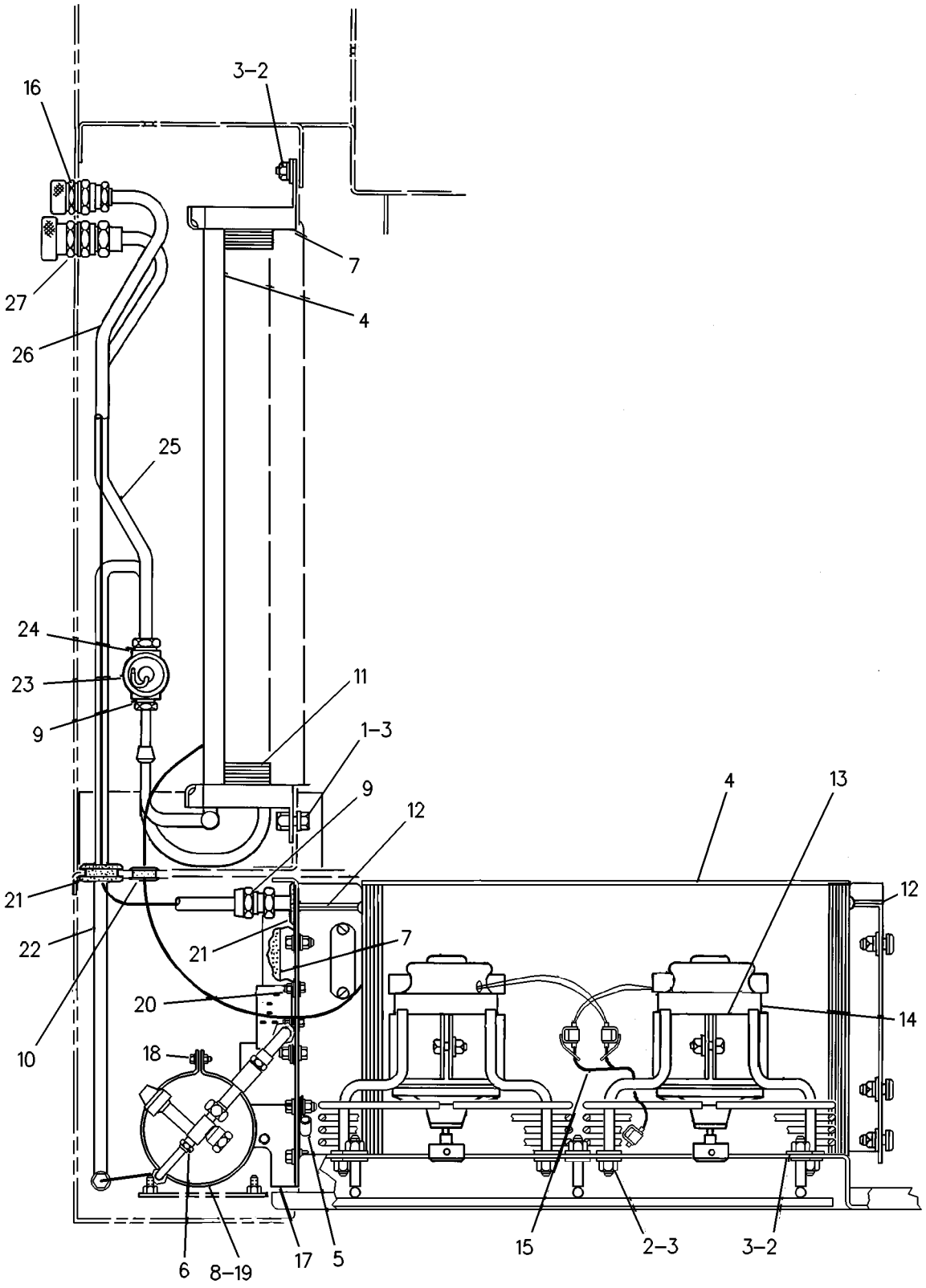

GRAPHIC #1 g00127965

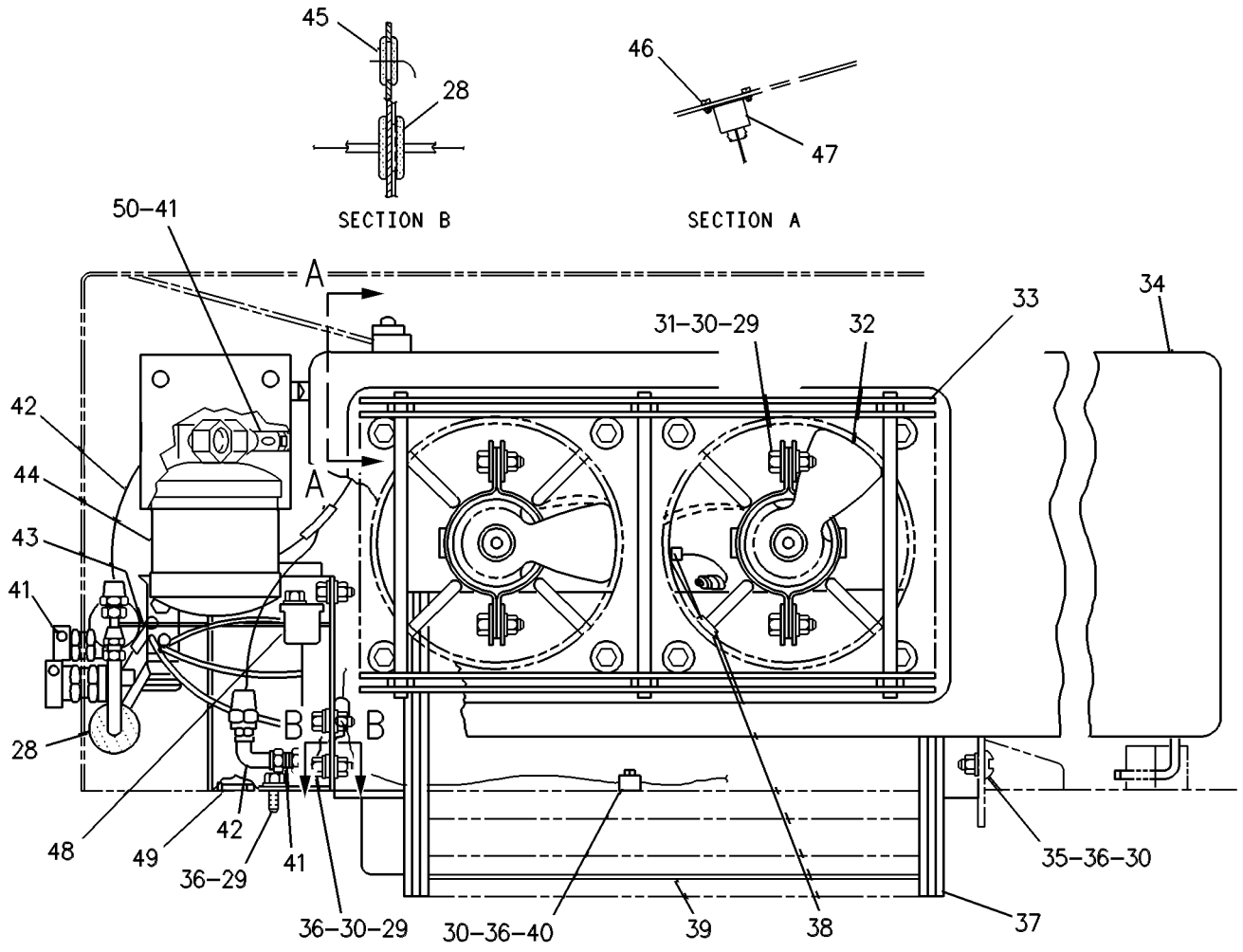

GRAPHIC #2

g00393594

OPERATOR STATION

8Y-5884 ARMREST GP–LH

S/N: 3XJ1-99999
PART OF 8Y-4191, 8Y-4192 SEAT GP-SUSPENSION
ALSO AN ATTACHMENT

SMCS-7307, 7312 **i00259858**

NOTE	REF NO	GRAPHIC REF	PART NUMBER	QTY	PART NAME 1 2 3 4 5 6 (PRODUCT LEVEL)	SEE PAGE
Y	1	1	**8Y-5911**	1	ARMREST GP	
	2	1	**8Y-5898**	1	BRACKET AS	
	3	1	**8S-4729**	1	BOLT (7/16-20X4.5IN)	
	4	1	**0S-1594**	2	BOLT (3/8-16X1IN)	
	5	1	**5V-1498**	3	LOCKNUT (3/8-16 THD)	
	6	1	**3E-4314**	1	BOLT-SHOULDER	

Y-SEPARATE ILLUSTRATION

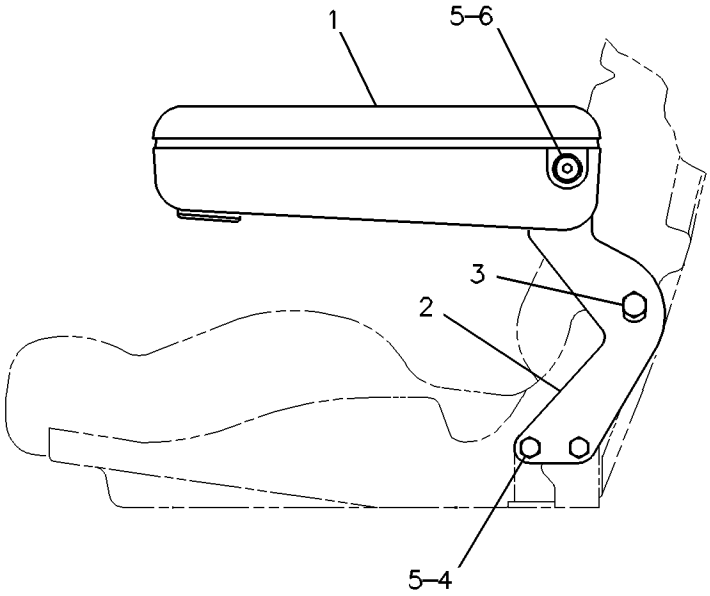

GRAPHIC #1 g00126851

OPERATOR STATION

8Y-5885 ARMREST GP–RH

S/N: 3XJ1-99999
PART OF 8Y-4191, 8Y-4192 SEAT GP-SUSPENSION
ALSO AN ATTACHMENT

SMCS-7307, 7312 **i00259864**

NOTE	REF NO	GRAPHIC REF	PART NUMBER	QTY	PART NAME 1 2 3 4 5 6 (PRODUCT LEVEL)	SEE PAGE
Y	1	1	**8Y-5911**	1	ARMREST GP	
	2	1	**8Y-5897**	1	BRACKET AS	
	3	1	**8S-4729**	1	BOLT (7/16-20X4.5IN)	
	4	1	**0S-1594**	2	BOLT (3/8-16X1IN)	
	5	1	**5V-1498**	3	LOCKNUT (3/8-16 THD)	
	6	1	**3E-4314**	1	BOLT-SHOULDER	

Y-SEPARATE ILLUSTRATION

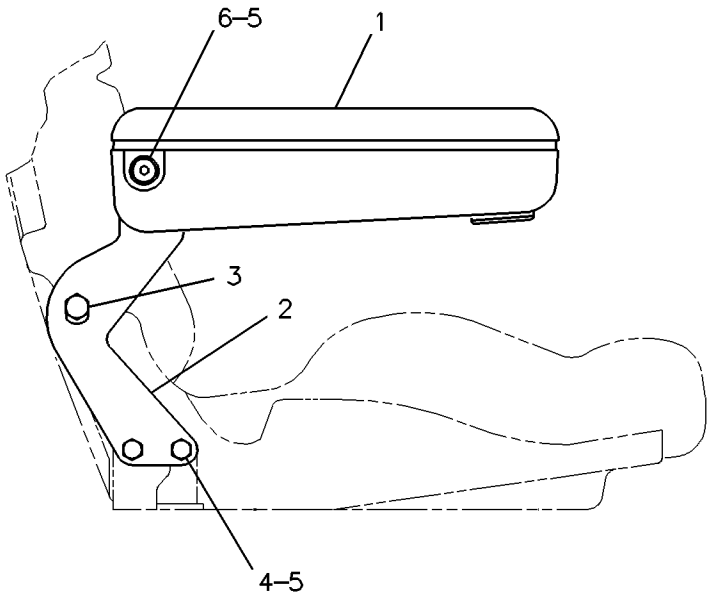

GRAPHIC #1 g00126852

OPERATOR STATION

8Y-5911 ARMREST GP

S/N: 3XJ1-99999
PART OF 8Y-5884, 8Y-5885 ARMREST GP
ALSO AN ATTACHMENT

SMCS-7307, 7312 **i01189199**

NOTE	REF NO	GRAPHIC REF	PART NUMBER	QTY	PART NAME 1 2 3 4 5 6 (PRODUCT LEVEL)	SEE PAGE
Z	1	1		1	BASE-ARMREST	
JZ	2	1		1	CUSHION AS-BACKREST	
	3	1	**6V-2687**	4	SCREW-PAN HEAD (10-24X1IN)	
LZ	4	1		1	KNOB AS	
	5	1	**3E-4312**	1	NUT-SQUARE	
	6	1	**8T-8641**	1	WASHER (M9.8X16.0X0.8MM THK)	
	7	1	**8S-7803**	1	RING-RETAINING	
LZ	8	1		1	SPRING	
					AVAILABLE REPAIR KIT(S):	
J			**8Y-5939**		KIT-CUSHION	
L			**8Y-6027**		KIT-ADJUSTER	

J-KIT MARKED J INCLUDES PART(S) MARKED J
L-KIT MARKED L INCLUDES PART(S) MARKED L
Z-NOT SERVICED SEPARATELY

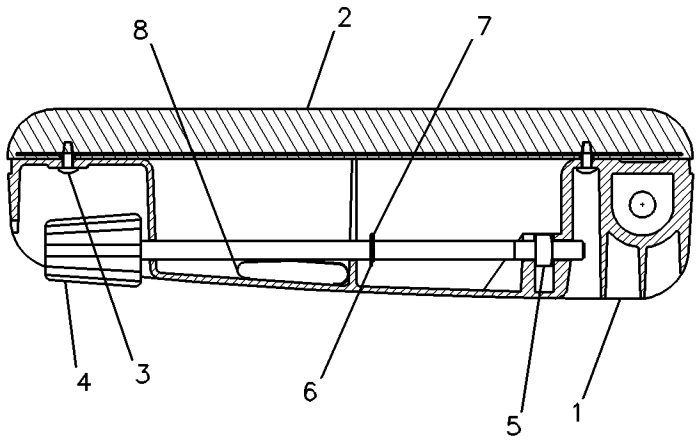

GRAPHIC #1 g00082772

OPERATOR STATION

6C-4138 CAB AR

S/N: 3XJ1-99999
PART OF 6C-4465 CONVERSION AR-LOW PROFILE CAB
AN ATTACHMENT

SMCS-7301 **i00308088**

NOTE	PART NUMBER	QTY	PART NAME 1 2 3 4 5 6 (PRODUCT LEVEL)	SEE PAGE
Y	*6C-4151*	1	CAB GP	
Y	*8R-7286*	1	HEATER GP-CAB	
Y	*8R-8118*	1	PRESSURIZER GP-CAB	
Y	*6C-4157*	1	WIPER GP-WINDOW	

Y-SEPARATE ILLUSTRATION

OPERATOR STATION

8R-5489 CAB AR

S/N: 3XJ1-99999

PART OF 8R-5041 OPERATOR AR

SMCS-7301 **i01313905**

NOTE	PART NUMBER	QTY	PART NAME 1 2 3 4 5 6 (PRODUCT LEVEL)	SEE PAGE
Y	*8R-6112*	1	CAB GP	
Y	*8R-7286*	1	HEATER GP-CAB	
Y	*8R-8118*	1	PRESSURIZER GP-CAB	
Y	*6C-4134*	1	WIPER GP-WINDOW	

Y-SEPARATE ILLUSTRATION

OPERATOR STATION

6C-3619 CAB AR-LOW PROFILE

S/N: 3XJ1-99999
AN ATTACHMENT

SMCS-7301, 7325, 7335 **i00259651**

NOTE	PART NUMBER	QTY	PART NAME 1 2 3 4 5 6 (PRODUCT LEVEL)	SEE PAGE
	6C-4448	1	CANOPY AS-LOW PROFILE	
	2K-3656	1	BAR	
	4D-9376	7	BOSS (3/8-16 THD)	
	1J-8040	2	PLATE	
Y	*6C-4465*	1	CONVERSION AR-LOW PROFILE CAB	
Y	**8V-3900**	1	MIRROR GP-REAR VIEW	
			S/N: 3XJ1-455	

Y-SEPARATE ILLUSTRATION

OPERATOR STATION

6C-4151 CAB GP

S/N: 3XJ1-99999
LOW
PART OF 6C-4138 CAB AR
AN ATTACHMENT

SMCS-7301, 7325, 7335 **i00259743**

NOTE	REF NO	GRAPHIC REF	PART NUMBER	QTY	PART NAME 1 2 3 4 5 6 (PRODUCT LEVEL)	SEE PAGE
	1	1	**4L-6454**	23	BOLT (3/8-16X1.0IN)	
	2	1	**3V-7479**	2	STRIP AS	
					(EACH INCLUDES)	
		1	**9F-6445**	2	NUT (1/4-20 THD)	
	3	1	**6C-4126**	1	COVER (WIPER REAR)	
	4	1	**4V-6981**	4	SCREW-BUTTON HEAD (1/4-20X.75IN)	
	5	1	**5P-4115**	4	WASHER (2MM THK)	
	6	1	**4B-1237**	3	SCREW-MACHINE	
Y	7	1	**6C-4158**	1	CAB GP	
	8	1	**5P-1075**	23	WASHER-HARD (3MM THK)	
	9	1	**4M-5281**	12	BOLT (1/4-20X.750IN)	
	10	1	**6C-4215**	1	STRIP	
	11	1	**6V-7646**	12	WASHER-HARD (2MM THK)	
Y	12	1	*8V-1578*	1	VISOR GP-CAB	
Y	13	1	**6C-4159**	1	DOOR GP-CAB	
BD	14	1	**5P-5637**		SEAL (.1M)	
	15	1	**031-0229**	4	BOLT	
	16	1	**8C-9678**	1	LAMP GP-DOME	
	17	1	**7N-9943**	1	LAMP-MINIATURE	
	18	1	**7N-7780**	1	PIN-CONNECTOR (BLADE)	
	19	1	**7N-7779**	2	SOCKET	
	20	1	**7N-7782**	1	HOUSING-PLUG	
	21	1	**7T-0020**	1	LENS	

B-USE AS REQUIRED
D-ORDER BY THE METER
Y-SEPARATE ILLUSTRATION

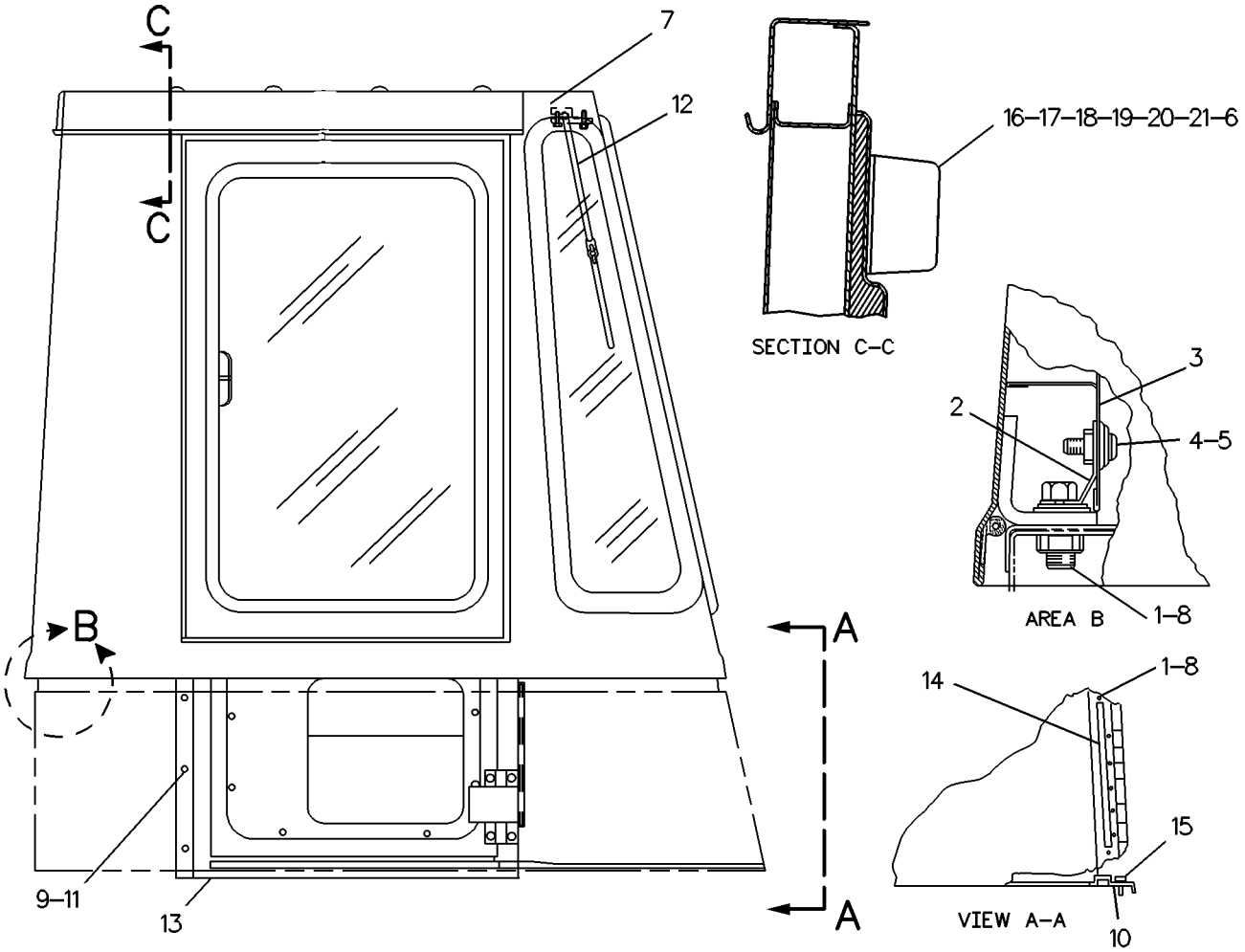

GRAPHIC #1

g00127170

OPERATOR STATION

6C-4158 CAB GP

S/N: 3XJ1-99999
LOW
PART OF 6C-4151 CAB GP
AN ATTACHMENT

SMCS-7301, 7325, 7335 **i01183943**

NOTE	REF NO	GRAPHIC REF	PART NUMBER	QTY	PART NAME 1 2 3 4 5 6 (PRODUCT LEVEL)	SEE PAGE
	1	1	**5V-8490**	1	GLASS-REAR	
	2	1	**4V-0437**	1	STRIP	
	3	1	**6C-4250**	1	CAB AS	
	6	1	**9V-6625**	4	PLUG	
		1	**6K-9593**	2	PLUG-BUTTON	
	7	1	**6C-5411**	1	GLASS	
	8	1	**9C-0513**	1	LEVER	
	9	1	**9C-1786**	1	SEAL	
	10	1	**4V-0822**	1	STRIP AS	
BD	11	1	**5P-6120**		TRIM-EDGE	
	12	1	**6C-5408**	2	GLASS	
	13	1	**6C-4186**	1	HARNESS AS	
	14	1	**6C-5409**	1	DOOR AS	
	15	1	**9F-6445**	5	NUT-WELD (1/4-20 THD)	
	16	1	**3V-7089**	2	HINGE	
	17	1	**4V-0827**	1	GRIP	
	18	1	**6C-5412**	2	SEAL	
	19	1	**6C-5413**	1	SEAL	
	20	1	**3V-7704**	1	BRACKET AS	
		1	**9F-6445**	2	NUT-WELD (1/4-20 THD)	
	21	1	**4M-5281**	7	BOLT (1/4-20X.750IN)	
	22	2	**5P-8524**	4	GROMMET	
	23	1	**5P-4115**	24	WASHER (2MM THK)	
	24	1	**5P-5510**	2	SCREW (3/8-16X1 1/4)	
		1	**4J-8265**	2	NUT (3/8-16 THD)	
		1	**4V-8198**	2	SPACER	
	25	1	**3V-7702**	1	BRACKET	
	26	1	**3V-7698**	1	STRIP	
D	27	1	**5P-7483**		SEAL (.35M)	
	28	1	**5V-4416**	1	BRACKET AS	
	29	1	**7V-0446**	1	CLIP	
	30	1	**7V-0444**	1	SPRING (OUTER)	
		1	**7V-0445**	1	SPRING (INNER)	
	31	1	**7V-0448**	1	WASHER (22.0 MM OD)	
	32	1	**7V-0447**	1	WASHER (18.6 MM OD)	
	33	1	**5V-5200**	1	BRACKET AS (TAB)	
		1	**7V-0449**	1	BUSHING-TERMINAL	
	34	1	**5V-5201**	1	BRACKET AS (BUSHING)	
		1	**7V-0449**	1	BUSHING-TERMINAL	
		1	**7V-0452**	1	BUSHING-TERMINAL	
	35	1	**5V-4203**	1	KNOB AS	
	36	1	**5P-4116**	1	WASHER (2MM THK)	
	37	1	**4M-5283**	10	BOLT (1/4-20X0.625IN)	
	38	1	**6V-8185**	2	NUT (1/4-20 THD)	
	39	1	**4V-6981**	2	SCREW-BUTTON HEAD (1/4-20X.75IN)	
	40	1	**1T-0550**	1	PIN-SPRING	
	41	1	**9C-0512**	1	COVER	
	42	1	**8R-3689**	1	SPRING	
	43	1	**6C-0235**	1	SEAL GP-WINDOW	
	44	1	**8T-6842**	1	FILM-INSTRUCTION (ALTERNATE EXIT)	
	45	1	**5C-8311**	1	RING (29.0MM ID)	
	46	1	**5C-8310**	1	BRACKET-RING	
	47	1	**6C-0236**	1	SEAL	
	48	1	**6C-0237**	1	STRIP-LOCKING	

6C-4158 CAB GP *(contd.)*

i01183943

NOTE	REF NO	GRAPHIC REF	PART NUMBER	QTY	PART NAME 1 2 3 4 5 6 (PRODUCT LEVEL)	SEE PAGE
	49	1	**6C-5416**	1	RETAINER	
	50	1	**6C-5415**	1	HEADLINER	
	51	1	**6C-5417**	1	RETAINER	
	52	2	**6C-5410**	1	GLASS	
M	53	2	**8T-4189**	4	BOLT (M8X1.25X20MM)	
	54	2	**5E-5496**	5	BUTTON	
	55	2	**6C-4251**	1	LINER	
	56	2	**6C-4274**	1	COVER	
M	57	2	**9X-2042**	3	SCREW-TRUSS HEAD (M6X1.0X12MM)	
BD	58	2	**5P-7485**		SEAL	
M	59	2	**9X-2044**	2	SCREW-TRUSS HEAD (M6X1X16MM)	
	60	2	**6V-8928**	2	HOOK-COAT	
	61	2	**6C-5418**	1	RETAINER	
	62	2	**8T-4224**	4	WASHER-HARD (2MM THK)	
	63	2	**6C-4246**	1	LINER	
	64	2	**9F-2978**	4	NUT-WELD (3/8-16 THD)	
	65	2	**6C-5414**	1	SEAL	
	66	2	**8H-6591**	4	PLUG-PROTECTION	
	67	2	**6C-4125**	1	BRACKET AS	
M		2	**6V-9632**	3	NUT-WELD (M6X1 THD)	

B-USE AS REQUIRED
D-ORDER BY THE METER
M-METRIC PART

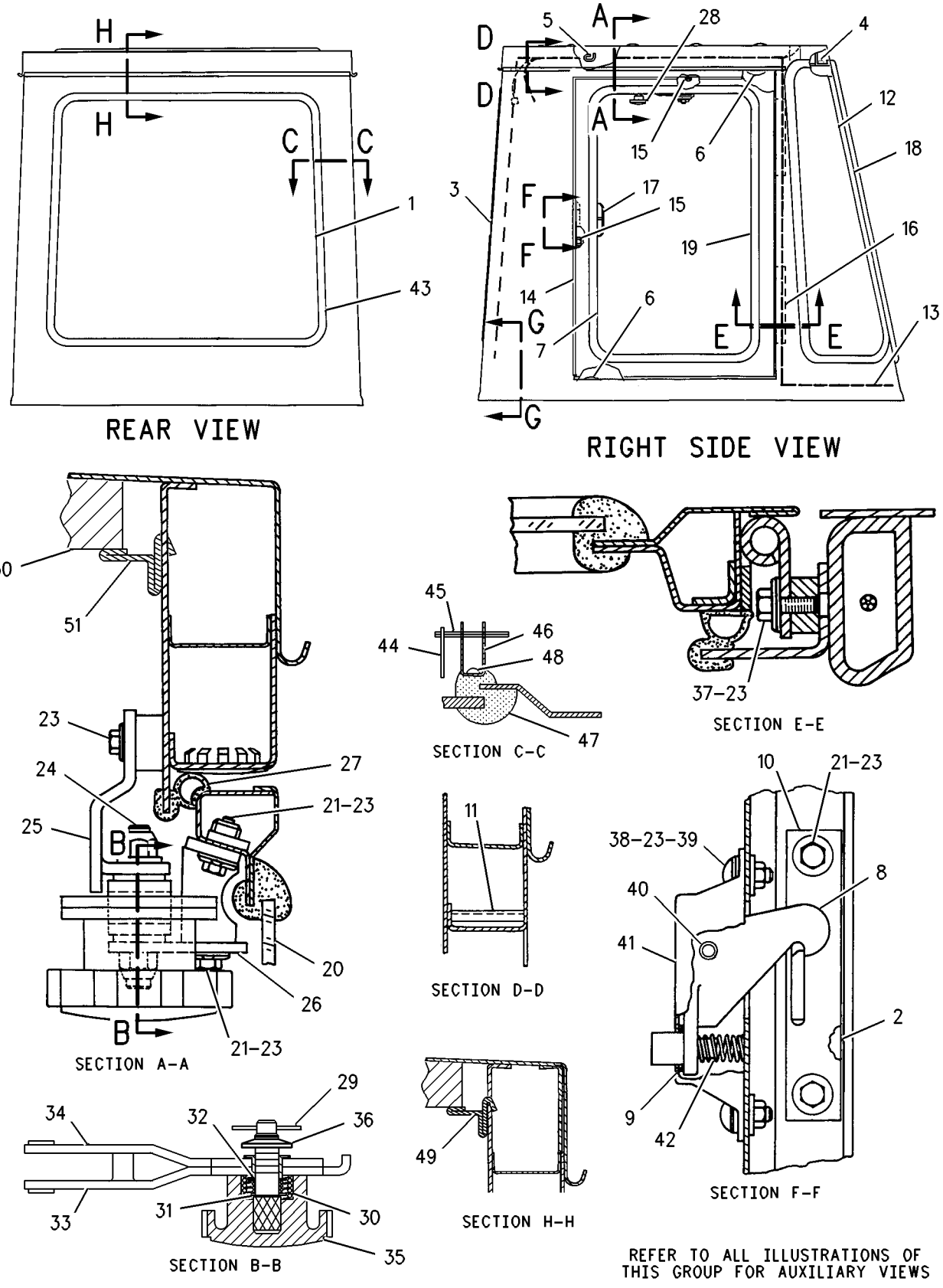

GRAPHIC #1 g00634244

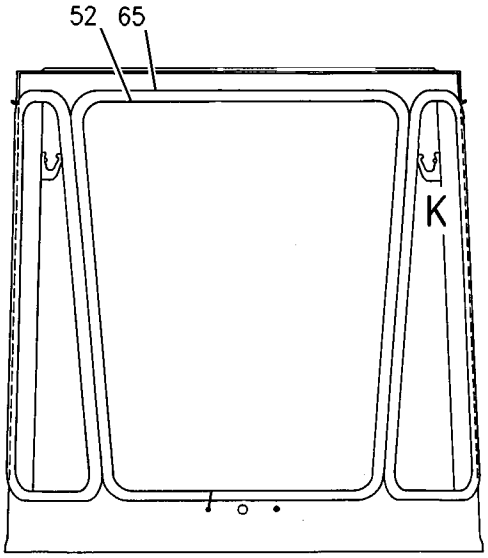

FRONT VIEW

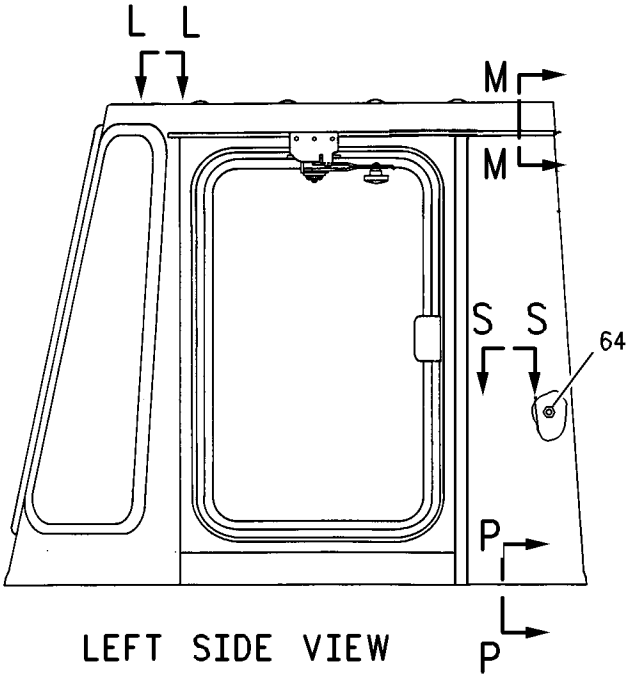

LEFT SIDE VIEW

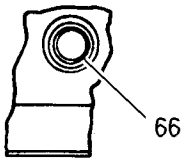

VIEW L-L

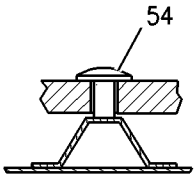

SECTION S-S

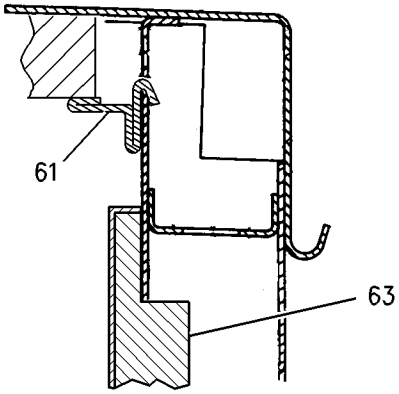

SECTION M-M

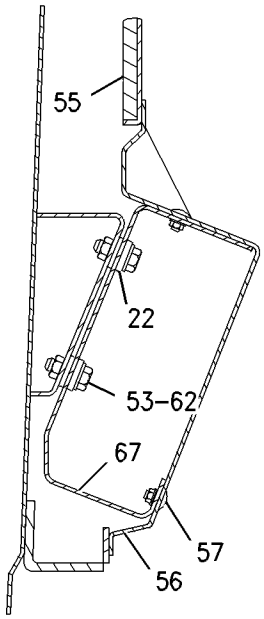

VIEW G-G

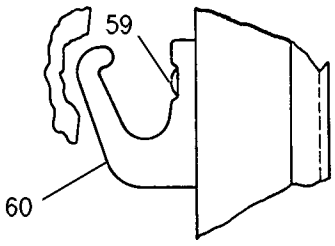

VIEW OF AREA K

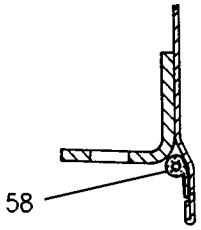

SECTION P-P

GRAPHIC #2 g00634245

OPERATOR STATION

6C-4180 CAB GP

S/N: 3XJ1-1415

PART OF 8R-6112 CAB GP

SMCS-7301, 7325, 7335 **i01343162**

NOTE	REF NO	GRAPHIC REF	PART NUMBER	QTY	PART NAME 1 2 3 4 5 6 (PRODUCT LEVEL)	SEE PAGE
	1	1	**6V-8185**	2	NUT (1/4-20 THD)	
	2	1	**4V-6981**	2	SCREW-BUTTON HEAD (1/4-20X.75IN)	
	3	1	**1T-0550**	1	PIN-SPRING	
	4	1	**9C-0512**	1	COVER	
	5	1	**6P-9785**	1	SPRING	
	6	1	**9C-0513**	1	LEVER	
	7	1	**9C-1786**	1	SEAL	
	8	2	**6C-4256**	1	HEADLINER AS (REAR)	
		2	**5P-9466**	1	PLATE-WARNING (READ OPERATION MANUAL)	
		2	**6K-3273**	4	RIVET-POP (6.4MM DIA)	
		2	**6K-3274**	4	PLATE-RIVET	
	9	2	**6C-4185**	1	HEADLINER-FRONT	
	10	1	**5P-4115**	24	WASHER (2MM THK)	
	11	1	**4M-5281**	7	BOLT (1/4-20X.750 IN)	
M	12	2	**8T-4138**	5	BOLT (M6X1.0X20MM)	
	13	1	**4V-0822**	1	STRIP AS	
	14	1	**4V-0437**	1	STRIP	
	16	1	**3V-7698**	1	STRIP	
	17	1	**5V-4416**	1	BRACKET AS	
		1	**7V-0446**	1	CLIP	
		1	**7V-0444**	1	SPRING (OUTER)	
		1	**7V-0445**	1	SPRING (INNER)	
		1	**7V-0448**	1	WASHER (22.0 MM OD)	
		1	**7V-0447**	1	WASHER (18.6 MM OD)	
		1	**5V-5200**	1	BRACKET AS (TAB)	
		1	**7V-0449**	1	BUSHING-TERMINAL	
		1	**5V-5201**	1	BRACKET AS (BUSHING)	
		1	**7V-0449**	1	BUSHING-TERMINAL	
		1	**7V-0452**	1	BUSHING-TERMINAL	
		1	**5V-4203**	1	KNOB AS	
	18	1	**3V-7702**	1	BRACKET	
	19	1	**5P-5510**	2	SCREW (3/8-16X1 1/4)	
	20	1	**3K-6060**	2	LOCKNUT (3/8-16 THD)	
	21	1	**4V-8198**	2	SPACER (5MM THK)	
	22	1	**4M-5283**	10	BOLT (1/4-20X0.625 IN)	
	23	2	**6V-7646**	5	WASHER-HARD (2MM THK)	
	24	1	**4M-5282**	3	BOLT (1/4-20X1.50 IN)	
D	25	1	**5P-7483**		SEAL (8MM THK)	
	26	1	**3V-7704**	1	BRACKET AS	
		1	**9F-6445**	2	NUT-WELD (1/4-20 THD)	
	27	1	**6C-4190**	1	CAB AS	
		1	**6K-9593**	2	PLUG-BUTTON	
		1	**5H-4871**	1	PLUG-BUTTON	
		1	**1F-0750**	4	NUT-WELD (3/8-16 THD)	
		1	**9F-6445**	4	NUT-WELD (1/4-20 THD)	
		1	**7T-1099**	4	LINK	
		1	**9V-6625**	4	PLUG	
	28	2	**6C-4187**	1	LINER	
BD	29	2	**5P-7485**		SEAL	
	30	1	**6C-0235**	1	SEAL GP-WINDOW	
		1	**8T-6842**	1	FILM-INSTRUCTION (ALTERNATE EXIT)	
		1	**5C-8311**	1	RING (29.0MM ID)	
		1	**5C-8310**	1	BRACKET-RING	
		1	**6C-0236**	1	SEAL	
		1	**6C-0237**	1	STRIP-LOCKING	
	32	1	**5V-8894**	2	GLASS-FRONT	

6C-4180 CAB GP *(contd.)*

i01343162

NOTE	REF NO	GRAPHIC REF	PART NUMBER	QTY	PART NAME 1 2 3 4 5 6 (PRODUCT LEVEL)	SEE PAGE
	33	1	**6C-5853**	1	HARNESS AS	
	34	1	**5V-9316**	1	DOOR AS-RH	
		1	**9F-6445**	5	NUT-WELD (1/4-20 THD)	
		1	**3V-7089**	2	HINGE	
		1	**4V-0827**	1	GRIP	
	35	1	**5V-8658**	1	GLASS	
	37	2	**5V-8720**	1	GLASS-FRONT	
	38	2	**6C-4225**	1	LINER	
BD	39	1	**5P-6120**		TRIM-EDGE	
	40	2	**8H-6591**	4	PLUG-PROTECTION	
	41	1	**5V-8490**	1	GLASS-REAR	
	43	2	**6V-8928**	2	HOOK-COAT	
M	44	2	**9X-2044**	2	SCREW-TRUSS HEAD (M6X1X16MM)	
	45	2	**6C-4125**	1	BRACKET AS	
M		2	**6V-9632**	3	NUT-WELD (M6X1 THD)	
	46	2	**5P-8524**	4	GROMMET	
M	47	2	**8T-4189**	4	BOLT (M8X1.25X20MM)	
	48	2	**8T-4224**	4	WASHER-HARD (8.8X16X2MM THK)	
M	49	2	**9X-2042**	3	SCREW-TRUSS HEAD (M6X1.0X12MM)	
	50	2	**6C-4274**	1	COVER	
	51	2	**5E-5496**	5	BUTTON	
	52	1	**6C-4295**	2	SEAL	
	53	1	**6C-4296**	1	SEAL	
	54	2	**6C-4297**	1	SEAL	
	55	1	**3S-2093**	2	STRAP-CABLE	

B-USE AS REQUIRED
D-ORDER BY THE METER
M-METRIC PART

REFER TO ALL ILLUSTRATIONS OF
THIS GROUP FOR AUXILIARY VIEWS

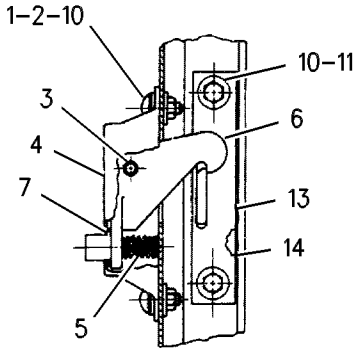

SECTION D-D

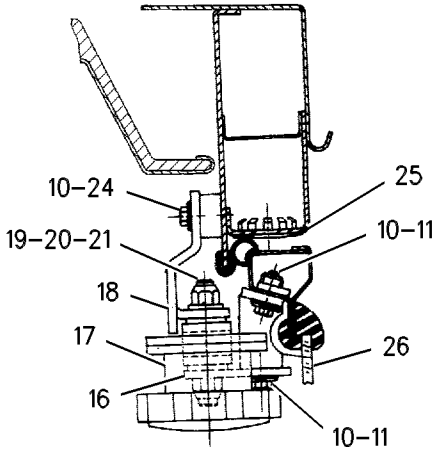

SECTION C-C

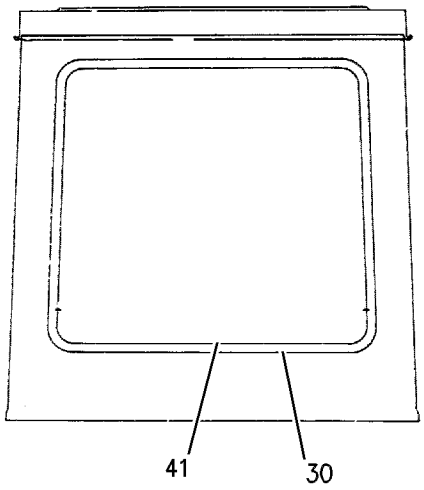

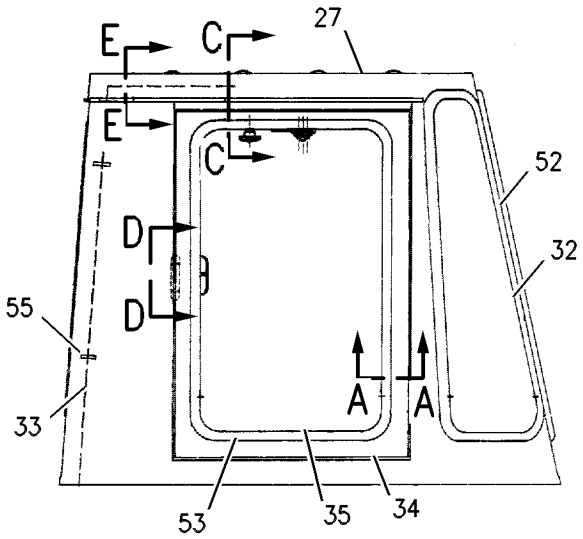

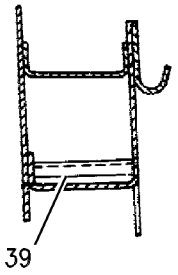

SECTION E-E

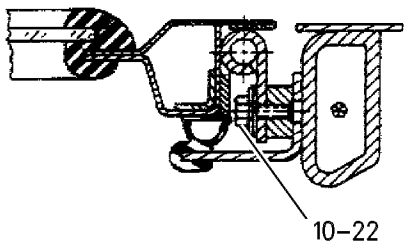

SECTION A-A

GRAPHIC #1 g00636972

REFER TO ALL ILLUSTRATIONS OF
THIS GROUP FOR AUXILIARY VIEWS

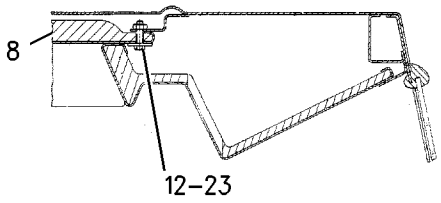

SECTION G-G

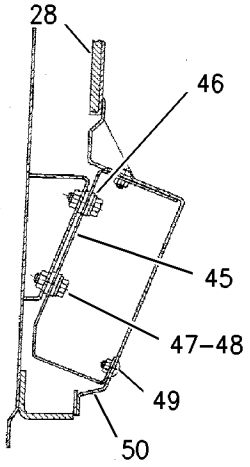

SECTION B-B

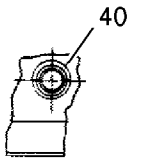

VEIW J-J

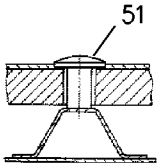

SECTION M-M

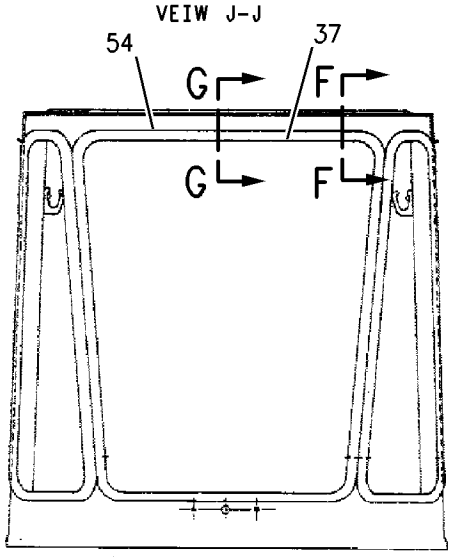

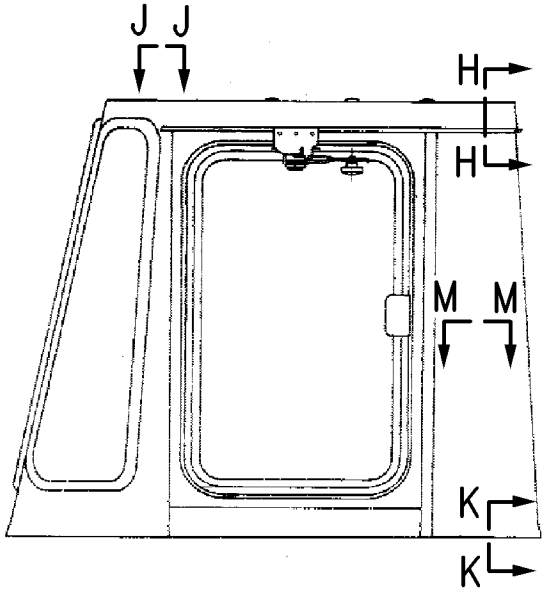

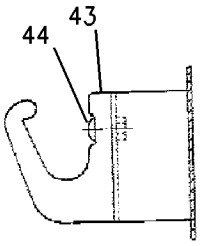

VIEW OF AREA L

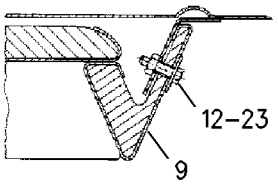

SECTION F-F

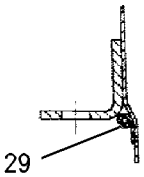

SECTION K-K

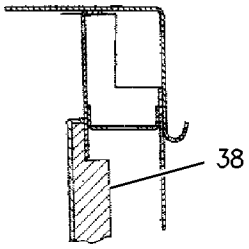

SECTION H-H

GRAPHIC #2 g00709853

OPERATOR STATION

6C-4180 CAB GP

S/N: 3XJ1416-99999

PART OF 8R-6112 CAB GP

SMCS-7301, 7325, 7335 **i01343196**

NOTE	REF NO	GRAPHIC REF	PART NUMBER	QTY	PART NAME 1 2 3 4 5 6 (PRODUCT LEVEL)	SEE PAGE
	1	1	**6V-8185**	2	NUT (1/4-20 THD)	
	2	1	**4V-6981**	2	SCREW-BUTTON HEAD (1/4-20X.75IN)	
	3	1	**4V-0825**	1	PIN	
	4	1	**4V-0828**	1	COVER	
	5	1	**6P-9785**	1	SPRING	
	6	1	**4V-0821**	1	PAWL AS	
	7	1	**9C-1786**	1	SEAL	
	8	2	**6C-4256**	1	HEADLINER AS (REAR)	
		2	**5P-9466**	1	PLATE-WARNING (READ OPERATION MANUAL)	
		2	**6K-3273**	4	RIVET-POP (6.4MM DIA)	
		2	**6K-3274**	4	PLATE-RIVET	
	9	2	**6C-4185**	1	HEADLINER-FRONT	
	10	1	**5P-4115**	24	WASHER (2MM THK)	
	11	1	**4M-5281**	7	BOLT (1/4-20X.750 IN)	
M	12	2	**8T-4138**	5	BOLT (M6X1.0X20MM)	
	13	1	**4V-0822**	1	STRIP AS	
	14	1	**4V-0437**	1	STRIP	
	16	1	**3V-7698**	1	STRIP	
	17	1	**5V-4416**	1	BRACKET AS	
		1	**7V-0446**	1	CLIP	
		1	**7V-0444**	1	SPRING (OUTER)	
		1	**7V-0445**	1	SPRING (INNER)	
		1	**7V-0448**	1	WASHER (22.0 MM OD)	
		1	**7V-0447**	1	WASHER (18.6 MM OD)	
		1	**5V-5200**	1	BRACKET AS (TAB)	
		1	**7V-0449**	1	BUSHING-TERMINAL	
		1	**5V-5201**	1	BRACKET AS (BUSHING)	
		1	**7V-0449**	1	BUSHING-TERMINAL	
		1	**7V-0452**	1	BUSHING-TERMINAL	
		1	**5V-4203**	1	KNOB AS	
	18	1	**3V-7702**	1	BRACKET	
	19	1	**5P-5510**	2	SCREW (3/8-16X1 1/4)	
	20	1	**3K-6060**	2	LOCKNUT (3/8-16 THD)	
	21	1	**4V-8198**	2	SPACER (5MM THK)	
	22	1	**4M-5283**	10	BOLT (1/4-20X0.625 IN)	
	23	2	**6V-7646**	5	WASHER-HARD (2MM THK)	
	24	1	**4M-5282**	3	BOLT (1/4-20X1.50 IN)	
D	25	1	**5P-7483**		SEAL (8MM THK)	
	26	1	**3V-7704**	1	BRACKET AS	
		1	**9F-6445**	2	NUT-WELD (1/4-20 THD)	
	27	1	**6C-4190**	1	CAB AS	
		1	**6K-9593**	2	PLUG-BUTTON	
		1	**5H-4871**	1	PLUG-BUTTON	
		1	**1F-0750**	4	NUT-WELD (3/8-16 THD)	
		1	**9F-6445**	4	NUT-WELD (1/4-20 THD)	
		1	**7T-1099**	4	LINK	
		1	**9V-6625**	4	PLUG	
	28	2	**6C-4187**	1	LINER	
BD	29	2	**5P-7485**		SEAL	
	30	1	**6C-0235**	1	SEAL GP-WINDOW	
		1	**8T-6842**	1	FILM-INSTRUCTION (ALTERNATE EXIT)	
		1	**5C-8311**	1	RING (29.0MM ID)	
		1	**5C-8310**	1	BRACKET-RING	
		1	**6C-0236**	1	SEAL	
		1	**6C-0237**	1	STRIP-LOCKING	
	32	1	**5V-8894**	2	GLASS-FRONT	

6C-4180 CAB GP *(contd.)*

i01343196

NOTE	REF NO	GRAPHIC REF	PART NUMBER	QTY	PART NAME 1 2 3 4 5 6 (PRODUCT LEVEL)	SEE PAGE
	33	1	**6C-5853**	1	HARNESS AS	
	34	1	**5V-9316**	1	DOOR AS-RH	
		1	**9F-6445**	5	NUT-WELD (1/4-20 THD)	
		1	**3V-7089**	2	HINGE	
		1	**4V-0827**	1	GRIP	
	35	1	**5V-8658**	1	GLASS	
	37	2	**5V-8720**	1	GLASS-FRONT	
	38	2	**6C-4225**	1	LINER	
BD	39	1	**5P-6120**		TRIM-EDGE	
	40	2	**8H-6591**	4	PLUG-PROTECTION	
	41	1	**5V-8490**	1	GLASS-REAR	
	43	2	**6V-8928**	2	HOOK-COAT	
M	44	2	**9X-2044**	2	SCREW-TRUSS HEAD (M6X1X16MM)	
	45	2	**6C-4125**	1	BRACKET AS	
M		2	**6V-9632**	3	NUT-WELD (M6X1 THD)	
	46	2	**5P-8524**	4	GROMMET	
M	47	2	**8T-4189**	4	BOLT (M8X1.25X20MM)	
	48	2	**8T-4224**	4	WASHER-HARD (8.8X16X2MM THK)	
M	49	2	**9X-2042**	3	SCREW-TRUSS HEAD (M6X1.0X12MM)	
	50	2	**6C-4274**	1	COVER	
	51	2	**5E-5496**	5	BUTTON	
	52	1	**6C-4295**	2	SEAL	
	53	1	**6C-4296**	1	SEAL	
	54	2	**6C-4297**	1	SEAL	
	55	1	**3S-2093**	2	STRAP-CABLE	
	56	1	**3B-4610**	1	COTTER	
	57	1	**4V-2112**	1	BUTTON	

B-USE AS REQUIRED
D-ORDER BY THE METER
M-METRIC PART

REFER TO ALL ILLUSTRATIONS OF
THIS GROUP FOR AUXILIARY VIEWS

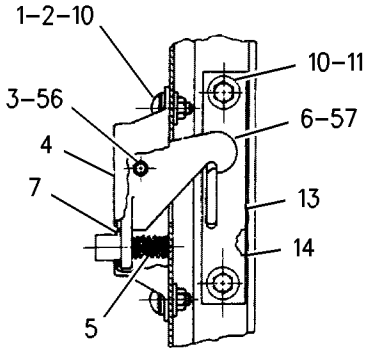

SECTION D-D

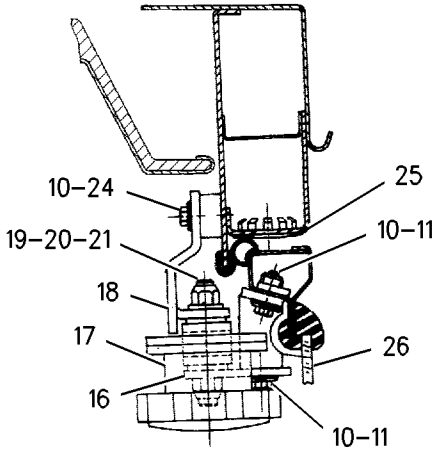

SECTION C-C

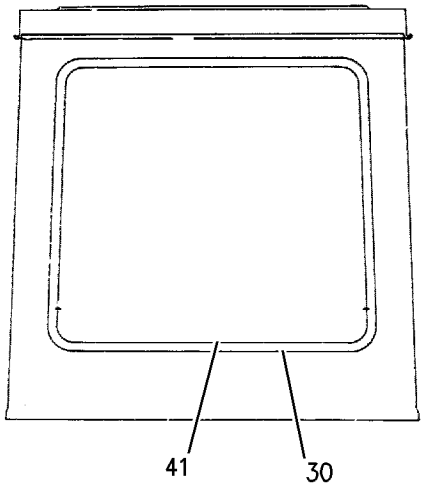

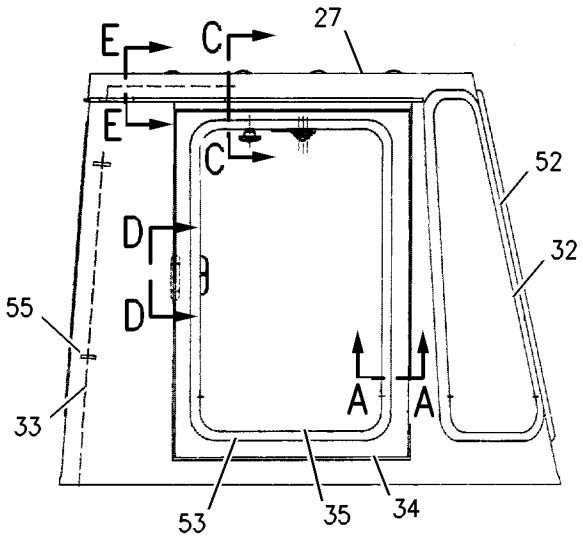

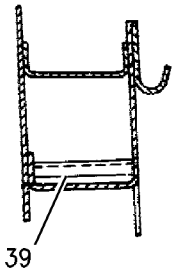

SECTION E-E

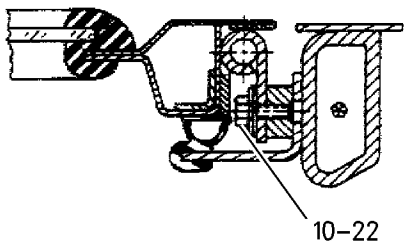

SECTION A-A

GRAPHIC #1 g00637452

REFER TO ALL ILLUSTRATIONS OF
THIS GROUP FOR AUXILIARY VIEWS

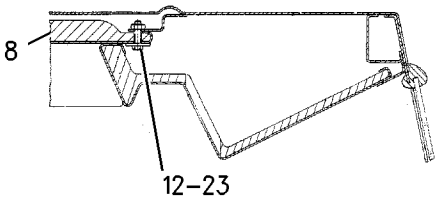

SECTION G-G

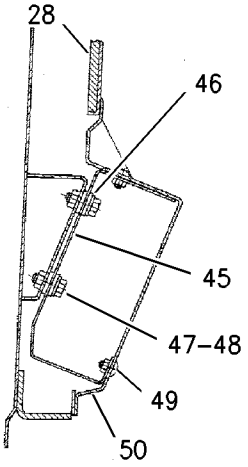

SECTION B-B

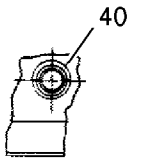

VEIW J-J

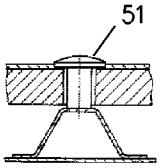

SECTION M-M

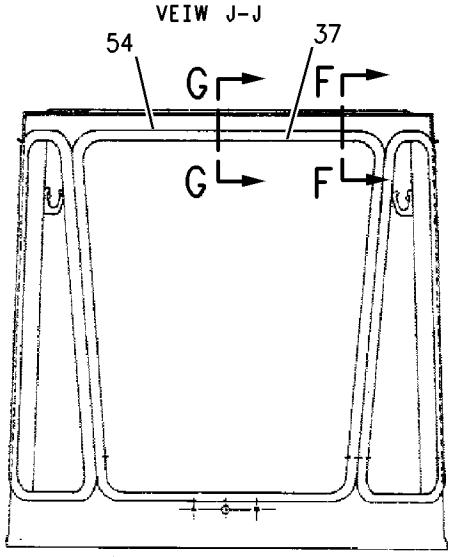

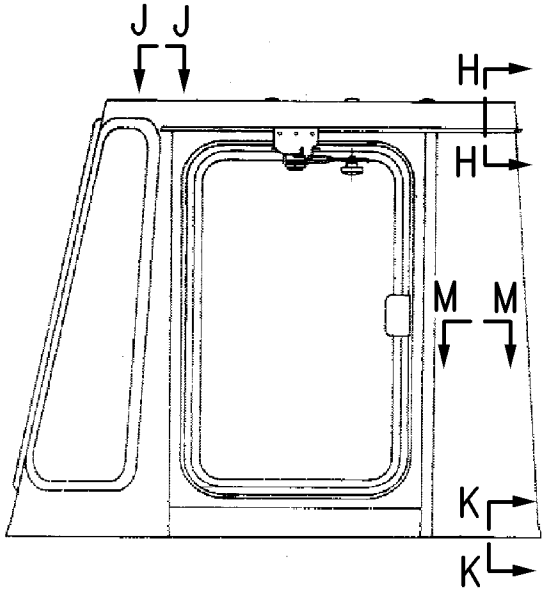

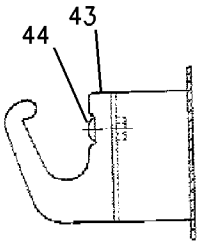

VIEW OF AREA L

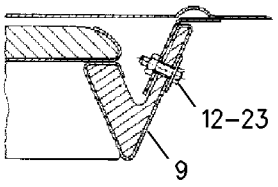

SECTION F-F

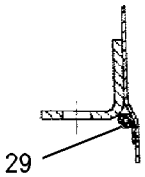

SECTION K-K

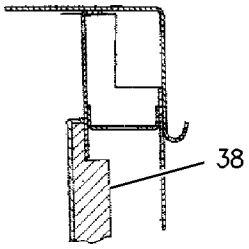

SECTION H-H

GRAPHIC #2 g00709853

OPERATOR STATION

6C-8493 CAB GP

S/N: 3XJ1-99999
PART OF 6C-5342 MONITOR AR-PAYLOAD
AN ATTACHMENT

SMCS-7301, 7325, 7335 **i01336262**

NOTE	PART NUMBER	QTY	PART NAME 1 2 3 4 5 6 (PRODUCT LEVEL)	SEE PAGE
M	**8T-4908**	2	BOLT (M8X1.25X25MM)	
	5M-3062	2	BOLT (3/8-16X.75 IN)	
	6C-8439	1	BRACKET	
	9X-9505	1	CONTROL GP-PMS DISPLAY	
	4E-2463	1	COVER	
	9X-8861	1	FILM-INSTRUCTION	
	5P-8441	1	GROMMET	
	4E-9781	1	HARNESS AS	
	9G-3670	1	HOUSING-PLUG	
	9G-3678	1	HOUSING-RECEPTACLE	
M	**5C-7261**	2	NUT (M8X1.25 THD)	
	6C-8432	1	PANEL AS-RH	
	7N-7780	7	PIN-CONNECTOR (BLADE)	
	6C-8637	1	PLATE	
	6V-2370	3	RIVET-POP	
	6V-3884	3	SCREW-HEX SOCKET (1/4-20X0.5 IN)	
	7N-7779	5	SOCKET-CONNECTOR	
	7K-1181	6	STRAP-CABLE (4IN DIA)	
	4E-2462	1	SUPPORT AS	
	9W-0625	1	SWITCH AS	
	9X-9688	2	SWITCH AS-PUSH BUTTON	
	8T-8748	1	ADAPTER-MOUNT	
	6F-0253	1	LOCKWASHER (16.26MM ID)	
	3K-0835	1	NUT	
	8T-8729	2	PIN-CONNECTOR	
	102-8802	1	KIT-RECEPTACLE (2 PIN)	
			(INCLUDES RECEPTACLE AS AND WEDGE)	
	3E-3365	1	WEDGE-RECEPTACLE LOCK (2 PIN)	
	8T-4224	2	WASHER-HARD (8.8X16X2MM THK)	
	8T-4896	2	WASHER-HARD (10.2X18.5X2.5MM THK)	

M-METRIC PART

MEMORANDA

OPERATOR STATION

8R-6112 CAB GP

S/N: 3XJ1-99999

PART OF 8R-5489 CAB AR

SMCS-7301, 7325, 7335 **i00259818**

NOTE	REF NO	GRAPHIC REF	PART NUMBER	QTY	PART NAME 1 2 3 4 5 6 (PRODUCT LEVEL)	SEE PAGE
	1	1	**4L-6454**	23	BOLT (3/8-16X1.0IN)	
	2	1	**3V-7479**	2	STRIP AS	
					(EACH INCLUDES)	
		1	**9F-6445**	2	NUT (1/4-20 THD)	
	3	1	**6C-4126**	1	COVER (WIPER REAR)	
	4	1	**4V-6981**	4	SCREW-BUTTON HEAD (1/4-20X.75IN)	
	5	1	**5P-4115**	4	WASHER (2MM THK)	
	6	1	**4B-1237**	3	SCREW-MACHINE	
Y	7	1	**6C-4180**	1	CAB GP	
	8	1	**5P-1075**	23	WASHER-HARD (3MM THK)	
	9	1	**4M-5281**	12	BOLT (1/4-20X.750IN)	
	10	1	**6C-4215**	1	STRIP	
	11	1	**6V-7646**	12	WASHER-HARD (2MM THK)	
Y	12	1	*8V-1578*	1	VISOR GP-CAB	
Y	13	1	**6C-4168**	1	DOOR GP-CAB	
D	14	1	**5P-5637**		SEAL (.1M)	
	15	1	**031-0229**	4	BOLT	
	16	1	**8C-9678**	1	LAMP GP-DOME	
	17	1	**7N-9943**	1	LAMP-MINIATURE	
	18	1	**7N-7780**	1	PIN-CONNECTOR (BLADE)	
	19	1	**7N-7779**	2	SOCKET	
	20	1	**7N-7782**	1	HOUSING-PLUG	
	21	1	**7T-0020**	1	LENS	

D-ORDER BY THE METER
Y-SEPARATE ILLUSTRATION

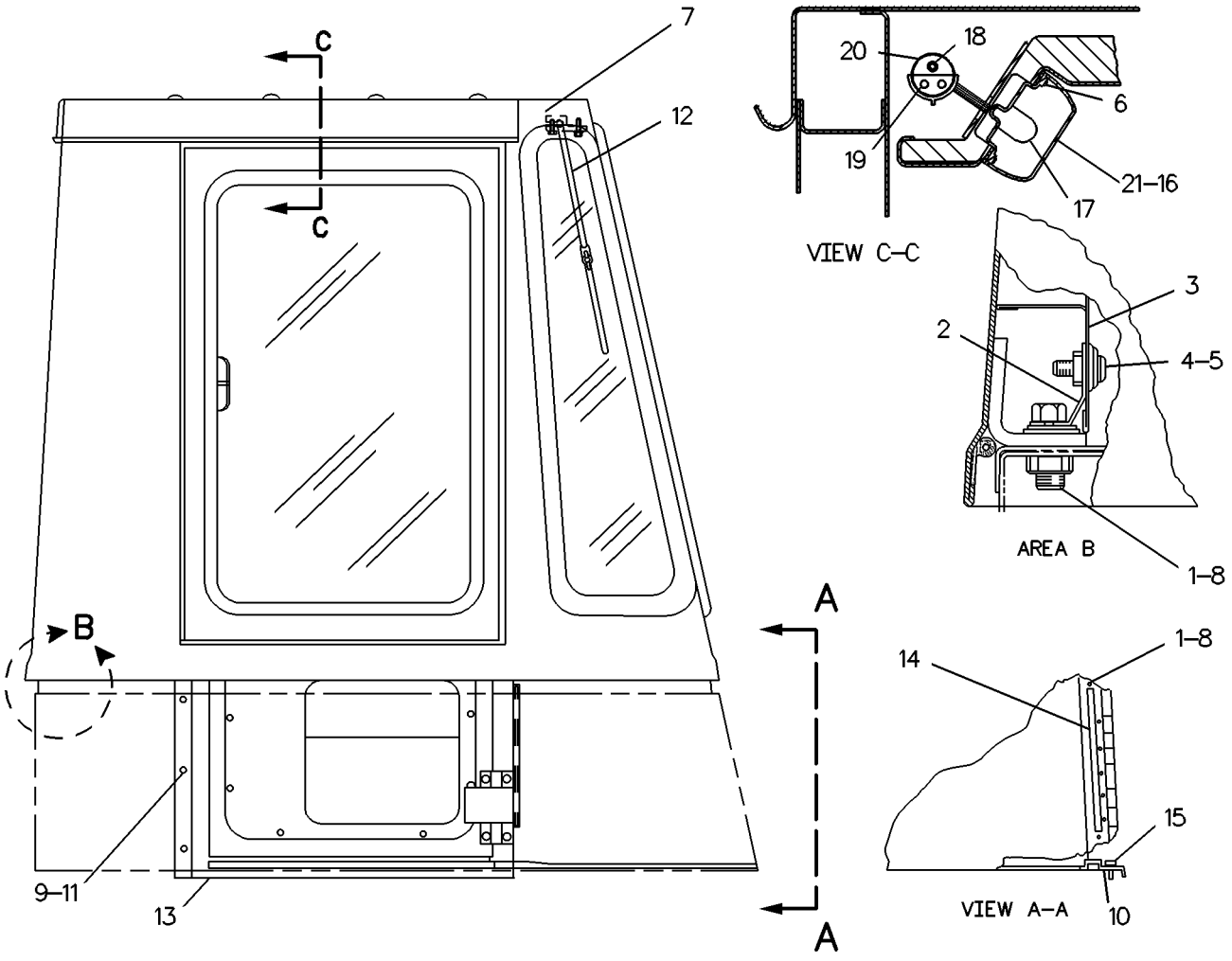

GRAPHIC #1 g00127027

OPERATOR STATION

6C-4050 CANOPY AR-OPEN ROPS

S/N: 3XJ1-99999
WITHOUT CAB
AN ATTACHMENT

SMCS-7302, 7323 **i01343154**

NOTE	PART NUMBER	QTY	PART NAME 1 2 3 4 5 6 (PRODUCT LEVEL)	SEE PAGE
	5S-7379	9	BOLT (3/8-16X.875 IN)	
	8S-9092	6	BOLT (5/8-11X2.25IN)	
	4L-9337	6	BOLT (3/8-16X1.5 IN)	
M	**8T-6912**	2	BOLT (M8X1.25X50MM)	
	8R-7913	2	BRACKET	
	8E-1550	2	BRACKET AS	
			(EACH INCLUDES)	
	9F-2978	1	NUT-WELD (3/8-16 THD)	
	8M-2770	4	CLIP (12.7MM ID)	
	4D-7794	3	CLIP (10.0MM ID)	
	8R-8161	1	HARNESS AS	
Y	**9X-1439**	2	LAMP GP-FLOOD	
Y	*6W-4909*	1	MIRROR GP-REAR VIEW	
M	**5C-7261**	2	NUT (M8X1.25 THD)	
	6V-8801	1	NUT (3/8-16 THD)	
Y	*2V-4291*	1	ROPS GP	
	8T-4121	2	WASHER-HARD (2.5MM THK)	
	8T-4896	13	WASHER-HARD (10.2X18.5X2.5MM THK)	

M-METRIC PART
Y-SEPARATE ILLUSTRATION

OPERATOR STATION

4Y-5670 CANOPY GP-SOFT

S/N: 3XJ1-99999
FOR USE WITH 6C-4048 CONVERSION AR-NONCAB
AN ATTACHMENT

SMCS-7302 **i00309442**

NOTE	PART NUMBER	QTY	PART NAME 1 2 3 4 5 6 (PRODUCT LEVEL)	SEE PAGE
M	**8T-4176**	4	BOLT (M12X1.75X90MM)	
	7X-0403	8	BOLT (1-8X2.25IN)	
M	**8T-4136**	14	BOLT (M10X1.50X25MM)	
	4Y-5667	1	BRACKET AS-LH	
	4Y-5064	1	BRACKET AS-RH	
	4Y-5659	1	POST AS-LH	
	4Y-5652	1	POST AS-RH	
	4Y-4327	1	ROOF	
	4Y-3048	12	SPACER	
	4Y-3630	4	STRAP	
	4Y-5669	1	TUBE AS	
	4Y-4790	2	TUBE AS	
	4Y-3046	12	WASHER	
	8T-4121	14	WASHER (2.5MM THK)	
	8T-4224	8	WASHER-HARD (2MM THK)	
	7X-0576	8	WASHER-HARD ((44.5MM)OD)	

M-METRIC PART

OPERATOR STATION

7C-8433 COMPRESSOR GP-REFRIGERANT

S/N: 3XJ1-99999
PART OF 8R-6206 AIR CONDITIONER AR
AN ATTACHMENT

SMCS-1802 **i01336260**

NOTE	REF NO	GRAPHIC REF	PART NUMBER	QTY	PART NAME 1 2 3 4 5 6 (PRODUCT LEVEL)	SEE PAGE
B	1	1	**8T-2502**	2	BOLT (3/8-16X1.125 IN)	
B	2	1	**8T-4896**	14	WASHER-HARD (10.2X18.5X2.5MM THK)	
	3	1	**7W-4975**	1	STRAP	
	4	1	**8T-4835**	1	BOLT (1/2-13X2.0 IN)	
		1	**8F-0492**	1	SPACER (15.87MM THK)	
	5	1	**8T-4223**	3	WASHER-HARD (3MM THK)	
	6	1	**7C-8236**	1	V-BELT	
	7	1	**8T-9389**	1	BOLT (1/2-13X2.75 IN)	
	8	1	**6V-8188**	2	NUT (1/2-13 THD)	
	9	1	**5S-7383**	2	BOLT (3/8-16X1.75 IN)	
	10	1	**7W-4973**	1	BRACKET	
	11	1	**6V-4432**	1	BOLT (1/2-13X4 IN)	
	12	1	**7W-4974**	2	PLATE	
	13	1	**4L-9337**	6	BOLT (3/8-16X1.5 IN)	
Y	14	1	**7T-8600**	1	COMPRESSOR GP-REFRIGERANT	
	15	1	**7C-8434**	1	BRACKET	
B	16	1	**9G-9150**	1	CLIP (10.2MM ID)	
B	17	1	**6V-8801**	7	NUT (3/8-16 THD)	
	18	1	**7W-4978**	1	NUT AS	

B-USE AS REQUIRED
Y-SEPARATE ILLUSTRATION

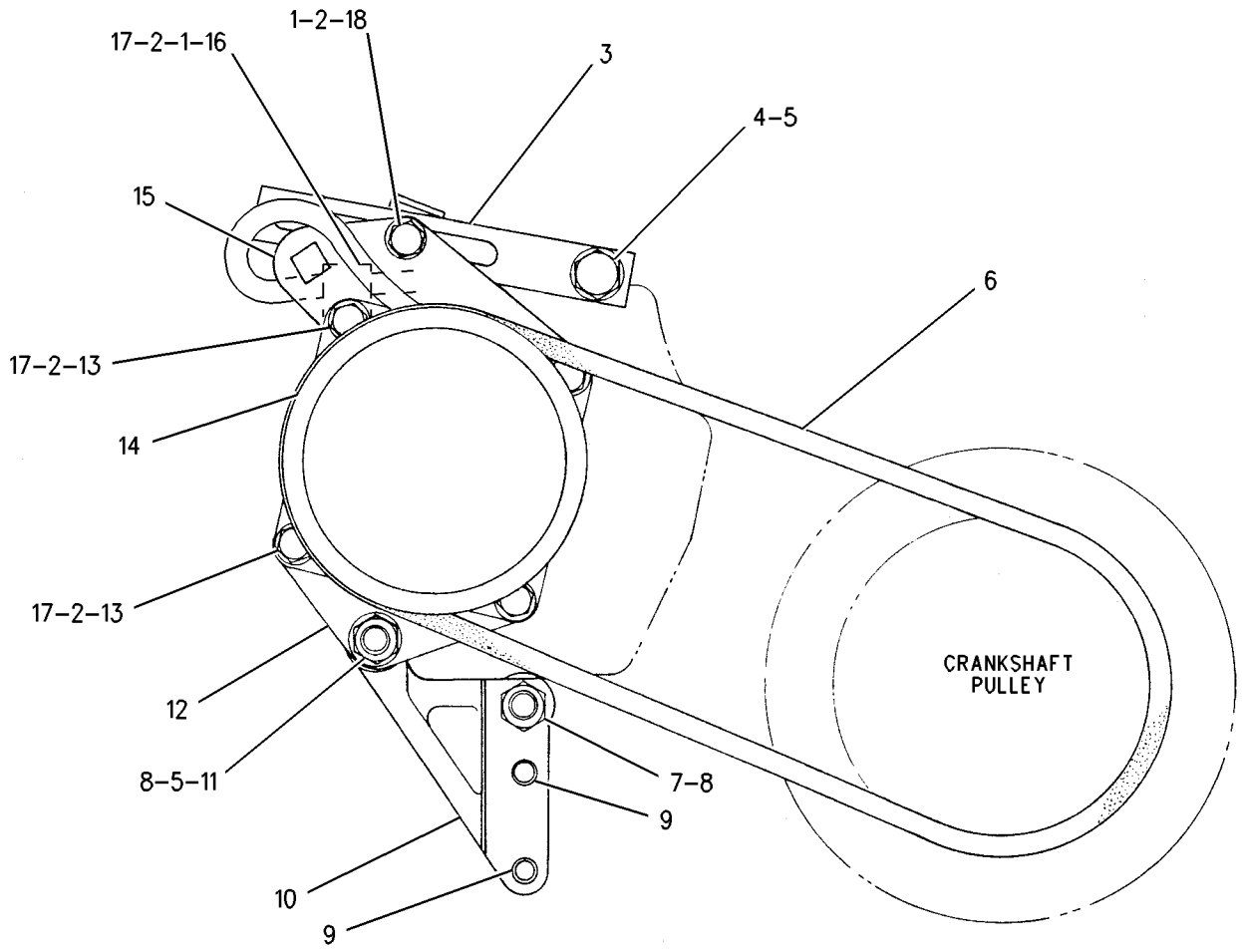

GRAPHIC #1 g00706574

OPERATOR STATION

7T-8600 COMPRESSOR GP-REFRIGERANT

S/N: 3XJ1-99999
PART OF 7C-8433 COMPRESSOR GP-REFRIGERANT
AN ATTACHMENT

SMCS-1802 **i01325238**

NOTE	REF NO	GRAPHIC REF	PART NUMBER	QTY	PART NAME 1 2 3 4 5 6 (PRODUCT LEVEL)	SEE PAGE
	1	1	**2K-0564**	1	LOCKNUT (1/2-20 THD)	
	2	1	**1H-3338**	3	LOCKWASHER (1/4-EXT.)	
M	3	1	**8T-4171**	3	BOLT (M6X1.0X12MM)	
	4	1	**8T-8816**	1	COMPRESSOR AS	
		1	**1H-8171**	2	SEAL-O-RING (20.2MM ID)	
		1	**7T-4532**	1	PLUG AS	
	5	1	**8T-8820**	1	DRIVE AS-CLUTCH	
	6	1	**8C-4405**	1	RING-RETAINING	
	7	1	**1B-8702**	1	KEY-WOODRUFF	
J	8	1	**8C-4158**	1	SEAL-BEARING	
	9	1	**8T-8814**	1	COVER-DUST	
	10	1	**8T-8813**	1	COIL AS	
		1	**7N-9737**	1	HOUSING-PLUG	
		1	**7N-7780**	1	PIN-CONNECTOR (BLADE)	
		1	**7N-7779**	1	SOCKET-CONNECTOR	
J	11	1	**8C-4160**	1	SEAL-COIL	
J	12	1	**8C-4159**	1	SEAL-PULLEY	
	13	1	**8T-8817**	1	BALL BEARING	
	14	1	**7X-6205**	1	VALVE AS-RELIEF	
		1	**3J-7354**	1	SEAL-O-RING (8.92MM ID)	
					AVAILABLE REPAIR KIT(S):	
			8T-8815	1	KIT-REFRIGERANT SEAL	
			8T-8819	1	KIT-ACCESSORY	
					(INCLUDES KEY, SHIMS, RINGS, CLAMP,& NUT)	
J			**8T-8821**	1	KIT-DUST SEAL	

J-KIT MARKED J INCLUDES PART(S) MARKED J
M-METRIC PART

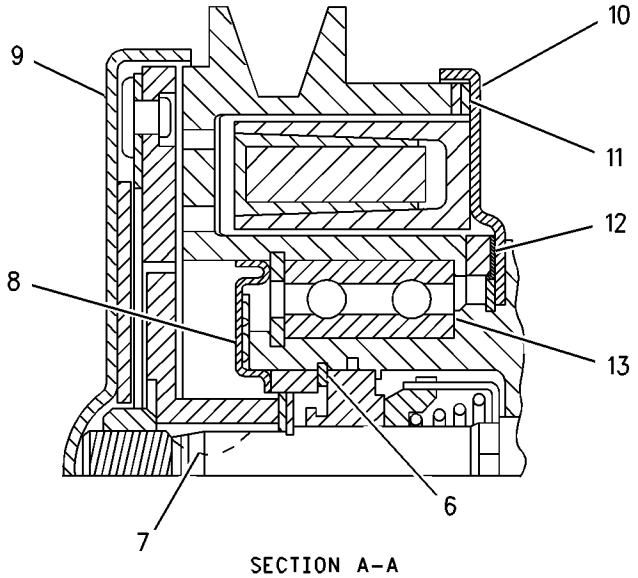

SECTION A-A

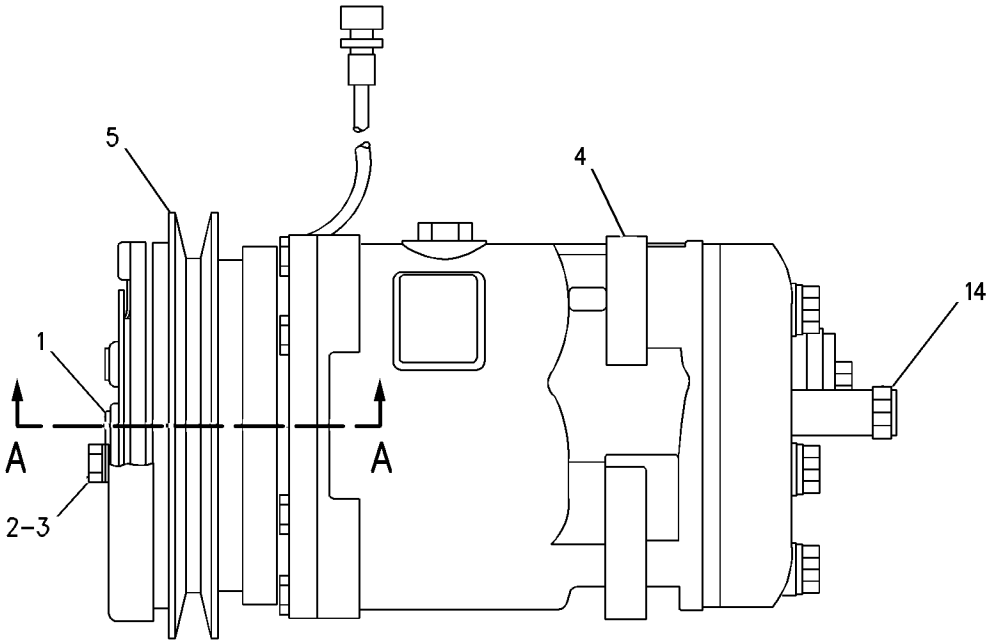

GRAPHIC #1

g00701524

OPERATOR STATION

6C-4465 CONVERSION AR-LOW PROFILE CAB

S/N: 3XJ1-99999
PART OF 6C-3619 CAB AR-LOW PROFILE
AN ATTACHMENT

SMCS-7301 **i00259736**

NOTE	PART NUMBER	QTY	PART NAME 1 2 3 4 5 6 (PRODUCT LEVEL)	SEE PAGE
Y	*6C-4138*	1	CAB AR	
Y	*6C-5238*	1	PROCUREMENT GP	
Y	*6C-4137*	1	SUPPORT GP-SEAT	

Y-SEPARATE ILLUSTRATION

OPERATOR STATION

4V-0039 CONVERSION AR-NON-ROPS

S/N: 3XJ1-99999
NON-ROPS
PART OF 6C-4048 CONVERSION AR-NONCAB
FOR USE WITH MACHINES EXPORTED WITHOUT ROPS
AN ATTACHMENT

SMCS-7302 **i01324594**

NOTE	REF NO	GRAPHIC REF	PART NUMBER	QTY	PART NAME 1 2 3 4 5 6 (PRODUCT LEVEL)	SEE PAGE
	1	1	**4L-6454**	4	BOLT (3/8-16X1 IN)	
	2	1	**5M-3062**	4	BOLT (3/8-16X.75 IN)	
	3	1	**8T-4896**	16	WASHER-HARD (10.2X18.5X2.5MM THK)	
	4	1	**8V-9755**	4	BLOCK	
	5	1	**7V-8367**	1	PLATE AS	
	6	1	**7V-8366**	1	PLATE AS	
					(EACH PLATE AS INCLUDED)	
	7	1	**9F-2978**	4	NUT-WELD (3/8-16 THD)	
	8	1	**9K-1376**	2	ANGLE	
	9	1	**4L-6459**	8	BOLT (3/8-16X2.5IN)	

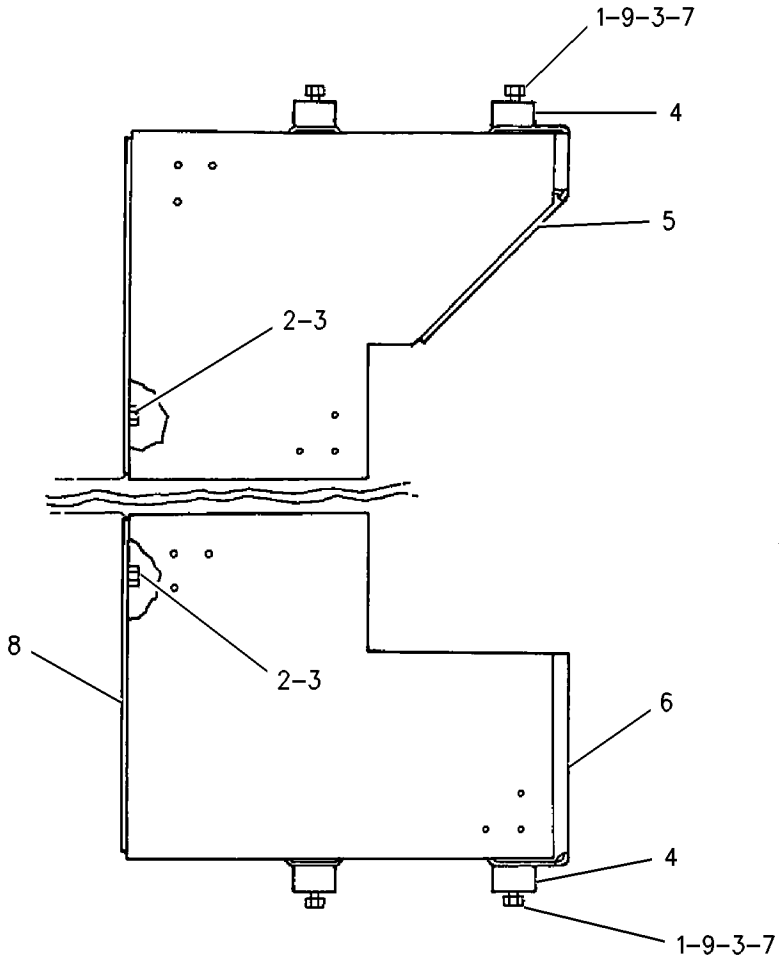

GRAPHIC #1 g00701044

OPERATOR STATION

6C-4048 CONVERSION AR-NONCAB

S/N: 3XJ1-99999
NON-ROPS
AN ATTACHMENT

SMCS-7302, 7323 **i00287022**

NOTE	PART NUMBER	QTY	PART NAME 1 2 3 4 5 6 (PRODUCT LEVEL)	SEE PAGE
	7X-0349	6	BOLT (5/8-11X3IN)	
Y	*4V-0039*	1	CONVERSION AR-NON-ROPS	
Y	*6C-4051*	1	CONVERSION GP-NONCAB	
	8V-2841	1	COUNTERWEIGHT AS	
	6C-5485	1	COUNTERWEIGHT GP	
			S/N: 3XJ433-99999	
Y	*4E-3731*	1	GUARD GP-LINES	
			S/N: 3XJ1-432	
	7N-7782	1	HOUSING-PLUG	
	5P-8502	1	PADLOCK GP	
A	**5P-8500**	2	KEY	
A	**5P-7958**	1	SLEEVE-CABLE SPLICE	
	9G-3695	3	PLUG-SEAL	
Y	*4E-0074*	1	SEAT GP-SUSPENSION	
Y	*6C-5440*	1	SUPPORT GP-SEAT	
			S/N: 3XJ433-99999	
	1J-5267	6	WASHER	

A-NOT PART OF THIS GROUP
Y-SEPARATE ILLUSTRATION

OPERATOR STATION

6C-5338 CONVERSION AR-NONCAB

S/N: 3XJ1-99999
EXTENDED LIFT ARM
CANNOT BE USED WITH 6C4048 CONVERSION AR
AN ATTACHMENT

SMCS-7302, 7323 **i01309891**

NOTE	PART NUMBER	QTY	PART NAME 1 2 3 4 5 6 (PRODUCT LEVEL)	SEE PAGE
	6C-5333	1	ARM AS-LIFT BEARING	
	4V-8673	2	BEARING-SLEEVE	
	4V-8674	2	BEARING-BUSHING	
	4V-8675	2	BEARING-SLEEVE	
	5V-2798	1	PLATE	
Y	**6C-5365**	1	CYLINDER GP-TILT	
Y	*8V-3195*	1	GUARD GP-BOTTOM	
			S/N: 3XJ1504-1679	
Y	*6C-7573*	1	COUNTERWEIGHT GP	
			S/N: 3XJ1680-99999	
	6C-5372	1	HARNESS AS	
	6C-5368	1	LINK AS	
	4V-8520	2	BEARING-SLEEVE	
	6C-5370	1	TUBE AS	

Y-SEPARATE ILLUSTRATION

OPERATOR STATION

6C-4051 CONVERSION GP-NONCAB

S/N: 3XJ1-99999
PART OF 6C-4048 CONVERSION AR-NONCAB
AN ATTACHMENT

SMCS-7302, 7323 **i00370180**

NOTE	PART NUMBER	QTY	PART NAME 1 2 3 4 5 6 (PRODUCT LEVEL)	SEE PAGE
	4L-6454	4	BOLT (3/8-16X1.0IN)	
M	**8T-4970**	1	BOLT (M6X1X14MM)	
	8R-7197	1	BRACKET	
	6C-4217	1	BRACKET AS	
	6C-4218	1	BRACKET AS	
	5V-0594	4	BUTTON-PLUG	
	6T-2774	4	CLIP	
	8R-7443	1	COVER	
	6C-4139	1	DOOR AS	
	9X-1798	1	FILM-IDENTIFICATION	
M	**5C-2890**	2	NUT (M6X1.00 THD)	
	6V-8185	4	NUT (1/4-20 THD)	
	8R-7195	1	PANEL	
			-OR-	
	6C-5553	1	PANEL AS	
	8R-7195	1	PANEL	
	6C-4272	1	PLATE	
	6C-4273	1	PLATE	
	4E-2828	2	PLATE AS	
	6C-5439	1	PLATE AS	
	4E-2829	1	PLATE AS	
	6C-5439	2	PLATE AS	
	6C-4166	1	PLATE AS	
	6C-4270	1	PLATE AS	
	2G-4815	1	PLUG	
	5H-4871	2	PLUG-BUTTON	
	5K-3546	1	PLUG-BUTTON	
	7D-4786	1	PLUG-BUTTON	
	7L-6479	2	PLUG-BUTTON	
	7T-0493	2	PLUG-ROCKER SWITCH	
	8D-7815	1	SCREW-BUTTON HEAD	
M	**9X-2044**	1	SCREW-TRUSS HEAD (M6X1X16MM)	
	4E-2844	1	STRIP	
	4E-2845	1	STRIP	
M	**8T-4130**	1	STUD (M6X1X18 MM)	
M	**8T-4130**	1	STUD (M6X1X18 MM)	
	5P-4115	5	WASHER (2MM THK)	
	5P-1075	4	WASHER-HARD (3MM THK)	
	8T-4205	9	WASHER-HARD (2MM THK)	

M-METRIC PART

OPERATOR STATION

6W-4703 DOOR GP-AIR INLET

S/N: 3XJ1-99999
PART OF 8R-8226 AIR CONDITIONER GP
AN ATTACHMENT

SMCS-7273 **i01324587**

NOTE	REF NO	GRAPHIC REF	PART NUMBER	QTY	PART NAME 1 2 3 4 5 6 (PRODUCT LEVEL)	SEE PAGE
	1	1	**3B-4605**	2	COTTER	
	2	1	**9V-0183**	1	DOOR AS	
		1	**6W-8906**	2	LATCH AS	
BCD	3	1	**5P-5943**		SEAL	
	4	1	**3V-2762**	1	ROD	
	5	1	**9V-0182**	1	ROD	
	6	1	**6S-6646**	2	PIN	

B-USE AS REQUIRED
C-CHANGE FROM PREVIOUS TYPE
D-ORDER BY THE METER

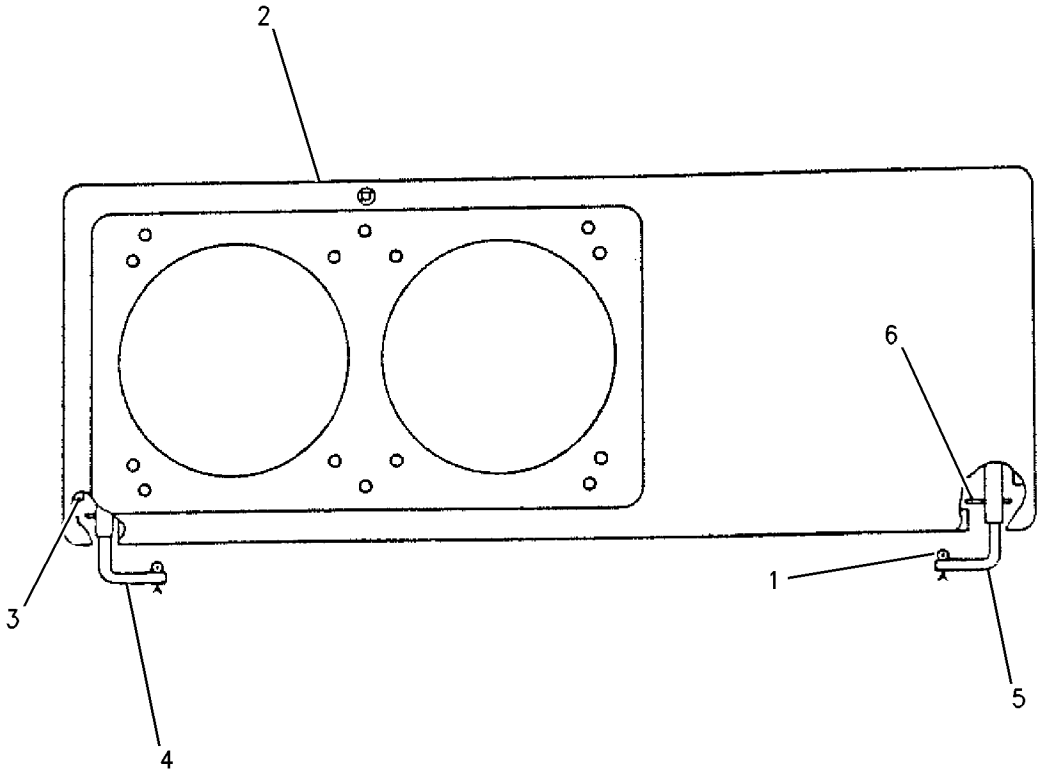

GRAPHIC #1 g00701014

OPERATOR STATION

6C-4159 DOOR GP-CAB

S/N: 3XJ1-99999
PART OF 6C-4151 CAB GP
AN ATTACHMENT

SMCS-7308 **i01184098**

NOTE	REF NO	GRAPHIC REF	PART NUMBER	QTY	PART NAME 1 2 3 4 5 6 (PRODUCT LEVEL)	SEE PAGE
	1	1	**6C-4212**	1	FRAME AS	
	2	1	**5S-7349**	8	BOLT (1/4-20X0.5IN)	
	3	1	**4E-3522**	1	ANGLE	
	4	1	**4M-5281**	4	BOLT (1/4-20X.750IN)	
	5	1	**5P-4115**	19	WASHER (2MM THK)	
BD	6	1	**5P-7036**		SEAL	
	7	1	**3V-5571**	1	BAR	
Y	8	1	**6C-5210**	1	WINDOW GP	
	9	1	**3V-9841**	1	PANEL	
	10	1	**6V-3884**	9	SCREW-HEX SOCKET (1/4-20X0.5IN)	
	11	1	**3V-3567**	1	HANDLE	
	12	1	**8V-9380**	1	LATCH AS-DOOR	
	13	1	**6V-7634**	4	BOLT-LOCKING (1/4-20X1.125IN)	
	14	1	**6C-4247**	1	SPRING-GAS	
	15	1	**6C-4174**	1	PIN	
	16	1	**6C-4176**	1	BUSHING-TERMINAL	
	17	1	**6C-4177**	2	BUSHING-TERMINAL	
	18	1	**6C-4175**	1	BUSHING-TERMINAL	
	19	1	**3B-4611**	1	PIN-COTTER	
	20	1	**3V-8595**	1	POCKET AS	
	21	1	**6C-4152**	1	DOOR AS	
	22	1	**3V-7089**	3	HINGE	
		1	**3V-3565**	1	STRIP	
		1	**3V-5610**	1	BAR	
		1	**9F-6445**	13	NUT-WELD (1/4-20 THD)	
D	23	2	**5P-7483**		SEAL (.35M)	
	24	2	**6V-8918**	4	BOLT (5/16-18X1.25IN)	
		2	**5P-4116**	4	WASHER (2MM THK)	
	25	2	**3V-3566**	1	STRAP	
	26	2	**3V-3557**	2	STRIP	
	27	2	**6V-1155**	1	STRIKER AS	
		2	**6V-4270**	1	WASHER-CONICAL (3.5MM THK)	
	28	2	**4M-5283**	15	BOLT (1/4-20X0.625IN)	
	29	2	**5P-4115**	15	WASHER (2MM THK)	
	30	2	**3V-3568**	1	STRIP	
	31	2	**8V-1107**	1	ROD	
	32	2	**6V-4514**	4	CLIP-ROD END	
	33	2	**8V-3518**	1	ROD	
	34	2	**4B-2047**	1	NUT (10-24 THD)	
	35	2	**5M-3062**	2	BOLT (3/8-16X.75IN)	
		2	**5P-1075**	2	WASHER-HARD (3MM THK)	
	36	2	**8Y-5742**	1	HANDLE AS-PADDLE	
	37	2	**5P-8503**	1	LOCK AS-CYLINDER	
		2	**2M-7819**	1	RING-RETAINING	
	38	2	**9S-2544**	18	SCREW-HEX HEAD	
	39	2	**3V-9834**	1	SHAFT AS	
	40	2	**3V-3565**	1	STRIP	
	41	2	**8T-0277**	1	PIN-SPRING	
	42	2	**3V-9835**	1	STRIP AS	

B-USE AS REQUIRED
D-ORDER BY THE METER
Y-SEPARATE ILLUSTRATION

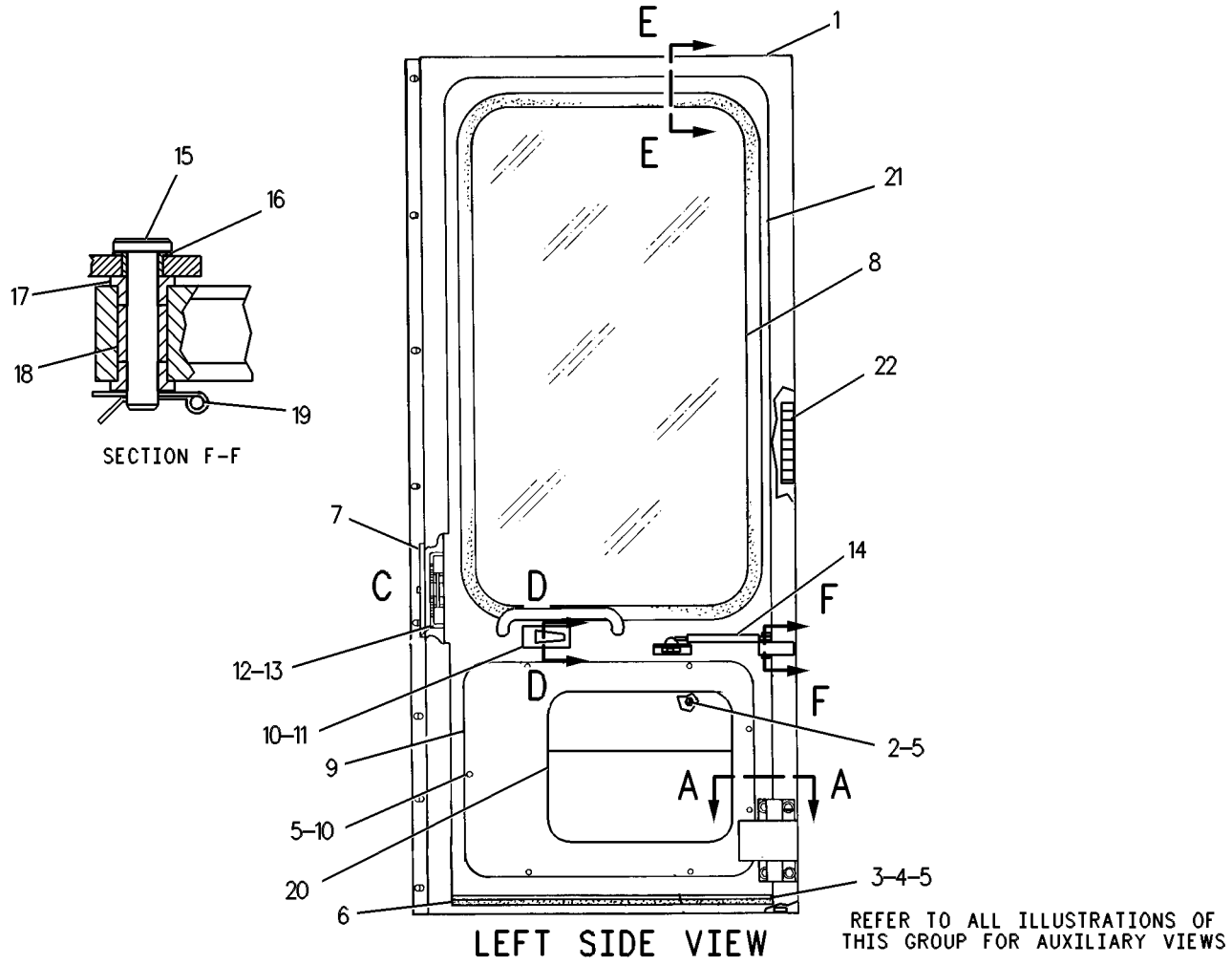

GRAPHIC #1

g00370185

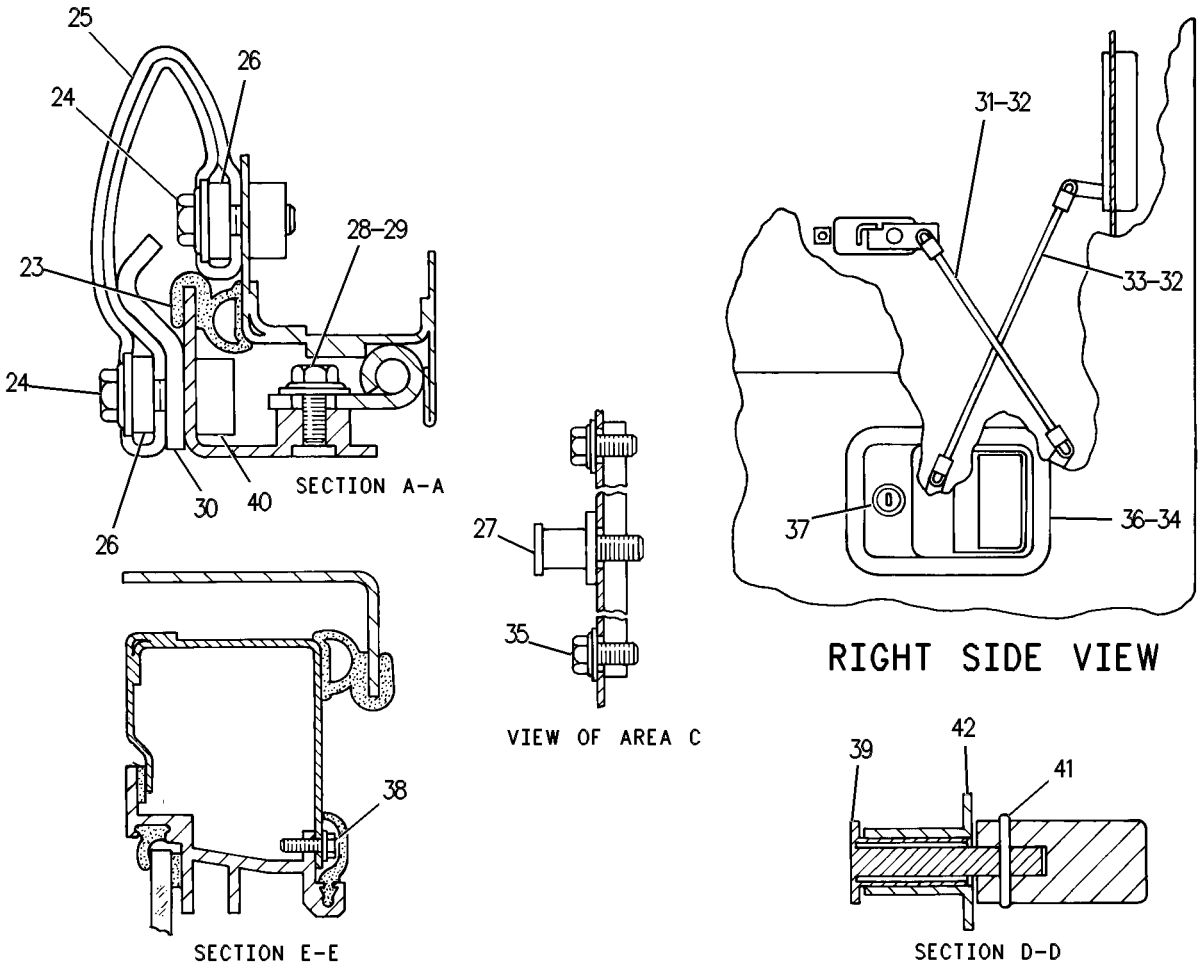

GRAPHIC #2 g00370186

MEMORANDA

OPERATOR STATION

6C-4168 DOOR GP-CAB

S/N: 3XJ1-99999

PART OF 8R-6112 CAB GP

SMCS-7308 **i01191342**

NOTE	REF NO	GRAPHIC REF	PART NUMBER	QTY	PART NAME 1 2 3 4 5 6 (PRODUCT LEVEL)	SEE PAGE
	1	1	**6C-4169**	1	FRAME AS	
	2	1	**5S-7349**	8	BOLT (1/4-20X0.5IN)	
	3	1	**4E-3522**	1	ANGLE	
	4	1	**4M-5281**	4	BOLT (1/4-20X.750IN)	
	5	1	**5P-4115**	19	WASHER (2MM THK)	
BD	6	1	**5P-7036**		SEAL	
	7	1	**3V-5571**	1	BAR	
Y	8	1	**104-7330**	1	WINDOW GP	
	9	1	**3V-9841**	1	PANEL	
	10	1	**6V-3884**	9	SCREW-HEX SOCKET (1/4-20X0.5IN)	
	11	1	**3V-3567**	1	HANDLE	
	12	1	**8V-9380**	1	LATCH AS-DOOR	
	13	1	**6V-7634**	4	BOLT-LOCKING (1/4-20X1.125IN)	
	14	1	**6C-4247**	1	SPRING-GAS	
	15	1	**6C-4174**	1	PIN	
	16	1	**6C-4176**	1	BUSHING-TERMINAL	
	17	1	**6C-4177**	2	BUSHING-TERMINAL	
	18	1	**6C-4175**	1	BUSHING-TERMINAL	
	19	1	**3B-4611**	1	PIN-COTTER	
	20	1	**3V-8595**	1	POCKET AS	
	21	1	**6C-4170**	1	DOOR AS	
	22	1	**3V-7089**	3	HINGE	
		1	**3V-3565**	1	STRIP	
	23	1	**3V-5610**	1	BAR	
	24	1	**9F-6445**	13	NUT-WELD (1/4-20 THD)	
M	25	1	**6V-9632**	1	NUT-WELD (M6X1 THD)	
BD	26	2	**5P-7483**		SEAL	
	27	2	**6V-8918**	4	BOLT (5/16-18X1.25IN)	
	28	2	**3V-3566**	1	STRAP	
	29	2	**3V-3557**	2	STRIP	
	30	2	**6V-1155**	1	STRIKER AS	
		2	**6V-4270**	1	WASHER-CONICAL (3.5MM THK)	
	31	2	**4M-5283**	15	BOLT (1/4-20X0.625IN)	
	32	2	**5P-4115**	15	WASHER (2MM THK)	
	33	2	**3V-3568**	1	STRIP	
	34	2	**8V-1107**	1	ROD	
	35	2	**6V-4514**	4	CLIP-ROD END	
	36	2	**8V-3518**	1	ROD	
	37	2	**4B-2047**	1	NUT (10-24 THD)	
	38	2	**5M-3062**	2	BOLT (3/8-16X.75IN)	
	39	2	**8V-3611**	1	HANDLE-OUTSIDE	
	40	2	**5P-8503**	1	LOCK AS-CYLINDER	
	41	2	**9S-2544**	20	SCREW-HEX HEAD	
	42	2	**3V-9834**	1	SHAFT AS	
	43	2	**3V-3565**	1	STRIP	
	44	2	**8T-0277**	1	PIN-SPRING	
	45	2	**3V-9835**	1	STRIP AS	
	46	2	**5P-4116**	4	WASHER (2MM THK)	
	47	2	**5P-1075**	2	WASHER-HARD (3MM THK)	
	48	2	**2M-7819**	1	RING-RETAINING	

B-USE AS REQUIRED
D-ORDER BY THE METER
M-METRIC PART
Y-SEPARATE ILLUSTRATION

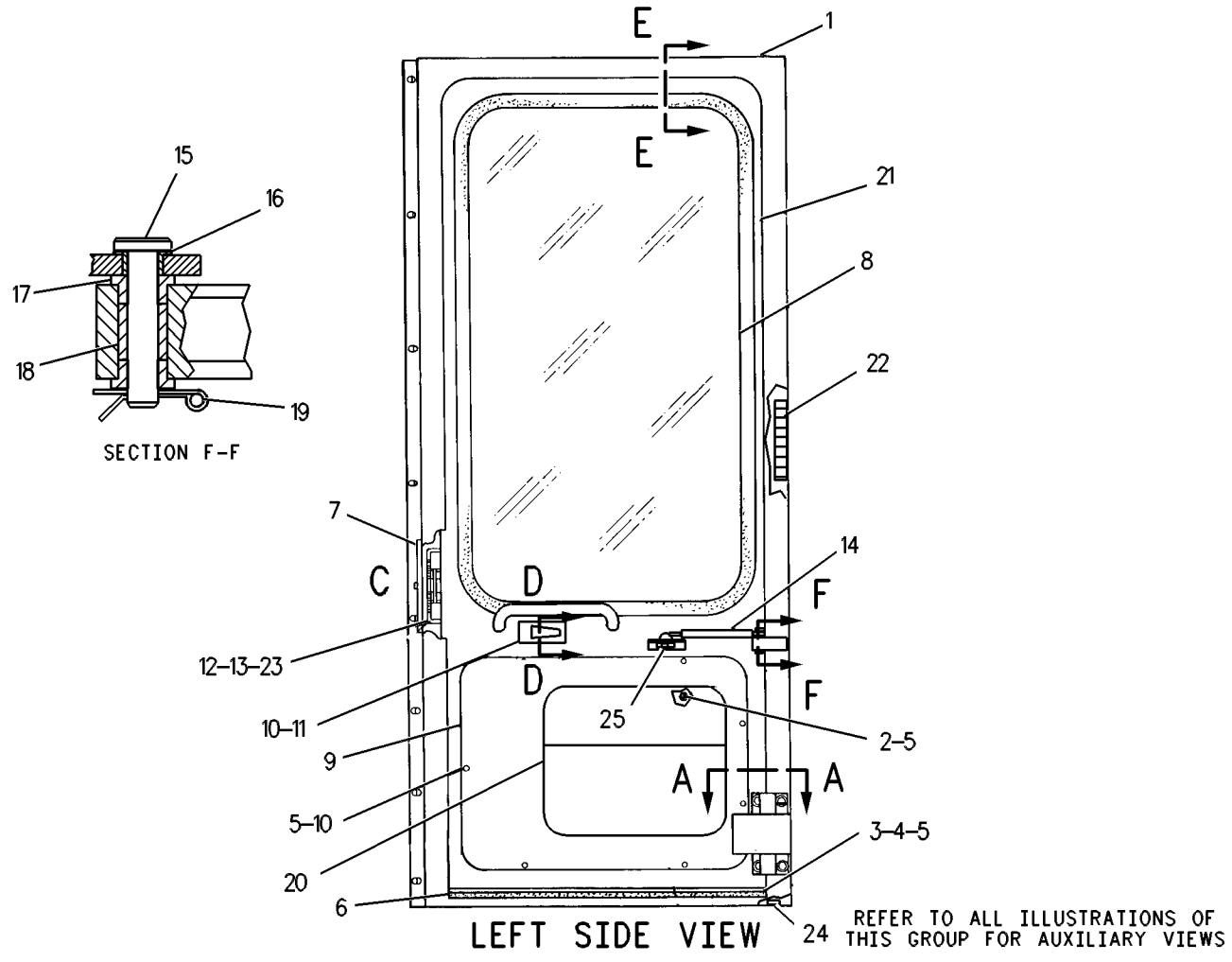

GRAPHIC #1 g00377776

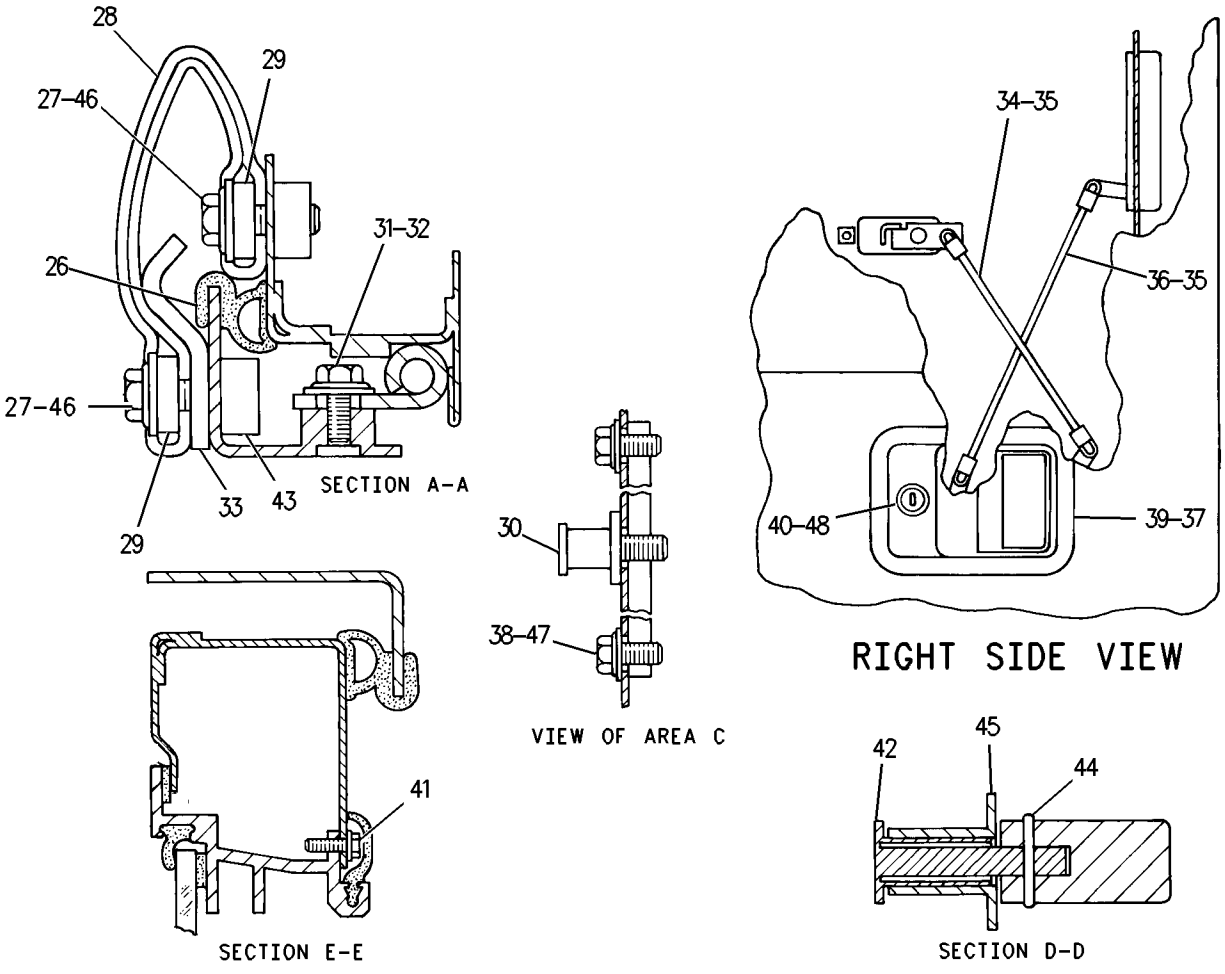

GRAPHIC #2 g00637782

OPERATOR STATION

6W-4705 DOOR GP-SIDE

S/N: 3XJ1-99999

PART OF 8R-5041 OPERATOR AR

SMCS-7273 **i01324585**

NOTE	REF NO	GRAPHIC REF	PART NUMBER	QTY	PART NAME 1 2 3 4 5 6 (PRODUCT LEVEL)	SEE PAGE
	1	1	**6C-0612**	1	DOOR AS	
		1	**6W-8906**	1	LATCH AS	
CD	2	1	**5P-5643**		SEAL	
	3	1	**3V-2762**	1	ROD	
	4	1	**3B-4605**	2	COTTER	
	5	1	**9V-0182**	1	ROD	
	6	1	**6S-6646**	2	PIN	

C-CHANGE FROM PREVIOUS TYPE
D-ORDER BY THE METER

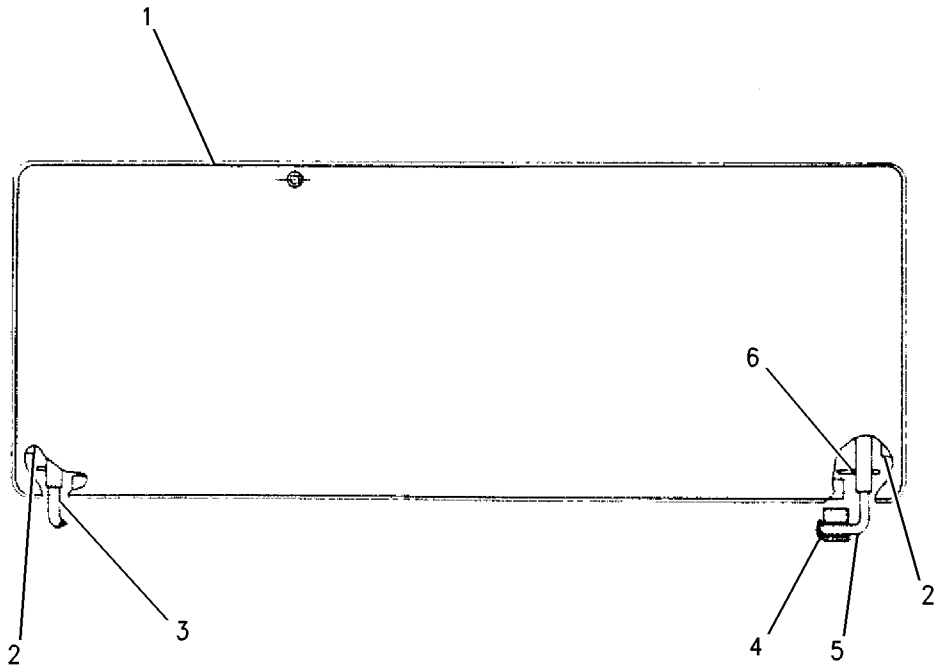

GRAPHIC #1 g00701008

OPERATOR STATION

8Y-5874 EXTENSION GP-BACKREST

S/N: 3XJ1-99999

PART OF 8Y-4191 SEAT GP-SUSPENSION

SMCS-7312 **i00259847**

NOTE	REF NO	GRAPHIC REF	PART NUMBER	QTY	PART NAME 1 2 3 4 5 6 (PRODUCT LEVEL)	SEE PAGE
	1	1	**8Y-5877**	1	PAN AS-EXTENSION	
					AVAILABLE REPAIR KIT(S):	
			8Y-5943	1	KIT-CUSHION	
					(INCLUDES CUSHION AS AND FASTENERS)	

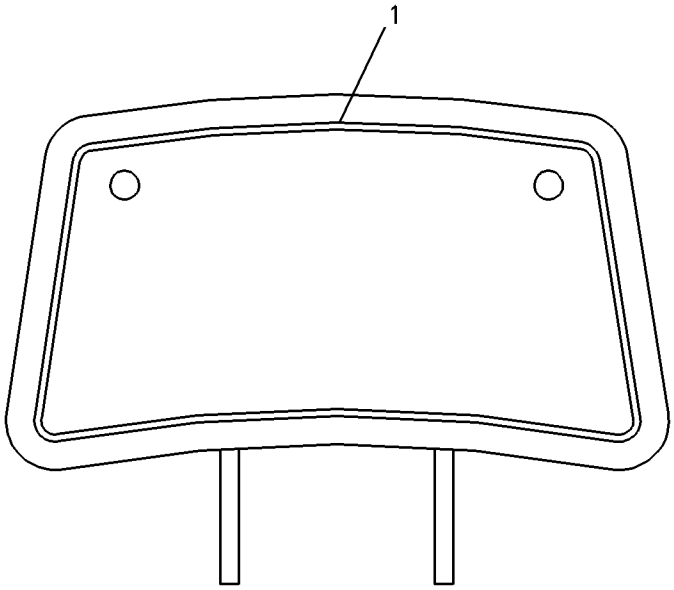

GRAPHIC #1 g00127398

OPERATOR STATION

8Y-5959 EXTENSION GP-BACKREST

S/N: 3XJ1-99999
VINYL
PART OF 8Y-4192 SEAT GP-SUSPENSION
AN ATTACHMENT

SMCS-7312 **i00752656**

NOTE	REF NO	GRAPHIC REF	PART NUMBER	QTY	PART NAME 1 2 3 4 5 6 (PRODUCT LEVEL)	SEE PAGE
	1	1	**8Y-5877**	1	PAN AS-EXTENSION	
J	2	1	**8Y-5947**	2	FASTENER	
JZ	3	1		1	CUSHION AS	
					AVAILABLE REPAIR KIT(S):	
J			**8Y-5960**	1	KIT-CUSHION	

J-KIT MARKED J INCLUDES PARTS MARKED J
Z-NOT SERVICED SEPARATELY

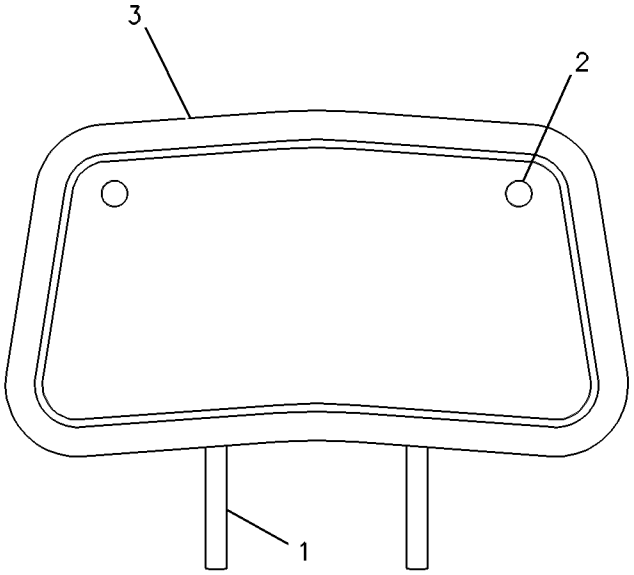

GRAPHIC #1 g00326278

OPERATOR STATION

4V-3506 GUARD GP-VANDALISM

S/N: 3XJ1-99999
CANNOT BE USED WITH CAB
AN ATTACHMENT

SMCS-7315 **i01325221**

NOTE	REF NO	GRAPHIC REF	PART NUMBER	QTY	PART NAME 1 2 3 4 5 6 (PRODUCT LEVEL)	SEE PAGE
	1	1	**4V-7707**	1	PLATE	
C	2	1	**4V-7708**	1	COVER AS	
	3	1	**5P-8502**	1	PADLOCK GP	
A		1	**8Y-6364**	1	SLEEVE	
A		1	**5P-8500**	1	KEY	
	4	1	**4L-6454**	2	BOLT (3/8-16X1 IN)	
		1	**5P-1075**	2	WASHER-HARD (3MM THK)	

A-NOT PART OF THIS GROUP
C-CHANGE FROM PREVIOUS TYPE

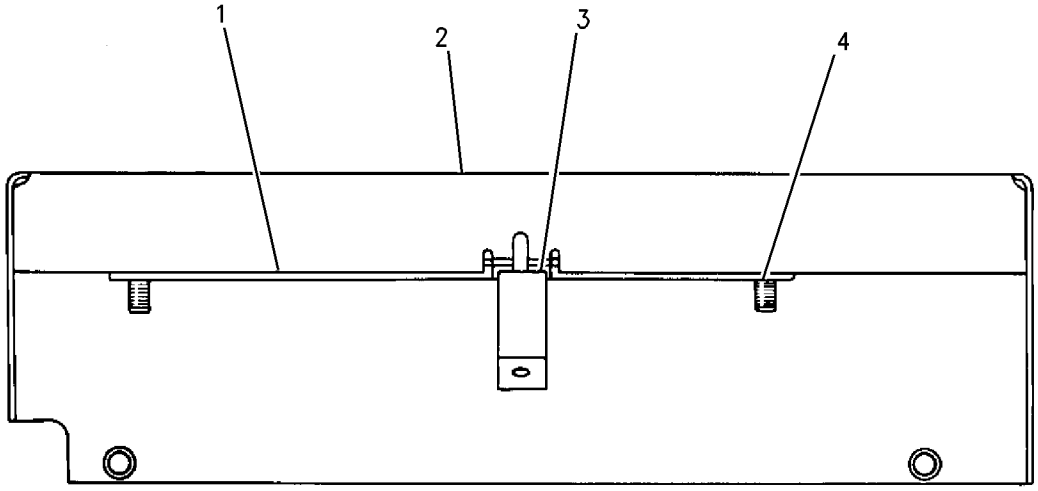

GRAPHIC #1 g00701582

OPERATOR STATION

8R-7066 GUARD GP-VANDALISM

S/N: 3XJ1-99999
CANNOT BE USED WITH CAB
AN ATTACHMENT

SMCS-7315 **i00286592**

NOTE	PART NUMBER	QTY	PART NAME 1 2 3 4 5 6 (PRODUCT LEVEL)	SEE PAGE
	4E-6575	1	ANGLE	
	4E-3870	1	BRACKET	
	4E-3874	1	BRACKET	
	4E-3867	2	COVER AS	
	4E-3875	1	COVER AS	
	5P-8502	3	PADLOCK GP	
			(EACH INCLUDES)	
A	**5P-8500**	2	KEY	
A	**6V-5874**	1	COVER	
	4E-3906	1	PANEL AS-LH	
	4E-3905	1	PANEL AS-RH	
D	**5P-5637**		SEAL (.1M)	
BD	**5P-7086**		TRIM	

A-NOT PART OF THIS GROUP
B-USE AS REQUIRED
D-ORDER BY THE METER

OPERATOR STATION

8R-7286 HEATER GP-CAB

S/N: 3XJ1-99999
PART OF 6C-4138, 8R-5489 CAB AR
ALSO AN ATTACHMENT

SMCS-7304 **i01189158**

NOTE	REF NO	GRAPHIC REF	PART NUMBER	QTY	PART NAME 1 2 3 4 5 6 (PRODUCT LEVEL)	SEE PAGE
	1	1	**7G-8699**	1	VALVE-WATER	
	2	1	**6W-0058**	2	ELBOW-HOSE	
	3	1	**9S-8752**	4	NUT (3/8-16 THD)	
	4	1	**5P-1075**	6	WASHER-HARD (3MM THK)	
	5	1	**5S-7379**	2	BOLT (3/8-16X.875IN)	
	6	1	**8T-0154**	8	CLAMP-HOSE	
	7	1	**6C-4124**	1	CABLE-CONNECTOR	
	8	1	**2V-0099**	1	KNOB	
BD	9	1	**5P-5643**		SEAL	
	10	1	**6T-1894**	1	COIL AS-HEATER	
BD	11	1	**5P-5921**		SEAL	
M	12	1	**8T-0286**	2	BOLT (M5X0.8X8MM)	
		1	**7X-0620**	2	WASHER-HARD (1.6MM THK)	
BE	13	1	**6V-8843**		HOSE (41CM)	
	14	1	**3V-7558**	1	FITTING AS	
	15	1	**7F-2060**	1	LOCKNUT (7/8-14 THD)	
	16	1	**5V-4236**	1	FITTING AS	
	17	1	**6K-9555**	2	GROMMET	
	18	1	**6K-8420**	1	LOCKNUT (1-1/16-12 THD)	
	19	1	**6T-5098**	1	CLIP-CABLE	
M		1	**8T-4142**	1	SCREW	
	20	1	**6C-5430**	1	BRACKET AS	
M	21	1	**8T-4970**	1	BOLT (M6X1X14MM)	
		1	**7X-0586**	1	WASHER-HARD (M7.2X32.0X2MM THK)	
	22	1	**6C-4300**	1	LEVER AS	
		1	**8L-8490**	1	BOLT-HEX SOCKET	
	23	1	**1P-6539**	1	RETAINER-ROD	
F		1	**5E-6102**	1	FITTING	

B-USE AS REQUIRED
D-ORDER BY THE METER
E-ORDER BY THE CENTIMETER
F-NOT SHOWN
M-METRIC PART

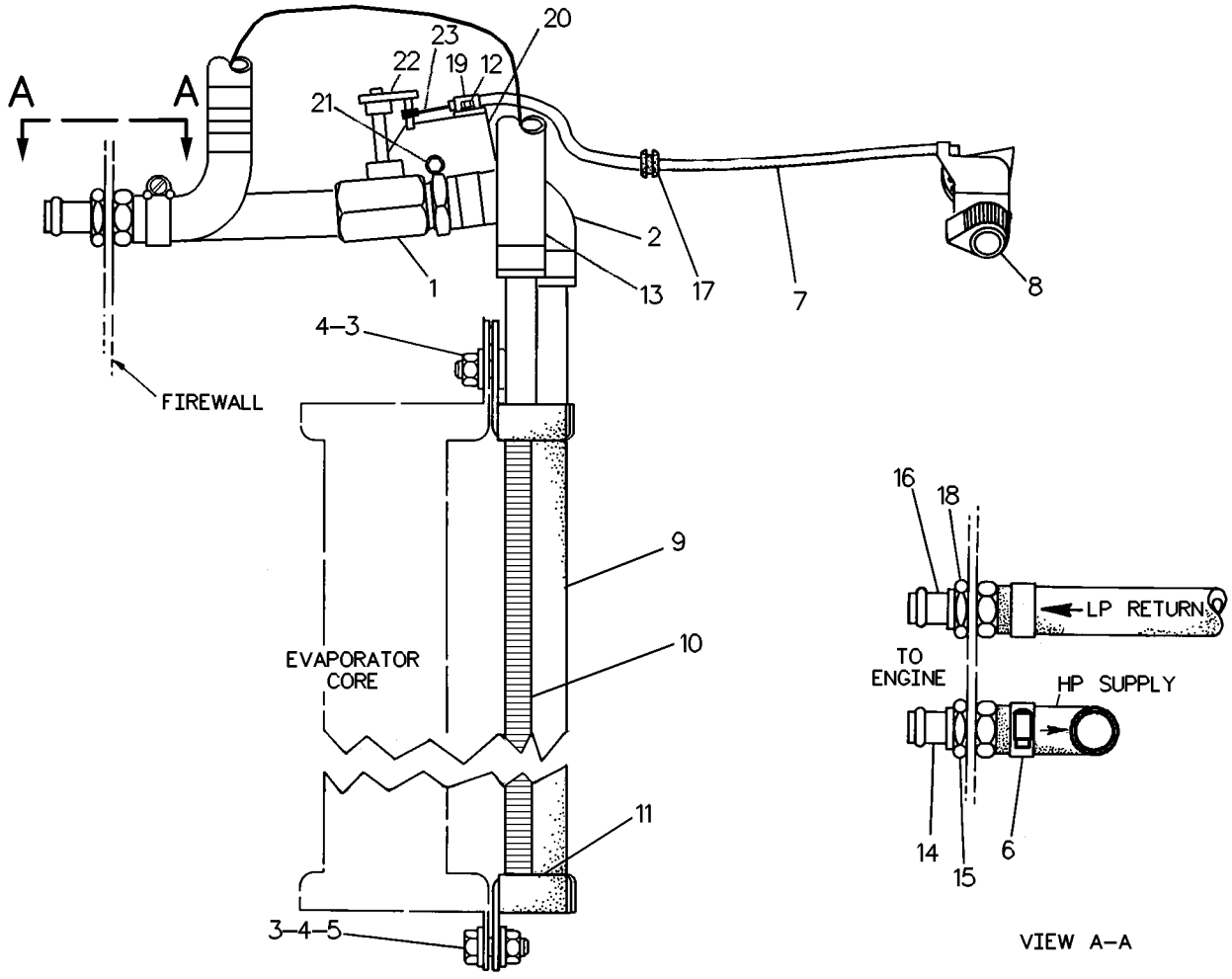

GRAPHIC #1 g00127139

OPERATOR STATION

2V-4280 HORN GP-AIR

S/N: 3XJ1-99999

AN ATTACHMENT

SMCS-7402 **i01325224**

NOTE	REF NO	GRAPHIC REF	PART NUMBER	QTY	PART NAME 1 2 3 4 5 6 (PRODUCT LEVEL)	SEE PAGE
	1	1	**5D-7132**	2	CLAMP-HORN	
		1	**7X-2501**	2	BOLT (1/4-20X1.25 IN)	
		1	**6V-8185**	2	NUT (1/4-20 THD)	
	2	1	**8T-4205**	4	WASHER-HARD (2MM THK)	
Y	3	1	**5D-6998**	1	HORN GP-AIR	
	4	1	**5D-7133**	1	BRACKET	
	5	1	**2H-9523**	1	GROMMET (34.92MM ID)	
	6	1	**2H-9524**	1	GROMMET	
	7	1	**7V-8217**	1	ANGLE	
	8	1	**8C-6561**	1	BOLT (5/16-18X1.375 IN)	
		1	**6V-8189**	1	NUT (5/16-18 THD)	
		1	**8T-4224**	2	WASHER-HARD (8.8X16X2MM THK)	
	9	1	**5K-9243**	2	ELBOW-FLARED (90 DEGREES)	
C	10	1	**5V-1842**	1	HOSE AS	
	11	1	**3V-0037**	1	HOSE AS	
Y	12	1	**4V-6682**	1	VALVE GP-AIR CONTROL	
	13	1	**5K-9239**	1	CONNECTOR	
	14	1	**4M-5281**	2	BOLT (1/4-20X.750 IN)	
	15	1	**9B-7237**	1	BOLT (3/8-16X1.25 IN)	
		1	**4S-5719**	1	SPACER (12.7MM THK)	
		1	**8T-4896**	1	WASHER-HARD (10.2X18.5X2.5MM THK)	
	16	1	**9M-8406**	1	CLIP (15.8MM ID)	

C-CHANGE FROM PREVIOUS TYPE
Y-SEPARATE ILLUSTRATION

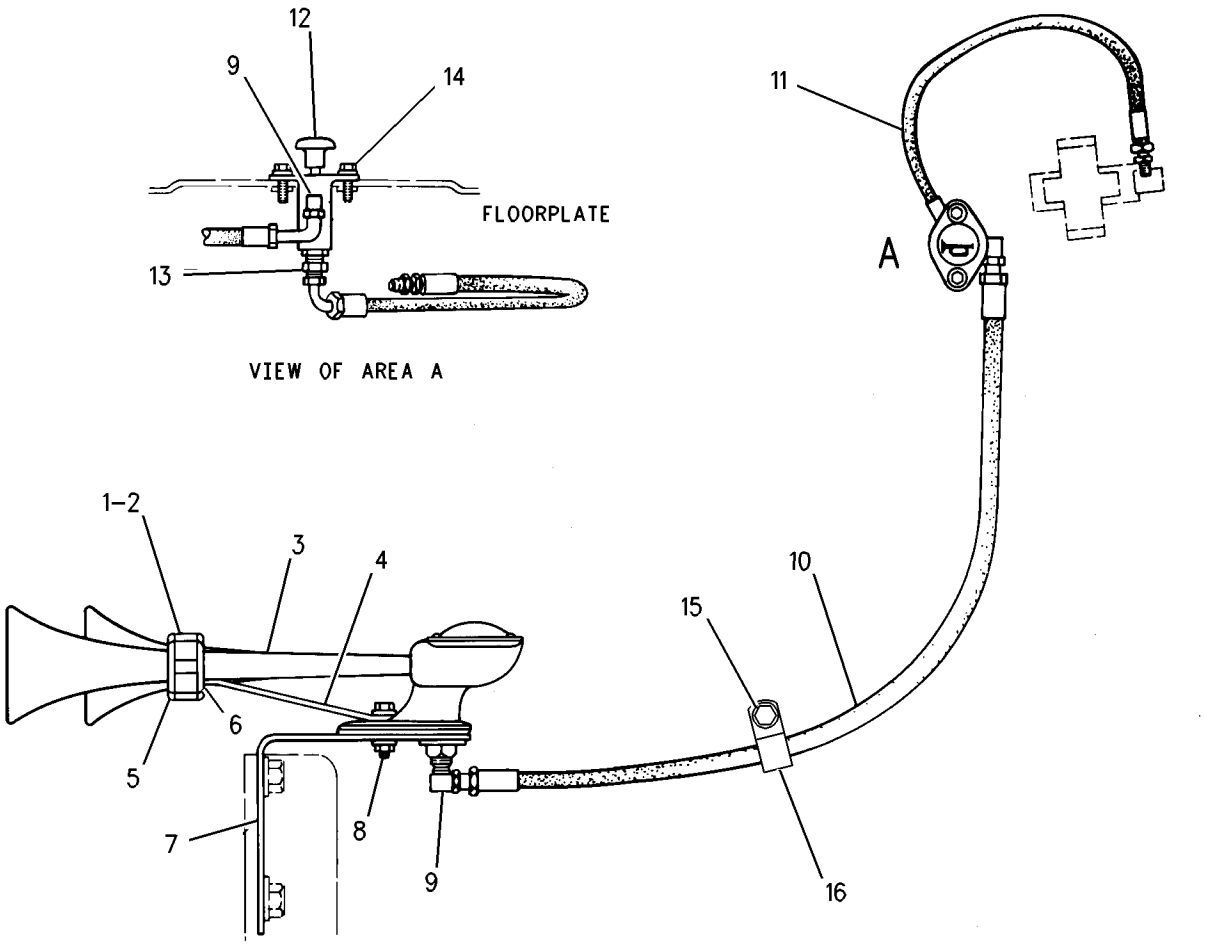

GRAPHIC #1 g00701587

OPERATOR STATION

5D-6998 HORN GP-AIR

S/N: 3XJ1-99999
PART OF 2V-4280 HORN GP-AIR
AN ATTACHMENT

SMCS-7402 **i01197683**

NOTE	REF NO	GRAPHIC REF	PART NUMBER	QTY	PART NAME 1 2 3 4 5 6 (PRODUCT LEVEL)	SEE PAGE
	1	1	**5D-6994**	1	PROJECTOR (LH)	
	2	1	**5D-6993**	1	PROJECTOR (RH)	
	3	1	**5D-6997**	1	PAD	
	4	1	**4B-5275**	1	WASHER	
	5	1	**5D-6996**	1	ADAPTER	
	6	1	**9S-1354**	1	NUT (5/8-18 THD)	
	7	1	**6F-0253**	1	LOCKWASHER (16.26MM ID)	
					AVAILABLE REPAIR KIT(S):	
			2G-6664	2	KIT-DIAPHRAGM	
					(EACH INCLUDES DIAPHRAGM, SEAL, COVER, SCREWS, NUTS, GASKET & DISC)	

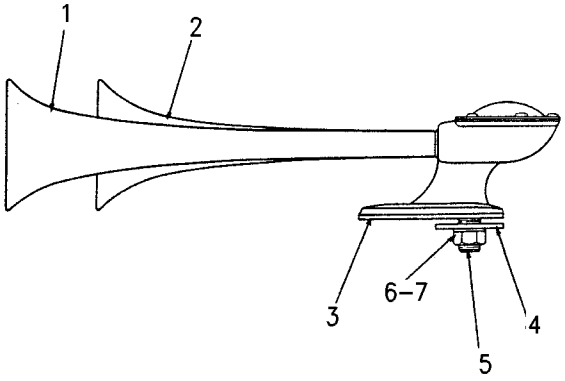

GRAPHIC #1 g00640308

OPERATOR STATION

8R-9527 HORN GP-ELECTRIC

S/N: 3XJ1-1253

SMCS-7402 **i01336254**

NOTE	REF NO	GRAPHIC REF	PART NUMBER	QTY	PART NAME 1 2 3 4 5 6 (PRODUCT LEVEL)	SEE PAGE
	1	1	**4E-2355**	1	INLAY	
	2	1	**4K-5122**	1	HOLDER AS-FUSE	
		1	**7N-2867**	1	CAP-FUSE HOLDER	
	3	1	**3K-8782**	1	FUSE (10 AMP)	
	4	1	**8T-8908**	2	BOLT (1/4-20X1 IN)	
		1	**8T-4205**	2	WASHER-HARD (2MM THK)	
	5	1	**4M-6425**	1	BOLT (5/16-18X1 IN)	
		1	**8T-4224**	1	WASHER-HARD (8.8X16X2MM THK)	
		1	**6V-8189**	1	NUT (5/16-18 THD)	
	6	1	**9L-8492**	1	PLUG	
	7	1	**7T-2296**	1	SWITCH GP-PUSH & HOLD (HORN)	
		1	**1B-2578**	2	NUT (3/8-16 THD)	
		1	**9F-5644**	2	LOCKWASHER (9.93X17.3X.9MM THK)	
	8	1	**7T-0969**	1	HORN AS (24 VOLT)	
		1	**9B-7233**	2	LOCKWASHER (NO.8)	
M	9	1	**8T-4136**	1	BOLT (M10X1.50X25MM)	
		1	**8T-4121**	1	WASHER-HARD (2.5MM THK)	
M		1	**8T-4133**	1	NUT (M10X1.50 THD)	

M-METRIC PART

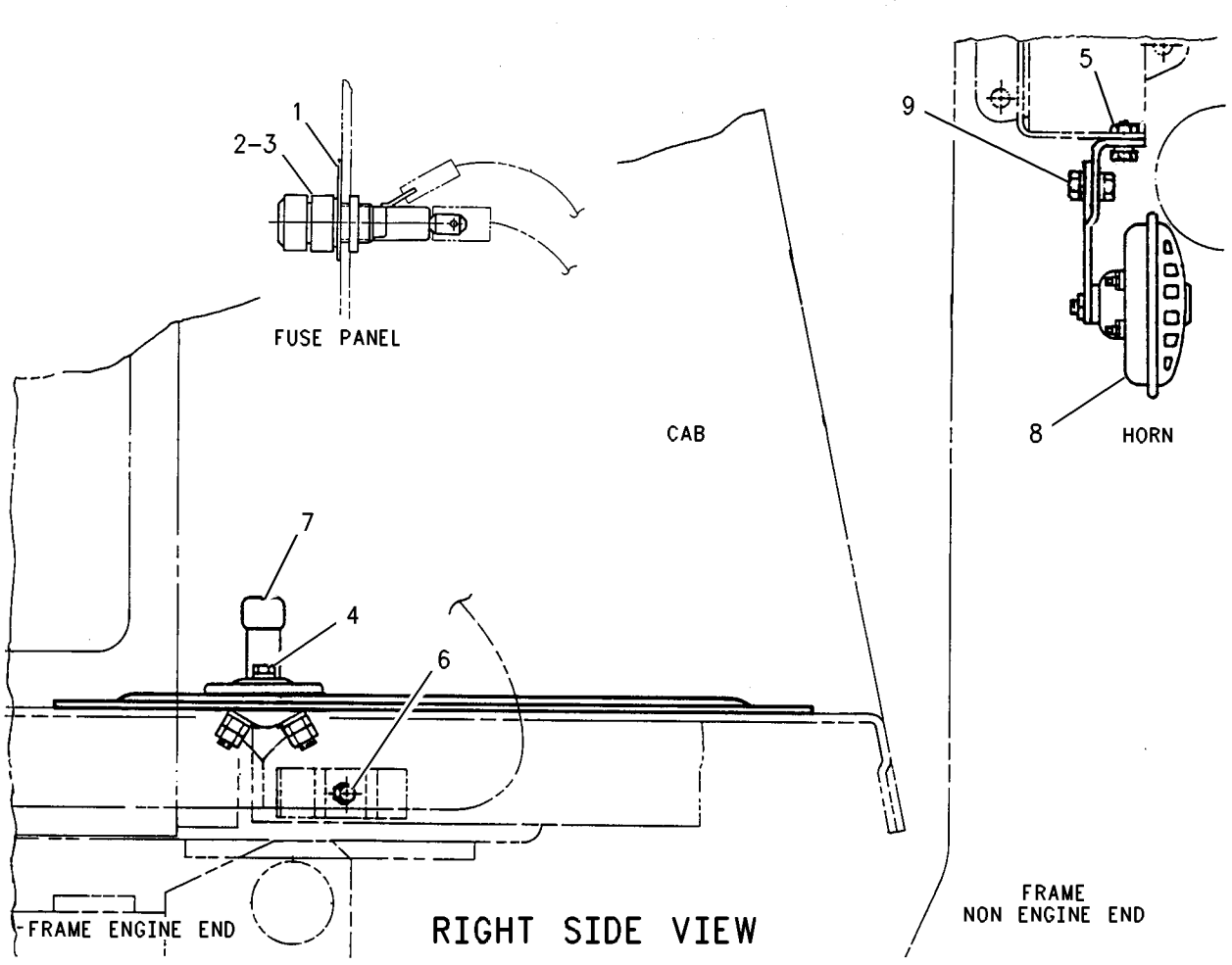

GRAPHIC #1 g00701585

OPERATOR STATION

8R-9527 HORN GP-ELECTRIC

S/N: 3XJ1254-99999

SMCS-7402 **i01324647**

NOTE	REF NO	GRAPHIC REF	PART NUMBER	QTY	PART NAME 1 2 3 4 5 6 (PRODUCT LEVEL)	SEE PAGE
	1	1	**8T-8908**	2	BOLT (1/4-20X1 IN)	
		1	**8T-4205**	2	WASHER-HARD (2MM THK)	
M	2	1	**8T-4136**	1	BOLT (M10X1.50X25MM)	
		1	**8T-4121**	1	WASHER-HARD (2.5MM THK)	
M		1	**8T-4133**	1	NUT (M10X1.50 THD)	
	3	1	**9L-8492**	1	PLUG	
	4	1	**7T-2296**	1	SWITCH GP-PUSH & HOLD (HORN)	
		1	**1B-2578**	2	NUT (3/8-16 THD)	
		1	**9F-5644**	2	LOCKWASHER (9.93X17.3X.9MM THK)	
C	5	1	**6C-5859**	1	HORN	

C-CHANGE FROM PREVIOUS TYPE
M-METRIC PART

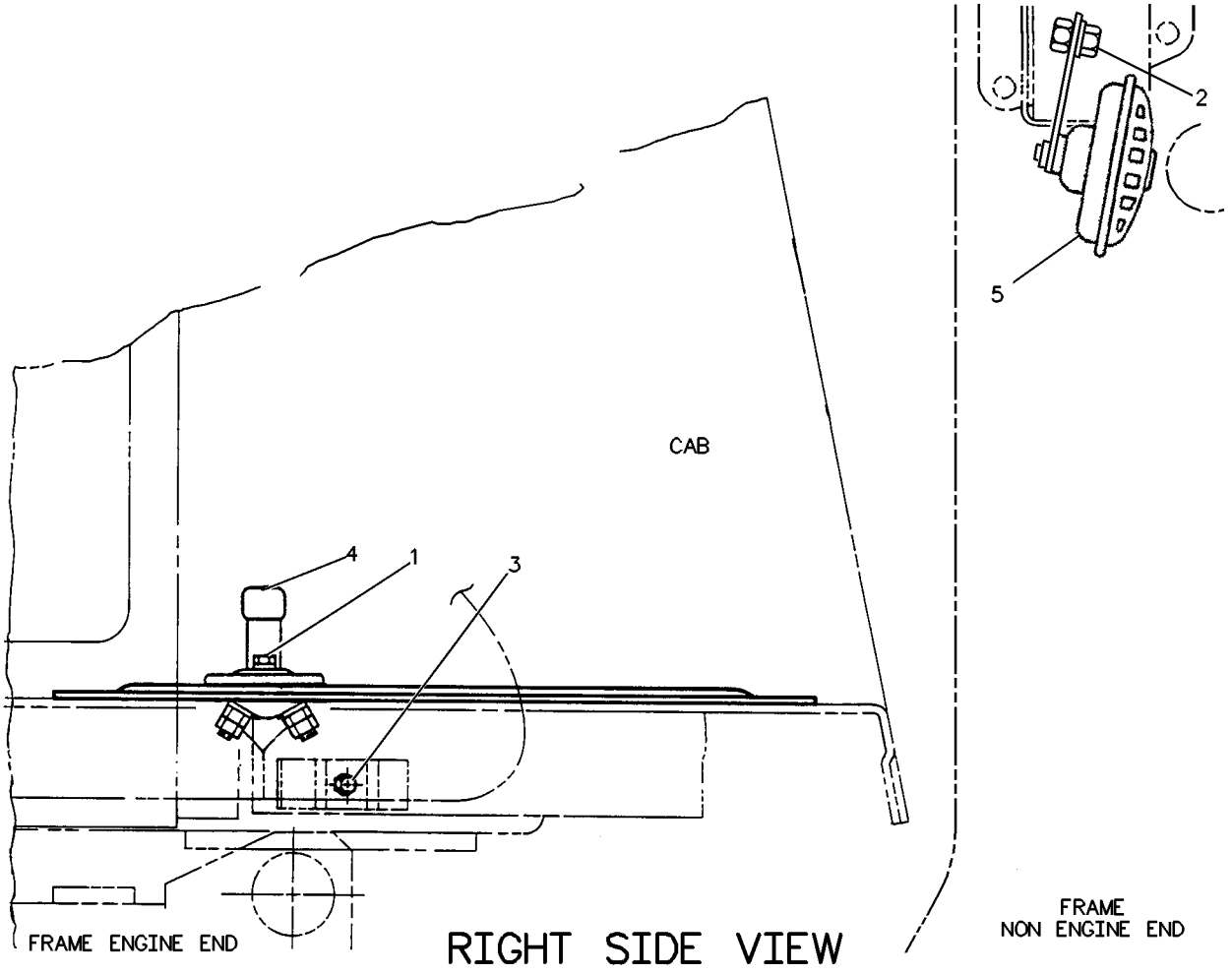

GRAPHIC #1 g00127433

OPERATOR STATION

8Y-6823 HOUSING GP-SEAT SUSPENSION

S/N: 3XJ1-99999
PART OF 8Y-5888 SUSPENSION GP-SEAT
ALSO AN ATTACHMENT

SMCS-7321, 7324 **i01197681**

NOTE	REF NO	GRAPHIC REF	PART NUMBER	QTY	PART NAME 1 2 3 4 5 6 (PRODUCT LEVEL)	SEE PAGE
	1	1	**8Y-6044**	1	SHAFT	
	2	1	**8Y-6066**	1	SPRING	
					AVAILABLE REPAIR KIT(S):	
			100-3224	1	KIT-INDICATOR	
					(INCLUDES STRAP-CABLE & RIVET-POP)	
			100-5179	1	KIT-BUMPER	
			8Y-6861	1	KIT-KNOB	
					(INCLUDES PINS, RACE & BEARING)	
			8Y-6860	1	KIT-SPRING	
					(INCLUDES RING, WASHERS & RETAINER)	
			8Y-6859	1	KIT-SPRING	
					(INCLUDES RINGS)	
			8Y-5945	1	KIT-SUSPENSION KNOB	
					(INCLUDES SCREWS)	

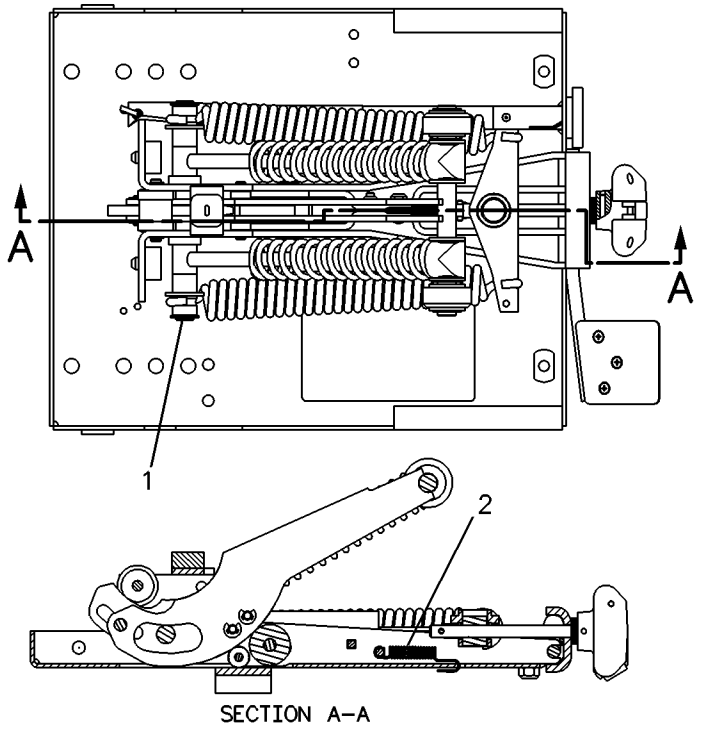

GRAPHIC #1 g00119448

OPERATOR STATION

4E-0351 INSTALLATION GP-CONTROLS

S/N: 3XJ1-99999

PART OF 8R-5041 OPERATOR AR

SMCS-1265, 4284 **i01325232**

NOTE	REF NO	GRAPHIC REF	PART NUMBER	QTY	PART NAME 1 2 3 4 5 6 (PRODUCT LEVEL)	SEE PAGE
	1	1	**5S-7379**	2	BOLT (3/8-16X.875 IN)	
	2	1	**8T-4896**	5	WASHER-HARD (10.2X18.5X2.5MM THK)	
	3	1	**8M-2770**	2	CLIP (12.7MM ID)	
	4	1	**4D-9517**	1	CLIP (12.7MM ID)	
	5	1	**9X-0391**	1	CABLE AS	
	6	1	**1V-6341**	4	SEAL	
	7	1	**6V-8801**	1	NUT (3/8-16 THD)	
	8	1	**7K-1181**	1	STRAP-CABLE (4IN DIA)	
	9	1	**8R-3675**	1	GUIDE	
	10	1	**5P-8167**	2	BOLT (3/8-16X.625 IN)	
	11	1	**8V-1623**	1	SEAL	
	12	1	**9S-1354**	1	NUT (5/8-18 THD)	
	13	1	**8T-4122**	2	WASHER (3.5MM THK)	
	14	1	**8V-1622**	1	HOUSING	
	15	1	**8B-3768**	1	ROD END	
	16	1	**5V-8377**	1	BRACKET	
	17	1	**4F-7952**	1	SEAL-O-RING (37.7MM ID)	
	18	1	**8V-1625**	1	GASKET	
	19	1	**8V-1626**	1	COVER	
	20	1	**6V-8187**	7	NUT (1/4-28 THD)	
	21	1	**8R-7202**	1	WIRE AS	
	22	1	**9X-5696**	1	CABLE AS	
	23	1	**9X-5695**	1	CABLE AS	
	24	1	**8T-8932**	1	PIN AS-SPRING	
	25	1	**8J-5839**	1	SPRING	
	26	1	**2V-7859**	2	BEARING	
	27	1	**5P-6438**	1	END-YOKE ROD	
	28	1	**8R-3674**	1	GUIDE	
	29	1	**8V-1624**	1	LEVER	
	30	1	**4M-5281**	1	BOLT (1/4-20X.750 IN)	
	31	1	**8T-4205**	1	WASHER-HARD (2MM THK)	
	32	1	**6L-7751**	1	ROD END	
	33	1	**9S-1303**	1	PIN	
		1	**3B-4607**	1	COTTER	
	34	1	**4M-6425**	2	BOLT (5/16-18X1 IN)	
		1	**8T-4224**	2	WASHER-HARD (8.8X16X2MM THK)	
	35	1	**1S-7446**	6	SCREW-MACHINE (8-32 THD)	
		1	**1H-4393**	6	LOCKWASHER (NO.8)	
	36	1	**5P-9299**	1	CLIP (12.7MM ID)	

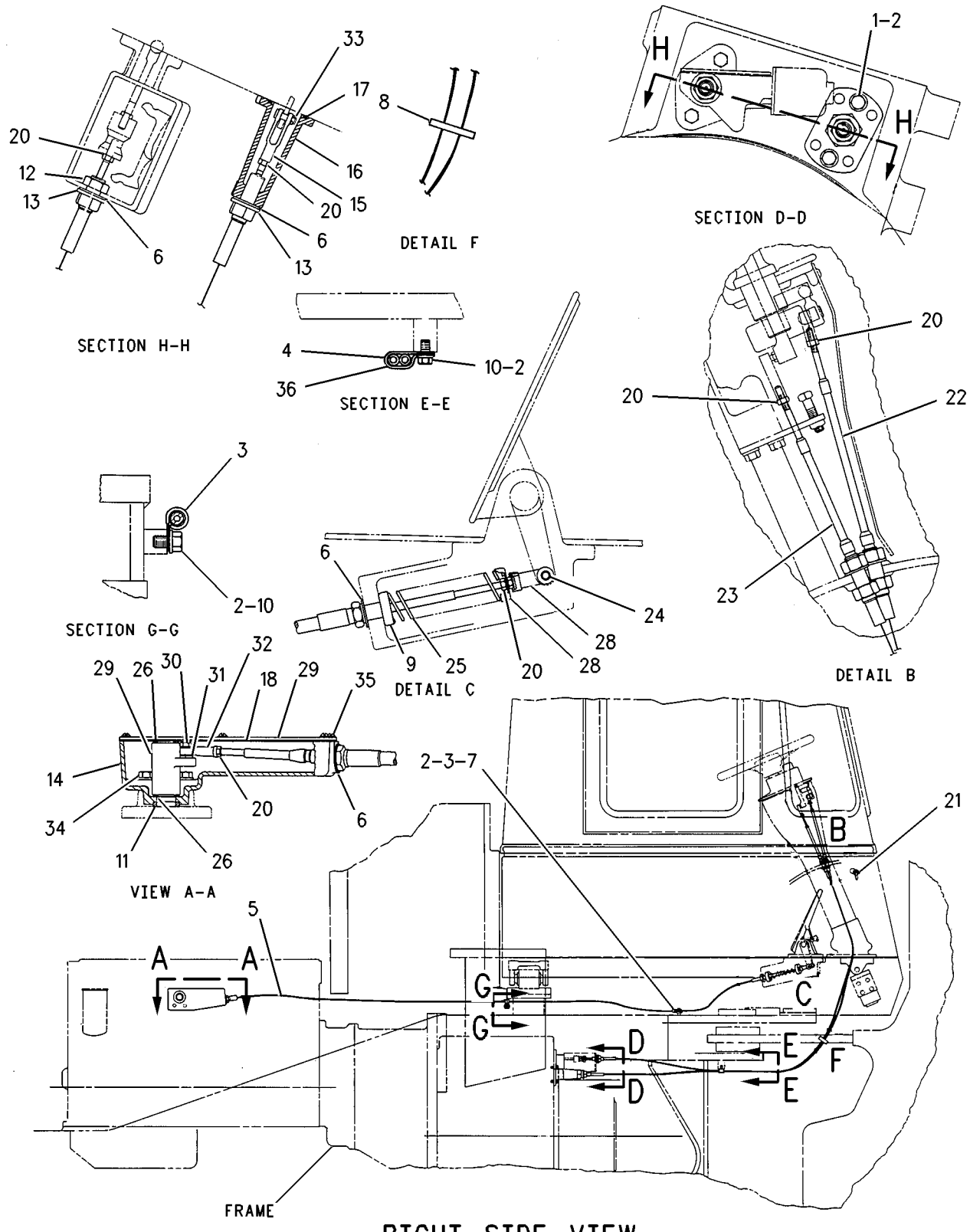

GRAPHIC #1 g00701435

OPERATOR STATION

6C-4057 INSTALLATION GP-RADIO

S/N: 3XJ1-99999
AN ATTACHMENT

SMCS-7338 **i00259687**

NOTE	REF NO	GRAPHIC REF	PART NUMBER	QTY	PART NAME 1 2 3 4 5 6 (PRODUCT LEVEL)	SEE PAGE
	1	1	**6C-4123**	1	COVER	
	2	1	**6C-4239**	1	COVER	
	3	1	**6C-4164**	1	SPEAKER AS-RADIO	
	4	1	**9W-3072**	1	ANTENNA AS	
	5	1	**9W-3073**	1	CABLE AS-COAXIAL	
Y	6	1	*8R-2950*	1	CONVERTER GP-ELECTRICAL	
	7	1	**4E-1411**	1	BUSHING-TERMINAL	
	8	1	**4E-1392**	1	EXTENSION	
	9	1	**5P-8441**	2	GROMMET	
	10	1	**3S-2093**	4	STRAP-CABLE (1.75IN DIA)	
M	11	1	**5C-7883**	2	BOLT-SOCKET HEAD	
	12	1	**6C-4213**	1	HARNESS AS	
	13	1	**4E-2675**	1	BOLT	
	14	1	**4E-2674**	1	BOLT	

M-METRIC PART
Y-SEPARATE ILLUSTRATION

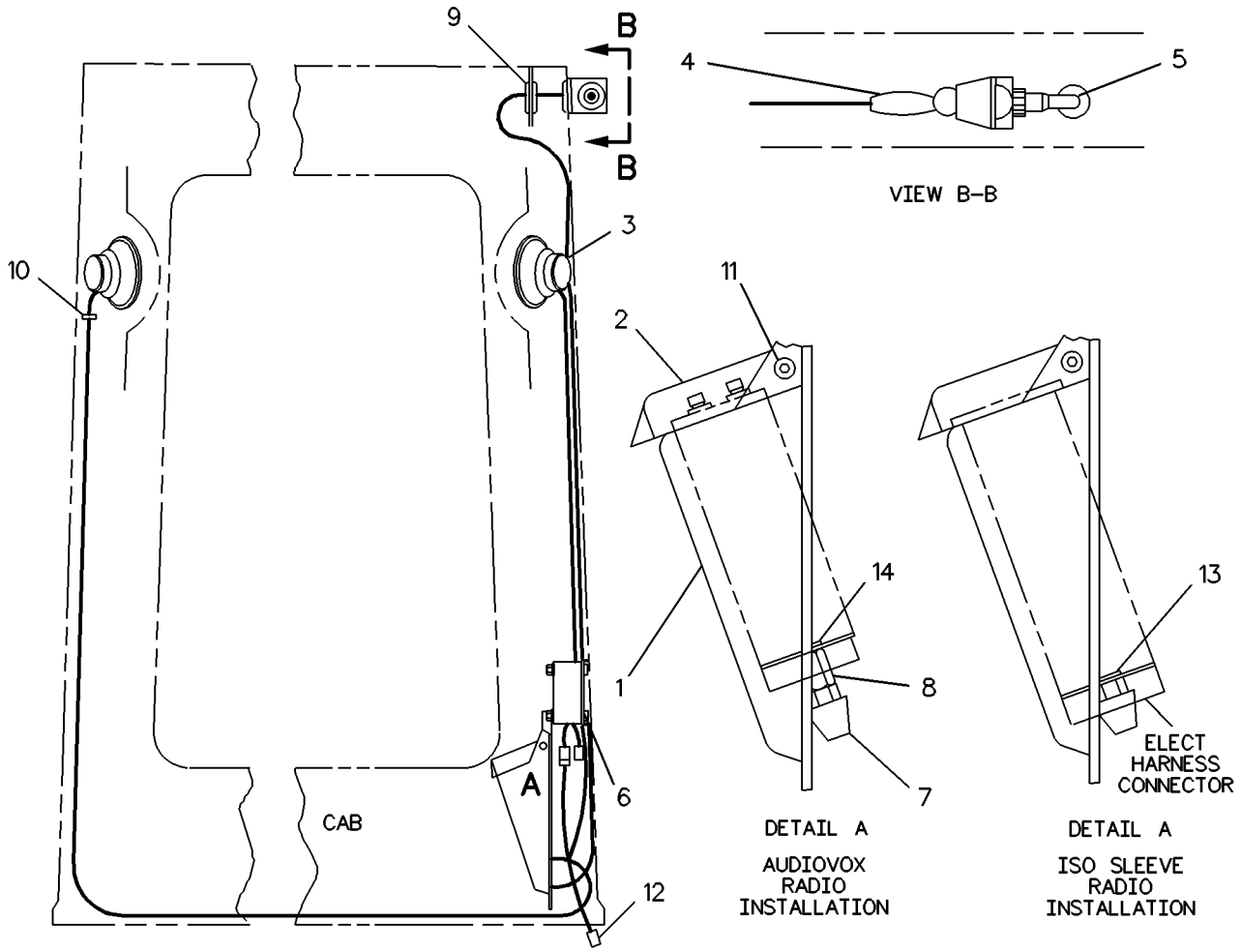

GRAPHIC #1 g00127659

MEMORANDA

OPERATOR STATION

3V-0390 LINES GP-AIR CONDITIONER

S/N: 3XJ1-99999
PART OF 8R-6206 AIR CONDITIONER AR
AN ATTACHMENT

SMCS-1808 **i01343145**

NOTE	REF NO	GRAPHIC REF	PART NUMBER	QTY	PART NAME 1 2 3 4 5 6 (PRODUCT LEVEL)	SEE PAGE
	1	1	**6V-0878**	1	FITTING-AIR CONDITIONER	
	2	1	**6M-5062**	1	SEAL-O-RING (10.82MM ID)	
E	3	1	**5P-5645**		HOSE (156CM)	
	4	1	**5P-0482**	1	COUPLING	
	5	1	**5P-4896**	1	COUPLING	
	6	1	**7K-1181**	5	STRAP-CABLE (4IN DIA)	
	7	1	**5P-3948**	1	COUPLING AS-REFRIGERANT	
		1	**1S-8947**	1	SEAL-O-RING (17.17MM ID)	
	8	1	**5P-3929**	1	COUPLING AS-REFRIGERANT	
		1	**5P-3944**	1	SEAL-O-RING (26.7MM ID)	
E	9	1	**5P-5676**		HOSE (152CM)	
	10	1	**5P-4898**	1	COUPLING	
	11	1	**5P-7488**	1	COUPLING	
	12	1	**5L-4758**	1	SEAL-O-RING (14.0MM ID)	
	13	1	**6V-0877**	1	FITTING-AIR CONDITIONER	
	14	1	**6D-1641**	1	CLIP (25.0MM ID)	
	15	1	**7X-3187**	1	BOLT (3/8-24X2.25IN)	
	16	1	**2S-1865**	1	BRACKET	
	17	1	**9B-7237**	1	BOLT (3/8-16X1.25 IN)	
		1	**8T-4896**	2	WASHER-HARD (10.2X18.5X2.5MM THK)	
	18	1	**1P-6356**	1	PLATE	
	19	1	**7X-0503**	1	WASHER-HARD	

E-ORDER BY THE CENTIMETER

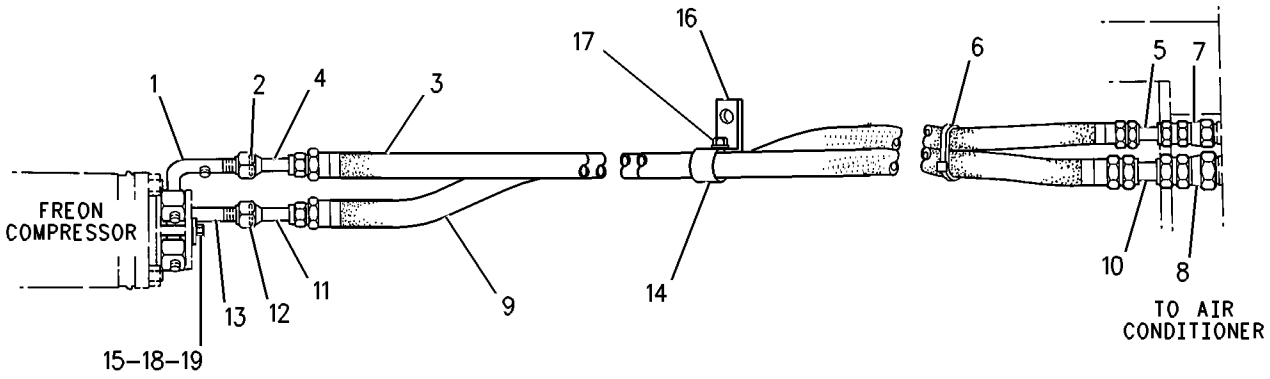

GRAPHIC #1 g00705513

OPERATOR STATION

4E-4788 LINES GP-HEATER

S/N: 3XJ1-99999

SMCS-7304 **i01325220**

NOTE	REF NO	GRAPHIC REF	PART NUMBER	QTY	PART NAME 1 2 3 4 5 6 (PRODUCT LEVEL)	SEE PAGE
	1	1	**6D-1641**	1	CLIP (25.0MM ID)	
		1	**5P-8167**	1	BOLT (3/8-16X.625 IN)	
		1	**6V-8801**	1	NUT (3/8-16 THD)	
		1	**2S-1865**	1	BRACKET	
	2	1	**1V-6585**	1	VALVE-SHUTOFF	
E	3	1	**5P-0765**		HOSE (236CM)	
	4	1	**5D-1026**	4	CLAMP-HOSE	
E	5	1	**5P-0767**		HOSE	
	6	1	**6B-1628**	1	BUSHING-REDUCING	
	7	1	**8B-2664**	1	BUSHING-REDUCER	
	8	1	**000-7244**	1	ELBOW-PIPE	
	9	1	**6V-3866**	1	VALVE	
	10	1	**9M-4972**	1	CLIP (28.58MM ID)	
	11	1	**5P-6994**	1	CLIP (25.5MM ID)	
	12	1	**8T-4896**	2	WASHER-HARD (10.2X18.5X2.5MM THK)	
	13	1	**6W-8946**	1	STRIP AS	
		1	**9F-2978**	1	NUT-WELD (3/8-16 THD)	
	14	1	**5M-3062**	1	BOLT (3/8-16X.75 IN)	
		1	**5P-1075**	1	WASHER-HARD (3MM THK)	
	15	1	**7K-1181**	1	STRAP-CABLE (4IN DIA)	

E-ORDER BY THE CENTIMETER

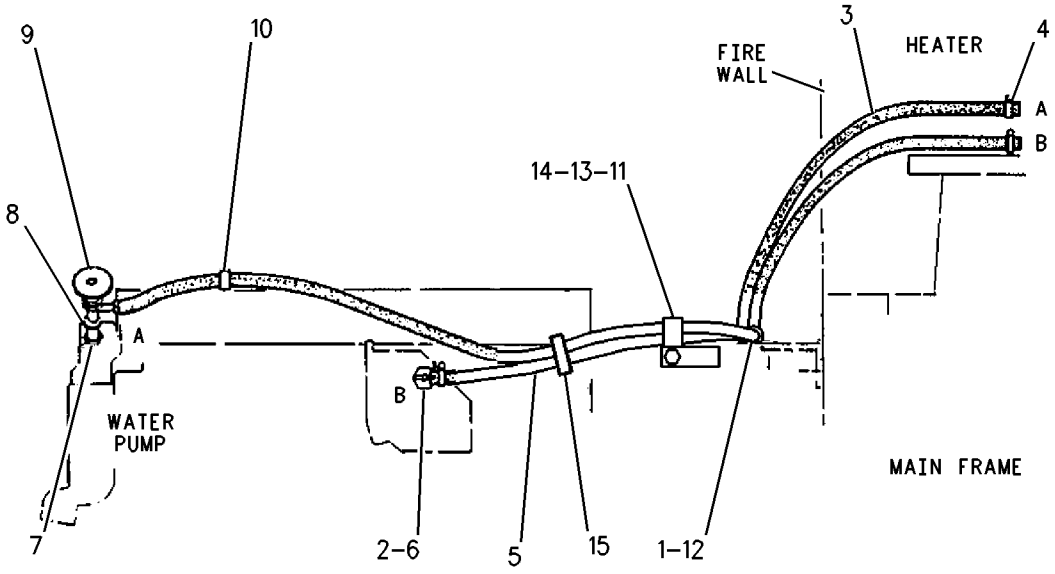

GRAPHIC #1 g00701407

OPERATOR STATION

8V-3173 MIRROR GP–LH

S/N: 3XJ456-99999
PART OF 7V-8703 MIRROR GP-REAR VIEW
ALSO AN ATTACHMENT

SMCS-7319 **i01324524**

NOTE	REF NO	GRAPHIC REF	PART NUMBER	QTY	PART NAME 1 2 3 4 5 6 (PRODUCT LEVEL)	SEE PAGE
C	1	1	**8T-2501**	2	BOLT (3/8-16X2.0 IN)	
C	2	1	**8T-4896**	7	WASHER-HARD (10.2X18.5X2.5MM THK)	
C	3	1	**8L-7395**	4	NUT-FULL	
C	4	1	**5C-9699**	1	TUBE	
C	5	1	**5C-9696**	1	TUBE AS (LH)	
C	6	1	**6K-4935**	1	BRACKET	
C		1	**6K-4934**	1	CLIP	
	7	1	**5P-2424**	3	BOLT (1/2-13X2.25 IN)	
		1	**8T-7971**	3	WASHER-HARD (5MM THK)	
	8	1	**4L-6454**	2	BOLT (3/8-16X1 IN)	
C	9	1	**5C-9698**	1	TUBE AS (LH)	
C	10	1	**8V-3896**	1	PLATE AS	
	11	1	**6C-1496**	1	MIRROR	
C	12	1	**7J-0728**	1	CLIP (TAB)	
C		1	**7J-0729**	1	CLIP (SLOT)	
	13	1	**9B-7237**	2	BOLT (3/8-16X1.25 IN)	

C-CHANGE FROM PREVIOUS TYPE

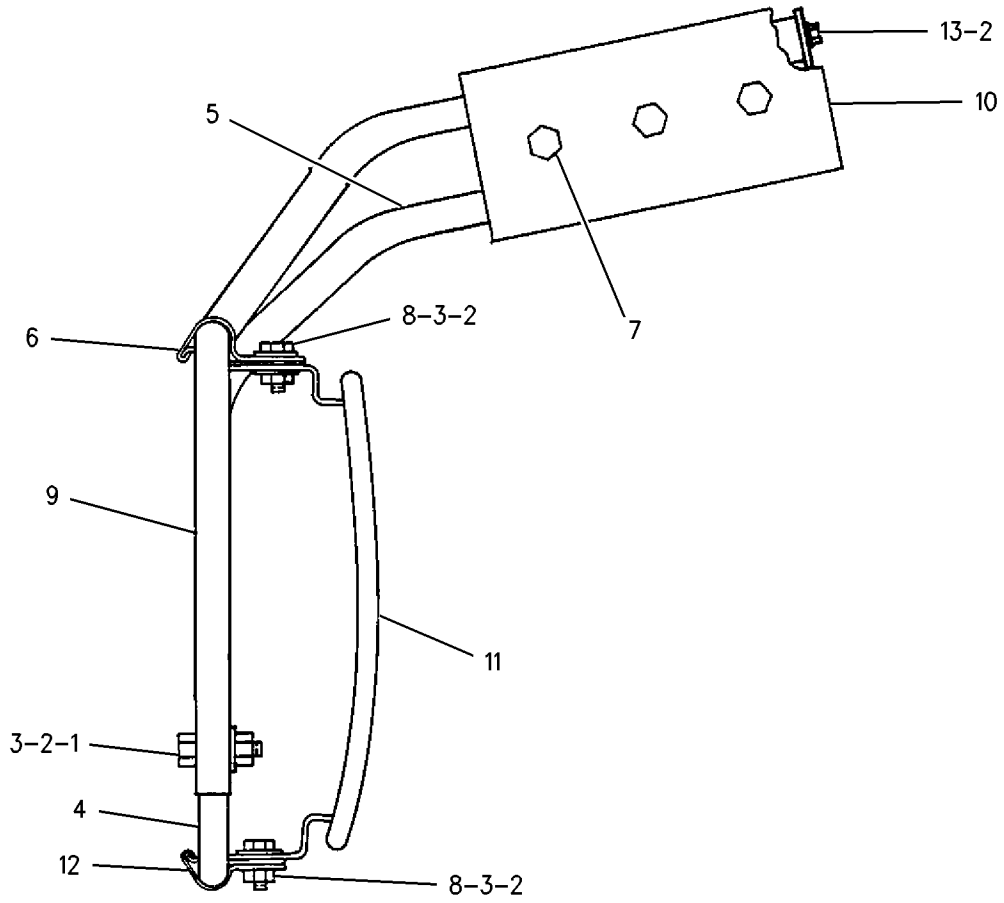

GRAPHIC #1 g00700942

OPERATOR STATION

8V-4355 MIRROR GP–RH

S/N: 3XJ455-99999
PART OF 7V-8703 MIRROR GP-REAR VIEW
ALSO AN ATTACHMENT

SMCS-7319 **i01343131**

NOTE	REF NO	GRAPHIC REF	PART NUMBER	QTY	PART NAME 1 2 3 4 5 6 (PRODUCT LEVEL)	SEE PAGE
C	1	1	**8T-2501**	2	BOLT (3/8-16X2.0 IN)	
C	2	1	**8L-7395**	4	NUT-FULL	
C	3	1	**8T-4896**	7	WASHER-HARD (10.2X18.5X2.5MM THK)	
	4	1	**5C-9699**	1	TUBE	
	5	1	**5C-9697**	1	TUBE AS (RH)	
C	6	1	**6K-4935**	1	BRACKET	
C		1	**6K-4934**	1	CLIP	
	7	1	**5P-2424**	3	BOLT (1/2-13X2.25 IN)	
		1	**8T-7971**	3	WASHER-HARD (5MM THK)	
	8	1	**4L-6454**	2	BOLT (3/8-16X1 IN)	
	9	1	**5C-9682**	1	TUBE-RH	
	10	1	**8V-3896**	1	PLATE AS	
	11	1	**6C-1496**	1	MIRROR	
C	12	1	**7J-0728**	1	CLIP (TAB)	
C		1	**7J-0729**	1	CLIP (SLOT)	
	13	1	**9B-7237**	2	BOLT (3/8-16X1.25 IN)	

C-CHANGE FROM PREVIOUS TYPE

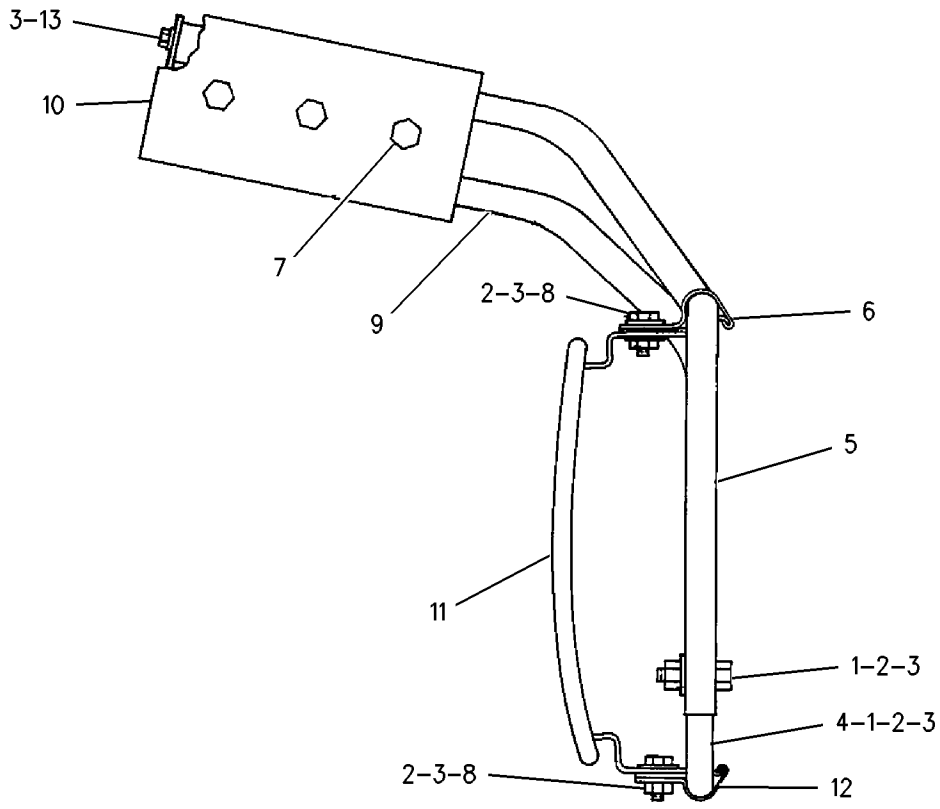

GRAPHIC #1 g00700956

OPERATOR STATION

8V-4965 MIRROR GP–RH

S/N: 3XJ1-455
PART OF 8V-3900 MIRROR GP-REAR VIEW
ALSO AN ATTACHMENT

SMCS-7319 **i01324560**

NOTE	REF NO	GRAPHIC REF	PART NUMBER	QTY	PART NAME 1 2 3 4 5 6 (PRODUCT LEVEL)	SEE PAGE
	1	1	**8V-3896**	1	PLATE AS	
	2	1	**9B-7237**	2	BOLT (3/8-16X1.25 IN)	
	3	1	**8T-4896**	6	WASHER-HARD (10.2X18.5X2.5MM THK)	
	4	1	**8V-5203**	1	TUBE-RH	
	5	1	**8V-3899**	1	TUBE-RH	
	6	1	**8L-7395**	4	NUT-FULL	
	7	1	**8V-3897**	1	TUBE	
	8	1	**6C-1496**	1	MIRROR	
	9	1	**4L-6454**	2	BOLT (3/8-16X1 IN)	
	10	1	**7J-0728**	2	CLIP (TAB)	
	11	1	**5P-2424**	3	BOLT (1/2-13X2.25 IN)	
		1	**8T-7971**	3	WASHER-HARD (5MM THK)	
	12	1	**7J-0729**	2	CLIP (SLOT)	
	13	1	**8T-2501**	2	BOLT (3/8-16X2.0 IN)	

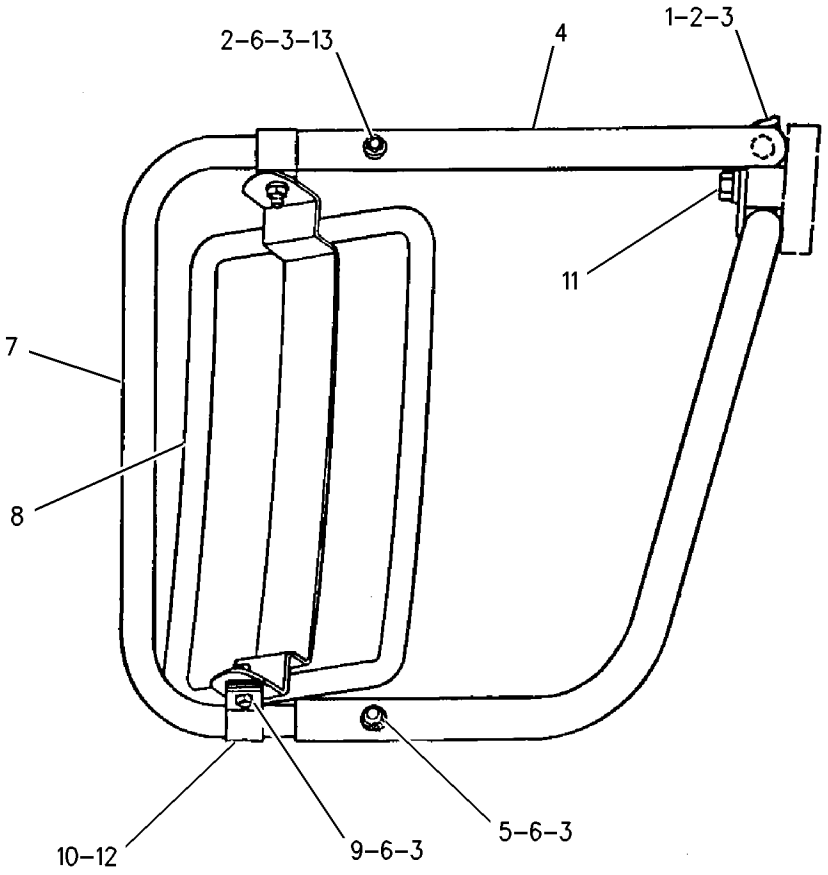

GRAPHIC #1 g00700983

OPERATOR STATION

103-5405 MIRROR GP

S/N: 3XJ1-99999

PART OF 6C-5683 CONVERSION AR-NON-ROADING, 6C-5684 CONVERSION AR-ROADING AN ATTACHMENT

SMCS-7319 **i00200086**

NOTE	REF NO	GRAPHIC REF	PART NUMBER	QTY	PART NAME 1 2 3 4 5 6 (PRODUCT LEVEL)	SEE PAGE
	1	1	**103-5420**	1	PLATE	
	2	1	**5P-6872**	1	MIRROR	

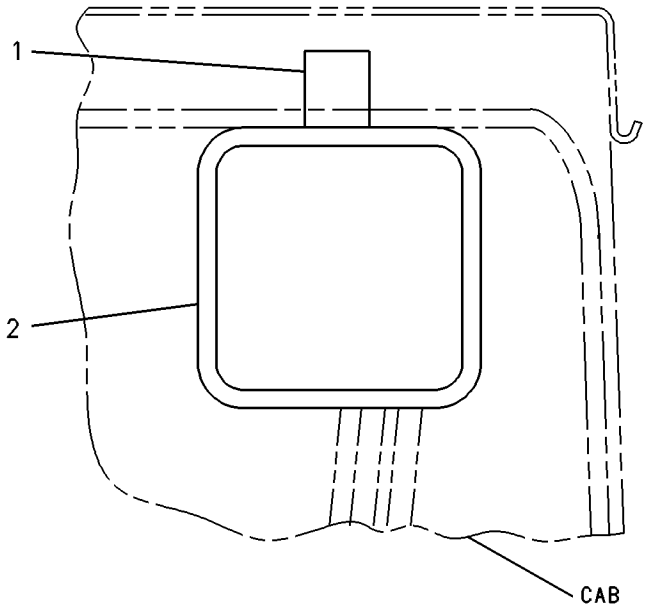

GRAPHIC #1 g00128132

OPERATOR STATION

6W-2601 MIRROR GP-REAR VIEW

S/N: 3XJ1-99999

AN ATTACHMENT

SMCS-7319 **i01324583**

NOTE	REF NO	GRAPHIC REF	PART NUMBER	QTY	PART NAME 1 2 3 4 5 6 (PRODUCT LEVEL)	SEE PAGE
	1	1	**5P-6872**	2	MIRROR	
	2	1	**6W-0543**	1	BRACKET-LH	
	3	1	**6W-0544**	1	BRACKET-RH	
	4	1	**4M-5281**	4	BOLT (1/4-20X.750 IN)	
		1	**8T-4205**	4	WASHER-HARD (2MM THK)	

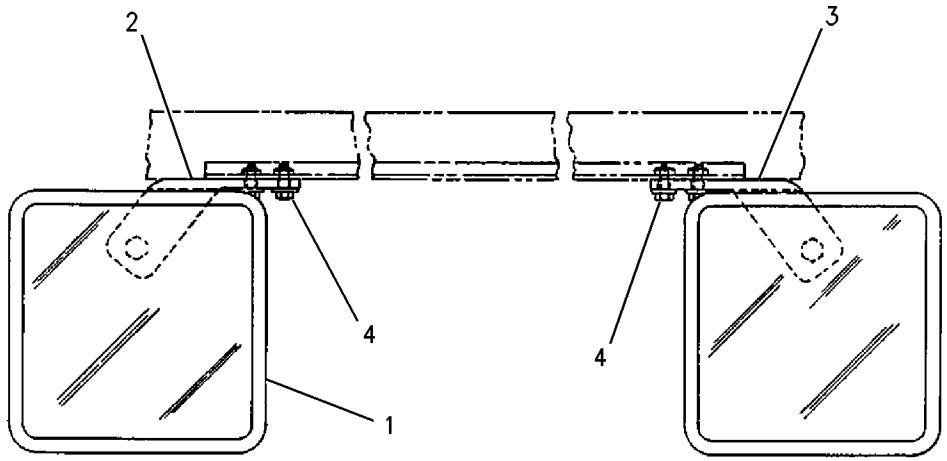

GRAPHIC #1 g00701006

OPERATOR STATION

6W4909 MIRROR GP-REAR VIEW

S/N: 3XJ1-99999
PART OF 6C-4050 CANOPY AR-OPEN ROPS
AN ATTACHMENT

SMCS-7319 **i00996613**

NOTE	REF NO	GRAPHIC REF	PART NUMBER	QTY	PART NAME 1 2 3 4 5 6 (PRODUCT LEVEL)	SEE PAGE
	1	1	**6W-1584**	1	BRACKET-LH	
		1	**6W-1583**	1	BRACKET-RH	
	2	1	**5P-6872**	2	MIRROR	

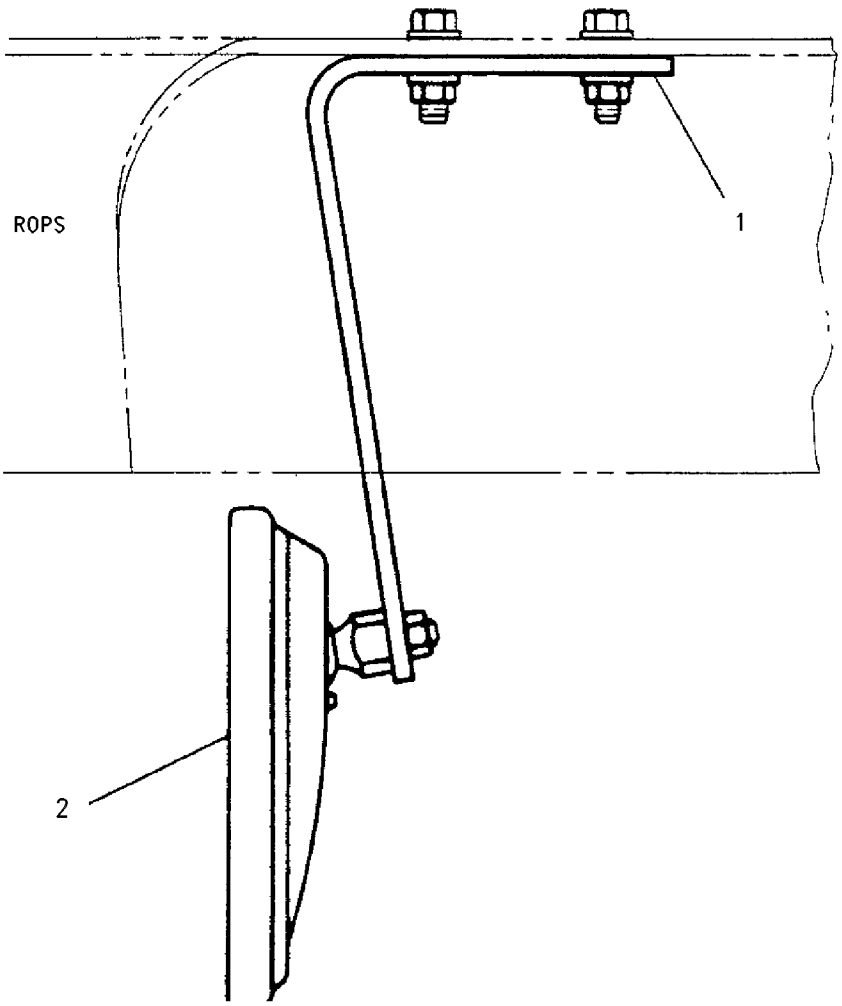

GRAPHIC #1 g00531152

OPERATOR STATION

7V-8703 MIRROR GP-REAR VIEW

S/N: 3XJ456-99999
PART OF 8R-5041 OPERATOR AR, 6C-4043 ROADING AR
ALSO AN ATTACHMENT

SMCS-7319 **i01324522**

NOTE	REF NO	GRAPHIC REF	PART NUMBER	QTY	PART NAME 1 2 3 4 5 6 (PRODUCT LEVEL)	SEE PAGE
Y	1	1	*8V-3173*	1	MIRROR GP (LH)	
CY		1	*8V-4355*	1	MIRROR GP (RH)	

C-CHANGE FROM PREVIOUS TYPE
Y-SEPARATE ILLUSTRATION

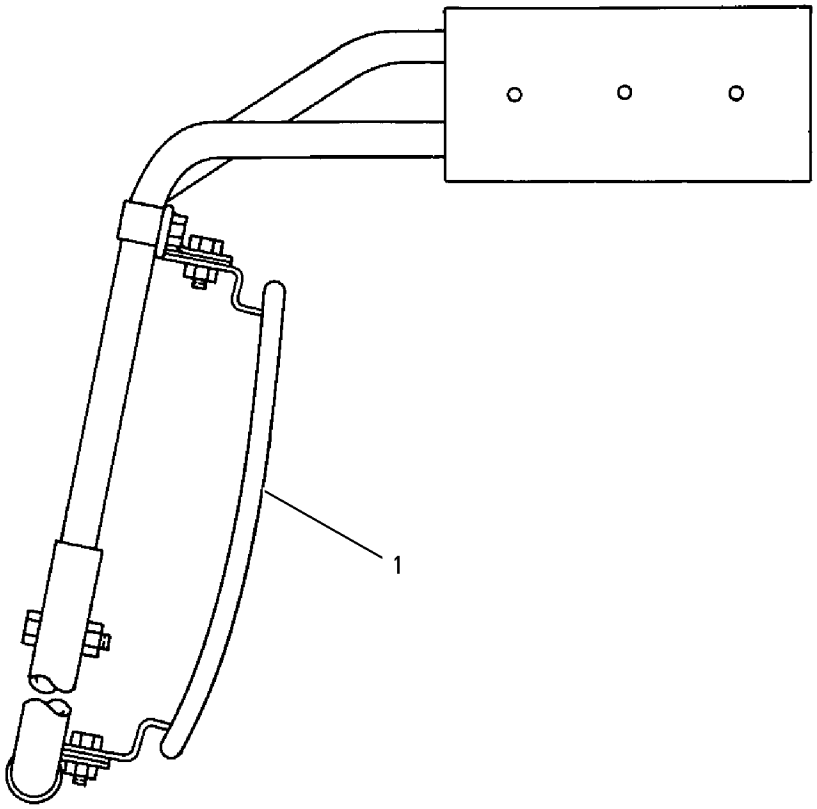

GRAPHIC #1 g00700953

OPERATOR STATION

8V-3900 MIRROR GP-REAR VIEW

S/N: 3XJ1-455

PART OF 6C-3619 CAB AR-LOW PROFILE, 8R-5041 OPERATOR AR

ALSO AN ATTACHMENT

SMCS-7319 **i01310007**

NOTE	PART NUMBER	QTY	PART NAME 1 2 3 4 5 6 (PRODUCT LEVEL)	SEE PAGE
Y	*8V-4965*	1	MIRROR GP	
Y	*8V-3901*	1	MIRROR GP-REAR VIEW	

Y-SEPARATE ILLUSTRATION

OPERATOR STATION

8V-3901 MIRROR GP-REAR VIEW—LH

S/N: 3XJ1-455
PART OF 8V-3900 MIRROR GP-REAR VIEW
ALSO AN ATTACHMENT

SMCS-7319 **i01324558**

NOTE	REF NO	GRAPHIC REF	PART NUMBER	QTY	PART NAME 1 2 3 4 5 6 (PRODUCT LEVEL)	SEE PAGE
	1	1	**8V-3896**	1	PLATE AS	
	2	1	**9B-7237**	2	BOLT (3/8-16X1.25 IN)	
	3	1	**8T-4896**	6	WASHER-HARD (10.2X18.5X2.5MM THK)	
	4	1	**8V-3893**	1	TUBE-LH	
	5	1	**8T-2501**	2	BOLT (3/8-16X2.0 IN)	
	6	1	**8L-7395**	4	NUT-FULL	
	7	1	**8V-3897**	1	TUBE	
	8	1	**6C-1496**	1	MIRROR	
	9	1	**4L-6454**	2	BOLT (3/8-16X1 IN)	
	10	1	**7J-0728**	2	CLIP (TAB)	
	11	1	**8V-3898**	1	TUBE-LH	
	12	1	**5P-2424**	3	BOLT (1/2-13X2.25 IN)	
		1	**8T-7971**	3	WASHER-HARD (5MM THK)	
	13	1	**7J-0729**	2	CLIP (SLOT)	

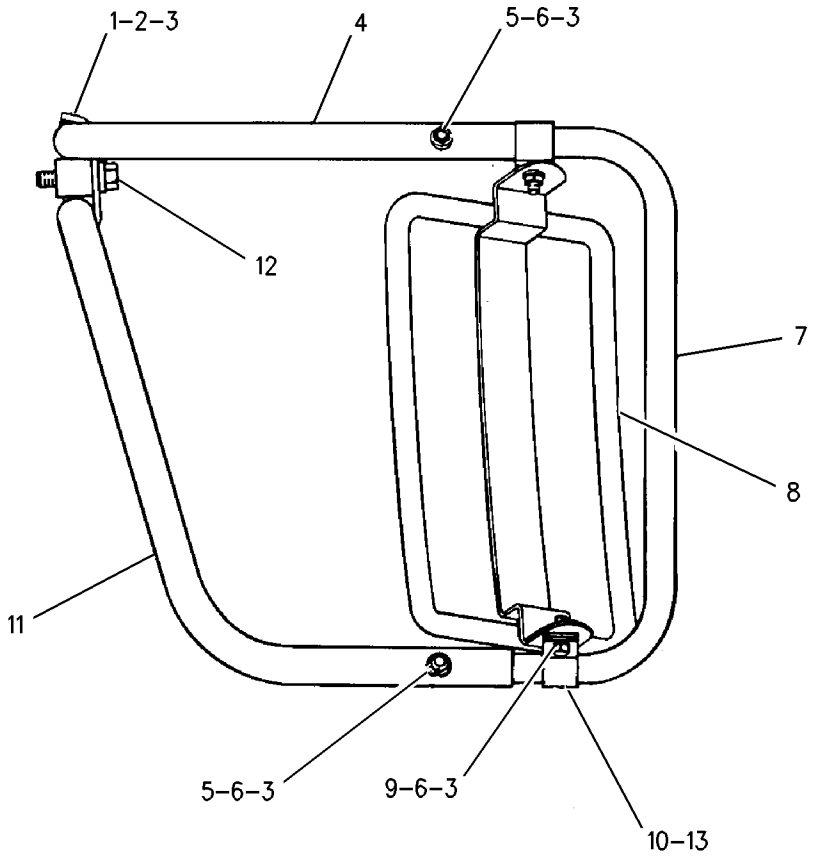

GRAPHIC #1 g00700975

OPERATOR STATION

6C-5342 MONITOR AR-PAYLOAD

S/N: 3XJ1-99999
AN ATTACHMENT

SMCS-7494 **i00684923**

NOTE	PART NUMBER	QTY	PART NAME 1 2 3 4 5 6 (PRODUCT LEVEL)	SEE PAGE
Y	*6C-8493*	1	CAB GP (PAYLOAD)	
Y	*6C-8494*	1	WIRING GP-MONITOR	

Y-SEPARATE ILLUSTRATION

OPERATOR STATION

4E-1706 MOUNTING GP-PLATFORM

S/N: 3XJ1-99999

PART OF 8R-5041 OPERATOR AR

SMCS-7253 **i01327870**

NOTE	REF NO	GRAPHIC REF	PART NUMBER	QTY	PART NAME 1 2 3 4 5 6 (PRODUCT LEVEL)	SEE PAGE
	1	1	**4E-0452**	1	BRACKET AS-LH	
	2	1	**8C-4436**	8	BOLT (1/2-13X1.375 IN)	
	3	1	**8T-4223**	8	WASHER-HARD (3MM THK)	
	4	1	**4E-2554**	1	SHROUD (LH)	
	5	1	**8T-4121**	1	WASHER-HARD (2.5MM THK)	
M	6	1	**8T-4136**	1	BOLT (M10X1.50X25MM)	
	7	1	**7X-0578**	10	WASHER-HARD (2.5MM THK)	
	8	1	**4J-8265**	4	NUT (3/8-16 THD)	
	9	1	**6J-0488**	2	SCREW-HEAD (3/8-16X.875 IN)	
	10	1	**6V-8801**	2	NUT (3/8-16 THD)	
	11	1	**4E-2555**	1	SHROUD (RH)	
	12	1	**5K-9107**	2	BOLT-LOCKING (3/8-16X0.75 IN)	
	13	1	**7G-1060**	1	STRAP AS-GROUND	
	14	1	**8T-4896**	1	WASHER-HARD (10.2X18.5X2.5MM THK)	
	15	1	**5P-8167**	1	BOLT (3/8-16X.625 IN)	
	16	1	**9W-6584**	4	WASHER (10MM THK)	
M	17	1	**8T-0070**	4	BOLT (M20X2.5X120MM)	
	18	1	**8T-3282**	4	WASHER-HARD (3.5MM THK)	
	19	1	**9W-4498**	8	MOUNT AS	
	20	1	**4E-0451**	1	BRACKET AS-RH	

M-METRIC PART

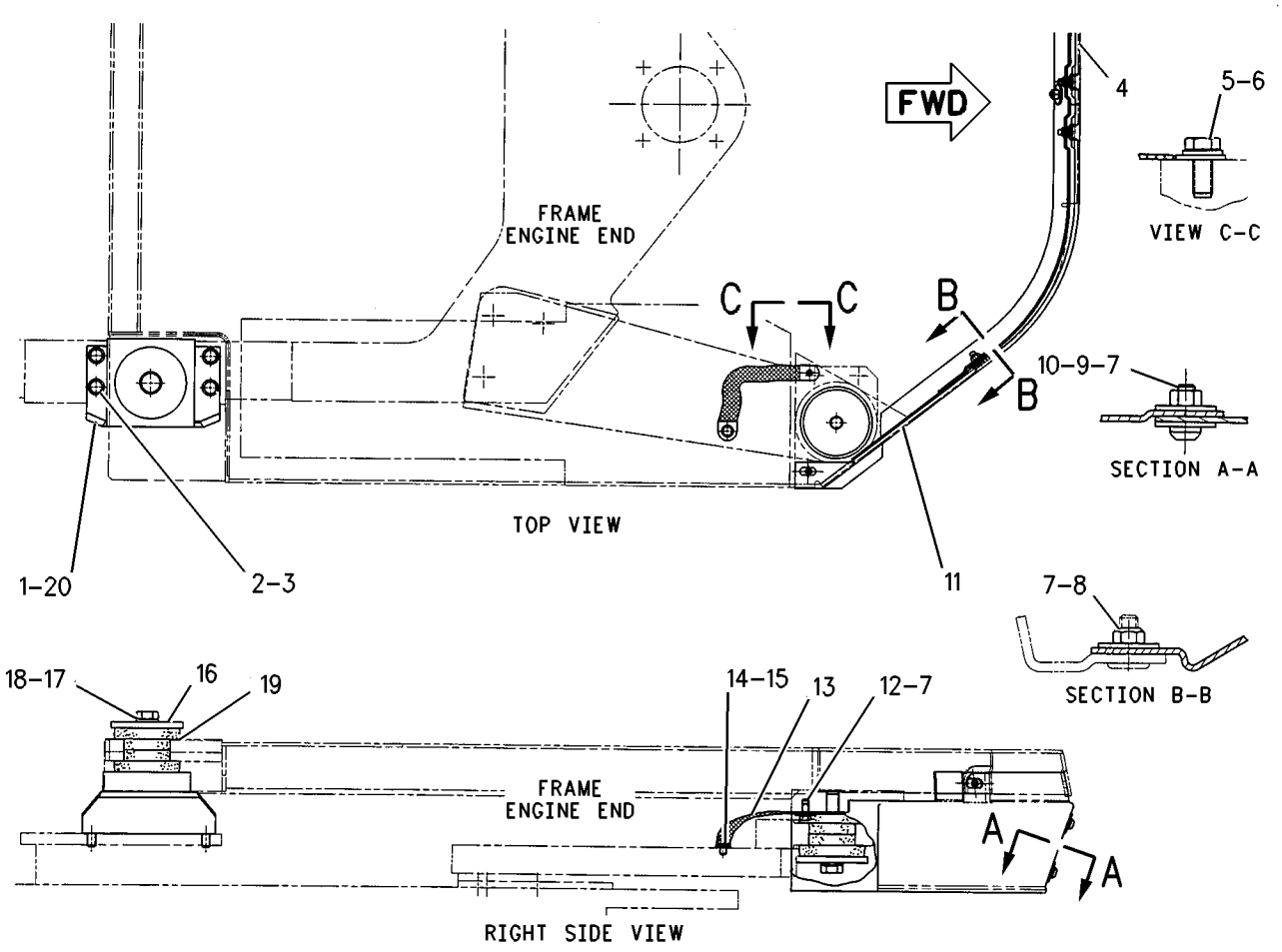

GRAPHIC #1 g00702413

OPERATOR STATION

8R-5041 OPERATOR AR

S/N: 3XJ1-99999

SMCS-7301, 7325, 7335 **i01741245**

NOTE	PART NUMBER	QTY	PART NAME 1 2 3 4 5 6 (PRODUCT LEVEL)	SEE PAGE
Y	*8R-5489*	1	CAB AR	
Y	*6W-0468*	1	CONTROL GP-PARKING BRAKE	
Y	*8R-8119*	1	CONTROL GP-PILOT OPERATED HYD	
Y	*8R-8785*	1	CONTROL GP-STEERING	
Y	*8R-8784*	1	CONTROL GP-TRANSMISSION	
Y	*6W-4705*	1	DOOR GP-SIDE	
	6C-3954	1	FLOOR MAT	
Y	*4E-0351*	1	INSTALLATION GP-CONTROLS	
Y	**8V-3900**	1	MIRROR GP-REAR VIEW	
			S/N: 3XJ1-455	
Y	**7V-8703**	1	MIRROR GP-REAR VIEW	
			S/N: 3XJ456-99999	
Y	*4E-1706*	1	MOUNTING GP-PLATFORM	
Y	*6W-8244*	1	NEUTRALIZER GP-TRANSMISSION	
Y	*8R-5490*	1	PANEL GP-INSTRUMENT	
Y	*8R-5346*	1	PANEL GP-INSTRUMENT	
Y	*6C-3959*	1	PEDAL GP-GOVERNOR	
Y	*6C-4100*	1	PLATFORM GP	
Y	*2V-4291*	1	ROPS GP	
Y	*4E-0073*	1	SEAT GP-SUSPENSION	
Y	*6C-4303*	1	STEERING COLUMN GP-ADJUSTABLE	
Y	*4E-2517*	1	SUPPORT GP-SEAT	
Y	*8R-5342*	1	SUPPRESSION GP-SOUND	
Y	*4E-2599*	1	WASHER GP-WINDOW	
Y	*8R-5344*	1	WIRING GP-INSTR & IGNITION	

Y-SEPARATE ILLUSTRATION

MEMORANDA

OPERATOR STATION

8Y-5992 PAN GP-SEAT—BOTTOM

S/N: 3XJ1-99999
PART OF 8Y-5883, 8Y-5954 SEAT GP
ALSO AN ATTACHMENT

SMCS-7312 **i01146072**

NOTE	REF NO	GRAPHIC REF	PART NUMBER	QTY	PART NAME 1 2 3 4 5 6 (PRODUCT LEVEL)	SEE PAGE
	1	1	**8Y-5892**	1	PAN AS-SEAT (BOTTOM)	
JL	2	1	**3K-4897**	4	PIN-SPRING	
N	3	1	**9M-5733**	1	RIVET-POP (4.78MM DIA)	
N	4	1	**6V-2456**	2	RING-RETAINING	
JZ	5	1		1	ROD AS	
JLZ	6	1		2	SPRING	
LZ	7	1		1	ROD AS	
LZ	8	1		1	BUSHING-TERMINAL	
NZ	9	1		1	BRACKET	
NZ	10	1		1	CABLE AS	
NZ	11	1		1	PIN	
NZ	12	1		1	ADJUSTER AS	
					AVAILABLE REPAIR KIT(S):	
J			**8Y-5995**	1	KIT-SEAT TILT	
					(INCLUDES BUSHING, LOCKPIN)	
L			**8Y-5998**	1	KIT-BACK TILT	
					(INCLUDES BUSHING)	
N			**8Y-5999**	1	KIT-ADJUSTER	

J-KIT MARKED J INCLUDES PART(S) MARKED J
L-KIT MARKED L INCLUDES PART(S) MARKED L
N-KIT MARKED N INCLUDES PART(S) MARKED N
Z-NOT SERVICED SEPARATELY

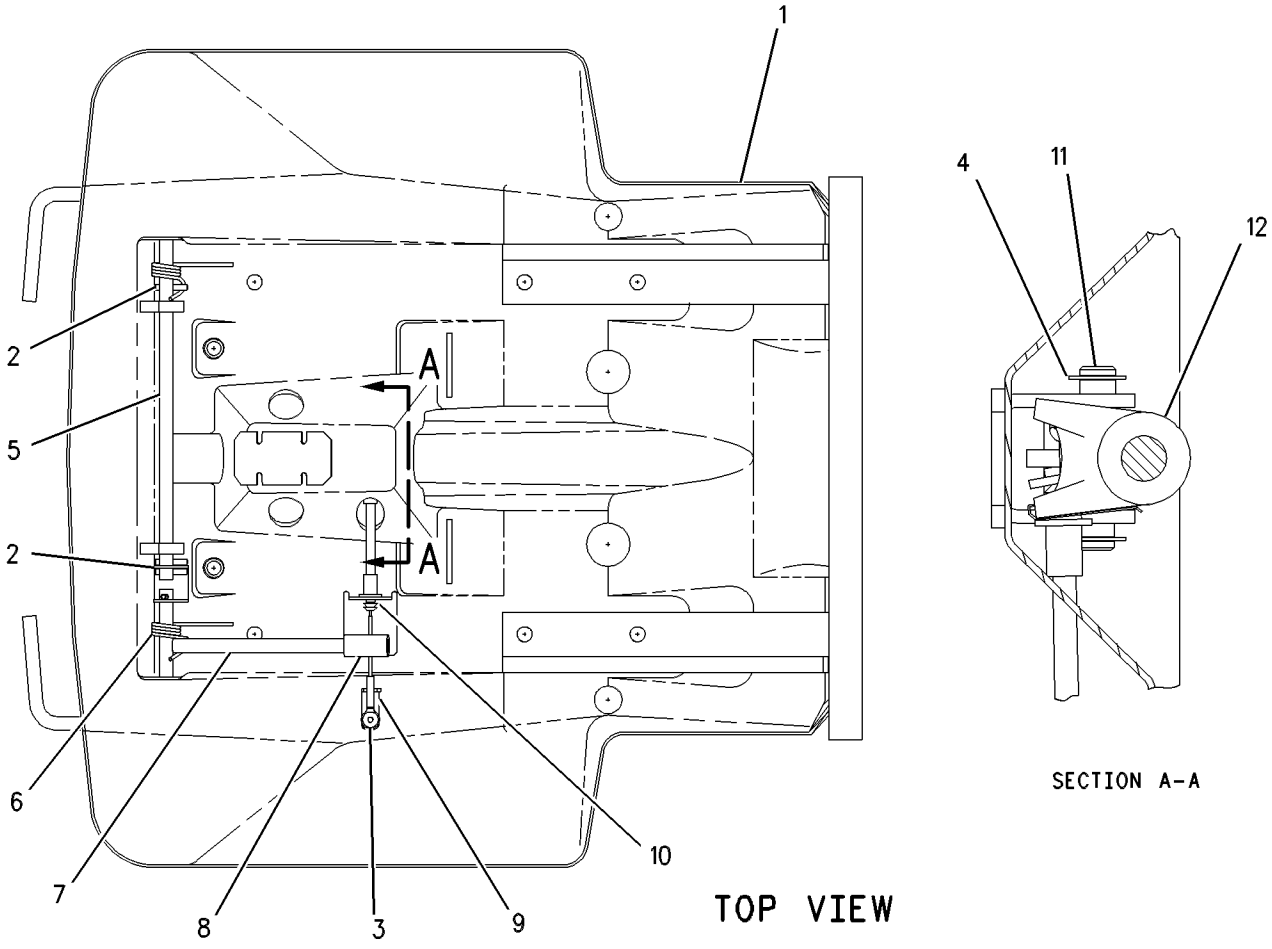

GRAPHIC #1 g00315615

OPERATOR STATION

8R-5346 PANEL GP-INSTRUMENT

S/N: 3XJ1-99999

PART OF 8R-5041 OPERATOR AR

SMCS-7451 **i00259711**

NOTE	REF NO	GRAPHIC REF	PART NUMBER	QTY	PART NAME 1 2 3 4 5 6 (PRODUCT LEVEL)	SEE PAGE
	1	1	**6C-4199**	1	PANEL AS	
	2	1	**6C-4193**	1	HARNESS AS	
	3	1	**6C-4082**	2	SWITCH AS (WIPER GP-WASHER)	
		1	**7K-4474**	1	CONNECTOR AS	
		1	**7N-7779**	3	SOCKET	
		1	**7N-7780**	2	PIN-CONNECTOR (BLADE)	
		1	**7N-7782**	1	HOUSING-PLUG	
		1	**7N-9737**	1	HOUSING-PLUG	
	4	1	**9W-0335**	1	LIGHTER AS-CIGAR	
	5	1	**9G-2264**	2	CLIP-CONNECTOR	
Y	6	1	**9G-7641**	1	SWITCH GP-START	
	7	1	**3H-2900**	1	GROMMET	
	8	1	**7X-0510**	1	WASHER-HARD	
	9	1	**1D-4717**	1	NUT (3/8-16 THD)	
	10	1	**5P-5454**	1	ASHTRAY	
	11	1	**5P-5824**	1	HOLDER-ASH TRAY	
	12	1	**9G-2265**	3	CLIP	
	13	1	**6C-4202**	1	FILM	
	14	1	**7N-9967**	3	LAMP-MINIATURE	
	15	1	**118-8500**	1	HARNESS AS	
	16	1	**8R-7196**	1	CUSHION AS-BACKREST	
M	17	1	**8T-4136**	2	BOLT (M10X1.50X25MM)	
	18	1	**8T-4121**	2	WASHER (2.5MM THK)	
M	19	1	**5C-2890**	3	NUT (M6X1.00 THD)	
	20	1	**5L-2579**	2	GROMMET	
	21	1	**7X-0586**	3	WASHER-HARD	
	22	1	**6C-4201**	1	BRACKET	
	23	1	**1D-4675**	1	BOLT-CARRIAGE	
	24	1	**5P-5774**	1	PLUG	
	25	1	**119-6105**	1	GROMMET	

M-METRIC PART
Y-SEPARATE ILLUSTRATION

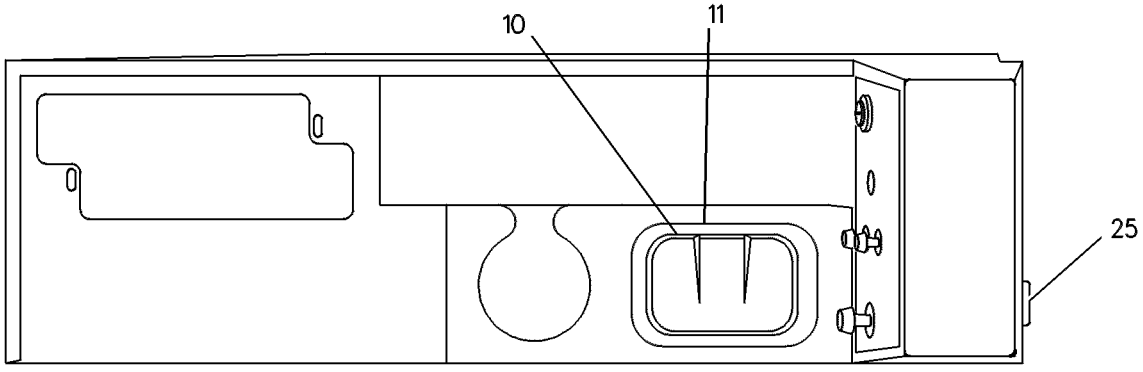

TOP VIEW

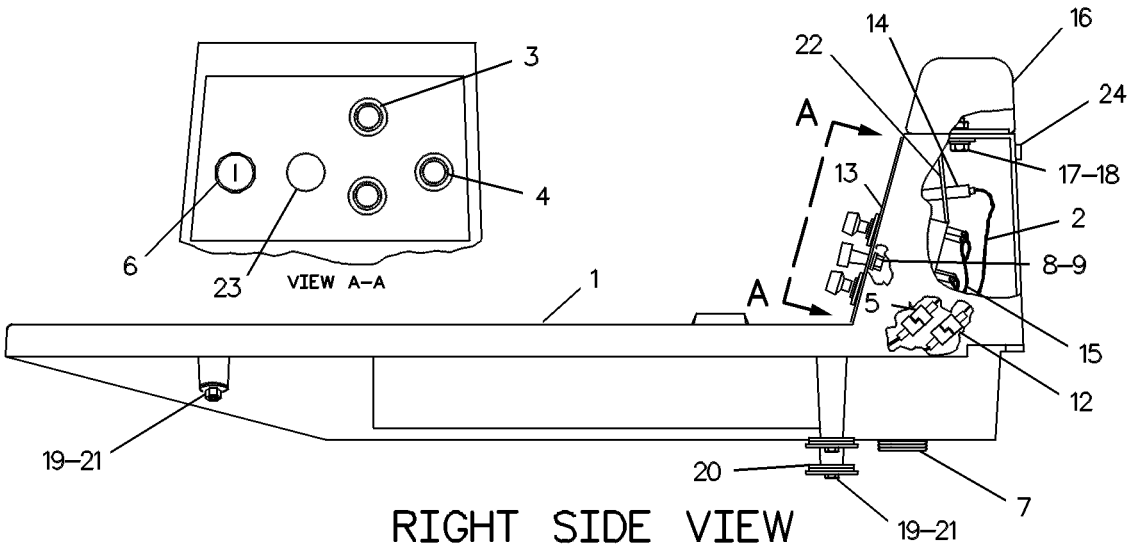

RIGHT SIDE VIEW

GRAPHIC #1 g00129301

OPERATOR STATION

8R-5490 PANEL GP-INSTRUMENT

S/N: 3XJ1-472

PART OF 8R-5041 OPERATOR AR

SMCS-7451 **i00259722**

NOTE	REF NO	GRAPHIC REF	PART NUMBER	QTY	PART NAME 1 2 3 4 5 6 (PRODUCT LEVEL)	SEE PAGE
Y	1	1	*8R-8108*	1	PANEL GP-INSTRUMENT	
	2	1	**6C-4207**	1	PANEL AS	
	3	1	**6C-4208**	1	PANEL AS-RH	
	4	1	**8R-7059**	1	COVER	
	5	1	**8R-7064**	1	BRACKET AS	
	6	1	**5L-8957**	2	STUD-WELD (3/8-16X1.00 IN)	
	7	1	**7X-1360**	1	CONTROL GP-ELECTRONIC	
	8	1	**8R-7154**	1	PLATE AS	
	9	1	**5L-8957**	1	STUD-WELD (3/8-16X1.00 IN)	
	10	1	**8R-7153**	1	PLATE AS	
	11	1	**5L-8957**	2	STUD-WELD (3/8-16X1.00 IN)	
	12	1	**8T-4896**	5	WASHER-HARD (2.5MM THK)	
		1	**6V-8801**	5	NUT (3/8-16 THD)	
M	13	1	**9X-2042**	2	SCREW-TRUSS HEAD (M6X1.0X12MM)	
	14	1	**9X-4971**	1	FILM-PANEL	

M-METRIC PART
Y-SEPARATE ILLUSTRATION

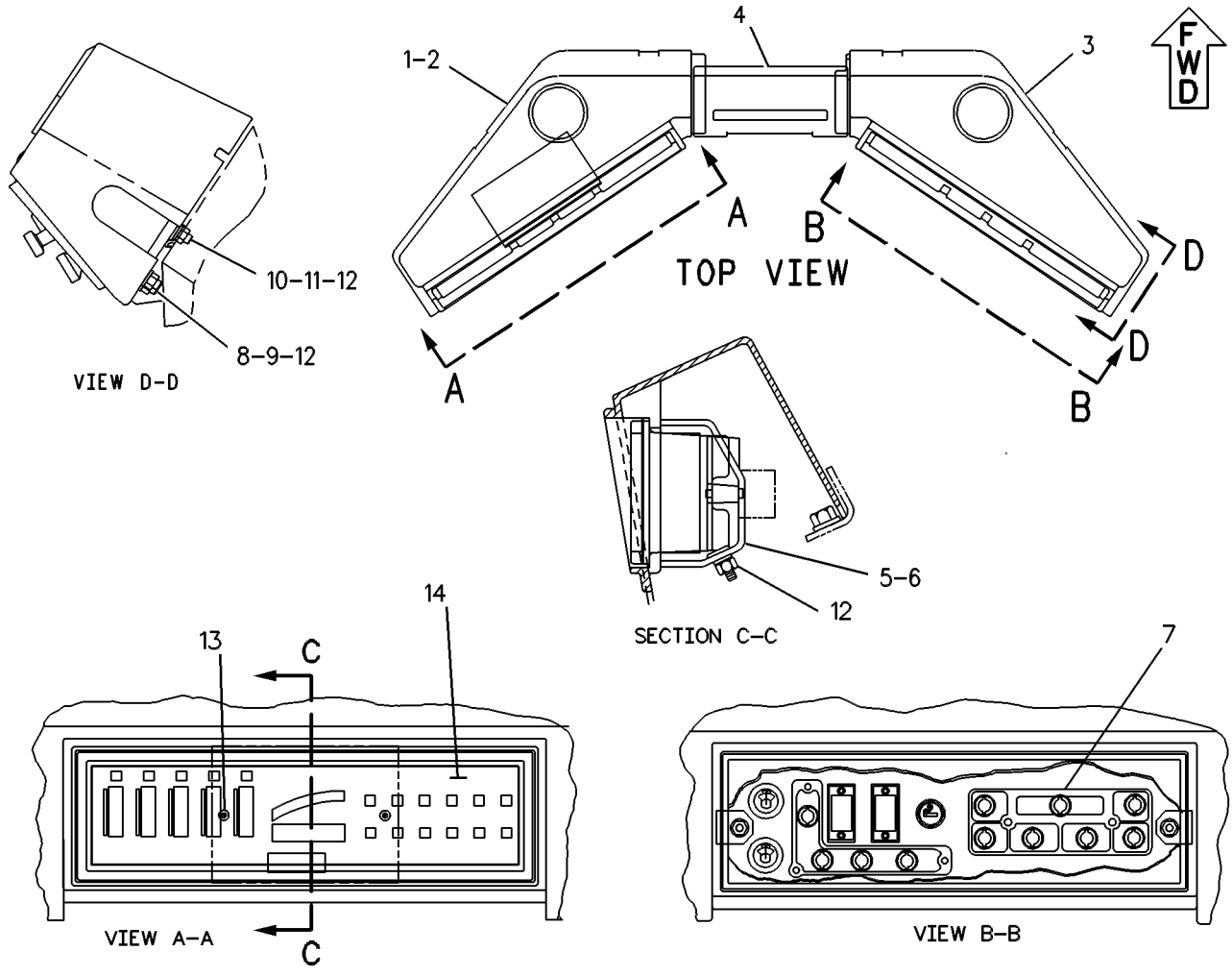

GRAPHIC #1 g00130166

MEMORANDA

OPERATOR STATION

8R-5490 PANEL GP-INSTRUMENT

S/N: 3XJ473-1159

PART OF 8R-5041 OPERATOR AR

SMCS-7451 **i00259748**

NOTE	REF NO	GRAPHIC REF	PART NUMBER	QTY	PART NAME 1 2 3 4 5 6 (PRODUCT LEVEL)	SEE PAGE
Y	1	1	*8R-8108*	1	PANEL GP-INSTRUMENT	
	2	1	**6C-4207**	1	PANEL AS	
	3	1	**6C-4208**	1	PANEL AS-RH	
	4	1	**8R-7059**	1	COVER	
	5	1	**8R-7064**	1	BRACKET AS	
	6	1	**5L-8957**	2	STUD-WELD (3/8-16X1.00 IN)	
CR	7	1	**3E-5331**	1	CONTROL GP-ELECTRONIC	
	8	1	**8R-7154**	1	PLATE AS	
	9	1	**5L-8957**	1	STUD-WELD (3/8-16X1.00 IN)	
	10	1	**8R-7153**	1	PLATE AS	
	11	1	**5L-8957**	2	STUD-WELD (3/8-16X1.00 IN)	
	12	1	**8T-4896**	5	WASHER-HARD (2.5MM THK)	
		1	**6V-8801**	5	NUT (3/8-16 THD)	
CM	13	1	**8T-4970**	2	BOLT (M6X1X14MM)	
C		1	**1H-3338**	2	LOCKWASHER (6.64MM ID)	
	14	1	**9X-4971**	1	FILM-PANEL	

C-CHANGE FROM PREVIOUS TYPE
M-METRIC PART
R-REMFG PART MAY BE AVAILABLE
Y-SEPARATE ILLUSTRATION

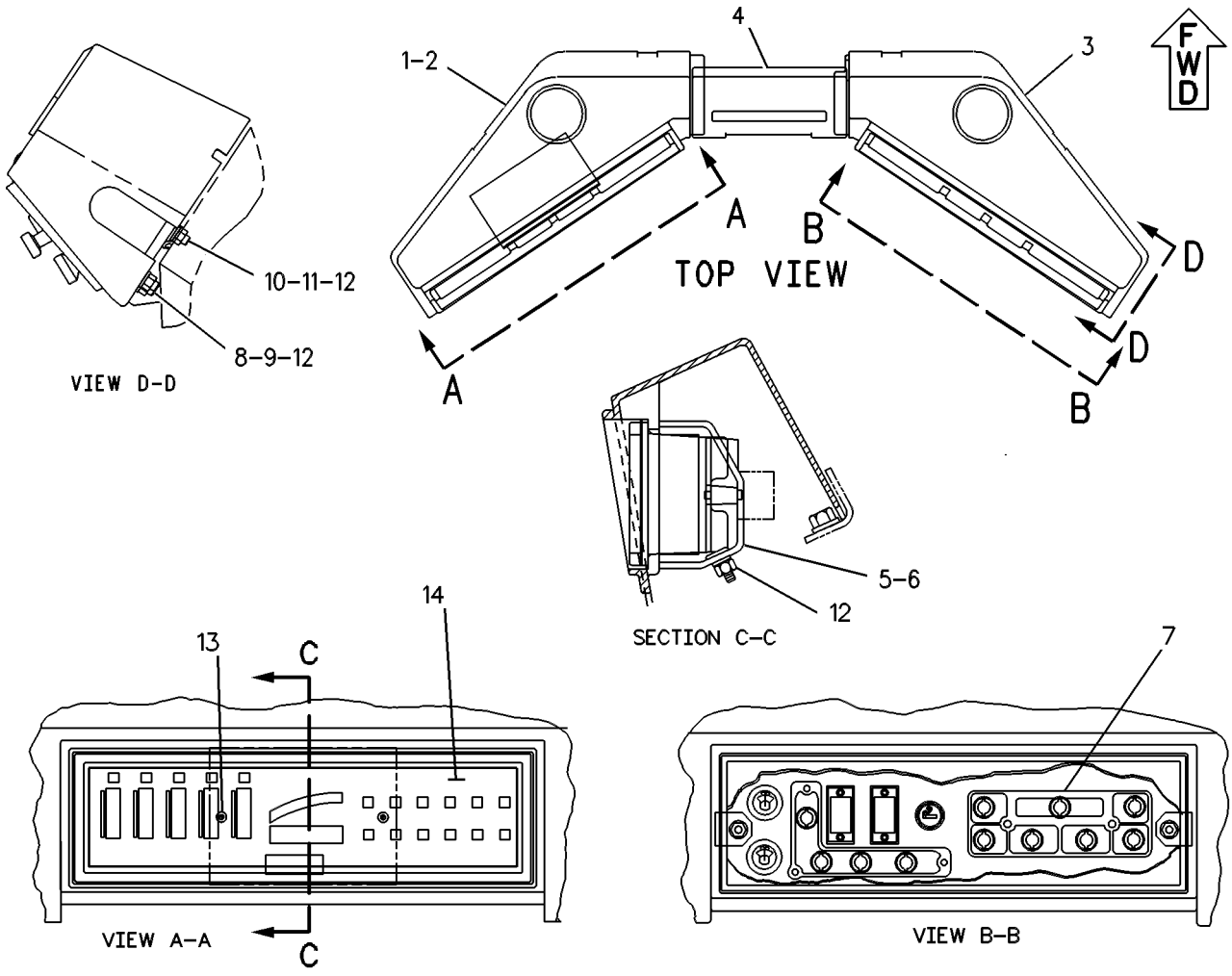

GRAPHIC #1

g00130166

OPERATOR STATION

8R-5490 PANEL GP-INSTRUMENT

S/N: 3XJ1160-1619

PART OF 8R-5041 OPERATOR AR

SMCS-7451 **i00259759**

NOTE	REF NO	GRAPHIC REF	PART NUMBER	QTY	PART NAME 1 2 3 4 5 6 (PRODUCT LEVEL)	SEE PAGE
Y	1	1	*8R-8108*	1	PANEL GP-INSTRUMENT	
	2	1	**6C-4207**	1	PANEL AS	
	3	1	**6C-4208**	1	PANEL AS-RH	
	4	1	**8R-7059**	1	COVER	
	5	1	**8R-7064**	1	BRACKET AS	
	6	1	**5L-8957**	2	STUD-WELD (3/8-16X1.00 IN)	
CR	7	1	**3E-6136**	1	CONTROL GP-ELECTRONIC (CMS)	
	8	1	**8R-7154**	1	PLATE AS	
	9	1	**5L-8957**	1	STUD-WELD (3/8-16X1.00 IN)	
	10	1	**8R-7153**	1	PLATE AS	
	11	1	**5L-8957**	2	STUD-WELD (3/8-16X1.00 IN)	
	12	1	**8T-4896**	5	WASHER-HARD (2.5MM THK)	
		1	**6V-8801**	5	NUT (3/8-16 THD)	
M	13	1	**8T-4970**	2	BOLT (M6X1X14MM)	
		1	**1H-3338**	2	LOCKWASHER (6.64MM ID)	

C-CHANGE FROM PREVIOUS TYPE
M-METRIC PART
R-REMFG PART MAY BE AVAILABLE
Y-SEPARATE ILLUSTRATION

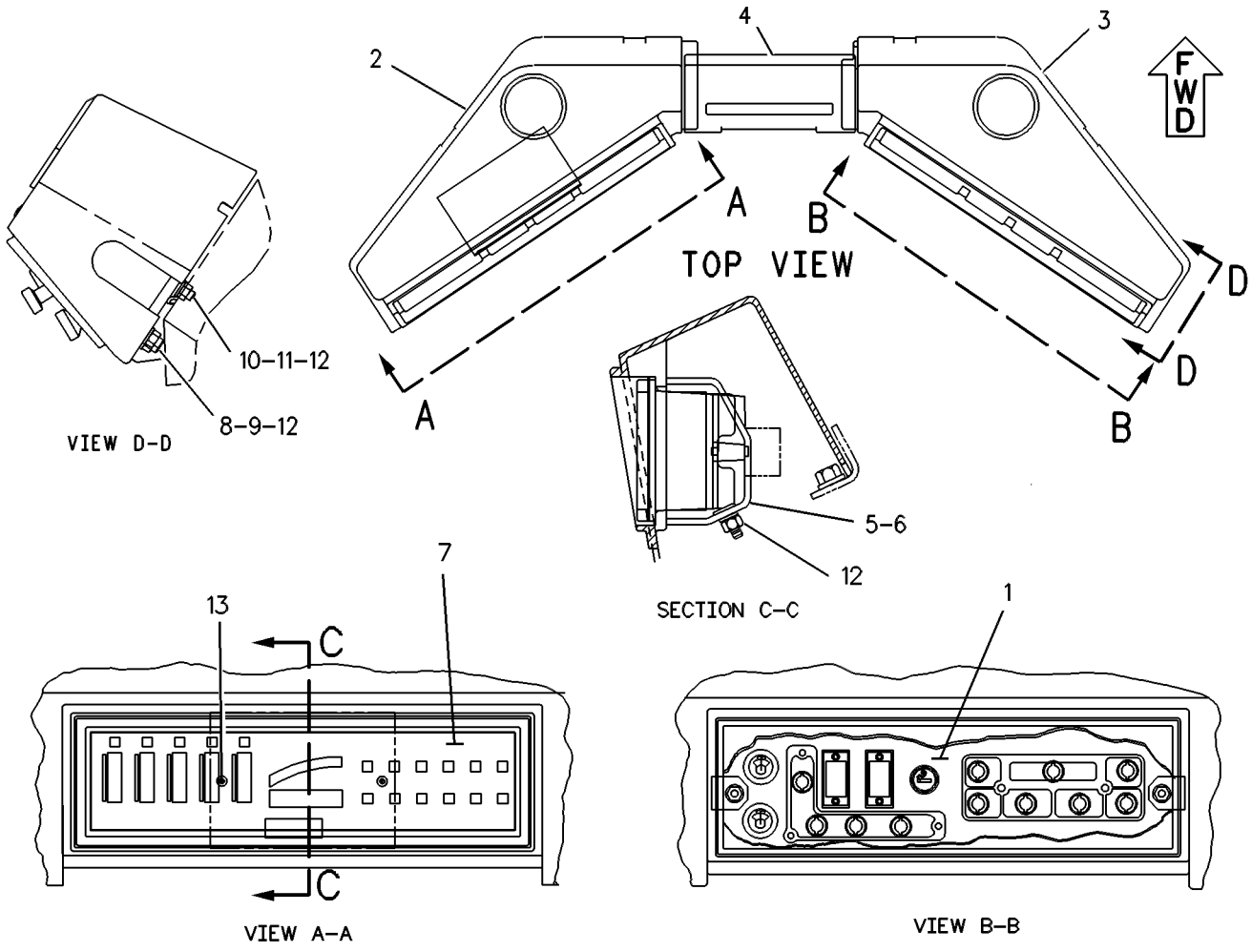

GRAPHIC #1 g00130167

OPERATOR STATION

8R-5490 PANEL GP-INSTRUMENT

S/N: 3XJ1620-99999

PART OF 8R-5041 OPERATOR AR

SMCS-7451 **i00259768**

NOTE	REF NO	GRAPHIC REF	PART NUMBER	QTY	PART NAME 1 2 3 4 5 6 (PRODUCT LEVEL)	SEE PAGE
Y	1	1	*8R-8108*	1	PANEL GP-INSTRUMENT	
	2	1	**8R-7056**	1	PANEL AS-LH	
	3	1	**6C-8643**	1	PANEL AS-RH	
	4	1	**8R-7059**	1	COVER	
	5	1	**8R-7064**	1	BRACKET AS	
	6	1	**5L-8957**	2	STUD-WELD (3/8-16X1.00 IN)	
R	7	1	**101-3371**	1	CONTROL GP-ELECTRONIC (CMSA VF DISPLAY)	
	8	1	**8R-7154**	1	PLATE AS	
	9	1	**5L-8957**	1	STUD-WELD (3/8-16X1.00 IN)	
	10	1	**8R-7153**	1	PLATE AS	
	11	1	**5L-8957**	2	STUD-WELD (3/8-16X1.00 IN)	
	12	1	**8T-4896**	5	WASHER-HARD (2.5MM THK)	
		1	**6V-8801**	5	NUT (3/8-16 THD)	
M	13	1	**8T-4970**	2	BOLT (M6X1X14MM)	
		1	**1H-3338**	2	LOCKWASHER (6.64MM ID)	

M-METRIC PART
R-REMFG PART MAY BE AVAILABLE
Y-SEPARATE ILLUSTRATION

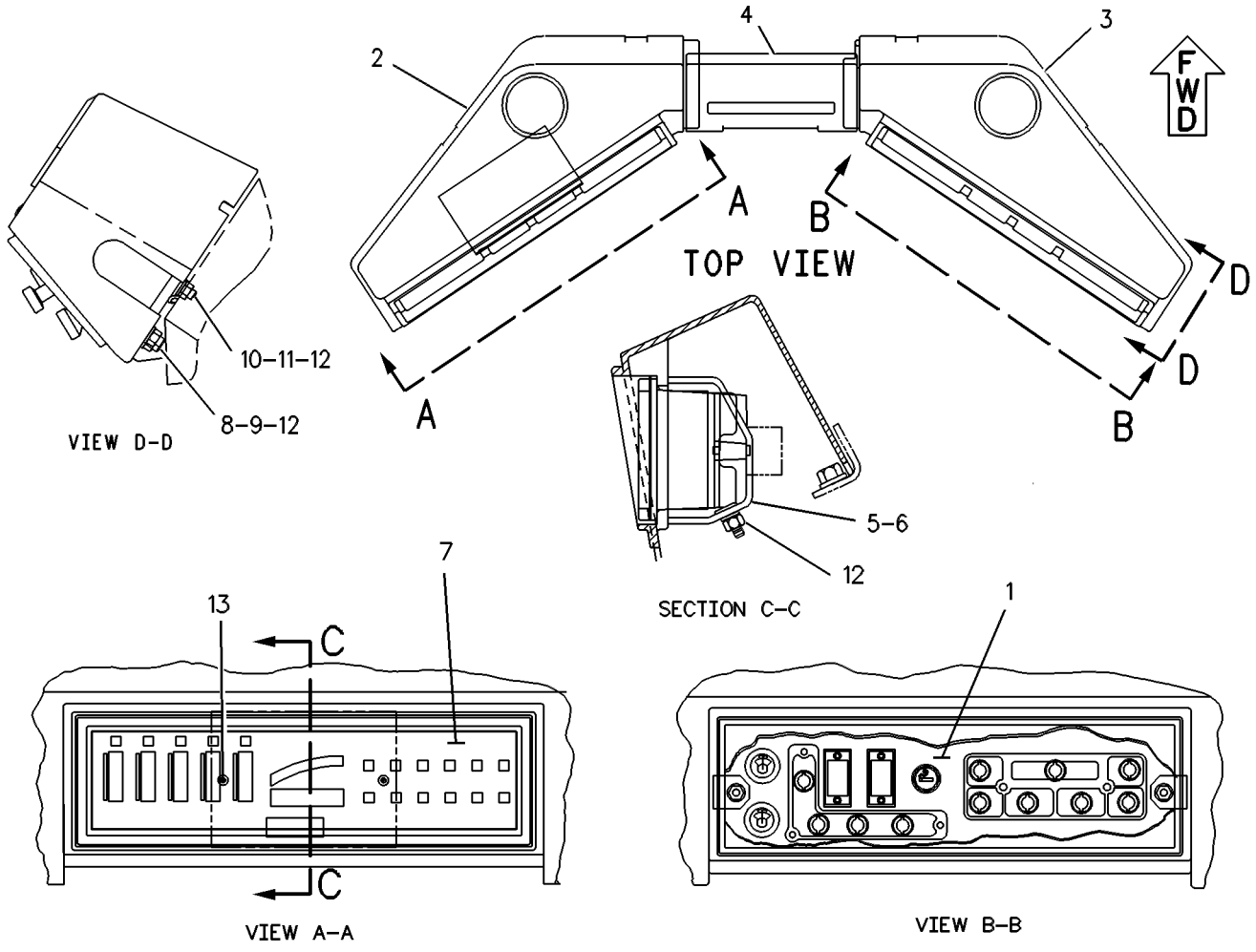

GRAPHIC #1 g00130167

OPERATOR STATION

8R-8108 PANEL GP-INSTRUMENT

S/N: 3XJ1-99999

PART OF 8R-5490 PANEL GP-INSTRUMENT

SMCS-7451 **i01342739**

NOTE	PART NUMBER	QTY	PART NAME 1 2 3 4 5 6 (PRODUCT LEVEL)	SEE PAGE
	9D-3127	1	BASE AS-INDICATOR LIGHT	
	6T-6329	2	BEZEL-ROCKER SWITCH	
	6V-8927	4	BOLT-SOCKET HEAD (6-32X.50IN)	
	6C-4254	2	BRACKET AS	
			(EACH INCLUDES)	
M	**6V-9632**	1	NUT-WELD (M6X1 THD)	
	6T-2774	6	CLIP	
	103-8951	1	FILM-IDENTIFICATION	
	6C-4227	1	HARNESS AS	
	104-5406	1	HARNESS AS	
	6C-4203	1	INLAY	
	7N-5876	12	LAMP (28 VOLT)	
	9W-2111	1	LAMP (28 VOLT)	
	6C-4204	1	PLATE	
	6C-4205	1	PLATE	
	7T-0493	3	PLUG-ROCKER SWITCH	
M	**6V-5698**	4	SCREW-BUTTON HEAD (M4X0.7X10MM)	
M	**9X-2046**	2	SCREW-TRUSS HEAD (M6X1X35MM)	
	6T-3989	1	SWITCH AS-ROCKER	
	3L-8187	8	LOCKWASHER (NO.6-INT)	
	6V-8374	8	SCREW-MACHINE (6-32X.25 IN)	
	9X-1423	1	SWITCH AS-ROCKER	
	3L-8187	8	LOCKWASHER (NO.6-INT)	
	6V-8374	8	SCREW-MACHINE (6-32X.25 IN)	

M-METRIC PART

MEMORANDA

OPERATOR STATION

6C-3959 PEDAL GP-GOVERNOR

S/N: 3XJ1-99999

GOVERNOR

PART OF 8R-5041 OPERATOR AR

SMCS-1276 **i01325233**

NOTE	REF NO	GRAPHIC REF	PART NUMBER	QTY	PART NAME 1 2 3 4 5 6 (PRODUCT LEVEL)	SEE PAGE
	1	1	**2V-7859**	2	BEARING	
	2	1	**1B-8704**	1	KEY-WOODRUFF	
	3	1	**2H-3903**	1	SETSCREW-SOCKET	
	4	1	**8V-1612**	1	SHAFT-GOVERNOR CONTROL	
	5	1	**031-0217**	5	BOLT-LOCKING (1/4-20X.88 IN)	
		1	**8T-4205**	5	WASHER-HARD (2MM THK)	
	6	1	**6C-3957**	1	PEDAL-FOOT	
	7	1	**6C-3958**	1	BRACKET AS	
		1	**4K-9097**	2	NUT-WELD (5/16-18 THD)	
	8	1	**8T-9043**	2	BOLT (5/16-18X.875 IN)	
	9	1	**8V-1596**	1	COVER AS	
		1	**6P-0593**	1	BEARING-ROLLER	
	10	1	**8V-1598**	1	GASKET	
	11	1	**4M-6425**	2	BOLT (5/16-18X1 IN)	
	12	1	**8V-1613**	1	LEVER	
	13	1	**8V-1621**	1	HOUSING AS	
		1	**6P-0593**	1	BEARING-ROLLER	
	14	1	**7F-3531**	1	BOLT (1/4-28X1.25IN)	
		1	**6V-8187**	1	NUT (1/4-28 THD)	
	15	1	**7X-0440**	2	BOLT (5/16-18X1.75IN)	
	16	1	**7X-3373**	1	BOLT (5/16-18X.88 IN)	

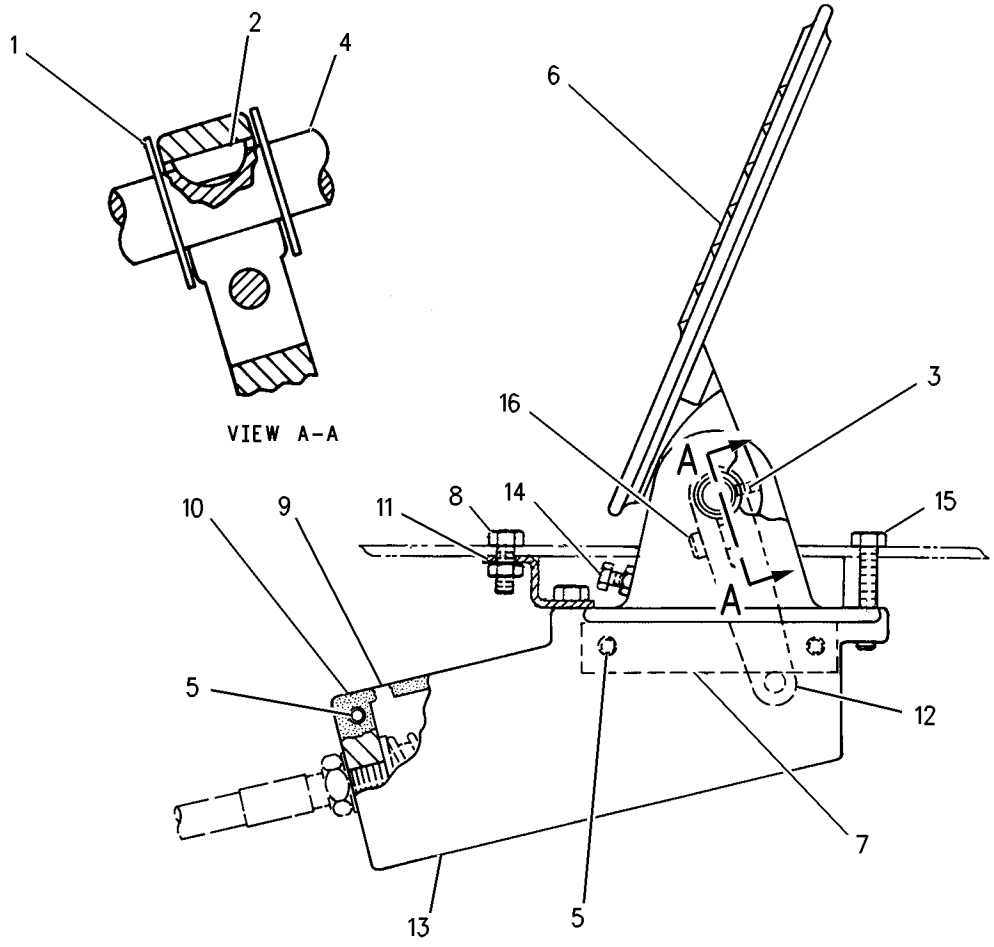

GRAPHIC #1 g00701517

OPERATOR STATION

6C-4100 PLATFORM GP

S/N: 3XJ1-918

PART OF 8R-5041 OPERATOR AR

SMCS-7253 **i00259697**

NOTE	PART NUMBER	QTY	PART NAME 1 2 3 4 5 6 (PRODUCT LEVEL)	SEE PAGE
M	**5C-9553**	6	BOLT (M6X1.0X16MM)	
	5K-0906	2	BOLT (5/16-18X0.63IN)	
	5M-3062	2	BOLT (3/8-16X.750IN)	
	3V-0613	6	BUMPER	
	5V-5815	1	DOOR AS	
	7P-1695	1	WASHER	
	6C-4109	1	DOOR AS	
	4D-3100	1	GROMMET	
	3V-7689	1	HANDLE AS	
	6C-4241	1	INSULATION	
	3V-7476	1	KEY-HANDLE	
	8Y-8299	1	LOCK AS-CYLINDER	
	8T-5004	1	SCREW-MACHINE (1/4-28X0.375IN)	
	7F-9223	1	LOCKWASHER (0.91MM THK)	
	2H-3923	1	LOCKWASHER	
	6C-4129	1	PLATE	
	6C-4194	1	PLATE	
	6C-7023	1	PLATE	
	6C-4140	1	PLATFORM AS	
	3L-1979	1	PLUG	
	4V-2027	1	PLUG	
	3N-4809	1	PLUG-BUTTON	
	4S-6336	2	PLUG-BUTTON	
M	**9X-2044**	10	SCREW-TRUSS HEAD (M6X1X16MM)	
	3V-8113	1	SHEET AS	
	9F-2978	2	NUT-WELD (3/8-16 THD)	
	9F-6445	3	NUT (1/4-20 THD)	
	5P-1075	3	WASHER-HARD (3MM THK)	
	8T-4205	6	WASHER-HARD (2MM THK)	
	8T-4224	2	WASHER-HARD (2MM THK)	

M-METRIC PART

MEMORANDA

OPERATOR STATION

6C-4100 PLATFORM GP

S/N: 3XJ919-997

PART OF 8R-5041 OPERATOR AR

SMCS-7253 **i01342728**

NOTE	REF NO	GRAPHIC REF	PART NUMBER	QTY	PART NAME 1 2 3 4 5 6 (PRODUCT LEVEL)	SEE PAGE
	1	1	**6C-4194**	1	PLATE	
	2	1	**5S-7349**	4	BOLT (1/4-20X0.5 IN)	
		1	**8T-4205**	4	WASHER-HARD (2MM THK)	
	3	1	**5P-1075**	3	WASHER-HARD (3MM THK)	
	4	1	**3V-7689**	1	HANDLE AS	
	5	1	**8Y-8299**	1	LOCK AS-CYLINDER	
		1	**7F-9223**	1	LOCKWASHER (0.91MM THK)	
		1	**8T-5004**	1	SCREW-MACHINE (1/4-28X0.375 IN)	
	6	1	**3L-1979**	1	PLUG (FOR 38.1MM DIA HOLE)	
	7	1	**4V-2027**	1	PLUG (FOR 28.4MM DIA HOLE)	
	8	1	**4D-3100**	1	GROMMET	
	9	1	**5M-3062**	2	BOLT (3/8-16X.75 IN)	
	10	1	**3V-8113**	1	SHEET AS	
	11	1	**6C-5877**	1	DOOR AS	
M	12	1	**9X-2044**	6	SCREW-TRUSS HEAD (M6X1X16MM)	
	13	1	**6C-4129**	1	PLATE	
BD	14	1	**5P-5969**		SEAL	
	15	1	**6C-4104**	1	PLATE AS	
	16	1	**3N-4809**	1	PLUG-BUTTON	
	17	1	**9S-2087**	6	SCREW-FORMING	
	18	1	**6C-4140**	1	PLATFORM AS	
BE	19	1	**7X-7877**		STRIP-EDGING	
	20	1	**6C-7349**	1	PLATE	
		1	**5L-2579**	1	GROMMET	
	21	1	**6C-4241**	1	INSULATION	
	22	1	**6K-2660**	1	PLUG-BUTTON	
	23	1	**6C-4108**	1	GASKET	
	24	1	**2H-3923**	1	LOCKWASHER (1.40MM THK)	
	25	1	**3V-0613**	6	BUMPER (9.6MM THK)	
	26	1	**0L-1351**	1	BOLT (3/8-16X.875 IN)	
	27	1	**4S-6336**	2	PLUG-BUTTON	
	28	1	**5V-5815**	1	DOOR AS	
		1	**7P-1695**	1	WASHER	
	29	1	**5K-0906**	2	BOLT (5/16-18X0.63 IN)	
		1	**8T-4224**	2	WASHER-HARD (8.8X16X2MM THK)	
F		1	**3V-7476**	1	KEY-HANDLE	

B-USE AS REQUIRED
D-ORDER BY THE METER
E-ORDER BY THE CENTIMETER
F-NOT SHOWN
M-METRIC PART

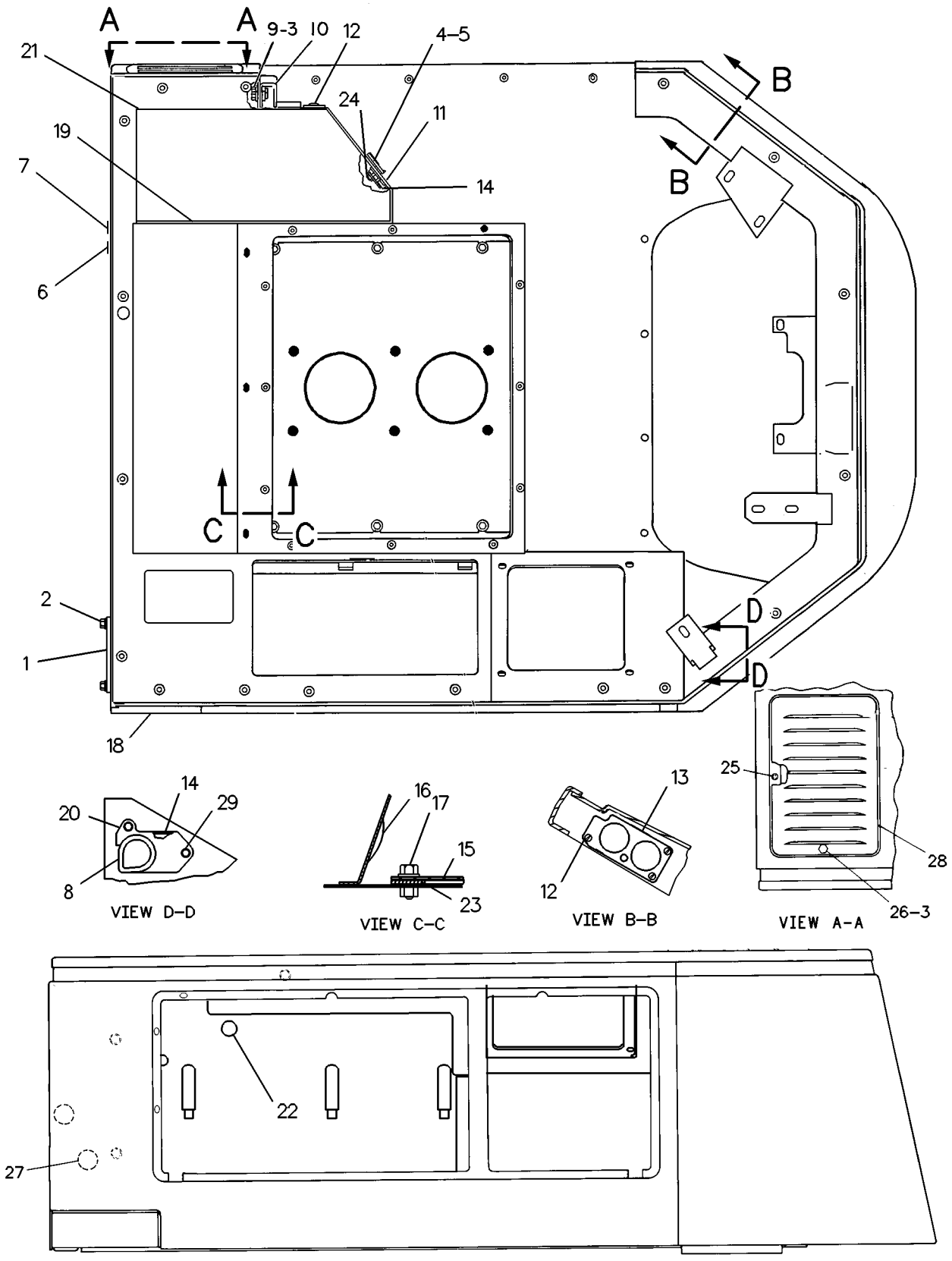

GRAPHIC #1 g00128208

OPERATOR STATION

6C-4100 PLATFORM GP

S/N: 3XJ998-99999

PART OF 8R-5041 OPERATOR AR

SMCS-7253 **i00259714**

NOTE	REF NO	GRAPHIC REF	PART NUMBER	QTY	PART NAME 1 2 3 4 5 6 (PRODUCT LEVEL)	SEE PAGE
	1	1	**6C-4194**	1	PLATE	
	2	1	**5S-7349**	4	BOLT (1/4-20X0.5IN)	
		1	**8T-4205**	4	WASHER-HARD (2MM THK)	
	3	1	**5P-1075**	3	WASHER-HARD (3MM THK)	
	4	1	**3V-7689**	1	HANDLE AS	
	5	1	**8Y-8299**	1	LOCK AS-CYLINDER	
		1	**7F-9223**	1	LOCKWASHER (0.91MM THK)	
		1	**8T-5004**	1	SCREW-MACHINE (1/4-28X0.375IN)	
	6	1	**3L-1979**	1	PLUG (FOR 38.1MM DIA HOLE)	
	7	1	**4V-2027**	1	PLUG (FOR 28.4MM DIA HOLE)	
	8	1	**4D-3100**	1	GROMMET	
	9	1	**5M-3062**	2	BOLT (3/8-16X.750IN)	
	10	1	**3V-8113**	1	SHEET AS	
	11	1	**6C-5877**	1	DOOR AS	
M	12	1	**9X-2044**	6	SCREW-TRUSS HEAD (M6X1X16MM)	
	13	1	**6C-4129**	1	PLATE	
BD	14	1	**5P-5969**		SEAL	
	15	1	**6C-4104**	1	PLATE AS	
	16	1	**3N-4809**	1	PLUG-BUTTON	
	17	1	**9S-2087**	6	SCREW-FORMING	
	18	1	**6C-4140**	1	PLATFORM AS	
BE	19	1	**7X-7877**		STRIP-EDGING	
	20	1	**6C-7023**	1	PLATE	
	21	1	**6C-4241**	1	INSULATION	
	22	1	**6K-2660**	1	PLUG-BUTTON	
	23	1	**6C-4108**	1	GASKET	
	24	1	**2H-3923**	1	LOCKWASHER	
	25	1	**3V-0613**	6	BUMPER (9.6MM THK)	
	26	1	**0L-1351**	1	BOLT (3/8-16X.875IN)	
	27	1	**4S-6336**	2	PLUG-BUTTON	
	28	1	**5V-5815**	1	DOOR AS	
		1	**7P-1695**	1	WASHER	
	29	1	**5K-0906**	2	BOLT (5/16-18X0.63IN)	
		1	**8T-4224**	2	WASHER-HARD (2MM THK)	
F		1	**3V-7476**	1	KEY-HANDLE	

B-USE AS REQUIRED
D-ORDER BY THE METER
E-ORDER BY THE CENTIMETER
F-NOT SHOWN
M-METRIC PART

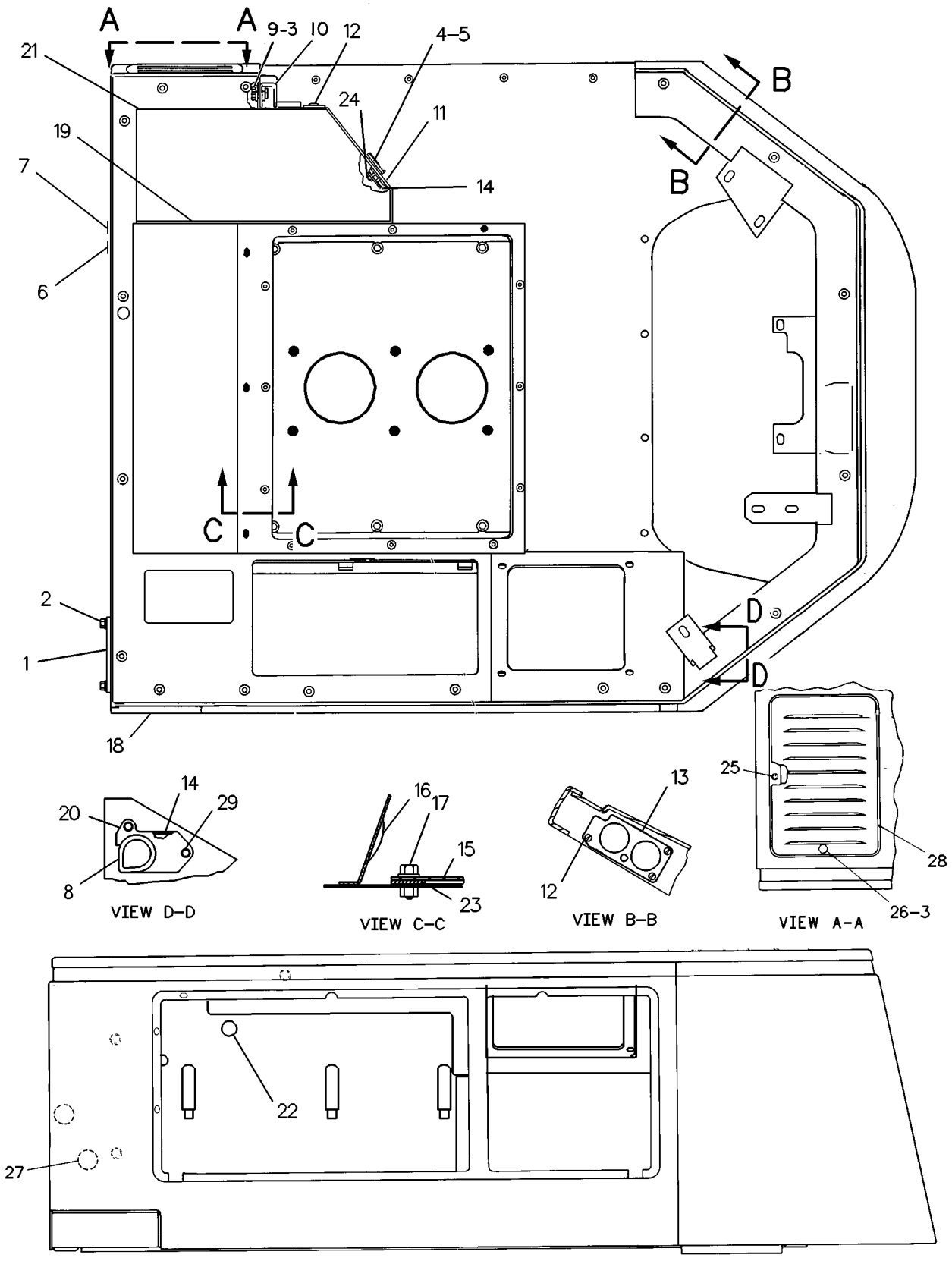

GRAPHIC #1 g00128208

OPERATOR STATION

8R-1187 PLATFORM GP

S/N: 3XJ1-353

SMCS-7253 **i00259494**

NOTE	REF NO	GRAPHIC REF	PART NUMBER	QTY	PART NAME 1 2 3 4 5 6 (PRODUCT LEVEL)	SEE PAGE
	1	1	**7V-5128**	1	PLATE AS	
		1	**9F-2978**	2	NUT-WELD (3/8-16 THD)	
	2	1	**9B-7237**	17	BOLT (3/8-16X1.25IN)	
	3	1	**8T-2561**	17	WASHER (5.0MM THK)	
	4	1	**6C-5006**	1	PLATFORM AS-LH	
		1	**7K-8967**	2	LOCKNUT-WELD	
		1	**9F-2978**	1	NUT-WELD (3/8-16 THD)	
		1	**4K-8501**	4	CLIP	
	5	1	**4E-2669**	1	BRACKET AS	
	6	1	**8R-1188**	1	PLATFORM AS-RH	
		1	**9F-2978**	1	NUT-WELD (3/8-16 THD)	
		1	**7K-8967**	2	LOCKNUT-WELD	
	7	1	**8R-3410**	1	PLATE AS	
	8	1	**7V-8489**	1	BRACKET AS	
		1	**9F-2978**	4	NUT-WELD (3/8-16 THD)	
	9	1	**4V-5358**	1	BRACKET AS	

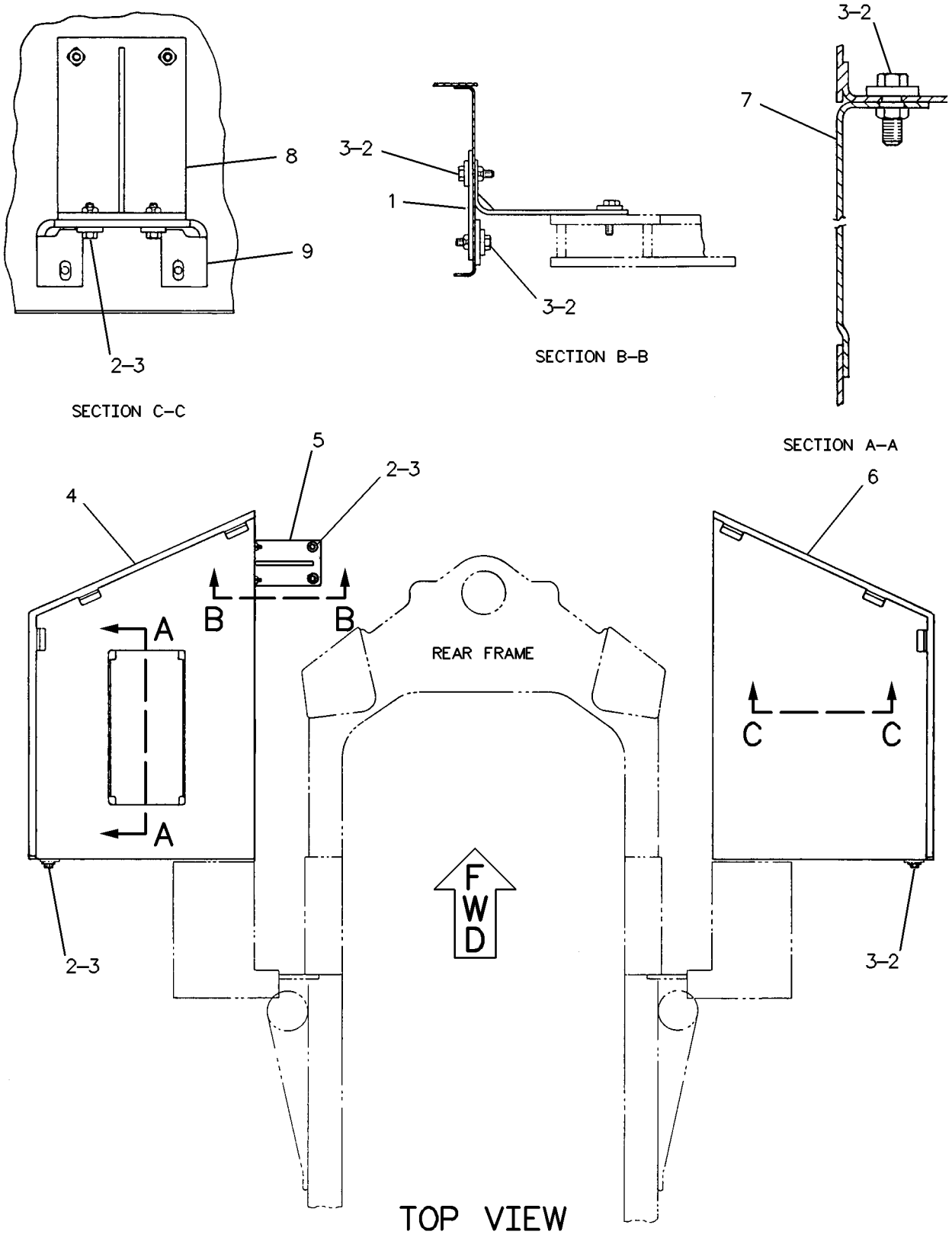

GRAPHIC #1 g00118792

OPERATOR STATION

8R-1187 PLATFORM GP

S/N: 3XJ354-1506

SMCS-7253 **i00259520**

NOTE	REF NO	GRAPHIC REF	PART NUMBER	QTY	PART NAME 1 2 3 4 5 6 (PRODUCT LEVEL)	SEE PAGE
	1	1	**7V-5128**	1	PLATE AS	
		1	**9F-2978**	2	NUT-WELD (3/8-16 THD)	
	2	1	**9B-7237**	17	BOLT (3/8-16X1.25IN)	
	3	1	**8T-2561**	17	WASHER (5.0MM THK)	
	4	1	**6C-5006**	1	PLATFORM AS-LH	
		1	**7K-8967**	2	LOCKNUT-WELD	
		1	**9F-2978**	1	NUT-WELD (3/8-16 THD)	
		1	**4K-8501**	4	CLIP	
	5	1	**4E-2669**	1	BRACKET AS	
	6	1	**8R-1188**	1	PLATFORM AS-RH	
		1	**9F-2978**	1	NUT-WELD (3/8-16 THD)	
		1	**7K-8967**	2	LOCKNUT-WELD	
	7	1	**8R-3410**	1	PLATE AS	
	8	1	**7V-8489**	1	BRACKET AS	
		1	**9F-2978**	4	NUT-WELD (3/8-16 THD)	
C	9	1	**8V-2090**	1	BRACKET	
C	10	1	**4L-6454**	2	BOLT (3/8-16X1.0IN)	
C		1	**8T-4896**	2	WASHER-HARD (2.5MM THK)	

C-CHANGE FROM PREVIOUS TYPE

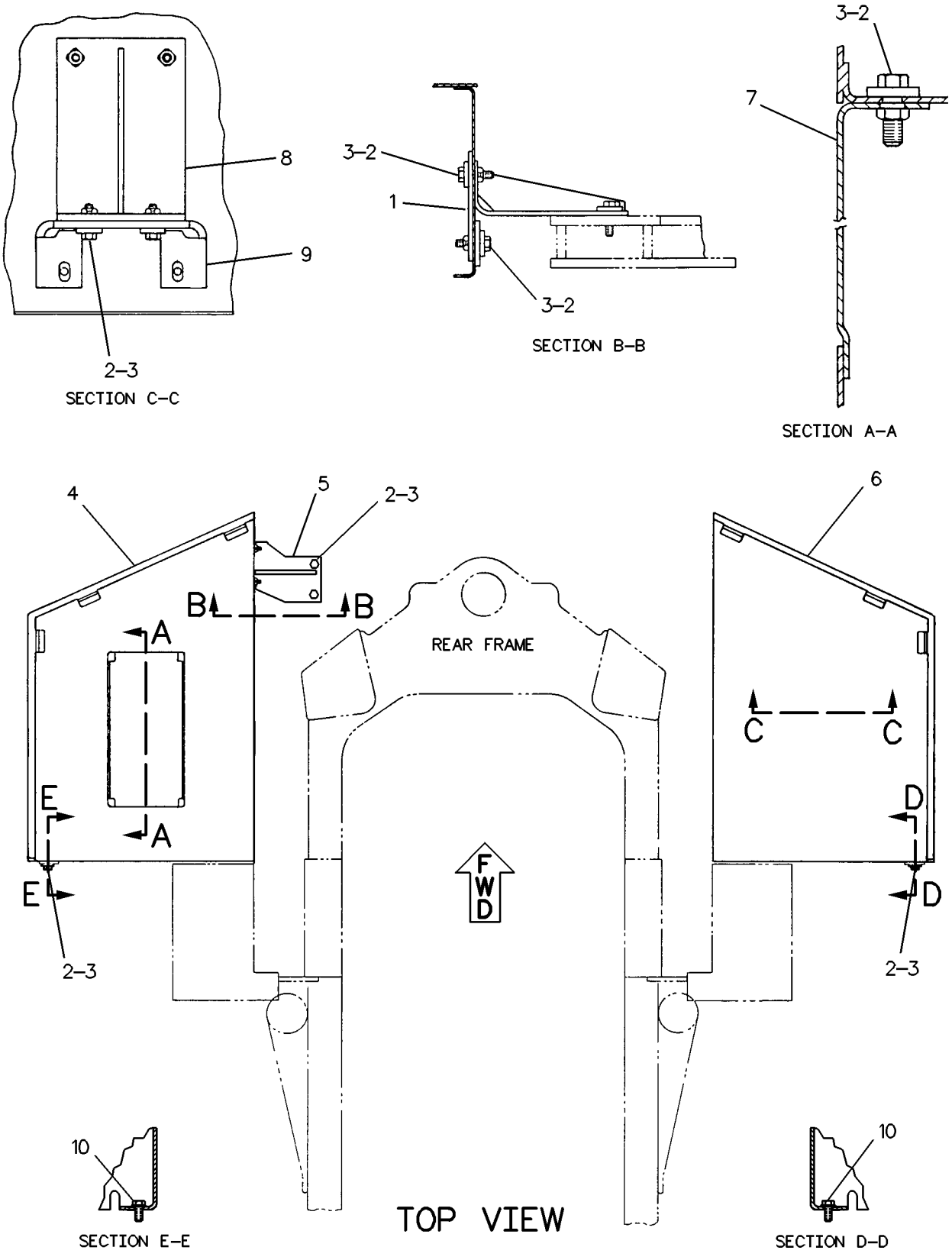

GRAPHIC #1 g00127072

OPERATOR STATION

8R-1187 PLATFORM GP

S/N: 3XJ1507-99999

SMCS-7253 **i00259537**

NOTE	REF NO	GRAPHIC REF	PART NUMBER	QTY	PART NAME 1 2 3 4 5 6 (PRODUCT LEVEL)	SEE PAGE
	1	1	**7V-5128**	1	PLATE AS	
		1	**9F-2978**	2	NUT-WELD (3/8-16 THD)	
	2	1	**9B-7237**	17	BOLT (3/8-16X1.25IN)	
	3	1	**8T-2561**	17	WASHER (5.0MM THK)	
C	4	1	**1K-8850**	2	SPRING	
	5	1	**4E-2669**	1	BRACKET AS	
	6	1	**8R-1188**	1	PLATFORM AS-RH	
		1	**9F-2978**	1	NUT-WELD (3/8-16 THD)	
		1	**7K-8967**	2	LOCKNUT-WELD	
	7	1	**8R-3410**	1	PLATE AS	
	8	1	**7V-8489**	1	BRACKET AS	
		1	**9F-2978**	4	NUT-WELD (3/8-16 THD)	
	9	1	**8V-2090**	1	BRACKET	
	10	1	**4L-6454**	2	BOLT (3/8-16X1.0IN)	
		1	**8T-4896**	2	WASHER-HARD (2.5MM THK)	
C	11	1	**6C-7252**	1	PLATFORM AS-LH	
		1	**7K-8967**	2	LOCKNUT-WELD	
		1	**9F-2978**	1	NUT-WELD (3/8-16 THD)	
		1	**4K-8501**	4	CLIP	
	12	1	**4E-8698**	1	DOOR AS	
	13	1	**8V-6072**	1	LATCH AS	

C-CHANGE FROM PREVIOUS TYPE

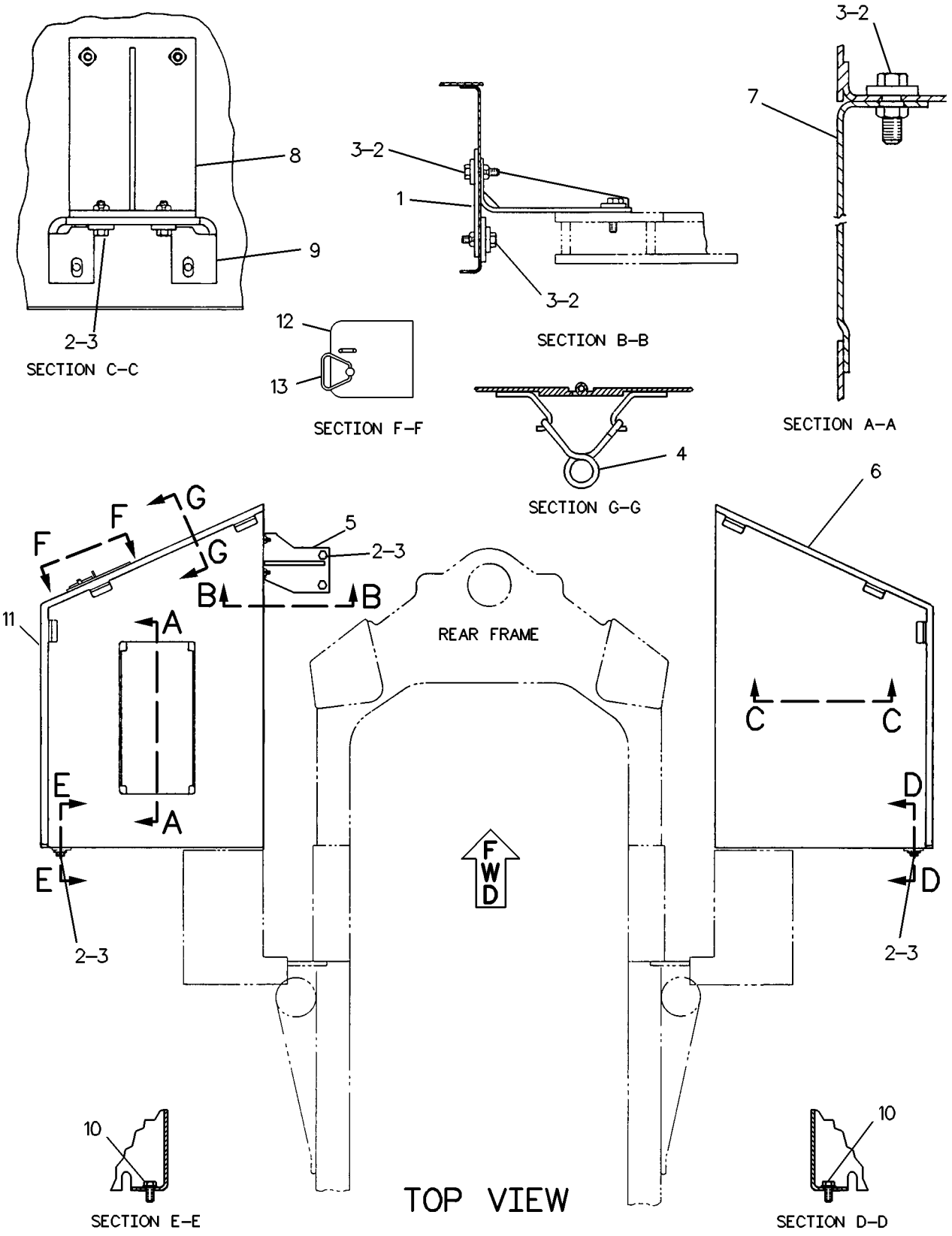

GRAPHIC #1 g00127628

OPERATOR STATION

8R-8118 PRESSURIZER GP-CAB

S/N: 3XJ1-1619
PART OF 6C-4138, 8R-5489 CAB AR
ALSO AN ATTACHMENT

SMCS-7311 **i01323487**

NOTE	REF NO	GRAPHIC REF	PART NUMBER	QTY	PART NAME 1 2 3 4 5 6 (PRODUCT LEVEL)	SEE PAGE
	1	1	**2J-6540**	4	CLAMP	
	2	1	**8R-7287**	1	BEZEL	
	3	1	**6V-8801**	4	NUT (3/8-16 THD)	
	4	1	**5P-1075**	4	WASHER-HARD (3MM THK)	
	5	1	**7T-4306**	7	LOUVER AS	
	6	1	**3V-0245**	1	INSULATION	
	7	1	**3V-6900**	4	COUPLING	
	8	1	**4V-2529**	2	CLIP	
D	9	1	**5P-9601**		HOSE (1.3 M)	
E	10	1	**5P-3915**	2	HOSE (140 CM)	
	11	1	**2V-9962**	2	FILM	
	12	1	**9V-1549**	2	HOUSING AS	
	13	1	**6C-4127**	1	PLATE AS	
		1	**6C-5441**	1	GASKET	
M	14	1	**8T-4970**	11	BOLT (M6X1X14MM)	
	15	1	**8T-4205**	14	WASHER-HARD (2MM THK)	
	16	1	**9X-1799**	1	FILM-HEATER & A/C CONTROL	
	17	1	**6C-4219**	1	BRACKET AS	
		1	**8D-5476**	2	STUD-WELD (3/8-16X19.1IN OAL)	
	18	1	**8V-2195**	1	BOOT	
	19	1	**4V-2530**	2	CLIP	
	20	1	**8T-4224**	6	WASHER-HARD (8.8X16X2MM THK)	
M		1	**8T-4189**	6	BOLT (M8X1.25X20MM)	
M	21	1	**8T-4138**	3	BOLT (M6X1.0X20MM)	
	22	1	**6C-4217**	1	BRACKET AS	
M		1	**6V-9632**	1	NUT-WELD (M6X1 THD)	
	23	1	**6C-4139**	1	DOOR AS	
	24	1	**6W-8906**	1	LATCH AS	
E	25	1	**5P-3915**		HOSE (55 CM)	
E	26	1	**5P-3915**		HOSE (120 CM)	
	27	2	**6P-3236**	1	SWITCH AS-ROTARY (FAN SPEED)	
		2	**6V-8362**	5	SCREW-MACHINE (8-32X.31 IN)	
		2	**9B-7233**	5	LOCKWASHER (NO.8) (4.27MM ID)	
	28	2	**2P-3261**	2	NUT	
	29	2	**2J-6540**	2	CLAMP	
	30	2	**5P-4115**	2	WASHER (2MM THK)	
	31	2	**5S-7379**	2	BOLT (3/8-16X.875 IN)	
D	32	2	**5P-5655**		SEAL (0.5 M)	
	33	2	**2S-3745**	6	SCREW-TAPPING	
	34	2	**9G-8694**	2	MOTOR AS	
					(EACH INCLUDES)	
		2	**7N-7779**	1	SOCKET-CONNECTOR	
		2	**7N-7780**	1	PIN-CONNECTOR (BLADE)	
		2	**7N-9738**	1	HOUSING-RECEPTACLE	
	35	2	**6C-4136**	1	HARNESS AS	
	36	2	**7H-2079**	4	LOCKWASHER	
		2	**4B-2049**	4	NUT (10-32 THD)	
	37	2	**3T-0243**	2	BLOWER AS	
					(EACH INCLUDES)	
		2	**3B-9191**	1	SETSCREW-SOCKET	
	38	2	**2V-0036**	1	FILTER AS	
	39	2	**9G-1950**	1	RESISTOR	
	40	2	**4D-6624**	2	WASHER-RUBBER	
	41	2	**2V-9989**	2	CLAMP AS-MOTOR	
					(EACH INCLUDES)	

8R-8118 **PRESSURIZER GP-CAB** *(contd.)* **i01323487**

NOTE	REF NO	GRAPHIC REF	PART NUMBER	QTY	PART NAME 1 2 3 4 5 6 (PRODUCT LEVEL)	SEE PAGE
		2	**9F-2978**	1	NUT-WELD (3/8-16 THD)	
	42	2	**7R-2258**	1	FILTER	
	43	2	**6C-4128**	1	COVER AS	
	44	2	**6W-8906**	2	LATCH AS	
M	45	2	**8T-4970**	3	BOLT (M6X1X14MM)	
	46	2	**8T-4205**	5	WASHER-HARD (2MM THK)	
	47	2	**6C-4167**	1	PLATE	
	48	2	**6V-0884**	2	SCREW-MACHINE (1/4-20X.375IN)	
	49	2	**7N-5876**	4	LAMP-MINIATURE (28 VOLT)	
	50	2	**2V-0099**	1	KNOB	
	51	2	**2P-4339**	1	NUT-JAM (7/16-20 THD)	
	52	2	**6C-4242**	1	INSULATION	
	53	2	**6C-4240**	1	PANEL	
	54	2	**6C-4221**	1	GASKET	
	55	2	**6C-4222**	1	GASKET	
	56	2	**6C-4220**	1	DUCT	
	57	2	**9V-1824**	2	SPACER	
	58	2	**6V-8185**	2	NUT (1/4-20 THD)	
M	59	2	**9X-2044**	2	SCREW-TRUSS HEAD (M6X1X16MM)	
	60	2	**6C-4166**	1	PLATE AS	
	61	2	**6C-4218**	1	BRACKET AS	
M		2	**6V-9632**	4	NUT-WELD (M6X1 THD)	
	62	2	**6C-5435**	1	GASKET	
	63	2	**6C-5436**	1	GASKET	
	64	2	**6V-3320**	1	SCREW-MACHINE (1/4-20X7.50 IN)	
M	65	2	**6V-7743**	1	LOCKNUT (M6X1.00 THD)	
	66	2	**6T-6708**	2	WASHER (4.1MM THK)	
	67	2	**6V-1668**	2	WASHER (3MM THK)	

D-ORDER BY THE METER
E-ORDER BY THE CENTIMETER
M-METRIC PART

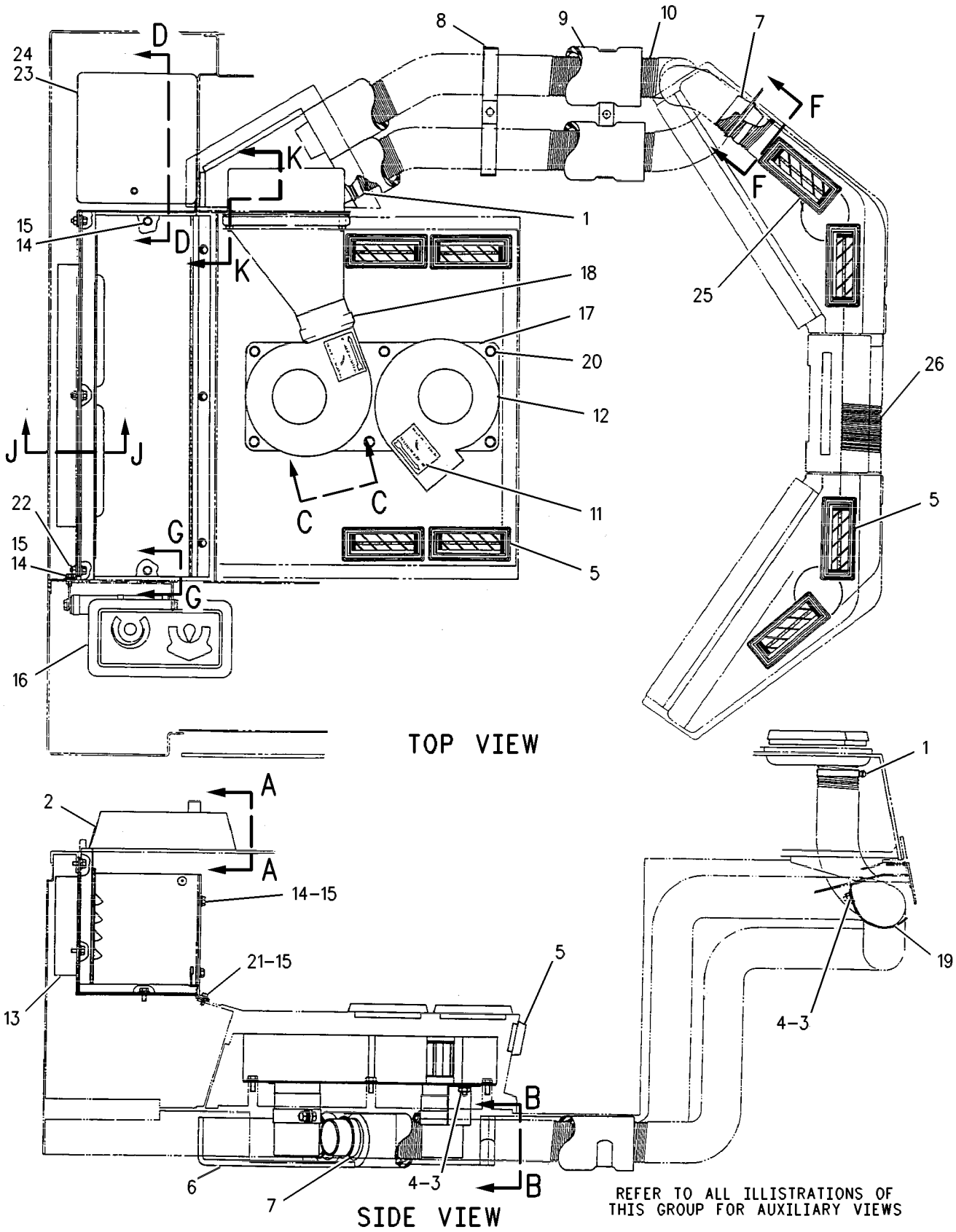

GRAPHIC #1 g00377782

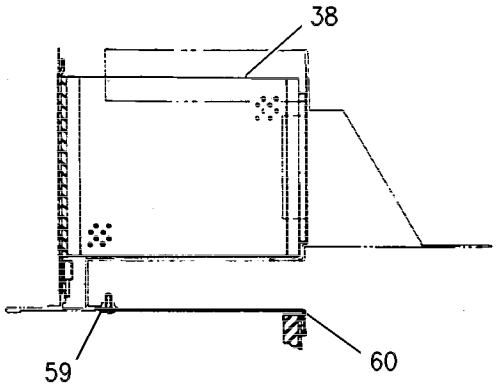

SECTION D-D

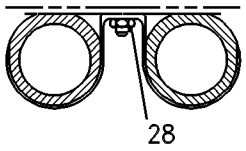

SECTION B-B

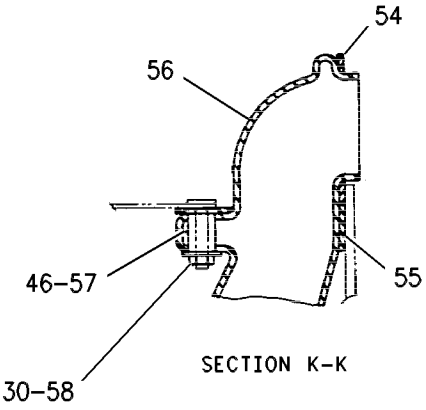

SECTION K-K

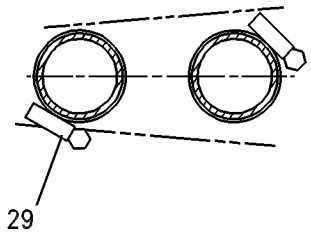

SECTION F-F

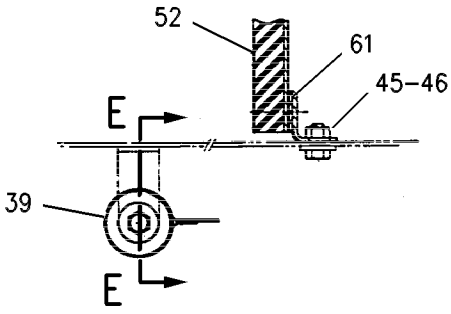

SECTION G-G

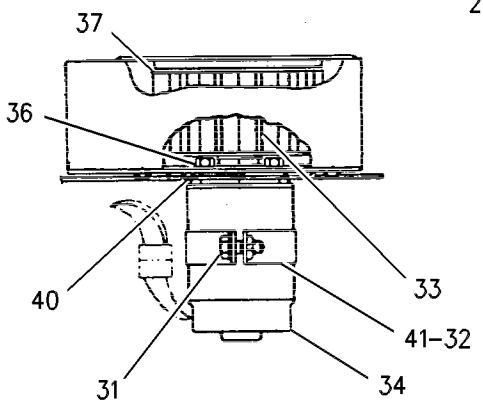

VIEW C-C

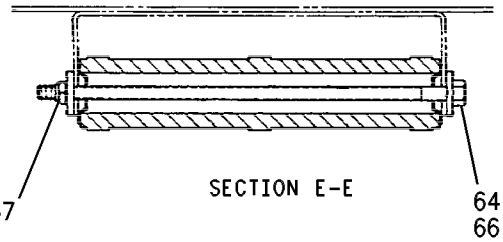

SECTION E-E

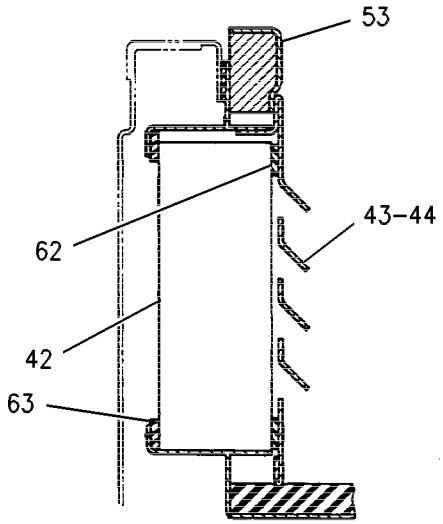

SECTION J-J

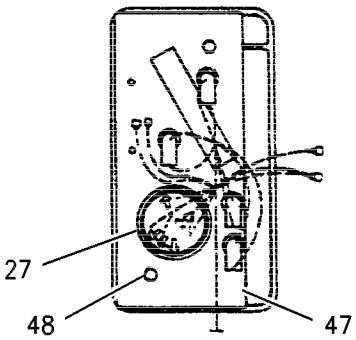

VIEW H-H

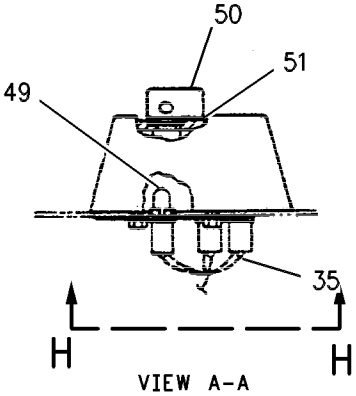

VIEW A-A

GRAPHIC #2

g00377783

OPERATOR STATION

8R-8118 PRESSURIZER GP-CAB

S/N: 3XJ1620-99999
PART OF 6C-4138, 8R-5489 CAB AR
ALSO AN ATTACHMENT

SMCS-7311 **i01323489**

NOTE	REF NO	GRAPHIC REF	PART NUMBER	QTY	PART NAME 1 2 3 4 5 6 (PRODUCT LEVEL)	SEE PAGE
	1	1	**2J-6540**	4	CLAMP	
	2	1	**8R-7287**	1	BEZEL	
	3	1	**6V-8801**	4	NUT (3/8-16 THD)	
	4	1	**5P-1075**	4	WASHER-HARD (3MM THK)	
C	5	1	**7T-4306**	5	LOUVER AS	
	6	1	**3V-0245**	1	INSULATION	
	7	1	**3V-6900**	4	COUPLING	
	8	1	**4V-2529**	2	CLIP	
D	9	1	**5P-9601**		HOSE (1.3 M)	
E	10	1	**5P-3915**	2	HOSE (140 CM)	
	11	1	**2V-9962**	2	FILM	
	12	1	**9V-1549**	2	HOUSING AS	
C	13	1	**6C-4127**	1	PLATE AS	
		1	**6C-5441**	1	GASKET	
M	14	1	**8T-4970**	11	BOLT (M6X1X14MM)	
	15	1	**8T-4205**	14	WASHER-HARD (2MM THK)	
C	16	1	**6C-7797**	1	FILM-HEATER	
	17	1	**6C-4219**	1	BRACKET AS	
		1	**8D-5476**	2	STUD-WELD (3/8-16X19.1IN OAL)	
	18	1	**8V-2195**	1	BOOT	
	19	1	**4V-2530**	2	CLIP	
	20	1	**8T-4224**	6	WASHER-HARD (8.8X16X2MM THK)	
M		1	**8T-4189**	6	BOLT (M8X1.25X20MM)	
M	21	1	**8T-4138**	3	BOLT (M6X1.0X20MM)	
	22	1	**6C-4217**	1	BRACKET AS	
M		1	**6V-9632**	1	NUT-WELD (M6X1 THD)	
	23	1	**6C-4139**	1	DOOR AS	
	24	1	**6W-8906**	1	LATCH AS	
E	25	1	**5P-3915**		HOSE (55 CM)	
E	26	1	**5P-3915**		HOSE (120 CM)	
C	27	1	**3V-0277**	2	DIFFUSER AS-BALL	
C	28	1	**8E-2843**	2	ADAPTER	
	29	2	**6P-3236**	1	SWITCH AS-ROTARY (FAN SPEED)	
		2	**6V-8362**	5	SCREW-MACHINE (8-32X.31 IN)	
		2	**9B-7233**	5	LOCKWASHER (NO.8) (4.27MM ID)	
	30	2	**2P-3261**	2	NUT	
	31	2	**2J-6540**	2	CLAMP	
	32	2	**5P-4115**	2	WASHER (2MM THK)	
	33	2	**5S-7379**	2	BOLT (3/8-16X.875 IN)	
D	34	2	**5P-5655**		SEAL (0.5 M)	
	35	2	**2S-3745**	6	SCREW-TAPPING	
	36	2	**9G-8694**	2	MOTOR AS	
					(EACH INCLUDES)	
		2	**7N-7779**	1	SOCKET-CONNECTOR	
		2	**7N-7780**	1	PIN-CONNECTOR (BLADE)	
		2	**7N-9738**	1	HOUSING-RECEPTACLE	
	37	2	**6C-4136**	1	HARNESS AS	
	38	2	**7H-2079**	4	LOCKWASHER	
		2	**4B-2049**	4	NUT (10-32 THD)	
	39	2	**3T-0243**	2	BLOWER AS	
					(EACH INCLUDES)	
		2	**3B-9191**	1	SETSCREW-SOCKET	
	40	2	**2V-0036**	1	FILTER AS	
	41	2	**9G-1950**	1	RESISTOR	
	42	2	**4D-6624**	2	WASHER-RUBBER	

8R-8118 **PRESSURIZER GP-CAB** *(contd.)* **i01323489**

NOTE	REF NO	GRAPHIC REF	PART NUMBER	QTY	PART NAME 1 2 3 4 5 6 (PRODUCT LEVEL)	SEE PAGE
	43	2	**2V-9989**	2	CLAMP AS-MOTOR	
					(EACH INCLUDES)	
		2	**9F-2978**	1	NUT-WELD (3/8-16 THD)	
	44	2	**7R-2258**	1	FILTER	
	45	2	**6C-4128**	1	COVER AS	
	46	2	**6W-8906**	2	LATCH AS	
M	47	2	**8T-4970**	3	BOLT (M6X1X14MM)	
	48	2	**8T-4205**	5	WASHER-HARD (2MM THK)	
	49	2	**6C-4167**	1	PLATE	
	50	2	**6V-0884**	2	SCREW-MACHINE (1/4-20X.375IN)	
	51	2	**7N-5876**	4	LAMP-MINIATURE (28 VOLT)	
	52	2	**2V-0099**	1	KNOB	
	53	2	**2P-4339**	1	NUT-JAM (7/16-20 THD)	
	54	2	**6C-4242**	1	INSULATION	
	55	2	**6C-4240**	1	PANEL	
	56	2	**6C-4221**	1	GASKET	
	57	2	**6C-4222**	1	GASKET	
	58	2	**6C-4220**	1	DUCT	
	59	2	**9V-1824**	2	SPACER	
	60	2	**6V-8185**	2	NUT (1/4-20 THD)	
M	61	2	**9X-2044**	2	SCREW-TRUSS HEAD (M6X1X16MM)	
	62	2	**6C-4166**	1	PLATE AS	
M		2	**6V-9632**	4	NUT-WELD (M6X1 THD)	
	63	2	**6C-4218**	1	BRACKET AS	
M		2	**6V-9632**	4	NUT-WELD (M6X1 THD)	
	64	2	**6C-5435**	1	GASKET	
	65	2	**6C-5436**	1	GASKET	
	66	2	**6V-3320**	1	SCREW-MACHINE (1/4-20X7.50 IN)	
M	67	2	**6V-7743**	1	LOCKNUT (M6X1.00 THD)	
	68	2	**6T-6708**	2	WASHER (4.1MM THK)	
	69	2	**6V-1668**	2	WASHER (3MM THK)	

C-CHANGE FROM PREVIOUS TYPE
D-ORDER BY THE METER
E-ORDER BY THE CENTIMETER
M-METRIC PART

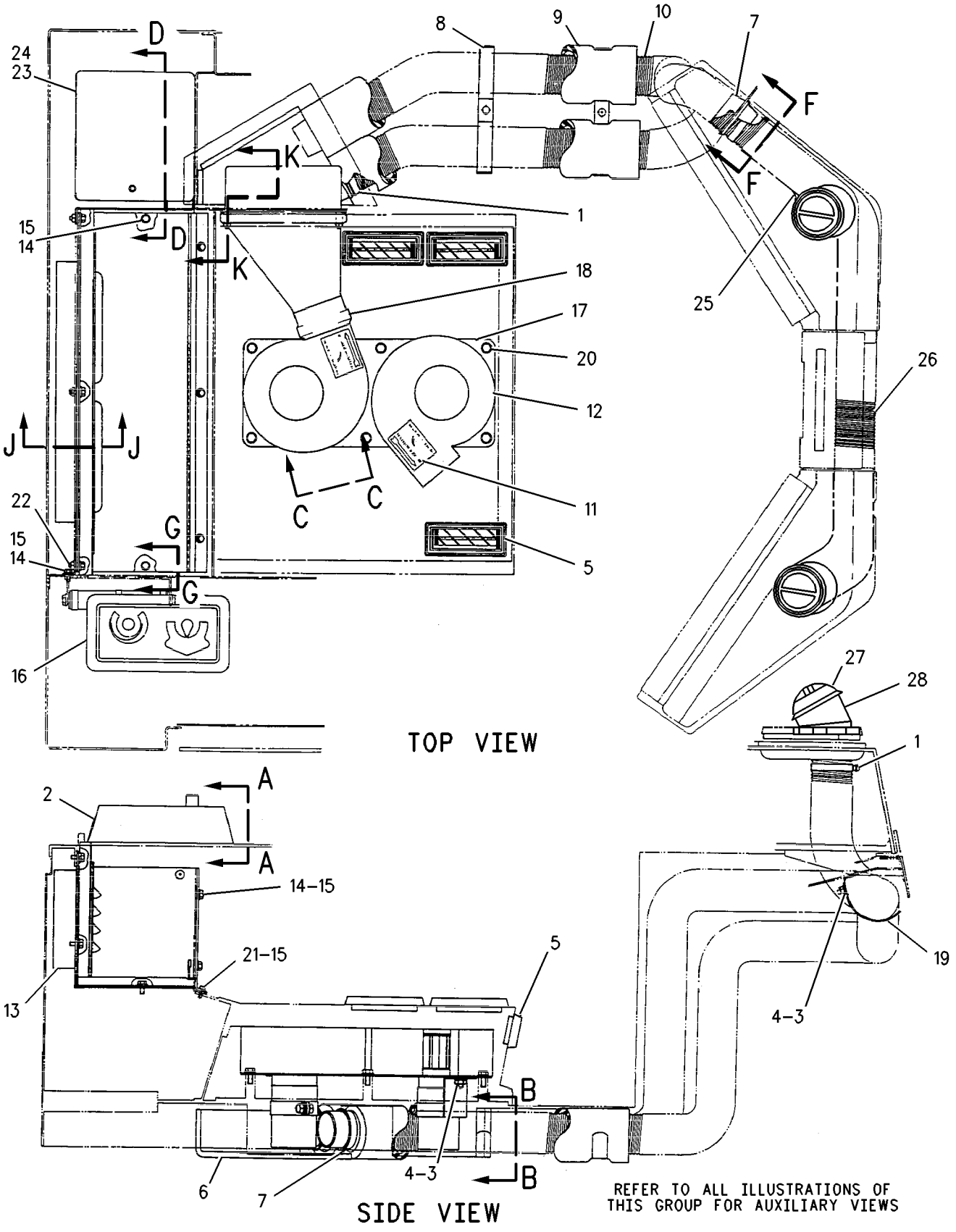

GRAPHIC #1 g00698109

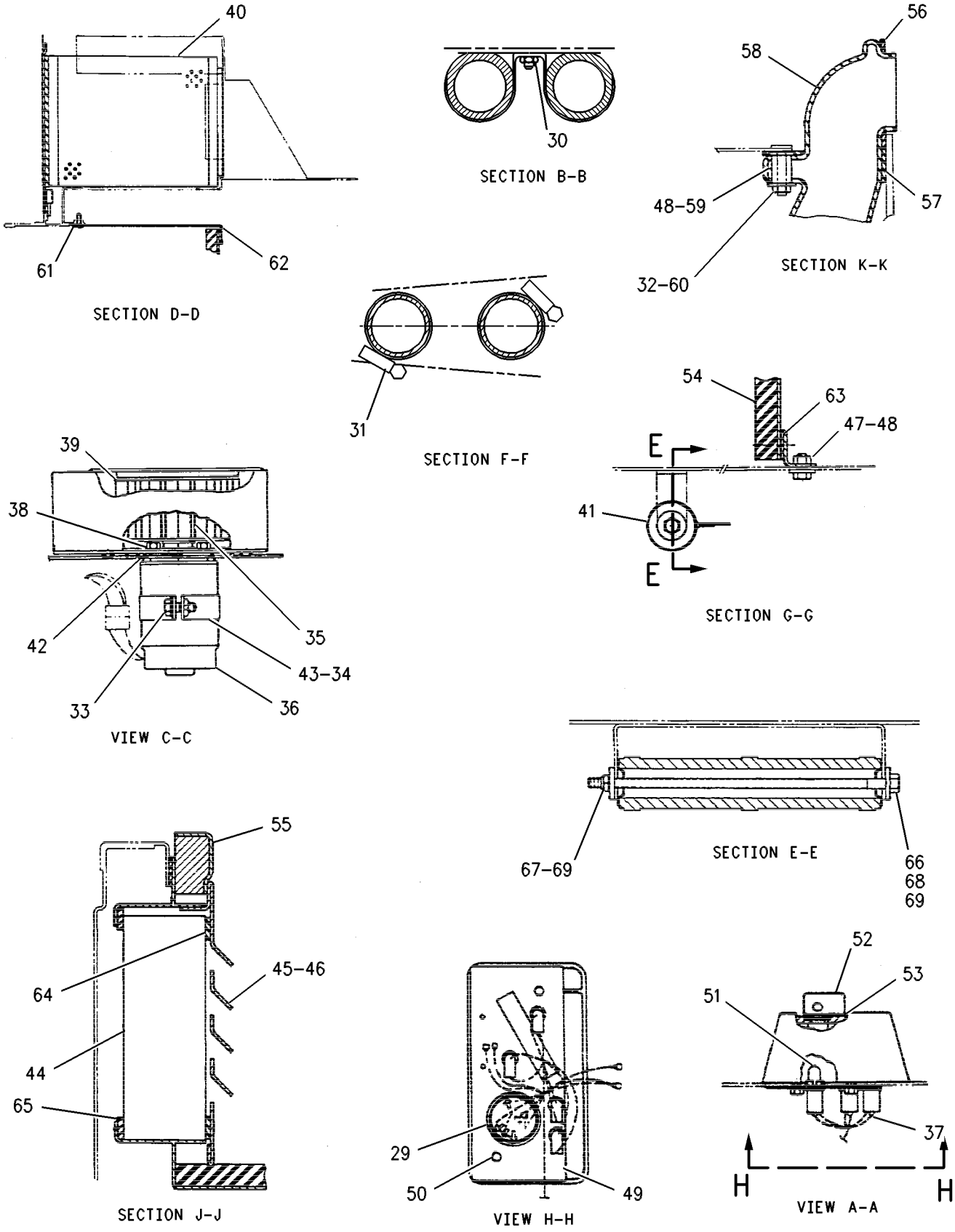

GRAPHIC #2

g00404658

OPERATOR STATION

2V-4291 ROPS GP

S/N: 3XJ1-99999

PART OF 6C-4050 CANOPY AR-OPEN ROPS, 8R-5041 OPERATOR AR

ALSO AN ATTACHMENT

SMCS-7323 **i01324593**

NOTE	REF NO	GRAPHIC REF	PART NUMBER	QTY	PART NAME 1 2 3 4 5 6 (PRODUCT LEVEL)	SEE PAGE
	1	1	**7V-5665**	12	SPACER (40MM THK)	
	2	1	**1D-4642**	12	BOLT (1-8X5IN)	
	3	1	**5C-6565**	2	BOLT (1/2-13X1.25 IN)	
		1	**5P-1076**	2	WASHER-HARD (4MM THK)	
	4	1	**9P-1131**	1	HANDHOLD	
C	5	1	**8V-9982**	1	CANOPY AS	

C-CHANGE FROM PREVIOUS TYPE

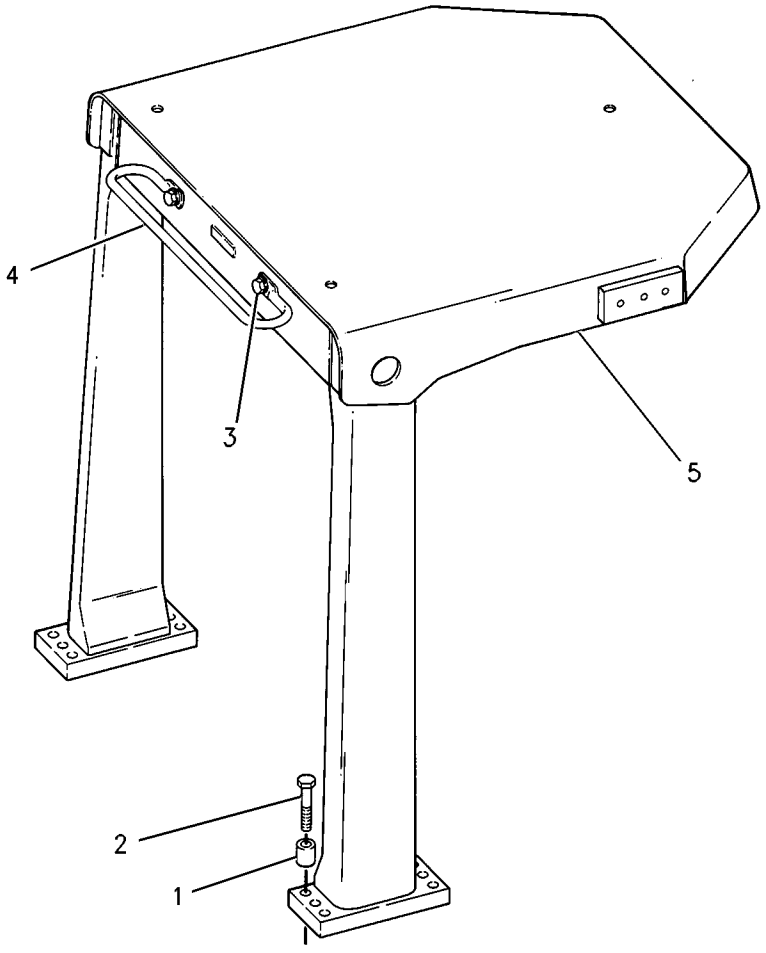

GRAPHIC #1 g00701039

OPERATOR STATION

8Y-3792 SEAT BELT GP

S/N: 3XJ1-99999
RETRACTABLE
PART OF 8Y-4191, 8Y-4192 SEAT GP-SUSPENSION
ALSO AN ATTACHMENT

SMCS-7327 **i00259801**

NOTE	REF NO	GRAPHIC REF	PART NUMBER	QTY	PART NAME 1 2 3 4 5 6 (PRODUCT LEVEL)	SEE PAGE
	1	1	**8S-0934**	1	LOCKNUT-FLANGE (7/16-20 THD)	
	2	1	**7X-0546**	1	WASHER-HARD (2MM THK)	
	3	1	**8Y-5953**	2	BOLT-HEX (7/16-20X1.5IN)	
	4	1	**8T-5360**	1	WASHER (2.5MM THK)	

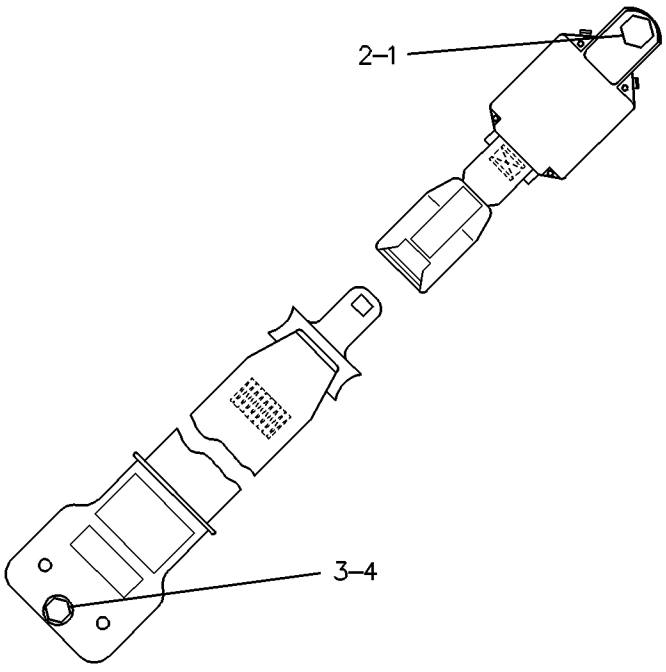

GRAPHIC #1 g00126850

OPERATOR STATION

6C-3385 SEAT GP

S/N: 3XJ1-99999
ADJUSTABLE
AN ATTACHMENT

SMCS-7312 **i01324518**

NOTE	REF NO	GRAPHIC REF	PART NUMBER	QTY	PART NAME 1 2 3 4 5 6 (PRODUCT LEVEL)	SEE PAGE
	1	1	**5K-0906**	6	BOLT (5/16-18X0.63 IN)	
	2	1	**5P-1075**	4	WASHER-HARD (3MM THK)	
	3	1	**6C-2073**	1	SUPPORT AS	
	4	1	**6C-2074**	1	SEAT GP	
Y	5	1	*6C-3383*	1	TETHER GP	
	6	1	**6V-8189**	6	NUT (5/16-18 THD)	
	7	1	**8T-4224**	6	WASHER-HARD (8.8X16X2MM THK)	
	8	1	**9B-7237**	4	BOLT (3/8-16X1.25 IN)	

Y-SEPARATE ILLUSTRATION

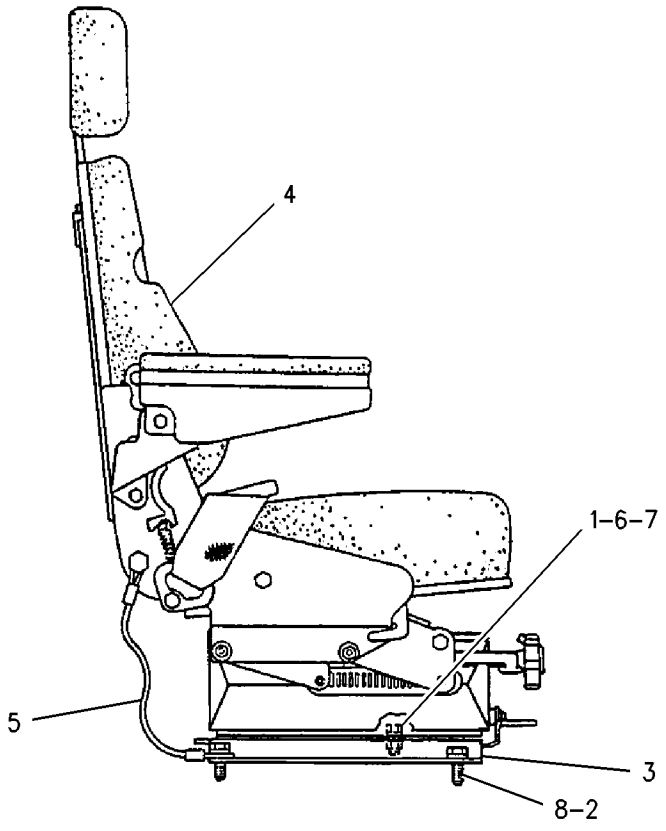

RIGHT SIDE VIEW

GRAPHIC #1 g00700932

OPERATOR STATION

6C-5034 SEAT GP

S/N: 3XJ1-99999

AN ATTACHMENT

SMCS-7312 **i01336298**

NOTE	PART NUMBER	QTY	PART NAME 1 2 3 4 5 6 (PRODUCT LEVEL)	SEE PAGE
	6C-5239	1	HARNESS AS	
	9B-7233	2	LOCKWASHER (NO.8)	
Y	*6C-5238*	1	SEAT GP-ADJUSTABLE	
	6V-8376	2	SCREW-MACHINE (8-32X.25 IN)	
	7T-0988	1	SWITCH AS-PRESSURE (PARKING BRAKE)	
	9S-7744	1	TEE-FLARED	
	6C-5053	2	TUBE AS	

Y-SEPARATE ILLUSTRATION

OPERATOR STATION

6C-5245 SEAT GP

S/N: 3XJ1-99999

PART OF 6C-5238 SEAT GP-ADJUSTABLE

AN ATTACHMENT

SMCS-7312 **i00259881**

NOTE	PART NUMBER	QTY	PART NAME 1 2 3 4 5 6 (PRODUCT LEVEL)	SEE PAGE
	5K-0906	6	BOLT (5/16-18X0.63IN)	
	9B-7237	4	BOLT (3/8-16X1.25IN)	
	7N-7782	1	HOUSING-PLUG	
	7N-9738	1	HOUSING-RECEPTACLE	
	6V-8189	6	NUT (5/16-18 THD)	
	7N-7780	2	PIN-CONNECTOR (BLADE)	
	6C-5237	1	SEAT GP	
	7N-7779	3	SOCKET	
	6C-2073	1	SUPPORT AS	
	8T-4224	6	WASHER-HARD (2MM THK)	
	5P-1075	4	WASHER-HARD (3MM THK)	

MEMORANDA

OPERATOR STATION

8Y-5883 SEAT GP

S/N: 3XJ1-99999
CLOTH
PART OF 8Y-4191 SEAT GP-SUSPENSION

SMCS-7312 **i01120677**

NOTE	REF NO	GRAPHIC REF	PART NUMBER	QTY	PART NAME 1 2 3 4 5 6 (PRODUCT LEVEL)	SEE PAGE
	1	1	**8Y-5947**	4	FASTENER	
Y	2	1	*8Y-5992*	1	PAN GP-SEAT (BOTTOM)	
	3	1	**9X-8918**	10	SCREW-FLAT HEAD	
	4	1	**9L-7469**	2	LOCKPIN	
	5	1	**7B-7525**	2	BOLT-SOCKET HEAD (7/16-14X1.25IN)	
		1	**8Y-6051**	2	SPACER (14.24MM THK)	
	6	1	**8Y-6001**	1	PLUG	
	7	1	**8Y-5929**	1	PLATE AS-SLIDE	
		1	**4K-9097**	6	NUT-WELD (5/16-18 THD)	
	8	1	**8Y-5930**	1	BAR AS-SLIDE	
	9	1	**8Y-5931**	1	BAR AS-LATCH	
	10	1	**8S-7803**	2	RING-RETAINING	
	11	1	**8Y-5932**	1	LATCH AS	
	12	1	**8Y-5936**	1	SPRING	
	13	1	**095-0878**	1	PIN-SPRING	
	14	1	**8Y-5981**	2	BUSHING-BACKREST	
	15	1	**8Y-5928**	2	SPRING	
	16	1	**2B-2695**	4	BOLT (5/16-18X.875IN)	
	17	1	**8Y-5937**	1	BRACKET AS-RH	
	18	1	**8Y-5938**	1	BRACKET AS-LH	
	19	1	**7U-4898**	6	SCREW (3/8-16X0.75IN)	
		1	**2K-4973**	6	LOCKNUT (3/8-16 THD)	
	20	1	**1C-0569**	2	BOLT (5/16-18X.5IN)	
	21	1	**8Y-5979**	1	PIN	
	22	1	**6V-2456**	2	RING-RETAINING	
	23	1	**8Y-6834**	1	SPRING-LH	
	24	1	**8Y-6833**	1	SPRING-RH	
	25	1	**8Y-5881**	1	PAN AS-BACK	
	26	1	**2F-7306**	1	SCREW-MACHINE (6-32X.25IN)	
	27	1	**8Y-6006**	1	LID AS	
	28	1	**8Y-6010**	1	LANYARD	
	29	1	**4S-8287**	4	RIVET-POP (6MM DIA)	
	30	1	**8Y-5972**	1	LATCH	
	31	1	**9N-1499**	4	RIVET	
	32	1	**3E-4336**	1	STUD-BALL	
	33	1	**3E-4335**	1	CLIP	
BE	34	1	**3E-6575**		SEAL	
	35	1	**8F-1462**	1	WASHER-PLATED	
B	36	1	**061-8803**	4	SHIM (1.52MM THK)	
					AVAILABLE REPAIR KIT(S):	
			8Y-6933	1	KIT-TILT PAN	
					(INCLUDES PAN)	
			8Y-5942	1	KIT-SEAT KNOB	
					(INCLUDES KNOBS)	
			8Y-5880	1	KIT-BACK CUSHION	
					(INCLUDES CUSHION AS)	
			8Y-5891	1	KIT-SEAT CUSHION	
					(INCLUDES CUSHION AS)	

B-USE AS REQUIRED
E-ORDER BY THE CENTIMETER
Y-SEPARATE ILLUSTRATION

8Y-5883 SEAT GP ***(contd.)*** **i01120677**

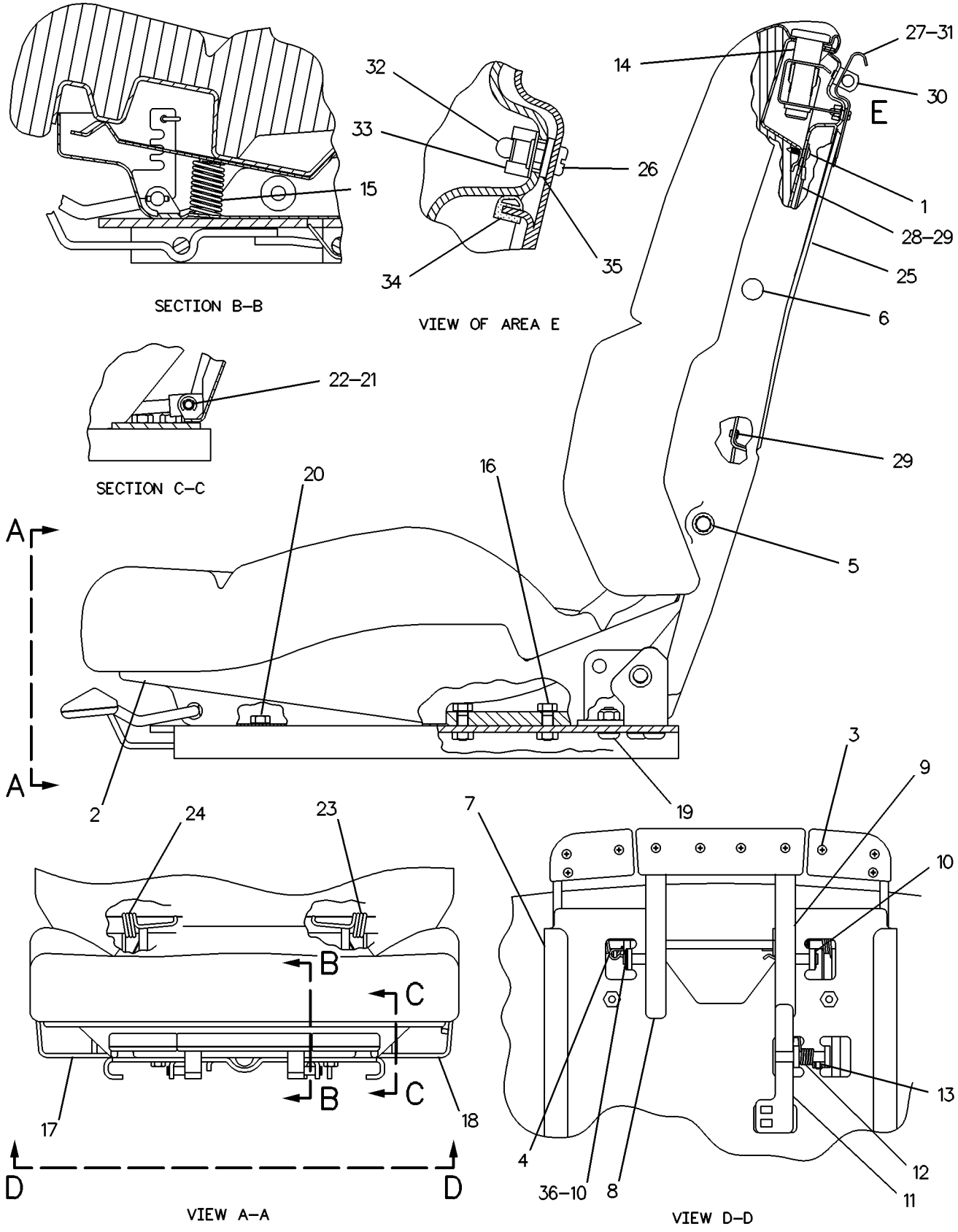

GRAPHIC #1 g00128162

OPERATOR STATION

8Y-5954 SEAT GP

S/N: 3XJ1-99999
VINYL
PART OF 8Y-4192 SEAT GP-SUSPENSION
AN ATTACHMENT

SMCS-7312 **i01120682**

NOTE	REF NO	GRAPHIC REF	PART NUMBER	QTY	PART NAME 1 2 3 4 5 6 (PRODUCT LEVEL)	SEE PAGE
	1	1	**8Y-5947**	4	FASTENER	
Y	2	1	*8Y-5992*	1	PAN GP-SEAT (BOTTOM)	
	3	1	**9X-8918**	10	SCREW-FLAT HEAD	
	4	1	**9L-7469**	2	LOCKPIN	
	5	1	**7B-7525**	2	BOLT-SOCKET HEAD (7/16-14X1.25IN)	
		1	**8Y-6051**	2	SPACER (14.24MM THK)	
	6	1	**8Y-6001**	1	PLUG	
	7	1	**8Y-5929**	1	PLATE AS-SLIDE	
		1	**4K-9097**	6	NUT-WELD (5/16-18 THD)	
	8	1	**8Y-5930**	1	BAR AS-SLIDE	
	9	1	**8Y-5931**	1	BAR AS-LATCH	
	10	1	**8S-7803**	2	RING-RETAINING	
	11	1	**8Y-5932**	1	LATCH AS	
	12	1	**8Y-5936**	1	SPRING	
	13	1	**095-0878**	1	PIN-SPRING	
	14	1	**8Y-5981**	2	BUSHING-BACKREST	
	15	1	**8Y-5928**	2	SPRING	
	16	1	**2B-2695**	4	BOLT (5/16-18X.875IN)	
	17	1	**8Y-5937**	1	BRACKET AS-RH	
	18	1	**8Y-5938**	1	BRACKET AS-LH	
	19	1	**7U-4898**	6	SCREW (3/8-16X0.75IN)	
		1	**2K-4973**	6	LOCKNUT (3/8-16 THD)	
	20	1	**1C-0569**	2	BOLT (5/16-18X.5IN)	
	21	1	**8Y-5979**	1	PIN	
	22	1	**6V-2456**	2	RING-RETAINING	
	23	1	**8Y-6834**	1	SPRING-LH	
	24	1	**8Y-6833**	1	SPRING-RH	
	25	1	**8Y-5881**	1	PAN AS-BACK	
	26	1	**2F-7306**	1	SCREW-MACHINE (6-32X.25IN)	
	27	1	**8Y-6006**	1	LID AS	
	28	1	**8Y-6010**	1	LANYARD	
	29	1	**4S-8287**	4	RIVET-POP (6MM DIA)	
	30	1	**8Y-5972**	1	LATCH	
	31	1	**9N-1499**	4	RIVET	
	32	1	**3E-4336**	1	STUD-BALL	
	33	1	**3E-4335**	1	CLIP	
BE	34	1	**3E-6575**		SEAL	
	35	1	**8F-1462**	1	WASHER-PLATED	
B	36	1	**061-8803**	4	SHIM (1.52MM THK)	
					AVAILABLE REPAIR KIT(S):	
			8Y-6933	1	KIT-TILT PAN	
					(INCLUDES PAN)	
			8Y-5942	1	KIT-SEAT KNOB	
					(INCLUDES KNOBS)	
			8Y-5955	1	KIT-BACK CUSHION	
					(INCLUDES CUSHION AS)	
			8Y-5957	1	KIT-SEAT CUSHION	
					(INCLUDES CUSHION AS)	

B-USE AS REQUIRED
E-ORDER BY THE CENTIMETER
Y-SEPARATE ILLUSTRATION

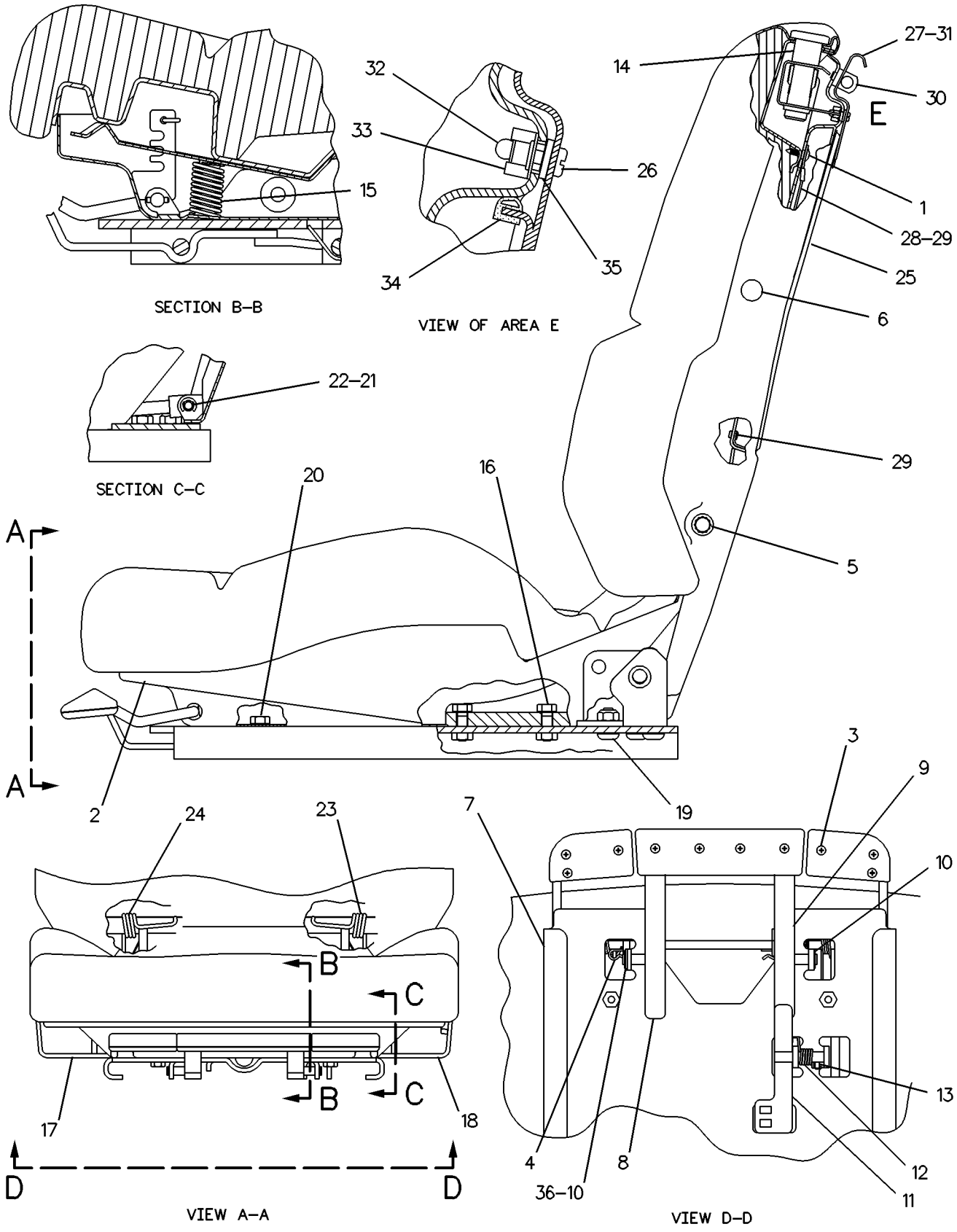

GRAPHIC #1 g00128161

OPERATOR STATION

6C-2726 SEAT GP-ADJUSTABLE

S/N: 3XJ1-99999
PART OF 6C-2738 SEAT GP-ADJUSTABLE
AN ATTACHMENT

SMCS-7312 **i00563440**

NOTE	PART NUMBER	QTY	PART NAME 1 2 3 4 5 6 (PRODUCT LEVEL)	SEE PAGE
	9B-7237	4	BOLT (3/8-16X1.25IN)	
	5K-0906	6	BOLT (5/16-18X0.63IN)	
	7N-7782	1	HOUSING-PLUG	
	7N-9738	1	HOUSING-RECEPTACLE	
	6V-8189	6	NUT (5/16-18 THD)	
	7N-7780	2	PIN-CONNECTOR	
	6C-2076	1	SEAT GP	
	7N-7779	3	SOCKET	
	6C-2073	1	SUPPORT AS	
	8T-4224	6	WASHER-HARD (2MM THK)	
	5P-1075	4	WASHER-HARD (3MM THK)	

OPERATOR STATION

6C-2738 SEAT GP-ADJUSTABLE

S/N: 3XJ1-99999

AN ATTACHMENT

SMCS-7312 **i00636187**

NOTE	PART NUMBER	QTY	PART NAME 1 2 3 4 5 6 (PRODUCT LEVEL)	SEE PAGE
Y	*6C-2726*	1	SEAT GP-ADJUSTABLE	
Y	*6C-3383*	1	TETHER GP	

Y-SEPARATE ILLUSTRATION

OPERATOR STATION

6C-5238 SEAT GP-ADJUSTABLE

S/N: 3XJ1-99999

PART OF 6C-4465 CONVERSION AR-LOW PROFILE CAB, 6C-5034 SEAT GP, 6C-7686 SEAT GP-ADJUSTABLE

AN ATTACHMENT

SMCS-7312 **i01323610**

NOTE	PART NUMBER	QTY	PART NAME 1 2 3 4 5 6 (PRODUCT LEVEL)	SEE PAGE
Y	**9G-9813**	1	ALARM GP (ACTION)	
Y	**6C-5245**	1	SEAT GP	
Y	*6C-3383*	1	TETHER GP	
	9D-3127	1	BASE AS-INDICATOR LIGHT	
	7N-2867	1	CAP-FUSE HOLDER	
	9G-9153	1	CLIP (12.00MM ID)	
	9G-9151	1	CLIP (10.20MM ID)	
	3T-3045	1	CLIP AS (12MM ID)	
	3T-3048	2	CLIP AS (10.2MM ID)	
	3K-8782	1	FUSE (10 AMP)	
	6C-5236	1	HARNESS AS	
	6C-5244	1	HARNESS AS	
	4K-5122	1	HOLDER AS-FUSE	
	7N-5876	1	LAMP-MINIATURE (28 VOLT)	
	6V-8367	1	LOCKWASHER (1.17 MM THK)	
	6V-8382	1	NUT-HEX (11/16-27 THD)	

Y-SEPARATE ILLUSTRATION

OPERATOR STATION

6C-7686 SEAT GP-ADJUSTABLE

S/N: 3XJ1-99999
AN ATTACHMENT

SMCS-7312 **i01204352**

NOTE	PART NUMBER	QTY	PART NAME 1 2 3 4 5 6 (PRODUCT LEVEL)	SEE PAGE
Y	*6C-5238*	1	SEAT GP-ADJUSTABLE	
	6C-5239	1	HARNESS AS	
	9B-7233	2	LOCKWASHER (NO.8)	
	6V-8376	2	SCREW-MACHINE (8-32X.25IN)	
	7T-0988	1	SWITCH AS-PRESSURE (PARKING BRAKE)	
	9S-7744	1	TEE-FLARED	
			NOTE A: INSTALL ON PARKING BRAKE LINES	

Y-SEPARATE ILLUSTRATION

OPERATOR STATION

4E-0073 SEAT GP-SUSPENSION

S/N: 3XJ1-99999

PART OF 8R-5041 OPERATOR AR

SMCS-7324, 7336 **i00259298**

NOTE	PART NUMBER	QTY	PART NAME 1 2 3 4 5 6 (PRODUCT LEVEL)	SEE PAGE
	8T-9056	4	BOLT (3/8-16X1-1/4IN)	
Y	**8Y-4191**	1	SEAT GP-SUSPENSION	
	8T-4896	4	WASHER-HARD (2.5MM THK)	

Y-SEPARATE ILLUSTRATION

OPERATOR STATION

4E-0074 SEAT GP-SUSPENSION

S/N: 3XJ1-99999
PART OF 6C-4048 CONVERSION AR-NONCAB
AN ATTACHMENT

SMCS-7324, 7336 **i00259324**

NOTE	PART NUMBER	QTY	PART NAME 1 2 3 4 5 6 (PRODUCT LEVEL)	SEE PAGE
	8T-9056	4	BOLT (3/8-16X1-1/4IN)	
Y	**8Y-4192**	1	SEAT GP-SUSPENSION	
	8T-4896	4	WASHER-HARD (2.5MM THK)	

Y-SEPARATE ILLUSTRATION

OPERATOR STATION

8Y-4191 SEAT GP-SUSPENSION

S/N: 3XJ1-99999
CLOTH
PART OF 4E-0073 SEAT GP-SUSPENSION

SMCS-7324, 7336 **i01315128**

NOTE	REF NO	GRAPHIC REF	PART NUMBER	QTY	PART NAME 1 2 3 4 5 6 (PRODUCT LEVEL)	SEE PAGE
Y	1	1	**8Y-5874**	1	EXTENSION GP-BACKREST	
Y	2	1	**8Y-5883**	1	SEAT GP (CLOTH)	
Y	3	1	**8Y-5884**	1	ARMREST GP (LH)	
Y	4	1	**8Y-5885**	1	ARMREST GP (RH)	
Y	5	1	**8Y-5888**	1	SUSPENSION GP-SEAT	
Y	6	1	**8Y-3792**	1	SEAT BELT GP (RETRACTABLE)	
ZJ	7	1		4	BLOCK-SLIDER	
J	8	1	**4F-4879**	1	BOLT (3/8-16X.5 IN)	
					AVAILABLE REPAIR KIT(S):	
J			**8Y-5889**	1	KIT-SLIDER BLOCK	

J-KIT MARKED J INCLUDES PARTS MARKED J
Y-SEPARATE ILLUSTRATION
Z-NOT SERVICED SEPARATELY

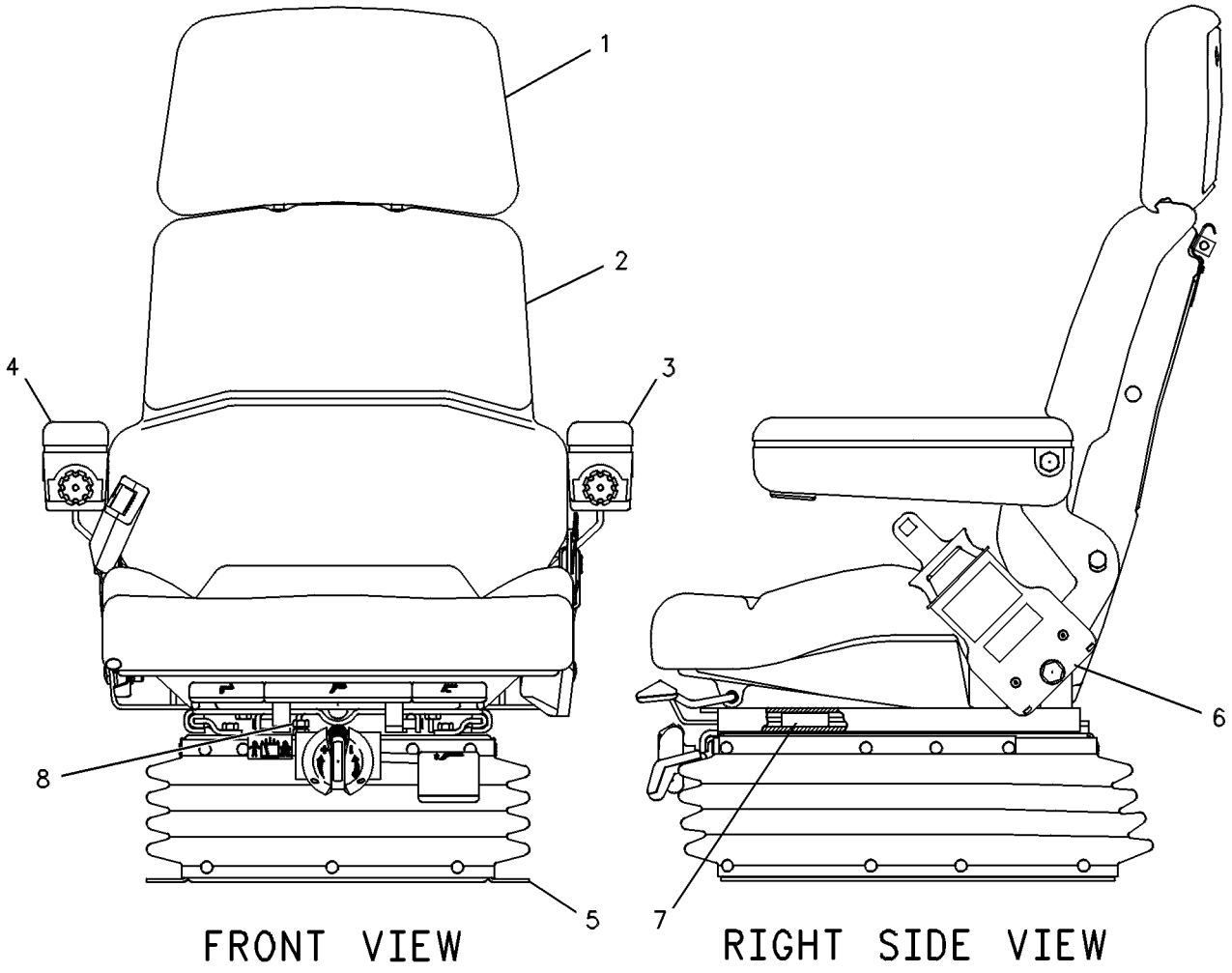

GRAPHIC #1 g00120051

8Y-4192 SEAT GP-SUSPENSION

S/N: 3XJ1-99999
PART OF 4E-0074 SEAT GP-SUSPENSION
AN ATTACHMENT

SMCS-7324, 7336 **i01315174**

NOTE	REF NO	GRAPHIC REF	PART NUMBER	QTY	PART NAME 1 2 3 4 5 6 (PRODUCT LEVEL)	SEE PAGE
Y	1	1	**8Y-5959**	1	EXTENSION GP-BACKREST	
Y	2	1	**8Y-5954**	1	SEAT GP (VINYL)	
Y	3	1	**8Y-5885**	1	ARMREST GP (RH)	
Y	4	1	**8Y-5884**	1	ARMREST GP (LH)	
Y	5	1	**8Y-5888**	1	SUSPENSION GP-SEAT	
Y	6	1	**8Y-3792**	1	SEAT BELT GP (RETRACTABLE)	
ZJ	7	1		4	BLOCK-SLIDER	
J	8	1	**4F-4879**	1	BOLT (3/8-16X.5 IN)	
					AVAILABLE REPAIR KIT(S):	
J			**8Y-5889**	1	KIT-SLIDER BLOCK	

J-KIT MARKED J INCLUDES PARTS MARKED J
Y-SEPARATE ILLUSTRATION
Z-NOT SERVICED SEPARATELY

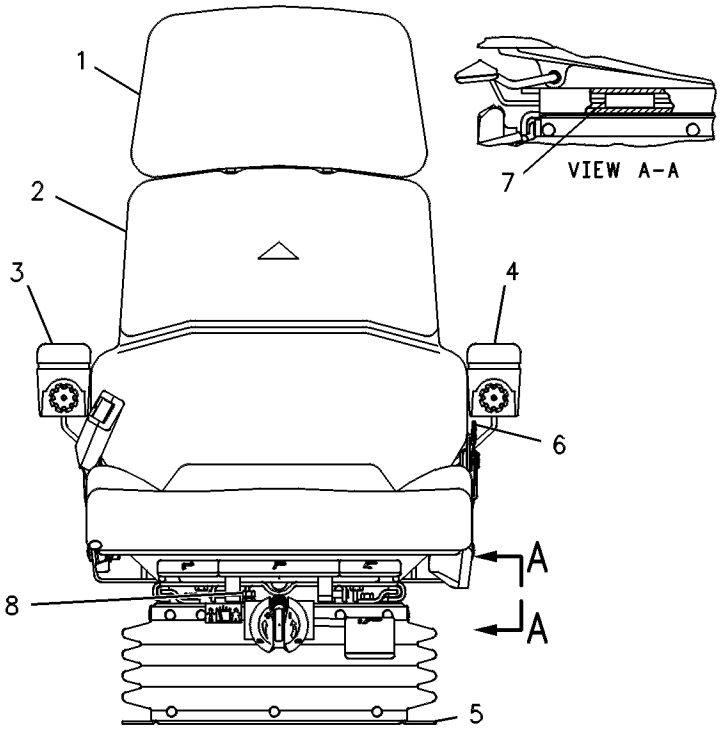

GRAPHIC #1 g00120417

OPERATOR STATION

4E-2517 SUPPORT GP-SEAT

S/N: 3XJ1-99999

PART OF 8R-5041 OPERATOR AR

SMCS-7321 **i00259364**

NOTE	REF NO	GRAPHIC REF	PART NUMBER	QTY	PART NAME 1 2 3 4 5 6 (PRODUCT LEVEL)	SEE PAGE
	1	1	**6C-4224**	1	SUPPORT AS	
	2	1	**5M-3062**	12	BOLT (3/8-16X.750IN)	
	3	1	**5P-1075**	12	WASHER-HARD (3MM THK)	

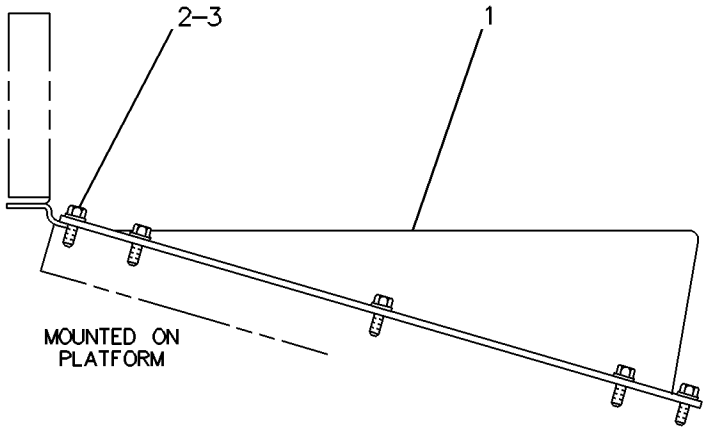

GRAPHIC #1 g00118824

OPERATOR STATION

6C-4137 SUPPORT GP-SEAT

S/N: 3XJ1-99999
PART OF 6C-4465 CONVERSION AR-LOW PROFILE CAB
AN ATTACHMENT

SMCS-7321 **i00259739**

NOTE	REF NO	GRAPHIC REF	PART NUMBER	QTY	PART NAME 1 2 3 4 5 6 (PRODUCT LEVEL)	SEE PAGE
	1	1	**6C-4298**	1	SUPPORT AS	
	2	1	**5M-3062**	12	BOLT (3/8-16X.750IN)	
	3	1	**5P-1075**	12	WASHER-HARD (3MM THK)	

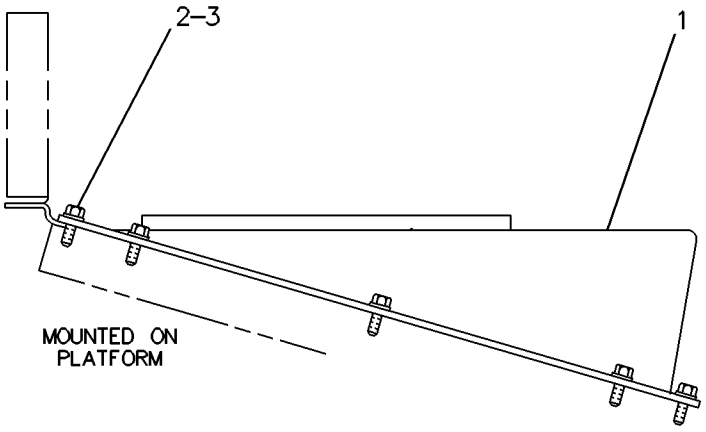

GRAPHIC #1 g00127166

OPERATOR STATION

6C-5440 SUPPORT GP-SEAT

S/N: 3XJ433-99999
PART OF 6C-4048 CONVERSION AR-NONCAB
AN ATTACHMENT

SMCS-7321 **i00286809**

NOTE	REF NO	GRAPHIC REF	PART NUMBER	QTY	PART NAME 1 2 3 4 5 6 (PRODUCT LEVEL)	SEE PAGE
	1	1	**6C-4299**	1	SUPPORT AS	
		1	**8H-9711**	4	NUT-WELD (3/8-16 THD)	
	2	1	**5M-3062**	12	BOLT (3/8-16X.750IN)	
	3	1	**5P-1075**	12	WASHER-HARD (3MM THK)	

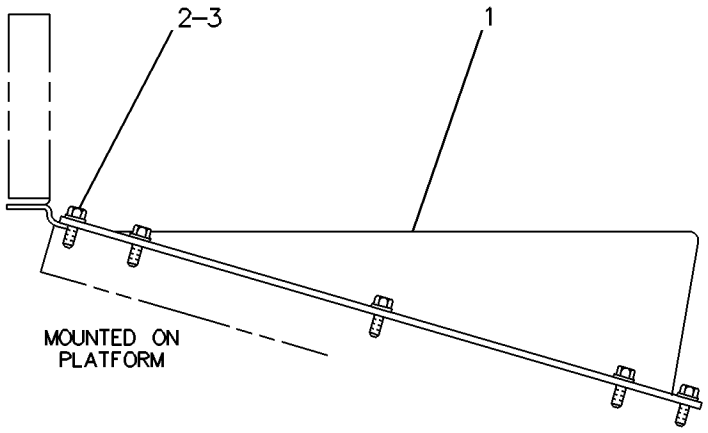

GRAPHIC #1 g00127132

MEMORANDA

OPERATOR STATION

8R-5342 SUPPRESSION GP-SOUND

S/N: 3XJ1-814

PART OF 8R-5041 OPERATOR AR

SMCS-7329, 7330 **i01325230**

NOTE	REF NO	GRAPHIC REF	PART NUMBER	QTY	PART NAME 1 2 3 4 5 6 (PRODUCT LEVEL)	SEE PAGE
	1	1	**6C-4142**	1	INSULATION	
	2	1	**6C-4150**	1	INSULATION	
	3	1	**6C-4148**	1	INSULATION	
	4	1	**6C-4147**	1	INSULATION	
	5	1	**9V-5764**	1	INSULATION-RH	
	6	1	**9V-5758**	1	INSULATION	
	7	1	**6C-4149**	1	INSULATION	
	8	1	**9V-5761**	2	INSULATION	
	9	1	**9V-5753**	1	INSULATION	
	10	1	**9V-5759**	1	INSULATION	
	11	1	**6C-4146**	2	INSULATION	
	12	1	**6C-4145**	1	INSULATION	
	13	1	**6C-4143**	1	INSULATION	
	14	1	**6C-4144**	1	INSULATION	
	15	1	**9C-4454**	1	PLATE	
	16	1	**5M-3062**	1	BOLT (3/8-16X.75 IN)	
	17	1	**5P-1075**	3	WASHER-HARD (3MM THK)	
	18	1	**6V-8801**	2	NUT (3/8-16 THD)	
	19	1	**6J-0488**	1	SCREW-HEAD (3/8-16X.875 IN)	
BD	20	1	**5P-5637**		SEAL	
F		1	**6C-4242**	1	INSULATION	

B-USE AS REQUIRED
D-ORDER BY THE METER
F-NOT SHOWN

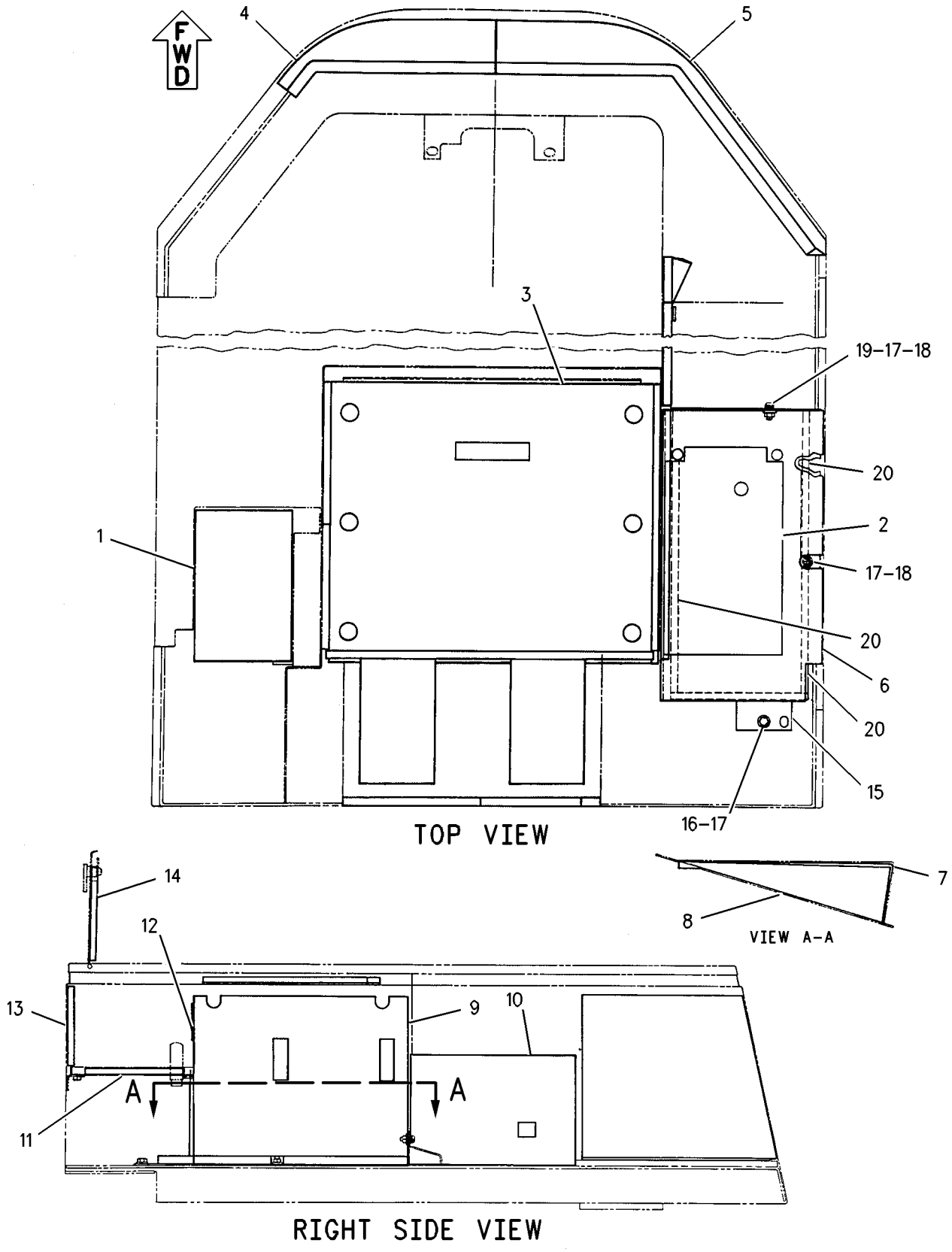

GRAPHIC #1 g00701425

OPERATOR STATION

8R-5342 SUPPRESSION GP-SOUND

S/N: 3XJ815-99999

PART OF 8R-5041 OPERATOR AR

SMCS-7329, 7330 **i00259679**

NOTE	REF NO	GRAPHIC REF	PART NUMBER	QTY	PART NAME 1 2 3 4 5 6 (PRODUCT LEVEL)	SEE PAGE
	1	1	**6C-4142**	1	INSULATION	
C	2	1	**4E-1417**	1	INSULATION	
	3	1	**6C-4148**	1	INSULATION	
	4	1	**6C-8175**	1	INSULATION	
	5	1	**9V-5764**	1	INSULATION-RH	
	6	1	**9V-5758**	1	INSULATION	
	7	1	**6C-4149**	1	INSULATION	
	8	1	**9V-5761**	2	INSULATION	
C	9	1	**6C-5843**	1	INSULATION	
C	10	1	**6C-5842**	1	INSULATION	
C	11	1	**6C-4146**	1	INSULATION	
	12	1	**6C-4145**	1	INSULATION	
BDC	13	1	**5P-5643**		SEAL (.6M)	
	14	1	**6C-4144**	1	INSULATION	
	15	1	**9C-4454**	1	PLATE	
	16	1	**5M-3062**	1	BOLT (3/8-16X.750IN)	
	17	1	**5P-1075**	3	WASHER-HARD (3MM THK)	
	18	1	**6V-8801**	2	NUT (3/8-16 THD)	
	19	1	**6J-0488**	1	SCREW-HEAD (3/8-16X.875IN)	
D	20	1	**5P-5637**		SEAL (.1M)	
	21	1	**6C-8176**	1	INSULATION	
	22	1	**5N-3175**	4	PLUG (16.764MM DIA)	

B-USE AS REQUIRED
C-CHANGE FROM PREVIOUS TYPE
D-ORDER BY THE METER

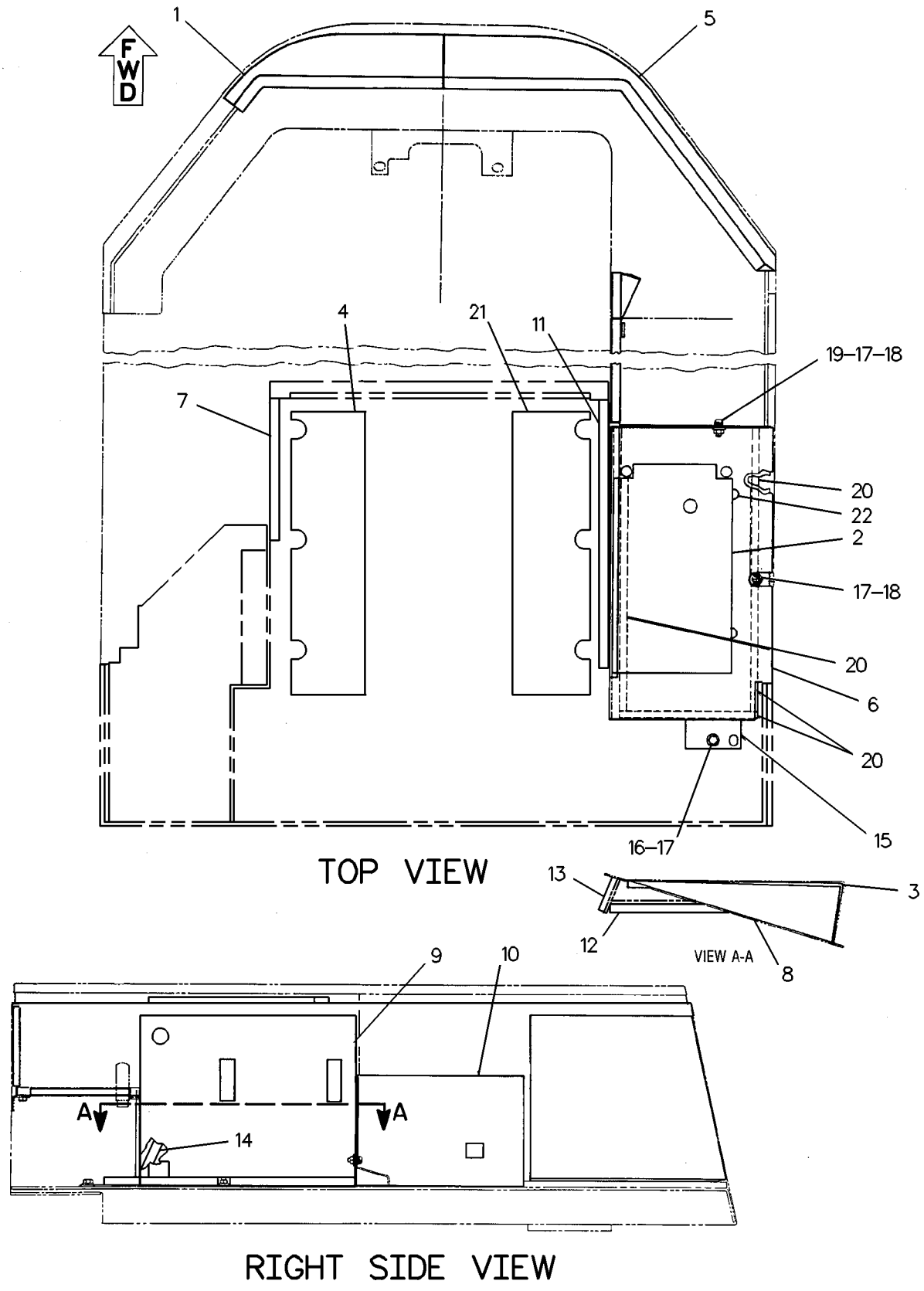

GRAPHIC #1 g00128164

OPERATOR STATION

8Y-5888 SUSPENSION GP-SEAT

S/N: 3XJ1-99999
PART OF 8Y-4191, 8Y-4192 SEAT GP-SUSPENSION
ALSO AN ATTACHMENT

SMCS-7324 **i01189117**

NOTE	REF NO	GRAPHIC REF	PART NUMBER	QTY	PART NAME 1 2 3 4 5 6 (PRODUCT LEVEL)	SEE PAGE
	1	1	**8Y-6022**	1	PLATE-SLIDE	
	2	1	**8Y-6023**	1	PLATE-SLIDE	
	3	1	**5M-3062**	6	BOLT (3/8-16X.75IN)	
	4	1	**7X-0608**	4	WASHER-HARD (2.0MM THK)	
		1	**2K-4973**	4	LOCKNUT (3/8-16 THD)	
	5	1	**8Y-6014**	1	HOUSING AS-LOWER	
Y	6	1	**8Y-6823**	1	HOUSING GP-SEAT SUSPENSION	
	7	1	**8Y-6012**	1	ARM AS-SUSPENSION	
					AVAILABLE REPAIR KIT(S):	
			8Y-5944	1	KIT-SUSPENSION BOOT	
			8Y-6858	1	KIT-DAMPER	
					(INCLUDES RETAINER & BEARINGS)	
			101-4194	1	KIT-BELT TETHER	
			101-4195	1	KIT-SUSPENSION ROLLER	
			101-4196	1	KIT-SUSPENSION SHAFT	
					(INCLUDES BEARINGS & LOCKNUTS)	

Y-SEPARATE ILLUSTRATION

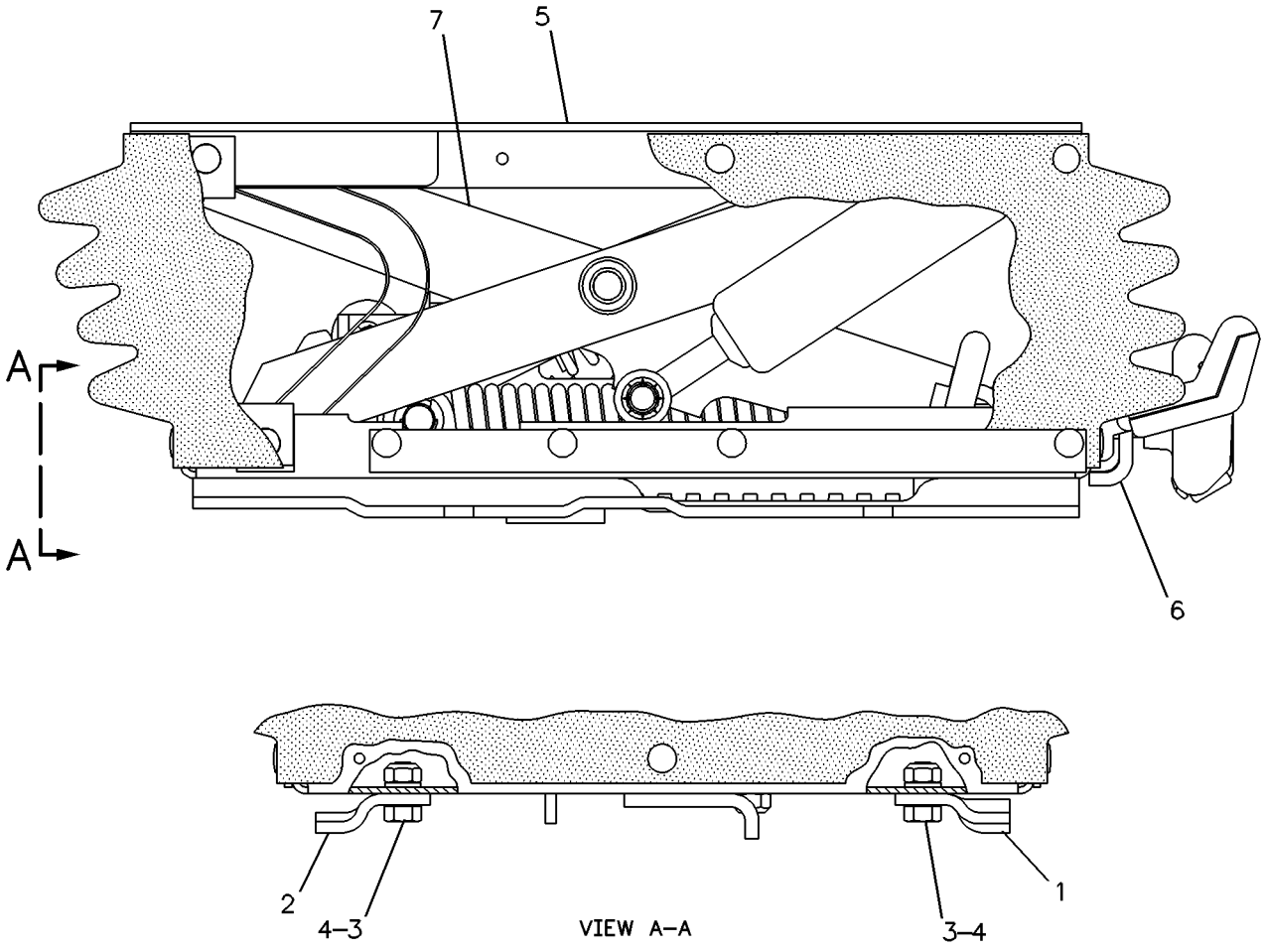

GRAPHIC #1 g00119808

OPERATOR STATION

8R-1774 TANK GP-WINDOW WASHER

S/N: 3XJ1-99999

PART OF 4E-2599 WASHER GP-WINDOW

SMCS-7306 **i01325242**

NOTE	REF NO	GRAPHIC REF	PART NUMBER	QTY	PART NAME 1 2 3 4 5 6 (PRODUCT LEVEL)	SEE PAGE
	1	1	**3W-6398**	1	CAP	
		1	**3W-6399**	1	PACKING	
	2	1	**8T-5914**	2	GROMMET	
	3	1	**8T-5913**	2	FILTER-SCREEN	
	4	1	**7T-8890**	2	PUMP AS-WASHER	

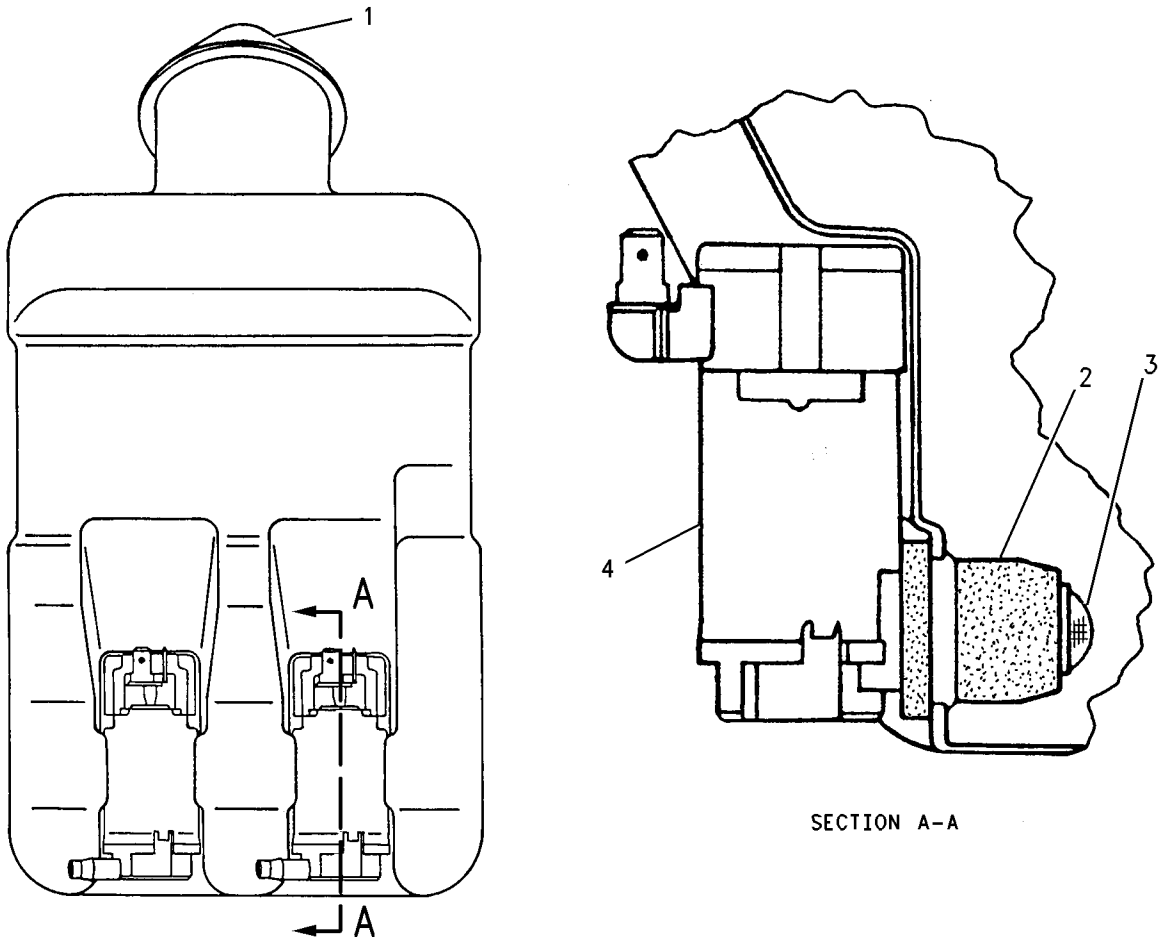

GRAPHIC #1 g00701537

6C-3383 TETHER GP

S/N: 3XJ1-99999

PART OF 6C-3385 SEAT GP, 6C-2738, 6C-5238 SEAT GP-ADJUSTABLE

AN ATTACHMENT

SMCS-7301, 7302, 7325, 7335 **i01324655**

NOTE	REF NO	GRAPHIC REF	PART NUMBER	QTY	PART NAME 1 2 3 4 5 6 (PRODUCT LEVEL)	SEE PAGE
	1	1	**6C-3338**	2	CABLE	
	2	1	**4L-9337**	2	BOLT (3/8-16X1.5 IN)	
	3	1	**6C-3347**	2	CLAMP	
	4	1	**5B-0486**	2	SPACER	
C	5	1	**8Y-4030**	1	SEAT BELT GP	
	6	1	**5V-5262**	2	BOLT-SHOULDER (7/16-20X1-1/4IN)	
	7	1	**8S-0934**	2	LOCKNUT-FLANGE (7/16-20 THD)	

C-CHANGE FROM PREVIOUS TYPE

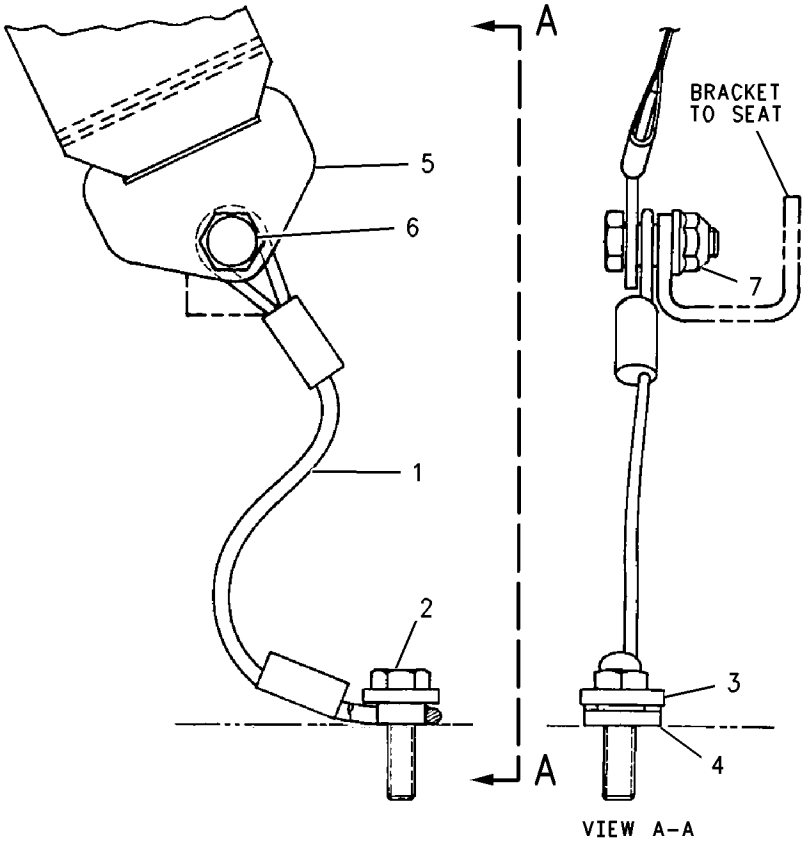

GRAPHIC #1 g00701080

OPERATOR STATION

4V-6682 VALVE GP-AIR CONTROL

S/N: 3XJ1-99999
PART OF 2V-4280 HORN GP-AIR
AN ATTACHMENT

SMCS-5509 **i01325253**

NOTE	REF NO	GRAPHIC REF	PART NUMBER	QTY	PART NAME 1 2 3 4 5 6 (PRODUCT LEVEL)	SEE PAGE
	1	1	**3B-4610**	1	COTTER	
	2	1	**4D-1138**	1	VALVE-INLET	
	3	1	**4D-1135**	1	SEAT-SPRING	
	4	1	**9F-5255**	1	STRAINER	
	5	1	**4D-1134**	1	CAP	
	6	1	**4D-1133**	1	SPRING	
	7	1	**4D-1137**	1	STEM	

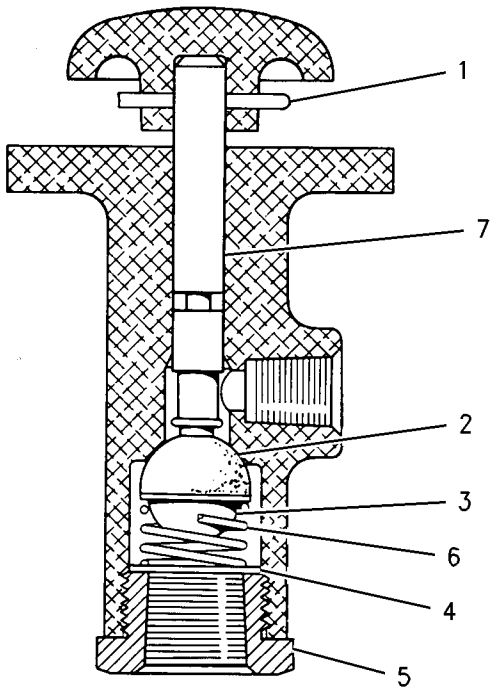

GRAPHIC #1 g00701600

OPERATOR STATION

8V-1578 VISOR GP-CAB

S/N: 3XJ1-99999
PART OF 6C-4151, 8R-6112 CAB GP
ALSO AN ATTACHMENT

SMCS-7301, 7325, 7335 **i01324592**

NOTE	REF NO	GRAPHIC REF	PART NUMBER	QTY	PART NAME 1 2 3 4 5 6 (PRODUCT LEVEL)	SEE PAGE
	1	1	**1H-3337**	6	BOLT (1/4-20X.875IN)	
	2	1	**4F-2292**	4	WASHER	
	3	1	**8V-1420**	2	CLAMP	
CY	4	1	**8V-1841**	1	VISOR GP-CAB	

C-CHANGE FROM PREVIOUS TYPE
Y-SEPARATE ILLUSTRATION

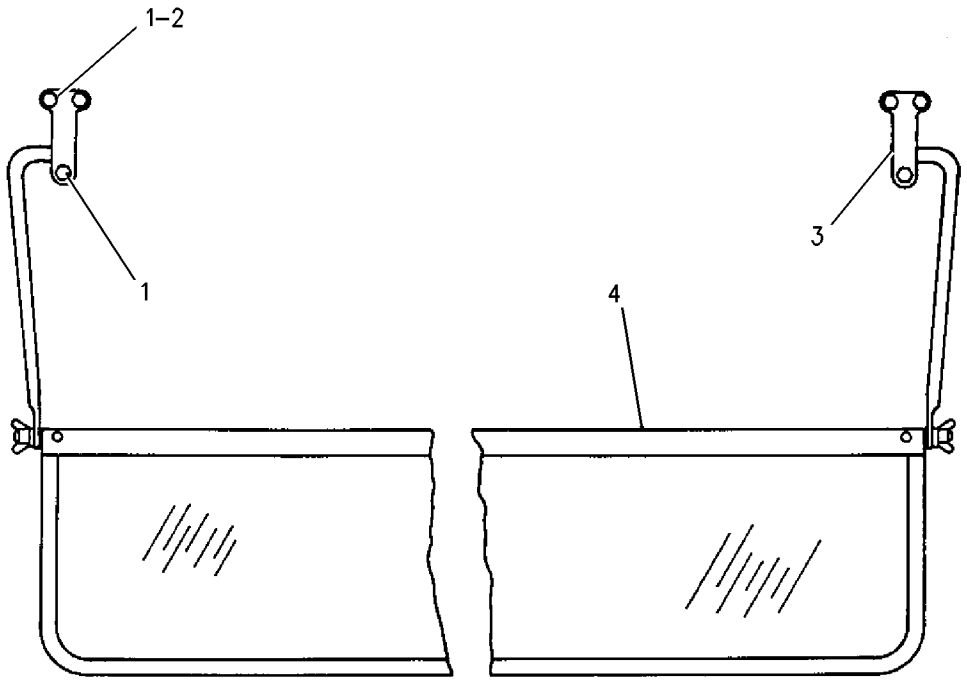

GRAPHIC #1 g00701036

OPERATOR STATION

8V-1841 VISOR GP-CAB

S/N: 3XJ1-99999
PART OF 8V-1578 VISOR GP-CAB
ALSO AN ATTACHMENT

SMCS-7301, 7325, 7335 **i01324590**

NOTE	REF NO	GRAPHIC REF	PART NUMBER	QTY	PART NAME 1 2 3 4 5 6 (PRODUCT LEVEL)	SEE PAGE
	1	1	**9V-0378**	1	BLADE AS	
	2	1	**9V-0379**	2	ARM AS	
	3	1	**9V-0879**	2	KNOB	
	4	1	**4B-4276**	2	WASHER (1.6MM THK)	
	5	1	**8N-4183**	4	WASHER	
	6	1	**035-0499**	2	NUT-WING	

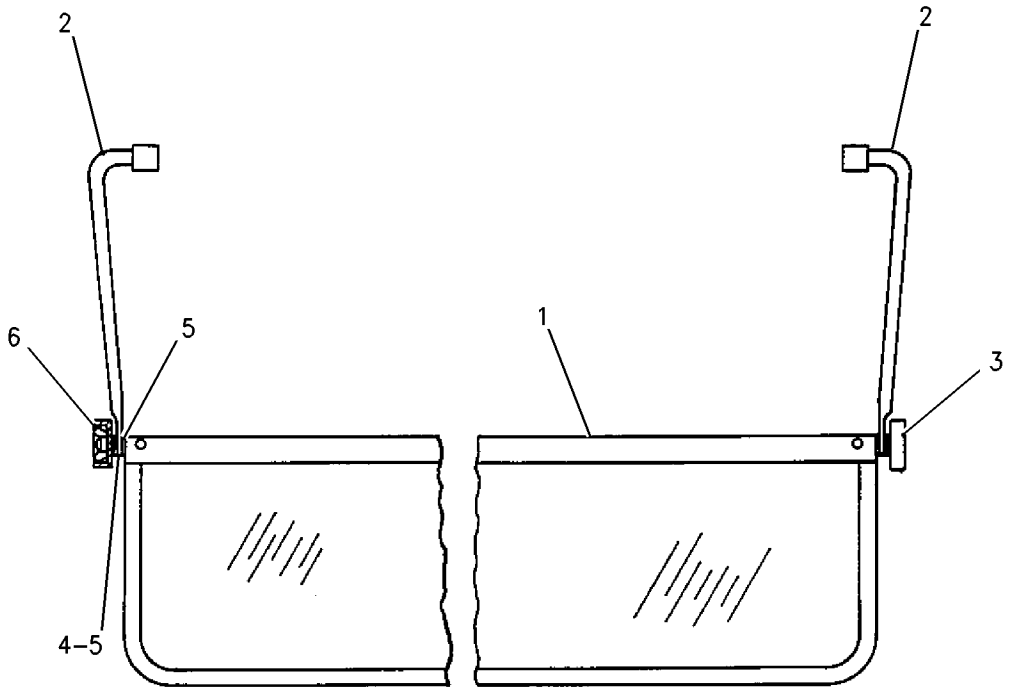

GRAPHIC #1 g00701030

OPERATOR STATION

4E-2599 WASHER GP-WINDOW

S/N: 3XJ1-99999

PART OF 8R-5041 OPERATOR AR

SMCS-7306 **i01334206**

NOTE	REF NO	GRAPHIC REF	PART NUMBER	QTY	PART NAME 1 2 3 4 5 6 (PRODUCT LEVEL)	SEE PAGE
Y	1	1	**8R-1774**	1	TANK GP-WINDOW WASHER	
	2	1	**6V-8801**	1	NUT (3/8-16 THD)	
	3	1	**8T-4896**	1	WASHER-HARD (10.2X18.5X2.5MM THK)	
	4	1	**9M-8406**	1	CLIP (15.8MM ID)	
D	5	1	**5P-5992**		HOSE (1.5M)	
	6	1	**8T-3993**	2	CLAMP-HOSE	
	7	1	**3S-2093**	4	STRAP-CABLE (1.75 IN DIA)	

D-ORDER BY THE METER
Y-SEPARATE ILLUSTRATION

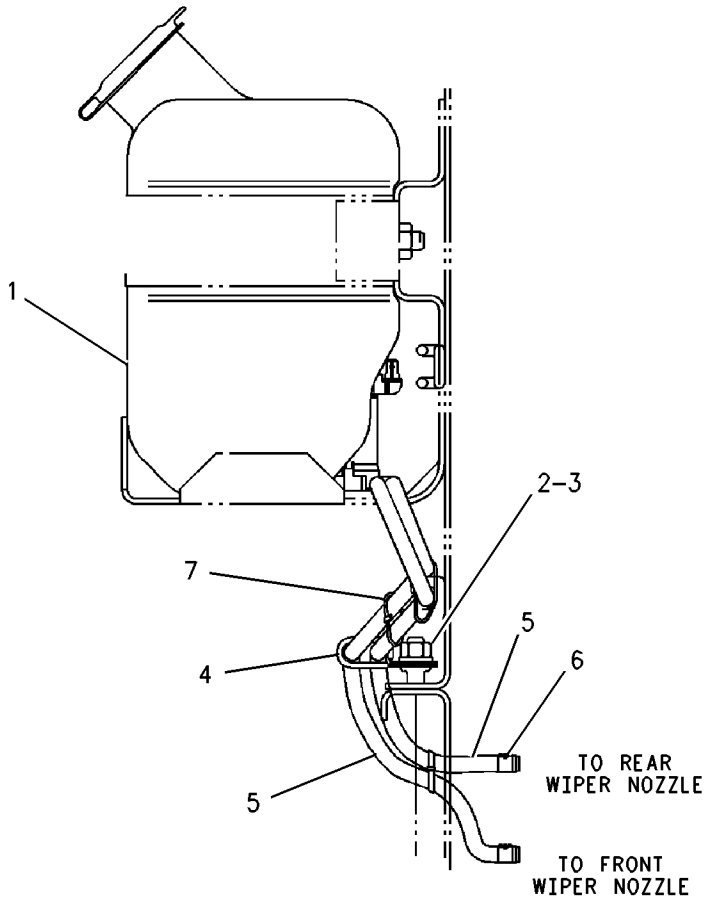

RIGHT SIDE VIEW

GRAPHIC #1 g00701569

MEMORANDA

OPERATOR STATION

6C-5210 WINDOW GP

S/N: 3XJ1-99999
PART OF 6C-4159 DOOR GP-CAB
AN ATTACHMENT

SMCS-7310, 7340 **i00259846**

NOTE	REF NO	GRAPHIC REF	PART NUMBER	QTY	PART NAME 1 2 3 4 5 6 (PRODUCT LEVEL)	SEE PAGE
	1	1	**6C-5206**	1	FRAME AS-UPPER	
	2	1	**6C-5204**	2	RAIL	
		1	**8C-6438**	6	SCREW-PAN HEAD	
	3	1	**9R-4023**	1	CATCH AS-LH	
	4	1	**9R-4022**	1	CATCH AS-RH	
	5	1	**6C-5208**	1	GLASS	
BD	6	1	**9X-2530**		SEAL	
	7	1	**8C-6438**	4	SCREW-PAN HEAD	
	8	1	*9R-4038*	1	FELT-GLAZING	
	9	1	**8R-0275**	4	CAP	
	10	1	**9R-4025**	2	SPACER-CATCH	
	11	1	**9R-4024**	4	BUSHING-TERMINAL	
M		1	**8T-4127**	4	SCREW-MACHINE (M5X0.8X20MM)	
M		1	**3C-6970**	4	NUT	
	12	1	**8C-6738**	2	SCREW-PAN HEAD	
	13	1	**8R-1057**	1	RAIL	
BD	14	1	**9X-2531**		SEAL	
BD	15	1	**9X-2532**		SEAL	
	16	1	**6C-5209**	1	GLASS	
	17	1	**9R-4037**	1	RUBBER-GLAZING	
	18	1	**6C-5207**	1	FRAME-LOWER	
	19	1	**6C-5211**	1	COVER-SCREW	
BD	20	1	**9X-2533**		STOP	

B-USE AS REQUIRED
D-ORDER BY THE METER
M-METRIC PART

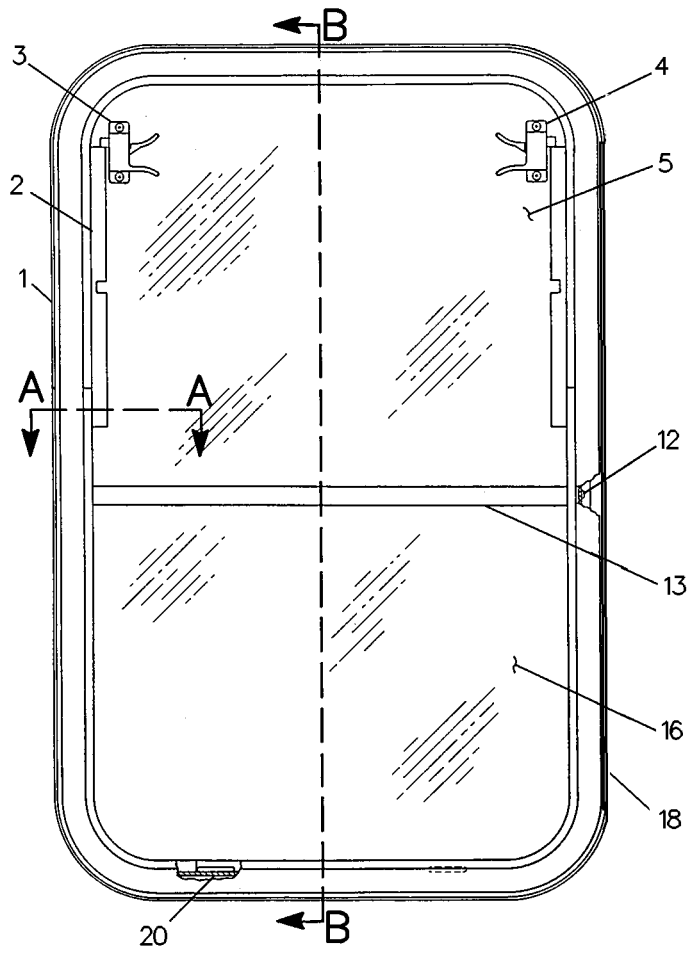

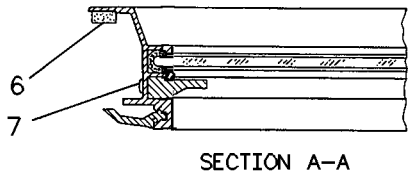

SECTION A–A

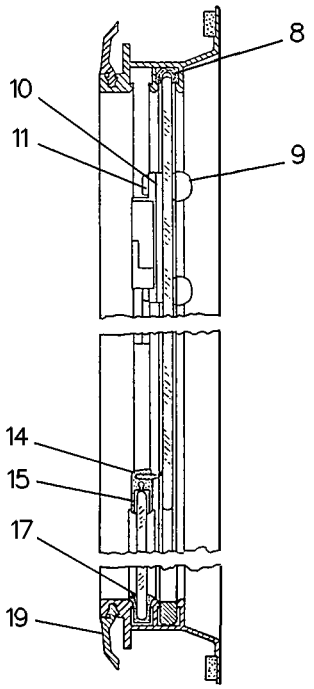

SECTION B–B

GRAPHIC #1

g00127182

OPERATOR STATION

104-7330 WINDOW GP

S/N: 3XJ1-99999

PART OF 6C-4168 DOOR GP-CAB

SMCS-7310, 7340 **i01191593**

NOTE	REF NO	GRAPHIC REF	PART NUMBER	QTY	PART NAME 1 2 3 4 5 6 (PRODUCT LEVEL)	SEE PAGE
	1	1	**9R-9754**	1	CATCH AS-LH	
		1	**150-8015**	1	GASKET	
	2	1	**5V-8719**	1	COVER-SCREW	
	3	1	**8C-6438**	3	SCREW-PAN HEAD	
BD	4	1	**9X-2530**		SEAL	
	5	1	**9R-9753**	1	CATCH AS-RH	
		1	**150-8015**	1	GASKET	
M	6	1	**6V-9673**	4	SCREW-MACHINE (M5X0.8X12MM)	
	7	1	**104-7331**	1	RAIL-RH	
	8	1	**8R-1057**	1	RAIL	
	9	1	**111-3111**	1	FRAME-LOWER	
B	10	1	**9X-2533**		STOP	
	11	1	**104-7332**	1	RAIL-LH	
BE	12	1	**8Y-6896**		GLAZING	
	13	1	**104-7333**	1	GLASS	
	14	1	**8R-1056**	1	GLASS	
BE	15	1	**8Y-6913**		GLAZING	
BD	16	1	**9X-2531**		SEAL	
BD	17	1	**9X-2532**		SEAL	
	18	1	**8C-6738**	2	SCREW-PAN HEAD	

B-USE AS REQUIRED
D-ORDER BY THE METER
E-ORDER BY THE CENTIMETER
M-METRIC PART

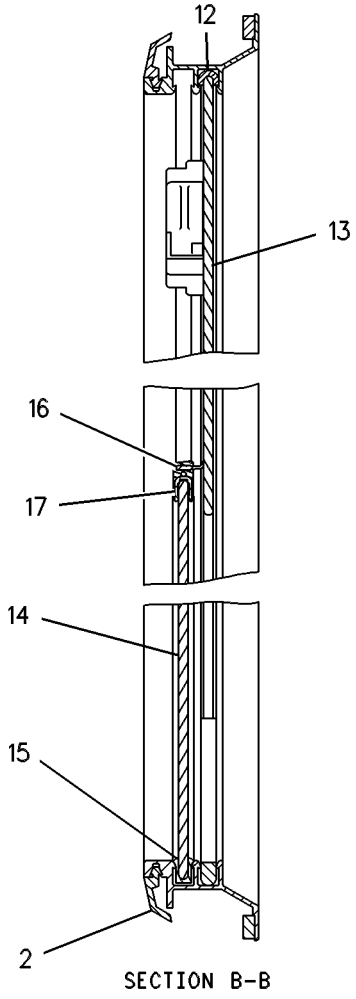

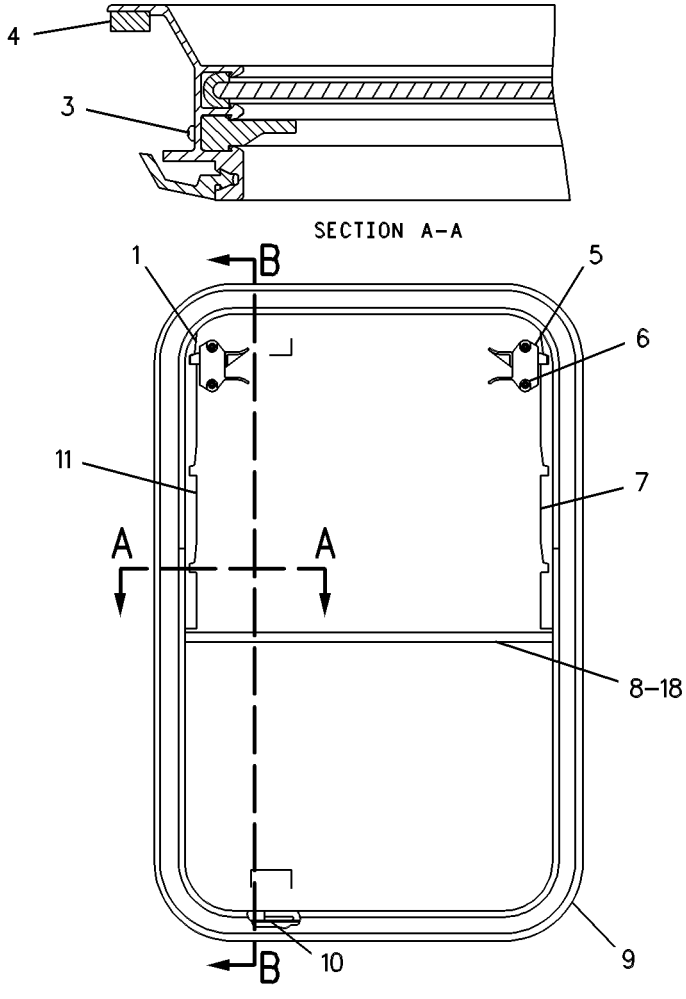

GRAPHIC #1

g00275882

OPERATOR STATION

3T-7064 WIPER GP-WINDOW

S/N: 3XJ1-99999
24 VOLT
PART OF 6C-4134, 6C-4157 WIPER GP-WINDOW
FIELD REPLACEMENT ORDER 9X-3337—PAGE
ALSO AN ATTACHMENT

SMCS-7305 **i00200097**

NOTE	PART NUMBER	QTY	PART NAME 1 2 3 4 5 6 (PRODUCT LEVEL)	SEE PAGE
Y	*7X-1982*	1	WIPER GP-WINDOW	
			—OR—	
Y	*7X-1983*	1	WIPER GP-WINDOW	

Y-SEPARATE ILLUSTRATION

MEMORANDA

OPERATOR STATION

6C-4134 WIPER GP-WINDOW

S/N: 3XJ1-99999
PART OF 8R-5489 CAB AR
TYPE 1

SMCS-7305 **i00259723**

NOTE	REF NO	GRAPHIC REF	PART NUMBER	QTY	PART NAME 1 2 3 4 5 6 (PRODUCT LEVEL)	SEE PAGE
	1	1	**1K-9007**	1	GROMMET	
Y	2	1	*3T-7064*	1	WIPER GP-WINDOW	
	3	1	**5K-1094**	2	LOCKWASHER	
D	4	1	**5P-5992**		HOSE (5.3 M)	
	5	1	**5P-8438**	2	GROMMET	
	6	1	**6C-4160**	1	WIPER GP	
	7	1	**6C-4161**	1	BLADE AS	
	8	1	**6C-4162**	1	ARM AS	
	9	1	**6C-4278**	1	ARM AS	
	10	1	**6V-3960**	2	BOLT (1/4-28X.875IN)	
Y	11	1	*6V-6561*	2	WIPER PIVOT GP	
	12	1	**6V-6797**	2	NOZZLE AS	
	13	1	**6V-6798**	4	CLIP-HOSE	
	14	1	**6V-6864**	1	BLADE AS-WIPER	
	15	1	**8T-5383**	1	VALVE AS-CHECK	
	16	1	**8T-5400**	4	CONNECTOR	
	17	1	**9D-6886**	6	CLAMP	
	18	1	**6C-5438**	4	CLIP-HOSE	

D-ORDER BY THE METER
Y-SEPARATE ILLUSTRATION

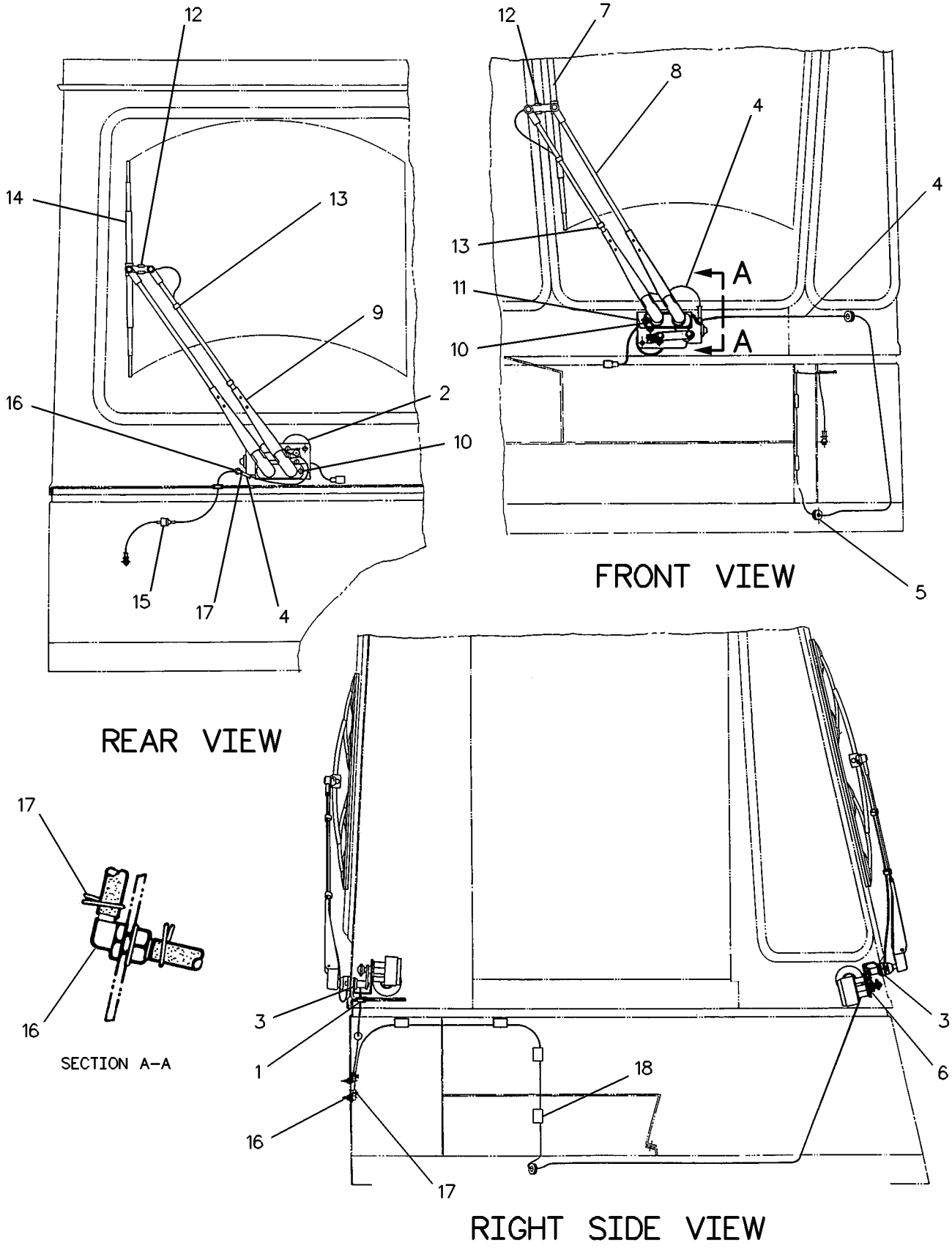

GRAPHIC #1

g00127426

OPERATOR STATION

6C-4134 WIPER GP-WINDOW

S/N: 3XJ1-99999
PART OF 8R-5489 CAB AR
TYPE 2

SMCS-7305 **i00259732**

NOTE	REF NO	GRAPHIC REF	PART NUMBER	QTY	PART NAME 1 2 3 4 5 6 (PRODUCT LEVEL)	SEE PAGE
	1	1	**1K-9007**	1	GROMMET	
CY	2	1	**9X-3337**	1	WIPER GP-WINDOW	
	3	1	**5K-1094**	2	LOCKWASHER	
D	4	1	**5P-5992**		HOSE (5.3 M)	
	5	1	**5P-8438**	2	GROMMET	
	6	1	**6C-4160**	1	WIPER GP	
	7	1	**6C-4161**	1	BLADE AS	
	8	1	**6C-4162**	1	ARM AS	
	9	1	**6C-4278**	1	ARM AS	
	10	1	**6V-3960**	2	BOLT (1/4-28X.875IN)	
Y	11	1	*6V-6561*	2	WIPER PIVOT GP	
	12	1	**6V-6797**	2	NOZZLE AS	
	13	1	**6V-6798**	4	CLIP-HOSE	
	14	1	**6V-6864**	1	BLADE AS-WIPER	
	15	1	**8T-5383**	1	VALVE AS-CHECK	
	16	1	**8T-5400**	4	CONNECTOR	
	17	1	**9D-6886**	6	CLAMP	
	18	1	**6C-5438**	4	CLIP-HOSE	

C-CHANGE FROM PREVIOUS TYPE
D-ORDER BY THE METER
Y-SEPARATE ILLUSTRATION

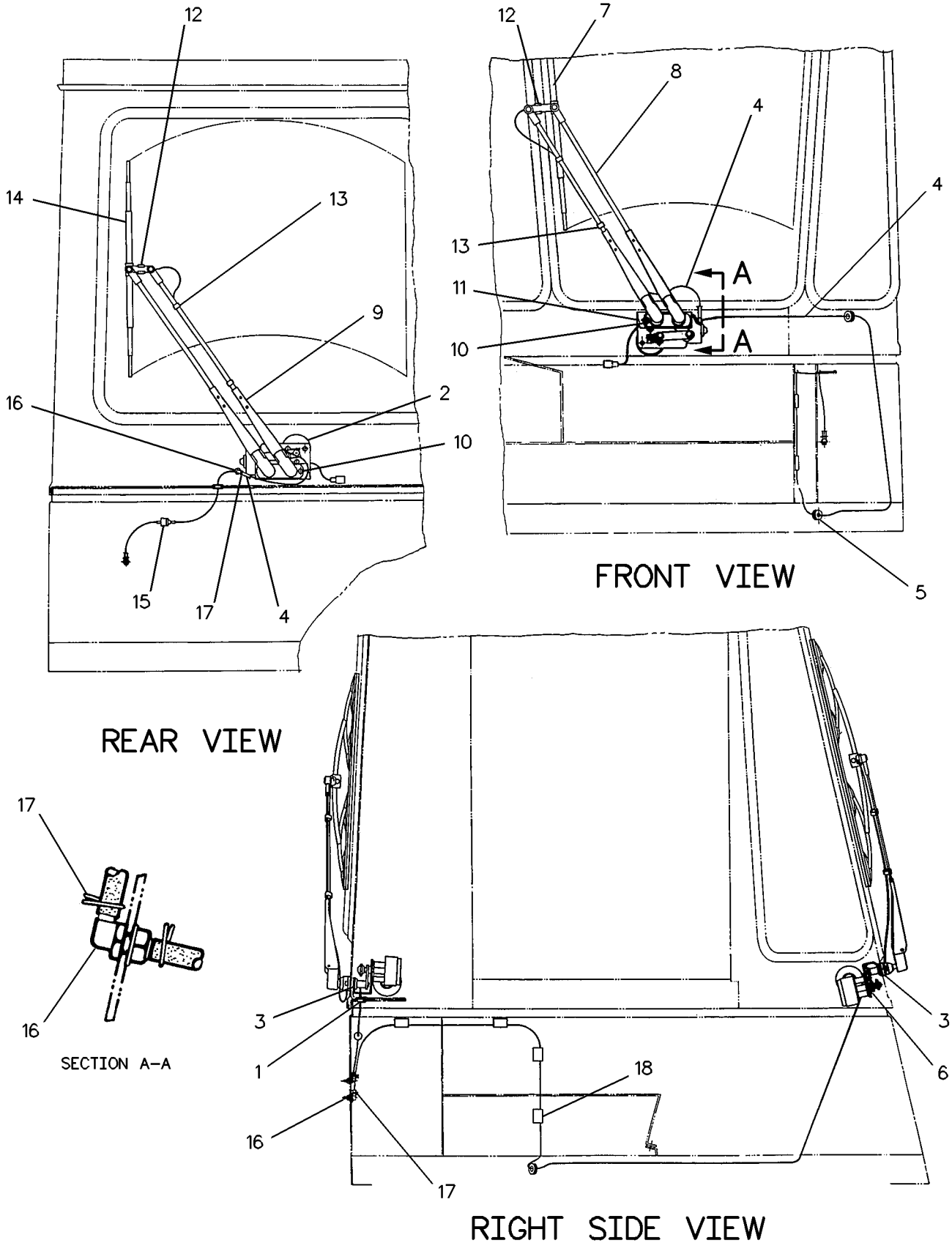

GRAPHIC #1

g00127426

6C-4157 WIPER GP-WINDOW

S/N: 3XJ1-99999
LOW
PART OF 6C-4138 CAB AR
AN ATTACHMENT
TYPE 1

SMCS-7305 **i00259325**

NOTE	REF NO	GRAPHIC REF	PART NUMBER	QTY	PART NAME 1 2 3 4 5 6 (PRODUCT LEVEL)	SEE PAGE
	1	1	**1K-9007**	1	GROMMET	
Y	2	1	*3T-7064*	1	WIPER GP-WINDOW	
	3	1	**5K-1094**	2	LOCKWASHER	
D	4	1	**5P-5992**		HOSE (5.3M)	
	5	1	**5P-8438**	2	GROMMET	
	6	1	**6C-4285**	1	WIPER GP	
	7	1	**5C-7260**	1	ARM AS-WIPER	
	8	1	**6V-7189**	1	ARM AS-WIPER	
	9	1	**6V-3960**	2	BOLT (1/4-28X.875IN)	
Y	10	1	*6V-6561*	2	WIPER PIVOT GP	
	11	1	**6V-6797**	2	NOZZLE AS	
	12	1	**6V-6798**	4	CLIP-HOSE	
	13	1	**6V-6864**	2	BLADE AS-WIPER	
	14	1	**8T-5383**	1	VALVE AS-CHECK	
	15	1	**8T-5400**	4	CONNECTOR	
	16	1	**9D-6886**	6	CLAMP	
	17	1	**6C-5438**	4	CLIP-HOSE	

D-ORDER BY THE METER
Y-SEPARATE ILLUSTRATION

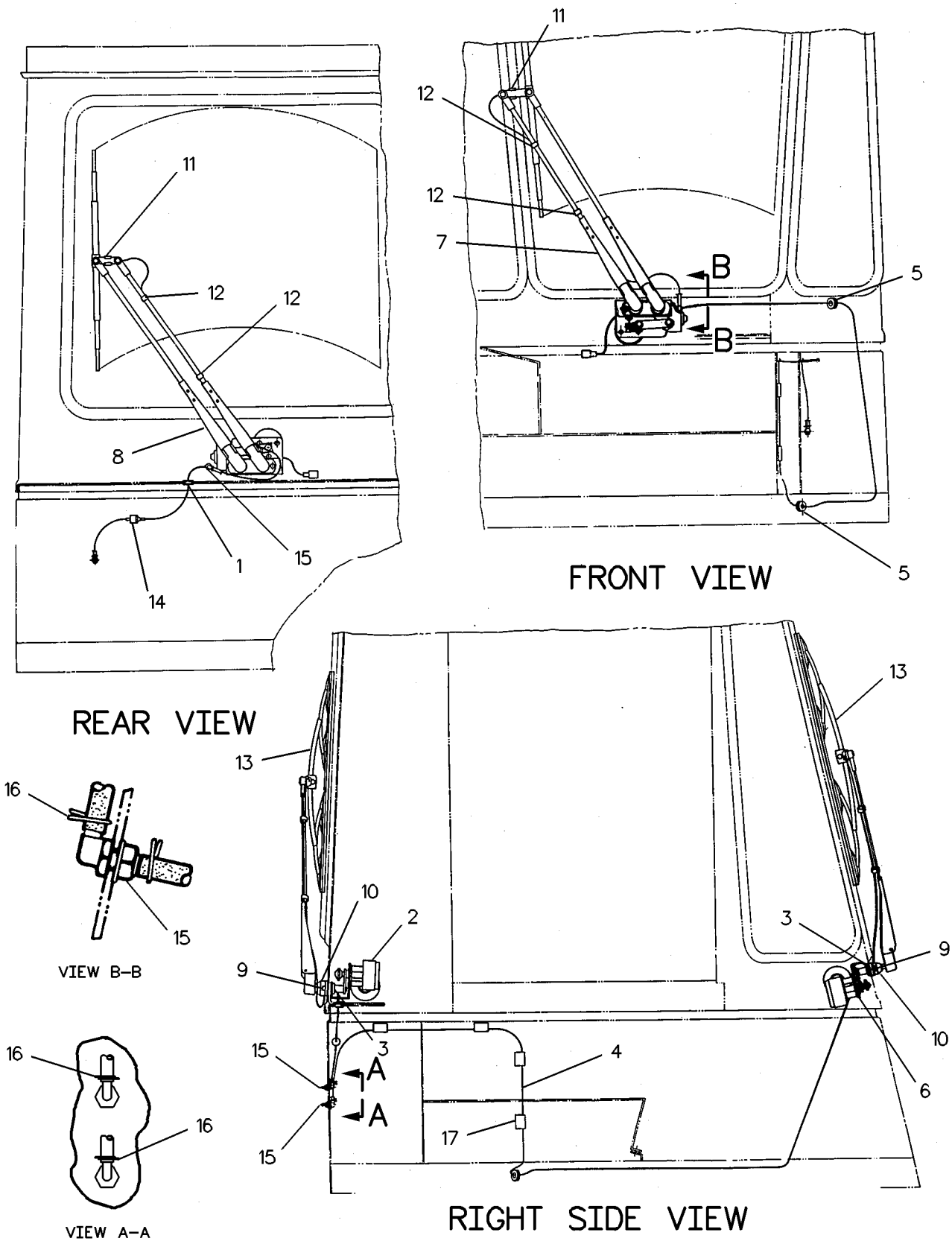

GRAPHIC #1 g00127168

OPERATOR STATION

6C-4157 WIPER GP-WINDOW

S/N: 3XJ1-99999
LOW
PART OF 6C-4138 CAB AR
AN ATTACHMENT
TYPE 2

SMCS-7305 **i00259342**

NOTE	REF NO	GRAPHIC REF	PART NUMBER	QTY	PART NAME 1 2 3 4 5 6 (PRODUCT LEVEL)	SEE PAGE
	1	1	**1K-9007**	1	GROMMET	
CY	2	1	**9X-3337**	1	WIPER GP-WINDOW	
	3	1	**5K-1094**	2	LOCKWASHER	
BD	4	1	**5P-5992**		HOSE (5.3M)	
	5	1	**5P-8438**	2	GROMMET	
	6	1	**6C-4285**	1	WIPER GP	
	7	1	**5C-7260**	1	ARM AS-WIPER	
	8	1	**6V-7189**	1	ARM AS-WIPER	
	9	1	**6V-3960**	2	BOLT (1/4-28X.875IN)	
Y	10	1	*6V-6561*	2	WIPER PIVOT GP	
	11	1	**6V-6797**	2	NOZZLE AS	
	12	1	**6V-6798**	4	CLIP-HOSE	
	13	1	**6V-6864**	2	BLADE AS-WIPER	
	14	1	**8T-5383**	1	VALVE AS-CHECK	
	15	1	**8T-5400**	4	CONNECTOR	
	16	1	**9D-6886**	6	CLAMP	
	17	1	**6C-5438**	4	CLIP-HOSE	

B-USE AS REQUIRED
C-CHANGE FROM PREVIOUS TYPE
D-ORDER BY THE METER
Y-SEPARATE ILLUSTRATION

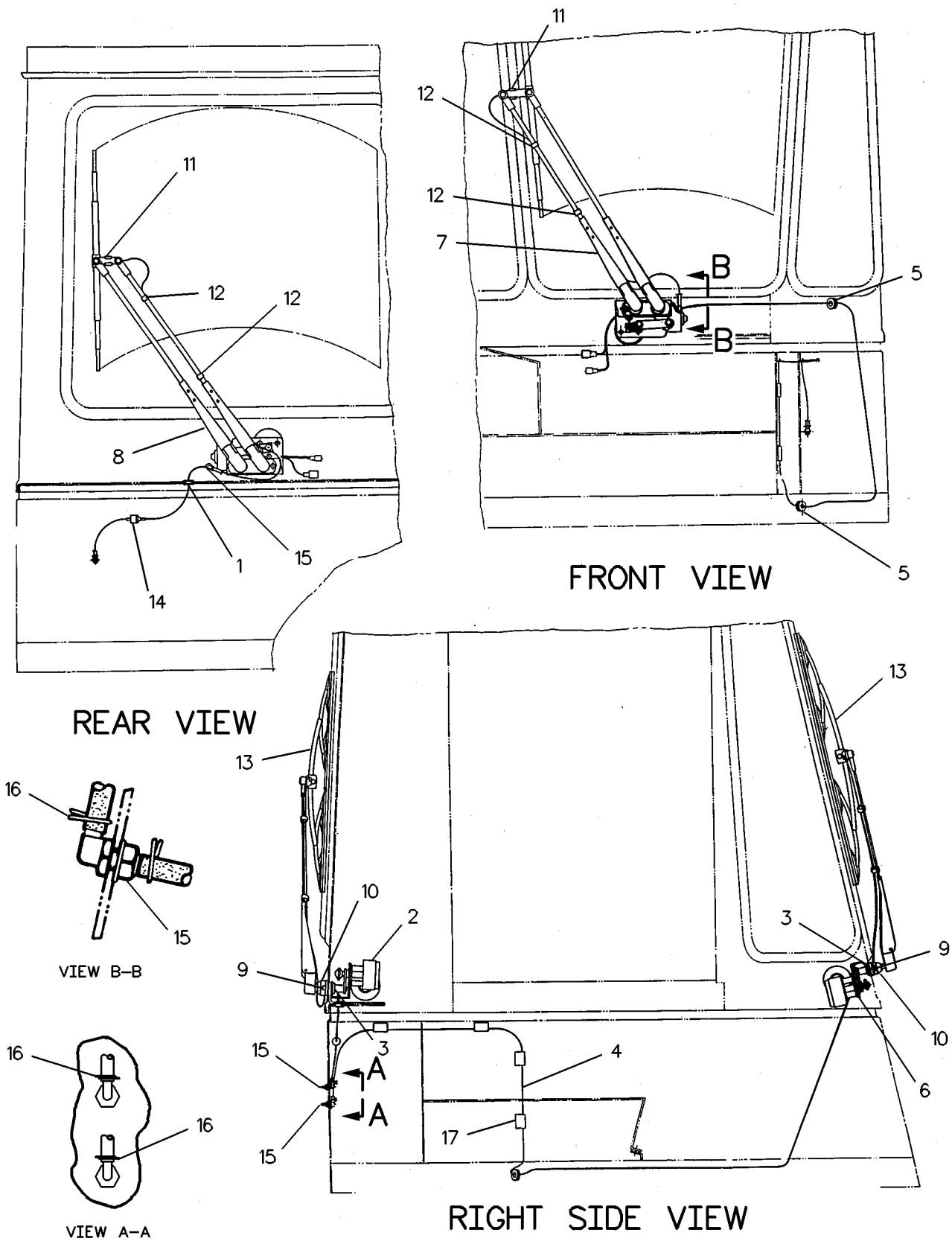

GRAPHIC #1 g00127759

OPERATOR STATION

7X-1982 WIPER GP-WINDOW

S/N: 3XJ1-99999
24 VOLT
PART OF 3T-7064 WIPER GP-WINDOW
FIELD REPLACEMENT ORDER 9X-3337—PAGE
ALSO AN ATTACHMENT

SMCS-7305 **i01325229**

NOTE	REF NO	GRAPHIC REF	PART NUMBER	QTY	PART NAME 1 2 3 4 5 6 (PRODUCT LEVEL)	SEE PAGE
M	1	1	**6V-6889**	2	NUT (M8X1.25 THD)	
		1	**6A-9718**	1	WASHER (M8.1X12.5X1MM THK)	
	2	1	**6V-6209**	1	CAP	
M	3	1	**6V-6213**	1	NUT (M20X1 THD)	
		1	**6V-6214**	1	WASHER (1.0MM THK)	
	4	1	**6V-6208**	1	LINK-CONNECTING	
	5	1	**3T-7059**	1	BRACKET	
	6	1	**6T-6216**	1	MOTOR AS-WINDOW WIPER	
	7	1	**7N-8204**	1	HOUSING-RECEPTACLE	
		1	**7N-7780**	2	PIN-CONNECTOR (BLADE)	
		1	**7N-7779**	2	SOCKET-CONNECTOR	
M	8	1	**5C-9553**	3	BOLT (M6X1.0X16MM)	
		1	**5P-0537**	3	WASHER-HARD (2MM THK)	
	9	1	**6V-6888**	1	WASHER-SPRING	
	10	1	**3T-7086**	1	CRANK AS	
M	11	1	**3C-1884**	4	SCREW-MACHINE (M5X0.8 BG THD)	
	12	1	**6V-6206**	1	SHAFT AS-DRIVE	

M-METRIC PART

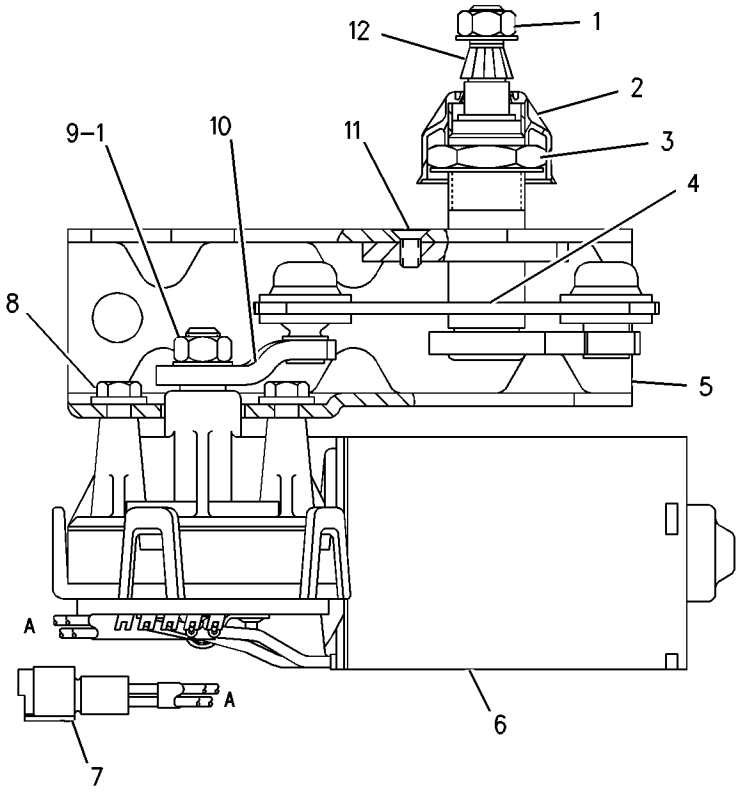

GRAPHIC #1 g00701744

OPERATOR STATION

7X-1983 WIPER GP-WINDOW

S/N: 3XJ1-99999
24 VOLT
PART OF 3T-7064 WIPER GP-WINDOW
FIELD REPLACEMENT ORDER 9X-3337—PAGE
ALSO AN ATTACHMENT

SMCS-7305 **i01325249**

NOTE	REF NO	GRAPHIC REF	PART NUMBER	QTY	PART NAME 1 2 3 4 5 6 (PRODUCT LEVEL)	SEE PAGE
M	1	1	**6V-6889**	2	NUT (M8X1.25 THD)	
	2	1	**6A-9718**	1	WASHER (M8.1X12.5X1MM THK)	
M	3	1	**6V-6213**	1	NUT (M20X1 THD)	
	4	1	**6V-6214**	1	WASHER (1.0MM THK)	
	5	1	**7X-1984**	1	MOTOR AS-WINDOW WIPER	
	6	1	**7N-8204**	1	HOUSING-RECEPTACLE	
	7	1	**7N-7780**	2	PIN-CONNECTOR (BLADE)	
	8	1	**7N-7779**	2	SOCKET-CONNECTOR	
	9	1	**5P-0537**	3	WASHER-HARD (2MM THK)	
	10	1	**6V-6888**	1	WASHER-SPRING	
M	11	1	**5C-9553**	3	BOLT (M6X1.0X16MM)	
	12	1	**7X-1986**	1	CRANK AS	
	13	1	**7X-6145**	1	SHAFT AS-DRIVE	
	14	1	**7X-6146**	1	LINK-CONNECTING	
M	15	1	**3C-1884**	4	SCREW-MACHINE (M5X0.8 BG THD)	
	16	1	**9W-0760**	1	CAP	
	17	1	**7X-1985**	1	BRACKET	

M-METRIC PART

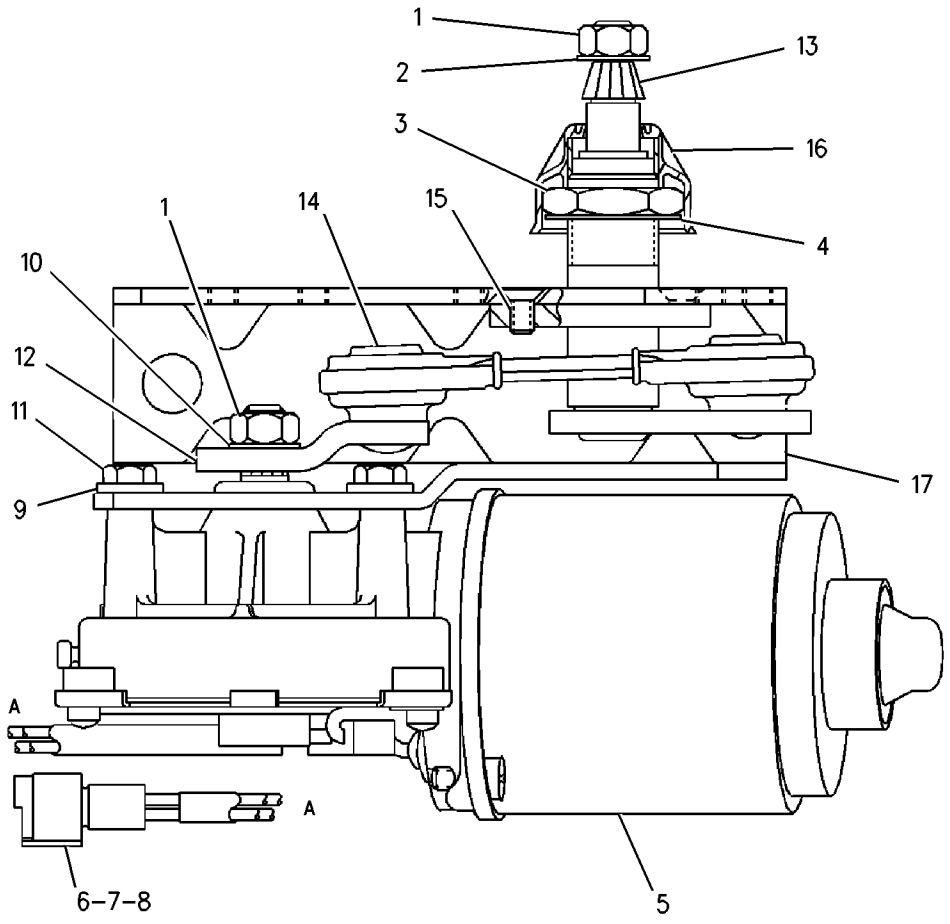

GRAPHIC #1 g00701574

9X-3337 WIPER GP-WINDOW

S/N: 3XJ1-99999
24 VOLT
PART OF 6C-4134, 6C-4157 WIPER GP-WINDOW
FIELD REPLACEMENT FOR 3T-7064—PAGE , 7X-1982—PAGE , 7X-1983—PAGE
ALSO AN ATTACHMENT AND FIELD INSTALLATION

SMCS-7305 **i01325227**

NOTE	REF NO	GRAPHIC REF	PART NUMBER	QTY	PART NAME 1 2 3 4 5 6 (PRODUCT LEVEL)	SEE PAGE
M	1	1	**6V-6889**	2	NUT (M8X1.25 THD)	
	2	1	**6A-9718**	1	WASHER (M8.1X12.5X1MM THK)	
M	3	1	**6V-6213**	1	NUT (M20X1 THD)	
	4	1	**6V-6214**	1	WASHER (1.0MM THK)	
	5	1	**9X-3392**	1	MOTOR AS-WINDOW WIPER (24 VOLT)	
	6	1	**7N-8204**	1	HOUSING-RECEPTACLE	
	7	1	**7N-7780**	2	PIN-CONNECTOR (BLADE)	
		1	**7N-7779**	2	SOCKET-CONNECTOR	
	8	1	**7K-4474**	1	CONNECTOR AS	
	9	1	**5P-0537**	3	WASHER-HARD (2MM THK)	
	10	1	**6V-6888**	1	WASHER-SPRING	
M	11	1	**5C-9553**	3	BOLT (M6X1.0X16MM)	
	12	1	**3T-7086**	1	CRANK AS	
	13	1	**6V-6206**	1	SHAFT AS-DRIVE	
	14	1	**6V-6208**	1	LINK-CONNECTING	
M	15	1	**3C-1884**	4	SCREW-MACHINE (M5X0.8 BG THD)	
	16	1	**6V-6209**	1	CAP	
	17	1	**3T-7059**	1	BRACKET	

M-METRIC PART

9X-3337 WIPER GP-WINDOW *(contd.)* **i01325227**

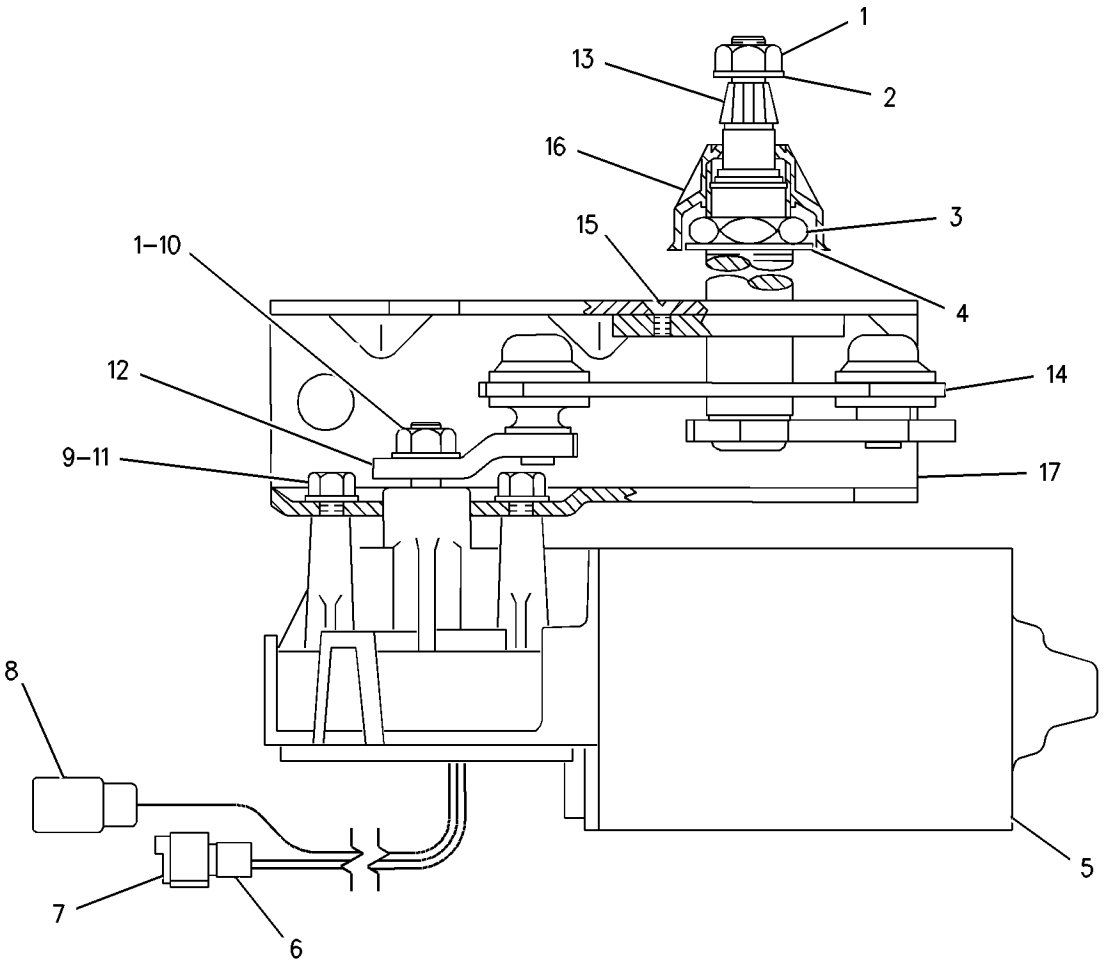

GRAPHIC #1 g00701611

OPERATOR STATION

6V-6561 WIPER PIVOT GP

S/N: 3XJ1-99999
PART OF 6C-4134, 6C-4157 WIPER GP-WINDOW
ALSO AN ATTACHMENT

SMCS-7305 **i01309601**

NOTE	REF NO	GRAPHIC REF	PART NUMBER	QTY	PART NAME 1 2 3 4 5 6 (PRODUCT LEVEL)	SEE PAGE
	1	1	**6V-6207**	1	SHAFT AS-PIVOT	
	2	1	**6V-6209**	1	CAP	
M	3	1	**6V-6889**	1	NUT (M8X1.25 THD)	
	4	1	**6A-9718**	1	WASHER (M8.1X12.5X1MM THK)	
	5	1	**6V-6210**	1	GASKET-SHAFT	

M-METRIC PART

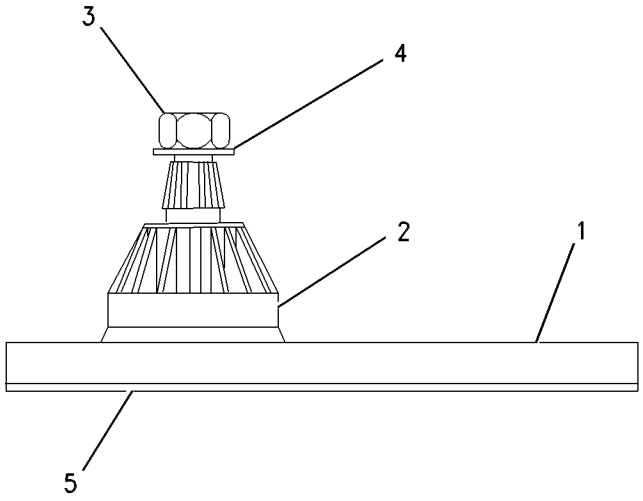

GRAPHIC #1 g00316575

SERVICE EQUIPMENT AND SUPPLIES

8R-6167 LOCK GP-VANDALISM

S/N: 3XJ1-99999
AN ATTACHMENT

SMCS-7430 **i01218053**

NOTE	PART NUMBER	QTY	PART NAME 1 2 3 4 5 6 (PRODUCT LEVEL)	SEE PAGE
Y	**5G-3612**	1	CAP GP-PROTECTION	
	6V-5874	1	COVER	
Y	*6G-8390*	1	COVER GP-HYDRAULIC TANK CAP	
	5P-8502	6	PADLOCK GP	
			(EACH INCLUDES)	
A	**8Y-6364**	1	SLEEVE	
A	**5P-8500**	1	KEY	

A-NOT PART OF THIS GROUP
Y-SEPARATE ILLUSTRATION

SERVICE EQUIPMENT AND SUPPLIES

9X-2766 PLATE & FILM GP

S/N: 3XJ1-99999

SMCS-7405, 7557 **i01319173**

NOTE	PART NUMBER	QTY	PART NAME 1 2 3 4 5 6 (PRODUCT LEVEL)	SEE PAGE
	4V-4018	1	FILM	
			ON RED PARKING BRAKE ACTUATION & RELEASE KNOB	
	6C-7445	1	FILM-CAT	
			ON RH SIDE OF ENGINE COMPARTMENT	
	6C-7446	1	FILM-CAT	
			ON LH SIDE OF COMPARTMENT	
	9X-8711	1	FILM-CATERPILLAR	
			ON TOP OF RADIATOR GUARD	
	3E-5200	1	FILM-CMS	
			ON FACE OF CMS PANEL	
	5P-1175	1	FILM-ENGINE OIL	
			ON OIL FILLER CAP	
	8C-8898	1	FILM-IDENTIFICATION (FUEL FILTER)	
			ON FUEL FILTER	
	8C-8901	1	FILM-IDENTIFICATION (OIL FILTER)	
			ON OIL FILTER	
	4V-2440	1	FILM-INSTRUCTION	
			ON TOP RIGHT SURFACE OF STEERING COLUMN	
	6V-9337	1	FILM-INSTRUCTION	
			ON TOP LH SIDE OF COVER	
	9V-7142	1	FILM-INSTRUCTION	
			ON THE FRONT OF THE FILLER NECK OF WINDSHIELD WASHER BOTTLE	
	7X-3229	2	FILM-LIFT & TIE DOWN	
			ONE EACH AT REAR LIFT & TIEDOWN EYES	
	1S-6636	1	FILM-PATENT	
			ON LOWER FRONT OF PLATFORM	
	9M-0016	1	FILM-PATENT (ENGINE)	
			ON SIDE OF AIR CLEANER	
	6C-7443	2	FILM-STRIPE	
			ON BOTH SIDES OF ENGINE COMPARTMENT	
	6C-8165	1	FILM-STRIPE	
			ON RH SIDE OF ENGINE COMPARTMENT	
	6C-8166	1	FILM-STRIPE	
			LH SIDE OF ENGINE COMPARTMENT	
	6C-8244	2	FILM-STRIPE	
			ON BOTH SIDES OF ENGINE COMPARTMENT	
	1P-2807	2	FILM-SYMBOL (LIFT)	
			ONE EACH AT FRONT EYES	
	7X-7644	2	FILM-SYMBOL (TIE DOWN LOCATION)	
			ONE EACH AT FRONT TIEDOWN EYES	
	3E-2418	1	FILM-WARNING	
			ON INSIDE OF UPPER FIREWALL DOOR	
	6V-4611	2	FILM-WARNING (JUMPER CABLE)	
			ON INSIDE OF BATTERY BOX	
	8T-1363	1	FILM-WARNING (HIGH COMPRESSED SPRING)	
			ON PARKING BRAKE ROTO CHAMBER	
	9X-2925	2	FILM-WARNING (BRAKE CONTROL)	
			ON INSIDE OF HYDRAULIC TANK COVER AS	
	4V-4354	1	PLATE-INSTRUCTION	
			ON SIDE OF HYDRAULIC CONTROL CONSOLE	
	9X-2765	1	PLATE-ROPS/FOPS	
			LOCATE ON RH SIDE OF ROPS ABOVE WINDOW	
	5P-7244	2	PLATE-WARNING (NO CLEARANCE)	
			ON EACH SIDEFACE OF LOADER FRAME 75MM FORWARD OF REAR EDGE AND UP 500MM FROM BOTTOM	

9X-2766 **PLATE & FILM GP** ***(contd.)*** **i01319173**

NOTE	PART NUMBER	QTY	PART NAME 1 2 3 4 5 6 (PRODUCT LEVEL)	SEE PAGE
	8T-1191	1	PLATE-WARNING (MACHINE OPERATION)	
			ABOVE RH WINDOW. ON TOP OF LH FRONT PLATEFORM FOR NON-CAB AR	
	4B-4158	8	SCREW-DRIVE	
	9X-8937	16	TACK-FASTENER	
	2T-1636	2	TREAD-NONSKID	
			CENTER ON TOP OF FIREWALL DOOR	

MEMORANDA

PART NUMBER INDEX

Part	Page
0	
0L-0364	58
	60
0L-1006	422
	424
0L-1026	51
0L-1138	349
0L-1329	49
	506
0L-1351	11
	78
	294
	299
	300
	350
	354
	782
	784
0L-1352	4
	6
	31
	72
	574
0L-1558	320
	322
0L-2070	30
	58
	60
	62
	70
	72
	104
	142
	294
	300
0L-2315	346
0S-0509	10
	57
	132
	300
0S-1566	55
	294
0S-1571	58
	60
	104
	590
	592
	594
	600
	604
	606
	608
0S-1573	294
0S-1579	352
	356
0S-1585	48
	503
0S-1587	35
	428
	430
	503
	506
0S-1588	70
	72
	149
	294
	320
	322
0S-1589	8
	9
	428
	430
0S-1590	63
	67
	68
	69
	76
	104
	294
	352
	356
0S-1591	31
	94
	100
	132
	134
	136
	138
	140
0S-1594	12
	26
	34
	58
	60
	96
	320
	322
	350
	354
	362
	364
	366
	688
	689
0S-1595	299
	492
0S-1608	320
	322
0S-1614	114
0S-1615	4
	6
	124
	145
	146
	151
	152
0S-1616	116
0S-1617	4
	6
	62
	463
0S-1618	34
	53
	100
0S-1619	4
	6
	63
	76
	294
	366
0S-1621	428
	430
	590
	592
	604
	606
0S-1748	34
0S-2307	558
0T-0055	140
	149
0T-0065	64
	65
	66
	76
0T-0102	58
	60
	382
	384
	386
0T-0278	498
0T-0318	300
0T-0431	300
0T-0573	31
	70
	342
	362
1	
1A-1135	34
	328
	330
	332
1A-1460	299
1A-1952	339
1A-2029	4
	6
	41
	58
	60
	62
	72
	100
	104
1A-2223	338
	339
1A-5183	132
	134
	136
	138
	339
1A-5576	528
	530
1A-5964	80
1A-8096	509
1A-8537	346
1A-8827	378
	380
1A-9579	38
1B-0676	406
1B-2578	272
	741
	742
1B-2790	53
1B-3934	404
1B-4203	51
1B-4207	434
1B-4430	620
	622
1B-5174	72
	77
1B-5355	104
1B-7182	148
1B-7709	29
	50
	51
1B-8702	716
1B-8704	778
1B-8705	182
	188
1B-8709	64
	65
	66
1C-0569	806
	808
1C-2251	30
	58
1D-4540	72
1D-4541	38
1D-4566	294
	503
1D-4595	29
1D-4628	528
	530
1D-4640	532
	534
1D-4642	800
1D-4675	768
1D-4716	62
1D-4717	46
	57
	94
	179
	294
	300
	438
	442
	446
	768
1D-5117	485
1D-5118	436
1F-0748	179
	399
	542
	572
1F-0750	380
	410
	498
	700
	704
1F-1006	64
	65
	66
1F-7958	320
	322
1H-1363	451
	457
1H-2629	252

► **PRIMARY REFERENCE**

PART NUMBER INDEX

Part	Page	Part	Page	Part	Page	Part	Page
1H-3244	172		430	1P-3704	334	1R-0719	316
	182	1K-6872	498		476	1R-0750	115
	184	1K-6985	78		480	1S-0994	191
	272	1K-8850	790		544		195
	284	1K-9007	840		546		199
	286		842		556		205
1H-3337	498		844		570		558
	830		846	1P-3705	476	1S-1953	121
1H-3338	716	1L-1486	480		480		146
	772	1L-3769	150		481	1S-2176	300
	774	1L-4789	176		484	1S-3612	462
	775	1L-5072	50		544	1S-3725	300
1H-3937	463		526		546	1S-4295	100
1H-4393	272	1L-5081	58		548		107
	336		60		550	1S-4392	93
	744	1L-7388	338		552	1S-4810	62
1H-5514	72	1M-0313	378		554	1S-5440	108
1H-7666	100		380		556		146
1H-8128	472	1M-1341	406	1P-3707	294	1S-5549	294
1H-8171	294	1M-1744	498		305	1S-5596	352
	716	1M-4969	190		306		356
1H-9696	576		194	1P-3708	476	1S-6595	62
	590		198		552	1S-6636	856
	592		204	1P-4244	2	1S-7107	4
	594	1M-6119	190		▶54		6
	596		194	1P-4576	485	1S-7251	190
	598		195	1P-4577	308		191
	600		198		310		194
	602		199		312		195
	604		204		314		198
	606		205		556		199
	608	1M-6120	190		562		204
1J-2176	294		194		566		205
	532		195	1P-4578	308		236
	534		198		310	1S-7252	190
1J-2860	318		199		312		194
1J-5267	373		204		314		198
	374		205		476		204
	720	1M-6718	648		480	1S-7446	744
1J-5353	646	1M-7643	97		484	1S-8947	680
1J-6474	574		98		544		684
1J-8040	693	1M-8649	526		570		748
1J-8387	344	1N-2909	62	1P-4579	476	1S-9540	17
1J-8945	503	1N-2911	62		480		20
1J-8960	590	1N-3576	▶17		548	1S-9543	43
	592	1N-3641	▶40		550	1S-9593	612
	594	1N-3800	116		552		614
	596	1N-3802	116	1P-5761	544		616
	598	1N-4406	2		546		618
	600		▶10		556		620
	602	1N-4458	38		570		622
	604	1P-0210	451	1P-6356	748		650
	606		457	1P-6367	12	1T-0416	132
	608	1P-0436	148		26		134
1J-9533	503	1P-0604	354	1P-6452	164		136
1J-9671	484	1P-1367	53	1P-6539	736		138
	508	1P-1413	390	1P-7346	67		140
	509		392		68	1T-0550	696
1J-9914	503	1P-2497	116		69		700
1K-4649	572	1P-2807	856	1P-8116	646	1T-0689	350
1K-6705	590	1P-3381	84	1P-8680	109		354
	592		86	1P-9945	28		508
	604		88	1P-9946	28	1T-0765	72
	606	1P-3703	274	1P-9956	43	1T-0767	350
1K-6776	428		278	1R-0658	70		354

▶ **PRIMARY REFERENCE**

PART NUMBER INDEX

Part	Page
1T-0822	94
1T-1278	350
	354
1T-1281	350
	354
1T-1282	350
	354
1T-1639	352
	356
1U-0322	590
	592
	594
	596
	598
	600
	602
	604
	606
	608
1U-0323	590
	592
	594
	596
	598
	600
	602
	604
	606
	608
1U-0367	552
	586
1U-0470	587
	588
1U-0471	587
	588
1U-0593	654
1U-1350	665
1U-1351	665
1U-1352	665
1U-1354	664
1U-1577	590
	592
	594
	596
	598
	600
	602
	604
	606
	608
1U-1578	590
	592
	594
	596
	598
	600
	602
	604
	606
	608
1U-2226	558
	▶645
1U-2228	645
1U-2667	▶510
	574
1U-2772	492
1U-2816	574
1U-2827	577
1U-3142	509
1U-3351	676
1U-3352	675
1U-3505	574
1U-3507	574
1U-3508	574
1U-3509	574
1U-3511	574
1U-3513	574
1U-3514	574
1U-3515	574
1U-3517	574
1U-3867	574
1U-8846	324
	326
	328
	330
	332
1V-3995	40
1V-5326	296
1V-6341	744
1V-6342	296
1V-6346	296
1V-6585	750
1V-7801	556
1V-9809	296
1W-0141	2
	▶244
1W-0613	94
1W-1669	151
	152
1W-1695	143
	▶151
	▶152
1W-1698	151
	152
1W-1699	151
	152
1W-3285	121
	146
1W-3286	145
	146
1W-3487	▶121
	145
1W-3601	84
	86
	88
1W-3792	2
	▶13
1W-3900	36
1W-4243	116
1W-4320	2
	▶57
1W-4321	57
1W-4323	57
1W-4402	34
1W-4405	15
1W-4407	28
1W-4619	78
1W-4785	38
1W-4928	55
1W-4972	179
1W-5300	22
	24
1W-5374	2
	▶149
1W-5634	2
	▶34
1W-5912	151
	152
1W-6523	116
1W-6539	▶144
	145
	146
1W-6541	144
1W-6629	124
1W-6810	75
	92
1W-6987	144
1W-7146	▶4
	8
1W-7147	6
1W-7609	32
1W-7816	36
1W-7831	2
	▶27
1W-7889	34
1W-9167	125
	126
	127
	128
	130
	131
	134
	136
	138
	140
1W-9168	125
	126
	127
	128
	129
	130
	131
1W-9169	125
	126
	127
	128
	129
	130
	131
	134
	136
	138
	140
1W-9171	144
2A-1162	35
2A-1420	40
	41
2A-1538	40
	41
2A-3798	11
2A-4429	22
	24
2A-4639	320
	322
2A-5546	112
2B-0858	4
	35
	53
	451
	457
2B-0941	476
2B-0947	294
2B-2404	100
	122
	352
	356
2B-2694	64
	65
	66
2B-2695	4
	6
	8
	9
	14
	646
	806
	808
2B-2994	328
	330
2B-7559	40
	346
2D-0388	272
2D-2443	343
	344
2D-2628	343
	344
2D-2629	343
	344
2D-2630	343
	344
2D-2631	343
	344
2D-2633	343
	344
2D-4867	652
2D-6392	110
2D-6642	499
2D-7325	450
	456
2D-9453	324
	326
	328
	330
	332
2D-9535	246
2F-2290	117
2F-7306	806
	808
2G-4815	722
2G-6664	740
2G-8767	191
	195
	199
	205
	236
2H-1855	229

▶ **PRIMARY REFERENCE**

PART NUMBER INDEX

Part	Page	Part	Page	Part	Page	Part	Page
2H-2995	646		576		65		364
2H-3088	320		806		66		366
	322		808	2P-1784	2	2S-1541	58
	346		826		▶63		60
2H-3429	150	2K-5065	320	2P-2458	58	2S-1865	748
	252		322	2P-2505	2		750
	274	2K-5103	318		▶32	2S-2923	38
	278	2K-6830	472	2P-2537	53	2S-3745	792
2H-3743	652		474	2P-2685	164		796
2H-3755	530	2L-0332	450	2P-2697	57	2S-4078	291
2H-3903	778		456	2P-2720	13		480
2H-3920	182	2L-1701	32	2P-2975	236		481
2H-3922	246		33	2P-3200	13		484
	258	2L-3793	508		134		504
2H-3923	780	2L-6726	274		136		544
	782		278		138		546
	784	2L-8075	172		140		548
2H-3924	680	2M-0913	191	2P-3201	12		550
	684		195	2P-3261	792		552
2H-3927	576		199		796		554
2H-3928	576		205	2P-3675	▶362		590
2H-3932	142	2M-2292	274	2P-4339	793		592
2H-3934	142		278		797		594
2H-4406	298	2M-2489	296	2P-5616	172		596
2H-5547	451	2M-4453	576		176		598
	457	2M-5407	58		184		600
2H-9247	320		60	2P-6105	2		602
	322	2M-7041	646		▶58		604
2H-9523	738	2M-7819	116		▶60		606
2H-9524	738		336	2P-6132	76		608
2J-0157	150		724	2P-6224	2	2S-4663	586
2J-0744	532		728		▶47	2S-4750	320
	534	2M-9346	191	2P-6245	65		322
2J-1020	556		195	2P-6530	2	2S-4872	646
2J-2864	576		199		▶12	2S-5658	17
2J-3118	576		205	2P-6573	2		18
2J-5638	370	2M-9780	42		▶103	2S-6160	97
	400		149	2P-7806	104		98
	402		190	2P-8421	558	2S-7383	114
2J-6088	506		194	2P-8746	63	2S-8439	316
2J-6089	506		198	2P-8986	320	2T-1636	370
2J-6356	316		204		322		857
2J-6540	792		451	2P-8987	320	2V-0036	792
	796		457		322		796
2J-7686	532		506	2P-9347	406	2V-0099	736
	534		645	2P-9556	116		793
2J-7763	574	2N-0828	116	2R-0695	463		797
2K-0564	716	2N-1287	38	2R-0720	463	2V-4226	▶346
2K-0713	328	2N-2766	97	2R-0724	463	2V-4232	▶122
	330		98	2R-1498	407	2V-4233	▶572
	332		100	2R-1532	467	2V-4248	▶548
2K-0715	328		107	2R-6806	122		▶550
	330	2P-0220	8	2R-9614	467		▶552
	332		9	2S-0669	339	2V-4257	▶570
2K-3549	390	2P-0449	122	2S-0696	646	2V-4280	▶738
	392	2P-1170	64	2S-0736	29	2V-4291	712
2K-3656	693		65		50		764
2K-4160	469		66		51		▶800
2K-4821	172	2P-1293	554	2S-0795	299	2V-6491	191
	176	2P-1487	49	2S-0987	498		195
	182	2P-1692	49	2S-1381	336		199
	184	2P-1738	42	2S-1382	362		205
	188	2P-1739	58		364	2V-7402	390
2K-4973	94		60		366		392
	414	2P-1781	64	2S-1384	362	2V-7859	514

▶ **PRIMARY REFERENCE**

PART NUMBER INDEX

Part	Page
	516
	518
	520
	522
	524
	744
	778
2V-7990	468
2V-8555	412
2V-9166	680
	684
2V-9174	498
2V-9489	334
2V-9490	334
2V-9682	681
	685
2V-9959	684
2V-9962	792
	796
2V-9989	792
	797
2W-0254	108
2W-0255	▶108
	145
2W-0256	▶145
	154
2W-0745	126
	130
2W-1011	2
	▶115
2W-1086	14
2W-1177	2
	▶43
2W-1605	2
	▶124
2W-1707	44
2W-1708	44
2W-1709	44
2W-1711	43
	▶44
2W-2216	116
2W-2410	▶116
	154
	156
2W-4160	2
	▶143
2W-4561	70
2W-5240	72
2W-5448	154
	156
2W-6102	117
2W-6103	116
2W-6104	116
2W-6134	18
2W-6688	148
2W-6757	49
2W-6779	2
	▶76
2W-7234	164
2W-7255	78
2W-7400	117
2W-7458	▶15
	16
2W-7678	78
2W-7952	46
2W-8002	▶78
	80
2W-8493	46
2W-8494	46
2W-8662	179
2W-8715	679
2W-8952	46
2W-9162	54
2W-9267	1
	▶28
2W-9304	2
	▶45
2W-9305	117
2W-9315	112
2W-9316	112
2W-9657	154
	156
2Y-5429	212
	228

3

Part	Page
3B-0551	72
3B-0623	24
	26
3B-1915	8
	9
	31
	62
	63
	70
	104
3B-2062	400
	402
	406
	416
3B-4501	246
	284
	286
	680
	685
3B-4502	176
3B-4505	4
	463
	509
3B-4506	4
	362
	364
	366
3B-4605	436
	723
	731
3B-4607	463
	744
3B-4610	705
	829
3B-4611	407
	416
	724
	728
3B-4615	109
	378
	380
	400
	402
3B-4617	226
	229
	378
	380
	428
	430
3B-5316	414
3B-6552	38
3B-7255	451
	457
3B-7262	166
3B-7273	166
	442
	446
3B-7276	168
3B-7722	450
	456
3B-7729	166
	442
	446
3B-7762	439
	443
	447
3B-7764	38
	191
	195
	199
	205
	447
3B-7866	450
	456
3B-8485	28
3B-8489	348
	404
	469
	652
3B-8491	652
3B-8686	412
3B-9191	792
	796
3C-1884	848
	850
	852
3C-6970	834
3D-0490	320
	322
3D-2824	151
	152
	316
	480
	484
	550
	552
	558
	576
3D-2898	151
	152
3D-2992	145
3D-4245	467
3D-4869	467
3D-6678	577
3D-8317	117
	646
3D-8752	274
	278
3D-9348	594
	596
	598
	600
	602
	608
3E-0127	256
3E-0128	256
3E-0129	256
3E-0130	256
3E-0131	256
3E-0132	256
3E-0133	256
3E-0134	256
3E-0135	256
3E-0136	256
3E-0137	256
3E-0138	256
3E-0139	256
3E-0140	256
3E-0141	256
3E-0142	256
3E-0143	256
3E-0144	256
3E-0145	256
3E-2418	856
3E-3274	358
3E-3365	708
3E-3370	242
3E-3371	242
	274
3E-4312	690
3E-4314	688
	689
3E-4335	806
	808
3E-4336	806
	808
3E-5200	856
3E-5201	494
	496
3E-5204	495
3E-5269	275
3E-5331	772
3E-5370	194
	198
	204
	264
	266
3E-5400	▶239
	274
	278
3E-5464	680
	685
3E-5493	540
	542
3E-6136	774
3E-6172	199
	205
3E-6575	806
	808
3E-6760	112

▶ **PRIMARY REFERENCE**

PART NUMBER INDEX

Part	Page
3E-6914	30
3E-7578	▶172
	180
3E-7886	198
	266
	322
3E-8034	251
3E-9293	279
3E-9342	198
	204
3F-0379	252
3F-1240	442
	446
3F-1688	226
3F-4134	158
	160
	162
3F-5792	300
3F-5920	318
3F-6795	51
3F-7183	404
3F-9556	284
	286
3G-1264	510
3G-1793	633
	637
	638
	640
	641
3G-1820	510
3G-2241	511
3G-2242	511
3G-2665	576
3G-2689	577
3G-2725	576
3G-2754	576
3G-2814	576
3G-2815	576
3G-2817	576
3G-2818	577
3G-2839	576
3G-3357	677
	678
3G-4055	▶677
3G-4056	▶678
3G-4117	590
	592
	604
	606
3G-4135	594
	596
	598
	600
	602
	608
3G-4459	608
	▶633
3G-5264	532
	534
3G-5358	677
	678
3G-5359	677
	678
3G-5492	528
	530
3G-5495	▶528
3G-5496	▶530
3G-5497	▶532
3G-5502	528
	530
3G-6395	654
3G-6455	576
3G-7242	610
3G-8956	▶654
3G-8991	587
	588
3G-9891	488
	▶492
3H-1461	294
	334
3H-2549	506
3H-2900	768
3H-3243	54
3H-3681	377
	378
	380
3H-8389	160
	162
3J-1907	115
	122
	124
	154
	156
	191
	195
	199
	205
	262
	264
	266
	274
	278
	308
	310
	312
	314
	316
	334
	484
	492
	495
	505
	508
	544
	546
	548
	550
	552
	558
	561
	562
	566
	576
	648
3J-4407	509
3J-5389	24
3J-5390	72
	77
	300
	438
	442
	446
	450
	451
	456
3J-5554	300
	362
3J-6008	574
3J-6019	17
3J-7352	100
	122
3J-7354	53
	62
	100
	116
	122
	124
	190
	194
	198
	204
	274
	278
	308
	310
	312
	314
	450
	452
	458
	548
	550
	552
	562
	566
	594
	596
	598
	600
	602
	608
	716
3J-7355	122
3J-7719	574
3J-9449	528
	530
3K-0196	320
	322
3K-0360	62
	122
	158
	160
	162
	290
	291
	480
	484
	490
	506
	508
	558
	567
	574
	576
	590
	592
	594
	596
	598
	600
	602
	604
	606
	608
	633
	634
	635
	636
	637
	638
	639
	640
	641
	642
	643
	644
3K-0835	708
3K-1644	296
3K-2511	338
3K-2876	404
3K-3147	191
	195
	199
	205
3K-4897	766
3K-5656	465
3K-5668	465
3K-5669	465
3K-5670	465
3K-5672	465
3K-5733	117
3K-6060	548
	550
	552
	700
	704
3K-6905	305
	306
3K-7092	540
	542
3K-8460	50
3K-8782	272
	284
	286
	741
	812
3K-9770	654
	655
3L-0526	362
3L-1425	28
	574
3L-1979	780
	782
	784
3L-2875	122
3L-8187	234
	289
	776
3N-4809	780
	782

▶ **PRIMARY REFERENCE**

PART NUMBER INDEX

Part	Page
	784
3N-8506	350
	354
3P-0009	116
3P-0764	451
	457
3P-0887	316
3P-1896	24
	26
3P-2404	56
3P-3461	294
3P-5414	407
3P-7009	339
3P-7899	342
3P-7995	681
	684
3P-8485	646
3P-9554	685
3P-9900	407
3S-1546	544
	546
	570
3S-2093	88
	190
	194
	198
	204
	236
	262
	264
	266
	288
	289
	290
	291
	370
	701
	705
	746
	832
3S-2695	358
	359
	▶364
	▶366
3S-2708	338
3S-2713	13
	50
	142
3S-5496	20
	24
3S-6049	190
	194
	198
	204
3S-6050	190
	194
	198
	204
3S-7023	474
3S-8313	24
	26
3S-8536	38
3S-8652	316
3S-8664	438
	442
3S-9733	576
3S-9896	338
3T-0049	226
3T-0243	792
	796
3T-0376	284
	286
3T-0688	316
3T-0809	361
3T-0810	298
3T-0811	298
3T-0842	248
3T-0844	248
3T-0847	248
3T-0849	248
3T-0850	248
3T-0858	248
3T-0862	248
3T-0863	248
3T-0864	248
3T-0865	248
3T-0867	248
3T-1815	260
3T-1872	▶300
	358
3T-1885	188
3T-1886	188
3T-1887	188
3T-1888	▶176
	180
3T-2145	350
	354
3T-2170	680
	685
3T-2647	250
3T-2662	284
	286
3T-2768	248
3T-2769	248
3T-3045	226
	229
	268
	270
	282
	812
3T-3046	226
3T-3047	190
	194
	198
	204
3T-3048	191
	195
	199
	205
	226
	228
	229
	232
	234
	812
3T-3203	339
3T-3422	252
3T-3434	252
3T-3453	246
3T-3935	294
3T-4384	339
3T-4716	248
3T-5815	298
	▶585
3T-5816	585
	▶646
3T-6305	▶248
	250
3T-6354	172
3T-6965	320
	322
3T-7017	248
3T-7020	248
3T-7021	248
3T-7022	248
3T-7025	248
3T-7059	848
	852
3T-7064	▶838
	840
	844
3T-7086	848
	852
3T-7567	274
	278
3T-8269	646
3V-0036	451
3V-0037	451
	457
	738
3V-0053	451
	457
3V-0153	498
3V-0170	498
3V-0245	792
	796
3V-0258	680
	684
3V-0277	796
3V-0356	498
3V-0390	679
	▶748
3V-0417	498
3V-0582	498
3V-0613	780
	782
	784
3V-2762	723
	731
3V-3557	724
	728
3V-3565	724
	728
3V-3566	724
	728
3V-3567	724
	728
3V-3568	724
	728
3V-4943	412
3V-5571	724
	728
3V-5598	451
	457
3V-5610	724
	728
3V-6894	680
	684
3V-6896	680
	684
3V-6900	792
	796
3V-6904	296
3V-6905	296
3V-6909	540
3V-7089	696
	701
	705
	724
	728
3V-7429	451
	457
3V-7476	780
	782
	784
3V-7479	694
	710
3V-7558	736
3V-7689	780
	782
	784
3V-7690	498
3V-7698	696
	700
	704
3V-7702	696
	700
	704
3V-7704	696
	700
	704
3V-7893	502
3V-8113	780
	782
	784
3V-8313	436
3V-8595	724
	728
3V-8686	498
3V-9535	652
3V-9834	724
	728
3V-9835	724
	728
3V-9841	724
	728
3W-6398	827
3W-6399	827
3Y-9065	450
	456
4B-0418	57
4B-0831	585
4B-1237	694

4

▶ **PRIMARY REFERENCE**

PART NUMBER INDEX

Part	Page
	710
4B-1284	438
4B-1663	158
	160
	162
4B-2043	172
	176
	184
	272
4B-2047	724
	728
4B-2049	226
	229
	232
	252
	256
	792
	796
4B-3938	11
	17
	20
4B-4158	520
	522
	524
	857
4B-4274	125
	127
	128
	131
	134
	136
	138
	140
	274
	278
	284
	286
	380
	416
4B-4276	272
	416
	498
	650
	831
4B-4278	416
4B-4550	324
	328
	330
4B-4845	4
4B-4863	176
	284
	286
4B-4910	50
	51
4B-5059	378
	380
4B-5275	740
4B-5387	17
	20
4B-5423	158
	160
	162
4B-5949	158
	160
	162
4B-9302	450
	456
4B-9365	143
4B-9373	318
4B-9374	318
4B-9782	17
	20
	64
	66
	505
	508
	509
4B-9806	514
	516
	518
	520
	522
	524
4B-9880	64
	65
	66
	646
4D-1133	829
4D-1134	829
4D-1135	829
4D-1137	829
4D-1138	829
4D-1212	191
	195
	199
	205
4D-1577	320
	322
4D-2287	▶462
	463
4D-2289	462
4D-2292	462
4D-2293	462
4D-2297	462
4D-2298	462
4D-2302	462
4D-2303	416
	462
4D-2305	462
4D-2634	462
4D-3100	780
	782
	784
4D-3704	294
4D-5371	558
4D-6433	587
	588
4D-6624	792
	796
4D-7735	451
	457
4D-7794	88
	191
	195
	199
	205
	228
	234
	262
	264
	266
	268
	270
	272
	370
	680
	681
	684
	685
	712
4D-8948	451
	457
4D-9164	554
4D-9376	693
4D-9517	744
4E-0048	▶282
4E-0073	764
	▶814
4E-0074	720
	▶815
4E-0120	422
	424
4E-0121	422
4E-0123	422
	424
4E-0126	422
	424
4E-0127	422
	424
4E-0351	▶744
	764
4E-0451	762
4E-0452	762
4E-0526	▶418
4E-0527	418
	▶420
4E-0538	232
4E-0780	377
4E-0782	377
4E-1286	191
	195
	199
	205
4E-1385	222
	224
4E-1387	222
	224
4E-1392	746
4E-1411	746
4E-1417	824
4E-1455	226
	228
4E-1457	226
	228
4E-1459	226
4E-1463	226
	229
4E-1477	390
	392
4E-1478	390
	392
4E-1486	227
	229
4E-1487	514
	516
4E-1495	227
4E-1669	▶236
4E-1686	227
	228
	232
4E-1706	▶762
	764
4E-1903	680
	684
4E-2039	680
4E-2042	685
4E-2091	▶376
4E-2129	166
4E-2228	400
4E-2240	324
	326
	328
	330
	332
4E-2242	190
	194
	198
	204
4E-2250	274
	278
4E-2355	286
	741
4E-2385	438
	442
	446
4E-2399	406
4E-2420	400
	402
4E-2424	400
	402
4E-2433	400
	402
4E-2436	400
	402
4E-2448	274
	278
4E-2452	274
	278
4E-2453	274
	278
4E-2460	275
	279
4E-2462	708
4E-2463	708
4E-2468	▶573
4E-2471	382
	384
	386
4E-2489	400
4E-2517	764
	▶818
4E-2554	762
4E-2555	762
4E-2599	764
	▶832
4E-2613	324

▶ **PRIMARY REFERENCE**

PART NUMBER INDEX

Part	Page	Part	Page	Part	Page	Part	Page
4E-2669	786		330		604		812
	788		332		606	4K-5537	305
	790	4E-8598	536		608		306
4E-2674	746		537		633	4K-6558	404
4E-2675	746		▶581		637	4K-6760	404
4E-2686	400	4E-8698	790		638	4K-6761	404
	402	4E-8702	162		640	4K-6780	404
4E-2828	722	4E-9687	275		641	4K-6781	404
4E-2829	722		279		642	4K-6804	324
4E-2844	722	4E-9781	708		643		326
4E-2845	722	4E-9821	314	4J-0523	506		328
4E-3119	652	4E-9822	314		594		330
4E-3169	▶580	4F-2292	830		596		332
4E-3188	191	4F-2294	274		598	4K-7270	328
	195		278		600		330
	199		284		602		332
	205		286		608	4K-7334	463
4E-3196	652		409	4J-0524	476	4K-7461	404
4E-3456	296		410		480	4K-7462	404
4E-3522	724	4F-3714	298		503	4K-7464	404
	728	4F-4879	816		548	4K-7465	404
4E-3644	318		817		550	4K-8179	122
4E-3645	318	4F-6024	116		552	4K-8190	390
4E-3731	▶398	4F-6464	652	4J-0525	503	4K-8302	282
	720	4F-7387	548	4J-1105	109	4K-8479	274
4E-3867	735		550	4J-3754	576		278
4E-3870	735		552	4J-3815	576		389
4E-3874	735	4F-7389	294	4J-3816	576		390
4E-3875	735	4F-7952	744	4J-5267	485		392
4E-3896	318	4F-7957	114	4J-5309	506	4K-8501	786
4E-3897	318		143	4J-5477	484		788
4E-3905	735	4F-8711	400		558		790
4E-3906	735		402		562	4K-9097	498
4E-3941	▶302	4F-8925	343		566		778
4E-4493	554	4F-8946	294	4J-5573	484		806
4E-4494	554	4H-3539	228	4J-6806	508		808
4E-4495	554	4H-7869	251	4J-7490	506	4K-9477	348
4E-4531	554	4H-8380	390	4J-7533	145	4K-9714	451
4E-4532	554		392		146		457
4E-4741	236	4H-8878	412		504		▶464
4E-4788	▶750	4J-0519	485		505	4L-1263	412
4E-4789	443		506		506	4L-3641	58
	447	4J-0520	308		508		60
	450		310		610	4L-6454	78
	456		312		649		166
4E-4820	398		314	4J-7945	574		168
4E-4821	398		556	4J-8224	508		236
4E-4822	398		562	4J-8265	696		336
4E-5118	398		566		762		378
4E-5208	542	4J-0522	308	4J-8997	60		380
4E-5210	542		310		143		389
4E-5213	542		312		503		396
4E-5786	484		314	4J-9218	528		406
4E-5826	▶484		476		530		438
4E-6083	▶536		480	4K-1388	352		442
4E-6520	406		484		356		446
4E-6575	735		546		509		450
4E-7928	514		570	4K-1540	428		456
	516		590		430		484
	518		592	4K-2039	436		498
	520		594	4K-4345	662		514
	522		596	4K-5122	272		516
	524		598		284		518
4E-8481	407		600		286		520
4E-8535	326		602		741		522

▶ **PRIMARY REFERENCE**

PART NUMBER INDEX

Part	Page	Part	Page	Part	Page	Part	Page
	524		696	4P-1831	125		738
	540		700	4P-1832	125	4S-5824	320
	542		704	4P-1833	125		322
	556		710	4P-1834	125	4S-5971	300
	576		724	4P-1892	▶125	4S-6336	780
	694		728		136		782
	710		738		138		784
	719		744	4P-2578	134	4S-8287	806
	722		756		136		808
	734	4M-5282	700		138	4S-8472	94
	752		704		140	4S-8537	338
	753	4M-5283	696	4P-2942	10	4S-8598	320
	754		700	4P-2974	6		322
	760		704	4P-2975	▶6	4S-8603	320
	788		724		9		322
	790		728	4P-3306	97	4T-0317	508
4L-6459	308	4M-6424	310		98	4T-0318	508
	310		485	4P-3546	64	4T-1574	470
	312	4M-6425	451		66		▶472
	314		457	4P-4020	▶64	4T-1580	472
	451		540		68	4T-1860	▶648
	457		542	4P-4195	▶126		649
	485		741		134	4T-2607	508
	556		744		136	4T-2741	634
	562		778	4P-5547	104		635
	719	4M-6480	62	4P-6564	▶82		636
4L-7124	272	4M-7470	407		86		639
4L-8337	100	4M-8013	95		88		644
4L-9337	74	4M-8239	362	4P-6590	96	4T-2742	567
	104		364	4P-7274	112		594
	222		366	4P-7275	112		596
	224	4M-8303	124	4P-7305	16		598
	346	4M-9592	338	4P-7306	16		600
	376	4N-0260	117	4P-7428	290		602
	409	4N-0432	117	4P-8480	121		608
	410	4N-1761	114		146		▶634
	450	4N-2953	116	4P-9028	146	4T-2745	▶587
	456	4N-3181	▶250	4P-9330	▶127		594
	480		251		▶128		596
	498	4N-3182	250		140		598
	540	4N-3732	64	4P-9331	▶129		600
	548		65		138		602
	550		66		140		608
	552	4N-4517	248	4P-9381	127	4T-2746	▶588
	556	4N-4526	13		128		590
	712	4N-5353	63	4P-9382	127		592
	714	4N-5484	116		128		594
	828	4N-5485	116	4P-9385	129		596
4L-9564	54	4N-5834	78	4P-9386	129		598
	338	4N-6404	116	4P-9828	146		600
4M-0061	452	4N-6406	116	4P-9832	146		602
	457	4N-6407	117	4P-9840	146		604
4M-1217	498	4N-6408	116	4P-9942	82		606
4M-1751	362	4N-6410	116	4P-9943	82		608
	364	4N-7521	256	4S-1962	272	4T-2764	608
	366	4N-7597	95		284		▶635
4M-1827	252	4N-7752	250	4S-4455	191	4T-3134	576
4M-1828	252	4N-8385	65		195	4T-4162	594
4M-1831	252	4N-9019	108		199		596
4M-2381	646		146		205		598
4M-5281	274	4N-9170	260		272		600
	278	4N-9679	38		274		602
	467	4P-0897	82		278		608
	498	4P-0915	▶251	4S-5719	451		▶636
	694	4P-1376	126		457	4T-4267	587

▶ **PRIMARY REFERENCE**

PART NUMBER INDEX

Part	Page	Part	Page	Part	Page	Part	Page
	588	4V-0828	704	4V-6391	498	4V-8316	548
4T-5070	648	4V-0939	558	4V-6393	498		550
4T-5071	648		561	4V-6394	498		552
4T-5541	562	4V-0968	268	4V-6421	652	4V-8318	548
	566		270	4V-6430	40		550
	▶610		308	4V-6441	463		552
4T-5613	472		310	4V-6442	463	4V-8518	652
	474		312	4V-6443	463	4V-8519	652
4T-6699	655		314	4V-6468	390	4V-8520	652
4T-6820	610		558		392		721
4T-6821	610		561	4V-6469	390	4V-8673	652
4T-7571	634	4V-1486	498		392		721
	635	4V-1584	390	4V-6682	738	4V-8674	652
	636		392		▶829		721
	639	4V-1939	268	4V-6692	390	4V-8675	652
	644		270	4V-6981	227		721
4T-9218	492	4V-2027	780		228	4V-8687	652
4T-9298	492		782		232	4V-8688	652
4T-9311	590		784		438	4V-8690	652
	592	4V-2112	705		442	4V-8819	336
	594	4V-2440	856		446	4V-9655	538
	596	4V-2475	485		498		▶582
	598	4V-2518	296		694	4V-9656	536
	600	4V-2529	792		696		538
	602		796		700		▶544
	604	4V-2530	792		704	4W-0452	47
	606		796		710	4W-0924	112
	608	4V-3125	465	4V-7079	346	4W-0951	100
4T-9312	590	4V-3126	451	4V-7080	346	4W-1339	2
	592		457	4V-7081	346		▶110
	594		▶465	4V-7082	346	4W-1512	62
	596	4V-3253	428		▶348	4W-1665	104
	598		430	4V-7099	652	4W-1667	104
	600	4V-3360	428	4V-7101	652	4W-2238	94
	602		430	4V-7171	▶428	4W-2239	▶179
	604	4V-3506	▶734		▶430	4W-2275	94
	606	4V-3514	434	4V-7174	656	4W-2321	64
	608	4V-3680	296		657		65
4T-9358	574	4V-3693	296		658		66
4T-9359	574	4V-4018	442		660	4W-2322	64
4V-0015	404		446		662		65
4V-0039	▶719		856		663		66
	720	4V-4154	451	4V-7175	656	4W-2357	82
4V-0041	409		457		657		90
	410		▶463		658	4W-2446	27
4V-0060	409	4V-4353	520		660	4W-2448	▶65
	410		522		662		67
4V-0081	409		524		663	4W-3864	78
	410	4V-4354	856	4V-7472	484	4W-5734	154
4V-0301	390	4V-4760	540	4V-7476	485		156
	392	4V-4840	540	4V-7478	485	4W-5735	154
4V-0437	696		542	4V-7697	122		156
	700	4V-5099	328	4V-7698	122	4W-5738	16
	704		330	4V-7699	122	4W-5739	43
4V-0611	558		332	4V-7700	122	4W-6868	116
4V-0612	268	4V-5102	498	4V-7707	734	4W-6869	146
	270	4V-5177	▶652	4V-7708	734	4W-7339	106
4V-0821	704	4V-5358	786	4V-7740	227	4W-7342	95
4V-0822	696	4V-5392	303		228	4W-7344	95
	700	4V-5397	303		232	4W-7346	95
	704	4V-5469	336	4V-8182	228	4W-7349	95
4V-0825	704	4V-5471	336		232	4W-7350	95
4V-0827	696	4V-5472	336	4V-8198	696	4W-7351	95
	701	4V-5503	336		700	4W-7352	95
	705	4V-6389	498		704	4W-7353	106

▶ **PRIMARY REFERENCE**

PART NUMBER INDEX

Part	Page
4W-7354	95
4W-7355	95
4W-7629	124
4W-8652	37
4W-9057	115
4W-9079	▶93
	94
4W-9479	6
4W-9489	4
	6
4Y-3046	713
4Y-3048	713
4Y-3630	713
4Y-4327	713
4Y-4790	713
4Y-5064	713
4Y-5652	713
4Y-5659	713
4Y-5667	713
4Y-5669	713
4Y-5670	▶713
4Y-5812	638
	640
	641
	642
	643
5	
5B-0486	406
	828
5B-0546	56
5B-0935	412
5B-1983	422
	424
5B-2183	612
	614
	616
	618
5B-5689	439
	443
	447
5B-5812	28
5B-7652	17
	20
5B-9079	34
	499
	514
	516
	518
	520
	522
	524
5B-9324	336
5B-9603	29
5C-2874	188
	248
5C-2890	219
	220
	224
	228
	272
	274
	278
	680
	684
	722
	768
5C-6565	377
	800
5C-7260	844
	846
5C-7261	222
	224
	226
	228
	260
	274
	278
	406
	708
	712
5C-7617	439
5C-7883	746
5C-8240	450
	456
5C-8310	696
	700
	704
5C-8311	696
	700
	704
5C-9031	438
	442
	446
5C-9207	428
	430
5C-9280	438
	442
	446
5C-9342	226
	229
5C-9413	438
5C-9418	438
5C-9553	272
	780
	848
	850
	852
5C-9563	226
	228
5C-9603	439
5C-9612	438
	443
	447
5C-9613	439
	443
	447
5C-9616	438
	442
	446
5C-9682	753
5C-9696	752
5C-9697	753
5C-9698	752
5C-9699	752
	753
5C-9838	438
5C-9841	438
5C-9873	439
5C-9951	439
5D-0353	576
5D-0767	462
5D-0768	462
5D-1026	88
	168
	374
	375
	394
	395
	750
5D-1901	526
5D-2989	339
5D-3636	463
5D-5958	510
5D-6176	576
5D-6574	336
5D-6993	740
5D-6994	740
5D-6996	740
5D-6997	740
5D-6998	738
	▶740
5D-7132	738
5D-7133	738
5D-8412	462
5D-9702	462
5E-5496	697
	701
	705
5E-6102	736
5F-0304	35
5F-0548	684
5F-1678	610
5F-3106	55
	80
	573
5F-3144	346
5F-4899	298
5F-5434	38
5F-7054	142
5F-9144	109
	116
	680
	681
	684
	685
5G-0817	226
	228
	409
	410
5G-2003	244
5G-2514	390
	392
5G-3612	▶109
	855
5H-2068	476
	480
	484
	544
	546
5H-2671	15
5H-3204	60
5H-3701	326
	328
	330
	332
5H-4019	562
	566
5H-4279	62
5H-4871	700
	704
	722
5H-5012	324
	326
	328
	330
	332
5H-6005	576
5H-6202	339
5H-6480	468
5H-6552	154
	156
5H-6734	320
	322
5H-8853	646
5H-9241	336
5H-9809	514
	516
	518
	520
	522
	524
5J-4773	667
	668
	669
	670
	671
	673
	674
5J-4776	508
5J-5400	472
5J-5402	472
5J-8200	472
	474
5J-8325	528
	530
	534
5K-0309	476
5K-0461	305
	306
5K-0906	262
	264
	266
	780
	782
	784
	802
	804
	810
5K-1063	466
5K-1065	466
5K-1094	840
	842
	844
	846
5K-2298	412
5K-2595	324
	328

▶ **PRIMARY REFERENCE**

PART NUMBER INDEX

Part	Page	Part	Page	Part	Page	Part	Page
5K-3294	282	5K-9249	450		554		439
5K-3493	404		456		590		442
5K-3546	438	5K-9979	412		592		446
	442	5K-9988	450		594		472
	446		456		600		585
	722	5L-2579	768		604	5M-6668	284
5K-4725	476		782		606		286
5K-5922	426	5L-4041	498		608	5M-8500	406
	427	5L-4507	284	5M-3038	338	5M-9548	362
5K-5923	426		286	5M-3062	166		364
	427	5L-4758	680		168		366
5K-6077	436		684		190	5M-9622	646
5K-8451	450		748		194	5M-9623	646
	456	5L-7200	227		198	5M-9624	646
5K-8591	339		228		204	5N-2840	190
5K-9090	476		246		268		194
	480	5L-8854	102		270		198
	554	5L-8855	102		275		204
	562	5L-8957	770		279	5N-3175	824
	566		772		376	5P-0068	652
5K-9107	762		774		377	5P-0076	350
5K-9235	438		775		378		354
	442	5M-1152	300		380	5P-0482	748
	446	5M-2057	462		428	5P-0537	4
	450		577		430		6
	451	5M-2894	4		450		110
	456		6		452		112
5K-9238	38		11		456		115
5K-9239	438		12		708		116
	450		26		719		124
	451		30		724		143
	456		31		728		148
	738		34		750		848
5K-9240	38		41		780		850
	438		57		782		852
	442		58		784	5P-0597	96
	446		60		818	5P-0598	102
	450		62		819	5P-0599	102
	451		63		820	5P-0742	554
	456		70		822	5P-0747	190
5K-9241	438		72		824		191
	451		78		826		194
	457		80	5M-3154	300		195
5K-9242	412		97	5M-4606	50		198
5K-9243	57		98		51		199
	352		104	5M-6126	339		204
	356		132	5M-6213	35		205
	412		134		58		236
	451		136		60	5P-0761	236
	457		138		62	5P-0765	750
	738		140		77	5P-0767	88
5K-9244	38		142		78		374
5K-9245	166		149		294		375
	168		294		298		394
	450		298		305		395
	451		299		306		750
	456		320		438	5P-0904	574
5K-9246	438		322		442	5P-1075	74
	442		342		446		132
	446		352		451		166
5K-9248	438		356		457		168
	442		366	5M-6214	36		306
	446		382		38		336
	450		384		90		376
	456		386		115		390

► **PRIMARY REFERENCE**

PART NUMBER INDEX

Part	Page	Part	Page	Part	Page	Part	Page
	392		548		562	5P-5655	680
	412		550		566		684
	416		552		696		792
	442		752		724		796
	446		753		728	5P-5664	681
	451		754	5P-4295	168	5P-5676	748
	457		760	5P-4443	57	5P-5757	95
	498	5P-2493	681	5P-4448	57	5P-5774	768
	514	5P-2526	320	5P-4483	320	5P-5777	484
	516		322		322	5P-5824	768
	518	5P-2566	179	5P-4484	324	5P-5901	498
	520		399		326	5P-5908	680
	522		404		328		684
	524		476		330	5P-5921	680
	540		480		332		681
	542		572	5P-4588	495		684
	694	5P-2675	268	5P-4868	84		685
	710		270		86		736
	722	5P-2937	450		88	5P-5943	723
	724		452	5P-4896	748	5P-5969	782
	728		456	5P-4898	748		784
	734	5P-2948	246	5P-4932	336	5P-5992	832
	736	5P-2955	485	5P-4939	125		840
	750	5P-3418	172		126		842
	780		176		127		844
	782		184		128		846
	784	5P-3419	172		129	5P-6120	696
	792		176		130		701
	796		184		131		705
	802	5P-3456	294	5P-4992	352	5P-6414	350
	804	5P-3494	294		356		354
	810	5P-3723	318	5P-5014	390	5P-6438	744
	818	5P-3915	792	5P-5045	338	5P-6620	154
	819		796	5P-5072	350		156
	820	5P-3928	680		354	5P-6718	612
	822		684	5P-5167	350		614
	824	5P-3929	748		354		616
5P-1076	158	5P-3930	338	5P-5168	350		618
	160	5P-3944	680		354		620
	162		684	5P-5296	338		622
	406		748	5P-5297	338		624
	572	5P-3948	748	5P-5411	320		625
	800	5P-4106	680		322		626
5P-1175	856		684	5P-5454	768	5P-6872	755
5P-1254	56	5P-4107	680	5P-5461	412		756
5P-1262	84		684	5P-5463	412		757
	86	5P-4115	262	5P-5510	696	5P-6945	112
	88		264		700		116
5P-1291	480		266		704	5P-6994	750
5P-1296	548		498	5P-5598	51	5P-7036	724
	550		694	5P-5623	272		728
	552		696	5P-5637	694	5P-7074	350
5P-1420	84		700		710		354
	86		704		735	5P-7086	735
5P-1424	554		710		822	5P-7211	422
5P-1505	168		722		824		424
5P-2094	480		724	5P-5643	374	5P-7213	492
5P-2228	56		728		680	5P-7244	856
	378		792		681	5P-7456	328
	380		796		684		330
	387	5P-4116	82		685		332
	388		90		731	5P-7483	407
	398		406		736		420
5P-2424	274		420		824		696
	278		540	5P-5645	748		700

► **PRIMARY REFERENCE**

PART NUMBER INDEX

Part	Page	Part	Page	Part	Page	Part	Page
	704		629	5P-9757	116		792
	724	5P-8361	677	5P-9806	294		796
	728		678		338	5S-7382	75
5P-7485	697	5P-8362	677	5P-9808	495		92
	700		678	5P-9888	680		308
	704	5P-8438	272		685		310
5P-7488	748		840	5R-7755	251		312
5P-7648	268		842	5S-0003	38		314
5P-7807	172		844	5S-2106	28		390
	176		846	5S-4246	336		392
	184	5P-8441	708	5S-4517	106		438
5P-7921	416		746	5S-4546	95		442
5P-7958	720	5P-8482	390	5S-4549	95		446
5P-8077	548		392	5S-4556	95		451
	550	5P-8500	109	5S-5199	95		457
	552		526	5S-5879	50		485
5P-8132	586		720		51		498
5P-8167	190		734	5S-5917	50		562
	194		735		51		566
	198		855	5S-5918	51		576
	204	5P-8502	109		52	5S-7383	306
	451		526	5S-6051	72		468
	457		720	5S-6348	43		498
	558		734	5S-6670	18		542
	744		735	5S-6735	12		556
	750		855		26		596
	762	5P-8503	724		100		598
5P-8194	338		728	5S-7001	362		602
5P-8210	112	5P-8524	696		364		714
5P-8215	151		701		366	5S-7646	109
	152		705		645	5S-7657	109
5P-8245	48	5P-8768	3	5S-7018	645	5S-7816	646
	294	5P-8823	654	5S-7046	296	5S-8055	11
	299		655	5S-7264	28	5S-8462	17
	320		677	5S-7347	336		20
	322		678	5S-7349	229	5S-9062	28
	339	5P-8899	390		252	5S-9088	179
	428		392		272		►180
	430	5P-8905	291		724	5S-9948	45
	590	5P-8907	336		728	5T-5682	343
	592	5P-9040	336		782		344
	604	5P-9085	191		784	5V-0353	652
	606		195	5S-7379	122	5V-0354	652
5P-8247	182		199		191	5V-0397	►488
	188		205		195		494
	324	5P-9119	576		199		495
	326	5P-9135	272		205		496
	328	5P-9186	298		224	5V-0575	488
	330	5P-9297	226		234	5V-0594	722
	332		229		416	5V-0612	438
	346		442		422		442
	428		446		424		446
	430		450		436	5V-0625	191
	468		452		443		195
5P-8248	40		456		447		199
	41	5P-9299	166		452		205
	434		168		458	5V-0746	656
5P-8249	528		744		581		657
	530	5P-9436	625		582		658
5P-8250	40	5P-9458	3		584		660
	41	5P-9466	700		680		662
	532		704		684		663
	534	5P-9592	336		712		665
5P-8334	412	5P-9601	792		736		666
5P-8356	628		796		744	5V-0747	656

► **PRIMARY REFERENCE**

PART NUMBER INDEX

Part	Page
	657
	658
	660
	662
	663
	665
	666
5V-0748	656
	657
	658
	660
	662
	663
	665
	666
5V-0749	656
	657
	658
	660
	662
	663
	665
	666
5V-0750	656
	657
	658
	660
	662
	663
	665
	666
5V-0751	656
	657
	658
	660
	662
	663
	665
	666
5V-0775	476
5V-0776	476
	480
5V-0779	476
	480
5V-0780	476
	480
5V-0781	476
5V-0782	476
5V-0783	476
5V-0791	476
	480
5V-0820	494
	495
	496
	▶502
5V-1042	438
5V-1063	336
5V-1202	498
5V-1321	438
	442
	446
5V-1410	540
	542
5V-1413	540
5V-1471	305
5V-1475	305
5V-1498	688
	689
5V-1842	451
	457
	738
5V-1846	450
	456
5V-2747	442
	446
	451
	457
5V-2748	451
5V-2787	540
	542
5V-2798	652
	721
5V-2998	227
	229
	232
5V-3854	400
	402
	416
5V-3885	190
	194
	198
	204
5V-3887	190
	194
	198
	204
5V-4110	▶334
5V-4203	696
	700
	704
5V-4236	736
5V-4362	334
5V-4380	334
5V-4416	696
	700
	704
5V-4907	450
	456
5V-5200	696
	700
	704
5V-5201	696
	700
	704
5V-5262	828
5V-5698	681
	685
5V-5815	780
	782
	784
5V-6380	414
5V-6439	268
	270
5V-7003	390
	392
5V-7076	414
5V-7610	498
5V-7627	438
	442
	446
5V-7654	414
5V-8280	390
	392
5V-8377	744
5V-8490	696
	701
	705
5V-8658	701
	705
5V-8719	836
5V-8720	701
	705
5V-8894	700
	704
5V-9316	701
	705
6	
6A-3304	438
	442
	446
6A-3488	450
	456
6A-9718	848
	850
	852
	854
6B-1628	750
6B-2882	100
6B-4196	416
6B-4198	114
	115
6B-4370	324
	326
	328
	330
	332
6B-5072	438
	442
	446
6B-6122	509
6B-6863	338
6B-7469	58
	97
	98
6B-9186	438
	442
	446
6C-0011	489
6C-0012	489
6C-0014	489
6C-0015	489
6C-0016	489
6C-0017	489
6C-0018	489
6C-0019	489
6C-0020	489
6C-0021	489
6C-0022	489
6C-0023	489
6C-0024	489
6C-0025	489
6C-0089	450
	456
6C-0090	450
	456
6C-0141	476
6C-0143	581
	582
	584
6C-0235	696
	700
	704
6C-0236	696
	700
	704
6C-0237	696
	700
	704
6C-0301	378
	380
6C-0302	378
	380
6C-0570	▶489
	490
6C-0606	554
6C-0612	731
6C-0745	378
	380
6C-0746	378
	380
6C-0747	378
	380
6C-1029	428
	430
6C-1039	548
	550
	552
6C-1276	476
	552
6C-1496	752
	753
	754
	760
6C-1810	392
6C-2073	802
	804
	810
6C-2074	802
6C-2076	810
6C-2306	442
	446
6C-2356	332
6C-2464	▶667
6C-2637	330
	332
6C-2726	▶810
	811
6C-2738	▶811
6C-3060	158
	160
	162
6C-3292	343
6C-3338	828
6C-3347	828
6C-3383	802
	811
	812

▶ **PRIMARY REFERENCE**

PART NUMBER INDEX

Part	Page	Part	Page	Part	Page	Part	Page
	▶828		797		728	6C-4250	696
6C-3385	▶802	6C-4129	780	6C-4177	724	6C-4251	697
6C-3458	▶1		782		728	6C-4254	776
6C-3483	344		784	6C-4180	▶700	6C-4256	700
6C-3522	324	6C-4134	692		▶704		704
	326		▶840		710	6C-4270	722
	328		▶842	6C-4185	700	6C-4272	722
	330	6C-4136	792		704	6C-4273	722
	332		796	6C-4186	696	6C-4274	697
6C-3561	▶382	6C-4137	718	6C-4187	700		701
	▶384		▶819		704		705
	▶386	6C-4138	▶691	6C-4190	700	6C-4278	840
	387		718		704		842
	388	6C-4139	722	6C-4193	768	6C-4285	844
6C-3573	399		792	6C-4194	780		846
6C-3602	▶373		796		782	6C-4294	684
	▶374	6C-4140	780		784	6C-4295	701
6C-3617	332		782	6C-4199	768		705
6C-3619	▶693		784	6C-4201	768	6C-4296	701
6C-3651	▶435	6C-4142	822	6C-4202	768		705
6C-3671	409		824	6C-4203	776	6C-4297	701
	410	6C-4143	822	6C-4204	776		705
6C-3677	416	6C-4144	822	6C-4205	776	6C-4298	819
6C-3678	380		824	6C-4207	770	6C-4299	820
6C-3679	416	6C-4145	822		772	6C-4300	736
6C-3681	370		824		774	6C-4303	▶498
6C-3914	409	6C-4146	822	6C-4208	770		764
	410		824		772	6C-4315	▶234
6C-3954	764	6C-4147	822		774	6C-4371	382
6C-3956	498	6C-4148	822	6C-4212	724	6C-4374	382
6C-3957	778		824	6C-4213	746	6C-4389	▶512
6C-3958	778	6C-4149	822	6C-4215	694	6C-4398	562
6C-3959	764		824		710		566
	▶778	6C-4150	822	6C-4217	722	6C-4399	562
6C-4029	409	6C-4151	691		792		566
	410		▶694		796	6C-4400	562
6C-4043	▶238	6C-4152	724	6C-4218	722		566
6C-4044	212	6C-4157	691		793	6C-4401	512
6C-4048	▶720		▶844		797		▶562
6C-4050	▶712		▶846	6C-4219	792		▶566
6C-4051	720	6C-4158	694		796	6C-4407	562
	▶722		▶696	6C-4220	793		566
6C-4057	▶746	6C-4159	694		797	6C-4408	562
6C-4082	768		▶724	6C-4221	793		567
6C-4085	212	6C-4160	840		797	6C-4409	562
6C-4086	212		842	6C-4222	793	6C-4410	562
6C-4100	764	6C-4161	840		797		567
	▶780		842	6C-4224	818	6C-4411	562
	▶782	6C-4162	840	6C-4225	701		566
	▶784		842		705	6C-4412	562
6C-4104	782	6C-4164	746	6C-4227	776		566
	784	6C-4166	722	6C-4234	272	6C-4413	562
6C-4108	782		793	6C-4237	272		566
	784		797	6C-4239	746	6C-4414	562
6C-4109	780	6C-4167	793	6C-4240	793		566
6C-4123	746		797		797	6C-4416	562
6C-4124	736	6C-4168	710	6C-4241	780		566
6C-4125	697		▶728		782	6C-4417	562
	701	6C-4169	728		784	6C-4418	562
	705	6C-4170	728	6C-4242	793		566
6C-4126	694	6C-4174	724		797	6C-4419	562
	710		728		822		566
6C-4127	792	6C-4175	724	6C-4246	697	6C-4428	234
	796		728	6C-4247	724	6C-4448	693
6C-4128	793	6C-4176	724		728	6C-4461	228

▶ **PRIMARY REFERENCE**

PART NUMBER INDEX

Part	Page
6C-4463	228
6C-4465	693
	▶718
6C-5006	786
	788
6C-5027	684
6C-5031	268
6C-5034	▶803
6C-5052	222
	224
6C-5053	803
6C-5085	422
	424
6C-5088	422
	424
6C-5170	▶212
6C-5178	▶656
	668
6C-5184	656
6C-5189	656
6C-5190	656
6C-5193	656
6C-5198	330
	332
6C-5204	834
6C-5206	834
6C-5207	834
6C-5208	834
6C-5209	834
6C-5210	724
	▶834
6C-5211	834
6C-5213	191
	195
	199
	205
6C-5233	228
6C-5234	228
6C-5236	812
6C-5237	804
6C-5238	718
	803
	▶812
	813
6C-5239	803
	813
6C-5244	812
6C-5245	▶804
	812
6C-5246	286
6C-5248	191
	195
	199
	205
6C-5275	384
	388
6C-5299	166
	168
6C-5303	324
	326
	328
	330
	332
6C-5305	384
	386
6C-5313	384
	386
6C-5314	384
	386
6C-5333	721
6C-5338	▶721
6C-5339	▶668
6C-5340	362
6C-5341	362
6C-5342	▶761
6C-5365	▶534
	721
6C-5366	534
6C-5368	721
6C-5370	721
6C-5372	721
6C-5381	60
6C-5386	166
	168
6C-5387	166
	168
6C-5408	696
6C-5409	696
6C-5410	697
6C-5411	696
6C-5412	696
6C-5413	696
6C-5414	697
6C-5415	697
6C-5416	697
6C-5417	697
6C-5418	697
6C-5430	736
6C-5435	793
	797
6C-5436	793
	797
6C-5438	840
	842
	844
	846
6C-5439	722
6C-5440	720
	▶820
6C-5441	792
	796
6C-5442	684
6C-5485	720
6C-5501	100
6C-5553	722
6C-5575	368
	370
6C-5683	▶368
6C-5684	▶370
6C-5685	368
6C-5697	212
6C-5700	422
	424
6C-5707	566
6C-5711	368
	370
6C-5712	370
6C-5735	368
6C-5736	370
6C-5738	368
	370
6C-5739	368
	370
6C-5801	368
	370
6C-5802	368
	370
6C-5807	232
6C-5828	370
6C-5842	824
6C-5843	824
6C-5853	701
	705
6C-5854	272
6C-5859	742
6C-5868	232
6C-5875	228
6C-5877	782
	784
6C-5917	2
	▶33
6C-5925	370
6C-5958	270
6C-7002	228
6C-7003	224
6C-7022	224
6C-7023	780
	784
6C-7040	370
6C-7041	370
6C-7158	370
6C-7159	370
6C-7224	370
6C-7227	370
6C-7232	370
6C-7239	375
6C-7252	790
6C-7349	782
6C-7390	376
6C-7443	856
6C-7445	856
6C-7446	856
6C-7482	179
6C-7573	▶375
	721
6C-7686	▶813
6C-7797	796
6C-7856	537
	▶546
6C-7857	▶537
6C-7875	376
6C-8029	370
6C-8032	▶288
	512
6C-8067	392
6C-8165	856
6C-8166	856
6C-8175	824
6C-8176	824
6C-8244	856
6C-8421	168
6C-8422	275
	279
6C-8432	708
6C-8439	708
6C-8493	▶708
	761
6C-8494	▶274
	▶278
	761
6C-8602	416
6C-8603	416
6C-8604	424
6C-8606	416
6C-8607	416
6C-8608	416
6C-8609	416
6C-8636	274
	278
6C-8637	708
6C-8640	275
	279
6C-8643	775
6C-8863	480
6C-8865	481
6C-8901	1
	▶75
6D-0443	343
	344
6D-1641	748
	750
6D-3025	274
	278
6D-3479	272
6D-3897	116
6D-3982	336
6D-4246	191
	195
	199
	205
	228
	262
	264
	266
	268
	270
	272
	480
	554
6D-4636	191
	195
	199
	205
6D-7690	318
6D-8498	151
	152
6D-9157	576
6E-0732	624
	625
	626
	▶627
6E-0733	624
	626
	▶628
6E-0734	625
	▶629
6E-0735	625
	▶630
	▶631
6E-0736	625

▶ **PRIMARY REFERENCE**

PART NUMBER INDEX

Part	Page
	▶632
6E-0737	612
	616
	620
6E-0738	614
	618
	622
6E-0739	612
	614
	620
	622
6E-0740	612
	616
	620
6E-0741	612
	614
	620
	622
6E-0742	612
	614
	616
	618
	620
	622
6E-0743	624
	625
	626
6E-0744	626
6E-0746	612
	614
	616
	618
	620
	622
6E-0747	612
	614
	620
	622
6E-0749	620
	622
6E-0750	612
	614
	616
	618
	620
	622
6E-0751	620
	622
6E-0752	620
	622
6E-0753	625
6E-0754	625
6E-0755	612
	614
	616
	618
	620
	622
6E-0756	614
	618
	622
6E-0757	629
6E-0758	629
6E-0759	629
6E-0760	629
6E-0761	629
6E-0762	628
	629
6E-0763	628
	629
6E-0764	628
	629
6E-0765	628
	629
6E-0766	628
	629
6E-0767	628
	629
6E-0768	628
6E-0769	628
6E-0770	627
	630
	631
	632
6E-0771	630
	631
	632
6E-0775	474
6E-1127	637
	638
	640
	641
	642
	643
6E-1148	590
	592
	594
	▶637
	▶638
6E-1203	576
6E-1440	528
	530
6E-1767	576
6E-1835	634
	635
	636
	639
	644
6E-2064	573
	▶574
6E-2377	590
	592
	594
	596
	598
	600
	602
	604
	606
	▶639
6E-2378	580
	▶590
	▶592
6E-2387	▶511
	574
6E-2389	511
6E-2390	511
6E-2391	511
6E-2392	511
6E-2393	511
6E-2394	511
6E-2395	511
6E-2464	612
	614
	616
	618
	622
	624
	625
	626
6E-2465	612
	614
	616
	618
	622
6E-2466	612
	614
	616
	618
	622
6E-2526	614
	618
	622
6E-2943	574
6E-3117	▶576
6E-3134	516
	▶612
6E-3135	522
	▶614
6E-3411	612
	614
	616
	618
6E-3412	612
	614
	616
	618
6E-3413	612
	614
	616
	618
6E-3528	550
	552
	▶586
6E-3651	574
6E-3737	581
	▶594
	▶596
	▶598
6E-3765	630
6E-3766	630
	631
6E-3767	627
	632
6E-3768	627
	632
6E-3769	627
	632
6E-4020	518
	▶616
6E-4021	524
	▶618
6E-4949	631
6E-5024	471
	▶474
6E-5025	474
6E-5028	474
6E-5237	616
	618
6E-5238	616
	618
6E-5510	638
	640
	641
	642
	643
6E-5861	596
	▶640
6E-5862	600
	604
	▶641
6E-5863	584
	▶600
	▶602
6E-5864	583
	▶604
	▶606
6E-6138	642
	643
6E-6256	598
	▶642
6E-6257	602
	606
	▶643
6F-0253	468
	708
	740
6F-0711	336
	576
6F-4855	576
6F-5559	576
6F-6672	151
	152
6F-7045	258
6F-7062	20
	299
6F-7172	65
6G-2256	191
	195
	199
	205
	236
6G-2263	190
	194
	198
	204
	236
6G-8390	▶526
	855
6G-9333	305
	306
6H-0192	36
6H-1717	27
6H-3956	226
	229
6H-3957	78
6H-4005	680
	684
6H-4006	680
	684

▶ **PRIMARY REFERENCE**

PART NUMBER INDEX

Part	Page
6H-7201	339
6H-9691	116
6I-0923	36
6I-0979	146
6I-1345	64
	66
6I-1346	▶66
	69
6I-1566	88
6I-1567	88
6I-2002	244
6I-2003	116
6I-2004	116
6I-2834	▶146
	156
6I-2842	146
6I-9696	322
6I-9697	322
6J-0488	272
	498
	681
	685
	762
	822
	824
6J-1038	608
6J-1080	576
6J-1081	576
6J-2386	492
6J-2419	151
	152
	610
6J-2797	472
	474
6J-4608	509
6J-6439	634
	635
	636
	639
	644
6J-6721	339
6K-0137	399
6K-0248	343
	344
6K-1972	38
6K-2171	334
6K-2172	334
6K-2198	498
6K-2430	328
	330
	332
6K-2643	426
	427
6K-2644	426
	427
6K-2660	782
	784
6K-3273	368
	370
	700
	704
6K-3274	700
	704
6K-3771	78
6K-4934	752
	753
6K-4935	752
	753
6K-5741	438
6K-6307	590
	592
	594
	596
	598
	600
	602
	604
	606
	608
6K-6826	451
	457
6K-8079	38
	451
	457
6K-8161	468
6K-8162	468
6K-8178	166
	168
	190
	194
	198
	204
	270
	451
	457
6K-8179	246
6K-8420	736
6K-8498	452
	458
6K-9555	226
	680
	684
	736
6K-9593	696
	700
	704
6K-9793	412
6L-3616	412
6L-5897	116
	164
6L-7159	680
6L-7751	744
6L-8617	84
	86
	88
6M-5062	680
	681
	684
	685
	748
6M-7504	452
	458
6N-1036	64
	65
	66
6N-1872	172
6N-2642	63
	▶67
	▶68
	▶69
6N-3350	2
	▶48
6N-3504	116
6N-3827	252
6N-5978	102
6N-6033	62
6N-7082	300
6N-7174	22
6N-7887	13
6N-8003	17
	18
6N-8079	2
	▶16
6N-8182	476
6N-8336	2
	▶37
6N-8589	272
	284
	286
6N-8599	74
6N-9995	246
6P-0593	778
6P-3236	792
	796
6P-4227	316
6P-4603	308
	310
	312
	314
	▶316
6P-4938	646
6P-4940	646
6P-4943	646
6P-4971	646
6P-4977	298
6P-4978	646
6P-5075	356
6P-7704	338
6P-9783	646
6P-9784	646
6P-9785	646
	700
	704
6P-9786	646
6S-4868	274
	278
6S-6646	723
	731
6T-1169	▶350
	352
6T-1483	680
	684
6T-1705	352
	356
6T-1706	352
	356
6T-1894	736
6T-2217	262
	264
	266
	284
	286
6T-2774	722
	776
6T-3989	776
6T-3990	234
	288
	289
6T-5098	736
6T-5532	318
6T-5859	610
	▶650
6T-6216	848
6T-6329	234
	288
	289
	776
6T-6708	793
	797
6T-7223	180
	▶182
6T-8084	650
6T-8409	322
6T-8500	650
6T-8666	294
6V-0352	680
	684
6V-0422	544
	546
6V-0423	480
6V-0473	338
6V-0678	450
	456
6V-0852	484
	544
	546
	548
	550
	552
6V-0877	748
6V-0878	748
6V-0884	793
	797
6V-1155	724
	728
6V-1179	511
6V-1195	511
6V-1270	577
6V-1322	305
	306
6V-1426	97
	98
6V-1427	97
	98
6V-1572	548
	550
	552
6V-1573	548
	550
	552
6V-1574	548
	550
	552
6V-1634	380
6V-1668	793
	797
6V-1813	94
6V-1899	492
6V-1999	37
6V-2313	274

▶ **PRIMARY REFERENCE**

PART NUMBER INDEX

Part	Page	Part	Page	Part	Page	Part	Page
	278	6V-4710	358	6V-6845	336		797
6V-2318	574		359	6V-6864	840	6V-8186	284
6V-2370	380	6V-4713	358		842		286
	708		359		844	6V-8187	744
6V-2383	412	6V-4750	3		846		778
6V-2456	766	6V-4789	2	6V-6888	848	6V-8188	56
	806	6V-5142	630		850		104
	808		631		852		191
6V-2478	338		632	6V-6889	848		195
6V-2606	645	6V-5511	438		850		199
6V-2687	690		442		852		205
6V-2722	236		446		854		252
6V-2982	3	6V-5512	438	6V-6921	142		256
6V-3233	392	6V-5586	648	6V-7189	844		274
6V-3265	451	6V-5686	324		846		278
	457		326	6V-7238	42		398
6V-3293	452		328	6V-7357	420		406
	457		330	6V-7634	724		502
6V-3320	793		332		728		580
	797	6V-5698	776	6V-7646	694		581
6V-3508	50	6V-5758	627		700		582
6V-3531	328		630		704		583
	330		631		710		584
	332		632	6V-7697	370		714
6V-3683	612	6V-5782	562	6V-7727	158	6V-8189	310
	614		566		160		452
	616	6V-5874	109	6V-7732	324		457
	618		735		326		612
	620		855	6V-7743	406		614
	622	6V-5894	110		793		616
	624	6V-6206	848		797		618
	625		852	6V-8023	2		620
	626	6V-6207	854	6V-8181	428		622
6V-3727	3	6V-6208	848		430		738
6V-3866	750		852	6V-8182	328		741
6V-3884	438	6V-6209	848		330		802
	708		852		332		804
	724		854		667		810
	728	6V-6210	854		668	6V-8212	554
6V-3940	442	6V-6213	848		669	6V-8236	303
	446		850		670	6V-8237	343
6V-3960	840		852		671	6V-8362	229
	842	6V-6214	848		673		259
	844		850		674		792
	846		852	6V-8183	406		796
6V-3965	484	6V-6317	226	6V-8185	182	6V-8363	246
	544	6V-6561	840		191	6V-8365	286
	546		842		195	6V-8367	812
	548		844		199	6V-8370	246
	550		846		205	6V-8374	234
	552		▶854		226		289
6V-4270	724	6V-6640	322		228		776
	728	6V-6717	212		272	6V-8376	262
6V-4350	339	6V-6775	350		514		264
6V-4351	339		354		516		266
6V-4365	362	6V-6797	840		518		284
	364		842		520		286
	366		844		522		461
6V-4432	480		846		524		803
	714	6V-6798	840		696		813
6V-4514	724		842		700	6V-8377	284
	728		844		704		286
6V-4611	856		846		722	6V-8378	191
6V-4626	28	6V-6835	154		738		195
6V-4708	358		156		793		199

▶ **PRIMARY REFERENCE**

PART NUMBER INDEX

Part	Page
	205
	284
	286
6V-8382	812
6V-8397	274
	278
	484
	558
	561
	562
	566
6V-8398	484
	554
	558
6V-8625	484
	558
6V-8628	562
	566
6V-8634	484
6V-8635	476
	480
6V-8636	274
	278
	558
	561
6V-8637	485
6V-8639	485
6V-8641	558
6V-8647	562
	566
6V-8716	554
6V-8723	558
6V-8724	484
	558
	561
	562
	566
6V-8774	562
	566
6V-8781	558
	562
	566
6V-8787	485
6V-8801	30
	122
	166
	168
	190
	194
	198
	204
	222
	224
	236
	268
	270
	272
	275
	279
	282
	305
	306
	376
	390
	392
	396
	397
	407
	412
	443
	447
	450
	451
	456
	498
	540
	542
	680
	684
	712
	714
	744
	750
	762
	770
	772
	774
	775
	792
	796
	822
	824
	832
6V-8818	336
6V-8843	736
6V-8918	724
	728
6V-8927	234
	288
	289
	776
6V-8928	697
	701
	705
6V-8936	484
6V-8997	554
6V-9001	558
6V-9005	562
	566
6V-9007	484
6V-9008	562
	566
6V-9168	484
6V-9169	485
6V-9200	274
	278
6V-9337	856
6V-9632	284
	286
	697
	701
	705
	728
	776
	792
	793
	796
	797
6V-9673	248
	836
6V-9746	484
	554
6V-9835	484
6V-9849	484
6V-9850	558
	562
	566
6V-9851	485
	558
6V-9875	554
6W-0058	736
6W-0147	476
	480
6W-0251	498
6W-0302	442
	446
6W-0303	442
	446
6W-0328	552
6W-0468	▶436
	764
6W-0543	756
6W-0544	756
6W-1583	757
6W-1584	757
6W-2342	469
6W-2601	▶756
6W-2950	652
6W-2955	226
6W-3004	426
	427
6W-4161	680
	684
6W-4162	680
	684
6W-4181	349
6W-4703	681
	685
	▶723
6W-4705	▶731
	764
6W-4798	476
6W-4909	712
6W-5427	390
	392
6W-5496	664
6W-5500	664
6W-5510	664
6W-5515	664
6W-5796	296
6W-5799	376
6W-5803	376
6W-5804	376
6W-5807	390
	392
6W-5810	390
	392
6W-5817	400
	402
	416
6W-5818	400
	402
	416
6W-5875	457
6W-7076	376
6W-7077	376
6W-7292	548
	550
6W-7295	548
	550
6W-7305	461
6W-8227	336
6W-8244	▶336
	764
6W-8277	303
6W-8304	652
6W-8906	723
	731
	792
	793
	796
	797
6W-8923	451
6W-8944	272
6W-8946	191
	195
	199
	205
	750
6W-8960	452
	457
6W-9580	514
	516
	518
	520
	522
	524
6W-9677	556
6W-9678	556
6W-9686	556
6W-9687	556
6W-9735	548
6W-9737	556
6W-9738	556
6Y-1690	350
	354
6Y-1731	▶352
	358
6Y-2089	292
	293
6Y-2546	324
	326
	328
	330
	332
6Y-2547	324
	326
	328
	330
	332
6Y-4767	339
6Y-4819	339
6Y-4840	339
6Y-4843	339
6Y-5911	338
6Y-5912	338
6Y-7732	328
	330
	332
6Y-9714	▶358

▶ **PRIMARY REFERENCE**

PART NUMBER INDEX

Part	Page
6Y-9715	320
6Y-9716	320
6Y-9717	▶320
	358
7	
7B-1480	450
	456
7B-1597	88
7B-2002	158
	160
	162
7B-2742	148
	244
7B-3028	320
	322
7B-3039	577
7B-3235	166
	168
	320
	322
7B-3642	320
	322
7B-5163	45
7B-7525	806
	808
7B-8194	509
7C-0396	152
7C-0791	116
7C-1897	190
	194
	204
	262
	264
7C-3093	74
7C-4006	24
7C-4515	84
	86
	88
7C-5278	144
7C-5551	▶130
	132
7C-5555	126
	130
7C-5556	130
7C-5561	131
7C-5562	131
7C-5563	131
7C-5564	131
7C-5732	▶94
7C-7011	50
7C-7013	▶50
	52
7C-7579	▶106
	107
7C-7596	▶95
	106
7C-7611	95
7C-7614	125
	127
	128
	131
7C-8236	714
7C-8433	679
	▶714
7C-8434	714
7C-8993	▶114
	154
	156
7D-4786	722
7D-6936	450
	456
7D-7233	286
	308
	310
	312
	314
7D-7469	343
	344
7D-8348	404
7D-8349	404
7D-8627	416
7E-0082	1
	▶2
7E-0802	190
	194
	198
	204
7E-1347	104
7E-2308	90
7E-2464	151
7E-2925	▶41
7E-2926	▶74
7E-2927	▶84
	▶86
	▶88
7E-3365	100
7E-3366	2
	▶100
7E-3367	2
	▶38
7E-3543	▶102
7E-3544	▶104
7E-3546	82
	90
7E-3547	82
	90
7E-3548	82
	90
7E-3549	82
	90
7E-3550	84
	86
	88
7E-3551	84
	86
7E-3552	84
	86
7E-3553	84
	86
	88
7E-3554	84
	86
	88
7E-3555	84
	86
	88
7E-3556	84
	86
	88
7E-3557	74
7E-3558	102
7E-3559	104
7E-3667	151
7E-3693	104
7E-3986	146
7E-4236	2
	▶42
7E-4237	42
7E-4350	▶96
7E-4656	151
	152
7E-4892	116
7E-5107	2
	▶154
	▶156
7E-5346	117
	148
7E-5354	38
7E-6047	44
7E-6565	90
7E-6785	154
	156
7E-7754	82
	90
7E-7759	84
	▶90
7E-7760	82
	90
7F-1866	476
7F-2060	736
7F-3531	778
7F-7590	58
7F-7621	172
	176
	184
7F-8267	294
7F-8268	294
	300
	462
7F-9223	780
	782
	784
7F-9571	434
7F-9572	434
7F-9578	434
7F-9579	434
7G-1060	762
7G-2132	300
7G-2343	338
7G-2516	339
7G-2830	338
7G-3737	294
7G-3975	338
7G-4291	646
7G-4842	646
7G-5618	338
7G-5670	339
7G-7218	338
7G-7724	338
7G-8699	736
7G-9563	646
7G-9565	646
7H-2079	176
	792
	796
7H-3171	75
	451
	457
7H-3270	300
7H-3472	485
7H-4412	439
7H-7055	122
7H-7658	339
7H-9678	150
7I-3415	480
7I-4147	332
7I-4148	332
7I-4149	326
7I-4150	326
7J-0728	752
	753
	754
7J-0729	752
	753
	754
	760
7J-5225	576
7J-5639	472
7J-6420	166
	168
7J-6461	472
7J-6469	472
7J-6580	339
7J-7423	590
	592
	594
	596
	598
	600
	602
	604
	606
	608
7J-8080	574
7J-8611	305
	306
	442
	446
	450
	456
7J-9682	472
	474
7J-9933	634
	635
	636
	639
	644
7K-0734	587
	588
7K-1181	212
	275
	279
	708
	744
	748
	750

▶ **PRIMARY REFERENCE**

PART NUMBER INDEX

Part	Page
7K-1401	305
	306
7K-1402	305
	306
7K-1456	438
	442
	446
	450
	452
	456
7K-1517	38
7K-1972	390
	392
7K-1977	227
	229
7K-3176	680
	684
7K-3304	680
	684
7K-4474	768
	852
7K-8967	786
	788
	790
7K-9203	470
	471
7K-9205	652
7K-9209	530
	652
7K-9211	532
	534
7K-9212	652
7K-9680	427
7L-2894	252
7L-3195	100
	107
7L-3326	108
	146
7L-6326	96
7L-6479	722
7M-1674	102
7M-3361	282
7M-4046	17
	20
7M-7219	116
7M-7794	294
7M-8485	298
	320
	322
	324
	326
	328
	330
	332
	476
	480
	484
	554
	562
	566
	570
	594
	596
	598
	600
	602
	608
	610
	633
7M-8592	362
	364
	366
7M-9918	106
7N-0129	176
7N-0140	246
7N-0165	72
7N-0172	77
7N-0174	176
	184
7N-0200	76
7N-0296	246
7N-0550	50
7N-0718	190
	194
	198
	204
	▶258
7N-0944	75
	92
7N-1046	145
	146
7N-1047	145
	146
7N-1052	154
	156
7N-1053	145
7N-1067	144
7N-1164	40
7N-1342	2
	▶11
7N-1796	164
7N-2059	246
7N-2171	117
7N-2172	117
7N-2176	154
	156
7N-2450	104
7N-2594	116
	117
7N-2705	72
7N-2790	299
7N-2867	284
	286
	741
	812
7N-2994	34
7N-3718	262
	264
	266
7N-5274	190
	194
	198
	204
7N-5352	633
	643
7N-5642	2
	▶8
	▶9
7N-5645	38
7N-5656	40
	41
7N-5876	776
	793
	797
	812
7N-5908	2
	▶80
7N-5910	78
7N-6550	▶18
	20
7N-7166	108
	146
7N-7264	108
	146
7N-7265	108
7N-7268	116
7N-7270	117
7N-7435	4
	6
7N-7436	4
7N-7438	4
7N-7439	4
	6
7N-7440	4
	6
7N-7441	4
	6
7N-7442	4
	6
7N-7443	4
7N-7444	4
7N-7445	4
	6
7N-7446	4
	6
7N-7447	4
	6
7N-7448	4
	6
7N-7449	4
7N-7450	4
	6
7N-7451	4
	6
7N-7779	166
	168
	170
	190
	191
	194
	195
	198
	199
	204
	205
	209
	210
	217
	218
	219
	220
	221
	246
	262
	264
	266
	272
	284
	286
	290
	291
	540
	542
	612
	614
	616
	618
	620
	622
	650
	680
	684
	694
	708
	710
	716
	768
	792
	796
	804
	810
	848
	850
	852
7N-7780	166
	168
	170
	190
	191
	194
	195
	198
	199
	204
	205
	209
	210
	217
	218
	219
	220
	221
	246
	262
	264
	266
	272
	284
	286
	290
	291
	540
	542
	612

▶ **PRIMARY REFERENCE**

PART NUMBER INDEX

Part	Page	Part	Page	Part	Page	Part	Page
	614		▶29		784		498
	616	7N-9554	154	7P-6682	191		700
	618		156		195		704
	620	7N-9737	166		199	7T-2009	158
	622		168		205	7T-2036	158
	650		170	7P-8992	400	7T-2037	109
	680		190		402		158
	684		194	7P-9231	451		160
	694		198		457		162
	708		204	7R-2258	793	7T-2296	741
	710		210		797		742
	716		217	7S-1156	548	7T-2339	248
	768		220		550	7T-2790	182
	792		246		552	7T-2792	182
	796		262	7S-1801	55	7T-2793	182
	804		264	7S-1803	55	7T-2795	182
	810		266	7S-2204	10	7T-2797	182
	848		284	7S-2962	320	7T-2798	182
	850		286		322	7T-2799	182
	852		612	7S-3161	51	7T-2800	182
7N-7781	210		614		52	7T-2801	182
	540		616	7S-3224	17	7T-2802	182
	542		618		18	7T-2803	182
7N-7782	199		620	7S-4338	272	7T-2804	182
	205		622	7S-4607	646	7T-2805	182
	209		650	7S-6369	530	7T-2816	182
	218		680	7S-6745	316	7T-3267	253
	219		684	7S-7144	22	7T-3268	253
	542		716		24	7T-3269	252
	694		768	7S-8491	590	7T-3270	252
	710	7N-9738	190		592	7T-3271	252
	720		191		594	7T-3276	252
	768		194		596	7T-3277	252
	804		195		598	7T-3278	252
	810		198		600	7T-3279	252
7N-7969	121		199		602	7T-3370	320
7N-7970	121		204		604		322
	146		205		606	7T-3451	252
7N-7998	20		209		608	7T-3454	252
7N-8015	51		221	7S-8553	645	7T-3973	252
7N-8018	24		262	7S-8920	476	7T-3974	252
7N-8026	2		264		480	7T-4306	792
	▶51		266	7S-8921	476		796
	▶52		272		480	7T-4532	716
7N-8204	848		290	7S-9323	150	7T-5038	350
	850		291	7S-9930	612	7T-5856	680
	852		612		614		684
7N-8421	145		614		616	7T-6416	182
	146		616		618	7T-6417	182
7N-8768	154		618		620	7T-6418	182
	156		620		622	7T-6799	259
7N-8775	116		622	7T-0020	694	7T-8000	▶210
7N-8780	116		792		710		211
7N-8785	117		796	7T-0493	722	7T-8530	190
7N-8821	117		804		776		194
	151		810	7T-0969	741	7T-8593	308
7N-9023	172	7N-9801	246	7T-0988	262		310
7N-9035	112	7N-9805	43		264		312
7N-9036	112	7N-9907	154		266		314
7N-9062	112		156		803	7T-8600	714
7N-9145	32	7N-9943	694		813		▶716
	33		710	7T-1099	382	7T-8816	338
7N-9519	115	7N-9967	768		384	7T-8890	827
7N-9520	115	7P-1695	780		386	7T-9370	338
7N-9536	2		782		389	7T-9517	246

▶ **PRIMARY REFERENCE**

PART NUMBER INDEX

Part	Page
7U-4898	806
	808
7V-0008	390
	392
7V-0122	426
	427
7V-0428	389
7V-0444	696
	700
	704
7V-0445	696
	700
	704
7V-0446	696
	700
	704
7V-0447	696
	700
	704
7V-0448	696
	700
	704
7V-0449	696
	700
	704
7V-0452	696
	700
	704
7V-0530	439
	443
	447
7V-0554	570
7V-1490	662
7V-1779	484
7V-1881	428
	430
7V-1940	439
	443
	447
7V-2131	461
7V-2377	499
7V-2744	498
7V-2755	544
7V-2839	438
	442
	446
7V-2888	▶414
7V-3509	378
	380
7V-3791	346
7V-3827	498
7V-3842	346
	348
	▶349
	360
7V-4395	336
7V-4655	389
7V-5128	786
	788
	790
7V-5161	443
	447
7V-5163	438
7V-5179	438
	442
	446
7V-5323	158
	160
	162
7V-5607	400
	402
7V-5646	461
7V-5647	461
7V-5656	378
7V-5665	800
7V-5793	389
7V-6234	310
	485
7V-6571	558
	561
	562
	566
7V-6614	246
7V-6659	268
	270
	558
	561
7V-6715	652
7V-6716	652
7V-7700	681
	684
7V-7829	226
7V-7832	226
7V-7834	227
	229
7V-8217	738
7V-8366	719
7V-8367	719
7V-8489	786
	788
	790
7V-8532	476
	480
7V-8646	438
	442
	446
7V-8655	438
	442
7V-8657	438
	442
	446
7V-8703	238
	▶758
	764
7V-8825	438
	442
	446
7V-8826	438
	442
	446
7V-9275	284
	286
7W-0134	151
	152
7W-0219	2
	▶70
7W-0250	116
7W-0362	▶22
7W-0507	69
7W-1470	2
	▶299
7W-1471	70
	▶72
7W-1927	144
7W-2015	112
7W-2230	96
7W-2808	144
7W-2826	112
7W-2827	112
7W-2830	110
	▶112
7W-4272	117
7W-4486	132
	134
	136
	138
	140
7W-4973	714
7W-4974	714
7W-4975	714
7W-4978	714
7W-5317	93
7W-5699	45
7W-5700	164
7W-5785	2
	▶107
7W-6333	370
	400
	402
7W-6492	42
7W-7778	106
7W-8106	409
	410
7W-8412	152
7W-9020	58
	60
7W-9321	35
7X-0290	485
	556
7X-0293	102
7X-0308	484
	570
7X-0310	544
	556
	570
7X-0311	544
7X-0313	334
	476
	480
	570
7X-0314	485
7X-0315	314
	484
7X-0316	404
7X-0317	476
	480
7X-0319	484
7X-0322	476
	480
7X-0325	398
	404
	548
	550
	552
7X-0326	476
	481
	484
	544
7X-0328	404
	548
	550
	552
	554
7X-0331	476
	562
	566
7X-0333	404
7X-0334	370
7X-0337	548
	550
	552
	580
	581
	582
	583
	584
7X-0338	179
7X-0339	502
7X-0340	580
	581
	582
	583
	584
7X-0344	399
7X-0345	404
	573
7X-0346	548
	550
	552
7X-0347	438
7X-0349	373
	374
	720
7X-0351	476
	552
7X-0357	375
7X-0362	399
7X-0365	652
7X-0366	469
	652
7X-0374	328
	330
	332
7X-0403	713
7X-0412	542
7X-0440	778
7X-0447	182
	188
	544
7X-0503	748
7X-0507	407
	544
	570
7X-0510	768
7X-0515	540
	542
	572

▶ **PRIMARY REFERENCE**

PART NUMBER INDEX

Part	Page
7X-0546	801
7X-0550	450
	456
7X-0562	248
	252
	256
	296
7X-0564	469
7X-0576	713
7X-0578	420
	680
	684
	762
7X-0579	542
7X-0582	652
7X-0583	375
7X-0584	488
	502
7X-0586	736
	768
7X-0588	428
	430
7X-0591	251
7X-0593	324
	326
7X-0608	406
	826
7X-0620	188
	736
7X-0632	422
	424
	570
7X-0750	390
7X-0772	498
	556
7X-0820	484
7X-0977	418
7X-0990	418
7X-1360	770
7X-1387	406
7X-1982	838
	▶848
7X-1983	838
	▶850
7X-1984	850
7X-1985	850
7X-1986	850
7X-2501	738
7X-2537	82
	90
7X-2538	260
7X-2548	667
7X-2623	328
	330
	332
7X-2832	358
7X-3182	284
7X-3186	305
	306
7X-3187	748
7X-3229	856
7X-3352	451
	457
7X-3373	252
	778
7X-6066	▶217
	226
	228
	232
7X-6145	850
7X-6146	850
7X-6205	716
7X-6279	680
	684
7X-7644	856
7X-7729	88
	228
	400
	402
	407
	544
	546
	570
7X-7732	6
7X-7877	782
	784
7X-7958	554
7Y-3195	190
	194
	198
	204
8	
8B-2377	114
8B-2540	40
8B-2664	750
8B-3768	744
8B-4967	334
8B-6349	17
	20
8B-9725	56
	420
8C-0564	558
8C-0566	376
	540
	542
8C-3079	510
8C-3085	648
8C-3121	542
8C-3234	132
	134
	136
	138
	140
8C-3411	474
8C-3445	53
8C-3446	53
	308
	310
	312
	314
	548
	550
	552
8C-3651	250
	▶252
8C-3655	253
8C-3678	274
	278
	389
8C-3679	389
	392
8C-3681	88
8C-4158	716
8C-4159	716
8C-4160	716
8C-4405	716
8C-4436	84
	86
	88
	488
	762
8C-5210	78
8C-5227	282
8C-5434	540
8C-5586	274
8C-5607	274
	278
8C-5608	274
	278
8C-6207	▶218
	222
	224
8C-6362	392
8C-6438	834
	836
8C-6561	738
8C-6712	308
	310
	312
	314
8C-6738	834
	836
8C-6876	610
8C-6877	334
	546
	570
8C-8555	358
	359
8C-8556	359
8C-8729	326
	328
	330
	332
8C-8778	222
	226
8C-8842	390
	392
8C-8844	540
8C-8898	856
8C-8901	856
8C-8977	191
	195
	199
	205
8C-9121	528
	530
	534
8C-9124	472
	474
8C-9133	472
	474
8C-9160	474
8C-9634	612
	614
	616
	618
	620
	622
8C-9635	612
	614
	616
	618
	620
	622
8C-9660	172
	184
8C-9678	694
	710
8C-9682	612
	614
	616
	618
	620
	622
8C-9683	612
	614
	616
	618
	620
	622
8D-0071	166
	168
8D-3791	414
8D-5054	37
8D-5476	792
	796
8D-6946	232
8D-7815	722
8D-9739	338
8E-1550	224
	712
8E-2843	796
8E-3471	352
	356
8E-3472	339
8E-6667	322
8E-8299	338
8E-8304	339
8E-8305	339
8E-9105	▶322
	359
8E-9311	354
8E-9312	▶354
	356
8E-9390	▶356
	359
8E-9391	▶359
8F-0492	714
8F-1326	176
	184

▶ **PRIMARY REFERENCE**

PART NUMBER INDEX

Part	Page
8F-1434	172
	184
	188
	191
	195
	199
	205
	246
	248
	252
	256
8F-1462	806
	808
8F-3170	346
8F-3590	680
8F-4452	318
8F-4610	112
8F-7702	498
8F-8151	84
	86
	88
8F-8178	114
8F-8733	577
8F-8882	576
8F-9538	109
8G-0851	390
	392
8G-0871	370
	400
	402
	416
8H-0878	176
8H-1141	252
8H-2778	150
8H-2807	150
8H-2810	150
8H-3497	162
8H-3532	633
	637
	638
	640
	641
	642
	643
8H-5303	258
8H-5306	258
8H-5352	339
8H-5505	629
8H-5772	532
	534
8H-6591	697
	701
	705
8H-7521	320
	322
8H-8648	190
	194
	198
	204
8H-9189	361
8H-9204	132
	134
	136
	138
	140
8H-9299	144
8H-9711	820
8H-9789	4
	6
	28
8J-0322	633
	637
	638
	640
	641
	642
	643
8J-0331	633
	637
	638
	640
	641
	642
	643
8J-0484	474
8J-1552	509
8J-1553	485
	▶509
8J-1701	503
8J-1702	503
8J-1705	504
8J-1898	587
	588
8J-2095	610
8J-4376	633
	637
8J-4954	▶676
	678
8J-4955	672
	▶675
	677
8J-5604	450
8J-5839	744
8J-5914	484
	544
	546
	548
	550
	552
8J-6910	576
8J-7415	472
8J-8197	166
	168
8J-8230	390
	392
8J-8343	154
	156
8J-8375	532
	534
8J-8450	506
8J-8451	506
8J-8466	506
8J-8472	508
8J-8473	508
8J-8782	577
8J-8783	577
8J-8796	495
8J-9348	650
8K-1207	17
	20
8K-1253	274
	278
8K-4112	498
8K-4909	294
8K-6474	436
8K-7525	665
	666
8K-7526	665
	666
8K-8467	426
	427
8K-8468	426
	427
8K-8469	427
8L-2786	42
8L-5831	228
8L-5832	116
	154
	156
8L-5922	298
8L-6557	100
8L-7395	752
	753
	754
	760
8L-8413	451
	457
	681
	685
8L-8490	736
8L-8662	11
8M-0505	62
8M-0904	58
	60
8M-1013	646
8M-1280	320
	488
8M-2538	362
	364
	366
8M-2770	190
	194
	198
	204
	282
	712
	744
8M-2772	680
8M-2773	228
	450
	452
	456
8M-3107	320
	322
8M-3182	53
8M-3267	11
8M-4228	528
	530
8M-4409	362
	364
	366
8M-4432	72
	298
8M-4448	50
8M-4986	362
	364
8M-5010	339
8M-5248	62
8M-5253	62
8M-5599	67
	68
8M-5661	562
	566
8M-7065	8
	9
8M-7145	389
	540
	542
8M-8489	342
8M-8515	154
	156
8M-9024	13
8M-9062	164
8M-9140	154
	156
8M-9307	20
	299
8N-0107	2
	▶49
8N-0110	36
8N-0246	2
	▶24
8N-0303	2
	▶36
8N-0442	2
	▶35
8N-0449	38
8N-0872	2
	▶30
8N-0888	1
	▶92
8N-0999	▶184
	679
8N-1149	62
8N-1214	40
	41
8N-1415	144
8N-1693	262
	264
	266
8N-1721	43
8N-1725	190
	194
	198
	204
8N-1792	1
	▶46
8N-1849	43
8N-1868	2
	▶97
	▶98
8N-1965	56
8N-2181	2
	▶31
8N-2182	1
	▶56
8N-2235	2
	▶62
8N-2487	145

▶ **PRIMARY REFERENCE**

PART NUMBER INDEX

Part	Page
	146
8N-2488	116
8N-2489	145
8N-2495	116
8N-2499	117
8N-2501	117
8N-2503	116
8N-2505	116
8N-2507	116
8N-2510	108
	146
8N-2511	108
8N-2518	121
8N-2622	226
	229
	232
8N-2637	151
	152
8N-2640	151
	152
8N-2641	151
	152
8N-3087	117
8N-3088	154
	156
8N-3168	117
8N-3251	50
8N-3252	51
8N-3256	116
8N-3258	116
8N-3259	116
8N-3293	31
8N-3324	51
8N-3325	50
8N-3326	51
8N-3327	50
8N-3945	117
8N-4110	17
	20
8N-4112	76
	▶77
8N-4183	831
8N-4247	56
8N-4326	275
	278
8N-4457	▶53
	72
8N-4485	26
	75
	92
8N-4745	2
	▶14
8N-4960	34
8N-5094	48
8N-5117	145
	146
8N-5132	132
	134
	136
	138
	140
8N-5286	2
	▶20
8N-5305	28
8N-5763	112
8N-5764	112
8N-5765	112
8N-5784	154
	156
8N-5928	78
8N-5929	78
8N-6199	148
8N-6200	▶148
	150
8N-6201	149
	▶150
8N-6680	110
8N-6796	22
	▶26
8N-7005	132
	134
	136
	138
	140
8N-7276	154
	156
	▶164
8N-7315	58
8N-7318	58
8N-7519	164
8N-8194	100
8N-8196	100
8N-8221	43
8N-8222	43
8N-8223	43
8N-8225	16
8N-8226	16
8N-8227	16
8N-8228	16
8N-8229	16
8N-8261	102
8N-8721	37
8N-9703	2
	▶55
8P-0408	158
	160
	162
8P-0668	109
8P-0953	350
	354
8P-0960	350
	354
8P-1438	320
	322
8P-1556	361
8P-1636	350
	354
8P-1715	320
	322
8P-1717	320
	322
8P-1758	352
	356
8P-1807	342
8P-1812	342
8P-1892	338
8P-1916	338
8P-1918	338
8P-1919	339
8P-1948	339
8P-1964	338
8P-2017	▶338
	358
	359
8P-2018	▶294
	358
	359
8P-2019	338
8P-2022	338
8P-2023	338
8P-2042	339
8P-2047	338
8P-2049	338
8P-2051	338
8P-2052	339
8P-2053	339
8P-2155	322
8P-2196	352
	356
8P-3040	▶361
	585
8P-3251	320
	322
8P-3442	389
8P-6321	646
8P-8540	406
8P-8677	350
	354
8P-8977	▶298
	358
	359
8P-9507	339
8P-9770	665
8R-0040	166
	168
8R-0231	▶672
8R-0275	834
8R-0319	664
8R-0377	432
8R-0378	432
8R-0379	432
8R-0380	432
8R-0381	432
8R-0382	432
8R-0752	548
	550
	552
8R-0859	450
	456
8R-0862	451
	457
	▶461
8R-0863	461
8R-0923	292
	293
8R-0925	324
	326
8R-0928	328
	330
	332
8R-0931	324
	326
	328
	330
	332
8R-0932	324
	326
	328
	330
	332
8R-0933	324
	328
8R-0934	318
8R-0935	318
8R-0941	292
	293
8R-0942	292
	293
8R-1013	328
	330
8R-1014	328
	330
8R-1015	328
	330
8R-1016	328
	330
	332
8R-1056	836
8R-1057	834
	836
8R-1088	303
8R-1187	▶786
	▶788
	▶790
8R-1188	786
	788
	790
8R-1200	▶409
	▶410
8R-1204	▶377
8R-1205	377
8R-1206	377
8R-1287	377
	380
8R-1522	450
	456
8R-1523	452
	457
8R-1774	▶827
	832
8R-1885	▶343
8R-1890	292
8R-1896	▶390
	▶392
8R-1897	390
8R-2095	450
	456
8R-2487	426
	428
8R-2491	▶426
	428
8R-2492	426
	428
8R-2566	382
	384
	386
8R-2649	190
	195
	199
	205

▶ **PRIMARY REFERENCE**

PART NUMBER INDEX

Part	Page
8R-2916	468
8R-2918	468
8R-2950	▶211
	746
8R-3051	222
8R-3252	292
	293
8R-3410	786
	788
	790
8R-3462	377
	476
8R-3529	▶450
	▶456
8R-3530	▶412
8R-3674	744
8R-3675	744
8R-3689	696
8R-3798	389
8R-3947	▶305
	▶306
8R-3948	305
	306
8R-3950	451
	457
8R-3951	451
	457
8R-3952	450
	456
8R-3954	▶166
	▶168
8R-3956	166
	168
8R-3959	▶246
8R-3960	246
8R-4136	395
8R-4297	308
	310
	312
	314
8R-4298	308
	310
	312
8R-4310	▶344
8R-4559	451
	457
8R-4560	451
	457
8R-4561	450
	456
8R-4786	▶308
	▶310
	▶312
	▶314
8R-4868	▶399
	418
8R-4869	▶395
	418
8R-5003	514
	516
	518
	520
	522
	524
8R-5041	▶764
8R-5048	▶389
8R-5049	▶396
8R-5050	▶387
	▶388
8R-5051	▶400
	▶402
8R-5052	▶222
	▶224
8R-5053	▶190
	▶194
	▶198
	▶204
8R-5054	▶262
	▶264
	▶266
8R-5055	▶268
	▶270
8R-5056	▶406
8R-5123	412
8R-5124	412
8R-5125	412
8R-5126	412
8R-5127	412
8R-5128	412
8R-5342	764
	▶822
	▶824
8R-5344	▶272
	764
8R-5346	764
	▶768
8R-5489	▶692
	764
8R-5490	764
	▶770
	▶772
	▶774
	▶775
8R-5802	▶289
	512
8R-5817	222
8R-6112	692
	▶710
8R-6167	▶855
8R-6206	▶679
8R-6213	41
8R-6701	514
	516
	518
	520
	522
	524
8R-7051	450
	456
8R-7052	450
	456
8R-7056	775
8R-7059	770
	772
	774
	775
8R-7064	770
	772
	774
	775
8R-7066	▶735
8R-7075	296
8R-7153	770
	772
	774
	775
8R-7154	770
	772
	774
	775
8R-7193	272
8R-7194	272
8R-7195	722
8R-7196	768
8R-7197	722
8R-7198	272
8R-7200	272
8R-7202	744
8R-7286	691
	692
	▶736
8R-7287	792
	796
8R-7443	722
8R-7723	274
	278
8R-7909	222
	224
8R-7911	222
	226
8R-7912	224
	226
8R-7913	222
	224
	712
8R-7931	284
	286
8R-7933	284
	286
8R-7964	400
	402
8R-7969	400
	402
8R-7974	400
	402
8R-7986	400
	402
8R-8108	770
	772
	774
	775
	▶776
8R-8118	691
	692
	▶792
	▶796
8R-8119	▶514
	▶516
	▶518
	764
8R-8139	268
	270
8R-8159	284
8R-8161	191
	195
	199
	205
	712
8R-8162	262
	264
	266
8R-8163	262
	264
	266
8R-8164	191
	195
	199
	205
8R-8165	190
	194
	198
	204
8R-8166	226
8R-8167	226
	228
8R-8169	226
	228
8R-8170	290
8R-8171	291
8R-8181	226
	228
8R-8185	282
8R-8197	▶673
8R-8198	▶674
8R-8201	▶669
8R-8202	▶670
8R-8203	▶671
8R-8204	▶657
	669
8R-8205	▶658
	670
8R-8206	▶664
	672
8R-8207	▶665
	673
8R-8208	▶666
	674
8R-8209	▶660
	671
8R-8214	657
8R-8215	657
8R-8226	679
	▶680
	▶684
8R-8335	318
8R-8336	303
8R-8340	292
	293
8R-8369	570
8R-8370	570
8R-8371	570
8R-8372	544
	546
8R-8373	544
	546
8R-8374	544
	546
8R-8381	514
	516
	518

▶ **PRIMARY REFERENCE**

PART NUMBER INDEX

Part	Page	Part	Page	Part	Page	Part	Page
	520	8R-9251	406	8S-1499	50	8T-1789	528
	522	8R-9252	406		51		530
	524	8R-9253	407	8S-1783	392	8T-1793	532
8R-8383	514	8R-9257	407	8S-2634	236		534
	516	8R-9260	406	8S-4211	236	8T-1905	485
	518	8R-9296	272	8S-4304	299		562
	520	8R-9297	680	8S-4729	688		566
	522		684		689	8T-2275	576
	524	8R-9399	681	8S-5278	436	8T-2335	558
8R-8392	▶494	8R-9403	680	8S-6511	64	8T-2501	190
8R-8393	▶232	8R-9426	191		65		194
	368		195		66		198
8R-8394	▶554		199	8S-6783	104		204
8R-8397	▶520		205	8S-6814	116		236
	▶522		▶284		352		498
	▶524		▶286		356		556
	536	8R-9463	▶538	8S-7048	296		558
	537	8R-9522	435	8S-7803	690		752
	538		▶495		806		753
8R-8438	468	8R-9524	▶290		808		754
8R-8440	296		494	8S-8874	58		760
8R-8456	398		496		60	8T-2502	40
8R-8476	658	8R-9525	▶291	8S-9092	712		102
8R-8477	658		495	8S-9191	149		274
8R-8485	660	8R-9526	190		590		278
8R-8486	660		194		592		334
8R-8489	382		198		594		488
8R-8536	664		204		600		581
8R-8537	664	8R-9527	▶741		604		582
8R-8539	664		▶742		606		584
8R-8540	664	8R-9537	▶226		608		714
8R-8567	665		▶228	8T-0070	41	8T-2561	82
	666		238		762		396
8R-8652	▶158	8R-9561	420	8T-0081	158		397
	▶160	8R-9562	420		160		786
	▶162	8R-9563	420		162		788
8R-8653	158	8R-9564	420	8T-0130	484		790
	160	8R-9565	420	8T-0154	736	8T-2925	292
8R-8784	▶296	8R-9566	420	8T-0277	724		293
	764	8R-9567	420		728	8T-2947	211
8R-8785	▶468	8R-9602	260	8T-0286	736	8T-3282	41
	764	8R-9712	▶260	8T-0328	116		328
8R-8818	554	8R-9713	418		188		330
8R-8820	554		▶422		248		332
8R-8823	554		▶424		252		762
8R-9121	435	8R-9805	420		256	8T-3285	262
	▶438	8R-9809	292	8T-0336	326		264
	▶442		293		332		266
	▶446	8R-9810	292		346	8T-3298	577
8R-9122	438		293	8T-0337	213	8T-3490	82
8R-9220	406	8R-9963	▶397		214		90
8R-9221	407		536		215		166
8R-9222	407		537		216		168
8R-9223	406		538	8T-0380	343		212
8R-9227	406	8S-0493	64	8T-0392	346		226
8R-9230	406		65	8T-0659	132		228
8R-9237	406		66		134		284
8R-9238	406	8S-0497	67		136		286
8R-9239	406		68		138		382
8R-9243	406	8S-0934	801		140		384
8R-9245	406		828	8T-0788	485		386
8R-9246	406	8S-0948	166	8T-1191	857		392
8R-9248	406		168	8T-1363	426		400
8R-9249	406	8S-1326	57		427		402
8R-9250	406	8S-1491	10		856	8T-3562	227

▶ **PRIMARY REFERENCE**

PART NUMBER INDEX

Part	Page
8T-3597	395
8T-3601	540
	542
8T-3612	228
	284
	286
	382
	384
	386
	406
	681
8T-3992	224
	228
8T-3993	832
8T-4121	74
	82
	84
	86
	88
	90
	191
	195
	199
	205
	214
	222
	224
	227
	228
	229
	256
	260
	275
	279
	284
	286
	382
	384
	386
	388
	400
	402
	406
	680
	684
	712
	713
	741
	742
	762
	768
8T-4122	229
	392
	394
	395
	399
	404
	451
	457
	548
	550
	552
	573
	744
8T-4127	834
8T-4130	681
	722
8T-4133	74
	84
	86
	88
	214
	222
	224
	226
	228
	229
	256
	260
	308
	310
	312
	314
	407
	741
	742
8T-4134	222
	224
	226
	229
	232
8T-4136	74
	82
	84
	86
	88
	90
	222
	224
	226
	228
	260
	382
	384
	386
	400
	402
	406
	416
	713
	741
	742
	762
	768
8T-4137	84
	86
	88
	166
	168
	191
	195
	199
	205
	228
	282
	382
	384
	386
	388
	407
	450
	456
8T-4138	700
	704
	792
	796
8T-4139	395
8T-4142	736
8T-4171	222
	224
	716
8T-4176	713
8T-4182	226
	275
	279
8T-4186	84
	86
	88
8T-4189	224
	229
	246
	406
	420
	697
	701
	705
	792
	796
8T-4191	226
	229
	284
	286
	451
8T-4195	84
	86
	88
	228
	370
	680
	684
8T-4196	82
	90
8T-4200	191
	195
	199
	205
	222
	224
	226
	229
	284
	286
	681
8T-4205	84
	86
	88
	158
	160
	162
	191
	195
	199
	205
	211
	219
	220
	222
	224
	227
	228
	229
	232
	248
	252
	272
	274
	278
	284
	286
	296
	305
	306
	406
	722
	738
	741
	742
	744
	756
	778
	780
	782
	784
	792
	793
	796
	797
8T-4219	212
8T-4222	406
8T-4223	56
	84
	86
	88
	104
	179
	191
	195
	199
	205
	227
	229
	274
	278
	370
	376
	377
	378
	380
	387
	388
	395
	398
	399
	404
	409
	410
	428
	430
	476
	480

► **PRIMARY REFERENCE**

PART NUMBER INDEX

Part	Page	Part	Page	Part	Page	Part	Page
	484		546		558		330
	498		548		562		332
	502		550		566		390
	542		552		576		392
	544		714		581		576
	546	8T-4896	40		582		667
	548		46		584		668
	550		75		596		669
	552		92		598		670
	556		94		602		671
	562		104		680		673
	567		122		681		674
	580		166		684	8T-5004	780
	581		168		685		782
	583		179		708		784
	584		190		712	8T-5069	296
	667		194		714	8T-5070	498
	714		198		719	8T-5360	188
	762		204		738		308
8T-4224	191		222		744		310
	195		224		748		312
	199		234		750		314
	205		236		752		334
	222		268		753		404
	224		270		754		476
	227		272		760		480
	229		274		762		484
	246		278		770		544
	251		282		772		546
	260		305		774		556
	262		306		775		801
	264		308		788	8T-5361	540
	266		310		790	8T-5383	840
	274		312		814		842
	278		314		815		844
	284		334		832		846
	286		346	8T-4897	227	8T-5391	251
	409		377		228		562
	410		378	8T-4908	82		566
	452		380		90	8T-5400	840
	457		409		274		842
	562		410		278		844
	566		416		708		846
	681		422	8T-4967	400	8T-5413	382
	697		424		402		384
	701		428	8T-4970	162		386
	705		430		248	8T-5913	827
	708		436		284	8T-5914	827
	713		438		286	8T-6342	194
	738		442		684		198
	741		446		722		204
	744		450		736		264
	780		451		772		266
	782		456		774		274
	784		468		775	8T-6462	400
	792		480		792	8T-6663	485
	796		484		793		495
	802		488		796	8T-6703	476
	804		498		797		480
	810		540	8T-4977	320	8T-6744	532
8T-4244	248		542		322		534
8T-4821	378		548	8T-4983	476	8T-6745	528
	380		550		480		530
8T-4835	502		552	8T-4984	76	8T-6756	447
	544		556	8T-4994	328	8T-6757	6

► **PRIMARY REFERENCE**

PART NUMBER INDEX

Part	Page
	15
8T-6762	6
	20
	24
	26
	294
8T-6763	20
	24
	26
	92
8T-6764	11
	20
	82
	362
	364
	366
8T-6765	20
8T-6842	696
	700
	704
8T-6871	548
	550
	552
8T-6876	485
8T-6895	484
8T-6912	224
	712
8T-6973	570
8T-6988	484
8T-7008	179
8T-7212	544
8T-7258	646
8T-7934	90
8T-7971	752
	753
	754
	760
8T-8389	528
	530
	534
8T-8566	252
8T-8569	252
8T-8641	690
8T-8729	242
	275
	708
8T-8730	194
	198
	204
	240
	241
	243
	264
	266
	278
8T-8731	194
	198
	204
	240
	241
	243
	264
	266
	278
8T-8748	708
8T-8813	716
8T-8814	716
8T-8815	716
8T-8816	716
8T-8817	716
8T-8819	716
8T-8820	716
8T-8821	716
8T-8908	741
	742
8T-8911	268
	270
8T-8912	540
8T-8915	562
	566
8T-8916	308
	310
	312
	314
	476
	480
	544
	570
8T-8917	158
	160
	162
	378
	380
	409
	410
	450
	456
	542
	572
8T-8919	104
	404
	476
	481
	548
	550
	552
	576
8T-8920	28
	476
	480
	548
	550
	552
8T-8932	744
8T-9043	439
	452
	457
	778
8T-9056	814
	815
8T-9101	46
	274
	278
	485
	566
8T-9358	484
8T-9371	376
8T-9375	548
	550
	552
8T-9377	558
8T-9378	179
	438
	442
	446
	596
	598
	602
8T-9380	544
	546
	570
8T-9382	476
	480
	484
	544
	546
	570
8T-9389	550
	552
	572
	714
8T-9391	562
	566
8T-9393	394
	395
	572
8T-9398	469
	652
8T-9404	542
8T-9415	540
8T-9515	304
8T-9530	390
	652
	664
8T-9792	438
	442
	446
8T-9884	253
8V-0003	346
8V-0603	558
8V-0615	190
	194
	198
	204
8V-0717	558
8V-1026	406
8V-1107	724
	728
8V-1190	498
8V-1223	378
	380
8V-1239	378
	380
8V-1240	380
8V-1241	380
8V-1248	378
	380
8V-1249	378
	380
8V-1250	378
	380
8V-1252	378
	380
8V-1254	378
	380
8V-1256	378
	380
8V-1259	378
	380
8V-1412	348
8V-1416	436
8V-1420	830
8V-1578	694
	710
	▶830
8V-1596	778
8V-1598	778
8V-1612	778
8V-1613	778
8V-1621	778
8V-1622	744
8V-1623	744
8V-1624	744
8V-1625	744
8V-1626	744
8V-1781	390
	392
8V-1841	830
	▶831
8V-2080	570
8V-2090	788
	790
8V-2195	792
	796
8V-2466	544
8V-2486	544
8V-2514	226
	228
8V-2841	373
	374
	720
8V-2843	399
8V-3173	▶752
	758
8V-3195	▶394
	721
8V-3205	394
8V-3518	724
	728
8V-3611	728
8V-3893	760
8V-3896	752
	753
	754
	760
8V-3897	754
	760
8V-3898	760
8V-3899	754
8V-3900	693
	▶759
	764
8V-3901	759
	▶760
8V-4355	▶753
	758
8V-4965	▶754
	759
8V-4967	442
	446

▶ **PRIMARY REFERENCE**

PART NUMBER INDEX

Part	Page
8V-5203	754
8V-5216	469
	▶470
	▶471
8V-5217	▶469
8V-5719	308
	310
	312
	314
8V-6072	382
	384
	386
	400
	402
	790
8V-7659	469
8V-9101	166
	168
8V-9174	166
	168
8V-9257	166
	168
8V-9258	166
	168
8V-9380	724
	728
8V-9728	570
8V-9755	719
8V-9982	800
8W-0580	562
	566
8W-1150	461
8W-1151	461
8W-2756	558
8W-2959	558
8W-3087	166
	168
8W-4677	498
8W-9602	343
	344
8Y-3792	▶801
	816
	817
8Y-4030	828
8Y-4191	814
	▶816
8Y-4192	815
	▶817
8Y-5742	724
8Y-5874	▶732
	816
8Y-5877	732
	733
8Y-5880	806
8Y-5881	806
	808
8Y-5883	▶806
	816
8Y-5884	▶688
	816
	817
8Y-5885	▶689
	816
	817
8Y-5888	816
	817
	▶826
8Y-5889	816
	817
8Y-5891	806
8Y-5892	766
8Y-5897	689
8Y-5898	688
8Y-5911	688
	689
	▶690
8Y-5928	806
	808
8Y-5929	806
	808
8Y-5930	806
	808
8Y-5931	806
	808
8Y-5932	806
	808
8Y-5936	806
	808
8Y-5937	806
	808
8Y-5938	806
	808
8Y-5939	690
8Y-5942	806
	808
8Y-5943	732
8Y-5944	826
8Y-5945	743
8Y-5947	733
	806
	808
8Y-5953	801
8Y-5954	▶808
	817
8Y-5955	808
8Y-5957	808
8Y-5959	▶733
	817
8Y-5960	733
8Y-5972	806
	808
8Y-5979	806
	808
8Y-5981	806
	808
8Y-5992	▶766
	806
	808
8Y-5995	766
8Y-5998	766
8Y-5999	766
8Y-6001	806
	808
8Y-6006	806
	808
8Y-6010	806
	808
8Y-6012	826
8Y-6014	826
8Y-6022	826
8Y-6023	826
8Y-6027	690
8Y-6044	743
8Y-6051	806
	808
8Y-6066	743
8Y-6364	526
	734
	855
8Y-6823	▶743
	826
8Y-6833	806
	808
8Y-6834	806
	808
8Y-6858	826
8Y-6859	743
8Y-6860	743
8Y-6861	743
8Y-6896	836
8Y-6913	836
8Y-6933	806
	808
8Y-8299	780
	782
	784
9B-7233	172
	176
	184
	227
	228
	229
	259
	262
	264
	266
	284
	286
	461
	741
	792
	796
	803
	813
9B-7237	236
	305
	306
	308
	310
	312
	314
	428
	430
	738
	748
	752
	753
	754
	760
	786
	788
	790
	802
	804
	810
9C-0148	452
	457
9C-0504	450
	456
9C-0512	696
	700
9C-0513	696
	700
9C-0572	452
	457
9C-0595	451
	457
9C-1084	▶558
9C-1085	▶476
	494
	495
9C-1484	652
9C-1786	696
	700
	704
9C-2355	484
9C-2356	485
9C-2358	484
9C-2359	485
9C-2360	485
9C-2361	484
9C-2362	484
9C-2363	484
9C-2364	485
9C-2365	484
9C-2366	484
9C-2367	484
9C-2368	484
9C-2369	484
9C-2370	484
9C-2371	485
9C-2372	484
9C-2420	476
	480
9C-2439	558
9C-2440	558
9C-2441	558
9C-2630	558
	562
	566
9C-2631	558
9C-2632	558
9C-2633	558
9C-2635	558
9C-2639	514
	516
	518
	520
	522
	524
9C-2640	514
	516
	518
	520
	522
	524

9

▶ **PRIMARY REFERENCE**

PART NUMBER INDEX

Part	Page	Part	Page	Part	Page	Part	Page
9C-2716	561		326		846	9G-0290	338
9C-2773	561		328	9D-8632	428	9G-0291	338
9C-2982	450		330		430	9G-0293	338
	456		332	9F-1399	528	9G-0398	681
9C-3199	378	9C-6306	328		530	9G-1950	792
	380		330	9F-2167	461		796
9C-3201	378		332	9F-2247	4	9G-2264	370
	380	9C-6327	324		38		768
9C-3293	406		326		172	9G-2265	768
9C-3391	407		328	9F-2289	378	9G-2413	350
9C-3581	652		330		380		354
9C-3861	406		332	9F-2947	84	9G-3251	646
9C-4080	346	9C-6570	396		86	9G-3670	708
9C-4197	390	9C-6571	397	9F-2978	74	9G-3678	708
	392	9C-6572	389		191	9G-3695	210
9C-4214	556	9C-6935	570		195		720
9C-4215	556	9C-6936	570		199	9G-4232	191
9C-4304	432	9C-6937	570		205		195
9C-4454	822	9C-6939	570		377		199
	824	9C-7459	540		378		205
9C-4553	514	9C-8052	412		382	9G-4338	250
	516	9C-8182	▶328		498	9G-4360	284
	518		▶330		684		286
	520		▶332		697	9G-4365	246
	522	9C-8183	▶318		712	9G-5127	305
	524	9C-8184	▶303		719		306
9C-4554	514	9C-8185	▶292		750		456
	516		▶293		780	9G-5301	646
	518	9C-8187	▶324		786	9G-5589	227
	520		▶326		788		228
	522	9C-8285	236		790		232
	524	9C-8299	▶662		793	9G-5867	322
9C-4555	514		▶663		797	9G-6082	160
	516		667	9F-3099	284		162
	518	9C-8381	▶556		286	9G-6743	338
	520	9C-8605	558	9F-3788	350	9G-6744	338
	522	9C-8669	318		354	9G-7411	342
	524	9C-8672	▶378	9F-4446	46	9G-7412	342
9C-4582	407		▶380	9F-5255	829	9G-7414	342
9C-4615	536	9C-8718	556	9F-5644	258	9G-7548	188
	537	9C-8719	556		741	9G-7549	188
	538	9C-8722	556		742	9G-7551	188
	▶561	9C-9159	349	9F-6445	443	9G-7552	188
9C-5790	450	9C-9191	328		447	9G-7553	188
	456		330		498	9G-7554	188
9C-5951	432		332		694	9G-7555	188
9C-5953	▶432	9C-9748	303		696	9G-7556	188
	433	9C-9751	▶540		700	9G-7559	188
9C-6016	303		▶542		701	9G-7560	188
9C-6027	292	9C-9840	428		704	9G-7562	188
	293		430		705	9G-7564	188
9C-6029	292		▶433		710	9G-7565	188
	293	9C-9841	433		724	9G-7566	188
9C-6030	292		▶434		728	9G-7567	188
	293	9C-9842	434		780	9G-7568	188
9C-6032	292	9C-9843	434	9F-6656	576	9G-7641	▶259
	293	9D-3127	776	9F-7882	498		768
9C-6037	324		812	9F-8125	229	9G-8020	338
9C-6038	324	9D-3769	226		232	9G-8451	272
9C-6039	324		268	9G-0280	339	9G-8548	361
	326		270	9G-0281	339	9G-8551	585
	328	9D-4507	681	9G-0284	339	9G-8694	792
	330	9D-6886	840	9G-0285	339		796
	332		842	9G-0286	339	9G-8909	190
9C-6041	324		844	9G-0289	338		194

▶ **PRIMARY REFERENCE**

PART NUMBER INDEX

Part	Page	Part	Page	Part	Page	Part	Page
	198	9K-0700	268		339		184
	204		270	9M-4355	338	9N-5769	13
9G-9150	191	9K-1376	719	9M-4849	58	9N-6612	28
	195	9K-3050	390		62	9P-1131	800
	199		392	9M-4972	750	9P-3041	646
	205	9K-6605	296	9M-5137	434	9P-3713	339
	262	9K-6764	499	9M-5138	434	9P-3731	338
	264	9K-6765	436	9M-5139	434	9P-4748	300
	266	9K-9731	469	9M-5140	434	9P-4749	300
	272		652	9M-5733	406	9P-5928	585
	284	9L-1658	97		420	9P-7121	158
	286	9L-3560	450		766		160
	389		456	9M-5870	226		162
	714	9L-4685	488	9M-6522	166	9P-7390	339
9G-9151	226	9L-6371	179		168	9P-7757	338
	812	9L-6770	172	9M-6527	78	9P-7766	320
9G-9152	268		176		98		322
	270		182	9M-6974	300	9P-8261	320
	272		184	9M-7357	438	9P-8283	338
	389		188		442	9P-8310	320
9G-9153	226	9L-7469	806		446		322
	812		808	9M-7394	526	9P-8516	339
9G-9154	272	9L-8492	438	9M-7609	252	9P-8517	294
9G-9155	226		442	9M-8406	190	9P-8521	339
9G-9287	191		446		194	9P-8614	339
	195		741		198	9P-8623	339
	199		742		204	9P-8624	339
	205	9L-9098	132		212	9P-8626	338
9G-9538	180		134		236	9P-8865	320
	▶188		136		262	9P-8866	320
9G-9813	▶170		138		264	9P-9031	338
	272		140		266	9P-9083	294
	812	9L-9159	134		268	9P-9507	350
9H-1110	51		136		270		354
9H-1112	51		138		438	9P-9509	350
9H-1113	50	9M-0016	856		451		354
	51	9M-0397	8		457	9P-9510	352
9H-2367	505		9		738		356
9H-5921	35	9M-0402	38		832	9P-9517	350
9H-7759	576	9M-1311	436	9M-8443	300		354
9J-0477	509	9M-1974	6	9M-8513	93	9P-9610	▶342
9J-5461	576		8	9M-9886	50		358
9J-5714	508		9		51		359
9J-5777	633		14	9N-0869	38	9P-9790	320
9J-5778	633		38		54		322
9J-6379	576		53	9N-0943	172	9R-2152	274
9J-6381	576		62		176		278
9J-6382	576		64		184	9R-4022	834
9J-7031	577		65	9N-1499	806	9R-4023	834
9J-7084	472		66		808	9R-4024	834
9J-7099	532		72	9N-1750	336	9R-4025	834
	534		100	9N-1754	112	9R-4037	834
9J-7100	532		148	9N-3040	38	9R-4038	834
	534		585	9N-3388	125	9R-9753	836
9J-7795	506		634		126	9R-9754	836
9J-8243	576		635		127	9S-1240	179
9J-9330	484		636		128	9S-1274	94
	▶506		639		129	9S-1303	744
9J-9380	502	9M-1986	316		130	9S-1316	227
	▶503	9M-2151	102		131		229
9J-9776	503	9M-2341	150		134	9S-1350	438
	▶504	9M-2904	56		136		442
9J-9842	576	9M-3695	93		138		446
9K-0384	426	9M-4335	292		140	9S-1354	426
	427		293		172		427

▶ **PRIMARY REFERENCE**

PART NUMBER INDEX

Part	Page
	428
	430
	468
	740
	744
9S-1366	506
9S-2004	172
	176
9S-2005	172
	176
	184
9S-2006	172
	176
	184
9S-2007	176
9S-2008	176
9S-2009	172
	176
	184
9S-2011	172
	176
	184
9S-2012	172
	177
	184
9S-2013	172
	176
	184
9S-2014	172
	176
	184
9S-2087	782
	784
9S-2246	176
	184
9S-2247	176
9S-2248	172
	176
	184
9S-2250	176
	184
9S-2252	176
9S-2254	176
9S-2255	172
	176
	184
9S-2256	176
9S-2258	176
9S-2260	172
	176
	184
9S-2261	176
9S-2262	172
	176
	184
9S-2290	172
	177
	184
9S-2291	173
	177
	185
9S-2292	172
	176
	184
9S-2300	172
	176
	184
9S-2301	172
	176
	184
9S-2302	172
	176
	184
9S-2354	103
9S-2389	172
	176
	184
9S-2390	172
	176
	184
9S-2393	172
	184
9S-2396	172
	176
	184
9S-2437	172
	176
	184
9S-2438	176
	184
9S-2542	176
9S-2544	172
	176
	184
9S-3263	244
9S-3451	184
9S-4167	115
9S-4180	145
	146
9S-4181	324
	326
	328
	330
	332
	554
	570
9S-4182	594
	596
	598
	600
	602
	608
9S-4183	485
	576
9S-4185	42
	62
	162
	480
	508
	567
9S-4187	506
	574
9S-4190	42
9S-4191	114
	115
	316
	334
9S-4693	284
	286
9S-5096	336
9S-5585	179
	514
	516
	518
	520
	522
	524
9S-6130	480
9S-6154	505
9S-6155	509
9S-7703	412
9S-7706	166
	168
9S-7720	412
	450
	456
9S-7724	450
	456
9S-7731	450
	456
9S-7738	439
	443
9S-7744	438
	442
	446
	803
	813
9S-7747	447
	451
	457
9S-8001	504
	505
	506
	508
	610
	649
9S-8002	62
9S-8004	630
	631
9S-8005	576
	590
	592
	594
	596
	598
	600
	602
	604
	606
	608
	633
9S-8008	316
	480
9S-8009	352
	356
9S-8010	480
	504
9S-8411	503
9S-8748	112
9S-8752	362
9S-9334	567
	610
9S-9370	262
	264
	266
9S-9829	176
	184
9S-9830	172
	176
	184
9S-9972	93
9T-0153	468
	▶490
9T-1206	485
	▶505
9T-1257	492
9T-1277	492
9T-1280	492
9T-1297	492
9T-1437	492
9T-2584	528
9T-2842	492
9T-3096	558
9T-3133	474
9T-3502	532
	534
9T-3503	530
9T-3964	472
9T-4543	558
9T-5042	510
9T-5044	511
9T-5049	510
9T-5057	510
9T-5075	510
9T-5087	510
9T-5088	511
9T-5093	510
9T-5100	510
9T-5107	510
9T-5112	510
9T-5114	511
9T-5337	574
9T-6061	514
	▶620
9T-6062	520
	▶622
9T-6648	612
	614
	616
	618
	620
	622
	▶624
9T-6649	612
	614
	616
	618
	620
	622
	▶625
9T-6650	614
	618
	622

▶ **PRIMARY REFERENCE**

PART NUMBER INDEX

Part	Page
	▶626
9T-6877	506
	▶508
9T-7202	637
9T-7272	556
	▶649
9T-7842	577
9T-8488	608
	▶644
9T-8489	582
	▶608
9T-8676	528
	530
9T-8994	532
9T-9940	532
	534
9U-0421	122
9U-0764	306
9U-0767	306
9U-1914	318
9U-1915	318
9U-2112	▶480
	496
9U-2113	480
9U-2385	457
9U-2393	550
9U-3218	289
9U-4377	457
9U-4714	▶496
9U-4735	▶583
9U-4736	536
	▶584
9U-9658	350
	354
9V-0166	657
	658
	660
	663
9V-0170	665
	666
9V-0182	723
	731
9V-0183	723
9V-0246	390
	392
9V-0247	409
	410
9V-0251	409
	410
9V-0276	378
	380
9V-0334	370
	400
	402
	416
9V-0344	406
9V-0350	406
9V-0353	406
9V-0354	406
9V-0378	831
9V-0379	831
9V-0450	400
	402
	416
9V-0453	370
	400
	402
	416
	464
	▶466
9V-0879	831
9V-0979	370
	400
	402
9V-1064	412
9V-1065	412
9V-1066	412
9V-1240	336
9V-1287	336
9V-1452	572
9V-1466	436
9V-1467	436
9V-1541	464
	▶467
9V-1549	792
	796
9V-1777	376
9V-1820	376
9V-1824	793
	797
9V-1832	308
	310
	312
	314
9V-2410	346
9V-2411	346
9V-2429	346
9V-2665	451
	457
9V-3286	442
	446
9V-3287	436
9V-3829	404
9V-3852	404
9V-3853	404
9V-4465	552
9V-4466	548
	550
	552
9V-4468	544
	546
9V-4469	390
	392
9V-4877	450
	456
9V-4892	389
9V-5174	346
	▶360
9V-5243	336
9V-5753	822
9V-5758	822
	824
9V-5759	822
9V-5761	822
	824
9V-5764	822
	824
9V-5954	407
9V-6374	336
9V-6375	336
9V-6392	554
9V-6523	404
9V-6524	404
9V-6525	404
9V-6526	461
9V-6537	▶404
9V-6557	450
	456
9V-6575	657
	658
	660
	663
9V-6625	696
	700
	704
9V-6729	443
	447
9V-7142	856
9V-7713	544
	546
9V-7714	544
	546
9V-8011	122
9V-8133	572
9V-8307	476
9V-8409	485
9V-8698	428
9V-8736	▶427
	430
9V-8971	442
	446
9V-8974	443
	447
9V-9157	412
9V-9158	412
9V-9547	227
9W-0202	275
	279
9W-0335	768
9W-0625	708
9W-0760	850
9W-0817	▶655
9W-1494	272
9W-2111	776
9W-3072	746
9W-3073	746
9W-3605	339
9W-4498	762
9W-6582	41
9W-6584	41
	762
9W-6684	324
	326
	328
	330
	332
9W-6749	667
	668
	669
	670
	671
	673
	674
9W-7023	646
9W-8384	350
	354
9W-8433	338
9W-8437	339
9W-9069	339
9W-9831	646
9W-9930	41
9X-0199	246
9X-0261	190
	194
	198
	204
9X-0332	248
9X-0377	190
	▶243
	262
9X-0391	744
9X-1035	291
9X-1159	290
9X-1386	190
	194
	198
	204
	266
9X-1404	▶219
	226
	228
9X-1406	▶220
	226
	228
9X-1407	▶221
	226
	228
9X-1423	776
9X-1439	▶213
	222
	224
	226
	228
	712
9X-1440	▶215
	228
9X-1441	▶216
	226
	228
9X-1798	722
9X-1799	792
9X-1813	242
	278
9X-2027	324
	326
	328
	330
	332
9X-2042	697
	701
	705
	770
9X-2043	406
9X-2044	697
	701
	705
	722
	780
	782
	784

▶ **PRIMARY REFERENCE**

PART NUMBER INDEX

Part	Page
	793
	797
9X-2046	776
9X-2201	548
	550
	552
9X-2299	407
9X-2399	485
9X-2480	274
	278
9X-2485	36
9X-2488	554
9X-2500	172
	184
9X-2518	3
9X-2525	451
	457
9X-2526	438
	442
	446
	451
	457
9X-2530	834
	836
9X-2531	834
	836
9X-2532	834
	836
9X-2533	834
	836
9X-2617	318
9X-2618	318
9X-2765	856
9X-2766	▶856
9X-2925	856
9X-3064	218
9X-3065	219
9X-3066	217
9X-3067	220
9X-3068	221
9X-3210	191
	195
	199
	205
9X-3252	191
	195
	▶209
9X-3337	842
	846
	▶852
9X-3392	852
9X-3455	213
	214
9X-3463	213
	214
9X-3495	191
	195
	199
	205
9X-4174	213
	214
9X-4175	215
9X-4176	216
9X-4243	213
	214
9X-4244	213
	214
	215
	216
9X-4447	250
	▶256
9X-4492	218
	219
9X-4493	217
9X-4494	220
	221
9X-4611	474
9X-4941	158
	160
	162
9X-4971	770
	772
9X-5272	190
	194
	198
	204
	▶241
9X-5617	542
9X-5630	236
9X-5682	494
9X-5695	744
9X-5696	744
9X-5993	612
	614
	616
	618
	620
	622
9X-6001	188
9X-6165	380
9X-6385	324
	326
9X-6395	634
	635
	636
	637
	638
	639
	640
	641
	642
	643
	644
9X-6451	42
9X-6494	318
9X-6774	▶214
	224
9X-7546	326
	330
	332
9X-7848	215
	216
9X-7849	215
	216
9X-8256	274
	278
9X-8296	2
9X-8567	2
9X-8711	856
9X-8861	708
9X-8918	806
	808
9X-8937	368
	370
	857
9X-9505	708
9X-9509	542
9X-9511	252
9X-9688	708
9X-9865	215
	216
9Y-0629	31
9Y-0630	31
9Y-1654	90
9Y-1655	90
9Y-1798	24
9Y-1979	103
9Y-4701	116
9Y-6439	33
9Y-6859	53
9Y-6860	53
9Y-7037	108
	146
9Y-7149	53
9Y-7524	125
	127
	128
	131
9Y-7562	▶131
	132
	134
9Y-7563	▶132
	▶134
	▶136
	▶138
	▶140
	142
9Y-7799	2
	▶142
9Y-9895	47
0	
000-7244	450
	456
	750
003-2143	84
	86
	88
004-1683	462
004-1963	590
	592
	594
	596
	598
	600
	602
	604
	606
	608
005-4362	122
008-3214	492
008-3843	414
009-2062	511
	574
010-2571	296
021-7941	84
	86
	88
027-1287	349
030-7946	124
030-7947	115
	124
030-8188	490
030-8194	149
031-0215	462
031-0216	116
031-0217	778
031-0229	694
	710
033-2177	447
033-5879	154
	156
033-6027	630
	631
	632
033-6028	627
033-6036	625
033-6042	630
	631
033-8248	275
	279
034-4160	4
	6
035-0499	831
035-3360	352
	356
036-9821	252
036-9823	252
037-7388	378
	380
061-6711	338
061-6717	166
	168
061-7540	362
	364
061-8803	806
	808
061-9457	510
065-3550	574
067-3161	339
068-4183	389
068-5963	406
068-8093	339
077-4643	492
091-9120	558
092-9741	270
	282
095-0878	806
	808
1	
100-3224	743
100-3652	16
100-4317	57
100-5179	743
100-6531	172

▶ **PRIMARY REFERENCE**

PART NUMBER INDEX

Part	Page
	184
100-6532	172
	184
100-6534	184
100-6656	172
100-6657	172
100-6658	172
100-7860	22
	24
101-3371	775
101-4194	826
101-4195	826
101-4196	826
101-7406	416
101-7407	416
101-7408	416
101-7409	416
101-8329	416
101-8330	416
101-8331	416
101-8335	416
101-8336	416
101-8337	416
101-8686	▶416
102-7508	304
102-7509	304
102-7510	304
102-7511	304
102-7512	304
102-7519	304
102-8802	708
102-8803	242
	274
103-2040	▶242
	278
103-4816	368
	370
103-5405	368
	370
	▶755
103-5420	755
103-5756	370
103-6258	402
103-6259	402
103-8951	776
104-4253	127
	128
104-4254	127
	128
104-5406	776
104-5512	18
104-5518	18
104-5527	18
104-5530	18
104-5970	650
104-6183	587
	588
104-7330	728
	▶836
104-7331	836
104-7332	836
104-7333	836
105-2508	148
105-3037	631
106-1279	566
106-1793	98
106-6493	112
107-0265	24
	26
107-0268	24
	26
107-2435	480
107-4430	616
	618
107-4862	552
107-5609	552
110-1488	293
110-5800	18
110-6465	244
110-8190	239
	▶240
111-3111	836
111-8010	92
111-8011	75
111-8015	24
112-6646	420
113-4404	663
114-0201	656
114-0358	675
	676
114-0359	675
	676
114-2687	60
114-8718	146
115-3358	112
115-7550	20
116-4681	526
118-5615	642
118-8500	768
119-6105	768
119-9027	667
121-0145	42
121-7907	663
122-9405	129
124-2726	528
126-7010	60
127-5537	299
129-0338	44
129-8086	395
131-6645	76
133-1247	14
134-0641	97
134-6547	291
135-7494	304
135-7495	304
137-1727	480
138-2887	6
138-9507	116
139-0178	272
141-1546	366
142-0444	302
	▶304
144-0502	6
144-0503	6
144-8299	352
	356
148-7425	24
148-7455	22
	24
148-7502	26
150-3728	116
150-3730	117
150-8015	836
151-2860	420
151-2861	420
151-4552	112
152-8245	166
	168
156-1153	346
157-1686	420
160-1400	346
167-2209	532
167-2320	532
167-2471	532
169-4199	42
169-4200	42
170-0560	78
170-7502	34
171-5349	190
	194
	198
	204
195-0302	34
196-0029	34
196-0223	34
196-9988	34
6	
6W4909	▶757

▶ **PRIMARY REFERENCE**

MEMORANDA



© 2002 Caterpillar
All Rights Reserved

Printed in U.S.A.