CATERPILLAR®

SEBP5426
June 2009

RUTHZIL TRATOR COMERCIAL DE PEÇAS LTDA 11 97083-6812 ROLANDO

Parts Manual

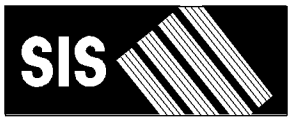

See "General Information" for New Parts Manual Features.

966H Wheel Loader

RYF1-Up (Machine)
RSX1-Up (Engine)
DKG1-Up (Transmission)
TKF1-Up (Torque Converter)

Powered By C11 Engine
This Parts Manual is also available in .pdf Format on Compact Disc (CD-ROM) - Caterpillar Form No. SERP5426.

Product and Dealer Information

Note: For product identification plate locations, see the section “Product Identification Information” in the Operation and Maintenance Manual.

Delivery Date: _____

Product Information

Model: _____

Product Identification Number: _____

Engine Serial Number: _____

Transmission Serial Number: _____

Generator Serial Number: _____

Attachment Serial Numbers: _____

Attachment Information: _____

Customer Equipment Number: _____

Dealer Equipment Number: _____

Dealer Information

Name: _____ Branch: _____

Address: _____

_____

_____

	Dealer Contact	Phone Number	Hours
Sales:	_____	_____	_____
Parts:	_____	_____	_____
Service:	_____	_____	_____

MEMORANDA

TABLE OF CONTENTS

Name	Page
GENERAL INFORMATION	A5
REPAIR ALTERNATIVES	A8
SUPPLEMENTAL COOLANT ADDITIVES	A9
MAINTENANCE PARTS	A10
INDEX	A13
MACHINE ARRANGEMENT	1
CHASSIS AR	1
GENERAL AR	1
ENGINE ARRANGEMENT	2
ENGINE AR-COMPLETE	2
ENGINE AR-CORE	3
INSTALLATION AR-ENGINE	4
BASIC ENGINE	5
BASE GP-VALVE COVER	5
CAMSHAFT GP	7
COVER GP-FRONT HOUSING	8
COVER GP-VALVE MECHANISM	9
CRANKSHAFT GP	10
CYLINDER BLOCK AS	12
CYLINDER BLOCK GP	15
CYLINDER HEAD AS	17
CYLINDER HEAD GP	19
DAMPER GP	21
DRAIN GP-ECOLOGY	22
DRIVE GP-ACCESSORY	23
FASTENER GP-CYLINDER HEAD	25
FASTENER GP-DAMPER & PULLEY	26
FLYWHEEL GP	27
GEAR GP-FRONT	28
HOUSING GP-FLYWHEEL	29
HOUSING GP-FRONT	30
LIFTER GP-VALVE	32
LIFTING GP-ENGINE	33
MOUNTING GP-ENGINE & XMSN	34
MOUNTING GP-FAN DRIVE	35
MOUNTING GP-VALVE MECHANISM	36
PAN GP-OIL	37
PISTON & ROD GP	39
PLUG GP-CYLINDER BLOCK	40
PLUG GP-ENGINE	43
PULLEY GP-ALTERNATOR	44
PULLEY GP-CRANKSHAFT	45
ROCKER ARM GP	46
SEAL GP-CRANKSHAFT	47
SUPPORT GP-ENGINE	48
VALVE MECHANISM GP	49
LUBRICATION SYSTEM	51
BASE GP-OIL FILTER	51
FILLER GP-ENGINE OIL	55
FILTER GP-ENGINE OIL	57
FUMES DISPOSAL GP	58
GAUGE GP-OIL LEVEL (DIPSTICK)	59
LINES GP-TURBOCHARGER OIL	60
PUMP GP-ENGINE OIL	62
COOLING SYSTEM	65
COOLER GP-ENGINE OIL	65
COOLING AR-HIGH AMBIENT TEMP	67
LINES GP-WATER	68
PUMP GP-WATER	73
RADIATOR & FAN GP	76
TANK GP-RADIATOR TOP	82
AIR INLET AND EXHAUST SYSTEM	83
AIR CLEANER GP	83
LINES GP-AFTERCOOLER AIR	85
LINES GP-AIR	87
MANIFOLD GP-EXHAUST	90
MANIFOLD GP-INLET	91
MUFFLER GP	92
PRECLEANER AR	94
PRECLEANER GP	95
TURBOCHARGER GP	96
FUEL SYSTEM	98
CAP GP-FUEL FILLER	98
FILTER GP-FUEL	99
FILTER GP-WATER SEP & FUEL	102
INJECTOR GP-FUEL	103
LINES GP-FUEL	104
LINES GP-FUEL DRAIN	107
PUMP GP-FUEL INJECTION	109
PUMP GP-FUEL PRM & PRIM FILTER	110
PUMP GP-FUEL PRM & WATER SEP	112
PUMP GP-FUEL TRANSFER	113
TANK GP-FUEL	115
VALVE GP-CHECK	118
ELECTRICAL AND STARTING SYSTEM	120
ALARM GP	120
ALTERNATOR GP-CHARGING	121
BATTERY & WIRING GP	124
BLOCK GP-JUNCTION	128
CONNECTION GP-ELECTRICAL	129
CONTROL & MTG GP-ENGINE ELEK	130
CONTROL AR-AUTODIG	131
CONTROL GP-AUTODIG	132
CONTROL GP-ENGINE ELECTRONIC	134
ELECTRICAL AR	135
ELECTRONICS GP-COMMUNICATION	135

TABLE OF CONTENTS

Name	Page
ELECTRONICS GP-IMPLEMENT	136
ELECTRONICS GP-MONITOR	136
ELECTRONICS GP-POWER TRAIN	137
HEATER GP-JACKET WATER	138
INSTALLATION AR-COMMUNICATION	140
INSTALLATION AR-SECURITY	140
INSTALLATION GP-COMMUNICATION	141
INSTALLATION GP-SECURITY	143
LAMP GP-DOME	145
LAMP GP-FLOOD	146
LAMP GP-HEAD & SIGNAL	150
LAMP GP-SIGNAL	154
LAMP GP-STOP & TAIL	156
LAMP GP-WARNING BEACON	157
LIGHTING AR-ROADING	158
LIGHTING AR-SIGNAL	158
LIGHTING GP-FLOOD	159
LIGHTING GP-FLOOD & SIGNAL	165
LIGHTING GP-ROADING	168
LIGHTING GP-WARNING BEACON	169
SENSOR & MTG GP-LIFT POSITION	171
SENSOR & MTG GP-PRESSURE	173
SENSOR & MTG GP-TILT POSITION	174
SENSOR GP-ENGINE	176
SENSOR GP-POSITION	178
SENSOR GP-PRESSURE	180
SENSOR GP-SPEED	187
SENSOR GP-TEMPERATURE	193
STARTING MOTOR GP-ELECTRIC	196
SWITCH GP-BYPASS	200
SWITCH GP-DIMMER	201
SWITCH GP-DISCONNECT	202
SWITCH GP-MAGNETIC	203
SWITCH GP-PRESSURE	207
SWITCH GP-RIDE CONTROL	208
SWITCH GP-ROTARY	209
SWITCH GP-SECONDARY STEERING	210
SWITCH GP-SIGNAL	211
SWITCH GP-TOGGLE	215
SWITCH GP-TRANSMISSION	217
SWITCH GP-WIPER	218
WIRING GP-AXLE TEMPERATURE	219
WIRING GP-CAB	221
WIRING GP-CHASSIS	231
WIRING GP-ELECTRONIC CONTROL	239
WIRING GP-ENGINE	242
WIRING GP-FRONT	244
WIRING GP-LIGHTING	246
WIRING GP-SECONDARY STEERING	249
WIRING GP-SENSOR	251
WIRING GP-UNIT INJECTOR	255
POWER TRAIN	256
AXLE & AXLE OIL COOLER AR	256
AXLE AR-FIXED	256
AXLE AR-OSCILLATING	257
BASE GP-OIL FILTER	259
BRAKE & PLANETARY GP	260
CASE & PARTS GP-PLANETARY	262
CONTROL GP-TRANSMISSION HYD	264
COOLER GP-TRANSMISSION OIL	266
DIFFERENTIAL GP	268
DIFFERENTIAL GP-LIMITED SLIP	269
DRAIN GP-ECOLOGY	270
FILLER GP-POWER TRAIN OIL	271
FILTER & LINES GP-TRANSMISSION	272
FILTER GP-OIL	274
GEAR GP-BEVEL & PINION	275
GEAR GP-OUTPUT TRANSFER	279
HEAT EXCHANGER GP-AXLE	284
HOUSING GP-FIXED AXLE	286
HOUSING GP-OSCILLATING AXLE	290
LINES GP-AXLE OIL COOLER	294
LINES GP-TORQUE CONV COOLER	298
MANIFOLD GP-CONTROL	300
MOUNTING GP-AXLE	301
MOUNTING GP-RIM	302
PLANETARY GP-TRANSMISSION	303
POWER TRAIN AR	307
PUMP GP-TRANSMISSION	308
RIM AR	309
RIM GP-DEMOUNTABLE	310
SHAFT GP-DRIVE	312
SLIP JOINT GP	313
SPIDER & BEARING GP	314
TIRE & RIM AR	315
TORQUE CONVERTER & HOUSING GP	316
TORQUE CONVERTER GP	318
TRANSMISSION AR	320
UNIVERSAL JOINT GP	321
VALVE GP-MODULATING	323
VALVE GP-RELIEF	324
FRAME AND BODY	327
ACTUATOR GP-POWER	327
BLOCK GP-AXLE OSC LIMITER	328
BOX GP-BATTERY	329
COUNTERWEIGHT GP	330
DOOR GP-ACCESS	332
FENDER GP	334
FENDER GP-FRONT	338
FRAME AS-LOADER	339
FRAME AS-REAR	341
GRILL GP-RADIATOR	344
GUARD GP-AXLE SEAL	346
GUARD GP-LOADER FRAME	347
GUARD GP-POWER TRAIN	348
HITCH GP-ARTICULATING	349
HOOD & GUARD GP	351

TABLE OF CONTENTS

Name	Page
LADDER GP	355
LINES GP-GREASE	359
LINK GP-STEERING FRAME LOCK	362
PANEL GP-SIDE	363
PANEL GP-TOP	366
SHIELD GP-ENGINE COMPARTMENT	367
SUPPORT GP-AIR INLET	369
SUPPORT GP-VALVE & FILTER	370
TILT GP-HOOD	372
BRAKING SYSTEM	373
ACCUMULATOR GP-BRAKE	373
BASE GP-FOOT BRAKE	375
BRAKE GP-PARKING	378
CONTROL GP-FOOT BRAKE	382
CONTROL GP-PARKING BRAKE	384
CONTROL GP-SERVICE BRAKE	385
VALVE GP-BRAKE CONTROL	391
STEERING SYSTEM	392
CYLINDER & MTG GP-STEERING	392
CYLINDER GP-STEERING	393
LINES GP-SECONDARY STEERING	395
LINES GP-STEERING	398
PUMP & MOTOR GP-SEC STEERING	404
PUMP & MTG GP-METERING	405
PUMP & MTG GP-SECONDARY STEER	407
STEERING AR-SECONDARY	408
STEERING COLUMN GP-ADJUSTABLE	409
VALVE GP-RELIEF	410
VALVE GP-SECONDARY STEERING	412
VALVE GP-STEERING	413
VALVE GP-STEERING NEUTRALIZER	415
HYDRAULIC SYSTEM	416
ACCUMULATOR & MTG GP-RIDE CONT	416
ACCUMULATOR GP-PILOT OIL	417
ACCUMULATOR GP-RIDE CONTROL	418
CONTROL & LINES GP-RIDE	420
CONTROL AR-HIGH LIFT	421
CONTROL AR-RIDE	421
COOLER GP-HYDRAULIC & AXLE OIL	421
CYLINDER & SEAL GP-LIFT	422
CYLINDER & SEAL GP-TILT	424
CYLINDER GP-LIFT	425
CYLINDER GP-TILT	429
FILTER GP-OIL	432
HYDRAULIC AR-2 VALVE	434
LINES GP-HYDRAULIC	435
LINES GP-HYDRAULIC OIL COOLER	440
LINES GP-LIFT CYLINDER	447
LINES GP-TILT CYLINDER	449
MANIFOLD GP-CONTROL	451
MANIFOLD GP-VALVE	453
MOTOR GP-PISTON	457
MOUNTING GP-HYDRAULIC TANK	459
PUMP & MTG GP-BRAKE & HYD FAN	460
PUMP & MTG GP-HYDRAULIC	462
PUMP GP-PISTON	464
ROTATING GP-PUMP	471
SWASHPLATE GP	473
TANK GP-HYDRAULIC	474
VALVE & MTG GP-MAIN CONTROL	476
VALVE GP-CHECK	482
VALVE GP-CONTROL	485
VALVE GP-DIVERTER	491
VALVE GP-DRAIN	492
VALVE GP-LOWERING CONTROL	493
VALVE GP-MAIN CONTROL	495
VALVE GP-MANUAL	498
VALVE GP-PRESSURE REDUCING	499
VALVE GP-PUMP CONTROL	500
VALVE GP-RELIEF	504
VALVE GP-RIDE CONTROL	505
VALVE GP-SHUTTLE	507
VALVE GP-SOLENOID	509
IMPLEMENTS	514
ARM & BEARING AS-LIFT	514
CONTROL GP-BUCKET	516
OPERATOR STATION	518
ADJUSTER GP-SEAT	518
AIR COMPRESSOR GP-SEAT	519
ARM GP-WINDOW WIPER	520
ARMREST GP	522
CAB AR-ENCLOSED ROPS	523
CONTROL GP-ELECTROHYDRAULIC	524
CONTROL GP-HANDLE	535
CONTROL GP-JOYSTICK	538
CONTROL GP-MONITOR	544
CONTROL GP-STEERING	545
CONTROL GP-TRANSMISSION	547
CONTROL GP-UNPRGMED MONITOR	549
DOOR GP-CAB	550
DUCT & FILTER GP-CAB AIR	555
FLOOR GP-SOUND SUPPRESSION	557
GUARD GP-WINDOW	559
HEATER GP-CAB	561
HORN GP-ELECTRIC	565
INSTALLATION GP-CONTROLS	566
INSTALLATION GP-RADIO	568
LATCH GP-CAB DOOR & WINDOW	571
LINER GP-CAB	573
LINES GP-CAB HEATER	576
MIRROR GP-REAR VIEW	579
MODULE GP-QUAD GAUGE	588

TABLE OF CONTENTS

Name	Page	Name	Page
MODULE GP-SPEEDOMETER & TACH	589		
MOTOR GP-WINDOW WIPER	590		
MOUNTING GP-CAB	592		
OPERATOR AR-ENCLOSED ROPS	593		
PAN GP-BACKREST	594		
PANEL GP-INSTRUMENT	596		
PEDAL GP-GOVERNOR	600		
RADIO GP	602		
RADIO GP-COMMUNICATION	605		
RECLINER GP-SEAT	606		
ROOF GP-CAB	607		
ROPS GP-ENCLOSED	608		
SEALING GP-GLASS	613		
SEAT BELT GP	614		
SEAT GP	615		
SEAT GP-SUSPENSION	620		
SHROUD GP-CAB	623		
SUPPORT GP-HYDRAULIC CONTROL	624		
SUPPRESSION GP-CAB SOUND	628		
SUSPENSION GP-SEAT	631		
TANK GP-WINDOW WASHER	633		
VISOR GP-CAB	634		
WASHER GP-WINDOW	635		
WINDOW GP-DOOR	636		
WIPER GP-WINDOW	640		
WORK TOOLS	643		
ADAPTER GP-TIP	643		
BUCKET AS-GENERAL PURPOSE	644		
BUCKET AS-MATERIAL HANDLING	648		
BUCKET AS-ROCK	650		
BUCKET GP-GENERAL PURPOSE	654		
BUCKET GP-MATERIAL HANDLING	658		
BUCKET GP-ROCK	658		
CARRIAGE GP-FORK	661		
EDGE GP-BIT & CUTTING	663		
EDGE GP-CUTTING	665		
EDGE GP-SEGMENT	667		
PIN GP-FORK	668		
PLATE GP-WEAR	669		
PROTECTOR GP-EDGE	669		
TINE GP	670		
TIP GP-ABRASION	671		
TIP GP-EXTRA-DUTY	672		
TIP GP-GENERAL PURPOSE	673		
TIP GP-PENETRATION	674		
SERVICE EQUIPMENT AND SUPPLIES	675		
FILM GP	675		
LINES GP-DIAGNOSTIC	677		
PLATE & FILM GP	683		
PART NUMBER INDEX	B1		

GENERAL INFORMATION

1. MACHINE IDENTIFICATION

Caterpillar machines are identified by Product Identification Numbers (PIN). Some components included in a machine may be identified by Serial Numbers (S/N). Typical components that will be serialized include engines, transmissions, bulldozers, and rippers. The machine and engine are further identified by arrangement numbers and in some cases modification numbers. These numbers are shown on the product identification plate(s) and on the master plate in the operator's compartment.

Caterpillar dealers need all of these numbers to determine accurate parts identification.

SIS *New Feature*

Effective First Quarter 2001 the Caterpillar Product Identification Number (PIN) changed from 8 to 17 characters. In an effort to provide uniform equipment identification, Caterpillar and other construction equipment manufacturers are moving to comply with the latest version of the product identification numbering standard. Non-road machine PINs are defined by ISO 10261. The new PIN format will apply to all Caterpillar machines and generator sets. The PIN plates and frame marking will display the 17 character PIN. The new format will look like the following:

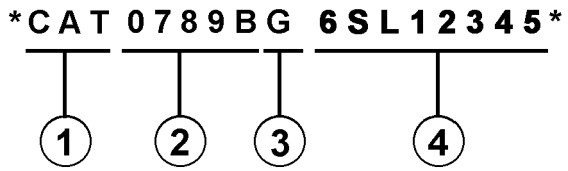

Where:

1. Caterpillar's World Manufacturing Code (characters 1-3)

2. Machine Descriptor (characters 4-8)

3. Check Character (character 9)

4. Machine Indicator Section (MIS) or Product Sequence Number (characters 10-17). These were previously referred to as the Serial Number.

Machines and generator sets produced before First Quarter 2001 will maintain their 8 character PIN format.

Components such as engines, transmissions, axles, etc. and work tools will continue to use an 8 character Serial Number (S/N).

2. ORDERING PARTS

WARNING

When replacement parts are required for this product Caterpillar recommends using Caterpillar replacement parts or parts with equivalent specifications including, but not limited to, physical dimensions, type, strength and material.

Failure to heed this warning can lead to premature failures, product damage, personal injury or death.

Quality Caterpillar replacement parts are available from Caterpillar dealers throughout the world. Their parts inventories are up to date and include all parts normally required to protect your investment in Caterpillar machines. Dealers may offer repair kits or remanufactured parts to allow selection of the most effective repair alternative for a particular situation. When ordering parts, your order should specify the quantity, part number, part name, and the serial number/product identification number of the machine for which the parts are needed.

3. PARTS MANUAL ORGANIZATION

Product information in this manual is presented as "information elements" that represent all of the components for the specific model. Engine Arrangement and Seat Group are examples of information elements. The information elements are organized alphabetically by part name and secondarily by part number within each major section of the manual.

4. TABLE OF CONTENTS

A table of contents (TOC) is found at the beginning of the manual. The TOC lists each section of the manual with a complete list of all information elements organized as they appear in the manual. Page numbers are provided for quick reference to detailed parts identification illustrations and serviceable consist lists.

5. MAINTENANCE PARTS INDEX

The Maintenance Parts Index, located near the beginning of the manual, references most frequently used maintenance part numbers, providing description, quantity, usage and page number. This information is organized alphabetically by part description.

GENERAL INFORMATION

6. INDEX

The index located near the front of the manual is an alphabetical listing of all information elements included in the manual. Page numbers are provided for quick reference to detailed parts identification illustrations and serviceable consist lists.

7. PART NUMBER INDEX

A numerical index listing all part numbers and the corresponding page number(s) appears at the back of the manual.

8. CAPTIONS

Captions located at the beginning of each information element identify the part number and part name along with additional descriptive information. PIN and S/N information found in each caption should be used to select correct information for a specific machine. Field replacement options, identification of optional attachment components, and where used ("part of") information is also provided.

The first line of a caption is shown in larger type font to indicate the beginning of an information element. Captions for additional pages that may be required to illustrate an information element will be shown in standard type font and will include the term *(contd.)* .

9. NON-SERVICED PARTS

In some instances it is necessary to display non-serviced parts that are a link to a lower level serviceable consist lists. These non-serviced part numbers are shown in *italic* type indicating that they are not available.

10. PARTS LIST REFERENCE NUMBERS

Numbers shown in the Ref No column correspond to numbers used in the associated graphic(s). An alphabetic suffix may be added to a reference number to identify lower level consist items. Numbers shown in the Graphic Ref column refer to the graphic number identifier displayed in the lower left corner of each illustration. The Graphic Ref number may be used in combination with the item Ref No to determine the correct part number. There may be intentional omission of a Ref No in a consist list as information is updated to reflect the latest serviceable part numbers.

11. INDENTED PART NAMES

When a part name is indented in a parts list, it is part of (included in) the group or assembly under which it is indented.

12. ILLUSTRATION REFERENCE LETTERS

When necessary, illustrations contain reference letters (A, B, C etc.) that are intended to track lines and harnesses from one point to another. They are also used to show where to reconnect illustrations that have been separated.

13. ABBREVIATIONS AND SYMBOLS

O.D. – Outside Diameter
I.D. – Inside Diameter
A – Not Part Of This Group
B – Use As Required
C – Change From Previous Type
D – Order By The Meter
E – Order By The Centimeter
F – Not Shown
G – Order By The Inch
I – Refer To Hydraulic Information System
M – Metric Part
R – Remfg Part May Be Available
Y – Separate Illustration
Z – Not Serviced Separately

SIS *New Feature*

14. DESCRIPTION OF TYPE CHANGES

Type - A type is defined as any configuration change that requires an additional Information Element for an Arrangement, Group, or Assembly. If serial number breaks for types are not available, a type # (Type 1, Type 2, etc.) will be displayed in the caption. These "type" changes are identified with a "C" note (change from previous type) in the Parts List. Only the "types" that apply to this Parts Manual will be included. Additional types may exist causing "C" notes to appear on an Information Element when no other types are shown.

15.<END>

This symbol indicates the end of an information element.

NOTE:

Continuing improvement and advancement of product design may cause changes to your machine which may not be included in this publication. Whenever a question arises regarding your caterpillar product or this publication, please consult your caterpillar dealer for the latest available information.

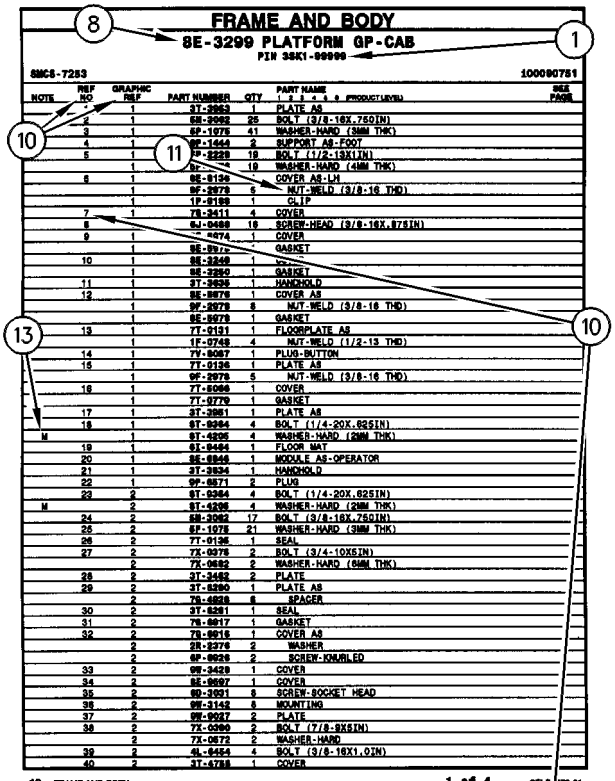
FRAME AND BODY
8E-3299 PLATFORM GP-CAB
PIN 3SK1-99999
SMCS-7283
100090751
NOTE REF NO GRAPHIC REF PART NUMBER QTY PART NAME SEE PAGE
1 1 3T-2953 1 PLATE AS
2 1 6E-2992 25 BOLT (3/8-16X.750IN)
3 1 6P-1076 41 WASHER-HARD (38MM THK)
4 1 9P-1444 2 SUPPORT AS-FOOT
5 1 7P-2229 19 BOLT (1/2-13X1IN)
1 19 WASHER-HARD (41MM THK)
6 1 8E-9136 COVER AS-LH
1 9F-2978 5 NUT-WELD (3/8-16 THD)
1 1P-0188 1 CLIP
7 1 7S-2411 4 COVER
8 9J-0498 18 SCREW-HEAD (3/8-16X.875IN)
9 1 1 COVER
1 GASKET
1 10
1 GASKET
11 1 3T-2638 1 HANDHOLD
12 1 8E-9078 1 COVER AS
1 9F-2978 8 NUT-WELD (3/8-16 THD)
1 GASKET
13 1 7T-0131 1 FLOORPLATE AS
1 1F-0748 4 NUT-WELD (1/2-13 THD)
14 1 7V-8067 1 PLUG-BUTTON
15 1 7T-0136 1 PLATE AS
1 9F-2978 5 NUT-WELD (3/8-16 THD)
16 1 7T-8066 1 COVER
1 7T-9779 1 GASKET
17 1 3T-3861 1 PLATE AS
18 1 6T-8364 4 BOLT (1/4-20X.625IN)
M 1 9T-4205 4 WASHER-HARD (20MM THK)
19 1 6L-8494 1 FLOOR MAT
20 1 8E-8846 1 MODULE AS-OPERATOR
21 1 3T-3834 1 HANDHOLD
22 1 9P-8671 2 PLUG
23 2 6T-8364 4 BOLT (1/4-20X.625IN)
M 2 9T-4205 4 WASHER-HARD (20MM THK)
24 2 6B-3062 17 BOLT (3/8-16X.750IN)
26 2 6P-1076 21 WASHER-HARD (38MM THK)
26 2 7T-0135 1 SEAL
27 2 7X-0075 2 BOLT (3/4-10X5IN)
2 7X-0682 2 WASHER-HARD (64MM THK)
28 2 3T-3462 2 PLATE
29 2 3T-8290 1 PLATE AS
2 7S-4828 8 SPACER
30 2 3T-8281 1 SEAL
31 2 7S-8817 1 GASKET
32 2 7S-8816 1 COVER AS
2 2R-3276 2 WASHER
2 6P-8626 2 SCREW-KNURLED
33 2 9W-3429 1 COVER
34 2 8E-8697 1 COVER
35 2 6D-3031 8 SCREW-SOCKET HEAD
36 2 9W-3142 8 MOUNTING
37 2 9W-8027 2 PLATE
38 2 7X-0090 2 BOLT (7/8-9X5IN)
2 7X-0672 2 WASHER-HARD
39 2 4L-8454 4 BOLT (3/8-16X1.0IN)
40 2 3T-4788 1 COVER
12 FRAME AND BODY
1 of 4
SELP4570-01

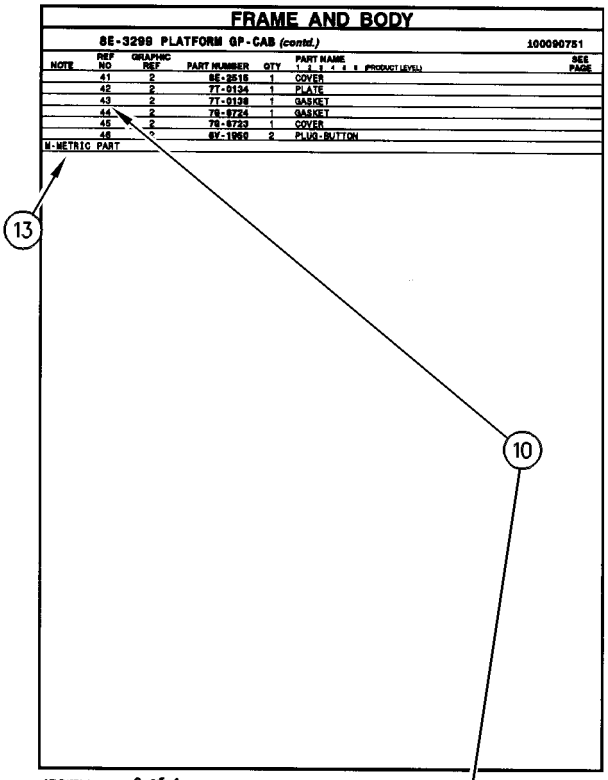
FRAME AND BODY
8E-3299 PLATFORM GP-CAB (contd.)
100090751
NOTE REF NO GRAPHIC REF PART NUMBER QTY PART NAME SEE PAGE
41 2 8E-2516 1 COVER
42 2 7T-0134 1 PLATE
43 2 7T-0138 1 GASKET
44 2 7S-8724 1 GASKET
45 2 7S-8723 1 COVER
46 2 6V-1950 2 PLUG-BUTTON
M-METRIC PART
SELP4570-01
2 of 4
FRAME AND BODY 13

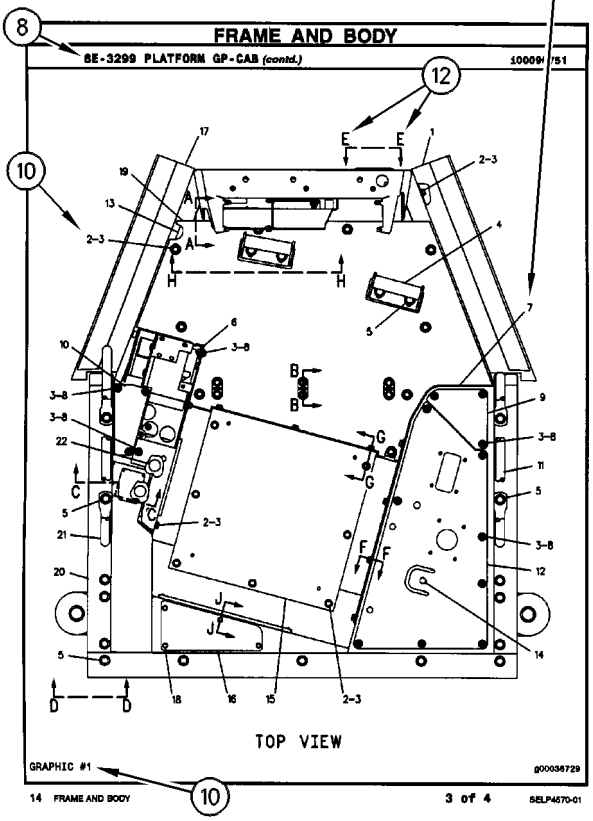
FRAME AND BODY
8E-3299 PLATFORM GP-CAB (contd.)
100090751
TOP VIEW
GRAPHIC #1
g00036729
14 FRAME AND BODY
3 of 4
SELP4570-01

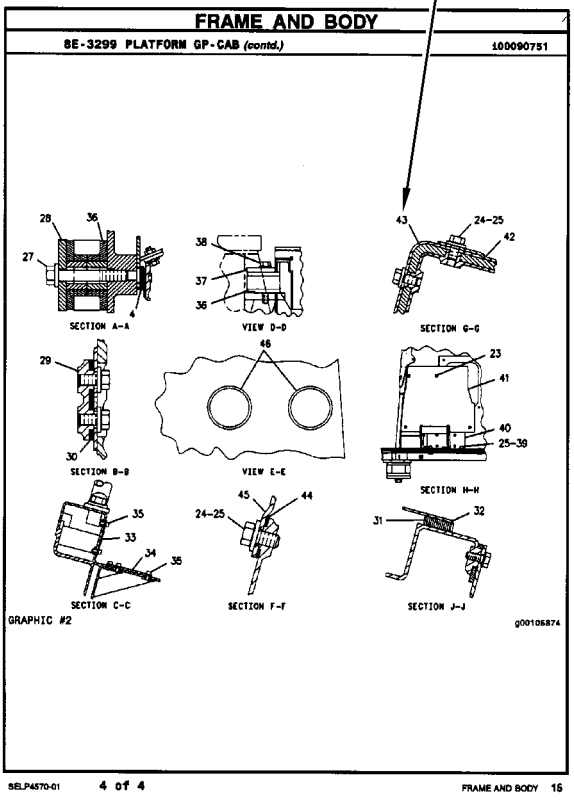
FRAME AND BODY
8E-3299 PLATFORM GP-CAB (contd.)
100090751
SECTION A-A
VIEW D-D
SECTION G-G
SECTION B-B
VIEW E-E
SECTION H-H
SECTION C-C
SECTION F-F
SECTION J-J
GRAPHIC #2
g00105874
SELP4570-01
4 of 4
FRAME AND BODY 15

REPAIR ALTERNATIVES

REMANUFACTURED COMPONENTS

As an option when making repairs consider Caterpillar Remanufactured Components. Components that are available through the Caterpillar Remanufactured Program are identified three ways in the parts book:

- with the letter R in the note field of the parts list
- with an R* at the beginning of the first line of the caption
- with an *R at the end of the first line of the caption

Typical components included in the Remanufacturing Program include:

ALTERNATORS
CONNECTING RODS
CRANKSHAFTS - UNDERSIZE
CRANKSHAFTS - UPGRADE TO NEW
CYLINDER HEADS
ELECTRONIC CONTROL MODULES (ECM)
ELECTRONIC SENSORS
FUEL INJECTORS
FUEL NOZZLES
FUEL PUMPS
GOVERNORS
OIL PUMPS
PISTONS
SHORT BLOCKS
STARTERS
TURBOCHARGERS - COMPLETE
TURBOCHARGER CARTRIDGES
WATER PUMPS

Caterpillar Remanufactured engines for many engine arrangements are also available.

SUPPLEMENTAL COOLANT ADDITIVES

CUSTOMER BENEFITS:

Protects against cavitation, foam, erosion, corrosion, and scale buildup in cooling systems.

- Provides measured coolant conditioner.

DESCRIPTION:

Additives deplete from the coolant with normal operation. For this reason, Supplemental Coolant Additives (SCA) must be added to all heavy duty coolants at regular intervals. In addition, when not using a fully formulated, pre-charged antifreeze, like Caterpillar's DEAC, an initial charge of SCA must be added to the cooling system. The amount of SCA added to the system is dependent on the capacity of the system.

The SCA for initial fill is provided as a liquid. SCA's for maintenance intervals are available in liquid form and as a spin-on element. (No Spin-on available for 3600 Family of Engines)

NOTE:

The amount of SCA added at initial fill is not the same as the amount added at maintenance intervals.

The coolant additive elements can be used with any ethylene or propylene glycol type antifreeze which meets ASTM D4985 or ASTM D5345 Specifications.

NOTE:

For use with standard heavy duty coolant only, not for use with Extended Life Coolant.

PARTS NEEDED:

Cooling System Capacity		Liquid SCA at Initial Fill	Liquid SCA at Maintenance*	Spin-on SCA Maintenance Element*
Liters	Gallons			
22-30	(6-8)	3P-2044 (1)	6V-3542 (1)	111-2370 (1)
30-38	(8-10)	3P-2044 (1) 6V-3542 (1)	111-2372 (1)	111-2369 (1)
38-49	(10-13)	3P-2044 (1) 8T-1589 (1)	111-2372 (1)	111-2369 (1)
49-64	(13-17)	3P-2044 (2)	8T-1589 (1)	9N-3368 (1)
64-83	(17-22)	3P-2044 (2) 8T-1589 (1)	111-2372 (1) 6V-3542 (1)	111-2371 (1)
83-114	(22-30)	3P-2044 (3) 8T-1589 (1)	3P-2044 (1)	9N-3718 (1)
114-163	(30-43)	3P-2044 (5)	3P-2044 (1) 6V-3542 (1)	111-2371 (2)
163-242	(43-64)	3P-2044 (8)	3P-2044 (2)	9N-3718 (2)

** Normal maintenance period is 250 hrs. See your Operation and Maintenance Manual for complete coolant maintenance instructions.*

( ) Indicates quantity required.

MAINTENANCE PARTS

DESCRIPTION	PART NUMBER	QTY	WHERE USED	PAGE
AIR INLET AND EXHAUST SYSTEM				
FILTER ELEMENT AS-AIR (PRIMARY)	245-3818	1	AIR CLEANER GP	84
FILTER ELEMENT AS-AIR (SECONDARY)	245-3819	1	AIR CLEANER GP	84
BASIC ENGINE				
PLUG-DRAIN	175-4966	1	DRAIN GP-ECOLOGY	22
PLUG-DRAIN (ENGINE OIL PAN)	9X-6451	1	PAN GP-OIL	37
SEAL-VALVE COVER	229-5711	1	COVER GP-VALVE MECHANISM	9
COOLING SYSTEM				
CAP-PRESSURE (7-PSI) (WATER TANK)	6L-8617	1	TANK GP-RADIATOR TOP	82
REGULATOR-TEMPERATURE (92-DEG C) (COOLANT)	248-5513	1	LINES GP-WATER	70
ELECTRICAL AND STARTING SYSTEM				
BATTERY (12-VOLT, 1400-CCA)	153-5710	2	BATTERY & WIRING GP	124
BELT-DRIVE	9X-8139	1	LAMP GP-WARNING BEACON	157
CIRCUIT BREAKER AS (105-AMPERE) (ALTERNATOR)	171-2212	1	WIRING GP-CHASSIS	233
CIRCUIT BREAKER AS (15-AMPERE) (RUNNING LIGHTS)	3T-2662	1	WIRING GP-CHASSIS	233
CIRCUIT BREAKER AS (20-AMPERE) (HOOD TILT ACTUATOR)	6T-3644	1	WIRING GP-CHASSIS	233
CIRCUIT BREAKER AS (30-AMPERE) (UNSWITCHED BAT POWER TO CAB)	6N-9349	1	WIRING GP-CHASSIS	233
CIRCUIT BREAKER AS (50-AMPERE) (ENGINE START)	171-2206	1	WIRING GP-CHASSIS	233
CIRCUIT BREAKER AS (80-AMPERE) (MAIN)	171-2210	1	WIRING GP-CHASSIS	233
ELEMENT AS (CIGARETTE LIGHTER)	198-6571	1	WIRING GP-CAB	222
FLASHER AS (24-VOLT)	217-8166	1	SWITCH GP-SIGNAL	211
		1	SWITCH GP-SIGNAL	213
FUSE (10-AMPERE)	9W-1442	24	WIRING GP-CAB	221
FUSE (15-AMPERE)	9W-1441	7	WIRING GP-CAB	221
FUSE (20-AMPERE)	9W-1446	1	WIRING GP-CAB	221
KEY (BATTERY DISCONNECT)	8H-5306	1	SWITCH GP-DISCONNECT	202
LAMP (24-VOLT)	100-3245	2	LAMP GP-HEAD & SIGNAL	150
LAMP (24-VOLT) (DOME)	7N-9943	1	LAMP GP-DOME	145
LAMP (24-VOLT) (SIGNAL)	100-3245	2	LAMP GP-HEAD & SIGNAL	152
LAMP (24-VOLT, 0.2-AMPERE)	7N-5876	4	WIRING GP-CAB	221
LAMP (24-VOLT, 21-WATT)	9X-4493	1	LAMP GP-SIGNAL	154
LAMP (24-VOLT, 21-WATT) (SIGNAL)	9X-4493	1	LAMP GP-HEAD & SIGNAL	150
		1	LAMP GP-HEAD & SIGNAL	152
LAMP (24-VOLT, 21-WATT) (STOP, TAIL)	9X-4493	1	LAMP GP-STOP & TAIL	156
LAMP (24-VOLT, 5-WATT) (STOP, TAIL)	9X-4492	1	LAMP GP-STOP & TAIL	156
LAMP (24-VOLT, 70-WATT)	9X-7849	1	LAMP GP-WARNING BEACON	157
LAMP (24-VOLT, 75/70-WATT)	9X-3465	1	LAMP GP-HEAD & SIGNAL	150
LAMP (24-VOLT, 75/70-WATT) (HEAD)	9X-3465	1	LAMP GP-HEAD & SIGNAL	152
LAMP-HALOGEN (24-VOLT, 70-WATT)	9X-3463	1	LAMP GP-FLOOD	148
		1	LAMP GP-FLOOD	149
LAMP-HALOGEN (35-WATT, HID)	209-6638	1	LAMP GP-FLOOD	146
		1	LAMP GP-FLOOD	147

MAINTENANCE PARTS

DESCRIPTION	PART NUMBER	QTY	WHERE USED	PAGE
FUEL SYSTEM				
COVER AS-FILTER	190-9775	1	CAP GP-FUEL FILLER	98
FILTER AS-WATER SEP & FUEL (PRIMARY)	326-1644	1	FILTER GP-WATER SEP & FUEL	102
FILTER-FUEL (ADVANCED EFFICIENCY)	1R-0762	1	FILTER GP-FUEL	99
STRAINER-FUEL	9P-7121	1	TANK GP-FUEL	116
HYDRAULIC SYSTEM				
BREATHER (HYDRAULIC TANK)	258-2829	1	LINES GP-HYDRAULIC	435
CAP-FILLER (HYDRAULIC TANK)	7H-1447	1	TANK GP-HYDRAULIC	474
FILTER-OIL (ADVANCED EFFICIENCY) (HYDRAULIC CASE DRAIN)	9T-8578	1	FILTER GP-OIL	432
FILTER-OIL (ULTRA HIGH EFFICIENCY) (HYDRAULIC CASE DRAIN)	144-0832	1	FILTER GP-OIL	432
FILTER-OIL (ULTRA HIGH EFFICIENCY) (POWER TRAIN)	225-4118	1	FILTER GP-OIL	433
PLUG-DRAIN (HYDRAULIC TANK OIL)	9J-7031	1	VALVE GP-DRAIN	492
SCREEN	6E-5066	1	MANIFOLD GP-VALVE	453
		1	MANIFOLD GP-VALVE	455
SCREEN (CONTROL VALVE MANIFOLD)	6E-5066	1	MANIFOLD GP-CONTROL	451
SCREEN AS (HYDRAULIC TANK)	9T-9227	2	TANK GP-HYDRAULIC	474
STRAINER AS-OIL (HYDRAULIC TANK FILL)	5D-7927	1	TANK GP-HYDRAULIC	474
LUBRICATION SYSTEM				
CAP AS-FILLER (ENGINE OIL)	5L-2952	1	FILLER GP-ENGINE OIL	55
FILTER-ENGINE OIL (ADVANCED EFFICIENCY)	1R-1808	1	FILTER GP-ENGINE OIL	57
HOSE (FUMES DISPOSAL)	237-9759	1	FUMES DISPOSAL GP	58
OPERATOR STATION				
BLADE AS-WIPER (700-MM)	6V-7419	2	WIPER GP-WINDOW	640
FILTER ELEMENT-CAB AIR (STANDARD EFFICIENCY)	7X-6041	2	DUCT & FILTER GP-CAB AIR	555
FUSE (15-AMPERE)	133-9012	1	HEATER GP-CAB	563
KEY-HANDLE	3V-7476	1	INSTALLATION GP-CONTROLS	566
SEAT BELT GP (RETRACTABLE, 51-MM)	236-7019	1	SEAT GP-SUSPENSION	620
POWER TRAIN				
BREATHER (PLANETARY CASE)	9G-5127	1	CASE & PARTS GP-PLANETARY	262
CAP-FILLER (POWER TRAIN)	5K-1568	1	FILLER GP-POWER TRAIN OIL	271
FILTER ELEMENT AS-OIL (ADVANCED EFFICIENCY)	328-3655	1	FILTER GP-OIL	274
PLUG (TRANSMISSION OIL DRAIN)	138-1510	1	DRAIN GP-ECOLOGY	270
PLUG-MAGNETIC (AXLE HOUSING)	5P-4484	1	HOUSING GP-FIXED AXLE	286
		1	HOUSING GP-FIXED AXLE	288
		1	HOUSING GP-OSCILLATING AXLE	290
		1	HOUSING GP-OSCILLATING AXLE	292
RACE-ROLLER BEARING	6V-4350	1	TORQUE CONVERTER GP	318
SCREEN GP-MAGNETIC	240-8259	1	GEAR GP-OUTPUT TRANSFER	279
SCREEN-SUCTION	4S-8598	1	GEAR GP-OUTPUT TRANSFER	279

MAINTENANCE PARTS

DESCRIPTION	PART NUMBER	QTY	WHERE USED	PAGE
STEERING SYSTEM				
RELAY	183-6970	1	PUMP & MOTOR GP-SEC STEERING	404
SEAL-O-RING	8C-3097	1	VALVE GP-RELIEF	411

INDEX

Name	Page

A

ACCUMULATOR & MTG GP-RIDE CONT 416
ACCUMULATOR GP-BRAKE–CHARGED 373
ACCUMULATOR GP-BRAKE–UNCHARGED 374
ACCUMULATOR GP-PILOT OIL–CHARGED 417
ACCUMULATOR GP-RIDE CONTROL–CHARGED 418
ACCUMULATOR GP-RIDE CONTROL–UNCHARGED 419
ACTUATOR GP-POWER 327
ADAPTER GP 68
ADAPTER GP-TIP 643
ADJUSTER GP-SEAT 518
AIR CLEANER GP 83, 84
AIR COMPRESSOR GP-SEAT 519
ALARM GP 120
ALTERNATOR GP-CHARGING 121, 123
ARM & BEARING AS-LIFT 514
ARM & BEARING AS-LIFT–HIGH LIFT MACHINES 515
ARM GP-WINDOW WIPER–FRONT 521
ARM GP-WINDOW WIPER–REAR 520
ARMREST GP 522
AXLE & AXLE OIL COOLER AR 256
AXLE AR-FIXED–FRONT, LIMITED SLIP DIFFERENTIAL 256
AXLE AR-FIXED–FRONT, STANDARD DIFFERENTIAL 256, 257
AXLE AR-OSCILLATING–REAR, LIMITED SLIP DIFFERENTIAL 257
AXLE AR-OSCILLATING–REAR, STANDARD DIFFERENTIAL 257, 258

B

BASE AS-JOYSTICK 538, 540, 542, 543
BASE GP-FOOT BRAKE–PEDAL, LH 376
BASE GP-FOOT BRAKE–PEDAL, RH 375
BASE GP-OIL FILTER 259
BASE GP-OIL FILTER–ENGINE 51, 52
BASE GP-VALVE COVER 6
BASE GP-VALVE COVER–ENGINE 5
BATTERY & WIRING GP 124
BATTERY (12-VOLT, 1400-CCA) 124
BATTERY COMPARTMENT DRIP PAN 37
BELT-DRIVE 157
BLADE AS-WIPER (700-MM) 640
BLOCK AS-FUSE 224
BLOCK GP-AXLE OSC LIMITER 328
BLOCK GP-JUNCTION 128
BLOCK GP-JUNCTION (BATTERY) 128
BOX GP-BATTERY 329
BRACKET AS-ADJUSTABLE SWITCH 376
BRAKE & PLANETARY GP 260
BRAKE GP-PARKING 378, 379, 380, 381
BREATHER (HYDRAULIC TANK) 435
BREATHER (PLANETARY CASE) 262
BUCKET AS-GENERAL PURPOSE 644, 645, 646, 647
BUCKET AS-MATERIAL HANDLING 648, 649
BUCKET AS-ROCK 650, 651, 652
BUCKET GP-GENERAL PURPOSE 654, 655, 656, 657
BUCKET GP-MATERIAL HANDLING 658
BUCKET GP-ROCK 658, 659, 660

C

CAB AR-ENCLOSED ROPS–HMU STEERING . . . 523
CAMSHAFT GP 7
CAP AS-FILLER (ENGINE OIL) 55
CAP GP-FUEL FILLER (EXTREME SERVICE, LOCKABLE) 116
CAP GP-FUEL FILLER–EXTREME SERVICE, LOCKABLE 98
CAP-FILLER (HYDRAULIC TANK) 474
CAP-FILLER (POWER TRAIN) 271
CAP-PRESSURE (7-PSI) (WATER TANK) 82
CARRIAGE GP-FORK–96-IN 661, 662
CARTRIDGE GP-TURBOCHARGER 97
CASE & PARTS GP-PLANETARY 262
CHASSIS AR 1
CIRCUIT BREAKER AS (105-AMPERE) (ALTERNATOR) 233
CIRCUIT BREAKER AS (15-AMPERE) (RUNNING LIGHTS) 233
CIRCUIT BREAKER AS (20-AMPERE) (HOOD TILT ACTUATOR) 233

INDEX

Name	Page
CIRCUIT BREAKER AS (30-AMPERE) (UNSWITCHED BAT POWER TO CAB)	233
CIRCUIT BREAKER AS (50-AMPERE) (ENGINE START)	233
CIRCUIT BREAKER AS (80-AMPERE) (MAIN)	233
CONNECTION GP-ELECTRICAL	129
CONTROL & LINES GP-RIDE	420
CONTROL & MTG GP-ENGINE ELEK	130
CONTROL AR-AUTODIG–HMU STEERING	131
CONTROL AR-HIGH LIFT–2-VALVE HYDRAULICS	421
CONTROL AR-RIDE	421
CONTROL GP-AUTODIG	132
CONTROL GP-BUCKET	516
CONTROL GP-DISPLAY ELECTRONIC (INDICATOR PANEL, CENTER)	132
CONTROL GP-DISPLAY ELECTRONIC (INDICATOR PANEL, RH, LH)	225
CONTROL GP-ELECTROHYDRAULIC	530 533
CONTROL GP-ELECTROHYDRAULIC–2-FUNCTION	524
CONTROL GP-ELECTROHYDRAULIC–JOYSTICK, 2-FUNCTION	526
CONTROL GP-ELECTROHYDRAULIC–JOYSTICK, 3-FUNCTION	528
CONTROL GP-ENGINE ELECTRONIC	134
CONTROL GP-FOOT BRAKE	382 383
CONTROL GP-HANDLE	535 536
CONTROL GP-HANDLE (LIFT, TILT, AUX, DOWNSHIFT SW)	543
CONTROL GP-HANDLE (LIFT, TILT, AUX, FNR, DNSFT)	540
CONTROL GP-HANDLE (LIFT, TILT, FNR, DOWNSHIFT)	538
CONTROL GP-HANDLE–LIFT, TILT, AUXILIARY, DOWNSHIFT SWITCH	537
CONTROL GP-JOYSTICK (2-FUNCTION, W/FNR, DOWNSHIFT)	533
CONTROL GP-JOYSTICK–2-FUNCTION, WITH DOWNSHIFT	542
CONTROL GP-JOYSTICK–2-FUNCTION, WITH FNR, DOWNSHIFT	538
CONTROL GP-JOYSTICK–3-FUNCTION, WITH DOWNSHIFT	543
CONTROL GP-JOYSTICK–3-FUNCTION, WITH FNR, DOWNSHIFT	540
CONTROL GP-MONITOR–DIMMER	544
CONTROL GP-PARKING BRAKE	384
CONTROL GP-SERVICE BRAKE	385
CONTROL GP-STEERING–HMU STEERING	545
CONTROL GP-TRANSMISSION	547 548
CONTROL GP-TRANSMISSION HYD	264
CONTROL GP-UNPRGMED MONITOR (CATERPILLAR MONITORING SYSTEM)	221 549
CONTROL GP-UNPRGMED MONITOR–CATERPILLAR MONITORING SYSTEM	549
CONTROL GP-UNPROGRAMMED	134
CONTROL GP-UNPROGRAMMED (IMPLEMENT)	222
CONTROL GP-UNPROGRAMMED (POWER TRAIN)	222
COOLANT HEATER LINES	576 578
COOLER GP-ENGINE OIL	65
COOLER GP-HYDRAULIC & AXLE OIL	421
COOLER GP-TRANSMISSION OIL	266
COOLING AR-HIGH AMBIENT TEMP	67
CORE AS-AFTERCOOLER	76
CORE AS-CONDENSER (REFRIGERANT)	67
CORE AS-HYDRAULIC OIL COOLER	76
CORE AS-OIL COOLER (AXLE, HYDRAULIC)	421
CORE AS-OIL COOLER (ENGINE)	65
CORE AS-OIL COOLER (TRANSMISSION)	266
CORE AS-RADIATOR	67 76
COUNTERWEIGHT GP	330 331
COVER AS-FILTER	98
COVER GP-FRONT HOUSING	8
COVER GP-VALVE MECHANISM	9
CRANKSHAFT GP	10
CYLINDER & MTG GP-STEERING	392
CYLINDER & SEAL GP-LIFT–LH	423
CYLINDER & SEAL GP-LIFT–RH	422
CYLINDER & SEAL GP-TILT	424
CYLINDER BLOCK AS	12 13 14
CYLINDER BLOCK GP	15
CYLINDER GP-LIFT–LH	425
CYLINDER GP-LIFT–RH	427
CYLINDER GP-STEERING	393
CYLINDER GP-TILT	429
CYLINDER GP-TILT–HIGH LIFT MACHINES	430
CYLINDER HEAD AS	17
CYLINDER HEAD GP	19 20

D

DAMPER GP	21
DIFFERENTIAL GP	268
DIFFERENTIAL GP-LIMITED SLIP	269
DOOR GP-ACCESS (REMOTE PRESSURE TAPS)	370

INDEX

Name	Page
DOOR GP-ACCESS–HOOD SIDE, LH	332
DOOR GP-ACCESS–HOOD SIDE, RH	333
DOOR GP-CAB–SLIDING WINDOW	554
DOOR GP-CAB–SLIDING WINDOW, LH	551
DOOR GP-CAB–SLIDING WINDOW, RH	550
DRAIN GP-ECOLOGY	22
DRAIN GP-ECOLOGY–POWER TRAIN	22
DRAIN GP-ECOLOGY–POWER TRAIN OIL	270
DRIVE GP-ACCESSORY	23
	24
DUCT & FILTER GP-CAB AIR	555

E

EDGE GP-BIT & CUTTING	663
	664
EDGE GP-CUTTING	665
	666
EDGE GP-SEGMENT	667
ELECTRICAL AR	135
ELECTRONICS GP-COMMUNICATION–PRODUCT LINK 300	135
	136
ELECTRONICS GP-IMPLEMENT	136
ELECTRONICS GP-MONITOR	136
	137
ELECTRONICS GP-POWER TRAIN	137
ELEMENT AS (CIGARETTE LIGHTER)	222
ENGINE AR-COMPLETE	2
ENGINE AR-CORE	3
EXTENSION GP-BACKREST (CLOTH)	617
	619

F

FASTENER GP-CYLINDER HEAD	25
FASTENER GP-DAMPER & PULLEY	26
FENDER GP	334
	336
FENDER GP-FRONT	338
FILLER GP-ENGINE OIL	55
FILLER GP-POWER TRAIN OIL	271
FILM GP	675
FILM-CONTROL (AUTODIG)	132
FILM-CONTROL (DUMP, TILT BACK)	524
FILM-CONTROL (JOYSTICK, 2-FCTN, DOWNSHIFT SW)	526
	533
FILM-CONTROL (JOYSTICK, 3-FCTN, DOWNSHIFT SW)	528
	530
FILM-CONTROL (LIFT, FLOAT, LOWER)	524
FILM-FUSE PANEL	573
FILM-IDENTIFICATION (12-VOLT)	596
FILM-IDENTIFICATION (AUTODIG)	132
FILM-IDENTIFICATION (CATERPILLAR, REAR CAB)	607
	675
FILM-IDENTIFICATION (DOWNSHIFT SWITCH)	524
FILM-IDENTIFICATION (HORN)	524
	530
FILM-IDENTIFICATION (IGNITION SWITCH)	143
FILM-IDENTIFICATION (LIGHTS)	596
FILM-IDENTIFICATION (UPPER PANEL, HMU STEERING)	599
FILM-INFORMATION (24-VOLT)	683
FILM-INFORMATION (INPUT/OUTPUT)	596
FILM-INFORMATION (PRODUCT LINK, READ OMM)	140
FILM-INFORMATION (SECURITY SYSTEM)	143
FILM-INSTRUCTION (ENGINE START)	596
FILM-INSTRUCTION (MACHINE SECURITY, CONSOLE)	143
FILM-INSTRUCTION (MAINTENANCE)	524
	526
	528
	530
	533
FILM-INSTRUCTION (NO STEP)	683
FILM-INSTRUCTION (SEAT ADJUSTMENT)	631
FILM-MONITOR (CATERPILLAR MONITORING SYSTEM)	599
FILM-PANEL (CENTER)	596
FILM-PANEL (LH)	596
FILM-PANEL (RH)	596
FILM-WARNING (ACCUMULATOR) (HIGH PRESSURE CYLINDER)	417
FILM-WARNING (CRUSH HAZARD, STAY BACK, INTL)	684
FILM-WARNING (HIGH PRESSURE, READ OMM)	418
	419
FILM-WARNING (HIGH PRESSURE, READ OMM, INTL)	420
FILM-WARNING (PRODUCT LINK RADIO, INTL)	140
FILM-WARNING (PRODUCT LINK)	140
FILTER & LINES GP-TRANSMISSION	272
FILTER AS-WATER SEP & FUEL (PRIMARY)	102
FILTER ELEMENT AS-AIR (PRIMARY)	84
FILTER ELEMENT AS-AIR (SECONDARY)	84
FILTER ELEMENT AS-OIL (ADVANCED EFFICIENCY)	274
FILTER ELEMENT-CAB AIR (STANDARD EFFICIENCY)	555
FILTER GP-ENGINE OIL	57
FILTER GP-FUEL	99
	100
FILTER GP-OIL	432

INDEX

Name	Page
	433
FILTER GP-OIL–POWER TRAIN	274
FILTER GP-WATER SEP & FUEL	102
FILTER-ENGINE OIL (ADVANCED EFFICIENCY)	57
FILTER-FUEL (ADVANCED EFFICIENCY)	99
FILTER-OIL (ADVANCED EFFICIENCY) (HYDRAULIC CASE DRAIN)	432
FILTER-OIL (ULTRA HIGH EFFICIENCY) (HYDRAULIC CASE DRAIN)	432
FILTER-OIL (ULTRA HIGH EFFICIENCY) (POWER TRAIN)	433
FLASHER AS (24-VOLT)	211
	213
FLOOR GP-SOUND SUPPRESSION	558
	608
FLOOR GP-SOUND SUPPRESSION–CAB	557
FLOOR MAT	573
FLYWHEEL GP	27
FRAME AS-LOADER	339
FRAME AS-REAR	341
FUMES DISPOSAL GP	58
FUSE (10-AMPERE)	221
FUSE (15-AMPERE)	221
	563
FUSE (20-AMPERE)	221

G

GAUGE AS-OIL LEVEL (DIPSTICK) (AXLE)	286
	288
	290
	292
GAUGE GP-OIL LEVEL (DIPSTICK)–ENGINE	59
GAUGE-LIQUID LEVEL (SIGHT GLASS)	474
GAUGE-SIGHT	68
GEAR GP-BEVEL & PINION	275
	277
GEAR GP-FRONT	28
GEAR GP-OUTPUT TRANSFER	279
GENERAL AR	1
GRILL GP-RADIATOR	344
GUARD GP-AXLE SEAL	346
GUARD GP-LOADER FRAME–FRONT	347
GUARD GP-POWER TRAIN	348
GUARD GP-WINDOW	559

H

HANDRAIL GP (LH)	367
HANDRAIL GP (RH)	367
HARNESS AS-AXLE (FRONT)	219
HARNESS AS-AXLE (REAR)	219
HARNESS AS-BRAKE (STOP LIGHT)	376
HARNESS AS-CHASSIS	233
HARNESS AS-CHASSIS (MAIN)	231
HARNESS AS-CONTROL	141
	526
	528
	530
	533
HARNESS AS-CONTROL (HEATED MIRRORS)	586
HARNESS AS-ENGINE	242
HARNESS AS-ENGINE (ELECTRONIC CONTROL MODULE)	239
HARNESS AS-ENGINE (UNIT INJECTOR)	255
HARNESS AS-FRONT CHASSIS	244
HARNESS AS-FRONT LIGHTING	162
HARNESS AS-HEATER & AIR COND	563
HARNESS AS-LIGHTING	160
HARNESS AS-LIGHTING (CAB FLOODLIGHTS)	222
HARNESS AS-LIGHTING (LH)	247
	248
HARNESS AS-LIGHTING (LOADER FRAME)	246
HARNESS AS-LIGHTING (RH)	247
	248
HARNESS AS-LIGHTING (TURN SIGNAL)	211
	213
HARNESS AS-LIGHTING (WARNING BEACON)	169
HARNESS AS-OPERATOR CONTROLS	224
HARNESS AS-RADIO	569
	603
	604
HARNESS AS-REAR LIGHTING	162
HARNESS AS-SENSOR (FUEL)	100
HARNESS AS-SENSOR (SPEED)	189
HARNESS AS-SENSOR (TILT)	251
	253
HARNESS AS-STEERING (SECONDARY)	249
HARNESS AS-SWITCH	232
HARNESS AS-TRANSMISSION	264
HARNESS AS-VALVE (SEAT AIR COMPRESSOR)	631
HARNESS AS-WIRING (SERVICE TOOL)	222
HEAT EXCHANGER GP-AXLE	284
HEATER GP-CAB	561
	563
HEATER GP-JACKET WATER	138
	139
HITCH GP-ARTICULATING	349
HOOD & GUARD GP	351
HORN GP-ELECTRIC	565
HOSE (FUMES DISPOSAL)	58
HOUSING GP-FILTER (POWER TRAIN)	274
HOUSING GP-FIXED AXLE	286
	288
HOUSING GP-FLYWHEEL	29

INDEX

Name	Page
HOUSING GP-FRONT	30
HOUSING GP-OSCILLATING AXLE	290
	292
HYDRAULIC AR-2 VALVE	434

I

INJECTOR GP-FUEL	103
INSTALLATION AR-COMMUNICATION–PRODUCT LINK 321SR	140
INSTALLATION AR-ENGINE	4
INSTALLATION AR-SECURITY	140
INSTALLATION GP-COMMUNICATION–PRODUCT LINK	141
INSTALLATION GP-CONTROLS–PARKING BRAKE CABLE	566
INSTALLATION GP-RADIO	568
	569
INSTALLATION GP-SECURITY	143

K

KEY (BATTERY DISCONNECT)	202
KEY-HANDLE	566
KIT-CONNECTING PLUG (12-PIN)	248
KIT-CONNECTING PLUG (6-PIN)	248
KIT-RECEPTACLE (12-PIN)	537
	538
	540
KIT-RECEPTACLE (2-PIN)	143
	162
KIT-SEAL	411
KIT-SEAL (DIVERTER VALVE) (HYDRAULIC FAN FLUID FLOW)	491
KIT-SLIDER BLOCK	621

L

LADDER GP	355
LAMP (24-VOLT)	150
LAMP (24-VOLT) (DOME)	145
LAMP (24-VOLT) (SIGNAL)	152
LAMP (24-VOLT, 0.2-AMPERE)	221
LAMP (24-VOLT, 21-WATT)	154
LAMP (24-VOLT, 21-WATT) (SIGNAL)	150
	152
LAMP (24-VOLT, 21-WATT) (STOP, TAIL)	156
LAMP (24-VOLT, 5-WATT) (STOP, TAIL)	156
LAMP (24-VOLT, 70-WATT)	157
LAMP (24-VOLT, 75/70-WATT)	150
LAMP (24-VOLT, 75/70-WATT) (HEAD)	152
LAMP GP-DOME	145
LAMP GP-FLOOD	148
	149
LAMP GP-FLOOD–HID	146
LAMP GP-FLOOD–HID, VERTICAL	147
LAMP GP-HEAD & SIGNAL–LH	150
LAMP GP-HEAD & SIGNAL–RH	152
LAMP GP-SIGNAL	154
LAMP GP-SIGNAL–STOP, TAIL	155
LAMP GP-STOP & TAIL–24-VOLT	156
LAMP GP-WARNING BEACON–ROTATING	157
LAMP-HALOGEN (24-VOLT, 70-WATT)	148
	149
LAMP-HALOGEN (35-WATT, HID)	146
	147
LATCH GP-CAB DOOR & WINDOW	571
LEVER (TURN SIGNAL SWITCH)	211
	213
LIFTER GP-VALVE	32
LIFTING GP-ENGINE	33
LIGHTER GP (12-VOLT) (CIGAR)	222
LIGHTING AR-ROADING–COMMAND CONTROL STEERING	158
LIGHTING AR-ROADING–HMU STEERING	158
LIGHTING AR-SIGNAL–COMMAND CONTROL STEERING	158
LIGHTING AR-SIGNAL–HMU STEERING	158
LIGHTING GP-FLOOD & SIGNAL–FRONT, REAR	165
	166
LIGHTING GP-FLOOD–4-LAMP, CAB FRONT, REAR	159
LIGHTING GP-FLOOD–CAB FRONT, REAR	162
LIGHTING GP-FLOOD–HID, CAB FRONT, REAR	160
LIGHTING GP-ROADING	168
LIGHTING GP-WARNING BEACON	169
LINER GP-CAB–ENCLOSED ROPS	573
LINES GP-AFTERCOOLER AIR	85
LINES GP-AIR	89
LINES GP-AIR–TURBOCHARGER	87
LINES GP-AIR–TURBOCHARGER OUTLET	88
LINES GP-AXLE OIL COOLER	294
LINES GP-CAB HEATER	576
	578
LINES GP-DIAGNOSTIC–REMOTE PRESSURE TAPS, HYDRAULIC	677
LINES GP-DIAGNOSTIC–REMOTE PRESSURE TAPS, TRANSMISSION	680
LINES GP-FUEL	104
	105
LINES GP-FUEL DRAIN	107
LINES GP-GREASE	359
LINES GP-HYDRAULIC	435
LINES GP-HYDRAULIC OIL COOLER	440
LINES GP-LIFT CYLINDER	447
LINES GP-SECONDARY STEERING	395
LINES GP-STEERING–HMU STEERING	398
LINES GP-TILT CYLINDER	449

INDEX

Name	Page
LINES GP-TORQUE CONV COOLER	298
LINES GP-TURBOCHARGER OIL	60
LINES GP-WATER–PUMP	72
LINES GP-WATER–RADIATOR	68
LINES GP-WATER–SINGLE WATER REGULATOR	70
LINK GP-STEERING FRAME LOCK	362
LITERATURE GP	1
LOCK GP-CYLINDER	76
	231

M

MANIFOLD GP-CONTROL	451
MANIFOLD GP-CONTROL–AXLE OIL FLOW DIVIDER	300
MANIFOLD GP-EXHAUST	90
MANIFOLD GP-INLET	91
MANIFOLD GP-VALVE–END COVER	455
MANIFOLD GP-VALVE–INLET	453
MIRROR GP-REAR VIEW–EXTERIOR	580
MIRROR GP-REAR VIEW–EXTERIOR, HEATED	586
MIRROR GP-REAR VIEW–EXTERIOR, HEATED, LH	584
MIRROR GP-REAR VIEW–EXTERIOR, HEATED, RH	583
MIRROR GP-REAR VIEW–EXTERIOR, LH	582
MIRROR GP-REAR VIEW–EXTERIOR, RH	581
MIRROR GP-REAR VIEW–INTERIOR	579
MODULE GP-INTERFACE (KEY)	143
MODULE GP-QUAD GAUGE	588
MODULE GP-SPEEDOMETER & TACH	589
MOTOR GP-ELECTRIC (SECONDARY STEERING)	404
MOTOR GP-PISTON	457
MOTOR GP-WINDOW WIPER	591
MOTOR GP-WINDOW WIPER–REAR	590
MOUNTING GP-AXLE	301
MOUNTING GP-CAB	592
MOUNTING GP-ENGINE & XMSN	34
MOUNTING GP-FAN DRIVE	35
MOUNTING GP-HYDRAULIC TANK	459
MOUNTING GP-RIM	302
MOUNTING GP-VALVE MECHANISM	36
MUFFLER GP	92

O

OPERATOR AR-ENCLOSED ROPS–HMU STEERING	593

P

PAN GP-BACKREST	595
PAN GP-BACKREST–LUMBAR	594
PAN GP-OIL–ENGINE	37
PANEL GP (RH)	351
PANEL GP-INSTRUMENT	599
PANEL GP-INSTRUMENT–LOWER	596
PANEL GP-SIDE	364
PANEL GP-SIDE (HOOD, LH)	351
PANEL GP-SIDE–HOOD, LH	363
PANEL GP-TOP (HOOD)	351
PANEL GP-TOP–HOOD	366
PEDAL GP-GOVERNOR	600
	601
PIN GP-FORK–ANTI-SWING	668
PISTON & ROD GP	39
PLANETARY GP-TRANSMISSION	303
PLATE & FILM GP	683
PLATE GP-WEAR	669
PLATE-IDENTIFICATION (CAT)	651
	652
	661
PLATE-SERIAL NUMBER (TRANSMISSION)	280
PLUG (TRANSMISSION OIL DRAIN)	270
PLUG GP-CYLINDER BLOCK	40
	41
	42
PLUG GP-ENGINE	43
PLUG-DRAIN	22
PLUG-DRAIN (ENGINE OIL PAN)	37
PLUG-DRAIN (HYDRAULIC TANK OIL)	492
PLUG-MAGNETIC (AXLE HOUSING)	286
	288
	290
	292
POTENTIOMETER AS (TEMPERATURE SELECT)	222
POWER TRAIN AR	307
PRECLEANER AR	94
PRECLEANER AS	94
	95
PRECLEANER GP	95
PROTECTOR GP-EDGE	669
PULLEY GP-ALTERNATOR	44
PULLEY GP-CRANKSHAFT	45
PUMP & MOTOR GP-SEC STEERING	404
PUMP & MTG GP-BRAKE & HYD FAN	460
PUMP & MTG GP-HYDRAULIC–IMPLEMENT, PILOT	462
PUMP & MTG GP-METERING	405
PUMP & MTG GP-SECONDARY STEER	407
PUMP GP-ENGINE OIL	62
	63
PUMP GP-FUEL INJECTION	109
PUMP GP-FUEL PRM & PRIM FILTER	110
PUMP GP-FUEL PRM & WATER SEP	112
PUMP GP-FUEL TRANSFER	113

INDEX

Name	Page
	114
PUMP GP-GEAR (SECONDARY STEERING)	404
PUMP GP-METERING (HMU STEERING)	405
PUMP GP-PISTON	464
	466
	468
PUMP GP-TRANSMISSION	308
PUMP GP-WATER	73
	74
	75

R

RACE-ROLLER BEARING	318
RADIATOR & FAN GP	76
RADIO GP–AM/FM	604
RADIO GP–AM/FM CD PLAYER	605
RADIO GP–AM/FM/WB CD PLAYER	602
	603
RADIO GP-COMMUNICATION–PRODUCT LINK 121SR	605
RECLINER GP-SEAT	606
REGULATOR AS-VOLTAGE (24-VOLT) (ALTERNATOR)	121
REGULATOR-TEMPERATURE (92-DEG C) (COOLANT)	70
RELAY	404
RELAY AS (24-VOLT) (FRONT CAB FLOODLIGHTS)	221
RELAY AS (24-VOLT) (HEATED MIRRORS)	586
RELAY AS (24-VOLT) (HOOD TILT MOTOR)	231
RELAY AS (24-VOLT) (HORN)	221
RELAY AS (24-VOLT) (REAR FLOODLIGHT)	221
RELAY AS (24-VOLT) (SECONDARY STEER INTERMEDIATE)	249
RIM AR	309
RIM GP-DEMOUNTABLE	310
	311
ROCKER ARM GP	46
ROOF GP-CAB	607
ROPS GP-ENCLOSED	608
ROTATING GP-PUMP	471
	472

S

SCREEN	453
	455
SCREEN (CONTROL VALVE MANIFOLD)	451
SCREEN AS (HYDRAULIC TANK)	474
SCREEN GP-MAGNETIC	279
SCREEN-SUCTION	279
SEAL GP-CRANKSHAFT	47
SEAL GP-CRANKSHAFT (FRONT)	30
SEAL GP-DUO-CONE	286
SEAL-O-RING	411
SEAL-VALVE COVER	9
SEALING GP-GLASS	523
	613
SEAT BELT GP	614
SEAT BELT GP (RETRACTABLE, 51-MM)	620
SEAT GP	617
SEAT GP–CLOTH	615
SEAT GP–CLOTH, HEATED	618
	619
SEAT GP-SUSPENSION	620
	621
SEAT GP-SUSPENSION–HEATED	622
SEGMENT-EDGE	667
SENDER AS-FUEL LEVEL	116
SENSOR & MTG GP-LIFT POSITION	135
	171
SENSOR & MTG GP-PRESSURE–LIFT CYLINDER OIL	173
SENSOR & MTG GP-TILT POSITION	174
SENSOR AS-POSITION	178
SENSOR AS-TEMPERATURE (FUEL)	100
SENSOR AS-TEMPERATURE (TORQUE CONVERTER OIL)	242
SENSOR GP-ENGINE	176
SENSOR GP-ENGINE (TEMPERATURE, PRESSURE)	2
SENSOR GP-POSITION	178
	179
SENSOR GP-POSITION (LIFT)	171
SENSOR GP-POSITION (ROTARY)	174
SENSOR GP-POSITION (ROTARY) (BRAKE PEDAL)	376
SENSOR GP-POSITION (THROTTLE)	600
SENSOR GP-PRESSURE	180
	181
	182
	183
	184
	185
	186
SENSOR GP-PRESSURE (AIR INLET MANIFOLD)	176
	186
SENSOR GP-PRESSURE (ATMOSPHERIC AIR)	176
SENSOR GP-PRESSURE (FUEL)	100
	176
SENSOR GP-PRESSURE (LIFT CYLINDER OIL)	173
SENSOR GP-SPEED	187
	188
	189
	190
	191

INDEX

Name	Page
	192
SENSOR GP-SPEED (MAGNETIC, HIGH OUTPUT) (TORQUE CONVERTER OUTPUT)	316
SENSOR GP-SPEED (TIMING, CAMSHAFT)	176
SENSOR GP-SPEED (TIMING, CRANKSHAFT)	176
SENSOR GP-SPEED (TRANSMISSION OUTPUT 1)	279
SENSOR GP-SPEED (TRANSMISSION OUTPUT 2)	279
SENSOR GP-TEMPERATURE	193
	194
	195
SENSOR GP-TEMPERATURE (FRONT AXLE OIL)	219
SENSOR GP-TEMPERATURE (HYDRAULIC OIL)	232
SENSOR GP-TEMPERATURE (REAR AXLE OIL)	219
SENSOR GP-TEMPERATURE (TRANSMISSION OIL)	264
SERVICE GP-COMMUNICATION (PRODUCT LINK 300)	135
SHAFT GP-DRIVE	312
SHIELD GP-ENGINE COMPARTMENT	367
SHROUD GP-CAB	623
SLIP JOINT GP	313
SOFTWARE GP-COMMUNICATION (PRODUCT LINK 121SR)	605
SOFTWARE GP-COMMUNICATION (PRODUCT LINK 300)	135
	136
SOLENOID AS-STARTING MOTOR (24-VOLT)	198
SPIDER & BEARING GP	314
STARTING MOTOR GP-ELECTRIC	196
	197
STEERING AR-SECONDARY	408
STEERING COLUMN GP-ADJUSTABLE	409
STRAINER AS-OIL (HYDRAULIC TANK FILL)	474
STRAINER-FUEL	116
SUN VISOR	634
SUPPORT GP-AIR INLET	369
SUPPORT GP-ENGINE	48
SUPPORT GP-HYDRAULIC CONTROL	624
SUPPORT GP-VALVE & FILTER	370
SUPPRESSION GP-CAB SOUND–FRONT	628
SUPPRESSION GP-CAB SOUND–REAR	630
SUSPENSION GP-SEAT–AIR	631
SWASHPLATE GP	473
SWITCH AS-DIMMER (ROADING)	201
SWITCH AS-LIMIT (STOP LIGHT)	376
SWITCH AS-MAGNETIC (24-VOLT)	205
SWITCH AS-PRESSURE (PARKING BRAKE OIL)	233
SWITCH AS-PRESSURE (PRIMARY STEERING OIL)	249
SWITCH AS-PRESSURE (SECONDARY STEERING OIL)	249
SWITCH AS-PRESSURE (SERVICE BRAKE OIL)	242
SWITCH AS-PUSH BUTTON (AUTODIG TRIGGER)	132
SWITCH AS-PUSH BUTTON (HORN)	221
	530
SWITCH AS-PUSH BUTTON (THROTTLE LOCK RESUME)	222
SWITCH AS-ROCKER (24-VOLT) (FINE MODULATION)	222
SWITCH AS-ROCKER (24-VOLT) (FRONT, REAR FLOODLIGHTS)	160
SWITCH AS-ROCKER (24-VOLT) (HYDRAULIC LOCKOUT)	222
SWITCH AS-ROCKER (24-VOLT, SEALED, ILLUMINATED)	530
SWITCH AS-ROCKER (24-VOLT, SEALED, ILLUMINATED) (3RD FUNCTION SELECT)	528
SWITCH AS-ROCKER (AIR CONDITIONER, HEATER)	225
SWITCH AS-ROCKER (AUTO LOADING KICKOUT SET)	132
SWITCH AS-ROCKER (AUTO LOADING MODE SELECT)	132
SWITCH AS-ROCKER (FAN BLOWER SPEED)	225
SWITCH AS-ROCKER (FORWARD, NEUTRAL, REVERSE)	217
SWITCH AS-ROCKER (HAZARD)	211
	213
SWITCH AS-ROCKER (HEATED MIRRORS)	586
SWITCH AS-ROCKER (LIFT, TILT KICKOUT)	225
SWITCH AS-ROCKER (MODE SELECT)	225
SWITCH AS-ROCKER (RIDE CONTROL)	208
SWITCH AS-ROCKER (SECONDARY STEERING)	210
SWITCH AS-ROCKER (TMSN NEUTRALIZER OVERRIDE)	225
SWITCH AS-ROCKER (WARNING BEACON)	169
SWITCH AS-ROTARY (24-VOLT) (AUTOSHIFT CONTROL)	222
SWITCH AS-ROTARY (24-VOLT) (VARIABLE SHIFT CONTROL)	222
SWITCH AS-ROTARY (24-VOLT, 5-FUNCTION) (RUNNING LIGHTS)	221
SWITCH AS-ROTARY (WIPER, WASHER) (REAR)	221
SWITCH AS-START (KEY)	221
SWITCH AS-TOGGLE (HOOD TILT ACTUATOR)	232

INDEX

Name	Page
SWITCH AS-TURN SIGNAL	211, 213
SWITCH GP-BYPASS	200
SWITCH GP-DIMMER–ROADING	201
SWITCH GP-DISCONNECT–BATTERY	202
SWITCH GP-MAGNETIC	203, 204, 205, 206
SWITCH GP-MAGNETIC (24-VOLT) (START RELAY)	231
SWITCH GP-PRESSURE (POWER TRAIN OIL FILTER BYPASS)	433
SWITCH GP-PRESSURE–FUEL FILTER	207
SWITCH GP-RIDE CONTROL	208
SWITCH GP-ROCKER (THIRD FUNCTION SELECT)	528, 530
SWITCH GP-ROTARY	209
SWITCH GP-SECONDARY STEERING	210
SWITCH GP-SIGNAL–TURN	211, 213
SWITCH GP-TOGGLE	215, 216
SWITCH GP-TOGGLE (GROUND LEVEL SHUTDOWN)	231
SWITCH GP-TRANSMISSION–REMOTE FORWARD, NEUTRAL, REVERSE CONTROL	217
SWITCH GP-WIPER (24-VOLT, INTERMITTENT) (FRONT)	221
SWITCH GP-WIPER–INTERMITTENT	218

T

TANK GP-FUEL	115, 116
TANK GP-HYDRAULIC	474
TANK GP-RADIATOR TOP	82
TANK GP-WINDOW WASHER	633
TILT GP-HOOD	372
TINE GP	670
TIP GP-ABRASION–K-90	671
TIP GP-EXTRA-DUTY	672
TIP GP-GENERAL PURPOSE	673
TIP GP-PENETRATION	674
TIRE & RIM AR	315
TORQUE CONVERTER & HOUSING GP–FREEWHEEL STATOR	316
TORQUE CONVERTER GP–FREEWHEEL STATOR	318
TRANSMISSION AR–FREEWHEEL STATOR TORQUE CONVERTER	320
TURBOCHARGER GP	96, 97

U

UNIVERSAL JOINT GP (DRIVE SHAFT, REAR)	312
UNIVERSAL JOINT GP–DRIVE SHAFT, FRONT	322
UNIVERSAL JOINT GP–DRIVE SHAFT, REAR	321

V

VALVE & MTG GP-MAIN CONTROL–2-FUNCTION	476
VALVE & MTG GP-MAIN CONTROL–2-FUNCTION, WITH RIDE CONTROL	479
VALVE GP-BRAKE CONTROL (SERVICE)	385
VALVE GP-BRAKE CONTROL–PARKING	391
VALVE GP-CHECK	440, 482, 483, 484, 485
VALVE GP-CHECK (AXLE OIL COOLER BYPASS)	300
VALVE GP-CHECK–FUEL	118, 119
VALVE GP-CONTROL	499
VALVE GP-CONTROL–HYDRAULIC BLOCK	485
VALVE GP-CONTROL–LIFT	489
VALVE GP-CONTROL–TILT	487
VALVE GP-DIVERTER	491
VALVE GP-DRAIN–ECOLOGY, HYDRAULIC	492
VALVE GP-FLOW DIVIDER (AXLE OIL)	300
VALVE GP-LOWERING CONTROL	493
VALVE GP-MAIN CONTROL–2-FUNCTION	497
VALVE GP-MAIN CONTROL–2-FUNCTION, WITH RIDE CONTROL	495
VALVE GP-MAKEUP	489
VALVE GP-MANUAL	498
VALVE GP-MODULATING	323
VALVE GP-PRESSURE REDUCING	499
VALVE GP-PRESSURE REDUCING (PILOT OIL)	455
VALVE GP-PUMP CONTROL–PRESSURE, FLOW COMPENSATOR	500, 502
VALVE GP-RELIEF	324, 325, 504
VALVE GP-RELIEF & DIVERTER (HYDRAULIC TANK)	451
VALVE GP-RELIEF (AXLE OIL)	300
VALVE GP-RELIEF (BRAKE)	451
VALVE GP-RELIEF (LINE, TILT)	487
VALVE GP-RELIEF (PUMP MARGIN PRESSURE)	455

INDEX

Name	Page
VALVE GP-RELIEF–PUMP BACKUP	411
VALVE GP-RELIEF–STEERING CYLINDER CROSSOVER	410
VALVE GP-RIDE CONTROL	505
VALVE GP-SECONDARY STEERING	412
VALVE GP-SELECTOR (STEERING)	413
VALVE GP-SHUTOFF (CAB HEATER)	576
VALVE GP-SHUTOFF (WATER PUMP)	576
VALVE GP-SHUTTLE	505
	507
	508
VALVE GP-SHUTTLE (BRAKE, HYDRAULIC FAN)	451
VALVE GP-SOLENOID	509
	510
	511
	513
VALVE GP-SOLENOID (24-VOLT) (HYDRAULIC LOCKOUT)	455
VALVE GP-SOLENOID (24-VOLT) (PILOT PROPORTIONING)	487
	489
VALVE GP-SOLENOID (DRIFT REDUCTION)	487
	489
VALVE GP-SOLENOID (RIDE CONT, LIFT CYL HEAD END)	505
VALVE GP-SOLENOID (RIDE CONTROL, BALANCE)	505
VALVE GP-SOLENOID–24-VOLT	512
VALVE GP-STEERING–HMU STEERING	413
VALVE GP-STEERING NEUTRALIZER	415
VALVE GP-TIRE	311
VALVE MECHANISM GP	49
VISOR GP-CAB	634

W

Name	Page
WASHER GP-WINDOW	635
WATER SEP & FUEL PRM PUMP GP	112
WINDOW GP-DOOR–LH	638
WINDOW GP-DOOR–RH	636
WIPER GP-WINDOW	640
WIRING GP-AXLE TEMPERATURE–OIL TEMPERATURE	219
WIRING GP-CAB	221
WIRING GP-CHASSIS	231
WIRING GP-ELECTRONIC CONTROL–ENGINE	239
WIRING GP-ENGINE	242
WIRING GP-FRONT	244
WIRING GP-LIGHTING–LOADER FRAME	246
	247
	248
WIRING GP-SECONDARY STEERING	249
WIRING GP-SENSOR	251
WIRING GP-SENSOR–TILT	253
WIRING GP-UNIT INJECTOR	255

MACHINE ARRANGEMENT

236-9000 CHASSIS AR

S/N: RYF1-UP

PART OF 236-8957 GENERAL AR

SMCS-7000 **i03607910**

NOTE	PART NUMBER	QTY	PART NAME 1 2 3 4 5 6 (PRODUCT LEVEL)	SEE PAGE
Y	*236-8973*	1	BOX GP-BATTERY	329
Y	*185-3644*	1	CONTROL GP-BUCKET	516
Y	*236-8972*	1	CONTROL GP-SERVICE BRAKE	385
Y	*326-8938*	1	COUNTERWEIGHT GP	331
Y	*119-4398*	1	CYLINDER & MTG GP-STEERING	392
Y	*236-8974*	1	FENDER GP	334
Y	**236-8976**	1	FRAME AS-LOADER	339
Y	**236-8975**	1	FRAME AS-REAR	341
Y	*252-9543*	1	GUARD GP-LOADER FRAME (FRONT)	347
Y	*119-4401*	1	HITCH GP-ARTICULATING	349
Y	*292-6010*	1	HOOD & GUARD GP	351
Y	*236-8978*	1	LADDER GP	355
Y	*236-8979*	1	LINES GP-AFTERCOOLER AIR	85
Y	*236-8980*	1	LINES GP-CAB HEATER	576
Y	*236-8981*	1	LINES GP-FUEL	104
Y	*236-8982*	1	LINES GP-GREASE	359
Y	*236-8983*	1	LINES GP-HYDRAULIC OIL COOLER	440
Y	*236-8985*	1	LINES GP-STEERING (HMU STEERING)	398
Y	*236-8987*	1	LINES GP-TORQUE CONV COOLER	298
Y	*236-8988*	1	LINES GP-WATER (RADIATOR)	68
Y	*112-6973*	1	LINK GP-STEERING FRAME LOCK	362
Y	*252-6980*	1	PANEL GP-SIDE	364
Y	*292-3022*	1	PLATE & FILM GP	683
Y	*236-8990*	1	RADIATOR & FAN GP	76
Y	*236-8991*	1	SHIELD GP-ENGINE COMPARTMENT	367
Y	*236-8992*	1	SUPPORT GP-AIR INLET	369
Y	*245-9818*	1	SUPPORT GP-VALVE & FILTER	370
Y	*276-1054*	1	TANK GP-FUEL	115
Y	*236-9039*	1	WASHER GP-WINDOW	635
	6V-1970	1	LITERATURE GP	
	2Y-3209	2	SEAL-WIRE	
	5P-8500	2	KEY	

Y-SEPARATE ILLUSTRATION

<END>

236-8957 GENERAL AR

S/N: RYF1-UP

SMCS-7000 **i03624908**

NOTE	PART NUMBER	QTY	PART NAME 1 2 3 4 5 6 (PRODUCT LEVEL)	SEE PAGE
Y	*236-9000*	1	CHASSIS AR	1
Y	*236-8961*	1	ELECTRICAL AR	135
Y	**234-7848**	1	ENGINE AR-COMPLETE	2
Y	*236-8963*	1	HYDRAULIC AR-2 VALVE	434
Y	*236-7231*	1	INSTALLATION AR-ENGINE	4
Y	*237-2570*	1	OPERATOR AR-ENCLOSED ROPS (HMU STEERING)	593
Y	*236-8965*	1	POWER TRAIN AR	307

Y-SEPARATE ILLUSTRATION

<END>

ENGINE ARRANGEMENT

234-7848 ENGINE AR-COMPLETE

S/N: RSX15243-UP

PART OF 236-8957 GENERAL AR

SMCS-1000 **i03618321**

NOTE	PART NUMBER	QTY	PART NAME 1 2 3 4 5 6 (PRODUCT LEVEL)	SEE PAGE
Y	*237-9767*	1	ALTERNATOR GP-CHARGING	123
Y	*237-9755*	1	BASE GP-OIL FILTER (ENGINE)	51
Y	*267-0007*	1	BREATHER GP (CRANKCASE)	
Y	*251-7610*	1	CONNECTION GP-ELECTRICAL	129
Y	*233-6191*	1	CONTROL & MTG GP-ENGINE ELEK	130
Y	*251-7600*	1	COOLER GP-ENGINE OIL	65
Y	*232-3120*	1	COOLER GP-TRANSMISSION OIL	266
Y	*227-2574*	1	COVER GP-FRONT HOUSING	8
Y	*229-2614*	1	COVER GP-VALVE MECHANISM	9
Y	*117-2766*	1	DAMPER GP	21
Y	*237-9769*	1	DRIVE GP-ACCESSORY	23
Y	*286-5803*	1	ENGINE AR-CORE	3
Y	*117-2771*	1	FASTENER GP-DAMPER & PULLEY	26
Y	*243-1670*	1	FILLER GP-ENGINE OIL	55
Y	*285-6638*	1	FILTER GP-FUEL (SECONDARY)	100
Y	*231-3492*	1	FILTER GP-ENGINE OIL	57
Y	*185-5803*	1	FLYWHEEL GP	27
Y	*340-7752*	1	FUMES DISPOSAL GP	58
Y	*236-5035*	1	GAUGE GP-OIL LEVEL (DIPSTICK) (ENGINE)	59
Y	*243-1680*	1	HOUSING GP-FLYWHEEL	29
Y	*224-0880*	1	LIFTING GP-ENGINE	33
Y	*237-9754*	1	LINES GP-AIR	88
Y	*237-9756*	1	LINES GP-AIR (90-DEG)	89
Y	*251-7595*	1	LINES GP-FUEL	105
Y	*234-7843*	1	LINES GP-TURBOCHARGER OIL	60
Y	*243-1667*	1	LINES GP-WATER (SINGLE WATER REGULATOR)	70
Y	*255-2397*	1	LINES GP-WATER (PUMP)	72
Y	*267-3476*	1	MANIFOLD GP-EXHAUST	90
Y	*222-3092*	1	MANIFOLD GP-INLET (MID)	91
Y	*219-7440*	1	MOUNTING GP-FAN DRIVE	35
Y	*234-7847*	1	PAN GP-OIL	37
Y	*117-0165*	1	PLUG GP-CYLINDER BLOCK (OIL GALLERY, END)	40
Y	*227-9545*	1	PLUG GP-CYLINDER BLOCK (OIL GALLERY, RH)	42
Y	*269-6164*	1	PLUG GP-ENGINE	43
Y	*123-0789*	1	PULLEY GP-ALTERNATOR	44
Y	*230-7168*	1	PULLEY GP-CRANKSHAFT	45
Y	*235-1080*	1	PUMP GP-FUEL PRM & PRIM FILTER	110
Y	*116-1091*	1	SEAL GP-CRANKSHAFT	47
Y	*243-1555*	1	SENSOR GP-ENGINE (TEMPERATURE, PRESSURE)	176
Y	*183-5518*	1	SUPPORT GP-ENGINE	48
Y	*234-7857*	1	TURBOCHARGER GP	96
Y	*237-9752*	1	WIRING GP-ELECTRONIC CONTROL (ENGINE)	239
	235-7509	1	ELECTRONICS GP-ENGINE RATINGS	
			PLEASE USE THE GASKET KIT LINK IN SIS OR CONTACT YOUR LOCAL DEALER FOR THE LATEST GASKET KIT INFORMATION	

Y-SEPARATE ILLUSTRATION

ENGINE ARRANGEMENT

286-5803 ENGINE AR-CORE

S/N: RSX15243-UP
TIER III
PART OF 234-7848 ENGINE AR-COMPLETE

SMCS-1000 **i03556361**

NOTE	PART NUMBER	QTY	PART NAME 1 2 3 4 5 6 (PRODUCT LEVEL)	SEE PAGE
Y	*267-0010*	1	BASE GP-VALVE COVER	5
Y	*223-7463*	1	CAMSHAFT GP	7
Y	*224-3882*	1	CRANKSHAFT GP	10
YR	*240-7271*	1	CYLINDER BLOCK GP	15
Y	*305-0618*	1	CYLINDER HEAD GP	20
Y	*222-3088*	1	GEAR GP-FRONT	28
Y	*218-7272*	1	HOUSING GP-FRONT	30
Y	*229-8084*	1	MOUNTING GP-VALVE MECHANISM	36
Y	*238-2721*	6	PISTON & ROD GP	39
Y	*223-3875*	1	PLUG GP-CYLINDER BLOCK	41
Y	*233-5221*	1	PUMP GP-ENGINE OIL	63
Y	*253-1459*	6	PUMP GP-FUEL INJECTION	109
Y	*305-6163*	1	PUMP GP-FUEL TRANSFER	114
Y	*228-5812*	1	PUMP GP-WATER	73
Y	*240-7272*	1	VALVE MECHANISM GP	49
Y	*230-0961*	1	WIRING GP-UNIT INJECTOR	255

R-REMFG PART MAY BE AVAILABLE
Y-SEPARATE ILLUSTRATION

ENGINE ARRANGEMENT

236-7231 INSTALLATION AR-ENGINE

S/N: RYF1-UP

PART OF 236-8957 GENERAL AR

SMCS-1000 **i03607915**

NOTE	PART NUMBER	QTY	PART NAME 1 2 3 4 5 6 (PRODUCT LEVEL)	SEE PAGE
Y	*235-1075*	1	AIR CLEANER GP	83
Y	*260-1939*	1	DRIVE GP-ACCESSORY	24
Y	*235-1078*	1	LINES GP-AIR (TURBOCHARGER)	87
Y	*235-1076*	1	LINES GP-FUEL DRAIN	107
Y	*185-5298*	1	MOUNTING GP-ENGINE & XMSN	34
Y	*237-9750*	1	MUFFLER GP	92
Y	*251-7593*	1	STARTING MOTOR GP-ELECTRIC	196

Y-SEPARATE ILLUSTRATION

BASIC ENGINE

267-0010 BASE GP-VALVE COVER—ENGINE

S/N: RSX15243-UP

PART OF 286-5803 ENGINE AR-CORE

SMCS-1120 **i03558942**

NOTE	REF NO	GRAPHIC REF	PART NUMBER	QTY	PART NAME 1 2 3 4 5 6 (PRODUCT LEVEL)	SEE PAGE
Y	1	1	**325-4505**	1	BASE GP-VALVE COVER	6
M	2	1	**6V-5221**	6	BOLT (M8X1.25X80-MM)	
	3	1	**132-5789**	1	CLIP	
M	4	1	**6V-3918**	7	BOLT (M8X1.25X50-MM)	
	5	1	**9M-1974**	13	WASHER-HARD (8.8X16X2-MM THK)	
	6	1	**272-0389**	1	SEAL	

M-METRIC PART
Y-SEPARATE ILLUSTRATION

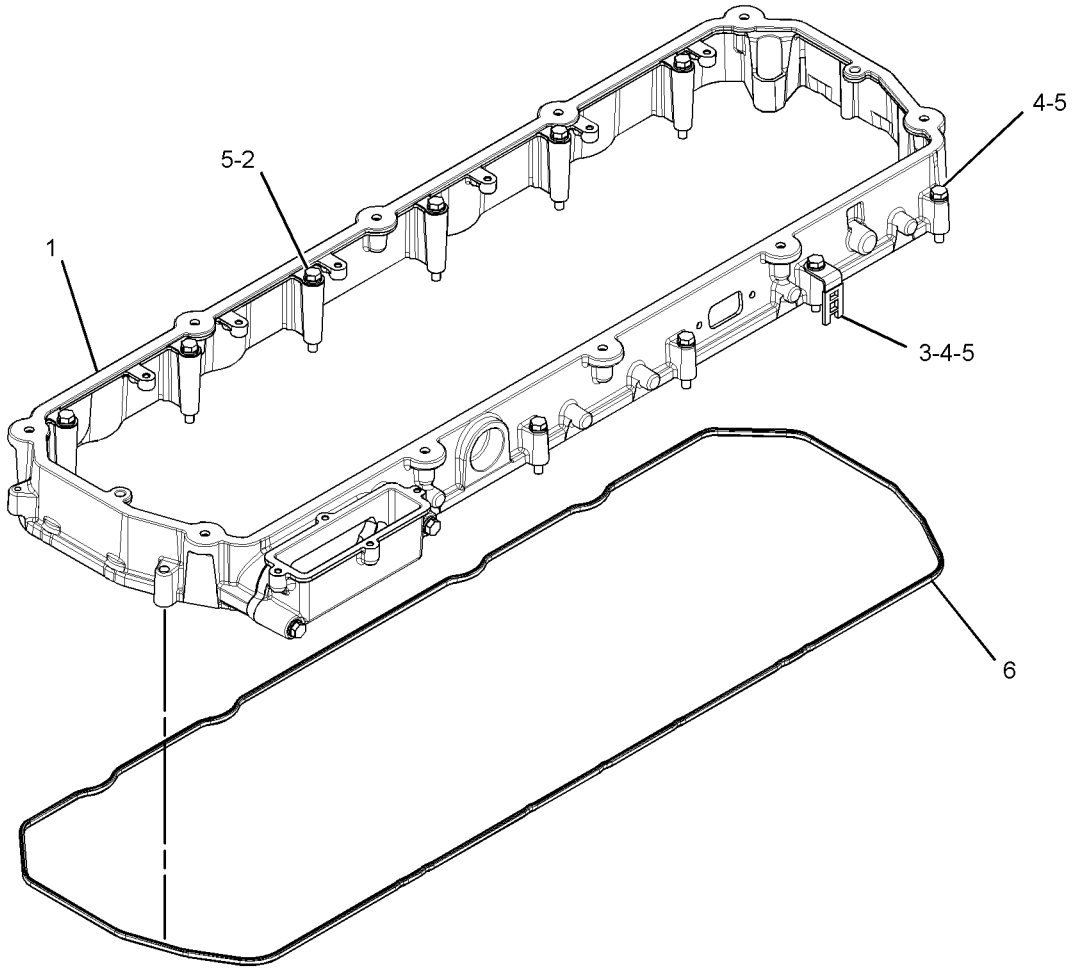

GRAPHIC #1 **<END>** g01881166

BASIC ENGINE

325-4505 BASE GP-VALVE COVER

S/N: RSX15243-UP

PART OF 267-0010 BASE GP-VALVE COVER

SMCS-1120 **i03558962**

NOTE	REF NO	GRAPHIC REF	PART NUMBER	QTY	PART NAME 1 2 3 4 5 6 (PRODUCT LEVEL)	SEE PAGE
	1	1	**321-5639**	1	SEAL	
	2	1	**332-3707**	1	ADAPTER	
M	3	1	**5P-8347**	2	BOLT (M8X1.25X70-MM)	
	4	1	**9M-1974**	2	WASHER-HARD (8.8X16X2-MM THK)	

M-METRIC PART

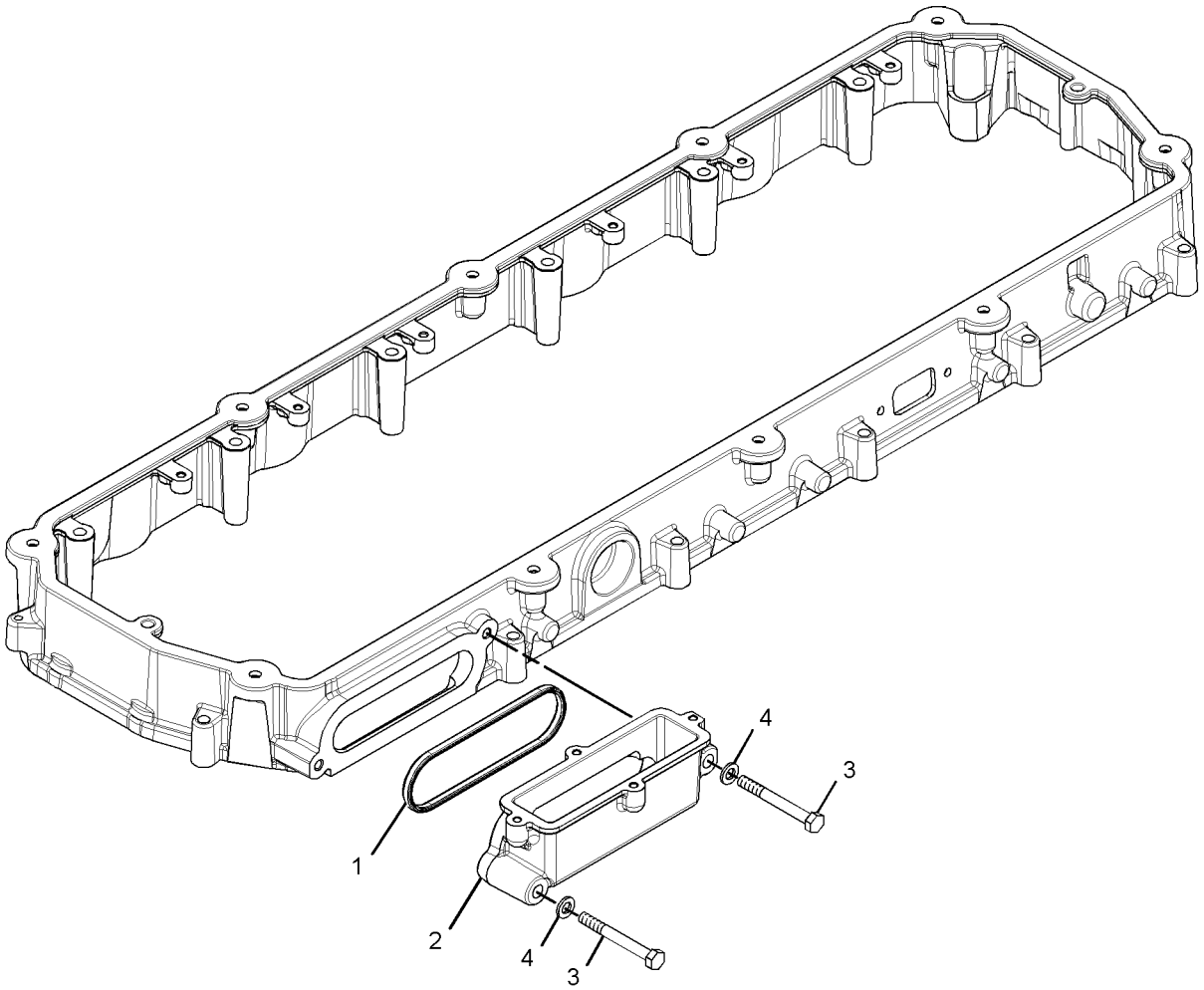

GRAPHIC #1 **<END>** g01880575

BASIC ENGINE

223-7463 CAMSHAFT GP

S/N: RSX15243-UP

PART OF 286-5803 ENGINE AR-CORE

SMCS-1210, 1211, 1212 **i03557823**

NOTE	REF NO	GRAPHIC REF	PART NUMBER	QTY	PART NAME 1 2 3 4 5 6 (PRODUCT LEVEL)	SEE PAGE
R	1	1	**223-7468**	1	CAMSHAFT AS	
	1A	1	**1B-8705**	1	KEY-WOODRUFF	
	1B	1	**222-3907**	1	GEAR (96-TEETH)	
	1C	1	**223-7471**	1	PLATE-THRUST	
	2	1	**229-5684**	1	COVER	
	3	1	**131-3718**	1	SEAL-O-RING	
M	4	1	**6V-5217**	4	BOLT (M8X1.25X20-MM)	
	5	1	**9M-1974**	4	WASHER-HARD (8.8X16X2-MM THK)	
M	6	1	**8T-0338**	4	BOLT-SOCKET HEAD (M8X1.25X45-MM)	

M-METRIC PART
R-REMFG PART MAY BE AVAILABLE

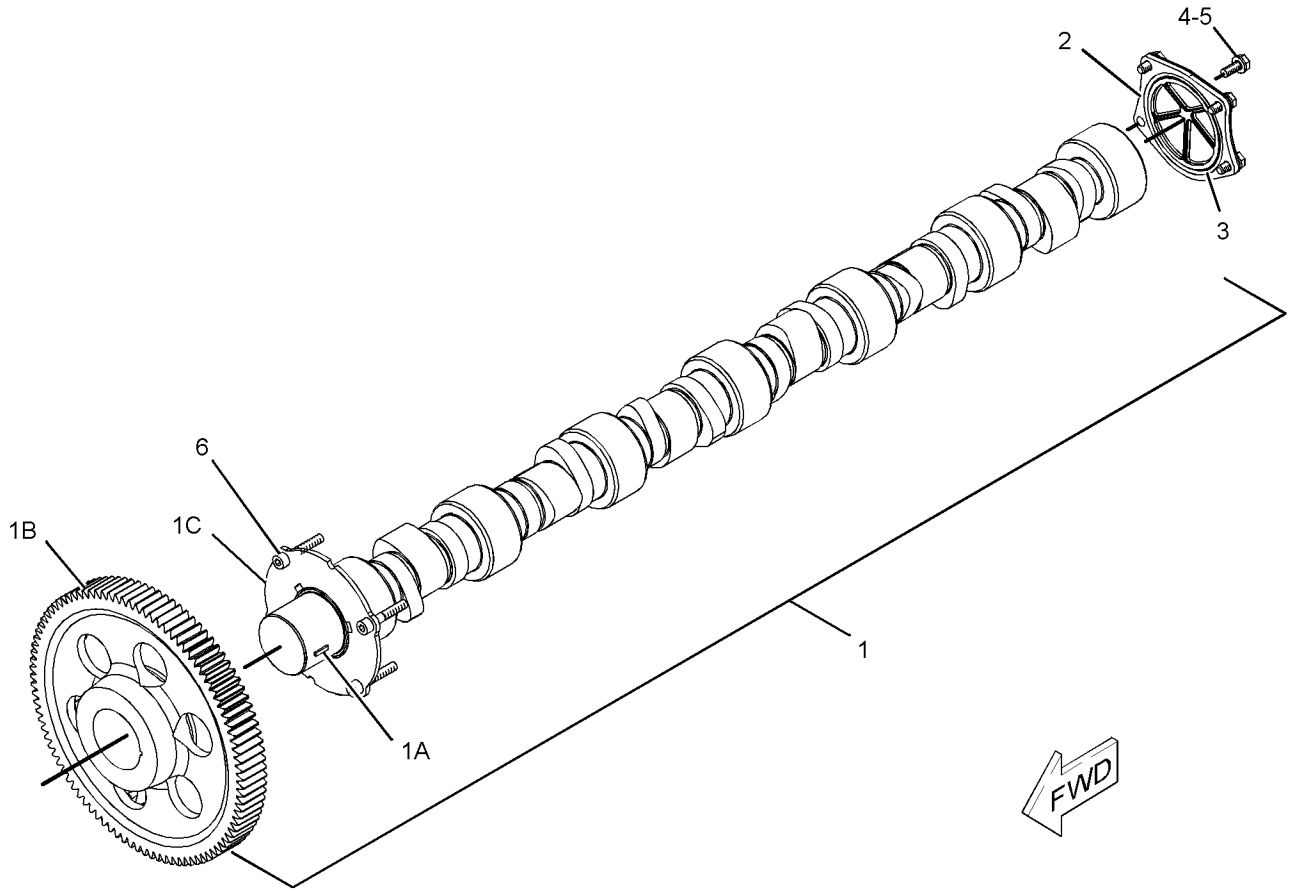

GRAPHIC #1 **<END>** g01043782

BASIC ENGINE

227-2574 COVER GP-FRONT HOUSING

S/N: RSX15243-UP
PROVIDES COVER WHEN AIR COMPRESSOR IS NOT USED
PART OF 234-7848 ENGINE AR-COMPLETE

SMCS-1151, 1166 **i03555774**

NOTE	REF NO	GRAPHIC REF	PART NUMBER	QTY	PART NAME 1 2 3 4 5 6 (PRODUCT LEVEL)	SEE PAGE
	1	1	**285-0823**	1	COVER	
M	2	1	**6V-8197**	3	BOLT (M12X1.75X40-MM)	
	3	1	**7J-6285**	1	SEAL-O-RING	
	4	1	**8T-4223**	3	WASHER-HARD (13.5X25.5X3-MM THK)	

M-METRIC PART

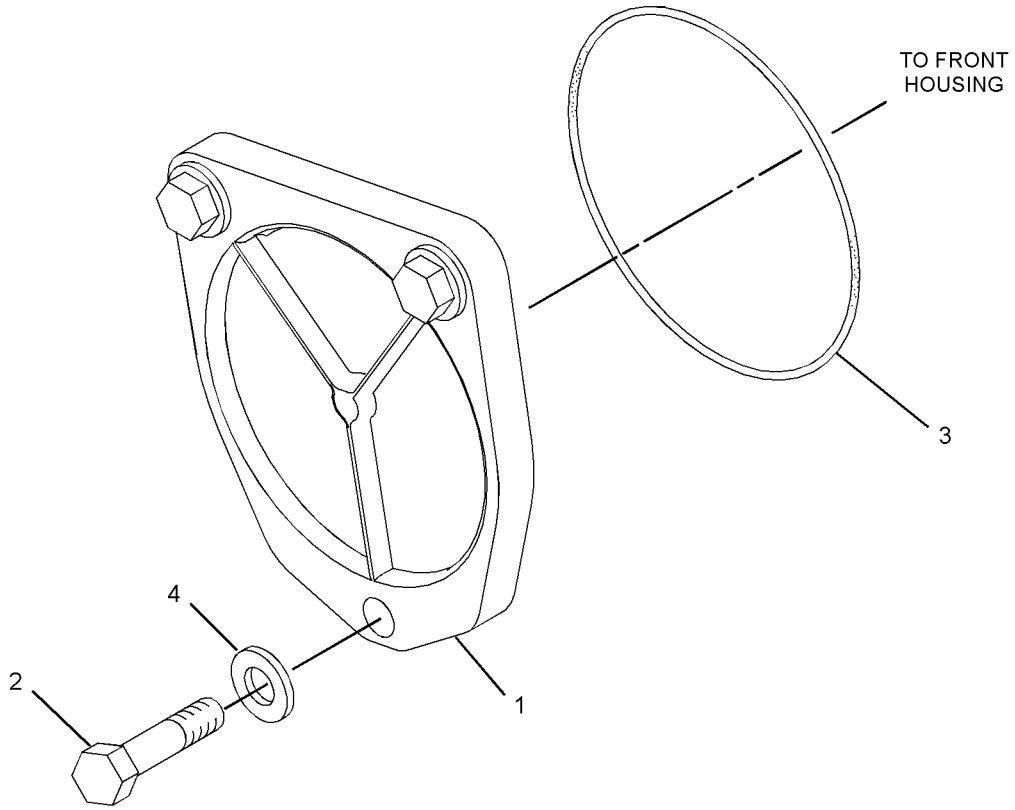

GRAPHIC #1 **<END>** g01345052

229-2614 COVER GP-VALVE MECHANISM

S/N: RSX15243-UP

PART OF 234-7848 ENGINE AR-COMPLETE

FOR USE WITH ALL ENGINES THAT REQUIRE A VARIABLE VALVE ACTUATOR GROUP OR A BRAKE.

SMCS-1107 **i03555798**

NOTE	REF NO	GRAPHIC REF	PART NUMBER	QTY	PART NAME 1 2 3 4 5 6 (PRODUCT LEVEL)	SEE PAGE
	1	1	**212-7728**	10	WASHER-ISOLATOR	
	2	1	**309-8825**	1	COVER-VALVE	
	3	1	**229-5711**	1	SEAL-VALVE COVER	
M	4	1	**8T-6912**	10	BOLT (M8X1.25X50-MM)	
	5	1	**8T-4224**	10	WASHER-HARD (8.8X16X2-MM THK)	

M-METRIC PART

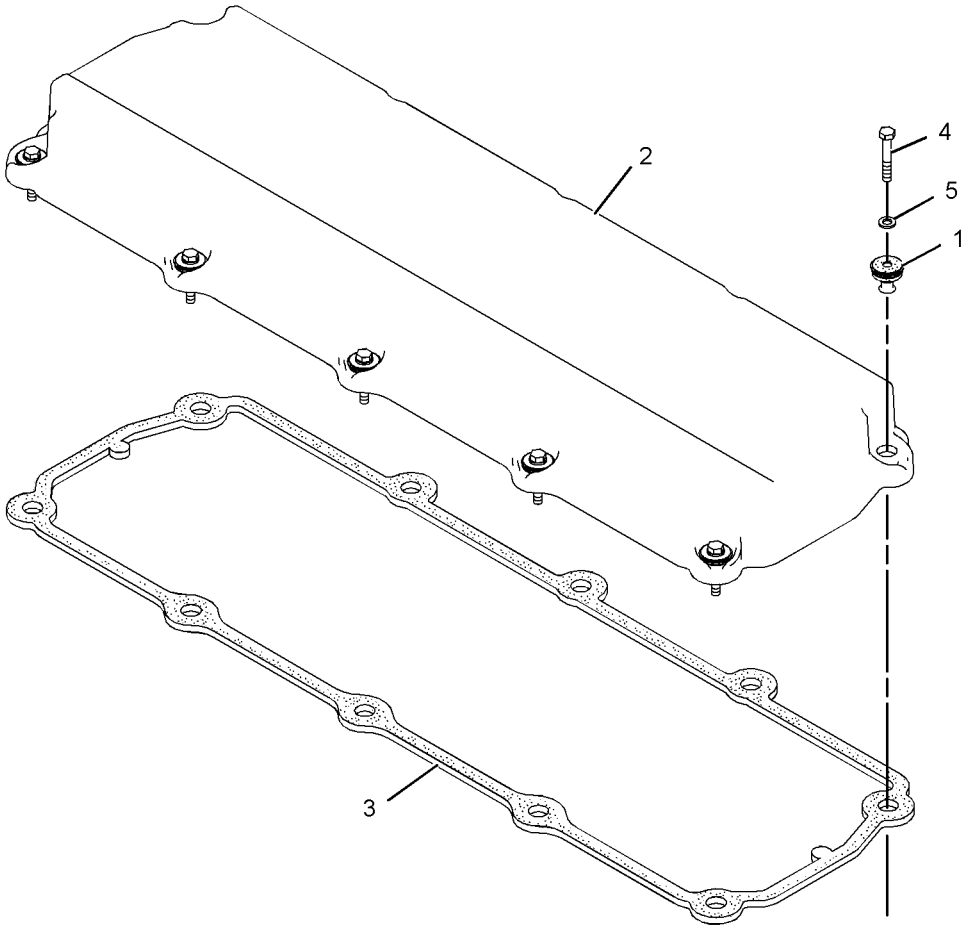

GRAPHIC #1 **<END>** g01376544

BASIC ENGINE

224-3882 CRANKSHAFT GP

S/N: RSX15243-UP

PART OF 286-5803 ENGINE AR-CORE

SMCS-1202 **i03557841**

NOTE	REF NO	GRAPHIC REF	PART NUMBER	QTY	PART NAME 1 2 3 4 5 6 (PRODUCT LEVEL)	SEE PAGE
J	1	1	**246-3144**	2	PLATE-THRUST	
J	2	1	**211-0587**	4	BEARING-MAIN (STANDARD)	
AB		1	**128-0400**		BEARING-MAIN (0.51-MM US)	
AB		1	**128-0401**		BEARING-MAIN (0.76-MM US)	
AB		1	**128-0402**		BEARING-MAIN (0.51-MM OS)	
AB		1	**128-0403**		BEARING-MAIN (0.51-MM US - 0.51-MM OS)	
J	3	1	**211-0588**	3	BEARING-MAIN (STANDARD)	
AB		1	**128-0382**		BEARING-MAIN (0.51-MM US)	
AB		1	**128-0383**		BEARING-MAIN (0.76-MM US)	
AB		1	**128-0384**		BEARING-MAIN (0.51-MM OS)	
AB		1	**128-0385**		BEARING-MAIN (0.51-MM US - 0.51-MM OS)	
R	4	1	**313-3996**	1	CRANKSHAFT AS	
		1	**6V-3536**	1	DOWEL	
		1	**9Y-0810**	1	SLEEVE-WEAR (REAR SEAL)	
		1	**9Y-0821**	1	SLEEVE (FRONT SEAL)	
		1	**187-8972**	1	GEAR-CRANKSHAFT (48-TEETH)	
					AVAILABLE REPAIR KIT(S):	
J			**243-6717**	1	KIT-CRANKSHAFT BEARING	
					(INCLUDES STANDARD BEARINGS & THRUST PLATES)	

A-NOT PART OF THIS GROUP
B-USE AS REQUIRED
J-KIT MARKED J INCLUDES PARTS MARKED J
R-REMFG PART MAY BE AVAILABLE

224-3882 **CRANKSHAFT GP** *(contd.)* **i03557841**

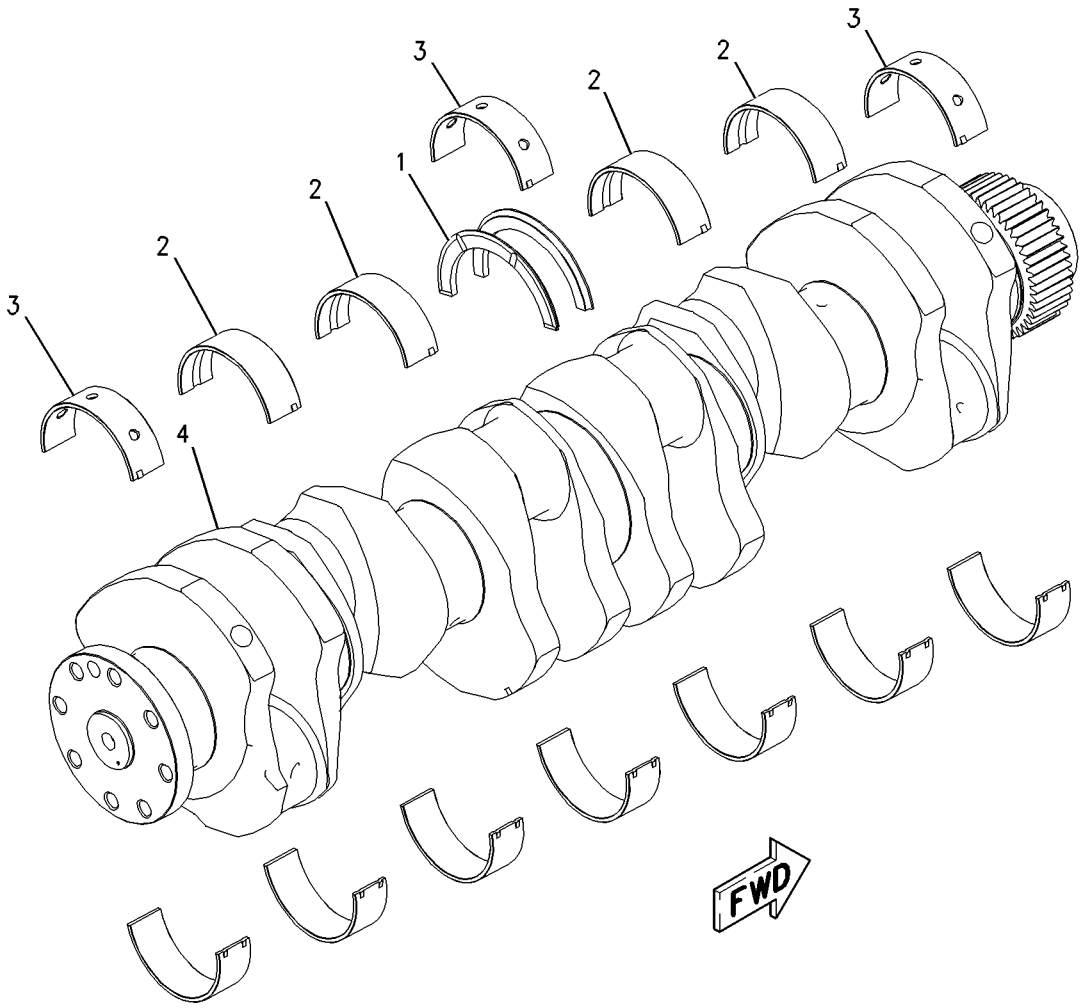

GRAPHIC #1 **<END>** g00939576

BASIC ENGINE

303-1382 CYLINDER BLOCK AS

S/N: RSX15243-UP

PART OF 303-1383 CYLINDER BLOCK AS

SMCS-1201 **i03558063**

NOTE	REF NO	GRAPHIC REF	PART NUMBER	QTY	PART NAME 1 2 3 4 5 6 (PRODUCT LEVEL)	SEE PAGE
	1	1	**223-6546**	14	BOLT (M18X2.5X170-MM)	
	2	1	**293-9397**	14	WASHER-HARD (19X34X3.5-MM THK)	
	3	1	**207-8572**	7	CAP-BEARING	

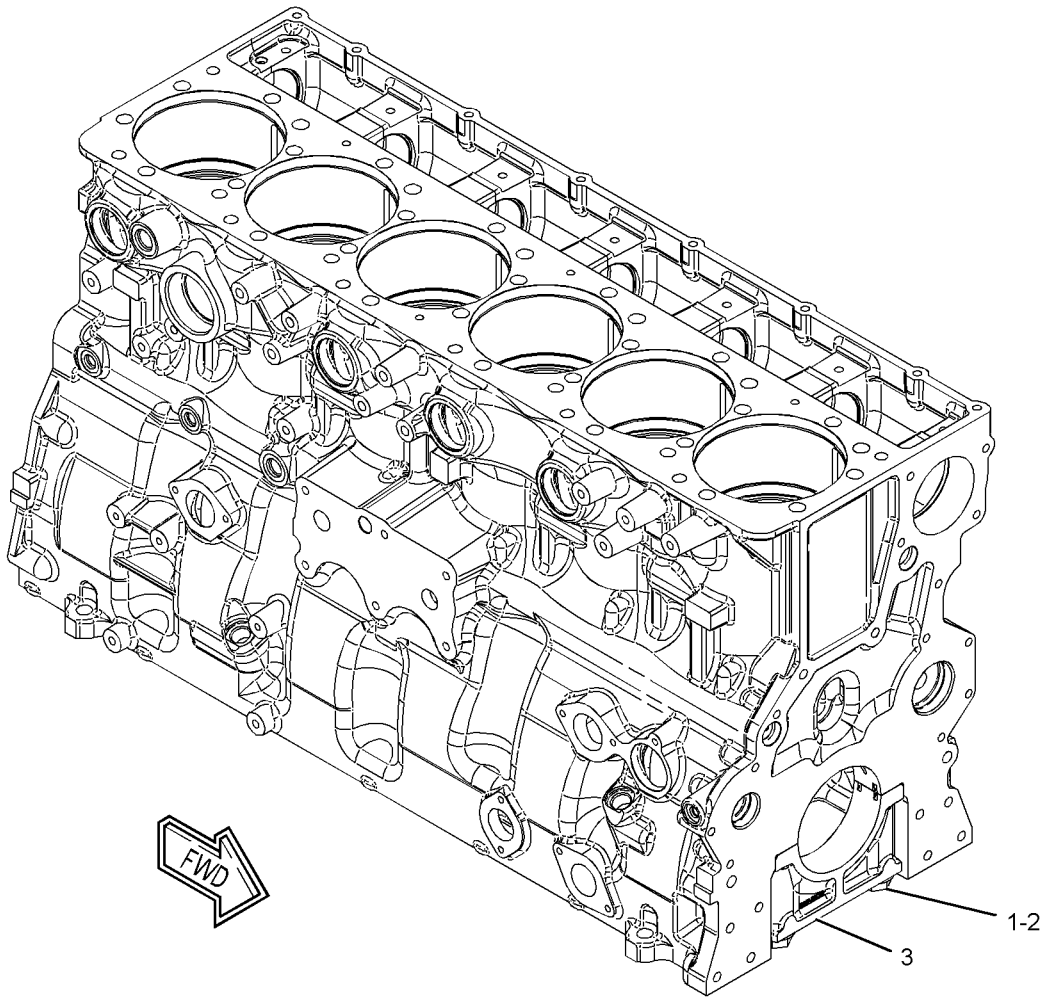

GRAPHIC #1 **<END>** g01338467

BASIC ENGINE

303-1383 CYLINDER BLOCK AS

S/N: RSX15243-UP

PART OF 303-1384 CYLINDER BLOCK AS

SMCS-1201 **i03558040**

NOTE	REF NO	GRAPHIC REF	PART NUMBER	QTY	PART NAME 1 2 3 4 5 6 (PRODUCT LEVEL)	SEE PAGE
	1	1	**187-8969**	7	BEARING	
Y	2	1	*303-1382*	1	CYLINDER BLOCK AS	12

Y-SEPARATE ILLUSTRATION

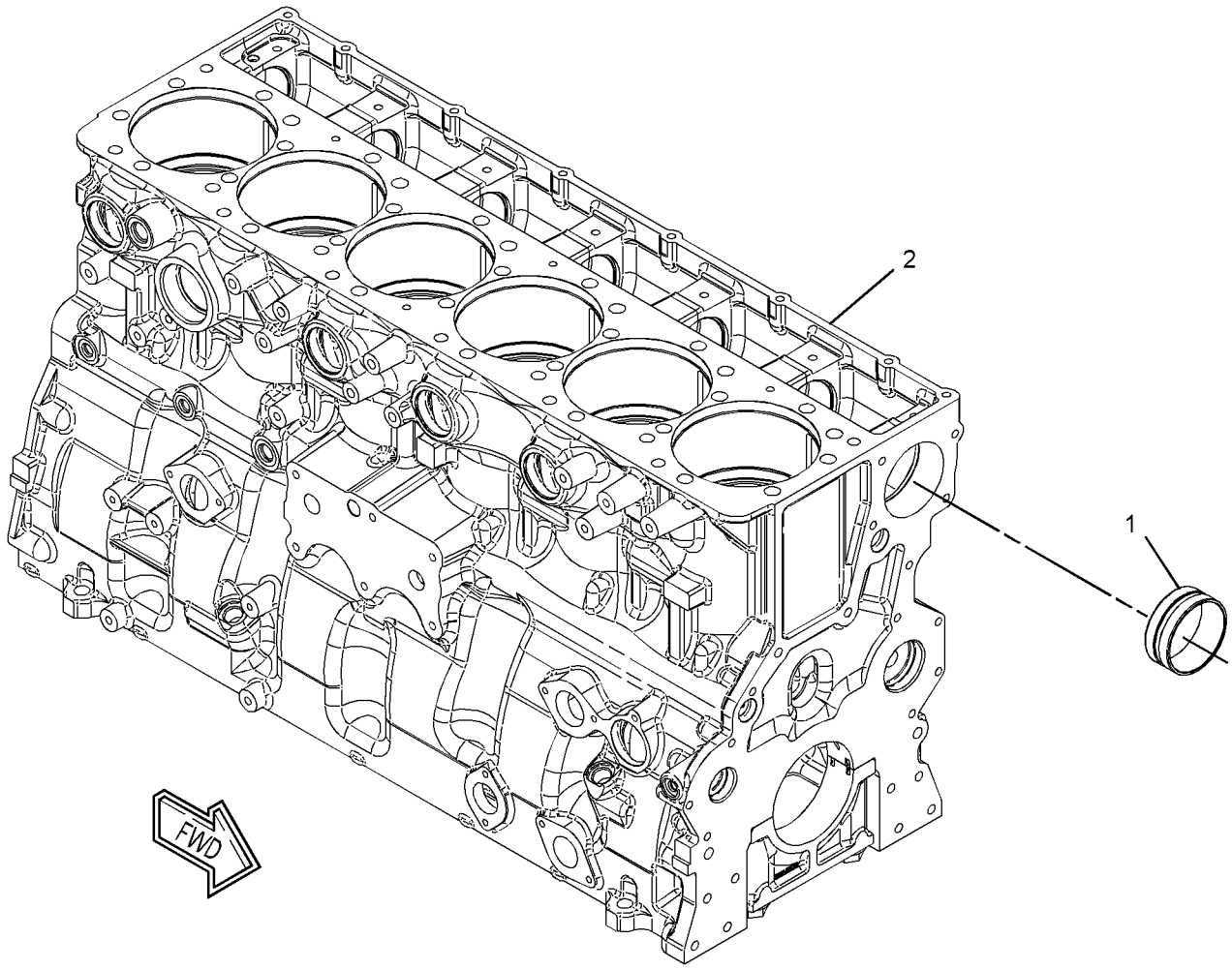

GRAPHIC #1 **<END>** g01338428

BASIC ENGINE

303-1384 CYLINDER BLOCK AS*R

S/N: RSX15243-UP

PART OF 240-7271 CYLINDER BLOCK GP

SMCS-1201 **i03557900**

NOTE	REF NO	GRAPHIC REF	PART NUMBER	QTY	PART NAME 1 2 3 4 5 6 (PRODUCT LEVEL)	SEE PAGE
	1	1	**4F-5695**	5	PLUG-CUP	
	2	1	**104-3560**	6	SEAL-LINER	
	3	1	**197-9330**	6	LINER-CYLINDER	
Y	4	1	*303-1383*	1	CYLINDER BLOCK AS	13

Y-SEPARATE ILLUSTRATION

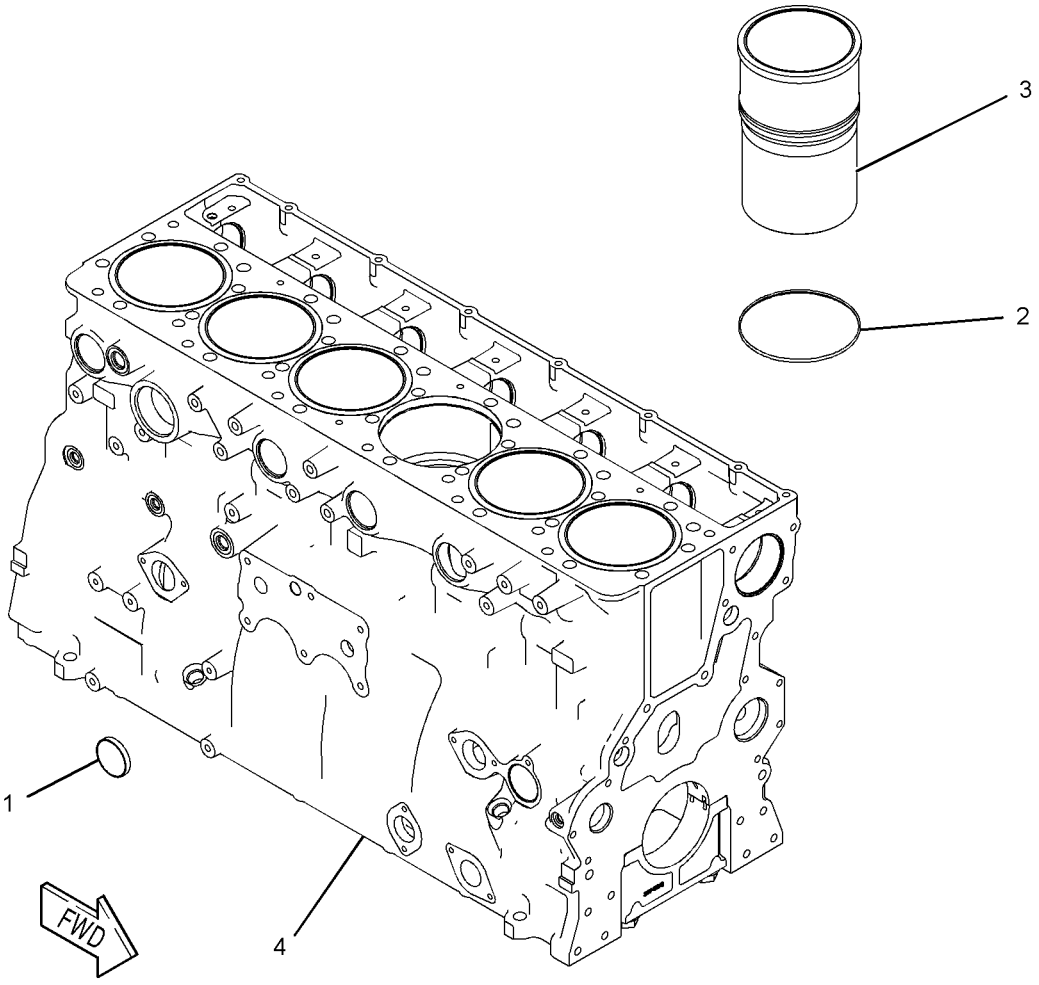

GRAPHIC #1 **<END>** g01009480

BASIC ENGINE

240-7271 CYLINDER BLOCK GP*R

S/N: RSX15243-UP

PART OF 286-5803 ENGINE AR-CORE

SMCS-1201 **i03557863**

NOTE	REF NO	GRAPHIC REF	PART NUMBER	QTY	PART NAME 1 2 3 4 5 6 (PRODUCT LEVEL)	SEE PAGE
	1	1	**3B-0623**	3	PLUG-CUP	
CYR	2	1	**303-1384**	1	CYLINDER BLOCK AS	14
	3	1	**9X-7378**	2	SEAL-O-RING	
	4	1	**9S-4182**	2	PLUG-O-RING (7/16-2 THD)	
	5	1	**6V-5048**	1	SEAL-O-RING	
	6	1	**6V-3538**	2	DOWEL	
	7	1	**7N-5683**	6	DOWEL	
	8	1	**9S-8002**	1	PLUG-O-RING (7/16-2 THD)	

C-CHANGE FROM PREVIOUS TYPE
R-REMFG PART MAY BE AVAILABLE
Y-SEPARATE ILLUSTRATION

240-7271 **CYLINDER BLOCK GP** *(contd.)* **i03557863**

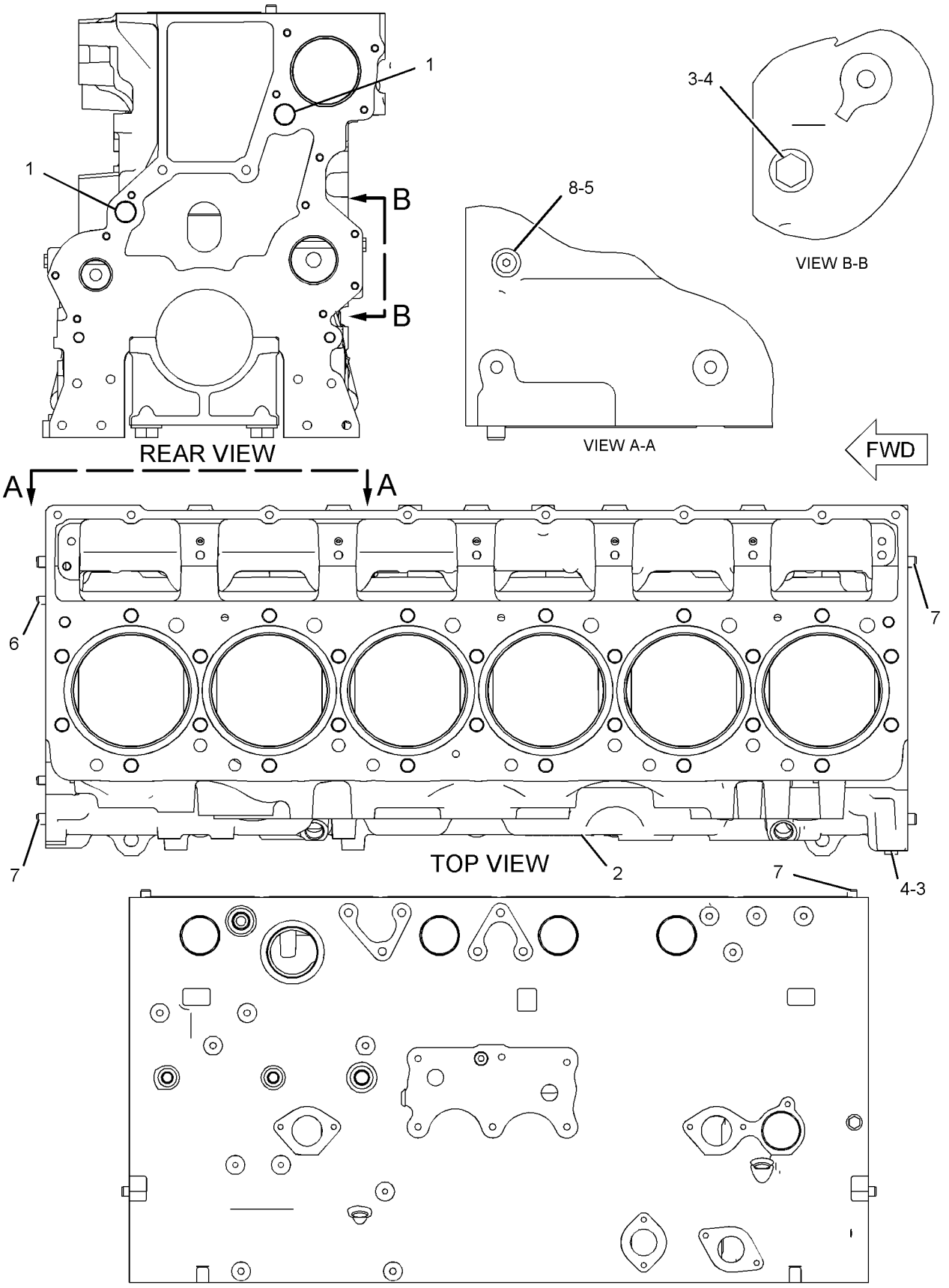

GRAPHIC #1

<END>

g01017611

308-6358 CYLINDER HEAD AS

S/N: RSX15243-UP

PART OF 305-0617 CYLINDER HEAD GP

SMCS-1100, 1101 **i03558160**

NOTE	REF NO	GRAPHIC REF	PART NUMBER	QTY	PART NAME 1 2 3 4 5 6 (PRODUCT LEVEL)	SEE PAGE
	1	2	**224-1270**	12	INSERT-VALVE SEAT (EXHAUST) (STANDARD)	
AB		2	**254-3944**		INSERT-VALVE SEAT (0.51-MM OS OD) (EXHAUST)	
AB		2	**331-5010**		INSERT-VALVE (0.13-MM OS OD) (EXHAUST)	
AB		2	**331-5011**		INSERT-VALVE (0.26-MM OS OD) (EXHAUST)	
	2	2	**260-4855**	12	INSERT-VALVE (INLET) (STANDARD)	
AB		2	**331-5007**		INSERT-VALVE (INLET 0.13 OS OD)	
AB		2	**331-5008**		INSERT-VALVE (INLET 0.26 OS OD)	
AB		2	**331-5009**		INSERT-VALVE (INLET 0.51 OS OD)	
	3	2	**263-4920**	6	SLEEVE-INJECTOR (INLET)	
	4	2	**268-2953**	24	GUIDE-VALVE	
	6	2	**166-2904**	12	SEAL-O-RING	
	7	1,2	**3B-0623**	35	PLUG-CUP	
	8	1,2	**6V-5049**	7	SEAL-O-RING	
	9	2	**6V-5063**	1	SEAL-O-RING	
	10	1,2	**9S-8004**	7	PLUG-O-RING	
	11	2	**9S-8008**	1	PLUG-O-RING	
	12	2	**9X-7430**	6	SEAL-O-RING	

A-NOT PART OF THIS GROUP
B-USE AS REQUIRED

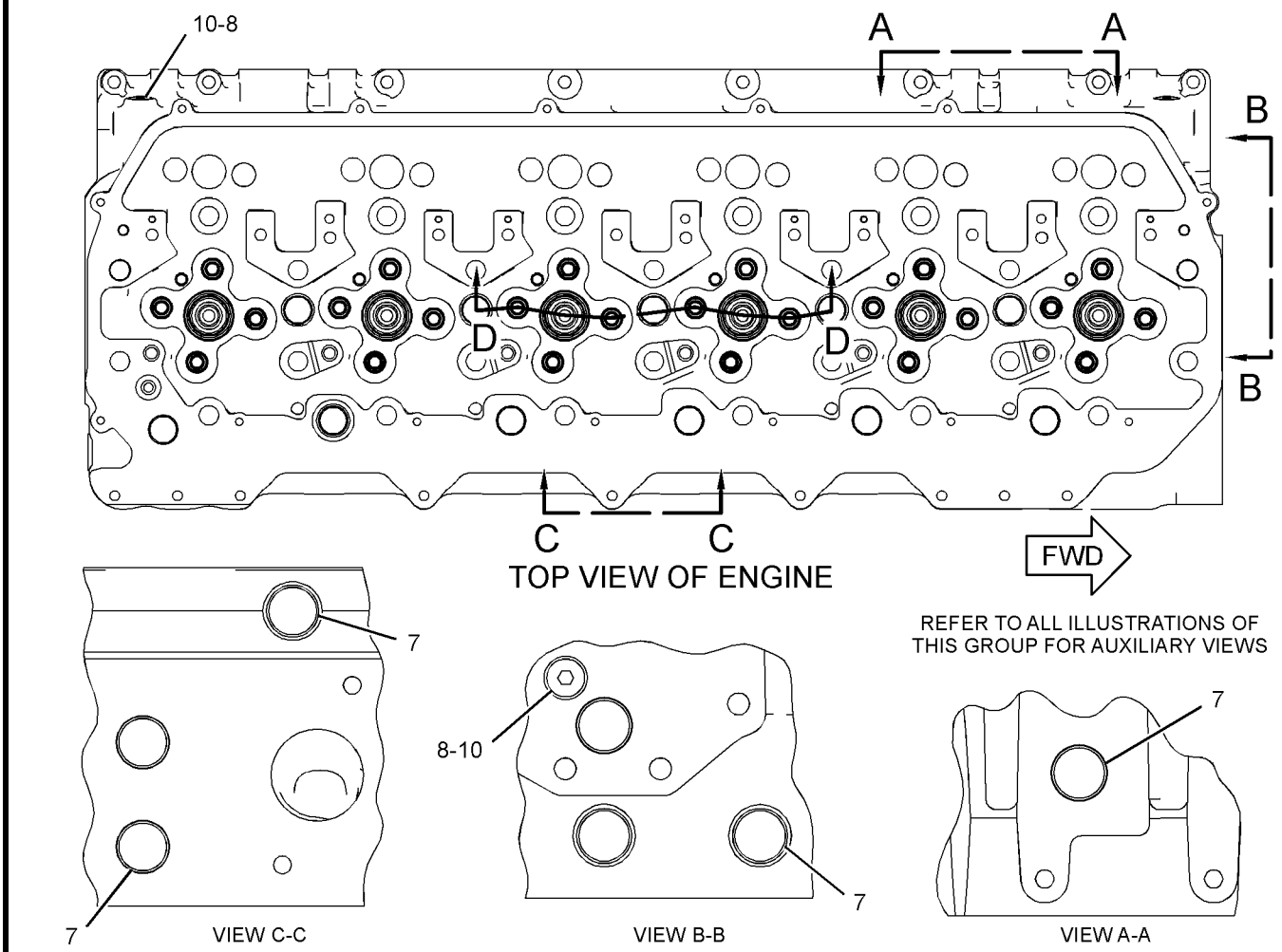

GRAPHIC #1

g01453409

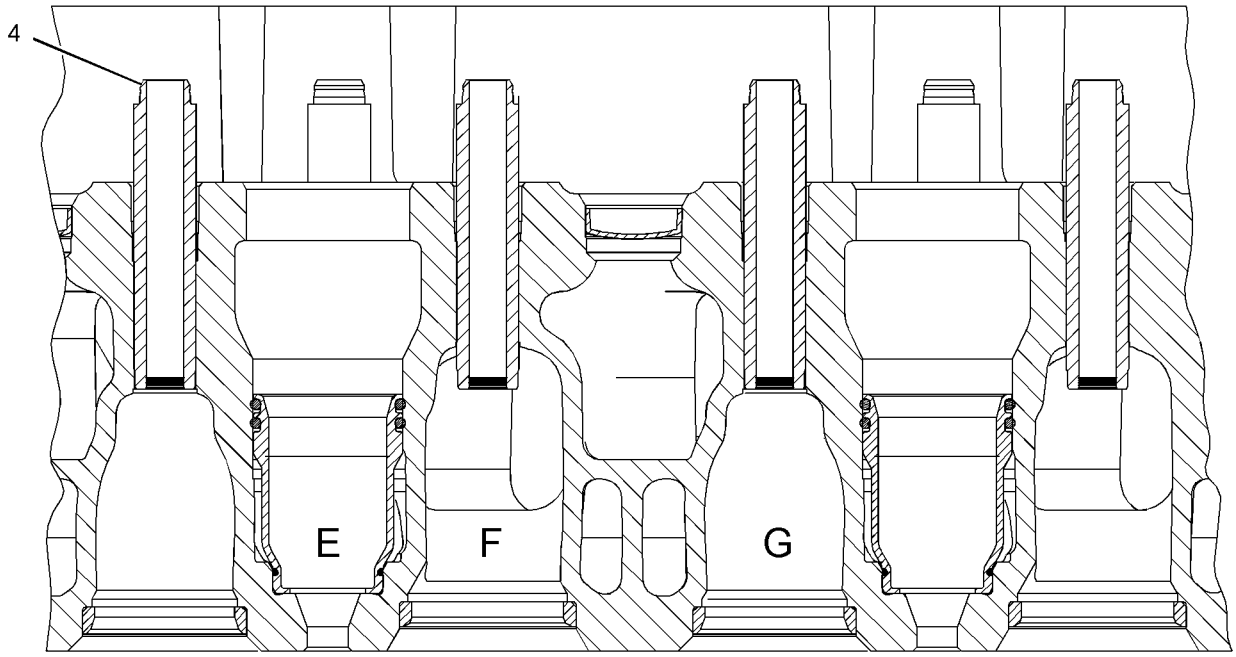

SECTION D-D

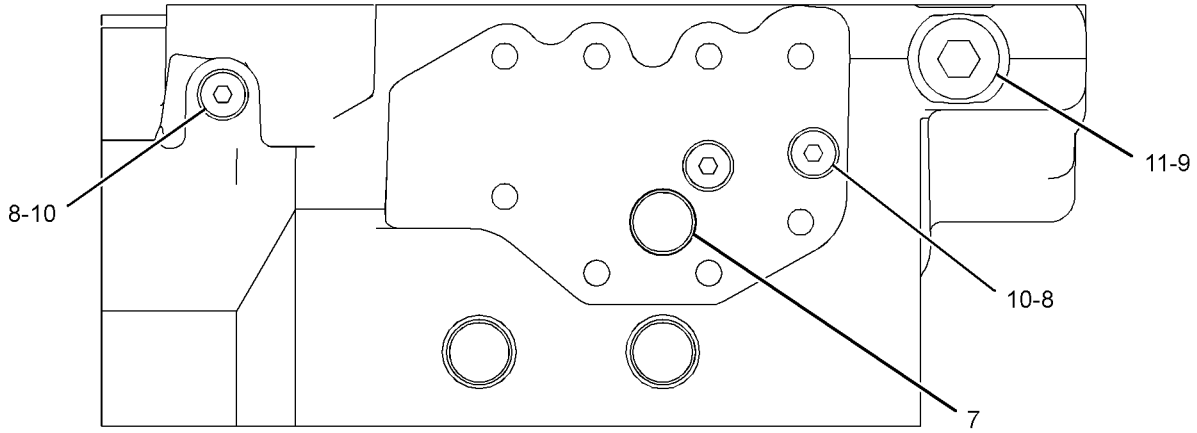

REAR VIEW OF ENGINE

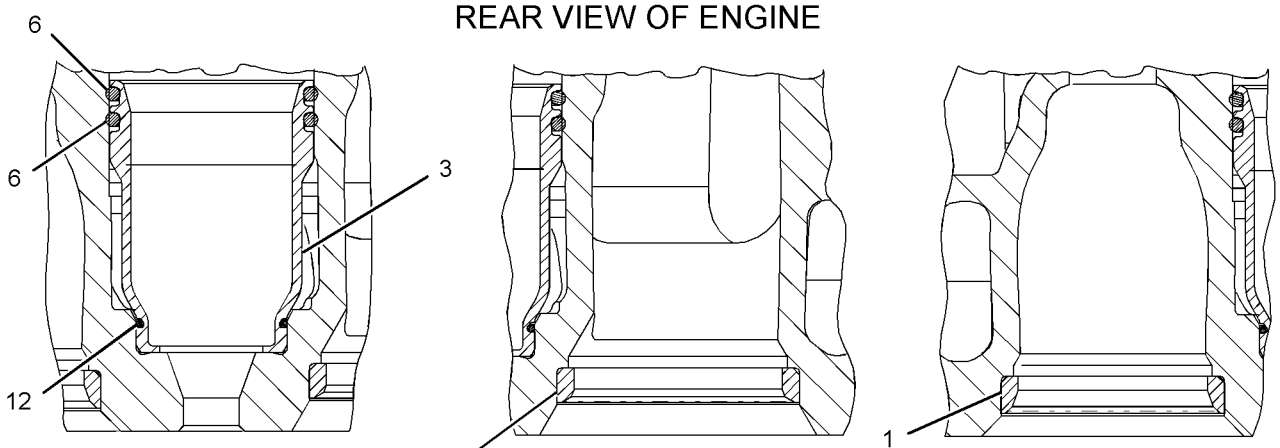

VIEW OF AREA E VIEW OF AREA F VIEW OF AREA G

GRAPHIC #2 **<END>** g01453410

305-0617 CYLINDER HEAD GP

S/N: RSX15243-UP

PART OF 305-0618 CYLINDER HEAD GP

SMCS-1100 **i03558143**

NOTE	REF NO	GRAPHIC REF	PART NUMBER	QTY	PART NAME 1 2 3 4 5 6 (PRODUCT LEVEL)	SEE PAGE
	1	1	**2A-4429**	48	LOCK-RETAINER	
	2	1	**332-2152**	24	SPRING-VALVE	
	3	1	**6V-5063**	2	SEAL-O-RING	
	4	1	**224-3030**	12	VALVE-EXHAUST	
	5	1	**9S-8008**	2	PLUG-O-RING	
	6	1	**224-3125**	12	BASE	
	7	1	**7E-7977**	24	ROTOCOIL AS	
					(EACH INCLUDES)	
		1	**7E-7978**	1	SHIELD	
	8	1	**224-4441**	24	SPRING	
	9	1	**252-7802**	12	VALVE-INLET	
Y	10	1	**308-6358**	1	CYLINDER HEAD AS	17
	11	1	**5P-5598**	1	SEAL-O-RING	
	12	1	**163-2478**	24	SEAL-VALVE STEM	

Y-SEPARATE ILLUSTRATION

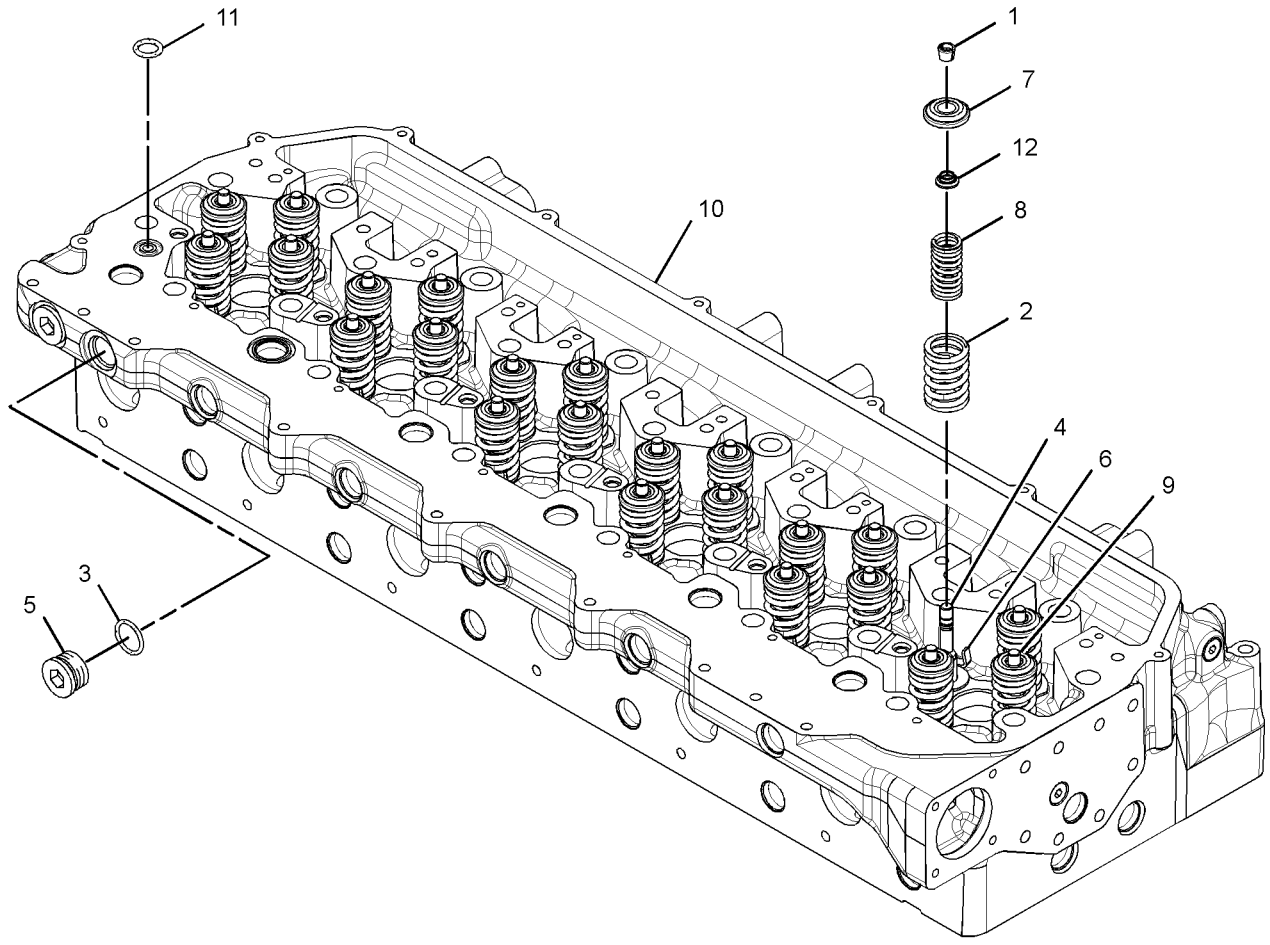

GRAPHIC #1 **<END>** g01451002

BASIC ENGINE

305-0618 CYLINDER HEAD GP

S/N: RSX15243-UP

PART OF 286-5803 ENGINE AR-CORE

SMCS-1100 **i03558080**

NOTE	REF NO	GRAPHIC REF	PART NUMBER	QTY	PART NAME 1 2 3 4 5 6 (PRODUCT LEVEL)	SEE PAGE
Y	1	1	*198-4963*	1	FASTENER GP-CYLINDER HEAD	25
	2	1	**221-9392**	1	GASKET (CYLINDER HEAD)	
Y	3	1	**305-0617**	1	CYLINDER HEAD GP	19

Y-SEPARATE ILLUSTRATION

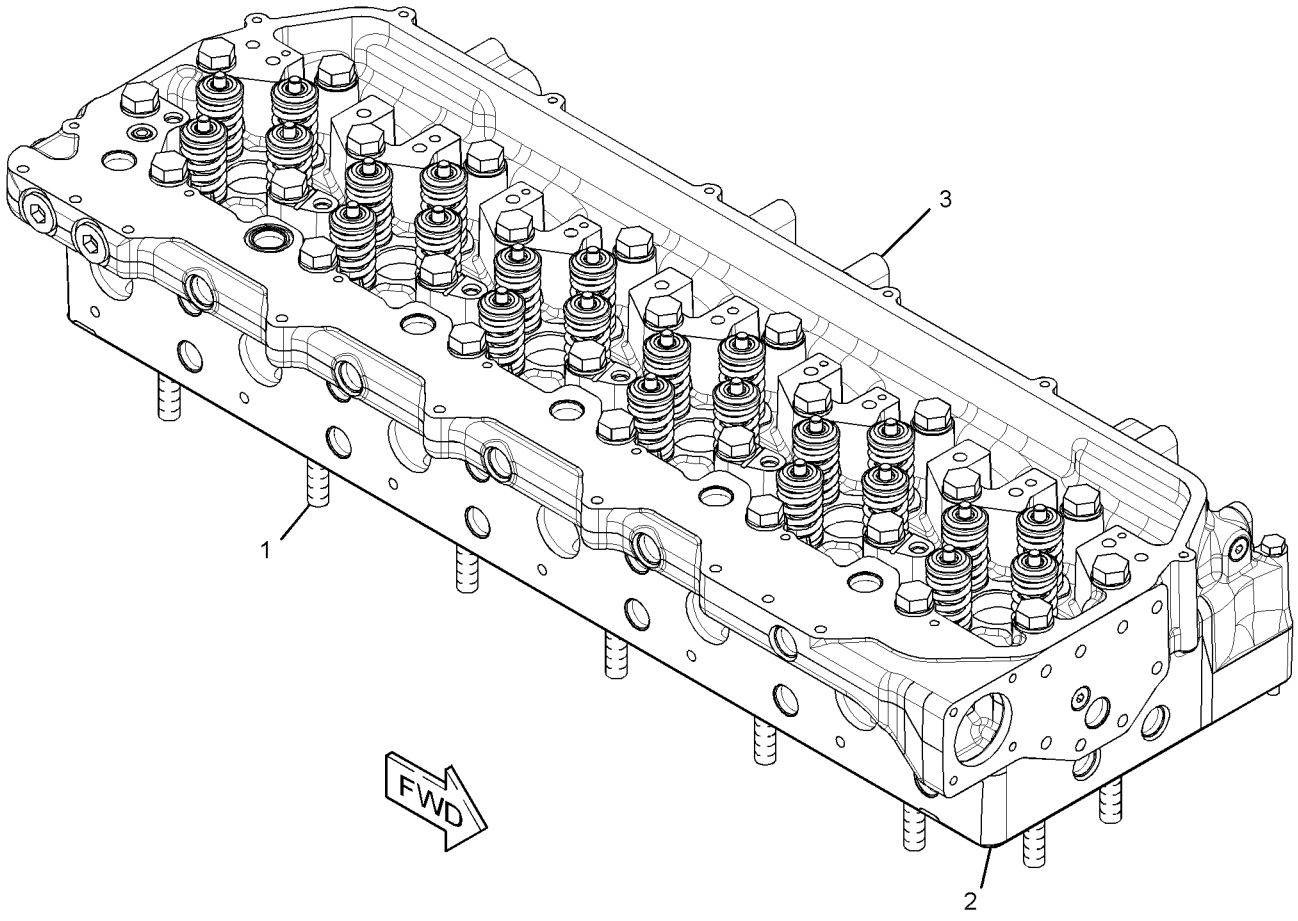

GRAPHIC #1 **<END>** g01364440

117-2766 DAMPER GP

S/N: RSX15243-UP

PROVIDES AVISCONIC DAMPER, ADAPTER AND FASTENING HARDWARE TO ATTACH THE DAMPER TO THE ADAPTER.

PART OF 234-7848 ENGINE AR-COMPLETE

SMCS-1205 **i03555872**

NOTE	REF NO	GRAPHIC REF	PART NUMBER	QTY	PART NAME 1 2 3 4 5 6 (PRODUCT LEVEL)	SEE PAGE
	1	1	**179-0092**	1	ADAPTER	
	2	1	**167-8125**	1	DAMPER AS	
M	3	1	**136-4183**	8	BOLT-12 POINT HEAD (M10X1.5X30-MM)	
	4	1	**9X-2027**	8	WASHER (11X18X2-MM THK)	

M-METRIC PART

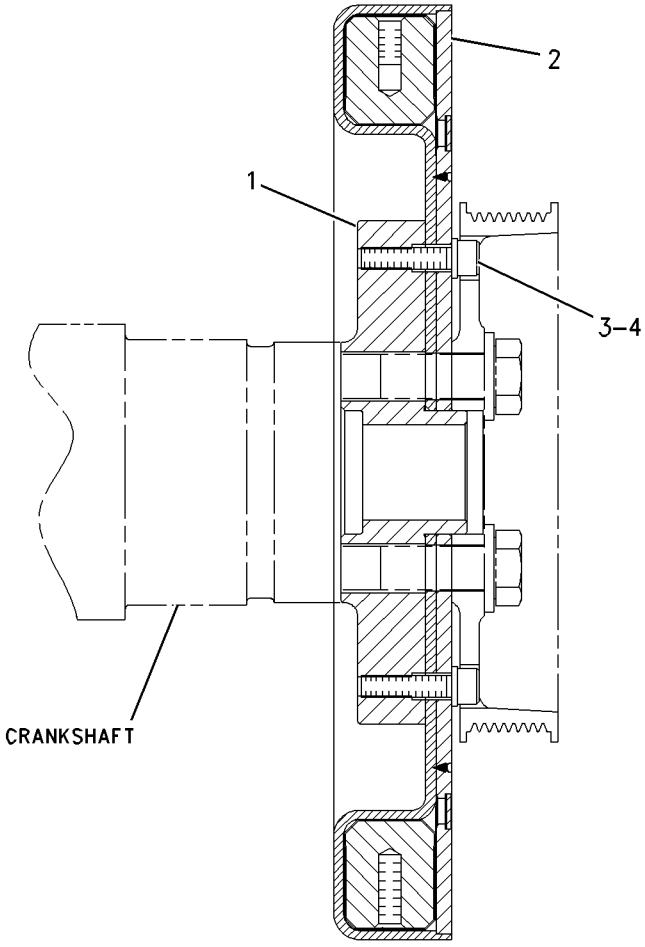

RIGHT SIDE VIEW

GRAPHIC #1 **<END>** g00783687

BASIC ENGINE

198-7248 DRAIN GP-ECOLOGY—POWER TRAIN

S/N: RYF1-UP

AN ATTACHMENT

SMCS-1302 **i01814174**

NOTE	REF NO	GRAPHIC REF	PART NUMBER	QTY	PART NAME 1 2 3 4 5 6 (PRODUCT LEVEL)	SEE PAGE
	1	1	**173-0566**	2	DRAIN GP-ECOLOGY	
					(EACH INCLUDES)	
	1A	1	**2K-8199**	1	SEAL-O-RING	
	1B	1	**077-3241**	1	SEAL-O-RING	
	1C	1	**175-4966**	1	PLUG-DRAIN	
	2	1	**7M-8485**	2	SEAL-O-RING	

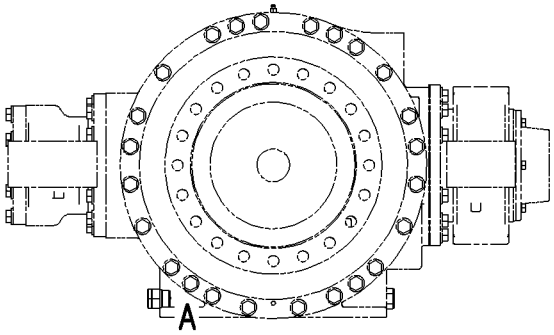

REAR AXLE

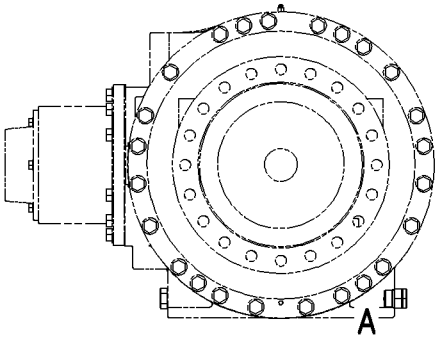

FRONT AXLE

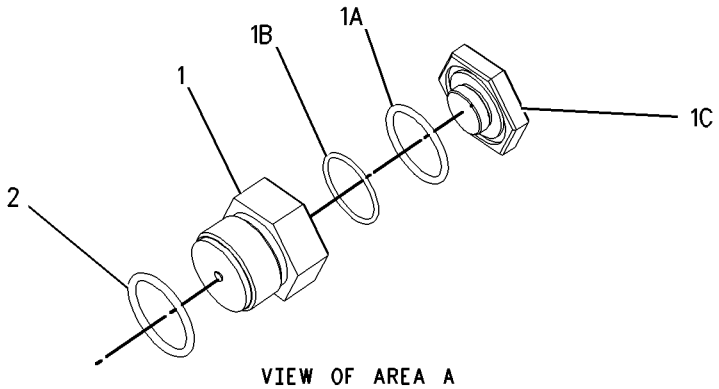

VIEW OF AREA A
COMMON BOTH AXLES

GRAPHIC #1 **<END>** g00886906

BASIC ENGINE

237-9769 DRIVE GP-ACCESSORY

S/N: RSX15243-UP

PART OF 234-7848 ENGINE AR-COMPLETE

SMCS-1207 **i03555961**

NOTE	REF NO	GRAPHIC REF	PART NUMBER	QTY	PART NAME 1 2 3 4 5 6 (PRODUCT LEVEL)	SEE PAGE
	1	1	**219-7475**	1	SUPPORT AS-FRONT	
	2	1	**258-5031**	1	BRACKET-SUPPORT	
	3	1	**5P-8245**	4	WASHER-HARD (13.5X25.5X3-MM THK)	
M	4	1	**6V-3822**	6	BOLT (M10X1.5X35-MM)	
M	5	1	**6V-4249**	2	BOLT (M10X1.5X50-MM)	
	6	1	**6V-5839**	8	WASHER (11X21X2.5-MM THK)	
M	7	1	**6V-8004**	2	BOLT (M12X1.75X120-MM)	
M	8	1	**6V-8149**	2	NUT (M12X1.75-THD)	

M-METRIC PART

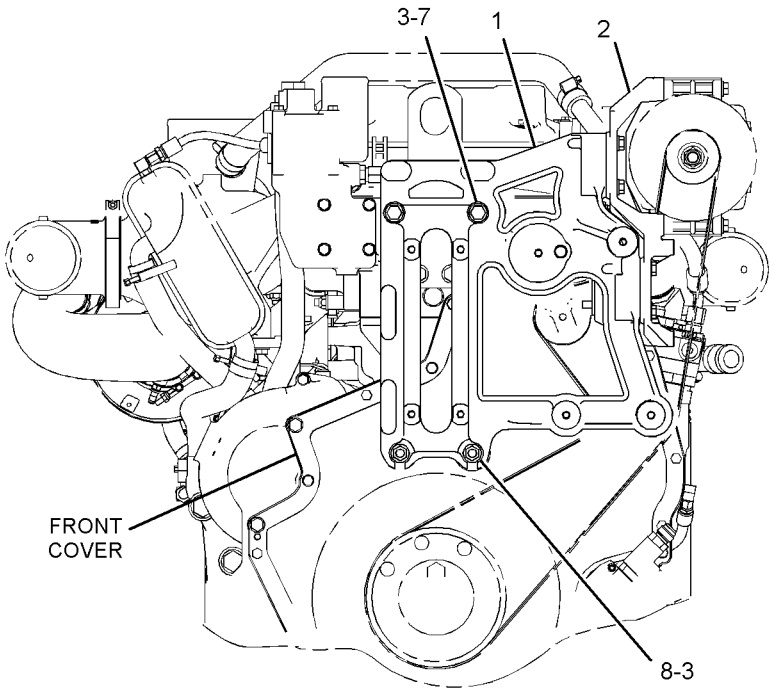

FRONT VIEW OF ENGINE

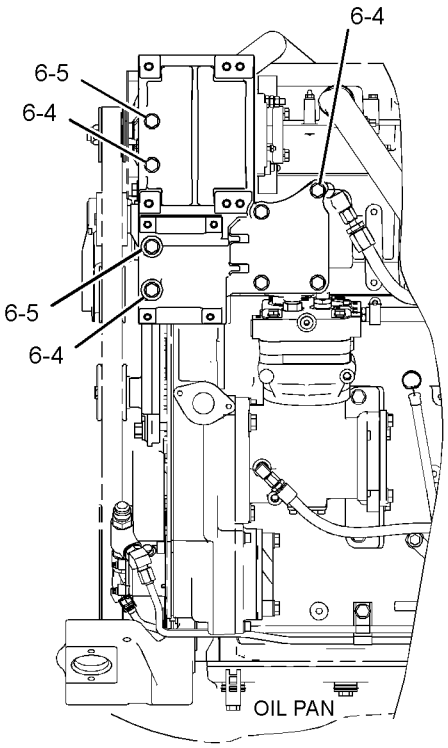

LEFT SIDE VIEW OF ENGINE

GRAPHIC #1 **<END>** g01337062

BASIC ENGINE

260-1939 DRIVE GP-ACCESSORY

S/N: RYF1-UP

PART OF 236-7231 INSTALLATION AR-ENGINE

SMCS-1207 **i03626036**

NOTE	REF NO	GRAPHIC REF	PART NUMBER	QTY	PART NAME 1 2 3 4 5 6 (PRODUCT LEVEL)	SEE PAGE
	1	1	**173-1498**	1	PULLEY AS-IDLER (8-GROOVE)	
M		1	**151-2900**	1	BOLT (M10X1.5X54.25-MM)	
		1	**166-6358**	1	COVER-DUST	
	2	1	**207-8118**	2	PULLEY AS-IDLER	
	3	1	**219-7489**	1	BELT TENSIONER	
	4	1	**334-1624**	1	BELT-SERPENTINE	
	5	1	**8T-4121**	1	WASHER-HARD (11X21X2.5-MM THK)	
M	6	1	**8T-4178**	1	BOLT (M10X1.5X90-MM)	

M-METRIC PART

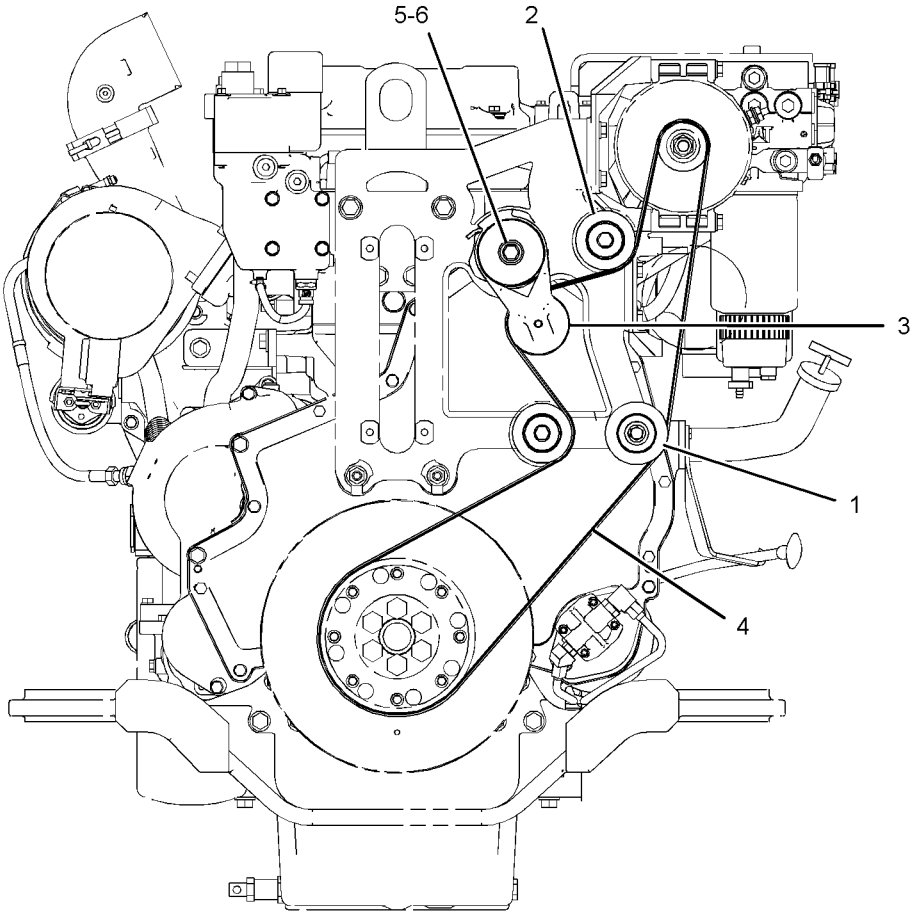

FRONT VIEW

GRAPHIC #1 **<END>** g01287280

198-4963 FASTENER GP-CYLINDER HEAD

S/N: RSX15243-UP

PART OF 305-0618 CYLINDER HEAD GP

SMCS-1100 **i03558101**

NOTE	REF NO	GRAPHIC REF	PART NUMBER	QTY	PART NAME 1 2 3 4 5 6 (PRODUCT LEVEL)	SEE PAGE
M	1	1	**242-1811**	26	BOLT-CYLINDER HEAD (M16X2X220-MM)	
	2	1	**210-4460**	8	BOLT (M10X1.5X130-MM)	
	3	1	**2S-5658**	26	WASHER-HARD (17X29X3-MM THK)	

M-METRIC PART

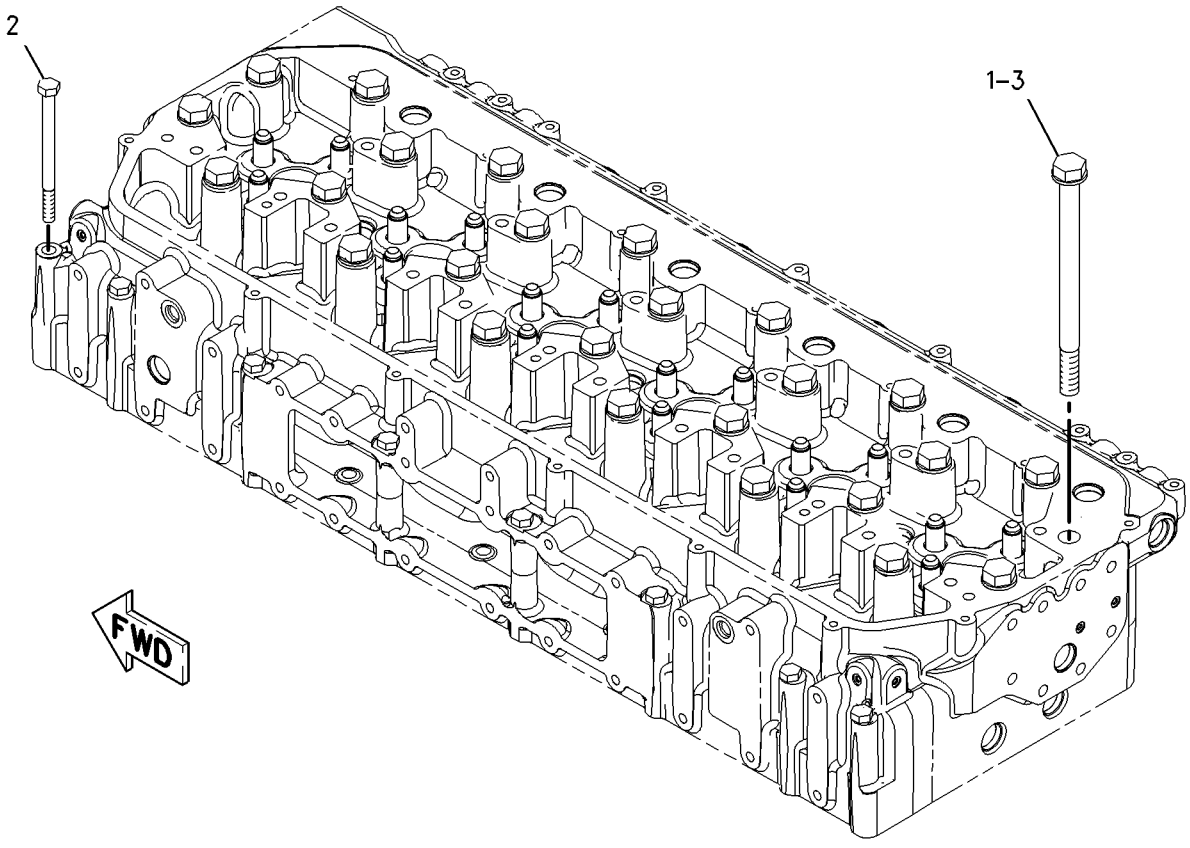

GRAPHIC #1 **<END>** g00949755

BASIC ENGINE

117-2771 FASTENER GP-DAMPER & PULLEY

S/N: RSX15243-UP

PART OF 234-7848 ENGINE AR-COMPLETE

SMCS-1205, 7553 **i03556540**

NOTE	REF NO	GRAPHIC REF	PART NUMBER	QTY	PART NAME 1 2 3 4 5 6 (PRODUCT LEVEL)	SEE PAGE
	1	1	**213-1585**	1	SPACER (10.5-MM THK)	
M	2	1	**8T-0281**	6	BOLT (M16X2X80-MM)	

M-METRIC PART

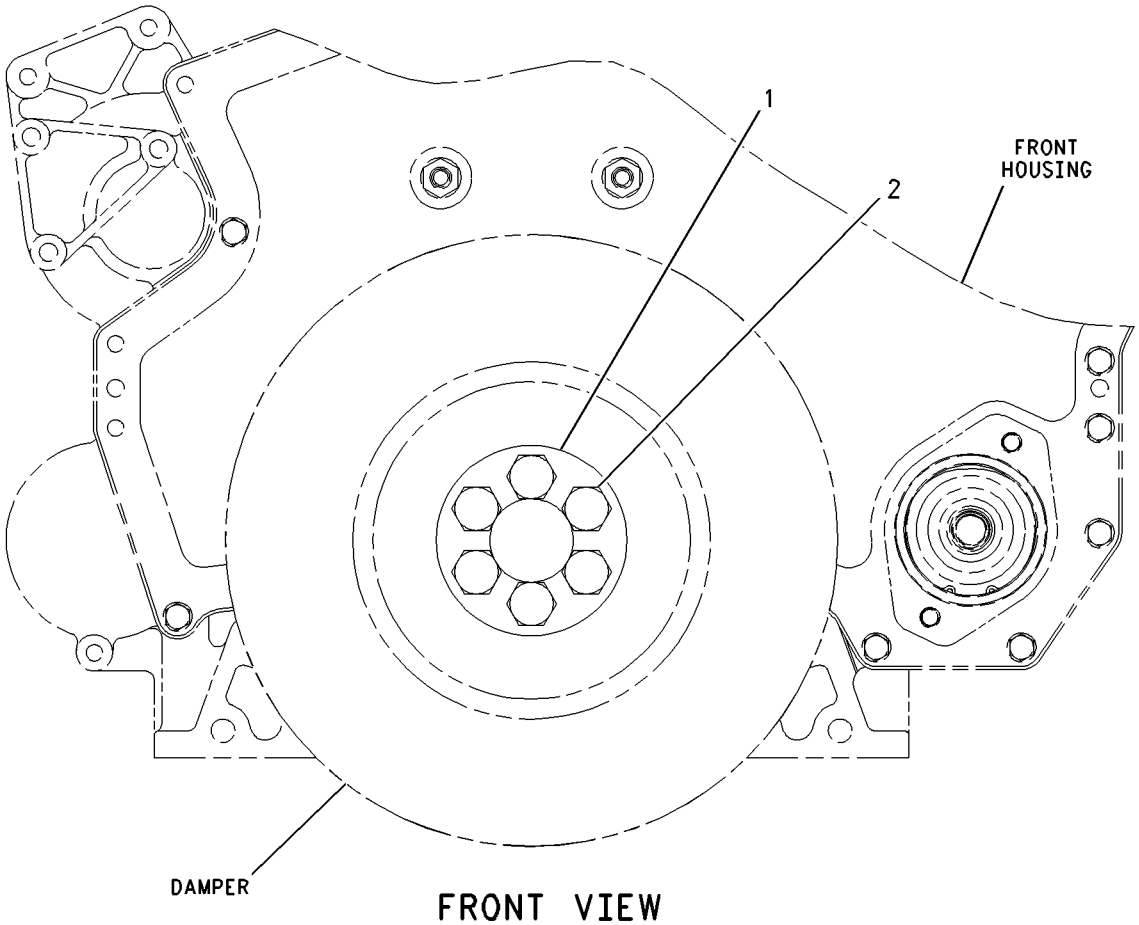

FRONT VIEW

GRAPHIC #1 **<END>** g00783716

BASIC ENGINE

185-5803 FLYWHEEL GP

S/N: RSX15243-UP

PART OF 234-7848 ENGINE AR-COMPLETE

SMCS-1156 **i03556901**

NOTE	REF NO	GRAPHIC REF	PART NUMBER	QTY	PART NAME 1 2 3 4 5 6 (PRODUCT LEVEL)	SEE PAGE
	1	1	**160-8210**	1	FLYWHEEL AS	
		1	**160-8185**	1	GEAR-FLYWHEEL (138-TEETH)	
	2	1	**5P-8247**	8	WASHER-HARD (17X32X3.5-MM THK)	
M	3	1	**9X-2021**	8	BOLT-LOCKING (M16X2X45-MM)	

M-METRIC PART

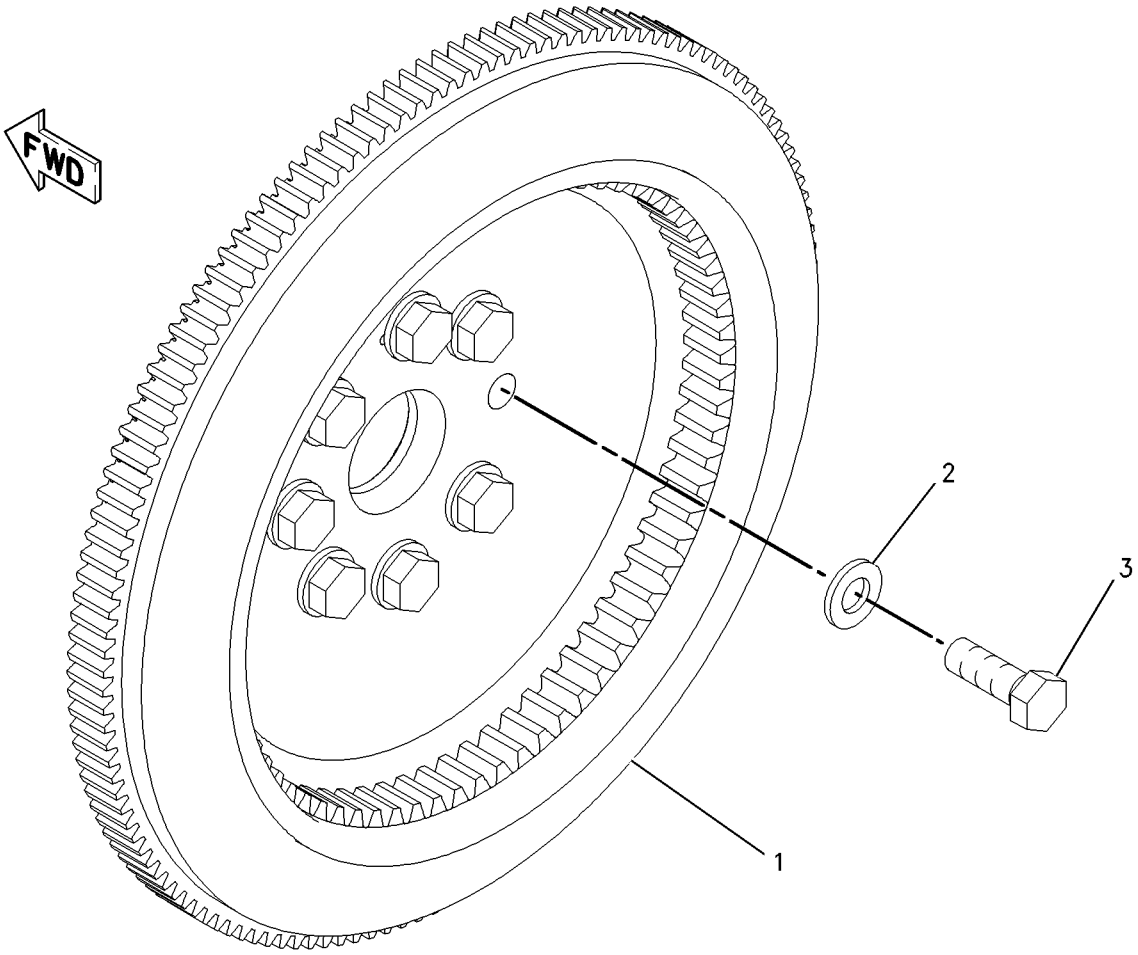

GRAPHIC #1 **<END>** g00766083

BASIC ENGINE

222-3088 GEAR GP-FRONT

S/N: RSX15243-UP

PART OF 286-5803 ENGINE AR-CORE

SMCS-1151, 1162, 1206 **i03558200**

NOTE	REF NO	GRAPHIC REF	PART NUMBER	QTY	PART NAME 1 2 3 4 5 6 (PRODUCT LEVEL)	SEE PAGE
	1	1	**7C-7851**	1	SHAFT	
	2	1	**218-7270**	1	SHAFT	
	3	1	**222-3902**	1	GEAR AS (64-TEETH)	
		1	**7C-7852**	1	BEARING	
	4	1	**222-3905**	1	GEAR AS (CAMSHAFT IDLER, 71-TEETH)	
M	5	1	**8T-0281**	1	BOLT (M16X2X80-MM)	
M	6	1	**8T-0360**	1	BOLT (M20X2.5X90-MM)	

M-METRIC PART

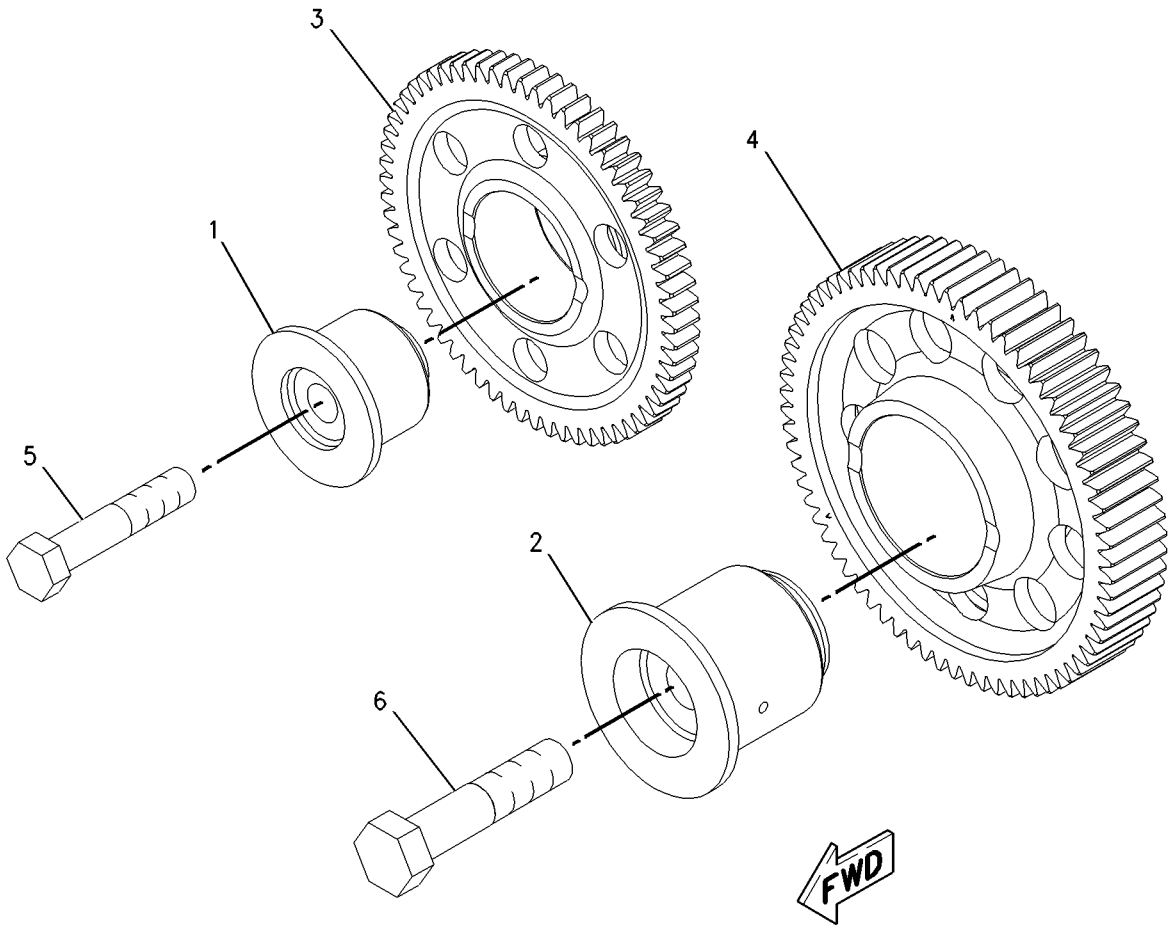

GRAPHIC #1 **<END>** g00939640

243-1680 HOUSING GP-FLYWHEEL

S/N: RSX15243-UP

PART OF 234-7848 ENGINE AR-COMPLETE

SMCS-1157 **i03556922**

NOTE	REF NO	GRAPHIC REF	PART NUMBER	QTY	PART NAME 1 2 3 4 5 6 (PRODUCT LEVEL)	SEE PAGE
	1	1	**174-1586**	1	HOUSING-FLYWHEEL	
	2	1	**199-4051**	1	COVER	
M	3	1	**099-3649**	2	BOLT (M8X1.25X40-MM)	
	4	1	*148-8411*	1	PLUG AS	
		1	**3K-0360**	1	SEAL-O-RING	
		1	**9S-4185**	1	PLUG-O-RING	
	5	1	**1H-5728**	1	SEAL-O-RING	
	6	1	**1J-9671**	1	SEAL-O-RING	
	7	1	**214-6277**	10	BOLT (M14X2X60-MM)	
	8	1	**3K-8460**	1	PLUG	
	9	1	**5D-9344**	1	SEAL-O-RING	
	10	1	**5P-8245**	2	WASHER-HARD (13.5X25.5X3-MM THK)	
	11	1	**5P-8246**	10	WASHER-HARD (15.5X29X3-MM THK)	
M	12	1	**8T-0106**	2	BOLT (M12X1.75X100-MM)	
	13	1	**8T-4224**	2	WASHER-HARD (8.8X16X2-MM THK)	
	14	1	**8T-6763**	1	PLUG-PIPE	
B	15	1	**1U-8846**		SEALANT-GASKET	

B-USE AS REQUIRED
M-METRIC PART

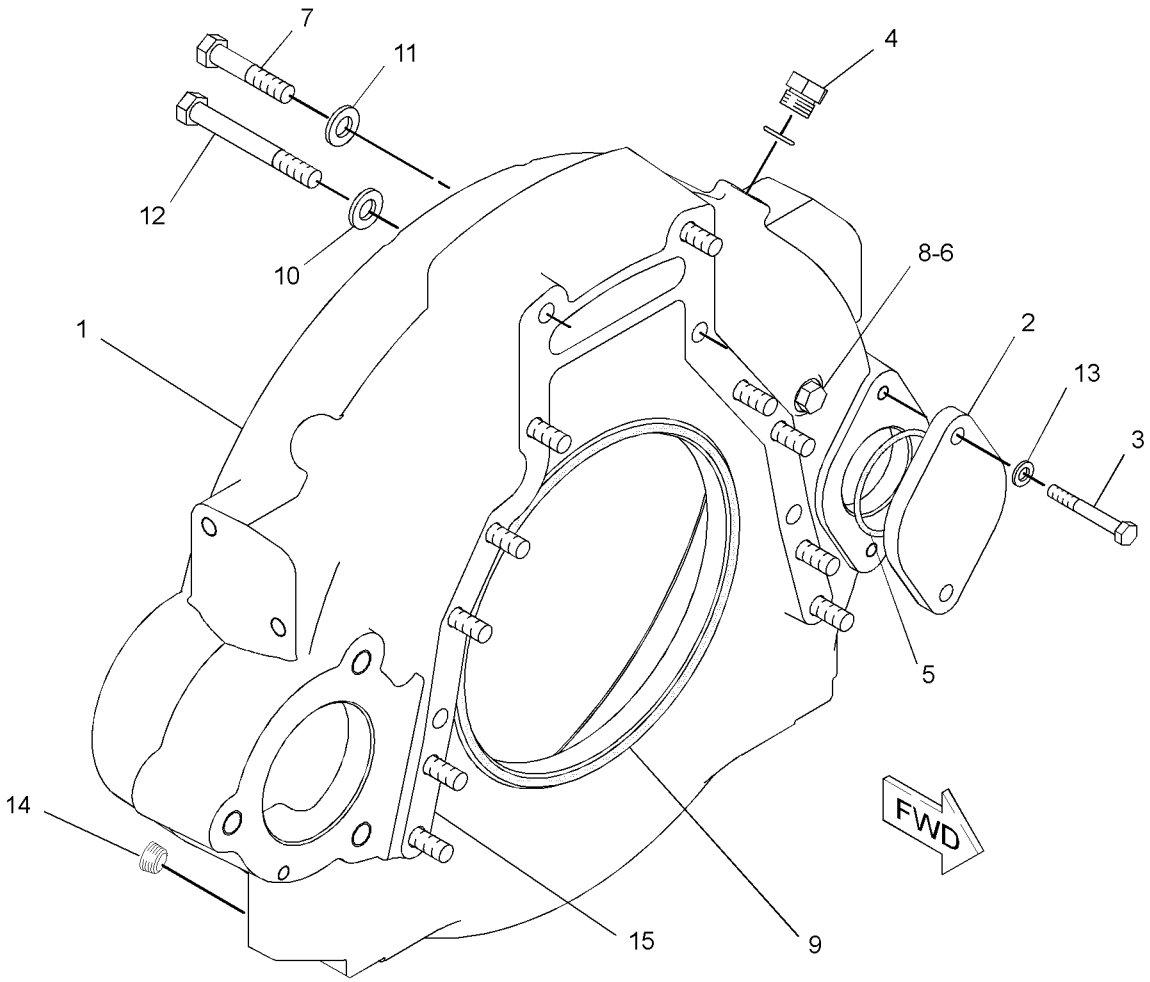

GRAPHIC #1 **<END>** g01441854

BASIC ENGINE

218-7272 HOUSING GP-FRONT

S/N: RSX15243-UP

PART OF 286-5803 ENGINE AR-CORE

SMCS-1151, 1162, 1206 **i03558240**

NOTE	REF NO	GRAPHIC REF	PART NUMBER	QTY	PART NAME 1 2 3 4 5 6 (PRODUCT LEVEL)	SEE PAGE
	1	1	**5P-6727**	1	BALL BEARING	
	2	1	**8H-9789**	1	BEARING AS-BALL	
	3	1	**251-4314**	1	ADAPTER	
	4	1	**278-7093**	1	COVER AS	
	5	1	**221-9357**	1	GEAR (40-TEETH)	
	6	1	**257-2015**	1	GASKET	
	7	1	**223-7852**	1	SEAL-INTEGRAL	
	8	1	**226-4755**	1	SEAL GP-CRANKSHAFT (FRONT)	
		1	**169-4166**	1	SEAL GP-CRANKSHAFT (FRONT)	
		1	**220-3373**	1	SEAL-RING	
	9	1	**329-3061**	1	HOUSING AS-FRONT	
	9A	1	**6V-3535**	2	DOWEL	
	10	1	**117-8801**	1	SEAL-O-RING	
M	11	1	**6V-2317**	17	BOLT (M8X1.25X30-MM)	
M	12	1	**6V-5192**	3	BOLT-SOCKET HEAD (M8X1.25X30-MM)	
M	13	1	**6V-5219**	9	BOLT (M8X1.25X40-MM)	
M	14	1	**6V-8225**	5	NUT (M6X1-THD)	
M	15	1	**3E-8016**	1	BOLT-SELF-LOCKING (M8X1.25X25-MM)	
	16	1	**9M-1974**	30	WASHER-HARD (8.8X16X2-MM THK)	
	17	1	**9X-8256**	5	WASHER (6.6X12X2-MM THK)	

M-METRIC PART

218-7272 **HOUSING GP-FRONT** *(contd.)* **i03558240**

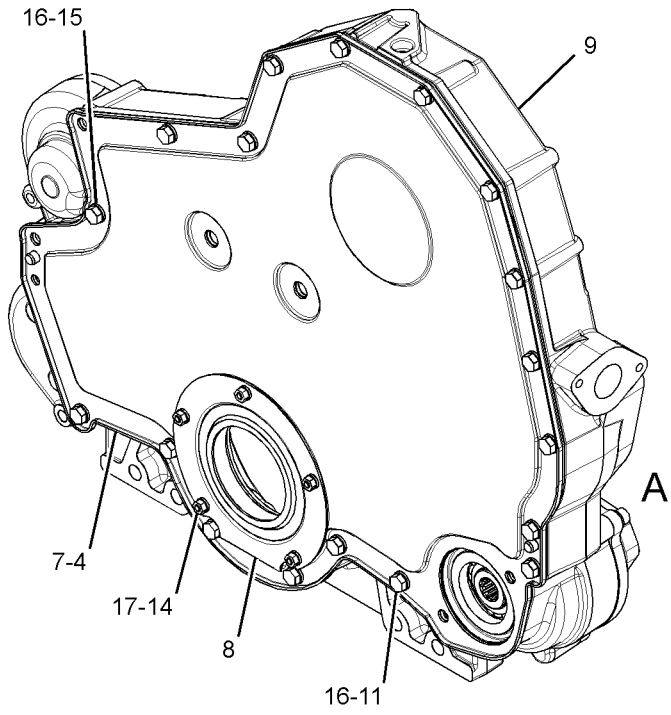

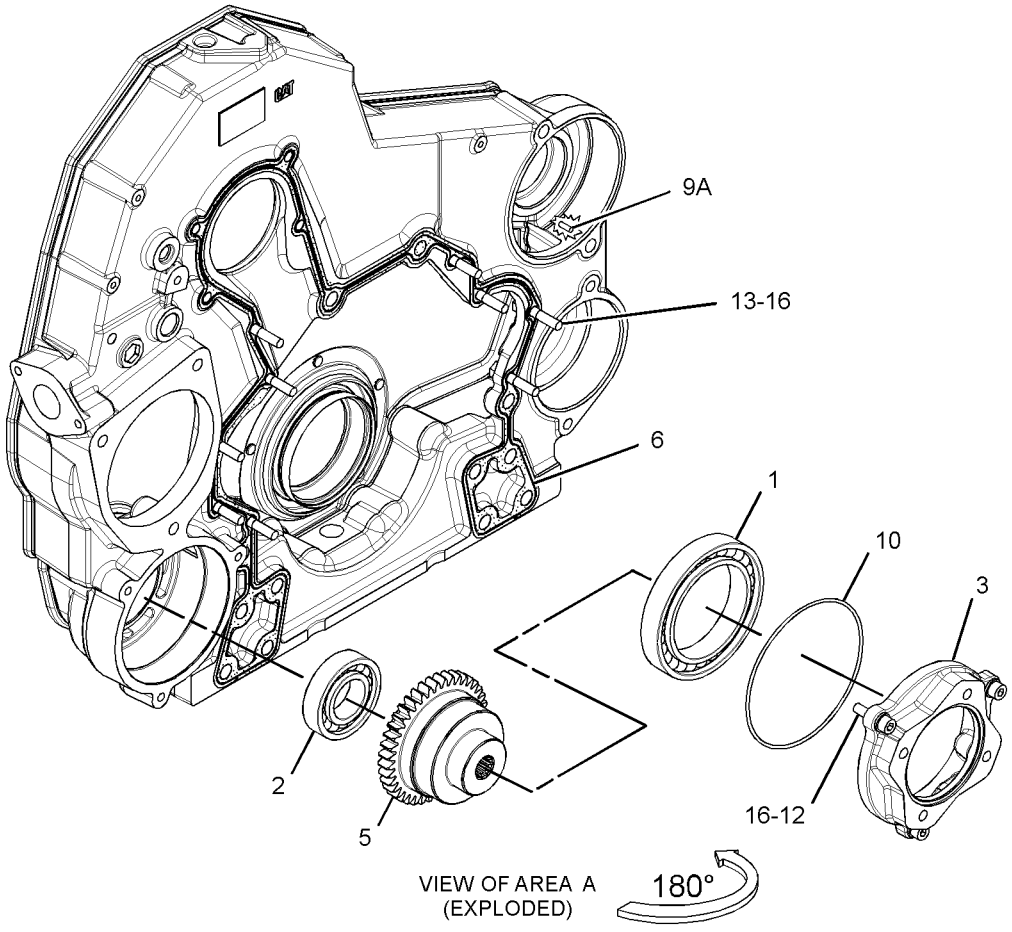

GRAPHIC #1 **<END>** g01833053

BASIC ENGINE

237-4376 LIFTER GP-VALVE

S/N: RSX15243-UP

PART OF 240-7272 VALVE MECHANISM GP

SMCS-1209 **i03558725**

NOTE	REF NO	GRAPHIC REF	PART NUMBER	QTY	PART NAME 1 2 3 4 5 6 (PRODUCT LEVEL)	SEE PAGE
	1	1	**202-7475**	6	LIFTER AS-UNIT INJECTOR	
	2	1	**251-1005**	12	LIFTER AS-VALVE	
	3	1	**269-2862**	5	BRACKET AS (INTERMEDIATE)	
		1	**129-2893**	1	DOWEL	
	4	1	**269-2860**	1	BRACKET AS (FRONT)	
		1	**129-2893**	1	DOWEL	
	5	1	**240-2636**	1	SHAFT AS	
	5A	1	**0L-1026**	2	PLUG-CUP	
	6	1	**269-2864**	1	BRACKET AS (REAR)	
	6A	1	**5L-4763**	1	PIN-SPRING	
M	7	1	**6V-5843**	7	BOLT (M10X1.5X45-MM)	
	8	1	**8E-8439**	1	DOWEL	

M-METRIC PART

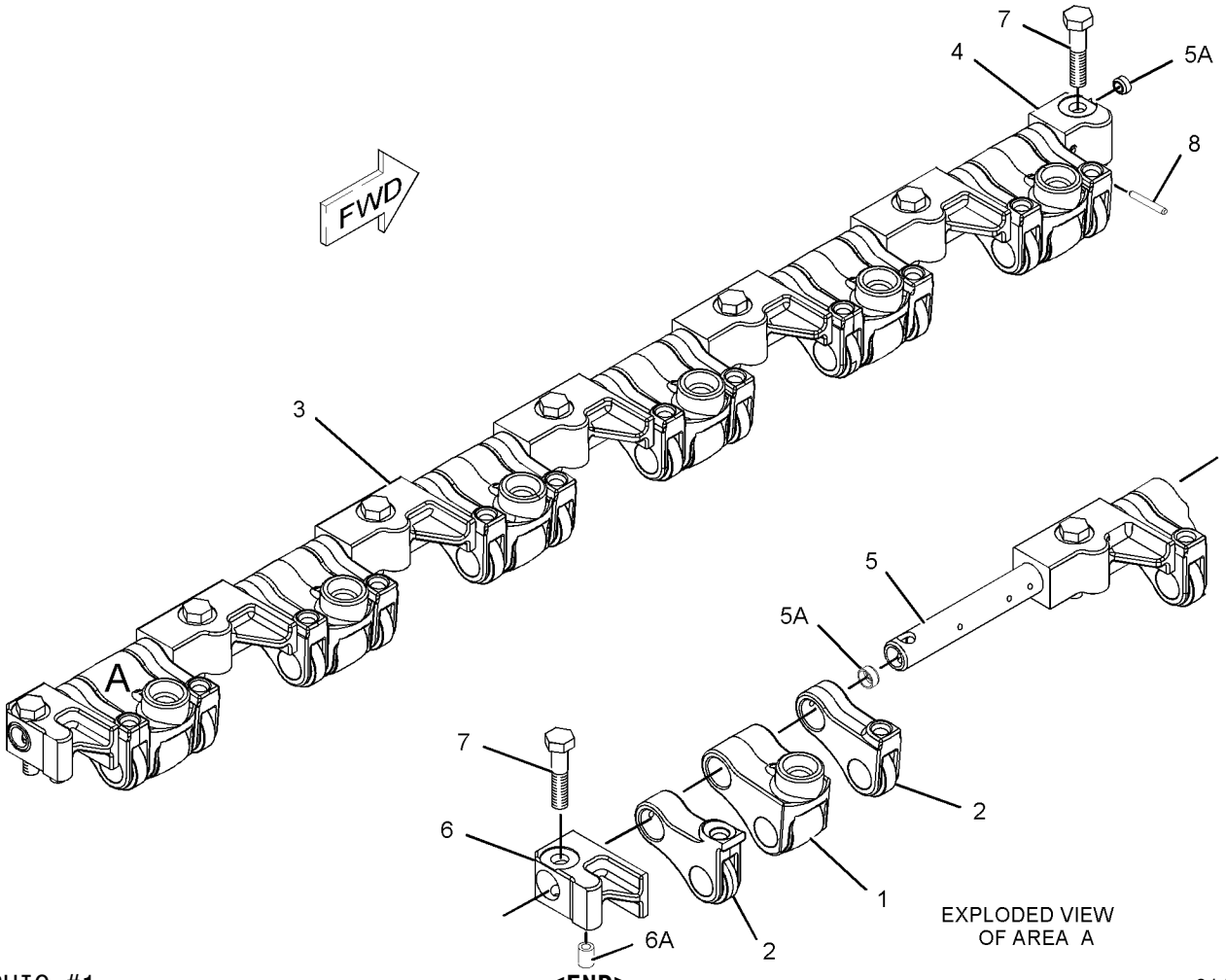

GRAPHIC #1 **<END>** g01119838

224-0880 LIFTING GP-ENGINE

S/N: RSX15243-UP

PART OF 234-7848 ENGINE AR-COMPLETE

SMCS-1122 **i03556941**

NOTE	REF NO	GRAPHIC REF	PART NUMBER	QTY	PART NAME 1 2 3 4 5 6 (PRODUCT LEVEL)	SEE PAGE
	1	1	**224-4140**	2	EYE-LIFTING	
	2	1	**5P-8245**	8	WASHER-HARD (13.5X25.5X3-MM THK)	
M	3	1	**6V-3668**	8	BOLT (M12X1.75X30-MM)	

M-METRIC PART

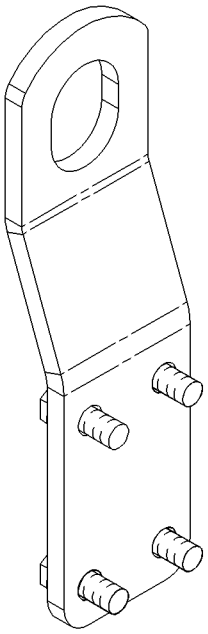

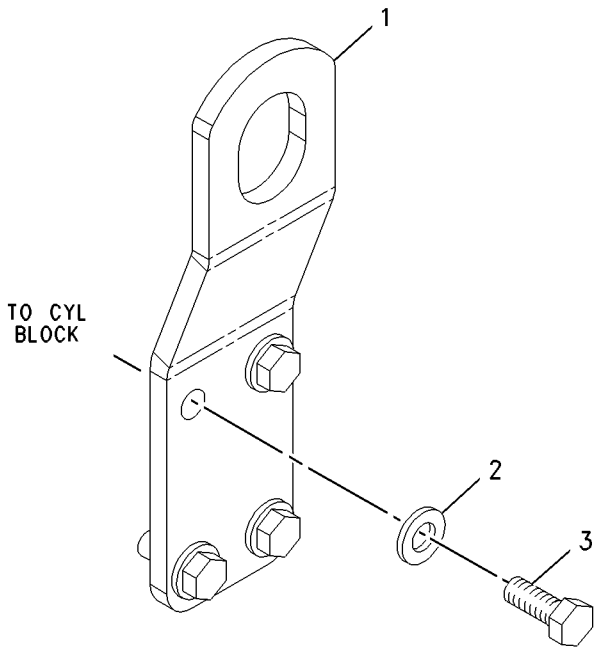

GRAPHIC #1 **<END>** g00950265

185-5298 MOUNTING GP-ENGINE & XMSN

S/N: RYF1-UP

PART OF 236-7231 INSTALLATION AR-ENGINE

SMCS-1152, 1154, 3082 **i03626001**

NOTE	REF NO	GRAPHIC REF	PART NUMBER	QTY	PART NAME 1 2 3 4 5 6 (PRODUCT LEVEL)	SEE PAGE
	1	1	**3E-4888**	4	WASHER (32X144X12-MM THK)	
	2	1	**6Y-9960**	4	MOUNT AS	
	3	1	**9W-7385**	4	SLEEVE	
	4	1	**138-4144**	2	BRACKET AS	
M	5	1	**7X-2563**	8	BOLT (M20X2.5X60-MM)	
	6	1	**165-3927**	11	BOLT	
	7	1	**8T-4123**	8	WASHER (22X35X3.5-MM THK)	
	8	1	**8T-4167**	4	WASHER-HARD (26X44X4-MM THK)	
M	9	1	**8T-4649**	4	BOLT (M24X3X140-MM)	
	10	1	**8T-4896**	11	WASHER-HARD (10.2X18.5X2.5-MM THK)	

M-METRIC PART

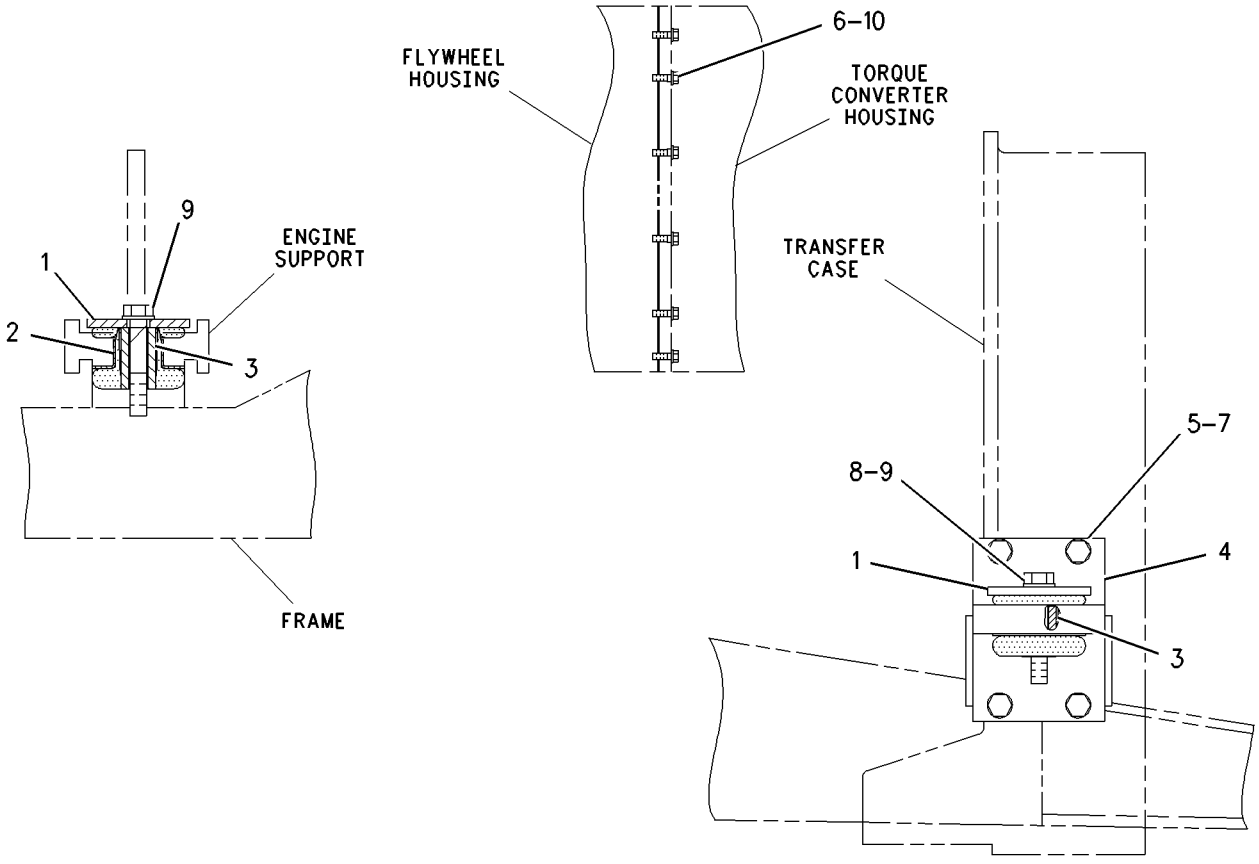

RIGHT SIDE VIEW

GRAPHIC #1 **<END>** g00766017

219-7440 MOUNTING GP-FAN DRIVE

S/N: RSX15243-UP
PROVIDES 2 FAN DRIVE MOUNTING STUDS 52-MM IN LENGTH
PART OF 234-7848 ENGINE AR-COMPLETE
FOR USE WITH FAN DRIVE MOUNTING

SMCS-1359 **i03557100**

NOTE	REF NO	GRAPHIC REF	PART NUMBER	QTY	PART NAME 1 2 3 4 5 6 (PRODUCT LEVEL)	SEE PAGE
M	1	1	**123-0764**	2	STUD-TAPERLOCK (BOLT)	
	2	1	**5P-8245**	2	WASHER-HARD (13.5X25.5X3-MM THK)	

M-METRIC PART

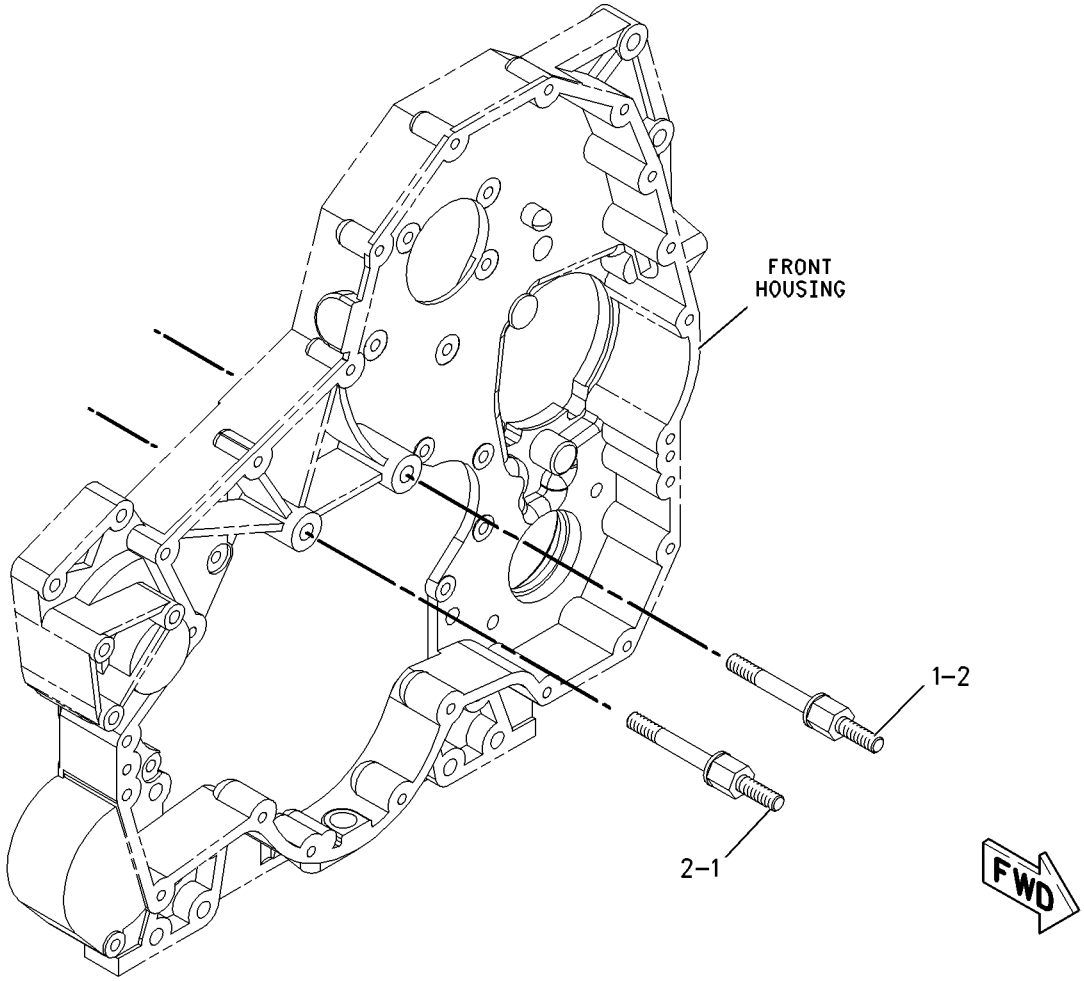

GRAPHIC #1 **<END>** g00948687

229-8084 MOUNTING GP-VALVE MECHANISM

S/N: RSX15243-UP
NON-VARIABLE VALVE ACTUATOR
PART OF 286-5803 ENGINE AR-CORE
FOR USE WITH NON-VARIABLE VALVE ACTUATOR ENGINES

SMCS-1102 **i03558342**

NOTE	REF NO	GRAPHIC REF	PART NUMBER	QTY	PART NAME 1 2 3 4 5 6 (PRODUCT LEVEL)	SEE PAGE
	1	1	**241-0847**	6	BOLT (M12X1.75X93-MM)	

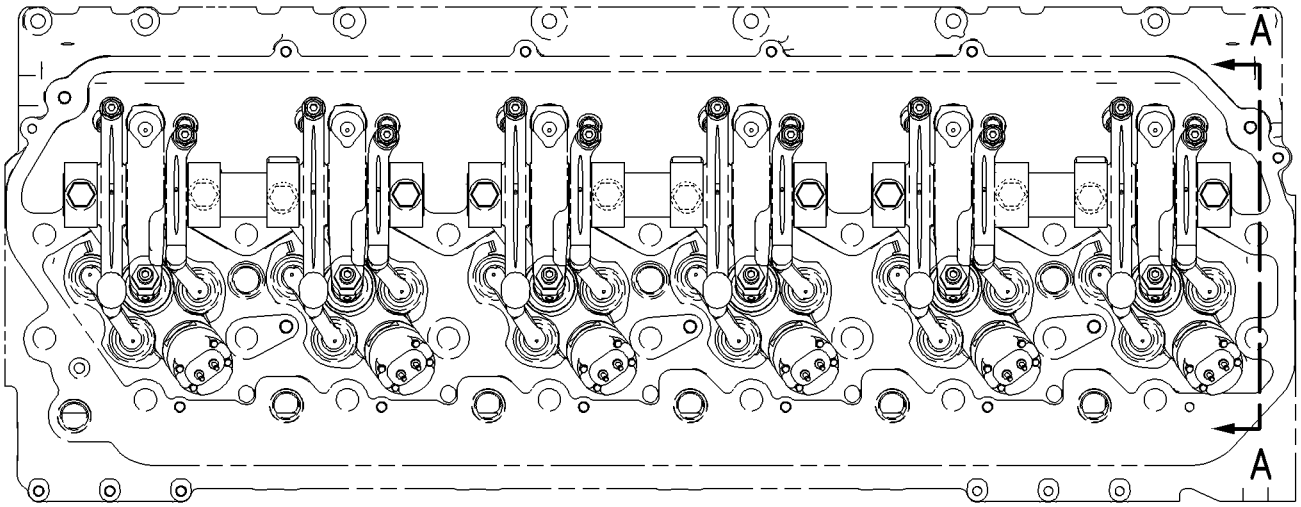

TOP VIEW

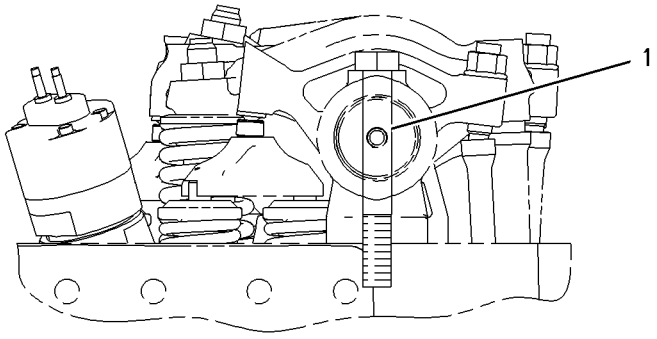

VIEW A-A

FWD

GRAPHIC #1 **<END>** g00950829

234-7847 PAN GP-OIL—ENGINE

S/N: RSX15243-UP

PART OF 234-7848 ENGINE AR-COMPLETE

SMCS-1302 **i03557105**

NOTE	REF NO	GRAPHIC REF	PART NUMBER	QTY	PART NAME 1 2 3 4 5 6 (PRODUCT LEVEL)	SEE PAGE
	1	1	**6V-7238**	1	VALVE-SHUTOFF (ENGINE OIL PAN DRAIN)	
	2	1	**9X-6451**	1	PLUG-DRAIN (ENGINE OIL PAN)	
	3	1	**217-3673**	1	SEAL-ISOLATION	
	4	1	**217-3674**	14	FASTENER AS	
	5	1	**235-1073**	1	PAN-OIL	
	6	1	**235-1074**	1	BELL AS-SUCTION	
		1	**210-1743**	1	ELBOW	
	7	1	**061-9458**	1	SEAL-O-RING	
M	8	1	**3E-8016**	2	BOLT-SELF-LOCKING (M8X1.25X25-MM)	
	9	1	**5P-8211**	1	SEAL-O-RING	
	10	1	**5P-8245**	2	WASHER-HARD (13.5X25.5X3-MM THK)	
M	11	1	**6A-5591**	2	BOLT (M12X1.75X25-MM)	
	12	1	**6N-8863**	14	WASHER (10.2X32X2.5-MM THK)	
M	13	1	**6V-4249**	13	BOLT (M10X1.5X50-MM)	
	14	1	**8L-2786**	1	SEAL-O-RING	
	15	1	**9M-1974**	2	WASHER-HARD (8.8X16X2-MM THK)	
	16	1	**132-5789**	1	CLIP	
	17	1	**287-3049**	1	STUD (M10X1.5X50-MM)	
	18	1	**8T-7934**	1	WASHER-HARD (11X21X5-MM THK)	
M	19	1	**8T-4133**	1	NUT (M10X1.5-THD)	
	20	1	**6V-5839**	1	WASHER (11X21X2.5-MM THK)	
	21	1	**3S-2093**	1	STRAP-CABLE	

M-METRIC PART

234-7847 **PAN GP-OIL** *(contd.)* **i03557105**

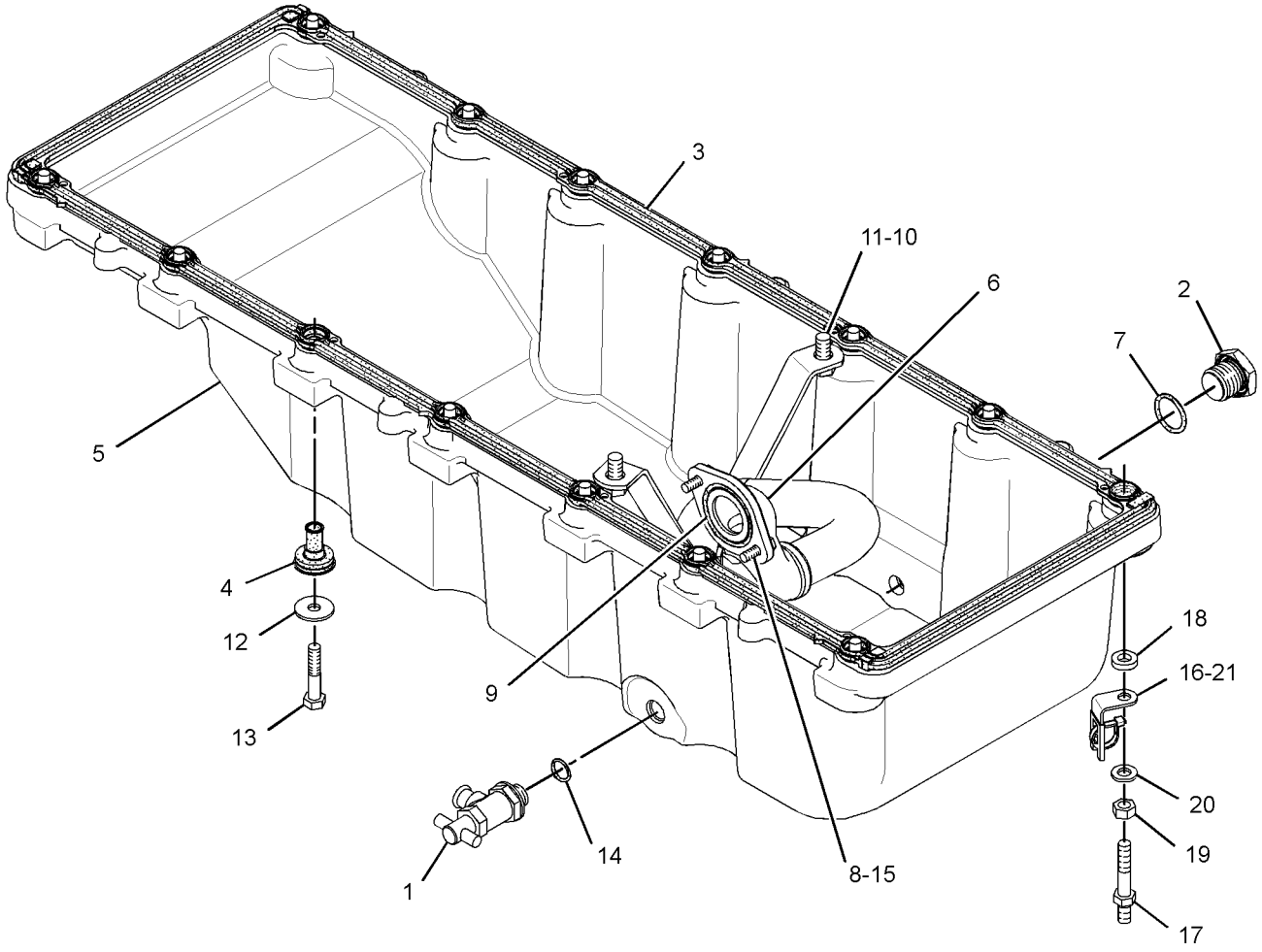

GRAPHIC #1 **<END>** g01350531

238-2721 PISTON & ROD GP

S/N: RSX15243-UP

PART OF 286-5803 ENGINE AR-CORE

SMCS-1225 **i03558360**

NOTE	REF NO	GRAPHIC REF	PART NUMBER	QTY	PART NAME 1 2 3 4 5 6 (PRODUCT LEVEL)	SEE PAGE
	1	1	**116-1089**	1	BEARING-CONNECTING ROD (STANDARD)	
AB			**128-0395**		BEARING-CONNECTING ROD (0.51-MM US)	
AB			**128-0396**		BEARING-CONNECTING ROD (0.76-MM US)	
	2	1	**197-9257**	1	RING-INTERMEDIATE	
	3	1	**197-9326**	2	RETAINER	
	4	1	**197-9327**	1	PIN-PISTON	
R	5	1	**223-9133**	1	ROD AS-CONNECTING	
	5A	1	**115-2972**	1	BEARING-CONNECTING ROD	
M	5B	1	**115-2973**	2	BOLT-CONNECTING ROD	
	6	1	**238-2717**	1	RING-PISTON-TOP	
R	7	1	**265-1111**	1	BODY AS-PISTON	
	8	1	**265-1113**	1	RING-PISTON (OIL CONTROL)	
C	9	1	**276-7222**	1	TUBE AS-OIL JET	
	10	1	**3E-4352**	1	WASHER-HARD (8.8X20.5X2.5-MM THK)	
M	11	1	**8T-0100**	1	BOLT (M8X1.25X60-MM)	

A-NOT PART OF THIS GROUP
B-USE AS REQUIRED
C-CHANGE FROM PREVIOUS TYPE
M-METRIC PART
R-REMFG PART MAY BE AVAILABLE

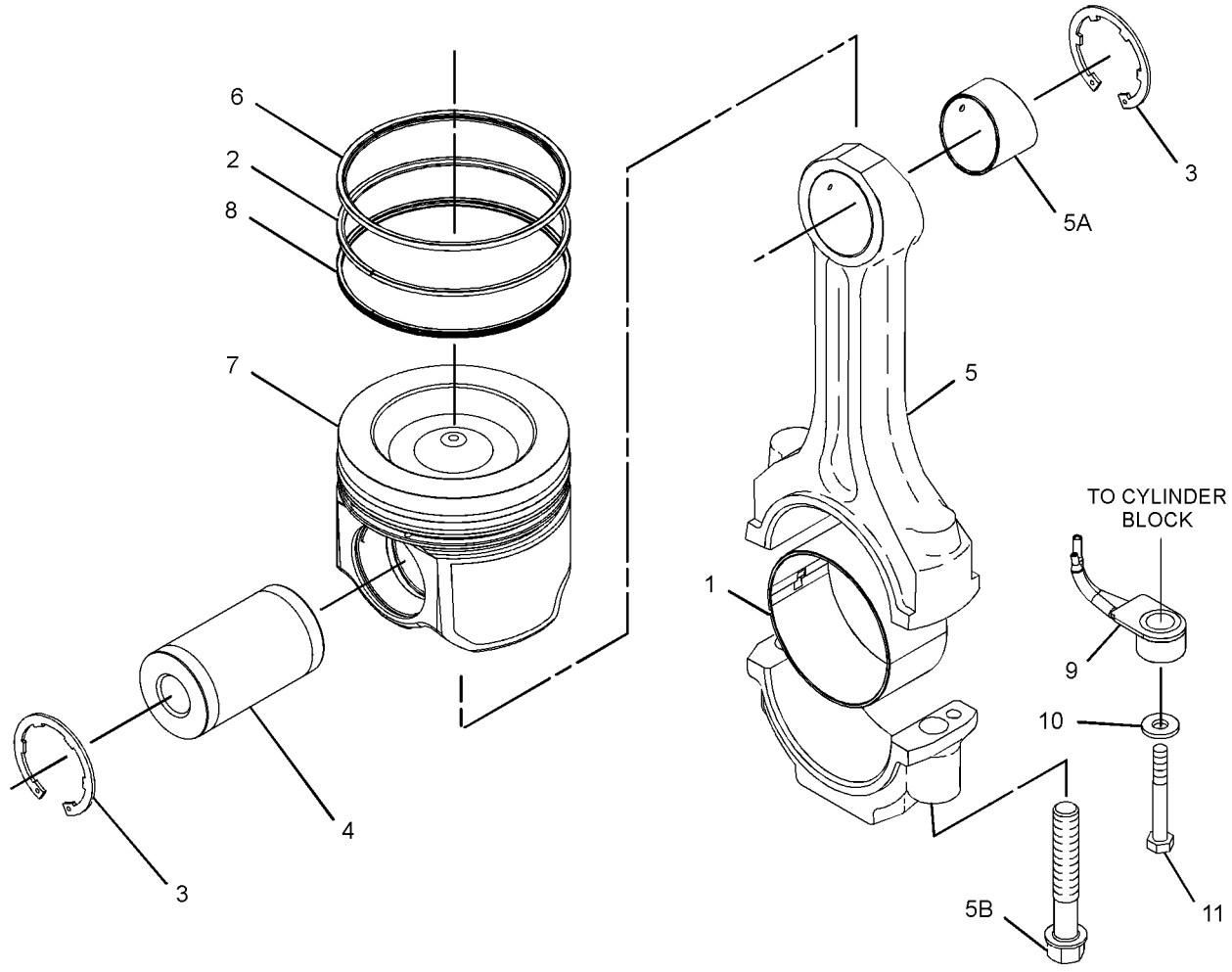

GRAPHIC #1 **<END>** g01272560

BASIC ENGINE

117-0165 PLUG GP-CYLINDER BLOCK

S/N: RSX15243-UP
RIGHT REAR OIL GALLERY
PART OF 234-7848 ENGINE AR-COMPLETE

SMCS-1201 **i03557123**

NOTE	REF NO	GRAPHIC REF	PART NUMBER	QTY	PART NAME 1 2 3 4 5 6 (PRODUCT LEVEL)	SEE PAGE
	1	1	**3B-0623**	1	PLUG-CUP	

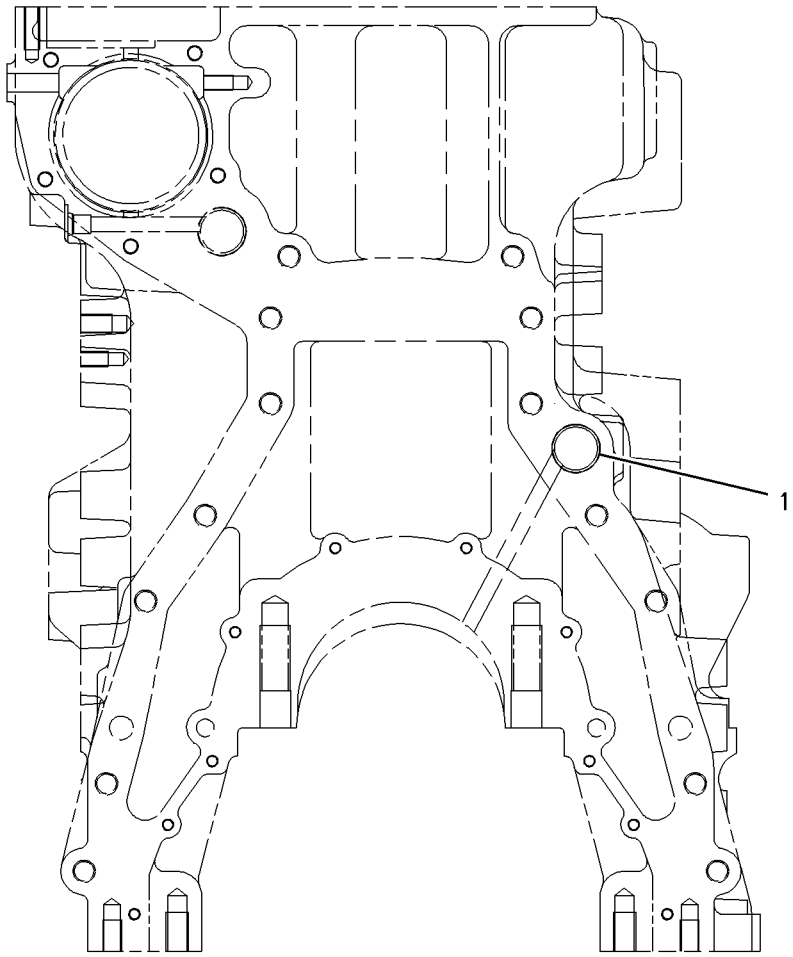

REAR VIEW

GRAPHIC #1 **<END>** g00796766

223-3875 PLUG GP-CYLINDER BLOCK

S/N: RSX15243-UP

PART OF 286-5803 ENGINE AR-CORE

SMCS-1201 **i03558383**

NOTE	REF NO	GRAPHIC REF	PART NUMBER	QTY	PART NAME 1 2 3 4 5 6 (PRODUCT LEVEL)	SEE PAGE
	1	1	**6V-5048**	1	SEAL-O-RING	
	2	1	**9S-4182**	1	PLUG-O-RING	

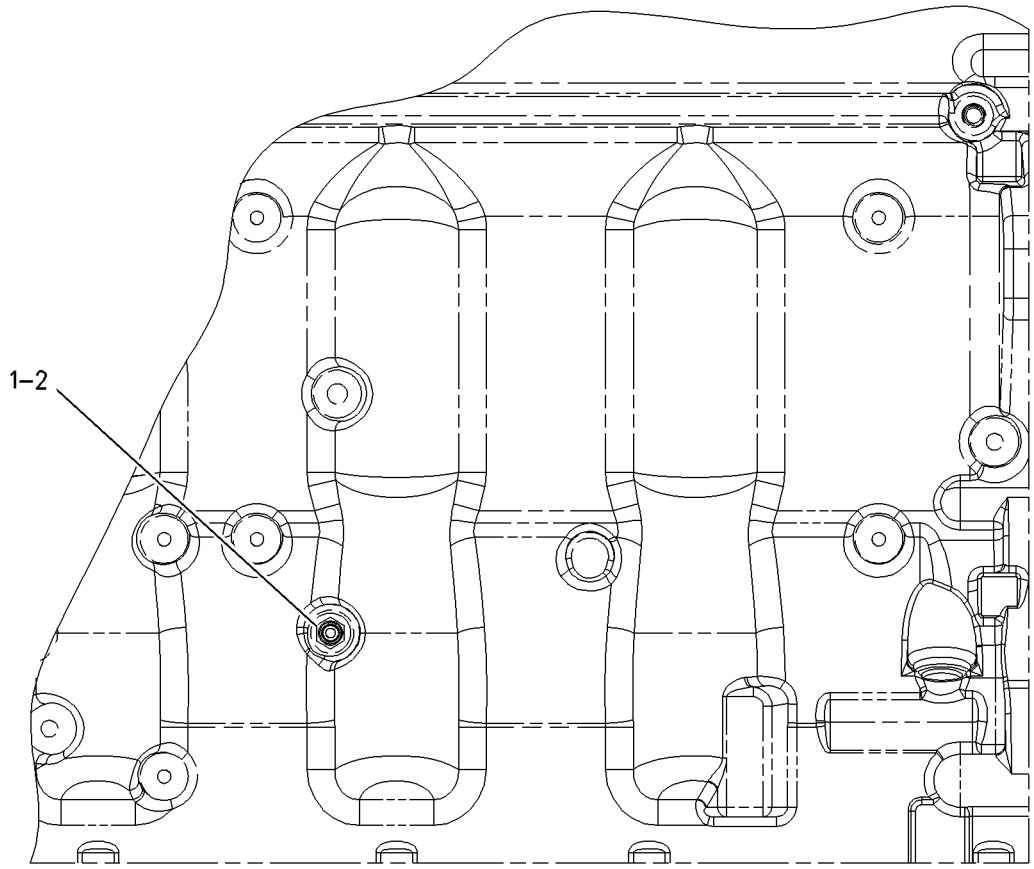

LEFT SIDE VIEW

GRAPHIC #1 **<END>** g00939495

227-9545 PLUG GP-CYLINDER BLOCK

S/N: RSX15243-UP

PROVIDES PLUGS FOR PORTS IN RIGHT HAND SIDE OIL GALLERY

PART OF 234-7848 ENGINE AR-COMPLETE

SMCS-1201 **i03557130**

NOTE	REF NO	GRAPHIC REF	PART NUMBER	QTY	PART NAME 1 2 3 4 5 6 (PRODUCT LEVEL)	SEE PAGE
	1	1	**6V-5049**	2	SEAL-O-RING	
	2	1	**8L-2786**	1	SEAL-O-RING	
	3	1	**9S-4185**	1	PLUG-O-RING	
	4	1	**9S-4191**	2	PLUG-O-RING	

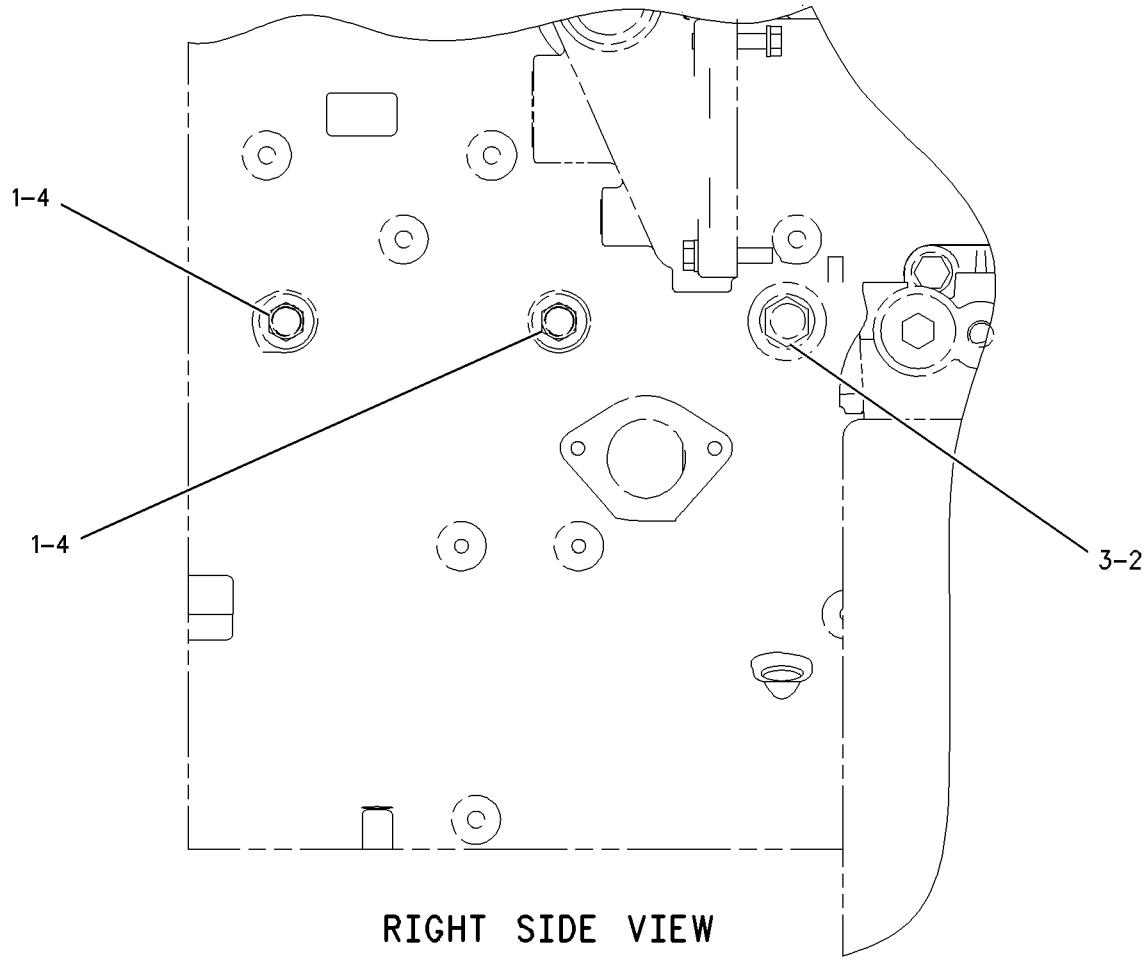

RIGHT SIDE VIEW

GRAPHIC #1 **<END>** g00950033

269-6164 PLUG GP-ENGINE

S/N: RSX15243-UP

PART OF 234-7848 ENGINE AR-COMPLETE

SMCS-1000 **i03557132**

NOTE	REF NO	GRAPHIC REF	PART NUMBER	QTY	PART NAME 1 2 3 4 5 6 (PRODUCT LEVEL)	SEE PAGE
	1	1	**3D-2824**	1	SEAL-O-RING	
	2	1	**6V-3251**	1	SEAL-O-RING	
	3	1	**6V-6609**	1	SEAL-O-RING	
	4	1	**9S-8005**	1	PLUG-O-RING	
	5	1	**9S-8006**	1	PLUG-O-RING	
	6	1	**9S-8008**	1	PLUG-O-RING	

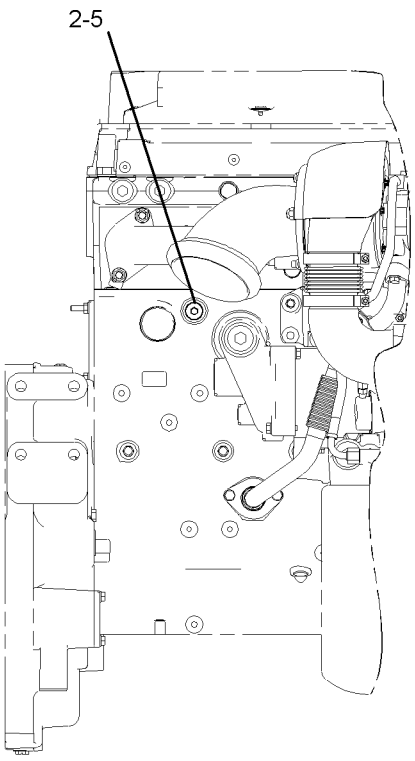

RIGHT SIDE VIEW

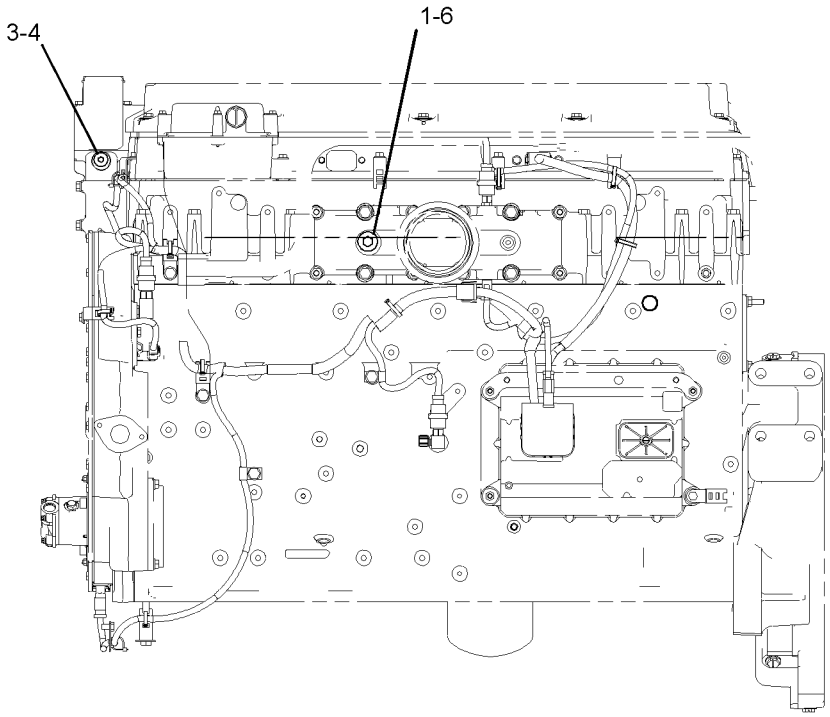

LEFT SIDE VIEW

GRAPHIC #1 **<END>** g01216945

BASIC ENGINE

123-0789 PULLEY GP-ALTERNATOR

S/N: RSX15243-UP
3.34:1 DRIVE RATIO. 57-MM (2.24 IN) DIAMETER PULLEY
PART OF 234-7848 ENGINE AR-COMPLETE
FOR USE WITH 190.5-MM (7.5 IN) DIAMETER CRANKSHAFT PULLEY,, 22.19-MM (0.87 IN) DIAMETER ALTERNATOR SHAFT WITH OR WITHOUT KEY

SMCS-1425 **i03557140**

NOTE	REF NO	GRAPHIC REF	PART NUMBER	QTY	PART NAME 1 2 3 4 5 6 (PRODUCT LEVEL)	SEE PAGE
	1	1	**123-0790**	1	PULLEY (8-GROOVE) (ALTERNATOR)	

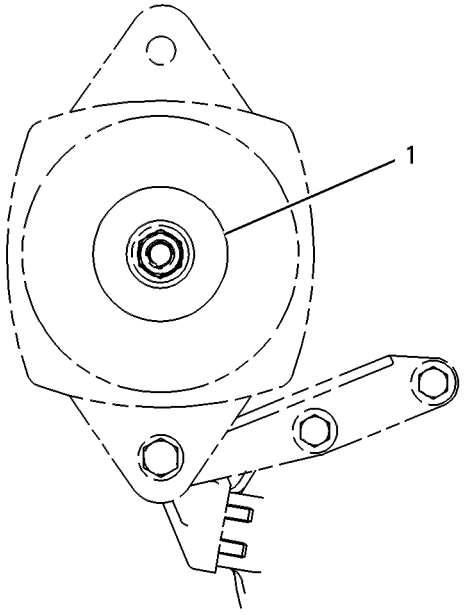

FRONT VIEW

GRAPHIC #1 **<END>** g00251352

BASIC ENGINE

230-7168 PULLEY GP-CRANKSHAFT

S/N: RSX15243-UP

PART OF 234-7848 ENGINE AR-COMPLETE

SMCS-1205 **i03557160**

NOTE	REF NO	GRAPHIC REF	PART NUMBER	QTY	PART NAME 1 2 3 4 5 6 (PRODUCT LEVEL)	SEE PAGE
	1	1	**230-7167**	1	PULLEY (8-GROOVE) (CRANKSHAFT)	

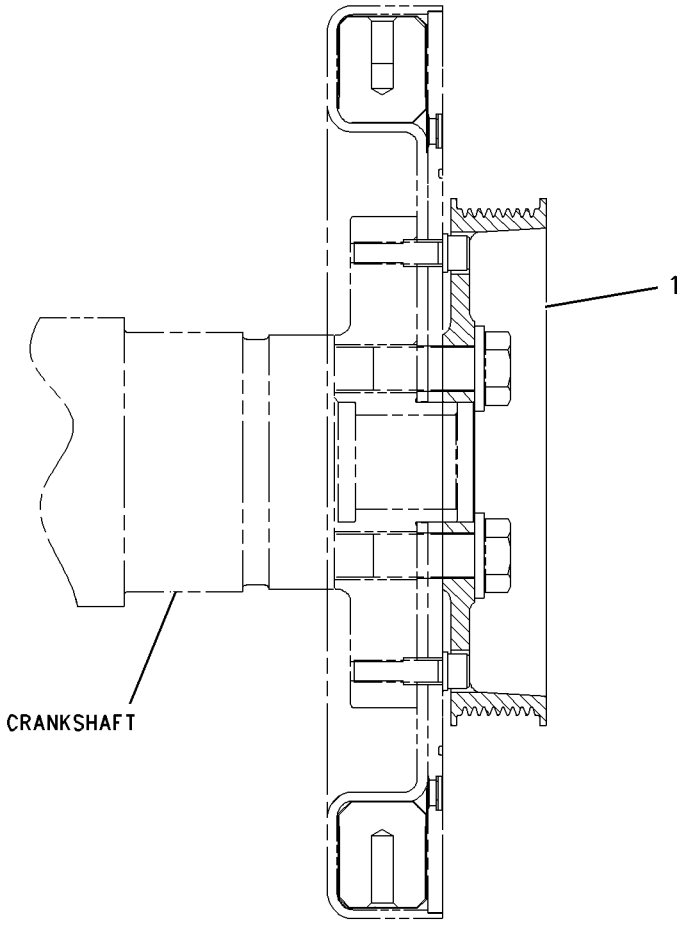

RIGHT SIDE VIEW

GRAPHIC #1 **<END>** g00783978

260-0252 ROCKER ARM GP

S/N: RSX15243-UP

PART OF 240-7272 VALVE MECHANISM GP

SMCS-1123 **i03558744**

NOTE	REF NO	GRAPHIC REF	PART NUMBER	QTY	PART NAME 1 2 3 4 5 6 (PRODUCT LEVEL)	SEE PAGE
	1	1	**258-8721**	1	BUTTON	
	2	1	**274-4490**	1	SCREW-ADJUSTMENT	
R	3	1	**260-0915**	1	ROCKER ARM AS (UNIT INJECTOR)	
		1	**2D-6642**	1	BALL	
	4	1	**8L-2777**	1	SEAL-O-RING	
	5	1	**245-6095**	1	NUT-HEX THIN (M12X1.5-THD)	

R-REMFG PART MAY BE AVAILABLE

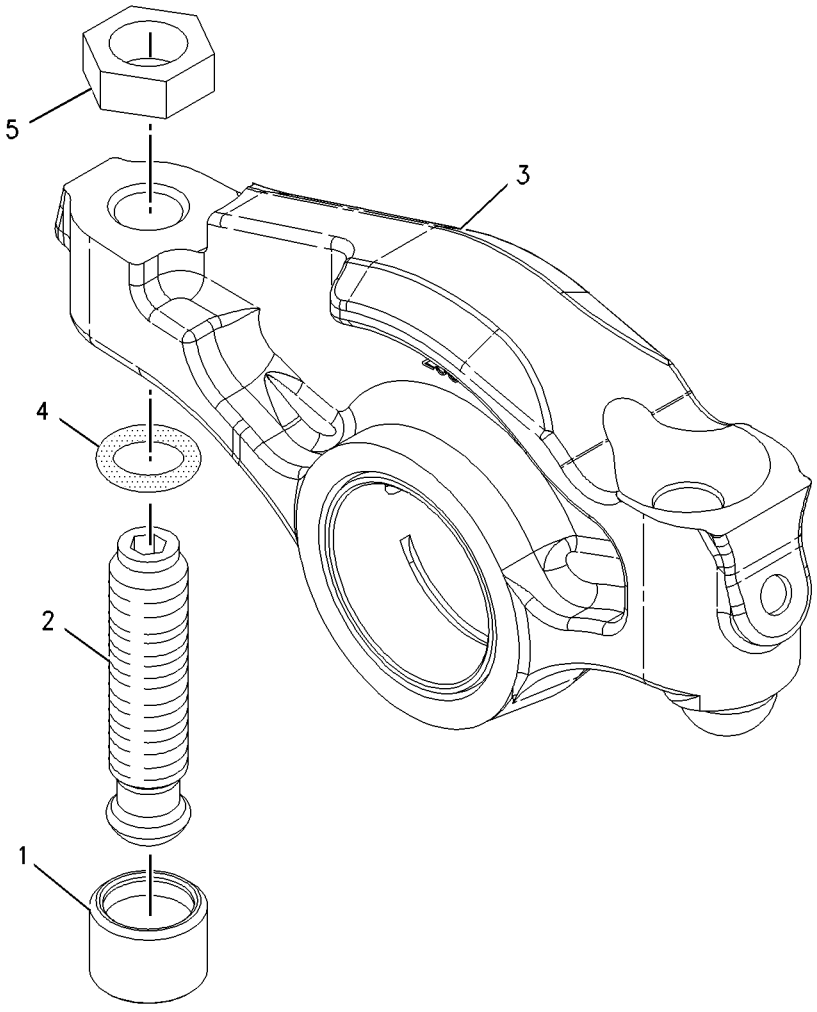

GRAPHIC #1 **<END>** g01007579

116-1091 SEAL GP-CRANKSHAFT

S/N: RSX15243-UP

PART OF 234-7848 ENGINE AR-COMPLETE

SMCS-1160, 1161 **i02586474**

NOTE	REF NO	GRAPHIC REF	PART NUMBER	QTY	PART NAME 1 2 3 4 5 6 (PRODUCT LEVEL)	SEE PAGE
	1	1	**160-2323**	1	COVER	
M	2	1	**8T-0640**	6	BOLT (M6X1X30-MM)	
	3	1	**5P-0537**	13	WASHER-HARD (7.2X14.5X2-MM THK)	
R	4	1	**294-6007**	7	BOLT-HEAD LOCKING (M6X1X18-MM)	
	5	1	**7C-1583**	1	GASKET	
	6	1	**107-6280**	1	SEAL-O-RING	
	7	1	**7C-1728**	1	SEAL-CRANKSHAFT (REAR) (REAR)	

M-METRIC PART
R-REMFG PART MAY BE AVAILABLE

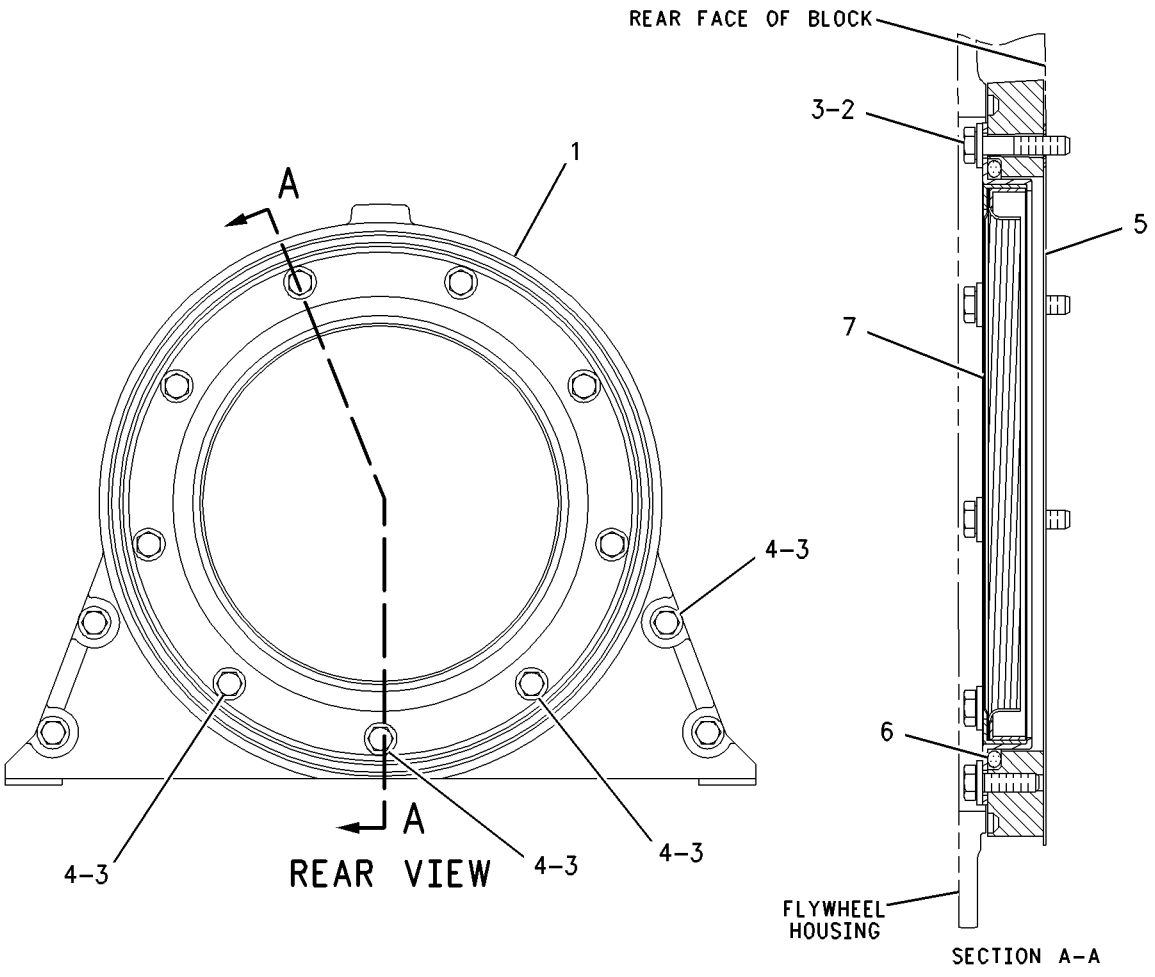

GRAPHIC #1 **<END>** g00785779

BASIC ENGINE

183-5518 SUPPORT GP-ENGINE

S/N: RSX15243-UP

PART OF 234-7848 ENGINE AR-COMPLETE

SMCS-1152, 1153, 1154 **i03557626**

NOTE	REF NO	GRAPHIC REF	PART NUMBER	QTY	PART NAME 1 2 3 4 5 6 (PRODUCT LEVEL)	SEE PAGE
	1	1	**229-2887**	1	SUPPORT (FRONT)	
	2	1	**5P-8245**	8	WASHER-HARD (13.5X25.5X3-MM THK)	
M	3	1	**6V-5696**	8	BOLT (M12X1.75X80-MM)	

M-METRIC PART

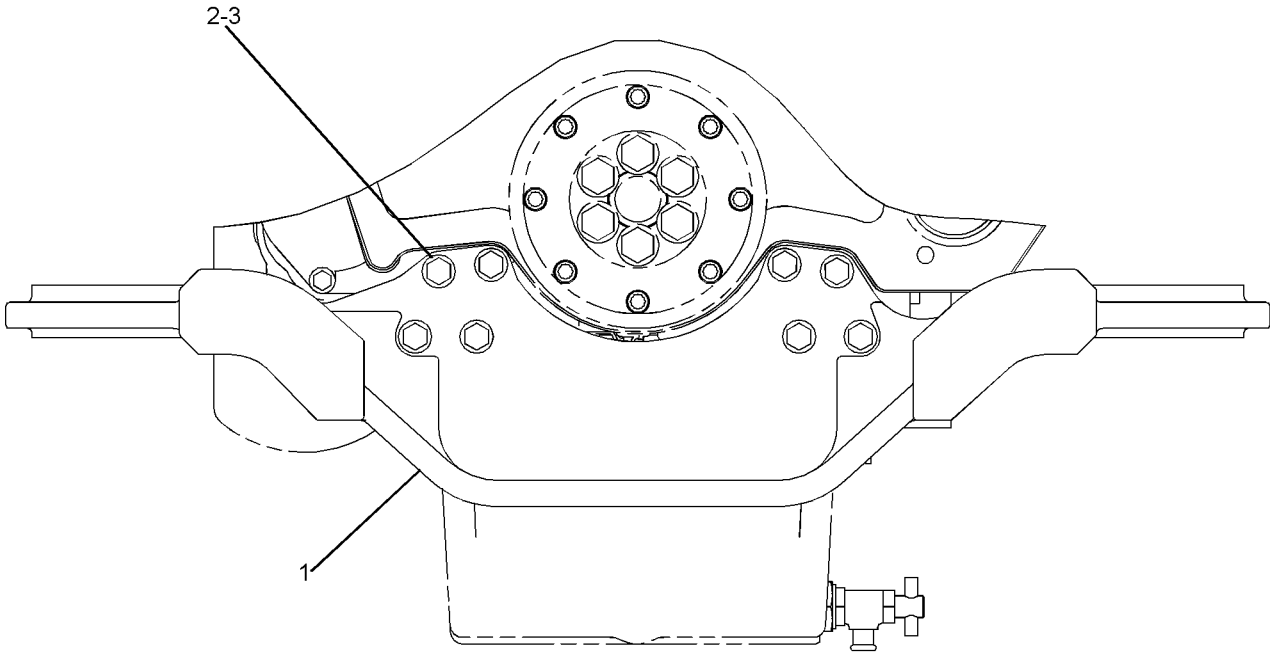

FRONT VIEW

GRAPHIC #1 **<END>** g01054311

240-7272 VALVE MECHANISM GP

S/N: RSX15243-UP

PART OF 286-5803 ENGINE AR-CORE

SMCS-1102, 1121, 1123 **i03558720**

NOTE	REF NO	GRAPHIC REF	PART NUMBER	QTY	PART NAME 1 2 3 4 5 6 (PRODUCT LEVEL)	SEE PAGE
	1	1	**319-0271**	6	PUSHROD-INJECTOR	
Y	2	1	*237-4376*	1	LIFTER GP-VALVE (MECHANISM)	32
	3	1	**319-0270**	12	PUSHROD-VALVE	
	4	1	**237-7253**	12	BRIDGE-VALVE	
Y	5	1	*260-0252*	3	ROCKER ARM GP	46

Y-SEPARATE ILLUSTRATION

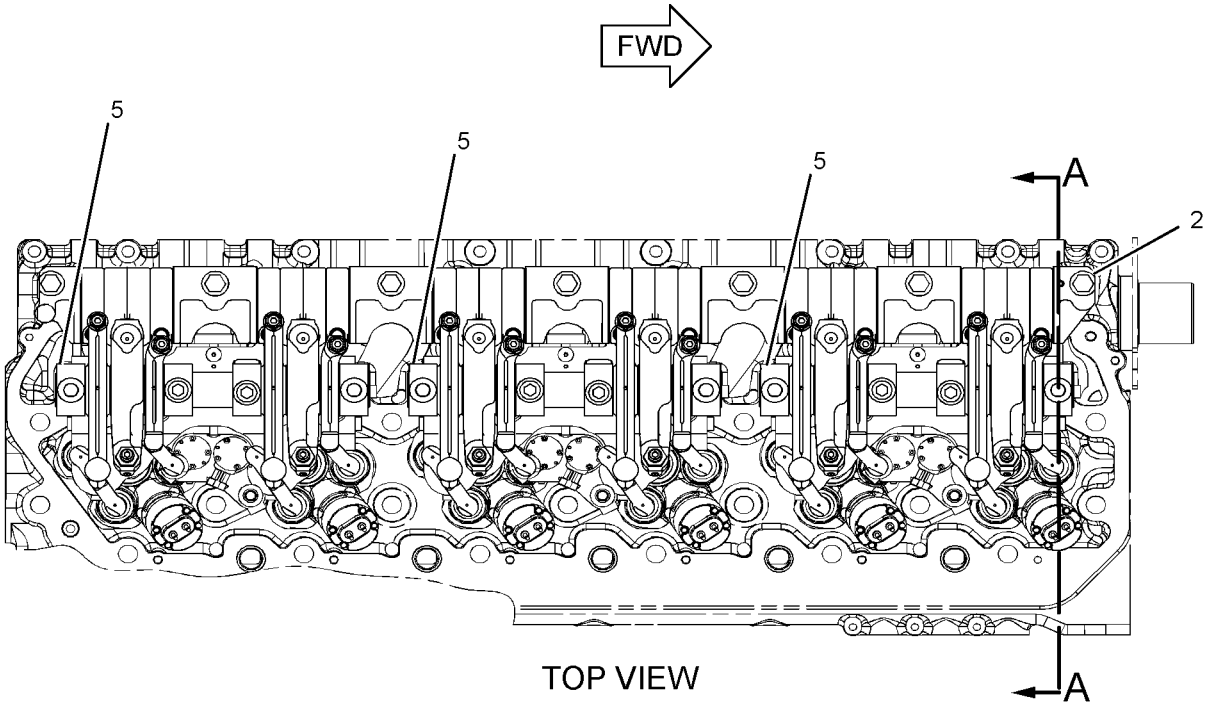

TOP VIEW

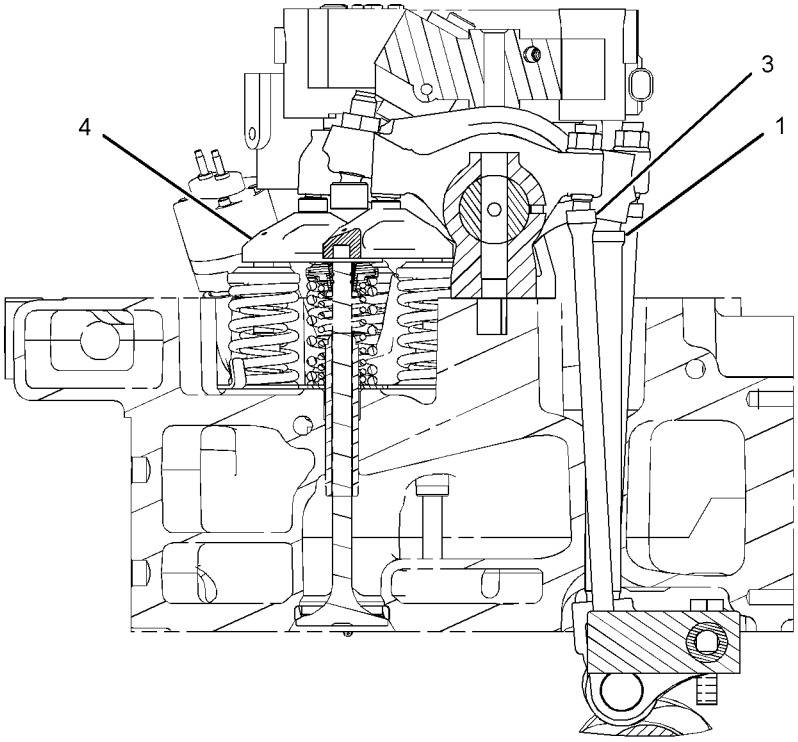

SECTION A-A

GRAPHIC #1 **<END>** g01291144

237-9755 BASE GP-OIL FILTER–ENGINE

S/N: RSX15243-UP
PART OF 234-7848 ENGINE AR-COMPLETE
FOR USE WITH RH STARTER GPS

SMCS-1306 **i03555586**

NOTE	REF NO	GRAPHIC REF	PART NUMBER	QTY	PART NAME 1 2 3 4 5 6 (PRODUCT LEVEL)	SEE PAGE
	1	1	**8C-3445**	1	CAP-DUST	
	2	1	*217-9060*	1	VALVE AS-FLUID SAMPLING (ENGINE OIL)	
		1	**3J-7354**	1	SEAL-O-RING	
		1	**154-9023**	1	VALVE-SAMPLING (ENGINE OIL)	
	3	1	**336-2216**	1	GASKET	
Y	4	1	**281-8366**	1	BASE GP-OIL FILTER (ENGINE)	52
M	5	1	**134-5245**	6	BOLT (M10X1.5X30-MM)	
	6	1	**3P-0650**	2	SEAL-O-RING	
	7	1	**5P-9617**	1	ADAPTER	
	8	1	**214-7568**	1	SEAL-O-RING	
	9	1	**6V-5839**	6	WASHER (11X21X2.5-MM THK)	

M-METRIC PART
Y-SEPARATE ILLUSTRATION

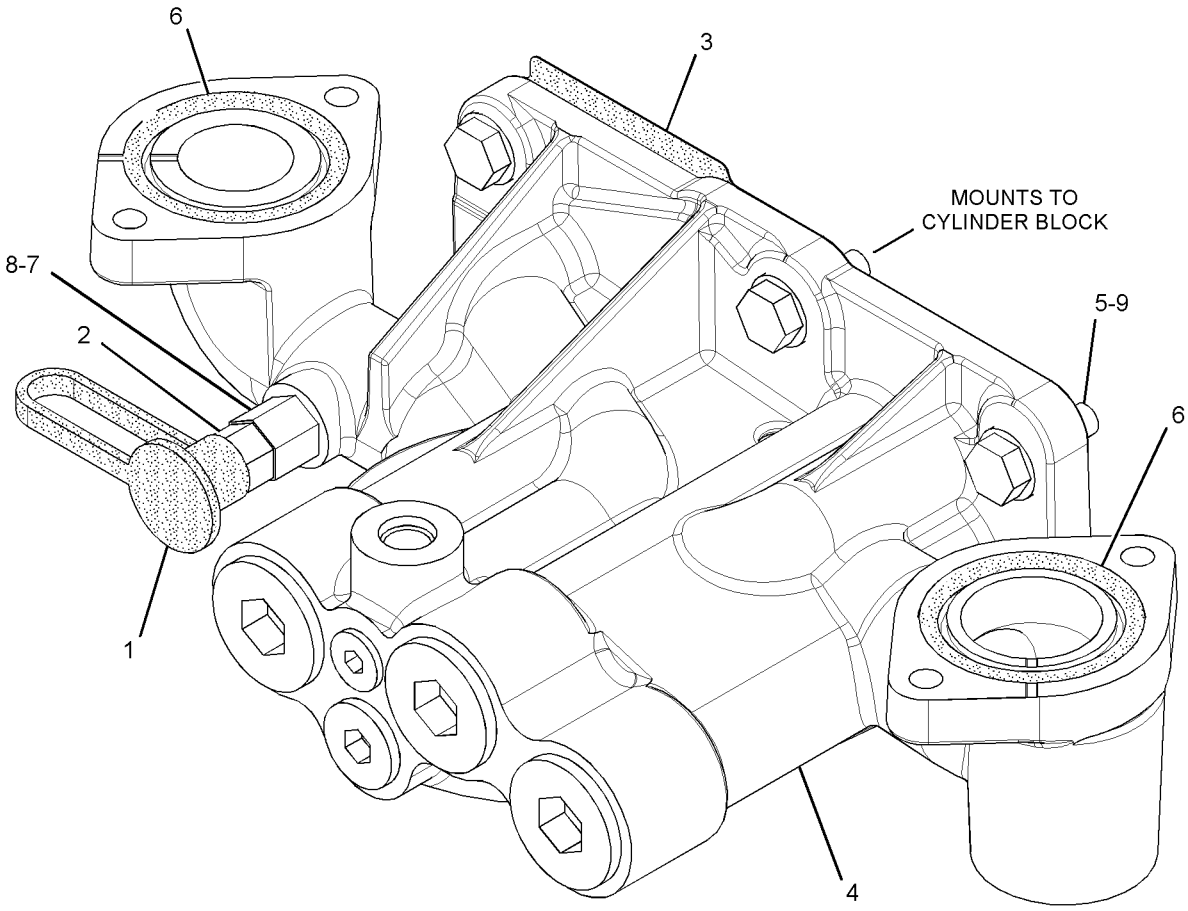

GRAPHIC #1 **<END>** g01833263

LUBRICATION SYSTEM

281-8366 BASE GP-OIL FILTER—ENGINE

S/N: RSX15243-UP

PART OF 237-9755 BASE GP-OIL FILTER

SMCS-1306 **i03555612**

NOTE	REF NO	GRAPHIC REF	PART NUMBER	QTY	PART NAME 1 2 3 4 5 6 (PRODUCT LEVEL)	SEE PAGE
	1	1,2	**4N-8150**	2	SPRING	
	2	1	**7C-3081**	1	SPACER (6.88X9.53X50-MM THK)	
	3	1	**7C-3082**	1	RETAINER	
	4	1	**7C-3083**	1	SEAT-RELIEF VALVE SPRING	
	5	1	**7C-3954**	1	SPRING AS	
	6	1,2	**1P-1367**	2	PLUNGER (ENGINE OIL COOLER RELIEF VALVE)	
	7	1	**224-3405**	1	VALVE AS (OIL PUMP BYPASS) (ENGINE)	
	8	1	**281-1750**	1	BASE AS-OIL FILTER	
	8A	1	**2P-4304**	1	STUD-HOLLOW	
	9	1	**1A-2170**	1	SPRING-RETAINER	
	10	1	**5P-7701**	3	SEAL-O-RING	
	11	2	**6V-5049**	2	SEAL-O-RING	
M	12	1	**6V-8359**	1	BOLT (M6X1X70-MM)	
	13	2	**9S-8004**	2	PLUG-O-RING	
	14	1	**9S-9334**	3	PLUG-O-RING	
	15	1	**9S-8006**	1	PLUG-O-RING	
	16	1	**2M-9780**	1	SEAL-O-RING	

M-METRIC PART

REFER TO ALL ILLUSTRATIONS OF THIS GROUP FOR AUXILIARY VIEWS

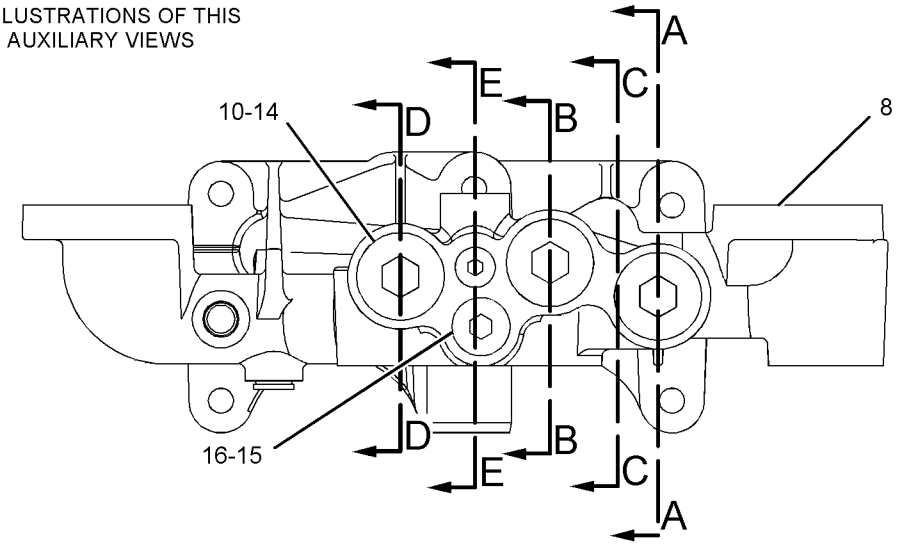

FRONT VIEW

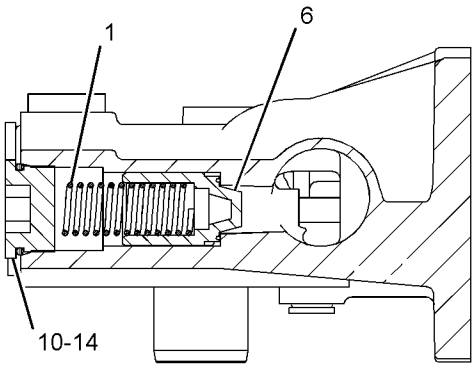

SECTION A-A

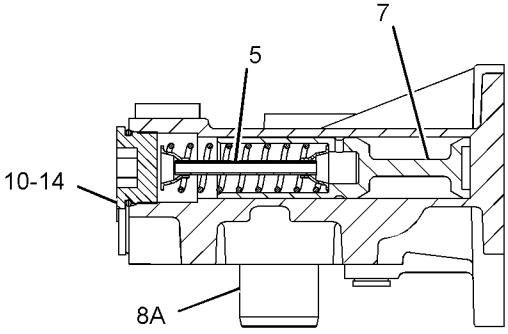

SECTION B-B

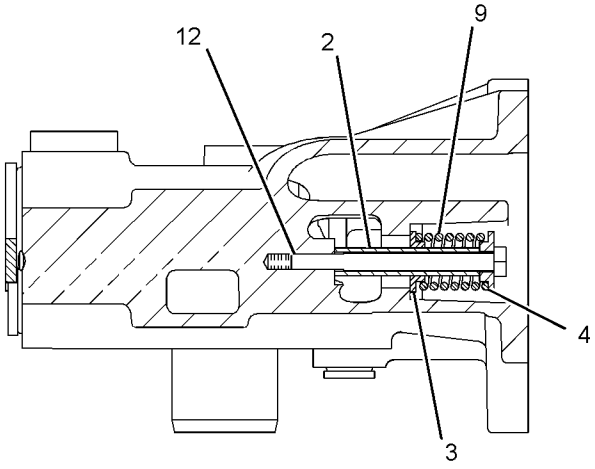

SECTION C-C

GRAPHIC #1

g01103881

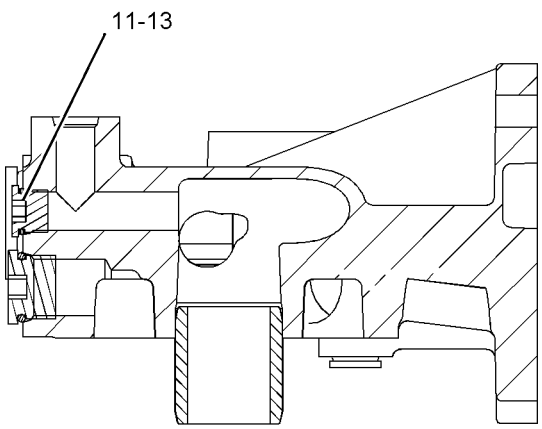

SECTION E-E

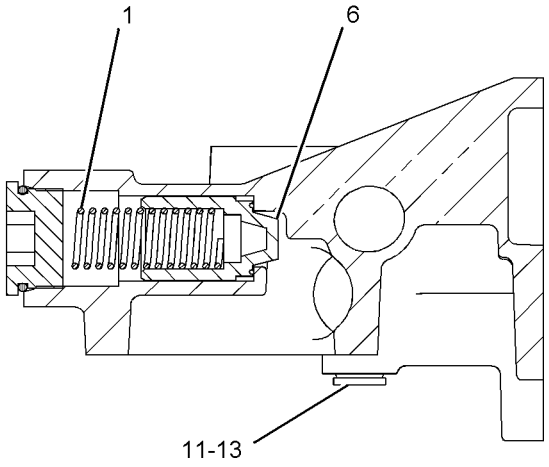

SECTION D-D

GRAPHIC #2 **<END>** g01103898

243-1670 FILLER GP-ENGINE OIL

S/N: RSX15243-UP

PART OF 234-7848 ENGINE AR-COMPLETE

SMCS-1316 **i03556610**

NOTE	REF NO	GRAPHIC REF	PART NUMBER	QTY	PART NAME 1 2 3 4 5 6 (PRODUCT LEVEL)	SEE PAGE
	1	1	**5L-2952**	1	CAP AS-FILLER (ENGINE OIL)	
		1	**6L-2609**	1	SEAL-RUBBER	
	2	1	**7C-1445**	3	COVER	
	3	1	**221-3263**	1	TUBE AS	
	4	1	**061-9455**	4	SEAL-O-RING	
M	5	1	**6V-3940**	2	BOLT (M8X1.25X25-MM)	
M	6	1	**6V-5217**	4	BOLT (M8X1.25X20-MM)	
	7	1	**9M-1974**	8	WASHER-HARD (8.8X16X2-MM THK)	
M	8	1	**6V-2317**	2	BOLT (M8X1.25X30-MM)	

M-METRIC PART

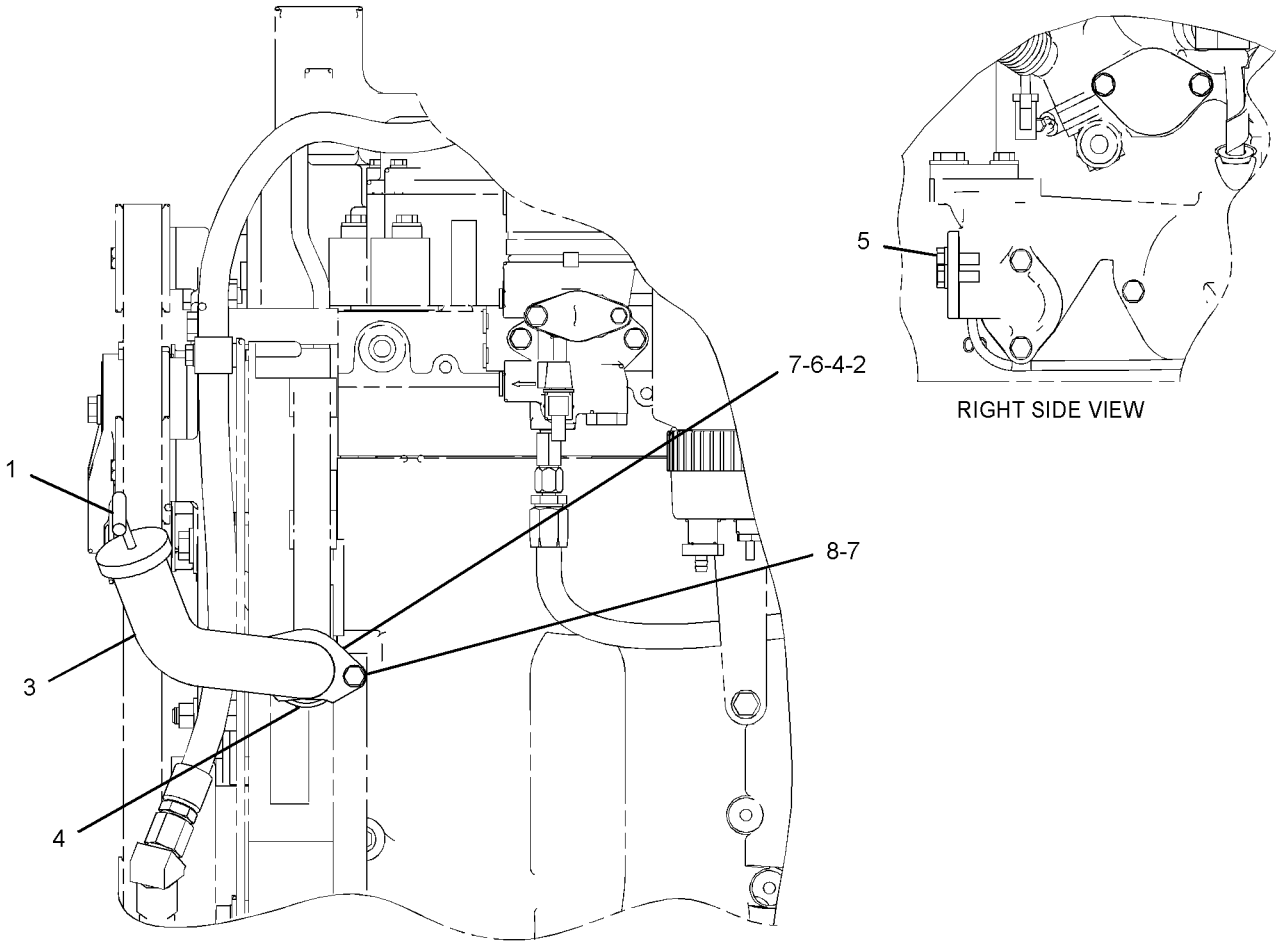

RIGHT SIDE VIEW

LEFT SIDE VIEW

GRAPHIC #1 **<END>** g01302174

231-3492 FILTER GP-ENGINE OIL

S/N: RSX15243-UP
PROVIDES PRIMARY HIGH EFFICIENCY FILTER
PART OF 234-7848 ENGINE AR-COMPLETE

SMCS-1306, 1308 **i03556705**

NOTE	REF NO	GRAPHIC REF	PART NUMBER	QTY	PART NAME 1 2 3 4 5 6 (PRODUCT LEVEL)	SEE PAGE
	1	1	**1R-1808**	1	FILTER-ENGINE OIL (ADVANCED EFFICIENCY)	

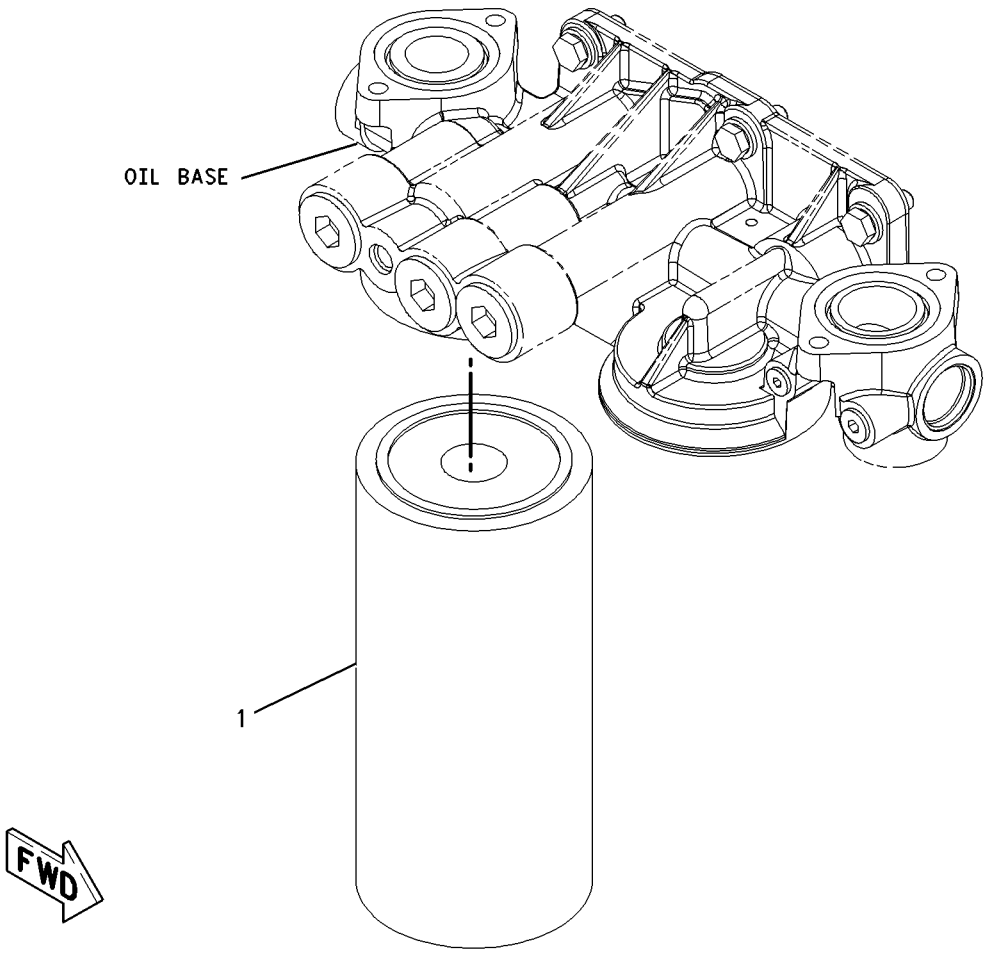

GRAPHIC #1 **<END>** g00951313

LUBRICATION SYSTEM

340-7752 FUMES DISPOSAL GP

S/N: RSX15243-UP

PART OF 234-7848 ENGINE AR-COMPLETE

SMCS-1317 **i03556910**

NOTE	REF NO	GRAPHIC REF	PART NUMBER	QTY	PART NAME 1 2 3 4 5 6 (PRODUCT LEVEL)	SEE PAGE
	1	1	**237-9759**	1	HOSE (FUMES DISPOSAL)	
	2	1	**2S-2053**	1	CLIP	
M	3	1	**2Y-5829**	1	NUT (M10X1.5-THD)	
	4	1	**6V-5839**	1	WASHER (11X21X2.5-MM THK)	
	5	1	**034-1432**	1	STRAP-CABLE	

M-METRIC PART

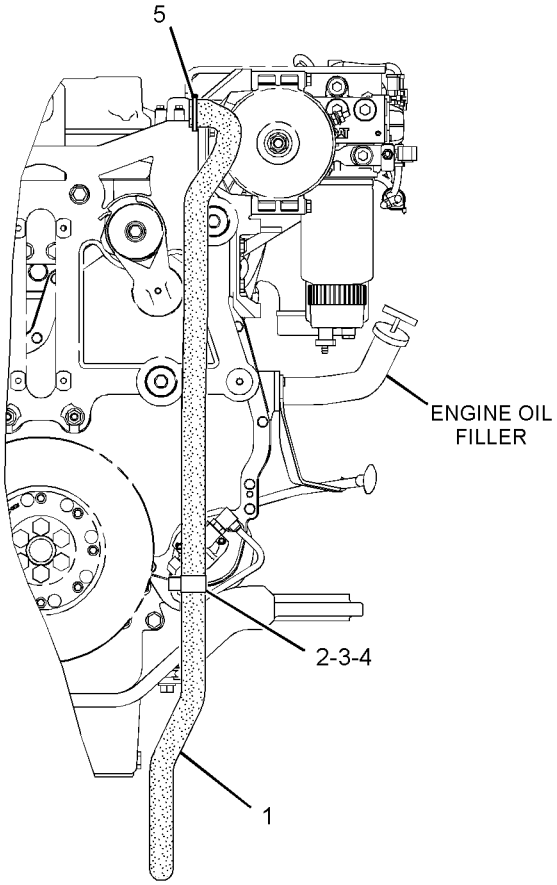

FRONT VIEW OF ENGINE

GRAPHIC #1 **<END>** g01380393

236-5035 GAUGE GP-OIL LEVEL (DIPSTICK)—ENGINE

S/N: RSX15243-UP

PART OF 234-7848 ENGINE AR-COMPLETE

SMCS-1326 **i03556918**

NOTE	REF NO	GRAPHIC REF	PART NUMBER	QTY	PART NAME 1 2 3 4 5 6 (PRODUCT LEVEL)	SEE PAGE
J	1	1	**209-7309**	3	PLUG	
	2	1	**284-4930**	1	GAUGE AS-OIL LEVEL (DIPSTICK) (ENGINE)	
	3	1	**284-4929**	1	TUBE AS	
	4	1	**3P-0647**	1	SEAL-O-RING	
J-USE TO PLUG OPTIONAL DIPSTICK LOCATIONS						

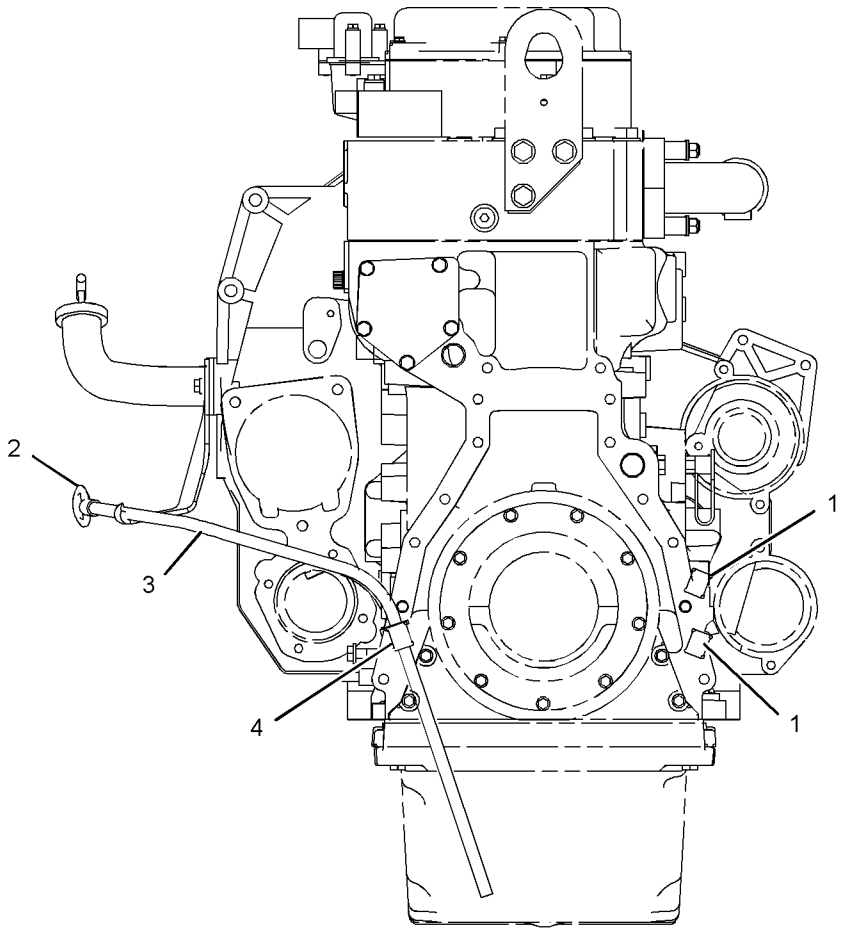

REAR VIEW

GRAPHIC #1

<END>

g01039918

LUBRICATION SYSTEM

234-7843 LINES GP-TURBOCHARGER OIL

S/N: RSX15243-UP

PART OF 234-7848 ENGINE AR-COMPLETE

SMCS-1052, 1307 **i03557041**

NOTE	REF NO	GRAPHIC REF	PART NUMBER	QTY	PART NAME 1 2 3 4 5 6 (PRODUCT LEVEL)	SEE PAGE
	1	1	**197-8418**	1	GASKET	
	2	1	**197-8419**	1	GASKET	
	3	1	**235-1071**	1	HOSE AS	
	4	1	**227-9920**	1	TUBE AS-DRAIN	
	5	1	**8T-6876**	1	ELBOW	
	6	1	**225-6948**	1	SEAL-O-RING	
M	7	1	**6V-5218**	6	BOLT (M8X1.25X35-MM)	
	8	1	**9M-1974**	6	WASHER-HARD (8.8X16X2-MM THK)	
	9	1	**6V-8398**	1	SEAL-O-RING	
	10	1	**3J-1907**	1	SEAL-O-RING	

M-METRIC PART

234-7843 **LINES GP-TURBOCHARGER OIL** *(contd.)* **i03557041**

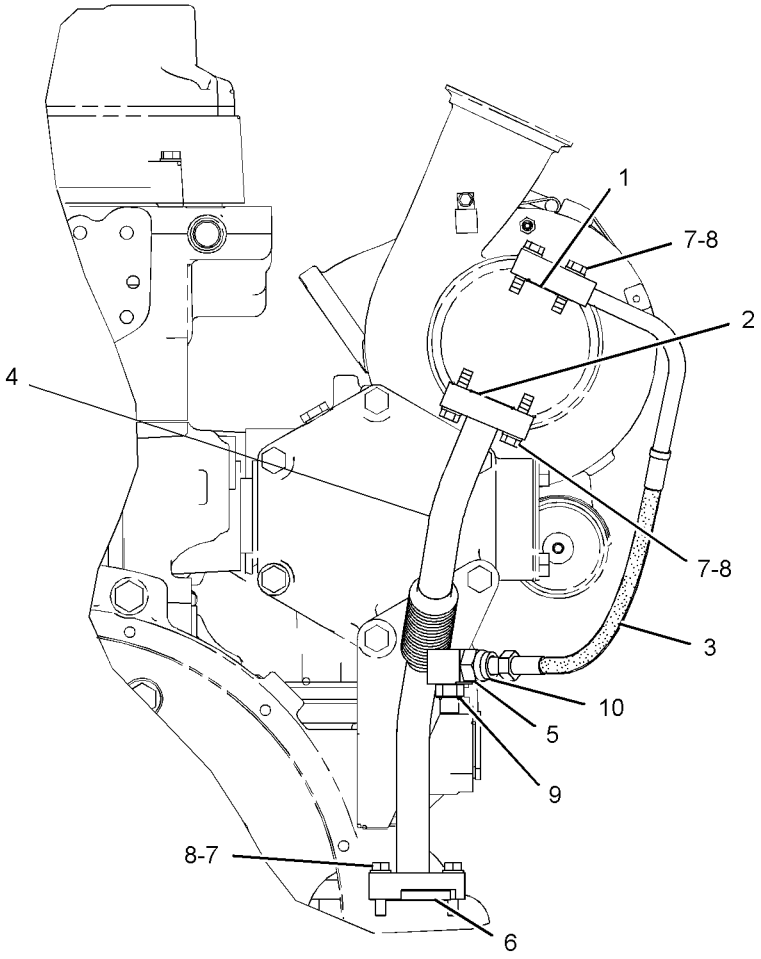

REAR VIEW

GRAPHIC #1 **<END>** g01249069

LUBRICATION SYSTEM

233-5220 PUMP GP-ENGINE OIL*R

S/N: RSX15243-UP

PART OF 233-5221 PUMP GP-ENGINE OIL

SMCS-1304, 1315 **i02010532**

NOTE	REF NO	GRAPHIC REF	PART NUMBER	QTY	PART NAME 1 2 3 4 5 6 (PRODUCT LEVEL)	SEE PAGE
	1	1	**9Y-8076**	1	SHAFT AS-OIL PUMP (8-TEETH)	
	2	1	**6D-7146**	1	SEAL-O-RING	
M	3	1	**6V-2317**	4	BOLT (M8X1.25X30-MM)	
	4	1	**9M-1974**	4	WASHER-HARD (8.8X16X2-MM THK)	
	5	1	**9Y-8075**	1	SHAFT AS-OIL PUMP (8-TEETH)	

M-METRIC PART

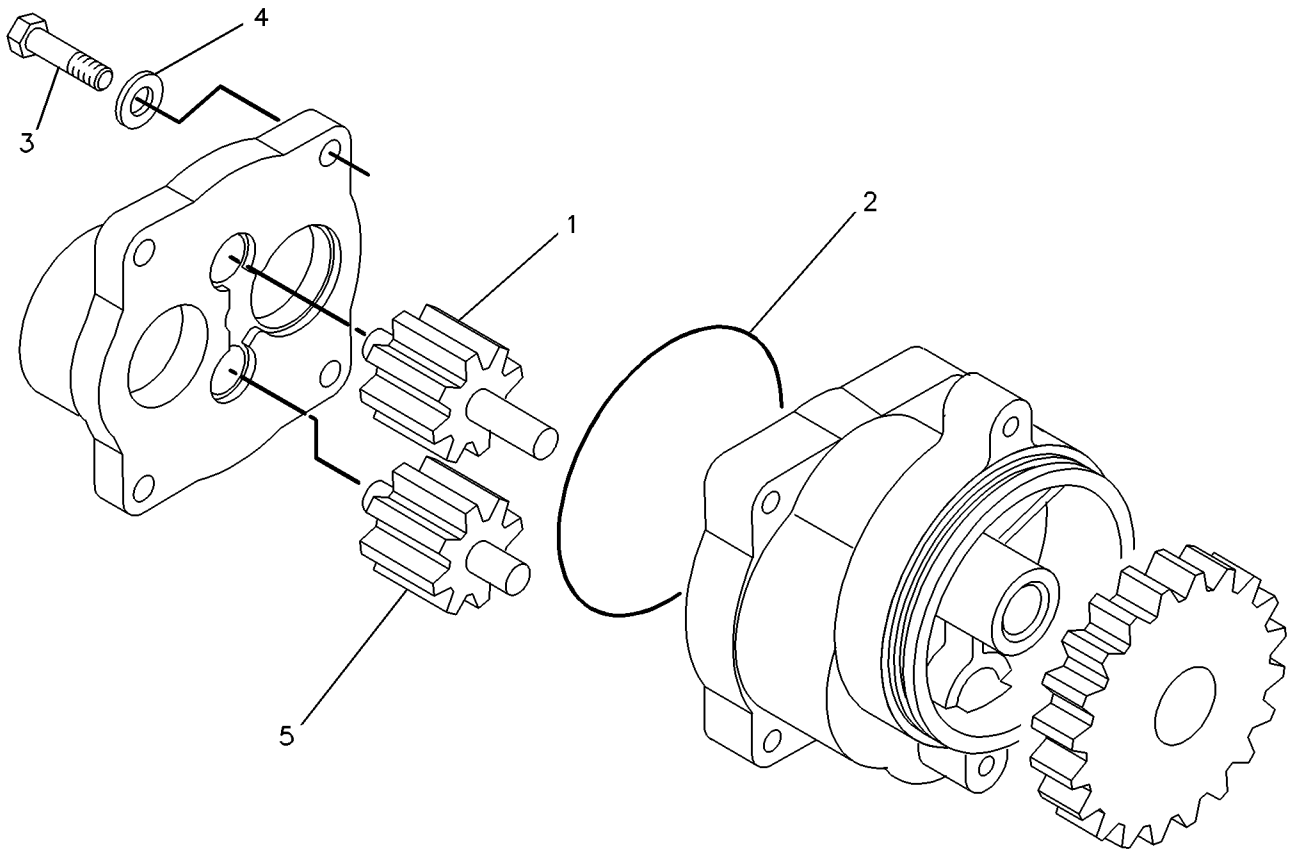

GRAPHIC #1 **<END>** g00228139

233-5221 PUMP GP-ENGINE OIL

S/N: RSX15243-UP
CONTAINS ALL LINES AND FASTENERS
PART OF 286-5803 ENGINE AR-CORE

SMCS-1304, 1315 **i03558403**

NOTE	REF NO	GRAPHIC REF	PART NUMBER	QTY	PART NAME 1 2 3 4 5 6 (PRODUCT LEVEL)	SEE PAGE
	1	1	**7C-1821**	1	COUPLING	
	2	1	**7C-1822**	1	COUPLING	
YR	3	1	**233-5220**	1	PUMP GP-ENGINE OIL	62
	4	1	**235-1448**	1	TUBE AS	
	5	1	**235-1451**	1	ELBOW-OIL PUMP	
	6	1	**061-8561**	1	SEAL-O-RING	
	8	1	**3E-6788**	1	SEAL-O-RING	
	9	1	**5P-8068**	2	SEAL-O-RING	
	10	1	**6V-3834**	1	SEAL-O-RING	
	11	1	**6V-5134**	3	SEAL-O-RING	
M	12	1	**6V-2317**	2	BOLT (M8X1.25X30-MM)	
M	13	1	**6V-5221**	5	BOLT (M8X1.25X80-MM)	
M	14	1	**7X-0870**	1	BOLT (M8X1.25X140-MM)	
	15	1	**8J-4351**	1	SEAL-O-RING	
	16	1	**9M-1974**	8	WASHER-HARD (8.8X16X2-MM THK)	

M-METRIC PART
R-REMFG PART MAY BE AVAILABLE
Y-SEPARATE ILLUSTRATION

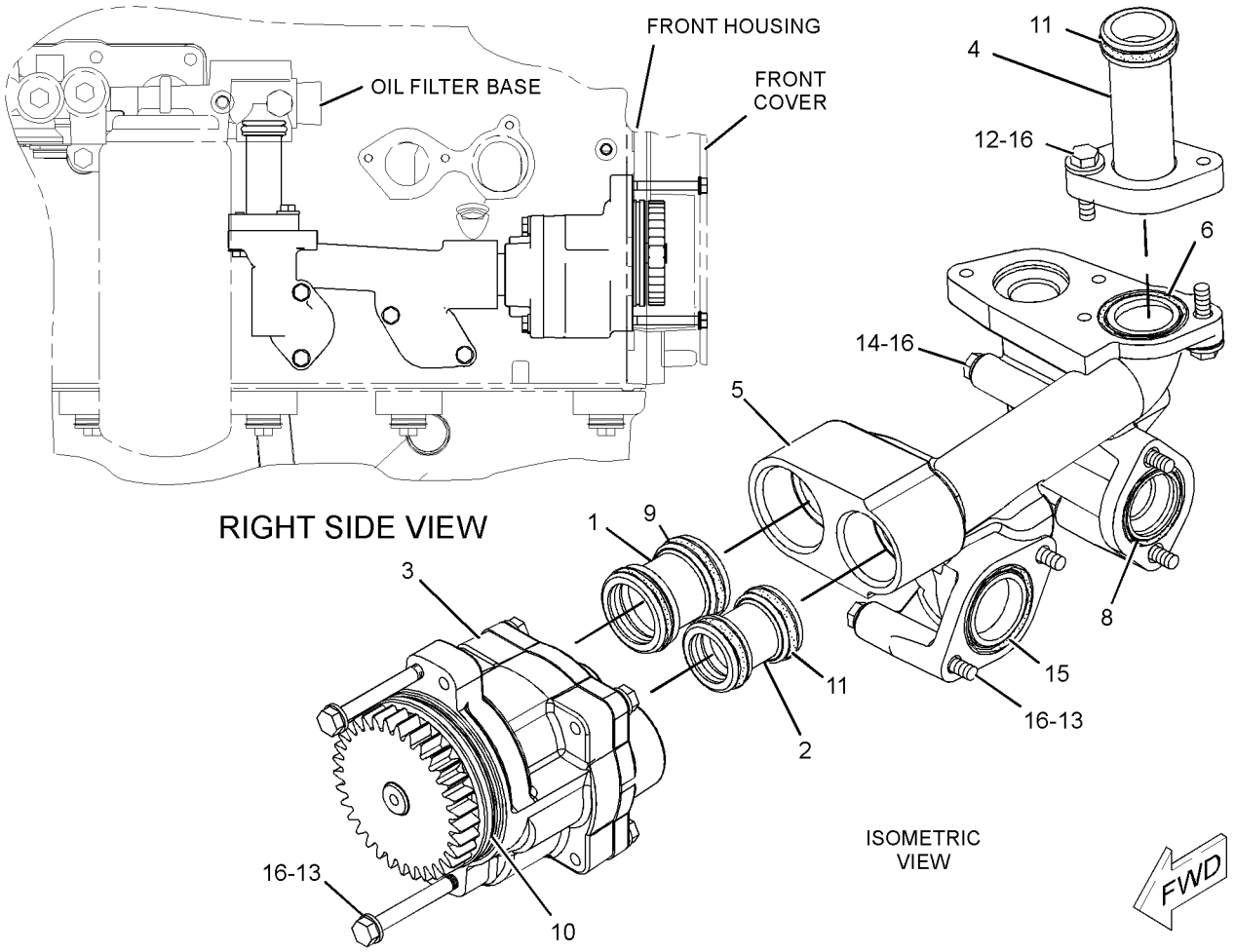

GRAPHIC #1 **<END>** g01246677

251-7600 COOLER GP-ENGINE OIL

S/N: RSX15243-UP

PART OF 234-7848 ENGINE AR-COMPLETE

SMCS-1378 **i03555701**

NOTE	REF NO	GRAPHIC REF	PART NUMBER	QTY	PART NAME 1 2 3 4 5 6 (PRODUCT LEVEL)	SEE PAGE
	1	1	**8E-9571**	1	WASHER-HARD (8.8X16X7-MM THK)	
	2	1	**224-2675**	1	SEAL	
	3	1	**131-6645**	1	HOSE	
	4	1	**224-6360**	2	SEAL	
	5	1	**301-7298**	2	CLAMP AS-BAND (CONSTANT TENSION)	
	6	1	**230-4518**	1	ELBOW	
	7	1	**230-4519**	1	BONNET (OIL COOLER)	
R	8	1	**236-8745**	1	CORE AS-OIL COOLER (ENGINE)	
M	10	1	**6V-2317**	5	BOLT (M8X1.25X30-MM)	
	11	1	*164-5590*	1	VALVE AS-FLUID SAMPLING (ENGINE OIL)	
		1	**3J-7354**	1	SEAL-O-RING	
		1	**8C-3446**	1	VALVE-FLUID SAMPLING	
	12	1	*241-6168*	1	PLUG AS	
	12A	1	**9S-4191**	1	PLUG-O-RING	
	12B	1	**6V-3250**	1	SEAL-O-RING	
M	13	1	**6V-5219**	5	BOLT (M8X1.25X40-MM)	
M	14	1	**6V-5221**	1	BOLT (M8X1.25X80-MM)	
	15	1	**9M-1974**	10	WASHER-HARD (8.8X16X2-MM THK)	
	16	1	*183-7263*	1	PLUG AS	
		1	**9S-8002**	1	PLUG-O-RING	
		1	**3J-7354**	1	SEAL-O-RING	
	17	1	**157-0670**	1	CAP-DUST	
	18	1	**8K-4739**	1	ADAPTER	
	19	1	**6V-3251**	1	SEAL-O-RING	

M-METRIC PART
R-REMFG PART MAY BE AVAILABLE

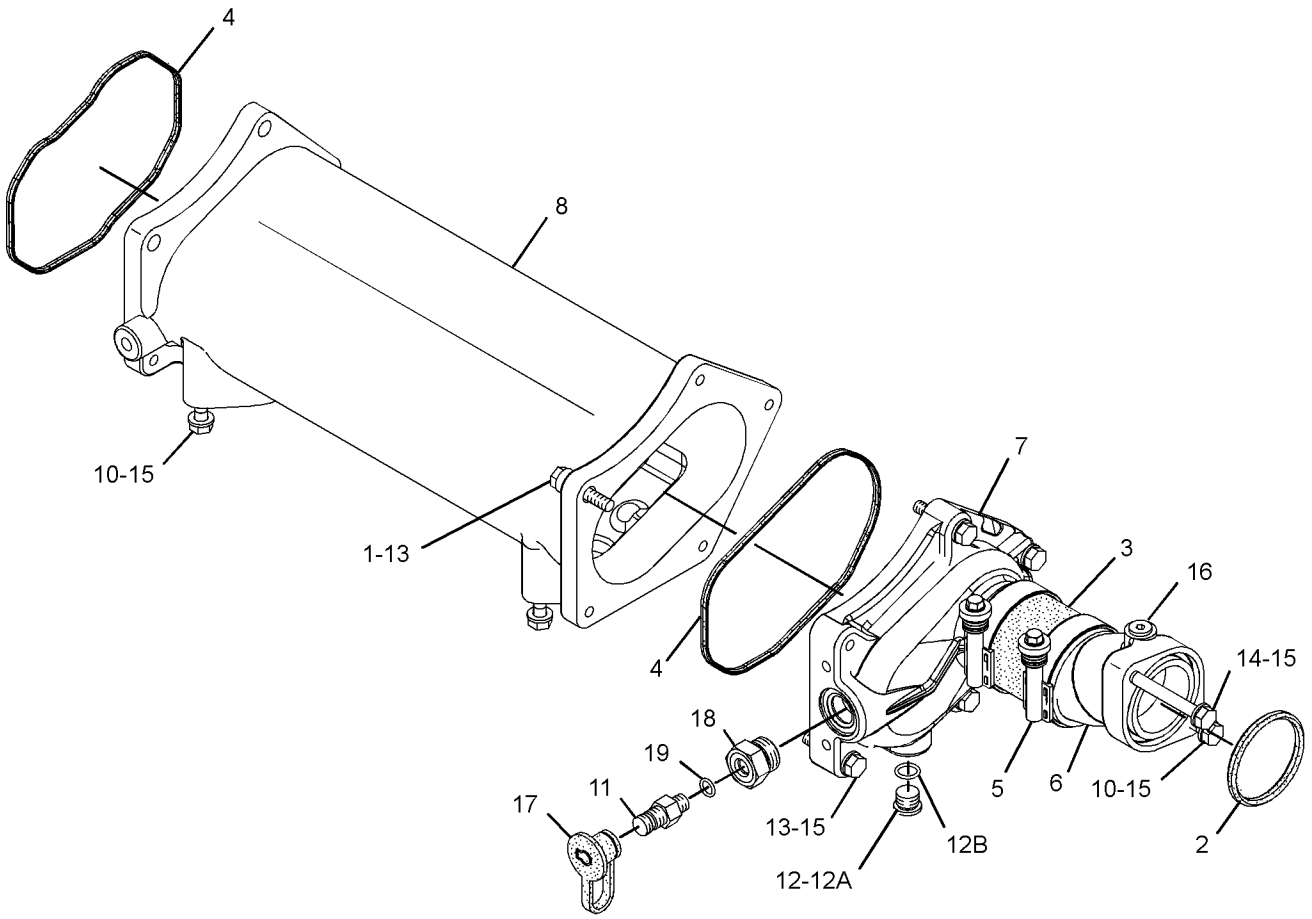

GRAPHIC #1 **<END>** g01421976

246-1921 COOLING AR-HIGH AMBIENT TEMP

S/N: RYF1-UP
AN ATTACHMENT

SMCS-1350, 1353, 1386, 1387, 5057 **i03630141**

NOTE	PART NUMBER	QTY	PART NAME 1 2 3 4 5 6 (PRODUCT LEVEL)	SEE PAGE
	244-8840	1	CORE AS-CONDENSER (REFRIGERANT)	
	256-6627	1	CORE AS-RADIATOR	

<END>

236-8988 LINES GP-WATER—RADIATOR

S/N: RYF1-UP

PART OF 236-9000 CHASSIS AR

SMCS-1380 **i03613943**

NOTE	REF NO	GRAPHIC REF	PART NUMBER	QTY	PART NAME 1 2 3 4 5 6 (PRODUCT LEVEL)	SEE PAGE
E	1	1	**5P-1262**		HOSE (11.5-CM EACH)	
	2	1	**6S-8620**	4	CLAMP-HOSE	
	3	1	**7K-1181**	1	STRAP-CABLE	
	4	1	**7X-1443**	8	PROTECTOR	
	5	1	**8F-8151**	1	VALVE-SHUTOFF (RADIATOR DRAIN)	
	6	1	**8T-4983**	2	CLAMP-HOSE	
	7	1	**9Y-9236**	1	GAUGE-SIGHT	
	8	1	*150-3024*	1	ELBOW AS	
		1	**3J-1907**	1	SEAL-O-RING	
		1	**5P-4924**	1	ELBOW	
	9	1	**241-8506**	1	TUBE	
	10	1	**260-1818**	1	TUBE AS	
	11	1	**268-1497**	1	ELBOW	
	12	1	**268-4045**	1	CONNECTOR	
Y	13	1	*312-2014*	1	TANK GP-RADIATOR TOP	82
	14	1	**124-1479**	1	CLIP	
	15	1	*169-7397*	1	ADAPTER GP	
		1	**3K-0360**	1	SEAL-O-RING	
		1	**3P-1932**	1	ADAPTER	
	16	1	**324-3210**	8	CLAMP	
	17	1	**3D-2824**	1	SEAL-O-RING	
	18	1	**3J-7354**	2	SEAL-O-RING	
	19	1	**5D-1026**	1	CLAMP-HOSE	
	20	1	**5P-1230**	1	CONNECTOR	
	21	1	**6V-1355**	1	ELBOW	
	22	1	**7D-7233**	2	CLIP	
	23	1	**7M-8485**	1	SEAL-O-RING	
	24	1	**7X-7729**	4	WASHER (11X25X3-MM THK)	
	25	1	**8T-4121**	2	WASHER-HARD (11X21X2.5-MM THK)	
M	26	1	**8T-4133**	1	NUT (M10X1.5-THD)	
M	27	1	**8T-4136**	3	BOLT (M10X1.5X25-MM)	
M	28	1	**8T-4195**	2	BOLT (M10X1.5X30-MM)	
E	29	1	**5P-1251**		HOSE (110-CM)	
E	30	1	**5P-0767**		HOSE (69-CM)	
E	31	1	**5P-1442**		HOSE (28-CM)	
E	32	1	**5P-6442**		HOSE (67-CM)	
E	33	1	**7Y-1976**		HOSE-WATER (285-CM)	

E-ORDER BY THE CENTIMETER
M-METRIC PART
Y-SEPARATE ILLUSTRATION

236-8988 **LINES GP-WATER** *(contd.)* **i03613943**

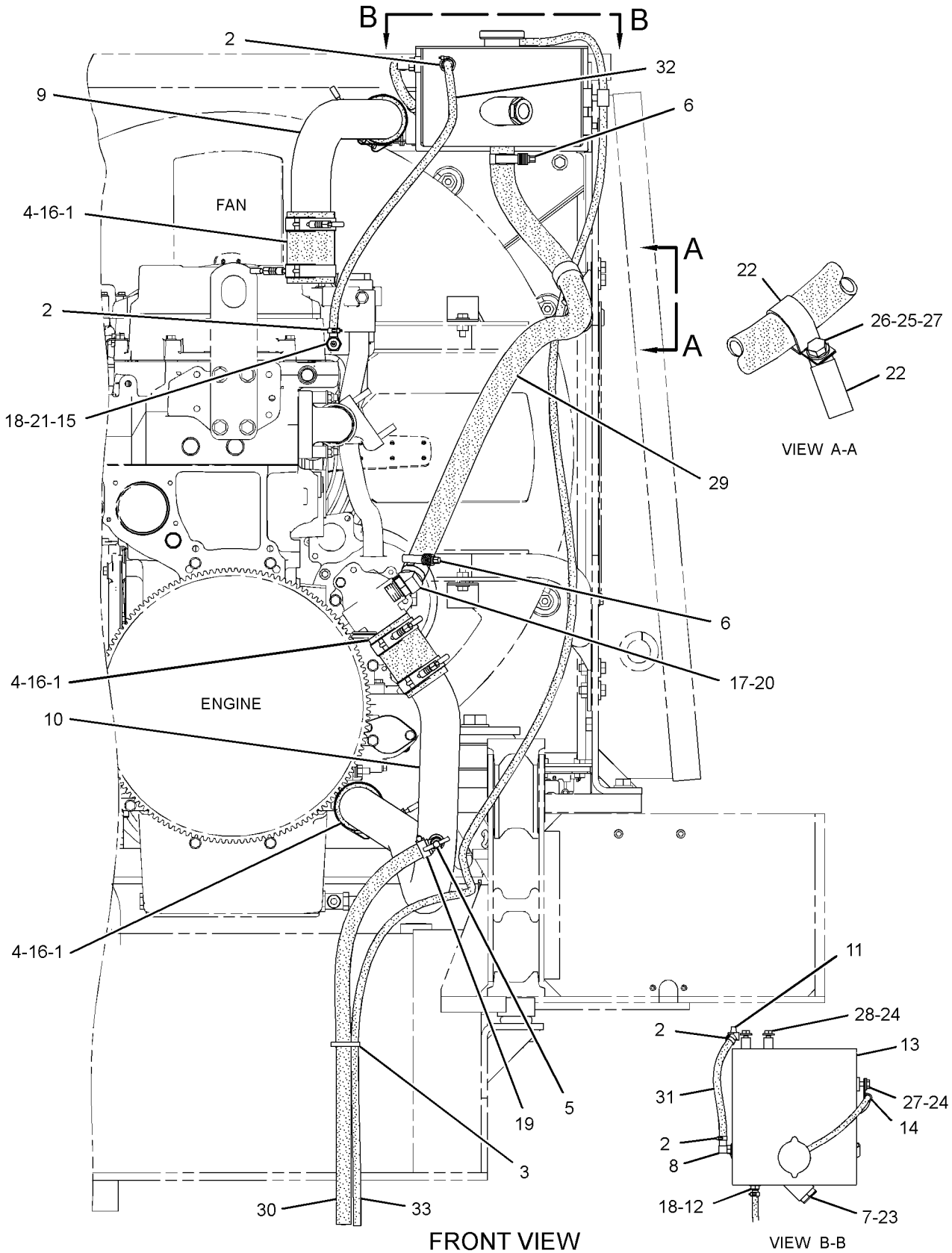

GRAPHIC #1

<END>

g01699714

COOLING SYSTEM

243-1667 LINES GP-WATER—SINGLE WATER REGULATOR

S/N: RSX15243-UP

PART OF 234-7848 ENGINE AR-COMPLETE

SMCS-1380 **i03557043**

NOTE	REF NO	GRAPHIC REF	PART NUMBER	QTY	PART NAME 1 2 3 4 5 6 (PRODUCT LEVEL)	SEE PAGE
	1	1	**224-6361**	1	SEAL (TEMPERATURE REGULATOR)	
	2	1	**227-5075**	1	SEAL (TEMPERATURE REGULATOR HOUSING)	
	3	1	**238-6721**	1	BASE	
	4	1	**238-6728**	1	TUBE-BYPASS	
	5	1	**238-6730**	1	HOUSING AS-REGULATOR	
		1	**3S-9643**	1	SEAL-LIP TYPE (WATER TEMPERATURE REGULATOR)	
	6	1	**239-8135**	1	VALVE AS-VENT (TEMPERATURE REGULATOR) (WATER LINES)	
		1	**9X-7380**	1	SEAL-O-RING	
		1	**9X-7380**	1	SEAL-O-RING	
	7	1	**248-5513**	1	REGULATOR-TEMPERATURE (92-DEG C) (COOLANT)	
	8	1	**230-2603**	4	BOLT (M8X1.25X90-MM)	
	10	1	**5P-9436**	2	PLUG	
	11	1	**6V-5063**	2	SEAL-O-RING	
	12	1	**6V-6609**	3	SEAL-O-RING	
	13	1	**6V-9027**	2	SEAL-O-RING	
	14	1	**7L-6580**	2	SEAL-O-RING	
M	15	1	**8T-0292**	4	BOLT (M8X1.25X90-MM)	
	16	1	**9M-1974**	4	WASHER-HARD (8.8X16X2-MM THK)	
	17	1	**9S-4182**	2	PLUG-O-RING (STRAIGHT THREAD-O RING)	
	18	1	**9S-8005**	3	PLUG-O-RING	

M-METRIC PART

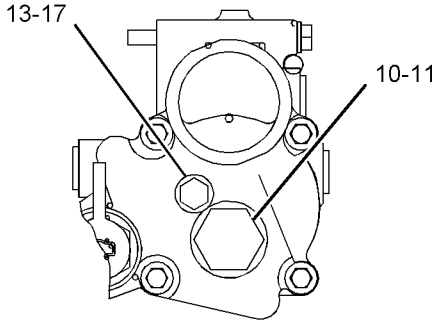

VIEW C-C

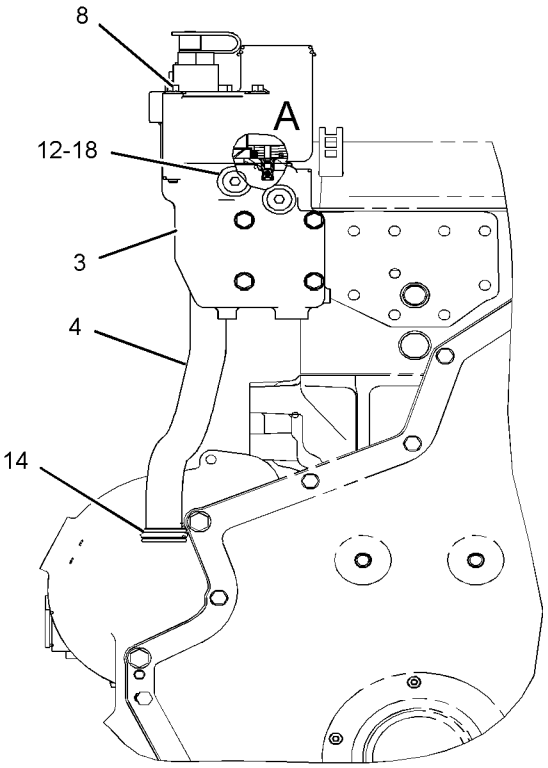

FRONT VIEW

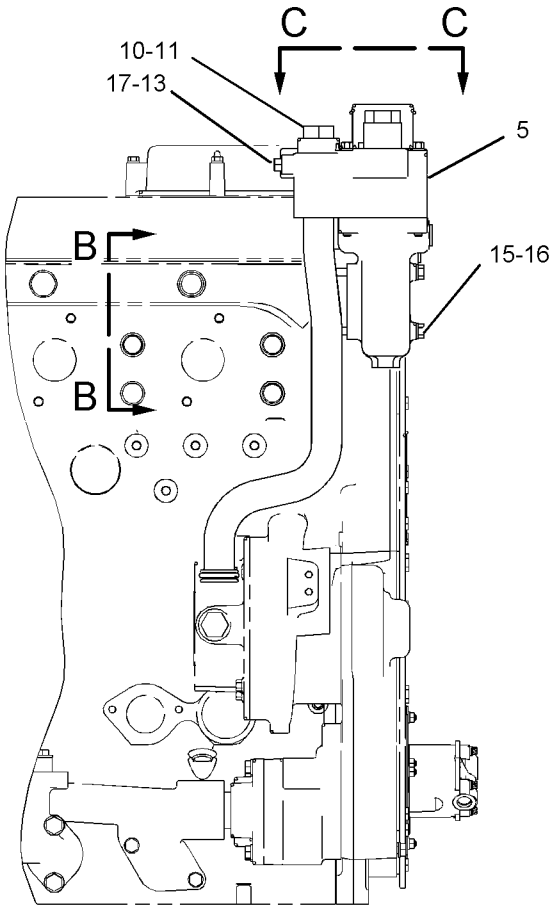

RIGHT SIDE VIEW

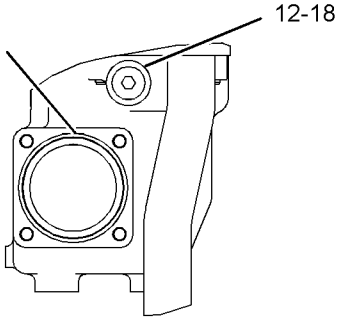

VIEW B-B

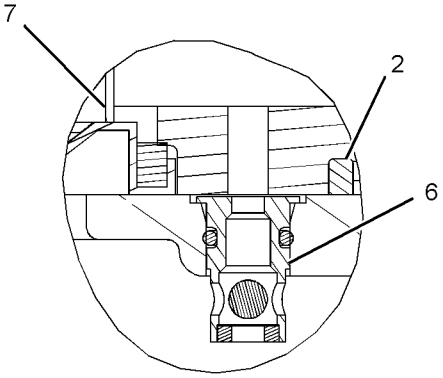

VIEW OF AREA A

GRAPHIC #1 **<END>** g01123849

COOLING SYSTEM

255-2397 LINES GP-WATER—PUMP

S/N: RSX15243-UP

PART OF 234-7848 ENGINE AR-COMPLETE

SMCS-1380 **i03557060**

NOTE	REF NO	GRAPHIC REF	PART NUMBER	QTY	PART NAME 1 2 3 4 5 6 (PRODUCT LEVEL)	SEE PAGE
	1	1	**255-2395**	1	ELBOW-WATER PUMP	
M	2	1	**6V-3940**	3	BOLT (M8X1.25X25-MM)	
	3	1	**6V-5063**	2	SEAL-O-RING	
	4	1	**9M-1974**	3	WASHER-HARD (8.8X16X2-MM THK)	
	5	1	**9S-4183**	2	PLUG-O-RING	

M-METRIC PART

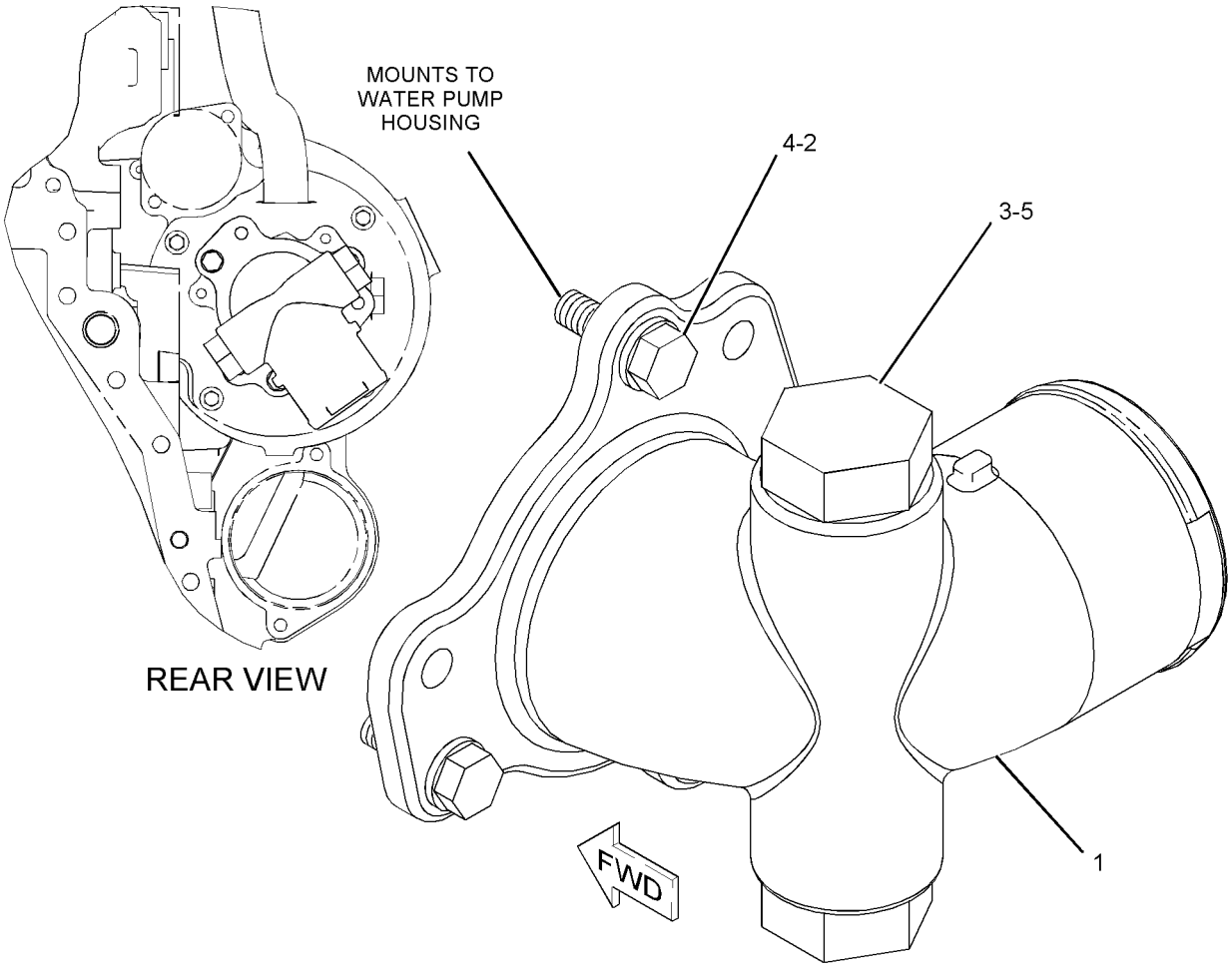

GRAPHIC #1 **<END>** g01121120

COOLING SYSTEM

228-5812 PUMP GP-WATER

S/N: RSX15243-UP

PART OF 286-5803 ENGINE AR-CORE

SMCS-1361 **i03558508**

NOTE	REF NO	GRAPHIC REF	PART NUMBER	QTY	PART NAME 1 2 3 4 5 6 (PRODUCT LEVEL)	SEE PAGE
CYR	1	1	**292-9252**	1	PUMP GP-WATER	74
	2	1	**6V-5839**	2	WASHER (11X21X2.5-MM THK)	
	3	1	**6V-7350**	1	SEAL-O-RING	
M	4	1	**8T-0643**	2	BOLT (M10X1.5X80-MM)	

C-CHANGE FROM PREVIOUS TYPE
M-METRIC PART
R-REMFG PART MAY BE AVAILABLE
Y-SEPARATE ILLUSTRATION

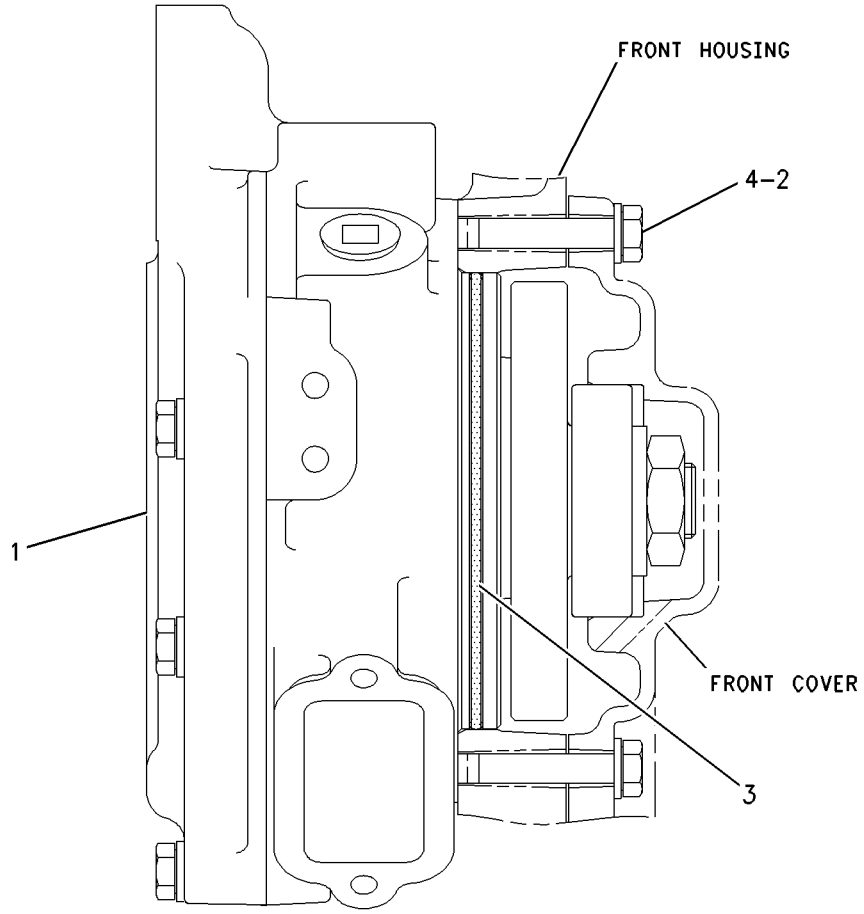

RIGHT SIDE VIEW

GRAPHIC #1 **<END>** g00942142

COOLING SYSTEM

292-9252 PUMP GP-WATER*R

S/N: RSX15243-UP

PART OF 228-5812 PUMP GP-WATER

SMCS-1361 **i03558521**

NOTE	REF NO	GRAPHIC REF	PART NUMBER	QTY	PART NAME 1 2 3 4 5 6 (PRODUCT LEVEL)	SEE PAGE
	1	1	**208-9281**	4	BOLT-FLANGE HEAD (M8X1.25X20-MM)	
Y	2	1	**293-0818**	1	PUMP GP-WATER	75
	3	1	**225-7003**	1	SEAL-O-RING	
	4	1	**228-5810**	1	COVER	
	5	1	**229-8810**	1	SEAL	
	6	1	**6V-3251**	1	SEAL-O-RING	
	7	1	**9S-4190**	1	PLUG-O-RING	

Y-SEPARATE ILLUSTRATION

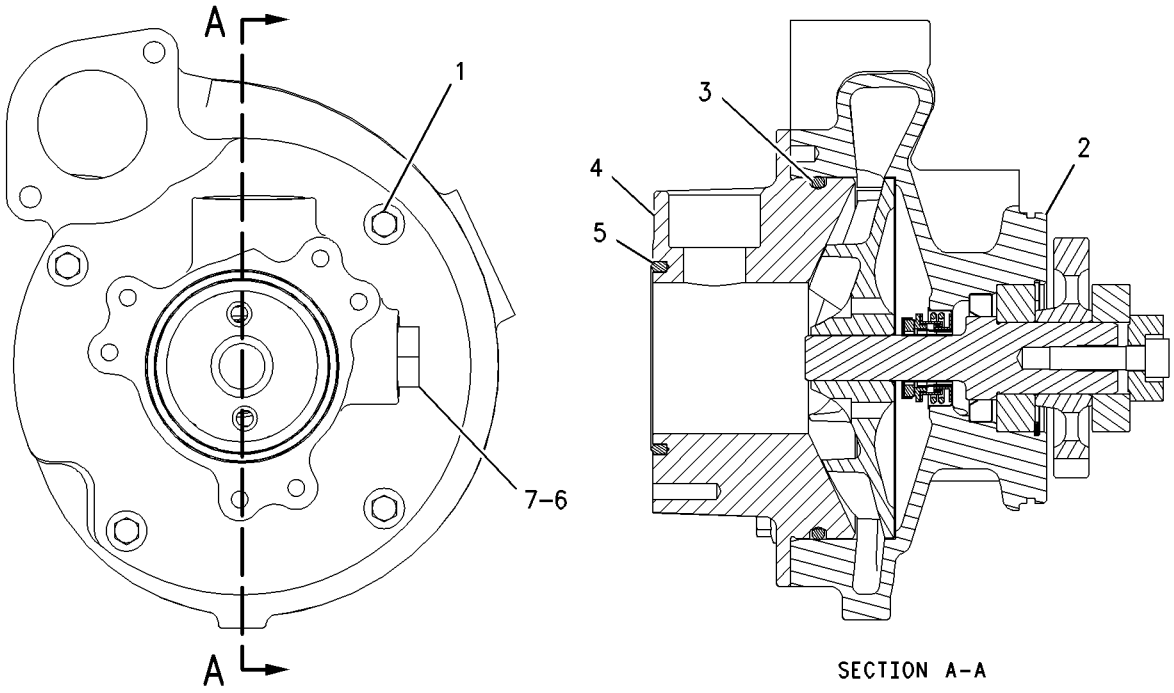

SECTION A-A

GRAPHIC #1 **<END>** g00950338

COOLING SYSTEM

293-0818 PUMP GP-WATER

S/N: RSX15243-UP

PART OF 292-9252 PUMP GP-WATER

SMCS-1361 **i03596458**

NOTE	REF NO	GRAPHIC REF	PART NUMBER	QTY	PART NAME 1 2 3 4 5 6 (PRODUCT LEVEL)	SEE PAGE
	1	1	**6V-9666**	1	WASHER-HARD	
	2	1	**128-0317**	1	SEAL GP (WATER PUMP)	
	3	1	**203-3831**	1	PLUG-CUP	
	4	1	**223-9143**	1	IMPELLER	
	5	1	**223-9145**	1	HOUSING-PUMP	
	6	1	**291-6905**	1	SHAFT-WATER PUMP	
	7	1	**292-1200**	1	GEAR-WATER PUMP (35-TEETH)	
	8	1	**1B-3867**	2	BALL BEARING	
M	9	1	**6V-5842**	1	BOLT (M10X1.5X40-MM)	
	10	1	**8C-3100**	1	SEAL-LIP TYPE	
	11	1	**8T-9598**	1	RING-RETAINING	

M-METRIC PART

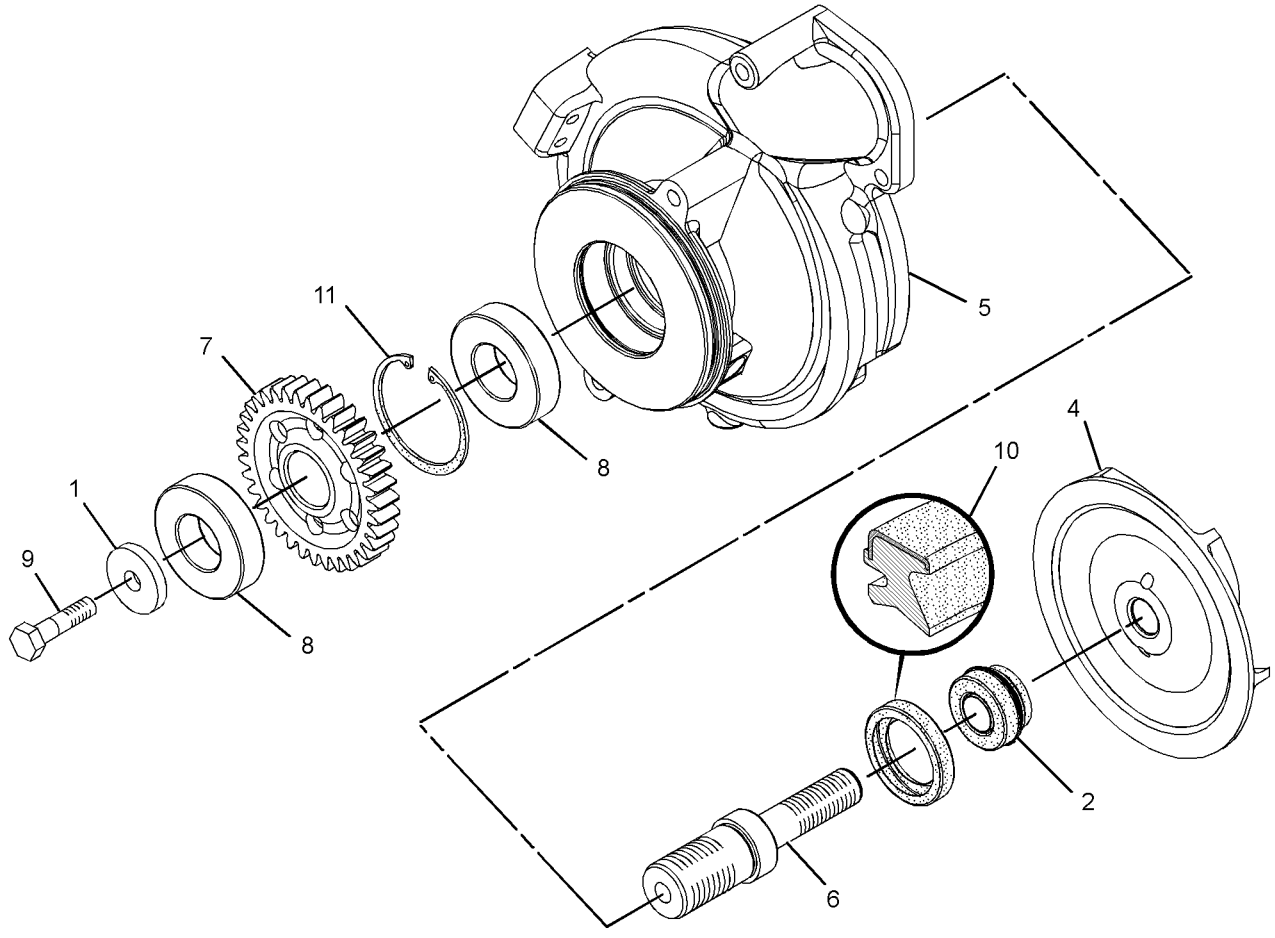

GRAPHIC #1 **<END>** g01324739

COOLING SYSTEM

236-8990 RADIATOR & FAN GP

S/N: RYF1-UP

PART OF 236-9000 CHASSIS AR

SMCS-1353, 1356 **i03615246**

NOTE	REF NO	GRAPHIC REF	PART NUMBER	QTY	PART NAME 1 2 3 4 5 6 (PRODUCT LEVEL)	SEE PAGE
	1	2	**4E-1384**	1	BUMPER-CONICAL	
	2	2	**5V-8780**	1	KNOB	
	3	2	**8T-2893**	2	LOCK GP-CYLINDER	
					(EACH INCLUDES)	
J		2	**226-0291**	1	LOCK AS	
		2	**226-0321**	1	CAM	
	4	2	**112-5344**	1	LATCH AS-DOOR	
	5	3	**121-3307**	2	MOUNT AS-RESILIENT	
	6	4	**192-7356**	1	ADAPTER	
YR	7	3	**161-8919**	1	MOTOR GP-PISTON (HYDRAULIC FAN)	457
	8	4	**262-6813**	1	SPIDER AS-FAN (8-BLADE)	
	10	2	**189-5594**	2	COVER AS	
					(EACH INCLUDES)	
		2	**194-5278**	1	HINGE	
	11	2	**209-5528**	1	STRIKER	
	12	2	**250-3337**	1	GUARD AS	
M		2	**8T-3490**	8	NUT-WELD (M10X1.5-THD)	
		2	**204-6529**	8	WASHER (13.8X50X5-MM)	
	14	2	**239-3450**	1	SUPPORT AS (RH)	
	15	2	**239-3451**	1	SUPPORT AS (LH)	
	16	1	**239-3453**	1	SUPPORT AS	
	17	1	**239-3454**	1	SUPPORT AS	
	18	2	**239-3455**	1	HINGE AS	
	19	2	**239-3456**	1	SUPPORT AS-MOTOR	
	20	4	**240-0105**	1	SHROUD AS	
	21	4	**240-0107**	1	BAFFLE AS	
	22	4	**240-9973**	1	BRACKET AS	
	23	2	**240-9975**	1	BRACKET AS	
	24	4	**277-8986**	1	BRACKET	
	25	1	**242-9415**	1	BAFFLE AS-BOTTOM	
	26	2	**242-9417**	1	ANGLE	
	27	2	**242-9418**	1	ANGLE	
	28	3	**242-9419**	1	ANGLE	
	29	2	**243-2289**	2	MOUNT AS	
	30	3	**260-0354**	1	CORE AS-AFTERCOOLER	
	31	1	**244-4498**	1	CORE AS-HYDRAULIC OIL COOLER	
	32	2	**244-6856**	1	BRACKET AS	
	33	1	**245-1172**	1	BAFFLE	
	34	1	**245-1173**	1	BAFFLE	
	35	3	**245-3206**	1	ANGLE AS	
	36	3	**245-4018**	1	BRACKET AS	
	37	3	**245-6011**	1	BAFFLE AS	
	38	1	**256-5309**	1	CORE AS-RADIATOR	
	39	1	**3K-5178**	1	GROMMET	
M	40	2	**5C-2890**	4	NUT (M6X1-THD)	
M	41	2	**5C-7261**	1	NUT (M8X1.25-THD)	
	42	2	**5P-1076**	8	WASHER-HARD (13.5X30X4-MM THK)	
	43	4	**7X-0515**	1	WASHER-HARD (17X35X5-MM THK)	
M	44	3	**7X-2546**	4	BOLT (M10X1.5X180-MM)	
M	45	1,3	**7X-2553**	8	BOLT (M16X2X40-MM)	
	46	1,2,3, 4	**7X-7729**	75	WASHER (11X25X3-MM THK)	
	47	1,3	**8T-4121**	14	WASHER-HARD (11X21X2.5-MM THK)	
M	48	4	**8T-4132**	1	NUT (M16X2-THD)	
M	49	2,3	**8T-4133**	16	NUT (M10X1.5-THD)	
M	50	1,4	**8T-4136**	11	BOLT (M10X1.5X25-MM)	

236-8990 **RADIATOR & FAN GP** *(contd.)* **i03615246**

NOTE	REF NO	GRAPHIC REF	PART NUMBER	QTY	PART NAME 1 2 3 4 5 6 (PRODUCT LEVEL)	SEE PAGE
M	51	1,2	**8T-4137**	5	BOLT (M10X1.5X20-MM)	
M	52	2	**8T-4138**	4	BOLT (M6X1X20-MM)	
M	53	1,2,3	**8T-4195**	48	BOLT (M10X1.5X30-MM)	
M	54	1,2,3, 4	**8T-4196**	15	BOLT (M10X1.5X35-MM)	
	55	3	**8T-4223**	2	WASHER-HARD (13.5X25.5X3-MM THK)	
	56	2,3,4	**8T-4226**	5	WASHER-PLATED (10.5X45X3-MM THK)	
M	57	2,3	**8T-4956**	10	BOLT (M12X1.75X35-MM)	
M	58	3	**8T-6466**	2	BOLT (M10X1.5X60-MM)	
	59	2	**9X-8256**	8	WASHER (6.6X12X2-MM THK)	
	60	1,3	**9X-8257**	8	WASHER (17.5X30X3.5-MM THK)	
D	61	1	**5P-8309**		SEAL (1-M EACH)	
E	62	1	**296-8592**		SEAL (111-CM EACH)	
E	62A	1	**296-8592**		SEAL (121.5-CM)	
D	63	3	**054-7915**		SEAL (1.05-M)	
D	63A	3	**054-7915**		SEAL (1-M)	
M	64	4	**8T-4186**	1	BOLT (M10X1.5X40-MM)	
	65	4	**277-8628**	2	MOUNT	
	66	4	**8T-7934**	8	WASHER-HARD (11X21X5-MM THK)	
B	67	3	**312-6458**		TAPE-REFLECTIVE	

B-USE AS REQUIRED
D-ORDER BY THE METER
E-ORDER BY THE CENTIMETER
J-REQUIRES CORPORATE KEY
M-METRIC PART
R-REMFG PART MAY BE AVAILABLE
Y-SEPARATE ILLUSTRATION

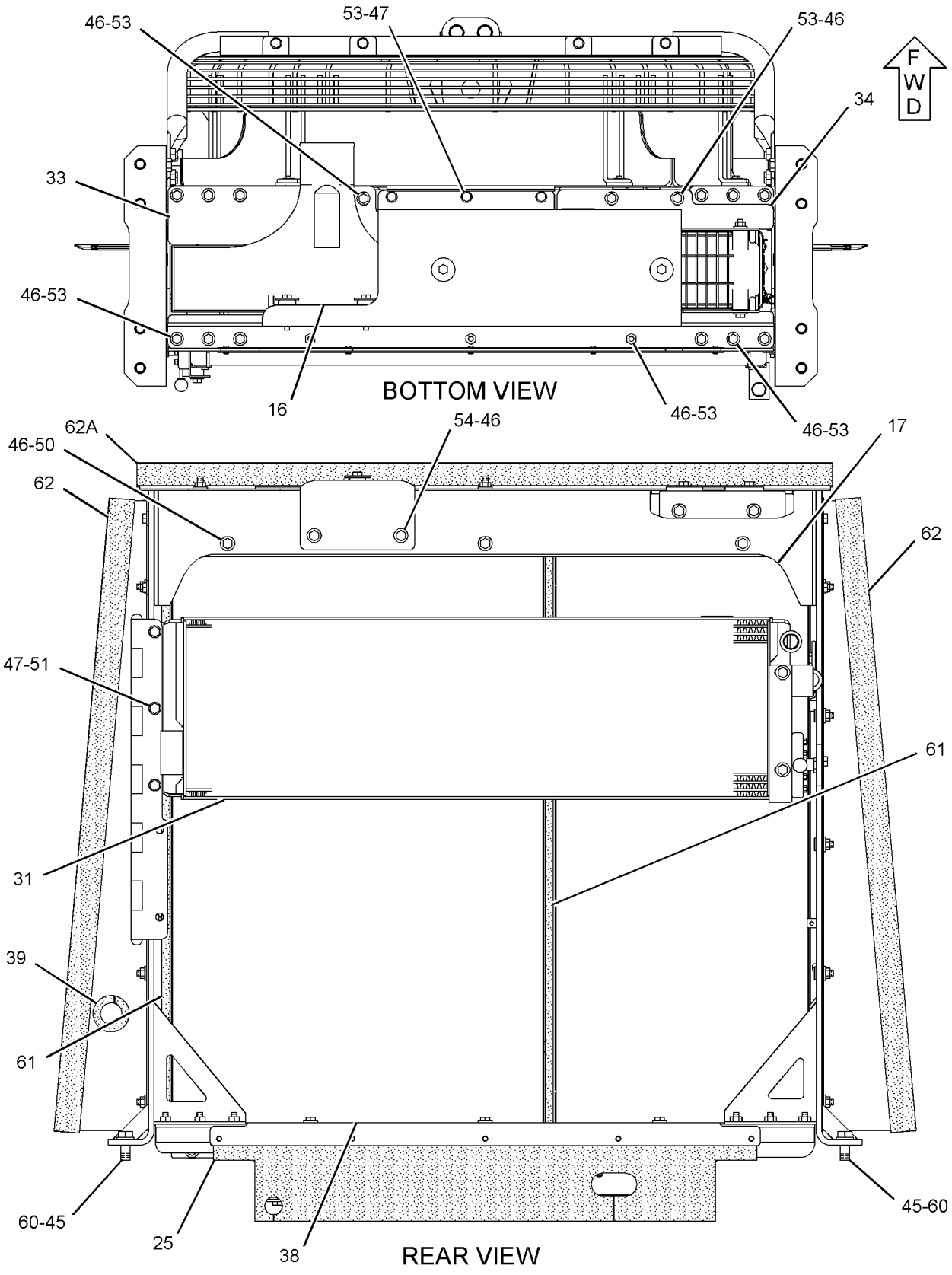

GRAPHIC #1

g01680565

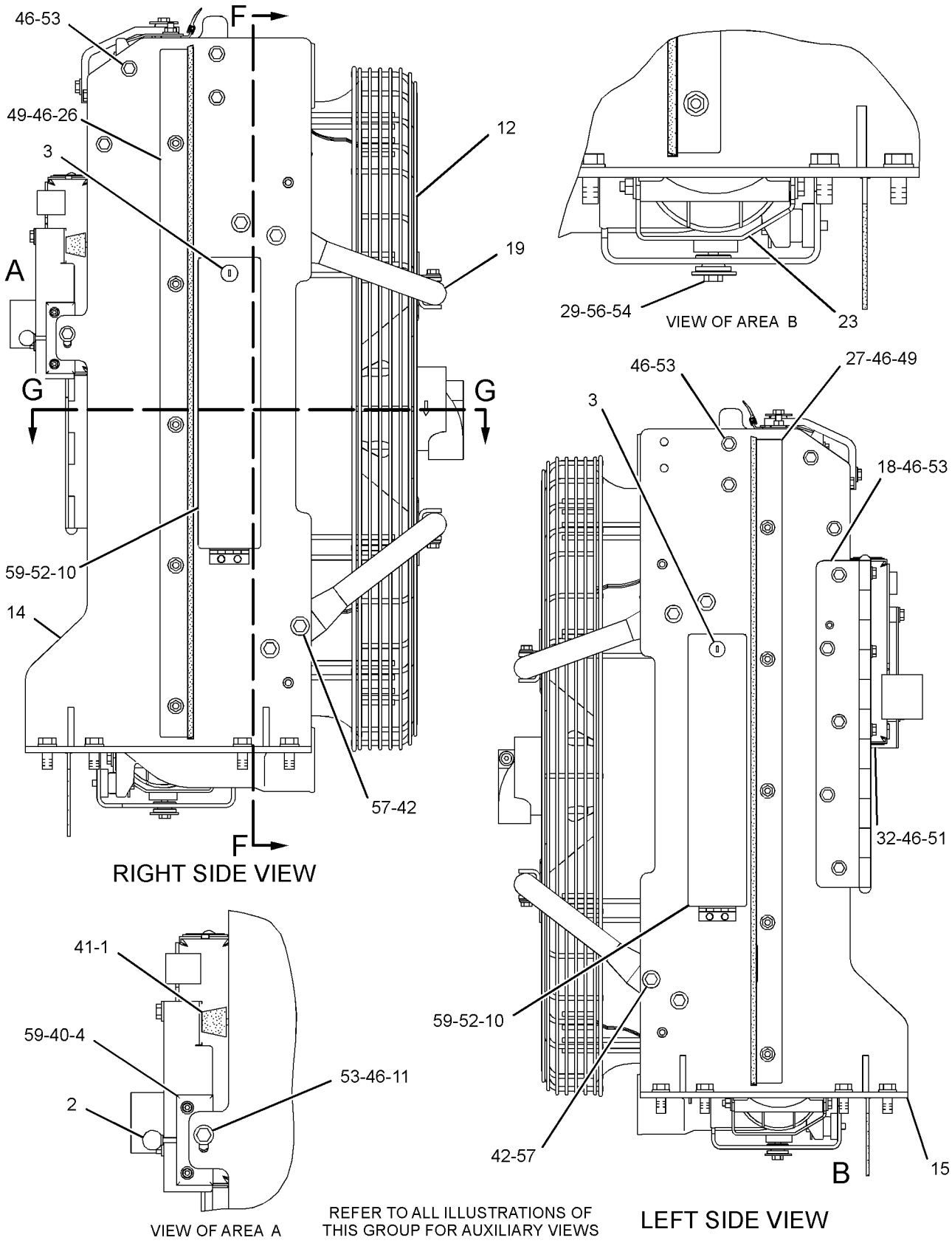

GRAPHIC #2

g01680564

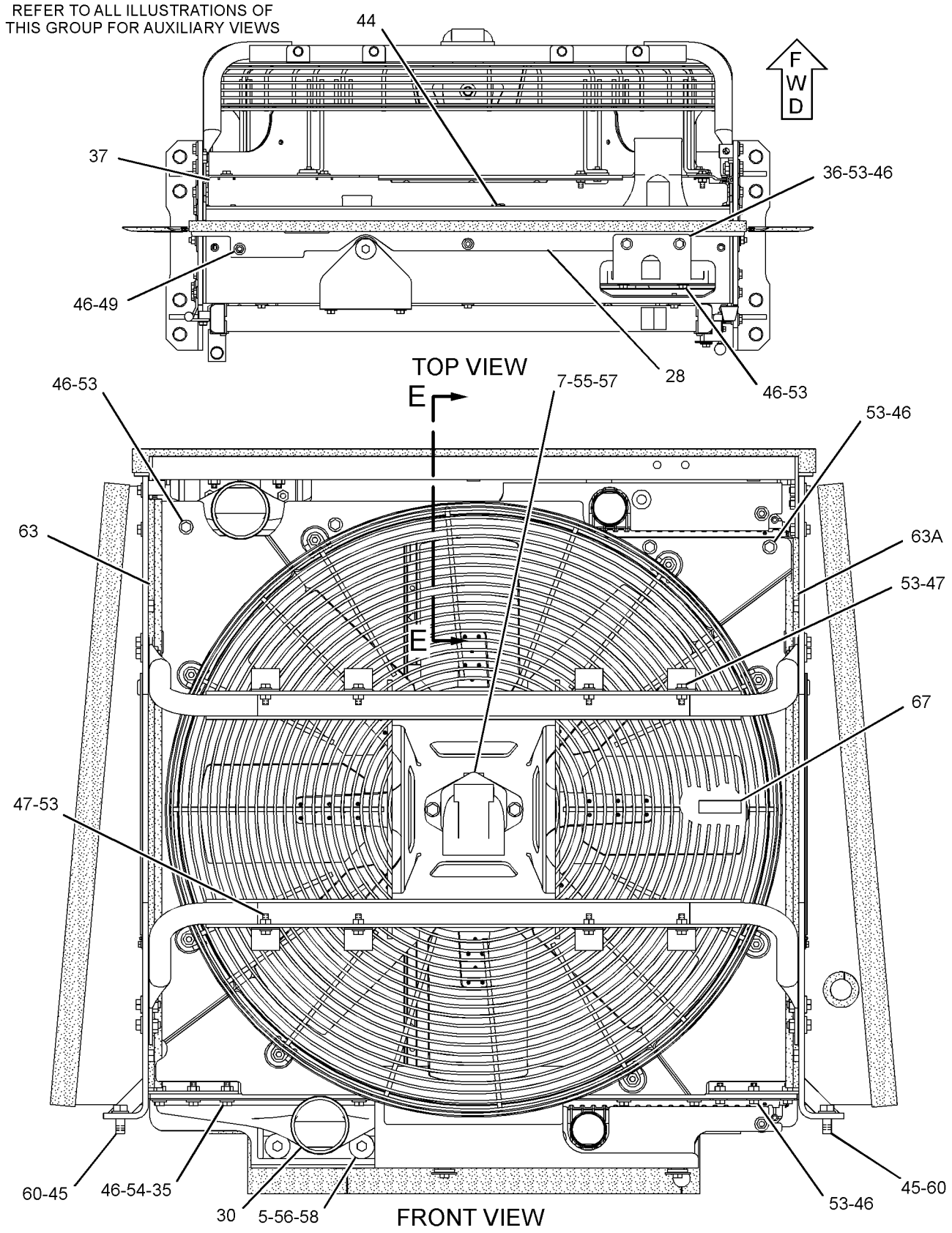

GRAPHIC #3

g01680566

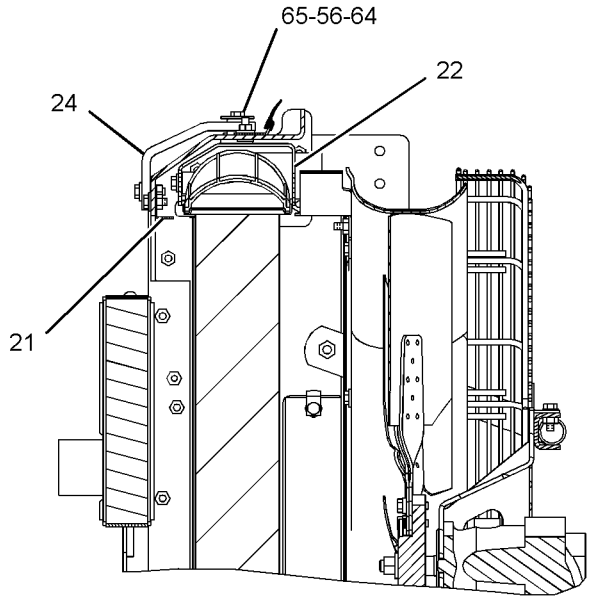

SECTION E-E

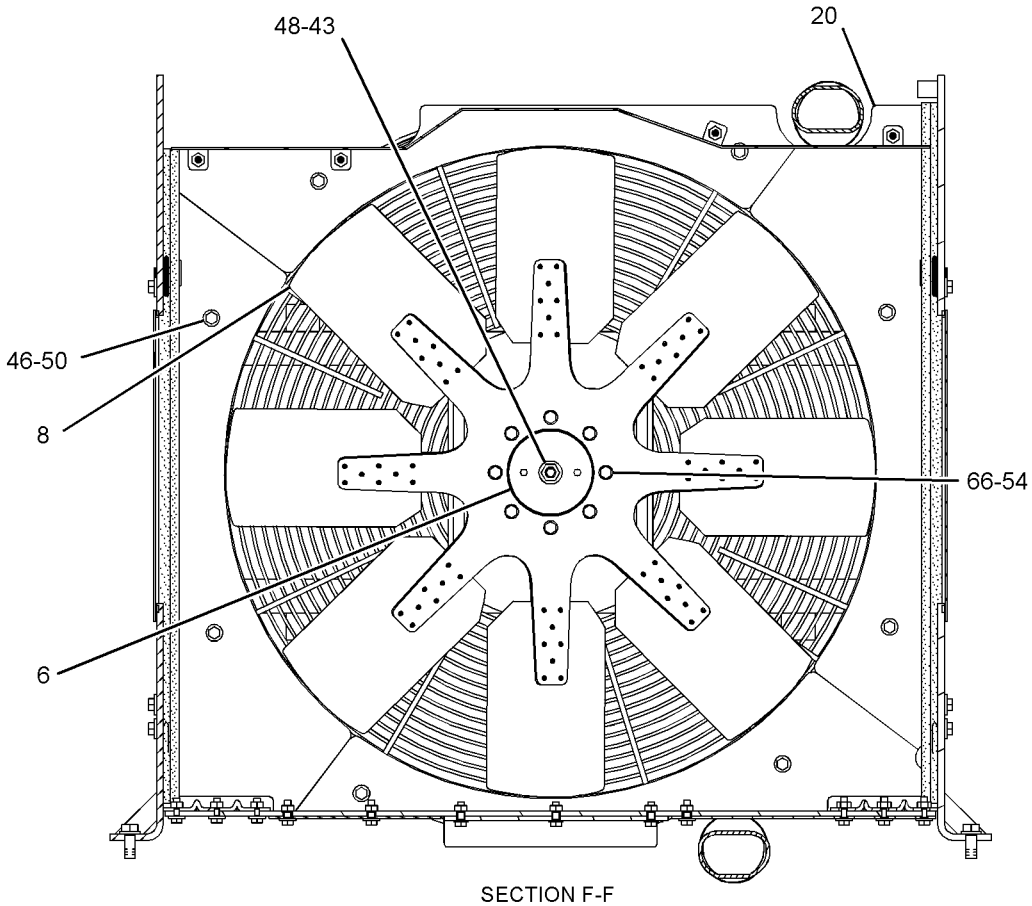

SECTION F-F

GRAPHIC #4 **<END>** g01680567

COOLING SYSTEM

312-2014 TANK GP-RADIATOR TOP

S/N: RYF1-UP

PART OF 236-8988 LINES GP-WATER

SMCS-1377 **i02909393**

NOTE	REF NO	GRAPHIC REF	PART NUMBER	QTY	PART NAME 1 2 3 4 5 6 (PRODUCT LEVEL)	SEE PAGE
	1	1	**6L-8617**	1	CAP-PRESSURE (7-PSI) (WATER TANK)	
	2	1	**312-1735**	1	TANK AS-WATER	

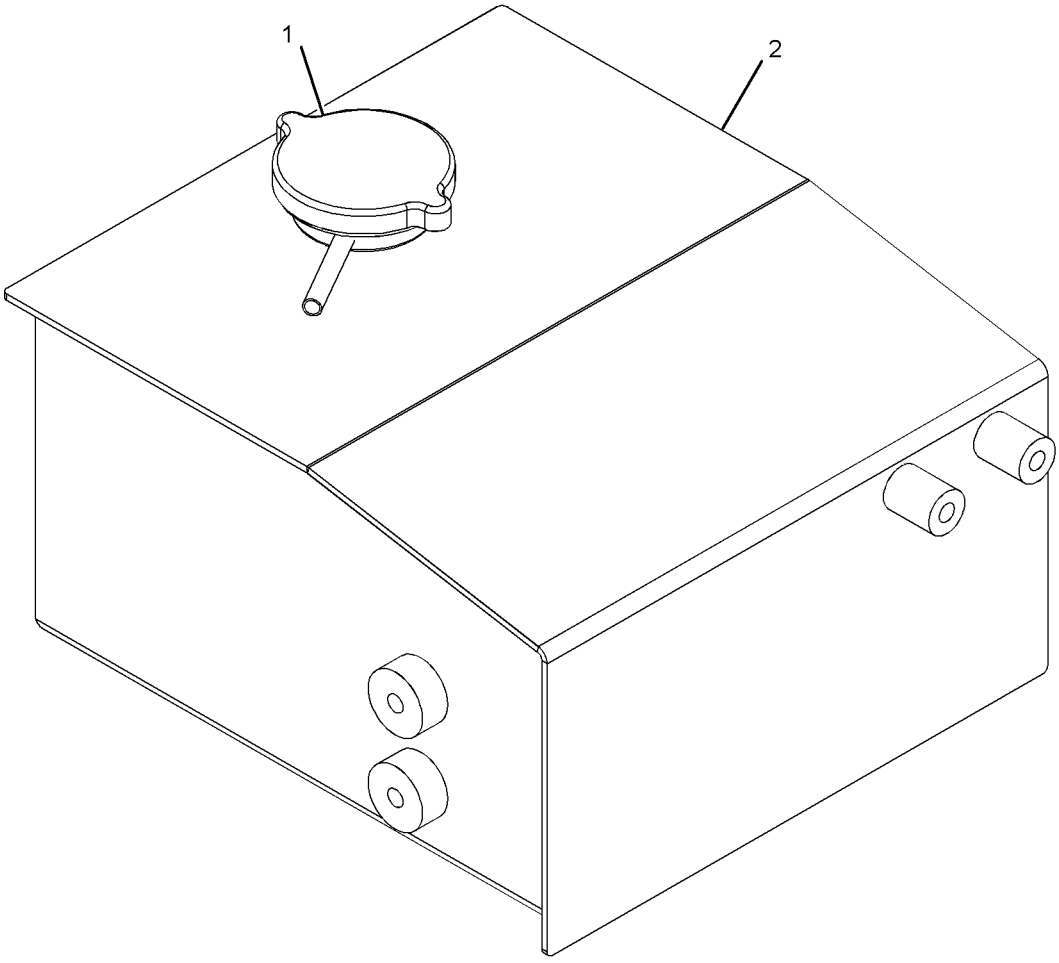

GRAPHIC #1 **<END>** g01390750

AIR INLET AND EXHAUST SYSTEM

235-1075 AIR CLEANER GP

S/N: RYF1-UP

PART OF 236-7231 INSTALLATION AR-ENGINE

SMCS-1051, 1054 **i03626002**

NOTE	REF NO	GRAPHIC REF	PART NUMBER	QTY	PART NAME 1 2 3 4 5 6 (PRODUCT LEVEL)	SEE PAGE
	1	1	**243-1679**	1	EXTENSION	
Y	2	1	**245-3815**	1	AIR CLEANER GP	84
	3	1	**245-3816**	1	CAP AS-AIR CLEANER	
	4	1	**240-2651**	1	CLAMP	
	5	1	**7K-1181**	1	STRAP-CABLE	
	6	1	**7X-0579**	4	WASHER-HARD (8.8X25.5X2-MM THK)	
M	7	1	**7X-2537**	4	BOLT (M8X1.25X35-MM)	

M-METRIC PART
Y-SEPARATE ILLUSTRATION

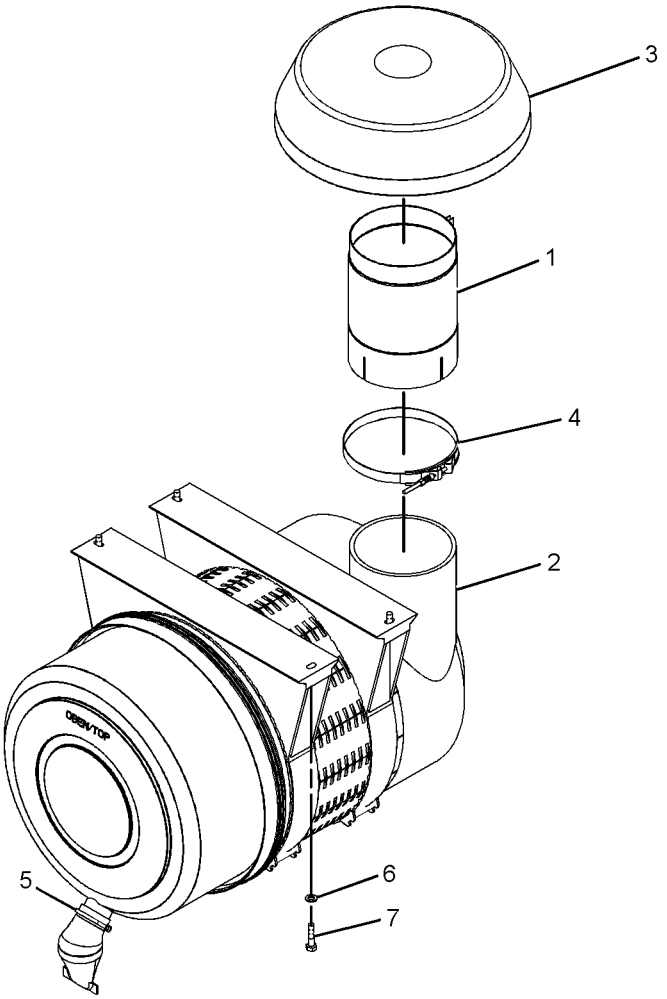

GRAPHIC #1 **<END>** g01261977

AIR INLET AND EXHAUST SYSTEM

245-3815 AIR CLEANER GP

S/N: RYF1-UP

PART OF 235-1075 AIR CLEANER GP

SMCS-1051, 1054 **i03626373**

NOTE	REF NO	GRAPHIC REF	PART NUMBER	QTY	PART NAME 1 2 3 4 5 6 (PRODUCT LEVEL)	SEE PAGE
	1	1	**245-3818**	1	FILTER ELEMENT AS-AIR (PRIMARY)	
	2	1	**245-3819**	1	FILTER ELEMENT AS-AIR (SECONDARY)	
	3	1	**246-4612**	1	VALVE-AIR CLEANER DUST	
	4	1	**246-4616**	1	COVER AS	
	5	1	**246-4617**	2	BRACKET AS	

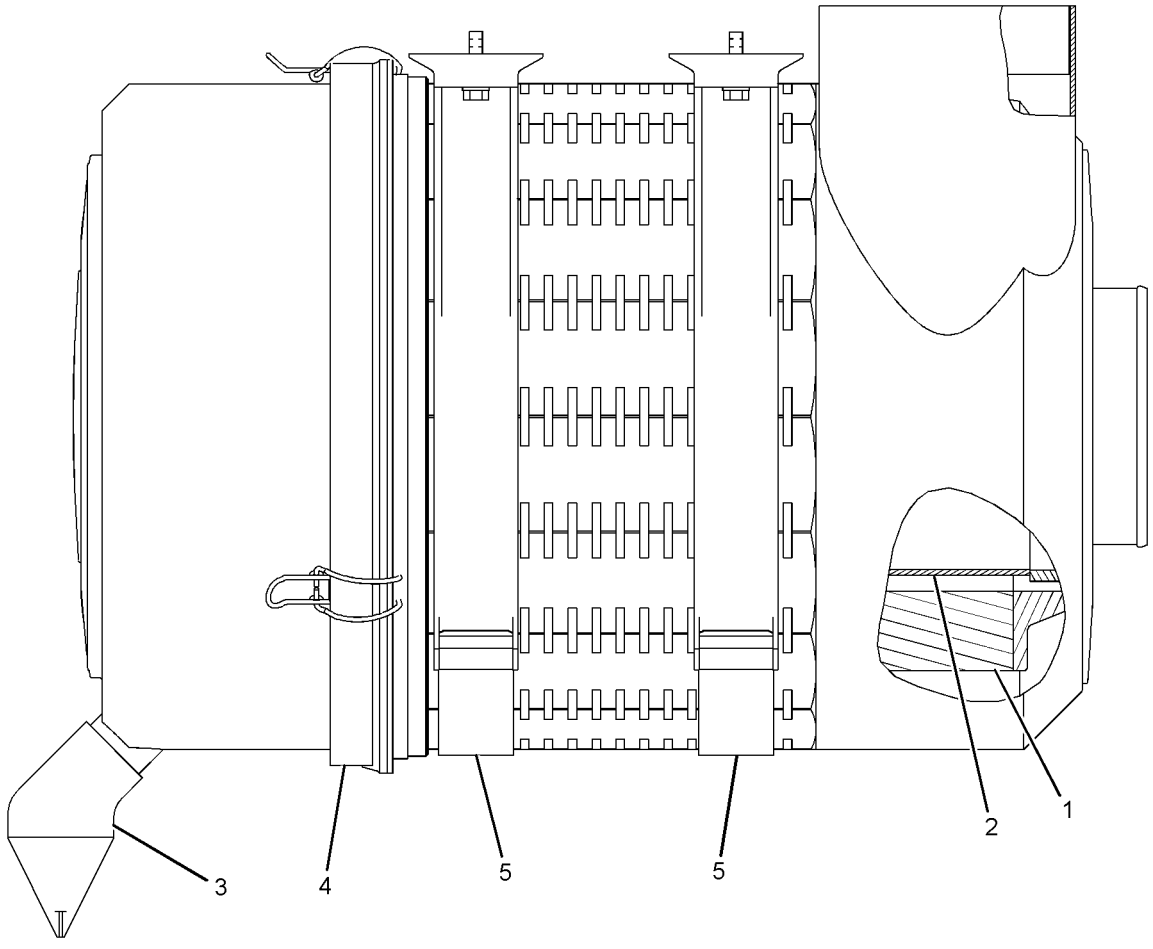

GRAPHIC #1 **<END>** g01113699

AIR INLET AND EXHAUST SYSTEM

236-8979 LINES GP-AFTERCOOLER AIR

S/N: RYF1-UP

PART OF 236-9000 CHASSIS AR

SMCS-1063, 1071 **i03611980**

NOTE	REF NO	GRAPHIC REF	PART NUMBER	QTY	PART NAME 1 2 3 4 5 6 (PRODUCT LEVEL)	SEE PAGE
	1	1	**7E-8630**	4	HOSE-AIR INLET	
	2	1	**177-0035**	1	U-BOLT (M10X1.5-THD)	
	3	1	**208-7448**	10	CLAMP	
	4	1	**217-1601**	1	HOSE-ELBOW	
	5	1	**262-6848**	1	TUBE	
	6	1	**275-9368**	1	BRACKET	
	7	1	**275-9369**	1	TUBE	
	8	1	**275-9370**	1	TUBE	
	9	1	**276-1028**	1	BRACKET AS	
M		1	**8T-3490**	2	NUT-WELD (M10X1.5-THD)	
	10	1	**7X-7729**	2	WASHER (11X25X3-MM THK)	
M	11	1	**8T-0389**	4	LOCKNUT (M10X1.5-THD)	
	12	1	**8T-4121**	4	WASHER-HARD (11X21X2.5-MM THK)	
M	13	1	**8T-4195**	4	BOLT (M10X1.5X30-MM)	
	14	1	**8T-4226**	2	WASHER-PLATED (10.5X45X3-MM THK)	

M-METRIC PART

236-8979 **LINES GP-AFTERCOOLER AIR** *(contd.)* **i03611980**

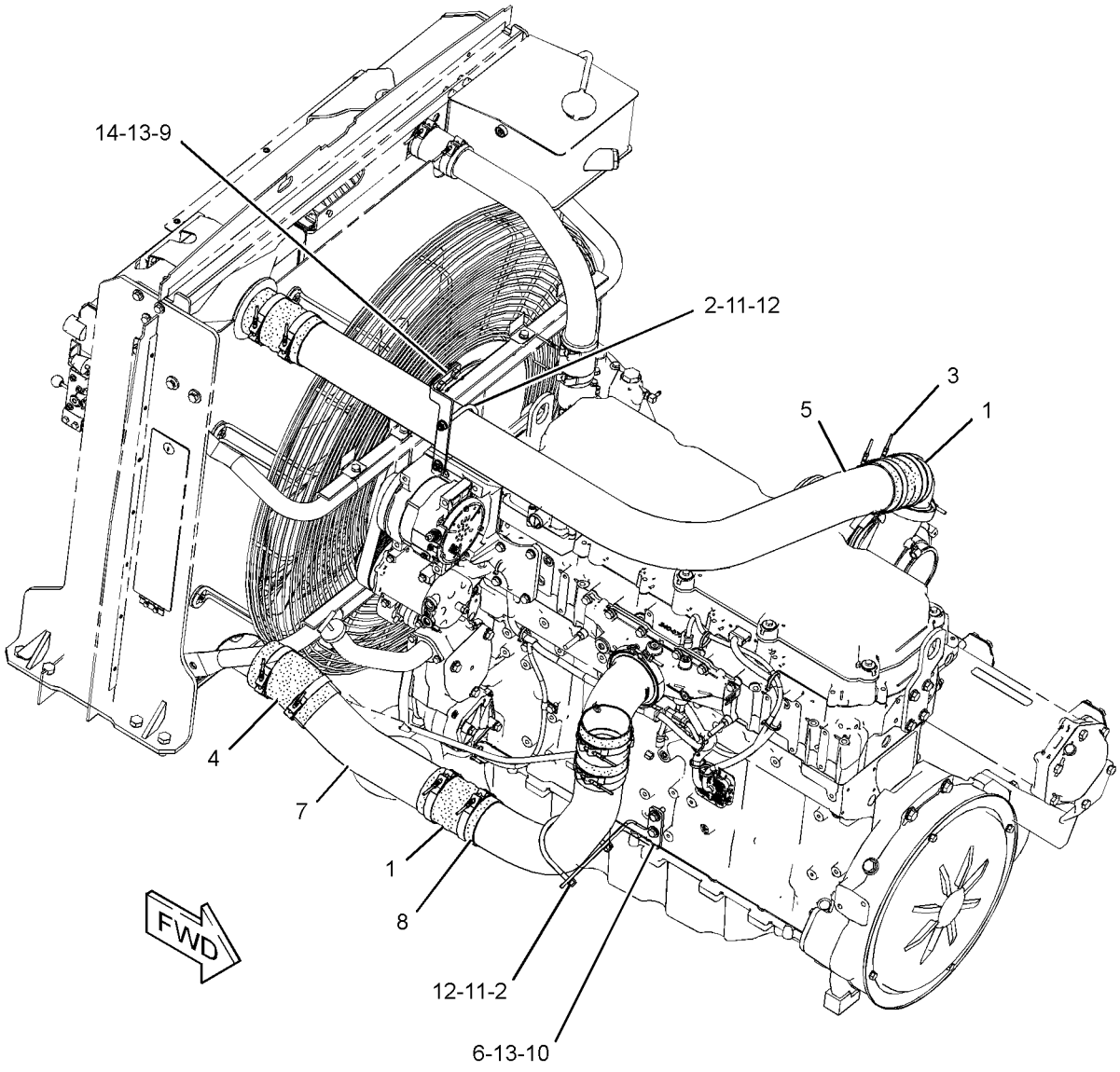

GRAPHIC #1 **<END>** g01190383

AIR INLET AND EXHAUST SYSTEM

235-1078 LINES GP-AIR—TURBOCHARGER

S/N: RYF1-UP

PART OF 236-7231 INSTALLATION AR-ENGINE

SMCS-1071 **i03626013**

NOTE	REF NO	GRAPHIC REF	PART NUMBER	QTY	PART NAME 1 2 3 4 5 6 (PRODUCT LEVEL)	SEE PAGE
	1	1	**9N-1941**	1	CLAMP-V-BAND	
	2	1	**206-6875**	3	CAP-TUBE	
	3	1	**241-9265**	1	CLAMP-MUFFLER	
	4	1	**243-1676**	1	TUBE AS	
	5	1	**243-1677**	1	TUBE AS	
	6	1	**303-2024**	1	ELBOW	
	7	1	**306-8150**	1	ELBOW	
	8	1	**332-7339**	3	CLAMP	
	9	1	**231-3264**	1	CLAMP (BOLT SPRING)	
	10	1	**7X-1443**	2	PROTECTOR	

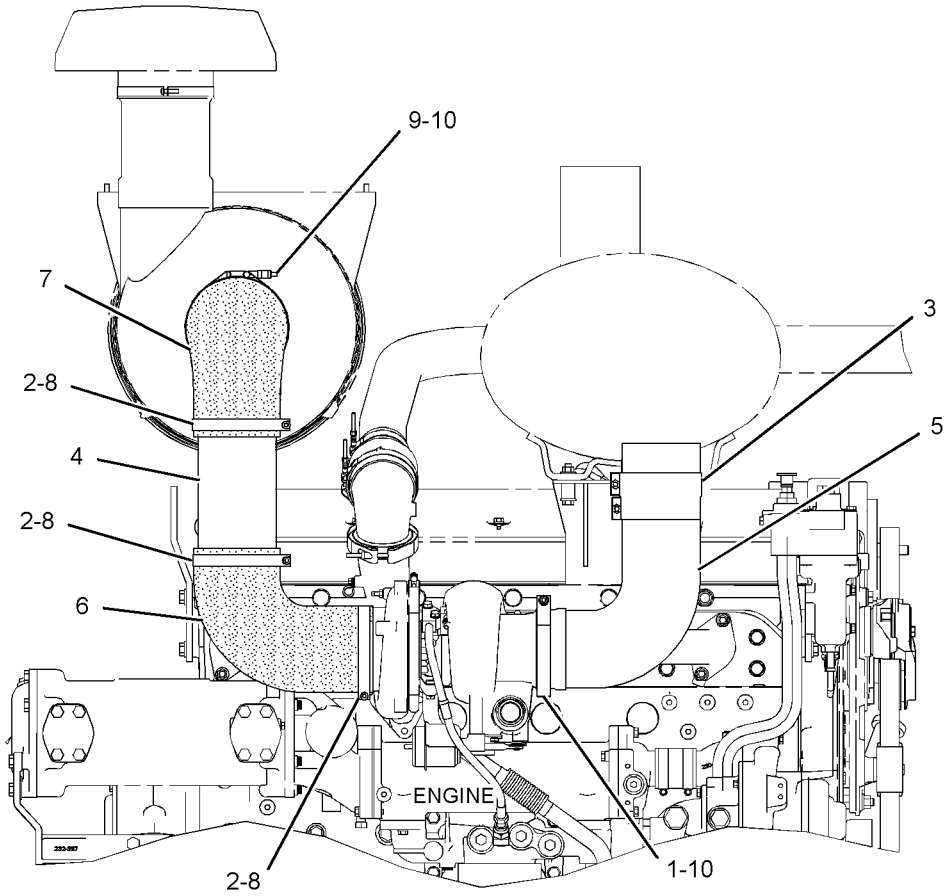

LEFT SIDE VIEW

GRAPHIC #1 **<END>** g01887253

AIR INLET AND EXHAUST SYSTEM

237-9754 LINES GP-AIR—TURBOCHARGER OUTLET

S/N: RSX15243-UP

PART OF 234-7848 ENGINE AR-COMPLETE

SMCS-1071 **i03556980**

NOTE	REF NO	GRAPHIC REF	PART NUMBER	QTY	PART NAME 1 2 3 4 5 6 (PRODUCT LEVEL)	SEE PAGE
	1	1	**127-0929**	1	CLAMP	
	2	1	**217-8946**	1	ELBOW	
	3	1	*183-3409*	1	PLUG AS	
	3A	1	**033-5853**	1	SEAL-O-RING	
		1	**9S-8002**	1	PLUG-O-RING	
	4	1	**8C-3089**	1	SEAL-O-RING	

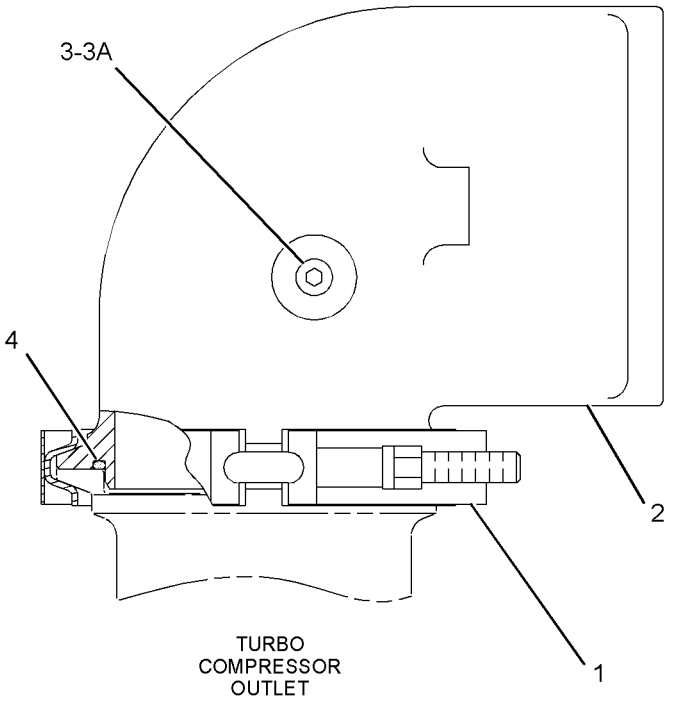

GRAPHIC #1 **<END>** g01158720

AIR INLET AND EXHAUST SYSTEM

237-9756 LINES GP-AIR

S/N: RSX15243-UP

PART OF 234-7848 ENGINE AR-COMPLETE

SMCS-1071 **i03557008**

NOTE	REF NO	GRAPHIC REF	PART NUMBER	QTY	PART NAME 1 2 3 4 5 6 (PRODUCT LEVEL)	SEE PAGE
	1	1	**203-0351**	1	ELBOW-AIR	
	2	1	**248-4840**	1	CAP-PROTECTIVE	
	3	1	**248-4841**	1	CLAMP-BAND	
	4	1	**6V-5048**	1	SEAL-O-RING	
	5	1	**9S-8002**	1	PLUG-O-RING	

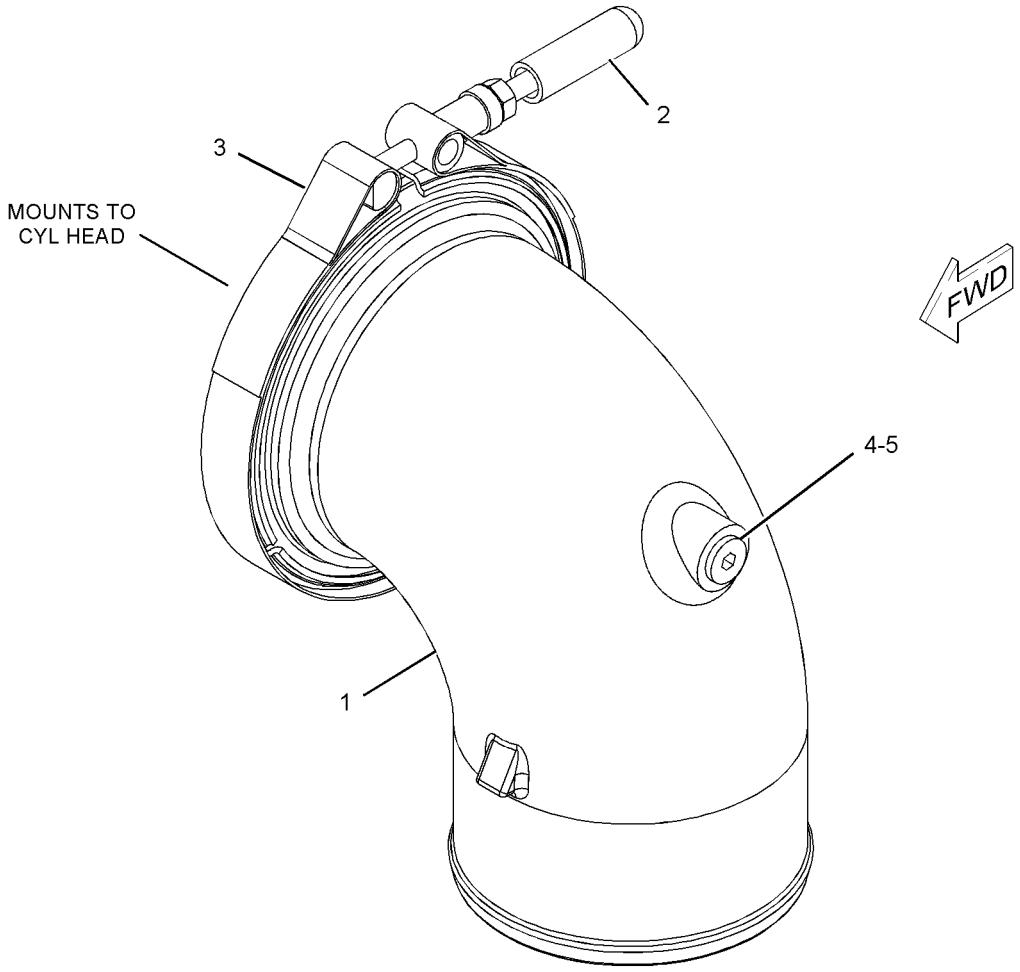

GRAPHIC #1 **<END>** g01121030

267-3476 MANIFOLD GP-EXHAUST

S/N: RSX15243-UP

PART OF 234-7848 ENGINE AR-COMPLETE

FOR USE WITH FRONT EXAUST TURBO WITH LOW STRESS FOOT DESIGN

SMCS-1059 **i03557072**

NOTE	REF NO	GRAPHIC REF	PART NUMBER	QTY	PART NAME 1 2 3 4 5 6 (PRODUCT LEVEL)	SEE PAGE
	1	1	**4P-4369**	12	SPACER (12X19X23.5-MM THK)	
	2	1	**283-2238**	6	GASKET (EXHAUST MANIFOLD)	
	3	1	**231-9030**	2	MANIFOLD-EXHAUST (END)	
	4	1	**247-2834**	1	MANIFOLD-EXHAUST (CENTER)	
M	5	1	**116-3715**	12	STUD-TAPERLOCK (M10X1.5X85-MM)	
M	6	1	**3E-8017**	12	LOCKNUT (M10X1.5-THD)	
	7	1	**6V-5839**	12	WASHER (11X21X2.5-MM THK)	
M	8	1	**9X-8281**	4	STUD-TAPERLOCK (M10X1.5X45-MM)	

M-METRIC PART

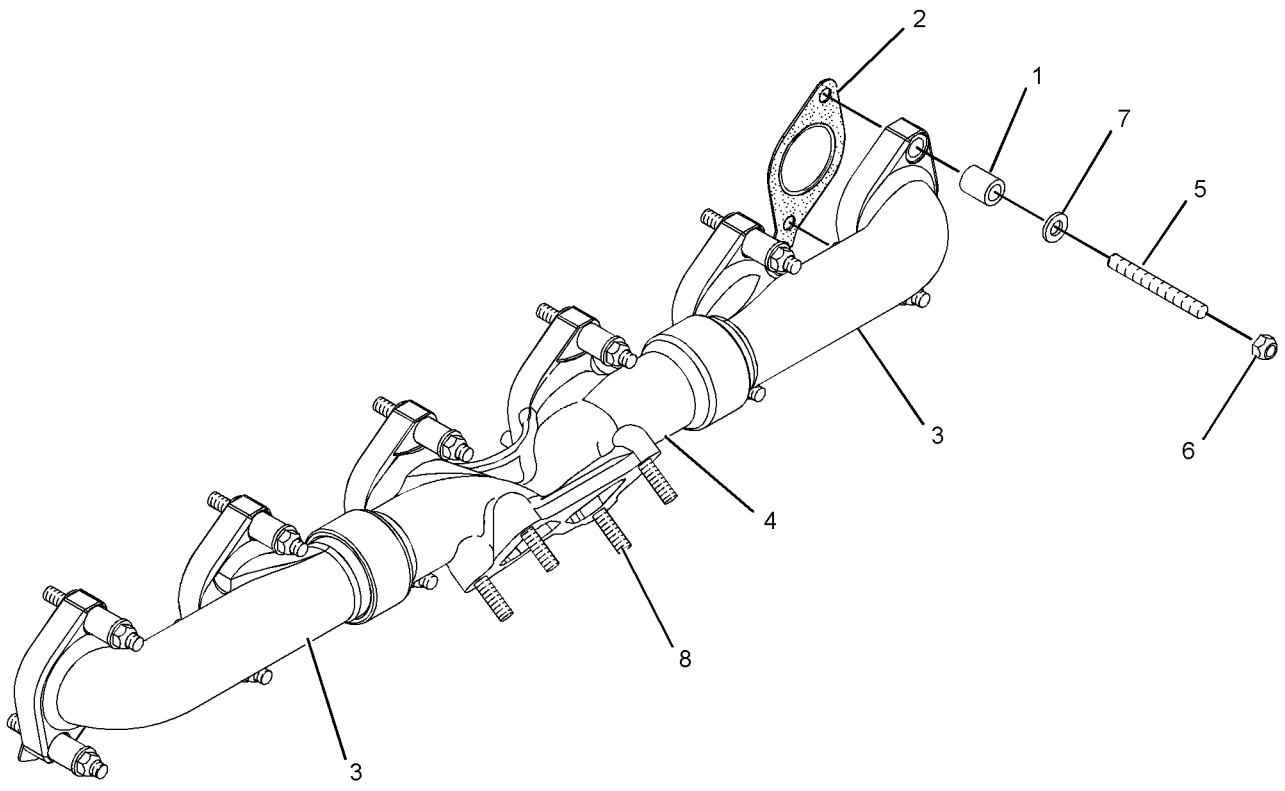

GRAPHIC #1 **<END>** g01271181

AIR INLET AND EXHAUST SYSTEM

222-3092 MANIFOLD GP-INLET

S/N: RSX15243-UP

PART OF 234-7848 ENGINE AR-COMPLETE

SMCS-1058 **i03557085**

NOTE	REF NO	GRAPHIC REF	PART NUMBER	QTY	PART NAME 1 2 3 4 5 6 (PRODUCT LEVEL)	SEE PAGE
	1	1	**121-5908**	1	STUD (M10X1.5X30-MM)	
	2	1	**281-2925**	1	MANIFOLD-INLET	
	3	1	**230-3518**	1	GASKET-MANIFOLD	
	4	1	**132-5789**	1	CLIP	
	5	1	**162-9527**	2	PLUG	
	6	1	**3J-1907**	2	SEAL-O-RING	
M	7	1	**6V-3822**	10	BOLT (M10X1.5X35-MM)	
	8	1	**6V-6353**	1	SEAL-O-RING	
	9	1	**7X-0623**	12	WASHER (10.5X21X2-MM THK)	
M	10	1	**176-9237**	1	STUD (M10X1.5X18-MM, M10X1.5X37-MM)	

M-METRIC PART

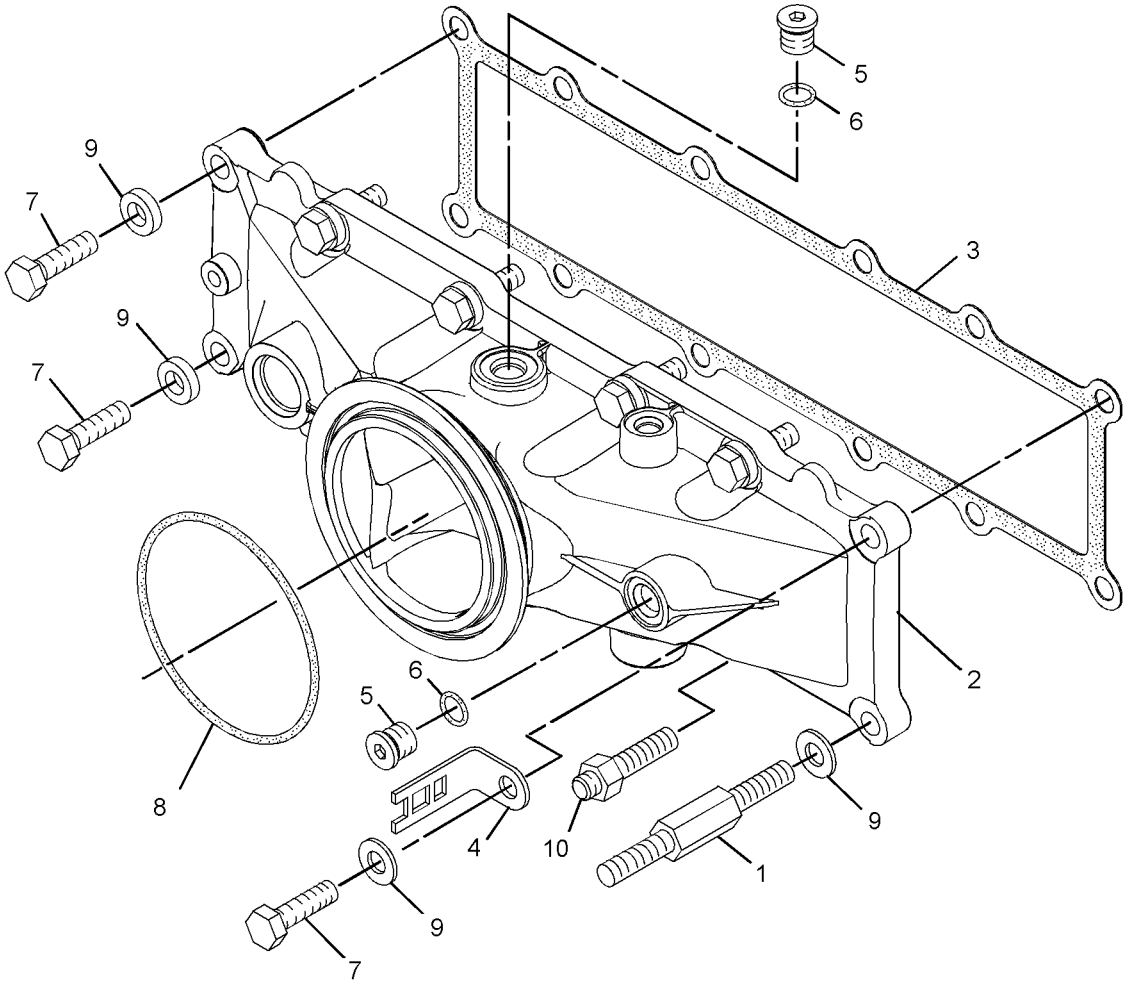

GRAPHIC #1 **<END>** g01255731

AIR INLET AND EXHAUST SYSTEM

237-9750 MUFFLER GP

S/N: RYF1-UP

PART OF 236-7231 INSTALLATION AR-ENGINE

SMCS-1062 **i03626021**

NOTE	REF NO	GRAPHIC REF	PART NUMBER	QTY	PART NAME 1 2 3 4 5 6 (PRODUCT LEVEL)	SEE PAGE
	1	1	**101-3120**	7	SPACER (10.5X25X20-MM THK)	
	2	1	**308-0951**	1	SUPPORT AS	
M		1	**9X-8487**	1	BOSS-WELD (M10X1.5X35-MM)	
	3	1	**243-1675**	1	MUFFLER AS	
	4	1	**7X-7729**	11	WASHER (11X25X3-MM THK)	
M	5	1	**8T-4133**	4	NUT (M10X1.5-THD)	
M	6	1	**8T-4182**	3	BOLT (M10X1.5X45-MM)	
M	7	1	**8T-6466**	4	BOLT (M10X1.5X60-MM)	

M-METRIC PART

237-9750 **MUFFLER GP** *(contd.)* **i03626021**

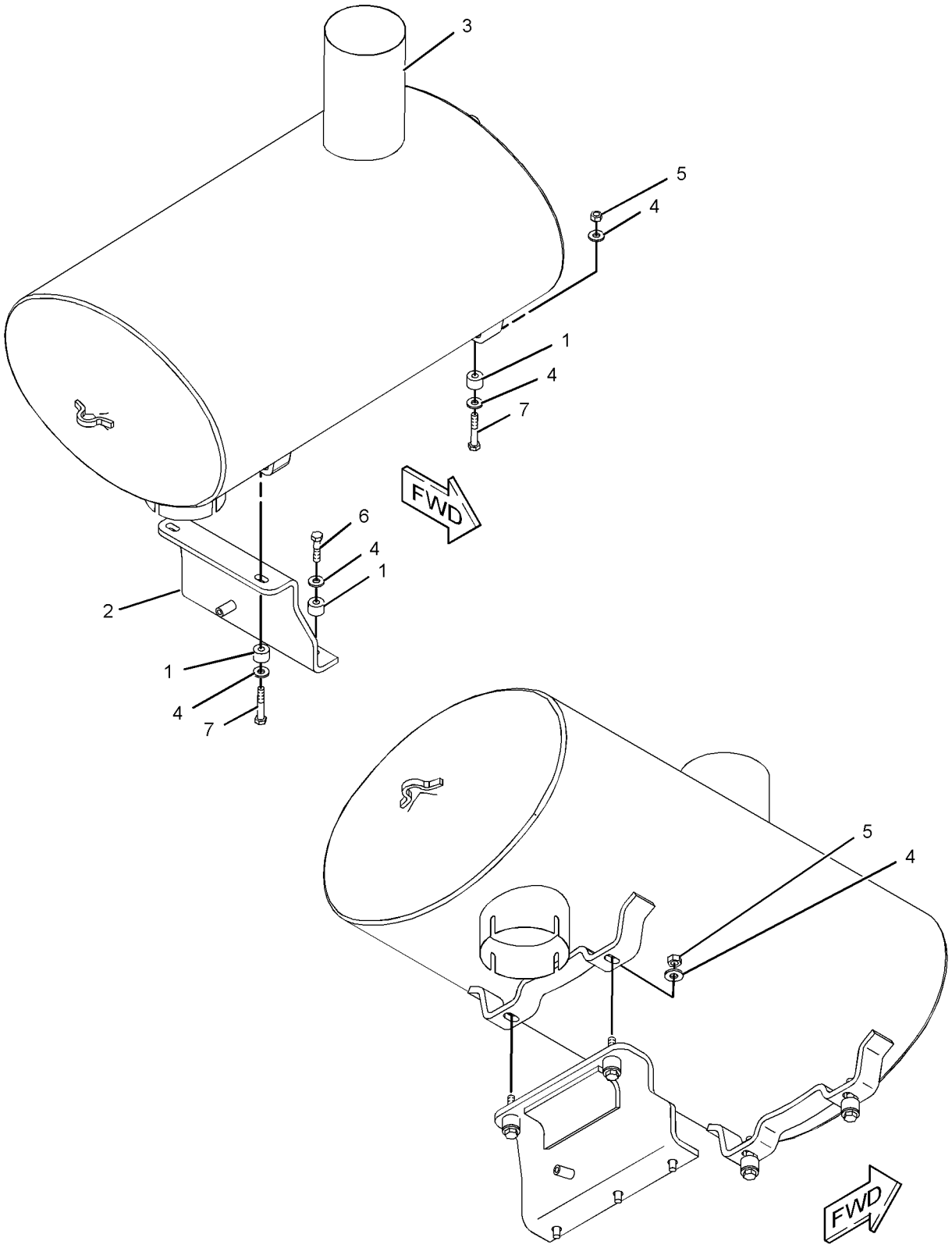

GRAPHIC #1 **<END>** g01421787

AIR INLET AND EXHAUST SYSTEM

236-9135 PRECLEANER AR

S/N: RYF1-UP

AN ATTACHMENT

SMCS-1055 **i03626544**

NOTE	REF NO	GRAPHIC REF	PART NUMBER	QTY	PART NAME 1 2 3 4 5 6 (PRODUCT LEVEL)	SEE PAGE
	1	1	**8T-4121**	6	WASHER-HARD (11X21X2.5-MM THK)	
	2	1	**070-0107**	1	PRECLEANER AS	
		1	**174-5415**	1	CLAMP	
	3	1	**3T-4894**	1	TUBE-EXTENSION	
	4	1	**250-0944**	1	PIPE AS-EXTENSION	
	5	1	**240-2651**	2	CLAMP	
M	6	1	**8T-4133**	3	NUT (M10X1.5-THD)	
M	7	1	**8T-4136**	3	BOLT (M10X1.5X25-MM)	

M-METRIC PART

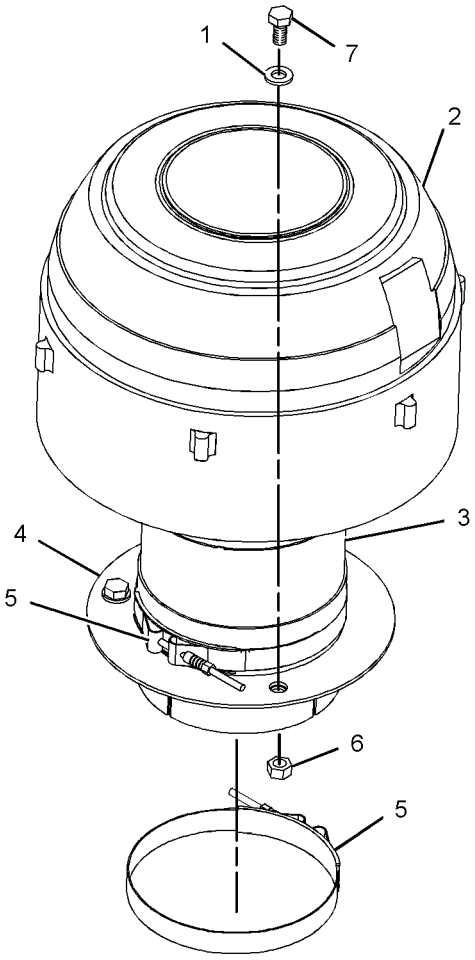

GRAPHIC #1 **<END>** g01116698

AIR INLET AND EXHAUST SYSTEM

236-9136 PRECLEANER GP

S/N: RYF1-UP

AN ATTACHMENT

SMCS-1055 **i03626546**

NOTE	REF NO	GRAPHIC REF	PART NUMBER	QTY	PART NAME 1 2 3 4 5 6 (PRODUCT LEVEL)	SEE PAGE
	1	1	**3T-4894**	1	TUBE-EXTENSION	
	2	1	**070-0107**	1	PRECLEANER AS	
	3	1	**153-1277**	1	KIT-SCREEN (PRECLEANER)	
					(KIT INCLUDES DAMPER AND PRESCREEN)	
	4	1	**145-6669**	6	SCREW-SELF-TAPPING (NO 10X19.05-MM)	
	5	1	**250-0944**	1	PIPE AS-EXTENSION	
	6	1	**240-2651**	2	CLAMP	
	7	1	**8T-4121**	6	WASHER-HARD (11X21X2.5-MM THK)	
M	8	1	**8T-4133**	3	NUT (M10X1.5-THD)	
M	9	1	**8T-4136**	3	BOLT (M10X1.5X25-MM)	

M-METRIC PART

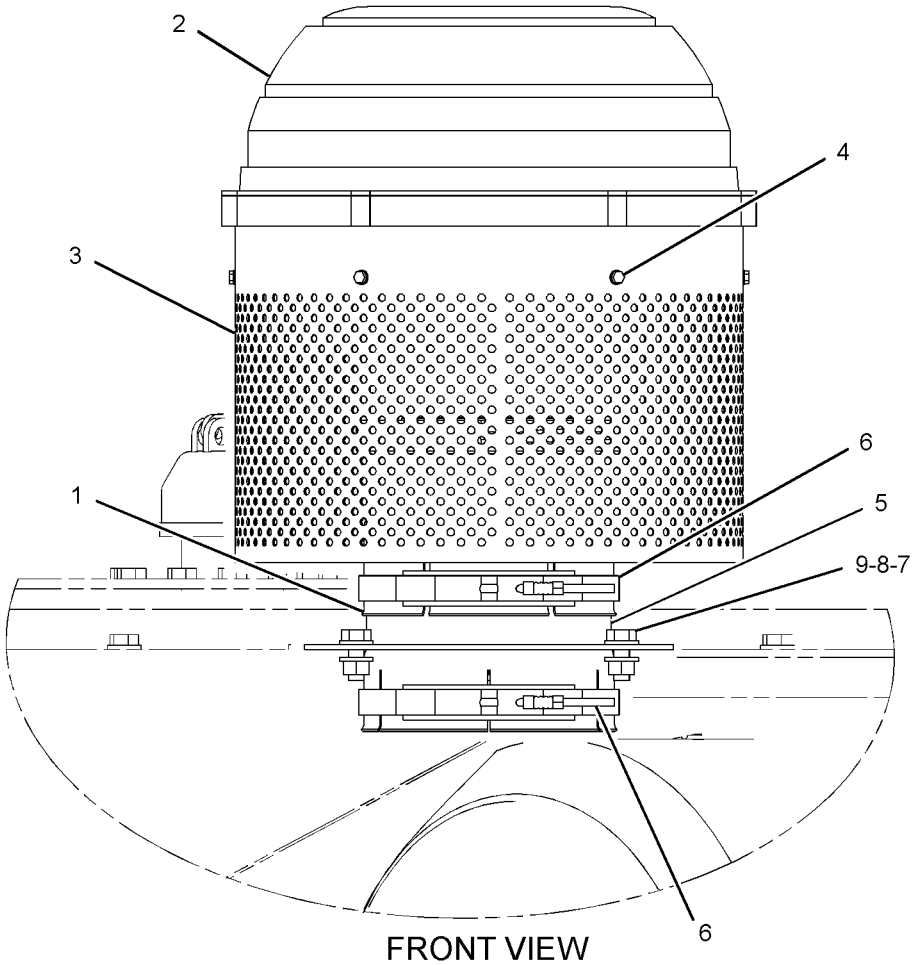

FRONT VIEW

GRAPHIC #1 **<END>** g01284623

AIR INLET AND EXHAUST SYSTEM

234-7857 TURBOCHARGER GP

S/N: RSX15243-UP

PART OF 234-7848 ENGINE AR-COMPLETE

SMCS-1052, 1053 **i03629021**

NOTE	REF NO	GRAPHIC REF	PART NUMBER	QTY	PART NAME 1 2 3 4 5 6 (PRODUCT LEVEL)	SEE PAGE
	1	1	**1S-4295**	1	GASKET (TURBOCHARGER)	
M	2	1	**3E-8017**	4	LOCKNUT (M10X1.5-THD)	
Y	3	1	**250-6115**	1	TURBOCHARGER GP	97

M-METRIC PART
Y-SEPARATE ILLUSTRATION

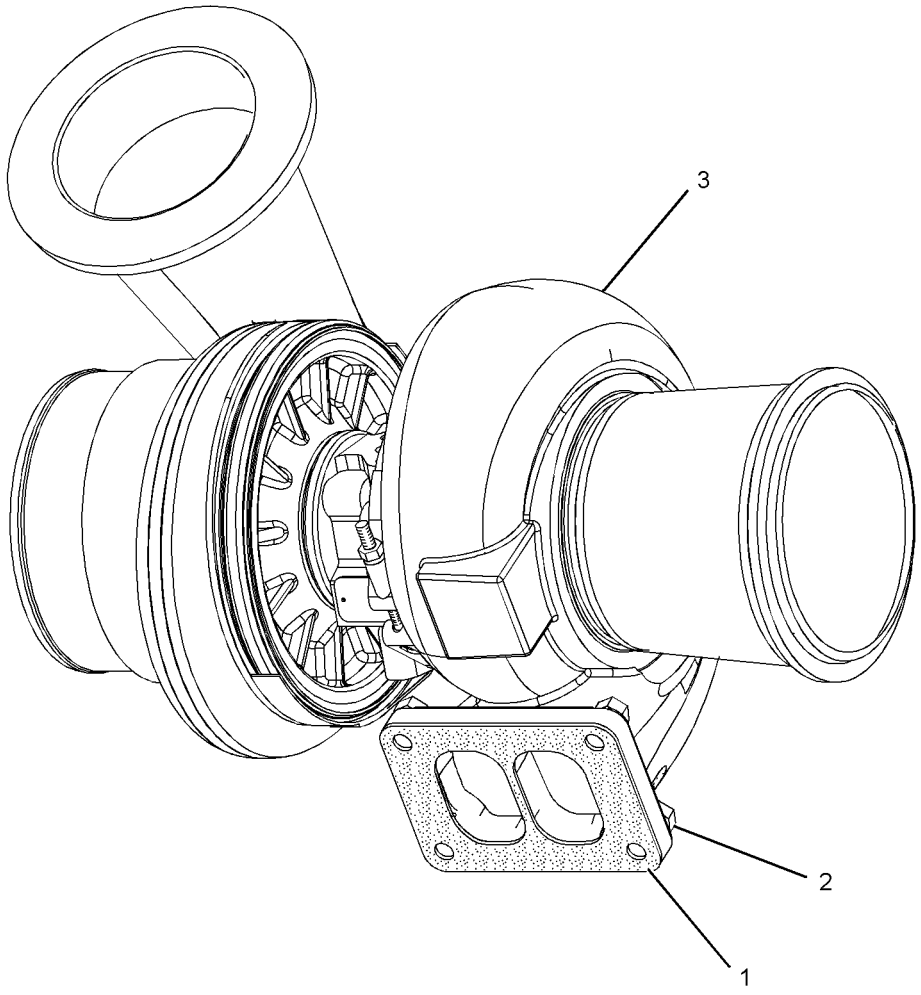

GRAPHIC #1 **<END>** g01147882

AIR INLET AND EXHAUST SYSTEM

250-6115 TURBOCHARGER GP

S/N: RSX15243-UP

PART OF 234-7857 TURBOCHARGER GP

SMCS-1052, 1053 **i03629046**

NOTE	REF NO	GRAPHIC REF	PART NUMBER	QTY	PART NAME 1 2 3 4 5 6 (PRODUCT LEVEL)	SEE PAGE
	1	1	**115-7087**	1	BOLT (M6X0.04X10.4-MM)	
	2	1	**123-8253**	1	CLAMP AS (TURBINE)	
	3	1	**161-6958**	1	CLIP-HOSE	
	4	1	**161-6963**	2	CLAMP	
	5	1	**239-5858**	1	CLAMP AS-COMPRESSOR	
	6	1	**242-3360**		HOSE (47-CM)	
R	7	1	**257-4323**	1	CARTRIDGE GP-TURBOCHARGER	

R-REMFG PART MAY BE AVAILABLE

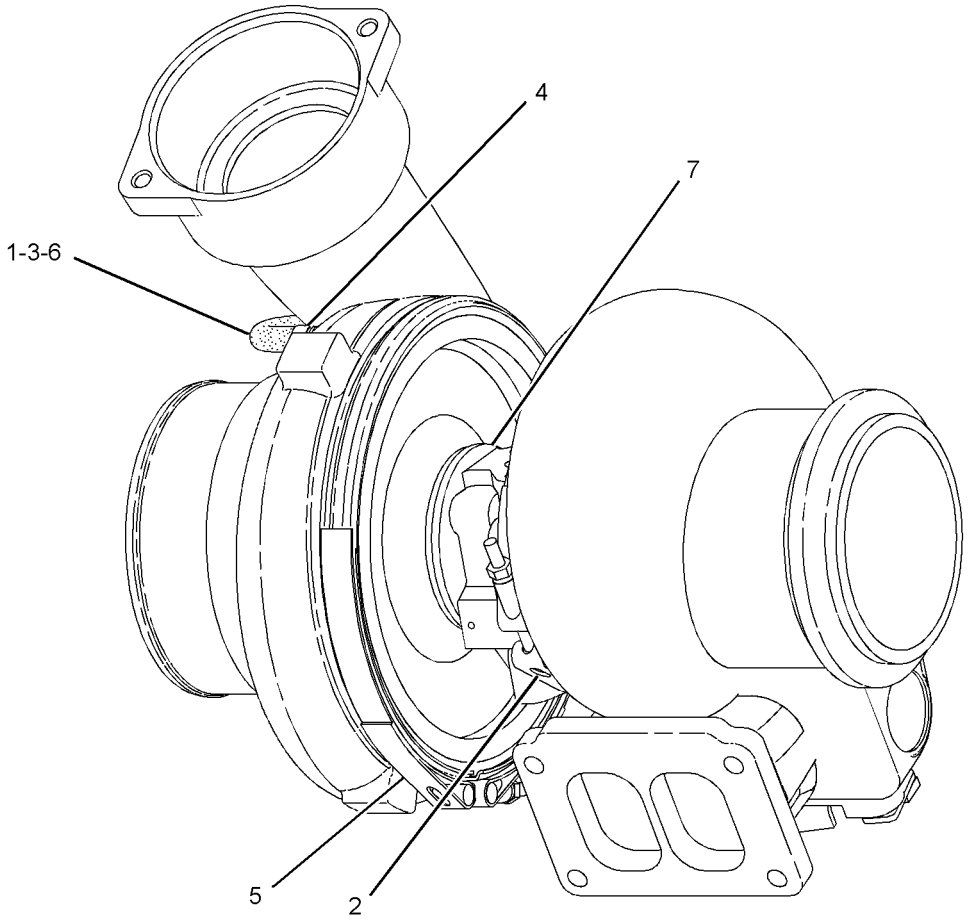

GRAPHIC #1 **<END>** g01121137

FUEL SYSTEM

288-2738 CAP GP-FUEL FILLER–EXTREME SERVICE, LOCKABLE

S/N: RYF1-UP

PART OF 284-6875 TANK GP-FUEL

SMCS-1273 **i02626082**

NOTE	REF NO	GRAPHIC REF	PART NUMBER	QTY	PART NAME 1 2 3 4 5 6 (PRODUCT LEVEL)	SEE PAGE
	1	1	**9X-8600**	1	SEAL-O-RING	
	2	1	**190-9775**	1	COVER AS-FILTER	

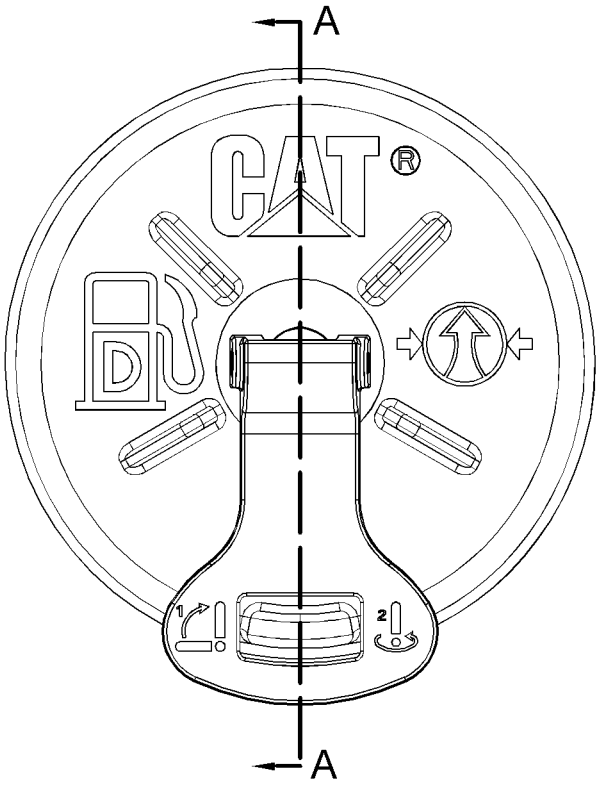

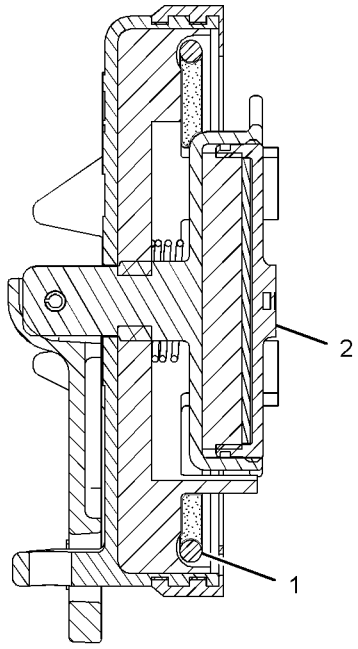

SECTION A-A

GRAPHIC #1 **<END>** g01271364

116-5436 FILTER GP-FUEL

S/N: RSX15243-UP

PART OF 285-6638 FILTER GP-FUEL

SMCS-1261 **i01855183**

NOTE	REF NO	GRAPHIC REF	PART NUMBER	QTY	PART NAME 1 2 3 4 5 6 (PRODUCT LEVEL)	SEE PAGE
	1	1	**1R-0762**	1	FILTER-FUEL (ADVANCED EFFICIENCY)	

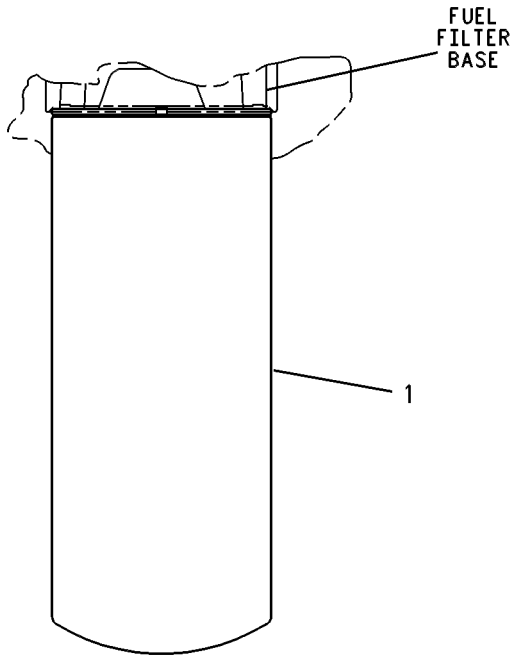

GRAPHIC #1 **<END>** g00269424

FUEL SYSTEM

285-6638 FILTER GP-FUEL

S/N: RSX15243-UP

PART OF 234-7848 ENGINE AR-COMPLETE

SMCS-1261 **i03556806**

NOTE	REF NO	GRAPHIC REF	PART NUMBER	QTY	PART NAME 1 2 3 4 5 6 (PRODUCT LEVEL)	SEE PAGE
	1	1	**3S-2093**	6	STRAP-CABLE	
Y	3	1	*116-5436*	1	FILTER GP-FUEL (SECONDARY)	99
Y	4	1	*233-6742*	1	VALVE GP-CHECK (FUEL)	118
	5	1	**235-3595**	1	ADAPTER	
	6	1	**237-9310**	1	BASE AS	
		1	**9S-4167**	1	STUD-HOLLOW (1-14X1.47-IN)	
Y	7	1	*239-2396*	1	SENSOR GP-PRESSURE (FUEL)	184
Y	8	1	**275-1253**	1	SWITCH GP-PRESSURE (FUEL FILTER)	207
	9	1	**285-6635**	1	HARNESS AS-SENSOR (FUEL)	
		1	**102-8803**	1	KIT-RECEPTACLE (3-PIN)	
					(INCLUDES RECEPTACLE AS & WEDGE)	
		1	**102-8806**	1	KIT-RECEPTACLE (8-PIN)	
					(INCLUDES RECEPTACLE AS & WEDGE)	
		1	**230-4011**	1	PLUG AS-CONNECTOR (2-PIN)	
		1	**230-4012**	1	RECEPTACLE AS-CONNECTOR (2-PIN)	
	10	1	**293-1844**	1	BRACKET AS	
		1	**7T-1099**	2	LINK	
M		1	**8T-3490**	2	NUT-WELD (M10X1.5-THD)	
M		1	**8T-3612**	3	NUT-WELD (M8X1.25-THD)	
M		1	**8Y-4489**	1	BOSS (M10X1.5-THD)	
		1	**9C-7929**	1	BLOCK	
	11	1	**132-5789**	2	CLIP	
	12	1	**136-1901**	1	CONNECTOR	
	13	1	*148-8318*	1	CONNECTOR AS	
		1	**3K-0360**	1	SEAL-O-RING	
		1	**6V-8397**	1	SEAL-O-RING	
		1	**6V-8634**	1	CONNECTOR	
	14	1	*148-8336*	1	CONNECTOR AS	
		1	**3J-1907**	1	SEAL-O-RING	
		1	**6V-8397**	1	SEAL-O-RING	
		1	**6V-8636**	1	CONNECTOR	
	15	1	*148-8374*	1	ELBOW AS	
		1	**3K-0360**	1	SEAL-O-RING	
		1	**6V-8397**	1	SEAL-O-RING	
		1	**6V-8723**	1	ELBOW	
	17	1	**256-6453**	1	SENSOR AS-TEMPERATURE (FUEL)	
	18	1	**3J-1907**	1	SEAL-O-RING	
	19	1	**3K-0360**	1	SEAL-O-RING	
	20	1	**4P-7581**	1	CLIP	
	21	1	**5I-3876**	1	GROMMET	
	22	1	**5P-6944**	1	ADAPTER	
M	23	1	**6V-4248**	3	BOLT (M10X1.5X25-MM)	
	24	1	**6V-5839**	5	WASHER (11X21X2.5-MM THK)	
M	25	1	**6V-5842**	2	BOLT (M10X1.5X40-MM)	
	26	1	**6V-8397**	1	SEAL-O-RING	
	27	1	**6V-9829**	1	CAP AS	
	28	1	**8L-2786**	2	SEAL-O-RING	
	29	1	*148-8411*	1	PLUG AS	
		1	**9S-4185**	1	PLUG-O-RING	
		1	**3K-0360**	1	SEAL-O-RING	

M-METRIC PART
Y-SEPARATE ILLUSTRATION

285-6638 **FILTER GP-FUEL** *(contd.)* **i03556806**

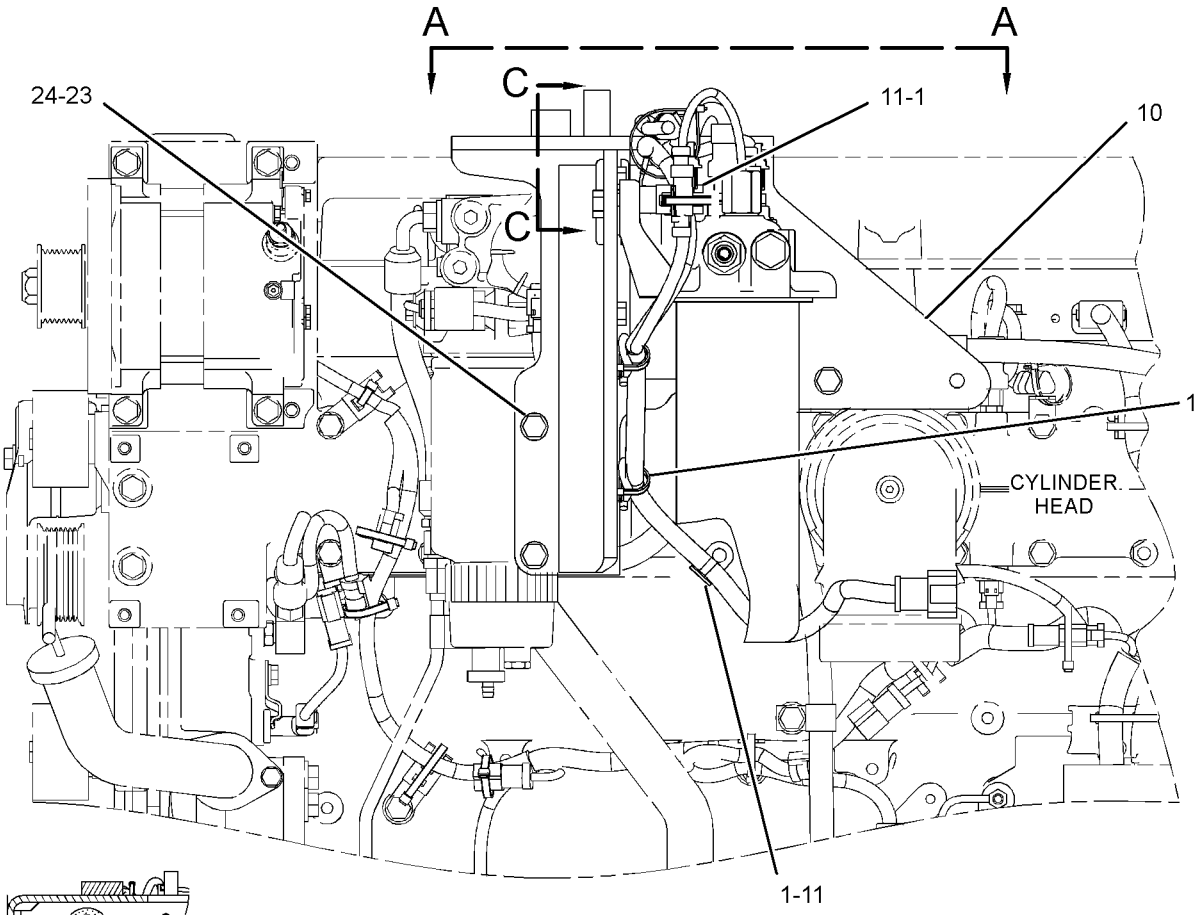

LEFT SIDE VIEW OF ENGINE

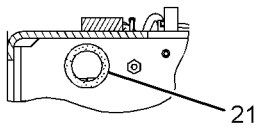

SECTION C-C

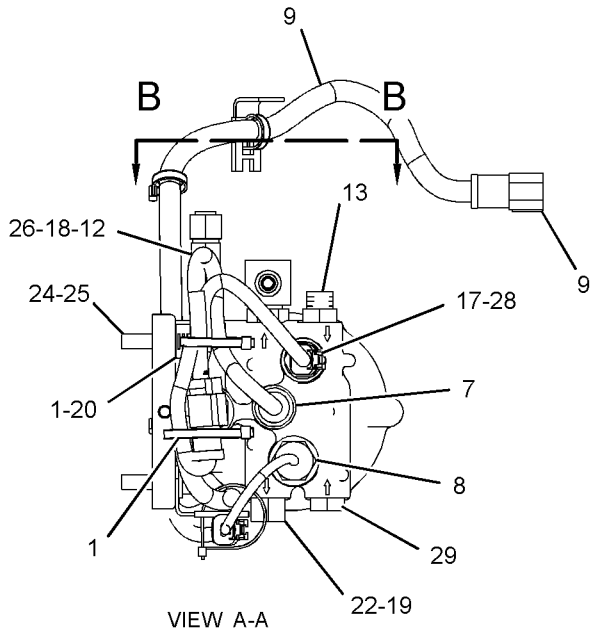

VIEW A-A

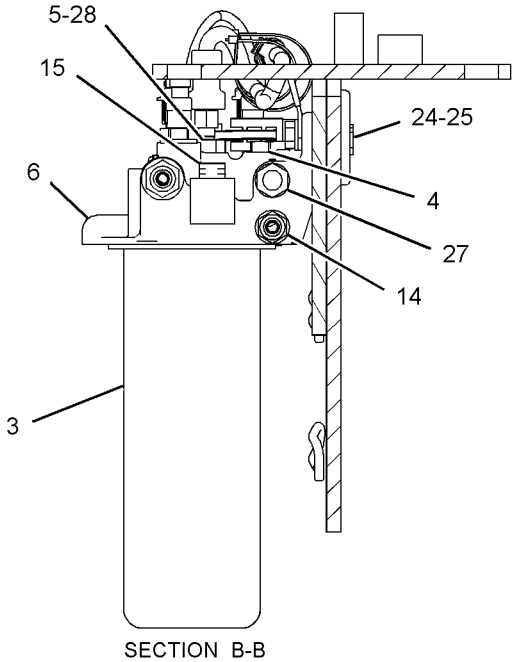

SECTION B-B

GRAPHIC #1 **<END>** g01731815

174-9570 FILTER GP-WATER SEP & FUEL

S/N: RSX15243-UP

PART OF 190-8977 PUMP GP-FUEL PRM & WATER SEP

SMCS-1260, 1261, 1263 **i03181922**

NOTE	REF NO	GRAPHIC REF	PART NUMBER	QTY	PART NAME 1 2 3 4 5 6 (PRODUCT LEVEL)	SEE PAGE
	1	1	**326-1644**	1	FILTER AS-WATER SEP & FUEL (PRIMARY)	
	1A	1	**220-8678**	1	SEAL-RING (FUEL, WATER SEPARATOR)	
	2	1	**270-5320**	1	BOWL AS (FUEL, WATER SEPARATOR)	

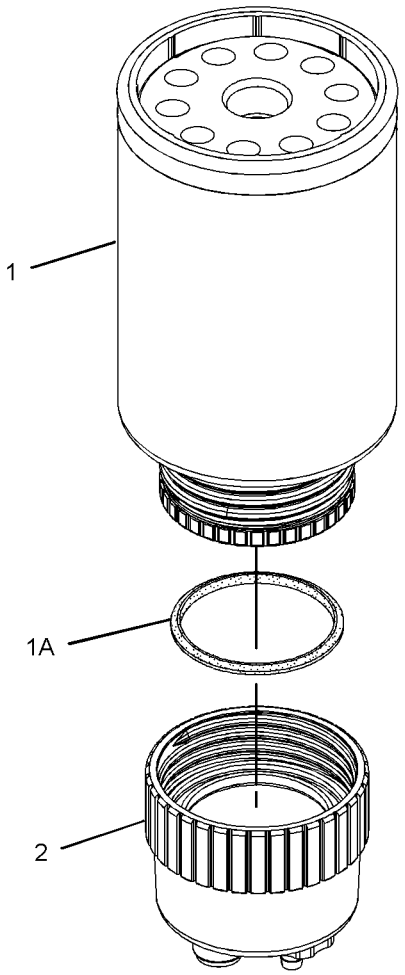

GRAPHIC #1 **<END>** g01179858

249-0712 INJECTOR GP-FUEL*R

S/N: RSX15243-UP

PART OF 253-1459 PUMP GP-FUEL INJECTION

SMCS-1251, 1254, 1290, 1713 **i03558423**

NOTE	REF NO	GRAPHIC REF	PART NUMBER	QTY	PART NAME 1 2 3 4 5 6 (PRODUCT LEVEL)	SEE PAGE
	1	1	**230-3728**	1	SEAL-O-RING	
	2	1	**230-3775**	1	SEAL-O-RING	
	3	1	**9X-7317**	1	SEAL-O-RING	

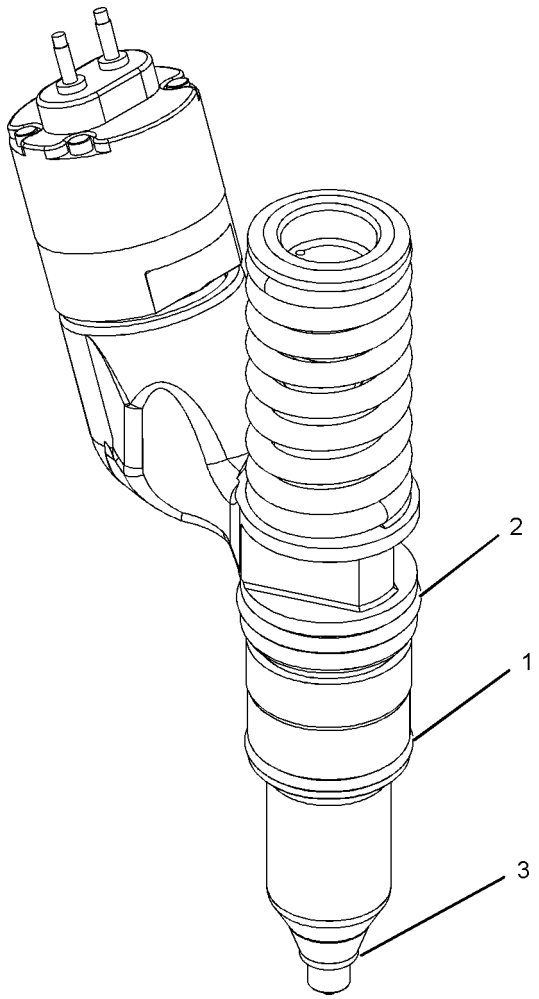

GRAPHIC #1 **<END>** g01065270

FUEL SYSTEM

236-8981 LINES GP-FUEL

S/N: RYF1-UP

PART OF 236-9000 CHASSIS AR

SMCS-1274 **i03612583**

NOTE	REF NO	GRAPHIC REF	PART NUMBER	QTY	PART NAME 1 2 3 4 5 6 (PRODUCT LEVEL)	SEE PAGE
I	1	1	**246-4793**	1	HOSE AS	
I	2	1	**280-8085**	1	HOSE AS	
	3	1	*148-8340*	1	CONNECTOR AS	
		1	**3K-0360**	1	SEAL-O-RING	
		1	**6V-8398**	1	SEAL-O-RING	
		1	**6V-8639**	1	CONNECTOR	
	4	1	*155-7327*	1	CONNECTOR AS	
		1	**3J-1907**	1	SEAL-O-RING	
		1	**5H-8853**	1	SEAL-O-RING	
		1	**6V-8636**	1	CONNECTOR	
	5	1	**1S-0994**	1	CLIP	
	6	1	**313-9198**	1	CLIP	
	7	1	**067-2551**	1	CLIP	
	8	1	**8T-4121**	1	WASHER-HARD (11X21X2.5-MM THK)	
M	9	1	**8T-4195**	1	BOLT (M10X1.5X30-MM)	

I-REFER TO HYDRAULIC INFORMATION SYSTEM
M-METRIC PART

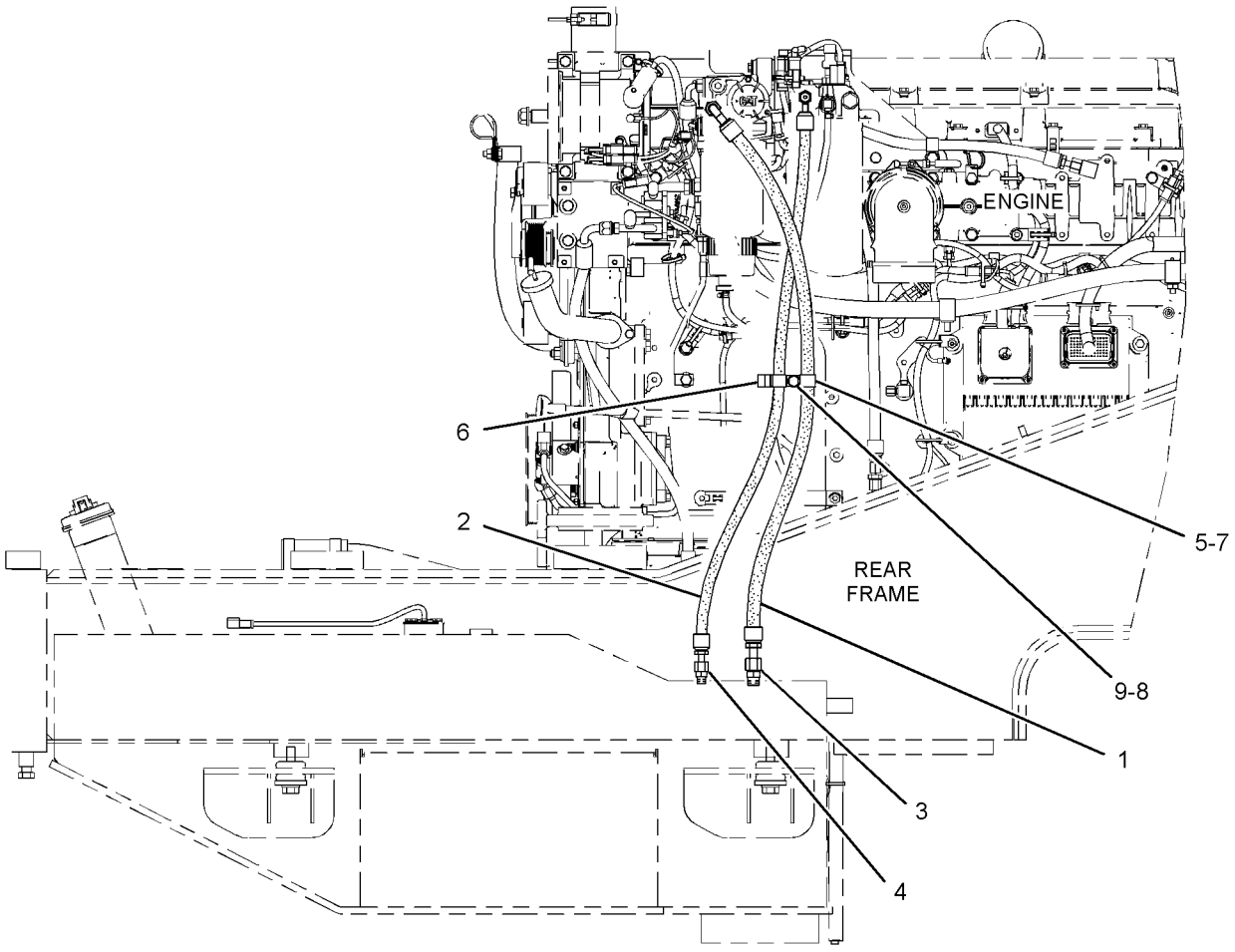

RIGHT SIDE VIEW

GRAPHIC #1 **<END>** g01784136

251-7595 LINES GP-FUEL

S/N: RSX15243-UP

PART OF 234-7848 ENGINE AR-COMPLETE

SMCS-1274 **i03557027**

NOTE	REF NO	GRAPHIC REF	PART NUMBER	QTY	PART NAME 1 2 3 4 5 6 (PRODUCT LEVEL)	SEE PAGE
	1	1	**7C-8246**	2	SPACER (10.5X20X24-MM THK)	
	2	1	**138-7500**	1	SPACER (11X25X50-MM THK)	
	3	1	**175-7739**	1	CLAMP	
	4	1	**301-6343**	2	STUD	
	5	1	**214-7568**	2	SEAL-O-RING	
	6	1	**303-4159**	1	TUBE AS	
I	7	1	**296-0035**	1	HOSE AS	
I	8	1	**285-1962**	1	HOSE AS	
I	9	1	**285-1963**	1	HOSE AS	
	10	1	**067-2551**	1	CLIP	
	11	1	**090-8747**	1	SPACER (11X19X32-MM THK)	
	12	1	*148-8378*	1	ELBOW AS	
		1	**3J-1907**	1	SEAL-O-RING	
		1	**6V-8397**	1	SEAL-O-RING	
		1	**6V-8724**	1	ELBOW	
	13	1	**228-7089**	3	SEAL-O-RING	
M	14	1	**6V-4249**	1	BOLT (M10X1.5X50-MM)	
	15	1	**6V-5839**	4	WASHER (11X21X2.5-MM THK)	
M	16	1	**8T-0643**	1	BOLT (M10X1.5X80-MM)	
	17	1	**7H-7055**	2	CLIP	
	18	1	**8T-1905**	1	ELBOW	
	19	1	**6V-8636**	1	CONNECTOR	
	20	1	**3S-2093**	4	STRAP-CABLE	
E	21	1	**8C-5064**		CONDUIT-FLEXIBLE (15-CM)	
E	21A	1	**8C-5064**		CONDUIT-FLEXIBLE (29-CM)	

E-ORDER BY THE CENTIMETER
I-REFER TO HYDRAULIC INFORMATION SYSTEM
M-METRIC PART

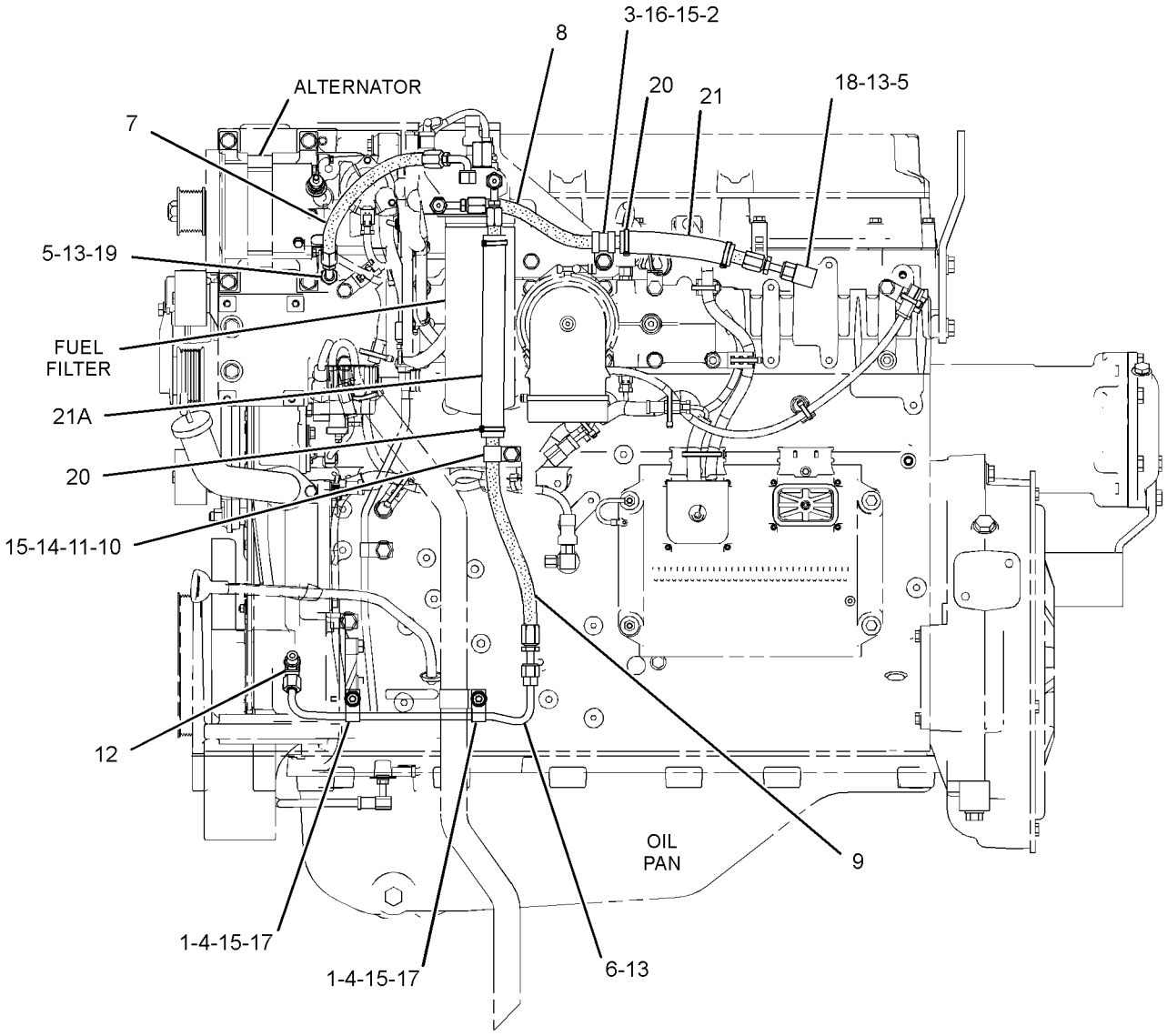

LEFT SIDE VIEW OF ENGINE

GRAPHIC #1 **<END>** g01436336

235-1076 LINES GP-FUEL DRAIN

S/N: RYF1-UP

PART OF 236-7231 INSTALLATION AR-ENGINE

SMCS-1274 **i03626004**

NOTE	REF NO	GRAPHIC REF	PART NUMBER	QTY	PART NAME 1 2 3 4 5 6 (PRODUCT LEVEL)	SEE PAGE
	1	1	**3S-2093**	3	STRAP-CABLE	
	2	1	**5D-1026**	1	CLAMP-HOSE	
	3	1	**141-8275**	1	VALVE-DRAIN (FUEL FILTER)	
	4	1	*148-8313*	1	ADAPTER AS	
		1	**3K-0360**	1	SEAL-O-RING	
		1	**5P-6944**	1	ADAPTER	
	5	1	**1P-4278**	2	CLAMP-HOSE	
E	6	1	**5P-0767**		HOSE (56-CM)	
E	7	1	**8C-6959**		HOSE (113-CM)	
E	8	1	**103-2529**		HOSE (145-CM)	

E-ORDER BY THE CENTIMETER

235-1076 **LINES GP-FUEL DRAIN** *(contd.)* **i03626004**

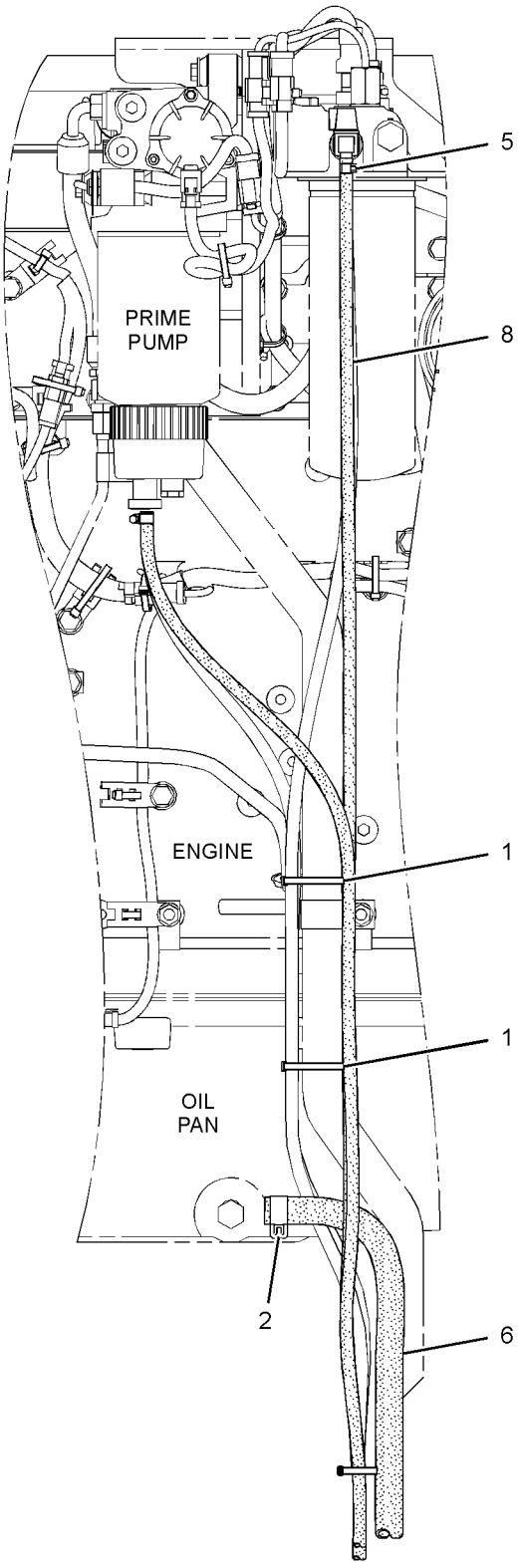

RIGHT SIDE VIEW

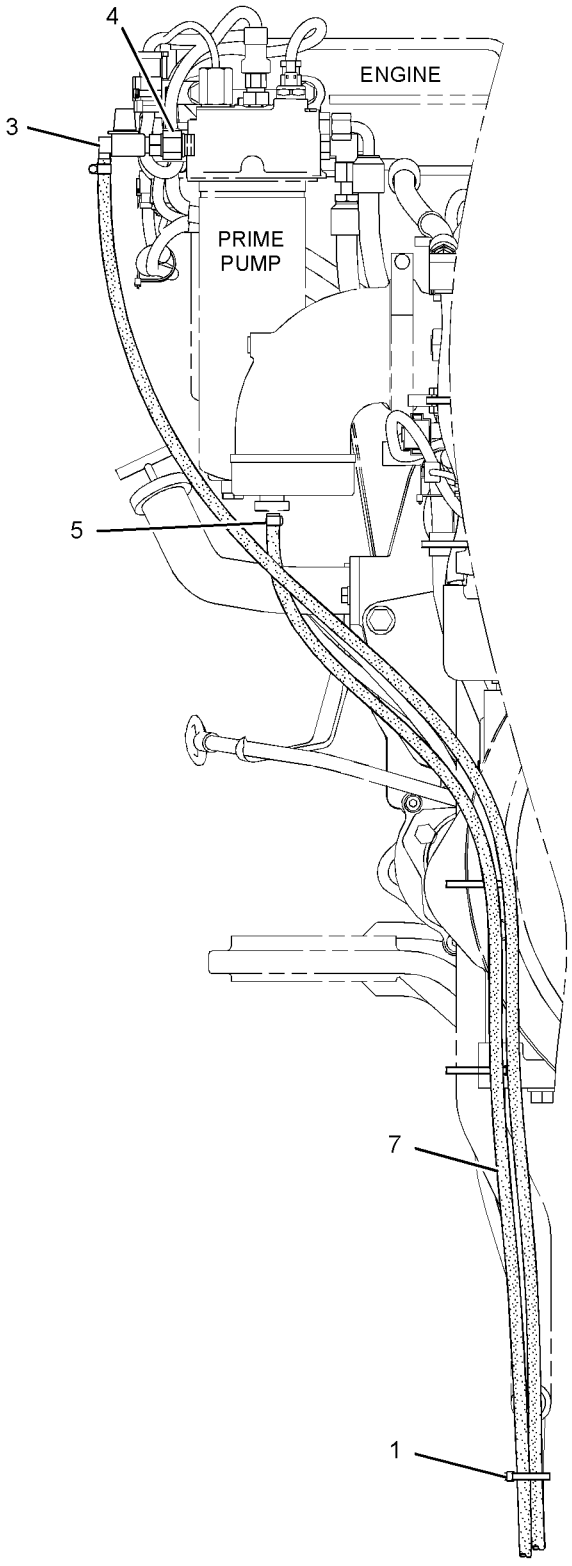

FRONT VIEW

GRAPHIC #1 **<END>** g01343956

253-1459 PUMP GP-FUEL INJECTION

S/N: RSX15243-UP

PART OF 286-5803 ENGINE AR-CORE

SMCS-1251, 1290 **i03558407**

NOTE	REF NO	GRAPHIC REF	PART NUMBER	QTY	PART NAME 1 2 3 4 5 6 (PRODUCT LEVEL)	SEE PAGE
	1	1	**224-4991**	1	CLAMP-INJECTOR	
YR	2	1	**249-0712**	1	INJECTOR GP-FUEL	103
M	3	1	**8T-0644**	1	BOLT (M10X1.5X90-MM)	

M-METRIC PART
R-REMFG PART MAY BE AVAILABLE
Y-SEPARATE ILLUSTRATION

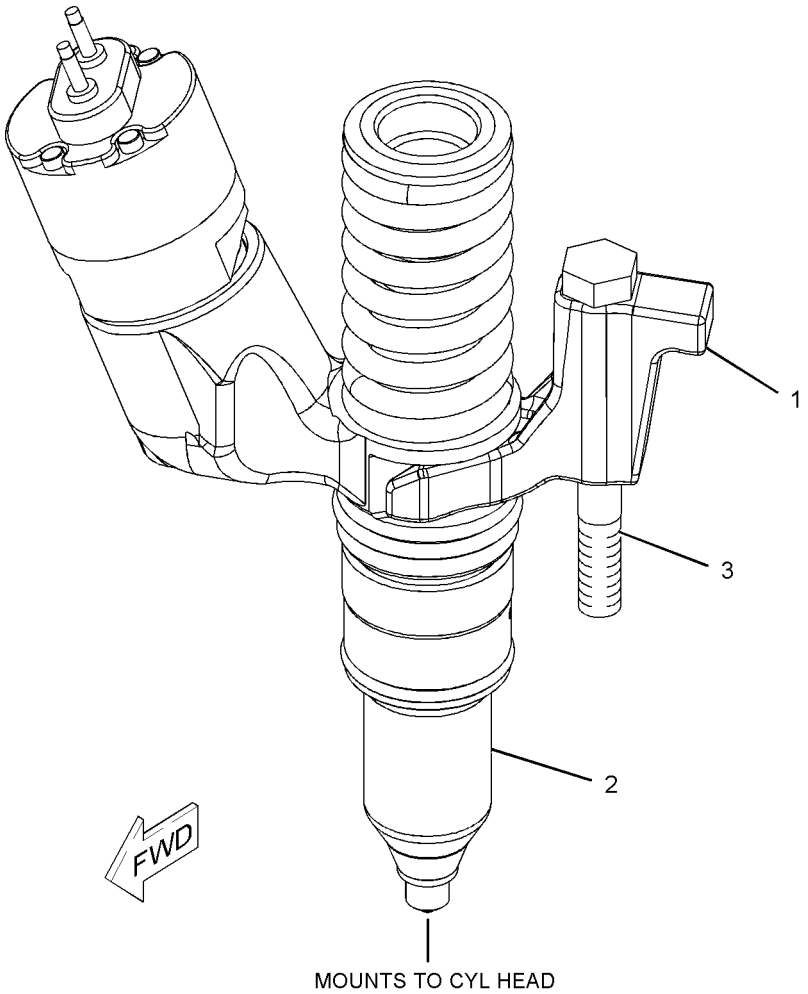

GRAPHIC #1

<END>

g01065170

FUEL SYSTEM

235-1080 PUMP GP-FUEL PRM & PRIM FILTER

S/N: RSX15243-UP

PART OF 234-7848 ENGINE AR-COMPLETE

SMCS-1258, 1260 **i03557162**

NOTE	REF NO	GRAPHIC REF	PART NUMBER	QTY	PART NAME 1 2 3 4 5 6 (PRODUCT LEVEL)	SEE PAGE
	1	1	**3S-2093**	1	STRAP-CABLE	
	2	1	**8T-8737**	5	PLUG-SEAL	
	3	1	**8T-9655**	8	MOUNT-ISOLATION	
Y	4	1	**165-5970**	1	SWITCH GP-TOGGLE (FUEL PRIMING)	216
Y	5	1	**190-8977**	1	PUMP GP-FUEL PRM & WATER SEP (PRIMARY FUEL FILTER)	112
	6	1	**191-1782**	1	SPACER (8.5X12.7X38.2-MM THK)	
	7	1	**232-1374**	1	BRACKET	
	8	1	**232-1376**	2	SPACER (8.5X12.7X139.1-MM THK)	
I	9	1	**307-9655**	1	HOSE AS	
	10	1	*148-8345*	1	CONNECTOR AS	
		1	**2M-9780**	1	SEAL-O-RING	
		1	**6V-8398**	1	SEAL-O-RING	
		1	**6V-8638**	1	CONNECTOR	
	11	1	**155-2260**	1	KIT-CONNECTING PLUG (3-PIN)	
					(INCLUDES PLUG AS,WEDGE & INTERFACE SEAL)	
	12	1	**155-2270**	1	KIT-CONNECTING PLUG (2-PIN)	
					(INCLUDES PLUG AS,WEDGE & INTERFACE SEAL))	
	13	1	**6V-8721**	1	ELBOW	
	14	1	*164-5619*	2	PLUG AS	
					(EACH INCLUDES)	
		1	**2M-9780**	1	SEAL-O-RING	
		1	**9S-8006**	1	PLUG-O-RING	
M	15	1	**3E-8005**	2	BOLT (M8X1.25X160-MM)	
	16	1	**3K-0360**	1	SEAL-O-RING	
	17	1	**6V-8398**	2	SEAL-O-RING	
	18	1	**6V-9002**	1	ELBOW	
	19	1	**7X-0579**	3	WASHER-HARD (8.8X25.5X2-MM THK)	
M	20	1	**8T-0100**	1	BOLT (M8X1.25X60-MM)	
	21	1	**2M-9780**	1	SEAL-O-RING	
	22	1	**305-3684**	1	PLATE-IDENTIFICATION (FUEL PRIMING PUMP ON, OFF)	

I-REFER TO HYDRAULIC INFORMATION SYSTEM
M-METRIC PART
Y-SEPARATE ILLUSTRATION

235-1080 **PUMP GP-FUEL PRM & PRIM FILTER** *(contd.)* **i03557162**

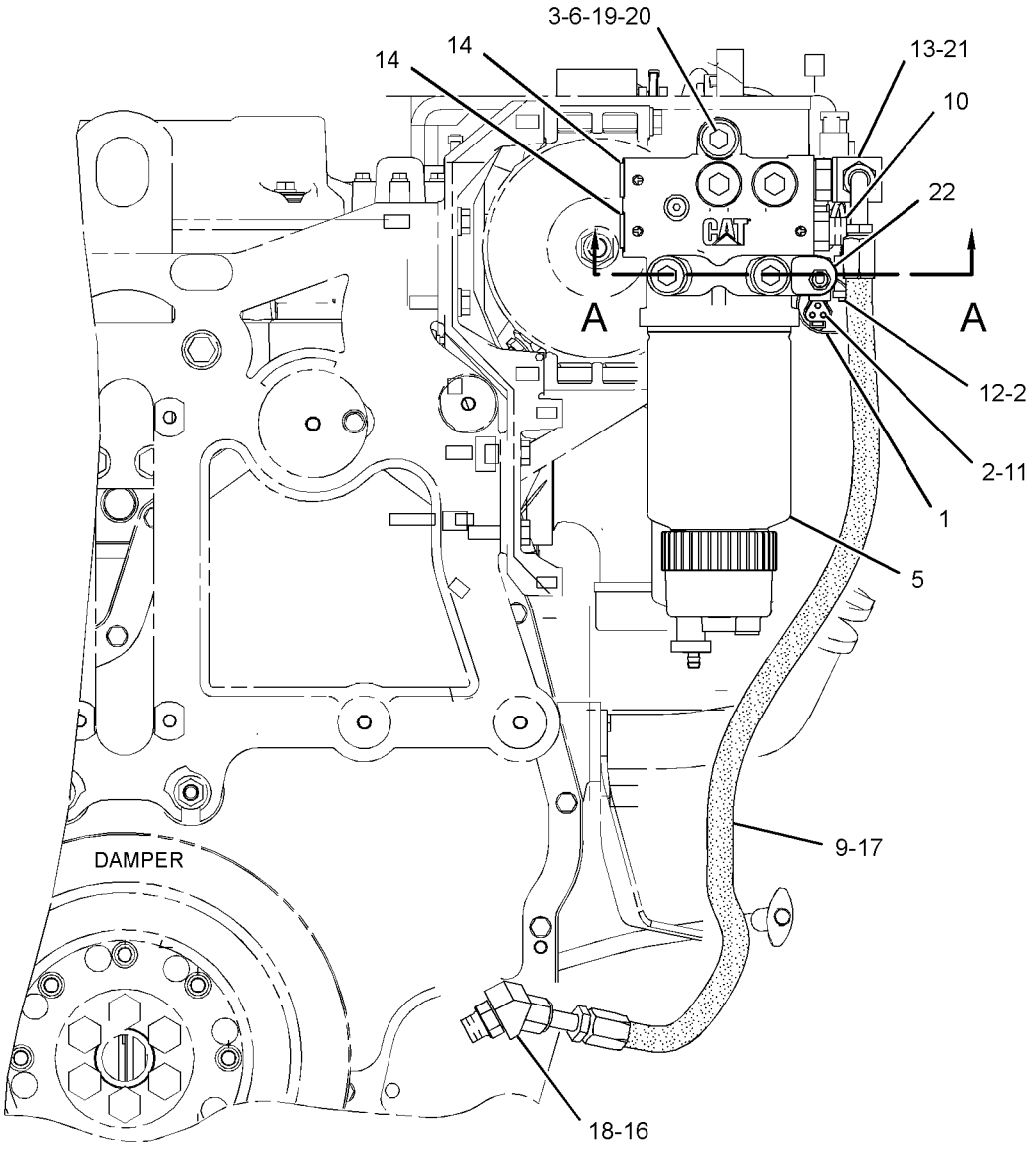

FRONT VIEW OF ENGINE

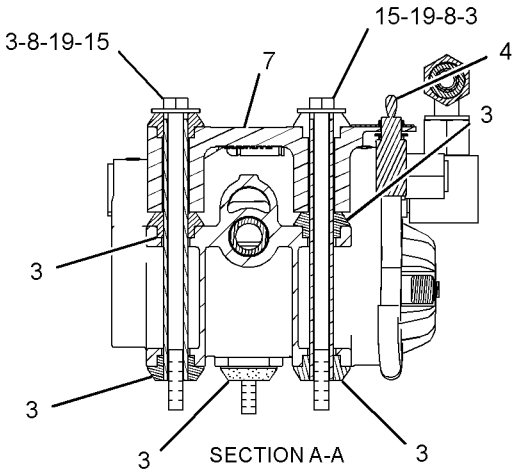

GRAPHIC #1 **<END>** g01665615

FUEL SYSTEM

190-8977 PUMP GP-FUEL PRM & WATER SEP

S/N: RSX15243-UP

PART OF 235-1080 PUMP GP-FUEL PRM & PRIM FILTER

SMCS-1258, 1261, 1263 **i01934929**

NOTE	REF NO	GRAPHIC REF	PART NUMBER	QTY	PART NAME 1 2 3 4 5 6 (PRODUCT LEVEL)	SEE PAGE
Y	1	1	*174-9570*	1	FILTER GP-WATER SEP & FUEL (PRIMARY)	102
	2	1	**190-8970**	1	PUMP AS-FUEL PRIMING	

Y-SEPARATE ILLUSTRATION

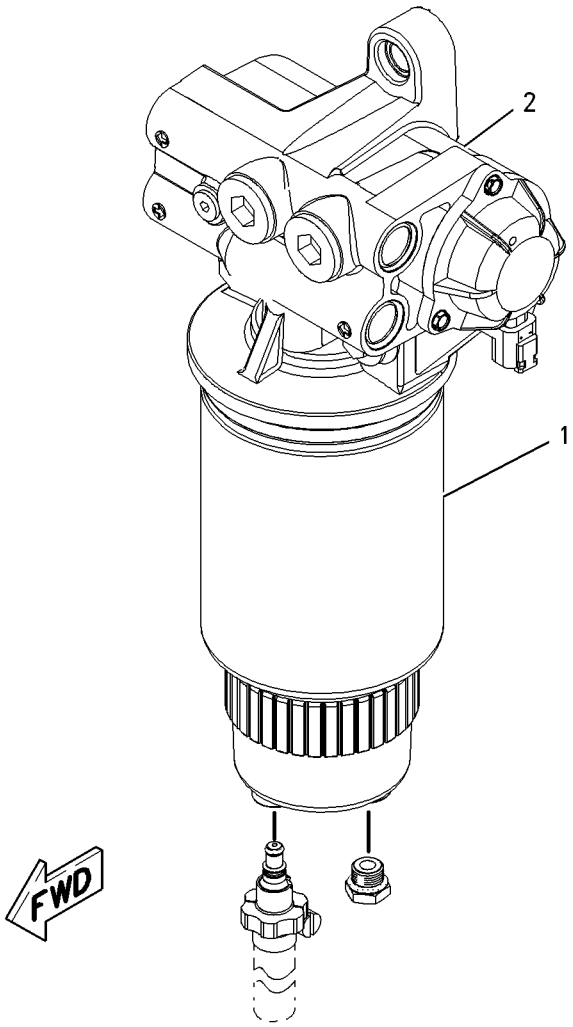

GRAPHIC #1 **<END>** g00904493

FUEL SYSTEM

295-9259 PUMP GP-FUEL TRANSFER

S/N: RSX15243-UP

PART OF 305-6163 PUMP GP-FUEL TRANSFER

SMCS-1256 **i03558486**

NOTE	REF NO	GRAPHIC REF	PART NUMBER	QTY	PART NAME 1 2 3 4 5 6 (PRODUCT LEVEL)	SEE PAGE
					(NO SERVICED PARTS)	

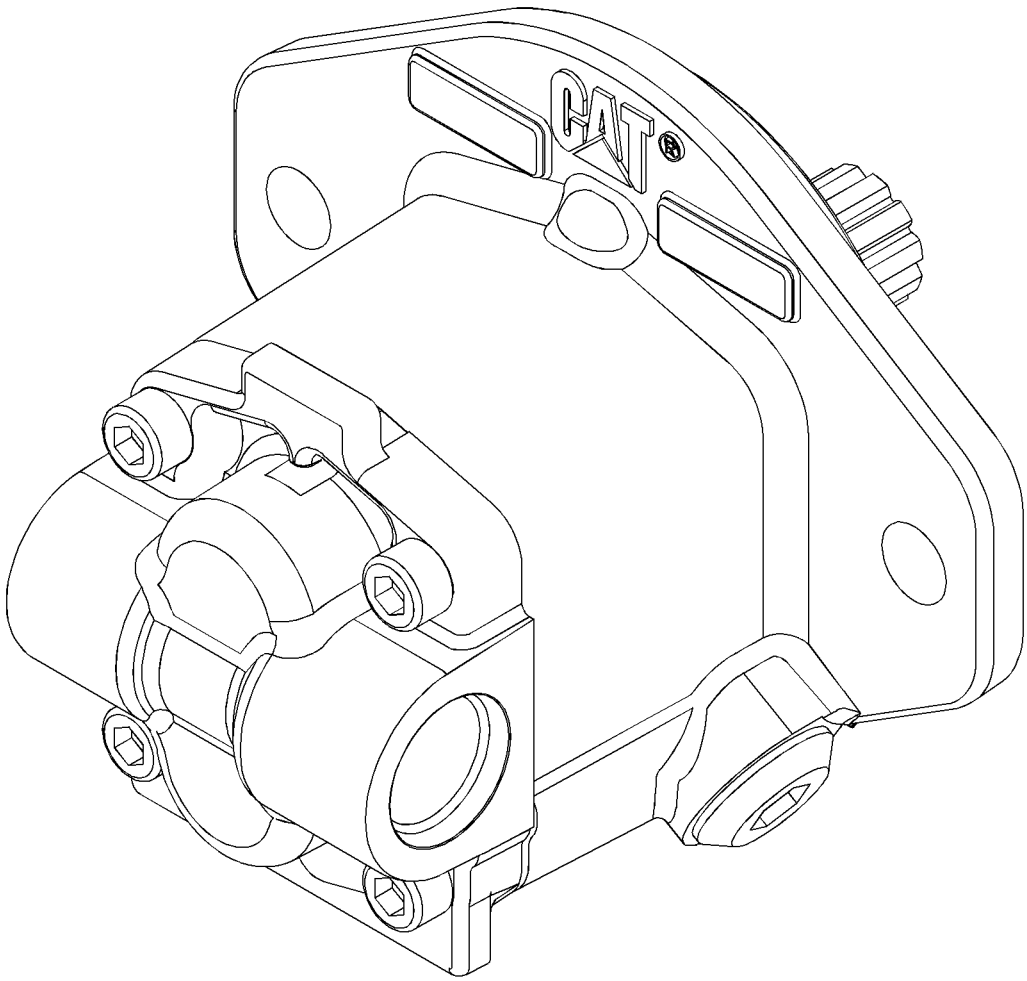

GRAPHIC #1 **<END>** g01357970

FUEL SYSTEM

305-6163 PUMP GP-FUEL TRANSFER

S/N: RSX15243-UP

PART OF 286-5803 ENGINE AR-CORE

SMCS-1256 **i03558460**

NOTE	REF NO	GRAPHIC REF	PART NUMBER	QTY	PART NAME 1 2 3 4 5 6 (PRODUCT LEVEL)	SEE PAGE
	1	1	**296-3447**	1	COVER	
Y	2	1	**295-9259**	1	PUMP GP-FUEL TRANSFER	113
	3	1	**107-5769**	1	SEAL-O-RING	
M	4	1	**136-4183**	4	BOLT-12 POINT HEAD (M10X1.5X30-MM)	
	5	1	**5P-4889**	1	SEAL-O-RING	
	6	1	**6V-5839**	4	WASHER (11X21X2.5-MM THK)	

M-METRIC PART
Y-SEPARATE ILLUSTRATION

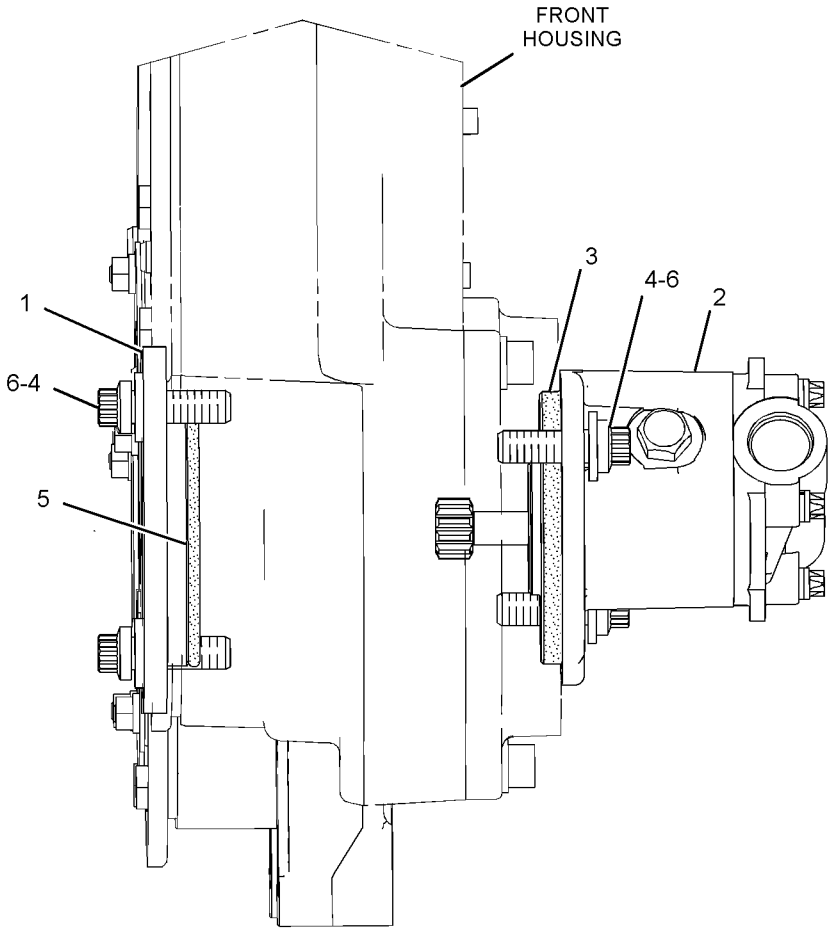

LEFT SIDE VIEW OF ENGINE

GRAPHIC #1

<END>

g01347884

FUEL SYSTEM

276-1054 TANK GP-FUEL

S/N: RYF1-UP

PART OF 236-9000 CHASSIS AR

SMCS-1273 **i03616120**

NOTE	REF NO	GRAPHIC REF	PART NUMBER	QTY	PART NAME 1 2 3 4 5 6 (PRODUCT LEVEL)	SEE PAGE
Y	1	1	*284-6875*	1	TANK GP-FUEL	116
	2	1	**187-7331**	8	MOUNT-RUBBER	
	3	1	**7K-1181**	1	STRAP-CABLE	
	4	1	**7X-0607**	4	WASHER-HARD (20X55X8-MM THK)	
M	5	1	**7X-2554**	4	BOLT (M16X2X70-MM)	
	6	1	**9X-8257**	4	WASHER (17.5X30X3.5-MM THK)	
	7	1	**3D-2824**	1	SEAL-O-RING	
	8	1	**188-8844**	1	VALVE-BREAKER RELIEF (FUEL TANK)	

M-METRIC PART
Y-SEPARATE ILLUSTRATION

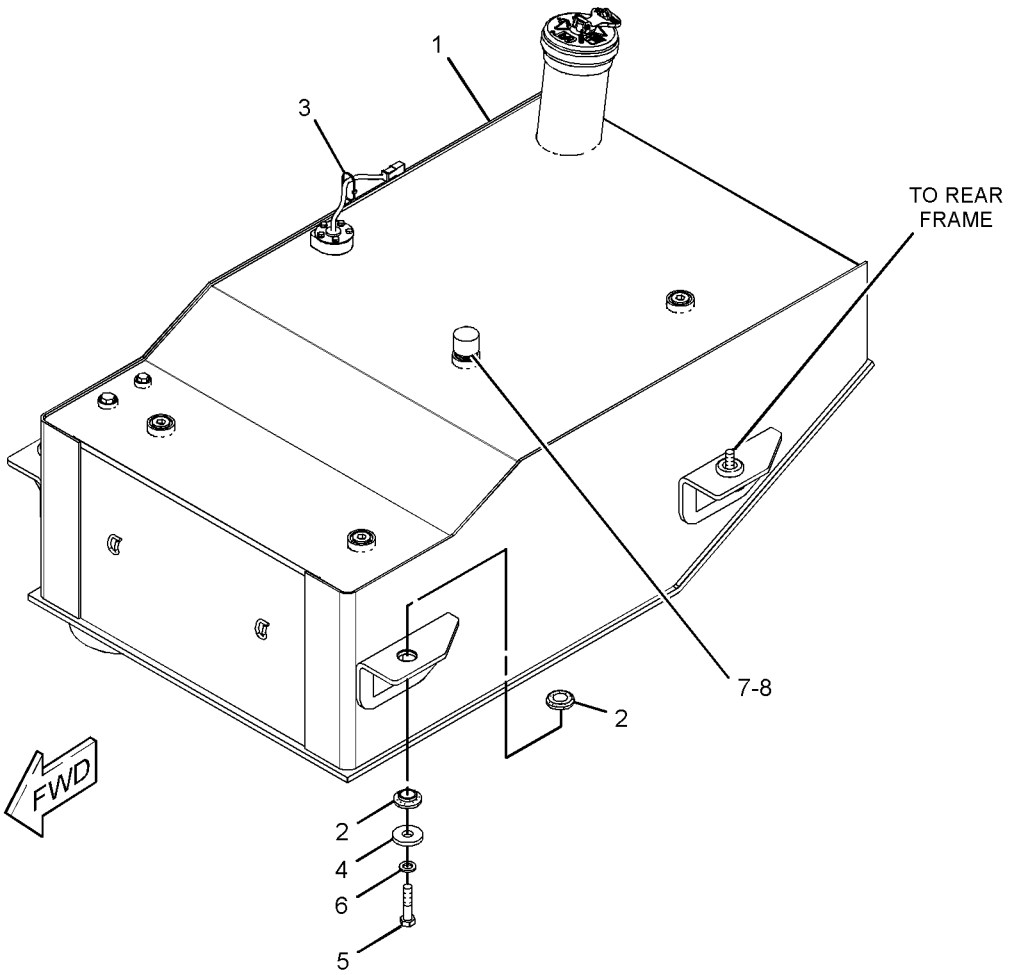

GRAPHIC #1 **<END>** g01790513

284-6875 TANK GP-FUEL

S/N: RYF1-UP

PART OF 276-1054 TANK GP-FUEL

SMCS-1273 **i03616844**

NOTE	REF NO	GRAPHIC REF	PART NUMBER	QTY	PART NAME 1 2 3 4 5 6 (PRODUCT LEVEL)	SEE PAGE
	1	1	**1H-8306**	1	SCREW-PURGE (1/2-20X1.625-IN)	
	2	1	**9P-7121**	1	STRAINER-FUEL	
	3	1	**275-1235**	1	TANK AS	
Y	4	1	**288-2738**	1	CAP GP-FUEL FILLER (EXTREME SERVICE, LOCKABLE)	98
	5	1	**322-7451**	1	SENDER AS-FUEL LEVEL	
		1	**102-8802**	1	KIT-RECEPTACLE (2-PIN)	
					(INCLUDES RECEPTACLE AS & WEDGE)	
		1	**186-3735**	2	PIN-CONNECTOR (16-GA TO 18-GA)	
B	6	1	*148-8409*	3	PLUG AS	
					(EACH INCLUDES)	
		1	**3D-2824**	1	SEAL-O-RING	
		1	**9S-8008**	1	PLUG-O-RING	
	7	1	**7M-8485**	1	SEAL-O-RING	
M	8	1	**8C-3210**	5	BOLT (M6X1X16-MM)	
	9	1	**9S-9334**	1	PLUG-O-RING	
	10	1	**9X-8256**	5	WASHER (6.6X12X2-MM THK)	

B-USE AS REQUIRED
M-METRIC PART
Y-SEPARATE ILLUSTRATION

284-6875 **TANK GP-FUEL** *(contd.)* **i03616844**

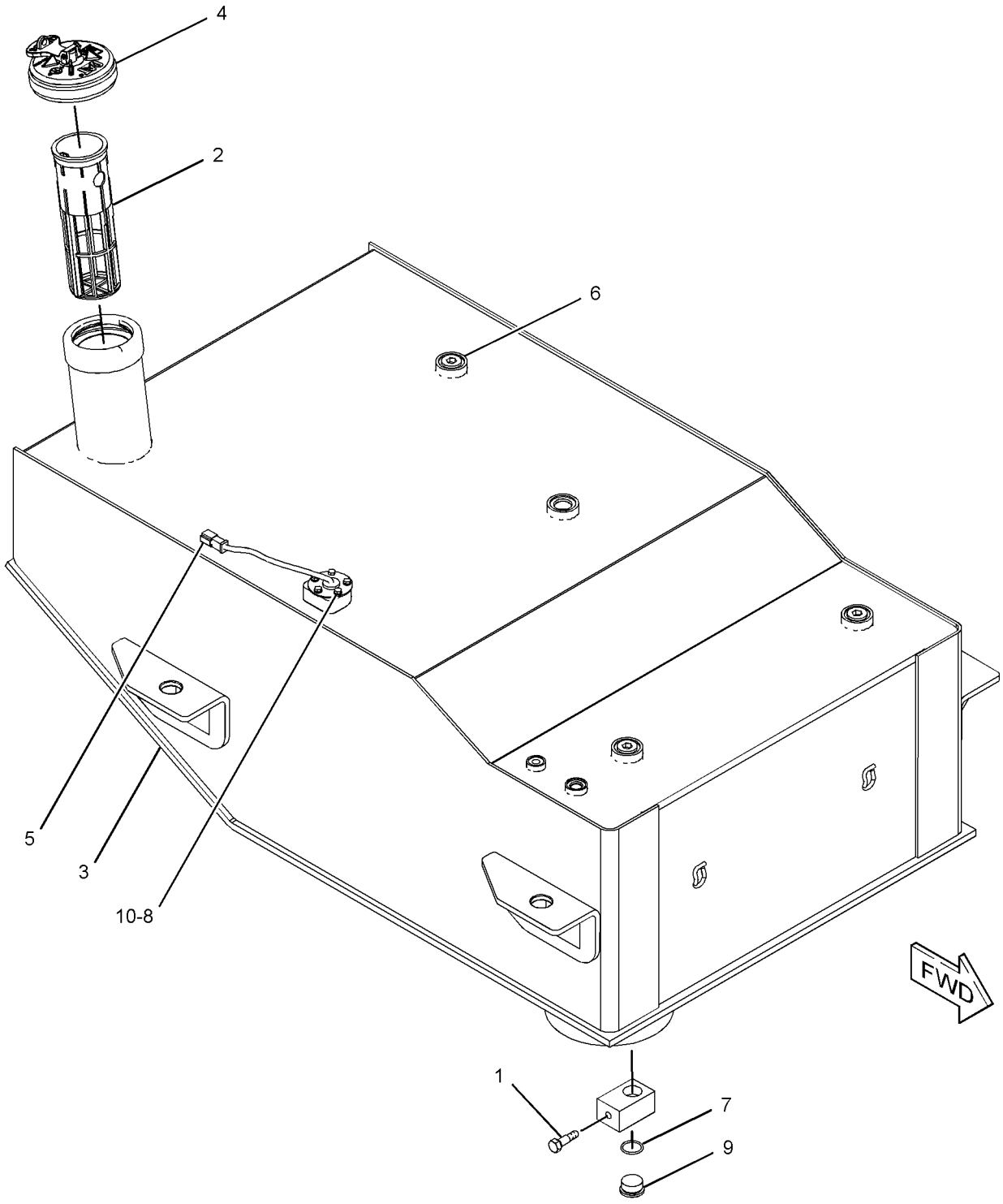

GRAPHIC #1 **<END>** g01881173

233-6742 VALVE GP-CHECK–FUEL

S/N: RSX15243-UP

PART OF 285-6638 FILTER GP-FUEL

SMCS-1251, 1274 **i02447191**

NOTE	REF NO	GRAPHIC REF	PART NUMBER	QTY	PART NAME 1 2 3 4 5 6 (PRODUCT LEVEL)	SEE PAGE
Y	1	1	**281-2725**	1	VALVE GP-CHECK (FUEL)	119
	2	1	**6V-4589**	1	SEAL-O-RING	

Y-SEPARATE ILLUSTRATION

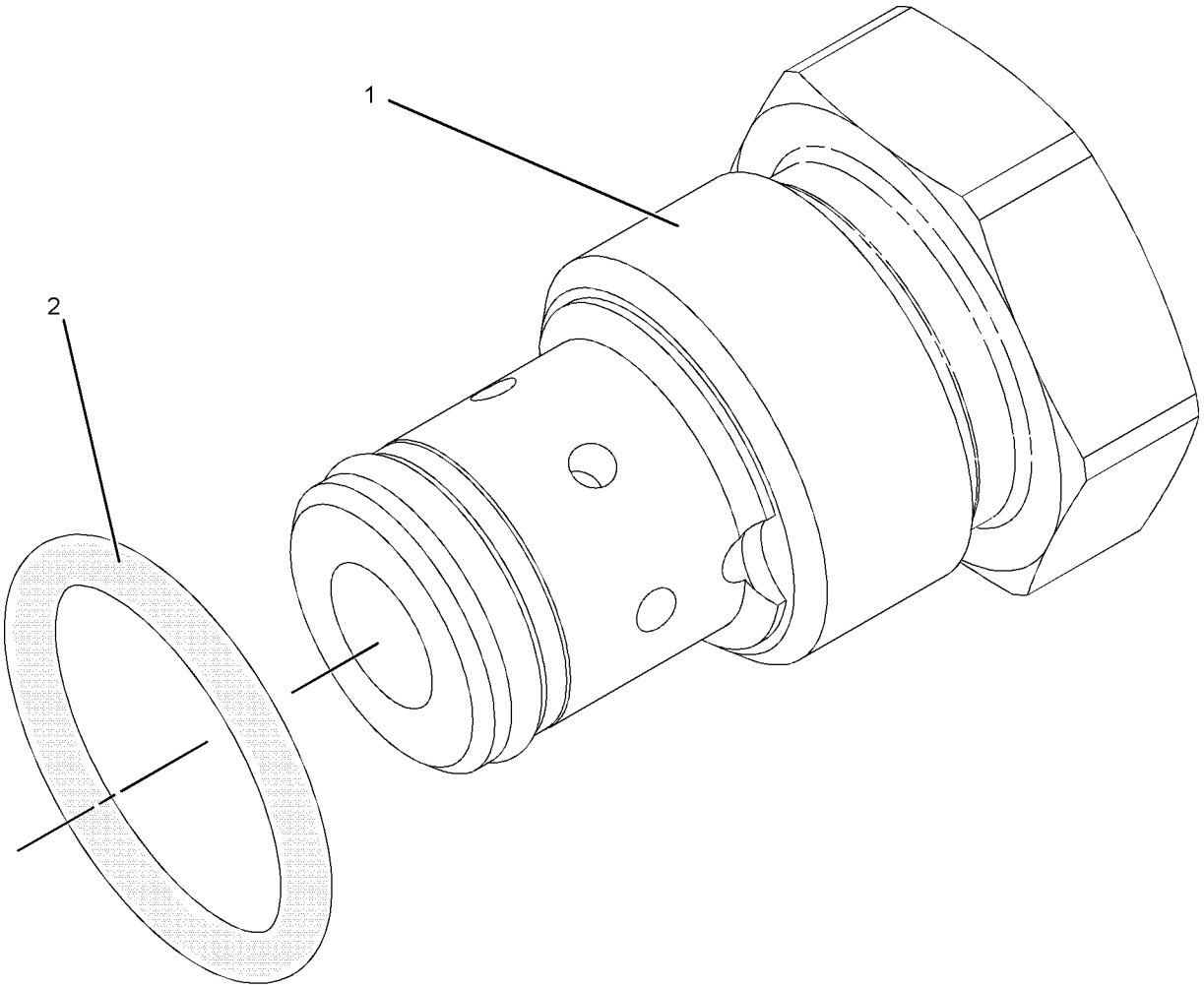

GRAPHIC #1 **<END>** g01031823

281-2725 VALVE GP-CHECK–FUEL

S/N: RSX15243-UP

PART OF 233-6742 VALVE GP-CHECK

SMCS-1251, 1274 **i02448132**

NOTE	REF NO	GRAPHIC REF	PART NUMBER	QTY	PART NAME 1 2 3 4 5 6 (PRODUCT LEVEL)	SEE PAGE
	1	1	**6V-6923**	1	RING-BACKUP	
	2	1	**033-6033**	1	SEAL-O-RING	

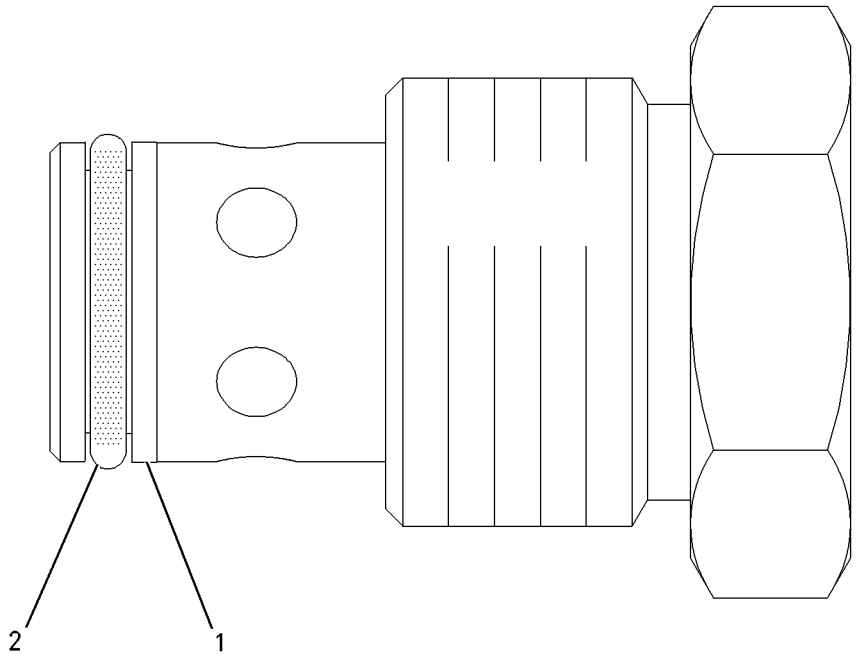

GRAPHIC #1 **<END>** g00864141

3E-6328 ALARM GP

S/N: RYF1-UP
24-VOLT
PART OF 237-4910 WIRING GP-CAB

SMCS-7400, 7402, 7407 **i02942905**

NOTE	REF NO	GRAPHIC REF	PART NUMBER	QTY	PART NAME 1 2 3 4 5 6 (PRODUCT LEVEL)	SEE PAGE
	1	1	**102-8802**	1	KIT-RECEPTACLE (2-PIN)	
					(INCLUDES RECEPTACLE AS & WEDGE)	
	2	1	**186-3735**	2	PIN-CONNECTOR (16-GA TO 18-GA)	

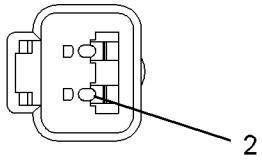

VIEW A–A

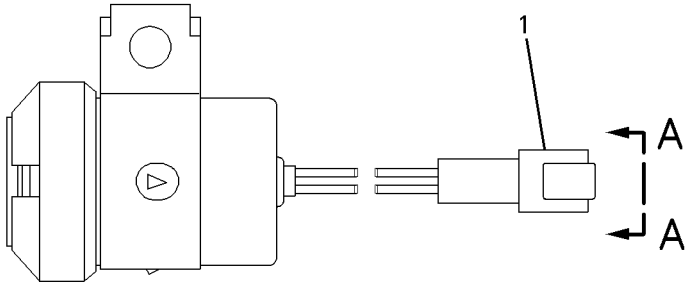

GRAPHIC #1 **<END>** g00697818

235-7133 ALTERNATOR GP-CHARGING

S/N: RSX15243-UP
24-VOLT, 80 AMPERE
PART OF 237-9767 ALTERNATOR GP-CHARGING

SMCS-1405 **i02580780**

NOTE	REF NO	GRAPHIC REF	PART NUMBER	QTY	PART NAME 1 2 3 4 5 6 (PRODUCT LEVEL)	SEE PAGE
	1	1	**228-9656**	1	FRAME AS-DRIVE END	
	2	1	**5S-7349**	1	BOLT (1/4-20X0.5-IN)	
	3	1	**185-2639**	1	FAN AS	
	4	1	**1H-3244**	1	LOCKWASHER	
	5	1	**228-9655**	1	FRAME AS-ALTERNATOR	
	6	1	**2K-4821**	1	LOCKNUT (5/8-18-THD)	
	7	1	**5P-8247**	1	WASHER-HARD (17X32X3.5-MM THK)	
	8	1	**228-9657**	1	COVER AS	
	9	1	**8T-4205**	1	WASHER-HARD (7.2X14.5X2-MM THK)	
	10	1	**185-2647**	1	GROMMET	
	11	1	**9L-6770**	1	CAP-DUST	
	12	1	**185-2643**	1	STATOR AS	
	13	1	**185-2638**	2	COLLAR	
	14	1	**185-2654**	1	PLATE	
	15	1	**185-2650**	1	ROTOR AS	
	16	1	**185-2644**	1	COIL AS	
	17	1	**185-2648**	1	REGULATOR AS-VOLTAGE (24-VOLT) (ALTERNATOR)	
	18	1	**6V-8189**	1	NUT (5/16-18-THD)	
	19	1	**8T-4224**	1	WASHER-HARD (8.8X16X2-MM THK)	
	20	1	**3F-9556**	1	LOCKWASHER	
					AVAILABLE REPAIR KIT(S):	
			185-2655	1	KIT-BEARING (ALTERNATOR)	
					(INCLUDES 3 BEARINGS)	
			185-2658	1	KIT-HARDWARE (ALTERNATOR)	
					(INCLUDES BOLTS)	
			199-7891	1	KIT-TERMINAL (ALTERNATOR)	
					(INCLUDES INSULATORS, WASHERS, NUT & STEP NUT)	
			199-8436	1	KIT-TERMINAL (ALTERNATOR)	
					(INCLUDES HOLDER AS, PLATE, INSULATOR, PIN, BOLT, GROMMET, & NUT)	

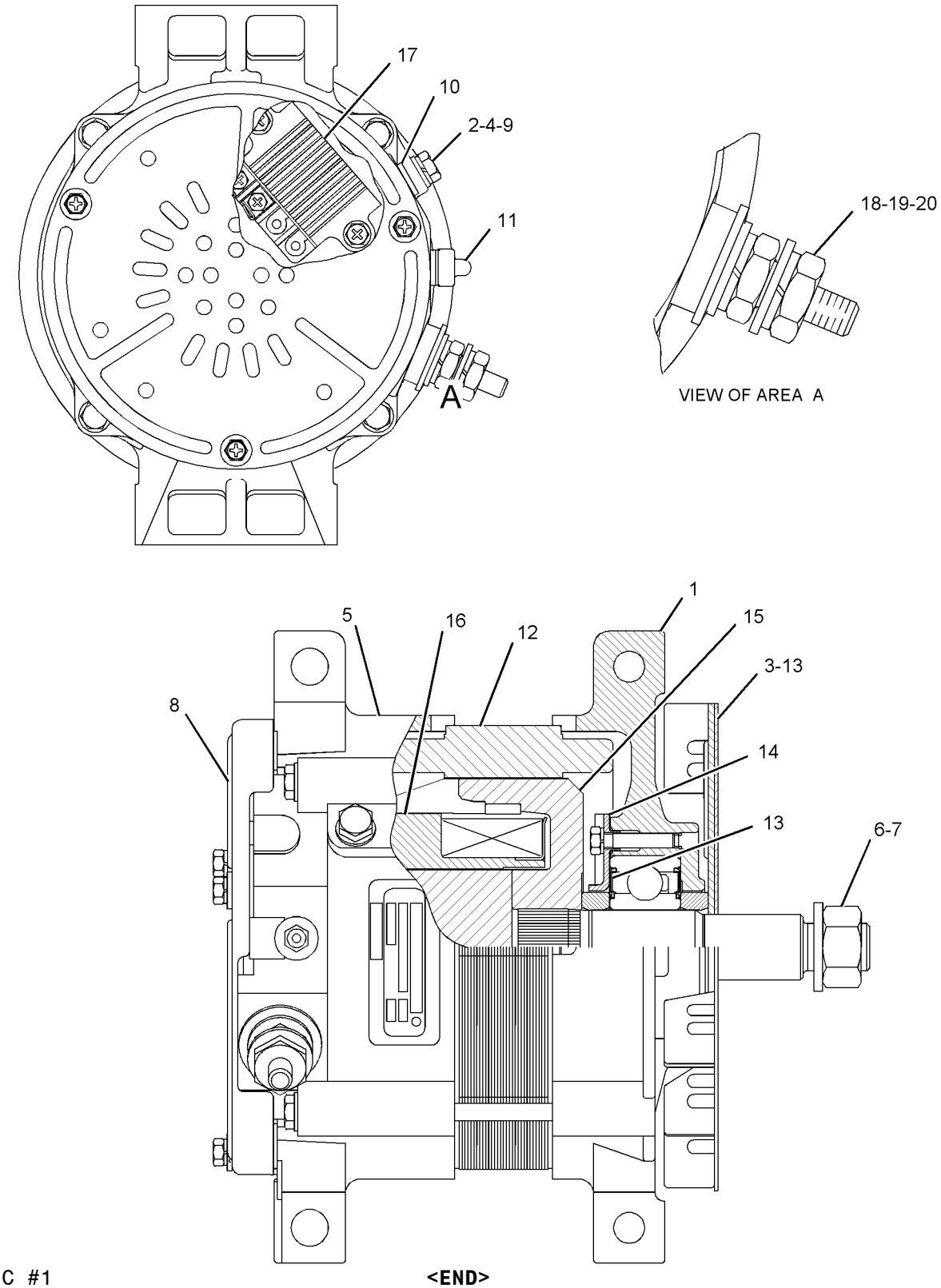

GRAPHIC #1

<END>

g01102532

237-9767 ALTERNATOR GP-CHARGING

S/N: RSX15243-UP
24-VOLT, 80-AMPERE
PART OF 234-7848 ENGINE AR-COMPLETE

SMCS-1405 **i03555566**

NOTE	REF NO	GRAPHIC REF	PART NUMBER	QTY	PART NAME 1 2 3 4 5 6 (PRODUCT LEVEL)	SEE PAGE
YR	1	1	**235-7133**	1	ALTERNATOR GP-CHARGING (24-VOLT, 80-AMPERE)	121
M	2	1	**8T-4198**	4	BOLT (M10X1.5X100-MM)	
	3	1	**8T-4121**	4	WASHER-HARD (11X21X2.5-MM THK)	

M-METRIC PART
R-REMFG PART MAY BE AVAILABLE
Y-SEPARATE ILLUSTRATION

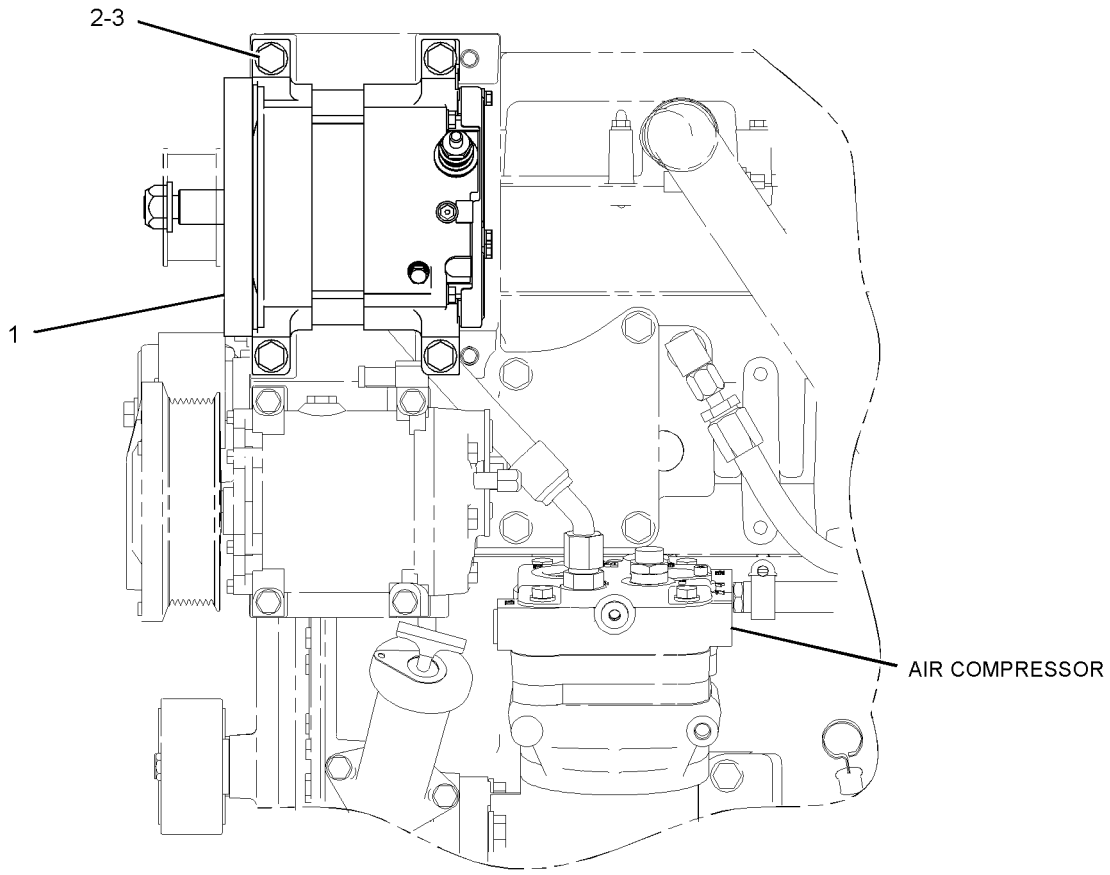

LEFT SIDE VIEW

GRAPHIC #1 **<END>** g01121140

ELECTRICAL AND STARTING SYSTEM

299-0745 BATTERY & WIRING GP

S/N: RYF1-UP

PART OF 236-8961 ELECTRICAL AR

SMCS-1401, 1402, 1408 **i03617460**

NOTE	REF NO	GRAPHIC REF	PART NUMBER	QTY	PART NAME 1 2 3 4 5 6 (PRODUCT LEVEL)	SEE PAGE
	1	1	**2G-8767**	7	WASHER (10.5X60X3-MM THK)	
	2	2	**3E-8320**	1	PLATE-INSTRUCTION (BATTERY)	
	3	1,2	**3S-2093**	9	STRAP-CABLE	
	4	2	**4H-1225**	1	WASHER (11X22X6-MM THK)	
	5	1	**6G-2256**	4	CLAMP (LOOP)	
	6	1	**6G-2263**	3	SPACER (10.5X19X28.5-MM THK)	
Y	7	2	**7N-0718**	1	SWITCH GP-DISCONNECT (BATTERY)	202
	8	2	**8V-0622**	1	CABLE AS	
		2	**8C-5917**	1	TERMINAL AS-BATTERY (POSITIVE)	
		2	**8T-9757**	1	TERMINAL AS-BATTERY (NEGATIVE)	
		2	**1M-6119**	1	BOLT (5/16-18X1.375-IN)	
		2	**1M-6120**	1	NUT (5/16-18-THD)	
		2	**9G-0003**	1	COVER-TERMINAL (BLACK)	
		2	**9G-0004**	1	COVER-TERMINAL (RED)	
E		2	**5P-0761**		CABLE (00-GA, RED) (14-CM)	
	9	1	**091-7124**	1	SPACER (11X19X58-MM THK)	
	10	1	**124-3019**	1	BRACKET AS	
	11	1	**148-3495**	1	BRACKET AS	
					(EACH BRACKET AS INCLUDES)	
M		1	**8T-3490**	1	NUT-WELD (M10X1.5-THD)	
	12	2	**153-5710**	2	BATTERY (12-VOLT, 1400-CCA)	
	13	2	**153-6281**	1	HOLD-DOWN-BATTERY	
	14	1	**243-5821**	1	BRACKET AS	
	15	2	**246-1696**	1	CABLE AS	
		2	**1S-7251**	1	TERMINAL-CABLE (00-GA, 1/2-IN BOLT)	
E		2	**5P-0761**		CABLE (00-GA, RED) (71-CM)	
		2	**8N-0869**	1	COVER-TERMINAL (RED)	
		2	**8N-1725**	1	COVER-TERMINAL (RED)	
		2	**3S-6049**	1	TERMINAL AS-BATTERY (POSITIVE)	
		2	**1M-6119**	1	BOLT (5/16-18X1.375-IN)	
		2	**1M-6120**	1	NUT (5/16-18-THD)	
	16	2	**246-1699**	1	CABLE AS	
E		2	**5P-0747**		CABLE (00-GA, BLACK) (30-CM)	
		2	**8S-3020**	1	TERMINAL-CABLE (00-GA, 3/8-IN BOLT)	
		2	**216-7790**	1	TERMINAL-RING	
	17	1	**246-6196**	1	RECEPTACLE AS	
E		1	**159-8049**		CABLE (00-GA, RED) (53-CM)	
E		1	**159-8050**		CABLE (00-GA, BLACK) (30-CM)	
	18	2	**287-8721**	1	CABLE AS	
		2	**1S-7251**	2	TERMINAL-CABLE (00-GA, 1/2-IN BOLT)	
E		2	**5P-0747**		CABLE (00-GA, BLACK) (55-CM)	
	19	1	**291-6806**	1	CABLE AS	
E		1	**8C-3056**		CABLE (2-GA, RED) (389-CM)	
		1	**8T-8827**	1	BOOT (RED)	
		1	**030-1712**	1	TERMINAL-RING (2-GA, 6.35-MM)	
B		1	**1P-0810**		TAPE-ELECTRICAL	
E		1	**125-7876**		TUBE-HEAT SHRINK (17.78-MM) (4-CM)	
	20	2	**296-1063**	2	ROD	
	21	2	**311-7613**	1	CABLE AS	
		2	**159-8049**		CABLE (00-GA, RED) (190-CM)	
		2	**8N-0869**	1	COVER-TERMINAL (RED)	
B		2	**1P-0810**	1	TAPE-ELECTRICAL	
	22	1	**313-1265**	1	BRACKET AS	
	23	2	**314-3995**	1	CABLE AS	
E		2	**8S-3020**	1	TERMINAL-CABLE (00-GA, 3/8-IN BOLT)	
		2	**9G-0003**	1	COVER-TERMINAL (BLACK)	

299-0745 **BATTERY & WIRING GP** *(contd.)* **i03617460**

NOTE	REF NO	GRAPHIC REF	PART NUMBER	QTY	PART NAME 1 2 3 4 5 6 (PRODUCT LEVEL)	SEE PAGE
		2	**9X-5699**	1	BOOT	
E		2	**159-8050**		CABLE (00-GA, BLACK) (40-CM)	
		2	**8T-9757**	1	TERMINAL AS-BATTERY (NEGATIVE)	
		2	**1M-6119**	1	BOLT (5/16-18X1.375-IN)	
		2	**1M-6120**	1	NUT (5/16-18-THD)	
Y	24	1	**322-3305**	1	BLOCK GP-JUNCTION	128
M	25	1	**113-6990**	1	BOLT (M20X2.5X25-MM)	
	26	1	**132-7551**	1	SPACER (11X19X6-MM THK)	
	27	2	**133-9379**	2	GROMMET	
	28	1	**2A-2677**	2	SPACER (10.7X17.14X19.05-MM THK)	
	29	1,2	**2V-1771**	7	GROMMET	
M	30	1	**5C-7261**	4	NUT (M8X1.25-THD)	
	31	1,2	**6D-4246**	7	CLIP	
	32	2	**7X-7729**	2	WASHER (11X25X3-MM THK)	
	33	1,2	**8M-2770**	15	CLIP	
	34	1	**8S-2634**	1	COVER AS	
M	35	2	**8T-0389**	2	LOCKNUT (M10X1.5-THD)	
	36	1,2	**8T-4121**	22	WASHER-HARD (11X21X2.5-MM THK)	
	37	1	**8T-4123**	1	WASHER (22X35X3.5-MM THK)	
M	38	1,2	**8T-4133**	5	NUT (M10X1.5-THD)	
M	39	1	**8T-4136**	1	BOLT (M10X1.5X25-MM)	
M	40	1,2	**8T-4137**	11	BOLT (M10X1.5X20-MM)	
M	41	1	**8T-4172**	1	BOLT (M10X1.5X80-MM)	
M	42	1	**8T-4185**	3	BOLT (M10X1.5X50-MM)	
M	43	1	**8T-4186**	1	BOLT (M10X1.5X40-MM)	
M	44	1	**8T-4192**	2	BOLT (M12X1.75X25-MM)	
M	45	1	**8T-4196**	1	BOLT (M10X1.5X35-MM)	
	46	1,2	**8T-4223**	3	WASHER-HARD (13.5X25.5X3-MM THK)	
	47	1	**8T-4224**	8	WASHER-HARD (8.8X16X2-MM THK)	
M	48	2	**8T-6466**	1	BOLT (M10X1.5X60-MM)	
M	49	1	**8T-7547**	4	BOLT (M8X1.25X30-MM)	
	50	2	**9W-1991**	1	SPACER (10.7X17.1X40-MM THK)	

B-USE AS REQUIRED
E-ORDER BY THE CENTIMETER
M-METRIC PART
Y-SEPARATE ILLUSTRATION

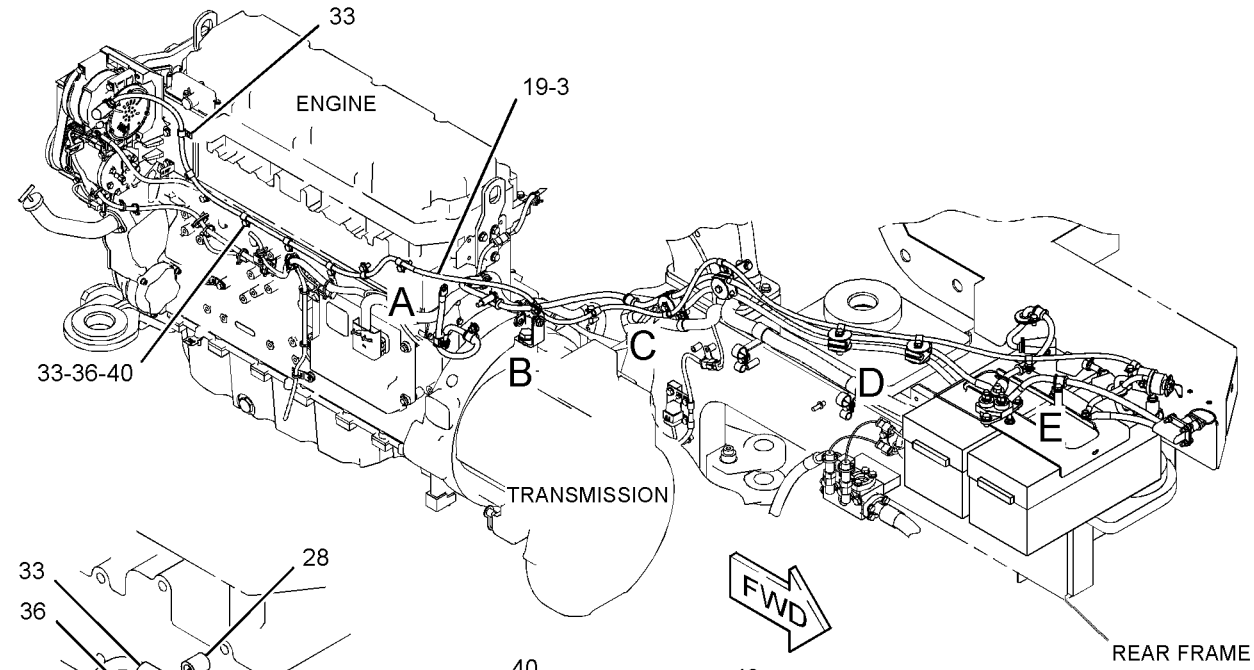

VIEW OF AREA A

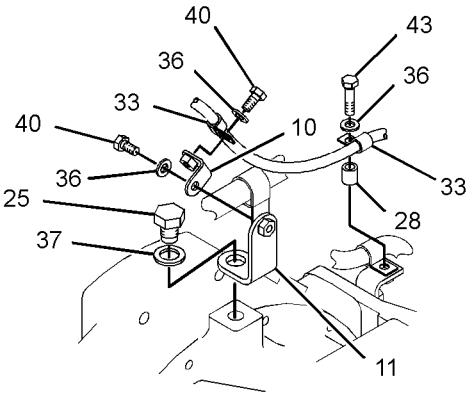

VIEW OF AREA B

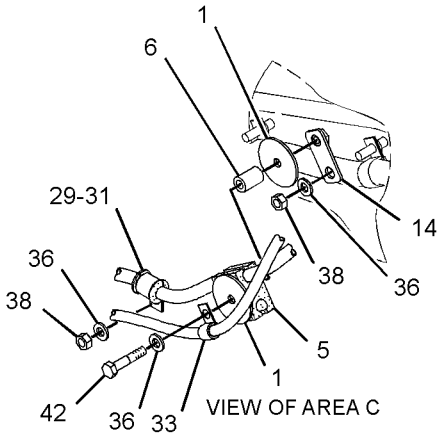

VIEW OF AREA C

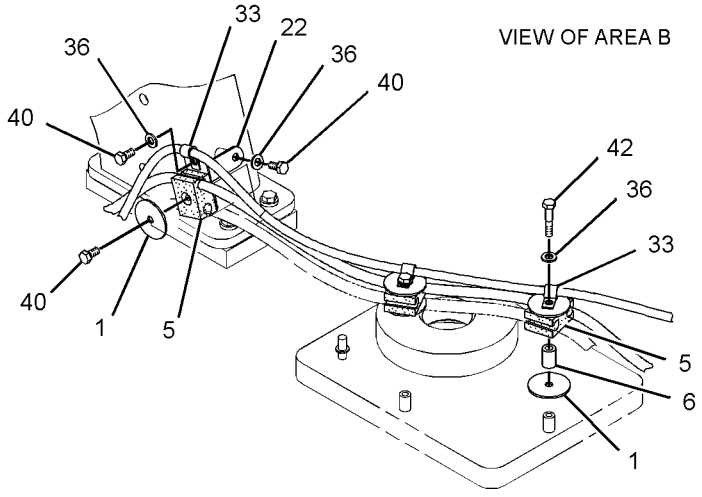

VIEW OF AREA D

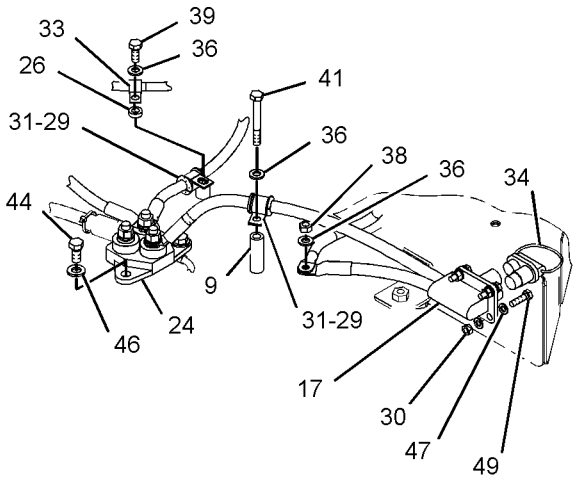

VIEW OF AREA E

GRAPHIC #1

g01927939

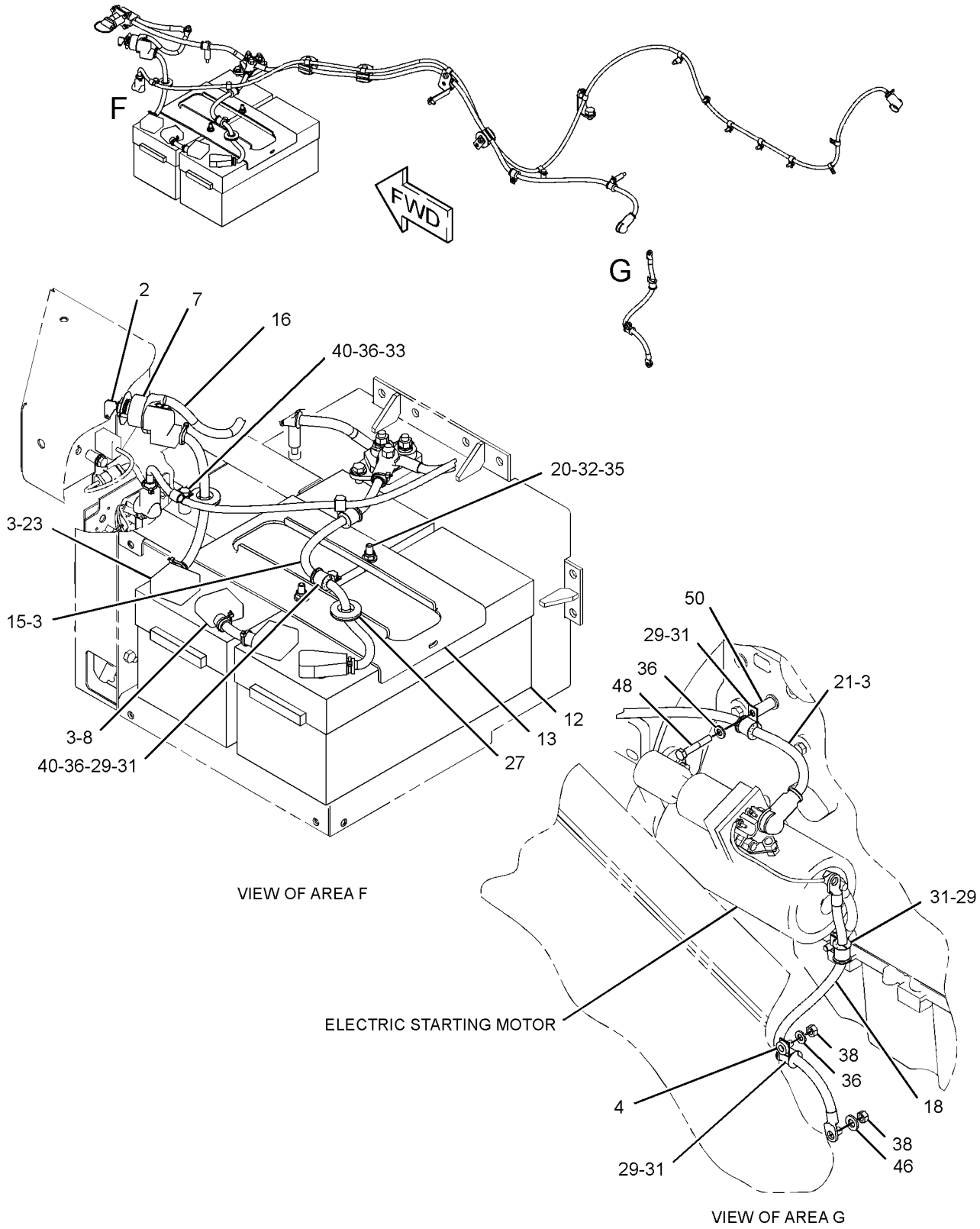

GRAPHIC #2 **<END>** g01927940

322-3305 BLOCK GP-JUNCTION

S/N: RYF1-UP

PART OF 299-0745 BATTERY & WIRING GP

SMCS-1408, 7426 **i03258120**

NOTE	REF NO	GRAPHIC REF	PART NUMBER	QTY	PART NAME 1 2 3 4 5 6 (PRODUCT LEVEL)	SEE PAGE
	1	1	**8T-3518**	6	NUT-FULL (1/2-13-THD)	
	2	1	**5G-6505**	3	WASHER (25X38X14-MM THK)	
	3	1	**7F-0560**	6	WASHER (0.516X0.938X0.101-IN THK)	
	4	1	**8C-6358**	1	BLOCK GP-JUNCTION (BATTERY)	
		1	**1D-5117**	3	NUT-JAM (1/2-13-THD)	
		1	**8T-3519**	3	BOLT-BRONZE (1/2-13X2-IN)	

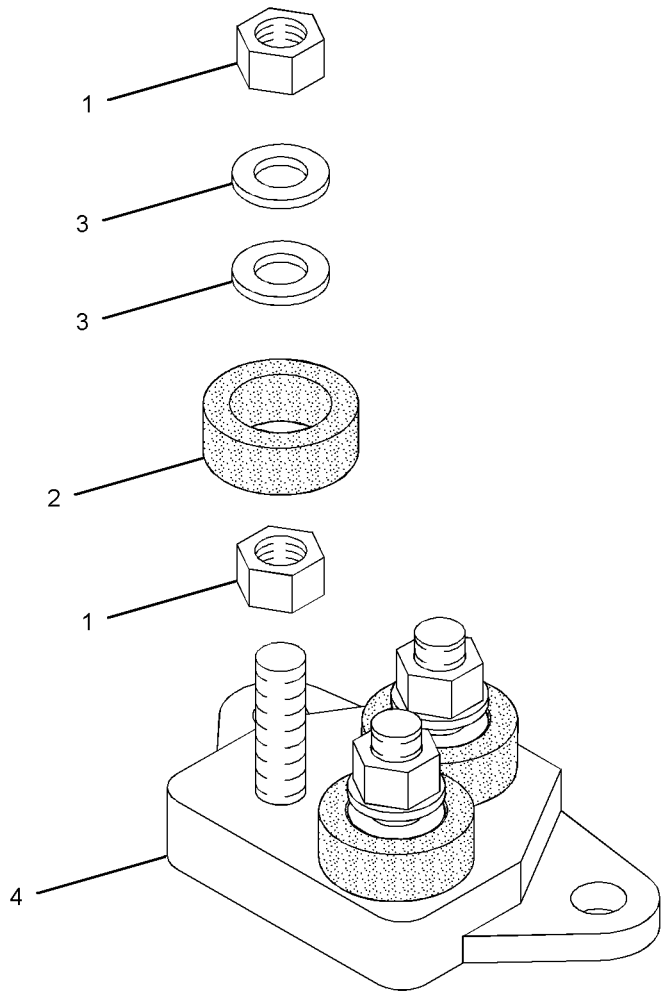

GRAPHIC #1 **<END>** g01931793

251-7610 CONNECTION GP-ELECTRICAL

S/N: RSX15243-UP

PART OF 234-7848 ENGINE AR-COMPLETE

SMCS-1408 **i03555661**

NOTE	REF NO	GRAPHIC REF	PART NUMBER	QTY	PART NAME 1 2 3 4 5 6 (PRODUCT LEVEL)	SEE PAGE
	1	1	**212-0431**	1	STUD	
M	2	1	**2Y-5829**	1	NUT (M10X1.5-THD)	
	3	1	**3E-4353**	1	WASHER-HARD (11X25X3-MM THK)	
	4	1	**6V-5839**	2	WASHER (11X21X2.5-MM THK)	

M-METRIC PART

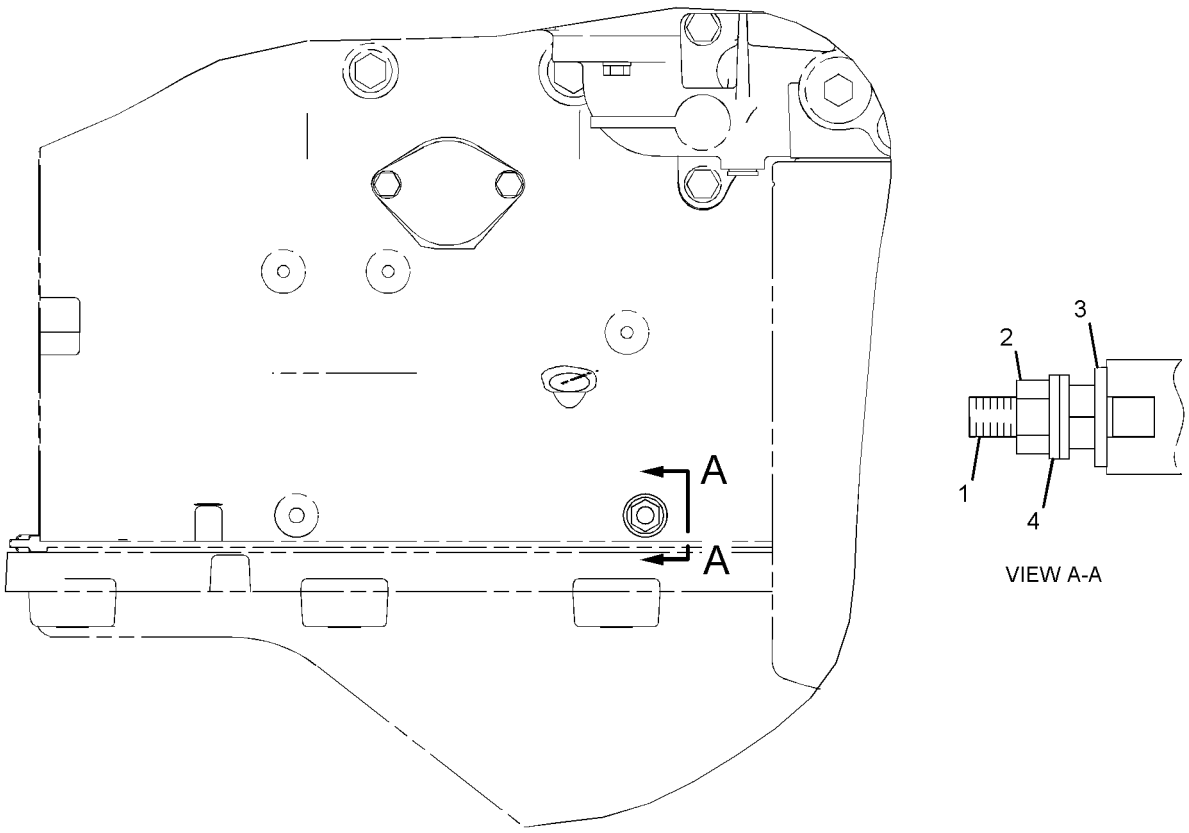

RIGHT SIDE VIEW

GRAPHIC #1 **<END>** g01121148

233-6191 CONTROL & MTG GP-ENGINE ELEK

S/N: RSX15243-UP

PART OF 234-7848 ENGINE AR-COMPLETE

SMCS-1901, 7620 **i03555666**

NOTE	REF NO	GRAPHIC REF	PART NUMBER	QTY	PART NAME 1 2 3 4 5 6 (PRODUCT LEVEL)	SEE PAGE
	1	1	**8T-9655**	8	MOUNT-ISOLATION	
M	2	1	**9X-2098**	4	STUD-TAPERLOCK (BOLT)	
Y	3	1	**226-7473**	1	CONTROL GP-ENGINE ELECTRONIC	134
	5	1	**233-0891**	2	BRACKET AS	
					(EACH INCLUDES)	
M		1	**232-1693**	1	BOLT-FLANGE HEAD (M6X1X35-MM)	
	6	1	**6I-1418**	4	SPACER (8.2X12.7X28.7-MM THK)	
	7	1	**9N-0869**	4	WASHER-HARD (8.8X25.5X2-MM THK)	

M-METRIC PART
Y-SEPARATE ILLUSTRATION

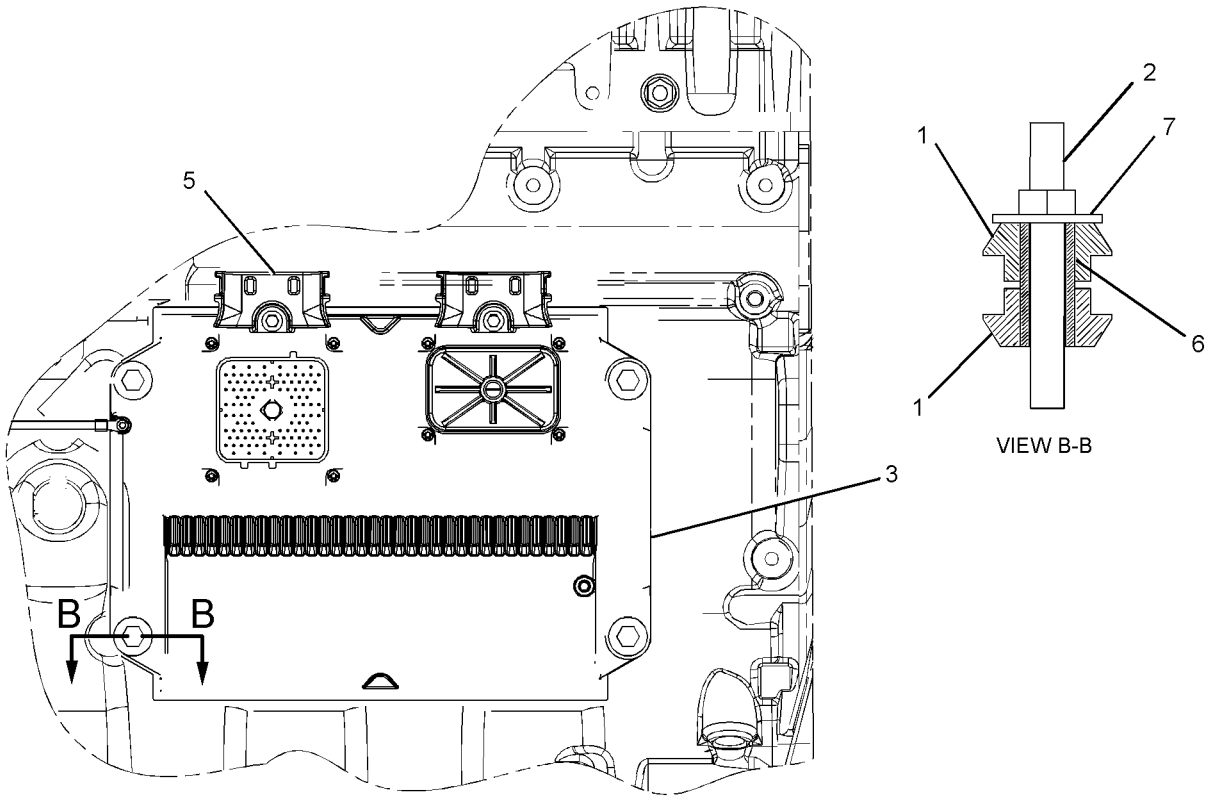

LEFT SIDE VIEW

GRAPHIC #1 **<END>** g01308133

236-9108 CONTROL AR-AUTODIG—HMU STEERING

S/N: RYF1-UP

AN ATTACHMENT

SMCS-5741 **i03626538**

NOTE	PART NUMBER	QTY	PART NAME 1 2 3 4 5 6 (PRODUCT LEVEL)	SEE PAGE
Y	*253-3471*	1	CONTROL GP-AUTODIG	132
Y	*239-4850*	1	SENSOR & MTG GP-PRESSURE (LIFT CYLINDER OIL)	173
	214-0113	1	CONFIGURATION-PREMIUM	

Y-SEPARATE ILLUSTRATION

<END>

253-3471 CONTROL GP-AUTODIG

S/N: RYF1-UP
PART OF 236-9108 CONTROL AR-AUTODIG
AN ATTACHMENT

SMCS-5741 **i02679257**

NOTE	REF NO	GRAPHIC REF	PART NUMBER	QTY	PART NAME 1 2 3 4 5 6 (PRODUCT LEVEL)	SEE PAGE
	1	1	**4E-2229**	1	DAMPER AS-ALARM	
Y	2	1	**106-0107**	1	SWITCH GP-ROTARY (ENGINE SPEED CONTROL) (AUTODIG MATERIAL SELECT)	209
	3	1	**110-6109**	1	KNOB-CONTROL (AUTODIG SELECT SWITCH)	
	4	1	**123-9694**	1	HORN (AUDIBLE ALARM/ AUTODIG CYCLE)	
	5	1	**265-8171**	1	SWITCH AS-PUSH BUTTON (AUTODIG TRIGGER)	
		1	**102-8803**	1	KIT-RECEPTACLE (3-PIN)	
					(INCLUDES RECEPTACLE AS & WEDGE)	
		1	**172-3511**	1	NUT (5/8-24-THD)	
		1	**6F-0253**	1	LOCKWASHER	
		1	**186-3735**	3	PIN-CONNECTOR (16-GA TO 18-GA)	
	6	1	**201-1531**	1	FILM-IDENTIFICATION (AUTODIG)	
	7	1	**236-4620**	1	SWITCH AS-ROCKER (AUTO LOADING MODE SELECT)	
	8	1	**236-4621**	1	SWITCH AS-ROCKER (AUTO LOADING KICKOUT SET)	
B	9	1	**251-1082**	1	FILM-CONTROL (AUTODIG)	
	11	1	**249-2775**	1	CONTROL GP-DISPLAY ELECTRONIC (INDICATOR PANEL, CENTER)	
		1	**102-8805**	1	KIT-RECEPTACLE (6-PIN)	
					(INCLUDES RECEPTACLE AS & WEDGE)	
		1	**186-3735**	5	PIN-CONNECTOR (16-GA TO 18-GA)	
		1	**1S-9593**	1	STRAP-CABLE	
	12	1	**107-1964**	4	SCREW-PAN HEAD (6-19X0.5-IN)	

B-USE AS REQUIRED
Y-SEPARATE ILLUSTRATION

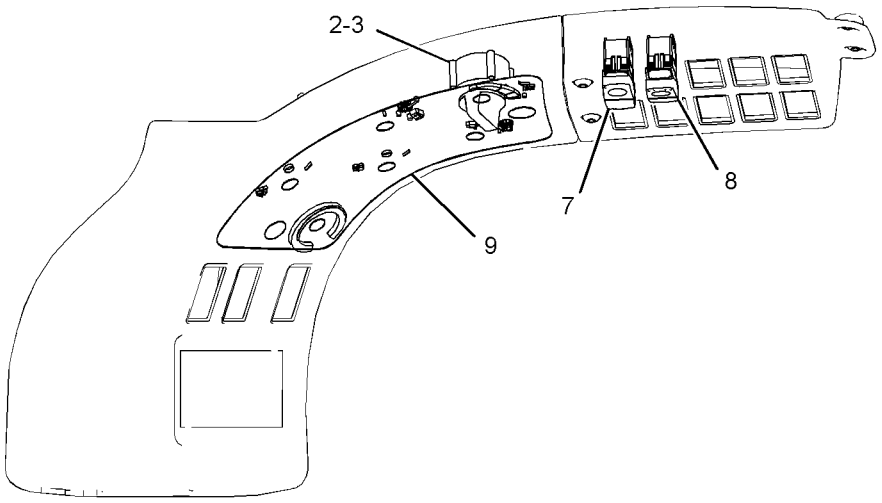

VIEW OF AREA D

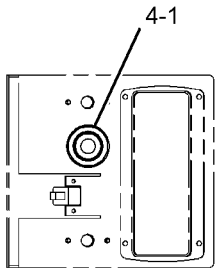

VIEW C-C

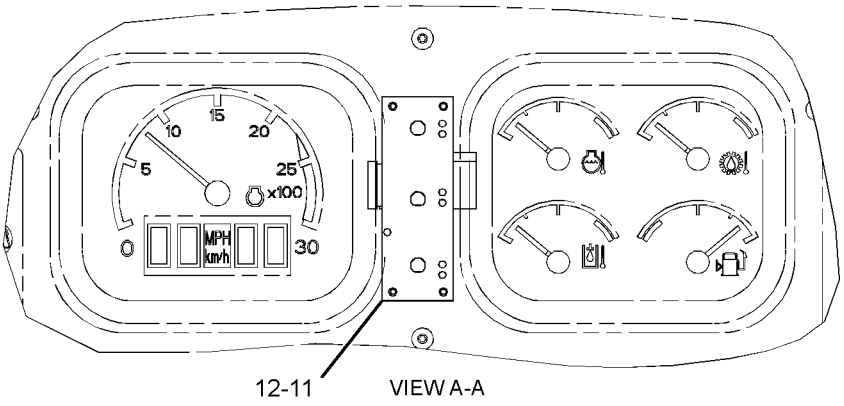

VIEW A-A

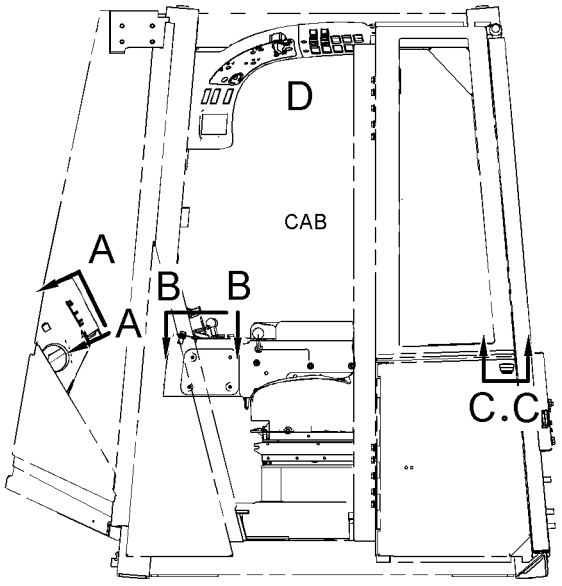

LEFT SIDE VIEW

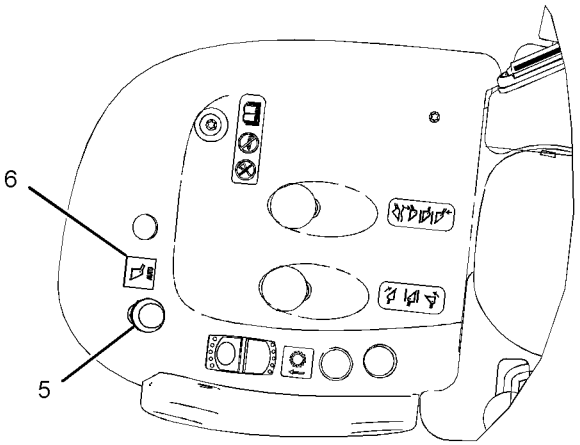

VIEW B-B

GRAPHIC #1 **<END>** g01370961

ELECTRICAL AND STARTING SYSTEM

226-7473 CONTROL GP-ENGINE ELECTRONIC

S/N: RSX15243-UP

PART OF 233-6191 CONTROL & MTG GP-ENGINE ELEK

SMCS-1901 **i02433822**

NOTE	REF NO	GRAPHIC REF	PART NUMBER	QTY	PART NAME 1 2 3 4 5 6 (PRODUCT LEVEL)	SEE PAGE
R	1	1	**262-2878**	1	CONTROL GP-UNPROGRAMMED	

R-REMFG PART MAY BE AVAILABLE

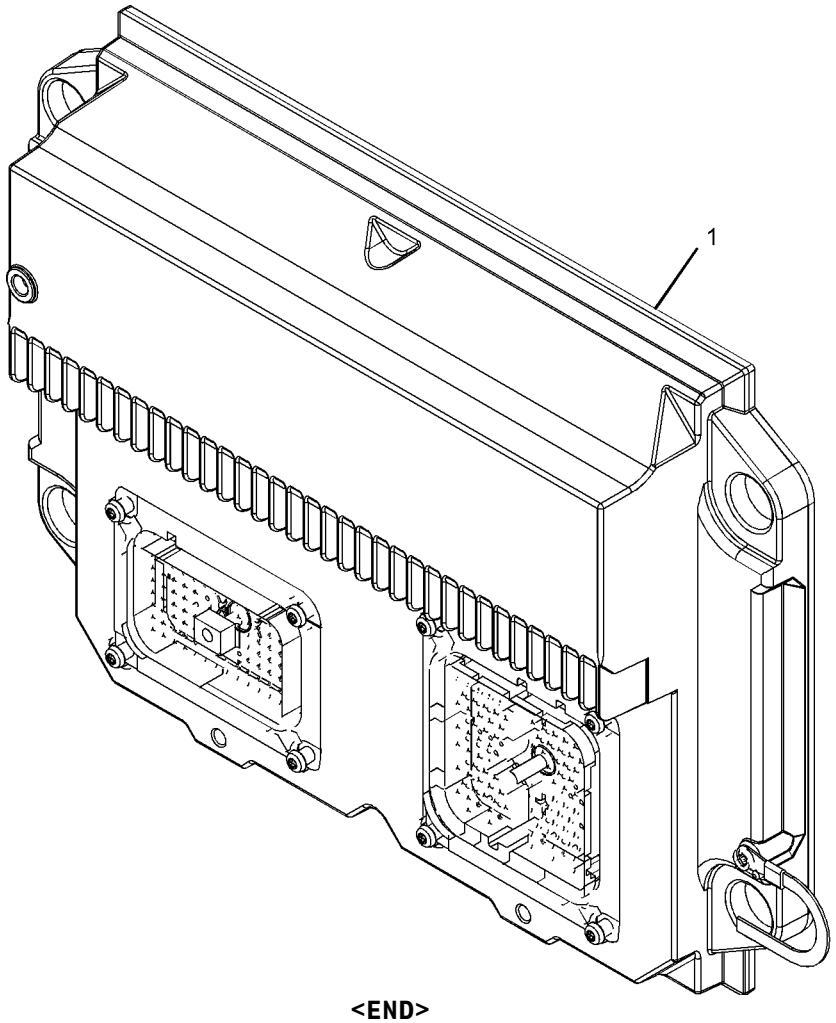

GRAPHIC #1 **<END>** g01101798

236-8961 ELECTRICAL AR

S/N: RYF1-UP

PART OF 236-8957 GENERAL AR

SMCS-1408, 1429, 7402, 7406 **i03632695**

NOTE	PART NUMBER	QTY	PART NAME 1 2 3 4 5 6 (PRODUCT LEVEL)	SEE PAGE
Y	*299-0745*	1	BATTERY & WIRING GP	124
Y	*236-8994*	1	ELECTRONICS GP-IMPLEMENT	136
Y	*236-8993*	1	ELECTRONICS GP-MONITOR (CATERPILLAR MONITORING SYSTEM)	136
Y	*236-8995*	1	ELECTRONICS GP-POWER TRAIN	137
Y	*246-3292*	1	HORN GP-ELECTRIC	565
Y	*235-5275*	1	LIGHTING GP-FLOOD & SIGNAL (FRONT, REAR)	165
Y	*179-9375*	1	SENSOR & MTG GP-LIFT POSITION	171
Y	*303-2238*	1	SENSOR & MTG GP-TILT POSITION	174
Y	*236-9003*	1	TILT GP-HOOD	372
Y	*246-2347*	1	WIRING GP-AXLE TEMPERATURE	219
Y	*237-4905*	1	WIRING GP-CHASSIS	231
Y	*237-4903*	1	WIRING GP-ENGINE	242
Y	*237-4904*	1	WIRING GP-FRONT	244
Y	*271-4016*	1	WIRING GP-LIGHTING (LOADER FRAME)	246
Y	*272-9821*	1	WIRING GP-SENSOR (TILT)	251

Y-SEPARATE ILLUSTRATION

<END>

262-1421 ELECTRONICS GP-COMMUNICATION–

PRODUCT LINK 300

S/N: RYF1-UP

PART OF 320-9997 INSTALLATION GP-COMMUNICATION

AN ATTACHMENT

SMCS-7606, 7610, 7620 **i03601391**

NOTE	PART NUMBER	QTY	PART NAME 1 2 3 4 5 6 (PRODUCT LEVEL)	SEE PAGE
	330-3409	1	SOFTWARE GP-COMMUNICATION (PRODUCT LINK 300)	
			-OR-	
	330-3410	1	SERVICE GP-COMMUNICATION (PRODUCT LINK 300)	
			(OPTIONAL SERVICE REPLACEMENT)(INCLUDES CONTROL GP & SOFTWARE)	
	7X-6315	1	STRAP AS-GROUND	
	126-7574	1	SCREW-PAN HEAD (8-32X9.52-MM)	
	134-4126	1	WASHER (4.52X8.28X0.76-MM THK)	

<END>

262-2043 ELECTRONICS GP-COMMUNICATION–

PRODUCT LINK 300

S/N: RYF1-UP

PART OF 261-3037, 263-3322 INSTALLATION AR-COMMUNICATION

AN ATTACHMENT

SMCS-7606, 7610, 7620 **i03211353**

NOTE	PART NUMBER	QTY	PART NAME 1 2 3 4 5 6 (PRODUCT LEVEL)	SEE PAGE
	330-3409	1	SOFTWARE GP-COMMUNICATION (PRODUCT LINK 300)	
			-OR-	
	330-3410	1	SERVICE GP-COMMUNICATION (PRODUCT LINK 300)	
			(OPTIONAL SERVICE REPLACEMENT) (INCLUDES CONTROL GP & SOFTWARE)	
	7X-6315	1	STRAP AS-GROUND	
	126-7574	1	SCREW-PAN HEAD (8-32X9.52-MM)	
	134-4126	1	WASHER (4.52X8.28X0.76-MM THK)	

<END>

236-8994 ELECTRONICS GP-IMPLEMENT

S/N: RYF1-UP

PART OF 236-8961 ELECTRICAL AR

SMCS-5701, 7610, 7620 **i03617909**

NOTE	PART NUMBER	QTY	PART NAME 1 2 3 4 5 6 (PRODUCT LEVEL)	SEE PAGE
	308-5712	1	SOFTWARE GP-IMPLEMENT	
			–OR–	
	336-3606	1	SERVICE GP-IMPLEMENT	
			(OPTIONAL SERVICE REPLACEMENT)(INCLUDES CONTROL GP & SOFTWARE)	

<END>

236-8993 ELECTRONICS GP-MONITOR

S/N: RYF1-UP

PART OF 236-8961 ELECTRICAL AR

SMCS-7490, 7494, 7601, 7603, 7610, 7620 **i03618020**

NOTE	PART NUMBER	QTY	PART NAME 1 2 3 4 5 6 (PRODUCT LEVEL)	SEE PAGE
	284-9601	1	SOFTWARE GP-MONITOR (CATERPILLAR MONITORING SYSTEM)	
			-OR-	
	284-9602	1	SERVICE GP-MONITOR (CATERPILLAR MONITORING SYSTEM)	
			(OPTIONAL SERVICE REPLACEMENT)(INCLUDES CONTROL GP & SOFTWARE)	

<END>

ELECTRICAL AND STARTING SYSTEM

330-5364 ELECTRONICS GP-MONITOR

S/N: RYF1-UP

AN ATTACHMENT

SMCS-7490, 7494, 7601, 7603, 7610, 7620 **i03629198**

NOTE	PART NUMBER	QTY	PART NAME 1 2 3 4 5 6 (PRODUCT LEVEL)	SEE PAGE
	326-4287	1	SOFTWARE GP-MONITOR	
			-OR-	
	326-4288	1	SERVICE GP-MONITOR	
			(OPTIONAL SERVICE REPLACEMENT)(INCLUDES CONTROL GP & SOFTWARE)	

<END>

330-5365 ELECTRONICS GP-MONITOR

S/N: RYF1-UP

AN ATTACHMENT

SMCS-7490, 7494, 7601, 7603, 7610, 7620 **i03629201**

NOTE	PART NUMBER	QTY	PART NAME 1 2 3 4 5 6 (PRODUCT LEVEL)	SEE PAGE
	329-9915	1	SOFTWARE GP-MONITOR	
			-OR-	
	329-9916	1	SERVICE GP-MONITOR	
			(OPTIONAL SERVICE REPLACEMENT)(INCLUDES CONTROL GP & SOFTWARE)	

<END>

236-8995 ELECTRONICS GP-POWER TRAIN

S/N: RYF1-UP

PART OF 236-8961 ELECTRICAL AR

SMCS-4800, 4808, 7610, 7620 **i03624419**

NOTE	PART NUMBER	QTY	PART NAME 1 2 3 4 5 6 (PRODUCT LEVEL)	SEE PAGE
	334-0336	1	SOFTWARE GP-POWER TRAIN	
			-OR-	
	334-0337	1	SERVICE GP-POWER TRAIN	
			(OPTIONAL SERVICE REPLACEMENT)(INCLUDES CONTROL GP & SOFTWARE)	

<END>

ELECTRICAL AND STARTING SYSTEM

246-2689 HEATER GP-JACKET WATER

S/N: RYF1-UP

AN ATTACHMENT

SMCS-1383 **i03630157**

NOTE	REF NO	GRAPHIC REF	PART NUMBER	QTY	PART NAME 1 2 3 4 5 6 (PRODUCT LEVEL)	SEE PAGE
	1	1	**246-2686**	1	ELEMENT AS-JACKET WATER HEATER (120-VOLT, 1500-WATT)	
	1A	1	**133-6517**	1	CAP AS-DUST	
	1B	1	**7M-8485**	1	SEAL-O-RING	
	2	1	**9N-5253**	1	CORD AS-HEATER ELEMENT (120-VOLT, 15-AMPERE)	

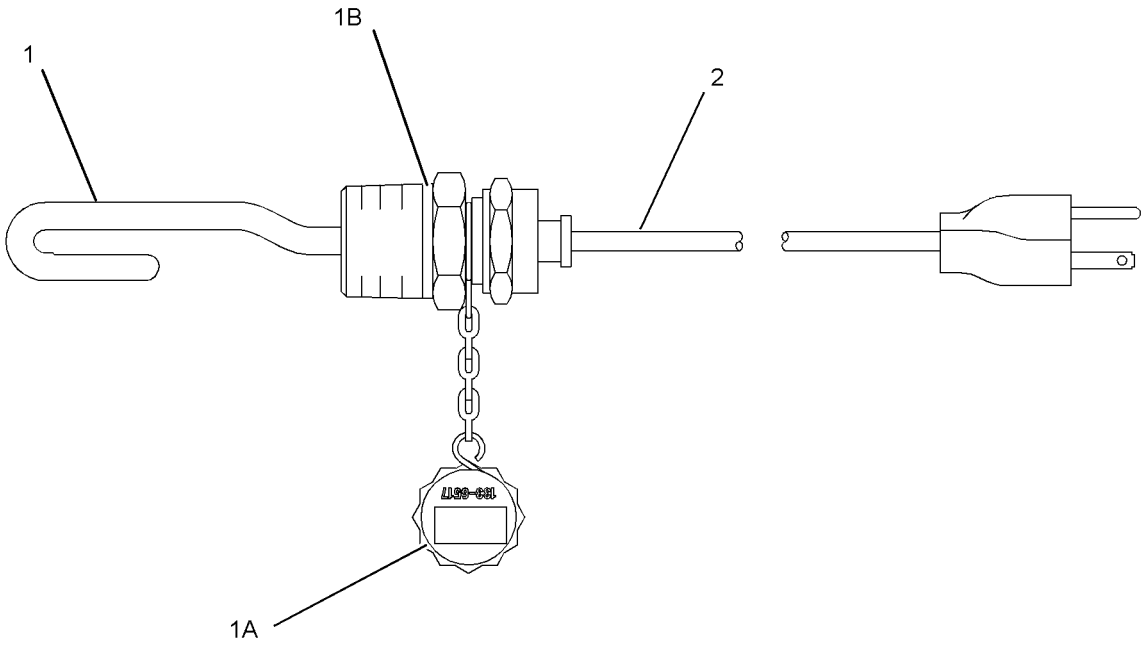

GRAPHIC #1 **<END>** g01108456

246-3514 HEATER GP-JACKET WATER

S/N: RYF1-UP
AN ATTACHMENT

SMCS-1383 **i03630162**

NOTE	REF NO	GRAPHIC REF	PART NUMBER	QTY	PART NAME 1 2 3 4 5 6 (PRODUCT LEVEL)	SEE PAGE
	1	1	**246-3513**	1	ELEMENT AS-JACKET WATER HEATER (240-VOLT, 1500-WATT)	
		1	**7M-8485**	1	SEAL-O-RING	
		1	**133-6517**	1	CAP AS-DUST	
	2	1	**217-6284**	1	CORD AS-HEATER	

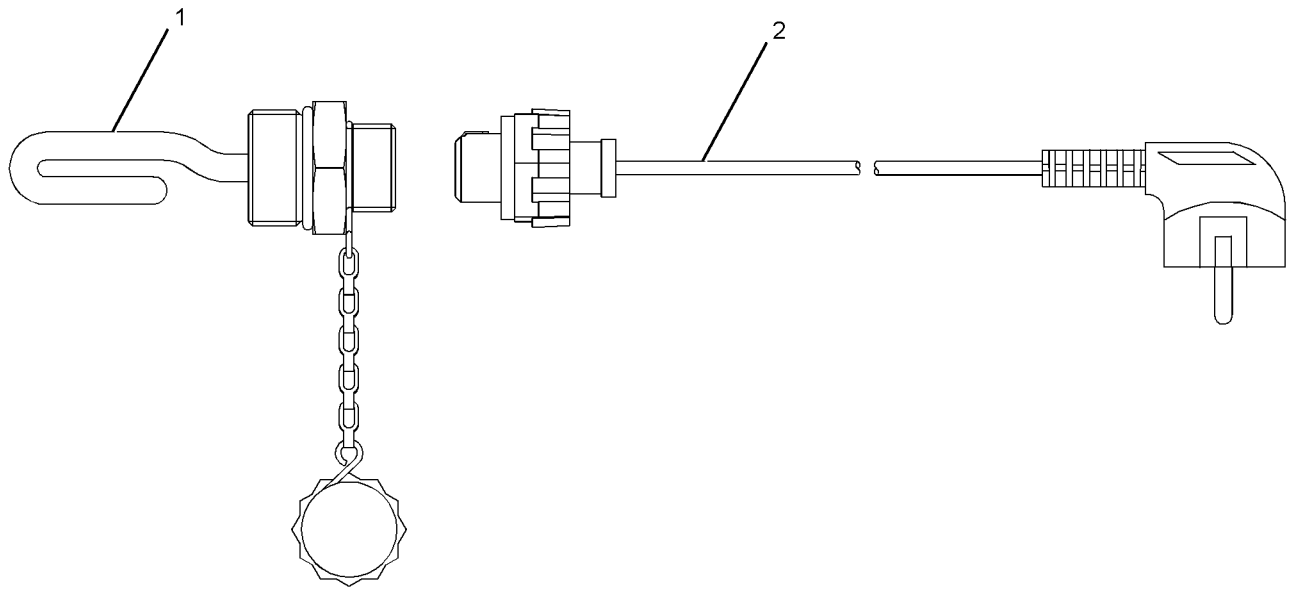

GRAPHIC #1 **<END>** g01210282

261-3037 INSTALLATION AR-COMMUNICATION–

PRODUCT LINK 321SR

S/N: RYF1-UP

AN ATTACHMENT

SMCS-7606 **i03159200**

NOTE	PART NUMBER	QTY	PART NAME 1 2 3 4 5 6 (PRODUCT LEVEL)	SEE PAGE
Y	*320-9997*	1	INSTALLATION GP-COMMUNICATION (PRODUCT LINK)	141
Y	*262-2043*	1	ELECTRONICS GP-COMMUNICATION (PRODUCT LINK 300)	136
	274-4283	1	FILM-WARNING (PRODUCT LINK)	
			(INSIDE CAB ON LEFT FRONT METAL POST ("A" POST) 820-MM ABOVE CAB FLOOR TO BOTTOM OF FILM)	
Y-SEPARATE ILLUSTRATION				

<END>

263-3322 INSTALLATION AR-COMMUNICATION–

PRODUCT LINK 321SR

S/N: RYF1-UP

AN ATTACHMENT

SMCS-7606 **i03039780**

NOTE	PART NUMBER	QTY	PART NAME 1 2 3 4 5 6 (PRODUCT LEVEL)	SEE PAGE
Y	*320-9997*	1	INSTALLATION GP-COMMUNICATION (PRODUCT LINK)	141
Y	*262-2043*	1	ELECTRONICS GP-COMMUNICATION (PRODUCT LINK 300)	136
	307-0047	1	FILM-INFORMATION (PRODUCT LINK, READ OMM)	
			(INSIDE CAB ON LEFT FRONT METAL POST BELOW FILM-WARN LINK)	
	274-4284	1	FILM-WARNING (PRODUCT LINK RADIO, INTL)	
			(INSIDE CAB ON LEFT FRONT METAL POST 820-MM ABOVE CAB FLOOR TO BOTTOM OF FILM)	
Y-SEPARATE ILLUSTRATION				

<END>

243-1945 INSTALLATION AR-SECURITY

S/N: RYF1-UP

AN ATTACHMENT

SMCS-7631 **i02317462**

NOTE	PART NUMBER	QTY	PART NAME 1 2 3 4 5 6 (PRODUCT LEVEL)	SEE PAGE
Y	*246-6291*	1	INSTALLATION GP-SECURITY	143
	264-0551	1	CONFIGURATION-PREMIUM	
Y-SEPARATE ILLUSTRATION				

<END>

320-9997 INSTALLATION GP-COMMUNICATION—PRODUCT LINK

S/N: RYF1-UP

PART OF 261-3037, 263-3322 INSTALLATION AR-COMMUNICATION

AN ATTACHMENT

SMCS-7606 **i03121280**

NOTE	REF NO	GRAPHIC REF	PART NUMBER	QTY	PART NAME 1 2 3 4 5 6 (PRODUCT LEVEL)	SEE PAGE
	1	1	**3S-2093**	3	STRAP-CABLE	
	2	1	**7K-1181**	9	STRAP-CABLE	
	3	1	**8C-5607**	8	MOUNT-ISOLATION	
	4	1	**8C-5608**	4	SPACER (6.5X9.5X25.4-MM THK)	
B	5	1	**229-2704**	4	SEAL	
CY	6	1	*262-1421*	1	ELECTRONICS GP-COMMUNICATION (PRODUCT LINK 300)	135
	7	1	**255-4369**	1	GROMMET	
Y	8	1	**263-9088**	1	RADIO GP-COMMUNICATION (PRODUCT LINK 121SR)	605
	9	1	**264-4872**	1	BRACKET AS	
	10	1	**276-0031**	1	HARNESS AS-CONTROL	
	11	1	**318-9628**	1	PLATE	
	12	1	**156-6175**	2	CLIP	
	13	1	**310-2393**	1	ANTENNA AS	
		1	**301-0589**	1	ANTENNA (FLEXIBLE)	
	14	1	**4D-8123**	1	CLIP	
M	15	1	**5C-9553**	1	BOLT (M6X1X16-MM)	
M	16	1	**8C-8451**	3	BOLT (M6X1X40-MM)	
M	17	1	**8T-2947**	1	BOLT (M6X1X45-MM)	
	18	1	**8T-4121**	4	WASHER-HARD (11X21X2.5-MM THK)	
M	19	1	**8T-4133**	2	NUT (M10X1.5-THD)	
M	20	1	**8T-4136**	2	BOLT (M10X1.5X25-MM)	
M	21	1	**8T-4138**	4	BOLT (M6X1X20-MM)	
M	22	1	**9X-2046**	2	SCREW-TRUSS HEAD (M6X1X35-MM)	
	23	1	**9X-6165**	8	WASHER (6.5X22X2.5-MM THK)	
	24	1	**9X-8256**	6	WASHER (6.6X12X2-MM THK)	

B-USE AS REQUIRED
C-CHANGE FROM PREVIOUS TYPE
M-METRIC PART
Y-SEPARATE ILLUSTRATION

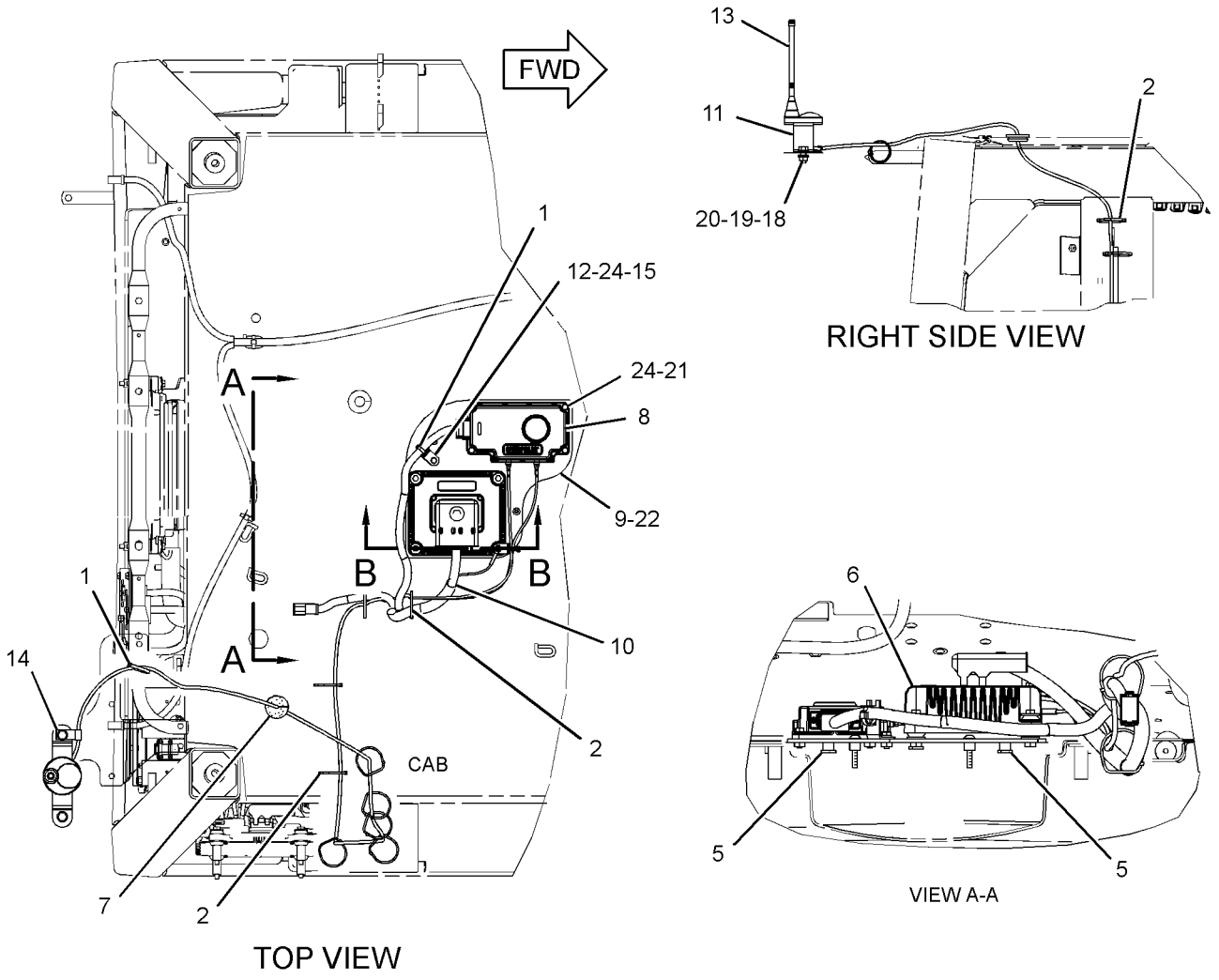

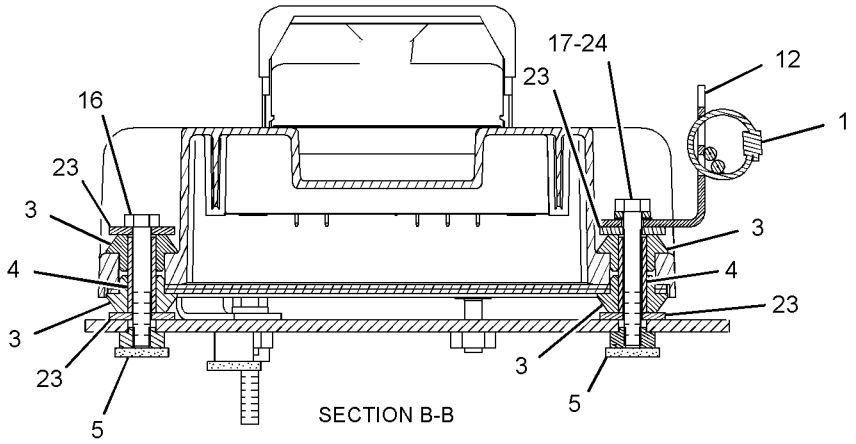

GRAPHIC #1 **<END>** g01515537

246-6291 INSTALLATION GP-SECURITY

S/N: RYF1-UP

PART OF 243-1945 INSTALLATION AR-SECURITY

AN ATTACHMENT

SMCS-7631 **i03021281**

NOTE	REF NO	GRAPHIC REF	PART NUMBER	QTY	PART NAME 1 2 3 4 5 6 (PRODUCT LEVEL)	SEE PAGE
	1	1	**3S-2093**	4	STRAP-CABLE	
	2	1	**8C-5607**	4	MOUNT-ISOLATION	
	3	1	**8C-5608**	2	SPACER (6.5X9.5X25.4-MM THK)	
	4	1	**198-5389**	1	FILM-IDENTIFICATION (IGNITION SWITCH)	
	5	1	**205-0826**	1	FILM-INSTRUCTION (MACHINE SECURITY, CONSOLE)	
	6	1	**206-5162**	2	KEY AS-ELECTRONIC (SECURITY)	
	7	1	*206-5203*	1	COIL AS (EXCITER)	
		1	**102-8802**	1	KIT-RECEPTACLE (2-PIN)	
					(INCLUDES RECEPTACLE AS & WEDGE)	
		1	**198-5389**	1	FILM-IDENTIFICATION (IGNITION SWITCH)	
		1	**205-8257**	1	COIL AS (EXCITER)	
D		1	**5P-5677**		WIRE (18-GA, BLACK) (0.4-M)	
		1	**186-3735**	2	PIN-CONNECTOR (16-GA TO 18-GA)	
	8	1	**218-0404**	1	MODULE GP-INTERFACE (KEY)	
		1	**6V-6715**	1	SCREW-PAN HEAD (4-20X0.25-IN)	
		1	**8C-3095**	1	SEAL-O-RING	
	9	1	**219-6314**	2	KEY RING (IDENTIFICATION)	
	10	1	**219-6607**	2	FILM-INFORMATION (SECURITY SYSTEM)	
	11	1	**9X-6165**	2	WASHER (6.5X22X2.5-MM THK)	
M	12	1	**7X-2533**	2	BOLT (M6X1X35-MM)	
	13	1	**213-2323**	1	PLATE AS	

D-ORDER BY THE METER
M-METRIC PART

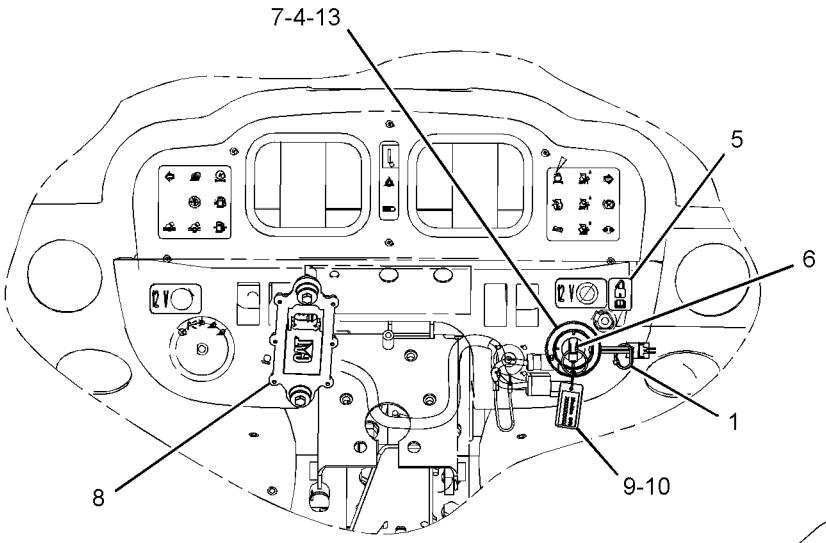

VIEW A-A

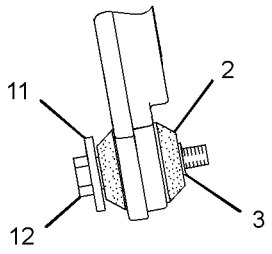

VIEW OF AREA B

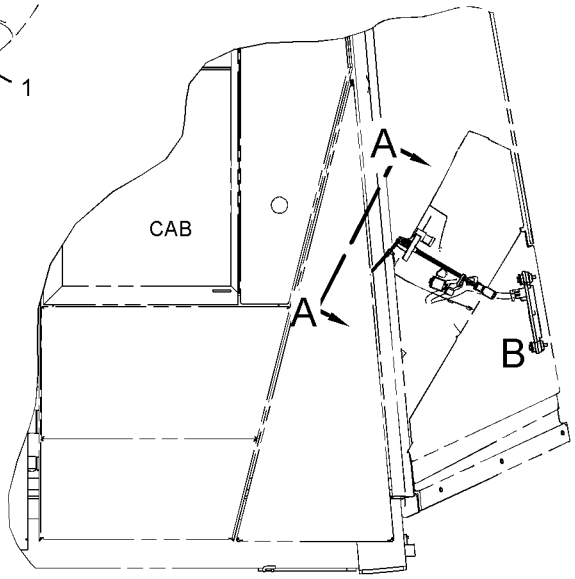

RIGHT SIDE VIEW

GRAPHIC #1 **<END>** g01534696

3E-6389 LAMP GP-DOME

S/N: RYF1-UP
24-VOLT, WITH SWITCH
PART OF 237-4910 WIRING GP-CAB

SMCS-1433 **i02942903**

NOTE	REF NO	GRAPHIC REF	PART NUMBER	QTY	PART NAME 1 2 3 4 5 6 (PRODUCT LEVEL)	SEE PAGE
	1	1	**7N-9943**	1	LAMP (24-VOLT) (DOME)	
	2	1	**102-8803**	1	KIT-RECEPTACLE (3-PIN)	
					(INCLUDES RECEPTACLE AS & WEDGE)	
	3	1	**186-3735**	3	PIN-CONNECTOR (16-GA TO 18-GA)	
	4	1	**7T-0020**	1	LENS-DOME LAMP	

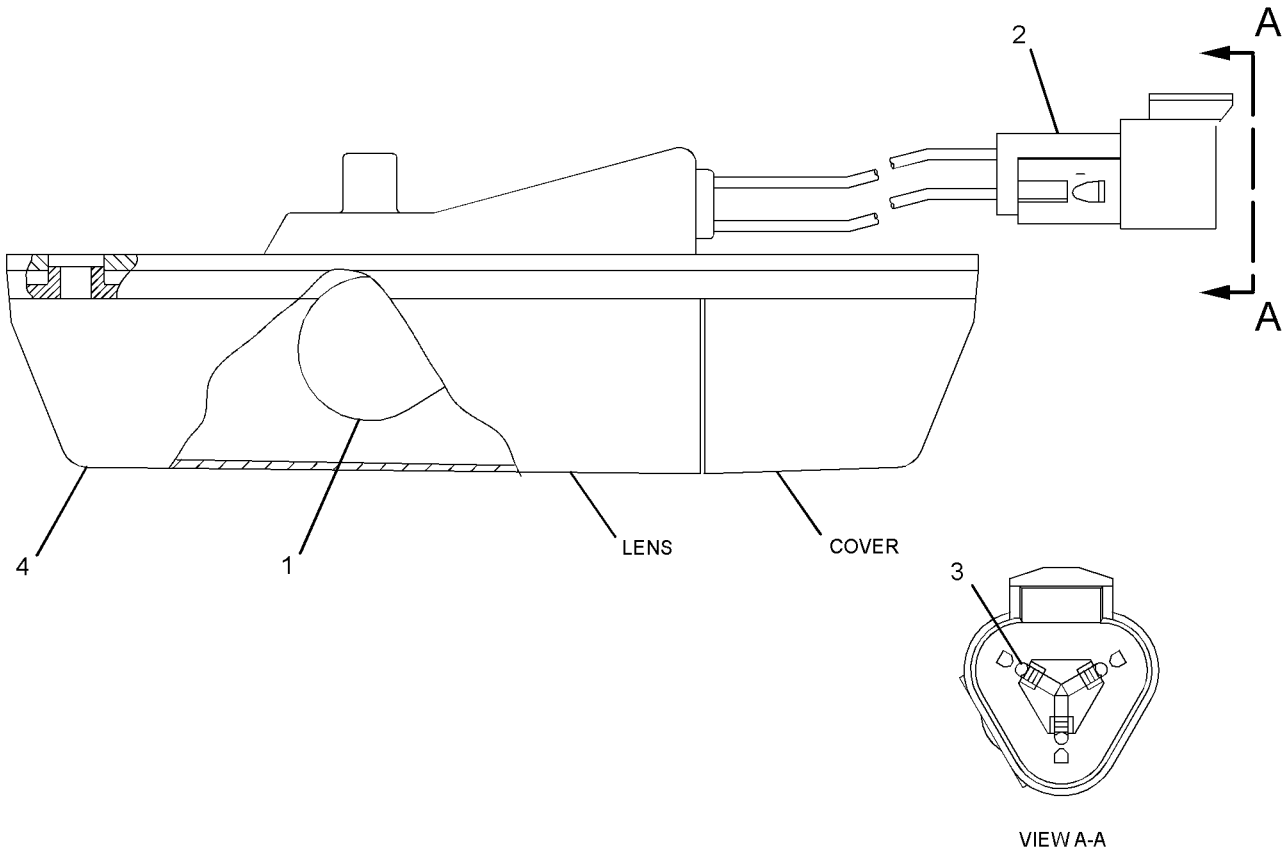

GRAPHIC #1 **<END>** g01270113

210-8422 LAMP GP-FLOOD–HID

S/N: RYF1-UP
24-VOLT,35-WATT
PART OF 235-8560 LIGHTING GP-FLOOD
AN ATTACHMENT

SMCS-1434 **i02790367**

NOTE	REF NO	GRAPHIC REF	PART NUMBER	QTY	PART NAME 1 2 3 4 5 6 (PRODUCT LEVEL)	SEE PAGE
	1	1	**229-9969**	1	LENS AS	
	2	1	**209-6638**	1	LAMP-HALOGEN (35-WATT, HID)	
M	3	1	**120-9027**	4	SCREW-PAN HEAD (M3X0.5X16-MM)	
CM	4	1	**8T-6869**	1	BOLT (M8X1.25X60-MM)	
CM	5	1	**6V-9189**	1	LOCKNUT (M8X1.25-THD)	
C	6	1	**296-7759**	1	BRACKET AS	
	7	1	**229-9974**	1	BEZEL	

C-CHANGE FROM PREVIOUS TYPE
M-METRIC PART

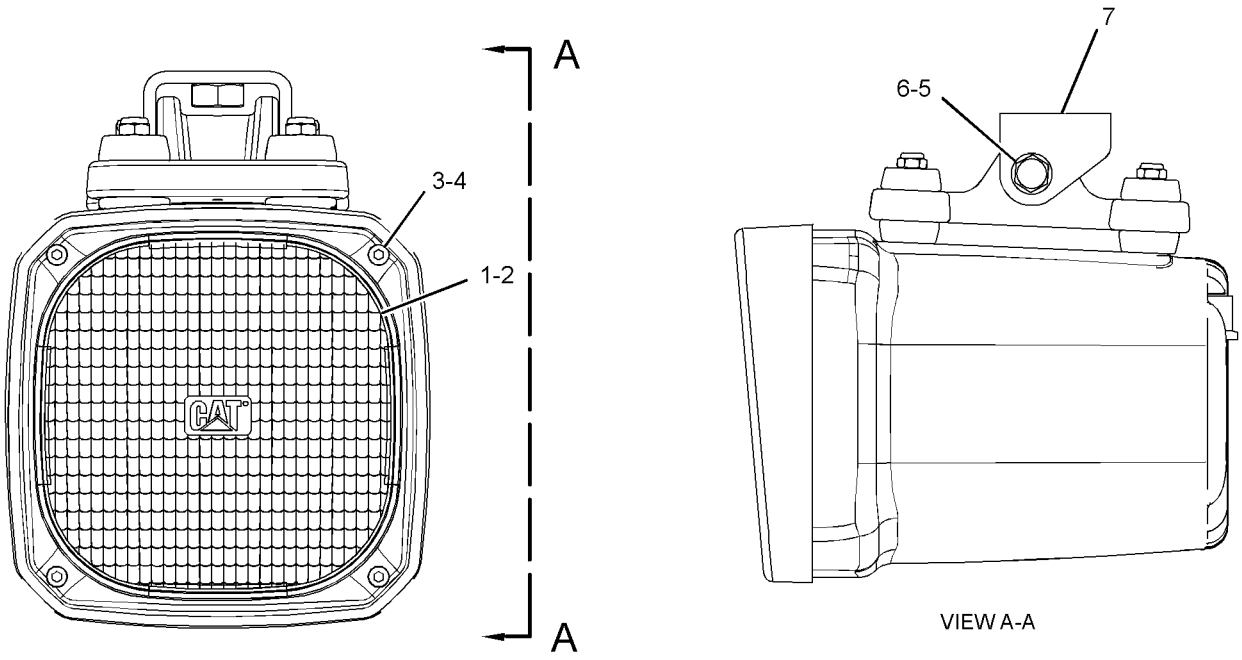

GRAPHIC #1 **<END>** g01395838

210-8423 LAMP GP-FLOOD–HID, VERTICAL

S/N: RYF1-UP
24-VOLT, 35-WATT
PART OF 235-8560 LIGHTING GP-FLOOD
AN ATTACHMENT

SMCS-1434 **i03501321**

NOTE	REF NO	GRAPHIC REF	PART NUMBER	QTY	PART NAME 1 2 3 4 5 6 (PRODUCT LEVEL)	SEE PAGE
	1	1	**229-9969**	1	LENS AS	
	2	1	**209-6638**	1	LAMP-HALOGEN (35-WATT, HID)	
M	3	1	**120-9027**	4	SCREW-PAN HEAD (M3X0.5X16-MM)	
CM	4	1	**8T-6869**	1	BOLT (M8X1.25X60-MM)	
CM	5	1	**6V-9189**	1	LOCKNUT (M8X1.25-THD)	
C	6	1	**296-7759**	1	BRACKET AS	
	7	1	**229-9974**	1	BEZEL	

C-CHANGE FROM PREVIOUS TYPE
M-METRIC PART

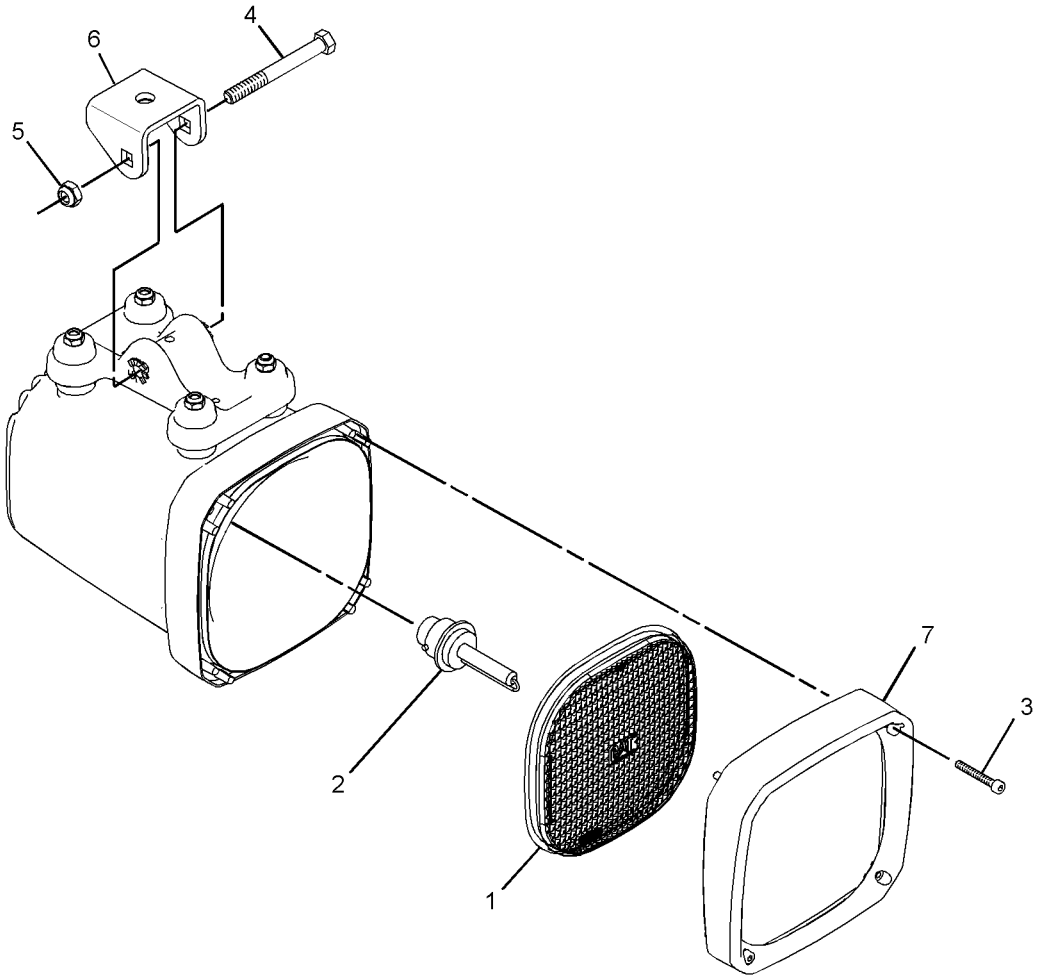

GRAPHIC #1 **<END>** g01355100

219-6485 LAMP GP-FLOOD

S/N: RYF1-UP
24-VOLT
PART OF 280-1456 LIGHTING GP-FLOOD, 235-5275, 235-5276 LIGHTING GP-FLOOD & SIGNAL
ALSO AN ATTACHMENT

SMCS-1434 **i03548460**

NOTE	REF NO	GRAPHIC REF	PART NUMBER	QTY	PART NAME 1 2 3 4 5 6 (PRODUCT LEVEL)	SEE PAGE
	1	1	**9X-3463**	1	LAMP-HALOGEN (24-VOLT, 70-WATT)	
	2	1	**9X-4244**	2	SCREW-SPECIAL (M4X1.79X25-MM)	
	4	1	**202-6614**	1	LENS AS (FLOODLIGHT)	
	5	1	**175-4292**	1	BODY AS	
	6	1	**164-7556**	1	BRACKET (LAMP RETAINING)	
	7	1	**247-4285**	1	BOLT (M8X1.25X50-MM)	
M	8	1	**6V-9189**	1	LOCKNUT (M8X1.25-THD)	
	9	1	**8T-4224**	2	WASHER-HARD (8.8X16X2-MM THK)	
	10	1	**175-4291**	1	BRACKET AS	

M-METRIC PART

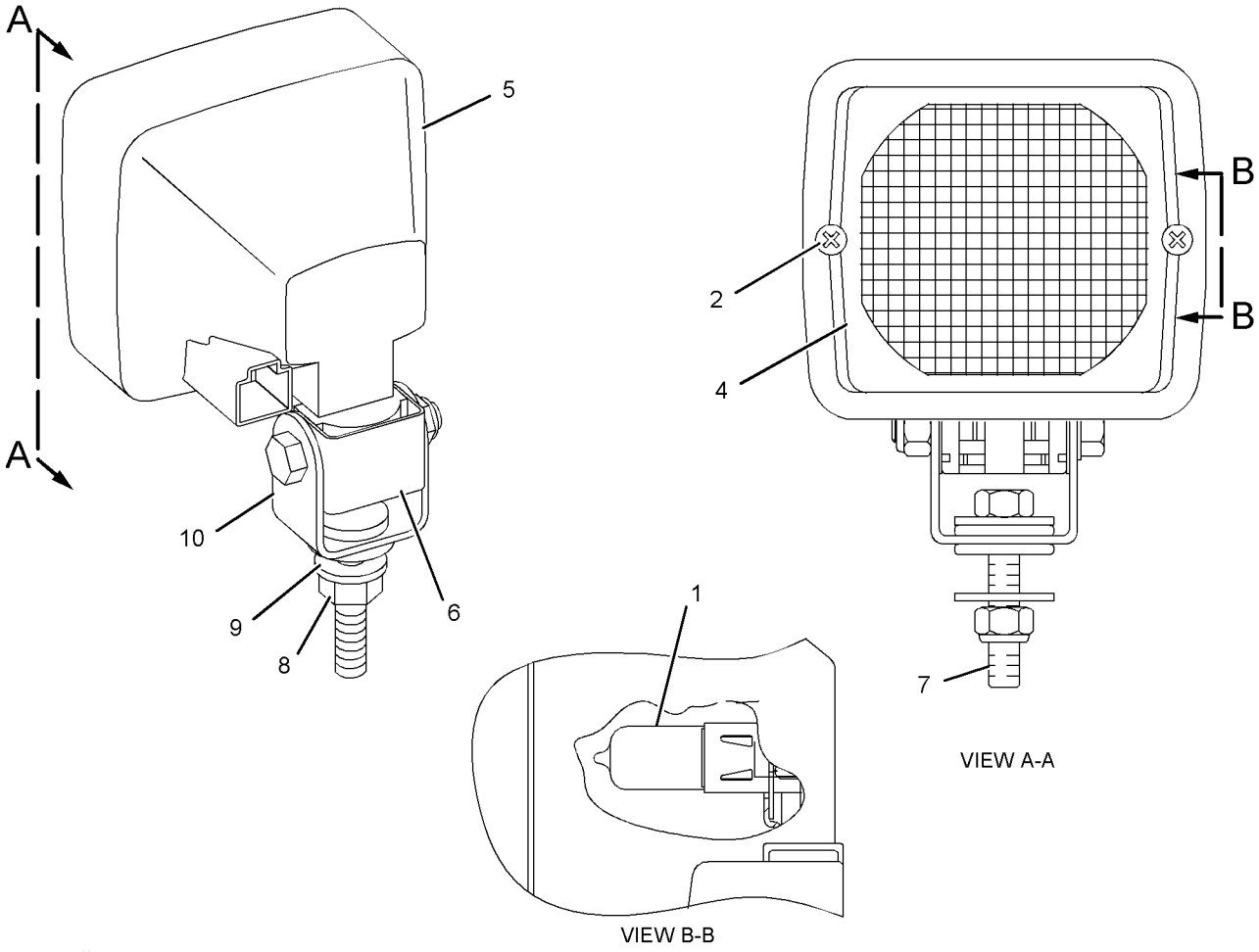

GRAPHIC #1 **<END>** g01146647

219-6487 LAMP GP-FLOOD

S/N: RYF1-UP
24-VOLT, 65-WATT
PART OF 235-8559, 280-1456 LIGHTING GP-FLOOD
ALSO AN ATTACHMENT

SMCS-1434 **i02920280**

NOTE	REF NO	GRAPHIC REF	PART NUMBER	QTY	PART NAME 1 2 3 4 5 6 (PRODUCT LEVEL)	SEE PAGE
	1	1	**9X-3463**	1	LAMP-HALOGEN (24-VOLT, 70-WATT)	
M	2	1	**8T-6912**	1	BOLT (M8X1.25X50-MM)	
M	3	1	**6V-9189**	1	LOCKNUT (M8X1.25-THD)	
	4	1	**8T-4224**	2	WASHER-HARD (8.8X16X2-MM THK)	
	5	1	**9X-4244**	2	SCREW-SPECIAL (M4X1.79X25-MM)	
	6	1	**202-6614**	1	LENS AS (FLOODLIGHT)	
	7	1	**175-4292**	1	BODY AS	
	8	1	**164-7556**	1	BRACKET (LAMP RETAINING)	
	9	1	**175-4291**	1	BRACKET AS	

M-METRIC PART

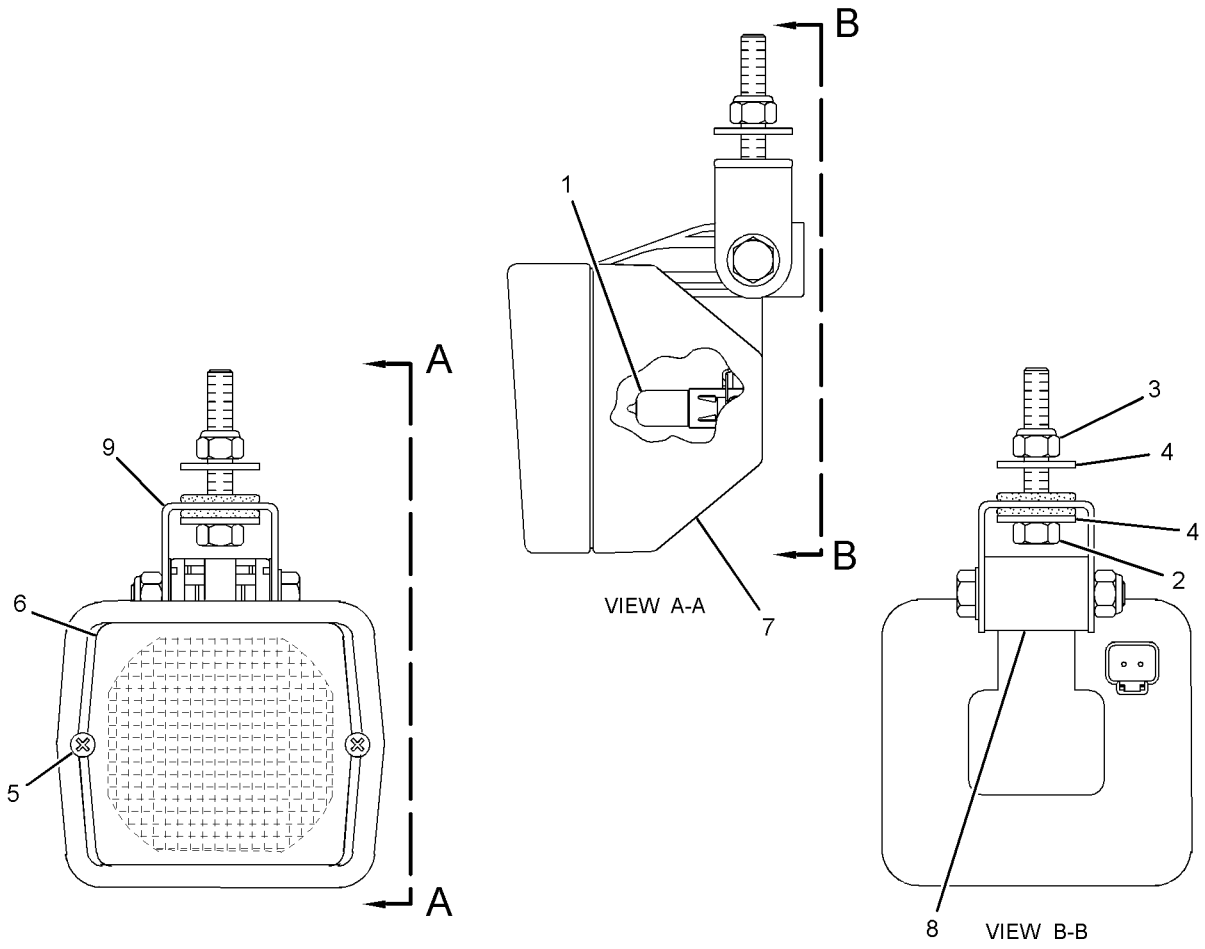

GRAPHIC #1 **<END>** g01453913

105-4849 LAMP GP-HEAD & SIGNAL–LH

S/N: RYF1-UP
PART OF 248-0414 LIGHTING GP-ROADING
AN ATTACHMENT

SMCS-1429, 1430 **i02205177**

NOTE	REF NO	GRAPHIC REF	PART NUMBER	QTY	PART NAME 1 2 3 4 5 6 (PRODUCT LEVEL)	SEE PAGE
	1	1	**9X-4244**	4	SCREW-SPECIAL	
	2	1	**100-3251**	2	SCREW-LENS	
	3	1	**9X-9865**	1	SEAL	
	4	1	**100-3248**	1	LENS AS (HEADLIGHT)	
	5	1	**9X-3465**	1	LAMP (24-VOLT, 75/70-WATT)	
	6	1	**136-3848**	1	LENS AS (AMBER) (SIGNAL)	
M	7	1	**8T-5005**	1	BOLT (M10X1.5X70-MM)	
M	8	1	**8T-0389**	1	LOCKNUT (M10X1.5-THD)	
	9	1	**100-3253**	1	SPACER (SPHERICAL)	
	10	1	**100-3254**	1	SPACER (SPHERICAL)	
	11	1	**100-3255**	1	WASHER (SPHERICAL)	
	13	1	**8T-8729**	5	PIN-CONNECTOR	
	14	1	**3E-3383**	1	WEDGE-RECEPTACLE LOCK (6-PIN)	
	15	1	**8T-8737**	1	PLUG-SEAL	
	16	1	**100-3245**	2	LAMP (24-VOLT)	
	17	1	**9X-4493**	1	LAMP (24-VOLT, 21-WATT) (SIGNAL)	
	18	1	**100-3250**	1	LENS (AMBER) (SIGNAL)	
	19	1	**136-3845**	1	BODY AS-LAMP	
	20	1	**102-8805**	1	KIT-RECEPTACLE (6-PIN)	
					(INCLUDES RECEPTACLE AS & WEDGE)	

M-METRIC PART

105-4849 LAMP GP-HEAD & SIGNAL *(contd.)* **i02205177**

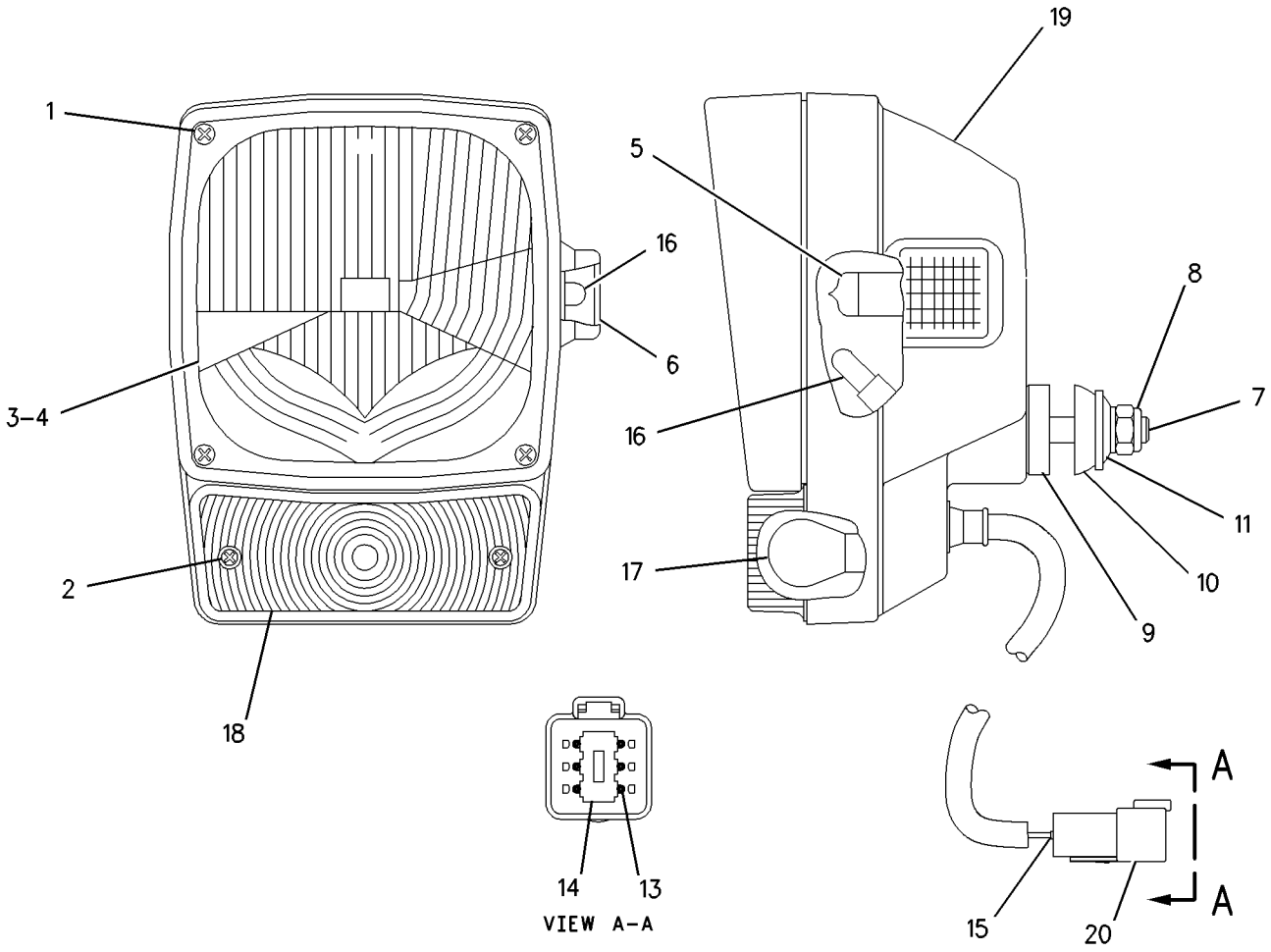

GRAPHIC #1 **<END>** g00661265

105-4850 LAMP GP-HEAD & SIGNAL–RH

S/N: RYF1-UP
PART OF 248-0414 LIGHTING GP-ROADING
AN ATTACHMENT

SMCS-1429, 1430 **i02205178**

NOTE	REF NO	GRAPHIC REF	PART NUMBER	QTY	PART NAME 1 2 3 4 5 6 (PRODUCT LEVEL)	SEE PAGE
	1	1	**9X-4244**	4	SCREW-SPECIAL	
	2	1	**100-3251**	2	SCREW-LENS	
	3	1	**9X-9865**	1	SEAL	
	4	1	**100-3248**	1	LENS AS (HEADLIGHT)	
	5	1	**9X-3465**	1	LAMP (24-VOLT, 75/70-WATT) (HEAD)	
	6	1	**136-3848**	1	LENS AS (AMBER) (SIGNAL)	
M	7	1	**8T-5005**	1	BOLT (M10X1.5X70-MM)	
M	8	1	**8T-0389**	1	LOCKNUT (M10X1.5-THD)	
	9	1	**100-3253**	1	SPACER (SPHERICAL)	
	10	1	**100-3254**	1	SPACER (SPHERICAL)	
	11	1	**100-3255**	1	WASHER (SPHERICAL)	
	12	1	**102-8805**	1	KIT-RECEPTACLE (6-PIN)	
					(INCLUDES RECEPTACLE AS & WEDGE)	
	13	1	**186-3735**	5	PIN-CONNECTOR (16-GA TO 18-GA)	
	14	1	**3E-3383**	1	WEDGE-RECEPTACLE LOCK (6-PIN)	
	15	1	**8T-8737**	1	PLUG-SEAL	
	16	1	**100-3245**	2	LAMP (24-VOLT) (SIGNAL)	
	17	1	**9X-4493**	1	LAMP (24-VOLT, 21-WATT) (SIGNAL)	
	18	1	**100-3250**	1	LENS (AMBER) (SIGNAL)	
	19	1	**136-3846**	1	BODY AS-LAMP	

M-METRIC PART

105-4850 LAMP GP-HEAD & SIGNAL *(contd.)* **i02205178**

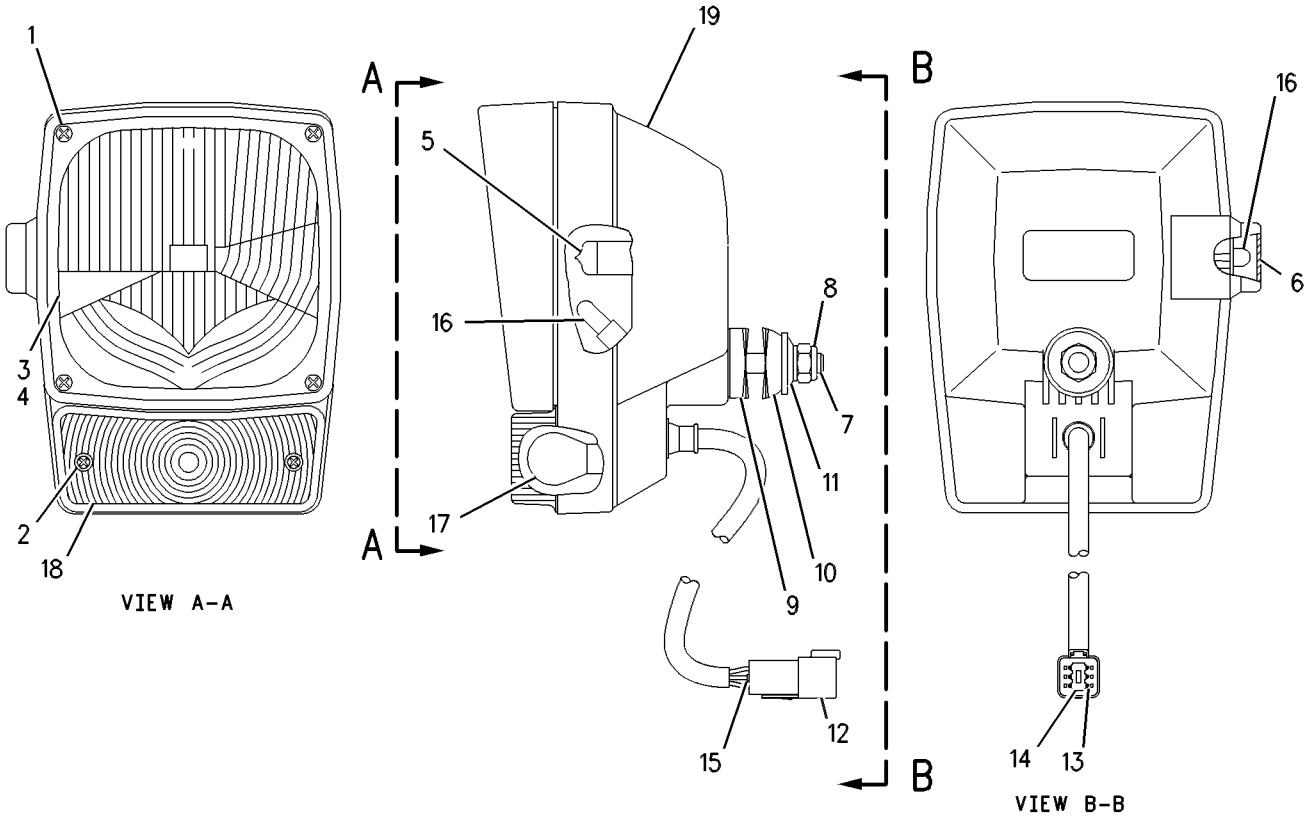

GRAPHIC #1 **<END>** g00610742

3E-6466 LAMP GP-SIGNAL

S/N: RYF1-UP
24-VOLT
PART OF 235-5276 LIGHTING GP-FLOOD & SIGNAL
AN ATTACHMENT

SMCS-1430 **i02454087**

NOTE	REF NO	GRAPHIC REF	PART NUMBER	QTY	PART NAME 1 2 3 4 5 6 (PRODUCT LEVEL)	SEE PAGE
	1	1	**9X-3066**	1	LENS-AMBER	
	2	1	**9X-4493**	1	LAMP (24-VOLT, 21-WATT)	
	3	1	**102-8802**	1	KIT-RECEPTACLE (2-PIN)	
					(KIT INCLUDES RECEPTACLE AS AND WEDGE)	
	4	1	**3E-3365**	1	WEDGE-RECEPTACLE LOCK (2-PIN)	
	5	1	**8T-8729**	2	PIN-CONNECTOR	

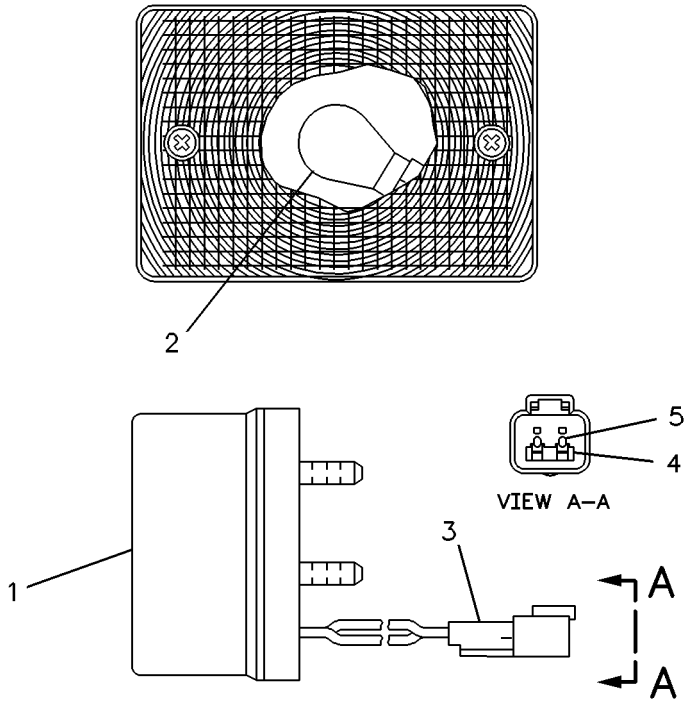

GRAPHIC #1 **<END>** g00083146

135-0426 LAMP GP-SIGNAL–STOP, TAIL

S/N: RYF1-UP
24 VOLT
PART OF 235-5275 LIGHTING GP-FLOOD & SIGNAL

SMCS-1430 **i02443767**

NOTE	REF NO	GRAPHIC REF	PART NUMBER	QTY	PART NAME 1 2 3 4 5 6 (PRODUCT LEVEL)	SEE PAGE
	1	1	**102-8803**	1	KIT-RECEPTACLE (3-PIN)	
					(INCLUDES RECEPTACLE AS & WEDGE)	
	2	1	**186-3735**	3	PIN-CONNECTOR (16-GA TO 18-GA)	

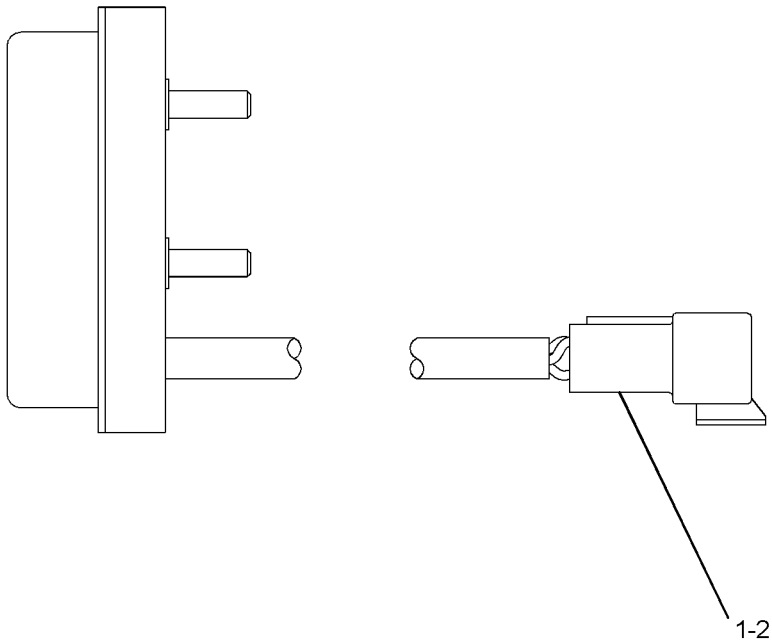

GRAPHIC #1 **<END>** g01213248

145-6929 LAMP GP-STOP & TAIL–24-VOLT

S/N: RYF1-UP

PART OF 235-5276 LIGHTING GP-FLOOD & SIGNAL, 248-0414 LIGHTING GP-ROADING AN ATTACHMENT

SMCS-1432 **i03116460**

NOTE	REF NO	GRAPHIC REF	PART NUMBER	QTY	PART NAME 1 2 3 4 5 6 (PRODUCT LEVEL)	SEE PAGE
	1	1	**9X-4493**	1	LAMP (24-VOLT, 21-WATT) (STOP, TAIL)	
	2	1	**9X-4492**	1	LAMP (24-VOLT, 5-WATT) (STOP, TAIL)	
	3	1	**102-8802**	1	KIT-RECEPTACLE (2-PIN)	
					(KIT INCLUDES RECEPTACLE AS & WEDGE)	
	4	1	**102-8803**	1	KIT-RECEPTACLE (3-PIN)	
					(KIT INCLUDES RECEPTACLE AS & WEDGE)	
M	5	1	**5C-2890**	2	NUT (M6X1-THD)	
	6	1	**1H-3244**	2	LOCKWASHER	
	7	1	**186-3735**	5	PIN-CONNECTOR (16-GA TO 18-GA)	
	8	1	**267-2809**	1	LENS (STOP, TAIL, TURN)	

M-METRIC PART

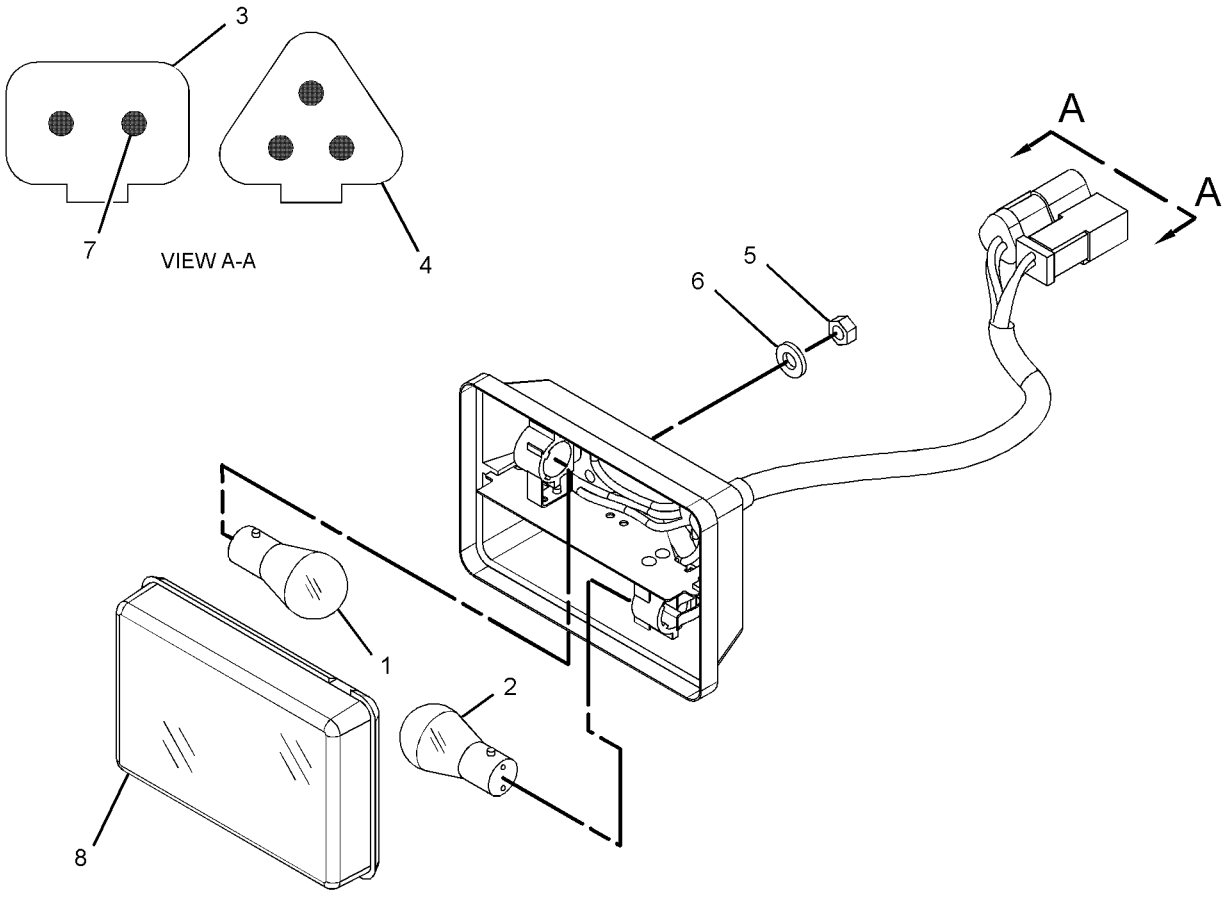

GRAPHIC #1 **<END>** g01393133

235-3937 LAMP GP-WARNING BEACON–ROTATING

S/N: RYF1-UP
24-VOLT. AMBER
PART OF 237-1012 LIGHTING GP-WARNING BEACON
AN ATTACHMENT

SMCS-1431 **i02585409**

NOTE	REF NO	GRAPHIC REF	PART NUMBER	QTY	PART NAME 1 2 3 4 5 6 (PRODUCT LEVEL)	SEE PAGE
	1	1	**272-9800**	1	LENS (AMBER)	
	2	1	**9X-7849**	1	LAMP (24-VOLT, 70-WATT)	
	3	1	**9X-8139**	1	BELT-DRIVE	
M	5	1	**6V-8225**	3	NUT (M6X1-THD)	
	6	1	**5P-0537**	3	WASHER-HARD (7.2X14.5X2-MM THK)	
	7	1	**102-8802**	1	KIT-RECEPTACLE (2-PIN)	
					(INCLUDES RECEPTACLE AS & WEDGE)	
	9	1	**186-3735**	2	PIN-CONNECTOR (16-GA TO 18-GA)	

M-METRIC PART

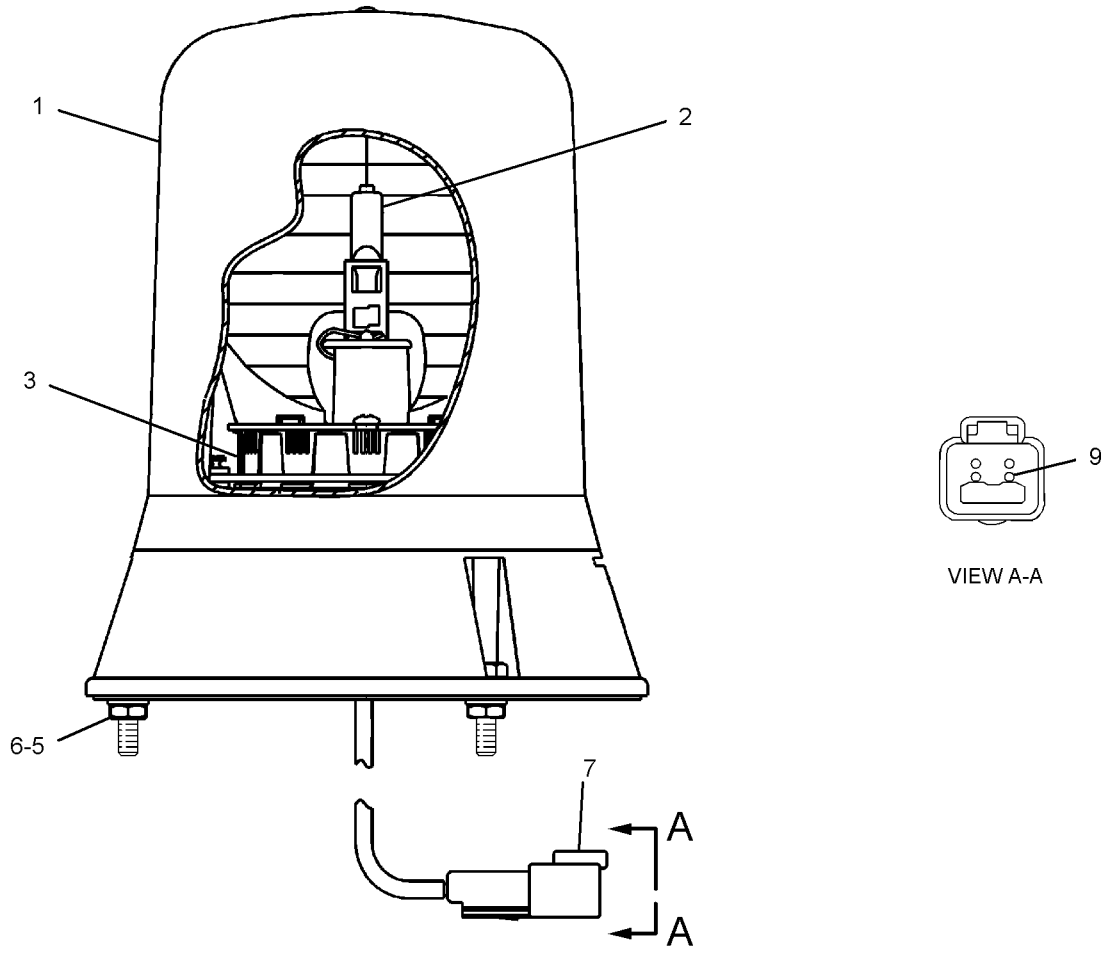

GRAPHIC #1 **<END>** g01199570

254-5525 LIGHTING AR-ROADING—HMU STEERING

S/N: RYF1-UP
AN ATTACHMENT

SMCS-1429 **i02449424**

NOTE	PART NUMBER	QTY	PART NAME 1 2 3 4 5 6 (PRODUCT LEVEL)	SEE PAGE
Y	*248-0414*	1	LIGHTING GP-ROADING	168
Y	*197-6475*	1	SWITCH GP-DIMMER (ROADING)	201
Y	*253-3951*	1	SWITCH GP-SIGNAL (TURN)	213
Y	*271-4037*	1	WIRING GP-LIGHTING (LOADER FRAME)	248
Y-SEPARATE ILLUSTRATION				

<END>

260-7765 LIGHTING AR-ROADING—COMMAND CONTROL STEERING

S/N: RYF1-UP
AN ATTACHMENT

SMCS-1429 **i03008540**

NOTE	PART NUMBER	QTY	PART NAME 1 2 3 4 5 6 (PRODUCT LEVEL)	SEE PAGE
Y	*248-0414*	1	LIGHTING GP-ROADING	168
Y	*197-6475*	1	SWITCH GP-DIMMER (ROADING)	201
Y	*252-5920*	1	SWITCH GP-SIGNAL (TURN)	211
Y	*271-4037*	1	WIRING GP-LIGHTING (LOADER FRAME)	248
Y-SEPARATE ILLUSTRATION				

<END>

235-5279 LIGHTING AR-SIGNAL—COMMAND CONTROL STEERING

S/N: RYF1-UP
AN ATTACHMENT

SMCS-1430 **i03008559**

NOTE	PART NUMBER	QTY	PART NAME 1 2 3 4 5 6 (PRODUCT LEVEL)	SEE PAGE
Y	*235-5276*	1	LIGHTING GP-FLOOD & SIGNAL (FRONT, REAR)	166
Y	*252-5920*	1	SWITCH GP-SIGNAL (TURN)	211
Y	*271-4028*	1	WIRING GP-LIGHTING (LOADER FRAME)	247
Y-SEPARATE ILLUSTRATION				

<END>

244-3599 LIGHTING AR-SIGNAL—HMU STEERING

S/N: RYF1-UP
AN ATTACHMENT

SMCS-1430 **i02445218**

NOTE	PART NUMBER	QTY	PART NAME 1 2 3 4 5 6 (PRODUCT LEVEL)	SEE PAGE
Y	*235-5276*	1	LIGHTING GP-FLOOD & SIGNAL (6-LAMP, FRONT, REAR)	166
Y	*253-3951*	1	SWITCH GP-SIGNAL (TURN)	213
Y	*271-4028*	1	WIRING GP-LIGHTING (LOADER FRAME)	247
Y-SEPARATE ILLUSTRATION				

<END>

235-8559 LIGHTING GP-FLOOD—4-LAMP, CAB FRONT, REAR

S/N: RYF1-UP

PART OF 237-2572 CAB AR-ENCLOSED ROPS

SMCS-1434 **i03019168**

NOTE	REF NO	GRAPHIC REF	PART NUMBER	QTY	PART NAME 1 2 3 4 5 6 (PRODUCT LEVEL)	SEE PAGE
Y	1	1	**219-6487**	4	LAMP GP-FLOOD (24-VOLT, 65-WATT)	149
	2	1	**236-9773**	1	BRACKET (LH)	
	3	1	**236-9774**	1	BRACKET (RH)	
	4	1	**4Y-8003**	2	U-BOLT	
	5	1	**8T-4121**	8	WASHER-HARD (11X21X2.5-MM THK)	
M	6	1	**8T-4133**	6	NUT (M10X1.5-THD)	
M	7	1	**8T-4195**	2	BOLT (M10X1.5X30-MM)	

M-METRIC PART
Y-SEPARATE ILLUSTRATION

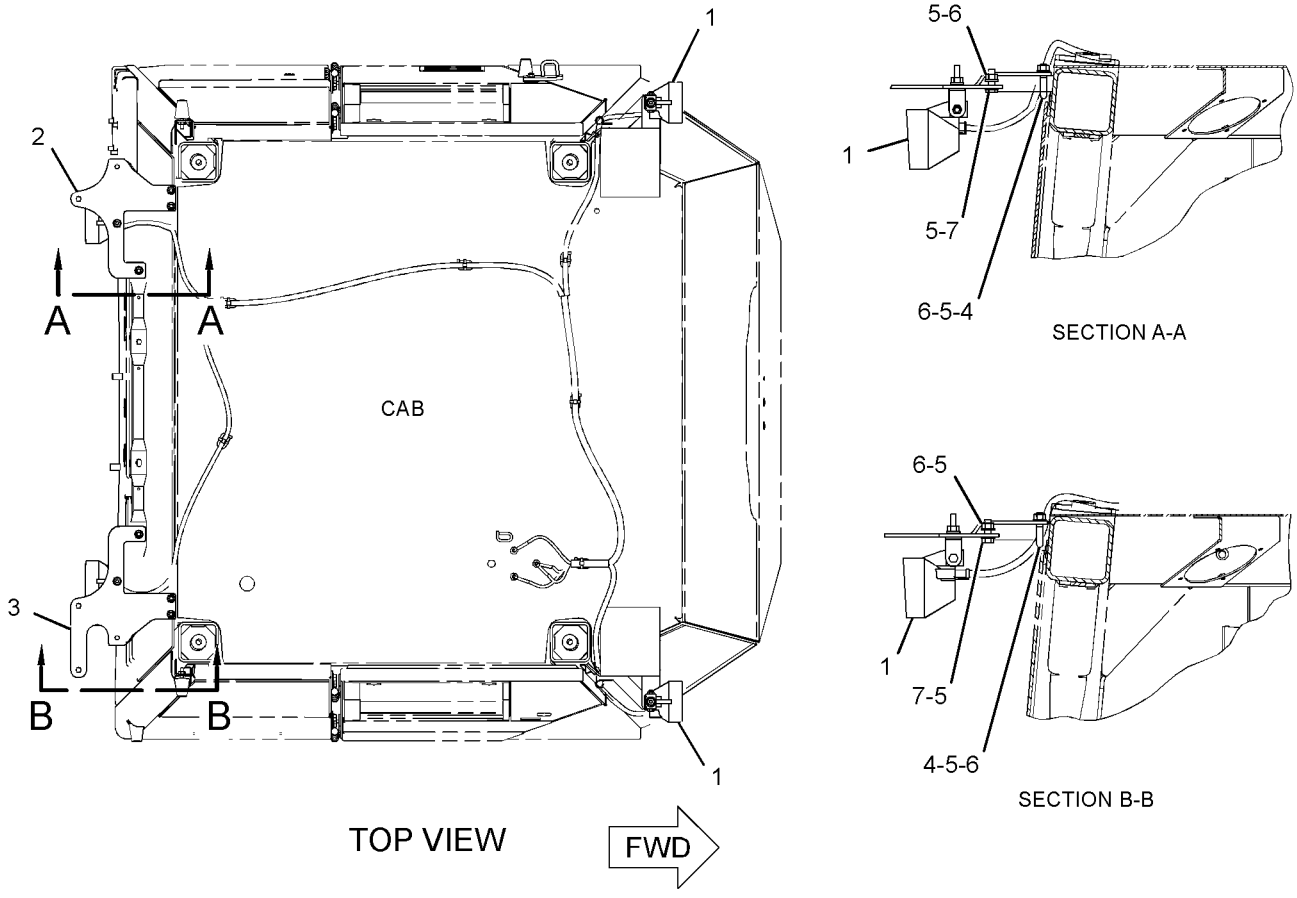

GRAPHIC #1 **<END>** g01482654

235-8560 LIGHTING GP-FLOOD—HID, CAB FRONT, REAR

S/N: RYF1-UP

AN ATTACHMENT

SMCS-1434 **i02987491**

NOTE	REF NO	GRAPHIC REF	PART NUMBER	QTY	PART NAME 1 2 3 4 5 6 (PRODUCT LEVEL)	SEE PAGE
	1	1	**251-4339**	1	SWITCH AS-ROCKER (24-VOLT) (FRONT, REAR FLOODLIGHTS)	
	2	1	**3S-2093**	8	STRAP-CABLE	
	3	1	**236-7773**	1	HARNESS AS-LIGHTING	
		1	**155-2270**	8	KIT-CONNECTING PLUG (2-PIN)	
					(INCLUDES PLUG AS AND WEDGE)	
	4	1	**236-9775**	1	BRACKET AS (LH)	
	5	1	**236-9776**	1	BRACKET AS (RH)	
	6	1	**132-5789**	2	CLIP	
Y	7	1	**210-8422**	2	LAMP GP-FLOOD (24-VOLT, 35-WATT, HID) (HIGH INTENSITY DISCHARGE, REAR)	146
Y	8	1	**210-8423**	2	LAMP GP-FLOOD (24-VOLT, 35-WATT, HID) (HIGH INTENSITY DISCHARGE, FR)	147
	9	1	**8T-4121**	8	WASHER-HARD (11X21X2.5-MM THK)	
M	10	1	**8T-4133**	2	NUT (M10X1.5-THD)	
M	11	1	**8T-4195**	6	BOLT (M10X1.5X30-MM)	
	12	1	**9M-8406**	4	CLIP	

M-METRIC PART
Y-SEPARATE ILLUSTRATION

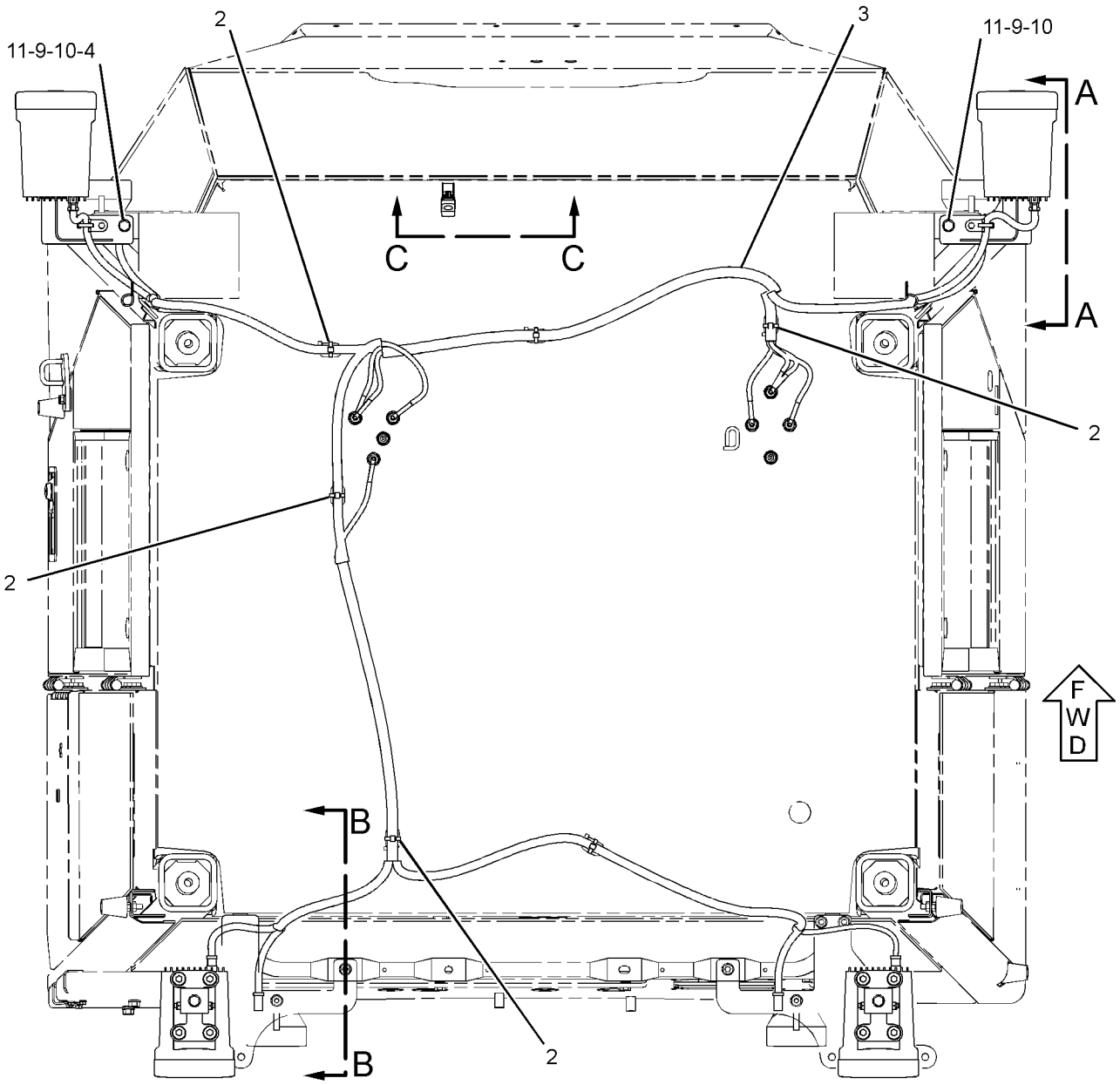

TOP VIEW

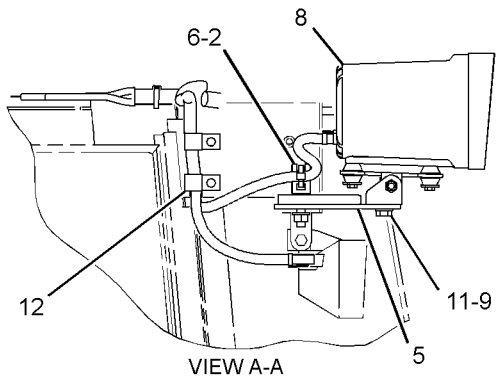

VIEW A-A

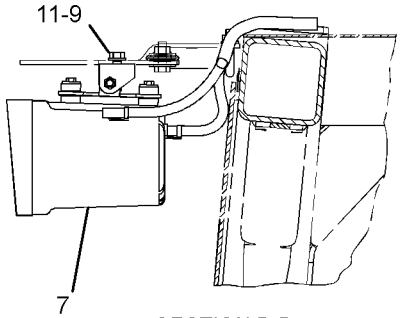

SECTION B-B

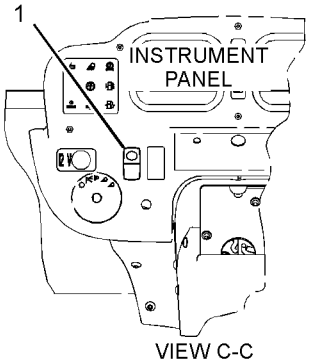

VIEW C-C

GRAPHIC #1

<END>

g01514621

280-1456 LIGHTING GP-FLOOD—CAB FRONT, REAR

S/N: RYF1-UP

AN ATTACHMENT

SMCS-1434 **i03308791**

NOTE	REF NO	GRAPHIC REF	PART NUMBER	QTY	PART NAME 1 2 3 4 5 6 (PRODUCT LEVEL)	SEE PAGE
	1	1,2	**3S-2093**	6	STRAP-CABLE	
	2	1,2	**188-1616**	2	PLATE	
Y	3	2	**219-6487**	2	LAMP GP-FLOOD (24-VOLT, 65-WATT)	149
	4	2	**280-1436**	2	HARNESS AS-FRONT LIGHTING	
					(EACH INCLUDES)	
		2	**102-8802**	1	KIT-RECEPTACLE (2-PIN)	
					(INCLUDES RECEPTACLE AS AND WEDGE)	
		2	**155-2270**	2	KIT-CONNECTING PLUG (2-PIN)	
					(INCLUDES PLUG AS AND WEDGE)	
	5	2	**280-1437**	2	HARNESS AS-REAR LIGHTING	
					(EACH INCLUDES)	
		2	**102-8802**	1	KIT-RECEPTACLE (2-PIN)	
					(INCLUDES RECEPTACLE AS AND WEDGE)	
		2	**155-2270**	2	KIT-CONNECTING PLUG (2-PIN)	
					(INCLUDES PLUG AS AND WEDGE)	
	6	2	**130-5300**	2	CLIP	
	7	2	**132-5789**	2	CLIP	
Y	8	2	**219-6485**	2	LAMP GP-FLOOD (24-VOLT)	148
	9	2	**8T-4121**	8	WASHER-HARD (11X21X2.5-MM THK)	
M	10	2	**8T-4133**	2	NUT (M10X1.5-THD)	
M	11	2	**8T-4136**	4	BOLT (M10X1.5X25-MM)	
M	12	2	**8T-4195**	2	BOLT (M10X1.5X30-MM)	
	13	2	**9M-8406**	4	CLIP	

M-METRIC PART
Y-SEPARATE ILLUSTRATION

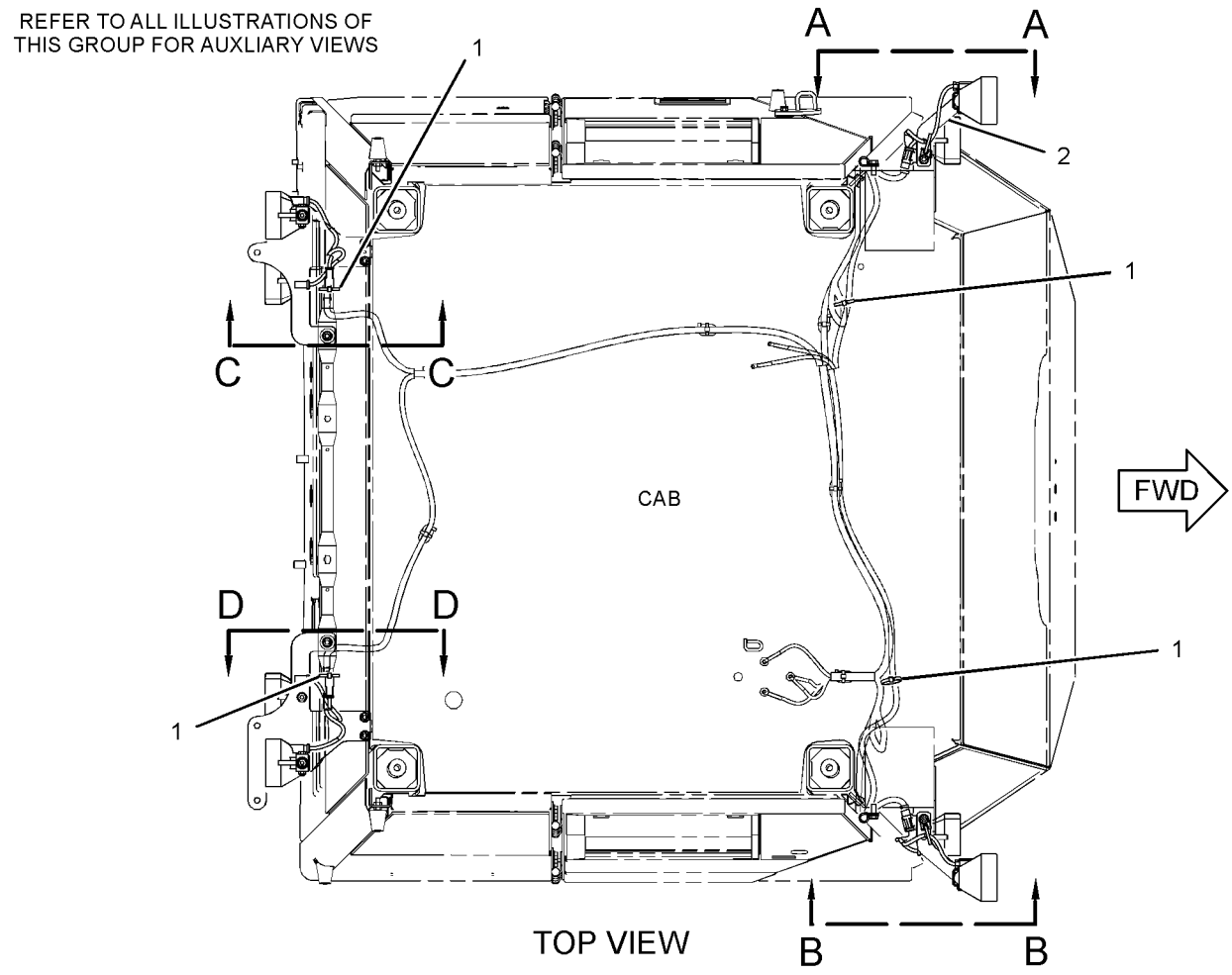

GRAPHIC #1 g01726473

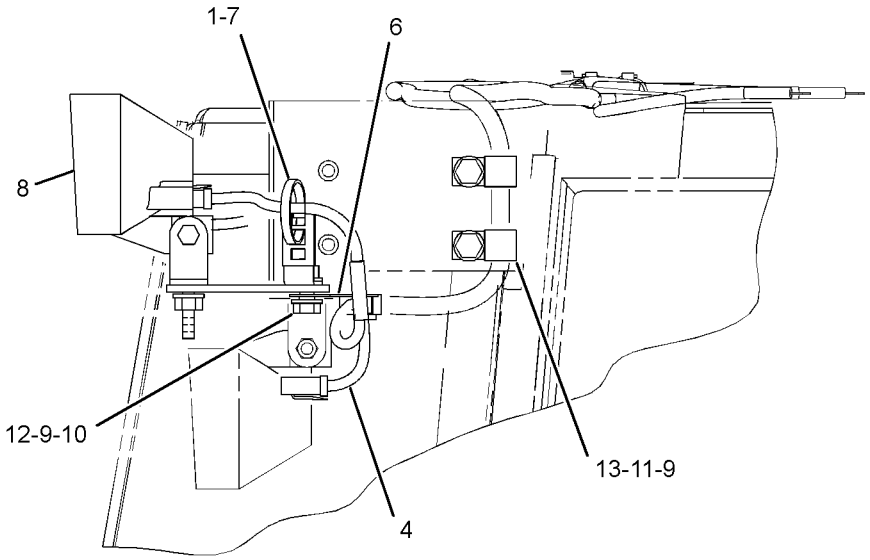

VIEW A-A

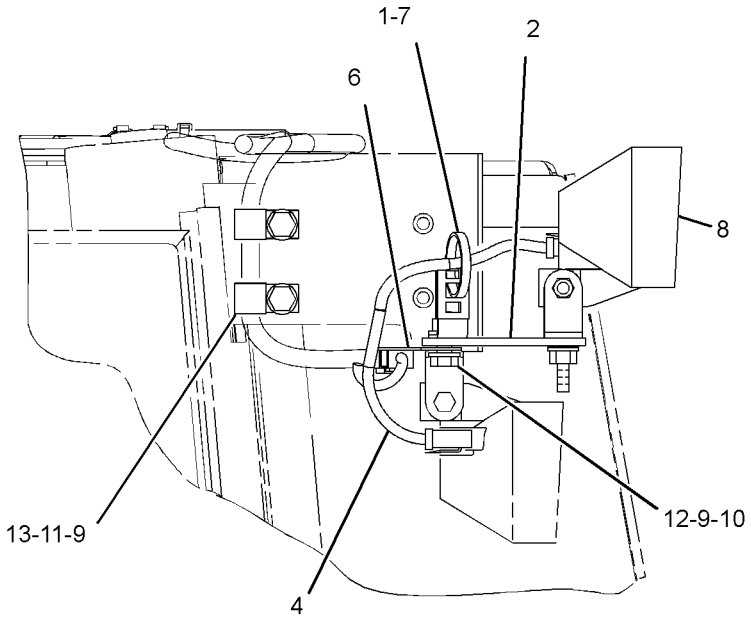

VIEW B-B

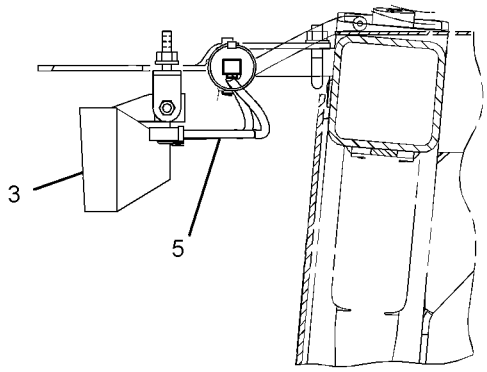

SECTION C-C

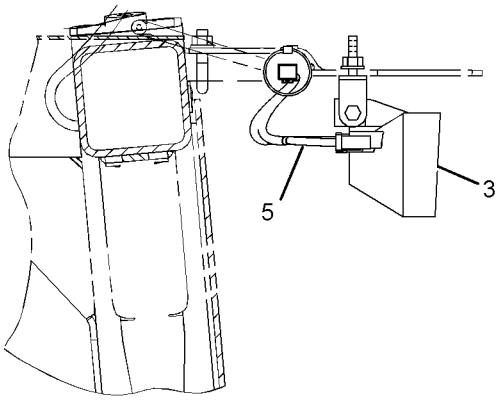

SECTION D-D

GRAPHIC #2 **<END>** g01726474

235-5275 LIGHTING GP-FLOOD & SIGNAL—FRONT, REAR

S/N: RYF1-UP

PART OF 236-8961 ELECTRICAL AR

SMCS-1430, 1434 **i03016666**

NOTE	REF NO	GRAPHIC REF	PART NUMBER	QTY	PART NAME 1 2 3 4 5 6 (PRODUCT LEVEL)	SEE PAGE
Y	1	1	**135-0426**	2	LAMP GP-SIGNAL (24-VOLT, STOP, TAIL)	155
Y	2	1	**219-6485**	2	LAMP GP-FLOOD (24-VOLT)	148
	3	1	**261-2332**	1	BRACKET AS (RH)	
	4	1	**261-2333**	1	BRACKET AS (LH)	
	5	1	**246-3290**	2	PLATE AS	
					(EACH INCLUDES)	
M		1	**8T-4935**	1	BOSS-WELD (M10X1.5X45-MM)	
	6	1	**130-5300**	4	CLIP	
M	7	1	**5C-2890**	6	NUT (M6X1-THD)	
	8	1	**111-4013**	2	GROMMET	
	9	1	**8T-4121**	10	WASHER-HARD (11X21X2.5-MM THK)	
M	10	1	**8T-4136**	8	BOLT (M10X1.5X25-MM)	
M	11	1	**9X-2044**	8	SCREW-TRUSS HEAD (M6X1X16-MM)	
	12	1	**9X-8256**	6	WASHER (6.6X12X2-MM THK)	
M	13	1	**8T-4137**	2	BOLT (M10X1.5X20-MM)	

M-METRIC PART
Y-SEPARATE ILLUSTRATION

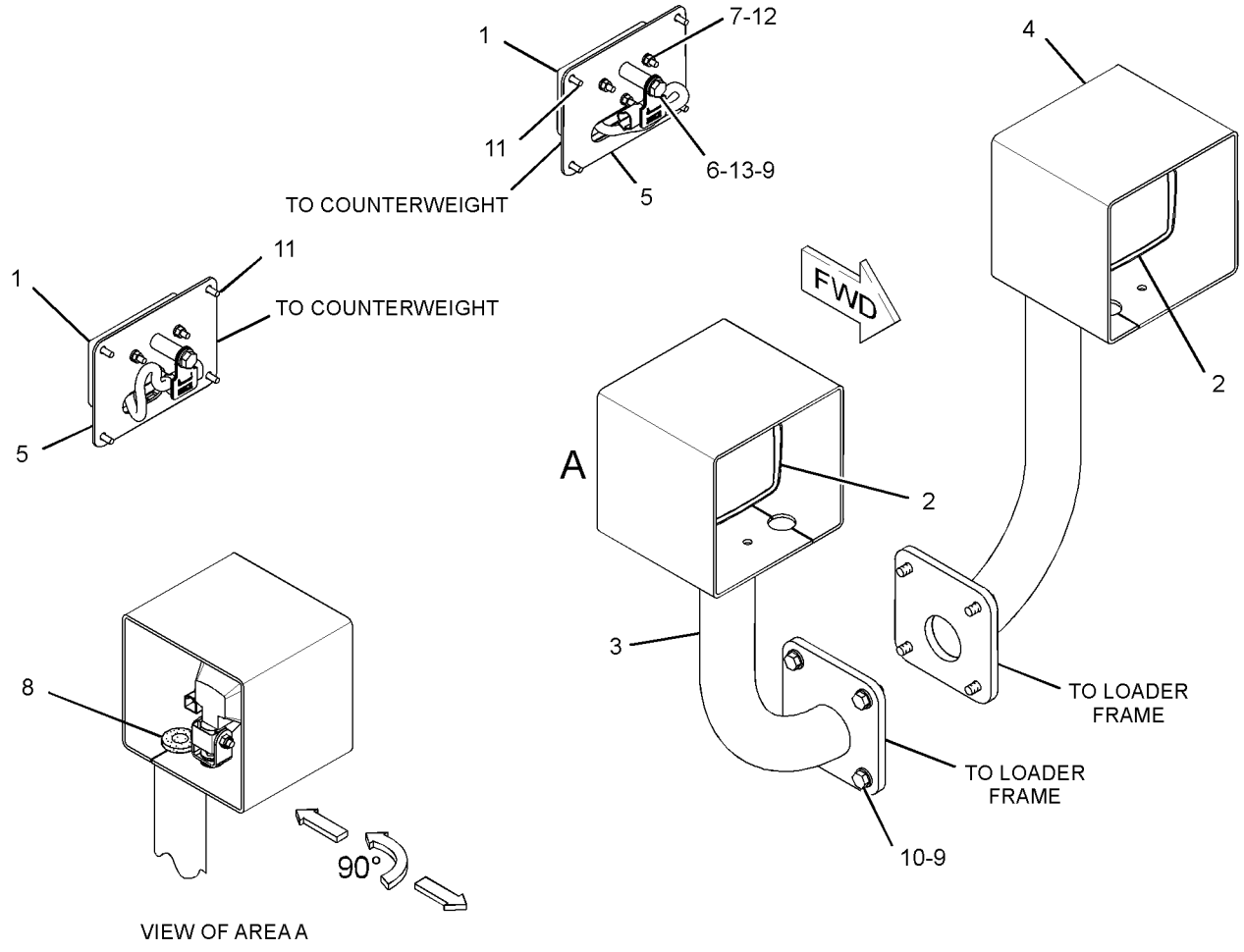

GRAPHIC #1 **<END>** g01482291

235-5276 LIGHTING GP-FLOOD & SIGNAL—FRONT, REAR

S/N: RYF1-UP

PART OF 235-5279, 244-3599 LIGHTING AR-SIGNAL

AN ATTACHMENT

SMCS-1430, 1434 **i03185240**

NOTE	REF NO	GRAPHIC REF	PART NUMBER	QTY	PART NAME 1 2 3 4 5 6 (PRODUCT LEVEL)	SEE PAGE
Y	1	1	**3E-6466**	2	LAMP GP-SIGNAL (24-VOLT)	154
	2	1	**111-4013**	2	GROMMET	
Y	3	1	**145-6929**	2	LAMP GP-STOP & TAIL (24-VOLT)	156
Y	4	1	**219-6485**	2	LAMP GP-FLOOD (24-VOLT)	148
	5	1	**246-3295**	2	PLATE AS	
					(EACH INCLUDES)	
M		1	**8T-4935**	1	BOSS-WELD (M10X1.5X45-MM)	
	6	1	**261-4405**	1	BRACKET AS (RH)	
	7	1	**261-4406**	1	BRACKET AS (LH)	
	8	1	**261-4884**	2	COVER	
	9	1	**130-5300**	6	CLIP	
M	10	1	**5C-2890**	6	NUT (M6X1-THD)	
	11	1	**8T-4121**	12	WASHER-HARD (11X21X2.5-MM THK)	
M	12	1	**8T-4136**	8	BOLT (M10X1.5X25-MM)	
M	13	1	**8T-4137**	4	BOLT (M10X1.5X20-MM)	
M	14	1	**8T-4138**	8	BOLT (M6X1X20-MM)	
	15	1	**8T-4205**	8	WASHER-HARD (7.2X14.5X2-MM THK)	
M	16	1	**9X-2044**	8	SCREW-TRUSS HEAD (M6X1X16-MM)	
	17	1	**9X-8256**	6	WASHER (6.6X12X2-MM THK)	

M-METRIC PART
Y-SEPARATE ILLUSTRATION

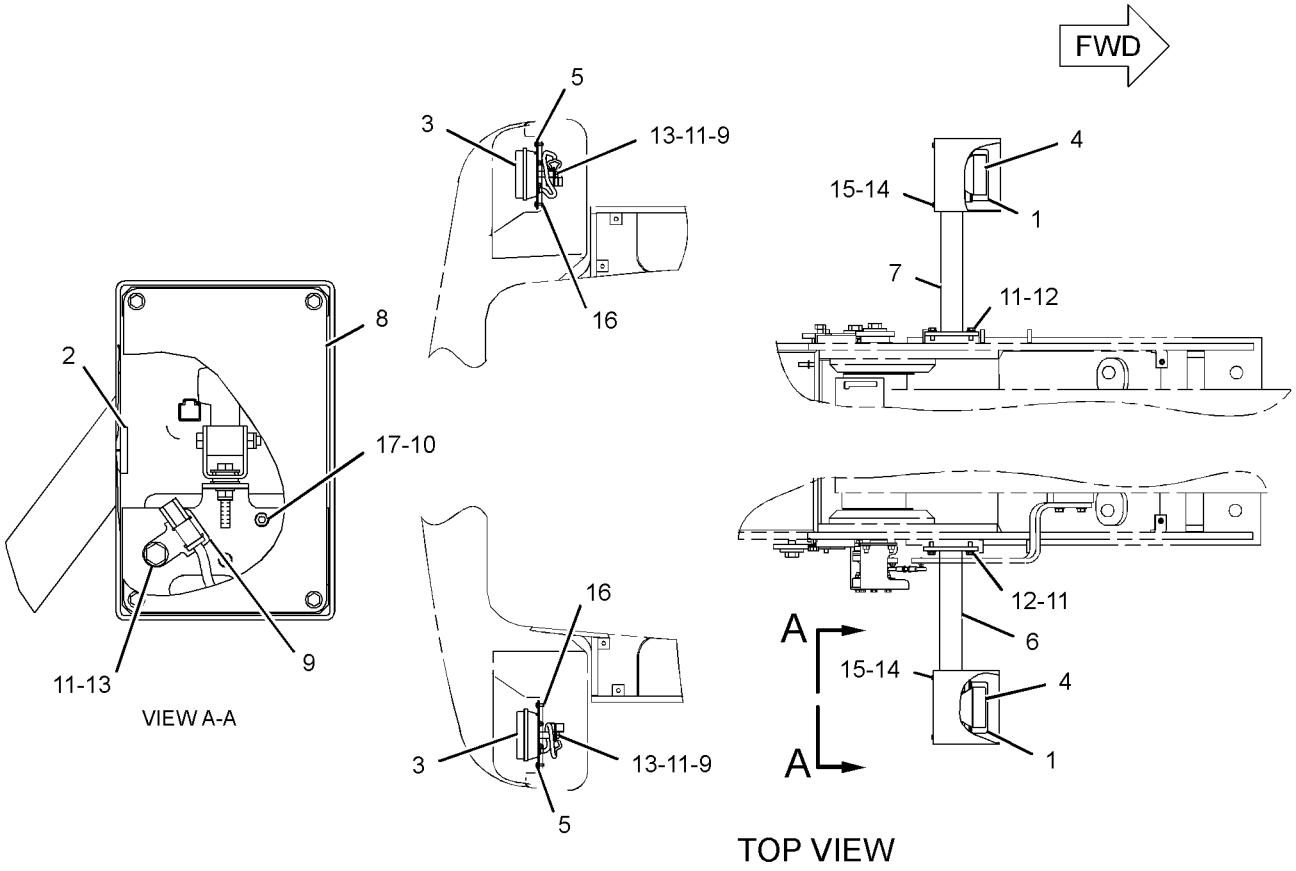

GRAPHIC #1 **<END>** g01388209

248-0414 LIGHTING GP-ROADING

S/N: RYF1-UP
PART OF 254-5525, 260-7765 LIGHTING AR-ROADING
AN ATTACHMENT

SMCS-1429 **i03008542**

NOTE	REF NO	GRAPHIC REF	PART NUMBER	QTY	PART NAME 1 2 3 4 5 6 (PRODUCT LEVEL)	SEE PAGE
Y	1	1	**105-4849**	1	LAMP GP-HEAD & SIGNAL (LH)	150
Y	2	1	**105-4850**	1	LAMP GP-HEAD & SIGNAL (RH)	152
	3	1	**111-4013**	2	GROMMET	
Y	4	1	**145-6929**	2	LAMP GP-STOP & TAIL (24-VOLT)	156
	5	1	**246-3295**	2	PLATE AS	
					(EACH INCLUDES)	
M		1	**8T-4935**	1	BOSS-WELD (M10X1.5X45-MM)	
	6	1	**260-9984**	1	BRACKET AS (RH)	
	7	1	**260-9985**	1	BRACKET AS (LH)	
	8	1	**130-5300**	4	CLIP	
	9	1	**8T-4121**	10	WASHER-HARD (11X21X2.5-MM THK)	
M	10	1	**8T-4136**	8	BOLT (M10X1.5X25-MM)	
M	11	1	**9X-2044**	8	SCREW-TRUSS HEAD (M6X1X16-MM)	
M	12	1	**8T-4137**	2	BOLT (M10X1.5X20-MM)	

M-METRIC PART
Y-SEPARATE ILLUSTRATION

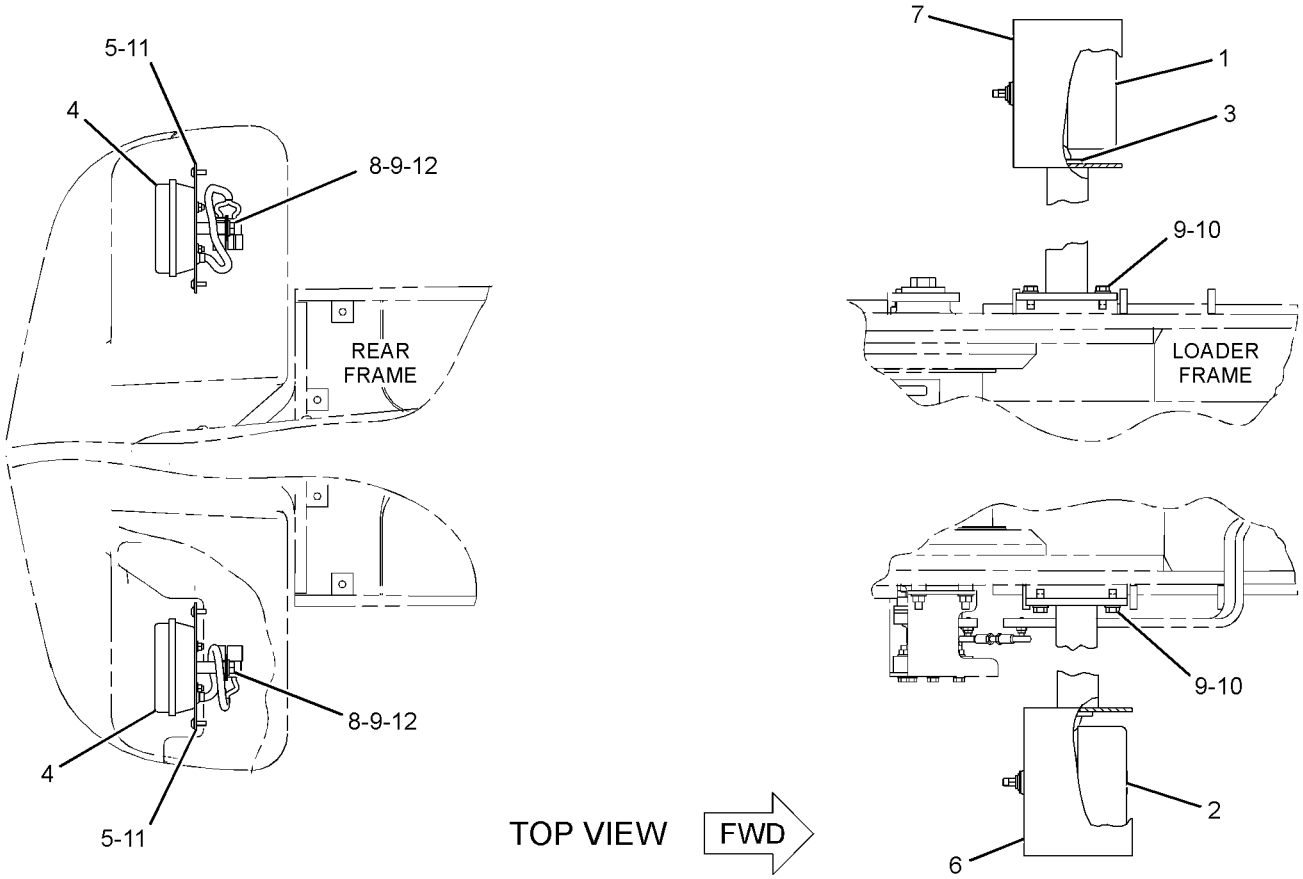

GRAPHIC #1 **<END>** g01526844

237-1012 LIGHTING GP-WARNING BEACON

S/N: RYF1-UP
AN ATTACHMENT

SMCS-1431 **i03296043**

NOTE	REF NO	GRAPHIC REF	PART NUMBER	QTY	PART NAME 1 2 3 4 5 6 (PRODUCT LEVEL)	SEE PAGE
	1	1	**3S-2093**	5	STRAP-CABLE	
	2	1	**9T-8556**	1	SPRING	
Y	3	1	**235-3937**	1	LAMP GP-WARNING BEACON (24-VOLT, AMBER)	157
	4	1	**236-7775**	1	HARNESS AS-LIGHTING (WARNING BEACON)	
		1	**155-2270**	1	KIT-CONNECTING PLUG (2-PIN)	
		1	**155-2270**	1	KIT-CONNECTING PLUG (2-PIN)	
					(EACH PLUG KIT INCLUDES PLUG AS & WEDGE)	
	5	1	**237-7262**	1	PLATE AS	
	6	1	**237-9736**	1	SWITCH AS-ROCKER (WARNING BEACON)	
	7	1	**255-4370**	1	BRACKET	
	8	1	**255-4371**	1	BRACKET	
	9	1	**4Y-8003**	2	U-BOLT	
M	10	1	**129-3180**	1	LOCKNUT (M12X1.75-THD)	
	11	1	**130-5300**	1	CLIP	
	12	1	**318-2605**	1	PIN-SPRING	
	13	1	**8T-4121**	12	WASHER-HARD (11X21X2.5-MM THK)	
	14	1	**8T-4122**	1	WASHER-HARD (17X32X3.5-MM THK)	
M	15	1	**8T-4133**	4	NUT (M10X1.5-THD)	
M	16	1	**8T-4137**	8	BOLT (M10X1.5X20-MM)	
	17	1	**8T-4223**	1	WASHER-HARD (13.5X25.5X3-MM THK)	
	18	1	**8M-2770**	1	CLIP	

M-METRIC PART
Y-SEPARATE ILLUSTRATION

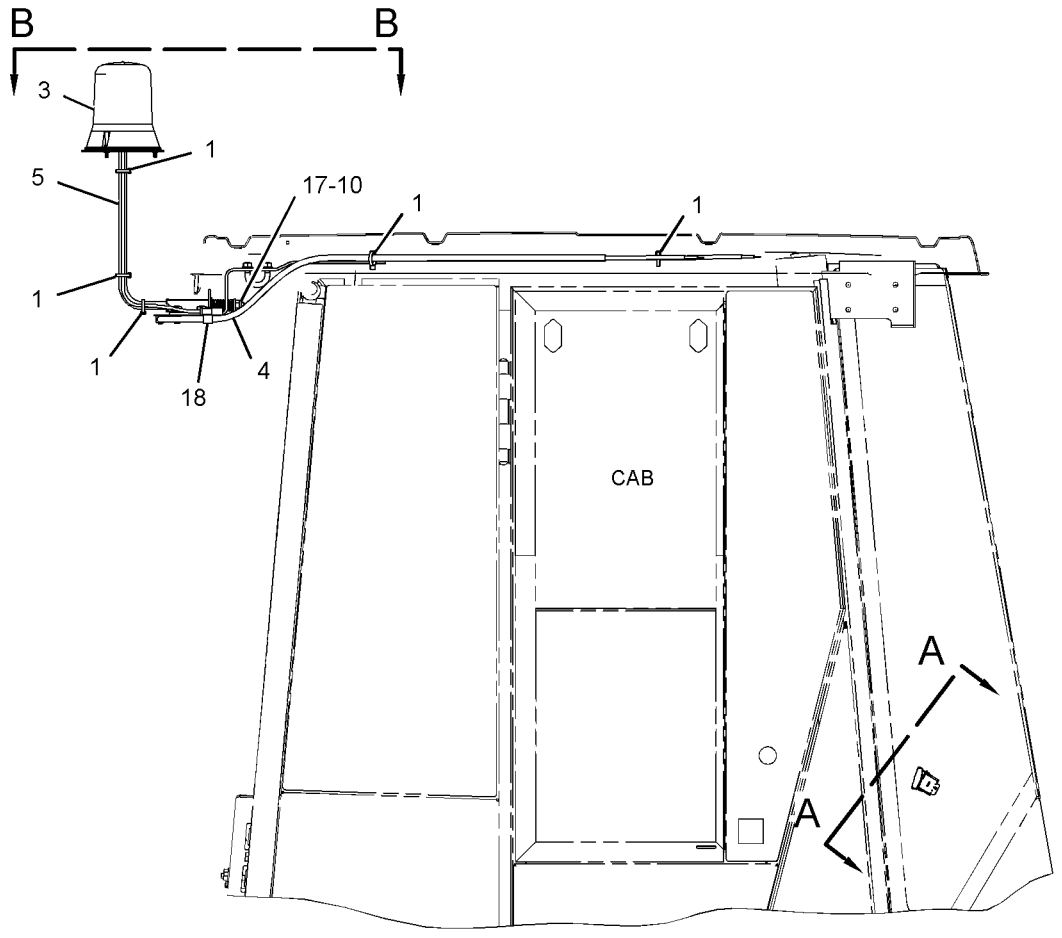

RIGHT SIDE VIEW

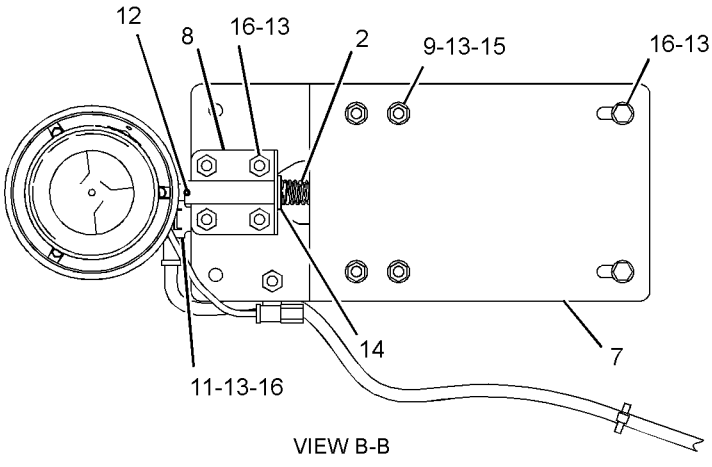

VIEW B-B

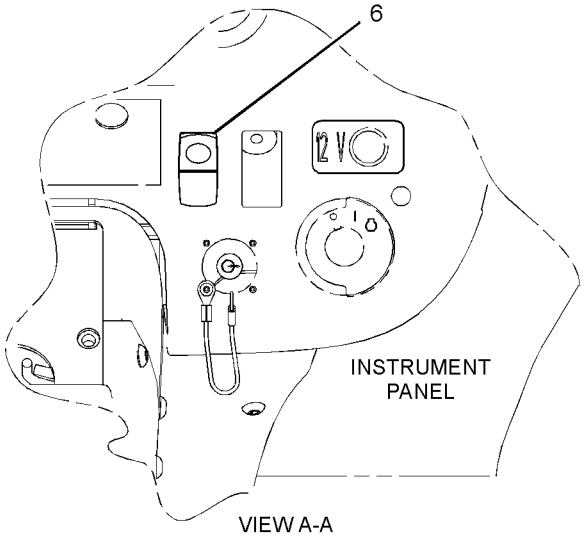

VIEW A-A

GRAPHIC #1 **<END>** g01626464

179-9375 SENSOR & MTG GP-LIFT POSITION

S/N: RYF1-UP

PART OF 236-8961 ELECTRICAL AR

SMCS-5736 **i03618464**

NOTE	REF NO	GRAPHIC REF	PART NUMBER	QTY	PART NAME 1 2 3 4 5 6 (PRODUCT LEVEL)	SEE PAGE
	1	1	**6C-3997**	3	SPACER (15X20X10-MM THK)	
	2	1	**166-0599**	1	ROD	
Y	3	1	**169-0417**	1	SENSOR GP-POSITION (LIFT)	178
	4	1	**179-7000**	1	ARM	
	5	1	**199-4064**	1	BRACKET AS	
	6	1	**214-3616**	1	PLATE	
	7	1	**214-3617**	1	PLATE	
	8	1	**130-5300**	1	CLIP	
M	9	1	**160-8500**	2	NUT (M8X1.25-THD)	
M	10	1	**5C-7261**	5	NUT (M8X1.25-THD)	
M	11	1	**7X-0818**	5	BOLT (M8X1.25X45-MM)	
	12	1	**7X-7662**	2	ROD END	
	13	1	**8T-4121**	4	WASHER-HARD (11X21X2.5-MM THK)	
M	14	1	**8T-4133**	3	NUT (M10X1.5-THD)	
M	15	1	**8T-4137**	1	BOLT (M10X1.5X20-MM)	
	16	1	**8T-4223**	2	WASHER-HARD (13.5X25.5X3-MM THK)	
	17	1	**8T-4224**	10	WASHER-HARD (8.8X16X2-MM THK)	
M	18	1	**8T-4956**	2	BOLT (M12X1.75X35-MM)	
M	19	1	**8T-4971**	2	BOLT (M6X1X30-MM)	
	20	1	**9X-8256**	2	WASHER (6.6X12X2-MM THK)	

M-METRIC PART
Y-SEPARATE ILLUSTRATION

179-9375 **SENSOR & MTG GP-LIFT POSITION** *(contd.)* **i03618464**

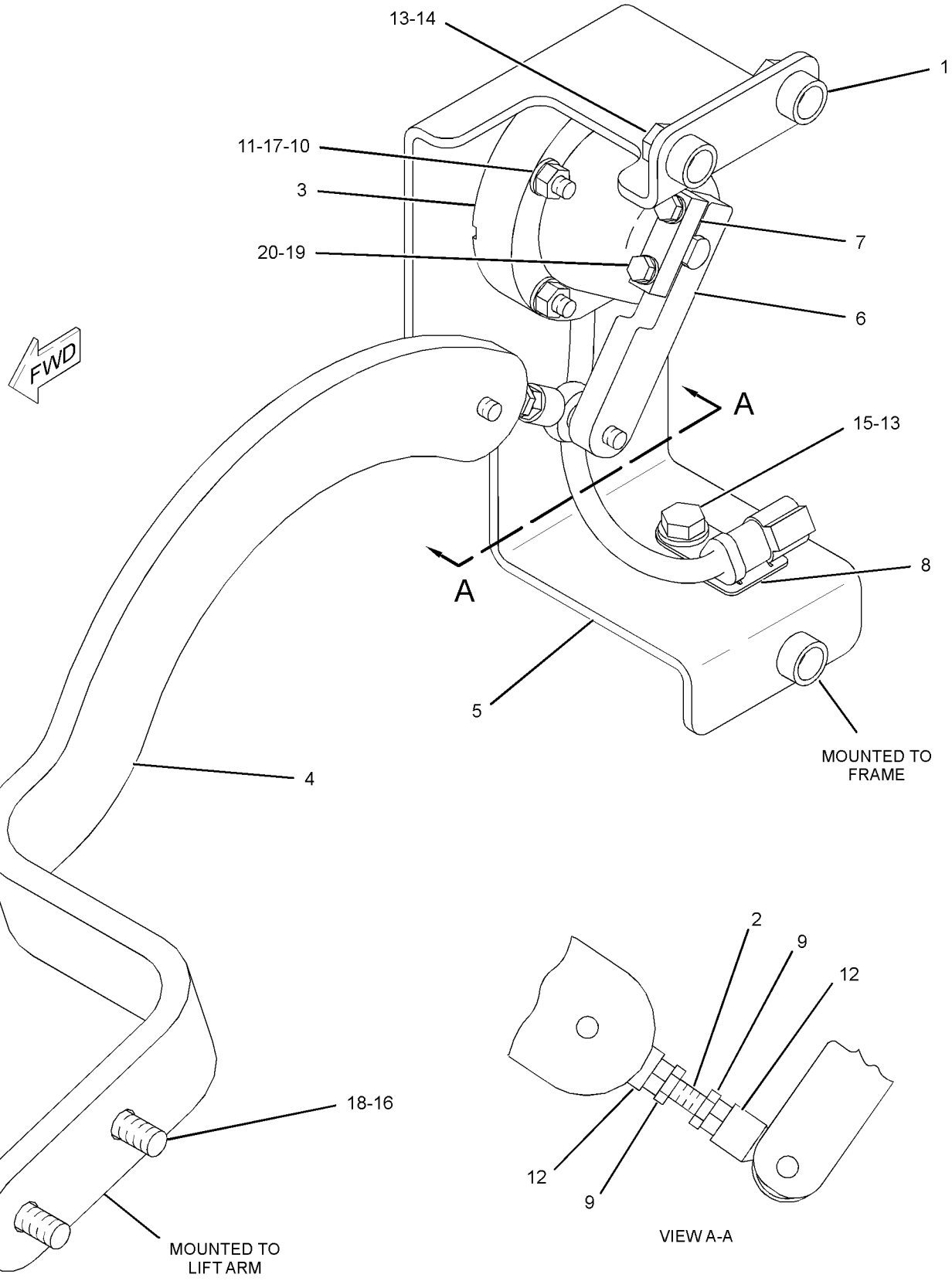

GRAPHIC #1 **<END>** g01286470

239-4850 SENSOR & MTG GP-PRESSURE–LIFT CYLINDER OIL

S/N: RYF1-UP
PART OF 236-9108 CONTROL AR-AUTODIG
AN ATTACHMENT

SMCS-1923 **i02449344**

NOTE	REF NO	GRAPHIC REF	PART NUMBER	QTY	PART NAME 1 2 3 4 5 6 (PRODUCT LEVEL)	SEE PAGE
	1	1	**5I-4376**	1	FITTING	
	2	1	**6V-0852**	1	CAP-DUST	
	3	1	**164-6871**	1	ADAPTER AS	
		1	**6V-8397**	1	SEAL-O-RING	
Y	4	1	**221-3416**	1	SENSOR GP-PRESSURE (LIFT CYLINDER OIL)	182
	5	1	*164-5567*	1	COUPLER AS-QUICK DISCONNECT	
		1	**3J-1907**	1	SEAL-O-RING	
		1	**6V-3965**	1	FITTING (QUICK DISCONNECT)	
	6	1	**3J-1907**	1	SEAL-O-RING	

Y-SEPARATE ILLUSTRATION

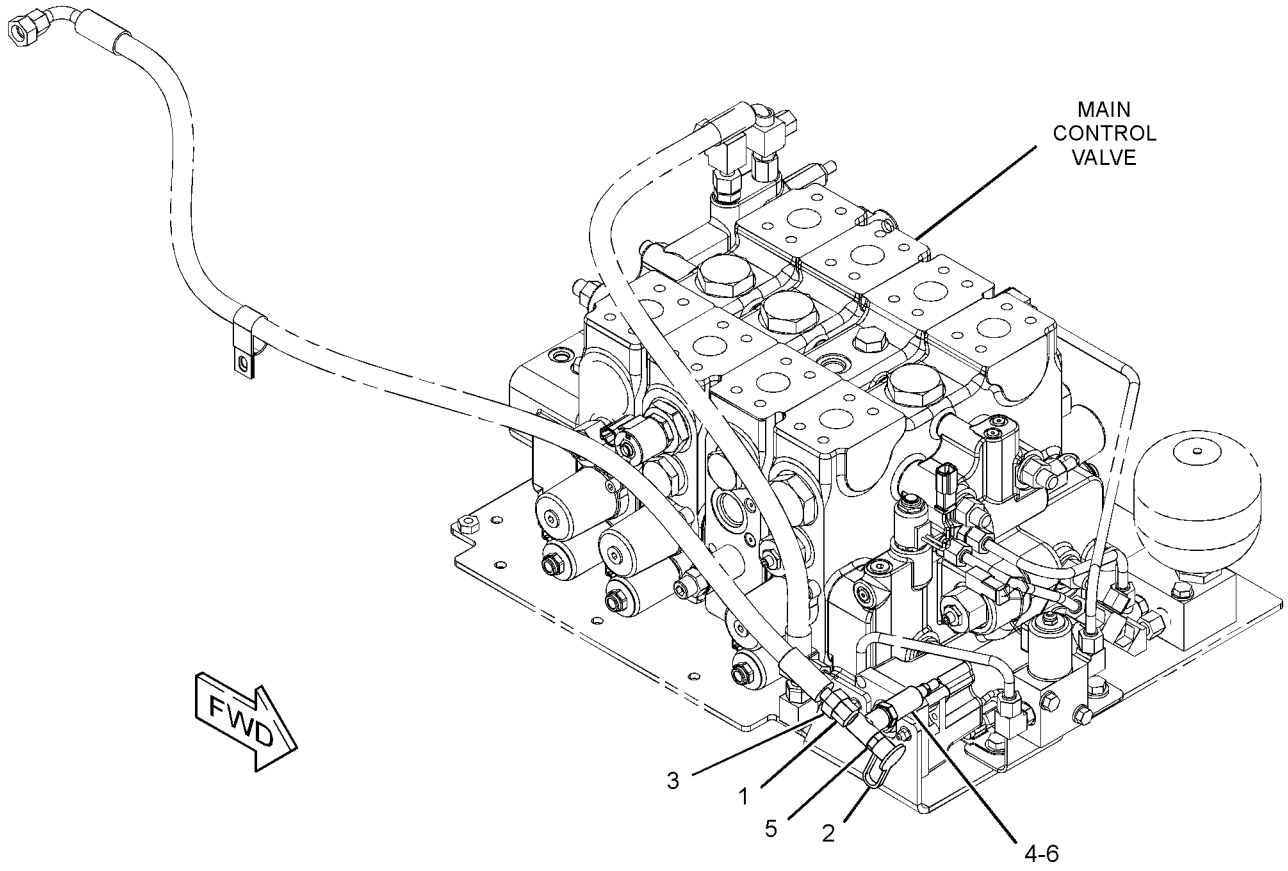

GRAPHIC #1 **<END>** g01198997

ELECTRICAL AND STARTING SYSTEM

303-2238 SENSOR & MTG GP-TILT POSITION

S/N: RYF1-UP

PART OF 236-8961 ELECTRICAL AR

SMCS-5736 **i03618580**

NOTE	REF NO	GRAPHIC REF	PART NUMBER	QTY	PART NAME 1 2 3 4 5 6 (PRODUCT LEVEL)	SEE PAGE
	1	1	**123-3202**	1	STRAP-CABLE	
	2	1	**168-6514**	1	SPACER (10.74X17.14X50.8-MM THK)	
Y	3	1	**169-0417**	1	SENSOR GP-POSITION (ROTARY)	178
	4	1	**249-4127**	1	BRACKET AS	
	5	1	**249-4134**	1	PLATE	
	6	1	**329-5087**	1	COVER	
	7	1	**335-6622**	1	BRACKET	
	8	1	**269-7250**	1	PLATE	
	10	1	**4D-7794**	1	CLIP	
M	12	1	**8T-0338**	5	BOLT-SOCKET HEAD (M8X1.25X45-MM)	
	13	1	**7X-7729**	4	WASHER (11X25X3-MM THK)	
M	14	1	**8T-0341**	1	BOLT-SOCKET HEAD (M10X1.5X60-MM)	
	15	1	**8T-4121**	5	WASHER-HARD (11X21X2.5-MM THK)	
M	16	1	**8T-4136**	7	BOLT (M10X1.5X25-MM)	
M	18	1	**8T-4195**	2	BOLT (M10X1.5X30-MM)	
	19	1	**8T-4224**	5	WASHER-HARD (8.8X16X2-MM THK)	
M	20	1	**8T-4971**	2	BOLT (M6X1X30-MM)	
	21	1	**9X-8256**	2	WASHER (6.6X12X2-MM THK)	

M-METRIC PART
Y-SEPARATE ILLUSTRATION

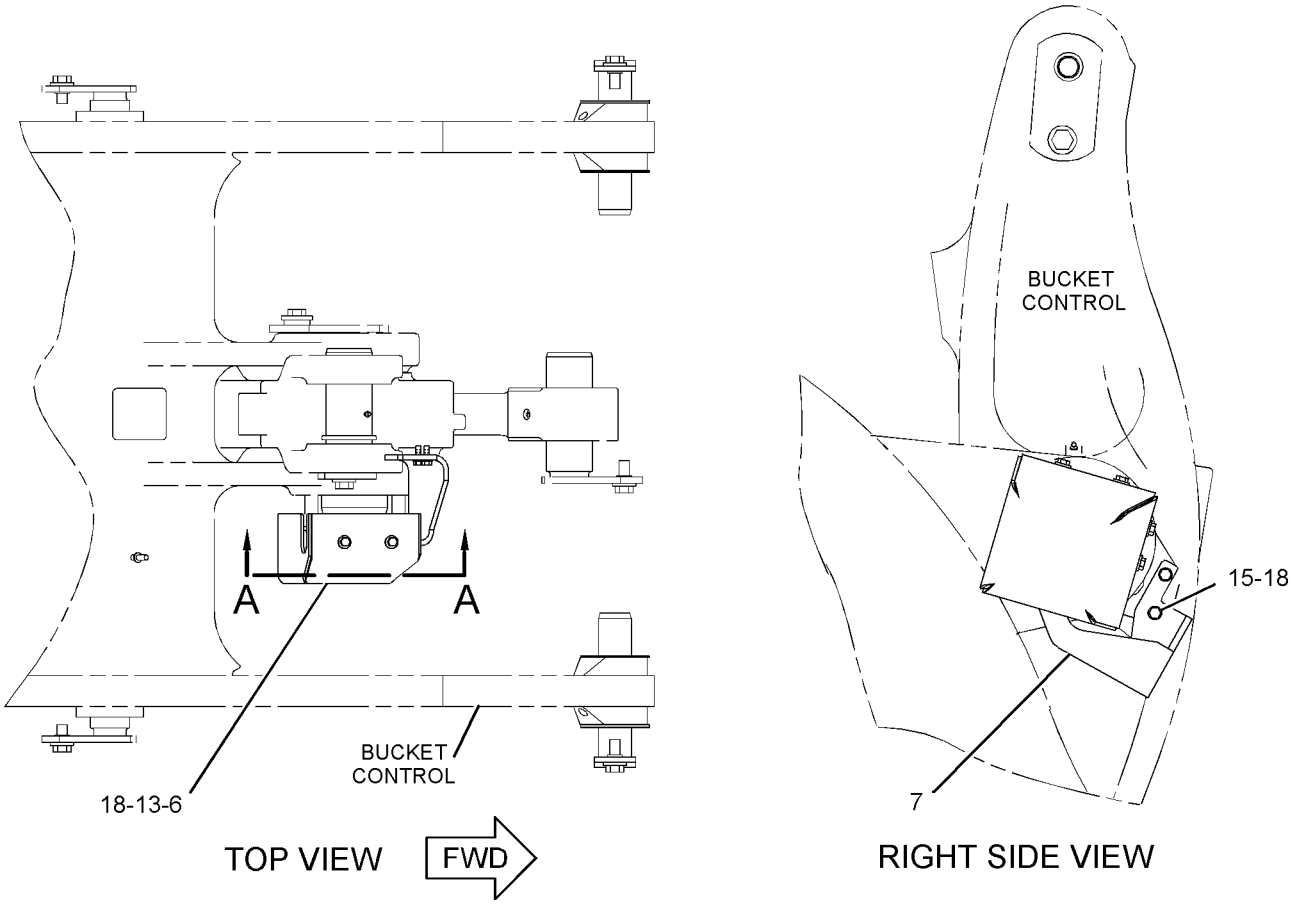

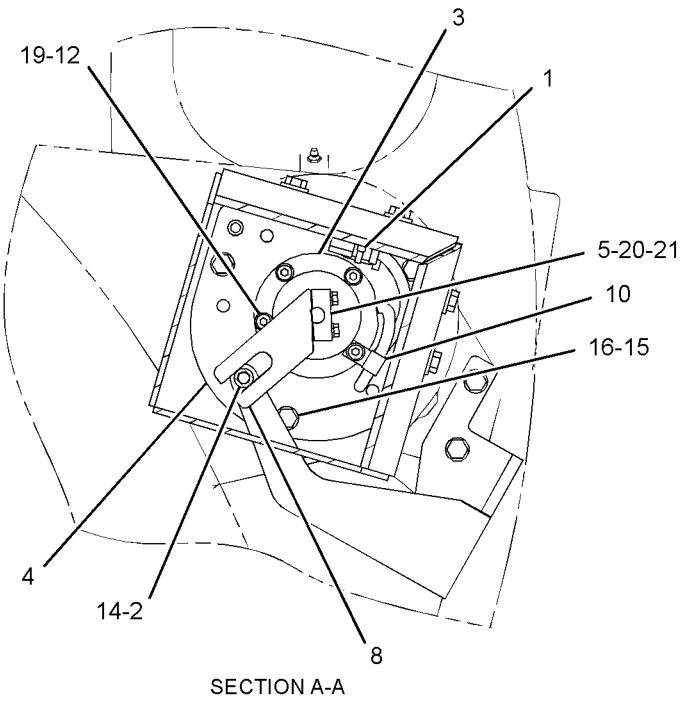

SECTION A-A

GRAPHIC #1 **<END>** g01682313

243-1555 SENSOR GP-ENGINE

S/N: RSX15243-UP

PART OF 234-7848 ENGINE AR-COMPLETE

SMCS-1718, 1906, 1907, 1912, 1917, 1923, 1924, 1928, 1929, 7400

i03557181

NOTE	REF NO	GRAPHIC REF	PART NUMBER	QTY	PART NAME 1 2 3 4 5 6 (PRODUCT LEVEL)	SEE PAGE
	1	1	**3S-2093**	2	STRAP-CABLE	
	2	1	**9X-0262**	1	ADAPTER	
	3	1	**117-0067**	1	ELBOW	
Y	4	1	**230-7149**	1	SENSOR GP-SPEED (TIMING, CRANKSHAFT)	191
	5	1	**234-4355**	1	ADAPTER-O-RING	
Y	6	1	*239-2395*	1	SENSOR GP-PRESSURE (ATMOSPHERIC AIR)	183
Y	7	1	*239-2396*	1	SENSOR GP-PRESSURE (FUEL)	184
Y	8	1	*239-2397*	1	SENSOR GP-SPEED (TIMING, CAMSHAFT)	192
Y	9	1	*274-7395*	1	SENSOR GP-TEMPERATURE (FUEL)	194
Y	10	1	*274-7396*	1	SENSOR GP-TEMPERATURE (COOLANT, WATER)	195
Y	11	1	*239-5674*	1	SENSOR GP-PRESSURE (AIR INLET MANIFOLD)	186
	12	1	**6V-5048**	2	SEAL-O-RING	
	13	1	**6V-5049**	1	SEAL-O-RING	
M	14	1	**6V-5215**	2	BOLT (M8X1.25X16-MM)	
	15	1	**9M-1974**	2	WASHER-HARD (8.8X16X2-MM THK)	
	16	1	**332-0194**	1	STRAP-CABLE	

M-METRIC PART
Y-SEPARATE ILLUSTRATION

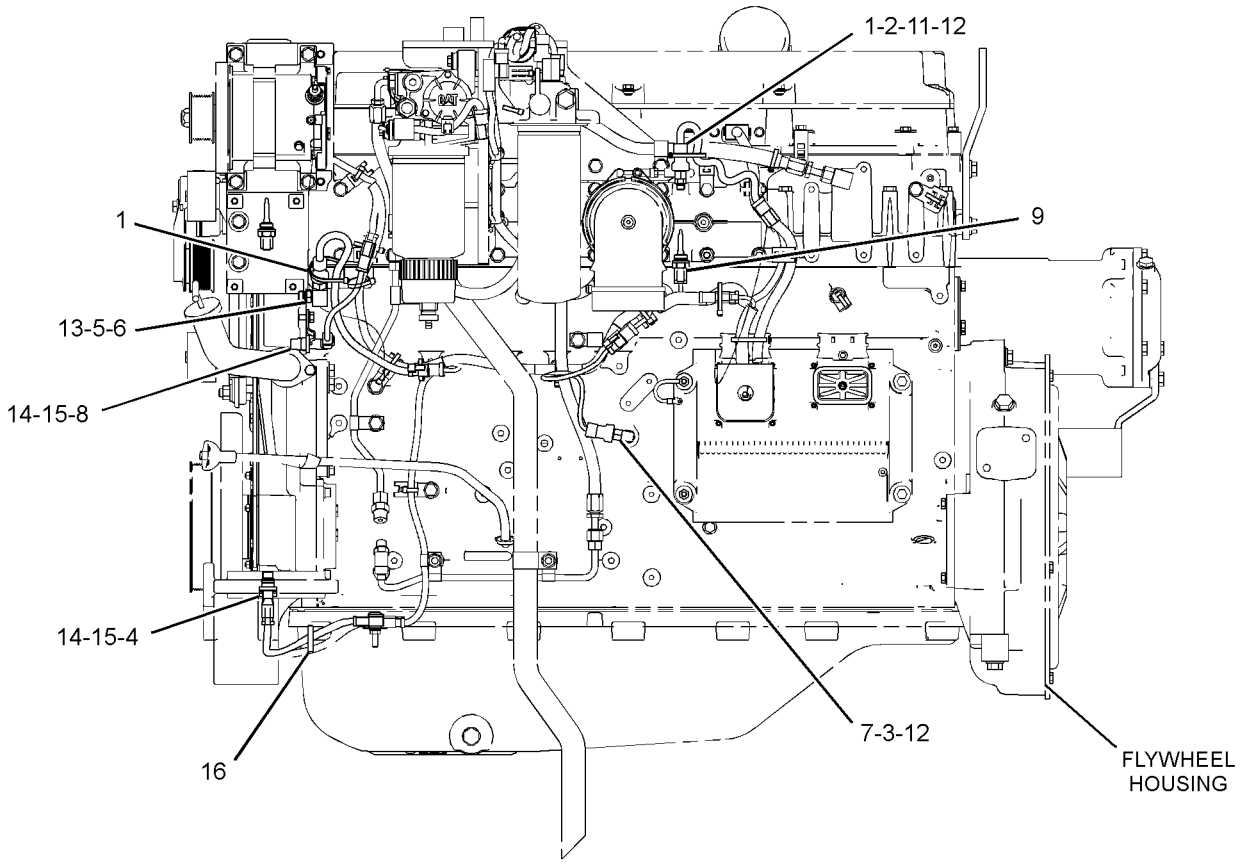

LEFT SIDE VIEW OF ENGINE

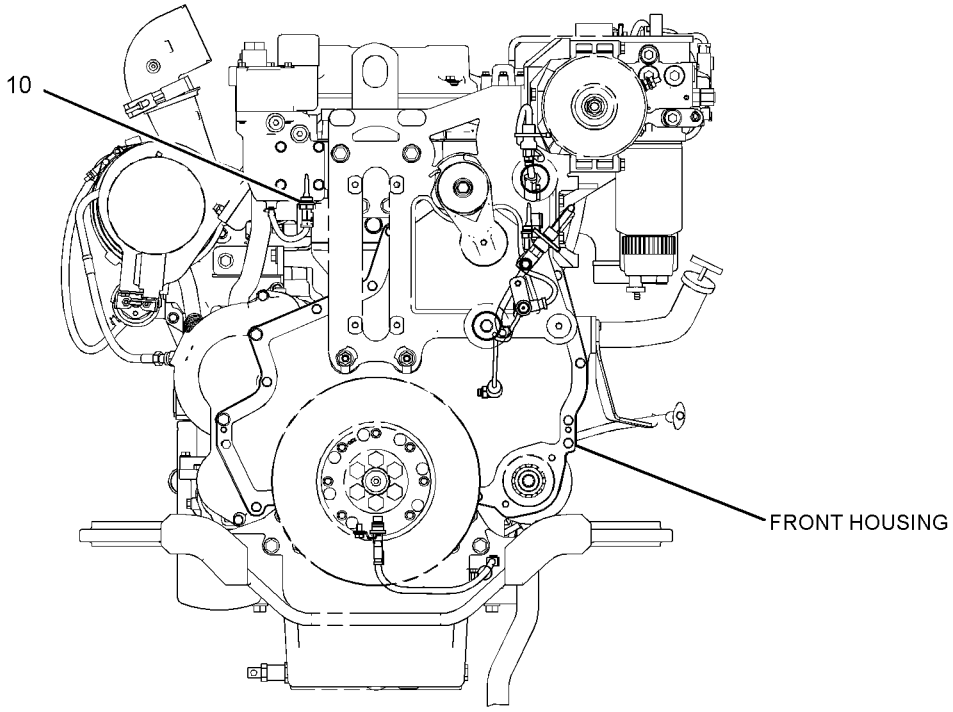

FRONT VIEW OF ENGINE

GRAPHIC #1 **<END>** g01861016

169-0417 SENSOR GP-POSITION

S/N: RYF1-UP

PART OF 179-9375 SENSOR & MTG GP-LIFT POSITION, 303-2238 SENSOR & MTG GP-TILT POSITION

SMCS-4269, 5702, 5736, 5737, 7494 **i02454090**

NOTE	REF NO	GRAPHIC REF	PART NUMBER	QTY	PART NAME 1 2 3 4 5 6 (PRODUCT LEVEL)	SEE PAGE
	1	1	*169-0418*	1	SENSOR AS-POSITION	
M		1	**6V-9671**	4	SCREW-MACHINE (M3X0.5X12-MM)	
	2	1	**102-8803**	1	KIT-RECEPTACLE (3-PIN)	
					(KIT INCLUDES RECEPTACLE AS AND WEDGE)	
	3	1	**9X-3401**	3	PIN-CONNECTOR (16-GA TO 18-GA)	
	4	1	**3E-3371**	1	WEDGE-RECEPTACLE LOCK (3-PIN)	
E	5	1	**119-3662**		TUBE-HEAT SHRINK (10.85-MM DIA) (5CM)	
E	6	1	**9X-1813**		SLEEVE (17CM)	
	7	1	**172-1482**	1	CLAMP	
M	8	1	**3E-8048**	2	SCREW-MACHINE (M3X0.5X6-MM)	

E-ORDER BY THE CENTIMETER
M-METRIC PART

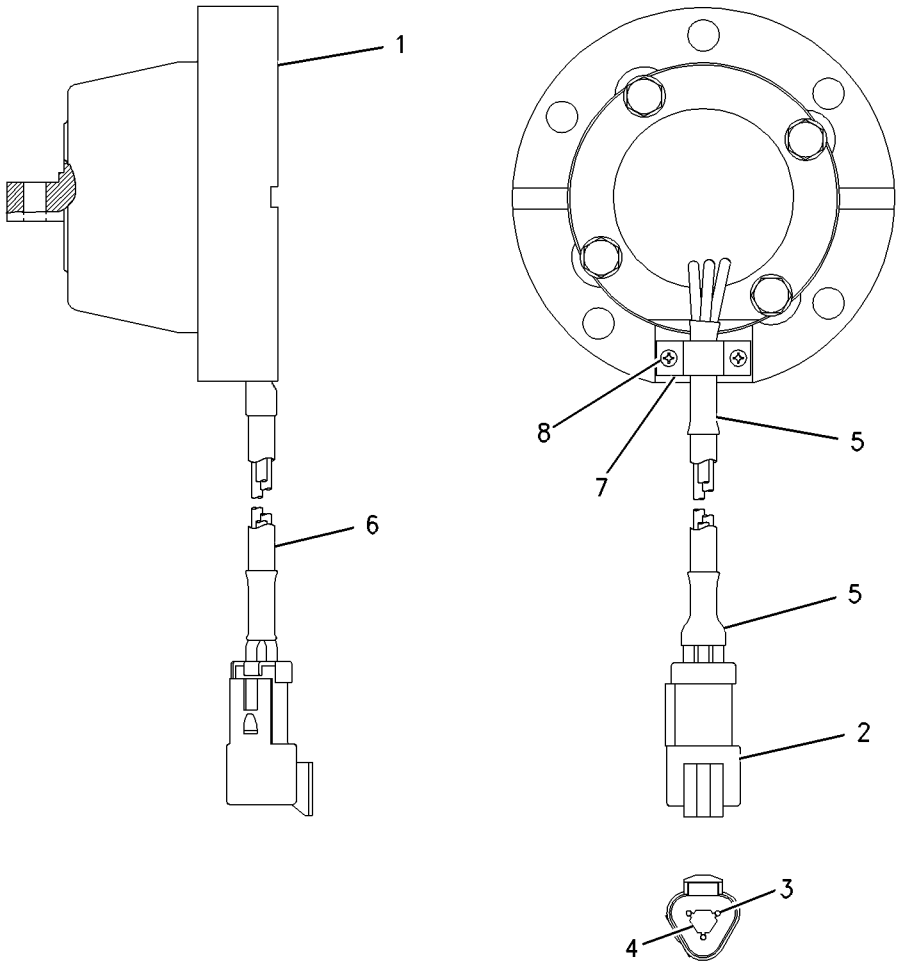

GRAPHIC #1 **<END>** g00887019

266-1466 SENSOR GP-POSITION

S/N: RYF1-UP

PART OF 201-8616 PEDAL GP-GOVERNOR

SMCS-4269, 5702, 5736, 5737, 7494 **i03080720**

NOTE	REF NO	GRAPHIC REF	PART NUMBER	QTY	PART NAME 1 2 3 4 5 6 (PRODUCT LEVEL)	SEE PAGE
	1	1	**9X-3401**	3	PIN-CONNECTOR (16-GA TO 18-GA)	
					—OR—	
		1	**126-1767**	3	PIN-CONNECTOR (14-GA)	
	2	1	**102-8803**	1	KIT-RECEPTACLE (3-PIN)	
					(INCLUDES RECEPTACLE AS & WEDGE)	

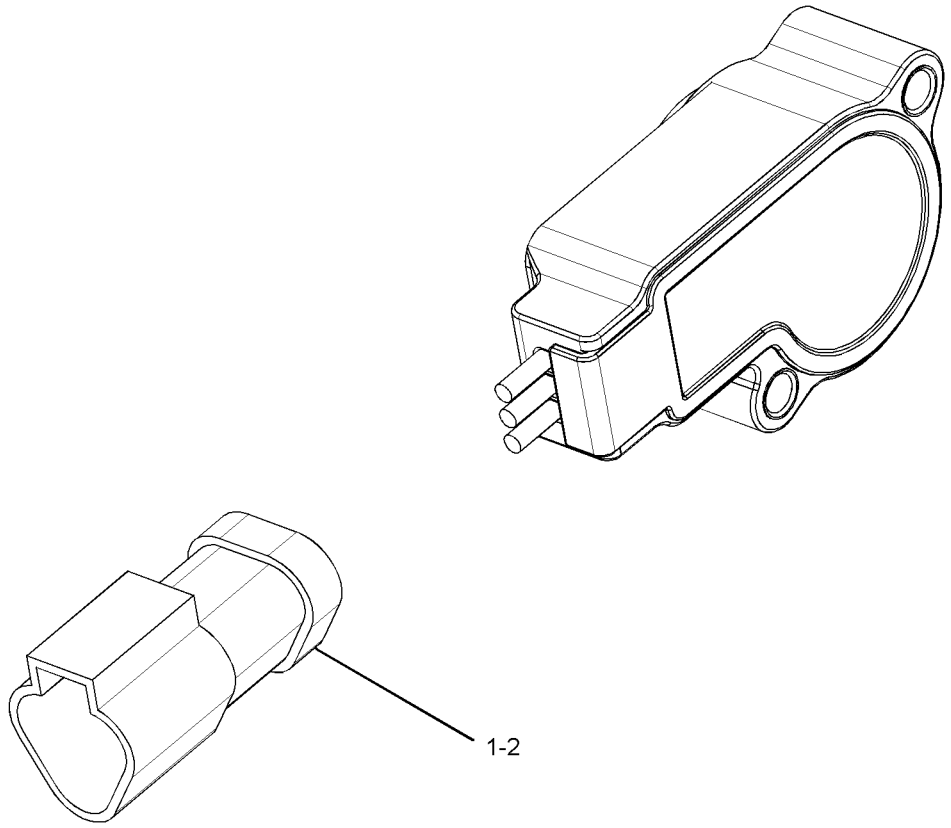

GRAPHIC #1 **<END>** g01583458

194-6722 SENSOR GP-PRESSURE

S/N: RYF1-UP; RSX15243-UP

PART OF 239-2395 SENSOR GP-PRESSURE, 237-4903 WIRING GP-ENGINE

SMCS-1408, 1925, 7494 **i03435061**

NOTE	REF NO	GRAPHIC REF	PART NUMBER	QTY	PART NAME 1 2 3 4 5 6 (PRODUCT LEVEL)	SEE PAGE
E	1	1	**9X-1813**		SLEEVE (34-CM)	
	2	1	**155-2260**	1	KIT-CONNECTING PLUG (3-PIN)	
					(INCLUDES PLUG AS, WEDGE & INTERFACE SEAL)	
	3	1	**180-9340**	3	SOCKET-CONNECTOR	

E-ORDER BY THE CENTIMETER

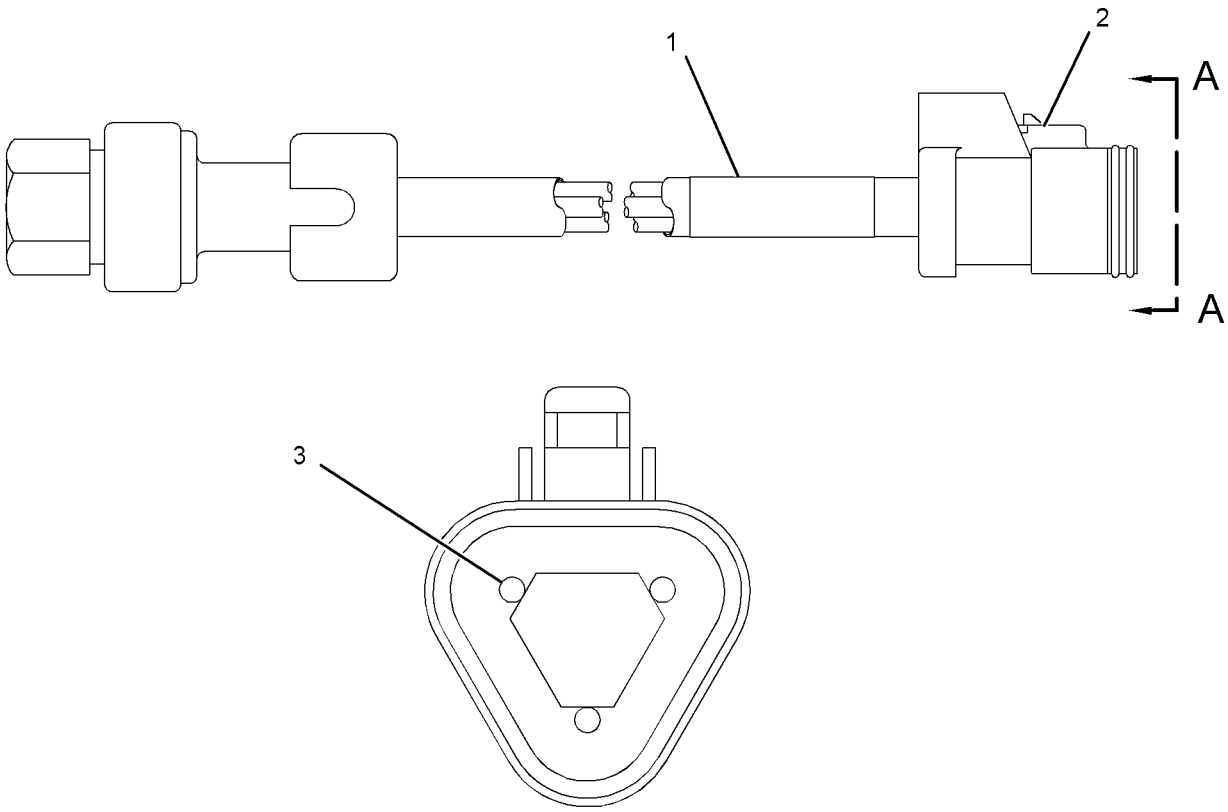

VIEW A-A

GRAPHIC #1 **<END>** g01381175

194-6725 SENSOR GP-PRESSURE

S/N: RSX15243-UP

PART OF 239-2396 SENSOR GP-PRESSURE

SMCS-1408, 1925, 7494 **i03435081**

NOTE	REF NO	GRAPHIC REF	PART NUMBER	QTY	PART NAME 1 2 3 4 5 6 (PRODUCT LEVEL)	SEE PAGE
E	1	1	**9X-1813**		SLEEVE (34-CM)	
	2	1	**155-2260**	1	KIT-CONNECTING PLUG (3-PIN)	
					(INCLUDES PLUG AS, INTERFACE SEAL & WEDGE)	
	3	1	**180-9340**	3	SOCKET-CONNECTOR (14-GA TO 18-GA)	

E-ORDER BY THE CENTIMETER

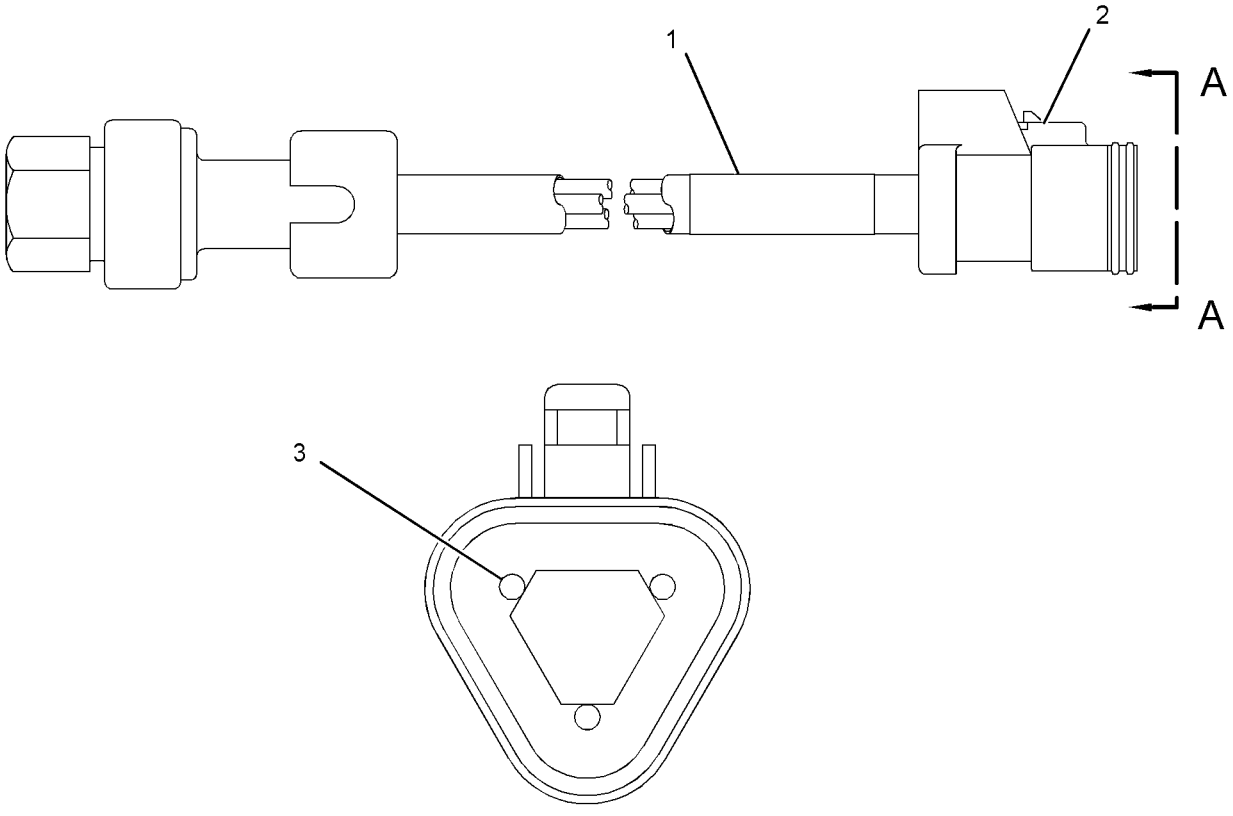

VIEW A-A

GRAPHIC #1 **<END>** g01662003

221-3416 SENSOR GP-PRESSURE

S/N: RYF1-UP
PART OF 239-4850 SENSOR & MTG GP-PRESSURE
AN ATTACHMENT

SMCS-1408, 1925, 7494 **i02449362**

NOTE	REF NO	GRAPHIC REF	PART NUMBER	QTY	PART NAME 1 2 3 4 5 6 (PRODUCT LEVEL)	SEE PAGE
	1	1	**155-2260**	1	KIT-CONNECTING PLUG (3-PIN)	
					(INCLUDES PLUG AS AND WEDGE)	
	2	1	**180-9340**	3	SOCKET-CONNECTOR	
	3	1	**155-2276**	1	WEDGE-PLUG LOCK (3-PIN)	

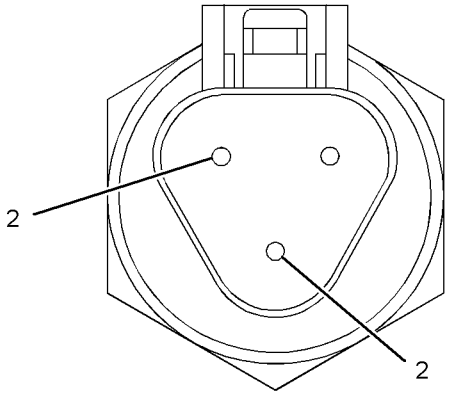

VIEW A-A

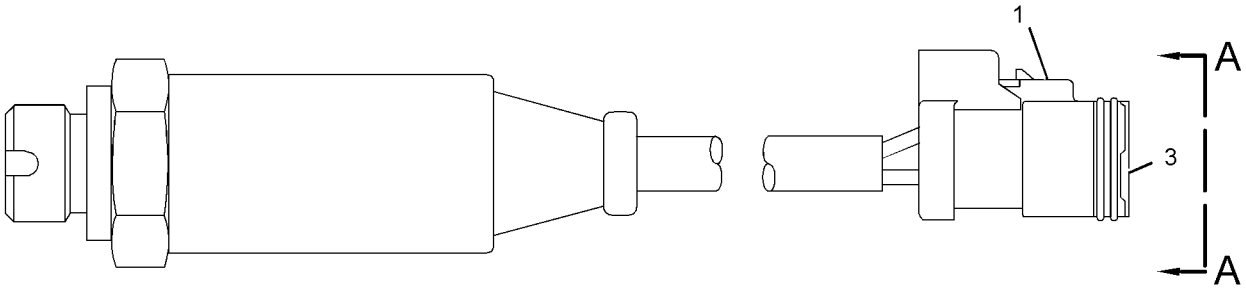

GRAPHIC #1 **<END>** g01175734

239-2395 SENSOR GP-PRESSURE

S/N: RSX15243-UP

PART OF 243-1555 SENSOR GP-ENGINE

SMCS-1408, 1925, 7494 **i03435101**

NOTE	REF NO	GRAPHIC REF	PART NUMBER	QTY	PART NAME 1 2 3 4 5 6 (PRODUCT LEVEL)	SEE PAGE
Y	1	1	**194-6722**	1	SENSOR GP-PRESSURE	180
	2	1	**6V-5049**	1	SEAL-O-RING	

Y-SEPARATE ILLUSTRATION

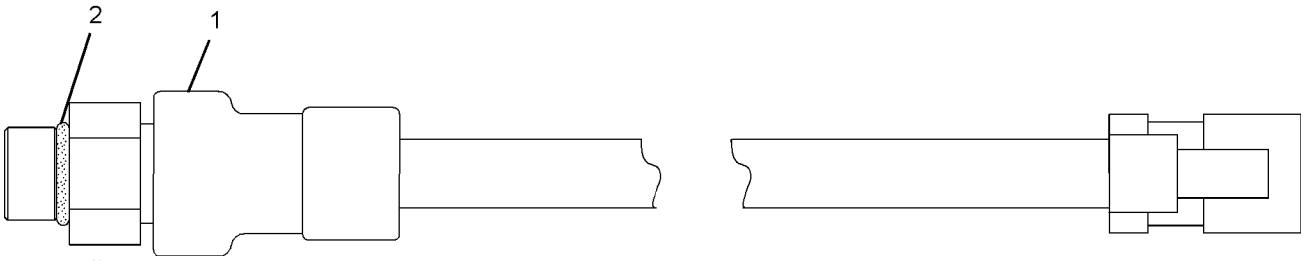

GRAPHIC #1 **<END>** g01019702

239-2396 SENSOR GP-PRESSURE

S/N: RSX15243-UP

PART OF 285-6638 FILTER GP-FUEL, 243-1555 SENSOR GP-ENGINE

SMCS-1408, 1925, 7494 **i03435120**

NOTE	REF NO	GRAPHIC REF	PART NUMBER	QTY	PART NAME 1 2 3 4 5 6 (PRODUCT LEVEL)	SEE PAGE
Y	1	1	**194-6725**	1	SENSOR GP-PRESSURE	181
	2	1	**6V-5048**	1	SEAL-O-RING	

Y-SEPARATE ILLUSTRATION

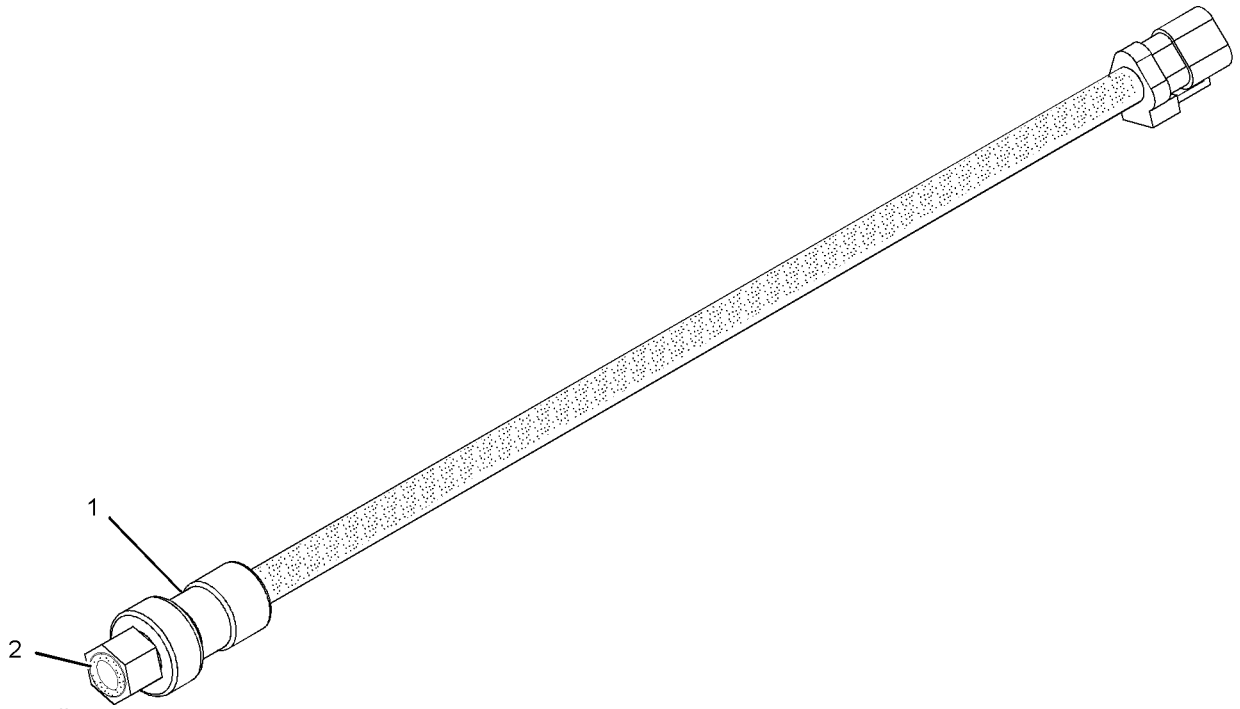

GRAPHIC #1 **<END>** g01019323

239-3478 SENSOR GP-PRESSURE

S/N: RSX15243-UP

PART OF 239-5674 SENSOR GP-PRESSURE

SMCS-1408, 1925, 7494 **i03330527**

NOTE	REF NO	GRAPHIC REF	PART NUMBER	QTY	PART NAME 1 2 3 4 5 6 (PRODUCT LEVEL)	SEE PAGE
BE	1	1	**9X-1813**		SLEEVE (34-CM)	
	2	1	**102-8803**	1	KIT-RECEPTACLE (3-PIN)	
					(INCLUDES RECEPTACLE AS & WEDGE)	
	3	1	**180-9339**	3	PIN-CONNECTOR (14-GA TO 18-GA)	
	4	1	**3E-3371**	1	WEDGE-RECEPTACLE LOCK (3-PIN)	

B-USE AS REQUIRED
E-ORDER BY THE CENTIMETER

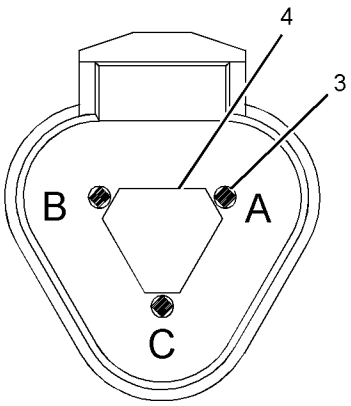

VIEW A-A

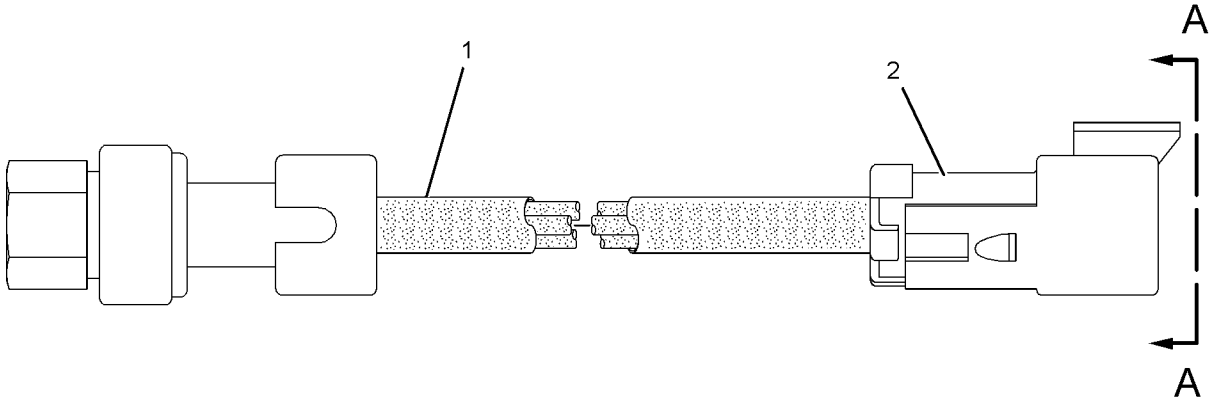

GRAPHIC #1 **<END>** g01019421

239-5674 SENSOR GP-PRESSURE

S/N: RSX15243-UP

PART OF 243-1555 SENSOR GP-ENGINE

SMCS-1408, 1925, 7494 **i02226235**

NOTE	REF NO	GRAPHIC REF	PART NUMBER	QTY	PART NAME 1 2 3 4 5 6 (PRODUCT LEVEL)	SEE PAGE
Y	1	1	**239-3478**	1	SENSOR GP-PRESSURE (AIR INLET MANIFOLD)	185
	2	1	**6V-5048**	1	SEAL-O-RING	

Y-SEPARATE ILLUSTRATION

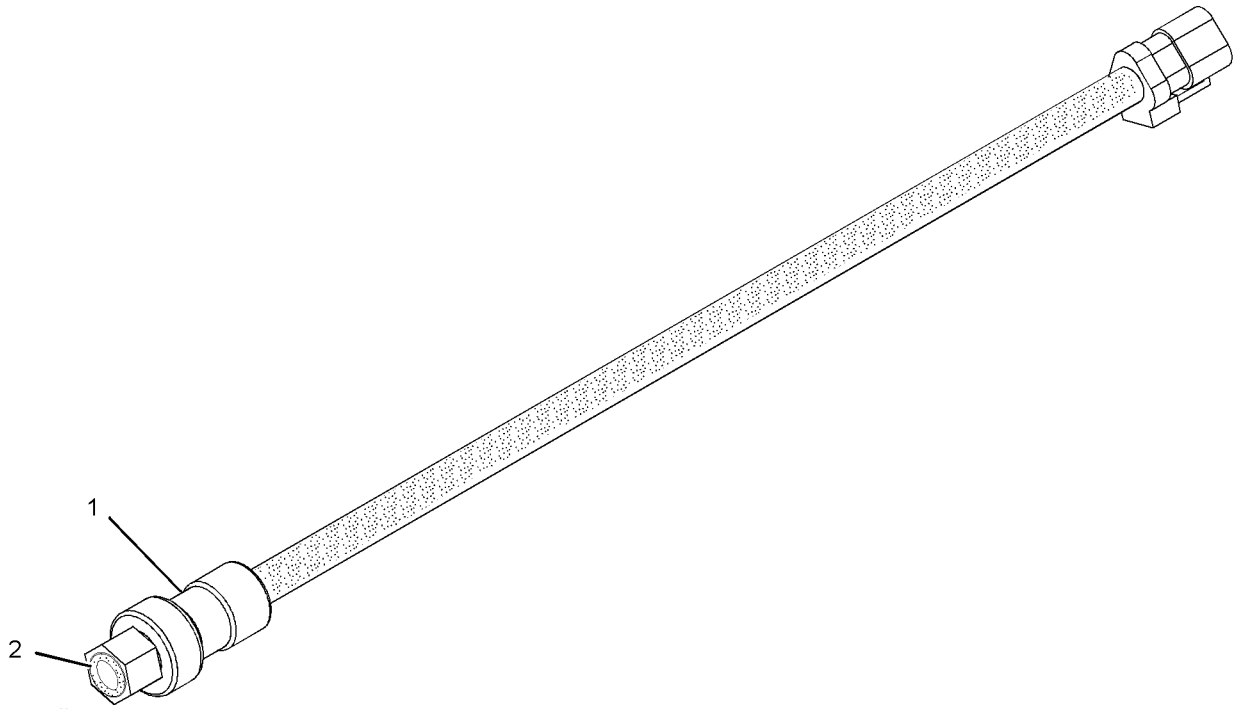

GRAPHIC #1 **<END>** g01019323

106-0543 SENSOR GP-SPEED

S/N: DKG1-UP

PART OF 237-8250 GEAR GP-OUTPUT TRANSFER

SMCS-1907, 1912, 3175, 4803, 7493 **i03628486**

NOTE	REF NO	GRAPHIC REF	PART NUMBER	QTY	PART NAME 1 2 3 4 5 6 (PRODUCT LEVEL)	SEE PAGE
	1	1	**102-8802**	1	KIT-RECEPTACLE (2-PIN)	
					(INCLUDES RECEPTACLE AS AND WEDGE)	
	2	1	**186-3735**	2	PIN-CONNECTOR (16-GA TO 18-GA)	
E	3	1	**9X-1813**		SLEEVE (14-CM)	
	4	1	**171-5349**	1	STRAP-MARKER	
	5	1	**3E-3365**	1	WEDGE-RECEPTACLE LOCK (2-PIN)	

E-ORDER BY THE CENTIMETER

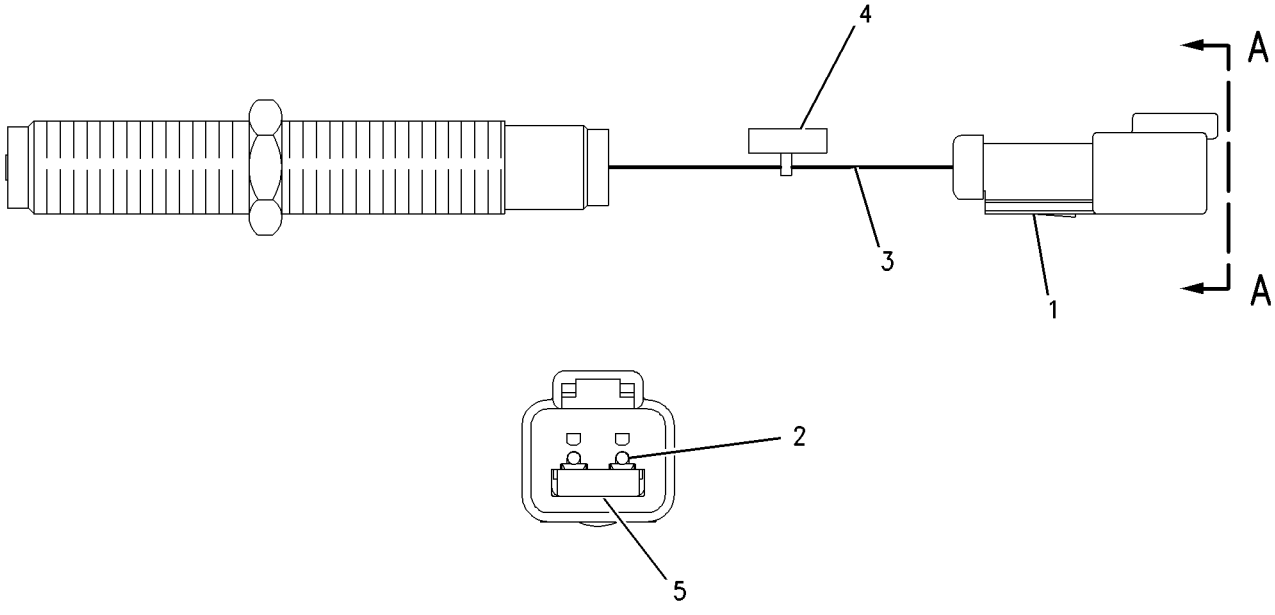

VIEW A-A

GRAPHIC #1 **<END>** g00901079

193-2550 SENSOR GP-SPEED

S/N: DKG1-UP

PART OF 237-8247 TORQUE CONVERTER & HOUSING GP

SMCS-1907, 1912, 3175, 4803, 7493 **i02919909**

NOTE	REF NO	GRAPHIC REF	PART NUMBER	QTY	PART NAME 1 2 3 4 5 6 (PRODUCT LEVEL)	SEE PAGE
	1	1	**171-5349**	1	STRAP-MARKER	
	2	1	**102-8802**	1	KIT-RECEPTACLE (2-PIN)	
					(INCLUDES RECEPTACLE AS & WEDGE)	
	3	1	**9X-3401**	2	PIN-CONNECTOR (16-GA TO 18-GA)	
E	4	1	**9X-1813**		SLEEVE (14-CM)	

E-ORDER BY THE CENTIMETER

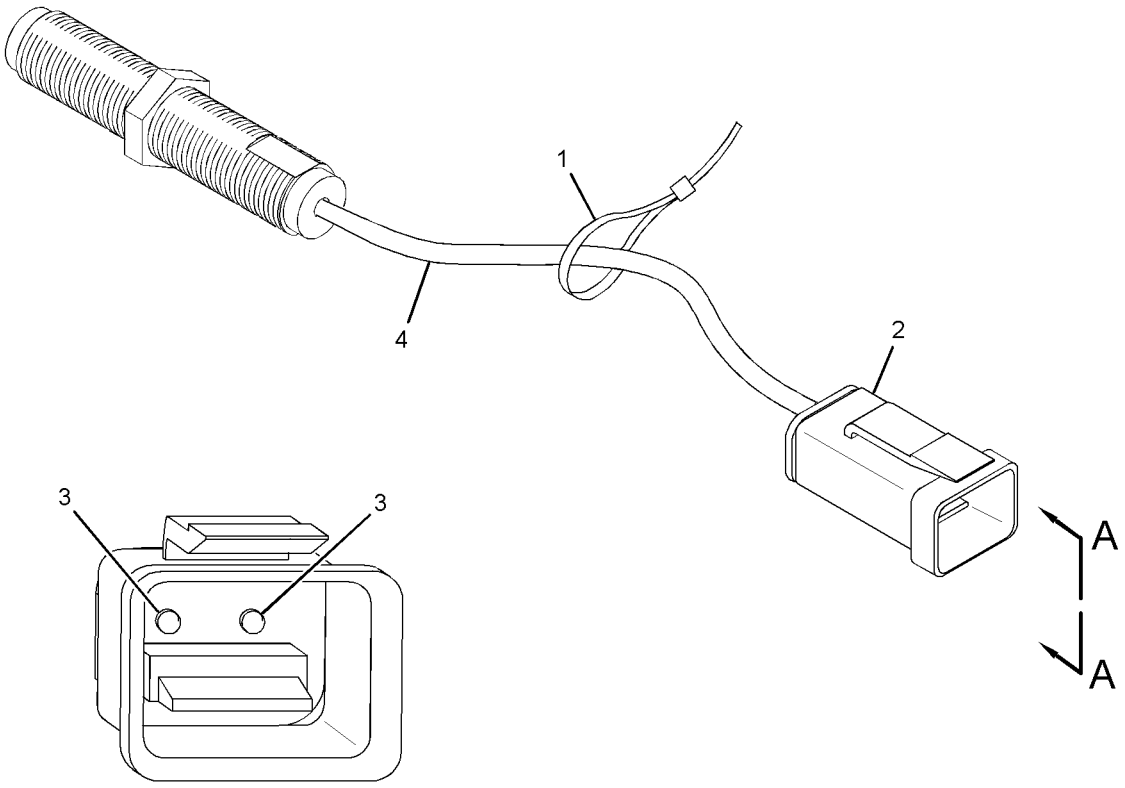

VIEW A-A

GRAPHIC #1 **<END>** g01454055

201-6615 SENSOR GP-SPEED

S/N: RSX15243-UP

PART OF 230-7149 SENSOR GP-SPEED

SMCS-1907, 1912, 3175, 4803, 7493 **i02945679**

NOTE	REF NO	GRAPHIC REF	PART NUMBER	QTY	PART NAME 1 2 3 4 5 6 (PRODUCT LEVEL)	SEE PAGE
	1	1	**133-0260**	1	BRACKET	
	2	1	**188-9429**	1	HARNESS AS-SENSOR (SPEED)	

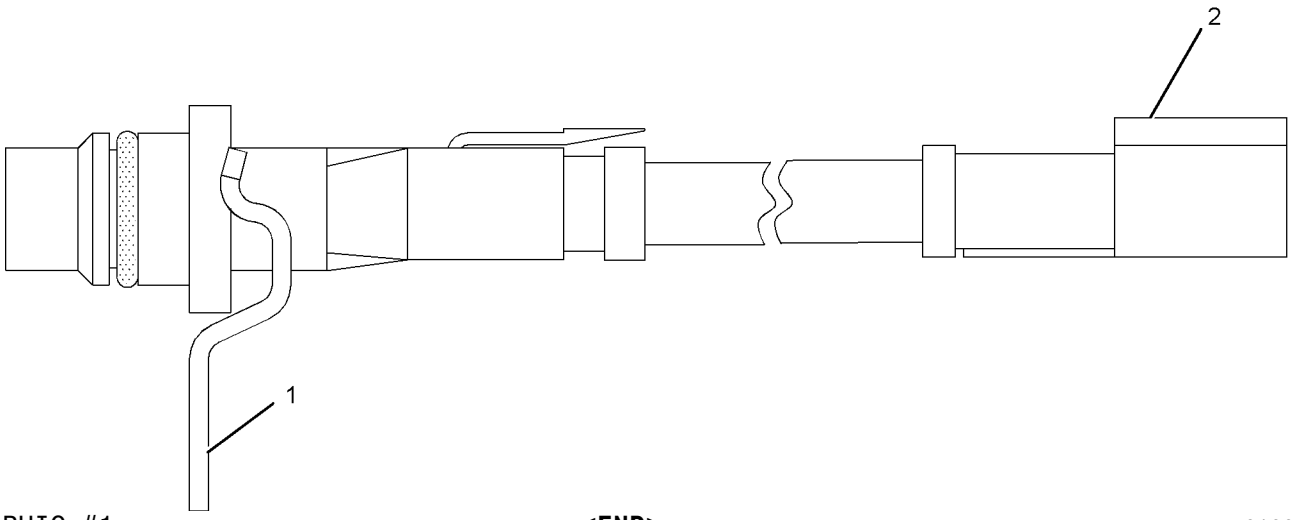

GRAPHIC #1 **<END>** g01009894

ELECTRICAL AND STARTING SYSTEM

201-6616 SENSOR GP-SPEED

S/N: RSX15243-UP

PART OF 239-2397 SENSOR GP-SPEED

SMCS-1907, 1912, 3175, 4803, 7493 **i03568484**

NOTE	REF NO	GRAPHIC REF	PART NUMBER	QTY	PART NAME 1 2 3 4 5 6 (PRODUCT LEVEL)	SEE PAGE
					NO SERVICED PARTS	

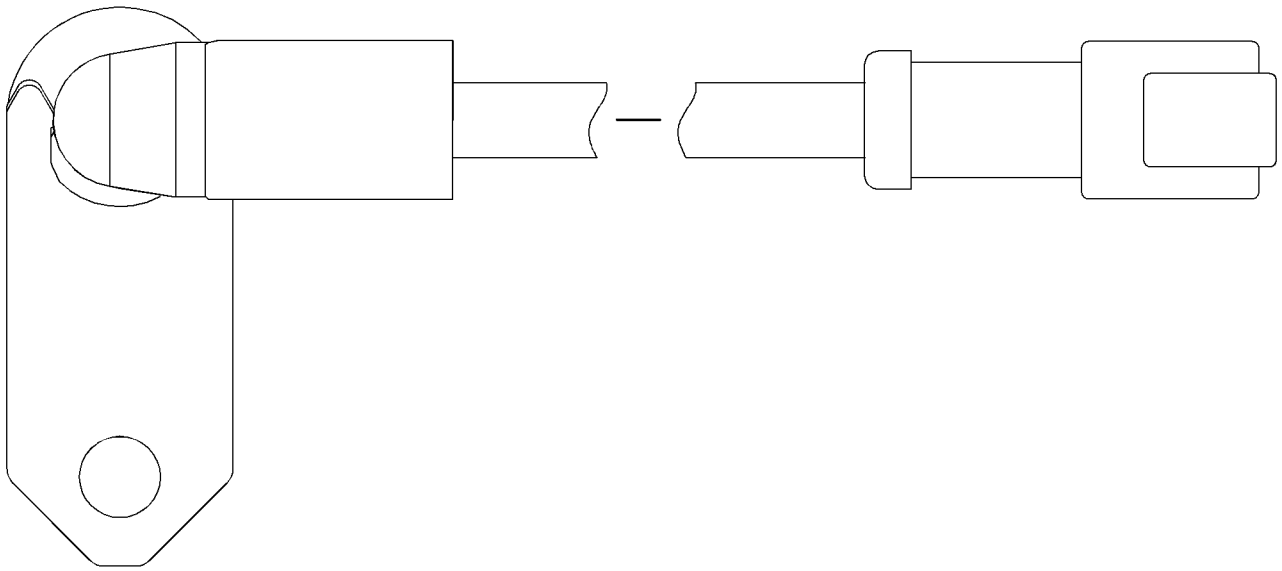

GRAPHIC #1 **<END>** g01895533

230-7149 SENSOR GP-SPEED

S/N: RSX15243-UP

PART OF 243-1555 SENSOR GP-ENGINE

SMCS-1907, 1912, 3175, 4803, 7493 **i03557200**

NOTE	REF NO	GRAPHIC REF	PART NUMBER	QTY	PART NAME 1 2 3 4 5 6 (PRODUCT LEVEL)	SEE PAGE
Y	1	1	**201-6615**	1	SENSOR GP-SPEED	189
	2	1	**228-4947**	1	SEAL-O-RING	

Y-SEPARATE ILLUSTRATION

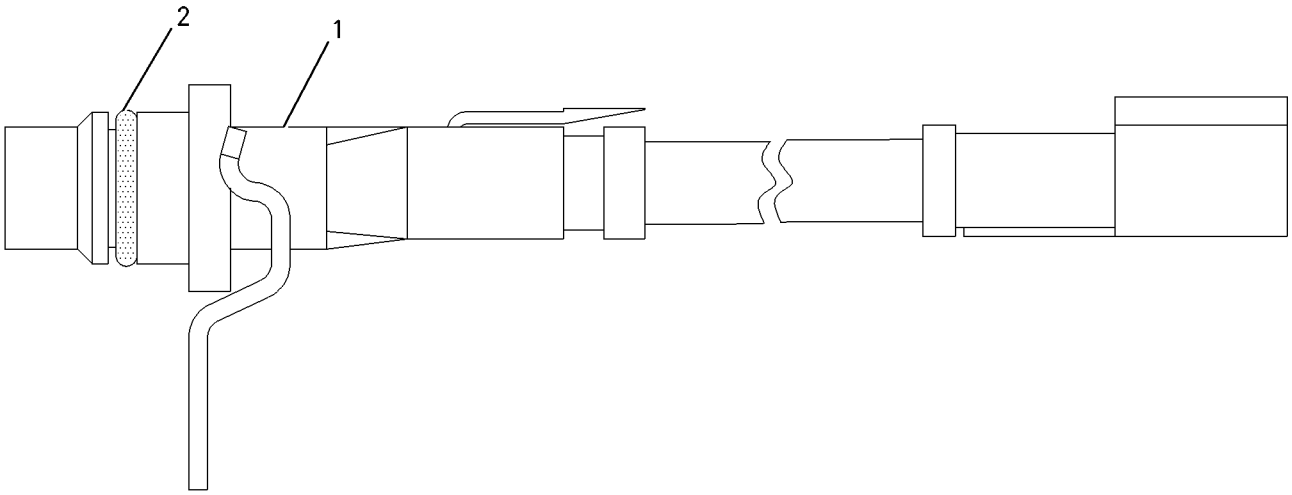

GRAPHIC #1 **<END>** g01007584

239-2397 SENSOR GP-SPEED

S/N: RSX15243-UP

PART OF 243-1555 SENSOR GP-ENGINE

SMCS-1907, 1912, 3175, 4803, 7493 **i03557604**

NOTE	REF NO	GRAPHIC REF	PART NUMBER	QTY	PART NAME 1 2 3 4 5 6 (PRODUCT LEVEL)	SEE PAGE
	1	1	**228-4947**	1	SEAL-O-RING	
Y	2	1	**201-6616**	1	SENSOR GP-SPEED	190

Y-SEPARATE ILLUSTRATION

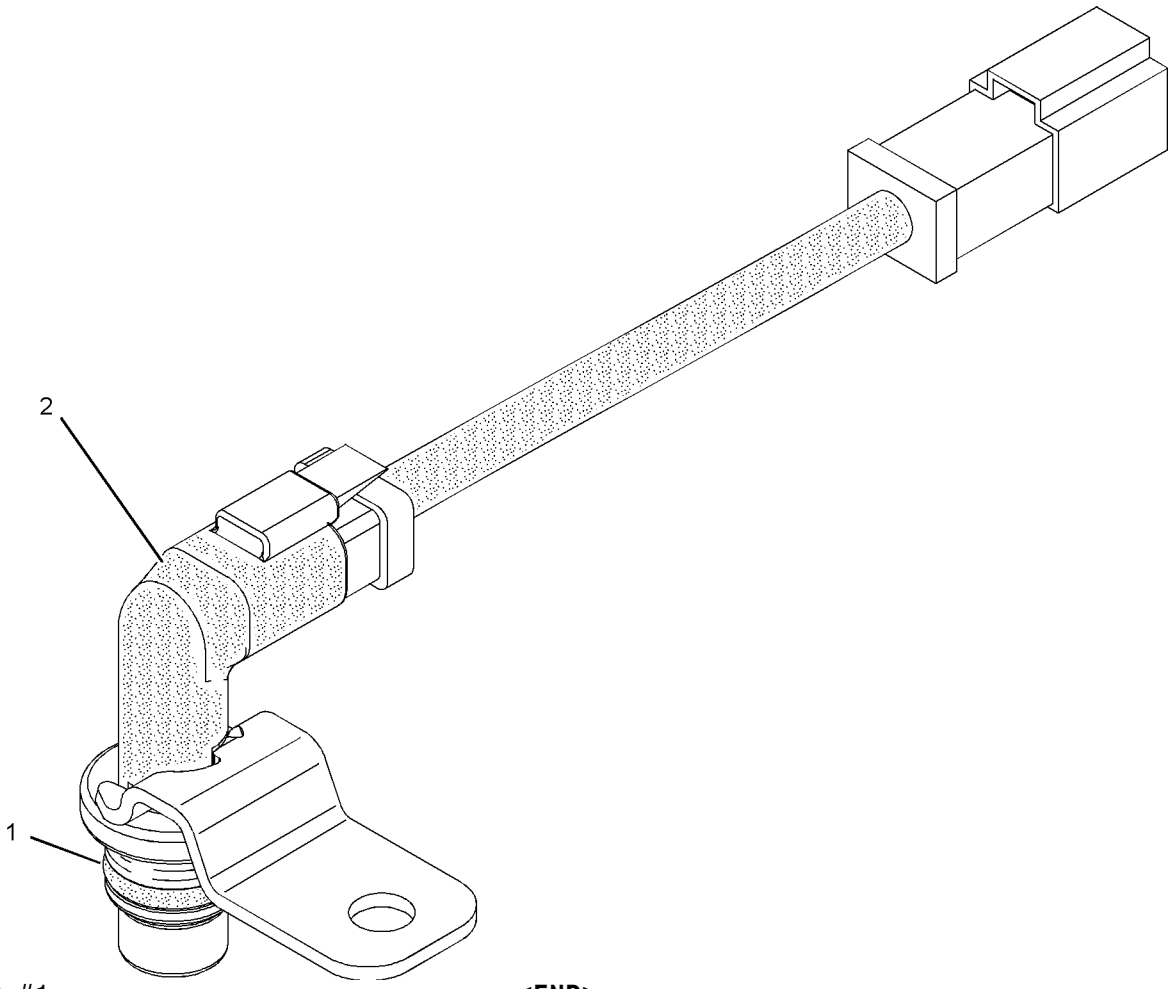

GRAPHIC #1 **<END>** g01019337

145-7028 SENSOR GP-TEMPERATURE

S/N: DKG1-UP

PART OF 237-8249 CONTROL GP-TRANSMISSION HYD

SMCS-1408, 1906, 1919, 1921, 1922, 1928, 1929, 301T, 3194, 429T, 509T

i01828633

NOTE	REF NO	GRAPHIC REF	PART NUMBER	QTY	PART NAME 1 2 3 4 5 6 (PRODUCT LEVEL)	SEE PAGE
	1	1	**102-8802**	1	KIT-RECEPTACLE (2-PIN)	
					(INCLUDES RECEPTACLE AS & WEDGE)	
BJ	2	1	**153-5043**		SLEEVE	
	3	1	**8T-8729**	2	PIN-CONNECTOR	
	4	1	**3E-3365**	1	WEDGE-RECEPTACLE LOCK (2-PIN)	

B-USE AS REQUIRED
J-ORDER BY THE DECIMETER

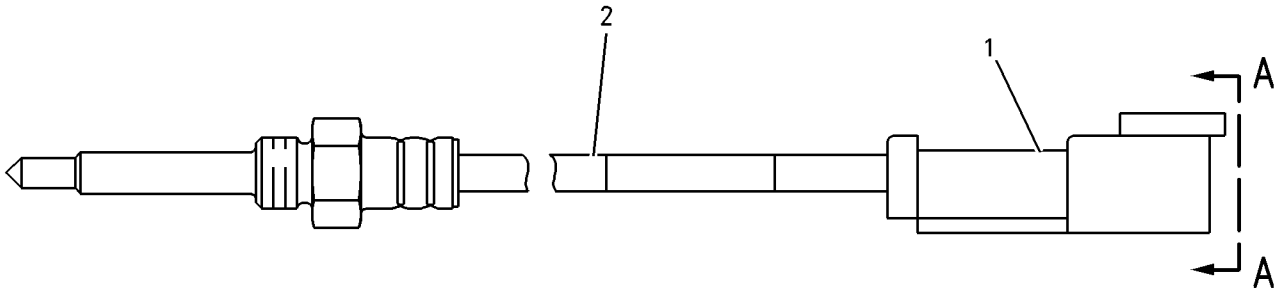

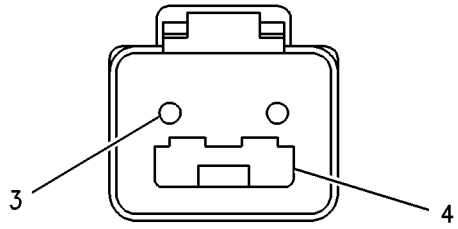

VIEW A-A

GRAPHIC #1 **<END>** g00917620

274-7395 SENSOR GP-TEMPERATURE

S/N: RSX15243-UP

PART OF 243-1555 SENSOR GP-ENGINE

SMCS-1408, 1906, 1919, 1921, 1922, 1928, 1929, 301T, 3194, 429T, 509T

i03435385

NOTE	REF NO	GRAPHIC REF	PART NUMBER	QTY	PART NAME 1 2 3 4 5 6 (PRODUCT LEVEL)	SEE PAGE
	1	1	**264-4297**	1	SENSOR GP-TEMPERATURE	
		1	**137-6645**	1	PAD	
	2	1	**8L-2786**	1	SEAL-O-RING	

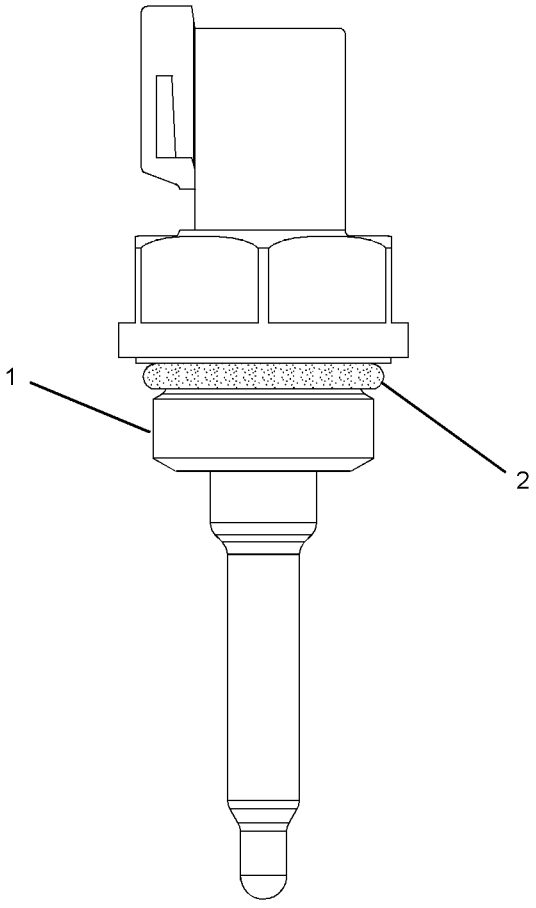

GRAPHIC #1

<END>

g01353734

274-7396 SENSOR GP-TEMPERATURE

S/N: RSX15243-UP

PART OF 243-1555 SENSOR GP-ENGINE

SMCS-1408, 1906, 1919, 1921, 1922, 1928, 1929, 301T, 3194, 429T, 509T

i03435390

NOTE	REF NO	GRAPHIC REF	PART NUMBER	QTY	PART NAME 1 2 3 4 5 6 (PRODUCT LEVEL)	SEE PAGE
	1	1	**264-4297**	1	SENSOR GP-TEMPERATURE	
		1	**137-6645**	1	PAD	
	2	1	**6V-6609**	1	SEAL-O-RING	

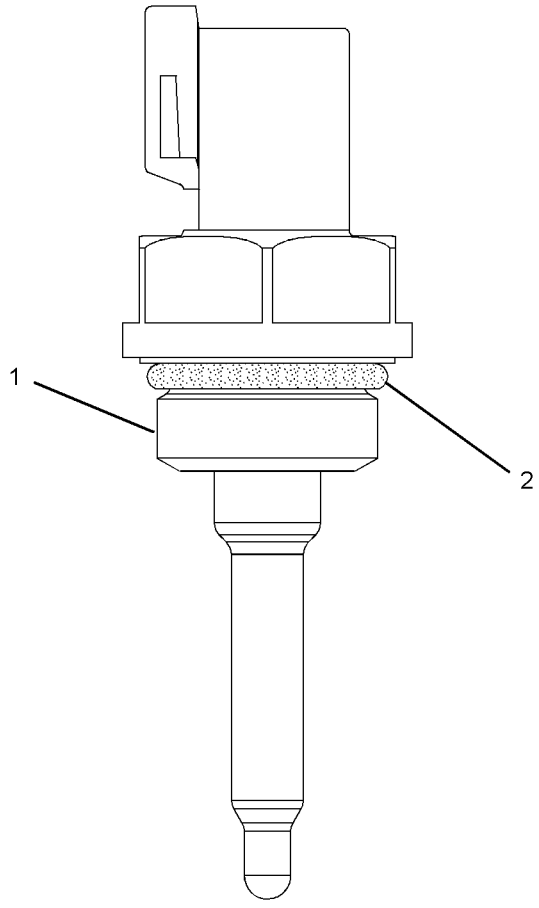

GRAPHIC #1

<END>

g01353734

251-7593 STARTING MOTOR GP-ELECTRIC

S/N: RYF1-UP
24-VOLT
PART OF 236-7231 INSTALLATION AR-ENGINE

SMCS-1453 **i03626022**

NOTE	REF NO	GRAPHIC REF	PART NUMBER	QTY	PART NAME 1 2 3 4 5 6 (PRODUCT LEVEL)	SEE PAGE
	1	1	**236-4269**	1	CABLE AS	
		1	**1S-7251**	1	TERMINAL-CABLE (00-GA, 1/2-IN BOLT)	
		1	**1S-7252**	1	TERMINAL-CABLE (00-GA, 3/8-IN BOLT)	
E		1	**5P-0747**		CABLE (00-GA, BLACK) (17-CM)	
	2	1	**4N-1059**	1	GASKET	
YR	3	1	**290-6527**	1	STARTING MOTOR GP-ELECTRIC	197
	4	1	**6V-0371**	3	BOLT (5/8-11X1.375-IN)	

E-ORDER BY THE CENTIMETER
R-REMFG PART MAY BE AVAILABLE
Y-SEPARATE ILLUSTRATION

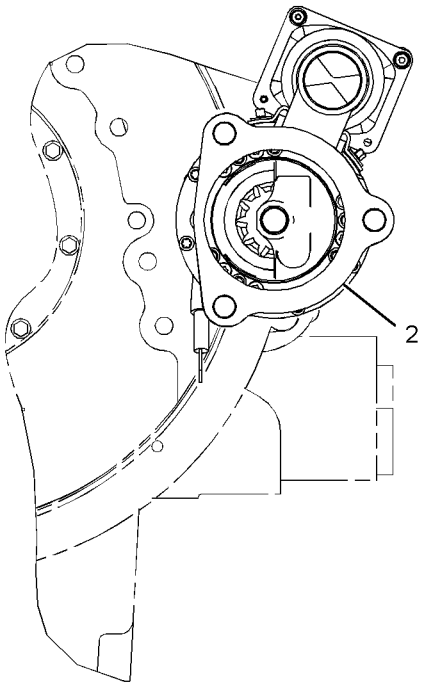

REAR VIEW

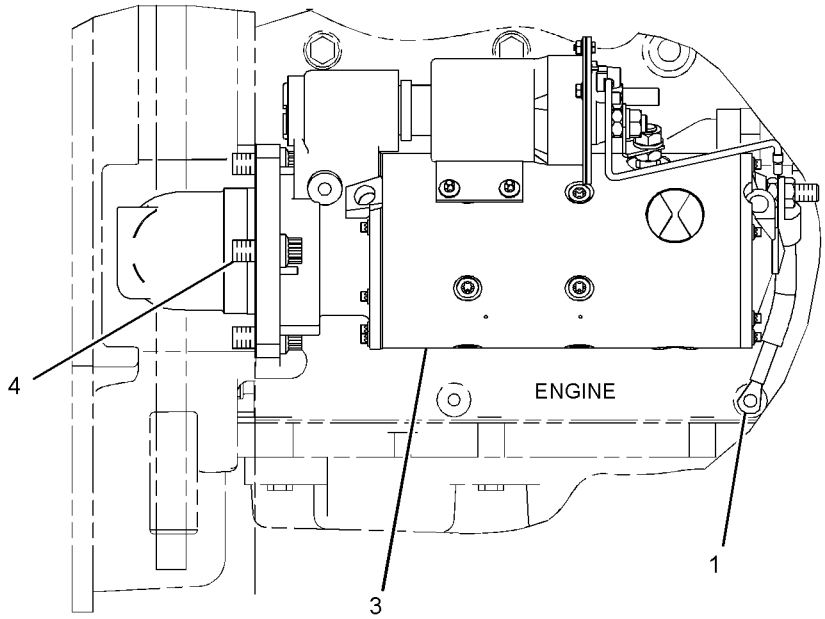

RIGHT SIDE VIEW

GRAPHIC #1 **<END>** g01390445

ELECTRICAL AND STARTING SYSTEM

290-6527 STARTING MOTOR GP-ELECTRIC*R

S/N: RYF1-UP

PART OF 251-7593 STARTING MOTOR GP-ELECTRIC

SMCS-1453 **i03626414**

NOTE	REF NO	GRAPHIC REF	PART NUMBER	QTY	PART NAME 1 2 3 4 5 6 (PRODUCT LEVEL)	SEE PAGE
	1	1	**7M-0326**	1	CONNECTOR	
	2	1	**9H-3757**	2	WASHER (0.516X1X0.094-IN THK)	
	3	1	**1S-7446**	3	SCREW-MACHINE (8-32X0.437-IN)	
	4	1	**8C-9660**	3	WASHER (4.6X7.9X0.8-MM THK)	
	5	1	**9S-2544**	9	SCREW-HEX HEAD (8-32X11.13-MM)	
	6	1	**7M-0327**	1	WASHER-THRUST (17.4X25.4X1.6-MM THK)	
	7	1	**3T-3418**	1	FRAME AS-END	
		1	**3T-3423**	1	CUP	
		1	**3T-3424**	1	PLUG-FELT	
		1	**9G-4101**	1	BUSHING-END	
	8	1	**3T-9525**	1	PLATE AS-BRUSH	
	8A	1	**6T-0371**	1	INSULATOR	
	8B	1	**5P-6298**	12	SCREW-MACHINE (10-32X0.5-IN)	
	8C	1	**7F-3525**	6	WASHER-BUSHING (0.207X0.39X0.09-IN THK)	
	8D	1	**6T-0372**	1	PLATE	
	8E	1	**3T-4709**	3	PLATE	
	8F	1	**2L-6679**	3	PLATE-INSULATOR	
	8G	1	**3T-4710**	3	PLATE	
	8H	1	**6T-0363**	6	HOLDER AS-BRUSH	
					(EACH INCLUDES)	
	8J	1	**3T-9494**	1	SPRING	
	8K	1	**9F-5599**	12	LOCKWASHER	
	9	1	**7F-3491**	2	WASHER (0.516X1X0.094-IN THK)	
	10	1	**3T-3422**	1	WIRE AS	
	11	1	**2J-8163**	2	SEAL-O-RING	
	12	1	**7X-3373**	1	BOLT (5/16-18X0.88-IN)	
	13	1	**3T-3434**	6	PLUG	
	14	1	**5J-5314**	5	BOLT (5/16-18X1.5-IN)	
	15	1	**3L-3380**	1	BUSHING-TERMINAL	
	16	1	**036-9821**	1	WASHER	
	17	1	**4M-1828**	1	RETAINER-SPRING	
	18	1	**306-3998**	1	BOOT-RUBBER	
	19	1	**9M-7609**	1	SPRING (SHIFT LEVER)	
	20	1	**4M-1827**	1	RETAINER-SPRING	
	21	1	**8C-3089**	1	SEAL-O-RING	
	22	1	**4M-1853**	1	LEVER AS-SHIFT	
	23	1	**5M-3034**	1	LOCKNUT (5/16-24-THD)	
	24	1	**7L-2894**	4	GASKET	
	25	1	**4M-1831**	4	PLUG-LEVER HOUSING	
	26	1	**4M-1854**	1	SHAFT-LEVER	
	27	1	**1H-1023**	1	SEAL-O-RING	
	28	1	**2D-6392**	1	SEAL-O-RING	
	29	1	**7T-3974**	1	HOUSING AS-DRIVE	
	30	1	**184-6964**	1	DRIVE AS-MOTOR	
	31	1	**2H-3429**	2	RING-RETAINING	
	32	1	**6V-1322**	4	BOLT (1/4-20X0.375-IN)	
	33	1	**8T-4205**	4	WASHER-HARD (7.2X14.5X2-MM THK)	
	34	1	**6N-3279**	1	INSULATOR	
	35	1	**036-9823**	13	BOLT (1/4-28X1-IN)	
	36	1	**1M-9971**	1	SPACER (0.835X1.72X0.188-IN THK)	
	37	1	**1H-2629**	3	STRIP-INSULATION	
	38	1	**7M-0324**	1	COIL AS-FIELD	
	39	1	**3R-8797**	12	SCREW & WASHER AS (3/8-24X0.72-IN)	
	40	1	**7F-3488**	6	SHOE-POLE	
	41	1	**7M-8651**	1	ARMATURE AS	
	42	1	**7M-0325**	1	INSULATOR	

290-6527 STARTING MOTOR GP-ELECTRIC *(contd.)* i03626414

NOTE	REF NO	GRAPHIC REF	PART NUMBER	QTY	PART NAME 1 2 3 4 5 6 (PRODUCT LEVEL)	SEE PAGE
	43	1	**3T-9524**	6	BRUSH AS	
	44	1	**3N-3763**	1	KIT-TERMINAL (STARTING MOTOR)	
	45	1	**125-6537**	1	INSULATOR	
	46	1	**3R-8801**	1	CLAMP	
	47	1	**8F-1434**	2	LOCKWASHER	
	48	1	**6V-8188**	6	NUT (1/2-13-THD)	
	49	1	**7X-0562**	6	WASHER-HARD (13.5X19X0.8-MM THK)	
	50	1	**4B-2049**	6	NUT (10-32-THD)	
	51	1	**8T-0328**	10	WASHER-HARD (5.5X10X1-MM THK)	
	52	1	**3T-9494**	6	SPRING	
	53	1	**3E-7771**	1	HOUSING AS (STARTING MOTOR)	
	54	1	**9G-4101**	1	BUSHING-END	
	55	1	**3T-3424**	6	PLUG-FELT	
	56	1	**3T-3423**	3	CUP	
	57	1	**1M-9968**	1	BUSHING	
	58	1	**2F-6678**	1	SEAL-LIP TYPE	
	59	1	**4L-2729**	1	WASHER (0.844X1.9X0.188-IN THK)	
	60	1	**4M-1896**	1	BUSHING-TERMINAL	
	61	1	**045-4065**	4	SCREW-MACHINE (10-32X0.75-IN)	
	62	1	**125-6535**	1	COVER-STARTING MOTOR	
	63	1	**7T-9123**	1	GASKET-PLATE	
	64	1	**318-2082**	1	SOLENOID AS-STARTING MOTOR (24-VOLT)	
	65	1	**125-6536**	1	TERMINAL AS	

290-6527 STARTING MOTOR GP-ELECTRIC *(contd.)* i03626414

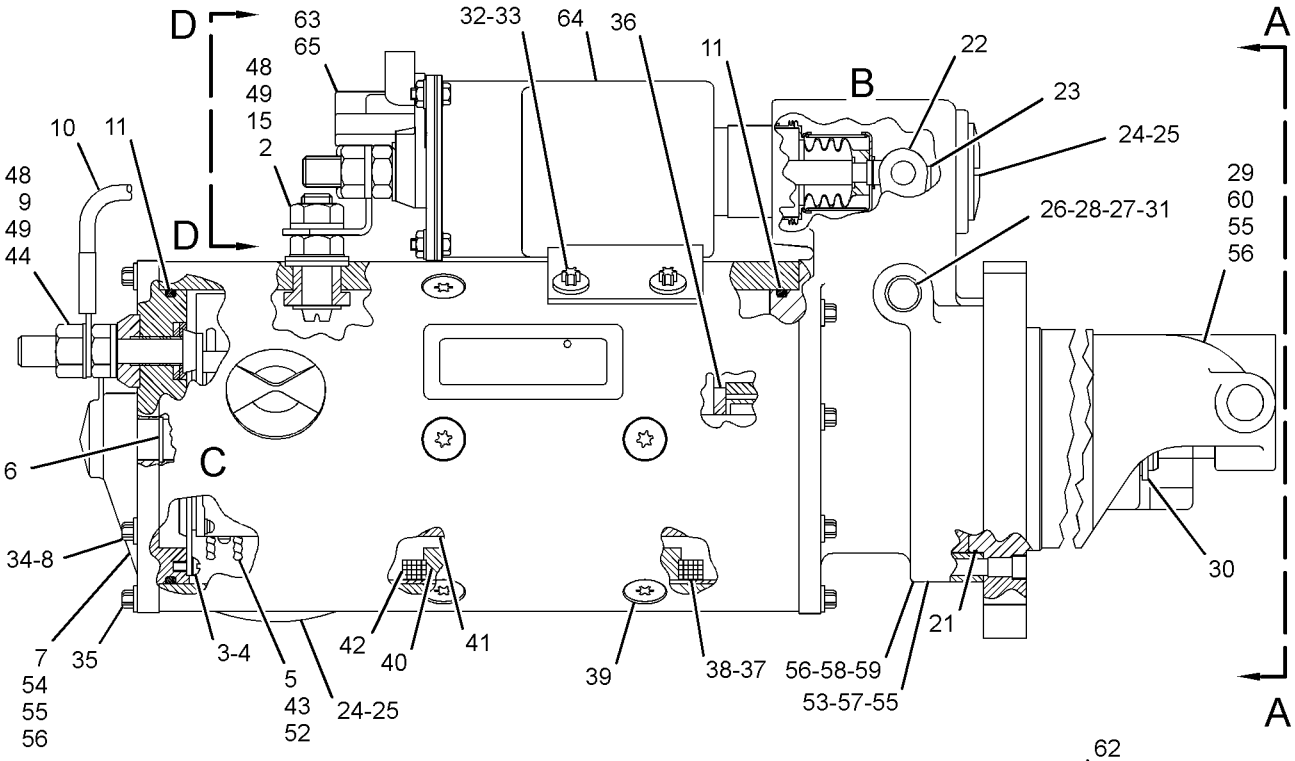

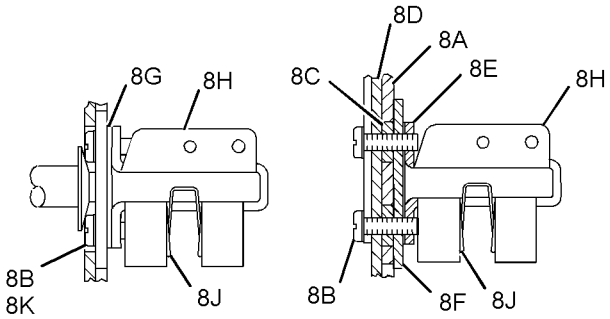

VIEW OF AREA C
(COVER REMOVED)

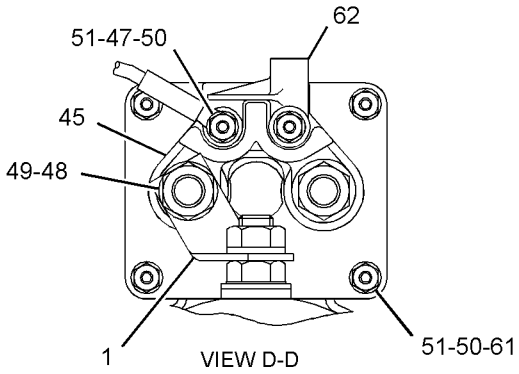

VIEW D-D

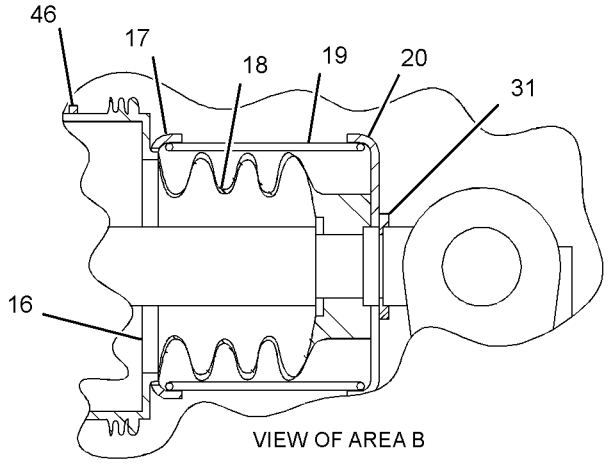

VIEW OF AREA B

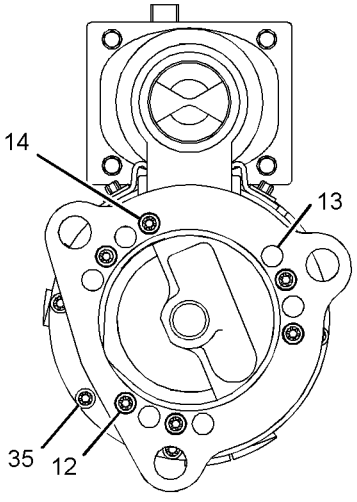

VIEW A-A

GRAPHIC #1 **<END>** g01517972

164-7577 SWITCH GP-BYPASS

S/N: RYF1-UP

PART OF 333-9309 BASE GP-OIL FILTER, 237-4905 WIRING GP-CHASSIS

SMCS-1408, 1435 **i02891455**

NOTE	REF NO	GRAPHIC REF	PART NUMBER	QTY	PART NAME 1 2 3 4 5 6 (PRODUCT LEVEL)	SEE PAGE
BE	1	1	**9X-1813**		SLEEVE	
	2	1	**102-8802**	1	KIT-RECEPTACLE (2-PIN)	
					(INCLUDES RECEPTACLE AS & WEDGE)	
	3	1	**186-3735**	2	PIN-CONNECTOR (16-GA TO 18-GA)	
	4	1	**3E-3365**	1	WEDGE-RECEPTACLE LOCK (2-PIN)	
	5	1	**3D-2824**	1	SEAL-O-RING	
Z	6	1		1	SWITCH AS	

B-USE AS REQUIRED
E-ORDER BY THE CENTIMETER
Z-NOT SERVICED SEPARATELY

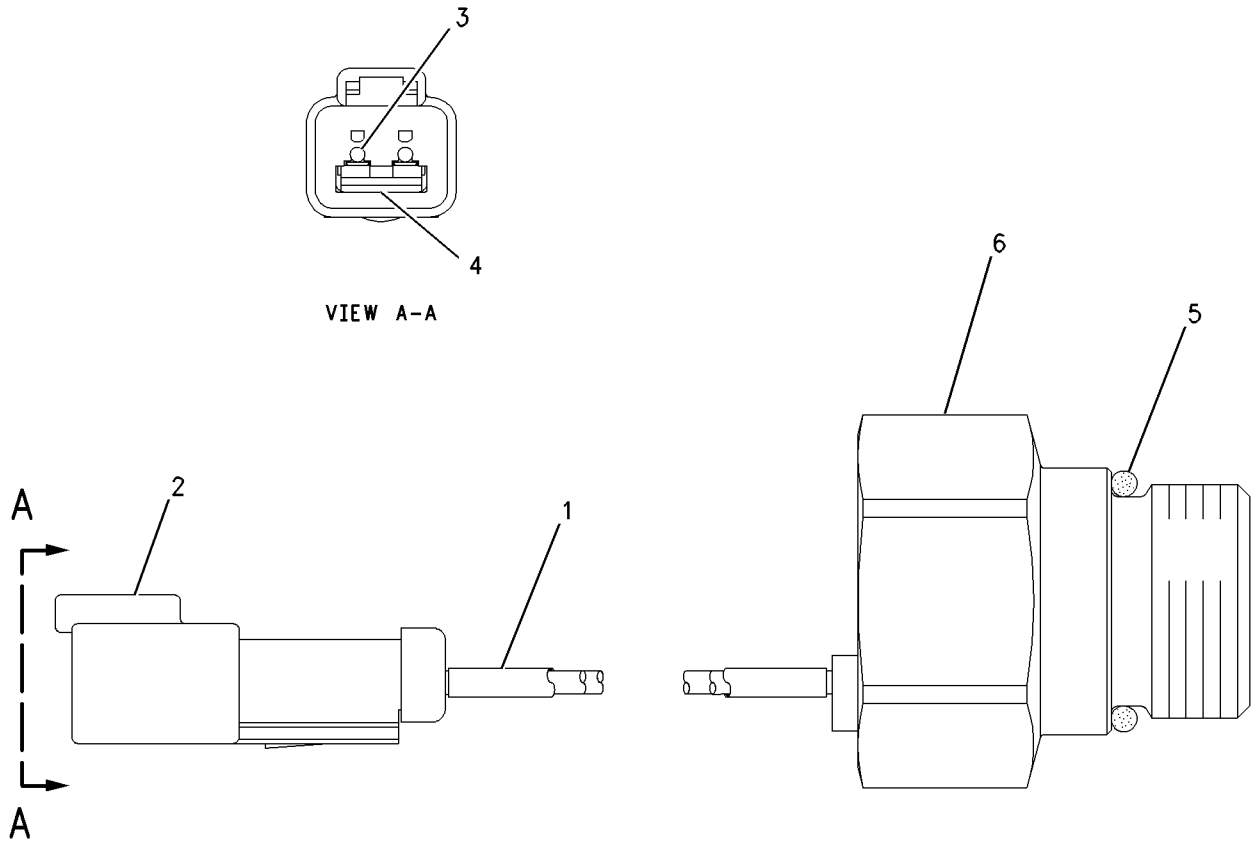

GRAPHIC #1 **<END>** g00750019

197-6475 SWITCH GP-DIMMER–ROADING

S/N: RYF1-UP
PART OF 254-5525, 260-7765 LIGHTING AR-ROADING
AN ATTACHMENT

SMCS-7332 **i02454102**

NOTE	REF NO	GRAPHIC REF	PART NUMBER	QTY	PART NAME 1 2 3 4 5 6 (PRODUCT LEVEL)	SEE PAGE
	1	1	**2H-1855**	1	SWITCH AS-DIMMER (ROADING)	
		1	**6V-8362**	3	SCREW-MACHINE (8-32X0.31-IN)	
		1	**9B-7233**	3	LOCKWASHER	
	2	1	**121-8039**	1	WIRE AS	
	3	1	**5S-7349**	3	BOLT (1/4-20X0.5-IN)	
	4	1	**8T-4205**	3	WASHER-HARD (7.2X14.5X2-MM THK)	

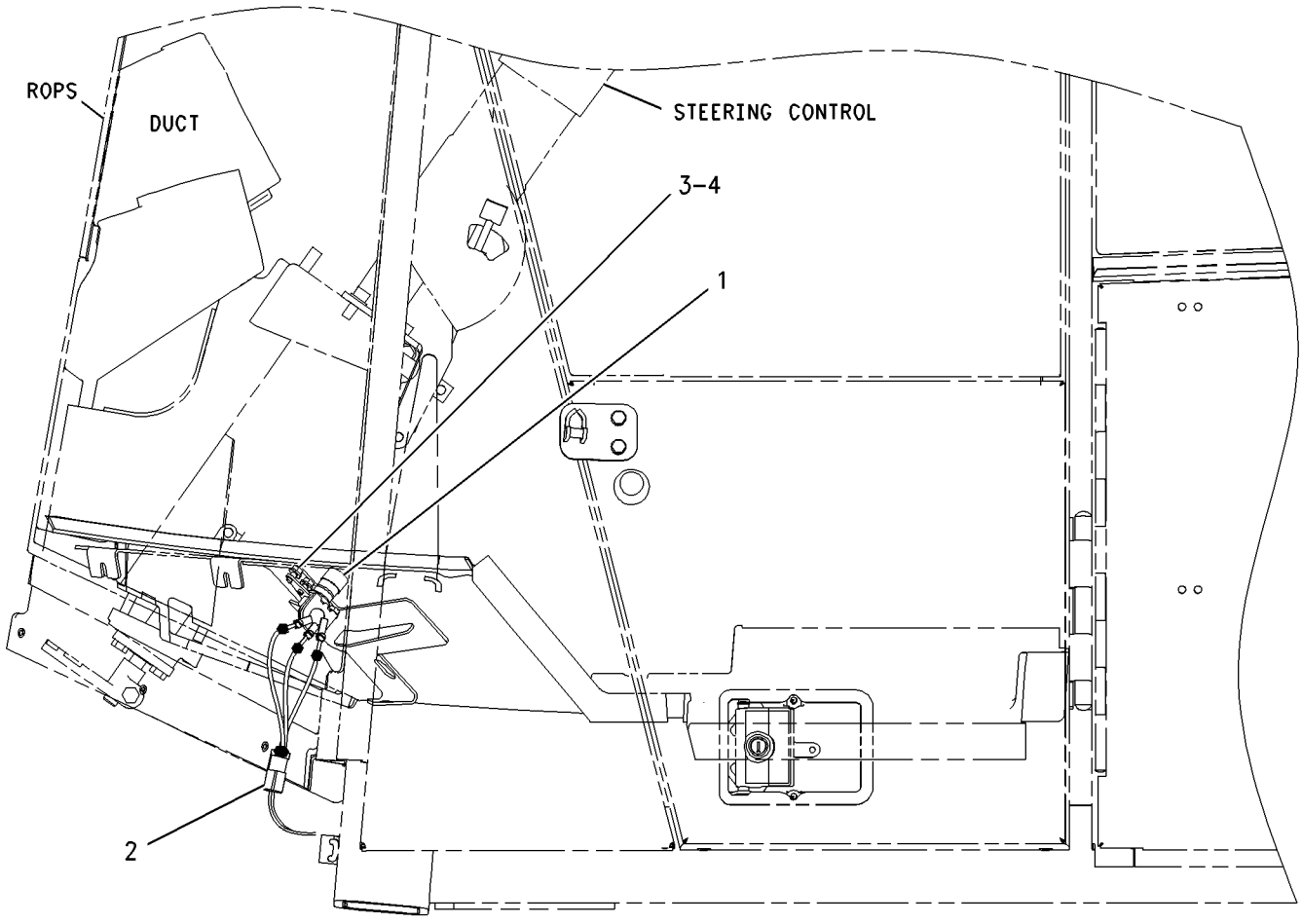

LEFT SIDE VIEW OF CAB

GRAPHIC #1 **<END>** g00799540

7N-0718 SWITCH GP-DISCONNECT–BATTERY

S/N: RYF1-UP
12-VOLT
PART OF 299-0745 BATTERY & WIRING GP

SMCS-1411 **i02587657**

NOTE	REF NO	GRAPHIC REF	PART NUMBER	QTY	PART NAME 1 2 3 4 5 6 (PRODUCT LEVEL)	SEE PAGE
	1	1	**8H-5306**	1	KEY (BATTERY DISCONNECT)	
	2	1	**8H-5303**	1	NUT (3/4-16-THD)	
	3	1	**2H-3922**	2	LOCKWASHER	
	4	1	**9F-5644**	2	LOCKWASHER	
	5	1	**6F-7045**	2	NUT-FULL (3/8-24-THD)	

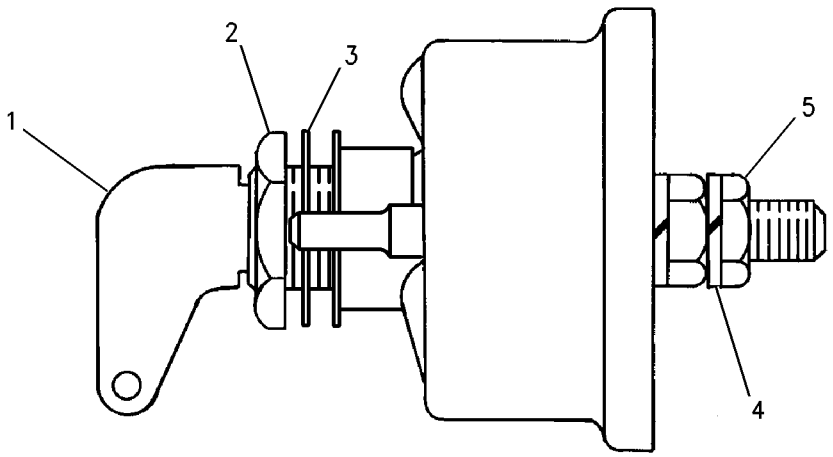

GRAPHIC #1 **<END>** g00715584

3E-0075 SWITCH GP-MAGNETIC

S/N: RYF1-UP
24-VOLT
PART OF 237-4905 WIRING GP-CHASSIS

SMCS-7499 **i02060459**

NOTE	PART NUMBER	QTY	PART NAME 1 2 3 4 5 6 (PRODUCT LEVEL)	SEE PAGE
Y	*175-2322*	1	SWITCH GP-MAGNETIC (START RELAY)	204
			—OR—	
Y	*175-2324*	1	SWITCH GP-MAGNETIC (START RELAY)	205

Y-SEPARATE ILLUSTRATION

<END>

175-2322 SWITCH GP-MAGNETIC

S/N: RYF1-UP
24-VOLT
PART OF 3E-0075 SWITCH GP-MAGNETIC

SMCS-7499 **i02064481**

NOTE	REF NO	GRAPHIC REF	PART NUMBER	QTY	PART NAME 1 2 3 4 5 6 (PRODUCT LEVEL)	SEE PAGE
	1	1	**102-8802**	1	KIT-RECEPTACLE (2-PIN)	
					(INCLUDES RECEPTACLE AS AND WEDGE)	
	2	1	**186-3735**	2	PIN-CONNECTOR (16-GA TO 18-GA)	
	3	1	**1H-3338**	2	LOCKWASHER (EXTERNAL TOOTH)	
	4	1	**012-0380**	2	LOCKWASHER	
M	5	1	**5C-2890**	2	NUT (M6X1-THD)	
E	6	1	**9X-1813**		SLEEVE (16-CM)	

E-ORDER BY THE CENTIMETER
M-METRIC PART

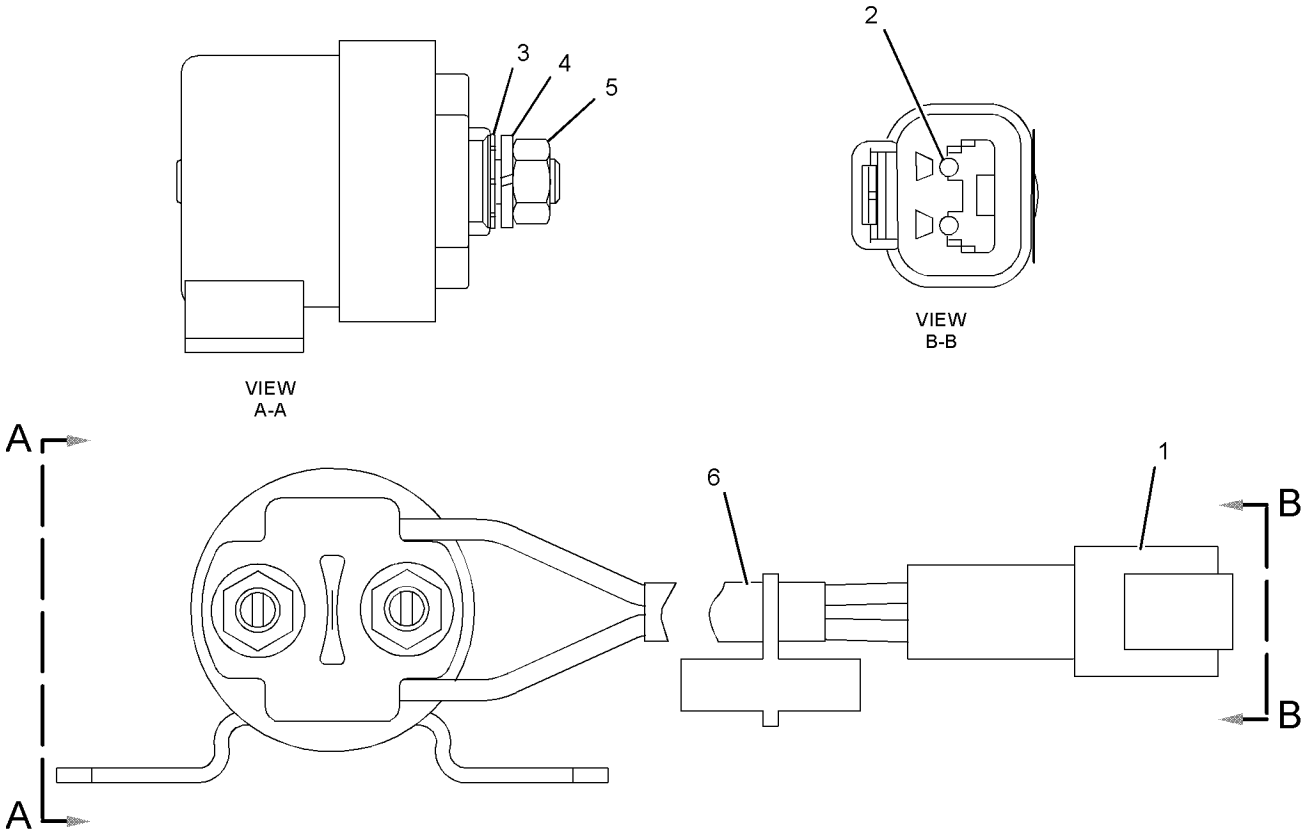

GRAPHIC #1 **<END>** g01057972

175-2324 SWITCH GP-MAGNETIC

S/N: RYF1-UP

PART OF 3E-0075 SWITCH GP-MAGNETIC

SMCS-7499 **i03363878**

NOTE	REF NO	GRAPHIC REF	PART NUMBER	QTY	PART NAME 1 2 3 4 5 6 (PRODUCT LEVEL)	SEE PAGE
	1	1	**3E-7277**	1	SWITCH AS-MAGNETIC (24-VOLT)	
	2	1	**102-8802**	1	KIT-RECEPTACLE (2-PIN)	
					(INCLUDES RECEPTACLE AS & WEDGE)	
	3	1	**186-3735**	2	PIN-CONNECTOR (16-GA TO 18-GA)	
	4	1	**1H-3338**	2	LOCKWASHER (EXTERNAL TOOTH)	
	5	1	**012-0380**	2	LOCKWASHER	
M	6	1	**5C-2890**	2	NUT (M6X1-THD)	
E	7	1	**9X-1813**		SLEEVE (16-CM)	

E-ORDER BY THE CENTIMETER
M-METRIC PART

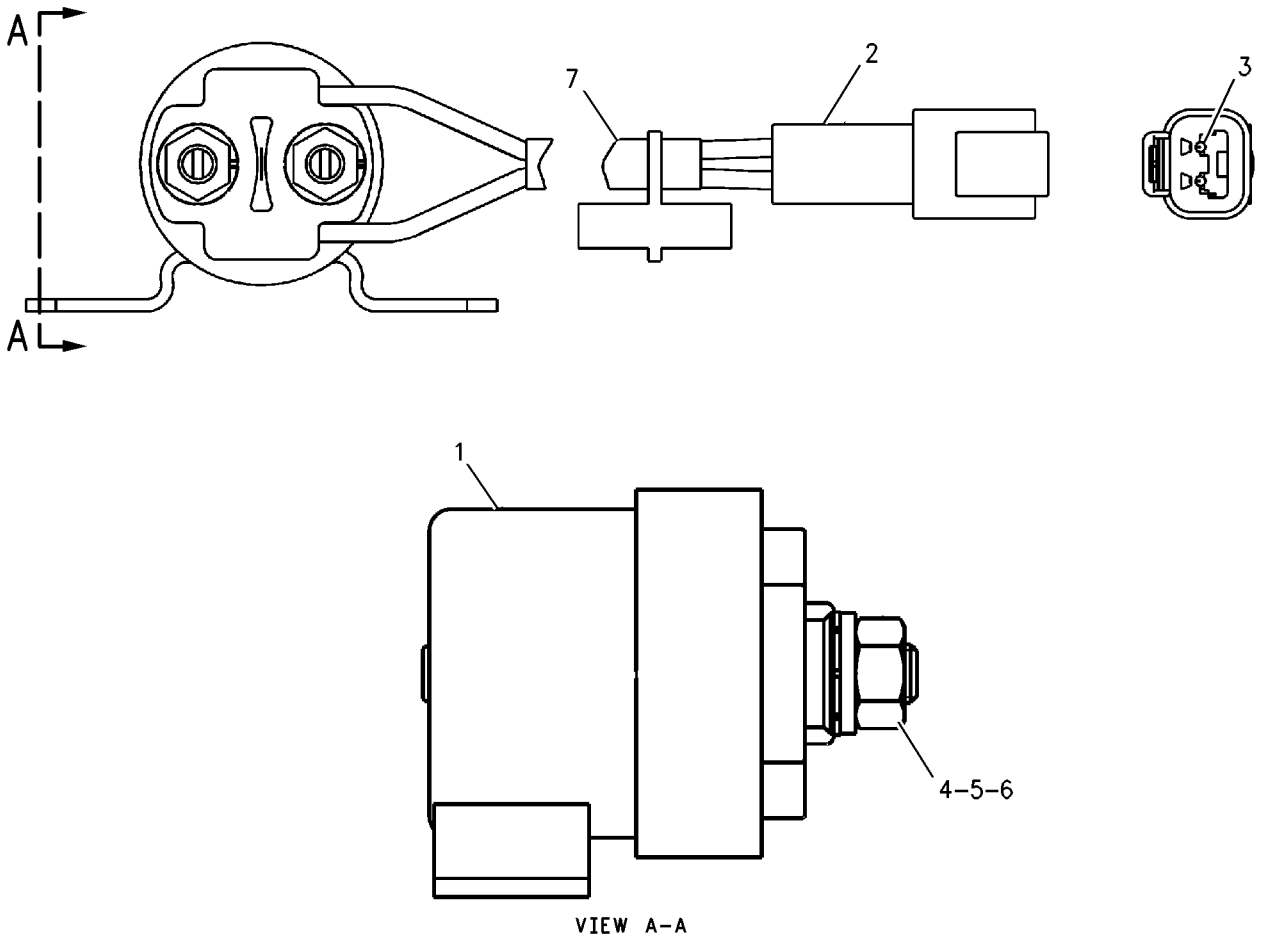

VIEW A–A

GRAPHIC #1 **<END>** g00985960

241-8368 SWITCH GP-MAGNETIC

S/N: RYF1-UP
24-VOLT
PART OF 237-4905 WIRING GP-CHASSIS

SMCS-7499 **i02290099**

NOTE	REF NO	GRAPHIC REF	PART NUMBER	QTY	PART NAME 1 2 3 4 5 6 (PRODUCT LEVEL)	SEE PAGE
	1	1	**155-2270**	1	KIT-CONNECTING PLUG (2-PIN)	
					(INCLUDES PLUG AS, WEDGE & INTERFACE SEAL)	
	2	1	**4F-2294**	2	NUT-JAM (5/16-24-THD)	
	3	1	**186-3736**	2	SOCKET-CONNECTOR (16-GA TO 18-GA)	

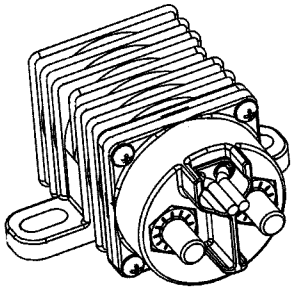

ISOMETRIC VIEW

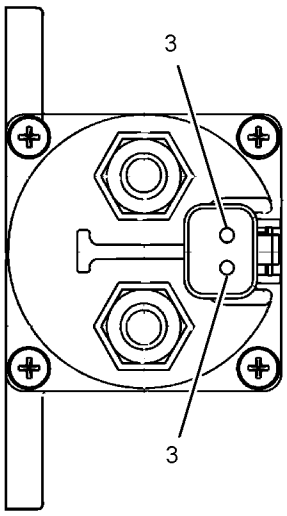

VIEW A-A

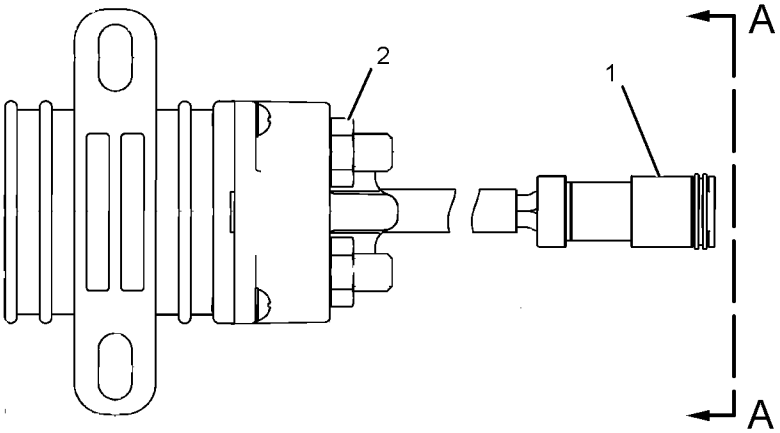

GRAPHIC #1 **<END>** g01077362

275-1253 SWITCH GP-PRESSURE–FUEL FILTER

S/N: RSX15243-UP

PART OF 285-6638 FILTER GP-FUEL

SMCS-1435 **i03525026**

NOTE	REF NO	GRAPHIC REF	PART NUMBER	QTY	PART NAME 1 2 3 4 5 6 (PRODUCT LEVEL)	SEE PAGE
	1	1	**230-4011**	1	PLUG AS-CONNECTOR (2-PIN)	
		1	**264-7029**	1	SEAL-CONNECTOR	
E	2	1	**9X-1813**		SLEEVE (14-CM)	
	3	1	**6V-4589**	1	SEAL-O-RING	
	4	1	**9X-7737**	1	SEAL-O-RING	
	5	1	**9X-3401**	2	PIN-CONNECTOR (16-GA TO 18-GA)	

E-ORDER BY THE CENTIMETER

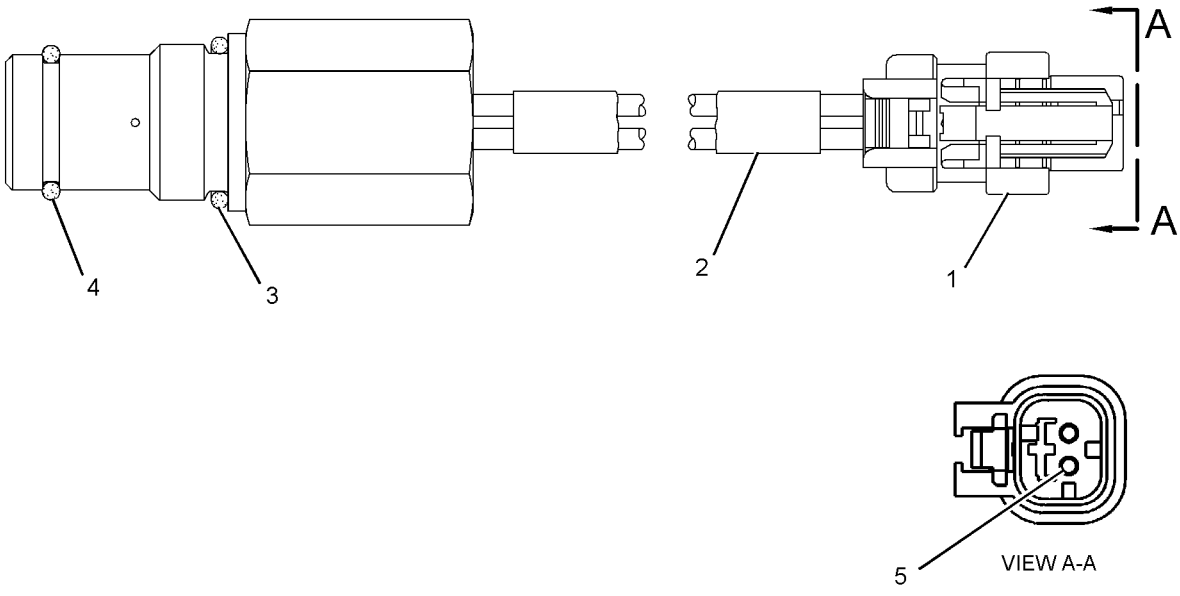

GRAPHIC #1 **<END>** g01238534

252-5917 SWITCH GP-RIDE CONTROL

S/N: RYF1-UP
PART OF 236-9094 CONTROL AR-RIDE
AN ATTACHMENT

SMCS-7332 **i02305803**

NOTE	REF NO	GRAPHIC REF	PART NUMBER	QTY	PART NAME 1 2 3 4 5 6 (PRODUCT LEVEL)	SEE PAGE
	1	1	**236-4612**	1	SWITCH AS-ROCKER (RIDE CONTROL)	

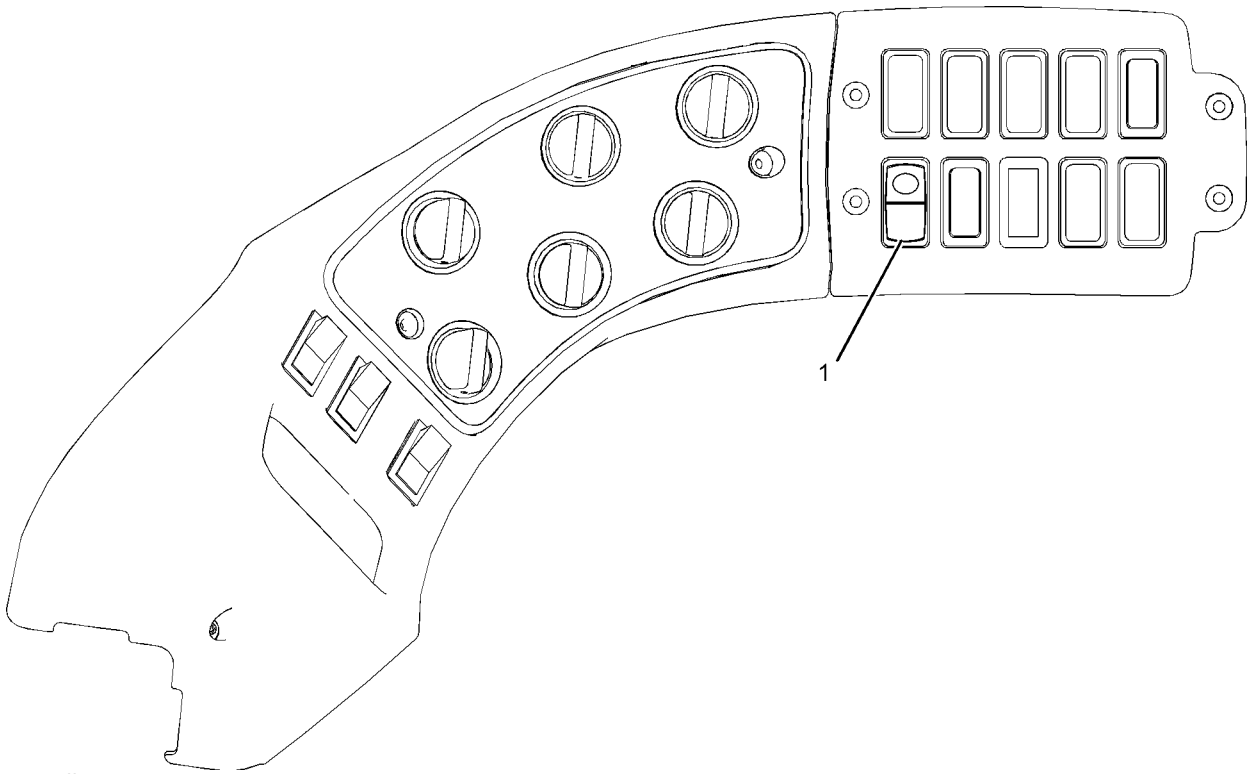

GRAPHIC #1 **<END>** g01080120

106-0107 SWITCH GP-ROTARY

S/N: RYF1-UP
PART OF 253-3471 CONTROL GP-AUTODIG
AN ATTACHMENT

SMCS-7332 **i02305918**

NOTE	REF NO	GRAPHIC REF	PART NUMBER	QTY	PART NAME 1 2 3 4 5 6 (PRODUCT LEVEL)	SEE PAGE
	1	1	**102-8805**	1	KIT-RECEPTACLE (6-PIN)	
					(INCLUDES RECEPTACLE AS & WEDGE)	
	2	1	**3E-3383**	1	WEDGE-RECEPTACLE LOCK (6-PIN)	
	3	1	**8T-8737**	1	PLUG-SEAL	
	4	1	**144-1636**	5	PIN-CONNECTOR (14-GA TO 18-GA)	
M	5	1	**7Y-5458**	1	NUT (M12X1-THD)	
	6	1	**7Y-5464**	1	WASHER (12.2X15.4X0.5-MM THK)	
	7	1	**106-0210**	1	SEAL	

M-METRIC PART

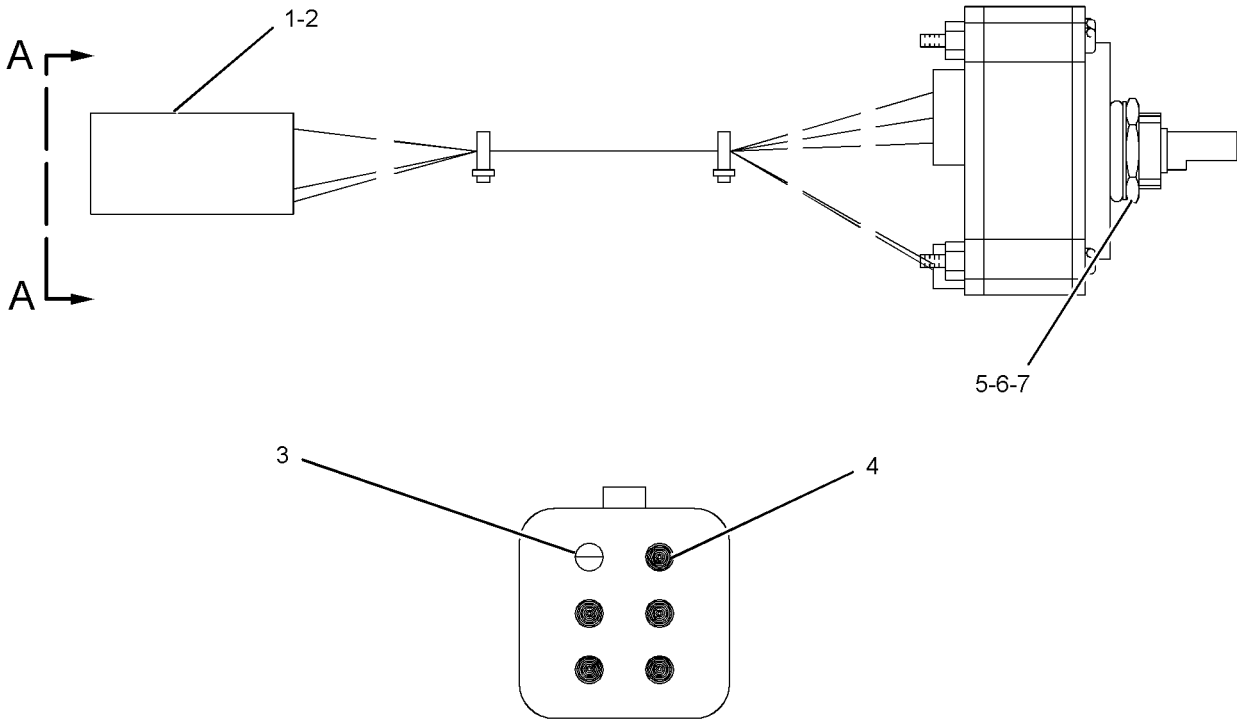

VIEW A-A

GRAPHIC #1 **<END>** g01098706

ELECTRICAL AND STARTING SYSTEM

252-5924 SWITCH GP-SECONDARY STEERING

S/N: RYF1-UP
PART OF 236-9087 STEERING AR-SECONDARY
AN ATTACHMENT

SMCS-7332 **i02307749**

NOTE	REF NO	GRAPHIC REF	PART NUMBER	QTY	PART NAME 1 2 3 4 5 6 (PRODUCT LEVEL)	SEE PAGE
	1	1	**236-4615**	1	SWITCH AS-ROCKER (SECONDARY STEERING)	

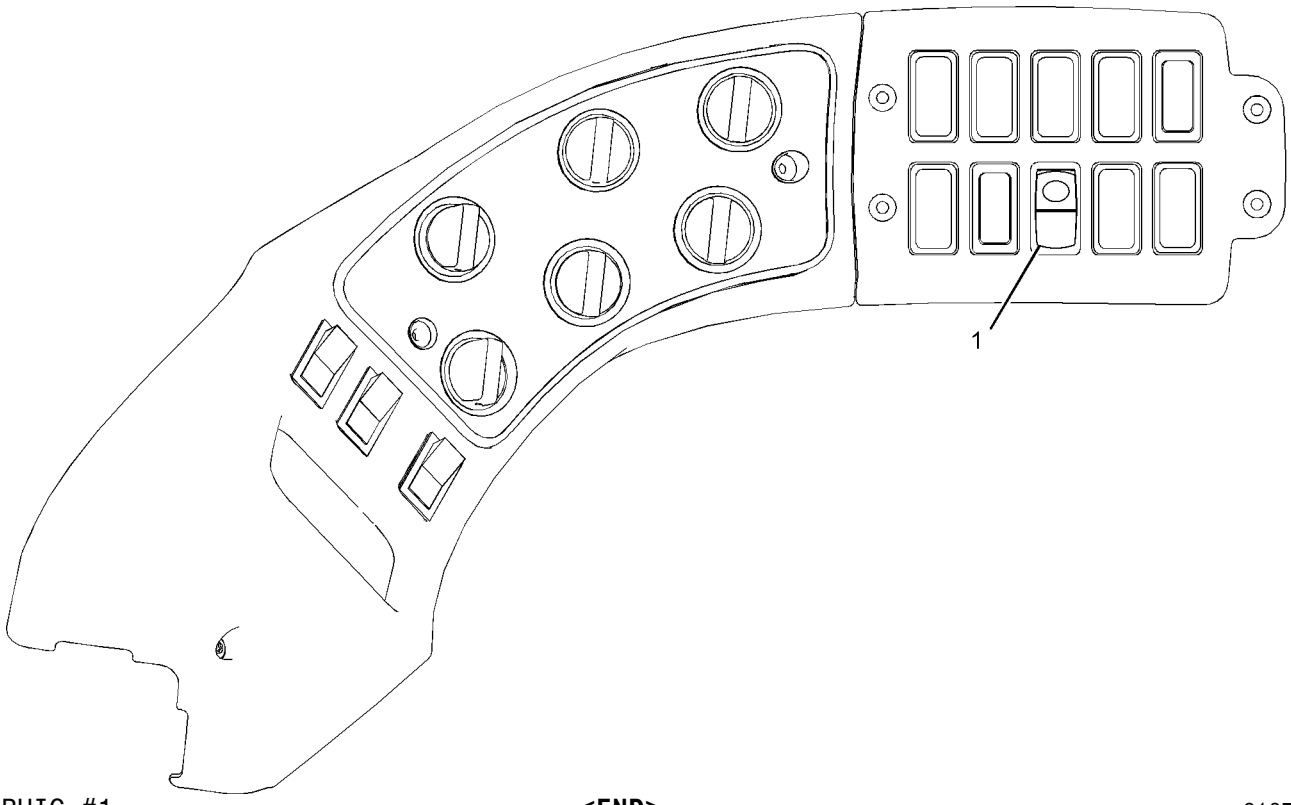

GRAPHIC #1 **<END>** g01079142

252-5920 SWITCH GP-SIGNAL–TURN

S/N: RYF1-UP

PART OF 235-5279 LIGHTING AR-SIGNAL

AN ATTACHMENT

SMCS-7332 **i03008556**

NOTE	REF NO	GRAPHIC REF	PART NUMBER	QTY	PART NAME 1 2 3 4 5 6 (PRODUCT LEVEL)	SEE PAGE
	1	1	**8N-2622**	1	LEVER (TURN SIGNAL SWITCH)	
	2	1	**134-9569**	1	SWITCH AS-TURN SIGNAL	
		1	**5L-7200**	1	SCREW (8-32X0.375-IN)	
		1	**9B-7233**	1	LOCKWASHER	
	3	1	**153-3945**	1	COVER AS	
	4	1	**154-4563**	1	HARNESS AS-LIGHTING (TURN SIGNAL)	
	5	1	**172-9200**	1	SUPPRESSOR-ARC	
	6	1	**201-5555**	1	PLATE-INSTRUCTION (TURN SIGNAL)	
	7	1	**214-9453**	1	BOOT	
	8	1	**214-9454**	1	BRACKET AS	
	9	1	**217-8166**	1	FLASHER AS (24-VOLT)	
	10	1	**236-4616**	1	SWITCH AS-ROCKER (HAZARD)	
	11	1	**096-6166**	3	WASHER-HARD (4.5X9X1-MM THK)	
M	12	1	**123-0707**	3	SCREW-HEX SOCKET (M4X0.7X20-MM)	
	13	1	**189-3158**	1	SUPPRESSOR-ARC	
M	14	1	**5C-8312**	3	NUT (M4X0.7-THD)	
M	15	1	**6V-3938**	2	BOLT (M10X1.5X20-MM)	
M	16	1	**8T-0288**	2	BOLT (M5X0.8X12-MM)	
	17	1	**8T-0328**	2	WASHER-HARD (5.5X10X1-MM THK)	
	18	1	**8T-4121**	6	WASHER-HARD (11X21X2.5-MM THK)	
	19	1	**9M-8406**	1	CLIP	

M-METRIC PART

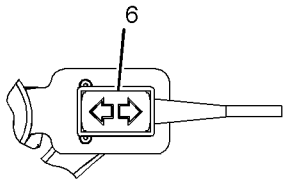

VIEW G-G

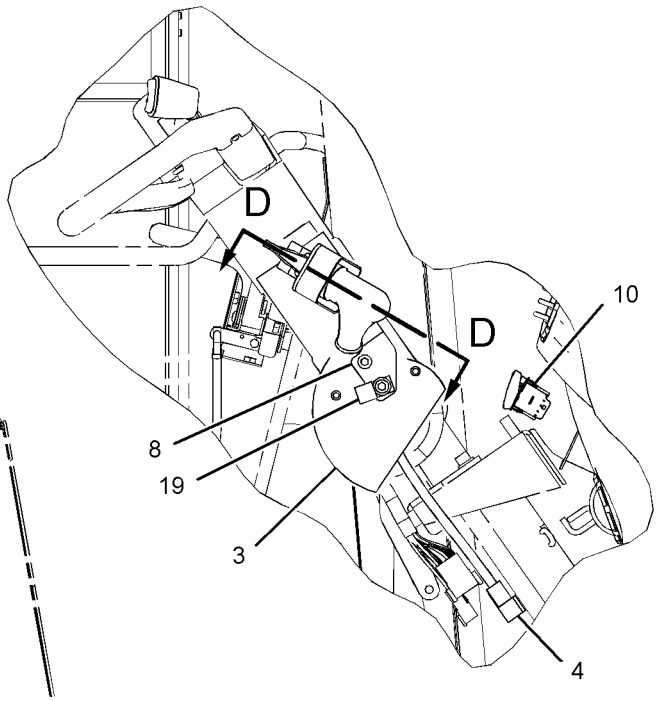

VIEW OF AREA A

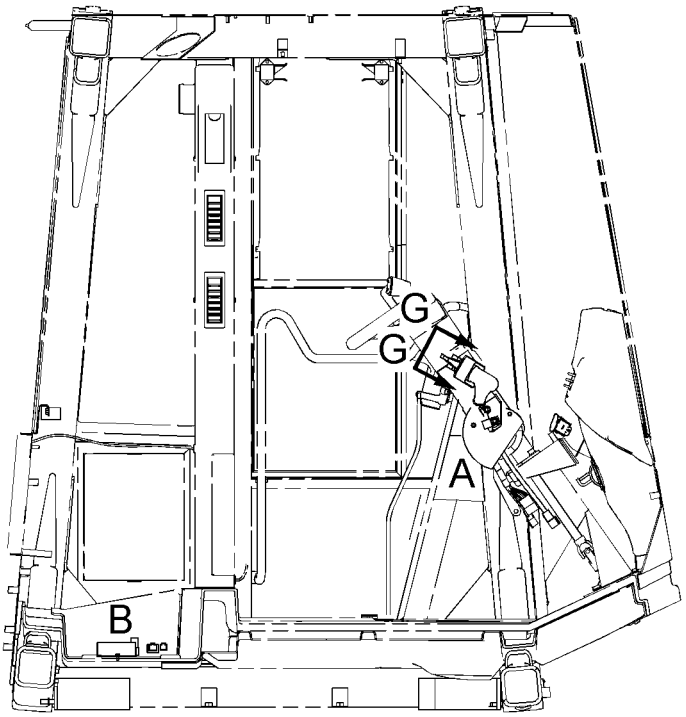

RIGHT SIDE VIEW

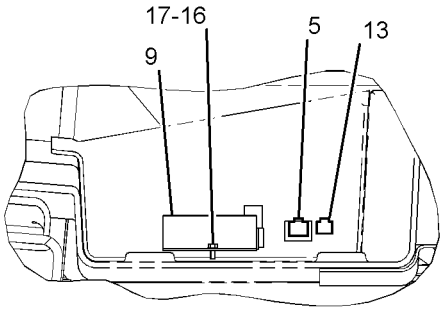

VIEW OF AREA B

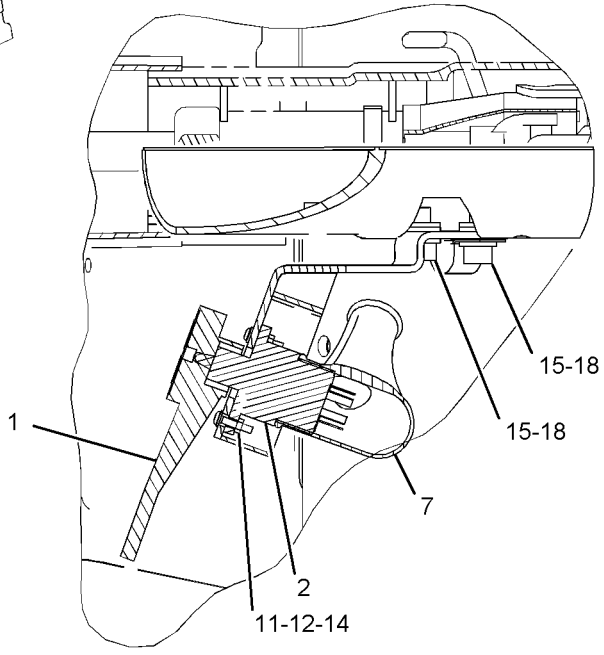

SECTION D-D

GRAPHIC #1 **<END>** g01116771

253-3951 SWITCH GP-SIGNAL–TURN

S/N: RYF1-UP

PART OF 254-5525 LIGHTING AR-ROADING, 244-3599 LIGHTING AR-SIGNAL AN ATTACHMENT

SMCS-7332 **i03087479**

NOTE	REF NO	GRAPHIC REF	PART NUMBER	QTY	PART NAME 1 2 3 4 5 6 (PRODUCT LEVEL)	SEE PAGE
	1	1	**8N-2622**	1	LEVER (TURN SIGNAL SWITCH)	
	2	1	**134-9569**	1	SWITCH AS-TURN SIGNAL	
		1	**5L-7200**	1	SCREW (8-32X0.375-IN)	
		1	**9B-7233**	1	LOCKWASHER	
	3	1	**149-0668**	1	COVER	
	4	1	**154-4563**	1	HARNESS AS-LIGHTING (TURN SIGNAL)	
		1	**102-8805**	1	KIT-RECEPTACLE (6-PIN)	
					(INCLUDES RECEPTACLE AS & WEDGE)	
	5	1	**154-8262**	1	BRACKET AS	
	6	1	**172-9200**	1	SUPPRESSOR-ARC	
	7	1	**201-5555**	1	PLATE-INSTRUCTION (TURN SIGNAL)	
	8	1	**217-8166**	1	FLASHER AS (24-VOLT)	
	9	1	**236-4616**	1	SWITCH AS-ROCKER (HAZARD)	
	10	1	**189-3158**	1	SUPPRESSOR-ARC	
M	11	1	**7Y-3173**	3	SCREW-BUTTON HEAD (M4X0.7X12-MM)	
M	12	1	**8T-0288**	2	BOLT (M5X0.8X12-MM)	
	13	1	**8T-0328**	2	WASHER-HARD (5.5X10X1-MM THK)	
M	14	1	**8T-4200**	2	BOLT (M8X1.25X16-MM)	
	15	1	**8T-4205**	1	WASHER-HARD (7.2X14.5X2-MM THK)	
	16	1	**9M-8406**	1	CLIP	
	17	1	**9X-2038**	4	WASHER (7X19X2-MM THK)	
M	18	1	**9X-2042**	4	SCREW-TRUSS HEAD (M6X1X12-MM)	
	19	1	**214-9453**	1	BOOT	

M-METRIC PART

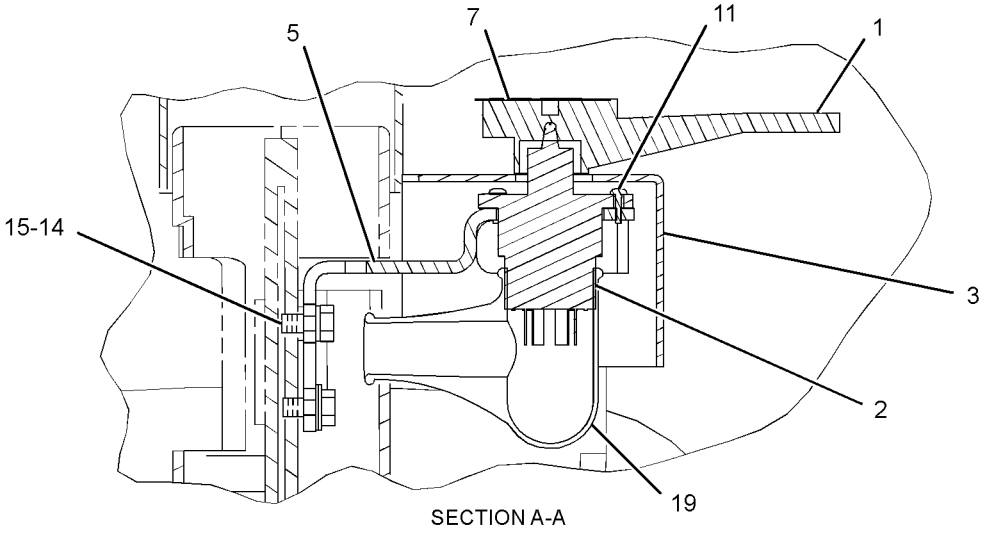

SECTION A-A

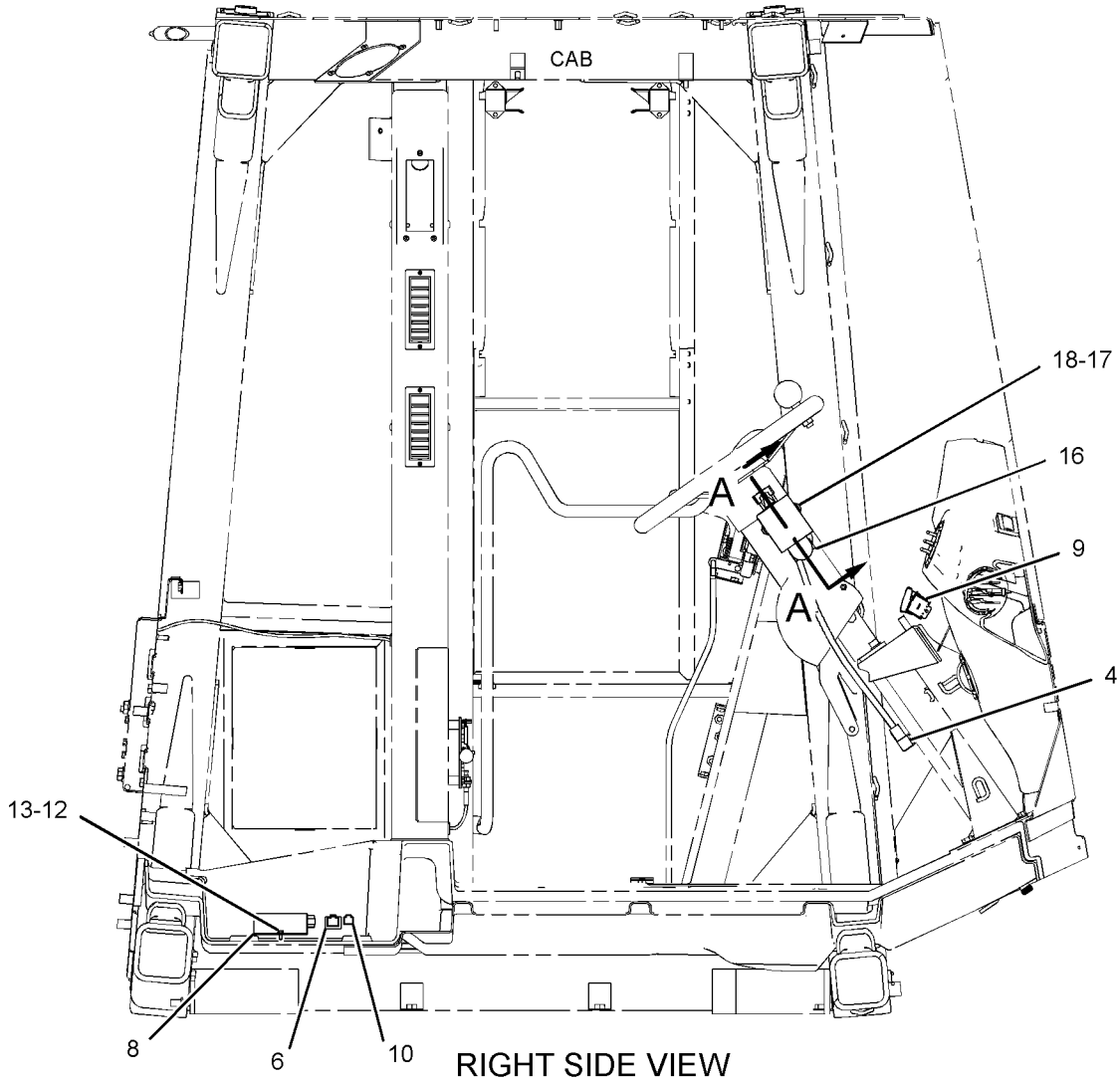

RIGHT SIDE VIEW

GRAPHIC #1

<END>

g01530822

158-6634 SWITCH GP-TOGGLE

S/N: RYF1-UP

PART OF 237-4905 WIRING GP-CHASSIS

SMCS-7332 **i03620042**

NOTE	REF NO	GRAPHIC REF	PART NUMBER	QTY	PART NAME 1 2 3 4 5 6 (PRODUCT LEVEL)	SEE PAGE
	1	1	**6T-3631**	2	NUT-HEX (15/32-32-THD)	
	2	1	**6T-3632**	1	LOCKWASHER	
	3	1	**6T-3633**	1	RING-LOCKING	
	4	1	**102-8804**	1	KIT-RECEPTACLE (4-PIN)	
					(INCLUDES RECEPTACLE AS & WEDGE)	
	5	1	**186-3735**	3	PIN-CONNECTOR (16-GA TO 18-GA)	
	6	1	**9G-3695**	1	PLUG	

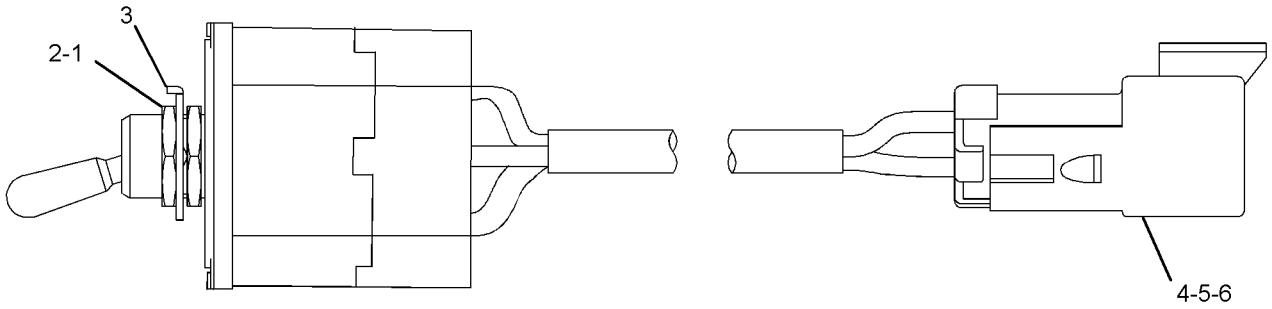

GRAPHIC #1 **<END>** g01618710

165-5970 SWITCH GP-TOGGLE

S/N: RSX15243-UP

PART OF 235-1080 PUMP GP-FUEL PRM & PRIM FILTER

SMCS-7332 **i02299813**

NOTE	REF NO	GRAPHIC REF	PART NUMBER	QTY	PART NAME 1 2 3 4 5 6 (PRODUCT LEVEL)	SEE PAGE
	1	1	**6T-3631**	2	NUT-HEX (15/32-32-THD)	
	2	1	**6T-3632**	1	LOCKWASHER	
	3	1	**6T-3633**	1	RING-LOCKING	
	4	1	**102-8803**	1	KIT-RECEPTACLE (3-PIN)	
					(INCLUDES RECEPTACLE AS & WEDGE)	
	5	1	**3E-3371**	1	WEDGE-RECEPTACLE LOCK (3-PIN)	
	6	1	**186-3735**	3	PIN-CONNECTOR (16-GA TO 18-GA)	

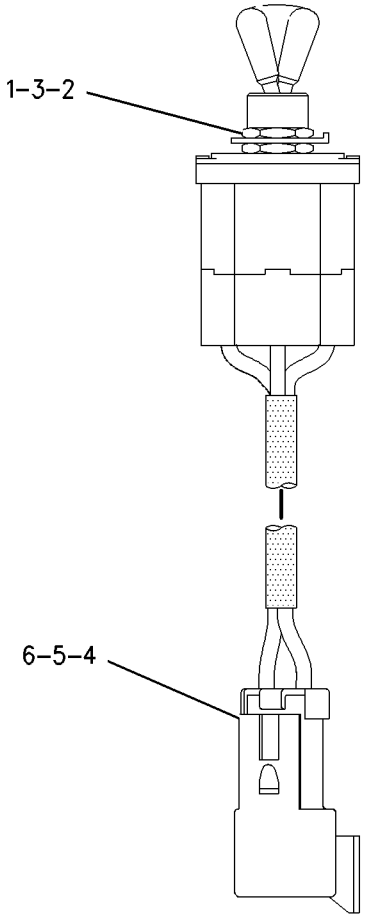

GRAPHIC #1 **<END>** g00749466

243-1938 SWITCH GP-TRANSMISSION–
REMOTE FORWARD, NEUTRAL, REVERSE CONTROL
S/N: RYF1-UP
AN ATTACHMENT

SMCS-1611, 3065, 7332 **i02869868**

NOTE	REF NO	GRAPHIC REF	PART NUMBER	QTY	PART NAME 1 2 3 4 5 6 (PRODUCT LEVEL)	SEE PAGE
C	1	1	**303-9566**	1	SWITCH AS-ROCKER (FORWARD, NEUTRAL, REVERSE)	

C-CHANGE FROM PREVIOUS TYPE

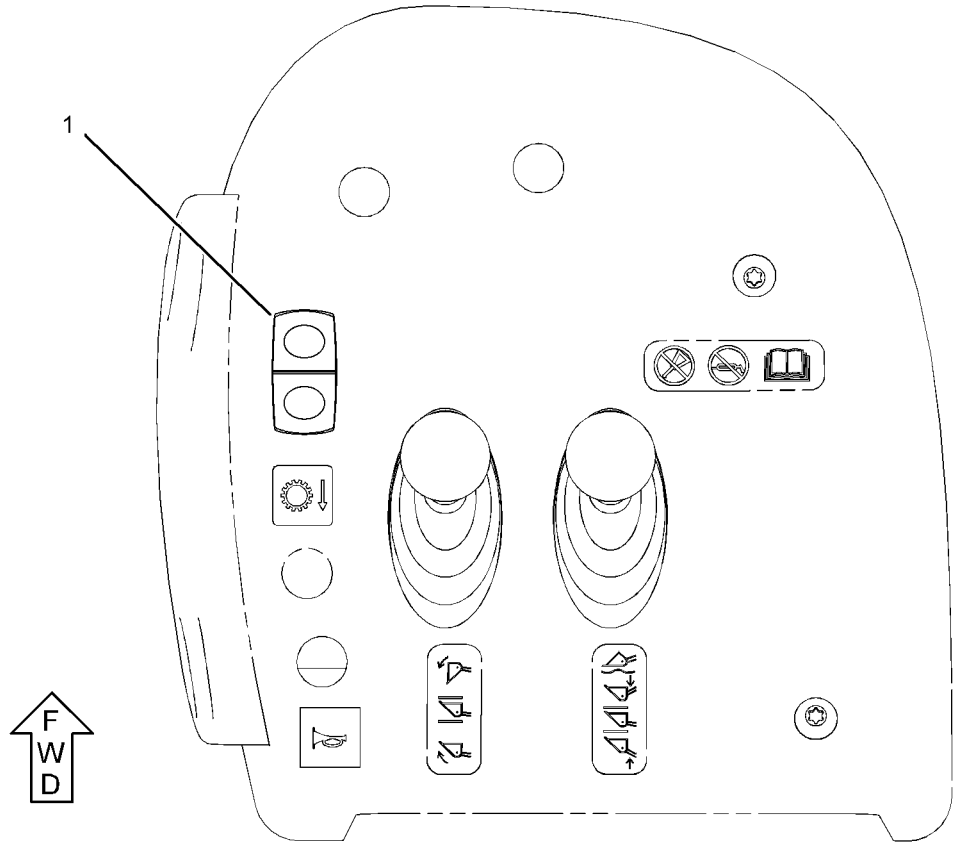

TOP VIEW

GRAPHIC #1 **<END>** g01202175

275-7741 SWITCH GP-WIPER–INTERMITTENT

S/N: RYF1-UP

PART OF 237-4910 WIRING GP-CAB

SMCS-7332 **i02992478**

NOTE	REF NO	GRAPHIC REF	PART NUMBER	QTY	PART NAME 1 2 3 4 5 6 (PRODUCT LEVEL)	SEE PAGE
	1	1	**6V-8369**	1	NUT (7/16-28-THD)	
	2	1	**2H-3920**	1	LOCKWASHER	
	3	1	**8T-8737**	2	PLUG-SEAL	
	4	1	**186-3735**	6	PIN-CONNECTOR (16-GA TO 18-GA)	
	5	1	**102-8806**	1	KIT-RECEPTACLE (8-PIN)	
					(INCLUDES RECEPTACLE AS & WEDGE)	

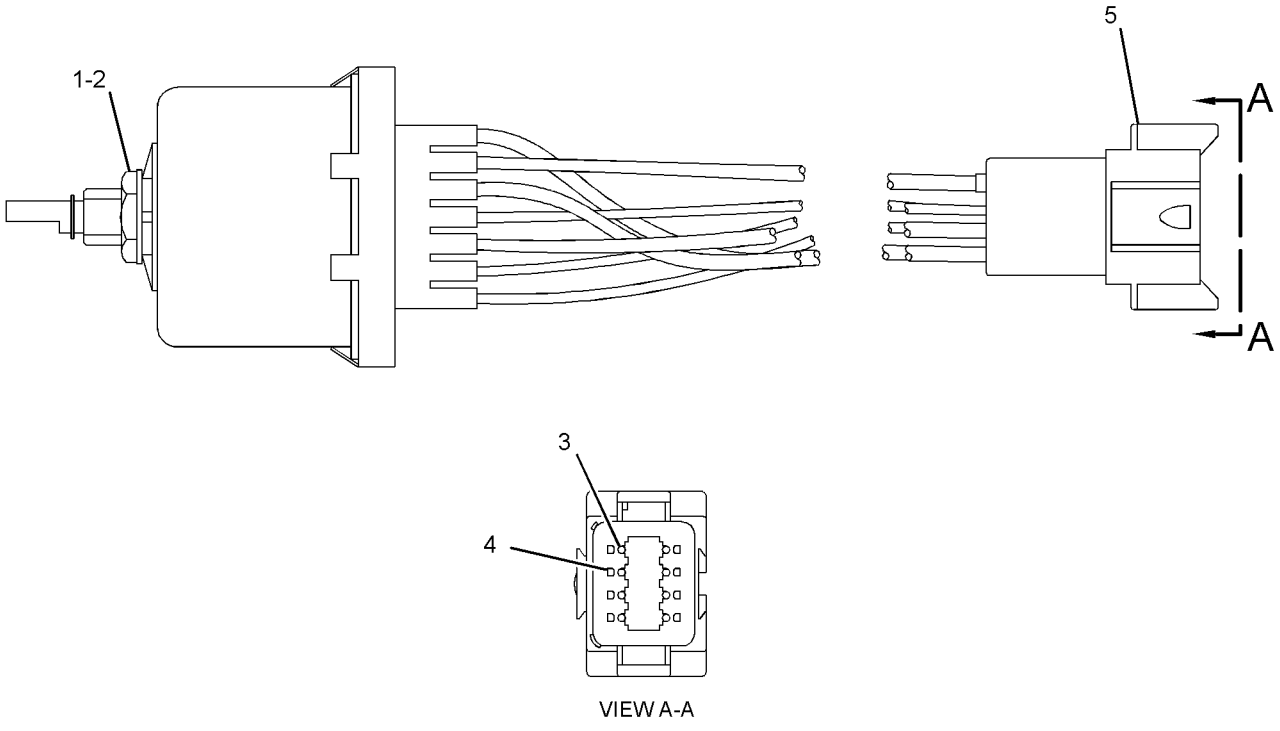

GRAPHIC #1 **<END>** g01445891

246-2347 WIRING GP-AXLE TEMPERATURE–OIL TEMPERATURE

S/N: RYF1-UP

PART OF 236-8961 ELECTRICAL AR

SMCS-1408, 3278, 429T **i03619600**

NOTE	REF NO	GRAPHIC REF	PART NUMBER	QTY	PART NAME 1 2 3 4 5 6 (PRODUCT LEVEL)	SEE PAGE
	1	1	**3S-2093**	2	STRAP-CABLE	
	2	1	**7K-1181**	3	STRAP-CABLE	
	3	1	**125-8534**	1	PLATE AS	
	4	1	**246-2348**	1	HARNESS AS-AXLE (REAR)	
	5	1	**246-2349**	1	HARNESS AS-AXLE (FRONT)	
	6	1	**264-4297**	1	SENSOR GP-TEMPERATURE (FRONT AXLE OIL)	
			137-6645	1	PAD	
	6A	1	**264-4297**	1	SENSOR GP-TEMPERATURE (REAR AXLE OIL)	
			137-6645	1	PAD	
	7	1	**329-1428**	2	BRACKET	
	8	1	**130-5300**	1	CLIP	
	9	1	**3K-0360**	2	SEAL-O-RING	
	10	1	**5P-9085**	1	CLIP	
	11	1	**6K-8178**	2	CLIP	
M	12	1	**7X-2552**	4	BOLT (M16X2X30-MM)	
	13	1	**8M-2770**	1	CLIP	
	14	1	**8T-4121**	6	WASHER-HARD (11X21X2.5-MM THK)	
M	15	1	**8T-4133**	1	NUT (M10X1.5-THD)	
M	16	1	**8T-4136**	1	BOLT (M10X1.5X25-MM)	
M	17	1	**8T-4137**	4	BOLT (M10X1.5X20-MM)	
	18	1	**9M-8406**	1	CLIP	
	19	1	**9X-8257**	4	WASHER (17.5X30X3.5-MM THK)	

M-METRIC PART

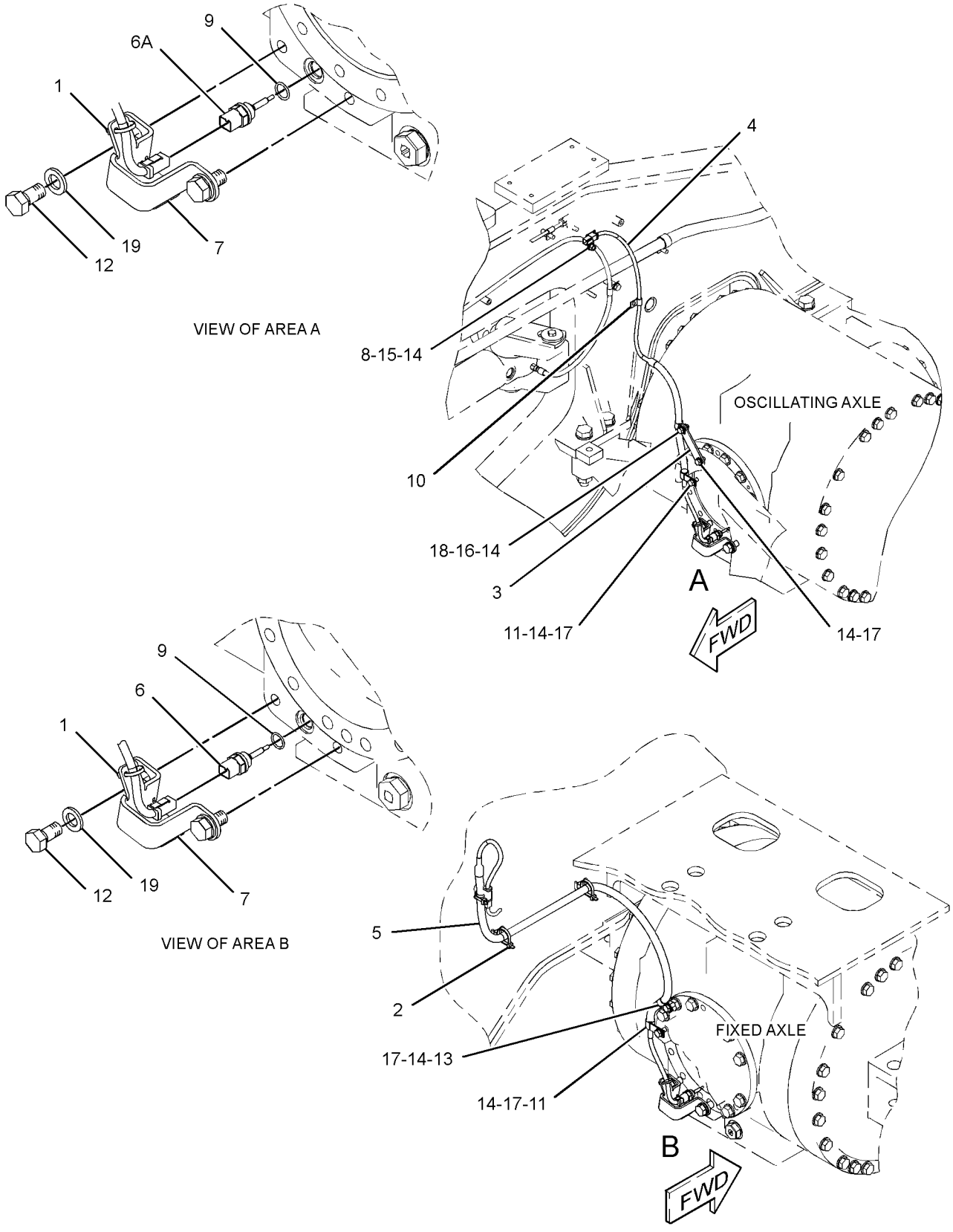

GRAPHIC #1 **<END>** g01624919

ELECTRICAL AND STARTING SYSTEM

237-4910 WIRING GP-CAB

S/N: RYF1-UP

PART OF 237-2572 CAB AR-ENCLOSED ROPS

SMCS-1408, 7301 **i03626300**

NOTE	REF NO	GRAPHIC REF	PART NUMBER	QTY	PART NAME 1 2 3 4 5 6 (PRODUCT LEVEL)	SEE PAGE
	1	4	**102-8802**	1	KIT-RECEPTACLE (2-PIN)	
					(INCLUDES RECEPTACLE AS & WEDGE)	
	2	3	**3E-5239**	1	RELAY AS (24-VOLT) (FRONT CAB FLOODLIGHTS)	
	2A	3	**3E-5239**	1	RELAY AS (24-VOLT) (REAR FLOODLIGHT)	
	2B	3	**3E-5239**	1	RELAY AS (24-VOLT) (HORN)	
Y	3	3	**3E-6328**	1	ALARM GP (24-VOLT) (ACTION)	120
Y	4	1	**3E-6389**	2	LAMP GP-DOME (24-VOLT) (CAB)	145
	5	1,3,4	**3S-2093**	23	STRAP-CABLE	
	6	2,3	**4P-8525**	11	SPACER (9X16X30-MM THK)	
	7	3	**4V-4164**	16	BUSHING-TERMINAL	
	8	2	**6I-1418**	8	SPACER (8.2X12.7X28.7-MM THK)	
	9	1	**6V-8369**	2	NUT (7/16-28-THD)	
C	10	1,3,4	**7K-1181**	37	STRAP-CABLE	
	11	3	**7N-5876**	4	LAMP (24-VOLT, 0.2-AMPERE)	
	12	3	**8C-6354**	1	CAP-RECEPTACLE	
	13	2	**8T-9655**	16	MOUNT-ISOLATION	
	14	1	**8X-5804**	1	STRAP AS-GROUND	
	15	3	**9F-8125**	16	LOCKWASHER	
	16	2	**9W-1441**	7	FUSE (15-AMPERE)	
	17	2	**9W-1442**	24	FUSE (10-AMPERE)	
	18	2	**9W-1446**	1	FUSE (20-AMPERE)	
	19	3	**098-8968**	16	WASHER (5X16X1.2-MM THK)	
Y	20	4	**103-5526**	1	CONTROL GP-MONITOR (BACKLIGHT DIMMER)	544
	21	3	**108-3320**	1	SWITCH AS-ROTARY (24-VOLT, 5-FUNCTION) (RUNNING LIGHTS)	
		3	**9W-0852**	8	PIN-CONNECTOR (14-GA)	
		3	**102-8806**	1	KIT-RECEPTACLE (8-PIN)	
					(INCLUDES RECEPTACLE AS & WEDGE)	
	22	1,3	**110-6109**	6	KNOB-CONTROL (CONTROL PANEL SWITCHES)	
Y	23	1	**275-7741**	1	SWITCH GP-WIPER (24-VOLT, INTERMITTENT) (FRONT)	218
J	24	3	**110-7887**	1	SWITCH AS-START (KEY)	
		3	**7T-6799**	1	NUT-MOUNTING (1-32-THD)	
		3	**102-8804**	1	KIT-RECEPTACLE (4-PIN)	
					(INCLUDES RECEPTACLE AS & WEDGE)	
		3	**186-3735**	4	PIN-CONNECTOR (16-GA TO 18-GA)	
	25	1	**112-6174**	1	SWITCH AS-ROTARY (WIPER, WASHER) (REAR)	
		1	**2H-3920**	1	LOCKWASHER	
		1	**6V-8369**	1	NUT (7/16-28-THD)	
		1	**186-3735**	6	PIN-CONNECTOR (16-GA TO 18-GA)	
		1	**8T-8737**	2	PLUG-SEAL	
		1	**102-8806**	1	KIT-RECEPTACLE (8-PIN)	
					(INCLUDES RECEPTACLE AS & WEDGE)	
	26	3	**117-2311**	1	SOCKET-AUXILIARY POWER (12-VOLT)	
	27	4	**121-8038**	1	RECEPTACLE AS (AUXILIARY)	
		4	**102-8803**	1	KIT-RECEPTACLE (3-PIN)	
					(INCLUDES RECEPTACLE AS & WEDGE)	
		4	**8T-8737**	1	PLUG-SEAL	
		4	**9W-0852**	2	PIN-CONNECTOR (14-GA)	
	28	1	**123-2896**	1	GASKET	
Y	29	1	**154-7443**	1	CONTROL GP-UNPRGMED MONITOR (CATERPILLAR MONITORING SYSTEM)	549
Y	30	3	**166-6928**	1	MODULE GP-QUAD GAUGE	588
	31	4	**170-1821**	1	SWITCH AS-PUSH BUTTON (HORN)	
		4	**6F-0253**	1	LOCKWASHER	
		4	**186-3735**	2	PIN-CONNECTOR (16-GA TO 18-GA)	

237-4910 **WIRING GP-CAB** ***(contd.)*** **i03626300**

NOTE	REF NO	GRAPHIC REF	PART NUMBER	QTY	PART NAME 1 2 3 4 5 6 (PRODUCT LEVEL)	SEE PAGE
		4	**172-3511**	1	NUT (5/8-24-THD)	
	32	3	**172-9200**	1	SUPPRESSOR-ARC	
	33	2	**173-2234**	1	PLATE AS	
	34	1	**185-6335**	1	SWITCH AS-ROTARY (24-VOLT) (AUTOSHIFT CONTROL)	
	34A	1	**185-6335**	1	SWITCH AS-ROTARY (24-VOLT) (VARIABLE SHIFT CONTROL)	
					(EACH SWITCH AS INCLUDES)	
		1	**8T-8737**	2	PLUG-SEAL	
		1	**9W-0852**	4	PIN-CONNECTOR (14-GA)	
		1	**102-8805**	1	KIT-RECEPTACLE (6-PIN)	
					(INCLUDES RECEPTACLE AS & WEDGE)	
	35	3,4	**198-6570**	1	LIGHTER GP (12-VOLT) (CIGAR)	
		3,4	**198-6571**	1	ELEMENT AS (CIGARETTE LIGHTER)	
	36	4	**209-0381**	1	CONVERTER-POWER (24-VOLT TO 12-VOLT)	
	37	1	**234-5925**	1	GASKET	
	38	1	**235-5506**	1	HARNESS AS-LIGHTING (CAB FLOODLIGHTS)	
		1	**9X-3402**	8	SOCKET-CONNECTOR (16-GA TO 18-GA)	
		1	**2L-8066**	4	TERMINAL-RING (10-GA TO 12-GA, NO 10 SCREW)	
E		1	**125-7875**		TUBE-HEAT SHRINK (7.44-MM DIA) (4-CM)	
		1	**155-2270**	4	KIT-CONNECTING PLUG (2-PIN)	
					(EACH KIT INCLUDES PLUG AS & WEDGE)	
	39	3	**236-4631**	4	BEZEL	
	40	4	**236-9993**	1	PLATE AS	
M		4	**6V-9632**	4	NUT-WELD (M6X1-THD)	
		4	**7T-1099**	5	LINK	
M		4	**8T-3490**	2	NUT-WELD (M10X1.5-THD)	
M		4	**8T-3612**	4	NUT-WELD (M8X1.25-THD)	
M		4	**8T-8874**	9	NUT-WELD (M5X0.8-THD)	
	41	1	**242-6099**	1	CLIP	
	42	3	**242-8421**	1	PLATE AS	
	43	1	**246-5459**	1	PLATE	
	45	3	**260-9602**	1	HARNESS AS-WIRING (SERVICE TOOL)	
		3	**8T-8737**	3	PLUG-SEAL	
		3	**9W-1951**	1	RECEPTACLE-CONNECTOR (9-PIN)	
		3	**102-8805**	1	KIT-RECEPTACLE (6-PIN)	
					(INCLUDES RECEPTACLE AS & WEDGE)	
		3	**144-1636**	12	PIN-CONNECTOR (14-GA TO 18-GA)	
B		3	**1P-0810**		TAPE-ELECTRICAL	
R	46	2	**304-5687**	1	CONTROL GP-UNPROGRAMMED (IMPLEMENT)	
R	46A	2	**304-5687**	1	CONTROL GP-UNPROGRAMMED (POWER TRAIN)	
	47	4	**263-1493**	1	SWITCH AS-PUSH BUTTON (THROTTLE LOCK RESUME)	
		4	**172-3511**	1	NUT (5/8-24-THD)	
		4	**6F-0253**	1	LOCKWASHER	
		4	**155-2260**	1	KIT-CONNECTING PLUG (3-PIN)	
					(INCLUDES PLUG AS AND WEDGE)	
		4	**9X-3402**	3	SOCKET-CONNECTOR (16-GA TO 18-GA)	
	48	4	**284-3623**	1	SWITCH AS-ROCKER (24-VOLT) (HYDRAULIC LOCKOUT)	
	49	4	**284-3624**	1	SWITCH AS-ROCKER (24-VOLT) (FINE MODULATION)	
	50	1	**291-2165**	1	POTENTIOMETER AS (TEMPERATURE SELECT)	
		1	**102-8803**	1	KIT-RECEPTACLE (3-PIN)	
					(INCLUDES RECEPTACLE AS AND WEDGE)	
		1	**186-3735**	4	PIN-CONNECTOR (16-GA TO 18-GA)	
		1	**236-8722**	1	WASHER (10.5X22.2X1.6-MM THK)	
C	51	1	**316-8515**	1	HARNESS AS-CAB	
		1	**3S-2093**	8	STRAP-CABLE	
		1	**3T-3157**	4	TERMINAL	
		1	**3T-3158**	4	SOCKET-LAMP	
		1	**3T-3159**	4	SPRING	

237-4910 **WIRING GP-CAB** ***(contd.)*** **i03626300**

NOTE	REF NO	GRAPHIC REF	PART NUMBER	QTY	PART NAME 1 2 3 4 5 6 (PRODUCT LEVEL)	SEE PAGE
		1	**3T-3278**	4	BOOT	
		1	**5P-4571**	4	TERMINAL-BLADE (14-GA)	
		1	**6D-4161**	4	CONTACT	
		1	**7G-7917**	1	PLUG-SEAL	
		1	**7G-7918**	1	PLUG-SEAL	
		1	**7G-7919**	1	PLUG-SEAL	
		1	**9X-0196**	2	TERMINAL AS	
		1	**8N-1532**	1	RECEPTACLE AS-CONNECTOR (6-PIN)	
		1	**8N-1536**	1	NUT (1-5/8-18-THD)	
		1	**8N-1535**	1	BELL AS-END	
		1	**8N-1537**	1	LOCKWASHER	
		1	**8N-1540**	2	PIN-CONNECTOR (12-GA TO 14-GA)	
		1	**8N-1548**	1	PIN-CONNECTOR	
		1	**8T-8737**	239	PLUG-SEAL	
		1	**8T-9834**	1	PLUG AS-CONNECTOR (40-PIN)	
		1	**3E-4367**	1	RING-RETAINING	
M		1	**3E-8557**	1	BOLT (M5X0.8X39.37-MM)	
		1	**9X-3132**	2	SEAL-CONNECTOR (40-PIN)	
		1	**9R-9806**	2	TERMINAL-BLADE	
		1	**9W-2033**	29	TERMINAL-BLADE	
		1	**9X-0145**	1	RECEPTACLE AS-CONNECTOR (24-PIN)	
		1	**9X-1054**	3	PLUG AS-CONNECTOR (4-PIN)	
		1	**9X-1056**	12	TERMINAL-RECEPTACLE (14-GA TO 16-GA)	
		1	**9X-6772**	1	STRAP-CABLE	
E		1	**9X-8705**	1	CONDUIT-FLEXIBLE (6-CM)	
		1	**100-5041**	8	TERMINAL-RECEPTACLE (18-GA TO 20-GA)	
		1	**102-8801**	1	KIT-RECEPTACLE (12-PIN)	
		1	**102-8802**	1	KIT-RECEPTACLE (2-PIN)	
		1	**102-8804**	1	KIT-RECEPTACLE (4-PIN)	
		1	**102-8806**	1	KIT-RECEPTACLE (8-PIN)	
					(EACH RECEPTACLE KIT INCLUDES RECEPTACLE AS & WEDGE)	
E		1	**119-3662**		TUBE-HEAT SHRINK (10.85-MM DIA) (33-CM)	
E		1	**125-7874**		TUBE-HEAT SHRINK (5.72-MM DIA) (355-CM)	
E		1	**125-7875**		TUBE-HEAT SHRINK (7.44-MM DIA) (125-CM)	
		1	**9X-3402**	367	SOCKET-CONNECTOR (16-GA TO 18-GA)	
		1	**126-1774**	4	COVER-CONNECTOR	
		1	**9G-4343**	1	TERMINAL (4-GA)	
E		1	**6V-9023**		TUBE-HEAT SHRINK (12.7-MM DIA) (4-CM)	
		1	**2L-8066**	2	TERMINAL-RING (10-GA TO 12-GA, NO 10 SCREW)	
D		1	**5P-6006**		TUBE-HEAT SHRINK (9.52-MM DIA) (1-M)	
		1	**2L-8067**	1	TERMINAL (10-GA TO 12-GA)	
D		1	**5P-6006**		TUBE-HEAT SHRINK (9.52-MM DIA) (1-M)	
		1	**2L-8071**	1	TERMINAL-RING (10-GA TO 12-GA, 1/2-IN SCREW)	
D		1	**5P-6006**		TUBE-HEAT SHRINK (9.52-MM DIA) (1-M)	
		1	**2L-8076**	6	TERMINAL (14-GA TO 16-GA, NO. 10 SCREW)	
D		1	**6V-2689**		TUBE-HEAT SHRINK (6.35-MM DIA) (1-M)	
		1	**5P-2766**	2	TERMINAL (18-GA)	
D		1	**6V-2689**		TUBE-HEAT SHRINK (6.35-MM DIA) (1-M)	
		1	**066-8391**	2	TERMINAL-BLADE (14-GA TO 18-GA)	
D		1	**6V-2689**		TUBE-HEAT SHRINK (6.35-MM DIA) (1-M)	
		1	**3K-4528**	1	TERMINAL-RING (6-GA TO 8-GA, 1/2-IN BOLT)	
E		1	**119-3662**		TUBE-HEAT SHRINK (10.85-MM DIA) (4-CM)	
		1	**2L-8071**	2	TERMINAL-RING (10-GA TO 12-GA, 1/2-IN SCREW)	
E		1	**125-7875**		TUBE-HEAT SHRINK (7.44-MM DIA) (4-CM)	
		1	**2L-8078**	2	TERMINAL (16-GA TO 14-GA)	
E		1	**125-7874**		TUBE-HEAT SHRINK (5.72-MM DIA) (3-CM)	
		1	**2L-8081**	4	TERMINAL (14-GA TO 16-GA)	

237-4910 **WIRING GP-CAB** *(contd.)* **i03626300**

NOTE	REF NO	GRAPHIC REF	PART NUMBER	QTY	PART NAME 1 2 3 4 5 6 (PRODUCT LEVEL)	SEE PAGE
E		1	**125-7874**		TUBE-HEAT SHRINK (5.72-MM DIA) (3-CM)	
B		1	**141-8061**		TAPE	
		1	**144-1636**	126	PIN-CONNECTOR (14-GA TO 18-GA)	
		1	**147-1445**	2	PLUG AS-CONNECTOR (70-PIN)	
		1	**159-9322**	1	SEAL-O-RING	
		1	**147-1446**	2	PLUG AS-CONNECTOR (70-PIN)	
		1	**159-9322**	1	SEAL-O-RING	
		1	**155-2255**	6	KIT-CONNECTING PLUG (12-PIN)	
		1	**155-2265**	5	KIT-CONNECTING PLUG (8-PIN)	
		1	**155-2260**	7	KIT-CONNECTING PLUG (3-PIN)	
		1	**155-2270**	5	KIT-CONNECTING PLUG (2-PIN)	
		1	**155-2271**	6	KIT-CONNECTING PLUG (4-PIN)	
		1	**155-2274**	13	KIT-CONNECTING PLUG (6-PIN)	
					(EACH PLUG KIT INCLUDES PLUG AS, WEDGE, & INTERFACE SEAL)	
B		1	**1P-0810**		TAPE-ELECTRICAL	
		1	**006-2884**	2	TERMINAL-BLADE (16-GA TO 20-GA)	
D		1	**6V-2689**		TUBE-HEAT SHRINK (6.35-MM DIA) (1-M)	
		1	**183-5785**	1	RECEPTACLE AS	
		1	**185-1861**	119	SEAL-WIRE	
		1	**188-6253**	1	BLOCK AS-FUSE	
		1	**1H-3244**	2	LOCKWASHER	
		1	**6V-8185**	2	NUT (1/4-20-THD)	
		1	**8T-4205**	2	WASHER-HARD (7.2X14.5X2-MM THK)	
		1	**151-1398**	4	KIT-TERMINAL (LOCK)	
		1	**188-6254**	1	COVER	
		1	**200-8789**	1	SEAL	
		1	**197-7565**	1	KIT-RECEPTACLE (4-PIN)	
					(INCLUDES RECEPTACLE AS & WEDGE)	
		1	**214-4208**	1	RECEPTACLE AS-CONNECTOR (70-PIN)	
		1	**230-4013**	1	PLUG AS-CONNECTOR (3-PIN)	
		1	**264-7030**	1	SEAL-CONNECTOR	
		1	**235-4123**	93	TERMINAL	
		1	**245-7434**	20	KIT-CONNECTING PLUG (10-PIN)	
					(INCLUDES PLUG CONNECTOR, WIRE ASSEMBLIES, & PLUGS)	
		1	**246-9371**	2	COVER-RELAY	
		1	**274-3774**	4	CAP-CONNECTOR	
		1	**274-3775**	1	CAP-CONNECTOR	
		1	**274-3776**	2	CAP-SEAL	
		1	**274-3777**	4	CAP-CONNECTOR	
		1	**274-3778**	1	CAP-SEAL	
		1	**274-3779**	1	CAP-SEAL	
	52	4	**310-7565**	1	HARNESS AS-OPERATOR CONTROLS	
		4	**8T-8737**	10	PLUG-SEAL	
		4	**102-8803**	1	KIT-RECEPTACLE (3-PIN)	
					(INCLUDES RECEPTACLE AS & WEDGE)	
E		4	**119-3662**		TUBE-HEAT SHRINK (10.85-MM DIA) (7-CM)	
E		4	**125-7874**		TUBE-HEAT SHRINK (5.72-MM DIA) (5-CM)	
E		4	**125-7874**		TUBE-HEAT SHRINK (5.72-MM DIA) (5-CM)	
		4	**9X-3402**	32	SOCKET-CONNECTOR (16-GA TO 18-GA)	
		4	**144-1636**	2	PIN-CONNECTOR (14-GA TO 18-GA)	
		4	**155-2260**	1	KIT-CONNECTING PLUG (3-PIN)	
		4	**155-2255**	1	KIT-CONNECTING PLUG (12-PIN)	
		4	**155-2265**	1	KIT-CONNECTING PLUG (8-PIN)	
		4	**155-2270**	1	KIT-CONNECTING PLUG (2-PIN)	
		4	**155-2271**	4	KIT-CONNECTING PLUG (4-PIN)	
					(EACH PLUG KIT INCLUDES PLUG AS, WEDGE, & INTERFACE SEAL)	
		4	**274-3775**	1	CAP-CONNECTOR	

237-4910 **WIRING GP-CAB** ***(contd.)*** **i03626300**

NOTE	REF NO	GRAPHIC REF	PART NUMBER	QTY	PART NAME 1 2 3 4 5 6 (PRODUCT LEVEL)	SEE PAGE
		4	**274-3776**	1	CAP-SEAL	
	53	4	**132-5789**	3	CLIP	
	54	1	**134-2540**	1	RESISTOR AS (3-PIN)	
	55	3,4	**156-6175**	3	CLIP	
	56	4	**202-2762**	1	CLIP	
	57	1,3,4	**228-6089**	13	PLUG (ROCKER SWITCH)	
	58	1	**236-4608**	1	SWITCH AS-ROCKER (MODE SELECT)	
	59	1	**236-4609**	1	SWITCH AS-ROCKER (TMSN NEUTRALIZER OVERRIDE)	
	60	1	**236-4610**	1	SWITCH AS-ROCKER (AIR CONDITIONER, HEATER)	
	61	1	**236-4611**	1	SWITCH AS-ROCKER (FAN BLOWER SPEED)	
	62	1	**236-4619**	1	SWITCH AS-ROCKER (LIFT, TILT KICKOUT)	
	63	3	**249-2763**	2	CONTROL GP-DISPLAY ELECTRONIC (INDICATOR PANEL, RH, LH)	
	64	4	**2A-2677**	1	SPACER (10.7X17.14X19.05-MM THK)	
	65	1	**2H-3920**	6	LOCKWASHER	
	67	3	**4B-2049**	16	NUT (10-32-THD)	
	68	4	**4D-7388**	1	CLIP	
	69	3	**4P-7581**	1	CLIP	
M	70	2	**5C-7261**	2	NUT (M8X1.25-THD)	
M	71	2	**5C-8312**	4	NUT (M4X0.7-THD)	
M	72	4	**5C-9553**	2	BOLT (M6X1X16-MM)	
	74	1	**6D-1641**	1	CLIP	
	75	3	**6D-6146**	8	SCREW-MACHINE (10-32X1.25-IN)	
C	76	4	**198-4775**	2	WASHER-HARD (6.6X15X6-MM THK)	
C	77	1	**6V-6635**	8	SCREW-PAN HEAD	
	78	1	**6V-3265**	4	CLIP	
	79	2	**6V-5645**	4	SCREW-MACHINE (10-32X0.87-IN)	
M	80	4	**6V-9673**	3	SCREW-MACHINE (M5X0.8X12-MM)	
M	81	3	**7X-0818**	3	BOLT (M8X1.25X45-MM)	
M	82	2	**8T-0337**	4	SCREW-MACHINE (M4X0.7X12-MM)	
	83	1,2,3, 4	**8T-4121**	15	WASHER-HARD (11X21X2.5-MM THK)	
M	84	4	**8T-4133**	1	NUT (M10X1.5-THD)	
M	85	3	**8T-4136**	1	BOLT (M10X1.5X25-MM)	
M	86	1,2,4	**8T-4137**	10	BOLT (M10X1.5X20-MM)	
M	87	1	**8T-4138**	8	BOLT (M6X1X20-MM)	
M	88	4	**8T-4171**	2	BOLT (M6X1X12-MM)	
M	89	4	**8T-4186**	1	BOLT (M10X1.5X40-MM)	
M	90	4	**8T-4195**	1	BOLT (M10X1.5X30-MM)	
C	91	1,3,4	**8T-4205**	9	WASHER-HARD (7.2X14.5X2-MM THK)	
	92	1,2	**8T-4223**	5	WASHER-HARD (13.5X25.5X3-MM THK)	
	93	2	**8T-4224**	2	WASHER-HARD (8.8X16X2-MM THK)	
M	94	1,2	**8T-4244**	5	NUT (M12X1.75-THD)	
M	95	3	**8T-4970**	5	BOLT (M6X1X14-MM)	
M	96	2	**8T-6870**	8	BOLT (M8X1.25X70-MM)	
	98	3	**9M-5870**	8	GROMMET	
	99	2,3	**9N-0869**	11	WASHER-HARD (8.8X25.5X2-MM THK)	
M	100	1	**9X-1046**	6	SCREW (M4X0.7X18-MM)	
M	101	4	**9X-2480**	2	BOLT (M6X1X45-MM)	
	102	3	**9X-6165**	1	WASHER (6.5X22X2.5-MM THK)	
	103	1,3,4	**9X-8256**	7	WASHER (6.6X12X2-MM THK)	
	104	4	**204-2281**	2	STRAP-TIE	
	105	4	**204-8000**	2	MOUNT (TIE WRAP)	
C	106	2,3	**6D-4244**	2	CLIP	

B-USE AS REQUIRED
C-CHANGE FROM PREVIOUS TYPE
D-ORDER BY THE METER
E-ORDER BY THE CENTIMETER
J-REQUIRES CORPORATE KEY
M-METRIC PART
R-REMFG PART MAY BE AVAILABLE
Y-SEPARATE ILLUSTRATION

237-4910 **WIRING GP-CAB** *(contd.)* **i03626300**

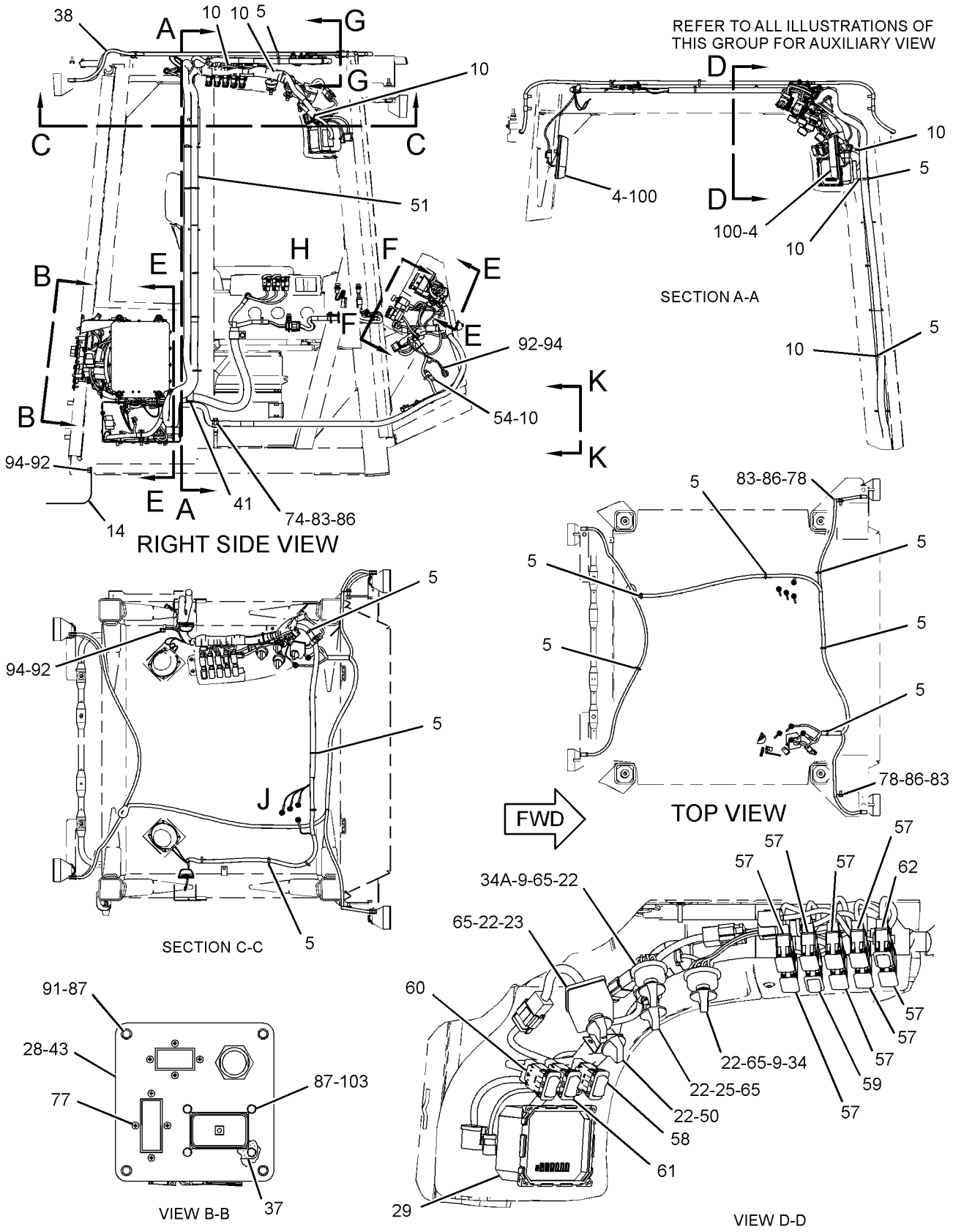

GRAPHIC #1 g01897058

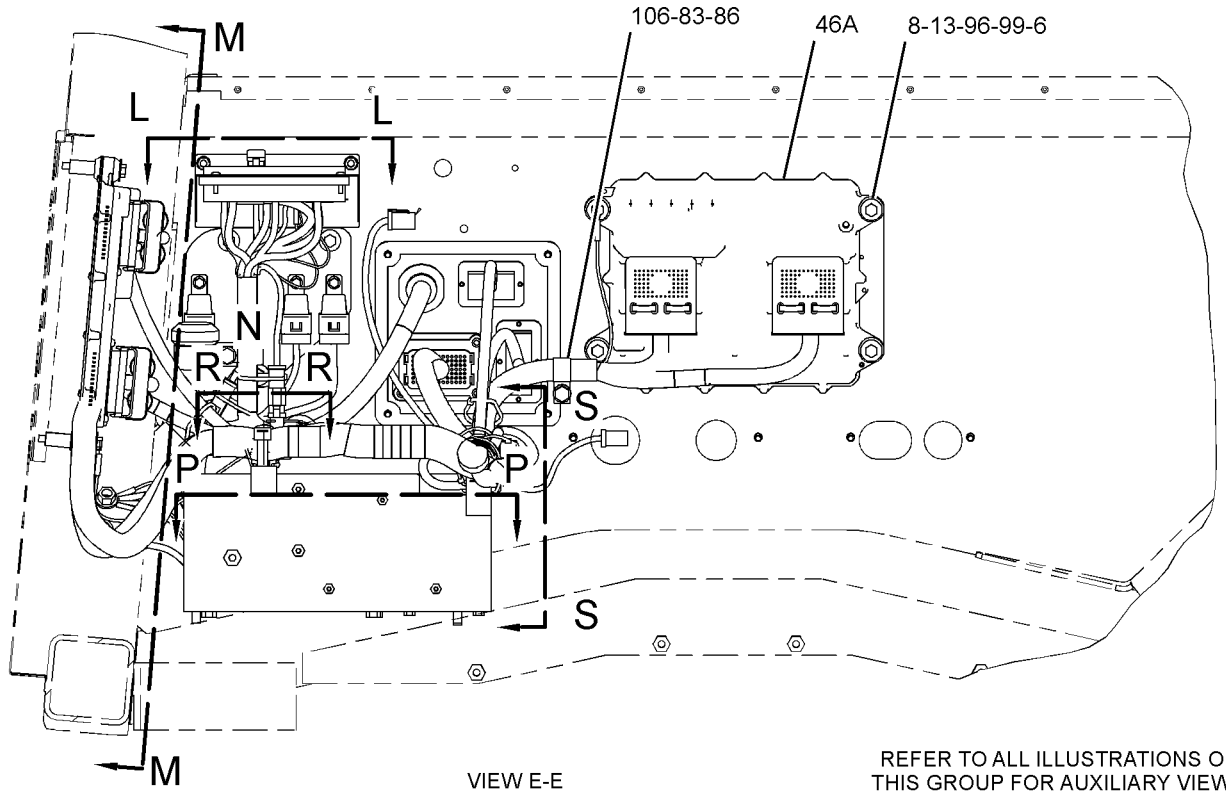

VIEW E-E

REFER TO ALL ILLUSTRATIONS OF THIS GROUP FOR AUXILIARY VIEWS

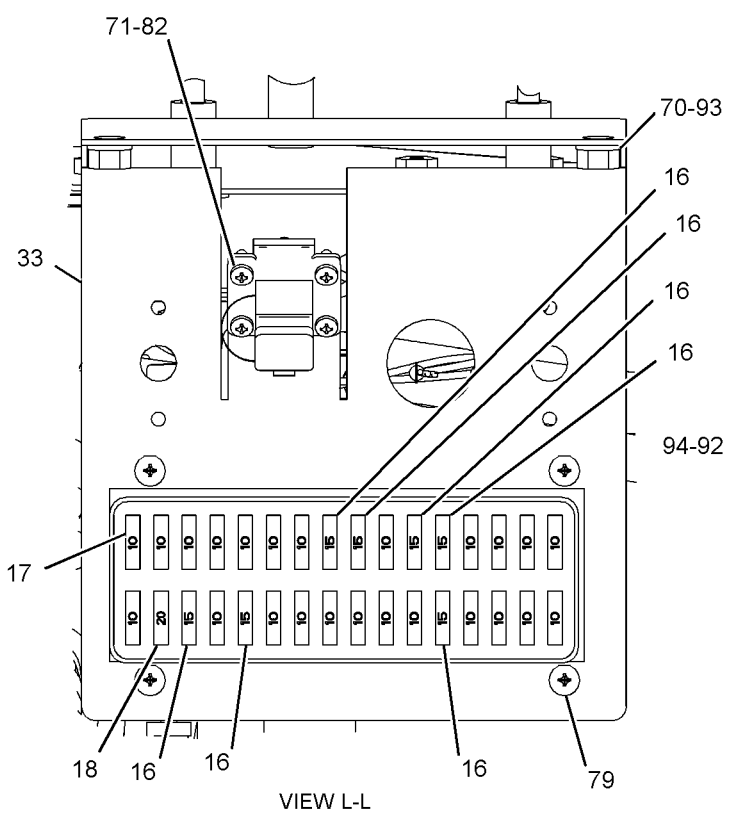

VIEW L-L

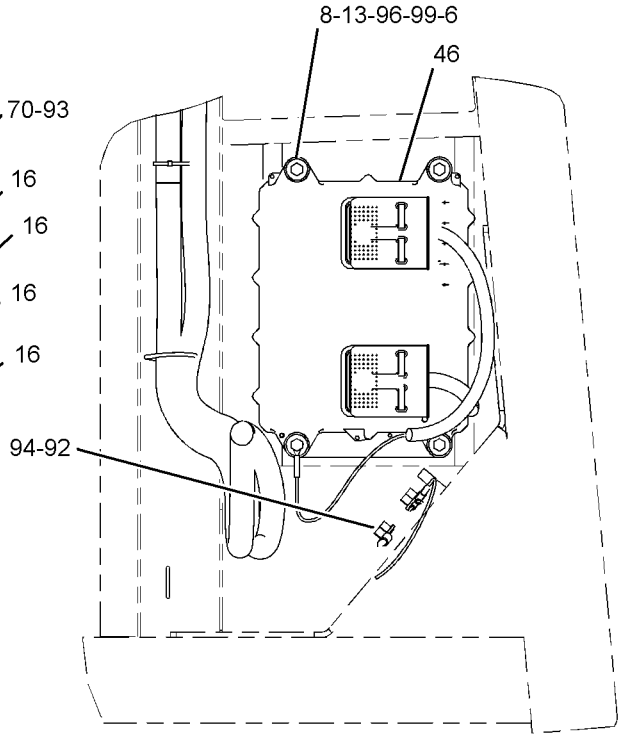

VIEW M-M

GRAPHIC #2

g01897059

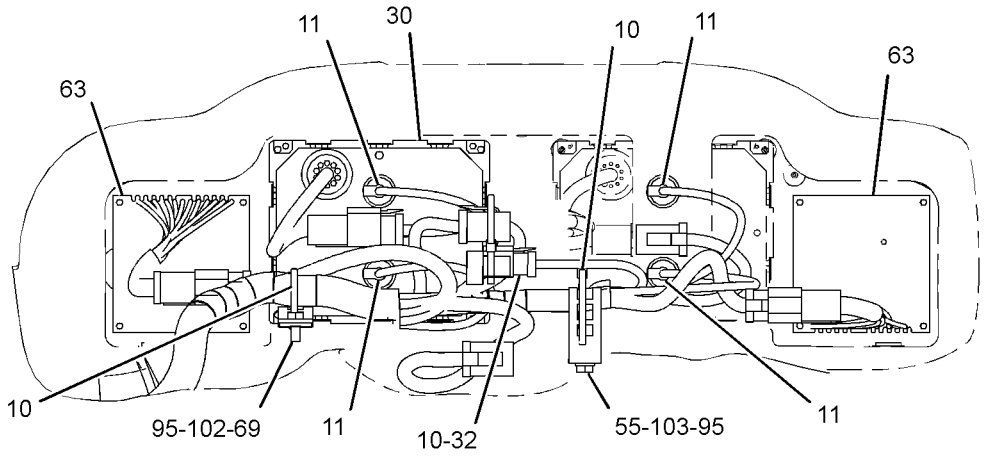

VIEW E-E

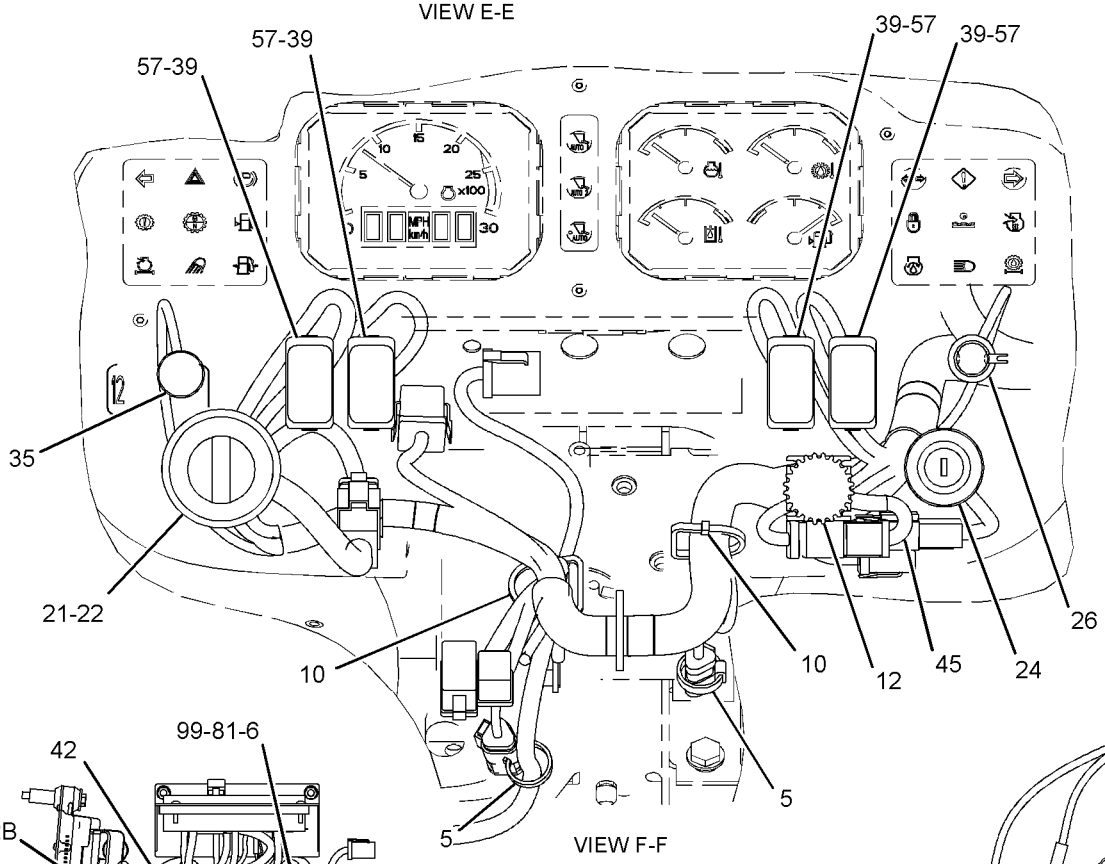

VIEW F-F

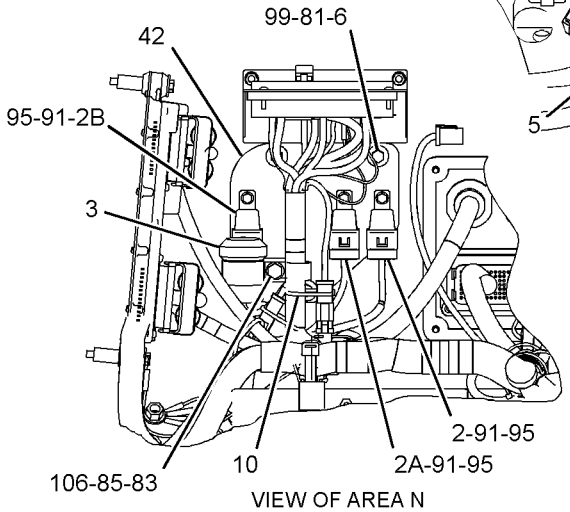

VIEW OF AREA N

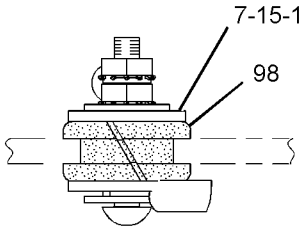

SECTION G-G

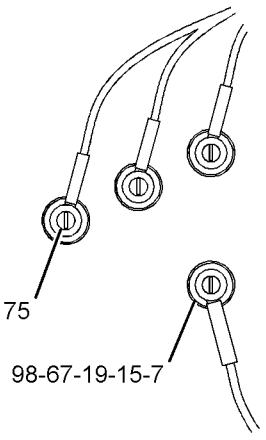

VIEW OF AREA J

GRAPHIC #3 g01897060

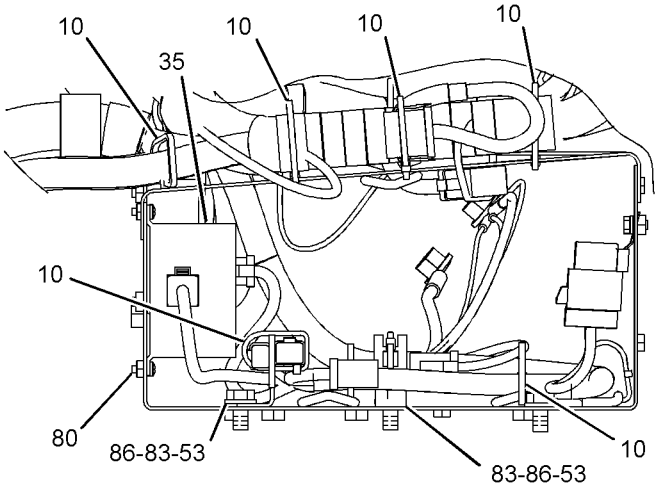

VIEW S-S

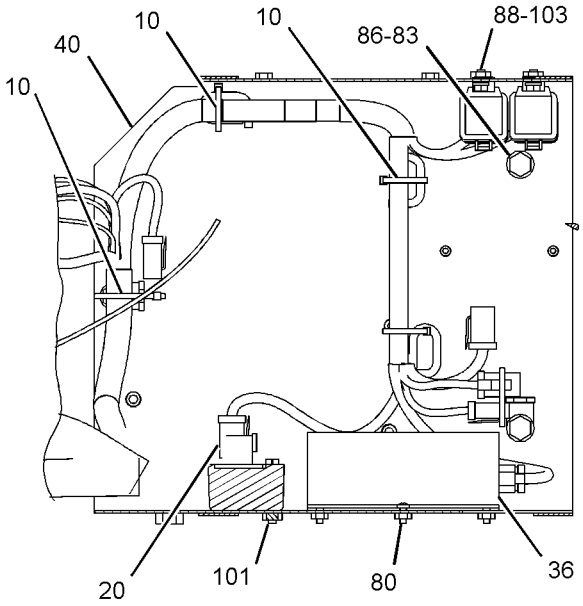

SECTION P-P

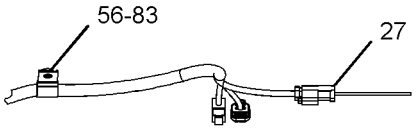

VIEW K-K

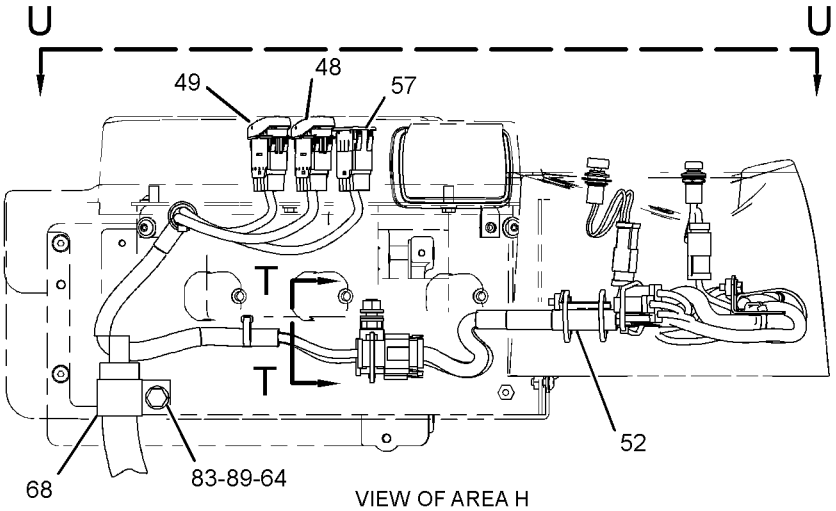

VIEW OF AREA H

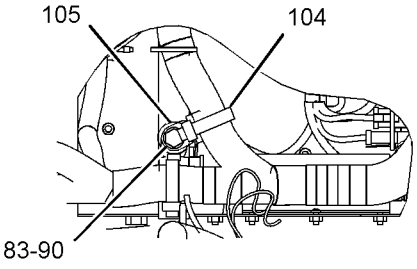

SECTION R-R

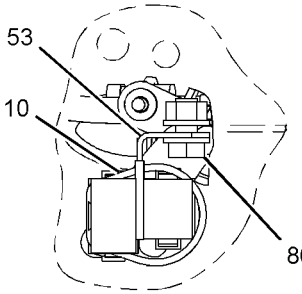

SECTION T-T

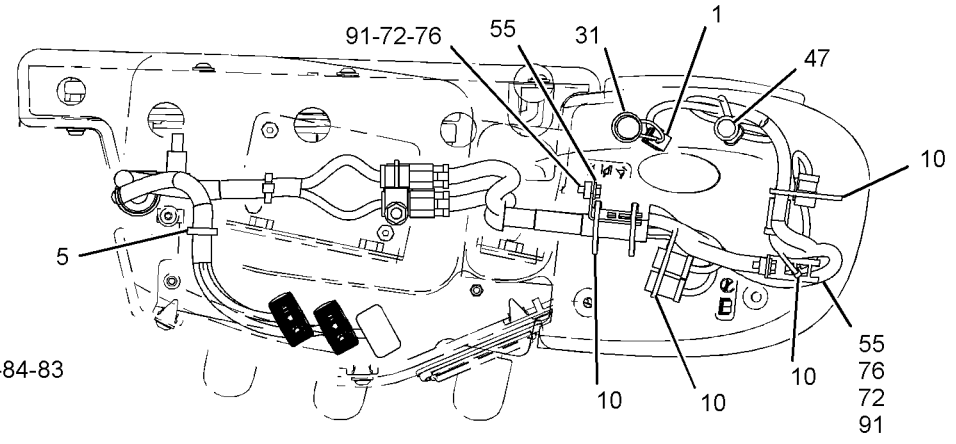

VIEW U-U

GRAPHIC #4 **<END>** g01897061

ELECTRICAL AND STARTING SYSTEM

237-4905 WIRING GP-CHASSIS

S/N: RYF1-UP

PART OF 236-8961 ELECTRICAL AR

SMCS-1408 **i03620004**

NOTE	REF NO	GRAPHIC REF	PART NUMBER	QTY	PART NAME 1 2 3 4 5 6 (PRODUCT LEVEL)	SEE PAGE
Y	1	3	**3E-0075**	1	SWITCH GP-MAGNETIC (24-VOLT) (START RELAY)	203
	2	3	**3E-5169**	1	GUARD-SWITCH	
C	3	1,2,3, 4	**7K-1181**	55	STRAP-CABLE	
	4	4	*8T-2893*	1	LOCK GP-CYLINDER	
J		4	**226-0291**	1	LOCK AS	
		4	**226-0321**	1	CAM	
	5	2	**116-4491**	1	BRACKET AS	
M		2	**8T-3490**	1	NUT-WELD (M10X1.5-THD)	
	6	1	**118-6365**	1	PLATE AS	
	7	1	**124-3019**	1	BRACKET AS	
M		1	**8T-3490**	1	NUT-WELD (M10X1.5-THD)	
	8	3	**149-2612**	1	RELAY AS (24-VOLT) (HOOD TILT MOTOR)	
		3	**186-3735**	2	PIN-CONNECTOR (16-GA TO 18-GA)	
		3	**9W-0852**	4	PIN-CONNECTOR (14-GA)	
		3	**102-8805**	1	KIT-RECEPTACLE (6-PIN)	
					(INCLUDES RECEPTACLE AS & WEDGE)	
C	9	3	**158-0591**	1	LOCKWASHER	
Y	10	3	**158-6634**	1	SWITCH GP-TOGGLE (GROUND LEVEL SHUTDOWN)	215
Y	11	1	**164-7577**	1	SWITCH GP-BYPASS (POWER TRAIN OIL FILTER)	200
	12	2	**172-4871**	1	CLAMP	
	13	3	**184-6636**	1	PLATE-IDENTIFICATION (ENGINE SHUTOFF)	
	14	2	**188-6185**	4	GROMMET	
	15	4	**188-6252**	1	PLATE-HOOD	
C	16	3	**209-4347**	2	WASHER	
	17	3	**218-4935**	1	SUPPRESSOR-ARC	
Y	18	3	**241-8368**	1	SWITCH GP-MAGNETIC (24-VOLT) (MAIN RELAY)	206
	19	2	**245-3257**	1	HARNESS AS-CHASSIS (MAIN)	
		2	**102-8801**	1	KIT-RECEPTACLE (12-PIN)	
		2	**102-8802**	6	KIT-RECEPTACLE (2-PIN)	
		2	**102-8803**	2	KIT-RECEPTACLE (3-PIN)	
		2	**102-8804**	1	KIT-RECEPTACLE (4-PIN)	
		2	**102-8805**	1	KIT-RECEPTACLE (6-PIN)	
					(EACH RECEPTACLE KIT INCLUDES RECEPTACLE AS & WEDGE)	
		2	**3S-2093**	2	STRAP-CABLE	
		2	**7G-7917**	1	PLUG-SEAL	
		2	**7G-7918**	1	PLUG-SEAL	
		2	**7G-7919**	1	PLUG-SEAL	
		2	**7K-1181**	1	STRAP-CABLE	
		2	**8N-1533**	1	PLUG AS-CONNECTOR (7-PIN)	
		2	**8N-1535**	1	BELL AS-END	
		2	**8N-1540**	1	PIN-CONNECTOR (12-GA TO 14-GA)	
		2	**8N-1541**	3	SOCKET-CONNECTOR (12-GA TO 14-GA)	
		2	**8N-1543**	1	SOCKET-CONNECTOR (10-GA)	
		2	**8N-1549**	1	SOCKET-CONNECTOR (4-GA)	
		2	**8T-8737**	74	PLUG-SEAL	
		2	**8T-8827**	1	BOOT (RED)	
		2	**9X-6772**	1	STRAP-CABLE	
		2	**113-0580**	1	RECEPTACLE AS-CONNECTOR (40-PIN)	
		2	**106-4155**	1	KIT-BOLT (ELECTRICAL CONNECTORS)	
					(INCLUDES BOLT, RING, & SEALS)	
E		2	**114-8843**		SLEEVE-PLASTIC (385-CM)	
E		2	**114-8845**		SLEEVE-PLASTIC (80-CM)	
E		2	**119-3662**		TUBE-HEAT SHRINK (10.85-MM DIA) (7-CM)	
E		2	**125-7874**		TUBE-HEAT SHRINK (5.72-MM DIA) (40-CM)	

237-4905 **WIRING GP-CHASSIS** *(contd.)* **i03620004**

NOTE	REF NO	GRAPHIC REF	PART NUMBER	QTY	PART NAME 1 2 3 4 5 6 (PRODUCT LEVEL)	SEE PAGE
E		2	**125-7875**		TUBE-HEAT SHRINK (7.44-MM DIA) (30-CM)	
		2	**9X-3402**	169	SOCKET-CONNECTOR (16-GA TO 18-GA)	
		2	**126-1774**	1	COVER-CONNECTOR	
		2	**2L-8071**	3	TERMINAL-RING (10-GA TO 12-GA, 1/2-IN SCREW)	
		2	**129-7163**	1	PLUG AS-CONNECTOR (1-PIN)	
		2	**129-7164**	1	RECEPTACLE AS-CONNECTOR (1-PIN)	
		2	**9G-4343**	1	TERMINAL (4-GA)	
		2	**5P-3454**	1	TERMINAL (4-GA)	
		2	**9G-4344**	1	TERMINAL (4-GA)	
		2	**2L-8050**	1	TERMINAL-RING (6-GA, 1/4-IN)	
					—OR—	
		2	**2L-8058**	1	TERMINAL-RING (8-GA, 1/4-IN)	
		2	**2L-8065**	1	TERMINAL (10-GA TO 12-GA)	
		2	**2L-8075**	2	TERMINAL (14-GA TO 16-GA, NO. 8 SCREW)	
		2	**131-3201**	1	BOOT	
		2	**9X-3401**	42	PIN-CONNECTOR (16-GA TO 18-GA)	
					—OR—	
		2	**126-1767**	42	PIN-CONNECTOR (14-GA)	
		2	**155-2260**	5	KIT-CONNECTING PLUG (3-PIN)	
		2	**155-2270**	10	KIT-CONNECTING PLUG (2-PIN)	
		2	**155-2271**	2	KIT-CONNECTING PLUG (4-PIN)	
		2	**155-2274**	2	KIT-CONNECTING PLUG (6-PIN)	
					(EACH PLUG KIT INCLUDES PLUG AS, WEDGE, & INTERFACE SEAL)	
		2	**160-7689**	1	PLUG AS-CONNECTOR (70-PIN)	
		2	**159-9322**	1	SEAL-O-RING	
		2	**171-5349**	2	STRAP-MARKER	
		2	**183-5784**	1	PLUG AS-CONNECTOR (40-PIN)	
		2	**3E-4367**	1	RING-RETAINING	
M		2	**3E-8557**	1	BOLT (M5X0.8X39.37-MM)	
		2	**9X-3490**	2	SEAL-CONNECTOR (40-PIN)	
		2	**2L-8057**	1	TERMINAL (8-GA, NO.10 SCREW)	
					—OR—	
		2	**2L-8049**	1	TERMINAL (6-GA, NO.10 SCREW)	
	20	3	**246-4489**	1	WIRE AS	
	21	4	**248-1545**	1	PLATE-FUSE	
	22	2	**264-4297**	1	SENSOR GP-TEMPERATURE (HYDRAULIC OIL)	
	23	2	**289-3038**	1	GROMMET	
	24	4	**301-2980**	1	SWITCH AS-TOGGLE (HOOD TILT ACTUATOR)	
		4	**186-3735**	3	PIN-CONNECTOR (16-GA TO 18-GA)	
		4	**102-8803**	2	KIT-RECEPTACLE (3-PIN)	
					(INCLUDES RECEPTACLE AS AND WEDGE)	
C	25	4	**315-5389**	1	NUT HEX	
C	26	4	**316-8501**	1	HARNESS AS-SWITCH	
		4	**6N-7523**	1	WASHER (6.48X11.9X1.57-MM THK)	
		4	**9G-3695**	9	PLUG	
		4	**9X-3402**	3	SOCKET-CONNECTOR (16-GA TO 18-GA)	
		4	**102-8803**	1	KIT-RECEPTACLE (3-PIN)	
					(INCLUDES RECEPTACLE AS & WEDGE)	
E		4	**114-8845**		SLEEVE-PLASTIC (40-CM)	
		4	**9X-3401**	3	PIN-CONNECTOR (16-GA TO 18-GA)	
					—OR—	
		4	**126-1767**	3	PIN-CONNECTOR (14-GA)	
		4	**155-2260**	1	KIT-CONNECTING PLUG (3-PIN)	
					(INCLUDES PLUG AS, WEDGE, & INTERFACE SEAL)	
C	27	3	**316-8502**	1	BAR-BUS	
C	28	3	**316-8503**	1	BAR-BUS	
C	29	3	**316-8504**	1	BAR-BUS	

237-4905 **WIRING GP-CHASSIS** *(contd.)* **i03620004**

NOTE	REF NO	GRAPHIC REF	PART NUMBER	QTY	PART NAME 1 2 3 4 5 6 (PRODUCT LEVEL)	SEE PAGE
C	30	4	**321-2964**	1	GROMMET AS	
C	31	3	**321-3357**	1	PANEL AS	
C	32	4	**321-3359**	1	PLATE	
	33	2	**327-4608**	1	SWITCH AS-PRESSURE (PARKING BRAKE OIL)	
		2	**186-3735**	3	PIN-CONNECTOR (16-GA TO 18-GA)	
E		2	**9X-1813**		SLEEVE (28-CM)	
		2	**102-8803**	1	KIT-RECEPTACLE (3-PIN)	
					(INCLUDES RECEPTACLE AS & WEDGE)	
	34	1,2,3, 4	**130-5300**	9	CLIP	
C	35	3	**132-5789**	2	CLIP	
	36	2	**147-0385**	1	CLIP	
C	37	3	**149-2147**	6	WASHER (7.2X14.5X2-MM THK)	
	38	3	**171-2206**	1	CIRCUIT BREAKER AS (50-AMPERE) (ENGINE START)	
		3	**6V-8187**	2	NUT (1/4-28-THD)	
		3	**8T-4205**	2	WASHER-HARD (7.2X14.5X2-MM THK)	
		3	**253-2111**	2	LOCKWASHER	
	39	3	**171-2210**	1	CIRCUIT BREAKER AS (80-AMPERE) (MAIN)	
		3	**6V-8187**	2	NUT (1/4-28-THD)	
		3	**8T-4205**	2	WASHER-HARD (7.2X14.5X2-MM THK)	
		3	**253-2111**	2	LOCKWASHER	
	40	3	**171-2212**	1	CIRCUIT BREAKER AS (105-AMPERE) (ALTERNATOR)	
		3	**6V-8187**	2	NUT (1/4-28-THD)	
		3	**8T-4205**	2	WASHER-HARD (7.2X14.5X2-MM THK)	
		3	**253-2111**	2	LOCKWASHER	
	41	2	**298-3650**	1	HARNESS AS-CHASSIS	
		2	**8T-8737**	3	PLUG-SEAL	
E		2	**114-8843**		SLEEVE-PLASTIC (100-CM)	
E		2	**125-7874**		TUBE-HEAT SHRINK (5.72-MM DIA) (10-CM)	
		2	**9X-3402**	20	SOCKET-CONNECTOR (16-GA TO 18-GA)	
		2	**155-2255**	1	KIT-CONNECTING PLUG (12-PIN)	
		2	**155-2260**	1	KIT-CONNECTING PLUG (3-PIN)	
		2	**155-2270**	4	KIT-CONNECTING PLUG (2-PIN)	
					(EACH PLUG KIT INCLUDES PLUG AS, WEDGE, & INTERFACE SEAL)	
C	42	3	**313-3280**	2	NUT	
	43	2	**0L-1407**	2	GROMMET	
	44	2	**1S-0994**	1	CLIP	
	45	2	**3E-6769**	1	SEAL-O-RING	
C	46	3	**3F-9556**	2	LOCKWASHER	
	47	2	**3J-1907**	1	SEAL-O-RING	
	48	2	**3P-3839**	1	GROMMET	
	49	3	**3T-2662**	1	CIRCUIT BREAKER AS (15-AMPERE) (RUNNING LIGHTS)	
		3	**6V-8376**	2	SCREW-MACHINE (8-32X0.25-IN)	
		3	**9B-7233**	2	LOCKWASHER	
C	50	4	**4B-4274**	6	WASHER (5.5X13X1.2-MM THK)	
C	51	4	**4B-4863**	6	WASHER (4.7X11X1.2-MM THK)	
	52	1,2	**4D-7388**	5	CLIP	
C	53	3	**4P-7581**	2	CLIP	
C	54	4	**5P-4115**	2	WASHER-HARD (7.2X19X2-MM THK)	
	55	3	**5P-9085**	1	CLIP	
	56	1,3	**5P-9297**	3	CLIP	
	57	3	**6N-9349**	1	CIRCUIT BREAKER AS (30-AMPERE) (UNSWITCHED BAT POWER TO CAB)	
		3	**6V-8376**	2	SCREW-MACHINE (8-32X0.25-IN)	
		3	**9B-7233**	2	LOCKWASHER	
	58	3	**6T-3644**	1	CIRCUIT BREAKER AS (20-AMPERE) (HOOD TILT ACTUATOR)	
		3	**6V-8376**	2	SCREW-MACHINE (8-32X0.25-IN)	

237-4905 **WIRING GP-CHASSIS** *(contd.)* **i03620004**

NOTE	REF NO	GRAPHIC REF	PART NUMBER	QTY	PART NAME 1 2 3 4 5 6 (PRODUCT LEVEL)	SEE PAGE
		3	**9B-7233**	2	LOCKWASHER	
	59	1,2	**7C-4354**	3	CLIP	
	60	1	**7D-1728**	1	CLIP	
	61	2	**7D-4092**	1	CLIP	
	62	4	**7U-4891**	6	SCREW (10-32X1-IN)	
	63	4	**7U-4892**	6	SCREW (8-32X0.75-IN)	
	64	1	**8M-2772**	1	CLIP	
	65	1	**8M-2773**	3	CLIP	
C	66	3	**8T-0122**	6	NUT-FULL (1/4-28-THD)	
C	67	3	**8T-0193**	2	NUT-FULL (5/16-24-THD)	
	68	1,2,3, 4	**8T-4121**	26	WASHER-HARD (11X21X2.5-MM THK)	
M	69	1,2,3	**8T-4133**	11	NUT (M10X1.5-THD)	
M	70	1,2,3, 4	**8T-4137**	11	BOLT (M10X1.5X20-MM)	
CM	71	3	**8T-4138**	3	BOLT (M6X1X20-MM)	
CM	72	4	**8T-4181**	2	BOLT (M6X1X20-MM)	
C	73	3	**8T-4205**	7	WASHER-HARD (7.2X14.5X2-MM THK)	
	74	1	**8T-4223**	1	WASHER-HARD (13.5X25.5X3-MM THK)	
M	75	1	**8T-4244**	1	NUT (M12X1.75-THD)	
CM	76	3	**8T-4970**	3	BOLT (M6X1X14-MM)	
M	77	4	**8T-5436**	4	BOLT (M10X1.5X130-MM)	
C	78	4	**9K-0700**	1	GROMMET	
CE	79	4	**126-8472**		SEAL (129-CM)	
CE	79A	4	**126-8472**		SEAL (13-CM)	

C-CHANGE FROM PREVIOUS TYPE
E-ORDER BY THE CENTIMETER
J-REQUIRES CORPORATE KEY
M-METRIC PART
Y-SEPARATE ILLUSTRATION

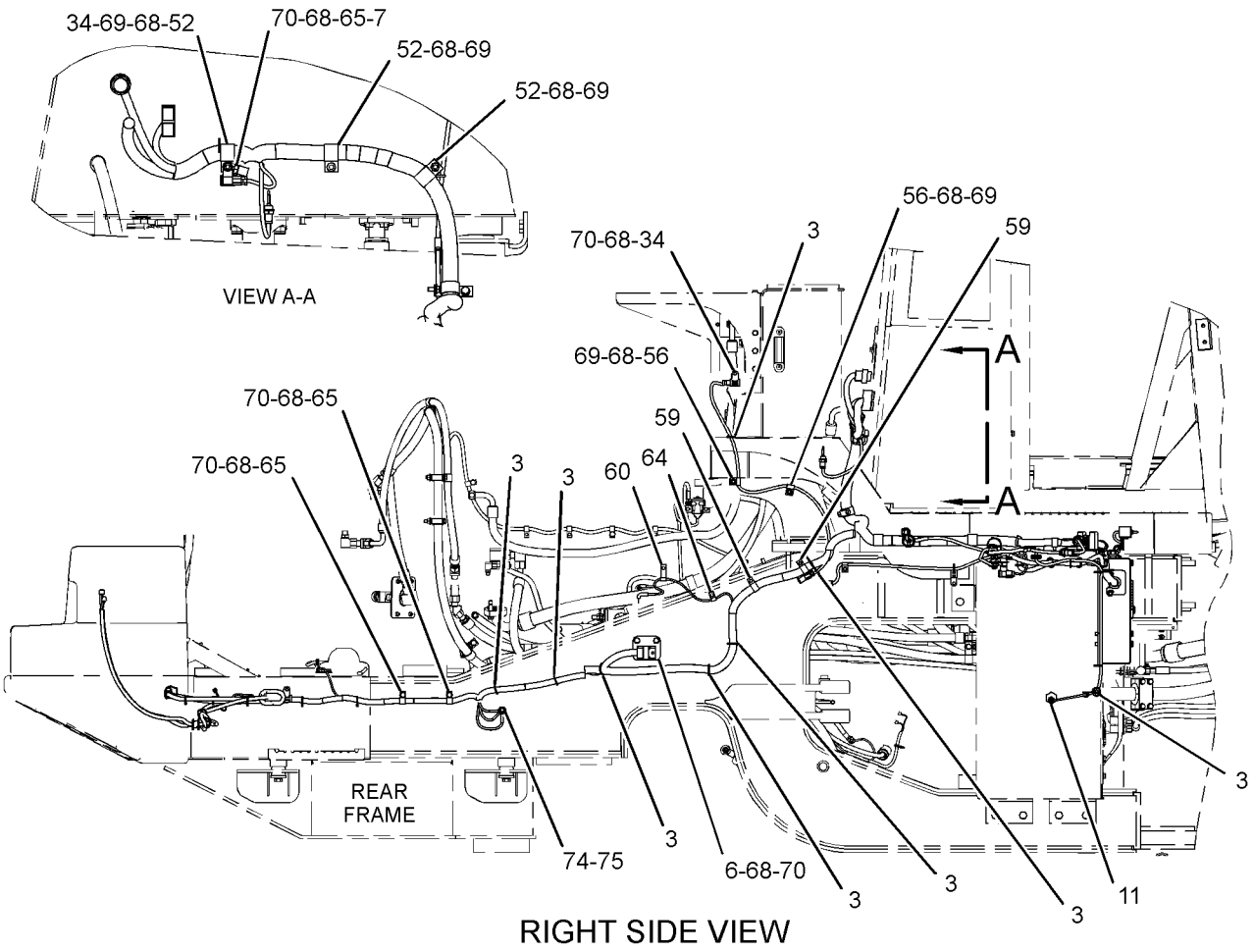

RIGHT SIDE VIEW

GRAPHIC #1 g01945763

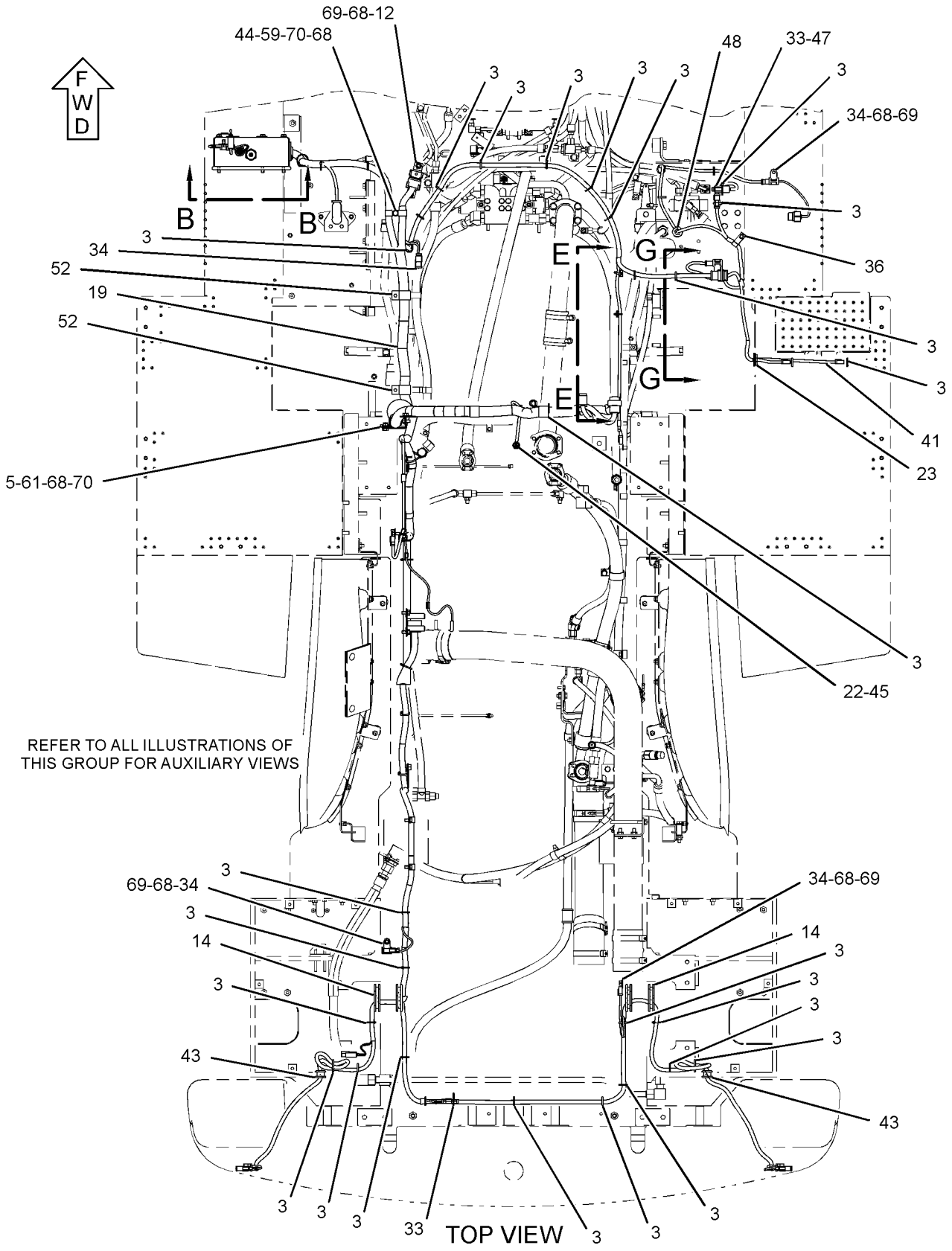

GRAPHIC #2

g01945764

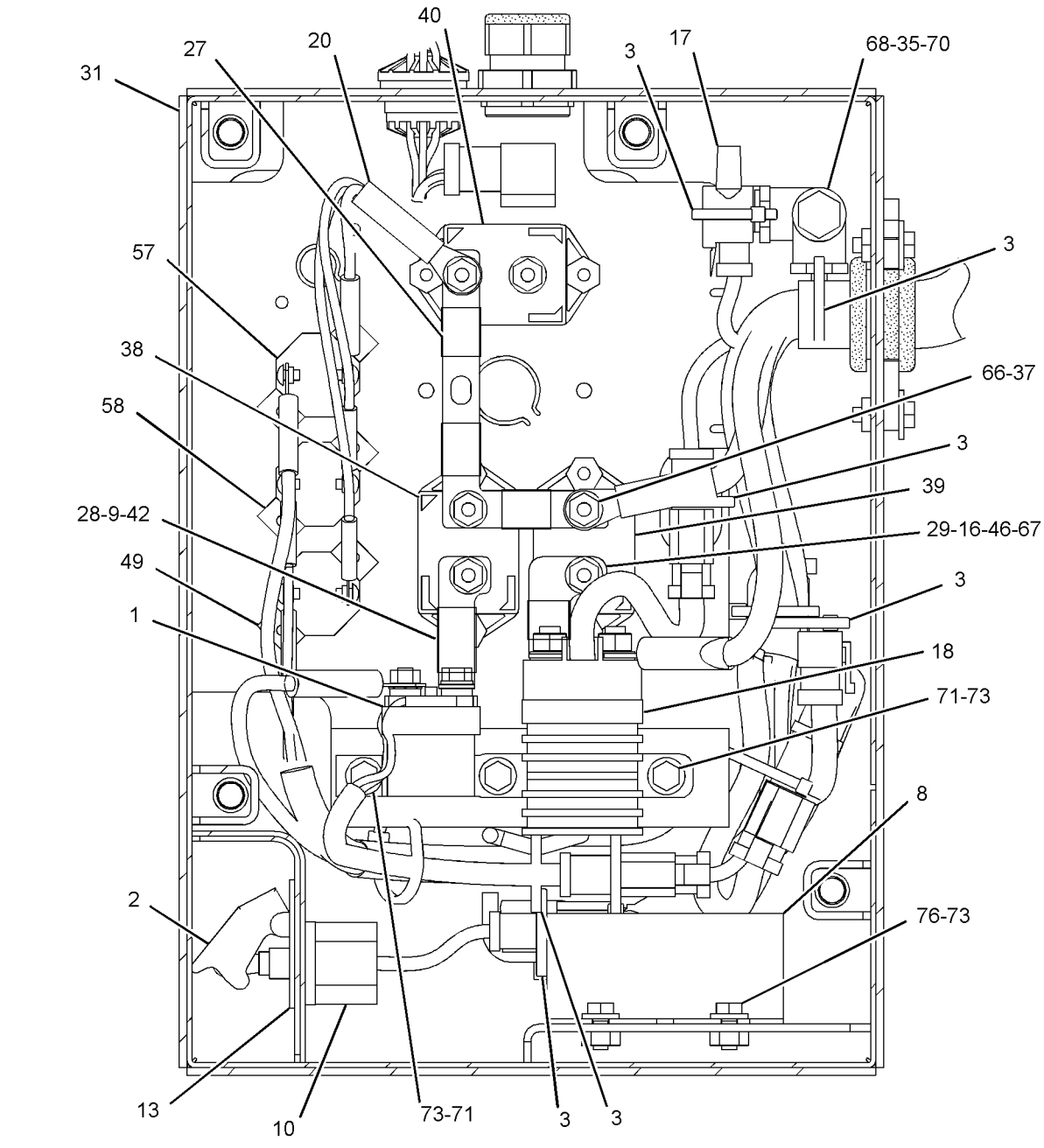

VIEW B-B

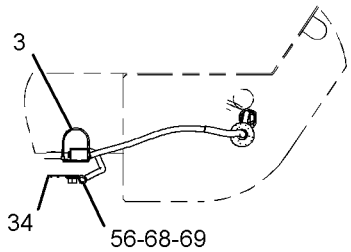

VIEW G-G

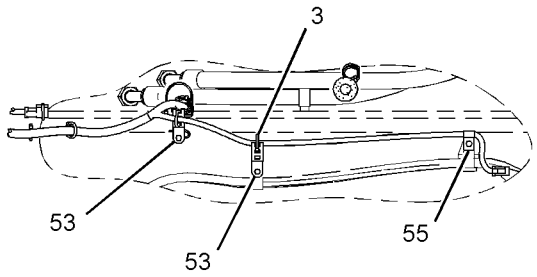

VIEW E-E

GRAPHIC #3

g01945765

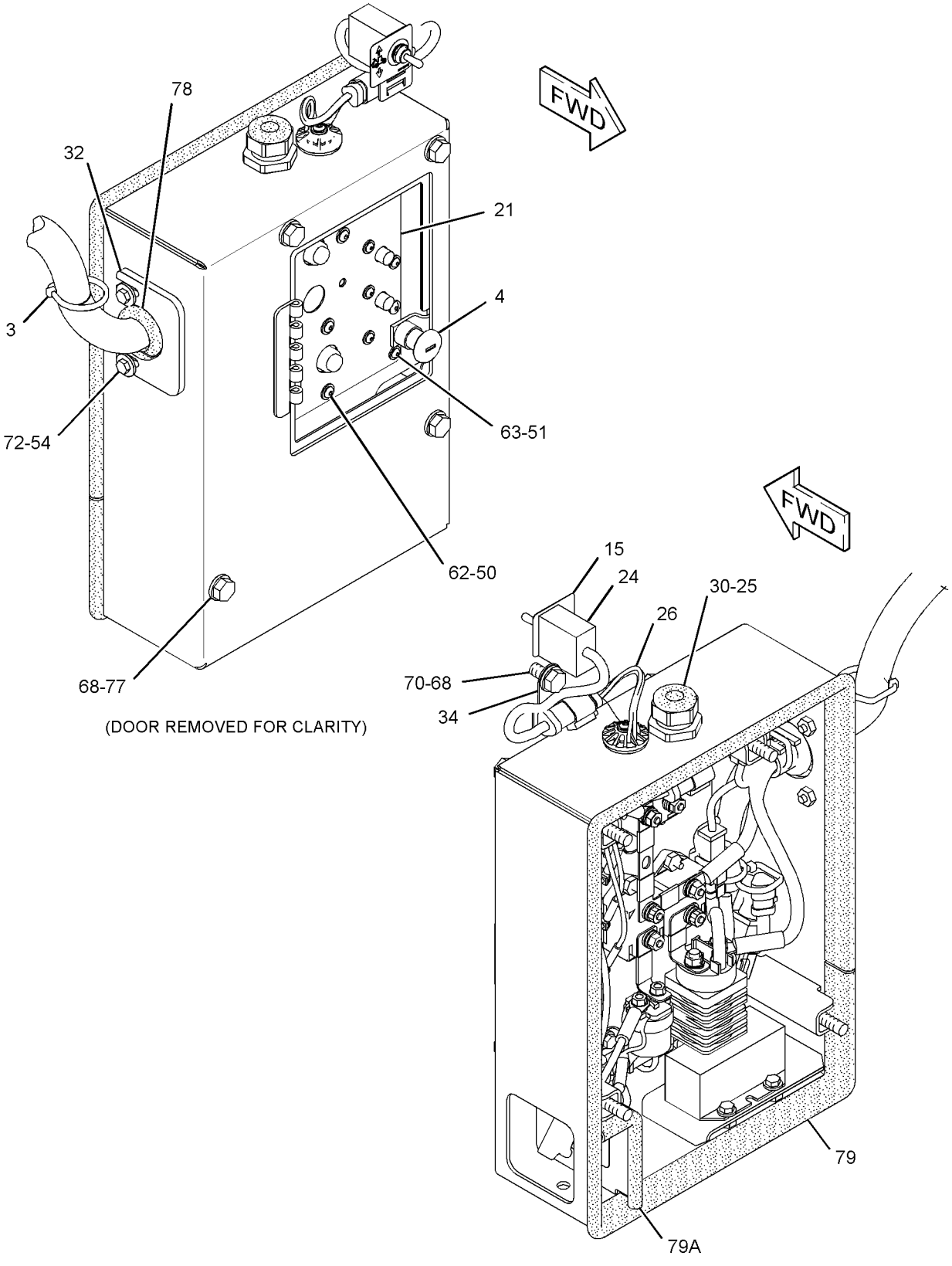

(DOOR REMOVED FOR CLARITY)

GRAPHIC #4 **<END>** g01945766

237-9752 WIRING GP-ELECTRONIC CONTROL—ENGINE

S/N: RSX15243-UP

PART OF 234-7848 ENGINE AR-COMPLETE

SMCS-1408 **i03557781**

NOTE	REF NO	GRAPHIC REF	PART NUMBER	QTY	PART NAME 1 2 3 4 5 6 (PRODUCT LEVEL)	SEE PAGE
	1	1,2	**3S-2093**	13	STRAP-CABLE	
	2	2	**4W-9149**	1	SPACER (10.5X19X16.75-MM THK)	
M	4	1	**9X-2097**	1	STUD (M8X1.25-THD)	
	5	1	**219-7461**	1	HARNESS AS-ENGINE (ELECTRONIC CONTROL MODULE)	
		1	**102-8802**	1	KIT-RECEPTACLE (2-PIN)	
					(INCLUDES RECEPTACLE AS & WEDGE)	
		1	**102-8803**	2	KIT-RECEPTACLE (3-PIN)	
					(EACH INCLUDES RECEPTACLE AS & WEDGE)	
		1	**3S-2093**	1	STRAP-CABLE	
		1	**8T-8737**	87	PLUG-SEAL	
		1	**155-2255**	1	KIT-CONNECTING PLUG (12-PIN)	
					(INCLUDES PLUG AS, WEDGE & INTERFACE SEAL)	
		1	**155-2265**	1	KIT-CONNECTING PLUG (8-PIN)	
					(INCLUDES PLUG AS, WEDGE & INTERFACE SEAL)	
		1	**155-2260**	1	KIT-CONNECTING PLUG (3-PIN)	
					(INCLUDES PLUG AS, WEDGE & INTERFACE SEAL)	
		1	**155-2270**	5	KIT-CONNECTING PLUG (2-PIN)	
					(EACH INCLUDES PLUG AS, WEDGE & INTERFACE SEAL)	
		1	**227-4002**	1	PLUG AS-CONNECTOR (108-PIN)	
	6	1	**303-5952**	1	STRAP-TIE	
	7	1	**132-5789**	2	CLIP	
	8	2	**149-9129**	2	CLIP	
M	9	1,2	**2Y-5829**	2	NUT (M10X1.5-THD)	
	10	1,2	**4P-7581**	6	CLIP	
	11	1	**5P-9085**	1	CLIP	
M	12	2	**6V-3918**	1	BOLT (M8X1.25X50-MM)	
	13	1,2	**6V-5839**	6	WASHER (11X21X2.5-MM THK)	
M	14	1	**6V-8212**	4	BOLT (M10X1.5X16-MM)	
M	15	2	**6V-8836**	1	BOLT (M6X1X14-MM)	
	16	2	**9M-1974**	1	WASHER-HARD (8.8X16X2-MM THK)	
	17	2	**9X-8267**	1	WASHER (6.6X12X2-MM THK)	

M-METRIC PART

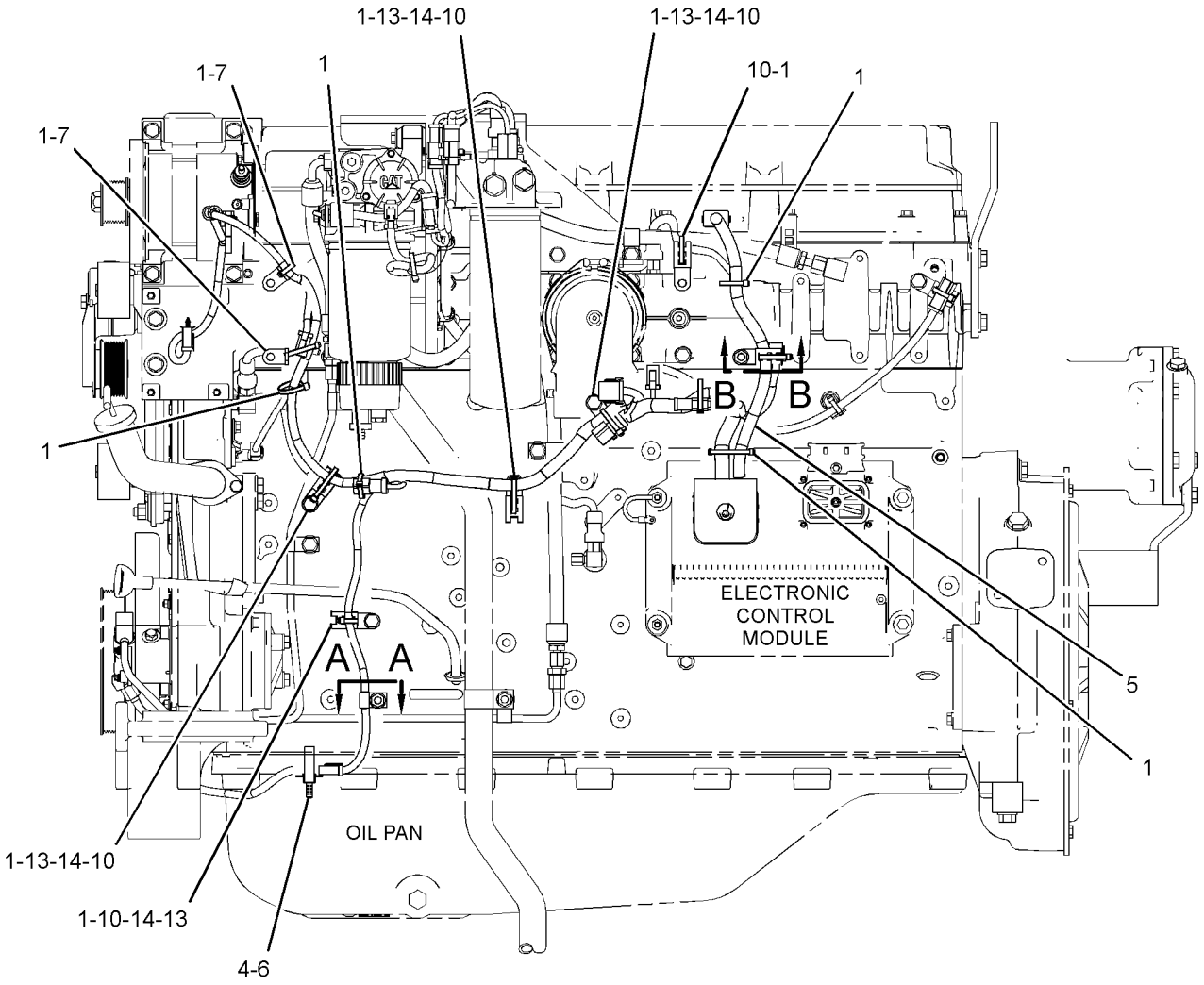

LEFT SIDE VIEW OF ENGINE

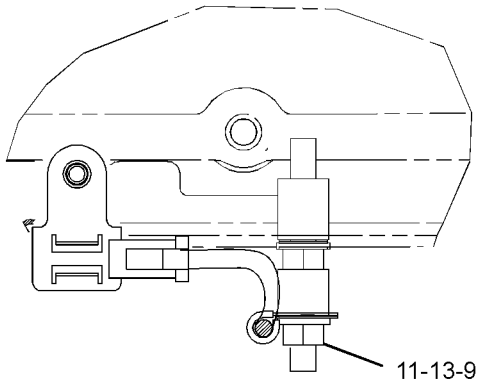

SECTION A-A

REFER TO ALL ILLUSTRATIONS OF THIS GROUP FOR AUXILIARY VIEWS.

GRAPHIC #1

g01810353

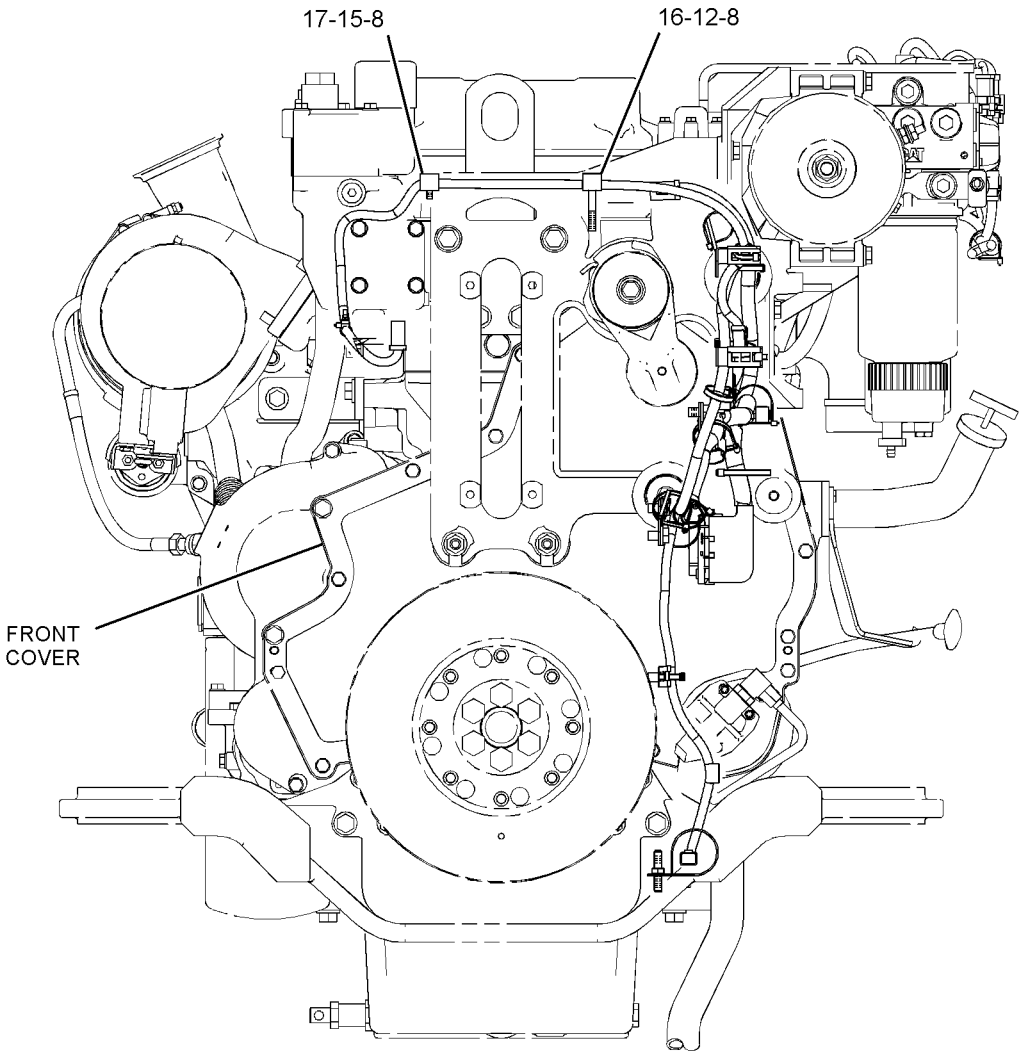

FRONT VIEW OF ENGINE

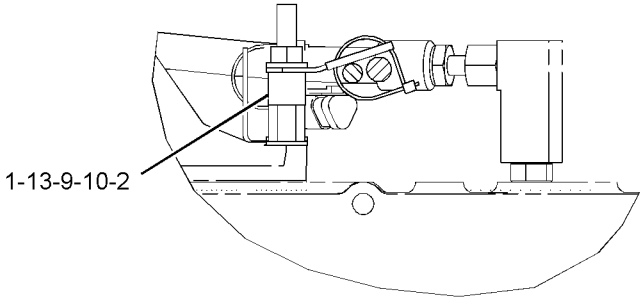

SECTION B-B

GRAPHIC #2 **<END>** g01810361

ELECTRICAL AND STARTING SYSTEM

237-4903 WIRING GP-ENGINE

S/N: RYF1-UP

PART OF 236-8961 ELECTRICAL AR

SMCS-1403, 1408 **i03620049**

NOTE	REF NO	GRAPHIC REF	PART NUMBER	QTY	PART NAME 1 2 3 4 5 6 (PRODUCT LEVEL)	SEE PAGE
	1	1	**3S-2093**	22	STRAP-CABLE	
	2	1	**121-1340**	1	ANGLE AS	
M		1	**8T-3490**	1	NUT-WELD (M10X1.5-THD)	
	3	1	**314-2405**	1	SWITCH AS-PRESSURE (SERVICE BRAKE OIL)	
		1	**102-8803**	1	KIT-RECEPTACLE (3-PIN)	
					(INCLUDES RECEPTACLE AS & WEDGE)	
E		1	**9X-1813**		SLEEVE (28-CM)	
		1	**186-3735**	1	PIN-CONNECTOR (16-GA TO 18-GA)	
Y	4	1	**194-6722**	1	SENSOR GP-PRESSURE (TURBOCHARGER INLET)	180
	5	1	**245-3514**	1	HARNESS AS-ENGINE	
		1	**102-8802**	2	KIT-RECEPTACLE (2-PIN)	
		1	**102-8803**	2	KIT-RECEPTACLE (3-PIN)	
					(EACH KIT INCLUDES RECEPTACLE AS & WEDGE)	
		1	**110-6845**	1	PLUG AS-CONNECTOR (40-PIN)	
		1	**8T-8737**	49	PLUG-SEAL	
		1	**126-1774**	1	COVER-CONNECTOR	
		1	**155-2270**	16	KIT-CONNECTING PLUG (2-PIN)	
		1	**155-2260**	4	KIT-CONNECTING PLUG (3-PIN)	
					(EACH KIT INCLUDES PLUG AS & WEDGE)	
		1	**160-7689**	1	PLUG AS-CONNECTOR (70-PIN)	
	6	1	**256-6453**	1	SENSOR AS-TEMPERATURE (TORQUE CONVERTER OIL)	
	7	1	**311-7036**	1	CABLE AS	
E		1	**8C-0596**		CABLE (2-GA, BLACK) (40-CM)	
		1	**030-1712**	1	TERMINAL-RING (2-GA, 6.35-MM)	
E		1	**125-7876**		TUBE-HEAT SHRINK (17.78-MM) (4-CM)	
	8	1	**130-5300**	4	CLIP	
	9	1	**130-5301**	1	CLIP	
	10	1	**132-5789**	3	CLIP	
	11	1	**134-2540**	1	RESISTOR AS (3-PIN)	
	12	1	**3J-1907**	2	SEAL-O-RING	
	13	1	**3K-0360**	1	SEAL-O-RING	
	14	1	**4P-7581**	5	CLIP	
	15	1	**4P-7582**	3	CLIP	
	16	1	**4P-8134**	1	CLIP	
	17	1	**6D-4246**	2	CLIP	
	18	1	**7D-1649**	1	WASHER-HARD (13.5X32X5-MM THK)	
	19	1	**8T-4121**	4	WASHER-HARD (11X21X2.5-MM THK)	
M	20	1	**8T-4136**	4	BOLT (M10X1.5X25-MM)	
	21	1	**8T-4223**	1	WASHER-HARD (13.5X25.5X3-MM THK)	
	22	1	**8T-8919**	1	BOLT (1/2-13X1.75-IN)	

E-ORDER BY THE CENTIMETER
M-METRIC PART
Y-SEPARATE ILLUSTRATION

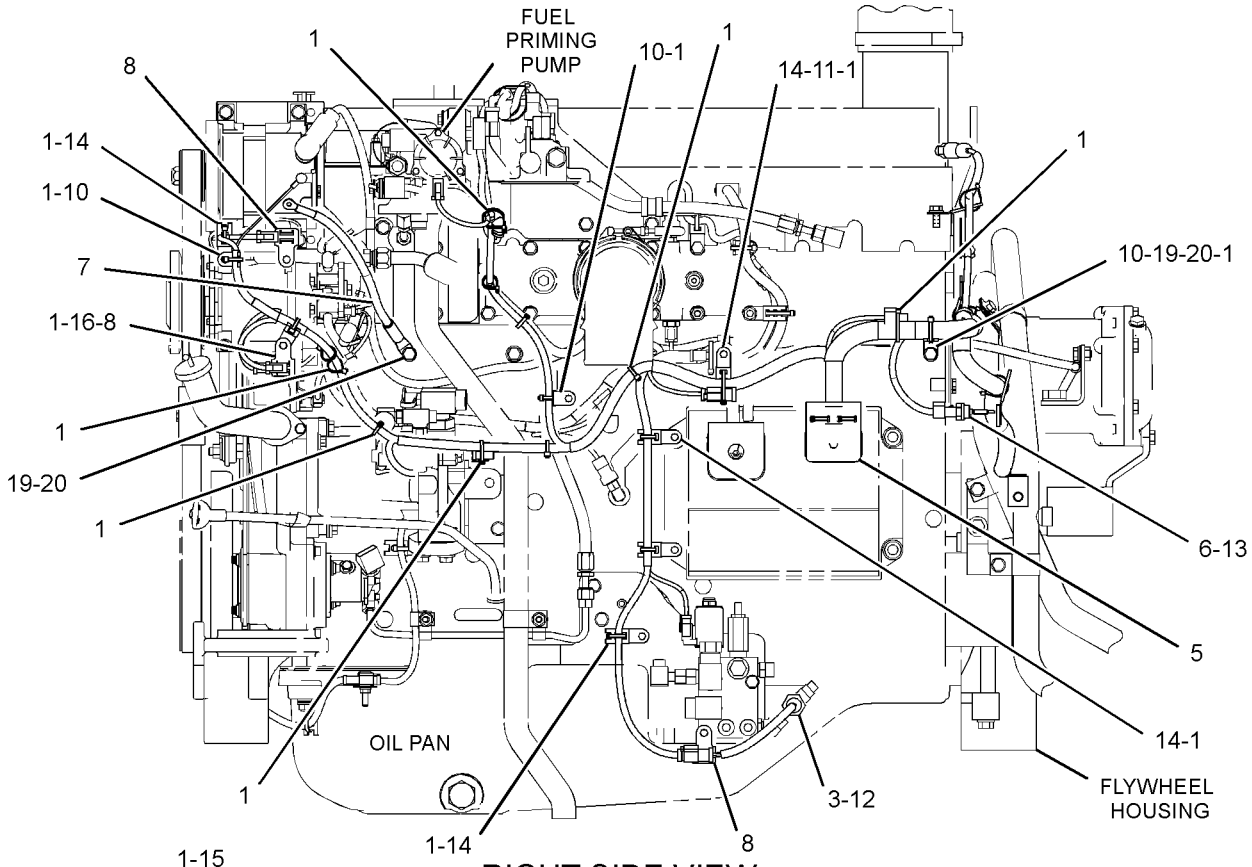

RIGHT SIDE VIEW

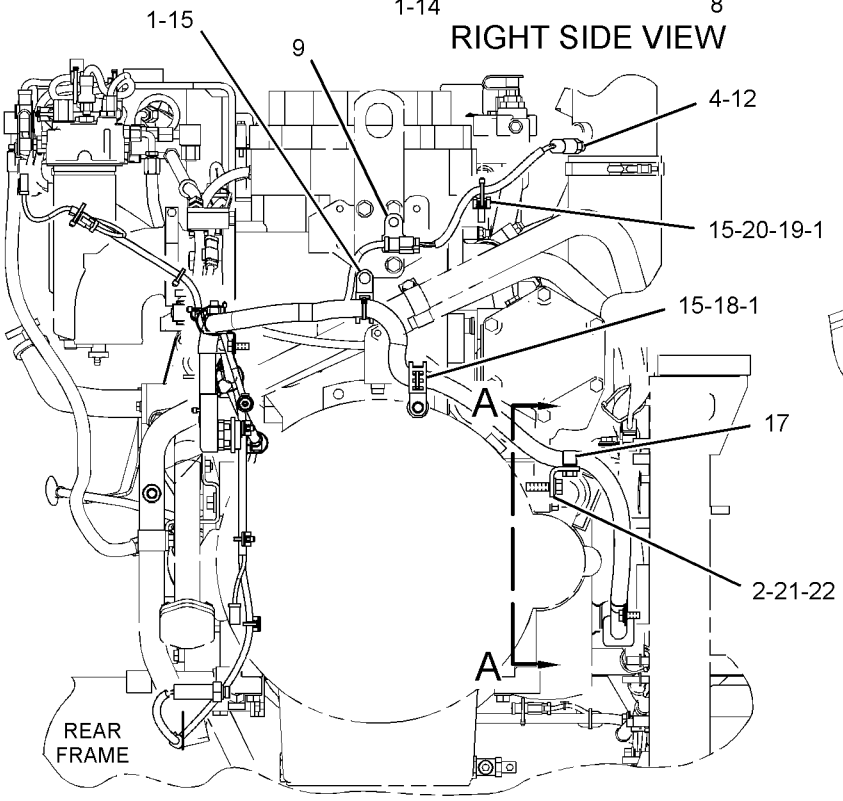

FRONT VIEW

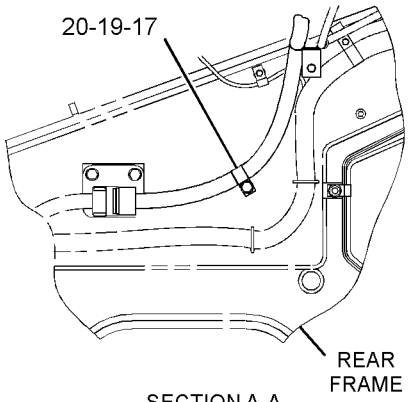

SECTION A-A

GRAPHIC #1 **<END>** g01627135

ELECTRICAL AND STARTING SYSTEM

237-4904 WIRING GP-FRONT

S/N: RYF1-UP

PART OF 236-8961 ELECTRICAL AR

SMCS-5734 **i03620100**

NOTE	REF NO	GRAPHIC REF	PART NUMBER	QTY	PART NAME 1 2 3 4 5 6 (PRODUCT LEVEL)	SEE PAGE
	1	1	**4H-1225**	3	WASHER (11X22X6-MM THK)	
	2	1	**5V-6152**	4	CLAMP	
	3	1	**5V-6153**	2	PLATE-COVER	
	4	1	**7K-1181**	19	STRAP-CABLE	
	5	1	**273-0275**	1	HARNESS AS-FRONT CHASSIS	
		1	**102-8802**	7	KIT-RECEPTACLE (2-PIN)	
		1	**102-8803**	2	KIT-RECEPTACLE (3-PIN)	
		1	**102-8801**	1	KIT-RECEPTACLE (12-PIN)	
					(EACH KIT RECEPTACLE INCLUDES RECEPTACLE AS AND WEDGE)	
E		1	**5P-1506**		HOSE (58-CM)	
		1	**113-0580**	1	RECEPTACLE AS-CONNECTOR (40-PIN)	
E		1	**114-8843**		SLEEVE-PLASTIC (400-CM)	
		1	**155-2270**	15	KIT-CONNECTING PLUG (2-PIN)	
		1	**155-2260**	4	KIT-CONNECTING PLUG (3-PIN)	
					(EACH KIT PLUG INCLUDES PLUG AS AND WEDGE)	
		1	**7K-1181**	2	STRAP-CABLE	
	6	1	**130-5300**	5	CLIP	
	7	1	**147-0385**	1	CLIP	
	8	1	**4K-8864**	9	CLIP	
	9	1	**4P-7428**	3	CLIP	
	10	1	**5P-9297**	2	CLIP	
	11	1	**6D-4246**	2	CLIP	
M	12	1	**8T-3844**	2	BOLT (M6X1X70-MM)	
	13	1	**8T-4121**	9	WASHER-HARD (11X21X2.5-MM THK)	
M	14	1	**8T-4133**	6	NUT (M10X1.5-THD)	
M	15	1	**8T-4137**	4	BOLT (M10X1.5X20-MM)	
M	16	1	**8T-6974**	2	BOLT (M6X1X80-MM)	
	17	1	**9X-8250**	1	CLIP	
	18	1	**9X-8256**	4	WASHER (6.6X12X2-MM THK)	

E-ORDER BY THE CENTIMETER
M-METRIC PART

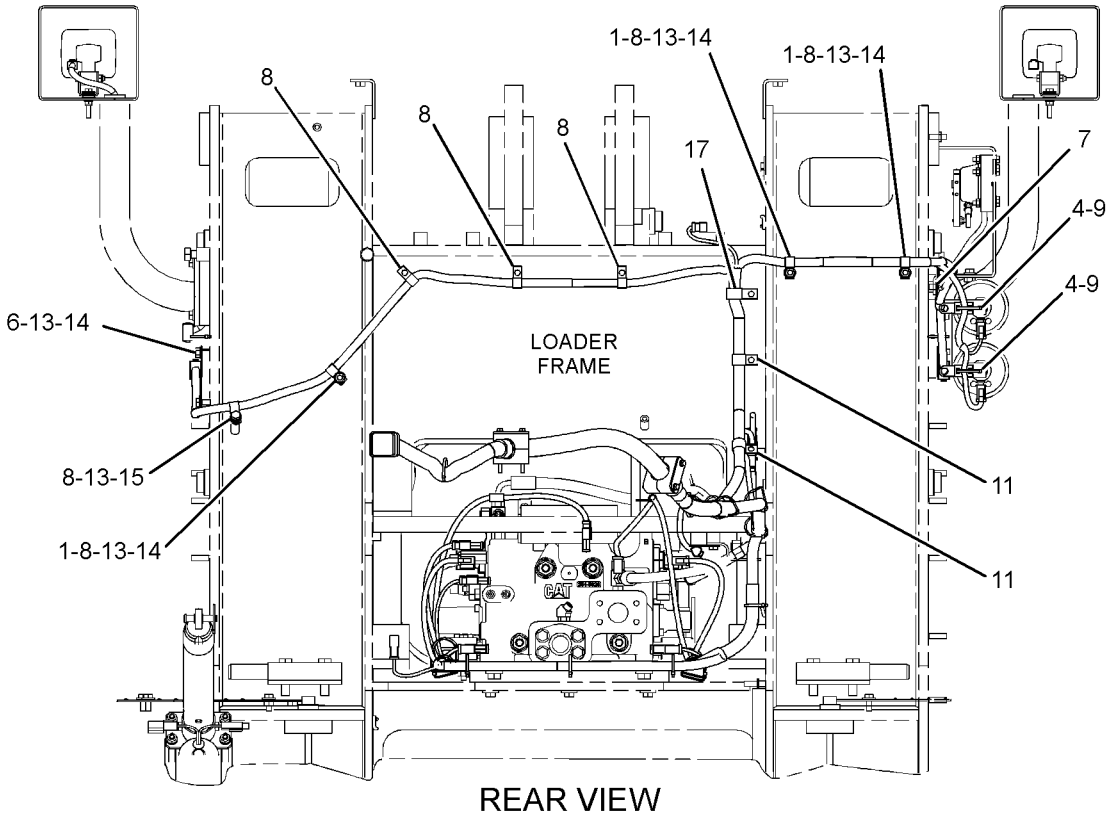

REAR VIEW

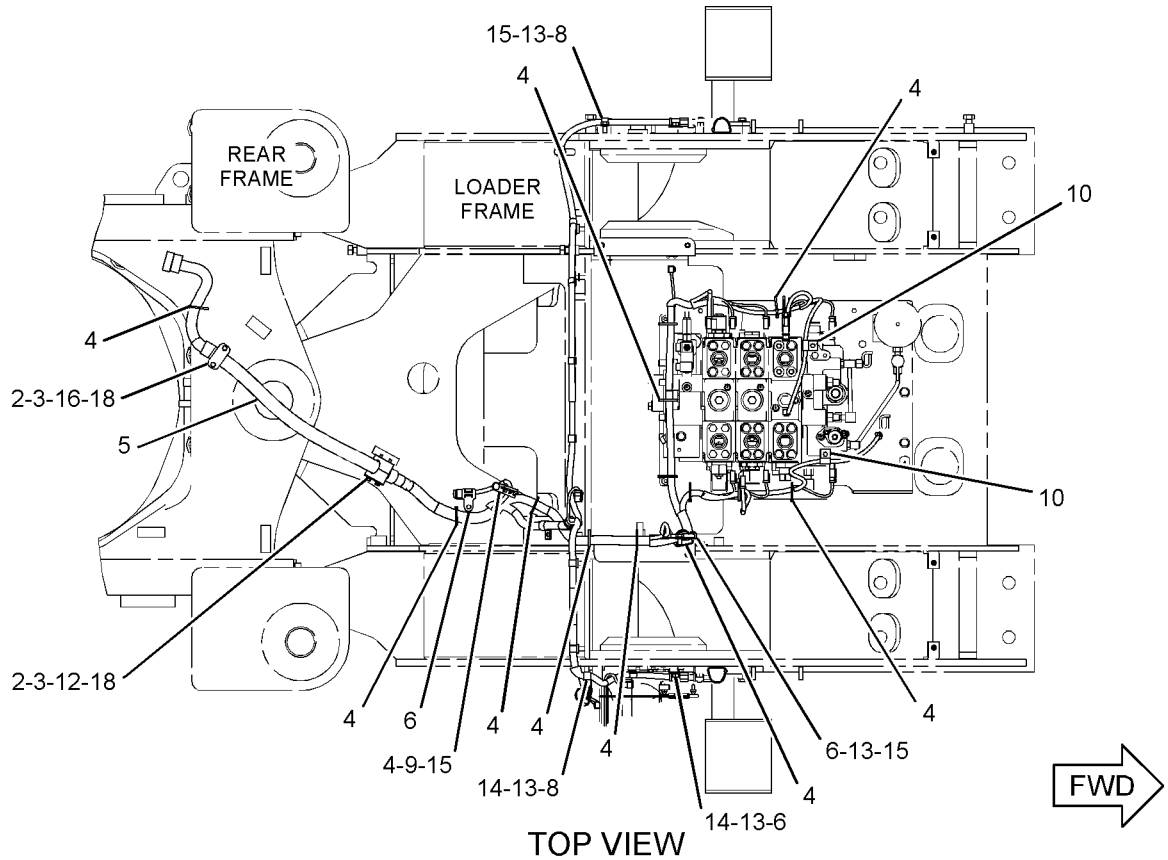

TOP VIEW

GRAPHIC #1 **<END>** g01596755

ELECTRICAL AND STARTING SYSTEM

271-4016 WIRING GP-LIGHTING–LOADER FRAME

S/N: RYF1-UP

PART OF 236-8961 ELECTRICAL AR

SMCS-1408, 1429 **i02441378**

NOTE	REF NO	GRAPHIC REF	PART NUMBER	QTY	PART NAME 1 2 3 4 5 6 (PRODUCT LEVEL)	SEE PAGE
	1	1	**271-4017**	2	HARNESS AS-LIGHTING (LOADER FRAME)	
					(EACH INCLUDES)	
		1	**155-2255**	1	KIT-CONNECTING PLUG (12-PIN)	
		1	**155-2270**	1	KIT-CONNECTING PLUG (2-PIN)	
					(EACH INCLUDES PLUG AS AND WEDGE)	

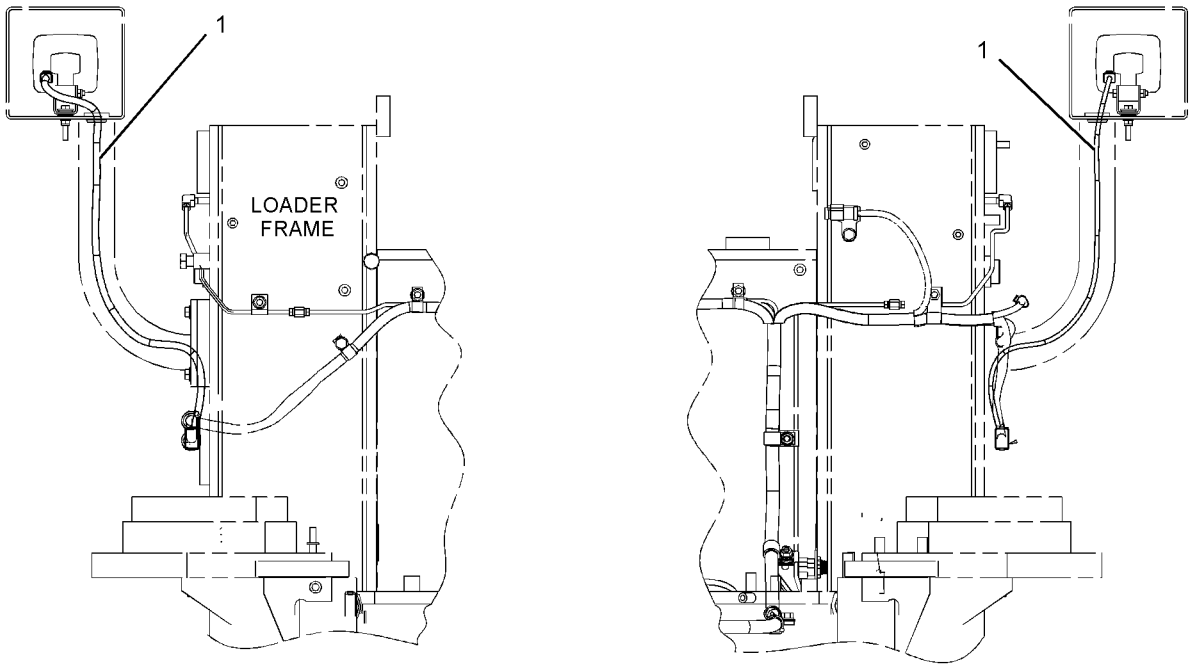

REAR VIEW

GRAPHIC #1 **<END>** g01201152

271-4028 WIRING GP-LIGHTING—LOADER FRAME

S/N: RYF1-UP

PART OF 235-5279, 244-3599 LIGHTING AR-SIGNAL

AN ATTACHMENT

SMCS-1408, 1429 **i02444739**

NOTE	REF NO	GRAPHIC REF	PART NUMBER	QTY	PART NAME 1 2 3 4 5 6 (PRODUCT LEVEL)	SEE PAGE
	1	1	**271-4029**	1	HARNESS AS-LIGHTING (LH)	
		1	**155-2255**	1	KIT-CONNECTING PLUG (12-PIN)	
		1	**155-2270**	1	KIT-CONNECTING PLUG (2-PIN)	
					(EACH KIT INCLUDES PLUG AS AND WEDGE)	
	2	1	**271-4030**	1	HARNESS AS-LIGHTING (RH)	
		1	**155-2255**	1	KIT-CONNECTING PLUG (12-PIN)	
		1	**155-2270**	1	KIT-CONNECTING PLUG (2-PIN)	
					(EACH KIT INCLUDES PLUG AS AND WEDGE)	

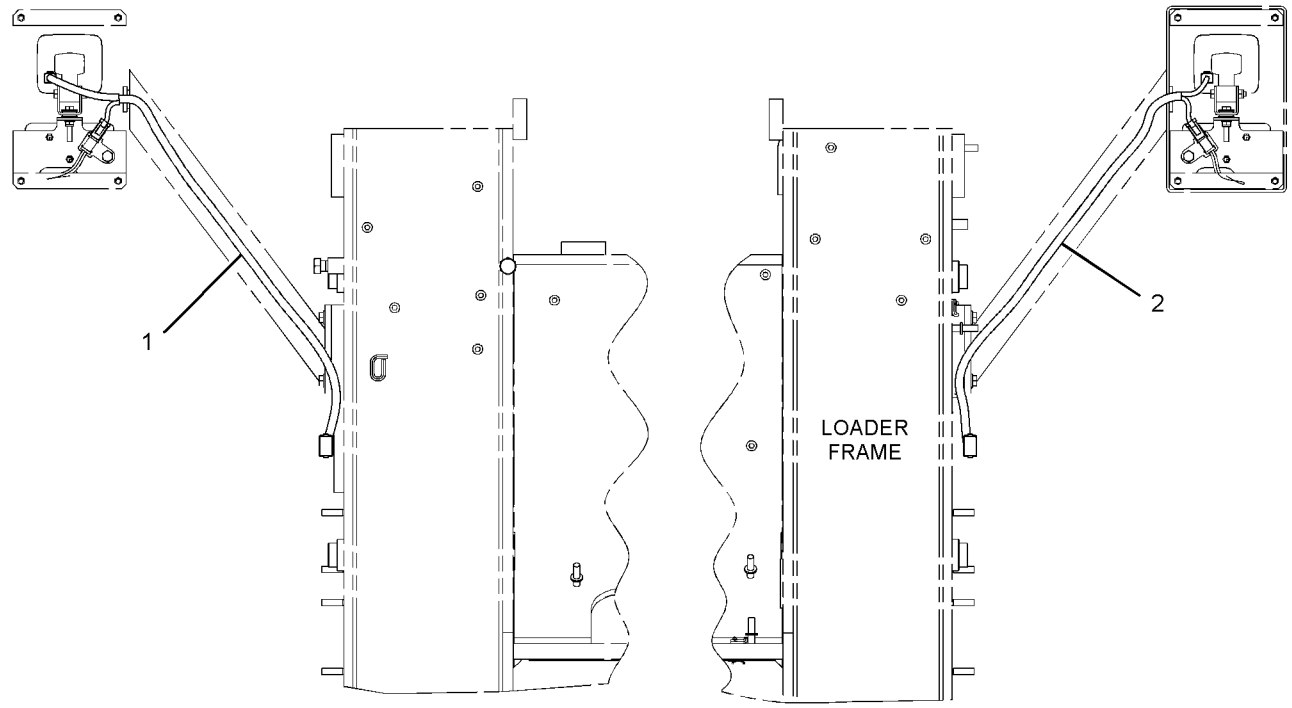

REAR VIEW

GRAPHIC #1 **<END>** g01195661

271-4037 WIRING GP-LIGHTING–LOADER FRAME

S/N: RYF1-UP
PART OF 254-5525, 260-7765 LIGHTING AR-ROADING
AN ATTACHMENT

SMCS-1408, 1429 **i02444737**

NOTE	REF NO	GRAPHIC REF	PART NUMBER	QTY	PART NAME 1 2 3 4 5 6 (PRODUCT LEVEL)	SEE PAGE
	1	1	**271-4038**	1	HARNESS AS-LIGHTING (LH)	
		1	**155-2255**	1	KIT-CONNECTING PLUG (12-PIN)	
		1	**155-2274**	1	KIT-CONNECTING PLUG (6-PIN)	
					(EACH KIT INCLUDES PLUG AS AND WEDGE)	
	2	1	**271-4039**	1	HARNESS AS-LIGHTING (RH)	
		1	**155-2255**	1	KIT-CONNECTING PLUG (12-PIN)	
		1	**155-2274**	1	KIT-CONNECTING PLUG (6-PIN)	
					(EACH KIT INCLUDES PLUG AS AND WEDGE)	

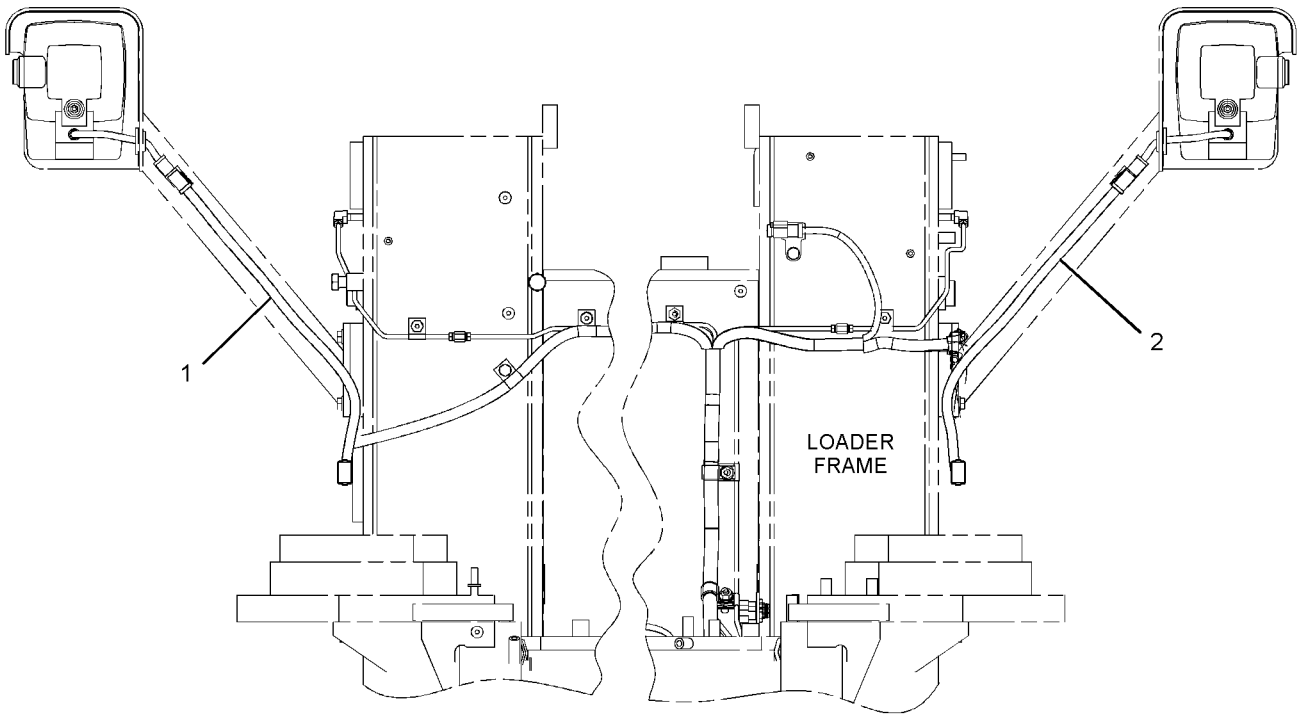

REAR VIEW

GRAPHIC #1 **<END>** g01195665

237-4909 WIRING GP-SECONDARY STEERING

S/N: RYF1-UP
PART OF 236-9087 STEERING AR-SECONDARY
AN ATTACHMENT

SMCS-1408, 4334 **i03629799**

NOTE	REF NO	GRAPHIC REF	PART NUMBER	QTY	PART NAME 1 2 3 4 5 6 (PRODUCT LEVEL)	SEE PAGE
	1	1	**3S-2093**	5	STRAP-CABLE	
	2	1	**3E-5239**	1	RELAY AS (24-VOLT) (SECONDARY STEER INTERMEDIATE)	
	3	1	**189-5604**	1	PLATE AS	
	4	1	**198-6755**	1	CABLE AS	
		1	**1S-7251**	1	TERMINAL-CABLE (00-GA, 1/2-IN BOLT)	
		1	**1S-7252**	1	TERMINAL-CABLE (00-GA, 3/8-IN BOLT)	
E		1	**5P-0747**		CABLE (00-GA, BLACK) (5-CM)	
	5	1	**258-7107**	1	HARNESS AS-STEERING (SECONDARY)	
	6	1	**308-0788**	1	SWITCH AS-PRESSURE (PRIMARY STEERING OIL)	
	6A	1	**308-0788**	1	SWITCH AS-PRESSURE (SECONDARY STEERING OIL)	
		1	**3E-3371**	1	WEDGE-RECEPTACLE LOCK (3-PIN)	
		1	**102-8803**	1	KIT-RECEPTACLE (3-PIN) (INCLUDES RECEPTACLE AS & WEDGE)	
		1	**186-3735**	1	PIN-CONNECTOR (16-GA TO 18-GA)	
E		1	**9X-1813**		SLEEVE (28-CM)	
	7	1	**329-6747**	1	CABLE AS	
		1	**8N-0869**	2	COVER-TERMINAL (RED)	
E		1	**159-8049**		CABLE (00-GA, RED) (215-CM)	
B		1	**1P-0810**		TAPE-ELECTRICAL	
		1	**1S-7251**	1	TERMINAL-CABLE (00-GA, 1/2-IN BOLT)	
	8	1	**033-8248**	2	CLIP	
	9	1	**130-5300**	1	CLIP	
	10	1	**218-4935**	1	SUPPRESSOR-ARC	
	11	1	**2A-2677**	1	SPACER (10.7X17.14X19.05-MM THK)	
	12	1	**2V-1771**	2	GROMMET	
	13	1	**3J-1907**	2	SEAL-O-RING	
	14	1	**5P-9297**	1	CLIP	
	15	1	**6D-4246**	2	CLIP	
	16	1	**8T-4121**	7	WASHER-HARD (11X21X2.5-MM THK)	
M	17	1	**8T-4133**	2	NUT (M10X1.5-THD)	
M	18	1	**8T-4137**	4	BOLT (M10X1.5X20-MM)	
M	19	1	**8T-4171**	1	BOLT (M6X1X12-MM)	
M	20	1	**8T-4185**	1	BOLT (M10X1.5X50-MM)	
	21	1	**8T-4223**	1	WASHER-HARD (13.5X25.5X3-MM THK)	
M	22	1	**8T-4244**	1	NUT (M12X1.75-THD)	
	23	1	**9X-8267**	1	WASHER (6.6X12X2-MM THK)	

B-USE AS REQUIRED
E-ORDER BY THE CENTIMETER
M-METRIC PART

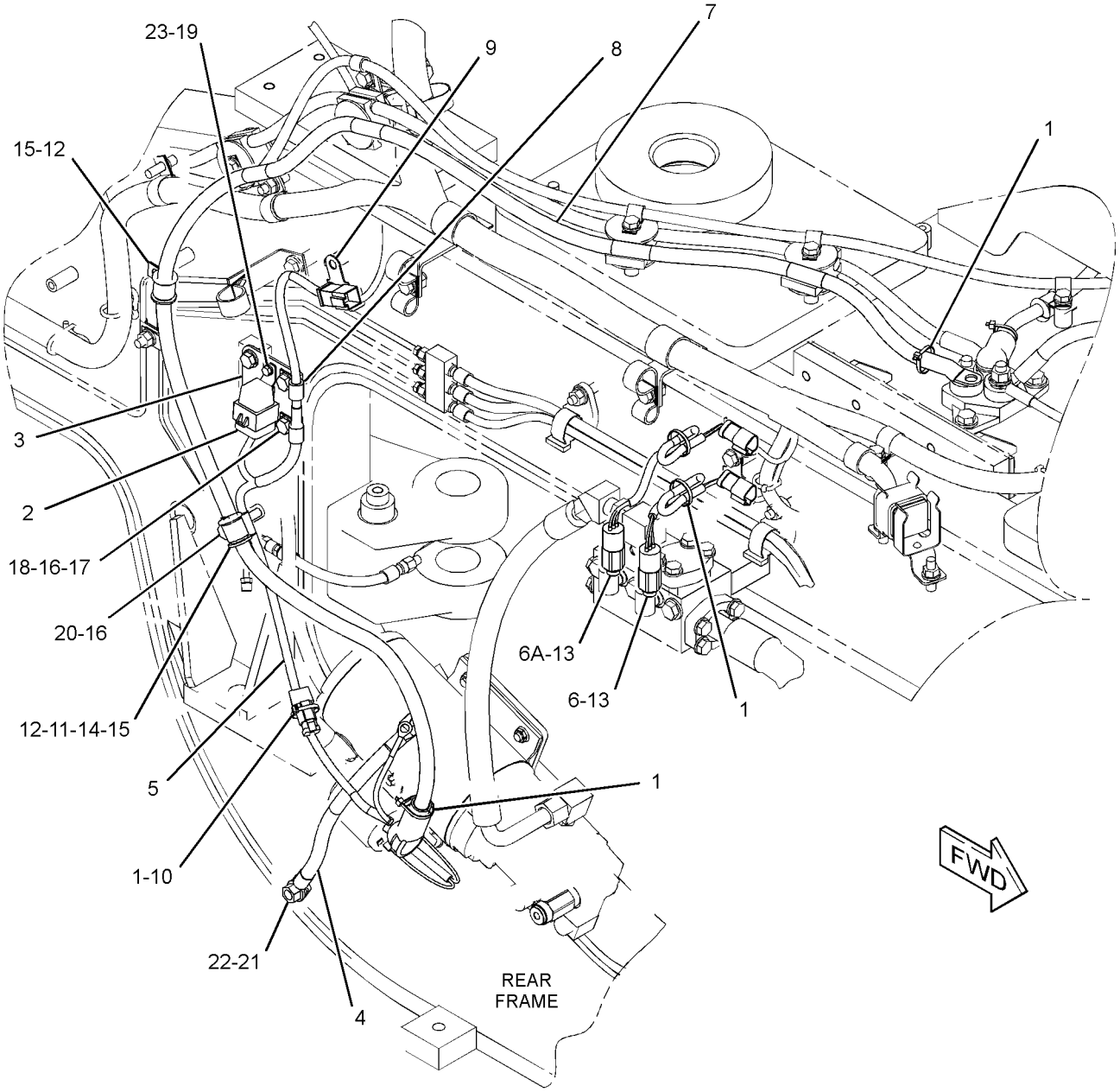

GRAPHIC #1 **<END>** g01683393

272-9821 WIRING GP-SENSOR

S/N: RYF1-UP

PART OF 236-8961 ELECTRICAL AR

SMCS-1408 **i03620121**

NOTE	REF NO	GRAPHIC REF	PART NUMBER	QTY	PART NAME 1 2 3 4 5 6 (PRODUCT LEVEL)	SEE PAGE
	1	1	**3S-2093**	1	STRAP-CABLE	
	2	1	**4V-1939**	4	CLAMP	
	3	1	**107-4749**	2	PLATE	
	4	1	**316-8510**	1	HARNESS AS-SENSOR (TILT)	
E		1	**8T-2225**		TUBE-HEAT SHRINK (25.4-MM DIA) (10-CM)	
E		1	**9X-1813**		SLEEVE (20-CM)	
		1	**9X-3402**	3	SOCKET-CONNECTOR (16-GA TO 18-GA)	
		1	**9X-3401**	3	PIN-CONNECTOR (16-GA TO 18-GA)	
					—OR—	
		1	**126-1767**	3	PIN-CONNECTOR (14-GA)	
		1	**102-8803**	1	KIT-RECEPTACLE (3-PIN)	
					(INCLUDES RECEPTACLE AS & WEDGE)	
		1	**155-2260**	1	KIT-CONNECTING PLUG (3-PIN)	
					(INCLUDES PLUG AS, WEDGE, & INTERFACE SEAL)	
	5	1	**130-5300**	1	CLIP	
M	6	1	**8C-8451**	4	BOLT (M6X1X40-MM)	
	7	1	**8T-4121**	4	WASHER-HARD (11X21X2.5-MM THK)	
M	8	1	**8T-4133**	2	NUT (M10X1.5-THD)	
M	9	1	**8T-4137**	1	BOLT (M10X1.5X20-MM)	
	10	1	**4K-8864**	3	CLIP	
	11	1	**9X-8256**	4	WASHER (6.6X12X2-MM THK)	
M	12	1	**8T-4136**	1	BOLT (M10X1.5X25-MM)	

E-ORDER BY THE CENTIMETER
M-METRIC PART

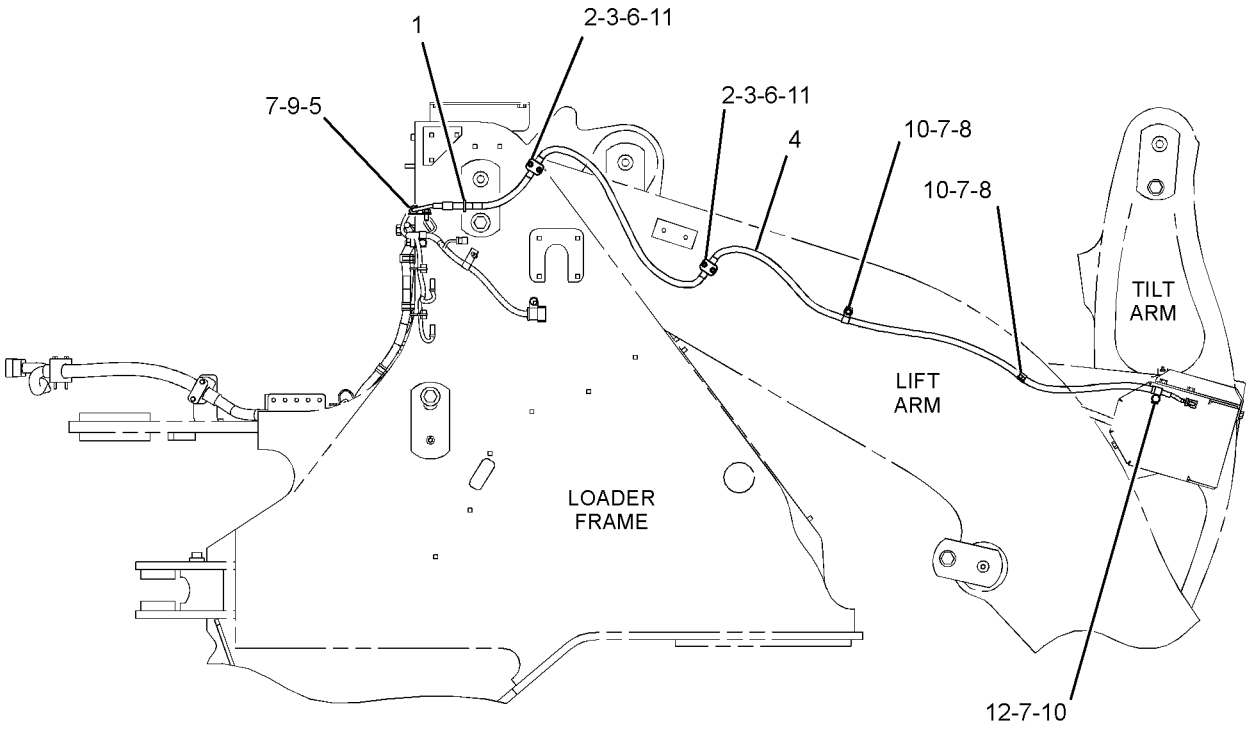

RIGHT SIDE VIEW

GRAPHIC #1 **<END>** g01943682

275-0024 WIRING GP-SENSOR–TILT

S/N: RYF1-UP
PART OF 236-9092 CONTROL AR-HIGH LIFT
AN ATTACHMENT

SMCS-1408 **i03629425**

NOTE	REF NO	GRAPHIC REF	PART NUMBER	QTY	PART NAME 1 2 3 4 5 6 (PRODUCT LEVEL)	SEE PAGE
	1	1	**3S-2093**	1	STRAP-CABLE	
	2	1	**4V-1939**	4	CLAMP	
	3	1	**107-4749**	2	PLATE	
	4	1	**275-0026**	1	HARNESS AS-SENSOR (TILT)	
		1	**102-8803**	1	KIT-RECEPTACLE (3-PIN)	
					(INCLUDES RECEPTACLE AS & WEDGE)	
		1	**155-2260**	1	KIT-CONNECTING PLUG (3-PIN)	
					(INCLUDES PLUG AS, WEDGE & INTERFACE SEAL)	
E		1	**8T-2225**		TUBE-HEAT SHRINK (25.4-MM DIA) (10-CM)	
BE		1	**114-8843**		SLEEVE-PLASTIC	
B		1	**1P-0810**		TAPE-ELECTRICAL	
	5	1	**130-5300**	1	CLIP	
M	6	1	**9X-2480**	4	BOLT (M6X1X45-MM)	
	7	1	**8T-4121**	3	WASHER-HARD (11X21X2.5-MM THK)	
M	8	1	**8T-4133**	2	NUT (M10X1.5-THD)	
M	9	1	**8T-4137**	1	BOLT (M10X1.5X20-MM)	
	10	1	**9M-8406**	3	CLIP	
	11	1	**9X-8256**	4	WASHER (6.6X12X2-MM THK)	

B-USE AS REQUIRED
E-ORDER BY THE CENTIMETER
M-METRIC PART

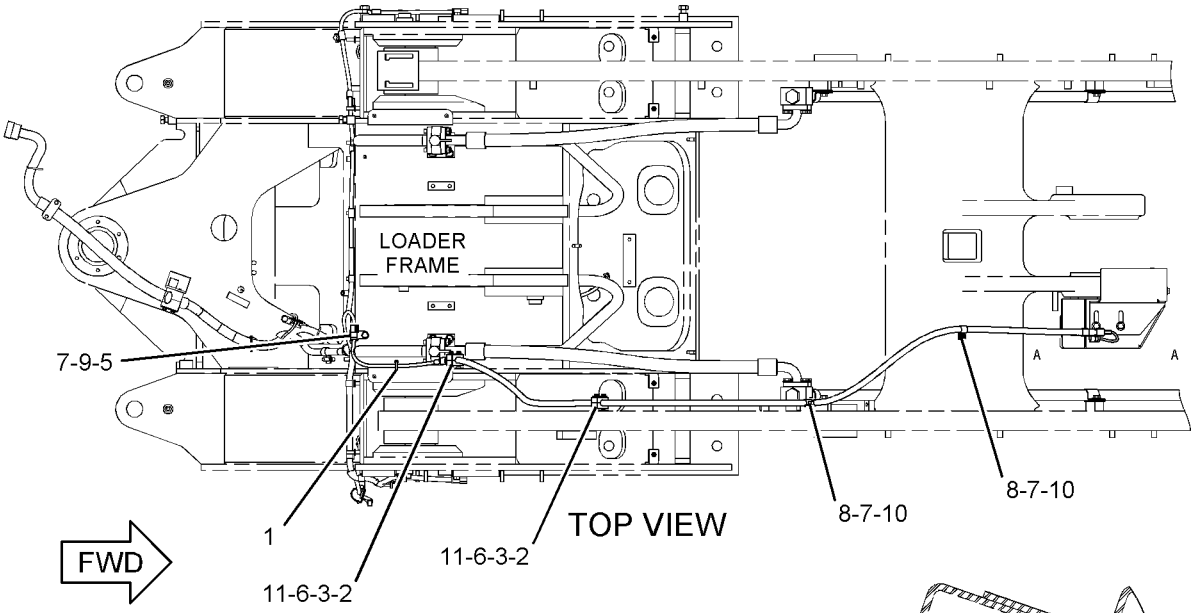

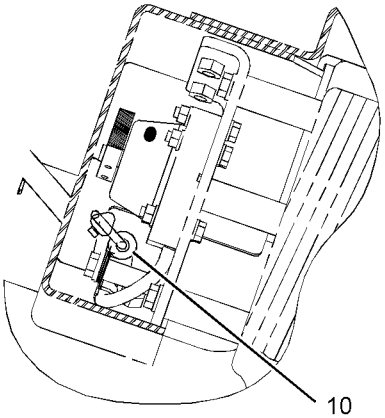

VIEW B-B

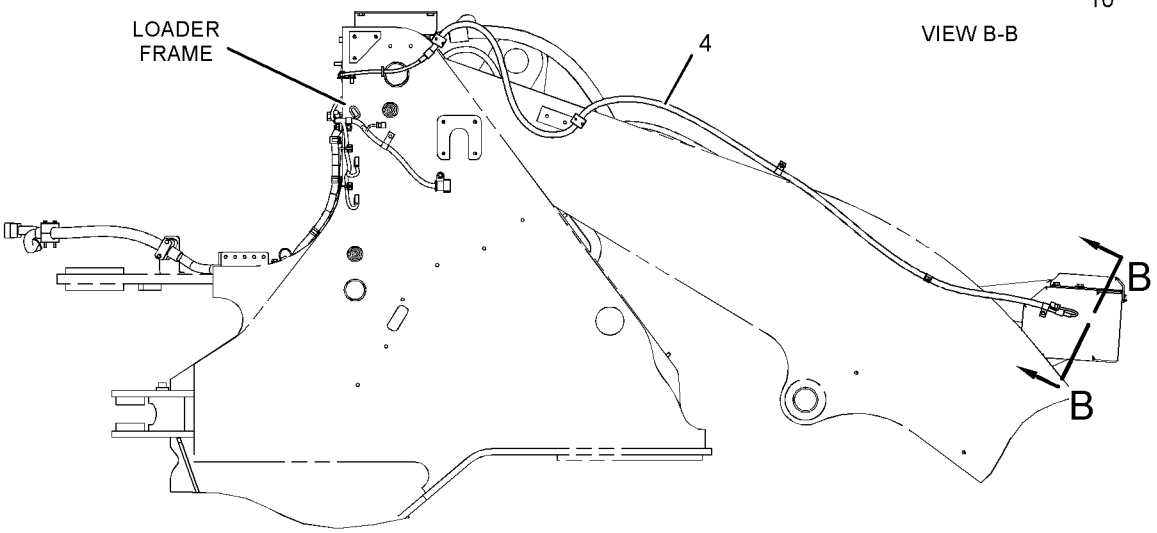

RIGHT SIDE VIEW

GRAPHIC #1 **<END>** g01196217

230-0961 WIRING GP-UNIT INJECTOR

S/N: RSX15243-UP

PART OF 286-5803 ENGINE AR-CORE

SMCS-1290, 1408 **i03558860**

NOTE	REF NO	GRAPHIC REF	PART NUMBER	QTY	PART NAME 1 2 3 4 5 6 (PRODUCT LEVEL)	SEE PAGE
	1	1	**3S-2093**	1	STRAP-CABLE	
	2	1	**7E-6508**	6	CAP AS	
	3	1	**230-0960**	1	HARNESS AS-ENGINE (UNIT INJECTOR)	
		1	**103-8133**	1	KIT-RECEPTACLE (12-PIN)	
					(INCLUDES RECEPTACLE AS & WEDGE)	
		1	**3S-2093**	3	STRAP-CABLE	
		1	**3S-2093**	2	STRAP-CABLE	
		1	**172-6063**	1	RECEPTACLE AS	
	4	1	**237-9960**	1	CLIP	
	5	1	**4P-8525**	4	SPACER (9X16X30-MM THK)	
	6	1	**2V-3216**	4	CLIP	
	7	1	**5P-0537**	7	WASHER-HARD (7.2X14.5X2-MM THK)	
M	8	1	**6V-7728**	4	BOLT (M6X1X45-MM)	
M	9	1	**6V-8214**	2	BOLT (M6X1X20-MM)	
M	10	1	**6V-8836**	1	BOLT (M6X1X14-MM)	

M-METRIC PART

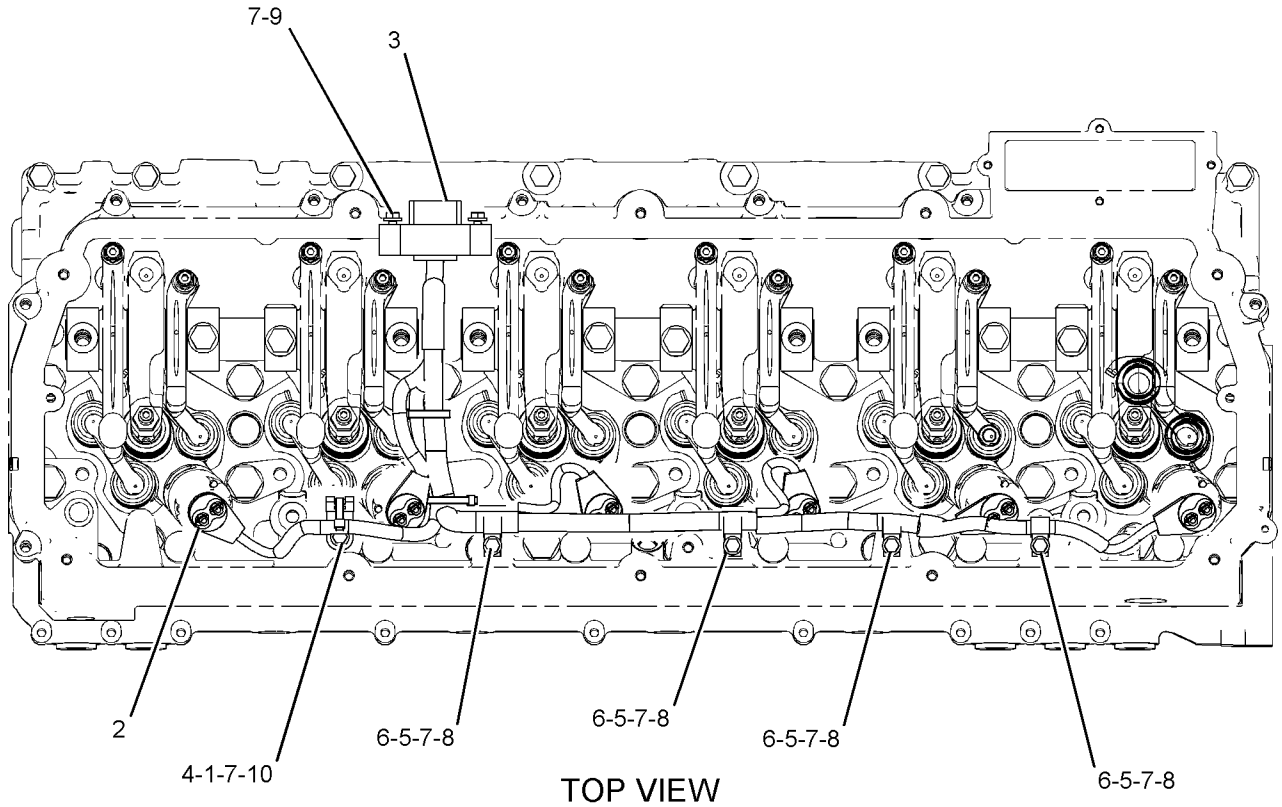

TOP VIEW

GRAPHIC #1

<END>

g01064811

236-9099 AXLE & AXLE OIL COOLER AR

S/N: RYF1-UP
AN ATTACHMENT

SMCS-1365, 3013, 3278 **i03626536**

NOTE	PART NUMBER	QTY	PART NAME 1 2 3 4 5 6 (PRODUCT LEVEL)	SEE PAGE
Y	*139-9102*	1	AXLE AR-FIXED (FRONT, STANDARD DIFFERENTIAL) (WITH HEAT EXCHANGER)	257
Y	*139-9101*	1	AXLE AR-OSCILLATING (REAR, STANDARD DIFFERENTIAL) (WITH HEAT EXCHANGER)	258
Y	*246-2070*	1	COOLER GP-HYDRAULIC & AXLE OIL	421
Y	*236-9100*	1	LINES GP-AXLE OIL COOLER	294

Y-SEPARATE ILLUSTRATION

<END>

129-4280 AXLE AR-FIXED—FRONT, STANDARD DIFFERENTIAL

S/N: RYF1-UP
PART OF 236-8965 POWER TRAIN AR

SMCS-3013, 3278 **i03626596**

NOTE	PART NUMBER	QTY	PART NAME 1 2 3 4 5 6 (PRODUCT LEVEL)	SEE PAGE
Y	*129-4289*	2	BRAKE & PLANETARY GP	260
Y	*129-4298*	1	DIFFERENTIAL GP	268
Y	*129-4290*	1	GEAR GP-BEVEL & PINION	275
Y	*129-4291*	1	HOUSING GP-FIXED AXLE	286

Y-SEPARATE ILLUSTRATION

<END>

129-4282 AXLE AR-FIXED—FRONT, LIMITED SLIP DIFFERENTIAL

S/N: RYF1-UP
AN ATTACHMENT

SMCS-3013, 3278 **i03626503**

NOTE	PART NUMBER	QTY	PART NAME 1 2 3 4 5 6 (PRODUCT LEVEL)	SEE PAGE
Y	*129-4289*	2	BRAKE & PLANETARY GP	260
Y	**129-4304**	1	DIFFERENTIAL GP-LIMITED SLIP	269
Y	*129-4290*	1	GEAR GP-BEVEL & PINION	275
Y	*129-4291*	1	HOUSING GP-FIXED AXLE	286

Y-SEPARATE ILLUSTRATION

<END>

139-9102 AXLE AR-FIXED–FRONT, STANDARD DIFFERENTIAL

S/N: RYF1-UP
WITH HEAT EXCHANGER
PART OF 236-9099 AXLE & AXLE OIL COOLER AR
AN ATTACHMENT

SMCS-3013, 3278 **i03629197**

NOTE	PART NUMBER	QTY	PART NAME 1 2 3 4 5 6 (PRODUCT LEVEL)	SEE PAGE
Y	*129-4289*	2	BRAKE & PLANETARY GP	260
Y	*129-4298*	1	DIFFERENTIAL GP	268
Y	*129-4290*	1	GEAR GP-BEVEL & PINION	275
Y	*160-0719*	1	HEAT EXCHANGER GP-AXLE	284
Y	*139-9107*	1	HOUSING GP-FIXED AXLE	288

Y-SEPARATE ILLUSTRATION

<END>

129-4281 AXLE AR-OSCILLATING–REAR, STANDARD DIFFERENTIAL

S/N: RYF1-UP
PART OF 236-8965 POWER TRAIN AR

SMCS-3013, 3278 **i03626617**

NOTE	PART NUMBER	QTY	PART NAME 1 2 3 4 5 6 (PRODUCT LEVEL)	SEE PAGE
Y	*129-4289*	2	BRAKE & PLANETARY GP	260
Y	*129-4298*	1	DIFFERENTIAL GP	268
Y	*129-4292*	1	GEAR GP-BEVEL & PINION	277
Y	*129-4293*	1	HOUSING GP-OSCILLATING AXLE	290

Y-SEPARATE ILLUSTRATION

<END>

129-4283 AXLE AR-OSCILLATING–REAR, LIMITED SLIP DIFFERENTIAL

S/N: RYF1-UP
AN ATTACHMENT

SMCS-3013, 3278 **i03626506**

NOTE	PART NUMBER	QTY	PART NAME 1 2 3 4 5 6 (PRODUCT LEVEL)	SEE PAGE
Y	*129-4289*	2	BRAKE & PLANETARY GP	260
Y	**129-4304**	1	DIFFERENTIAL GP-LIMITED SLIP	269
Y	*129-4292*	1	GEAR GP-BEVEL & PINION	277
Y	*129-4293*	1	HOUSING GP-OSCILLATING AXLE	290

Y-SEPARATE ILLUSTRATION

<END>

139-9101 AXLE AR-OSCILLATING–
REAR, STANDARD DIFFERENTIAL
S/N: RYF1-UP
WITH HEAT EXCHANGER
PART OF 236-9099 AXLE & AXLE OIL COOLER AR
AN ATTACHMENT

SMCS-3013, 3278 **i03629195**

NOTE	PART NUMBER	QTY	PART NAME 1 2 3 4 5 6 (PRODUCT LEVEL)	SEE PAGE
Y	*129-4289*	2	BRAKE & PLANETARY GP	260
Y	*129-4298*	1	DIFFERENTIAL GP	268
Y	*129-4292*	1	GEAR GP-BEVEL & PINION	277
Y	*160-0719*	1	HEAT EXCHANGER GP-AXLE	284
Y	*139-9106*	1	HOUSING GP-OSCILLATING AXLE	292

Y-SEPARATE ILLUSTRATION

<END>

333-9309 BASE GP-OIL FILTER

S/N: RYF1-UP

PART OF 333-6439 FILTER GP-OIL

SMCS-3004, 3067 **i03531267**

NOTE	REF NO	GRAPHIC REF	PART NUMBER	QTY	PART NAME 1 2 3 4 5 6 (PRODUCT LEVEL)	SEE PAGE
	1	1	**3T-9549**	1	ADAPTER	
	2	1	**7G-4998**	1	SPOOL-BYPASS	
Y	3	1	**164-7577**	1	SWITCH GP-BYPASS (POWER TRAIN OIL FILTER)	200
		1	**3D-2824**	1	SEAL-O-RING	
		1	**102-8802**	1	KIT-RECEPTACLE (2-PIN)	
					(INCLUDES RECEPTACLE AS & WEDGE)	
		1	**186-3735**	2	PIN-CONNECTOR (16-GA TO 18-GA)	
E		1	**9X-1813**		SLEEVE (19-CM)	
	5	1	**334-2679**	1	SPRING	
	6	1	**334-2680**	1	SPRING	
	7	1	**5P-7815**	1	SEAL-O-RING	
	8	1	**6V-5050**	1	SEAL-O-RING	
	9	1	**9S-8008**	1	PLUG-O-RING	
					PARTS SHOWN IN GRAPHIC(S) WITHOUT A REFERENCE NUMBER ARE NOT SERVICED SEPARATELY	

E-ORDER BY THE CENTIMETER
Y-SEPARATE ILLUSTRATION

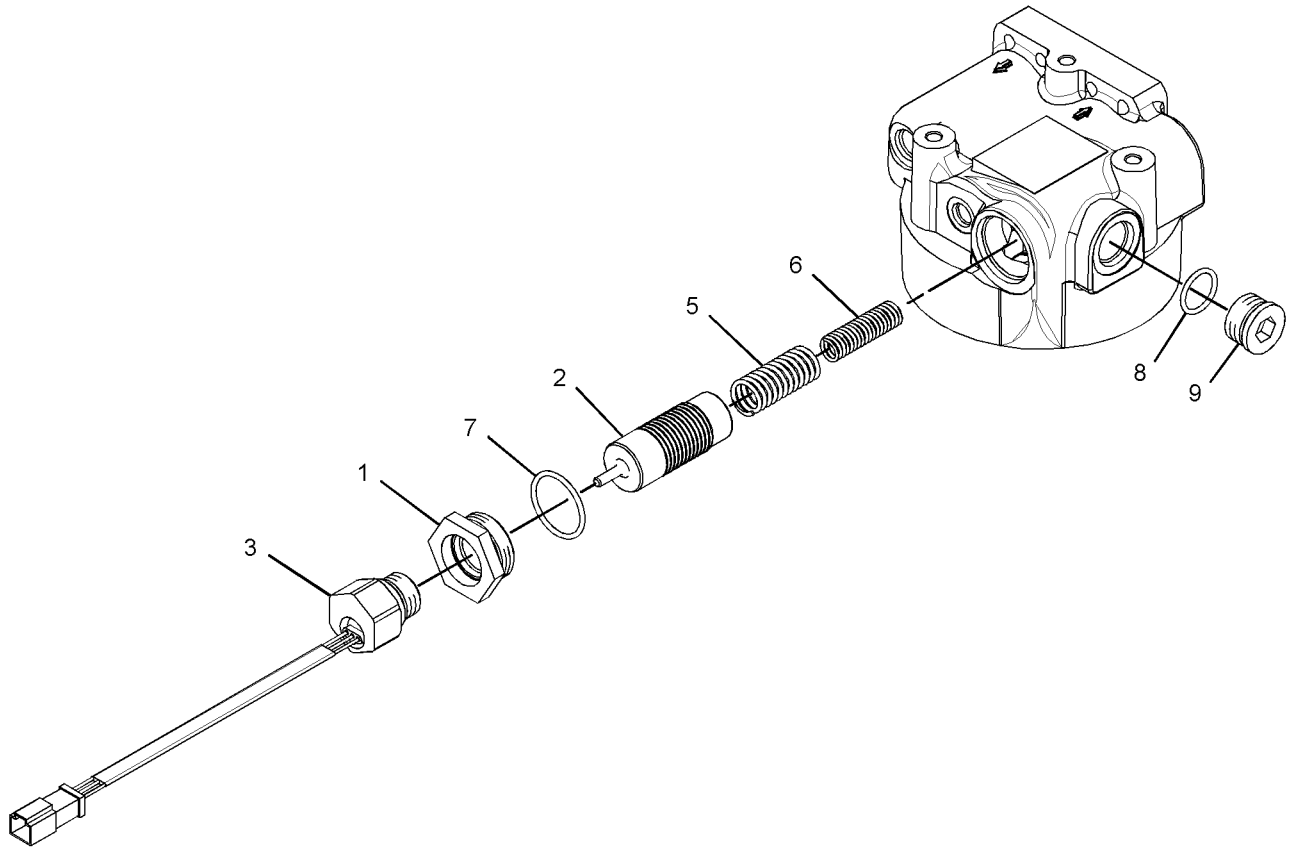

GRAPHIC #1 **<END>** g01857294

129-4289 BRAKE & PLANETARY GP

S/N: RYF1-UP

PART OF 129-4280, 129-4282, 139-9102 AXLE AR-FIXED, 129-4281, 129-4283, 139-9101 AXLE AR-OSCILLATING

ALSO AN ATTACHMENT

SMCS-4011, 4255 **i03626608**

NOTE	REF NO	GRAPHIC REF	PART NUMBER	QTY	PART NAME 1 2 3 4 5 6 (PRODUCT LEVEL)	SEE PAGE
	1	1	**8T-2925**	3	PIN-SPRING	
	2	1	**112-0759**	1	PLUG	
	3	1	**117-1803**	1	CUP	
	4	1	**129-4300**	1	CARRIER-PLANETARY	
	5	1	**130-5866**	1	PLATE-REACTION	
	6	1	**172-6011**	1	SEAL-BRAKE	
	7	1	**172-6007**	1	SEAL-BRAKE	
	8	1	**163-8781**	3	SPRING	
	9	1	**163-3008**	6	WASHER-THRUST	
	10	1	**138-1645**	3	PIN-SPRING	
	11	1	**149-9113**	1	DOWEL	
	12	1	**149-9114**	1	PIN (BRAKE DISC WEAR INDICATOR)	
	13	1	**150-4651**	1	SEAL-O-RING	
	14	1	**096-6166**	1	WASHER-HARD (4.5X9X1-MM THK)	
	15	1	**117-1801**	1	DOWEL	
	16	1	**127-8909**	1	GEAR-SUN (18-TEETH)	
	17	1	**129-4296**	3	BEARING-SLEEVE	
	18	1	**129-4299**	3	GEAR-PLANETARY (27-TEETH)	
	19	1	**129-4323**	3	SHAFT-PLANETARY	
	20	1	**129-5403**	1	GEAR-RING (75-TEETH)	
	21	1	**130-5859**	1	PLATE-REACTION	
	22	1	**130-5860**	2	DISC-FRICTION	
	23	1	**130-5867**	1	PISTON-REACTION	
	24	1	**133-4952**	4	DOWEL	
	25	1	**2N-2658**	1	BOLT-SOCKET HEAD (8-32X15.88-MM)	
	26	1	**3P-7832**	4	DOWEL	

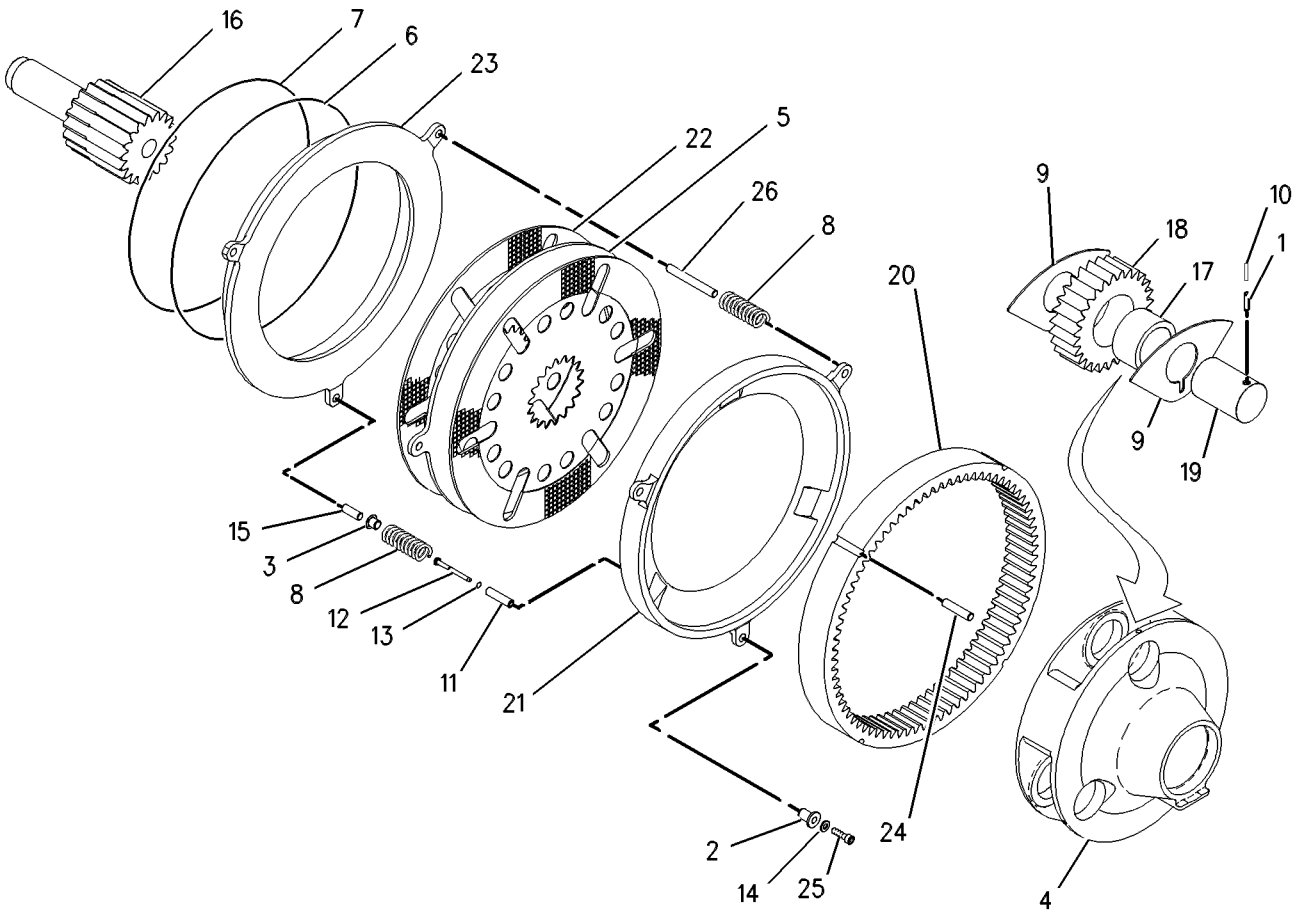

GRAPHIC #1 **<END>** g00448845

237-8242 CASE & PARTS GP-PLANETARY

S/N: DKG1-UP

PART OF 243-6733 TRANSMISSION AR

SMCS-3064 **i03627088**

NOTE	REF NO	GRAPHIC REF	PART NUMBER	QTY	PART NAME 1 2 3 4 5 6 (PRODUCT LEVEL)	SEE PAGE
	1	1	**9G-5127**	1	BREATHER (PLANETARY CASE)	
	2	1	**245-2711**	1	TUBE AS	
	3	1	**5F-8000**	1	SEAL-O-RING	
M	4	1	**6V-3668**	2	BOLT (M12X1.75X30-MM)	
	5	1	**9M-5024**	1	SEAL-O-RING	
	6	1	**127-9323**	1	BRACKET AS	
M		1	**8T-3490**	1	NUT-WELD (M10X1.5-THD)	
	7	1	**5P-8245**	14	WASHER-HARD (13.5X25.5X3-MM THK)	
M	8	1	**6V-5684**	1	BOLT (M12X1.75X45-MM)	
	9	1	**5P-9806**	1	SEAL-O-RING	
	10	1	**6V-5839**	22	WASHER (11X21X2.5-MM THK)	
M	11	1	**6V-5230**	14	BOLT (M10X1.5X60-MM)	
M	12	1	**6V-3822**	4	BOLT (M10X1.5X35-MM)	
	13	1	**287-6408**	1	TUBE	
M	14	1	**8T-0372**	1	BOLT (M12X1.75X90-MM)	
M	15	1	**6V-3823**	14	BOLT (M12X1.75X60-MM)	
	16	1	**1P-3707**	1	SEAL-RECTANGULAR	
	17	1	**5P-8068**	1	SEAL-O-RING	
M	18	1	**7X-2544**	1	BOLT (M10X1.5X104-MM)	
M	19	1	**6V-4248**	4	BOLT (M10X1.5X25-MM)	
	20	1	**1H-8720**	2	SEAL-O-RING	
	21	1	**3H-2652**	1	SEAL-O-RING	
M	22	1	**6V-5842**	2	BOLT (M10X1.5X40-MM)	
M	23	1	**141-6348**	2	BOLT (M10X1.5X65-MM)	
	26	1	**237-9062**	1	COVER	
	27	1	*164-5567*	1	COUPLER AS-QUICK DISCONNECT	
		1	**3J-1907**	1	SEAL-O-RING	
		1	**6V-3965**	1	FITTING (QUICK DISCONNECT)	
	29	1	**6V-0852**	1	CAP-DUST	
M	30	1	**6V-7981**	4	BOLT (M10X1.5X70-MM)	

M-METRIC PART

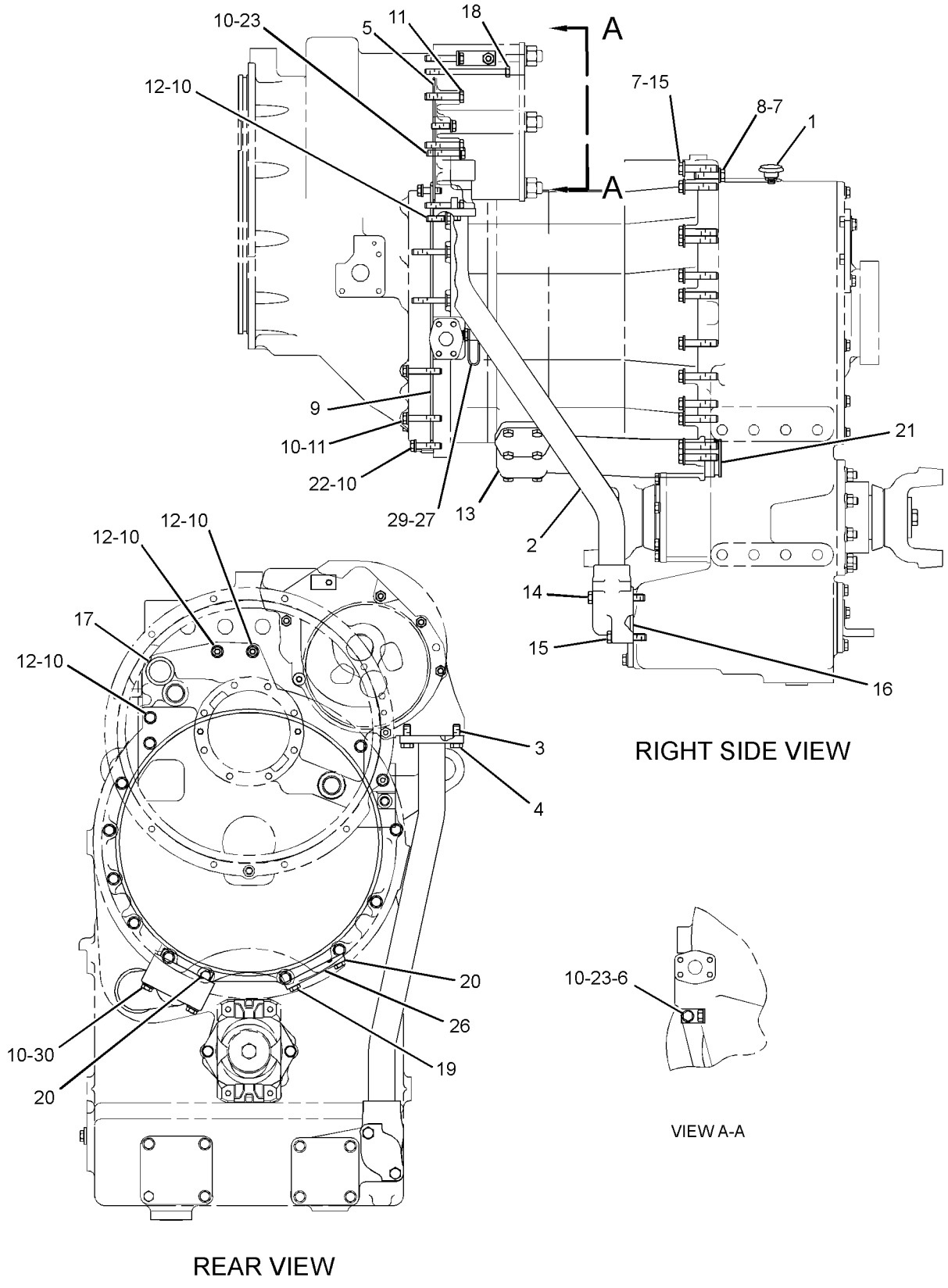

GRAPHIC #1 **<END>** g01278880

POWER TRAIN

237-8249 CONTROL GP-TRANSMISSION HYD

S/N: DKG1-UP

PART OF 243-6733 TRANSMISSION AR

SMCS-3073, 3167 **i03627092**

NOTE	REF NO	GRAPHIC REF	PART NUMBER	QTY	PART NAME 1 2 3 4 5 6 (PRODUCT LEVEL)	SEE PAGE
Y	1	1	**223-4434**	1	VALVE GP-RELIEF (TRANSMISSION HYDRAULIC CONTROL)	325
	2	1	**4F-4097**	1	SEAL-O-RING	
	3	1	**4P-8134**	2	CLIP	
M	4	1	**6V-6317**	2	BOLT (M10X1.5X20-MM)	
	5	1	**130-5300**	1	CLIP	
	6	1	**186-2458**	1	CLIP AS	
Y	7	1	**145-7028**	1	SENSOR GP-TEMPERATURE (TRANSMISSION OIL)	193
Y	8	1	**244-3114**	6	VALVE GP-MODULATING (24-VOLT) (TRANSMISSION CLUTCH)	323
	9	1	**6D-7889**	6	SEAL-O-RING	
	10	1	**174-9603**	3	PLATE	
	11	1	**3S-2093**	12	STRAP-CABLE	
	12	1	**247-4863**	1	HARNESS AS-TRANSMISSION	
		1	**7X-6222**	1	PLUG AS-CONNECTOR (24-PIN)	
		1	**155-2270**	1	KIT-CONNECTING PLUG (2-PIN)	
					(INCLUDES PLUG AS AND WEDGE)	
	13	1	**148-1928**	1	VALVE-RELIEF (TORQUE CONVERTER INLET)	
	14	1	**9X-4609**	1	SEAL-O-RING	
M	15	1	**8T-0100**	16	BOLT (M8X1.25X60-MM)	
	16	1	**9M-1974**	13	WASHER-HARD (8.8X16X2-MM THK)	
Y	17	1	**130-5485**	1	VALVE GP-RELIEF (TORQUE CONVERTER OUTLET)	324
	18	1	**6V-0852**	6	CAP-DUST	
	19	1	**6V-5839**	5	WASHER (11X21X2.5-MM THK)	
M	20	1	**8T-0643**	3	BOLT (M10X1.5X80-MM)	
	21	1	**061-7540**	1	SEAL-O-RING	
	22	1	**6V-4365**	1	SEAL-O-RING	
	23	1	*150-3065*	1	ADAPTER AS	
		1	**3J-1907**	1	SEAL-O-RING	
		1	**6V-0484**	1	ADAPTER-O-RING	
	24	1	**8T-7934**	1	WASHER-HARD (11X21X5-MM THK)	
	25	1	**6D-4246**	1	CLIP	
M	26	1	**6V-8212**	1	BOLT (M10X1.5X16-MM)	
	27	1	**7J-0204**	1	SEAL-O-RING	
	28	1	**166-7265**	1	CLIP AS	
	29	1	**4P-7428**	1	CLIP	
M	30	1	**6V-4248**	1	BOLT (M10X1.5X25-MM)	

M-METRIC PART
Y-SEPARATE ILLUSTRATION

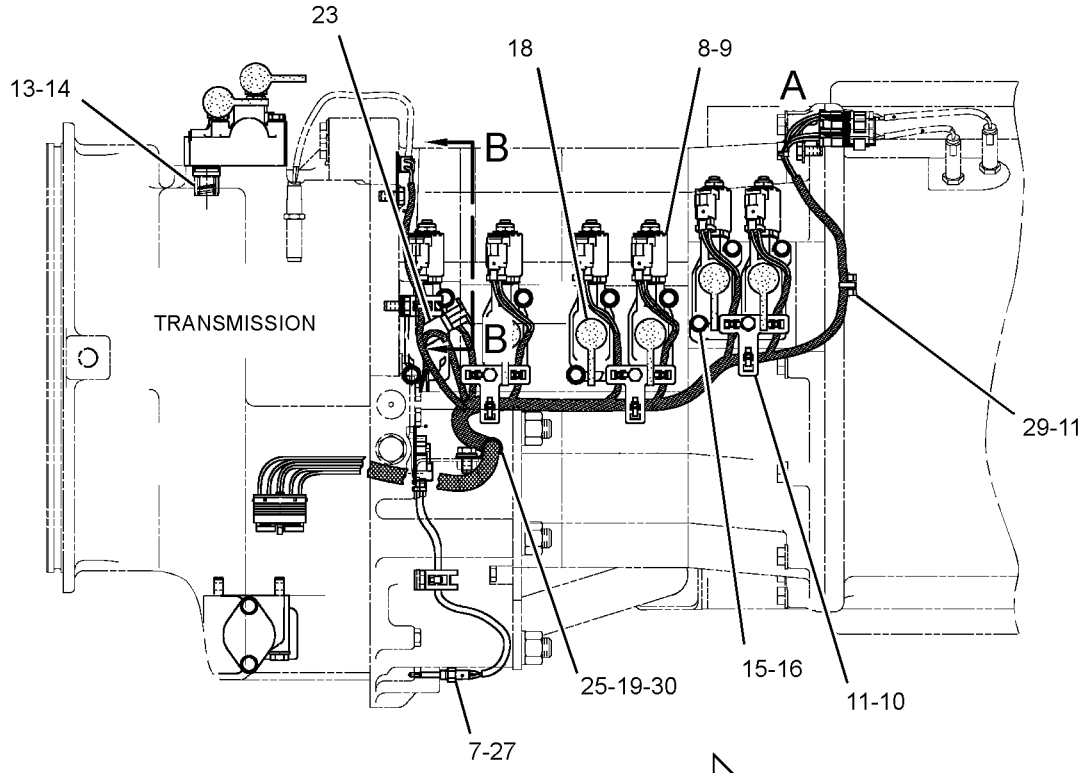

TOP VIEW FWD

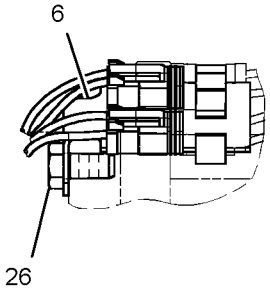

VIEW OF AREA A

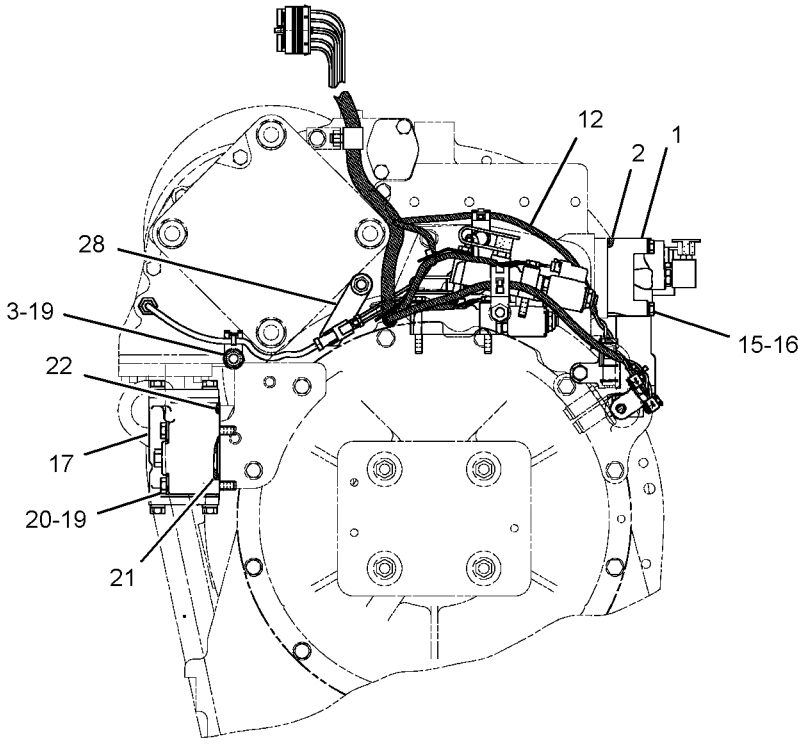

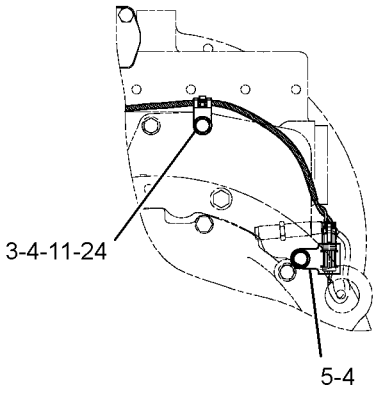

VIEW B-B

FRONT VIEW

GRAPHIC #1 **<END>** g01798435

232-3120 COOLER GP-TRANSMISSION OIL

S/N: RSX15243-UP

PART OF 234-7848 ENGINE AR-COMPLETE

SMCS-1375 **i03555740**

NOTE	REF NO	GRAPHIC REF	PART NUMBER	QTY	PART NAME 1 2 3 4 5 6 (PRODUCT LEVEL)	SEE PAGE
	1	1	**2S-0795**	2	GASKET	
	2	1	**8M-9307**	1	PLUG (TRANSMISSION OIL COOLER)	
	3	1	**8S-4304**	1	BONNET-XMSN OIL COOLER	
	4	1	**124-5043**	1	COUPLING	
R	5	1	**187-3523**	1	CORE AS-OIL COOLER (TRANSMISSION)	
		1	**8T-6764**	1	PLUG-PIPE	
	6	1	**231-3178**	1	BRACKET	
	7	1	**232-3116**	1	BONNET	
	8	1	**308-0950**	1	BRACKET AS	
	9	1	**6H-1717**	2	BOLT (1/2-13X1.125-IN)	
	10	1	**171-2438**	6	BOLT-12 POINT HEAD (M12X1.75X30-MM)	
	11	1	*241-6168*	1	PLUG AS	
		1	**6V-3250**	1	SEAL-O-RING	
		1	**9S-4191**	1	PLUG-O-RING	
	12	1	**2N-5243**	2	SEAL-O-RING	
M	13	1	**8T-0293**	8	BOLT (M12X1.75X20-MM)	
	14	1	**3E-4353**	2	WASHER-HARD (11X25X3-MM THK)	
	15	1	**3H-5523**	2	COVER	
	16	1	**3J-5553**	2	GASKET	
	17	1	**5P-8245**	12	WASHER-HARD (13.5X25.5X3-MM THK)	
	18	1	**6F-7062**	1	WASHER (12.7X19.05X1.83-MM THK)	
M	19	1	**6V-1820**	2	BOLT (M10X1.5X30-MM)	
M	20	1	**6V-2317**	2	BOLT (M8X1.25X30-MM)	
M	21	1	**6V-3668**	6	BOLT (M12X1.75X30-MM)	
M	22	1	**160-8748**	2	BOLT (M12X1.75X55-MM)	
	23	1	**6V-5064**	1	SEAL-O-RING	
M	24	1	**6V-5219**	3	BOLT (M8X1.25X40-MM)	
	25	1	**9M-1974**	5	WASHER-HARD (8.8X16X2-MM THK)	
	26	1	**9S-9334**	1	PLUG-O-RING	

M-METRIC PART
R-REMFG PART MAY BE AVAILABLE

232-3120 **COOLER GP-TRANSMISSION OIL** *(contd.)* **i03555740**

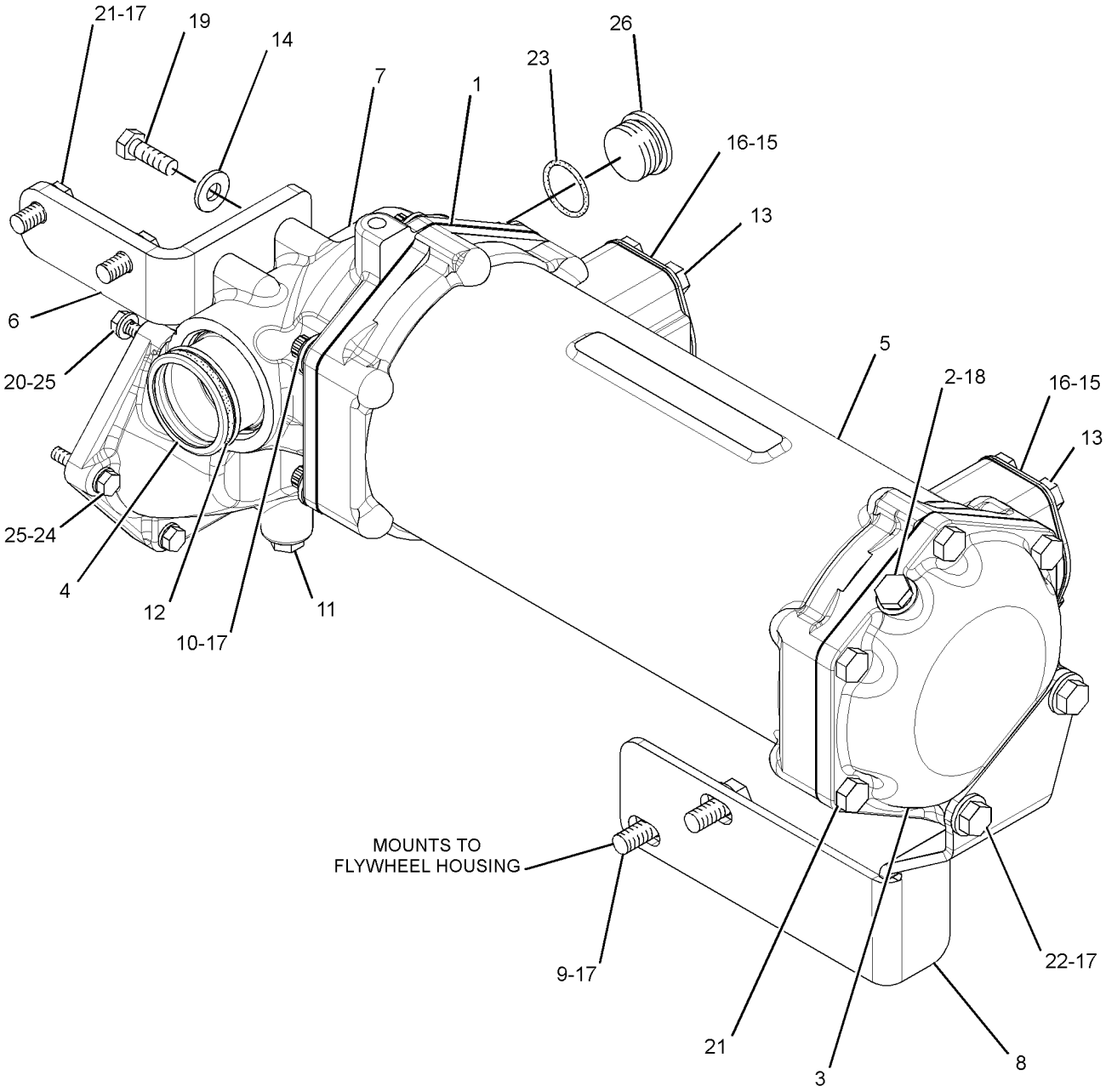

GRAPHIC #1 **<END>** g01881134

129-4298 DIFFERENTIAL GP

S/N: RYF1-UP
PART OF 129-4280, 139-9102 AXLE AR-FIXED, 129-4281, 139-9101 AXLE AR-OSCILLATING
ALSO AN ATTACHMENT

SMCS-3258 **i03626609**

NOTE	REF NO	GRAPHIC REF	PART NUMBER	QTY	PART NAME 1 2 3 4 5 6 (PRODUCT LEVEL)	SEE PAGE
	1	1	**151-4464**	4	BEARING-SLEEVE	
M	2	1	**127-1960**	8	SCREW-FLAT HEAD (M6X1X16-MM)	
	3	1	**217-3682**	4	WASHER-THRUST	
	4	1	**129-2339**	1	SPIDER	
	5	1	**129-2342**	2	WASHER-THRUST	
	6	1	**9C-6023**	4	PINION-DIFFERENTIAL BEVEL (10-TEETH)	
	7	1	**129-2341**	2	GEAR-DIFFERENTIAL BEVEL (18-TEETH)	
	8	1	**130-1848**	1	CASE AS-DIFFERENTIAL	
J	8A	1		4	WASHER-HARD (17X32X3.5-MM THK)	
J	8B	1		4	BOLT (M16X2X160-MM)	

J-PARTS MARKED J ARE FOR SHIPPING & STORAGE ONLY, REMOVE BEFORE INSTALLATION INTO AXLE
M-METRIC PART

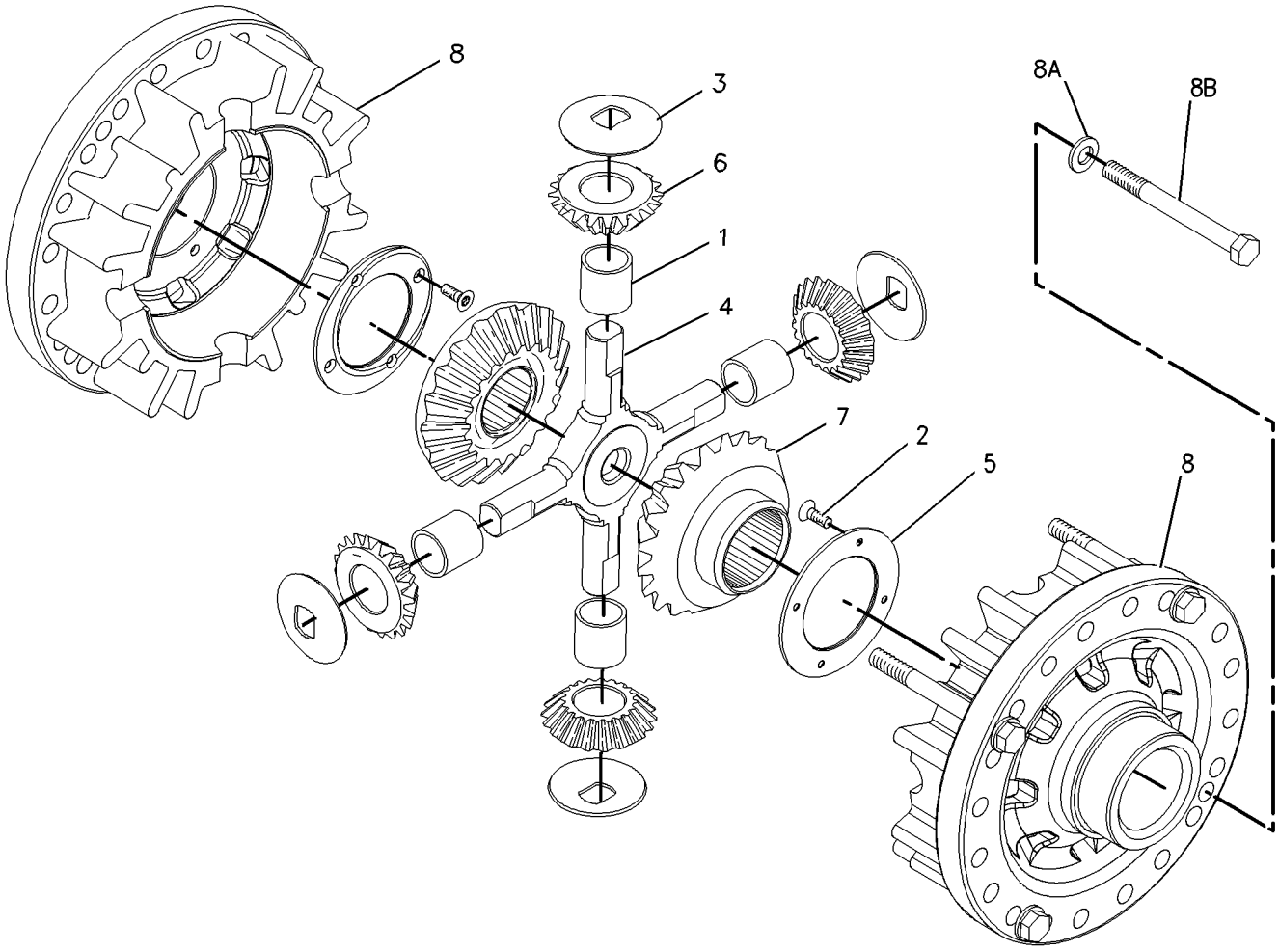

GRAPHIC #1 **<END>** g00858126

129-4304 DIFFERENTIAL GP-LIMITED SLIP

S/N: RYF1-UP

PART OF 129-4282 AXLE AR-FIXED, 129-4283 AXLE AR-OSCILLATING

AN ATTACHMENT

SMCS-3263 **i03629233**

NOTE	REF NO	GRAPHIC REF	PART NUMBER	QTY	PART NAME 1 2 3 4 5 6 (PRODUCT LEVEL)	SEE PAGE
	1	1	**135-7493**	2	WASHER	
	2	1	**102-7509**	2	HOUSING-ACTUATOR	
	3	1	**102-7510**	4	PINION-DIFFERENTIAL BEVEL	
	4	1	**102-7511**	2	SHAFT-PINION	
	5	1	**135-7492**	2	GEAR (16-TEETH)	
	6	1	**135-7495**	2	KIT-DISC (DIFF BEVEL PINION,THICK)	
	7	1	**135-7496**	1	CASE AS	
JM	7A	1	**8T-9515**	2	BOLT-SOCKET HEAD (M10X1.5X40-MM)	
	8	1	**135-7494**	2	KIT-DISC (DIFF BEVEL PINION,THIN)	

J-PART MARKED J IS FOR SHIPPING & STORAGE ONLY, REMOVE BEFORE INSTALLATION INTO AXLE.
M-METRIC PART

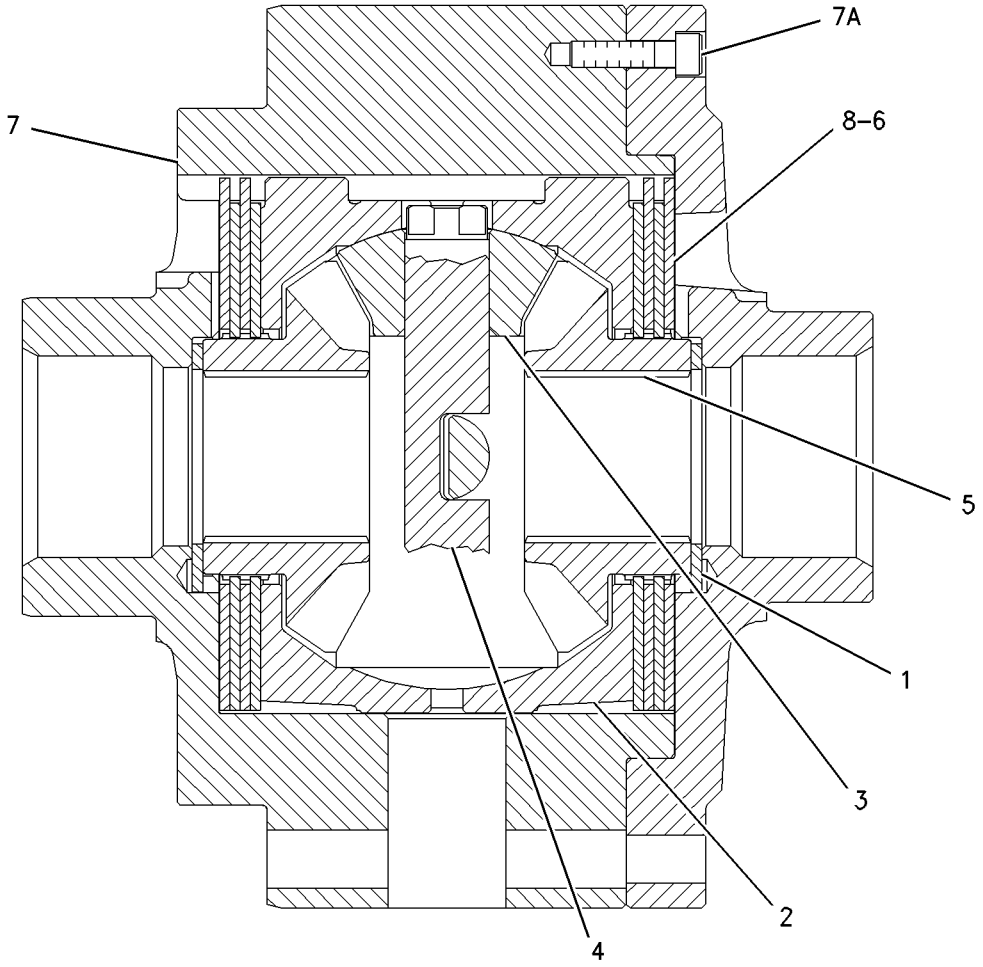

GRAPHIC #1 **<END>** g00858146

138-1509 DRAIN GP-ECOLOGY—POWER TRAIN OIL

S/N: DKG1-UP

PART OF 237-8250 GEAR GP-OUTPUT TRANSFER

SMCS-3260 **i03539109**

NOTE	REF NO	GRAPHIC REF	PART NUMBER	QTY	PART NAME 1 2 3 4 5 6 (PRODUCT LEVEL)	SEE PAGE
	1	1	**138-1510**	1	PLUG (TRANSMISSION OIL DRAIN)	
	2	1	**192-1023**	1	DRAIN AS	
		1	**077-3241**	1	SEAL-O-RING	
	3	1	**7M-8485**	1	SEAL-O-RING	

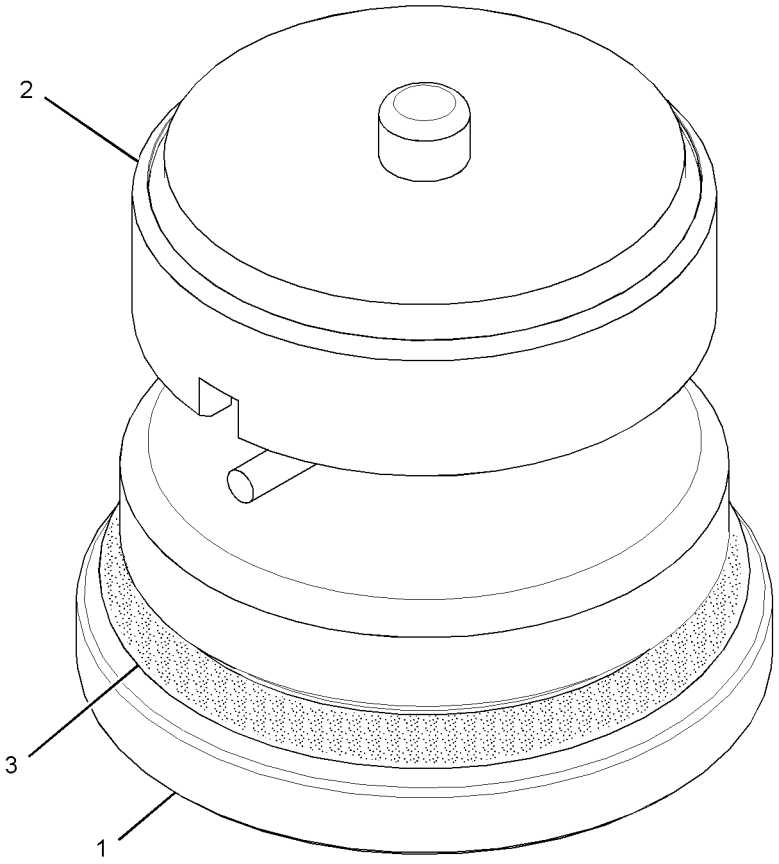

GRAPHIC #1 **<END>** g01298016

246-4792 FILLER GP-POWER TRAIN OIL

S/N: RYF1-UP

PART OF 236-8965 POWER TRAIN AR

SMCS-3005, 3081 **i03626960**

NOTE	REF NO	GRAPHIC REF	PART NUMBER	QTY	PART NAME 1 2 3 4 5 6 (PRODUCT LEVEL)	SEE PAGE
	1	1	**2S-4750**	1	GASKET	
	2	1	**4B-9782**	1	BALL	
	3	1	**5K-1568**	1	CAP-FILLER (POWER TRAIN)	
	4	1	**6F-5188**	1	SEAL-RING	
	5	1	**6H-5139**	1	PLATE-PRESSURE	
	6	1	**9M-0164**	2	CLAMP-HOSE	
E	7	1	**5P-1291**		HOSE (21-CM)	
	8	1	**134-6635**	1	GAUGE AS-OIL LEVEL (SIGHT GAUGE) (POWER TRAIN OIL FILLER)	
		1	**5J-2974**	4	SEAL-O-RING	
		1	**122-8353**	2	BOLT (M12X1.75X46.5-MM)	
	9	1	**298-6500**	1	TUBE AS	
	10	1	**298-6501**	1	TUBE AS	
	11	1	**7D-7233**	2	CLIP	
	12	1	**8T-4121**	6	WASHER-HARD (11X21X2.5-MM THK)	
M	13	1	**8T-4137**	2	BOLT (M10X1.5X20-MM)	
M	14	1	**8T-4195**	4	BOLT (M10X1.5X30-MM)	

E-ORDER BY THE CENTIMETER
M-METRIC PART

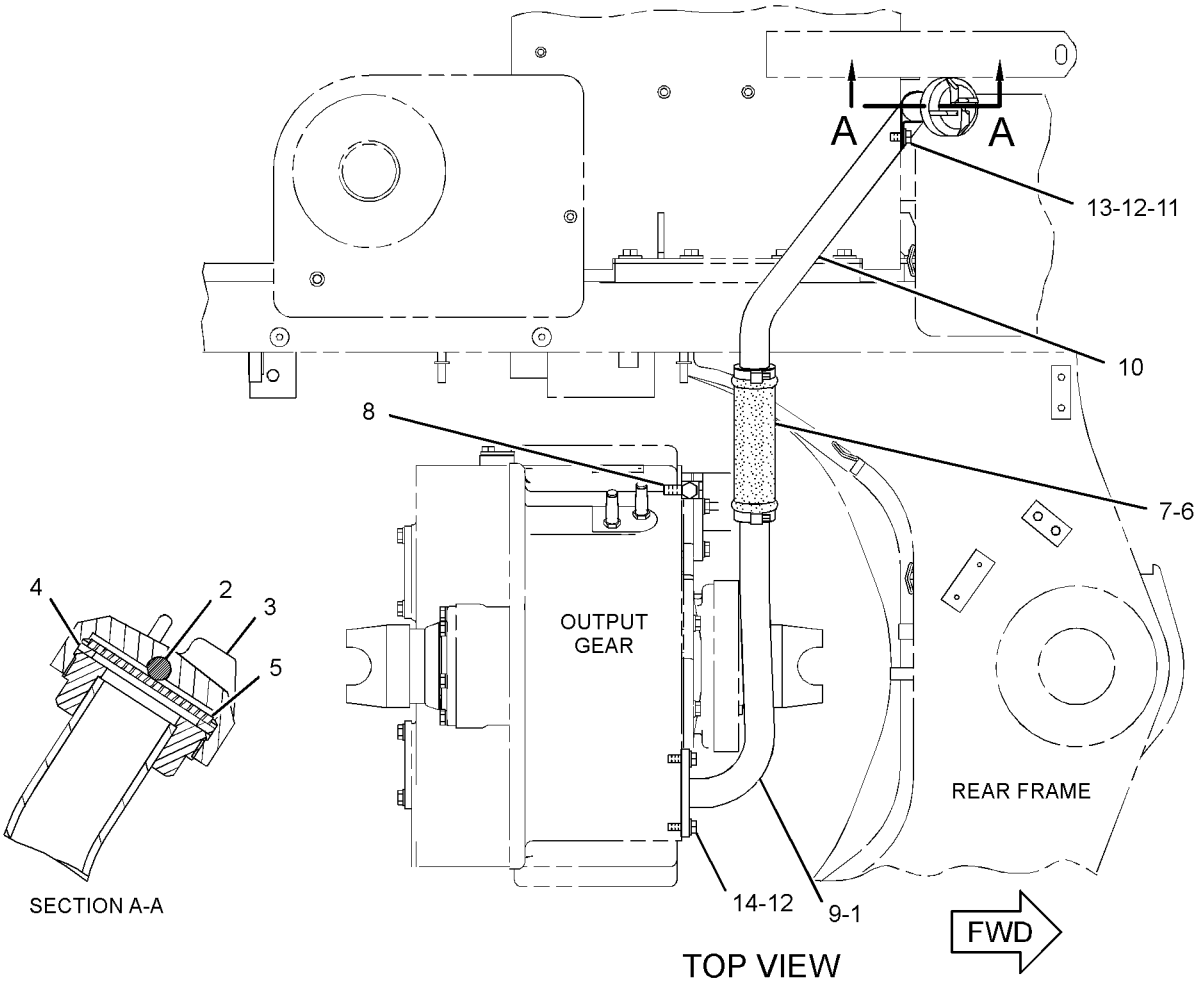

GRAPHIC #1 **<END>** g01372161

236-8999 FILTER & LINES GP-TRANSMISSION

S/N: RYF1-UP

PART OF 236-8965 POWER TRAIN AR

SMCS-3067, 3154 **i03626969**

NOTE	REF NO	GRAPHIC REF	PART NUMBER	QTY	PART NAME 1 2 3 4 5 6 (PRODUCT LEVEL)	SEE PAGE
	1	1	**4J-0520**	4	SEAL-O-RING	
	2	1	**133-3260**	8	SPACER (11X19X10-MM THK)	
I	3	1	**276-9775**	2	HOSE AS	
	4	1	**276-9776**	1	TUBE AS	
	5	1	**276-9777**	1	TUBE AS	
	6	1	**276-9778**	1	BRACKET	
			132-7551	8	SPACER (11X19X6-MM THK)	
	7	1	*164-5577*	2	ELBOW AS	
					(EACH INCLUDES)	
		1	**5K-9090**	2	SEAL-O-RING	
		1	**6V-8984**	1	ELBOW	
Y	8	1	**333-6439**	1	FILTER GP-OIL (POWER TRAIN)	274
M	9	1	**6V-3822**	2	BOLT (M10X1.5X35-MM)	
	10	1	**6V-5839**	2	WASHER (11X21X2.5-MM THK)	
	11	1	**6V-9172**	2	NUT (1-7/16-12-THD)	
	12	1	**7G-5984**	1	CLIP (TAB)	
	13	1	**7G-5985**	1	CLIP (SLOT)	
	14	1	**7G-5986**	1	GROMMET	
	15	1	**7X-7729**	5	WASHER (11X25X3-MM THK)	
	16	1	**8C-3206**	8	FLANGE-HALF	
	17	1	**8T-4121**	16	WASHER-HARD (11X21X2.5-MM THK)	
M	18	1	**8T-4136**	2	BOLT (M10X1.5X25-MM)	
M	19	1	**8T-4182**	8	BOLT (M10X1.5X45-MM)	
M	20	1	**8T-4196**	11	BOLT (M10X1.5X35-MM)	

I-REFER TO HYDRAULIC INFORMATION SYSTEM
M-METRIC PART
Y-SEPARATE ILLUSTRATION

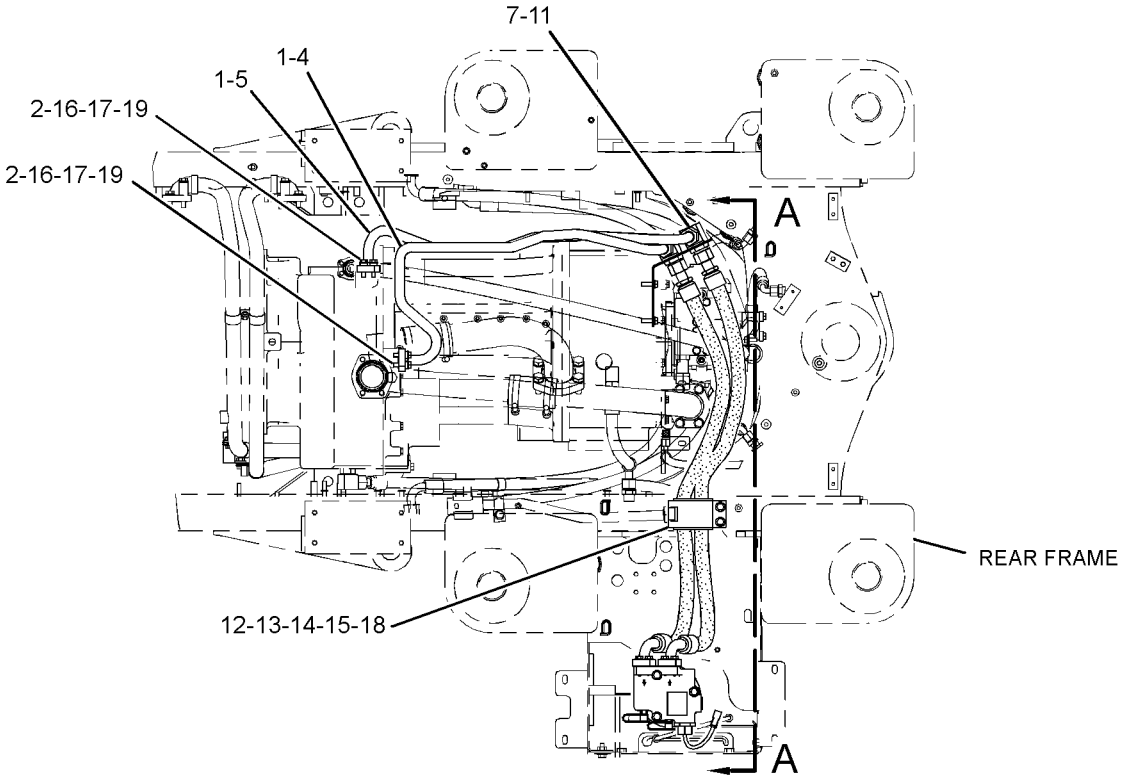

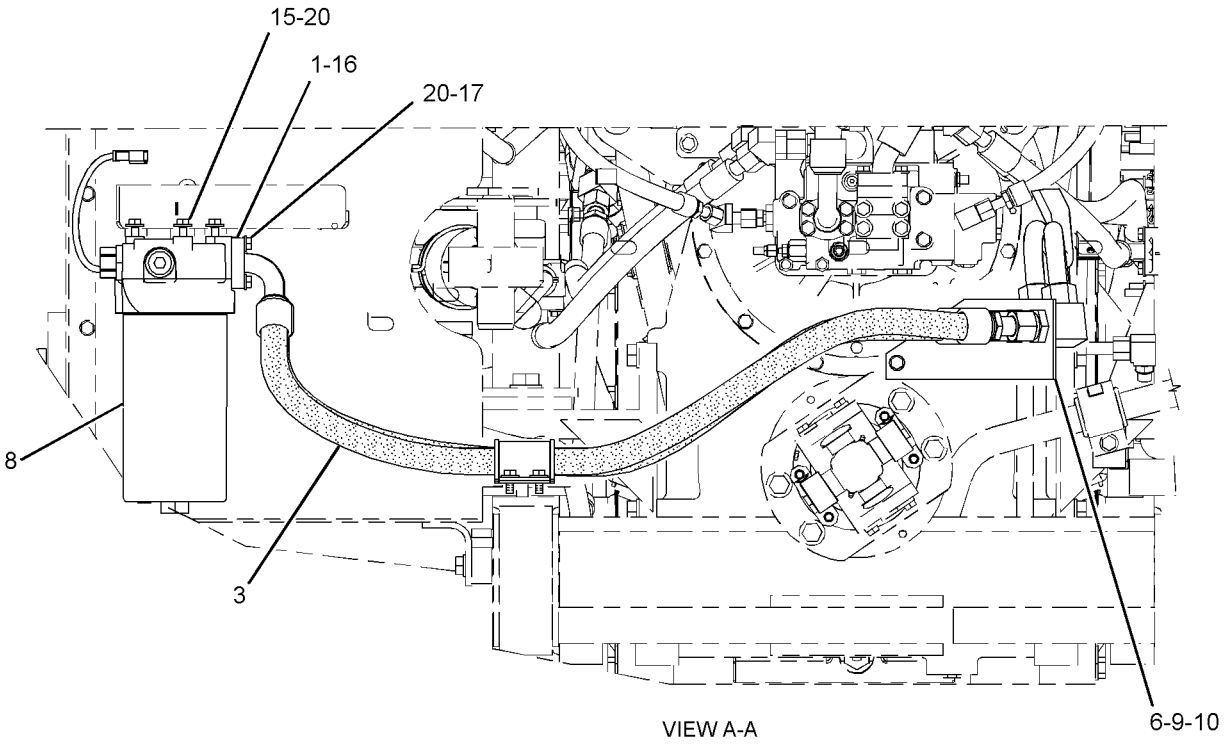

GRAPHIC #1 **<END>** g01841154

333-6439 FILTER GP-OIL—POWER TRAIN

S/N: RYF1-UP

PART OF 236-8999 FILTER & LINES GP-TRANSMISSION

SMCS-3004, 3067 **i03520558**

NOTE	REF NO	GRAPHIC REF	PART NUMBER	QTY	PART NAME 1 2 3 4 5 6 (PRODUCT LEVEL)	SEE PAGE
	1	1	**6V-0852**	1	CAP-DUST	
	2	1	**8C-3447**	1	CAP-DUST	
	3	1	**321-5967**	1	HOUSING GP-FILTER (POWER TRAIN)	
		1	**3J-1907**	1	SEAL-O-RING	
		1	**9S-8004**	1	PLUG-O-RING	
	4	1	**328-3655**	1	FILTER ELEMENT AS-OIL (ADVANCED EFFICIENCY)	
Y	5	1	**333-9309**	1	BASE GP-OIL FILTER (POWER TRAIN)	259
	6	1	**3J-1907**	1	SEAL-O-RING	
	7	1	**3J-7354**	1	SEAL-O-RING	
	8	1	**6V-3965**	1	FITTING (QUICK DISCONNECT)	
	9	1	**8C-3446**	1	VALVE-FLUID SAMPLING	
	10	1	**130-0229**	1	SEAL-O-RING	

Y-SEPARATE ILLUSTRATION

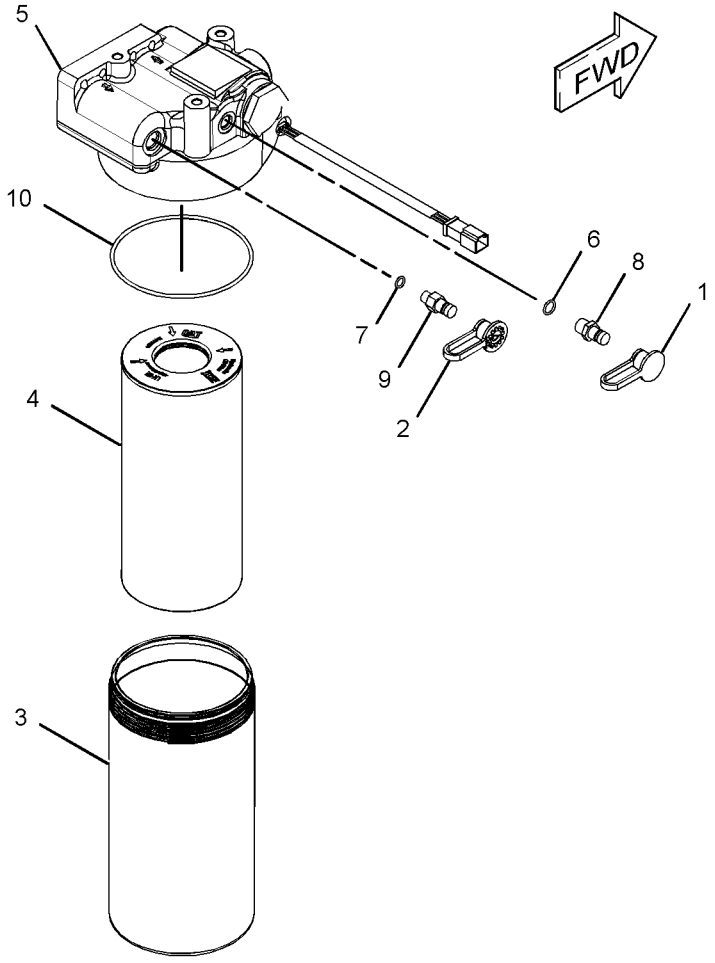

GRAPHIC #1 **<END>** g01854300

129-4290 GEAR GP-BEVEL & PINION

S/N: RYF1-UP

PART OF 129-4280, 129-4282, 139-9102 AXLE AR-FIXED

ALSO AN ATTACHMENT

SMCS-3254, 3256 **i03626610**

NOTE	REF NO	GRAPHIC REF	PART NUMBER	QTY	PART NAME 1 2 3 4 5 6 (PRODUCT LEVEL)	SEE PAGE
	1	1	**4S-5838**	1	RETAINER	
M	2	1	**8T-6868**	1	BOLT (M12X1.75X80-MM)	
	3	1	**1L-7518**	1	CONE-BEARING	
	4	1	**173-7501**	1	NUT-ADJUSTING	
	5	1	**4E-3897**	2	LOCK	
M	6	1	**4E-3896**	2	BOLT (M6X1X14-MM)	
	7	1	**4E-4031**	2	PIN	
	8	1	**132-6597**	1	CONE-BEARING	
	9	1	**132-6598**	1	CUP-BEARING	
	10	1	**6K-5529**	1	CONE-BEARING	
	11	1	**6K-5528**	1	CUP-BEARING	
	12	1	**6W-4749**	1	WASHER (75.5X106X5-MM THK)	
	13	1	**6W-4750**	1	NUT-STAKE (LOCK)	
	14	1	**133-3574**	1	SHAFT-BEVEL PINION	
	15	1	**129-5401**	1	GEAR-BEVEL (52-TEETH)	
	16	1	**9X-2617**	4	PIN-SPRING	
	17	1	**9X-2618**	4	PIN-SPRING	
	18	1	**8S-9075**	1	CONE-BEARING	
M	19	1	**9X-6494**	20	BOLT (M20X2.5X200-MM)	
	20	1	**173-7502**	1	NUT-ADJUSTMENT	
	22	1	**7S-4001**	1	SEAL-O-RING	
	23	1	**134-3032**	1	YOKE AS	
	25	1	**133-3605**	1	SLEEVE AS	
		1	**6B-4370**	1	CUP-BEARING	
	26	1	**133-3606**	1	SLEEVE AS	
		1	**8S-9076**	1	CUP-BEARING	

M-METRIC PART

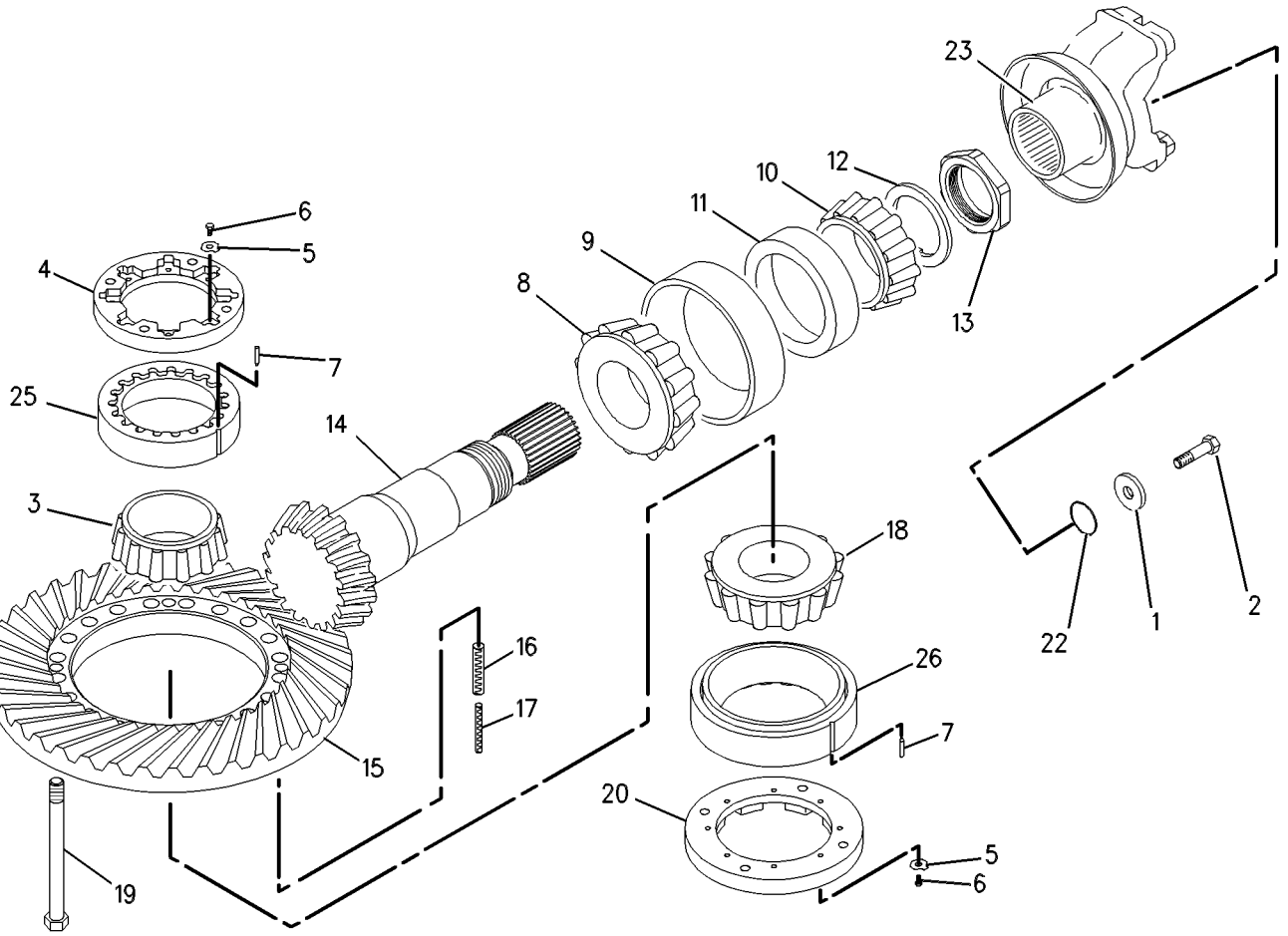

GRAPHIC #1 **<END>** g00542553

129-4292 GEAR GP-BEVEL & PINION

S/N: RYF1-UP

PART OF 129-4281, 129-4283, 139-9101 AXLE AR-OSCILLATING

ALSO AN ATTACHMENT

SMCS-3254, 3256 **i03626621**

NOTE	REF NO	GRAPHIC REF	PART NUMBER	QTY	PART NAME 1 2 3 4 5 6 (PRODUCT LEVEL)	SEE PAGE
	1	1	**8S-9075**	1	CONE-BEARING	
M	2	1	**4E-3896**	2	BOLT (M6X1X14-MM)	
	3	1	**4E-3897**	2	LOCK	
	4	1	**6K-5528**	1	CUP-BEARING	
	5	1	**6K-5529**	1	CONE-BEARING	
	6	1	**6W-4749**	1	WASHER (75.5X106X5-MM THK)	
	7	1	**6W-4750**	1	NUT-STAKE (LOCK)	
	8	1	**1L-7518**	1	CONE-BEARING	
	9	1	**9X-2617**	4	PIN-SPRING	
	10	1	**9X-2618**	4	PIN-SPRING	
M	11	1	**9X-6494**	20	BOLT (M20X2.5X200-MM)	
	12	1	**173-7501**	1	NUT-ADJUSTING	
	13	1	**132-6597**	1	CONE-BEARING	
	14	1	**132-6598**	1	CUP-BEARING	
	15	1	**129-5401**	1	GEAR-BEVEL (52-TEETH)	
	16	1	**129-5400**	1	SHAFT-BEVEL PINION	
	17	1	**133-3605**	1	SLEEVE AS	
	18	1	**6B-4370**	1	CUP-BEARING	
	19	1	**133-3606**	1	SLEEVE AS	
	20	1	**8S-9076**	1	CUP-BEARING	
	21	1	**4E-4031**	2	PIN	
	22	1	**173-7502**	1	NUT-ADJUSTMENT	
	23	1	**156-1150**	1	YOKE AS	
	24	1	**134-3030**	1	GUARD	

M-METRIC PART

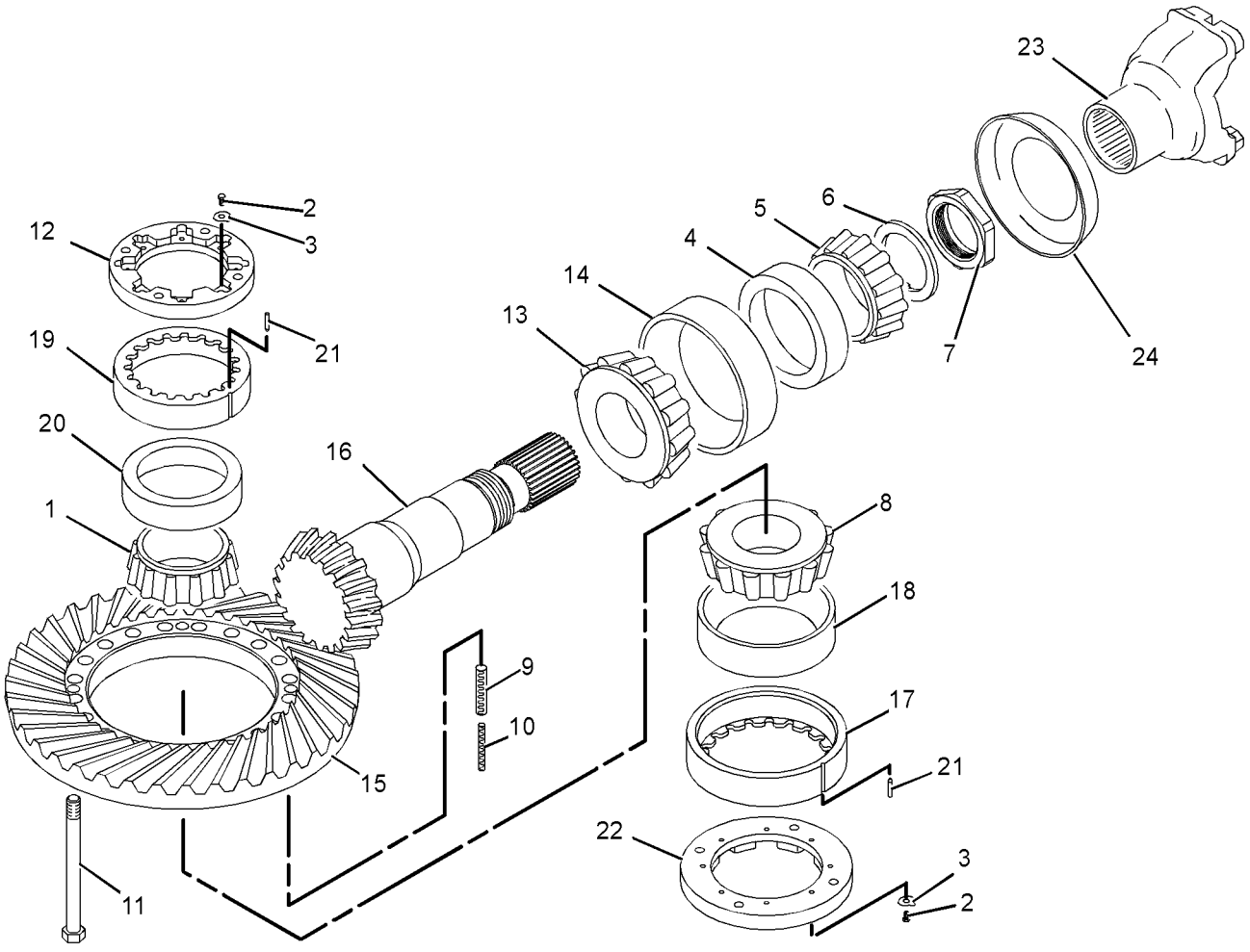

GRAPHIC #1 **<END>** g01219647

237-8250 GEAR GP-OUTPUT TRANSFER

S/N: DKG1-UP

PART OF 243-6733 TRANSMISSION AR

SMCS-3075, 3159 **i03627554**

NOTE	REF NO	GRAPHIC REF	PART NUMBER	QTY	PART NAME 1 2 3 4 5 6 (PRODUCT LEVEL)	SEE PAGE
	1	1	**248-0356**	1	CASE AS	
M		1	**8T-5414**	8	STUD (M12X1.75X50-MM)	
	2	2	**237-9068**	1	GEAR	
	3	2	**5P-2526**	2	CUP-BEARING	
	4	2	**2K-5065**	2	CONE-BEARING	
	5	2	**252-0995**	1	CAGE AS	
M		2	**3E-4319**	4	STUD-TAPERLOCK (M12X1.75X55-MM)	
	6	2	**4D-1577**	1	SEAL-O-RING	
B	7	2	**322-3111**	1	SHIM PACK (INCLUDES 12-SHIMS)	
	8	1	**3T-6965**	1	PLATE-EYE	
M	9	1	**6V-5842**	4	BOLT (M10X1.5X40-MM)	
	10	1,3	**6V-5839**	22	WASHER (11X21X2.5-MM THK)	
M	11	1	**6V-1820**	10	BOLT (M10X1.5X30-MM)	
	12	2	**246-5422**	1	COVER	
M	13	2	**6V-8149**	12	NUT (M12X1.75-THD)	
	14	2	**237-9069**	1	GEAR	
	15	2	**222-9875**	1	CAGE-BEARING	
Y	16	2	**138-1509**	1	DRAIN GP-ECOLOGY (POWER TRAIN OIL)	270
	17	2	**5P-8245**	12	WASHER-HARD (13.5X25.5X3-MM THK)	
	18	2	**265-3930**	2	RETAINER	
M	19	2	**8T-0358**	2	BOLT (M16X2X90-MM)	
	20	2	**2H-3088**	2	SEAL-O-RING	
	21	2	**266-6644**	1	SHAFT-OUTPUT	
	22	2	**117-4465**	2	YOKE AS	
					(EACH INCLUDES)	
		2	**3K-0196**	1	GUARD	
	23	2	**116-8231**	1	CAGE-BEARING	
	24	3	**8M-3107**	1	COVER	
	25	3	**2S-4750**	1	GASKET	
M	26	3	**6V-4248**	8	BOLT (M10X1.5X25-MM)	
	27	2	**5H-6734**	2	SEAL-O-RING	
	28	2	**222-9874**	1	RETAINER-BEARING	
M	29	2	**6V-1819**	6	BOLT (M10X1.5X100-MM)	
	30	2	**2P-8987**	2	CONE-BEARING	
	31	2	**2P-8986**	2	CUP-BEARING	
	32	2	**2H-9247**	1	SEAL-O-RING	
	33	2	**8P-2155**	1	SPACER (61X76X43-MM THK)	
	34	2	**7B-3642**	1	BEARING-INNER	
	35	2	**5P-5411**	1	RACE-BEARING OUTER	
	36	3	**193-2200**	2	SEAL-LIP TYPE	
Y	37	3	**106-0543**	1	SENSOR GP-SPEED (TRANSMISSION OUTPUT 1)	187
Y	37A	3	**106-0543**	1	SENSOR GP-SPEED (TRANSMISSION OUTPUT 2)	187
	38	3	**8P-3251**	1	COVER AS	
		3	**7B-3028**	2	SCREW-DRIVE (NO 4X3/16-IN)	
		3	**7S-2962**	1	WASHER-SPRING (52.3X82.5X9.1-MM THK)	
		3	**8P-1722**	1	COVER	
	39	3	**8H-7521**	1	SEAL-O-RING	
	40	3	**4S-8598**	1	SCREEN-SUCTION	
	41	3	**240-8259**	1	SCREEN GP-MAGNETIC	
		3	**8M-7160**	3	MAGNET	
	42	2	**3F-5792**	1	SEAL-O-RING	
	43	1	**135-0134**	1	ANGLE	
	44	1	**247-8495**	1	BRACKET AS	
	45	1	**1V-6341**	2	SEAL	
	46	1	**9X-8268**	2	WASHER (17.5X30X3.5-MM THK)	
	47	2	**5M-2894**	6	WASHER-HARD (10.2X18.5X2.5-MM THK)	

237-8250 **GEAR GP-OUTPUT TRANSFER** *(contd.)* **i03627554**

NOTE	REF NO	GRAPHIC REF	PART NUMBER	QTY	PART NAME 1 2 3 4 5 6 (PRODUCT LEVEL)	SEE PAGE
	48	1	**5M-3154**	1	COVER	
	49	1	**1S-6595**	1	GASKET-OIL SUPPLY	
M	50	1	**6V-6317**	2	BOLT (M10X1.5X20-MM)	
	51	1	**6V-1720**	1	PLATE-SERIAL NUMBER (TRANSMISSION)	
B	52	2	**1U-8846**		SEALANT-GASKET	

B-USE AS REQUIRED
M-METRIC PART
Y-SEPARATE ILLUSTRATION

REFER TO ALL ILLUSTRATIONS OF
THIS GROUP FOR AUXILIARY VIEWS

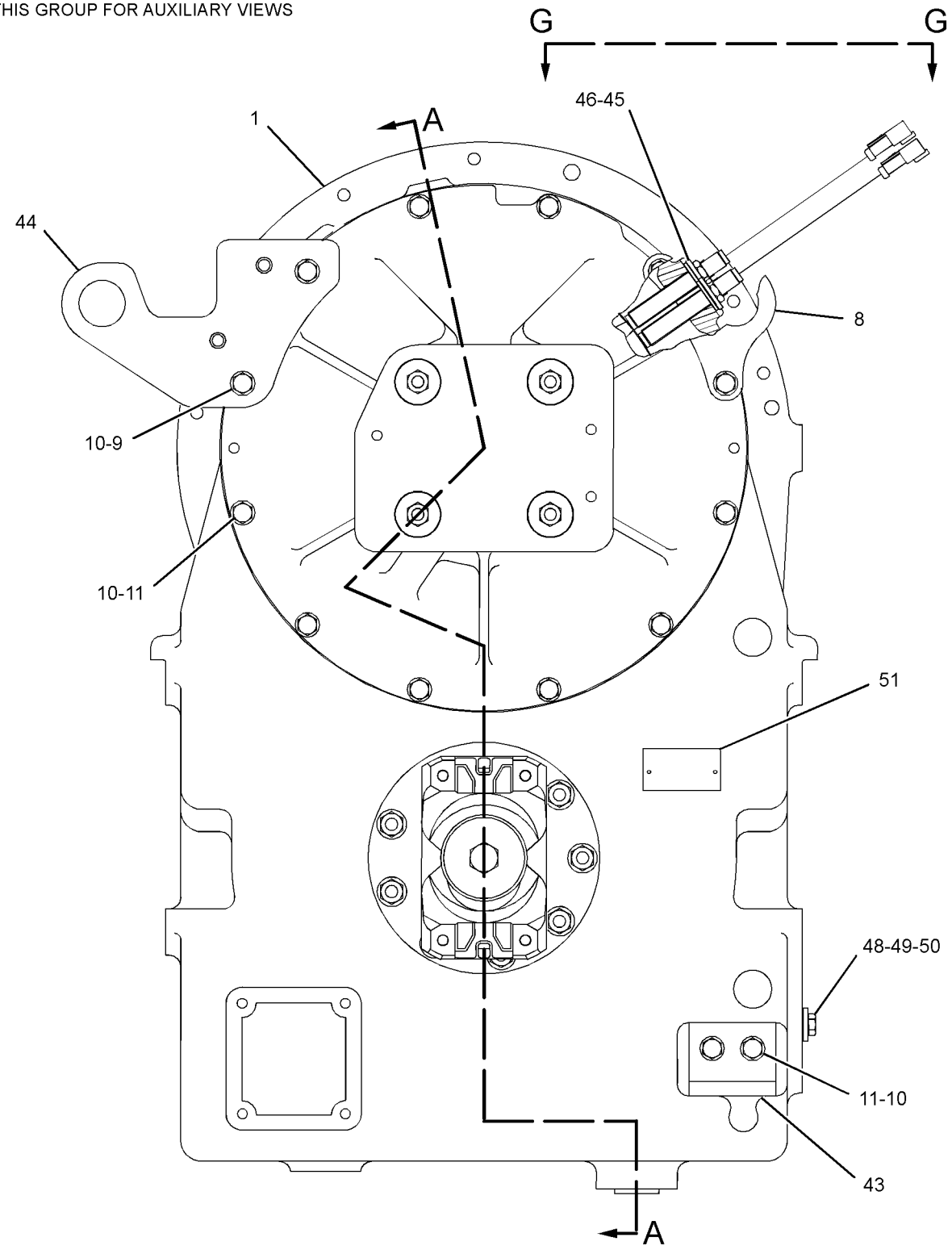

FRONT VIEW

GRAPHIC #1

g01692856

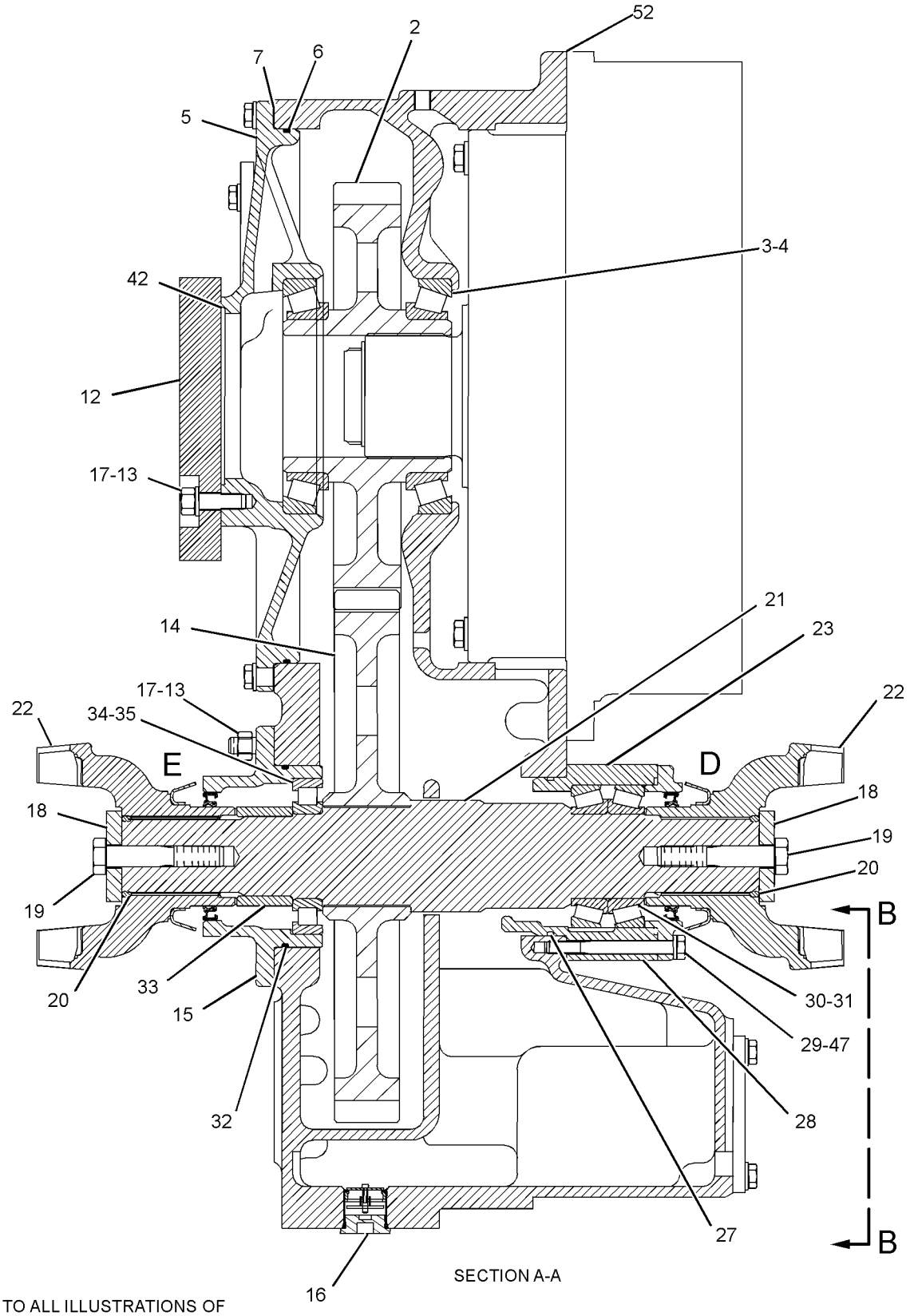

SECTION A-A

REFER TO ALL ILLUSTRATIONS OF
THIS GROUP FOR AUXILIARY VIEWS

GRAPHIC #2

g01692855

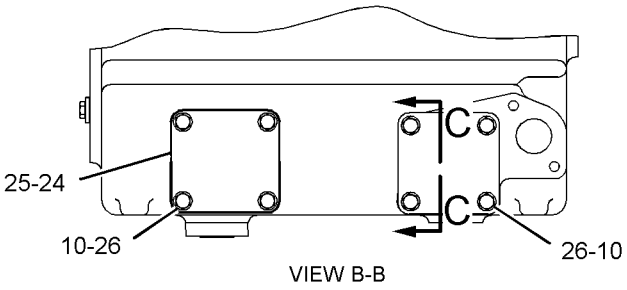

VIEW B-B

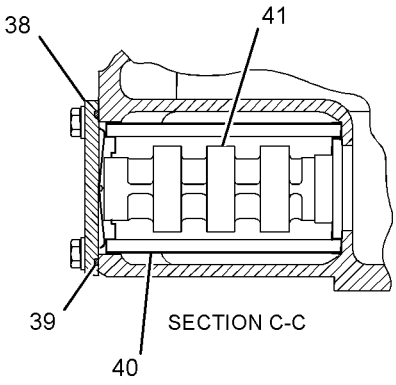

SECTION C-C

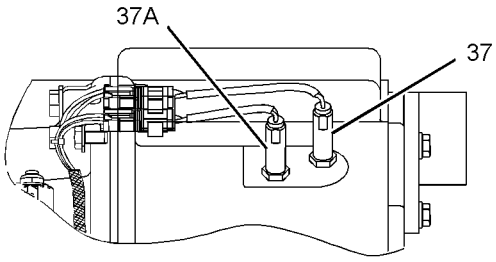

VIEW G-G

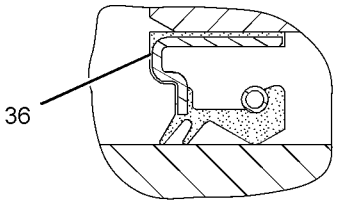

VIEW OF AREA E

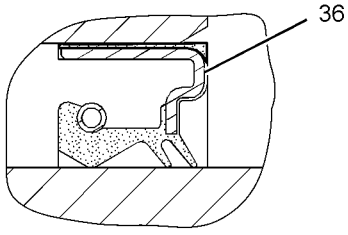

VIEW OF AREA D

GRAPHIC #3 **<END>** g01692857

160-0719 HEAT EXCHANGER GP-AXLE

S/N: RYF1-UP

PART OF 139-9102 AXLE AR-FIXED, 139-9101 AXLE AR-OSCILLATING

AN ATTACHMENT

SMCS-1379 **i03629229**

NOTE	REF NO	GRAPHIC REF	PART NUMBER	QTY	PART NAME 1 2 3 4 5 6 (PRODUCT LEVEL)	SEE PAGE
	1	1	**8E-9571**	3	WASHER-HARD (8.8X16X7-MM THK)	
	2	1	**131-8215**	1	HEADER	
	3	1	**160-0718**	1	HEAT EXCHANGER AS-AXLE	
M		1	**6V-5218**	12	BOLT (M8X1.25X35-MM)	
B		1	**1U-8846**		SEALANT-GASKET	
		1	**131-1285**	1	COVER-RETURN	
		1	**131-4020**	1	MANIFOLD	
		1	**132-7534**	12	LOCK	
		1	**160-0720**	1	TUBE AS	
	4	1	**106-9586**	2	SEAL-O-RING	
M	5	1	**3E-8016**	3	BOLT-SELF-LOCKING (M8X1.25X25-MM)	
	7	1	**3D-2824**	2	SEAL-O-RING	
		1	**6V-8398**	2	SEAL-O-RING	
		1	**6V-8633**	2	CONNECTOR	
M	8	1	**8T-2394**	6	BOLT-SOCKET HEAD (M8X1.25X90-MM)	
M	9	1	**8T-4189**	6	BOLT (M8X1.25X20-MM)	
	10	1	**9M-1974**	12	WASHER-HARD (8.8X16X2-MM THK)	
B	11	1	**1U-8846**		SEALANT-GASKET	

B-USE AS REQUIRED
M-METRIC PART

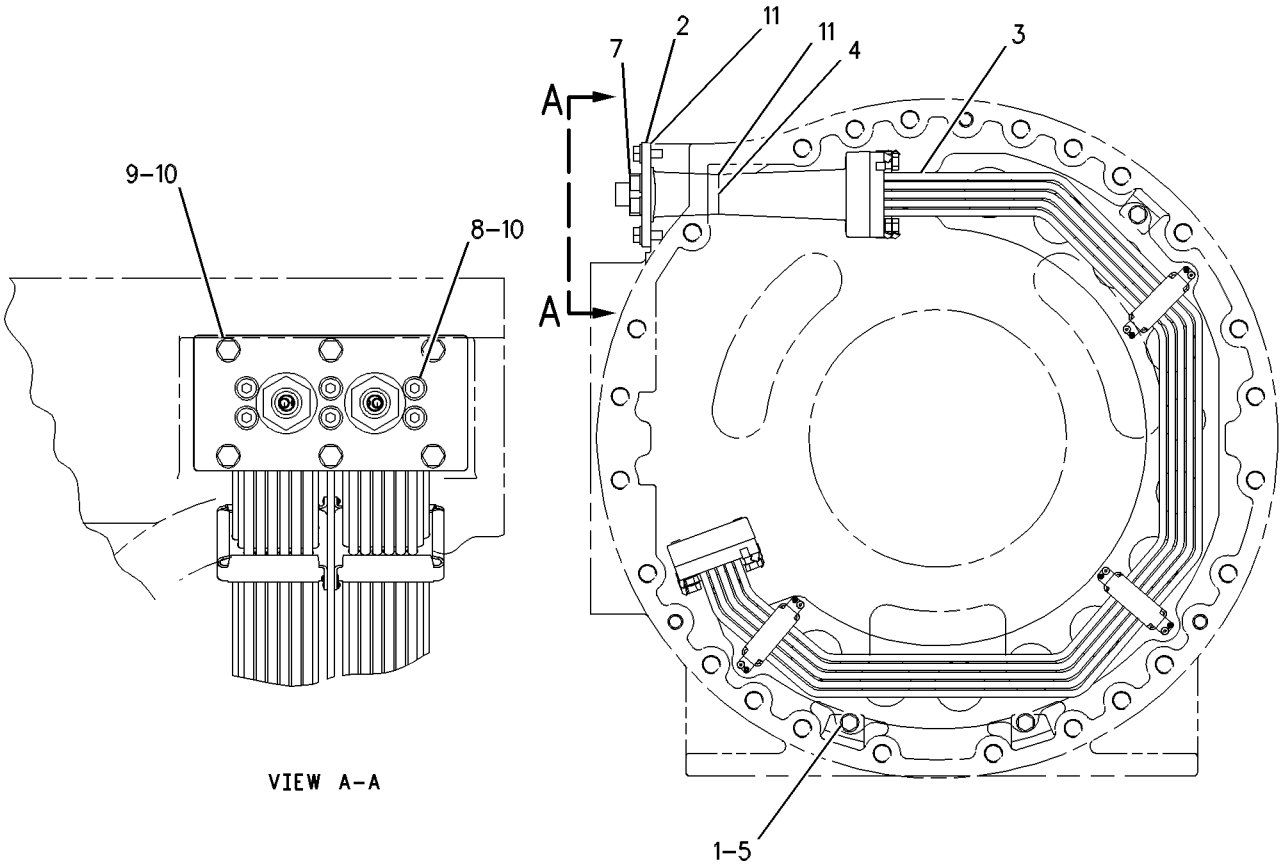

GRAPHIC #1 **<END>** g00603729

129-4291 HOUSING GP-FIXED AXLE

S/N: RYF1-UP
PART OF 129-4280, 129-4282 AXLE AR-FIXED
ALSO AN ATTACHMENT

SMCS-3260 **i03626613**

NOTE	REF NO	GRAPHIC REF	PART NUMBER	QTY	PART NAME 1 2 3 4 5 6 (PRODUCT LEVEL)	SEE PAGE
	1	1	**5H-3701**	2	SCREW-PURGE (7/16-20-THD)	
	2	1	**5M-6592**	2	CUP-BEARING (TAPERED ROLLER)	
	3	1	**5P-4484**	1	PLUG-MAGNETIC (AXLE HOUSING)	
	4	1	**6B-4852**	2	CONE-BEARING (TAPERED ROLLER)	
	5	1	**8R-0512**	1	GAUGE AS-OIL LEVEL (DIPSTICK) (AXLE)	
	6	1	**8T-0336**	1	FITTING-PRESSURE RELIEF	
	7	1	**9G-5317**	2	SEAL GP-DUO-CONE	
	8	1	**251-4525**	2	HOUSING-AXLE SHAFT	
	9	1	**9S-9334**	1	PLUG-O-RING	
	10	1	**156-4773**	1	RETAINER	
B	11	1	**130-8707**	1	SHIM PACK (INCLUDES 15-SHIMS)	
	12	1	**133-4292**	1	SEAL-LIP TYPE	
	13	1	**130-5869**	1	HOUSING-PINION	
	14	1	**127-8910**	2	SHAFT-AXLE	
	15	1	**3B-0551**	1	PLUG-PIPE	
	16	1	**4E-2240**	2	NUT-BEARING	
	17	1	**4K-6804**	1	SEAL-O-RING	
	18	1	**5H-5012**	2	RING-RETAINING	
	19	1	**5P-8247**	58	WASHER-HARD (17X32X3.5-MM THK)	
M	20	1	**6V-5686**	10	BOLT (M16X2X50-MM)	
M	21	1	**6V-7732**	6	BOLT (M10X1.5X25-MM)	
	22	1	**6Y-2546**	2	CONE-BEARING	
	23	1	**6Y-2547**	2	CUP-BEARING	
	24	1	**7M-8485**	2	SEAL-O-RING	
M	25	1	**8T-0207**	24	BOLT (M16X2X100-MM)	
	26	1	**9C-6041**	2	DOWEL	
	27	1	**9X-2027**	6	WASHER (11X18X2-MM THK)	
M	28	1	**9X-2075**	24	BOLT (M16X2X200-MM)	
B	29	1	**1U-8846**		SEALANT-GASKET	
	30	1	**187-8883**	1	HOUSING AS	

B-USE AS REQUIRED
M-METRIC PART

129-4291 **HOUSING GP-FIXED AXLE** *(contd.)* **i03626613**

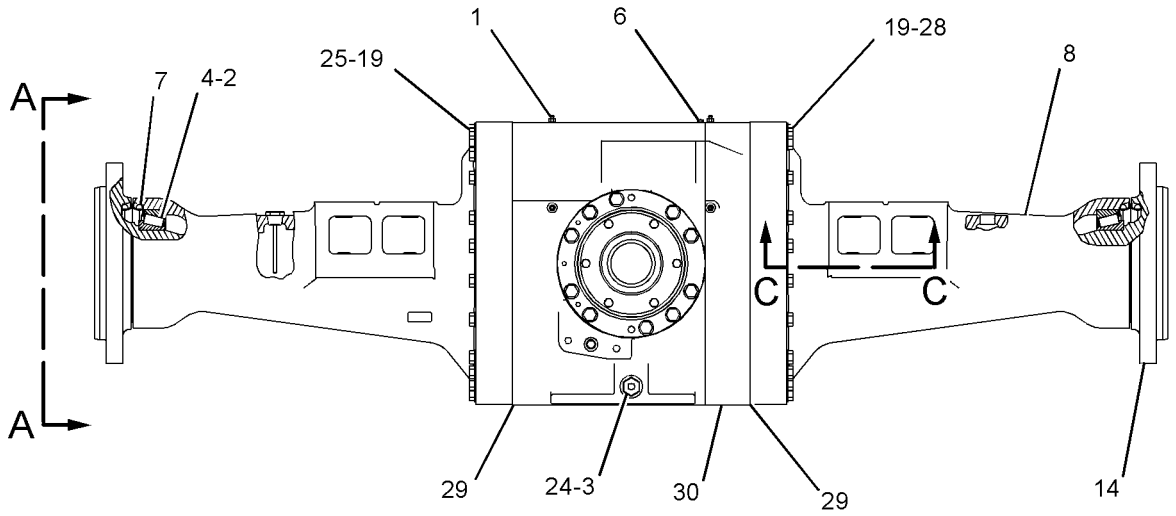

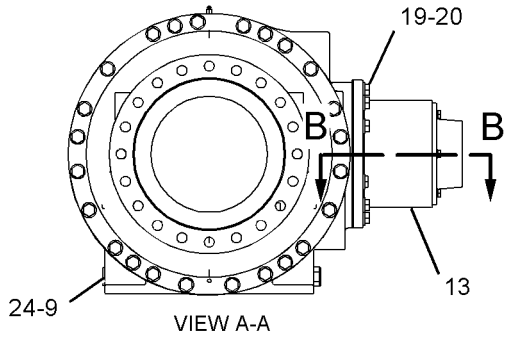

VIEW A-A

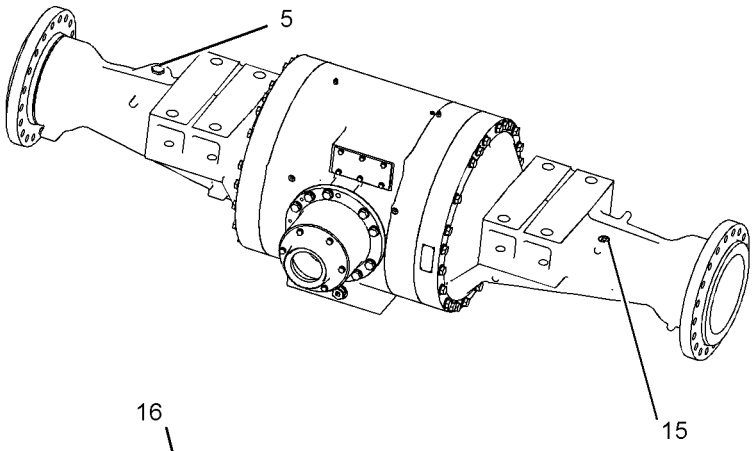

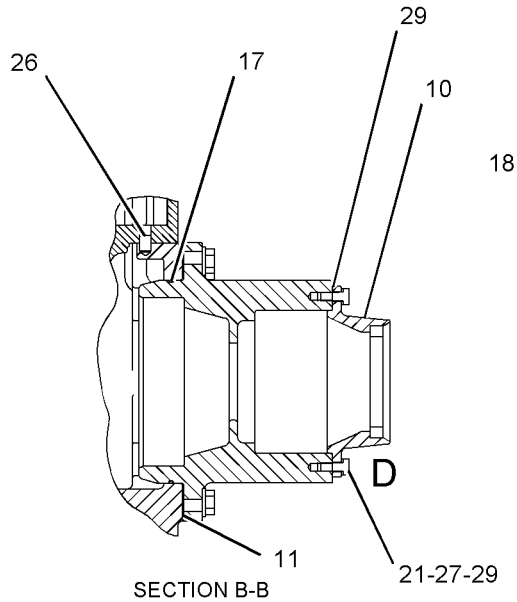

SECTION B-B

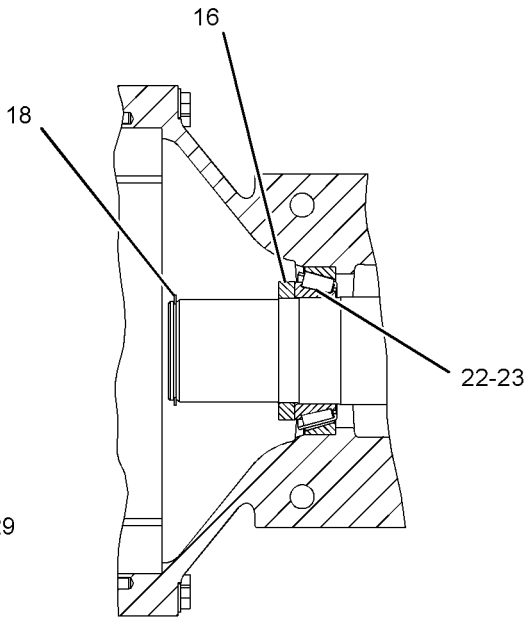

SECTION C-C

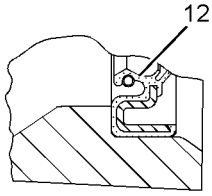

VIEW OF AREA D

GRAPHIC #1 **<END>** g01121438

POWER TRAIN

139-9107 HOUSING GP-FIXED AXLE

S/N: RYF1-UP
PART OF 139-9102 AXLE AR-FIXED
AN ATTACHMENT

SMCS-3260 **i03629228**

NOTE	REF NO	GRAPHIC REF	PART NUMBER	QTY	PART NAME 1 2 3 4 5 6 (PRODUCT LEVEL)	SEE PAGE
	1	1	**5H-3701**	2	SCREW-PURGE (7/16-20-THD)	
	2	1	**5M-6592**	2	CUP-BEARING (TAPERED ROLLER)	
	3	1	**5P-4484**	1	PLUG-MAGNETIC (AXLE HOUSING)	
	4	1	**6B-4852**	2	CONE-BEARING (TAPERED ROLLER)	
	5	1	**8R-0512**	1	GAUGE AS-OIL LEVEL (DIPSTICK) (AXLE)	
	6	1	**8T-0336**	1	FITTING-PRESSURE RELIEF	
	7	1	**9W-6684**	2	SEAL GP-DUO-CONE	
	8	1	**251-4525**	2	HOUSING-AXLE SHAFT	
	9	1	**9S-9334**	1	PLUG-O-RING	
	10	1	**156-4773**	1	RETAINER	
B	11	1	**130-8707**	1	SHIM PACK (INCLUDES 15-SHIMS)	
	12	1	**133-4292**	1	SEAL-LIP TYPE	
	14	1	**127-8910**	2	SHAFT-AXLE	
	15	1	**3B-0551**	1	PLUG-PIPE	
	16	1	**4E-2240**	2	NUT-BEARING	
	17	1	**4K-6804**	1	SEAL-O-RING	
	18	1	**5H-5012**	2	RING-RETAINING	
	19	1	**5P-8247**	58	WASHER-HARD (17X32X3.5-MM THK)	
M	20	1	**6V-5686**	10	BOLT (M16X2X50-MM)	
M	21	1	**6V-7732**	6	BOLT (M10X1.5X25-MM)	
	22	1	**6Y-2546**	2	CONE-BEARING	
	23	1	**6Y-2547**	2	CUP-BEARING	
	24	1	**7M-8485**	2	SEAL-O-RING	
M	25	1	**8T-0207**	24	BOLT (M16X2X100-MM)	
	26	1	**9C-6041**	2	DOWEL	
	27	1	**9X-2027**	6	WASHER (11X18X2-MM THK)	
M	28	1	**9X-2075**	24	BOLT (M16X2X200-MM)	
B	29	1	**8C-8422**		SEALANT	
	30	1	**187-8894**	1	HOUSING AS	

B-USE AS REQUIRED
M-METRIC PART

139-9107 **HOUSING GP-FIXED AXLE** *(contd.)* **i03629228**

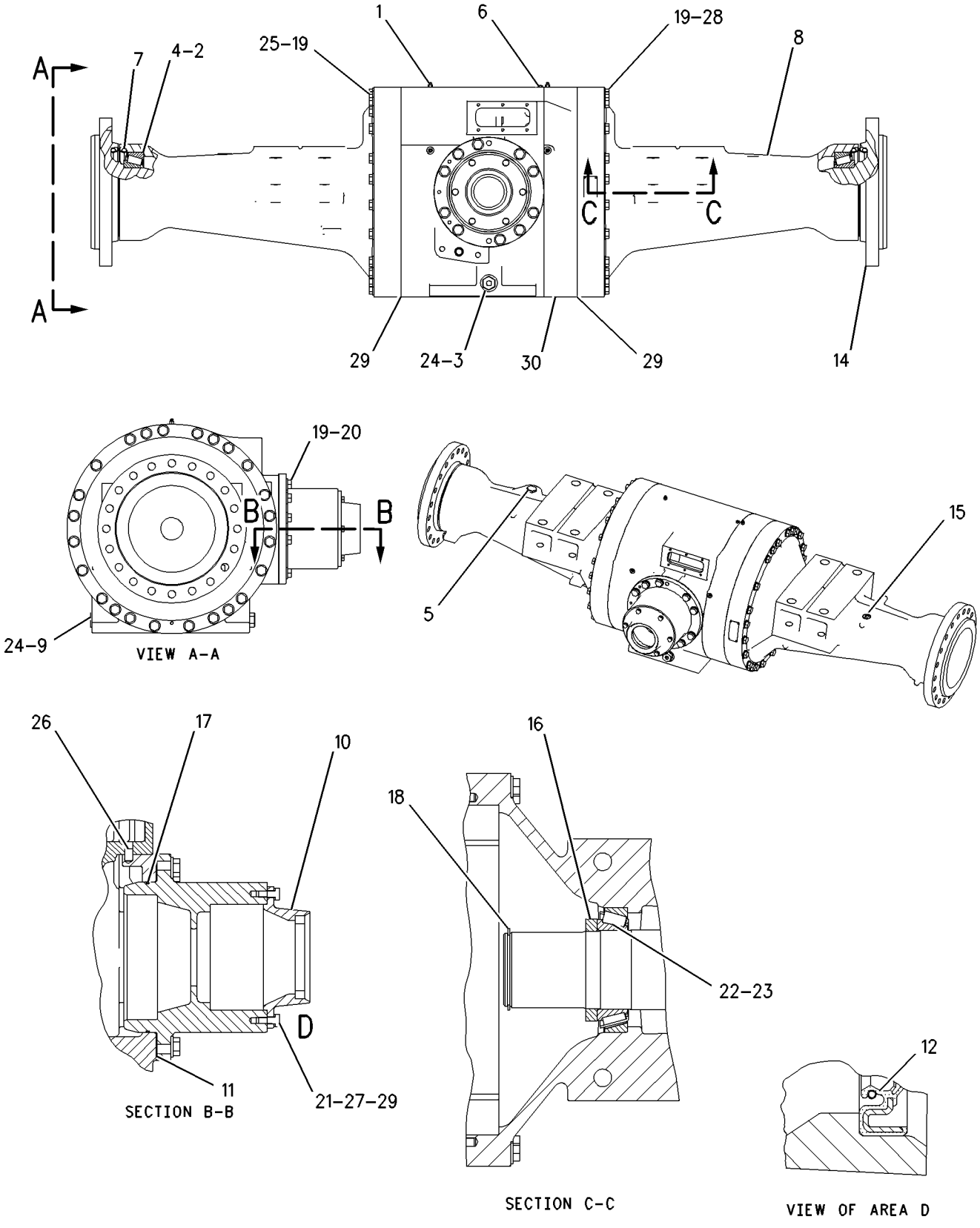

GRAPHIC #1 **<END>** g00894389

129-4293 HOUSING GP-OSCILLATING AXLE

S/N: RYF1-UP

PART OF 129-4281, 129-4283 AXLE AR-OSCILLATING

ALSO AN ATTACHMENT

SMCS-3260, 3268 **i03626767**

NOTE	REF NO	GRAPHIC REF	PART NUMBER	QTY	PART NAME 1 2 3 4 5 6 (PRODUCT LEVEL)	SEE PAGE
	1	1	**129-5398**	1	SUPPORT-FRONT TRUNNION	
	2	1	**2K-0715**	2	WASHER-THRUST (5.03X6.71X0.250-IN THK)	
	3	1	**3D-8417**	2	SEAL-LIP TYPE	
	4	1	**4V-5099**	1	COVER	
	5	1	**5H-3701**	2	SCREW-PURGE (7/16-20-THD)	
	6	1	**5M-6592**	2	CUP-BEARING (TAPERED ROLLER)	
	7	1	**5P-4484**	1	PLUG-MAGNETIC (AXLE HOUSING)	
	8	1	**6B-4852**	2	CONE-BEARING (TAPERED ROLLER)	
	9	1	**6K-2430**	1	SEAL-LIP TYPE	
	10	1	**8R-0512**	1	GAUGE AS-OIL LEVEL (DIPSTICK) (AXLE)	
	11	1	**8T-0336**	1	FITTING-PRESSURE RELIEF	
	12	1	**9C-9191**	1	TRUNNION	
	13	1	**9W-6684**	2	SEAL GP-DUO-CONE	
	14	1	**109-4731**	1	PLATE	
	15	1	**129-5395**	2	HOUSING-AXLE SHAFT	
B	16	1	**1U-8846**		SEALANT-GASKET (70-ML)	
	17	1	**156-4773**	1	RETAINER	
	18	1	**130-8706**	1	HOUSING-PINION	
B	19	1	**130-8707**	1	SHIM PACK (INCLUDES 15-SHIMS)	
	20	1	**213-1366**	1	BEARING-SLEEVE	
	21	1	**133-4292**	1	SEAL-LIP TYPE	
	22	1	**213-1370**	1	BEARING-SLEEVE	
	23	1	**187-8889**	1	HOUSING AS-OSCILLATING	
	24	1	**127-8910**	2	SHAFT-AXLE	
	25	1	**3B-0551**	1	PLUG-PIPE	
	26	1	**4E-2240**	2	NUT-BEARING	
	27	1	**4K-6804**	1	SEAL-O-RING	
	28	1	**5H-5012**	2	RING-RETAINING	
	29	1	**5P-8247**	78	WASHER-HARD (17X32X3.5-MM THK)	
M	30	1	**6V-3531**	4	BOLT (M20X2.5X50-MM)	
M	31	1	**6V-5686**	26	BOLT (M16X2X50-MM)	
M	32	1	**6V-7732**	6	BOLT (M10X1.5X25-MM)	
M	33	1	**9X-2075**	24	BOLT (M16X2X200-MM)	
	34	1	**6Y-2546**	2	CONE-BEARING	
	35	1	**6Y-2547**	2	CUP-BEARING	
	36	1	**7M-8485**	2	SEAL-O-RING	
M	37	1	**8T-0207**	24	BOLT (M16X2X100-MM)	
	38	1	**8T-3282**	4	WASHER-HARD (22X35X3.5-MM THK)	
	39	1	**9C-6041**	2	DOWEL	
	40	1	**9X-2027**	6	WASHER (11X18X2-MM THK)	
	41	1	**155-6456**	1	SUPPORT-TRUNNION	
M	42	1	**6C-8648**	4	BOLT (M16X2-THD)	
	43	1	**9S-9334**	1	PLUG-O-RING	
	44	1	**6V-7979**	1	RING-RETAINING	

B-USE AS REQUIRED
M-METRIC PART

129-4293 **HOUSING GP-OSCILLATING AXLE** *(contd.)* **i03626767**

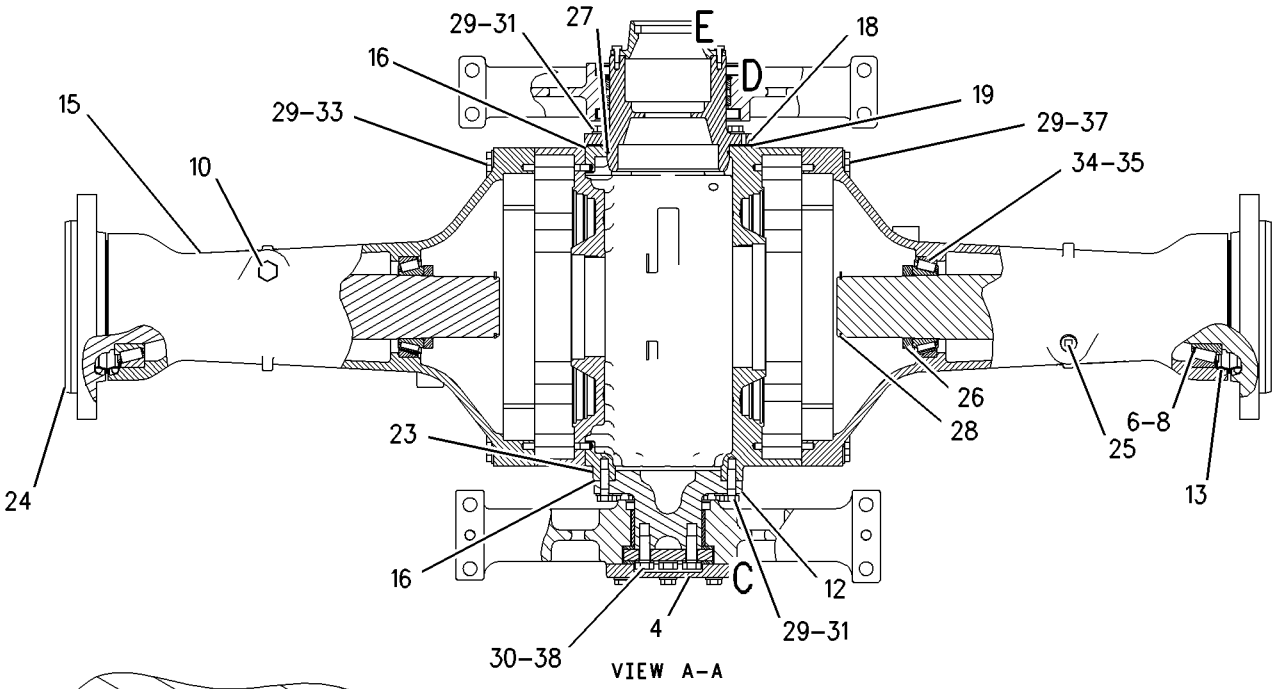

VIEW A–A

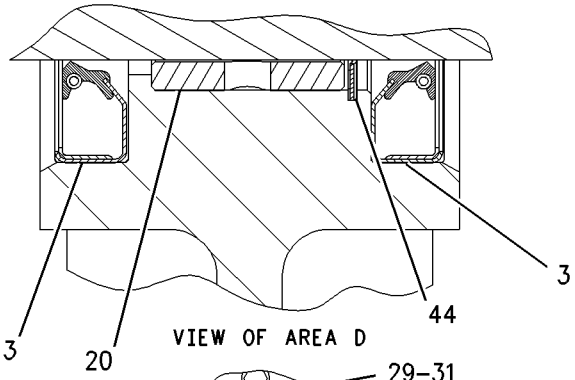

VIEW OF AREA D

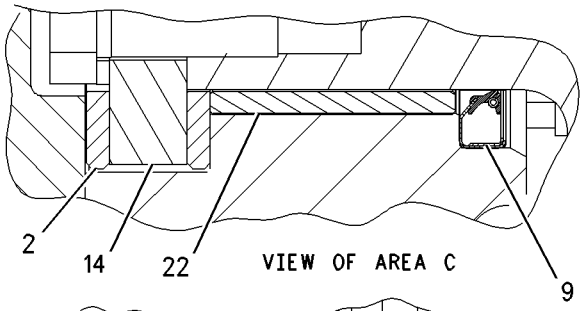

VIEW OF AREA C

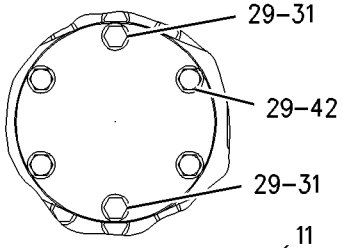

VIEW F-F

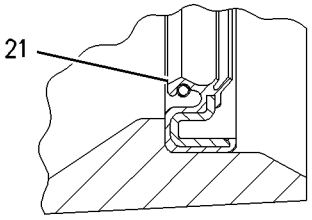

VIEW OF AREA E

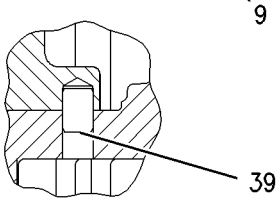

SECTION B-B

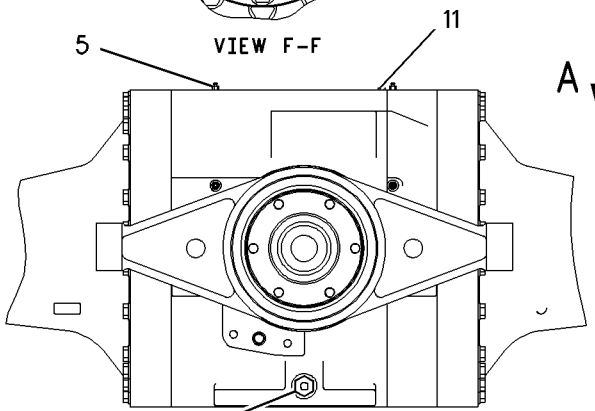

VIEW G-G

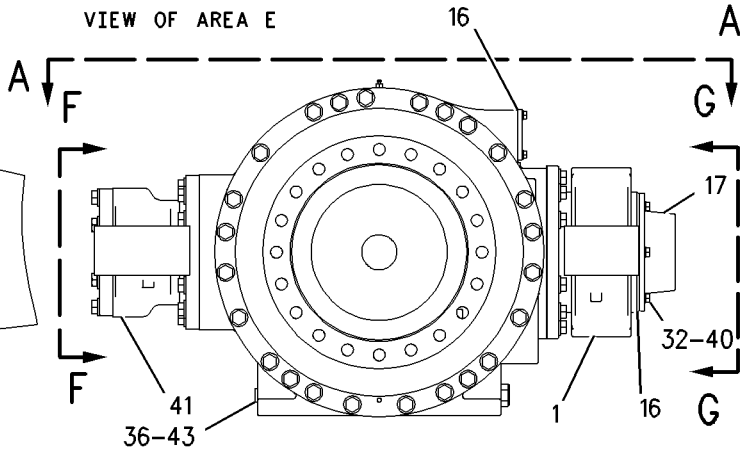

GRAPHIC #1 **<END>** g00880734

139-9106 HOUSING GP-OSCILLATING AXLE

S/N: RYF1-UP
PART OF 139-9101 AXLE AR-OSCILLATING
AN ATTACHMENT

SMCS-3260, 3268 **i03629230**

NOTE	REF NO	GRAPHIC REF	PART NUMBER	QTY	PART NAME 1 2 3 4 5 6 (PRODUCT LEVEL)	SEE PAGE
	1	1	**129-5398**	1	SUPPORT-FRONT TRUNNION	
	2	1	**2K-0715**	2	WASHER-THRUST (5.03X6.71X0.250-IN THK)	
	3	1	**3D-8417**	2	SEAL-LIP TYPE	
	4	1	**4V-5099**	1	COVER	
	5	1	**5H-3701**	2	SCREW-PURGE (7/16-20-THD)	
	6	1	**5M-6592**	2	CUP-BEARING (TAPERED ROLLER)	
	7	1	**5P-4484**	1	PLUG-MAGNETIC (AXLE HOUSING)	
	8	1	**6B-4852**	2	CONE-BEARING (TAPERED ROLLER)	
	9	1	**6K-2430**	1	SEAL-LIP TYPE	
	10	1	**8R-0512**	1	GAUGE AS-OIL LEVEL (DIPSTICK) (AXLE)	
	11	1	**8T-0336**	1	FITTING-PRESSURE RELIEF	
	12	1	**9C-9191**	1	TRUNNION	
	13	1	**9W-6684**	2	SEAL GP-DUO-CONE	
	14	1	**109-4731**	1	PLATE	
	15	1	**129-5395**	2	HOUSING-AXLE SHAFT	
B	16	1	**1U-8846**		SEALANT-GASKET (70-ML)	
	17	1	**156-4773**	1	RETAINER	
	18	1	**130-8706**	1	HOUSING-PINION	
B	19	1	**130-8707**	1	SHIM PACK (INCLUDES 15-SHIMS)	
	20	1	**213-1366**	1	BEARING-SLEEVE	
	21	1	**133-4292**	1	SEAL-LIP TYPE	
	22	1	**213-1370**	1	BEARING-SLEEVE	
	23	1	**187-8899**	1	HOUSING AS	
	24	1	**127-8910**	2	SHAFT-AXLE	
	25	1	**3B-0551**	1	PLUG-PIPE	
	26	1	**4E-2240**	2	NUT-BEARING	
	27	1	**4K-6804**	1	SEAL-O-RING	
	28	1	**5H-5012**	2	RING-RETAINING	
	29	1	**5P-8247**	78	WASHER-HARD (17X32X3.5-MM THK)	
M	30	1	**6V-3531**	4	BOLT (M20X2.5X50-MM)	
M	31	1	**6V-5686**	26	BOLT (M16X2X50-MM)	
M	32	1	**6V-7732**	6	BOLT (M10X1.5X25-MM)	
M	33	1	**9X-2075**	24	BOLT (M16X2X200-MM)	
	34	1	**6Y-2546**	2	CONE-BEARING	
	35	1	**6Y-2547**	2	CUP-BEARING	
	36	1	**7M-8485**	2	SEAL-O-RING	
M	37	1	**8T-0207**	24	BOLT (M16X2X100-MM)	
	38	1	**8T-3282**	4	WASHER-HARD (22X35X3.5-MM THK)	
	39	1	**9C-6041**	2	DOWEL	
	40	1	**9X-2027**	6	WASHER (11X18X2-MM THK)	
	41	1	**155-6456**	1	SUPPORT-TRUNNION	
M	42	1	**6C-8648**	4	BOLT (M16X2-THD)	
	43	1	**9S-9334**	1	PLUG-O-RING	
	44	1	**6V-7979**	1	RING-RETAINING	

B-USE AS REQUIRED
M-METRIC PART

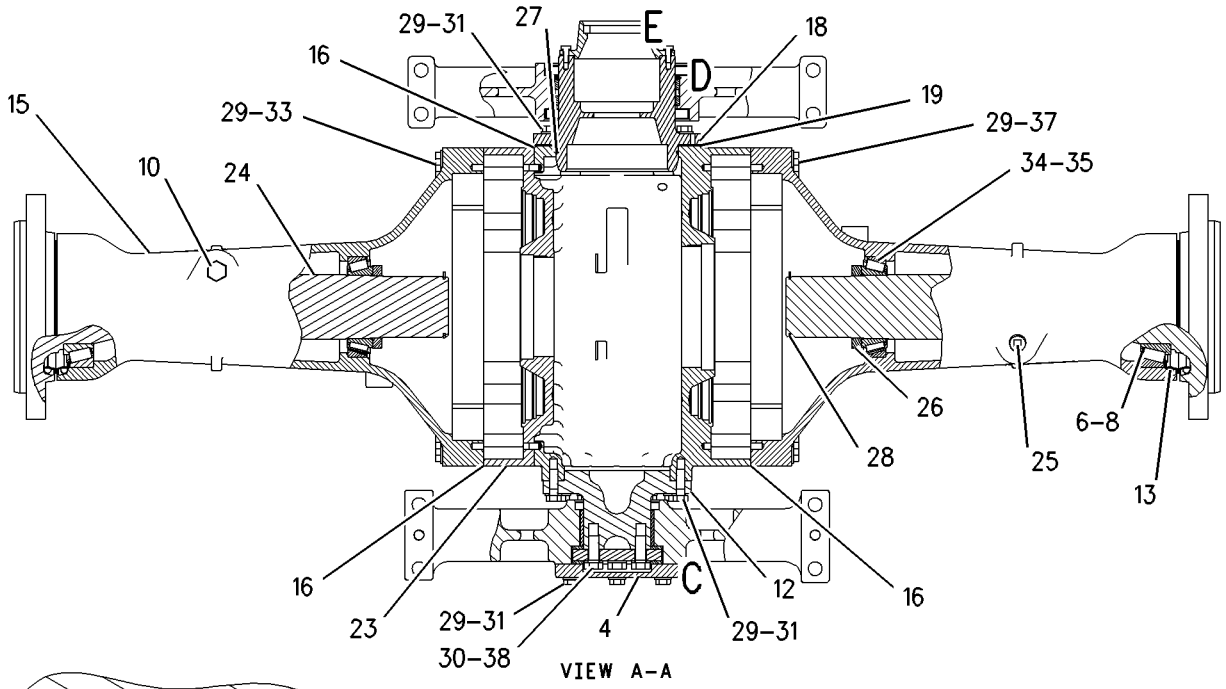

VIEW A–A

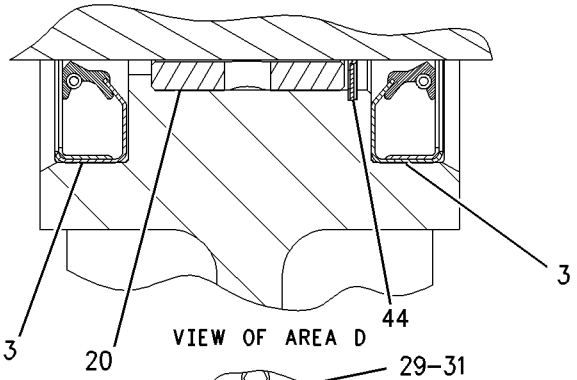

VIEW OF AREA D

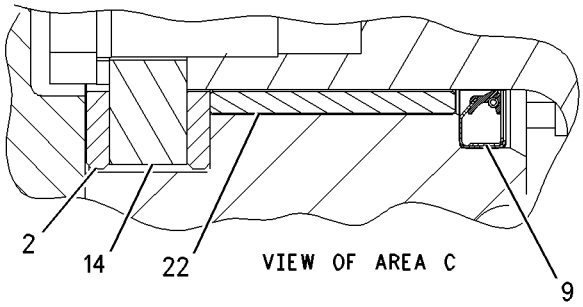

VIEW OF AREA C

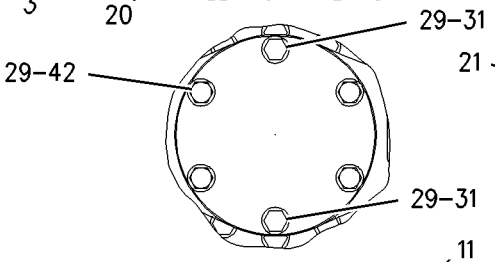

VIEW F-F

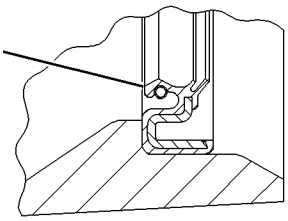

VIEW OF AREA E

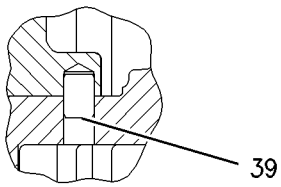

SECTION B-B

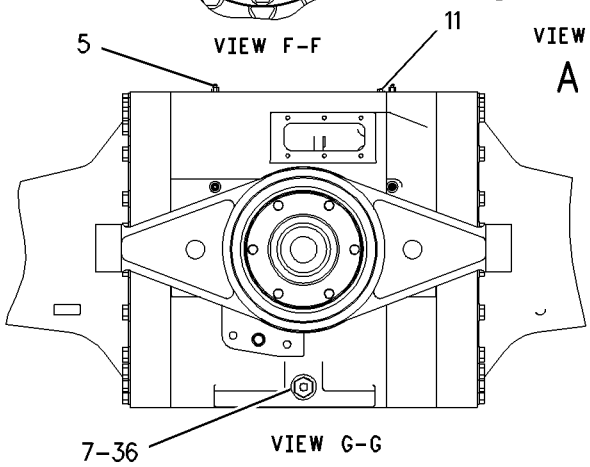

VIEW G-G

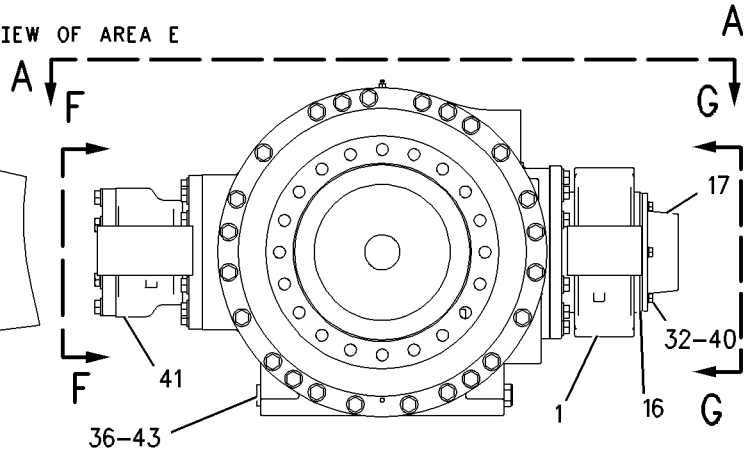

GRAPHIC #1 **<END>** g00894431

POWER TRAIN

236-9100 LINES GP-AXLE OIL COOLER

S/N: RYF1-UP
PART OF 236-9099 AXLE & AXLE OIL COOLER AR
AN ATTACHMENT

SMCS-1365, 3016 **i03629199**

NOTE	REF NO	GRAPHIC REF	PART NUMBER	QTY	PART NAME 1 2 3 4 5 6 (PRODUCT LEVEL)	SEE PAGE
I	1	1	**4E-9273**	1	HOSE AS	
I	2	1	**102-1758**	1	HOSE AS	
I	3	1	**122-0082**	1	HOSE AS	
I	4	2	**252-4931**	1	HOSE AS	
I	5	2	**152-0264**	1	HOSE AS	
I	6	1	**152-1872**	1	HOSE AS	
	7	2	*148-8327*	1	CONNECTOR AS	
		2	**6V-8637**	1	CONNECTOR	
		2	**3D-2824**	1	SEAL-O-RING	
		2	**6V-9746**	1	SEAL-O-RING	
Y	8	2	**237-8180**	1	MANIFOLD GP-CONTROL (AXLE OIL FLOW DIVIDER)	300
	9	2	**244-3280**	1	BRACKET AS	
I	10	2	**244-3282**	1	HOSE AS	
I	11	2	**244-3283**	1	HOSE AS	
	12	2	**272-0292**	1	TUBE AS	
	13	2	**272-0293**	1	TUBE AS	
	14	1	**285-9235**	1	BRACKET AS	
M		1	**8T-3490**	1	NUT-WELD (M10X1.5-THD)	
	15	2	**287-2072**	1	BRACKET AS	
M		2	**8T-3490**	1	NUT-WELD (M10X1.5-THD)	
	16	2	*148-8347*	1	ELBOW AS	
		2	**3D-2824**	1	SEAL-O-RING	
		2	**6V-9007**	1	ELBOW	
		2	**6V-9746**	1	SEAL-O-RING	
	17	2	*148-8364*	4	ELBOW AS	
					(EACH INCLUDES)	
		2	**3K-0360**	1	SEAL-O-RING	
		2	**6V-8398**	1	SEAL-O-RING	
		2	**6V-8625**	1	ELBOW	
	18	2	*148-8370*	1	ELBOW AS	
		2	**6V-8398**	1	SEAL-O-RING	
		2	**6V-9851**	1	ELBOW	
	19	2	*148-8375*	2	ELBOW AS	
					(EACH INCLUDES)	
		2	**6V-8398**	2	SEAL-O-RING	
		2	**6V-8981**	1	ELBOW	
	20	2	*153-6241*	1	ELBOW AS	
		2	**6V-8398**	1	SEAL-O-RING	
		2	**8C-8989**	1	ELBOW	
	21	2	*164-5572*	2	UNION AS	
					(EACH INCLUDES)	
		2	**6V-8398**	2	SEAL-O-RING	
		2	**6V-8731**	1	UNION	
	22	2	**1B-3057**	2	CLIP	
	24	2	**1S-0994**	6	CLIP	
	25	2	**6V-9169**	2	NUT-BULKHEAD (13/16-16-THD)	
	26	1	**7D-7735**	2	CLIP	
M	27	2	**7X-2545**	2	BOLT (M10X1.5X150-MM)	
M	28	1	**7X-2553**	1	BOLT (M16X2X40-MM)	
	29	1,2	**8T-4121**	14	WASHER-HARD (11X21X2.5-MM THK)	
M	30	2	**8T-4133**	3	NUT (M10X1.5-THD)	
M	31	2	**8T-4136**	6	BOLT (M10X1.5X25-MM)	
M	32	1	**8T-4137**	1	BOLT (M10X1.5X20-MM)	
	33	1	**9X-8257**	1	WASHER (17.5X30X3.5-MM THK)	
M	34	1	**8T-4195**	1	BOLT (M10X1.5X30-MM)	

236-9100 LINES GP-AXLE OIL COOLER *(contd.)* i03629199

NOTE	REF NO	GRAPHIC REF	PART NUMBER	QTY	PART NAME 1 2 3 4 5 6 (PRODUCT LEVEL)	SEE PAGE
M	35	1	**8T-0389**	1	LOCKNUT (M10X1.5-THD)	
	36	1	**1S-0833**	1	CLIP	

I-REFER TO HYDRAULIC INFORMATION SYSTEM
M-METRIC PART
Y-SEPARATE ILLUSTRATION

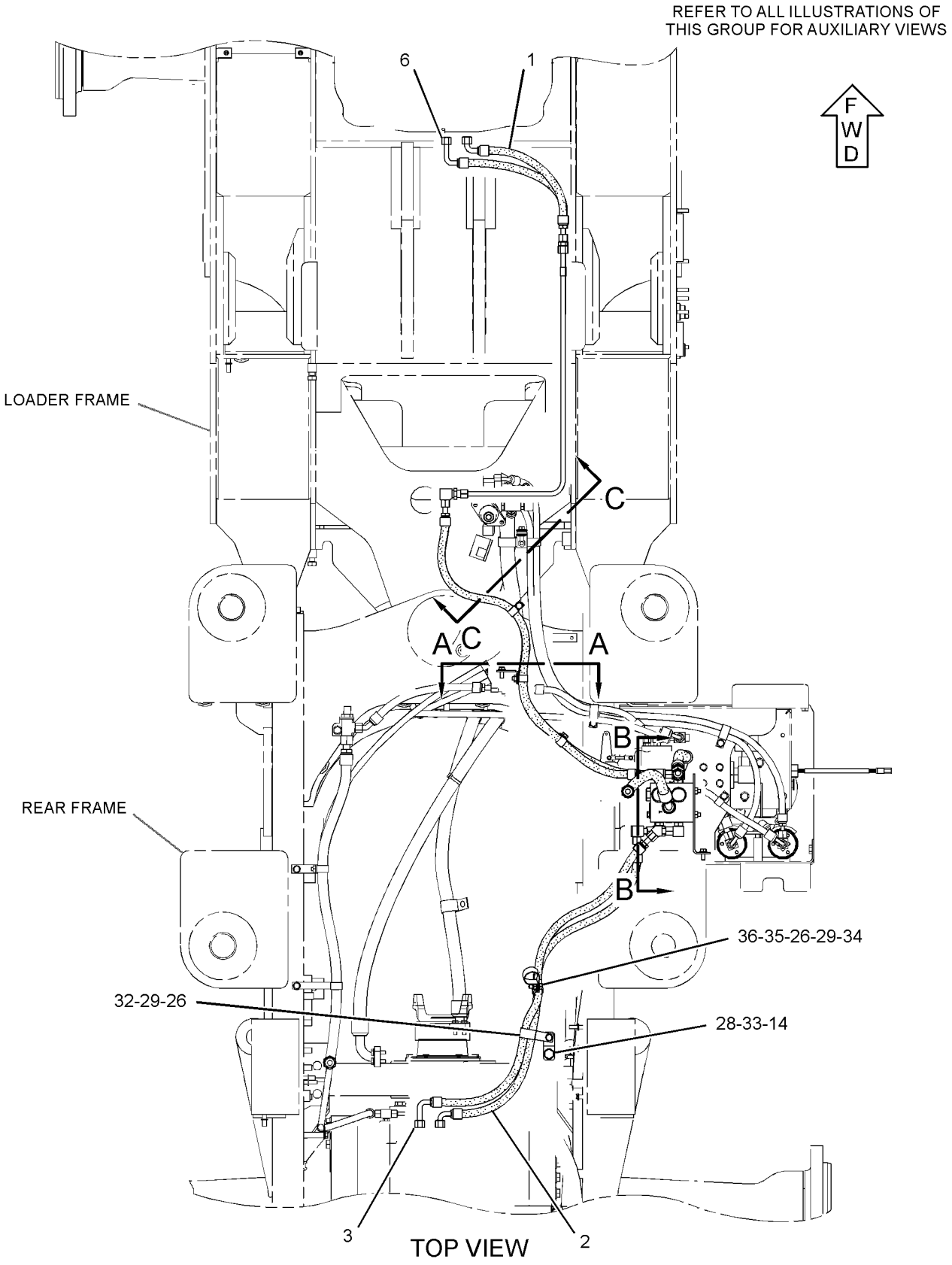

GRAPHIC #1

g01626945

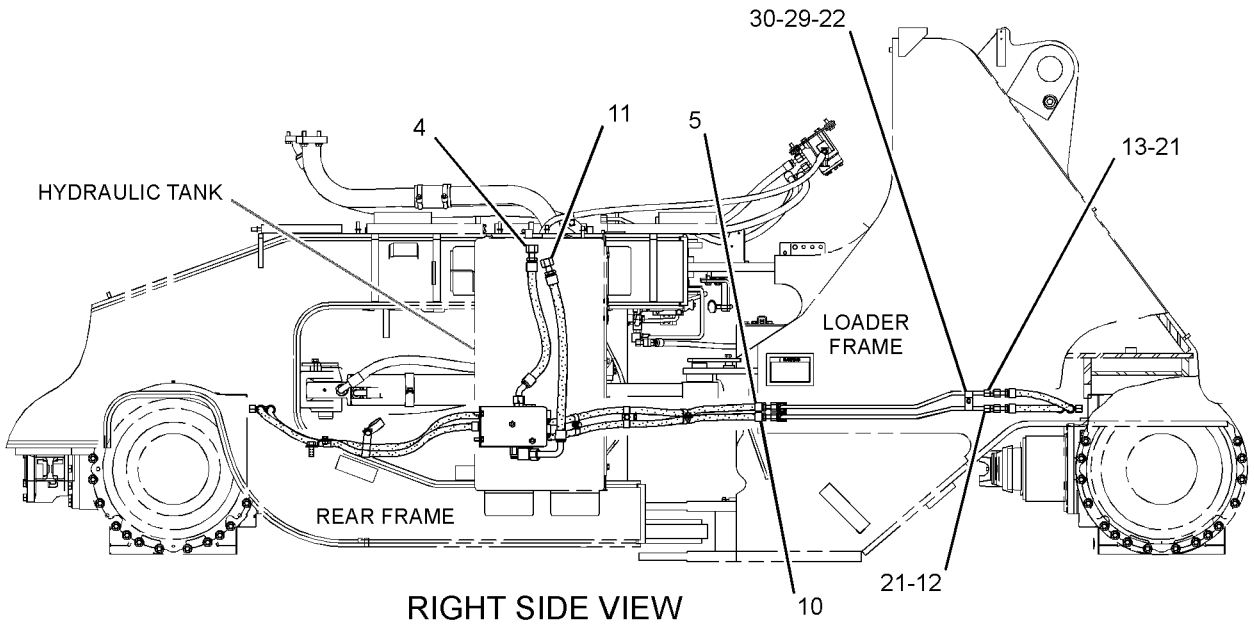

RIGHT SIDE VIEW

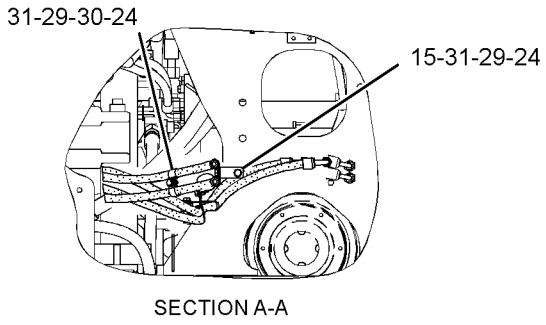

SECTION A-A

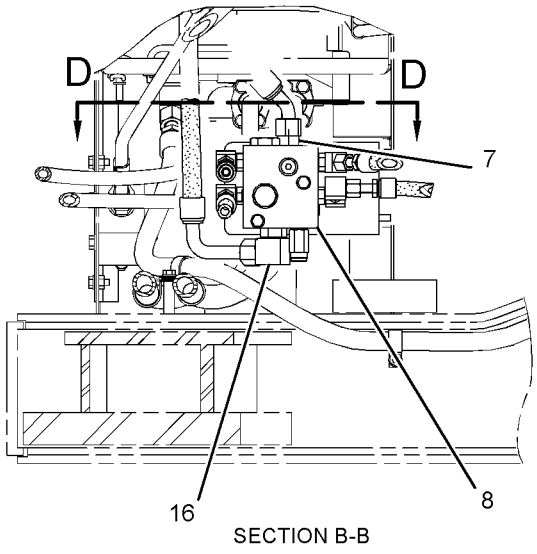

SECTION B-B

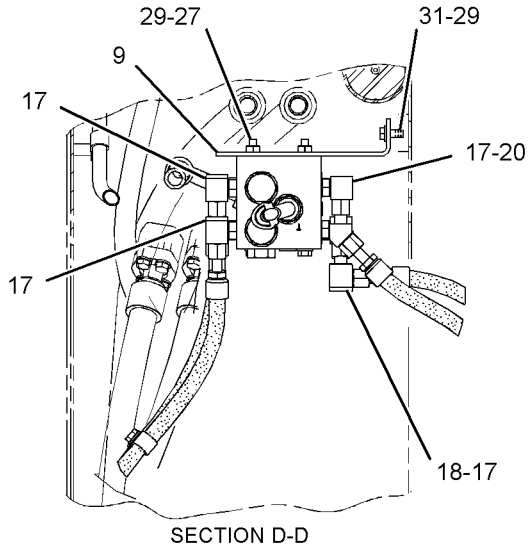

SECTION D-D

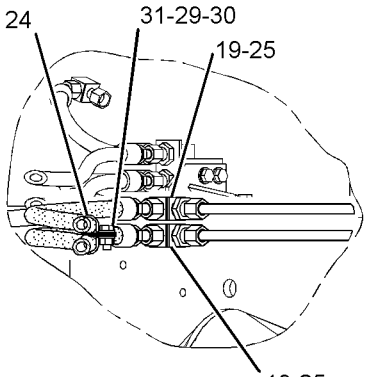

SECTION C-C

GRAPHIC #2 **<END>** g01626946

236-8987 LINES GP-TORQUE CONV COOLER

S/N: RYF1-UP

PART OF 236-9000 CHASSIS AR

SMCS-1375, 3016 **i03613561**

NOTE	REF NO	GRAPHIC REF	PART NUMBER	QTY	PART NAME 1 2 3 4 5 6 (PRODUCT LEVEL)	SEE PAGE
	1	1	**4J-0520**	1	SEAL-O-RING	
	2	1	**158-0495**	1	FLANGE-ONE PIECE	
	3	1	**158-0496**	2	FLANGE	
	4	1	**236-9006**	1	TUBE AS	
	5	1	**236-9036**	1	TUBE AS	
	6	1	**242-6122**	1	ELBOW	
	7	1	**286-5763**	1	BRACKET AS	
M		1	**8T-3490**	2	NUT-WELD (M10X1.5-THD)	
	8	1	**1P-3705**	1	SEAL-RECTANGULAR	
	9	1	**2L-2685**	1	CLIP	
	10	1	**4D-2886**	1	CLIP	
	11	1	**4F-7389**	2	SEAL-O-RING	
	12	1	**4J-0525**	2	SEAL-O-RING	
	13	1	**5P-1076**	1	WASHER-HARD (13.5X30X4-MM THK)	
	14	1	**7S-8920**	2	CLIP (SLOT)	
	15	1	**7S-8921**	2	CLIP (TAB)	
	16	1	**7X-3392**	4	WASHER-HARD (13.5X22.5X3-MM THK)	
	17	1	**8T-4121**	12	WASHER-HARD (11X21X2.5-MM THK)	
M	18	1	**8T-4133**	1	NUT (M10X1.5-THD)	
M	19	1	**8T-4136**	4	BOLT (M10X1.5X25-MM)	
M	20	1	**8T-4184**	4	BOLT (M12X1.75X45-MM)	
M	21	1	**8T-4195**	5	BOLT (M10X1.5X30-MM)	
	22	1	**8T-4223**	8	WASHER-HARD (13.5X25.5X3-MM THK)	
M	23	1	**8T-4648**	4	BOLT (M12X1.75X70-MM)	
M	24	1	**8T-4956**	4	BOLT (M12X1.75X35-MM)	
M	25	1	**8T-5005**	2	BOLT (M10X1.5X70-MM)	
	26	1	**8T-9384**	1	BOLT (1/2-13X0.875-IN)	

M-METRIC PART

236-8987 **LINES GP-TORQUE CONV COOLER** *(contd.)* **i03613561**

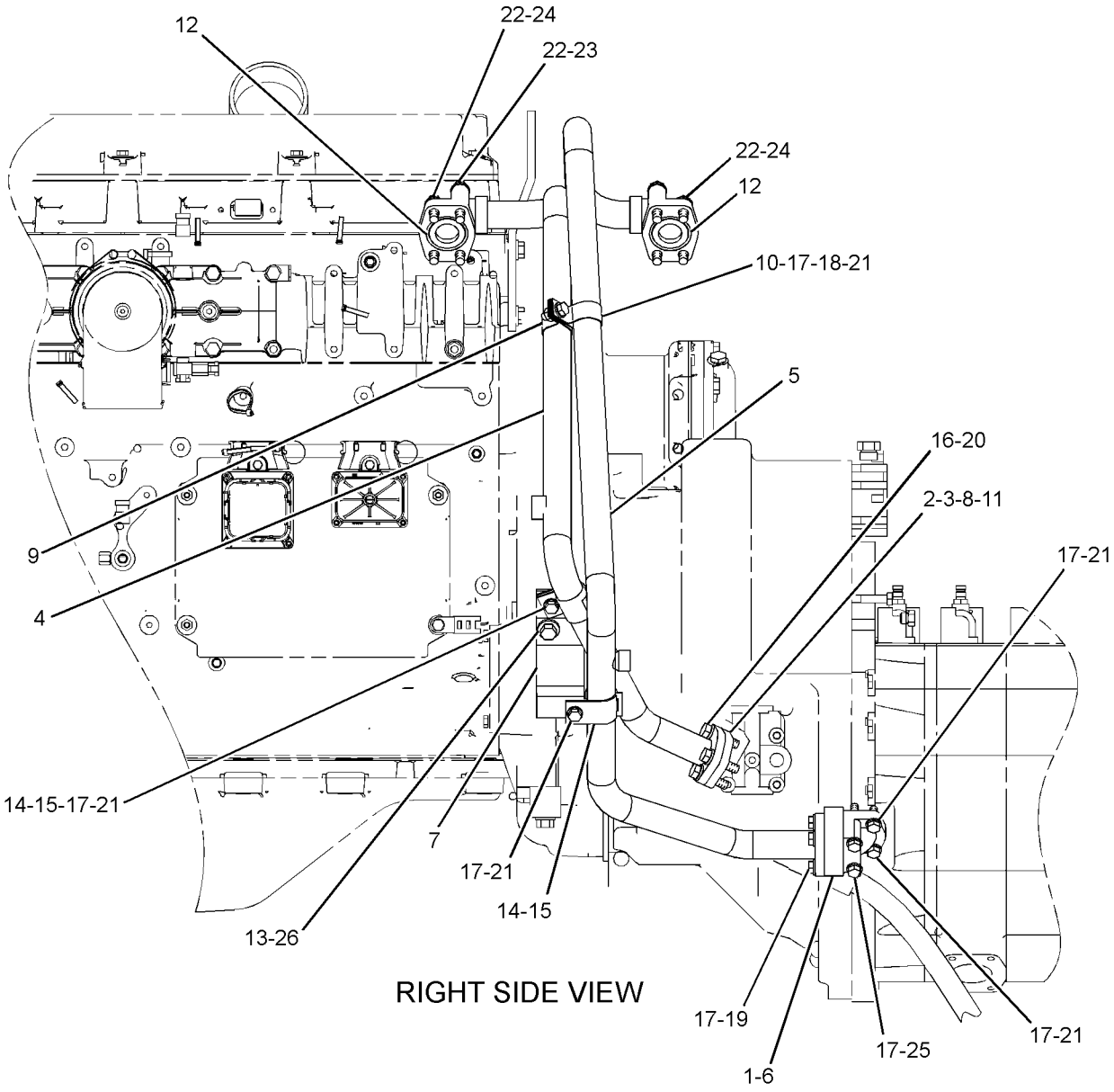

RIGHT SIDE VIEW

GRAPHIC #1 **<END>** g01272880

237-8180 MANIFOLD GP-CONTROL—AXLE OIL FLOW DIVIDER

S/N: RYF1-UP
PART OF 236-9100 LINES GP-AXLE OIL COOLER
AN ATTACHMENT

SMCS-3206, 3272, 5137 **i03629225**

NOTE	REF NO	GRAPHIC REF	PART NUMBER	QTY	PART NAME 1 2 3 4 5 6 (PRODUCT LEVEL)	SEE PAGE
J	1	1	**142-8977**	2	VALVE GP-CHECK (AXLE OIL COOLER BYPASS)	
H	2	1	**237-8181**	1	VALVE GP-FLOW DIVIDER (AXLE OIL)	
N	3	1	**237-8183**	1	VALVE GP-RELIEF (AXLE OIL)	
	4	1	**9S-8004**	4	PLUG-O-RING	
	5	1	**3J-1907**	4	SEAL-O-RING	
	6	1	**9S-8005**	1	PLUG-O-RING	
	7	1	**3K-0360**	1	SEAL-O-RING	
					AVAILABLE REPAIR KIT(S):	
J			**141-1232**	1	KIT-SEAL	
H			**237-8260**	1	KIT-SEAL	
N			**227-5509**	1	KIT-SEAL	

H-KIT MARKED H SERVICES PART MARKED H
J-KIT MARKED J SERVICES PART MARKED J
N-KIT MARKED N SERVICES PART MARKED N

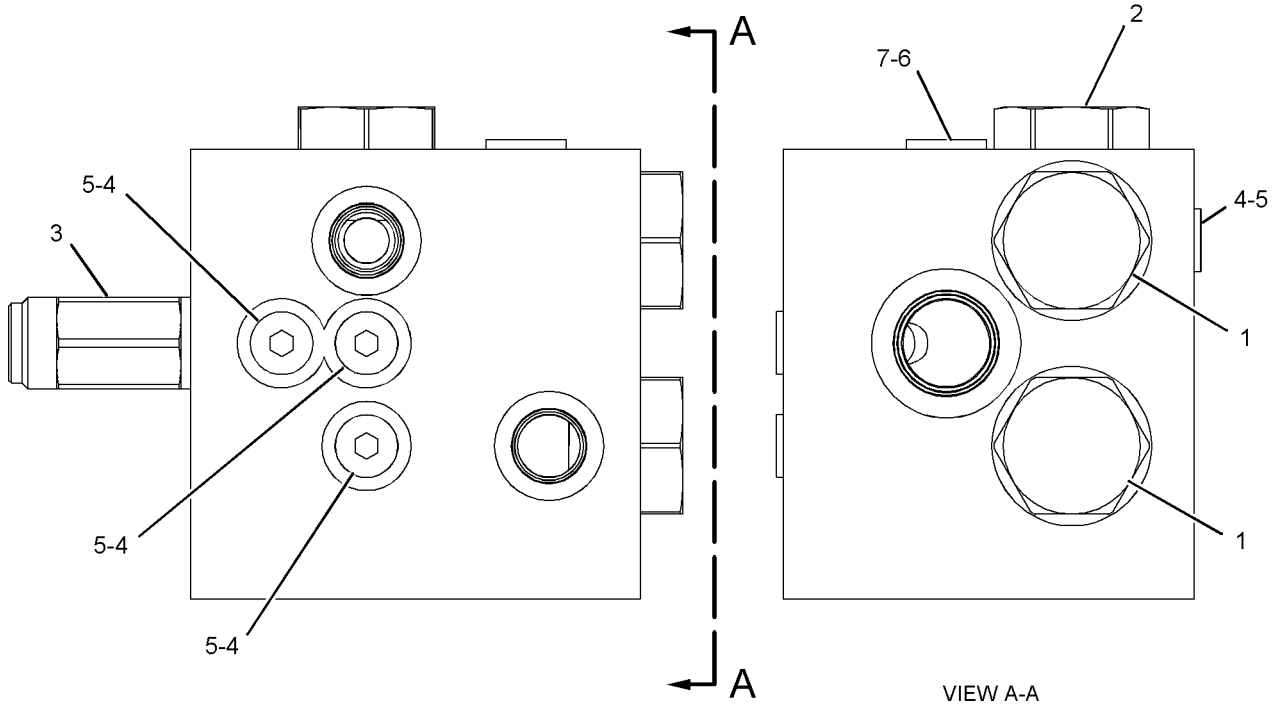

GRAPHIC #1 **<END>** g01080215

129-4278 MOUNTING GP-AXLE

S/N: RYF1-UP

PART OF 236-8965 POWER TRAIN AR

SMCS-3268, 3278 **i03626977**

NOTE	REF NO	GRAPHIC REF	PART NUMBER	QTY	PART NAME 1 2 3 4 5 6 (PRODUCT LEVEL)	SEE PAGE
	1	1	**6C-2356**	2	DOWEL	
	2	1	**165-0197**	2	PLATE	
M	3	1	**112-1533**	8	BOLT (M24X3X160-MM)	
M	4	1	**163-8682**	8	BOLT (M30X3.5X200-MM)	
	5	1	**3S-7023**	8	WASHER (34X57X6-MM THK)	
	6	1	**6V-8237**	16	WASHER (26X44X4-MM THK)	
M	7	1	**7X-0851**	8	NUT (M24X3-THD)	
	8	1	**7X-7729**	4	WASHER (11X25X3-MM THK)	
M	9	1	**8T-4136**	4	BOLT (M10X1.5X25-MM)	

M-METRIC PART

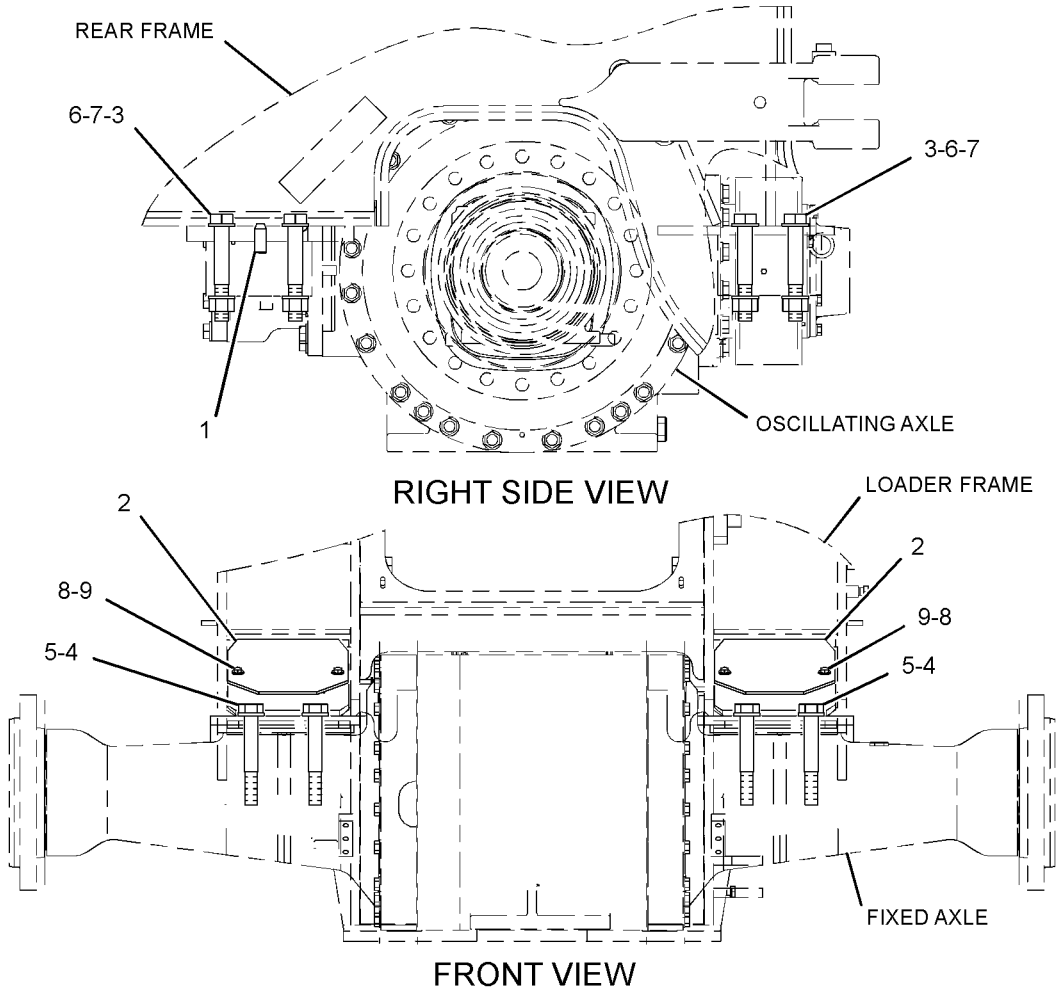

GRAPHIC #1

<END>

g01680134

127-4736 MOUNTING GP-RIM

S/N: RYF1-UP
PART OF 127-4782 RIM AR
AN ATTACHMENT

SMCS-4202, 4209 **i03629983**

NOTE	PART NUMBER	QTY	PART NAME 1 2 3 4 5 6 (PRODUCT LEVEL)	SEE PAGE
M	**8T-0380**	80	BOLT (M24X3X60-MM)	
	6V-8237	80	WASHER (26X44X4-MM THK)	

M-METRIC PART

<END>

POWER TRAIN

237-8248 PLANETARY GP-TRANSMISSION

S/N: DKG1-UP

PART OF 243-6733 TRANSMISSION AR

SMCS-3160 **i03628518**

NOTE	REF NO	GRAPHIC REF	PART NUMBER	QTY	PART NAME 1 2 3 4 5 6 (PRODUCT LEVEL)	SEE PAGE
	1	1	**237-9061**	1	SHAFT-INPUT	
M	2	1	**6V-5696**	1	BOLT (M12X1.75X80-MM)	
	3	1	**4S-5824**	1	RETAINER	
	4	1	**237-9060**	1	GEAR (51-TEETH)	
	5	1	**237-5747**	1	HOUSING-CLUTCH	
	6	1	**3P-7019**	2	SEAL-METAL	
	7	1	**3K-1432**	2	RING-METAL SEAL	
	8	1	**9W-0517**	1	CARRIER-PLANETARY	
	9	2	**8P-8950**	2	RING-METAL SEAL	
	10	1	**6P-7773**	5	RING-SEAL	
	11	2	**7G-6061**	1	COUPLING	
	12	1	**8E-9849**	10	DISC AS-FRICTION	
	13	2	**8E-9846**	10	PLATE-CLUTCH	
	14	2	**7G-5572**	1	GEAR-SUN (29-TEETH)	
	15	2	**110-7452**	1	PLATE	
	16	1	**9W-0518**	1	CARRIER-RING	
	17	2	**7G-8121**	2	RING-LOCK	
	18	1	**7G-5569**	1	GEAR-RING (83-TEETH)	
	19	1	**6V-1649**	2	BALL BEARING	
	20	2	**7G-5593**	1	GEAR-SUN (38-TEETH)	
	21	1	**7G-6062**	1	GEAR-RING (82-TEETH)	
	22	2	**110-7450**	5	PISTON-CLUTCH	
	23	1	**5L-2931**	1	RING-RETAINING	
	24	2	**6V-0834**	1	RING-RETAINING	
	25	1	**7G-5594**	1	GEAR-SUN (38-TEETH)	
	26	2	**9G-1491**	1	CARRIER-PLANETARY	
	27	1	**7G-3711**	1	GEAR-RING (82-TEETH)	
	28	2	**6V-0835**	1	RING-RETAINING	
	29	1	**7G-5444**	1	CARRIER-PLANETARY	
	30	2	**6Y-9713**	1	GEAR AS-SUN (44-TEETH)	
		2	**8S-0527**	2	PLUG-CUP	
	31	2	**7G-5675**	5	RING-SEAL	
	32	1	**110-7455**	1	HOUSING	
	33	1	**9M-1503**	1	RING-METAL SEAL	
	34	2	**213-3719**	1	PLATE-REACTION	
	35	1	**6P-7983**	1	RING-RETAINING	
	36	2	**3T-9960**	5	DISC-FRICTION	
	37	1	**6P-7968**	4	PLATE-CLUTCH	
	38	2	**035-3360**	1	RING-RETAINING	
	39	1	**9H-5604**	1	RING-RETAINING	
	40	2	**8E-1666**	1	PLATE-RETAINER	
	41	2	**9G-1234**	5	SPRING-DISC	
	42	1	**9N-4460**	1	HOUSING AS-CLUTCH	
		1	**3S-8109**	1	PIN-SPRING	
		1	**4S-8537**	1	DOWEL	
	43	2	**237-9070**	1	HOUSING AS	
		2	**1A-2223**	1	DOWEL	
		2	**115-0532**	1	PLUG-ORIFICE	
	44	1	**6P-7985**	2	RING-SEAL	
	45	2	**7X-7608**	1	RING-RETAINING	
	46	2	**143-4642**	1	BEARING-SPECIAL	
	47	1	**3P-3441**	1	RING-RETAINING	
	48	1	**112-7847**	1	HOUSING	
	49	1	**6Y-7881**	1	GEAR-RING (86-TEETH)	
	50	2	**237-9067**	1	CARRIER-PLANETARY	
	51	1	**6Y-5952**	1	GEAR AS-SUN (42-TEETH)	

237-8248 **PLANETARY GP-TRANSMISSION** *(contd.)* **i03628518**

NOTE	REF NO	GRAPHIC REF	PART NUMBER	QTY	PART NAME 1 2 3 4 5 6 (PRODUCT LEVEL)	SEE PAGE
		1	**6Y-2109**	1	CARRIER-SEAL	
	52	1	**237-9064**	1	SHAFT AS-OUTPUT	
		1	**8S-3426**	1	DOWEL	
		1	**9G-7683**	2	BEARING-SLEEVE	
	53	1	**6P-2233**	3	GEAR-PLANETARY (20-TEETH)	
	54	2	**5P-3131**	3	BEARING AS-ROLLER	
	55	1	**7G-5614**	3	SHAFT-PLANETARY	
	56	2	**3S-8109**	15	PIN-SPRING	
	57	2	**8E-8297**	6	DISC-THRUST	
	58	1	**294-0877**	3	BOLT-SPECIAL	
	59	1	**9W-0519**	1	DISC-THRUST	
	60	1	**7G-6945**	8	SPRING	
	61	2	**7G-5730**	1	RING-SEAL	
	62	1	**6V-1586**	1	RING-RETAINING	
	63	2	**6P-7772**	1	RING-SEAL	
	64	1	**176-9273**	1	PISTON	
	65	2	**186-2517**	1	GEAR-RING (82-TEETH)	
	66	1,2	**8E-8299**	32	DISC-THRUST	
	67	2	**5P-3930**	8	BEARING AS-ROLLER	
	68	1	**291-6665**	1	HOUSING-SUPPORT	
	69	2	**6P-8005**	8	GEAR (23-TEETH)	
	70	2	**3T-7584**	4	SPRING	
	71	2	**9P-5558**	1	RING-RETAINING	
	72	1	**6P-7743**	4	SHAFT-PLANETARY	
	73	2	**7S-4534**	8	BEARING-CAGED	
	74	1	**7G-3710**	4	ROD	
	75	1	**6P-8003**	4	GEAR (27-TEETH)	
	76	1	**6P-7742**	4	SHAFT-PLANETARY	
	77	1	**1M-8649**	1	RING-RETAINING	
	78	1	**250-0839**	1	BEARING AS-ROLLER	
	79	2	**9H-5546**	6	DOWEL	
	80	2	**1M-3151**	6	DOWEL-REACTION	
	81	1	**8P-9723**	1	RING-SEAL	
	82	1	**8D-2714**	4	SEAL-O-RING	
	83	2	**9G-5828**	4	SPRING	
	84	2	**4H-4737**	4	PIN-SPRING	
	85	1	**1M-3150**	6	DOWEL-REACTION	
	86	1	**6Y-7880**	4	SHAFT-PLANETARY	
	87	1	**7T-3456**	4	DISC-FRICTION	
	88	2	**7T-3343**	5	PLATE-CLUTCH	
	89	1	**6Y-8030**	1	RING-SEAL	
	90	2	**7T-1285**	4	GEAR-PLANETARY (23-TEETH)	
M	91	2	**8T-0106**	1	BOLT (M12X1.75X100-MM)	
	92	2	**6Y-5352**	5	DISC-FRICTION	
	93	1	**7G-0437**	5	PLATE-CLUTCH	
	94	1	**235-2496**	3	WASHER-HARD (15.5X26X3-MM THK)	
	95	1	**237-8246**	12	BOLT-SPECIAL	
	96	1	**242-9522**	1	RACE-SPECIAL ROLLER BEARING	
	97	1	**242-9523**	1	PLATE-END	
	98	2	**061-6711**	2	RING-RETAINING	
	99	1	**5P-8245**	12	WASHER-HARD (13.5X25.5X3-MM THK)	

M-METRIC PART

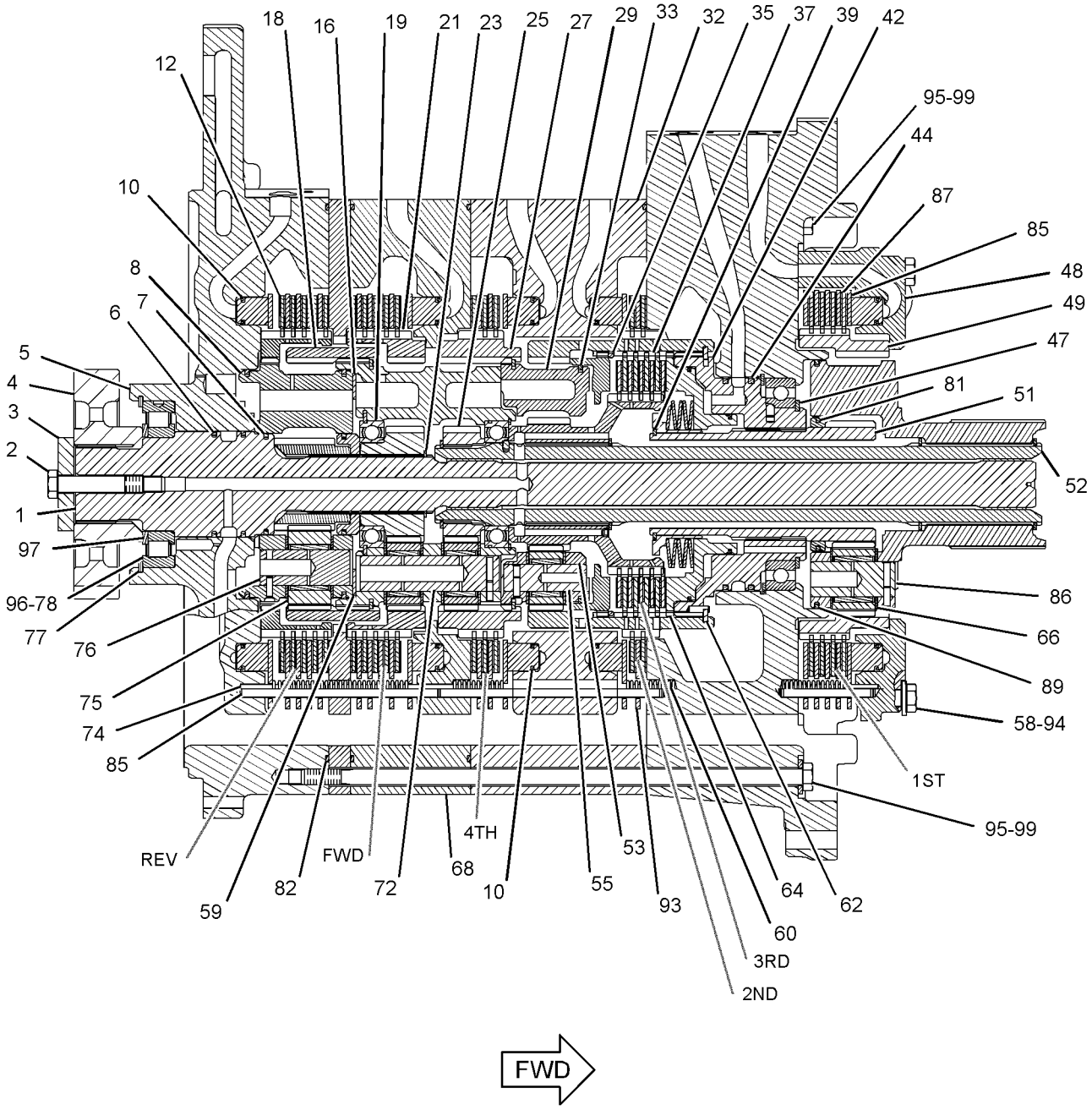

GRAPHIC #1 g01623266

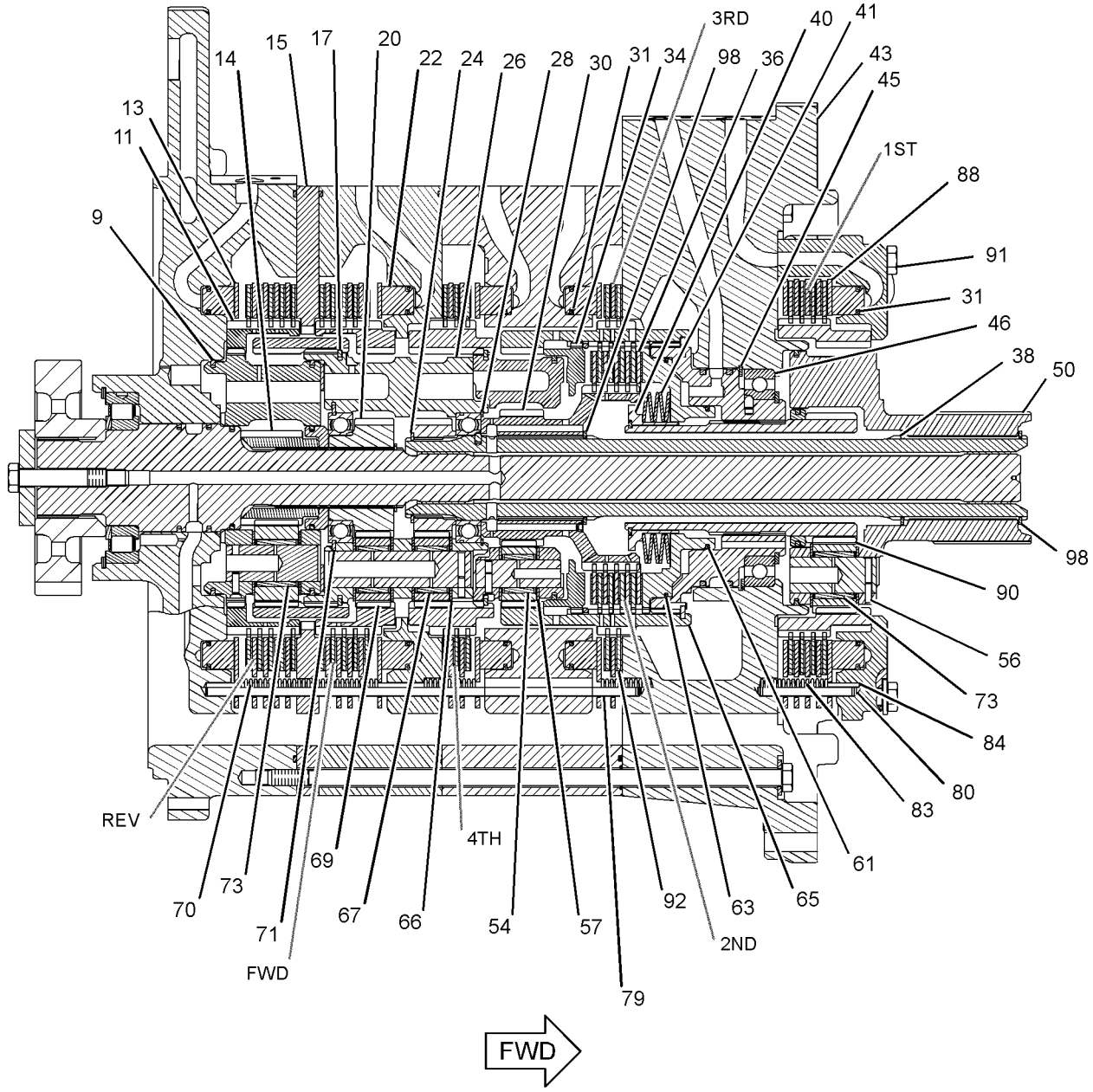

GRAPHIC #2 **<END>** g01623267

POWER TRAIN

236-8965 POWER TRAIN AR

S/N: RYF1-UP

PART OF 236-8957 GENERAL AR

SMCS-3000, 4000 **i03607911**

NOTE	PART NUMBER	QTY	PART NAME 1 2 3 4 5 6 (PRODUCT LEVEL)	SEE PAGE
Y	**129-4280**	1	AXLE AR-FIXED (FRONT, STANDARD DIFFERENTIAL)	256
Y	**129-4281**	1	AXLE AR-OSCILLATING (REAR, STANDARD DIFFERENTIAL)	257
Y	*122-7197*	1	BRAKE GP-PARKING	378
Y	*246-4792*	1	FILLER GP-POWER TRAIN OIL	271
Y	*236-8999*	1	FILTER & LINES GP-TRANSMISSION	272
Y	*129-4278*	1	MOUNTING GP-AXLE	301
Y	*125-9358*	1	SHAFT GP-DRIVE	312
Y	**243-6733**	1	TRANSMISSION AR (FREEWHEEL STATOR TORQUE CONV)	320

Y-SEPARATE ILLUSTRATION

<END>

POWER TRAIN

241-8686 PUMP GP-TRANSMISSION

S/N: DKG1-UP

PART OF 243-6733 TRANSMISSION AR

SMCS-3066 **i03628541**

NOTE	REF NO	GRAPHIC REF	PART NUMBER	QTY	PART NAME 1 2 3 4 5 6 (PRODUCT LEVEL)	SEE PAGE
	1	1	**127-9094**	1	COVER AS-OIL PUMP	
		1	**129-4536**	2	BEARING-SLEEVE	
	2	1	**241-8687**	1	MANIFOLD AS	
		1	**1H-0974**	2	DOWEL	
		1	**129-4536**	2	BEARING-SLEEVE	
	3	1	**243-0505**	1	GEAR AS-OIL PUMP (17-TEETH)	
	4	1	**243-0507**	1	GEAR AS (17-TEETH)	
	5	1	**243-0572**	1	BODY AS-OIL PUMP	
		1	**8M-8489**	4	DOWEL	
	6	1	**148-8410**	1	PLUG AS	
		1	**2M-9780**	1	SEAL-O-RING	
		1	**9S-4190**	1	PLUG-O-RING	
	7	1	**6V-5839**	6	WASHER (11X21X2.5-MM THK)	
M	8	1	**6V-5815**	6	BOLT (M10X1.5X75-MM)	

M-METRIC PART

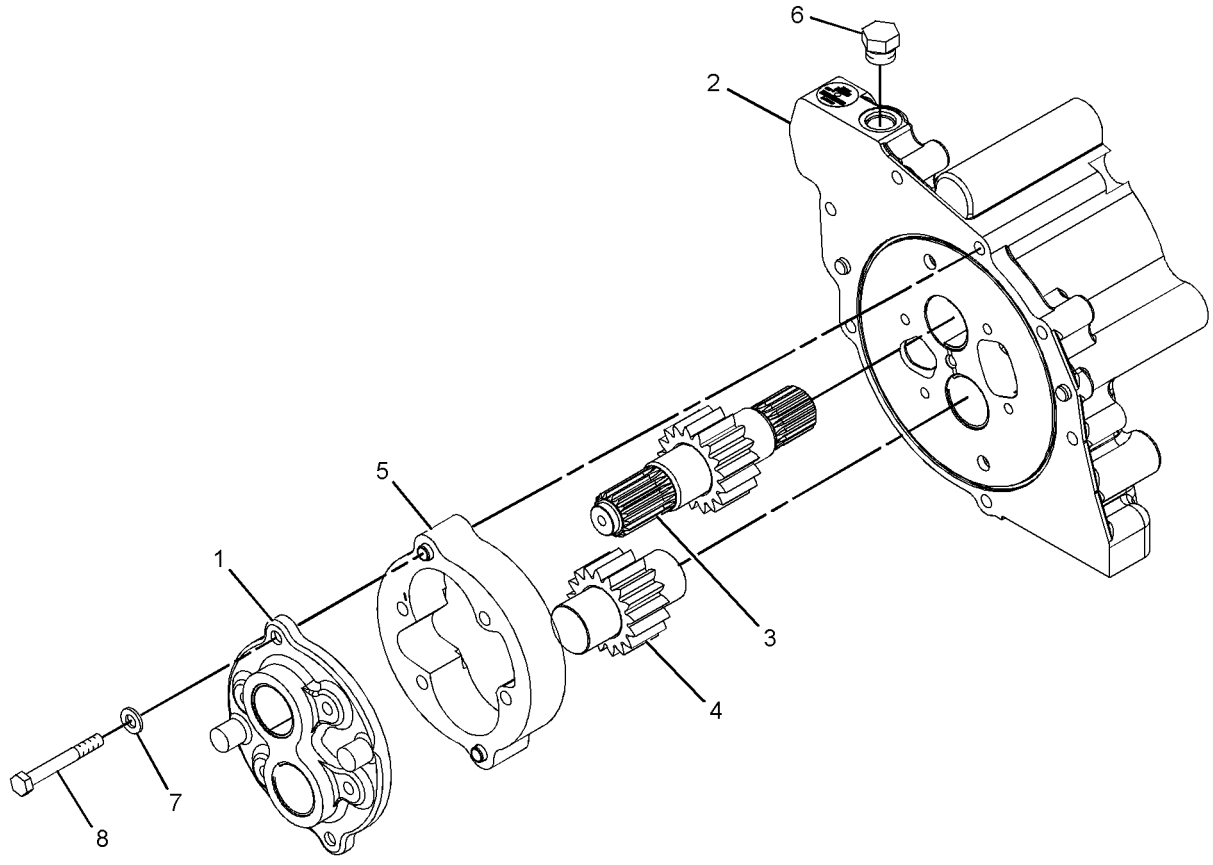

GRAPHIC #1 **<END>** g01114318

127-4782 RIM AR

S/N: RYF1-UP

PART OF 127-4773, 127-4774, 165-6178, 178-6928 TIRE & RIM AR

AN ATTACHMENT

SMCS-4209 **i03629942**

NOTE	PART NUMBER	QTY	PART NAME 1 2 3 4 5 6 (PRODUCT LEVEL)	SEE PAGE
Y	*127-4736*	1	MOUNTING GP-RIM	302
Y	*206-9280*	4	RIM GP-DEMOUNTABLE	311

Y-SEPARATE ILLUSTRATION

<END>

206-9279 RIM GP-DEMOUNTABLE

S/N: RYF1-UP
(22X25)
PART OF 206-9280 RIM GP-DEMOUNTABLE
AN ATTACHMENT

SMCS-4209 **i03629999**

NOTE	REF NO	GRAPHIC REF	PART NUMBER	QTY	PART NAME 1 2 3 4 5 6 (PRODUCT LEVEL)	SEE PAGE
	1	1	**7D-7469**	1	RING-LOCK	
	2	1	**206-9272**	1	RIM AS	
	3	1	**208-7473**	1	FLANGE AS	
	4	1	**5T-5682**	1	DRIVER	

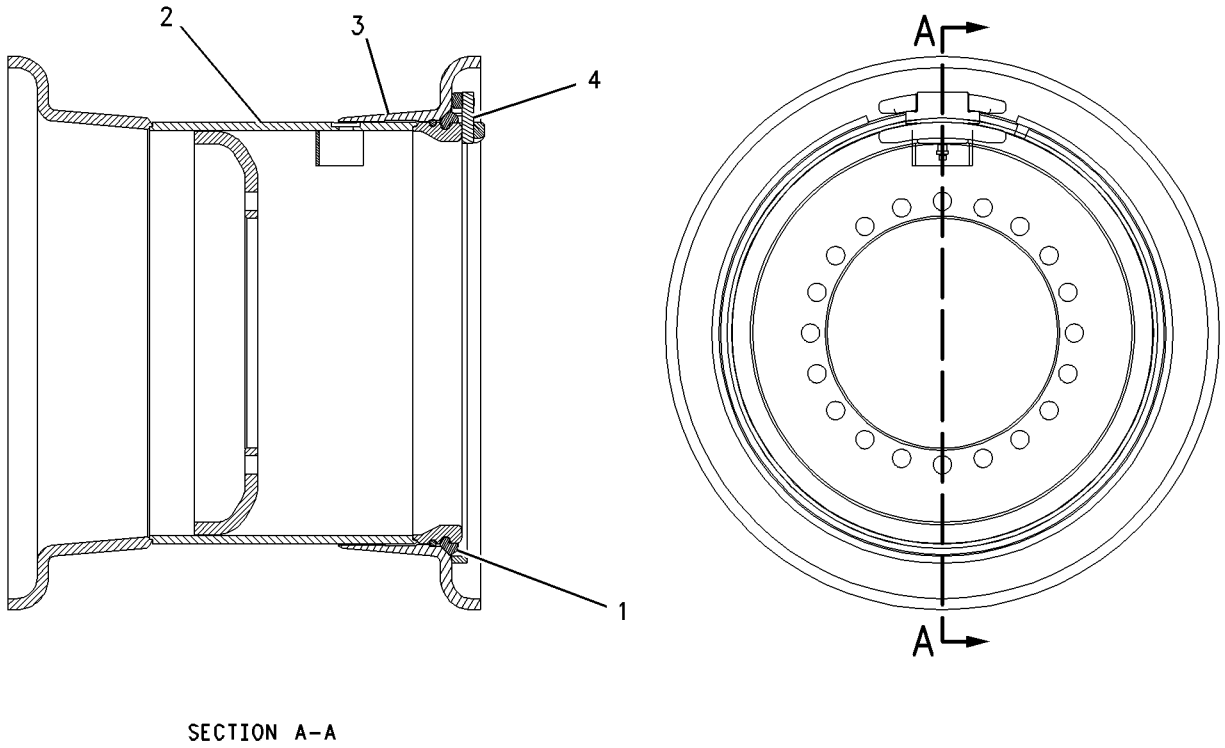

SECTION A-A

GRAPHIC #1 **<END>** g00878032

206-9280 RIM GP-DEMOUNTABLE

S/N: RYF1-UP
PART OF 127-4782 RIM AR
AN ATTACHMENT

SMCS-4209 **i03629986**

NOTE	REF NO	GRAPHIC REF	PART NUMBER	QTY	PART NAME 1 2 3 4 5 6 (PRODUCT LEVEL)	SEE PAGE
	1	1	**2D-2511**	1	VALVE GP-TIRE	
	2	1	**2D-2443**	1	SEAL-O-RING	
Y	3	1	*206-9279*	1	RIM GP-DEMOUNTABLE	310

Y-SEPARATE ILLUSTRATION

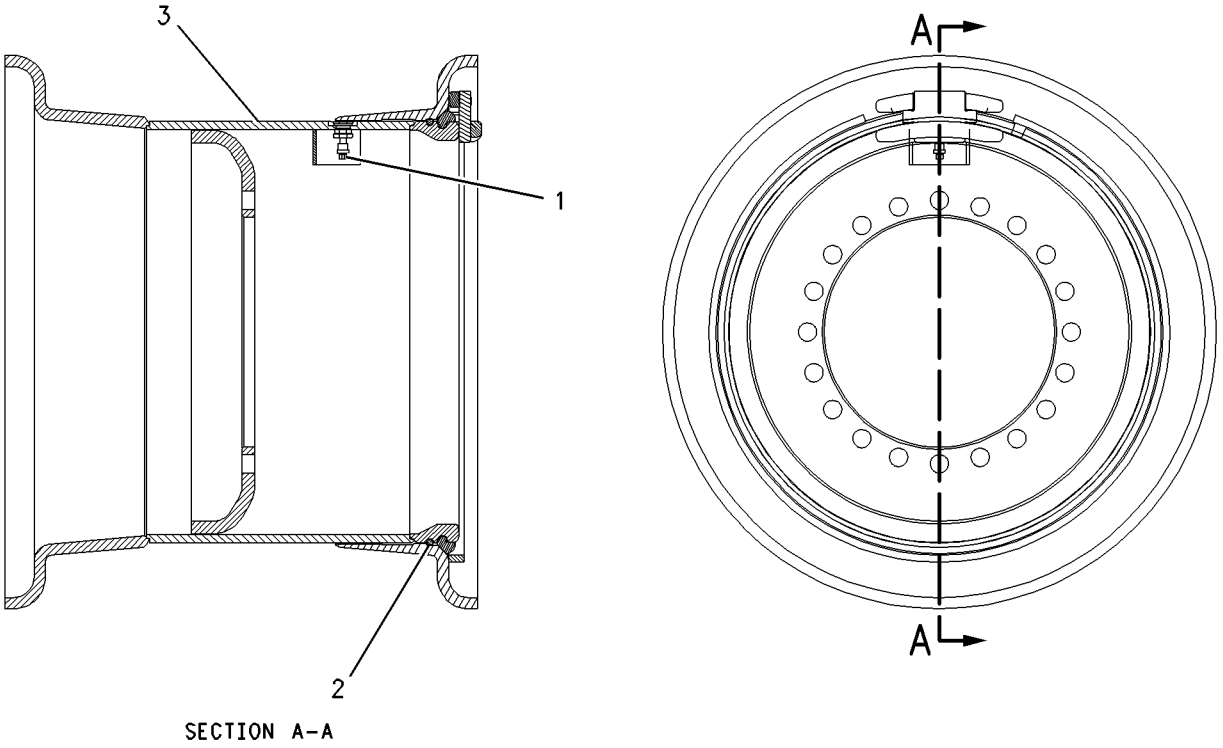

SECTION A-A

GRAPHIC #1 **<END>** g00878008

POWER TRAIN

125-9358 SHAFT GP-DRIVE

S/N: RYF1-UP

PART OF 236-8965 POWER TRAIN AR

SMCS-3253 **i03626979**

NOTE	REF NO	GRAPHIC REF	PART NUMBER	QTY	PART NAME 1 2 3 4 5 6 (PRODUCT LEVEL)	SEE PAGE
	1	1	**4V-7081**	10	STRAP	
	2	1	**9V-2429**	1	RETAINER	
	3	1	**110-6923**	4	SPACER	
	4	1	**179-3185**	1	YOKE-BRAKE	
Y	5	1	**329-9657**	1	SLIP JOINT GP	313
Y	6	1	**125-8808**	1	UNIVERSAL JOINT GP (DRIVE SHAFT, REAR)	321
Y	7	1	**329-9658**	1	UNIVERSAL JOINT GP (DRIVE SHAFT, FRONT)	322
	8	1	**296-4301**	1	BEARING AS	
		1	**197-6667**	1	SETSCREW	
	9	1	**138-3816**	20	BOLT-12 POINT HEAD (M12X1.25X30-MM)	
M	10	1	**7X-2554**	4	BOLT (M16X2X70-MM)	
M	11	1	**8T-4176**	1	BOLT (M12X1.75X90-MM)	

M-METRIC PART
Y-SEPARATE ILLUSTRATION

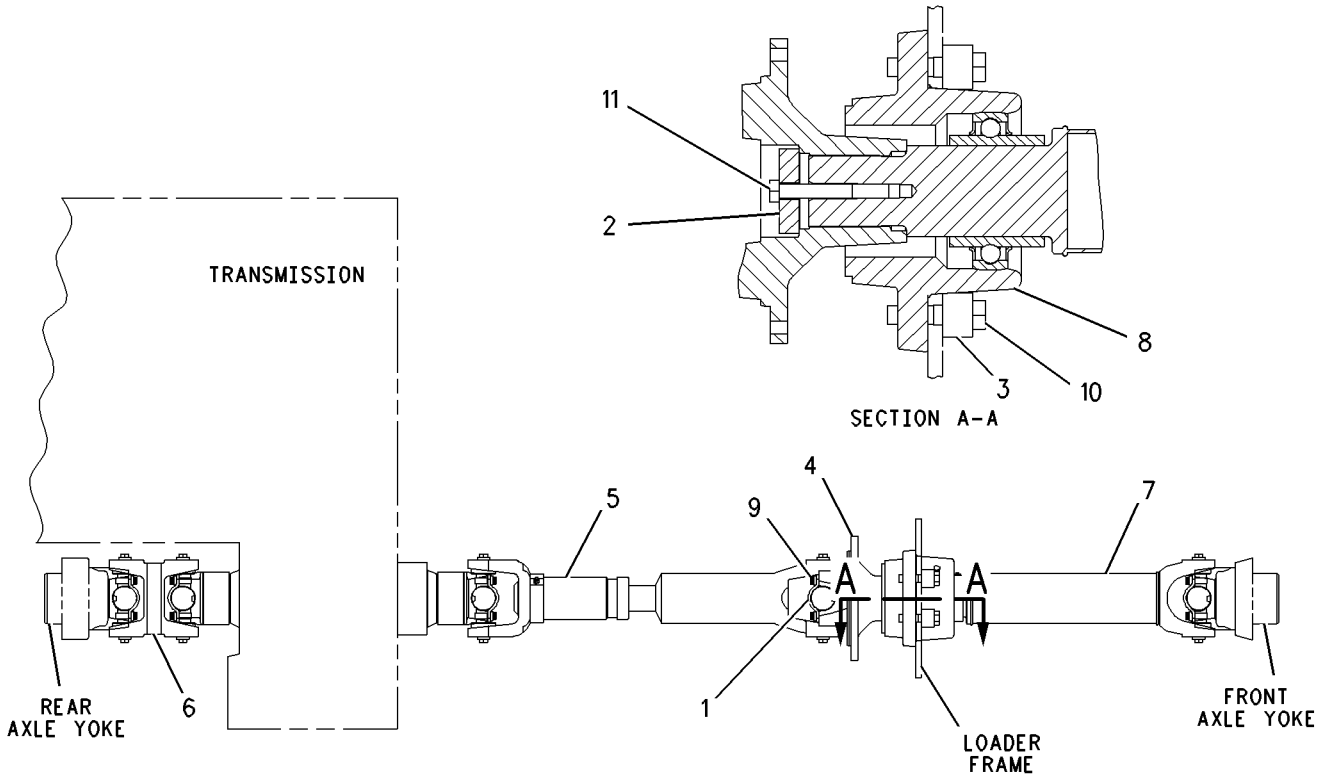

GRAPHIC #1 **<END>** g00719646

329-9657 SLIP JOINT GP

S/N: RYF1-UP

PART OF 125-9358 SHAFT GP-DRIVE

SMCS-3251 **i03627038**

NOTE	REF NO	GRAPHIC REF	PART NUMBER	QTY	PART NAME 1 2 3 4 5 6 (PRODUCT LEVEL)	SEE PAGE
	1	1	**3B-8489**	1	FITTING-GREASE	
	2	1	**8V-1412**	1	RETAINER	
Y	3	1	**125-8810**	2	SPIDER & BEARING GP	314
	4	1	**196-8490**	1	CAP AS-DUST	
		1	**8T-0336**	1	FITTING-PRESSURE RELIEF	

Y-SEPARATE ILLUSTRATION

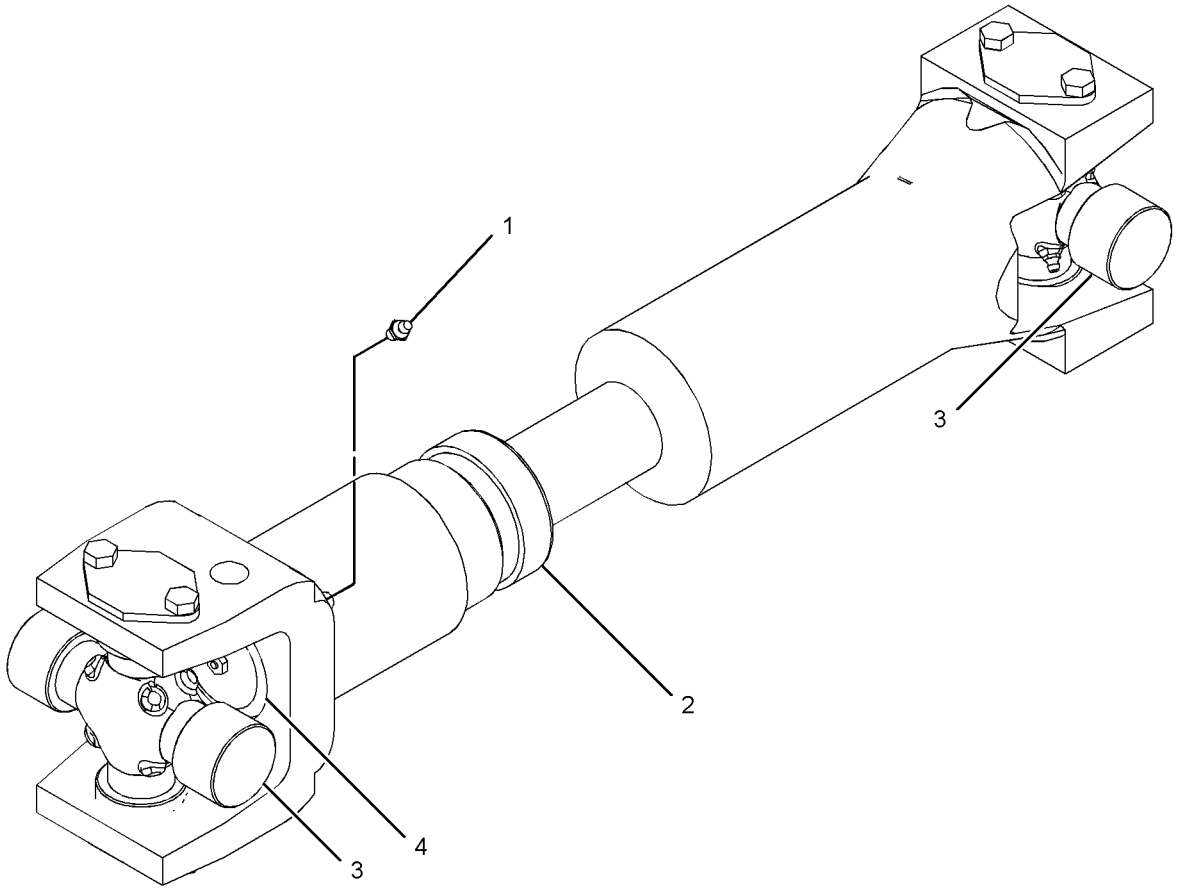

GRAPHIC #1 **<END>** g01634156

POWER TRAIN

125-8810 SPIDER & BEARING GP

S/N: RYF1-UP

PART OF 329-9657 SLIP JOINT GP, 125-8808, 329-9658 UNIVERSAL JOINT GP

SMCS-3251, 3253 **i00811623**

NOTE	REF NO	GRAPHIC REF	PART NUMBER	QTY	PART NAME 1 2 3 4 5 6 (PRODUCT LEVEL)	SEE PAGE
M	1	1	**153-1185**	4	BOLT (HEX HEAD, M10X1.25X16-MM)	
	2	1	**027-1287**	2	FITTING-GREASE	
	3	1	**9C-9159**	2	PLATE	

M-METRIC PART

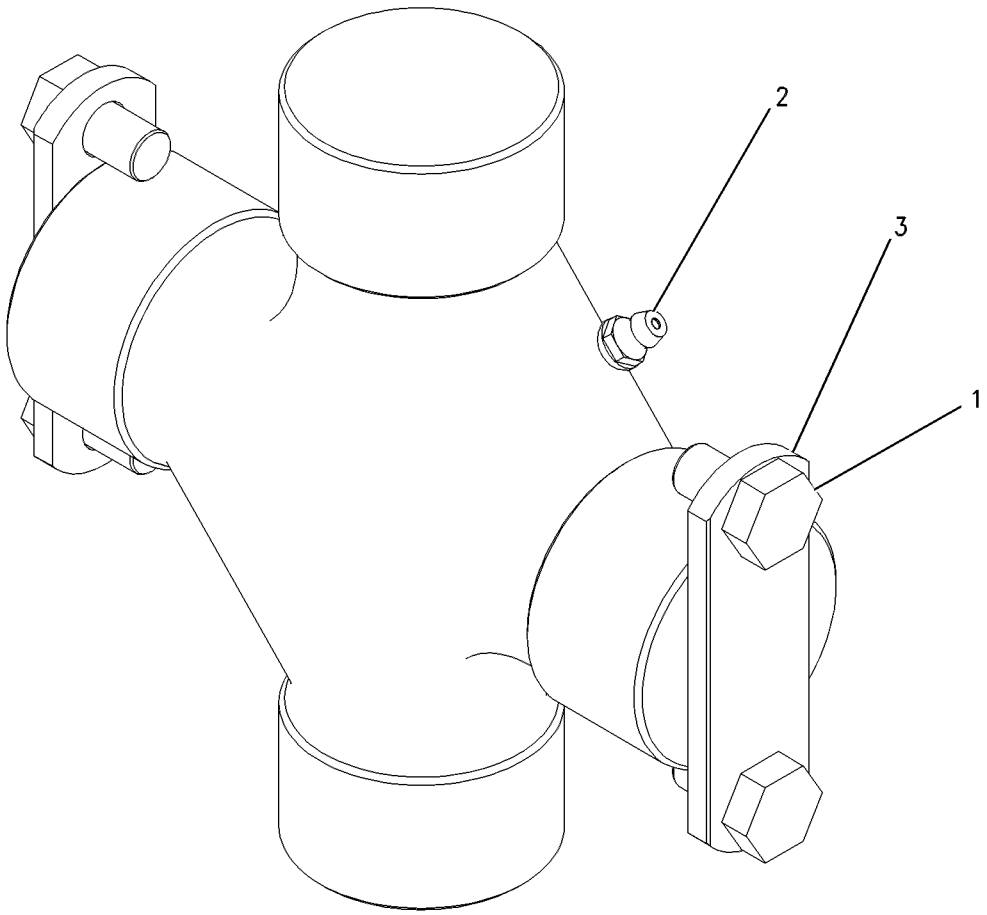

GRAPHIC #1 **<END>** g00389972

127-4773 TIRE & RIM AR

S/N: RYF1-UP
AN ATTACHMENT

SMCS-4202 **i03626501**

NOTE	PART NUMBER	QTY	PART NAME 1 2 3 4 5 6 (PRODUCT LEVEL)	SEE PAGE
Y	*127-4782*	1	RIM AR	309
	127-4781	4	TIRE (26.5-25)	

Y-SEPARATE ILLUSTRATION

<END>

127-4774 TIRE & RIM AR

S/N: RYF1-UP
AN ATTACHMENT

SMCS-4202 **i03626502**

NOTE	PART NUMBER	QTY	PART NAME 1 2 3 4 5 6 (PRODUCT LEVEL)	SEE PAGE
Y	*127-4782*	1	RIM AR	309
	4E-8168	4	TIRE (26.5-R25)	

Y-SEPARATE ILLUSTRATION

<END>

165-6178 TIRE & RIM AR

S/N: RYF1-UP
AN ATTACHMENT

SMCS-4202 **i03626525**

NOTE	PART NUMBER	QTY	PART NAME 1 2 3 4 5 6 (PRODUCT LEVEL)	SEE PAGE
Y	*127-4782*	1	RIM AR	309
	165-6163	4	TIRE (26.5-R25)	

Y-SEPARATE ILLUSTRATION

<END>

178-6928 TIRE & RIM AR

S/N: RYF1-UP
AN ATTACHMENT

SMCS-4202 **i03626527**

NOTE	PART NUMBER	QTY	PART NAME 1 2 3 4 5 6 (PRODUCT LEVEL)	SEE PAGE
Y	*176-2444*	1	BLOCK GP-AXLE OSC LIMITER	328
Y	*127-4782*	1	RIM AR	309
	178-6927	4	TIRE (26.5-R25)	

Y-SEPARATE ILLUSTRATION

<END>

237-8247 TORQUE CONVERTER & HOUSING GP–

FREEWHEEL STATOR

S/N: DKG1-UP

PART OF 243-6733 TRANSMISSION AR

SMCS-3101, 3105 **i03628595**

NOTE	REF NO	GRAPHIC REF	PART NUMBER	QTY	PART NAME 1 2 3 4 5 6 (PRODUCT LEVEL)	SEE PAGE
	1	1	**237-9059**	1	GEAR (66-TEETH)	
	2	1	**1S-5596**	1	RETAINER	
	3	1	**0S-1579**	1	BOLT (1/2-20X2-IN)	
	4	1	**0S-1590**	8	BOLT (3/8-16X2-IN)	
	5	1	**5M-2894**	8	WASHER-HARD (10.2X18.5X2.5-MM THK)	
	6	1	**243-3725**	1	HOUSING-TORQUE CONVERTER	
	7	1	**122-6579**	1	FLANGE-PUMP DRIVE	
M	8	1	**8T-0281**	1	BOLT (M16X2X80-MM)	
	9	1	**9X-8268**	2	WASHER (17.5X30X3.5-MM THK)	
M	10	1	**6V-1820**	8	BOLT (M10X1.5X30-MM)	
	11	1	**243-1606**	1	GEAR-PUMP DRIVE (67-TEETH)	
	12	1	**1F-2771**	1	BALL BEARING	
	13	1	**123-3205**	1	SHAFT	
Y	14	1	**243-1604**	1	TORQUE CONVERTER GP (FREEWHEEL STATOR)	318
	15	1	**1T-1639**	1	RING	
	16	1	**144-8299**	1	SEAL-O-RING	
	17	1	**3R-2437**	2	PLUG AS	
					(EACH INCLUDES)	
		1	**4K-1388**	1	SEAL-O-RING	
		1	**9S-8009**	1	PLUG-O-RING	
	18	1	**3P-0647**	1	SEAL-O-RING	
	19	1	**6V-0852**	1	CAP-DUST	
	20	1	**6V-3965**	1	FITTING (QUICK DISCONNECT)	
	21	1	**3J-1907**	1	SEAL-O-RING	
Y	22	1	**193-2550**	1	SENSOR GP-SPEED (MAGNETIC, HIGH OUTPUT) (TORQUE CONVERTER OUTPUT)	188
	23	1	**1V-6341**	1	SEAL	
	24	1	**6V-5839**	8	WASHER (11X21X2.5-MM THK)	

M-METRIC PART
Y-SEPARATE ILLUSTRATION

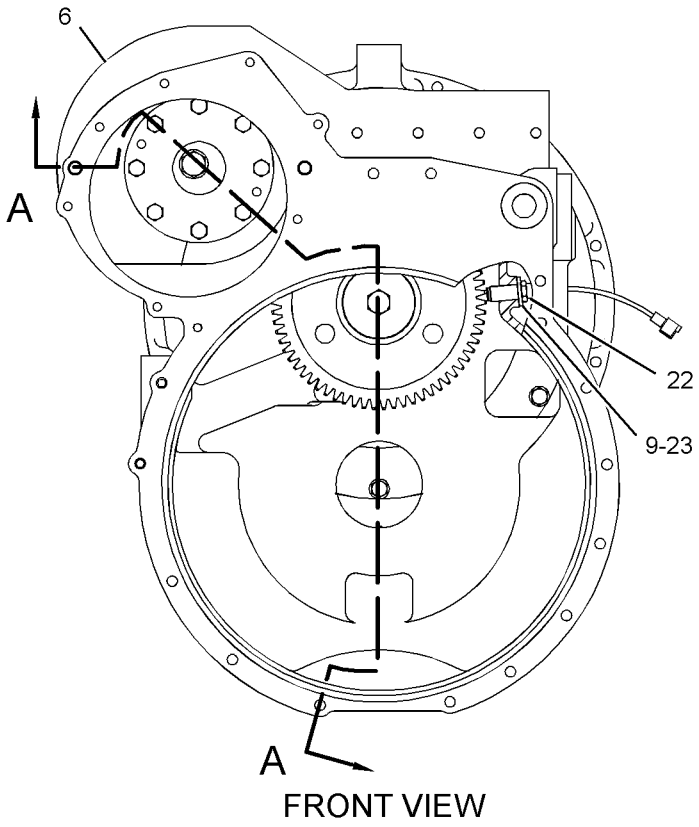

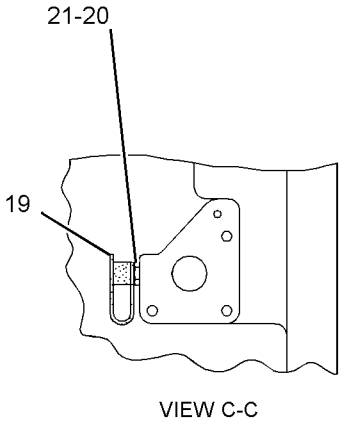

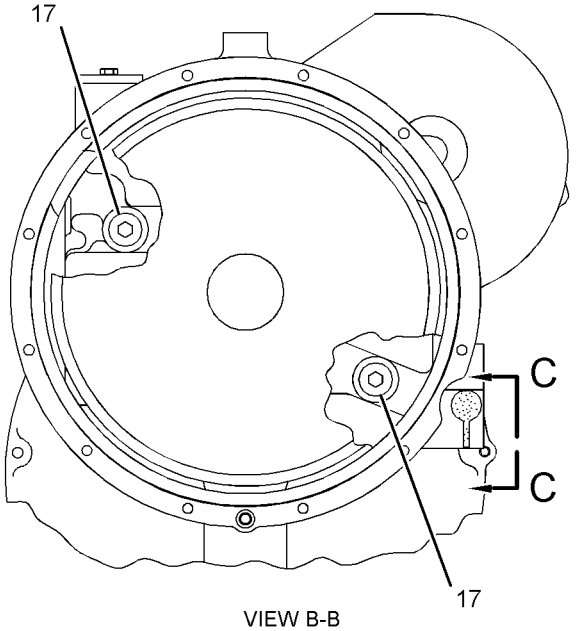

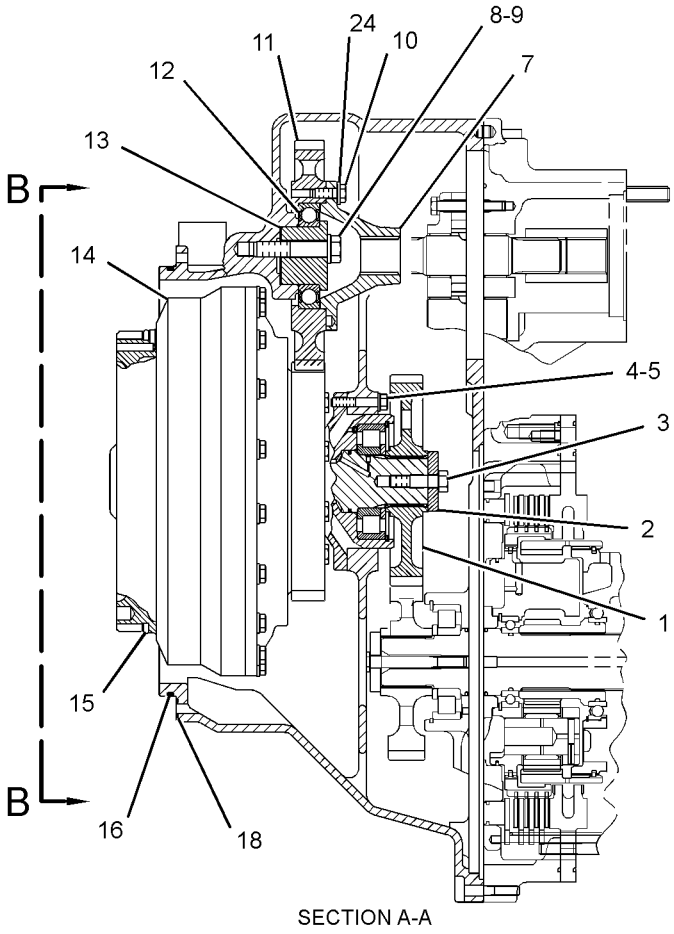

GRAPHIC #1 **<END>** g01693214

243-1604 TORQUE CONVERTER GP—FREEWHEEL STATOR

S/N: TKF1-UP

PART OF 237-8247 TORQUE CONVERTER & HOUSING GP

SMCS-3101 **i03628940**

NOTE	REF NO	GRAPHIC REF	PART NUMBER	QTY	PART NAME 1 2 3 4 5 6 (PRODUCT LEVEL)	SEE PAGE
	1	1	**6Y-3148**	1	SHAFT-OUTPUT	
	2	1	**5P-6414**	3	RING-RETAINING	
	3	1	**5K-8591**	1	BEARING-OUTER	
	4	1	**171-6348**	1	CARRIER AS	
		1	**1P-0604**	1	PLUG-CUP	
		1	**4S-8541**	1	DOWEL	
M	5	1	**6V-3823**	8	BOLT (M12X1.75X60-MM)	
	6	1	**243-1607**	1	GEAR-PUMP DRIVE (70-TEETH)	
	7	1	**8E-9972**	1	IMPELLER-CONVERTER	
M	8	1	**6V-1820**	34	BOLT (M10X1.5X30-MM)	
	9	1	**6V-5839**	34	WASHER (11X21X2.5-MM THK)	
	10	1	**6Y-4859**	1	HOUSING	
	11	1	**8E-5247**	1	BALL BEARING	
	12	1	**3E-6799**	1	SEAL-O-RING	
	13	1	**6Y-1087**	1	COVER-END	
	14	1	**8E-6539**	1	HUB AS	
		1	**4S-8541**	1	DOWEL	
	15	1	**064-3843**	1	RING-SNAP	
	16	1	**8E-6648**	1	SPACER (60.2X80X3-MM THK)	
	17	1	**5K-9065**	1	RING-RETAINING	
	18	1	**6V-8128**	1	RING-RETAINING	
	19	1	**191-8720**	1	PLATE-SPLINED	
	20	1	**6Y-1089**	1	TURBINE-CONVERTER	
	21	1	**6Y-1090**	1	STATOR-CONVERTER	
	22	1	**141-0752**	1	SPACER	
	23	1	**119-5727**	1	BALL BEARING	
	24	1	**1T-1621**	1	RING-SEAL	
	25	1	**3N-8506**	1	RING-PISTON	
	26	1	**6V-4350**	1	RACE-ROLLER BEARING	
	27	1	**6V-4351**	1	PLATE-INNER RACE	
	28	1	**194-4411**	2	WASHER-THRUST	
	29	1	**141-1236**	1	RACE-FREEWHEEL	
	30	1	**8P-7857**	9	ROLLER-FREEWHEEL	
	31	1	**8P-7858**	9	SPRING-FREEWHEEL	
	32	1	**7G-8430**	1	CAM-FREEWHEEL	

M-METRIC PART

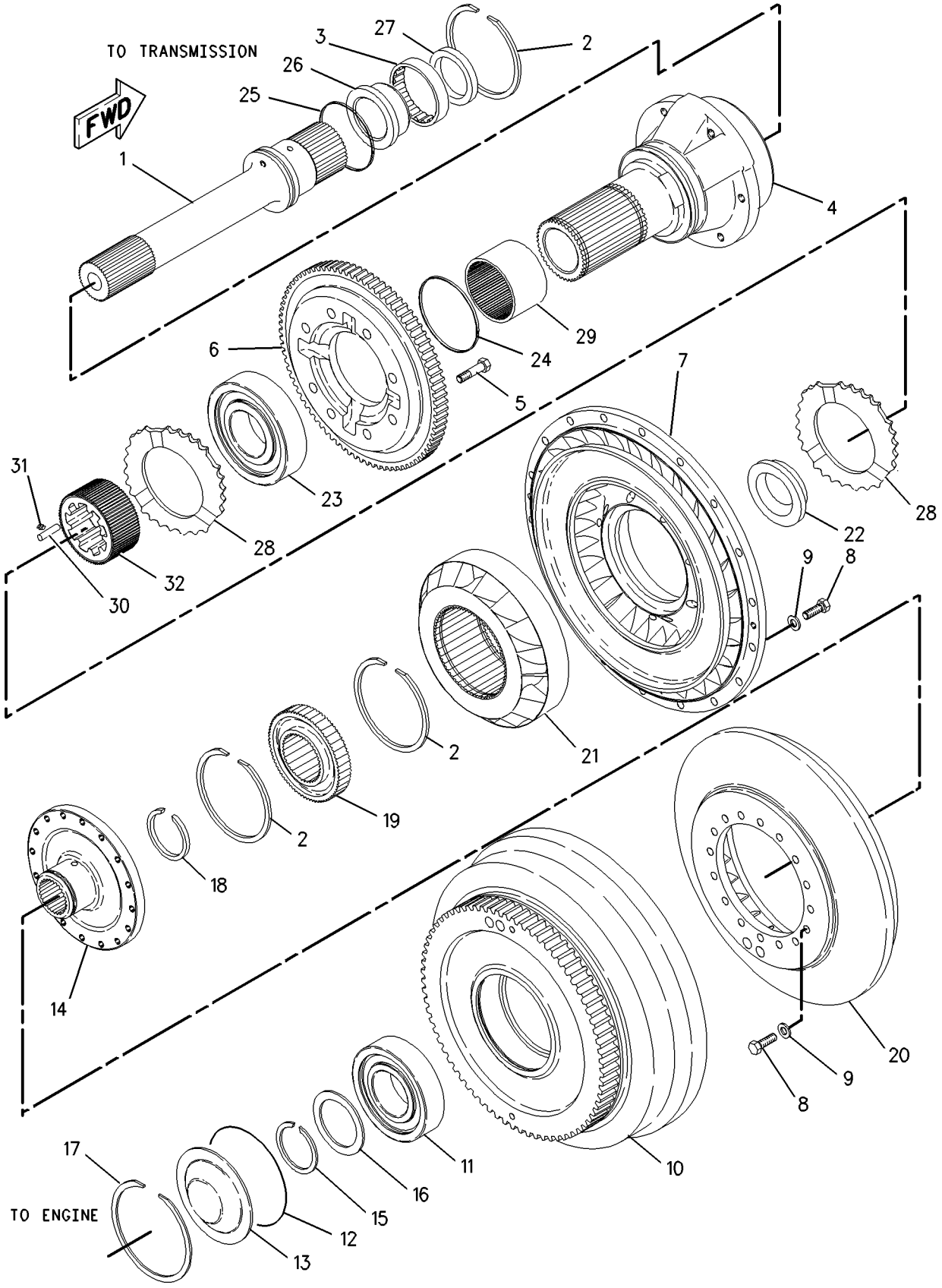

GRAPHIC #1 **<END>** g00819807

243-6733 TRANSMISSION AR–
FREEWHEEL STATOR TORQUE CONVERTER
S/N: DKG1-UP
PART OF 236-8965 POWER TRAIN AR

SMCS-3030 **i03627080**

NOTE	PART NUMBER	QTY	PART NAME 1 2 3 4 5 6 (PRODUCT LEVEL)	SEE PAGE
Y	*237-8242*	1	CASE & PARTS GP-PLANETARY	262
Y	*237-8249*	1	CONTROL GP-TRANSMISSION HYD	264
Y	*237-8250*	1	GEAR GP-OUTPUT TRANSFER	279
Y	*237-8248*	1	PLANETARY GP-TRANSMISSION	303
Y	**241-8686**	1	PUMP GP-TRANSMISSION	308
Y	*237-8247*	1	TORQUE CONVERTER & HOUSING GP (FREEWHEEL STATOR)	316

Y-SEPARATE ILLUSTRATION

<END>

125-8808 UNIVERSAL JOINT GP–DRIVE SHAFT, REAR

S/N: RYF1-UP

PART OF 125-9358 SHAFT GP-DRIVE

SMCS-3251, 3253 **i03627039**

NOTE	REF NO	GRAPHIC REF	PART NUMBER	QTY	PART NAME 1 2 3 4 5 6 (PRODUCT LEVEL)	SEE PAGE
Y	1	1	**125-8810**	2	SPIDER & BEARING GP	314

Y-SEPARATE ILLUSTRATION

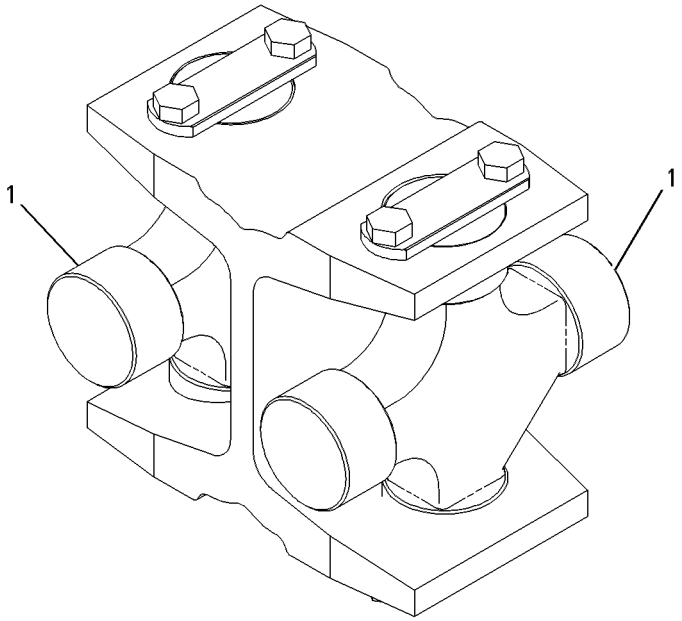

GRAPHIC #1 **<END>** g00283046

329-9658 UNIVERSAL JOINT GP—DRIVE SHAFT, FRONT

S/N: RYF1-UP

PART OF 125-9358 SHAFT GP-DRIVE

SMCS-3251, 3253 **i03627036**

NOTE	REF NO	GRAPHIC REF	PART NUMBER	QTY	PART NAME 1 2 3 4 5 6 (PRODUCT LEVEL)	SEE PAGE
Y	1	1	**125-8810**	1	SPIDER & BEARING GP	314

Y-SEPARATE ILLUSTRATION

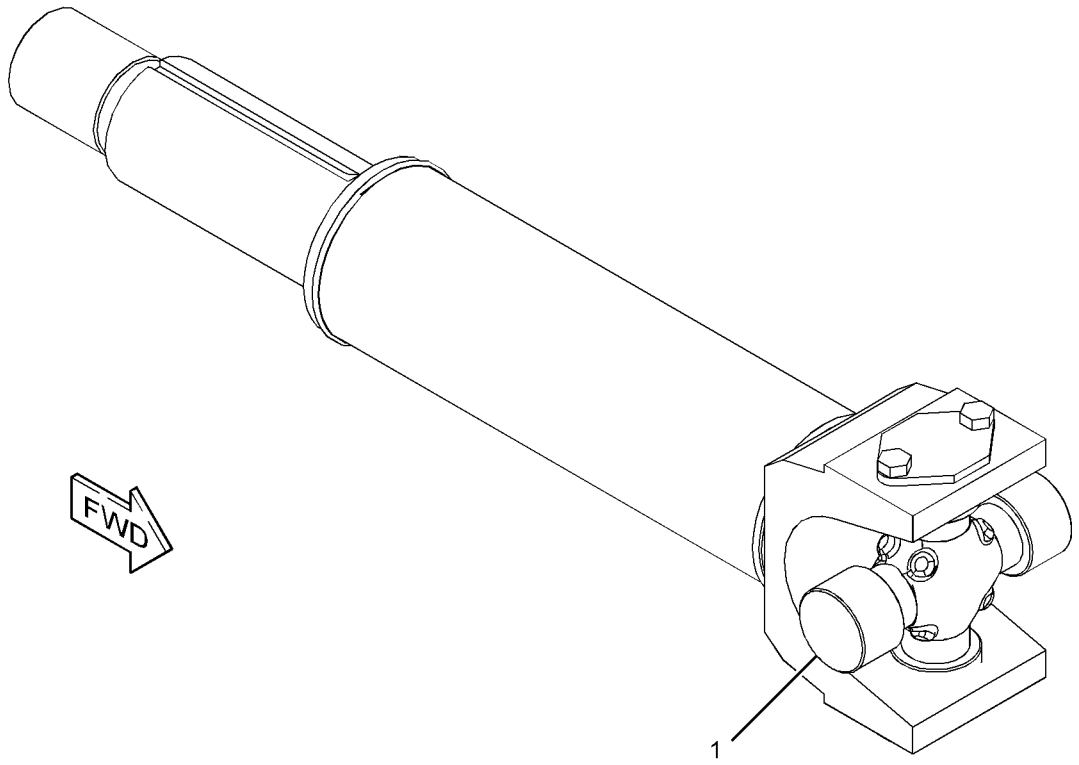

GRAPHIC #1 **<END>** g01634392

244-3114 VALVE GP-MODULATING

S/N: DKG1-UP
24-VOLT
PART OF 237-8249 CONTROL GP-TRANSMISSION HYD

SMCS-3139 **i03627113**

NOTE	REF NO	GRAPHIC REF	PART NUMBER	QTY	PART NAME 1 2 3 4 5 6 (PRODUCT LEVEL)	SEE PAGE
	1	1	**6V-3965**	1	FITTING (QUICK DISCONNECT)	
	2	1	**323-9531**	1	COIL AS (24-VOLT)	
	3	1	**214-7568**	1	SEAL-O-RING	
	4	1	**164-2108**	1	WASHER (13.03X25.4X2.38-MM THK)	
	5	1	**218-2373**	1	NUT (1/2-28-THD)	
					PARTS SHOWN IN GRAPHIC(S) WITHOUT A REFERENCE NUMBER ARE NOT SERVICED SEPARATELY	

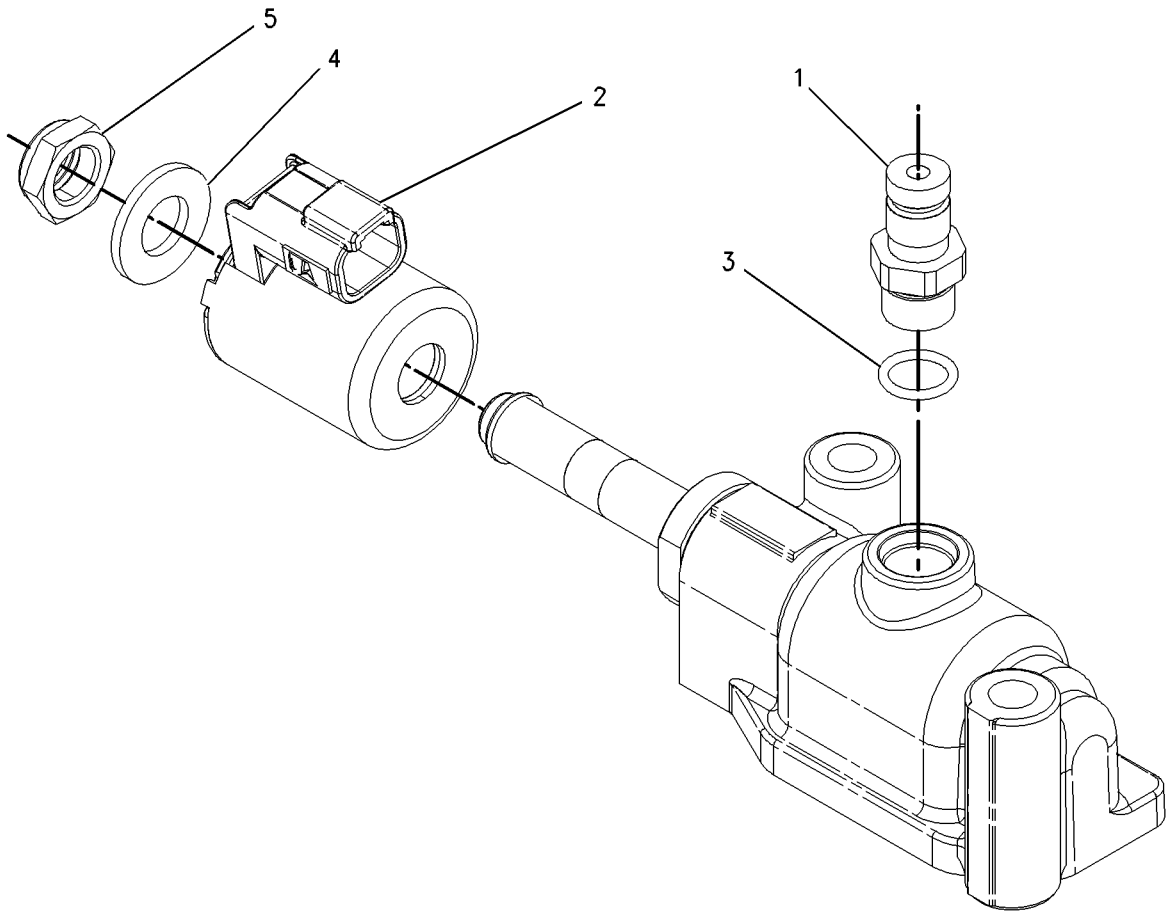

GRAPHIC #1 **<END>** g00919065

130-5485 VALVE GP-RELIEF

S/N: DKG1-UP

PART OF 237-8249 CONTROL GP-TRANSMISSION HYD

SMCS-3133, 3182, 3210, 3213 **i03627114**

NOTE	REF NO	GRAPHIC REF	PART NUMBER	QTY	PART NAME 1 2 3 4 5 6 (PRODUCT LEVEL)	SEE PAGE
	1	1	**2S-1384**	1	SPOOL AS-RELIEF	
		1	**2S-1385**	1	SPOOL-RELIEF VALVE	
		1	**5M-9548**	1	SPRING	
		1	**7M-8592**	1	RING-RETAINING	
		1	**8M-2538**	1	POPPET	
		1	**8M-4409**	1	RETAINER	
	2	1	**4M-8239**	2	COVER	
M	3	1	**8T-4136**	4	BOLT (M10X1.5X25-MM)	
	4	1	**8T-4121**	4	WASHER-HARD (11X21X2.5-MM THK)	
	5	1	**3J-1907**	1	SEAL-O-RING	
	6	1	**9S-4191**	1	PLUG-O-RING	
	7	1	**4M-1751**	3	SPACER (15.09X0.4-MM THK)	
	8	1	**5S-7001**	5	SPACER (7.54X14.15X0.9-MM THK)	
	9	1	**8M-4986**	2	SEAL-O-RING	
	10	1	**2S-1382**	1	SPRING	

M-METRIC PART

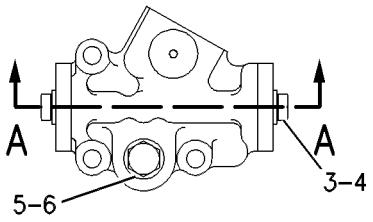

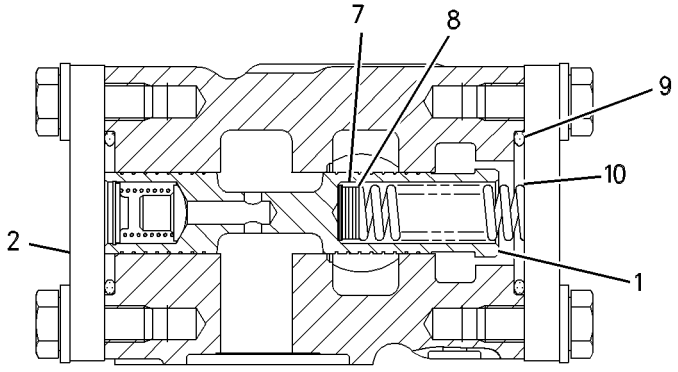

SECTION A-A

GRAPHIC #1 **<END>** g00280709

223-4434 VALVE GP-RELIEF

S/N: DKG1-UP

PART OF 237-8249 CONTROL GP-TRANSMISSION HYD

SMCS-3133, 3182, 3210, 3213 **i03627119**

NOTE	REF NO	GRAPHIC REF	PART NUMBER	QTY	PART NAME 1 2 3 4 5 6 (PRODUCT LEVEL)	SEE PAGE
	1	1	**2S-4663**	1	SEAL-O-RING	
	2	1	*164-5567*	2	COUPLER AS-QUICK DISCONNECT	
					(EACH INCLUDES)	
		1	**3J-1907**	1	SEAL-O-RING	
		1	**6V-3965**	1	FITTING (QUICK DISCONNECT)	
	4	1	**6V-0852**	2	CAP-DUST	
	5	1	**241-6206**	1	PLUG	
	6	1	**2M-9780**	1	SEAL-O-RING	
	7	1	**202-2005**	1	COVER	
	8	1	**9M-2110**	1	COVER-ADJUSTMENT	
	9	1	**9S-8001**	3	PLUG-O-RING	
	10	1	**4J-7533**	3	SEAL-O-RING	
M	11	1	**6V-5218**	2	BOLT (M8X1.25X35-MM)	
	12	1	**9M-1974**	2	WASHER-HARD (8.8X16X2-MM THK)	
M	13	1	**6V-3940**	2	BOLT (M8X1.25X25-MM)	
	14	1	**8E-1143**	1	SLUG	
	15	1	**9U-8668**	1	SPOOL AS	
		1	**3D-8317**	1	RING-RETAINING	
		1	**4B-9880**	1	BALL	
		1	**4M-2381**	1	SPRING	
		1	**8E-9893**	1	SPOOL-RELIEF	
		1	**9U-8669**	1	RETAINER	
	16	1	**1M-9351**	1	SPRING	
	17	1	**2S-5835**	1	PISTON-LOAD	
	18	1	**202-2006**	1	SCREW-ADJUSTMENT	
	19	1	**8M-5253**	1	SEAL-O-RING	
	20	1	*164-6874*	2	FITTING AS-ELBOW	
					(EACH INCLUDES)	
		1	**3J-1907**	1	SEAL-O-RING	
		1	**085-7356**	1	FITTING	
	21	1	**111-3200**	1	BODY	

M-METRIC PART

223-4434 **VALVE GP-RELIEF** *(contd.)* **i03627119**

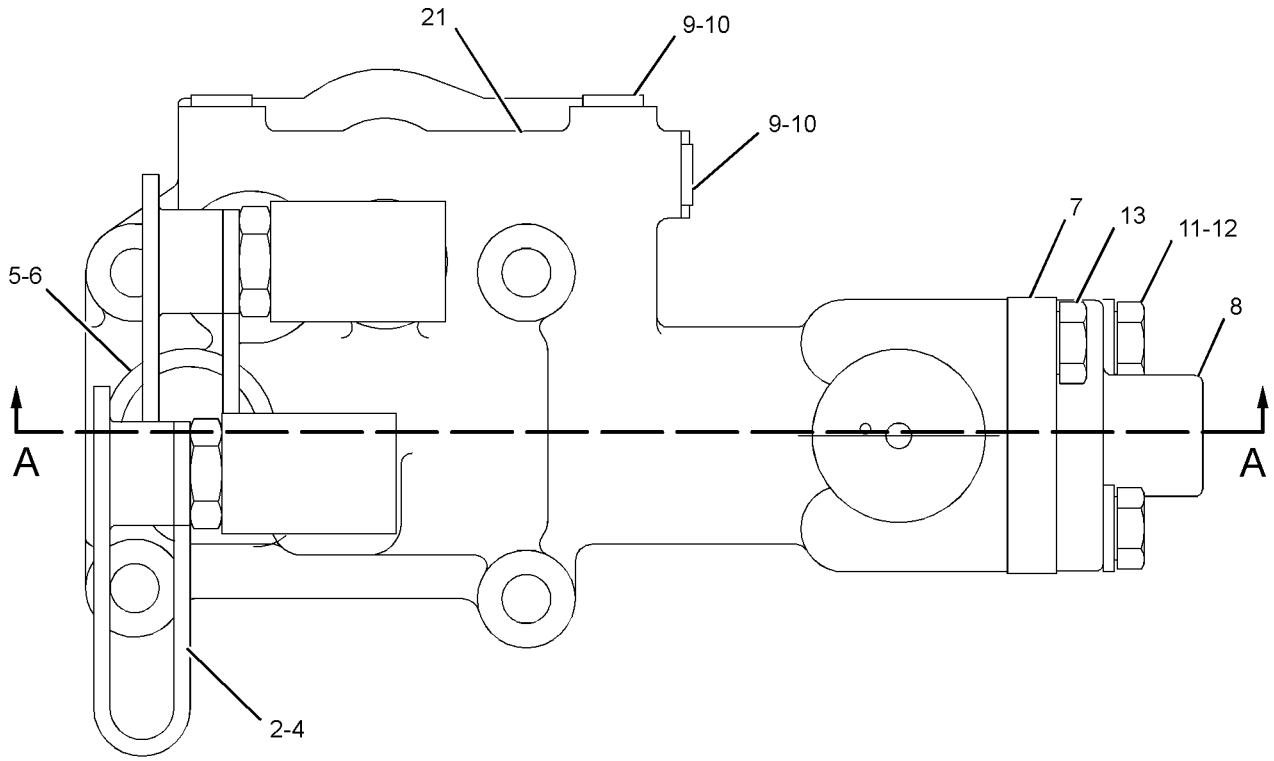

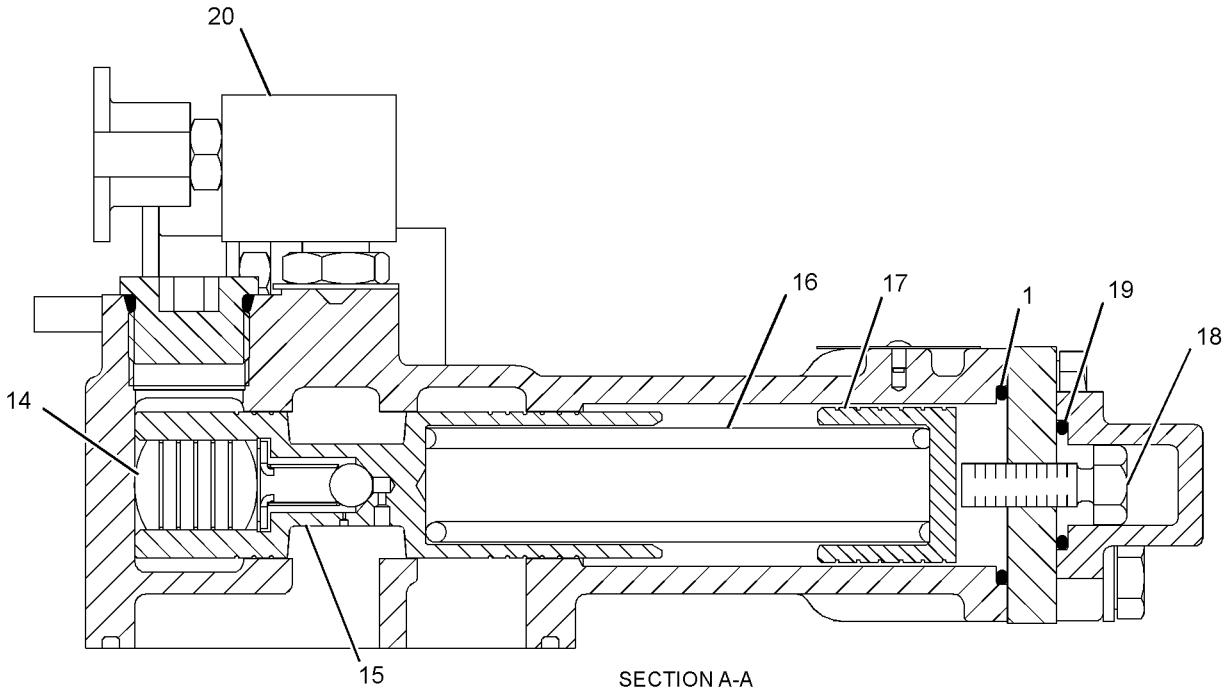

SECTION A-A

GRAPHIC #1 **<END>** g01177498

FRAME AND BODY

305-8958 ACTUATOR GP-POWER

S/N: RYF1-UP

PART OF 236-9003 TILT GP-HOOD

SMCS-1427, 7153, 7275 **i02908744**

NOTE	REF NO	GRAPHIC REF	PART NUMBER	QTY	PART NAME 1 2 3 4 5 6 (PRODUCT LEVEL)	SEE PAGE
	1	1	**117-1559**	1	MOUNT AS	
	2	1	**122-4233**	1	WIPER	
	3	1	**305-8969**	1	POST AS	
	4	1	**305-8966**	1	POWERHEAD AS	
M	5	1	**179-4324**	2	LOCKNUT (M5X0.8-THD)	
	6	1	**168-2166**	1	GASKET-MOTOR (HOOD TILT)	
	7	1	**203-6473**	1	GASKET	
	8	1	**205-6029**	1	MOTOR AS-ELECTRIC (HOOD TILT)	
	9	1	**308-2071**	1	ROD END	
	10	1	**8T-4121**	4	WASHER-HARD (11X21X2.5-MM THK)	
M	11	1	**8T-4133**	4	NUT (M10X1.5-THD)	
M	12	1	**8T-4137**	2	BOLT (M10X1.5X20-MM)	
	13	1	**278-0644**	1	GASKET-COVER	

M-METRIC PART

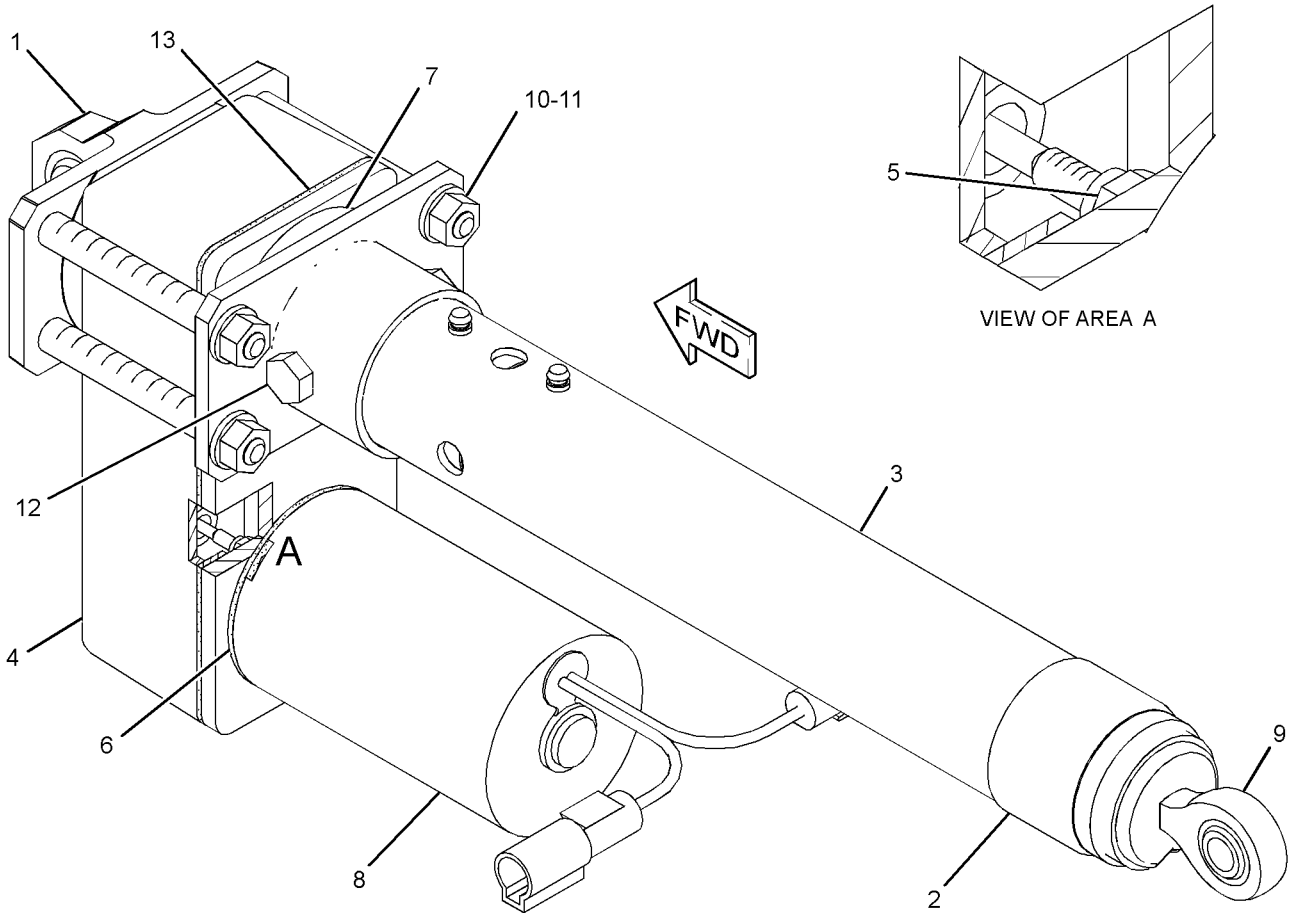

GRAPHIC #1 **<END>** g01447785

176-2444 BLOCK GP-AXLE OSC LIMITER

S/N: RYF1-UP
PART OF 178-6928 TIRE & RIM AR
AN ATTACHMENT

SMCS-3278, 7051 **i03013596**

NOTE	REF NO	GRAPHIC REF	PART NUMBER	QTY	PART NAME 1 2 3 4 5 6 (PRODUCT LEVEL)	SEE PAGE
	1	1	**314-9350**	2	BLOCK	
	2	1	**314-9351**	2	BLOCK	

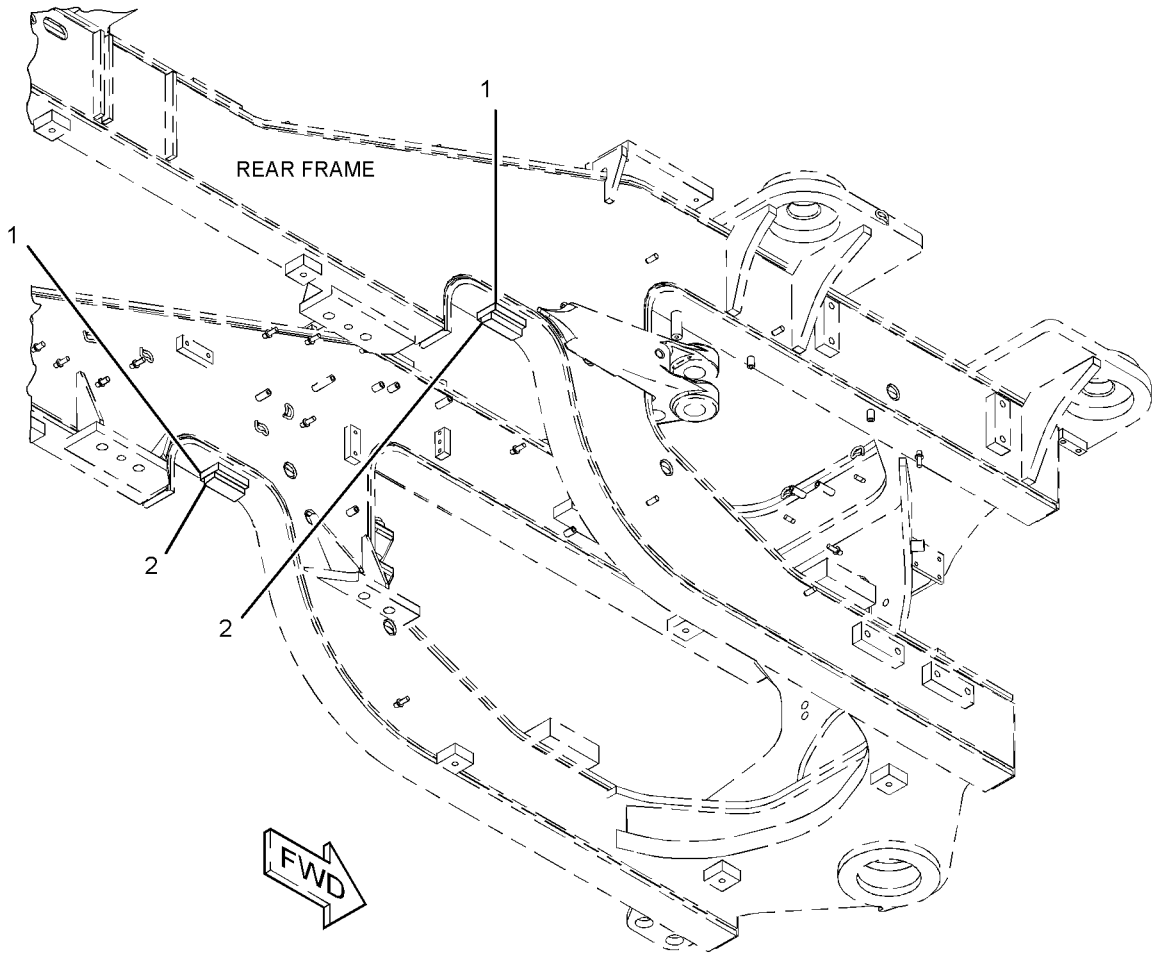

GRAPHIC #1 **<END>** g01533979

FRAME AND BODY

236-8973 BOX GP-BATTERY

S/N: RYF1-UP

PART OF 236-9000 CHASSIS AR

SMCS-7257 **i03608001**

NOTE	REF NO	GRAPHIC REF	PART NUMBER	QTY	PART NAME 1 2 3 4 5 6 (PRODUCT LEVEL)	SEE PAGE
	1	1	**244-6308**	1	BOX GP-BATTERY	
	2	1	**275-5635**	1	COVER	
	3	1	**5P-1076**	8	WASHER-HARD (13.5X30X4-MM THK)	
	4	1	**8T-4121**	4	WASHER-HARD (11X21X2.5-MM THK)	
M	5	1	**8T-4137**	4	BOLT (M10X1.5X20-MM)	
M	6	1	**8T-4139**	8	BOLT (M12X1.75X30-MM)	

M-METRIC PART

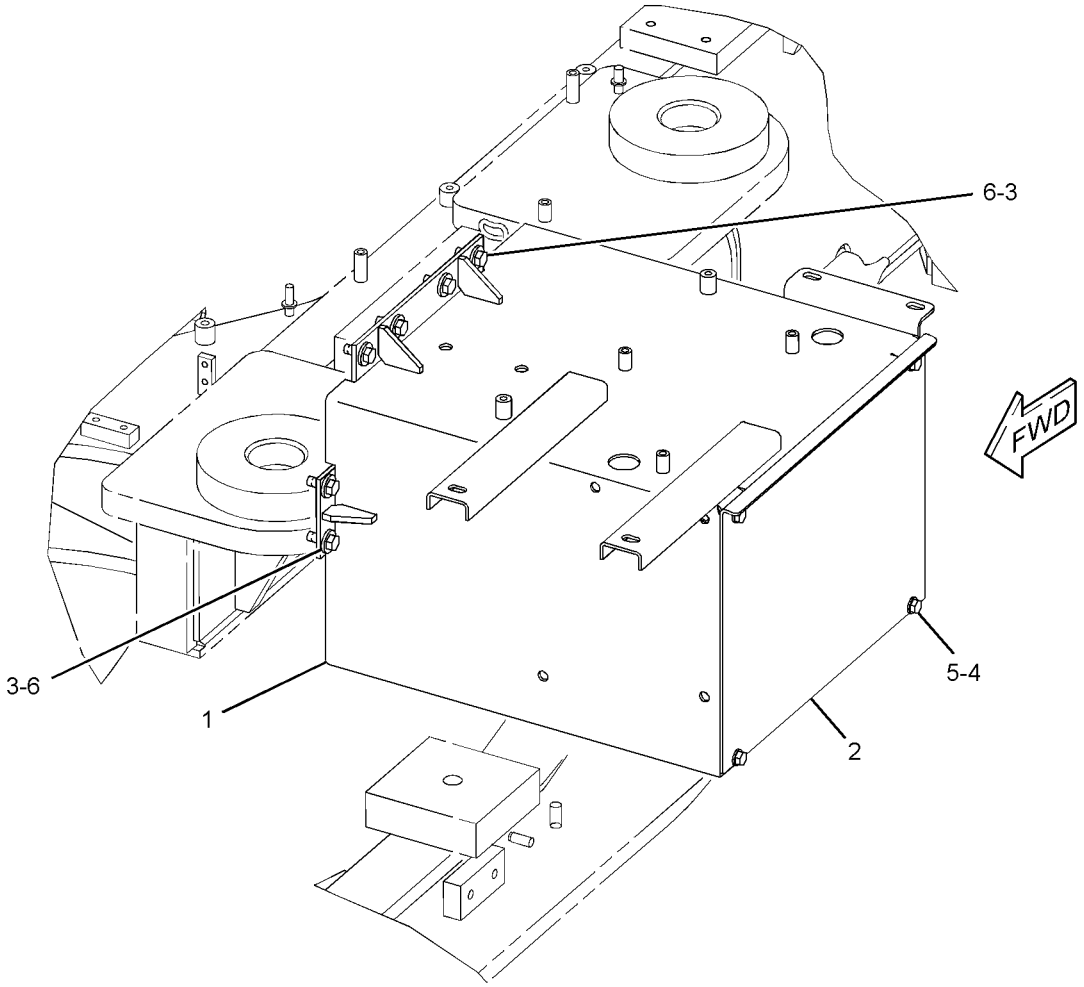

GRAPHIC #1 **<END>** g01354233

FRAME AND BODY

243-3702 COUNTERWEIGHT GP

S/N: RYF1-UP
PART OF 236-9092 CONTROL AR-HIGH LIFT
AN ATTACHMENT

SMCS-7056 **i03629422**

NOTE	REF NO	GRAPHIC REF	PART NUMBER	QTY	PART NAME 1 2 3 4 5 6 (PRODUCT LEVEL)	SEE PAGE
	1	1	**162-7120**	1	PIN	
	2	1	**219-0017**	1	PIN-HITCH	
	3	1	**243-3703**	1	COUNTERWEIGHT	
	4	1	**9X-8258**	8	WASHER (33X56X6-MM THK)	
M	5	1	**7X-2584**	4	BOLT (M30X3.5X140-MM)	
M	6	1	**7X-2586**	4	BOLT (M30X3.5X180-MM)	

M-METRIC PART

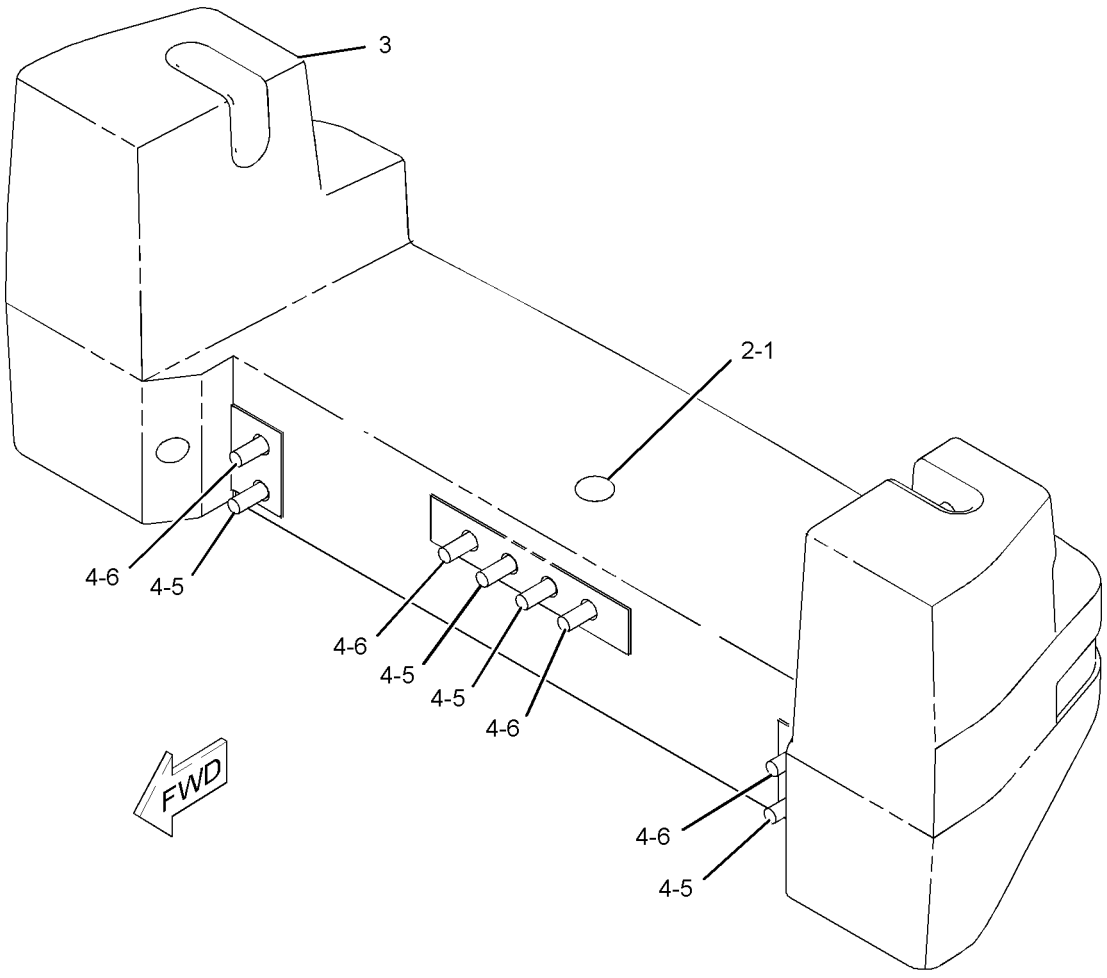

GRAPHIC #1 **<END>** g01116934

FRAME AND BODY

326-8938 COUNTERWEIGHT GP

S/N: RYF1-UP

PART OF 236-9000 CHASSIS AR

SMCS-7056 **i03609079**

NOTE	REF NO	GRAPHIC REF	PART NUMBER	QTY	PART NAME 1 2 3 4 5 6 (PRODUCT LEVEL)	SEE PAGE
	1	1	**162-7120**	1	PIN	
	2	1	**219-0017**	1	PIN-HITCH	
	3	1	**326-8939**	1	COUNTERWEIGHT	
M	4	1	**3E-9850**	2	BOLT (M30X3.5X220-MM)	
M	5	1	**7X-2584**	4	BOLT (M30X3.5X140-MM)	
	6	1	**9X-8258**	6	WASHER (33X56X6-MM THK)	

M-METRIC PART

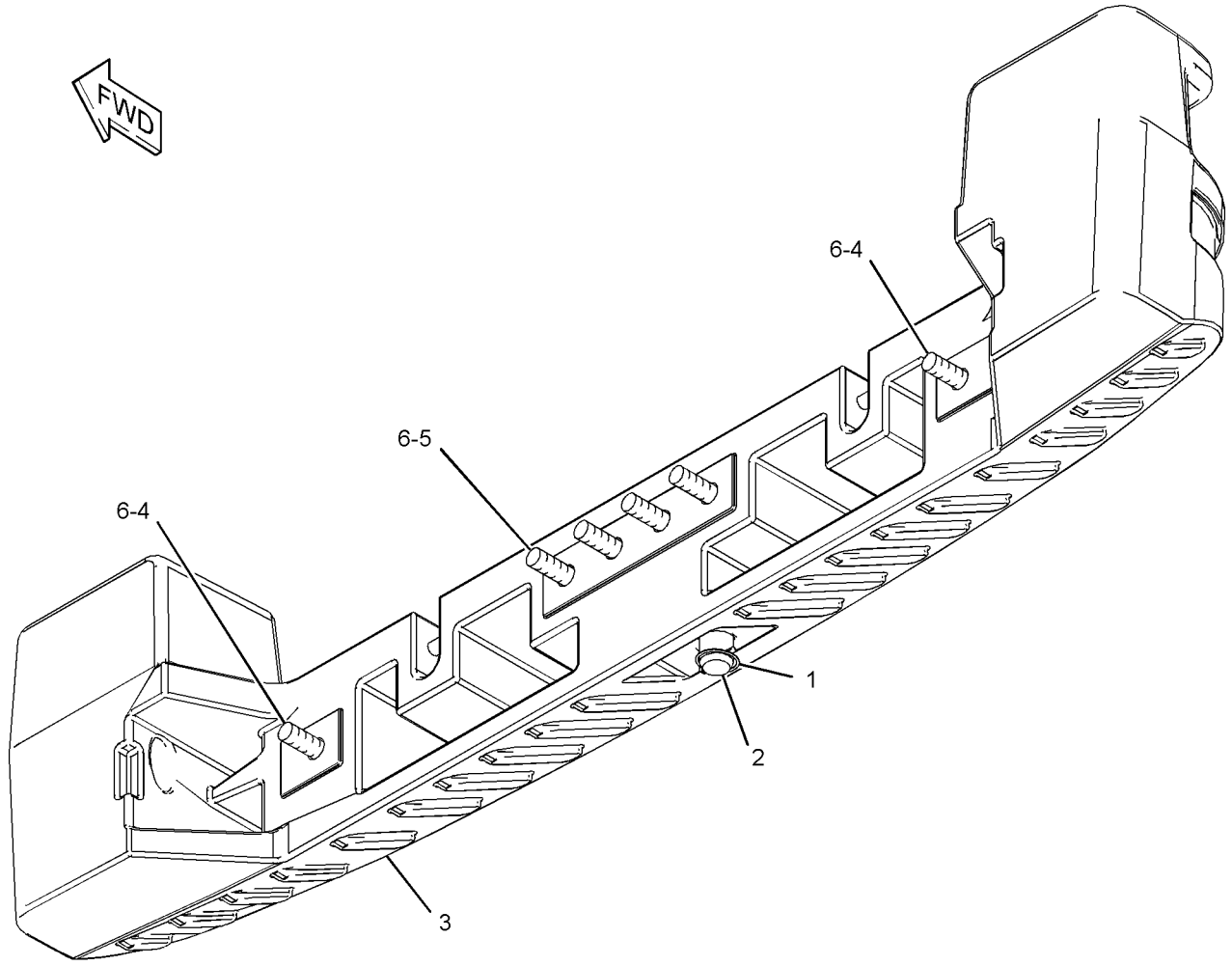

GRAPHIC #1 **<END>** g01790553

FRAME AND BODY

292-6003 DOOR GP-ACCESS—HOOD SIDE, LH

S/N: RYF1-UP

PART OF 292-6010 HOOD & GUARD GP

SMCS-7273 **i03611948**

NOTE	REF NO	GRAPHIC REF	PART NUMBER	QTY	PART NAME 1 2 3 4 5 6 (PRODUCT LEVEL)	SEE PAGE
	1	1	**6V-4604**	1	RIVET-POP	
	2	1	**9V-1777**	1	CABLE	
	3	1	**9V-1820**	1	SPACER	
	4	1	**118-9587**	1	CAM-LATCH	
J	5	1	**275-0572**	1	LATCH AS	
	6	1	**292-6007**	1	DOOR AS	
		1	**119-0281**	2	HINGE AS	

J-REQUIRES CORPORATE KEY

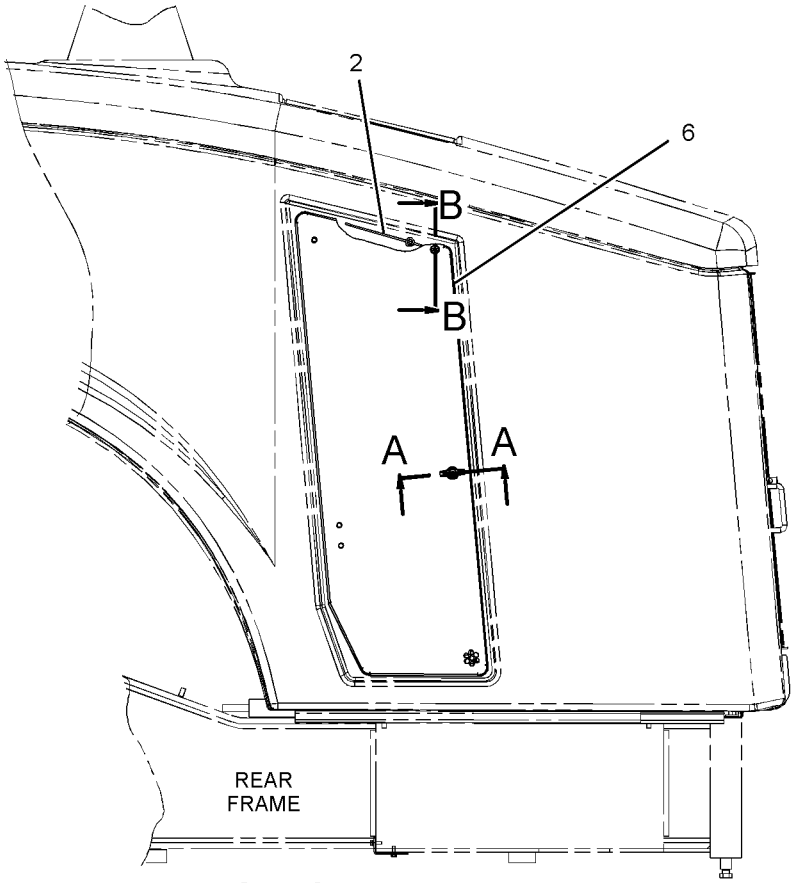

RIGHT SIDE VIEW

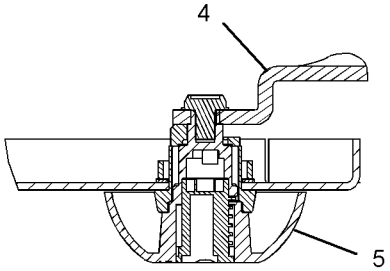

SECTION A-A

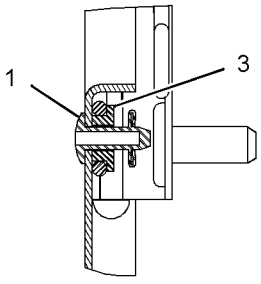

SECTION B-B

GRAPHIC #1 **<END>** g01372841

292-6004 DOOR GP-ACCESS—HOOD SIDE, RH

S/N: RYF1-UP

PART OF 292-6010 HOOD & GUARD GP

SMCS-7273 **i03610858**

NOTE	REF NO	GRAPHIC REF	PART NUMBER	QTY	PART NAME 1 2 3 4 5 6 (PRODUCT LEVEL)	SEE PAGE
	1	1	**6V-4604**	1	RIVET-POP	
	2	1	**9V-1777**	1	CABLE	
	3	1	**9V-1820**	1	SPACER	
	4	1	**118-9587**	1	CAM-LATCH	
J	5	1	**275-0572**	1	LATCH AS	
	6	1	**292-6005**	1	DOOR AS	
		1	**119-0281**	2	HINGE AS	

J-REQUIRES CORPORATE KEY

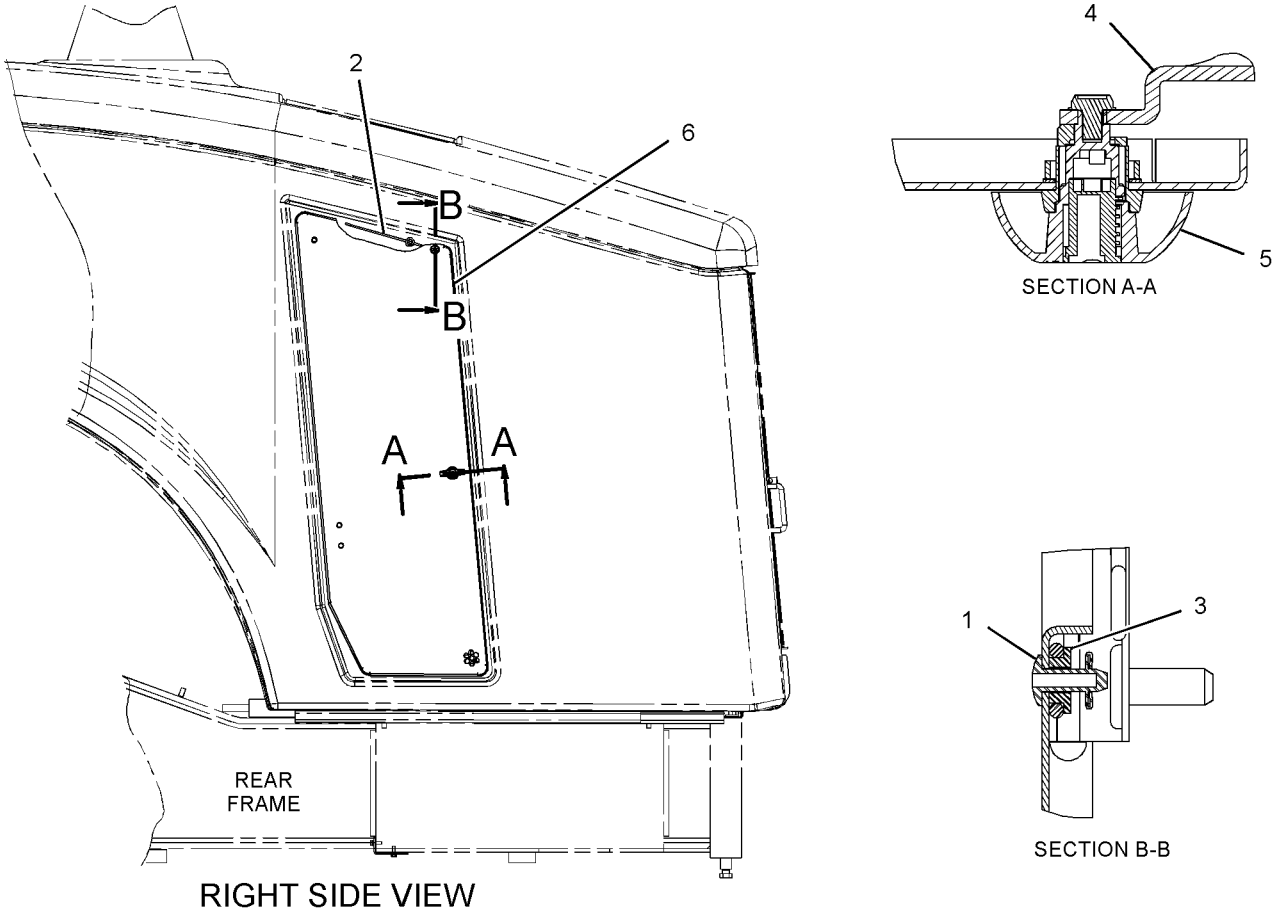

RIGHT SIDE VIEW

GRAPHIC #1 **<END>** g01372758

FRAME AND BODY

236-8974 FENDER GP

S/N: RYF1-UP

PART OF 236-9000 CHASSIS AR

SMCS-7252 **i03609260**

NOTE	REF NO	GRAPHIC REF	PART NUMBER	QTY	PART NAME 1 2 3 4 5 6 (PRODUCT LEVEL)	SEE PAGE
	1	1	**1K-8850**	1	SPRING	
	2	1	**275-0571**	1	CAM-LATCH	
	3	1	**172-6252**	1	FENDER AS-FRONT (RH)	
	4	1	**172-6251**	1	FENDER AS-FRONT (LH)	
	5	1	**329-1690**	1	FENDER AS (LH)	
	6	1	**329-1691**	1	FENDER AS (RH)	
	7	1	**244-2571**	1	DEFLECTOR AS (REAR, RH)	
	8	1	**245-7428**	1	DEFLECTOR AS (REAR, LH)	
	9	1	**303-6334**	2	PLATE	
M	10	1	**5C-9553**	2	BOLT (M6X1X16-MM)	
	11	1	**7X-0589**	12	WASHER-HARD (12X28.5X5-MM THK)	
M	12	1	**8T-0389**	12	LOCKNUT (M10X1.5-THD)	
M	13	1	**8T-4139**	12	BOLT (M12X1.75X30-MM)	
	14	1	**5P-1076**	12	WASHER-HARD (13.5X30X4-MM THK)	
	15	1	**9X-8256**	2	WASHER (6.6X12X2-MM THK)	
J	16	1	**275-0572**	1	LATCH AS	
M	17	1	**8T-4195**	6	BOLT (M10X1.5X30-MM)	
	18	1	**7X-7729**	6	WASHER (11X25X3-MM THK)	

J-REQUIRES CORPORATE KEY
M-METRIC PART

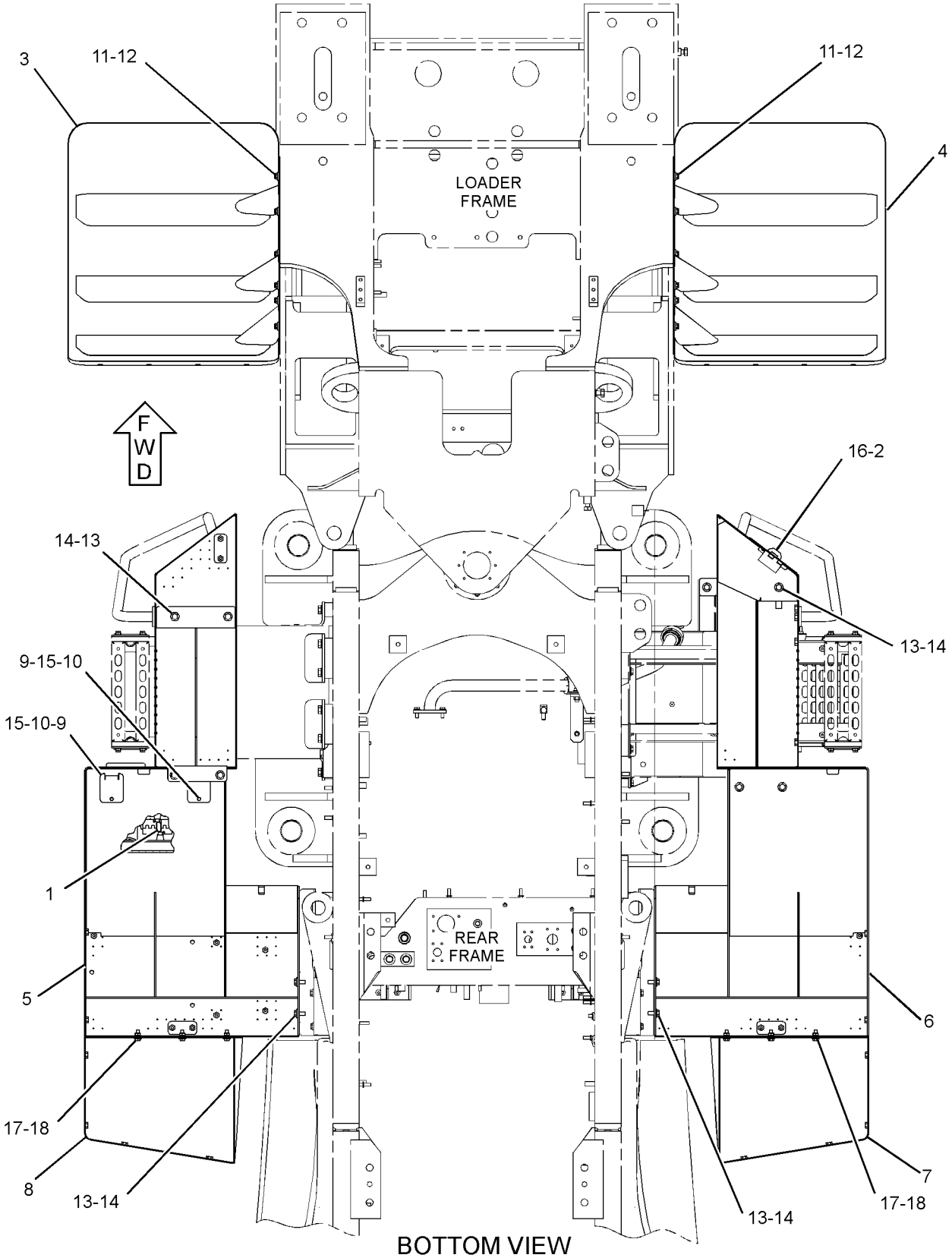

GRAPHIC #1

<END>

g01680374

FRAME AND BODY

250-9969 FENDER GP

S/N: RYF1-UP

AN ATTACHMENT

SMCS-7252 **i03630185**

NOTE	REF NO	GRAPHIC REF	PART NUMBER	QTY	PART NAME 1 2 3 4 5 6 (PRODUCT LEVEL)	SEE PAGE
	1	1	**138-6814**	2	STRIP AS	
	2	1	**138-6819**	2	FLAP	
	3	1	**271-4956**	2	FLAP	
	4	1	**271-4958**	2	STRIP	
	5	1	**272-5550**	1	DEFLECTOR AS (LH)	
	6	1	**273-2554**	1	DEFLECTOR AS (RH)	
	7	1	**275-7808**	1	DEFLECTOR (LH)	
	8	1	**275-7809**	1	DEFLECTOR (RH)	
	9	1	**275-7810**	1	DEFLECTOR (LH)	
	10	1	**275-7811**	1	DEFLECTOR (RH)	
M	11	1	**6V-7357**	10	BOLT (M6X1X25-MM)	
	12	1	**7X-7729**	28	WASHER (11X25X3-MM THK)	
M	13	1	**8T-0389**	8	LOCKNUT (M10X1.5-THD)	
M	14	1	**8T-4136**	20	BOLT (M10X1.5X25-MM)	
	15	1	**9X-6165**	10	WASHER (6.5X22X2.5-MM THK)	

M-METRIC PART

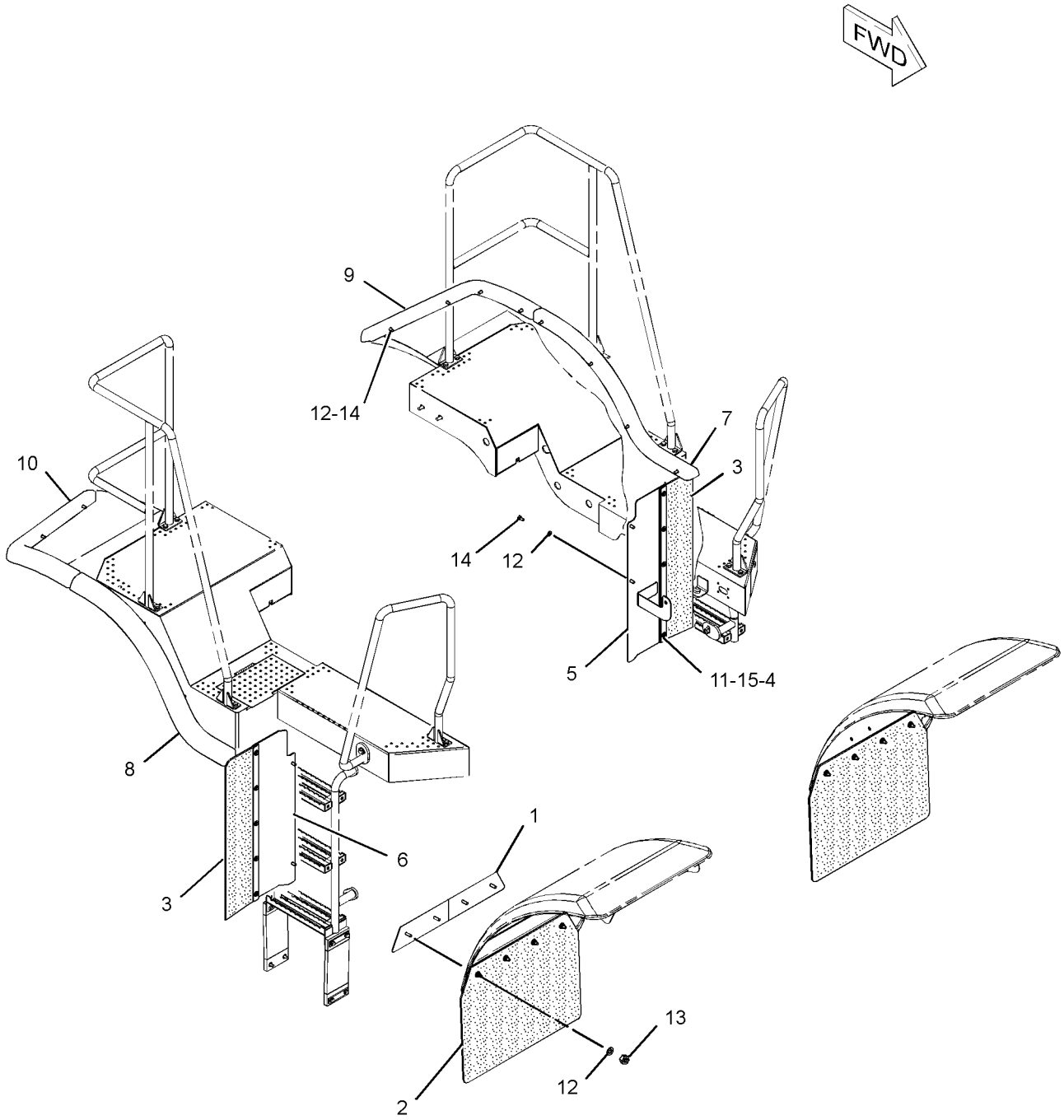

GRAPHIC #1 **<END>** g01196181

FRAME AND BODY

236-9119 FENDER GP-FRONT

S/N: RYF1-UP

AN ATTACHMENT

SMCS-7252 **i03626540**

NOTE	REF NO	GRAPHIC REF	PART NUMBER	QTY	PART NAME 1 2 3 4 5 6 (PRODUCT LEVEL)	SEE PAGE
	1	1	**201-6775**	1	FENDER AS-FRONT (LH)	
	2	1	**201-6776**	1	FENDER AS-FRONT (RH)	
	3	1	**201-6780**	1	PLATE (LH)	
	4	1	**201-6781**	1	PLATE (RH)	
	5	1	**8T-4121**	12	WASHER-HARD (11X21X2.5-MM THK)	
M	6	1	**8T-4133**	12	NUT (M10X1.5-THD)	
M	7	1	**8T-4183**	8	BOLT (M12X1.75X40-MM)	
	8	1	**8T-4223**	8	WASHER-HARD (13.5X25.5X3-MM THK)	

M-METRIC PART

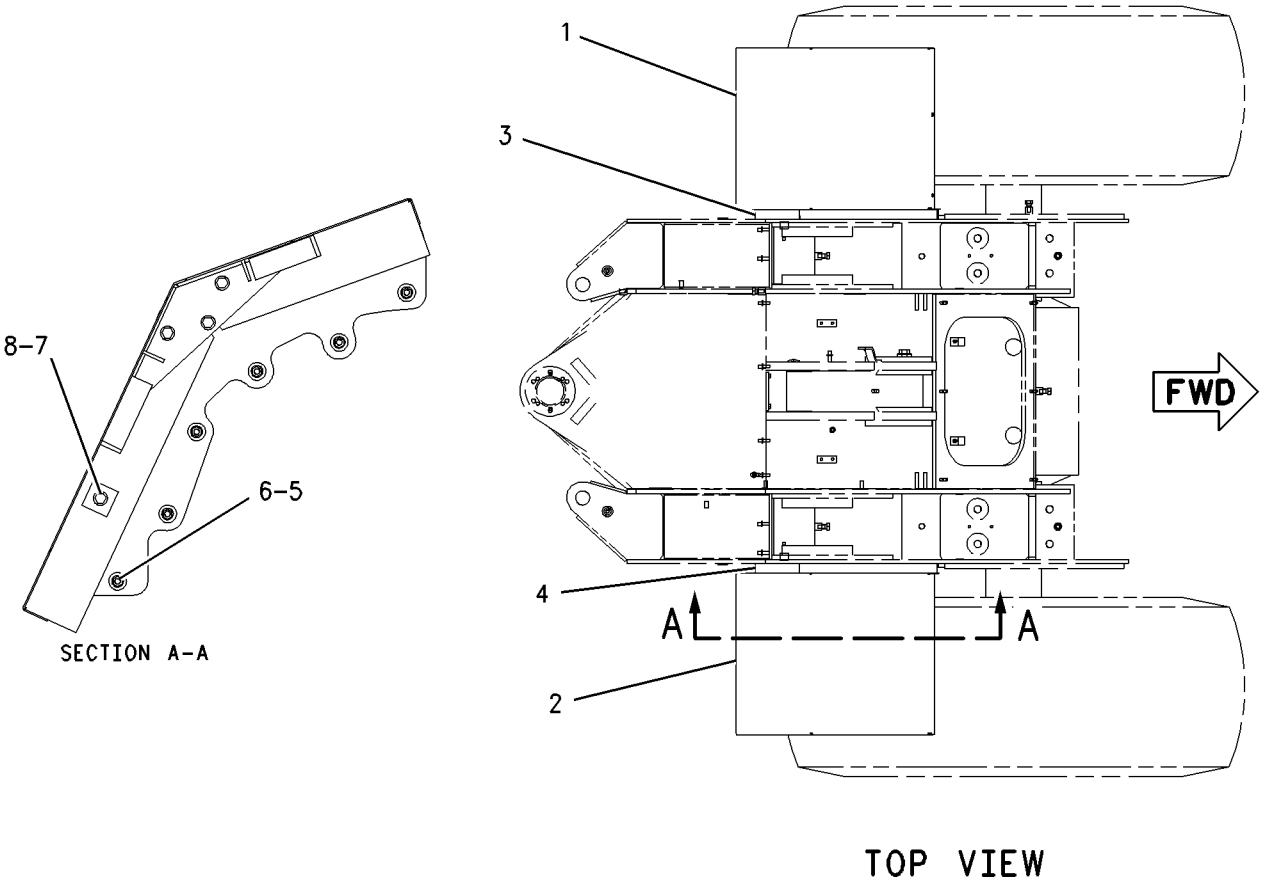

GRAPHIC #1 **<END>** g00877702

236-8976 FRAME AS-LOADER

S/N: RYF1-UP

PART OF 236-9000 CHASSIS AR

SMCS-7054 **i03610005**

NOTE	REF NO	GRAPHIC REF	PART NUMBER	QTY	PART NAME 1 2 3 4 5 6 (PRODUCT LEVEL)	SEE PAGE
	1	1	**7K-1972**	2	EYE	
	3	2	**8Y-7023**	2	BOSS (M12X1.75-THD)	
	4	1	**9C-6809**	3	BLOCK (M10X1.5-THD)	
	11	2	**170-0664**	4	ANGLE AS	
M		2	**8T-3490**	1	NUT-WELD (M10X1.5-THD)	
	22	2	**254-0004**	1	BRACKET AS	
M		2	**8T-3490**	2	NUT-WELD (M10X1.5-THD)	
	27	2	**276-0730**	1	BRACKET AS	
M		2	**8T-3490**	2	NUT-WELD (M10X1.5-THD)	
M	30	2	**110-2023**	17	STUD-WELD (M10X1.5X25-MM)	
	31	2	**132-6964**	1	PLATE	
	32	1,2	**7T-1099**	14	LINK	
M	33	2	**7X-0750**	1	BOSS-WELD (M10X1.5X55-MM)	
M	34	2	**8T-3851**	5	BOSS-WELD (M10X1.5X17.5-MM)	
M	35	2	**8T-4219**	5	STUD-WELD (M10X1.5X17.5-MM)	
M	36	2	**8T-4935**	1	BOSS-WELD (M10X1.5X45-MM)	
M	37	1,2	**8T-7501**	15	STUD-WELD (M10X1.5X38-MM)	
	38	2	**9C-7929**	1	BLOCK	

M-METRIC PART

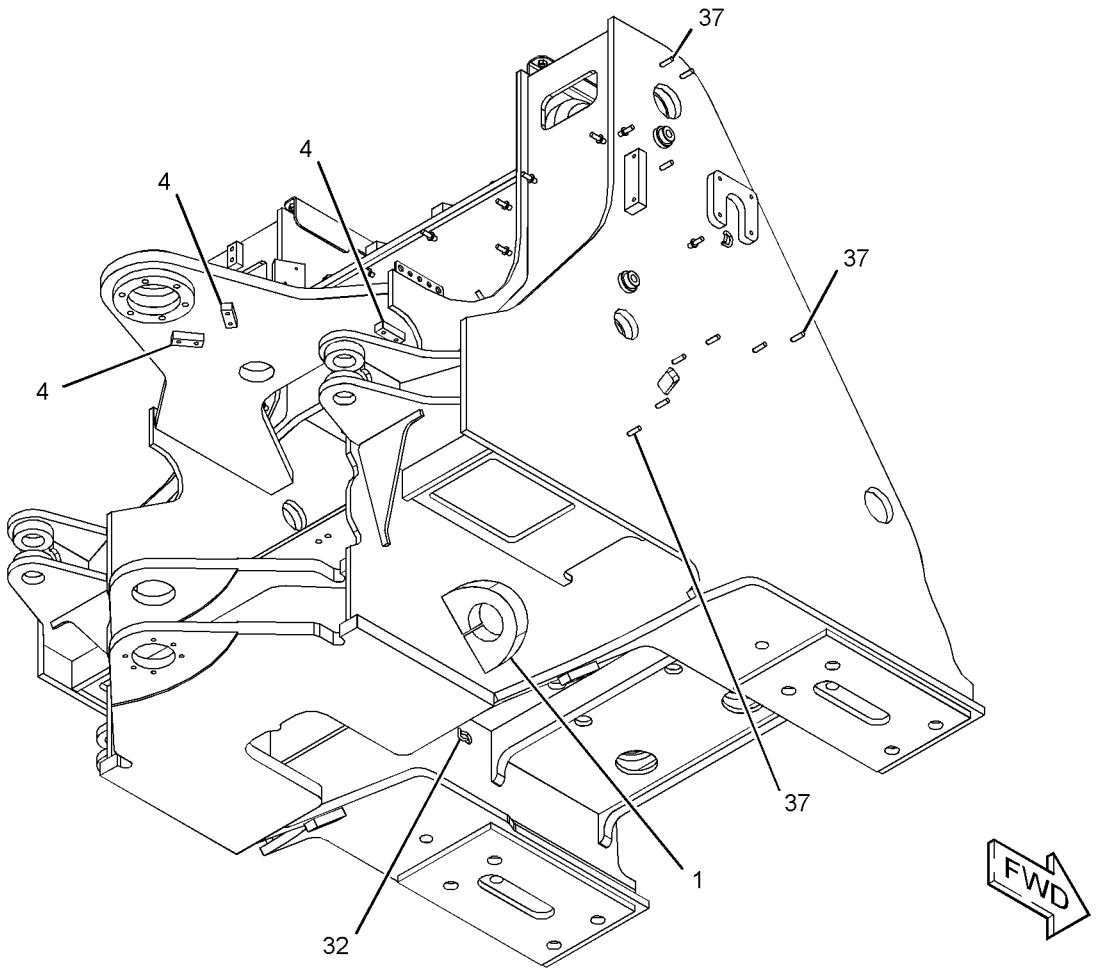

GRAPHIC #1 g01937083

236-8976 FRAME AS-LOADER *(contd.)* **i03610005**

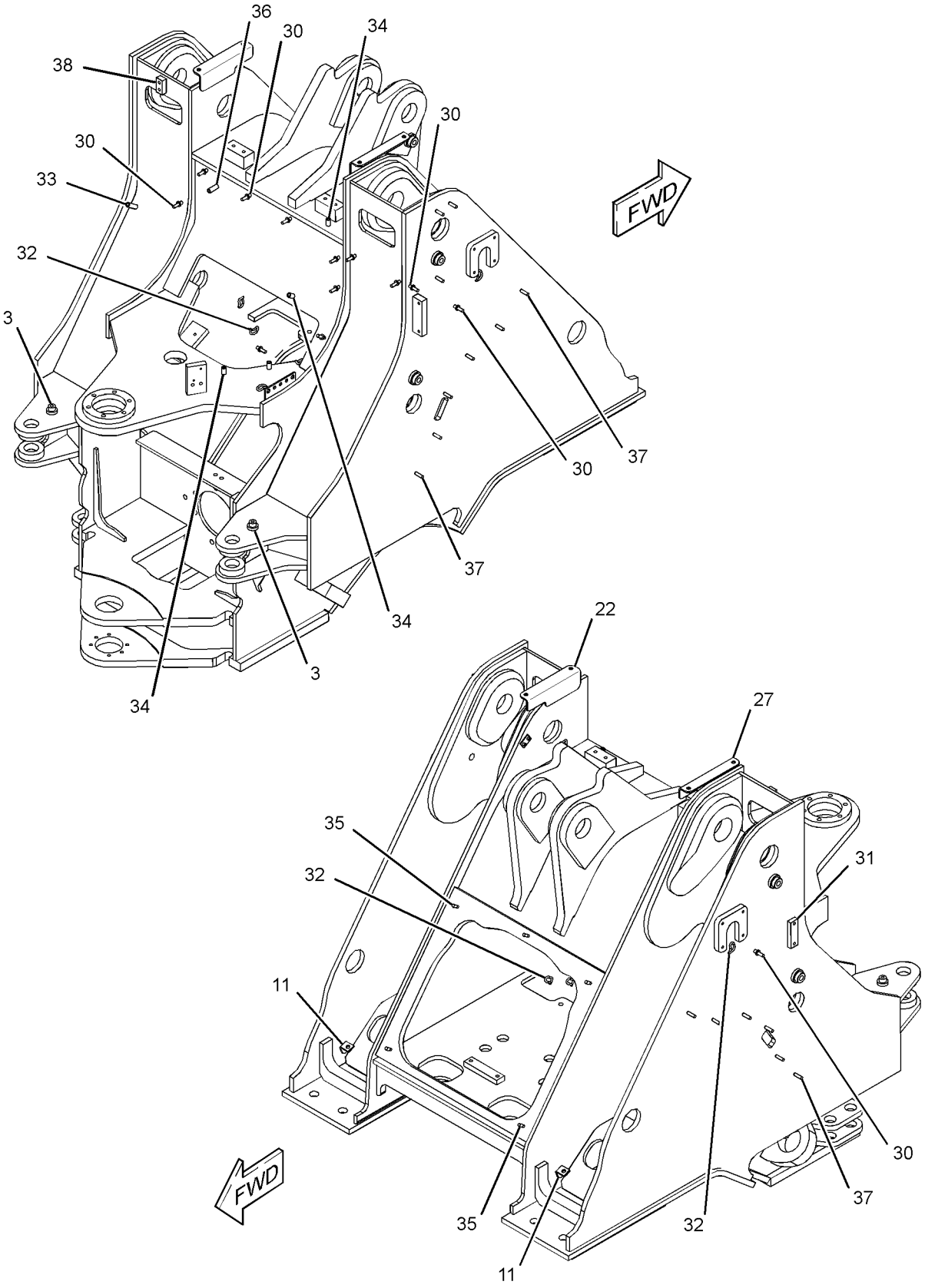

GRAPHIC #2 **<END>** g01937084

FRAME AND BODY

236-8975 FRAME AS-REAR

S/N: RYF1-UP

PART OF 236-9000 CHASSIS AR

SMCS-7051 **i03610200**

NOTE	REF NO	GRAPHIC REF	PART NUMBER	QTY	PART NAME 1 2 3 4 5 6 (PRODUCT LEVEL)	SEE PAGE
	1	1,2	**5P-2248**	4	GUSSET	
	3	1	**7Y-2522**	1	PLATE	
	4	1	**8Y-7023**	1	BOSS (M12X1.75-THD)	
	5	1	**9C-4935**	1	PLATE	
	6	1,2	**9C-6809**	5	BLOCK (M10X1.5-THD)	
	7	1	**123-9313**	1	HITCH AS	
	13	1	**141-3638**	2	PLATE	
	15	2	**143-7022**	2	PLATE AS	
	21	1	**244-3525**	1	ENCLOSURE AS (LH)	
	21A	1	**7T-1099**	2	LINK	
	21B	1	**8X-5147**	4	BLOCK	
M	21C	1	**6V-9632**	4	NUT-WELD (M6X1-THD)	
M	21D	1	**8T-3597**	4	NUT-WELD (M12X1.75-THD)	
M	21E	2	**8T-3490**	2	NUT-WELD (M10X1.5-THD)	
	22	2	**244-3526**	1	ENCLOSURE AS (RH)	
	22A	1	**7T-1099**	2	LINK	
	22B	2	**8X-5147**	4	BLOCK	
M	22C	1	**8T-3597**	4	NUT-WELD (M12X1.75-THD)	
M	22D	2	**8T-3490**	2	NUT-WELD (M10X1.5-THD)	
M	34	1	**110-2023**	24	STUD-WELD (M10X1.5X25-MM)	
M	35	1	**112-9073**	8	STUD-WELD (M12X1.75X21.1-MM)	
	37	2	**141-0008**	1	PLATE	
	43	1	**5I-3333**	1	PLATE	
	44	1,2	**7T-1099**	28	LINK	
M	45	1	**7X-0750**	2	BOSS-WELD (M10X1.5X55-MM)	
M	46	1	**7X-0752**	2	BOSS-WELD (M10X1.5X65-MM OAL)	
M	47	2	**7Y-8763**	2	BOSS (M10X1.5X25-MM)	
M	48	1	**8T-3635**	3	STUD-WELD (M12X1.75X34.93-MM OAL)	
M	49	1	**8T-3734**	1	BOSS-WELD (M10X1.5X40-MM)	
M	50	1	**8T-3851**	19	BOSS-WELD (M10X1.5X17.5-MM)	
M	51	1	**8T-4219**	2	STUD-WELD (M10X1.5X17.5-MM)	
M	52	1	**8T-4935**	4	BOSS-WELD (M10X1.5X45-MM)	
M	53	1,2	**8T-4967**	8	STUD-WELD (M10X1.5X23-MM OAL)	
	54	2	**8X-5147**	1	BLOCK	
	55	1	**8X-5963**	2	BLOCK	
	56	1	**9C-7863**	2	BLOCK	
	57	2	**9C-7929**	1	BLOCK	
M	58	2	**9R-1733**	1	BOSS (M10X1.5X66.5-MM)	
	59	1	**9R-2060**	4	BOSS (M10X1.5X21-MM)	
M	60	1	**8Y-4489**	2	BOSS (M10X1.5-THD)	
M	61	1	**9R-2640**	2	BOSS (M12X1.75X25-MM)	

M-METRIC PART

236-8975 FRAME AS-REAR *(contd.)* i03610200

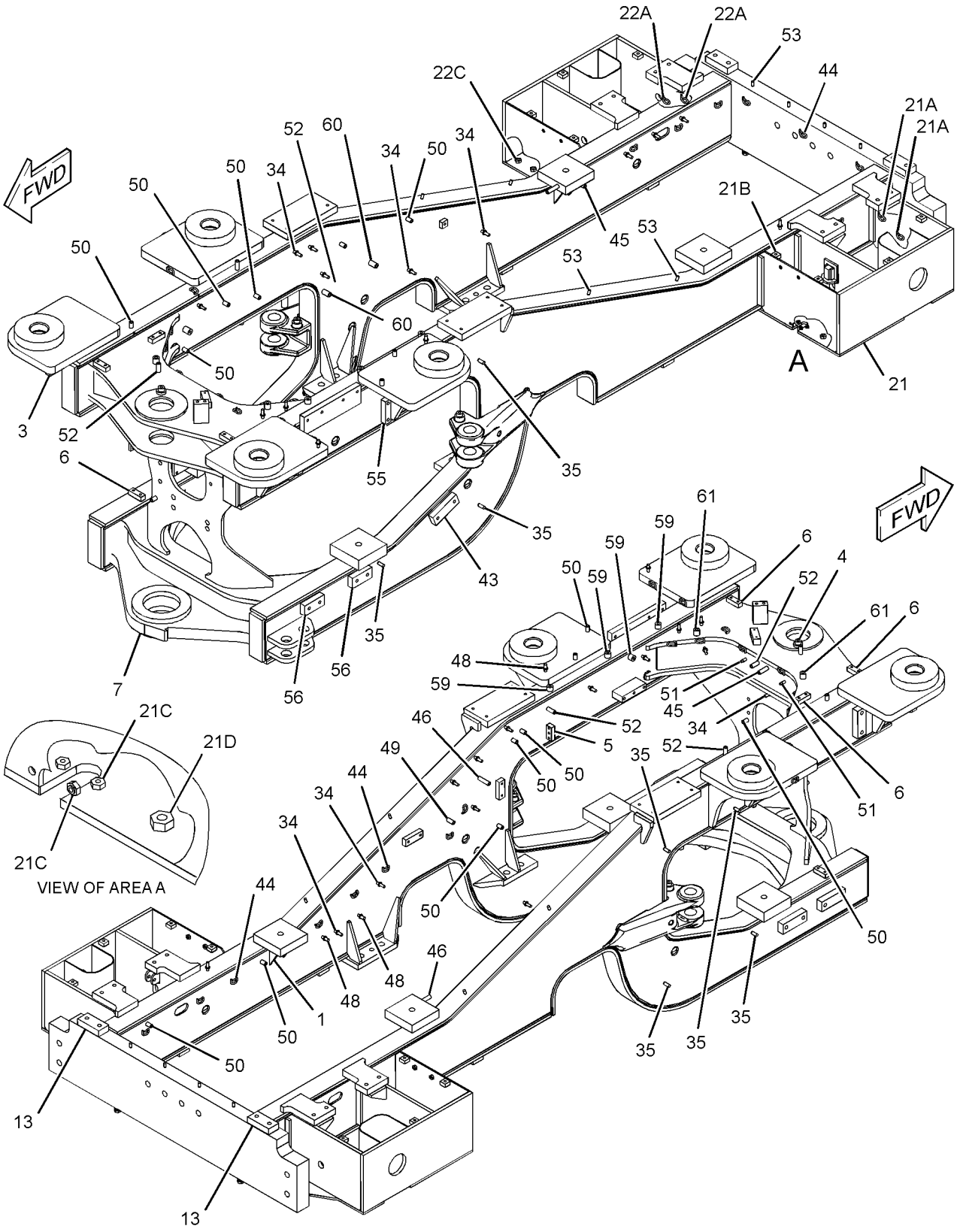

GRAPHIC #1 g01903019

236-8975 FRAME AS-REAR *(contd.)* **i03610200**

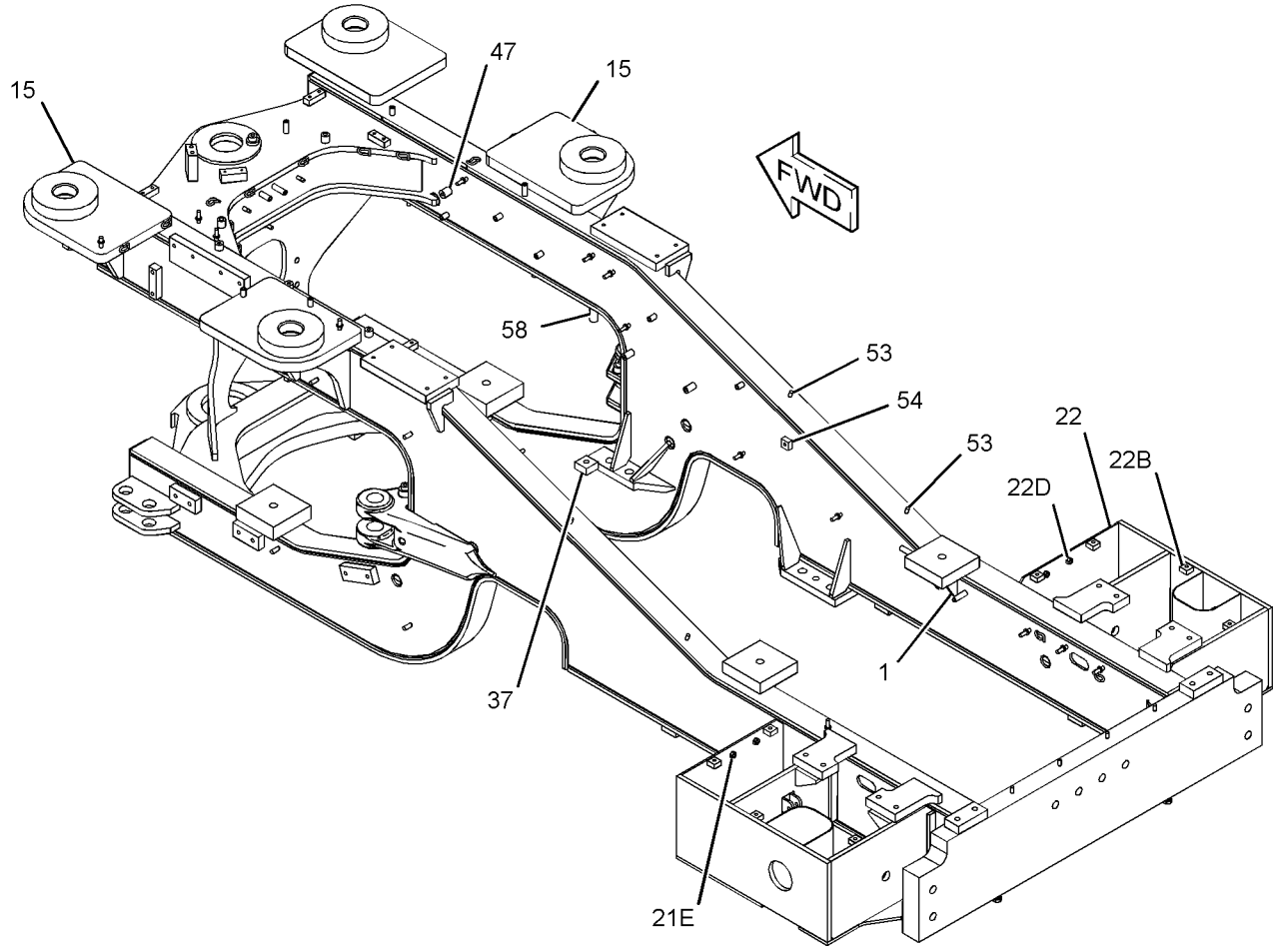

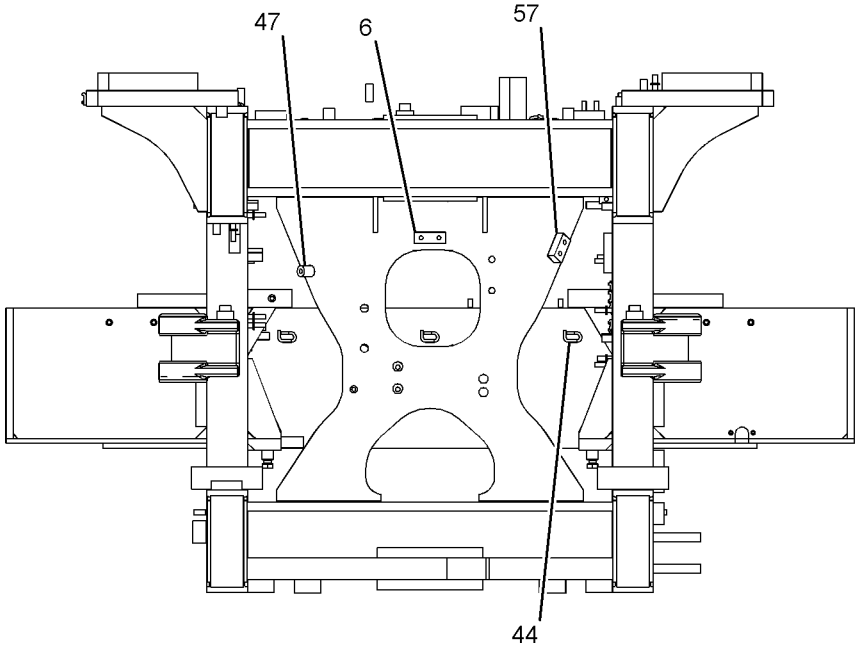

FRONT VIEW

GRAPHIC #2 **<END>** g01903020

FRAME AND BODY

242-0772 GRILL GP-RADIATOR

S/N: RYF1-UP

PART OF 292-6010 HOOD & GUARD GP

SMCS-7170 **i03610461**

NOTE	REF NO	GRAPHIC REF	PART NUMBER	QTY	PART NAME 1 2 3 4 5 6 (PRODUCT LEVEL)	SEE PAGE
	1	1	**3B-2062**	1	PIN	
	2	1	**5P-0372**	2	LOCK PIN	
	3	1	**6W-5817**	1	SPRING	
	4	1	**6W-5818**	1	LATCH	
	5	1	**296-9937**	1	PIN AS	
	6	1	**174-8663**	1	PIN	
	7	1	**229-7534**	1	LATCH AS	
	8	1	**236-9939**	1	PLATE AS	
		1	**8T-4121**	2	WASHER-HARD (11X21X2.5-MM THK)	
	9	1	**242-0773**	1	GRILL AS-REAR	
	9A	1	**8G-0871**	1	HANDLE	
	9B	1	**9V-0334**	1	ANGLE	
	9C	1	**9V-0453**	1	BUSHING-TERMINAL	
	9D	1	**174-3085**	3	HINGE AS	
	10	1	**264-4437**	2	BAFFLE	
	11	1	**287-7892**	1	ANGLE (RADIATOR)	
	12	1	**096-3781**	1	PIN-CLEVIS	
	13	1	**5P-1076**	4	WASHER-HARD (13.5X30X4-MM THK)	
	14	1	**7X-7729**	8	WASHER (11X25X3-MM THK)	
	15	1	**8T-4121**	4	WASHER-HARD (11X21X2.5-MM THK)	
M	16	1	**8T-4133**	6	NUT (M10X1.5-THD)	
M	17	1	**8T-4136**	8	BOLT (M10X1.5X25-MM)	
M	18	1	**9X-2040**	4	SCREW-TRUSS HEAD (M10X1.5X25-MM)	
J	19	1	**310-7066**		SEAL (860-MM)	

J-ORDER BY THE MILLIMETER
M-METRIC PART

242-0772 **GRILL GP-RADIATOR** *(contd.)* **i03610461**

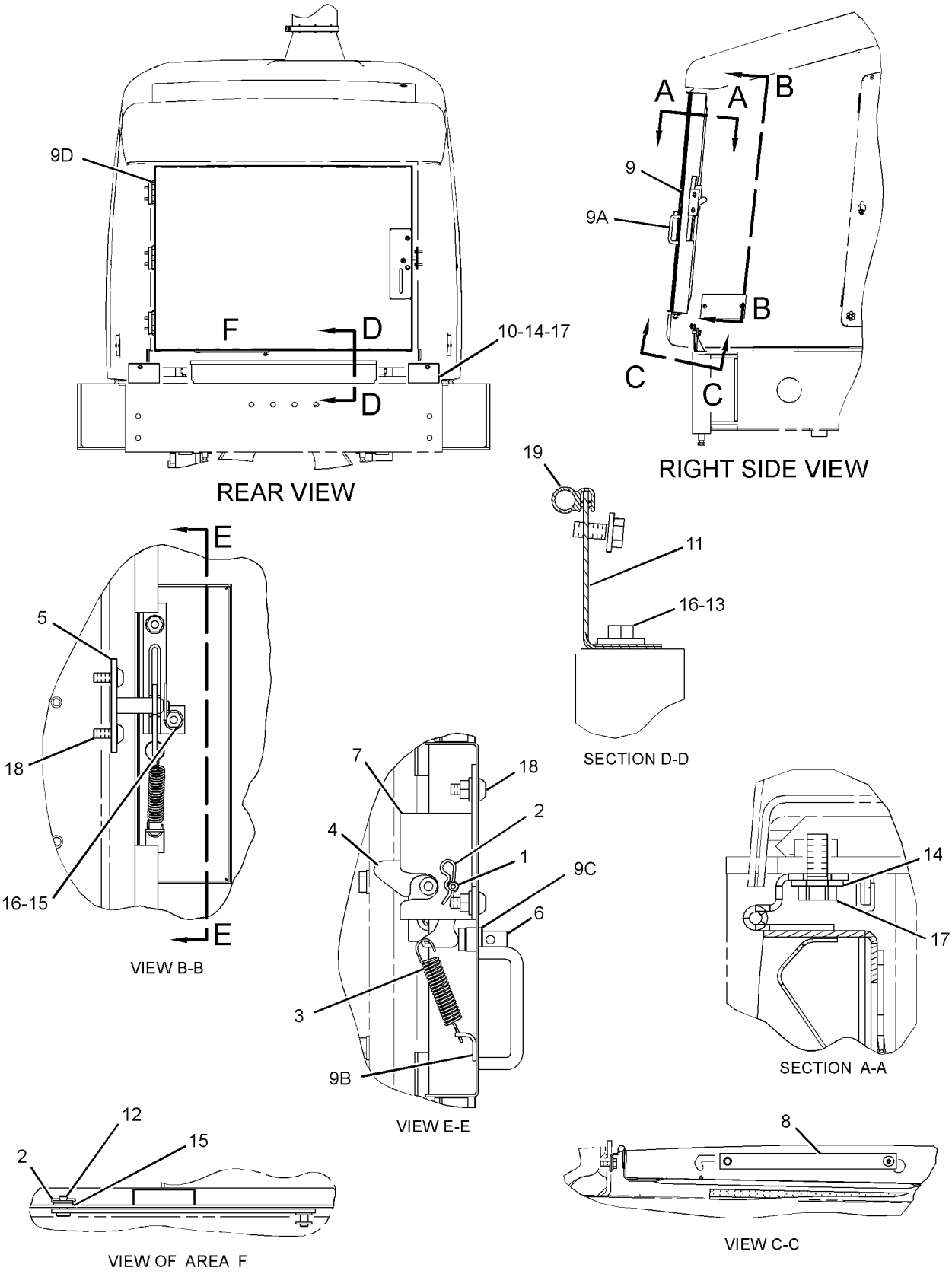

GRAPHIC #1 **<END>** g01944859

FRAME AND BODY

231-6046 GUARD GP-AXLE SEAL

S/N: RYF1-UP

AN ATTACHMENT

SMCS-3259, 3260 **i03626528**

NOTE	REF NO	GRAPHIC REF	PART NUMBER	QTY	PART NAME 1 2 3 4 5 6 (PRODUCT LEVEL)	SEE PAGE
	1	1	**122-4771**	8	PLATE	
	2	1	**122-4772**	8	GUARD AS	
					(EACH INCLUDES)	
M		1	**8T-3490**	4	NUT-WELD (M10X1.5-THD)	
	3	1	**231-6047**	4	SHAFT-AXLE	
	4	1	**8T-4121**	64	WASHER-HARD (11X21X2.5-MM THK)	
M	5	1	**8T-4196**	64	BOLT (M10X1.5X35-MM)	

M-METRIC PART

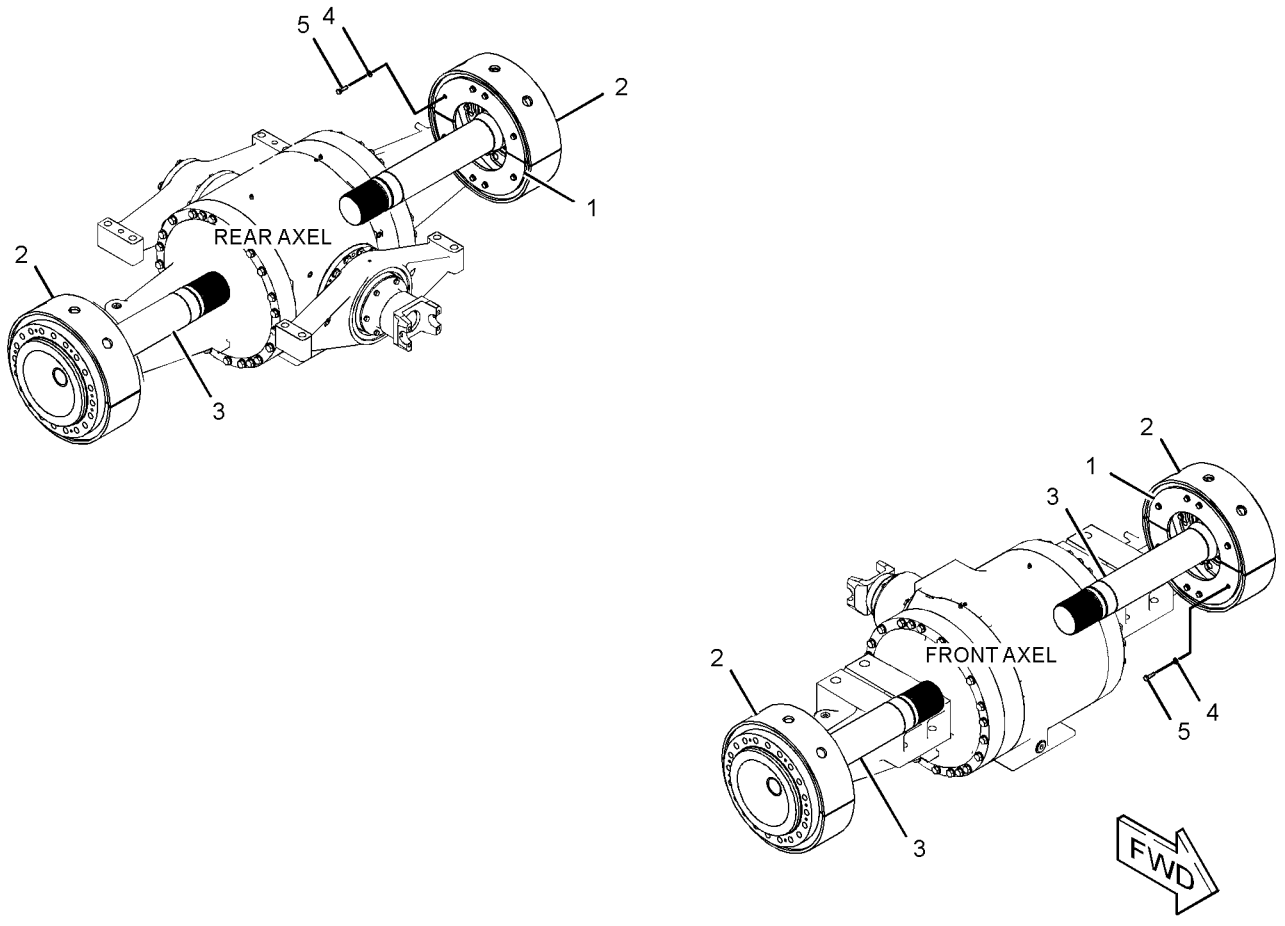

GRAPHIC #1 **<END>** g01333843

252-9543 GUARD GP-LOADER FRAME–FRONT

S/N: RYF1-UP

PART OF 236-9000 CHASSIS AR

SMCS-7054 **i03610244**

NOTE	REF NO	GRAPHIC REF	PART NUMBER	QTY	PART NAME 1 2 3 4 5 6 (PRODUCT LEVEL)	SEE PAGE
	1	1	**271-9032**	2	COVER	
	2	1	**271-9033**	1	ANGLE	
	3	1	**271-9034**	2	PLATE	
	4	1	**271-9035**	1	PLATE AS	
	5	1	**8T-2561**	5	WASHER-HARD (10.5X28.5X5-MM THK)	
	6	1	**8T-4121**	8	WASHER-HARD (11X21X2.5-MM THK)	
M	7	1	**8T-4133**	5	NUT (M10X1.5-THD)	
M	8	1	**8T-4136**	8	BOLT (M10X1.5X25-MM)	

M-METRIC PART

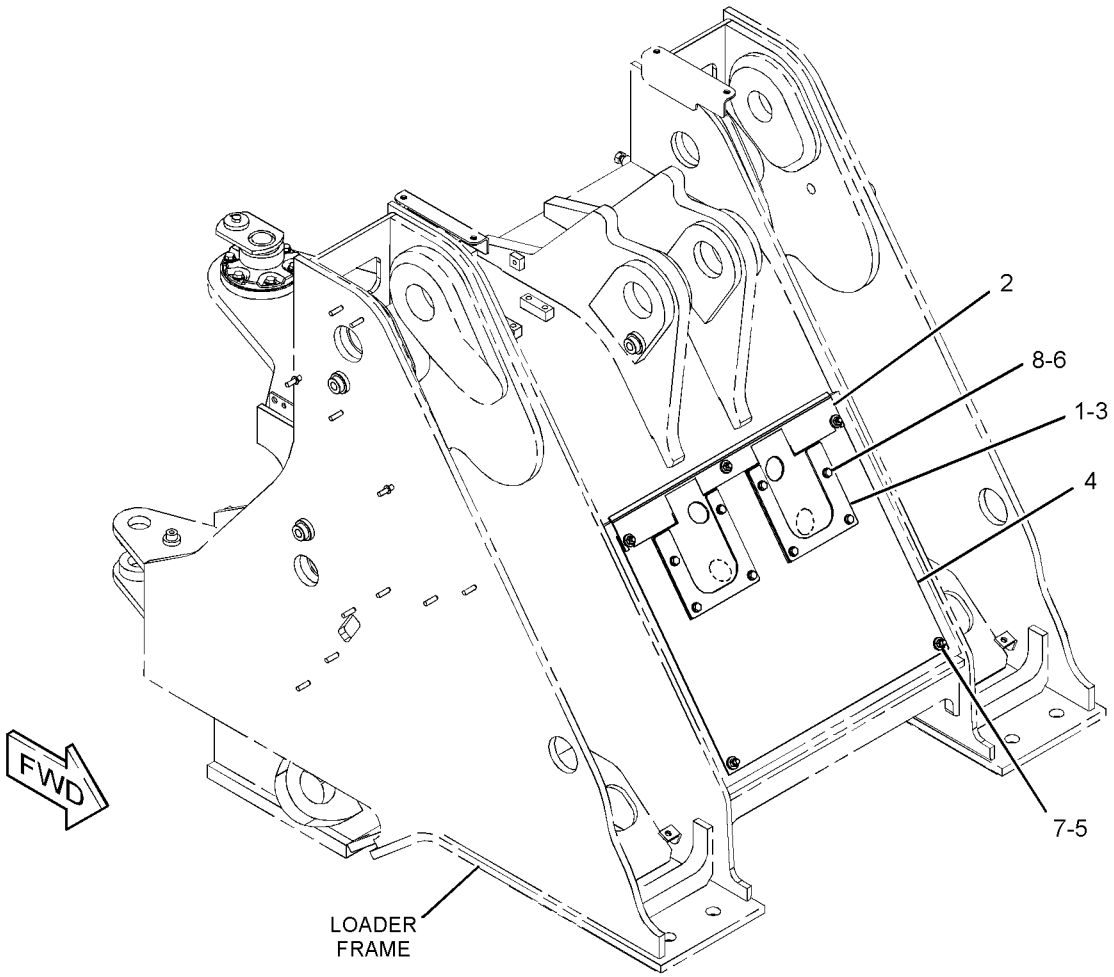

GRAPHIC #1 **<END>** g01189501

FRAME AND BODY

119-4376 GUARD GP-POWER TRAIN

S/N: RYF1-UP

AN ATTACHMENT

SMCS-7153 **i03626500**

NOTE	REF NO	GRAPHIC REF	PART NUMBER	QTY	PART NAME 1 2 3 4 5 6 (PRODUCT LEVEL)	SEE PAGE
	1	1	**135-4404**	1	COVER AS	
M		1	**8T-3490**	1	NUT-WELD (M10X1.5-THD)	
	2	1	**135-4555**	1	PLATE	
	3	1	**7X-0583**	4	WASHER-HARD (17X45X6-MM THK)	
M	4	1	**8T-4779**	4	BOLT (M16X2X35-MM)	
	5	1	**8T-4121**	4	WASHER-HARD (11X21X2.5-MM THK)	
M	6	1	**8T-4196**	4	BOLT (M10X1.5X35-MM)	

M-METRIC PART

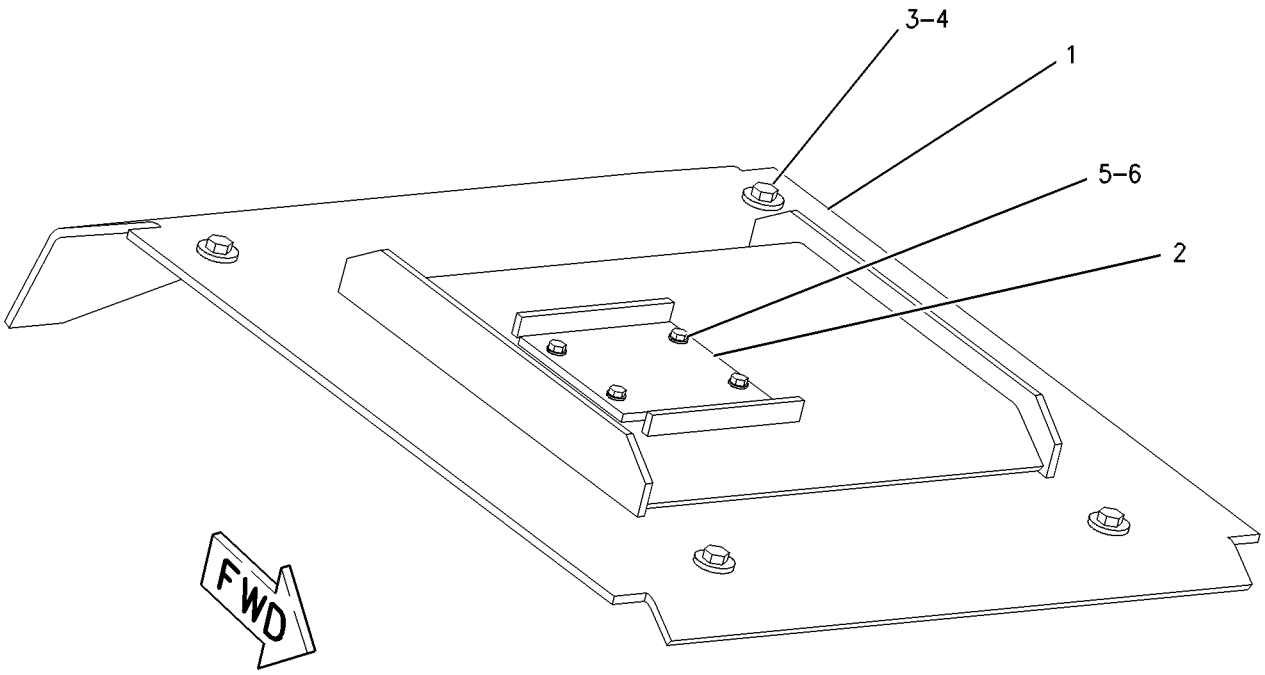

GRAPHIC #1 **<END>** g00484887

119-4401 HITCH GP-ARTICULATING

S/N: RYF1-UP

PART OF 236-9000 CHASSIS AR

SMCS-7057, 7100 **i03610275**

NOTE	REF NO	GRAPHIC REF	PART NUMBER	QTY	PART NAME 1 2 3 4 5 6 (PRODUCT LEVEL)	SEE PAGE
	1	1	**1B-3934**	2	CUP-BEARING	
B	2	1	**1V-8848**	1	SHIM PACK (INCLUDES 20-SHIMS)	
	3	1	**1V-8852**	1	CAP	
	4	1	**3B-8489**	2	FITTING-GREASE	
	5	1	**3F-7183**	2	CONE-BEARING	
	6	1	**4K-6780**	1	SPACER	
	7	1	**4K-6781**	1	SPACER	
	8	1	**4K-7461**	1	SEAL-LIP TYPE	
	9	1	**4K-7462**	1	SEAL-LIP TYPE	
	10	1	**6H-3999**	2	SEAL-LIP TYPE	
	11	1	**7D-8636**	2	CONE-BEARING	
	12	1	**7D-8637**	2	CUP-BEARING	
	13	1	**236-5925**	1	RETAINER	
	14	1	**115-2955**	1	PIN AS	
	15	1	**115-3183**	1	CAP	
B	16	1	**118-8276**	1	SHIM PACK (INCLUDES 20-SHIMS)	
	17	1	**134-3079**	1	PLATE	
	18	1	**134-3080**	1	PIN	
	19	1	**134-3081**	1	CAP	
B	20	1	**137-7668**	1	SHIM PACK (INCLUDES 19 SHIMS)	
	21	1	**137-7669**	1	CAP	
	22	1	**4V-1901**	2	BEARING-SLEEVE	
M	23	1	**7X-2549**	6	BOLT (M12X1.75X100-MM)	
	24	1	**8T-4123**	2	WASHER (22X35X3.5-MM THK)	
M	25	1	**8T-4139**	1	BOLT (M12X1.75X30-MM)	
M	26	1	**8T-4183**	6	BOLT (M12X1.75X40-MM)	
	27	1	**8T-4223**	20	WASHER-HARD (13.5X25.5X3-MM THK)	
M	28	1	**8T-5041**	8	BOLT (M12X1.75X120-MM)	
M	29	1	**8T-6430**	2	BOLT (M20X2.5X50-MM)	

B-USE AS REQUIRED
M-METRIC PART

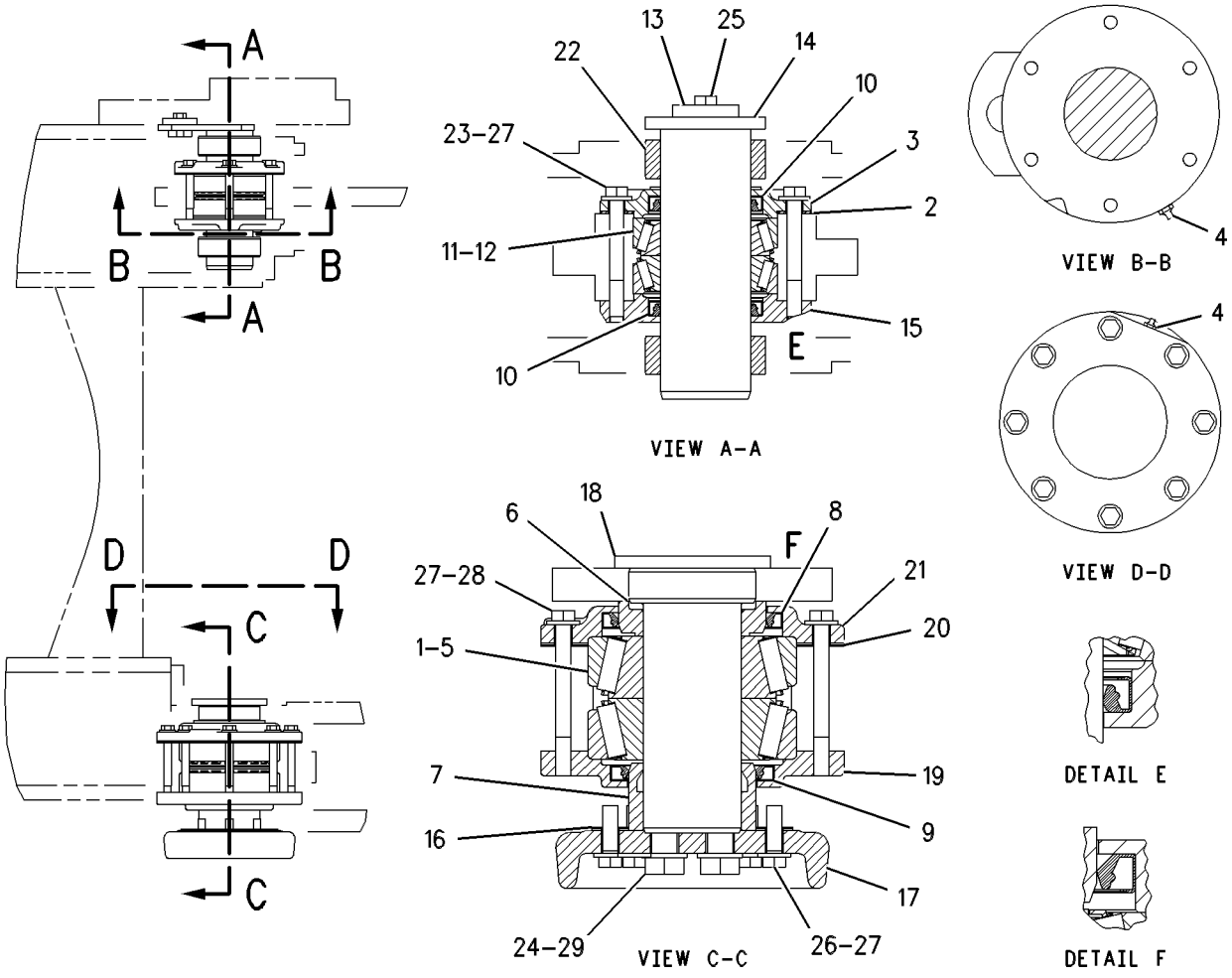

GRAPHIC #1 **<END>** g00284542

292-6010 HOOD & GUARD GP

S/N: RYF1-UP

PART OF 236-9000 CHASSIS AR

SMCS-7251 **i03610341**

NOTE	REF NO	GRAPHIC REF	PART NUMBER	QTY	PART NAME 1 2 3 4 5 6 (PRODUCT LEVEL)	SEE PAGE
	1	2	**125-7037**	1	INSERT	
	2	3	**131-1586**	2	ROD AS	
	3	3	**239-8410**	1	PLATE	
Y	4	1	*242-0772*	1	GRILL GP-RADIATOR	344
	5	2	**244-1046**	2	BRACKET	
	6	1	**312-3146**	1	TUBE AS	
Y	8	1	*250-5593*	1	PANEL GP-SIDE (HOOD, LH)	363
	9	1	*250-5594*	1	PANEL GP (RH)	
		1	**7X-0603**	7	WASHER-HARD (9.9X35X2.5-MM THK)	
		1	**148-8240**	7	CLIP	
		1	**240-9133**	1	INSULATION-HOOD (RH)	
		1	**250-5596**	1	PANEL AS-SIDE (RH)	
Y	10	1	*250-5599*	1	PANEL GP-TOP (HOOD)	366
	11	3	**252-5175**	1	BRACKET AS	
	12	2	**252-5180**	1	SUPPORT AS	
	13	3	**252-5182**	1	BRACKET AS	
Y	14	1	*292-6003*	1	DOOR GP-ACCESS (HOOD SIDE, LH)	332
Y	15	1	*292-6004*	1	DOOR GP-ACCESS (HOOD SIDE, RH)	333
	16	1	**292-6009**	1	GRILL AS-TOP (HOOD)	
	17	3	**3B-4611**	2	PIN-COTTER	
	18	3	**4M-7470**	6	GROMMET	
M	19	2	**5C-2890**	4	NUT (M6X1-THD)	
	20	2,3	**7X-7729**	40	WASHER (11X25X3-MM THK)	
	21	2,3	**8T-4121**	38	WASHER-HARD (11X21X2.5-MM THK)	
M	22	2,3	**8T-4133**	20	NUT (M10X1.5-THD)	
M	23	2,3	**8T-4196**	56	BOLT (M10X1.5X35-MM)	
	24	3	**9M-5884**	6	BUMPER	
M	25	3	**9X-2044**	2	SCREW-TRUSS HEAD (M6X1X16-MM)	
	26	2	**9X-8256**	4	WASHER (6.6X12X2-MM THK)	
D	27	2	**6V-6604**		SEAL (0.9-M)	
E	28	1	**126-8472**		SEAL (7.5-CM EACH)	
J	29	2	**310-7066**		SEAL (1160-MM)	
J	29A	2	**310-7066**		SEAL (250-MM)	
J	29B	2	**310-7066**		SEAL (290-MM)	
E	30	1	**300-7318**		SEAL (148-CM)	
E	31	2	**120-5281**		SEAL (103.5-CM EACH)	
E	32	2	**190-6616**		SEAL (115-CM)	

D-ORDER BY THE METER
E-ORDER BY THE CENTIMETER
J-ORDER BY THE MILLIMETER
M-METRIC PART
Y-SEPARATE ILLUSTRATION

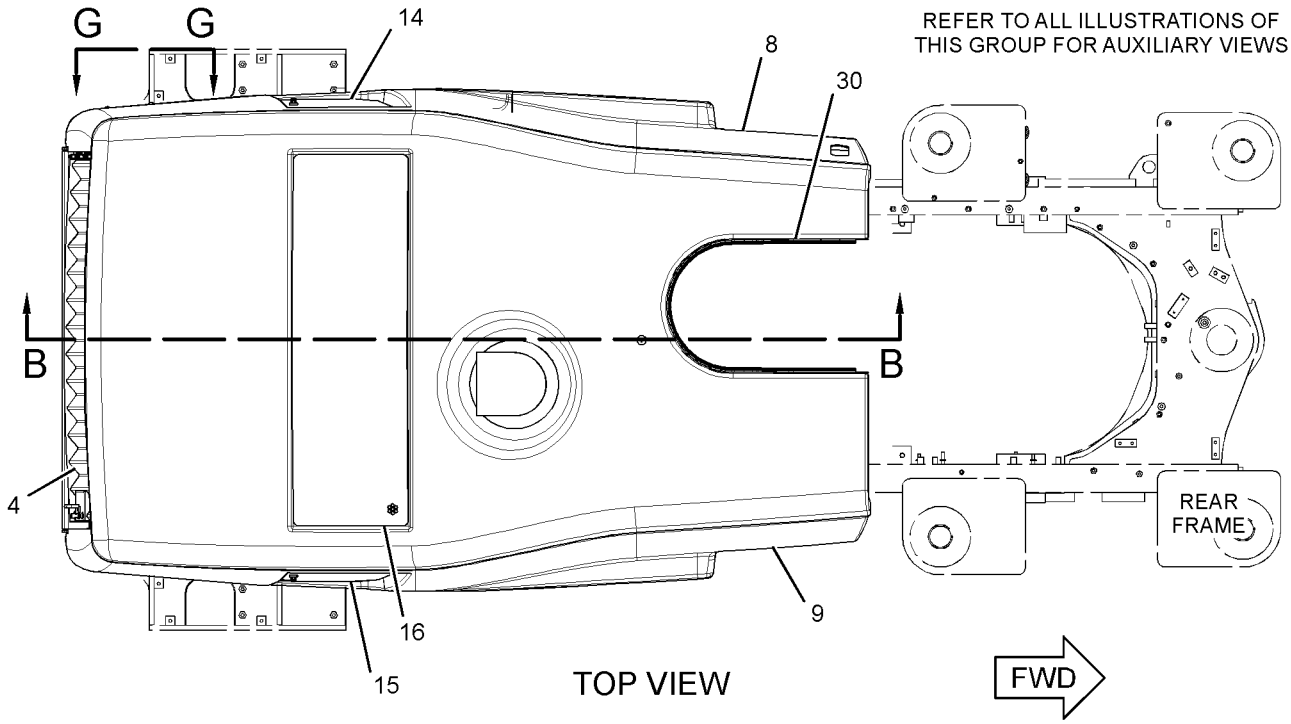

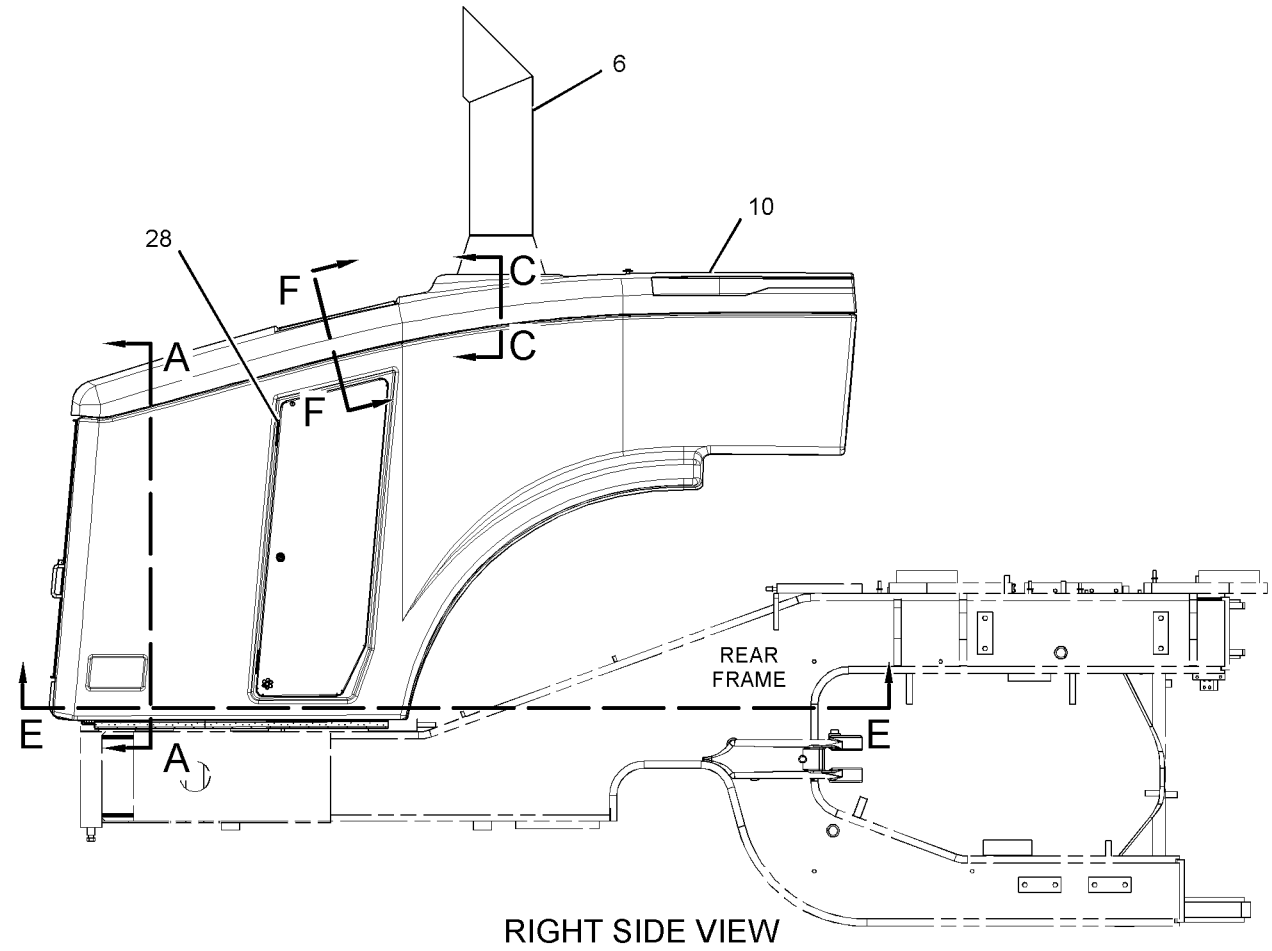

GRAPHIC #1

g01699473

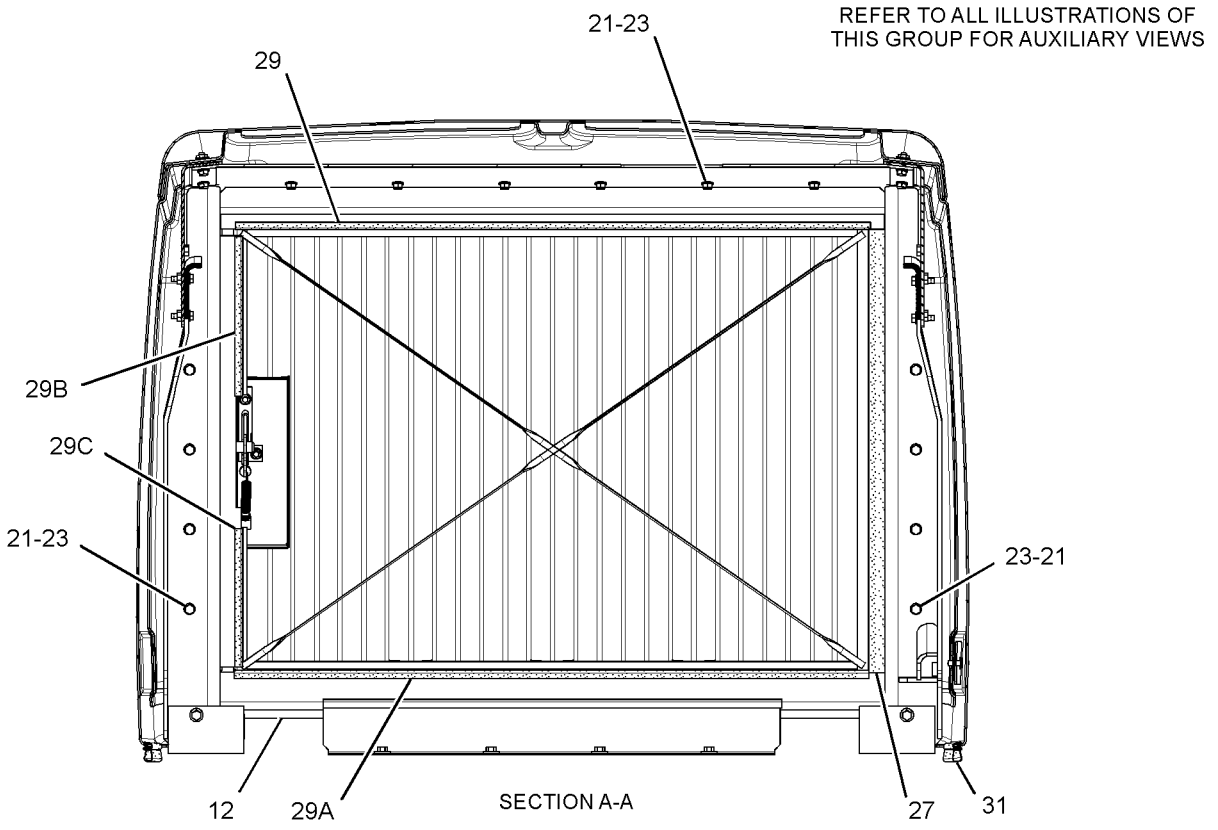

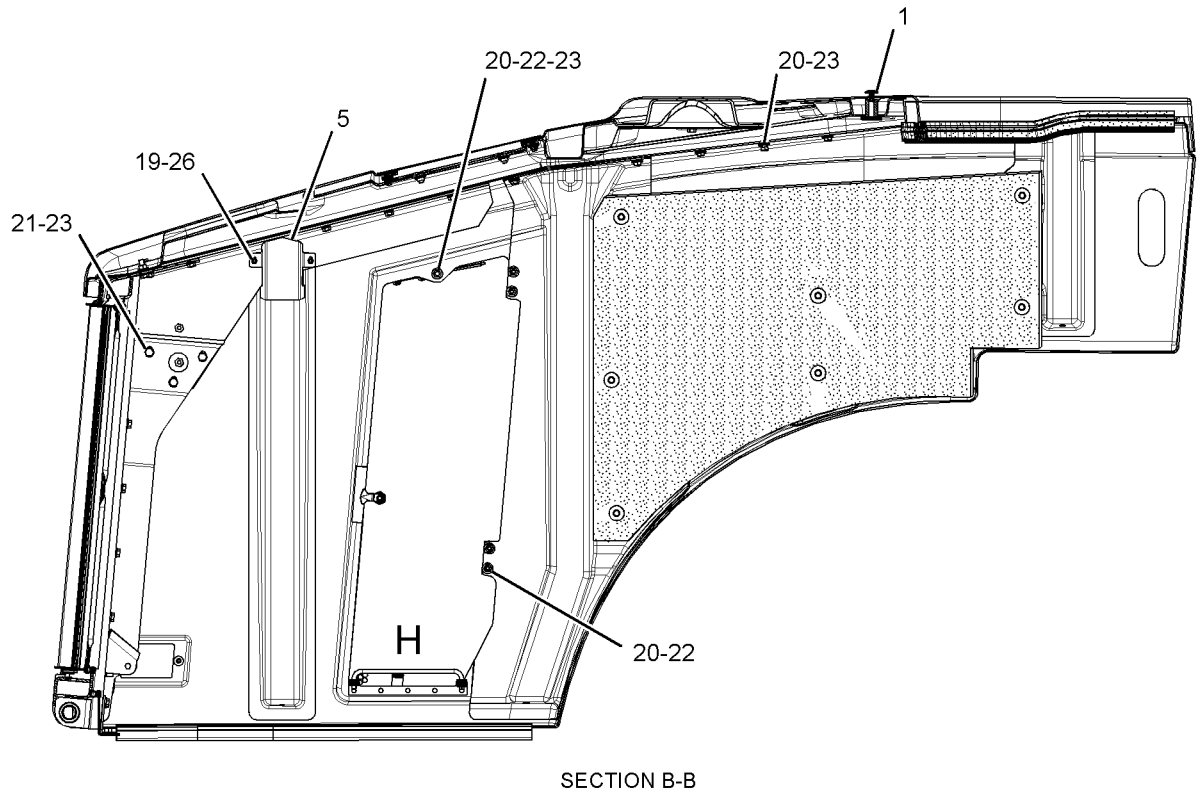

GRAPHIC #2 g01426301

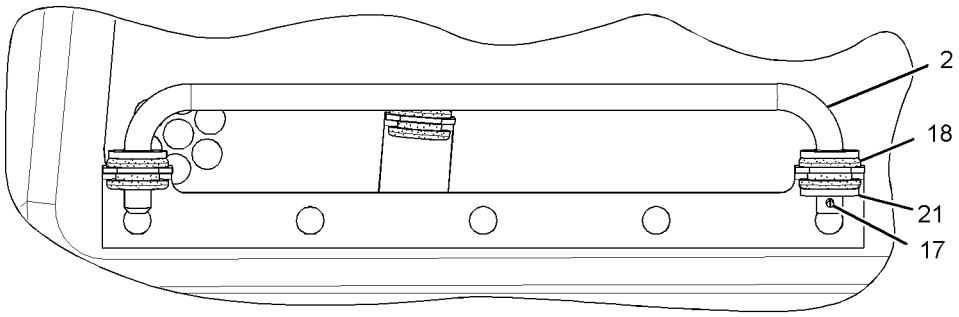

VIEW OF AREA H

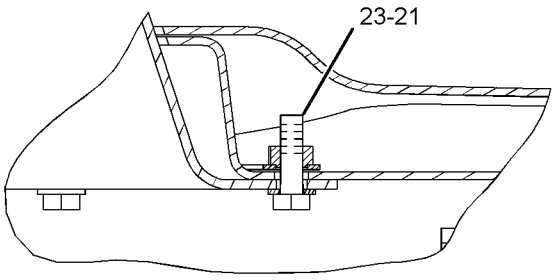

SECTION C-C

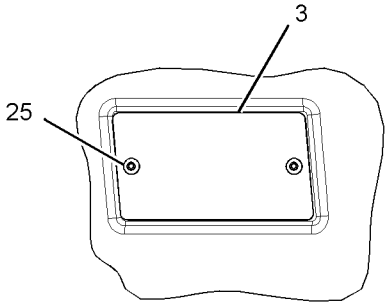

VIEW G-G

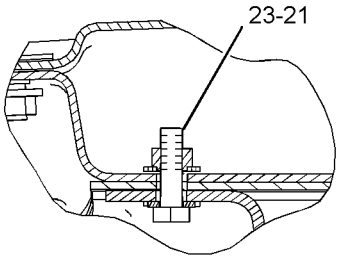

SECTION F-F

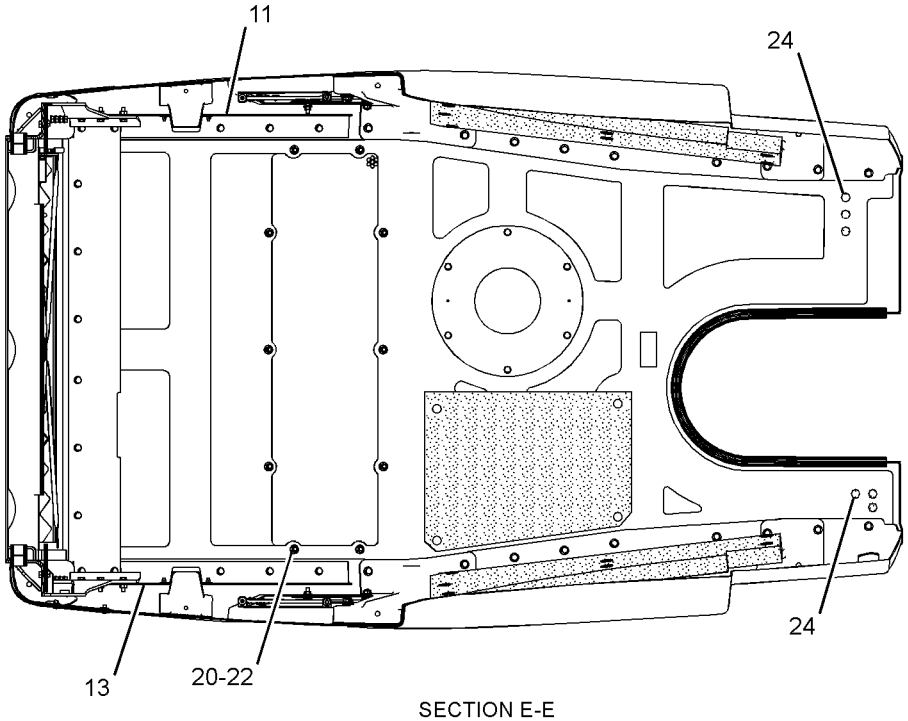

SECTION E-E

GRAPHIC #3 **<END>** g01426303

FRAME AND BODY

236-8978 LADDER GP

S/N: RYF1-UP

PART OF 236-9000 CHASSIS AR

SMCS-7254 **i03611967**

NOTE	REF NO	GRAPHIC REF	PART NUMBER	QTY	PART NAME 1 2 3 4 5 6 (PRODUCT LEVEL)	SEE PAGE
	1	2,3	**7W-8106**	32	SPACER (11.13X19.05X15-MM THK)	
	2	2,3	**234-1530**	4	STEP AS	
					(EACH INCLUDES)	
M		2,3	**8T-3490**	4	NUT-WELD (M10X1.5-THD)	
	3	2,3	**234-1531**	3	STEP	
	4	2,3	**234-3545**	16	PLATE	
	5	2,3	**234-5101**	4	BRACKET AS	
					(EACH INCLUDES)	
M		2,3	**8T-3490**	4	NUT-WELD (M10X1.5-THD)	
	6	2,3	**234-5107**	8	SUPPORT-STEP (RUBBER)	
	7	3	**243-6390**	1	HANDRAIL AS (LH)	
	8	2	**243-6391**	1	HANDRAIL AS (RH)	
	9	3	**243-6409**	1	HANDRAIL AS (LH)	
	10	2	**243-6410**	1	HANDRAIL AS (RH)	
	11	3	**244-3541**	1	LADDER AS (LH)	
	12	3	**309-3949**	1	SUPPORT AS	
	13	2	**245-9087**	1	LADDER AS (RH)	
	14	2,3	**5P-1076**	10	WASHER-HARD (13.5X30X4-MM THK)	
	15	1,3	**7X-7729**	12	WASHER (11X25X3-MM THK)	
	16	1,2,3	**8T-4121**	48	WASHER-HARD (11X21X2.5-MM THK)	
M	17	2,3	**8T-4139**	22	BOLT (M12X1.75X30-MM)	
M	18	2,3	**8T-4186**	32	BOLT (M10X1.5X40-MM)	
M	19	1,3	**8T-4195**	28	BOLT (M10X1.5X30-MM)	
	20	2,3	**8T-4223**	12	WASHER-HARD (13.5X25.5X3-MM THK)	

M-METRIC PART

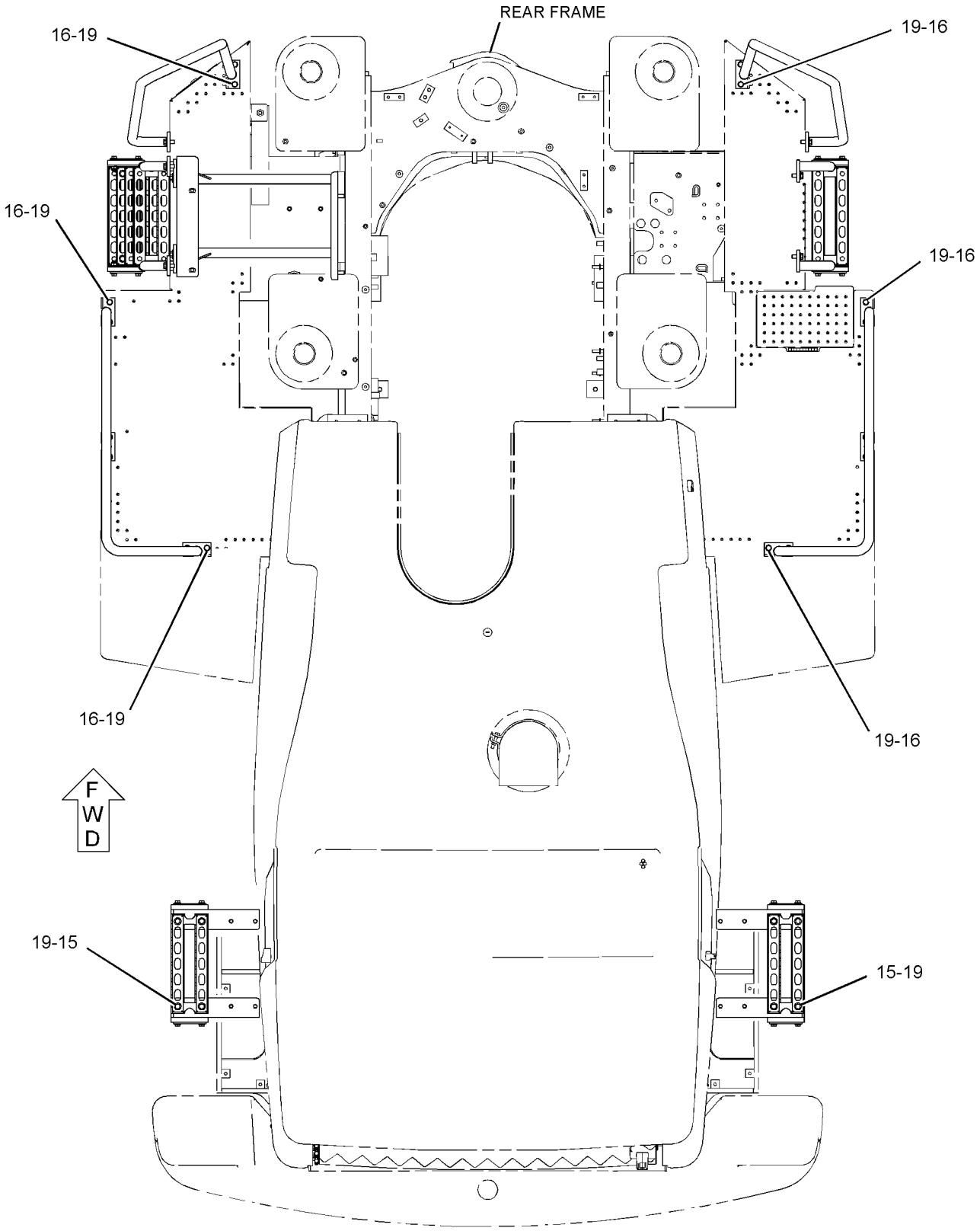

TOP VIEW

GRAPHIC #1

g01389273

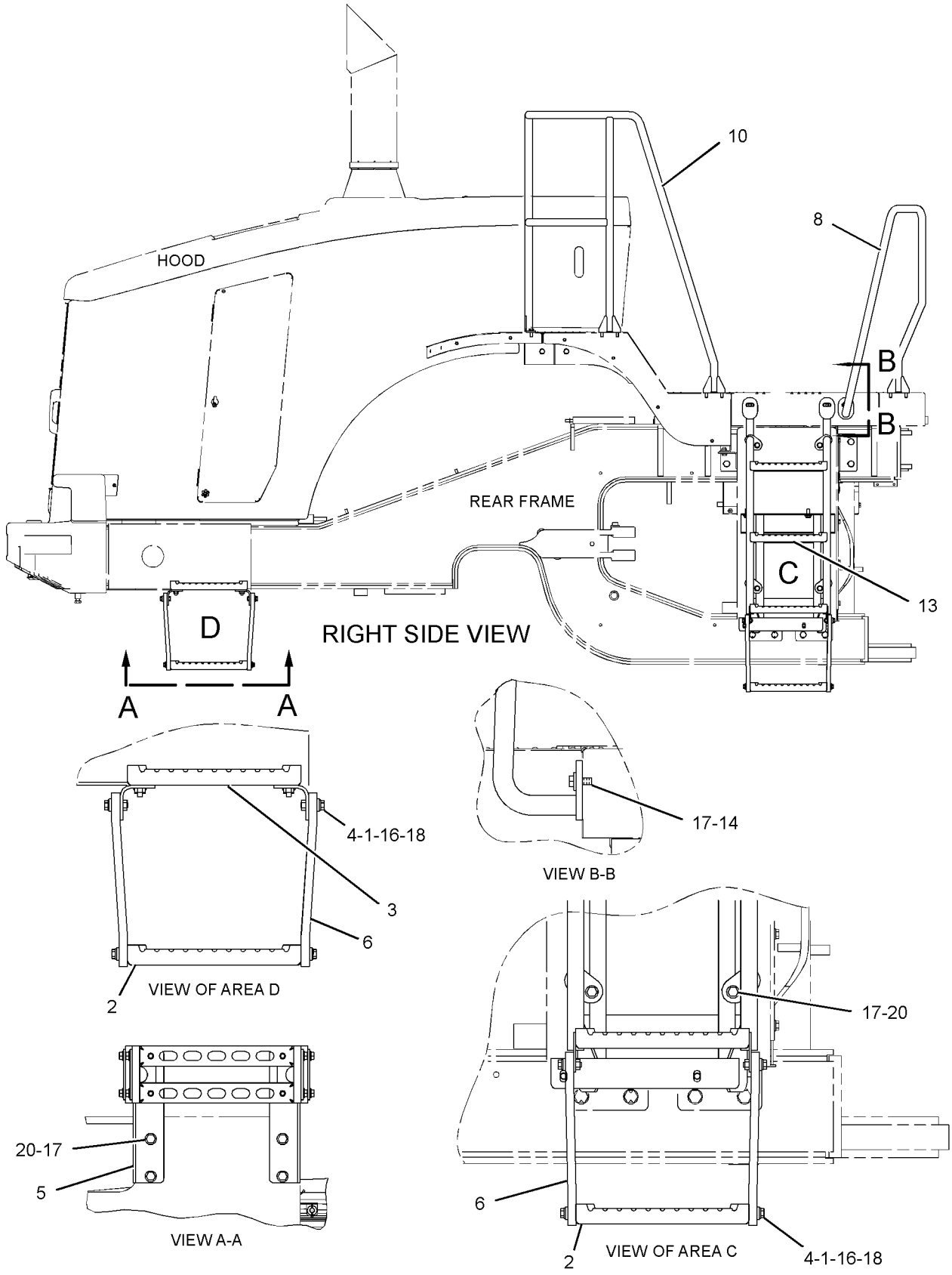

GRAPHIC #2

g01389274

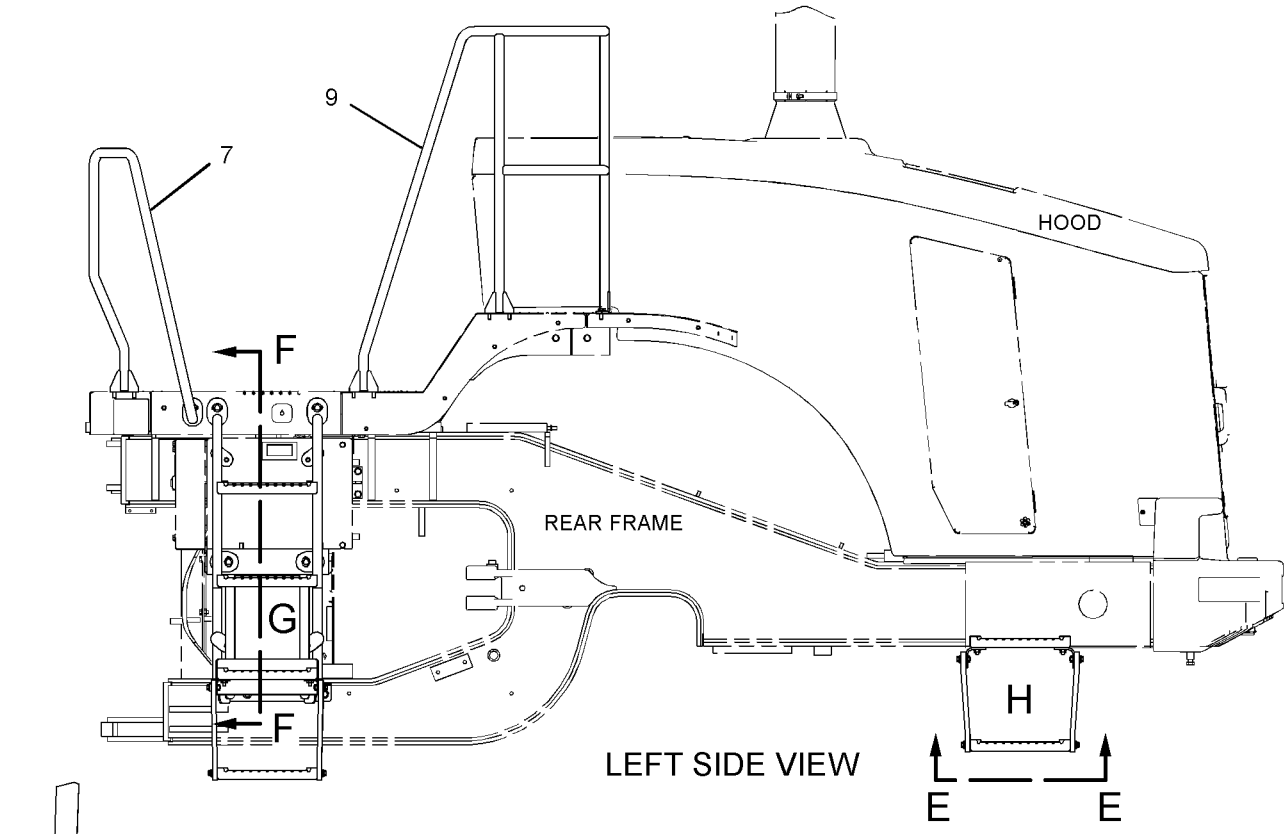

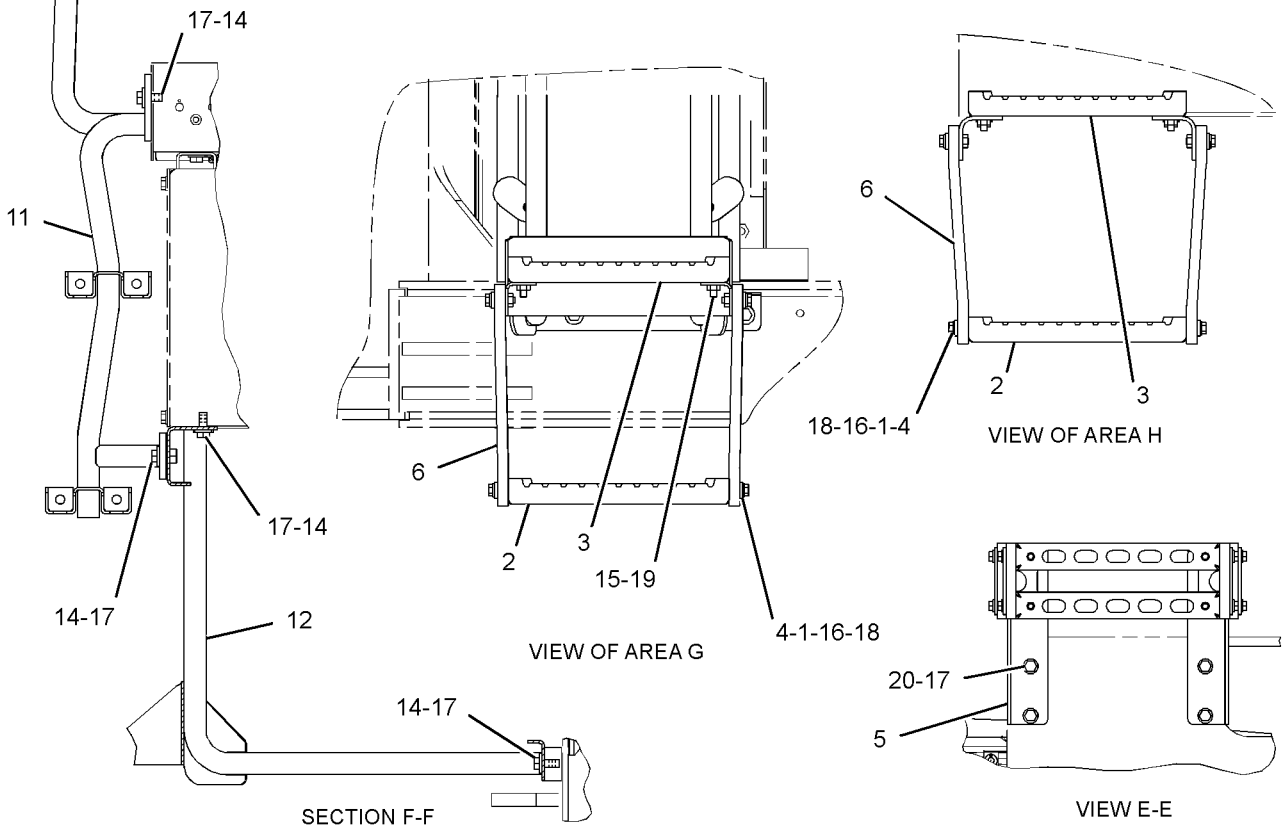

GRAPHIC #3 **<END>** g01389283

FRAME AND BODY

236-8982 LINES GP-GREASE

S/N: RYF1-UP

PART OF 236-9000 CHASSIS AR

SMCS-7510 **i03612605**

NOTE	REF NO	GRAPHIC REF	PART NUMBER	QTY	PART NAME 1 2 3 4 5 6 (PRODUCT LEVEL)	SEE PAGE
	1	2	**4H-1225**	6	WASHER (11X22X6-MM THK)	
	2	2	**5B-0935**	7	FITTING-GREASE	
	3	2	**5K-9242**	1	UNION-FLARED	
	4	1,2	**5K-9243**	7	ELBOW-FLARED	
	5	2	**5K-9979**	1	CONNECTOR	
	6	2	**5P-5461**	7	NUT (1/8-27-THD)	
	7	2	**5P-5463**	7	ADAPTER-LUBRICATION	
	8	1	**6L-3616**	4	CONNECTOR	
	9	1	**111-4838**	6	CLIP	
	10	1	**111-4839**	6	STRAP	
	11	1	**197-3855**	1	TUBE AS	
	12	1	**197-3856**	1	TUBE AS	
	13	1	**197-6629**	1	TUBE AS	
	14	2	**245-6800**	1	TUBE AS	
	15	2	**245-6801**	1	TUBE AS	
	16	2	**245-6802**	1	TUBE AS	
	17	1	**245-6804**	1	TUBE AS	
	18	1	**256-7880**	1	HOSE AS	
	19	1	**256-7881**	1	HOSE AS	
	20	1	**256-7882**	1	HOSE AS	
	21	1	**256-7883**	1	HOSE AS	
I	22	2	**275-3514**	1	HOSE AS	
	23	1,2	**2B-2404**	8	CLIP	
	24	2	**3B-6552**	4	ELBOW-PIPE	
	25	1,2	**5K-2298**	6	CLIP	
	26	1	**6V-3265**	2	CLIP	
	27	1	**7D-7233**	1	CLIP	
	28	1	**8M-2773**	1	CLIP	
	29	1,2	**8T-4121**	20	WASHER-HARD (11X21X2.5-MM THK)	
M	30	1,2	**8T-4133**	17	NUT (M10X1.5-THD)	
M	31	1	**8T-4136**	1	BOLT (M10X1.5X25-MM)	
M	32	1,2	**8T-4137**	2	BOLT (M10X1.5X20-MM)	
	33	1	**8T-4223**	2	WASHER-HARD (13.5X25.5X3-MM THK)	

I-REFER TO HYDRAULIC INFORMATION SYSTEM
M-METRIC PART

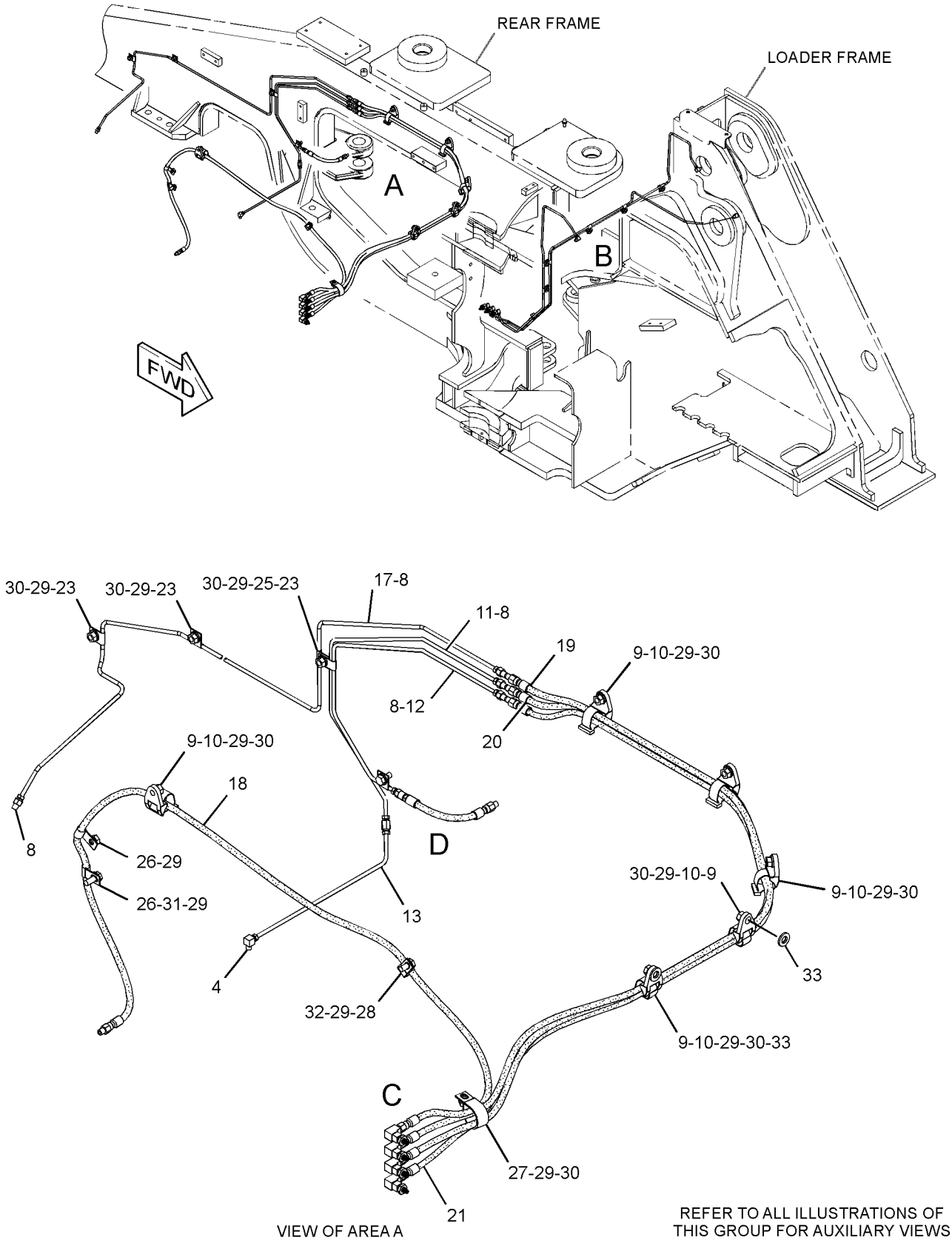

VIEW OF AREA A

REFER TO ALL ILLUSTRATIONS OF THIS GROUP FOR AUXILIARY VIEWS

GRAPHIC #1

g01795958

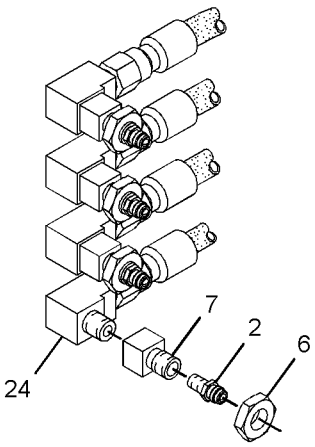

VIEW OF AREA C
(EXPLODED)

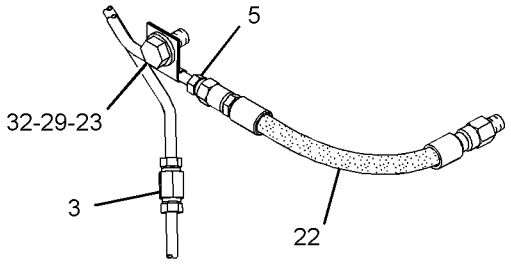

VIEW OF AREA D

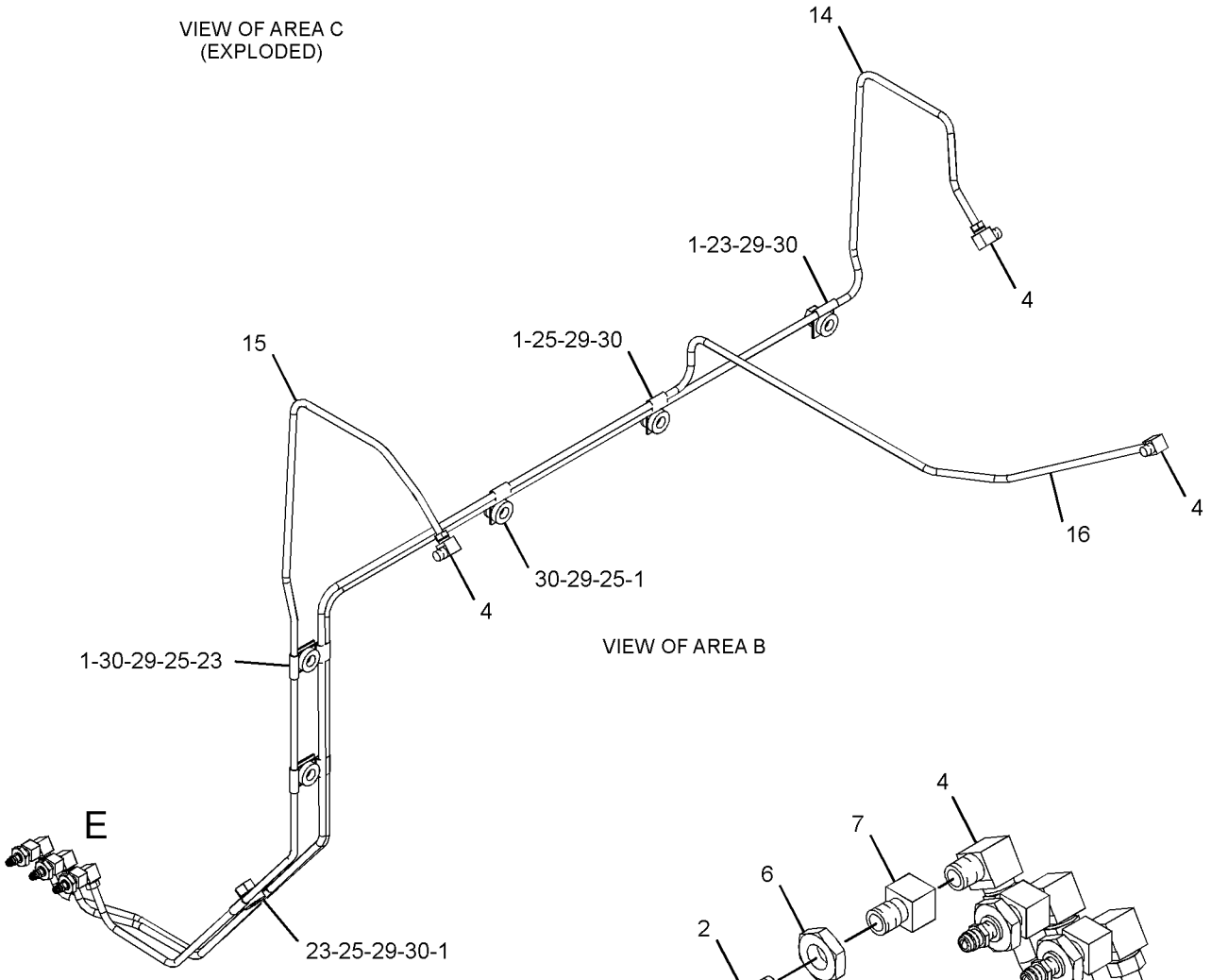

VIEW OF AREA B

VIEW OF AREA E
(EXPLODED)

GRAPHIC #2 **<END>** g01795974

FRAME AND BODY

112-6973 LINK GP-STEERING FRAME LOCK

S/N: RYF1-UP

PART OF 236-9000 CHASSIS AR

SMCS-7506 **i00810329**

NOTE	REF NO	GRAPHIC REF	PART NUMBER	QTY	PART NAME 1 2 3 4 5 6 (PRODUCT LEVEL)	SEE PAGE
	1	1	**5V-6380**	2	PIN	
	2	1	**8D-3791**	2	PIN	
	3	1	**127-1579**	1	LINK	

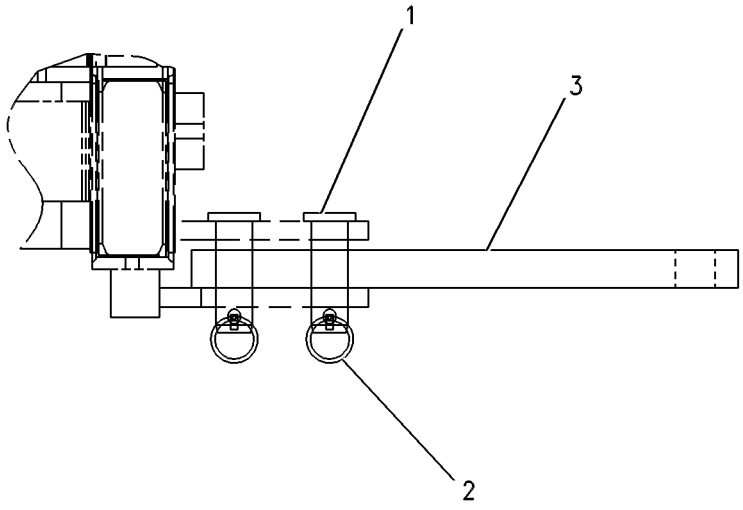

GRAPHIC #1 **<END>** g00262252

250-5593 PANEL GP-SIDE–HOOD, LH

S/N: RYF1-UP

PART OF 292-6010 HOOD & GUARD GP

SMCS-7267 **i03611945**

NOTE	REF NO	GRAPHIC REF	PART NUMBER	QTY	PART NAME 1 2 3 4 5 6 (PRODUCT LEVEL)	SEE PAGE
	1	1	**148-8240**	7	CLIP	
	2	1	**240-9134**	1	INSULATION-HOOD (LH)	
	3	1	**250-5595**	1	PANEL AS-SIDE (LH)	
	4	1	**7X-0603**	7	WASHER-HARD (9.9X35X2.5-MM THK)	

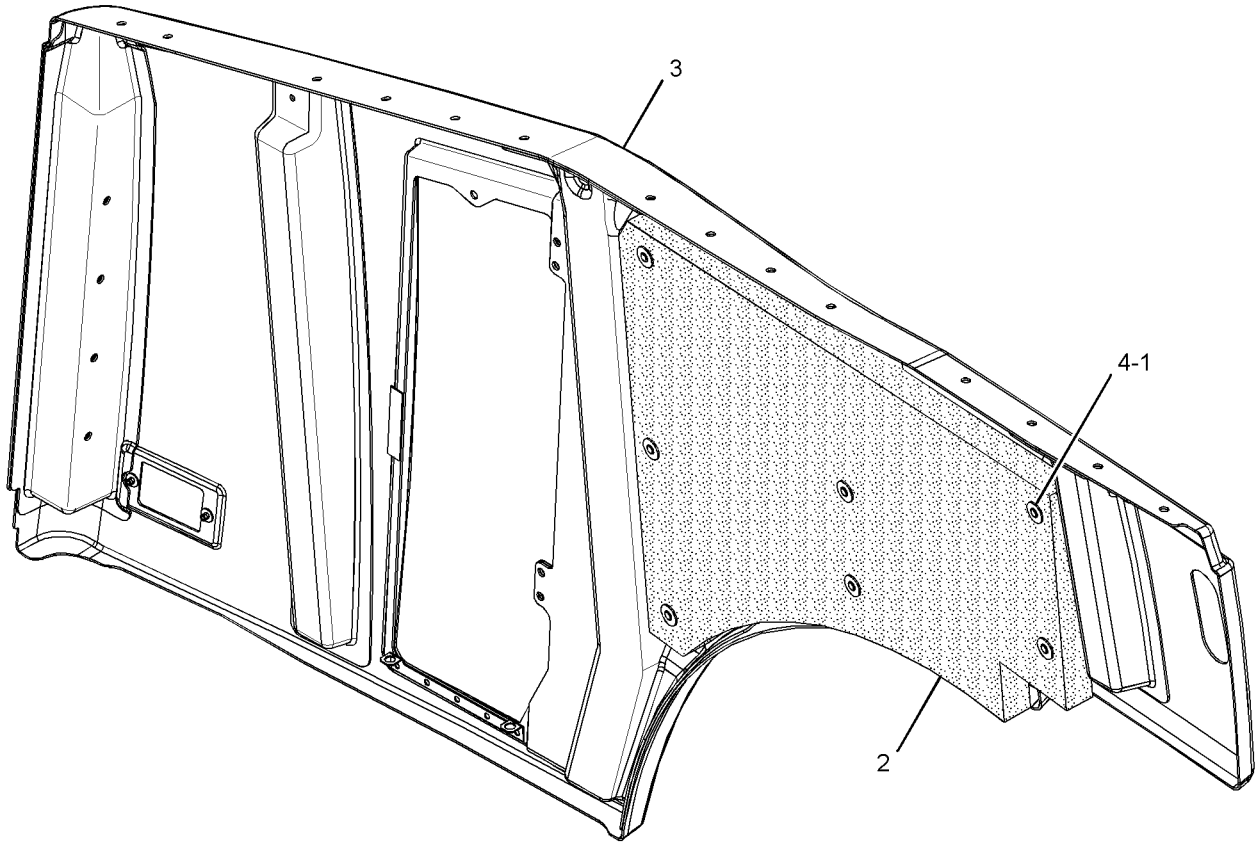

GRAPHIC #1 **<END>** g01389767

FRAME AND BODY

252-6980 PANEL GP-SIDE

S/N: RYF1-UP

PART OF 236-9000 CHASSIS AR

SMCS-7267 **i03614983**

NOTE	REF NO	GRAPHIC REF	PART NUMBER	QTY	PART NAME 1 2 3 4 5 6 (PRODUCT LEVEL)	SEE PAGE
	1	1	**4E-1384**	4	BUMPER-CONICAL	
	2	1	**5P-0372**	4	LOCK PIN	
	3	1	**242-7218**	1	INSULATION	
	4	1	**252-6971**	1	PANEL-OUTER (RH)	
	5	1	**252-6972**	1	PANEL-OUTER (LH)	
	6	1	**252-6973**	1	SUPPORT AS (RH)	
	7	1	**252-6974**	1	SUPPORT AS (LH)	
	8	1	**252-6979**	1	PLATE	
	9	1	**252-6982**	1	PLATE	
	10	1	**252-6985**	1	PLATE AS	
	11	1	**252-6986**	1	PLATE AS	
	12	1	**302-8817**	2	BRACKET	
	13	1	**302-8821**	1	PLATE AS (RH)	
	14	1	**302-8822**	1	PLATE AS (LH)	
	15	1	**096-3781**	4	PIN-CLEVIS	
M	16	1	**5C-7261**	4	NUT (M8X1.25-THD)	
	17	1	**7X-0589**	4	WASHER-HARD (12X28.5X5-MM THK)	
	18	1	**7X-7729**	40	WASHER (11X25X3-MM THK)	
M	19	1	**8T-0389**	14	LOCKNUT (M10X1.5-THD)	
	20	1	**8T-4121**	4	WASHER-HARD (11X21X2.5-MM THK)	
M	21	1	**8T-4133**	8	NUT (M10X1.5-THD)	
M	22	1	**8T-4183**	6	BOLT (M12X1.75X40-MM)	
M	23	1	**8T-4195**	22	BOLT (M10X1.5X30-MM)	
	24	1	**8T-4223**	6	WASHER-HARD (13.5X25.5X3-MM THK)	
D	25	1	**310-7066**		SEAL (1.2-M EACH)	
E	26	1	**246-0435**		SEAL (135.5-CM EACH)	
E	27	1	**167-0608**		SEAL (32-CM EACH)	
E	27A	1	**167-0608**		SEAL (10-CM EACH)	

D-ORDER BY THE METER
E-ORDER BY THE CENTIMETER
M-METRIC PART

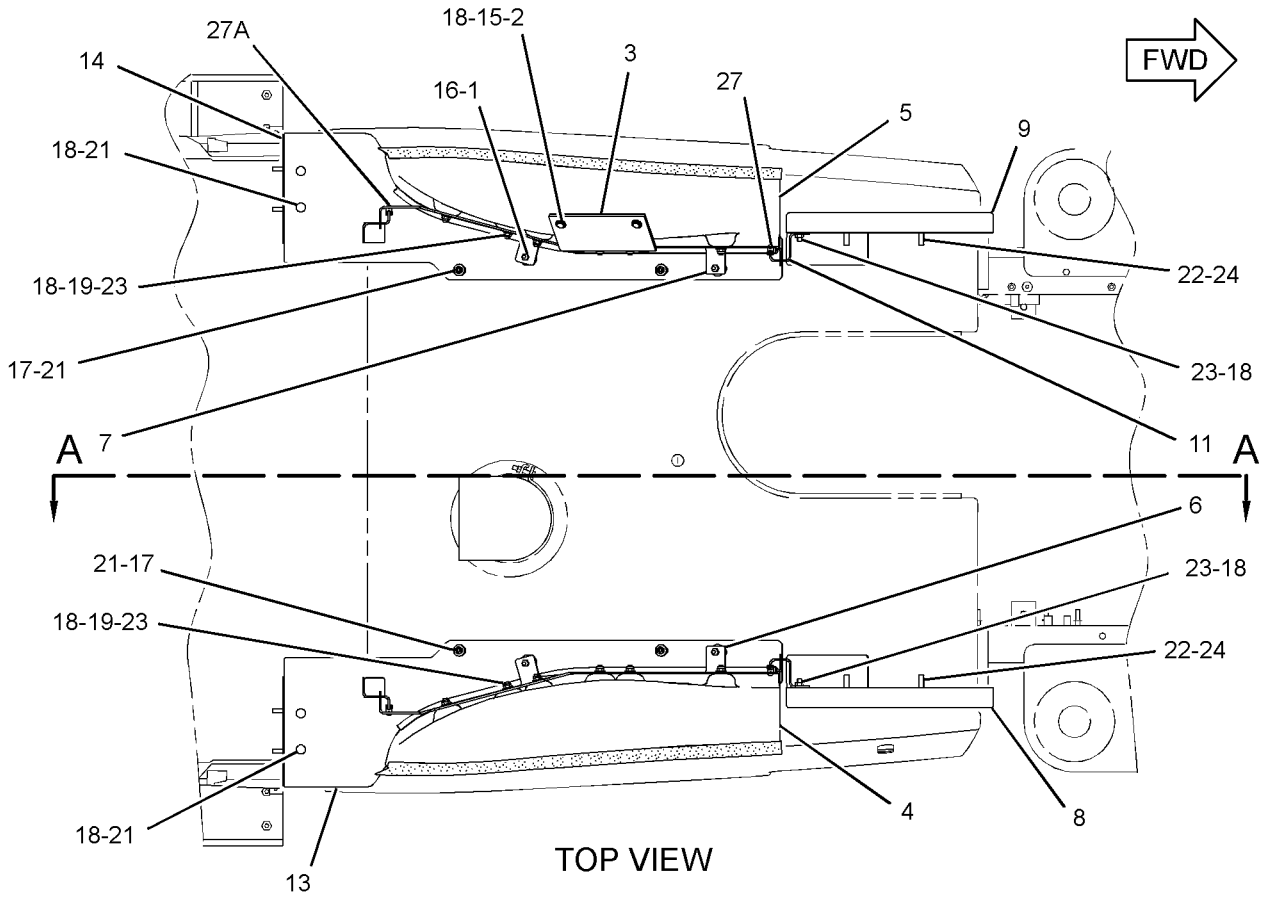

TOP VIEW

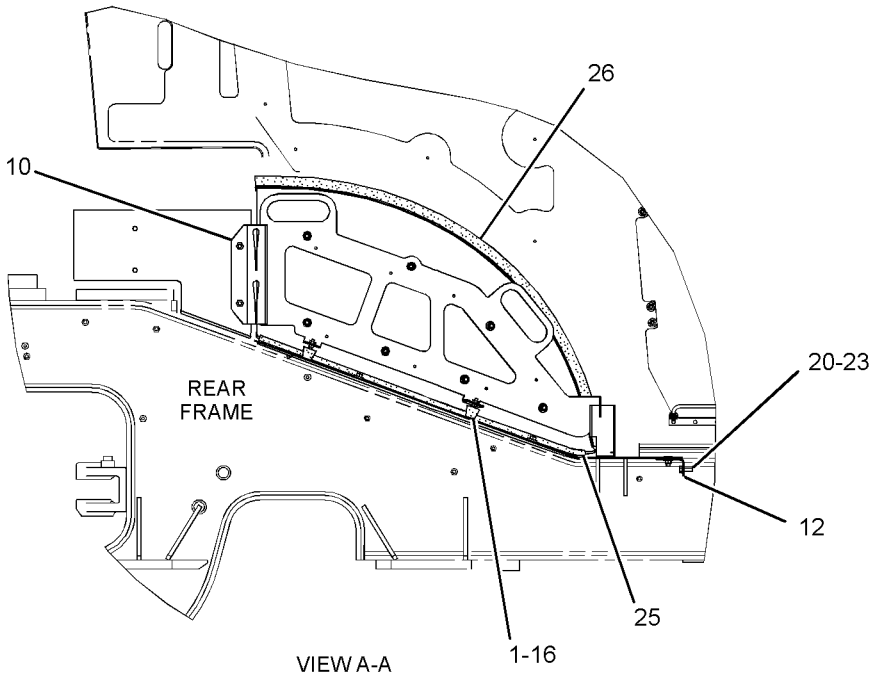

VIEW A-A

GRAPHIC #1 **<END>** g01365661

250-5599 PANEL GP-TOP–HOOD

S/N: RYF1-UP

PART OF 292-6010 HOOD & GUARD GP

SMCS-7251 **i03610856**

NOTE	REF NO	GRAPHIC REF	PART NUMBER	QTY	PART NAME 1 2 3 4 5 6 (PRODUCT LEVEL)	SEE PAGE
	1	1	**224-9392**	4	FASTENER-SINGLE HEAD	
	2	1	**240-9136**	1	INSULATION-HOOD (TOP)	
	3	1	**250-5590**	1	PANEL AS-HOOD (TOP)	

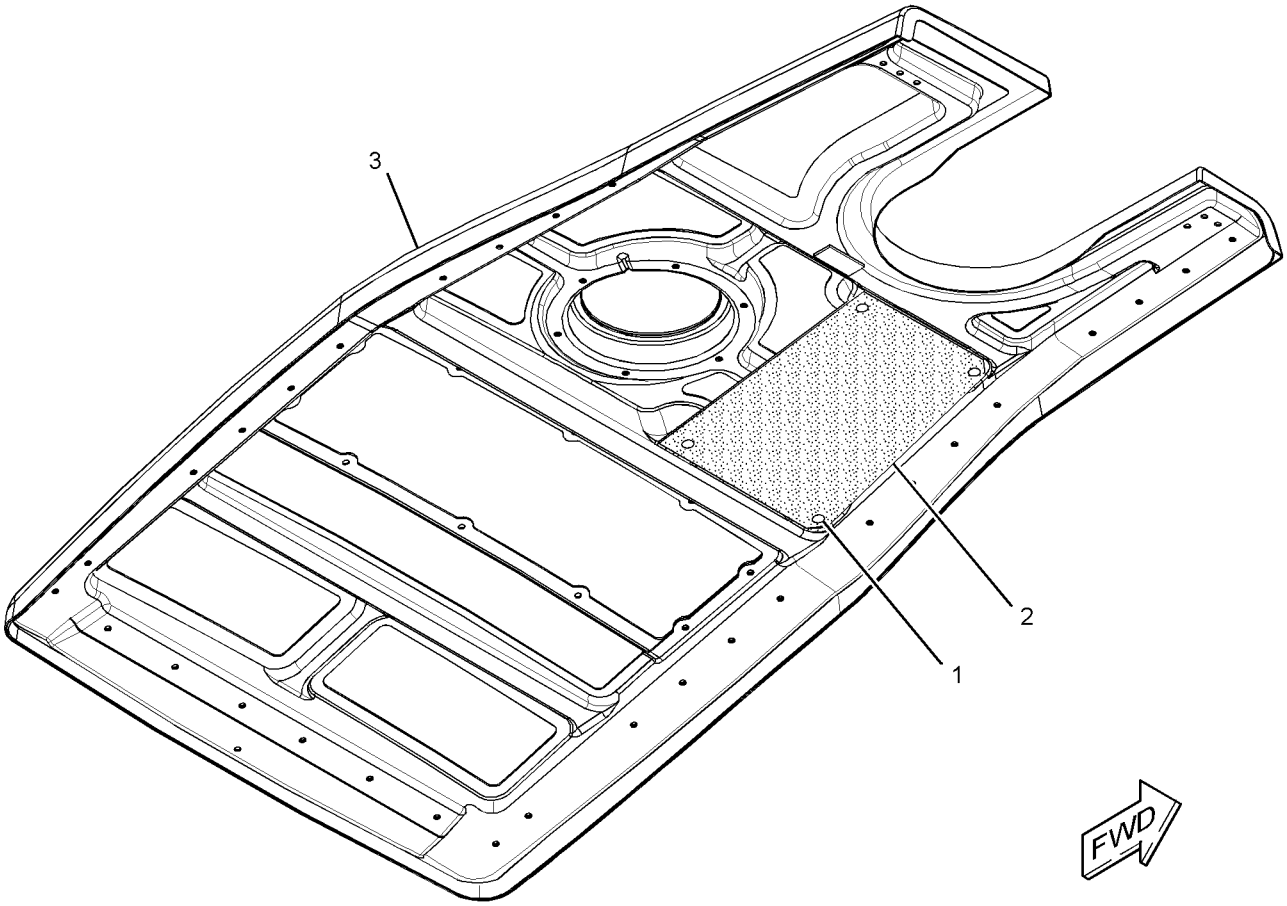

GRAPHIC #1 **<END>** g01390438

236-8991 SHIELD GP-ENGINE COMPARTMENT

S/N: RYF1-UP

PART OF 236-9000 CHASSIS AR

SMCS-7154, 7263 **i03615304**

NOTE	REF NO	GRAPHIC REF	PART NUMBER	QTY	PART NAME 1 2 3 4 5 6 (PRODUCT LEVEL)	SEE PAGE
	1	1	**6V-0292**	1	PLUG	
	2	1	**134-5330**	1	GROMMET	
	3	1	**142-2623**	1	GROMMET	
	4	1	**142-2624**	1	GROMMET	
	5	1	**178-3129**	1	GROMMET	
	6	1	**197-5470**	1	GROMMET	
	7	1	**236-9086**	1	SHIELD	
	8	1	**243-5401**	1	HANDRAIL GP (LH)	
	9	1	**243-5405**	1	HANDRAIL GP (RH)	
	10	1	**243-5412**	1	COVER (BELT TENSIONER)	
	11	1	**254-5762**	1	PANEL AS-SOUND SUPPRESSION	
	12	1	**255-1312**	1	STRIP	
	13	1	**5P-1076**	4	WASHER-HARD (13.5X30X4-MM THK)	
	14	1	**5P-4116**	4	WASHER-HARD (8.8X20.5X2-MM THK)	
	15	1	**7X-7729**	4	WASHER (11X25X3-MM THK)	
M	16	1	**8T-4133**	7	NUT (M10X1.5-THD)	
M	17	1	**8T-4183**	4	BOLT (M12X1.75X40-MM)	
M	18	1	**8T-4186**	4	BOLT (M10X1.5X40-MM)	
M	19	1	**8T-4195**	3	BOLT (M10X1.5X30-MM)	
	20	1	**8T-4226**	7	WASHER-PLATED (10.5X45X3-MM THK)	
M	21	1	**8T-4908**	4	BOLT (M8X1.25X25-MM)	
	22	1	**1M-4543**	1	GROMMET	
E	23	1	**300-7318**		SEAL (131.2-CM EACH)	
E	23A	1	**300-7318**		SEAL (124-CM)	

E-ORDER BY THE CENTIMETER
M-METRIC PART

236-8991 **SHIELD GP-ENGINE COMPARTMENT** *(contd.)* **i03615304**

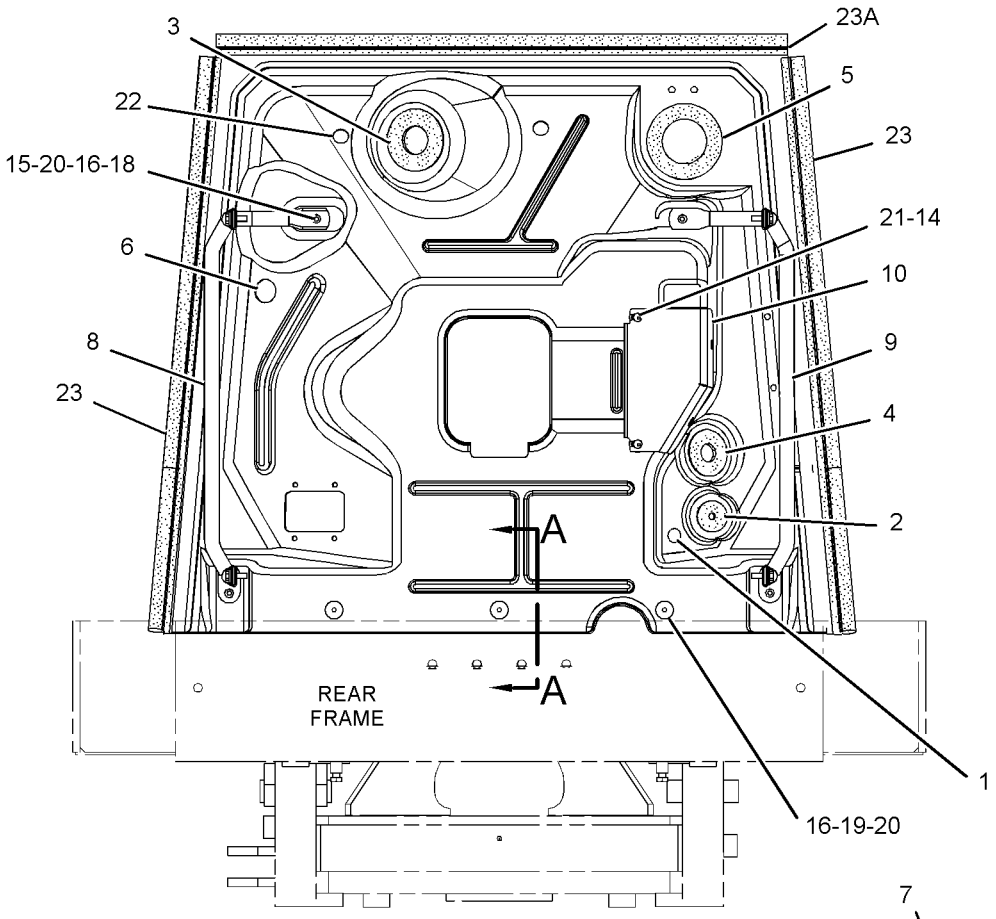

REAR VIEW

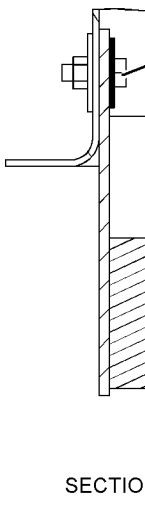

SECTION A-A

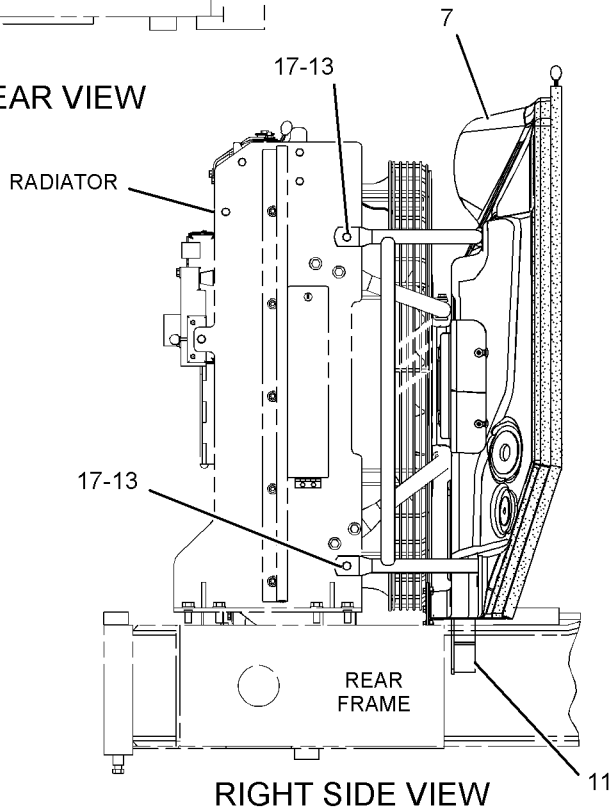

RIGHT SIDE VIEW

GRAPHIC #1 **<END>** g01196533

236-8992 SUPPORT GP-AIR INLET

S/N: RYF1-UP

PART OF 236-9000 CHASSIS AR

SMCS-1087 **i03615323**

NOTE	REF NO	GRAPHIC REF	PART NUMBER	QTY	PART NAME 1 2 3 4 5 6 (PRODUCT LEVEL)	SEE PAGE
	1	1	**243-6529**	1	PLATE AS	
M		1	**8T-3490**	5	NUT-WELD (M10X1.5-THD)	
M		1	**8T-3612**	2	NUT-WELD (M8X1.25-THD)	
	2	1	**257-4159**	2	PLATE	
	3	1	**8T-4121**	14	WASHER-HARD (11X21X2.5-MM THK)	
M	4	1	**8T-4133**	4	NUT (M10X1.5-THD)	
M	5	1	**8T-4136**	10	BOLT (M10X1.5X25-MM)	
L	6	1	**308-9131**		SEAL (450-MM EACH)	

L-ORDER BY THE MILLIMETER
M-METRIC PART

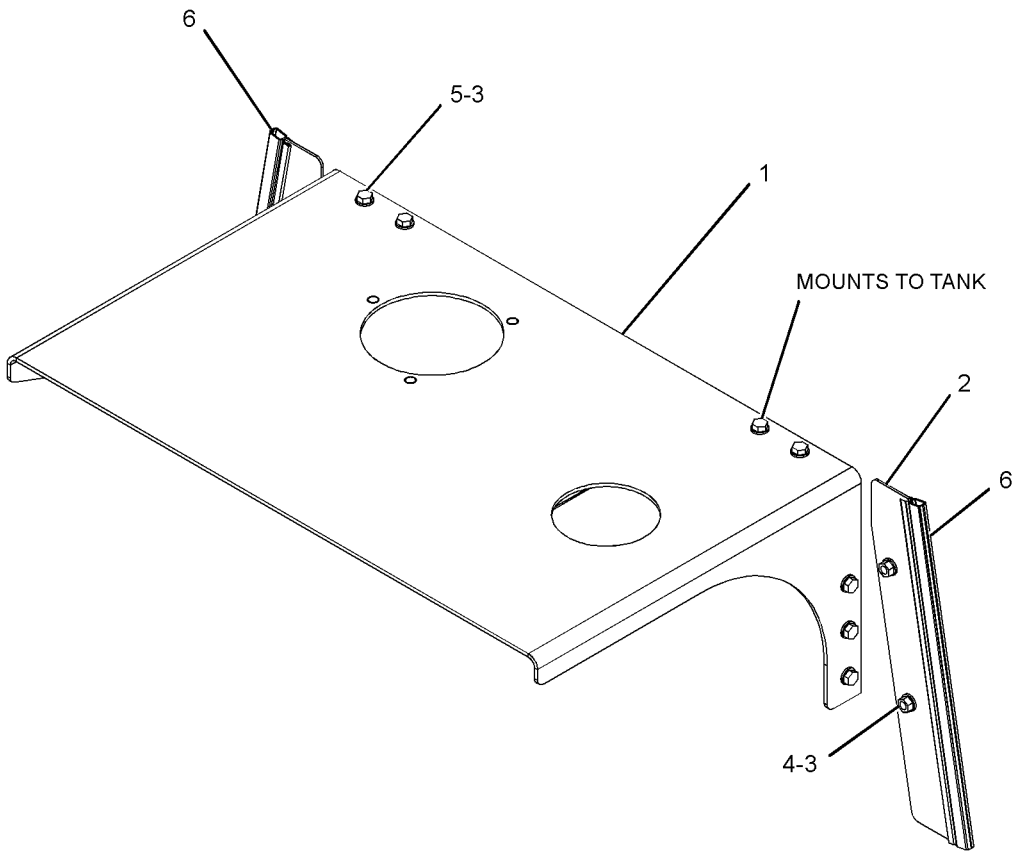

GRAPHIC #1 **<END>** g01389057

FRAME AND BODY

245-9818 SUPPORT GP-VALVE & FILTER

S/N: RYF1-UP

PART OF 236-9000 CHASSIS AR

SMCS-4263, 5068 **i03615362**

NOTE	REF NO	GRAPHIC REF	PART NUMBER	QTY	PART NAME 1 2 3 4 5 6 (PRODUCT LEVEL)	SEE PAGE
	1	1	**2G-1388**	1	LATCH	
	2	1	**3B-4611**	1	PIN-COTTER	
	3	1	**318-2100**	1	ENCLOSURE AS-SERVICE CENTER	
	4	1	**245-6173**	1	DOOR AS-ACCESS (HYD FILTER, BRAKE ACCUMULATOR)	
M		1	**8T-3597**	4	NUT-WELD (M12X1.75-THD)	
		1	**113-9359**	1	HINGE	
	5	1	**245-6175**	1	ROD AS	
	6	1	**246-4374**	1	DOOR GP-ACCESS (REMOTE PRESSURE TAPS)	
M	7	1	**7X-2553**	10	BOLT (M16X2X40-MM)	
	8	1	**8T-4121**	8	WASHER-HARD (11X21X2.5-MM THK)	
	9	1	**318-2106**	1	BRACKET	
M	10	1	**8T-4136**	7	BOLT (M10X1.5X25-MM)	
M	11	1	**8T-4139**	2	BOLT (M12X1.75X30-MM)	
	12	1	**5P-1076**	2	WASHER-HARD (13.5X30X4-MM THK)	
	13	1	**7X-0515**	10	WASHER-HARD (17X35X5-MM THK)	

M-METRIC PART

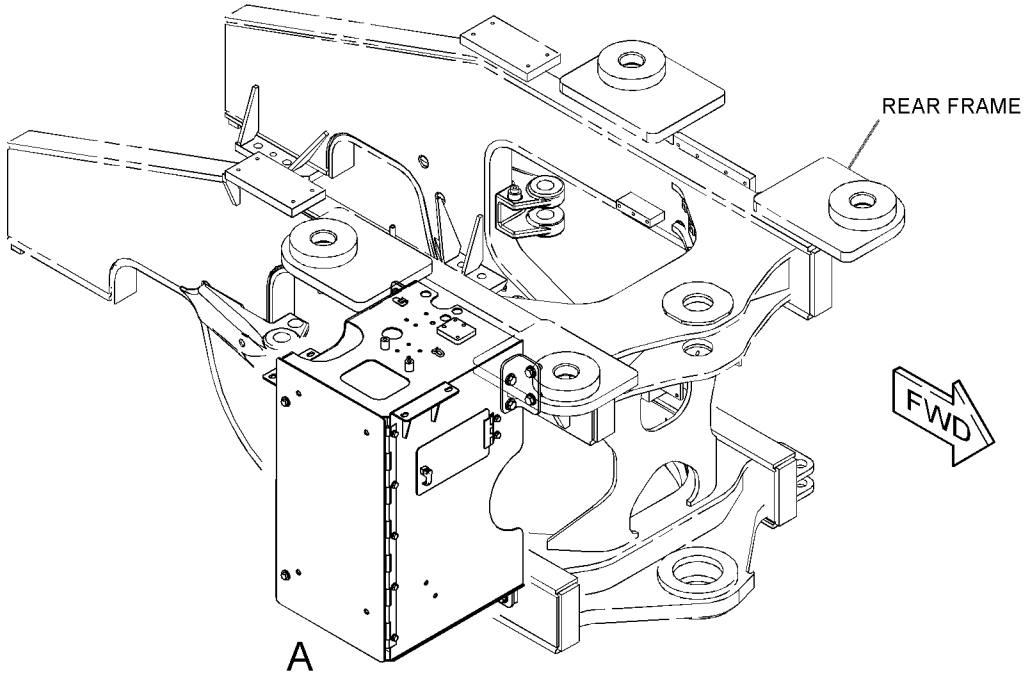

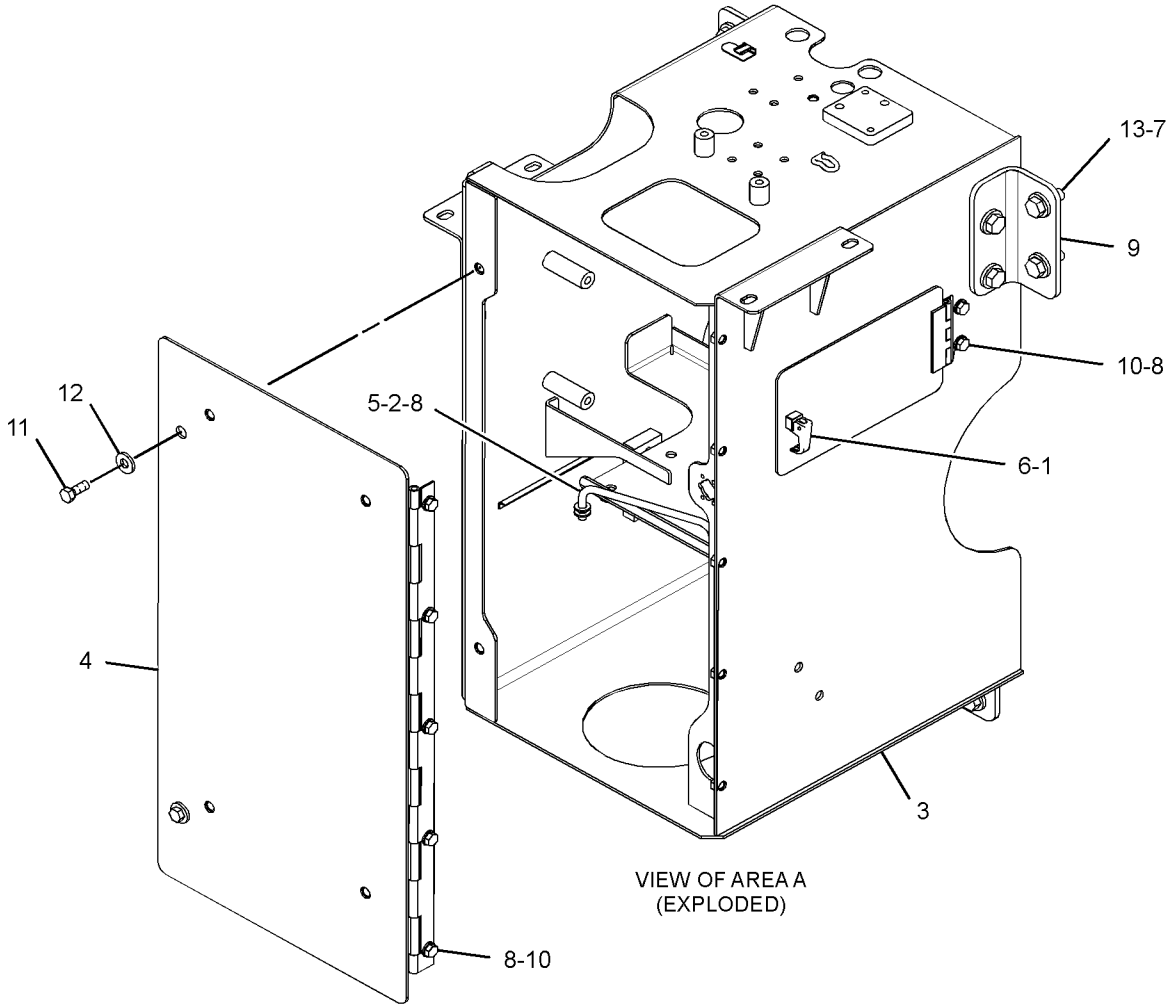

VIEW OF AREA A
(EXPLODED)

GRAPHIC #1 **<END>** g01936774

FRAME AND BODY

236-9003 TILT GP-HOOD

S/N: RYF1-UP

PART OF 236-8961 ELECTRICAL AR

SMCS-1427, 7251 **i03618630**

NOTE	REF NO	GRAPHIC REF	PART NUMBER	QTY	PART NAME 1 2 3 4 5 6 (PRODUCT LEVEL)	SEE PAGE
	1	1	**6S-6646**	2	PIN-COTTER	
	2	1	**178-6450**	4	SPACER (17X35X30-MM THK)	
	3	1	**245-4053**	1	PIN AS (LH)	
	4	1	**245-4063**	1	PIN AS (RH)	
	5	1	**245-7963**	1	COVER	
	6	1	**246-1472**	1	COVER AS	
	7	1	**251-6162**	1	COVER	
Y	8	1	**305-8958**	1	ACTUATOR GP-POWER	327
	9	1	**6W-5752**	1	PIN	
	10	1	**7V-9791**	1	PIN	
	11	1	**7X-7729**	8	WASHER (11X25X3-MM THK)	
M	12	1	**8T-4136**	8	BOLT (M10X1.5X25-MM)	
M	13	1	**8T-4138**	4	BOLT (M6X1X20-MM)	
M	14	1	**118-7313**	4	BOLT (M16X2X70-MM)	
	15	1	**9X-8256**	4	WASHER (6.6X12X2-MM THK)	
	16	1	**9X-8257**	4	WASHER (17.5X30X3.5-MM THK)	

M-METRIC PART
Y-SEPARATE ILLUSTRATION

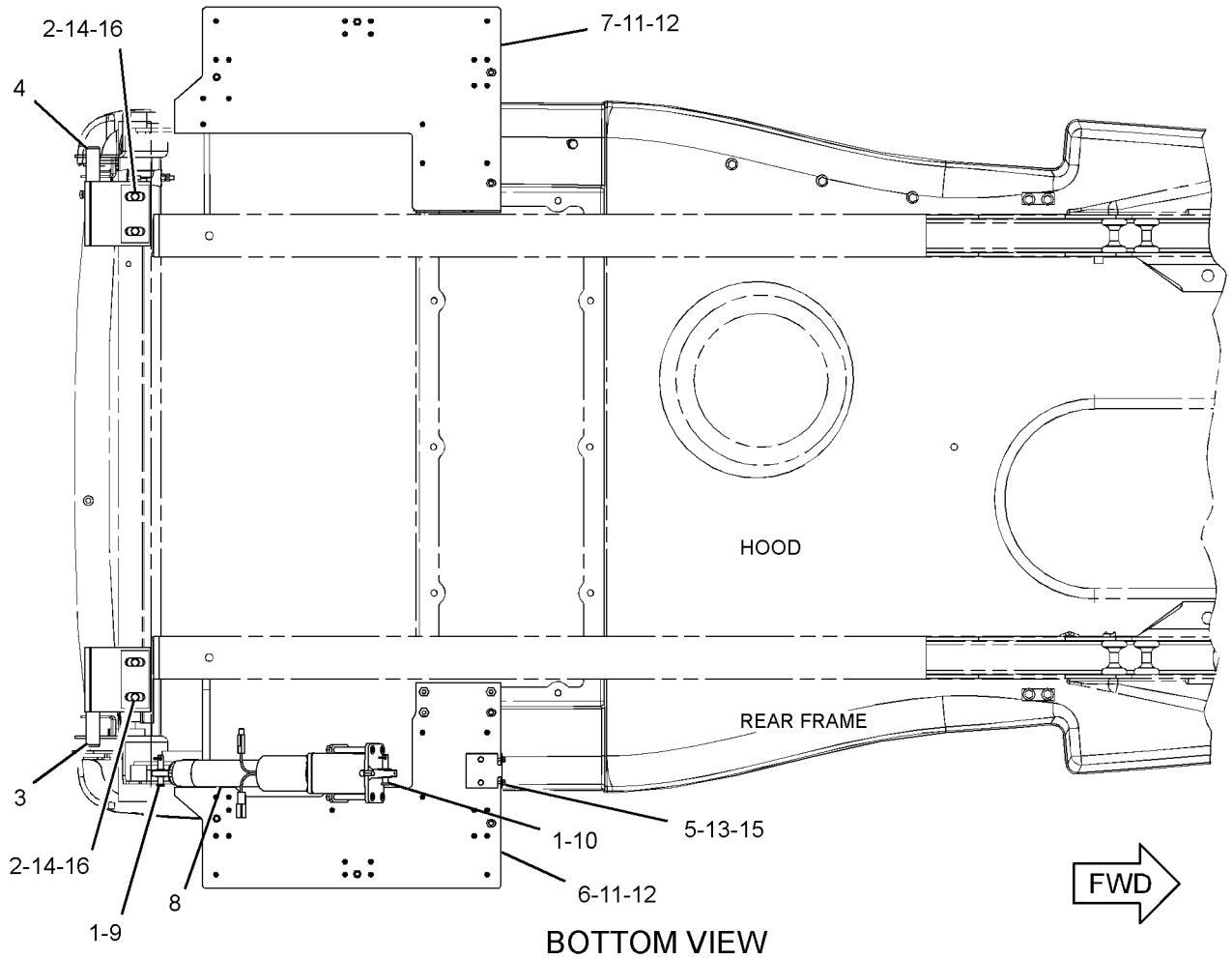

BOTTOM VIEW

GRAPHIC #1

<END>

g01423064

198-9841 ACCUMULATOR GP-BRAKE—CHARGED

S/N: RYF1-UP

PART OF 236-8972 CONTROL GP-SERVICE BRAKE

FIELD REPLACEMENT ORDER 220-2727—PAGE 374

SMCS-4263 **i03615185**

NOTE	REF NO	GRAPHIC REF	PART NUMBER	QTY	PART NAME 1 2 3 4 5 6 (PRODUCT LEVEL)	SEE PAGE
	1	1	**069-2535**	1	VALVE-GAS	
	2	1	**111-9110**	1	PROTECTOR-GAS VALVE	
	3	1	**1J-9671**	1	SEAL-O-RING	
	4	1	**5M-3062**	2	BOLT (3/8-16X0.75-IN)	
	5	1	**203-1558**	1	KIT-SEAL	
					(INCLUDES SEALS, END CAPS, & GAS VALVE	

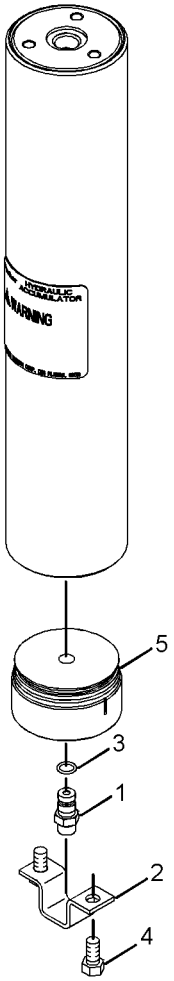

GRAPHIC #1

<END>

g01246930

220-2727 ACCUMULATOR GP-BRAKE—UNCHARGED

S/N: RYF1-UP

FIELD REPLACEMENT FOR 198-9841—PAGE 373

SMCS-4263 **i03608648**

NOTE	REF NO	GRAPHIC REF	PART NUMBER	QTY	PART NAME 1 2 3 4 5 6 (PRODUCT LEVEL)	SEE PAGE
	1	1	**069-2535**	1	VALVE-GAS	
	2	1	**111-9110**	1	PROTECTOR-GAS VALVE	
	3	1	**1J-9671**	1	SEAL-O-RING	
	4	1	**5M-3062**	2	BOLT (3/8-16X0.75-IN)	
	5	1	**203-1558**	1	KIT-SEAL	

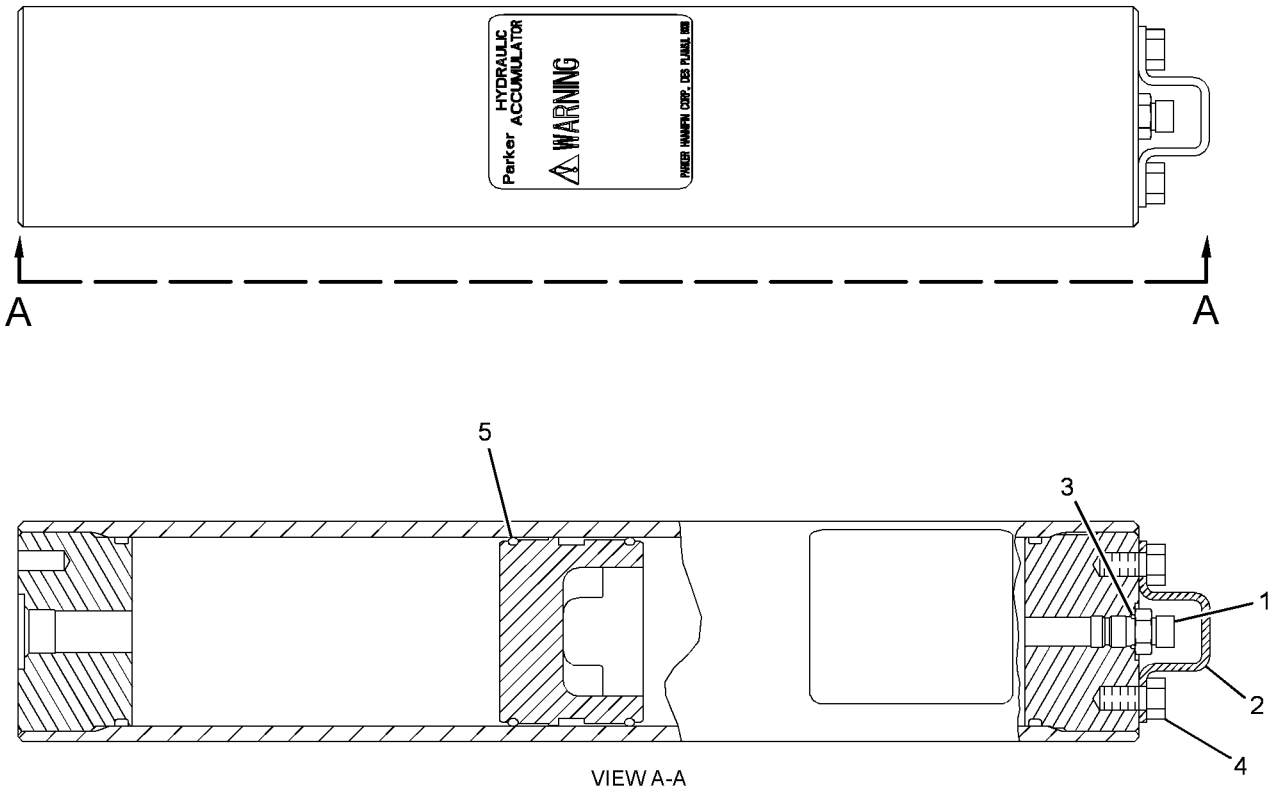

VIEW A-A

GRAPHIC #1 **<END>** g01260232

188-7497 BASE GP-FOOT BRAKE–PEDAL, RH

S/N: RYF1-UP

PART OF 271-0263 CONTROL GP-FOOT BRAKE

SMCS-4269 **i01425691**

NOTE	REF NO	GRAPHIC REF	PART NUMBER	QTY	PART NAME 1 2 3 4 5 6 (PRODUCT LEVEL)	SEE PAGE
	1	1	**4E-8958**	1	PIN	
	2	1	**4E-9664**	1	PIN	
	3	1	**8S-2225**	1	SEAL-LIP TYPE	
	4	1	**009-3101**	4	RING-RETAINING	
	5	1	**113-7752**	1	PEDAL-BRAKE	
	6	1	**115-2247**	1	SPRING	
	7	1	**163-3926**	1	ROLLER	
	8	1	**180-3997**	1	BASE AS	

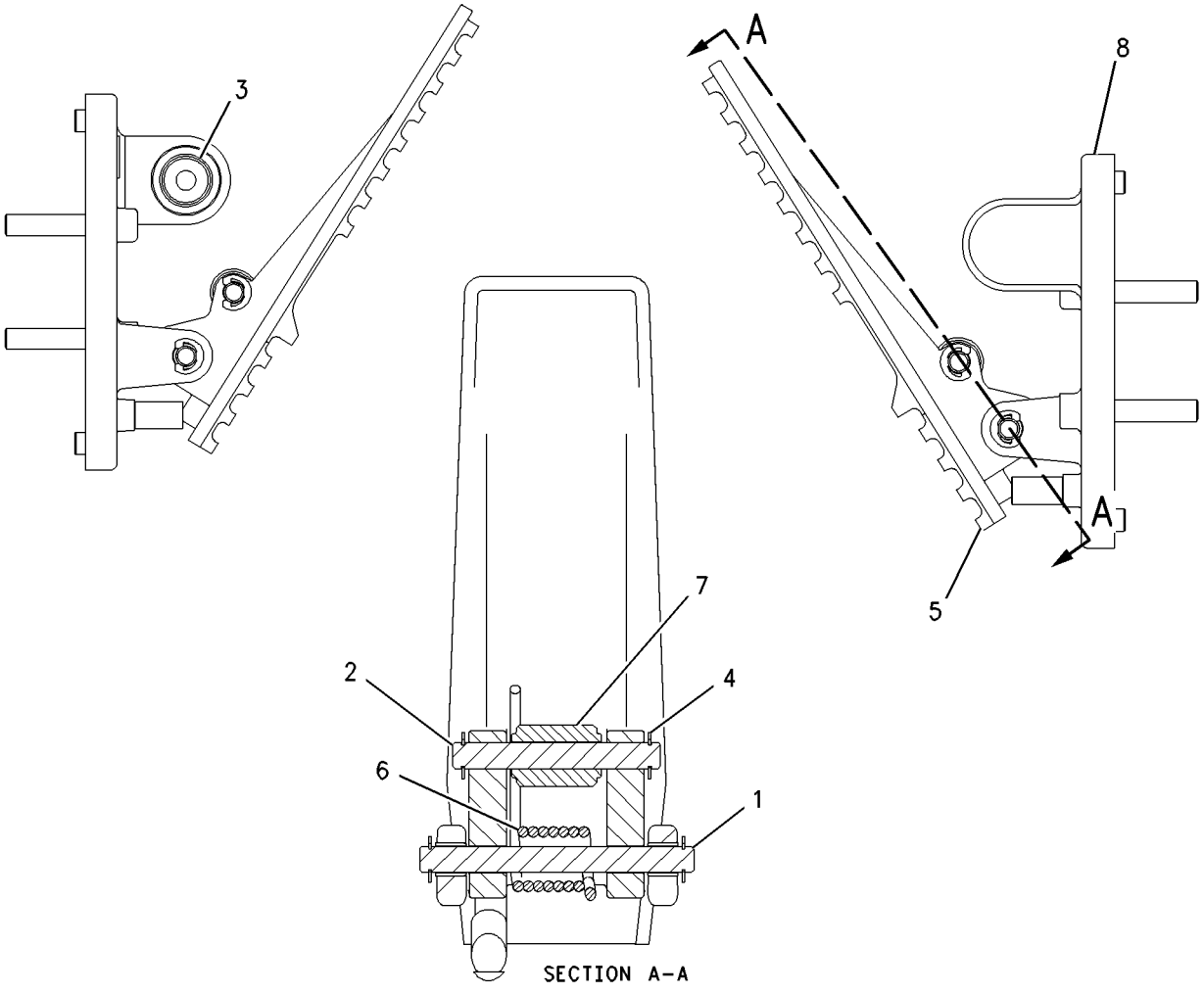

GRAPHIC #1 **<END>** g00748565

271-0264 BASE GP-FOOT BRAKE–PEDAL, LH

S/N: RYF1-UP

PART OF 271-0263 CONTROL GP-FOOT BRAKE

SMCS-4269 **i02442946**

NOTE	REF NO	GRAPHIC REF	PART NUMBER	QTY	PART NAME 1 2 3 4 5 6 (PRODUCT LEVEL)	SEE PAGE
	1	1	**4E-9664**	1	PIN	
	2	1	**009-3101**	3	RING-RETAINING	
	3	1	**105-6117**	1	SWITCH AS-LIMIT (STOP LIGHT)	
	4	1	**113-7752**	1	PEDAL-BRAKE	
	5	1	**115-2247**	1	SPRING	
	6	1	**146-1892**	1	HARNESS AS-BRAKE (STOP LIGHT)	
		1	**155-2270**	1	KIT-CONNECTING PLUG (2-PIN)	
					(INCLUDES PLUG AS AND WEDGE)	
M	7	1	**153-6273**	1	SETSCREW	
	8	1	**200-2217**	1	COVER	
	9	1	**200-2218**	1	BRACKET AS-ADJUSTABLE SWITCH	
	10	1	**200-2219**	6	BOLT	
	11	1	**200-2220**	1	SEAL	
	12	1	**200-2221**	1	PIN	
	13	1	**230-7640**	1	ROLLER	
M	14	1	**125-3295**	2	SCREW-PAN HEAD (M2.5X0.45X12-MM)	
	15	1	**267-5222**	1	SENSOR GP-POSITION (ROTARY) (BRAKE PEDAL)	
		1	**186-3735**	3	PIN-CONNECTOR (16-GA TO 18-GA)	
E		1	**9X-1813**		SLEEVE (13-CM)	
		1	**230-4014**	1	RECEPTACLE AS-CONNECTOR (3-PIN)	
M	16	1	**8T-2899**	2	SCREW-MACHINE (M2.5X0.45X6-MM)	

E-ORDER BY THE CENTIMETER
M-METRIC PART

271-0264 BASE GP-FOOT BRAKE *(contd.)* **i02442946**

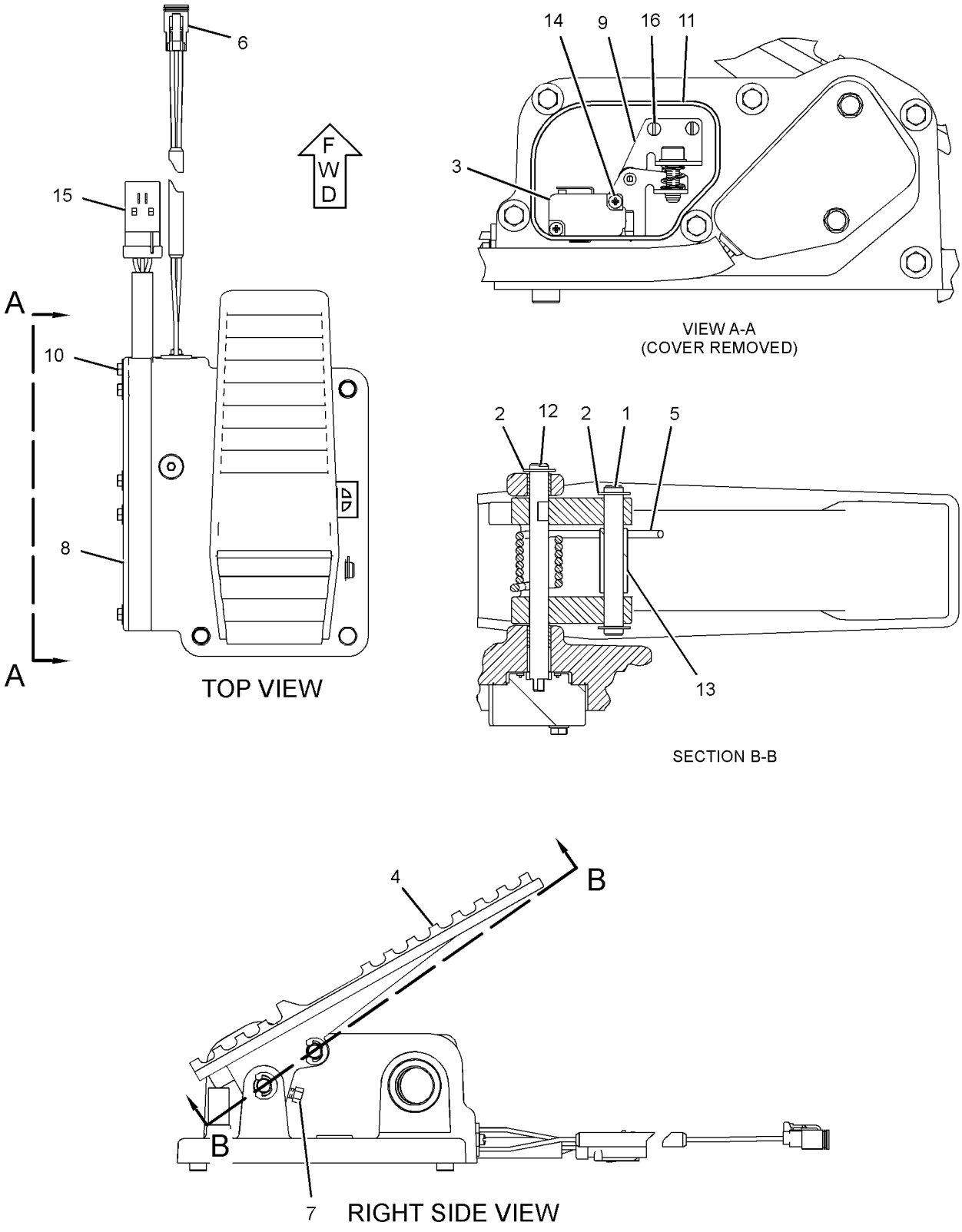

GRAPHIC #1

<END>

g01199507

BRAKING SYSTEM

122-7197 BRAKE GP-PARKING

S/N: RYF1-UP

PART OF 236-8965 POWER TRAIN AR

SMCS-4267 **i03626815**

NOTE	REF NO	GRAPHIC REF	PART NUMBER	QTY	PART NAME 1 2 3 4 5 6 (PRODUCT LEVEL)	SEE PAGE
	1	1	**3B-4617**	1	PIN-COTTER	
	2	1	**4K-1540**	1	PIN-CLEVIS	
	3	1	**6H-3618**	2	PLUG-PROTECTION	
	4	1	**317-5890**	1	LEVER	
	5	1	**154-8042**	1	ACTUATOR (PARKING BRAKE)	
Y	6	1	**283-9997**	1	BRAKE GP-PARKING	381
	7	1	**209-0499**	1	END-YOKE ROD	
	8	1	**150-7693**	1	BRACKET AS	
	9	1	**9X-8257**	4	WASHER (17.5X30X3.5-MM THK)	
M	10	1	**8T-4133**	1	NUT (M10X1.5-THD)	
M	11	1	**8T-4139**	3	BOLT (M12X1.75X30-MM)	
M	12	1	**8T-4194**	8	BOLT (M12X1.75X50-MM)	
	13	1	**8T-4223**	14	WASHER-HARD (13.5X25.5X3-MM THK)	
M	14	1	**8T-4244**	2	NUT (M12X1.75-THD)	
M	15	1	**100-4982**	4	BOLT-SELF-LOCKING (M16X2X45-MM)	
M	16	1	**8T-4196**	1	BOLT (M10X1.5X35-MM)	
	17	1	**156-6418**	1	DRUM AS	
	18	1	**8T-4121**	1	WASHER-HARD (11X21X2.5-MM THK)	

M-METRIC PART
Y-SEPARATE ILLUSTRATION

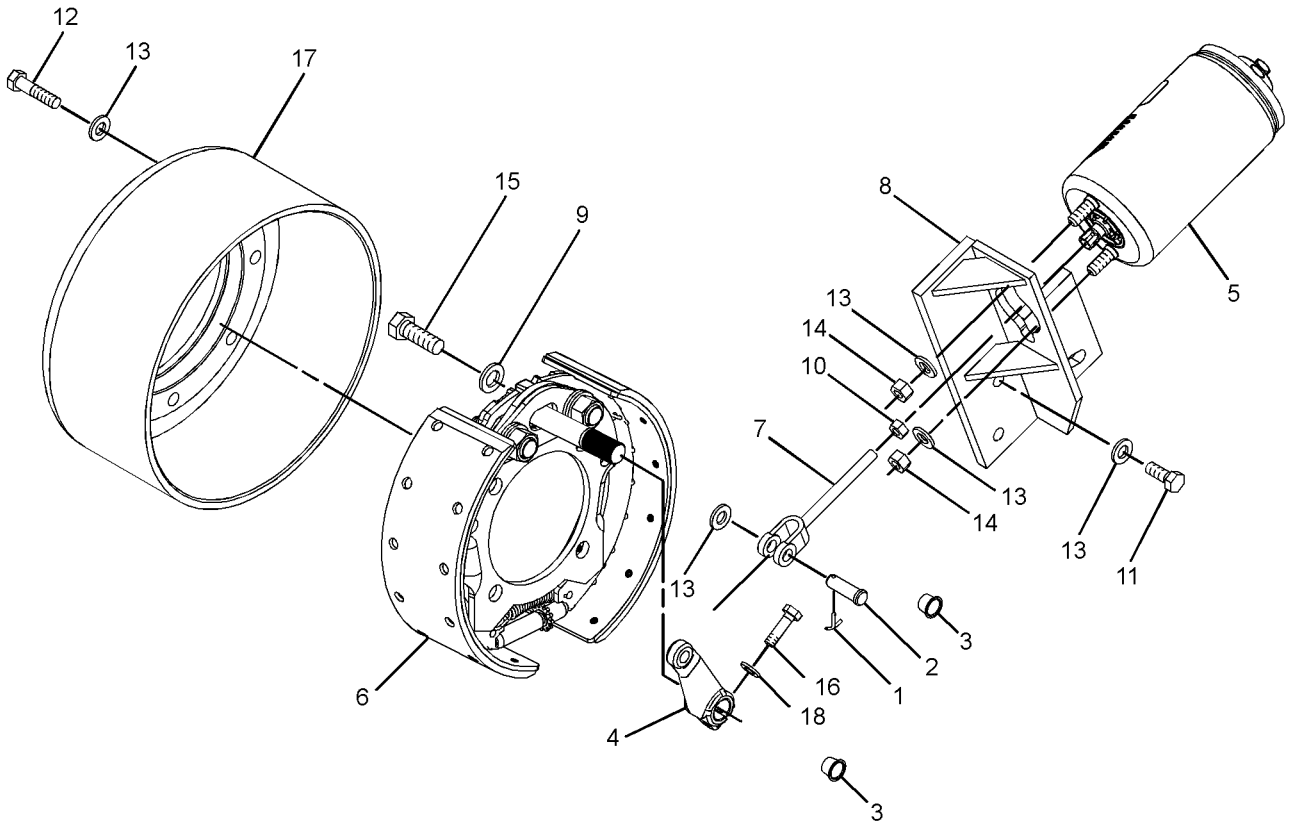

GRAPHIC #1 **<END>** g01680055

BRAKING SYSTEM

149-0643 BRAKE GP-PARKING

S/N: RYF1-UP

PART OF 283-9997 BRAKE GP-PARKING

SMCS-4267 **i03626955**

NOTE	PART NUMBER	QTY	PART NAME 1 2 3 4 5 6 (PRODUCT LEVEL)	SEE PAGE
			(NO SERVICED PARTS)	

<END>

BRAKING SYSTEM

283-9981 BRAKE GP-PARKING

S/N: RYF1-UP

PART OF 283-9997 BRAKE GP-PARKING

SMCS-4267 **i03626957**

NOTE	REF NO	GRAPHIC REF	PART NUMBER	QTY	PART NAME 1 2 3 4 5 6 (PRODUCT LEVEL)	SEE PAGE
	1	1	**6B-6682**	2	NUT-FULL (3/4-16-THD)	
	2	1	**6W-7297**	2	PIN	
	3	1	**6W-7301**	2	RING-RETAINING	
	4	1	**7F-9571**	1	SCREW-ADJUSTMENT	
	5	1	**7F-9572**	1	NUT (1/2-20-THD)	
	6	1	**7F-9578**	1	SPRING	
	7	1	**7F-9579**	1	SOCKET	
	8	1	**9M-5137**	1	BRACE-ANCHOR PIN	
	9	1	**9M-5139**	2	SPRING	
	10	1	**155-4979**	1	PLATE AS-BRAKE	
	11	1	**196-2314**	1	CAMSHAFT	
	12	1	**283-9982**	1	SHOE AS-BRAKE	
	13	1	**283-9983**	1	SHOE AS-BRAKE	
	14	1	**5P-8248**	4	WASHER-HARD (20X36.5X3.5-MM THK)	
					AVAILABLE REPAIR KIT(S):	
			283-9984	1	KIT-BRAKE LINING	
					(KIT INCLUDES LINING AND RIVETS)	

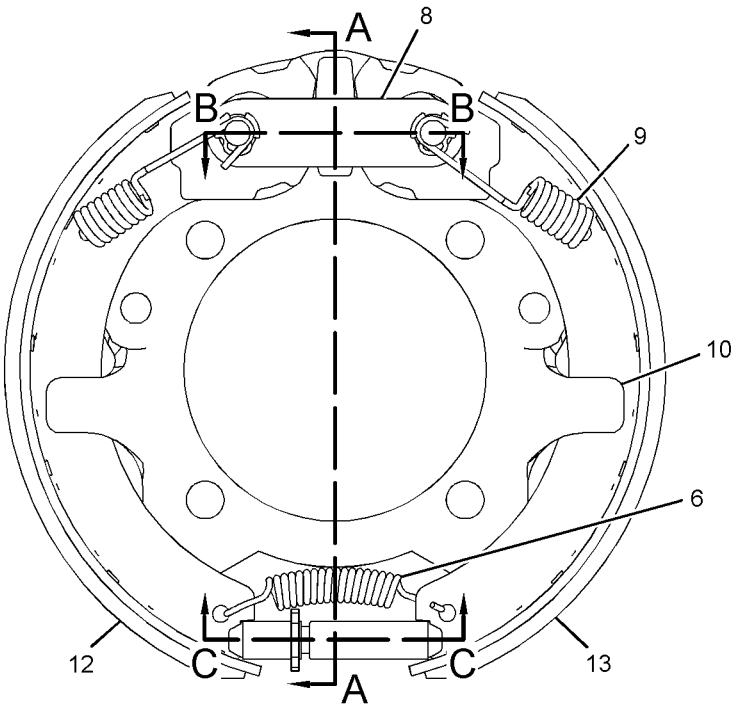

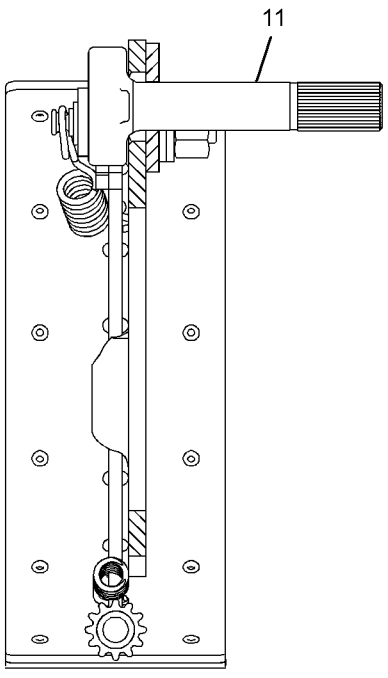

SECTION A-A

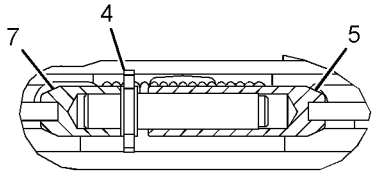

SECTION C-C

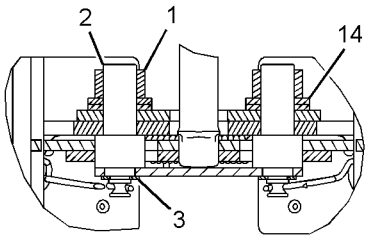

SECTION B-B

GRAPHIC #1 **<END>** g01271666

283-9997 BRAKE GP-PARKING

S/N: RYF1-UP

PART OF 122-7197 BRAKE GP-PARKING

SMCS-4267 **i03626883**

NOTE	PART NUMBER	QTY	PART NAME 1 2 3 4 5 6 (PRODUCT LEVEL)	SEE PAGE
Y	*149-0643*	1	BRAKE GP-PARKING	379
			-OR-	
Y	*283-9981*	1	BRAKE GP-PARKING	380

Y-SEPARATE ILLUSTRATION

<END>

BRAKING SYSTEM

265-6695 CONTROL GP-FOOT BRAKE

S/N: RYF1-UP

PART OF 237-2572 CAB AR-ENCLOSED ROPS

SMCS-4269 **i02442560**

NOTE	REF NO	GRAPHIC REF	PART NUMBER	QTY	PART NAME 1 2 3 4 5 6 (PRODUCT LEVEL)	SEE PAGE
Y	1	1	**271-0263**	1	CONTROL GP-FOOT BRAKE	383
M	2	1	**099-3649**	6	BOLT (M8X1.25X40-MM)	
	3	1	**8T-4224**	6	WASHER-HARD (8.8X16X2-MM THK)	

M-METRIC PART
Y-SEPARATE ILLUSTRATION

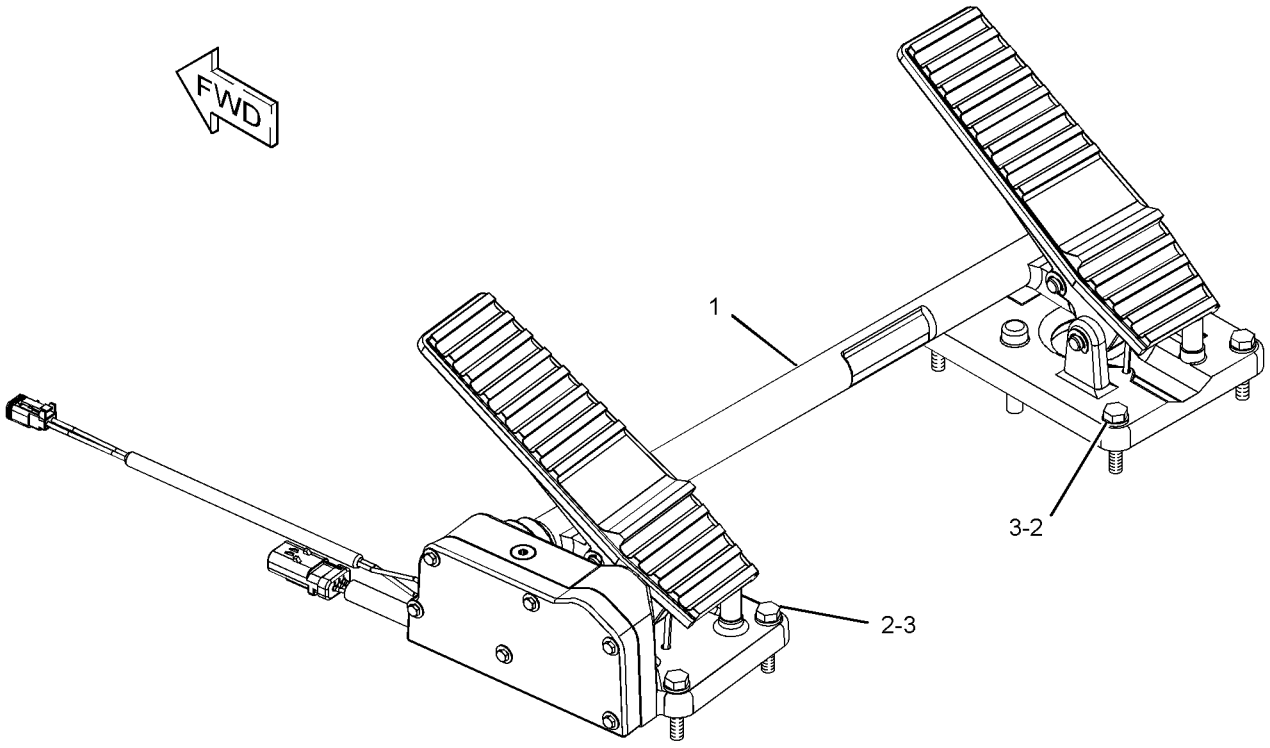

GRAPHIC #1 **<END>** g01202978

BRAKING SYSTEM

271-0263 CONTROL GP-FOOT BRAKE

S/N: RYF1-UP

PART OF 265-6695 CONTROL GP-FOOT BRAKE

SMCS-4269 **i02454359**

NOTE	REF NO	GRAPHIC REF	PART NUMBER	QTY	PART NAME 1 2 3 4 5 6 (PRODUCT LEVEL)	SEE PAGE
	1	1	**180-3994**	1	SHAFT AS	
Y	2	1	**188-7497**	1	BASE GP-FOOT BRAKE (PEDAL, RH)	375
Y	3	1	**271-0264**	1	BASE GP-FOOT BRAKE (PEDAL, LH)	376

Y-SEPARATE ILLUSTRATION

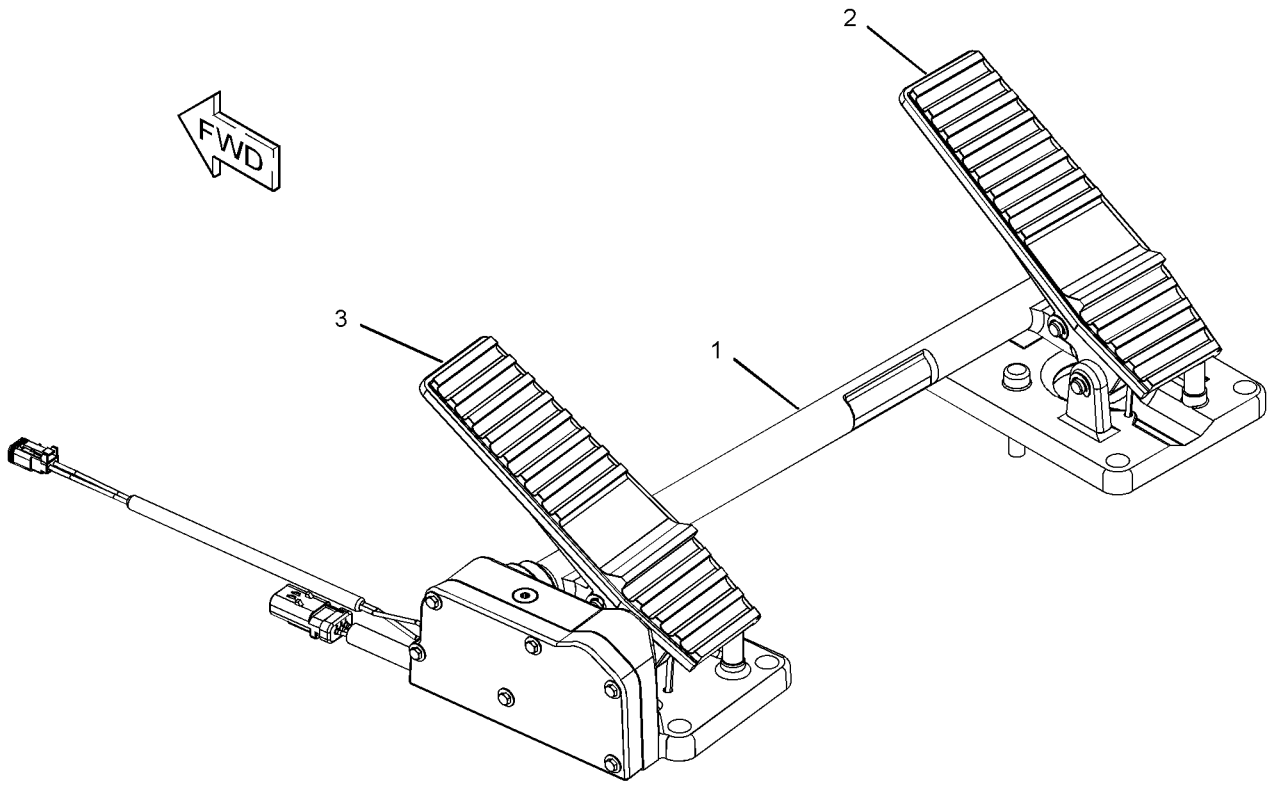

GRAPHIC #1 **<END>** g01202981

BRAKING SYSTEM

244-2747 CONTROL GP-PARKING BRAKE

S/N: RYF1-UP

PART OF 237-2572 CAB AR-ENCLOSED ROPS

SMCS-4282, 4284 **i02992209**

NOTE	REF NO	GRAPHIC REF	PART NUMBER	QTY	PART NAME 1 2 3 4 5 6 (PRODUCT LEVEL)	SEE PAGE
	1	1	**3S-2093**	1	STRAP-CABLE	
	2	1	**9C-9458**	1	BRACKET AS	
	3	1	**122-1671**	1	KNOB	
	5	1	**195-2187**	1	CABLE AS-PARKING BRAKE CONTROL	
		1	**8T-4223**	3	WASHER-HARD (13.5X25.5X3-MM THK)	
M		1	**8T-4244**	4	NUT (M12X1.75-THD)	
		1	**9B-0453**	2	LOCKWASHER	
M	7	1	**5C-2890**	1	NUT (M6X1-THD)	
	8	1	**6V-3265**	1	CLIP	
	9	1	**8T-4121**	2	WASHER-HARD (11X21X2.5-MM THK)	
M	10	1	**8T-4137**	1	BOLT (M10X1.5X20-MM)	
	11	1	**314-9754**	1	BRACKET AS	
M	12	1	**9X-6032**	1	BOLT-SOCKET HEAD (M10X1.5X30-MM)	

M-METRIC PART

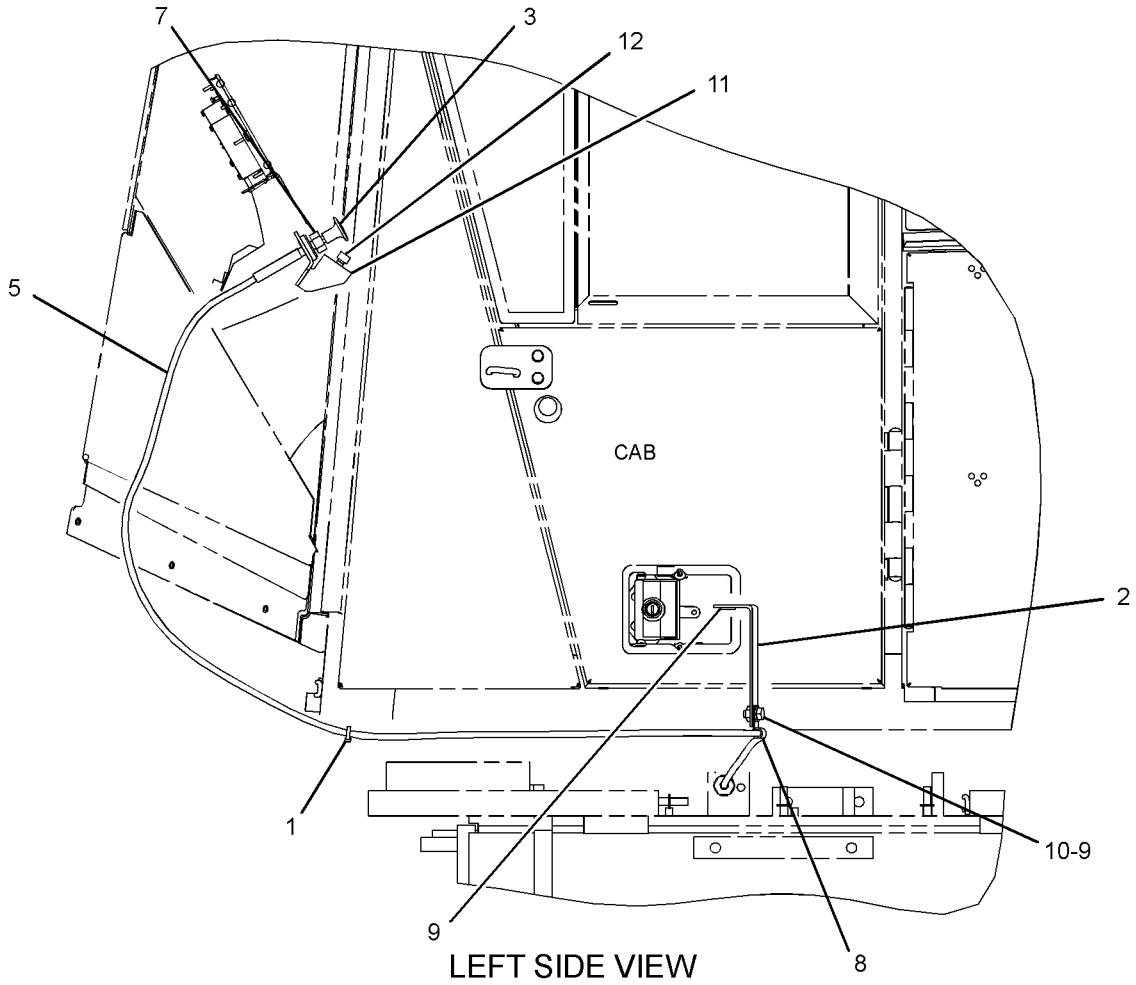

LEFT SIDE VIEW

GRAPHIC #1

<END>

g01457892

BRAKING SYSTEM

236-8972 CONTROL GP-SERVICE BRAKE

S/N: RYF1-UP

PART OF 236-9000 CHASSIS AR

SMCS-4257, 4258, 4263, 4265, 4269, 4280 **i03608261**

NOTE	REF NO	GRAPHIC REF	PART NUMBER	QTY	PART NAME 1 2 3 4 5 6 (PRODUCT LEVEL)	SEE PAGE
	1	1	**5P-6724**	1	BEARING-ROLLER	
	2	1	**7I-4078**	1	LEVER AS	
I	3	3	**8E-5502**	1	HOSE AS	
	4	2	**091-1745**	6	WASHER (16.6X24X1.2-MM THK)	
	5	1	**101-3846**	1	ROD-CONTROL	
	6	1	**103-0010**	1	BRACKET AS	
M		1	**8T-3490**	1	NUT-WELD (M10X1.5-THD)	
Y	7	2	**106-1774**	1	VALVE GP-BRAKE CONTROL (PARKING)	391
I	8	2	**118-1030**	2	HOSE AS	
I	9	2	**124-1866**	1	HOSE AS	
	10	1	**132-2453**	1	UNION	
	11	1	**135-3823**	2	TUBE AS	
	12	1	**142-1657**	1	BRACKET AS	
M		1	**8T-3490**	1	NUT-WELD (M10X1.5-THD)	
	13	1	**150-8013**	1	PLATE AS	
	14	1	*162-8264*	1	TEE AS	
		1	**6V-8398**	1	SEAL-O-RING	
		1	**081-5645**	1	TEE	
	15	2	**184-7415**	2	ELBOW	
	16	1	**192-5017**	1	BRACKET AS	
M		1	**8T-3490**	1	NUT-WELD (M10X1.5-THD)	
	17	2	*196-2036*	2	TEE AS	
					(EACH INCLUDES)	
		2	**3K-0360**	1	SEAL-O-RING	
		2	**6V-8398**	1	SEAL-O-RING	
		2	**9X-2492**	1	TEE-O-RING	
	18	3	**197-7382**	2	CLAMP	
Y	19	3	**198-9841**	2	ACCUMULATOR GP-BRAKE (CHARGED)	373
	20	2	**210-5587**	1	VALVE GP-BRAKE CONTROL (SERVICE)	
		2	**117-7798**	1	BOOT	
		2	**117-7799**	1	KIT-SEAL (BRAKE VALVE)	
					(INCLUDES BOOT, QUAD RING, CUP & O-RINGS)	
I	21	2	**213-3607**	1	HOSE AS	
	22	2	*241-6215*	1	ELBOW AS	
		2	**3J-1907**	1	SEAL-O-RING	
		2	**6V-8076**	1	ELBOW	
I	23	3	**243-0565**	1	HOSE AS	
	24	1	**243-0570**	1	BRACKET AS	
I	25	3	**244-3265**	1	HOSE AS	
I	26	2	**244-3268**	1	HOSE AS	
I	27	2	**244-3279**	1	HOSE AS	
I	28	1	**244-3285**	1	HOSE AS	
	29	1	**244-3287**	1	BRACKET AS	
M		1	**8T-3490**	2	NUT-WELD (M10X1.5-THD)	
	30	1,2	**246-4777**	2	BRACKET	
I	31	1	**246-4780**	1	HOSE AS	
I	32	2	**246-4781**	1	HOSE AS	
I	33	2	**246-4783**	1	HOSE AS	
I	34	2	**266-7738**	1	HOSE AS	
I	35	2	**266-7740**	1	HOSE AS	
	36	2	**284-7057**	1	BRACKET AS	
M		2	**8C-8421**	1	STUD-WELD	
I	37	1	**321-3504**	1	HOSE AS	
M	38	1	**099-3649**	2	BOLT (M8X1.25X40-MM)	
	39	1	*148-8336*	3	CONNECTOR AS	
					(EACH INCLUDES)	

236-8972 **CONTROL GP-SERVICE BRAKE** *(contd.)* **i03608261**

NOTE	REF NO	GRAPHIC REF	PART NUMBER	QTY	PART NAME 1 2 3 4 5 6 (PRODUCT LEVEL)	SEE PAGE
		1	**3J-1907**	1	SEAL-O-RING	
		1	**6V-8397**	1	SEAL-O-RING	
		1	**6V-8636**	1	CONNECTOR	
	40	1	*148-8361*	4	ELBOW AS	
					(EACH INCLUDES)	
		1	**3J-7354**	1	SEAL-O-RING	
		1	**6V-8397**	1	SEAL-O-RING	
		1	**6V-9200**	1	ELBOW	
	41	2	*148-8364*	2	ELBOW AS	
					(EACH INCLUDES)	
		2	**3K-0360**	1	SEAL-O-RING	
		2	**6V-8398**	1	SEAL-O-RING	
		2	**6V-8625**	1	ELBOW	
	42	1	*148-8365*	1	ELBOW AS	
		1	**3J-1907**	1	SEAL-O-RING	
		1	**6V-8398**	1	SEAL-O-RING	
		1	**8T-6876**	1	ELBOW	
	43	3	*148-8370*	2	ELBOW AS	
					(EACH INCLUDES)	
		3	**6V-8398**	1	SEAL-O-RING	
		3	**6V-9851**	1	ELBOW	
	44	2	*148-8374*	1	ELBOW AS	
		2	**3K-0360**	1	SEAL-O-RING	
		2	**6V-8397**	1	SEAL-O-RING	
		2	**6V-8723**	1	ELBOW	
	45	1	*148-8377*	2	ELBOW AS	
					(EACH INCLUDES)	
		1	**6V-8397**	2	SEAL-O-RING	
		1	**6V-8980**	1	ELBOW	
	46	2	*148-8378*	1	ELBOW AS	
		2	**3J-1907**	1	SEAL-O-RING	
		2	**6V-8397**	1	SEAL-O-RING	
		2	**6V-8724**	1	ELBOW	
	47	2	*148-8411*	1	PLUG AS	
		2	**3K-0360**	1	SEAL-O-RING	
		2	**9S-4185**	1	PLUG-O-RING	
	48	2	*148-8427*	1	TEE AS	
		2	**6V-8398**	3	SEAL-O-RING	
		2	**8T-6895**	1	TEE-UNION	
	49	3	*148-8428*	2	TEE AS	
					(EACH INCLUDES)	
		3	**3K-0360**	1	SEAL-O-RING	
		3	**6V-8398**	2	SEAL-O-RING	
		3	**6V-8782**	1	TEE	
	50	1	*148-8433*	1	TEE AS	
		1	**6V-8397**	2	SEAL-O-RING	
		1	**6V-9836**	1	TEE-SWIVEL	
	51	1,3	*148-8434*	2	TEE AS	
					(EACH INCLUDES)	
		1,3	**6V-8397**	2	SEAL-O-RING	
		1,3	**6V-9843**	1	TEE-SWIVEL	
	52	3	*148-8444*	1	TEE AS-SWIVEL	
		3	**6V-8398**	2	SEAL-O-RING	
		3	**6V-9837**	1	TEE-SWIVEL	
	53	1,2	*164-5567*	3	COUPLER AS-QUICK DISCONNECT	
					(EACH INCLUDES)	
		1,2	**3J-1907**	1	SEAL-O-RING	
		1,2	**6V-3965**	1	FITTING (QUICK DISCONNECT)	
	54	3	*164-5574*	1	TEE AS	

236-8972 **CONTROL GP-SERVICE BRAKE** *(contd.)* **i03608261**

NOTE	REF NO	GRAPHIC REF	PART NUMBER	QTY	PART NAME 1 2 3 4 5 6 (PRODUCT LEVEL)	SEE PAGE
		3	**3D-2824**	1	SEAL-O-RING	
		3	**6V-8784**	1	TEE-FACE SEAL	
		3	**6V-9746**	2	SEAL-O-RING	
	55	1	*164-5580*	1	TEE AS	
		1	**6V-8398**	2	SEAL-O-RING	
		1	**6V-9489**	1	TEE-BULKHEAD	
		1	**6V-9746**	1	SEAL-O-RING	
	56	3	**198-4777**	2	WASHER-HARD (11X25X10-MM THK)	
	57	2	**1S-6420**	1	CLIP	
	58	1	**3B-4607**	2	PIN-COTTER	
	59	1	**3B-4640**	1	PIN-COTTER	
	60	2	**4D-7735**	1	CLIP	
	61	1,2,3	**5K-5338**	10	CLIP	
	62	1	**5P-4116**	2	WASHER-HARD (8.8X20.5X2-MM THK)	
	63	1	**5P-4295**	1	CLIP	
	64	1	**6D-4246**	2	CLIP	
	65	1,2	**6V-0852**	3	CAP-DUST	
	66	2	**6V-1889**	2	CLIP	
	67	2	**6V-8397**	4	SEAL-O-RING	
	68	1,2	**6V-9168**	4	NUT (11/16-16-THD)	
	69	1,2	**6V-9169**	2	NUT-BULKHEAD (13/16-16-THD)	
	70	3	**6V-9832**	1	CAP AS	
	71	1	**7X-2618**	2	PIN	
	72	1,2	**8M-2773**	9	CLIP	
	73	1	**8T-0741**	2	SEAL-LIP TYPE	
	74	1,2,3	**8T-4121**	29	WASHER-HARD (11X21X2.5-MM THK)	
M	75	1,2	**8T-4133**	9	NUT (M10X1.5-THD)	
M	76	1,2,3	**8T-4136**	12	BOLT (M10X1.5X25-MM)	
M	77	1,2	**8T-4137**	4	BOLT (M10X1.5X20-MM)	
M	78	1,2,3	**8T-4139**	6	BOLT (M12X1.75X30-MM)	
M	79	2	**8T-4195**	1	BOLT (M10X1.5X30-MM)	
M	80	2,3	**8T-4196**	3	BOLT (M10X1.5X35-MM)	
	81	1,2,3	**8T-4223**	6	WASHER-HARD (13.5X25.5X3-MM THK)	
	82	1	**8T-7934**	1	WASHER-HARD (11X21X5-MM THK)	
	83	1,2	**9X-8257**	5	WASHER (17.5X30X3.5-MM THK)	
E	84	1	**206-2725**		GUARD (30-CM)	

E-ORDER BY THE CENTIMETER
I-REFER TO HYDRAULIC INFORMATION SYSTEM
M-METRIC PART
Y-SEPARATE ILLUSTRATION

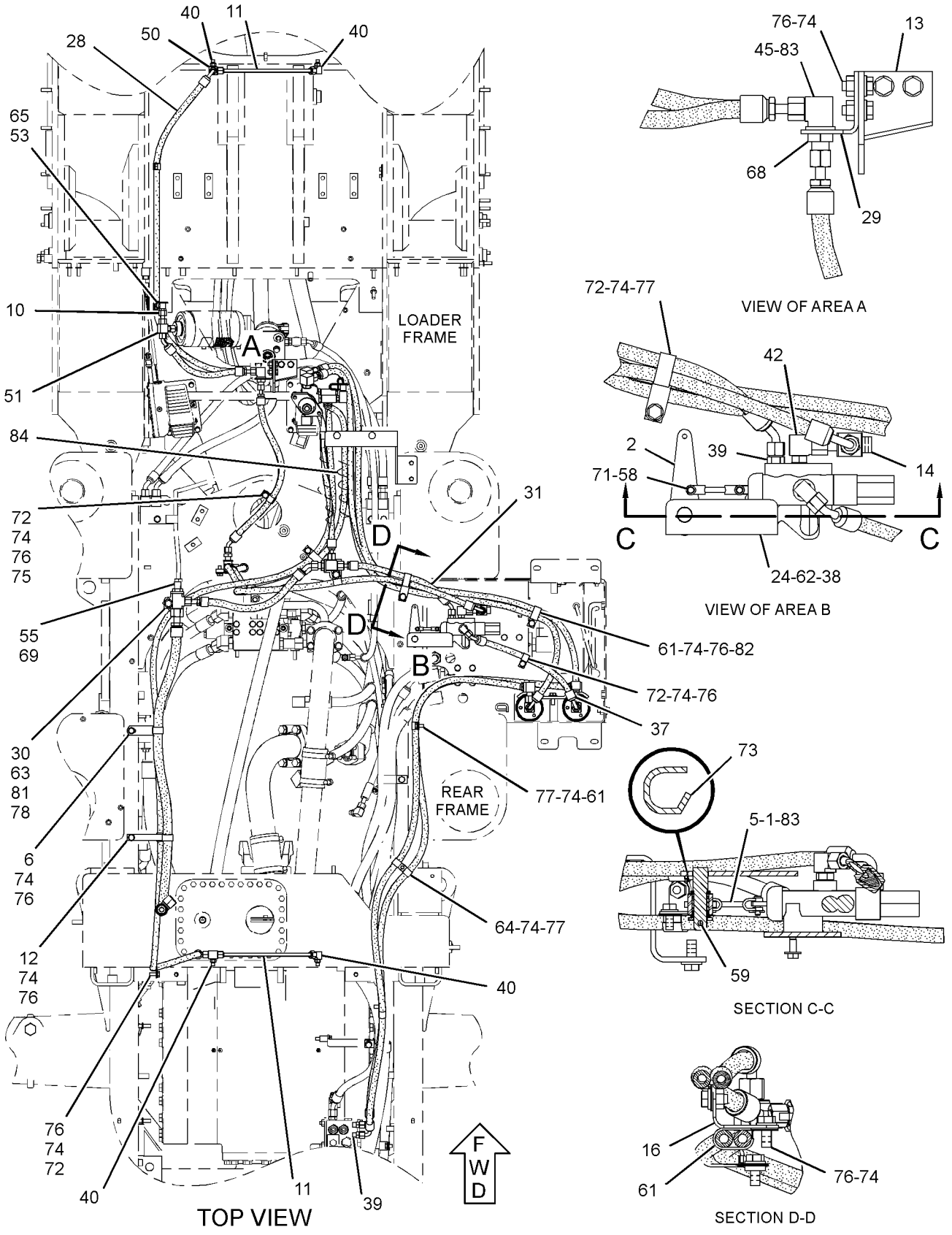

GRAPHIC #1 g01915533

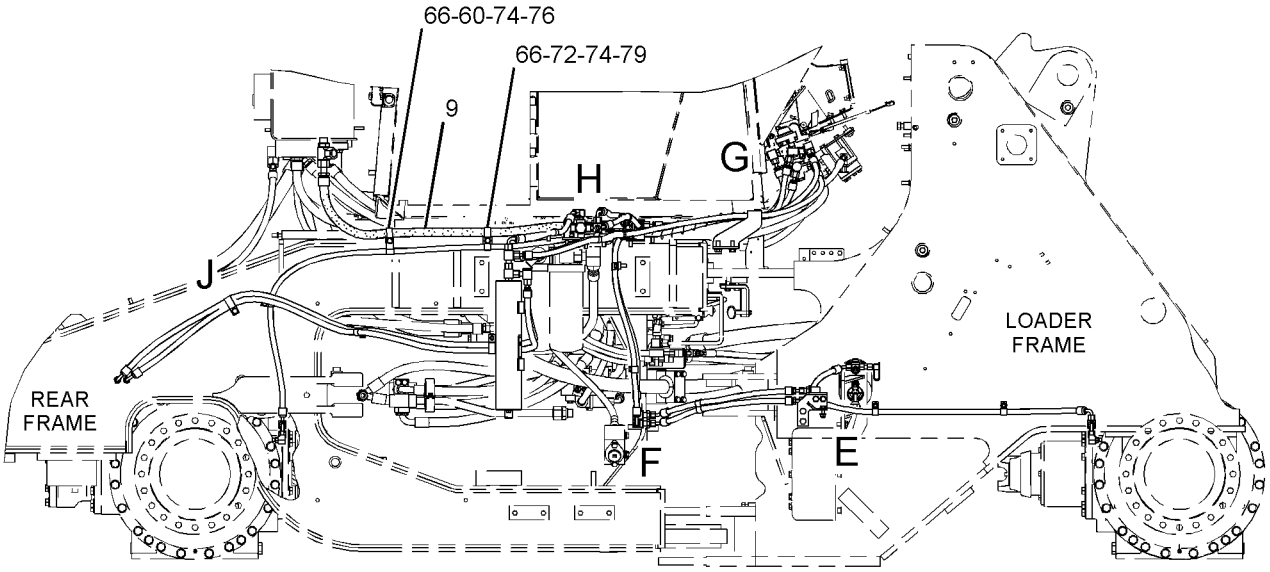

RIGHT SIDE VIEW

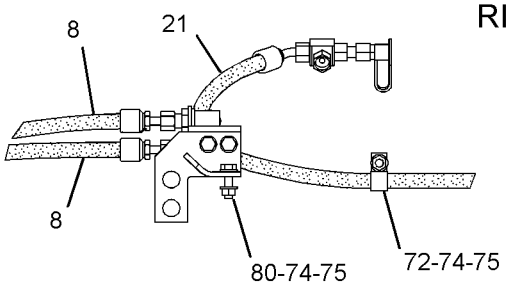

VIEW OF AREA E

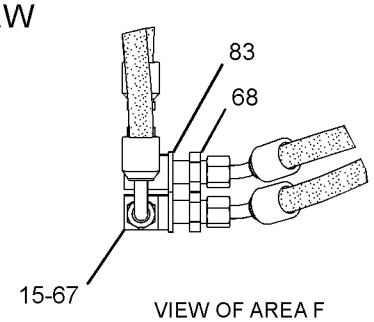

VIEW OF AREA F

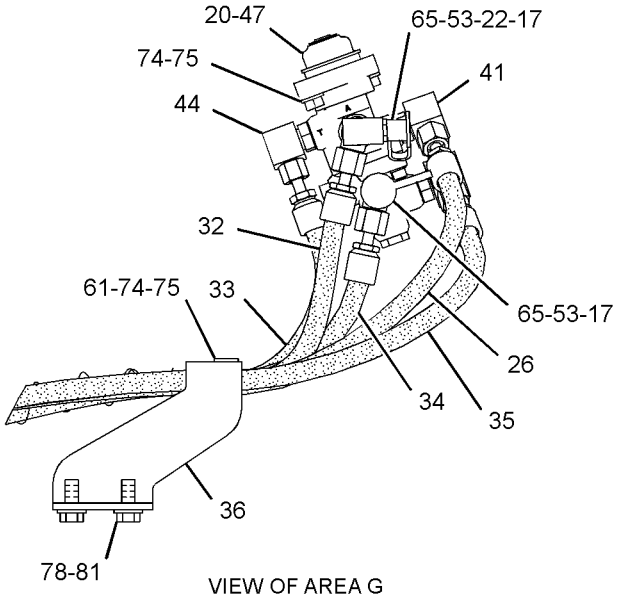

VIEW OF AREA G

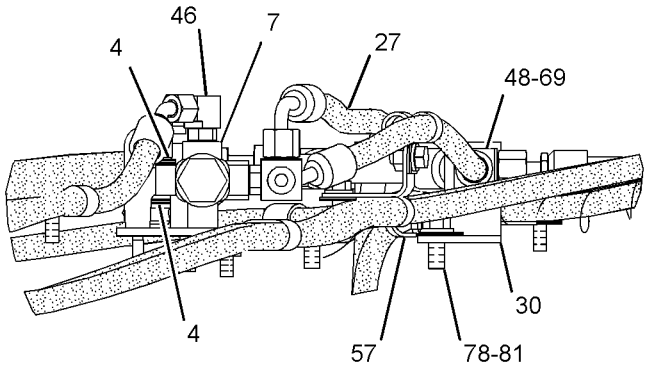

VIEW OF AREA H

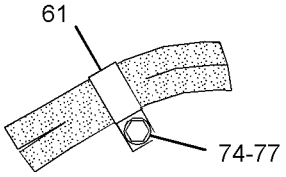

VIEW OF AREA J

GRAPHIC #2

g01915534

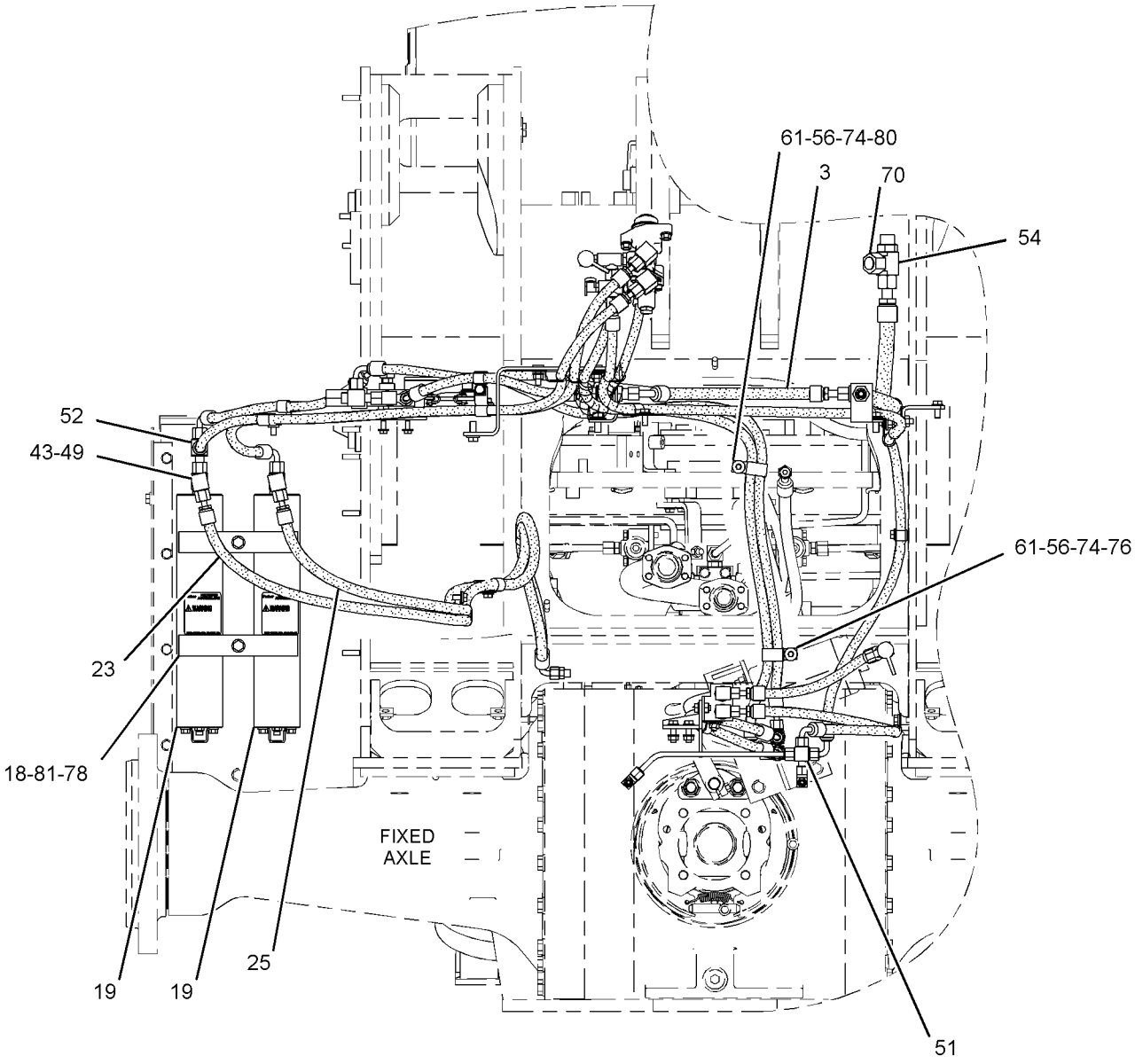

FRONT VIEW

GRAPHIC #3 **<END>** g01915535

106-1774 VALVE GP-BRAKE CONTROL–PARKING

S/N: RYF1-UP

PART OF 236-8972 CONTROL GP-SERVICE BRAKE

SMCS-4265, 4282 **i02444766**

NOTE	REF NO	GRAPHIC REF	PART NUMBER	QTY	PART NAME 1 2 3 4 5 6 (PRODUCT LEVEL)	SEE PAGE
	1	1	**4J-7533**	2	SEAL-O-RING	
	2	1	**9S-8001**	2	PLUG-O-RING	
	3	1	**257-7676**	1	KIT-REPAIR	
					(INCLUDES BOOT, SEALS, RETAINING, DETENT BALLS AND SPRINGS)	

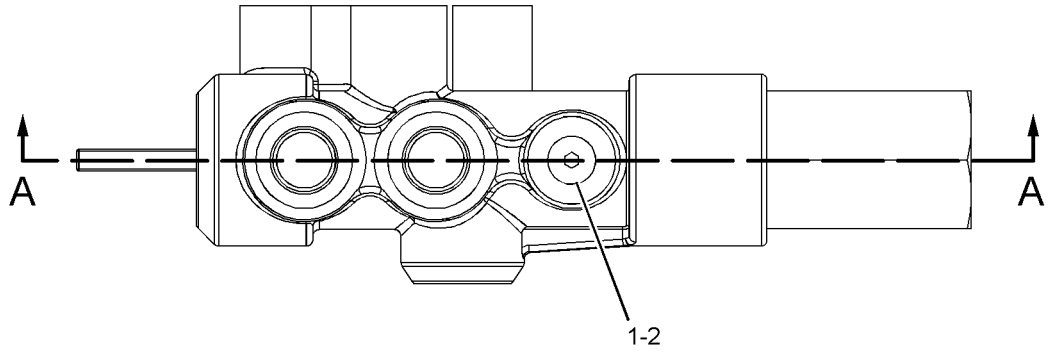

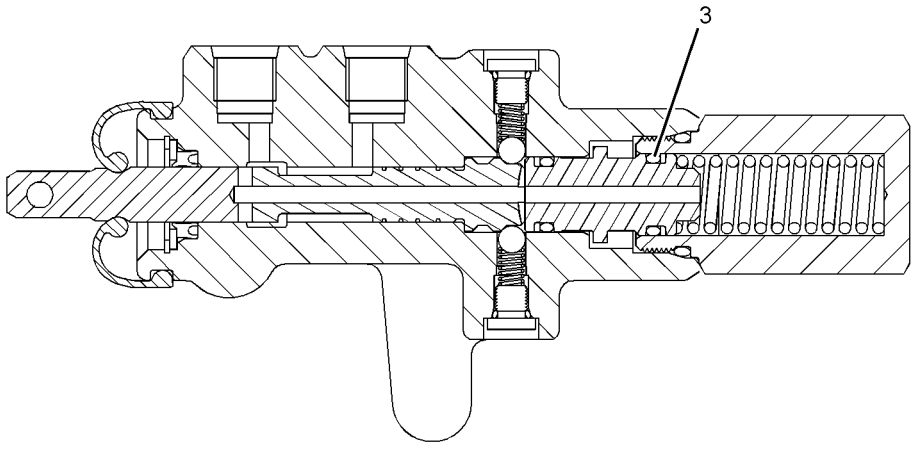

SECTION A-A

GRAPHIC #1 **<END>** g01118794

STEERING SYSTEM

119-4398 CYLINDER & MTG GP-STEERING

S/N: RYF1-UP

PART OF 236-9000 CHASSIS AR

SMCS-4303 **i03609161**

NOTE	REF NO	GRAPHIC REF	PART NUMBER	QTY	PART NAME 1 2 3 4 5 6 (PRODUCT LEVEL)	SEE PAGE
	1	1	**3B-8489**	2	FITTING-GREASE	
Y	2	1	**314-9336**	2	CYLINDER GP-STEERING	393
	3	1	**136-1711**	4	PIN AS	
	4	1	**7G-8839**	4	SPACER (13.5X57X6-MM THK)	
M	5	1	**8T-4192**	4	BOLT (M12X1.75X25-MM)	

M-METRIC PART
Y-SEPARATE ILLUSTRATION

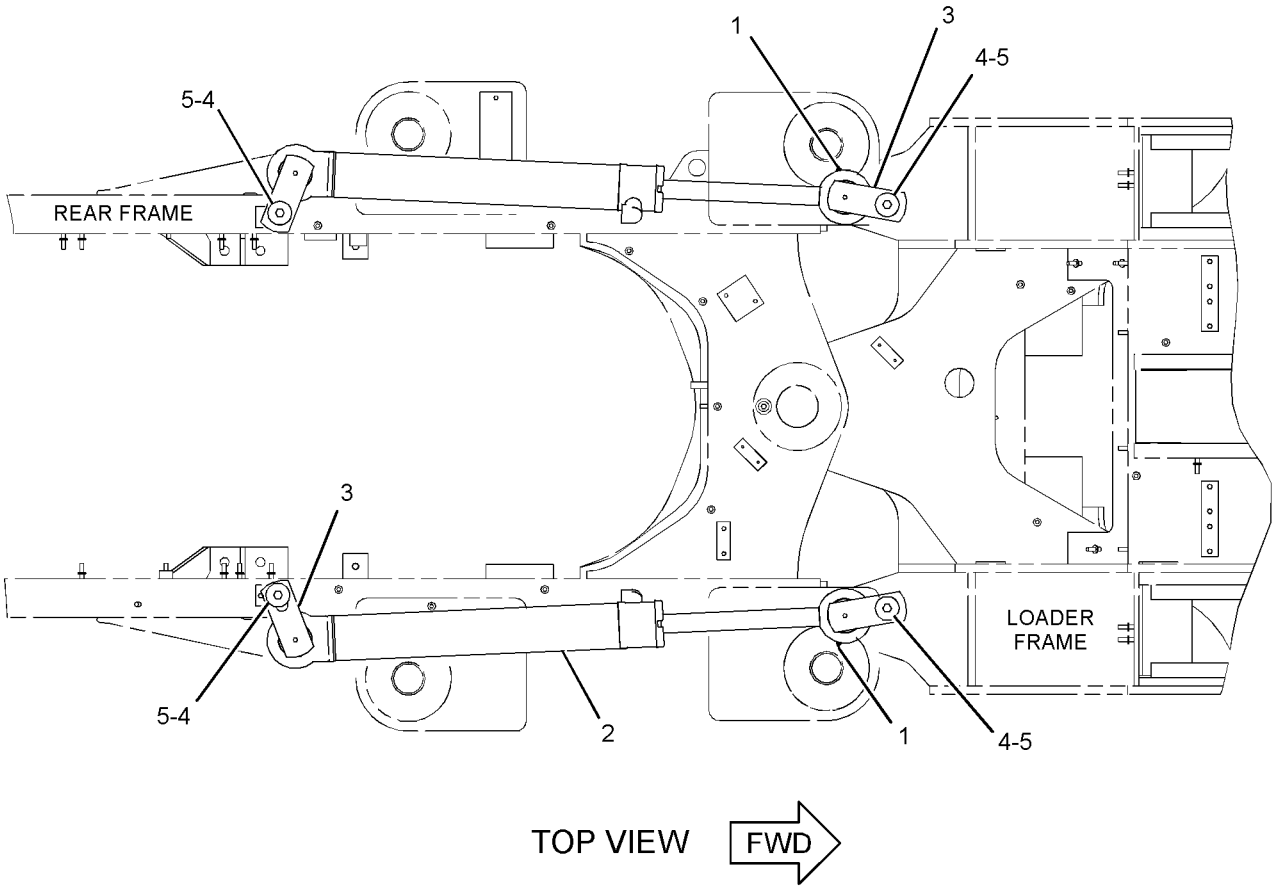

GRAPHIC #1 **<END>** g01298880

STEERING SYSTEM

314-9336 CYLINDER GP-STEERING

S/N: RYF1-UP
88.9MM BORE X 649.6MM STROKE
PART OF 119-4398 CYLINDER & MTG GP-STEERING

SMCS-4303 **i03609187**

NOTE	REF NO	GRAPHIC REF	PART NUMBER	QTY	PART NAME 1 2 3 4 5 6 (PRODUCT LEVEL)	SEE PAGE
R	1	1	**135-4688**	1	CYLINDER AS	
		1	**6E-1497**	1	BOSS	
		1	**1K-6985**	2	RING-RETAINING	
		1	**9M-1328**	1	BEARING	
R	2	1	**135-4690**	1	ROD AS	
		1	**1K-6985**	2	RING-RETAINING	
		1	**9M-1328**	1	BEARING	
	3	1	**145-9105**	1	PISTON	
	4	1	**314-9337**	1	HEAD	
M	5	1	**173-9683**	1	BOLT (M30X3.5X90-MM)	
	6	1	**175-7898**	1	SEAL-O-RING	
	7	1	**308-1845**	1	SEAL-WIPER	
	8	1	**308-1873**	1	SEAL AS-U-CUP	
	9	1	**308-1876**	1	SEAL AS-BUFFER	
	10	1	**4J-9224**	1	RING-BACKUP	
	11	1	**4T-5613**	1	RING-WEAR	
	12	1	**4T-8054**	1	SEAL AS	
	13	1	**7J-9885**	1	RING-WEAR	
	14	1	**9X-8399**	1	WASHER (33X56X6-MM THK)	

M-METRIC PART
R-REMFG PART MAY BE AVAILABLE

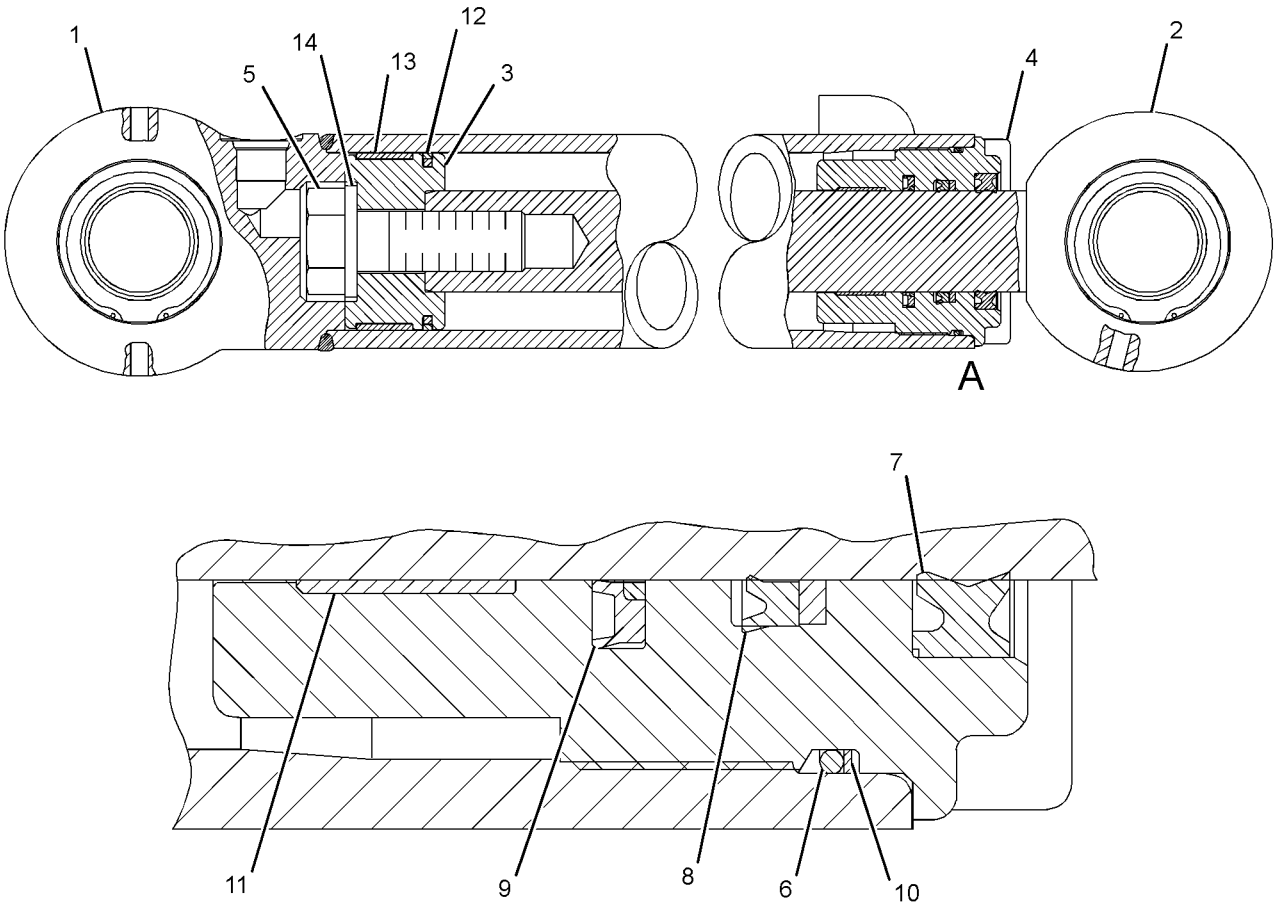

VIEW OF AREA A

GRAPHIC #1 **<END>** g01622280

STEERING SYSTEM

236-9007 LINES GP-SECONDARY STEERING

S/N: RYF1-UP

PART OF 236-9087 STEERING AR-SECONDARY

AN ATTACHMENT

SMCS-4304 **i03629797**

NOTE	REF NO	GRAPHIC REF	PART NUMBER	QTY	PART NAME 1 2 3 4 5 6 (PRODUCT LEVEL)	SEE PAGE
	1	2	**6V-0484**	2	ADAPTER-O-RING	
	2	2	**8X-5027**	2	ELBOW	
	3	2	**127-9323**	1	BRACKET AS	
Y	4	2	**141-2597**	1	VALVE GP-SECONDARY STEERING	412
	5	1	**177-0762**	1	BRACKET AS	
I	7	1	**245-7688**	1	HOSE AS	
I	8	1	**245-7690**	1	HOSE AS	
I	9	1	**245-7691**	1	HOSE AS	
I	10	2	**278-1808**	1	HOSE AS	
I	11	2	**278-3310**	1	HOSE AS	
	12	1	*148-8327*	1	CONNECTOR AS	
		1	**3D-2824**	1	SEAL-O-RING	
		1	**6V-8637**	1	CONNECTOR	
		1	**6V-9746**	1	SEAL-O-RING	
	13	1	*148-8359*	1	ELBOW AS	
		1	**3K-0360**	1	SEAL-O-RING	
		1	**6V-9746**	1	SEAL-O-RING	
		1	**6V-9877**	1	ELBOW	
	14	2	*148-8364*	1	ELBOW AS	
		2	**3K-0360**	1	SEAL-O-RING	
		2	**6V-8398**	1	SEAL-O-RING	
		2	**6V-8625**	1	ELBOW	
	15	2	*148-8390*	1	ELBOW AS	
		2	**2M-9780**	1	SEAL-O-RING	
		2	**6V-8626**	1	ELBOW	
		2	**7J-9108**	1	SEAL-O-RING	
	16	2	*171-6723*	1	ELBOW AS	
		2	**6V-9746**	1	SEAL-O-RING	
		2	**8T-8899**	1	ELBOW	
	17	1	*150-4048*	1	ELBOW AS	
		1	**3K-0360**	1	SEAL-O-RING	
		1	**6V-8722**	1	ELBOW	
		1	**7J-9108**	1	SEAL-O-RING	
	18	2	*153-6256*	1	ELBOW AS	
		2	**7J-9108**	1	SEAL-O-RING	
		2	**8C-7563**	1	ELBOW	
	19	2	**1P-4577**	8	FLANGE-HALF	
	20	2	**3J-1907**	2	SEAL-O-RING	
	21	2	**4J-0520**	5	SEAL-O-RING	
M	22	2	**8T-6466**	3	BOLT (M10X1.5X60-MM)	
	23	2	**6V-1889**	2	CLIP	
M	24	2	**7X-2549**	3	BOLT (M12X1.75X100-MM)	
	25	1	**7X-7729**	1	WASHER (11X25X3-MM THK)	
	26	1,2	**8T-4121**	28	WASHER-HARD (11X21X2.5-MM THK)	
M	27	1	**8T-4136**	1	BOLT (M10X1.5X25-MM)	
M	28	1,2	**8T-4137**	3	BOLT (M10X1.5X20-MM)	
M	29	2	**8T-4172**	2	BOLT (M10X1.5X80-MM)	
M	30	2	**8T-4196**	18	BOLT (M10X1.5X35-MM)	
M	31	2	**8T-4198**	2	BOLT (M10X1.5X100-MM)	
	32	2	**8T-4223**	3	WASHER-HARD (13.5X25.5X3-MM THK)	
	33	2	**6W-7636**	1	SPACER (11.13X19.05X30-MM THK)	
	34	2	**1S-0944**	1	CLIP	

I-REFER TO HYDRAULIC INFORMATION SYSTEM
M-METRIC PART
Y-SEPARATE ILLUSTRATION

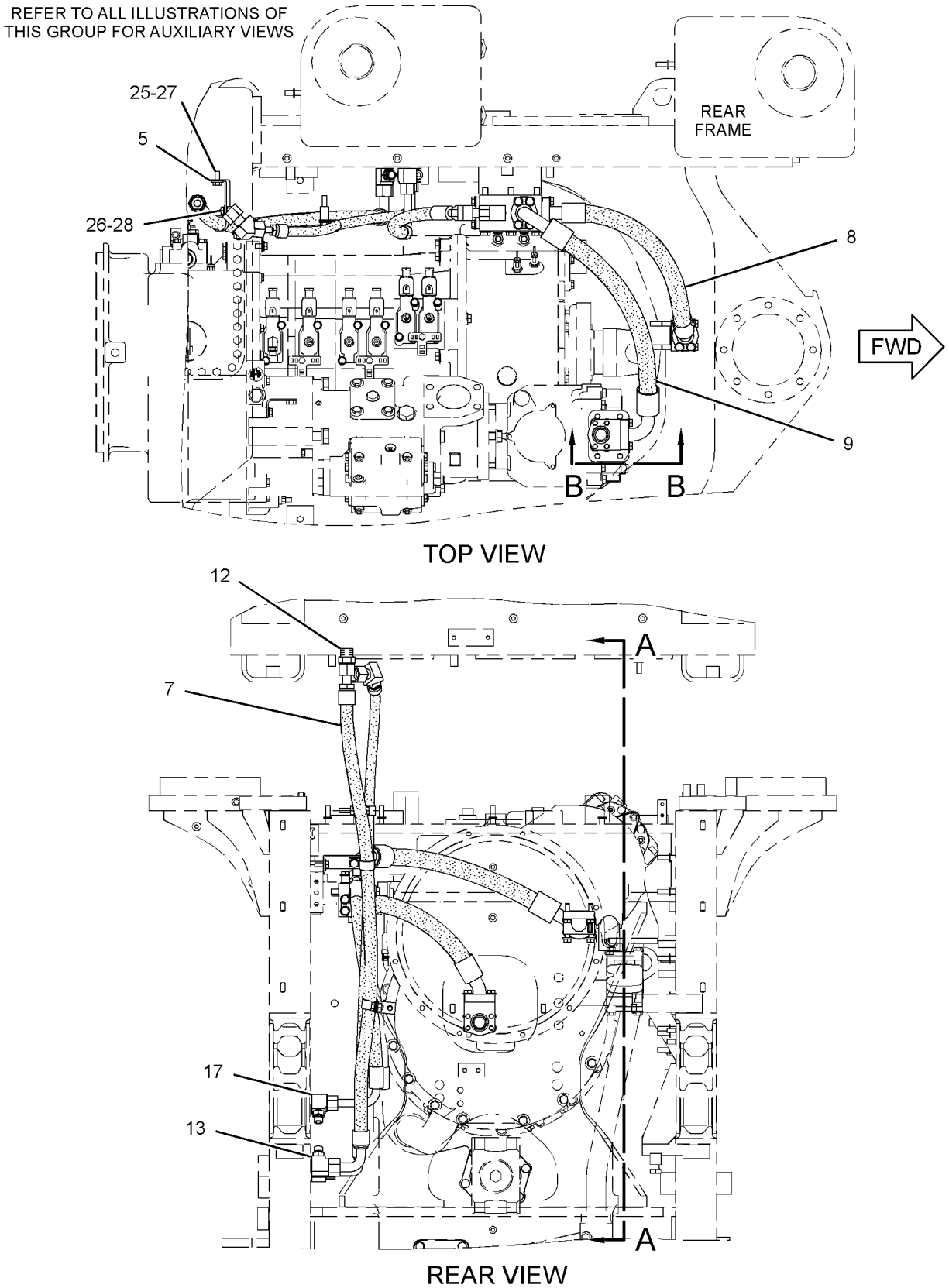

GRAPHIC #1

g01795713

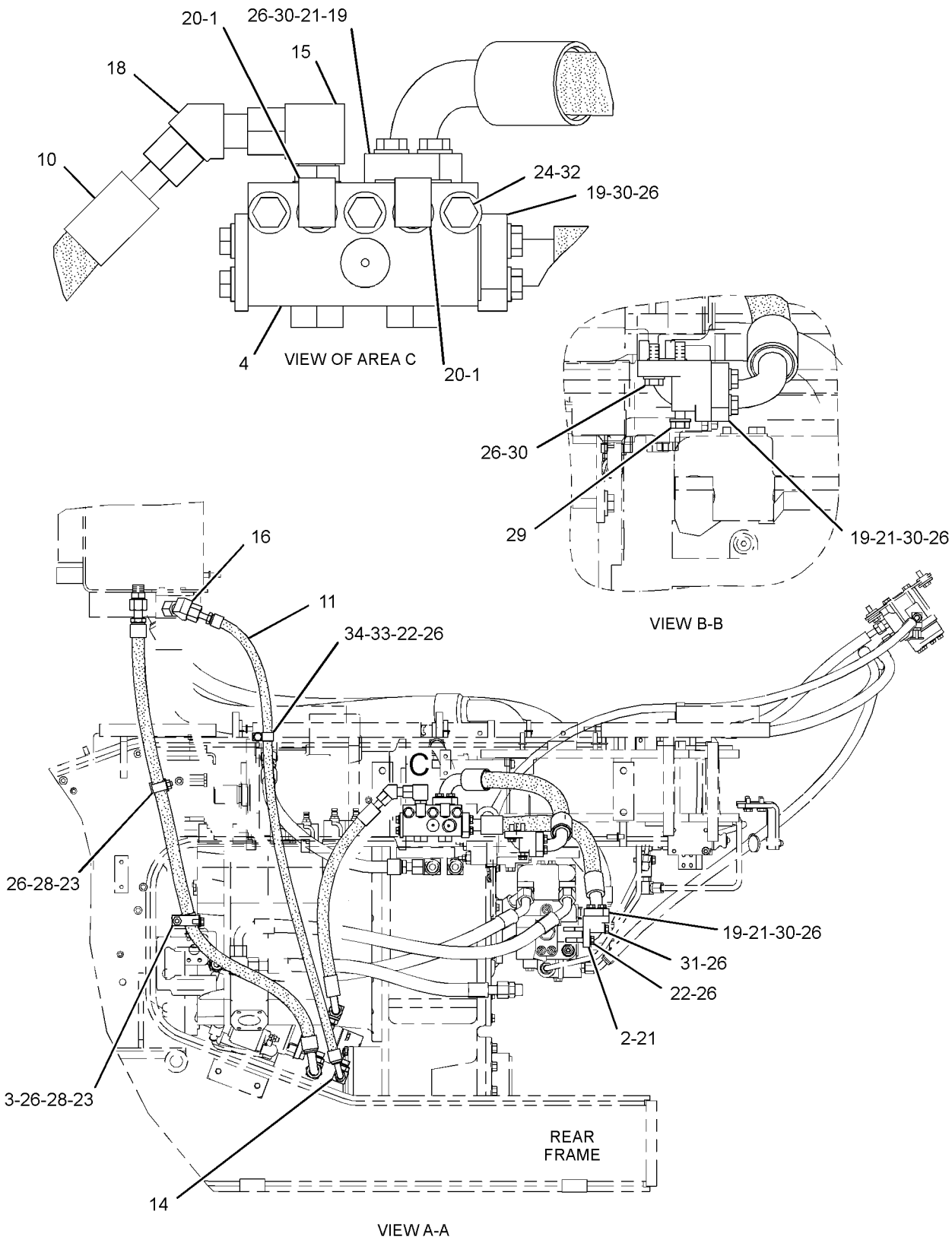

GRAPHIC #2 **<END>** g01795714

STEERING SYSTEM

236-8985 LINES GP-STEERING—HMU STEERING

S/N: RYF1-UP

PART OF 236-9000 CHASSIS AR

SMCS-4304 **i03612968**

NOTE	REF NO	GRAPHIC REF	PART NUMBER	QTY	PART NAME 1 2 3 4 5 6 (PRODUCT LEVEL)	SEE PAGE
E	1	2	**5P-1295**		HOSE (13-CM)	
	2	2	**9J-3866**	1	ADAPTER	
I	3	3	**104-5923**	1	HOSE AS	
	4	3	**127-4667**	1	STRIP AS	
	5	2	**135-5038**	1	MANIFOLD	
I	6	3	**136-3313**	1	HOSE AS	
Y	7	2	**142-3996**	1	VALVE GP-STEERING (HMU STEERING)	413
M	8	3	**146-6581**	2	BOLT-FLAT HEAD (M12X1.75X72-MM)	
Y	9	3	*146-7571*	2	VALVE GP-STEERING NEUTRALIZER (HMU STEERING)	415
	10	3	**147-8583**	2	BRACKET	
	11	3	**149-0257**	2	TUBE AS	
	12	3	**149-0271**	2	PLATE	
	13	3	**149-0272**	1	MANIFOLD	
	14	3	**192-5624**	1	BRACKET AS	
	15	3	*205-7200*	2	ELBOW AS	
					(EACH INCLUDES)	
		3	**3J-1907**	1	SEAL-O-RING	
		3	**6V-8397**	1	SEAL-O-RING	
		3	**108-2144**	1	ELBOW	
I	16	2	**244-6577**	1	HOSE AS	
	17	2	**244-6578**	1	TUBE AS	
I	18	2	**245-3017**	1	HOSE AS	
	19	3	**245-4370**	1	TUBE AS	
	20	2	**246-6292**	1	TUBE AS	
	21	2	**246-6293**	1	TUBE AS	
I	22	3	**247-0507**	2	HOSE AS	
I	23	2	**247-3018**	2	HOSE AS	
I	24	2	**247-3020**	1	HOSE AS	
	25	3	**258-5428**	1	TUBE AS	
	26	3	**258-5429**	1	TUBE AS	
I	27	3	**271-2609**	2	HOSE AS	
I	28	3	**271-2610**	1	HOSE AS	
	29	3	**271-3987**	1	TUBE AS	
I	30	3	**285-0112**	1	HOSE AS	
	31	3	**286-0693**	1	SPACER (11X25X18-MM THK)	
I	32	3	**311-8374**	1	HOSE AS	
	33	3	**324-9356**	1	TUBE AS	
	34	3	**326-7677**	1	TUBE AS	
	35	2	**329-9700**	2	TUBE AS	
Y	36	3	*331-1303*	1	PUMP & MTG GP-METERING	405
	37	2	**144-0367**	2	CLAMP-HOSE	
	38	2	*148-8317*	2	CONNECTOR AS	
					(EACH INCLUDES)	
		2	**3D-2824**	1	SEAL-O-RING	
		2	**5K-9090**	1	SEAL-O-RING	
		2	**6V-8714**	1	CONNECTOR	
	39	2	*148-8325*	1	CONNECTOR AS	
		2	**3J-1907**	2	SEAL-O-RING	
		2	**4J-5477**	2	SEAL-O-RING	
		2	**6V-8641**	2	CONNECTOR	
	40	2	*148-8340*	2	CONNECTOR AS	
					(EACH INCLUDES)	
		2	**3K-0360**	1	SEAL-O-RING	
		2	**6V-8398**	1	SEAL-O-RING	
		2	**6V-8639**	1	CONNECTOR	

236-8985 **LINES GP-STEERING** *(contd.)* **i03612968**

NOTE	REF NO	GRAPHIC REF	PART NUMBER	QTY	PART NAME 1 2 3 4 5 6 (PRODUCT LEVEL)	SEE PAGE
	41	2	*148-8344*	2	CONNECTOR AS	
					(EACH INCLUDES)	
		2	**3D-2824**	1	SEAL-O-RING	
		2	**6V-9162**	1	CONNECTOR	
		2	**6V-9746**	1	SEAL-O-RING	
	42	3	*148-8364*	1	ELBOW AS	
					(EACH INCLUDES)	
		3	**3K-0360**	1	SEAL-O-RING	
		3	**6V-8398**	1	SEAL-O-RING	
		3	**6V-8625**	1	ELBOW	
	43	2,3	*148-8370*	3	ELBOW AS	
					(EACH INCLUDES)	
		2,3	**6V-8398**	1	SEAL-O-RING	
		2,3	**6V-9851**	1	ELBOW	
	44	3	*148-8375*	2	ELBOW AS	
					(EACH INCLUDES)	
		3	**6V-8398**	2	SEAL-O-RING	
		3	**6V-8981**	1	ELBOW	
	45	2,3	*148-8378*	3	ELBOW AS	
					(EACH INCLUDES)	
		2,3	**3J-1907**	1	SEAL-O-RING	
		2,3	**6V-8397**	1	SEAL-O-RING	
		2,3	**6V-8724**	1	ELBOW	
	46	3	*148-8411*	1	PLUG AS	
		3	**3K-0360**	1	SEAL-O-RING	
		3	**9S-4185**	1	PLUG-O-RING	
	47	3	*148-8457*	2	UNION AS	
					(EACH INCLUDES)	
		3	**6V-8398**	2	SEAL-O-RING	
		3	**6V-8995**	1	UNION	
	48	3	*150-4043*	4	CONNECTOR AS	
					(EACH INCLUDES)	
		3	**3J-1907**	1	SEAL-O-RING	
		3	**6V-8398**	1	SEAL-O-RING	
		3	**6V-9873**	1	CONNECTOR	
	49	2	*153-6237*	1	ELBOW AS	
		2	**3D-2824**	1	SEAL-O-RING	
		2	**6V-9004**	1	ELBOW	
		2	**6V-9746**	1	SEAL-O-RING	
	50	2	*153-6241*	1	ELBOW AS	
		2	**6V-8398**	1	SEAL-O-RING	
		2	**8C-8989**	1	ELBOW	
	51	3	*153-6257*	2	UNION AS	
					(EACH INCLUDES)	
		3	**6V-8398**	2	SEAL-O-RING	
		3	**6V-9808**	1	UNION	
	52	3	**164-5572**	1	UNION AS	
	53	2	*164-5606*	3	CONNECTOR AS	
					(EACH INCLUDES)	
		2	**3D-2824**	1	SEAL-O-RING	
		2	**6V-9746**	1	SEAL-O-RING	
		2	**8T-0078**	1	CONNECTOR	
	54	2	*171-6723*	3	ELBOW AS	
					(EACH INCLUDES)	
		2	**6V-9746**	1	SEAL-O-RING	
		2	**8T-8899**	1	ELBOW	
	55	2,3	**198-4777**	5	WASHER-HARD (11X25X10-MM THK)	
	56	2	**1P-3703**	2	SEAL-RECTANGULAR	
	57	2	**1P-3704**	2	SEAL-RECTANGULAR	

236-8985 **LINES GP-STEERING** *(contd.)* **i03612968**

NOTE	REF NO	GRAPHIC REF	PART NUMBER	QTY	PART NAME 1 2 3 4 5 6 (PRODUCT LEVEL)	SEE PAGE
	58	2	**1P-4584**	2	FLANGE-HALF	
	59	2	**2A-2677**	1	SPACER (10.7X17.14X19.05-MM THK)	
	60	3	**4B-0418**	3	CLIP	
	61	2	**4D-7388**	1	CLIP	
	62	2	**4J-0520**	3	SEAL-O-RING	
	63	2	**4J-5267**	2	SEAL-O-RING	
	64	2	**5G-7020**	2	CLIP (SLOT)	
	65	2	**5G-7021**	2	CLIP (TAB)	
	66	3	**6D-1641**	1	CLIP	
	67	3	**6D-4244**	2	CLIP	
	68	2	**6D-4246**	1	CLIP	
	69	2	**6J-2680**	2	SEAL-O-RING	
	70	3	**6V-9169**	4	NUT-BULKHEAD (13/16-16-THD)	
	71	3	**7B-1598**	1	CLIP	
	72	2	**7X-7729**	4	WASHER (11X25X3-MM THK)	
	73	2	**8C-3205**	4	FLANGE-HALF	
	74	2	**8C-3206**	2	FLANGE-HALF	
	75	3	**8S-0948**	1	CLIP	
	76	2	**8T-1889**	2	CLIP (SLOT)	
	77	2	**8T-1890**	2	CLIP (TAB)	
	78	2,3	**8T-4121**	46	WASHER-HARD (11X21X2.5-MM THK)	
M	79	2	**8T-4133**	3	NUT (M10X1.5-THD)	
M	80	2,3	**8T-4136**	8	BOLT (M10X1.5X25-MM)	
M	81	3	**8T-4137**	5	BOLT (M10X1.5X20-MM)	
M	82	2,3	**8T-4182**	5	BOLT (M10X1.5X45-MM)	
M	83	2	**8T-4184**	4	BOLT (M12X1.75X45-MM)	
M	84	3	**8T-4186**	1	BOLT (M10X1.5X40-MM)	
M	85	3	**8T-4195**	1	BOLT (M10X1.5X30-MM)	
M	86	2	**8T-4196**	12	BOLT (M10X1.5X35-MM)	
M	87	2	**8T-4198**	12	BOLT (M10X1.5X100-MM)	
	88	2	**8T-4223**	4	WASHER-HARD (13.5X25.5X3-MM THK)	
M	89	3	**8T-4244**	2	NUT (M12X1.75-THD)	
M	90	2	**8T-5005**	4	BOLT (M10X1.5X70-MM)	
M	91	2	**8T-5436**	3	BOLT (M10X1.5X130-MM)	
M	92	3	**8T-6466**	4	BOLT (M10X1.5X60-MM)	
	93	3	**9X-2027**	4	WASHER (11X18X2-MM THK)	

E-ORDER BY THE CENTIMETER
I-REFER TO HYDRAULIC INFORMATION SYSTEM
M-METRIC PART
Y-SEPARATE ILLUSTRATION

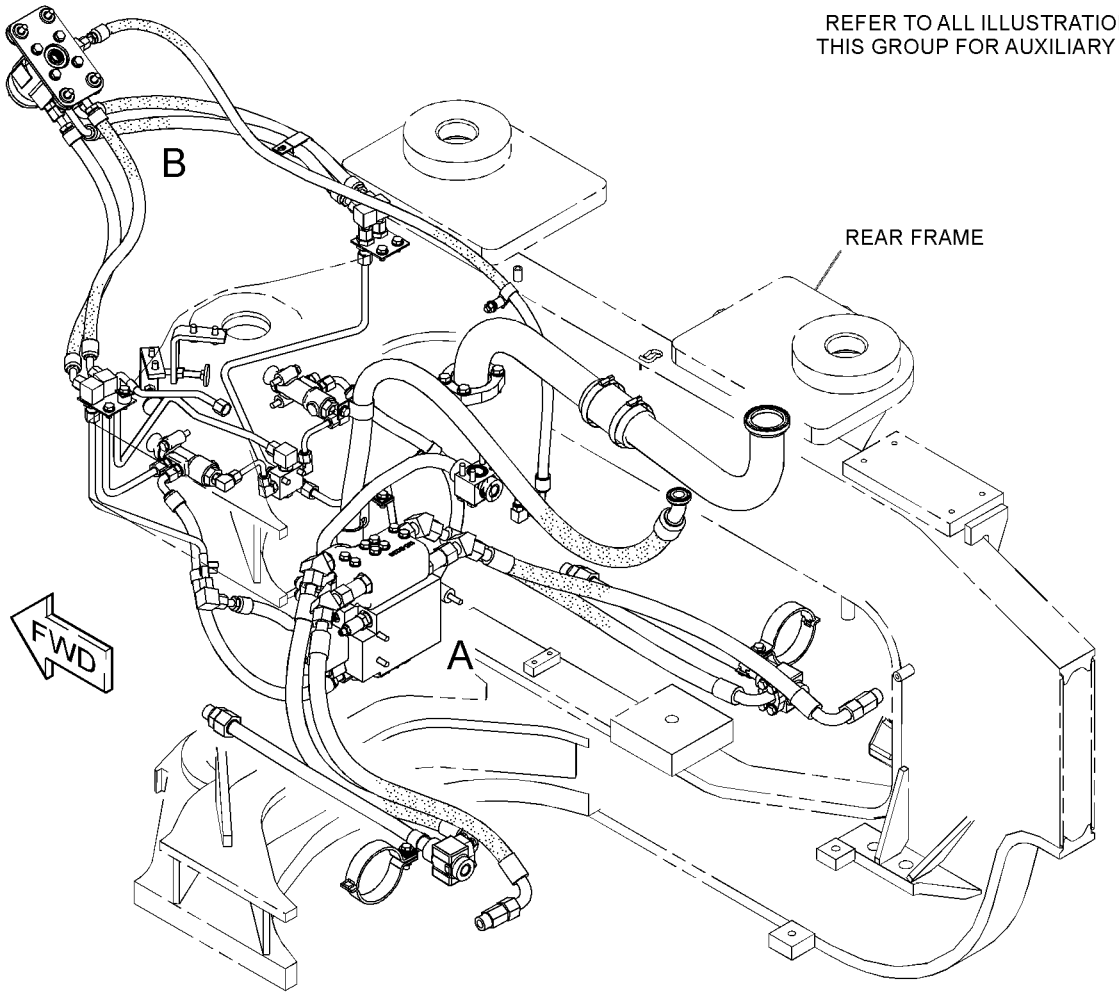

GRAPHIC #1 g01798416

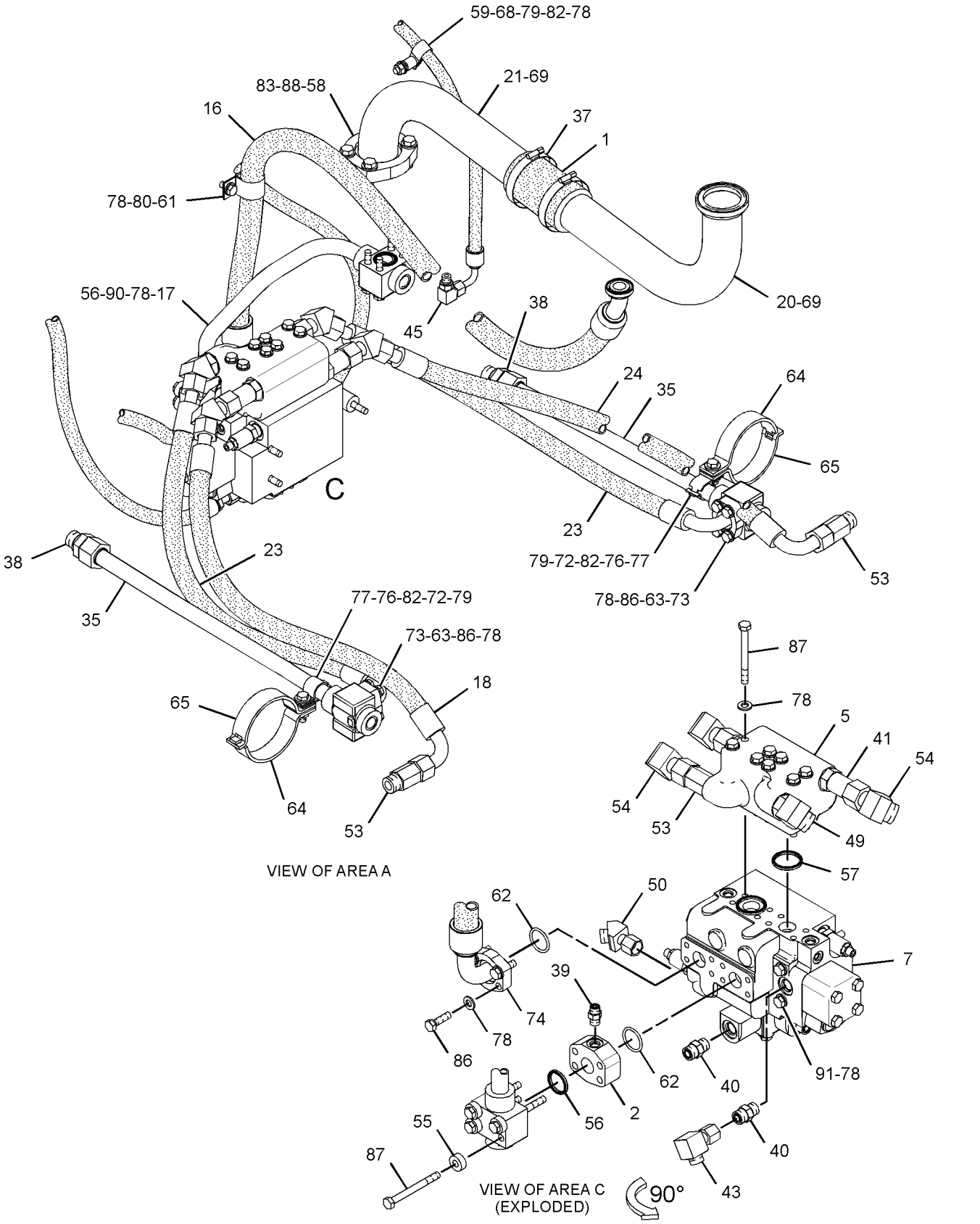

GRAPHIC #2

g01798417

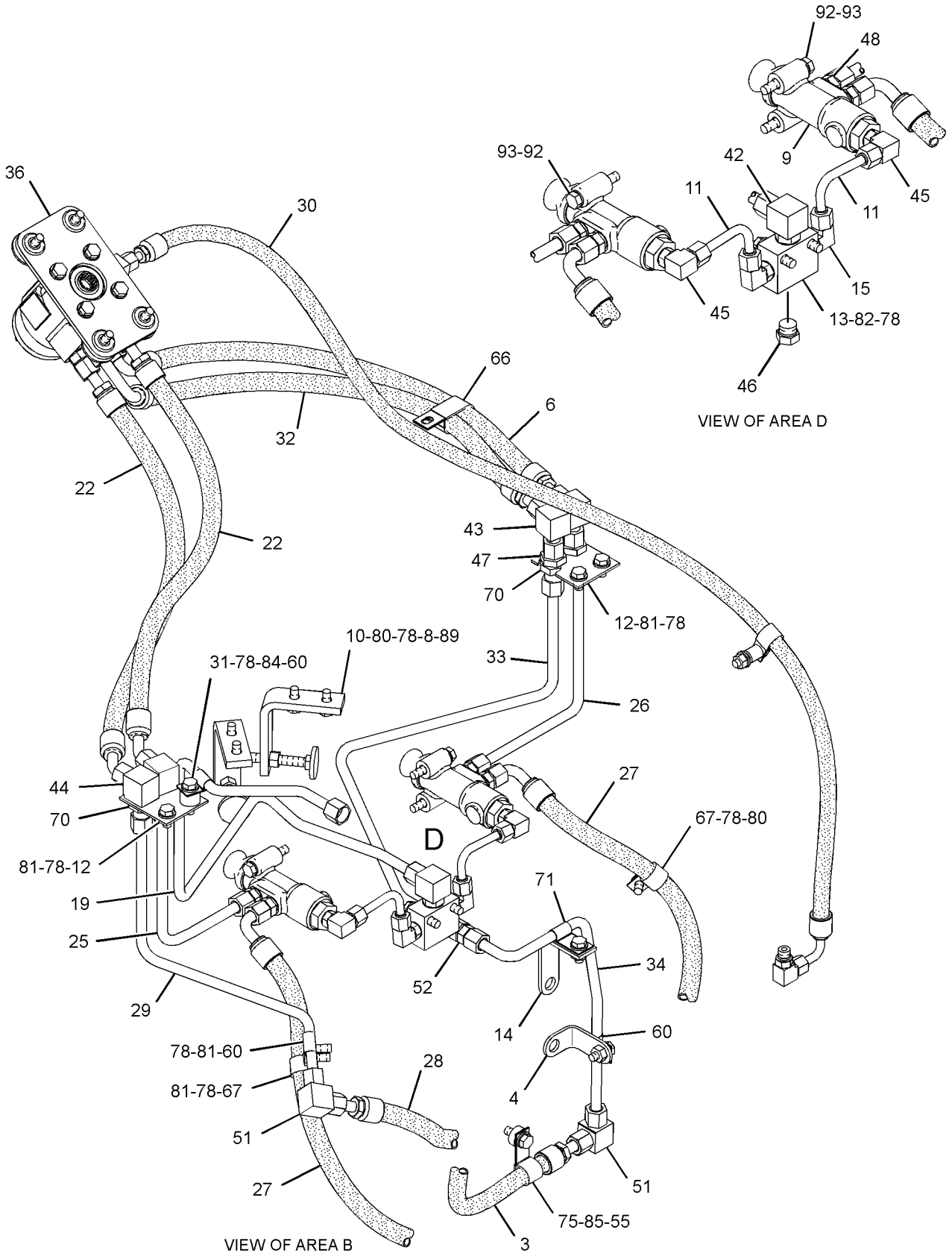

GRAPHIC #3 **<END>** g01798418

275-8544 PUMP & MOTOR GP-SEC STEERING

S/N: RYF1-UP
PART OF 236-9088 PUMP & MTG GP-SECONDARY STEER
AN ATTACHMENT

SMCS-4324, 4325 **i02544776**

NOTE	REF NO	GRAPHIC REF	PART NUMBER	QTY	PART NAME 1 2 3 4 5 6 (PRODUCT LEVEL)	SEE PAGE
	1	1	**117-5268**	1	GASKET	
	2	1	**183-6967**	1	MOTOR GP-ELECTRIC (SECONDARY STEERING)	
	3	1	**183-6970**	1	RELAY	
	4	1	**183-6971**	1	CABLE AS	
	5	1	**277-0731**	1	PUMP GP-GEAR (SECONDARY STEERING)	
	6	1	**237-9878**	1	KIT-RELIEF VALVE	

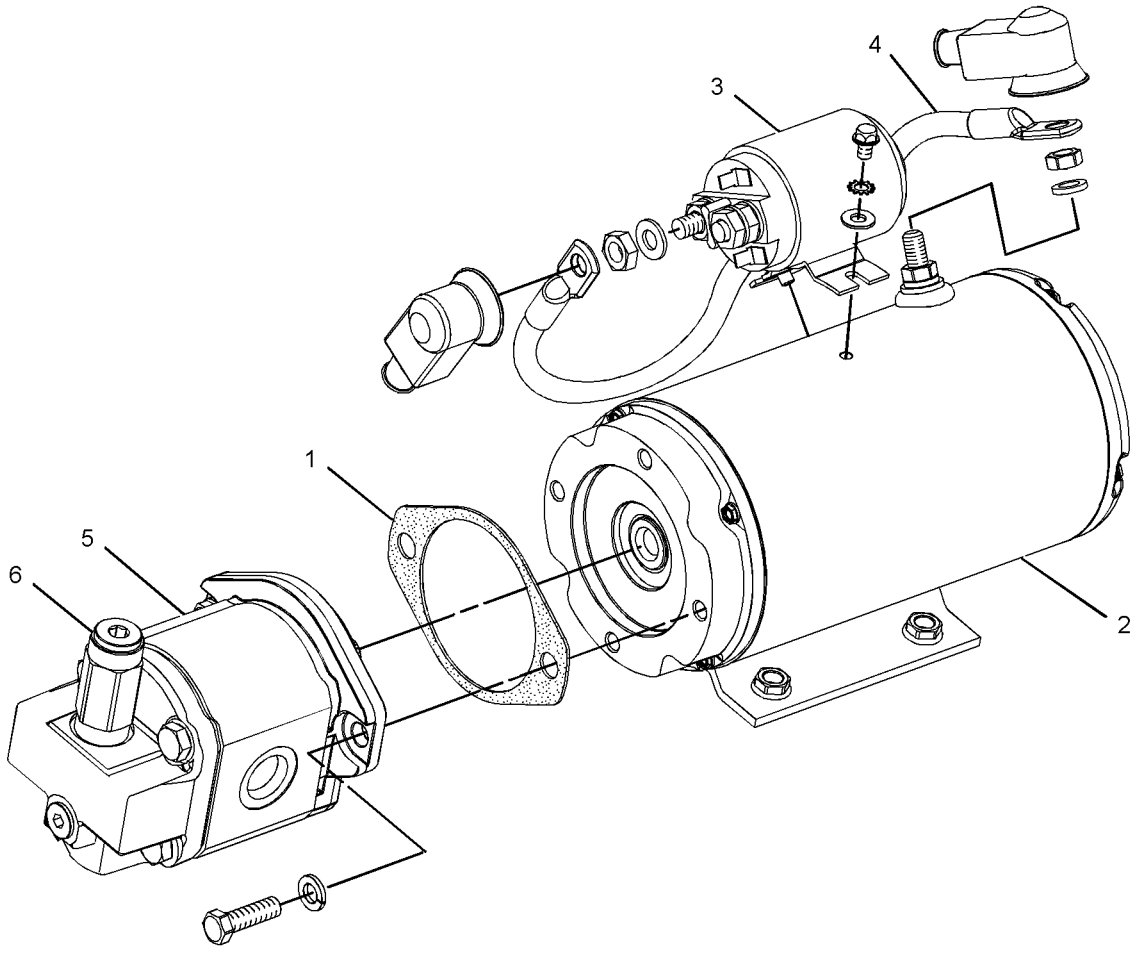

GRAPHIC #1 **<END>** g01210759

STEERING SYSTEM

331-1303 PUMP & MTG GP-METERING

S/N: RYF1-UP

PART OF 236-8985 LINES GP-STEERING

SMCS-4312 **i03613360**

NOTE	REF NO	GRAPHIC REF	PART NUMBER	QTY	PART NAME 1 2 3 4 5 6 (PRODUCT LEVEL)	SEE PAGE
	1	1	**6N-6984**	4	MOUNT-RUBBER	
	2	1	**6V-0852**	1	CAP-DUST	
	3	1	**141-8807**	1	PLATE	
	4	1	*150-4027*	1	TEE AS	
		1	**3E-2310**	1	TEE	
		1	**3J-1907**	1	SEAL-O-RING	
		1	**6V-8397**	1	SEAL-O-RING	
J	5	1	**230-4176**	1	PUMP GP-METERING (HMU STEERING)	
	6	1	*148-8340*	4	CONNECTOR AS	
		1	**3K-0360**	1	SEAL-O-RING	
		1	**6V-8398**	1	SEAL-O-RING	
		1	**6V-8639**	1	CONNECTOR	
	7	1	*150-4047*	1	ADAPTER AS	
		1	**3J-7354**	1	SEAL-O-RING	
		1	**8T-2353**	1	ADAPTER	
	8	1	*164-5567*	1	COUPLER AS-QUICK DISCONNECT	
		1	**6V-3965**	1	FITTING (QUICK DISCONNECT)	
		1	**214-7568**	1	SEAL-O-RING	
	9	1	**8T-4121**	4	WASHER-HARD (11X21X2.5-MM THK)	
M	10	1	**8T-4137**	4	BOLT (M10X1.5X20-MM)	
M	11	1	**8T-4196**	4	BOLT (M10X1.5X35-MM)	
	12	1	**8T-4226**	4	WASHER-PLATED (10.5X45X3-MM THK)	
					AVAILABLE REPAIR KIT(S):	
J			**257-8471**	1	KIT-SEAL (HMU)	
					(INCLUDES SEALS & RINGS)	

J-KIT MARKED J IS AVAILABLE FOR PART MARKED J
M-METRIC PART

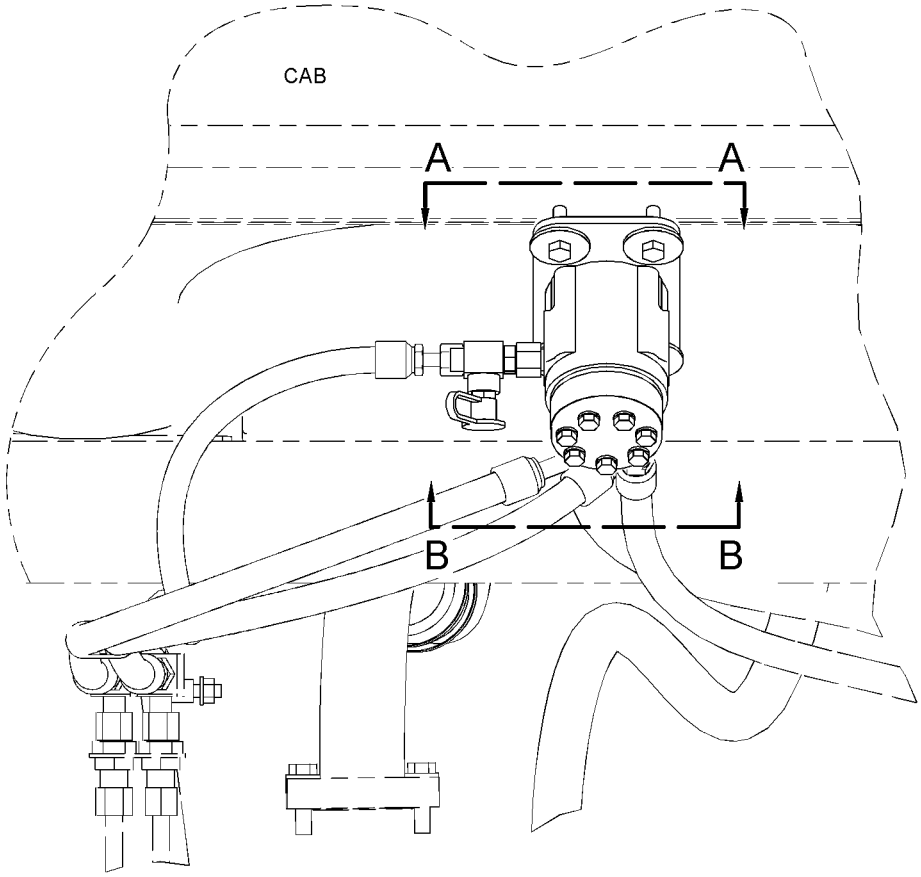

FRONT VIEW

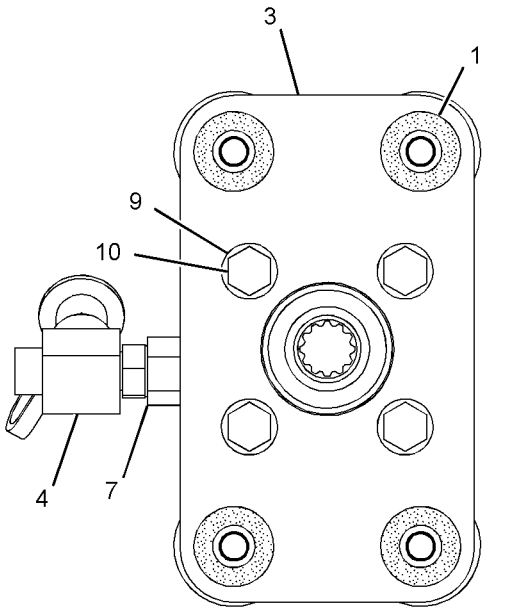

VIEW A-A

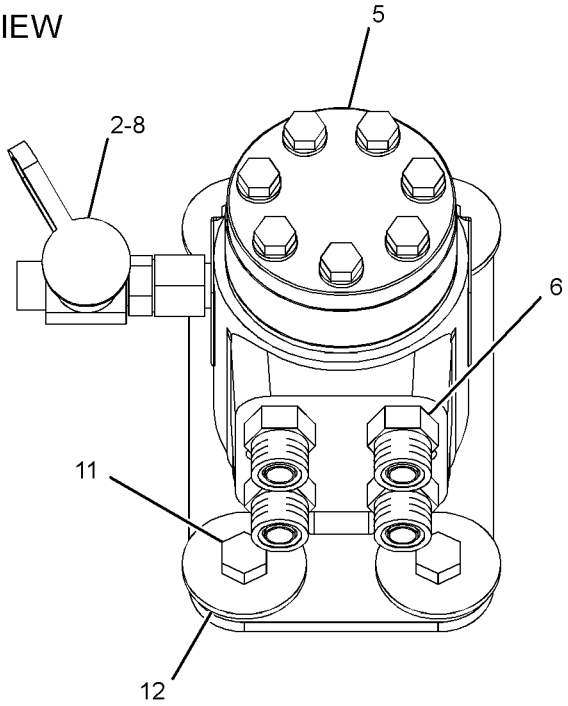

VIEW B-B

GRAPHIC #1 **<END>** g01794856

236-9088 PUMP & MTG GP-SECONDARY STEER

S/N: RYF1-UP
PART OF 236-9087 STEERING AR-SECONDARY
AN ATTACHMENT

SMCS-4324 **i03629798**

NOTE	REF NO	GRAPHIC REF	PART NUMBER	QTY	PART NAME 1 2 3 4 5 6 (PRODUCT LEVEL)	SEE PAGE
Y	1	1	**275-8544**	1	PUMP & MOTOR GP-SEC STEERING	404
	2	1	**245-7686**	1	BRACKET	
	3	1	**8T-4121**	4	WASHER-HARD (11X21X2.5-MM THK)	
M	4	1	**8T-4136**	4	BOLT (M10X1.5X25-MM)	
M	5	1	**8T-4139**	2	BOLT (M12X1.75X30-MM)	
	6	1	**8T-4223**	2	WASHER-HARD (13.5X25.5X3-MM THK)	

M-METRIC PART
Y-SEPARATE ILLUSTRATION

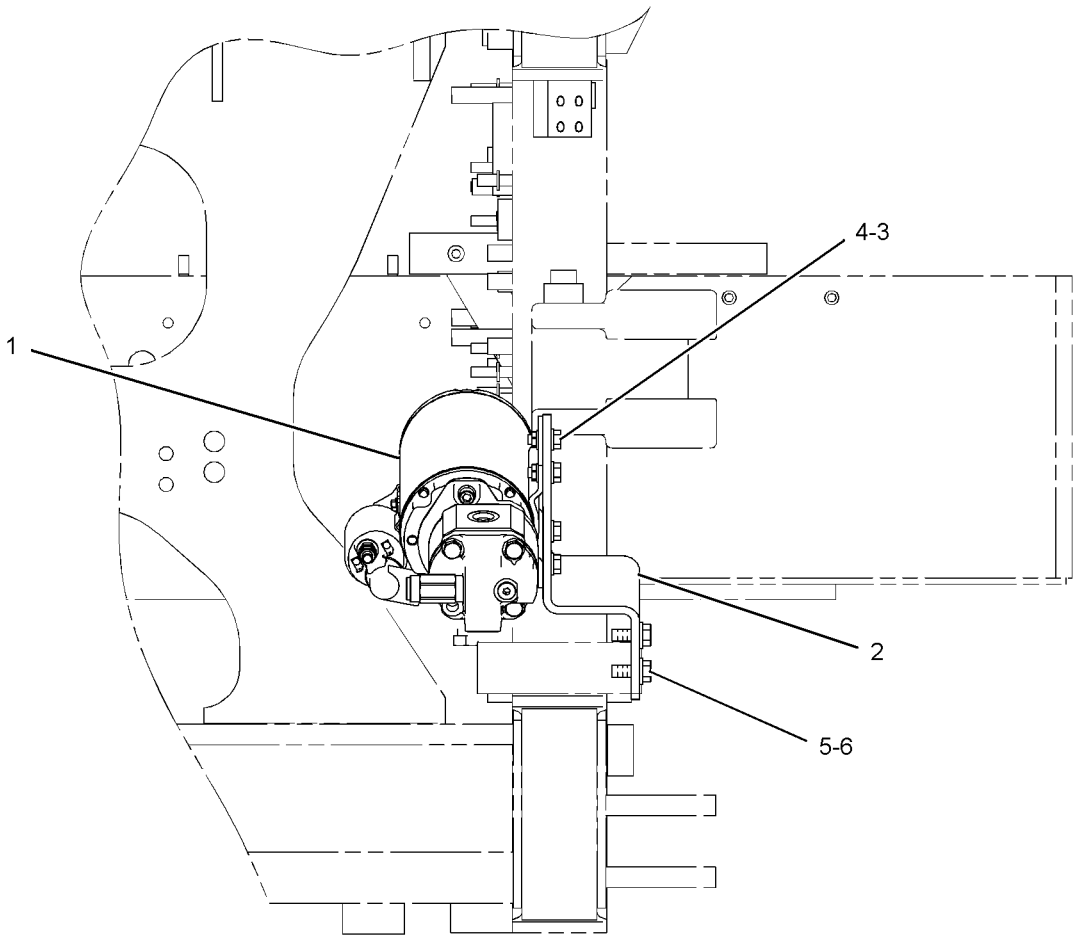

FRONT VIEW

GRAPHIC #1 **<END>** g01229879

STEERING SYSTEM

236-9087 STEERING AR-SECONDARY

S/N: RYF1-UP

AN ATTACHMENT

SMCS-4300 **i03626530**

NOTE	PART NUMBER	QTY	PART NAME 1 2 3 4 5 6 (PRODUCT LEVEL)	SEE PAGE
Y	*236-9007*	1	LINES GP-SECONDARY STEERING	395
Y	*236-9088*	1	PUMP & MTG GP-SECONDARY STEER	407
Y	*252-5924*	1	SWITCH GP-SECONDARY STEERING	210
Y	*237-4909*	1	WIRING GP-SECONDARY STEERING	249

Y-SEPARATE ILLUSTRATION

<END>

297-4926 STEERING COLUMN GP-ADJUSTABLE

S/N: RYF1-UP

PART OF 141-8802 CONTROL GP-STEERING

SMCS-4338 **i03454941**

NOTE	REF NO	GRAPHIC REF	PART NUMBER	QTY	PART NAME 1 2 3 4 5 6 (PRODUCT LEVEL)	SEE PAGE
	1	1	**271-9111**	2	KIT-CONTACT	
					(EACH INCLUDES HORN CONTACT AS, LOCKWASHERS & SCREWS)	
M	2	1	**6V-8227**	1	NUT (M18X1.5-THD)	
	3	1	**319-9511**	1	KIT-SPRING	
	4	1	**271-9109**	1	KIT-TILT LEVER	
					(INCLUDES BOLTS, DOWEL, SPRING & TILT LEVER)	
	5	1	**271-9110**	1	KIT-PIVOT	
					(INCLUDES BUSHING-PIVOTS & PIN-PIVOTS)	
	6	1	**186-3735**	1	PIN-CONNECTOR (16-GA TO 18-GA)	

M-METRIC PART

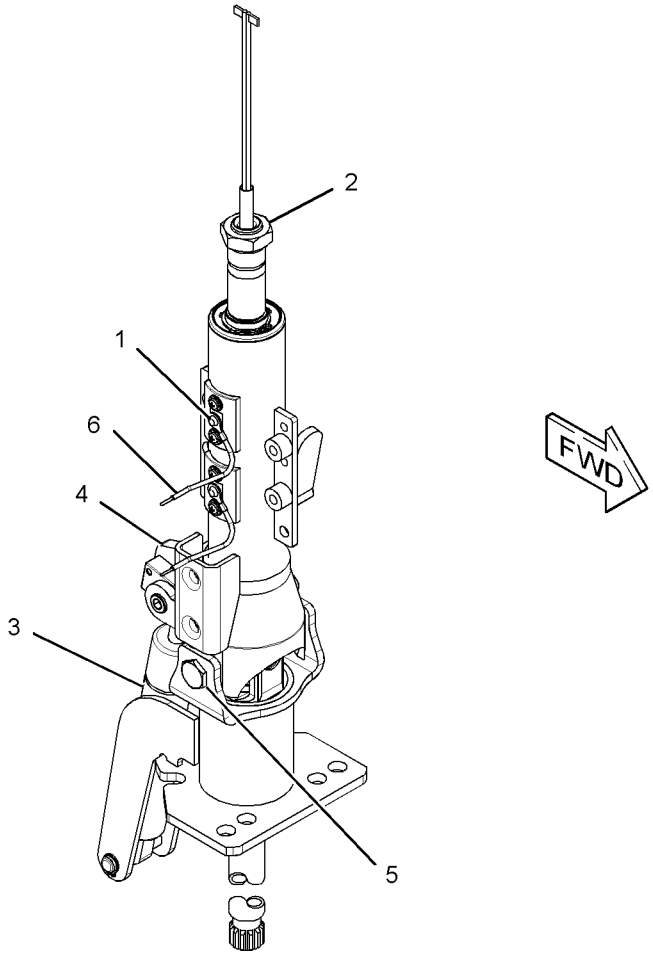

GRAPHIC #1 **<END>** g01525180

129-8222 VALVE GP-RELIEF–STEERING CYLINDER CROSSOVER

S/N: RYF1-UP

PART OF 142-3996 VALVE GP-STEERING

SMCS-4322, 5069, 7428 **i00808859**

NOTE	REF NO	GRAPHIC REF	PART NUMBER	QTY	PART NAME 1 2 3 4 5 6 (PRODUCT LEVEL)	SEE PAGE
	1	1	**2M-9780**	1	SEAL-O-RING	
	2	1	**6E-0410**	1	SEAL-O-RING	
	3	1	**5P-2199**	2	RING-BACKUP	

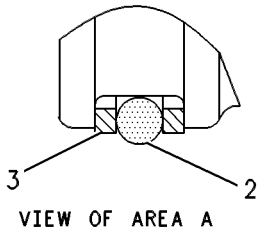

VIEW OF AREA A

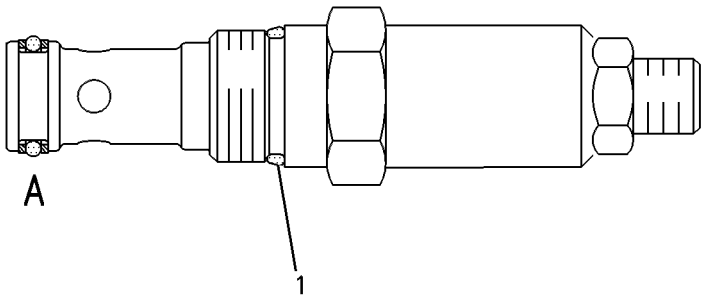

GRAPHIC #1 **<END>** g00262783

132-5258 VALVE GP-RELIEF—PUMP BACKUP

S/N: RYF1-UP

PART OF 142-3996 VALVE GP-STEERING

SMCS-4322, 5069, 7428 **i01193356**

NOTE	REF NO	GRAPHIC REF	PART NUMBER	QTY	PART NAME 1 2 3 4 5 6 (PRODUCT LEVEL)	SEE PAGE
	1	1	**7X-4776**	2	RING-BACKUP	
	2	1	**8C-3097**	1	SEAL-O-RING	
	3	1	**3K-0360**	1	SEAL-O-RING	
					AVAILABLE REPAIR KIT(S):	
			6E-4753	1	KIT-SEAL	
					(CONSISTS OF RINGS AND SEALS)	

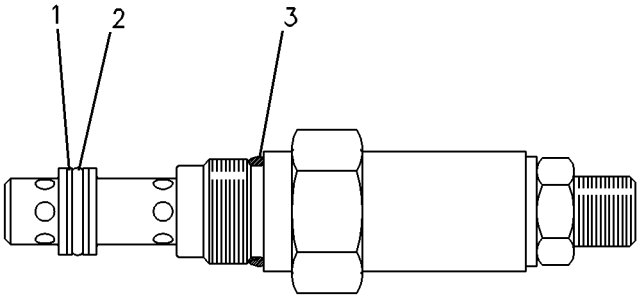

GRAPHIC #1 **<END>** g00119845

STEERING SYSTEM

141-2597 VALVE GP-SECONDARY STEERING

S/N: RYF1-UP
PART OF 236-9007 LINES GP-SECONDARY STEERING
AN ATTACHMENT

SMCS-4339 **i00717799**

NOTE	REF NO	GRAPHIC REF	PART NUMBER	QTY	PART NAME 1 2 3 4 5 6 (PRODUCT LEVEL)	SEE PAGE
	1	1	**2S-2596**	2	SPRING	
	2	1	**100-8010**	2	VALVE-CHECK	
	3	1	**100-8011**	2	PLUG	
M	4	1	**8T-4136**	4	BOLT (M10X1.5X25-MM)	
	5	1	**3J-7479**	1	COVER	
	6	1	**4J-0519**	1	SEAL-O-RING	
	7	1	**7M-8485**	2	SEAL-O-RING	
	8	1	**8T-4121**	4	WASHER-HARD (11X21X2.5-MM THK)	

M-METRIC PART

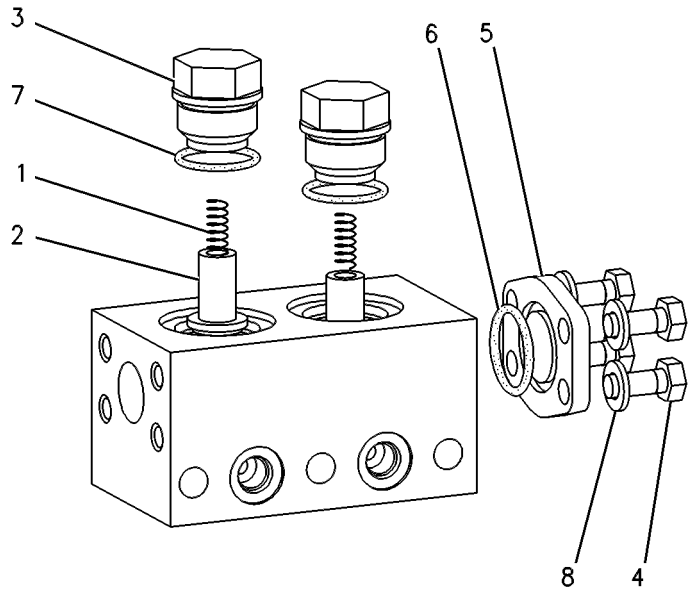

GRAPHIC #1 **<END>** g00130458

142-3996 VALVE GP-STEERING—HMU STEERING

S/N: RYF1-UP

PART OF 236-8985 LINES GP-STEERING

SMCS-4307 **i03612973**

NOTE	REF NO	GRAPHIC REF	PART NUMBER	QTY	PART NAME 1 2 3 4 5 6 (PRODUCT LEVEL)	SEE PAGE
Y	1	1	**132-5258**	1	VALVE GP-RELIEF (PUMP BACKUP)	411
M	2	1	**8T-6466**	2	BOLT (M10X1.5X60-MM)	
	3	1	**8F-9206**	7	SEAL-O-RING	
M	4	1	**8T-4196**	18	BOLT (M10X1.5X35-MM)	
	5	1	**5J-2974**	2	SEAL-O-RING	
	6	1	**2S-2596**	4	SPRING	
	7	1	**4B-9782**	4	BALL	
	8	1	*183-7263*	11	PLUG AS	
					(EACH INCLUDES)	
		1	**3J-7354**	1	SEAL-O-RING	
		1	**9S-8002**	1	PLUG-O-RING	
	10	1	**142-3995**	1	STEM	
	11	1	*148-8408*	1	PLUG AS	
		1	**3D-2824**	1	SEAL-O-RING	
		1	**9S-4183**	1	PLUG-O-RING	
	12	1	**3J-1907**	2	SEAL-O-RING	
Y	13	1	**129-8222**	1	VALVE GP-RELIEF (STEERING CYLINDER CROSSOVER)	410
	15	1	**8C-3206**	8	FLANGE-HALF	
	16	1	**9S-6154**	2	PLUG AS	
					(EACH INCLUDES)	
		1	**3J-1907**	1	SEAL-O-RING	
		1	**5H-3193**	1	PIN-SPRING	
		1	**7J-1089**	1	PLUG	
	17	1	**9T-7220**	1	COVER	
	18	1	**4J-0520**	1	SEAL-O-RING	
	19	1	**8T-4121**	16	WASHER-HARD (11X21X2.5-MM THK)	
M	20	1	**8T-5005**	4	BOLT (M10X1.5X70-MM)	
	21	1	**6T-6052**	1	PLUG-ORIFICE	
	22	1	**6E-5397**	1	VALVE GP-SELECTOR (STEERING)	
		1	**6E-5289**	2	CONNECTOR	
		1	**6E-5291**	2	SPRING	
		1	**3K-0360**	2	SEAL-O-RING	
		1	**5H-3193**	2	PIN-SPRING	
	23	1	*148-8411*	1	PLUG AS	
		1	**3K-0360**	1	SEAL-O-RING	
		1	**9S-4185**	1	PLUG-O-RING	
B	25	1	**6J-6516**	8	SHIM (0.01-IN THK)	
B	26	1	**6J-6517**	1	SHIM (0.12-MM THK)	
	27	1	**7J-4321**	1	RETAINER-SPRING	
	28	1	**126-8473**	1	SPRING	
M	29	1	**6V-5195**	1	BOLT-SOCKET HEAD (M8X1.25X50-MM)	
	30	1	**9M-1974**	1	WASHER-HARD (8.8X16X2-MM THK)	
	31	1	**6J-6506**	1	SPACER	
	32	1	**9T-8672**	1	RETAINER	
	33	1	*164-5619*	1	PLUG AS	
		1	**2M-9780**	1	SEAL-O-RING	
		1	**9S-8006**	1	PLUG-O-RING	
	35	1	**8J-6815**	2	PLUG-ORIFICE	

B-USE AS REQUIRED
M-METRIC PART
Y-SEPARATE ILLUSTRATION

142-3996 VALVE GP-STEERING *(contd.)* i03612973

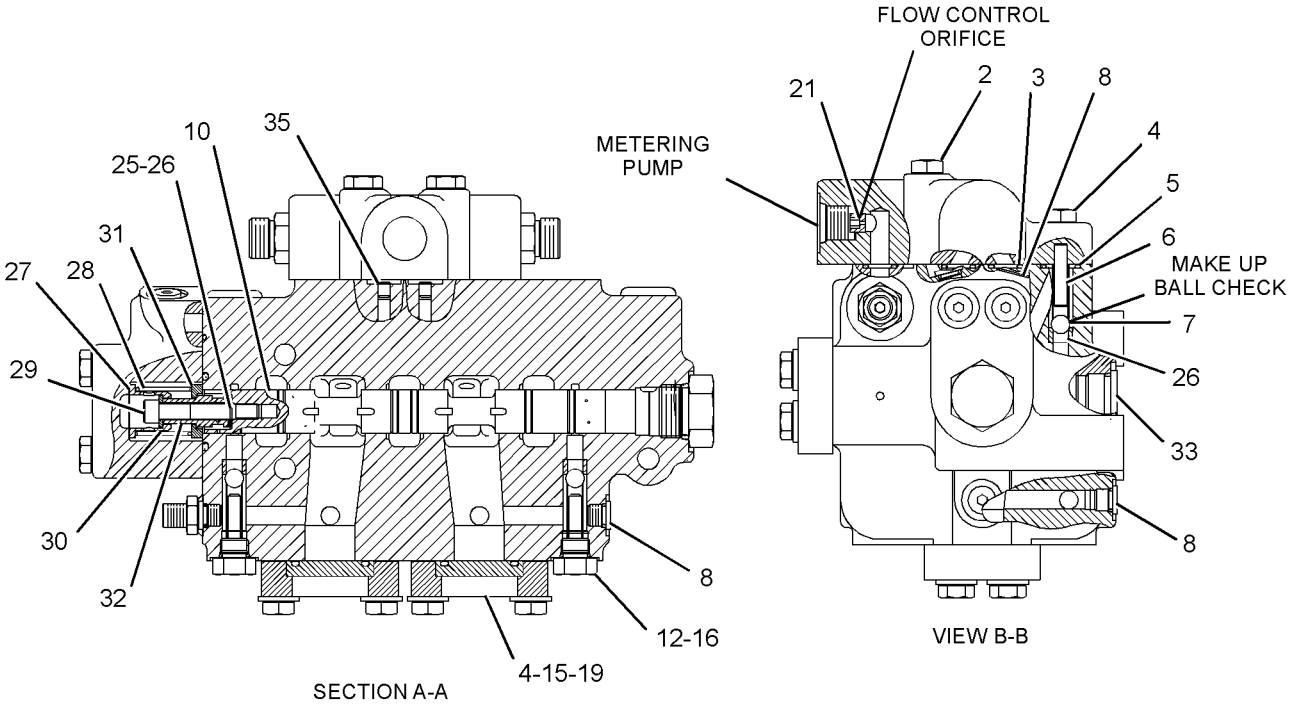

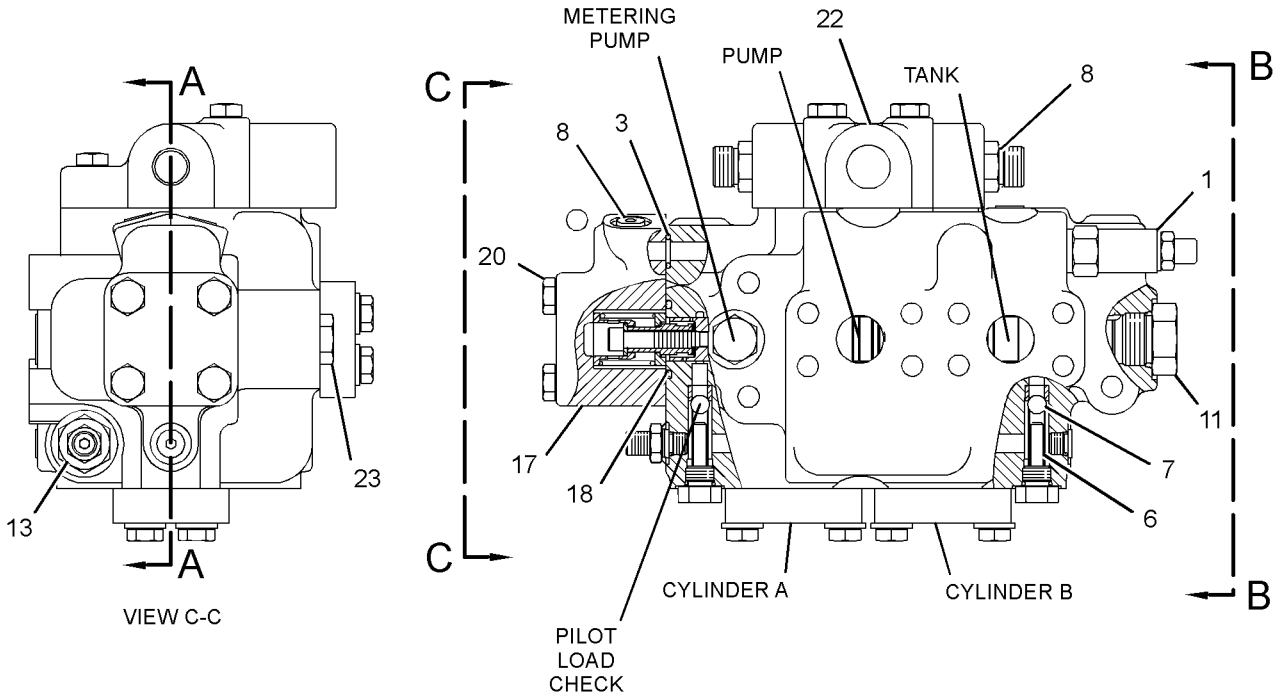

GRAPHIC #1 **<END>** g01166187

STEERING SYSTEM

146-7571 VALVE GP-STEERING NEUTRALIZER

S/N: RYF1-UP

PART OF 236-8985 LINES GP-STEERING

SMCS-4330 **i03325361**

NOTE	REF NO	GRAPHIC REF	PART NUMBER	QTY	PART NAME 1 2 3 4 5 6 (PRODUCT LEVEL)	SEE PAGE
	1	1	**6J-4568**	1	BOOT	
	2	1	**6V-1949**	1	SEAL-LIP TYPE	
	3	1	**3D-2824**	1	SEAL-O-RING	
	4	1	**5F-9035**	1	SPRING	

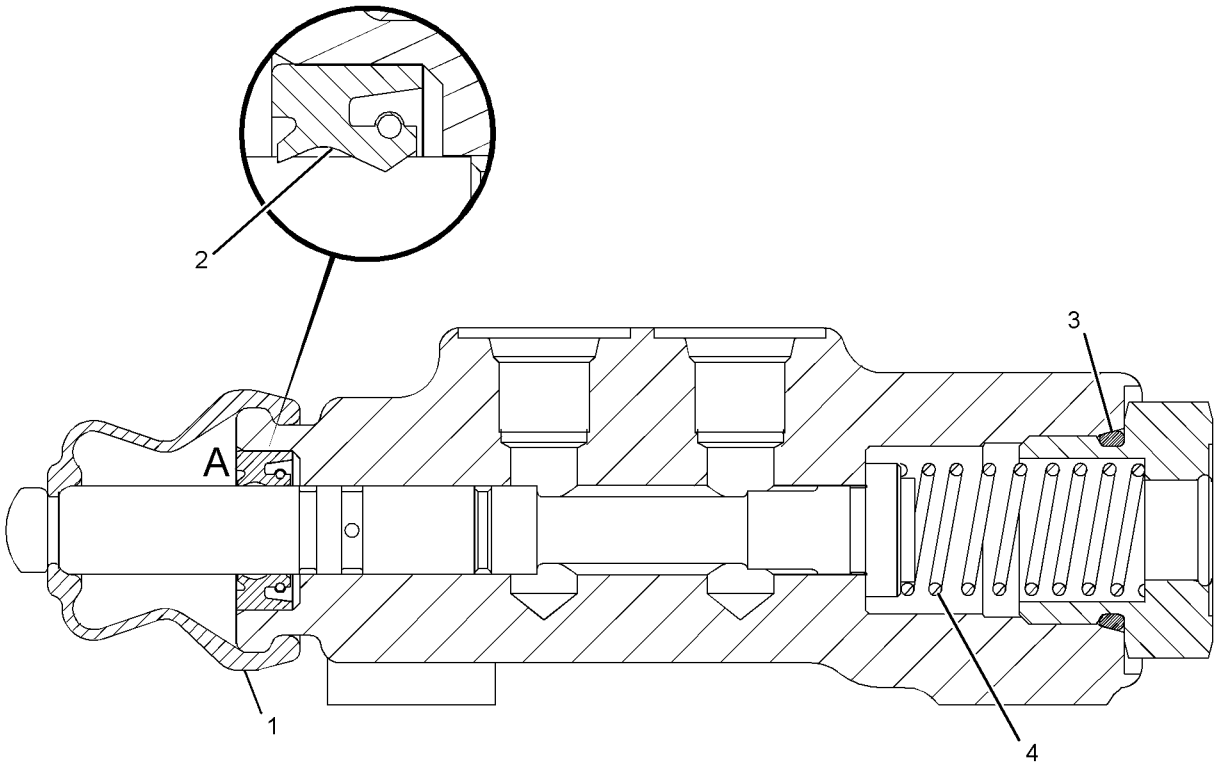

GRAPHIC #1 **<END>** g01317840

325-7124 ACCUMULATOR & MTG GP-RIDE CONT

S/N: RYF1-UP
PART OF 236-9096 CONTROL & LINES GP-RIDE
AN ATTACHMENT

SMCS-5077 **i03629736**

NOTE	REF NO	GRAPHIC REF	PART NUMBER	QTY	PART NAME 1 2 3 4 5 6 (PRODUCT LEVEL)	SEE PAGE
Y	1	1	*325-7131*	1	ACCUMULATOR GP-RIDE CONTROL (CHARGED)	418
	2	1	**270-2636**	2	BRACKET	
	3	1	**7X-7729**	6	WASHER (11X25X3-MM THK)	
M	4	1	**8T-4136**	6	BOLT (M10X1.5X25-MM)	
	5	1	**6V-9854**	1	ELBOW	
	6	1	*197-0398*	1	CONNECTOR AS	
		1	**5K-9090**	1	SEAL-O-RING	
		1	**7M-8485**	1	SEAL-O-RING	
		1	**8C-3443**	1	CONNECTOR	

M-METRIC PART
Y-SEPARATE ILLUSTRATION

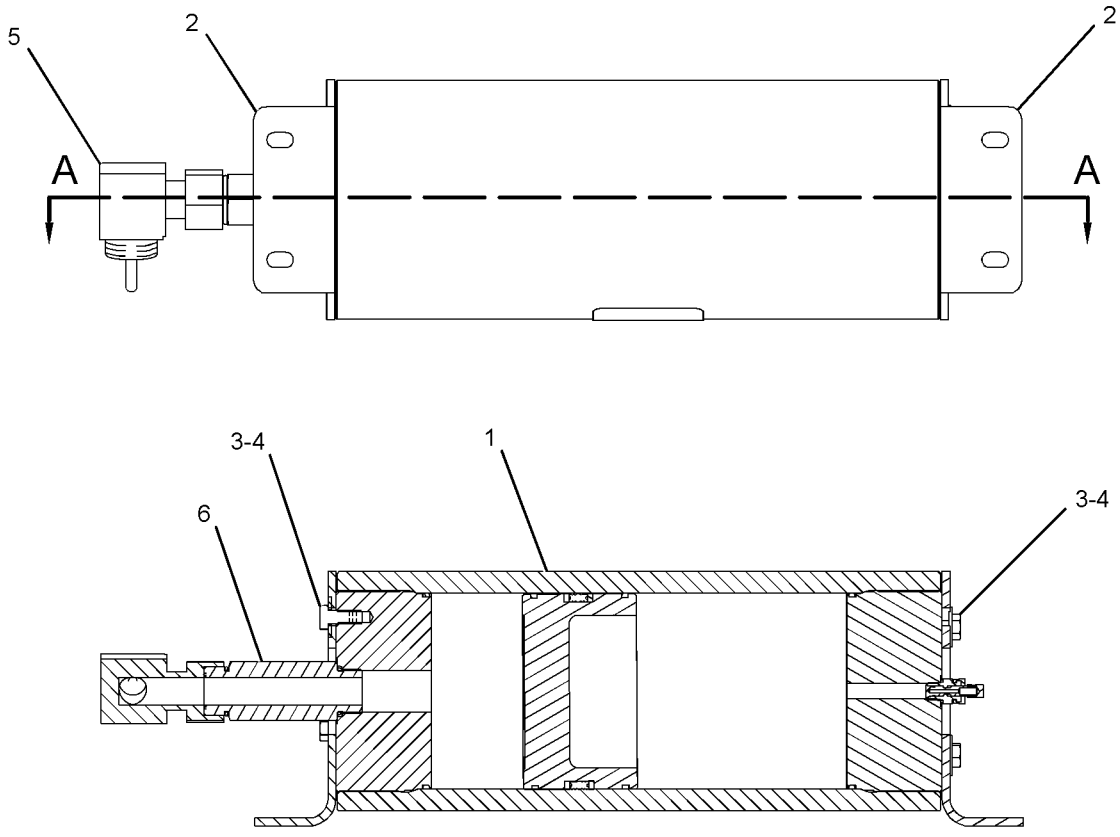

SECTION A-A

GRAPHIC #1 **<END>** g01625336

245-2975 ACCUMULATOR GP-PILOT OIL—CHARGED

S/N: RYF1-UP

PART OF 236-9035, 236-9095 VALVE & MTG GP-MAIN CONTROL

ALSO AN ATTACHMENT

SMCS-5077 **i02911936**

NOTE	REF NO	GRAPHIC REF	PART NUMBER	QTY	PART NAME 1 2 3 4 5 6 (PRODUCT LEVEL)	SEE PAGE
	1	1	**204-8758**	1	FILM-WARNING (ACCUMULATOR) (HIGH PRESSURE CYLINDER)	

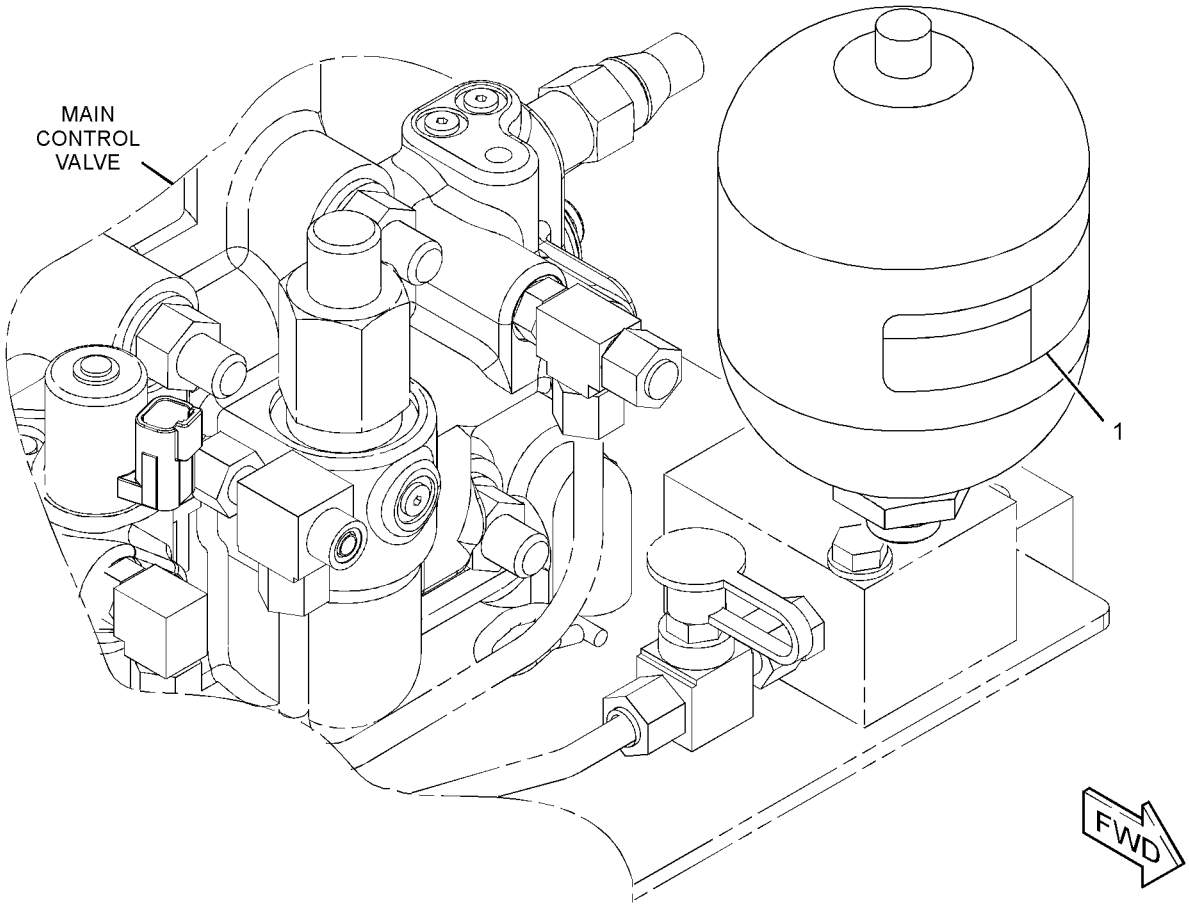

GRAPHIC #1 **<END>** g01407582

325-7131 ACCUMULATOR GP-RIDE CONTROL—CHARGED

S/N: RYF1-UP
PART OF 325-7124 ACCUMULATOR & MTG GP-RIDE CONT
FIELD REPLACEMENT ORDER 325-7145—PAGE 419
AN ATTACHMENT

SMCS-5004, 5077 **i03629760**

NOTE	REF NO	GRAPHIC REF	PART NUMBER	QTY	PART NAME 1 2 3 4 5 6 (PRODUCT LEVEL)	SEE PAGE
	1	1	**241-0037**	1	FILM-WARNING (HIGH PRESSURE, READ OMM)	
	2	1	**158-2336**	1	VALVE-GAS	
					AVAILABLE REPAIR KIT(S):	
			325-7163	1	KIT-SEAL	
					(KIT INCLUDES RINGS, WASHERS, & SEALS)	

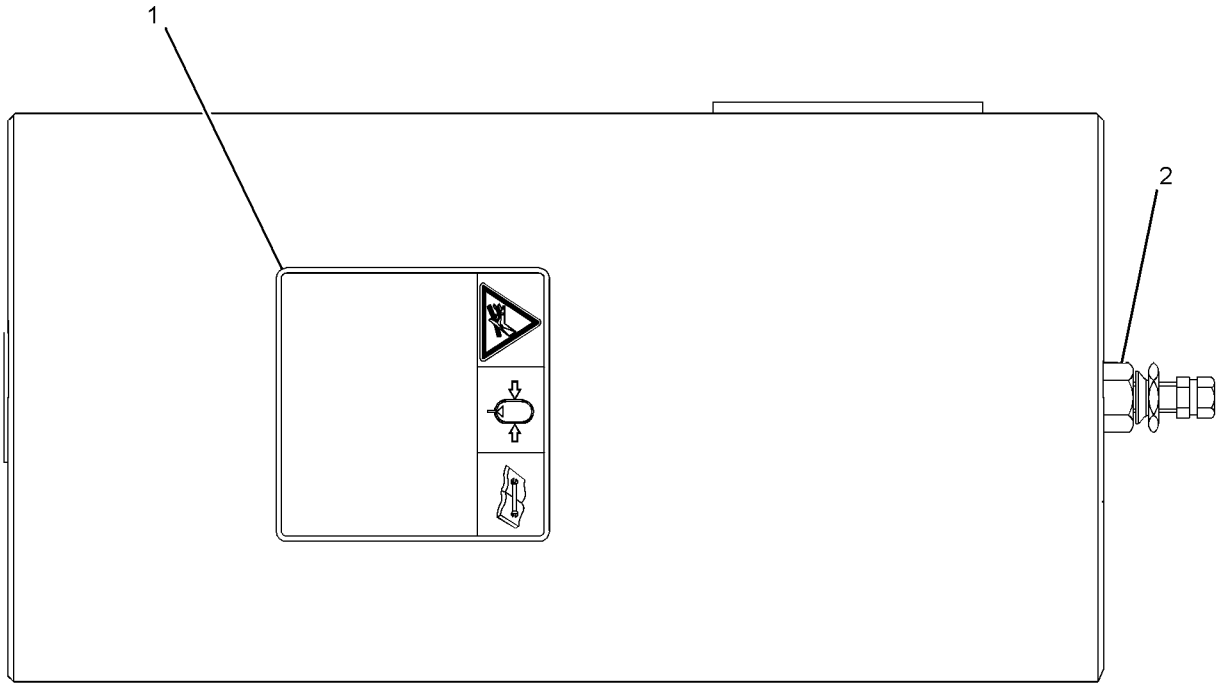

GRAPHIC #1 **<END>** g01625360

325-7145 ACCUMULATOR GP-RIDE CONTROL—UNCHARGED

S/N: RYF1-UP

FIELD REPLACEMENT FOR 325-7131—PAGE 418

SMCS-5004, 5077 **i03629765**

NOTE	REF NO	GRAPHIC REF	PART NUMBER	QTY	PART NAME 1 2 3 4 5 6 (PRODUCT LEVEL)	SEE PAGE
	2	1	**158-2336**	1	VALVE-GAS	
	3	1	**241-0037**	1	FILM-WARNING (HIGH PRESSURE, READ OMM)	
					AVAILABLE REPAIR KIT(S):	
			325-7163	1	KIT-SEAL	
					(KIT INCLUDES RINGS, WASHERS, & SEALS)	

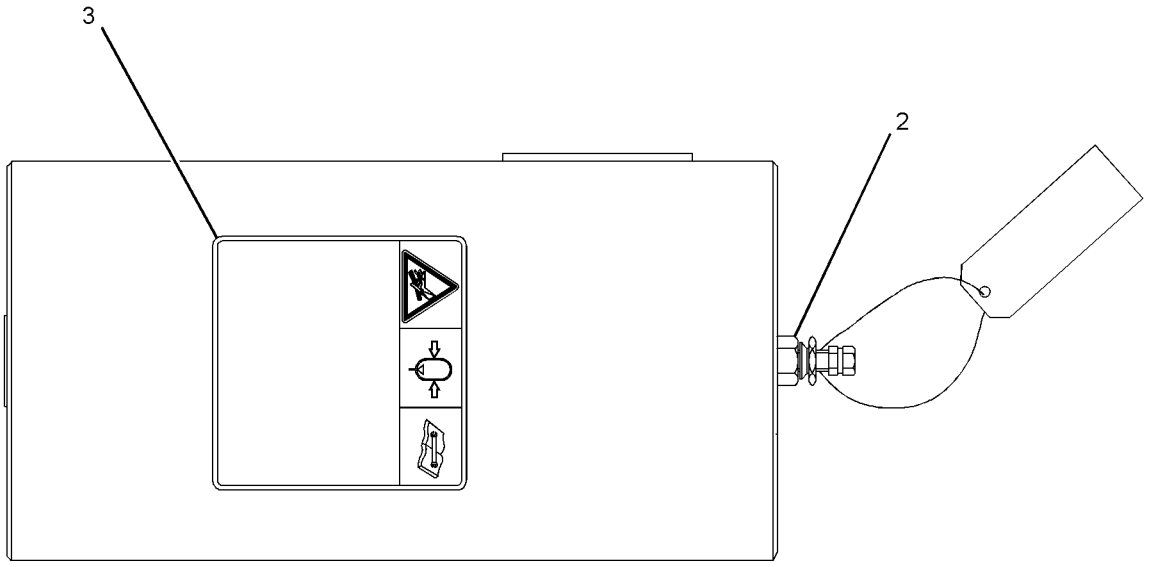

GRAPHIC #1 **<END>** g01625384

HYDRAULIC SYSTEM

236-9096 CONTROL & LINES GP-RIDE

S/N: RYF1-UP
PART OF 236-9094 CONTROL AR-RIDE
AN ATTACHMENT

SMCS-5004, 5057 **i03629481**

NOTE	REF NO	GRAPHIC REF	PART NUMBER	QTY	PART NAME 1 2 3 4 5 6 (PRODUCT LEVEL)	SEE PAGE
	1	1	**224-0672**	1	FILM-WARNING (HIGH PRESSURE, READ OMM, INTL)	
I	2	1	**325-5018**	1	HOSE AS	
Y	3	1	*325-7124*	1	ACCUMULATOR & MTG GP-RIDE CONT	416
	4	1	**7X-7729**	4	WASHER (11X25X3-MM THK)	
M	5	1	**8T-4195**	4	BOLT (M10X1.5X30-MM)	

I-REFER TO HYDRAULIC INFORMATION SYSTEM
M-METRIC PART
Y-SEPARATE ILLUSTRATION

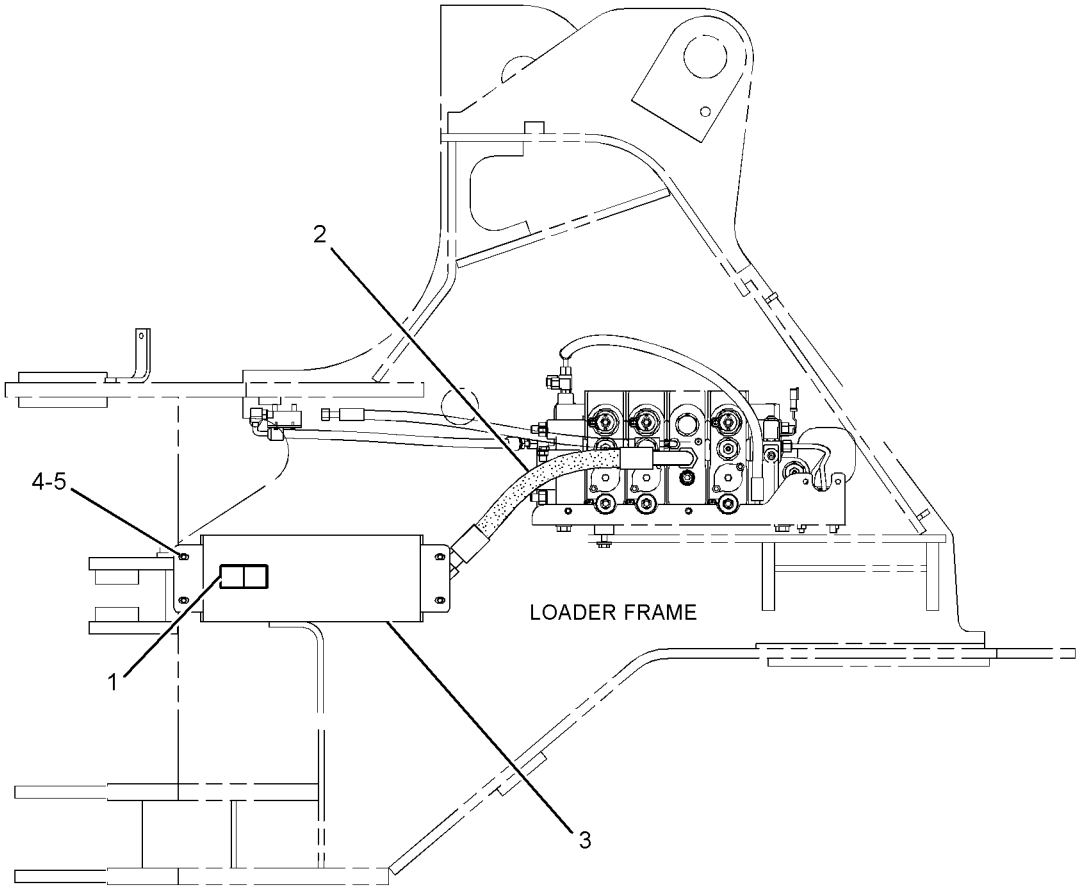

RIGHT SIDE VIEW

GRAPHIC #1 **<END>** g01247042

HYDRAULIC SYSTEM

236-9092 CONTROL AR-HIGH LIFT–2-VALVE HYDRAULICS

S/N: RYF1-UP
AN ATTACHMENT

SMCS-5104, 6119, 6129 **i03626533**

NOTE	PART NUMBER	QTY	PART NAME 1 2 3 4 5 6 (PRODUCT LEVEL)	SEE PAGE
Y	**287-5814**	1	ARM & BEARING AS-LIFT (HIGH LIFT MACHINES)	515
Y	*243-3702*	1	COUNTERWEIGHT GP	330
Y	**245-7484**	1	CYLINDER GP-TILT (HIGH LIFT MACHINES)	430
Y	*275-0024*	1	WIRING GP-SENSOR (TILT)	253
	254-3571	1	BRACKET AS	
	335-7120	1	BRACKET	
Y-SEPARATE ILLUSTRATION				

<END>

236-9094 CONTROL AR-RIDE

S/N: RYF1-UP
AN ATTACHMENT

SMCS-5004 **i03626535**

NOTE	PART NUMBER	QTY	PART NAME 1 2 3 4 5 6 (PRODUCT LEVEL)	SEE PAGE
Y	*236-9096*	1	CONTROL & LINES GP-RIDE	420
Y	*252-5917*	1	SWITCH GP-RIDE CONTROL	208
Y	*236-9095*	1	VALVE & MTG GP-MAIN CONTROL (2-FUNCTION, WITH RIDE CONTROL)	479
Y-SEPARATE ILLUSTRATION				

<END>

246-2070 COOLER GP-HYDRAULIC & AXLE OIL

S/N: RYF1-UP
PART OF 236-9099 AXLE & AXLE OIL COOLER AR
AN ATTACHMENT

SMCS-1365, 1374 **i03629202**

NOTE	PART NUMBER	QTY	PART NAME 1 2 3 4 5 6 (PRODUCT LEVEL)	SEE PAGE
	251-1110	1	CORE AS-OIL COOLER (AXLE, HYDRAULIC)	

<END>

HYDRAULIC SYSTEM

236-9031 CYLINDER & SEAL GP-LIFT–RH

S/N: RYF1-UP

PART OF 236-8963 HYDRAULIC AR-2 VALVE

SMCS-5102 **i03621502**

NOTE	REF NO	GRAPHIC REF	PART NUMBER	QTY	PART NAME 1 2 3 4 5 6 (PRODUCT LEVEL)	SEE PAGE
Y	1	1	*242-4275*	1	CYLINDER GP-LIFT (RH)	427
	2	1	**7K-9209**	2	SEAL-LIP TYPE	

Y-SEPARATE ILLUSTRATION

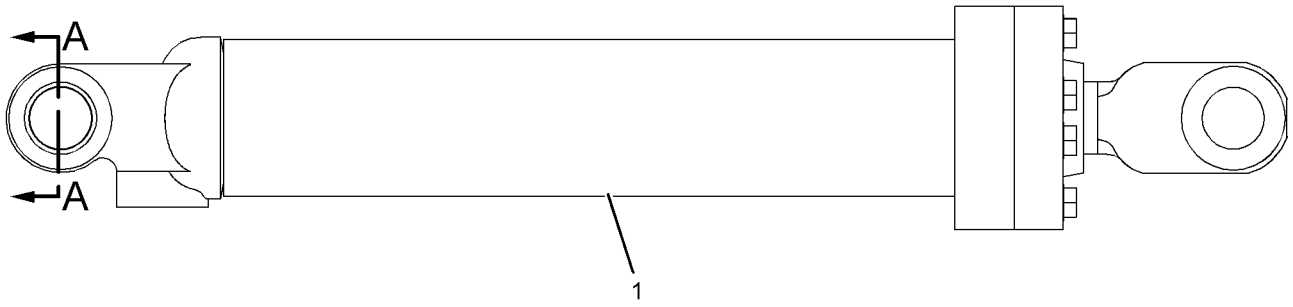

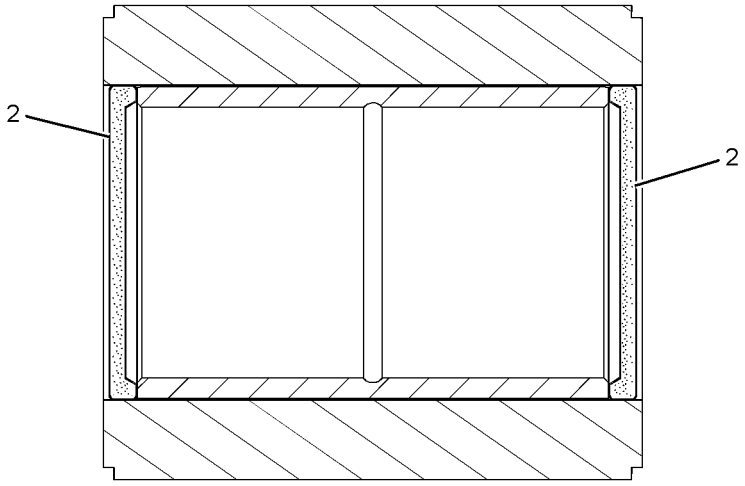

SECTION A-A

GRAPHIC #1 **<END>** g01116018

HYDRAULIC SYSTEM

236-9032 CYLINDER & SEAL GP-LIFT–LH

S/N: RYF1-UP

PART OF 236-8963 HYDRAULIC AR-2 VALVE

SMCS-5102 **i03621503**

NOTE	REF NO	GRAPHIC REF	PART NUMBER	QTY	PART NAME 1 2 3 4 5 6 (PRODUCT LEVEL)	SEE PAGE
	1	1	**7K-9209**	2	SEAL-LIP TYPE	
Y	2	1	**242-4274**	1	CYLINDER GP-LIFT (LH)	425

Y-SEPARATE ILLUSTRATION

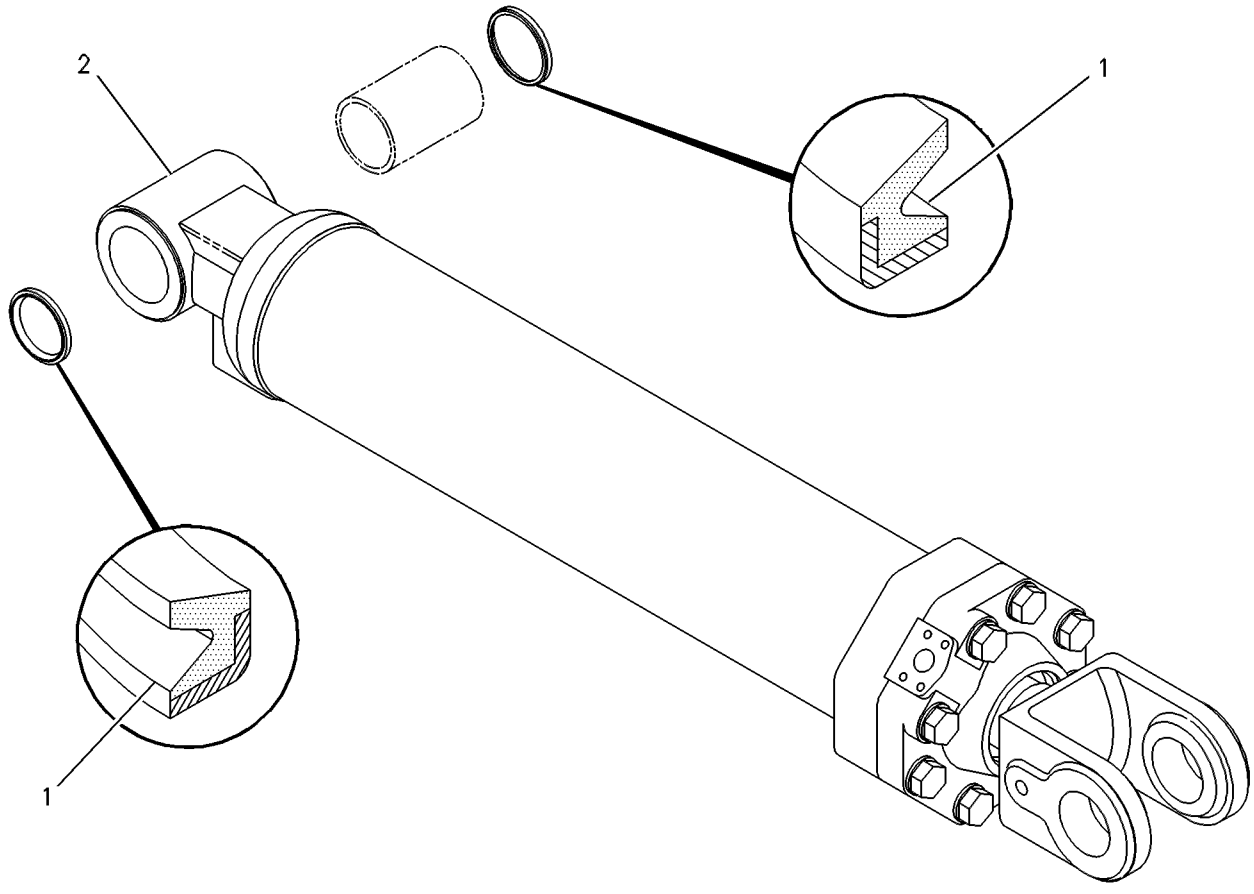

GRAPHIC #1 **<END>** g00281288

HYDRAULIC SYSTEM

236-9103 CYLINDER & SEAL GP-TILT

S/N: RYF1-UP

PART OF 236-8963 HYDRAULIC AR-2 VALVE

SMCS-5104 **i03621744**

NOTE	REF NO	GRAPHIC REF	PART NUMBER	QTY	PART NAME 1 2 3 4 5 6 (PRODUCT LEVEL)	SEE PAGE
	1	1	**7K-9211**	4	SEAL-LIP TYPE	
Y	2	1	**242-4273**	1	CYLINDER GP-TILT	429

Y-SEPARATE ILLUSTRATION

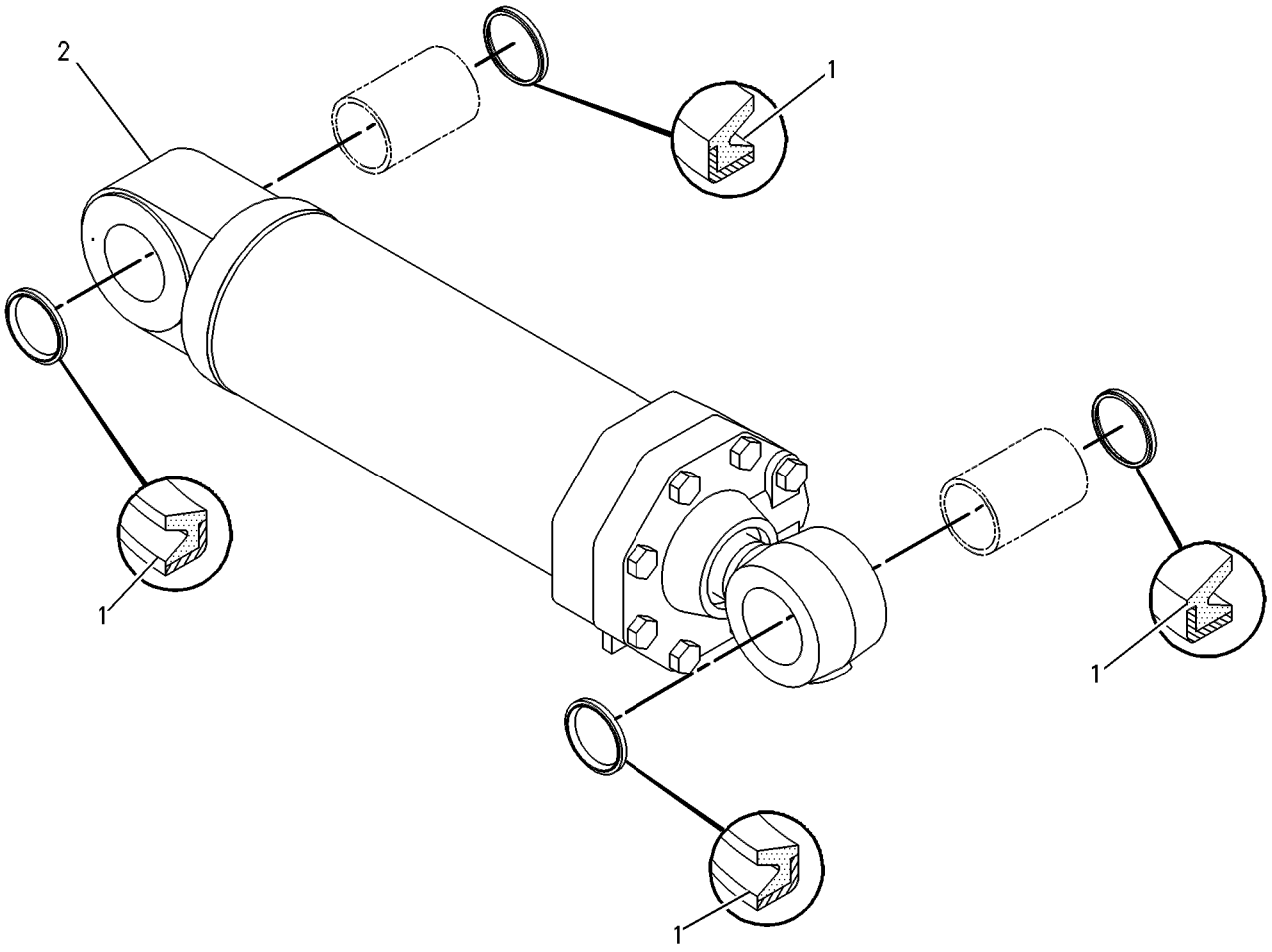

GRAPHIC #1 **<END>** g00281733

HYDRAULIC SYSTEM

242-4274 CYLINDER GP-LIFT–LH

S/N: RYF1-UP

PART OF 236-9032 CYLINDER & SEAL GP-LIFT

SMCS-5102 **i03621662**

NOTE	REF NO	GRAPHIC REF	PART NUMBER	QTY	PART NAME 1 2 3 4 5 6 (PRODUCT LEVEL)	SEE PAGE
	1	1	**162-7209**	1	RING-BACKUP	
	2	1	**244-6628**	1	HEAD	
R	3	1	**244-7025**	1	ROD AS	
R	4	1	**244-7030**	1	CYLINDER AS	
		1	**9T-8676**	1	BEARING-SLEEVE	
	5	1	**248-3317**	1	PISTON	
	6	1	**132-4907**	1	RING-WEAR (ROD)	
	7	1	**167-2211**	1	SEAL AS-BUFFER	
	8	1	**167-2324**	1	SEAL-U-CUP	
	9	1	**225-3286**	1	SEAL-WIPER	
	10	1	**2J-7686**	1	LOCKNUT	
	11	1	**6V-5657**	1	SEAL-O-RING	
	12	1	**6V-8237**	8	WASHER (26X44X4-MM THK)	
M	13	1	**8T-0667**	8	BOLT (M24X3X100-MM)	
	14	1	**8T-1788**	1	SEAL AS	
	15	1	**9J-5550**	1	RING-WEAR	
					AVAILABLE REPAIR KIT(S):	
			295-9888	1	KIT-SEAL	
					INCLUDES SEAL-O-RINGS, SEAL AS, WEAR RINGS, BACKUP RING, U-CUP SEAL AND WIPER SEAL.	

M-METRIC PART
R-REMFG PART MAY BE AVAILABLE

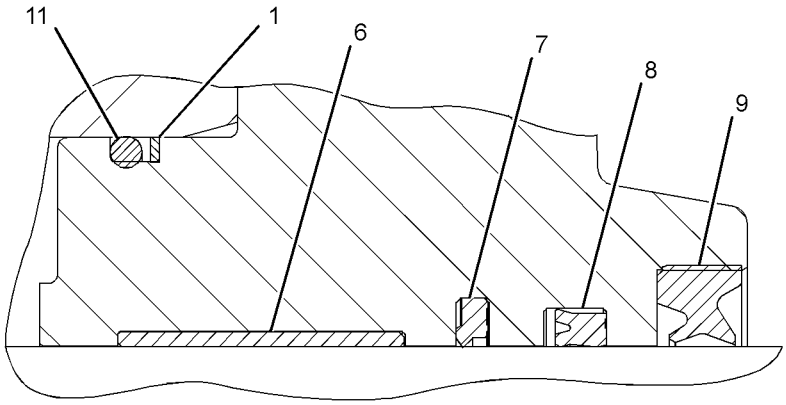

VIEW OF AREA A

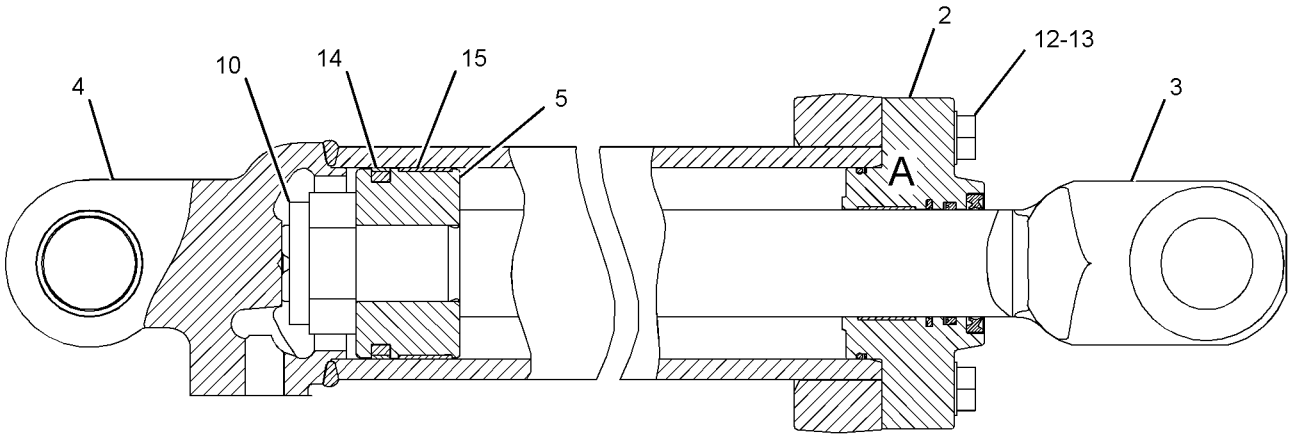

GRAPHIC #1 **<END>** g01374945

242-4275 CYLINDER GP-LIFT–RH

S/N: RYF1-UP

PART OF 236-9031 CYLINDER & SEAL GP-LIFT

SMCS-5102 **i03621686**

NOTE	REF NO	GRAPHIC REF	PART NUMBER	QTY	PART NAME 1 2 3 4 5 6 (PRODUCT LEVEL)	SEE PAGE
	1	1	**162-7209**	1	RING-BACKUP	
	2	1	**244-6628**	1	HEAD	
R	3	1	**244-7025**	1	ROD AS	
R	4	1	**244-7030**	1	CYLINDER AS	
		1	**9T-8676**	1	BEARING-SLEEVE	
	5	1	**248-3317**	1	PISTON	
	6	1	**132-4907**	1	RING-WEAR (ROD)	
	7	1	**167-2211**	1	SEAL AS-BUFFER	
	8	1	**167-2324**	1	SEAL-U-CUP	
	9	1	**225-3286**	1	SEAL-WIPER	
	10	1	**2J-7686**	1	LOCKNUT	
	11	1	**6V-5657**	1	SEAL-O-RING	
	12	1	**6V-8237**	8	WASHER (26X44X4-MM THK)	
M	13	1	**8T-0667**	8	BOLT (M24X3X100-MM)	
	14	1	**8T-1788**	1	SEAL AS	
	15	1	**9J-5550**	1	RING-WEAR	

M-METRIC PART
R-REMFG PART MAY BE AVAILABLE

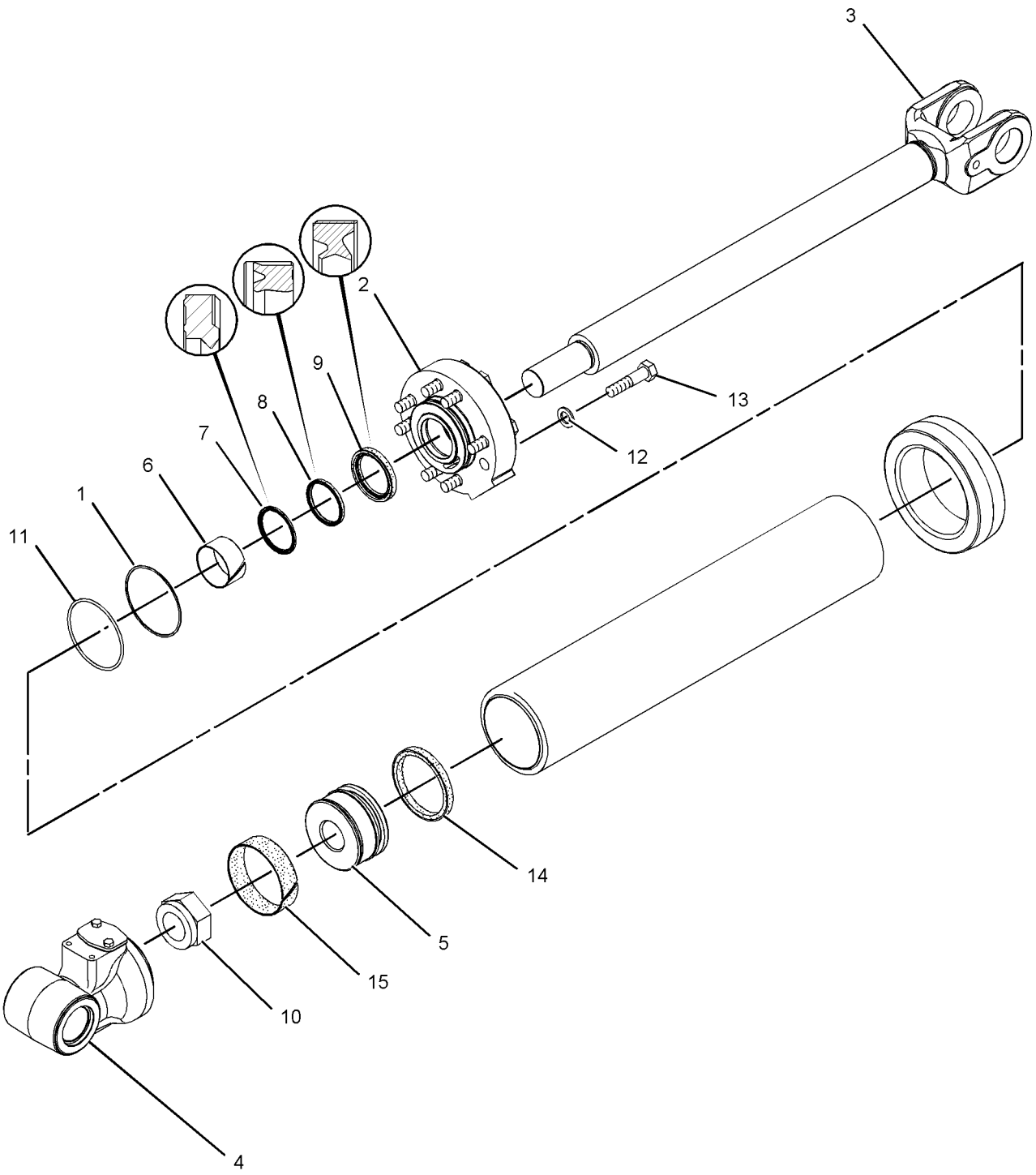

GRAPHIC #1 **<END>** g01116954

242-4273 CYLINDER GP-TILT

S/N: RYF1-UP

PART OF 236-9103 CYLINDER & SEAL GP-TILT

SMCS-5104 **i03621800**

NOTE	REF NO	GRAPHIC REF	PART NUMBER	QTY	PART NAME 1 2 3 4 5 6 (PRODUCT LEVEL)	SEE PAGE
	1	1	**244-3602**	1	HEAD	
	2	1	**244-4509**	1	PISTON	
R	3	1	**244-4513**	1	CYLINDER AS	
		1	**7Y-2522**	1	PLATE	
R	4	1	**247-8493**	1	ROD AS	
		1	**9J-7099**	1	BEARING-SLEEVE	
J	5	1	**095-1726**	1	SEAL-O-RING	
J	6	1	**105-7262**	1	RING	
J	7	1	**167-2209**	1	SEAL AS-BUFFER	
J	8	1	**167-2320**	1	SEAL-U-CUP	
J	9	1	**225-3285**	1	SEAL-WIPER	
	10	1	**2J-7686**	1	LOCKNUT	
	11	1	**5P-8250**	8	WASHER (28X49X5-MM THK)	
J	12	1	**7Y-4945**	1	RING-BACKUP	
J	13	1	**8T-6745**	1	RING-WEAR	
J	14	1	**9X-3607**	1	SEAL AS	
	15	1	**9X-8896**	8	BOLT (1-8X4-IN)	
					AVAILABLE REPAIR KIT(S):	
			313-3829	1	KIT-SEAL	

J-KIT MARKED J SERVICES PARTS MARKED J
R-REMFG PART MAY BE AVAILABLE

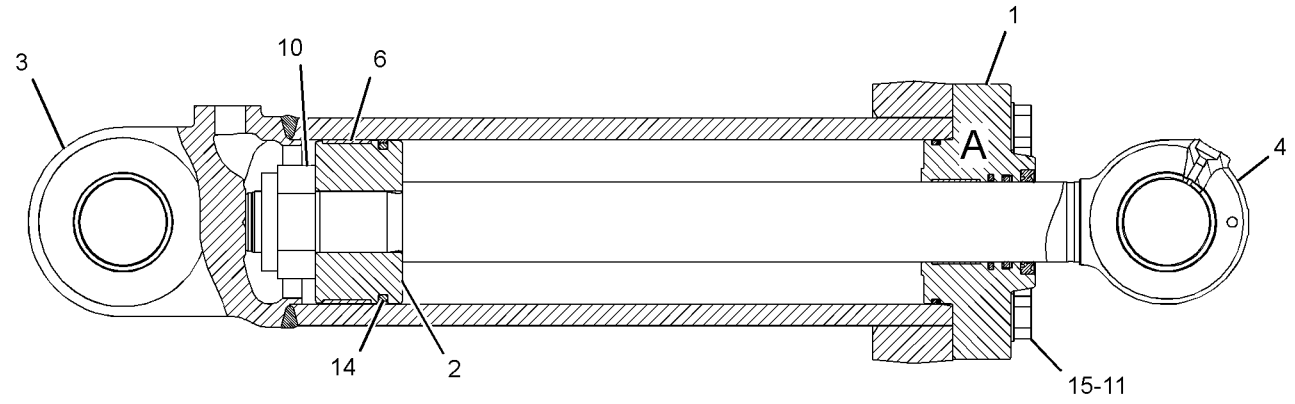

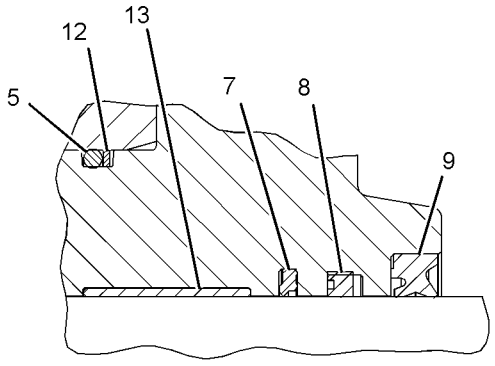

VIEW OF AREA A

GRAPHIC #1 **<END>** g01388579

HYDRAULIC SYSTEM

245-7484 CYLINDER GP-TILT—HIGH LIFT MACHINES

S/N: RYF1-UP

PART OF 236-9092 CONTROL AR-HIGH LIFT

AN ATTACHMENT

SMCS-5104 **i03629423**

NOTE	REF NO	GRAPHIC REF	PART NUMBER	QTY	PART NAME 1 2 3 4 5 6 (PRODUCT LEVEL)	SEE PAGE
	1	1	**244-3602**	1	HEAD	
	2	1	**244-4509**	1	PISTON	
	3	1	**245-7502**	1	CYLINDER AS	
		1	**9J-7100**	1	BEARING-SLEEVE	
	4	1	**247-8492**	1	ROD AS	
		1	**9J-7099**	1	BEARING-SLEEVE	
J	5	1	**095-1726**	1	SEAL-O-RING	
J	6	1	**105-7262**	1	RING	
J	7	1	**167-2209**	1	SEAL AS-BUFFER	
J	8	1	**167-2320**	1	SEAL-U-CUP	
J	9	1	**7Y-4945**	1	RING-BACKUP	
J	10	1	**225-3285**	1	SEAL-WIPER	
	11	1	**2J-7686**	1	LOCKNUT	
	12	1	**5P-8250**	8	WASHER (28X49X5-MM THK)	
J	13	1	**8T-6745**	1	RING-WEAR	
J	14	1	**9X-3607**	1	SEAL AS	
		1	**9X-3606**	1	RING-EXPANDER	
	15	1	**9X-8896**	8	BOLT (1-8X4-IN)	
					AVAILABLE REPAIR KIT(S):	
J			**313-3829**	1	KIT-SEAL	

J-KIT MARKED J INCLUDES PARTS MARKED J

245-7484 CYLINDER GP-TILT *(contd.)* **i03629423**

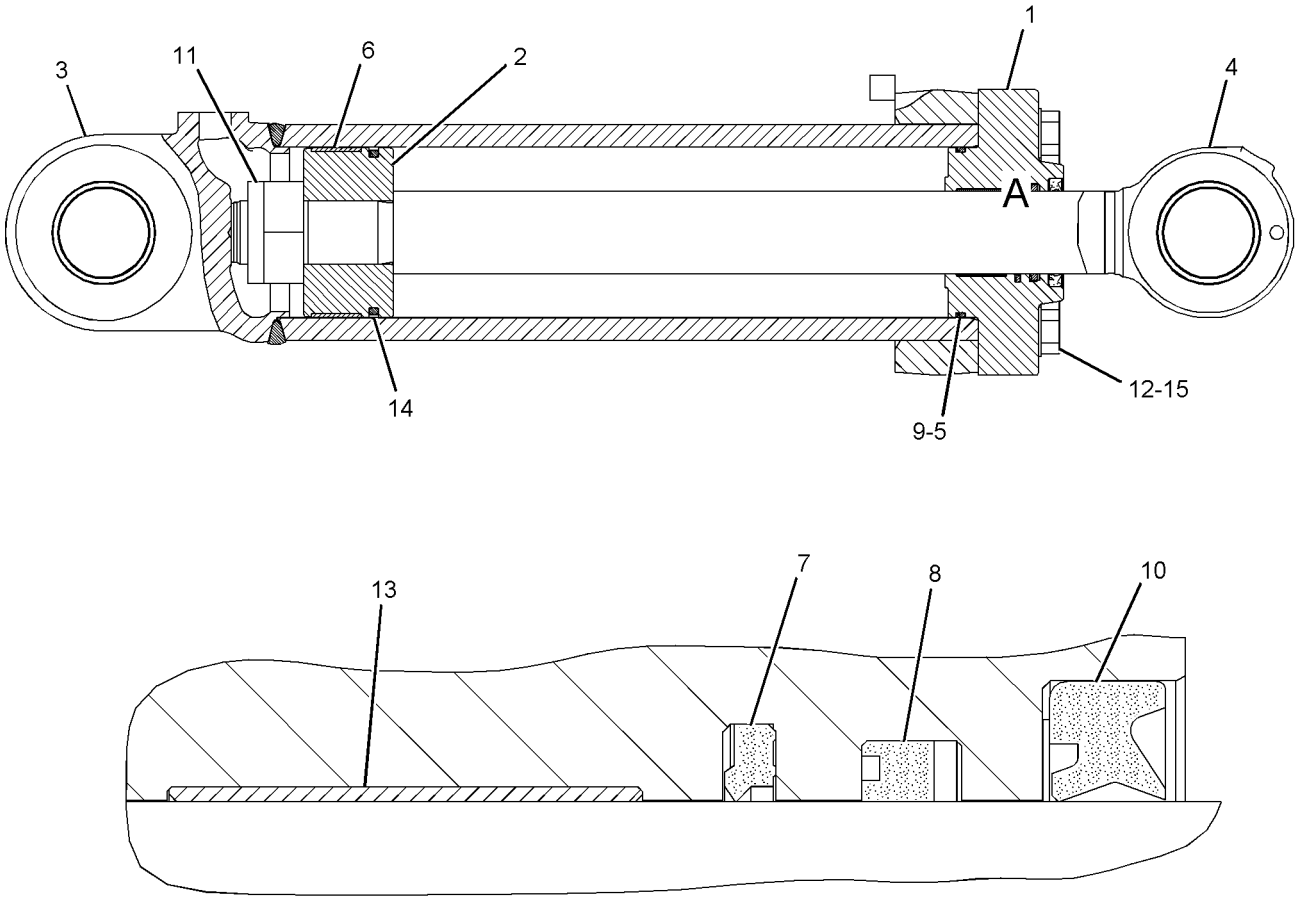

VIEW OF AREA A

GRAPHIC #1 **<END>** g01117788

HYDRAULIC SYSTEM

249-2334 FILTER GP-OIL

S/N: RYF1-UP

PART OF 236-8997 LINES GP-HYDRAULIC

SMCS-5068, 5091, 5092 **i03037121**

NOTE	REF NO	GRAPHIC REF	PART NUMBER	QTY	PART NAME 1 2 3 4 5 6 (PRODUCT LEVEL)	SEE PAGE
	1	1	**9T-8578**	1	FILTER-OIL (ADVANCED EFFICIENCY) (HYDRAULIC CASE DRAIN)	
					—OR—	
			144-0832	1	FILTER-OIL (ULTRA HIGH EFFICIENCY) (HYDRAULIC CASE DRAIN)	

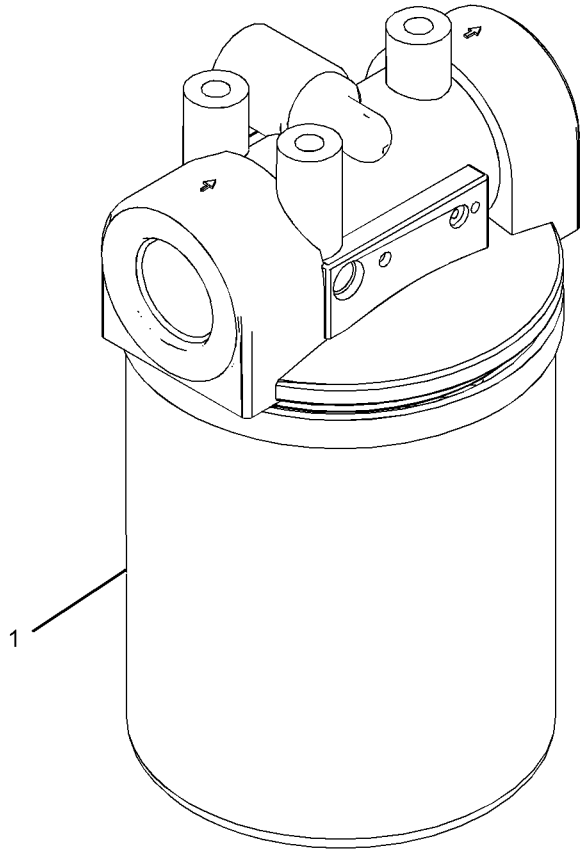

GRAPHIC #1 **<END>** g01583055

330-9358 FILTER GP-OIL

S/N: RYF1-UP

PART OF 236-8983 LINES GP-HYDRAULIC OIL COOLER

SMCS-5068, 5091, 5092 **i03480193**

NOTE	REF NO	GRAPHIC REF	PART NUMBER	QTY	PART NAME 1 2 3 4 5 6 (PRODUCT LEVEL)	SEE PAGE
	1	1	**8C-3446**	1	VALVE-FLUID SAMPLING (POWER TRAIN OIL)	
	2	1	**8C-3451**	1	CAP-DUST	
	3	1	**225-4118**	1	FILTER-OIL (ULTRA HIGH EFFICIENCY) (POWER TRAIN)	
	4	1	**227-6744**	1	SWITCH GP-PRESSURE (POWER TRAIN OIL FILTER BYPASS)	
		1	**102-8802**	1	KIT-RECEPTACLE (2-PIN)	
					(INCLUDES RECEPTACLE AS & WEDGE)	
		1	**3J-1907**	1	SEAL-O-RING	
		1	**5F-9144**	1	SEAL-O-RING	
		1	**186-3735**	1	PIN-CONNECTOR (16-GA TO 18-GA)	
E		1	**9X-1813**		SLEEVE (14-CM)	
	5	1	**3J-1907**	2	SEAL-O-RING	
	6	1	**3J-7354**	1	SEAL-O-RING	
	7	1	**5F-9144**	1	SEAL-O-RING	
	8	1	**8C-6712**	1	ELBOW	

E-ORDER BY THE CENTIMETER

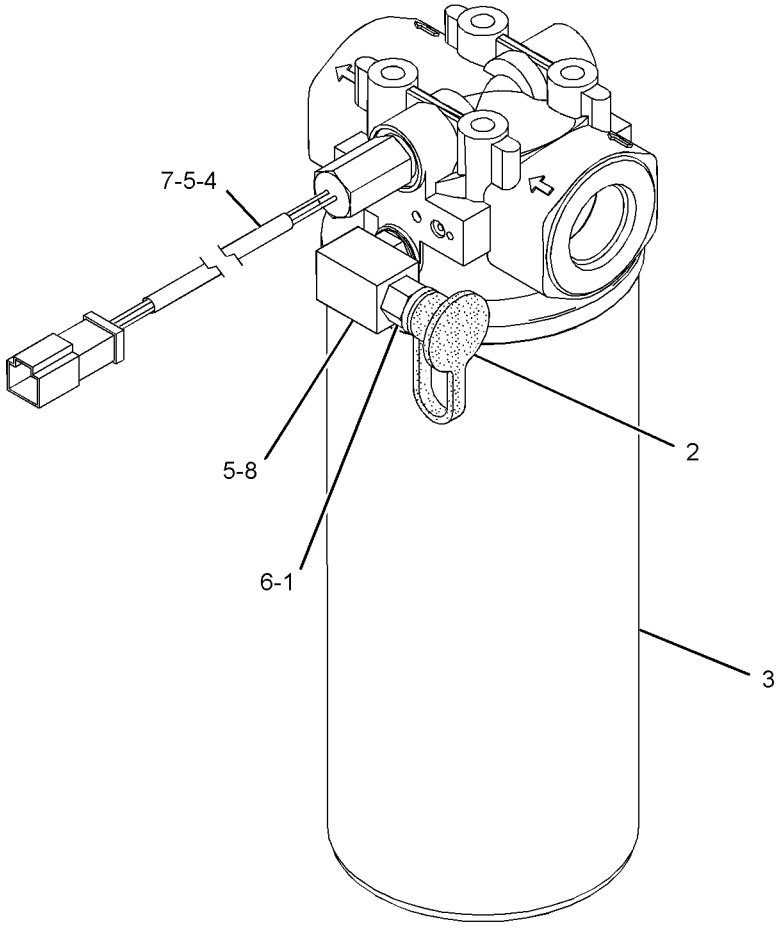

GRAPHIC #1 **<END>** g01662936

HYDRAULIC SYSTEM

236-8963 HYDRAULIC AR-2 VALVE

S/N: RYF1-UP

PART OF 236-8957 GENERAL AR

SMCS-5051 **i03607913**

NOTE	PART NUMBER	QTY	PART NAME 1 2 3 4 5 6 (PRODUCT LEVEL)	SEE PAGE
Y	*236-9031*	1	CYLINDER & SEAL GP-LIFT (RH)	422
Y	*236-9032*	1	CYLINDER & SEAL GP-LIFT (LH)	423
Y	*236-9103*	1	CYLINDER & SEAL GP-TILT	424
Y	*236-9046*	1	LINES GP-DIAGNOSTIC (REMOTE PRESSURE TAPS, HYD)	677
Y	*236-8997*	1	LINES GP-HYDRAULIC	435
Y	*236-9033*	1	LINES GP-LIFT CYLINDER	447
Y	*236-9034*	1	LINES GP-TILT CYLINDER	449
Y	*236-8998*	1	MOUNTING GP-HYDRAULIC TANK	459
Y	*236-9105*	1	PUMP & MTG GP-BRAKE & HYD FAN	460
Y	*246-2055*	1	PUMP & MTG GP-HYDRAULIC (IMPLEMENT, PILOT)	462
Y	**237-2742**	1	TANK GP-HYDRAULIC	474
Y	*236-9035*	1	VALVE & MTG GP-MAIN CONTROL (2-FUNCTION)	476
Y	*236-9037*	1	VALVE GP-LOWERING CONTROL	493

Y-SEPARATE ILLUSTRATION

<END>

HYDRAULIC SYSTEM

236-8997 LINES GP-HYDRAULIC

S/N: RYF1-UP

PART OF 236-8963 HYDRAULIC AR-2 VALVE

SMCS-5057 **i03622060**

NOTE	REF NO	GRAPHIC REF	PART NUMBER	QTY	PART NAME 1 2 3 4 5 6 (PRODUCT LEVEL)	SEE PAGE
	1	2	**4V-1878**	1	HOSE	
	2	2	**8T-6907**	1	VALVE AS-SHUTOFF	
	3	3	*148-8424*	1	TEE AS	
		3	**6V-8397**	1	SEAL-O-RING	
		3	**8T-8902**	1	TEE	
	4	3	*148-8440*	1	TEE AS	
		3	**3D-2824**	1	SEAL-O-RING	
		3	**6V-9746**	1	SEAL-O-RING	
		3	**8C-0569**	1	TEE-O-RING	
	5	3	*164-5567*	1	COUPLER AS-QUICK DISCONNECT	
		3	**3J-1907**	1	SEAL-O-RING	
		3	**6V-3965**	1	FITTING (QUICK DISCONNECT)	
	6	2	*188-2008*	2	ELBOW AS	
					(EACH INCLUDES)	
		2	**3D-2824**	1	SEAL-O-RING	
		2	**5K-9090**	1	SEAL-O-RING	
		2	**8T-7970**	1	ELBOW	
	7	1	**198-7651**	1	BRACKET AS	
M		1	**8T-3490**	1	NUT-WELD (M10X1.5-THD)	
	8	3	**258-2829**	1	BREATHER (HYDRAULIC TANK)	
	9	2	*241-6209*	1	CROSS AS	
		2	**5K-9090**	3	SEAL-O-RING	
		2	**117-5208**	1	CROSS	
	10	1	**243-3720**	2	CLAMP	
I	11	2	**243-4186**	1	HOSE AS	
I	12	2	**243-4187**	1	HOSE AS	
	13	2	**243-4566**	1	TUBE AS	
I	14	3	**243-4623**	1	HOSE AS	
I	15	3	**243-4624**	1	HOSE AS	
I	16	3	**243-4625**	1	HOSE AS	
I	17	3	**243-4626**	1	HOSE AS	
I	18	2	**243-4692**	1	HOSE AS	
	19	2	**243-4786**	1	TUBE AS	
	20	3	**243-6897**	1	BRACKET AS	
Y	21	2	**245-5943**	1	VALVE GP-DRAIN (ECOLOGY, HYDRAULIC)	492
I	22	1	**246-1133**	1	HOSE AS	
	23	2	**246-3371**	1	TUBE AS	
Y	24	3	**249-2334**	1	FILTER GP-OIL (HYDRAULIC CASE DRAIN)	432
I	25	2	**295-7007**	1	HOSE AS	
	26	3	*260-9189*	2	ELBOW AS-SWIVEL	
					(EACH INCLUDES)	
		3	**7M-8485**	1	SEAL-O-RING	
		3	**124-8333**	1	ELBOW	
I	27	3	**255-7790**	1	HOSE AS	
	28	1	**337-3953**	1	GUARD-HOSE	
	29	3	**270-7147**	1	BRACKET AS	
I	30	2	**329-8276**	1	HOSE AS	
	31	3	**273-3959**	1	TUBE AS	
I	32	1	**274-5871**	1	HOSE AS	
	33	1	**275-8880**	1	FLANGE	
I	34	2	**226-2256**	1	HOSE AS	
	35	2	*148-8327*	1	CONNECTOR AS	
		2	**3D-2824**	1	SEAL-O-RING	
		2	**6V-8637**	1	CONNECTOR	
		2	**6V-9746**	1	SEAL-O-RING	
	36	3	*148-8336*	1	CONNECTOR AS	

236-8997 **LINES GP-HYDRAULIC** ***(contd.)*** **i03622060**

NOTE	REF NO	GRAPHIC REF	PART NUMBER	QTY	PART NAME 1 2 3 4 5 6 (PRODUCT LEVEL)	SEE PAGE
		3	**3J-1907**	1	SEAL-O-RING	
		3	**6V-8397**	1	SEAL-O-RING	
		3	**6V-8636**	1	CONNECTOR	
M	37	3	**8T-4140**	2	BOLT (M16X2X60-MM)	
M	38	3	**8T-4195**	1	BOLT (M10X1.5X30-MM)	
	39	3	*148-8366*	1	ELBOW AS	
		3	**6V-8397**	2	SEAL-O-RING	
		3	**6V-8987**	1	ELBOW	
	40	2,3	*148-8378*	2	ELBOW AS	
					(EACH INCLUDES)	
		2,3	**3J-1907**	1	SEAL-O-RING	
		2,3	**6V-8397**	1	SEAL-O-RING	
		2,3	**6V-8724**	1	ELBOW	
	41	3	*148-8380*	1	ELBOW AS	
		3	**6V-8398**	2	SEAL-O-RING	
		3	**6V-8988**	1	ELBOW	
	42	3	**8T-7934**	1	WASHER-HARD (11X21X5-MM THK)	
	43	2	*148-8455*	1	UNION AS	
		2	**6V-8997**	1	UNION	
		2	**6V-9746**	2	SEAL-O-RING	
	44	3	*150-3068*	2	UNION AS	
					(EACH INCLUDES)	
		3	**5K-9090**	2	SEAL-O-RING	
		3	**6V-9649**	1	UNION	
	45	3	*153-6230*	1	CONNECTOR AS	
		3	**2M-9780**	1	SEAL-O-RING	
		3	**5K-9090**	1	SEAL-O-RING	
		3	**8T-9386**	1	CONNECTOR	
	46	2	*153-6248*	1	ADAPTER AS	
		2	**6V-8397**	1	SEAL-O-RING	
		2	**8T-6663**	1	ADAPTER-PORT	
	47	3	**198-4780**	2	WASHER-HARD (17.5X32X8-MM THK)	
	48	3	*153-6237*	1	ELBOW AS	
		3	**3D-2824**	1	SEAL-O-RING	
		3	**6V-9004**	1	ELBOW	
		3	**6V-9746**	1	SEAL-O-RING	
	49	2,3	**1P-3704**	2	SEAL-RECTANGULAR	
	50	2	**1P-4579**	6	FLANGE-HALF	
	51	2,3	**1P-5767**	4	FLANGE-HALF	
	52	2,3	**1S-0994**	2	CLIP	
	53	3	*225-7657*	1	ELBOW AS	
		3	**3K-0360**	1	SEAL-O-RING	
		3	**9X-2091**	1	ELBOW (SWIVEL)	
	54	1	**2H-6338**	2	SEAL-O-RING	
	55	2	**2P-1293**	1	LOCKNUT (1-3/16-12-THD)	
	56	1	**200-6345**	2	MOUNT (DUAL SWIVEL)	
	57	1	**3P-2404**	2	CLIP	
	58	3	**4D-7388**	1	CLIP	
	59	2	**4J-0524**	4	SEAL-O-RING	
	60	1	**204-2281**	4	STRAP-TIE	
	61	2	**5P-1076**	2	WASHER-HARD (13.5X30X4-MM THK)	
	62	1	**6D-4244**	1	CLIP	
	63	2	**6D-4246**	1	CLIP	
	64	3	**6V-0852**	1	CAP-DUST	
	65	1	**6V-1875**	1	GROMMET	
	66	1,3	**6V-1889**	2	CLIP	
	67	3	**6V-9168**	1	NUT (11/16-16-THD)	
	68	3	**6V-9169**	1	NUT-BULKHEAD (13/16-16-THD)	
	69	3	**7K-1401**	1	CLIP	

236-8997 **LINES GP-HYDRAULIC** *(contd.)* **i03622060**

NOTE	REF NO	GRAPHIC REF	PART NUMBER	QTY	PART NAME 1 2 3 4 5 6 (PRODUCT LEVEL)	SEE PAGE
	70	3	**7K-1402**	1	BRACKET	
	71	1	**7X-0591**	4	WASHER-HARD (17X29X3-MM THK)	
M	72	3	**7X-2543**	4	BOLT (M10X1.5X120-MM)	
	73	1,2,3	**8T-4121**	12	WASHER-HARD (11X21X2.5-MM THK)	
M	74	1	**8T-4136**	1	BOLT (M10X1.5X25-MM)	
M	75	1,2,3	**8T-4137**	7	BOLT (M10X1.5X20-MM)	
M	76	2	**8T-4183**	8	BOLT (M12X1.75X40-MM)	
M	77	2	**8T-4184**	4	BOLT (M12X1.75X45-MM)	
M	78	2,3	**8T-4192**	3	BOLT (M12X1.75X25-MM)	
M	79	1	**8T-4193**	4	BOLT (M16X2X50-MM)	
M	80	2,3	**8T-4194**	8	BOLT (M12X1.75X50-MM)	
	81	2,3	**8T-4223**	23	WASHER-HARD (13.5X25.5X3-MM THK)	
M	82	2	**8T-4956**	2	BOLT (M12X1.75X35-MM)	
	83	2	**8T-4985**	2	CLAMP-HOSE	
	84	3	**9X-8257**	2	WASHER (17.5X30X3.5-MM THK)	
	85	2	**3J-1907**	1	SEAL-O-RING	

I-REFER TO HYDRAULIC INFORMATION SYSTEM
M-METRIC PART
Y-SEPARATE ILLUSTRATION

REFER TO ALL ILLUSTRATIONS OF THIS GROUP FOR AUXILIARY VIEWS

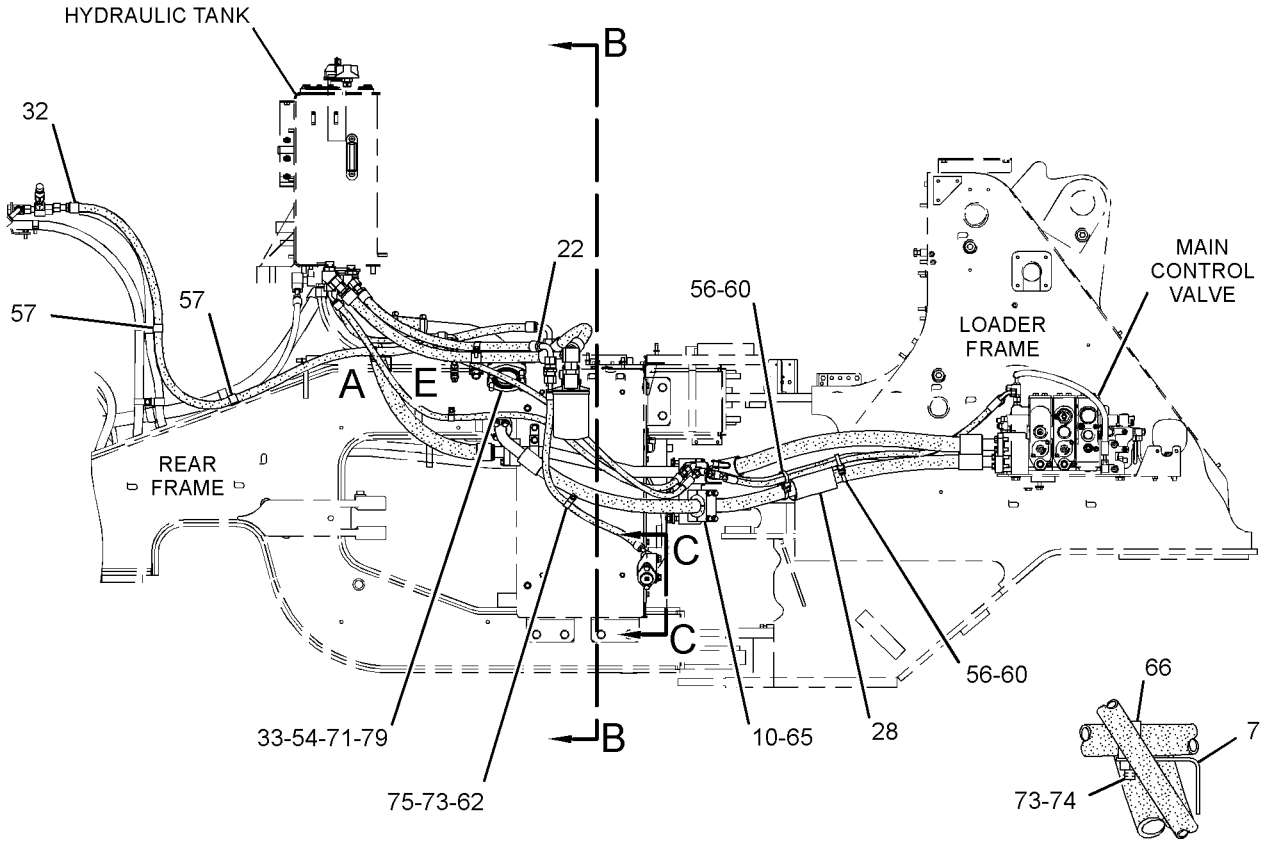

RIGHT SIDE VIEW

VIEW OF AREA A

GRAPHIC #1

g01879263

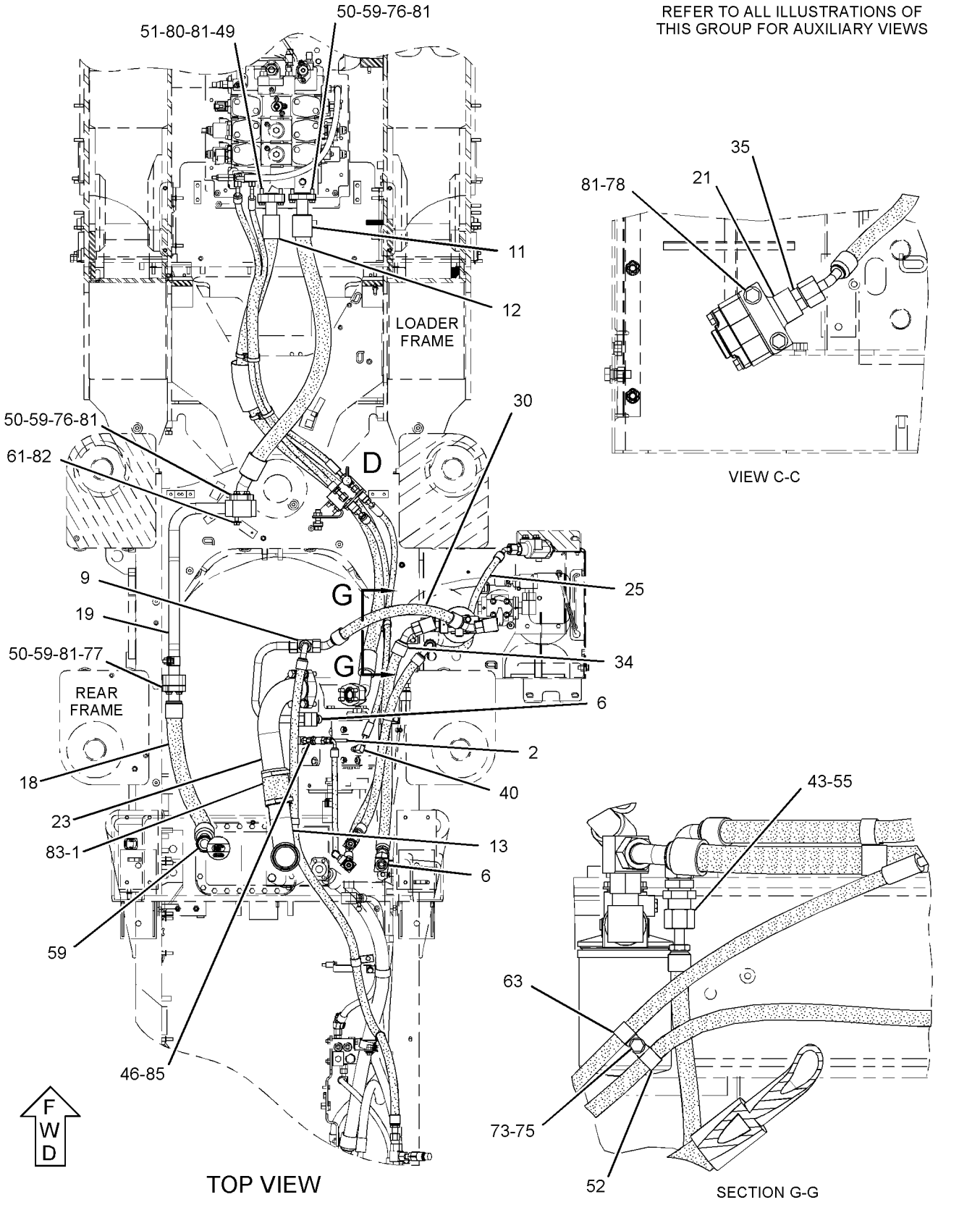

GRAPHIC #2

g01879279

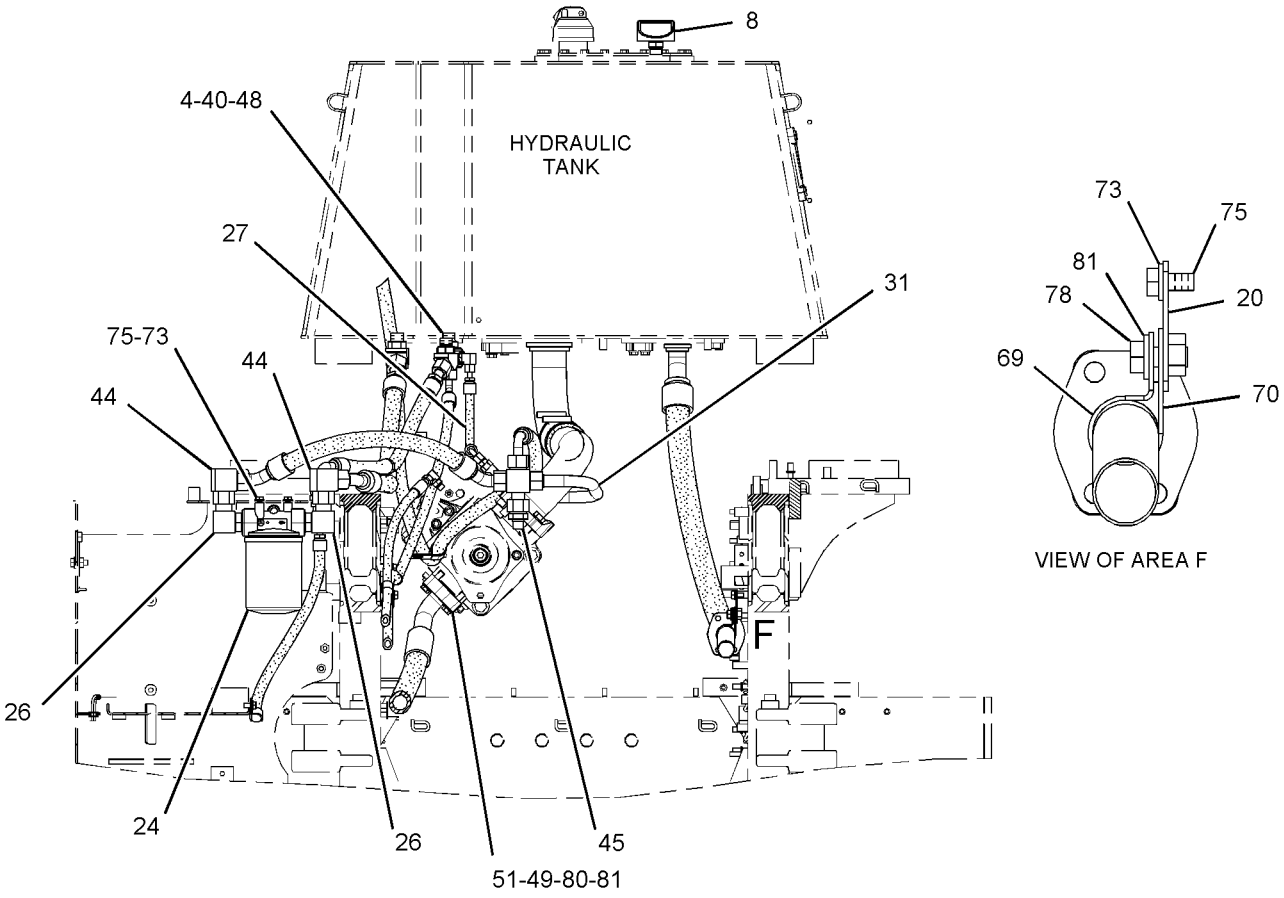

SECTION B-B

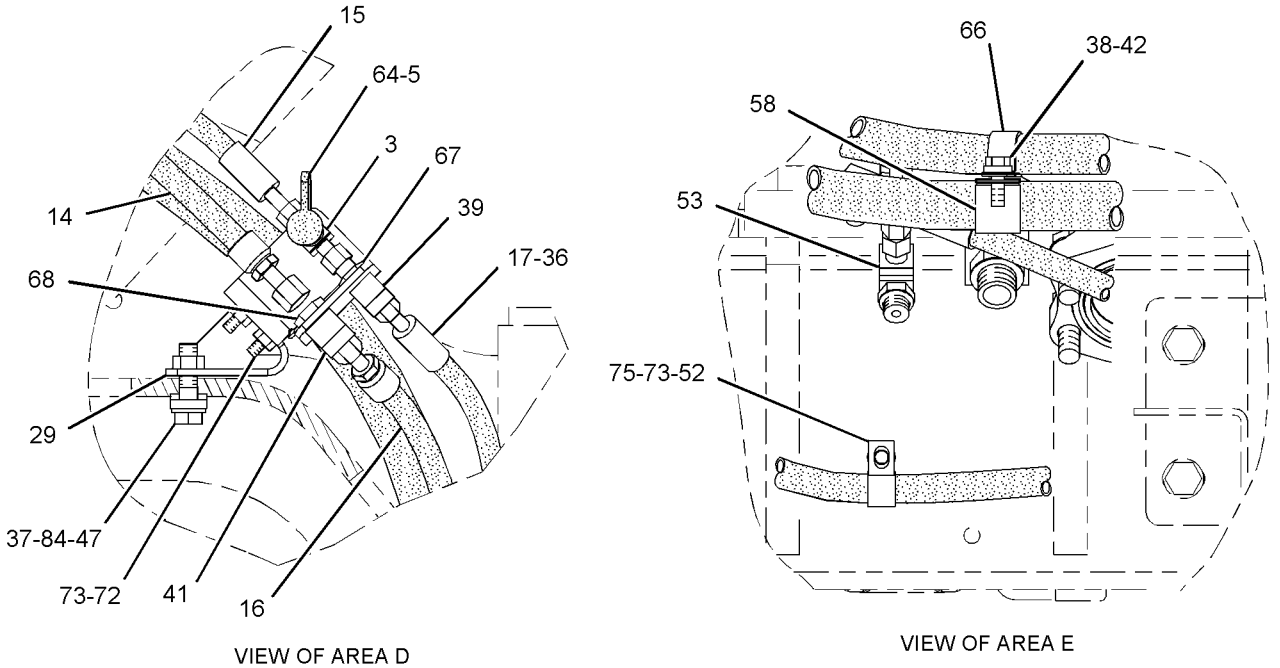

GRAPHIC #3 **<END>** g01879313

HYDRAULIC SYSTEM

236-8983 LINES GP-HYDRAULIC OIL COOLER

S/N: RYF1-UP

PART OF 236-9000 CHASSIS AR

SMCS-1374, 5057 **i03612803**

NOTE	REF NO	GRAPHIC REF	PART NUMBER	QTY	PART NAME 1 2 3 4 5 6 (PRODUCT LEVEL)	SEE PAGE
I	1	1	**2T-3011**	1	HOSE AS	
	2	2	**6V-9171**	1	NUT-BULKHEAD (1-3/16-12-THD)	
I	3	1	**7I-5054**	1	HOSE AS	
	4	3	**8X-4186**	2	WASHER (32X60X3-MM THK)	
	5	1	**9R-6307**	1	SPACER (11X28X12-MM THK)	
I	6	3	**9U-4819**	1	HOSE AS	
I	7	3	**109-5081**	1	HOSE AS	
	8	2	**127-9323**	1	BRACKET AS	
M		2	**8T-3490**	1	NUT-WELD (M10X1.5-THD)	
	9	2	*148-8424*	1	TEE AS	
		2	**6V-8397**	1	SEAL-O-RING	
		2	**8T-8902**	1	TEE	
	10	3	*148-8443*	1	TEE AS	
		3	**3J-1907**	1	SEAL-O-RING	
		3	**6V-8397**	1	SEAL-O-RING	
		3	**7X-2459**	1	TEE-O-RING	
	11	2	*148-8447*	1	TEE AS-SWIVEL	
		2	**7J-9108**	1	SEAL-O-RING	
		2	**7X-0872**	1	TEE-SWIVEL	
	12	2	*161-4336*	1	ELBOW AS	
		2	**5K-9090**	1	SEAL-O-RING	
		2	**6V-9746**	1	SEAL-O-RING	
		2	**124-0195**	1	ELBOW	
	13	3	*164-5611*	1	TEE AS	
		3	**6V-9746**	1	SEAL-O-RING	
		3	**7M-8485**	1	SEAL-O-RING	
		3	**8T-3312**	1	TEE	
	14	3	*164-6874*	1	FITTING AS-ELBOW	
		3	**3J-1907**	1	SEAL-O-RING	
		3	**085-7356**	1	FITTING	
	15	2	*241-6208*	1	ELBOW AS	
		2	**2M-9780**	1	SEAL-O-RING	
		2	**5K-9090**	1	SEAL-O-RING	
		2	**119-6220**	1	ELBOW	
I	16	3	**2T-2098**	1	HOSE AS	
Y	17	2	**242-1307**	1	MANIFOLD GP-CONTROL (BRAKE CHARGE, HYD FAN CONTROL)	451
Y	18	2	**330-9358**	1	FILTER GP-OIL (POWER TRAIN)	433
Y	19	3	**244-1426**	1	VALVE GP-CHECK (HYDRAULIC OIL COOLER BYPASS)	484
	20	3	**244-8832**	1	TUBE AS	
I	21	2	**244-8836**	1	HOSE AS	
I	22	2	**244-8837**	1	HOSE AS	
	23	2	**246-0573**	1	TUBE AS	
	24	2	**253-1540**	1	BRACKET AS	
	25	2	**253-8482**	1	SPACER (32.5X42.2X10-MM THK)	
	26	3	**254-6581**	1	PLATE AS	
	27	3	**296-6980**	1	SPACER (11X25X30-MM THK)	
	28	2	**307-5393**	1	VALVE GP-CHECK	
	29	3	**315-1418**	1	TUBE AS	
	30	2	**317-6752**	1	TUBE AS	
	31	1	**317-7374**	1	BRACKET AS	
	32	1	**318-2936**	1	BRACKET AS	
I	33	1	**186-3497**	1	HOSE AS	
	34	2	**318-9644**	1	TUBE AS	
	35	2	**319-4903**	1	BRACKET AS	
	36	1	**322-4659**	1	BRACKET	

236-8983 LINES GP-HYDRAULIC OIL COOLER *(contd.)* i03612803

NOTE	REF NO	GRAPHIC REF	PART NUMBER	QTY	PART NAME 1 2 3 4 5 6 (PRODUCT LEVEL)	SEE PAGE
	37	2	*329-5475*	1	SNUBBER AS	
		2	**3J-1907**	1	SEAL-O-RING	
		2	**317-7595**	1	SNUBBER	
	38	1	**067-3045**	1	CLIP	
	39	2	**089-7338**	2	SLEEVE	
	40	1	**134-3988**	1	CLIP	
	41	2	*148-8315*	1	CONNECTOR AS	
		2	**2M-9780**	1	SEAL-O-RING	
		2	**6V-8642**	1	CONNECTOR	
		2	**7J-9108**	1	SEAL-O-RING	
	42	2	*148-8327*	1	CONNECTOR AS	
		2	**3D-2824**	1	SEAL-O-RING	
		2	**6V-8637**	1	CONNECTOR	
		2	**6V-9746**	1	SEAL-O-RING	
	43	2	*148-8353*	1	ELBOW AS	
		2	**3J-1907**	1	SEAL-O-RING	
		2	**6V-8397**	1	SEAL-O-RING	
		2	**6V-9001**	1	ELBOW	
	44	2	*148-8357*	1	ELBOW AS	
		2	**5K-9090**	1	SEAL-O-RING	
		2	**6V-9008**	1	ELBOW	
		2	**7M-8485**	1	SEAL-O-RING	
	45	2	*148-8360*	1	ELBOW AS	
		2	**6V-9182**	1	ELBOW	
		2	**6V-9746**	1	SEAL-O-RING	
		2	**7M-8485**	1	SEAL-O-RING	
	46	2	*148-8367*	1	ELBOW AS	
		2	**6V-8397**	1	SEAL-O-RING	
		2	**6V-9850**	1	ELBOW	
	47	1,3	*148-8376*	1	ELBOW AS	
		1,3	**6V-8983**	1	ELBOW	
		1,3	**6V-9746**	2	SEAL-O-RING	
	48	2,3	*148-8392*	4	ELBOW AS	
					(EACH INCLUDES)	
		2,3	**6V-9746**	1	SEAL-O-RING	
		2,3	**6V-9853**	1	ELBOW	
	49	2	*148-8413*	1	REDUCER AS	
		2	**4J-5477**	1	SEAL-O-RING	
		2	**6V-8934**	1	ADAPTER AS	
	50	3	*148-8449*	1	TEE AS-SWIVEL	
		3	**6V-9746**	2	SEAL-O-RING	
		3	**6V-9839**	1	TEE-SWIVEL	
	51	2	*148-8455*	1	UNION AS	
		2	**6V-8997**	1	UNION	
		2	**6V-9746**	2	SEAL-O-RING	
	52	2	*150-3035*	1	ELBOW AS	
		2	**6V-9746**	1	SEAL-O-RING	
		2	**8T-1718**	1	ELBOW	
	53	2	*150-4043*	1	CONNECTOR AS	
		2	**3J-1907**	1	SEAL-O-RING	
		2	**6V-8398**	1	SEAL-O-RING	
		2	**6V-9873**	1	CONNECTOR	
	54	3	*150-4047*	1	ADAPTER AS	
		3	**3J-7354**	1	SEAL-O-RING	
		3	**8T-2353**	1	ADAPTER	
	55	3	*153-6237*	3	ELBOW AS	
					(EACH INCLUDES)	
		3	**3D-2824**	1	SEAL-O-RING	
		3	**6V-9004**	1	ELBOW	

236-8983 LINES GP-HYDRAULIC OIL COOLER *(contd.)* i03612803

NOTE	REF NO	GRAPHIC REF	PART NUMBER	QTY	PART NAME 1 2 3 4 5 6 (PRODUCT LEVEL)	SEE PAGE
		3	**6V-9746**	1	SEAL-O-RING	
	56	2	*153-6256*	1	ELBOW AS	
		2	**7J-9108**	1	SEAL-O-RING	
		2	**8C-7563**	1	ELBOW	
	57	2	*155-3504*	1	ELBOW AS	
		2	**2M-9780**	1	SEAL-O-RING	
		2	**6V-9003**	1	ELBOW	
		2	**7J-9108**	1	SEAL-O-RING	
	58	2,3	*164-5567*	3	COUPLER AS-QUICK DISCONNECT	
					(EACH INCLUDES)	
		2,3	**214-7568**	1	SEAL-O-RING	
		2,3	**6V-3965**	1	FITTING (QUICK DISCONNECT)	
	59	3	*164-5573*	1	UNION AS	
		3	**6V-8398**	1	SEAL-O-RING	
		3	**6V-8738**	1	UNION	
		3	**7J-9108**	1	SEAL-O-RING	
	60	3	*164-5574*	1	TEE AS	
		3	**3D-2824**	1	SEAL-O-RING	
		3	**6V-8784**	1	TEE-FACE SEAL	
		3	**6V-9746**	2	SEAL-O-RING	
	61	2	*164-6860*	1	TEE AS	
		2	**6V-9350**	1	TEE-BULKHEAD	
		2	**7J-9108**	3	SEAL-O-RING	
I	62	1	**166-7959**	1	HOSE AS	
	63	3	*171-6723*	1	ELBOW AS	
		3	**6V-9746**	1	SEAL-O-RING	
		3	**8T-8899**	1	ELBOW	
	64	3	*171-6728*	1	ELBOW AS	
		3	**3K-0360**	1	SEAL-O-RING	
		3	**8T-0249**	1	ELBOW	
	65	2	*172-9287*	1	CONNECTOR AS	
		2	**3J-1907**	1	SEAL-O-RING	
		2	**6V-8397**	1	SEAL-O-RING	
		2	**7E-9898**	1	CONNECTOR	
	66	3	**1P-4578**	2	FLANGE-HALF	
	67	3	**1P-4579**	2	FLANGE-HALF	
	68	2	**1S-0724**	1	CLIP	
	69	2	*250-1426*	1	ELBOW AS	
		2	**3D-2824**	1	SEAL-O-RING	
		2	**250-1425**	1	ELBOW	
	70	1,2,3	**2P-1293**	2	LOCKNUT (1-3/16-12-THD)	
	71	2	**3P-2404**	3	CLIP	
	72	3	**4J-0522**	1	SEAL-O-RING	
	73	3	**4J-0524**	1	SEAL-O-RING	
	74	1	**5G-9603**	1	SPACER (11.03X26.6X50-MM THK)	
	75	2	**5K-9660**	1	CLIP	
	76	3	**5P-4116**	4	WASHER-HARD (8.8X20.5X2-MM THK)	
	77	1	**6D-4244**	2	CLIP	
	78	2,3	**6V-0852**	3	CAP-DUST	
	79	1,2,3	**6V-1889**	5	CLIP	
	80	2	**6V-9170**	1	NUT-BULKHEAD (1-14-THD)	
	81	2	**6V-9746**	1	SEAL-O-RING	
	82	1	**7D-1553**	2	CLIP	
	83	1,2,3	**8T-4121**	26	WASHER-HARD (11X21X2.5-MM THK)	
M	84	1	**8T-4133**	1	NUT (M10X1.5-THD)	
M	85	1,2	**8T-4136**	8	BOLT (M10X1.5X25-MM)	
M	86	1,2	**8T-4137**	9	BOLT (M10X1.5X20-MM)	
M	87	1	**8T-4178**	1	BOLT (M10X1.5X90-MM)	
M	88	3	**8T-6466**	1	BOLT (M10X1.5X60-MM)	

236-8983 LINES GP-HYDRAULIC OIL COOLER *(contd.)* i03612803

NOTE	REF NO	GRAPHIC REF	PART NUMBER	QTY	PART NAME 1 2 3 4 5 6 (PRODUCT LEVEL)	SEE PAGE
M	89	1	**8T-4186**	1	BOLT (M10X1.5X40-MM)	
M	90	2,3	**8T-4189**	5	BOLT (M8X1.25X20-MM)	
M	91	2	**8T-4192**	1	BOLT (M12X1.75X25-MM)	
M	92	2	**8T-4195**	1	BOLT (M10X1.5X30-MM)	
M	93	3	**8T-4196**	4	BOLT (M10X1.5X35-MM)	
	94	2,3	**8T-4223**	5	WASHER-HARD (13.5X25.5X3-MM THK)	
	95	1,2	**8T-4224**	2	WASHER-HARD (8.8X16X2-MM THK)	
M	96	3	**8T-4956**	4	BOLT (M12X1.75X35-MM)	
M	97	2	**8T-5436**	2	BOLT (M10X1.5X130-MM)	
E	98	2	**7Y-5074**		GUARD-HOSE (43-CM)	
E	98A	2	**7Y-5074**		GUARD-HOSE (96-CM)	
E	98B	2	**7Y-5074**		GUARD-HOSE (69-CM)	

E-ORDER BY THE CENTIMETER
I-REFER TO HYDRAULIC INFORMATION SYSTEM
M-METRIC PART
Y-SEPARATE ILLUSTRATION

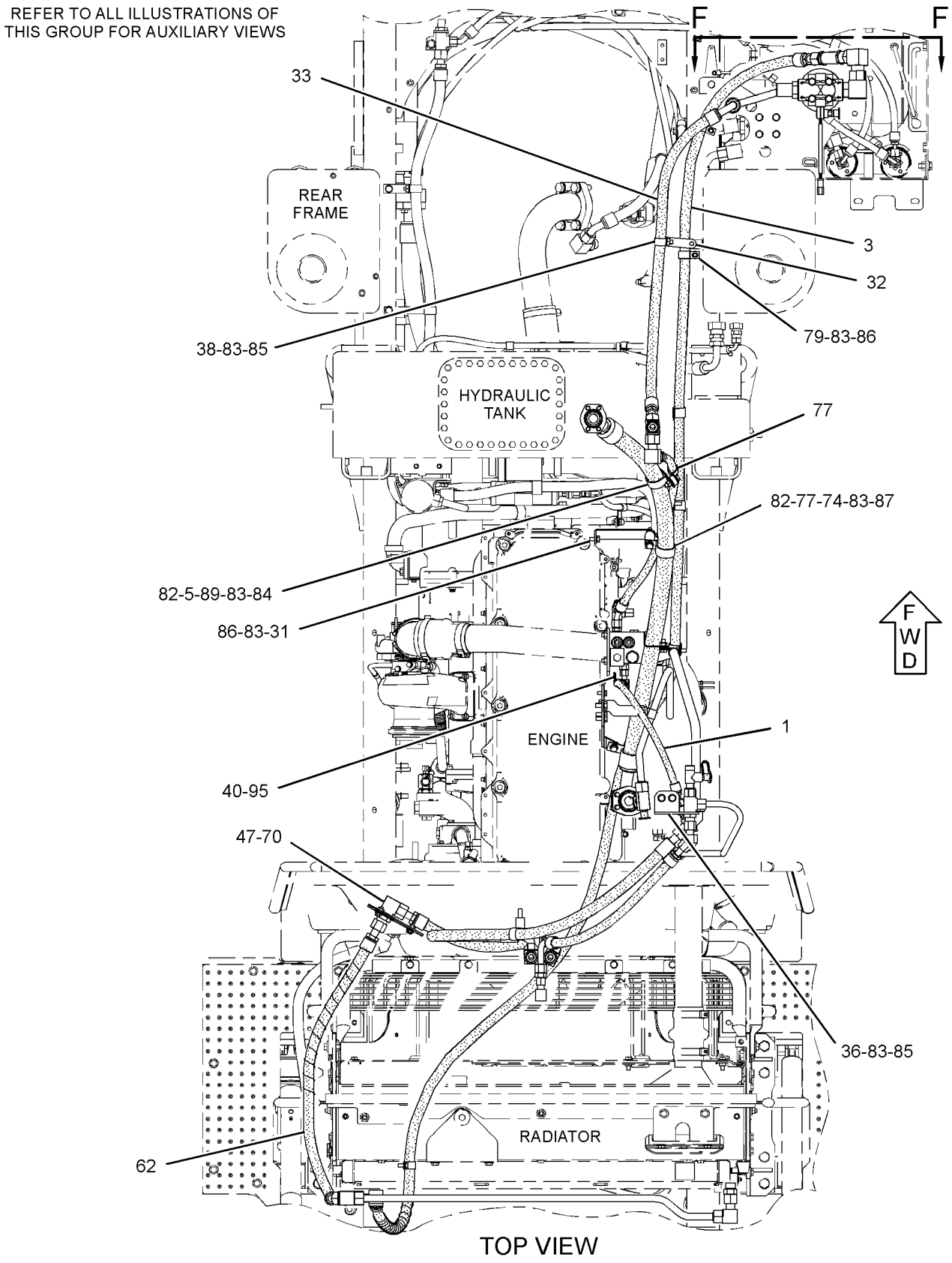

GRAPHIC #1

g01838275

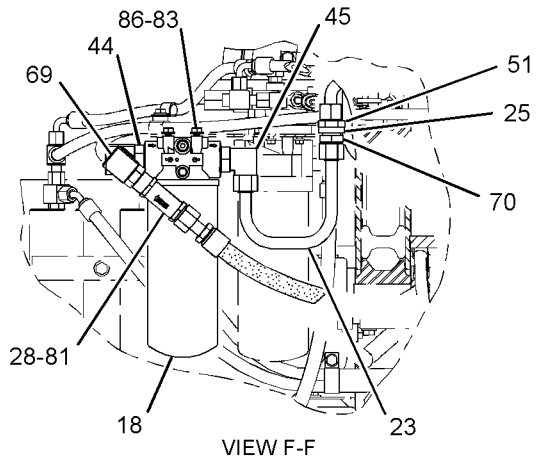

VIEW F-F

REFER TO ALL ILLUSTRATIONS OF THIS GROUP FOR AUXILIARY VIEWS

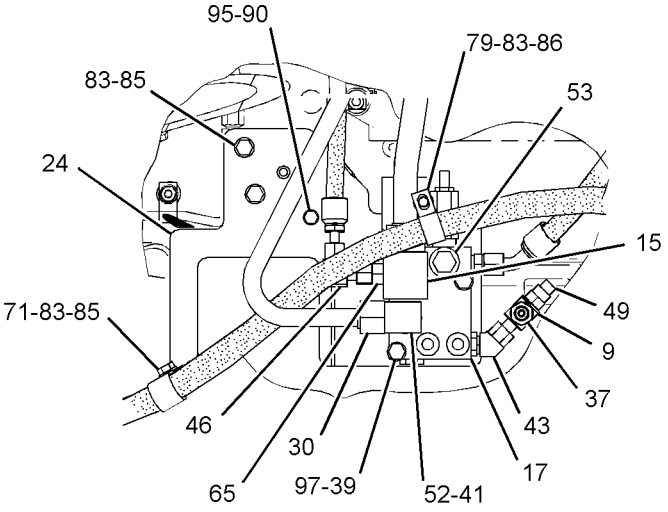

VIEW OF AREA C

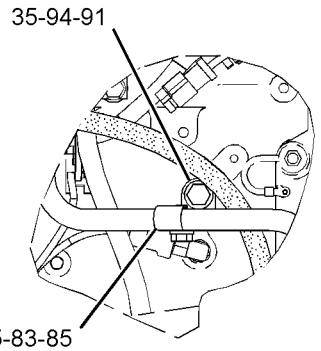

VIEW OF AREA A

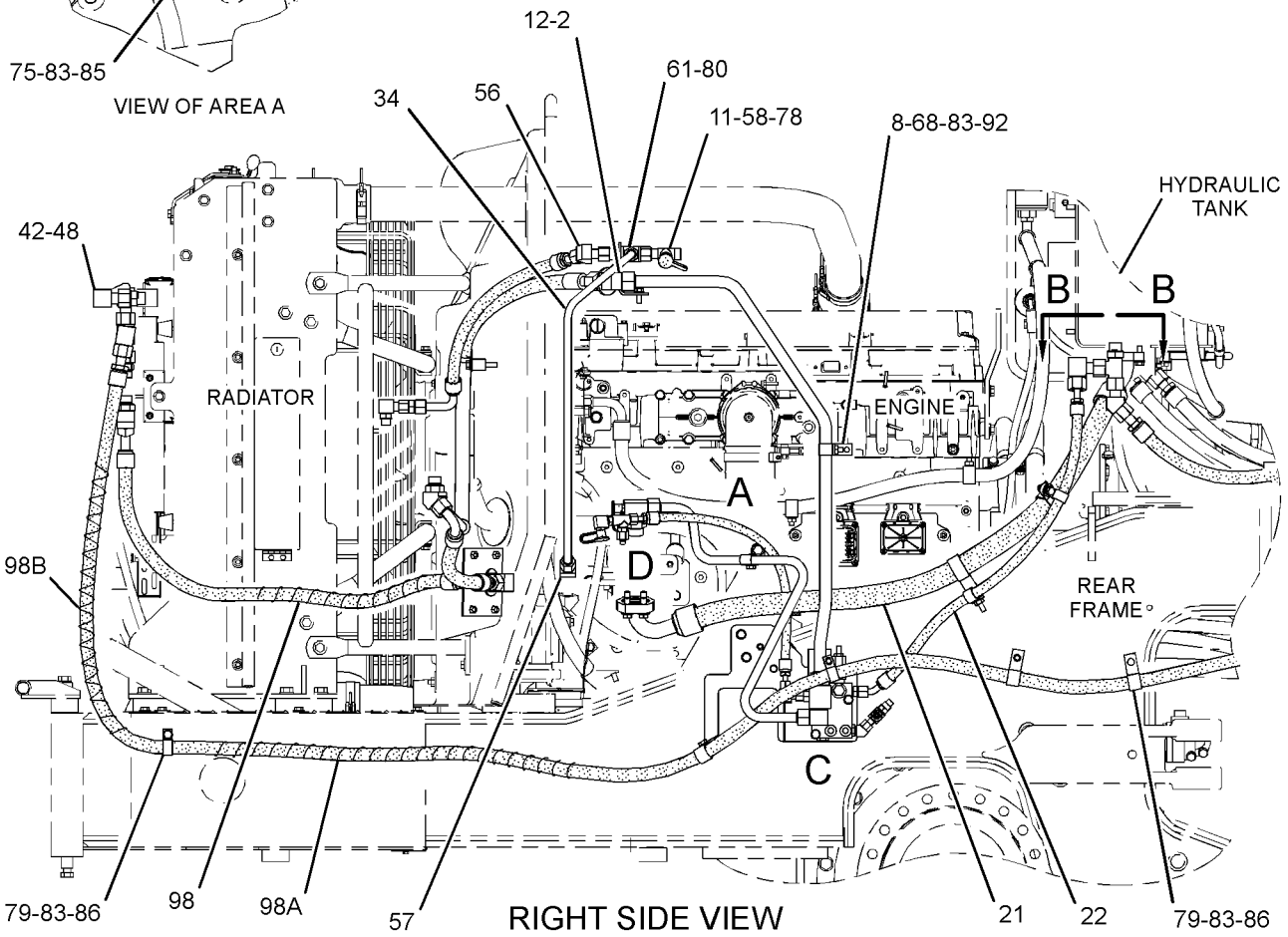

GRAPHIC #2

g01838276

236-8983 **LINES GP-HYDRAULIC OIL COOLER** *(contd.)* **i03612803**

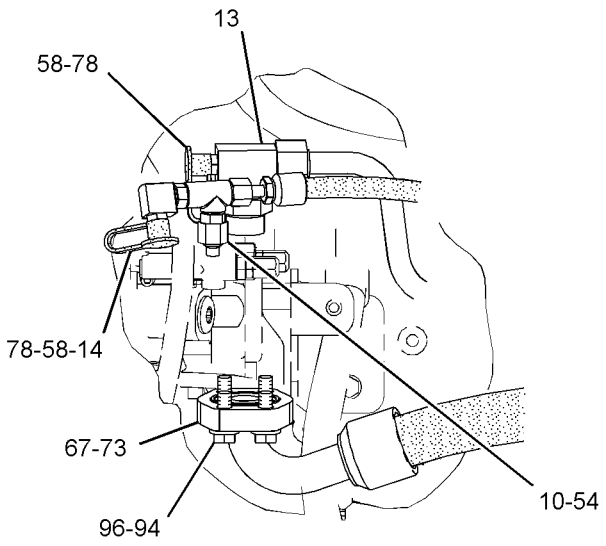

VIEW OF AREA D

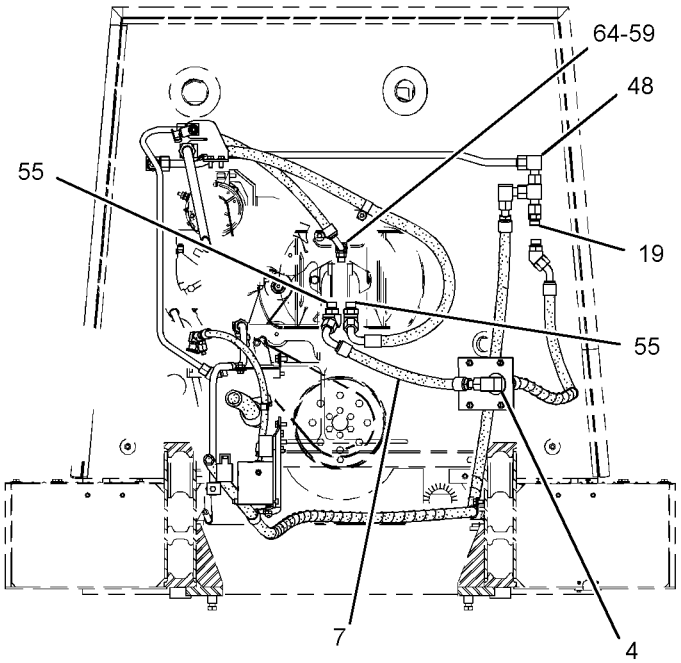

FRONT VIEW

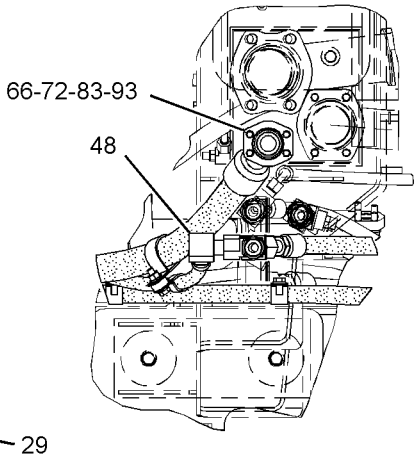

VIEW B-B

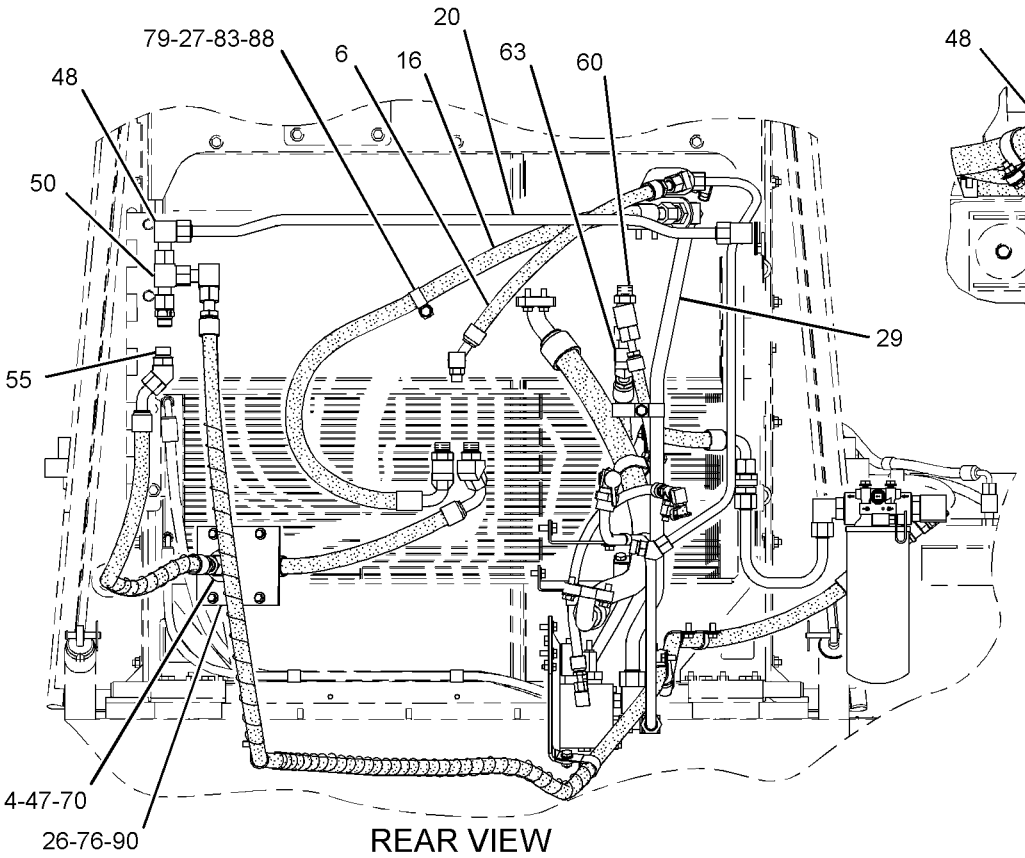

REAR VIEW

GRAPHIC #3 **<END>** g01838277

HYDRAULIC SYSTEM

236-9033 LINES GP-LIFT CYLINDER

S/N: RYF1-UP

PART OF 236-8963 HYDRAULIC AR-2 VALVE

SMCS-5057, 5102 **i03622163**

NOTE	REF NO	GRAPHIC REF	PART NUMBER	QTY	PART NAME 1 2 3 4 5 6 (PRODUCT LEVEL)	SEE PAGE
	1	1	**134-5333**	2	BRACKET	
	2	1	**134-5334**	2	BRACKET	
	3	1	**134-5335**	2	BRACKET AS	
					(EACH INCLUDES)	
M		1	**8T-3597**	4	NUT-WELD (M12X1.75-THD)	
	4	1	**244-3329**	1	TUBE AS	
	5	1	**244-3330**	1	TUBE AS	
	6	1	**267-8937**	1	BRACKET AS	
		1	**7Y-2522**	1	PLATE	
	7	1	**267-9445**	1	BRACKET AS	
		1	**7Y-2522**	1	PLATE	
	8	1	**321-1173**	1	TUBE AS	
	9	1	**321-1174**	1	TUBE AS	
	10	1	**321-1175**	1	TUBE AS	
	11	1	**321-1176**	1	TUBE AS	
I	12	1	**321-1177**	2	HOSE AS	
I	13	1	**321-1178**	2	HOSE AS	
	14	1	*148-8407*	4	PLUG AS	
					(EACH INCLUDES)	
		1	**3J-1907**	1	SEAL-O-RING	
		1	**9S-4191**	1	PLUG-O-RING	
	15	1	**1P-3703**	2	SEAL-RECTANGULAR	
	16	1	**1P-3704**	12	SEAL-RECTANGULAR	
	17	1	**1P-5767**	12	FLANGE-HALF	
	18	1	**6V-0400**	4	FLANGE-HALF	
	19	1	**7Y-4538**	4	CLAMP-HALF	
M	20	1	**8T-4139**	8	BOLT (M12X1.75X30-MM)	
M	21	1	**8T-4183**	16	BOLT (M12X1.75X40-MM)	
M	22	1	**8T-4192**	18	BOLT (M12X1.75X25-MM)	
M	23	1	**8T-4194**	32	BOLT (M12X1.75X50-MM)	
	24	1	**8T-4223**	86	WASHER-HARD (13.5X25.5X3-MM THK)	
M	25	1	**8T-4648**	8	BOLT (M12X1.75X70-MM)	
M	26	1	**8T-4956**	4	BOLT (M12X1.75X35-MM)	

I-REFER TO HYDRAULIC INFORMATION SYSTEM
M-METRIC PART

236-9033 **LINES GP-LIFT CYLINDER** *(contd.)* **i03622163**

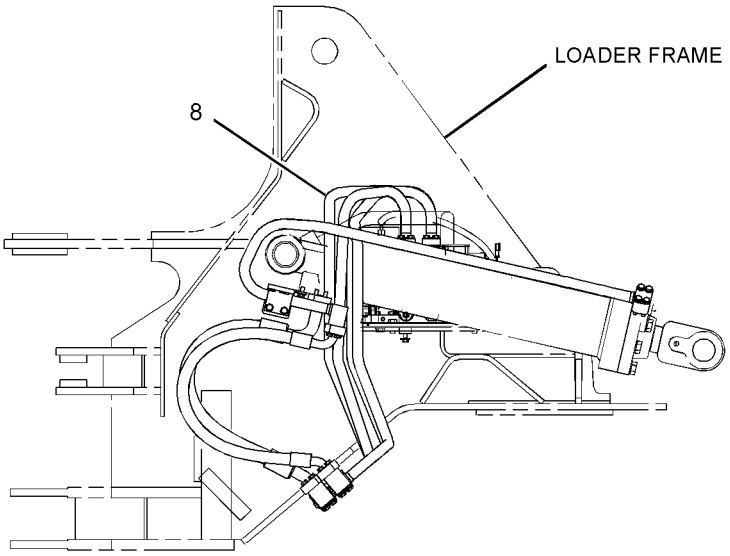

RIGHT SIDE VIEW

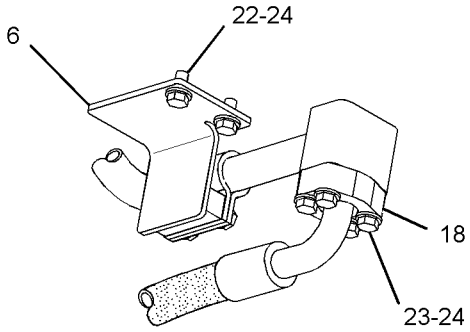

VIEW OF AREA A
(PARTS REMOVED FOR CLARITY)

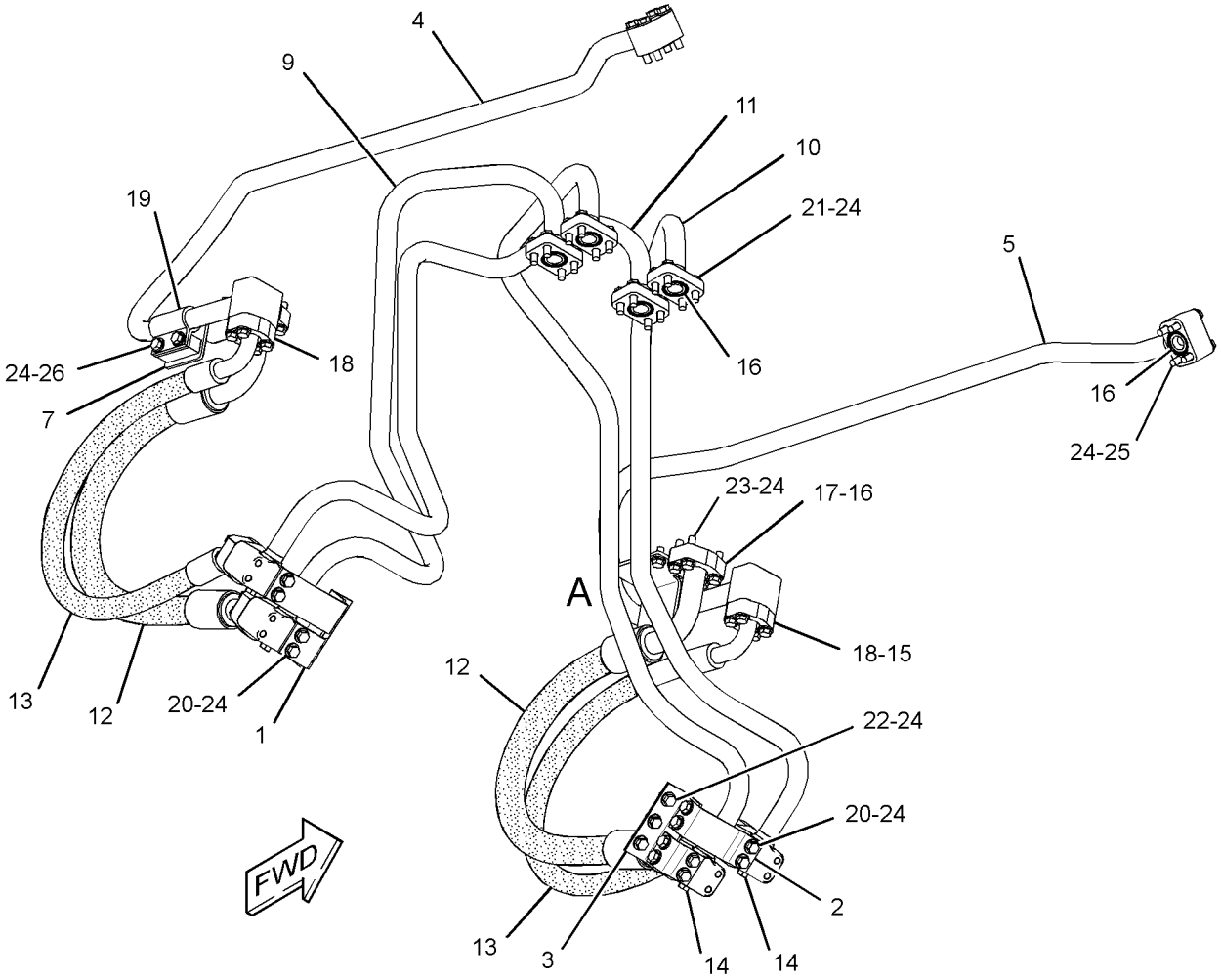

GRAPHIC #1

<END>

g01943576

HYDRAULIC SYSTEM

236-9034 LINES GP-TILT CYLINDER

S/N: RYF1-UP

PART OF 236-8963 HYDRAULIC AR-2 VALVE

SMCS-5057, 5104 **i03622898**

NOTE	REF NO	GRAPHIC REF	PART NUMBER	QTY	PART NAME 1 2 3 4 5 6 (PRODUCT LEVEL)	SEE PAGE
	1	1	**245-7306**	1	TUBE AS	
	2	1	**254-3569**	1	BRACKET AS	
	3	1	**319-0762**	1	TUBE AS	
	4	1	**319-0763**	1	TUBE AS	
I	5	1	**319-0764**	1	HOSE AS	
I	6	1	**319-0765**	1	HOSE AS	
	7	1	**319-2444**	2	BRACKET AS	
	8	1	*164-5567*	2	COUPLER AS-QUICK DISCONNECT	
					(EACH INCLUDES)	
		1	**214-7568**	1	SEAL-O-RING	
		1	**6V-3965**	1	FITTING (QUICK DISCONNECT)	
	9	1	**1P-3704**	7	SEAL-RECTANGULAR	
	10	1	**1P-5767**	8	FLANGE-HALF	
	11	1	**6V-0852**	2	CAP-DUST	
C	12	1	**7Y-4538**	2	CLAMP-HALF	
M	13	1	**8T-4139**	4	BOLT (M12X1.75X30-MM)	
M	14	1	**8T-4183**	16	BOLT (M12X1.75X40-MM)	
M	15	1	**8T-4194**	16	BOLT (M12X1.75X50-MM)	
	16	1	**8T-4223**	40	WASHER-HARD (13.5X25.5X3-MM THK)	
M	17	1	**8T-4648**	4	BOLT (M12X1.75X70-MM)	

C-CHANGE FROM PREVIOUS TYPE
I-REFER TO HYDRAULIC INFORMATION SYSTEM
M-METRIC PART

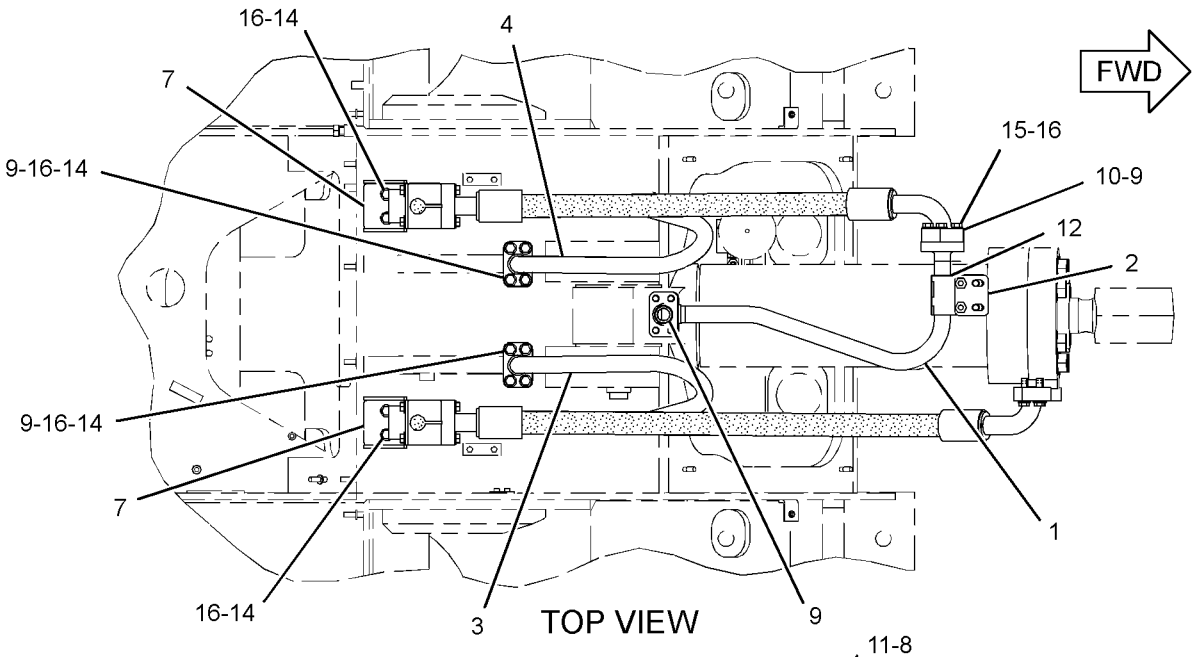

TOP VIEW

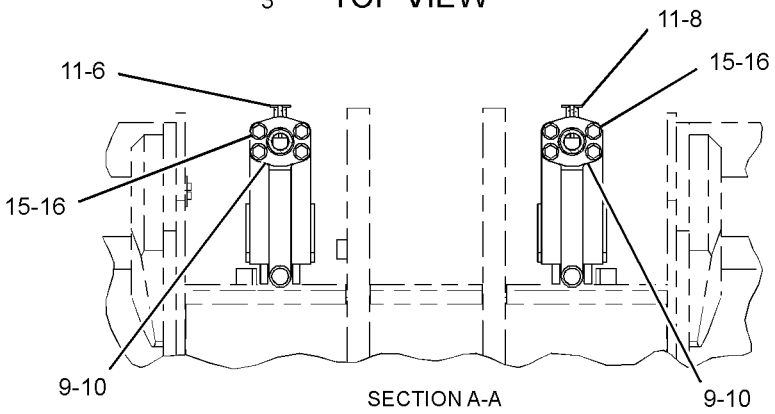

SECTION A-A

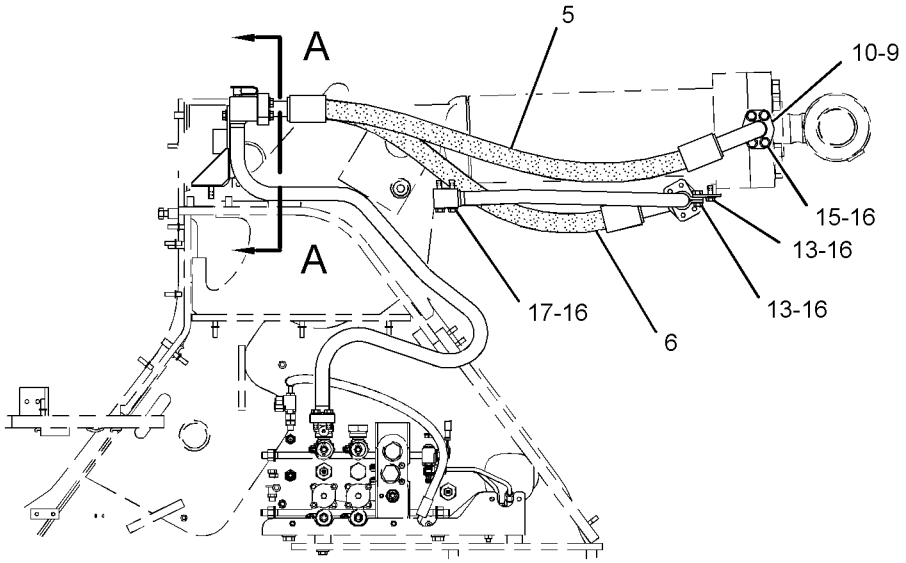

RIGHT SIDE VIEW

GRAPHIC #1

<END>

g01619179

242-1307 MANIFOLD GP-CONTROL

S/N: RYF1-UP

PART OF 236-8983 LINES GP-HYDRAULIC OIL COOLER

SMCS-4264, 5072, 5264, 5467, 5479 **i02762825**

NOTE	REF NO	GRAPHIC REF	PART NUMBER	QTY	PART NAME 1 2 3 4 5 6 (PRODUCT LEVEL)	SEE PAGE
JY	1	1	**252-9256**	1	VALVE GP-DIVERTER (HYDRAULIC FAN)	491
Y	2	1	**158-9956**	1	VALVE GP-CHECK (BRAKE OIL)	482
	3	1	**4J-7533**	2	SEAL-O-RING	
	4	1	**3J-1907**	2	SEAL-O-RING	
	5	1	**245-8355**	1	VALVE GP-RELIEF (BRAKE)	
H		1	**2M-9780**	1	SEAL-O-RING	
H		1	**161-6149**	1	SEAL-O-RING	
H		1	**161-6161**	2	RING-BACKUP	
Y	6	1	**257-8414**	1	VALVE GP-SHUTTLE (BRAKE ACCUMULATOR)	507
CL	7	1	**239-0618**	1	VALVE GP-SHUTTLE (BRAKE, HYDRAULIC FAN)	
		1	**3H-0442**	1	SEAL-O-RING	
Y	8	1	**183-7595**	1	VALVE GP-SOLENOID (24-VOLT) (BRAKE, HYDRAULIC FAN)	509
C	9	1	**6E-5066**	1	SCREEN (CONTROL VALVE MANIFOLD)	
C	10	1	**282-5394**	1	PLUG-ORIFICE	
	11	1	**9S-8001**	2	PLUG-O-RING	
	12	1	**9S-8004**	1	PLUG-O-RING	
C	13	1	**282-5397**	1	VALVE GP-RELIEF & DIVERTER (HYDRAULIC TANK)	
C	14	1	**282-5393**	1	PLUG-ORIFICE	
					AVAILABLE REPAIR KIT(S):	
J			**200-6282**	1	KIT-SEAL (DIVERTER VALVE)	
					(INCLUDES SEALS & RINGS)	
H			**133-5545**	1	KIT-SEAL (RELIEF VALVE)	
					(INCLUDES SEALS & RINGS)	
L			**239-5195**	1	KIT-SEAL (SHUTTLE VALVE)	
					(INCLUDES SEAL-O-RING & BACKUP RINGS)	

C-CHANGE FROM PREVIOUS TYPE
H-KIT MARKED H INCLUDES PARTS MARKED H
J-KIT MARKED J SERVICES PARTS MARKED J
L-KIT MARKED L SERVICES PARTS MARKED L
Y-SEPARATE ILLUSTRATION

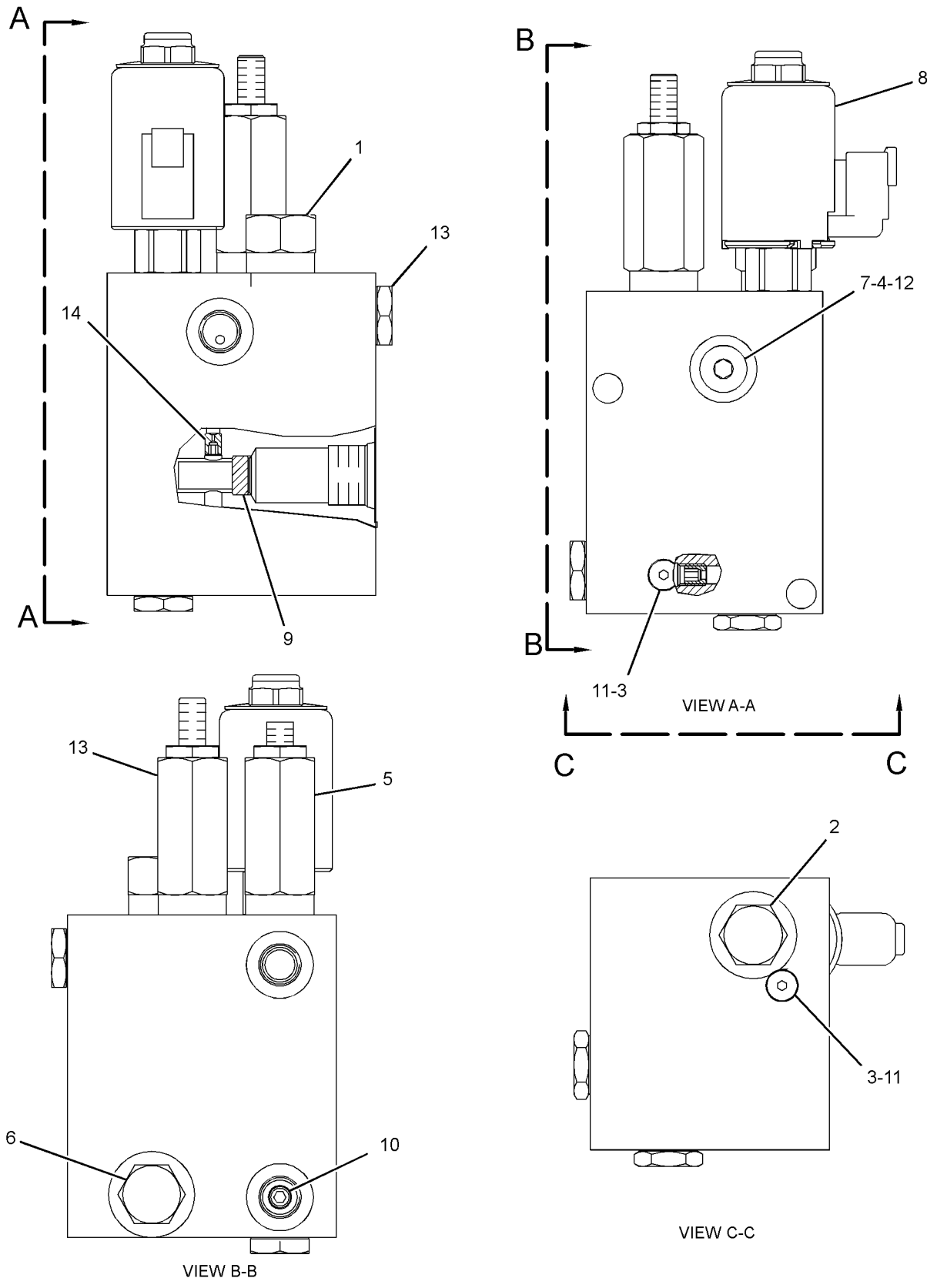

GRAPHIC #1 **<END>** g01383030

269-9397 MANIFOLD GP-VALVE–INLET

S/N: RYF1-UP

PART OF 261-2337, 261-3945 VALVE GP-MAIN CONTROL

ALSO AN ATTACHMENT

SMCS-5264 **i03624884**

NOTE	REF NO	GRAPHIC REF	PART NUMBER	QTY	PART NAME 1 2 3 4 5 6 (PRODUCT LEVEL)	SEE PAGE
	1	1	**1T-0936**	1	PLUG-PIPE	
	2	1	*148-8395*	1	PLUG AS	
		1	**3K-0360**	1	SEAL-O-RING	
		1	**9S-8005**	1	PLUG-O-RING	
	3	1	**6E-5066**	1	SCREEN	
Y	4	1	**193-1665**	1	VALVE GP-PRESSURE REDUCING (SIGNAL DUPLICATION)	499
J	5	1	**235-6160**	1	VALVE GP-RELIEF (LOAD SENSING SIGNAL)	
	6	1	*162-0177*	1	PLUG AS	
		1	**3J-1907**	1	SEAL-O-RING	
		1	**9S-8004**	1	PLUG-O-RING	
	7	1	*173-3993*	6	PLUG AS	
					(EACH INCLUDES)	
		1	**4J-7533**	1	SEAL-O-RING	
		1	**9S-8001**	1	PLUG-O-RING	
					AVAILABLE REPAIR KIT(S):	
J			**225-9611**	1	KIT-SEAL (RELIEF VALVE)	
					(KIT INCLUDES RINGS AND SEALS)	

J-KIT MARKED J SERVICES PART MARKED J
Y-SEPARATE ILLUSTRATION

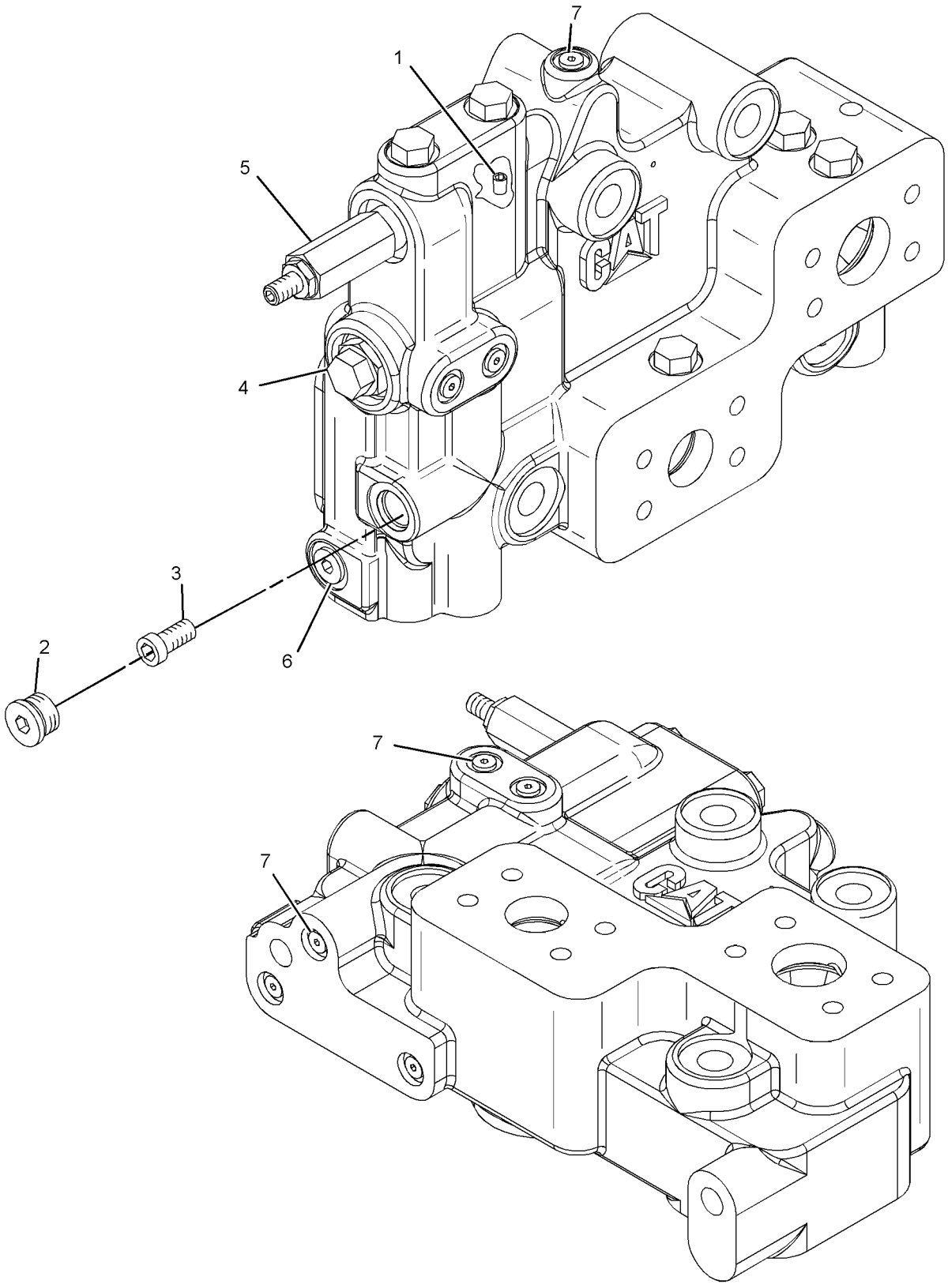

GRAPHIC #1 **<END>** g01189575

269-9398 MANIFOLD GP-VALVE—END COVER

S/N: RYF1-UP

PART OF 261-2337, 261-3945 VALVE GP-MAIN CONTROL

ALSO AN ATTACHMENT

SMCS-5264 **i03624807**

NOTE	REF NO	GRAPHIC REF	PART NUMBER	QTY	PART NAME 1 2 3 4 5 6 (PRODUCT LEVEL)	SEE PAGE
	1	1	**4J-9535**	2	SEAL-O-RING	
	2	1	**6E-5066**	1	SCREEN	
Y	3	1	**225-0300**	1	VALVE GP-SOLENOID (24-VOLT) (HYDRAULIC LOCKOUT)	510
H	4	1	**282-4349**	1	VALVE GP-PRESSURE REDUCING (PILOT OIL)	
	5	1	**6J-3134**	4	SEAL-O-RING	
J	6	1	**254-5789**	1	VALVE GP-RELIEF (PUMP MARGIN PRESSURE)	
M	7	1	**8T-1158**	1	BOLT-SOCKET HEAD (M8X1.25X20-MM)	
	8	1	*148-8395*	1	PLUG AS	
		1	**3K-0360**	1	SEAL-O-RING	
		1	**9S-8005**	1	PLUG-O-RING	
Y	9	1	**158-9956**	1	VALVE GP-CHECK (PILOT OIL)	482
	10	1	*162-0177*	5	PLUG AS	
					(EACH INCLUDES)	
		1	**3J-1907**	1	SEAL-O-RING	
		1	**9S-8004**	1	PLUG-O-RING	
	11	1	*173-3993*	16	PLUG AS	
					(EACH INCLUDES)	
		1	**4J-7533**	1	SEAL-O-RING	
		1	**9S-8001**	1	PLUG-O-RING	
	12	1	*183-7263*	2	PLUG AS	
					(EACH INCLUDES)	
		1	**3J-7354**	1	SEAL-O-RING	
		1	**9S-8002**	1	PLUG-O-RING	
	13	1	**1P-3705**	1	SEAL-RECTANGULAR	
	14	1	**4J-0524**	2	SEAL-O-RING	
					AVAILABLE REPAIR KIT(S):	
H			**224-7135**	1	KIT-SEAL	
					(KIT INCLUDES RINGS & SEALS)	
J			**239-6336**	1	KIT-SEAL	
					(KIT INCLUDES RINGS & SEALS)	

H-KIT MARKED H SERVICES PART MARKED H
J-KIT MARKED J SERVICES PART MARKED J
M-METRIC PART
Y-SEPARATE ILLUSTRATION

269-9398 **MANIFOLD GP-VALVE** *(contd.)* **i03624807**

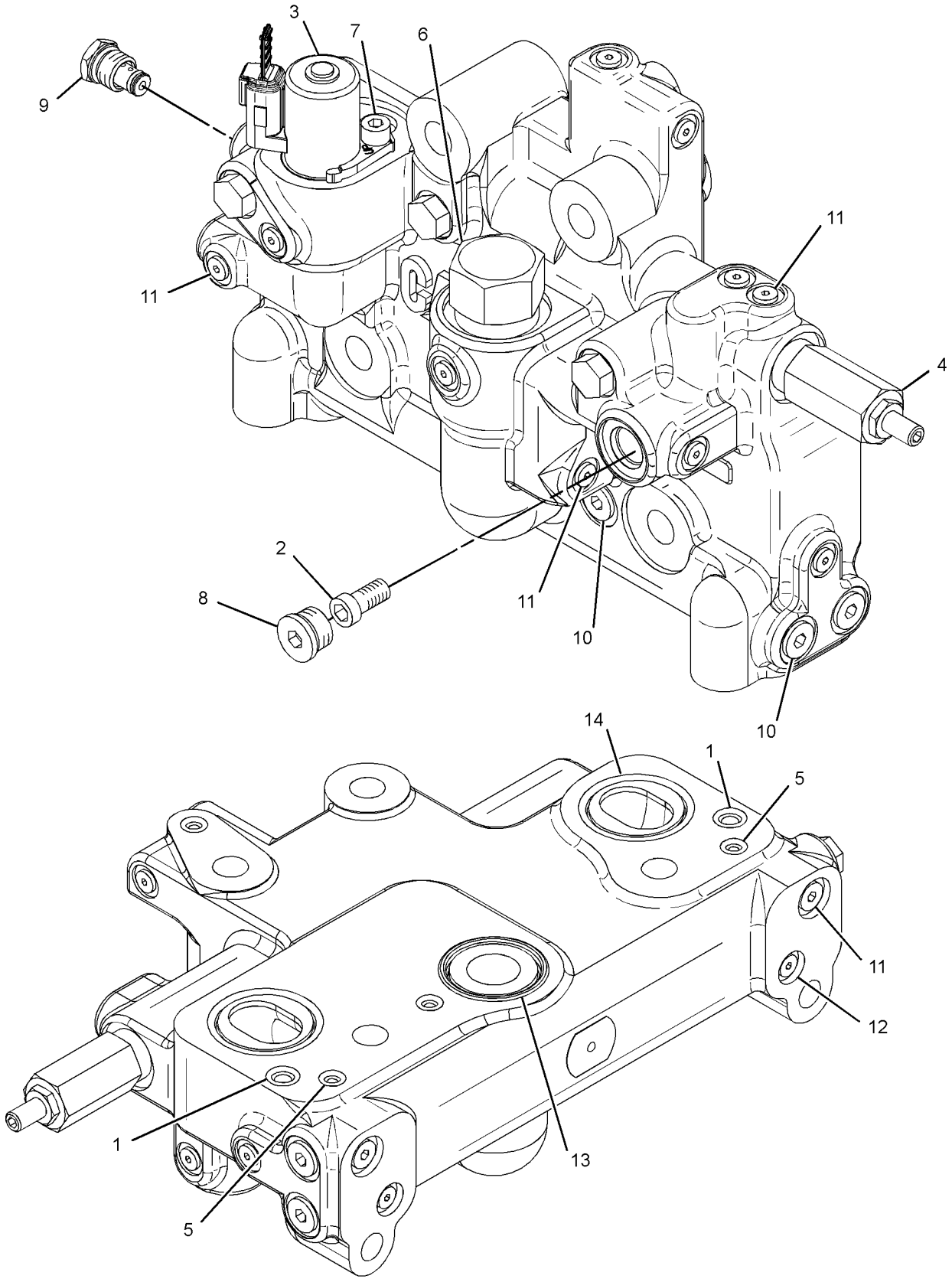

GRAPHIC #1 **<END>** g01189087

161-8919 MOTOR GP-PISTON*R

S/N: RYF1-UP

PART OF 236-8990 RADIATOR & FAN GP

SMCS-1386, 5058 **i03615245**

NOTE	REF NO	GRAPHIC REF	PART NUMBER	QTY	PART NAME 1 2 3 4 5 6 (PRODUCT LEVEL)	SEE PAGE
	1	1	**1D-4539**	3	BOLT (5/16-18X2.5-IN)	
	2	1	**1B-9575**	3	BOLT (5/16-18X1.56-IN)	
	3	1	**9S-8004**	1	PLUG-O-RING	
	4	1	**3J-1907**	2	SEAL-O-RING	
	5	1	**117-9734**	1	PLUG (9/16-18 THD)	
	6	1	**9J-5706**	1	PLUNGER	
	7	1	**9J-5696**	1	SPRING	
	8	1	**033-5381**	1	BEARING AS-NEEDLE	
	9	1	**5P-1827**	2	RACE-THRUST BEARING	
	10	1	**5P-1828**	1	BEARING-THRUST	
	11	1	**135-2037**	1	RING-RETAINING	
	12	1	**117-9736**	1	SEAL AS-SHAFT	
	13	1	**117-9735**	1	SEAL-SHAFT	
	14	1	**8C-3078**	1	SEAL-O-RING	
	15	1	**131-4859**	1	SHAFT-MOTOR	
	16	1	**5L-4019**	2	RING-RETAINING	
	17	1	**5P-1941**	1	BEARING AS-NEEDLE	
	18	1	**3G-3484**	1	PLATE-CAM	
	19	1	**3G-3483**	1	ROTATOR	
	20	1	**117-9737**	1	PLATE-VALVE	
	21	1	**3K-0715**	1	SEAL-O-RING	
F		1	**5H-8985**	1	PIN-SPRING (4.76MM)	
F		1	**8L-6565**	1	PIN-SPRING (3.18MM)	

F-NOT SHOWN

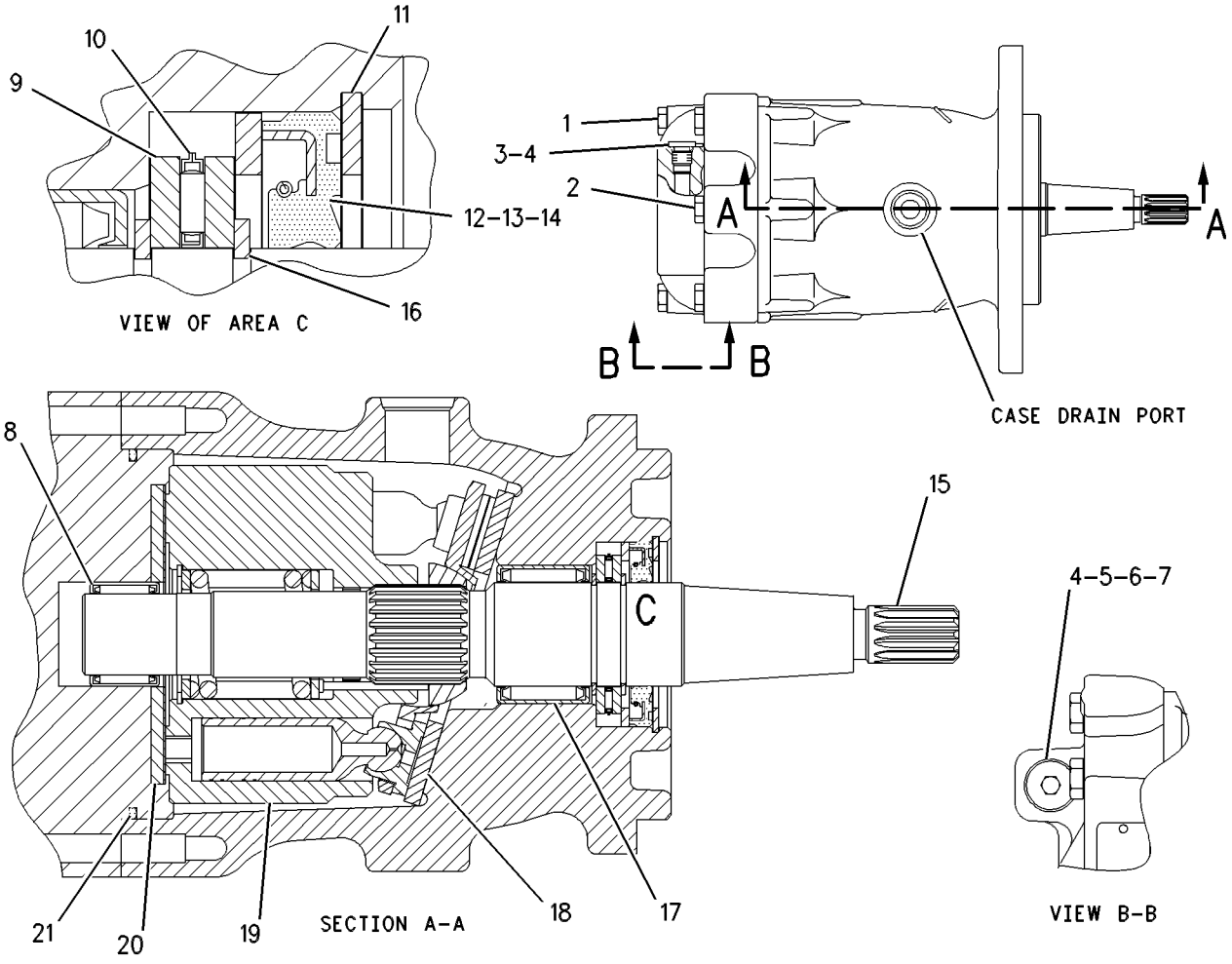

GRAPHIC #1 **<END>** g00503452

236-8998 MOUNTING GP-HYDRAULIC TANK

S/N: RYF1-UP

PART OF 236-8963 HYDRAULIC AR-2 VALVE

SMCS-5056 **i03622932**

NOTE	REF NO	GRAPHIC REF	PART NUMBER	QTY	PART NAME 1 2 3 4 5 6 (PRODUCT LEVEL)	SEE PAGE
	1	1	**6T-6080**	8	MOUNT-RUBBER	
	2	1	**254-9941**	1	MOUNT AS (RH)	
M		1	**8T-3597**	5	NUT-WELD (M12X1.75-THD)	
	3	1	**254-9942**	1	MOUNT AS (LH)	
M		1	**8T-3597**	5	NUT-WELD (M12X1.75-THD)	
M		1	**9X-8487**	1	BOSS-WELD (M10X1.5X35-MM)	
	4	1	**8T-4123**	4	WASHER (22X35X3.5-MM THK)	
M	5	1	**8T-4183**	8	BOLT (M12X1.75X40-MM)	
M	6	1	**8T-6381**	4	BOLT (M20X2.5X120-MM)	
	7	1	**8T-7971**	8	WASHER-HARD (13.5X25.5X5-MM THK)	
	8	1	**8X-0674**	4	WASHER (22X100X10-MM THK)	

M-METRIC PART

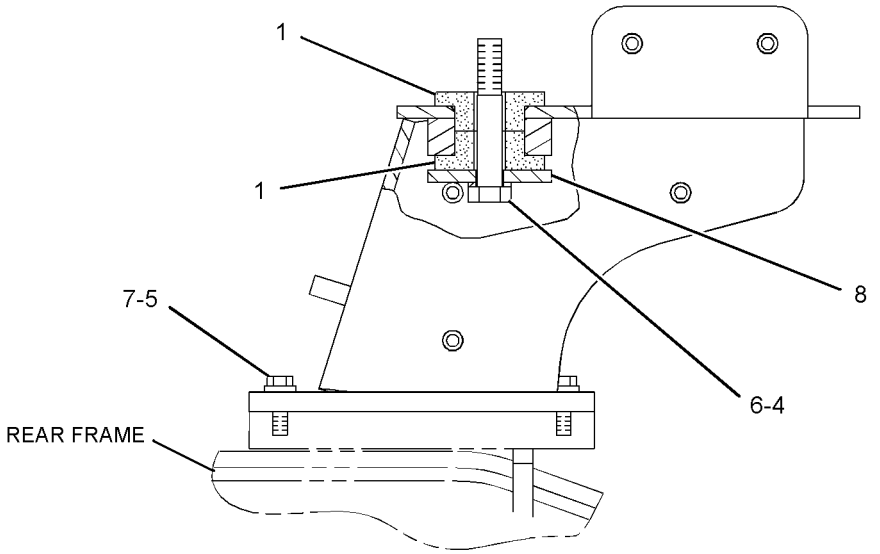

LEFT SIDE VIEW

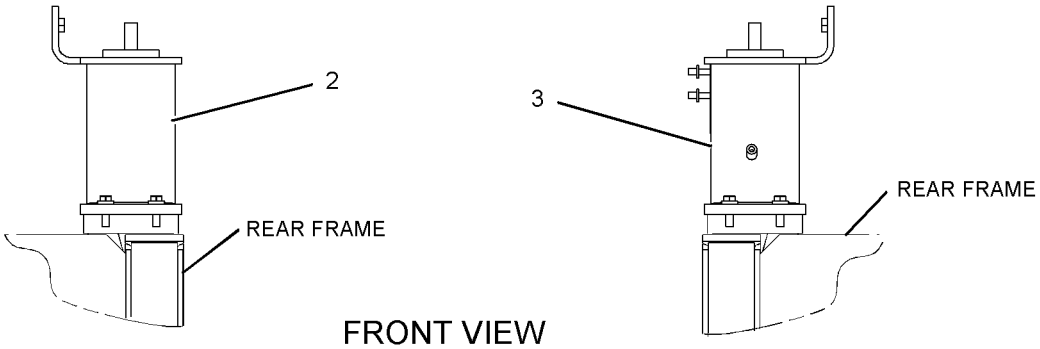

FRONT VIEW

GRAPHIC #1 **<END>** g01116124

HYDRAULIC SYSTEM

236-9105 PUMP & MTG GP-BRAKE & HYD FAN

S/N: RYF1-UP

PART OF 236-8963 HYDRAULIC AR-2 VALVE

SMCS-1387, 4268 **i03622953**

NOTE	REF NO	GRAPHIC REF	PART NUMBER	QTY	PART NAME 1 2 3 4 5 6 (PRODUCT LEVEL)	SEE PAGE
	1	1	**6H-7062**	2	SPACER (13.5X25X19-MM THK)	
	2	1	**147-7131**	1	GEAR (42-TEETH)	
	3	1	**198-2820**	1	SEAL	
	4	1	**204-9734**	2	SPACER (11X18X25-MM THK)	
	5	1	**242-9005**	1	BRACKET AS	
M		1	**8T-3490**	1	NUT-WELD (M10X1.5-THD)	
	6	1	**290-6085**	1	FLANGE	
YR	7	1	*254-5147*	1	PUMP GP-PISTON (BRAKE, HYDRAULIC FAN)	466
	8	1	**2K-0337**	1	LOCKNUT (3/4-16-THD)	
	9	1	**3D-0053**	1	BALL BEARING	
	10	1	**5P-1076**	2	WASHER-HARD (13.5X30X4-MM THK)	
	11	1	**6V-6353**	1	SEAL-O-RING	
	12	1	**8T-4121**	4	WASHER-HARD (11X21X2.5-MM THK)	
M	13	1	**8T-4139**	1	BOLT (M12X1.75X30-MM)	
M	14	1	**8T-4182**	2	BOLT (M10X1.5X45-MM)	
M	15	1	**8T-4183**	2	BOLT (M12X1.75X40-MM)	
M	16	1	**8T-4186**	2	BOLT (M10X1.5X40-MM)	
	17	1	**8T-4223**	3	WASHER-HARD (13.5X25.5X3-MM THK)	
M	18	1	**8T-4910**	1	BOLT (M12X1.75X60-MM)	
	19	1	**8T-4994**	1	WASHER-HARD (20X36.5X3.5-MM THK)	

M-METRIC PART
R-REMFG PART MAY BE AVAILABLE
Y-SEPARATE ILLUSTRATION

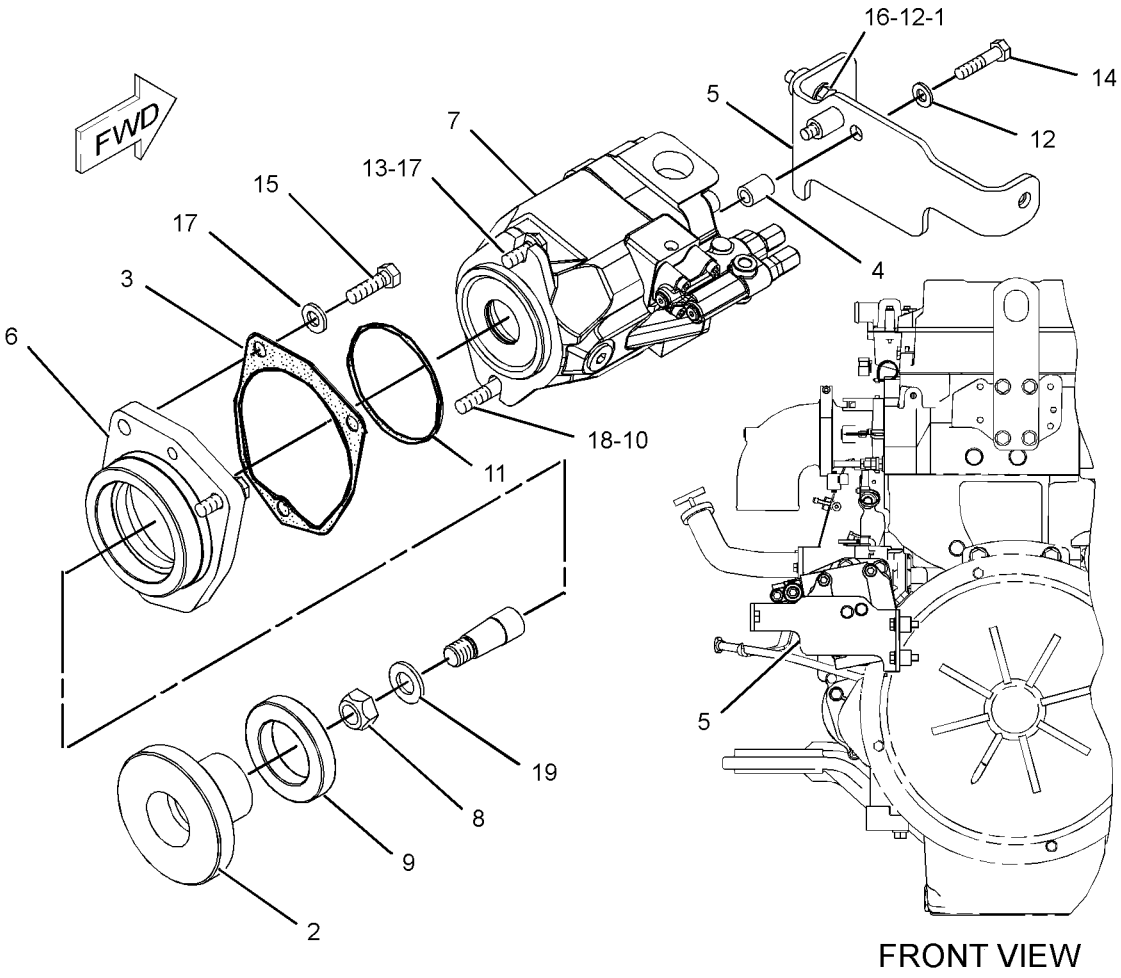

GRAPHIC #1 **<END>** g01449542

HYDRAULIC SYSTEM

246-2055 PUMP & MTG GP-HYDRAULIC—IMPLEMENT, PILOT

S/N: RYF1-UP

PART OF 236-8963 HYDRAULIC AR-2 VALVE

SMCS-5055, 5070, 5073, 5084 **i03624248**

NOTE	REF NO	GRAPHIC REF	PART NUMBER	QTY	PART NAME 1 2 3 4 5 6 (PRODUCT LEVEL)	SEE PAGE
	1	1	**132-9713**	1	COUPLING AS	
		1	**1L-3768**	1	RING-RETAINING	
YR	2	1	**241-9157**	1	PUMP GP-PISTON (STEERING)	464
	3	1	**246-2065**	1	BRACKET	
Y	4	1	**292-8768**	1	PUMP GP-PISTON (IMPLEMENT, PILOT)	468
	5	1	**117-8801**	1	SEAL-O-RING	
M	6	1	**6V-5844**	2	BOLT (M16X2X35-MM)	
	7	1	**7D-9014**	1	SEAL-O-RING	
	8	1	**7X-7729**	6	WASHER (11X25X3-MM THK)	
	9	1	**226-4192**	4	WASHER-HARD (21.5X35X8-MM THK)	
M	10	1	**7X-2563**	4	BOLT (M20X2.5X60-MM)	
M	11	1	**8T-4196**	2	BOLT (M10X1.5X35-MM)	
M	12	1	**8T-5005**	4	BOLT (M10X1.5X70-MM)	
	13	1	**9X-8268**	2	WASHER (17.5X30X3.5-MM THK)	
	14	1	**246-2889**	1	COUPLING AS	
		1	**8C-3312**	2	RING-RETAINING	

M-METRIC PART
R-REMFG PART MAY BE AVAILABLE
Y-SEPARATE ILLUSTRATION

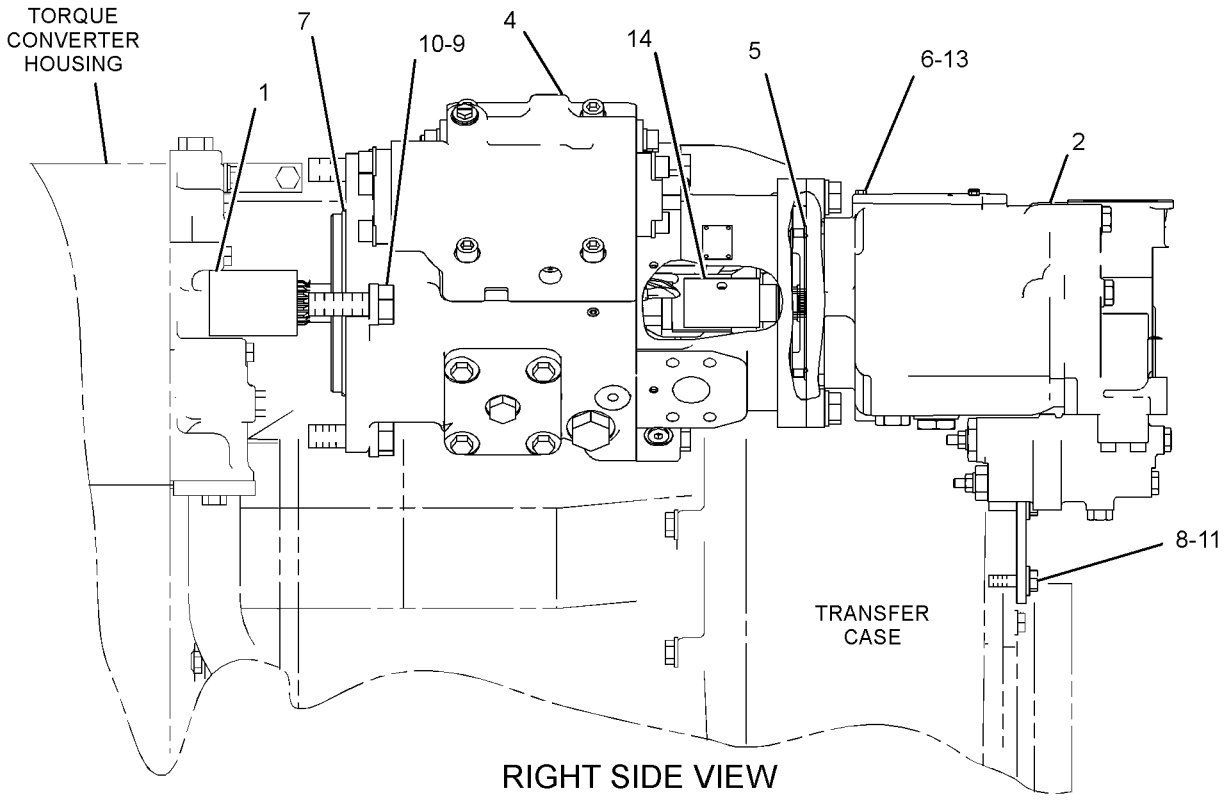

RIGHT SIDE VIEW

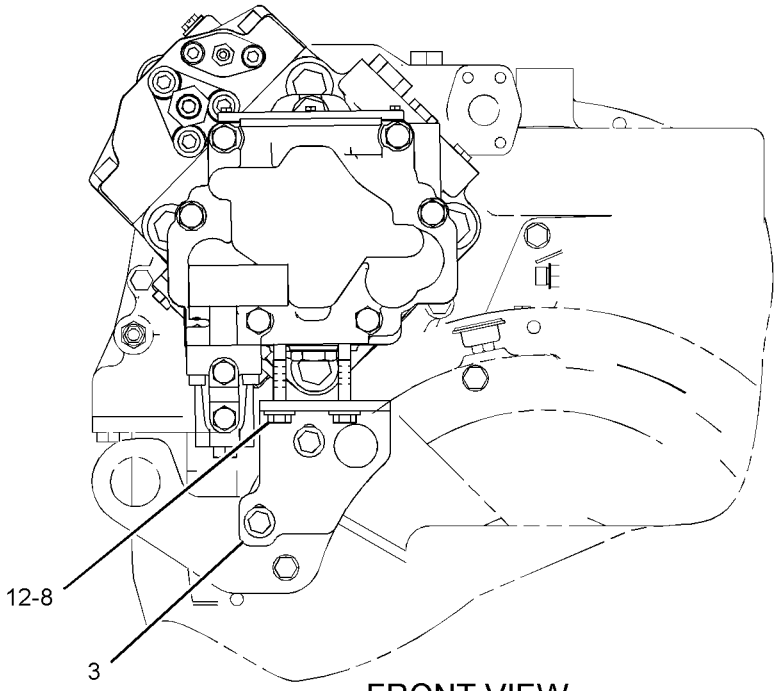

FRONT VIEW

GRAPHIC #1 **<END>** g01339670

HYDRAULIC SYSTEM

241-9157 PUMP GP-PISTON*R

S/N: RYF1-UP

PART OF 246-2055 PUMP & MTG GP-HYDRAULIC

SMCS-5070 **i03624270**

NOTE	REF NO	GRAPHIC REF	PART NUMBER	QTY	PART NAME 1 2 3 4 5 6 (PRODUCT LEVEL)	SEE PAGE
	1	1	**6E-4224**	1	PLUG-SWASHPLATE	
	2	1	**033-6036**	1	SEAL-O-RING	
	3	1	**100-3402**	1	BEARING-SWASH	
	4	1	**100-3405**	1	BEARING-SWASH	
M	5	1	**6V-8837**	3	BOLT (M6X1X16-MM)	
	6	1	**4F-4097**	1	SEAL-O-RING	
M	7	1	**3E-4302**	2	SCREW-FLAT HEAD (M4X0.7X10-MM)	
	8	1	**100-3404**	1	COVER-TRUNNION	
	9	1	**9T-1636**	1	SEAT	
	10	1	**9T-1710**	1	POPPET	
	11	1	**9T-1699**	1	SPRING	
	12	1	**117-0823**	1	HEAD-PUMP	
B	13	1	**6E-1436**	1	SHIM PACK (INCLUDES 17-SHIMS) (PISTON PUMP)	
	14	1	**6Y-4280**	1	CONE-BEARING	
	15	1	**7T-9755**	1	CUP-BEARING	
	16	1	**9T-7775**	1	PLATE-VALVE	
	17	1	**3E-7417**	2	PLUG	
	18	1	**8T-7876**	2	SEAL-O-RING	
	19	1	**7L-9061**	2	SEAL-O-RING	
	20	1	**100-3413**	1	GASKET	
Y	21	1	**100-3412**	1	ROTATING GP-PUMP (STEERING)	471
	22	1	**100-3409**	1	SPRING-BIAS	
	23	1	**100-3408**	1	KIT-BIAS PISTON (PUMP)	
					(INCLUDES SPRING, ROD, PISTON, AND SEAL)	
	24	1	**002-1212**	1	CUP-BEARING	
	25	1	**2F-8509**	1	CONE-BEARING	
	26	1	**102-2066**	1	SHAFT-PUMP	
	27	1	**102-2067**	1	HOUSING-PUMP	
	28	1	**006-8663**	1	RING	
	29	1	**8T-4750**	1	SEAL-LIP TYPE	
Y	30	1	**169-3290**	1	SWASHPLATE GP	473
	31	1	**100-3415**	1	KIT-CONTROL PISTON (PUMP)	
					(INCLUDES ROD, PISTON, AND SEAL)	
	32	1	**9T-1652**	1	PIN	
M	33	1	**6V-8336**	1	BOLT (M12X1.75X70-MM)	
M	34	1	**6V-7673**	4	BOLT (M12X1.75X50-MM)	
M	35	1	**8T-0372**	1	BOLT (M12X1.75X90-MM)	
M	36	1	**6V-8337**	4	BOLT-SOCKET HEAD (M8X1.25X35-MM)	
	37	1	**141-1053**	1	VALVE GP-PUMP CONTROL (PRESSURE, FLOW COMPENSATOR) (STEERING)	
	38	1	**3D-2824**	1	SEAL-O-RING	
	39	1	**9S-4183**	1	PLUG-O-RING	
	40	1	**095-0888**	2	PIN-SPRING	
	41	1	**109-3204**	3	SEAL-O-RING	

B-USE AS REQUIRED
M-METRIC PART
Y-SEPARATE ILLUSTRATION

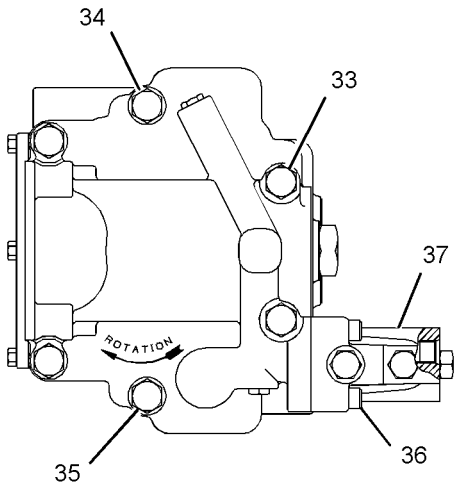

VIEW E-E

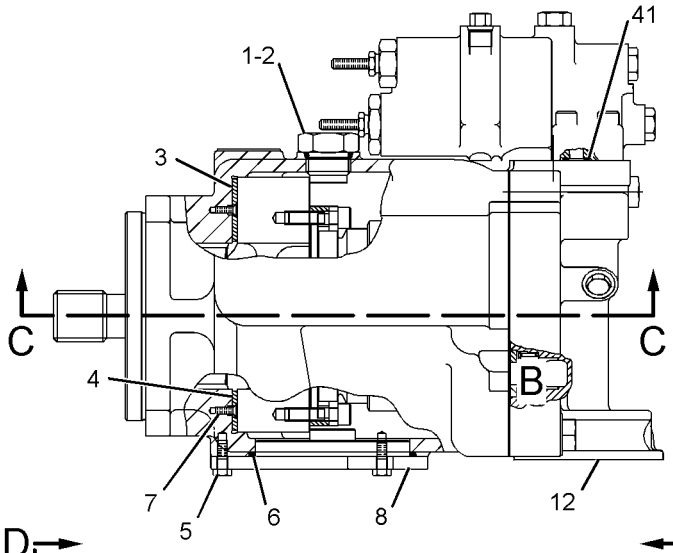

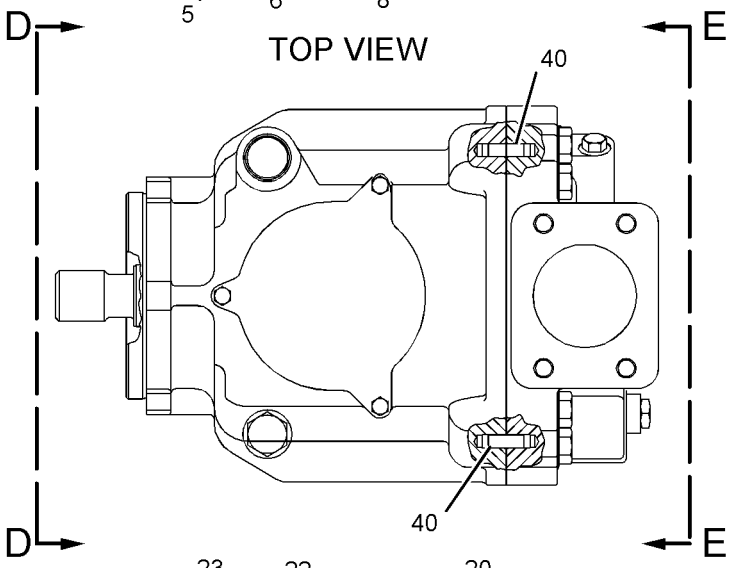

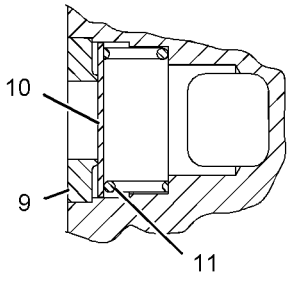

VIEW OF AREA B

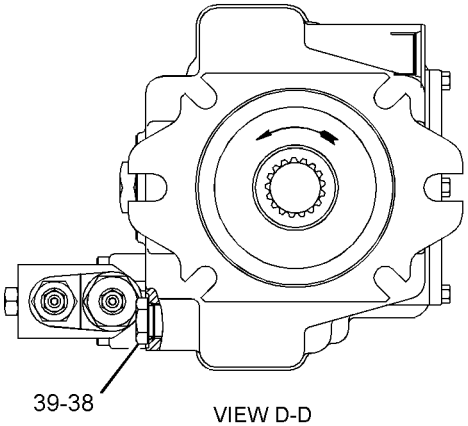

VIEW D-D

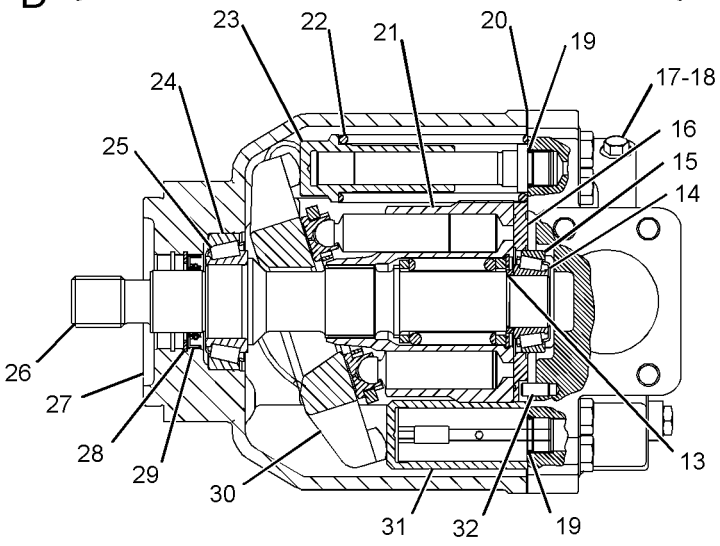

SECTION C-C

GRAPHIC #1 **<END>** g01116694

HYDRAULIC SYSTEM

254-5147 PUMP GP-PISTON*R

S/N: RYF1-UP

PART OF 236-9105 PUMP & MTG GP-BRAKE & HYD FAN

SMCS-5070 **i03624162**

NOTE	REF NO	GRAPHIC REF	PART NUMBER	QTY	PART NAME 1 2 3 4 5 6 (PRODUCT LEVEL)	SEE PAGE
Y	1	1	**258-5193**	1	ROTATING GP-PUMP	472
	2	1	**168-7861**	1	PISTON-ACTUATOR	
	3	1	**168-2198**	1	LINK-CONTROL	
	4	1	**197-1762**	1	SWASHPLATE	
	5	1	**198-2617**	1	SHAFT	
	6	1	**196-1251**	1	PLUG	
	7	1	**127-9490**	1	SPRING (BIAS)	
	8	1	**9S-8002**	1	PLUG-O-RING	
	9	1	**198-2618**	1	KEY	
	10	1	**185-0263**	1	BEARING	
	11	1	**189-4717**	1	BEARING	
	12	1	**237-4227**	2	BEARING-CRADLE	
	13	1	**166-0344**	1	SEAL-SHAFT	
	14	1	**127-9485**	1	SEAL-O-RING	
	15	1	**8T-7525**	1	SEAL-O-RING	
	16	1	**168-3504**	1	SEAL	
	17	1	**8C-3110**	1	RING-RETAINING	
M	18	1	**095-0670**	4	BOLT (M12X1.75X45-MM)	
	19	1	**9S-8006**	1	PLUG-O-RING	
	20	1	**120-4394**	1	PLUG-BREAK OFF	
	21	1	**9X-8979**	1	DOWEL	
	22	1	**2M-9780**	1	SEAL-O-RING	
Y	23	1	**207-0697**	1	VALVE GP-PUMP CONTROL (PRESSURE, FLOW COMPENSATOR)	500
	24	1	**3J-7354**	1	SEAL-O-RING	
	25	1	**9X-7680**	3	SEAL-O-RING	
M	26	1	**8T-8442**	4	BOLT-SOCKET HEAD (M6X1X30-MM)	
B	27	1	**127-9483**	1	SHIM (PRELOAD)	

B-USE AS REQUIRED
M-METRIC PART
Y-SEPARATE ILLUSTRATION

254-5147 PUMP GP-PISTON *(contd.)* **i03624162**

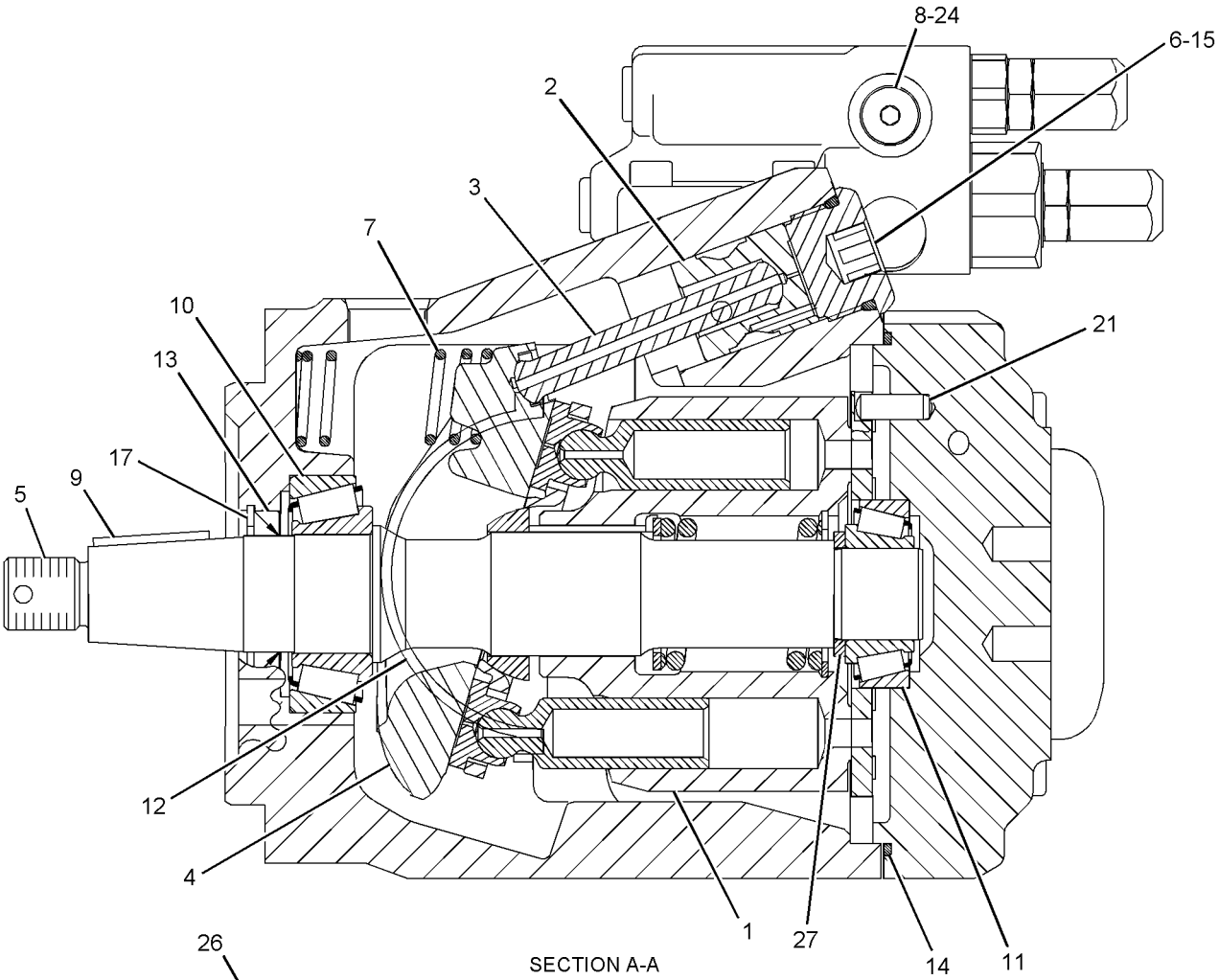

SECTION A-A

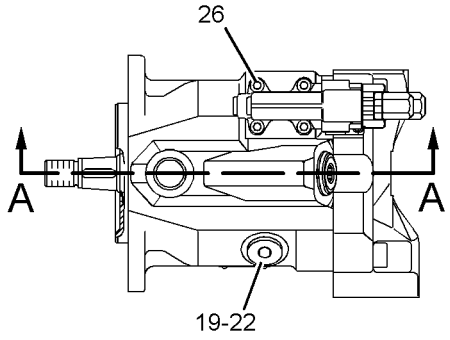

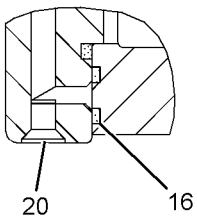

SECTION C-C

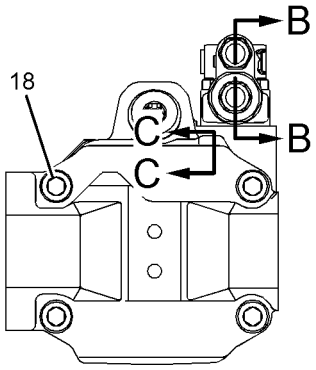

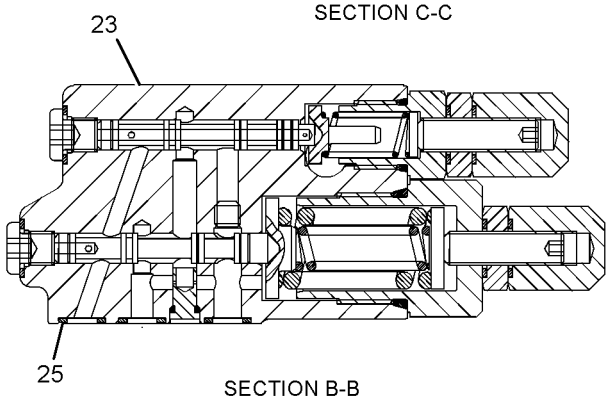

SECTION B-B

GRAPHIC #1 **<END>** g01116397

HYDRAULIC SYSTEM

292-8768 PUMP GP-PISTON

S/N: RYF1-UP

PART OF 246-2055 PUMP & MTG GP-HYDRAULIC

SMCS-5070 **i03624367**

NOTE	REF NO	GRAPHIC REF	PART NUMBER	QTY	PART NAME 1 2 3 4 5 6 (PRODUCT LEVEL)	SEE PAGE
	1	2	**7Y-4215**	1	SPACER	
	2	1	**8J-0101**	1	PLATE-NOTICE (HYDRAULIC OIL FILL)	
	3	2	**096-4389**	9	SPRING	
	4	2	**129-7853**	1	PLATE-CREEP	
	5	2	**129-7921**	1	RING-RETAINING	
	6	2	**129-7925**	2	SEAL-LIP TYPE	
	7	2	**129-7927**	1	BEARING	
	8	1	**150-5782**	2	COVER	
	9	2	**173-3427**	1	GUIDE-BALL	
	10	1	**192-0573**	2	PIN-DOWEL	
	11	1	**245-8095**	1	PLATE-ADAPTER	
	12	1	**254-6555**	1	BLOCK	
	13	1	**256-0083**	1	BARREL AS-PUMP	
	14	2	**256-7485**	1	PISTON AS	
	15	2	**263-7474**	1	SET-BEARING	
	16	1	**273-3591**	1	SHAFT-PUMP (17-TEETH)	
	18	1	**292-8769**	1	BODY AS-PUMP	
		1	**124-1555**	2	PLUG	
Y	20	1	**298-8919**	1	VALVE GP-PUMP CONTROL (PRESSURE, FLOW COMPENSATOR)	502
	21	2	**067-3161**	1	RING-RETAINING	
	22	1,2	**094-1875**	3	DOWEL	
	23	1	**094-1883**	1	PLUG	
M	24	1	**095-0673**	4	BOLT-SOCKET HEAD (M12X1.75X60-MM)	
	25	2	**095-0946**	1	RING-RETAINING	
	26	1	**095-7388**	1	PLUG	
	27	2	**117-8801**	1	SEAL-O-RING	
	28	2	**129-7979**	2	DOWEL	
	29	2	**189-9763**	1	SEAL-O-RING	
	30	1	**193-1736**	2	SEAL-O-RING	
	31	2	**236-6919**	1	SEAL-O-RING	
	32	2	**242-6801**	1	SWASHPLATE AS	
		2	**094-1875**	1	DOWEL	
		2	**173-3428**	1	BEARING-SLEEVE	
		2	**242-6803**	2	PIN-DOWEL	
	33	1	**242-6804**	2	BEARING (ROCKER)	
	34	1	**3D-2824**	2	SEAL-O-RING	
	35	1	**3J-1907**	1	SEAL-O-RING	
	36	1,2	**3K-0360**	3	SEAL-O-RING	
	37	1	**4B-4158**	4	SCREW-DRIVE (NO 4X1/4-IN)	
	38	2	**4I-1022**	1	ORIFICE	
	39	2	**6V-3907**	1	SEAL-O-RING (FUEL FILTER)	
M	40	2	**6V-8200**	2	BOLT-SOCKET HEAD (M12X1.75X35-MM)	
M	41	1	**8T-4136**	8	BOLT (M10X1.5X25-MM)	
M	42	1	**8T-4140**	4	BOLT (M16X2X60-MM)	
	43	1	**9S-4183**	2	PLUG-O-RING (1 1/16-12-THD)	
	44	1	**9S-4185**	2	PLUG-O-RING (3/4-16-THD)	
	45	1	**9S-8004**	1	PLUG-O-RING (9/16-18-THD)	
	46	2	**9S-8005**	1	PLUG-O-RING (3/4-16-THD)	

M-METRIC PART
Y-SEPARATE ILLUSTRATION

REFER TO ALL ILLUSTRATIONS OF
THIS GROUP FOR AUXILIARY VIEWS

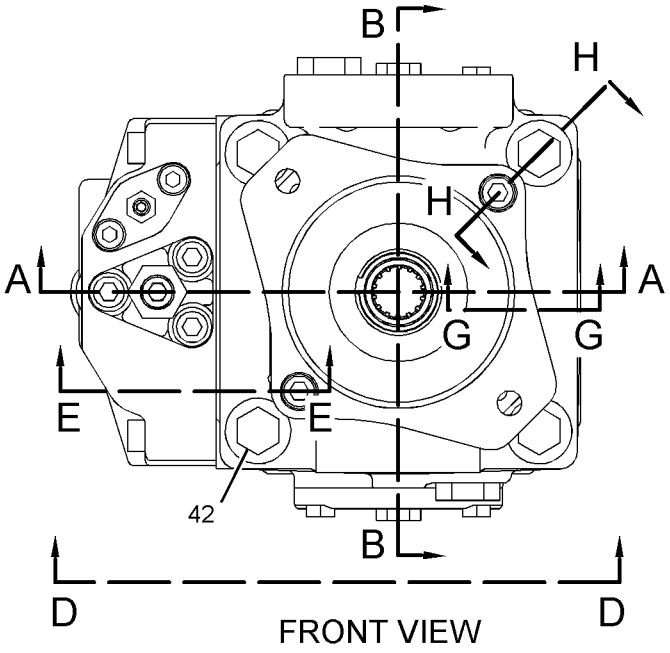

FRONT VIEW

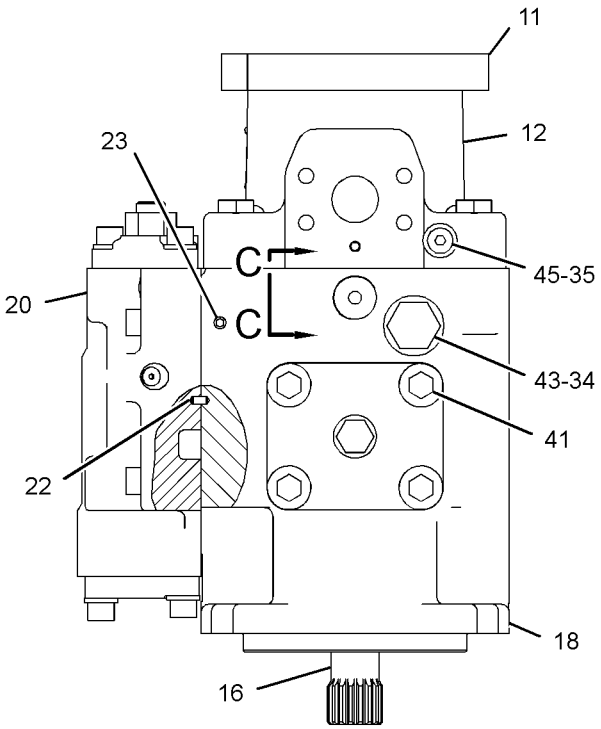

VIEW D-D

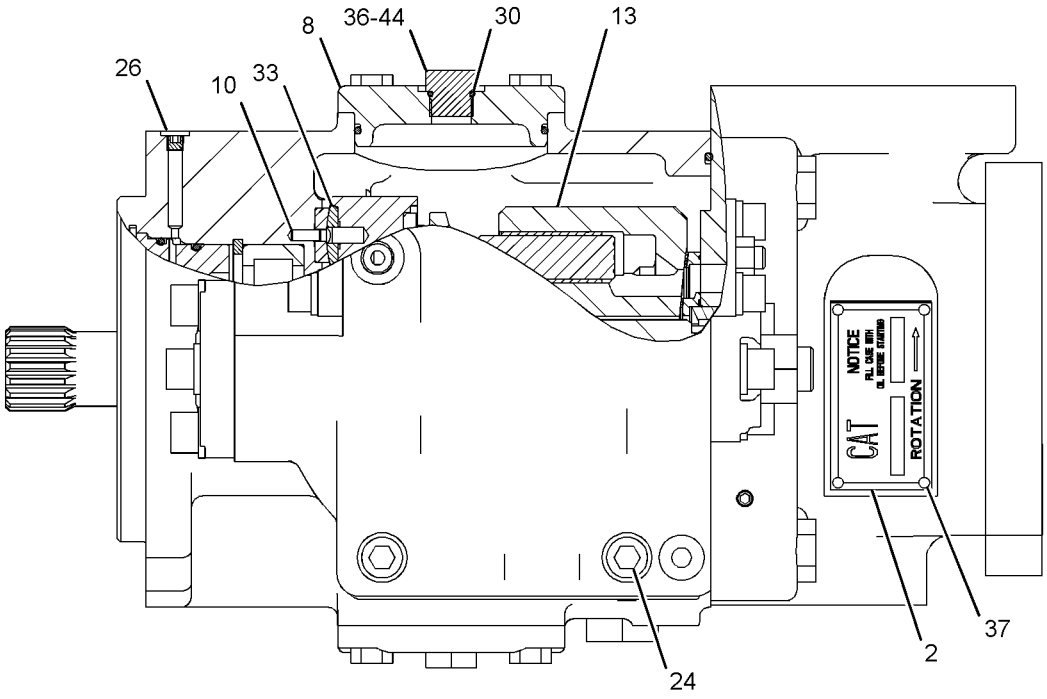

SECTION B-B

GRAPHIC #1

g01371580

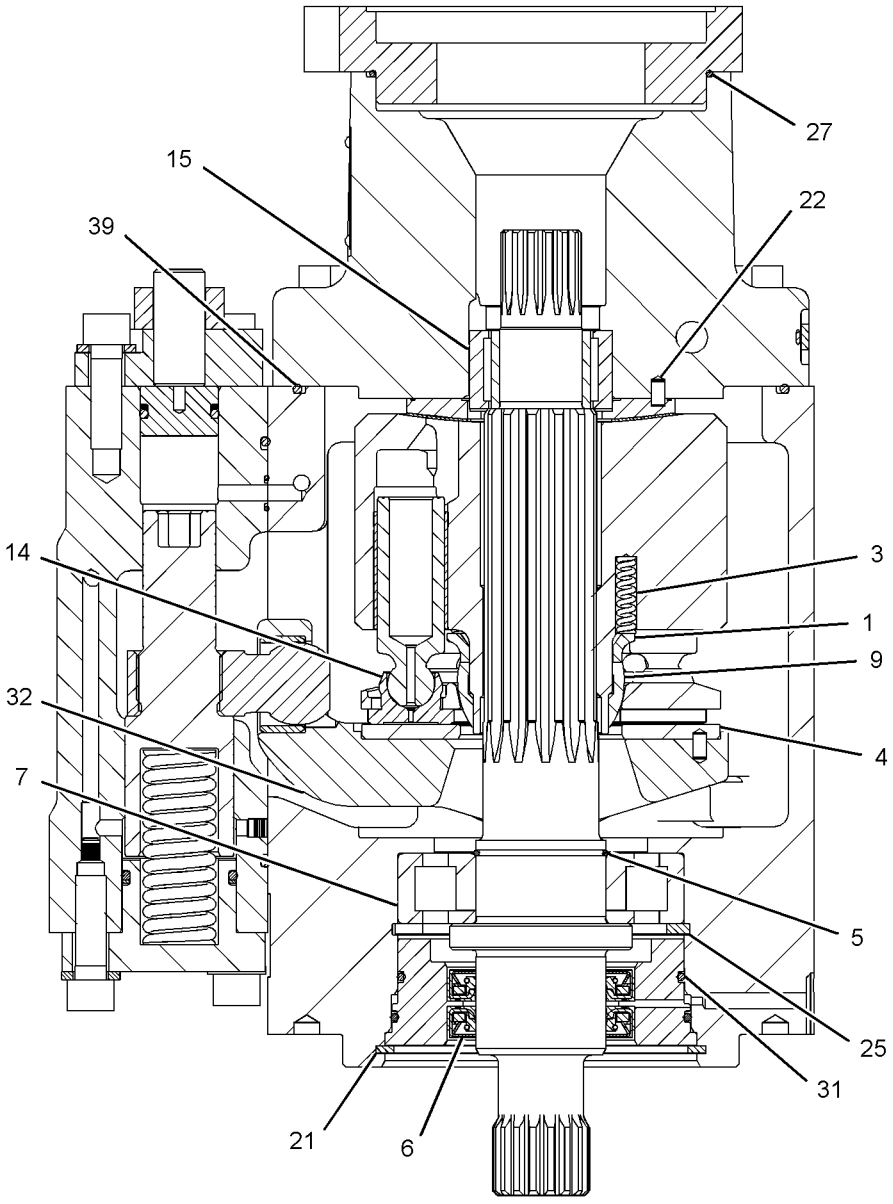

SECTION A-A

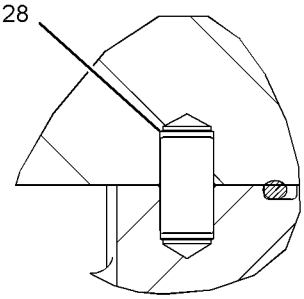

SECTION C-C

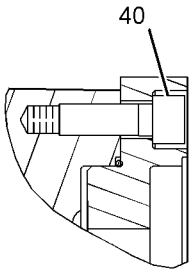

SECTION H-H

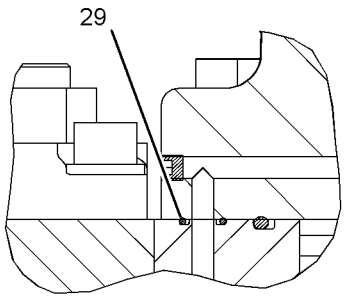

SECTION E-E

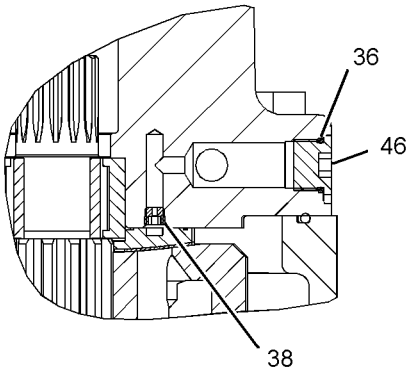

SECTION G-G

GRAPHIC #2 **<END>** g01371581

HYDRAULIC SYSTEM

100-3412 ROTATING GP-PUMP

S/N: RYF1-UP

PART OF 241-9157 PUMP GP-PISTON

SMCS-1387, 5070, 5084 **i00130809**

NOTE	REF NO	GRAPHIC REF	PART NUMBER	QTY	PART NAME 1 2 3 4 5 6 (PRODUCT LEVEL)	SEE PAGE
	1	1	**9T-7774**	1	BARREL	
	2	1	**3J-8500**	1	RING-RETAINING	
	3	1	**9T-7769**	1	GUIDE-OUTER	
M	4	1	**6V-5192**	4	BOLT-SOCKET HEAD (M8X1.25X30-MM)	
	5	1	**100-3410**	2	PLATE	
	6	1	**100-3411**	2	PLATE-SPACER	
	7	1	**9T-7765**	9	PISTON	
	8	1	**9T-7767**	1	PLATE-RETRACTION	
	9	1	**9T-7773**	1	GUIDE-INNER	
	10	1	**9T-7771**	1	SPRING	

M-METRIC PART

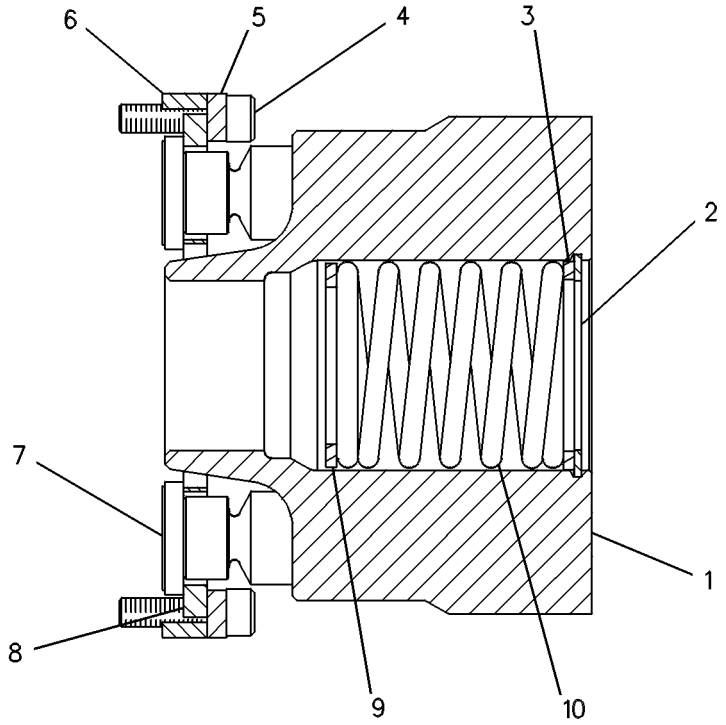

GRAPHIC #1 **<END>** g00084780

HYDRAULIC SYSTEM

258-5193 ROTATING GP-PUMP

S/N: RYF1-UP

PART OF 254-5147 PUMP GP-PISTON

SMCS-1387, 5070, 5084 **i03624246**

NOTE	REF NO	GRAPHIC REF	PART NUMBER	QTY	PART NAME 1 2 3 4 5 6 (PRODUCT LEVEL)	SEE PAGE
	1	1	**138-8175**	1	BEARING-TAPERED ROLLER	
	2	1	**168-7940**	3	PIN	
	3	1	**096-0015**	1	RING-RETAINING	
	4	1	**233-0455**	1	BARREL	
	5	1	**168-7941**	1	SPRING	
	6	1	**168-7942**	1	WASHER (36.5-MM ODX2.0-MM THK)	
	7	1	**168-7943**	9	PISTON AS	
	8	1	**258-5194**	1	PLATE	
	9	1	**175-6796**	1	PLATE-VALVE	

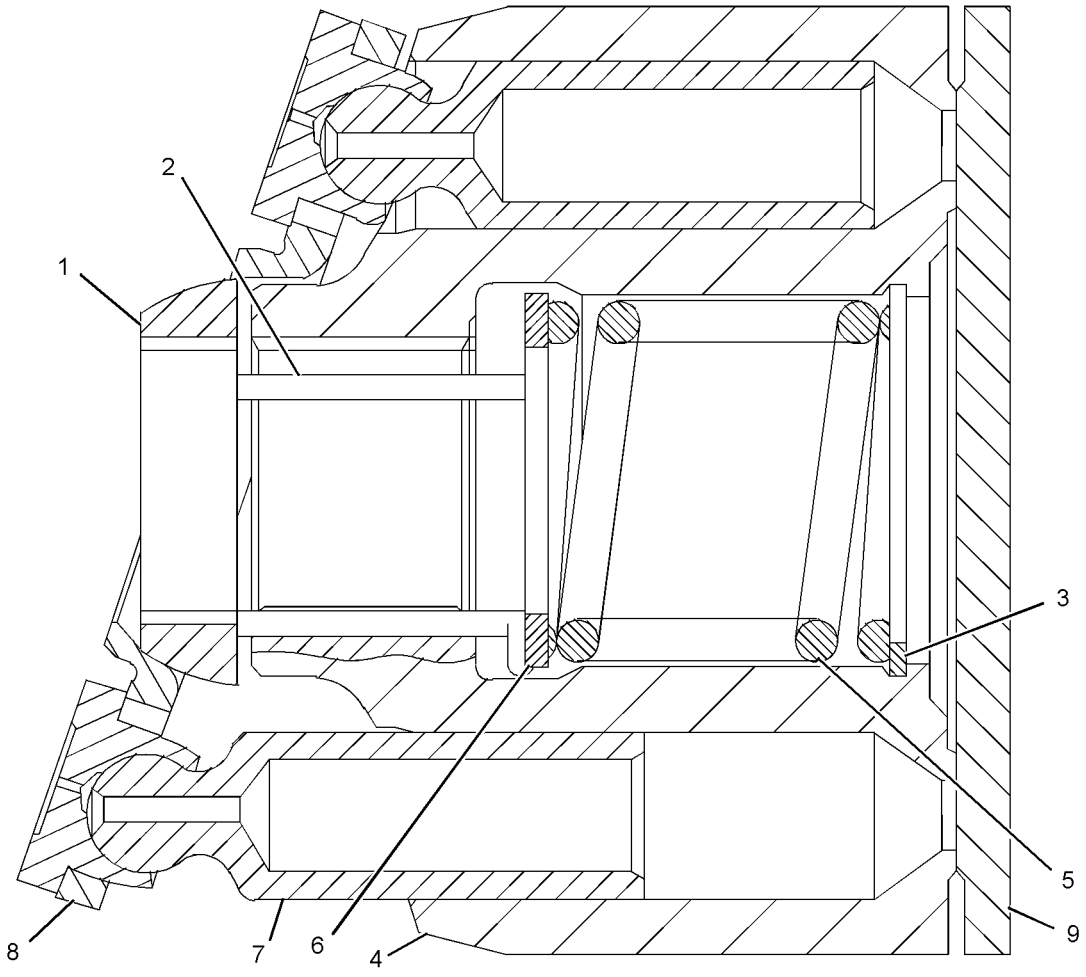

GRAPHIC #1 **<END>** g01117012

169-3290 SWASHPLATE GP

S/N: RYF1-UP

PART OF 241-9157 PUMP GP-PISTON

SMCS-5070 **i01771931**

NOTE	REF NO	GRAPHIC REF	PART NUMBER	QTY	PART NAME 1 2 3 4 5 6 (PRODUCT LEVEL)	SEE PAGE
	1	1	**1H-3937**	2	PIN	
	2	1	**167-1801**	2	STOP-SWASHPLATE	

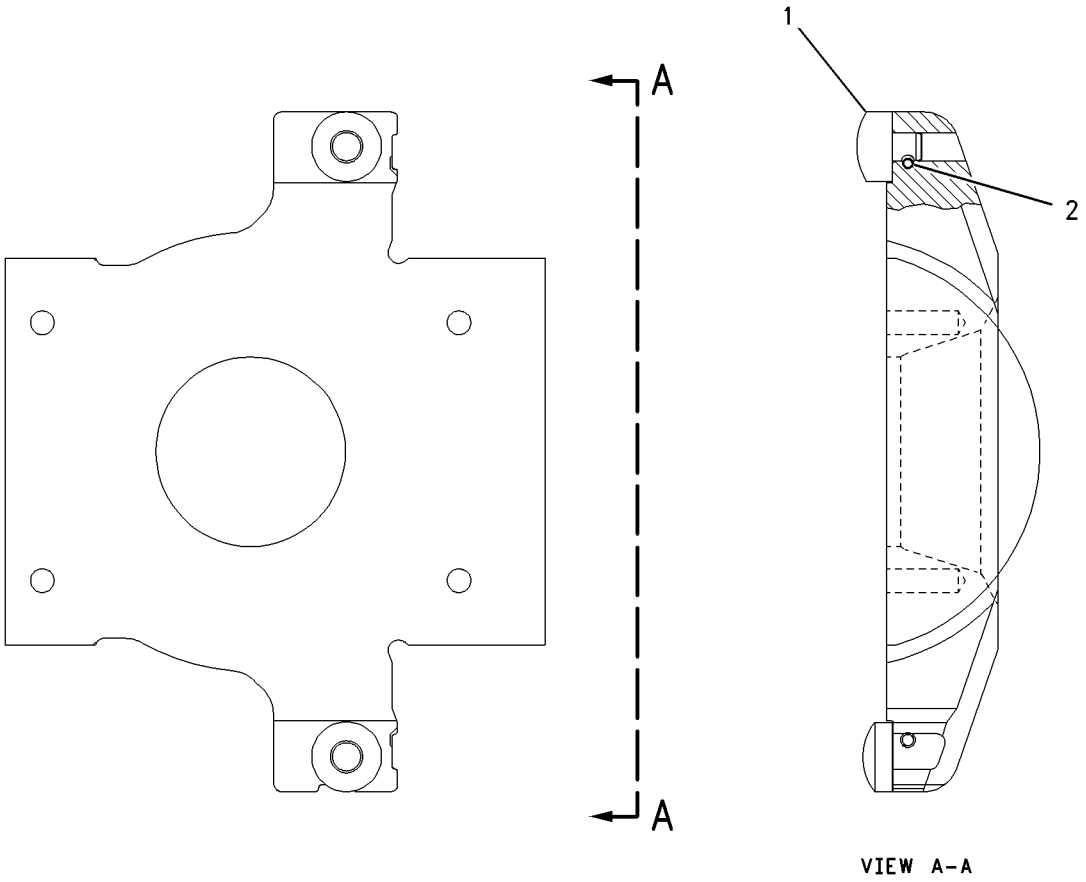

VIEW A-A

GRAPHIC #1 **<END>** g00938671

HYDRAULIC SYSTEM

237-2742 TANK GP-HYDRAULIC

S/N: RYF1-UP

PART OF 236-8963 HYDRAULIC AR-2 VALVE

SMCS-5056 **i03606240**

NOTE	REF NO	GRAPHIC REF	PART NUMBER	QTY	PART NAME 1 2 3 4 5 6 (PRODUCT LEVEL)	SEE PAGE
	1	1	**1P-4578**	2	FLANGE-HALF (STANDARD PRESSURE)	
	2	1	**1P-4579**	2	FLANGE-HALF	
	3	1	**1P-4584**	2	FLANGE-HALF	
	4	1	**275-8880**	1	FLANGE	
	5	1	**7X-0591**	4	WASHER-HARD (17X29X3-MM THK)	
	6	1	**8C-3206**	2	FLANGE-HALF	
	7	1	**8T-4121**	8	WASHER-HARD (11X21X2.5-MM THK)	
M	8	1	**8T-4184**	4	BOLT (M12X1.75X45-MM)	
M	9	1	**8T-4193**	4	BOLT (M16X2X50-MM)	
M	10	1	**8T-4196**	8	BOLT (M10X1.5X35-MM)	
	11	1	**8T-4223**	8	WASHER-HARD (13.5X25.5X3-MM THK)	
M	12	1	**8T-4183**	4	BOLT (M12X1.75X40-MM)	
	13	1	**5D-1911**	1	COVER-HYDRAULIC CAP	
	14	1	**5D-7927**	1	STRAINER AS-OIL (HYDRAULIC TANK FILL)	
	15	1	**7H-1447**	1	CAP-FILLER (HYDRAULIC TANK)	
	16	1	**9M-7394**	1	LEVER	
	17	1	**9T-9226**	2	PLATE	
	18	1	**9T-9227**	2	SCREEN AS (HYDRAULIC TANK)	
	19	1	**237-2743**	1	TANK AS-HYDRAULIC	
	20	1	**244-0405**	1	COVER AS	
	21	1	**244-0420**	1	GASKET	
	22	1	**260-8636**	1	GAUGE-LIQUID LEVEL (SIGHT GLASS)	
	23	1	**1L-5072**	1	DOWEL	
	24	1	**2D-4202**	1	PLATE	
	25	1	**2J-7761**	1	RING-RETAINING	
	26	1	**6H-9361**	1	RING-RETAINING	
M	27	1	**6V-7744**	2	LOCKNUT (M10X1.5-THD)	
	28	1	**8T-2275**	1	BALL	
M	29	1	**8T-4201**	24	BOLT-LOCKING (M10X1.5X20-MM)	
	30	1	**9H-6454**	1	GASKET (HYDRAULIC TANK)	
	31	1	*148-8408*	1	PLUG AS	
		1	**3D-2824**	1	SEAL-O-RING	
		1	**9S-4183**	1	PLUG-O-RING	
	32	1	**5P-4116**	1	WASHER-HARD (8.8X20.5X2-MM THK)	
	33	1	**299-7996**	1	PLATE	
	34	1	**299-7997**	1	SCREEN	
M	35	1	**6V-3918**	1	BOLT (M8X1.25X50-MM)	

M-METRIC PART

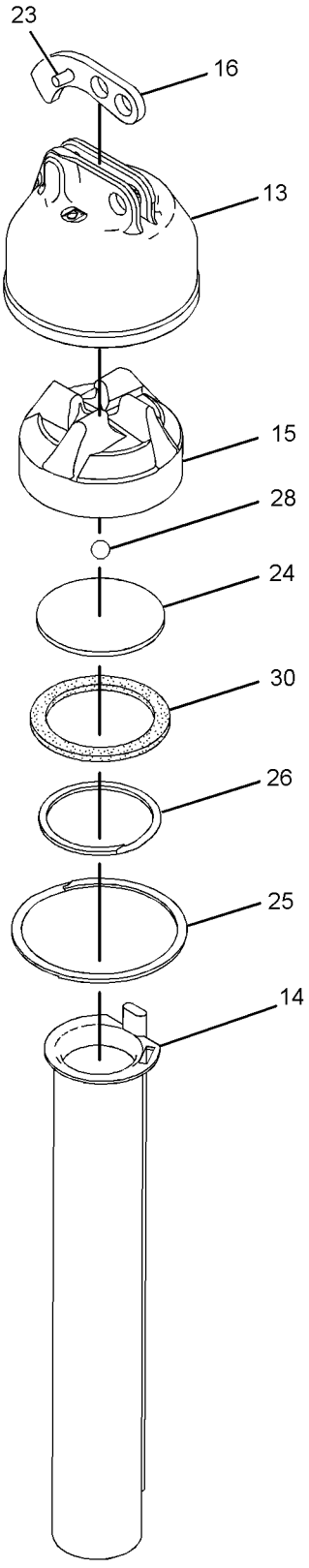

VIEW OF AREA A
(EXPLODED)

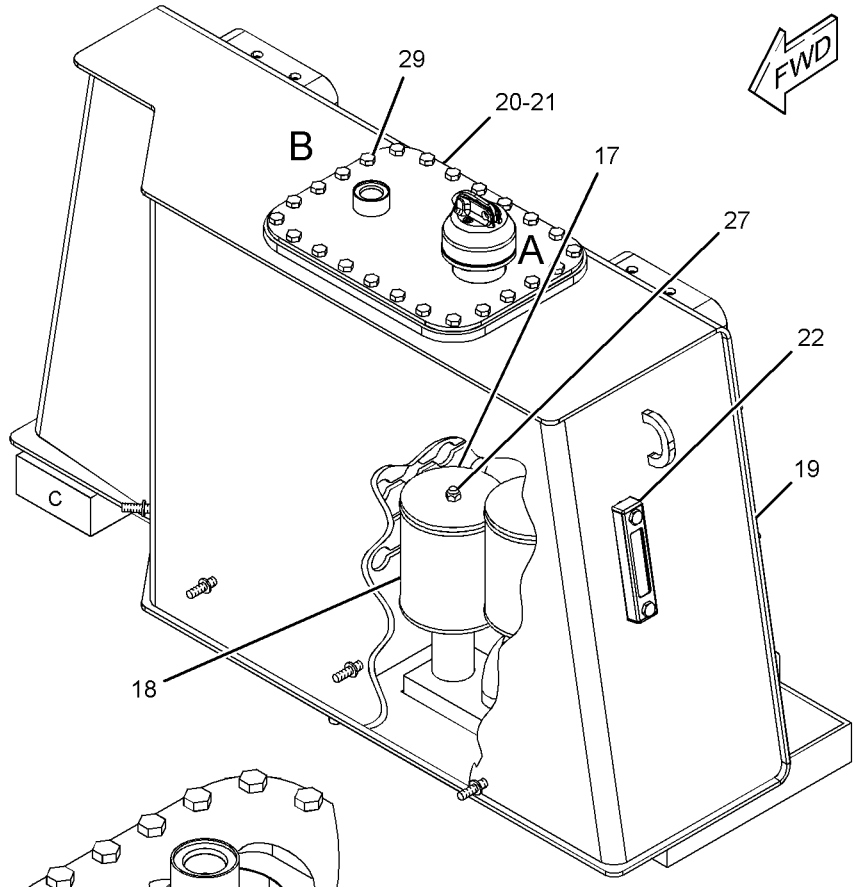

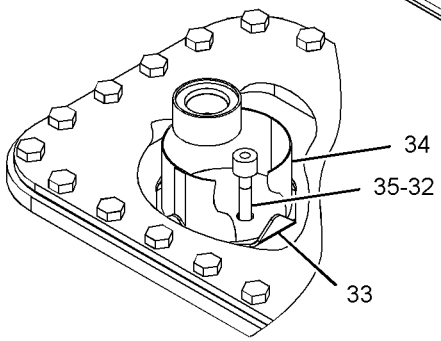

VIEW OF AREA B

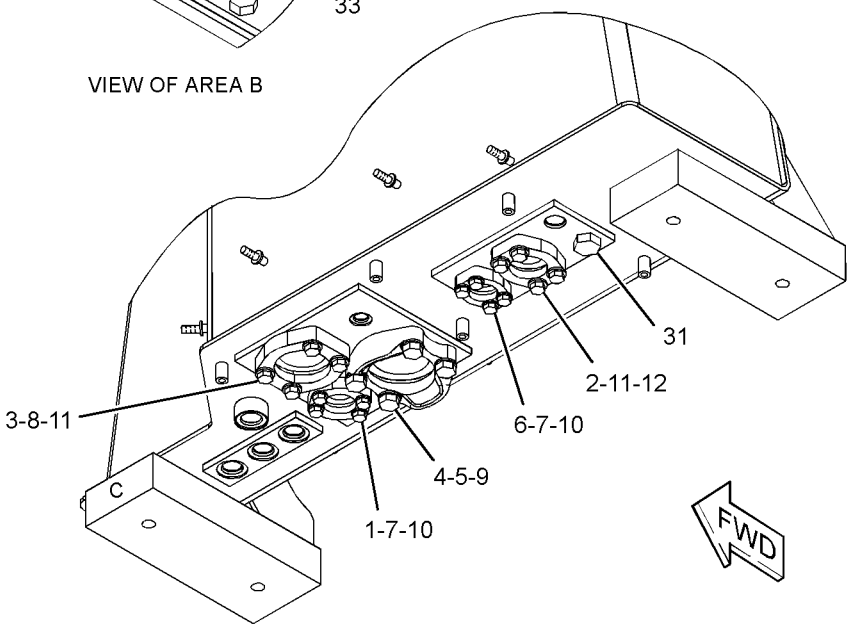

GRAPHIC #1

<END>

g01830656

HYDRAULIC SYSTEM

236-9035 VALVE & MTG GP-MAIN CONTROL—2-FUNCTION

S/N: RYF1-UP

PART OF 236-8963 HYDRAULIC AR-2 VALVE

SMCS-5051 **i03624375**

NOTE	REF NO	GRAPHIC REF	PART NUMBER	QTY	PART NAME 1 2 3 4 5 6 (PRODUCT LEVEL)	SEE PAGE
	2	1	*148-8424*	1	TEE AS	
		1	**6V-8397**	1	SEAL-O-RING	
		1	**8T-8902**	1	TEE	
	3	1	*165-6365*	1	FITTING AS	
		1	**3J-1907**	1	SEAL-O-RING	
		1	**7W-7381**	1	FITTING-OUTLET	
	4	1	**241-2628**	1	BRACKET AS	
	5	1	**244-6625**	1	ADAPTER-SPECIAL	
Y	6	1	*245-2975*	1	ACCUMULATOR GP-PILOT OIL (CHARGED) (DEAD ENGINE, LIFT ARM LOWER)	417
I	7	1	**249-0787**	1	HOSE AS	
	8	1	**259-1502**	1	BLOCK	
	9	1	**259-1971**	1	TUBE AS	
	10	1	**259-2092**	1	TUBE AS	
	12	1	*148-8336*	2	CONNECTOR AS	
					(EACH INCLUDES)	
		1	**3J-1907**	1	SEAL-O-RING	
		1	**6V-8397**	1	SEAL-O-RING	
		1	**6V-8636**	1	CONNECTOR	
	13	1	**148-8367**	2	ELBOW AS	
					(EACH INCLUDES)	
		1	**6V-8397**	1	SEAL-O-RING	
		1	**6V-9850**	1	ELBOW	
	14	1	*148-8378*	1	ELBOW AS	
		1	**3J-1907**	1	SEAL-O-RING	
		1	**6V-8397**	1	SEAL-O-RING	
		1	**6V-8724**	1	ELBOW	
	15	1	*148-8435*	2	TEE AS	
					(EACH INCLUDES)	
		1	**3J-1907**	1	SEAL-O-RING	
		1	**6V-8397**	2	SEAL-O-RING	
		1	**6V-8781**	1	TEE-FACE SEAL	
	16	1	*150-3033*	1	ELBOW AS	
		1	**3J-1907**	1	SEAL-O-RING	
		1	**4J-5477**	1	SEAL-O-RING	
		1	**8T-0164**	1	ELBOW	
	17	1	*150-4044*	2	CONNECTOR AS	
					(EACH INCLUDES)	
		1	**3J-1907**	1	SEAL-O-RING	
		1	**6V-8397**	1	SEAL-O-RING	
		1	**8T-1779**	1	CONNECTOR	
	18	1	*150-4043*	1	CONNECTOR AS	
		1	**3J-1907**	1	SEAL-O-RING	
		1	**6V-8398**	1	SEAL-O-RING	
		1	**6V-9873**	1	CONNECTOR	
	19	1	**152-3411**	1	ELBOW	
	20	1	*164-5567*	1	COUPLER AS-QUICK DISCONNECT	
		1	**3J-1907**	1	SEAL-O-RING	
		1	**6V-3965**	1	FITTING (QUICK DISCONNECT)	
Y	21	1	**261-3945**	1	VALVE GP-MAIN CONTROL (2-FUNCTION)	497
	22	1	**3D-2824**	1	SEAL-O-RING	
	23	1	**3J-1907**	1	SEAL-O-RING	
	24	1	**5P-1076**	3	WASHER-HARD (13.5X30X4-MM THK)	
	25	1	**6V-0852**	1	CAP-DUST	
	26	1	**6V-8397**	3	SEAL-O-RING	
	27	1	**6V-8398**	1	SEAL-O-RING	

236-9035 VALVE & MTG GP-MAIN CONTROL *(contd.)* i03624375

NOTE	REF NO	GRAPHIC REF	PART NUMBER	QTY	PART NAME 1 2 3 4 5 6 (PRODUCT LEVEL)	SEE PAGE
	28	1	**6V-9829**	3	CAP AS	
M	29	1	**7X-2552**	4	BOLT (M16X2X30-MM)	
	30	1	**8T-4121**	2	WASHER-HARD (11X21X2.5-MM THK)	
	31	1	**8T-4122**	4	WASHER-HARD (17X32X3.5-MM THK)	
M	32	1	**8T-4172**	2	BOLT (M10X1.5X80-MM)	
M	33	1	**8T-4183**	3	BOLT (M12X1.75X40-MM)	
M	34	1	**8T-4192**	2	BOLT (M12X1.75X25-MM)	
	35	1	**8T-4223**	2	WASHER-HARD (13.5X25.5X3-MM THK)	
	36	1	**5P-4295**	1	CLIP	

I-REFER TO HYDRAULIC INFORMATION SYSTEM
M-METRIC PART
Y-SEPARATE ILLUSTRATION

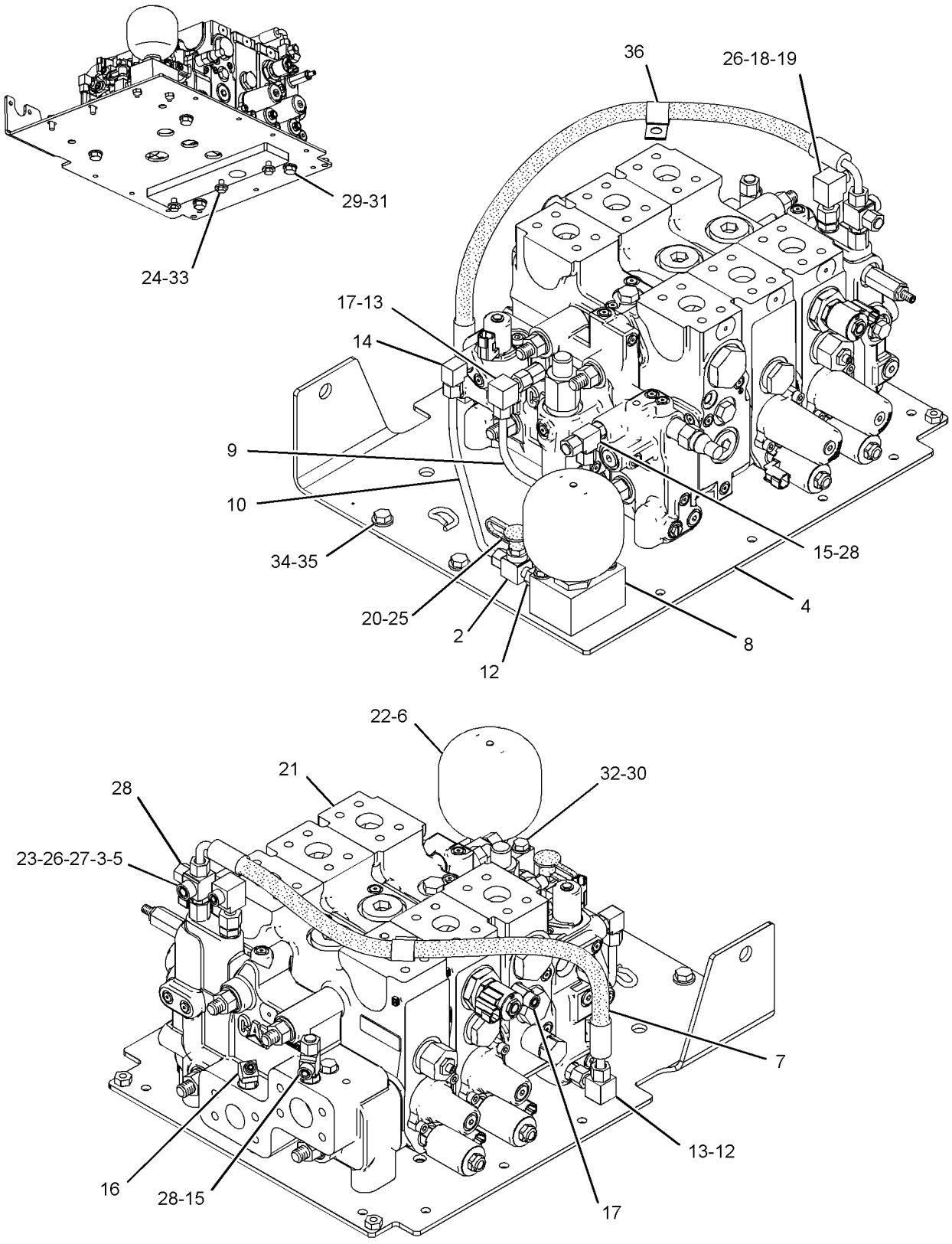

GRAPHIC #1 **<END>** g01388852

HYDRAULIC SYSTEM

236-9095 VALVE & MTG GP-MAIN CONTROL–
2-FUNCTION, WITH RIDE CONTROL
S/N: RYF1-UP
PART OF 236-9094 CONTROL AR-RIDE
AN ATTACHMENT

SMCS-5051 **i03629495**

NOTE	REF NO	GRAPHIC REF	PART NUMBER	QTY	PART NAME 1 2 3 4 5 6 (PRODUCT LEVEL)	SEE PAGE
	1	1	*148-8424*	1	TEE AS	
		1	**6V-8397**	1	SEAL-O-RING	
		1	**8T-8902**	1	TEE	
	2	1	*165-6365*	1	FITTING AS	
		1	**3J-1907**	1	SEAL-O-RING	
		1	**7W-7381**	1	FITTING-OUTLET	
	3	1	**241-2628**	1	BRACKET AS	
	4	1	**244-6625**	1	ADAPTER-SPECIAL	
Y	5	1	*245-2975*	1	ACCUMULATOR GP-PILOT OIL (CHARGED) (DEAD ENGINE, LIFT ARM LOWER)	417
I	6	1	**249-0787**	1	HOSE AS	
	7	1	**259-1502**	1	BLOCK	
	8	1	**259-1971**	1	TUBE AS	
	9	1	**259-2092**	1	TUBE AS	
	10	1	*148-8336*	2	CONNECTOR AS	
					(EACH INCLUDES)	
		1	**3J-1907**	1	SEAL-O-RING	
		1	**6V-8397**	1	SEAL-O-RING	
		1	**6V-8636**	1	CONNECTOR	
	11	1	*148-8367*	2	ELBOW AS	
					(EACH INCLUDES)	
		1	**6V-8397**	1	SEAL-O-RING	
		1	**6V-9850**	1	ELBOW	
	12	1	*148-8378*	1	ELBOW AS	
		1	**3J-1907**	1	SEAL-O-RING	
		1	**6V-8397**	1	SEAL-O-RING	
		1	**6V-8724**	1	ELBOW	
	14	1	*148-8435*	2	TEE AS	
					(EACH INCLUDES)	
		1	**3J-1907**	1	SEAL-O-RING	
		1	**6V-8397**	2	SEAL-O-RING	
		1	**6V-8781**	1	TEE-FACE SEAL	
	15	1	*150-3033*	1	ELBOW AS	
		1	**3J-1907**	1	SEAL-O-RING	
		1	**4J-5477**	1	SEAL-O-RING	
		1	**8T-0164**	1	ELBOW	
	16	1	*150-4044*	2	CONNECTOR AS	
					(EACH INCLUDES)	
		1	**3J-1907**	1	SEAL-O-RING	
		1	**6V-8397**	1	SEAL-O-RING	
		1	**8T-1779**	1	CONNECTOR	
	17	1	*150-4043*	1	CONNECTOR AS	
		1	**3J-1907**	1	SEAL-O-RING	
		1	**6V-8398**	1	SEAL-O-RING	
		1	**6V-9873**	1	CONNECTOR	
	18	1	**152-3411**	1	ELBOW	
	19	1	*164-5567*	1	COUPLER AS-QUICK DISCONNECT	
		1	**3J-1907**	1	SEAL-O-RING	
		1	**6V-3965**	1	FITTING (QUICK DISCONNECT)	
Y	20	1	**261-2337**	1	VALVE GP-MAIN CONTROL (2-FUNCTION, WITH RIDE CONTROL)	495
	21	1	**3D-2824**	1	SEAL-O-RING	
	22	1	**3J-1907**	1	SEAL-O-RING	
	23	1	**5P-1076**	3	WASHER-HARD (13.5X30X4-MM THK)	

236-9095 VALVE & MTG GP-MAIN CONTROL *(contd.)* i03629495

NOTE	REF NO	GRAPHIC REF	PART NUMBER	QTY	PART NAME 1 2 3 4 5 6 (PRODUCT LEVEL)	SEE PAGE
	24	1	**6V-0852**	1	CAP-DUST	
	25	1	**6V-8397**	3	SEAL-O-RING	
	26	1	**6V-8398**	1	SEAL-O-RING	
	27	1	**6V-9829**	3	CAP AS	
M	29	1	**7X-2552**	4	BOLT (M16X2X30-MM)	
	30	1	**8T-4121**	2	WASHER-HARD (11X21X2.5-MM THK)	
	31	1	**8T-4122**	4	WASHER-HARD (17X32X3.5-MM THK)	
M	32	1	**8T-4172**	2	BOLT (M10X1.5X80-MM)	
M	33	1	**8T-4183**	3	BOLT (M12X1.75X40-MM)	
M	34	1	**8T-4192**	2	BOLT (M12X1.75X25-MM)	
	35	1	**8T-4223**	2	WASHER-HARD (13.5X25.5X3-MM THK)	
	36	1	**5P-4295**	1	CLIP	

I-REFER TO HYDRAULIC INFORMATION SYSTEM
M-METRIC PART
Y-SEPARATE ILLUSTRATION

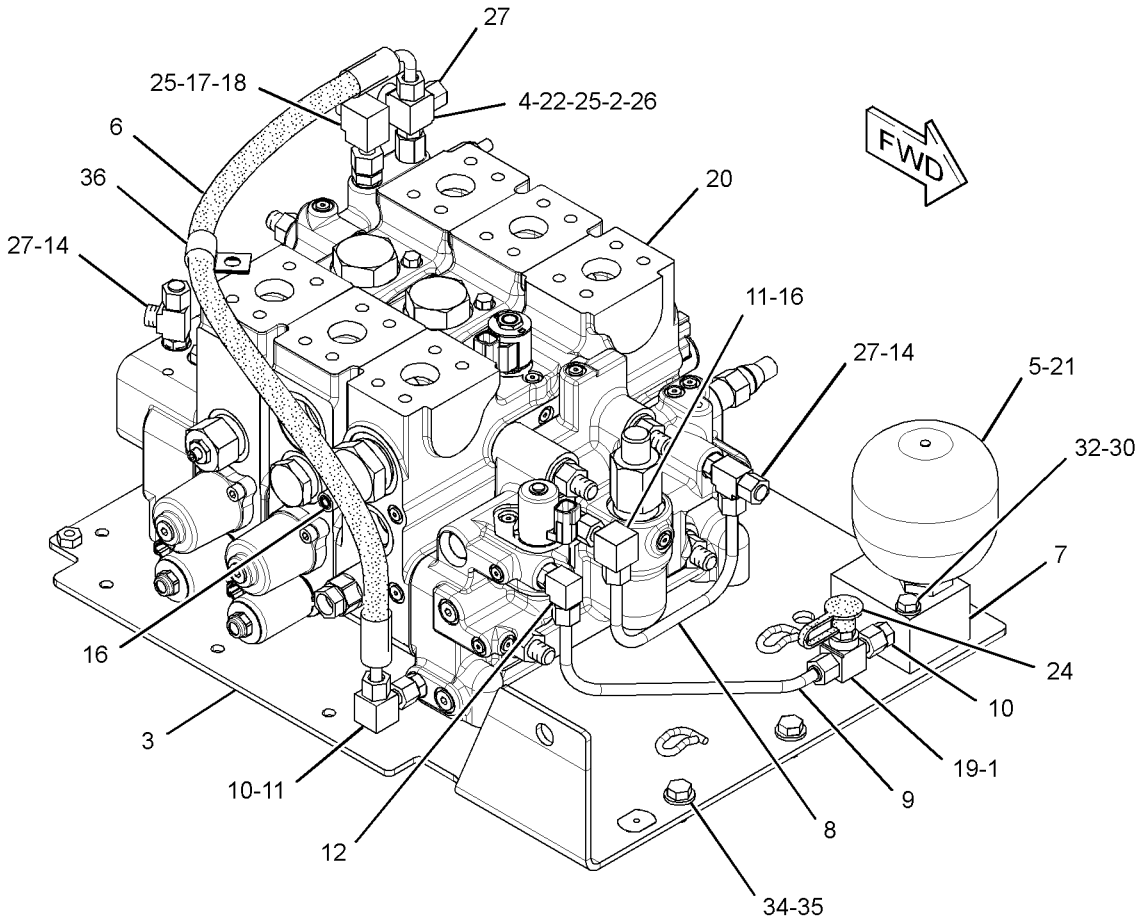

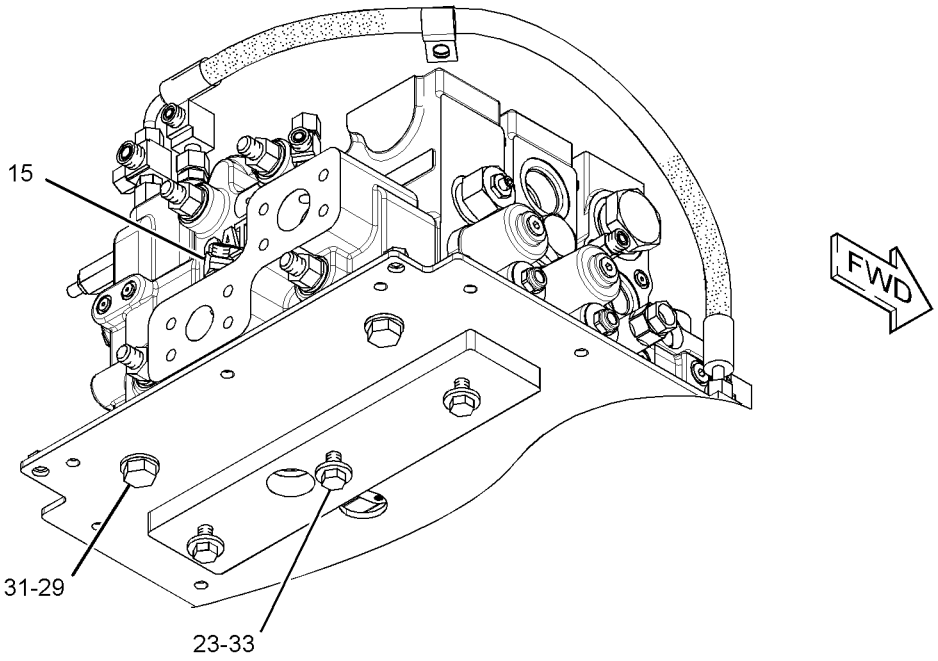

GRAPHIC #1 **<END>** g01410030

HYDRAULIC SYSTEM

158-9956 VALVE GP-CHECK

S/N: RYF1-UP

PART OF 242-1307 MANIFOLD GP-CONTROL, 269-9398 MANIFOLD GP-VALVE

ALSO AN ATTACHMENT

SMCS-5067 **i02106248**

NOTE	REF NO	GRAPHIC REF	PART NUMBER	QTY	PART NAME 1 2 3 4 5 6 (PRODUCT LEVEL)	SEE PAGE
	1	1	**3K-0360**	1	SEAL-O-RING	
	2	1	**161-6154**	1	SEAL-O-RING	
	3	1	**6E-0381**	1	RING-BACKUP	

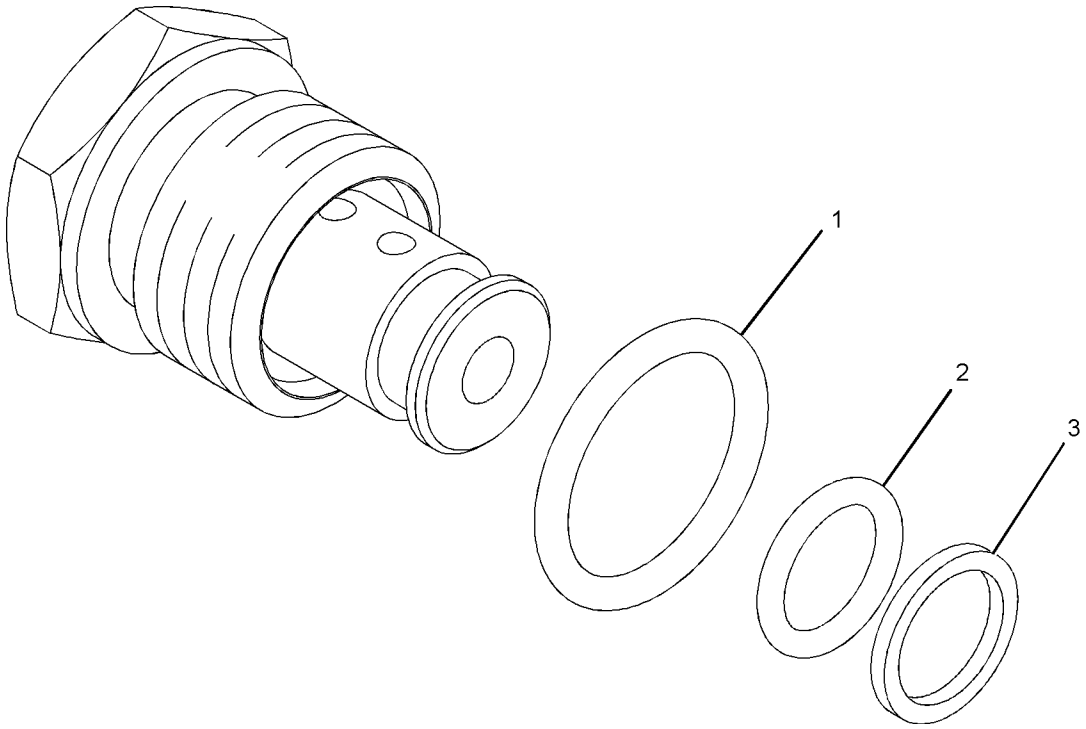

GRAPHIC #1 **<END>** g01016882

194-1723 VALVE GP-CHECK

S/N: RYF1-UP
PART OF 253-4026 VALVE GP-RIDE CONTROL
AN ATTACHMENT

SMCS-5067 **i02248420**

NOTE	REF NO	GRAPHIC REF	PART NUMBER	QTY	PART NAME 1 2 3 4 5 6 (PRODUCT LEVEL)	SEE PAGE
	1	1	**2M-9780**	1	SEAL-O-RING	
	2	1	**161-6149**	1	SEAL-O-RING	
	3	1	**7X-4776**	1	RING-BACKUP	

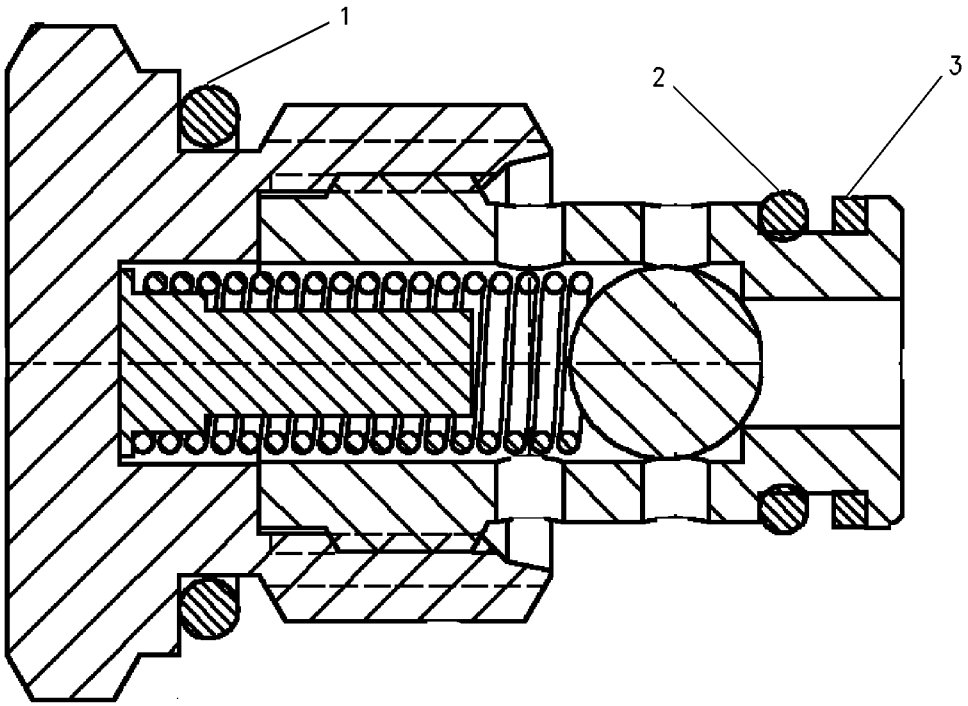

GRAPHIC #1 **<END>** g00748809

HYDRAULIC SYSTEM

244-1426 VALVE GP-CHECK

S/N: RYF1-UP

PART OF 236-8983 LINES GP-HYDRAULIC OIL COOLER

SMCS-5067 **i03177741**

NOTE	REF NO	GRAPHIC REF	PART NUMBER	QTY	PART NAME 1 2 3 4 5 6 (PRODUCT LEVEL)	SEE PAGE
	1	1	**3D-2824**	1	SEAL-O-RING	
	2	1	**6V-9746**	1	SEAL-O-RING	

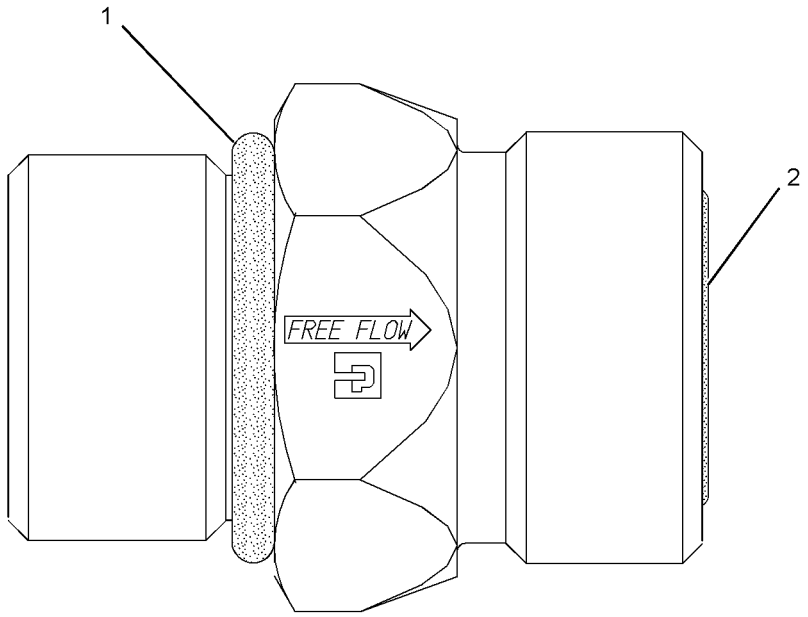

GRAPHIC #1 **<END>** g01128106

247-7601 VALVE GP-CONTROL—HYDRAULIC BLOCK

S/N: RYF1-UP

PART OF 261-3945 VALVE GP-MAIN CONTROL

SMCS-5051 **i03624781**

NOTE	REF NO	GRAPHIC REF	PART NUMBER	QTY	PART NAME 1 2 3 4 5 6 (PRODUCT LEVEL)	SEE PAGE
	1	1	**180-8722**	2	SEAL-O-RING	
	2	1	**9T-7692**	2	RING	
	3	1	**095-1750**	1	SEAL-O-RING	
	4	1	**148-9359**	2	PLUG	
C	5	1	**288-8932**	1	VALVE GP-CHECK	
	6	1	**223-1341**	1	PLUG AS	
		1	**3K-0360**	1	SEAL-O-RING	
		1	**7J-9933**	1	SEAL-O-RING	
	7	1	**240-4695**	2	RING-BACKUP	
	8	1	**247-4481**	1	PLUG	
	9	1	**7J-9108**	1	SEAL-O-RING	
	11	1	**256-4362**	2	RING-BACKUP	
	12	1	**256-4363**	2	RING-BACKUP	
	13	1	**256-4552**	2	PLUG	
	14	1	**256-7280**	2	RING-BACKUP	
Y	15	1	**260-8590**	1	VALVE GP-SHUTTLE (BALL RESOLVER)	508
	16	1	**095-1751**	1	SEAL-O-RING	
	17	1	*207-8218*	1	PLUG AS	
		1	**7J-0204**	1	SEAL-O-RING	
		1	**9S-8007**	1	PLUG	
	18	1	*148-8406*	1	PLUG AS	
		1	**7M-8485**	1	SEAL-O-RING	
		1	**9S-9334**	1	PLUG-O-RING	
	19	1	*148-8411*	2	PLUG AS	
					(EACH INCLUDES)	
		1	**3K-0360**	1	SEAL-O-RING	
		1	**9S-4185**	1	PLUG-O-RING	
	20	1	*162-0177*	1	PLUG AS	
		1	**3J-1907**	1	SEAL-O-RING	
		1	**9S-8004**	1	PLUG-O-RING	
	21	1	*164-4180*	1	PLUG AS	
		1	**9S-4191**	1	PLUG-O-RING	
		1	**7M-8485**	1	SEAL-O-RING	
	22	1	*173-3993*	13	PLUG AS	
					(EACH INCLUDES)	
		1	**4J-7533**	1	SEAL-O-RING	
		1	**9S-8001**	1	PLUG-O-RING	
	23	1	*162-6448*	1	PLUG AS	
		1	**1N-5999**	1	PLUG-O-RING	
		1	**7J-0204**	1	SEAL-O-RING	
	24	1	**1P-3704**	2	SEAL-RECTANGULAR	
	25	1	**1P-3705**	1	SEAL-RECTANGULAR	
	26	1	**2M-9780**	1	SEAL-O-RING	
	27	1	**2S-4078**	2	SEAL-O-RING	
	28	1	**4J-0524**	2	SEAL-O-RING	
	29	1	**4J-9535**	2	SEAL-O-RING	
	30	1	**6J-3134**	5	SEAL-O-RING	
	31	1	**6V-0357**	2	SEAL-O-RING	
	32	1	**9W-7783**	2	PLUG	
	33	1	**292-8061**	2	PLUG-EXPANSION	

C-CHANGE FROM PREVIOUS TYPE
Y-SEPARATE ILLUSTRATION

247-7601 **VALVE GP-CONTROL** *(contd.)* **i03624781**

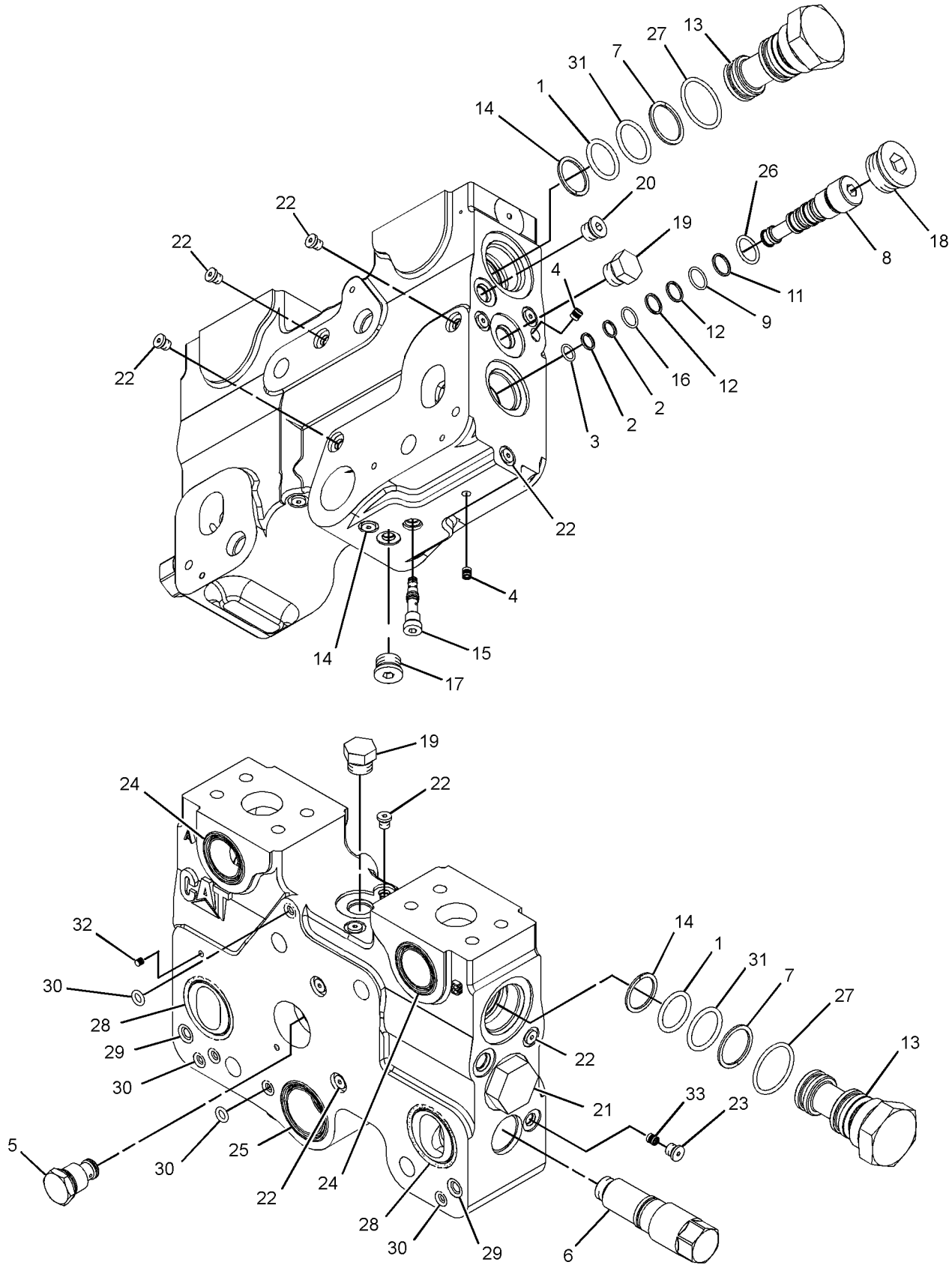

GRAPHIC #1 **<END>** g01887234

261-0015 VALVE GP-CONTROL–TILT

S/N: RYF1-UP

PART OF 261-2337, 261-3945 VALVE GP-MAIN CONTROL

ALSO AN ATTACHMENT

SMCS-5051 **i03624880**

NOTE	REF NO	GRAPHIC REF	PART NUMBER	QTY	PART NAME 1 2 3 4 5 6 (PRODUCT LEVEL)	SEE PAGE
	1	1	**1T-0936**	1	PLUG-PIPE	
	4	1	**148-9359**	4	PLUG	
	8	1	**234-4851**	1	SPRING (INNER)	
	9	1	**236-9832**	1	SPRING (OUTER)	
	10	1	**250-7531**	1	PLUG-RETAINER	
J	11	1	**256-2866**	2	VALVE GP-RELIEF (LINE, TILT)	
	12	1	**260-3053**	1	HOUSING-SPRING	
	13	1	**260-3055**	1	HOUSING-SPRING	
	14	1	**260-3058**	1	BOLT	
Y	16	1	**260-8590**	1	VALVE GP-SHUTTLE (BALL RESOLVER)	508
Y	18	1	**262-5265**	1	VALVE GP-SOLENOID (DRIFT REDUCTION)	511
	19	1	**284-1010**	1	SPRING (OUTER)	
	20	1	**284-1011**	1	SPRING (INNER)	
	22	1	**295-0993**	1	RETAINER (SPRING)	
Y	23	1	**300-6057**	2	VALVE GP-SOLENOID (24-VOLT) (PILOT PROPORTIONING)	512
	24	1	*162-0177*	2	PLUG AS	
					(EACH INCLUDES)	
		1	**3J-1907**	1	SEAL-O-RING	
		1	**9S-8004**	1	PLUG-O-RING	
	25	1	*164-5619*	1	PLUG AS	
		1	**2M-9780**	1	SEAL-O-RING	
		1	**9S-8006**	1	PLUG-O-RING	
	26	1	*183-7263*	1	PLUG AS	
		1	**3J-7354**	1	SEAL-O-RING	
		1	**9S-8002**	1	PLUG-O-RING	
	27	1	**1P-3705**	1	SEAL-RECTANGULAR	
	28	1	**2S-4078**	1	SEAL-O-RING	
	29	1	**3E-6771**	2	SEAL-O-RING	
	30	1	**3J-1907**	1	SEAL-O-RING	
	31	1	**4J-0524**	2	SEAL-O-RING	
	32	1	**4J-9535**	2	SEAL-O-RING	
M	33	1	**5A-3604**	4	BOLT-SOCKET HEAD (M8X1.25X25-MM)	
	34	1	**6J-3134**	4	SEAL-O-RING	
					AVAILABLE REPAIR KIT(S):	
J			**238-9842**	1	KIT-SEAL (RELIEF VALVE)	
					(INCLUDES SEALS AND RINGS)	

J-KIT MARKED J SERVICES PARTS MARKED J
M-METRIC PART
Y-SEPARATE ILLUSTRATION

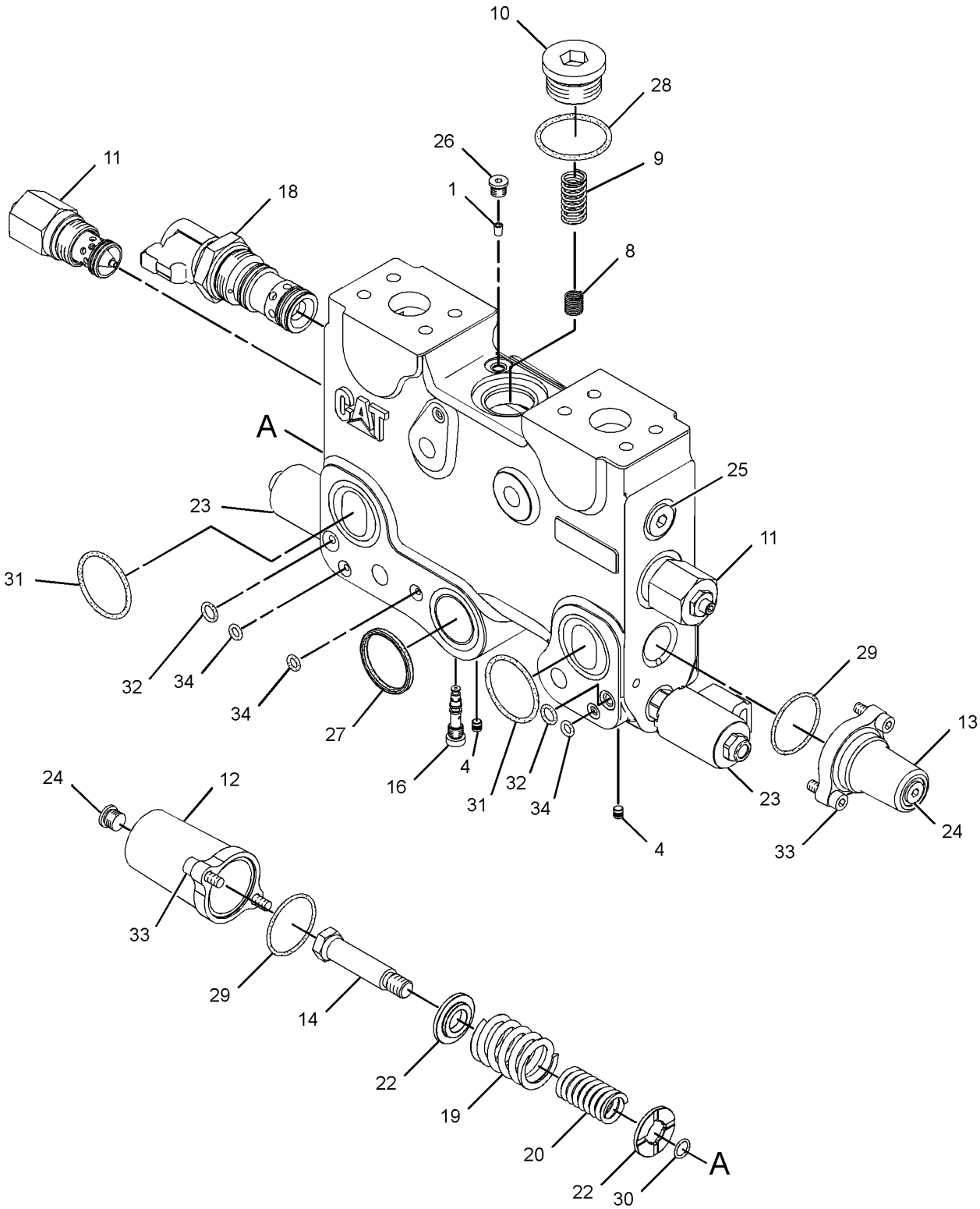

GRAPHIC #1 **<END>** g01869624

261-0016 VALVE GP-CONTROL–LIFT

S/N: RYF1-UP

PART OF 261-2337, 261-3945 VALVE GP-MAIN CONTROL

ALSO AN ATTACHMENT

SMCS-5051 **i03624839**

NOTE	REF NO	GRAPHIC REF	PART NUMBER	QTY	PART NAME 1 2 3 4 5 6 (PRODUCT LEVEL)	SEE PAGE
	1	1	**1T-0936**	1	PLUG-PIPE	
	4	1	**148-9359**	4	PLUG	
	7	1	**234-4851**	1	SPRING	
J	9	1	**234-4869**	1	VALVE GP-MAKEUP	
	10	1	**234-4870**	1	PLUG (SHUTOFF)	
	11	1	**236-9832**	1	SPRING	
	12	1	**240-4696**	1	RING-BACKUP	
	13	1	**250-7531**	1	PLUG-RETAINER	
	14	1	**260-3053**	1	HOUSING-SPRING	
	15	1	**260-3055**	1	HOUSING-SPRING	
	16	1	**260-3058**	1	BOLT	
Y	18	1	**260-8590**	1	VALVE GP-SHUTTLE (BALL RESOLVER)	508
Y	20	1	**262-5265**	1	VALVE GP-SOLENOID (DRIFT REDUCTION)	511
	21	1	**284-1010**	1	SPRING	
	22	1	**284-1011**	1	SPRING	
	24	1	**295-0993**	2	RETAINER	
Y	25	1	**300-6057**	2	VALVE GP-SOLENOID (24-VOLT) (PILOT PROPORTIONING)	512
	26	1	*162-0177*	2	PLUG AS	
					(EACH INCLUDES)	
		1	**3J-1907**	1	SEAL-O-RING	
		1	**9S-8004**	1	PLUG-O-RING	
	27	1	*164-5619*	1	PLUG AS	
		1	**9S-8006**	1	PLUG-O-RING	
		1	**2M-9780**	1	SEAL-O-RING	
	28	1	*183-7263*	1	PLUG AS	
		1	**9S-8002**	1	PLUG-O-RING	
		1	**3J-7354**	1	SEAL-O-RING	
	29	1	**1P-3705**	1	SEAL-RECTANGULAR	
	30	1	**2S-4078**	1	SEAL-O-RING	
	31	1	**3E-6771**	2	SEAL-O-RING	
	32	1	**3J-1907**	1	SEAL-O-RING	
	33	1	**4J-0524**	2	SEAL-O-RING	
	34	1	**4J-8996**	1	SEAL-O-RING	
	35	1	**4J-9535**	2	SEAL-O-RING	
M	36	1	**5A-3604**	4	BOLT-SOCKET HEAD (M8X1.25X25-MM)	
	37	1	**6J-3134**	4	SEAL-O-RING	
	38	1	**7M-8485**	1	SEAL-O-RING	
					AVAILABLE REPAIR KIT(S):	
J			**238-9842**	1	KIT-SEAL (RELIEF VALVE)	
					(INCLUDES SEALS AND RINGS)	

J-KIT MARKED J SERVICES PART MARKED J
M-METRIC PART
Y-SEPARATE ILLUSTRATION

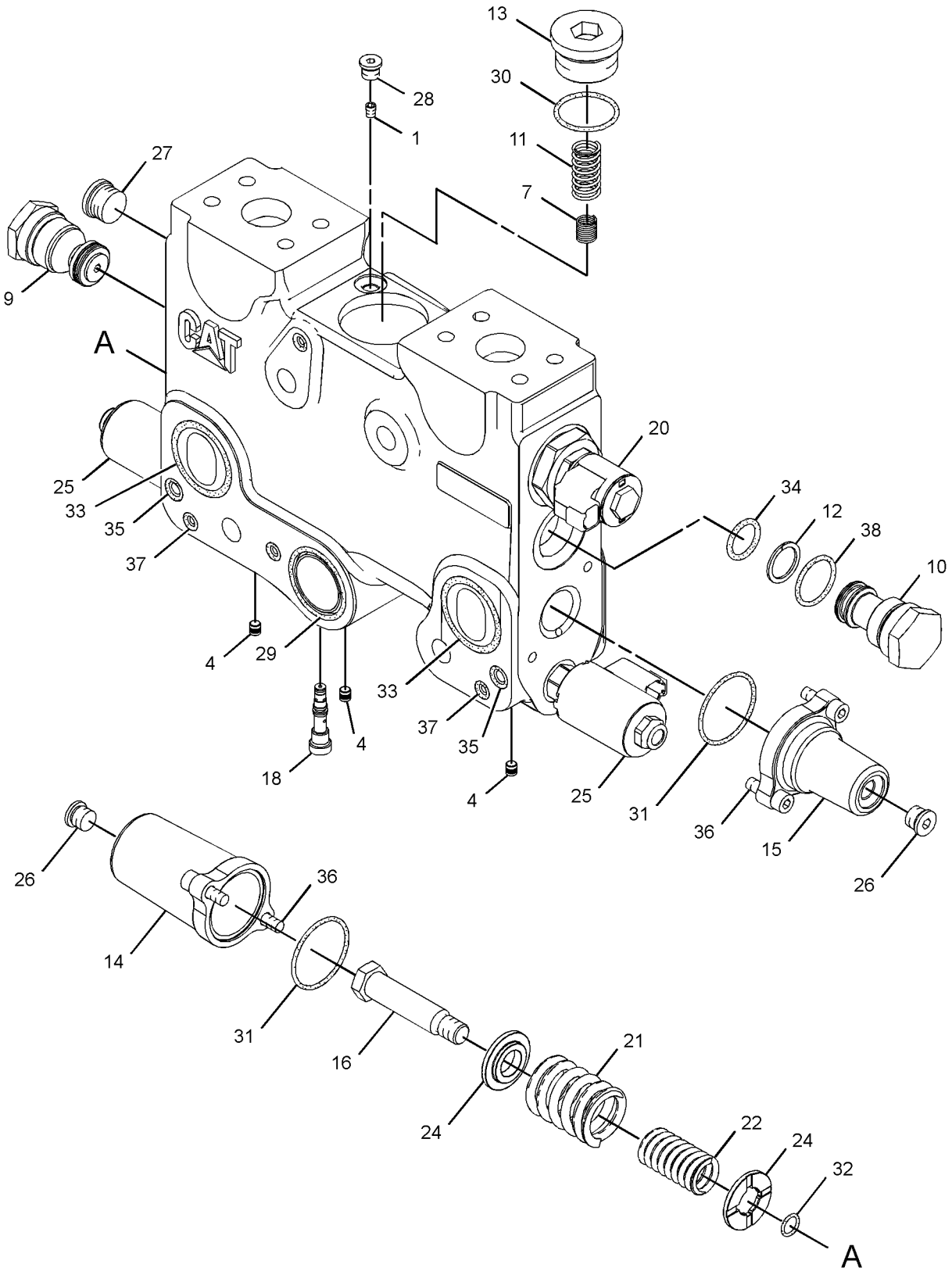

GRAPHIC #1 **<END>** g01869639

252-9256 VALVE GP-DIVERTER

S/N: RYF1-UP

PART OF 242-1307 MANIFOLD GP-CONTROL

SMCS-5066 **i02250581**

NOTE	REF NO	GRAPHIC REF	PART NUMBER	QTY	PART NAME 1 2 3 4 5 6 (PRODUCT LEVEL)	SEE PAGE
J	1	1	**2M-9780**	1	SEAL-O-RING	
J	2	1	**6V-5142**	1	SEAL-O-RING	
J	3	1	**169-1617**	2	RING-BACKUP	
J	4	1	**095-1751**	1	SEAL-O-RING	
J	5	1	**169-1616**	2	RING-BACKUP	
					AVAILABLE REPAIR KIT(S):	
J			**200-6282**	1	KIT-SEAL (DIVERTER VALVE) (HYDRAULIC FAN FLUID FLOW)	
					(INCLUDES SEALS & RINGS)	

J-KIT MARKED J SERVICES PARTS MARKED J

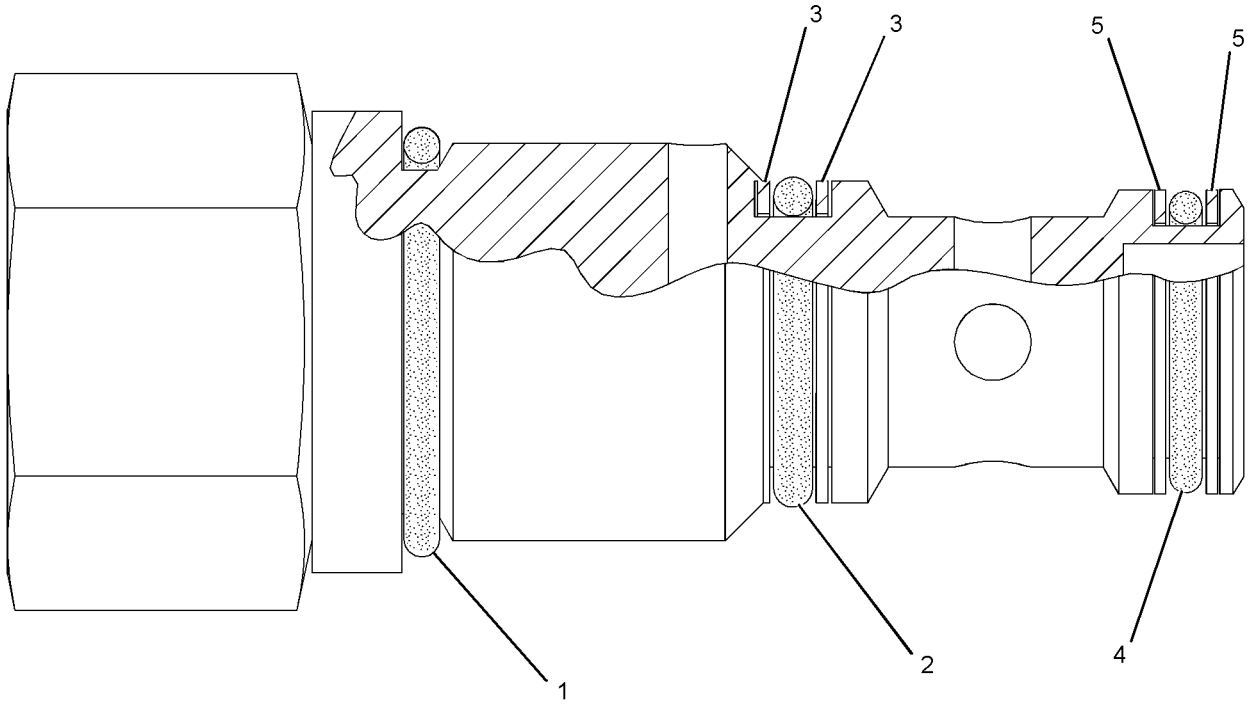

GRAPHIC #1 **<END>** g01109584

HYDRAULIC SYSTEM

245-5943 VALVE GP-DRAIN–ECOLOGY, HYDRAULIC

S/N: RYF1-UP

PART OF 236-8997 LINES GP-HYDRAULIC

SMCS-5076 **i02908524**

NOTE	REF NO	GRAPHIC REF	PART NUMBER	QTY	PART NAME 1 2 3 4 5 6 (PRODUCT LEVEL)	SEE PAGE
	1	1	**1U-2827**	1	GUIDE-VALVE	
	2	1	**8J-8782**	1	BODY-DRAIN VALVE	
	3	1	**8J-8783**	1	VALVE	
	4	1	**9J-7031**	1	PLUG-DRAIN (HYDRAULIC TANK OIL)	
	5	1	**283-5192**	1	BLOCK	
	6	1	**5M-2057**	1	SEAL-O-RING	
	7	1	**7B-3039**	1	SPRING	
M	8	1	**8T-0722**	2	BOLT-LOCKING (M10X1.5X30-MM)	
	9	1	**8T-3298**	1	SEAL-RECTANGULAR	
	10	1	**8T-4896**	2	WASHER-HARD (10.2X18.5X2.5-MM THK)	

M-METRIC PART

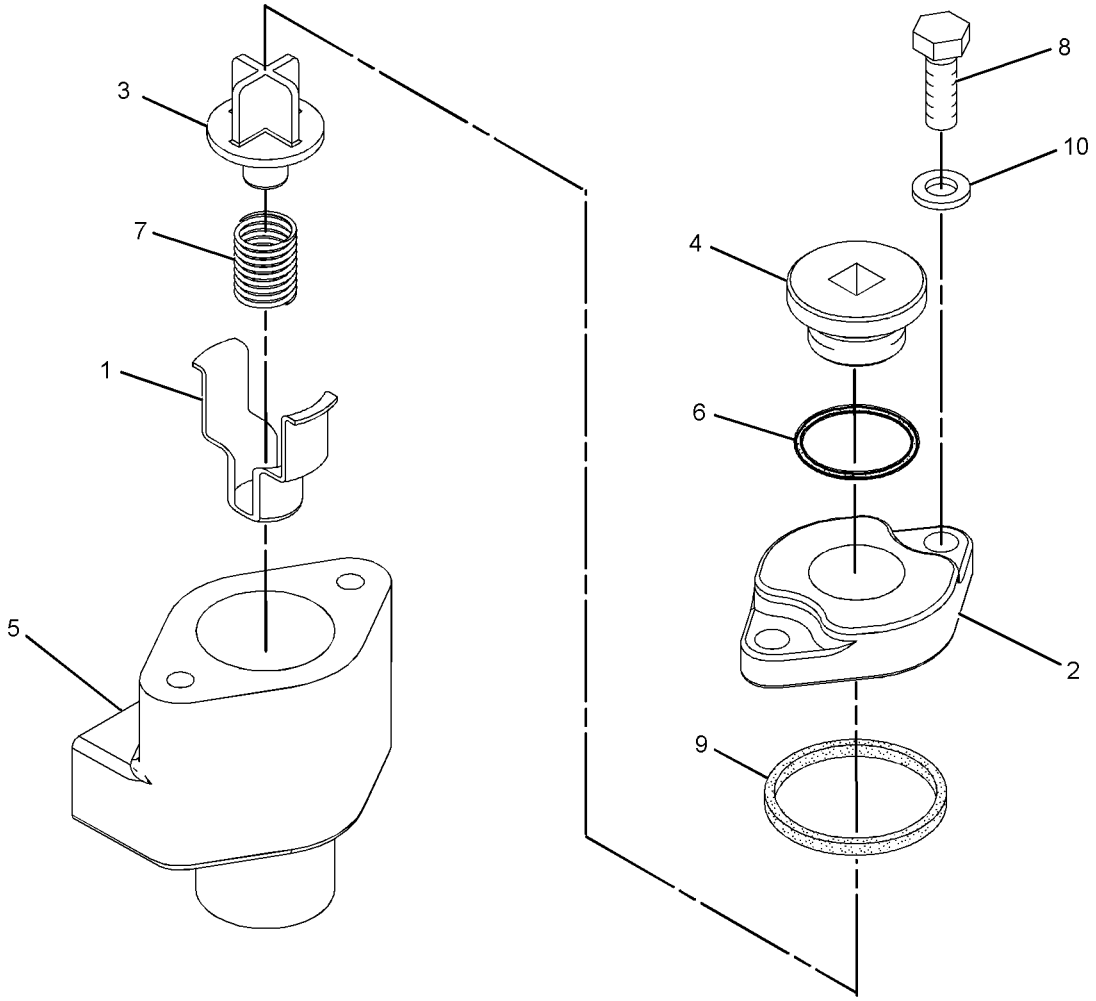

GRAPHIC #1 **<END>** g01387050

236-9037 VALVE GP-LOWERING CONTROL

S/N: RYF1-UP

PART OF 236-8963 HYDRAULIC AR-2 VALVE

SMCS-5147 **i03624889**

NOTE	REF NO	GRAPHIC REF	PART NUMBER	QTY	PART NAME 1 2 3 4 5 6 (PRODUCT LEVEL)	SEE PAGE
	1	1	**136-9699**	1	BRACKET AS	
M		1	**8T-3490**	1	NUT-WELD (M10X1.5-THD)	
I	2	1	**245-3217**	1	HOSE AS	
I	3	1	**245-3219**	1	HOSE AS	
	4	1	**259-8317**	1	PLATE	
	5	1	**096-6166**	4	WASHER-HARD (4.5X9X1-MM THK)	
Y	6	1	**112-1817**	1	VALVE GP-MANUAL (LOWERING CONTROL)	498
	7	1	*148-8378*	1	ELBOW AS	
		1	**3J-1907**	1	SEAL-O-RING	
		1	**6V-8397**	1	SEAL-O-RING	
		1	**6V-8724**	1	ELBOW	
	8	1	*148-8435*	1	TEE AS	
		1	**3J-1907**	1	SEAL-O-RING	
		1	**6V-8397**	2	SEAL-O-RING	
		1	**6V-8781**	1	TEE-FACE SEAL	
	9	1	**6D-4246**	1	CLIP	
	10	1	**6V-9829**	1	CAP AS	
M	11	1	**8T-0285**	4	SCREW-MACHINE (M4X0.7X12-MM)	
	12	1	**8T-4121**	3	WASHER-HARD (11X21X2.5-MM THK)	
M	13	1	**8T-4136**	1	BOLT (M10X1.5X25-MM)	
M	14	1	**8T-4137**	2	BOLT (M10X1.5X20-MM)	
M	15	1	**8T-4183**	1	BOLT (M12X1.75X40-MM)	
	16	1	**8T-4223**	1	WASHER-HARD (13.5X25.5X3-MM THK)	

I-REFER TO HYDRAULIC INFORMATION SYSTEM
M-METRIC PART
Y-SEPARATE ILLUSTRATION

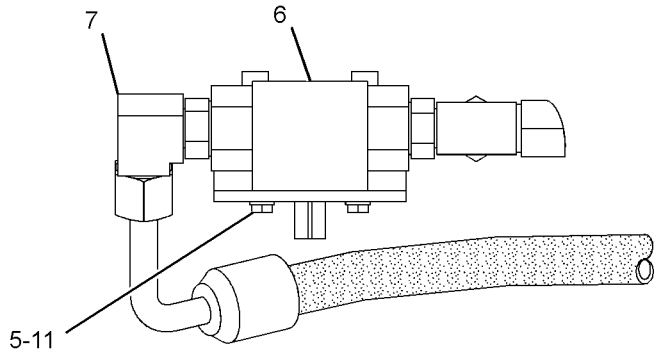

VIEW A-A

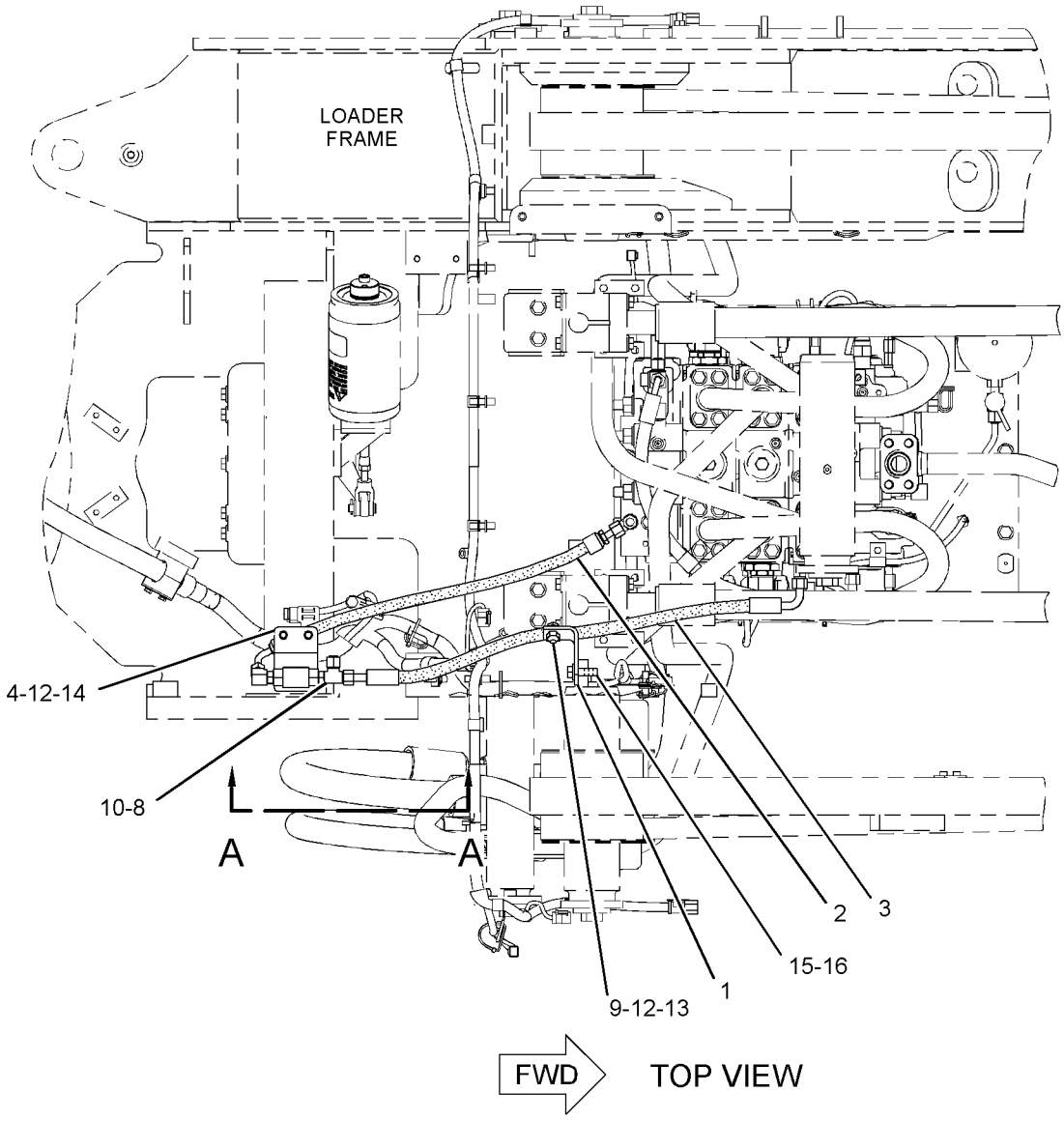

GRAPHIC #1 **<END>** g01599753

261-2337 VALVE GP-MAIN CONTROL–
2-FUNCTION, WITH RIDE CONTROL
S/N: RYF1-UP
PART OF 236-9095 VALVE & MTG GP-MAIN CONTROL
AN ATTACHMENT

SMCS-5051 **i03629581**

NOTE	REF NO	GRAPHIC REF	PART NUMBER	QTY	PART NAME 1 2 3 4 5 6 (PRODUCT LEVEL)	SEE PAGE
M	2	1	**8T-4132**	8	NUT (M16X2-THD)	
	3	1	**238-1795**	4	ROD	
Y	4	1	**253-4026**	1	VALVE GP-RIDE CONTROL	505
Y	5	1	**261-0015**	1	VALVE GP-CONTROL (TILT)	487
Y	6	1	**261-0016**	1	VALVE GP-CONTROL (LIFT)	489
Y	8	1	**269-9397**	1	MANIFOLD GP-VALVE (INLET)	453
Y	9	1	**269-9398**	1	MANIFOLD GP-VALVE (END COVER)	455
	10	1	*183-7263*	1	PLUG AS	
		1	**3J-7354**	1	SEAL-O-RING	
		1	**9S-8002**	1	PLUG-O-RING	
	11	1	**9X-8257**	8	WASHER (17.5X30X3.5-MM THK)	

M-METRIC PART
Y-SEPARATE ILLUSTRATION

261-2337 VALVE GP-MAIN CONTROL *(contd.)* **i03629581**

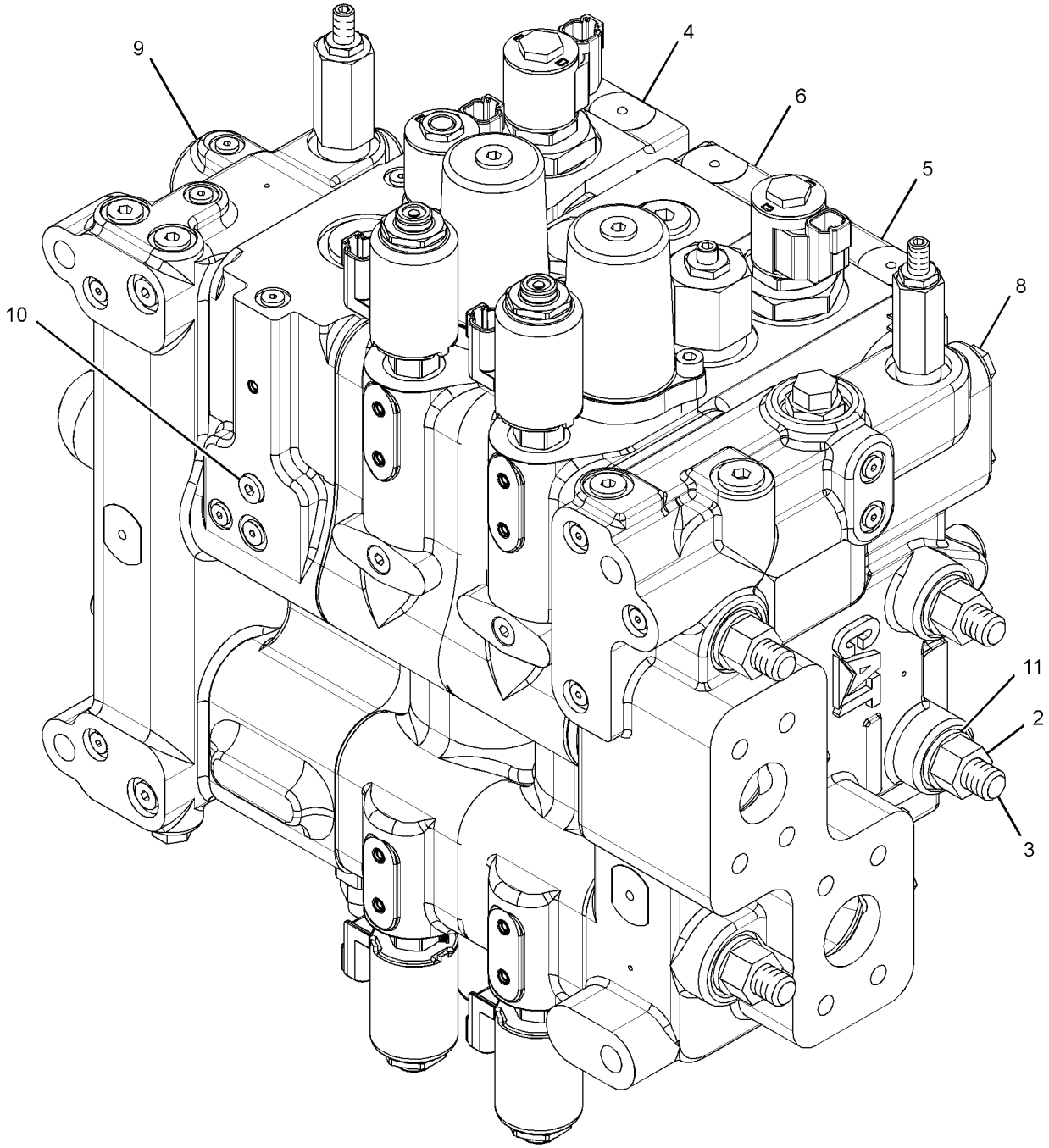

GRAPHIC #1 **<END>** g01739553

261-3945 VALVE GP-MAIN CONTROL–2-FUNCTION

S/N: RYF1-UP

PART OF 236-9035 VALVE & MTG GP-MAIN CONTROL

SMCS-5051 **i03624405**

NOTE	REF NO	GRAPHIC REF	PART NUMBER	QTY	PART NAME 1 2 3 4 5 6 (PRODUCT LEVEL)	SEE PAGE
M	1	1	**8T-4132**	8	NUT (M16X2-THD)	
	2	1	**238-1795**	4	ROD	
Y	3	1	**247-7601**	1	VALVE GP-CONTROL (HYDRAULIC BLOCK)	485
Y	4	1	**261-0015**	1	VALVE GP-CONTROL (TILT)	487
Y	5	1	**261-0016**	1	VALVE GP-CONTROL (LIFT)	489
	6	1	**9X-8257**	8	WASHER (17.5X30X3.5-MM THK)	
Y	7	1	**269-9397**	1	MANIFOLD GP-VALVE (INLET)	453
Y	8	1	**269-9398**	1	MANIFOLD GP-VALVE (END COVER)	455
	9	1	*183-7263*	1	PLUG AS	
		1	**3J-7354**	1	SEAL-O-RING	
		1	**9S-8002**	1	PLUG-O-RING	

M-METRIC PART
Y-SEPARATE ILLUSTRATION

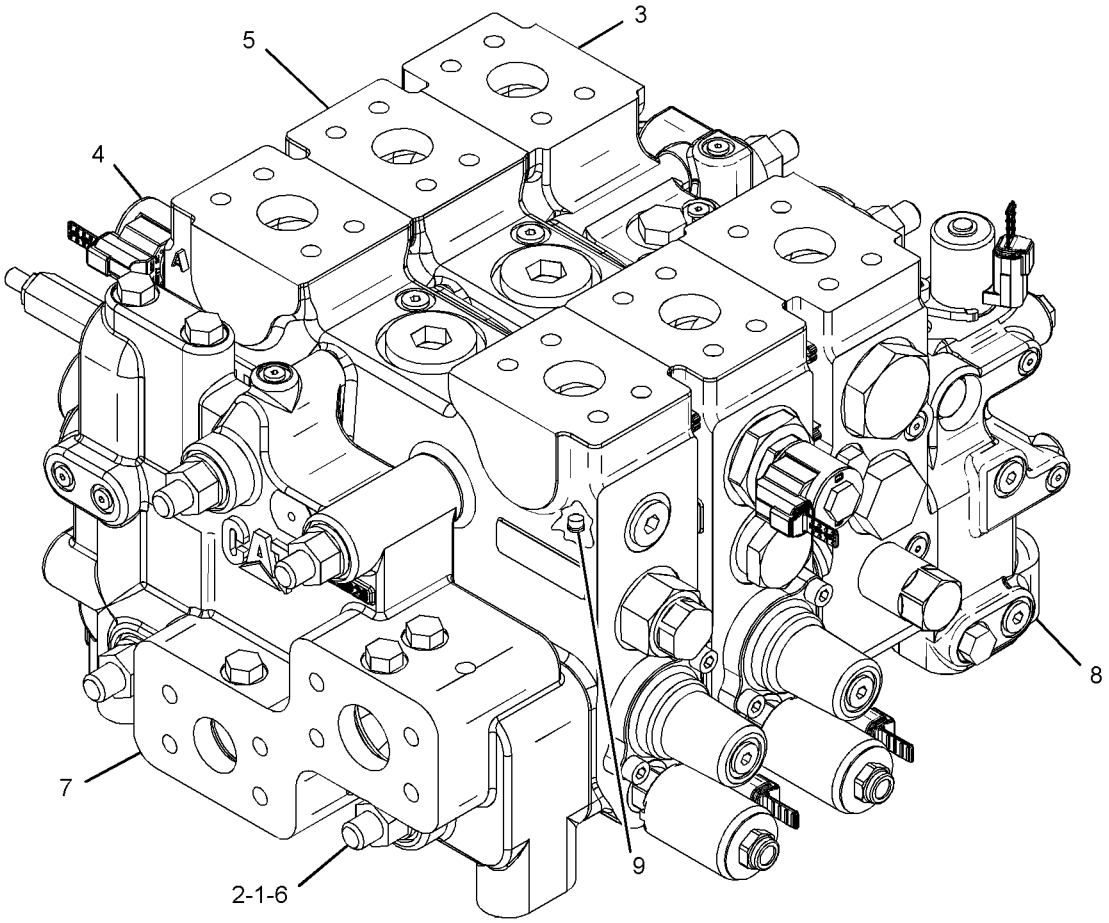

GRAPHIC #1 **<END>** g01189732

HYDRAULIC SYSTEM

112-1817 VALVE GP-MANUAL

S/N: RYF1-UP

PART OF 236-9037 VALVE GP-LOWERING CONTROL

SMCS-5001, 5130, 5147 **i01859603**

NOTE	PART NUMBER	QTY	PART NAME 1 2 3 4 5 6 (PRODUCT LEVEL)	SEE PAGE
J	*202-0671*	1	VALVE GP-MANUAL	
			—OR—	
J	*202-0673*	1	VALVE GP-MANUAL	
			—OR—	
J	*202-0674*	1	VALVE GP-MANUAL	
			AVAILABLE REPAIR KIT(S):	
J	**112-9861**	1	KIT-SEAL	
			(INCLUDES SEALS, CONNECTORS & THRUST RING)	

J-KIT MARKED J SERVICES PARTS MARKED J

<END>

193-1665 VALVE GP-PRESSURE REDUCING

S/N: RYF1-UP
PART OF 269-9397 MANIFOLD GP-VALVE
ALSO AN ATTACHMENT

SMCS-5117 **i03624885**

NOTE	REF NO	GRAPHIC REF	PART NUMBER	QTY	PART NAME 1 2 3 4 5 6 (PRODUCT LEVEL)	SEE PAGE
	1	1	**193-1664**	1	VALVE GP-CONTROL	
	2	1	**3J-1907**	2	SEAL-O-RING	
	3	1	**4J-5268**	1	SEAL-O-RING	
	4	1	**4J-5351**	1	SEAL-O-RING	
	5	1	**301-5243**	1	RING-BACKUP	
	6	1	**5J-2974**	1	SEAL-O-RING	
	7	1	**5P-6719**	1	PLUG	
	8	1	**301-5241**	1	RING-BACKUP	
	9	1	**301-5242**	1	RING-BACKUP	

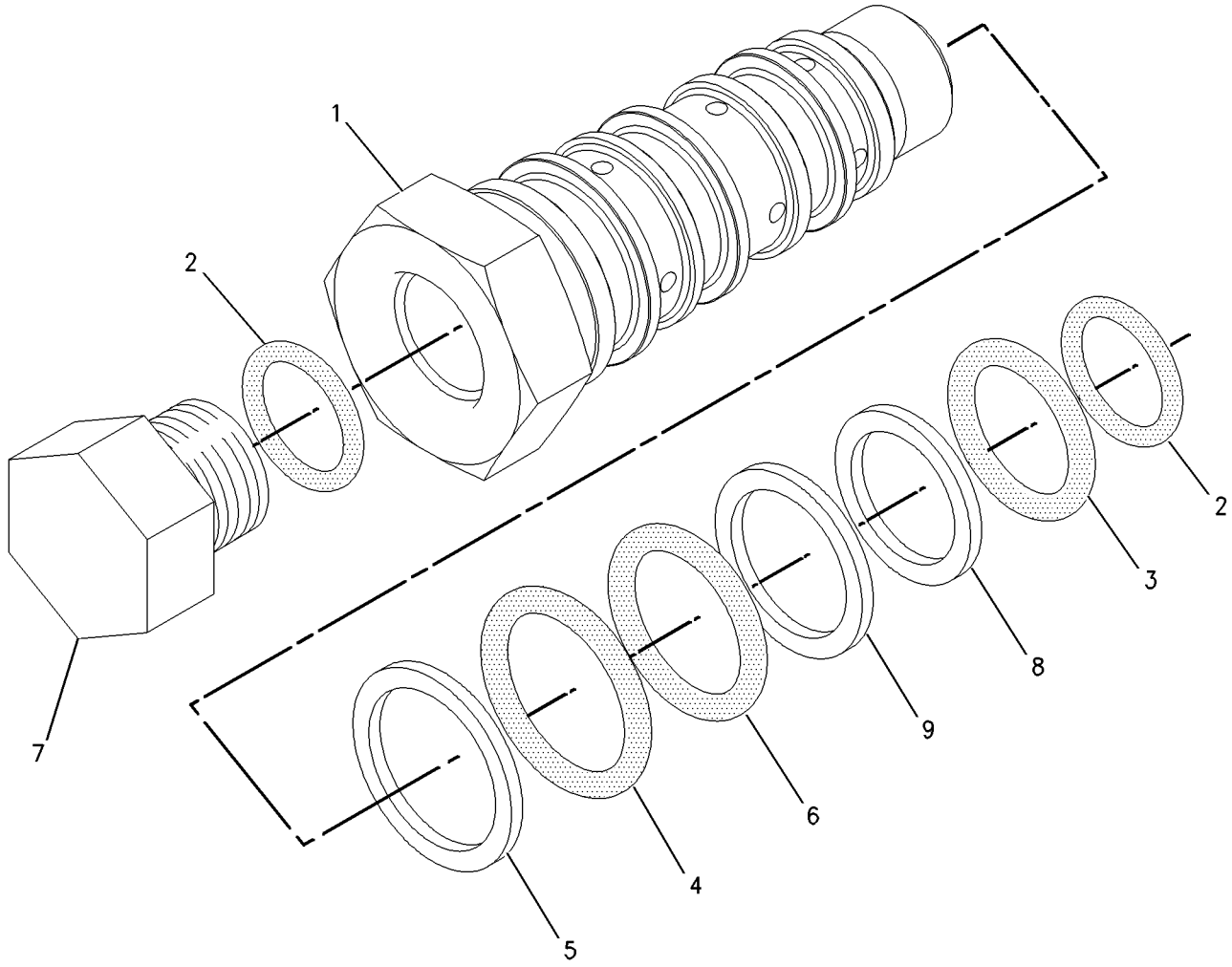

GRAPHIC #1 **<END>** g00763618

HYDRAULIC SYSTEM

207-0697 VALVE GP-PUMP CONTROL–
PRESSURE, FLOW COMPENSATOR
S/N: RYF1-UP

PART OF 254-5147 PUMP GP-PISTON

SMCS-5455 **i01787268**

NOTE	REF NO	GRAPHIC REF	PART NUMBER	QTY	PART NAME 1 2 3 4 5 6 (PRODUCT LEVEL)	SEE PAGE
	1	1	**6E-6528**	6	SEAL	
	2	1	**6E-6527**	2	PLUG	
	3	1	**6E-3268**	1	RETAINER-SPRING	
	4	1	**6E-3275**	1	SPRING	
	5	1	**6E-3274**	1	SPRING	
	6	1	**033-6043**	1	SEAL-O-RING	
	7	1	**6E-3272**	1	SEAT	
	8	1	**6E-6540**	1	PLUG	
M	9	1	**6E-6538**	2	NUT-ADJUSTMENT (M8X1-THD)	
M	10	1	**6E-6537**	2	SCREW-ADJUSTMENT (M8X1X28-MM)	
M	11	1	**6E-6539**	2	NUT-CAP (M8X1-THD)	
	12	1	**6E-3273**	1	SEAT	
	13	1	**6E-6536**	1	PLUG	
	14	1	**6V-8352**	1	SEAL-O-RING	
	15	1	**193-1036**	1	SPRING	
	16	1	**6E-3276**	1	SPRING	
	17	1	**6E-3269**	1	RETAINER-SPRING	
	18	1	**105-2145**	1	VALVE-ORIFICE	
	19	1	**5P-9262**	1	SEAL-O-RING	
	20	1	**3J-7354**	1	SEAL-O-RING	
	21	1	**9S-8002**	1	PLUG-O-RING	
M	22	1	**8T-8442**	4	BOLT-SOCKET HEAD (M6X1X30-MM)	
	23	1	**9X-7680**	3	SEAL-O-RING	
	24	1	**119-0959**	1	PLUG-ORIFICE	

M-METRIC PART

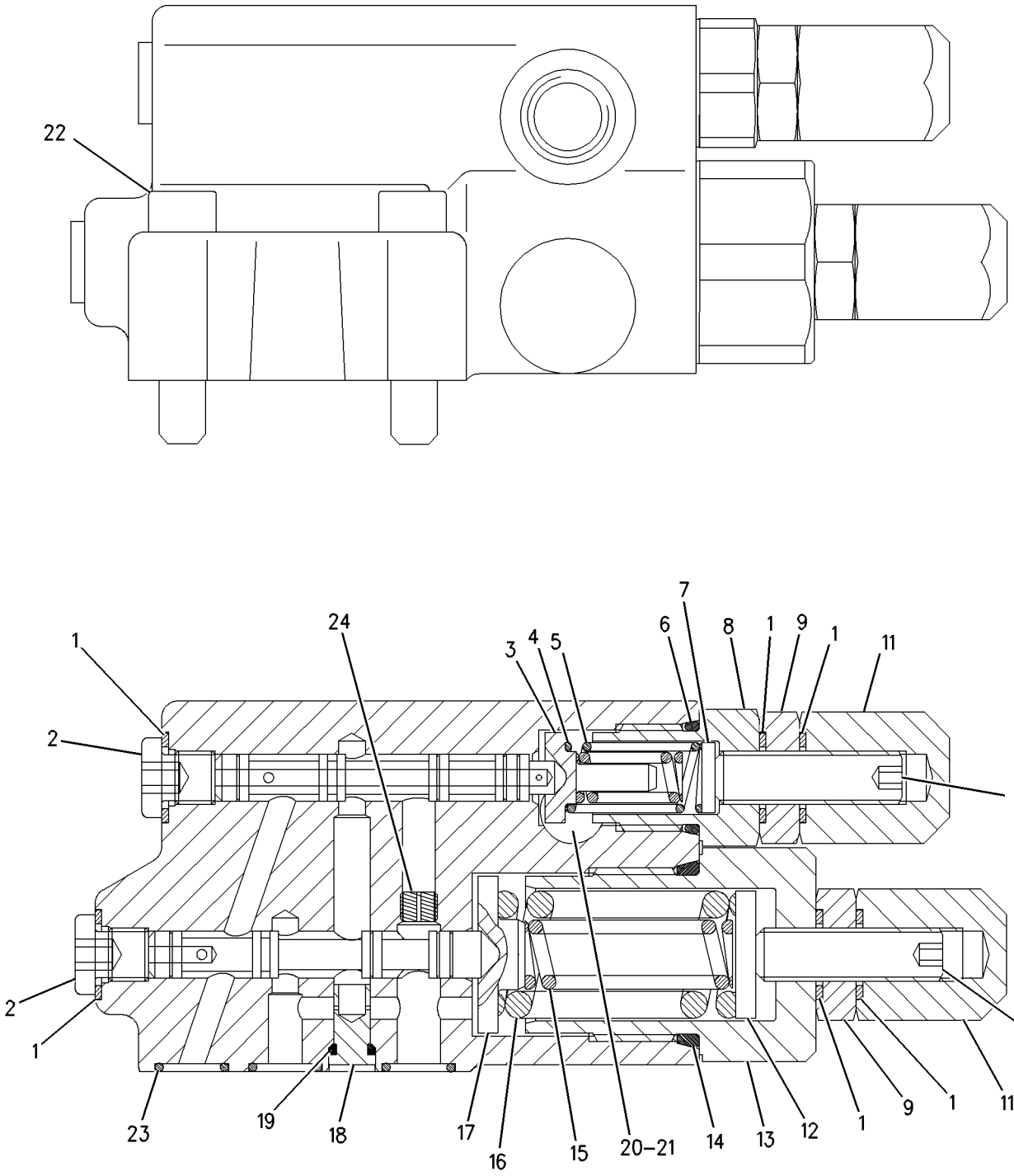

GRAPHIC #1 **<END>** g00826611

298-8919 VALVE GP-PUMP CONTROL–
PRESSURE, FLOW COMPENSATOR
S/N: RYF1-UP
PART OF 292-8768 PUMP GP-PISTON

SMCS-5455 **i02747133**

NOTE	REF NO	GRAPHIC REF	PART NUMBER	QTY	PART NAME 1 2 3 4 5 6 (PRODUCT LEVEL)	SEE PAGE
	1	1	**215-9962**	1	STOPPER	
M	2	1	**225-4607**	1	SETSCREW (M20X2.5X45-MM)	
	3	1	**245-7438**	1	PIN	
	4	1	**247-8920**	1	ORIFICE	
	5	1	**248-9953**	1	RETAINER	
	6	1	**248-9954**	1	RETAINER	
	7	1	**248-9955**	1	GUIDE	
	8	1	**254-6562**	1	BODY AS	
		1	**124-1555**	1	PLUG	
	9	1	**259-7889**	1	SPOOL AS	
	10	1	**263-1202**	1	SPRING	
	11	1	**263-1203**	1	COVER	
	12	1	**263-1204**	1	PISTON	
	13	1	**273-5464**	1	COVER	
	14	1	**277-2545**	2	SEAL-O-RING	
	15	1	**277-2548**	2	SEAL-O-RING	
	16	1	**277-2550**	1	SEAL-O-RING	
	17	1	**294-0701**	2	COVER	
	18	1	**294-0702**	2	SETSCREW	
	19	1	**303-3499**	2	PISTON	
	20	1	**095-1785**	2	RING-BACKUP	
	21	1	**095-1787**	2	RING-BACKUP	
	22	1	**095-1788**	1	RING-BACKUP	
M	23	1	**8T-4131**	1	NUT (M20X2.5-THD)	
	24	1	**153-8623**	1	RING-BACKUP	
	25	1	**189-9763**	3	SEAL-O-RING	
	26	1	**190-7673**	1	SEAL-O-RING	
	27	1	**190-7674**	1	SEAL-O-RING	
	28	1	**270-8937**	1	SPRING	
	29	1	**3J-1907**	1	SEAL-O-RING	
	30	1	**3K-6113**	4	WASHER-HARD (12X18.5X3-MM THK)	
	31	1	**6V-3319**	1	SEAL-O-RING	
	32	1	**7J-0204**	1	SEAL-O-RING	
	33	1	**7X-3392**	6	WASHER-HARD (13.5X22.5X3-MM THK)	
M	34	1	**8T-0273**	6	BOLT-SOCKET HEAD (M12X1.75X40-MM)	
M	35	1	**8T-4133**	2	NUT (M10X1.5-THD)	
	36	1	**9S-8004**	1	PLUG-O-RING	
	37	1	**9S-8007**	1	PLUG	
M	38	1	**9X-6032**	4	BOLT-SOCKET HEAD (M10X1.5X30-MM)	

M-METRIC PART

298-8919 **VALVE GP-PUMP CONTROL** *(contd.)* **i02747133**

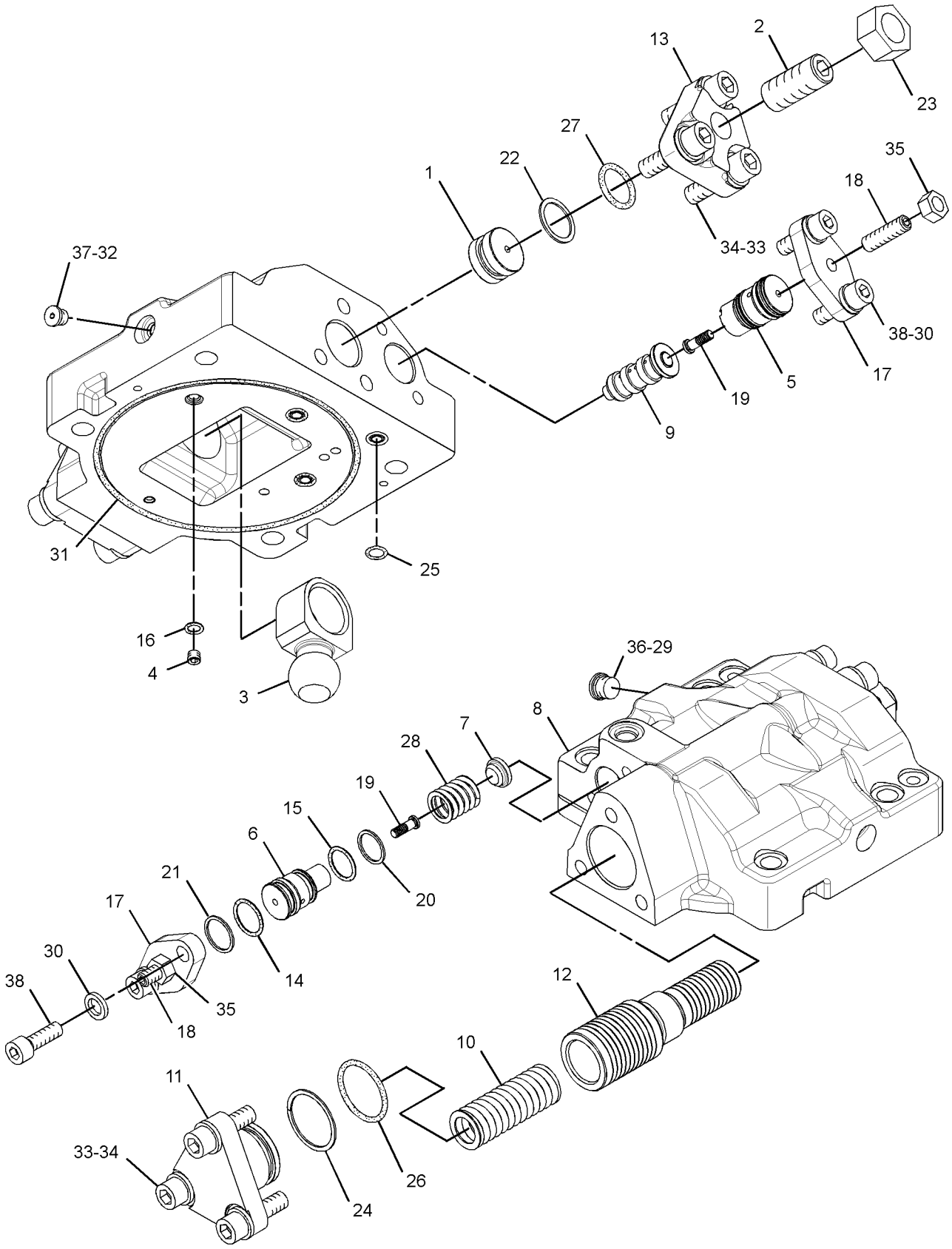

GRAPHIC #1 **<END>** g01370970

HYDRAULIC SYSTEM

4T-7581 VALVE GP-RELIEF

S/N: RYF1-UP
PART OF 253-4026 VALVE GP-RIDE CONTROL
AN ATTACHMENT

SMCS-5069, 5117 **i02252757**

NOTE	REF NO	GRAPHIC REF	PART NUMBER	QTY	PART NAME 1 2 3 4 5 6 (PRODUCT LEVEL)	SEE PAGE
	1	1	**6E-1835**	1	RETAINER AS	
	2	1	**9X-6395**	1	NUT (3/4-16-THD)	
	3	1	**7J-9933**	1	SEAL-O-RING	
	4	1	**4T-7571**	1	PLATE	
	5	1	**6J-6439**	1	VALVE-POPPET	
	6	1	**3K-0360**	2	SEAL-O-RING	
	7	1	**4T-4942**	1	SPRING	
	8	1	**9M-1974**	2	WASHER-HARD (8.8X16X2-MM THK)	

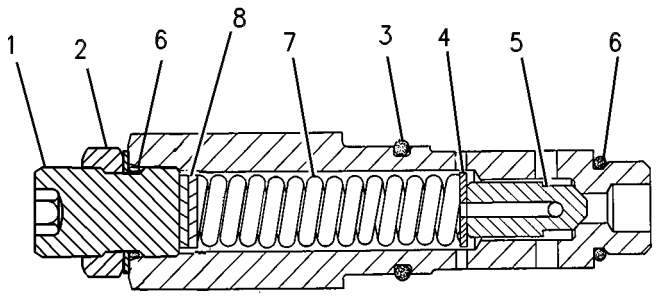

GRAPHIC #1 **<END>** g00121410

HYDRAULIC SYSTEM

253-4026 VALVE GP-RIDE CONTROL

S/N: RYF1-UP

PART OF 261-2337 VALVE GP-MAIN CONTROL

AN ATTACHMENT

SMCS-5004, 5054, 5066 **i03174682**

NOTE	REF NO	GRAPHIC REF	PART NUMBER	QTY	PART NAME 1 2 3 4 5 6 (PRODUCT LEVEL)	SEE PAGE
	1	1	**148-9359**	5	PLUG	
Y	2	1	**194-1723**	1	VALVE GP-CHECK (PILOT OIL)	483
J	3	1	**235-6157**	1	VALVE GP-SHUTTLE	
	4	1	**237-2234**	1	VALVE GP-SOLENOID (RIDE CONTROL, LIFT CYL ROD END)	
		1	**2S-4078**	1	SEAL-O-RING	
		1	**096-3044**	1	SEAL-O-RING	
		1	**099-8232**	1	SEAL-O-RING	
	5	1	**252-0737**	1	VALVE GP-SOLENOID (RIDE CONTROL, BALANCE)	
	5A	1	**252-0737**	1	VALVE GP-SOLENOID (RIDE CONT, LIFT CYL HEAD END)	
L	6	1	**253-1285**	1	VALVE GP-CHECK (RIDE CONTROL)	
	7	1	**253-4025**	1	BODY-VALVE	
Y	9	1	**260-8590**	1	VALVE GP-SHUTTLE	508
	10	1	*148-8395*	1	PLUG AS	
		1	**3K-0360**	1	SEAL-O-RING	
		1	**9S-8005**	1	PLUG-O-RING	
	11	1	*148-8406*	1	PLUG AS	
		1	**7M-8485**	1	SEAL-O-RING	
		1	**9S-9334**	1	PLUG-O-RING	
	12	1	**162-0177**	1	PLUG AS	
		1	**3J-1907**	1	SEAL-O-RING	
		1	**9S-8004**	1	PLUG-O-RING	
	13	1	**173-3993**	14	PLUG AS	
					(EACH INCLUDES)	
		1	**4J-7533**	1	SEAL-O-RING	
		1	**9S-8001**	1	PLUG-O-RING	
	14	1	*207-8218*	3	PLUG AS	
					(EACH INCLUDES)	
		1	**7J-0204**	1	SEAL-O-RING	
		1	**9S-8007**	1	PLUG	
	15	1	**1P-3704**	2	SEAL-RECTANGULAR	
	16	1	**1P-3705**	1	SEAL-RECTANGULAR	
	18	1	**4J-0524**	2	SEAL-O-RING	
	19	1	**4J-9535**	2	SEAL-O-RING	
Y	20	1	**4T-7581**	1	VALVE GP-RELIEF (RIDE CONTROL)	504
	21	1	**6J-3134**	5	SEAL-O-RING	
					AVAILABLE REPAIR KIT(S):	
J			**238-9844**	1	KIT-SEAL (SHUTTLE VALVE)	
L			**238-9843**	1	KIT-SEAL (CHECK VALVE)	
					(EACH KIT INCLUDES SEAL-O-RINGS AND RING-BACKUPS)	

J-KIT MARKED J SERVICES PARTS MARKED J
L-KIT MARKED L SERVICES PARTS MARKED L
Y-SEPARATE ILLUSTRATION

253-4026 VALVE GP-RIDE CONTROL *(contd.)* i03174682

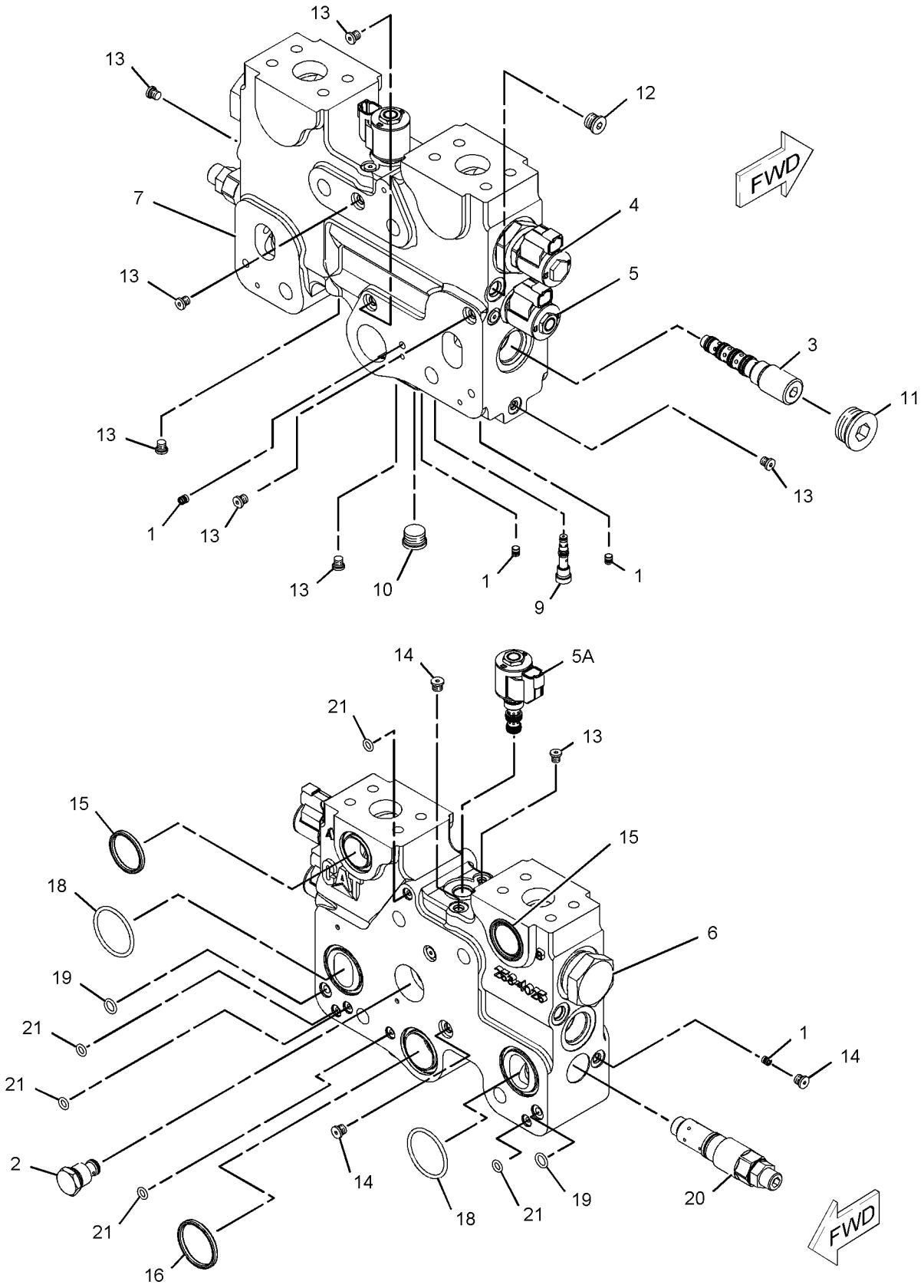

GRAPHIC #1 **<END>** g01116534

HYDRAULIC SYSTEM

257-8414 VALVE GP-SHUTTLE

S/N: RYF1-UP

PART OF 242-1307 MANIFOLD GP-CONTROL

SMCS-5079 **i02708474**

NOTE	REF NO	GRAPHIC REF	PART NUMBER	QTY	PART NAME 1 2 3 4 5 6 (PRODUCT LEVEL)	SEE PAGE
	1	1	**3K-0360**	1	SEAL-O-RING	
	2	1	**161-6149**	1	SEAL-O-RING	
	3	1	**095-1750**	1	SEAL-O-RING	
	4	1	**161-6161**	1	RING-BACKUP	
	5	1	**187-0541**	1	RING-BACKUP	

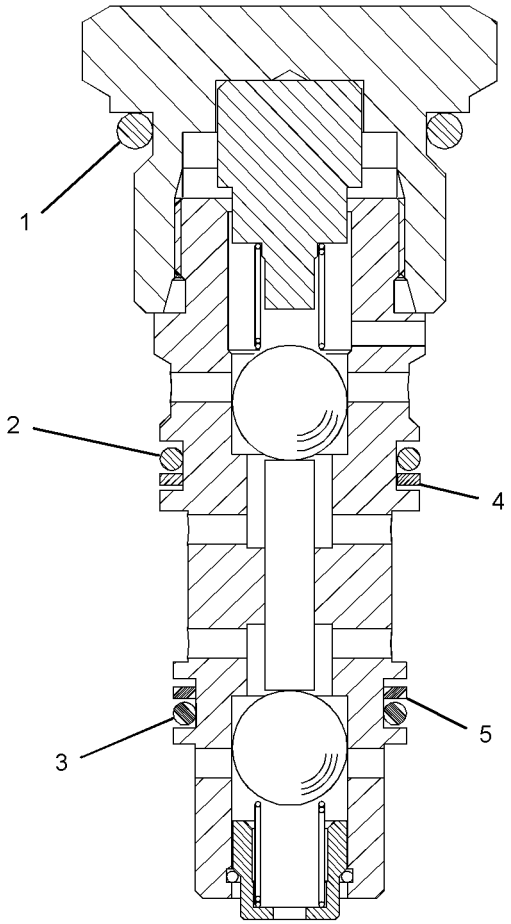

GRAPHIC #1 **<END>** g01104191

260-8590 VALVE GP-SHUTTLE

S/N: RYF1-UP
PART OF 247-7601, 261-0015, 261-0016 VALVE GP-CONTROL, 253-4026 VALVE GP-RIDE CONTROL
ALSO AN ATTACHMENT

SMCS-5079 **i02233009**

NOTE	REF NO	GRAPHIC REF	PART NUMBER	QTY	PART NAME 1 2 3 4 5 6 (PRODUCT LEVEL)	SEE PAGE
J	1	1	**3J-7354**	1	SEAL-O-RING	
J	2	1	**9N-1756**	1	SEAL-O-RING	
J	3	1	**3H-0442**	1	SEAL-O-RING	
					AVAILABLE REPAIR KIT(S):	
J			**240-7356**	1	KIT-SEAL (SHUTTLE VALVE) (IMPLEMENT CONTROL)	

J-(KIT MARKED J INCLUDES PARTS MARKED J)

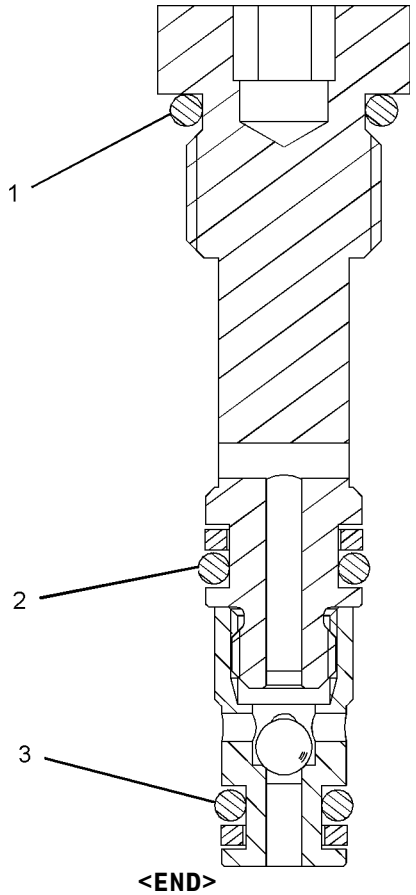

GRAPHIC #1 **<END>** g01018080

183-7595 VALVE GP-SOLENOID

S/N: RYF1-UP

PART OF 242-1307 MANIFOLD GP-CONTROL

SMCS-5132, 5479 **i02357432**

NOTE	REF NO	GRAPHIC REF	PART NUMBER	QTY	PART NAME 1 2 3 4 5 6 (PRODUCT LEVEL)	SEE PAGE
	1	1	**146-3728**	1	WASHER-SPRING	
	2	1	**187-8191**	1	COIL AS	
Z	3	1		1	CARTRIDGE AS	
Z	4	1		1	ADAPTER AS	

Z-NOT SERVICED SEPARATELY

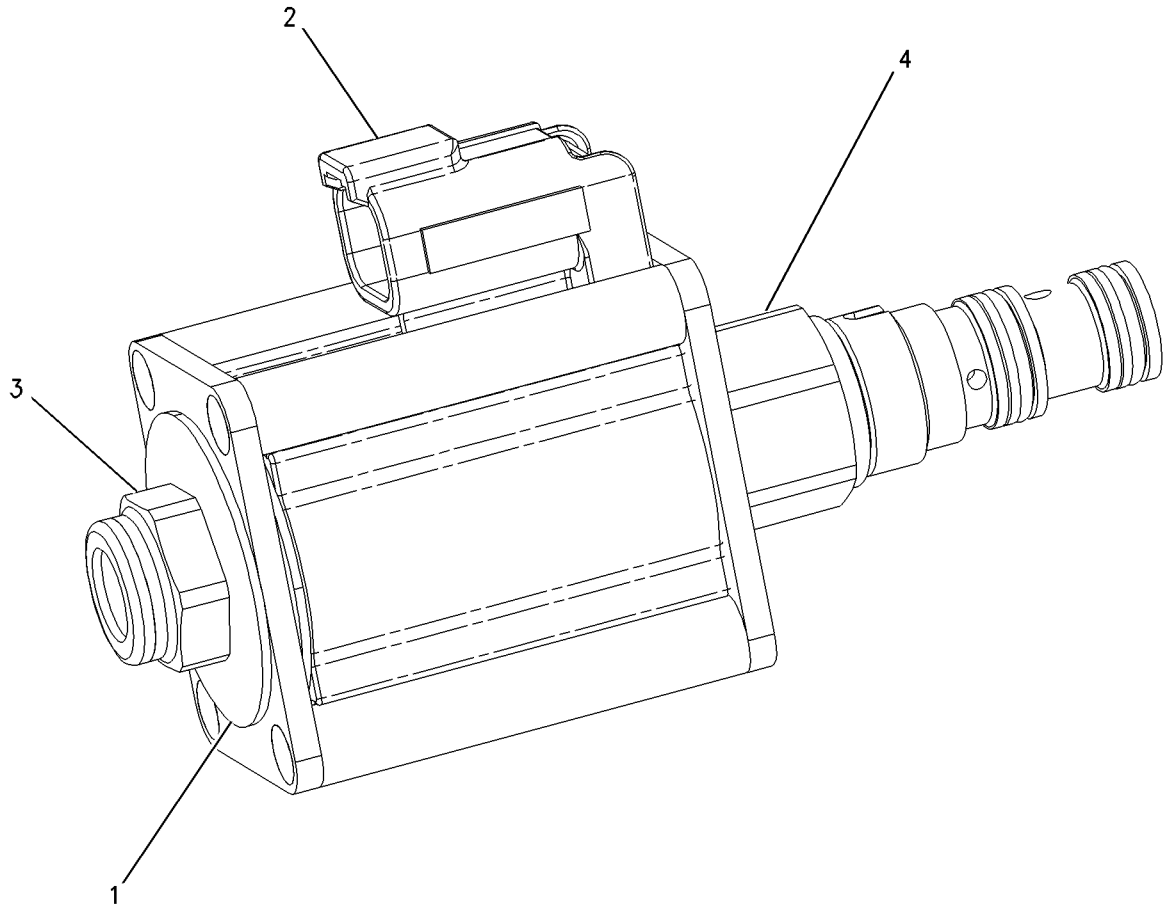

GRAPHIC #1 **<END>** g00891511

HYDRAULIC SYSTEM

225-0300 VALVE GP-SOLENOID

S/N: RYF1-UP
PART OF 269-9398 MANIFOLD GP-VALVE
ALSO AN ATTACHMENT

SMCS-5132, 5479 **i03624819**

NOTE	REF NO	GRAPHIC REF	PART NUMBER	QTY	PART NAME 1 2 3 4 5 6 (PRODUCT LEVEL)	SEE PAGE
	1	1	**212-0061**	1	FLANGE	
					AVAILABLE REPAIR KIT(S):	
			200-2371	1	KIT-SEAL	
					(INCLUDES O-RING SEALS)	

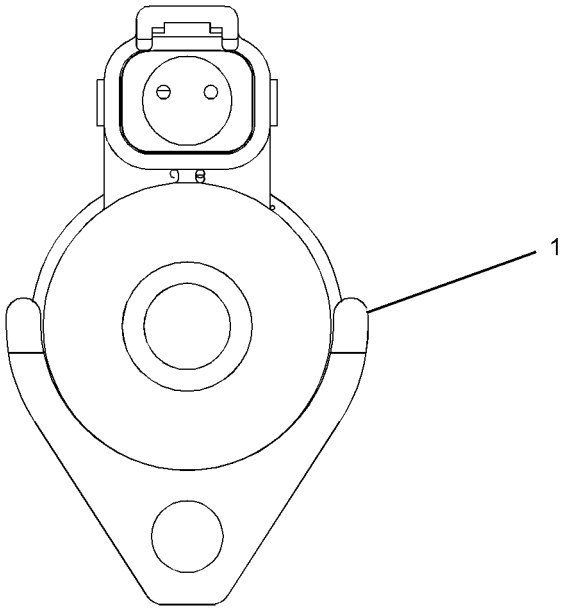

GRAPHIC #1 **<END>** g01113783

HYDRAULIC SYSTEM

262-5265 VALVE GP-SOLENOID

S/N: RYF1-UP

PART OF 261-0015, 261-0016 VALVE GP-CONTROL

ALSO AN ATTACHMENT

SMCS-5132, 5479 **i03624863**

NOTE	REF NO	GRAPHIC REF	PART NUMBER	QTY	PART NAME 1 2 3 4 5 6 (PRODUCT LEVEL)	SEE PAGE
	1	1	**2S-4078**	1	SEAL-O-RING	
	2	1	**096-3044**	1	SEAL-O-RING	
	3	1	**099-8232**	1	SEAL-O-RING	
	4	1	**307-2991**	1	RING-BACKUP	
	5	1	**307-2990**	1	RING-BACKUP	
	6	1	**250-6148**	1	COIL AS (24-VOLT)	
	7	1	**114-2772**	1	NUT (1/2-20-THD)	

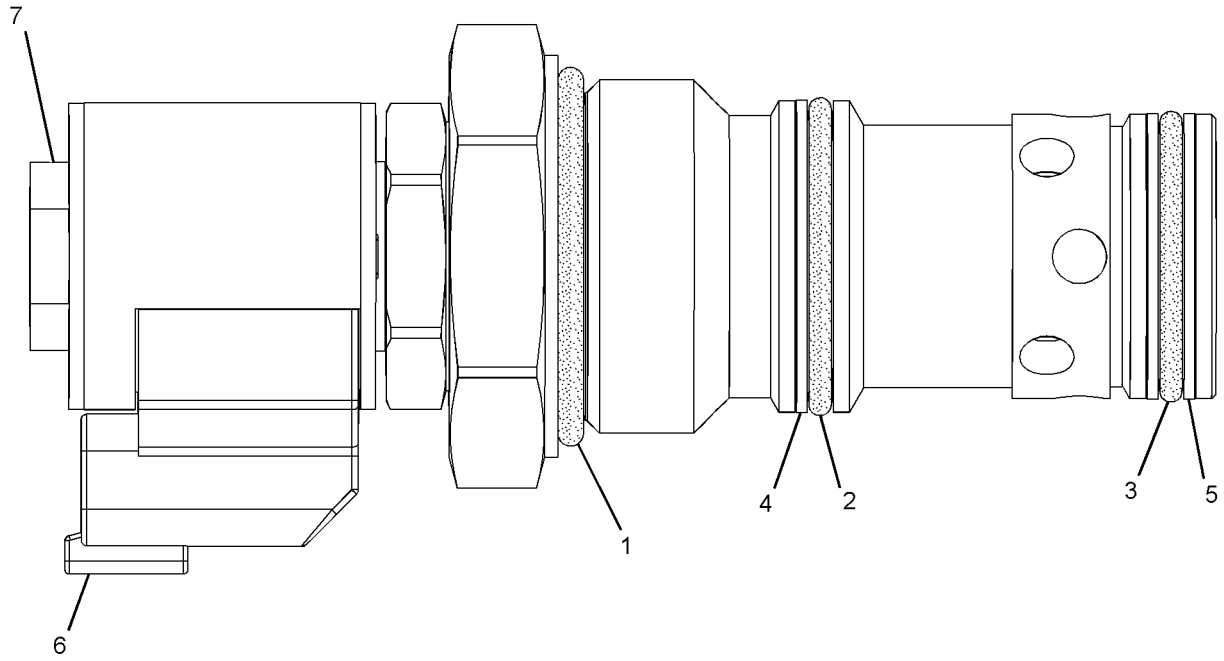

GRAPHIC #1 **<END>** g01376451

300-6057 VALVE GP-SOLENOID–24-VOLT

S/N: RYF1-UP
PART OF 261-0015, 261-0016 VALVE GP-CONTROL
FIELD REPLACEMENT ORDER 313-7668–PAGE 513
ALSO AN ATTACHMENT

SMCS-5132, 5479 **i03624868**

NOTE	REF NO	GRAPHIC REF	PART NUMBER	QTY	PART NAME 1 2 3 4 5 6 (PRODUCT LEVEL)	SEE PAGE
	1	1	**191-9247**	1	WASHER (19.15X31.65X2.36-MM THK)	
	2	1	**198-2914**	1	NUT (3/4-32-THD)	
	3	1	**312-8629**	1	COIL AS	

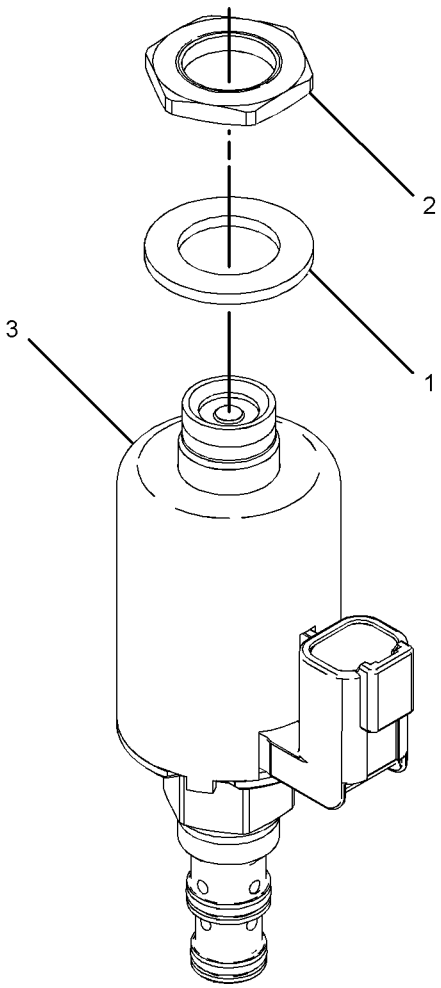

GRAPHIC #1 **<END>** g01723233

313-7668 VALVE GP-SOLENOID

S/N: RYF1-UP
24-VDC
FIELD INSTALLATION

SMCS-5132, 5479 **i03302458**

NOTE	REF NO	GRAPHIC REF	PART NUMBER	QTY	PART NAME 1 2 3 4 5 6 (PRODUCT LEVEL)	SEE PAGE
	1	1	**191-9247**	1	WASHER (19.15X31.65X2.36-MM THK)	
	2	1	**198-2914**	1	NUT (3/4-32-THD)	
	3	1	**312-8629**	1	COIL AS	
F			**3K-0360**	1	SEAL-O-RING	
F			**4K-2039**	1	SEAL-O-RING	
F			**6M-5062**	1	SEAL-O-RING	

F-NOT SHOWN

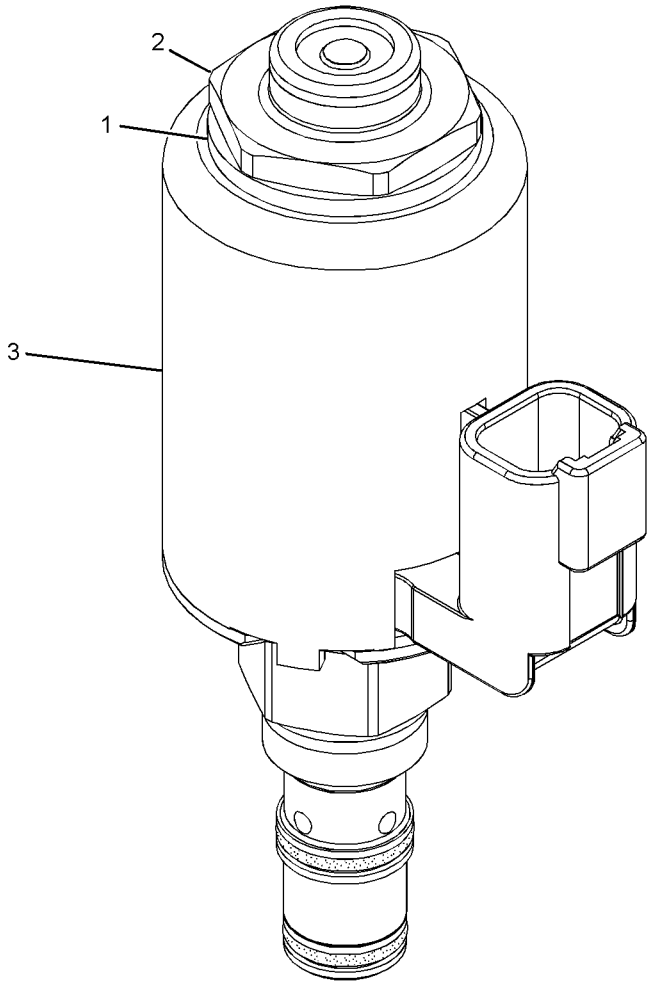

GRAPHIC #1 **<END>** g01637233

287-5806 ARM & BEARING AS-LIFT

S/N: RYF1-UP

PART OF 185-3644 CONTROL GP-BUCKET

SMCS-6118, 6119, 7069 **i03608067**

NOTE	REF NO	GRAPHIC REF	PART NUMBER	QTY	PART NAME 1 2 3 4 5 6 (PRODUCT LEVEL)	SEE PAGE
M	1	1	**8C-8499**	3	BOSS-WELD (M10X1.5X50-MM)	
	1A	1	**9C-7863**	1	BLOCK	
M	1B	1	**110-2023**	2	STUD-WELD (M10X1.5X25-MM)	
	2	1	**4V-8673**	2	BEARING-SLEEVE	
	3	1	**4V-8674**	2	BEARING-SLEEVE	
	4	1	**4V-8675**	2	BEARING-SLEEVE	

M-METRIC PART

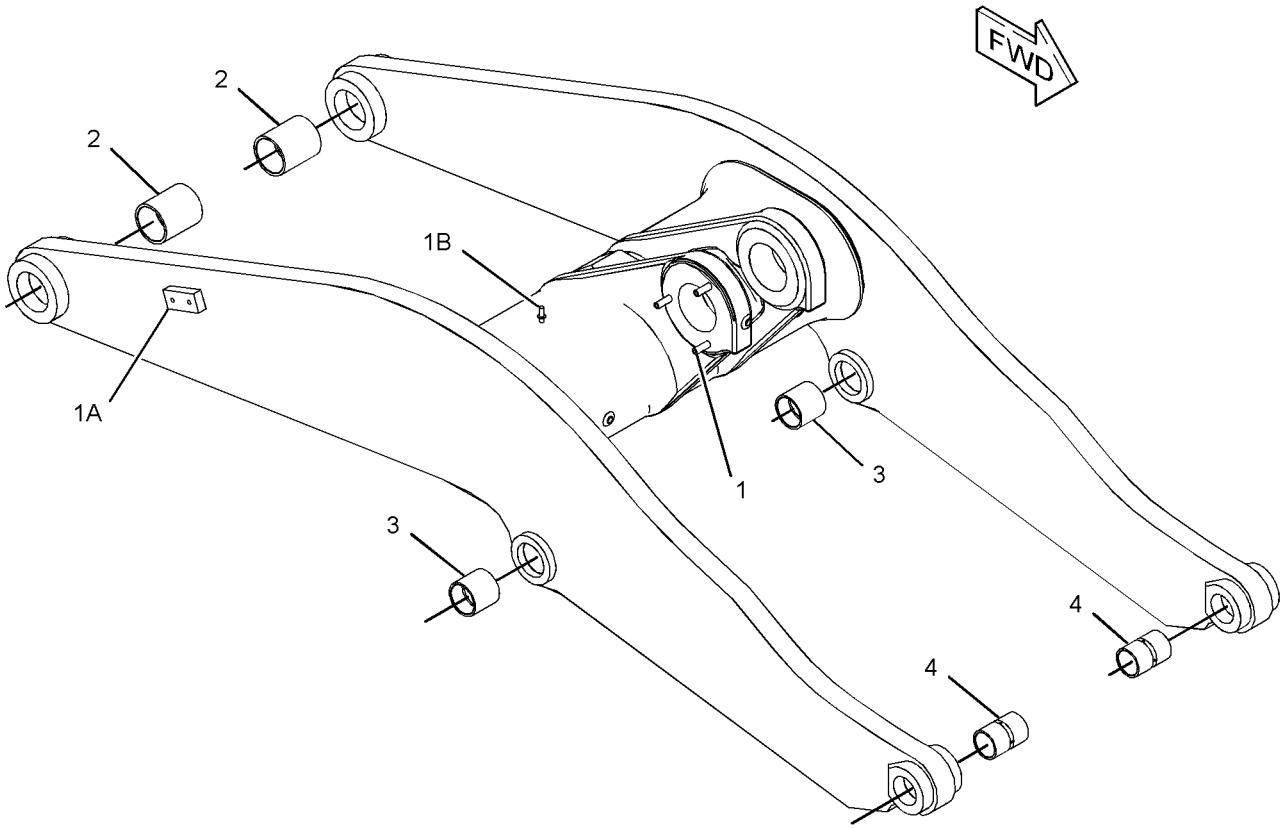

GRAPHIC #1 **<END>** g01876335

287-5814 ARM & BEARING AS-LIFT—HIGH LIFT MACHINES

S/N: RYF1-UP
PART OF 236-9092 CONTROL AR-HIGH LIFT
AN ATTACHMENT

SMCS-6118, 6119, 7069 **i03629426**

NOTE	REF NO	GRAPHIC REF	PART NUMBER	QTY	PART NAME 1 2 3 4 5 6 (PRODUCT LEVEL)	SEE PAGE
	1	1	*242-0444*	1	ARM AS-LIFT	
	1A	1	**9C-7863**	1	BLOCK	
M	1B	1	**110-2023**	2	STUD-WELD (M10X1.5X25-MM)	
	2	1	**4V-8673**	2	BEARING-SLEEVE	
	3	1	**4V-8674**	2	BEARING-SLEEVE	
	4	1	**4V-8675**	2	BEARING-SLEEVE	

M-METRIC PART

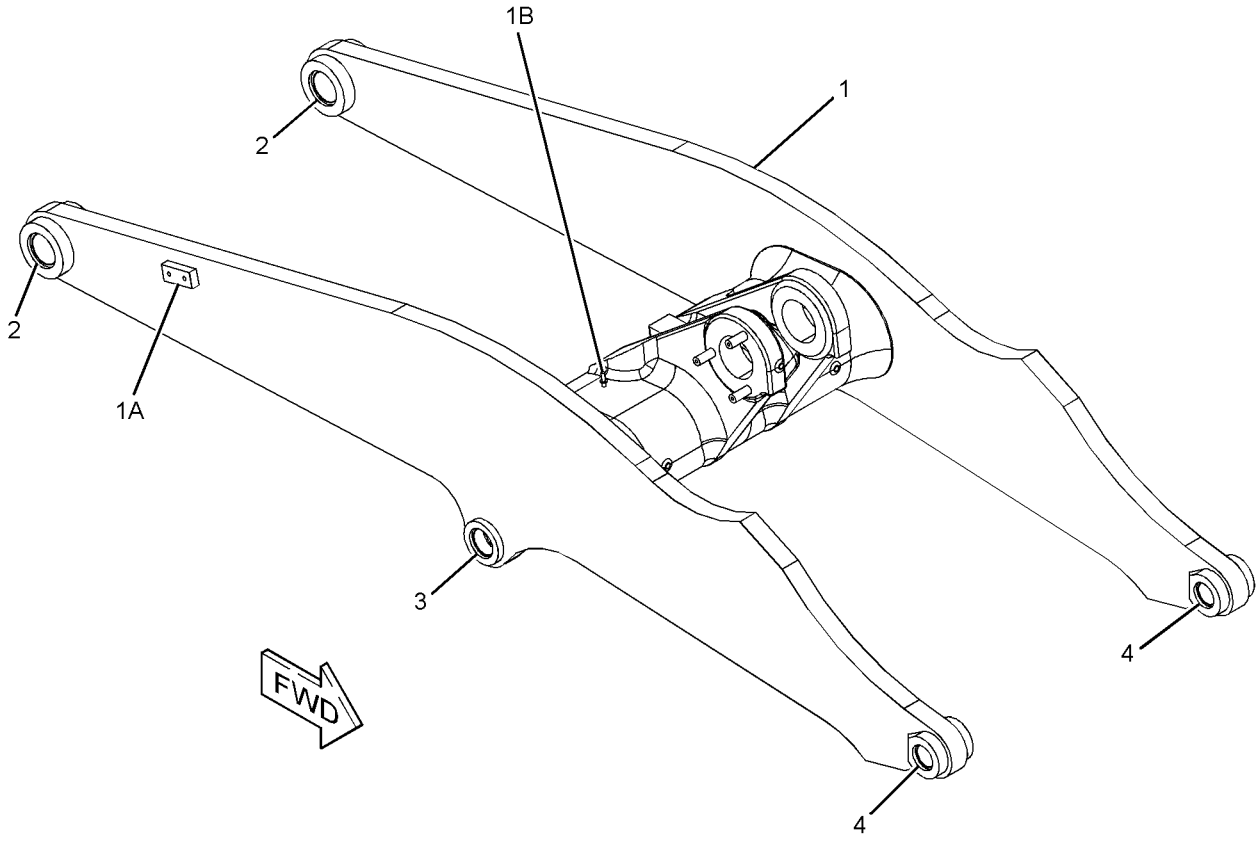

GRAPHIC #1 **<END>** g01275281

IMPLEMENTS

185-3644 CONTROL GP-BUCKET

S/N: RYF1-UP

PART OF 236-9000 CHASSIS AR

SMCS-6107 **i03608041**

NOTE	REF NO	GRAPHIC REF	PART NUMBER	QTY	PART NAME 1 2 3 4 5 6 (PRODUCT LEVEL)	SEE PAGE
	1	1	**2D-4867**	2	FITTING-GREASE	
	2	1	**3B-8489**	6	FITTING-GREASE	
	3	1	**3B-8491**	2	FITTING-GREASE	
	4	1	**4E-3196**	2	PIN AS	
	5	1	**4V-7099**	3	PIN AS	
	6	1	**4V-7101**	1	PIN AS	
B	7	1	**5V-0353**	4	WASHER (65X133X1.6-MM THK)	
B	8	1	**5V-0354**	4	WASHER (66X133X3-MM THK)	
	9	1	**7V-6715**	2	PIN AS	
	10	1	**9C-7907**	7	SPACER (21.5X28X14-MM THK)	
	11	1	**096-6467**	6	WASHER (22X60X8-MM THK)	
	12	1	**137-4117**	1	LINK & BEARING AS-BUCKET	
		1	**4V-8520**	2	BEARING-SLEEVE	
	13	1	**138-6674**	2	PIN AS	
	14	1	**138-6679**	1	PIN AS	
	15	1	**138-6685**	2	PIN AS	
B	16	1	**159-0268**	4	SHIM (0.35-MM THK)	
B	17	1	**159-0269**	8	SHIM (0.35-MM THK)	
	18	1	**278-7217**	1	LEVER AS	
		1	**4V-8519**	1	BEARING-SLEEVE	
Y	19	1	**287-5806**	1	ARM & BEARING AS-LIFT	514
	20	1	**7K-9205**	4	SEAL-LIP TYPE	
	21	1	**7K-9209**	4	SEAL-LIP TYPE	
	22	1	**7K-9212**	8	SEAL-LIP TYPE	
	23	1	**7K-9220**	2	SEAL-LIP TYPE	
M	24	1	**8T-4780**	6	BOLT (M20X2.5X30-MM)	
	25	1	**8T-5439**	7	WASHER-HARD (21.5X45X6-MM THK)	
M	26	1	**8T-5460**	2	BOLT (M20X2.5X40-MM)	
M	27	1	**8T-6430**	5	BOLT (M20X2.5X50-MM)	

B-USE AS REQUIRED
M-METRIC PART
Y-SEPARATE ILLUSTRATION

185-3644 **CONTROL GP-BUCKET** *(contd.)* **i03608041**

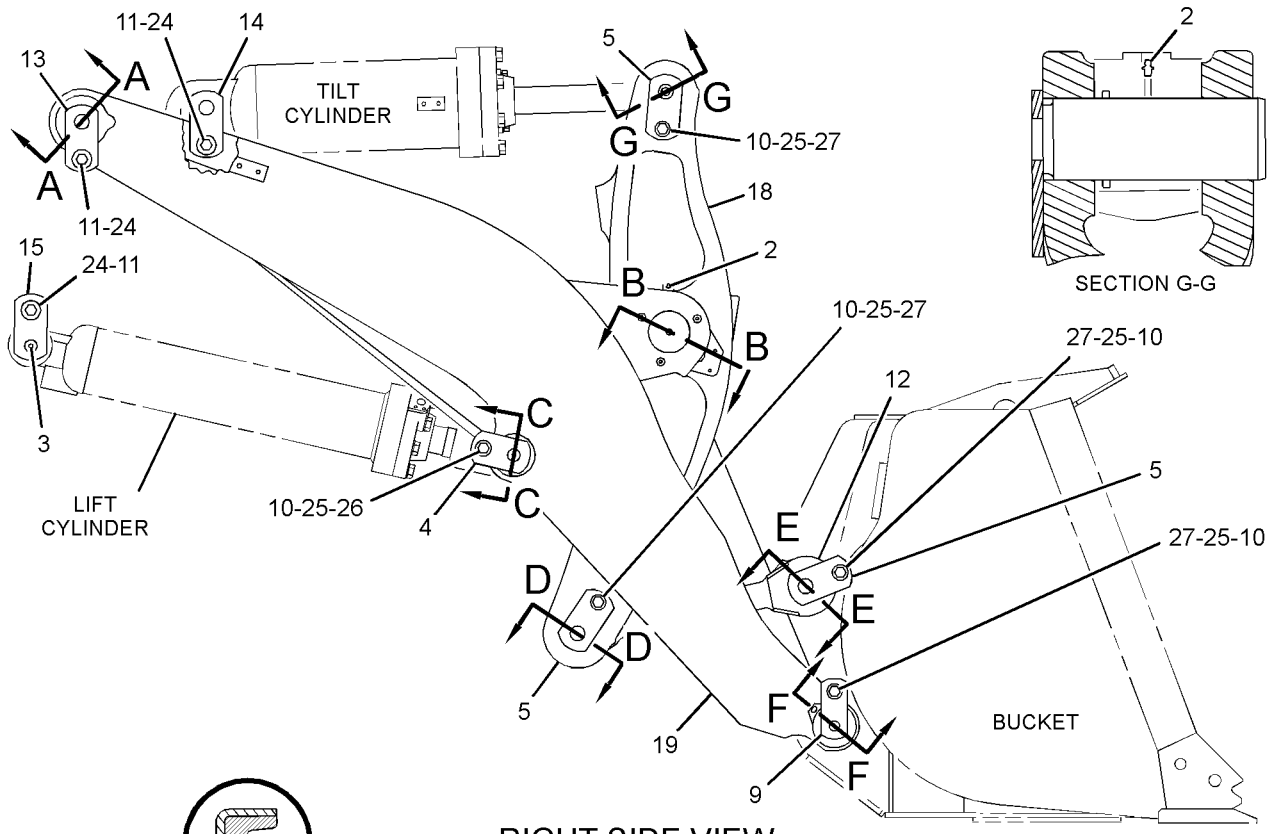

RIGHT SIDE VIEW

SECTION G-G

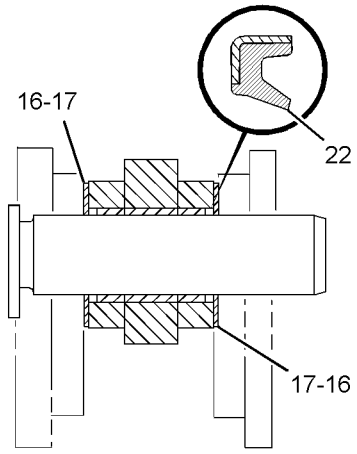

SECTION A-A

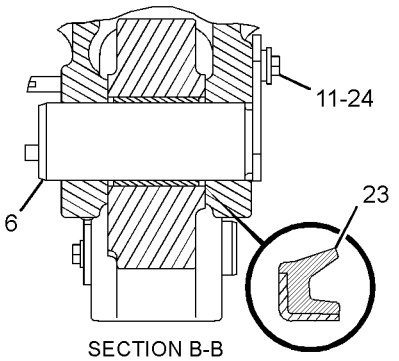

SECTION B-B

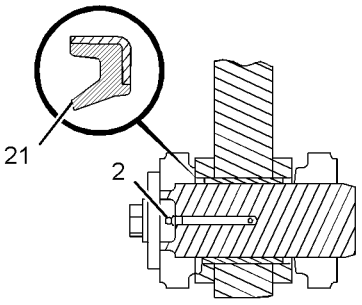

SECTION C-C

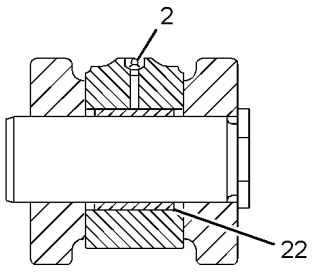

SECTION D-D

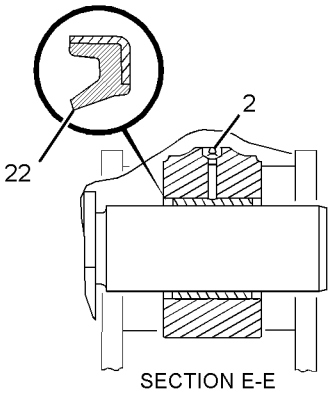

SECTION E-E

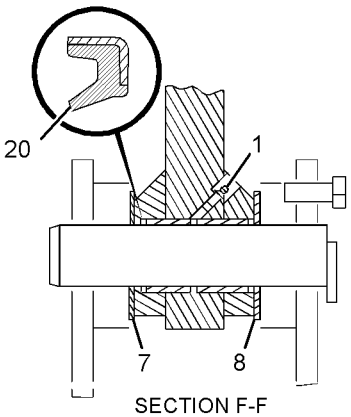

SECTION F-F

GRAPHIC #1

<END>

g01277285

OPERATOR STATION

173-1028 ADJUSTER GP-SEAT

S/N: RYF1-UP
PART OF 178-0603, 246-4302 SEAT GP
ALSO AN ATTACHMENT

SMCS-7321 **i01437574**

NOTE	REF NO	GRAPHIC REF	PART NUMBER	QTY	PART NAME 1 2 3 4 5 6 (PRODUCT LEVEL)	SEE PAGE
	1	1	**4V-8256**	4	SPRING	
	2	1	**117-4486**	1	ANCHOR	
	3	1	**117-4492**	1	ROD	
	4	1	**132-0338**	2	WASHER-PLASTIC (13X31.7X0.8-MM THK)	
	5	1	**136-1544**	1	LATCH AS-LH	
	6	1	**143-1288**	1	LOCKNUT-FLANGE (3/8-16-THD)	
	7	1	**156-5545**	1	LATCH AS-RH	
	8	1	**164-4531**	1	ROD	
	9	1	**9M-1974**	1	WASHER-HARD (8.8X16X2-MM THK)	
	10	1	**170-1114**	1	HANDLE (SLIDE ADJUSTMENT)	
	11	1	**170-1115**	1	HANDLE (TILT ADJUSTMENT)	
	12	1	**172-4001**	1	BRACKET	
	13	1	**1D-4675**	1	BOLT-CARRIAGE (3/8-16X0.75-IN)	
	14	1	**2K-4973**	2	LOCKNUT (3/8-16-THD)	
	15	1	**7L-8170**	1	NUT-FULL (5/16-18-THD)	
	16	1	**7X-0608**	2	WASHER-HARD (10.2X16X2-MM THK)	
	17	1	**170-1112**	1	PLATE AS	

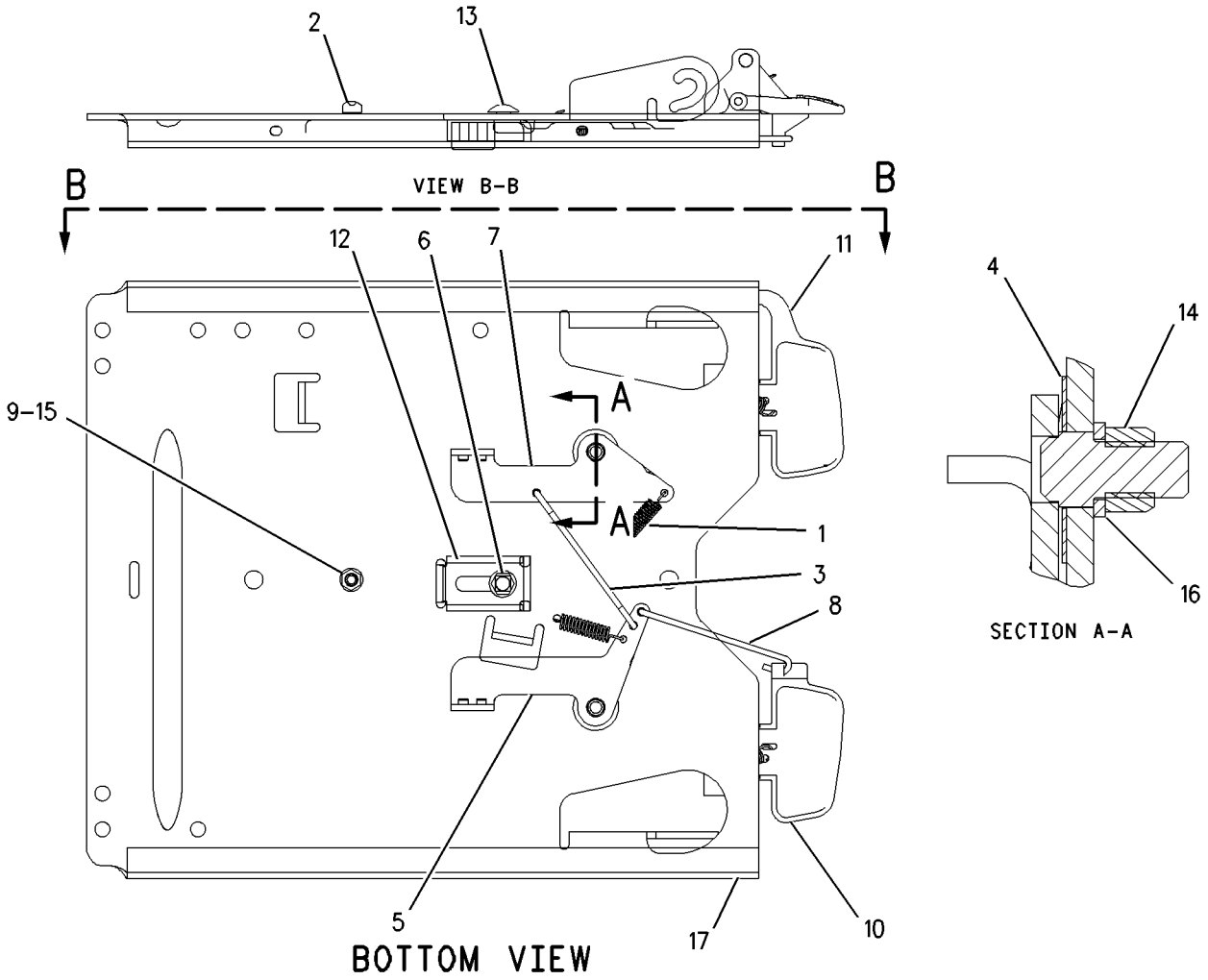

GRAPHIC #1 **<END>** g00686297

OPERATOR STATION

237-3970 AIR COMPRESSOR GP-SEAT

S/N: RYF1-UP

FOR OPTIONAL FIELD REPLACEMENT ORDER 214-0783 COMPRESSOR,211-5358 CONDUIT(100-CM) & 5P-6010 TUBE(1-M), PROVIDES HEAVY DUTY SEAT COMPRESSOR PART OF 191-2933 SUSPENSION GP-SEAT ALSO AN ATTACHMENT

SMCS-731S, 7324 **i02784170**

NOTE	REF NO	GRAPHIC REF	PART NUMBER	QTY	PART NAME 1 2 3 4 5 6 (PRODUCT LEVEL)	SEE PAGE
					(NO SERVICED PARTS)	

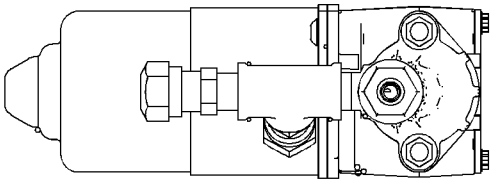

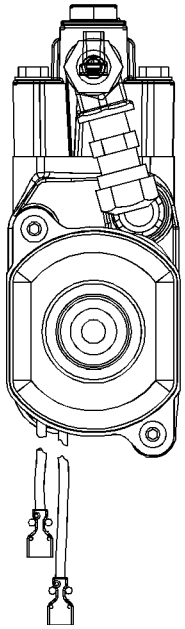

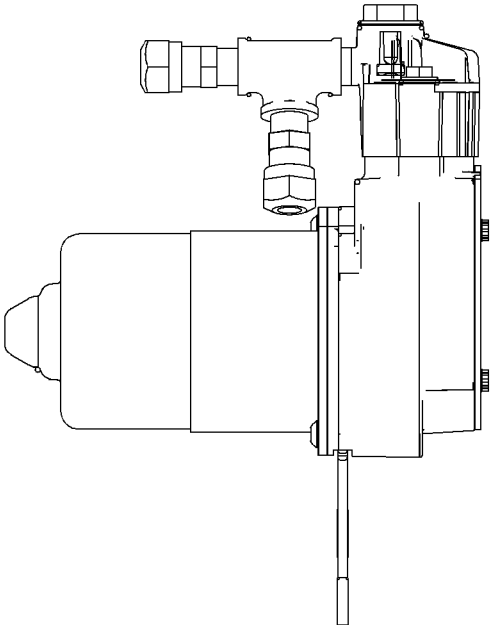

GRAPHIC #1 **<END>** g01040576

OPERATOR STATION

214-7634 ARM GP-WINDOW WIPER–REAR

S/N: RYF1-UP

PART OF 257-2016 WIPER GP-WINDOW

SMCS-7305 **i01933231**

NOTE	REF NO	GRAPHIC REF	PART NUMBER	QTY	PART NAME 1 2 3 4 5 6 (PRODUCT LEVEL)	SEE PAGE
M	1	1	**191-8921**	2	BOLT-SOCKET HEAD (M6X1X25-MM)	
	2	1	**227-7392**	2	WASHER (6.3X10.3X0.4-MM THK)	
M	3	1	**6V-8225**	2	NUT (M6X1-THD)	
	4	1	**136-3195**	1	NOZZLE AS-WASHER	
	5	1	**136-3188**	3	CLIP	

M-METRIC PART

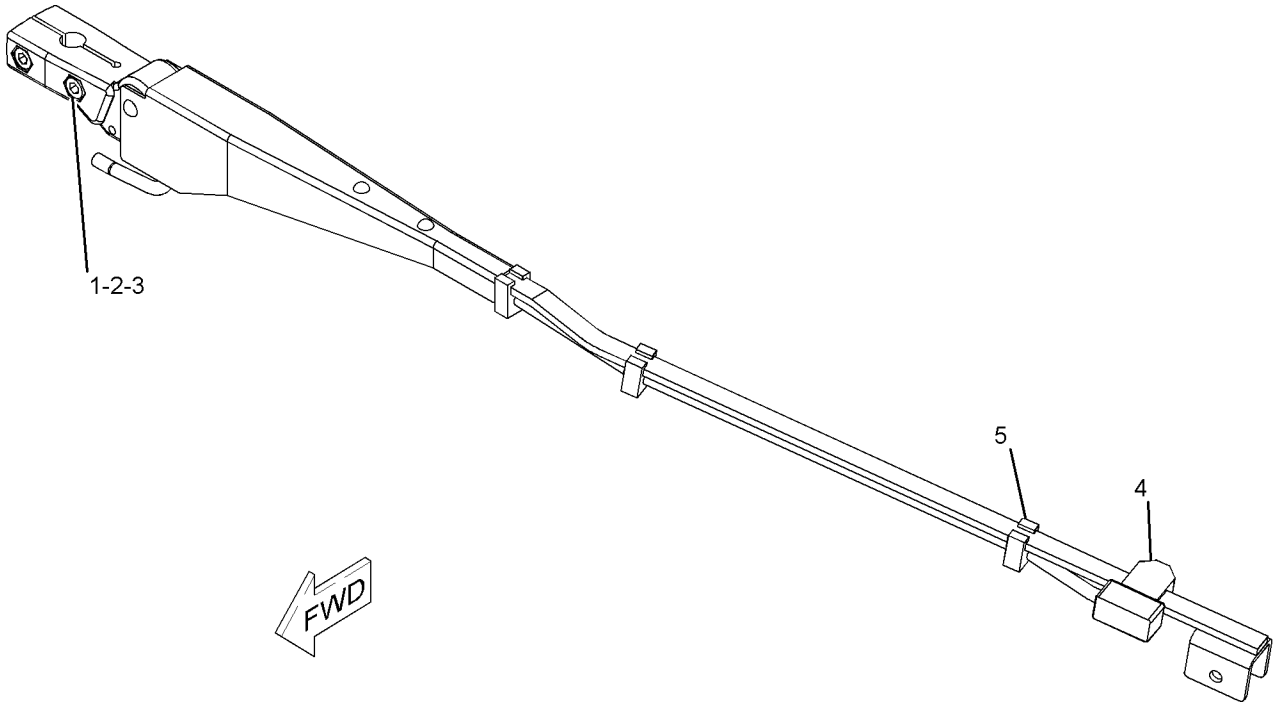

GRAPHIC #1 **<END>** g01024688

OPERATOR STATION

214-7635 ARM GP-WINDOW WIPER–FRONT

S/N: RYF1-UP

PART OF 257-2016 WIPER GP-WINDOW

SMCS-7305 **i01902746**

NOTE	REF NO	GRAPHIC REF	PART NUMBER	QTY	PART NAME 1 2 3 4 5 6 (PRODUCT LEVEL)	SEE PAGE
M	1	1	**191-8921**	4	BOLT-SOCKET HEAD (M6X1X25-MM)	
	2	1	**227-7392**	4	WASHER (6.3X10.3X0.4-MM THK)	
M	3	1	**6V-8225**	4	NUT (M6X1-THD)	
	4	1	**136-3190**	1	NOZZLE AS-WASHER	
	5	1	**136-3188**	3	CLIP	

M-METRIC PART

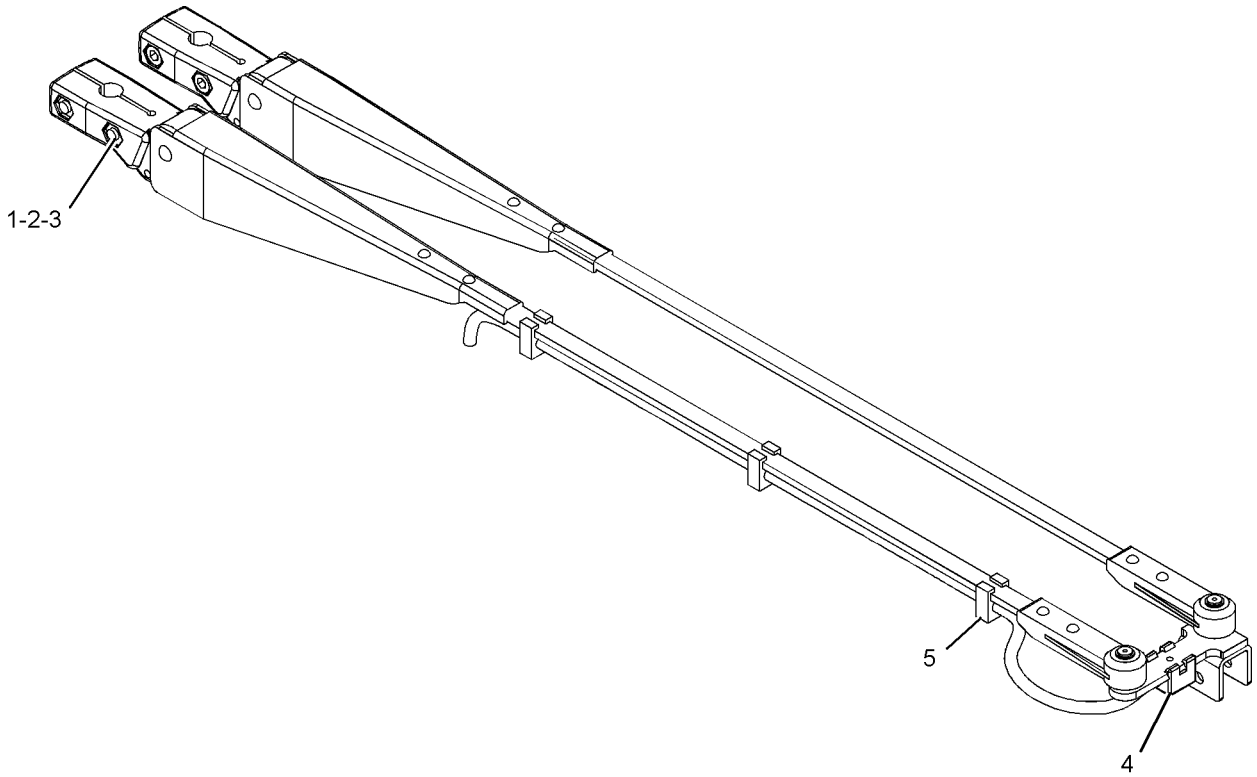

GRAPHIC #1 **<END>** g01021918

OPERATOR STATION

188-9820 ARMREST GP

S/N: RYF1-UP
PART OF 178-7913, 246-4447 SEAT GP
ALSO AN ATTACHMENT

SMCS-7307, 7312 **i02250550**

NOTE	REF NO	GRAPHIC REF	PART NUMBER	QTY	PART NAME 1 2 3 4 5 6 (PRODUCT LEVEL)	SEE PAGE
	1	1	**173-2219**	1	CUSHION AS	
	2	1	**143-1288**	1	LOCKNUT-FLANGE (3/8-16 THD)	
	3	1	**163-1149**	1	BRACKET AS	
	4	1	**1K-6872**	1	LOCKNUT (1/2-13-THD)	
	5	1	**2M-0849**	1	WASHER-HARD (13.5X25.5X5-MM THK)	
	6	1	**3E-4312**	1	NUT-SQUARE (3/8-16 THD)	
	7	1	**4L-6454**	1	BOLT (3/8-16X1-IN)	
	8	1	**6V-2687**	4	SCREW-PAN HEAD (10-24X1-IN)	
	9	1	**8S-7803**	1	RING-RETAINING	
	10	1	**8T-8641**	1	WASHER (M9.8X16X0.8-MM THK)	
	11	1	**8Y-5910**	1	KNOB AS	
	12	1	**8Y-5913**	1	BASE-ARMREST	
	13	1	**8Y-5914**	1	SPRING	
	14	1	**9X-8873**	1	BOLT (1/2-13X2.25-IN)	

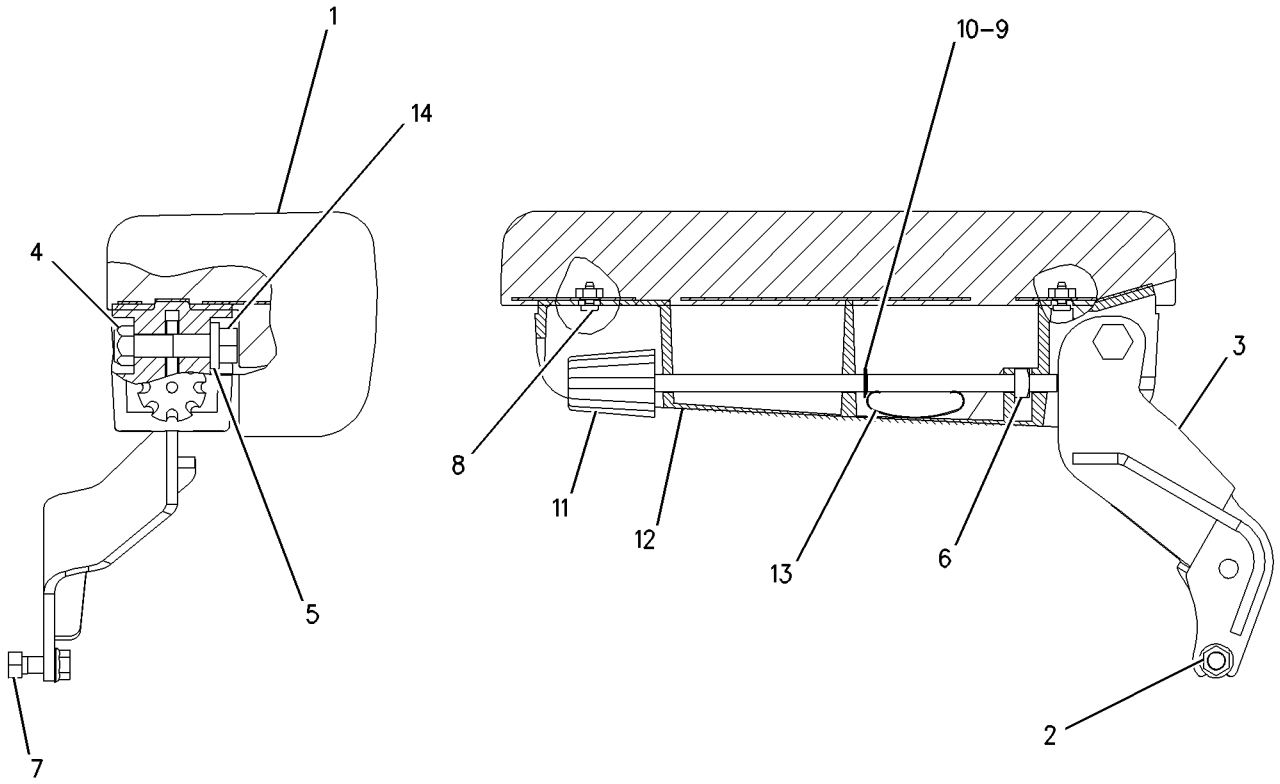

GRAPHIC #1 **<END>** g00812871

OPERATOR STATION

237-2572 CAB AR-ENCLOSED ROPS—HMU STEERING

S/N: RYF1-UP

PART OF 237-2570 OPERATOR AR-ENCLOSED ROPS

SMCS-7301 **i03625766**

NOTE	PART NUMBER	QTY	PART NAME 1 2 3 4 5 6 (PRODUCT LEVEL)	SEE PAGE
Y	*243-1089*	1	CONTROL GP-ELECTROHYDRAULIC (2-FUNCTION)	524
Y	*265-6695*	1	CONTROL GP-FOOT BRAKE	382
Y	*244-2747*	1	CONTROL GP-PARKING BRAKE	384
Y	*141-8802*	1	CONTROL GP-STEERING (HMU STEERING)	545
Y	*121-9300*	1	CONTROL GP-TRANSMISSION	547
Y	*171-8888*	1	DUCT & FILTER GP-CAB AIR	555
Y	**232-1397**	1	FLOOR GP-SOUND SUPPRESSION (CAB)	557
Y	*243-1092*	1	HEATER GP-CAB	561
Y	*257-2008*	1	INSTALLATION GP-RADIO	568
Y	*235-8559*	1	LIGHTING GP-FLOOD (CAB FRONT, REAR)	159
Y	*232-1394*	1	LINER GP-CAB (ENCLOSED ROPS)	573
Y	*109-8203*	1	MIRROR GP-REAR VIEW (INTERIOR)	579
Y	**192-7049**	1	MODULE GP-SPEEDOMETER & TACH	589
Y	*310-6071*	1	PANEL GP-INSTRUMENT	599
Y	*245-6458*	1	PANEL GP-INSTRUMENT (LOWER)	596
Y	*207-1759*	1	PEDAL GP-GOVERNOR	601
Y	*331-2879*	1	ROOF GP-CAB	607
Y	*237-2574*	1	ROPS GP-ENCLOSED	608
Y	*117-1410*	1	SEALING GP-GLASS	613
Y	*174-3624*	1	SEAT GP-SUSPENSION	620
Y	*243-1090*	1	SUPPORT GP-HYDRAULIC CONTROL (REAR)	624
Y	*234-9553*	1	SUPPRESSION GP-CAB SOUND (REAR)	630
Y	*232-1396*	1	SUPPRESSION GP-CAB SOUND (FRONT)	628
Y	*257-2016*	1	WIPER GP-WINDOW	640
Y	*237-4910*	1	WIRING GP-CAB	221

Y-SEPARATE ILLUSTRATION

<END>

OPERATOR STATION

243-1089 CONTROL GP-ELECTROHYDRAULIC–2-FUNCTION

S/N: RYF1-UP

PART OF 237-2572 CAB AR-ENCLOSED ROPS

SMCS-5702 **i02839807**

NOTE	REF NO	GRAPHIC REF	PART NUMBER	QTY	PART NAME 1 2 3 4 5 6 (PRODUCT LEVEL)	SEE PAGE
	1	1	**4E-8722**	4	NUT (RETAINER)	
	2	1	**140-5945**	1	FILM-IDENTIFICATION (HORN)	
	3	1	**189-2077**	1	FILM-CONTROL (LIFT, FLOAT, LOWER)	
	4	1	**189-2078**	1	FILM-CONTROL (DUMP, TILT BACK)	
	5	1	**189-2079**	1	FILM-INSTRUCTION (MAINTENANCE)	
	6	1	**245-6447**	1	CUSHION AS	
	7	1	**247-4184**	1	FILM-IDENTIFICATION (DOWNSHIFT SWITCH)	
	8	1	**247-4969**	1	PLATE	
	9	1	**262-5236**	1	COVER	
	10	1	**262-5239**	1	HOUSING AS	
	11	1	**262-5240**	1	PLATE AS	
CY	12	1	**307-4671**	1	CONTROL GP-HANDLE (TILT)	535
CY	12A	1	**307-4671**	1	CONTROL GP-HANDLE (LIFT)	535
M	13	1	**6R-7653**	2	SCREW (M6X1X15-MM)	
	14	1	**8R-3695**	2	GROMMET	
	15	1	**8T-4205**	2	WASHER-HARD (7.2X14.5X2-MM THK)	
M	16	1	**8T-4970**	2	BOLT (M6X1X14-MM)	
	17	1	**9X-2038**	4	WASHER (7X19X2-MM THK)	
M	18	1	**9X-2044**	17	SCREW-TRUSS HEAD (M6X1X16-MM)	
M	19	1	**9X-2045**	4	SCREW-TRUSS HEAD (M6X1X20-MM)	
D	20	1	**6V-3987**		SEAL (0.06-M EACH)	

C-CHANGE FROM PREVIOUS TYPE
D-ORDER BY THE METER
M-METRIC PART
Y-SEPARATE ILLUSTRATION

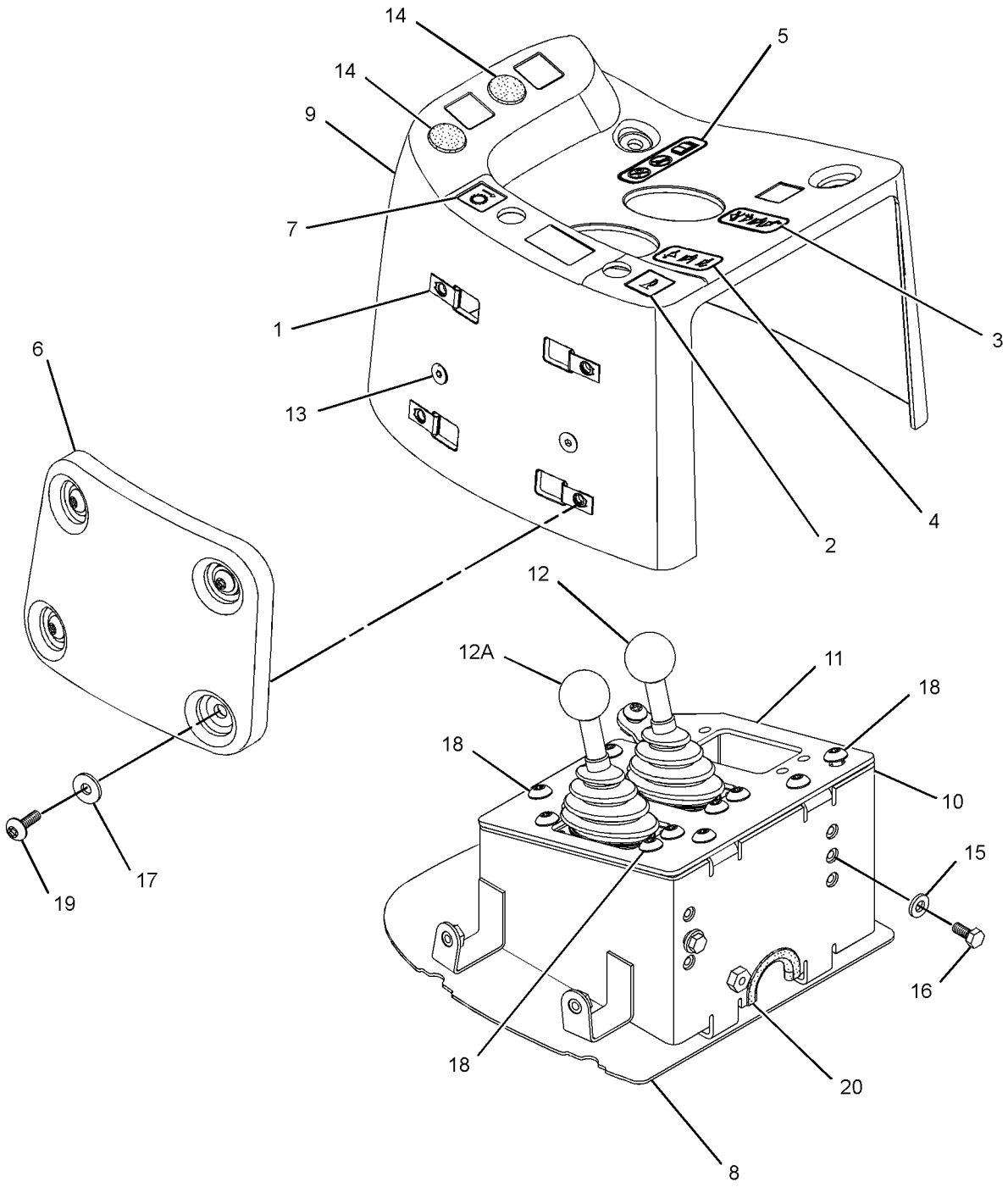

GRAPHIC #1 **<END>** g01412437

OPERATOR STATION

243-1941 CONTROL GP-ELECTROHYDRAULIC–
JOYSTICK, 2-FUNCTION
S/N: RYF1-UP
AN ATTACHMENT

SMCS-5702 **i03250900**

NOTE	REF NO	GRAPHIC REF	PART NUMBER	QTY	PART NAME 1 2 3 4 5 6 (PRODUCT LEVEL)	SEE PAGE
	1	1	**4E-8722**	4	NUT (RETAINER)	
C	2	1	**7K-1181**	5	STRAP-CABLE	
	3	1	**189-2079**	1	FILM-INSTRUCTION (MAINTENANCE)	
	4	1	**245-6447**	1	CUSHION AS	
CY	5	1	**319-9558**	1	CONTROL GP-JOYSTICK (2-FUNCTION, WITH DOWNSHIFT)	542
C	6	1	**316-8507**	1	HARNESS AS-CONTROL	
	7	1	**247-4969**	1	PLATE	
	8	1	**254-9149**	1	FILM-CONTROL (JOYSTICK, 2-FCTN, DOWNSHIFT SW)	
	9	1	**262-5238**	1	COVER	
	10	1	**262-5239**	1	HOUSING AS	
	11	1	**263-1995**	1	PLATE AS	
M	12	1	**112-6646**	4	LOCKNUT (M6X1-THD)	
	13	1	**156-6175**	1	CLIP	
	14	1	**198-4775**	1	WASHER-HARD (6.6X15X6-MM THK)	
M	15	1	**6R-7653**	2	SCREW (M6X1X15-MM)	
	16	1	**8R-3695**	3	GROMMET	
M	17	1	**8T-4138**	1	BOLT (M6X1X20-MM)	
	18	1	**8T-4205**	3	WASHER-HARD (7.2X14.5X2-MM THK)	
M	19	1	**8T-4970**	2	BOLT (M6X1X14-MM)	
	20	1	**9X-2038**	4	WASHER (7X19X2-MM THK)	
M	21	1	**9X-2044**	9	SCREW-TRUSS HEAD (M6X1X16-MM)	
M	22	1	**9X-2045**	4	SCREW-TRUSS HEAD (M6X1X20-MM)	
D	23	1	**6V-3987**		SEAL (0.062-M EACH)	
C	24	1	**228-6089**	1	PLUG (ROCKER SWITCH)	

C-CHANGE FROM PREVIOUS TYPE
D-ORDER BY THE METER
M-METRIC PART
Y-SEPARATE ILLUSTRATION

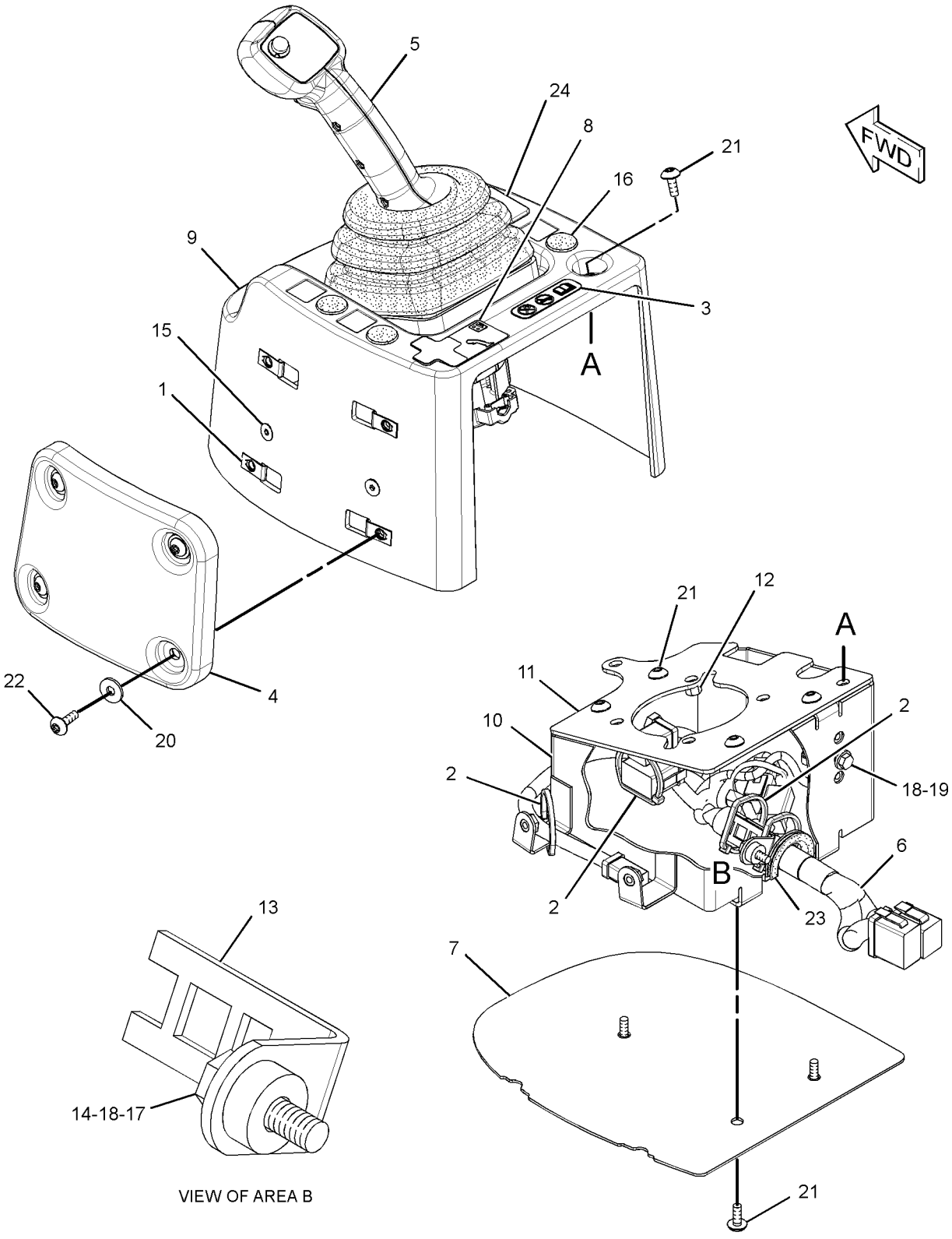

GRAPHIC #1 **<END>** g01620377

OPERATOR STATION

243-1946 CONTROL GP-ELECTROHYDRAULIC–
JOYSTICK, 3-FUNCTION
S/N: RYF1-UP
AN ATTACHMENT

SMCS-5702 **i03250981**

NOTE	REF NO	GRAPHIC REF	PART NUMBER	QTY	PART NAME 1 2 3 4 5 6 (PRODUCT LEVEL)	SEE PAGE
	1	1	**4E-8722**	4	NUT (RETAINER)	
	2	1	**189-2079**	1	FILM-INSTRUCTION (MAINTENANCE)	
	3	1	**245-6447**	1	CUSHION AS	
CY	4	1	**319-9559**	1	CONTROL GP-JOYSTICK (3-FUNCTION, WITH DOWNSHIFT)	543
C	5	1	**316-8507**	1	HARNESS AS-CONTROL	
	6	1	**247-4969**	1	PLATE	
	7	1	**254-9150**	1	FILM-CONTROL (JOYSTICK, 3-FCTN, DOWNSHIFT SW)	
	8	1	**262-5238**	1	COVER	
	9	1	**262-5239**	1	HOUSING AS	
	10	1	**263-1995**	1	PLATE AS	
	11	1	*265-6696*	1	SWITCH GP-ROCKER (THIRD FUNCTION SELECT)	
		1	**256-7822**	1	SWITCH AS-ROCKER (24-VOLT, SEALED, ILLUMINATED) (3RD FUNCTION SELECT)	
M	12	1	**112-6646**	4	LOCKNUT (M6X1-THD)	
M	13	1	**6R-7653**	2	SCREW (M6X1X15-MM)	
	14	1	**8R-3695**	3	GROMMET	
	15	1	**8T-4205**	3	WASHER-HARD (7.2X14.5X2-MM THK)	
M	16	1	**8T-4970**	2	BOLT (M6X1X14-MM)	
	17	1	**9X-2038**	4	WASHER (7X19X2-MM THK)	
M	18	1	**9X-2044**	9	SCREW-TRUSS HEAD (M6X1X16-MM)	
M	19	1	**9X-2045**	4	SCREW-TRUSS HEAD (M6X1X20-MM)	
D	20	1	**6V-3987**		SEAL (0.062-M EACH)	
C	21	1	**7K-1181**	5	STRAP-CABLE	
M	22	1	**8T-4138**	1	BOLT (M6X1X20-MM)	
	23	1	**156-6175**	1	CLIP	
	24	1	**198-4775**	1	WASHER-HARD (6.6X15X6-MM THK)	
C	25	1	**228-6089**	1	PLUG (ROCKER SWITCH)	

C-CHANGE FROM PREVIOUS TYPE
D-ORDER BY THE METER
M-METRIC PART
Y-SEPARATE ILLUSTRATION

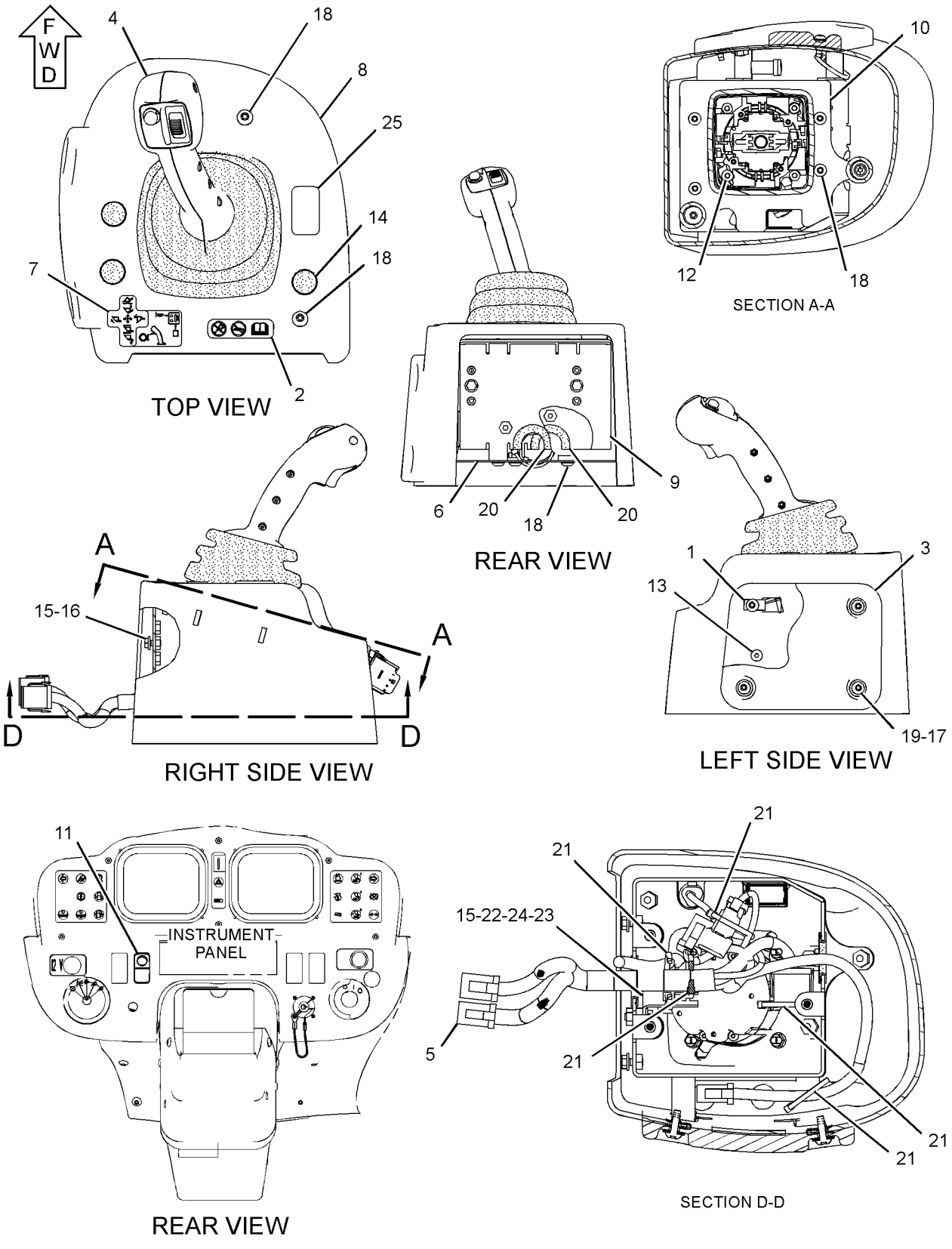

GRAPHIC #1 **<END>** g01679217

OPERATOR STATION

319-8253 CONTROL GP-ELECTROHYDRAULIC

S/N: RYF1-UP

AN ATTACHMENT

SMCS-5702 **i03089129**

NOTE	REF NO	GRAPHIC REF	PART NUMBER	QTY	PART NAME 1 2 3 4 5 6 (PRODUCT LEVEL)	SEE PAGE
	1	2	**4E-8722**	4	NUT (RETAINER)	
	2	1	**7K-1181**	5	STRAP-CABLE	
M	3	1	**112-6646**	4	LOCKNUT (M6X1-THD)	
	4	1	**140-5945**	1	FILM-IDENTIFICATION (HORN)	
	5	1	**170-1821**	1	SWITCH AS-PUSH BUTTON (HORN)	
		1	**6F-0253**	1	LOCKWASHER	
		1	**186-3735**	2	PIN-CONNECTOR (16-GA TO 18-GA)	
		1	**172-3511**	1	NUT (5/8-24-THD)	
	6	1	**189-2079**	1	FILM-INSTRUCTION (MAINTENANCE)	
	7	1	**228-6089**	1	PLUG (ROCKER SWITCH)	
	8	2	**245-6447**	1	CUSHION AS	
	9	1	**247-4969**	1	PLATE	
	10	1	**254-9150**	1	FILM-CONTROL (JOYSTICK, 3-FCTN, DOWNSHIFT SW)	
	11	1	**262-5238**	1	COVER	
	12	1	**262-5239**	1	HOUSING AS	
	13	1	**263-1995**	1	PLATE AS	
	14	1	*265-6696*	1	SWITCH GP-ROCKER (THIRD FUNCTION SELECT)	
		1	**256-7822**	1	SWITCH AS-ROCKER (24-VOLT, SEALED, ILLUMINATED)	
Y	15	1	**277-3281**	1	CONTROL GP-JOYSTICK (3-FUNCTION, W/FNR, DOWNSHIFT)	540
	16	1	**316-8507**	1	HARNESS AS-CONTROL	
	17	1	**156-6175**	1	CLIP	
	18	1	**198-4775**	1	WASHER-HARD (6.6X15X6-MM THK)	
M	19	2	**6R-7653**	2	SCREW (M6X1X15-MM)	
	20	1	**8R-3695**	2	GROMMET	
M	21	1	**8T-4138**	1	BOLT (M6X1X20-MM)	
	22	1	**8T-4205**	3	WASHER-HARD (7.2X14.5X2-MM THK)	
M	23	1	**8T-4970**	2	BOLT (M6X1X14-MM)	
	24	2	**9X-2038**	4	WASHER (7X19X2-MM THK)	
M	25	1	**9X-2044**	9	SCREW-TRUSS HEAD (M6X1X16-MM)	
M	26	2	**9X-2045**	4	SCREW-TRUSS HEAD (M6X1X20-MM)	
D	27	1	**6V-3987**	2	SEAL (0.062-M EACH)	

D-ORDER BY THE METER
M-METRIC PART
Y-SEPARATE ILLUSTRATION

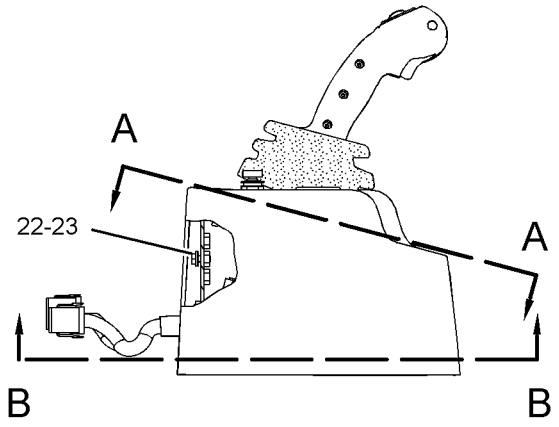

RIGHT SIDE VIEW

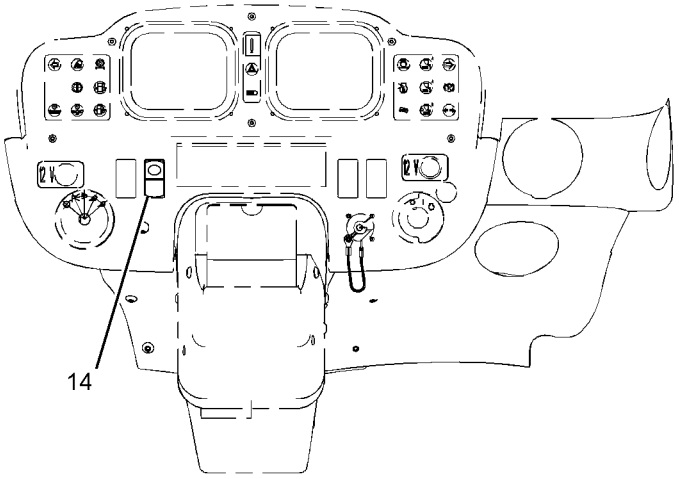

FRONT VIEW
(DASH)

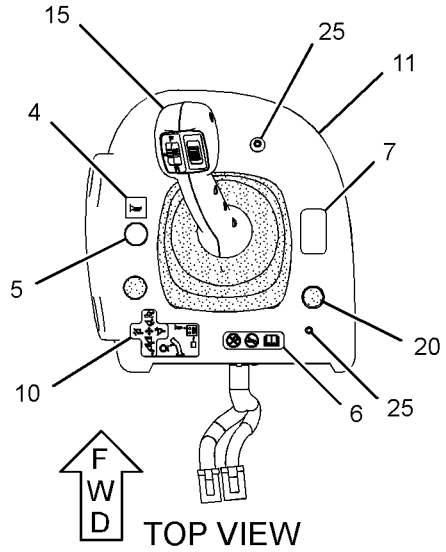

TOP VIEW

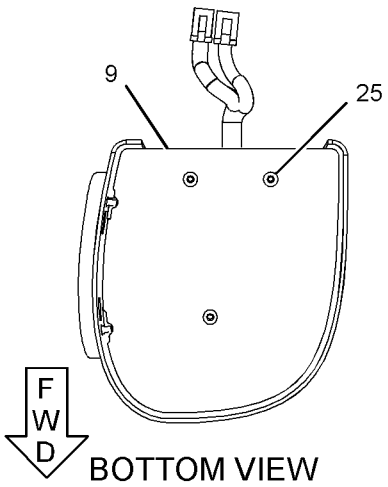

BOTTOM VIEW

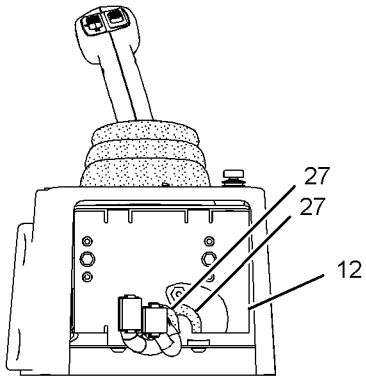

REAR VIEW

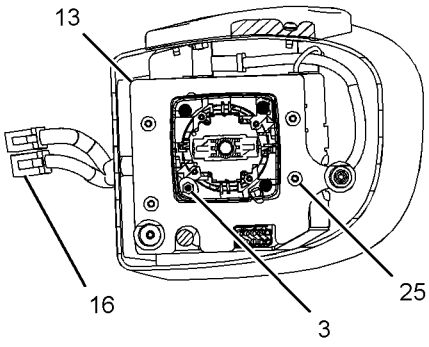

SECTION A-A

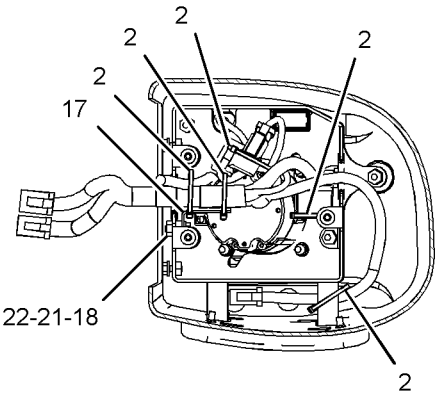

SECTION B-B

GRAPHIC #1

g01591256

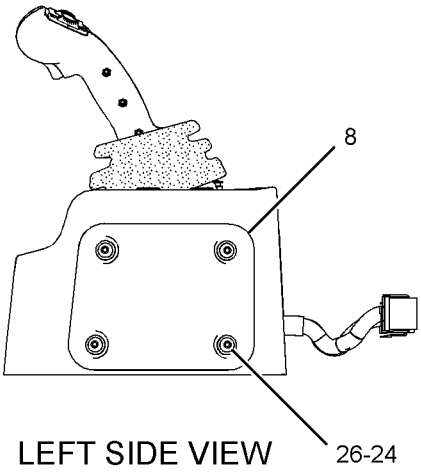

LEFT SIDE VIEW

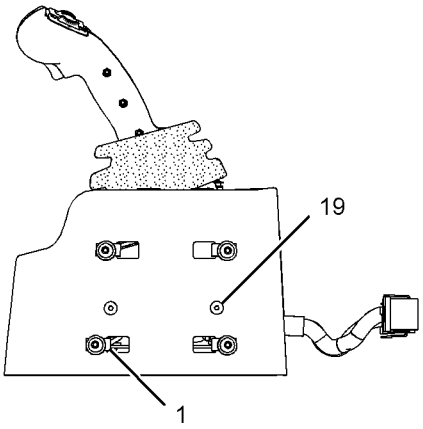

LEFT SIDE VIEW
(CUSHION REMOVED FOR CLARITY)

GRAPHIC #2 **<END>** g01591257

OPERATOR STATION

319-8254 CONTROL GP-ELECTROHYDRAULIC

S/N: RYF1-UP

AN ATTACHMENT

SMCS-5702 **i03099480**

NOTE	REF NO	GRAPHIC REF	PART NUMBER	QTY	PART NAME 1 2 3 4 5 6 (PRODUCT LEVEL)	SEE PAGE
	1	1	**4E-8722**	4	NUT (RETAINER)	
	2	1	**7K-1181**	5	STRAP-CABLE	
M	3	1	**112-6646**	4	LOCKNUT (M6X1-THD)	
	4	1	**189-2079**	1	FILM-INSTRUCTION (MAINTENANCE)	
	5	1	**228-6089**	1	PLUG (ROCKER SWITCH)	
	6	1	**245-6447**	1	CUSHION AS	
	7	1	**247-4969**	1	PLATE	
	8	1	**254-9149**	1	FILM-CONTROL (JOYSTICK, 2-FCTN, DOWNSHIFT SW)	
	9	1	**262-5238**	1	COVER	
	10	1	**262-5239**	1	HOUSING AS	
	11	1	**263-1995**	1	PLATE AS	
Y	12	1	**274-2371**	1	CONTROL GP-JOYSTICK (2-FUNCTION, W/FNR, DOWNSHIFT)	538
	13	1	**316-8507**	1	HARNESS AS-CONTROL	
	14	1	**156-6175**	1	CLIP	
	15	1	**198-4775**	1	WASHER-HARD (6.6X15X6-MM THK)	
M	16	1	**6R-7653**	2	SCREW (M6X1X15-MM)	
	17	1	**8R-3695**	3	GROMMET	
M	18	1	**8T-4138**	1	BOLT (M6X1X20-MM)	
	19	1	**8T-4205**	3	WASHER-HARD (7.2X14.5X2-MM THK)	
M	20	1	**8T-4970**	2	BOLT (M6X1X14-MM)	
	21	1	**9X-2038**	4	WASHER (7X19X2-MM THK)	
M	22	1	**9X-2044**	9	SCREW-TRUSS HEAD (M6X1X16-MM)	
M	23	1	**9X-2045**	4	SCREW-TRUSS HEAD (M6X1X20-MM)	
D	24	1	**6V-3987**		SEAL (0.07-M EACH)	

D-ORDER BY THE METER
M-METRIC PART
Y-SEPARATE ILLUSTRATION

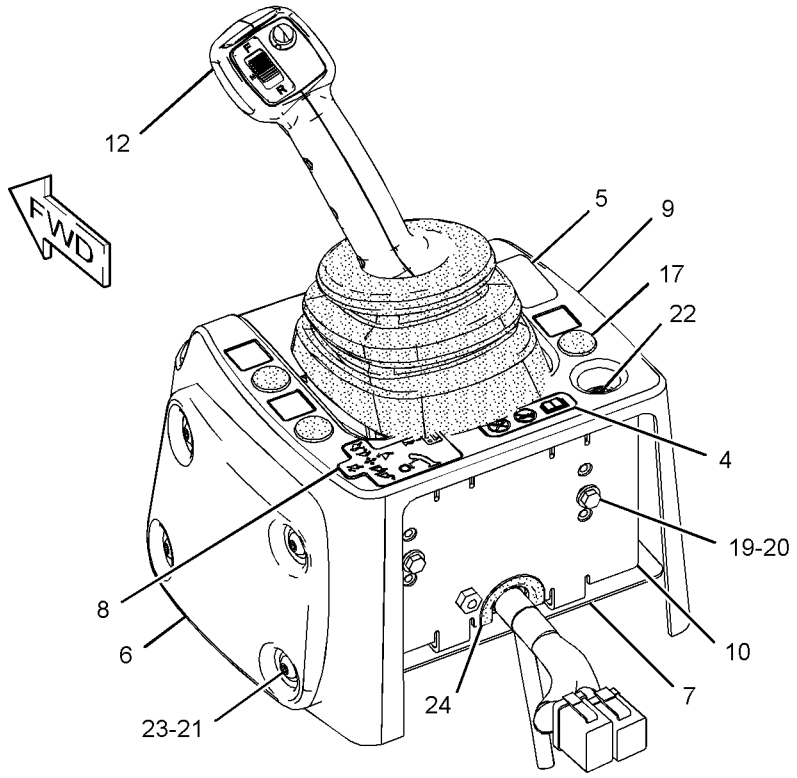

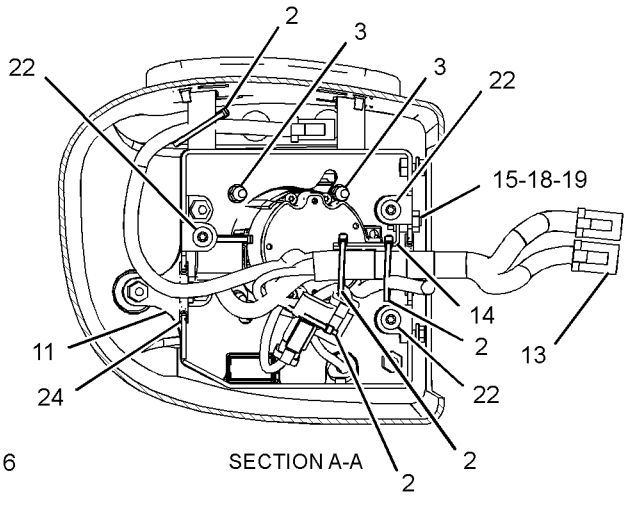

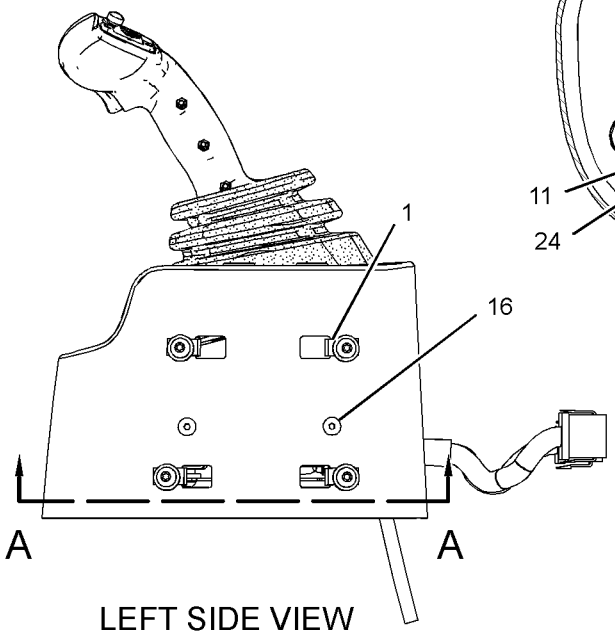

LEFT SIDE VIEW

(CUSHION ASSEMBLY REMOVED FOR CLARITY)

GRAPHIC #1 **<END>** g01571257

OPERATOR STATION

307-4671 CONTROL GP-HANDLE

S/N: RYF1-UP

PART OF 243-1089 CONTROL GP-ELECTROHYDRAULIC

SMCS-5063, 5705 **i02828658**

NOTE	REF NO	GRAPHIC REF	PART NUMBER	QTY	PART NAME 1 2 3 4 5 6 (PRODUCT LEVEL)	SEE PAGE
	1	1	**151-9274**	1	KIT-RECEPTACLE (4-PIN)	
					(INCLUDES RECEPTACLE AS AND WEDGE)	
	2	1	**278-8974**	1	KNOB	
	3	1	**278-8965**	1	BOOT	
	4	1	**278-8967**	1	RETAINER-BOOT	
M	5	1	**278-8970**	4	SCREW (M3X10X6-MM)	

M-METRIC PART

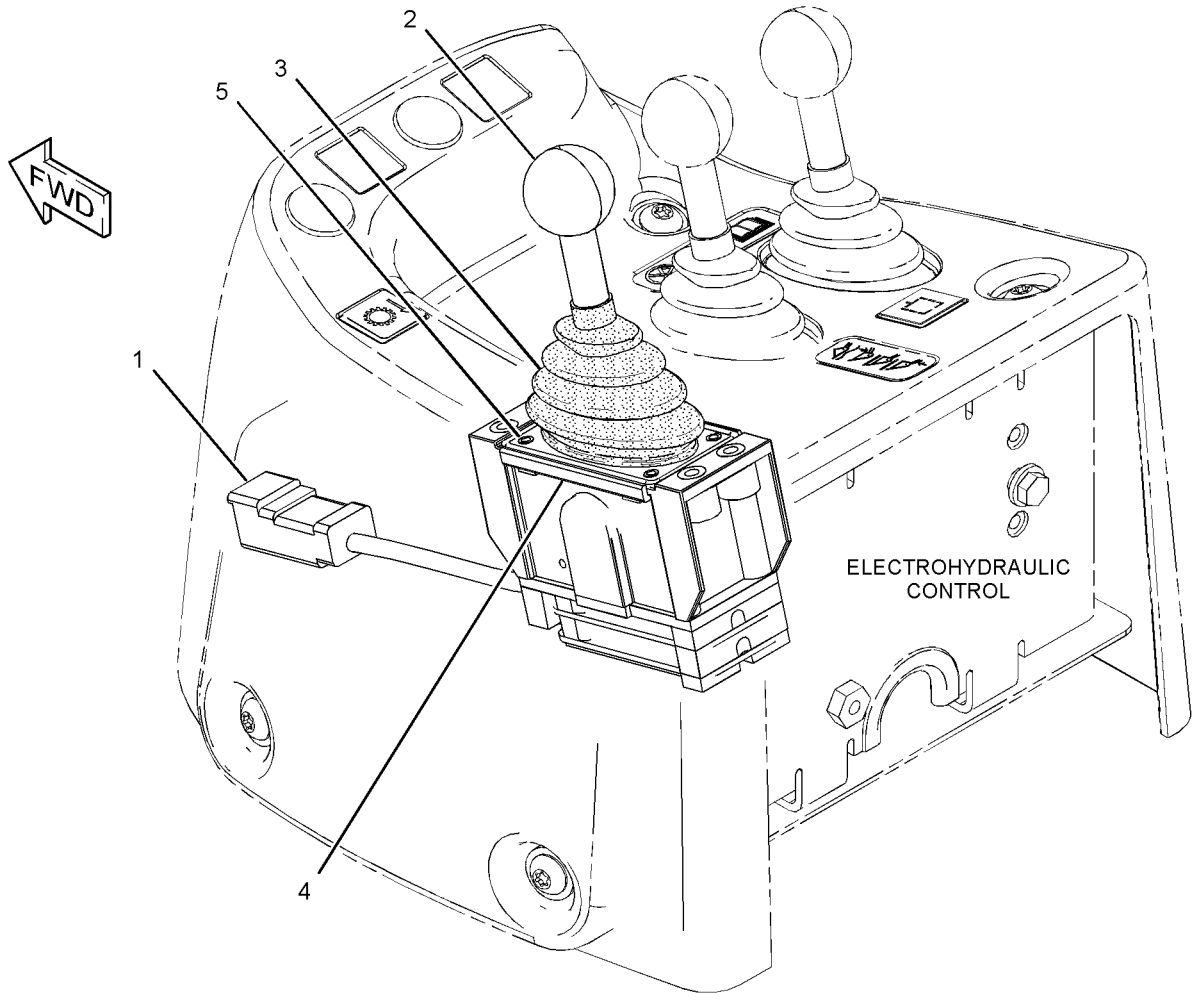

GRAPHIC #1 **<END>** g01412967

OPERATOR STATION

319-9556 CONTROL GP-HANDLE

S/N: RYF1-UP
PART OF 319-9558 CONTROL GP-JOYSTICK
AN ATTACHMENT

SMCS-5063, 5705 **i03262307**

NOTE	REF NO	GRAPHIC REF	PART NUMBER	QTY	PART NAME 1 2 3 4 5 6 (PRODUCT LEVEL)	SEE PAGE
	1	1	**174-3091**	1	KIT-RECEPTACLE (12-PIN)	
					(INCLUDES RECEPTACLE AS & WEDGE)	
	2	1	**186-3735**	4	PIN-CONNECTOR (16-GA TO 18-GA)	
	3	1	**144-0331**	1	CAP-PUSH BUTTON (YELLOW)	
	4	1	**8T-8737**	8	PLUG-SEAL	

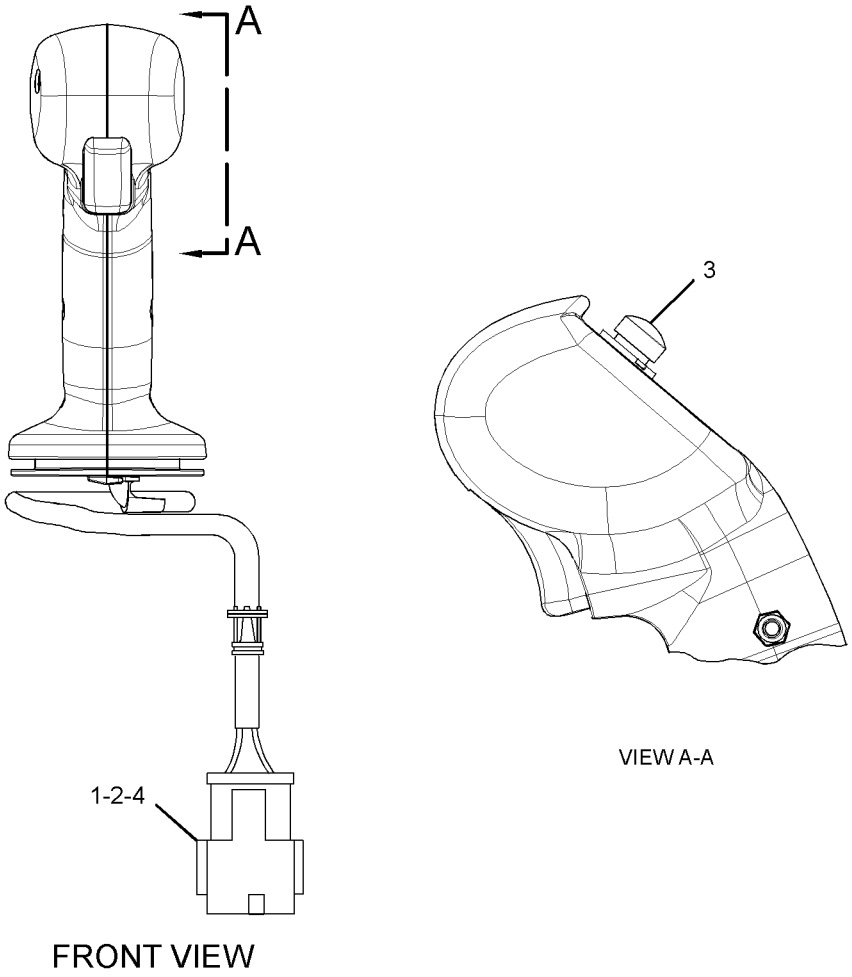

VIEW A-A

FRONT VIEW

GRAPHIC #1 **<END>** g01614394

319-9557 CONTROL GP-HANDLE–
LIFT, TILT, AUXILIARY, DOWNSHIFT SWITCH
S/N: RYF1-UP
PART OF 319-9559 CONTROL GP-JOYSTICK
AN ATTACHMENT

SMCS-5063, 5705 **i03023922**

NOTE	REF NO	GRAPHIC REF	PART NUMBER	QTY	PART NAME 1 2 3 4 5 6 (PRODUCT LEVEL)	SEE PAGE
	1	1	**174-3091**	1	KIT-RECEPTACLE (12-PIN)	
					(INCLUDES RECEPTACLE AS & WEDGE)	
	2	1	**186-3735**	8	PIN-CONNECTOR (16-GA TO 18-GA)	
	3	1	**144-0331**	1	CAP-PUSH BUTTON (YELLOW)	
	4	1	**8T-8737**	4	PLUG-SEAL	

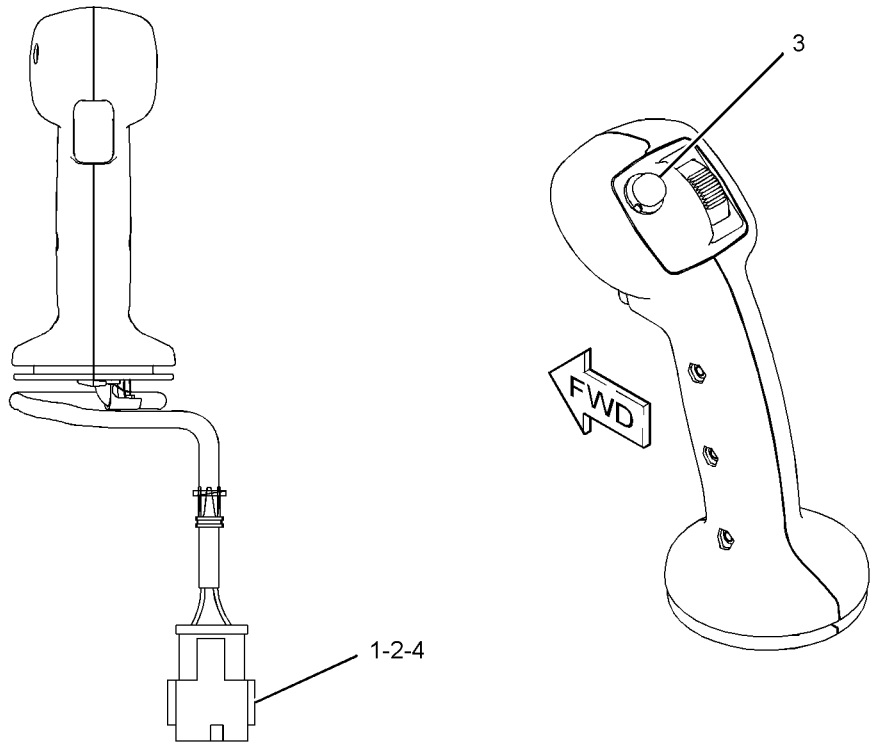

FRONT VIEW

GRAPHIC #1 **<END>** g01585193

OPERATOR STATION

274-2371 CONTROL GP-JOYSTICK–
2-FUNCTION, WITH FNR, DOWNSHIFT
S/N: RYF1-UP
PART OF 319-8254 CONTROL GP-ELECTROHYDRAULIC
AN ATTACHMENT

SMCS-5063, 5705 **i03101662**

NOTE	REF NO	GRAPHIC REF	PART NUMBER	QTY	PART NAME 1 2 3 4 5 6 (PRODUCT LEVEL)	SEE PAGE
	1	1	**277-7570**	1	BASE AS-JOYSTICK	
		1	**102-8805**	1	KIT-RECEPTACLE (6-PIN)	
					(INCLUDES RECEPTACLE AS & WEDGE)	
		1	**186-3735**	6	PIN-CONNECTOR (16-GA TO 18-GA)	
M		1	**280-0440**	4	STUD-MOUNTING (M6X1-THD)	
	2	1	**279-6641**	1	BOOT	
	3	1	**277-3279**	1	CONTROL GP-HANDLE (LIFT, TILT, FNR, DOWNSHIFT)	
		1	**8T-8737**	4	PLUG-SEAL	
		1	**144-0331**	1	CAP-PUSH BUTTON (YELLOW)	
		1	**174-3091**	1	KIT-RECEPTACLE (12-PIN)	
					(INCLUDES RECEPTACLE AS & WEDGE)	
		1	**186-3735**	8	PIN-CONNECTOR (16-GA TO 18-GA)	
M	4	1	**213-7489**	3	SCREW (M4X25-MM)	
M	5	1	**178-9983**	3	LOCKNUT (M4X0.7-THD)	
	6	1	**174-3091**	1	KIT-RECEPTACLE (12-PIN)	
					(INCLUDES RECEPTACLE AS & WEDGE)	
	7	1	**102-8805**	1	KIT-RECEPTACLE (6-PIN)	
					(INCLUDES RECEPTACLE AS & WEDGE)	
	8	1	**186-3735**	8	PIN-CONNECTOR (16-GA TO 18-GA)	
	9	1	**8T-8737**	4	PLUG-SEAL	

M-METRIC PART

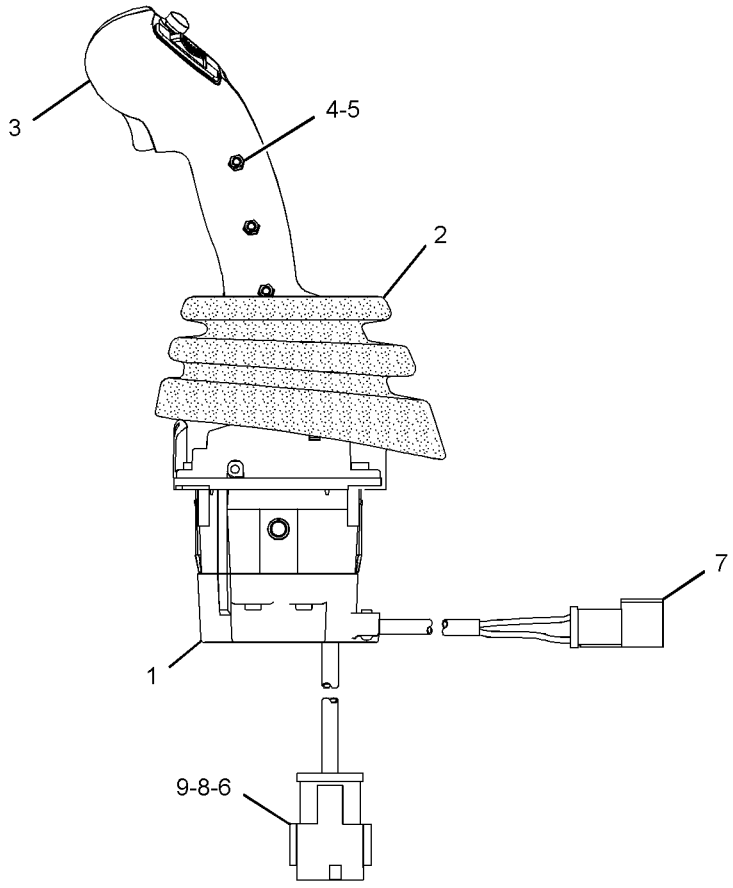

LEFT SIDE VIEW

GRAPHIC #1 **<END>** g01593739

OPERATOR STATION

277-3281 CONTROL GP-JOYSTICK–
3-FUNCTION, WITH FNR, DOWNSHIFT
S/N: RYF1-UP
PART OF 319-8253 CONTROL GP-ELECTROHYDRAULIC
AN ATTACHMENT

SMCS-5063, 5705 **i03124161**

NOTE	REF NO	GRAPHIC REF	PART NUMBER	QTY	PART NAME 1 2 3 4 5 6 (PRODUCT LEVEL)	SEE PAGE
	1	1	**277-7570**	1	BASE AS-JOYSTICK	
		1	**102-8805**	1	KIT-RECEPTACLE (6-PIN)	
					(INCLUDES RECEPTACLE AS & WEDGE)	
		1	**186-3735**	6	PIN-CONNECTOR (16-GA TO 18-GA)	
M		1	**280-0440**	4	STUD-MOUNTING (M6X1-THD)	
	2	1	**279-6641**	1	BOOT	
	3	1	**277-3282**	1	CONTROL GP-HANDLE (LIFT, TILT, AUX, FNR, DNSFT)	
		1	**8T-8737**	2	PLUG-SEAL	
		1	**174-3091**	1	KIT-RECEPTACLE (12-PIN)	
					(INCLUDES RECEPTACLE AS & WEDGE)	
		1	**186-3735**	10	PIN-CONNECTOR (16-GA TO 18-GA)	
M	4	1	**213-7489**	3	SCREW (M4X25-MM)	
M	5	1	**178-9983**	3	LOCKNUT (M4X0.7-THD)	
	6	1	**174-3091**	1	KIT-RECEPTACLE (12-PIN)	
					(INCLUDES RECEPTACLE AS & WEDGE)	
	7	1	**102-8805**	1	KIT-RECEPTACLE (6-PIN)	
					(INCLUDES RECEPTACLE AS & WEDGE)	
	8	1	**186-3735**	10	PIN-CONNECTOR (16-GA TO 18-GA)	
	9	1	**8T-8737**	2	PLUG-SEAL	

M-METRIC PART

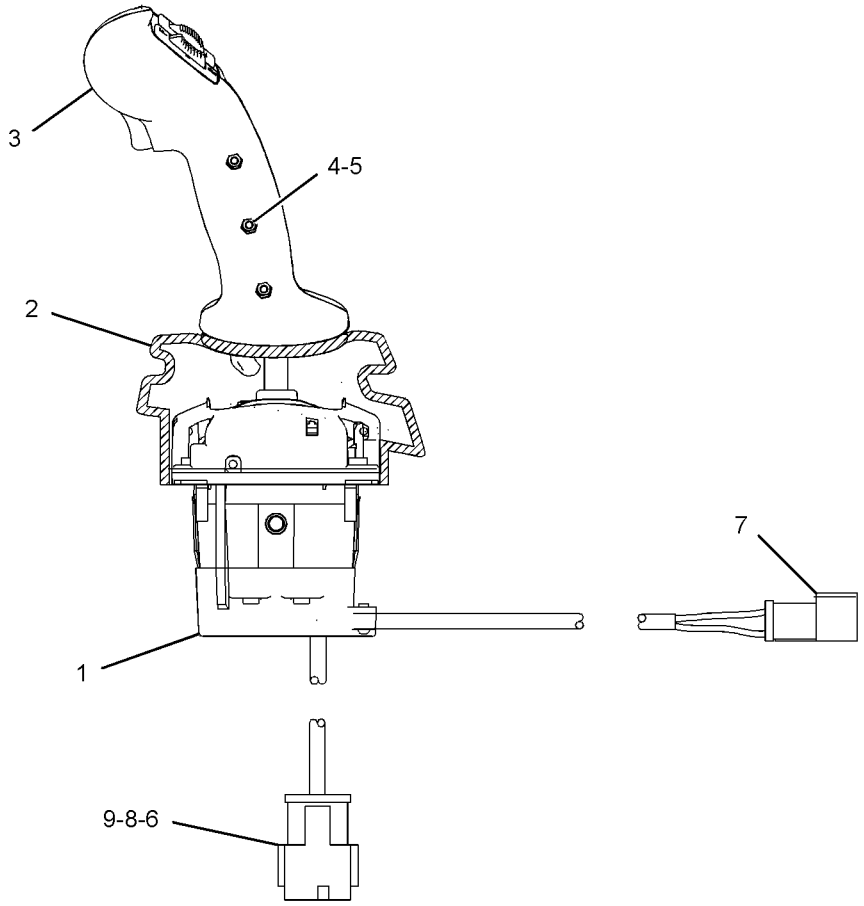

LEFT SIDE VIEW

GRAPHIC #1 **<END>** g01588014

319-9558 CONTROL GP-JOYSTICK–
2-FUNCTION, WITH DOWNSHIFT
S/N: RYF1-UP
PART OF 243-1941 CONTROL GP-ELECTROHYDRAULIC
AN ATTACHMENT

SMCS-5063, 5705 **i03250902**

NOTE	REF NO	GRAPHIC REF	PART NUMBER	QTY	PART NAME 1 2 3 4 5 6 (PRODUCT LEVEL)	SEE PAGE
	1	1	**277-7570**	1	BASE AS-JOYSTICK	
	2	1	**279-6641**	1	BOOT	
Y	3	1	**319-9556**	1	CONTROL GP-HANDLE (LIFT, TILT, DOWNSHIFT SWITCH)	536
M	4	1	**213-7489**	3	SCREW (M4X25-MM)	
M	5	1	**178-9983**	3	LOCKNUT (M4X0.7-THD)	
	6	1	**174-3091**	1	KIT-RECEPTACLE (12-PIN)	
	7	1	**102-8805**	1	KIT-RECEPTACLE (6-PIN)	
					(EACH KIT-RECEPTACLE INCLUDES RECEPTACLE AS & WEDGE)	
	8	1	**186-3735**	10	PIN-CONNECTOR (16-GA TO 18-GA)	
	9	1	**8T-8737**	8	PLUG-SEAL	
M	10	1	**280-0440**	4	STUD-MOUNTING (M6X1-THD)	
	11	1	**144-0331**	1	CAP-PUSH BUTTON (YELLOW)	

M-METRIC PART
Y-SEPARATE ILLUSTRATION

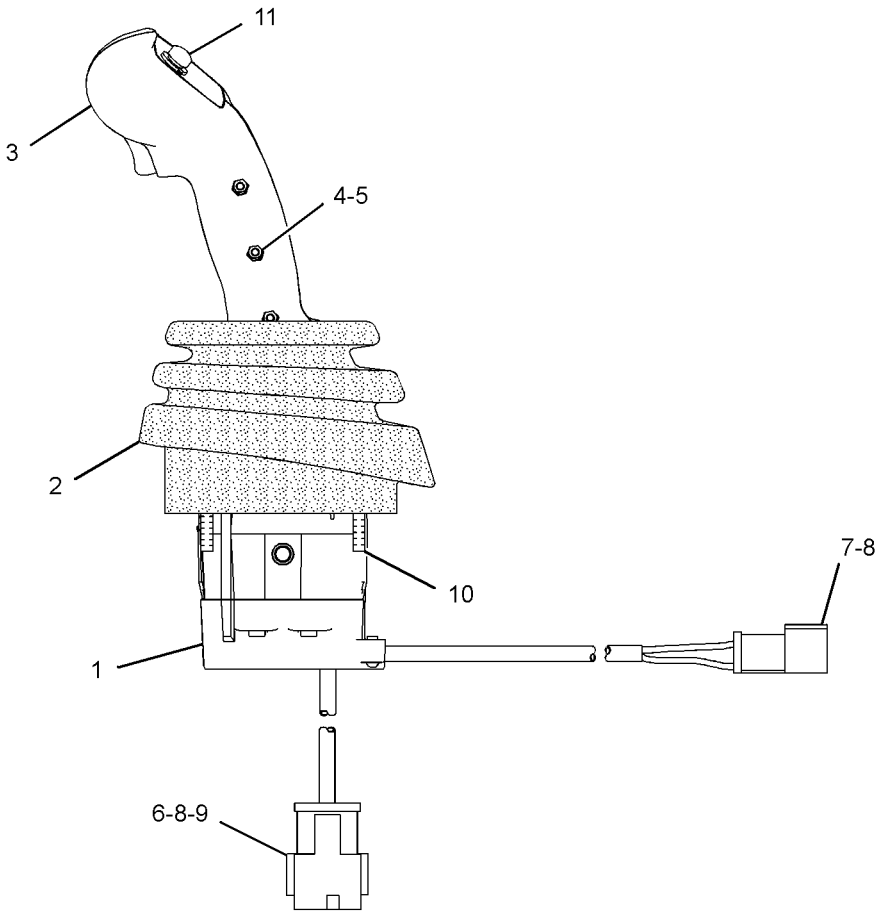

LEFT SIDE VIEW

GRAPHIC #1 **<END>** g01614495

319-9559 CONTROL GP-JOYSTICK–
3-FUNCTION, WITH DOWNSHIFT
S/N: RYF1-UP
PART OF 243-1946 CONTROL GP-ELECTROHYDRAULIC
AN ATTACHMENT

SMCS-5063, 5705 **i03017924**

NOTE	REF NO	GRAPHIC REF	PART NUMBER	QTY	PART NAME 1 2 3 4 5 6 (PRODUCT LEVEL)	SEE PAGE
	1	1	**277-7570**	1	BASE AS-JOYSTICK	
		1	**102-8805**	1	KIT-RECEPTACLE (6-PIN)	
					(INCLUDES RECEPTACLE AS & WEDGE)	
		1	**186-3735**	6	PIN-CONNECTOR (16-GA TO 18-GA)	
M		1	**280-0440**	4	STUD-MOUNTING (M6X1-THD)	
Y	2	1	**319-9557**	1	CONTROL GP-HANDLE (LIFT, TILT, AUX, DOWNSHIFT SW)	537
M	3	1	**213-7489**	3	SCREW (M4X25-MM)	
M	4	1	**178-9983**	3	LOCKNUT (M4X0.7-THD)	
	5	1	**102-8805**	1	KIT-RECEPTACLE (6-PIN)	
					(INCLUDES RECEPTACLE AS & WEDGE)	
M	6	1	**280-0440**	4	STUD-MOUNTING (M6X1-THD)	
	7	1	**279-6641**	1	BOOT	

M-METRIC PART
Y-SEPARATE ILLUSTRATION

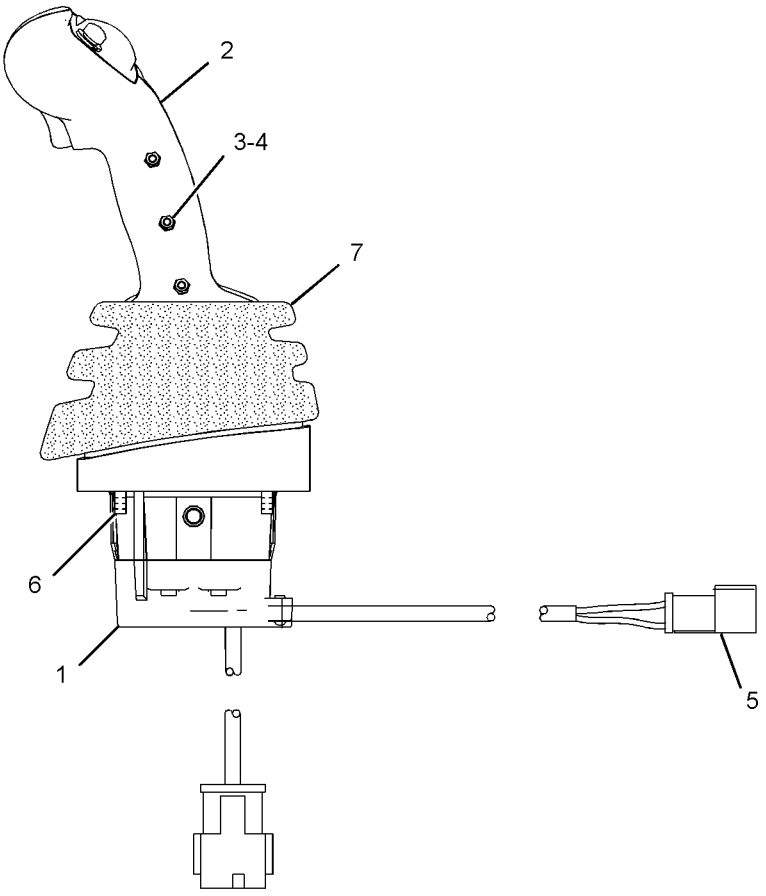

LEFT SIDE VIEW

GRAPHIC #1 **<END>** g01585942

OPERATOR STATION

103-5526 CONTROL GP-MONITOR—DIMMER

S/N: RYF1-UP

PART OF 237-4910 WIRING GP-CAB

SMCS-7490, 7494, 7601 **i00718151**

NOTE	REF NO	GRAPHIC REF	PART NUMBER	QTY	PART NAME 1 2 3 4 5 6 (PRODUCT LEVEL)	SEE PAGE
	1	1	**5P-9132**	2	SCREW-HEX FLANGE (6-32X0.187-IN)	
	2	1	**3E-3383**	1	WEDGE-RECEPTACLE LOCK (6-PIN)	
	3	1	**8T-8729**	6	PIN-CONNECTOR (16-GA TO 18-GA)	

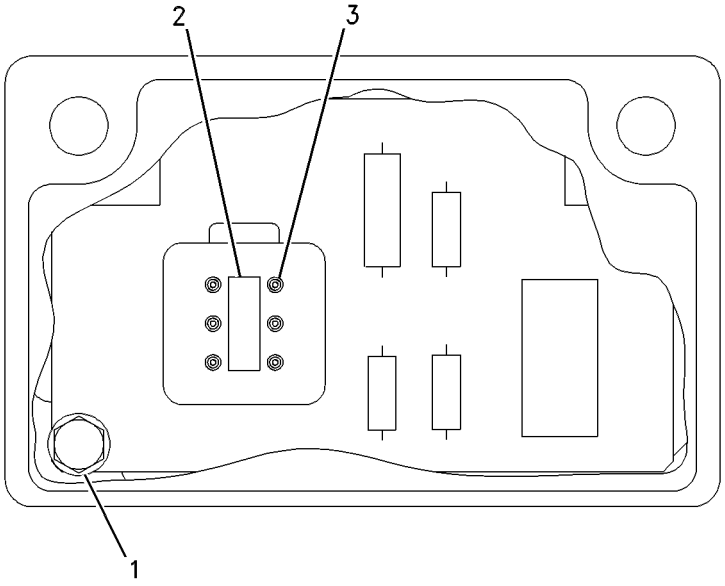

GRAPHIC #1 **<END>** g00316579

OPERATOR STATION

141-8802 CONTROL GP-STEERING—HMU STEERING

S/N: RYF1-UP

PART OF 237-2572 CAB AR-ENCLOSED ROPS

SMCS-4310, 4338, 4343 **i03062862**

NOTE	REF NO	GRAPHIC REF	PART NUMBER	QTY	PART NAME 1 2 3 4 5 6 (PRODUCT LEVEL)	SEE PAGE
	1	1	**2T-3360**	1	BUTTON AS-HORN	
	2	1	**8R-2918**	1	KNOB AS	
M	3	1	**105-3477**	1	BOLT-SOCKET HEAD (M10X1.5X45-MM)	
	4	1	**123-6713**	1	WEDGE	
	5	1	**124-0065**	1	BLOCK	
	6	1	**141-8808**	1	COVER AS (RH)	
	7	1	**141-8811**	1	COVER AS (LH)	
	8	1	**144-0896**	1	BRACKET AS	
M		1	**8T-3490**	4	NUT-WELD (M10X1.5-THD)	
	9	1	**146-3793**	1	STEERING WHEEL	
Y	10	1	**297-4926**	1	STEERING COLUMN GP-ADJUSTABLE	409
	11	1	**255-8545**	2	WASHER-RUBBER (21.5X55X2-MM THK)	
	12	1	**291-5392**	1	BOOT	
	13	1	**099-7241**	1	WASHER-HARD (19X34X3-MM THK)	
M	14	1	**6V-5683**	4	BOLT (M6X1X16-MM)	
CM	15	1	**8T-1159**	4	BOLT-SOCKET HEAD (M10X1.5X25-MM)	
	16	1	**8T-4121**	10	WASHER-HARD (11X21X2.5-MM THK)	
M	17	1	**8T-4136**	4	BOLT (M10X1.5X25-MM)	
M	18	1	**8T-4185**	2	BOLT (M10X1.5X50-MM)	

C-CHANGE FROM PREVIOUS TYPE
M-METRIC PART
Y-SEPARATE ILLUSTRATION

141-8802 **CONTROL GP-STEERING** *(contd.)* **i03062862**

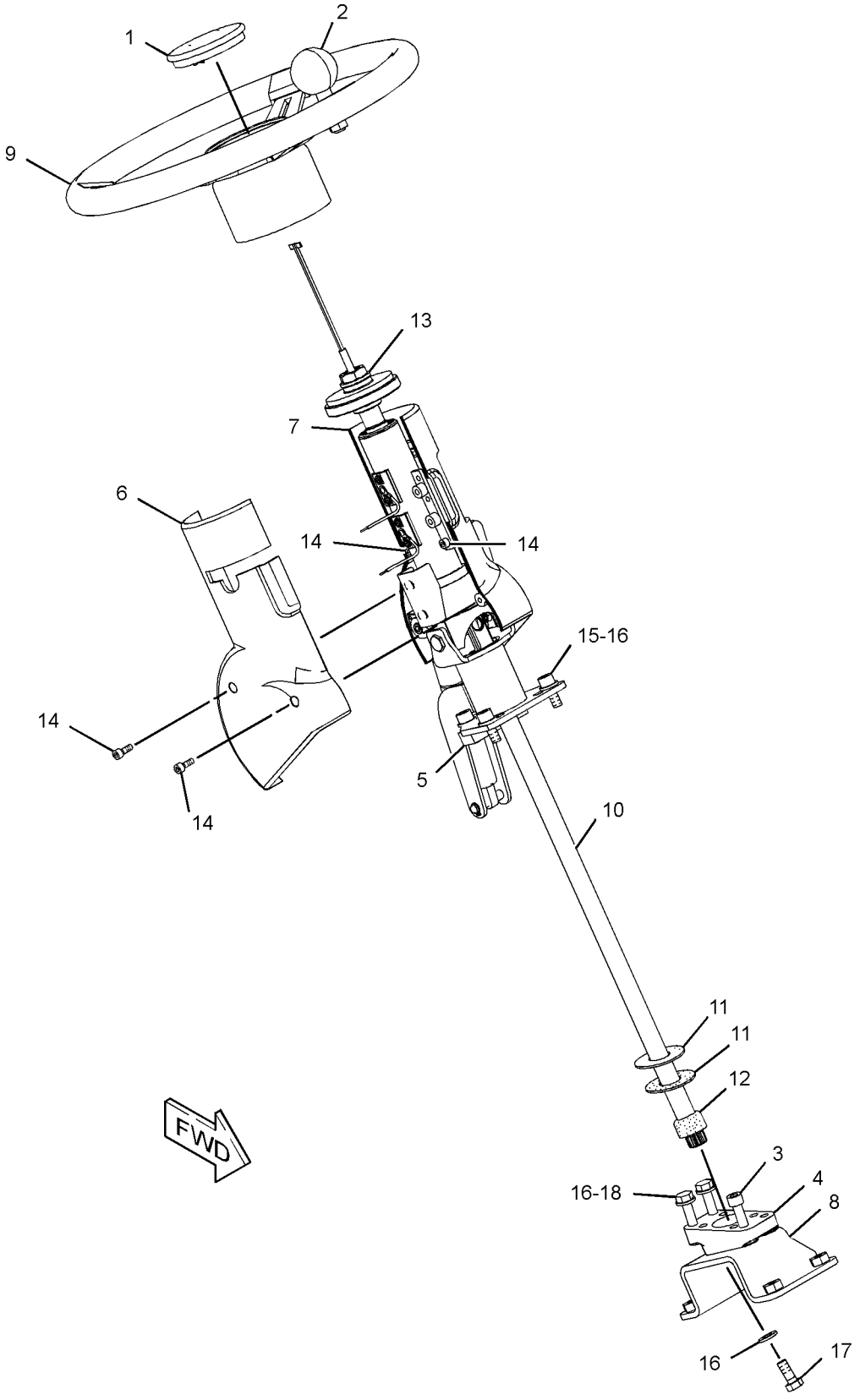

GRAPHIC #1 **<END>** g01588654

OPERATOR STATION

121-9300 CONTROL GP-TRANSMISSION

S/N: RYF1-UP

PART OF 237-2572 CAB AR-ENCLOSED ROPS

SMCS-3065, 3168 **i02845385**

NOTE	REF NO	GRAPHIC REF	PART NUMBER	QTY	PART NAME 1 2 3 4 5 6 (PRODUCT LEVEL)	SEE PAGE
M	1	1	**134-1374**	4	BOLT-SOCKET HEAD (M5X0.8X20-MM)	
CY	2	1	**299-5840**	1	CONTROL GP-TRANSMISSION	548
	3	1	**3S-2093**	1	STRAP-CABLE	
	4	1	**4P-7581**	1	CLIP	
	5	1	**7K-1181**	1	STRAP-CABLE	
	6	1	**8T-4121**	1	WASHER-HARD (11X21X2.5-MM THK)	
M	7	1	**8T-4137**	1	BOLT (M10X1.5X20-MM)	

C-CHANGE FROM PREVIOUS TYPE
M-METRIC PART
Y-SEPARATE ILLUSTRATION

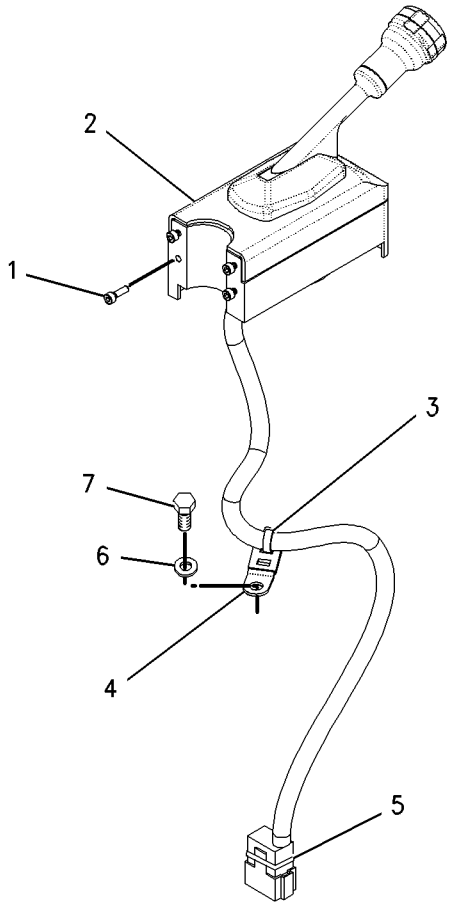

GRAPHIC #1 **<END>** g00851858

OPERATOR STATION

299-5840 CONTROL GP-TRANSMISSION

S/N: RYF1-UP

PART OF 121-9300 CONTROL GP-TRANSMISSION

SMCS-3065, 3168 **i03188820**

NOTE	REF NO	GRAPHIC REF	PART NUMBER	QTY	PART NAME 1 2 3 4 5 6 (PRODUCT LEVEL)	SEE PAGE
	1	1	**9G-3695**	2	PLUG	
	2	1	**102-8801**	1	KIT-RECEPTACLE (12-PIN)	
					(INCLUDES RECEPTACLE AS & WEDGE)	
	3	1	**186-3736**	4	SOCKET-CONNECTOR (16-GA TO 18-GA)	
	4	1	**186-3735**	9	PIN-CONNECTOR (16-GA TO 18-GA)	
	5	1	**101-9161**	1	WIRE AS	
	6	1	**155-2271**	2	KIT-CONNECTING PLUG (4-PIN)	
					(EACH INCLUDES PLUG AS & WEDGE)	

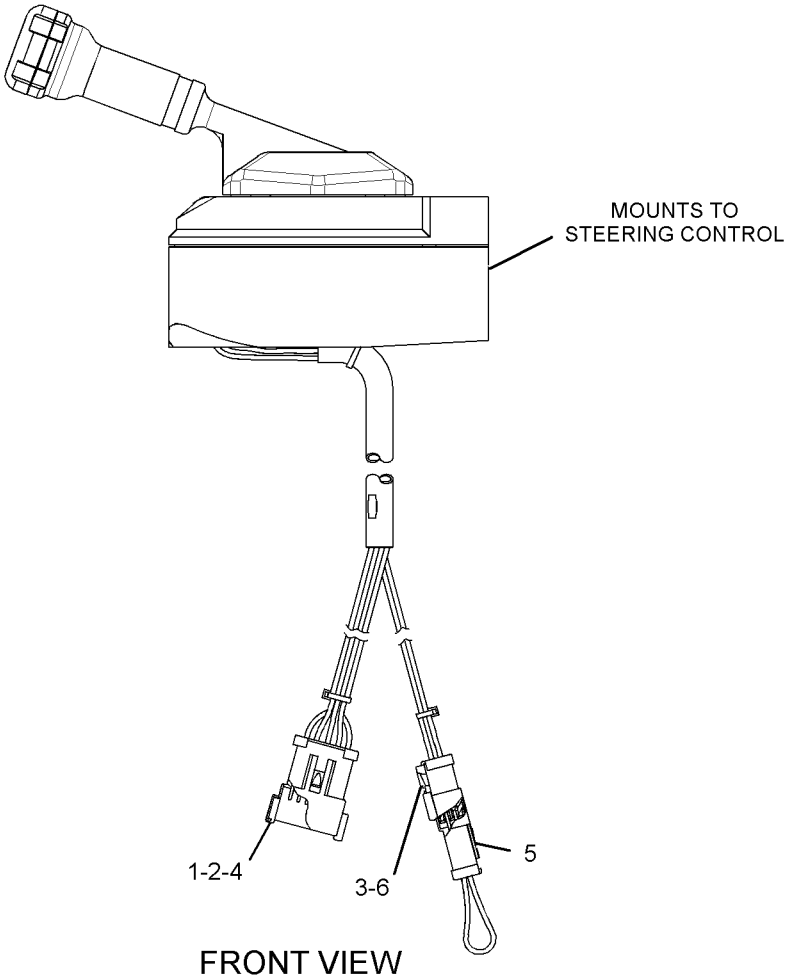

FRONT VIEW

GRAPHIC #1 **<END>** g01616638

OPERATOR STATION

154-7443 CONTROL GP-UNPRGMED MONITOR–

CATERPILLAR MONITORING SYSTEM

S/N: RYF1-UP

PART OF 237-4910 WIRING GP-CAB

SMCS-7610 **i02616459**

NOTE	PART NUMBER	QTY	PART NAME 1 2 3 4 5 6 (PRODUCT LEVEL)	SEE PAGE
	252-4501	1	CONTROL GP-UNPRGMED MONITOR (CATERPILLAR MONITORING SYSTEM)	

<END>

OPERATOR STATION

185-7534 DOOR GP-CAB—SLIDING WINDOW, RH

S/N: RYF1-UP

PART OF 270-3388 DOOR GP-CAB

SMCS-7308 **i03009049**

NOTE	REF NO	GRAPHIC REF	PART NUMBER	QTY	PART NAME 1 2 3 4 5 6 (PRODUCT LEVEL)	SEE PAGE
B	1	1	**5P-7803**	2	PLUG-BUTTON	
	2	1	**103-1122**	1	MOUNT-LATCH	
Y	3	1	*185-7522*	1	WINDOW GP-DOOR (RH)	636
	4	1	**185-7533**	1	GLASS (CAB DOOR, RH)	
	5	1	**185-7538**	1	DOOR AS (RH)	
		1	**205-0926**	2	HINGE	
M	6	1	**9X-2041**	1	SCREW-TRUSS HEAD (M10X1.5X20-MM)	
E	7	1	**3E-3805**		SEAL (470-CM)	
	8	1	**110-7524**	7	BUTTON	

B-USE AS REQUIRED
E-ORDER BY THE CENTIMETER
M-METRIC PART
Y-SEPARATE ILLUSTRATION

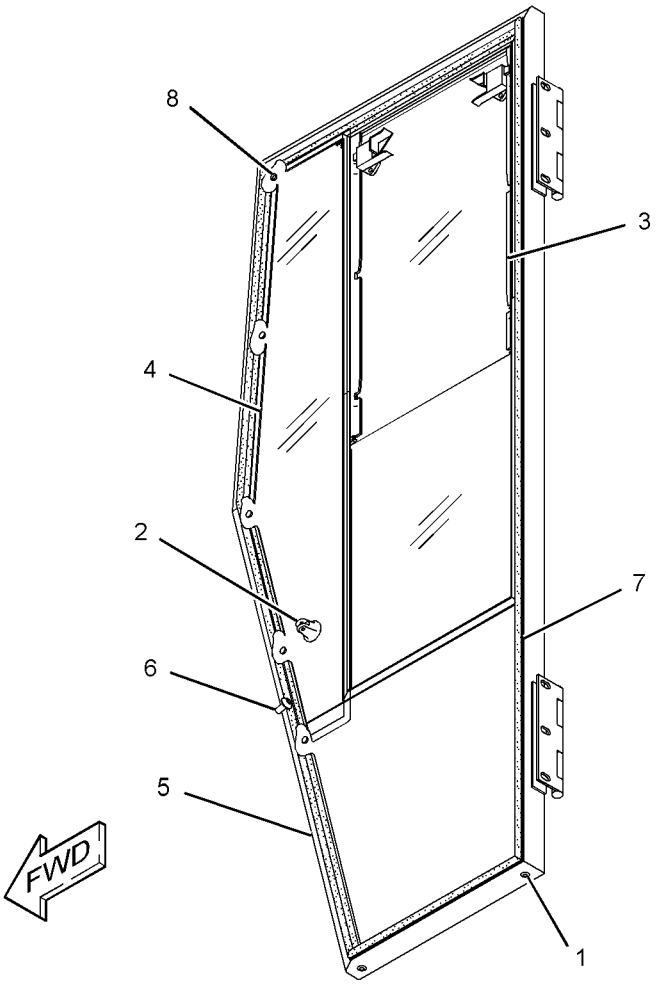

GRAPHIC #1 **<END>** g01457584

247-1852 DOOR GP-CAB—SLIDING WINDOW, LH

S/N: RYF1-UP

PART OF 270-3388 DOOR GP-CAB

SMCS-7308 **i03021290**

NOTE	REF NO	GRAPHIC REF	PART NUMBER	QTY	PART NAME 1 2 3 4 5 6 (PRODUCT LEVEL)	SEE PAGE
	1	1	**5P-7803**	2	PLUG-BUTTON	
	2	2	**6V-7636**	2	PIN AS-SPRING	
	3	1	**277-6203**	1	PLATE	
	4	2	**8T-4742**	1	END-YOKE ROD	
	5	2	**108-5471**	1	CLEVIS	
	6	1	**109-5008**	1	BUMPER-CONICAL	
	8	1	**277-6204**	1	COVER	
	9	2	**278-0647**	1	LATCH AS-HOLD OPEN	
J	10	1	**170-7709**	1	HANDLE AS-DOOR	
		1	**8Y-4501**	1	SPRING-HANDLE	
		1	**8Y-6338**	2	BRACKET-MOUNTING	
Y	11	1	*185-7523*	1	WINDOW GP-DOOR (LH)	638
	12	1	**187-1469**	1	GLASS (CAB DOOR, LH)	
	13	1	**225-3755**	2	GASKET	
	14	1	**247-1853**	1	DOOR AS-CAB (LH)	
M		1	**8T-3612**	1	NUT-WELD (M8X1.25-THD)	
		1	**205-0926**	2	HINGE	
Y	15	2	**247-1855**	1	LATCH GP-CAB DOOR & WINDOW	571
	16	2	**247-1859**	1	BRACKET AS	
	17	1	**247-1862**	1	BRACKET AS	
	18	2	**247-1869**	1	ROD	
	19	2	**247-1870**	1	ROD AS	
	20	2	**096-0067**	1	PIN-CLEVIS	
B	21	2	**242-5206**	4	SPACER (6.4X12.5X0.76-MM THK)	
M	22	2	**5C-2890**	1	NUT (M6X1-THD)	
M	23	1	**5C-7261**	1	NUT (M8X1.25-THD)	
	24	2	**6V-8185**	1	NUT (1/4-20-THD)	
M	25	1	**8T-4189**	2	BOLT (M8X1.25X20-MM)	
	26	1	**8T-4224**	2	WASHER-HARD (8.8X16X2-MM THK)	
M	27	2	**8T-4971**	4	BOLT (M6X1X30-MM)	
M	28	1,2	**9X-2042**	10	SCREW-TRUSS HEAD (M6X1X12-MM)	
M	29	2	**9X-6155**	4	BOLT-SOCKET HEAD (M6X1X16.7-MM)	
E	31	1	**3E-3805**		SEAL (470-CM)	
	32	2	**6V-9197**	1	LOCK PIN	
	33	1	**110-7524**	7	BUTTON	

B-USE AS REQUIRED
E-ORDER BY THE CENTIMETER
J-REQUIRES CORPORATE KEY
M-METRIC PART
Y-SEPARATE ILLUSTRATION

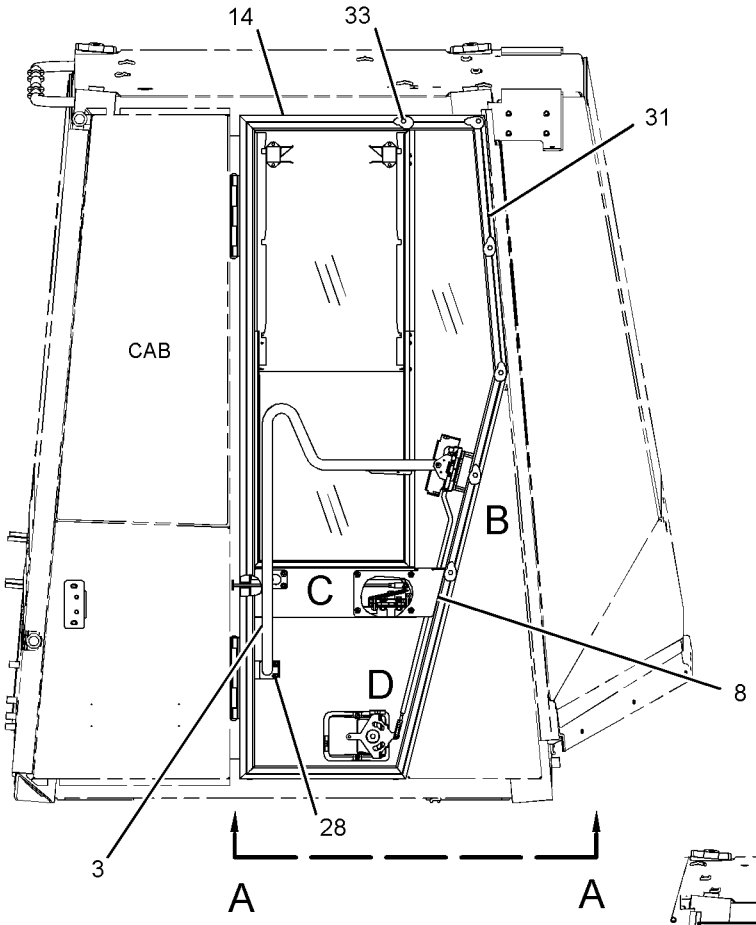

RIGHT SIDE VIEW

REFER TO ALL ILLUSTRATIONS OF
THIS GROUP FOR AUXILIARY VIEWS

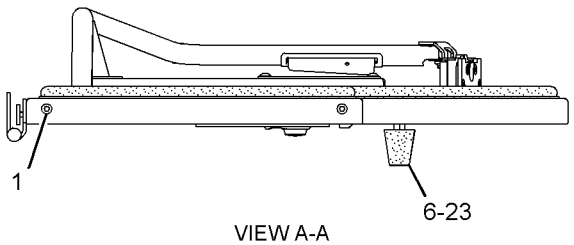

VIEW A-A

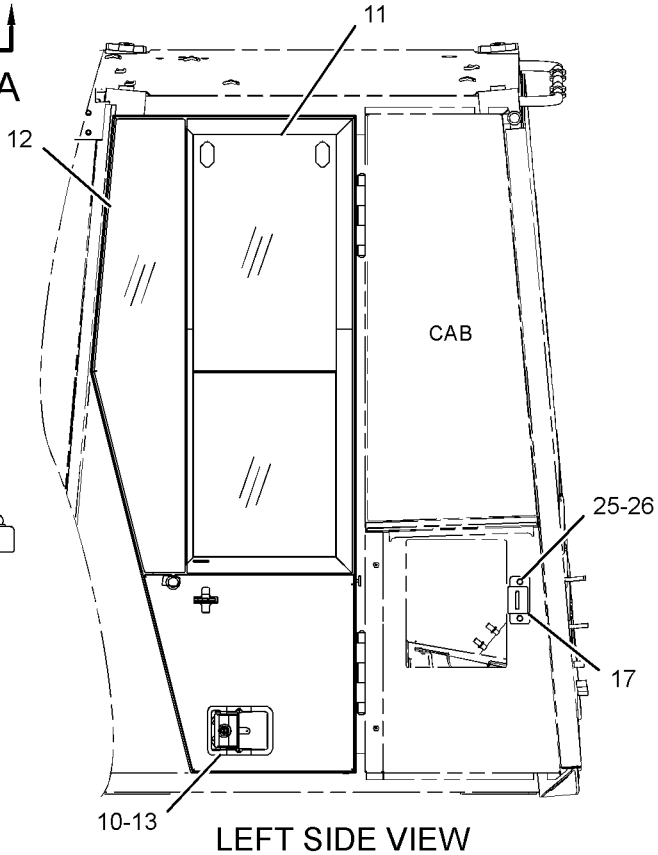

LEFT SIDE VIEW

GRAPHIC #1

g01458009

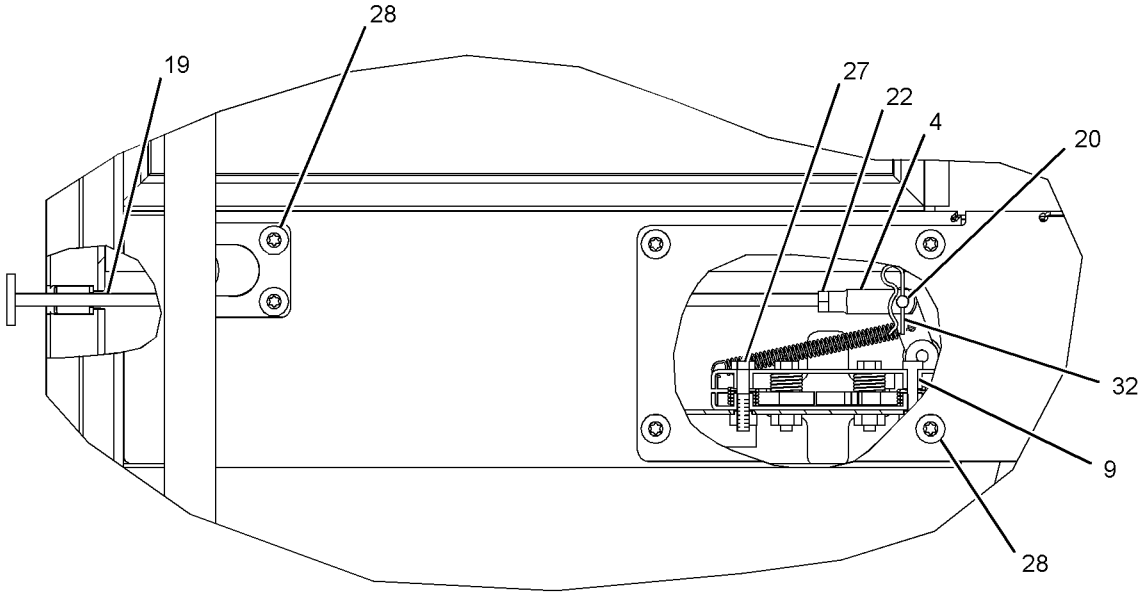

VIEW OF AREA C

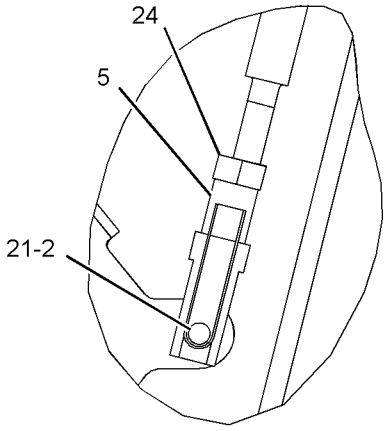

VIEW OF AREA D

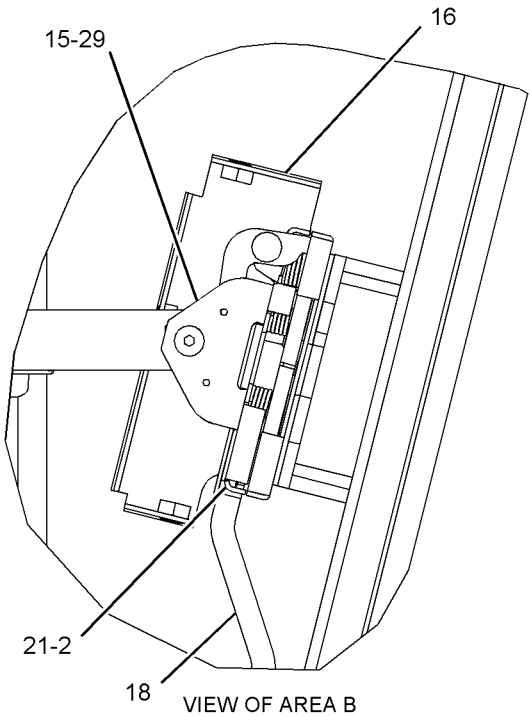

VIEW OF AREA B

GRAPHIC #2 **<END>** g01458008

OPERATOR STATION

270-3388 DOOR GP-CAB—SLIDING WINDOW

S/N: RYF1-UP

PART OF 237-2574 ROPS GP-ENCLOSED

SMCS-7308 **i02442671**

NOTE	PART NUMBER	QTY	PART NAME 1 2 3 4 5 6 (PRODUCT LEVEL)	SEE PAGE
Y	*247-1852*	1	DOOR GP-CAB (SLIDING WINDOW, LH)	551
Y	*185-7534*	1	DOOR GP-CAB (SLIDING WINDOW, RH)	550

Y-SEPARATE ILLUSTRATION

<END>

OPERATOR STATION

171-8888 DUCT & FILTER GP-CAB AIR

S/N: RYF1-UP

PART OF 237-2572 CAB AR-ENCLOSED ROPS

SMCS-7337, 7342 **i03627248**

NOTE	REF NO	GRAPHIC REF	PART NUMBER	QTY	PART NAME 1 2 3 4 5 6 (PRODUCT LEVEL)	SEE PAGE
	1	1	**7X-6041**	2	FILTER ELEMENT-CAB AIR (STANDARD EFFICIENCY)	
	3	1	**8Y-6388**	4	LOUVER AS-VENT	
	4	1	**135-8280**	2	SEAL	
C	5	1	**164-8474**	6	LOUVER AS-VENT	
	6	1	**151-5715**	3	LOUVER AS-VENT	
	7	1	**177-4495**	4	BRACKET AS	
	8	1	**196-0052**	2	DUCT AS	
	9	1	**198-8772**	1	DUCT AS	
	10	1	**209-0746**	2	STRAP	
	11	1	**104-2091**	8	SCREW-FLAT HEAD (NO 6X0.5-IN)	
	12	1	**117-8929**	2	WASHER (6.6X22X2-MM THK)	
	13	1	**148-3626**	6	SCREW-FLAT HEAD (NO 6X3/4-IN)	
	14	1	**5P-4116**	4	WASHER-HARD (8.8X20.5X2-MM THK)	
M	15	1	**7X-2537**	4	BOLT (M8X1.25X35-MM)	
	16	1	**9G-2673**	2	GROMMET	
M	17	1	**9X-2043**	8	SCREW-TRUSS HEAD (M6X1X14-MM)	
M	18	1	**9X-2044**	8	SCREW-TRUSS HEAD (M6X1X16-MM)	
E	19	1	**117-4473**		SEAL (5-CM EACH)	
D	20	1	**5P-8309**		SEAL (0.46-M)	
E	21	1	**8T-9005**		SEAL (60-CM EACH)	
H	22	1	**284-3953**		SEAL (26-DM EACH)	

C-CHANGE FROM PREVIOUS TYPE
D-ORDER BY THE METER
E-ORDER BY THE CENTIMETER
H-ORDER BY THE DECIMETER
M-METRIC PART

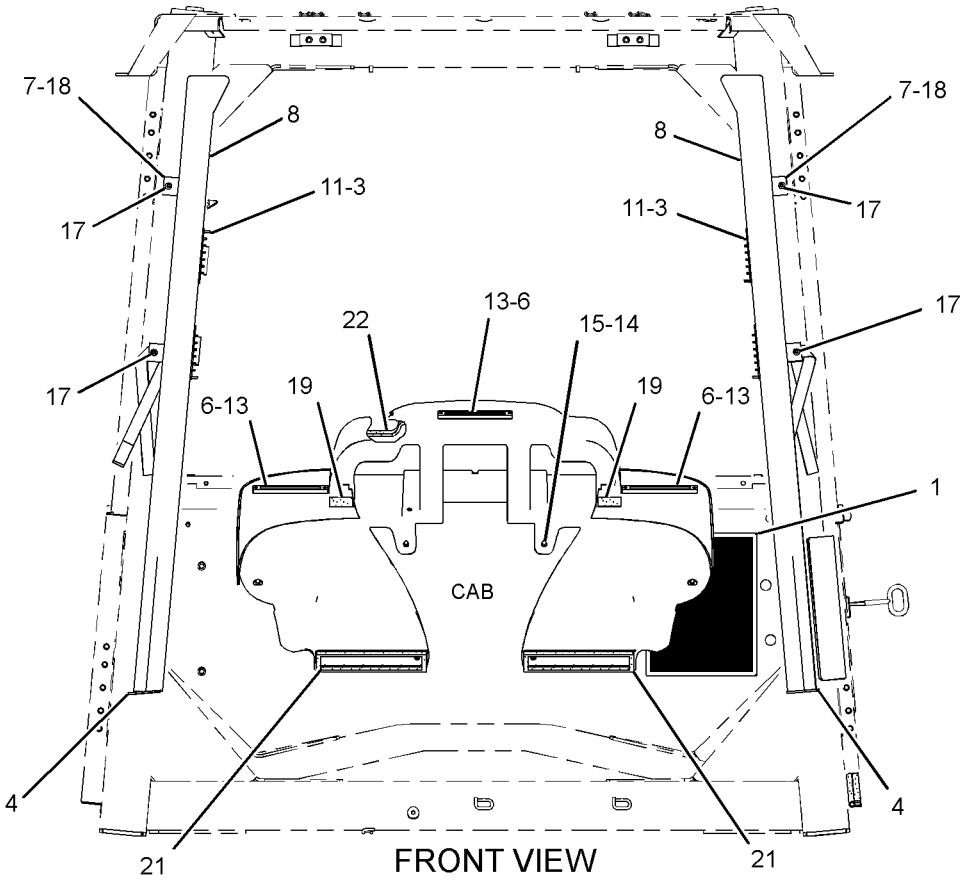

FRONT VIEW

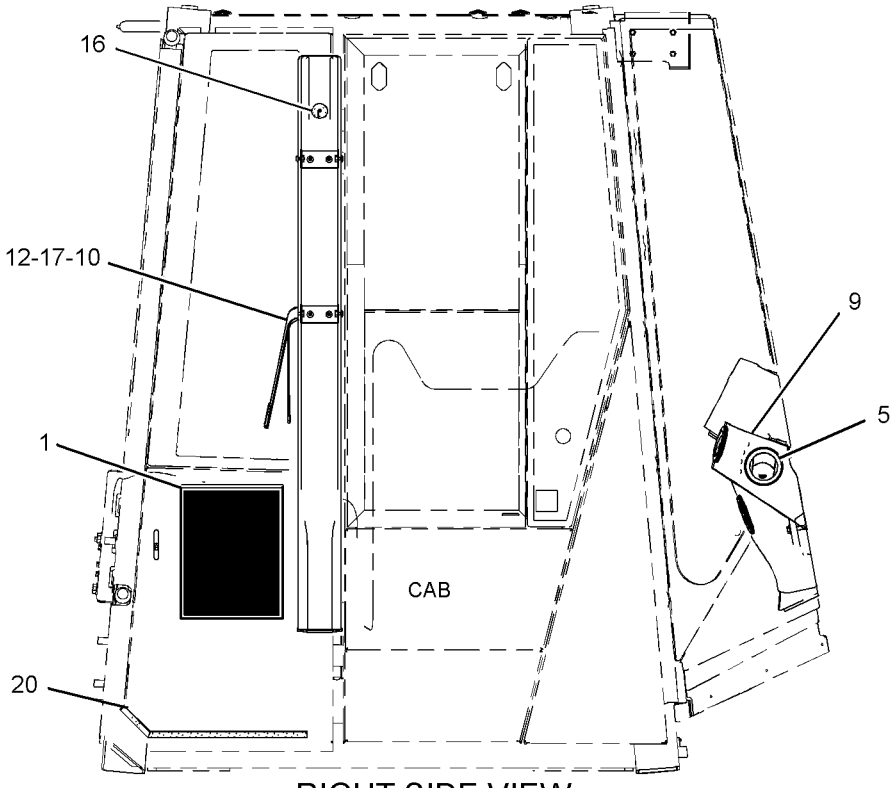

RIGHT SIDE VIEW

GRAPHIC #1

<END>

g01946787

232-1397 FLOOR GP-SOUND SUPPRESSION–CAB

S/N: RYF1-UP

PART OF 237-2572 CAB AR-ENCLOSED ROPS

SMCS-7265, 7301 **i03019165**

NOTE	REF NO	GRAPHIC REF	PART NUMBER	QTY	PART NAME 1 2 3 4 5 6 (PRODUCT LEVEL)	SEE PAGE
	1	1	**224-9392**	8	FASTENER-SINGLE HEAD	
	2	1	**225-9578**	1	INSULATION	
	3	1	**225-9579**	1	PANEL	
	4	1	**236-8896**	1	INSULATION	
	5	1	**318-9630**	2	PLATE	
	6	1	**8T-4121**	2	WASHER-HARD (11X21X2.5-MM THK)	
M	7	1	**8T-4137**	2	BOLT (M10X1.5X20-MM)	

M-METRIC PART

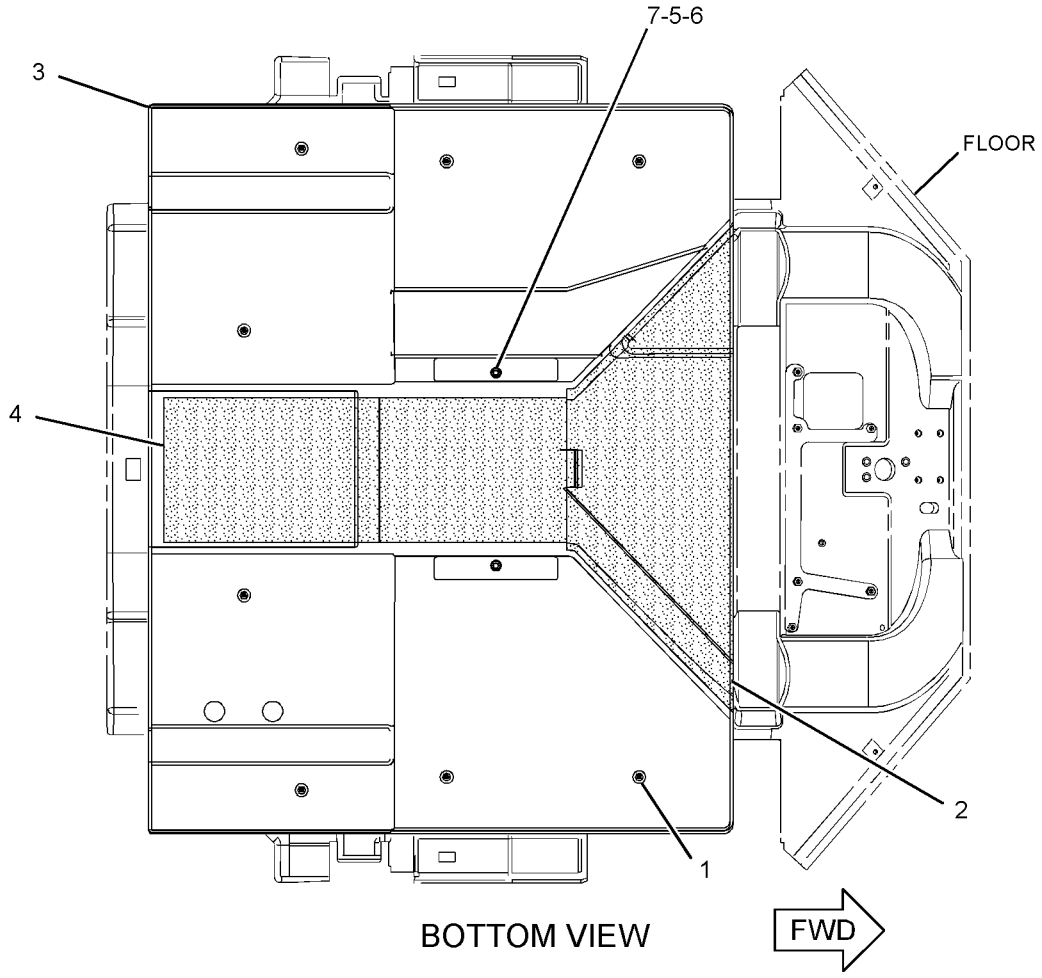

GRAPHIC #1 **<END>** g01515950

OPERATOR STATION

232-2964 FLOOR GP-SOUND SUPPRESSION

S/N: RYF1-UP

PART OF 237-2574 ROPS GP-ENCLOSED

SMCS-7265, 7301 **i03625807**

NOTE	REF NO	GRAPHIC REF	PART NUMBER	QTY	PART NAME 1 2 3 4 5 6 (PRODUCT LEVEL)	SEE PAGE
	1	1	**2M-6102**	3	PIPE	
	2	1	**6S-3859**	2	WASHER (0.562X1.75X0.063-IN THK)	
	4	1	**213-8819**	1	INSULATION	
	5	1	*233-3346*	1	PLATE AS	
M		1	**8T-3612**	6	NUT-WELD (M8X1.25-THD)	

M-METRIC PART

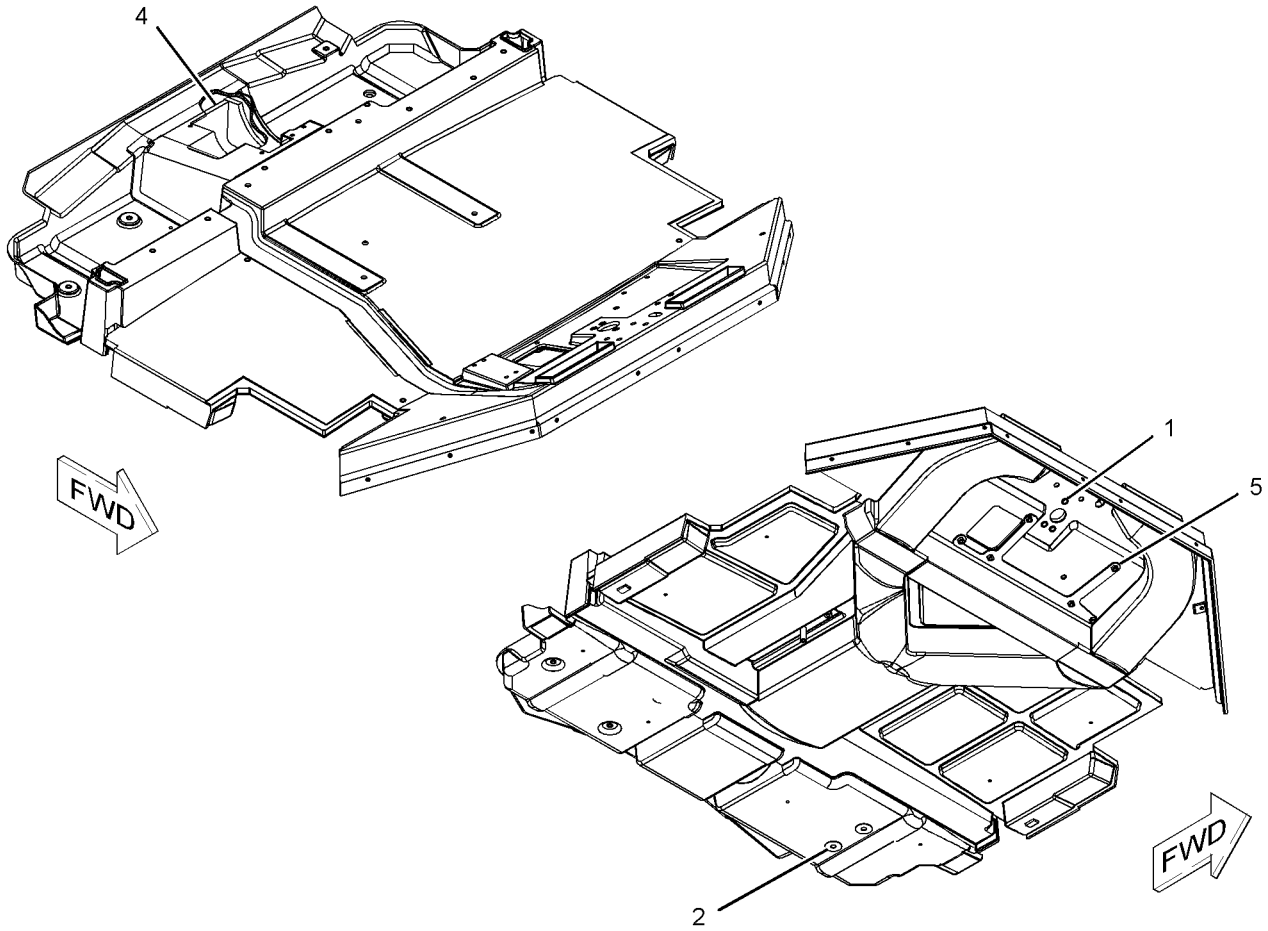

GRAPHIC #1 **<END>** g01186047

OPERATOR STATION

240-4542 GUARD GP-WINDOW

S/N: RYF1-UP

AN ATTACHMENT

SMCS-7165, 7182, 7310 **i02443753**

NOTE	REF NO	GRAPHIC REF	PART NUMBER	QTY	PART NAME 1 2 3 4 5 6 (PRODUCT LEVEL)	SEE PAGE
	1	1	**2G-9524**	2	LATCH	
	2	1	**4E-1384**	2	BUMPER-CONICAL	
	3	1	**6C-3678**	4	RIVET	
	4	1	**6C-3679**	4	RIVET-POP	
	5	1	**6S-6646**	6	PIN-COTTER	
	6	1	**7K-6536**	2	RIVET-POP	
	7	1	**8G-6035**	2	CLIP	
	8	1	**240-4548**	1	GRILL AS-FRONT	
	9	1	**240-4551**	1	GRILL AS-RH	
	10	1	**240-4552**	1	GRILL AS-LH	
	11	1	**240-4557**	1	TUBE	
	12	1	**240-4630**	2	PLATE	
	13	1	**241-6978**	1	TUBE	
	14	1	**241-8651**	1	TUBE AS	
	15	1	**241-8652**	1	TUBE AS	
	16	1	**244-2539**	2	ROD AS	
					(EACH INCLUDES)	
		1	**6V-5839**	2	WASHER (11X21X2.5-MM THK)	
	17	1	**0S-0175**	4	PIN-CLEVIS	
	18	1	**4M-7470**	4	GROMMET	
M	19	1	**5C-7261**	2	NUT (M8X1.25-THD)	
	20	1	**5P-1076**	12	WASHER-HARD (13.5X30X4-MM THK)	
M	21	1	**7X-2555**	6	BOLT (M16X2X80-MM)	
	22	1	**8T-4121**	2	WASHER-HARD (11X21X2.5-MM THK)	
M	23	1	**8T-4139**	12	BOLT (M12X1.75X30-MM)	
	24	1	**9X-8257**	6	WASHER (17.5X30X3.5-MM THK)	

M-METRIC PART

240-4542 **GUARD GP-WINDOW** *(contd.)* **i02443753**

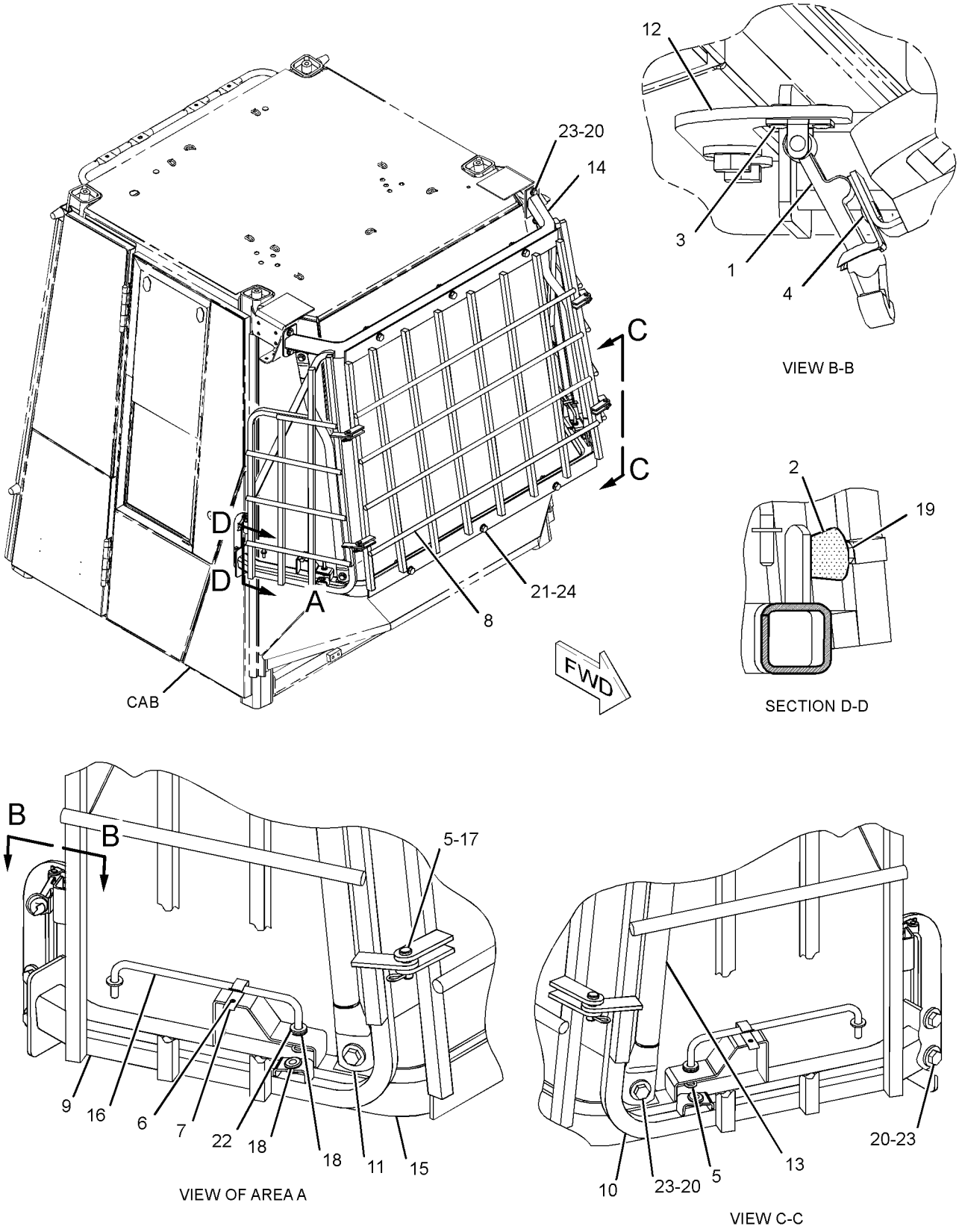

GRAPHIC #1 **<END>** g01197003

OPERATOR STATION

243-1092 HEATER GP-CAB

S/N: RYF1-UP

PART OF 237-2572 CAB AR-ENCLOSED ROPS

SMCS-7304 **i02449509**

NOTE	REF NO	GRAPHIC REF	PART NUMBER	QTY	PART NAME 1 2 3 4 5 6 (PRODUCT LEVEL)	SEE PAGE
M	1	1	**8T-4971**	4	BOLT (M6X1X30-MM)	
Y	2	1	**276-3964**	1	HEATER GP-CAB	563
	3	1	**192-2822**	1	GASKET	
	4	1	**229-2704**	8	SEAL	
Y	5	1	*243-1093*	1	LINES GP-CAB HEATER	578
M	6	1	**5C-9553**	2	BOLT (M6X1X16-MM)	
M	8	1	**9X-2040**	3	SCREW-TRUSS HEAD (M10X1.5X25-MM)	
	9	1	**8T-4205**	6	WASHER-HARD (7.2X14.5X2-MM THK)	
E	11	1	**123-3827**		SEAL (28-CM EACH)	
E	11A	1	**123-3827**		SEAL (33-CM EACH)	

E-ORDER BY THE CENTIMETER
M-METRIC PART
Y-SEPARATE ILLUSTRATION

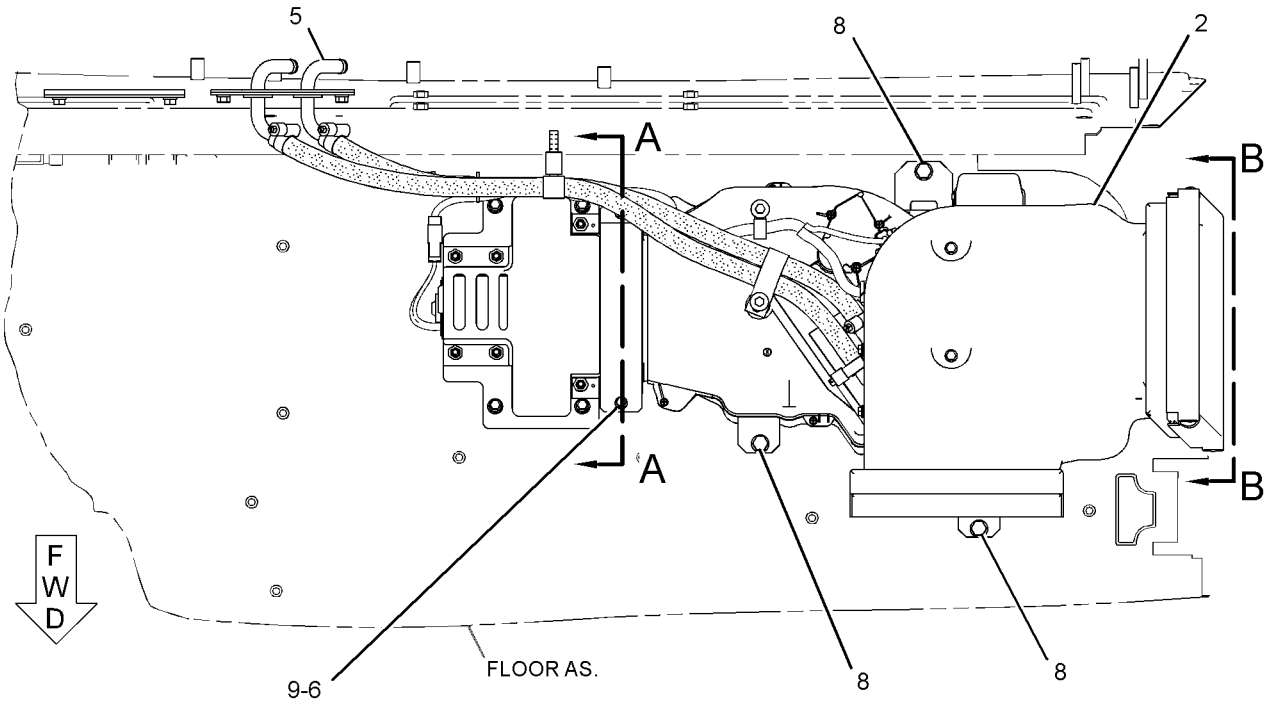

TOP VIEW

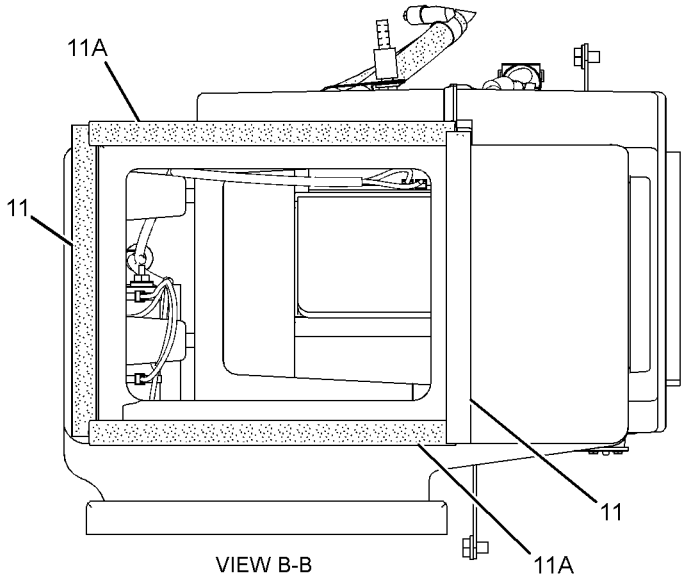

VIEW B-B

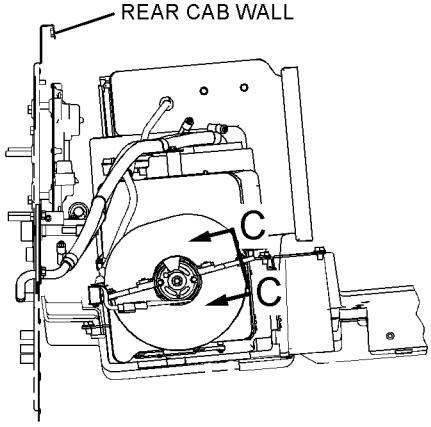

RIGHT SIDE VIEW

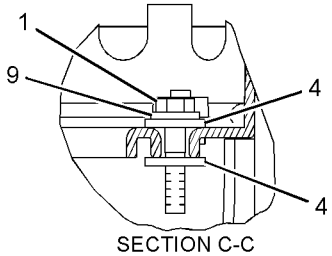

SECTION C-C

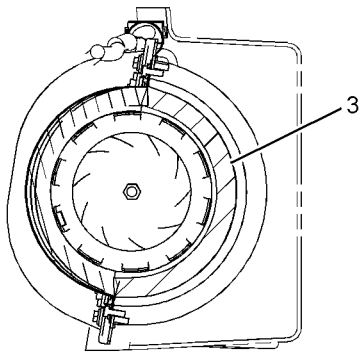

SECTION A-A

GRAPHIC #1 **<END>** g01189860

OPERATOR STATION

276-3964 HEATER GP-CAB

S/N: RYF1-UP

PART OF 243-1092 HEATER GP-CAB

SMCS-7304 **i03440122**

NOTE	REF NO	GRAPHIC REF	PART NUMBER	QTY	PART NAME 1 2 3 4 5 6 (PRODUCT LEVEL)	SEE PAGE
	1	1	**3S-2093**	1	STRAP-CABLE	
	2	1	**6T-6708**	2	WASHER (7X28.6X4.1-MM THK)	
M	3	1	**8C-7581**	1	SCREW-MACHINE (M4X0.7X8-MM)	
	4	1	**125-9740**	1	RESISTOR	
	5	1	**133-9012**	1	FUSE (15-AMPERE)	
	6	1	**177-6704**	2	GASKET	
	7	1	**177-6716**	1	DOOR	
	8	1	**177-6727**	1	ACTUATOR	
	9	1	**320-1457**	1	DOOR AS	
		1	**4K-9429**	4	RIVET-POP	
		1	**4B-4274**	1	WASHER (5.5X13X1.2-MM THK)	
M		1	**187-7719**	1	SCREW-HEX FLANGE (M5X2.24X14-MM)	
		1	**208-2929**	2	GASKET	
	10	1	**179-4682**	2	LEVER	
	11	1	**179-4683**	1	ROD	
	12	1	**185-4778**	1	HOUSING AS	
	13	1	**185-4780**	1	HOUSING	
	14	1	**185-4782**	1	HOUSING	
	15	1	**185-4783**	1	COVER	
	16	1	**185-4785**	1	DUCT AS	
M	17	1	**187-7719**	24	SCREW-HEX FLANGE (M5X2.24X14-MM)	
	18	1	**188-7690**	1	SUPPORT	
	19	1	**189-4682**	1	COIL AS-HEATER	
	20	1	**192-2820**	1	PLATE	
	21	1	**192-2822**	1	GASKET	
	22	1	**192-2823**	1	HARNESS AS-HEATER & AIR COND	
		1	**102-8801**	2	KIT-RECEPTACLE (12-PIN)	
					(EACH KIT INCLUDES RECEPTACE AS AND WEDGE)	
		1	**155-2270**	2	KIT-CONNECTING PLUG (2-PIN)	
					(EACH KIT INCLUDES PLUG AS AND WEDGE)	
	23	1	**193-0702**	1	GASKET	
	24	1	**193-7307**	1	GROMMET	
	25	1	**197-1397**	1	BRACKET	
	26	1	**197-1398**	1	BRACKET	
	27	1	**197-1399**	1	BRACKET	
	28	1	**329-4959**	1	BRACKET AS	
M		1	**6V-9632**	3	NUT-WELD (M6X1-THD)	
	29	1	**199-7499**	1	GASKET	
	30	1	**202-1327**	1	GASKET	
	31	1	**268-8792**	1	MOTOR AS-BLOWER (24-VOLT, A/C, HEATER)	
		1	**102-8802**	2	KIT-RECEPTACLE (2-PIN)	
					(EACH KIT INCLUDES RECEPTACLE AS AND WEDGE)	
		1	**9W-0852**	2	PIN-CONNECTOR (14-GA)	
M	32	1	**129-3178**	7	LOCKNUT (M6X1-THD)	
	33	1	**130-5300**	1	CLIP	
M	34	1	**141-9784**	1	BOLT (M6X1X190-MM)	
	35	1	**4B-4274**	2	WASHER (5.5X13X1.2-MM THK)	
M	36	1	**5C-9553**	8	BOLT (M6X1X16-MM)	
	37	1	**5P-4115**	3	WASHER-HARD (7.2X19X2-MM THK)	
	38	1	**6V-1668**	2	WASHER (6.5X29.1X3-MM THK)	
	39	1	**6V-4369**	1	CLIP	
M	40	1	**6V-7357**	3	BOLT (M6X1X25-MM)	
	41	1	**8T-4205**	11	WASHER-HARD (7.2X14.5X2-MM THK)	
	42	1	**9X-7373**	1	GROMMET	
J	43	1	**5P-5927**		SEAL (10-DM)	
J	44	1	**5P-5639**		SEAL (10-DM)	

276-3964 HEATER GP-CAB *(contd.)* i03440122

J-SOLD BY THE DECIMETER
M-METRIC PART

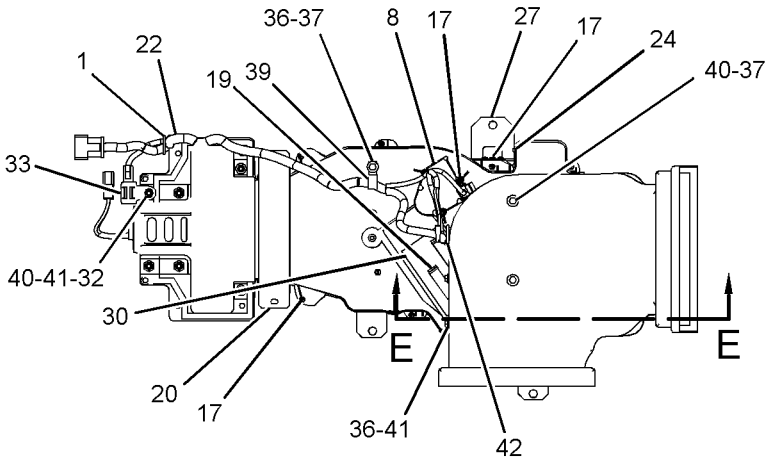

VIEW A-A

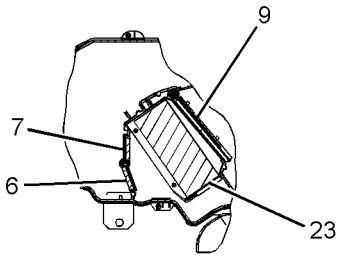

SECTION D-D

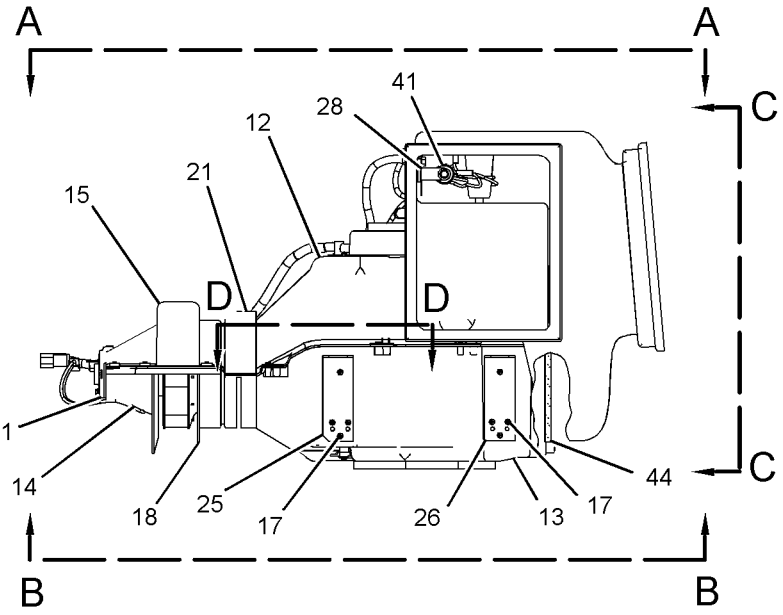

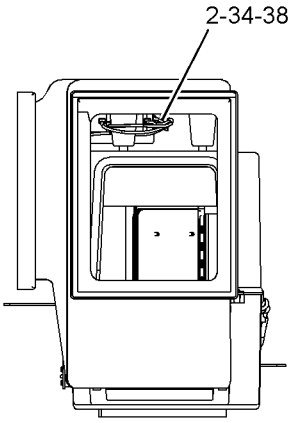

VIEW C-C

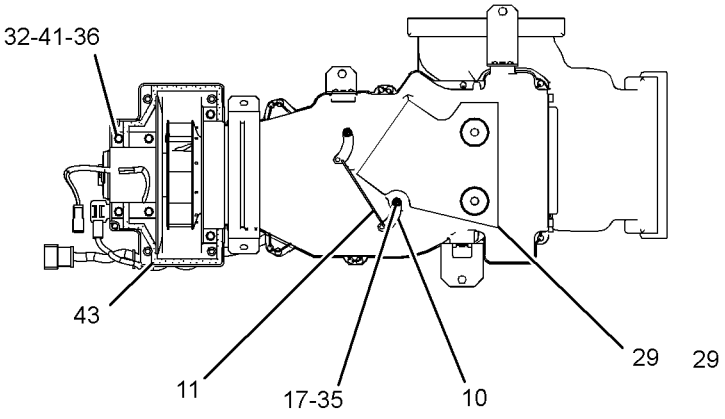

VIEW B-B

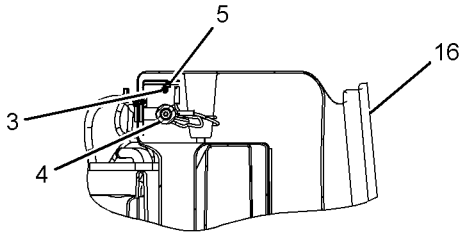

SECTION E-E

GRAPHIC #1 **<END>** g01618742

OPERATOR STATION

246-3292 HORN GP-ELECTRIC

S/N: RYF1-UP

PART OF 236-8961 ELECTRICAL AR

SMCS-7402 **i03618026**

NOTE	REF NO	GRAPHIC REF	PART NUMBER	QTY	PART NAME 1 2 3 4 5 6 (PRODUCT LEVEL)	SEE PAGE
	1	1	**163-1201**	1	HORN AS (24-VOLT, LOW TONE)	
	2	1	**174-7875**	1	HORN AS (24-VOLT, HIGH TONE)	
	3	1	**8T-4121**	2	WASHER-HARD (11X21X2.5-MM THK)	
M	4	1	**8T-4137**	2	BOLT (M10X1.5X20-MM)	

M-METRIC PART

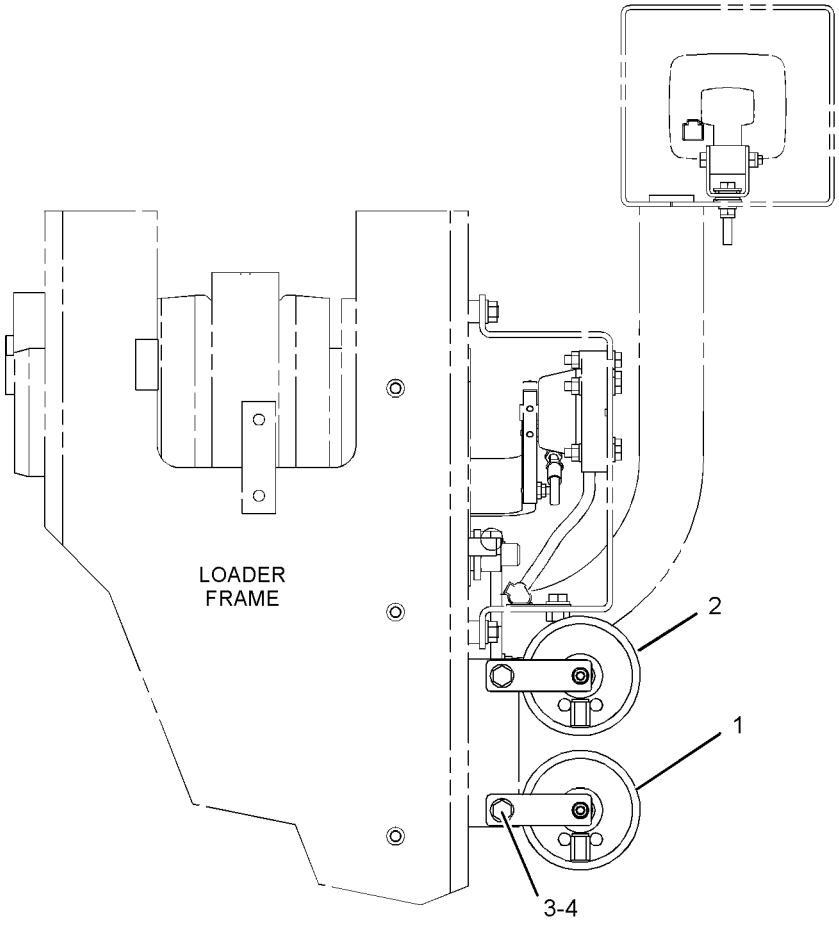

REAR VIEW

GRAPHIC #1 **<END>** g01141471

OPERATOR STATION

244-2787 INSTALLATION GP-CONTROLS–

PARKING BRAKE CABLE

S/N: RYF1-UP

PART OF 237-2570 OPERATOR AR-ENCLOSED ROPS

SMCS-1265, 4284 **i03625853**

NOTE	REF NO	GRAPHIC REF	PART NUMBER	QTY	PART NAME 1 2 3 4 5 6 (PRODUCT LEVEL)	SEE PAGE
	1	1	**9U-0830**	1	END-YOKE ROD	
	2	1	**152-1684**	1	ANGLE	
	3	1	**096-0067**	1	PIN-CLEVIS	
	4	1	**5B-9192**	1	PIN-COTTER	
M	5	1	**5C-2874**	1	NUT (M5X0.8-THD)	
	6	1	**8T-4121**	2	WASHER-HARD (11X21X2.5-MM THK)	
M	7	1	**8T-4137**	2	BOLT (M10X1.5X20-MM)	
	8	1	**3V-7476**	1	KEY-HANDLE	
	9	1	**8T-4223**	1	WASHER-HARD (13.5X25.5X3-MM THK)	
M	10	1	**8T-4244**	1	NUT (M12X1.75-THD)	
	11	1	**3S-2093**	2	STRAP-CABLE	
	12	1	**236-6253**	1	GROMMET	

M-METRIC PART

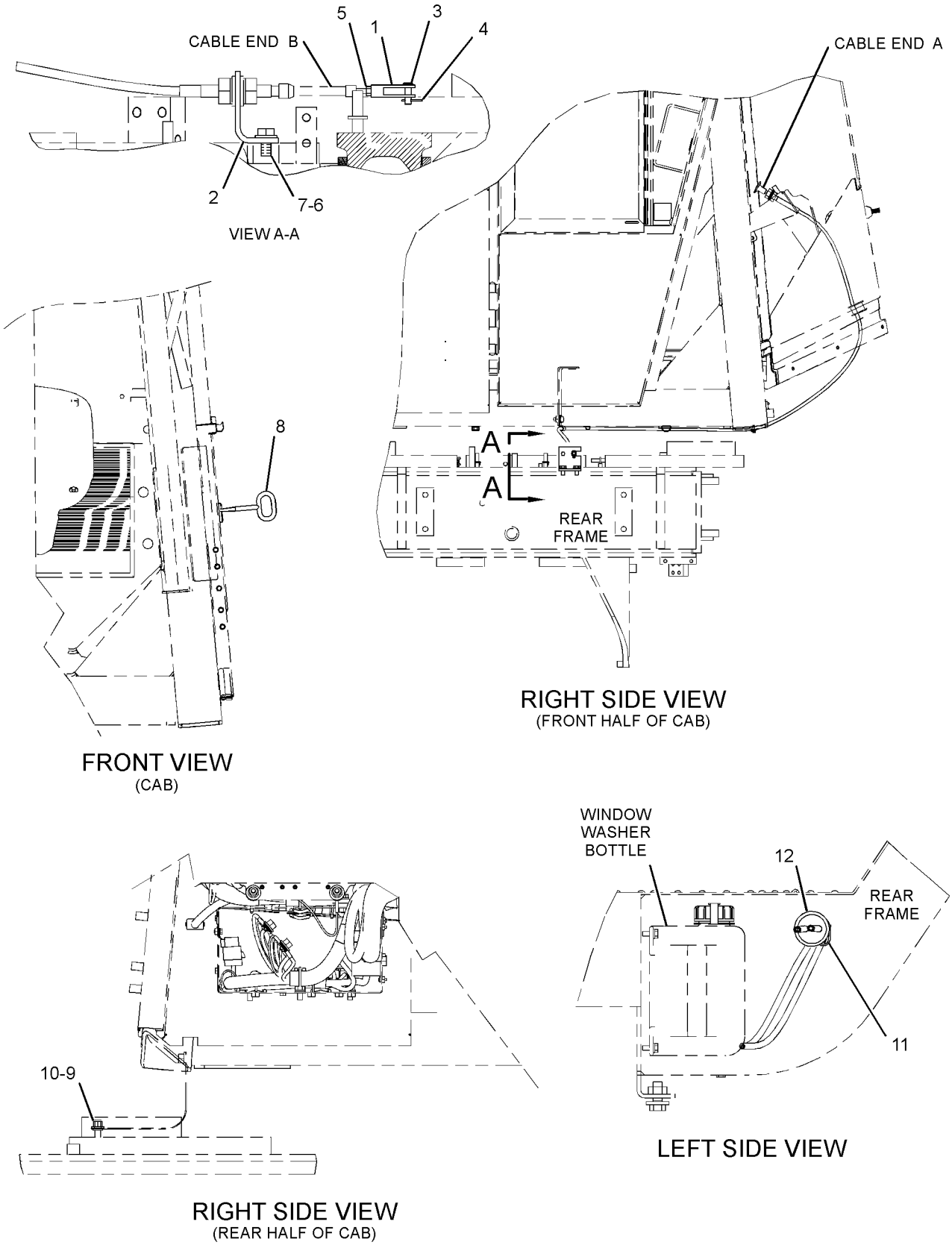

GRAPHIC #1 **<END>** g01845016

OPERATOR STATION

257-2008 INSTALLATION GP-RADIO

S/N: RYF1-UP

PART OF 237-2572 CAB AR-ENCLOSED ROPS

SMCS-7338 **i02305967**

NOTE	REF NO	GRAPHIC REF	PART NUMBER	QTY	PART NAME 1 2 3 4 5 6 (PRODUCT LEVEL)	SEE PAGE
	1	1	**3S-2093**	10	STRAP-CABLE	
	2	1	**9U-2331**	1	ANTENNA AS (COMMUNICATION RADIO)	
	3	1	**9U-4431**	1	MOUNT-ANTENNA	
	4	1	**9U-8263**	1	COVER	
	5	1	**168-8772**	2	SPEAKER AS-RADIO	
	6	1	**173-2200**	1	CABLE AS	
	7	1	**011-7960**	1	GROMMET	
	8	1	**8T-0328**	8	WASHER-HARD (5.5X10X1-MM THK)	
M	9	1	**8T-0337**	8	SCREW-MACHINE (M4X0.7X12-MM)	
D	10	1	**8T-2562**		TRIM (0.06-M EACH)	

D-ORDER BY THE METER
M-METRIC PART

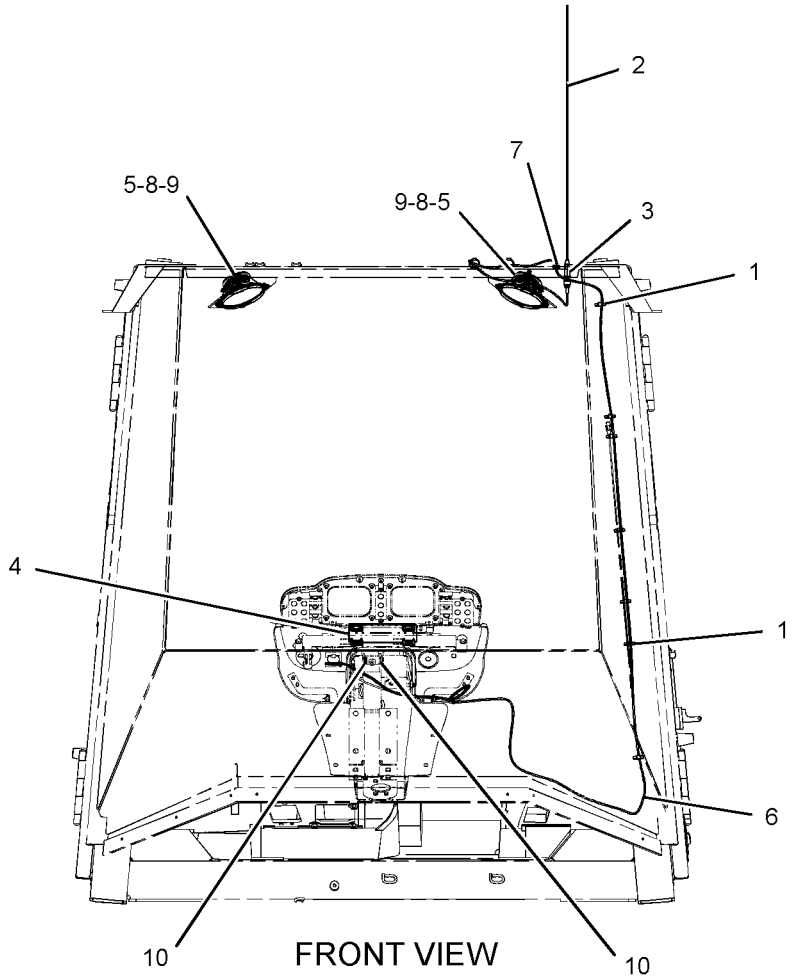

GRAPHIC #1 **<END>** g01141875

OPERATOR STATION

320-9998 INSTALLATION GP-RADIO

S/N: RYF1-UP

AN ATTACHMENT

SMCS-7338 **i03037200**

NOTE	REF NO	GRAPHIC REF	PART NUMBER	QTY	PART NAME 1 2 3 4 5 6 (PRODUCT LEVEL)	SEE PAGE
	1	1	**3S-2093**	6	STRAP-CABLE	
	2	1	**7K-1181**	1	STRAP-CABLE	
	3	1	**9U-2332**	2	ANTENNA AS (CB)	
	4	1	**9U-4431**	2	MOUNT-ANTENNA	
	5	1	**191-5114**	2	CABLE AS (COAX)	
	6	1	**208-3777**	1	BRACKET	
	7	1	**208-3778**	1	BRACKET	
	8	1	**208-3779**	1	BRACKET AS	
	9	1	**209-0381**	1	CONVERTER-POWER (24-VOLT TO 12-VOLT)	
	10	1	**236-6253**	2	GROMMET	
	11	1	**236-7772**	1	HARNESS AS-RADIO	
	12	1	**318-9631**	1	PLATE	
	13	1	**4Y-8003**	1	U-BOLT	
M	14	1	**5C-9553**	2	BOLT (M6X1X16-MM)	
M	15	1	**6V-7357**	4	BOLT (M6X1X25-MM)	
M	16	1	**6V-9673**	4	SCREW-MACHINE (M5X0.8X12-MM)	
	17	1	**8T-4121**	3	WASHER-HARD (11X21X2.5-MM THK)	
M	18	1	**8T-4133**	2	NUT (M10X1.5-THD)	
M	19	1	**8T-4137**	1	BOLT (M10X1.5X20-MM)	
	20	1	**9X-8256**	6	WASHER (6.6X12X2-MM THK)	

M-METRIC PART

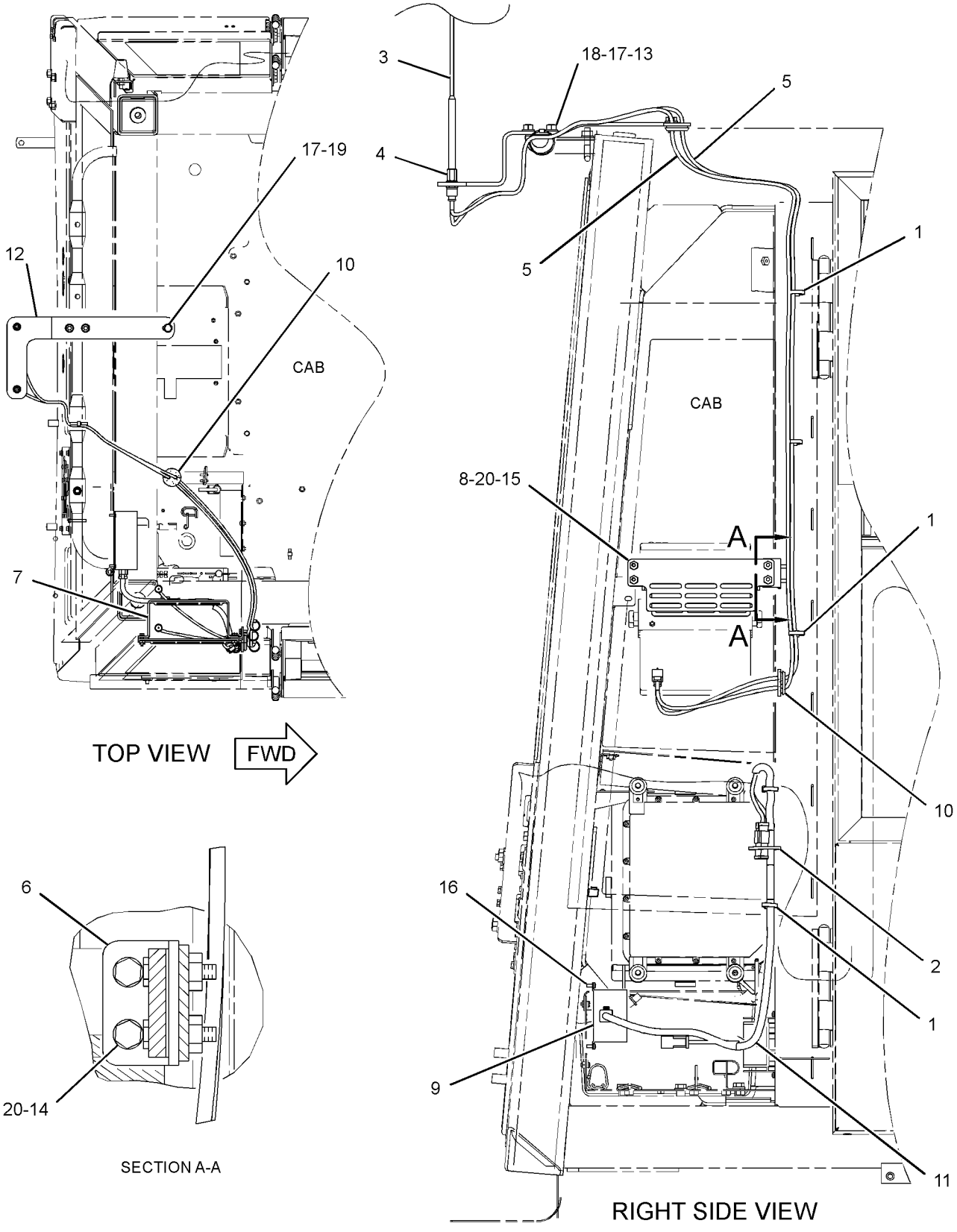

GRAPHIC #1

<END>

g01509293

OPERATOR STATION

247-1855 LATCH GP-CAB DOOR & WINDOW

S/N: RYF1-UP

PART OF 247-1852 DOOR GP-CAB

SMCS-7308, 7310 **i03021292**

NOTE	REF NO	GRAPHIC REF	PART NUMBER	QTY	PART NAME 1 2 3 4 5 6 (PRODUCT LEVEL)	SEE PAGE
	1	1	**247-1865**	1	LATCH AS	
	2	1	**250-9308**	1	CLIP	
	3	1	**250-9309**	1	HANDLE AS	
	4	1	**250-9310**	1	SPRING AS	
	5	1	**250-9311**	1	ROD-LINK	
	6	1	**250-9312**	1	CLIP	
M	7	1	**5C-7423**	1	SCREW (M6X1X16-MM)	

M-METRIC PART

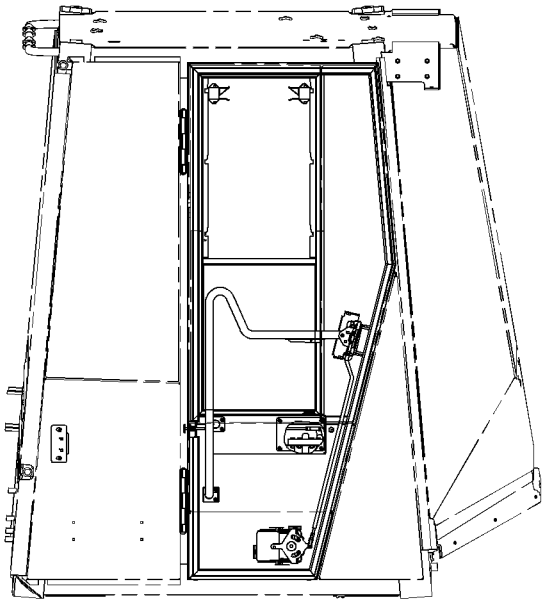

RIGHT SIDE VIEW

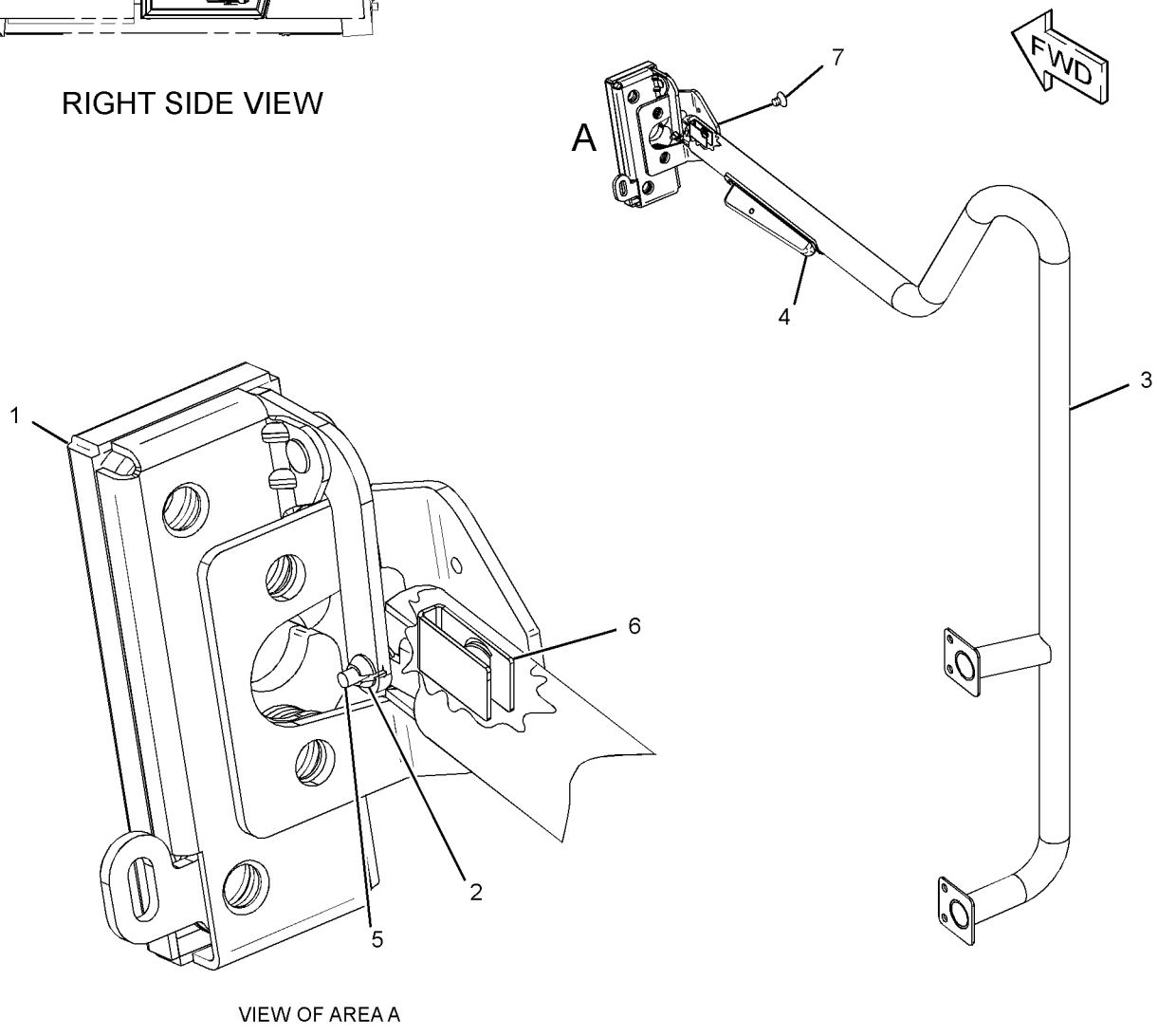

VIEW OF AREA A

GRAPHIC #1 **<END>** g01190518

OPERATOR STATION

232-1394 LINER GP-CAB—ENCLOSED ROPS

S/N: RYF1-UP

PART OF 237-2572 CAB AR-ENCLOSED ROPS

SMCS-7329 **i03424696**

NOTE	REF NO	GRAPHIC REF	PART NUMBER	QTY	PART NAME 1 2 3 4 5 6 (PRODUCT LEVEL)	SEE PAGE
	1	2	**222-3686**	1	BRACKET (LH)	
	2	2	**222-3687**	1	BRACKET (RH)	
	4	2	**5P-7958**	1	SLEEVE-CABLE SPLICE	
	5	1	**6V-8928**	2	HOOK-COAT	
	6	2	**8T-6842**	1	FILM-INSTRUCTION (PULL RING, ALTERNATE EXIT)	
	7	2	**160-9925**	1	LANYARD	
	8	1	**161-3415**	1	STRAP	
	9	1	**173-2115**	1	FLOOR MAT	
	10	1	**173-2185**	1	LINER-CAB	
	11	2	**173-2187**	1	COVER AS	
	12	1	**178-4323**	9	CAP	
	13	2	**190-5497**	1	COVER AS	
		2	**2R-2376**	2	WASHER (7X16X0.8-MM THK)	
		2	**134-0780**	2	THUMBSCREW	
	14	1	**197-2027**	1	BRACKET AS	
	15	2	**197-2072**	1	COVER	
	16	2	**210-5551**	1	TRAY	
	17	2	**211-0667**	1	COVER AS	
	18	1	**233-5036**	2	ANGLE AS	
	19	1	**234-1360**	1	INSULATION	
	20	1	**243-3763**	1	INSULATION	
	21	1	**247-1863**	1	COVER-LATCH	
	22	2	**253-9521**	4	SCREW-TRUSS HEAD (M12X1.75X20-MM)	
	23	1	**259-6893**	1	FILM-FUSE PANEL	
	24	2	**272-6674**	1	COVER	
M	25	2	**5C-7261**	4	NUT (M8X1.25-THD)	
	26	1	**8D-6542**	4	GROMMET	
	27	1,2	**8R-3695**	2	GROMMET	
	28	1,2	**8T-4121**	6	WASHER-HARD (11X21X2.5-MM THK)	
M	29	2	**8T-4137**	2	BOLT (M10X1.5X20-MM)	
M	30	1	**8T-4195**	4	BOLT (M10X1.5X30-MM)	
	31	2	**5P-4116**	4	WASHER-HARD (8.8X20.5X2-MM THK)	
M	32	2	**9X-2040**	6	SCREW-TRUSS HEAD (M10X1.5X25-MM)	
M	33	1,2	**9X-2041**	7	SCREW-TRUSS HEAD (M10X1.5X20-MM)	
M	34	1,2	**9X-2042**	10	SCREW-TRUSS HEAD (M6X1X12-MM)	
M	35	1,2	**9X-2045**	8	SCREW-TRUSS HEAD (M6X1X20-MM)	
M	36	2	**9X-2046**	4	SCREW-TRUSS HEAD (M6X1X35-MM)	
	37	2	**9X-6165**	1	WASHER (6.5X22X2.5-MM THK)	
D	38	2	**5P-5927**		SEAL (0.8-M)	
BD	39	2	**7Y-8555**		SEAL (0.9-M)	
E	40	2	**8T-9005**		SEAL (46-CM)	
	41	1	**307-9732**	1	CAP	
	42	1	**308-0467**	1	PLUG-RUBBER	
	44	1	**255-8545**	10	WASHER-RUBBER (21.5X55X2-MM THK)	

B-USE AS REQUIRED
D-ORDER BY THE METER
E-ORDER BY THE CENTIMETER
M-METRIC PART

REFER TO ALL ILLUSTRATIONS OF
THIS GROUP FOR AUXILIARY VIEWS

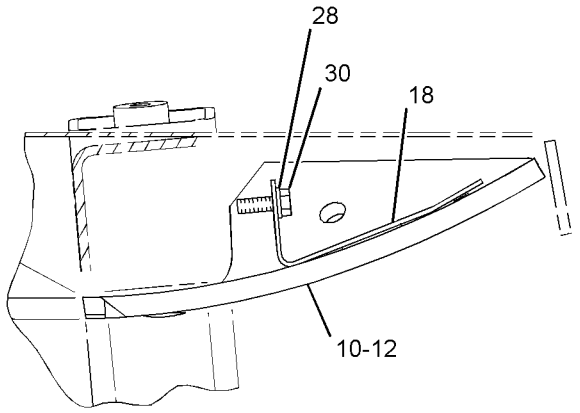

VIEW OF AREA B

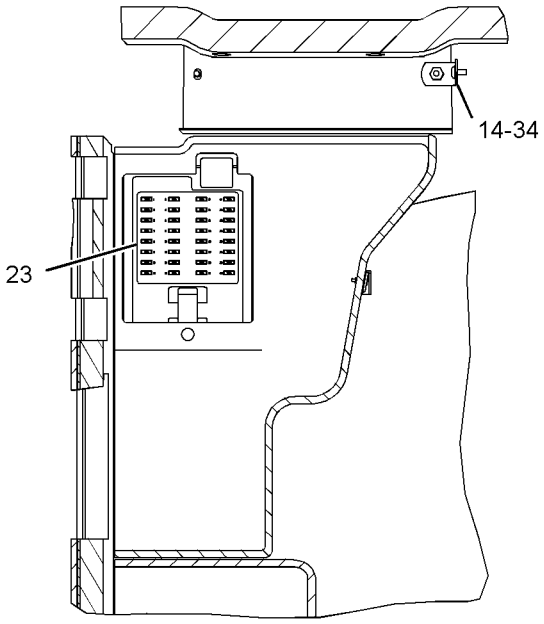

SECTION C-C

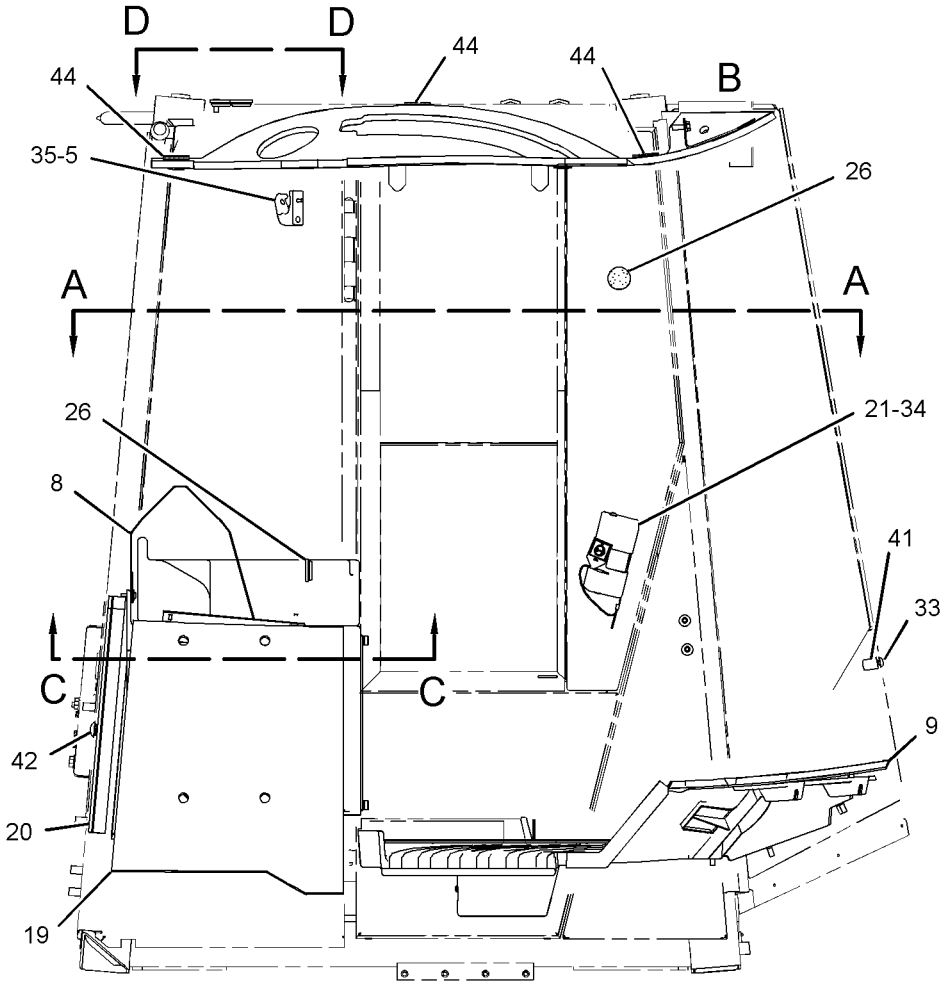

RIGHT SIDE VIEW

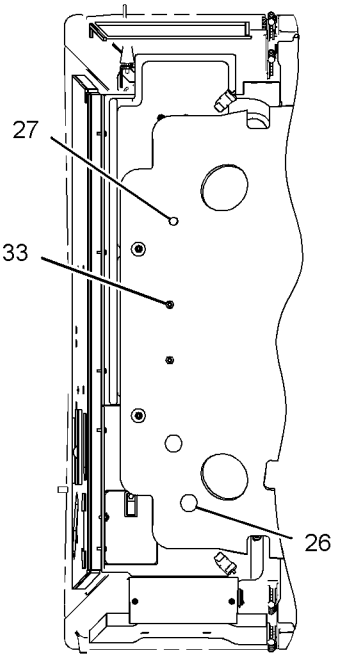

VIEW D-D

GRAPHIC #1

g01942933

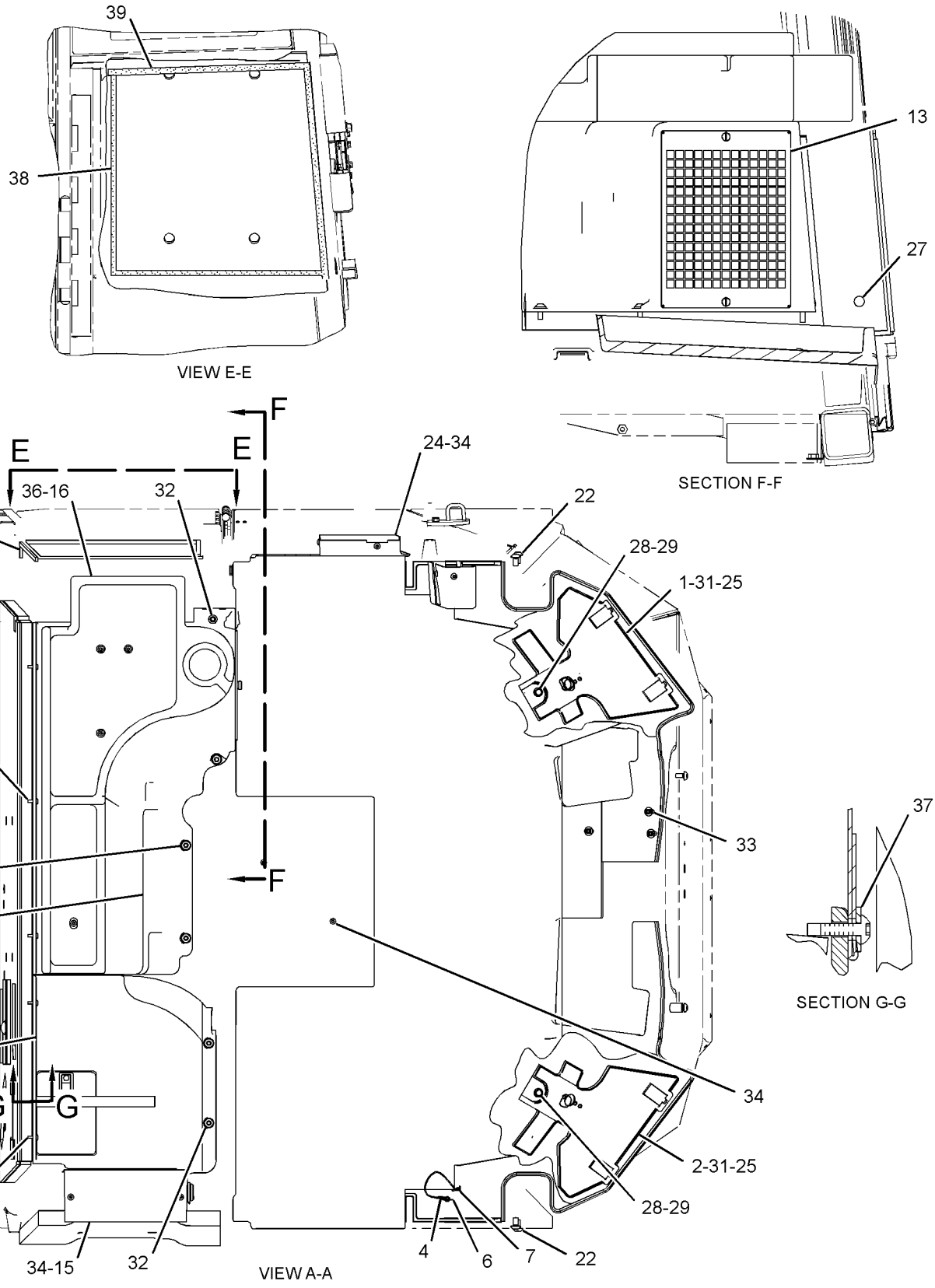

GRAPHIC #2 **<END>** g01942934

OPERATOR STATION

236-8980 LINES GP-CAB HEATER

S/N: RYF1-UP

PART OF 236-9000 CHASSIS AR

SMCS-7304 **i03612534**

NOTE	REF NO	GRAPHIC REF	PART NUMBER	QTY	PART NAME 1 2 3 4 5 6 (PRODUCT LEVEL)	SEE PAGE
	1	1	**9X-2488**	4	CLAMP-HOSE	
	2	1	*161-9916*	1	ADAPTER AS	
		1	**2M-9780**	1	SEAL-O-RING	
		1	**6V-7420**	1	ADAPTER	
	3	1	*165-2273*	1	VALVE GP-SHUTOFF (CAB HEATER)	
	3A	1	*165-2273*	1	VALVE GP-SHUTOFF (WATER PUMP)	
					(EACH VALVE INCLUDES)	
		1	**3K-0360**	1	SEAL-O-RING	
		1	**6V-7238**	1	VALVE-SHUTOFF	
	4	1	**274-8330**	1	BRACKET AS	
M		1	**8T-3490**	1	NUT-WELD (M10X1.5-THD)	
	5	1	*155-7321*	1	ADAPTER AS	
		1	**3D-2824**	1	SEAL-O-RING	
		1	**6V-1722**	1	ADAPTER-O-RING	
	6	1	*194-2903*	1	ELBOW AS	
		1	**3K-0360**	1	SEAL-O-RING	
		1	**8T-0119**	1	ELBOW	
	7	1	**3E-4321**	3	CLIP	
	8	1	**6D-4244**	1	CLIP	
	9	1	**7D-7233**	1	CLIP	
	10	1	**8T-4121**	6	WASHER-HARD (11X21X2.5-MM THK)	
M	11	1	**8T-4133**	1	NUT (M10X1.5-THD)	
M	12	1	**8T-4136**	1	BOLT (M10X1.5X25-MM)	
M	13	1	**8T-4137**	4	BOLT (M10X1.5X20-MM)	
M	14	1	**8T-4200**	1	BOLT (M8X1.25X16-MM)	
	15	1	**8T-4224**	1	WASHER-HARD (8.8X16X2-MM THK)	
	16	1	**9X-8250**	1	CLIP	
E	17	1	**5P-0767**		HOSE (222.8-CM)	
E	17A	1	**5P-0767**		HOSE (138.5-CM)	

E-ORDER BY THE CENTIMETER
M-METRIC PART

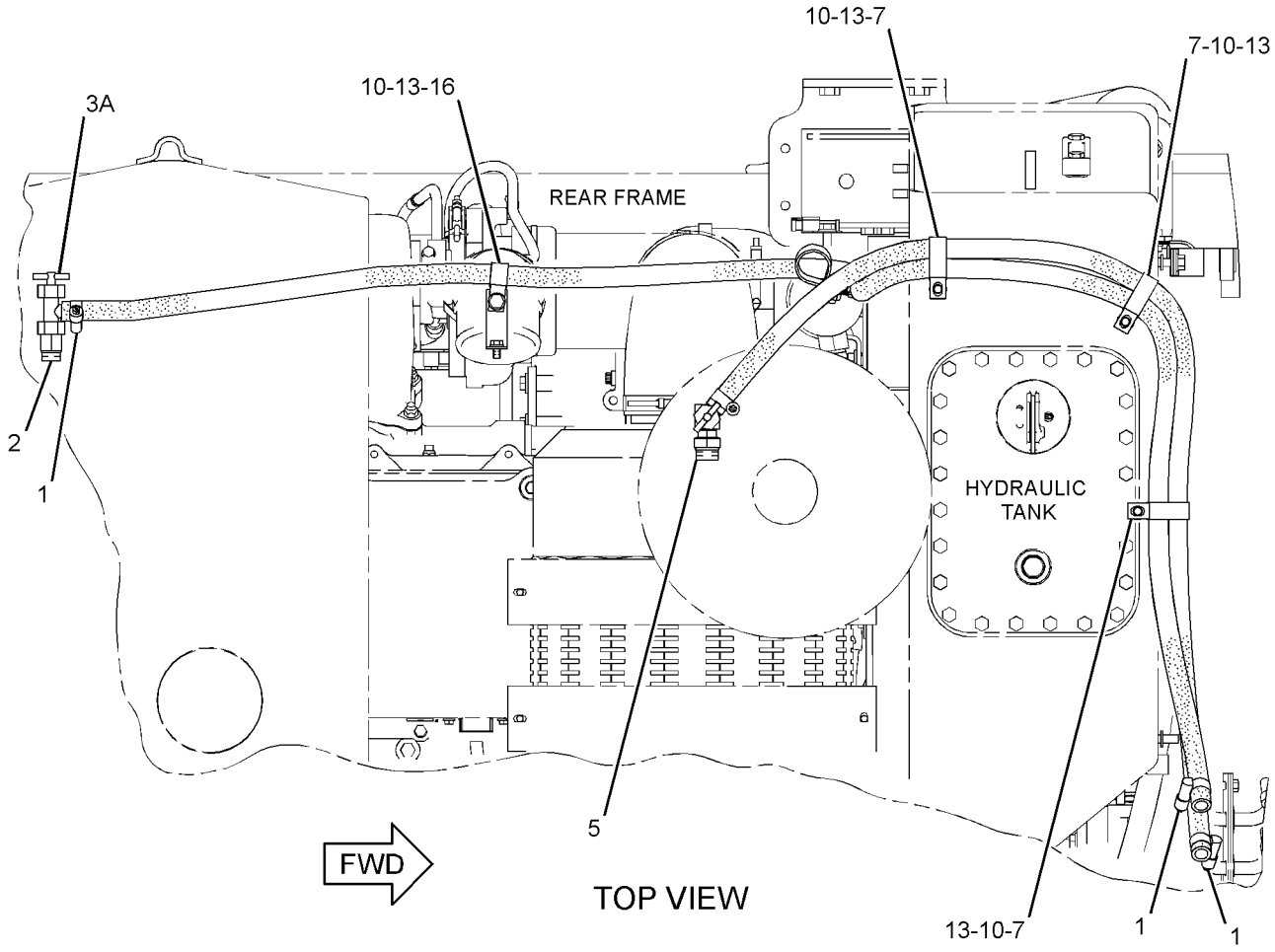

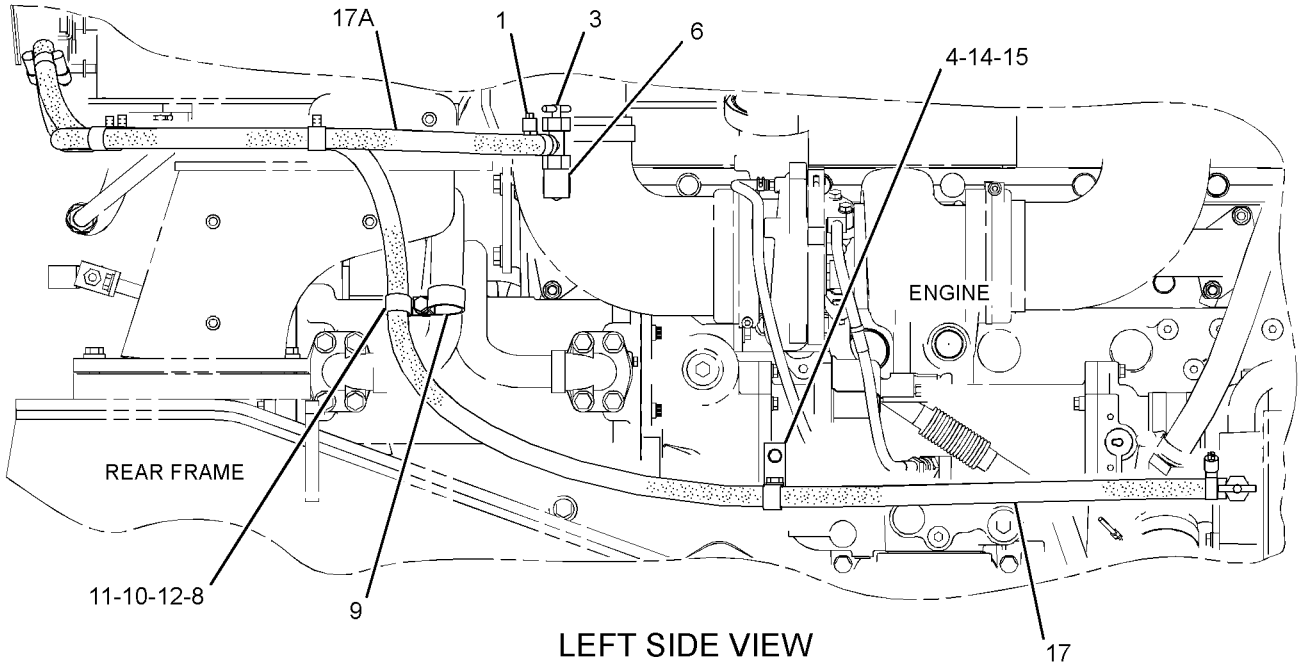

GRAPHIC #1 **<END>** g01668093

OPERATOR STATION

243-1093 LINES GP-CAB HEATER

S/N: RYF1-UP

PART OF 243-1092 HEATER GP-CAB

SMCS-7304 **i02561681**

NOTE	REF NO	GRAPHIC REF	PART NUMBER	QTY	PART NAME 1 2 3 4 5 6 (PRODUCT LEVEL)	SEE PAGE
	1	1	**6D-1641**	2	CLIP	
	2	1	**9X-2488**	4	CLAMP-HOSE	
	3	1	**244-2119**	1	PLATE AS	
	4	1	**244-2360**	1	PLATE AS	
	5	1	**246-3231**	1	GASKET	
	6	1	**132-4354**	1	SPACER (10.5X19X26.5-MM THK)	
	7	1	**4I-7889**	1	SPACER (11X25X45-MM THK)	
M	8	1	**5C-7261**	4	NUT (M8X1.25-THD)	
M	9	1	**8T-3844**	1	BOLT (M6X1X70-MM)	
	10	1	**8T-4121**	1	WASHER-HARD (11X21X2.5-MM THK)	
	11	1	**8T-4224**	4	WASHER-HARD (8.8X16X2-MM THK)	
M	12	1	**085-8091**	1	BOLT (M10X1.5X55-MM)	
	13	1	**9X-6165**	1	WASHER (6.5X22X2.5-MM THK)	
E	14	1	**5P-0767**		HOSE (85.1-CM)	
E	15	1	**5P-0767**		HOSE (79.1-CM)	

E-ORDER BY THE CENTIMETER
M-METRIC PART

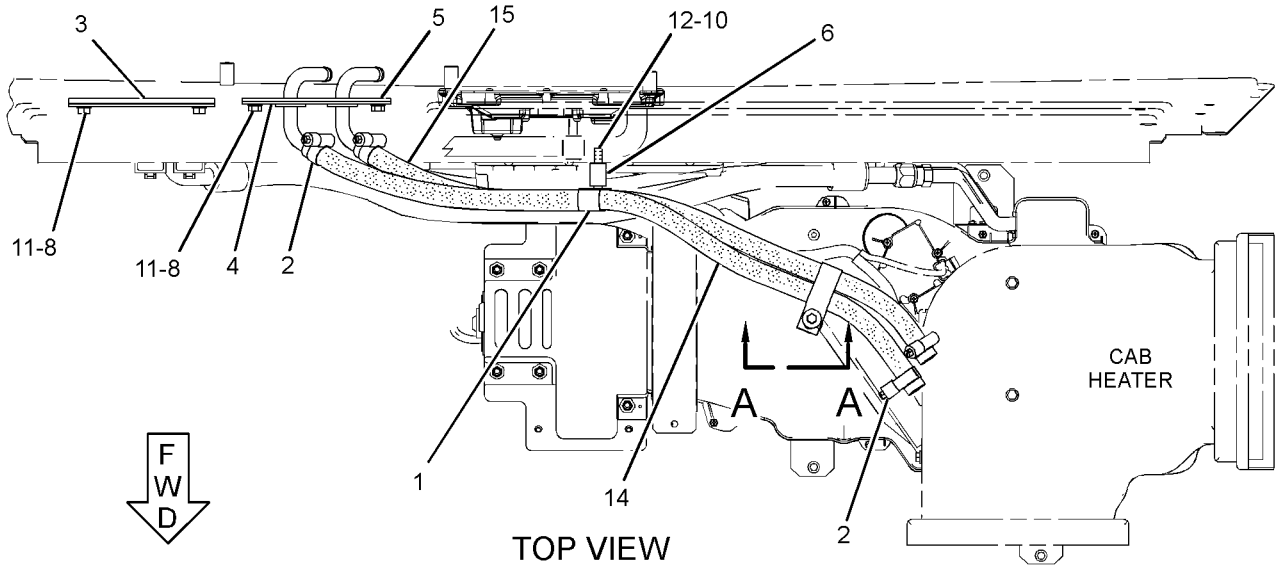

TOP VIEW

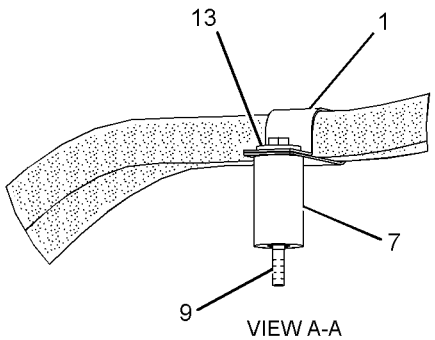

VIEW A-A

GRAPHIC #1

<END>

g01262845

109-8203 MIRROR GP-REAR VIEW–INTERIOR

S/N: RYF1-UP

PART OF 237-2572 CAB AR-ENCLOSED ROPS

SMCS-7319 **i03011734**

NOTE	REF NO	GRAPHIC REF	PART NUMBER	QTY	PART NAME 1 2 3 4 5 6 (PRODUCT LEVEL)	SEE PAGE
	1	1	**275-5588**	2	MIRROR AS	
					(EACH INCLUDES)	
		1	**3K-6060**	1	LOCKNUT (3/8-16-THD)	
	2	1	**115-2073**	2	BRACKET	
	3	1	**235-4546**	2	NUT-JAM (3/8-16-THD)	

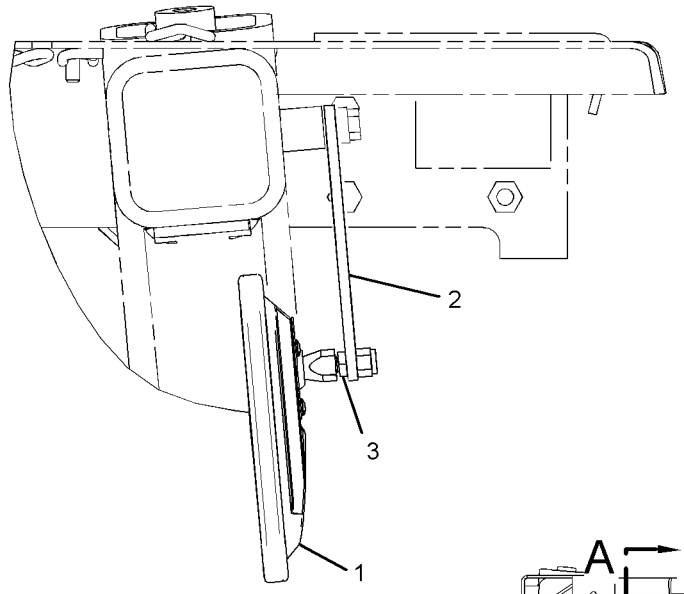

VIEW A-A

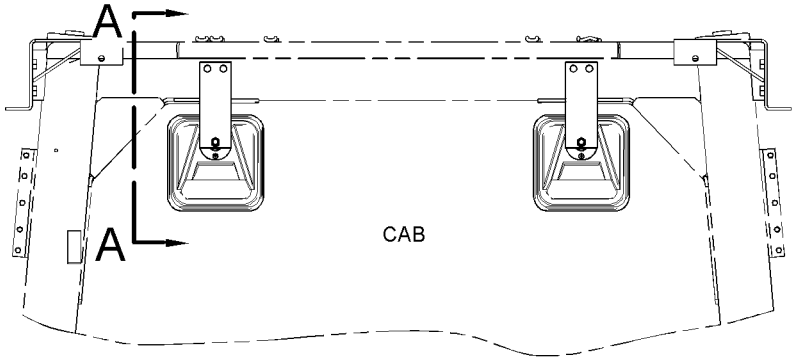

FRONT VIEW

GRAPHIC #1 **<END>** g01457836

OPERATOR STATION

197-6474 MIRROR GP-REAR VIEW—EXTERIOR

S/N: RYF1-UP

AN ATTACHMENT

SMCS-7319 **i03337682**

NOTE	REF NO	GRAPHIC REF	PART NUMBER	QTY	PART NAME 1 2 3 4 5 6 (PRODUCT LEVEL)	SEE PAGE
Y	1	1	*200-8897*	1	MIRROR GP-REAR VIEW (EXTERIOR, RH)	581
Y	2	1	*200-8898*	1	MIRROR GP-REAR VIEW (EXTERIOR, LH)	582

Y-SEPARATE ILLUSTRATION

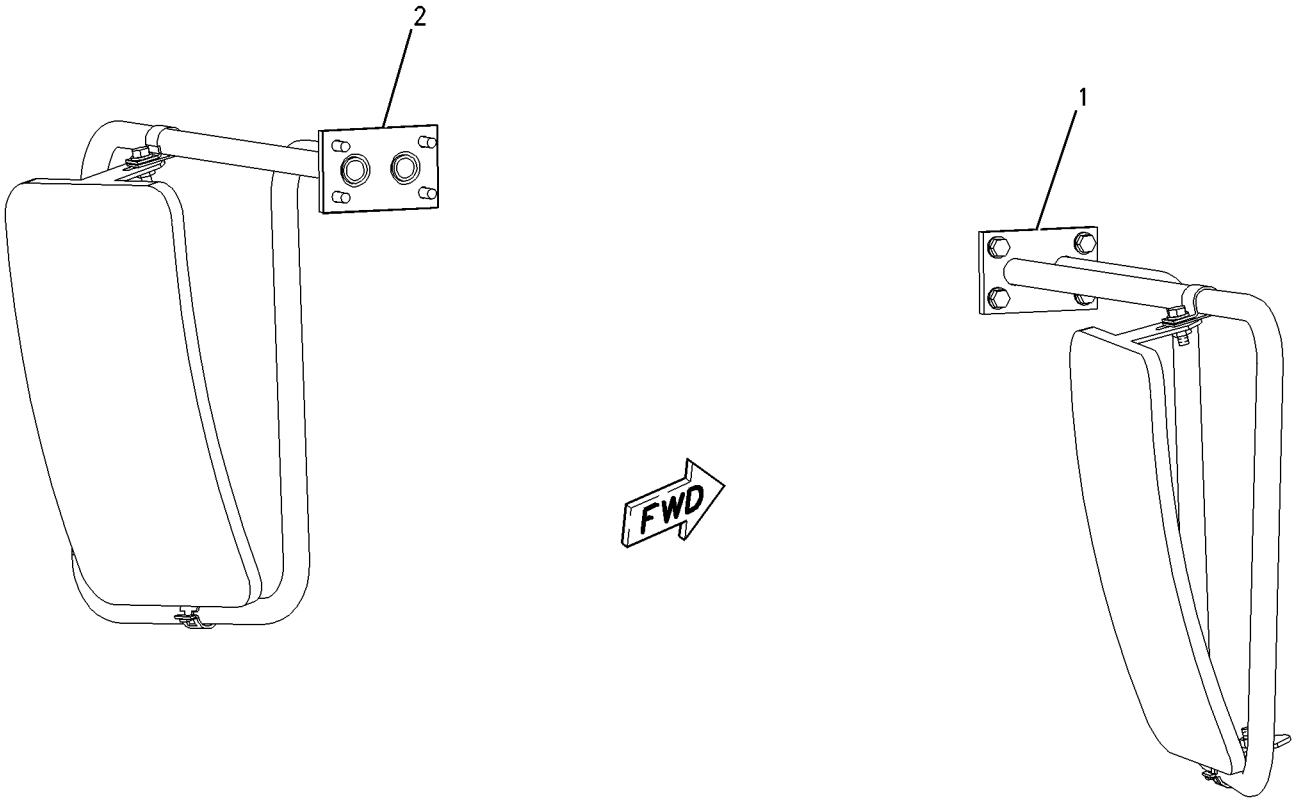

GRAPHIC #1 **<END>** g00887014

200-8897 MIRROR GP-REAR VIEW—EXTERIOR, RH

S/N: RYF1-UP

PART OF 197-6474 MIRROR GP-REAR VIEW

AN ATTACHMENT

SMCS-7319 **i02156616**

NOTE	REF NO	GRAPHIC REF	PART NUMBER	QTY	PART NAME 1 2 3 4 5 6 (PRODUCT LEVEL)	SEE PAGE
	1	1	**5P-6879**	1	MIRROR	
	2	1	**8T-1889**	2	CLIP (SLOT)	
	3	1	**8T-1890**	2	CLIP (TAB)	
	4	1	**200-8895**	1	BRACKET AS	
	5	1	**8T-4121**	6	WASHER-HARD (11X21X2.5-MM THK)	
M	6	1	**8T-4133**	2	NUT (M10X1.5-THD)	
M	7	1	**8T-4195**	6	BOLT (M10X1.5X30-MM)	

M-METRIC PART

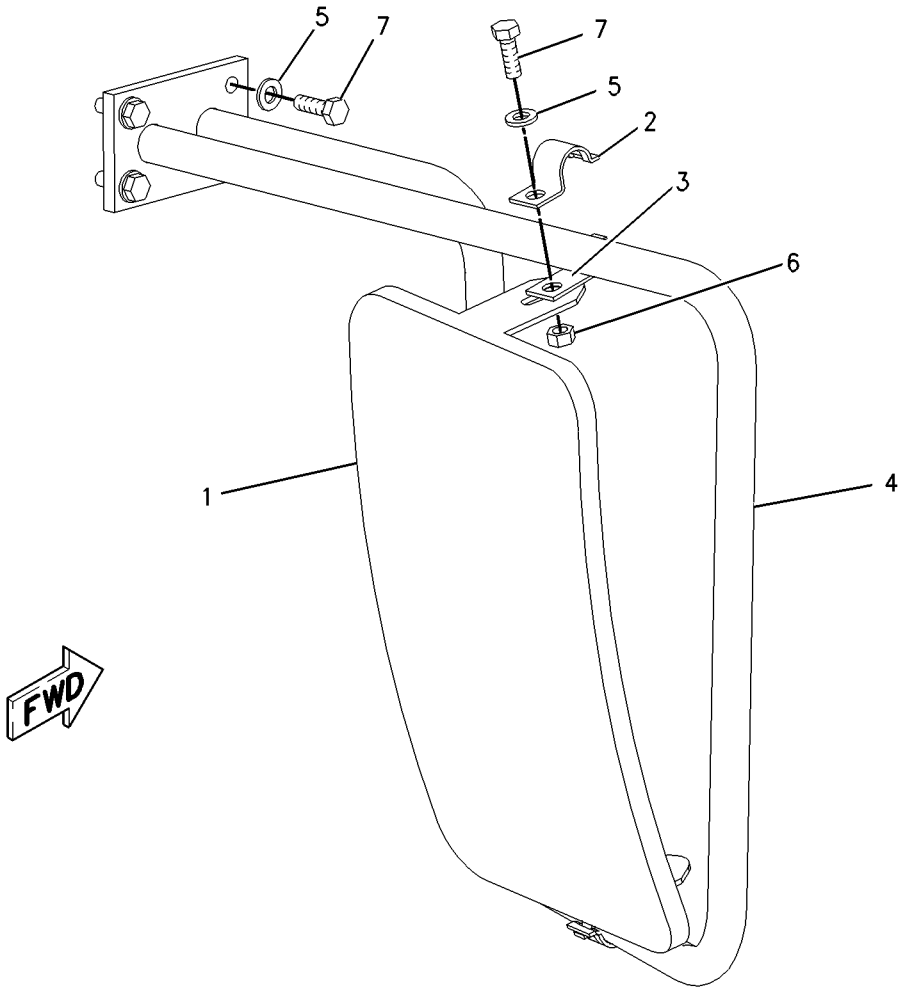

GRAPHIC #1 **<END>** g00886764

OPERATOR STATION

200-8898 MIRROR GP-REAR VIEW—EXTERIOR, LH

S/N: RYF1-UP
PART OF 197-6474 MIRROR GP-REAR VIEW
AN ATTACHMENT

SMCS-7319 **i02156619**

NOTE	REF NO	GRAPHIC REF	PART NUMBER	QTY	PART NAME 1 2 3 4 5 6 (PRODUCT LEVEL)	SEE PAGE
	1	1	**5P-6879**	1	MIRROR	
	2	1	**8T-1889**	2	CLIP (SLOT)	
	3	1	**8T-1890**	2	CLIP (TAB)	
	4	1	**200-8896**	1	BRACKET AS	
	5	1	**8T-4121**	6	WASHER-HARD (11X21X2.5-MM THK)	
M	6	1	**8T-4133**	2	NUT (M10X1.5-THD)	
M	7	1	**8T-4195**	6	BOLT (M10X1.5X30-MM)	

M-METRIC PART

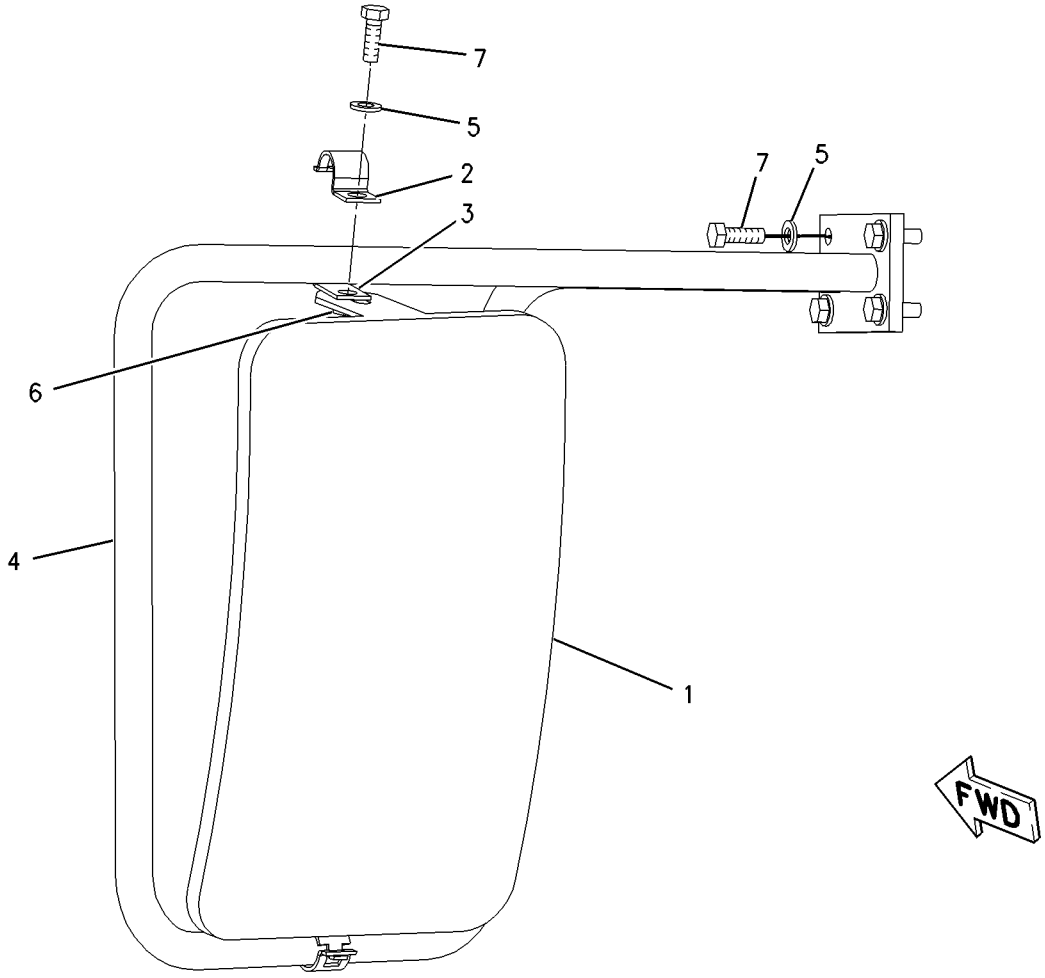

GRAPHIC #1 **<END>** g00887633

245-8818 MIRROR GP-REAR VIEW—EXTERIOR, HEATED, RH

S/N: RYF1-UP

PART OF 259-1999 MIRROR GP-REAR VIEW

AN ATTACHMENT

SMCS-7319 **i03007136**

NOTE	REF NO	GRAPHIC REF	PART NUMBER	QTY	PART NAME 1 2 3 4 5 6 (PRODUCT LEVEL)	SEE PAGE
	1	1	**3S-2093**	4	STRAP-CABLE	
	2	1	**202-8649**	1	MIRROR AS (HEATED)	
		1	**102-8802**	1	KIT-RECEPTACLE (2-PIN)	
					(INCLUDES RECEPTACLE AS AND WEDGE)	
		1	**186-3735**	2	PIN-CONNECTOR (16-GA TO 18-GA)	
	3	1	**244-8786**	1	TUBE AS	
	4	1	**130-5300**	1	CLIP	
	5	1	**8T-1889**	2	CLIP (SLOT)	
	6	1	**8T-1890**	2	CLIP (TAB)	
	7	1	**8T-4121**	8	WASHER-HARD (11X21X2.5-MM THK)	
M	8	1	**8T-4133**	2	NUT (M10X1.5-THD)	
M	10	1	**8T-4195**	6	BOLT (M10X1.5X30-MM)	
	11	1	**258-7370**	1	LATCH AS	
	12	1	**3F-2617**	1	LOCKNUT (5/16-24-THD)	
	13	1	**8T-4224**	1	WASHER-HARD (8.8X16X2-MM THK)	

M-METRIC PART

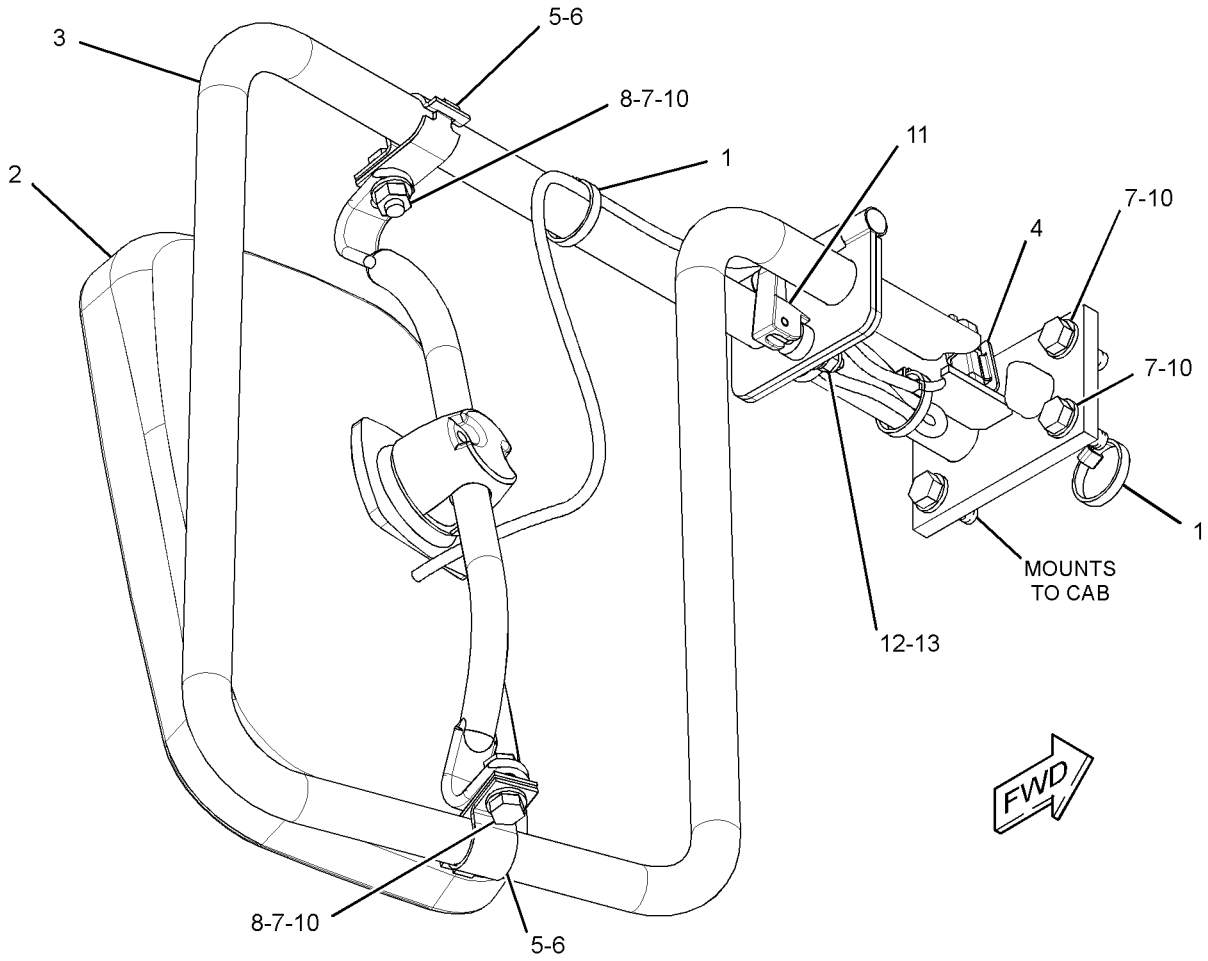

GRAPHIC #1 **<END>** g01525187

OPERATOR STATION

245-8819 MIRROR GP-REAR VIEW—EXTERIOR, HEATED, LH

S/N: RYF1-UP

PART OF 259-1999 MIRROR GP-REAR VIEW

AN ATTACHMENT

SMCS-7319 **i03021251**

NOTE	REF NO	GRAPHIC REF	PART NUMBER	QTY	PART NAME 1 2 3 4 5 6 (PRODUCT LEVEL)	SEE PAGE
	1	1	**3S-2093**	4	STRAP-CABLE	
	2	1	**202-8649**	1	MIRROR AS (HEATED)	
		1	**102-8802**	1	KIT-RECEPTACLE (2-PIN)	
					(INCLUDES RECEPTACLE AS & WEDGE)	
		1	**186-3735**	2	PIN-CONNECTOR (16-GA TO 18-GA)	
	3	1	**244-8785**	1	TUBE AS	
	4	1	**130-5300**	1	CLIP	
	5	1	**8T-1889**	2	CLIP (SLOT)	
	6	1	**8T-1890**	2	CLIP (TAB)	
	7	1	**8T-4121**	8	WASHER-HARD (11X21X2.5-MM THK)	
M	8	1	**8T-4133**	2	NUT (M10X1.5-THD)	
M	10	1	**8T-4195**	6	BOLT (M10X1.5X30-MM)	
	11	1	**258-7370**	1	LATCH AS	
	12	1	**3F-2617**	1	LOCKNUT (5/16-24-THD)	
	13	1	**8T-4224**	1	WASHER-HARD (8.8X16X2-MM THK)	

M-METRIC PART

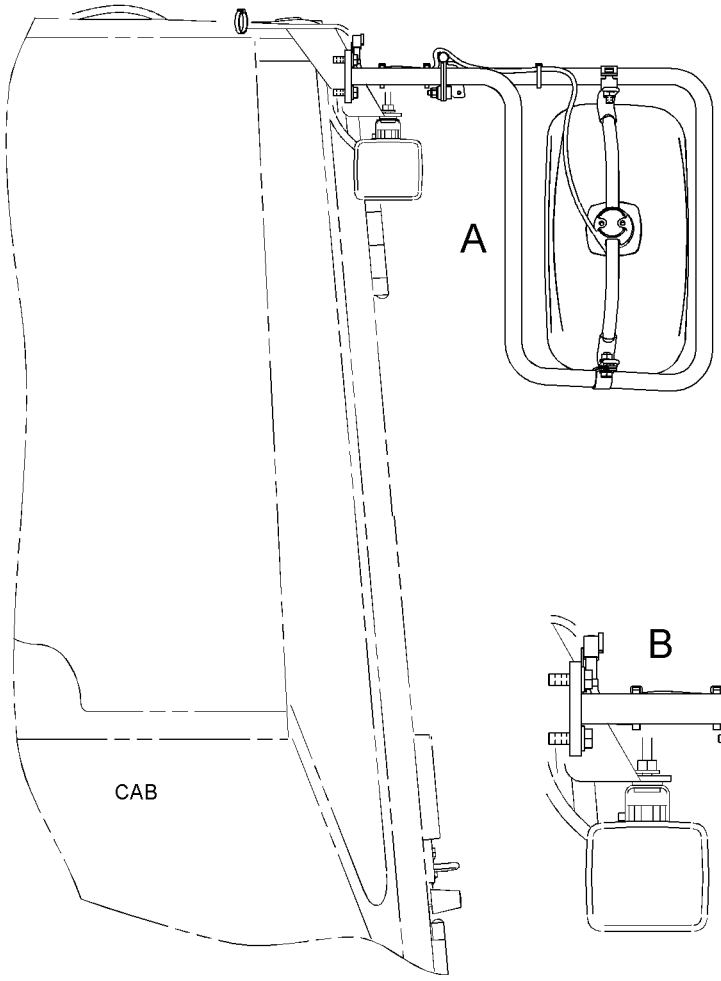

FRONT VIEW

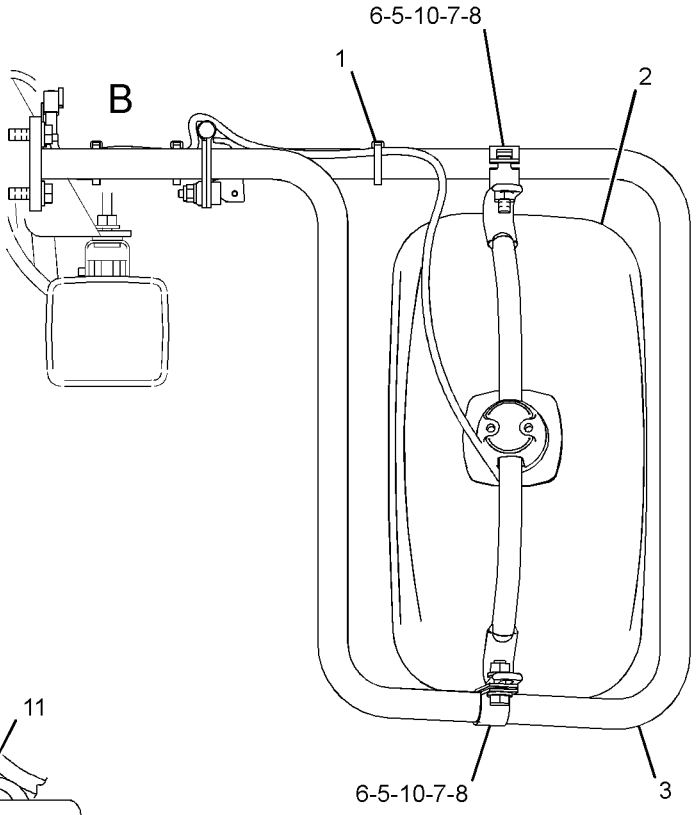

VIEW OF AREA A

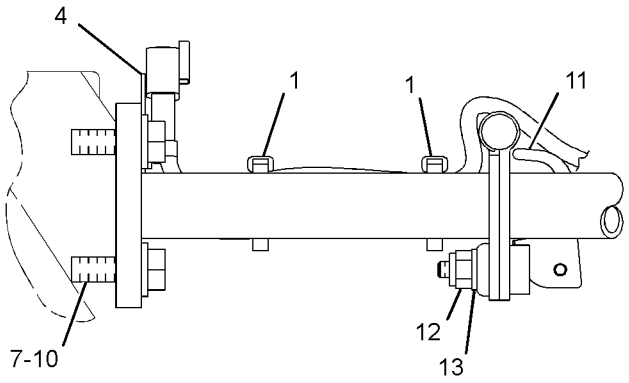

VIEW OF AREA B

GRAPHIC #1 **<END>** g01370459

OPERATOR STATION

259-1999 MIRROR GP-REAR VIEW—EXTERIOR, HEATED

S/N: RYF1-UP

AN ATTACHMENT

SMCS-7319 **i02444761**

NOTE	REF NO	GRAPHIC REF	PART NUMBER	QTY	PART NAME 1 2 3 4 5 6 (PRODUCT LEVEL)	SEE PAGE
	1	1	**3E-5239**	1	RELAY AS (24-VOLT) (HEATED MIRRORS)	
	2	1	**3S-2093**	1	STRAP-CABLE	
	3	1	**236-4630**	1	SWITCH AS-ROCKER (HEATED MIRRORS)	
	4	1	**236-6207**	1	HARNESS AS-CONTROL (HEATED MIRRORS)	
		1	**155-2270**	1	KIT-CONNECTING PLUG (2-PIN)	
		1	**155-2270**	1	KIT-CONNECTING PLUG (2-PIN)	
					(KITS INCLUDE PLUG AS AND WEDGE)	
Y	5	1	**245-8818**	1	MIRROR GP-REAR VIEW (EXTERIOR, HEATED, RH)	583
Y	6	1	**245-8819**	1	MIRROR GP-REAR VIEW (EXTERIOR, HEATED, LH)	584
M	7	1	**8T-4171**	1	BOLT (M6X1X12-MM)	
	8	1	**9X-8256**	1	WASHER (6.6X12X2-MM THK)	

M-METRIC PART
Y-SEPARATE ILLUSTRATION

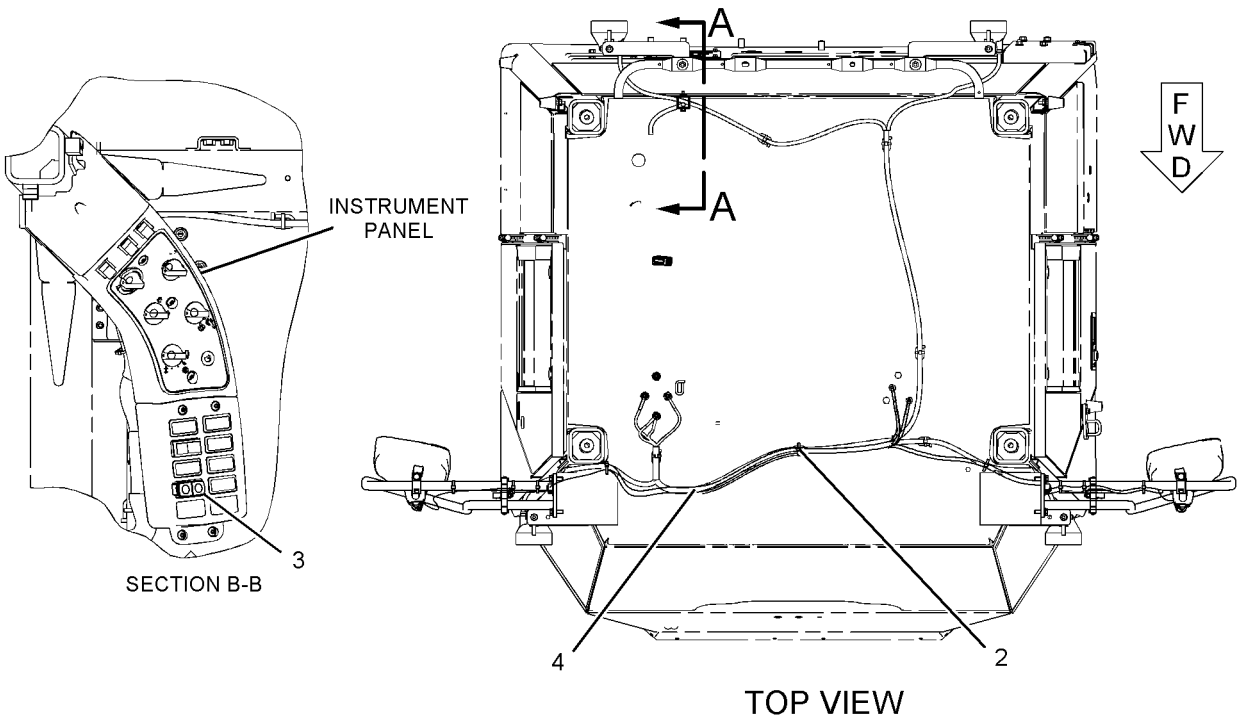

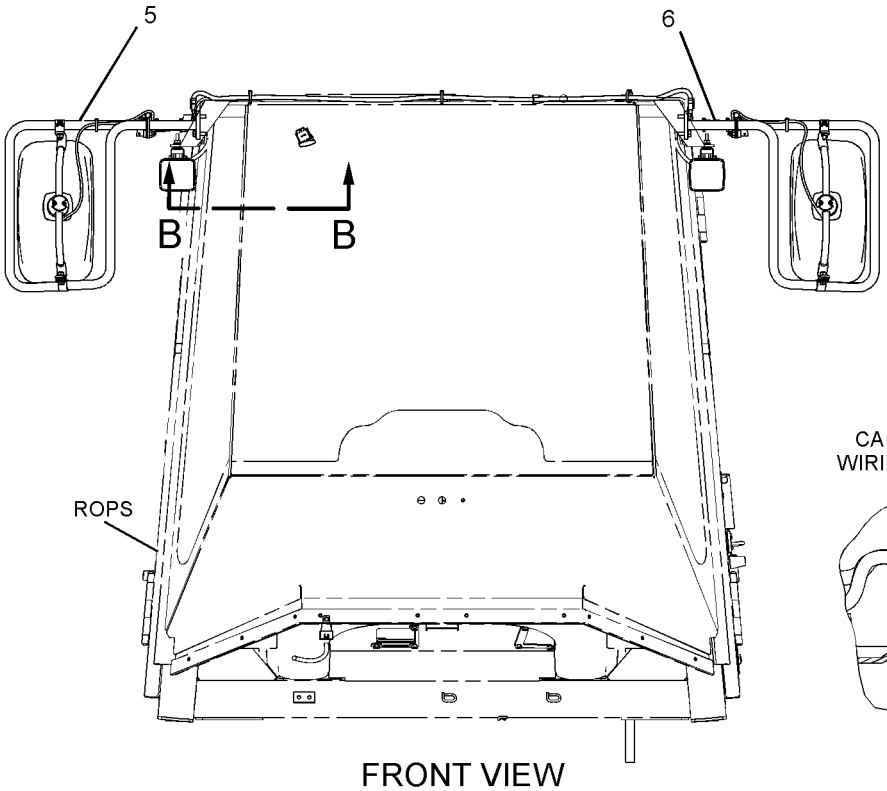

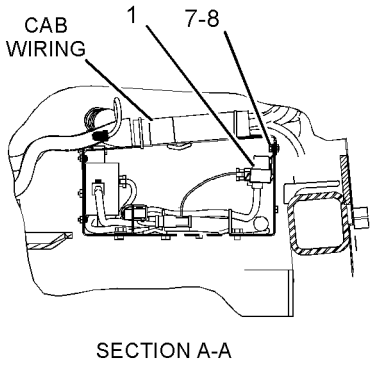

GRAPHIC #1 **<END>** g01114930

OPERATOR STATION

166-6928 MODULE GP-QUAD GAUGE

S/N: RYF1-UP

PART OF 237-4910 WIRING GP-CAB

SMCS-7450, 7451, 7490, 7601 **i01883788**

NOTE	REF NO	GRAPHIC REF	PART NUMBER	QTY	PART NAME 1 2 3 4 5 6 (PRODUCT LEVEL)	SEE PAGE
	1	1	**102-8805**	1	KIT-RECEPTACLE (6-PIN)	
					(INCLUDES RECEPTACLE AS & WEDGE)	
	2	1	**8T-8729**	6	PIN-CONNECTOR	
	3	1	**3E-3383**	1	WEDGE-RECEPTACLE LOCK (6-PIN)	

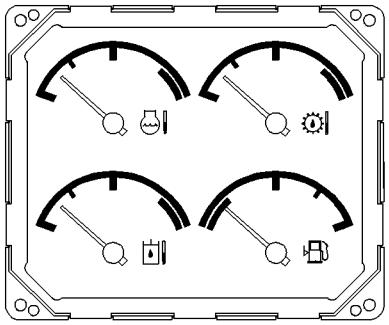

VIEW B-B

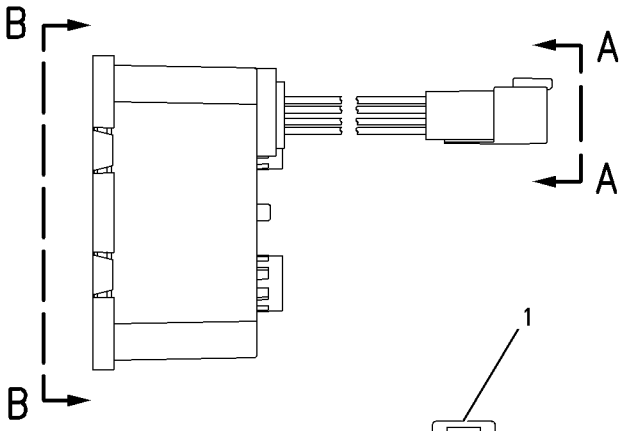

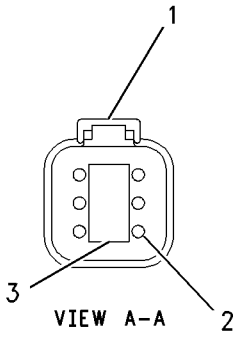

VIEW A-A

GRAPHIC #1 **<END>** g00690309

OPERATOR STATION

192-7049 MODULE GP-SPEEDOMETER & TACH

S/N: RYF1-UP

PART OF 237-2572 CAB AR-ENCLOSED ROPS

SMCS-7451, 7462, 7464, 7490, 7601 **i02143815**

NOTE	REF NO	GRAPHIC REF	PART NUMBER	QTY	PART NAME 1 2 3 4 5 6 (PRODUCT LEVEL)	SEE PAGE
	1	1	**102-8805**	1	KIT-RECEPTACLE (6-PIN)	
					(INCLUDES RECEPTACLE AS AND WEDGE)	
	2	1	**8T-8729**	6	PIN-CONNECTOR	
	3	1	**3E-3383**	1	WEDGE-RECEPTACLE LOCK (6-PIN)	

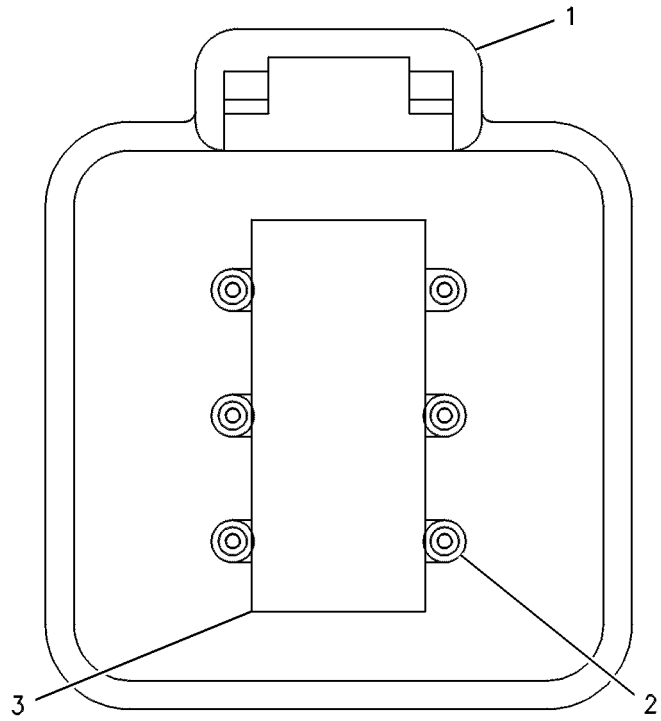

GRAPHIC #1 **<END>** g00120509

OPERATOR STATION

155-5789 MOTOR GP-WINDOW WIPER–REAR

S/N: RYF1-UP

PART OF 257-2016 WIPER GP-WINDOW

SMCS-7305 **i02566106**

NOTE	REF NO	GRAPHIC REF	PART NUMBER	QTY	PART NAME 1 2 3 4 5 6 (PRODUCT LEVEL)	SEE PAGE
	1	1	**102-8805**	1	KIT-RECEPTACLE (6-PIN)	
					(INCLUDES RECEPTACLE AS AND WEDGE)	
	2	1	**8T-8737**	1	PLUG-SEAL	
	3	1	**186-3735**	5	PIN-CONNECTOR (16-GA TO 18-GA)	

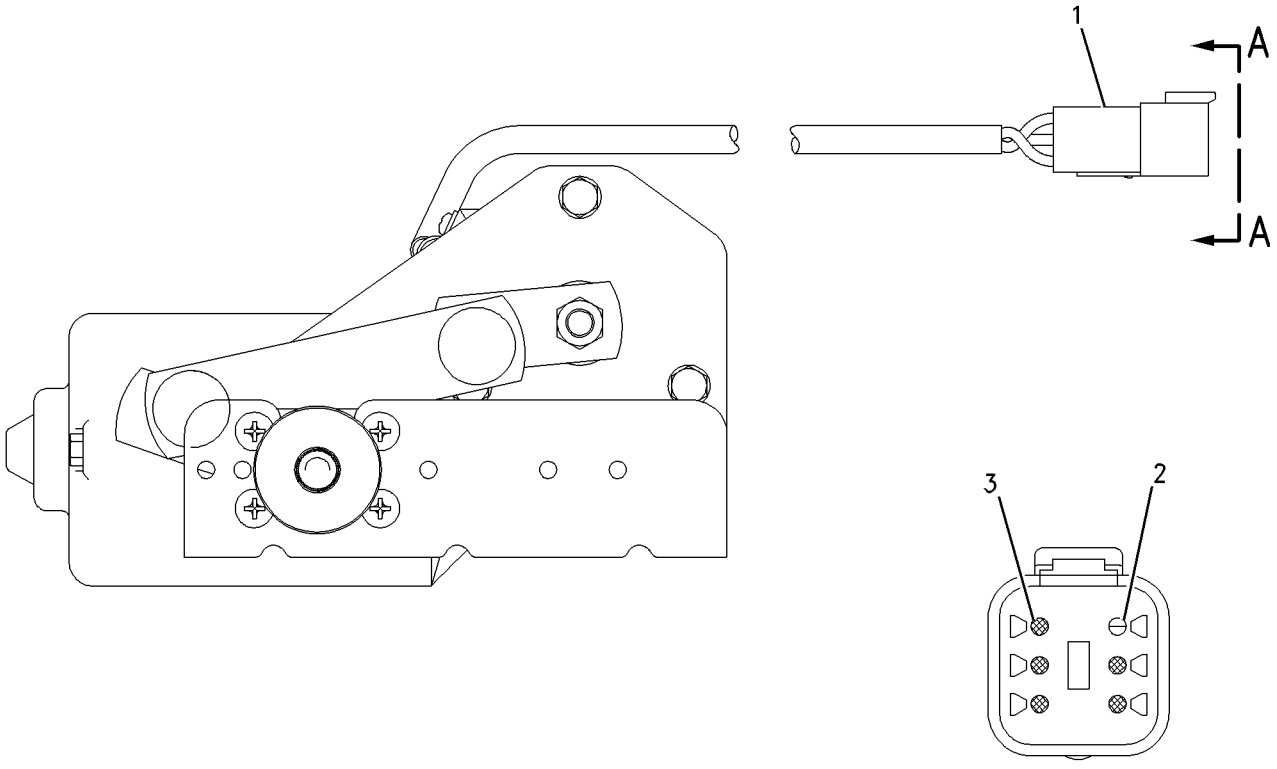

VIEW A-A

GRAPHIC #1 **<END>** g00665801

OPERATOR STATION

189-8622 MOTOR GP-WINDOW WIPER

S/N: RYF1-UP

PART OF 257-2016 WIPER GP-WINDOW

SMCS-7305 **i02219162**

NOTE	REF NO	GRAPHIC REF	PART NUMBER	QTY	PART NAME 1 2 3 4 5 6 (PRODUCT LEVEL)	SEE PAGE
	1	1	**102-8805**	1	KIT-RECEPTACLE (6-PIN)	
					(INCLUDES RECEPTACLE AS AND WEDGE)	
	2	1	**8T-8737**	1	PLUG-SEAL	
	3	1	**186-3735**	5	PIN-CONNECTOR (16-GA TO 18-GA)	
	4	1	**206-5823**	2	CAP	

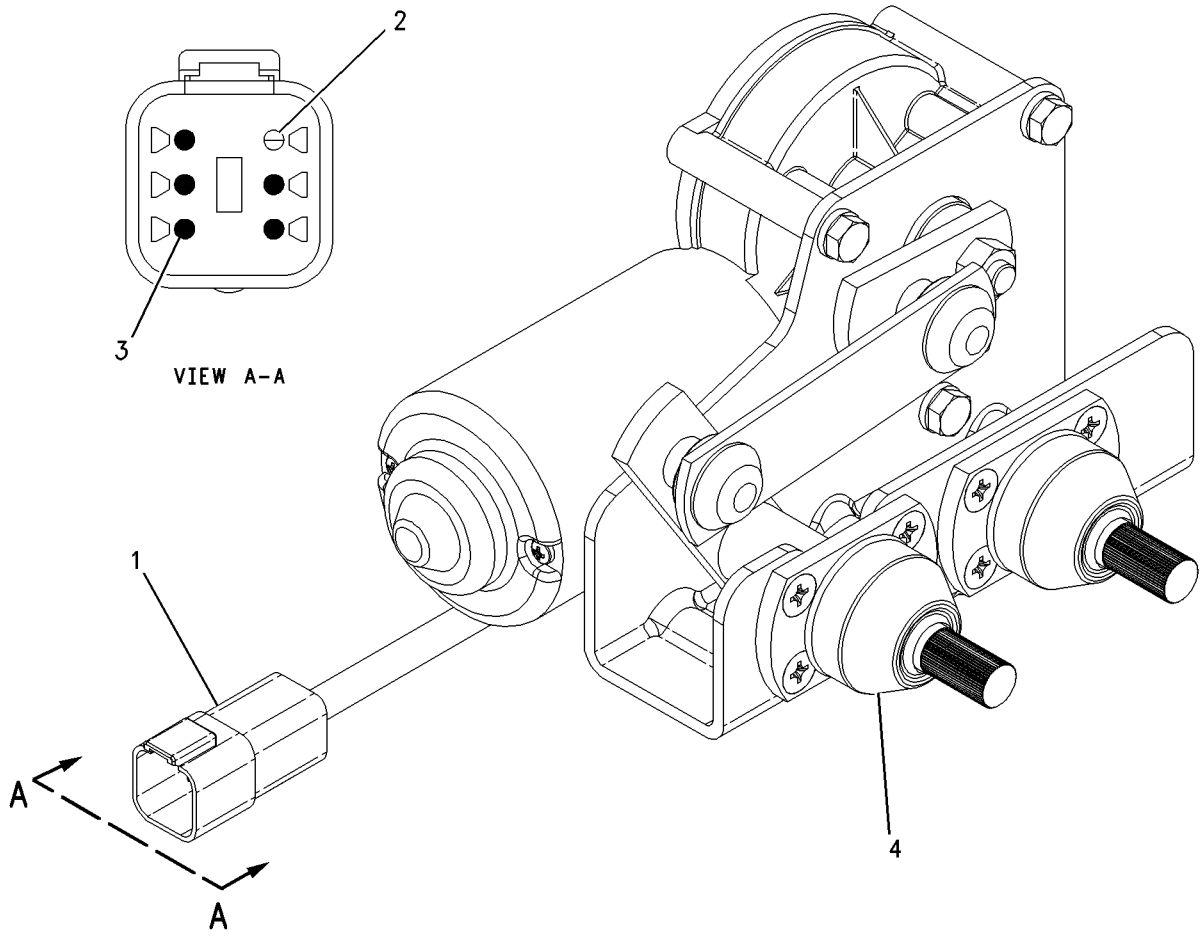

GRAPHIC #1 **<END>** g00847619

OPERATOR STATION

329-4998 MOUNTING GP-CAB

S/N: RYF1-UP

PART OF 237-2570 OPERATOR AR-ENCLOSED ROPS

SMCS-7301 **i03625886**

NOTE	REF NO	GRAPHIC REF	PART NUMBER	QTY	PART NAME 1 2 3 4 5 6 (PRODUCT LEVEL)	SEE PAGE
	1	1	**7X-0593**	4	WASHER-HARD (34X57X6-MM THK)	
	2	1	**9U-0512**	4	WASHER (32X144X12-MM THK)	
	3	1	**311-2178**	8	MOUNT	
M	4	1	**8T-6624**	4	BOLT (M30X3.5X180-MM)	

M-METRIC PART

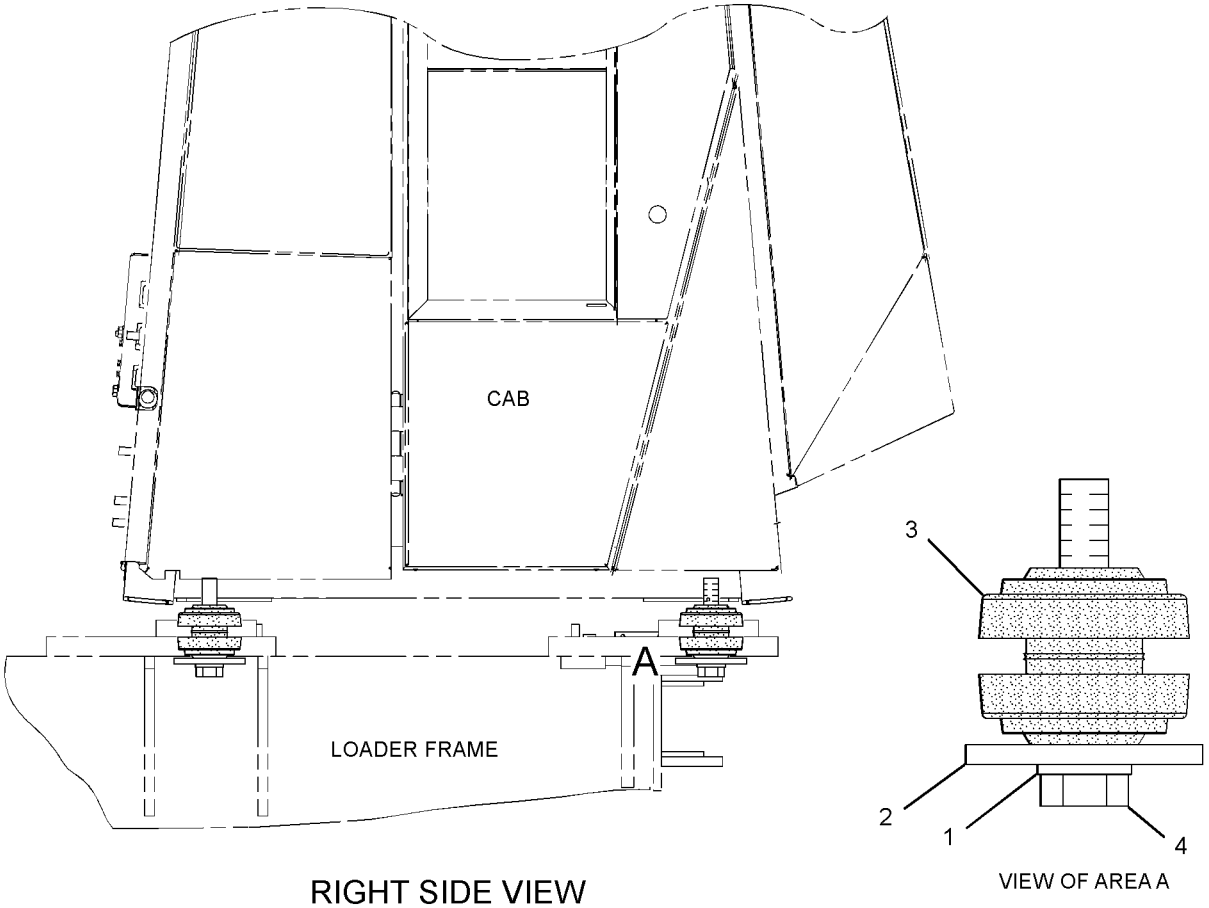

RIGHT SIDE VIEW

GRAPHIC #1 **<END>** g01859615

OPERATOR STATION

237-2570 OPERATOR AR-ENCLOSED ROPS—HMU STEERING

S/N: RYF1-UP

PART OF 236-8957 GENERAL AR

SMCS-7301 **i03607907**

NOTE	PART NUMBER	QTY	PART NAME 1 2 3 4 5 6 (PRODUCT LEVEL)	SEE PAGE
Y	*237-2572*	1	CAB AR-ENCLOSED ROPS (HMU STEERING)	523
Y	*244-2787*	1	INSTALLATION GP-CONTROLS (PARKING BRAKE CABLE)	566
Y	*329-4998*	1	MOUNTING GP-CAB	592
Y	*331-2880*	1	SHROUD GP-CAB	623

Y-SEPARATE ILLUSTRATION

<END>

OPERATOR STATION

292-6402 PAN GP-BACKREST–LUMBAR

S/N: RYF1-UP

PART OF 292-9237 PAN GP-BACKREST

SMCS-7312 **i03095782**

NOTE	REF NO	GRAPHIC REF	PART NUMBER	QTY	PART NAME 1 2 3 4 5 6 (PRODUCT LEVEL)	SEE PAGE
	1	1	**5P-7957**	1	LANYARD	
	2	1	**136-1543**	1	PLATE AS-LUMBAR	
	3	1	**173-2052**	1	RETAINER	
	4	1	**178-7907**	1	HOLDER	
	5	1	**261-5694**	1	PAN AS-BACKREST	
	6	1	**322-3161**	1	SPRING	
	7	1	**4K-9429**	8	RIVET-POP	

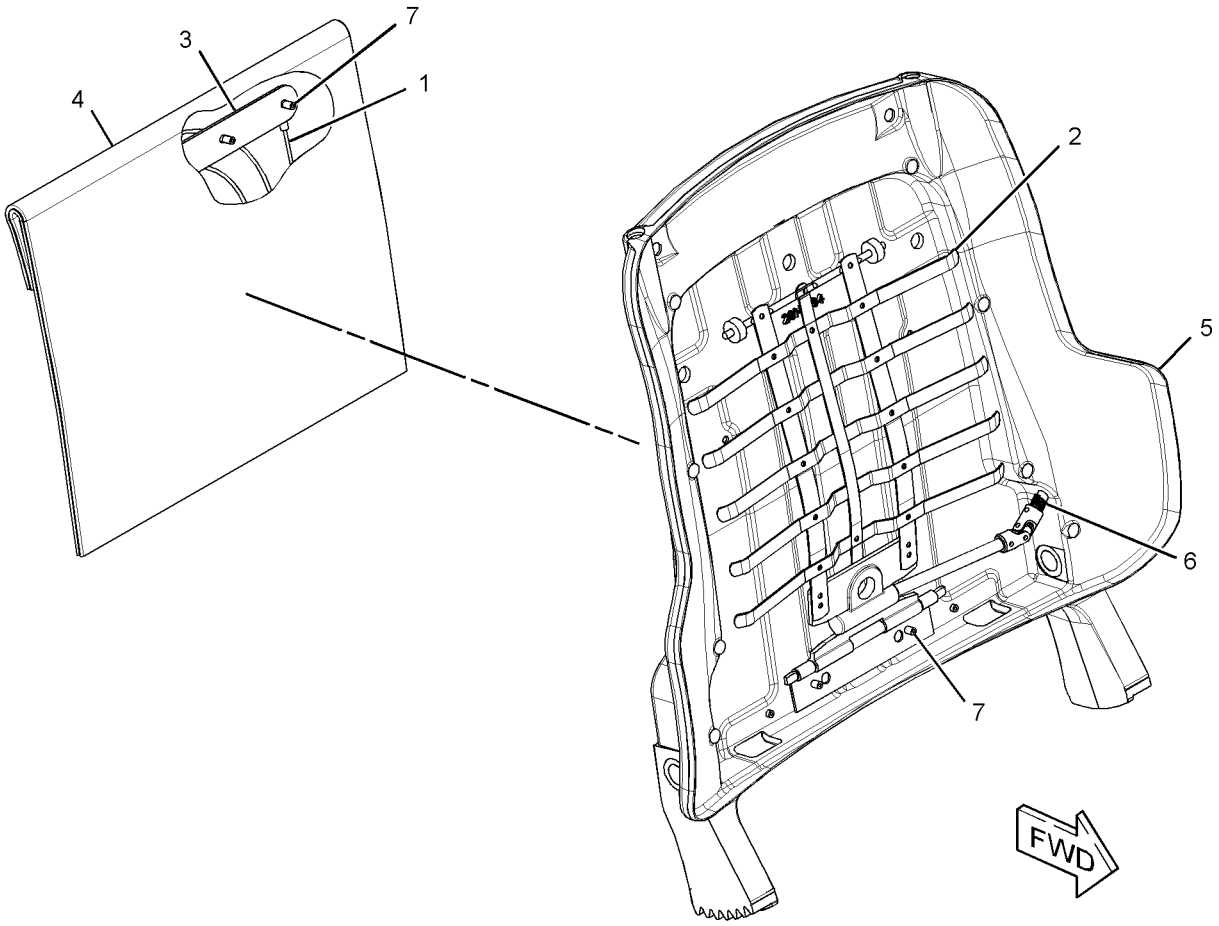

GRAPHIC #1 **<END>** g01577333

OPERATOR STATION

292-9237 PAN GP-BACKREST

S/N: RYF1-UP

PART OF 178-0603 SEAT GP

SMCS-7312 **i03093580**

NOTE	REF NO	GRAPHIC REF	PART NUMBER	QTY	PART NAME 1 2 3 4 5 6 (PRODUCT LEVEL)	SEE PAGE
	1	1	**164-4883**	1	KNOB-LUMBAR	
	2	1	**250-4628**	3	PLUG	
	3	1	**292-6097**	1	CUSHION AS-BACK	
Y	4	1	**292-6402**	1	PAN GP-BACKREST (LUMBAR)	594
	5	1	**5P-0537**	2	WASHER-HARD (7.2X14.5X2-MM THK)	
	6	1	**6V-8969**	2	SCREW-BUTTON HEAD (1/4-20X0.5-IN)	
	7	1	**8T-7566**	1	PIN-SPRING	

Y-SEPARATE ILLUSTRATION

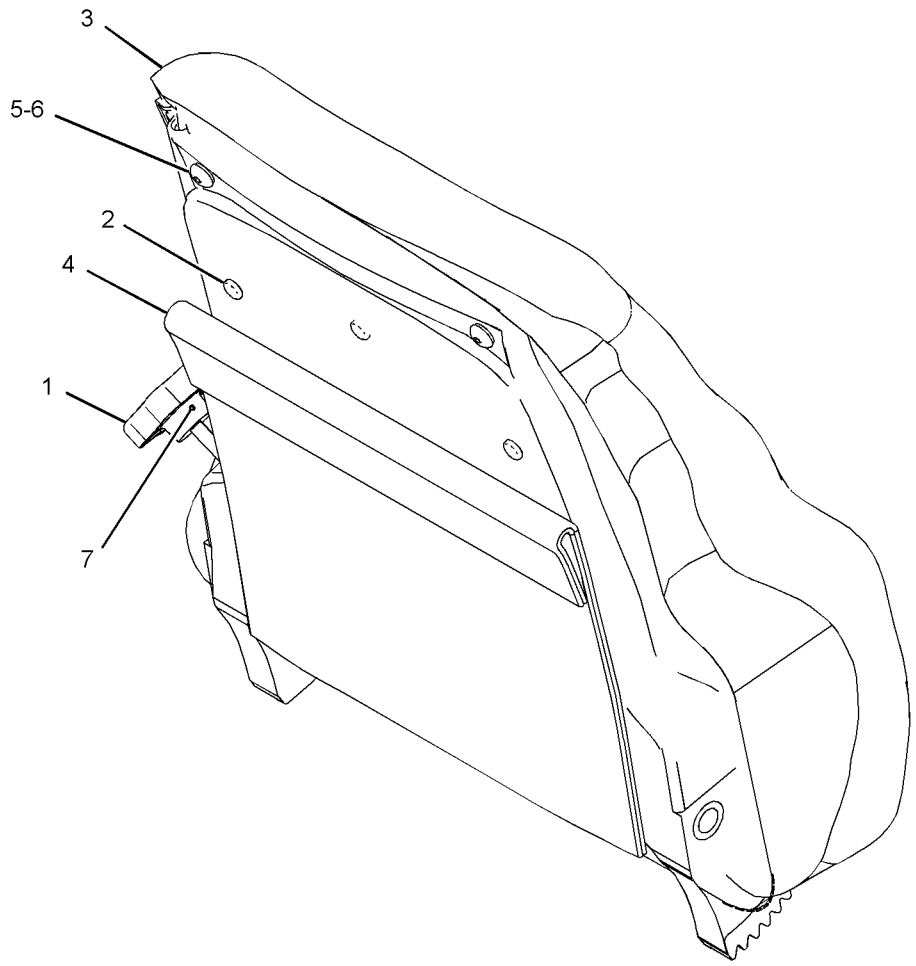

GRAPHIC #1 **<END>** g01336870

OPERATOR STATION

245-6458 PANEL GP-INSTRUMENT–LOWER

S/N: RYF1-UP

PART OF 237-2572 CAB AR-ENCLOSED ROPS

SMCS-7451 **i03176247**

NOTE	REF NO	GRAPHIC REF	PART NUMBER	QTY	PART NAME 1 2 3 4 5 6 (PRODUCT LEVEL)	SEE PAGE
	1	2	**4E-8722**	4	NUT (RETAINER)	
	2	1	**4I-3038**	1	WASHER (3.3X8X0.5-MM THK)	
	3	1	**5P-7958**	1	SLEEVE-CABLE SPLICE	
	4	1	**128-8617**	1	PLATE AS	
	5	1	**129-7184**	1	FILM-INSTRUCTION (ENGINE START)	
	6	1	**165-9104**	2	SPACER (6.5X9.5X10-MM THK)	
	7	2	**173-2205**	1	COVER	
	8	2	**173-2206**	1	COVER	
	9	1	**179-9392**	1	LANYARD	
	10	1	**189-2076**	1	FILM-IDENTIFICATION (LIGHTS)	
	11	1	**189-2512**	1	PLATE	
	12	1	**198-8774**	1	BEZEL	
	13	1	**199-9641**	1	PANEL-CONTROL	
	14	1	**200-0727**	1	BEZEL	
	15	1	**200-0731**	1	BRACKET AS	
	16	1	**200-8152**	1	BRACKET AS (LH)	
	17	1	**200-8153**	1	BRACKET AS (RH)	
	18	1	**200-8154**	2	FILM-IDENTIFICATION (12-VOLT)	
	19	1	**201-2733**	1	FILM-INFORMATION (INPUT/OUTPUT)	
	20	1	**251-4282**	1	FILM-PANEL (CENTER)	
	21	1	**251-4283**	1	FILM-PANEL (LH)	
	22	1	**251-4284**	1	FILM-PANEL (RH)	
	23	1	**107-1964**	8	SCREW-PAN HEAD (6-19X0.5-IN)	
M	24	1	**155-4098**	4	SCREW-BUTTON HEAD (M3X0.5X1-MM)	
	25	1	**2V-3726**	1	BUMPER	
M	26	1	**5C-2890**	2	NUT (M6X1-THD)	
M	27	1	**7Y-7256**	2	SCREW-TRUSS HEAD (M4X0.7X35-MM)	
	28	1	**8T-4205**	2	WASHER-HARD (7.2X14.5X2-MM THK)	
M	29	1	**9X-1046**	18	SCREW (M4X0.7X18-MM)	
M	30	1,2	**9X-2044**	25	SCREW-TRUSS HEAD (M6X1X16-MM)	

M-METRIC PART

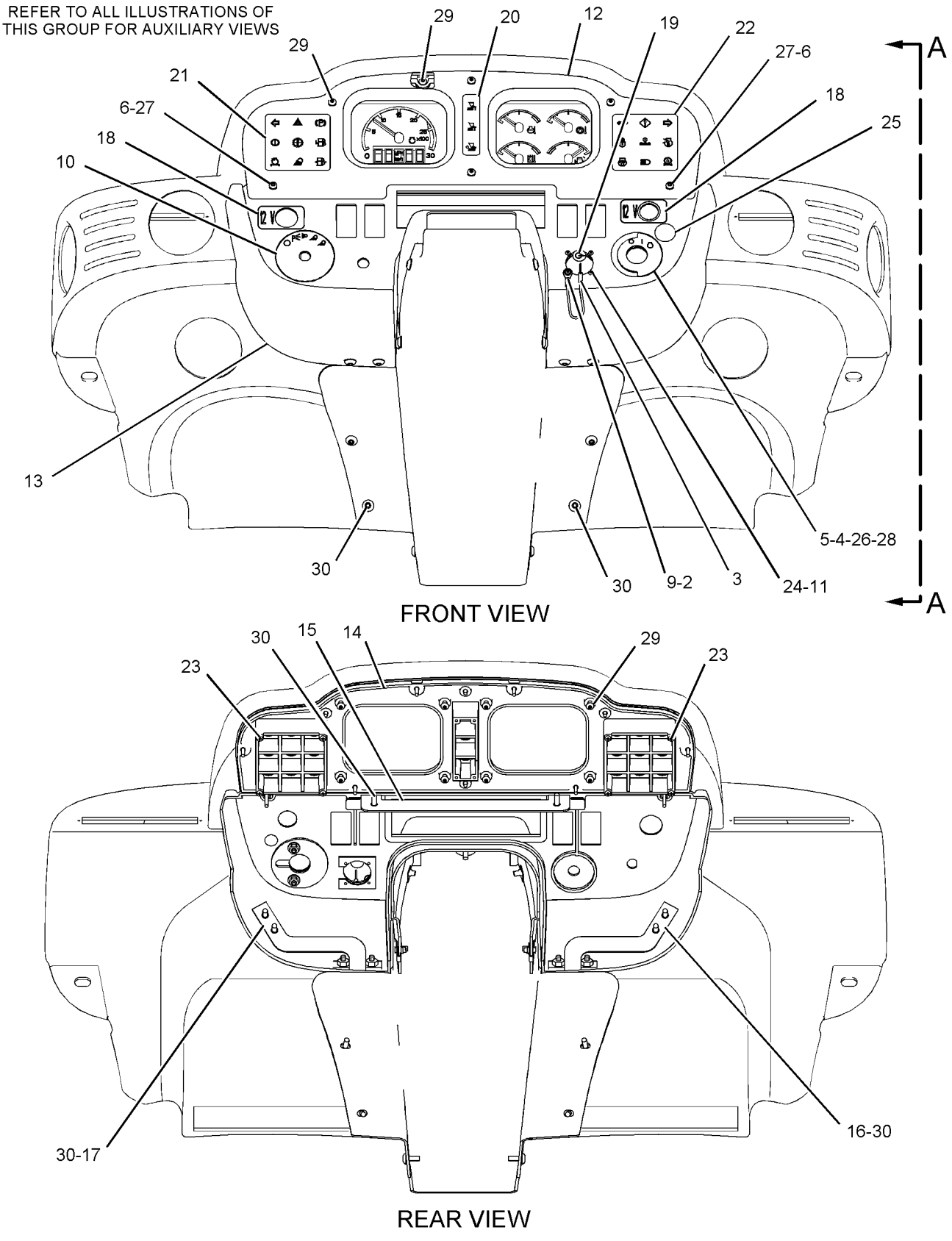

GRAPHIC #1 g01141513

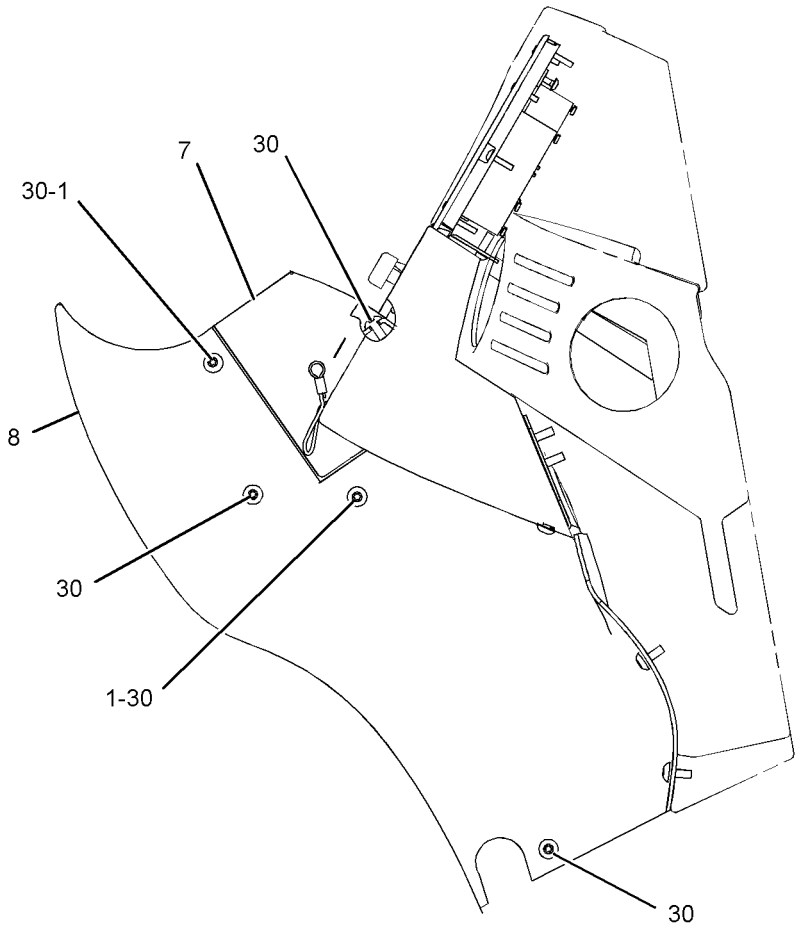

VIEW A-A

GRAPHIC #2 **<END>** g01142232

OPERATOR STATION

310-6071 PANEL GP-INSTRUMENT

S/N: RYF1-UP

PART OF 237-2572 CAB AR-ENCLOSED ROPS

SMCS-7451 **i03625852**

NOTE	REF NO	GRAPHIC REF	PART NUMBER	QTY	PART NAME 1 2 3 4 5 6 (PRODUCT LEVEL)	SEE PAGE
	1	1	**173-2148**	1	FILM-MONITOR (CATERPILLAR MONITORING SYSTEM)	
	2	1	**192-1954**	1	FILM-IDENTIFICATION (UPPER PANEL, HMU STEERING)	
	3	1	**216-7888**	1	PANEL-CONTROL	
	4	1	**245-6460**	1	COVER-UPPER	
	5	1	**258-5438**	1	COVER AS-LOWER	
	6	1	**309-9810**	1	BRACKET AS	
	7	1	**310-3603**	1	BRACKET AS	
M	8	1	**5C-2890**	2	NUT (M6X1-THD)	
M	9	1	**7Y-3173**	4	SCREW-BUTTON HEAD (M4X0.7X12-MM)	
M	10	1	**9X-2044**	2	SCREW-TRUSS HEAD (M6X1X16-MM)	
M	11	1	**9X-2045**	10	SCREW-TRUSS HEAD (M6X1X20-MM)	
M	12	1	**9X-2046**	1	SCREW-TRUSS HEAD (M6X1X35-MM)	
	13	1	**8T-4205**	2	WASHER-HARD (7.2X14.5X2-MM THK)	

M-METRIC PART

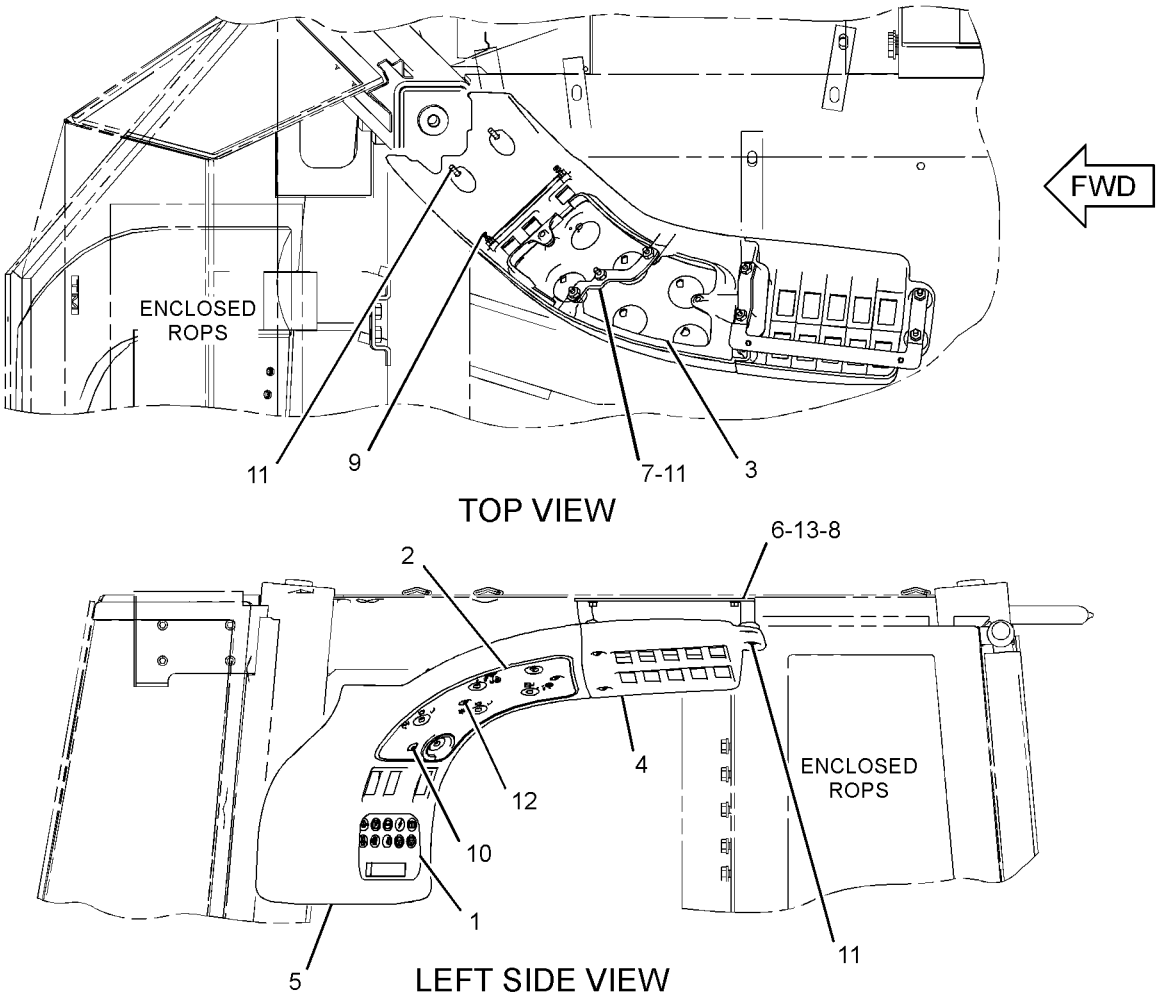

GRAPHIC #1

<END>

g01619727

OPERATOR STATION

201-8616 PEDAL GP-GOVERNOR

S/N: RYF1-UP

PART OF 207-1759 PEDAL GP-GOVERNOR

SMCS-1276 **i03176250**

NOTE	REF NO	GRAPHIC REF	PART NUMBER	QTY	PART NAME 1 2 3 4 5 6 (PRODUCT LEVEL)	SEE PAGE
	1	1	**123-9431**	1	COVER	
Y	2	1	**266-1466**	1	SENSOR GP-POSITION (THROTTLE)	179
	3	1	**7G-7053**	1	GROMMET	
	4	1	**160-6365**	2	SCREW	
	5	1	**160-6366**	2	CLIP	
	6	1	**140-2961**	1	KIT-ROLLER (FOOT BRAKE CONTROL)	
					(INCLUDES ROLLLER AND ROLLER PIN)	
	7	1	**274-9189**	1	KIT-TREADLE PIN (FOOT BRAKE CONTROL)	
					(INCLUDES 6 BUSHINGS, 1 PIN, AND 2 CLIPS)	
	8	1	**140-2963**	2	SCREW	
	9	1	**208-3703**	1	PLATE AS	

Y-SEPARATE ILLUSTRATION

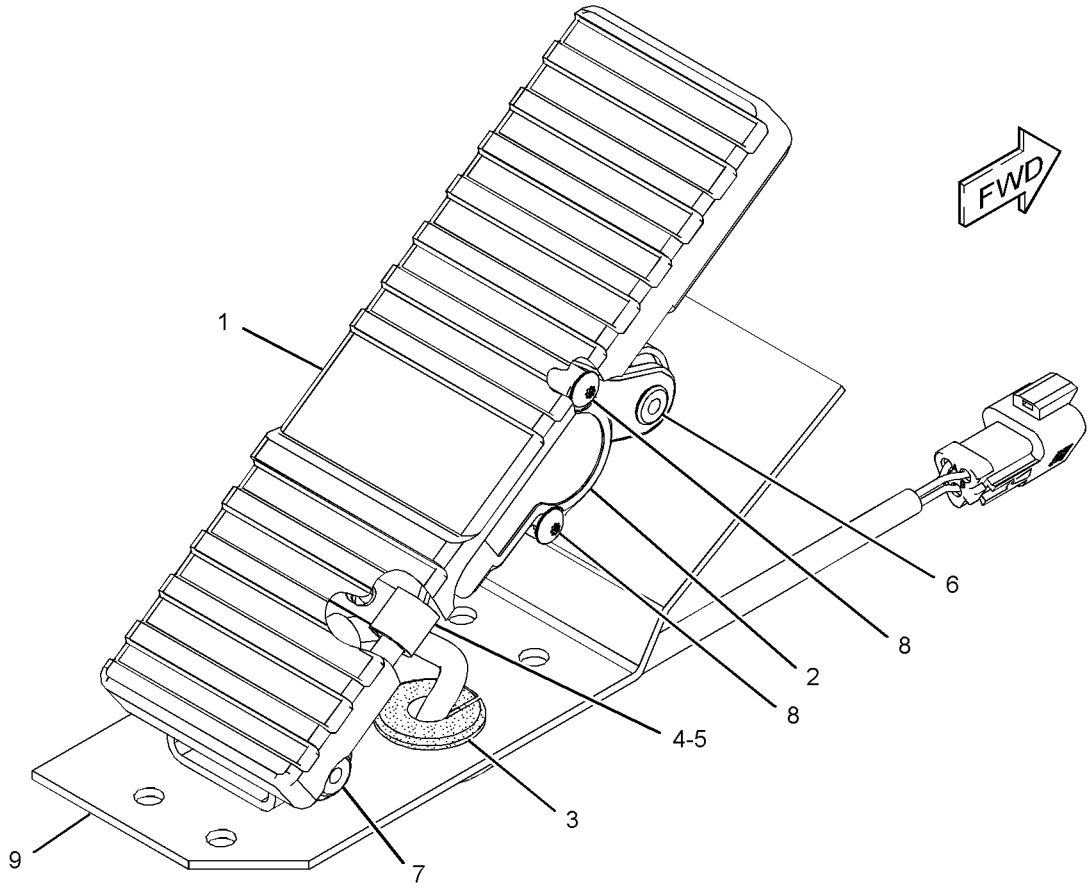

GRAPHIC #1 **<END>** g01520460

OPERATOR STATION

207-1759 PEDAL GP-GOVERNOR

S/N: RYF1-UP

PART OF 237-2572 CAB AR-ENCLOSED ROPS

SMCS-1276 **i03504860**

NOTE	REF NO	GRAPHIC REF	PART NUMBER	QTY	PART NAME 1 2 3 4 5 6 (PRODUCT LEVEL)	SEE PAGE
CY	1	1	**201-8616**	1	PEDAL GP-GOVERNOR	600
	2	1	**147-0385**	1	CLIP	
	3	1	**8T-4224**	4	WASHER-HARD (8.8X16X2-MM THK)	
M	4	1	**8T-4908**	4	BOLT (M8X1.25X25-MM)	

C-CHANGE FROM PREVIOUS TYPE
M-METRIC PART
Y-SEPARATE ILLUSTRATION

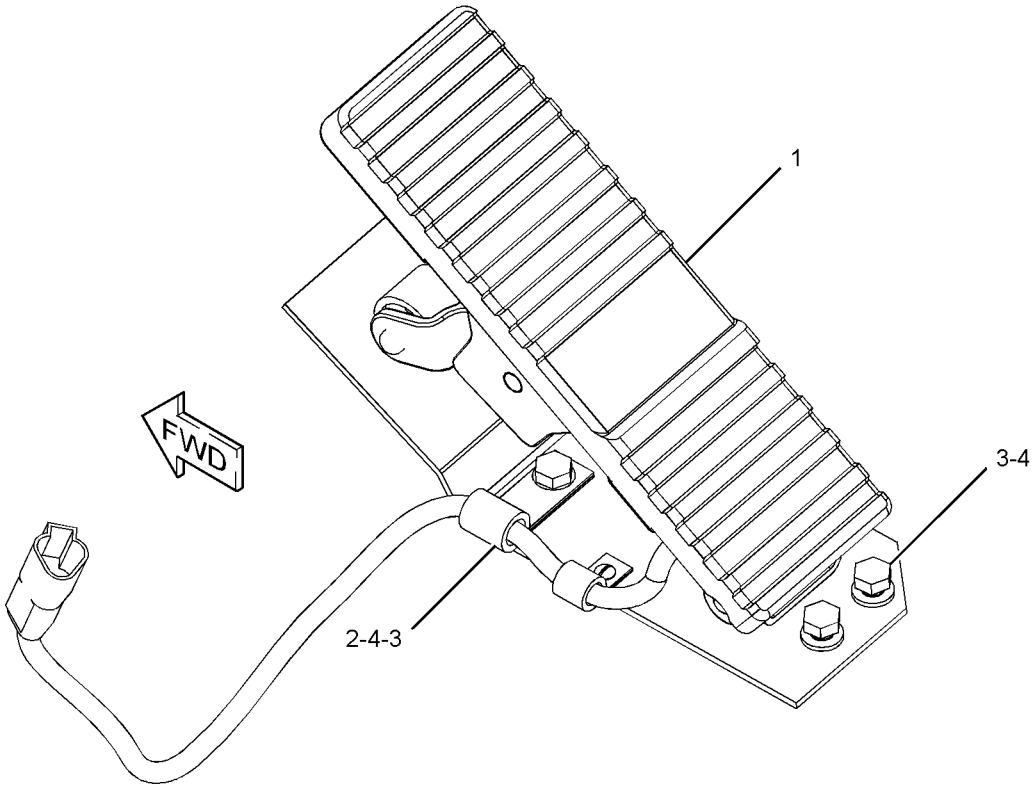

GRAPHIC #1 **<END>** g01680337

OPERATOR STATION

241-4936 RADIO GP–AM/FM/WB CD PLAYER

S/N: RYF1-UP
PART OF 248-4152 RADIO GP
AN ATTACHMENT

SMCS-7338 **i02579352**

NOTE	REF NO	GRAPHIC REF	PART NUMBER	QTY	PART NAME 1 2 3 4 5 6 (PRODUCT LEVEL)	SEE PAGE
	1	1	**142-9681**	1	KNOB-SELECT	
	2	1	**192-7054**	1	SLEEVE	

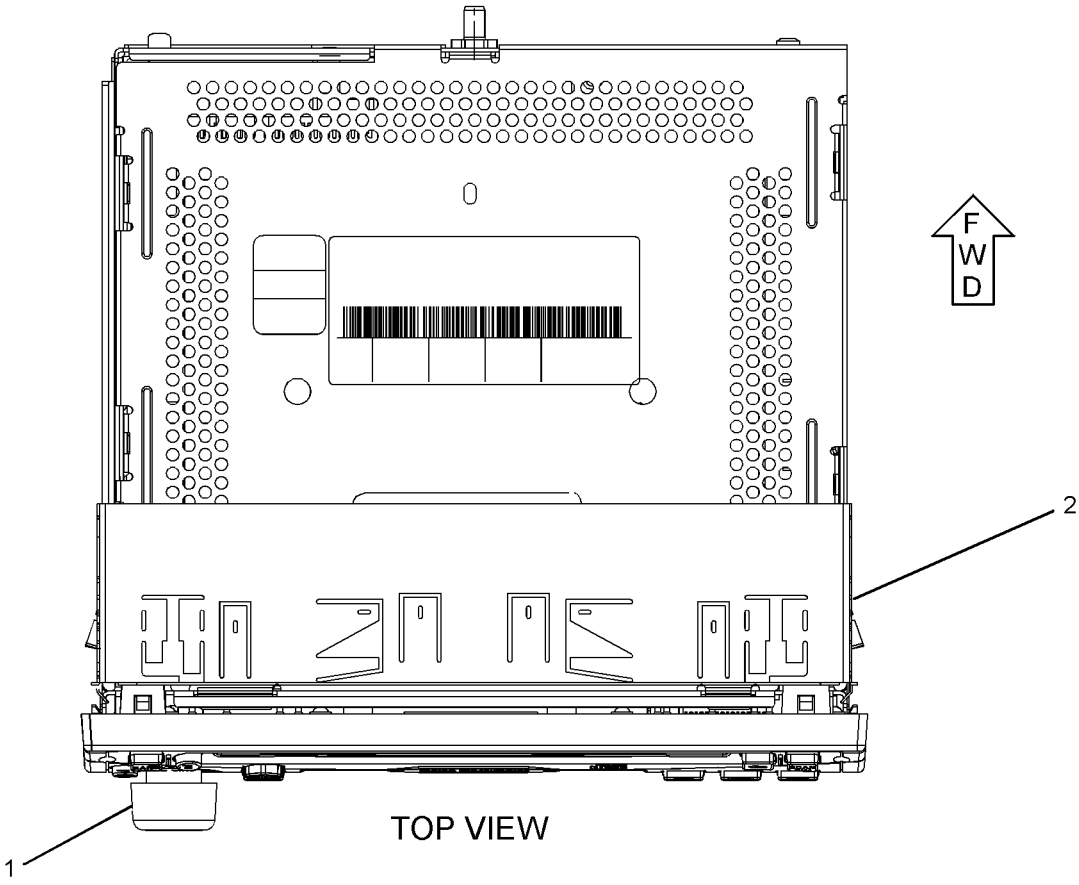

TOP VIEW

GRAPHIC #1 **<END>** g01230279

OPERATOR STATION

248-4152 RADIO GP–AM/FM/WB CD PLAYER

S/N: RYF1-UP

PART OF 284-4739 RADIO GP

AN ATTACHMENT

SMCS-7338 **i02579198**

NOTE	PART NUMBER	QTY	PART NAME 1 2 3 4 5 6 (PRODUCT LEVEL)	SEE PAGE
Y	**241-4936**	1	RADIO GP (AM/FM/WB CD PLAYER)	602
	241-4939	1	BUSHING	
	200-5728	1	HARNESS AS-RADIO	
	160-3518	1	KIT-RECEPTACLE (8-PIN)	
			(INCLUDES RECEPTACLE AS & WEDGE)	

Y-SEPARATE ILLUSTRATION

<END>

OPERATOR STATION

273-6356 RADIO GP–AM/FM

S/N: RYF1-UP

AN ATTACHMENT

SMCS-7338 **i03630714**

NOTE	REF NO	GRAPHIC REF	PART NUMBER	QTY	PART NAME 1 2 3 4 5 6 (PRODUCT LEVEL)	SEE PAGE
	1	1	**215-1182**	1	HARNESS AS-RADIO	

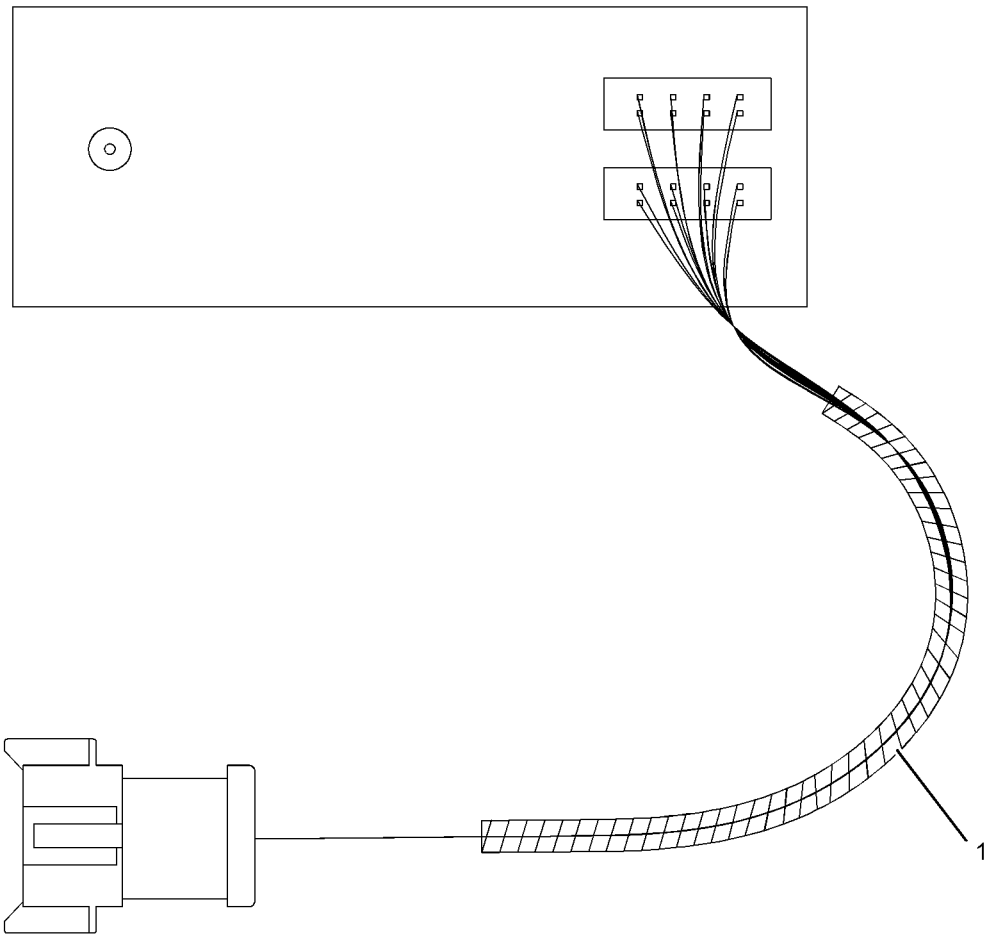

GRAPHIC #1 **<END>** g01159255

OPERATOR STATION

284-4739 RADIO GP—AM/FM CD PLAYER

S/N: RYF1-UP

AN ATTACHMENT

SMCS-7338 **i02579148**

NOTE	PART NUMBER	QTY	PART NAME 1 2 3 4 5 6 (PRODUCT LEVEL)	SEE PAGE
Y	*248-4152*	1	RADIO GP (AM/FM/WB/CD PLAYER)	603

Y-SEPARATE ILLUSTRATION

<END>

263-9088 RADIO GP-COMMUNICATION—PRODUCT LINK 121SR

S/N: RYF1-UP

PART OF 320-9997 INSTALLATION GP-COMMUNICATION

AN ATTACHMENT

SMCS-733T **i03194501**

NOTE	PART NUMBER	QTY	PART NAME 1 2 3 4 5 6 (PRODUCT LEVEL)	SEE PAGE
	330-3408	1	SOFTWARE GP-COMMUNICATION (PRODUCT LINK 121SR)	

<END>

OPERATOR STATION

210-2270 RECLINER GP-SEAT

S/N: RYF1-UP

PART OF 178-0603 SEAT GP

SMCS-7312 **i03626687**

NOTE	REF NO	GRAPHIC REF	PART NUMBER	QTY	PART NAME 1 2 3 4 5 6 (PRODUCT LEVEL)	SEE PAGE
	1	1	**177-1862**	1	BRACKET (SEAT BELT) (SEAT BELT)	
	2	1	**210-2262**	1	BRACKET AS (LH)	
	3	1	**210-2263**	1	BRACKET AS (RH)	
	4	1	**210-2266**	1	GEAR-LOCK (14-TEETH)	
	5	1	**293-2911**	1	SHAFT AS	
		1	**2L-5893**	2	PIN-SPRING	
		1	**170-8590**	1	SPRING	
	6	1	**217-7933**	1	LATCH	
	7	1	**236-5197**	1	SPRING	
	8	1	**031-0214**	1	BOLT-LOCKING (1/4-20X0.5-IN)	
	9	1	**101-2867**	1	WASHER-HARD (7.2X25X2-MM THK)	
	10	1	**4M-6425**	1	BOLT (5/16-18X1-IN)	
	11	1	**5M-2894**	1	WASHER-HARD (10.2X18.5X2.5-MM THK)	
	12	1	**5S-7383**	1	BOLT (3/8-16X1.75-IN)	
	13	1	**8T-4224**	1	WASHER-HARD (8.8X16X2-MM THK)	

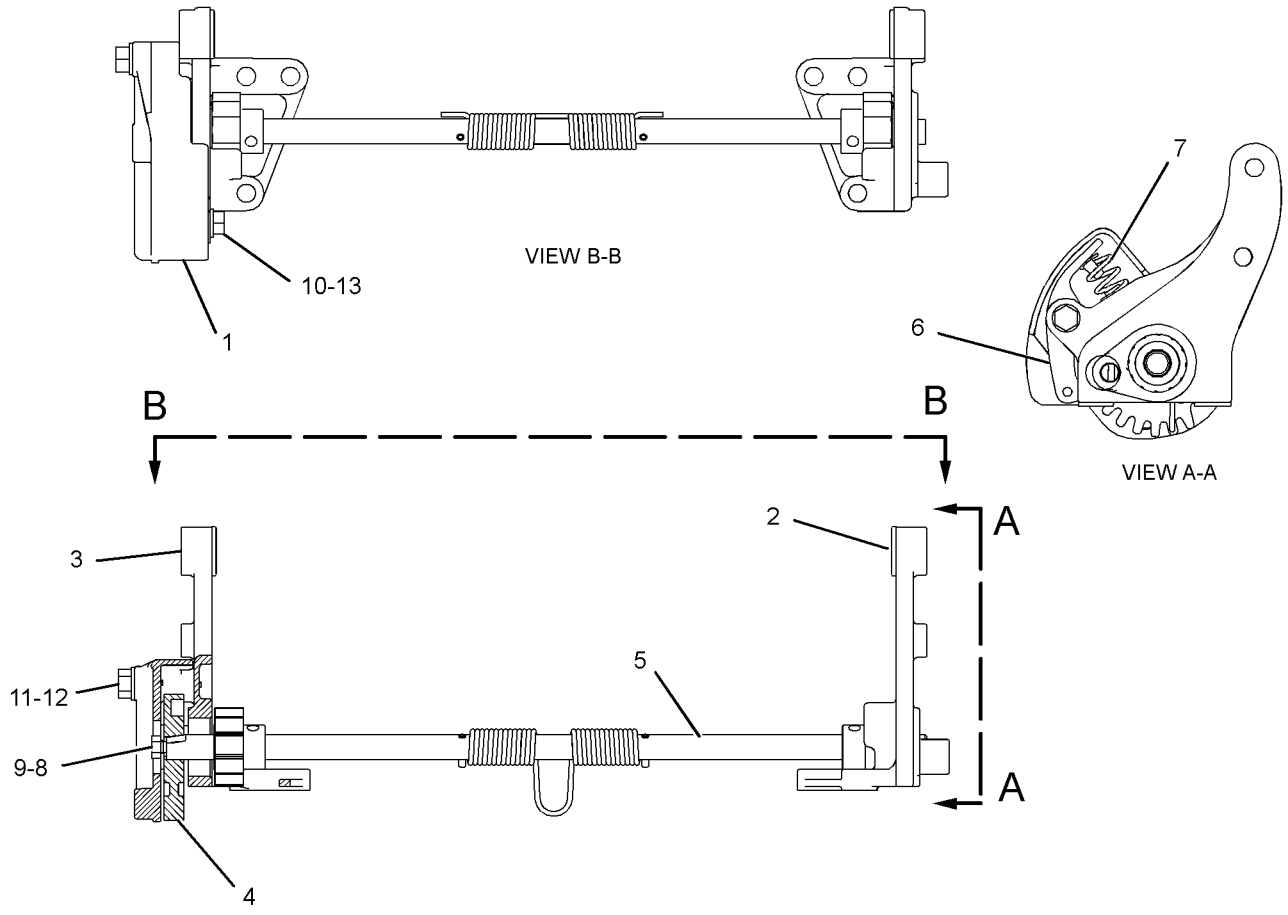

GRAPHIC #1 **<END>** g01296294

OPERATOR STATION

331-2879 ROOF GP-CAB

S/N: RYF1-UP

PART OF 237-2572 CAB AR-ENCLOSED ROPS

SMCS-7301 **i03523123**

NOTE	REF NO	GRAPHIC REF	PART NUMBER	QTY	PART NAME 1 2 3 4 5 6 (PRODUCT LEVEL)	SEE PAGE
	1	1	**107-3157**	8	WASHER (22X76.2X6-MM THK)	
	2	1	**173-2118**	1	ROOF	
	3	1	**196-0436**	4	SPACER (25X40X12-MM THK)	
	4	1	**197-4859**	1	FILM-IDENTIFICATION (CATERPILLAR, REAR CAB)	
	5	1	**197-5470**	4	GROMMET	
	6	1	**8T-4122**	4	WASHER-HARD (17X32X3.5-MM THK)	
M	7	1	**8T-4193**	4	BOLT (M16X2X50-MM)	

M-METRIC PART

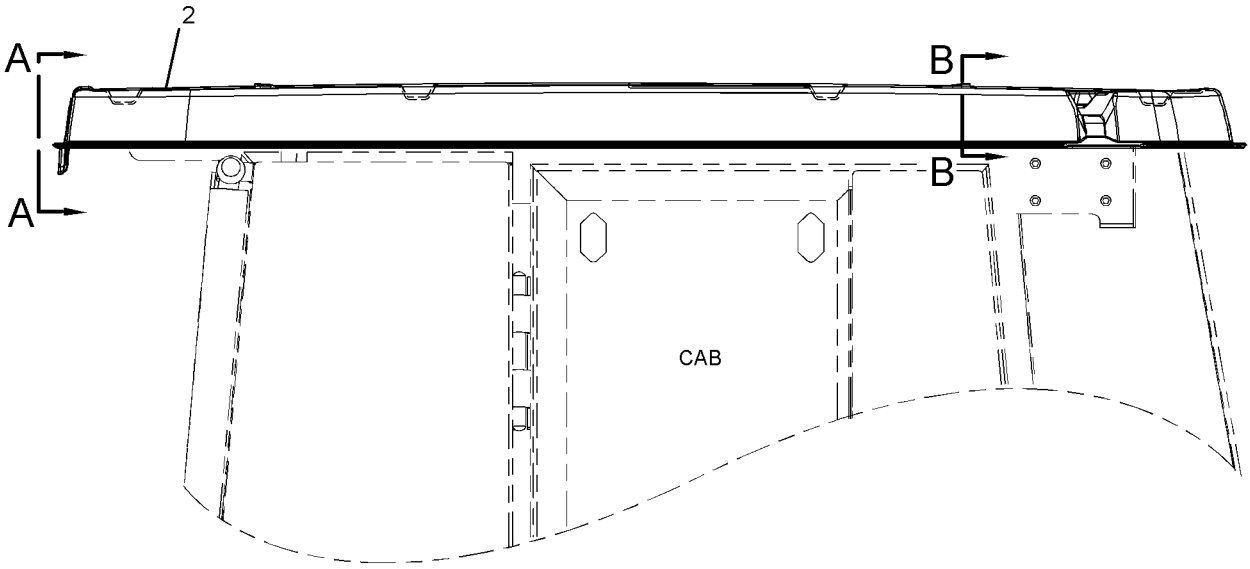

RIGHT SIDE VIEW



VIEW A-A

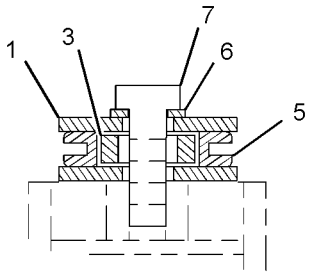

SECTION B-B

GRAPHIC #1 **<END>** g01912553

OPERATOR STATION

237-2574 ROPS GP-ENCLOSED

S/N: RYF1-UP

PART OF 237-2572 CAB AR-ENCLOSED ROPS

SMCS-7301 **i03625786**

NOTE	REF NO	GRAPHIC REF	PART NUMBER	QTY	PART NAME 1 2 3 4 5 6 (PRODUCT LEVEL)	SEE PAGE
M	2	2	**9X-2042**	2	SCREW-TRUSS HEAD (M6X1X12-MM)	
	3	1	**107-4600**	1	GLASS (RIGHT SIDE-REAR)	
	4	2	**107-4602**	1	GLASS (LEFT SIDE-REAR)	
	5	2	**109-5008**	3	BUMPER-CONICAL	
	6	3	**111-0687**	1	STRIKER AS	
	7	3	**114-9252**	1	BRACKET AS	
	8	3	**126-1052**	1	PIN	
	9	3	**128-1026**	1	SHIELD-STRIKER	
	10	2	**136-9351**	1	TRIM (RH)	
	11	2	**154-9508**	1	TRIM (LH)	
	12	2	**173-2142**	1	GLASS (FRONT)	
	13	2	**173-2143**	1	GLASS (FRONT, RH)	
	14	2	**173-2144**	1	GLASS (FRONT, LH)	
	15	3	**187-4161**	1	SHEET AS	
	16	3	**188-5175**	1	CHANNEL AS (LH)	
	17	3	**188-5177**	1	BRACKET AS	
	18	3	**204-6132**	1	CHANNEL	
	19	3	**209-5018**	1	LATCH AS	
	20	4	**210-1254**	2	INSULATION	
Y	21	1	**232-2964**	1	FLOOR GP-SOUND SUPPRESSION	558
	22	2	**237-2577**	1	CAB AS 1/4 WALL	
	23	2	**242-8263**	1	SHEET AS	
	24	1	**243-4369**	1	PLATE AS (RH)	
	25	2	**243-4371**	1	PLATE AS (LH)	
	26	3	**243-5553**	1	TRIM (RH)	
	27	3	**243-5554**	1	TRIM (RH)	
	28	3	**243-5555**	1	TRIM (LH)	
	29	3	**243-5556**	1	TRIM (LH)	
	30	4	**245-4333**	1	INSULATION	
	31	2	**247-1860**	1	DOOR AS	
		2	**1V-6755**	1	LATCH AS	
		2	**2N-2258**	6	RIVET-POP	
		2	**111-1316**	1	HINGE	
	32	2	**255-4367**	1	GLASS (REAR)	
	33	3	**258-7623**	1	TRIM (RH)	
	34	3	**258-7624**	1	TRIM (LH)	
Y	35	1	*270-3388*	1	DOOR GP-CAB (SLIDING WINDOW)	554
M	36	2	**5C-7261**	3	NUT (M8X1.25-THD)	
	37	3,4	**8T-4121**	22	WASHER-HARD (11X21X2.5-MM THK)	
M	38	3	**8T-4133**	4	NUT (M10X1.5-THD)	
M	39	3	**8T-4136**	4	BOLT (M10X1.5X25-MM)	
M	40	3,4	**8T-4137**	14	BOLT (M10X1.5X20-MM)	
M	41	3	**9X-2044**	2	SCREW-TRUSS HEAD (M6X1X16-MM)	
D	42	4	**5P-6120**		TRIM-EDGE (1-M)	
	43	2	**314-5214**	1	INSULATION	
	44	4	**314-5213**	1	INSULATION	
B	45	2	**214-9186**	28	BUTTON	
B	46	2	**110-7524**	8	BUTTON	
	47	3	**8T-4222**	1	WASHER-PLATED (11X32X2.5-MM THK)	
	48	1	**321-8299**	11	PLATE	
	49	2	**320-6212**	1	PLATE	
	50	2	**7X-2634**		SEAL (110-CM)	
	50A	2	**7X-2634**	2	SEAL (23-CM EACH)	
	50B	2	**7X-2634**	2	SEAL (146-CM EACH)	
	50C	2	**7X-2634**		SEAL (123-CM)	
	50D	2	**7X-2634**	2	SEAL (52-CM EACH)	

B-USE AS REQUIRED
D-ORDER BY THE METER
M-METRIC PART
Y-SEPARATE ILLUSTRATION

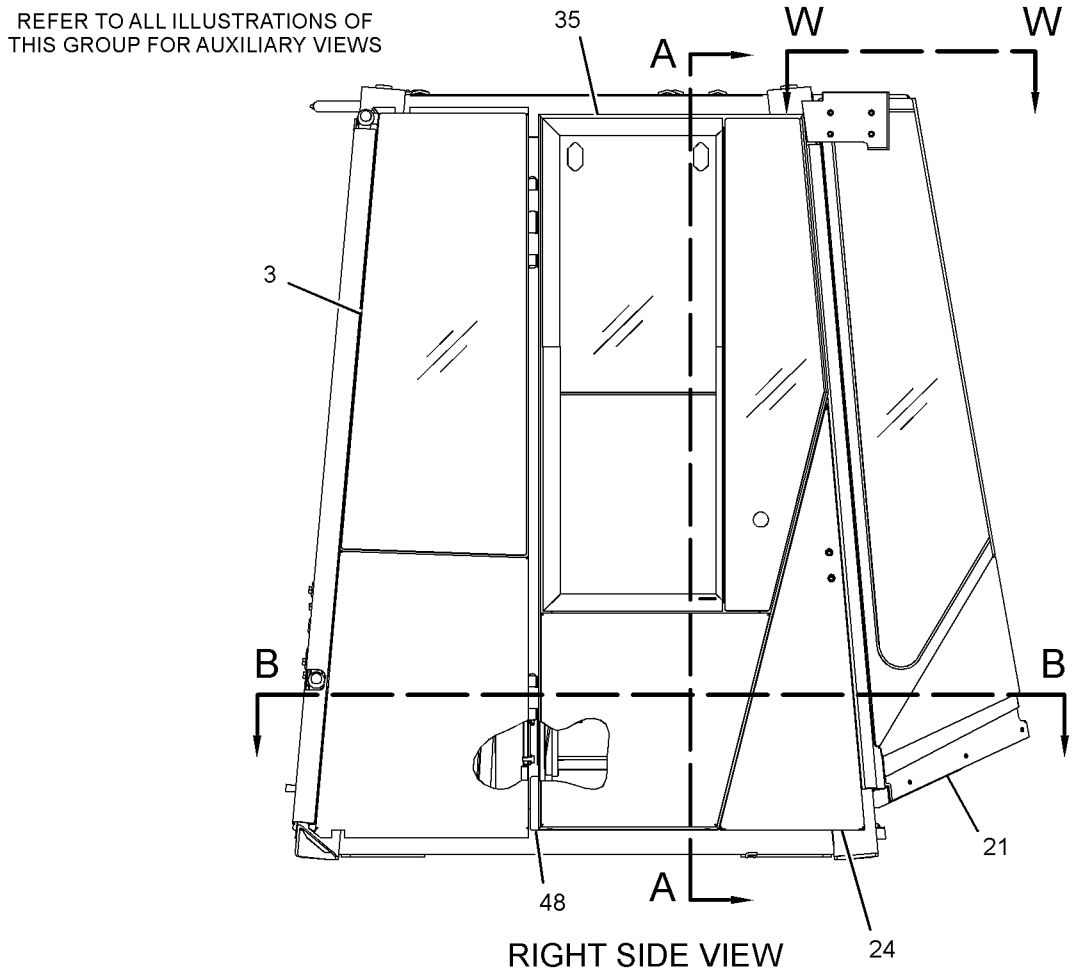

GRAPHIC #1 g01502266

OPERATOR STATION

237-2574 **ROPS GP-ENCLOSED** *(contd.)* **i03625786**

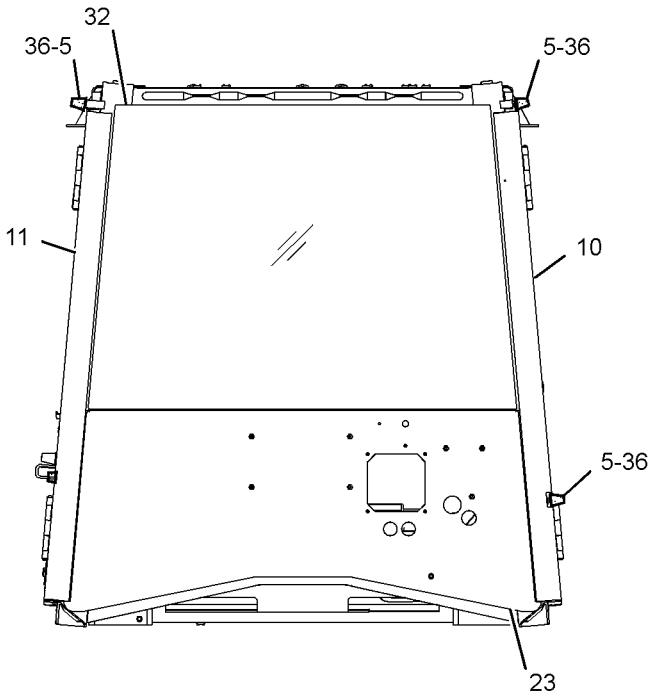

REAR VIEW

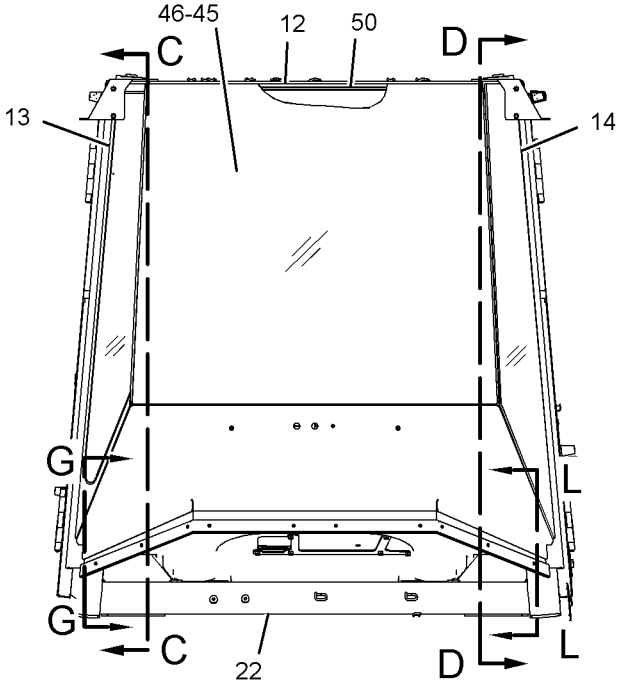

FRONT VIEW

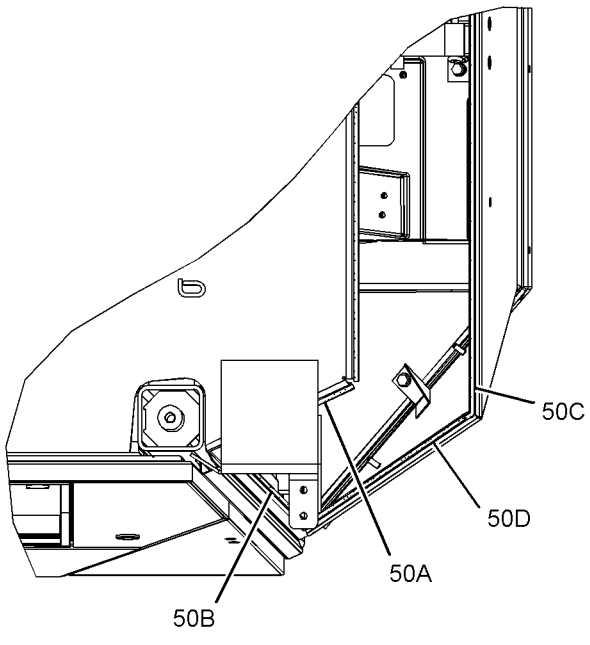

VIEW W-W

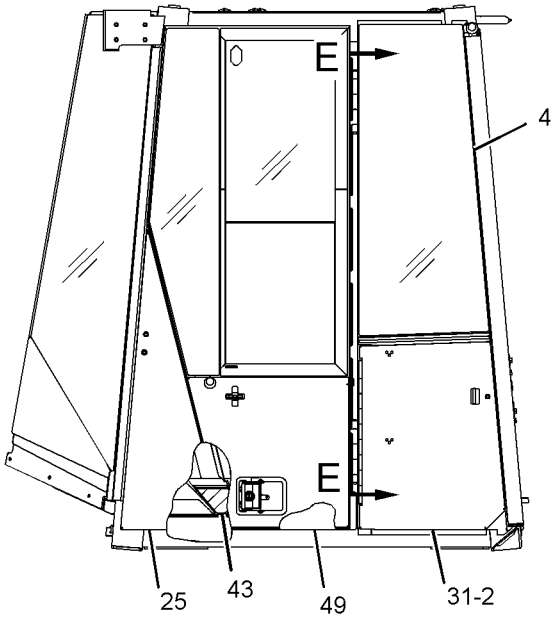

LEFT SIDE VIEW

REFER TO ALL ILLUSTRATIONS OF
THIS GROUP FOR AUXILIARY VIEWS

GRAPHIC #2

g01502051

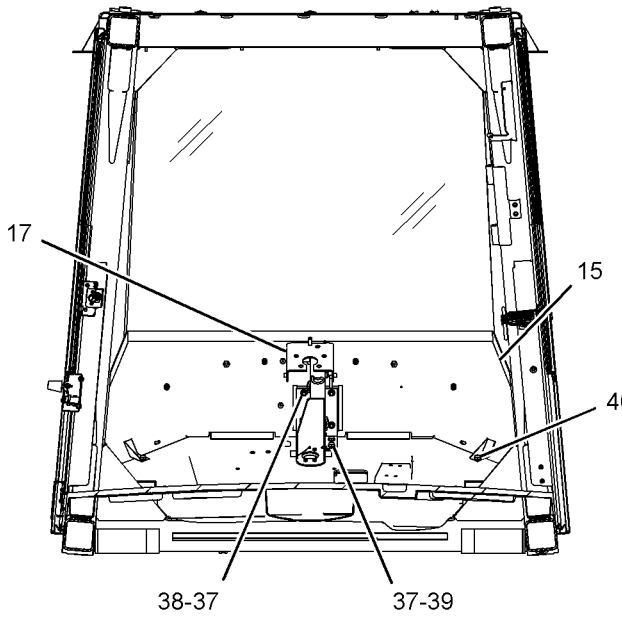

SECTION A-A

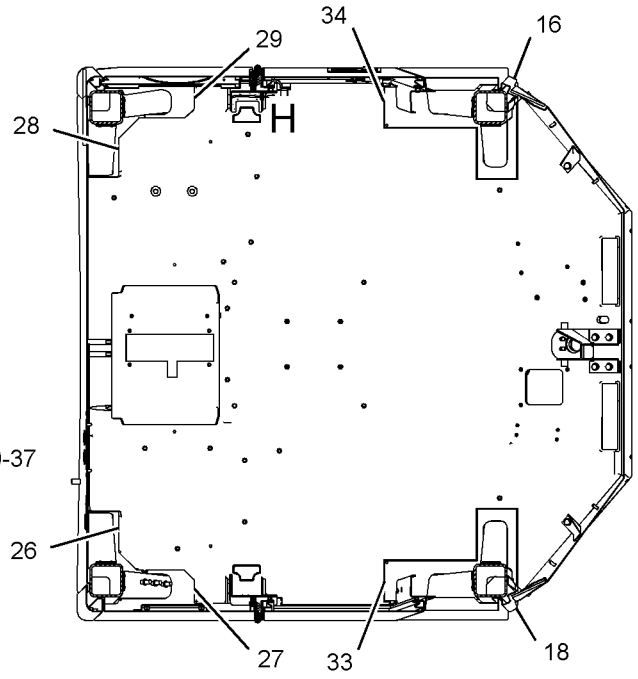

SECTION B-B

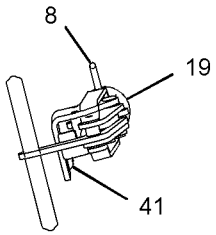

VIEW OF AREA E

REFER TO ALL ILLUSTRATIONS OF
THIS GROUP FOR AUXILIARY VIEWS

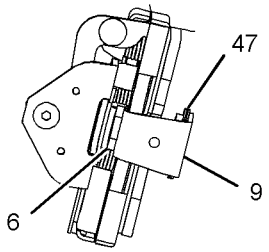

VIEW OF AREA K

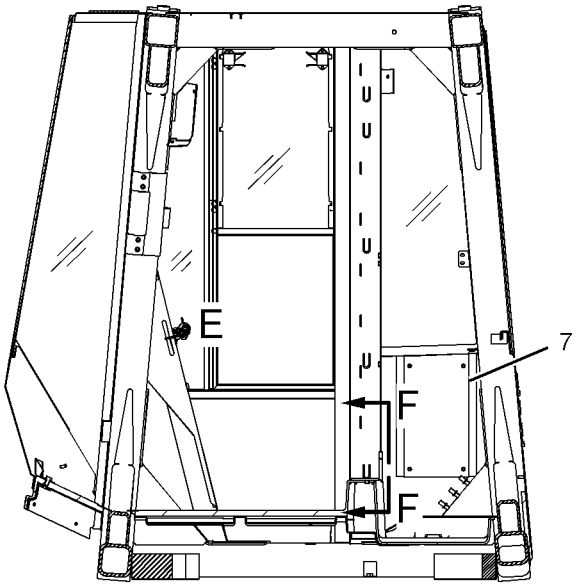

SECTION C-C

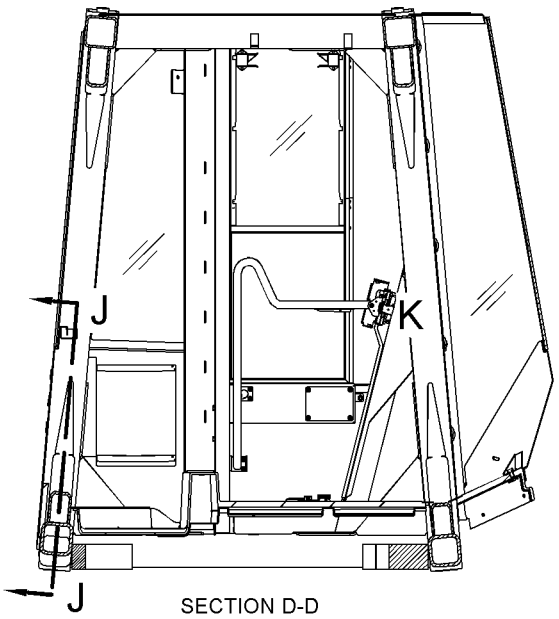

SECTION D-D

GRAPHIC #3

g01502053

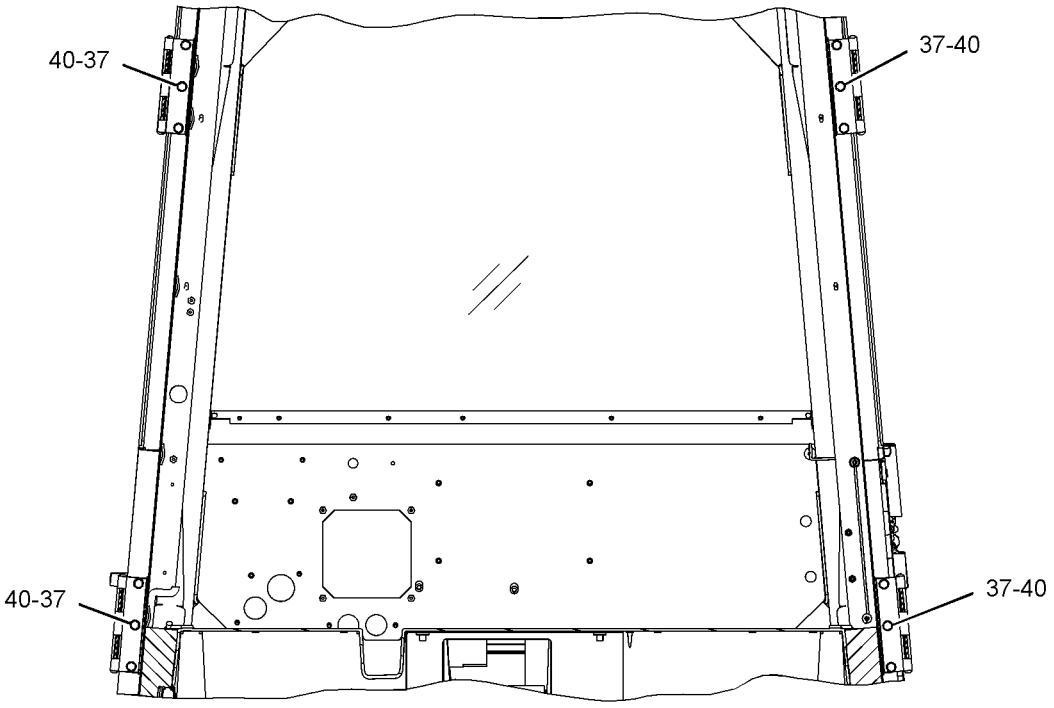

SECTION E-E

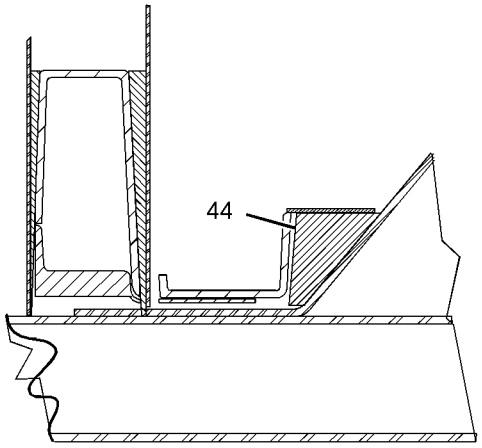

SECTION L-L

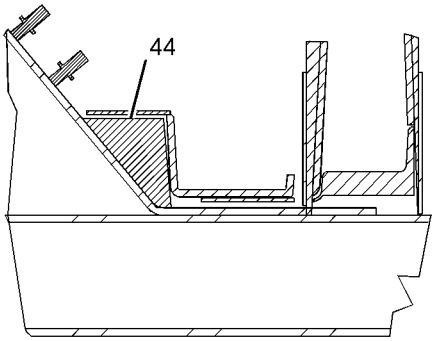

SECTION G-G

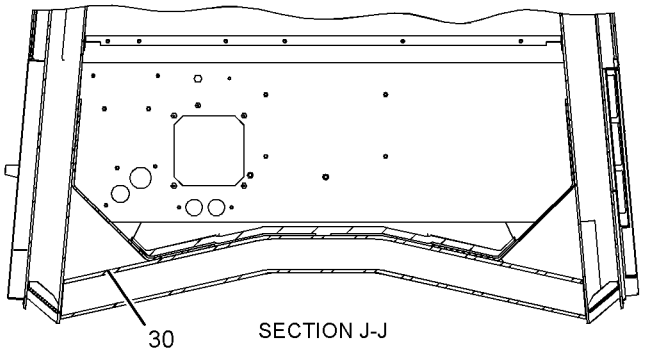

SECTION J-J

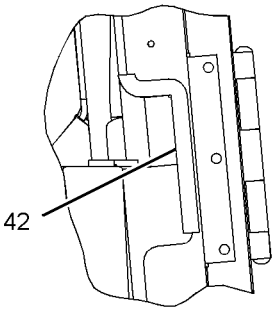

SECTION F-F

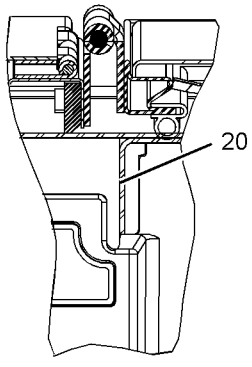

VIEW OF AREA H

GRAPHIC #4 **<END>** g01502052

OPERATOR STATION

117-1410 SEALING GP-GLASS

S/N: RYF1-UP

PART OF 237-2572 CAB AR-ENCLOSED ROPS

SMCS-7310, 7340 **i03625833**

NOTE	PART NUMBER	QTY	PART NAME 1 2 3 4 5 6 (PRODUCT LEVEL)	SEE PAGE
B	**311-3898**	1	ADHESIVE	

B-USE AS REQUIRED

<END>

OPERATOR STATION

236-7019 SEAT BELT GP

S/N: RYF1-UP

PART OF 174-3624 SEAT GP-SUSPENSION

SMCS-7327 **i02220017**

NOTE	REF NO	GRAPHIC REF	PART NUMBER	QTY	PART NAME 1 2 3 4 5 6 (PRODUCT LEVEL)	SEE PAGE
	1	1	**0T-0244**	1	BOLT (7/16-20X1.25-IN)	
	2	1	**205-6388**	1	BOLT (7/16-20X1.75-IN)	

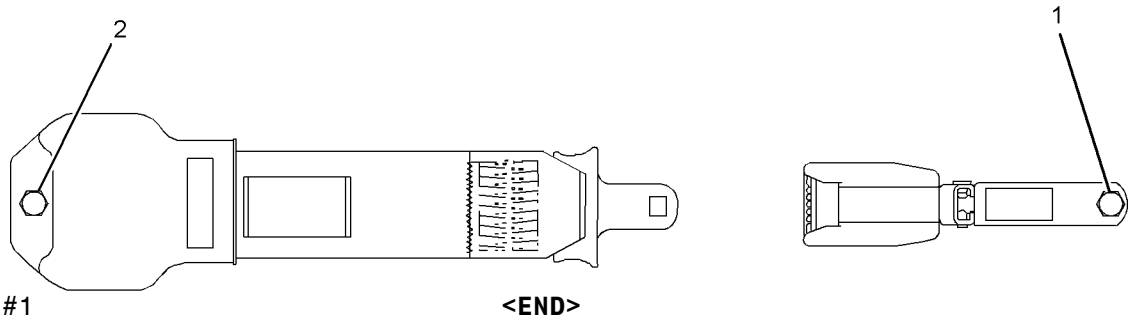

GRAPHIC #1 **<END>** g01072526

OPERATOR STATION

178-0603 SEAT GP–CLOTH

S/N: RYF1-UP

PART OF 178-7913 SEAT GP

SMCS-7312 **i02679176**

NOTE	REF NO	GRAPHIC REF	PART NUMBER	QTY	PART NAME 1 2 3 4 5 6 (PRODUCT LEVEL)	SEE PAGE
	1	1	**218-0861**	1	PAN AS	
		1	**8T-9082**	5	RIVET-POP	
		1	**217-9049**	1	CUSHION AS	
	2	1	**143-1288**	8	LOCKNUT-FLANGE (3/8-16-THD)	
	3	1	**171-1230**	6	SCREW-BUTTON HEAD (3/8-16X1-IN)	
	4	1	**171-6682**	1	BAR	
	5	1	**172-2416**	2	PIN	
Y	6	1	*173-1028*	1	ADJUSTER GP-SEAT	518
	7	1	**177-1863**	2	BOLT-PIVOT (3/8-16X2.89-IN)	
Y	8	1	*210-2270*	1	RECLINER GP-SEAT	606
CY	9	1	*292-9237*	1	PAN GP-BACKREST	595
	10	1	**184-2298**	1	ROD	
	11	1	**184-2299**	4	WASHER (7X25.4X2.54-MM THK)	
	12	1	**095-0843**	2	PIN-COTTER	
	13	1	**5V-1496**	2	RETAINER	
	14	1	**6V-7646**	2	WASHER-HARD (7.2X25X2-MM THK)	
	15	1	**8T-0328**	1	WASHER-HARD (5.5X10X1-MM THK)	
	16	1	**8T-4205**	1	WASHER-HARD (7.2X14.5X2-MM THK)	
C	17	1	**294-5042**	2	SPACER (11.1X19.5X9.67-MM THK)	

C-CHANGE FROM PREVIOUS TYPE
Y-SEPARATE ILLUSTRATION

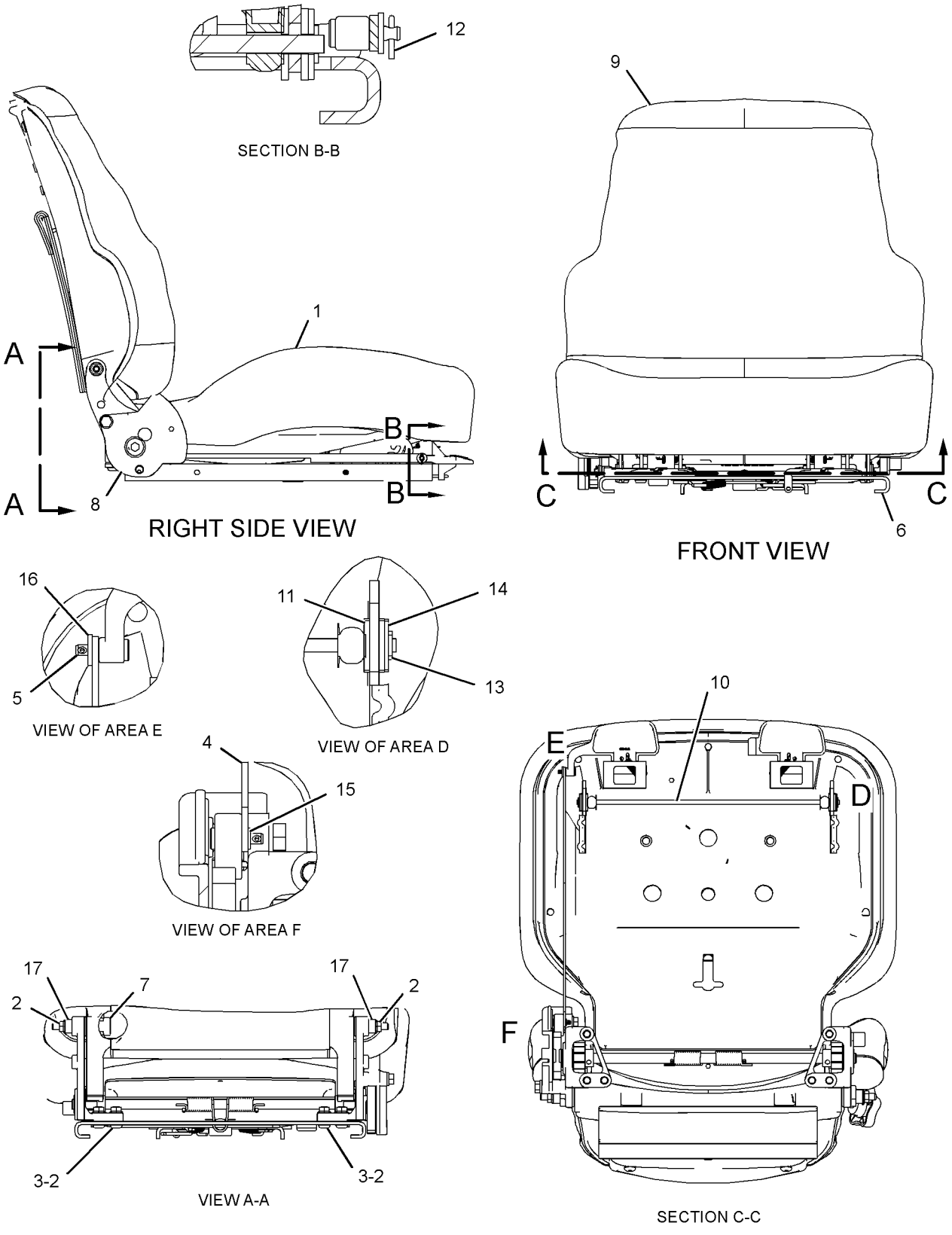

GRAPHIC #1 **<END>** g01336990

OPERATOR STATION

178-7913 SEAT GP

S/N: RYF1-UP

PART OF 219-8094 SEAT GP-SUSPENSION

SMCS-7312 **i02307263**

NOTE	REF NO	GRAPHIC REF	PART NUMBER	QTY	PART NAME 1 2 3 4 5 6 (PRODUCT LEVEL)	SEE PAGE
	1	1	**143-1288**	4	LOCKNUT-FLANGE (3/8-16-THD)	
	2	1	**171-1230**	3	SCREW-BUTTON HEAD (3/8-16X1-IN)	
	3	1	**229-1494**	1	EXTENSION GP-BACKREST (CLOTH)	
Y	5	1	**178-0603**	1	SEAT GP (CLOTH)	615
	8	1	**180-9617**	1	BRACKET AS	
Y	10	1	**188-9820**	1	ARMREST GP (LH)	522
	11	1	**4L-6454**	1	BOLT (3/8-16X1-IN)	

Y-SEPARATE ILLUSTRATION

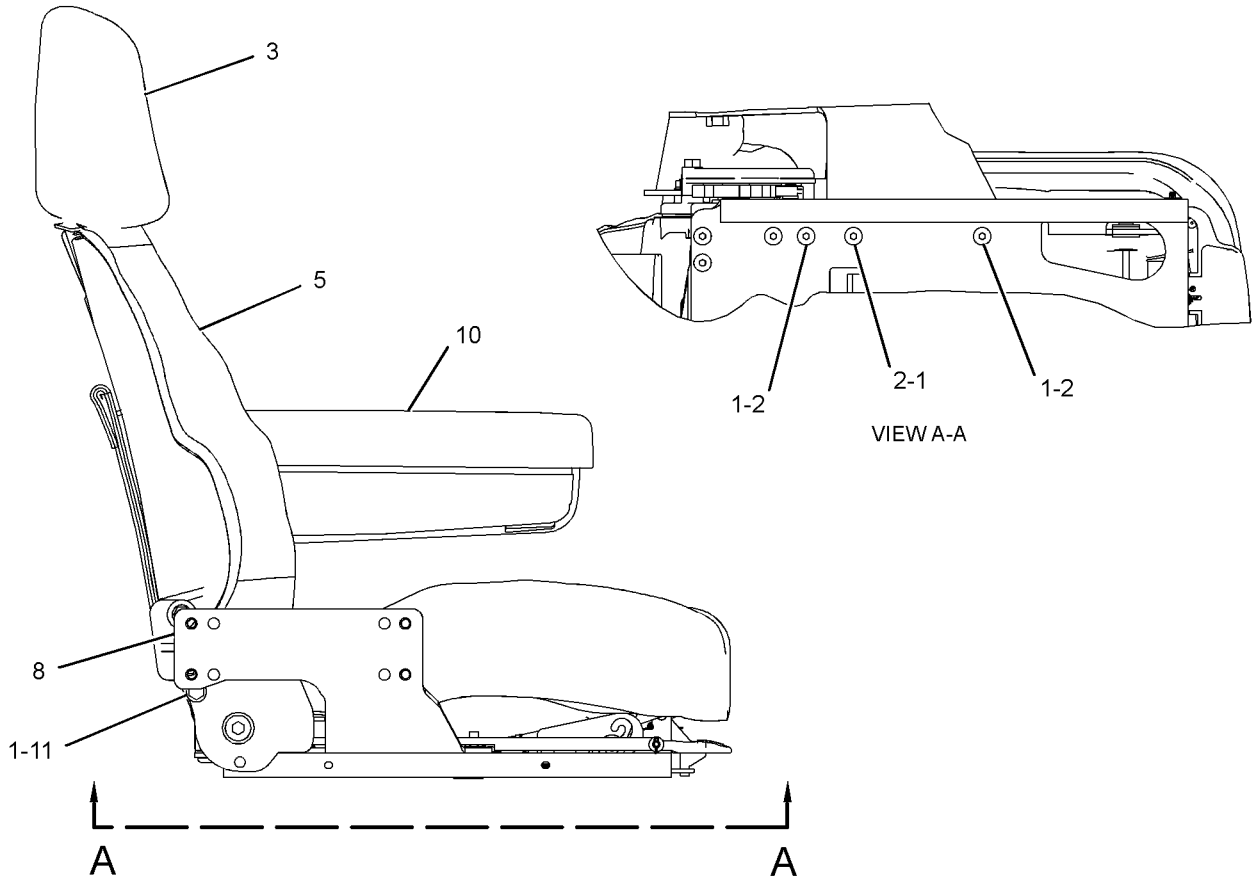

RIGHT SIDE VIEW

GRAPHIC #1 **<END>** g01156062

OPERATOR STATION

246-4302 SEAT GP—CLOTH, HEATED

S/N: RYF1-UP
PART OF 246-4447 SEAT GP
AN ATTACHMENT

SMCS-7312 **i02581022**

NOTE	PART NUMBER	QTY	PART NAME 1 2 3 4 5 6 (PRODUCT LEVEL)	SEE PAGE
Y	*173-1028*	1	ADJUSTER GP-SEAT	518

Y-SEPARATE ILLUSTRATION

<END>

246-4447 SEAT GP—CLOTH, HEATED

S/N: RYF1-UP
24-VOLT
PART OF 237-2069 SEAT GP-SUSPENSION
AN ATTACHMENT

SMCS-7312 **i02580737**

NOTE	REF NO	GRAPHIC REF	PART NUMBER	QTY	PART NAME 1 2 3 4 5 6 (PRODUCT LEVEL)	SEE PAGE
	1	1	**143-1288**	4	LOCKNUT-FLANGE (3/8-16-THD)	
	2	1	**171-1230**	3	SCREW-BUTTON HEAD (3/8-16X1-IN)	
	3	1	**180-9617**	1	BRACKET AS	
Y	4	1	**188-9820**	1	ARMREST GP (LH)	522
	5	1	**229-1494**	1	EXTENSION GP-BACKREST (CLOTH)	
		1	**117-4491**	1	ROD	
Y	6	1	**246-4302**	1	SEAT GP (CLOTH, HEATED)	618
	7	1	**4L-6454**	1	BOLT (3/8-16X1-IN)	

Y-SEPARATE ILLUSTRATION

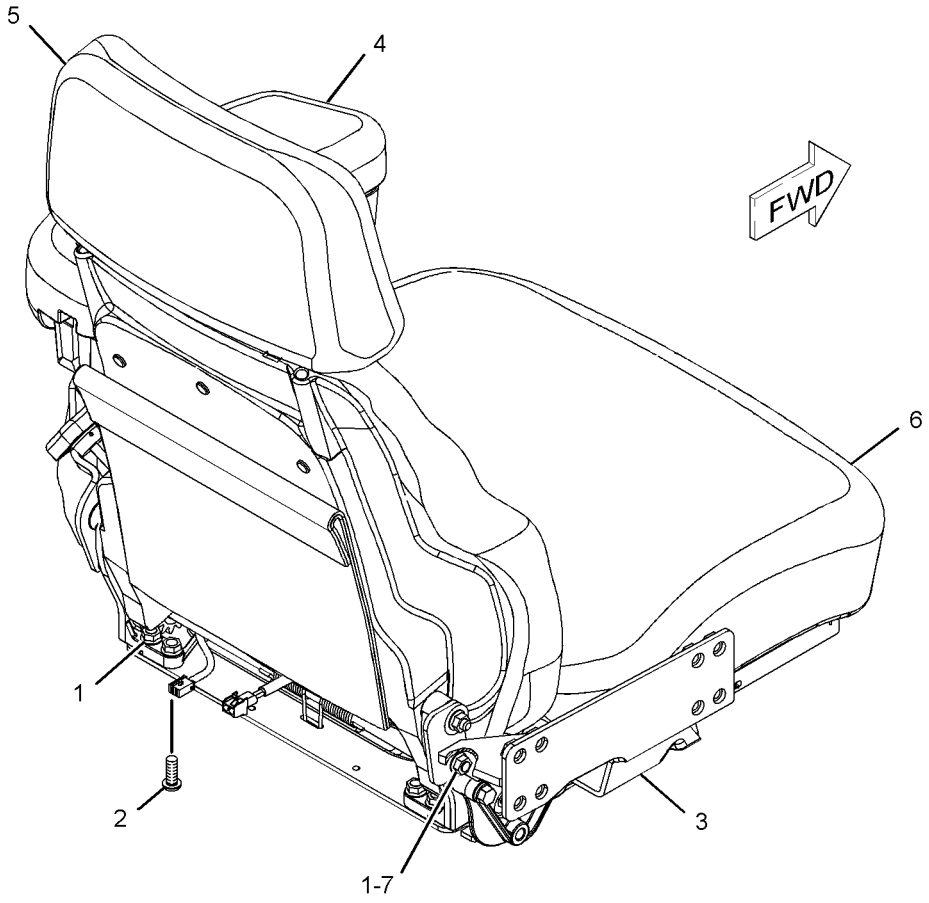

GRAPHIC #1 **<END>** g01143415

OPERATOR STATION

174-3624 SEAT GP-SUSPENSION

S/N: RYF1-UP

PART OF 237-2572 CAB AR-ENCLOSED ROPS

SMCS-7324, 7336 **i02219190**

NOTE	REF NO	GRAPHIC REF	PART NUMBER	QTY	PART NAME 1 2 3 4 5 6 (PRODUCT LEVEL)	SEE PAGE
	1	1	**192-2175**	1	PLATE AS	
	2	1	**209-3750**	2	BOLT (M10X1.5X75-MM)	
Y	3	1	**219-8094**	1	SEAT GP-SUSPENSION	621
M	4	1	**7X-2545**	2	BOLT (M10X1.5X150-MM)	
	5	1	**8T-4896**	4	WASHER-HARD (10.2X18.5X2.5-MM THK)	
Y	6	1	**236-7019**	1	SEAT BELT GP (RETRACTABLE, 51-MM)	614
	7	1	**205-6388**	1	BOLT (7/16-20X1.75-IN)	
	8	1	**177-4937**	1	SPACER (11.7X19.8X20.3-MM THK)	
	9	1	**0T-0244**	1	BOLT (7/16-20X1.25-IN)	

M-METRIC PART
Y-SEPARATE ILLUSTRATION

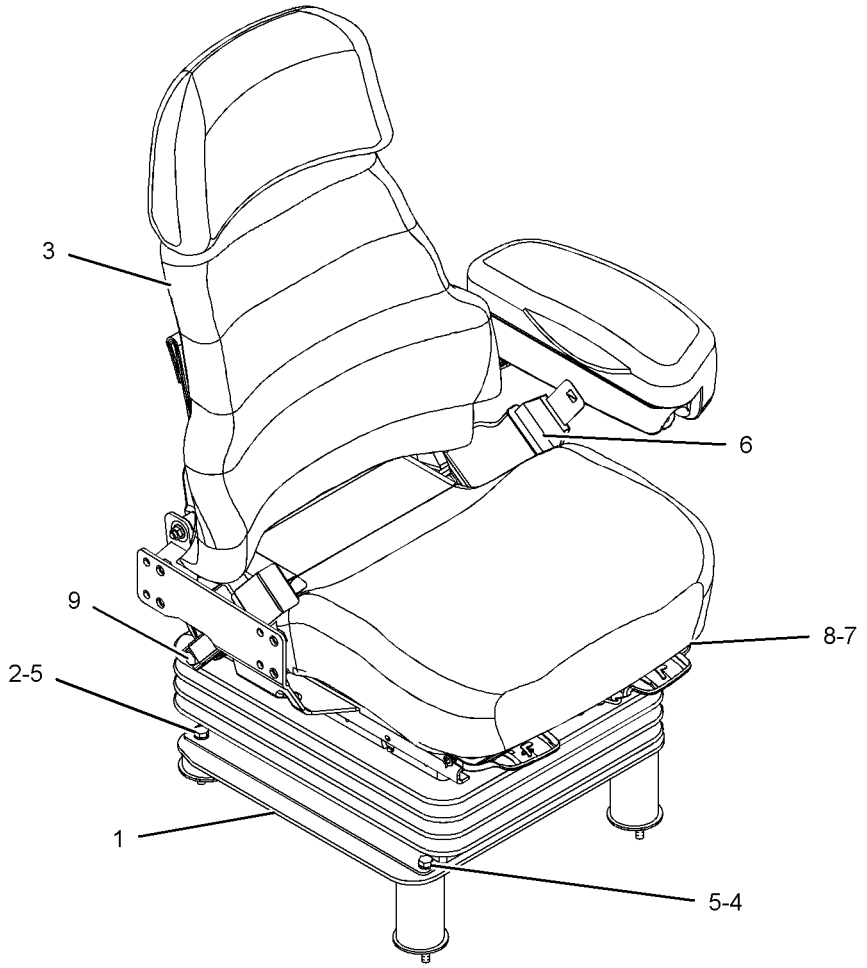

GRAPHIC #1 **<END>** g01104707

219-8094 SEAT GP-SUSPENSION

S/N: RYF1-UP

PART OF 174-3624 SEAT GP-SUSPENSION

SMCS-7324, 7336 **i02220014**

NOTE	REF NO	GRAPHIC REF	PART NUMBER	QTY	PART NAME 1 2 3 4 5 6 (PRODUCT LEVEL)	SEE PAGE
JZ	1	1		4	BLOCK-SLIDER	
J	2	1	**173-5787**	4	SETSCREW (1/4-20-THD)	
Y	3	1	**178-7913**	1	SEAT GP	617
Y	4	1	**191-2933**	1	SUSPENSION GP-SEAT (AIR)	631
J	5	1	**203-7703**	2	WASHER-HARD (10.2X22.22X2.38-MM THK)	
J	6	1	**4F-4879**	1	BOLT (3/8-16X0.5-IN)	
					AVAILABLE REPAIR KIT(S):	
J			**173-7035**	1	KIT-SLIDER BLOCK	

J-KIT MARKED J SERVICES PARTS MARKED J
Y-SEPARATE ILLUSTRATION
Z-NOT SERVICED SEPARATELY

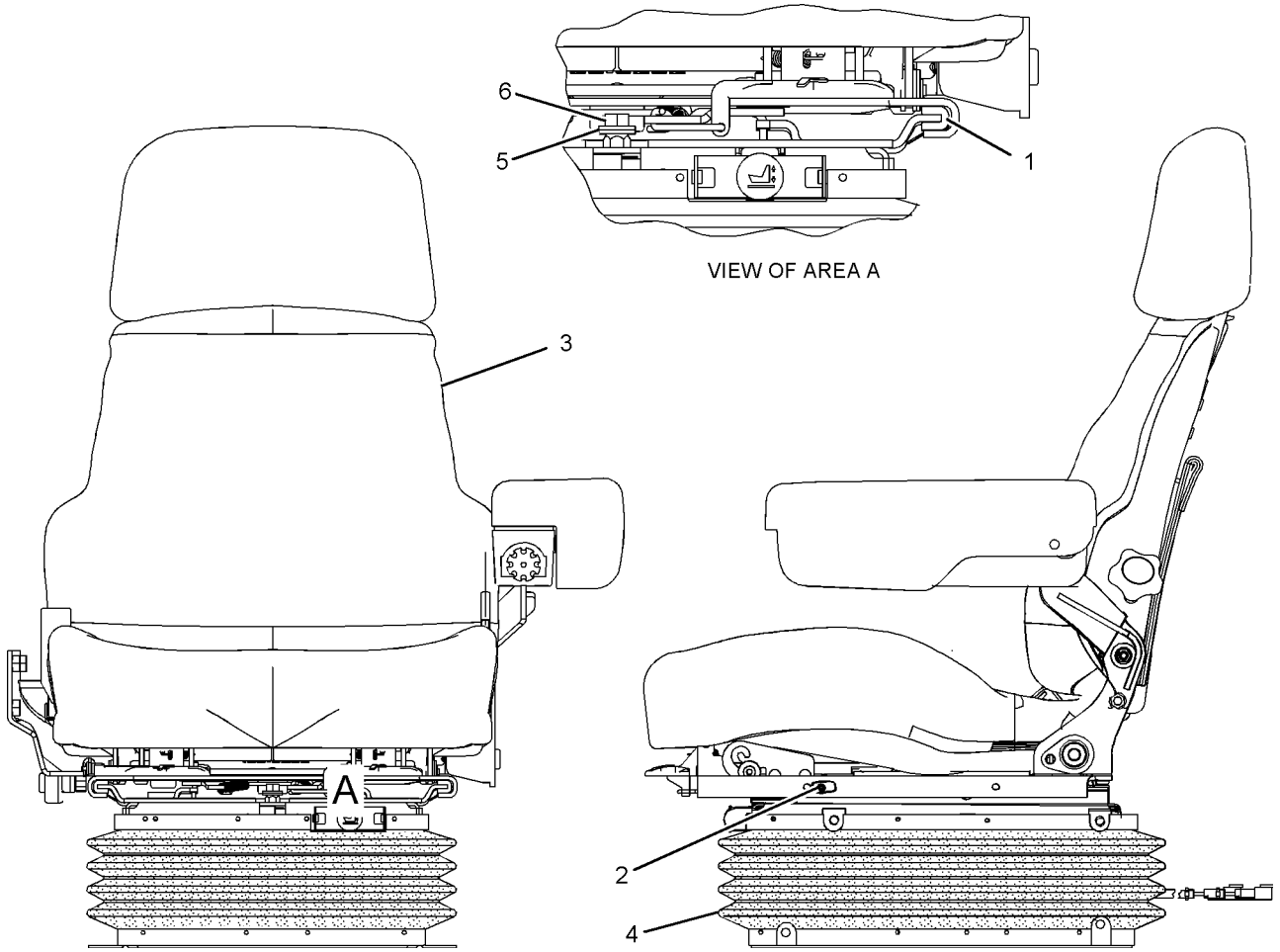

GRAPHIC #1 **<END>** g01100900

OPERATOR STATION

237-2069 SEAT GP-SUSPENSION–HEATED

S/N: RYF1-UP
24-VOLT
AN ATTACHMENT

SMCS-7324, 7336 **i02580167**

NOTE	REF NO	GRAPHIC REF	PART NUMBER	QTY	PART NAME 1 2 3 4 5 6 (PRODUCT LEVEL)	SEE PAGE
JZ	1	1		4	BLOCK-SLIDER	
J	2	1	**173-5787**	4	SETSCREW (1/4-20-THD)	
Y	3	1	**191-2933**	1	SUSPENSION GP-SEAT (AIR)	631
J	4	1	**203-7703**	2	WASHER-HARD (10.2X22.22X2.38-MM THK)	
Y	5	1	**246-4447**	1	SEAT GP (24-VOLT, CLOTH, HEATED)	619
J	6	1	**4F-4879**	1	BOLT (3/8-16X0.5-IN)	
					AVAILABLE REPAIR KIT(S):	
			173-7035	1	KIT-SLIDER BLOCK (SUSPENSION SEAT)	

J-KIT MARKED J INCLUDES PARTS MARKED J
Y-SEPARATE ILLUSTRATION
Z-NOT SERVICED SEPARATELY

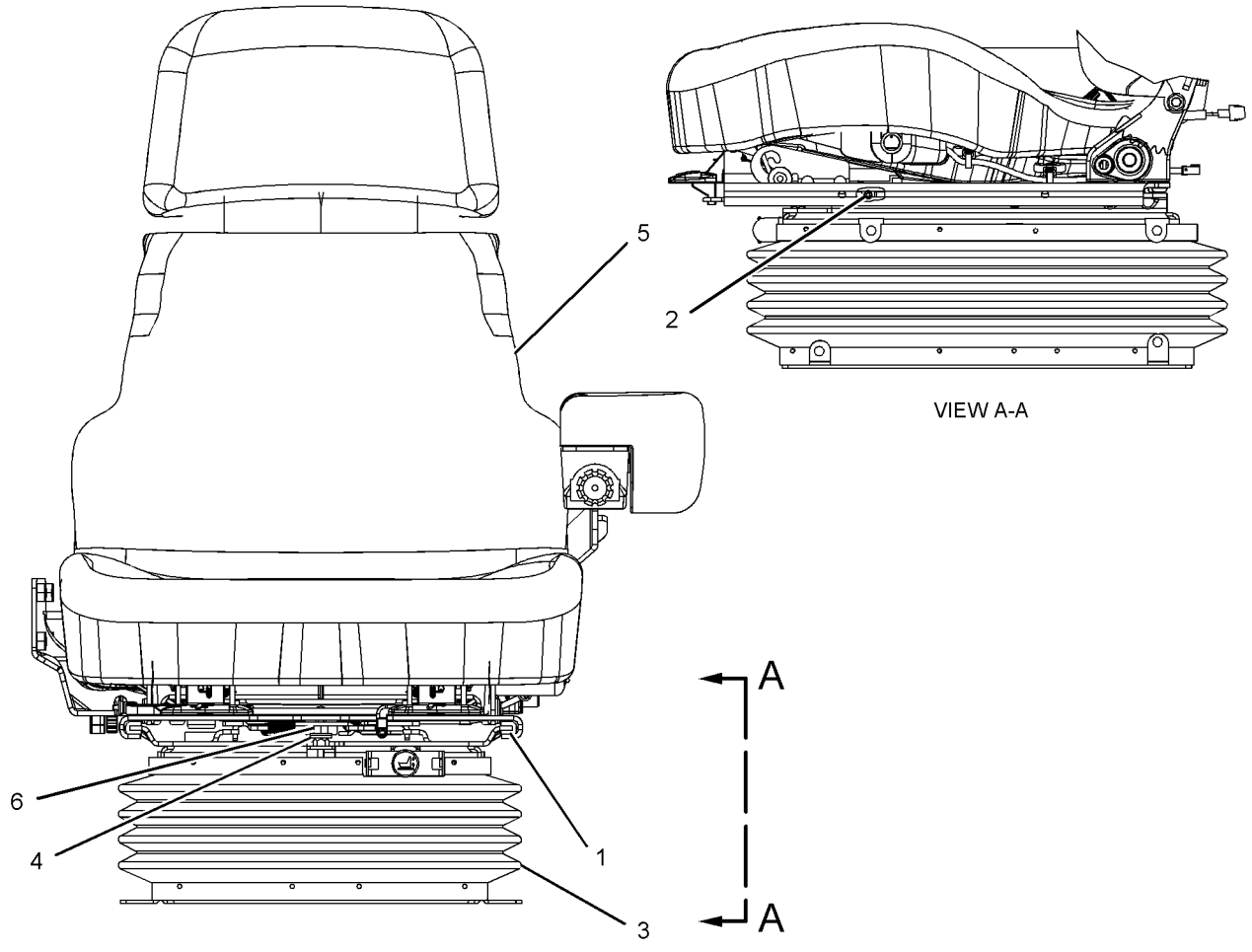

GRAPHIC #1 **<END>** g01144380

OPERATOR STATION

331-2880 SHROUD GP-CAB

S/N: RYF1-UP

PART OF 237-2570 OPERATOR AR-ENCLOSED ROPS

SMCS-7301 **i03537279**

NOTE	REF NO	GRAPHIC REF	PART NUMBER	QTY	PART NAME 1 2 3 4 5 6 (PRODUCT LEVEL)	SEE PAGE
M	1	1	**9X-2045**	10	SCREW-TRUSS HEAD (M6X1X20-MM)	
	2	1	**216-4531**	1	SHROUD	

M-METRIC PART

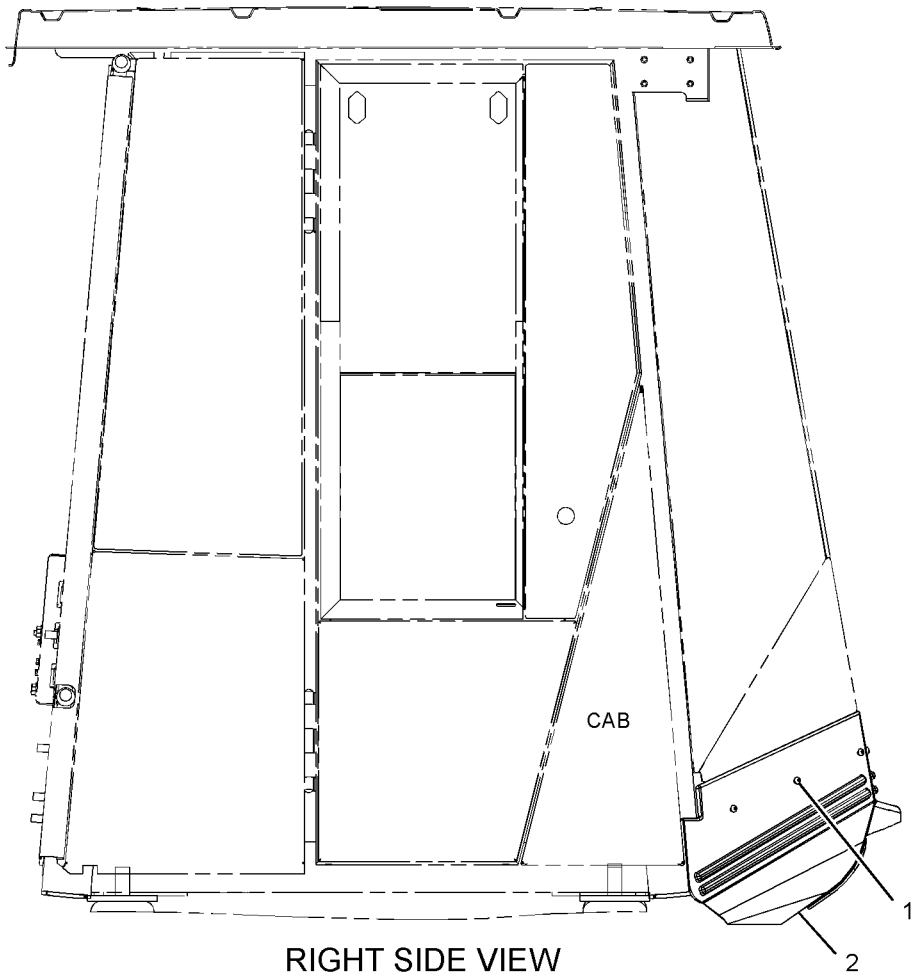

RIGHT SIDE VIEW

GRAPHIC #1 **<END>** g01922574

OPERATOR STATION

243-1090 SUPPORT GP-HYDRAULIC CONTROL

S/N: RYF1-UP

PART OF 237-2572 CAB AR-ENCLOSED ROPS

SMCS-5258 **i02207789**

NOTE	REF NO	GRAPHIC REF	PART NUMBER	QTY	PART NAME 1 2 3 4 5 6 (PRODUCT LEVEL)	SEE PAGE
	1	3	**4E-6523**	1	SUPPORT-SLIDE	
	2	2	**4E-8722**	2	NUT	
	3	3	**4E-9173**	2	SHAFT-CONTROL	
	4	3	**4E-9174**	2	BEARING	
	5	3	**7V-0445**	1	SPRING	
	6	3	**7X-3310**	1	KNOB-BALL	
	7	2	**8Y-5746**	1	ASHTRAY	
	8	2	**8Y-6333**	1	GASKET (ASHTRAY)	
	9	3	**9U-0952**	1	PIN	
	10	3	**9U-0953**	1	GUIDE	
	11	3	**9U-0954**	1	STUD	
	12	3	**9U-0955**	1	PIN	
	13	3	**9U-0958**	1	SLIDER	
	14	3	**9U-3925**	4	RING-RETAINING	
	15	3	**9U-3926**	2	STOP	
	16	2	**9U-3927**	1	BEARING	
B	17	2	**137-6841**	2	SHIM (0.2-MM THK)	
	18	3	**174-4301**	1	LEVER AS	
	19	1	**198-8769**	1	CONSOLE AS	
	20	2	**200-0728**	1	BRACKET	
	21	2	**200-0729**	1	BRACKET	
	22	3	**203-0328**	1	SPACER (16X19X9-MM THK)	
	23	1	**203-9991**	3	KNOB AS	
	24	1	**205-8212**	1	CUSHION AS	
	25	1	**210-6783**	1	BRACKET AS	
M		1	**6V-9632**	2	NUT-WELD (M6X1-THD)	
	26	1	**248-2079**	1	COVER	
	27	3	**253-0575**	1	BRACKET AS	
M		3	**6V-9632**	6	NUT-WELD (M6X1-THD)	
		3	**7T-1099**	3	LINK	
M		3	**8T-3490**	1	NUT-WELD (M10X1.5-THD)	
	28	1	**254-9146**	1	CUSHION AS	
M		1	**6V-9632**	2	NUT-WELD (M6X1-THD)	
	29	1	**254-9147**	1	CUSHION AS	
M		1	**6V-9632**	4	NUT-WELD (M6X1-THD)	
M	30	3	**099-3649**	4	BOLT (M8X1.25X40-MM)	
	31	3	**3K-4897**	1	PIN-SPRING	
M	32	3	**5C-7261**	4	NUT (M8X1.25-THD)	
M	33	3	**6V-9327**	4	SETSCREW-SOCKET	
M	34	3	**8T-4136**	4	BOLT (M10X1.5X25-MM)	
M	35	2	**8T-4138**	11	BOLT (M6X1X20-MM)	
	36	1,2	**8T-4205**	11	WASHER-HARD (7.2X14.5X2-MM THK)	
	37	2,3	**8T-4224**	9	WASHER-HARD (8.8X16X2-MM THK)	
	38	3	**9X-2027**	1	WASHER (11X18X2-MM THK)	
	39	1,2,3	**9X-2038**	9	WASHER (7X19X2-MM THK)	
M	40	1,2,3	**9X-2044**	9	SCREW-TRUSS HEAD (M6X1X16-MM)	
M	41	2	**9X-2616**	2	SCREW-SOCKET (M8X1.25X16-MM)	

B-USE AS REQUIRED
M-METRIC PART

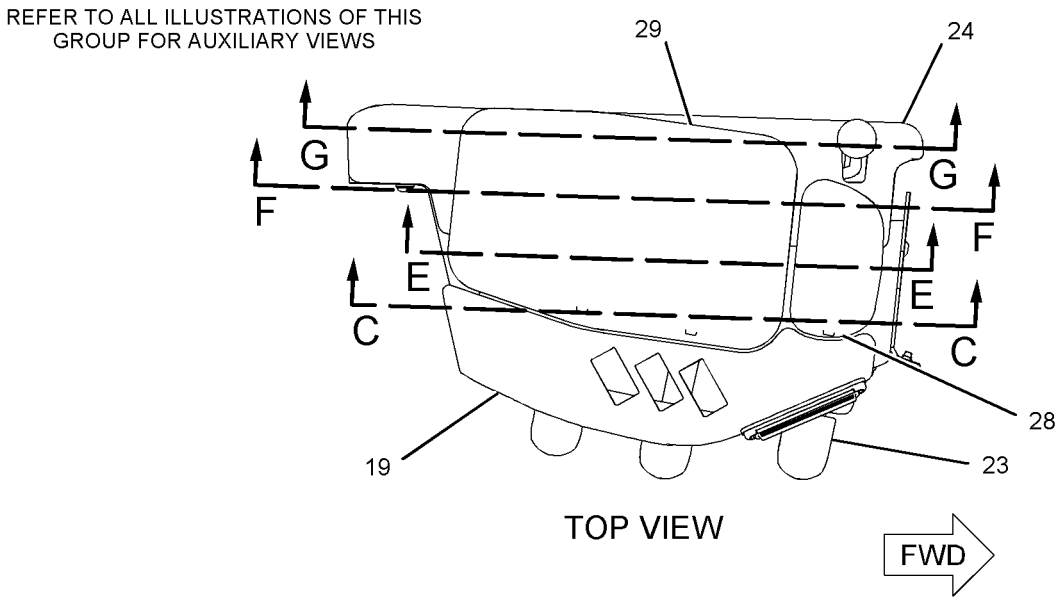

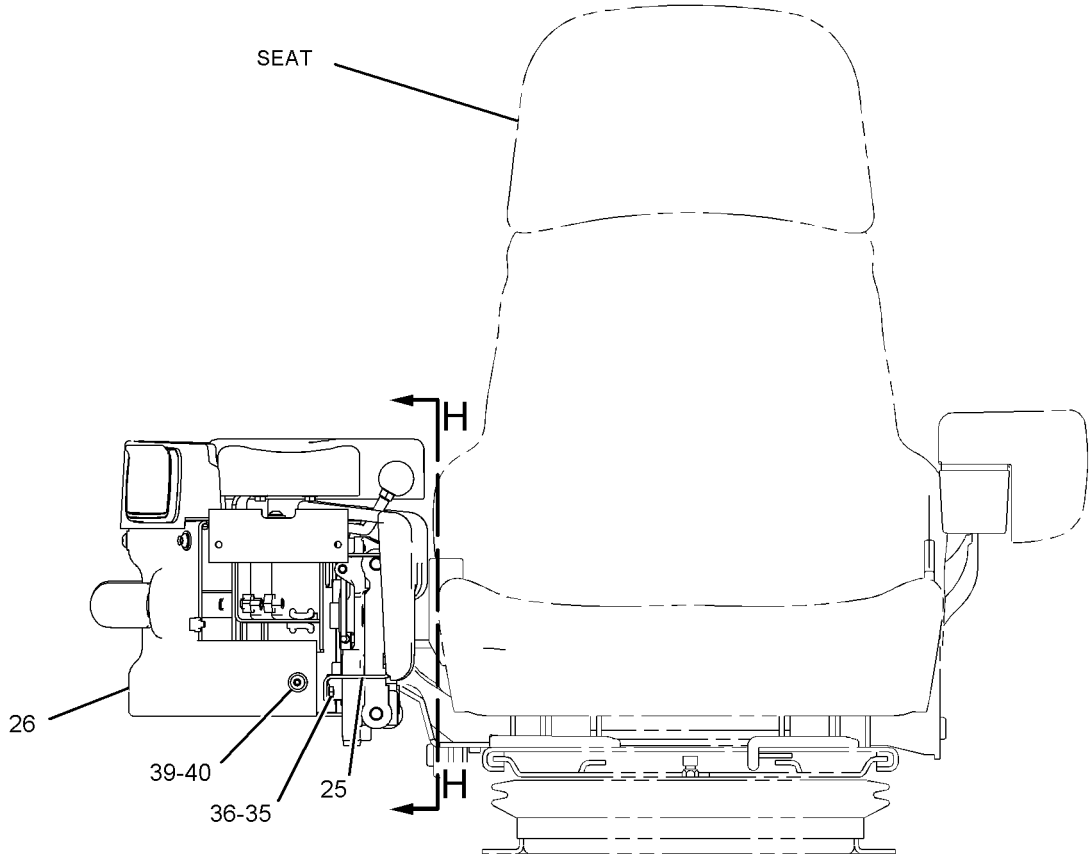

RIGHT SIDE VIEW

GRAPHIC #1 g01122400

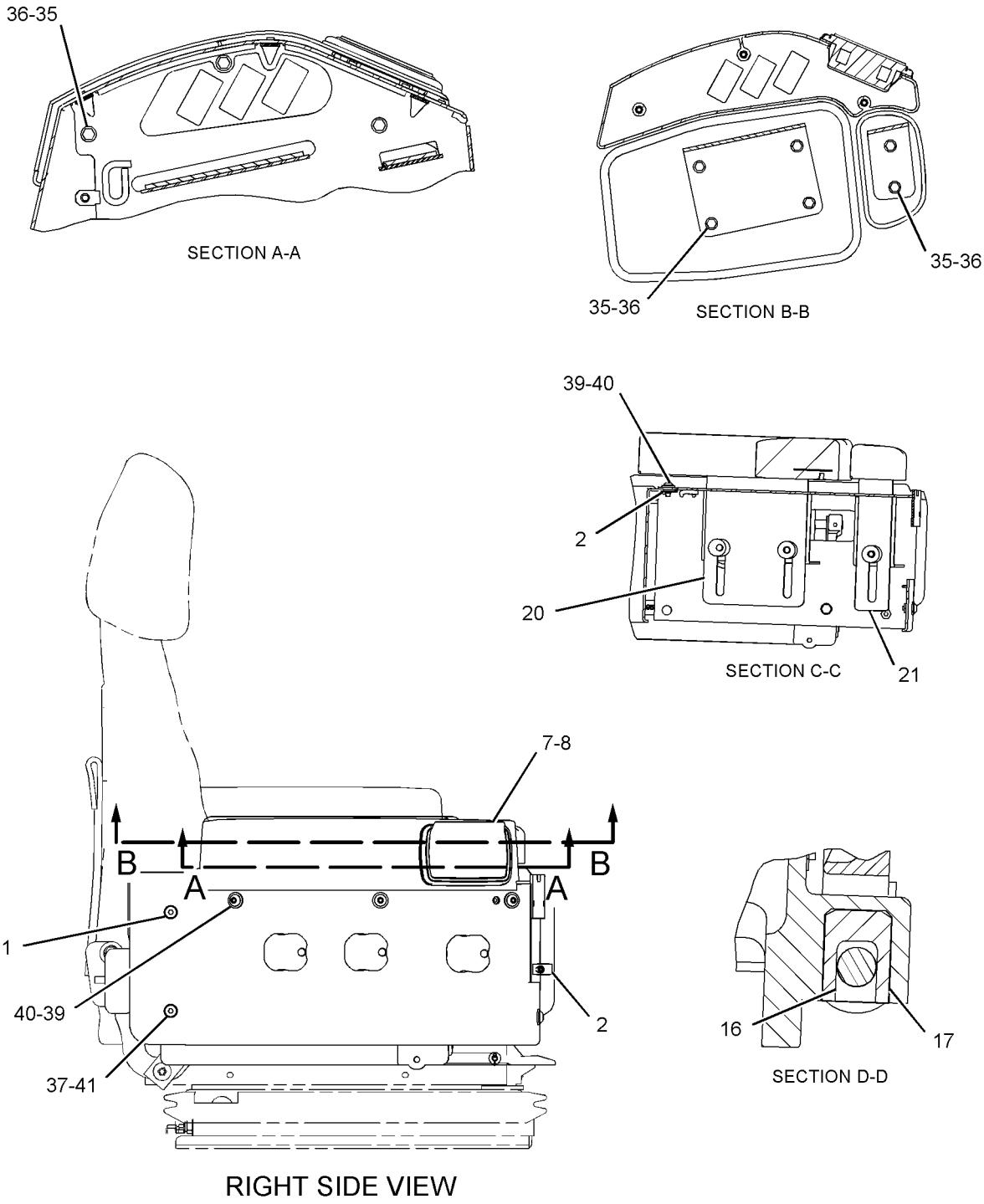

GRAPHIC #2

g01116949

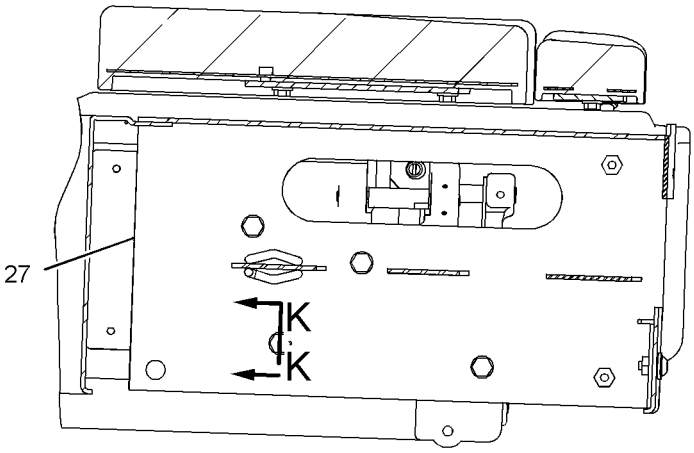

SECTION E-E

REFER TO ALL ILLUSTRATIONS OF THIS GROUP FOR AUXILIARY VIEWS

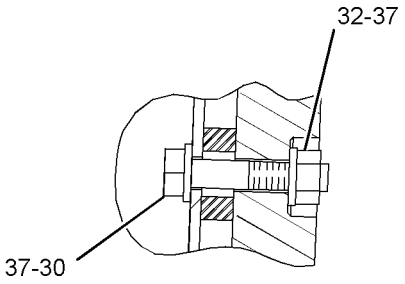

SECTION K-K

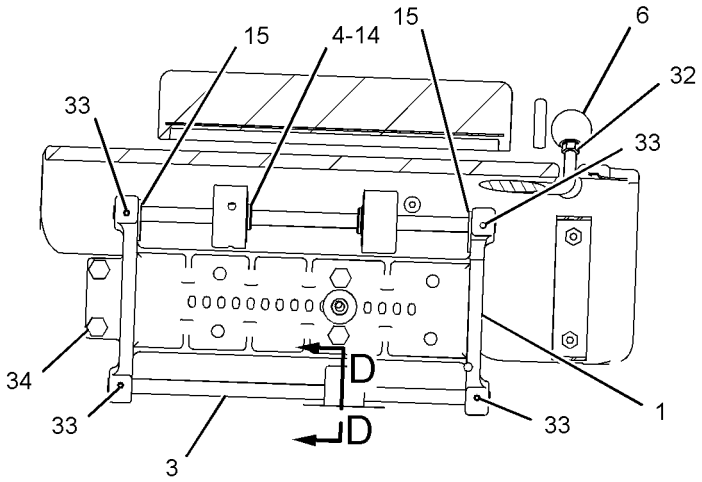

SECTION G-G

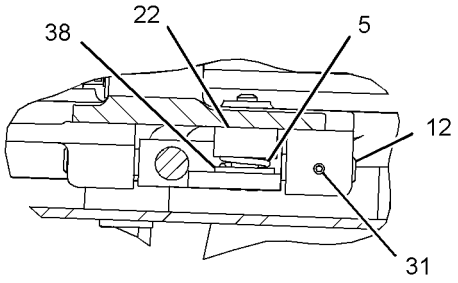

SECTION J-J

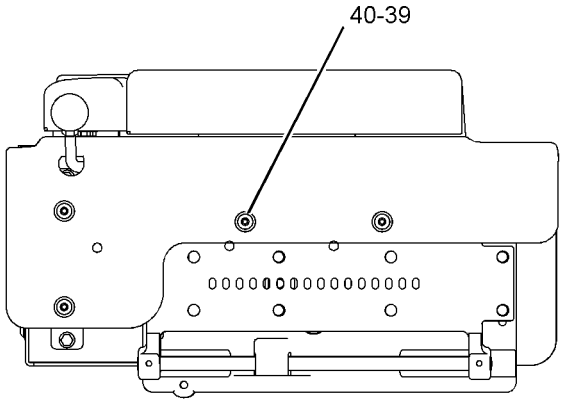

VIEW H-H

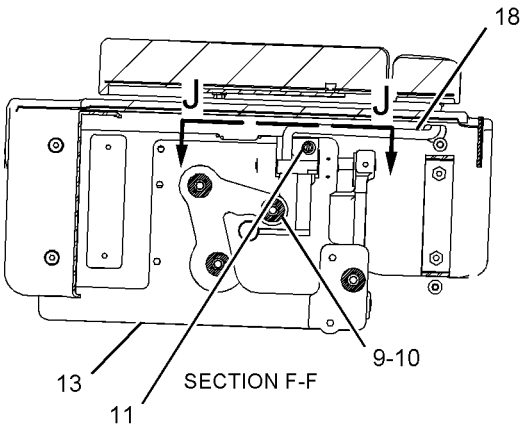

SECTION F-F

GRAPHIC #3 **<END>** g01116950

OPERATOR STATION

232-1396 SUPPRESSION GP-CAB SOUND—FRONT

S/N: RYF1-UP

PART OF 237-2572 CAB AR-ENCLOSED ROPS

SMCS-7329 **i02373040**

NOTE	REF NO	GRAPHIC REF	PART NUMBER	QTY	PART NAME 1 2 3 4 5 6 (PRODUCT LEVEL)	SEE PAGE
	1	1	**232-1684**	1	INSULATION	
	2	1	**232-1685**	1	INSULATION	
	3	1	**232-1686**	1	INSULATION	
	4	1	**232-1687**	1	INSULATION	
	5	1	**251-5872**	1	INSULATION	
	6	1	**232-1712**	1	INSULATION	
	7	1	**233-0915**	1	INSULATION	
	8	1	**233-0916**	1	INSULATION	

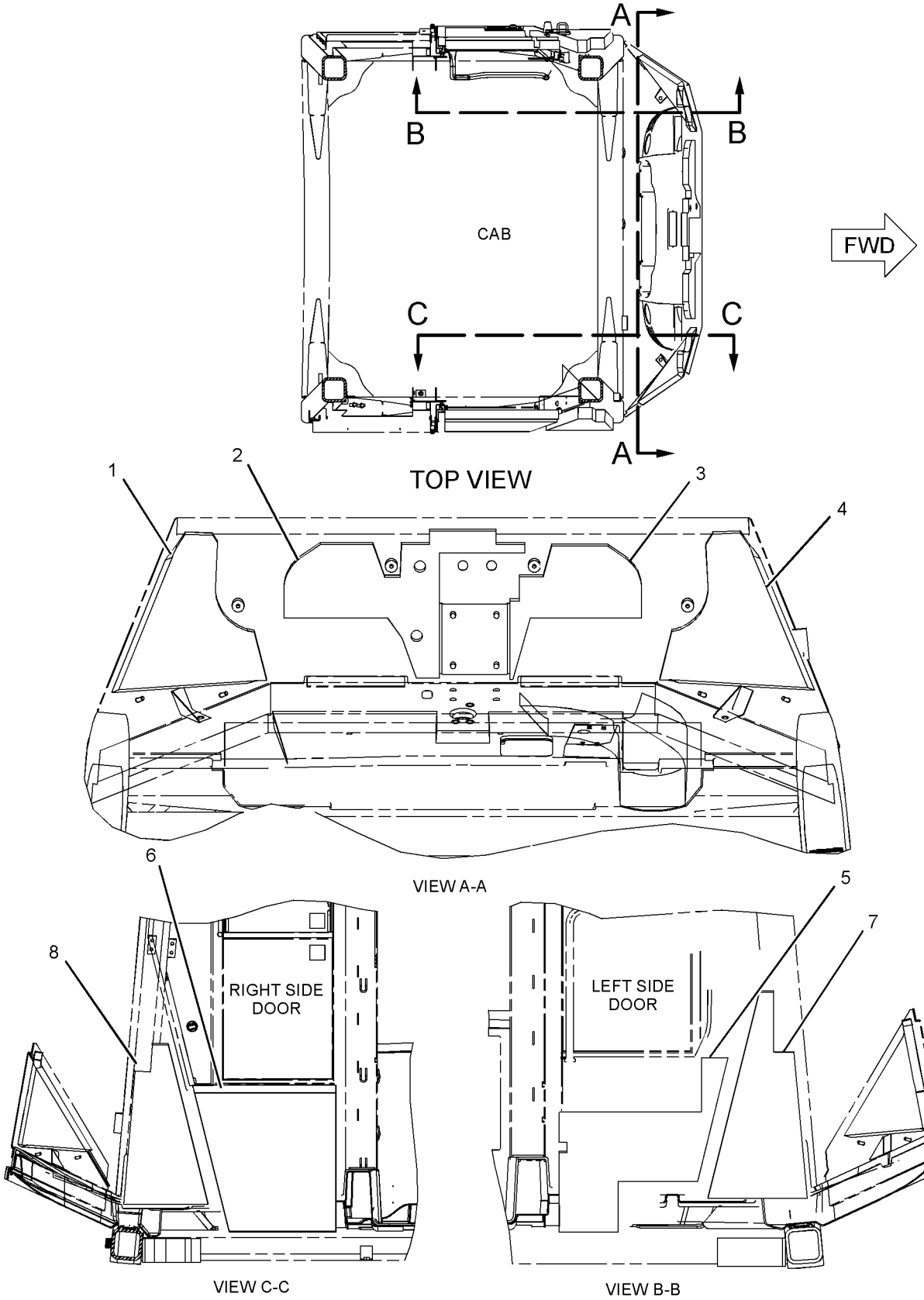

GRAPHIC #1 **<END>** g01195904

OPERATOR STATION

234-9553 SUPPRESSION GP-CAB SOUND–REAR

S/N: RYF1-UP

PART OF 237-2572 CAB AR-ENCLOSED ROPS

SMCS-7329 **i02219193**

NOTE	REF NO	GRAPHIC REF	PART NUMBER	QTY	PART NAME 1 2 3 4 5 6 (PRODUCT LEVEL)	SEE PAGE
	1	1	**228-4428**	1	INSULATION	
	2	1	**234-9571**	1	INSULATION	
	3	1	**234-9572**	2	INSULATION	

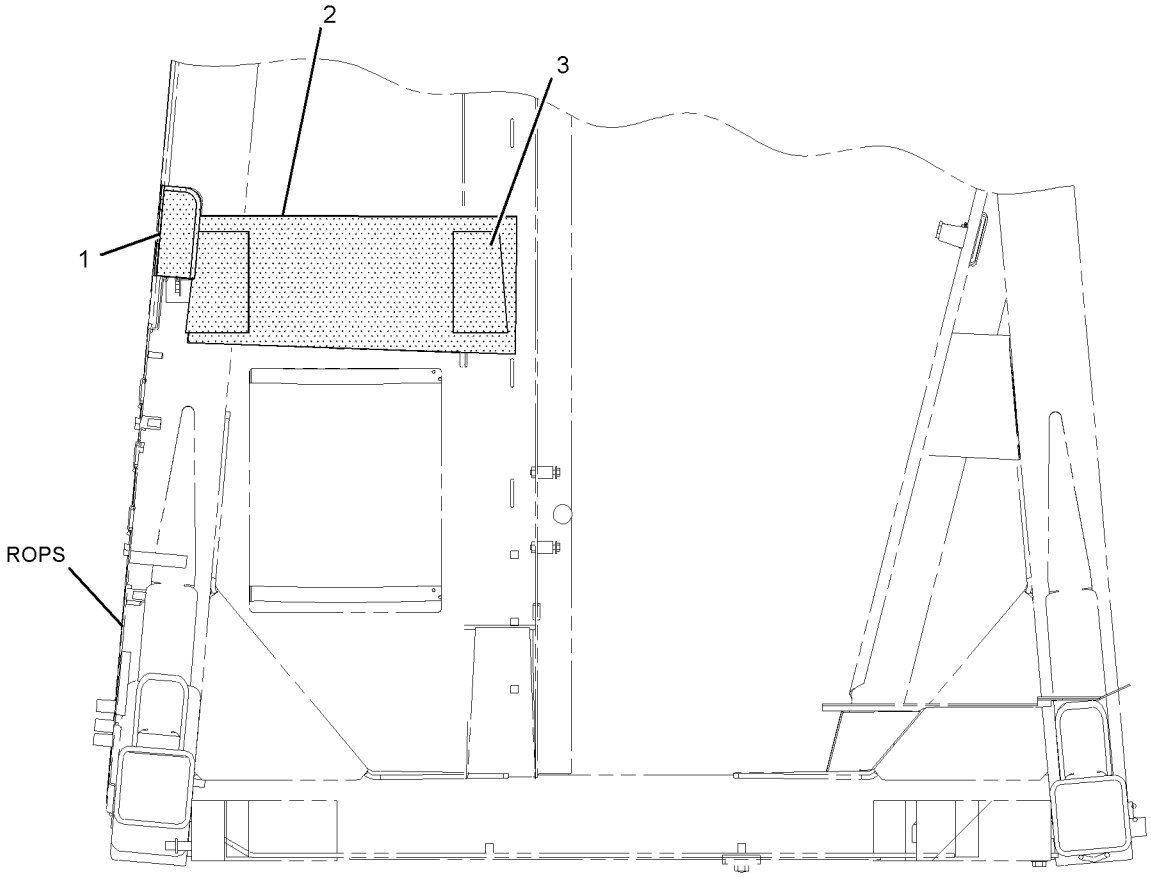

RIGHT SIDE VIEW

GRAPHIC #1 **<END>** g01066019

OPERATOR STATION

191-2933 SUSPENSION GP-SEAT—AIR

S/N: RYF1-UP
PART OF 219-8094, 237-2069 SEAT GP-SUSPENSION
ALSO AN ATTACHMENT

SMCS-7324 **i03176251**

NOTE	REF NO	GRAPHIC REF	PART NUMBER	QTY	PART NAME 1 2 3 4 5 6 (PRODUCT LEVEL)	SEE PAGE
	1	1	**3P-9900**	5	WASHER (10.5X30X3-MM THK)	
	2	1	**4B-4278**	2	WASHER (10.2X20.5X1.6-MM THK)	
	3	1	**4V-8577**	12	BEARING	
	4	1	**8L-8413**	1	STRAP-CABLE	
	5	1	**145-0326**	1	FILM-INSTRUCTION (SEAT ADJUSTMENT)	
	6	1	**164-1234**	1	PLATE	
	7	1	**101-0003**	33	FASTENER	
	8	1	**169-7380**	1	BOLT-SOCKET HEAD (3/8-16X0.375-IN)	
	9	1	**186-5107**	2	SCREW-DRIVE (NO 8X1.25-IN)	
	10	1	**192-7752**	4	SHAFT AS	
	11	1	**192-7755**	1	HOUSING AS (LOWER)	
	12	1	**192-7760**	1	SHAFT	
	13	1	**192-7767**	1	SCISSORS AS	
	14	1	**192-7783**	1	TOGGLE AS (WIDE)	
	15	1	**192-7787**	1	TOGGLE AS (NARROW)	
	16	1	**192-7790**	1	HOUSING AS (UPPER)	
	17	1	**192-7795**	1	BOOT	
	18	1	**192-7805**	1	HARNESS AS-VALVE (SEAT AIR COMPRESSOR)	
	19	1	**192-7810**	1	SPRING AS-AIR	
		1	**5P-4423**	1	ELBOW	
		1	**163-1135**	1	SPRING	
J	20	1	**192-7812**	1	BOLT-SHOULDER (3/8-16X2-IN)	
	21	1	**192-7820**	3	BUMPER	
	22	1	**192-7822**	1	SHAFT	
	23	1	**237-3943**	1	BRACKET	
Y	24	1	**237-3970**	1	AIR COMPRESSOR GP-SEAT	519
	25	1	**108-4311**	1	SCREW-MACHINE (3/8-16X0.75-IN)	
J	26	1	**2K-4973**	8	LOCKNUT (3/8-16-THD)	
J	27	1	**3J-4818**	1	LOCKWASHER	
M	28	1	**5C-2890**	3	NUT (M6X1-THD)	
	29	1	**8T-9371**	1	BOLT (3/8-16X0.5-IN)	
E	30	1	**211-5358**		CONDUIT-FLEXIBLE (36-CM)	
E	30A	1	**211-5358**		CONDUIT-FLEXIBLE (27-CM)	
D	31	1	**5P-6010**		TUBE (0.4-M)	
D	31A	1	**5P-6010**		TUBE (0.3-M)	
					AVAILABLE REPAIR KIT(S):	
			192-7799	1	KIT-AIR VALVE (SUSPENSION SEAT)	
					(INCLUDES KNOB AS, NUT, VALVE, LOCKWASHER & FITTING)	
J			**192-7848**	1	KIT-SHOCK ABSORBER (SUSPENSION SEAT)	
					(ALSO INCLUDES SHOCK ABSORBER, BEARINGS, WASHERS & BOLT)	
			211-9294	1	KIT-TETHER (SUSPENSION SEAT)	
					(INCLUDES TETHERS)	

D-ORDER BY THE METER
E-ORDER BY THE CENTIMETER
J-KIT MARKED J SERVICES PARTS MARKED J
M-METRIC PART
Y-SEPARATE ILLUSTRATION

191-2933 SUSPENSION GP-SEAT *(contd.)* i03176251

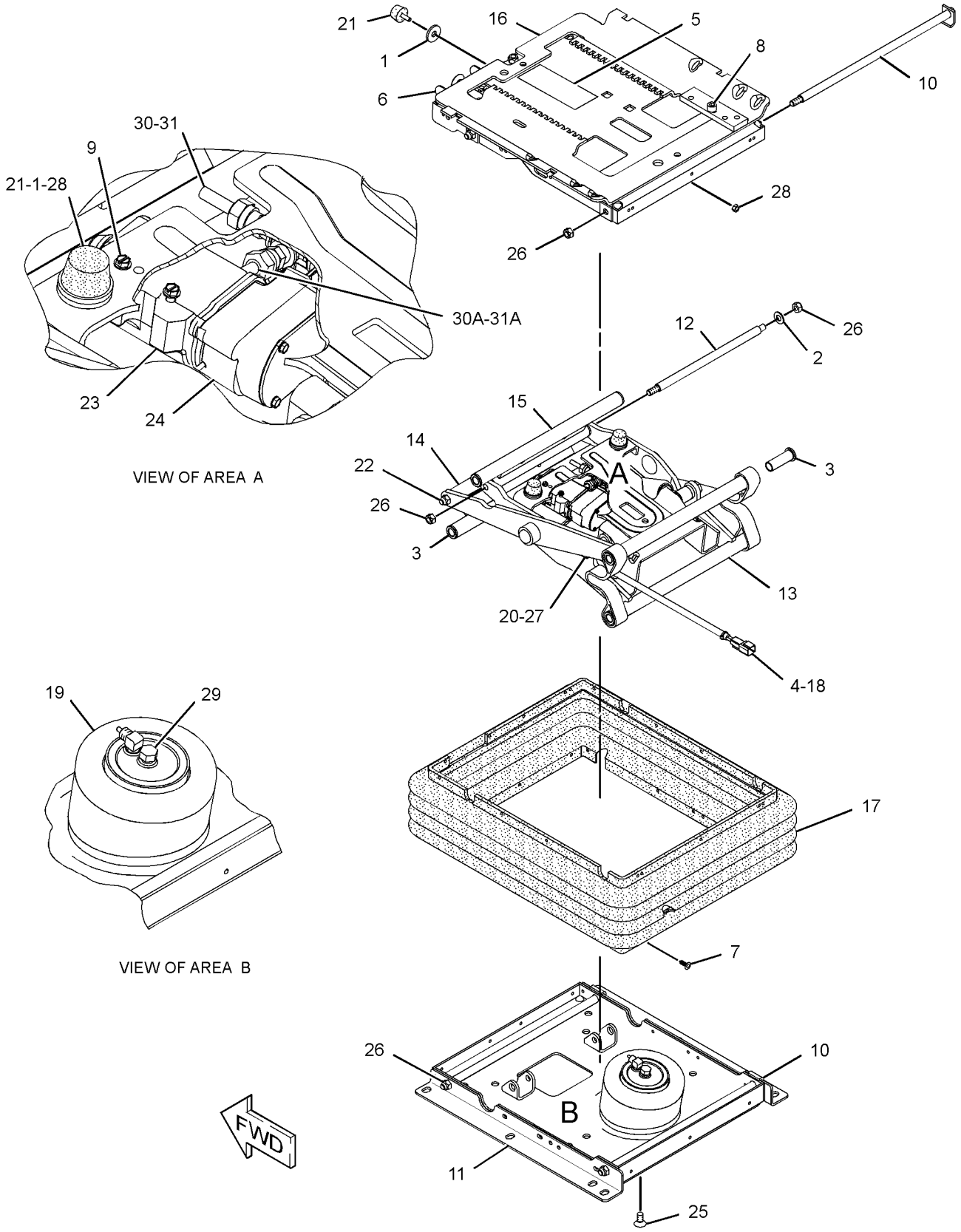

GRAPHIC #1 **<END>** g01598864

OPERATOR STATION

293-8834 TANK GP-WINDOW WASHER

S/N: RYF1-UP

PART OF 236-9039 WASHER GP-WINDOW

SMCS-7306 **i02869556**

NOTE	REF NO	GRAPHIC REF	PART NUMBER	QTY	PART NAME 1 2 3 4 5 6 (PRODUCT LEVEL)	SEE PAGE
	1	1	**293-8835**	2	PUMP AS-WASHER	
					(EACH INCLUDES)	
		1	**102-8802**	1	KIT-RECEPTACLE (2-PIN)	
					(INCLUDES RECEPTACLE AS & WEDGE)	
		1	**186-3735**	2	PIN-CONNECTOR (16-GA TO 18-GA)	

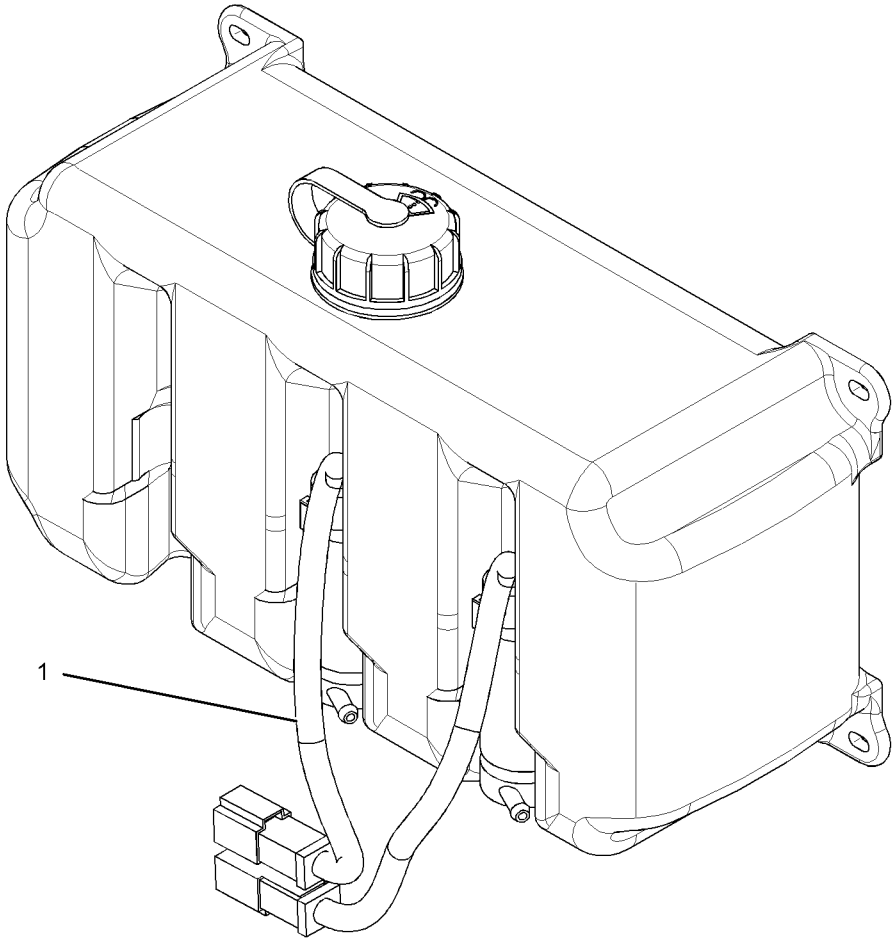

GRAPHIC #1 **<END>** g01346176

OPERATOR STATION

131-2633 VISOR GP-CAB

S/N: RYF1-UP

AN ATTACHMENT

SMCS-7301 **i03407342**

NOTE	REF NO	GRAPHIC REF	PART NUMBER	QTY	PART NAME 1 2 3 4 5 6 (PRODUCT LEVEL)	SEE PAGE
M	1	1	**111-4627**	2	SCREW-MACHINE (M6X1X30-MM)	
	2	1	**123-4371**	1	VISOR AS	

M-METRIC PART

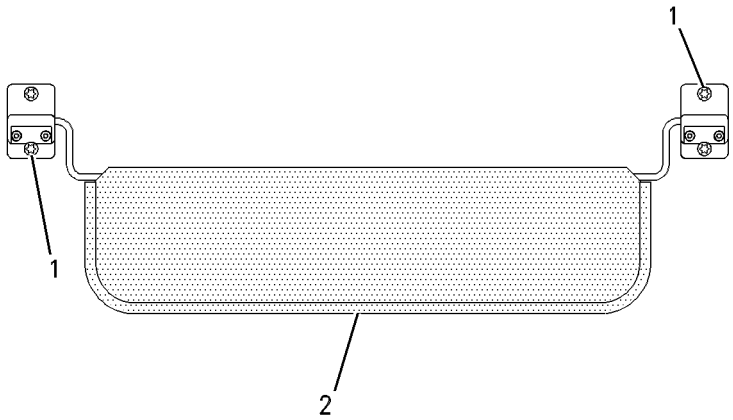

REAR VIEW

GRAPHIC #1 **<END>** g00501655

OPERATOR STATION

236-9039 WASHER GP-WINDOW

S/N: RYF1-UP

PART OF 236-9000 CHASSIS AR

SMCS-7306 **i02869545**

NOTE	REF NO	GRAPHIC REF	PART NUMBER	QTY	PART NAME 1 2 3 4 5 6 (PRODUCT LEVEL)	SEE PAGE
Y	1	1	**293-8834**	1	TANK GP-WINDOW WASHER	633
		1	**293-8835**	1	PUMP AS-WASHER	
		1	**102-8802**	1	KIT-RECEPTACLE (2-PIN)	
					(INCLUDES RECEPTACLE AS AND WEDGE)	
		1	**186-3735**	2	PIN-CONNECTOR (16-GA TO 18-GA)	
M	2	1	**5C-9553**	4	BOLT (M6X1X16-MM)	
	3	1	**9X-8256**	4	WASHER (6.6X12X2-MM THK)	

M-METRIC PART
Y-SEPARATE ILLUSTRATION

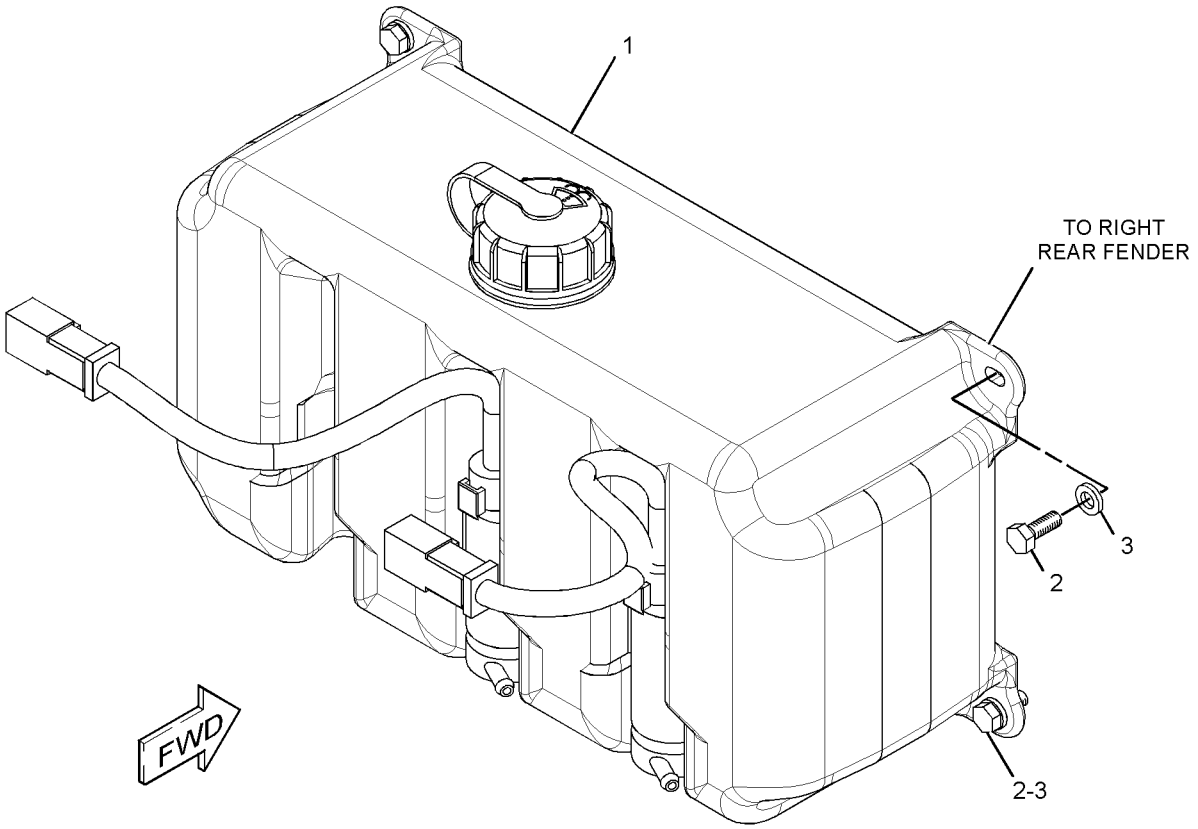

GRAPHIC #1 **<END>** g01351729

OPERATOR STATION

185-7522 WINDOW GP-DOOR–RH

S/N: RYF1-UP

PART OF 185-7534 DOOR GP-CAB

SMCS-7308, 7310 **i02586922**

NOTE	REF NO	GRAPHIC REF	PART NUMBER	QTY	PART NAME 1 2 3 4 5 6 (PRODUCT LEVEL)	SEE PAGE
	1	1	**8C-6738**	2	SCREW-PAN HEAD (6-20X1-IN)	
	2	1	**185-7524**	1	GLASS-SLIDING	
	3	1	**185-7525**	1	GLASS-FIXED	
	4	1	**185-7529**	1	FRAME AS-WINDOW (UPPER, RH)	
	5	1	**187-5127**	1	CATCH AS	
	6	1	**187-5128**	1	CATCH AS	
					(EACH CATCH AS INCLUDES)	
		1	**150-8015**	1	GASKET	
	7	1	**211-9856**	1	STRIP AS	
	8	1	**286-9380**	1	KIT-SEAL	
					(KIT INCLUDES GLAZING, SEALS, AND STOP)	

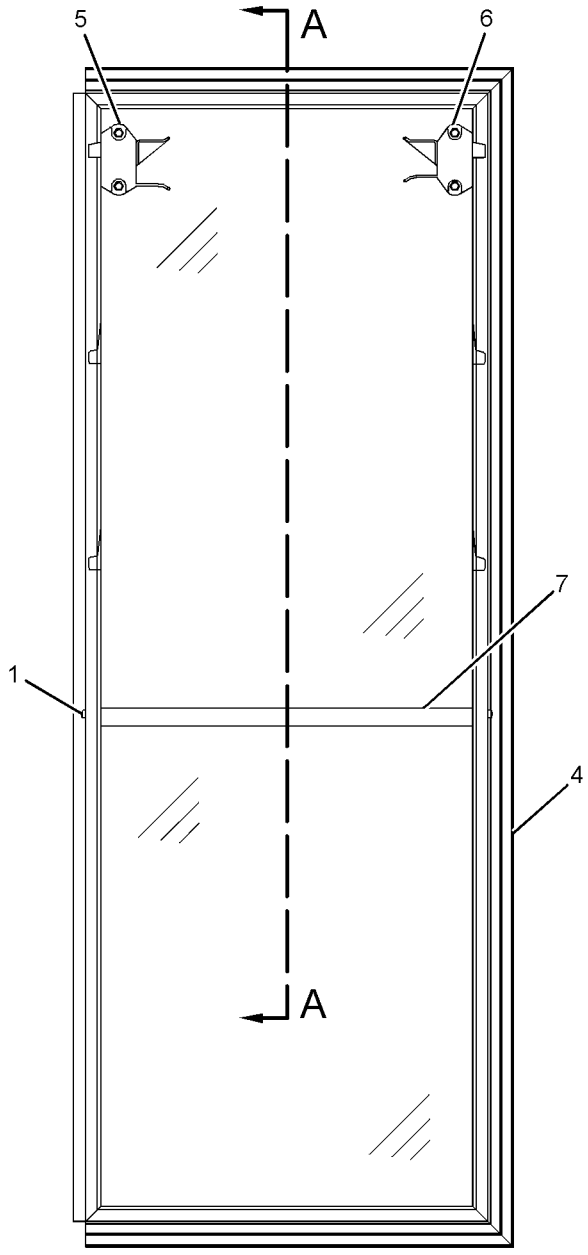

RIGHT SIDE VIEW

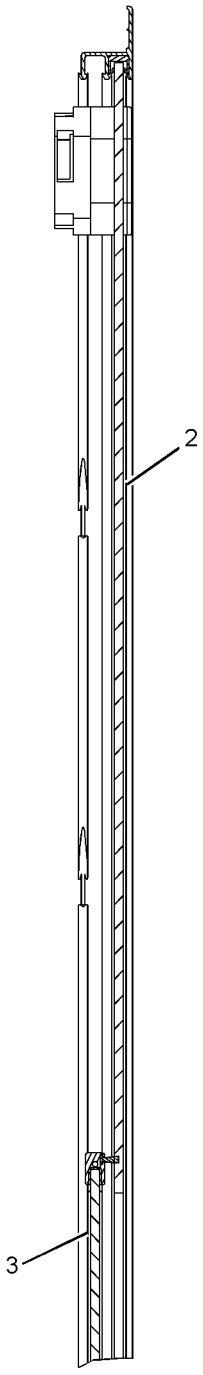

SECTION A-A

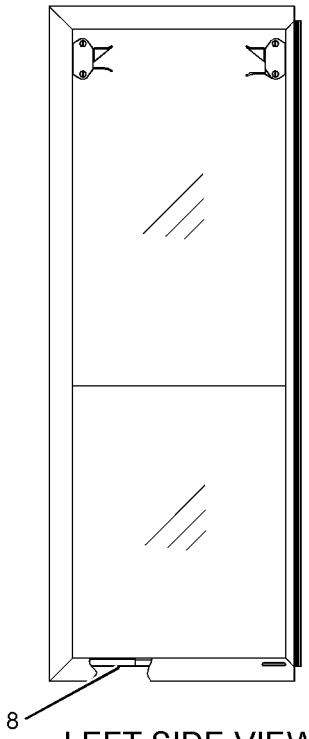

LEFT SIDE VIEW

GRAPHIC #1 **<END>** g01255790

OPERATOR STATION

185-7523 WINDOW GP-DOOR–LH

S/N: RYF1-UP

PART OF 247-1852 DOOR GP-CAB

SMCS-7308, 7310 **i03605820**

NOTE	REF NO	GRAPHIC REF	PART NUMBER	QTY	PART NAME 1 2 3 4 5 6 (PRODUCT LEVEL)	SEE PAGE
	1	1	**8C-6738**	2	SCREW-PAN HEAD (6-20X1-IN)	
	2	1	**185-7524**	1	GLASS-SLIDING	
	3	1	**185-7525**	1	GLASS-FIXED	
	4	1	**185-7531**	1	FRAME AS-WINDOW (UPPER LH)	
	5	1	**187-5127**	1	CATCH AS	
	6	1	**187-5128**	1	CATCH AS	
					(EACH CATCH AS INCLUDES)	
		1	**150-8015**	1	GASKET	
	7	1	**211-9856**	1	STRIP AS	
	8	1	**286-9380**	1	KIT-SEAL	
					(KIT INCLUDES GLAZING, SEALS, AND STOP)	

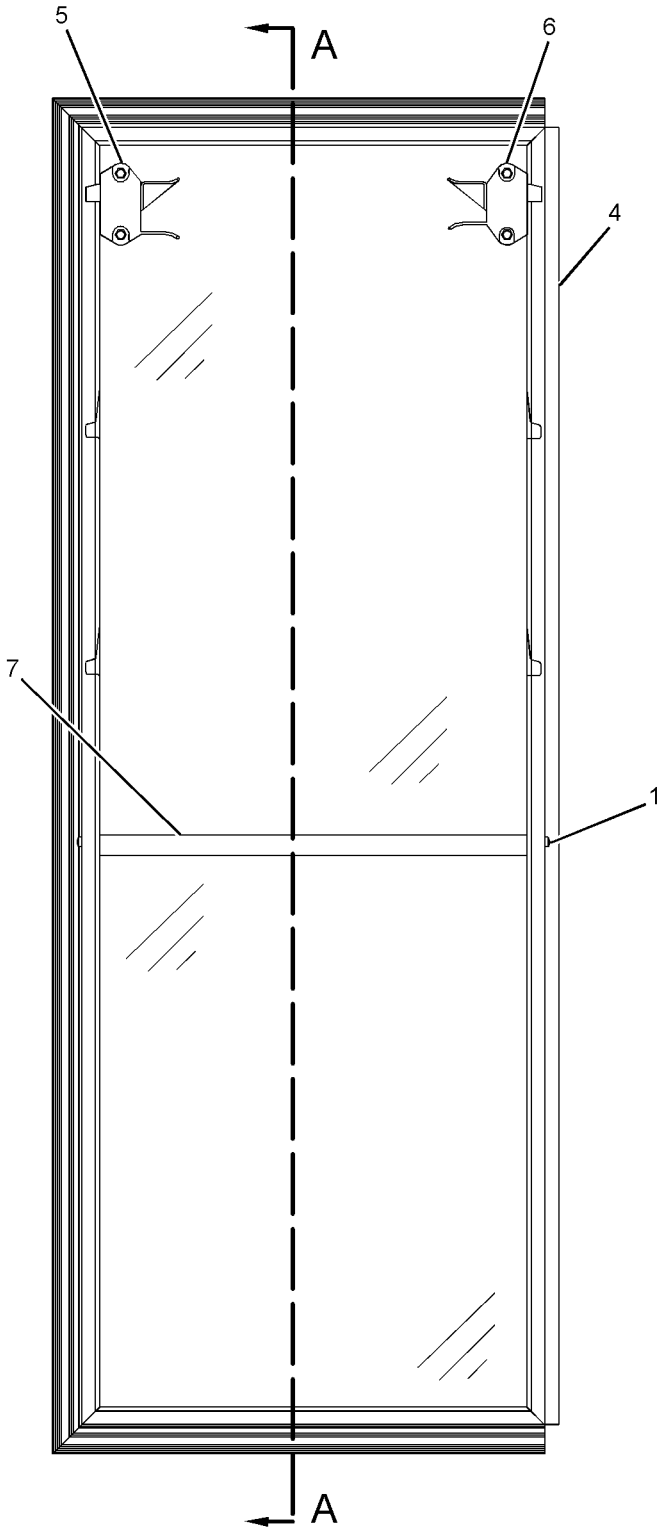

LEFT SIDE VIEW

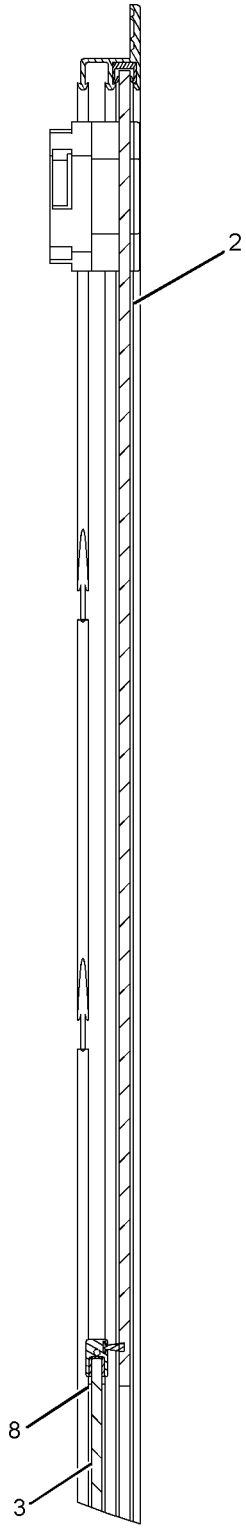

SECTION A-A

GRAPHIC #1 **<END>** g01255915

OPERATOR STATION

257-2016 WIPER GP-WINDOW

S/N: RYF1-UP

PART OF 237-2572 CAB AR-ENCLOSED ROPS

SMCS-7305 **i03022664**

NOTE	REF NO	GRAPHIC REF	PART NUMBER	QTY	PART NAME 1 2 3 4 5 6 (PRODUCT LEVEL)	SEE PAGE
	1	1	**3S-2093**	5	STRAP-CABLE	
	2	2	**3V-3263**	1	CONNECTOR (HOSE)	
	3	2	**6V-6210**	1	GASKET-SHAFT	
	4	1	**6V-7419**	2	BLADE AS-WIPER (700-MM)	
	5	2	**7K-1181**	1	STRAP-CABLE	
	6	2	**8T-5400**	1	CONNECTOR AS	
	7	1	**9C-9458**	1	BRACKET AS	
M		1	**8T-3490**	1	NUT-WELD (M10X1.5-THD)	
	8	2	**124-3637**	1	PLATE-WIPER	
Y	9	2	**155-5789**	1	MOTOR GP-WINDOW WIPER (REAR)	590
Y	10	1	**189-8622**	1	MOTOR GP-WINDOW WIPER (FRONT)	591
	11	2	**211-1167**	1	GROMMET	
Y	12	1	**214-7634**	1	ARM GP-WINDOW WIPER (REAR)	520
Y	13	1	**214-7635**	1	ARM GP-WINDOW WIPER (FRONT)	521
	14	1	**236-6253**	1	GROMMET	
	15	2	**257-2197**	1	PLUG	
	16	2	**2V-3216**	1	CLIP	
M	17	2	**5C-9553**	1	BOLT (M6X1X16-MM)	
	18	1,2	**6V-3265**	6	CLIP	
	19	1,2	**8T-4121**	4	WASHER-HARD (11X21X2.5-MM THK)	
M	20	1	**8T-4136**	1	BOLT (M10X1.5X25-MM)	
M	21	1,2	**8T-4137**	2	BOLT (M10X1.5X20-MM)	
M	22	2	**8T-4138**	1	BOLT (M6X1X20-MM)	
	23	2	**8T-4205**	2	WASHER-HARD (7.2X14.5X2-MM THK)	
E	24	2	**144-0195**		HOSE (334-CM)	
E	24A	2	**144-0195**		HOSE (215.7-CM)	

E-ORDER BY THE CENTIMETER
M-METRIC PART
Y-SEPARATE ILLUSTRATION

REFER TO ALL ILLUSTRATIONS OF
THIS GROUP FOR AUXILIARY VIEWS

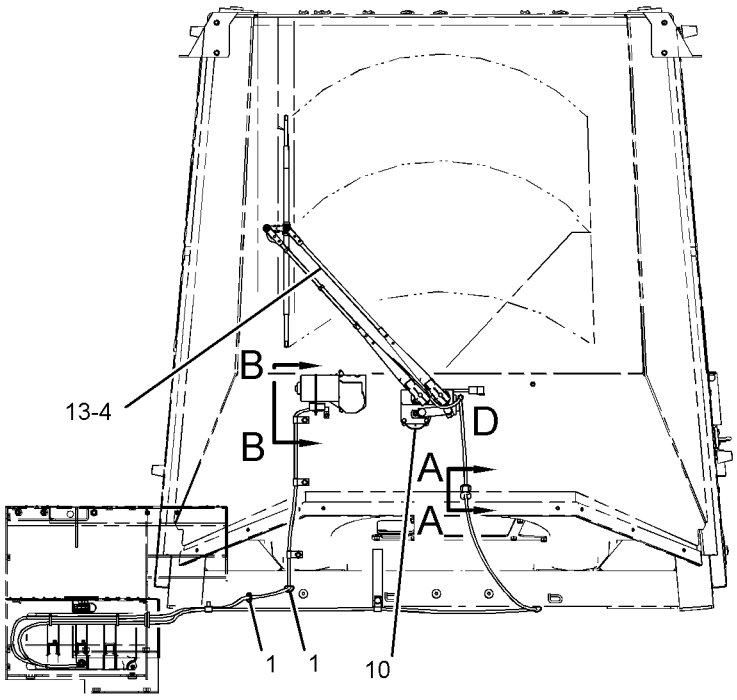

FRONT VIEW

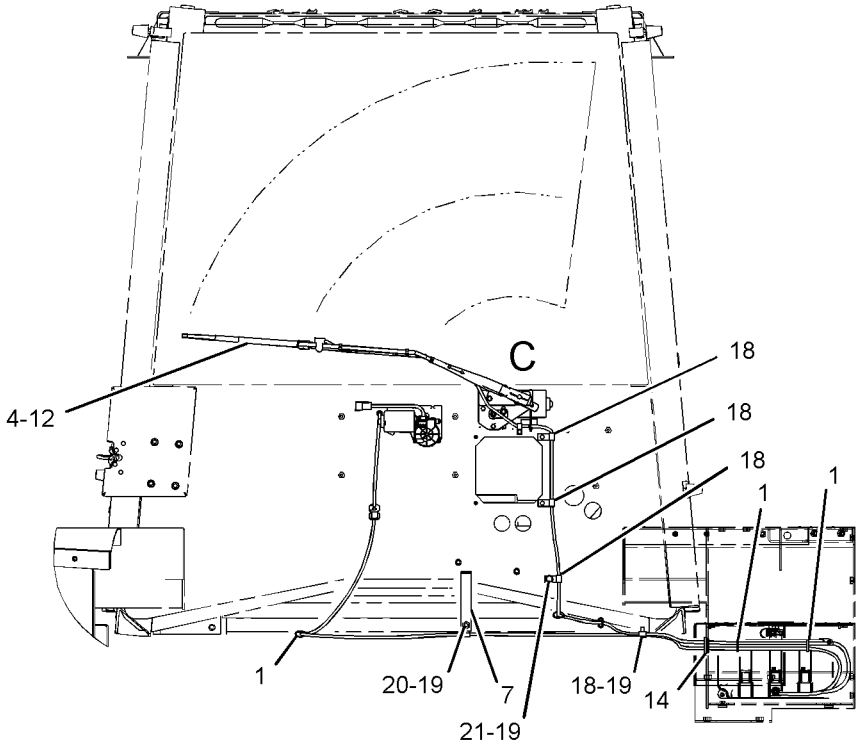

REAR VIEW

GRAPHIC #1

g01501782

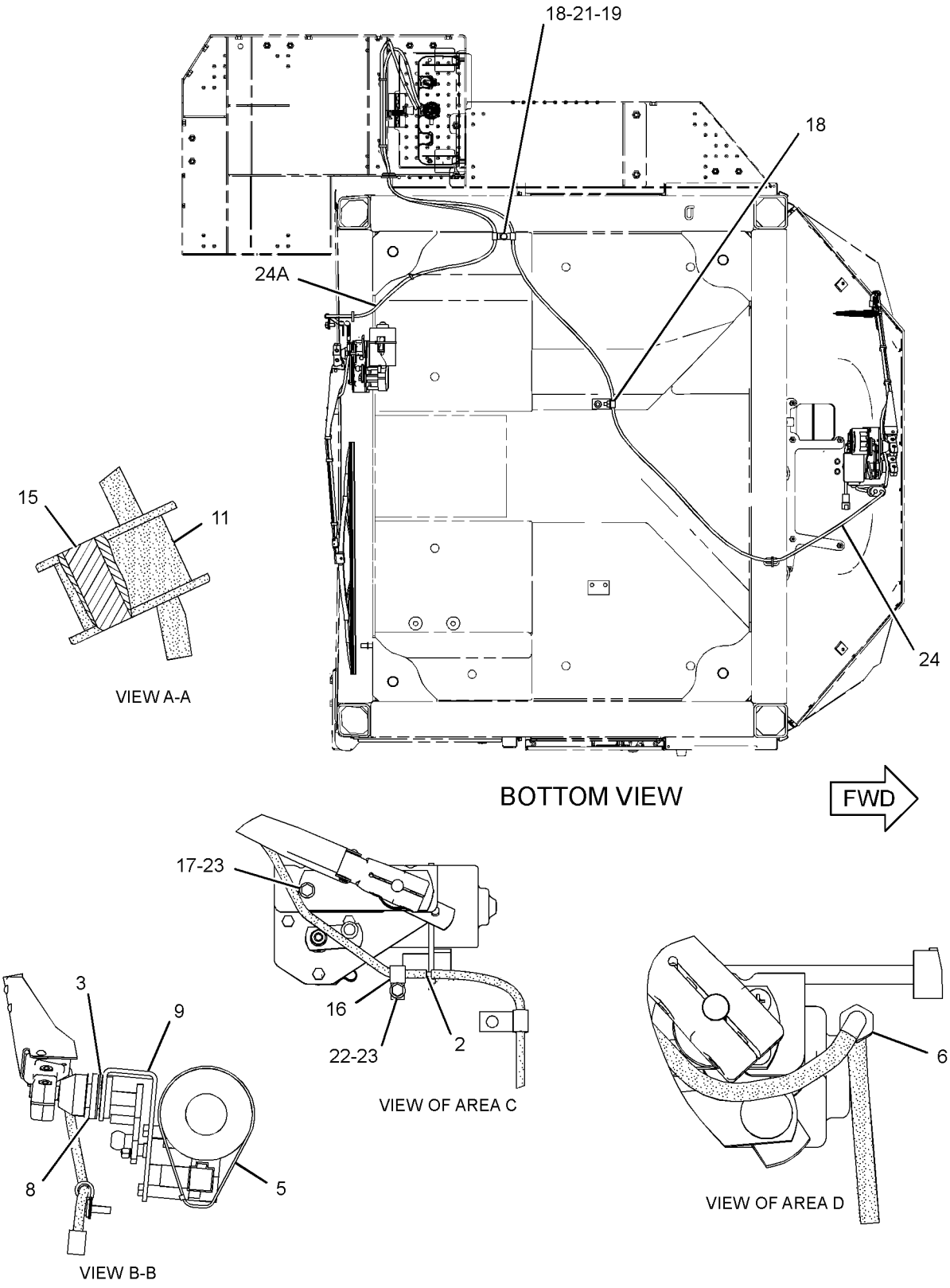

GRAPHIC #2 **<END>** g01501783

WORK TOOLS

229-6942 ADAPTER GP-TIP

S/N: RYF1-UP
K-90
AN ATTACHMENT

SMCS-6803 **i03015902**

NOTE	REF NO	GRAPHIC REF	PART NUMBER	QTY	PART NAME 1 2 3 4 5 6 (PRODUCT LEVEL)	SEE PAGE
	1	1	**5P-8362**	12	NUT (1-1/4-7-THD)	
	2	1	**222-1097**	6	ADAPTER-TIP (K-90, 2-STRAP, CENTER)	
	3	1	**229-7098**	1	ADAPTER-TIP (K-90, LONG, RH)	
	4	1	**229-7099**	1	ADAPTER-TIP (K-90, LONG, LH)	
	5	1	**3K-9770**	4	NUT-FULL (1-1/4-7-THD)	
	6	1	**5P-8361**	12	BOLT-PLOW (1-1/4-7X4.92-IN)	
	7	1	**5P-8823**	2	BOLT-PLOW (1-1/4-7X4.13-IN)	
	8	1	**6V-6535**	2	BOLT-PLOW (1-1/4-7X3.74-IN)	

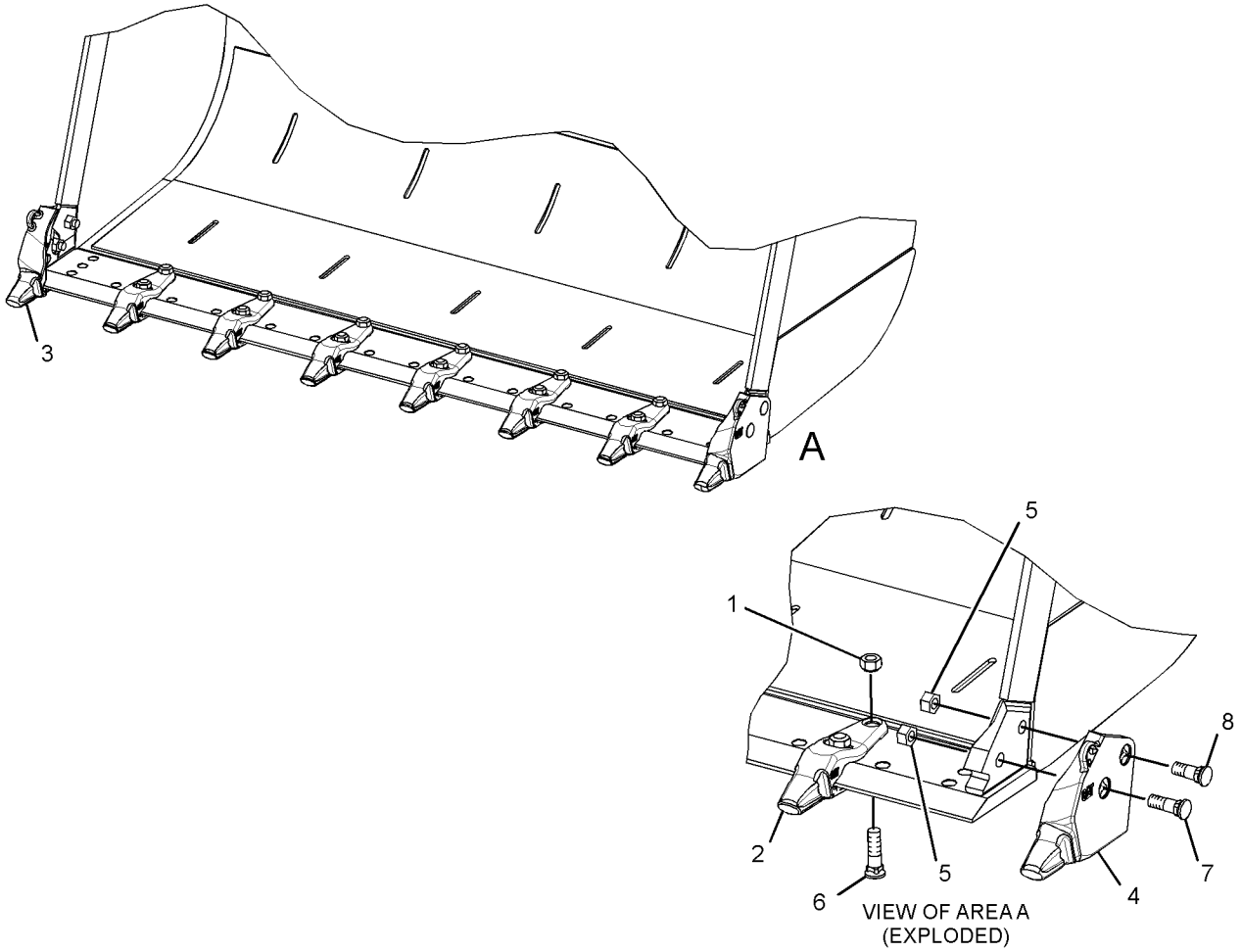

GRAPHIC #1 **<END>** g01387886

WORK TOOLS

133-1676 BUCKET AS-GENERAL PURPOSE

S/N: RYF1-UP
3.8 CU M (5.0 CU YD)
PART OF 133-1667 BUCKET GP-GENERAL PURPOSE
AN ATTACHMENT

SMCS-6101 **i03629258**

NOTE	REF NO	GRAPHIC REF	PART NUMBER	QTY	PART NAME 1 2 3 4 5 6 (PRODUCT LEVEL)	SEE PAGE
	2	1	**128-9623**	4	PLATE-WEAR	
	3	1	**134-7934**	1	HINGE AS (LIFT-RH-OUTER)	
	4	1	**134-7935**	1	HINGE AS (LIFT-LH-OUTER)	
	5	1	**134-7936**	1	HINGE AS (LIFT-RH-INNER)	
	6	1	**134-7937**	1	HINGE AS (LIFT-LH-INNER)	
	7	1	**134-7940**	1	HINGE AS (TILT-RH)	
	8	1	**134-7941**	1	HINGE AS (TILT-LH)	
	9	1	**8E-5310**	1	PLATE-CORNER (RH)	
	10	1	**134-4500**	2	BAR	
	11	1	**143-2643**	2	PLATE	
	12	1	**8E-5311**	1	PLATE-CORNER (LH)	
	13	1	**9V-6575**	1	EDGE-CUTTING	

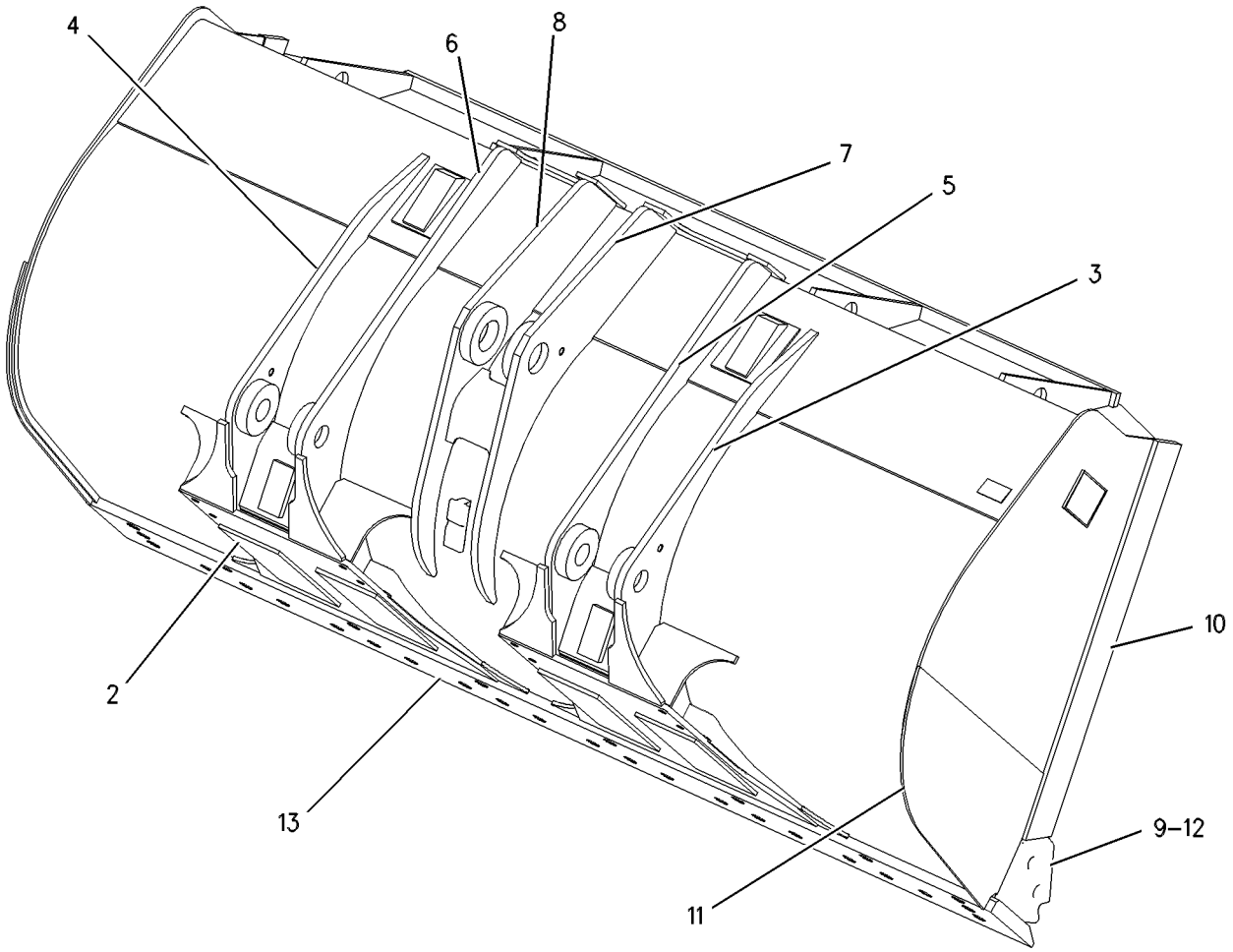

GRAPHIC #1 **<END>** g00513882

WORK TOOLS

133-1677 BUCKET AS-GENERAL PURPOSE

S/N: RYF1-UP
3.6 CU M (4.75 CU YD)
PART OF 133-1668 BUCKET GP-GENERAL PURPOSE
AN ATTACHMENT

SMCS-6101 **i03629243**

NOTE	REF NO	GRAPHIC REF	PART NUMBER	QTY	PART NAME 1 2 3 4 5 6 (PRODUCT LEVEL)	SEE PAGE
	2	1	**128-9623**	4	PLATE-WEAR	
	3	1	**134-7934**	1	HINGE AS (LIFT-RH-OUTER)	
	4	1	**134-7935**	1	HINGE AS (LIFT-LH-OUTER)	
	5	1	**134-7936**	1	HINGE AS (LIFT-RH-INNER)	
	6	1	**134-7937**	1	HINGE AS (LIFT-LH-INNER)	
	7	1	**134-7940**	1	HINGE AS (TILT-RH)	
	8	1	**134-7941**	1	HINGE AS (TILT-LH)	
	9	1	**8E-5310**	1	PLATE-CORNER (RH)	
	10	1	**134-4500**	2	BAR	
	11	1	**142-8567**	2	PLATE	
	12	1	**8E-5311**	1	PLATE-CORNER (LH)	
	13	1	**9V-6575**	1	EDGE-CUTTING	

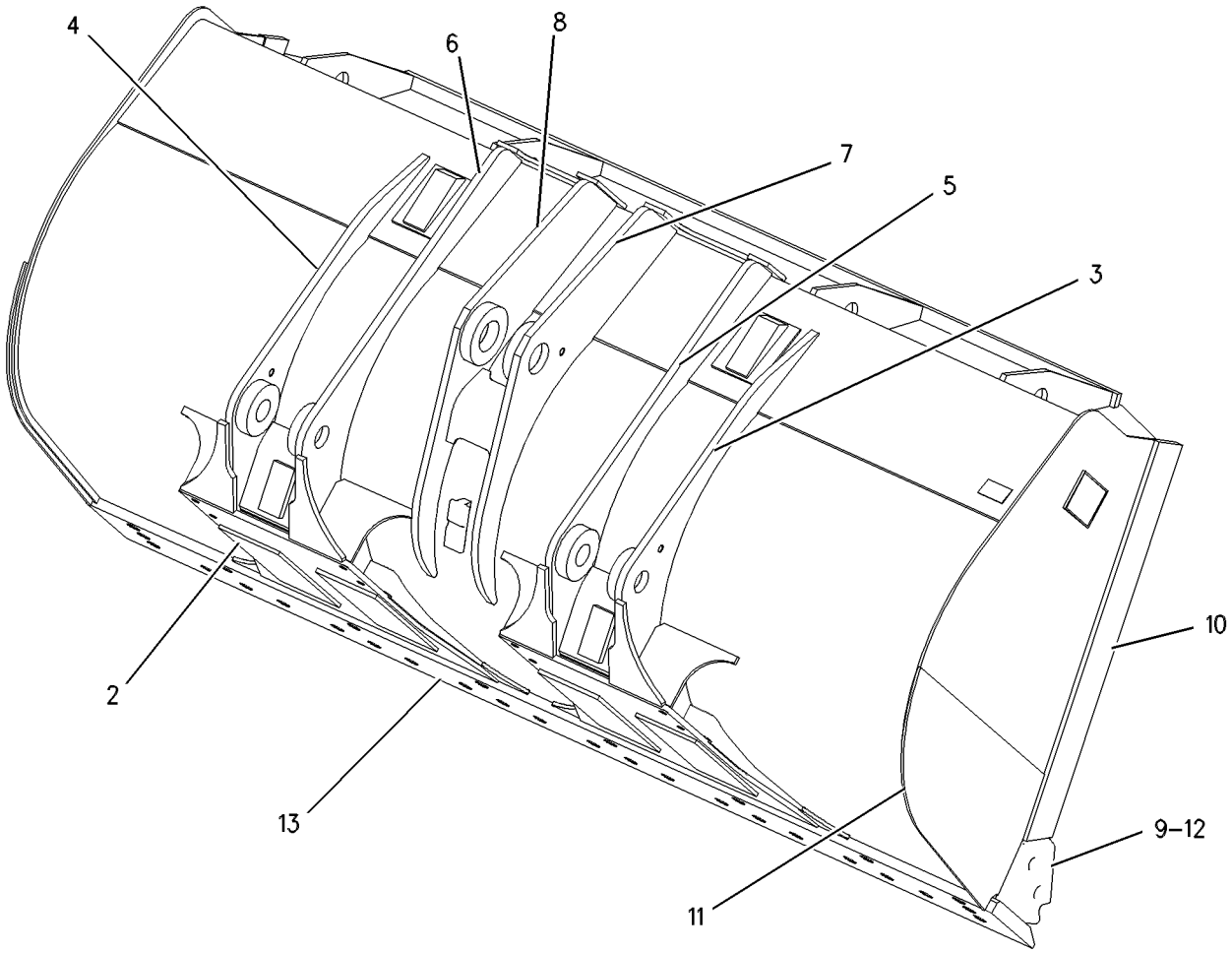

GRAPHIC #1 **<END>** g00448603

WORK TOOLS

133-1681 BUCKET AS-GENERAL PURPOSE

S/N: RYF1-UP
4.0 CU M(5.25 CU YD)
PART OF 133-1671 BUCKET GP-GENERAL PURPOSE
AN ATTACHMENT

SMCS-6101 **i03629248**

NOTE	REF NO	GRAPHIC REF	PART NUMBER	QTY	PART NAME 1 2 3 4 5 6 (PRODUCT LEVEL)	SEE PAGE
	1	1	**9V-6575**	1	EDGE-CUTTING	
	3	1	**128-9623**	4	PLATE-WEAR	
	4	1	**134-7934**	1	HINGE AS (LIFT-RH-OUTER)	
	5	1	**134-7935**	1	HINGE AS (LIFT-LH-OUTER)	
	6	1	**134-7936**	1	HINGE AS (LIFT-RH-INNER)	
	7	1	**134-7937**	1	HINGE AS (LIFT-LH-INNER)	
	8	1	**134-7940**	1	HINGE AS (TILT-RH)	
	9	1	**134-7941**	1	HINGE AS (TILT-LH)	
	10	1	**8E-5310**	1	PLATE-CORNER (RH)	
	11	1	**137-3863**	2	BAR	
	12	1	**143-3330**	2	PLATE	
	13	1	**8E-5311**	1	PLATE-CORNER (LH)	

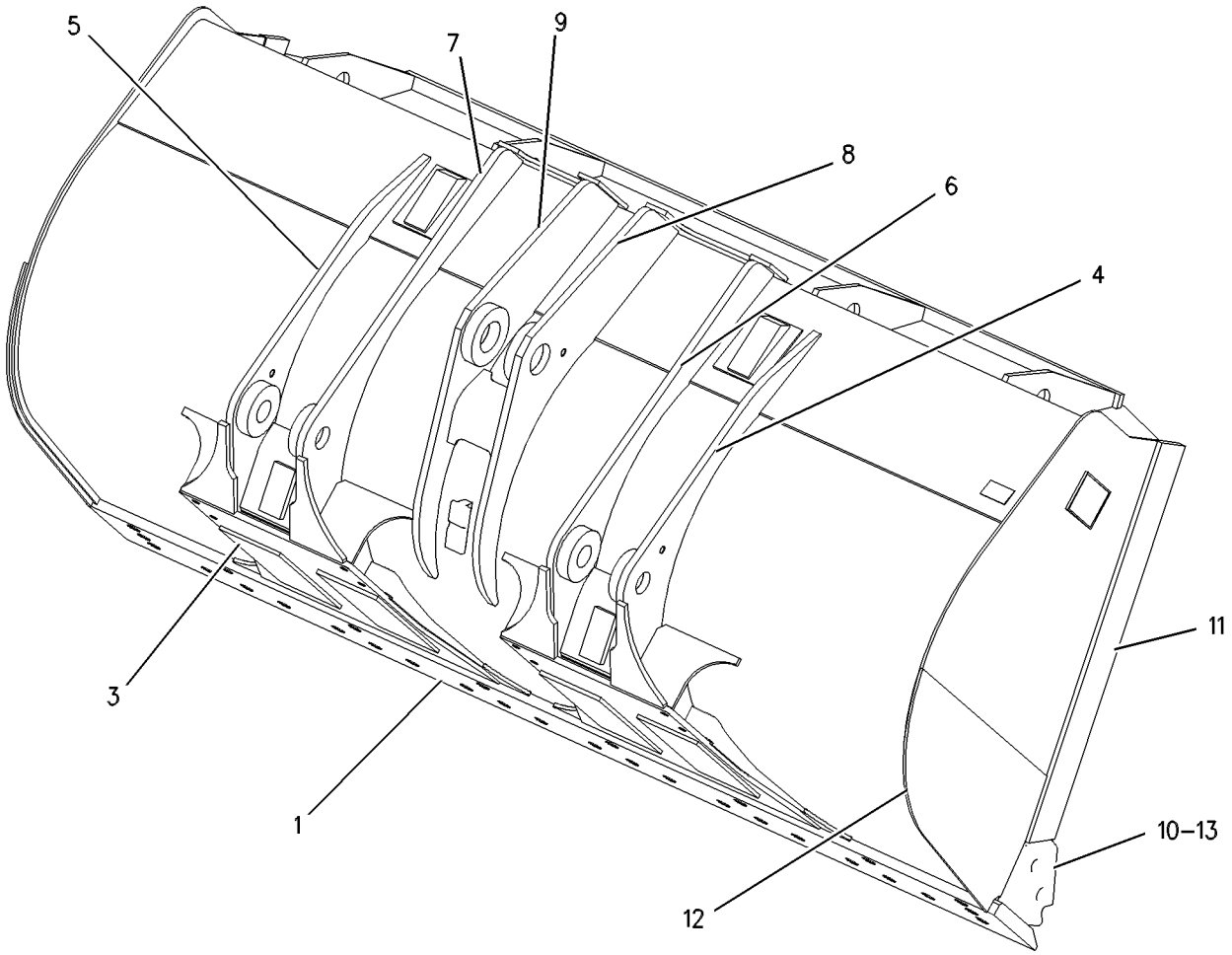

GRAPHIC #1 **<END>** g00448656

WORK TOOLS

133-1700 BUCKET AS-GENERAL PURPOSE

S/N: RYF1-UP
4.3 CU M (5.5 CU YD)
PART OF 133-1693 BUCKET GP-GENERAL PURPOSE
AN ATTACHMENT

SMCS-6101 **i03629266**

NOTE	REF NO	GRAPHIC REF	PART NUMBER	QTY	PART NAME 1 2 3 4 5 6 (PRODUCT LEVEL)	SEE PAGE
	1	1	**7I-3015**	1	EDGE-CUTTING	
	2	1	**128-9623**	4	PLATE-WEAR	
	3	1	**134-7934**	1	HINGE AS (LIFT-RH-OUTER)	
	4	1	**134-7935**	1	HINGE AS (LIFT-LH-OUTER)	
	5	1	**134-7936**	1	HINGE AS (LIFT-RH-INNER)	
	6	1	**134-7937**	1	HINGE AS (LIFT-LH-INNER)	
	7	1	**134-7940**	1	HINGE AS (TILT-RH)	
	8	1	**134-7941**	1	HINGE AS (TILT-LH)	
	9	1	**8E-5310**	1	PLATE-CORNER (RH)	
	10	1	**137-3863**	2	BAR	
	11	1	**143-3330**	2	PLATE	
	12	1	**8E-5311**	1	PLATE-CORNER (LH)	

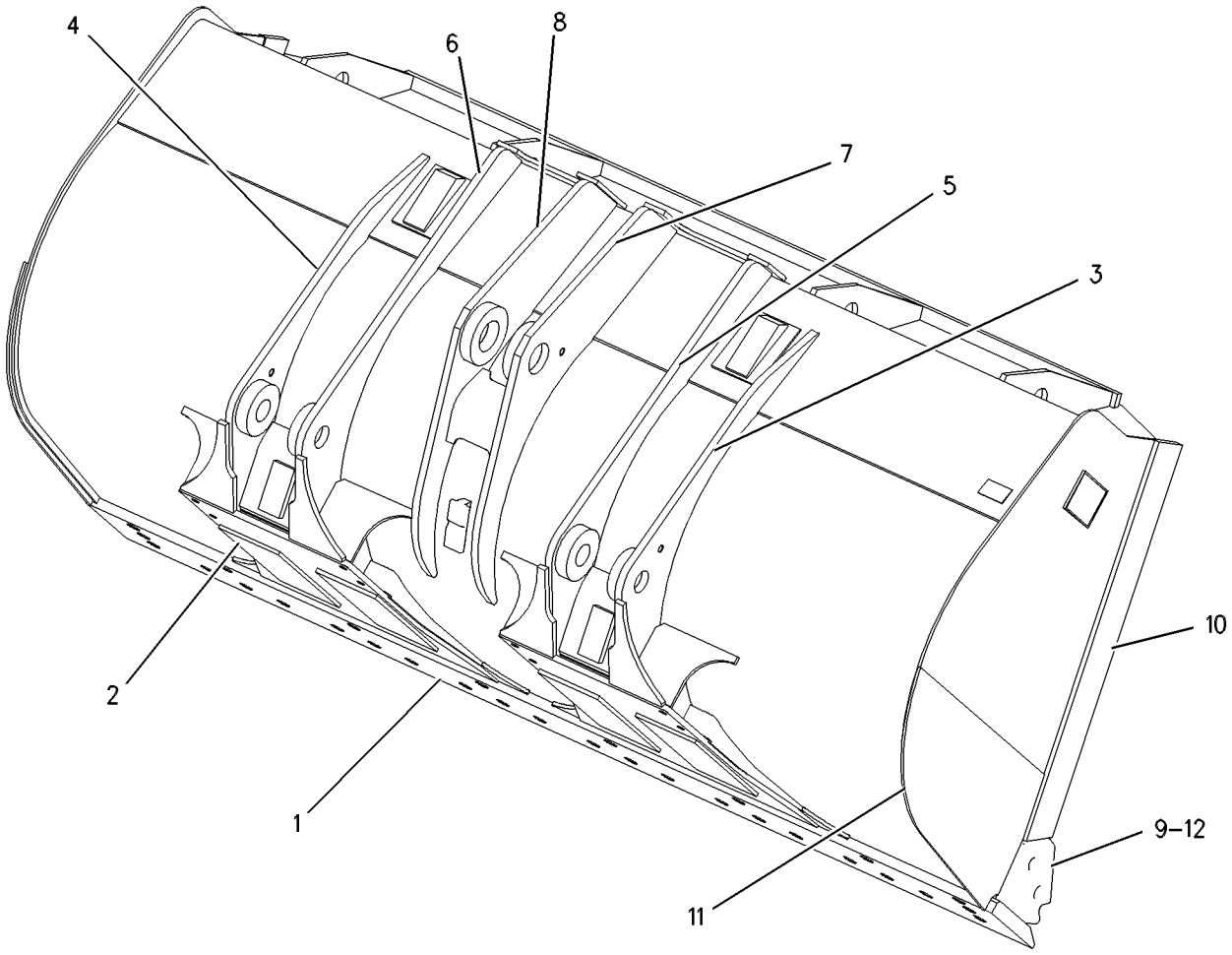

GRAPHIC #1 **<END>** g00448984

WORK TOOLS

133-1680 BUCKET AS-MATERIAL HANDLING

S/N: RYF1-UP
3.8 CU M(5.0 CU YD)
PART OF 133-1670 BUCKET GP-MATERIAL HANDLING
AN ATTACHMENT

SMCS-6101 **i03629270**

NOTE	REF NO	GRAPHIC REF	PART NUMBER	QTY	PART NAME 1 2 3 4 5 6 (PRODUCT LEVEL)	SEE PAGE
	1	1	**7I-3015**	1	EDGE-CUTTING	
	3	1	**128-9623**	4	PLATE-WEAR	
	4	1	**134-4504**	1	HINGE AS (LIFT, OUTER, RH)	
	5	1	**134-4505**	1	HINGE AS (LIFT, OUTER, LH)	
	6	1	**134-4506**	1	HINGE AS (LIFT, INNER, RH)	
	7	1	**134-4507**	1	HINGE AS (LIFT, INNER, LH)	
	8	1	**134-4510**	1	HINGE AS (TILT, CENTER, RH)	
	9	1	**134-4511**	1	HINGE AS (TILT, CENTER, LH)	
	10	1	**140-7962**	2	PLATE-WEAR	
	11	1	**8E-5310**	1	PLATE-CORNER (RH)	
	12	1	**144-6232**	2	PLATE	
	13	1	**144-7662**	2	BAR	
	14	1	**8E-5311**	1	PLATE-CORNER (LH)	

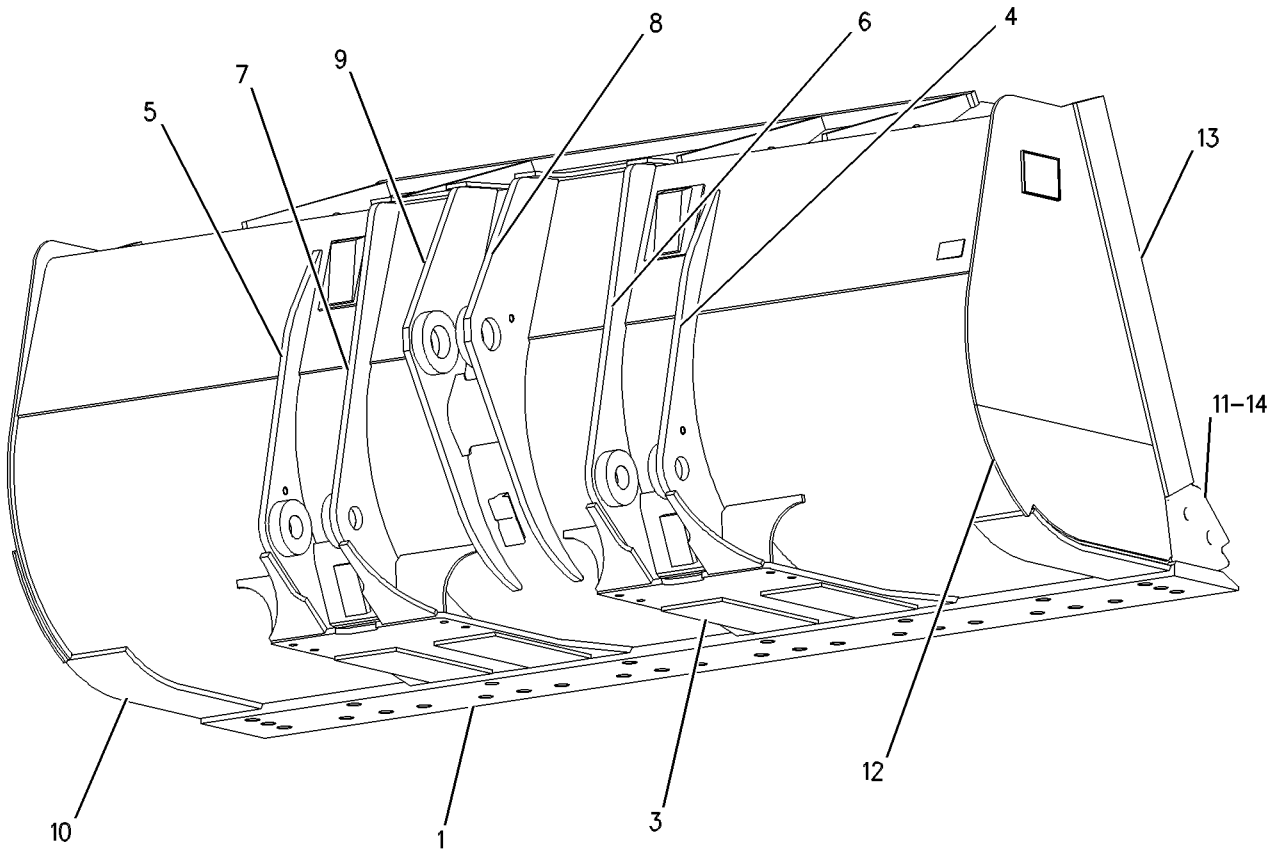

GRAPHIC #1 **<END>** g00499769

133-1698 BUCKET AS-MATERIAL HANDLING

S/N: RYF1-UP
4.0 CU M (5.25 CU YD)
PART OF 133-1691 BUCKET GP-MATERIAL HANDLING
AN ATTACHMENT

SMCS-6101 **i03629269**

NOTE	REF NO	GRAPHIC REF	PART NUMBER	QTY	PART NAME 1 2 3 4 5 6 (PRODUCT LEVEL)	SEE PAGE
	1	1	**7I-3015**	1	EDGE-CUTTING	
	2	1	**134-4504**	1	HINGE AS (LIFT, OUTER, RH)	
	3	1	**134-4505**	1	HINGE AS (LIFT, OUTER, LH)	
	4	1	**134-4506**	1	HINGE AS (LIFT, INNER, RH)	
	5	1	**134-4507**	1	HINGE AS (LIFT, INNER, LH)	
	6	1	**134-4510**	1	HINGE AS (TILT, CENTER, RH)	
	7	1	**134-4511**	1	HINGE AS (TILT, CENTER, LH)	
	8	1	**134-4521**	2	PLATE-WEAR	
	9	1	**8E-5310**	1	PLATE-CORNER (RH)	
	10	1	**134-4500**	2	BAR	
	11	1	**145-9397**	2	PLATE	
	12	1	**8E-5311**	1	PLATE-CORNER (LH)	
	13	1	**128-9624**	4	PLATE	

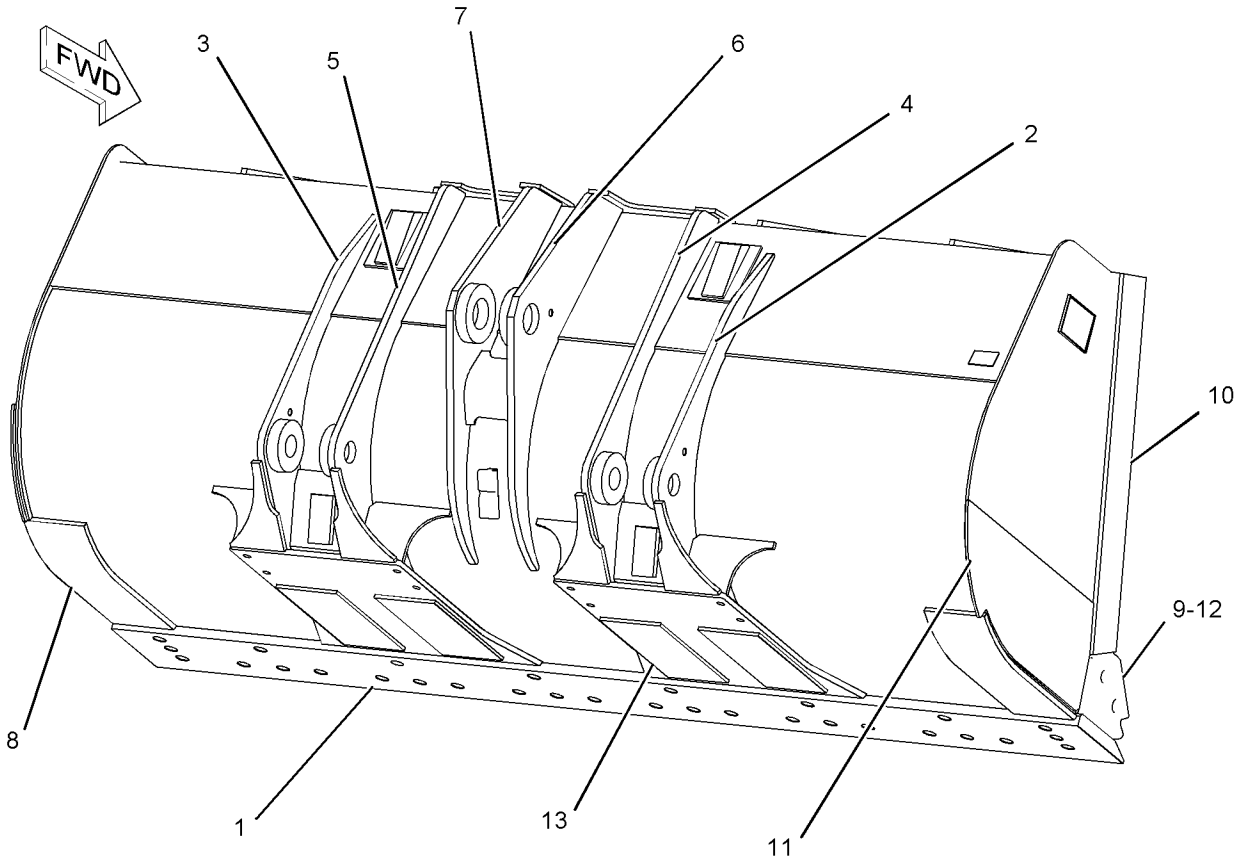

GRAPHIC #1 **<END>** g01089348

WORK TOOLS

148-6907 BUCKET AS-ROCK

S/N: RYF1-UP
3.5 CU M(4.5 CU YD)
PART OF 148-6899 BUCKET GP-ROCK
AN ATTACHMENT

SMCS-6102 **i03629273**

NOTE	REF NO	GRAPHIC REF	PART NUMBER	QTY	PART NAME 1 2 3 4 5 6 (PRODUCT LEVEL)	SEE PAGE
	1	1	**148-6953**	1	HINGE AS (LIFT, OUTER, LH)	
	2	1	**148-6950**	1	HINGE AS (LIFT, INNER, LH)	
	3	1	**148-6947**	1	HINGE AS (TILT, LH)	
	4	1	**148-6946**	1	HINGE AS (TILT, RH)	
	5	1	**148-6949**	1	HINGE AS (LIFT, INNER, RH)	
	6	1	**148-6952**	1	HINGE AS (LIFT, OUTER, RH)	
	7	1	**154-1604**	1	EDGE-CUTTING	
	8	1	**148-6916**	1	PLATE	
	9	1	**9V-0165**	4	PLATE	
	10	1	**9V-0957**	2	PLATE	

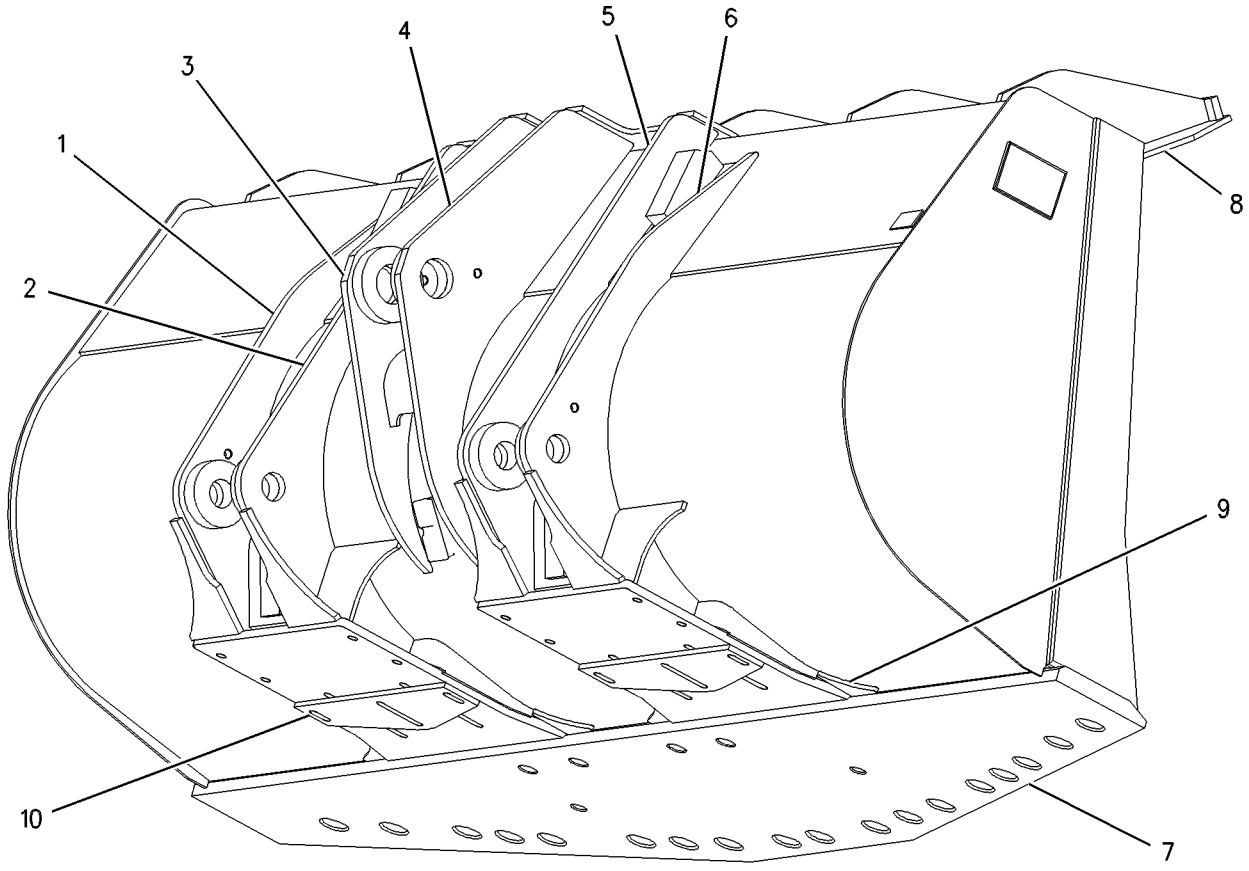

GRAPHIC #1 **<END>** g00484925

254-4500 BUCKET AS-ROCK

S/N: RYF1-UP
3.5 CU M(4.5 CU YD)
PART OF 254-4496 BUCKET GP-ROCK
AN ATTACHMENT

SMCS-6102 **i03630210**

NOTE	REF NO	GRAPHIC REF	PART NUMBER	QTY	PART NAME 1 2 3 4 5 6 (PRODUCT LEVEL)	SEE PAGE
	1	1	**148-6946**	1	HINGE AS (TILT, RH)	
	2	1	**148-6947**	1	HINGE AS (TILT, LH)	
	3	1	**148-6949**	1	HINGE AS (LIFT, INNER, RH)	
	4	1	**148-6950**	1	HINGE AS (LIFT, INNER, LH)	
	5	1	**148-6952**	1	HINGE AS (LIFT, OUTER, RH)	
	6	1	**148-6953**	1	HINGE AS (LIFT, OUTER, LH)	
	7	1	**254-4505**	1	EDGE AS-CUTTING	
		1	**222-1094**	2	ADAPTER-TIP (K-90, 2-STRAP, CENTER)	
		1	**222-1095**	3	ADAPTER-TIP (K-90, 2-STRAP, RH)	
		1	**222-1096**	3	ADAPTER-TIP (K-90, 2-STRAP, LH)	
	8	1	*256-2303*	1	PLATE AS (RH)	
	9	1	*256-2304*	1	PLATE AS (LH)	
					(EACH PLATE AS INCLUDES)	
		1	**2C-9259**	1	PLATE-IDENTIFICATION (CAT)	
		1	**148-6936**	1	PLATE	
		1	**256-2299**	1	BAR	

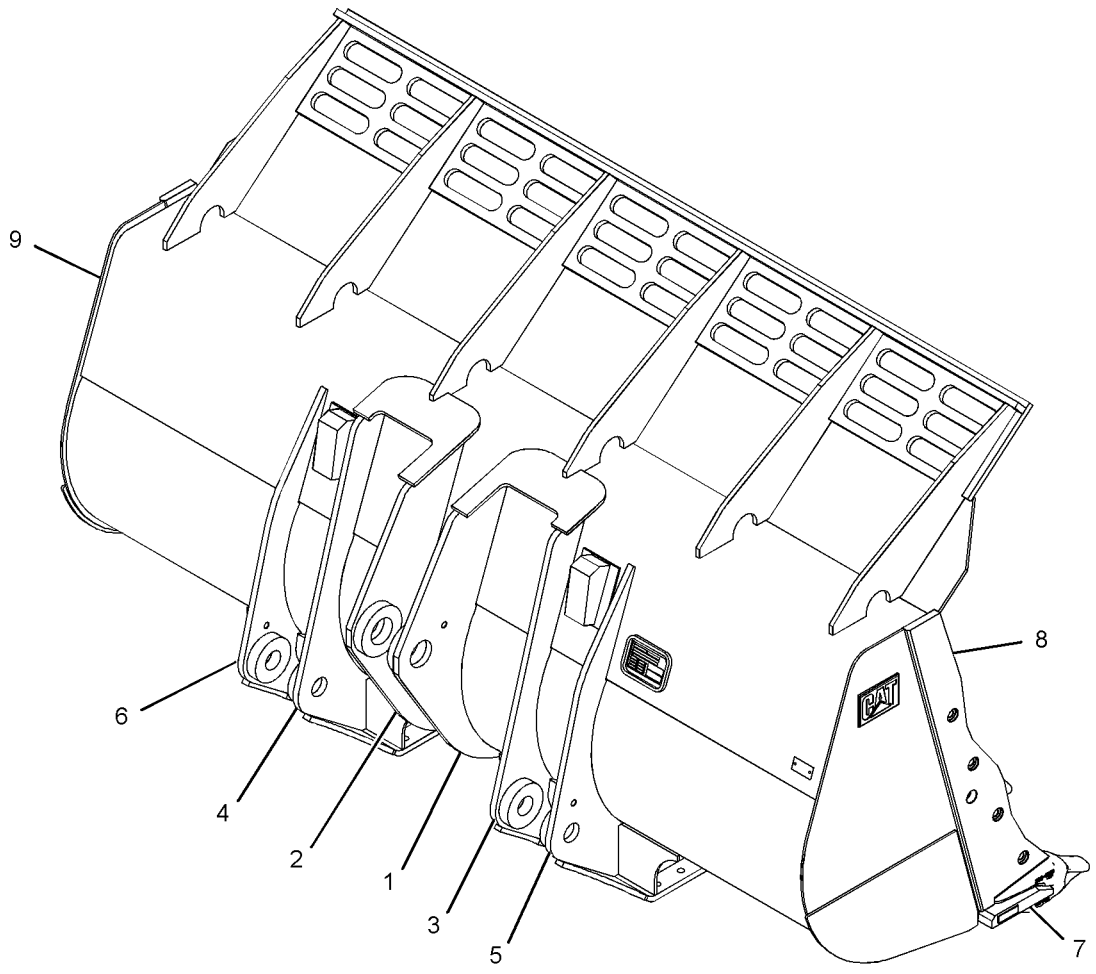

GRAPHIC #1 **<END>** g01185477

WORK TOOLS

254-4501 BUCKET AS-ROCK

S/N: RYF1-UP
3.5-CU M(4.6-CU YD)
PART OF 254-4497 BUCKET GP-ROCK
AN ATTACHMENT

SMCS-6102 **i03630699**

NOTE	REF NO	GRAPHIC REF	PART NUMBER	QTY	PART NAME 1 2 3 4 5 6 (PRODUCT LEVEL)	SEE PAGE
	1	1	**148-6946**	1	HINGE AS (TILT, RH)	
	2	1	**148-6947**	1	HINGE AS (TILT, LH)	
	3	1	**148-6949**	1	HINGE AS (LIFT, INNER, RH)	
	4	1	**148-6950**	1	HINGE AS (LIFT, INNER, LH)	
	5	1	**148-6952**	1	HINGE AS (LIFT, OUTER, RH)	
	6	1	**148-6953**	1	HINGE AS (LIFT, OUTER, LH)	
	7	1	**254-4505**	1	EDGE AS-CUTTING	
	7A	1	**222-1094**	2	ADAPTER-TIP (K-90, 2-STRAP, CENTER)	
	7B	1	**222-1095**	3	ADAPTER-TIP (K-90, 2-STRAP, RH)	
	7C	1	**222-1096**	3	ADAPTER-TIP (K-90, 2-STRAP, LH)	
	8	1	*256-2301*	1	PLATE AS (RH)	
	8A	1	**2C-9259**	1	PLATE-IDENTIFICATION (CAT)	
	8B	1	**256-2299**	1	BAR	
	9	1	*256-2302*	1	PLATE AS (LH)	
	9A	1	**2C-9259**	1	PLATE-IDENTIFICATION (CAT)	
	9B	1	**256-2299**	1	BAR	

254-4501 **BUCKET AS-ROCK** *(contd.)* **i03630699**

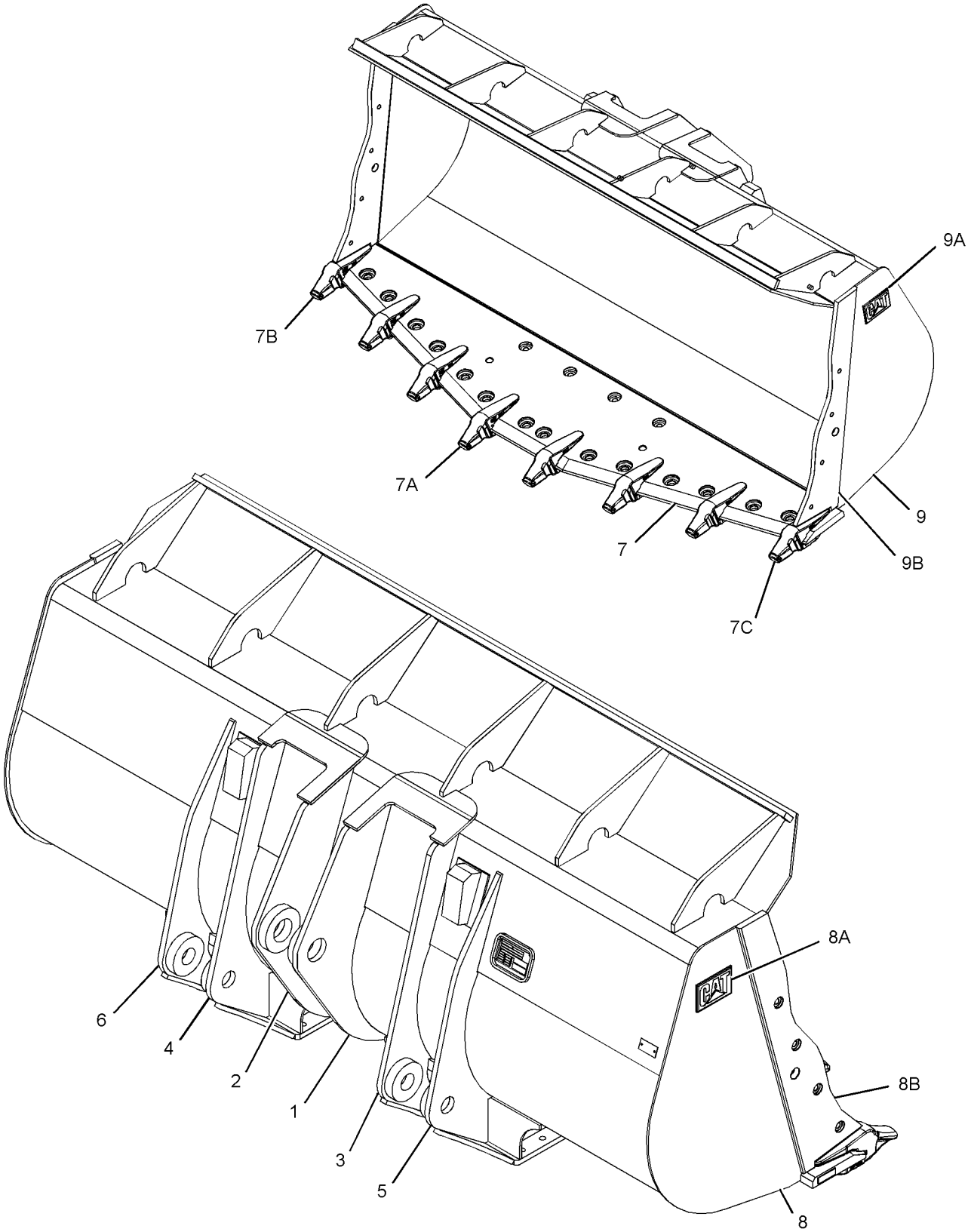

GRAPHIC #1 **<END>** g01177018

WORK TOOLS

133-1667 BUCKET GP-GENERAL PURPOSE

S/N: RYF1-UP
3.8 CU M (5.0 CU YD)
AN ATTACHMENT

SMCS-6101 **i03626508**

NOTE	REF NO	GRAPHIC REF	PART NUMBER	QTY	PART NAME 1 2 3 4 5 6 (PRODUCT LEVEL)	SEE PAGE
Y	1	1	**133-1676**	1	BUCKET AS-GENERAL PURPOSE	644
Y	2	1	*161-9131*	1	PLATE GP-WEAR	669

Y-SEPARATE ILLUSTRATION

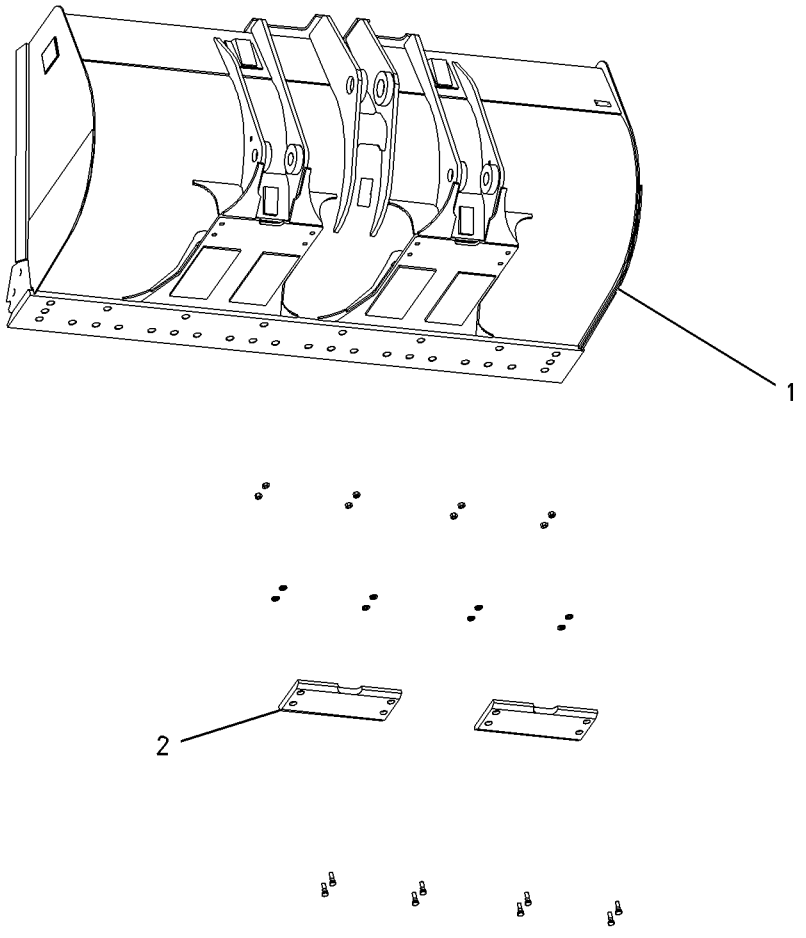

GRAPHIC #1 **<END>** g00689496

133-1668 BUCKET GP-GENERAL PURPOSE

S/N: RYF1-UP
3.6 CU M (4.75 CU YD)
AN ATTACHMENT

SMCS-6101 **i03626509**

NOTE	REF NO	GRAPHIC REF	PART NUMBER	QTY	PART NAME 1 2 3 4 5 6 (PRODUCT LEVEL)	SEE PAGE
Y	1	1	**133-1677**	1	BUCKET AS-GENERAL PURPOSE	645
Y	2	1	*161-9131*	1	PLATE GP-WEAR	669

Y-SEPARATE ILLUSTRATION

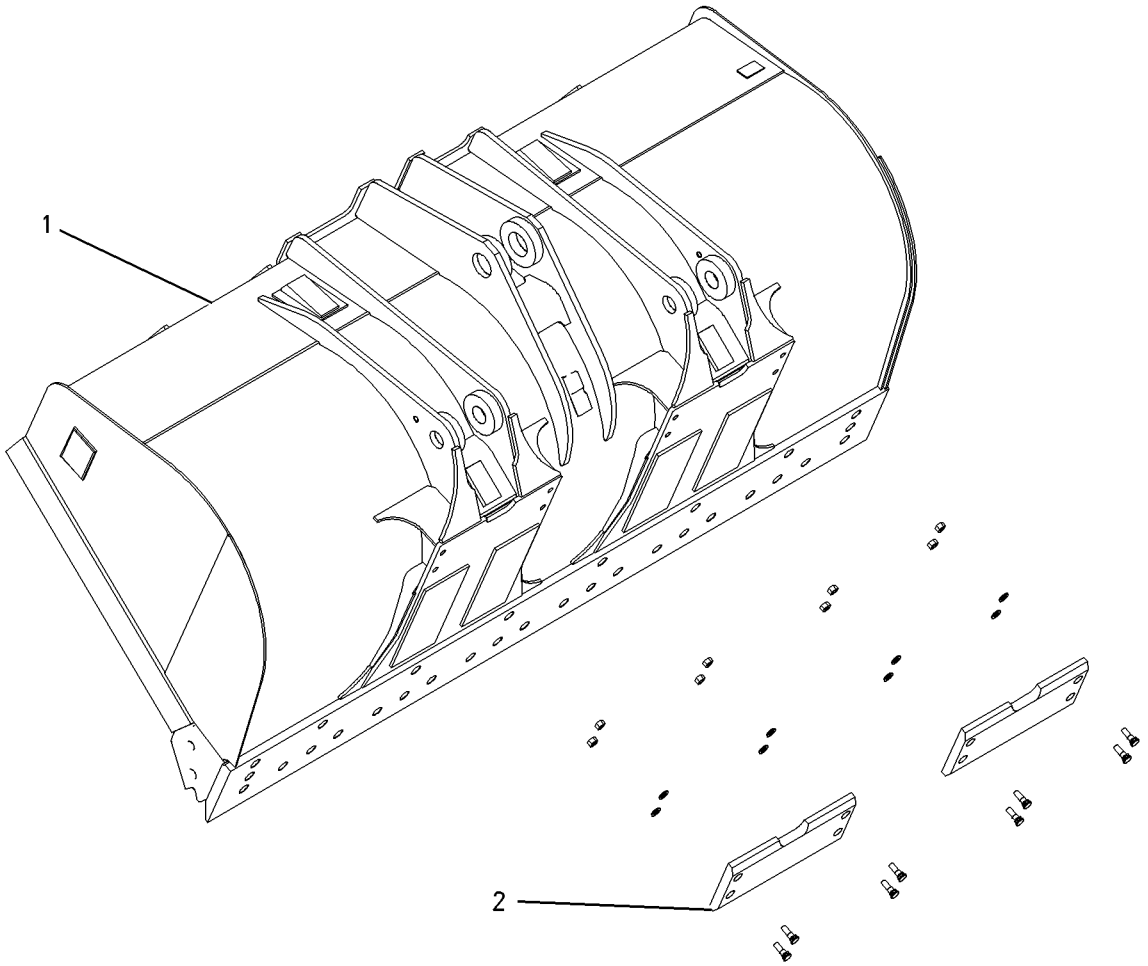

GRAPHIC #1 **<END>** g00689502

WORK TOOLS

133-1671 BUCKET GP-GENERAL PURPOSE

S/N: RYF1-UP
4.0 CU M (5.25 CU YD)
AN ATTACHMENT

SMCS-6101 **i03626513**

NOTE	REF NO	GRAPHIC REF	PART NUMBER	QTY	PART NAME 1 2 3 4 5 6 (PRODUCT LEVEL)	SEE PAGE
Y	1	1	**133-1681**	1	BUCKET AS-GENERAL PURPOSE	646
Y	2	1	*161-9131*	1	PLATE GP-WEAR	669

Y-SEPARATE ILLUSTRATION

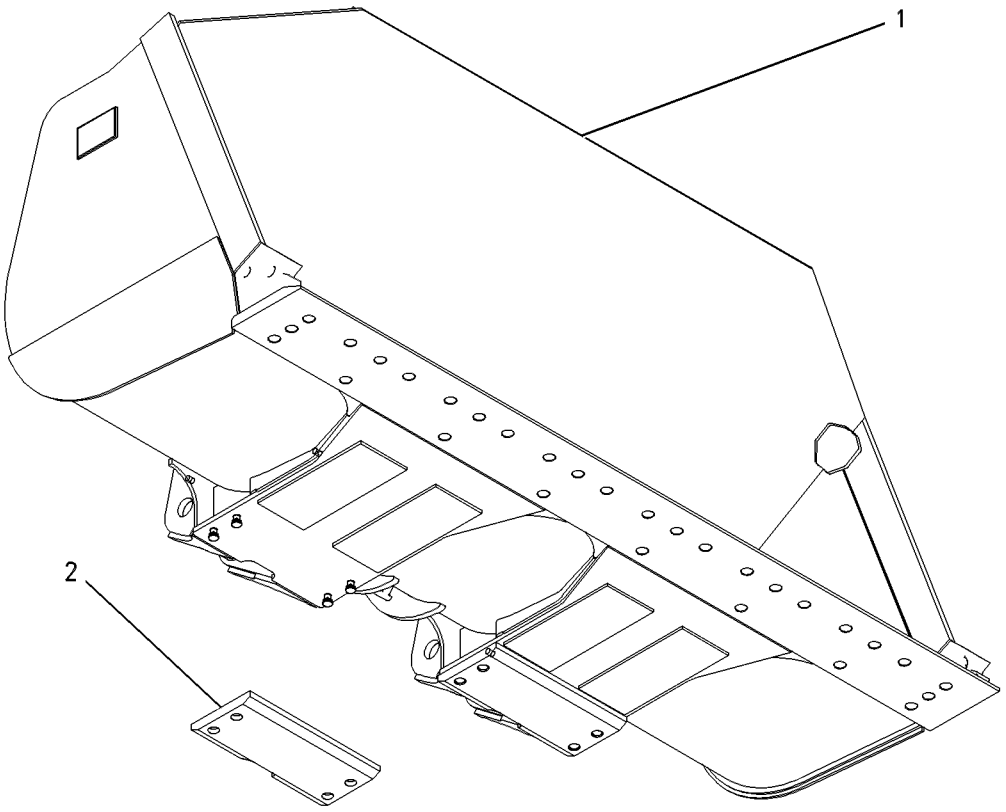

GRAPHIC #1 **<END>** g00584629

WORK TOOLS

133-1693 BUCKET GP-GENERAL PURPOSE

S/N: RYF1-UP
4.3 CU M (5.5 CU YD)
AN ATTACHMENT

SMCS-6101 **i03626515**

NOTE	REF NO	GRAPHIC REF	PART NUMBER	QTY	PART NAME 1 2 3 4 5 6 (PRODUCT LEVEL)	SEE PAGE
Y	1	1	**133-1700**	1	BUCKET AS-GENERAL PURPOSE	647
Y	2	1	*161-9131*	1	PLATE GP-WEAR	669

Y-SEPARATE ILLUSTRATION

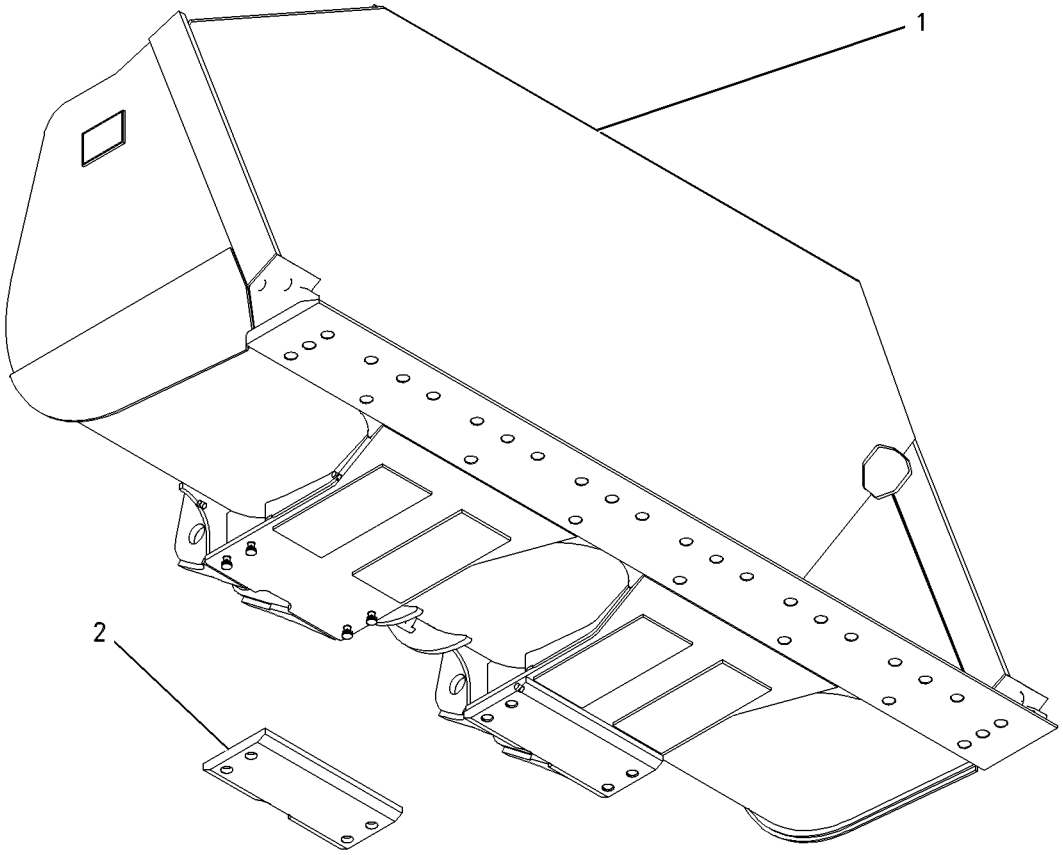

GRAPHIC #1 **<END>** g00584631

WORK TOOLS

133-1670 BUCKET GP-MATERIAL HANDLING

S/N: RYF1-UP
3.8 CU M(5.0 CU YD)
AN ATTACHMENT

SMCS-6101 **i03626511**

NOTE	PART NUMBER	QTY	PART NAME 1 2 3 4 5 6 (PRODUCT LEVEL)	SEE PAGE
Y	**133-1680**	1	BUCKET AS-MATERIAL HANDLING	648
Y	*161-9131*	1	PLATE GP-WEAR	669

Y-SEPARATE ILLUSTRATION

<END>

133-1691 BUCKET GP-MATERIAL HANDLING

S/N: RYF1-UP
4.0 CU (5.25 CU YD)
AN ATTACHMENT

SMCS-6101 **i03626514**

NOTE	PART NUMBER	QTY	PART NAME 1 2 3 4 5 6 (PRODUCT LEVEL)	SEE PAGE
Y	**133-1698**	1	BUCKET AS-MATERIAL HANDLING	649
Y	*161-9131*	1	PLATE GP-WEAR	669

Y-SEPARATE ILLUSTRATION

<END>

148-6899 BUCKET GP-ROCK

S/N: RYF1-UP
3.5 CU M (4.5 CU YD)
AN ATTACHMENT

SMCS-6102 **i03626523**

NOTE	PART NUMBER	QTY	PART NAME 1 2 3 4 5 6 (PRODUCT LEVEL)	SEE PAGE
Y	**148-6907**	1	BUCKET AS-ROCK	650
Y	*161-9131*	1	PLATE GP-WEAR	669

Y-SEPARATE ILLUSTRATION

<END>

WORK TOOLS

254-4496 BUCKET GP-ROCK

S/N: RYF1-UP
3.5-CU M (4.5-CU YD)
FOR USE WITH 135-9293—PAGE 667, 135-8245—PAGE 669
AN ATTACHMENT

SMCS-6102 **i03630201**

NOTE	REF NO	GRAPHIC REF	PART NUMBER	QTY	PART NAME 1 2 3 4 5 6 (PRODUCT LEVEL)	SEE PAGE
Y	1	1	*254-4500*	1	BUCKET AS-ROCK	651
Y	2	1	*161-9131*	1	PLATE GP-WEAR	669

Y-SEPARATE ILLUSTRATION

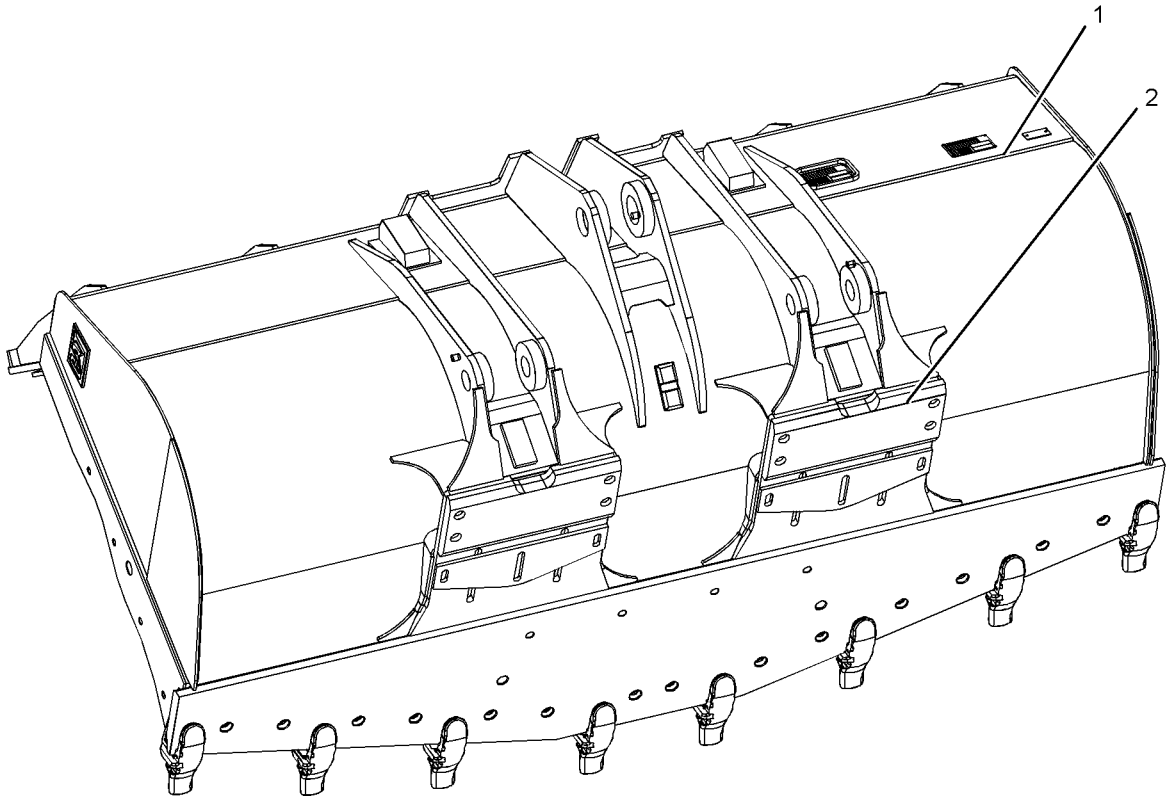

GRAPHIC #1 **<END>** g01174505

254-4497 BUCKET GP-ROCK

S/N: RYF1-UP
3.5-CU M (4.6-CU YD)
FOR USE WITH 135-9293—PAGE 667, 135-8245—PAGE 669
AN ATTACHMENT

SMCS-6102 **i03630268**

NOTE	REF NO	GRAPHIC REF	PART NUMBER	QTY	PART NAME 1 2 3 4 5 6 (PRODUCT LEVEL)	SEE PAGE
Y	1	1	*254-4501*	1	BUCKET AS-ROCK	652
Y	2	1	*161-9131*	1	PLATE GP-WEAR	669

Y-SEPARATE ILLUSTRATION

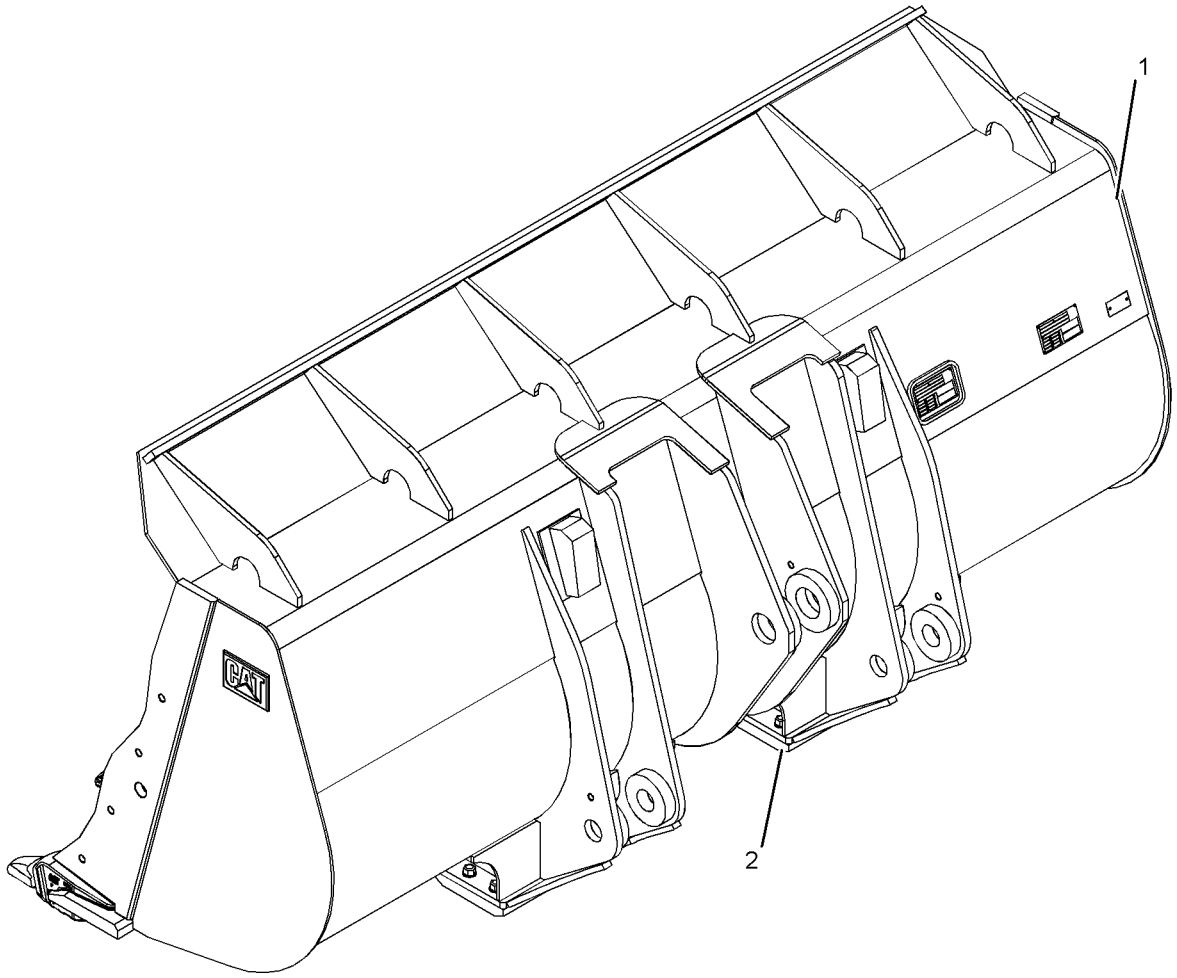

GRAPHIC #1 **<END>** g01181244

312-6429 CARRIAGE GP-FORK—96-IN

S/N: RYF1-UP
PART OF 329-4983 CARRIAGE GP-FORK
FOR USE WITH 318-3365—PAGE 668
ALSO AN ATTACHMENT

SMCS-6402 **i03406126**

NOTE	REF NO	GRAPHIC REF	PART NUMBER	QTY	PART NAME 1 2 3 4 5 6 (PRODUCT LEVEL)	SEE PAGE
	1	1	**9C-7907**	2	SPACER (21.5X28X14-MM THK)	
	2	1	**312-6272**	2	PLATE-LOCK	
	3	1	**316-3590**	1	PLATE (TOOL)	
	4	1	**321-8389**	1	PLATE-FORK	
	5	1	**327-4382**	2	PIN AS	
	6	1	*331-3437*	1	CARRIAGE AS-FORK	
		1	**2C-9259**	2	PLATE-IDENTIFICATION (CAT)	
		1	**147-7633**	6	BOSS-TAPPED	
		1	**312-8990**	2	PLATE	
	7	1	**312-5694**	1	SETSCREW (1/4-20X0.25-IN)	
	8	1	**7X-0582**	2	WASHER-HARD (20X44.5X6-MM THK)	
M	9	1	**8T-6430**	2	BOLT (M20X2.5X50-MM)	

M-METRIC PART

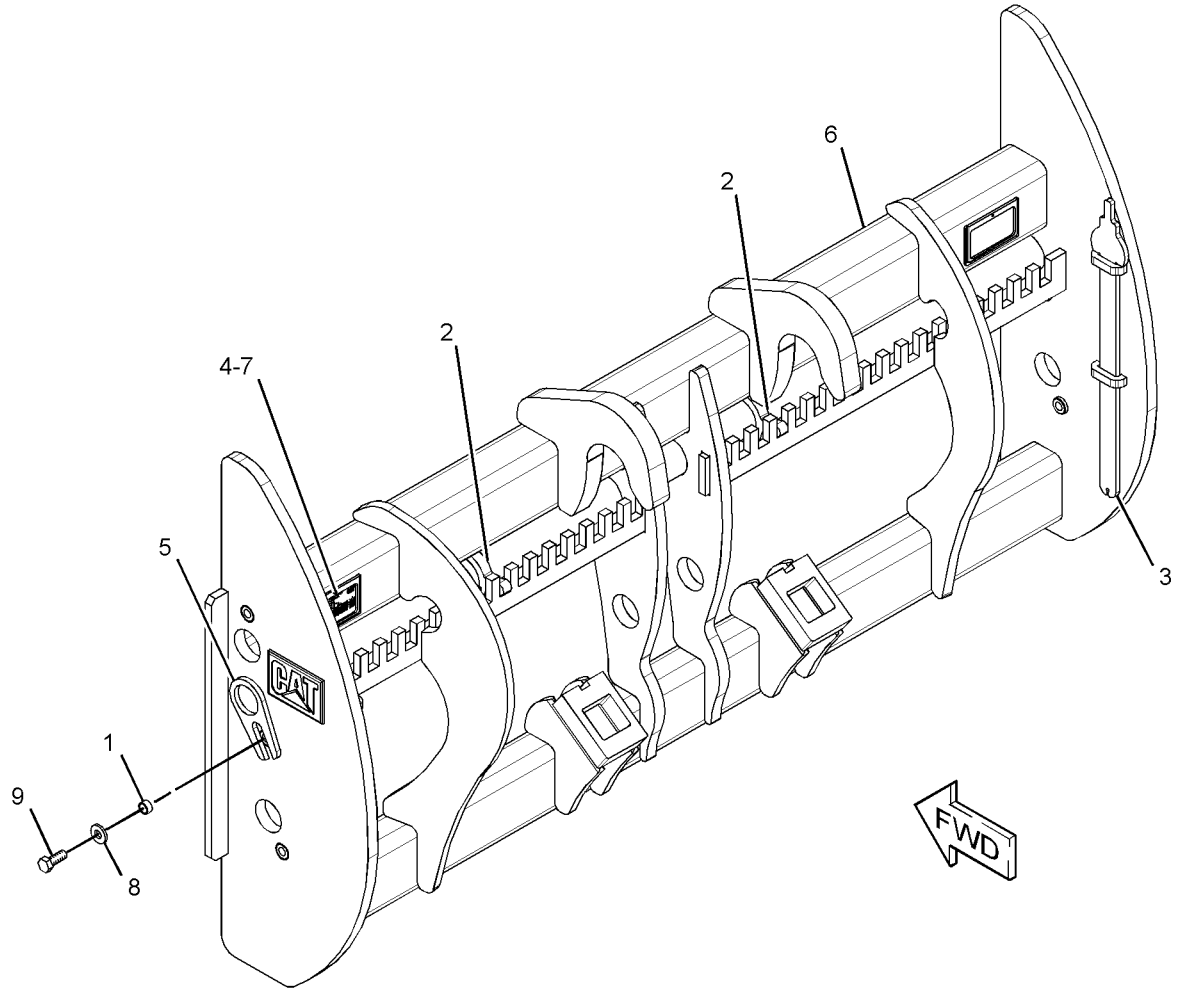

GRAPHIC #1 **<END>** g01826395

WORK TOOLS

329-4983 CARRIAGE GP-FORK–96-IN

S/N: RYF1-UP

AN ATTACHMENT

SMCS-6402 **i03405841**

NOTE	REF NO	GRAPHIC REF	PART NUMBER	QTY	PART NAME 1 2 3 4 5 6 (PRODUCT LEVEL)	SEE PAGE
	1	1	**137-4234**	1	PLATE-IDENTIFICATION (WORK TOOL)	
Y	2	1	*312-6429*	1	CARRIAGE GP-FORK (96-IN)	661
Y	3	1	*318-3365*	1	PIN GP-FORK (ANTI-SWING)	668
	4	1	**312-5694**	1	SETSCREW (1/4-20X0.25-IN)	

Y-SEPARATE ILLUSTRATION

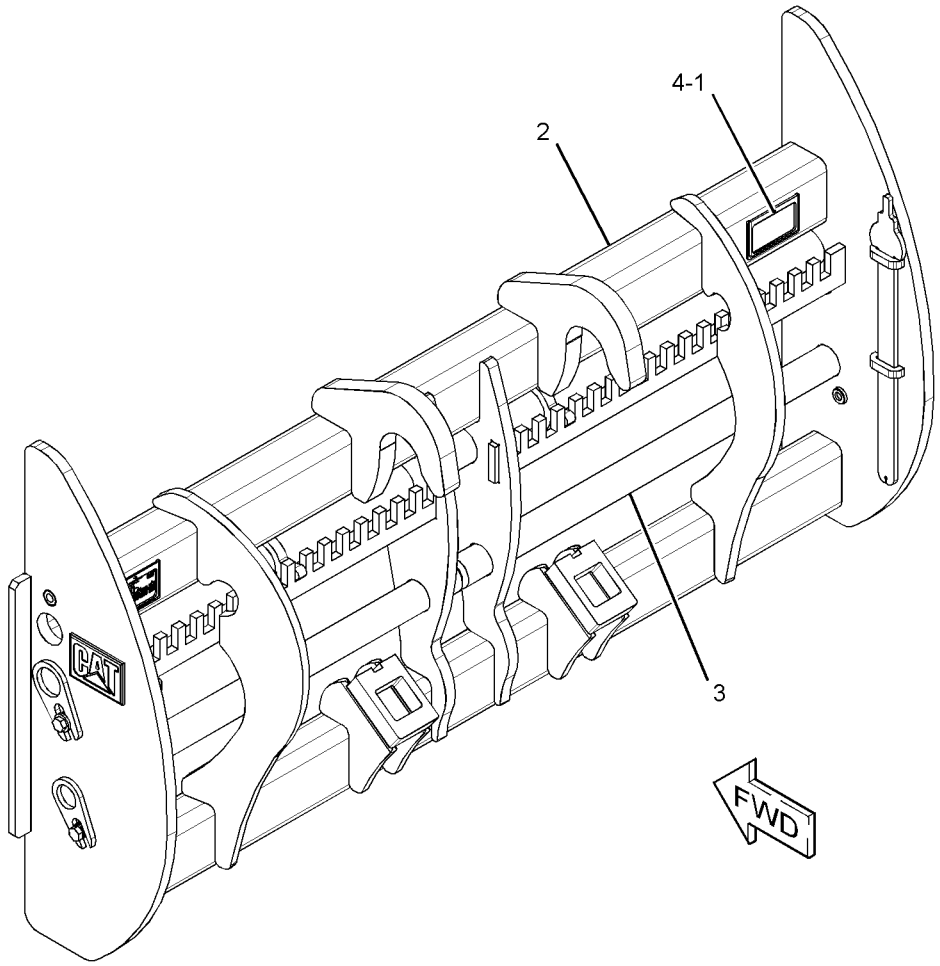

GRAPHIC #1 **<END>** g01826415

3G-8956 EDGE GP-BIT & CUTTING

S/N: RYF1-UP

AN ATTACHMENT

SMCS-6801 **i01081306**

NOTE	REF NO	GRAPHIC REF	PART NUMBER	QTY	PART NAME 1 2 3 4 5 6 (PRODUCT LEVEL)	SEE PAGE
	1	1	**3K-9770**	12	NUT-FULL (1-1/4-7 THD)	
		1	**5P-8823**	12	BOLT-PLOW (1 1/4-7X4.13IN)	
	2	1	**1U-0593**	2	EDGE-CUTTING	
	3	1	**3G-6395**	2	EDGE-END	

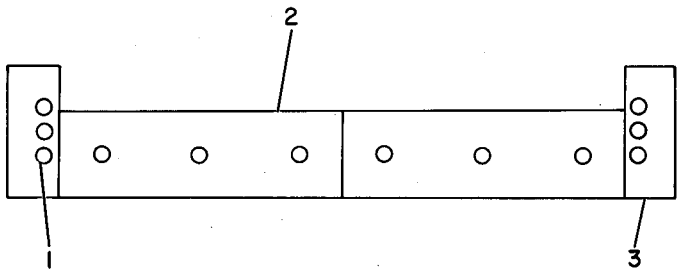

GRAPHIC #1 **<END>** g00118379

WORK TOOLS

9W-0817 EDGE GP-BIT & CUTTING

S/N: RYF1-UP

AN ATTACHMENT

SMCS-6801 **i03630113**

NOTE	REF NO	GRAPHIC REF	PART NUMBER	QTY	PART NAME 1 2 3 4 5 6 (PRODUCT LEVEL)	SEE PAGE
	1	1	**4T-6699**	5	EDGE-SEGMENT	
	2	1	**308-3054**	2	EDGE-SEGMENT	
	3	1	**3K-9770**	14	NUT-FULL (1-1/4-7-THD)	
	4	1	**5P-8823**	14	BOLT-PLOW (1-1/4-7X4.13-IN)	

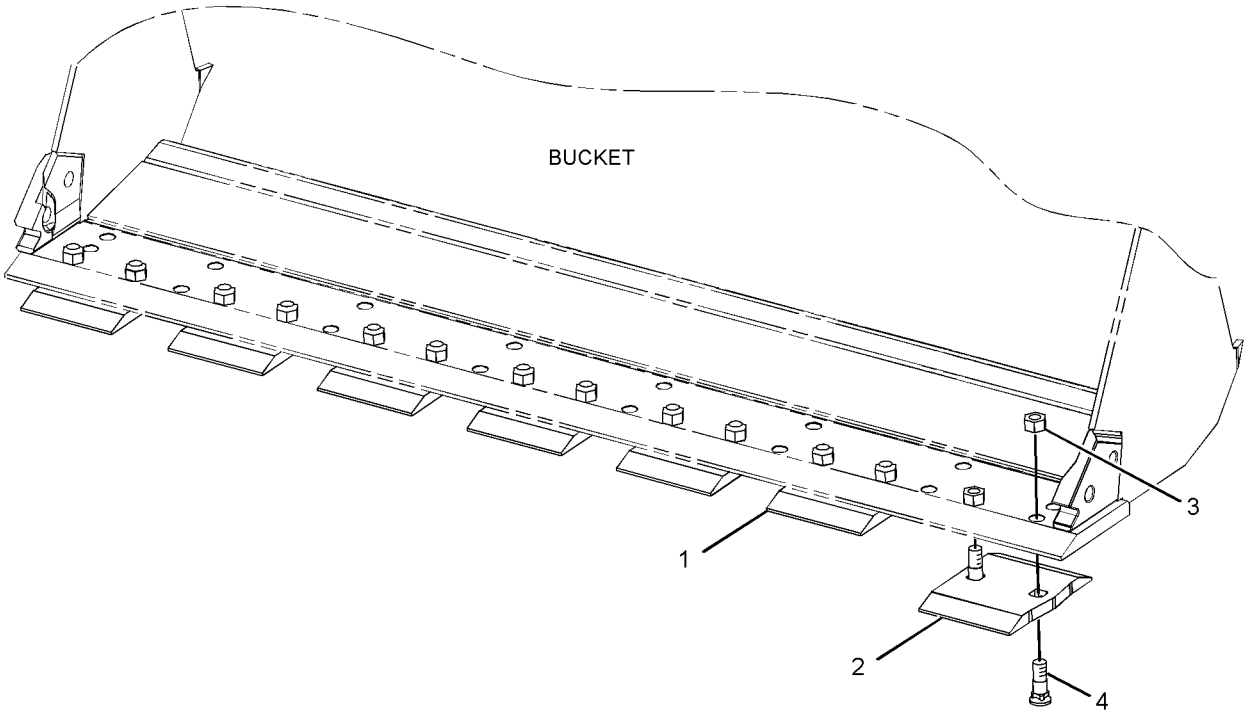

GRAPHIC #1 **<END>** g01395131

WORK TOOLS

100-6667 EDGE GP-CUTTING

S/N: RYF1-UP

AN ATTACHMENT

SMCS-6801 **i03626497**

NOTE	REF NO	GRAPHIC REF	PART NUMBER	QTY	PART NAME 1 2 3 4 5 6 (PRODUCT LEVEL)	SEE PAGE
	1	1	**308-4322**	2	EDGE-SEGMENT	
	2	1	**100-6666**	5	EDGE-SEGMENT	
	3	1	**3K-9770**	14	NUT-FULL (1-1/4-7-THD)	
	4	1	**5P-8823**	14	BOLT-PLOW (1-1/4-7X4.13-IN)	

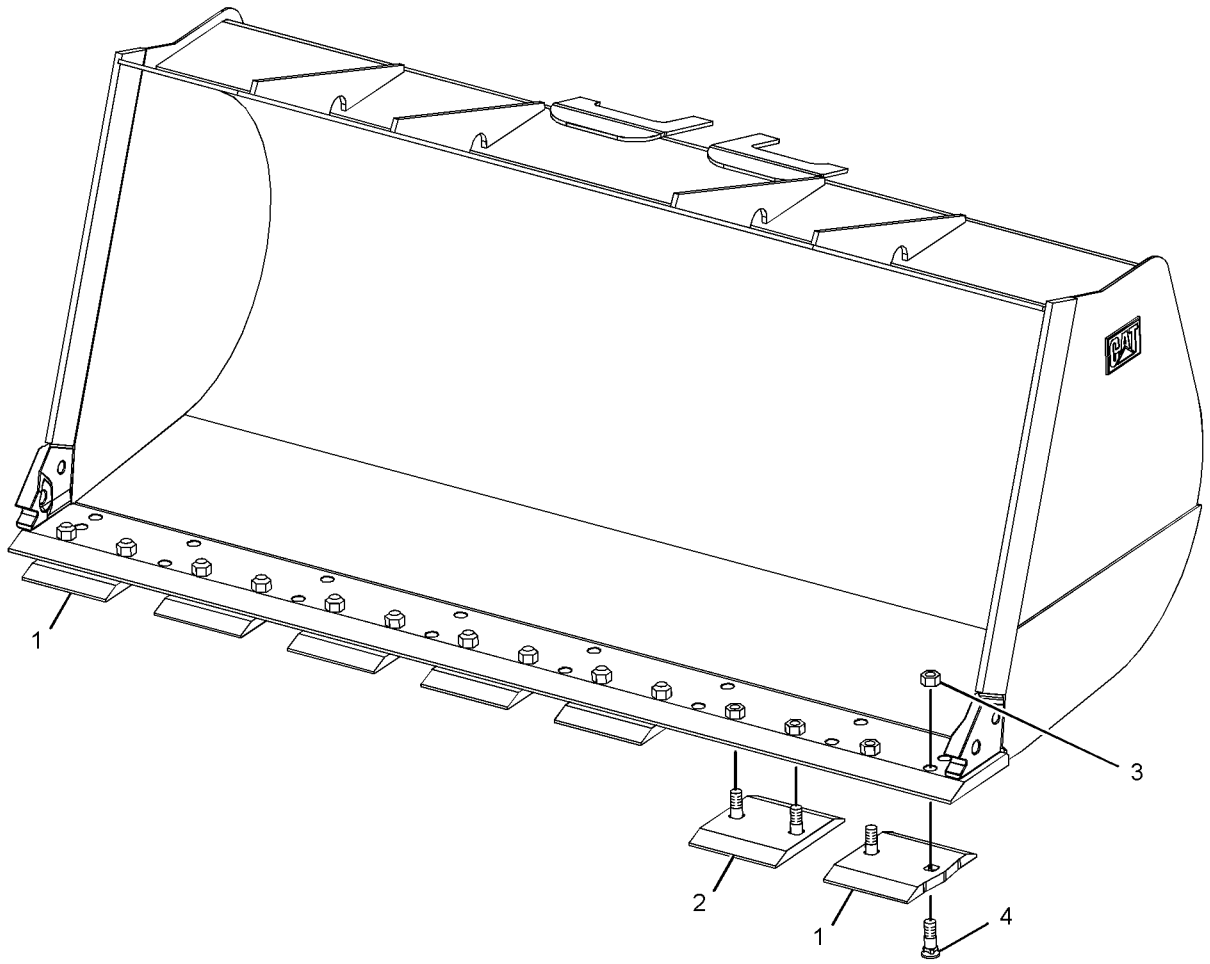

GRAPHIC #1 **<END>** g01392091

WORK TOOLS

100-6669 EDGE GP-CUTTING

S/N: RYF1-UP
AN ATTACHMENT

SMCS-6801 **i03626498**

NOTE	PART NUMBER	QTY	PART NAME 1 2 3 4 5 6 (PRODUCT LEVEL)	SEE PAGE
	5P-8823	12	BOLT-PLOW (1-1/4-7X4.13-IN)	
	100-6668	2	EDGE-CUTTING	
	3G-6395	2	EDGE-END	
	3K-9770	12	NUT-FULL (1-1/4-7-THD)	

<END>

135-9297 EDGE GP-CUTTING

S/N: RYF1-UP
35-MM THICK
AN ATTACHMENT

SMCS-6801 **i03626520**

NOTE	PART NUMBER	QTY	PART NAME 1 2 3 4 5 6 (PRODUCT LEVEL)	SEE PAGE
	8T-9079	18	BOLT-PLOW (1-1/4-7X3.35-IN)	
	135-8244	1	EDGE-CUTTING (LH)	
	135-8241	1	EDGE-CUTTING (RH)	
	135-8240	1	EDGE-CUTTING	
	135-8242	1	EDGE-CUTTING (LH)	
	135-8243	1	EDGE-CUTTING (RH)	
	3K-9770	18	NUT-FULL (1-1/4-7-THD)	
	4K-0684	18	WASHER-HARD (34X55X6-MM THK)	

<END>

140-6824 EDGE GP-CUTTING

S/N: RYF1-UP
FOR USE WITH 100-6669—PAGE 666
AN ATTACHMENT

SMCS-6801 **i03626521**

NOTE	PART NUMBER	QTY	PART NAME 1 2 3 4 5 6 (PRODUCT LEVEL)	SEE PAGE
	5P-8823	12	BOLT-PLOW (1-1/4-7X4.13-IN)	
	140-6823	2	EDGE-CUTTING	
	167-7430	2	EDGE-END	
	3K-9770	12	NUT-FULL (1-1/4-7-THD)	

<END>

WORK TOOLS

135-9293 EDGE GP-SEGMENT

S/N: RYF1-UP
40-MM THICK, FOR USE WITH J350 ADAPTERS & TIPS
AN ATTACHMENT

SMCS-6818 **i03626519**

NOTE	PART NUMBER	QTY	PART NAME 1 2 3 4 5 6 (PRODUCT LEVEL)	SEE PAGE
	8T-9079	14	BOLT-PLOW (1-1/4-7X3.35-IN)	
	135-9294	1	EDGE-SEGMENT	
	135-9296	3	EDGE-SEGMENT	
	135-9295	3	EDGE-SEGMENT	
	3K-9770	14	NUT-FULL (1-1/4-7-THD)	

<END>

318-3365 PIN GP-FORK—ANTI-SWING

S/N: RYF1-UP

PART OF 329-4983 CARRIAGE GP-FORK

AN ATTACHMENT

SMCS-6458 **i03405881**

NOTE	REF NO	GRAPHIC REF	PART NUMBER	QTY	PART NAME 1 2 3 4 5 6 (PRODUCT LEVEL)	SEE PAGE
	1	1	**9C-7907**	2	SPACER (21.5X28X14-MM THK)	
	2	1	**316-3499**	2	PIN AS	
	3	1	**8T-4123**	2	WASHER (22X35X3.5-MM THK)	
M	4	1	**8T-6430**	2	BOLT (M20X2.5X50-MM)	

M-METRIC PART

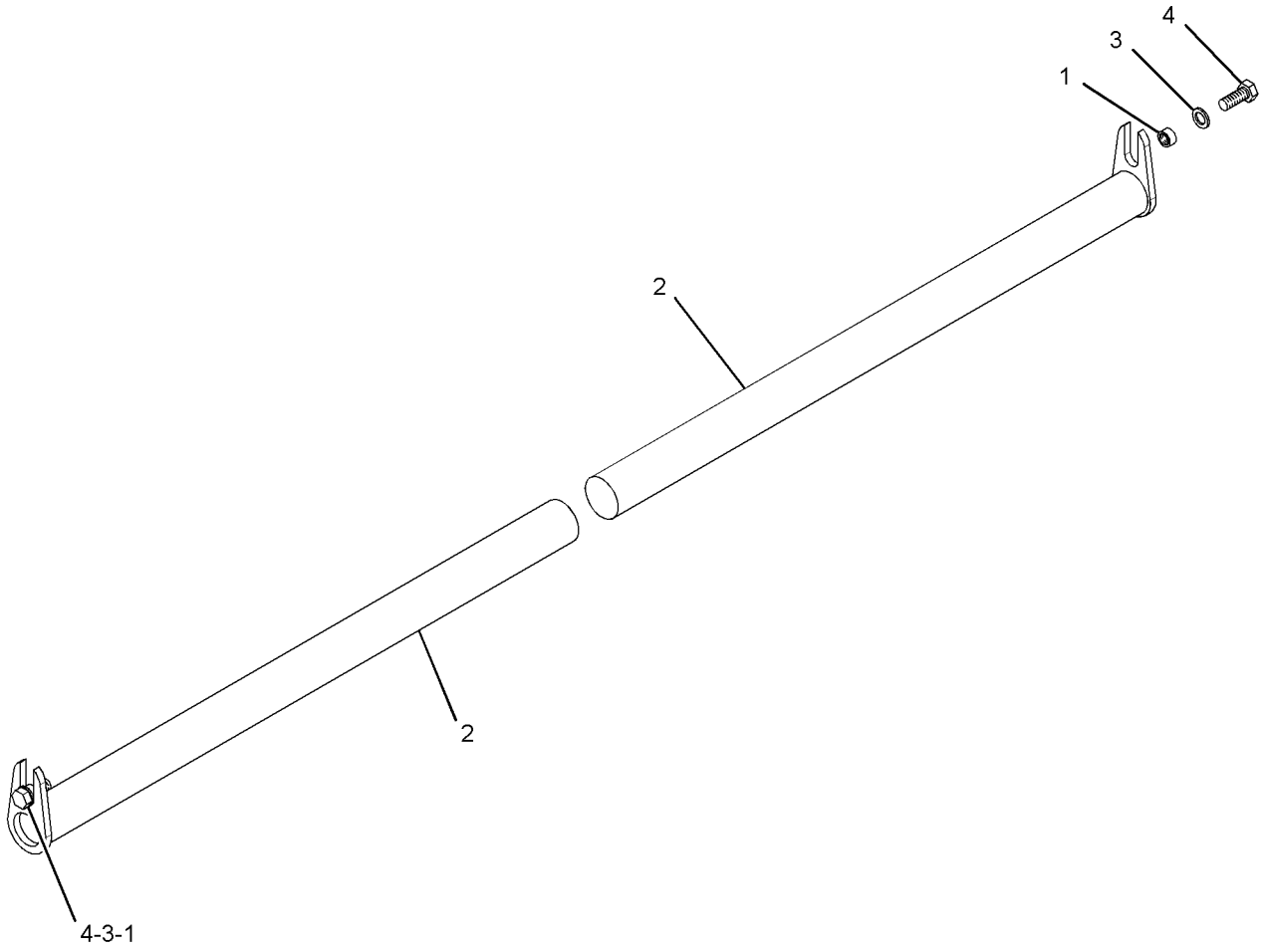

GRAPHIC #1 **<END>** g01571294

WORK TOOLS

161-9131 PLATE GP-WEAR

S/N: RYF1-UP

PART OF 133-1667, 133-1668, 133-1671, 133-1693 BUCKET GP-GENERAL PURPOSE, 133-1670, 133-1691 BUCKET GP-MATERIAL HANDLING, 148-6899, 254-4496, 254-4497 BUCKET GP-ROCK

AN ATTACHMENT

SMCS-6120, 6820 **i03629242**

NOTE	PART NUMBER	QTY	PART NAME 1 2 3 4 5 6 (PRODUCT LEVEL)	SEE PAGE
	5J-4773	8	BOLT-PLOW (3/4-10X2.5-IN)	
	2J-3506	8	NUT-FULL (3/4-10-THD)	
	161-8573	2	PLATE-WEAR	
	5P-8248	8	WASHER-HARD (20X36.5X3.5-MM THK)	

<END>

135-8245 PROTECTOR GP-EDGE

S/N: RYF1-UP

AN ATTACHMENT

SMCS-6120 **i03626517**

NOTE	PART NUMBER	QTY	PART NAME 1 2 3 4 5 6 (PRODUCT LEVEL)	SEE PAGE
	135-9292	4	PIN	
	135-8246	2	PROTECTOR	
	114-0359	4	RETAINER AS	

<END>

WORK TOOLS

312-6432 TINE GP

S/N: RYF1-UP
72-IN (18.30-CM)
AN ATTACHMENT

SMCS-6458 **i03547078**

NOTE	REF NO	GRAPHIC REF	PART NUMBER	QTY	PART NAME 1 2 3 4 5 6 (PRODUCT LEVEL)	SEE PAGE
	1	1	**312-6234**	1	FORK GP-PALLET (72-IN)	
	2	1	**312-6235**	1	FORK GP-PALLET (72-IN)	

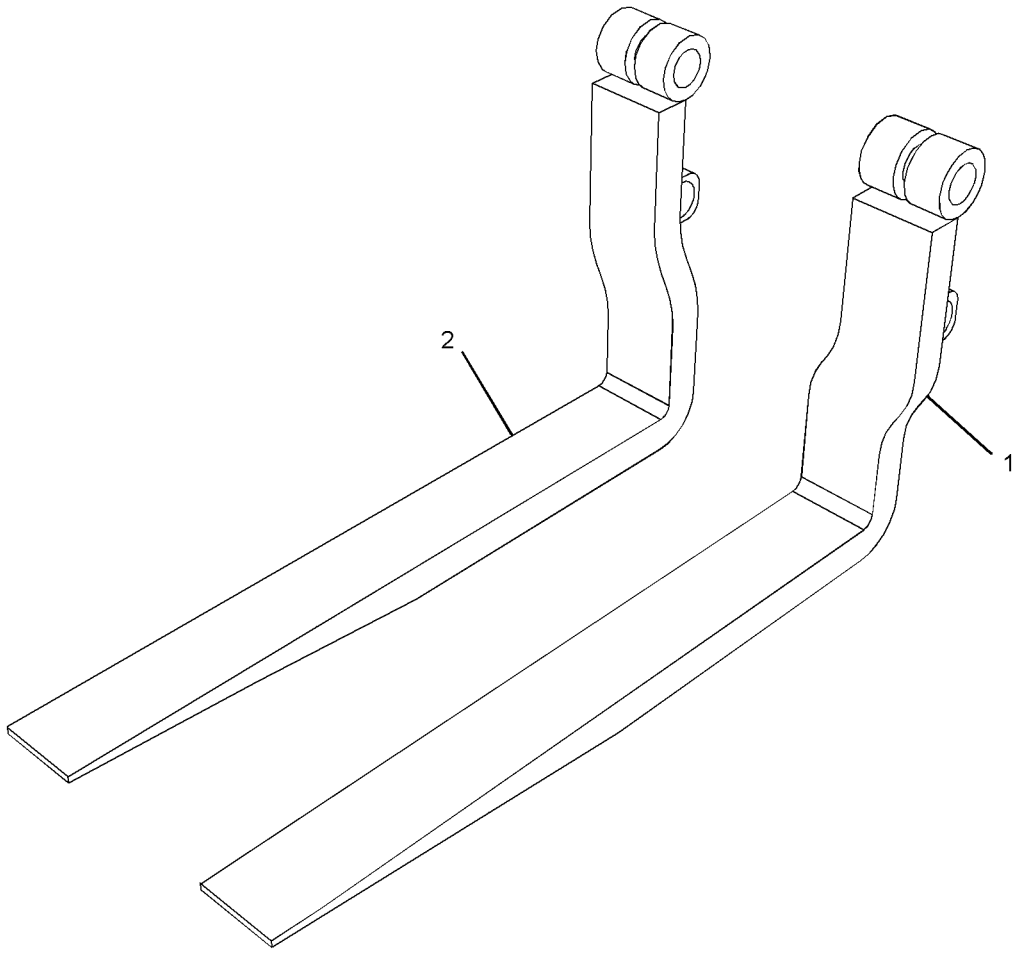

GRAPHIC #1 **<END>** g01593283

WORK TOOLS

257-1773 TIP GP-ABRASION–K-90

S/N: RYF1-UP

AN ATTACHMENT

SMCS-6805 **i03630730**

NOTE	REF NO	GRAPHIC REF	PART NUMBER	QTY	PART NAME 1 2 3 4 5 6 (PRODUCT LEVEL)	SEE PAGE
	1	1	**220-9090**	1	RETAINER-G.E.T.	
	2	1	**222-1092**	1	TIP-ABRASION	

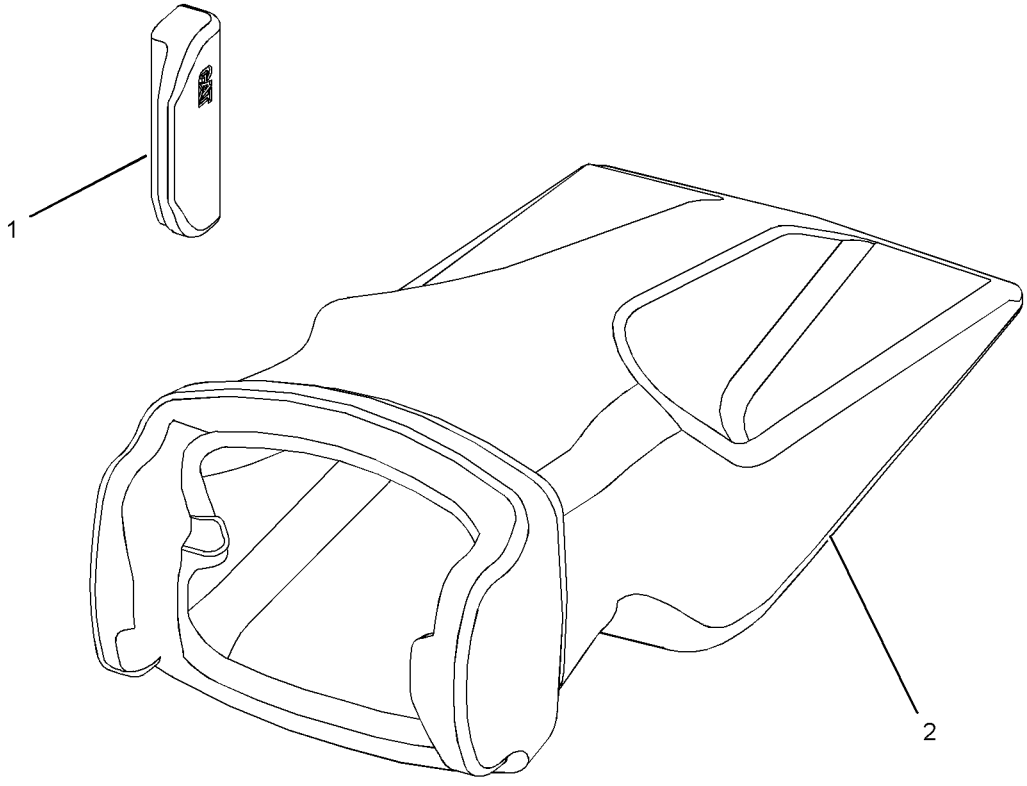

GRAPHIC #1 **<END>** g01195467

WORK TOOLS

217-4891 TIP GP-EXTRA-DUTY

S/N: RYF1-UP
K-90
AN ATTACHMENT

SMCS-6805 **i02449348**

NOTE	REF NO	GRAPHIC REF	PART NUMBER	QTY	PART NAME 1 2 3 4 5 6 (PRODUCT LEVEL)	SEE PAGE
	1	1	**220-9090**	1	RETAINER-G.E.T.	
	2	1	**220-9091**	1	TIP-EXTRA-DUTY (K-90)	

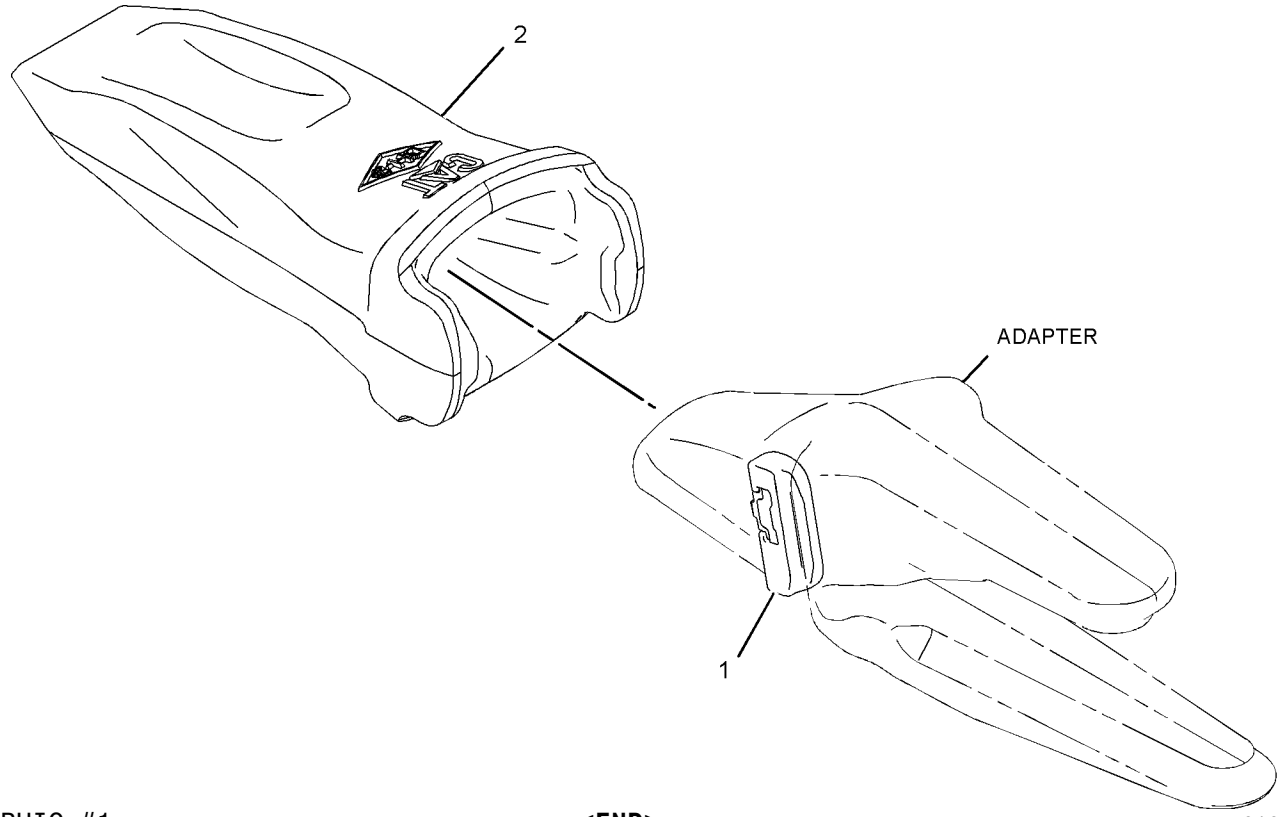

GRAPHIC #1 **<END>** g01074500

WORK TOOLS

217-4896 TIP GP-GENERAL PURPOSE

S/N: RYF1-UP
K-90
AN ATTACHMENT

SMCS-6805 **i02539849**

NOTE	REF NO	GRAPHIC REF	PART NUMBER	QTY	PART NAME 1 2 3 4 5 6 (PRODUCT LEVEL)	SEE PAGE
	1	1	**220-9090**	1	RETAINER-G.E.T.	
	2	1	**220-9099**	1	TIP-GENERAL PURPOSE (K-90)	

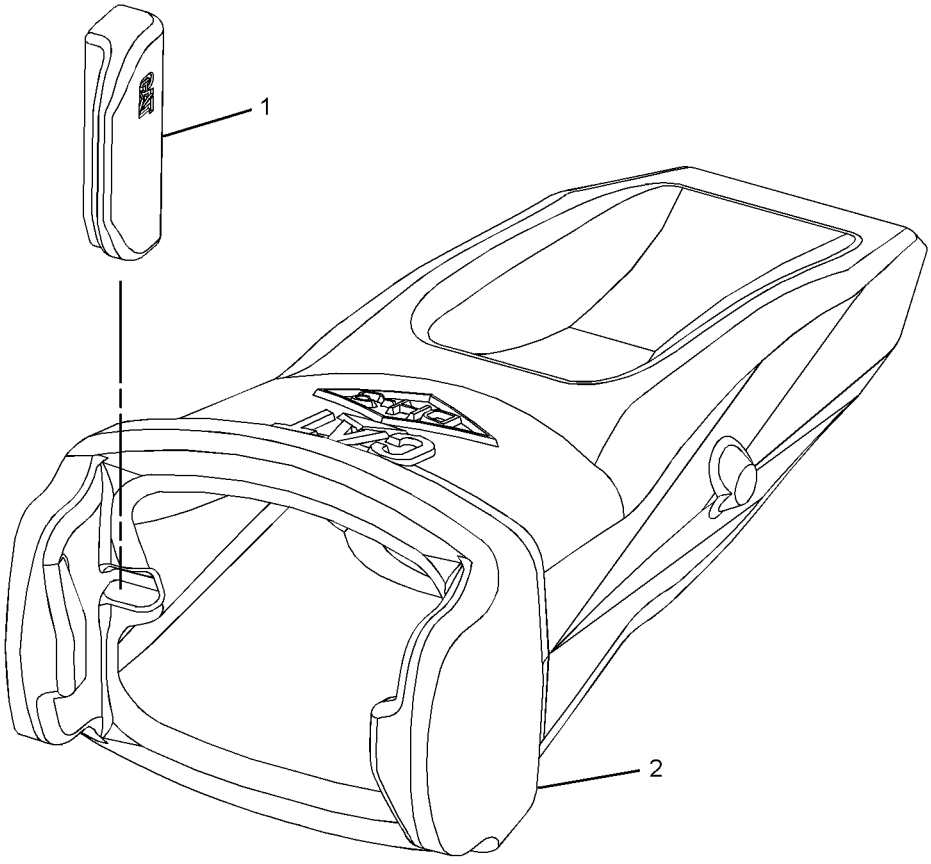

GRAPHIC #1 **<END>** g01279515

WORK TOOLS

217-4892 TIP GP-PENETRATION

S/N: RYF1-UP
K-90
AN ATTACHMENT

SMCS-6805 **i02100100**

NOTE	REF NO	GRAPHIC REF	PART NUMBER	QTY	PART NAME 1 2 3 4 5 6 (PRODUCT LEVEL)	SEE PAGE
	1	1	**220-9090**	1	RETAINER-G.E.T.	
	2	1	**220-9092**	1	TIP-PENETRATION (K-90) (K-90)	

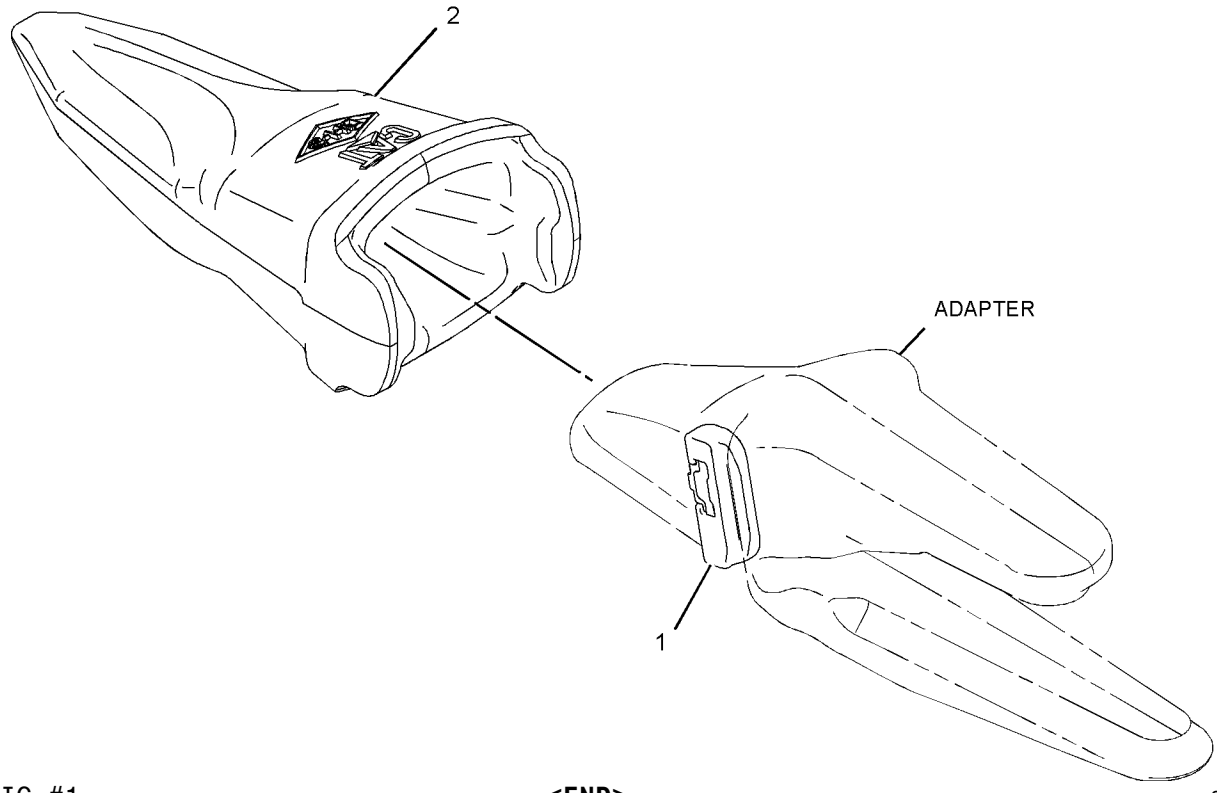

GRAPHIC #1 **<END>** g01074482

SERVICE EQUIPMENT AND SUPPLIES

297-0938 FILM GP

S/N: RYF1-UP

PART OF 292-3022 PLATE & FILM GP

SMCS-7405, 7557 **i03615044**

NOTE	REF NO	GRAPHIC REF	PART NUMBER	QTY	PART NAME 1 2 3 4 5 6 (PRODUCT LEVEL)	SEE PAGE
E	1	1	**206-6305**		FILM-STRIPE (RED REFLECTIVE) (13.5-CM EACH)	
	2	1	**197-4859**	1	FILM-IDENTIFICATION (CATERPILLAR, REAR CAB)	
	3	1	**209-0516**	1	FILM-IDENTIFICATION (CATERPILLAR, FRONT WINDOW)	
	4	1	**253-0861**	2	FILM-INFORMATION (CAT POWER, ACERT TECHNOLOGY)	
	5	1	**297-0937**	1	FILM-IDENTIFICATION (CAT 966H, RH)	
	6	1	**297-0936**	1	FILM-IDENTIFICATION (CAT 966H, LH)	

E-ORDER BY THE CENTIMETER



REAR VIEW
(CAB)

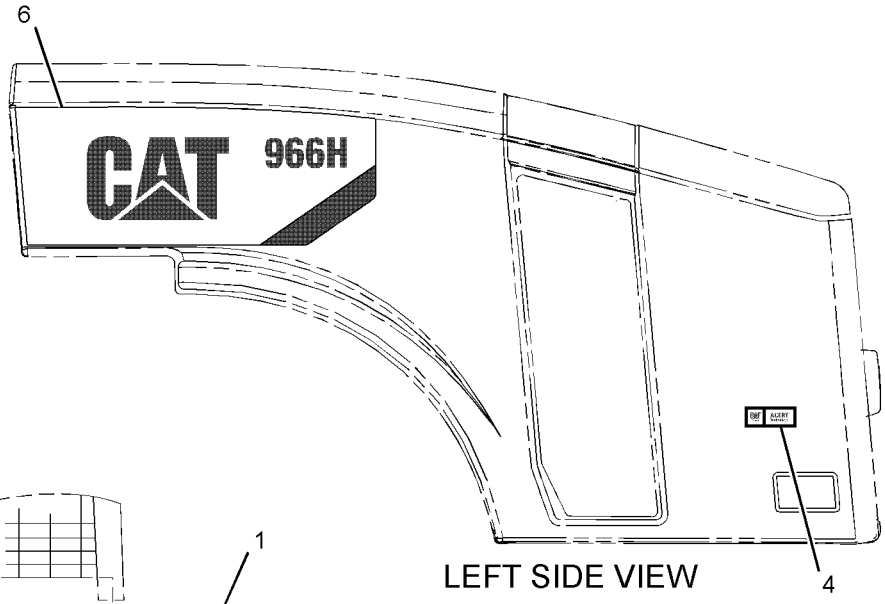

LEFT SIDE VIEW

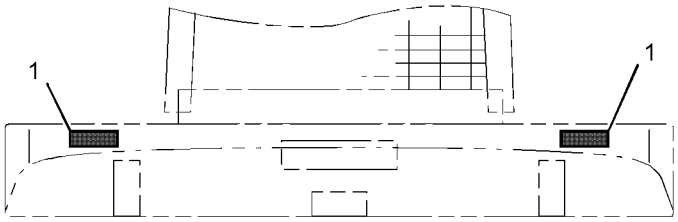

REAR VIEW
(REAR FRAME)

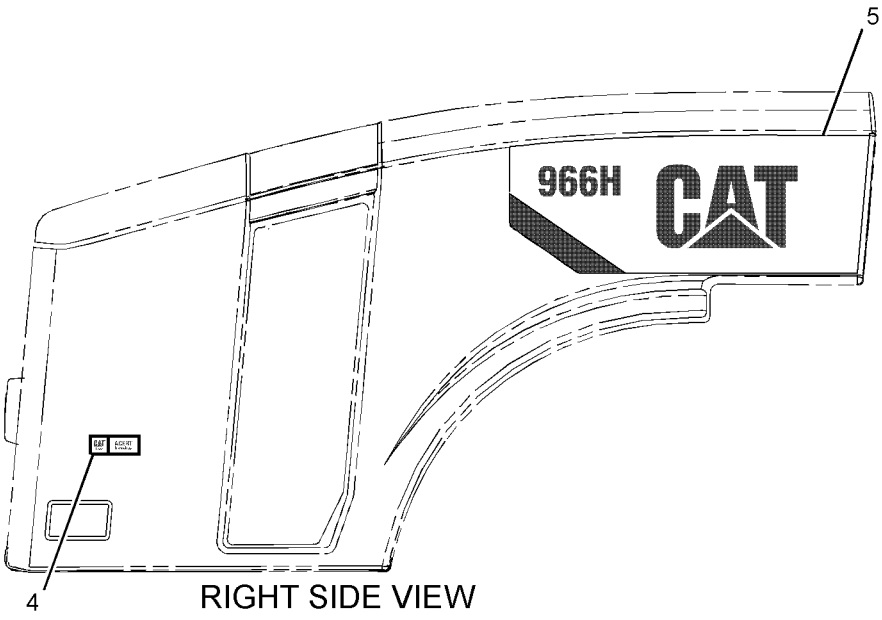

RIGHT SIDE VIEW

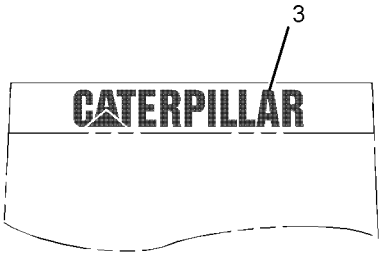

FRONT VIEW

GRAPHIC #1 **<END>** g01373753

SERVICE EQUIPMENT AND SUPPLIES

236-9046 LINES GP-DIAGNOSTIC–
REMOTE PRESSURE TAPS, HYDRAULIC
S/N: RYF1-UP
PART OF 236-8963 HYDRAULIC AR-2 VALVE

SMCS-7554 **i03622046**

NOTE	REF NO	GRAPHIC REF	PART NUMBER	QTY	PART NAME 1 2 3 4 5 6 (PRODUCT LEVEL)	SEE PAGE
	1	1,2	**6V-0852**	7	CAP-DUST	
	2	2	**111-4836**	2	CLIP	
	3	1,2	**185-6250**	7	FITTING AS	
	4	1	**234-3539**	1	WASHER-WAVE	
	5	1	**246-0717**	1	HOSE AS (BRAKE PRESSURE)	
	6	2	**246-0718**	1	HOSE AS (TORQUE CONVERTER INLET PRESS)	
	7	2	**246-0719**	1	HOSE AS (TORQUE CONVERTER OUTLET PRESS)	
	8	2	**246-0720**	1	HOSE AS (TRANSMISSION LUBRICATION PRESS)	
	9	2	**246-0721**	1	HOSE AS (TRANSMISSION PUMP)	
	10	2	**256-0854**	1	PLATE	
	11	1	**256-3881**	1	HOSE AS (STEERING PUMP)	
	12	1	**256-3882**	1	HOSE AS (MAIN HYD RELIEF VALVE PRESSURE)	
	13	1	*148-8325*	1	CONNECTOR AS	
		1	**3J-1907**	1	SEAL-O-RING	
		1	**4J-5477**	1	SEAL-O-RING	
		1	**6V-8641**	1	CONNECTOR	
	14	2	*148-8351*	6	ELBOW AS	
					(EACH INCLUDES)	
		2	**4J-5477**	1	SEAL-O-RING	
		2	**6V-9849**	1	ELBOW	
	15	2	*148-8368*	1	ELBOW AS	
		2	**3J-1907**	1	SEAL-O-RING	
		2	**4J-5477**	1	SEAL-O-RING	
		2	**6V-8627**	1	ELBOW	
	16	1	*150-3033*	2	ELBOW AS	
					(EACH INCLUDES)	
		1	**3J-1907**	1	SEAL-O-RING	
		1	**4J-5477**	1	SEAL-O-RING	
		1	**8T-0164**	1	ELBOW	
	17	1,2	**170-4735**	7	RING-RETAINING	
	18	1,2	**4J-5477**	7	SEAL-O-RING	
	19	2	**6D-3479**	1	CLIP	
	20	1	**6V-3265**	1	CLIP	
	21	1,2	**8T-4121**	8	WASHER-HARD (11X21X2.5-MM THK)	
M	22	2	**8T-4136**	6	BOLT (M10X1.5X25-MM)	
M	23	1,2	**8T-4137**	2	BOLT (M10X1.5X20-MM)	
E	24	1	**7I-1024**		GUARD-HOSE (30-CM)	
E	25	1	**7Y-5074**		GUARD-HOSE (30-CM)	

E-ORDER BY THE CENTIMETER
M-METRIC PART

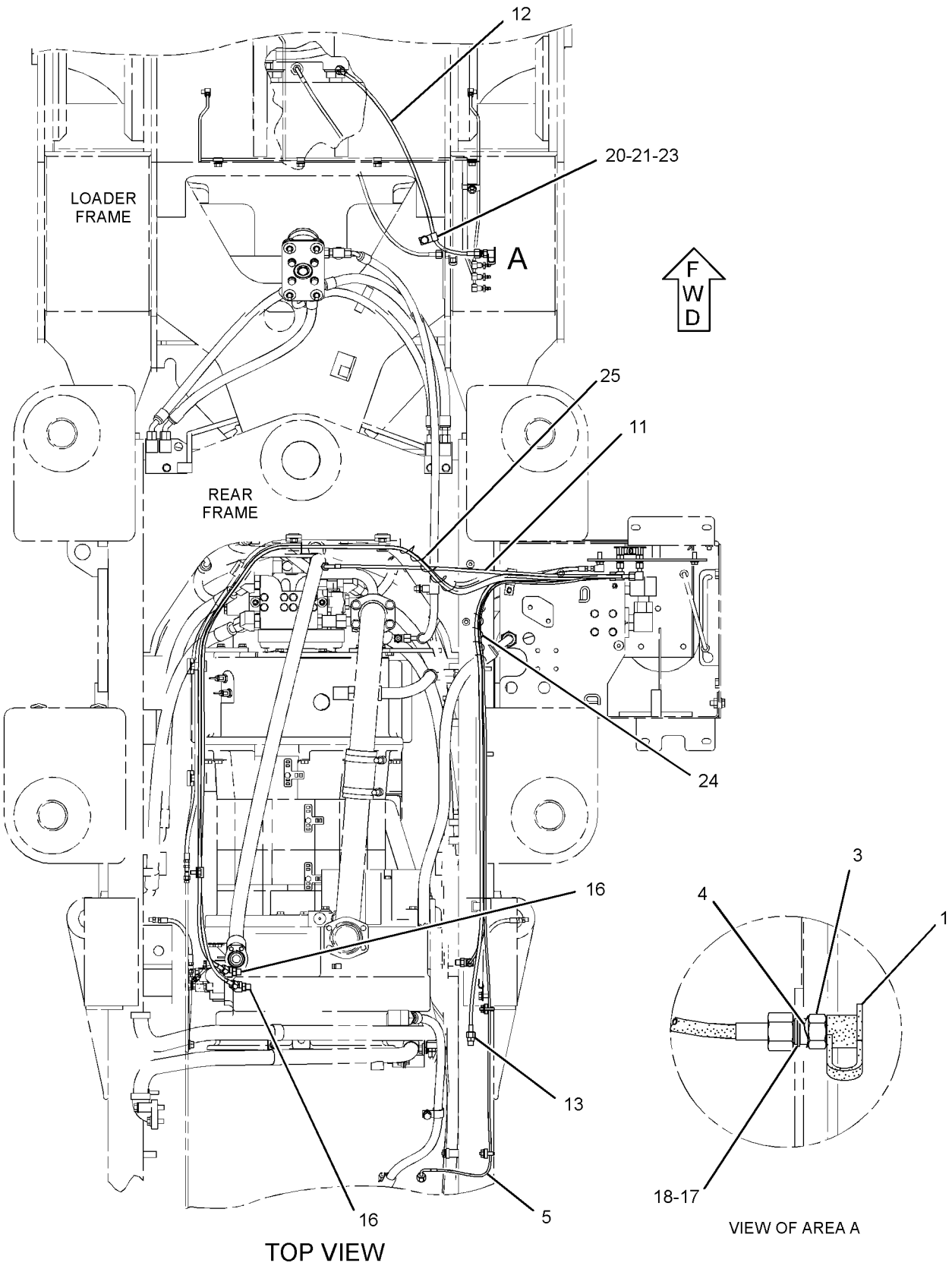

GRAPHIC #1

g01420628

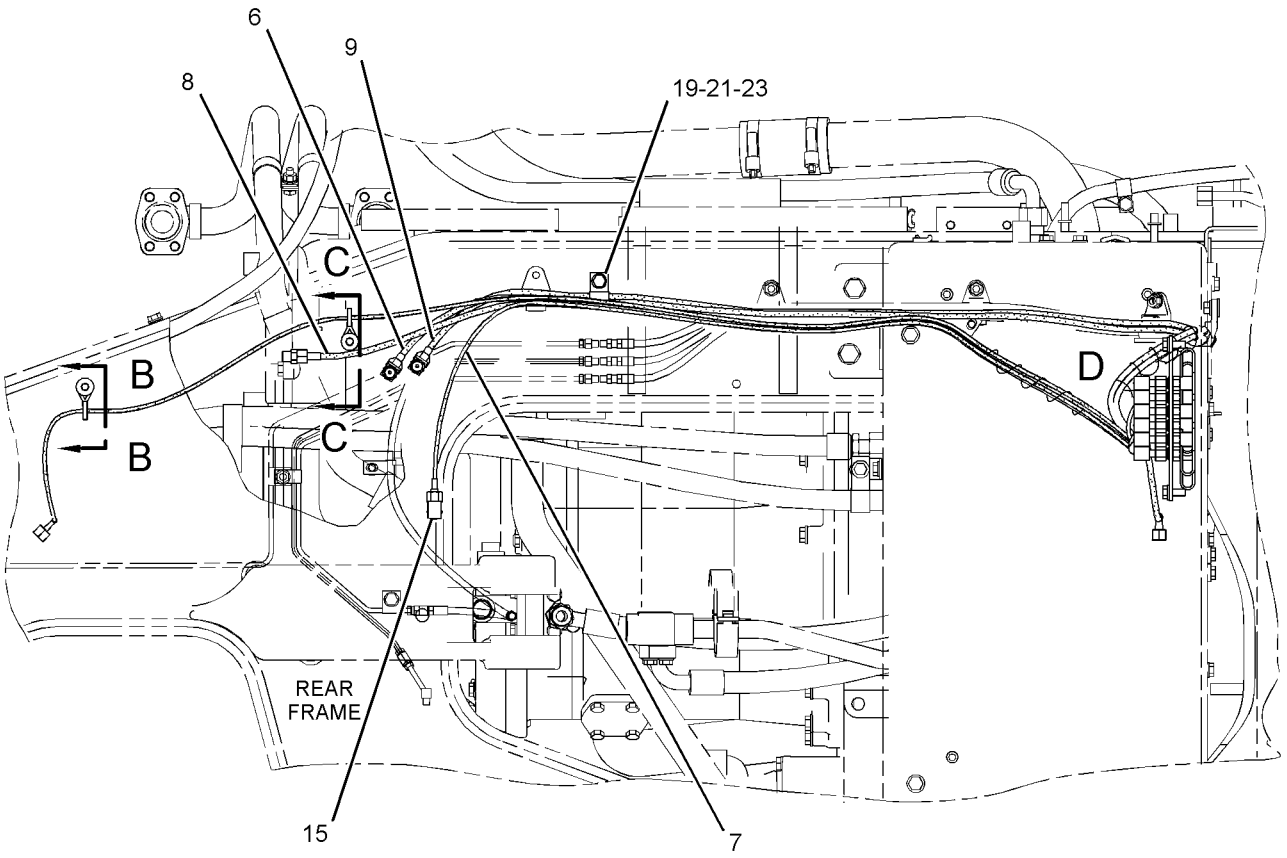

RIGHT SIDE VIEW

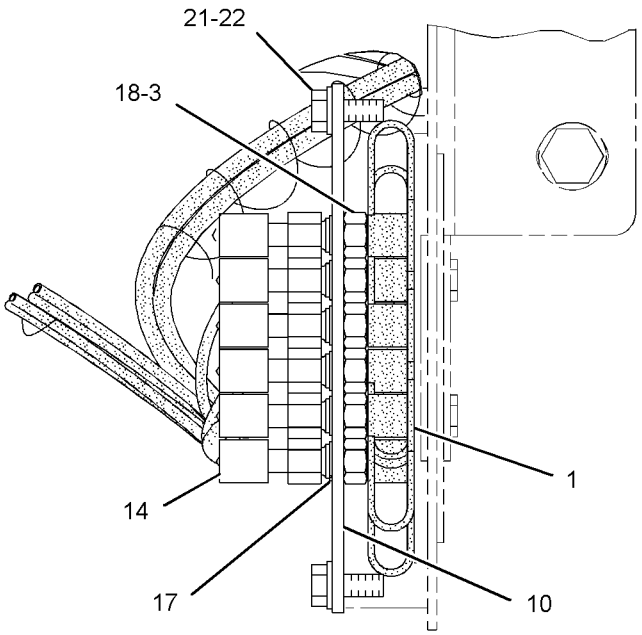

VIEW OF AREA D

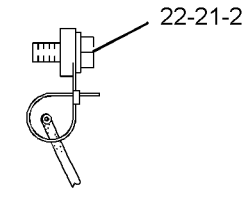

SECTION B-B

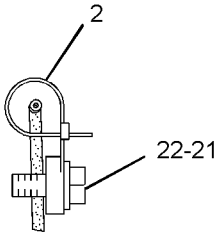

SECTION C-C

GRAPHIC #2 **<END>** g01420629

SERVICE EQUIPMENT AND SUPPLIES

236-9129 LINES GP-DIAGNOSTIC–
REMOTE PRESSURE TAPS, TRANSMISSION
S/N: RYF1-UP
AN ATTACHMENT

SMCS-7554 **i03626543**

NOTE	REF NO	GRAPHIC REF	PART NUMBER	QTY	PART NAME 1 2 3 4 5 6 (PRODUCT LEVEL)	SEE PAGE
	1	1,2	**290-0677**	1	HOSE AS (XMSN CLUTCH 6, 1ST GEAR PRESS)	
	2	1,2	**290-0676**	1	HOSE AS (XMSN CLUTCH 5, 2ND GEAR PRESS)	
	3	1,2	**290-0675**	1	HOSE AS (XMSN CLUTCH 4, 3RD GEAR PRESS)	
	4	1,2	**290-0674**	1	HOSE AS (XMSN CLUTCH 3, 4TH GEAR PRESS)	
	5	1,2	**290-0673**	1	HOSE AS (XMSN CLUTCH 2, FORWARD PRESS)	
	6	1,2	**290-0672**	1	HOSE AS (XMSN CLUTCH 1, REVERSE PRESS)	
	7	1	**6V-0852**	6	CAP-DUST	
	8	2	**7K-1181**	2	STRAP-CABLE	
	9	1	**127-9323**	1	BRACKET AS	
M		1	**8T-3490**	1	NUT-WELD (M10X1.5-THD)	
	10	1	**185-6250**	6	FITTING AS	
	11	1	*148-8351*	6	ELBOW AS	
					(EACH INCLUDES)	
		1	**4J-5477**	1	SEAL-O-RING	
		1	**6V-9849**	1	ELBOW	
	12	2	*148-8368*	6	ELBOW AS	
					(EACH INCLUDES)	
		2	**3J-1907**	1	SEAL-O-RING	
		2	**4J-5477**	1	SEAL-O-RING	
		2	**6V-8627**	1	ELBOW	
	13	1	**170-4735**	6	RING-RETAINING	
	14	2	**4J-5477**	6	SEAL-O-RING	
	15	1	**5P-7854**	1	CLIP	
	16	1	**6V-1889**	1	CLIP	
	17	1	**7X-7729**	1	WASHER (11X25X3-MM THK)	
M	18	1	**8T-4137**	1	BOLT (M10X1.5X20-MM)	

M-METRIC PART

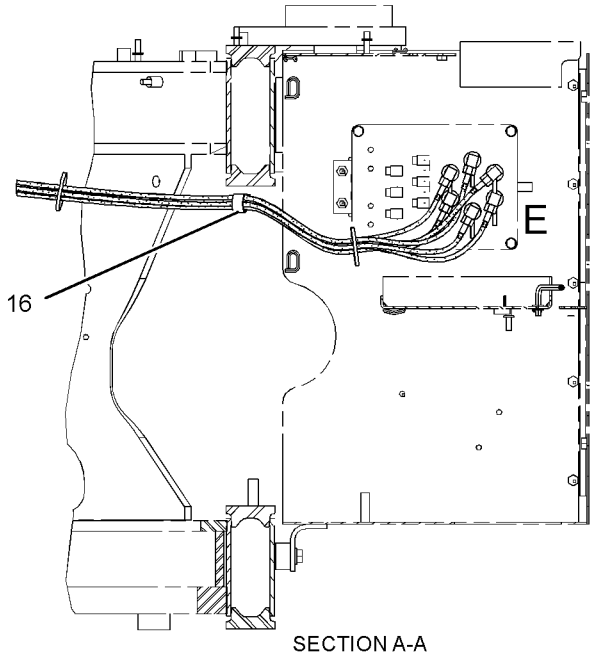

SECTION A-A

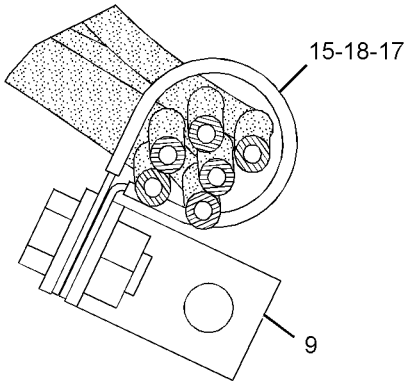

SECTION F-F

PATTERN POSITION IS PER TAG NUMBERS ON LINES

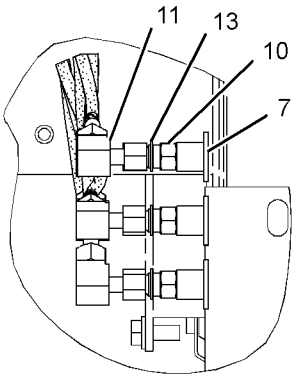

VIEW OF AREA C

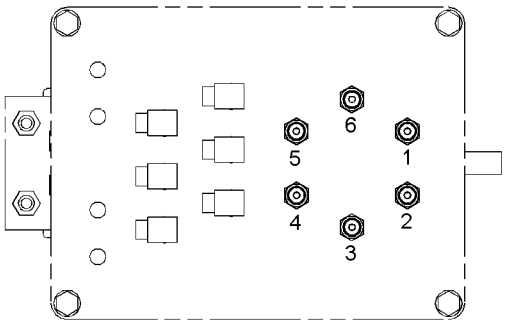

VIEW OF AREA E
(DUST CAPS REMOVED)

REMOTE TRANSMISSION PRESSURE TAPS DESCRIPTION	
1	TRANSMISSION CLUTCH 6, 1ST GEAR PRESSURE
2	TRANSMISSION CLUTCH 5, 2ND GEAR PRESSURE
3	TRANSMISSION CLUTCH 4, 3RD GEAR PRESSURE
4	TRANSMISSION CLUTCH 3, 4TH GEAR PRESSURE
5	TRANSMISSION CLUTCH 2, FORWARD GEAR PRESSURE
6	TRANSMISSION CLUTCH 1, REVERSE GEAR PRESSURE

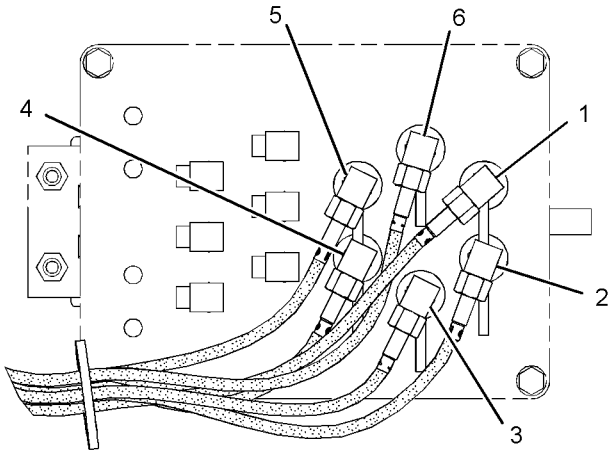

VIEW OF AREA E

GRAPHIC #1

g01258825

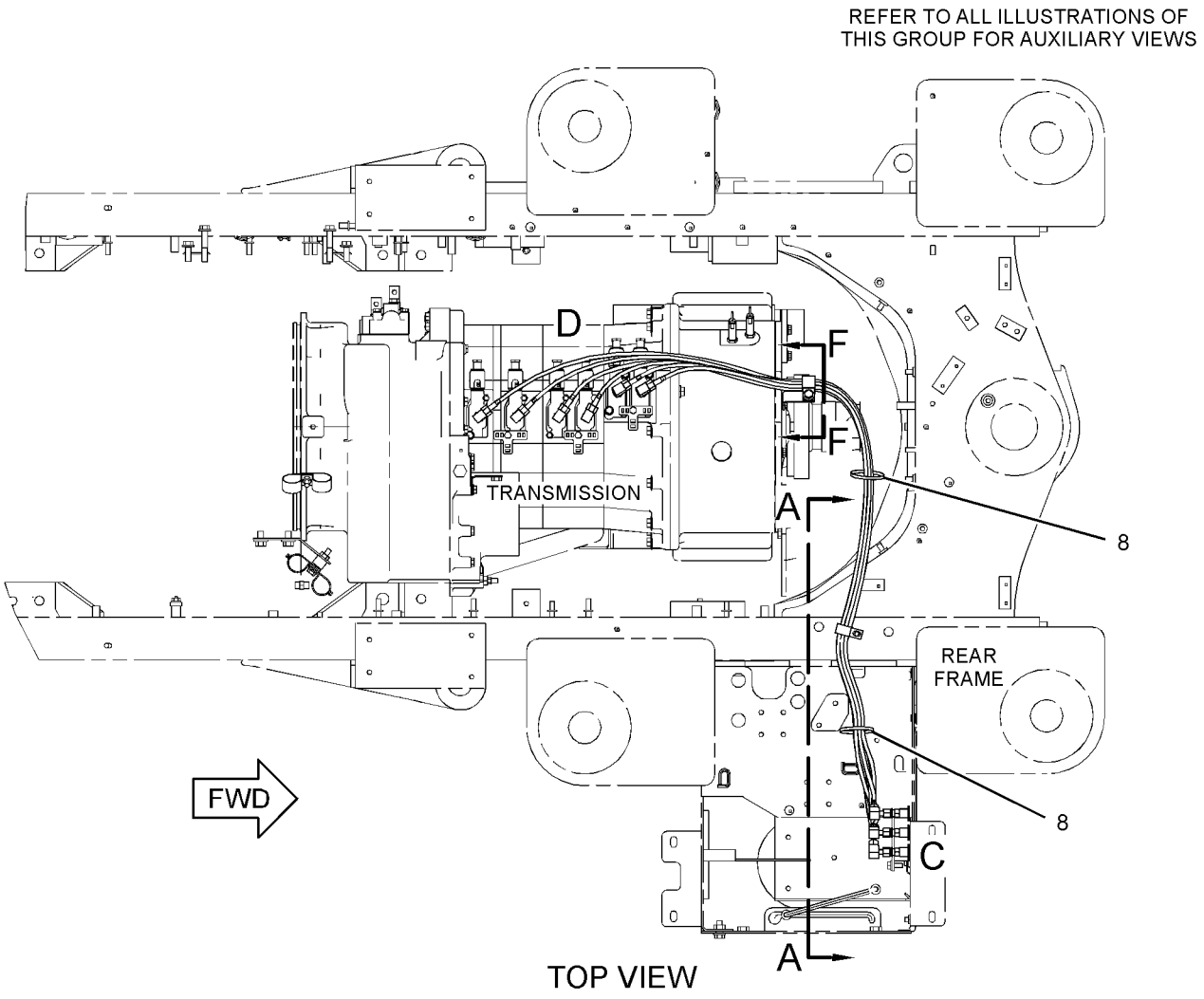

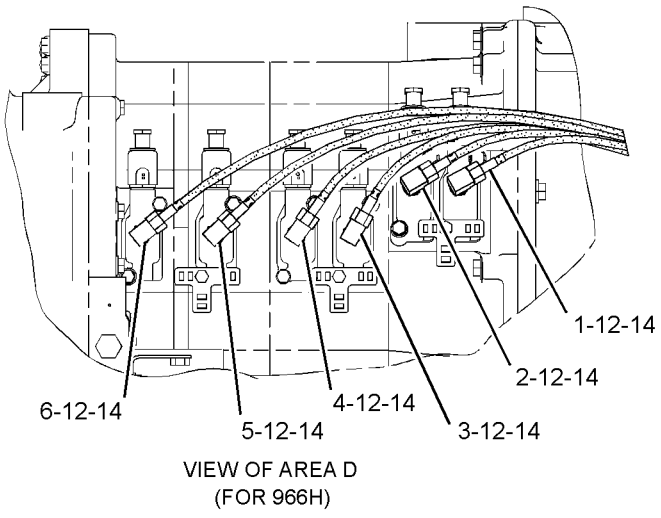

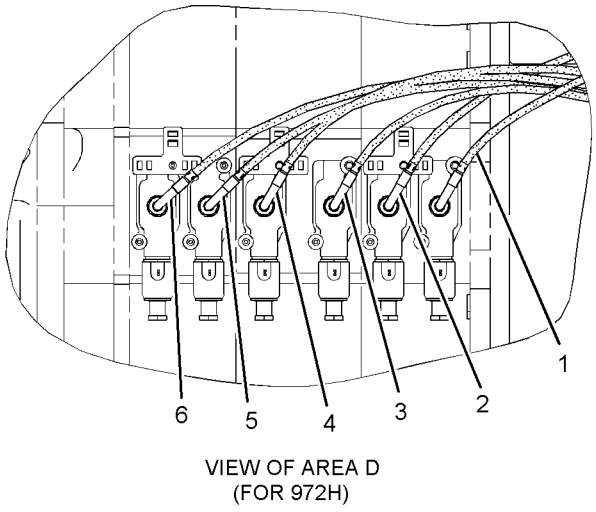

GRAPHIC #2 **<END>** g01258824

SERVICE EQUIPMENT AND SUPPLIES

292-3022 PLATE & FILM GP

S/N: RYF1-UP

PART OF 236-9000 CHASSIS AR

SMCS-7405, 7557 **i03615020**

NOTE	PART NUMBER	QTY	PART NAME 1 2 3 4 5 6 (PRODUCT LEVEL)	SEE PAGE
Y	*297-0938*	1	FILM GP	675
	5P-1175	1	FILM-IDENTIFICATION (ENGINE OIL FILL)	
			(ATTACHED TO CRANKCASE OIL FILLER CAP)	
	261-0471	1	FILM-IDENTIFICATION (REMOTE PRESSURE TAPS)	
			(ON THE INSIDE OF THE DIAGNOSTIC CONNECTOR DOOR ON THE HYDRAILIC SERVICE CENTER)	
	158-7864	1	FILM-IDENTIFICATION (HYDRAULIC OIL)	
			(FORWARD OF & ABOVE THE HYDRAULIC TANK SIGHT GAUGE ON TANK SURFACE)	
	1P-2807	2	FILM-INFORMATION (LIFT EYE LOCATION)	
			(ONE EACH AT FRONT LIFT EYES)	
	134-7258	1	FILM-INFORMATION (EXTENDED LIFE COOLANT,READ OMM)	
			(NEXT TO RADIATOR FILL CAP)	
	148-3587	1	FILM-INFORMATION (TRANSMISSION OIL LEVEL)	
			(ON FRONT SIDE OF TRANSMISSION SIGHT GAUGE)	
	146-6747	2	FILM-INFORMATION (24-VOLT)	
			(ONE ON BATTERY BOX COVER & ONE BELOW FILM-WARNING 225-0312)	
	7X-7644	2	FILM-INFORMATION (TIE-DOWN)	
			(ONE EACH AT FRONT TIE DOWN EYES)	
	252-5875	1	FILM-INFORMATION (ROPS, FOPS, READ OMM)	
			(ON RH SIDE OF CAB ABOVE PLATFORM & REARWARD OF DOOR. CENTER IN PANEL)	
	334-4603	1	FILM-INFORMATION (HYDO ADVANCED 10)	
			(ON TOP OF HYDRAULIC TANK BETWEEN THE FILLER CAP & THE VACUUM BREAKER PORT, WITH THE LETTERS ON THE FILM READABLE FROM	
			REAR)	
	187-0661	1	FILM-INSTRUCTION (ALTERNATE EXIT)	
			(ON GLASS OF RH DOOR JUST ABOVE THE LATCH)	
	7X-3229	2	FILM-INSTRUCTION (LIFT EYE, TIE-DOWN LOCATION)	
			(ONE EACH AT REAR LIFT & TIEDOWN EYES. LOCATE TO THE RIGHT AND CENTERED ON THE LIFT EYE HOLE)	
	124-2456	4	FILM-INSTRUCTION (NO STEP)	
			(ON TOP OF HOOD BEHIND CAB ON EACH SIDE & ON EACH FENDER FLARE)	
	263-3180	1	FILM-INSTRUCTION (MACHINE MAINTENANCE)	
			(ATTACHED TO THE INSIDE OF HYDRAULIC SERVICE CENTER ACCESS PANEL)	
	276-1858	1	FILM-INSTRUCTION (GREASE PRESSURE PORTS)	
			(ON RH SIDE OF NON-ENGINE END FRAME BELOW GREASE FITTING BLOCK)	
	296-1393	1	FILM-INSTRUCTION (MACHINE SERVICE)	
			(ATTATCHED TO OUTSIDE OF HYDRAULIC SERVICE CENTER ACCESS PANEL)	
	219-0305	1	FILM-WARNING (NO WELD, NO DRILL, READ OMM)	
			(ON RH SIDE OF CAB ABOVE PLATFORM & REARWARD OF DOOR. CENTER IN PANEL)	
	225-0312	2	FILM-WARNING (JUMP START, READ OMM)	
			(ONE ON BATTERY BOX COVER & ONE AT BOTTOM REAR CORNER OF BOX GP-BATTER, ON SURFACE OF BATTERY BOX NEAR LADDER, LEAVE)	
			ROOM TO LOCATE 146-6747)	
	225-4257	2	FILM-WARNING (HOT FLUID UNDER PRESS, INTL)	
			(NEXT TO RADIATOR FILL CAP)	

292-3022 **PLATE & FILM GP** *(contd.)* **i03615020**

NOTE	PART NUMBER	QTY	PART NAME 1 2 3 4 5 6 (PRODUCT LEVEL)	SEE PAGE
			(NEXT TO HYD. TANK FILL CAP)	
	226-1240	2	FILM-WARNING (CRUSH HAZARD, STAY BACK, INTL)	
			(ON SIDEFACE OF LOADER FRAME 75-MM FORWARD OF REAR EDGE AND UP 500-MM FROM BOTTOM - ON EACH SIDE)	
	226-1274	1	FILM-WARNING (CRUSH HAZARD, READ OMM, INTL)	
			(BELOW CRUSH WARNING FILM ON THE SIDE OF THE MACHINE WITH THE ARTICULATION LOCK)	
	227-7391	1	FILM-WARNING (SEAT BELT, INTERNATIONAL)	
			(ON RH CAB POST)	
	228-2616	1	FILM-WARNING (UNIVERSAL, READ OMM, INTL)	
			(INSIDE CAB ON INSIDE SURFACE OF FRONT LH POST APPROXIMATELY 900-MM ABOVE CAB FLOOR)	
	237-6256	2	FILM-WARNING (FAN)	
			(ON EACH SIDE OF RADIATOR CENTERED 25-MM ABOVE THE FAN ACCESS DOOR)	
	239-6986	1	PLATE-IDENTIFICATION (MACHINE)	
			(ON LEFT SIDE OF LOADER FRAME. FRONT EDGE OF PLATE 130-MM TO THE REAR OF CENTER LINE OF LIFT CYLINDER PIN. TOP OF PLATE	
			15-MM BELOW THE HORIZONTAL CENTER LINE OF THE LIFT CYLINDER PIN. FOR CONCEALED PIN LOCATION SEE CHART)	
A	**3N-3790**	1	PLATE-SERIAL NUMBER (ENGINE)	
			(ON NO 6 ROD POCKET 65-MM FROM REAR FACE OF BLOCK & 185-MM FROM THE BOTTOM FACE OF BLOCK, ON RH SIDE OF CYLINDER BLOCK)	
	236-7230	1	TAG-WARNING (STEERING FRAME LOCK)	
			(ON STEERING WHEEL)	

A-NOT PART OF THIS GROUP
Y-SEPARATE ILLUSTRATION

<END>

PART NUMBER INDEX

Part	Page
0	
0L-1026	32
0L-1407	233
0S-0175	559
0S-1579	316
0S-1590	316
0T-0244	614
	620
1	
1A-2170	52
1A-2223	303
1B-3057	294
1B-3867	75
1B-3934	349
1B-8705	7
1B-9575	457
1D-4539	457
1D-4675	518
1D-5117	128
1F-2771	316
1H-0974	308
1H-1023	197
1H-2629	197
1H-3244	121
	156
	224
1H-3338	204
	205
1H-3937	473
1H-5728	29
1H-8306	116
1H-8720	262
1J-9671	29
	373
	374
1K-6872	522
1K-6985	393
1K-8850	334
1L-3768	462
1L-5072	474
1L-7518	275
	277
1M-3150	304
1M-3151	304
1M-4543	367
1M-6119	124
	125
1M-6120	124
	125
1M-8649	304
1M-9351	325
1M-9968	198
1M-9971	197
1N-5999	485
1P-0604	318
1P-0810	124
	222
	224
	249
	253
1P-1367	52
1P-2807	683
1P-3703	399
	447
1P-3704	399
	436
	447
	449
	485
	505
1P-3705	298
	455
	485
	487
	489
	505
1P-3707	262
1P-4278	107
1P-4577	395
1P-4578	442
	474
1P-4579	436
	442
	474
1P-4584	400
	474
1P-5767	436
	447
	449
1R-0762	99
1R-1808	57
1S-0724	442
1S-0833	295
1S-0944	395
1S-0994	104
	233
	294
	436
1S-4295	96
1S-5596	316
1S-6420	387
1S-6595	280
1S-7251	124
	196
	249
1S-7252	196
	249
1S-7446	197
1S-9593	132
1T-0936	453
	487
	489
1T-1621	318
1T-1639	316
1U-0593	663
1U-2827	492
1U-8846	29
	280
	284
	286
	290
	292
1V-6341	279
	316
1V-6755	608
1V-8848	349
1V-8852	349
2	
2A-2677	125
	225
	249
	400
2A-4429	19
2B-2404	359
2C-9259	651
	652
	661
2D-2443	311
2D-2511	311
2D-4202	474
2D-4867	516
2D-6392	197
2D-6642	46
2F-6678	198
2F-8509	464
2G-1388	370
2G-8767	124
2G-9524	559
2H-1855	201
2H-3088	279
2H-3429	197
2H-3920	218
	221
	225
2H-3922	202
2H-6338	436
2H-9247	279
2J-3506	669
2J-7686	425
	427
	429
	430
2J-7761	474
2J-8163	197
2K-0337	460
2K-0715	290
	292
2K-4821	121
2K-4973	518
	631
2K-5065	279
2K-8199	22
2L-2685	298
2L-5893	606
2L-6679	197
2L-8049	232
2L-8050	232
2L-8057	232
2L-8058	232
2L-8065	232
2L-8066	222
	223
2L-8067	223
2L-8071	223
	232
2L-8075	232
2L-8076	223
2L-8078	223
2L-8081	223
2M-0849	522
2M-6102	558
2M-9780	52
	110
	308
	325
	395
	410
	413
	436
	440
	441
	442
	451
	466
	483
	485
	487
	489
	491
	576
2N-2258	608
2N-2658	260
2N-5243	266
2P-1293	436
	442
2P-4304	52
2P-8986	279
2P-8987	279
2R-2376	573
2S-0795	266
2S-1382	324
2S-1384	324
2S-1385	324
2S-2053	58
2S-2596	412
	413
2S-4078	485
	487
	489
	505
	511
2S-4663	325
2S-4750	271
	279
2S-5658	25
2S-5835	325
2T-2098	440
2T-3011	440
2T-3360	545
2V-1771	125
	249
2V-3216	255
	640
2V-3726	596
2Y-3209	1
2Y-5829	58
	129
	239
3	
3B-0551	286

► **PRIMARY REFERENCE**

PART NUMBER INDEX

Part	Page	Part	Page	Part	Page	Part	Page
	288		551		262		110
	290	3E-4302	464		264		219
	292	3E-4312	522		274		242
3B-0623	15	3E-4319	279		300		294
	17	3E-4321	576		316		300
	40	3E-4352	39		324		385
3B-2062	344	3E-4353	129		325		386
3B-4607	387		266		385		395
3B-4611	351	3E-4367	223		386		398
	370		232		395		399
3B-4617	378	3E-4888	34		398		405
3B-4640	387	3E-5169	231		399		411
3B-6552	359	3E-5239	221		405		413
3B-8489	313		249		413		436
	349		586		433		442
	392	3E-6328	▶120		435		453
	516		221		436		455
3B-8491	516	3E-6389	▶145		437		468
3D-0053	460		221		440		482
3D-2824	43	3E-6466	▶154		441		485
	68		166		442		504
	115	3E-6769	233		447		505
	116	3E-6771	487		451		507
	200		489		453		513
	259	3E-6788	63		455		576
	284	3E-6799	318		457	3K-0715	457
	294	3E-7277	205		468	3K-1432	303
	387	3E-7417	464		476	3K-4528	223
	395	3E-7771	198		479	3K-4897	624
	398	3E-8005	110		485	3K-5178	76
	399	3E-8016	30		487	3K-6060	579
	413		37		489	3K-6113	502
	415		284		493	3K-8460	29
	435	3E-8017	90		499	3K-9770	643
	436		96		502		663
	441	3E-8048	178		505		664
	442	3E-8320	124		677		665
	464	3E-8557	223		680		666
	468		232	3J-4818	631		667
	474	3E-9850	331	3J-5553	266	3L-3380	197
	476	3F-2617	583	3J-7354	51	3N-3763	198
	479		584		65	3N-3790	684
	484	3F-5792	279		68	3N-8506	318
	576	3F-7183	349		274	3P-0647	59
3D-8317	325	3F-9556	121		386		316
3D-8417	290		233		405	3P-0650	51
	292	3G-3483	457		413	3P-1932	68
3E-0075	▶203	3G-3484	457		433	3P-2404	436
	231	3G-6395	663		441		442
3E-2310	405		666		455	3P-3441	303
3E-3365	154	3G-8956	▶663		466	3P-3839	233
	187	3H-0442	451		487	3P-7019	303
	193		508		489	3P-7832	260
	200	3H-2652	262		495	3P-9900	631
3E-3371	178	3H-5523	266		497	3R-2437	316
	185	3J-1907	60		500	3R-8797	197
	216		68		508	3R-8801	198
	249		91	3J-7479	412	3S-2093	37
3E-3383	150		100	3J-8500	471		100
	152		104	3K-0196	279		105
	209		105	3K-0360	29		107
	544		173		68		110
	588		233		100		124
	589		242		104		141
3E-3805	550		249		107		143

▶ **PRIMARY REFERENCE**

PART NUMBER INDEX

Part	Page
	160
	162
	169
	176
	219
	221
	222
	231
	239
	242
	249
	251
	253
	255
	264
	384
	547
	563
	566
	568
	569
	583
	584
	586
	640
3S-6049	124
3S-7023	301
3S-8109	303
	304
3S-9643	70
3T-2662	233
3T-3157	222
3T-3158	222
3T-3159	222
3T-3278	223
3T-3418	197
3T-3422	197
3T-3423	197
	198
3T-3424	197
	198
3T-3434	197
3T-4709	197
3T-4710	197
3T-4894	94
	95
3T-6965	279
3T-7584	304
3T-9494	197
	198
3T-9524	198
3T-9525	197
3T-9549	259
3T-9960	303
3V-3263	640
3V-7476	566

4

Part	Page
4B-0418	400
4B-2049	198
	225
4B-4158	468
4B-4274	233
4B-4278	631
4B-4863	233
4B-9782	271
	413
4B-9880	325
4D-1577	279
4D-2886	298
4D-7388	225
	233
	400
	436
4D-7735	387
4D-7794	174
4D-8123	141
4E-1384	76
	364
	559
4E-2229	132
4E-2240	286
	288
	290
	292
4E-3196	516
4E-3896	275
	277
4E-3897	275
	277
4E-4031	275
	277
4E-6523	624
4E-8168	315
4E-8722	524
	526
	528
	530
	533
	596
	624
4E-8958	375
4E-9173	624
4E-9174	624
4E-9273	294
4E-9664	375
	376
4F-2294	206
4F-4097	264
	464
4F-4879	621
	622
4F-5695	14
4F-7389	298
4H-1225	124
	244
	359
4H-4737	304
4I-1022	468
4I-3038	596
4I-7889	578
4J-0519	412
4J-0520	272
	298
	395
	400
	413
4J-0522	442
4J-0524	436
	442
	455
	485
	487
	489
	505
4J-0525	298
4J-5267	400
4J-5268	499
4J-5351	499
4J-5477	398
	441
	476
	479
	677
	680
4J-7533	325
	391
	451
	453
	455
	485
	505
4J-8996	489
4J-9224	393
4J-9535	455
	485
	487
	489
	505
4K-0684	666
4K-1388	316
4K-1540	378
4K-2039	513
4K-6780	349
4K-6781	349
4K-6804	286
	288
	290
	292
4K-7461	349
4K-7462	349
4K-8864	244
	251
4K-9429	563
	594
4L-2729	198
4L-6454	522
	617
	619
4M-1751	324
4M-1827	197
4M-1828	197
4M-1831	197
4M-1853	197
4M-1854	197
4M-1896	198
4M-2381	325
4M-6425	606
4M-7470	351
	559
4M-8239	324
4N-1059	196
4N-8150	52
4P-4369	90
4P-7428	244
	264
4P-7581	100
	225
	233
	239
	242
	547
4P-7582	242
4P-8134	242
	264
4P-8525	221
	255
4S-5824	303
4S-5838	275
4S-8537	303
4S-8541	318
4S-8598	279
4T-4942	504
4T-5613	393
4T-6699	664
4T-7571	504
4T-7581	▶504
	505
4T-8054	393
4V-1878	435
4V-1901	349
4V-1939	251
	253
4V-4164	221
4V-5099	290
	292
4V-7081	312
4V-7099	516
4V-7101	516
4V-8256	518
4V-8519	516
4V-8520	516
4V-8577	631
4V-8673	514
	515
4V-8674	514
	515
4V-8675	514
	515
4W-9149	239
4Y-8003	159
	169
	569

5

Part	Page
5A-3604	487
	489
5B-0935	359
5B-9192	566
5C-2874	566
5C-2890	76
	156
	165
	166
	204

▶ **PRIMARY REFERENCE**

PART NUMBER INDEX

Part	Page	Part	Page	Part	Page	Part	Page
	205	5K-9065	318	5P-1506	244		35
	351	5K-9090	272	5P-1827	457		37
	384		398	5P-1828	457		48
	551		416	5P-1941	457		262
	596		435	5P-2199	410		266
	599		436	5P-2248	341		279
	631		440	5P-2526	279		304
5C-7261	76		441	5P-2766	223	5P-8246	29
	125	5K-9242	359	5P-3131	304	5P-8247	27
	171	5K-9243	359	5P-3454	232		121
	225	5K-9660	442	5P-3930	304		286
	364	5K-9979	359	5P-4115	233		288
	551	5L-2931	303		563		290
	559	5L-2952	55	5P-4116	367		292
	573	5L-4019	457		387	5P-8248	380
	578	5L-4763	32		442		669
	608	5L-7200	211		474	5P-8250	429
	624		213		555		430
5C-7423	571	5M-2057	492		573	5P-8309	77
5C-8312	211	5M-2894	279	5P-4295	387		555
	225		316		477	5P-8347	6
5C-9553	141		606		480	5P-8361	643
	225	5M-3034	197	5P-4423	631	5P-8362	643
	334	5M-3062	373	5P-4484	286	5P-8500	1
	561		374		288	5P-8823	643
	563	5M-3154	280		290		663
	569	5M-6592	286		292		664
	635		288	5P-4571	223		665
	640		290	5P-4889	114		666
5D-1026	68		292	5P-4924	68	5P-9085	219
	107	5M-9548	324	5P-5411	279		233
5D-1911	474	5P-0372	344	5P-5461	359		239
5D-7927	474		364	5P-5463	359	5P-9132	544
5D-9344	29	5P-0537	47	5P-5598	19	5P-9262	500
5F-8000	262		157	5P-5639	563	5P-9297	233
5F-9035	415		255	5P-5677	143		244
5F-9144	433		595	5P-5927	563		249
5G-6505	128	5P-0747	124		573	5P-9436	70
5G-7020	400		196	5P-6006	223	5P-9617	51
5G-7021	400		249	5P-6010	631	5P-9806	262
5G-9603	442	5P-0761	124	5P-6120	608	5S-7001	324
5H-3193	413	5P-0767	68	5P-6298	197	5S-7349	121
5H-3701	286		107	5P-6414	318		201
	288		576	5P-6442	68	5S-7383	606
	290		578	5P-6719	499	5T-5682	310
	292	5P-1076	76	5P-6724	385	5V-0353	516
5H-5012	286		298	5P-6727	30	5V-0354	516
	288		329	5P-6879	581	5V-1496	615
	290		334		582	5V-6152	244
	292		344	5P-6944	100	5V-6153	244
5H-6734	279		355		107	5V-6380	362
5H-8853	104		367	5P-7701	52	5V-8780	76
5H-8985	457		370	5P-7803	550		
5I-3333	341		436		551		
5I-3876	100		460	5P-7815	259	**6**	
5I-4376	173		476	5P-7854	680		
5J-2974	271		479	5P-7957	594	6A-5591	37
	413		559	5P-7958	573	6B-4370	275
	499	5P-1175	683		596		277
5J-4773	669	5P-1230	68	5P-8068	63	6B-4852	286
5J-5314	197	5P-1251	68		262		288
5K-1568	271	5P-1262	68	5P-8211	37		290
5K-2298	359	5P-1291	271	5P-8245	23		292
5K-5338	387	5P-1295	398		29	6B-6682	380
5K-8591	318	5P-1442	68		33	6C-2356	301

PART NUMBER INDEX

Part	Page	Part	Page	Part	Page	Part	Page
6C-3678	559	6H-3999	349	6V-0292	367	6V-3535	30
6C-3679	559	6H-5139	271	6V-0357	485	6V-3536	10
6C-3997	171	6H-7062	460	6V-0371	196	6V-3538	15
6C-8648	290	6H-9361	474	6V-0400	447	6V-3668	33
	292	6I-1418	130	6V-0484	264		262
6D-1641	225		221		395		266
	400	6J-2680	400	6V-0834	303	6V-3822	23
	578	6J-3134	455	6V-0835	303		91
6D-3479	677		485	6V-0852	173		262
6D-4161	223		487		262		272
6D-4244	225		489		264	6V-3823	262
	400		505		274		318
	436	6J-4568	415		316	6V-3834	63
	442	6J-6439	504		325	6V-3907	468
	576	6J-6506	413		387	6V-3918	5
6D-4246	125	6J-6516	413		405		239
	242	6J-6517	413		436		474
	244	6K-2430	290		442	6V-3938	211
	249		292		449	6V-3940	55
	264	6K-5528	275		476		72
	387		277		480		325
	400	6K-5529	275		677	6V-3965	173
	436		277		680		262
	493	6K-8178	219	6V-1322	197		274
6D-6146	225	6L-2609	55	6V-1355	68		316
6D-7146	62	6L-3616	359	6V-1586	304		323
6D-7889	264	6L-8617	82	6V-1649	303		325
6E-0381	482	6M-5062	513	6V-1668	563		386
6E-0410	410	6N-3279	197	6V-1720	280		405
6E-1436	464	6N-6984	405	6V-1722	576		435
6E-1497	393	6N-7523	232	6V-1819	279		442
6E-1835	504	6N-8863	37	6V-1820	266		449
6E-3268	500	6N-9349	233		279		476
6E-3269	500	6P-2233	304		316		479
6E-3272	500	6P-7742	304		318	6V-3987	524
6E-3273	500	6P-7743	304	6V-1875	436		526
6E-3274	500	6P-7772	304	6V-1889	387		528
6E-3275	500	6P-7773	303		395		530
6E-3276	500	6P-7968	303		436		533
6E-4224	464	6P-7983	303		442	6V-4248	100
6E-4753	411	6P-7985	303		680		262
6E-5066	451	6P-8003	304	6V-1949	415		264
	453	6P-8005	304	6V-1970	1		279
	455	6R-7653	524	6V-2317	30	6V-4249	23
6E-5289	413		526		55		37
6E-5291	413		528		62		105
6E-5397	413		530		63	6V-4350	318
6E-6527	500		533		65	6V-4351	318
6E-6528	500	6S-3859	558		266	6V-4365	264
6E-6536	500	6S-6646	372	6V-2687	522	6V-4369	563
6E-6537	500		559	6V-2689	223	6V-4589	118
6E-6538	500	6S-8620	68		224		207
6E-6539	500	6T-0363	197	6V-3250	65	6V-4604	332
6E-6540	500	6T-0371	197		266		333
6F-0253	132	6T-0372	197	6V-3251	43	6V-5048	15
	221	6T-3631	215		65		41
	222		216		74		89
	530	6T-3632	215	6V-3265	225		176
6F-5188	271		216		359		184
6F-7045	202	6T-3633	215		384		186
6F-7062	266		216		640	6V-5049	17
6G-2256	124	6T-3644	233		677		42
6G-2263	124	6T-6052	413	6V-3319	502		52
6H-1717	266	6T-6080	459	6V-3531	290		176
6H-3618	378	6T-6708	563		292		183

► **PRIMARY REFERENCE**

PART NUMBER INDEX

Part	Page	Part	Page	Part	Page	Part	Page
6V-5050	259		460		387		399
6V-5063	17	6V-6535	643		398		436
	19	6V-6604	351		399		476
	70	6V-6609	43		405		479
	72		70		435		493
6V-5064	266		195		436	6V-8731	294
6V-5134	63	6V-6635	225		440	6V-8738	442
6V-5142	491	6V-6715	143		441	6V-8781	476
6V-5192	30	6V-6923	119		442		479
	471	6V-7238	37		476		493
6V-5195	413		576		479	6V-8782	386
6V-5215	176	6V-7350	73		480	6V-8784	387
6V-5217	7	6V-7357	336		493		442
	55		563	6V-8398	60	6V-8836	239
6V-5218	60		569		104		255
	284	6V-7419	640		110	6V-8837	464
	325	6V-7420	576		284	6V-8928	573
6V-5219	30	6V-7636	551		294	6V-8934	441
	65	6V-7646	615		385	6V-8969	595
	266	6V-7673	464		386	6V-8980	386
6V-5221	5	6V-7728	255		387	6V-8981	294
	63	6V-7732	286		395		399
	65		288		398	6V-8983	441
6V-5230	262		290		399	6V-8984	272
6V-5645	225		292		405	6V-8987	436
6V-5657	425	6V-7744	474		436	6V-8988	436
	427	6V-7979	290		441	6V-8995	399
6V-5683	545		292		442	6V-8997	436
6V-5684	262	6V-7981	262		476		441
6V-5686	286	6V-8004	23		479	6V-9001	441
	288	6V-8076	385		480	6V-9002	110
	290	6V-8128	318	6V-8625	294	6V-9003	442
	292	6V-8149	23		386	6V-9004	399
6V-5696	48		279		395		436
	303	6V-8185	224		399		441
6V-5815	308		551	6V-8626	395	6V-9007	294
6V-5839	23	6V-8187	233	6V-8627	677	6V-9008	441
	37	6V-8188	198		680	6V-9023	223
	51	6V-8189	121	6V-8633	284	6V-9027	70
	58	6V-8197	8	6V-8634	100	6V-9162	399
	73	6V-8200	468	6V-8636	100	6V-9168	387
	90	6V-8212	239		104		436
	100		264		105	6V-9169	294
	105	6V-8214	255		386		387
	114	6V-8225	30		436		400
	129		157		476		436
	239		520		479	6V-9170	442
	262		521	6V-8637	294	6V-9171	440
	264	6V-8227	409		395	6V-9172	272
	272	6V-8237	301		435	6V-9182	441
	279		302		441	6V-9189	146
	308		425	6V-8638	110		147
	316		427	6V-8639	104		148
	318	6V-8336	464		398		149
	559	6V-8337	464		405	6V-9197	551
6V-5842	75	6V-8352	500	6V-8641	398	6V-9200	386
	100	6V-8359	52		677	6V-9327	624
	262	6V-8362	201	6V-8642	441	6V-9350	442
	279	6V-8369	218	6V-8714	398	6V-9489	387
6V-5843	32		221	6V-8721	110	6V-9632	222
6V-5844	462	6V-8376	233	6V-8722	395		341
6V-6210	640	6V-8397	100	6V-8723	100		563
6V-6317	264		105		386		624
	280		173	6V-8724	105	6V-9649	436
6V-6353	91		386		386	6V-9666	75

PART NUMBER INDEX

Part	Page	Part	Page	Part	Page	Part	Page
6V-9671	178	6Y-7880	304	7G-5985	272	7L-2894	197
6V-9673	225	6Y-7881	303	7G-5986	272	7L-6580	70
	569	6Y-8030	304	7G-6061	303	7L-8170	518
6V-9746	294	6Y-9713	303	7G-6062	303	7L-9061	464
	387	6Y-9960	34	7G-6945	304	7M-0324	197
	395			7G-7053	600	7M-0325	197
	399			7G-7917	223	7M-0326	197
	435	**7**			231	7M-0327	197
	436			7G-7918	223	7M-8485	22
	440	7B-1598	400		231		68
	441	7B-3028	279	7G-7919	223		116
	442	7B-3039	492		231		138
	484	7B-3642	279	7G-8121	303		139
6V-9808	399	7C-1445	55	7G-8430	318		270
6V-9829	100	7C-1583	47	7G-8839	392		286
	477	7C-1728	47	7H-1447	474		288
	480	7C-1821	63	7H-7055	105		290
	493	7C-1822	63	7I-1024	677		292
6V-9832	387	7C-3081	52	7I-3015	647		412
6V-9836	386	7C-3082	52		648		416
6V-9837	386	7C-3083	52		649		435
6V-9839	441	7C-3954	52	7I-4078	385		440
6V-9843	386	7C-4354	234	7I-5054	440		441
6V-9849	677	7C-7851	28	7J-0204	264		485
	680	7C-7852	28		485		489
6V-9850	441	7C-8246	105		502		505
	476	7D-1553	442		505	7M-8592	324
	479	7D-1649	242	7J-1089	413	7M-8651	197
6V-9851	294	7D-1728	234	7J-4321	413	7N-0718	124
	386	7D-4092	234	7J-6285	8		►202
	399	7D-7233	68	7J-9108	395	7N-5683	15
6V-9853	441		271		440	7N-5876	221
6V-9854	416		359		441	7N-9943	145
6V-9873	399		576		442	7S-2962	279
	441	7D-7469	310		485	7S-4001	275
	476	7D-7735	294	7J-9885	393	7S-4534	304
	479	7D-8636	349	7J-9933	485	7S-8920	298
6V-9877	395	7D-8637	349		504	7S-8921	298
6W-4749	275	7D-9014	462	7K-1181	68	7T-0020	145
	277	7E-6508	255		83	7T-1099	100
6W-4750	275	7E-7977	19		115		222
	277	7E-7978	19		141		339
6W-5752	372	7E-8630	85		219		341
6W-5817	344	7E-9898	442		221		624
6W-5818	344	7F-0560	128		231	7T-1285	304
6W-7297	380	7F-3488	197		244	7T-3343	304
6W-7301	380	7F-3491	197		526	7T-3456	304
6W-7636	395	7F-3525	197		528	7T-3974	197
6Y-1087	318	7F-9571	380		530	7T-6799	221
6Y-1089	318	7F-9572	380		533	7T-9123	198
6Y-1090	318	7F-9578	380		547	7T-9755	464
6Y-2109	304	7F-9579	380		569	7U-4891	234
6Y-2546	286	7G-0437	304		640	7U-4892	234
	288	7G-3710	304		680	7V-0445	624
	290	7G-3711	303	7K-1401	436	7V-6715	516
	292	7G-4998	259	7K-1402	437	7V-9791	372
6Y-2547	286	7G-5444	303	7K-1972	339	7W-7381	476
	288	7G-5569	303	7K-6536	559		479
	290	7G-5572	303	7K-9205	516	7W-8106	355
	292	7G-5593	303	7K-9209	422	7X-0515	76
6Y-3148	318	7G-5594	303		423		370
6Y-4280	464	7G-5614	304		516	7X-0562	198
6Y-4859	318	7G-5675	303	7K-9211	424	7X-0579	83
6Y-5352	304	7G-5730	304	7K-9212	516		110
6Y-5952	303	7G-5984	272	7K-9220	516	7X-0582	661

► **PRIMARY REFERENCE**

PART NUMBER INDEX

Part	Page
7X-0583	348
7X-0589	334
	364
7X-0591	437
	474
7X-0593	592
7X-0603	351
	363
7X-0607	115
7X-0608	518
7X-0623	91
7X-0750	339
	341
7X-0752	341
7X-0818	171
	225
7X-0851	301
7X-0870	63
7X-0872	440
7X-1443	68
	87
7X-2459	440
7X-2533	143
7X-2537	83
	555
7X-2543	437
7X-2544	262
7X-2545	294
	620
7X-2546	76
7X-2549	349
	395
7X-2552	219
	477
	480
7X-2553	76
	294
	370
7X-2554	115
	312
7X-2555	559
7X-2563	34
	462
7X-2584	330
	331
7X-2586	330
7X-2618	387
7X-2634	608
7X-3229	683
7X-3310	624
7X-3373	197
7X-3392	298
	502
7X-4776	411
	483
7X-6041	555
7X-6222	264
7X-6315	135
	136
7X-7608	303
7X-7644	683
7X-7662	171
7X-7729	68
	76
	85
	92
	125
	174
	272
	301
	334
	336
	344
	351
	355
	364
	367
	372
	395
	400
	416
	420
	462
	680
7Y-1976	68
7Y-2522	341
	429
	447
7Y-3173	213
	599
7Y-4215	468
7Y-4538	447
	449
7Y-4945	429
	430
7Y-5074	443
	677
7Y-5458	209
7Y-5464	209
7Y-7256	596
7Y-8555	573
7Y-8763	341
8C-0569	435
8C-0596	242
8C-3056	124
8C-3078	457
8C-3089	88
	197
8C-3095	143
8C-3097	411
8C-3100	75
8C-3110	466
8C-3205	400
8C-3206	272
	400
	413
	474
8C-3210	116
8C-3312	462
8C-3443	416
8C-3445	51
8C-3446	65
	274
	433
8C-3447	274
8C-3451	433
8C-5064	105
8C-5607	141
	143
8C-5608	141
	143
8C-5917	124
8C-6354	221
8C-6358	128
8C-6712	433
8C-6738	636
	638
8C-6959	107
8C-7563	395
	442
8C-7581	563
8C-8421	385
8C-8422	288
8C-8451	141
	251
8C-8499	514
8C-8989	294
	399
8C-9660	197
8D-2714	304
8D-3791	362
8D-6542	573
8E-1143	325
8E-1666	303
8E-5247	318
8E-5310	644
	645
	646
	647
	648
	649
8E-5311	644
	645
	646
	647
	648
	649
8E-5502	385
8E-6539	318
8E-6648	318
8E-8297	304
8E-8299	304
8E-8439	32
8E-9571	65
	284
8E-9846	303
8E-9849	303
8E-9893	325
8E-9972	318
8F-1434	198
8F-8151	68
8F-9206	413
8G-0871	344
8G-6035	559
8H-5303	202
8H-5306	202
8H-7521	279
8H-9789	30
8J-0101	468
8J-4351	63
8J-6815	413
8J-8782	492
8J-8783	492
8K-4739	65
8L-2777	46
8L-2786	37
	42
	100
	194
8L-6565	457
8L-8413	631
8M-2538	324
8M-2770	125
	169
	219
8M-2772	234
8M-2773	234
	359
	387
8M-3107	279
8M-4409	324
8M-4986	324
8M-5253	325
8M-7160	279
8M-8489	308
8M-9307	266
8N-0869	124
	249
8N-1532	223
8N-1533	231
8N-1535	223
	231
8N-1536	223
8N-1537	223
8N-1540	223
	231
8N-1541	231
8N-1543	231
8N-1548	223
8N-1549	231
8N-1725	124
8N-2622	211
	213
8P-1722	279
8P-2155	279
8P-3251	279
8P-7857	318
8P-7858	318
8P-8950	303
8P-9723	304
8R-0512	286
	288
	290
	292
8R-2918	545
8R-3695	524
	526
	528
	530
	533
	573
8S-0527	303
8S-0948	400
8S-2225	375
8S-2634	125
8S-3020	124

8

PART NUMBER INDEX

Part	Page
8S-3426	304
8S-4304	266
8S-7803	522
8S-9075	275
	277
8S-9076	275
	277
8T-0078	399
8T-0100	39
	110
	264
8T-0106	29
	304
8T-0119	576
8T-0122	234
8T-0164	476
	479
	677
8T-0193	234
8T-0207	286
	288
	290
	292
8T-0249	442
8T-0273	502
8T-0281	26
	28
	316
8T-0285	493
8T-0288	211
	213
8T-0292	70
8T-0293	266
8T-0328	198
	211
	213
	568
	615
8T-0336	286
	288
	290
	292
	313
8T-0337	225
	568
8T-0338	7
	174
8T-0341	174
8T-0358	279
8T-0360	28
8T-0372	262
	464
8T-0380	302
8T-0389	85
	125
	150
	152
	295
	334
	336
	364
8T-0640	47
8T-0643	73
	105
	264
8T-0644	109
8T-0667	425
	427
8T-0722	492
8T-0741	387
8T-1158	455
8T-1159	545
8T-1718	441
8T-1779	476
	479
8T-1788	425
	427
8T-1889	400
	581
	582
	583
	584
8T-1890	400
	581
	582
	583
	584
8T-1905	105
8T-2225	251
	253
8T-2275	474
8T-2353	405
	441
8T-2394	284
8T-2561	347
8T-2562	568
8T-2893	76
	231
8T-2899	376
8T-2925	260
8T-2947	141
8T-3282	290
	292
8T-3298	492
8T-3312	440
8T-3490	76
	85
	100
	124
	222
	231
	242
	262
	294
	298
	339
	341
	346
	348
	355
	369
	385
	435
	440
	460
	493
	545
	576
	624
	640
	680
8T-3518	128
8T-3519	128
8T-3597	341
	370
	447
	459
8T-3612	100
	222
	369
	551
	558
8T-3635	341
8T-3734	341
8T-3844	244
	578
8T-3851	339
	341
8T-4121	24
	68
	76
	85
	94
	95
	104
	123
	125
	141
	159
	160
	162
	165
	166
	168
	169
	171
	174
	211
	219
	225
	234
	242
	244
	249
	251
	253
	271
	272
	294
	298
	324
	327
	329
	338
	344
	346
	347
	348
	351
	355
	359
	364
	369
	370
	378
	384
	387
	395
	400
	405
	407
	412
	413
	437
	442
	460
	474
	477
	480
	493
	545
	547
	557
	559
	565
	566
	569
	573
	576
	578
	581
	582
	583
	584
	608
	640
	677
8T-4122	169
	477
	480
	607
8T-4123	34
	125
	349
	459
	668
8T-4131	502
8T-4132	76
	495
	497
8T-4133	37
	68
	76
	92
	94
	95
	125
	141
	159
	160
	162
	169
	171
	219
	225
	234
	244
	249
	251
	253

► **PRIMARY REFERENCE**

PART NUMBER INDEX

Part	Page
	294
	298
	327
	338
	344
	347
	351
	359
	364
	367
	369
	378
	387
	400
	442
	502
	569
	576
	581
	582
	583
	584
	608
8T-4136	68
	76
	94
	95
	125
	141
	162
	165
	166
	168
	174
	219
	225
	242
	251
	272
	294
	298
	301
	324
	336
	344
	347
	359
	369
	370
	372
	387
	395
	400
	407
	412
	416
	437
	442
	468
	493
	545
	576
	608
	624
	640
	677
8T-4137	77
	125
	165
	166
	168
	169
	171
	219
	225
	234
	244
	249
	251
	253
	271
	294
	327
	329
	359
	384
	387
	395
	400
	405
	437
	442
	493
	547
	557
	565
	566
	569
	573
	576
	608
	640
	677
	680
8T-4138	77
	141
	166
	225
	234
	372
	526
	528
	530
	533
	624
	640
8T-4139	329
	334
	349
	355
	370
	378
	387
	407
	447
	449
	460
	559
8T-4140	436
	468
8T-4167	34
8T-4171	225
	249
	586
8T-4172	125
	395
	477
	480
8T-4176	312
8T-4178	24
	442
8T-4181	234
8T-4182	92
	272
	400
	460
8T-4183	338
	349
	364
	367
	437
	447
	449
	459
	460
	474
	477
	480
	493
8T-4184	298
	400
	437
	474
8T-4185	125
	249
	545
8T-4186	77
	125
	225
	355
	367
	400
	443
	460
8T-4189	284
	443
	551
8T-4192	125
	392
	437
	443
	447
	477
	480
8T-4193	437
	474
	607
8T-4194	378
	437
	447
	449
8T-4195	68
	77
	85
	104
	159
	160
	162
	174
	225
	271
	294
	298
	334
	355
	364
	367
	387
	400
	420
	436
	443
	573
	581
	582
	583
	584
8T-4196	77
	125
	272
	346
	348
	351
	378
	387
	395
	400
	405
	413
	443
	462
	474
8T-4198	123
	395
	400
8T-4200	213
	576
8T-4201	474
8T-4205	121
	166
	197
	201
	213
	224
	225
	233
	234
	524
	526
	528
	530
	533
	561
	563
	596
	599
	615
	624
	640
8T-4219	339

► **PRIMARY REFERENCE**

PART NUMBER INDEX

Part	Page	Part	Page	Part	Page	Part	Page
	341		449	8T-6663	436		440
8T-4222	608	8T-4649	34	8T-6745	429		476
8T-4223	8	8T-4742	551		430		479
	77	8T-4750	464	8T-6763	29	8T-8919	242
	125	8T-4779	348	8T-6764	266	8T-9005	555
	169	8T-4780	516	8T-6842	573		573
	171	8T-4896	34	8T-6868	275	8T-9079	666
	225		492	8T-6869	146		667
	234		620		147	8T-9082	615
	242	8T-4908	367	8T-6870	225	8T-9371	631
	249		601	8T-6876	60	8T-9384	298
	298	8T-4910	460		386	8T-9386	436
	338	8T-4935	165	8T-6895	386	8T-9515	269
	349		166	8T-6907	435	8T-9598	75
	355		168	8T-6912	9	8T-9655	110
	359		339		149		130
	364		341	8T-6974	244		221
	378	8T-4956	77	8T-7501	339	8T-9757	124
	384		171	8T-7525	466		125
	387		298	8T-7547	125	8T-9834	223
	395		437	8T-7566	595	8V-0622	124
	400		443	8T-7876	464	8V-1412	313
	407		447	8T-7934	37	8X-0674	459
	437	8T-4967	341		77	8X-4186	440
	443	8T-4970	225		264	8X-5027	395
	447		234		387	8X-5147	341
	449		524		436	8X-5804	221
	460		526	8T-7970	435	8X-5963	341
	474		528	8T-7971	459	8Y-4489	100
	477		530	8T-8442	466		341
	480		533		500	8Y-4501	551
	493	8T-4971	171	8T-8641	522	8Y-5746	624
	566		174	8T-8729	150	8Y-5910	522
8T-4224	9		551		154	8Y-5913	522
	29		561		193	8Y-5914	522
	121	8T-4983	68		544	8Y-6333	624
	125	8T-4985	437		588	8Y-6338	551
	148	8T-4994	460		589	8Y-6388	555
	149	8T-5005	150	8T-8737	110	8Y-7023	339
	171		152		150		341
	174		298		152		
	225		400		209		
	382		413		218	**9**	
	443		462		221		
	551	8T-5041	349		222	9B-0453	384
	576	8T-5400	640		223	9B-7233	201
	578	8T-5414	279		224		211
	583	8T-5436	234		231		213
	584		400		233		233
	601		443		239		234
	606	8T-5439	516		242	9C-4935	341
	624	8T-5460	516		536	9C-6023	268
8T-4226	77	8T-6381	459		537	9C-6041	286
	85	8T-6430	349		538		288
	367		516		540		290
	405		661		542		292
8T-4244	225		668		590	9C-6809	339
	234	8T-6466	77		591		341
	249		92	8T-8827	124	9C-7863	341
	378		125		231		514
	384		395	8T-8874	222		515
	400		400	8T-8899	395	9C-7907	516
	566		413		399		661
8T-4648	298		442		442		668
	447	8T-6624	592	8T-8902	435	9C-7929	100

► **PRIMARY REFERENCE**

PART NUMBER INDEX

Part	Page	Part	Page	Part	Page	Part	Page
	339		518		89	9T-7773	471
	341	9M-2110	325		413	9T-7774	471
9C-9159	314	9M-5024	262		455	9T-7775	464
9C-9191	290	9M-5137	380		466	9T-8556	169
	292	9M-5139	380		487	9T-8578	432
9C-9458	384	9M-5870	225		489	9T-8672	413
	640	9M-5884	351		495	9T-8676	425
9F-5599	197	9M-7394	474		497		427
9F-5644	202	9M-7609	197		500	9T-9226	474
9F-8125	221	9M-8406	160	9S-8004	17	9T-9227	474
9G-0003	124		162		52	9U-0512	592
9G-0004	124		211		274	9U-0830	566
9G-1234	303		213		300	9U-0952	624
9G-1491	303		219		451	9U-0953	624
9G-2673	555		253		453	9U-0954	624
9G-3695	215	9N-0869	130		455	9U-0955	624
	232		225		457	9U-0958	624
	548	9N-1756	508		468	9U-2331	568
9G-4101	197	9N-1941	87		485	9U-2332	569
	198	9N-4460	303		487	9U-3925	624
9G-4343	223	9N-5253	138		489	9U-3926	624
	232	9P-5558	304		502	9U-3927	624
9G-4344	232	9P-7121	116		505	9U-4431	568
9G-5127	262	9R-1733	341	9S-8005	43		569
9G-5317	286	9R-2060	341		70	9U-4819	440
9G-5828	304	9R-2640	341		300	9U-8263	568
9G-7683	304	9R-6307	440		453	9U-8668	325
9H-3757	197	9R-9806	223		455	9U-8669	325
9H-5546	304	9S-2544	197		468	9V-0165	650
9H-5604	303	9S-4167	100		505	9V-0334	344
9H-6454	474	9S-4182	15	9S-8006	43	9V-0453	344
9J-3866	398		41		52	9V-0957	650
9J-5550	425		70		110	9V-1777	332
	427	9S-4183	72		413		333
9J-5696	457		413		466	9V-1820	332
9J-5706	457		464		487		333
9J-7031	492		468		489	9V-2429	312
9J-7099	429		474	9S-8007	485	9V-6575	644
	430	9S-4185	29		502		645
9J-7100	430		42		505		646
9K-0700	234		100	9S-8008	17	9W-0517	303
9L-6770	121		386		19	9W-0518	303
9M-0164	271		399		43	9W-0519	304
9M-1328	393		413		116	9W-0817	►664
9M-1503	303		468		259	9W-0852	221
9M-1974	5		485	9S-8009	316		222
	6	9S-4190	74	9S-9334	52		231
	7		308		116		563
	30	9S-4191	42		266	9W-1441	221
	37		65		286	9W-1442	221
	55		266		288	9W-1446	221
	60		324		290	9W-1951	222
	62		447		292	9W-1991	125
	63		485		485	9W-2033	223
	65	9S-6154	413		505	9W-6684	288
	70	9S-8001	325	9T-1636	464		290
	72		391	9T-1652	464		292
	176		451	9T-1699	464	9W-7385	34
	239		453	9T-1710	464	9W-7783	485
	264		455	9T-7220	413	9X-0145	223
	266		485	9T-7692	485	9X-0196	223
	284		505	9T-7765	471	9X-0262	176
	325	9S-8002	15	9T-7767	471	9X-1046	225
	413		65	9T-7769	471		596
	504		88	9T-7771	471	9X-1054	223

► **PRIMARY REFERENCE**

PART NUMBER INDEX

Part	Page
9X-1056	223
9X-1813	178
	180
	181
	185
	187
	188
	200
	204
	205
	207
	233
	242
	249
	251
	259
	376
	433
9X-2021	27
9X-2027	21
	286
	288
	290
	292
	400
	624
9X-2038	213
	524
	526
	528
	530
	533
	624
9X-2040	344
	561
	573
9X-2041	550
	573
9X-2042	213
	551
	573
	608
9X-2043	555
9X-2044	165
	166
	168
	351
	524
	526
	528
	530
	533
	555
	596
	599
	608
	624
9X-2045	524
	526
	528
	530
	533
	573
	599
	623
9X-2046	141
	573
	599
9X-2075	286
	288
	290
	292
9X-2091	436
9X-2097	239
9X-2098	130
9X-2480	225
	253
9X-2488	576
	578
9X-2492	385
9X-2616	624
9X-2617	275
	277
9X-2618	275
	277
9X-3066	154
9X-3132	223
9X-3401	178
	179
	188
	207
	232
	251
9X-3402	222
	223
	224
	232
	233
	251
9X-3463	148
	149
9X-3465	150
	152
9X-3490	232
9X-3606	430
9X-3607	429
	430
9X-4244	148
	149
	150
	152
9X-4492	156
9X-4493	150
	152
	154
	156
9X-4609	264
9X-5699	125
9X-6032	384
	502
9X-6155	551
9X-6165	141
	143
	225
	336
	573
	578
9X-6395	504
9X-6451	37
9X-6494	275
	277
9X-6772	223
	231
9X-7317	103
9X-7373	563
9X-7378	15
9X-7380	70
9X-7430	17
9X-7680	466
	500
9X-7737	207
9X-7849	157
9X-8139	157
9X-8250	244
	576
9X-8256	30
	77
	116
	141
	165
	166
	171
	174
	225
	244
	251
	253
	334
	351
	372
	569
	586
	635
9X-8257	77
	115
	219
	294
	372
	378
	387
	437
	495
	497
	559
9X-8258	330
	331
9X-8267	239
	249
9X-8268	279
	316
	462
9X-8281	90
9X-8399	393
9X-8487	92
	459
9X-8600	98
9X-8705	223
9X-8873	522
9X-8896	429
	430
9X-8979	466
9X-9865	150
	152
9Y-0810	10
9Y-0821	10
9Y-8075	62
9Y-8076	62
9Y-9236	68
0	
002-1212	464
006-2884	224
006-8663	464
009-3101	375
	376
011-7960	568
012-0380	204
	205
027-1287	314
030-1712	124
	242
031-0214	606
033-5381	457
033-5853	88
033-6033	119
033-6036	464
033-6043	500
033-8248	249
034-1432	58
035-3360	303
036-9821	197
036-9823	197
045-4065	198
054-7915	77
061-6711	304
061-7540	264
061-8561	63
061-9455	55
061-9458	37
064-3843	318
066-8391	223
067-2551	104
	105
067-3045	441
067-3161	468
069-2535	373
	374
070-0107	94
	95
077-3241	22
	270
081-5645	385
085-7356	325
	440
085-8091	578
089-7338	441
090-8747	105
091-1745	385
091-7124	124
094-1875	468
094-1883	468
095-0670	466
095-0673	468
095-0843	615
095-0888	464
095-0946	468
095-1726	429
	430

► **PRIMARY REFERENCE**

PART NUMBER INDEX

Part	Page
095-1750	485
	507
095-1751	485
	491
095-1785	502
095-1787	502
095-1788	502
095-7388	468
096-0015	472
096-0067	551
	566
096-3044	505
	511
096-3781	344
	364
096-4389	468
096-6166	211
	260
	493
096-6467	516
098-8968	221
099-3649	29
	382
	385
	624
099-7241	545
099-8232	505
	511
1	
100-3245	150
	152
100-3248	150
	152
100-3250	150
	152
100-3251	150
	152
100-3253	150
	152
100-3254	150
	152
100-3255	150
	152
100-3402	464
100-3404	464
100-3405	464
100-3408	464
100-3409	464
100-3410	471
100-3411	471
100-3412	464
	▶471
100-3413	464
100-3415	464
100-4982	378
100-5041	223
100-6666	665
100-6667	▶665
100-6668	666
100-6669	▶666
100-8010	412
100-8011	412
101-0003	631
101-2867	606
101-3120	92
101-3846	385
101-9161	548
102-1758	294
102-2066	464
102-2067	464
102-7509	269
102-7510	269
102-7511	269
102-8801	223
	231
	244
	548
	563
102-8802	116
	120
	143
	154
	156
	157
	162
	187
	188
	193
	200
	204
	205
	221
	223
	231
	239
	242
	244
	259
	433
	563
	583
	584
	633
	635
102-8803	100
	132
	145
	155
	156
	178
	179
	185
	216
	221
	222
	224
	231
	232
	233
	239
	242
	244
	249
	251
	253
102-8804	215
	221
	223
	231
	244
	548
	563
	564
	583
	584
	633
	635
102-8805	132
	150
	152
	209
	213
	222
	231
	538
	540
	542
	543
	588
	589
	590
	591
102-8806	100
	218
	221
	223
103-0010	385
103-1122	550
103-2529	107
103-5526	221
	▶544
103-8133	255
104-2091	555
104-3560	14
104-5923	398
105-2145	500
105-3477	545
105-4849	▶150
	168
105-4850	▶152
	168
105-6117	376
105-7262	429
	430
106-0107	132
	▶209
106-0210	209
106-0543	▶187
	279
106-1774	385
	▶391
106-4155	231
106-9586	284
107-1964	132
	596
107-3157	607
107-4600	608
107-4602	608
107-4749	251
	253
107-5769	114
107-6280	47
108-2144	398
108-3320	221
108-4311	631
108-5471	551
109-3204	464
109-4731	290
	292
109-5008	551
	608
109-5081	440
109-8203	523
	▶579
110-2023	339
	341
	514
	515
110-6109	132
	221
110-6845	242
110-6923	312
110-7450	303
110-7452	303
110-7455	303
110-7524	550
	551
	608
110-7887	221
111-0687	608
111-1316	608
111-3200	325
111-4013	165
	166
	168
111-4627	634
111-4836	677
111-4838	359
111-4839	359
111-9110	373
	374
112-0759	260
112-1533	301
112-1817	493
	▶498
112-5344	76
112-6174	221
112-6646	526
	528
	530
	533
112-6973	1
	▶362
112-7847	303
112-9073	341
112-9861	498
113-0580	231
	244
113-6990	125
113-7752	375
	376
113-9359	370
114-0359	669
114-2772	511
114-8843	231
	233
	244
	253
114-8845	231
	232
114-9252	608
115-0532	303
115-2073	579
115-2247	375
	376

▶ **PRIMARY REFERENCE**

PART NUMBER INDEX

Part	Page	Part	Page	Part	Page	Part	Page
115-2955	349	120-5281	351		321	129-3180	169
115-2972	39	120-9027	146		322	129-4278	▶301
115-2973	39		147	125-9358	307		307
115-3183	349	121-1340	242		▶312	129-4280	▶256
115-7087	97	121-3307	76	125-9740	563		307
116-1089	39	121-5908	91	126-1052	608	129-4281	▶257
116-1091	2	121-8038	221	126-1767	179		307
	▶47	121-8039	201		232	129-4282	▶256
116-3715	90	121-9300	523		251	129-4283	▶257
116-4491	231		▶547	126-1774	223	129-4289	256
116-5436	▶99	122-0082	294		232		257
	100	122-1671	384		242		258
116-8231	279	122-4233	327	126-7574	135		▶260
117-0067	176	122-4771	346		136	129-4290	256
117-0165	2	122-4772	346	126-8472	234		257
	▶40	122-6579	316		351		▶275
117-0823	464	122-7197	307	126-8473	413	129-4291	256
117-1410	523		▶378	127-0929	88		▶286
	▶613	122-8353	271	127-1579	362	129-4292	257
117-1559	327	123-0707	211	127-1960	268		258
117-1801	260	123-0764	35	127-4667	398		▶277
117-1803	260	123-0789	2	127-4736	▶302	129-4293	257
117-2311	221		▶44		309		▶290
117-2766	2	123-0790	44	127-4773	▶315	129-4296	260
	▶21	123-2896	221	127-4774	▶315	129-4298	256
117-2771	2	123-3202	174	127-4781	315		257
	▶26	123-3205	316	127-4782	▶309		258
117-4465	279	123-3827	561		315		▶268
117-4473	555	123-4371	634	127-8909	260	129-4299	260
117-4486	518	123-6713	545	127-8910	286	129-4300	260
117-4491	619	123-8253	97		288	129-4304	256
117-4492	518	123-9313	341		290		257
117-5208	435	123-9431	600		292		▶269
117-5268	404	123-9694	132	127-9094	308	129-4323	260
117-7798	385	124-0065	545	127-9323	262	129-4536	308
117-7799	385	124-0195	440		395	129-5395	290
117-8801	30	124-1479	68		440		292
	462	124-1555	468		680	129-5398	290
	468		502	127-9483	466		292
117-8929	555	124-1866	385	127-9485	466	129-5400	277
117-9734	457	124-2456	683	127-9490	466	129-5401	275
117-9735	457	124-3019	124	128-0317	75		277
117-9736	457		231	128-0382	10	129-5403	260
117-9737	457	124-3637	640	128-0383	10	129-7163	232
118-1030	385	124-5043	266	128-0384	10	129-7164	232
118-6365	231	124-8333	435	128-0385	10	129-7184	596
118-7313	372	125-3295	376	128-0395	39	129-7853	468
118-8276	349	125-6535	198	128-0396	39	129-7921	468
118-9587	332	125-6536	198	128-0400	10	129-7925	468
	333	125-6537	198	128-0401	10	129-7927	468
119-0281	332	125-7037	351	128-0402	10	129-7979	468
	333	125-7874	223	128-0403	10	129-8222	▶410
119-0959	500		224	128-1026	608		413
119-3662	178		231	128-8617	596	130-0229	274
	223		233	128-9623	644	130-1848	268
	224	125-7875	222		645	130-5300	162
	231		223		646		165
119-4376	▶348		232		647		166
119-4398	1	125-7876	124		648		168
	▶392		242	128-9624	649		169
119-4401	1	125-8534	219	129-2339	268		171
	▶349	125-8808	312	129-2341	268		219
119-5727	318		▶321	129-2342	268		233
119-6220	440	125-8810	313	129-2893	32		242
120-4394	466		▶314	129-3178	563		244

▶ **PRIMARY REFERENCE**

PART NUMBER INDEX

Part	Page
	249
	251
	253
	264
	563
	583
	584
130-5301	242
130-5485	264
	▶324
130-5859	260
130-5860	260
130-5866	260
130-5867	260
130-5869	286
130-8706	290
	292
130-8707	286
	288
	290
	292
131-1285	284
131-1586	351
131-2633	▶634
131-3201	232
131-3718	7
131-4020	284
131-4859	457
131-6645	65
131-8215	284
132-0338	518
132-2453	385
132-4354	578
132-4907	425
	427
132-5258	▶411
	413
132-5789	5
	37
	91
	100
	160
	162
	225
	233
	239
	242
132-6597	275
	277
132-6598	275
	277
132-6964	339
132-7534	284
132-7551	125
	272
132-9713	462
133-0260	189
133-1667	▶654
133-1668	▶655
133-1670	▶658
133-1671	▶656
133-1676	▶644
	654
133-1677	▶645
	655
133-1680	▶648
	658
133-1681	▶646
	656
133-1691	▶658
133-1693	▶657
133-1698	▶649
	658
133-1700	▶647
	657
133-3260	272
133-3574	275
133-3605	275
	277
133-3606	275
	277
133-4292	286
	288
	290
	292
133-4952	260
133-5545	451
133-6517	138
	139
133-9012	563
133-9379	125
134-0780	573
134-1374	547
134-2540	225
	242
134-3030	277
134-3032	275
134-3079	349
134-3080	349
134-3081	349
134-3988	441
134-4126	135
	136
134-4500	644
	645
	649
134-4504	648
	649
134-4505	648
	649
134-4506	648
	649
134-4507	648
	649
134-4510	648
	649
134-4511	648
	649
134-4521	649
134-5245	51
134-5330	367
134-5333	447
134-5334	447
134-5335	447
134-6635	271
134-7258	683
134-7934	644
	645
	646
	647
134-7935	644
	645
	646
	647
134-7936	644
	645
	646
	647
134-7937	644
	645
	646
	647
134-7940	644
	645
	646
	647
134-7941	644
	645
	646
	647
134-9569	211
	213
135-0134	279
135-0426	▶155
	165
135-2037	457
135-3823	385
135-4404	348
135-4555	348
135-4688	393
135-4690	393
135-5038	398
135-7492	269
135-7493	269
135-7494	269
135-7495	269
135-7496	269
135-8240	666
135-8241	666
135-8242	666
135-8243	666
135-8244	666
135-8245	▶669
135-8246	669
135-8280	555
135-9292	669
135-9293	▶667
135-9294	667
135-9295	667
135-9296	667
135-9297	▶666
136-1543	594
136-1544	518
136-1711	392
136-1901	100
136-3188	520
	521
136-3190	521
136-3195	520
136-3313	398
136-3845	150
136-3846	152
136-3848	150
	152
136-4183	21
	114
136-9351	608
136-9699	493
137-3863	646
	647
137-4117	516
137-4234	662
137-6645	194
	195
	219
137-6841	624
137-7668	349
137-7669	349
138-1509	▶270
	279
138-1510	270
138-1645	260
138-3816	312
138-4144	34
138-6674	516
138-6679	516
138-6685	516
138-6814	336
138-6819	336
138-7500	105
138-8175	472
139-9101	256
	▶258
139-9102	256
	▶257
139-9106	258
	▶292
139-9107	257
	▶288
140-2961	600
140-2963	600
140-5945	524
	530
140-6823	666
140-6824	▶666
140-7962	648
141-0008	341
141-0752	318
141-1053	464
141-1232	300
141-1236	318
141-2597	395
	▶412
141-3638	341
141-6348	262
141-8061	224
141-8275	107
141-8802	523
	▶545
141-8807	405
141-8808	545
141-8811	545
141-9784	563
142-1657	385
142-2623	367
142-2624	367
142-3995	413
142-3996	398
	▶413
142-8567	645

▶ **PRIMARY REFERENCE**

PART NUMBER INDEX

Part	Page	Part	Page	Part	Page	Part	Page
142-8977	300	148-6949	650		436	150-4027	405
142-9681	602		651		476	150-4043	399
143-1288	518		652		479		441
	522	148-6950	650		493		476
	615		651	148-8380	436		479
	617		652	148-8390	395	150-4044	476
	619	148-6952	650	148-8392	441		479
143-2643	644		651	148-8395	453	150-4047	405
143-3330	646		652		455		441
	647	148-6953	650		505	150-4048	395
143-4642	303		651	148-8406	485	150-4651	260
143-7022	341		652		505	150-5782	468
144-0195	640	148-8240	351	148-8407	447	150-7693	378
144-0331	536		363	148-8408	413	150-8013	385
	537	148-8313	107		474	150-8015	636
	538	148-8315	441	148-8409	116		638
	542	148-8317	398	148-8410	308	151-1398	224
144-0367	398	148-8318	100	148-8411	29	151-2900	24
144-0832	432	148-8325	398		100	151-4464	268
144-0896	545		677		386	151-5715	555
144-1636	209	148-8327	294		399	151-9274	535
	222		395		413	152-0264	294
	224		435		485	152-1684	566
144-6232	648		441	148-8413	441	152-1872	294
144-7662	648	148-8336	100	148-8424	435	152-3411	476
144-8299	316		385		440		479
145-0326	631		435		476	153-1185	314
145-6669	95		476		479	153-1277	95
145-6929	▶156		479	148-8427	386	153-3945	211
	166	148-8340	104	148-8428	386	153-5043	193
	168		398	148-8433	386	153-5710	124
145-7028	▶193		405	148-8434	386	153-6230	436
	264	148-8344	399	148-8435	476	153-6237	399
145-9105	393	148-8345	110		479		436
145-9397	649	148-8347	294		493		441
146-1892	376	148-8351	677	148-8440	435	153-6241	294
146-3728	509		680	148-8443	440		399
146-3793	545	148-8353	441	148-8444	386	153-6248	436
146-6581	398	148-8357	441	148-8447	440	153-6256	395
146-6747	683	148-8359	395	148-8449	441		442
146-7571	398	148-8360	441	148-8455	436	153-6257	399
	▶415	148-8361	386		441	153-6273	376
147-0385	233	148-8364	294	148-8457	399	153-6281	124
	244		386	148-9359	485	153-8623	502
	601		395		487	154-1604	650
147-1445	224		399		489	154-4563	211
147-1446	224	148-8365	386		505		213
147-7131	460	148-8366	436	149-0257	398	154-7443	221
147-7633	661	148-8367	441	149-0271	398		▶549
147-8583	398		476	149-0272	398	154-8042	378
148-1928	264		479	149-0643	▶379	154-8262	213
148-3495	124	148-8368	677		381	154-9023	51
148-3587	683		680	149-0668	213	154-9508	608
148-3626	555	148-8370	294	149-2147	233	155-2255	224
148-6899	▶658		386	149-2612	231		233
148-6907	▶650		399	149-9113	260		239
	658	148-8374	100	149-9114	260		246
148-6916	650		386	149-9129	239		247
148-6936	651	148-8375	294	150-3024	68		248
148-6946	650		399	150-3033	476	155-2260	110
	651	148-8376	441		479		180
	652	148-8377	386		677		181
148-6947	650	148-8378	105	150-3035	441		182
	651		386	150-3065	264		222
	652		399	150-3068	436		224

▶ **PRIMARY REFERENCE**

PART NUMBER INDEX

Part	Page	Part	Page	Part	Page	Part	Page
	232	158-9956	451	163-2478	19		430
	233		455	163-3008	260	167-2211	425
	239		▶482	163-3926	375		427
	242	159-0268	516	163-8682	301	167-2320	429
	244	159-0269	516	163-8781	260		430
	251	159-8049	124	164-1234	631	167-2324	425
	253		249	164-2108	323		427
155-2265	224	159-8050	124	164-4180	485	167-7430	666
	239		125	164-4531	518	167-8125	21
155-2270	110	159-9322	224	164-4883	595	168-2166	327
	160		232	164-5567	173	168-2198	466
	162	160-0718	284		262	168-3504	466
	169	160-0719	257		325	168-6514	174
	206		258		386	168-7861	466
	222		▶284		405	168-7940	472
	224	160-0720	284		435	168-7941	472
	232	160-2323	47		442	168-7942	472
	233	160-3518	603		449	168-7943	472
	239	160-6365	600		476	168-8772	568
	242	160-6366	600		479	169-0417	171
	244	160-7689	232	164-5572	294		174
	246		242		399		▶178
	247	160-8185	27	164-5573	442	169-0418	178
	264	160-8210	27	164-5574	386	169-1616	491
	376	160-8500	171		442	169-1617	491
	563	160-8748	266	164-5577	272	169-3290	464
	586	160-9925	573	164-5580	387		▶473
155-2271	224	161-3415	573	164-5590	65	169-4166	30
	232	161-4336	440	164-5606	399	169-7380	631
	548	161-6149	451	164-5611	440	169-7397	68
155-2274	224		483	164-5619	110	170-0664	339
	232		507		413	170-1112	518
	248	161-6154	482		487	170-1114	518
155-2276	182	161-6161	451		489	170-1115	518
155-3504	442		507	164-6860	442	170-1821	221
155-4098	596	161-6958	97	164-6871	173		530
155-4979	380	161-6963	97	164-6874	325	170-4735	677
155-5789	▶590	161-8573	669		440		680
	640	161-8919	76	164-7556	148	170-7709	551
155-6456	290		▶457		149	170-8590	606
	292	161-9131	654	164-7577	▶200	171-1230	615
155-7321	576		655		231		617
155-7327	104		656		259		619
156-1150	277		657	164-8474	555	171-2206	233
156-4773	286		658	165-0197	301	171-2210	233
	288		659	165-2273	576	171-2212	233
	290		660	165-3927	34	171-2438	266
	292		▶669	165-5970	110	171-5349	187
156-5545	518	161-9916	576		▶216		188
156-6175	141	162-0177	453	165-6163	315		232
	225		455	165-6178	▶315	171-6348	318
	526		485	165-6365	476	171-6682	615
	528		487		479	171-6723	395
	530		489	165-9104	596		399
	533		505	166-0344	466		442
156-6418	378	162-6448	485	166-0599	171	171-6728	442
157-0670	65	162-7120	330	166-2904	17	171-8888	523
158-0495	298		331	166-6358	24		▶555
158-0496	298	162-7209	425	166-6928	221	172-1482	178
158-0591	231		427		▶588	172-2416	615
158-2336	418	162-8264	385	166-7265	264	172-3511	132
	419	162-9527	91	166-7959	442		222
158-6634	▶215	163-1135	631	167-0608	364		530
	231	163-1149	522	167-1801	473	172-4001	518
158-7864	683	163-1201	565	167-2209	429	172-4871	231

▶ **PRIMARY REFERENCE**

PART NUMBER INDEX

Part	Page	Part	Page	Part	Page	Part	Page
172-6007	260	175-4292	148		497		216
172-6011	260		149	183-7595	451		218
172-6063	255	175-4966	22		▶509		221
172-6251	334	175-6796	472	184-2298	615		222
172-6252	334	175-7739	105	184-2299	615		231
172-9200	211	175-7898	393	184-6636	231		232
	213	176-2444	315	184-6964	197		233
	222		▶328	184-7415	385		242
172-9287	442	176-9237	91	185-0263	466		249
173-0566	22	176-9273	304	185-1861	224		259
173-1028	▶518	177-0035	85	185-2638	121		376
	615	177-0762	395	185-2639	121		409
	618	177-1862	606	185-2643	121		433
173-1498	24	177-1863	615	185-2644	121		530
173-2052	594	177-4495	555	185-2647	121		536
173-2115	573	177-4937	620	185-2648	121		537
173-2118	607	177-6704	563	185-2650	121		538
173-2142	608	177-6716	563	185-2654	121		540
173-2143	608	177-6727	563	185-2655	121		542
173-2144	608	178-0603	▶615	185-2658	121		543
173-2148	599		617	185-3644	1		548
173-2185	573	178-3129	367		▶516		583
173-2187	573	178-4323	573	185-4778	563		584
173-2200	568	178-6450	372	185-4780	563		590
173-2205	596	178-6927	315	185-4782	563		591
173-2206	596	178-6928	▶315	185-4783	563		633
173-2219	522	178-7907	594	185-4785	563		635
173-2234	222	178-7913	▶617	185-5298	4	186-3736	206
173-3427	468		621		▶34		548
173-3428	468	178-9983	538	185-5803	2	186-5107	631
173-3993	453		540		▶27	187-0541	507
	455		542	185-6250	677	187-0661	683
	485		543		680	187-1469	551
	505	179-0092	21	185-6335	222	187-3523	266
173-5787	621	179-3185	312	185-7522	550	187-4161	608
	622	179-4324	327		▶636	187-5127	636
173-7035	621	179-4682	563	185-7523	551		638
	622	179-4683	563		▶638	187-5128	636
173-7501	275	179-7000	171	185-7524	636		638
	277	179-9375	135		638	187-7331	115
173-7502	275		▶171	185-7525	636	187-7719	563
	277	179-9392	596		638	187-8191	509
173-9683	393	180-3994	383	185-7529	636	187-8883	286
174-1586	29	180-3997	375	185-7531	638	187-8889	290
174-3085	344	180-8722	485	185-7533	550	187-8894	288
174-3091	536	180-9339	185	185-7534	▶550	187-8899	292
	537	180-9340	180		554	187-8969	13
	538		181	185-7538	550	187-8972	10
	540		182	186-2458	264	188-1616	162
	542	180-9617	617	186-2517	304	188-2008	435
174-3624	523		619	186-3497	440	188-5175	608
	▶620	183-3409	88	186-3735	116	188-5177	608
174-4301	624	183-5518	2		120	188-6185	231
174-5415	94		▶48		132	188-6252	231
174-7875	565	183-5784	232		143	188-6253	224
174-8663	344	183-5785	224		145	188-6254	224
174-9570	▶102	183-6967	404		152	188-7497	▶375
	112	183-6970	404		155		383
174-9603	264	183-6971	404		156	188-7690	563
175-2322	203	183-7263	65		157	188-8844	115
	▶204		413		187	188-9429	189
175-2324	203		455		200	188-9820	▶522
	▶205		487		204		617
175-4291	148		489		205		619
	149		495		215	189-2076	596

▶ **PRIMARY REFERENCE**

PART NUMBER INDEX

Part	Page
189-2077	524
189-2078	524
189-2079	524
	526
	528
	530
	533
189-2512	596
189-3158	211
	213
189-4682	563
189-4717	466
189-5594	76
189-5604	249
189-8622	▶591
	640
189-9763	468
	502
190-5497	573
190-6616	351
190-7673	502
190-7674	502
190-8970	112
190-8977	110
	▶112
190-9775	98
191-1782	110
191-2933	621
	622
	▶631
191-5114	569
191-8720	318
191-8921	520
	521
191-9247	512
	513
192-0573	468
192-1023	270
192-1954	599
192-2175	620
192-2820	563
192-2822	561
	563
192-2823	563
192-5017	385
192-5624	398
192-7049	523
	▶589
192-7054	602
192-7356	76
192-7752	631
192-7755	631
192-7760	631
192-7767	631
192-7783	631
192-7787	631
192-7790	631
192-7795	631
192-7799	631
192-7805	631
192-7810	631
192-7812	631
192-7820	631
192-7822	631
192-7848	631
193-0702	563
193-1036	500
193-1664	499
193-1665	453
	▶499
193-1736	468
193-2200	279
193-2550	▶188
	316
193-7307	563
194-1723	▶483
	505
194-2903	576
194-4411	318
194-5278	76
194-6722	▶180
	183
	242
194-6725	▶181
	184
195-2187	384
196-0052	555
196-0436	607
196-1251	466
196-2036	385
196-2314	380
196-8490	313
197-0398	416
197-1397	563
197-1398	563
197-1399	563
197-1762	466
197-2027	573
197-2072	573
197-3855	359
197-3856	359
197-4859	607
	675
197-5470	367
	607
197-6474	▶580
197-6475	158
	▶201
197-6629	359
197-6667	312
197-7382	385
197-7565	224
197-8418	60
197-8419	60
197-9257	39
197-9326	39
197-9327	39
197-9330	14
198-2617	466
198-2618	466
198-2820	460
198-2914	512
	513
198-4775	225
	526
	528
	530
	533
198-4777	387
	399
198-4780	436
198-4963	20
	▶25
198-5389	143
198-6570	222
198-6571	222
198-6755	249
198-7248	▶22
198-7651	435
198-8769	624
198-8772	555
198-8774	596
198-9841	▶373
	385
199-4051	29
199-4064	171
199-7499	563
199-7891	121
199-8436	121
199-9641	596
2	
200-0727	596
200-0728	624
200-0729	624
200-0731	596
200-2217	376
200-2218	376
200-2219	376
200-2220	376
200-2221	376
200-2371	510
200-5728	603
200-6282	451
	491
200-6345	436
200-8152	596
200-8153	596
200-8154	596
200-8789	224
200-8895	581
200-8896	582
200-8897	580
	▶581
200-8898	580
	▶582
201-1531	132
201-2733	596
201-5555	211
	213
201-6615	▶189
	191
201-6616	▶190
	192
201-6775	338
201-6776	338
201-6780	338
201-6781	338
201-8616	▶600
	601
202-0671	498
202-0673	498
202-0674	498
202-1327	563
202-2005	325
202-2006	325
202-2762	225
202-6614	148
	149
202-7475	32
202-8649	583
	584
203-0328	624
203-0351	89
203-1558	373
	374
203-3831	75
203-6473	327
203-7703	621
	622
203-9991	624
204-2281	225
	436
204-6132	608
204-6529	76
204-8000	225
204-8758	417
204-9734	460
205-0826	143
205-0926	550
	551
205-6029	327
205-6388	614
	620
205-7200	398
205-8212	624
205-8257	143
206-2725	387
206-5162	143
206-5203	143
206-5823	591
206-6305	675
206-6875	87
206-9272	310
206-9279	▶310
	311
206-9280	309
	▶311
207-0697	466
	▶500
207-1759	523
	▶601
207-8118	24
207-8218	485
	505
207-8572	12
208-2929	563
208-3703	600
208-3777	569
208-3778	569
208-3779	569
208-7448	85
208-7473	310
208-9281	74
209-0381	222
	569
209-0499	378
209-0516	675

▶ **PRIMARY REFERENCE**

PART NUMBER INDEX

Part	Page
209-0746	555
209-3750	620
209-4347	231
209-5018	608
209-5528	76
209-6638	146
	147
209-7309	59
210-1254	608
210-1743	37
210-2262	606
210-2263	606
210-2266	606
210-2270	▶606
	615
210-4460	25
210-5551	573
210-5587	385
210-6783	624
210-8422	▶146
	160
210-8423	▶147
	160
211-0587	10
211-0588	10
211-0667	573
211-1167	640
211-5358	631
211-9294	631
211-9856	636
	638
212-0061	510
212-0431	129
212-7728	9
213-1366	290
	292
213-1370	290
	292
213-1585	26
213-2323	143
213-3607	385
213-3719	303
213-7489	538
	540
	542
	543
213-8819	558
214-0113	131
214-3616	171
214-3617	171
214-4208	224
214-6277	29
214-7568	51
	105
	323
	405
	442
	449
214-7634	▶520
	640
214-7635	▶521
	640
214-9186	608
214-9453	211
	213
214-9454	211
215-1182	604
215-9962	502
216-4531	623
216-7790	124
216-7888	599
217-1601	85
217-3673	37
217-3674	37
217-3682	268
217-4891	▶672
217-4892	▶674
217-4896	▶673
217-6284	139
217-7933	606
217-8166	211
	213
217-8946	88
217-9049	615
217-9060	51
218-0404	143
218-0861	615
218-2373	323
218-4935	231
	249
218-7270	28
218-7272	3
	▶30
219-0017	330
	331
219-0305	683
219-6314	143
219-6485	▶148
	162
	165
	166
219-6487	▶149
	159
	162
219-6607	143
219-7440	2
	▶35
219-7461	239
219-7475	23
219-7489	24
219-8094	620
	▶621
220-2727	▶374
220-3373	30
220-8678	102
220-9090	671
	672
	673
	674
220-9091	672
220-9092	674
220-9099	673
221-3263	55
221-3416	173
	▶182
221-9357	30
221-9392	20
222-1092	671
222-1094	651
	652
222-1095	651
	652
222-1096	651
	652
222-1097	643
222-3088	3
	▶28
222-3092	2
	▶91
222-3686	573
222-3687	573
222-3902	28
222-3905	28
222-3907	7
222-9874	279
222-9875	279
223-1341	485
223-3875	3
	▶41
223-4434	264
	▶325
223-6546	12
223-7463	3
	▶7
223-7468	7
223-7471	7
223-7852	30
223-9133	39
223-9143	75
223-9145	75
224-0672	420
224-0880	2
	▶33
224-1270	17
224-2675	65
224-3030	19
224-3125	19
224-3405	52
224-3882	3
	▶10
224-4140	33
224-4441	19
224-4991	109
224-6360	65
224-6361	70
224-7135	455
224-9392	366
	557
225-0300	455
	▶510
225-0312	683
225-3285	429
	430
225-3286	425
	427
225-3755	551
225-4118	433
225-4257	683
225-4607	502
225-6948	60
225-7003	74
225-7657	436
225-9578	557
225-9579	557
225-9611	453
226-0291	76
	231
226-0321	76
	231
226-1240	684
226-1274	684
226-2256	435
226-4192	462
226-4755	30
226-7473	130
	▶134
227-2574	2
	▶8
227-4002	239
227-5075	70
227-5509	300
227-6744	433
227-7391	684
227-7392	520
	521
227-9545	2
	▶42
227-9920	60
228-2616	684
228-4428	630
228-4947	191
	192
228-5810	74
228-5812	3
	▶73
228-6089	225
	526
	528
	530
	533
228-7089	105
228-9655	121
228-9656	121
228-9657	121
229-1494	617
	619
229-2614	2
	▶9
229-2704	141
	561
229-2887	48
229-5684	7
229-5711	9
229-6942	▶643
229-7098	643
229-7099	643
229-7534	344
229-8084	3
	▶36
229-8810	74
229-9969	146
	147
229-9974	146
	147
230-0960	255
230-0961	3
	▶255
230-2603	70
230-3518	91
230-3728	103

▶ **PRIMARY REFERENCE**

PART NUMBER INDEX

Part	Page	Part	Page	Part	Page	Part	Page
230-3775	103	234-5101	355	236-5925	349		▶435
230-4011	100	234-5107	355	236-6207	586	236-8998	434
	207	234-5925	222	236-6253	566		▶459
230-4012	100	234-7843	2		569	236-8999	▶272
230-4013	224		▶60		640		307
230-4014	376	234-7847	2	236-6919	468	236-9000	1
230-4176	405		▶37	236-7019	▶614	236-9003	135
230-4518	65	234-7848	1		620		▶372
230-4519	65		▶2	236-7230	684	236-9006	298
230-7149	176	234-7857	2	236-7231	1	236-9007	▶395
	▶191		▶96		▶4		408
230-7167	45	234-9553	523	236-7772	569	236-9031	▶422
230-7168	2		▶630	236-7773	160		434
	▶45	234-9571	630	236-7775	169	236-9032	▶423
230-7640	376	234-9572	630	236-8722	222		434
231-3178	266	235-1071	60	236-8745	65	236-9033	434
231-3264	87	235-1073	37	236-8896	557		▶447
231-3492	2	235-1074	37	236-8957	▶1	236-9034	434
	▶57	235-1075	4	236-8961	1		▶449
231-6046	▶346		▶83		▶135	236-9035	434
231-6047	346	235-1076	4	236-8963	1		▶476
231-9030	90		▶107		▶434	236-9036	298
232-1374	110	235-1078	4	236-8965	1	236-9037	434
232-1376	110		▶87		▶307		▶493
232-1394	523	235-1080	2	236-8972	1	236-9039	1
	▶573		▶110		▶385		▶635
232-1396	523	235-1448	63	236-8973	1	236-9046	434
	▶628	235-1451	63		▶329		▶677
232-1397	523	235-2496	304	236-8974	1	236-9086	367
	▶557	235-3595	100		▶334	236-9087	▶408
232-1684	628	235-3937	▶157	236-8975	1	236-9088	▶407
232-1685	628		169		▶341		408
232-1686	628	235-4123	224	236-8976	1	236-9092	▶421
232-1687	628	235-4546	579		▶339	236-9094	▶421
232-1693	130	235-5275	135	236-8978	1	236-9095	421
232-1712	628		▶165		▶355		▶479
232-2964	▶558	235-5276	158	236-8979	1	236-9096	▶420
	608		▶166		▶85		421
232-3116	266	235-5279	▶158	236-8980	1	236-9099	▶256
232-3120	2	235-5506	222		▶576	236-9100	256
	▶266	235-6157	505	236-8981	1		▶294
233-0455	472	235-6160	453		▶104	236-9103	▶424
233-0891	130	235-7133	▶121	236-8982	1		434
233-0915	628		123		▶359	236-9105	434
233-0916	628	235-7509	2	236-8983	1		▶460
233-3346	558	235-8559	▶159		▶440	236-9108	▶131
233-5036	573		523	236-8985	1	236-9119	▶338
233-5220	▶62	235-8560	▶160		▶398	236-9129	▶680
	63	236-4269	196	236-8987	1	236-9135	▶94
233-5221	3	236-4608	225		▶298	236-9136	▶95
	▶63	236-4609	225	236-8988	1	236-9773	159
233-6191	2	236-4610	225		▶68	236-9774	159
	▶130	236-4611	225	236-8990	1	236-9775	160
233-6742	100	236-4612	208		▶76	236-9776	160
	▶118	236-4615	210	236-8991	1	236-9832	487
234-1360	573	236-4616	211		▶367		489
234-1530	355		213	236-8992	1	236-9939	344
234-1531	355	236-4619	225		▶369	236-9993	222
234-3539	677	236-4620	132	236-8993	135	237-1012	▶169
234-3545	355	236-4621	132		▶136	237-2069	▶622
234-4355	176	236-4630	586	236-8994	135	237-2234	505
234-4851	487	236-4631	222		▶136	237-2570	1
	489	236-5035	2	236-8995	135		▶593
234-4869	489		▶59		▶137	237-2572	▶523
234-4870	489	236-5197	606	236-8997	434		593

▶ **PRIMARY REFERENCE**

PART NUMBER INDEX

Part	Page	Part	Page	Part	Page	Part	Page
237-2574	523		▶123	240-9136	366		▶524
	▶608	237-9769	2	240-9973	76	243-1090	523
237-2577	608		▶23	240-9975	76		▶624
237-2742	434	237-9878	404	241-0037	418	243-1092	523
	▶474	237-9960	255		419		▶561
237-2743	474	238-1795	495	241-0847	36	243-1093	561
237-3943	631		497	241-2628	476		▶578
237-3970	▶519	238-2717	39		479	243-1555	2
	631	238-2721	3	241-4936	▶602		▶176
237-4227	466		▶39		603	243-1604	316
237-4376	▶32	238-6721	70	241-4939	603		▶318
	49	238-6728	70	241-6168	65	243-1606	316
237-4903	135	238-6730	70		266	243-1607	318
	▶242	238-9842	487	241-6206	325	243-1667	2
237-4904	135		489	241-6208	440		▶70
	▶244	238-9843	505	241-6209	435	243-1670	2
237-4905	135	238-9844	505	241-6215	385		▶55
	▶231	239-0618	451	241-6978	559	243-1675	92
237-4909	▶249	239-2395	176	241-8368	▶206	243-1676	87
	408		▶183		231	243-1677	87
237-4910	▶221	239-2396	100	241-8506	68	243-1679	83
	523		176	241-8651	559	243-1680	2
237-5747	303		▶184	241-8652	559		▶29
237-6256	684	239-2397	176	241-8686	▶308	243-1938	▶217
237-7253	49		▶192		320	243-1941	▶526
237-7262	169	239-3450	76	241-8687	308	243-1945	▶140
237-8180	294	239-3451	76	241-9157	462	243-1946	▶528
	▶300	239-3453	76		▶464	243-2289	76
237-8181	300	239-3454	76	241-9265	87	243-3702	▶330
237-8183	300	239-3455	76	242-0444	515		421
237-8242	▶262	239-3456	76	242-0772	▶344	243-3703	330
	320	239-3478	▶185		351	243-3720	435
237-8246	304		186	242-0773	344	243-3725	316
237-8247	▶316	239-4850	131	242-1307	440	243-3763	573
	320		▶173		▶451	243-4186	435
237-8248	▶303	239-5195	451	242-1811	25	243-4187	435
	320	239-5674	176	242-3360	97	243-4369	608
237-8249	▶264		▶186	242-4273	424	243-4371	608
	320	239-5858	97		▶429	243-4566	435
237-8250	▶279	239-6336	455	242-4274	423	243-4623	435
	320	239-6986	684		▶425	243-4624	435
237-8260	300	239-8135	70	242-4275	422	243-4625	435
237-9059	316	239-8410	351		▶427	243-4626	435
237-9060	303	240-0105	76	242-5206	551	243-4692	435
237-9061	303	240-0107	76	242-6099	222	243-4786	435
237-9062	262	240-2636	32	242-6122	298	243-5401	367
237-9064	304	240-2651	83	242-6801	468	243-5405	367
237-9067	303		94	242-6803	468	243-5412	367
237-9068	279		95	242-6804	468	243-5553	608
237-9069	279	240-4542	▶559	242-7218	364	243-5554	608
237-9070	303	240-4548	559	242-8263	608	243-5555	608
237-9310	100	240-4551	559	242-8421	222	243-5556	608
237-9736	169	240-4552	559	242-9005	460	243-5821	124
237-9750	4	240-4557	559	242-9415	76	243-6390	355
	▶92	240-4630	559	242-9417	76	243-6391	355
237-9752	2	240-4695	485	242-9418	76	243-6409	355
	▶239	240-4696	489	242-9419	76	243-6410	355
237-9754	2	240-7271	3	242-9522	304	243-6529	369
	▶88		▶15	242-9523	304	243-6717	10
237-9755	2	240-7272	3	243-0505	308	243-6733	307
	▶51		▶49	243-0507	308		▶320
237-9756	2	240-7356	508	243-0565	385	243-6897	435
	▶89	240-8259	279	243-0570	385	244-0405	474
237-9759	58	240-9133	351	243-0572	308	244-0420	474
237-9767	2	240-9134	363	243-1089	523	244-1046	351

▶ **PRIMARY REFERENCE**

PART NUMBER INDEX

Part	Page
244-1426	440
	▶484
244-2119	578
244-2360	578
244-2539	559
244-2571	334
244-2747	▶384
	523
244-2787	▶566
	593
244-3114	264
	▶323
244-3265	385
244-3268	385
244-3279	385
244-3280	294
244-3282	294
244-3283	294
244-3285	385
244-3287	385
244-3329	447
244-3330	447
244-3525	341
244-3526	341
244-3541	355
244-3599	▶158
244-3602	429
	430
244-4498	76
244-4509	429
	430
244-4513	429
244-6308	329
244-6577	398
244-6578	398
244-6625	476
	479
244-6628	425
	427
244-6856	76
244-7025	425
	427
244-7030	425
	427
244-8785	584
244-8786	583
244-8832	440
244-8836	440
244-8837	440
244-8840	67
245-1172	76
245-1173	76
245-2711	262
245-2975	▶417
	476
	479
245-3017	398
245-3206	76
245-3217	493
245-3219	493
245-3257	231
245-3514	242
245-3815	83
	▶84
245-3816	83
245-3818	84
245-3819	84
245-4018	76
245-4053	372
245-4063	372
245-4333	608
245-4370	398
245-5943	435
	▶492
245-6011	76
245-6095	46
245-6173	370
245-6175	370
245-6447	524
	526
	528
	530
	533
245-6458	523
	▶596
245-6460	599
245-6800	359
245-6801	359
245-6802	359
245-6804	359
245-7306	449
245-7428	334
245-7434	224
245-7438	502
245-7484	421
	▶430
245-7502	430
245-7686	407
245-7688	395
245-7690	395
245-7691	395
245-7963	372
245-8095	468
245-8355	451
245-8818	▶583
	586
245-8819	▶584
	586
245-9087	355
245-9818	1
	▶370
246-0435	364
246-0573	440
246-0717	677
246-0718	677
246-0719	677
246-0720	677
246-0721	677
246-1133	435
246-1472	372
246-1696	124
246-1699	124
246-1921	▶67
246-2055	434
	▶462
246-2065	462
246-2070	256
	▶421
246-2347	135
	▶219
246-2348	219
246-2349	219
246-2686	138
246-2689	▶138
246-2889	462
246-3144	10
246-3231	578
246-3290	165
246-3292	135
	▶565
246-3295	166
	168
246-3371	435
246-3513	139
246-3514	▶139
246-4302	▶618
	619
246-4374	370
246-4447	▶619
	622
246-4489	232
246-4612	84
246-4616	84
246-4617	84
246-4777	385
246-4780	385
246-4781	385
246-4783	385
246-4792	▶271
	307
246-4793	104
246-5422	279
246-5459	222
246-6196	124
246-6291	140
	▶143
246-6292	398
246-6293	398
246-9371	224
247-0507	398
247-1852	▶551
	554
247-1853	551
247-1855	551
	▶571
247-1859	551
247-1860	608
247-1862	551
247-1863	573
247-1865	571
247-1869	551
247-1870	551
247-2834	90
247-3018	398
247-3020	398
247-4184	524
247-4285	148
247-4481	485
247-4863	264
247-4969	524
	526
	528
	530
	533
247-7601	▶485
	497
247-8492	430
247-8493	429
247-8495	279
247-8920	502
248-0356	279
248-0414	158
	▶168
248-1545	232
248-2079	624
248-3317	425
	427
248-4152	▶603
	605
248-4840	89
248-4841	89
248-5513	70
248-9953	502
248-9954	502
248-9955	502
249-0712	▶103
	109
249-0787	476
	479
249-2334	▶432
	435
249-2763	225
249-2775	132
249-4127	174
249-4134	174
250-0839	304
250-0944	94
	95
250-1425	442
250-1426	442
250-3337	76
250-4628	595
250-5590	366
250-5593	351
	▶363
250-5594	351
250-5595	363
250-5596	351
250-5599	351
	▶366
250-6115	96
	▶97
250-6148	511
250-7531	487
	489
250-9308	571
250-9309	571
250-9310	571
250-9311	571
250-9312	571
250-9969	▶336
251-1005	32
251-1082	132
251-1110	421
251-4282	596
251-4283	596
251-4284	596
251-4314	30
251-4339	160
251-4525	286

▶ **PRIMARY REFERENCE**

PART NUMBER INDEX

Part	Page	Part	Page	Part	Page	Part	Page
	288		660	257-7676	391	261-3945	476
251-5872	628	254-4505	651	257-8414	451		▶497
251-6162	372		652		▶507	261-4405	166
251-7593	4	254-5147	460	257-8471	405	261-4406	166
	▶196		▶466	258-2829	435	261-4884	166
251-7595	2	254-5525	▶158	258-5031	23	261-5694	594
	▶105	254-5762	367	258-5193	466	262-1421	▶135
251-7600	2	254-5789	455		▶472		141
	▶65	254-6555	468	258-5194	472	262-2043	▶136
251-7610	2	254-6562	502	258-5428	398		140
	▶129	254-6581	440	258-5429	398	262-2878	134
252-0737	505	254-9146	624	258-5438	599	262-5236	524
252-0995	279	254-9147	624	258-7107	249	262-5238	526
252-4501	549	254-9149	526	258-7370	583		528
252-4931	294		533		584		530
252-5175	351	254-9150	528	258-7623	608		533
252-5180	351		530	258-7624	608	262-5239	524
252-5182	351	254-9941	459	258-8721	46		526
252-5875	683	254-9942	459	259-1502	476		528
252-5917	▶208	255-1312	367		479		530
	421	255-2395	72	259-1971	476		533
252-5920	158	255-2397	2		479	262-5240	524
	▶211		▶72	259-1999	▶586	262-5265	487
252-5924	▶210	255-4367	608	259-2092	476		489
	408	255-4369	141		479		▶511
252-6971	364	255-4370	169	259-6893	573	262-6813	76
252-6972	364	255-4371	169	259-7889	502	262-6848	85
252-6973	364	255-7790	435	259-8317	493	263-1202	502
252-6974	364	255-8545	545	260-0252	▶46	263-1203	502
252-6979	364		573		49	263-1204	502
252-6980	1	256-0083	468	260-0354	76	263-1493	222
	▶364	256-0854	677	260-0915	46	263-1995	526
252-6982	364	256-2299	651	260-1818	68		528
252-6985	364		652	260-1939	4		530
252-6986	364	256-2301	652		▶24		533
252-7802	19	256-2302	652	260-3053	487	263-3180	683
252-9256	451	256-2303	651		489	263-3322	▶140
	▶491	256-2304	651	260-3055	487	263-4920	17
252-9543	1	256-2866	487		489	263-7474	468
	▶347	256-3881	677	260-3058	487	263-9088	141
253-0575	624	256-3882	677		489		▶605
253-0861	675	256-4362	485	260-4855	17	264-0551	140
253-1285	505	256-4363	485	260-7765	▶158	264-4297	194
253-1459	3	256-4552	485	260-8590	485		195
	▶109	256-5309	76		487		219
253-1540	440	256-6453	100		489		232
253-2111	233		242		505	264-4437	344
253-3471	131	256-6627	67		▶508	264-4872	141
	▶132	256-7280	485	260-8636	474	264-7029	207
253-3951	158	256-7485	468	260-9189	435	264-7030	224
	▶213	256-7822	528	260-9602	222	265-1111	39
253-4025	505		530	260-9984	168	265-1113	39
253-4026	495	256-7880	359	260-9985	168	265-3930	279
	▶505	256-7881	359	261-0015	▶487	265-6695	▶382
253-8482	440	256-7882	359		495		523
253-9521	573	256-7883	359		497	265-6696	528
254-0004	339	257-1773	▶671	261-0016	▶489		530
254-3569	449	257-2008	523		495	265-8171	132
254-3571	421		▶568		497	266-1466	▶179
254-3944	17	257-2015	30	261-0471	683		600
254-4496	▶659	257-2016	523	261-2332	165	266-6644	279
254-4497	▶660		▶640	261-2333	165	266-7738	385
254-4500	▶651	257-2197	640	261-2337	479	266-7740	385
	659	257-4159	369		▶495	267-0007	2
254-4501	▶652	257-4323	97	261-3037	▶140	267-0010	3

▶ **PRIMARY REFERENCE**

PART NUMBER INDEX

Part	Page	Part	Page	Part	Page	Part	Page
	▶5	273-2554	336	277-2548	502	284-6875	115
267-2809	156	273-3591	468	277-2550	502		▶116
267-3476	2	273-3959	435	277-3279	538	284-7057	385
	▶90	273-5464	502	277-3281	530	284-9601	136
267-5222	376	273-6356	▶604		▶540	284-9602	136
267-8937	447	274-2371	533	277-3282	540	285-0112	398
267-9445	447		▶538	277-6203	551	285-0823	8
268-1497	68	274-3774	224	277-6204	551	285-1962	105
268-2953	17	274-3775	224	277-7570	538	285-1963	105
268-4045	68	274-3776	224		540	285-6635	100
268-8792	563		225		542	285-6638	2
269-2860	32	274-3777	224		543		▶100
269-2862	32	274-3778	224	277-8628	77	285-9235	294
269-2864	32	274-3779	224	277-8986	76	286-0693	398
269-6164	2	274-4283	140	278-0644	327	286-5763	298
	▶43	274-4284	140	278-0647	551	286-5803	2
269-7250	174	274-4490	46	278-1808	395		▶3
269-9397	▶453	274-5871	435	278-3310	395	286-9380	636
	495	274-7395	176	278-7093	30		638
	497		▶194	278-7217	516	287-2072	294
269-9398	▶455	274-7396	176	278-8965	535	287-3049	37
	495		▶195	278-8967	535	287-5806	▶514
	497	274-8330	576	278-8970	535		516
270-2636	416	274-9189	600	278-8974	535	287-5814	421
270-3388	▶554	275-0024	▶253	279-6641	538		▶515
	608		421		540	287-6408	262
270-5320	102	275-0026	253		542	287-7892	344
270-7147	435	275-0571	334		543	287-8721	124
270-8937	502	275-0572	332	280-0440	538	288-2738	▶98
271-0263	382		333		540		116
	▶383		334		542	288-8932	485
271-0264	▶376	275-1235	116		543	289-3038	232
	383	275-1253	100	280-1436	162	290-0672	680
271-2609	398		▶207	280-1437	162	290-0673	680
271-2610	398	275-3514	359	280-1456	▶162	290-0674	680
271-3987	398	275-5588	579	280-8085	104	290-0675	680
271-4016	135	275-5635	329	281-1750	52	290-0676	680
	▶246	275-7741	▶218	281-2725	118	290-0677	680
271-4017	246		221		▶119	290-6085	460
271-4028	158	275-7808	336	281-2925	91	290-6527	196
	▶247	275-7809	336	281-8366	51		▶197
271-4029	247	275-7810	336		▶52	291-2165	222
271-4030	247	275-7811	336	282-4349	455	291-5392	545
271-4037	158	275-8544	▶404	282-5393	451	291-6665	304
	▶248		407	282-5394	451	291-6806	124
271-4038	248	275-8880	435	282-5397	451	291-6905	75
271-4039	248		474	283-2238	90	292-1200	75
271-4956	336	275-9368	85	283-5192	492	292-3022	1
271-4958	336	275-9369	85	283-9981	▶380		▶683
271-9032	347	275-9370	85		381	292-6003	▶332
271-9033	347	276-0031	141	283-9982	380		351
271-9034	347	276-0730	339	283-9983	380	292-6004	▶333
271-9035	347	276-1028	85	283-9984	380		351
271-9109	409	276-1054	1	283-9997	378	292-6005	333
271-9110	409		▶115		▶381	292-6007	332
271-9111	409	276-1858	683	284-1010	487	292-6009	351
272-0292	294	276-3964	561		489	292-6010	1
272-0293	294		▶563	284-1011	487		▶351
272-0389	5	276-7222	39		489	292-6097	595
272-5550	336	276-9775	272	284-3623	222	292-6402	▶594
272-6674	573	276-9776	272	284-3624	222		595
272-9800	157	276-9777	272	284-3953	555	292-8061	485
272-9821	135	276-9778	272	284-4739	▶605	292-8768	462
	▶251	277-0731	404	284-4929	59		▶468
273-0275	244	277-2545	502	284-4930	59	292-8769	468

▶ **PRIMARY REFERENCE**

PART NUMBER INDEX

Part	Page	Part	Page	Part	Page	Part	Page
292-9237	▶595	301-6343	105	310-7565	224	318-9630	557
	615	301-7298	65	311-2178	592	318-9631	569
292-9252	73	302-8817	364	311-3898	613	318-9644	440
	▶74	302-8821	364	311-7036	242	319-0270	49
293-0818	74	302-8822	364	311-7613	124	319-0271	49
	▶75	303-1382	▶12	311-8374	398	319-0762	449
293-1844	100		13	312-1735	82	319-0763	449
293-2911	606	303-1383	▶13	312-2014	68	319-0764	449
293-8834	▶633		14		▶82	319-0765	449
	635	303-1384	▶14	312-3146	351	319-2444	449
293-8835	633		15	312-5694	661	319-4903	440
	635	303-2024	87		662	319-8253	▶530
293-9397	12	303-2238	135	312-6234	670	319-8254	▶533
294-0701	502		▶174	312-6235	670	319-9511	409
294-0702	502	303-3499	502	312-6272	661	319-9556	▶536
294-0877	304	303-4159	105	312-6429	▶661		542
294-5042	615	303-5952	239		662	319-9557	▶537
294-6007	47	303-6334	334	312-6432	▶670		543
295-0993	487	303-9566	217	312-6458	77	319-9558	526
	489	304-5687	222	312-8629	512		▶542
295-7007	435	305-0617	▶19		513	319-9559	528
295-9259	▶113		20	312-8990	661		▶543
	114	305-0618	3	313-1265	124	320-1457	563
295-9888	425		▶20	313-3280	233	320-6212	608
296-0035	105	305-3684	110	313-3829	429	320-9997	140
296-1063	124	305-6163	3		430		▶141
296-1393	683		▶114	313-3996	10	320-9998	▶569
296-3447	114	305-8958	▶327	313-7668	▶513	321-1173	447
296-4301	312		372	313-9198	104	321-1174	447
296-6980	440	305-8966	327	314-2405	242	321-1175	447
296-7759	146	305-8969	327	314-3995	124	321-1176	447
	147	306-3998	197	314-5213	608	321-1177	447
296-8592	77	306-8150	87	314-5214	608	321-1178	447
296-9937	344	307-0047	140	314-9336	392	321-2964	233
297-0936	675	307-2990	511		▶393	321-3357	233
297-0937	675	307-2991	511	314-9337	393	321-3359	233
297-0938	▶675	307-4671	524	314-9350	328	321-3504	385
	683		▶535	314-9351	328	321-5639	6
297-4926	▶409	307-5393	440	314-9754	384	321-5967	274
	545	307-9655	110	315-1418	440	321-8299	608
298-3650	233	307-9732	573	315-5389	232	321-8389	661
298-6500	271	308-0467	573	316-3499	668	322-3111	279
298-6501	271	308-0788	249	316-3590	661	322-3161	594
298-8919	468	308-0950	266	316-8501	232	322-3305	125
	▶502	308-0951	92	316-8502	232		▶128
299-0745	▶124	308-1845	393	316-8503	232	322-4659	440
	135	308-1873	393	316-8504	232	322-7451	116
299-5840	547	308-1876	393	316-8507	526	323-9531	323
	▶548	308-2071	327		528	324-3210	68
299-7996	474	308-3054	664		530	324-9356	398
299-7997	474	308-4322	665		533	325-4505	5
		308-5712	136	316-8510	251		▶6
		308-6358	▶17	316-8515	222	325-5018	420
3			19	317-5890	378	325-7124	▶416
		308-9131	369	317-6752	440		420
300-6057	487	309-3949	355	317-7374	440	325-7131	416
	489	309-8825	9	317-7595	441		▶418
	▶512	309-9810	599	318-2082	198	325-7145	▶419
300-7318	351	310-2393	141	318-2100	370	325-7163	418
	367	310-3603	599	318-2106	370		419
301-0589	141	310-6071	523	318-2605	169	326-1644	102
301-2980	232		▶599	318-2936	440	326-4287	137
301-5241	499	310-7066	344	318-3365	662	326-4288	137
301-5242	499		351		▶668	326-7677	398
301-5243	499		364	318-9628	141	326-8938	1

▶ **PRIMARY REFERENCE**

PART NUMBER INDEX

Part	Page	Part	Page	Part	Page	Part	Page
	▶331		▶58				
326-8939	331						
327-4382	661						
327-4608	233						
328-3655	274						
329-1428	219						
329-1690	334						
329-1691	334						
329-3061	30						
329-4959	563						
329-4983	▶662						
329-4998	▶592						
	593						
329-5087	174						
329-5475	441						
329-6747	249						
329-8276	435						
329-9657	312						
	▶313						
329-9658	312						
	▶322						
329-9700	398						
329-9915	137						
329-9916	137						
330-3408	605						
330-3409	135						
	136						
330-3410	135						
	136						
330-5364	▶137						
330-5365	▶137						
330-9358	▶433						
	440						
331-1303	398						
	▶405						
331-2879	523						
	▶607						
331-2880	593						
	▶623						
331-3437	661						
331-5007	17						
331-5008	17						
331-5009	17						
331-5010	17						
331-5011	17						
332-0194	176						
332-2152	19						
332-3707	6						
332-7339	87						
333-6439	272						
	▶274						
333-9309	▶259						
	274						
334-0336	137						
334-0337	137						
334-1624	24						
334-2679	259						
334-2680	259						
334-4603	683						
335-6622	174						
335-7120	421						
336-2216	51						
336-3606	136						
337-3953	435						
340-7752	2						



© 2009 CATERPILLAR
ALL RIGHTS
RESERVED

CAT, CATERPILLAR, THEIR RESPECTIVE LOGOS, “CATERPILLAR YELLOW” AND THE POWER EDGE TRADE DRESS, AS WELL AS CORPORATE AND PRODUCT IDENTITY USED HEREIN, ARE TRADEMARKS OF CATERPILLAR AND MAY NOT BE USED WITHOUT PERMISSION.

PRINTED IN
U.S.A.