JANEIRO 2010

966H

TM 5-3805-291-23-1

TECHNICAL MANUAL

RUTHZIL TRATOR COMERCIAL DE PEÇAS LTDA 11 97083-6812 ROLANDO CITRANGULO

FIELD MAINTENANCE MANUAL
(Includes Unit and Direct Support Maintenance)

FOR

CATERPILLAR

LOADER, HEAVY, SCOOP:
DIESEL ENGINE DRIVEN (DED), 4-WHEEL DRIVE

4.5 CUBIC YARD ROCK BUCKET
NSN 3805-01-533-1857

AND

5.0 CUBIC YARD GENERAL PURPOSE BUCKET
NSN 3805-01-533-1853
MODEL 966H



DISTRIBUTION STATEMENT A - Approved for public release; distribution is unlimited.

HEADQUARTERS, DEPARTMENT OF THE ARMY

JANUARY 2010

WARNING SUMMARY

This warning summary contains general safety warnings and hazardous materials warnings that must be understood and applied during operation and maintenance of this equipment. Failure to observe these precautions could result in serious injury or death to personnel. Also included are explanations of safety and hazardous materials icons used within the technical manual.



BIOLOGICAL - abstract symbol shows that a material may contain bacteria or viruses that present a danger to life or health.



CHEMICAL - drops of liquid on hand shows that the material will cause burns or irritation to human skin or tissue.



EAR PROTECTION - headphones over ears show that noise level will harm ears.



ELECTRICAL - electrical wire to arm with electricity symbol running through human body shows that shock hazard is present.



EYE PROTECTION - person with goggles shows that the material will injure the eyes.



FIRE - flame shows that a material may ignite and cause burns.



FLYING PARTICLES - arrows bouncing off face with face shield shows that particles flying through the air will harm face.



HEAVY PARTS - hand with heavy object on top shows that heavy parts can crush and harm.



HEAVY PARTS - heavy object on human figure shows that heavy parts present a danger to life or limb.



HOT AREA - hand over object radiating heat shows that part is hot and can burn.



HYDRAULIC FLUID PRESSURE - hydraulic fluid spraying human hand shows that fluid escaping under great pressure can cause injury or death to personnel.



RADIOACTIVE - identifies a material that emits radioactive energy and can injure human tissue or organs.



SLICK FLOOR - wavy line on floor with legs prone shows that slick floor presents a danger from falling.



VAPOR - human figure in a cloud shows that material vapors present a danger to life or health.

FOR INFORMATION ON FIRST AID, REFER TO FM 4-25.11.



WARNING

CARBON MONOXIDE (EXHAUST GASES) CAN KILL!

- **Carbon monoxide is a colorless, odorless, deadly poison which, when breathed, deprives the body of oxygen and causes suffocation. Exposure to air containing carbon monoxide produces symptoms of headache, dizziness, loss of muscular control, apparent drowsiness, and coma. Permanent brain damage or death can result from severe exposure.**
- **Carbon monoxide occurs in exhaust fumes of internal combustion engines. Carbon monoxide can become dangerously concentrated under conditions of inadequate ventilation. The following precautions must be observed to ensure safety of personnel when engine is operated.**

1. **DO NOT operate engine in enclosed areas.**
2. **DO NOT idle engine without adequate ventilation.**
3. **DO NOT drive machine with inspection plates or cover plates removed.**
4. **BE ALERT for exhaust poisoning symptoms. They are:**
   - **Headache**
   - **Dizziness**
   - **Sleepiness**
   - **Loss of muscular control**
5. **If you see another person with exhaust poisoning symptoms:**
   - **Remove person from area.**
   - **Expose to fresh air.**
   - **Keep person warm.**
   - **Do not permit physical exercise.**
   - **Administer Cardiopulmonary Resuscitation (CPR), if necessary.**
   - **Notify a medic.**
6. **BE AWARE. The field protective mask for Nuclear, Biological, and Chemical (NBC) protection will not protect you from carbon monoxide poisoning.**

The Best Defense Against Carbon Monoxide Poisoning Is Good Ventilation!




WARNING

BATTERIES



- **To avoid injury, eye protection and acid-resistant gloves must be worn when working around batteries. DO NOT smoke, use open flame, make sparks, or create other ignition sources around batteries. If a battery is giving off gases, it can explode and cause injury to personnel. Remove all jewelry such as rings, ID tags, watches, and bracelets. If jewelry or a tool contacts a battery terminal, a direct short will result in instant heating or electric shock, damage to equipment, and injury to personnel.**
- **Sulfuric acid contained in batteries can cause serious burns. If battery corrosion or electrolyte makes contact with skin, eyes or clothing, take immediate action to stop the corrosive burning effects. Failure to follow these procedures may result in death or serious injury to personnel.**

a. **Eyes. Flush with cold water for no less than 15 minutes and seek medical attention immediately.**

b. **Skin. Flush with large amounts of cold water until all acid is removed. Seek medical attention as required.**

c. **Internal. If corrosion or electrolyte is ingested, drink large amounts of water or milk. Follow with milk of magnesia, beaten egg, or vegetable oil. Seek medical attention immediately.**

d. **Clothing/Equipment. Wash area with large amounts of cold water. Neutralize acid with baking soda or household ammonia.**

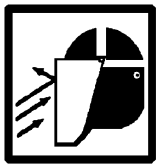

WARNING

COMPRESSED AIR

Particles blown by compressed air are hazardous. DO NOT exceed 15 psi (103 kPa) nozzle pressure when drying parts with compressed air. Use a maximum of 30 psi (207 kPa) when cleaning components. DO NOT direct compressed air against human skin. Make sure air stream is directed away from user and other personnel in the area. To prevent injury, user must wear protective goggles or face shield. Failure to follow this warning may result in injury to personnel.




WARNING

ETHER COLD START SYSTEM




Ether fuel is extremely flammable and toxic. DO NOT smoke and make sure you are in a well-ventilated area away from heat, open flames or sparks. Wear eye protection. Avoid contact with skin and eyes and avoid breathing ether fumes. If fluid enters or fumes irritate the eyes, wash immediately with large quantities of clean water for 15 minutes. Seek medical attention immediately if ether is inhaled or causes eye irritation. Failure to follow this warning may cause injury or death to personnel.



WARNING

FIRE EXTINGUISHER

Discharging large quantities of dry chemical fire extinguisher inside an enclosed cab may result in temporary breathing difficulty during and immediately after the discharge event. Discharge fire extinguisher from outside the cab. Ventilate cab thoroughly prior to reentry.



WARNING

FUEL HANDLING

- **DO NOT smoke or permit any open flame in area of loader while you are servicing fuel system. Be sure hose nozzle is grounded against filler tube during refueling to prevent static electricity. Failure to follow this warning may result in injury to personnel or equipment damage.**
- **DO NOT perform fuel system checks, inspections, or maintenance while smoking or near fire, flames, or sparks. Fuel may ignite, causing injury or death to personnel or damage to equipment.**
- **Operating personnel must wear fuel-resistant gloves when handling fuels. If exposed to fuel, promptly wash exposed skin and change fuel-soaked clothing. Failure to follow this warning may result in injury to personnel.**



WARNING

HAZARDOUS WASTE DISPOSAL



- **When servicing this machine, performing maintenance, or disposing of materials such as engine coolant, hydraulic fluid, lubricants, battery acids or batteries, and CARC paint, consult your unit/local hazardous waste disposal center or safety office for local regulatory guidance. If further information is needed, please contact The Army Environmental Hotline at 1-800-872-3845.**
- **Lubricating/hydraulic oils and engine coolant used in the performance of maintenance can be very slippery. Immediately wipe up any spills. Failure to follow this warning may result in injury to personnel.**



WARNING

HEARING PROTECTION

Your hearing can be PERMANENTLY DAMAGED if you are exposed to constant high noise levels of 85 dB or greater. Hearing protection is required when operating machine or when working on machine while it is operating. Failure to wear hearing protection may result in hearing loss.



WARNING

HYDRAULIC SYSTEM PRESSURE



- **DO NOT disconnect or remove any hydraulic system line or fitting unless engine is shut down and hydraulic system pressure has been relieved. Tighten all connections before applying pressure. Escaping hydraulic fluid under pressure can penetrate the skin, causing injury to personnel.**
- **At operating temperature, hydraulic oil is hot. Allow hydraulic oil to cool before disconnecting any hydraulic lines. Failure to follow this warning may result in injury to personnel.**

WARNING

HYDRAULIC SYSTEM PRESSURE

The accumulator is filled with dry nitrogen. DO NOT loosen or remove the valve or cap from the top of the accumulator.

WARNING

MACHINE OPERATION

- **Use caution and maintain three-point contact at all times when mounting or dismounting machine. DO NOT use steering wheel as a handhold. Failure to follow this warning may result in injury or death to personnel.**
- **BE ALERT for personnel in the area while operating machine. Always check to ensure area is clear of personnel and obstructions before moving. Failure to follow this warning may result in injury or death to personnel.**
- **Use of seat belt while operating machine is mandatory. Fasten belt BEFORE operating machine. Trying to fasten belt during operation creates a hazardous condition. Failure to follow this warning may result in injury or death to personnel.**
- **DO NOT allow riders on machine. Failure to follow this warning may result in injury or death to personnel.**
- **NEVER leave operator compartment without applying parking brake. Failure to follow this warning may result in injury or death to personnel.**
- **DO NOT use parking/emergency brake to stop a moving machine under usual conditions. Only if service brakes fail, apply parking/emergency brake. Failure to follow this warning may result in injury to personnel or damage to equipment.**
- **NEVER use starting fluid or spray to aid in starting the engine, other than the on-board ether cold start system. Failure to follow this warning may cause injury or death to personnel or damage to equipment.**
- **Always use a ground guide when driving machine up or down ramps in preparation for highway or marine transport. Failure to use a ground guide may cause injury or death to personnel or damage to equipment.**



WARNING

NBC EXPOSURE



- **If NBC exposure is suspected, personnel wearing protective equipment must handle all air cleaner media. Consult your NBC Officer or NBC NCO for appropriate handling or disposal procedures.**
- **Refer to FM 3-3, *Chemical and Biological Contamination Avoidance,* TM 3-4230-236-10, *Operator's Manual for Decontamination System, Sorbent: M100,* FM 3-3-1, *Nuclear Contamination Avoidance.***
- **NBC contaminated filters must be handled using adequate precautions and must be disposed of by trained personnel.**
- **Failure to follow these warnings may cause injury or death to personnel.**



To order this NBC decal use:

National Stock Number (NSN) - 7690-01-114-3702
Part Number (PN) - 12296626
Commercial and Government Entity Code (CAGEC) - 19207



WARNING

PRESSURIZED COOLING SYSTEM



- **DO NOT service cooling system unless engine has been allowed to cool down. This is a pressurized cooling system and escaping steam or hot coolant may result in serious burns.**
- **DO NOT remove cooling system radiator cap when engine is hot. Allow engine to cool down. Loosen cap to first stop and let any pressure out of cooling system, then remove cap. Failure to follow this warning may result in serious burns.**
- **Wear effective eye, hand, and skin protection when handling coolants. Failure to do so may result in injury to personnel.**




WARNING

SOLVENT CLEANING COMPOUND




Solvent cleaning compound MIL-PRF-680 Type III is an environmentally compliant and low toxic material. However, it may be irritating to the eyes and skin. Use protective gloves and goggles. Use in well-ventilated areas. Keep away from open flames and other sources of ignition. Failure to do so may result in injury or death to personnel.

WARNING

TIRES

- **Operating machine with underinflated or defective tire may lead to tire failure and loss of traction or control. Failure to follow this warning may cause damage to equipment or injury to personnel.**
- **If tire pressure is 0 psi (0 kPa) DO NOT inflate. Notify Unit Maintenance. Failure to follow this warning may cause injury or death to personnel.**
- **Use a self-inflating chuck and stand at a distance behind tire when inflating tire. Failure to follow this warning may cause injury or death to personnel.**




WARNING

WORK SAFETY




- **Lifting cables, chains, hooks, and slings used for lifting machine must be in good condition and of suitable capacity. Failure to follow this warning may cause injury or death to personnel and damage to equipment.**
- **Improper use of lifting equipment and improper attachment of cables to machine may cause injury to personnel and damage to equipment. Observe all standard rules of safety.**
- **Hitch and steering movement can reduce clearances suddenly and cause injury. Always stop engine BEFORE working in area of hitch link.**
- **Use extreme caution when handling heavy parts. Provide adequate support and use assistance during procedure. Ensure that any lifting equipment used is in good condition and of suitable load capacity. Keep clear of heavy parts supported only by lifting equipment. Failure to follow this warning may cause injury or death to personnel.**
- **Wear suitable eye protection and keep face and eyes away from exhausting air tank drain valves. Failure to do so may cause injury to personnel.**
- **Hot oil or metal parts can cause severe burns. Wear insulated gloves, long sleeves, and eye protection when working with heated parts.**
- **Before operating machine, secure the steering frame lock in stowed position. Failure to lock steering frame lock into stowed position can result in loss of steering and injury or death to personnel.**

LIST OF EFFECTIVE PAGES/WORK PACKAGES

Date of issue for original manual is:
NOTE: Zero in the "Change No." column indicates an original page or work package.
Original . . . . . 15 January 2010

Total number of volumes is 2. Total number of pages for front and rear matter is 114 and total number of work packages is 237, consisting of the following:

Page/WP No. **Change No.**

Volume I

Front Cover 0
Warning Summary (8 pgs.) 0
i thru xii 0
CHAPTER 1 title page 0
WP 0001 00 (122 pgs.) 0
WP 0002 00 (16 pgs.) 0
WP 0003 00 (188 pgs.) 0
CHAPTER 2 title page 0
WP 0004 00 (6 pgs.) 0
WP 0005 00 (16 pgs.) 0
WP 0006 00 (10 pgs.) 0
WP 0007 00 (50 pgs.) 0
WP 0008 00 (104 pgs.) 0
WP 0009 00 (286 pgs.) 0
WP 0010 00 (6 pgs.) 0
WP 0011 00 (12 pgs.) 0
WP 0012 00 (6 pgs.) 0
WP 0013 00 (78 pgs.) 0
WP 0014 00 (60 pgs.) 0
WP 0015 00 (38 pgs.) 0
WP 0016 00 (16 pgs.) 0
WP 0017 00 (70 pgs.) 0
WP 0018 00 (22 pgs.) 0
CHAPTER 3 title page 0
WP 0019 00 (4 pgs.) 0
WP 0020 00 (30 pgs.) 0
WP 0021 00 (2 pgs.) 0
WP 0022 00 (24 pgs.) 0
WP 0023 00 (10 pgs.) 0
WP 0024 00 (6 pgs.) 0
WP 0025 00 (4 pgs.) 0
WP 0026 00 (2 pgs.) 0
WP 0027 00 (4 pgs.) 0
WP 0028 00 (6 pgs.) 0
WP 0029 00 (6 pgs.) 0
WP 0030 00 (8 pgs.) 0
WP 0031 00 (12 pgs.) 0
WP 0032 00 (10 pgs.) 0
WP 0033 00 (6 pgs.) 0
WP 0034 00 (12 pgs.) 0
WP 0035 00 (6 pgs.) 0
WP 0036 00 (4 pgs.) 0
WP 0037 00 (6 pgs.) 0
WP 0038 00 (4 pgs.) 0
WP 0039 00 (4 pgs.) 0
WP 0040 00 (6 pgs.) 0
WP 0041 00 (2 pgs.) 0
WP 0042 00 (4 pgs.) 0
WP 0043 00 (10 pgs.) 0
WP 0044 00 (4 pgs.) 0
WP 0045 00 (6 pgs.) 0
WP 0046 00 (4 pgs.) 0
WP 0047 00 (4 pgs.) 0
WP 0048 00 (4 pgs.) 0
WP 0049 00 (6 pgs.) 0
CHAPTER 5 title page 0
WP 0230 00 (2 pgs.) 0
WP 0231 00 (4 pgs.) 0
WP 0232 00 (22 pgs.) 0
WP 0233 00 (6 pgs.) 0
WP 0234 00 (22 pgs.) 0
WP 0235 00 (8 pgs.) 0
WP 0236 00 (6 pgs.) 0
WP 0237 00 (2 pgs.) 0
Index-1 to Index-22 0
Foldouts (52 pgs.) 0
Metric conversion chart 0
Back Cover 0

Volume II

Front Cover (2 pgs) 0
Warning Summary (8 pgs.) 0
i thru x 0
WP 0050 00 (14 pgs.) 0
WP 0051 00 (10 pgs.) 0
WP 0052 00 (10 pgs.) 0
WP 0053 00 (10 pgs.) 0
WP 0054 00 (2 pgs.) 0
WP 0055 00 (14 pgs.) 0
WP 0056 00 (6 pgs.) 0
WP 0057 00 (8 pgs.) 0
WP 0058 00 (6 pgs.) 0
WP 0059 00 (2 pgs.) 0
WP 0060 00 (6 pgs.) 0
WP 0061 00 (4 pgs.) 0

Page/WP No.	Change No.
WP 0062 00 (4 pgs.)	0
WP 0063 00 (12 pgs.)	0
WP 0064 00 (4 pgs.)	0
WP 0065 00 (2 pgs.)	0
WP 0066 00 (4 pgs.)	0
WP 0067 00 (2 pgs.)	0
WP 0068 00 (2 pgs.)	0
WP 0069 00 (6 pgs.)	0
WP 0070 00 (6 pgs.)	0
WP 0071 00 (12 pgs.)	0
WP 0072 00 (4 pgs.)	0
WP 0073 00 (2 pgs.)	0
WP 0074 00 (2 pgs.)	0
WP 0075 00 (4 pgs.)	0
WP 0076 00 (4 pgs.)	0
WP 0077 00 (2 pgs.)	0
WP 0078 00 (2 pgs.)	0
WP 0079 00 (2 pgs.)	0
WP 0080 00 (4 pgs.)	0
WP 0081 00 (2 pgs.)	0
WP 0082 00 (4 pgs.)	0
WP 0083 00 (4 pgs.)	0
WP 0084 00 (2 pgs.)	0
WP 0085 00 (6 pgs.)	0
WP 0086 00 (4 pgs.)	0
WP 0087 00 (2 pgs.)	0
WP 0088 00 (2 pgs.)	0
WP 0089 00 (6 pgs.)	0
WP 0090 00 (2 pgs.)	0
WP 0091 00 (4 pgs.)	0
WP 0092 00 (4 pgs.)	0
WP 0093 00 (4 pgs.)	0
WP 0094 00 (2 pgs.)	0
WP 0095 00 (2 pgs.)	0
WP 0096 00 (6 pgs.)	0
WP 0097 00 (12 pgs.)	0
WP 0098 00 (4 pgs.)	0
WP 0099 00 (2 pgs.)	0
WP 0100 00 (6 pgs.)	0
WP 0101 00 (4 pgs.)	0
WP 0102 00 (6 pgs.)	0
WP 0103 00 (4 pgs.)	0
WP 0104 00 (8 pgs.)	0
WP 0105 00 (4 pgs.)	0
WP 0106 00 (4 pgs.)	0
WP 0107 00 (4 pgs.)	0
WP 0108 00 (4 pgs.)	0
WP 0109 00 (4 pgs.)	0
WP 0110 00 (4 pgs.)	0
WP 0111 00 (2 pgs.)	0
WP 0112 00 (6 pgs.)	0
WP 0113 00 (8 pgs.)	0
WP 0114 00 (10 pgs.)	0
WP 0115 00 (4 pgs.)	0
WP 0116 00 (4 pgs.)	0
WP 0117 00 (14 pgs.)	0
WP 0118 00 (4 pgs.)	0
WP 0119 00 (4 pgs.)	0
WP 0120 00 (4 pgs.)	0
WP 0121 00 (10 pgs.)	0
WP 0122 00 (4 pgs.)	0
WP 0123 00 (4 pgs.)	0
WP 0124 00 (10 pgs.)	0
WP 0125 00 (6 pgs.)	0
WP 0126 00 (4 pgs.)	0
WP 0127 00 (10 pgs.)	0
WP 0128 00 (4 pgs.)	0
WP 0129 00 (22 pgs.)	0
WP 0130 00 (4 pgs.)	0
WP 0131 00 (18 pgs.)	0
WP 0132 00 (16 pgs.)	0
WP 0133 00 (34 pgs.)	0
WP 0134 00 (12 pgs.)	0
WP 0135 00 (8 pgs.)	0
WP 0136 00 (4 pgs.)	0
WP 0137 00 (4 pgs.)	0
WP 0138 00 (10 pgs.)	0
WP 0139 00 (4 pgs.)	0
WP 0140 00 (6 pgs.)	0
WP 0141 00 (2 pgs.)	0
WP 0142 00 (2 pgs.)	0
WP 0143 00 (4 pgs.)	0
WP 0144 00 (12 pgs.)	0
WP 0145 00 (6 pgs.)	0
WP 0146 00 (6 pgs.)	0
WP 0147 00 (4 pgs.)	0
WP 0148 00 (6 pgs.)	0
WP 0149 00 (6 pgs.)	0
WP 0150 00 (8 pgs.)	0
WP 0151 00 (12 pgs.)	0
WP 0152 00 (12 pgs.)	0
WP 0153 00 (10 pgs.)	0
WP 0154 00 (12 pgs.)	0
WP 0155 00 (6 pgs.)	0
WP 0156 00 (26 pgs.)	0
WP 0157 00 (12 pgs.)	0
WP 0158 00 (6 pgs.)	0
WP 0159 00 (16 pgs.)	0
WP 0160 00 (2 pgs.)	0
WP 0161 00 (12 pgs.)	0
WP 0162 00 (26 pgs.)	0
WP 0163 00 (4 pgs.)	0
WP 0164 00 (6 pgs.)	0
WP 0165 00 (4 pgs.)	0
WP 0166 00 (4 pgs.)	0
WP 0167 00 (8 pgs.)	0

Page/WP No.	Change No.
WP 0168 00 (10 pgs.)	0
WP 0169 00 (6 pgs.)	0
WP 0170 00 (8 pgs.)	0
CHAPTER 4 title page	0
WP 0171 00 (38 pgs.)	0
WP 0172 00 (12 pgs.)	0
WP 0173 00 (6 pgs.)	0
WP 0174 00 (4 pgs.)	0
WP 0175 00 (4 pgs.)	0
WP 0176 00 (6 pgs.)	0
WP 0177 00 (4 pgs.)	0
WP 0178 00 (4 pgs.)	0
WP 0179 00 (6 pgs.)	0
WP 0180 00 (4 pgs.)	0
WP 0181 00 (6 pgs.)	0
WP 0182 00 (6 pgs.)	0
WP 0183 00 (2 pgs.)	0
WP 0184 00 (2 pgs.)	0
WP 0185 00 (6 pgs.)	0
WP 0186 00 (4 pgs.)	0
WP 0187 00 (6 pgs.)	0
WP 0188 00 (4 pgs.)	0
WP 0189 00 (10 pgs.)	0
WP 0190 00 (14 pgs.)	0
WP 0191 00 (10 pgs.)	0
WP 0192 00 (12 pgs.)	0
WP 0193 00 (4 pgs.)	0
WP 0194 00 (4 pgs.)	0
WP 0195 00 (24 pgs.)	0
WP 0196 00 (8 pgs.)	0
WP 0197 00 (6 pgs.)	0
WP 0198 00 (4 pgs.)	0
WP 0199 00 (32 pgs.)	0
WP 0200 00 (4 pgs.)	0
WP 0201 00 (4 pgs.)	0
WP 0202 00 (4 pgs.)	0
WP 0203 00 (4 pgs.)	0
WP 0204 00 (20 pgs.)	0
WP 0205 00 (4 pgs.)	0
WP 0206 00 (4 pgs.)	0
WP 0207 00 (8 pgs.)	0
WP 0208 00 (10 pgs.)	0
WP 0209 00 (8 pgs.)	0
WP 0210 00 (4 pgs.)	0
WP 0211 00 (18 pgs.)	0
WP 0212 00 (10 pgs.)	0
WP 0213 00 (4 pgs.)	0
WP 0214 00 (28 pgs.)	0
WP 0215 00 (10 pgs.)	0
WP 0216 00 (12 pgs.)	0
WP 0217 00 (6 pgs.)	0
WP 0218 00 (14 pgs.)	0
WP 0219 00 (2 pgs.)	0
WP 0220 00 (2 pgs.)	0
WP 0221 00 (4 pgs.)	0
WP 0222 00 (8 pgs.)	0
WP 0223 00 (16 pgs.)	0
WP 0224 00 (4 pgs.)	0
WP 0225 00 (4 pgs.)	0
WP 0226 00 (6 pgs.)	0
WP 0227 00 (10 pgs.)	0
WP 0228 00 (16 pgs.)	0
WP 0229 00 (16 pgs.)	0
CHAPTER 5 title page	0
WP 0230 00 (2 pgs.)	0
WP 0231 00 (4 pgs.)	0
WP 0232 00 (22 pgs.)	0
WP 0233 00 (6 pgs.)	0
WP 0234 00 (22 pgs.)	0
WP 0235 00 (8 pgs.)	0
WP 0236 00 (6 pgs.)	0
WP 0237 00 (2 pgs.)	0
Index-1 to Index-16	0
Foldouts (52)	0
Metric conversion chart	0
Back cover	0

HEADQUARTERS
DEPARTMENT OF THE ARMY
Washington, D.C., 15 January 2010

TECHNICAL MANUAL

FIELD MAINTENANCE MANUAL
(Includes Unit and Direct Support Maintenance)

FOR

LOADER, HEAVY, SCOOP:
DIESEL ENGINE DRIVEN (DED), 4-WHEEL DRIVE

4.5 CUBIC YARD ROCK BUCKET
NSN 3805-01-533-1857

AND

5.0 CUBIC YARD GENERAL PURPOSE BUCKET
NSN 3805-01-533-1853

MODEL 966H

REPORTING ERRORS AND RECOMMENDING IMPROVEMENTS

You can help improve this publication. If you find any errors, or if you would like to recommend any improvements to the procedures in this publication, please let us know. The preferred method is to submit your DA Form 2028 (Recommended Changes to Publications and Blank Forms) through the Internet, on the Army Electronic Product Support (AEPS) website. The Internet address is https://aeps.ria.army.mil. The DA Form 2028 is located under the Public Applications section in the AEPS Public Home Page. Fill out the form and click on SUBMIT. Using this form on the AEPS will enable us to respond quicker to your comments and better manage the DA Form 2028 program. You may also mail, email, or fax your comments or DA Form 2028 directly to the U.S. Army TACOM Life Cycle Management Command. The postal mail address is U.S. Army TACOM Life Cycle Management Command, ATTN: AMSTA-LCL-MPP/TECH PUBS, 1 Rock Island Arsenal, Rock Island, IL 61299-7630. The email address is tacomlcmc.daform2028@us.army.mil. The fax number is DSN 793-0726 or Commercial (309) 782-0726.

DISTRIBUTION STATEMENT A - Approved for public release; distribution is unlimited.

Table of Contents

Page

VOLUME I

Warning Summary . . . . . a
WP Figure 2. How To Use This Manual xii

CHAPTER 1. INTRODUCTORY INFORMATION, EQUIPMENT DESCRIPTION AND DATA, AND THEORY OF OPERATION

WP 0001 00 General Information 0001 00-1
WP 0002 00 Equipment Description and Data. 0002 00-1
WP 0003 00 Theory of Operation 0003 00-1

CHAPTER 2. TROUBLESHOOTING PROCEDURES

WP 0004 00 Troubleshooting Introduction 0004 00-1
WP 0005 00 How to Use MSD with ET 0005 00-1
WP 0006 00 How To Use On-Board Diagnostics 0006 00-1
WP 0007 00 Troubleshooting Symptom Index 0007 00-1
WP 0008 00 Troubleshooting Without a Diagnostic Code 0008 00-1
WP 0009 00 Troubleshooting With a Diagnostic Code 0009 00-1
WP 0010 00 Engine Tests, Inspections, and Adjustments 0010 00-1
WP 0011 00 Fuel System Tests, Inspections, and Adjustments. 0011 00-1
WP 0012 00 Cooling System Tests, Inspections, and Adjustments. 0012 00-1
WP 0013 00 Electrical System Tests, Inspections, and Adjustments 0013 00-1
WP 0014 00 Powertrain Tests, Inspections, and Adjustments. 0014 00-1
WP 0015 00 Brake System Tests, Inspections, and Adjustments 0015 00-1
WP 0016 00 Steering System Tests, Inspections, and Adjustments 0016 00-1
WP 0017 00 Hydraulic System Tests, Inspections, and Adjustments 0017 00-1
WP 0018 00 Air Conditioning System Tests, Inspections, and Adjustments 0018 00-1

CHAPTER 3. UNIT MAINTENANCE INSTRUCTIONS

WP 0019 00 Preventive Maintenance Checks and Services (PMCS) Introduction 0019 00-1
WP 0020 00 Preventive Maintenance Checks and Services (PMCS) Including Lubrication Instructions 0020 00-1
WP 0021 00 Service Upon Receipt 0021 00-1
WP 0022 00 Electrical General Maintenance Instructions. 0022 00-1
WP 0023 00 Mechanical General Maintenance Instructions 0023 00-1
WP 0024 00 Valve Cover and Base Replacement 0024 00-1
WP 0025 00 Changing Engine Oil and Filter. 0025 00-1
WP 0026 00 Crankcase Breather Replacement 0026 00-1
WP 0027 00 Engine Oil Cooler Core Replacement 0027 00-1
WP 0028 00 Engine Oil Filter Base Replacement 0028 00-1
WP 0029 00 Engine Oil Filler Tube and Dipstick Tube Replacement 0029 00-1
WP 0030 00 Air Cleaner and Precleaner Replacement 0030 00-1
WP 0031 00 Air Intake Assembly Hoses and Lines Replacement 0031 00-1
WP 0032 00 Turbocharger Assembly, Air Lines, and Oil Lines Replacement 0032 00-1
WP 0033 00 Fuel Tank Replacement. 0033 00-1
WP 0034 00 Fuel Filter Lines and Fittings Replacement. 0034 00-1
WP 0035 00 Primary Fuel Filter and Water Separator Replacement. 0035 00-1
WP 0036 00 Secondary Fuel Filter and Base Replacement 0036 00-1

Table of Contents - Continued

Page

WP 0037 00 Ether Starting Aid Replacement 0037 00-1
WP 0038 00 Fuel Priming Pump Replacement 0038 00-1
WP 0039 00 Throttle Pedal and Throttle Position Sensor Maintenance 0039 00-1
WP 0040 00 Muffler and Exhaust Pipe Replacement 0040 00-1
WP 0041 00 Cooling System Service 0041 00-1
WP 0042 00 Radiator Top Tank Replacement 0042 00-1
WP 0043 00 Cooling System Lines Replacement 0043 00-1
WP 0044 00 Thermostat Replacement 0044 00-1
WP 0045 00 Water Pump Replacement 0045 00-1
WP 0046 00 Alternator Replacement 0046 00-1
WP 0047 00 Belt Tensioner and Idler Pulleys Replacement 0047 00-1
WP 0048 00 Serpentine Belt Replacement 0048 00-1
WP 0049 00 Blower Motor Resistor Replacement 0049 00-1

CHAPTER 5. SUPPORTING INFORMATION

WP 0230 00 References 0230 00-1
WP 0231 00 Maintenance Allocation Chart (MAC) Introduction 0231 00-1
WP 0232 00 Maintenance Allocation Chart (MAC) 0232 00-1
WP 0233 00 . . . . . 0233 00-1
WP 0233 00 Expendable and Durable Items List 0233 00-1
WP 0234 00 Torque Limits 0234 00-1
WP 0235 00 Preparation for Storage or Shipment 0235 00-1
WP 0236 00 Nomenclature Cross-Reference List 0236 00-1
WP 0237 00 Schematics Introduction 0237 00-1
Index Index-1

Electrical

Figure 1. Electrical Schematics - Key to Components . . . . . FP-1/(FP-2 Blank)
Figure 1. Electrical Schematics - Key to Harnesses . . . . . FP-3/(FP-4 Blank)
Figure 1. Electrical Schematics - Lighting Circuit (Sheet 1 of 21) . . . . . FP-5/(FP-6 Blank)
Figure 1. Electrical Schematics - Lighting Circuit (Sheet 2 of 21) . . . . . FP-7/(FP-8 Blank)
Figure 1. Electrical Schematics - Accessories Circuit (Sheet 3 of 21) . . . . . FP-9/(FP-10 Blank)
Figure 1. Electrical Schematics - Accessories Circuit (Sheet 4 of 21) . . . . . FP-11/(FP-12 Blank)
Figure 1. Electrical Schematics - Accessories Circuit (Sheet 5 of 21) . . . . . FP-13/(FP-14 Blank)
Figure 1. Electrical Schematics - Accessories Circuit (Sheet 6 of 21) . . . . . FP-15/(FP-16 Blank)
Figure 1. Electrical Schematics - Implement Circuit (Sheet 7 of 21) . . . . . FP-17/(FP-18 Blank)
Figure 1. Electrical Schematics - Implement Circuit (Sheet 8 of 21) . . . . . FP-19/(FP-20 Blank)
Figure 1. Electrical Schematics - Implement Circuit (Sheet 9 of 21) . . . . . FP-21/(FP-22 Blank)
Figure 1. Electrical Schematics - Implement Circuit (Sheet 10 of 21) . . . . . FP-23/(FP-24 Blank)
Figure 1. Electrical Schematics - Implement Circuit (Sheet 11 of 21) . . . . . FP-25/(FP-26 Blank)
Figure 1. Electrical Schematics - Engine Circuit (Sheet 12 of 21) . . . . . FP-27/(FP-28 Blank)
Figure 1. Electrical Schematics - Engine Circuit (Sheet 13 of 21) . . . . . FP-29/(FP-30 Blank)

Table of Contents - Continued

Page

Electrical - Continued

Figure 1. Electrical Schematics - Transmission Circuit (Sheet 14 of 21) . . . . . FP-31/(FP-32 Blank)
Figure 1. Electrical Schematics - Transmission Circuit (Sheet 15 of 21) . . . . . FP-33/(FP-34 Blank)
Figure 1. Electrical Schematics - Transmission Circuit (Sheet 16 of 21) . . . . . FP-35/(FP-36 Blank)
Figure 1. Electrical Schematics - Starting Circuit (Sheet 17 of 21). . . . . FP-37/(FP-38 Blank)
Figure 1. Electrical Schematics - Starting Circuit (Sheet 18 of 21). . . . . FP-39/(FP-40 Blank)
Figure 1. Electrical Schematics - Power Distribution Circuit (Sheet 19 of 21). . . . . FP-41/(FP-42 Blank)
Figure 1. Electrical Schematics - Messenger Circuit (Sheet 20 of 21) . . . . . FP-43/(FP-44 Blank)
Figure 1. Electrical Schematics - Legend (Sheet 21 of 21) . . . . . FP-45/(FP-46 Blank)

Hydraulic

Figure 2. Hydraulic Component Locator (Sheet 1 of 3) . . . . . FP-47/(FP-48 Blank)
Figure 2. Hydraulic Schematic (Sheet 2 of 3) . . . . . FP-49/(FP-50 Blank)
Figure 2. Hydraulic Schematic Legend (Sheet 3 of 3). . . . . FP-51/(FP-52 Blank)

VOLUME II

Warning Summary . . . . . a
How To Use This Manual ix

Electrical System

WP 0050 00 Rearview Camera, Cable, and Display Replacement 0050 00-1
WP 0051 00 Starter Replacement. 0051 00-1
WP 0052 00 HVAWP 0052 00C Blend Door Actuator Replacement 0052 00-1
WP 0053 00 Fuse, Relay, Circuit Breaker, and Arc Suppressor Replacement 0053 00-1
WP 0054 00 Instrument Cluster Replacement 0054 00-1
WP 0055 00 Instrument Panels and Switches Replacement 0055 00-1
WP 0056 00 Messenger ECM Replacement 0056 00-1
WP 0057 00 Engine Electronic Control Module (ECM) Replacement 0057 00-1
WP 0058 00 Hood Tilt Actuator Replacement. 0058 00-1
WP 0059 00 Hood Tilt Switch and Wiring Harness Replacement 0059 00-1
WP 0060 00 Implement Electronic Control Module (ECM) Replacement 0060 00-1
WP 0061 00 Main Light Switch and Arctic Heater Switch Replacement 0061 00-1
WP 0062 00 Power Converter Replacement 0062 00-1
WP 0063 00 Powertrain Electronic Control Module (ECM) Replacement 0063 00-1
WP 0064 00 Stoplight Limit Switch Maintenance. 0064 00-1
WP 0065 00 Turnlamp Flasher Replacement. 0065 00-1
WP 0066 00 Turnlamp Switch Replacement 0066 00-1
WP 0067 00 Windshield Wiper Switches Replacement 0067 00-1
WP 0068 00 Blackout Drive Light Replacement 0068 00-1
WP 0069 00 Dome Lamp Replacement 0069 00-1
WP 0070 00 Stoplight Assembly and Bracket Replacement 0070 00-1

Table of Contents - Continued

Page

Electrical System - Continued

WP 0071 00 Service Lights and Front Turnlamp Replacement 0071 00-1
WP 0072 00 Worklights Maintenance 0072 00-1
WP 0073 00 Atmospheric Pressure Sensor Replacement 0073 00-1
WP 0074 00 Boost Pressure Sensor Replacement 0074 00-1
WP 0075 00 Brake Pedal Position Sensor Replacement 0075 00-1
WP 0076 00 Camshaft Speed/Timing Sensor (Secondary) Replacement 0076 00-1
WP 0077 00 Coolant Temperature Sensor Replacement 0077 00-1
WP 0078 00 Crankshaft Speed/Timing Sensor (Primary) Replacement 0078 00-1
WP 0079 00 Engine Oil Pressure Sensor Replacement 0079 00-1
WP 0080 00 Fuel Level Sending Unit Replacement 0080 00-1
WP 0081 00 Front and Rear Axle Oil Temperature Sensors Replacement 0081 00-1
WP 0082 00 Fuel Temperature Sensor Replacement 0082 00-1
WP 0083 00 Hydraulic Oil Temperature Sensor Replacement 0083 00-1
WP 0084 00 Intake Manifold Air Temperature Sensor Replacement 0084 00-1
WP 0085 00 Lift Kickout Position Sensor and Mounting Replacement 0085 00-1
WP 0086 00 Parking Brake Oil Pressure Switch Replacement 0086 00-1
WP 0087 00 Service Brake Oil Pressure Switch Replacement 0087 00-1
WP 0088 00 Steering Oil Pressure Switches Replacement 0088 00-1
WP 0089 00 Tilt Kickout Position Sensor and Mounting Replacement 0089 00-1
WP 0090 00 Torque Converter Oil Temperature Sensor Replacement 0090 00-1
WP 0091 00 Torque Converter Output Speed Sensor Replacement 0091 00-1

Transmission System

WP 0092 00 Transmission Oil Temperature Sensors Replacement 0092 00-1
WP 0093 00 Transmission Output Speed Sensor Replacement 0093 00-1
WP 0094 00 Backup Alarm Replacement 0094 00-1
WP 0095 00 Horn Replacement 0095 00-1
WP 0096 00 Batteries Replacement 0096 00-1
WP 0097 00 Battery Cables Replacement 0097 00-1
WP 0098 00 Battery Disconnect Switch Replacement 0098 00-1
WP 0099 00 NATO Slave Receptacle Replacement 0099 00-1
WP 0100 00 Transmission Service 0100 00-1
WP 0101 00 Shift Lever Replacement 0101 00-1
WP 0102 00 Transmission Oil Cooler Lines Replacement 0102 00-1
WP 0103 00 Transmission Oil Filler Tube Replacement 0103 00-1
WP 0104 00 Transmission Oil Filter Base, Lines, and Bypass Switch Replacement 0104 00-1
WP 0105 00 Transmission Oil Filter Element Replacement 0105 00-1
WP 0106 00 Transmission Test Lines and Fittings Replacement 0106 00-1

Propeller and Propeller Shafts

WP 0107 00 Center Drive Shaft (Slip Joint) Replacement 0107 00-1
WP 0108 00 Front Drive Shaft Carrier Bearing Replacement 0108 00-1
WP 0109 00 Front Drive Shaft Replacement 0109 00-1
WP 0110 00 Rear Drive Shaft Replacement 0110 00-1
WP 0111 00 Differential and Final Drive Oil Change 0111 00-1

Table of Contents - Continued

Page

Brake System

WP 0112 00 Parking Brake Actuator Replacement 0112 00-1
WP 0113 00 Parking Brake Maintenance 0113 00-1
WP 0114 00 Brake Accumulator Maintenance 0114 00-1
WP 0115 00 Parking Brake Control Valve Replacement 0115 00-1
WP 0116 00 Service Brake Control Valve Replacement 0116 00-1
WP 0117 00 Service Brake Lines and Hoses Replacement 0117 00-1
WP 0118 00 Brake Pedals Replacement 0118 00-1

Wheel and Tire Maintenance

WP 0119 00 Wheel and Tire Assembly (Front) Replacement 0119 00-1
WP 0120 00 Wheel and Tire Assembly (Rear) Replacement 0120 00-1

Steering System

WP 0121 00 Steering Column Replacement 0121 00-1
WP 0122 00 Steering Wheel Replacement 0122 00-1
WP 0123 00 Secondary Steering Pump and Electric Motor Maintenance 0123 00-1
WP 0124 00 Steering Hoses, Lines, and Fittings Replacement 0124 00-1
WP 0125 00 Steering Cylinders Replacement 0125 00-1
WP 0126 00 Secondary Steering Valve Replacement 0126 00-1
WP 0127 00 Steering Control Valve Maintenance 0127 00-1
WP 0128 00 Steering Metering Pump Replacement 0128 00-1

Frame

WP 0129 00 Remote Lubrication Lines, Hoses, and Fittings Replacement 0129 00-1
WP 0130 00 Counterweight Replacement 0130 00-1

Body and Cab

WP 0131 00 Cab Doors Maintenance 0131 00-1
WP 0132 00 Cab Remove/Install 0132 00-1
WP 0133 00 Chassis Guard, Side Panels, Hydraulic Service Box, Circuit Breaker Box, and Battery Box Replacement 0133 00-1
WP 0134 00 Handrails, Ladders, and Steps Replacement 0134 00-1
WP 0135 00 Side Covers and Hood Replacement 0135 00-1
WP 0136 00 Front Fenders Replacement 0136 00-1
WP 0137 00 Rear Fenders Replacement 0137 00-1
WP 0138 00 Cab Liners and Dome Light Replacement 0138 00-1
WP 0139 00 Cab Sun Visor and Mirrors Replacement 0139 00-1
WP 0140 00 Seat Assembly Replacement 0140 00-1
WP 0141 00 Seat Belt Replacement 0141 00-1
WP 0142 00 Rifle Rack Replacement 0142 00-1
WP 0143 00 Toolbox Replacement 0143 00-1

Body, Chassis, Accessory Items

WP 0144 00 Windshield Washer Bottle and Hoses Replacement 0144 00-1
WP 0145 00 Front Windshield Wipers and Motor Replacement 0145 00-1
WP 0146 00 Rear Windshield Wiper and Motor Replacement 0146 00-1

Table of Contents - Continued

Page

Body, Chassis, Accessory Items - Continued

WP 0147 00 Data Plates Replacement 0147 00-1
WP 0148 00 Hydraulic System Oil Change and Filter Replacement 0148 00-1

Hydraulic System

WP 0149 00 Quick Coupler Diverter Valve Replacement 0149 00-1
WP 0150 00 Pilot Oil Accumulator Maintenance 0150 00-1
WP 0151 00 Ride Control Accumulator Maintenance 0151 00-1
WP 0152 00 Tilt Cylinders Replacement 0152 00-1
WP 0153 00 Lift Cylinders Replacement 0153 00-1
WP 0154 00 Hydraulic System Oil Filter Bases and Cooler Hoses, Lines, and Fittings Replacement 0154 00-1
WP 0155 00 Hydraulic System Oil Filter Bases Replacement 0155 00-1
WP 0156 00 Implement Hydraulic Hoses, Lines, and Fittings Replacement 0156 00-1
WP 0157 00 Main Control Valve and Implement Pump Hydraulic Hoses, Lines, and Fittings Replacement 0157 00-1
WP 0158 00 Quick Coupler Cylinder Replacement 0158 00-1
WP 0159 00 Hydraulic Tank Replacement 0159 00-1
WP 0160 00 Sight Gage Replacement 0160 00-1

Special Purpose Kits

WP 0161 00 Arctic Heater Replacement 0161 00-1
WP 0162 00 Arctic Heater Installation 0162 00-1
WP 0163 00 Bristles Replacement 0163 00-1
WP 0164 00 Broom Hose, Manifold, and Link Replacement 0164 00-1
WP 0165 00 Broom Motor Replacement 0165 00-1
WP 0166 00 Broom Shields and Springs Replacement 0166 00-1
WP 0167 00 Pallet Forks Repair 0167 00-1

Air Conditioning

WP 0168 00 Air Conditioning/Heater Blower Motor Replacement 0168 00-1

Earthmoving Equipment

WP 0169 00 Quick Coupler Replacement 0169 00-1
WP 0170 00 Bucket Tips and Cutting Edges Replacement 0170 00-1

CHAPTER 4. DIRECT SUPPORT MAINTENANCE INSTRUCTIONS

Engine

WP 0171 00 Engine Replacement 0171 00-1
WP 0172 00 Cylinder Head Replacement 0172 00-1
WP 0173 00 Crankshaft Vibration Damper and Pulley Replacement 0173 00-1
WP 0174 00 Front Main Seal Replacement 0174 00-1
WP 0175 00 Rear Main Seal Replacement 0175 00-1
WP 0176 00 Flywheel Housing Replacement 0176 00-1
WP 0177 00 Flywheel Replacement 0177 00-1
WP 0178 00 Front Cover Replacement 0178 00-1
WP 0179 00 Intake/Exhaust Valve Lash Adjustment 0179 00-1

Table of Contents - Continued

Page

Engine - Continued

WP 0180 00 Rocker Arms and Push Rods Maintenance 0180 00-1
WP 0181 00 Engine Oil Pan Maintenance 0181 00-1
WP 0182 00 Engine Oil Pump Replacement 0182 00-1
WP 0183 00 Piston Cooling Jets Replacement 0183 00-1
WP 0184 00 Exhaust Manifold Replacement 0184 00-1
WP 0185 00 Intake Manifold Replacement 0185 00-1
WP 0186 00 Idler Gears Replacement 0186 00-1

Fuel

WP 0187 00 Fuel Injectors and Wiring Harness Maintenance 0187 00-1
WP 0188 00 Fuel Transfer Pump Replacement 0188 00-1
WP 0189 00 Aftercooler Replacement 0189 00-1

Cooling System

WP 0190 00 Cooling System Package (Radiator, Fan, Aftercooler, and Oil Cooler) Replacement 0190 00-1
WP 0191 00 Radiator Replacement 0191 00-1
WP 0192 00 Fan Hydraulic Motor and Fan Group Replacement 0192 00-1
WP 0193 00 Hydraulic Oil Cooler Replacement 0193 00-1

Electrical System

WP 0194 00 Accessory Support Brackets Replacement 0194 00-1
WP 0195 00 Cab Wiring Harness and Fuse/Relay Block Replacement 0195 00-1
WP 0196 00 Engine Wiring Harness Replacement 0196 00-1
WP 0197 00 Front Chassis Wiring Harness Replacement 0197 00-1
WP 0198 00 Heater and Air Conditioning Wiring Harness Replacement 0198 00-1
WP 0199 00 Rear Chassis Wiring Harness Replacement 0199 00-1
WP 0200 00 Secondary Steering Wiring Harness Replacement 0200 00-1

Transmission

WP 0201 00 Transmission Control Wiring Harness Replacement 0201 00-1
WP 0202 00 Transmission Hydraulic Control Relief Valve Replacement 0202 00-1
WP 0203 00 Transmission Modulating Valve Replacement 0203 00-1
WP 0204 00 Transmission and Torque Converter Replacement 0204 00-1
WP 0205 00 Transmission Oil Cooler Replacement 0205 00-1
WP 0206 00 Transmission Oil Pump (Gear Pump) Replacement 0206 00-1

Front Axle

WP 0207 00 Front Axle Replacement 0207 00-1

Rear Axle

WP 0208 00 Rear Axle Replacement 0208 00-1
WP 0209 00 Rear Axle Trunnion Replacement 0209 00-1

Steering System

WP 0210 00 Steering Neutralizer Valve Replacement 0210 00-1

Table of Contents - Continued

Page

Frame

WP 0211 00 Separate Front Loader Frame and Rear Frame 0211 00-1

Body and Cab

WP 0212 00 Engine Compartment Shield Replacement 0212 00-1
WP 0213 00 Windshield Front/Rear and Doors Glass Replacement 0213 00-1

Hydraulic System

WP 0214 00 Seat Assembly Repair 0214 00-1
WP 0215 00 Braking and Hydraulic Fan Pump Replacement 0215 00-1
WP 0216 00 Piston Pumps (Steering and Implement/Pilot) Replacement. 0216 00-1
WP 0217 00 Brake Charge and Hydraulic Fan Control Manifold Replacement 0217 00-1
WP 0218 00 Main Hydraulic Control Valve Replacement 0218 00-1
WP 0219 00 Electrohydraulic Control (Joystick) Replacement. 0219 00-1

Refrigeration and Air Conditioning

WP 0220 00 Heater Core Replacement 0220 00-1
WP 0221 00 Air Conditioning System Compressor Replacement. 0221 00-1
WP 0222 00 Air Conditioning System Service 0222 00-1
WP 0223 00 Refrigerant Hoses, Lines, Valves, Flanges, and Fittings Replacement. 0223 00-1
WP 0224 00 Inline Refrigerant Dryer Replacement 0224 00-1
WP 0225 00 Refrigerant Accumulator Replacement 0225 00-1
WP 0226 00 Air Conditioning System Condenser Replacement 0226 00-1

Earthmoving Equipment

WP 0227 00 Evaporator Core Replacement. 0227 00-1
WP 0228 00 Bucket Tilt Lever and Link Replacement 0228 00-1
WP 0229 00 Bucket Lift Arms Replacement 0229 00-1

CHAPTER 5. SUPPORTING INFORMATION

WP 0230 00 References 0230 00-1
WP 0231 00 Maintenance Allocation Chart (MAC) Introduction 0231 00-1
WP 0232 00 Maintenance Allocation Chart (MAC) 0232 00-1
WP 0233 00 Expendable and Durable Items List 0233 00-1
WP 0234 00 Torque Limits 0234 00-1
WP 0235 00 Preparation for Storage or Shipment 0235 00-1
WP 0236 00 Nomenclature Cross-Reference List 0236 00-1
WP 0237 00 Schematics Introduction 0237 00-1
Index Index-1

Electrical

Figure 1. Electrical Schematics - Key to Components . . . . . FP-1/(FP-2 Blank)
Figure 1. Electrical Schematics - Key to Harnesses . . . . . FP-3/(FP-4 Blank)
Figure 1. Electrical Schematics - Lighting Circuit (Sheet 1 of 21) . . . . . FP-5/(FP-6 Blank)
Figure 1. Electrical Schematics - Lighting Circuit (Sheet 2 of 21) . . . . . FP-7/(FP-8 Blank)
Figure 1. Electrical Schematics - Accessories Circuit (Sheet 3 of 21) . . . . . FP-9/(FP-10 Blank)

Table of Contents - Continued

Page

Electrical - Continued

Figure 1. Electrical Schematics - Accessories Circuit (Sheet 4 of 21) . . . . . FP-11/(FP-12 Blank)
Figure 1. Electrical Schematics - Accessories Circuit (Sheet 5 of 21) . . . . . FP-13/(FP-14 Blank)
Figure 1. Electrical Schematics - Accessories Circuit (Sheet 6 of 21) . . . . . FP-15/(FP-16 Blank)
Figure 1. Electrical Schematics - Implement Circuit (Sheet 7 of 21) . . . . . FP-17/(FP-18 Blank)
Figure 1. Electrical Schematics - Implement Circuit (Sheet 8 of 21) . . . . . FP-19/(FP-20 Blank)
Figure 1. Electrical Schematics - Implement Circuit (Sheet 9 of 21) . . . . . FP-21/(FP-22 Blank)
Figure 1. Electrical Schematics - Implement Circuit (Sheet 10 of 21) . . . . . FP-23/(FP-24 Blank)
Figure 1. Electrical Schematics - Implement Circuit (Sheet 11 of 21) . . . . . FP-25/(FP-26 Blank)
Figure 1. Electrical Schematics - Engine Circuit (Sheet 12 of 21) . . . . . FP-27/(FP-28 Blank)
Figure 1. Electrical Schematics - Engine Circuit (Sheet 13 of 21) . . . . . FP-29/(FP-30 Blank)
Figure 1. Electrical Schematics - Transmission Circuit (Sheet 14 of 21) . . . . . FP-31/(FP-32 Blank)
Figure 1. Electrical Schematics - Transmission Circuit (Sheet 15 of 21) . . . . . FP-33/(FP-34 Blank)
Figure 1. Electrical Schematics - Transmission Circuit (Sheet 16 of 21) . . . . . FP-35/(FP-36 Blank)
Figure 1. Electrical Schematics - Starting Circuit (Sheet 17 of 21). . . . . FP-37/(FP-38 Blank)
Figure 1. Electrical Schematics - Starting Circuit (Sheet 18 of 21). . . . . FP-39/(FP-40 Blank)
Figure 1. Electrical Schematics - Power Distribution Circuit (Sheet 19 of 21). . . . . FP-41/(FP-42 Blank)
Figure 1. Electrical Schematics - Messenger Circuit (Sheet 20 of 21) . . . . . FP-43/(FP-44 Blank)
Figure 1. Electrical Schematics - Legend (Sheet 21 of 21) . . . . . FP-45/(FP-46 Blank)

Hydraulic

Figure 2. Hydraulic Component Locator (Sheet 1 of 3) . . . . . FP-47/(FP-48 Blank)
Figure 2. Hydraulic Schematic (Sheet 2 of 3) . . . . . FP-49/(FP-50 Blank)
Figure 2. Hydraulic Schematic Legend (Sheet 3 of 3). . . . . FP-51/(FP-52 Blank)

HOW TO USE THIS MANUAL

NOTE

If at any time you are unsure how to use this manual or you cannot locate the information you need, notify your supervisor.

INTRODUCTION

1. This manual is designed to help you troubleshoot and maintain the 966H Wheel Loader Type I and II and to perform troubleshooting and maintenance on the equipment.
2. This manual is written in work package format:
    a. Chapters divide the manual into major categories of information (e.g., *Introductory Information, Equipment Description and Data, and Theory of Operation*, *Troubleshooting Procedures*, *Unit Maintenance Instructions*, Direct Support and Maintenance Instructions, and *Supporting Information*).
    b. Each Chapter is divided into work packages, which are identified by a 6-digit number (e.g., 0001 00, 0002 00) located on the upper right-hand corner of each page. The work package page number (e.g., 0001 00-1, 0001 00-2) is located centered at the bottom of each page.
    c. If a Change Package is issued to this manual, added work packages use the 5th and 6th digits of their number to indicate new material. For instance, work packages inserted between WP 0001 00 and WP 0002 00 are numbered WP 0001 01, WP 0001 02, etc.
3. Read through this manual to become familiar with its organization and contents before attempting to operate or maintain the equipment.
4. This manual is published in two volumes: Volume I covers *Theory of Operations* and *Troubleshooting*.
5. The second volume (TM 5-3805-291-23-2) covers *Field Level Maintenance Instructions*.

CONTENTS OF THIS MANUAL

1. A *Warning Summary* is located at the beginning of each volume of the manual. Become familiar with these warnings before operating or performing operator troubleshooting or maintenance on the machine.
2. A *Table of Contents* in Volume I lists the contents of Volumes I and II. *The Table of Contents in* Volume II lists the contents of Volume II only.
    a. The *Table of Contents* also provides *Reporting Errors and Recommending Improvements* information and DA Form 2028 addresses, for the submittal of corrections to this manual.
    b. If you cannot find what you are looking for in the *Table of Contents*, refer to the alphabetical *Index* at the back of the manual. The alphabetical index for each volume lists only those work packages found in that volume.
3. Chapter 1, *Introductory Information, Equipment Description and Data, and Theory of Operation*, provides general information on the manual and the equipment.
4. Chapter 2, covers all *Troubleshooting Procedures*. Soldier becomes familiar with how to use MSD in order to troubleshoot 966H Wheel Loader. WP 0005 00 explains how to use MSD with ET. WP 0007 00 contains a *Troubleshooting Symptom Index*. If the machine malfunctions, this index should always be consulted to locate the appropriate troubleshooting procedure.
5. Chapter 3, describes *Unit Maintenance Instructions*. Major areas covered are *Preventive Maintenance Checks and Services (PMCS)*.
6. Chapter 4, covers *Direct Support Maintenance Instructions*.
7. Chapter 5, in both volumes, includes *Supporting Information: References, Maintenance Allocation Chart (MAC) Introduction, Maintenance Allocation Chart (MAC), Expendable and Durable Items List*, *Torque Limits, Preparation for Storage or Shipment,* and *Schematics.*

FEATURES OF THIS MANUAL

1. WARNINGs, CAUTIONs, NOTEs, subject headings, and other important information are highlighted in **BOLD** print as a visual aid.

WARNING

A WARNING indicates a hazard which may result in injury or death to personnel.

CAUTION

A CAUTION is a reminder of safety practices or directs attention to usage practices that may result in damage to equipment.

NOTE

A NOTE is a statement containing information that will make the procedures easier to perform.

2. Statements and words of particular interest may be printed in CAPITAL LETTERS to create emphasis.
3. Within a procedural step, reference may be made to another work package in this manual or to another manual. These references indicate where you should look for more complete information.
   a. If you are told: “Perform PMCS (WP 0020 00),” go to WP 0020 00 in this manual for instructions.
   b. If you are told: “For complete information on servicing batteries, refer to TM 9-6140-200-14,” go to the *References* work package (WP 0224 00) for complete information.
4. Illustrations are placed after, and as close to, the procedural steps to which they apply. Callouts placed on the art are text or numbers.
5. Numbers located at lower right corner of art (e.g., 427-C001; 427-C002) are art control numbers and are used for tracking purposes only.
6. Dashed leader lines used in the Lubrication Chart (WP 0020 00) and in the PMCS Table (WP 0020 00) indicate that called out lubrication points are located on both sides of the machine.
7. Technical instructions include metric units as well as standard units. For your reference, a *Metric Conversion Chart* is located on the inside back cover of the manual.

CHAPTER 1

INTRODUCTORY INFORMATION, EQUIPMENT DESCRIPTION AND DATA, AND THEORY OF OPERATION

Maintenance Task Title **Page**

Scope 0001 00-1
Maintenance Forms, Records, and Reports 0001 00-1
Reporting Equipment Improvement Recommendations (EIR) 0001 00-1
Corrosion Prevention and Control (CPC) 0001 00-1
Destruction of Army Materiel to Prevent Enemy Use 0001 00-2
Preparation for Storage or Shipment 0001 00-2
List of Abbreviations/Acronyms 0001 00-2
Warranty Information 0001 00-4

SCOPE

1. **Type of Manual.** This manual is for use in performing field level troubleshooting and maintenance on the 966H Wheel Loader.
2. **Equipment Name and Model Number.** Loader, Heavy, Scoop: Diesel Engine Driven (DED) 4-Wheel Drive, Model 966H.
   a. Type I, 4.5 Cubic Yard Rock Bucket, NSN 3805-01-533-1857
   b. Type II, 5.0 Cubic Yard General Purpose (GP) Bucket, NSN 3805-01-533-1853
3. **Purpose of Equipment.** The 966H Wheel Loader is used in worldwide earthmoving and construction projects by U.S. Army forces in engineer troop support.

MAINTENANCE FORMS, RECORDS, AND REPORTS

Department of the Army forms and procedures used for the equipment maintenance will be those prescribed by DA PAM 738-750, *Functional Users Manual for The Army Maintenance Management System (TAMMS*).

REPORTING EQUIPMENT IMPROVEMENT RECOMMENDATIONS (EIR)

If your loader needs improvement, let us know. Send us an EIR. You, the user, are the only one who can tell us what you don't like about your equipment. Let us know why you don't like the design or performance. (E-Mail: TACOM-TECH-PUBS@conus.army.mil) We will send you a reply. The preferred method for submitting Quality Deficiency Reports (QDRs) is through the Army Electronic Product Support (AEPS) website under the Electronic Deficiency Reporting System (EDRS). The web address is: https://aeps.ria.army.mil. If the above method is not available to you, put it on an SF 368 (Product Quality Deficiency Report), and mail it to us at: Department of the Army, U.S. Army Tank-automotive and Armaments Command, AMSRD-TAR-E, PDQR MS 268, 6501 E. 11 Mile Road, Warren, MI 38397-5000.

CORROSION PREVENTION AND CONTROL (CPC)

1. CPC of Army materiel is a continuing concern. It is important that any corrosion problems with this item be reported so that the problem can be corrected and improvements can be made to prevent the problem in future items.
2. Corrosion specifically occurs with metals. It is an electrochemical process that causes the degradation of metals. It is commonly caused by exposure to moisture, acids, bases, or salts. An example is the rusting of iron. Corrosion damage in metals can be seen, depending on the metal, as tarnishing, pitting, fogging, surface residue, and/or cracking.
3. Plastics, composites, and rubbers can also degrade. Degradation is caused by thermal (heat), oxidation (oxygen), solvation (solvents), or photolytic (light, typically UV) processes. The most common exposures are excessive heat or light. Damage from these processes will appear as cracking, softening, swelling, and/or breaking.
4. SF Form 368*, Product Quality Deficiency Report* should be submitted to the address specified in DA PAM 738-750, *Functional Users Manual for TAMMS*.

DESTRUCTION OF ARMY MATERIEL TO PREVENT ENEMY USE

For destruction of Army materiel to prevent enemy use, refer to TM 750-244-3, *Procedure for Destruction of Equipment to Prevent Enemy Use*.

PREPARATION FOR STORAGE OR SHIPMENT

Refer to WP 0235 00.

LIST OF ABBREVIATIONS/ACRONYMS

NOTE

Refer to ASME Y14.38-1999, *Abbreviations and Acronyms*, for standard abbreviations.

ABBREVIATIONS/ACRONYMS	DEFINITION
AAL	Additional Authorization List
AAR	Association of American Railroads
AC	Air Conditioning
AC	Alternating Current
AOAP	Army Oil Analysis Program
ATAAC	Air-to-air After Cooler
AWG	American Wire Gage
B.O.	Blackout
BII	Basic Issue Items
BTC	Before Top Center
C	Celsius
CAGEC	Commercial and Government Entity Code
CCA	Cold Cranking Amps
CG	Center of Gravity
CI	Component Identifier
CID	Cubic Inch Displacement
cm	Centimeter
COEI	Components of End Item
CONUS	Continental United States
CPC	Corrosion Prevention and Control
DC	Direct Current
DED	Diesel Engine Driven
DIT	Direct Injection Turbocharged
ECM	Electronic Control Module
ECU	Electronic Control Unit
EEC	Electronic Engine Control
EID	Event Identifier
EIR	Equipment Improvement Recommendations
ET	Electronic Technician
F	Fahrenheit

LIST OF ABBREVIATIONS/ACRONYMS - CONTINUED

ABBREVIATIONS/ACRONYMS	DEFINITION
FLS	Full Load Setting
FMI	Failure Mode Identifier
FMTV	Family of Medium Tactical Vehicles
F/N/R	Forward/Neutral/Reverse
FRC	Fuel Ration Control
FTS	Full Torque Setting
gal.	Gallon
GCWR	Gross Combination Weight Rating
GIC	Gabarit International de Chargement
GP	General Purpose
GVWR	Gross Vehicle Weight Rating
Hz	Hertz
in.	Inch
kg	Kilogram
km	Kilometer
kPa	Kilopascal
kph	Kilometers per Hour
kW	Kilowatt
L	Liter
LASH	Lighter Aboard Ship
lb	Pound
lb-in.	Pound Inch
lb-ft	Pound Foot
LH	Left Hand
m	Meter
min.	Minute
mm	Millimeter
MMS	Machine Monitor System
MP	Multi-Purpose
MPH	Miles per Hour
MSD	Maintenance Support Drive
N	Neutral
NATO	North Atlantic Treaty Organization
NBC	Nuclear, Biological, and Chemical
N/C	Normally Closed
Nm	Newton Meter
N/O	Normally Open
OCONUS	Outside Continental United States
PC	Personal Computer

LIST OF ABBREVIATIONS/ACRONYMS - CONTINUED

ABBREVIATIONS/ACRONYMS	DEFINITION
PLS-EMM-CMM	Palletized Load System-Engineer Mission Module-Concrete Mobile Mixer
PLS-EMM-DB	Palletized Load System-Engineer Mission Module-Dump Body
PMCS	Preventive Maintenance Checks and Services
PPPC	Proportional, Priority, Pressure Compensated System
PQDR	Product Quality Deficiency Report
PR	Ply Rating
psi	Pounds per Square Inch
PWM	Pulse Width Modulation
RH	Right Hand
RO/RO	Roll-On/Roll-Off
ROPS/FOPS	Rollover Protective Structure/Falling Object Protective Structure
rpm	Repetitions per Minute
SDDC	Surface Deployment and Distribution Command
SDS	Sorbent Decontamination System: M100
SG	Spheroidal Graphite
SRC	Source
T/S	Trouble Shooting
TAMMS	Functional Users Manual for The Army Maintenance Management System
TOE/MTOE	Table of Organization and Equipment/Modified Table of Organization and Equipment
US gpm	US Gallon per Minute
VLPM	Voltage Load Protection Module
WCA	Warranty Claim Action
yd	Yard

WARRANTY INFORMATION

For warranty information refer to TB 5-3805-291-14, *Warranty Technical Bulletin for the 966H Wheel Loader*. For a list of Caterpillar Dealers please see Table 1. They are also located in the Warranty TB.

Caterpillar Dealers

Table 1. Caterpillar Dealers.

Dealer Name	Country	City	State/Province/Region	Phone
ALLIED MACHINERY LIMITED	AFGHANISTAN	KARACHI	SIND PROVINCE	93 (20) 220 0287 GENERAL INFO
ALLIED MACHINERY LIMITED	AFGHANISTAN	KARACHI	SIND PROVINCE	93 (20) 2200287 GENERAL INFO
MAIA SHQIPERI SH.P.K.	ALBANIA	TIRANA	TIRANA RRETH	355 (42) 71.386 GENERAL INFO
MAGELLAN	ALGERIA		PICARDIE REGION	213 (9) 73.66.63 GENERAL INFO

Table 1. Caterpillar Dealers - Continued.

Dealer Name	Country	City	State/Province/Region	Phone
MAGELLAN	ALGERIA		PICARDIE REGION	213 (2) 60.88.47 GENERAL INFO
HAWTHORNE MACHINERY OF SAMOA,	AMERICAN SAMOA	PAGO PAGO	EASTERN DISTRICT	684 () 699 4320 GENERAL INFO
BARLOWORLD EQUIPAMENTOS	ANGOLA	LUANDA	LUANDA PROVINCIA	244 (2) 399-824 GENERAL INFO
FINNING ARGENTINA S.A.	ARGENTINA	SAN FERNANDO	BUENOS AIRES PROVINCIA	54 (11) 4725-8800 GENERAL INFO
FINNING ARGENTINA S.A.	ARGENTINA	RESISTENCIA	CHACO PROVINCIA	54 (3722) 428869 GENERAL INFO
FINNING ARGENTINA S.A.	ARGENTINA	COMODORO RIVADAVIA	CHUBUT PROVINCIA	54 (297) 4485232 GENERAL INFO
FINNING ARGENTINA S.A.	ARGENTINA	NEUQUEN	NEUQUEN PROVINCIA	54 (299) 4436334 GENERAL INFO
FINNING ARGENTINA S.A.	ARGENTINA	SALTA	SALTA PROVINCIA	54 (387) 4270648 GENERAL INFO
FINNING ARGENTINA S.A.	ARGENTINA	RIO GRANDE	TIERRA DEL FUEGO	54 (2964) 426626 GENERAL INFO
FINNING ARGENTINA S.A.	ARGENTINA	SAN MIGUEL DE TUCUMAN	TUCUMAN PROVINCIA	54 (381) 4270777 GENERAL INFO
ZEPPELIN ARMENIA LLC	ARMENIA	ZUG		7 (374) 10 55 17 53 GENERAL INFO
ZEPPELIN ARMENIA LLC	ARMENIA	ZUG		7 (374) 10 55 17 53 GENERAL INFO
WESTRAC PTY. LTD.	AUSTRALIA	FYSHWICK	AUSTRALIAN CAPITAL TERRITORY	61 (2) 6290 4500 GENERAL INFO
WESTRAC PTY. LTD.	AUSTRALIA	ALBURY	NEW SOUTH WALES STATE	61 (2) 6025 6799 GENERAL INFO
WESTRAC PTY. LTD.	AUSTRALIA	BATHURST	NEW SOUTH WALES STATE	61 (2) 6331 6411 GENERAL INFO
CAVILL POWER PRODUCTS PTY. LTD.	AUSTRALIA	BROKEN HILL	NEW SOUTH WALES STATE	61 (8) 8088 3877 GENERAL INFO
WESTRAC PTY. LTD.	AUSTRALIA	DUBBO	NEW SOUTH WALES STATE	61 (02) 6885 8000 GENERAL INFO
WESTRAC PTY. LTD.	AUSTRALIA	GRAFTON	NEW SOUTH WALES STATE	61 (2) 6642 8211 GENERAL INFO
WESTRAC PTY. LTD.	AUSTRALIA	MOREE	NEW SOUTH WALES STATE	61 (2) 6752 4500 GENERAL INFO
WESTRAC PTY. LTD.	AUSTRALIA	MUSWELLBROOK	NEW SOUTH WALES STATE	61 (2) 6541 5449 GENERAL INFO
WESTRAC PTY. LTD.	AUSTRALIA	SOUTH TWEED HEADS	NEW SOUTH WALES STATE	61 (7) 5513 1920 GENERAL INFO
WESTRAC PTY. LTD.	AUSTRALIA	TAMWORTH	NEW SOUTH WALES STATE	61 (2) 6701 7222 GENERAL INFO
WESTRAC PTY. LTD.	AUSTRALIA	THORNTON	NEW SOUTH WALES STATE	61 (2) 4949 1866 GENERAL INFO
WESTRAC PTY. LTD.	AUSTRALIA	THORNTON	NEW SOUTH WALES STATE	61 (2) 4949 1888 GENERAL INFO

Table 1. Caterpillar Dealers - Continued.

Dealer Name	Country	City	State/Province/Region	Phone
WESTRAC PTY. LTD.	AUSTRALIA	UNANDERRA	NEW SOUTH WALES STATE	61 (2) 4271 8925 GENERAL INFO
WESTRAC PTY. LTD.	AUSTRALIA	WAGGA WAGGA	NEW SOUTH WALES STATE	61 (2) 6971 7688 GENERAL INFO
WESTRAC PTY. LTD. (NSW)	AUSTRALIA	WEST WYALONG	NEW SOUTH WALES STATE	61 (02) 6752 4500 GENERAL INFO
WESTRAC PTY. LTD.	AUSTRALIA	WETHERILL PARK	NEW SOUTH WALES STATE	61 (2) 9609 8888 GENERAL INFO
WESTRAC PTY. LTD.	AUSTRALIA	WETHERILL PARK	NEW SOUTH WALES STATE	61 (2) 9609 8801 GENERAL INFO
HASTINGS DEERING (AUSTRALIA)	AUSTRALIA	ALICE SPRINGS	NORTHERN TERRITORY	61 (8) 8952 1888 GENERAL INFO
ENERGY POWER SYSTEMS AUSTRALIA	AUSTRALIA	DARWIN	NORTHERN TERRITORY	61 (8) 8941 4309 GENERAL INFO
HASTINGS DEERING (AUSTRALIA)	AUSTRALIA	DARWIN	NORTHERN TERRITORY	61 (8) 8984 1221 GENERAL INFO
HASTINGS DEERING (AUSTRALIA)	AUSTRALIA	NHULUNBUY	NORTHERN TERRITORY	61 (8) 8987 1478 GENERAL INFO
HASTINGS DEERING (AUSTRALIA)	AUSTRALIA	PALMERSTON	NORTHERN TERRITORY	61 (8) 8984 1200 GENERAL INFO
ENERGY POWER SYSTEMS AUSTRALIA	AUSTRALIA	ARCHERFIELD	QUEENSLAND STATE	61 (07) 3722 1400 GENERAL INFO
HASTINGS DEERING (AUSTRALIA)	AUSTRALIA	ARCHERFIELD	QUEENSLAND STATE	61 (7) 3365 9229 GENERAL INFO
HASTINGS DEERING (AUSTRALIA)	AUSTRALIA	ARCHERFIELD	QUEENSLAND STATE	61 (7) 3365 9229 GENERAL INFO
HASTINGS DEERING (AUSTRALIA)	AUSTRALIA	BURLEIGH HEADS	QUEENSLAND STATE	61 (7) 5520 3200 GENERAL INFO
ENERGY POWER SYSTEMS AUSTRALIA	AUSTRALIA	CAIRNS	QUEENSLAND STATE	61 (7) 4035 0324 GENERAL INFO
HASTINGS DEERING (AUSTRALIA)	AUSTRALIA	CAIRNS	QUEENSLAND STATE	61 (7) 4035 0335 GENERAL INFO
HASTINGS DEERING (AUSTRALIA)	AUSTRALIA	DYSART	QUEENSLAND STATE	61 (7) 4958 1200 GENERAL INFO
HASTINGS DEERING (AUSTRALIA)	AUSTRALIA	EMERALD	QUEENSLAND STATE	61 (7) 4982 2555 GENERAL INFO
HASTINGS DEERING (AUSTRALIA)	AUSTRALIA	GARBUTT	QUEENSLAND STATE	61 (7) 4727 7699 GENERAL INFO
HASTINGS DEERING (AUSTRALIA)	AUSTRALIA	GLADSTONE	QUEENSLAND STATE	61 (07) 4976 9745 GENERAL INFO
HASTINGS DEERING (AUSTRALIA)	AUSTRALIA	MACKAY	QUEENSLAND STATE	61 (7) 4952 0777 GENERAL INFO
HASTINGS DEERING (AUSTRALIA)	AUSTRALIA	MOUNT ISA	QUEENSLAND STATE	61 (7) 4744 1444 GENERAL INFO
HASTINGS DEERING (AUSTRALIA)	AUSTRALIA	ROCKHAMPTON	QUEENSLAND STATE	61 (7) 4930 8688 GENERAL INFO
HASTINGS DEERING (AUSTRALIA)	AUSTRALIA	TOOWOOMBA	QUEENSLAND STATE	61 (7) 4631 0700 GENERAL INFO

Table 1. Caterpillar Dealers - Continued.

Dealer Name	Country	City	State/Province/Region	Phone
HASTINGS DEERING (AUSTRALIA)	AUSTRALIA	WEIPA	QUEENSLAND STATE	61 (7) 4069 8757 GENERAL INFO
CAVILL POWER PRODUCTS PTY. LTD.	AUSTRALIA	ENFIELD	SOUTH AUSTRALIA STATE	61 (8) 8343 1600 GENERAL INFO
CAVILL POWER PRODUCTS PTY. LTD.	AUSTRALIA	MOUNT GAMBIER	SOUTH AUSTRALIA STATE	61 (8) 8723 0566 GENERAL INFO
CAVILL POWER PRODUCTS PTY. LTD.	AUSTRALIA	PORT LINCOLN	SOUTH AUSTRALIA STATE	61 (8) 8682 6042 GENERAL INFO
ENERGY POWER SYSTEMS AUSTRALIA	AUSTRALIA	PROSPECT	SOUTH AUSTRALIA STATE	61 (8) 8269 2722 GENERAL INFO
CAVILL POWER PRODUCTS PTY. LTD.	AUSTRALIA	ROXBY DOWNS	SOUTH AUSTRALIA STATE	61 (8) 8671 0014 GENERAL INFO
CAVILL POWER PRODUCTS PTY. LTD.	AUSTRALIA	WHYALLA	SOUTH AUSTRALIA STATE	61 (8) 8645 8988 GENERAL INFO
CAVILL POWER PRODUCTS PTY. LTD.	AUSTRALIA	WINGFIELD	SOUTH AUSTRALIA STATE	61 (08) 8440 5800 GENERAL INFO
CAVILL POWER PRODUCTS PTY. LTD.	AUSTRALIA	WINGFIELD	SOUTH AUSTRALIA STATE	61 (8) 8682 9735 GENERAL INFO
WILLIAM ADAMS PTY. LTD.	AUSTRALIA	GLENORCHY	TASMANIA STATE	61 (3) 6249 0566 GENERAL INFO
WILLIAM ADAMS PTY. LTD.	AUSTRALIA	MOWBRAY HEIGHTS	TASMANIA STATE	61 (3) 6326 6366 GENERAL INFO
WILLIAM ADAMS PTY. LTD.	AUSTRALIA	SOMERSET	TASMANIA STATE	61 (3) 6433 8888 GENERAL INFO
WILLIAM ADAMS PTY. LTD.	AUSTRALIA	SOMERSET	TASMANIA STATE	61 (3) 6466 1488 GENERAL INFO
WILLIAM ADAMS PTY. LTD.	AUSTRALIA	BENDIGO	VICTORIA STATE	61 (3) 5444 5366 GENERAL INFO
WILLIAM ADAMS PTY. LTD.	AUSTRALIA	CAMPBELLFIELD	VICTORIA STATE	61 (3) 9308 8555 GENERAL INFO
WILLIAM ADAMS PTY. LTD.	AUSTRALIA	CLAYTON	VICTORIA STATE	61 (3) 9566 0666 GENERAL INFO
ENERGY POWER SYSTEMS AUSTRALIA	AUSTRALIA	HALLAM	VICTORIA STATE	61 (3) 9703 4000 GENERAL INFO
WILLIAM ADAMS PTY. LTD.	AUSTRALIA	HALLAM	VICTORIA STATE	61 (3) 9703 2600 GENERAL INFO
WILLIAM ADAMS PTY. LTD.	AUSTRALIA	HORSHAM	VICTORIA STATE	61 (3) 5382 0071 GENERAL INFO
WILLIAM ADAMS PTY. LTD.	AUSTRALIA	MILDURA	VICTORIA STATE	61 (3) 5018 6100 GENERAL INFO
WILLIAM ADAMS PTY. LTD.	AUSTRALIA	NEWMERELLA	VICTORIA STATE	61 (3) 5154 3011 GENERAL INFO
WILLIAM ADAMS PTY. LTD.	AUSTRALIA	NIDDRIE	VICTORIA STATE	61 (3) 9931 9666 GENERAL INFO
WILLIAM ADAMS PTY. LTD.	AUSTRALIA	SUNSHINE	VICTORIA STATE	61 (3) 9931 9666 GENERAL INFO
WILLIAM ADAMS PTY. LTD.	AUSTRALIA	TRARALGON	VICTORIA STATE	61 (3) 5175 6200 GENERAL INFO

Table 1. Caterpillar Dealers - Continued.

Dealer Name	Country	City	State/Province/Region	Phone
WILLIAM ADAMS PTY. LTD.	AUSTRALIA	WEST MELBOURNE	VICTORIA STATE	61 (3) 9329 9077 GENERAL INFO
WILLIAM ADAMS PTY. LTD.	AUSTRALIA	WODONGA	VICTORIA STATE	61 (2) 6024 4744 GENERAL INFO
WESTRAC PTY. LTD.	AUSTRALIA	BOULDER	WESTERN AUSTRALIA STATE	61 (8) 9021 9300 GENERAL INFO
WESTRAC PTY. LTD.	AUSTRALIA	BUNBURY	WESTERN AUSTRALIA STATE	61 (8) 9725 4166 GENERAL INFO
WESTRAC PTY. LTD.	AUSTRALIA	ESPERANCE	WESTERN AUSTRALIA STATE	61 (8) 9071 5652 GENERAL INFO
WESTRAC EQUIPMENT PTY. LTD.	AUSTRALIA	GERALDTON	WESTERN AUSTRALIA STATE	61 (8) 9923 6210 AFTER HOURS
WESTRAC PTY. LTD.	AUSTRALIA	GERALDTON	WESTERN AUSTRALIA STATE	61 (8) 9923 3233 GENERAL INFO
WESTRAC EQUIPMENT PTY. LTD.	AUSTRALIA	KALGOORLIE	WESTERN AUSTRALIA STATE	61 (8) 9021 9342 GENERAL INFO
WESTRAC EQUIPMENT PTY. LTD.	AUSTRALIA	KARRATHA	WESTERN AUSTRALIA STATE	61 (8) 9182 2300 GENERAL INFO
WESTRAC PTY. LTD.	AUSTRALIA	KATANNING	WESTERN AUSTRALIA STATE	61 (8) 9821 5555 GENERAL INFO
WESTRAC PTY. LTD.	AUSTRALIA	KEWDALE PEET PARK	WESTERN AUSTRALIA STATE	61 (8) 9353 2066 GENERAL INFO
WESTRAC PTY. LTD.	AUSTRALIA	KUNUNURRA	WESTERN AUSTRALIA STATE	61 (8) 9168 1688 GENERAL INFO
WESTRAC PTY. LTD.	AUSTRALIA	LAKE ARGYLE	WESTERN AUSTRALIA STATE	61 (8) 9167 1378 GENERAL INFO
WESTRAC PTY. LTD.	AUSTRALIA	MIDLAND	WESTERN AUSTRALIA STATE	61 (8) 9377 9444 GENERAL INFO
WESTRAC EQUIPMENT PTY. LTD.	AUSTRALIA	NAVAL BASE	WESTERN AUSTRALIA STATE	61 (8) 9437 2922 GENERAL INFO
WESTRAC PTY. LTD.	AUSTRALIA	NEWMAN	WESTERN AUSTRALIA STATE	61 (8) 9175 1653 GENERAL INFO
WESTRAC PTY. LTD.	AUSTRALIA	PORT HEDLAND	WESTERN AUSTRALIA STATE	61 (8) 9173 8300 GENERAL INFO
WESTRAC PTY. LTD.	AUSTRALIA	TOM PRICE	WESTERN AUSTRALIA STATE	61 (8) 9189 2412 GENERAL INFO
WESTRAC EQUIPMENT PTY. LTD.	AUSTRALIA	WANGARA	WESTERN AUSTRALIA STATE	61 (8) 9377 9721 GENERAL INFO
ENERGY POWER SYSTEMS AUSTRALIA	AUSTRALIA	WELSHPOOL	WESTERN AUSTRALIA STATE	61 (08) 9442 8500 GENERAL INFO
ZEPPELIN OESTERREICH GMBH	AUSTRIA	STADELBACH	KARNTEN BUNDESLAND	43 (4258) 8410-0 GENERAL INFO
ZEPPELIN OESTERREICH GMBH	AUSTRIA	FISCHAMEND	NIEDEROSTERRICH BUNDESLAND	43 (1) 2232 790 GENERAL INFO
ZEPPELIN OESTERREICH GMBH	AUSTRIA	LINZ	OBEROSTERREICH BUNDESLAND	43 (732) 757055 GENERAL INFO
ZEPPELIN OESTERREICH GMBH	AUSTRIA	THALGAU	SALZBURG BUNDESLAND	43 (6235) 20 131 555 GENERAL INFO

Table 1. Caterpillar Dealers - Continued.

Dealer Name	Country	City	State/Province/Region	Phone
ZEPPELIN OESTERREICH GMBH	AUSTRIA	KALSDORF BEI GRAZ	STEIERMARK BUNDESLAND	43 (3135) 50970 GENERAL INFO
ZEPPELIN OESTERREICH GMBH	AUSTRIA	INNSBRUCK	TIROL BUNDESLAND	43 (512) 392341 GENERAL INFO
ZEPPELIN OESTERREICH GMBH	AUSTRIA	FRASTANZ	VORARLBERG BUNDESLAND	43 (5522) 54397 555 GENERAL INFO
MACHINE INTERNATIONAL TRADE	AZERBAIJAN	VALETTA	MALTA I.	994 (12) 498-9348 GENERAL INFO
MACHINE INTERNATIONAL TRADE	AZERBAIJAN	VALETTA	MALTA I.	994 (12) 498-9348 GENERAL INFO
MACHINERY & ENERGY LIMITED	BAHAMAS	FREEPORT	GRAND BAHAMA I. DISTRICT	1 (242) 352-5981 GENERAL INFO
MACHINERY & ENERGY LIMITED	BAHAMAS	NASSAU	NEW PROVIDENCE I. DISTRICT	1 (242) 323-5701 GENERAL INFO
MOHAMED ABDULRAHMAN AL BAHAR	BAHRAIN	MANAMA	AL MANAMAH	973 (17) 728270 GENERAL INFO
MOHAMED ABDULRAHMAN AL-BAHAR	BAHRAIN	MANAMA	AL MANAMAH	973 (17) 728270 GENERAL INFO
BANGLA TRAC LIMITED	BANGLADESH	GULSHAN	DHAKA DIVISION	880 (2) 885-9812 GENERAL INFO
RIMCO (BARBADOS) SRL	BARBADOS	CHRIST CHURCH	CHRIST CHURCH PARISH	1 (787) 273-5768 GENERAL INFO
ZEPPELIN INTERNATIONAL AG	BELARUS	MINSK	MINSK OBLAST	7 (910) 431 00 70 GENERAL INFO
ZEPPELIN INTERNATIONAL AG	BELARUS	ZUG		375 (170) 226 92 38 PRIMARY BUSINESS
BERGERAT MONNOYEUR S.A.	BELGIUM	ANTWERPEN	ANTWERPEN PROVINCIE	32 (3) 544 76 55 GENERAL INFO
ENERGYST CAT RENTAL POWER	BELGIUM	ANTWERPEN	ANTWERPEN PROVINCIE	32 (3) 457 5269 GENERAL INFO
BERGERAT MONNOYEUR S.A.	BELGIUM	OVERIJSE	BRABANT PROVINCIE	32 (2) 689 22 11 GENERAL INFO
BERGERAT MONNOYEUR S.A.	BELGIUM	OVERIJSE	BRABANT PROVINCIE	32 (2) 689 22 11 GENERAL INFO
BERGERAT MONNOYEUR S.A.	BELGIUM	GRACE-HOLLOGNE	LIEGE PROVINCIE	32 (4) 247-29-47 GENERAL INFO
BERGERAT MONNOYEUR S.A.	BELGIUM	LIEGE	LIEGE PROVINCIE	32 (4) 247 29 47 GENERAL INFO
GUNCO BV	BELGIUM	SOLLENTUNA	STOCKHOLM LAN	32 (5) 5410 040 GENERAL INFO
BERGERAT MONNOYEUR S.A.	BELGIUM	IZEGEM	WEST-VLAANDEREN PROVINCIE	32 (51) 31 39 20 GENERAL INFO
BERGERAT MONNOYEUR S.A.	BELGIUM	IZEGEM	WEST-VLAANDEREN PROVINCIE	32 (51) 33 62 89 GENERAL INFO
GENERAL EQUIPMENT COMPANY LTD.	BELIZE	LADYVILLE	BELIZE DISTRICT	501 (25) 2117 GENERAL INFO
BENIN EQUIPEMENTS	BENIN	COTONOU	ATLANTIQUE PROVINCE	229 () 33 18 06 GENERAL INFO

Table 1. Caterpillar Dealers - Continued.

Dealer Name	Country	City	State/Province/Region	Phone
TIL LIMITED	BHUTAN	PHUNTSHOLING	SAMCHI DZONG	975 (5) 253004 GENERAL INFO
FINNING BOLIVIA S.A.	BOLIVIA	LA PAZ	LA PAZ DEPARTAMENTO	591 (2) 81-4196 GENERAL INFO
FINNING BOLIVIA S.A.	BOLIVIA	LA PAZ	LA PAZ DEPARTAMENTO	591 (2) 78-4513 GENERAL INFO
FINNING BOLIVIA S.A.	BOLIVIA	SANTA CRUZ	SANTA CRUZ DEPARTAMENTO	591 (3) 42-9688 GENERAL INFO
BOSTEK MACHINERY D.O.O.	BOSNIA/HERZEGOW	BIJELJINA	BOSNIA I HERZEGOVINA REPUBLIKA	387 (55) 208 020 GENERAL INFO
BOSTEK MACHINERY D.O.O.	BOSNIA/HERZEGOW	BLAZUJ	BOSNIA I HERZEGOVINA REPUBLIKA	387 (33) 776 300 GENERAL INFO
TEKNOXGROUP SA	BOSNIA/HERZEGOW	LUGANO	TICINO CANTON	387 (33) 776 300 GENERAL INFO
BOTSWANA EARTHMOVING MACHINERY	BOTSWANA	GABORONE	SOUTH-EAST DISTRICT	267 () 3951781 GENERAL INFO
SOTREQ S.A.	BRAZIL	RIO BRANCO	ACRE ESTADO	55 (68) 226-4921 GENERAL INFO
SOTREQ S.A.	BRAZIL	MANAUS	AMAZONAS ESTADO	55 (92) 654-3234 GENERAL INFO
BAHEMA EQUIPAMENTOS S.A.	BRAZIL	ITAPEBI	BAHIA ESTADO	55 (73) 3286.1227 GENERAL INFO
BAHEMA EQUIPAMENTOS S.A.	BRAZIL	ITAPEBI	BAHIA ESTADO	55 (71) 255-7577 GENERAL INFO
BAHEMA EQUIPAMENTOS S.A.	BRAZIL	SALVADOR	BAHIA ESTADO	55 (71) 2107.7500 GENERAL INFO
BAHEMA EQUIPAMENTOS S.A.	BRAZIL	SALVADOR	BAHIA ESTADO	55 (071) 2107.7600 GENERAL INFO
MARCOSA S/A MAQUINAS E	BRAZIL	SALVADOR	BAHIA ESTADO	55 (85) 4011.3302 DIRECTOR
BAHEMA RENTAL	BRAZIL	TEIXEIRA DE FREITAS	BAHIA ESTADO	55 (73) 32915670 GENERAL INFO
MARCOSA S/A MAQUINAS E	BRAZIL	TEIXEIRA DE FREITAS	BAHIA ESTADO	55 (73) 255-7576 GENERAL INFO
MARCOSA S/A MAQUINAS E	BRAZIL	FORTALEZA	CEARA ESTADO	55 (85) 4011.3300 GENERAL INFO
MARCOSA S/A MAQUINAS E	BRAZIL	FORTALEZA	CEARA ESTADO	55 (85) 4011.3399 GENERAL INFO
MARCOSA S/A MAQUINAS E	BRAZIL	FORTALEZA	CEARA ESTADO	55 (85) 4011.3399 GENERAL INFO
SOTREQ S.A.	BRAZIL	GUARA	DISTRITO FEDERAL	55 (62) 204-2000 GENERAL INFO
MARCOSA S/A MAQUINAS E	BRAZIL	SERRA	ESPIRITO SANTO ESTADO	55 (27) 3324.5747 GENERAL INFO
SOENERGY SISTEMAS	BRAZIL	SERRA	ESPIRITO SANTO ESTADO	
SOTREQ S.A.	BRAZIL	VITORIA	ESPIRITO SANTO ESTADO	55 (27) 322-8311 GENERAL INFO
SOTREQ S.A.	BRAZIL	GOIANIA	GOIAS ESTADO	55 (62) 204-2000 GENERAL INFO

Table 1. Caterpillar Dealers - Continued.

Dealer Name	Country	City	State/Province/Region	Phone
SOTREQ S.A.	BRAZIL	MINACU	GOIAS ESTADO	55 (62) 379-1635 GENERAL INFO
BAHEMA EQUIPAMENTOS S.A.	BRAZIL	SAO LUIS	MARANHAO ESTADO	55 (98) 2107.1200 GENERAL INFO
BAHEMA EQUIPAMENTOS S.A.	BRAZIL	SAO LUIS	MARANHAO ESTADO	55 (71) 2107.1299 GENERAL INFO
BAHEMA RENTAL	BRAZIL	SAO LUIS	MARANHAO ESTADO	55 (98) 2107.1200 GENERAL INFO
MARCOSA S/A MAQUINAS E	BRAZIL	SAO LUIS	MARANHAO ESTADO	55 (85) 4011.3302 DIRECTOR
SOTREQ S.A.	BRAZIL	CAMPO GRANDE	MATO GROSSO DO SUL ESTADO	55 (67) 787-1020 GENERAL INFO
SOTREQ S.A.	BRAZIL	CUIABA	MATO GROSSO ESTADO	55 (65) 665-2121 GENERAL INFO
SOTREQ S.A.	BRAZIL	SINOP	MATO GROSSO ESTADO	55 (65) 665-2121 GENERAL INFO
SOTREQ S.A.	BRAZIL	BELO ORIENTE	MINAS GERAIS ESTADO	55 (31) 3829-6978 GENERAL INFO
SOTREQ RENTAL SERVICES	BRAZIL	CONTAGEM	MINAS GERAIS ESTADO	55 (31) 333-3595 GENERAL INFO
SOTREQ S.A.	BRAZIL	CONTAGEM	MINAS GERAIS ESTADO	55 (31) 359-6000 GENERAL INFO
SOTREQ S.A.	BRAZIL	ITABIRA	MINAS GERAIS ESTADO	55 (31) 3831-6944 GENERAL INFO
SOTREQ S.A.	BRAZIL	UBERLANDIA	MINAS GERAIS ESTADO	55 (34) 3236-6300 GENERAL INFO
SOTREQ S.A.	BRAZIL	BELEM	PARA ESTADO	55 (91) 211-9500 GENERAL INFO
SOTREQ S.A.	BRAZIL	MARABA	PARA ESTADO	55 (91) 322-1711 GENERAL INFO
SOTREQ S.A.	BRAZIL	ORIXIMINA	PARA ESTADO	55 (93) 549-1603 GENERAL INFO
SOTREQ S.A.	BRAZIL	PARAUAPEBAS	PARA ESTADO	55 (91) 327-1204 GENERAL INFO
PARANA EQUIPAMENTOS S.A.	BRAZIL	CASCAVEL	PARANA ESTADO	55 (45) 225-2111 GENERAL INFO
PARANA EQUIPAMENTOS S.A.	BRAZIL	CURITIBA	PARANA ESTADO	55 (41) 371-2211 GENERAL INFO
PARANA EQUIPAMENTOS S.A.	BRAZIL	LONDRINA	PARANA ESTADO	55 (43) 328-1133 GENERAL INFO
PARANA EQUIPAMENTOS S.A.	BRAZIL	MARINGA	PARANA ESTADO	55 (41) 3712211 FINANCE
PARANA EQUIPAMENTOS S.A.	BRAZIL	PINHAIS	PARANA ESTADO	55 () 668-3568 GENERAL INFO
MARCOSA S/A MAQUINAS E	BRAZIL	JABOATAO DOS GUARARAPES	PERNAMBUCO ESTADO	55 (81) 2123.1300 GENERAL INFO
MARCOSA S/A MAQUINAS E	BRAZIL	JABOATAO DOS GUARARAPES	PERNAMBUCO ESTADO	55 (81) 2123.1300 GENERAL INFO

Table 1. Caterpillar Dealers - Continued.

Dealer Name	Country	City	State/Province/Region	Phone
MARCOSA S/A MAQUINAS E EQUIP.	BRAZIL	JABOATAO DOS GUARARAPES	PERNAMBUCO ESTADO	55 (81) 2123.1399 GENERAL INFO
BAHEMA EQUIPAMENTOS S.A.	BRAZIL	TERESINA	PIAUI ESTADO	55 (86) 3219.1196 GENERAL INFO
MARCOSA S/A MAQUINAS E	BRAZIL	TERESINA	PIAUI ESTADO	55 (85) 4011.3302 DIRECTOR
SOTREQ RENTAL SERVICES	BRAZIL	RIO DE JANEIRO	RIO DE JANEIRO ESTADO	55 (21) 260-8182 GENERAL INFO
SOTREQ S.A.	BRAZIL	RIO DE JANEIRO	RIO DE JANEIRO ESTADO	55 (21) 865-7722 GENERAL INFO
MARCOSA RENTAL STORE S/A	BRAZIL	PARNAMIRIM	RIO GRANDE DO NORTE ESTADO	55 (084) 3643.3704 GENERAL INFO
PARANA EQUIPAMENTOS S.A.	BRAZIL	CAXIAS DO SUL	RIO GRANDE DO SUL ESTADO	55 (41) 3712211 FINANCE
PARANA EQUIPAMENTOS S.A.	BRAZIL	PORTO ALEGRE	RIO GRANDE DO SUL ESTADO	55 (51) 341-5355 GENERAL INFO
PARANA EQUIPAMENTOS S.A.	BRAZIL	PORTO ALEGRE	RIO GRANDE DO SUL ESTADO	55 (41) 371-2211 GENERAL INFO
SOTREQ S.A.	BRAZIL	JI PARANA	RONDONIA ESTADO	55 (69) 422-1915 GENERAL INFO
SOTREQ S.A.	BRAZIL	BOA VISTA	RORAIMA TERRITORIO	55 (95) 625-1907 GENERAL INFO
PARANA EQUIPAMENTOS S.A.	BRAZIL	CHAPECO	SANTA CATARINA ESTADO	55 (045) 225-2111 GENERAL INFO
PARANA EQUIPAMENTOS S.A.	BRAZIL	ICARA	SANTA CATARINA ESTADO	55 (41) 37122115 GENERAL INFO
PARANA EQUIPAMENTOS S.A.	BRAZIL	JOINVILLE	SANTA CATARINA ESTADO	55 (51) 341-5355 GENERAL INFO
PARANA EQUIPAMENTOS S.A.	BRAZIL	SAO JOSE	SANTA CATARINA ESTADO	55 (48) 246-8755 GENERAL INFO
SOTREQ S.A.	BRAZIL	BAURU	SAO PAULO ESTADO	55 (14) 230-3717 GENERAL INFO
SOTREQ S.A.	BRAZIL	RIBEIRAO PRETO	SAO PAULO ESTADO	55 (16) 627-2525 GENERAL INFO
SOTREQ S.A.	BRAZIL	RIBEIRAO PRETO	SAO PAULO ESTADO	55 (16) 627-0887 GENERAL INFO
SOTREQ S.A.	BRAZIL	SANTOS	SAO PAULO ESTADO	55 (13) 222-4900 GENERAL INFO
SOTREQ S.A.	BRAZIL	SAO JOSE DO RIO PRETO	SAO PAULO ESTADO	55 (17) 224-8111 GENERAL INFO
SOTREQ S.A.	BRAZIL	SAO JOSE DOS CAMPOS	SAO PAULO ESTADO	55 (12) 321-6800 GENERAL INFO
SOTREQ RENTAL SERVICES	BRAZIL	SAO PAULO	SAO PAULO ESTADO	55 (11) 3718-5000 GENERAL INFO
SOTREQ S.A.	BRAZIL	SUMARE	SAO PAULO ESTADO	55 (19) 3864-6400 GENERAL INFO
BAHEMA EQUIPAMENTOS S.A.	BRAZIL	ARACAJU	SERGIPE ESTADO	55 (79) 3253.1515 GENERAL INFO

Table 1. Caterpillar Dealers - Continued.

Dealer Name	Country	City	State/Province/Region	Phone
MARCOSA S/A MAQUINAS E EQUIP.	BRAZIL	ARACAJU	SERGIPE ESTADO	55 (79) 3253-1515 GENERAL INFO
SOTREQ S.A.	BRAZIL	PALMAS	TOCATINS ESTADO	55 (63) 214-2030 GENERAL INFO
TRACTORS MALAYSIA (1982)	BRUNEI DARUSS.	KUALA BELAIT	BELAIT DAERAH	673 (3) 333460 GENERAL INFO
TRACTORS MALAYSIA (1982)	BRUNEI DARUSS.	BANDAR SERI BEGAWAN	BRUNEI/MUARA DAERAH	673 (2) 651176 GENERAL INFO
ELTRAK BULGARIA LTD	BULGARIA	SOFIA	SOFIA CITY	359 (2) 958-6037 GENERAL INFO
ELTRAK BULGARIA LTD.	BULGARIA	SOFIA	SOFIA CITY	359 (2) 958-6037 GENERAL INFO
ELTRAK BULGARIA LTD.	BULGARIA	SOFIA	SOFIA CITY	359 (2) 958-6037 GENERAL INFO
BURKINA EQUIPEMENTS	BURKINA FASO	OUAGADOUGOU	KADIOGO PROVINCE	226 () 50 36 47 66 GENERAL INFO
METRO GROUP OF CAMBODIA CO LTD.	CAMBODIA	PHNOM PENH	PHNUM PENH ROTTATHEANEI	855 (23) 211 221 GENERAL INFO
S.H.O. CAMEROUN	CAMEROON	YAOUNDE	CENTRE PROVINCE	237 () 30.46.81 GENERAL INFO
S.H.O. CAMEROUN	CAMEROON	DOUALA	LITTORAL PROVINCE	237 () 37.90.83 GENERAL INFO
S.H.O. CAMEROUN	CAMEROON	GAROUA	NORD PROVINCE	237 () 21.75.56 GENERAL INFO
RAYDON RENTALS LTD.	CANADA	BONNYVILLE	ALBERTA	1 (780) 826-3777 GENERAL INFO
FINNING (CANADA)	CANADA	CALGARY	ALBERTA	1 (403) 295-5750 AFTER HOURS
RAYDON RENTALS LTD.	CANADA	CALGARY	ALBERTA	1 (403) 640-4800 GENERAL INFO
FINNING (CANADA)	CANADA	CLAIRMONT	ALBERTA	1 (780) 831-2600 GENERAL INFO
RAYDON RENTALS LTD.	CANADA	COCHRANE	ALBERTA	1 (403) 932-3821 GENERAL INFO
RAYDON RENTALS LTD.	CANADA	CONKLIN	ALBERTA	1 (780) 559-2123 GENERAL INFO
RAYDON RENTALS LTD.	CANADA	DRAYTON VALLEY	ALBERTA	1 (780) 542-7377 GENERAL INFO
FINNING (CANADA)	CANADA	EDMONTON	ALBERTA	1 (780) 930-4800 PRIMARY BUSINESS
FINNING (CANADA)	CANADA	EDMONTON	ALBERTA	1 (800) 661 6769 GENERAL INFO
FINNING (CANADA)	CANADA	EDMONTON	ALBERTA	1 (780) 483-1122 GENERAL INFO
FINNING (CANADA)	CANADA	EDMONTON	ALBERTA	1 (780) 483-3558 GENERAL INFO
FINNING (CANADA)	CANADA	EDMONTON	ALBERTA	1 (780) 483-3636 GENERAL INFO

Table 1. Caterpillar Dealers - Continued.

Dealer Name	Country	City	State/Province/Region	Phone
FINNING (CANADA)	CANADA	EDMONTON	ALBERTA	1 (403) 516-2800 GENERAL INFO
FINNING (CANADA)	CANADA	EDMONTON	ALBERTA	1 (780) 930-4949 GENERAL INFO
FINNING (CANADA)	CANADA	EDMONTON	ALBERTA	1 (780) 438-7981 GENERAL INFO
RAYDON RENTALS LTD.	CANADA	EDMONTON	ALBERTA	1 (780) 875-7368 GENERAL INFO
RAYDON RENTALS LTD.	CANADA	EDMONTON	ALBERTA	1 (780) 989-1300 GENERAL INFO
RAYDON RENTALS LTD.	CANADA	EDMONTON	ALBERTA	1 (780) 989-1300 GENERAL INFO
RAYDON RENTALS LTD.	CANADA	EDMONTON	ALBERTA	1 (780) 930-8518 GENERAL INFO
FINNING (CANADA)	CANADA	FORT MCMURRAY	ALBERTA	1 (780) 743-2218 GENERAL INFO
FINNING (CANADA)	CANADA	FORT MCMURRAY	ALBERTA	1 (780) 790-2010 GENERAL INFO
RAYDON RENTALS LTD.	CANADA	FORT MCMURRAY	ALBERTA	1 (780) 743-5217 GENERAL INFO
RAYDON RENTALS LTD.	CANADA	GRANDE PRAIRIE	ALBERTA	1 (780) 513-1245 GENERAL INFO
RAYDON RENTALS LTD.	CANADA	HIGH LEVEL	ALBERTA	1 (780) 926-3667 GENERAL INFO
RAYDON RENTALS LTD.	CANADA	HINTON	ALBERTA	1 (780) 865-5700 GENERAL INFO
FINNING (CANADA)	CANADA	LETHBRIDGE	ALBERTA	1 (403) 328-3366 GENERAL INFO
FINNING (CANADA)	CANADA	MEDICINE HAT	ALBERTA	1 (403) 528-8730 GENERAL INFO
FINNING (CANADA)	CANADA	PEACE RIVER	ALBERTA	1 (780) 624-1550 GENERAL INFO
RAYDON RENTALS LTD.	CANADA	PEACE RIVER	ALBERTA	1 (780) 624-1577 GENERAL INFO
FINNING (CANADA)	CANADA	RED DEER	ALBERTA	1 (403) 347-1106 GENERAL INFO
RAYDON RENTALS LTD.	CANADA	ROCKY MOUNTAIN HOUSE	ALBERTA	1 (403) 845-3202 GENERAL INFO
RAYDON RENTALS LTD.	CANADA	SLAVE LAKE	ALBERTA	1 (780) 849-5006 GENERAL INFO
RAYDON RENTALS LTD.	CANADA	WABASCA	ALBERTA	1 (780) 891-3300 GENERAL INFO
FINNING (CANADA)	CANADA	CAMPBELL RIVER	BRITISH COLUMBIA	1 (250) 287-7494 GENERAL INFO
FINNING (CANADA)	CANADA	CHILLIWACK	BRITISH COLUMBIA	1 (250) 792-1918 GENERAL INFO
RAYDON RENTALS LTD.	CANADA	CLOVERLEAF	BRITISH COLUMBIA	1 (604) 576-6627 GENERAL INFO

Table 1. Caterpillar Dealers - Continued.

Dealer Name	Country	City	State/Province/Region	Phone
RAYDON RENTALS LTD.	CANADA	COQUITLAM	BRITISH COLUMBIA	1 (604) 944-6642 GENERAL INFO
FINNING (CANADA)	CANADA	CRANBROOK	BRITISH COLUMBIA	1 (250) 489-6631 GENERAL INFO
RAYDON RENTALS LTD.	CANADA	CRANBROOK	BRITISH COLUMBIA	1 (250) 425-2469 GENERAL INFO
FINNING (CANADA)	CANADA	FORT NELSON	BRITISH COLUMBIA	1 (250) 774-7275 GENERAL INFO
RAYDON RENTALS LTD.	CANADA	FORT NELSON	BRITISH COLUMBIA	1 (250) 774-6812 GENERAL INFO
FINNING (CANADA)	CANADA	FORT ST JOHN	BRITISH COLUMBIA	1 (250) 787-7761 GENERAL INFO
RAYDON RENTALS LTD.	CANADA	FORT ST JOHN	BRITISH COLUMBIA	1 (250) 785-8700 GENERAL INFO
FINNING (CANADA)	CANADA	HOUSTON	BRITISH COLUMBIA	1 (250) 845-2213 GENERAL INFO
FINNING (CANADA)	CANADA	KAMLOOPS	BRITISH COLUMBIA	1 (250) 372-9552 GENERAL INFO
RAYDON RENTALS LTD.	CANADA	LANGLEY	BRITISH COLUMBIA	1 (604) 888 5787 GENERAL INFO
FINNING (CANADA)	CANADA	MACKENZIE	BRITISH COLUMBIA	1 (250) 997-3216 GENERAL INFO
FINNING (CANADA)	CANADA	NANAIMO	BRITISH COLUMBIA	1 (250) 714-0134 GENERAL INFO
FINNING (CANADA)	CANADA	NELSON	BRITISH COLUMBIA	1 (250) 304-6700 GENERAL INFO
RAYDON RENTALS LTD.	CANADA	NORTH VANCOUVER	BRITISH COLUMBIA	1 (604) 986-7822 GENERAL INFO
RAYDON RENTALS LTD.	CANADA	PARKSVILLE	BRITISH COLUMBIA	1 (250) 248 1100 GENERAL INFO
FINNING (CANADA)	CANADA	PRINCE GEORGE	BRITISH COLUMBIA	1 (250) 563-0331 GENERAL INFO
RAYDON RENTALS LTD.	CANADA	PRINCE GEORGE	BRITISH COLUMBIA	1 (250) 562-9292 GENERAL INFO
FINNING (CANADA)	CANADA	QUESNEL	BRITISH COLUMBIA	1 (250) 992-7051 GENERAL INFO
FINNING (CANADA)	CANADA	REVELSTOKE	BRITISH COLUMBIA	1 (250) 837-5201 GENERAL INFO
FINNING (CANADA)	CANADA	RICHMOND	BRITISH COLUMBIA	1 (604) 328-4006 AFTER HOURS
RAYDON RENTALS LTD.	CANADA	RICHMOND	BRITISH COLUMBIA	1 (604) 270 6642 GENERAL INFO
FINNING (CANADA)	CANADA	SPARWOOD	BRITISH COLUMBIA	1 (250) 425-6282 GENERAL INFO
FINNING (CANADA)	CANADA	SURREY	BRITISH COLUMBIA	1 (604) 881-2600 GENERAL INFO
FINNING (CANADA)	CANADA	SURREY	BRITISH COLUMBIA	1 (604) 888-3406 GENERAL INFO

Table 1. Caterpillar Dealers - Continued.

Dealer Name	Country	City	State/Province/Region	Phone
FINNING (CANADA)	CANADA	SURREY	BRITISH COLUMBIA	1 (604) 881-2600 GENERAL INFO
FINNING (CANADA)	CANADA	SURREY	BRITISH COLUMBIA	1 (604) 881-2931 GENERAL INFO
FINNING INTERNATIONAL	CANADA	SURREY	BRITISH COLUMBIA	1 (604) 881-2600 GENERAL INFO
RAYDON RENTALS LTD.	CANADA	SURREY	BRITISH COLUMBIA	1 (604) 888-5787 GENERAL INFO
FINNING (CANADA)	CANADA	TERRACE	BRITISH COLUMBIA	1 (250) 638-4600 GENERAL INFO
RAYDON RENTALS LTD.	CANADA	VANCOUVER	BRITISH COLUMBIA	1 (604) 228-7822 GENERAL INFO
FINNING (CANADA)	CANADA	VERNON	BRITISH COLUMBIA	1 (250) 545-2321 GENERAL INFO
FINNING (CANADA)	CANADA	VICTORIA	BRITISH COLUMBIA	1 (250) 744-1117 GENERAL INFO
FINNING (CANADA)	CANADA	WILLIAMS LAKE	BRITISH COLUMBIA	1 (250) 392-3381 GENERAL INFO
TOROMONT CAT	CANADA	BRANDON	MANITOBA	1 (204) 571-2460 GENERAL INFO
TOROMONT CAT	CANADA	ELIE	MANITOBA	1 (204) 353-3850 GENERAL INFO
TOROMONT CAT	CANADA	THOMPSON	MANITOBA	1 (204) 677-1975 GENERAL INFO
BATTLEFIELD EQUIPMENT RENTALS	CANADA	WINNIPEG	MANITOBA	1 (204) 728-0405 GENERAL INFO
BATTLEFIELD EQUIPMENT RENTALS	CANADA	WINNIPEG	MANITOBA	1 (204) 474-2411 GENERAL INFO
TOROMONT CAT	CANADA	WINNIPEG	MANITOBA	1 (204) 453-4343 GENERAL INFO
TOROMONT CAT	CANADA	WINNIPEG	MANITOBA	1 (204) 681-3230 GENERAL INFO
TOROMONT CAT	CANADA	WINNIPEG	MANITOBA	1 (204) 331-4343 GENERAL INFO
ATLANTIC TRACTORS & EQUIPMENT	CANADA	BATHURST	NEW BRUNSWICK	1 (506) 548-9871 GENERAL INFO
ATLANTIC TRACTORS & EQUIPMENT	CANADA	FREDERICTON	NEW BRUNSWICK	1 (506) 452-6651 GENERAL INFO
ATLANTIC TRACTORS & EQUIPMENT	CANADA	MONCTON	NEW BRUNSWICK	1 (506) 852-4545 GENERAL INFO
LOCATION HEWITT INC.	CANADA	MONCTON	NEW BRUNSWICK	1 (506) 859-7788 GENERAL INFO
BATTLEFIELD EQUIPMENT RENTALS	CANADA	ARNOLDS COVE	NEWFOUNDLAND	1 (709) 463-8859 GENERAL INFO
BATTLEFIELD EQUIPMENT RENTALS	CANADA	CORNER BROOK	NEWFOUNDLAND	1 (709) 634-2610 GENERAL INFO
TOROMONT CAT	CANADA	CORNER BROOK	NEWFOUNDLAND	1 (709) 632-1400 AFTER HOURS

Table 1. Caterpillar Dealers - Continued.

Dealer Name	Country	City	State/Province/Region	Phone
BATTLEFIELD EQUIPMENT RENTALS	CANADA	GANDER	NEWFOUNDLAND	1 (709) 256-2060 GENERAL INFO
TOROMONT CAT	CANADA	GRAND FALLS-WIN	NEWFOUNDLAND	1 (709) 486-5229 AFTER HOURS
TOROMONT CAT	CANADA	HAPPY VALLEY-GOOSE BAY	NEWFOUNDLAND	1 (709) 896-1399 AFTER HOURS
BATTLEFIELD EQUIPMENT RENTALS	CANADA	HAWKES BAY	NEWFOUNDLAND	1 (709) 248-5345 GENERAL INFO
BATTLEFIELD EQUIPMENT RENTALS	CANADA	ST JOHN'S	NEWFOUNDLAND	1 (709) 745-8766 GENERAL INFO
TOROMONT CAT	CANADA	ST JOHN'S	NEWFOUNDLAND	1 (709) 682-8933 AFTER HOURS
HEWITT EQUIPMENT LIMITEE	CANADA	WABUSH	NEWFOUNDLAND	1 (709) 282-3350 GENERAL INFO
FINNING (CANADA)	CANADA	HAY RIVER	NORTHWEST TERRITORIES	1 (867) 874-6537 GENERAL INFO
FINNING (CANADA)	CANADA	INUVIK	NORTHWEST TERRITORIES	1 (867) 777-2551 GENERAL INFO
TOROMONT CAT	CANADA	IQALUIT	NORTHWEST TERRITORIES	1 (867) 979-4178 GENERAL INFO
TOROMONT CAT	CANADA	RANKIN INLET	NORTHWEST TERRITORIES	1 (867) 645-3422 GENERAL INFO
ATLANTIC TRACTORS & EQUIPMENT	CANADA	DARTMOUTH	NOVA SCOTIA	1 (902) 468-0581 GENERAL INFO
ATLANTIC TRACTORS & EQUIPMENT	CANADA	DARTMOUTH	NOVA SCOTIA	1 (902) 468 0581 GENERAL INFO
LOCATION HEWITT INC.	CANADA	DARTMOUTH	NOVA SCOTIA	1 (902) 454-6480 GENERAL INFO
LOCATION HEWITT INC.	CANADA	DARTMOUTH	NOVA SCOTIA	1 (902) 481-3455 GENERAL INFO
ATLANTIC TRACTORS & EQUIPMENT	CANADA	SYDNEY	NOVA SCOTIA	1 (902) 564-8166 GENERAL INFO
ATLANTIC TRACTORS & EQUIPMENT	CANADA	YARMOUTH	NOVA SCOTIA	1 (902) 742-7673 GENERAL INFO
BATTLEFIELD EQUIPMENT RENTALS	CANADA	AJAX	ONTARIO	1 (905) 427-5556 GENERAL INFO
BATTLEFIELD EQUIPMENT RENTALS	CANADA	BARRIE	ONTARIO	1 (705) 721 1919 GENERAL INFO
BATTLEFIELD EQUIPMENT RENTALS	CANADA	BELLEVILLE	ONTARIO	1 (613) 966-2822 GENERAL INFO
BATTLEFIELD EQUIPMENT RENTALS	CANADA	BRAMPTON	ONTARIO	1 (905) 457-7977 GENERAL INFO
BATTLEFIELD EQUIPMENT RENTALS	CANADA	BURLINGTON	ONTARIO	1 (905) 333-1440 GENERAL INFO
BATTLEFIELD EQUIPMENT RENTALS	CANADA	CAMBRIDGE	ONTARIO	1 (519) 650-4040 GENERAL INFO
TOROMONT CAT	CANADA	CAMBRIDGE	ONTARIO	1 (519) 650-1211 GENERAL INFO

Table 1. Caterpillar Dealers - Continued.

Dealer Name	Country	City	State/Province/Region	Phone
BATTLEFIELD EQUIPMENT RENTALS	CANADA	COBOURG	ONTARIO	1 (905) 372-1888 GENERAL INFO
DIESEL DISTRIBUTION,	CANADA	CONCORD	ONTARIO	1 (905) 799-1544 GENERAL INFO
TOROMONT CAT	CANADA	CONCORD	ONTARIO	1 (416) 667-5900 GENERAL INFO
TOROMONT CAT	CANADA	CONCORD	ONTARIO	1 (416) 667-5511 GENERAL INFO
TOROMONT CAT	CANADA	CONCORD	ONTARIO	1 (416) 667-5577 EMERGENCY
TOROMONT CAT	CANADA	CONCORD	ONTARIO	1 (519) 376-2365 GENERAL INFO
TOROMONT CAT	CANADA	DRYDEN	ONTARIO	1 (807) 223-4505 GENERAL INFO
BATTLEFIELD EQUIPMENT RENTALS	CANADA	GLOUCESTER	ONTARIO	1 (613) 736-6868 GENERAL INFO
BATTLEFIELD EQUIPMENT RENTALS	CANADA	GORMLEY	ONTARIO	1 (905) 887-0707 GENERAL INFO
BATTLEFIELD EQUIPMENT RENTALS	CANADA	GUELPH	ONTARIO	1 (519) 836-5220 GENERAL INFO
BATTLEFIELD EQUIPMENT RENTALS	CANADA	HAMILTON	ONTARIO	1 (905) 577-7777 GENERAL INFO
TOROMONT CAT	CANADA	KANATA	ONTARIO	1 (613) 836-5171 GENERAL INFO
BATTLEFIELD EQUIPMENT RENTALS	CANADA	KINGSTON	ONTARIO	1 (613) 547-4200 GENERAL INFO
BATTLEFIELD EQUIPMENT RENTALS	CANADA	LONDON	ONTARIO	1 (519) 453-3000 GENERAL INFO
TOROMONT CAT	CANADA	LONDON	ONTARIO	1 (519) 681-1903 AFTER HOURS
TOROMONT CAT	CANADA	MAIDSTONE	ONTARIO	1 (519) 737-7386 GENERAL INFO
BATTLEFIELD EQUIPMENT RENTALS	CANADA	NAPANEE	ONTARIO	1 (613) 354-2105 GENERAL INFO
BATTLEFIELD EQUIPMENT RENTALS	CANADA	NEPEAN	ONTARIO	1 (613) 828-5121 GENERAL INFO
BATTLEFIELD EQUIPMENT RENTALS	CANADA	NIAGARA FALLS	ONTARIO	1 (905) 374-7700 GENERAL INFO
TOROMONT CAT	CANADA	ORILLIA	ONTARIO	1 (705) 327-1801 GENERAL INFO
TOROMONT CAT	CANADA	PETERBOROUGH	ONTARIO	1 (705) 742-2436 GENERAL INFO
BATTLEFIELD EQUIPMENT RENTALS	CANADA	SARNIA	ONTARIO	1 (519) 336-6151 GENERAL INFO
TOROMONT CAT	CANADA	SAULT STE MARIE	ONTARIO	1 (705) 759-2444 GENERAL INFO
TOROMONT CAT	CANADA	SOUTH PORCUPINE	ONTARIO	1 (705) 235-3221 GENERAL INFO

Table 1. Caterpillar Dealers - Continued.

Dealer Name	Country	City	State/Province/Region	Phone
TOROMONT CAT	CANADA	ST CATHARINES	ONTARIO	1 (905) 688-6224 GENERAL INFO
BATTLEFIELD EQUIPMENT RENTALS	CANADA	STONEY CREEK	ONTARIO	1 (905) 878-5740 GENERAL INFO
TOROMONT CAT	CANADA	STONEY CREEK	ONTARIO	1 (905) 561-5901 GENERAL INFO
TOROMONT CAT	CANADA	SUDBURY	ONTARIO	1 (705) 688-7172 AFTER HOURS
TOROMONT CAT	CANADA	THUNDER BAY	ONTARIO	1 (807) 475-7535 GENERAL INFO
TOROMONT CAT	CANADA	TIMMINS	ONTARIO	1 (705) 268-9900 GENERAL INFO
BATTLEFIELD EQUIPMENT RENTALS	CANADA	TORONTO	ONTARIO	1 (416) 406-5778 GENERAL INFO
BATTLEFIELD EQUIPMENT RENTALS	CANADA	TRENTON	ONTARIO	1 (613) 392-9278 GENERAL INFO
BATTLEFIELD EQUIPMENT RENTALS	CANADA	WATERLOO	ONTARIO	1 (519) 725-2888 GENERAL INFO
BATTLEFIELD EQUIPMENT RENTALS	CANADA	WINDSOR	ONTARIO	1 (519) 974-1386 GENERAL INFO
BATTLEFIELD EQUIPMENT RENTALS	CANADA	WOODSTOCK	ONTARIO	1 (519) 421-0501 GENERAL INFO
ATLANTIC TRACTORS & EQUIPMENT	CANADA	CHARLOTTETOWN	PRINCE EDWARD ISLAND	1 (902) 468-0581 EMERGENCY
LOCATION HEWITT INC.	CANADA	CHARLOTTETOWN	PRINCE EDWARD ISLAND	1 (902) 566-5077 GENERAL INFO
LOCATION HEWITT INC.	CANADA	CHARLOTTETOWN	PRINCE EDWARD ISLAND	1 (902) 894-7368 GENERAL INFO
LOCATION HEWITT INC.	CANADA	SUMMERSIDE	PRINCE EDWARD ISLAND	1 (902) 888-4333 GENERAL INFO
HEWITT EQUIPMENT LIMITEE	CANADA	BAIE COMEAU	QUEBEC	1 (418) 296-3003 GENERAL INFO
LOCATION HEWITT INC.	CANADA	BAIE-COMEAU	QUEBEC	1 (418) 296-4631 GENERAL INFO
HEWITT EQUIPMENT LIMITEE	CANADA	CHICOUTIMI	QUEBEC	1 (418) 545-1560 GENERAL INFO
LOCATION HEWITT INC.	CANADA	CHICOUTIMI	QUEBEC	1 (418) 545-0496 GENERAL INFO
HEWITT EQUIPMENT LIMITEE	CANADA	HULL	QUEBEC	1 (819) 770-1601 GENERAL INFO
LOCATION HEWITT INC.	CANADA	HULL	QUEBEC	1 (819) 7788002 GENERAL INFO
HEWITT EQUIPEMENT LIMITEE	CANADA	POINTE CLAIRE	QUEBEC	1 (514) 630-3198 AFTER HOURS
HEWITT EQUIPMENT LIMITEE	CANADA	POINTE CLAIRE	QUEBEC	1 (514) 630-3198 AFTER HOURS
LOCATION HEWITT INC.	CANADA	POINTE CLAIRE	QUEBEC	1 (514) 352-6121 GENERAL INFO

Table 1. Caterpillar Dealers - Continued.

Dealer Name	Country	City	State/Province/Region	Phone
LOCATION HEWITT INC.	CANADA	POINTE CLAIRE	QUEBEC	1 (514) 620-1775 GENERAL INFO
HEWITT EQUIPMENT LIMITEE	CANADA	SEPT ILES	QUEBEC	1 (418) 962-7791 GENERAL INFO
LOCATION HEWITT INC.	CANADA	SEPT-ILES	QUEBEC	1 (418) 964-1200 GENERAL INFO
HEWITT EQUIPMENT LIMITEE	CANADA	ST AUGUSTIN DE DESMAURES	QUEBEC	1 (418) 878-3000 GENERAL INFO
HEWITT EQUIPMENT LIMITEE	CANADA	ST HUBERT	QUEBEC	1 (450) 678-6091 GENERAL INFO
LOCATION HEWITT INC.	CANADA	STE-ROSE	QUEBEC	1 (450) 624-1800 GENERAL INFO
HEWITT EQUIPMENT LIMITEE	CANADA	TROIS RIVIERES OUEST	QUEBEC	1 (819) 371-1005 GENERAL INFO
HEWITT EQUIPMENT LIMITEE	CANADA	VAL D'OR	QUEBEC	1 (819) 825-5494 GENERAL INFO
KRAMER LTD.	CANADA	ESTEVAN	SASKATCHEWAN	1 (306) 634-3311 GENERAL INFO
KRAMER LTD.	CANADA	KINDERSLEY	SASKATCHEWAN	1 (306) 463-3797 GENERAL INFO
KRAMER LTD.	CANADA	REGINA	SASKATCHEWAN	1 (306) 545-3311 GENERAL INFO
KRAMER LTD.	CANADA	SASKATOON	SASKATCHEWAN	1 (306) 382-3550 GENERAL INFO
KRAMER LTD.	CANADA	SWIFT CURRENT	SASKATCHEWAN	1 (306) 773-3240 GENERAL INFO
KRAMER LTD.	CANADA	TISDALE	SASKATCHEWAN	1 (306) 873-3460 AFTER HOURS
FINNING (CANADA)	CANADA	WHITEHORSE	YUKON TERRITORY	1 (867) 668-4800 GENERAL INFO
MACHINERY & ENERGY LIMITED	CAYMAN ISLANDS	SAVANNAH	GRAND CAYMAN I.	1 (345) 949-0333 GENERAL INFO
S.H.O. CENTRAFRIQUE	CENT. AFR. REP.	BANGUI	BANGUI COMMUNE	236 (61) 4800 GENERAL INFO
S.H.O. TCHAD	CHAD	N'DJAMENA	CHARI-BARGUIRMI PREFECTURE	235 () 51.41.71 GENERAL INFO
FINNING CHILE S.A.	CHILE	ANTOFAGASTA	ANTOFAGASTA REGION	56 (55) 200-800 GENERAL INFO
FINNING CHILE S.A.	CHILE	CALAMA	ANTOFAGASTA REGION	56 (55) 330-113 GENERAL INFO
FINNING CHILE S.A.	CHILE	COPIAPO	ATACAMA REGION	56 (52) 21-7090 GENERAL INFO
FINNING CHILE S.A.	CHILE	CONCEPCION	BIO-BIO REGION	56 (41) 261-700 GENERAL INFO
FINNING CHILE S.A.	CHILE	COQUIMBO	COQUIMBO REGION	56 (51) 209-300 GENERAL INFO
FINNING CHILE S.A.	CHILE	PUERTO MONTT	LOS LAGOS REGION	56 (65) 268-698 GENERAL INFO

Table 1. Caterpillar Dealers - Continued.

Dealer Name	Country	City	State/Province/Region	Phone
FINNING CHILE S.A.	CHILE	VALDIVIA	LOS LAGOS REGION	56 (63) 21-3648 GENERAL INFO
FINNING CHILE S.A.	CHILE	PUNTA ARENAS	MAGALLANES Y ANTARTICA CHILENA REGION	56 (61) 213-123 GENERAL INFO
FINNING CHILE S.A.	CHILE	SANTIAGO	REGION METROPOLITANA DE SANTIAGO REGION	56 (2) 679-7000 GENERAL INFO
FINNING CHILE S.A.	CHILE	IQUIQUE	TARAPACA REGION	56 (57) 42-5557 GENERAL INFO
FINNING CHILE S.A.	CHILE	POZO ALMONTE	TARAPACA REGION	56 (57) 751-600 GENERAL INFO
FINNING CHILE S.A.	CHILE	VALPARAISO	VALPARAISO REGION (ACONCAGUA)	56 (32) 25-1067 GENERAL INFO
LEI SHING HONG MACHINERY LTD.	CHINA	HEFEI	ANHUI SHENG	86 (551) 424-2513 GENERAL INFO
WESTRAC (BEIJING) MACHINERY	CHINA	BEIJING	BEIJING SHI	86 (10) 6747-7799 GENERAL INFO
XIAMEN SIME DARBY CEL	CHINA	FUZHOU	FUJIAN SHENG	86 (591) 8744-6980 GENERAL INFO
XIAMEN SIME DARBY CEL	CHINA	XIAMEN	FUJIAN SHENG	86 (592) 562-5456 GENERAL INFO
GANSU ECI-METRO ENGINEERING	CHINA	LANZHOU	GANSU SHENG	86 (931) 2501-833 GENERAL INFO
GANSU ECI-METRO ENGINEERING	CHINA	YINCHUAN	GANSU SHENG	86 (951) 673-3215 GENERAL INFO
FOSHAN SHUNDE CEL MACHINERY CO	CHINA	GUANGZHOU	GUANGDONG SHENG	86 (20) 3863 7290 GENERAL INFO
FOSHAN SHUNDE CEL MACHINERY CO	CHINA	GUANGZHOU	GUANGDONG SHENG	86 (20) 8436-0644 GENERAL INFO
FOSHAN SHUNDE CEL MACHINERY	CHINA	SHUNDE	GUANGDONG SHENG	86 (757) 2633-0868 GENERAL INFO
FOSHAN SHUNDE CEL MACHINERY CO	CHINA	NANNING	GUANGXI ZIZHIQU	86 (771) 5642-760 GENERAL INFO
GUIZHOU ECI-METRO ENGINEERING	CHINA	GUIYANG	GUIZHOU SHENG	86 (851) 471-8340 FINANCE
FOSHAN SHUNDE CEL MACHINERY CO	CHINA	HAIKOU	HAIHAN SHENG	86 (898) 6675-1390 GENERAL INFO
LIAONING WESTRAC MACHINERY	CHINA	SHIJIAZHUANG	HEBEI SHENG	86 (311) 561-6548 GENERAL INFO
WESTRAC (CHINA) MACHINERY	CHINA	TANGSHAN	HEBEI SHENG	86 (315) 550 8500 GENERAL INFO
WESTRAC CHINA LIMITED	CHINA	HARBIN	HEILONGJIANG SHENG	86 (451) 8242 5511 GENERAL INFO
LEI SHING HONG MACHINERY	CHINA	NANYANG	HENAN SHENG	86 (0377) 352 9916 GENERAL INFO
LEI SHING HONG MACHINERY LTD.	CHINA	ZHENGZHOU	HENAN SHENG	86 (371) 561-5931 GENERAL INFO
WESTRAC CHINA LIMITED	CHINA	WAN CHAI	HONG KONG ISLAND	86 (755) 369-3612 GENERAL INFO

Table 1. Caterpillar Dealers - Continued.

Dealer Name	Country	City	State/Province/Region	Phone
LEI SHING HONG MACHINERY	CHINA	WUHAN	HUBEI SHENG	86 (27) 6189 5022 GENERAL INFO
LEI SHING HONG MACHINERY	CHINA	YICHANG	HUBEI SHENG	86 (717) 756-1415 GENERAL INFO
FOSHAN SHUNDE CEL MACHINERY CO	CHINA	CHANGSHA	HUNAN SHENG	86 (731) 501-3701 GENERAL INFO
LEI SHING HONG MACHINERY	CHINA	HUZHOU	JIANGSU SHENG	86 (0572) 226 6055 GENERAL INFO
LEI SHING HONG MACHINERY	CHINA	KUNSHAN	JIANGSU SHENG	86 (512) 5766-3168 GENERAL INFO
LEI SHING HONG MACHINERY	CHINA	NANJING	JIANGSU SHENG	86 (25) 661-1497 GENERAL INFO
LEI SHING HONG MACHINERY	CHINA	TAIZHOU	JIANGSU SHENG	86 (0576) 246 3680 GENERAL INFO
LEI SHING HONG MACHINERY	CHINA	WUXI	JIANGSU SHENG	86 (0510) 8820 4241 GENERAL INFO
LEI SHING HONG MACHINERY LTD.	CHINA	XUZHOU	JIANGSU SHENG	86 (516) 8776 2129 GENERAL INFO
XIAMEN SIME DARBY CEL	CHINA	NANCHANG	JIANGXI SHENG	86 (791) 385-5730 GENERAL INFO
LIAONING WESTRAC MACHINERY	CHINA	CHANGCHUN	JILIN SHENG	86 (431) 469-0311 GENERAL INFO
LIAONING WESTRAC MACHINERY	CHINA	ANSHAN	LIAONING SHENG	86 (412) 241 5000 GENERAL INFO
LIAONING WESTRAC MACHINERY	CHINA	SHENYANG	LIAONING SHENG	86 (24) 8845-1770 GENERAL INFO
LIAONING WESTRAC MACHINERY	CHINA	BAOTOU	NEI MONGOL ZIZHIQU	86 (472) 313-5601 GENERAL INFO
QINGHAI ECI-METRO ENGINEERING	CHINA	GERLMU	QINGHAI SHENG	86 (979) 846-4573 GENERAL INFO
QINHAI ECI-METRO ENGINEERING	CHINA	XINING	QINGHAI SHENG	86 (971) 522-4986 GENERAL INFO
SHAANXI ECI-METRO ENGINEERING	CHINA	XIAN	SHAANXI SHENG	86 (29) 4521-914 GENERAL INFO
LEI SHING HONG MACHINERY	CHINA	JINAN	SHANDONG SHENG	86 (531) 8685-448 GENERAL INFO
LEI SHING HONG MACHINERY	CHINA	JINING	SHANDONG SHENG	86 (0537) 208 3366 GENERAL INFO
LEI SHING HONG MACHINERY	CHINA	LINYI	SHANDONG SHENG	86 (0539) 808 5501 GENERAL INFO
LEI SHING HONG MACHINERY	CHINA	QINGDAO	SHANDONG SHENG	86 (532) 5640-290 GENERAL INFO
LEI SHING HONG MACHINERY	CHINA	PUDONG	SHANGHAI SHI	86 (21) 5048-0051 GENERAL INFO
LEI SHING HONG MACHINERY LTD.	CHINA	SHANGHAI	SHANGHAI SHI	66 (21) 5449 0990 GENERAL INFO
ASIMCO INTERNATIONAL CASTING	CHINA	JIANG XIAN	SHANXI SHENG	86 (10) 6438 2663 GENERAL INFO

Table 1. Caterpillar Dealers - Continued.

Dealer Name	Country	City	State/Province/Region	Phone
LIAONING WESTRAC MACHINERY	CHINA	JINCHENG	SHANXI SHENG	86 (356) 206-1855 GENERAL INFO
LIAONING WESTRAC MACHINERY	CHINA	TAI YUAN	SHANXI SHENG	86 (351) 712 9856 GENERAL INFO
SICHUAN ECI-METRO ENGINEERING	CHINA	CHENGDU	SICHUAN SHENG	86 (28) 8575-4830 FINANCE
SICHUAN ECI-METRO ENGINEERING	CHINA	CHONGQING	SICHUAN SHENG	86 (23) 6885-1681 ENGINES
ASIA POWER SYSTEMS (TIANJIN)	CHINA	TANGGU	TIANJIN SHI	86 (22) 2576-0808 GENERAL INFO
ASIATRAK (TIANJIN) LTD.	CHINA	TANGGU	TIANJIN SHI	86 (22) 2352 4806 GENERAL INFO
TIANJIN WESTRAC MACHINERY	CHINA	TIANJIN	TIANJIN SHI	86 (22) 2391 7717 GENERAL INFO
WESTRAC (CHINA) MACHINERY	CHINA	TIANJIN	TIANJIN SHI	86 (22) 2576 0099 GENERAL INFO
SICHUAN ECI-METRO ENGINEERING	CHINA	LHASA	TIBET (XIZANG ZIZHIQU)	86 (891) 686-6086 GENERAL INFO
XIAMEN SIME DARBY CEL	CHINA	URUMQI	XINJIANG UYGUR ZIZHIQU	86 (991) 384-0026 GENERAL INFO
YUNNAN ECI-METRO ENGINEERING	CHINA	DALI	YUNNAN SHENG	86 (872) 219-5183 GENERAL INFO
YUNNAN ECI-METRO ENGINEERING	CHINA	KUNMING	YUNNAN SHENG	86 (871) 727-4917 ENGINES
LEI SHING HONG MACHINERY LTD.	CHINA	JINHUA	ZHEJIANG SHENG	86 (579) 234-6087 GENERAL INFO
LEI SHING HONG MACHINERY	CHINA	NINGBO	ZHEJIANG SHENG	86 (574) 8750-0754 GENERAL INFO
LEI SHING HONG MACHINERY LTD.	CHINA	SHANGHAI		86 (21) 6212-1000 GENERAL INFO
GENERAL DE EQUIPOS DE COLOMBIA	COLOMBIA	MEDELLIN	ANTIOQUIA DEPARTAMENTO	57 (4) 265-5200 GENERAL INFO
GENERAL DE EQUIPOS DE COLOMBIA	COLOMBIA	BARRANQUILLA	ATLANTICO DEPARTAMENTO	57 (5) 358-1490 GENERAL INFO
GENERAL DE EQUIPOS DE COLOMBIA	COLOMBIA	BARRANQUILLA	ATLANTICO DEPARTAMENTO	57 (5) 378-0157 GENERAL INFO
GENERAL DE EQUIPOS DE COLOMBIA	COLOMBIA	CARTAGENA	BOLIVAR DEPARTAMENTO	57 (56) 68 66 01 GENERAL INFO
GENERAL DE EQUIPOS DE COLOMBIA	COLOMBIA	CARTAGENA	BOLIVAR DEPARTAMENTO	57 (56) 63 26 74 GENERAL INFO
GENERAL DE EQUIPOS DE COLOMBIA	COLOMBIA	SANTA FE DE BOGOTA	DISTRITO ESPECIAL	57 (1) 368-3900 GENERAL INFO
GENERAL DE EQUIPOS DE COLOMBIA	COLOMBIA	CERREJON	LA GUAJIRA DEPARTAMENTO	57 (53) 50 58 67 GENERAL INFO
GENERAL DE EQUIPOS DE COLOMBIA	COLOMBIA	CUCUTA	NORTE DE SANTANDER DEPARTAMENTO	57 (75) 71 40 85 GENERAL INFO
GENERAL DE EQUIPOS DE COLOMBIA	COLOMBIA	BUCARAMANGA	SANTANDER DEPARTAMENTO	57 (7) 634-5582 GENERAL INFO

Table 1. Caterpillar Dealers - Continued.

Dealer Name	Country	City	State/Province/Region	Phone
GENERAL DE EQUIPOS DE COLOMBIA	COLOMBIA	CALI	VALLE DEL CAUCA DEPARTAMENTO	57 (2) 882-2030 GENERAL INFO
GENERAL DE EQUIPOS DE COLOMBIA	COLOMBIA	CALI	VALLE DEL CAUCA DEPARTAMENTO	57 (2) 664-4718 GENERAL INFO
HENRI FRAISE FILS & CIE	COMOROS	MORONI	GREAT COMORO I.	269 () 61.32.76 GENERAL INFO
S.H.O. CONGO	CONGO	POINTE-NOIRE	KOUILOU REGION	242 () 94.09.58 GENERAL INFO
TRACTAFRIC CONGO S.P.R.L.	CONGO DEM REP.	KINSHASA	FEDERAL DISTRICT	243 (98) 16.62.44 GENERAL INFO
MAQUINARIA Y TRACTORES, LTDA.	COSTA RICA	SANTA ANA	SAN JOSE PROVINCIA	506 () 205-0000 GENERAL INFO
MAQUINARIA Y TRACTORES, LTDA.	COSTA RICA	SANTA ANA	SAN JOSE PROVINCIA	506 () 661-0461 GENERAL INFO
MAQUINARIA Y TRACTORES, LTDA.	COSTA RICA	SANTA ANA	SAN JOSE PROVINCIA	506 () 798-4701 GENERAL INFO
MAQUINARIA Y TRACTORES, LTDA.	COSTA RICA	SANTA ANA	SAN JOSE PROVINCIA	506 () 666-2422 GENERAL INFO
MAQUINARIA Y TRACTORES, LTDA.	COSTA RICA	SANTA ANA	SAN JOSE PROVINCIA	506 () 771-0200 GENERAL INFO
MAQUINARIA Y TRACTORES, LTDA.	COSTA RICA	SANTA ANA	SAN JOSE PROVINCIA	506 () 460-1485 GENERAL INFO
MAQUINARIA Y TRACTORES, LTDA.	COSTA RICA	SANTA ANA	SAN JOSE PROVINCIA	506 () 573-8880 GENERAL INFO
MANUTENTION AFRICAINE	COTE D'IVOIRE	ABIDJAN	ABIDJAN DEPARTEMENT	225 () 23 53 55 80 GENERAL INFO
MANUTENTION AFRICAINE	COTE D'IVOIRE	ABIDJAN	ABIDJAN DEPARTEMENT	225 () 21 26 20 09 GENERAL INFO
CONTEK D.O.O.	CROATIA	JURDANI	HRVATSKA REPUBLIKA	385 (51) 332 559 GENERAL INFO
CONTEK D.O.O.	CROATIA	OSIJEK	HRVATSKA REPUBLIKA	385 (31) 297 180 GENERAL INFO
CONTEK D.O.O.	CROATIA	SOLIN	HRVATSKA REPUBLIKA	385 (21) 217 944 GENERAL INFO
CONTEK D.O.O.	CROATIA	ZAGREB	HRVATSKA REPUBLIKA	385 (1) 2404 611 GENERAL INFO
TEKNOXGROUP SA	CROATIA	LUGANO	TICINO CANTON	385 (1) 2404 611 GENERAL INFO
CYPRUS TRADING CORPORATION	CYPRUS	LIMASSOL	LIMASSOL DISTRICT	357 (25) 338 554 GENERAL INFO
CYPRUS TRADING CORPORATION	CYPRUS	NICOSIA	NICOSIA DISTRICT	357 (22) 740 500 GENERAL INFO
PHOENIX-ZEPPELIN SPOL.S R.O.	CZECH REPUBLIC	BRNO	CZECH REPUBLIC	420 (5) 43245880 GENERAL INFO
PHOENIX-ZEPPELIN SPOL.S R.O.	CZECH REPUBLIC	CESKE BUDEJOVICE	CZECH REPUBLIC	420 (60) 219 2073 GENERAL INFO
PHOENIX-ZEPPELIN SPOL.S R.O.	CZECH REPUBLIC	HAVIROV	CZECH REPUBLIC	420 (69) 6440587 GENERAL INFO

Table 1. Caterpillar Dealers - Continued.

Dealer Name	Country	City	State/Province/Region	Phone
PHOENIX-ZEPPELIN SPOL.S R.O.	CZECH REPUBLIC	JINDRICHUV HRADEC	CZECH REPUBLIC	420 (331) 321224 GENERAL INFO
PHOENIX-ZEPPELIN SPOL.S R.O.	CZECH REPUBLIC	MODLETICE	CZECH REPUBLIC	420 (2) 660153339 ENGINES
PHOENIX-ZEPPELIN SPOL.S.R.O.	CZECH REPUBLIC	MODLETICE	CZECH REPUBLIC	420 (2) 66015444 GENERAL INFO
PHOENIX-ZEPPELIN SPOL.S R.O.	CZECH REPUBLIC	MOST	CZECH REPUBLIC	420 (35) 20608 GENERAL INFO
PHOENIX-ZEPPELIN SPOL.S R.O.	CZECH REPUBLIC	PLZEN	CZECH REPUBLIC	420 (19) 7470320 GENERAL INFO
PHOENIX-ZEPPELIN SPOL.S R.O.	CZECH REPUBLIC	SOKOLOV	CZECH REPUBLIC	420 (168) 312159 GENERAL INFO
PON EQUIPMENT A/S	DENMARK	AARHUS N	ARHUS AMT	45 (70) 25 44 11 GENERAL INFO
PON EQUIPMENT A/S	DENMARK	BRONDBY	KOBENHAVN AMT	45 (70) 25 22 11 GENERAL INFO
PON POWER A/S	DENMARK	ESBJERG	RIBE AMT	45 (76) 14 64 00 GENERAL INFO
CRAMO A/S (DK)	DENMARK	SOLLENTUNA	STOCKHOLM LAN	45 (98) 10 30 11 GENERAL INFO
CRAMO A/S (DK)	DENMARK	SOLLENTUNA	STOCKHOLM LAN	45 (43) 63 01 00 GENERAL INFO
CRAMO A/S (DK)	DENMARK	SOLLENTUNA	STOCKHOLM LAN	45 (48) 22 01 11 GENERAL INFO
CRAMO A/S (DK)	DENMARK	SOLLENTUNA	STOCKHOLM LAN	45 (98) 92 41 55 GENERAL INFO
CRAMO A/S (DK)	DENMARK	SOLLENTUNA	STOCKHOLM LAN	45 (55) 56 25 11 GENERAL INFO
CRAMO A/S (DK)	DENMARK	SOLLENTUNA	STOCKHOLM LAN	45 (33) 23 11 11 GENERAL INFO
CRAMO A/S (DK)	DENMARK	SOLLENTUNA	STOCKHOLM LAN	45 (56) 63 01 55 GENERAL INFO
CRAMO A/S (DK)	DENMARK	SOLLENTUNA	STOCKHOLM LAN	45 (54) 82 25 11 GENERAL INFO
CRAMO A/S (DK)	DENMARK	SOLLENTUNA	STOCKHOLM LAN	45 (57) 61 14 44 GENERAL INFO
CRAMO A/S (DK)	DENMARK	SOLLENTUNA	STOCKHOLM LAN	45 (75) 94 18 11 GENERAL INFO
CRAMO A/S (DK)	DENMARK	SOLLENTUNA	STOCKHOLM LAN	45 (86) 78 78 00 GENERAL INFO
ANCIENS COMPTOIRS RIES	DJIBOUTI	DJIBOUTI	DJIBOUTI CERCLE	253 () 35.11.67 GENERAL INFO
IMCA THE CAT RENTAL STORE	DOMINICAN REP.	SANTO DOMINGO	DISTRICTO NACIONAL	1 (809) 560-4622 GENERAL INFO
IMPLEMENTOS Y MAQUINARIAS	DOMINICAN REP.	SANTO DOMINGO	DISTRICTO NACIONAL	1 (809) 560-4622 GENERAL INFO
IMPORTADORA INDUSTRIAL	ECUADOR	CUENCA	AZUAY PROVINCIA	593 (7) 866-050 GENERAL INFO

Table 1. Caterpillar Dealers - Continued.

Dealer Name	Country	City	State/Province/Region	Phone
IMPORTADORA INDUSTRIAL	ECUADOR	GUAYAQUIL	GUAYAS PROVINCIA	593 (4) 223-7000 GENERAL INFO
IMPORTADORA INDUSTRIAL	ECUADOR	GUAYAQUIL	GUAYAS PROVINCIA	593 (4) 223-7000 GENERAL INFO
IMPORTADORA INDUSTRIAL	ECUADOR	PORTOVIEJO	MANABI PROVINCIA	593 (4) 223-7000 GENERAL INFO
IMPORTADORA INDUSTRIAL	ECUADOR	QUITO	PICHINCHA PROVINCIA	593 (2) 470-882 GENERAL INFO
IMPORTADORA INDUSTRIAL	ECUADOR	QUITO	PICHINCHA PROVINCIA	593 (4) 223-7000 GENERAL INFO
IMPORTADORA INDUSTRIAL	ECUADOR	NUEVA LOJA	SUCUMBIOS PROVINCIA	593 (4) 223-7000 GENERAL INFO
IMPORTADORA INDUSTRIAL	ECUADOR	NUEVA LOJA	SUCUMBIOS PROVINCIA	593 (4) 223-7000 GENERAL INFO
IMPORTADORA INDUSTRIAL	ECUADOR	AMBATO	TUNGURAHUA PROVINCIA	593 (4) 223-7000 GENERAL INFO
IMPORTADORA INDUSTRIAL	ECUADOR	PUERTO FRANCISCO DE ORELLANA		593 (4) 223-7000 GENERAL INFO
IMPORTADORA INDUSTRIAL	ECUADOR	SANTO DOMINGO DE LOS COLORADOS		593 (4) 223-7000 GENERAL INFO
UNATRAC INTERNATIONAL	EGYPT	GIZA	AL JIZAH MUHAFAZAH	20 (2) 303-9640 GENERAL INFO
MANTRAC	EGYPT	ALEXANDRIA	ISKANDARIYAH MUHAFAZAH	20 (3) 448 10 43 GENERAL INFO
UNATRAC INTERNATIONAL	EGYPT	ALEXANDRIA	ISKANDARIYAH MUHAFAZAH	1 (4) 297-0709 GENERAL INFO
COMPANIA GENERAL DE EQUIPOS	EL SALVADOR	SAN SALVADOR	SAN SALVADOR DEPARTAMENTO	(503) 223-2323 GENERAL INFO
COMPANIA GENERAL DE EQUIPOS	EL SALVADOR	SAN SALVADOR	SAN SALVADOR DEPARTAMENTO	(503) 451-3132 GENERAL INFO
COMPANIA GENERAL DE EQUIPOS	EL SALVADOR	SAN SALVADOR	SAN SALVADOR DEPARTAMENTO	(503) 669-5582 GENERAL INFO
COMPANIA GENERAL DE EQUIPOS	EL SALVADOR	SAN SALVADOR	SAN SALVADOR DEPARTAMENTO	(503) 440-2638 GENERAL INFO
ERITREA EQUIPMENT P.L.C.	ERITREA	ASMARA	ERITREA AKABABEE	291 (1) 188802 GENERAL INFO
WIHURI AS	ESTONIA	TABASALU	HARJUMAA	(372) 603 24 13 GENERAL INFO
AS EHITUSLAENUTUS (EST)	ESTONIA	SOLLENTUNA	STOCKHOLM LAN	45 (372) 33 72 633 GENERAL INFO
AS EHITUSLAENUTUS (EST)	ESTONIA	SOLLENTUNA	STOCKHOLM LAN	45 (372) 44 77 360 GENERAL INFO
AS EHITUSLAENUTUS (EST)	ESTONIA	SOLLENTUNA	STOCKHOLM LAN	45 (372) 32 23 022 GENERAL INFO
AS EHITUSLAENUTUS (EST)	ESTONIA	SOLLENTUNA	STOCKHOLM LAN	45 (372) 7 306 090 GENERAL INFO
AS EHITUSTOORIIST (EST)	ESTONIA	SOLLENTUNA	STOCKHOLM LAN	45 (372) 6 830 800 GENERAL INFO

Table 1. Caterpillar Dealers - Continued.

Dealer Name	Country	City	State/Province/Region	Phone
AS EHITUSTOORIIST (EST)	ESTONIA	SOLLENTUNA	STOCKHOLM LAN	45 (372) 6 212 396 GENERAL INFO
CRAMO BALTIC	ESTONIA	SOLLENTUNA	STOCKHOLM LAN	37 (273) 6 26 11 GENERAL INFO
CRAMO BALTIC	ESTONIA	SOLLENTUNA	STOCKHOLM LAN	37 (278) 64 742 GENERAL INFO
CRAMO BALTIC	ESTONIA	SOLLENTUNA	STOCKHOLM LAN	37 (276) 71 162 GENERAL INFO
CRAMO BALTIC	ESTONIA	SOLLENTUNA	STOCKHOLM LAN	37 (243) 33 396 GENERAL INFO
CRAMO BALTIC	ESTONIA	SOLLENTUNA	STOCKHOLM LAN	37 (245) 38 792 GENERAL INFO
RIES ENGINEERING SHARE CO.	ETHIOPIA	ADDIS ABABA	ADDIS ABABA AKABABEE	251 (1) 42.11.33 GENERAL INFO
CARPTRAC	FIJI	LAMBASA	VANUA LEVU I.	679 () 811868 GENERAL INFO
CARPTRAC	FIJI	LAUTOKA	VITI LEVU I.	679 () 661877 GENERAL INFO
CARPTRAC	FIJI	SUVA	VITI LEVU I.	679 () 331 3644 GENERAL INFO
WIHURI OY WITRAKTOR	FINLAND	LEMPAALA	HAME LAANI	358 (3) 3670-200 GENERAL INFO
WIHURI OY WITRAKTOR	FINLAND	VUORELA	KUOPIO LAANI	358 (1) 261 4611 GENERAL INFO
WIHURI OY WITRAKTOR	FINLAND	OULU	OULU LAANI	358 (8) 466 5970 GENERAL INFO
HELSINGIN KONE-PEKKA OY (SF)	FINLAND	SOLLENTUNA	STOCKHOLM LAN	358 (9) 819 42 00 GENERAL INFO
HELSINGIN KONE-PEKKA OY (SF)	FINLAND	SOLLENTUNA	STOCKHOLM LAN	358 (9) 350 76 10 GENERAL INFO
VUOKRAMESTARIT OY	FINLAND	SOLLENTUNA	STOCKHOLM LAN	358 (9) 855 3360 GENERAL INFO
VUOKRAMESTARIT OY	FINLAND	SOLLENTUNA	STOCKHOLM LAN	358 (3) 612 0975 GENERAL INFO
VUOKRAMESTARIT OY	FINLAND	SOLLENTUNA	STOCKHOLM LAN	358 (9) 868 33 110 GENERAL INFO
VUOKRAMESTARIT OY	FINLAND	SOLLENTUNA	STOCKHOLM LAN	358 (19) 454 900 GENERAL INFO
VUOKRAMESTARIT OY	FINLAND	SOLLENTUNA	STOCKHOLM LAN	358 (9) 283 064 GENERAL INFO
VUOKRAMESTARIT OY	FINLAND	SOLLENTUNA	STOCKHOLM LAN	358 (2) 641 7666 GENERAL INFO
VUOKRAMESTARIT OY	FINLAND	SOLLENTUNA	STOCKHOLM LAN	358 (2) 865 4666 GENERAL INFO
VUOKRAMESTARIT OY	FINLAND	SOLLENTUNA	STOCKHOLM LAN	358 (19) 722 925 GENERAL INFO
VUOKRAMESTARIT OY	FINLAND	SOLLENTUNA	STOCKHOLM LAN	358 (3) 318 4177 GENERAL INFO

Table 1. Caterpillar Dealers - Continued.

Dealer Name	Country	City	State/Province/Region	Phone
VUOKRAMESTARIT OY	FINLAND	SOLLENTUNA	STOCKHOLM LAN	358 (2) 232 0666 GENERAL INFO
WIHURI OY WITRAKTOR	FINLAND	VANTAA	UUSIMAA LAANI	358 (9) 415 815 GENERAL INFO
WIHURI OY WITRAKTOR	FINLAND	VANTAA	UUSIMAA LAANI	358 (9) 415 815 GENERAL INFO
WIHURI OY WITRAKTOR	FINLAND	HELSINGBY	VAASA LAANI	358 (6) 344 4766 GENERAL INFO
BERGERAT MONNOYEUR S.A.S.	FRANCE	VENDENHEIM	ALSACE REGION	33 (3) 88.19.06.17 GENERAL INFO
BERGERAT MONNOYEUR S.A.S.	FRANCE	WITTELSHEIM	ALSACE REGION	33 (3) 89.57.81.81 GENERAL INFO
ENERGYST CAT RENTAL POWER	FRANCE	BLANQUEFORT	AQUITAINE REGION	33 (5) 56 35 76 20 GENERAL INFO
BERGERAT MONNOYEUR S.A.S.	FRANCE	BON ENCONTRE	AQUITAINE REGION	33 (5) 53.96.38.69 GENERAL INFO
J.A. DELMAS EXPORT S.A.	FRANCE	BORDEAUX	AQUITAINE REGION	33 (556) 79 62 00 GENERAL INFO
J.A. DELMAS EXPORT S.A.	FRANCE	BORDEAUX	AQUITAINE REGION	33 (556) 79 62 00 GENERAL INFO
J.A. DELMAS EXPORT S.A.	FRANCE	BORDEAUX	AQUITAINE REGION	33 (556) 79 62 00 GENERAL INFO
J.A. DELMAS EXPORT S.A.	FRANCE	BORDEAUX	AQUITAINE REGION	33 (556) 79 62 00 GENERAL INFO
J.A. DELMAS EXPORT S.A.	FRANCE	BORDEAUX	AQUITAINE REGION	33 (556) 79 62 00 GENERAL INFO
J.A. DELMAS EXPORT S.A.	FRANCE	BORDEAUX	AQUITAINE REGION	33 (556) 79 62 00 GENERAL INFO
J.A. DELMAS EXPORT S.A.	FRANCE	BORDEAUX	AQUITAINE REGION	33 (556) 79 62 00 GENERAL INFO
J.A. DELMAS EXPORT S.A.	FRANCE	BORDEAUX	AQUITAINE REGION	33 (556) 79 62 00 GENERAL INFO
J.A. DELMAS EXPORT S.A.	FRANCE	BORDEAUX	AQUITAINE REGION	33 (556) 79 62 00 GENERAL INFO
J.A. DELMAS EXPORT S.A.	FRANCE	BORDEAUX	AQUITAINE REGION	33 (556) 79 62 00 GENERAL INFO
J.A. DELMAS EXPORT S.A.	FRANCE	BORDEAUX	AQUITAINE REGION	33 (556) 79 62 00 GENERAL INFO
BERGERAT MONNOYEUR T.P.	FRANCE	LONS	AQUITAINE REGION	33 (5) 59.32.50.93 GENERAL INFO
BERGERAT MONNOYEUR S.A.S.	FRANCE	ST. MEDARD EN JALLES	AQUITAINE REGION	33 (5) 56.70.70.70 GENERAL INFO
BERGERAT MONNOYEUR S.A.S.	FRANCE	CEBAZAT	AUVERGNE REGION	33 (4) 73.25.82.82 GENERAL INFO
BERGERAT MONNOYEUR S.A.S.	FRANCE	AGNEAUX	BASSE-NORMANDIE REGION	33 (2) 33.06.09.33 GENERAL INFO
BERGERAT MONNOYEUR S.A.S.	FRANCE	CARPIQUET	BASSE-NORMANDIE REGION	33 (2) 31.26.66.30 GENERAL INFO

Table 1. Caterpillar Dealers - Continued.

Dealer Name	Country	City	State/Province/Region	Phone
BERGERAT MONNOYEUR S.A.S.	FRANCE	GIBERVILLE	BASSE-NORMANDIE REGION	33 (2) 31.72.06.27 GENERAL INFO
BERGERAT MONNOYEUR S.A.S.	FRANCE	HERMIVAL LES VAUX	BASSE-NORMANDIE REGION	33 (2) 31.32.57.66 GENERAL INFO
BERGERAT MONNOYEUR S.A.S.	FRANCE	TOURLAVILLE	BASSE-NORMANDIE REGION	33 (2) 33.22.22.58 GENERAL INFO
BERGERAT MONNOYEUR S.A.S.	FRANCE	VERSON	BASSE-NORMANDIE REGION	33 (2) 31.26.16.00 GENERAL INFO
BERGERAT MONNOYEUR S.A.S.	FRANCE	CHENOVE	BOURGOGNE REGION	33 (3) 80.51.11.66 GENERAL INFO
BERGERAT MONNOYEUR S.A.S.	FRANCE	GENLIS	BOURGOGNE REGION	33 (3) 80.47.28.28 GENERAL INFO
BERGERAT MONNOYEUR S.A.S.	FRANCE	MONETEAU	BOURGOGNE REGION	33 (3) 86.40.92.50 GENERAL INFO
BERGERAT MONNOYEUR S.A.S.	FRANCE	BREST NAVAL	BRETAGNE REGION	33 (2) 98.41.87.07 GENERAL INFO
BERGERAT MONNOYEUR S.A.S.	FRANCE	CAUDAN	BRETAGNE REGION	33 (2) 97.81.06.63 GENERAL INFO
BERGERAT MONNOYEUR S.A.S.	FRANCE	FOUGERES	BRETAGNE REGION	33 (2) 99.94.08.70 GENERAL INFO
BERGERAT MONNOYEUR S.A.S.	FRANCE	NOYAL SUR VILAINE	BRETAGNE REGION	33 (2) 99.00.25.25 GENERAL INFO
BERGERAT MONNOYEUR S.A.S.	FRANCE	QUIMPER	BRETAGNE REGION	33 (2) 98.52.77.29 GENERAL INFO
BERGERAT MONNOYEUR S.A.S.	FRANCE	RENNES	BRETAGNE REGION	33 (2) 99.59.14.99 GENERAL INFO
BERGERAT MONNOYEUR S.A.S.	FRANCE	ST. LEONARD	BRETAGNE REGION	33 (3) 21.10.61.60 GENERAL INFO
BERGERAT MONNOYEUR S.A.S.	FRANCE	ST. MARCEL SAONE ET LOIRE	BRETAGNE REGION	33 (3) 85.42.91.22 GENERAL INFO
BERGERAT MONNOYEUR S.A.S.	FRANCE	VITRE	BRETAGNE REGION	33 (2) 99.74.60.02 GENERAL INFO
BERGERAT MONNOYEUR S.A.S.	FRANCE	LUANT	CENTRE REGION	33 (2) 54.36.10.25 GENERAL INFO
BERGERAT MONNOYEUR S.A.S.	FRANCE	PARCAY MESLAY	CENTRE REGION	33 (2) 47.29.09.95 GENERAL INFO
BERGERAT MONNOYEUR S.A.S.	FRANCE	ST. CYR EN VAL	CENTRE REGION	33 (2) 38.76.00.70 GENERAL INFO
BERGERAT MONNOYEUR S.A.S.	FRANCE	CHALONS EN CHAMPAGNE	CHAMPAGNE-ARDENNE REGION	33 (3) 26.70.41.96 GENERAL INFO
BERGERAT MONNOYEUR S.A.S.	FRANCE	CHALONS EN CHAMPAGNE	CHAMPAGNE-ARDENNE REGION	33 (3) 26.64.53.39 GENERAL INFO
BERGERAT MONNOYEUR S.A.S.	FRANCE	REIMS	CHAMPAGNE-ARDENNE REGION	33 (3) 26.06.24.73 GENERAL INFO
BERGERAT MONNOYEUR S.A.S.	FRANCE	BIVILLE SUR MER	HAUTE-NORMANDIE REGION	33 (2) 35.83.60.39 GENERAL INFO
BERGERAT MONNOYEUR S.A.S.	FRANCE	EU	HAUTE-NORMANDIE REGION	33 (2) 35.50.02.30 GENERAL INFO

Table 1. Caterpillar Dealers - Continued.

Dealer Name	Country	City	State/Province/Region	Phone
BERGERAT MONNOYEUR S.A.S.	FRANCE	EVREUX	HAUTE-NORMANDIE REGION	33 (2) 32.28.27.41 GENERAL INFO
BERGERAT MONNOYEUR S.A.S.	FRANCE	GAILLON	HAUTE-NORMANDIE REGION	33 (2) 32.53.55.25 GENERAL INFO
BERGERAT MONNOYEUR S.A.S.	FRANCE	GISORS	HAUTE-NORMANDIE REGION	33 (2) 32.55.39.33 GENERAL INFO
BERGERAT MONNOYEUR S.A.S.	FRANCE	GRUCHET LE VALASSE	HAUTE-NORMANDIE REGION	33 (2) 35.31.32.20 GENERAL INFO
BERGERAT MONNOYEUR S.A.S.	FRANCE	LE HAVRE	HAUTE-NORMANDIE REGION	33 (2) 35.53.02.90 GENERAL INFO
BERGERAT MONNOYEUR S.A.S.	FRANCE	NOTRE DAME DE BONDEVILLE	HAUTE-NORMANDIE REGION	33 (2) 35.76.02.98 GENERAL INFO
BERGERAT MONNOYEUR S.A.S.	FRANCE	ROUEN	HAUTE-NORMANDIE REGION	33 (2) 32.81.34.34 GENERAL INFO
BERGERAT MONNOYEUR S.A.S.	FRANCE	ST. PIERRE LES ELBEUF	HAUTE-NORMANDIE REGION	33 (2) 35.81.76.52 GENERAL INFO
BERGERAT MONNOYEUR S.A.S.	FRANCE	VAL DE REUIL	HAUTE-NORMANDIE REGION	33 (2) 32.25.16.20 GENERAL INFO
BERGERAT MONNOYEUR S.A.S.	FRANCE	ARGENTEUIL	ILE-DE-FRANCE REGION	33 (1) 39 82 67 01 GENERAL INFO
BERGERAT MONNOYEUR S.A.S.	FRANCE	BONNEUIL SUR MARNE	ILE-DE-FRANCE REGION	33 (1) 43.99.66.00 GENERAL INFO
BERGERAT MONNOYEUR S.A.S.	FRANCE	BRIE COMTE ROBERT	ILE-DE-FRANCE REGION	33 (1) 60.62.48.00 GENERAL INFO
BERGERAT MONNOYEUR T.P.	FRANCE	CHAUCONIN-NEUFMONTIER	ILE-DE-FRANCE REGION	33 (1) 64.33.93.33 GENERAL INFO
BERGERAT MONNOYEUR S.A.S.	FRANCE	GENNEVILLIERS	ILE-DE-FRANCE REGION	33 (1) 41.21.32.22 GENERAL INFO
BERGERAT MONNOYEUR S.A.S.	FRANCE	MONTLHERY	ILE-DE-FRANCE REGION	33 (1) 69.01.23.45 GENERAL INFO
ENERGYST CAT RENTAL POWER	FRANCE	MONTLHERY	ILE-DE-FRANCE REGION	33 (1) 69 80 22 60 GENERAL INFO
ENERIA S.A.S.	FRANCE	MONTLHERY	ILE-DE-FRANCE REGION	33 (1) 69.80.21.00 GENERAL INFO
ENERIA S.A.S.	FRANCE	MONTLHERY	ILE-DE-FRANCE REGION	33 (1) 69.80.21.00 GENERAL INFO
BERGERAT MONNOYEUR S.A.S.	FRANCE	PIERRELAYE	ILE-DE-FRANCE REGION	33 (1) 30 37 94 40 GENERAL INFO
BERGERAT MONNOYEUR S.A.S.	FRANCE	POINCY	ILE-DE-FRANCE REGION	33 (1) 60.01.28.88 GENERAL INFO
TRACTAFRIC BURUNDI	FRANCE	PUTEAUX	ILE-DE-FRANCE REGION	33 (1) 49.06.44.00 GENERAL INFO
TRACTAFRIC RWANDA	FRANCE	PUTEAUX	ILE-DE-FRANCE REGION	33 (1) 49.06.44.00 GENERAL INFO
TRACTAFRIC S.N.C.	FRANCE	PUTEAUX	ILE-DE-FRANCE REGION	33 (1) 49.06.44.00 GENERAL INFO
TRACTAFRIC S.N.C.	FRANCE	PUTEAUX	ILE-DE-FRANCE REGION	33 (1) 49.06.44.00 GENERAL INFO

Table 1. Caterpillar Dealers - Continued.

Dealer Name	Country	City	State/Province/Region	Phone
TRACTAFRIC S.N.C.	FRANCE	PUTEAUX	ILE-DE-FRANCE REGION	33 (1) 49.06.44.00 GENERAL INFO
TRACTAFRIC S.N.C.	FRANCE	PUTEAUX	ILE-DE-FRANCE REGION	33 (1) 49.06.44.00 GENERAL INFO
TRACTAFRIC S.N.C.	FRANCE	PUTEAUX	ILE-DE-FRANCE REGION	33 (1) 49.06.44.00 GENERAL INFO
TRACTAFRIC S.N.C.	FRANCE	PUTEAUX	ILE-DE-FRANCE REGION	33 (1) 49.06.44.00 GENERAL INFO
TRACTAFRIC S.N.C.	FRANCE	PUTEAUX	ILE-DE-FRANCE REGION	33 (1) 49.06.44.00 GENERAL INFO
TRACTAFRIC S.N.C.	FRANCE	PUTEAUX	ILE-DE-FRANCE REGION	33 (1) 49.06.44.00 GENERAL INFO
BERGERAT MONNOYEUR S.A.S.	FRANCE	ROSNY SUR SEINE	ILE-DE-FRANCE REGION	33 (1) 30.42.94.70 GENERAL INFO
BERGERAT MONNOYEUR S.A.S.	FRANCE	ST. DENIS	ILE-DE-FRANCE REGION	33 (1) 49.22.60.61 GENERAL INFO
BERGERAT MONNOYEUR S.A.S.	FRANCE	ST. THIBAULT DES VIGNES	ILE-DE-FRANCE REGION	33 (1) 60.35.43.70 GENERAL INFO
BERGERAT MONNOYEUR S.A.S.	FRANCE	TRAPPES	ILE-DE-FRANCE REGION	33 (1) 34.82.01.41 GENERAL INFO
BERGERAT MONNOYEUR S.A.S.	FRANCE	VERNEUIL SUR SEINE	ILE-DE-FRANCE REGION	33 (1) 30.06.57.30 GENERAL INFO
BERGERAT MONNOYEUR S.A.S.	FRANCE	VERT ST. DENIS	ILE-DE-FRANCE REGION	33 (1) 64.52.03.32 GENERAL INFO
BERGERAT MONNOYEUR S.A.S.	FRANCE	FENOUILLET HAUTE GARONNE	LANGUEDOC-ROUSSILLON REGION	33 (5) 61.70.55.41 GENERAL INFO
BERGERAT MONNOYEUR S.A.S.	FRANCE	PERPIGNAN	LANGUEDOC-ROUSSILLON REGION	33 (4) 68.54.55.77 GENERAL INFO
BERGERAT MONNOYEUR S.A.S.	FRANCE	VENDARGUES	LANGUEDOC-ROUSSILLON REGION	33 (4) 67.03.18.09 GENERAL INFO
BERGERAT MONNOYEUR S.A.S.	FRANCE	VENDARGUES	LANGUEDOC-ROUSSILLON REGION	33 (4) 67.87.42.42 GENERAL INFO
BERGERAT MONNOYEUR S.A.S.	FRANCE	COUZEIX	LIMOUSIN REGION	33 (5) 55.38.30.79 GENERAL INFO
BERGERAT MONNOYEUR S.A.S.	FRANCE	CARLING	LORRAINE REGION	33 (3) 87.82.63.92 GENERAL INFO
BERGERAT MONNOYEUR S.A.S.	FRANCE	ELOYES	LORRAINE REGION	33 (3) 29.62.53.16 GENERAL INFO
BERGERAT MONNOYEUR S.A.S.	FRANCE	ENNERY	LORRAINE REGION	33 (3) 87.73.83.34 GENERAL INFO
BERGERAT MONNOYEUR S.A.S.	FRANCE	GONDREVILLE	LORRAINE REGION	33 (3) 83.65.26.26 GENERAL INFO
BERGERAT MONNOYEUR S.A.S.	FRANCE	GONDREVILLE	LORRAINE REGION	33 (3) 83.63.64.90 GENERAL INFO
BERGERAT MONNOYEUR S.A.S.	FRANCE	LUDRES	LORRAINE REGION	33 (3) 83.15.62.50 GENERAL INFO
BERGERAT MONNOYEUR S.A.S.	FRANCE	PIERREVILLE	LORRAINE REGION	33 (2) 33.52.42.97 GENERAL INFO

Table 1. Caterpillar Dealers - Continued.

Dealer Name	Country	City	State/Province/Region	Phone
BERGERAT MONNOYEUR S.A.S.	FRANCE	BEAUZEVILLE	MIDI-PYRENEES REGION	33 (2) 32.42.94.00 GENERAL INFO
BERGERAT MONNOYEUR S.A.S.	FRANCE	ONET LE CHATEAU	MIDI-PYRENEES REGION	33 (5) 65.67.04.15 GENERAL INFO
BERGERAT MONNOYEUR S.A.S.	FRANCE	TOULOUSE	MIDI-PYRENEES REGION	33 (5) 61.36.71.00 GENERAL INFO
BERGERAT MONNOYEUR S.A.S.	FRANCE	TOULOUSE	MIDI-PYRENEES REGION	33 (5) 61.34.08.33 GENERAL INFO
BERGERAT MONNOYEUR S.A.S.	FRANCE	ARRAS	NORD-PAS-DE-CALAIS REGION	33 (3) 21.07.34.34 GENERAL INFO
BERGERAT MONNOYEUR S.A.S.	FRANCE	BETHUNE	NORD-PAS-DE-CALAIS REGION	33 (3) 21.01.61.35 GENERAL INFO
BERGERAT MONNOYEUR S.A.S.	FRANCE	MAUBEUGE	NORD-PAS-DE-CALAIS REGION	33 (3) 27.66.31.31 GENERAL INFO
BERGERAT MONNOYEUR S.A.S.	FRANCE	PETITE SYNTHE	NORD-PAS-DE-CALAIS REGION	33 (3) 28.64.90.90 GENERAL INFO
BERGERAT MONNOYEUR T.P.	FRANCE	PETITE SYNTHE	NORD-PAS-DE-CALAIS REGION	33 (3) 28.25.29.14 GENERAL INFO
BERGERAT MONNOYEUR S.A.S.	FRANCE	ROUBAIX	NORD-PAS-DE-CALAIS REGION	33 (3) 20.75.98.54 GENERAL INFO
BERGERAT MONNOYEUR S.A.S.	FRANCE	ST. OMER	NORD-PAS-DE-CALAIS REGION	33 (3) 21.98.45.00 GENERAL INFO
BERGERAT MONNOYEUR S.A.S.	FRANCE	TRITH ST. LEGER	NORD-PAS-DE-CALAIS REGION	33 (3) 27.28.70.00 GENERAL INFO
BERGERAT MONNOYEUR S.A.S.	FRANCE	WATTIGNIES	NORD-PAS-DE-CALAIS REGION	33 (3) 20.62.04.40 GENERAL INFO
BERGERAT MONNOYEUR S.A.S.	FRANCE	WATTIGNIES	NORD-PAS-DE-CALAIS REGION	33 (3) 20.32.75.75 GENERAL INFO
BERGERAT MONNOYEUR S.A.S.	FRANCE	BONCHAMPS LES LAVAL	PAYS DE LA LOIRE REGION	33 (2) 43.67.07.67 GENERAL INFO
BERGERAT MONNOYEUR S.A.S.	FRANCE	CHATEAU-GONTIERE-AZE	PAYS DE LA LOIRE REGION	33 (2) 43.06.05.05 GENERAL INFO
BERGERAT MONNOYEUR S.A.S.	FRANCE	MAYENNE	PAYS DE LA LOIRE REGION	33 (2) 43.32.15.15 GENERAL INFO
BERGERAT MONNOYEUR S.A.S.	FRANCE	PORNIC	PAYS DE LA LOIRE REGION	33 (2) 40.82.68.57 GENERAL INFO
BERGERAT MONNOYEUR S.A.S.	FRANCE	ST. HERBLAIN	PAYS DE LA LOIRE REGION	33 (2) 28.25.01.05 GENERAL INFO
BERGERAT MONNOYEUR S.A.S.	FRANCE	ST. HERBLAIN	PAYS DE LA LOIRE REGION	33 (2) 40.16.98.00 GENERAL INFO
BERGERAT MONNOYEUR S.A.S.	FRANCE	ST. JEAN DE LINIERES	PAYS DE LA LOIRE REGION	33 (2) 41.81.88.30 GENERAL INFO
BERGERAT MONNOYEUR S.A.S.	FRANCE	ST. NAZAIRE-LOIRE ATLANTIQUE	PAYS DE LA LOIRE REGION	33 (2) 40.91.51.54 GENERAL INFO
BERGERAT MONNOYEUR S.A.S.	FRANCE	ST. SYLVAIN D'ANJOU	PAYS DE LA LOIRE REGION	33 (2) 41.96.95.00 GENERAL INFO
BERGERAT MONNOYEUR S.A.S.	FRANCE	BONNEVILLE	PICARDIE REGION	33 (4) 50.25.09.60 GENERAL INFO

Table 1. Caterpillar Dealers - Continued.

Dealer Name	Country	City	State/Province/Region	Phone
BERGERAT MONNOYEUR S.A.S.	FRANCE	PERONNE	PICARDIE REGION	33 (3) 22.83.08.08 GENERAL INFO
MAGELLAN	FRANCE	ST. DENIS	PICARDIE REGION	33 (1) 49.22.60.62 GENERAL INFO
BERGERAT MONNOYEUR S.A.S.	FRANCE	NIORT	POITOU-CHARENTES REGION	33 (5) 49.79.38.69 GENERAL INFO
BERGERAT MONNOYEUR S.A.S.	FRANCE	AIX EN PROVENCE	PROVENCE-COTE D'AZUR REGION	33 (4) 42.24.55.55 GENERAL INFO
BERGERAT MONNOYEUR S.A.S.	FRANCE	PUGET SUR ARGENS	PROVENCE-COTE D'AZUR REGION	33 (4) 94.45.23.57 GENERAL INFO
BERGERAT MONNOYEUR S.A.S.	FRANCE	SORGUES	PROVENCE-COTE D'AZUR REGION	33 (4) 90.39.26.17 GENERAL INFO
BERGERAT MONNOYEUR S.A.S.	FRANCE	ST. MARTIN DU VAR	PROVENCE-COTE D'AZUR REGION	33 (4) 93.08.44.00 GENERAL INFO
BERGERAT MONNOYEUR S.A.S.	FRANCE	ANDREZIEUX BOUTHEON	RHONE-ALPES REGION	33 (4) 77.02.06.56 GENERAL INFO
BERGERAT MONNOYEUR S.A.S.	FRANCE	ANDREZIEUX BOUTHEON	RHONE-ALPES REGION	33 (4) 77.36.46.12 GENERAL INFO
BERGERAT MONNOYEUR S.A.S.	FRANCE	ANNECY	RHONE-ALPES REGION	33 (4) 50.52.78.61 GENERAL INFO
BERGERAT MONNOYEUR S.A.S.	FRANCE	ARBIN	RHONE-ALPES REGION	33 (4) 79.84.20.13 GENERAL INFO
BERGERAT MONNOYEUR S.A.S.	FRANCE	BONNEVILLE	RHONE-ALPES REGION	33 (4) 50.25.28.19 GENERAL INFO
BERGERAT MONNOYEUR S.A.S.	FRANCE	BOURGOIN JALLIEU	RHONE-ALPES REGION	33 (4) 37.03.33.30 GENERAL INFO
BERGERAT MONNOYEUR S.A.S.	FRANCE	ECHIROLLES	RHONE-ALPES REGION	33 (4) 76.33.34.34 GENERAL INFO
ENERGYST CAT RENTAL POWER	FRANCE	FEYZIN	RHONE-ALPES REGION	33 (4) 72 89 11 40 GENERAL INFO
BERGERAT MONNOYEUR S.A.S.	FRANCE	LIMAS	RHONE-ALPES REGION	33 (4) 74.68.80.31 GENERAL INFO
BERGERAT MONNOYEUR S.A.S.	FRANCE	MONTMELIAN	RHONE-ALPES REGION	33 (4) 79.84.15.44 GENERAL INFO
BERGERAT MONNOYEUR S.A.S.	FRANCE	ROANNE	RHONE-ALPES REGION	33 (4) 77.72.85.85 GENERAL INFO
BERGERAT MONNOYEUR S.A.S.	FRANCE	ST. FORGEUX	RHONE-ALPES REGION	33 (4) 74.05.94.24 GENERAL INFO
BERGERAT MONNOYEUR S.A.S.	FRANCE	ST. JEAN LA BUSSIERE	RHONE-ALPES REGION	33 (4) 74.89.08.23 GENERAL INFO
BERGERAT MONNOYEUR S.A.S.	FRANCE	ST. MARCEL LES VALENCE	RHONE-ALPES REGION	33 (4) 75.58.87.23 GENERAL INFO
BERGERAT MONNOYEUR S.A.S.	FRANCE	ST. MARCEL LES VALENCE	RHONE-ALPES REGION	33 (4) 75.85.73.73 GENERAL INFO
BERGERAT MONNOYEUR S.A.S.	FRANCE	VENISSIEUX	RHONE-ALPES REGION	33 (4) 72.21.50.50 GENERAL INFO
BERGERAT MONNOYEUR S.A.S.	FRANCE	VENISSIEUX	RHONE-ALPES REGION	33 (4) 72.90.13.74 GENERAL INFO

Table 1. Caterpillar Dealers - Continued.

Dealer Name	Country	City	State/Province/Region	Phone
BERGERAT MONNOYEUR S.A.S.	FRANCE	ST. ETIENNE DU ROUVRAY		33 (2) 35.65.16.43 GENERAL INFO
BERGERAT MONNOYEUR S.A.S.	FRANCE	ST. MARTIN DE SEIGNANX		33 (5) 59.56.55.24 GENERAL INFO
BERGERAT MONNOYEUR S.A.S.	FRANCE	ST. PANTALEON DE LARCHE		33 (5) 55.86.90.13 GENERAL INFO
BERGERAT MONNOYEUR S.A.S.	FRANCE	VENDENHEIM		33 (3) 88.18.05.50 GENERAL INFO
SOCOMAT	FRENCH GUIANA	CAYENNE	CAYENNE ARRONDISSEMENT	594 (594) 35.04.30 GENERAL INFO
SOCOMAT SAS POWER	FRENCH GUIANA	CAYENNE	CAYENNE ARRONDISSEMENT	594 (594) 35.04.30 GENERAL INFO
SODIVA S.A.	FRENCH POLYNES.	PAPEETE	ILES DU VENT	689 () 50 8700 GENERAL INFO
SODIVA S.A.	FRENCH POLYNES.	PAPEETE	ILES DU VENT	689 () 50 8700 GENERAL INFO
S.H.O. GABON	GABON	LIBREVILLE	ESTUAIRE PROVINCE	241 () 76.01.40 GENERAL INFO
MACHINE INTERNATIONAL TRADE	GEORGIA	VALETTA	MALTA I.	995 (32) 33 99 03 GENERAL INFO
MACHINE INTERNATIONAL TRADE	GEORGIA	VALETTA	MALTA I.	995 (32) 33 99 03 GENERAL INFO
ZEPPELIN BAUMASCHINEN GMBH	GERMANY	BINDLACH	BADEN-WURTTEMBERG	49 (9208) 667-0 GENERAL INFO
MVS ZEPPELIN GMBH & CO. KG	GERMANY	BOEBLINGEN	BADEN-WURTTEMBERG	49 (7031) 640 530 GENERAL INFO
ZEPPELIN BAUMASCHINEN GMBH	GERMANY	BOEBLINGEN	BADEN-WURTTEMBERG	49 (7031) 6405-0 GENERAL INFO
MVS ZEPPELIN GMBH & CO. KG	GERMANY	ILLINGEN	BADEN-WURTTEMBERG	49 (6825) 40518 GENERAL INFO
MVS ZEPPELIN GMBH & CO. KG	GERMANY	TENINGEN	BADEN-WURTTEMBERG	49 (7663) 931 114 GENERAL INFO
ZEPPELIN BAUMASCHINEN GMBH	GERMANY	TENINGEN	BADEN-WURTTEMBERG	49 (7663) 9311-0 GENERAL INFO
MVS ZEPPELIN GMBH & CO. KG	GERMANY	WAIBLINGEN	BADEN-WURTTEMBERG	49 (7151) 20530-60 GENERAL INFO
MVS ZEPPELIN GMBH & CO. KG	GERMANY	WEINGARTEN BADEN	BADEN-WURTTEMBERG	49 (751) 362 5030 GENERAL INFO
ZEPPELIN BAUMASCHINEN GMBH	GERMANY	WEINGARTEN BADEN	BADEN-WURTTEMBERG	49 (751) 362 5036 GENERAL INFO
ENERGYST CAT RENTAL POWER	GERMANY	WERTHEIM	BADEN-WURTTEMBERG	49 (9397) 92 00-0 GENERAL INFO
MVS ZEPPELIN GMBH & CO. KG	GERMANY	BINDLACH	BAYERN	49 (9208) 66 715 GENERAL INFO
MVS ZEPPELIN GMBH & CO. KG	GERMANY	ERLANGEN	BAYERN	49 (9131) 999 322 GENERAL INFO
ZEPPELIN BAUMASCHINEN GMBH	GERMANY	ERLANGEN	BAYERN	49 (9131) 9993-0 GENERAL INFO

Table 1. Caterpillar Dealers - Continued.

Dealer Name	Country	City	State/Province/Region	Phone
MVS ZEPPELIN GMBH & CO. KG	GERMANY	GARCHING B MUENCHEN	BAYERN	49 (89) 3219 7520 GENERAL INFO
MVS ZEPPELIN GMBH & CO. KG	GERMANY	GARCHING B MUENCHEN	BAYERN	49 (30) 4037 1660 GENERAL INFO
ZEPPELIN BAUMASCHINEN GMBH	GERMANY	GARCHING B MUENCHEN	BAYERN	49 (89) 32000-0 GENERAL INFO
ZEPPELIN BAUMASCHINEN GMBH	GERMANY	GARCHING B MUENCHEN	BAYERN	49 (04202)516-144 GENERAL INFO
MVS ZEPPELIN GMBH & CO. KG	GERMANY	GERSTHOFEN	BAYERN	49 (821) 478 6530 GENERAL INFO
MVS ZEPPELIN GMBH & CO. KG	GERMANY	INGOLSTADT	BAYERN	49 (841) 623 580 GENERAL INFO
MVS ZEPPELIN GMBH & CO. KG	GERMANY	KIRCHHEIM BEI MUENCHEN	BAYERN	49 (89) 900591-0 GENERAL INFO
MVS ZEPPELIN GMBH & CO. KG	GERMANY	MUENCHEN	BAYERN	49 (89) 8180 1325 GENERAL INFO
MVS ZEPPELIN GMBH & CO. KG	GERMANY	MUENCHEN	BAYERN	49 (89) 430 3565 GENERAL INFO
MVS ZEPPELIN GMBH & CO. KG	GERMANY	NUERNBERG	BAYERN	49 (911) 300 313 GENERAL INFO
MVS ZEPPELIN GMBH & CO. KG	GERMANY	ROTTENDORF	BAYERN	49 (9302) 9060 17 GENERAL INFO
ZEPPELIN BAUMASCHINEN GMBH	GERMANY	ROTTENDORF	BAYERN	49 (9302) 9060-0 GENERAL INFO
MVS ZEPPELIN GMBH & CO. KG	GERMANY	STRAUBING	BAYERN	49 (9421) 925 917 GENERAL INFO
ZEPPELIN BAUMASCHINEN GMBH	GERMANY	STRAUBING	BAYERN	49 (9421) 9259-0 GENERAL INFO
MVS ZEPPELIN GMBH & CO. KG	GERMANY	WEISSENHORN	BAYERN	49 (7309) 954 300 GENERAL INFO
ZEPPELIN BAUMASCHINEN GMBH	GERMANY	WEISSENHORN	BAYERN	49 (7309) 954-0 GENERAL INFO
MVS ZEPPELIN GMBH & CO. KG	GERMANY	BERLIN	BERLIN	49 (30) 4037 1660 GENERAL INFO
MVS ZEPPELIN GMBH & CO. KG	GERMANY	BERLIN	BERLIN	49 (30) 40371-601 GENERAL INFO
MVS ZEPPELIN GMBH & CO. KG	GERMANY	BERLIN	BERLIN	49 (30) 6874095 GENERAL INFO
MVS ZEPPELIN GMBH & CO. KG	GERMANY	BERLIN	BERLIN	49 (30) 5550 0111 GENERAL INFO
MVS ZEPPELIN GMBH & CO. KG	GERMANY	BERLIN	BERLIN	49 (30) 7407 0834 GENERAL INFO
MVS ZEPPELIN GMBH & CO. KG	GERMANY	BERLIN	BERLIN	49 (30) 349 5747 GENERAL INFO
MVS ZEPPELIN GMBH & CO. KG	GERMANY	BERLIN	BERLIN	49 (30) 475 9760 GENERAL INFO
ENERGYST CAT RENTAL POWER	GERMANY	BEELITZ	BRANDENBURG	49 (33204)40096 GENERAL INFO

Table 1. Caterpillar Dealers - Continued.

Dealer Name	Country	City	State/Province/Region	Phone
MVS ZEPPELIN GMBH & CO. KG	GERMANY	BRANDENBURG	BRANDENBURG	49 (3381) 799 984 GENERAL INFO
MVS ZEPPELIN GMBH & CO. KG	GERMANY	COTTBUS	BRANDENBURG	49 (355) 75310 GENERAL INFO
MVS ZEPPELIN GMBH & CO. KG	GERMANY	EISENHUETTENSTADT	BRANDENBURG	49 (3364) 413 646 GENERAL INFO
MVS ZEPPELIN GMBH & CO. KG	GERMANY	FALKENSEE	BRANDENBURG	49 (3322) 21470 GENERAL INFO
MVS ZEPPELIN GMBH & CO. KG	GERMANY	FINOWFURT	BRANDENBURG	49 (3335) 445 920 GENERAL INFO
ZEPPELIN BAUMASCHINEN GMBH	GERMANY	FINOWFURT	BRANDENBURG	49 (3335) 4459-0 GENERAL INFO
MVS ZEPPELIN GMBH & CO. KG	GERMANY	FRANKFURT ODER	BRANDENBURG	49 (335) 414 960 GENERAL INFO
MVS ZEPPELIN GMBH & CO. KG	GERMANY	FURSTENWALDE	BRANDENBURG	49 (3361) 372 110 GENERAL INFO
MVS ZEPPELIN GMBH & CO. KG	GERMANY	GROSS KREUTZ	BRANDENBURG	49 (33207)37611 GENERAL INFO
MVS ZEPPELIN GMBH & CO. KG	GERMANY	KRIESCHOW	BRANDENBURG	49 (35604)61011 GENERAL INFO
ZEPPELIN BAUMASCHINEN GMBH	GERMANY	KRIESCHOW	BRANDENBURG	49 (35604)610-0 GENERAL INFO
MVS ZEPPELIN GMBH & CO. KG	GERMANY	MICHENDORF	BRANDENBURG	49 (33205)5930 GENERAL INFO
MVS ZEPPELIN GMBH & CO. KG	GERMANY	ORANIENBURG	BRANDENBURG	49 (3301) 5230-0 GENERAL INFO
MVS ZEPPELIN GMBH & CO. KG	GERMANY	POTSDAM	BRANDENBURG	49 (331) 887 300 GENERAL INFO
MVS ZEPPELIN GMBH & CO. KG	GERMANY	RATHENOW	BRANDENBURG	49 (3385) 519 062 GENERAL INFO
MVS ZEPPELIN GMBH & CO. KG	GERMANY	SCHENKENDORF BEI KOENIGS	BRANDENBURG	49 (3375) 903 464 GENERAL INFO
ZEPPELIN BAUMASCHINEN GMBH	GERMANY	SCHENKENDORF BEI KOENIGS	BRANDENBURG	49 (3375) 9034-0 GENERAL INFO
MVS ZEPPELIN GMBH & CO. KG	GERMANY	ZEESEN	BRANDENBURG	49 (3375) 902 660 GENERAL INFO
ZEPPELIN BAUMASCHINEN GMBH	GERMANY	ACHIM BEI BREMEN	BREMEN	49 (4202) 516-0 GENERAL INFO
ENERGYST CAT RENTAL POWER	GERMANY	LANGWEDEL	BREMEN	49 (4232) 98 060 GENERAL INFO
MVS ZEPPELIN GMBH & CO. KG	GERMANY	HAMBURG	HAMBURG	49 (40) 300850-3 GENERAL INFO
MVS ZEPPELIN GMBH & CO. KG	GERMANY	HAMBURG	HAMBURG	49 (40) 8537 3885 GENERAL INFO
MVS ZEPPELIN GMBH & CO. KG	GERMANY	ALSFELD	HESSEN	49 (6631) 960 119 GENERAL INFO
ZEPPELIN BAUMASCHINEN GMBH	GERMANY	ALSFELD	HESSEN	49 (6631) 96010 GENERAL INFO

Table 1. Caterpillar Dealers - Continued.

Dealer Name	Country	City	State/Province/Region	Phone
MVS ZEPPELIN GMBH & CO. KG	GERMANY	HANAU	HESSEN	49 (6181) 915 619 GENERAL INFO
ZEPPELIN BAUMASCHINEN GMBH	GERMANY	HANAU	HESSEN	49 (6181) 9156-0 GENERAL INFO
MVS ZEPPELIN GMBH & CO. KG	GERMANY	LOHFELDEN	HESSEN	49 (561) 511 9912 GENERAL INFO
ZEPPELIN BAUMASCHINEN GMBH	GERMANY	LOHFELDEN	HESSEN	49 (561) 51199-0 GENERAL INFO
MVS ZEPPELIN GMBH & CO. KG	GERMANY	MOERFELDEN-WALLDORF	HESSEN	49 (6105) 297 872 GENERAL INFO
MVS ZEPPELIN GMBH & CO. KG	GERMANY	GREIFSWALD	MECKLENBURG-VORPOMMERN	49 (3834) 5490 GENERAL INFO
MVS ZEPPELIN GMBH & CO. KG	GERMANY	KAVELSTORF	MECKLENBURG-VORPOMMERN	49 (38208)64924 GENERAL INFO
MVS ZEPPELIN GMBH & CO. KG	GERMANY	NEUBRANDENBURG	MECKLENBURG-VORPOMMERN	49 (395) 429 930 GENERAL INFO
ZEPPELIN BAUMASCHINEN GMBH	GERMANY	NEUBRANDENBURG	MECKLENBURG-VORPOMMERN	49 (395) 363060 GENERAL INFO
MVS ZEPPELIN GMBH & CO. KG	GERMANY	NEUSTRELITZ	MECKLENBURG-VORPOMMERN	49 (3981) 444 136 GENERAL INFO
MVS ZEPPELIN GMBH & CO. KG	GERMANY	ROSTOCK	MECKLENBURG-VORPOMMERN	49 (381) 809 3111 GENERAL INFO
MVS ZEPPELIN GMBH & CO. KG	GERMANY	SCHWERIN	MECKLENBURG-VORPOMMERN	49 (385) 615 905 GENERAL INFO
MVS ZEPPELIN GMBH & CO. KG	GERMANY	ACHIM BEI BREMEN	NIEDERSACHSEN	49 (4202) 516 160 GENERAL INFO
MVS ZEPPELIN GMBH & CO. KG	GERMANY	BRAUNSCHWEIG	NIEDERSACHSEN	49 (531) 236 2961 GENERAL INFO
MVS ZEPPELIN GMBH & CO. KG	GERMANY	HANNOVER	NIEDERSACHSEN	49 (511) 352 997 0 GENERAL INFO
MVS ZEPPELIN GMBH & CO. KG	GERMANY	HILDESHEIM	NIEDERSACHSEN	49 (5121) 280 305 GENERAL INFO
ZEPPELIN BAUMASCHINEN GMBH	GERMANY	KAVELSTORF	NIEDERSACHSEN	49 (38208)649-0 GENERAL INFO
MVS ZEPPELIN GMBH & CO. KG	GERMANY	KLIPPHAUSEN	NIEDERSACHSEN	49 (35204)46754 GENERAL INFO
MVS ZEPPELIN GMBH & CO. KG	GERMANY	LAATZEN	NIEDERSACHSEN	49 (5102) 700 212 GENERAL INFO
ZEPPELIN BAUMASCHINEN GMBH	GERMANY	LAATZEN	NIEDERSACHSEN	49 (5102) 7002-0 GENERAL INFO
MVS ZEPPELIN GMBH & CO. KG	GERMANY	OSNABRUECK	NIEDERSACHSEN	49 (541) 121 9415 GENERAL INFO
ZEPPELIN BAUMASCHINEN GMBH	GERMANY	OSNABRUECK	NIEDERSACHSEN	49 (541) 12194-0 GENERAL INFO
MVS ZEPPELIN GMBH & CO. KG	GERMANY	STUHR	NIEDERSACHSEN	49 (421) 569 6916 GENERAL INFO
MVS ZEPPELIN GMBH & CO. KG	GERMANY	WESTERSTEDE	NIEDERSACHSEN	49 (4488) 847 217 GENERAL INFO

Table 1. Caterpillar Dealers - Continued.

Dealer Name	Country	City	State/Province/Region	Phone
ZEPPELIN BAUMASCHINEN GMBH	GERMANY	WESTERSTEDE	NIEDERSACHSEN	49 (4488) 8472-0 GENERAL INFO
ZEPPELIN BAUMASCHINEN GMBH	GERMANY	WIEDEMAR	NIEDERSACHSEN	49 (34207)79-0 GENERAL INFO
MVS ZEPPELIN GMBH & CO. KG	GERMANY	BAD OEYNHAUSEN	NORDRHEIN-WESTFALEN	49 (5731) 254 066 GENERAL INFO
MVS ZEPPELIN GMBH & CO. KG	GERMANY	DORTMUND	NORDRHEIN-WESTFALEN	49 (231) 1087 7030 GENERAL INFO
MVS ZEPPELIN GMBH & CO. KG	GERMANY	DORTMUND	NORDRHEIN-WESTFALEN	49 (231) 462 087 GENERAL INFO
MVS ZEPPELIN GMBH & CO. KG	GERMANY	DUSSELDORF	NORDRHEIN-WESTFALEN	49 (211) 239 4270 GENERAL INFO
MVS ZEPPELIN GMBH & CO. KG	GERMANY	ESCHWEILER	NORDRHEIN-WESTFALEN	49 (2403) 876 518 GENERAL INFO
ZEPPELIN BAUMASCHINEN GMBH	GERMANY	ESCHWEILER	NORDRHEIN-WESTFALEN	49 (2403) 8765-0 GENERAL INFO
MVS ZEPPELIN GMBH & CO. KG	GERMANY	FRECHEN	NORDRHEIN-WESTFALEN	49 (2234) 933 207 GENERAL INFO
MVS ZEPPELIN GMBH & CO. KG	GERMANY	HAMM	NORDRHEIN-WESTFALEN	49 (2385) 7252 GENERAL INFO
ZEPPELIN BAUMASCHINEN GMBH	GERMANY	HAMM	NORDRHEIN-WESTFALEN	49 (2385) 72-0 GENERAL INFO
MVS ZEPPELIN GMBH & CO. KG	GERMANY	HERNE	NORDRHEIN-WESTFALEN	49 (2323) 964 060 GENERAL INFO
MVS ZEPPELIN GMBH & CO. KG	GERMANY	KOELN	NORDRHEIN-WESTFALEN	49 (2203) 929 180 GENERAL INFO
ZEPPELIN BAUMASCHINEN GMBH	GERMANY	KOLN-PORZ	NORDRHEIN-WESTFALEN	49 (2203) 929-0 GENERAL INFO
MVS ZEPPELIN GMBH & CO. KG	GERMANY	LANGENFELD	NORDRHEIN-WESTFALEN	49 (2173) 394 950 GENERAL INFO
ENERGYST CAT RENTAL POWER	GERMANY	MUELHEIM A D RUHR	NORDRHEIN-WESTFALEN	49 (208) 305 960 GENERAL INFO
MVS ZEPPELIN GMBH & CO. KG	GERMANY	NEUSS	NORDRHEIN-WESTFALEN	49 (2131) 936 511 GENERAL INFO
ZEPPELIN BAUMASCHINEN GMBH	GERMANY	NEUSS	NORDRHEIN-WESTFALEN	49 (2131) 9365-0 GENERAL INFO
MVS ZEPPELIN GMBH & CO. KG	GERMANY	OBERHAUSEN	NORDRHEIN-WESTFALEN	49 (208) 656 9933 GENERAL INFO
ZEPPELIN BAUMASCHINEN GMBH	GERMANY	OBERHAUSEN	NORDRHEIN-WESTFALEN	49 (208) 65699-0 GENERAL INFO
MVS ZEPPELIN GMBH & CO. KG	GERMANY	WUENNENBERG	NORDRHEIN-WESTFALEN	49 (2957) 988 822 GENERAL INFO
ZEPPELIN BAUMASCHINEN GMBH	GERMANY	WUENNENBERG	NORDRHEIN-WESTFALEN	49 (2957) 9888-0 GENERAL INFO
MVS ZEPPELIN GMBH & CO. KG	GERMANY	WUPPERTAL	NORDRHEIN-WESTFALEN	49 (202) 257 9811 GENERAL INFO
MVS ZEPPELIN GMBH & CO. KG	GERMANY	FRANKENTHAL	RHEINLAND-PFALZ	49 (6233) 770 325 GENERAL INFO

Table 1. Caterpillar Dealers - Continued.

Dealer Name	Country	City	State/Province/Region	Phone
ZEPPELIN BAUMASCHINEN GMBH	GERMANY	FRANKENTHAL	RHEINLAND-PFALZ	49 (6233) 7703-0 GENERAL INFO
MVS ZEPPELIN GMBH & CO. KG	GERMANY	MUELHEIM-KAERLICH	RHEINLAND-PFALZ	49 (2630) 962 167 GENERAL INFO
ZEPPELIN BAUMASCHINEN GMBH	GERMANY	MUELHEIM-KAERLICH	RHEINLAND-PFALZ	49 (2630) 9419-0 GENERAL INFO
ZEPPELIN BAUMASCHINEN GMBH	GERMANY	ILLINGEN	SAARLAND	49 (6825) 405-0 GENERAL INFO
MVS ZEPPELIN GMBH & CO. KG	GERMANY	BAUTZEN	SACHSEN	49 (3591) 601 891 GENERAL INFO
MVS ZEPPELIN GMBH & CO. KG	GERMANY	DRESDEN	SACHSEN	49 (351) 897 770 GENERAL INFO
MVS ZEPPELIN GMBH & CO. KG	GERMANY	HEIDENAU SACHS	SACHSEN	49 (3529) 574 350 GENERAL INFO
MVS ZEPPELIN GMBH & CO. KG	GERMANY	KAUFUNGEN	SACHSEN	49 (5605) 2005 GENERAL INFO
MVS ZEPPELIN GMBH & CO. KG	GERMANY	LEIPZIG	SACHSEN	49 (341) 244 190 GENERAL INFO
MVS ZEPPELIN GMBH & CO. KG	GERMANY	LIMBACH-OBERFROHNA	SACHSEN	49 (3722) 606 111 GENERAL INFO
MVS ZEPPELIN GMBH & CO. KG	GERMANY	MARKKLEEBERG	SACHSEN	49 (34299)79505 GENERAL INFO
MVS ZEPPELIN GMBH & CO. KG	GERMANY	RIESA	SACHSEN	49 (3525) 717 270 GENERAL INFO
MVS ZEPPELIN GMBH & CO. KG	GERMANY	ROEHRSDORF BEI CHEMNITZ	SACHSEN	49 (3722) 500 180 GENERAL INFO
MVS ZEPPELIN GMBH & CO. KG	GERMANY	WIEDEMAR	SACHSEN	49 (34207)79113 GENERAL INFO
MVS ZEPPELIN GMBH & CO. KG	GERMANY	ZWICKAU	SACHSEN	49 (375) 679 2120 GENERAL INFO
MVS ZEPPELIN GMBH & CO. KG	GERMANY	DESSAU	SACHSEN-ANHALT	49 (340) 519 6760 GENERAL INFO
MVS ZEPPELIN GMBH & CO. KG	GERMANY	EISLEBEN	SACHSEN-ANHALT	49 (3475) 611 814 GENERAL INFO
MVS ZEPPELIN GMBH & CO. KG	GERMANY	HALBERSTADT	SACHSEN-ANHALT	49 (3941) 602 338 GENERAL INFO
MVS ZEPPELIN GMBH & CO. KG	GERMANY	HALDENSLEBEN	SACHSEN-ANHALT	49 (3904) 462 457 GENERAL INFO
MVS ZEPPELIN GMBH & CO. KG	GERMANY	HALLE SAALE	SACHSEN-ANHALT	49 (345) 77950 GENERAL INFO
MVS ZEPPELIN GMBH & CO. KG	GERMANY	IRXLEBEN	SACHSEN-ANHALT	49 (39204)78224 GENERAL INFO
ZEPPELIN BAUMASCHINEN GMBH	GERMANY	IRXLEBEN	SACHSEN-ANHALT	49 (39204)60045-51 GENERAL INFO
MVS ZEPPELIN GMBH & CO. KG	GERMANY	LUTHERSTADT WITTENBERG	SACHSEN-ANHALT	49 (3491) 642 434 GENERAL INFO
MVS ZEPPELIN GMBH & CO. KG	GERMANY	MAGDEBURG	SACHSEN-ANHALT	49 (391) 30024-0 GENERAL INFO

Table 1. Caterpillar Dealers - Continued.

Dealer Name	Country	City	State/Province/Region	Phone
MVS ZEPPELIN GMBH & CO. KG	GERMANY	GLINDE	SCHLESWIG-HOLSTEIN	49 (40) 7611 9180 GENERAL INFO
ENERGYST CAT RENTAL POWER	GERMANY	HENSTEDT-ULZBURG	SCHLESWIG-HOLSTEIN	49 (4193) 7543 0 GENERAL INFO
MVS ZEPPELIN GMBH & CO. KG	GERMANY	LUEBECK	SCHLESWIG-HOLSTEIN	49 (451) 592 2180 GENERAL INFO
MVS ZEPPELIN GMBH & CO. KG	GERMANY	NORDERSTEDT	SCHLESWIG-HOLSTEIN	49 (40) 525 1062 GENERAL INFO
ZEPPELIN BAUMASCHINEN GMBH	GERMANY	OSTERROENFELD	SCHLESWIG-HOLSTEIN	49 (4331) 8477-0 GENERAL INFO
MVS ZEPPELIN GMBH & CO. KG	GERMANY	QUICKBORN PINNEBERG	SCHLESWIG-HOLSTEIN	49 (4106) 700 380 GENERAL INFO
MVS ZEPPELIN GMBH & CO. KG	GERMANY	ERFURT	THURINGEN	49 (361) 740 750 GENERAL INFO
MVS ZEPPELIN GMBH & CO. KG	GERMANY	ERFURT	THURINGEN	49 (361) 493 3311 GENERAL INFO
ZEPPELIN BAUMASCHINEN GMBH	GERMANY	ERFURT	THURINGEN	49 (361) 49333-0 GENERAL INFO
MVS ZEPPELIN GMBH & CO. KG	GERMANY	FOERITZ	THURINGEN	49 (3675) 403 834 GENERAL INFO
MVS ZEPPELIN GMBH & CO. KG	GERMANY	GERA	THURINGEN	49 (365) 439 0136 GENERAL INFO
MVS ZEPPELIN GMBH & CO. KG	GERMANY	JENA	THURINGEN	49 (3641) 617 108 GENERAL INFO
ZEPPELIN BAUMASCHINEN GMBH	GERMANY	TRIPTIS	THURINGEN	49 (36482)3620 GENERAL INFO
MVS ZEPPELIN GMBH & CO. KG	GERMANY	WEIMAR THUER	THURINGEN	49 (3643) 4290 GENERAL INFO
MVS ZEPPELIN GMBH & CO. KG	GERMANY	ZELLA MEHLIS	THURINGEN	49 (3682) 46900 GENERAL INFO
ZEPPELIN BAUMASCHINEN GMBH	GERMANY	BOCHOW BEI GROSS KREUTZ		49 (33207)376-0 GENERAL INFO
ZEPPELIN BAUMASCHINEN GMBH	GERMANY	GLINDE		49 (4106) 7003-0 GENERAL INFO
ZEPPELIN BAUMASCHINEN GMBH	GERMANY	KLIPPHAUSEN		49 (35204)467-0 GENERAL INFO
ZEPPELIN BAUMASCHINEN GMBH	GERMANY	PLEISSA		49 (3722) 606-0 GENERAL INFO
ZEPPELIN BAUMASCHINEN GMBH	GERMANY	WITTENFOERDEN		49 (385) 64705-32 GENERAL INFO
ZEPPELIN BAUMASCHINEN GMBH	GERMANY	ZELLA MEHLIS		49 (3682) 46 90 55 GENERAL INFO
TRACTOR & EQUIPMENT GHANA LTD.	GHANA	KUMASI	ASHANTI REGION	233 (51) 23161 GENERAL INFO
TRACTOR & EQUIPMENT GHANA LTD.	GHANA	ACCRA NORTH	GREATER ACCRA REGION	233 (21) 239625 GENERAL INFO
TRACTOR & EQUIPMENT GHANA LTD.	GHANA	KOTWERE	WESTERN REGION	233 (362) 20707 GENERAL INFO

Table 1. Caterpillar Dealers - Continued.

Dealer Name	Country	City	State/Province/Region	Phone
TRACTOR & EQUIPMENT GHANA LTD.	GHANA	TAKORADI	WESTERN REGION	233 (031) 26450 GENERAL INFO
TRACTOR & EQUIPMENT GHANA LTD.	GHANA	TARKWA	WESTERN REGION	233 (362) 20706 GENERAL INFO
ELTRAK S.A.	GREECE	ATHENS	CENTRAL GREECE & EUBOEA REGION	30 (210) 8196800 GENERAL INFO
ELTRAK	GREECE	EGALEO	CENTRAL GREECE & EUBOEA REGION	30 (210) 8196800 GENERAL INFO
ELTRAK S.A.	GREECE	HERAKLION (IRAKLION)	CRETE REGION	30 (2810) 261777 GENERAL INFO
ELTRAK S.A.	GREECE	KALOCHORI	MACEDONIA REGION	30 (2310) 754606 GENERAL INFO
ELTRAK S.A.	GREECE	PATRAS	PELOPONNESE REGION	30 (210) 436143 GENERAL INFO
ELTRAK S.A.	GREECE	LARISA	THESSALY REGION	30 (2410) 285051 GENERAL INFO
MEDIBAM S.A.S.	GUADELOUPE	JARRY	BASSE-TERRE I.	590 () 26 76 65 GENERAL INFO
MEDIBAM S.A.S.	GUADELOUPE	JARRY	BASSE-TERRE I.	590 () 26 76 65 GENERAL INFO
HAWTHORNE PACIFIC CORP.	GUAM	SAIPAN	SAIPAN	670 () 288-6900 GENERAL INFO
HAWTHORNE PACIFIC CORP.	GUAM	TAMUNING		1 (671) 646-9118 GENERAL INFO
CORPORACION GENERAL DE	GUATEMALA	GUATEMALA CITY	GUATEMALA DEPARTAMENTO	502 (2) 477-3252 GENERAL INFO
MANUTENTION GUINEENNE	GUINEA	CONAKRY	CONAKRY REGION	224 () 13 40 90 11 GENERAL INFO
MACHINERY CORP. OF GUYANA LTD.	GUYANA	GEORGETOWN	DEMERARA-MAHAICA REGION	592 (65) 4986 GENERAL INFO
HAITI RENTAL	HAITI	PORT-AU-PRINCE	OUEST DEPARTEMENT	509 () 510-9863 GENERAL INFO
HAYTIAN TRACTOR & EQUIPMENT	HAITI	PORT-AU-PRINCE	OUEST DEPARTEMENT	509 () 246-1836 GENERAL INFO
CASA COMERCIAL MATHEWS S.A.	HONDURAS	CHOLUTECA	CHOLUTECA DEPARTAMENTO	504 () 882-4260 GENERAL INFO
CASA COMERCIAL MATHEWS S.A.	HONDURAS	SAN PEDRO SULA	CORTES DEPARTAMENTO	504 () 559-5899 GENERAL INFO
CASA COMERCIAL MATHEWS S.A.	HONDURAS	TEGUCIGALPA	FRANCISCO MORAZAN DEPARTAMENTO	504 () 230-2069 GENERAL INFO
LEI SHING HONG MACHINERY LTD.	HONG KONG	HONG KONG	HONG KONG ISLAND	852 () 2526 1051 GENERAL INFO
WESTRAC CHINA LIMITED	HONG KONG	WAN CHAI	HONG KONG ISLAND	852 () 2598 8832 GENERAL INFO
THE CHINA ENGINEERS, LIMITED	HONG KONG	CHEUNG SHA WAN	KOWLOON PENINSULA	852 () 2742-2861 GENERAL INFO
THE CHINA ENGINEERS, LIMITED	HONG KONG	YUEN LONG	NEW TERRITORIES	852 () 2882-9090 GENERAL INFO

Table 1. Caterpillar Dealers - Continued.

Dealer Name	Country	City	State/Province/Region	Phone
ECI-METRO INVESTMENT CO. LTD.	HONG KONG	HONG KONG		852 () 2277-0355 GENERAL INFO
HUNTRACO TRADING & SERVICING	HUNGARY	PECS	BARANYA MEGYE	36 (72) 233777 GENERAL INFO
HUNTRACO TRADING & SERVICING	HUNGARY	BEKESCSABA	BEKES MEGYE	36 (66) 454996 GENERAL INFO
HUNTRACO TRADING & SERVICING	HUNGARY	BUDAORS	BUDAPEST FOVAROS	36 (23) 504200 GENERAL INFO
HUNTRACO TRADING & SERVICING	HUNGARY	BUDAORS	BUDAPEST FOVAROS	36 (23) 504200 GENERAL INFO
HUNTRACO TRADING & SERVICING	HUNGARY	SZOLNOK	JASZ-NAGYKUN-SZOLNOK-MEGYE	36 (656) 514 711 GENERAL INFO
HUNTRACO TRADING & SERVICING	HUNGARY	SIOFOK	SOMOGY MEGYE	36 (84) 510810 GENERAL INFO
HUNTRACO TRADING & SERVICING	HUNGARY	NYIREGYHAZA	SZABOLCS-SZATMAR-BEREG MEGYE	36 (42) 595066 GENERAL INFO
HUNTRACO TRADING & SERVICING	HUNGARY	SZOMBATHELY	VAS MEGYE	36 (94) 345735 GENERAL INFO
HEKLA LTD.	ICELAND	REYKJAVIK	REYKJAVIK	354 () 590 5100 GENERAL INFO
HEKLA LTD.	ICELAND	REYKJAVIK	REYKJAVIK	354 () 590 5100 GENERAL INFO
GMMCO LIMITED	INDIA	SECUNDERABAD	ANDHRA PRADESH STATE	91 (040) 774-2142 GENERAL INFO
GMMCO LIMITED	INDIA	VIJAYAWADA	ANDHRA PRADESH STATE	91 (0866) 474049 GENERAL INFO
GMMCO LIMITED	INDIA	VIZAG	ANDHRA PRADESH STATE	91 (891) 2550342 GENERAL INFO
GMMCO LIMITED	INDIA	WALTAIR UPLANDS	ANDHRA PRADESH STATE	91 (0891) 550342 GENERAL INFO
TIL LIMITED	INDIA	DHANBAD	BIHAR STATE	91 (326) 20-3807 GENERAL INFO
TIL LIMITED	INDIA	JAMSHEDPUR	BIHAR STATE	91 (0657) 22-8853 GENERAL INFO
TIL LIMITED	INDIA	RAMGARH	BIHAR STATE	91 (06553)24567 GENERAL INFO
GMMCO LIMITED	INDIA	RANCHI	BIHAR STATE	91 (0651) 560762 GENERAL INFO
GMMCO LIMITED	INDIA	KIRANDUL	CHHATTISGARH STATE	91 (07857)55713 GENERAL INFO
GMMCO LIMITED	INDIA	SILVASSA	DADRA AND NAGAR HAVELI TERRITORY	91 (0260) 646674 GENERAL INFO
TIL LIMITED	INDIA	NEW DELHI	DELHI TERRITORY	91 (11) 331-1607 GENERAL INFO
GMMCO LIMITED	INDIA	ALTO PROVORIM	GOA STATE	91 (0832) 417424 GENERAL INFO
GMMCO LIMITED	INDIA	AHMEDABAD	GUJARAT STATE	91 (79) 2658-9694 GENERAL INFO

Table 1. Caterpillar Dealers - Continued.

Dealer Name	Country	City	State/Province/Region	Phone
GMMCO LIMITED	INDIA	AHMEDABAD	GUJARAT STATE	91 (79) 2689-0315 GENERAL INFO
GMMCO LIMITED	INDIA	GANDHIDHAM	GUJARAT STATE	91 (2836) 221-911 GENERAL INFO
GMMCO LIMITED	INDIA	SURAT	GUJARAT STATE	91 (0261) 8246996 GENERAL INFO
TIL LIMITED	INDIA	DHARUHERA	HARYANA STATE	91 (1274) 242 600 GENERAL INFO
GMMCO LIMITED	INDIA	BANGALORE	KARNATAKA STATE	91 (080) 6688628 GENERAL INFO
GMMCO LIMITED	INDIA	HOSPET	KARNATAKA STATE	91 (08394)30179 GENERAL INFO
GMMCO LIMITED	INDIA	COCHIN	KERALA STATE	91 (0484) 339365 GENERAL INFO
GMMCO LIMITED	INDIA	BHILAI	MADHYA PRADESH STATE	91 (0788) 241655 GENERAL INFO
GMMCO LIMITED	INDIA	BILASPUR	MADHYA PRADESH STATE	91 (7752) 266-5087 GENERAL INFO
GMMCO LIMITED	INDIA	INDORE	MADHYA PRADESH STATE	91 (0731) 559106 GENERAL INFO
GMMCO LIMITED	INDIA	JABALPUR	MADHYA PRADESH STATE	91 (761) 2503-5320 GENERAL INFO
GMMCO LIMITED	INDIA	JHINGURDAH	MADHYA PRADESH STATE	91 (07805)66998 GENERAL INFO
GMMCO LIMITED	INDIA	KORBA	MADHYA PRADESH STATE	91 (7759) 2245-431 GENERAL INFO
GMMCO LIMITED	INDIA	CHANDRAPUR	MAHARASHTRA STATE	91 (7172) 252616 GENERAL INFO
GMMCO LIMITED	INDIA	NAGPUR	MAHARASHTRA STATE	91 (07104)32601 GENERAL INFO
GMMCO LIMITED	INDIA	PANVEL	MAHARASHTRA STATE	91 (214) 322-1622 GENERAL INFO
GMMCO LIMITED	INDIA	PUNE	MAHARASHTRA STATE	91 (020) 5531189 GENERAL INFO
TIL LIMITED	INDIA	BHUBANESWAR	ORISSA STATE	91 (0674) 310379 GENERAL INFO
TIL LIMITED	INDIA	JHARSUGUDA	ORISSA STATE	91 (06645)73190 GENERAL INFO
GMMCO LIMITED	INDIA	SAMBALPUR	ORISSA STATE	91 (0663) 541321 GENERAL INFO
TIL LIMITED	INDIA	TALCHER	ORISSA STATE	91 (06765)40623 GENERAL INFO
GMMCO LIMITED	INDIA	KIRUMAMBAKKAM	PONDICHERRY TERRITORY	91 (0413) 611469 GENERAL INFO
TIL LIMITED	INDIA	KIRUMAMBAKKAM	PONDICHERRY TERRITORY	91 (0413) 611409 GENERAL INFO
TIL LIMITED	INDIA	LUDHIANA	PUNJAB STATE	91 (0161) 650242 GENERAL INFO

Table 1. Caterpillar Dealers - Continued.

Dealer Name	Country	City	State/Province/Region	Phone
TIL LIMITED	INDIA	UDAIPUR	RAJASTHAN STATE	91 (0294) 440966 GENERAL INFO
GMMCO LIMITED	INDIA	CHENNAI	TAMIL NADU STATE	91 (44) 2234 2611 GENERAL INFO
GMMCO LIMITED	INDIA	COIMBATORE	TAMIL NADU STATE	91 (0422) 444919 GENERAL INFO
GMMCO LIMITED	INDIA	MADURAI	TAMIL NADU STATE	91 (0452) 484553 GENERAL INFO
HINDUSTAN POWERPLUS LIMITED	INDIA	MATHAGONDAPALLI	TAMIL NADU STATE	91 (04344)22913 GENERAL INFO
GMMCO LIMITED	INDIA	PONDICHERRY	TAMIL NADU STATE	91 (413) 261-1469 GENERAL INFO
GMMCO LIMITED	INDIA	TIRUCHENGODU	TAMIL NADU STATE	91 (04288)281217 GENERAL INFO
TIL LIMITED	INDIA	GHAZIABAD	UTTAR PRADESH STATE	91 (0575) 477-0790 GENERAL INFO
TIL LIMITED	INDIA	ASANSOL	WEST BENGAL STATE	91 (341) 25-3160 GENERAL INFO
GMMCO LIMITED	INDIA	CALCUTTA	WEST BENGAL STATE	91 (033) 2205518 GENERAL INFO
TIL LIMITED	INDIA	CALCUTTA	WEST BENGAL STATE	91 (033) 2469-3732 GENERAL INFO
TIL LIMITED	INDIA	SILIGURI	WEST BENGAL STATE	91 (0353) 535-791 GENERAL INFO
P.T. TRAKINDO UTAMA	INDONESIA	BENGKULU	BENGKULU PROPINSI	62 (0736) 21786 GENERAL INFO
NANAR REMANUFACTURING CENTER	INDONESIA	JAKARTA	DAERAH KHUSUS IBUKOTA JAKARTA RAYA	62 (021) 4682 7927 GENERAL INFO
P.T. TRAKINDO UTAMA	INDONESIA	JAKARTA	DAERAH KHUSUS IBUKOTA JAKARTA RAYA	62 (021) 600 9493 GENERAL INFO
P.T. TRAKINDO UTAMA	INDONESIA	JAKARTA	DAERAH KHUSUS IBUKOTA JAKARTA RAYA	62 (021) 782 2373 GENERAL INFO
P.T. TRAKINDO UTAMA	INDONESIA	JAKARTA	DAERAH KHUSUS IBUKOTA JAKARTA RAYA	62 (021) 6009493 GENERAL INFO
P.T. TRAKINDO UTAMA	INDONESIA	JAMBI	JAMBI PROPINSI	62 (0741) 443 749 GENERAL INFO
P.T. TRAKINDO UTAMA	INDONESIA	BANDUNG	JAWA BARAT PROPINSI	62 (022) 680 3012 GENERAL INFO
P.T. TRAKINDO UTAMA	INDONESIA	BEKASI	JAWA BARAT PROPINSI	62 (021) 885 2092 GENERAL INFO
P.T. TRAKINDO UTAMA	INDONESIA	CIREBON	JAWA BARAT PROPINSI	62 (0231) 209 779 GENERAL INFO
P.T. TRAKINDO UTAMA	INDONESIA	SEMARANG	JAWA TENGAH PROPINSI	62 (024) 761 6123 GENERAL INFO
P.T. TRAKINDO UTAMA	INDONESIA	SURABAYA	JAWA TIMUR PROPINSI	62 (031) 843 8398 GENERAL INFO
P.T. TRAKINDO UTAMA	INDONESIA	PONTIANAK	KALIMANTAN BARAT PROPINSI	62 (0561) 732 152 GENERAL INFO

Table 1. Caterpillar Dealers - Continued.

Dealer Name	Country	City	State/Province/Region	Phone
P.T. TRAKINDO UTAMA	INDONESIA	BANJARMASIN	KALIMANTAN SELATAN PROPINSI	62 (0511) 251 167 GENERAL INFO
P.T. TRAKINDO UTAMA	INDONESIA	BATULICIN	KALIMANTAN SELATAN PROPINSI	62 (0518) 71488 GENERAL INFO
P.T. TRAKINDO UTAMA	INDONESIA	TANJUNG	KALIMANTAN SELATAN PROPINSI	62 (0526) 22534 GENERAL INFO
P.T. TRAKINDO UTAMA	INDONESIA	PANGKALANBUUN	KALIMANTAN TENGAH PROPINSI	62 (0532) 21500 GENERAL INFO
P.T. TRAKINDO UTAMA	INDONESIA	BALIKPAPAN	KALIMANTAN TIMUR PROPINSI	62 (0542) 762 810 GENERAL INFO
P.T. TRAKINDO UTAMA	INDONESIA	DENPASAR	KALIMANTAN TIMUR PROPINSI	62 (0361) 281896 GENERAL INFO
P.T. TRAKINDO UTAMA	INDONESIA	SAMARINDA	KALIMANTAN TIMUR PROPINSI	62 (0541) 260 269 GENERAL INFO
P.T. TRAKINDO UTAMA	INDONESIA	SANGATA	KALIMANTAN TIMUR PROPINSI	62 (0549) 21800 GENERAL INFO
P.T. TRAKINDO UTAMA	INDONESIA	SANGATTA	KALIMANTAN TIMUR PROPINSI	62 (0549) 21800 GENERAL INFO
P.T. TRAKINDO UTAMA	INDONESIA	TANAHGROGOT	KALIMANTAN TIMUR PROPINSI	62 (0543) 22941 GENERAL INFO
P.T. TRAKINDO UTAMA	INDONESIA	TARAKAN	KALIMANTAN TIMUR PROPINSI	62 (0551) 21045 GENERAL INFO
P.T. TRAKINDO UTAMA	INDONESIA	BANDAR LAMPUNG	LAMPUNG PROPINSI	62 (0721) 481 942 GENERAL INFO
P.T. TRAKINDO UTAMA	INDONESIA	TERNATE	MALUKU PROPINSI	62 (0921) 21720 GENERAL INFO
P.T. TRAKINDO UTAMA	INDONESIA	BANDAACEH	NANGGROE ACEH DARUSSALAM	62 (0651) 770 033 GENERAL INFO
P.T. TRAKINDO UTAMA	INDONESIA	BATU HIJAU	NUSATENGGARA BARAT PROPINSI	62 (372) 635 318 GENERAL INFO
P.T. TRAKINDO UTAMA	INDONESIA	BIAK	PAPUA PROPINSI	62 (0981) 23860 GENERAL INFO
P.T. TRAKINDO UTAMA	INDONESIA	JAYAPURA	PAPUA PROPINSI	62 (0967) 536 606 GENERAL INFO
P.T. TRAKINDO UTAMA	INDONESIA	MANOKWARI	PAPUA PROPINSI	62 (021) 7884 9714 GENERAL INFO
P.T. TRAKINDO UTAMA	INDONESIA	MERAUKE	PAPUA PROPINSI	62 (0971) 322 908 GENERAL INFO
P.T. TRAKINDO UTAMA	INDONESIA	SORONG	PAPUA PROPINSI	62 (0951) 324 460 GENERAL INFO
TRAKINDO UTAMA SERVICES (S)	INDONESIA	TEMBAGAPURA	PAPUA PROPINSI	62 (0901) 541 2911 GENERAL INFO
P.T. TRAKINDO UTAMA	INDONESIA	TIMKA	PAPUA PROPINSI	62 (901) 302 157 438 100GENERAL INFO
P.T. TRAKINDO UTAMA	INDONESIA	BATAM	RIAU PROPINSI	62 (0778) 412 182 GENERAL INFO
P.T. TRAKINDO UTAMA	INDONESIA	KARIMUN	RIAU PROPINSI	62 (0777) 324 917 GENERAL INFO

Table 1. Caterpillar Dealers - Continued.

Dealer Name	Country	City	State/Province/Region	Phone
P.T. TRAKINDO UTAMA	INDONESIA	PEKANBARU	RIAU PROPINSI	62 (0761) 23624 GENERAL INFO
P.T. TRAKINDO UTAMA	INDONESIA	MAKASSAR	SULAWESI SELATAN PROPINSI	62 (0411) 449 127 GENERAL INFO
TRAKINDO UTAMA SERVICES (S)	INDONESIA	SOROAKO	SULAWESI SELATAN PROPINSI	62 (021) 5249272 GENERAL INFO
P.T. TRAKINDO UTAMA	INDONESIA	LUWUK	SULAWESI TENGAH PROPINSI	62 (0461) 23031 GENERAL INFO
P.T. TRAKINDO UTAMA	INDONESIA	PALU	SULAWESI TENGAH PROPINSI	62 (0451) 421 129 GENERAL INFO
P.T. TRAKINDO UTAMA	INDONESIA	KENDARI	SULAWESI TENGGARA PROPINSI	62 (0401) 327 995 GENERAL INFO
P.T. TRAKINDO UTAMA	INDONESIA	MENADO	SULAWESI UTARA PROPINSI	62 (0431) 854 712 GENERAL INFO
P.T. TRAKINDO UTAMA	INDONESIA	PADANG	SUMATERA BARAT PROPINSI	62 (0751) 51633 GENERAL INFO
TRAKINDO UTAMA SERVICES (S)	INDONESIA	KELIAN	SUMATERA SELATAN PROPINSI	62 (021) 521-1764 GENERAL INFO
P.T. TRAKINDO UTAMA	INDONESIA	PALEMBANG	SUMATERA SELATAN PROPINSI	62 (0711) 411 633 GENERAL INFO
P.T. TRAKINDO UTAMA	INDONESIA	PANGKALPINANG	SUMATERA SELATAN PROPINSI	62 (0717) 433 052 GENERAL INFO
P.T. TRAKINDO UTAMA	INDONESIA	PRABUMULIH	SUMATERA SELATAN PROPINSI	62 (0711) 592 635 GENERAL INFO
P.T. TRAKINDO UTAMA	INDONESIA	TANJUNG PANDAN	SUMATERA SELATAN PROPINSI	62 (0719) 21691 GENERAL INFO
P.T. TRAKINDO UTAMA	INDONESIA	MEDAN	SUMATERA UTARA PROPINSI	62 (061) 786 5311 GENERAL INFO
UNATRAC INTERNATIONAL/	IRAQ	GIZA	AL JIZAH MUHAFAZAH	964 (1) 778-3783 GENERAL INFO
UNATRAC INTERNATIONAL/	IRAQ	GIZA	AL JIZAH MUHAFAZAH	964 (40) 615-939 GENERAL INFO
UNATRAC INTERNATIONAL/	IRAQ	ALEXANDRIA	ISKANDARIYAH MUHAFAZAH	964 (1) 778-3783 GENERAL INFO
MC CORMICK MACNAUGHTON, LTD.	IRELAND	ORANMORE	CONNACHT PROVINCE	353 (91) 790-777 GENERAL INFO
MC CORMICK MACNAUGHTON, LTD.	IRELAND	CARLOW	LEINSTER PROVINCE	353 (59) 914 2045 GENERAL INFO
MC CORMICK MACNAUGHTON, LTD.	IRELAND	CLONDALKIN	LEINSTER PROVINCE	353 (1) 464-3500 GENERAL INFO
MC CORMICK MACNAUGHTON, LTD.	IRELAND	DUBLIN	LEINSTER PROVINCE	353 (1) 409-7474 GENERAL INFO
MC CORMICK MACNAUGHTON, LTD.	IRELAND	DUBLIN	LEINSTER PROVINCE	353 (1) 456-8500 GENERAL INFO
MC CORMICK MACNAUGHTON, LTD.	IRELAND	CORK	MUNSTER PROVINCE	353 (21) 50-2252 GENERAL INFO
MC CORMICK MACNAUGHTON, LTD.	IRELAND	CORK	MUNSTER PROVINCE	353 (21) 497 7170 GENERAL INFO

Table 1. Caterpillar Dealers - Continued.

Dealer Name	Country	City	State/Province/Region	Phone
MC CORMICK MACNAUGHTON, LTD.	IRELAND	CORK	MUNSTER PROVINCE	353 (21) 439-4424 GENERAL INFO
MC CORMICK MACNAUGHTON, LTD.	IRELAND	LIMERICK	MUNSTER PROVINCE	353 (61) 311 388 GENERAL INFO
MC CORMICK MACNAUGHTON, LTD.	IRELAND	ATHLONE		353 (906) 486-906 GENERAL INFO
TRACTORS AND EQUIPMENT	ISRAEL	QIRYAT BIALIK	HAIFA MEHOZ	972 (4) 878-7444 GENERAL INFO
TRACTORS AND EQUIPMENT	ISRAEL	BEER SHEVA	SOUTHERN MEHOZ	972 (7) 627-3810 GENERAL INFO
TRACTORS AND EQUIPMENT	ISRAEL	HOLON	TEL AVIV MEHOZ	972 (3) 557-1555 GENERAL INFO
TRACTORS AND EQUIPMENT	ISRAEL	HOLON	TEL AVIV MEHOZ	972 (3) 557-1555 GENERAL INFO
MACCHINE AGRICOLE INDUSTRIALI	ITALY	SCERNE DI PINETO	ABRUZZI REGIONE	39 (085) 94.65.41 GENERAL INFO
MACCHINE AGRICOLE INDUSTRIALI	ITALY	FOGGIA	APULIA REGIONE	39 (0881) 68.04.05 GENERAL INFO
MACCHINE AGRICOLE INDUSTRIALI	ITALY	MODUGNO	APULIA REGIONE	39 (080) 58.61.111 GENERAL INFO
MACCHINE AGRICOLE INDUSTRIALI	ITALY	POTENZA	BASILICATA REGIONE	39 (0971) 48.55.19 GENERAL INFO
MACCHINE AGRICOLE INDUSTRIALI	ITALY	CATANZARO	CALABRIA REGIONE	39 (0961) 75.40.88 GENERAL INFO
MACCHINE AGRICOLE INDUSTRIALI	ITALY	RENDE	CALABRIA REGIONE	39 (0984) 83.16.11 GENERAL INFO
MACCHINE AGRICOLE INDUSTRIALI	ITALY	MARCIANISE	CAMPANIA REGIONE	39 (0823) 58.31.11 GENERAL INFO
MEC-TRACK S.R.L.	ITALY	BAZZANO	EMILIA-ROMAGNA REGIONE	390 (51) 83 61 11 GENERAL INFO
COMPAGNIA GENERALE TRATTORI	ITALY	CALDERARA DI RENO	EMILIA-ROMAGNA REGIONE	39 (051) 6477.210 GENERAL INFO
COMPAGNIA GENERALE TRATTORI	ITALY	GRAGNANO TREBBIENSE	EMILIA-ROMAGNA REGIONE	39 (0523) 762601 GENERAL INFO
COMPAGNIA GENERALE TRATTORI	ITALY	SANTARCANGELO DI ROMAGNA	EMILIA-ROMAGNA REGIONE	39 (0541) 623473 GENERAL INFO
COMPAGNIA GENERALE TRATTORI	ITALY	TRICESIMO	FRUILI-VENEZIA GIULIA REGIONE	39 (0432) 852624 GENERAL INFO
MACCHINE AGRICOLE INDUSTRIALI	ITALY	FROSINONE	LATIUM REGIONE	39 (0775) 89.81.63 GENERAL INFO
MACCHINE AGRICOLE INDUSTRIALI	ITALY	ORTE	LATIUM REGIONE	39 (0761) 40.20.10 GENERAL INFO
MACCHINE AGRICOLE INDUSTRIALI	ITALY	ROMA	LATIUM REGIONE	39 (06) 82.60.1 GENERAL INFO
MACCHINE AGRICOLE INDUSTRIALI	ITALY	ROMA	LATIUM REGIONE	39 (06) 90.06.211 GENERAL INFO
MACCHINE AGRICOLE INDUSTRIALI	ITALY	ROMA	LATIUM REGIONE	390 (6) 82.60.1 GENERAL INFO

Table 1. Caterpillar Dealers - Continued.

Dealer Name	Country	City	State/Province/Region	Phone
COMPAGNIA GENERALE TRATTORI	ITALY	GENOA	LIGURIA REGIONE	39 (010) 7236.210 GENERAL INFO
NOLOITALIA S.P.A.	ITALY	BARANZATE	LOMBARDY REGIONE	39 (02) 3560352 GENERAL INFO
COMPAGNIA GENERALE TRATTORI	ITALY	CARUGATE	LOMBARDY REGIONE	39 (02) 923641 GENERAL INFO
NOLOITALIA S.P.A.	ITALY	CASTEGNATO	LOMBARDY REGIONE	39 (035) 2722355 GENERAL INFO
NOLOITALIA S.P.A.	ITALY	LALLIO	LOMBARDY REGIONE	39 (030) 690501 GENERAL INFO
COMPAGNIA GENERALE TRATTORI	ITALY	PASSIRANO	LOMBARDY REGIONE	39 (030) 657 681 GENERAL INFO
COMPAGNIA GENERALE TRATTORI	ITALY	POSTALESIO	LOMBARDY REGIONE	39 (0342) 493802 GENERAL INFO
NOLOITALIA S.P.A.	ITALY	ROZZANO	LOMBARDY REGIONE	39 (030) 57503249 GENERAL INFO
COMPAGNIA GENERALE	ITALY	VIMODRONE	LOMBARDY REGIONE	39 (02) 27427-1 GENERAL INFO
COMPAGNIA GENERALE TRATTORI	ITALY	VIMODRONE	LOMBARDY REGIONE	39 (02) 27427-1 GENERAL INFO
COMPAGNIA GENERALE TRATTORI	ITALY	OSIMO	MARCHES REGIONE	39 (071) 710-8233 GENERAL INFO
COMPAGNIA GENERALE TRATTORI	ITALY	FOSSANO	PIEDMONT REGIONE	39 (0172) 693366 GENERAL INFO
COMPAGNIA GENERALE TRATTORI	ITALY	SETTIMO TORINESE	PIEDMONT REGIONE	39 (011) 896 3511 GENERAL INFO
COMPAGNIA GENERALE TRATTORI	ITALY	VERCELLI	PIEDMONT REGIONE	39 (0161) 2951 GENERAL INFO
COMPAGNIA GENERALE TRATTORI	ITALY	VERCELLI	PIEDMONT REGIONE	39 (0161) 296 609 GENERAL INFO
MACCHINE AGRICOLE INDUSTRIALI	ITALY	VERCELLI	PIEDMONT REGIONE	39 (471) 82.56.88 GENERAL INFO
MACCHINE AGRICOLE INDUSTRIALI	ITALY	CAGLIARI	SARDINIA REGIONE	39 (070) 21.12.71 GENERAL INFO
MACCHINE AGRICOLE INDUSTRIALI	ITALY	SASSARI	SARDINIA REGIONE	39 (079) 26.37.401 GENERAL INFO
MACCHINE AGRICOLE INDUSTRIALI	ITALY	CARINI	SICILY REGIONE	39 (091) 86.33.111 GENERAL INFO
MACCHINE AGRICOLE INDUSTRIALI	ITALY	CATANIA	SICILY REGIONE	39 (095) 74.98.111 GENERAL INFO
MACCHINE AGRICOLE INDUSTRIALI	ITALY	MESSINA	SICILY REGIONE	39 (90) 62.55.915 GENERAL INFO
COMPAGNIA GENERALE TRATTORI	ITALY	GARDOLO	TRENTINO- ALTO ADIGE REGIONE	39 (0461) 421386 GENERAL INFO
COMPAGNIA GENERALE TRATTORI	ITALY	ORA-AUER	TRENTINO- ALTO ADIGE REGIONE	39 (0471) 810485 GENERAL INFO
COMPAGNIA GENERALE TRATTORI	ITALY	AREZZO	TUSCANY REGIONE	39 (0575) 394.210 GENERAL INFO

Table 1. Caterpillar Dealers - Continued.

Dealer Name	Country	City	State/Province/Region	Phone
COMPAGNIA GENERALE TRATTORI	ITALY	AVENZA	TUSCANY REGIONE	39 (0585) 858451 GENERAL INFO
COMPAGNIA GENERALE TRATTORI	ITALY	CALENZANO	TUSCANY REGIONE	39 (055) 88604.210 GENERAL INFO
COMPAGNIA GENERALE TRATTORI	ITALY	STAGNO	TUSCANY REGIONE	39 (0586) 944020 GENERAL INFO
COMPAGNIA GENERALE TRATTORI	ITALY	TORGIANO	UMBRIA REGIONE	39 (075) 988-0124 GENERAL INFO
COMPAGNIA GENERALE TRATTORI	ITALY	QUART	VALLE D'AOSTA REGIONE	39 (0165) 765352 GENERAL INFO
NOLOITALIA S.P.A.	ITALY	RUBANO	VENETO REGIONE	39 (049) 8733712 GENERAL INFO
COMPAGNIA GENERALE TRATTORI	ITALY	SARMEOLA	VENETO REGIONE	39 (049) 8733.710 GENERAL INFO
COMPAGNIA GENERALE TRATTORI	ITALY	VERONA	VENETO REGIONE	39 (045) 8201431 GENERAL INFO
POWER & TRACTORS LIMITED	JAMAICA	KINGSTON	KINGSTON PARISH	1 (876) 923-7190 GENERAL INFO
POWER & TRACTORS LIMITED	JAMAICA	MONTEGO BAY	SAINT JAMES PARISH	1 (876) 953-2386 GENERAL INFO
CENTRAL JAPAN CATERPILLAR	JAPAN	ANJO-SHI	AICHI-KEN	81 (566) 98-1112 GENERAL INFO
SHIKOKU CONSTRUCTION EQUIPMENT	JAPAN	MATSUYAMA-SHI	EHIME-KEN	81 (89) 972-1481 GENERAL INFO
SHIKOKU CONSTRUCTION EQUIPMENT	JAPAN	MATSUYAMA-SHI	EHIME-KEN	81 (89) 972-1481 GENERAL INFO
KYUSHU CATERPILLAR MITSUBISHI	JAPAN	CHIKUSHINO-SHI	FUKUOKA-KEN	81 (92) 924-1211 GENERAL INFO
KYUSHU CATERPILLAR MITSUBISHI	JAPAN	CHIKUSHINO-SHI	FUKUOKA-KEN	81 (92) 924-1211 GENERAL INFO
HOKKAIDO CM CONSTRUCTION	JAPAN	SAPPORO-SHI	HOKKAI-DO	81 (11) 881-6612 GENERAL INFO
SHIKOKU KIKI CO., LTD.	JAPAN	TAKAMATSU-SHI	KAGAWA-KEN	81 (87) 836-0363 GENERAL INFO
EAST JAPAN CATERPILLAR	JAPAN	SAGAMIHARA-SHI	KANAGAWA-KEN	81 (42) 775-2610 GENERAL INFO
TOHOKU CONSTRUCTION EQUIPMENT	JAPAN	IWANUMA-SHI	MIYAGI-KEN	81 (223) 22-3111 GENERAL INFO
TOHOKU CONSTRUCTION EQUIPMENT	JAPAN	IWANUMA-SHI	MIYAGI-KEN	81 (223) 22-3111 GENERAL INFO
OKINAWA CATERPILLAR MITSUBISHI	JAPAN	NAKAGAMI	OKINAWA-KEN	81 (98) 946-0311 GENERAL INFO
OKINAWA CATERPILLAR MITSUBISHI	JAPAN	NAKAGAMI	OKINAWA-KEN	81 (98) 946-0311 GENERAL INFO
WEST JAPAN CATERPILLAR	JAPAN	IBARAKI-SHI	OSAKA-FU	81 (72) 641-1135 GENERAL INFO
SHINKO ENGINEERING CO., LTD.	JAPAN	GIFU		81 (584) 89-3121 GENERAL INFO

Table 1. Caterpillar Dealers - Continued.

Dealer Name	Country	City	State/Province/Region	Phone
JORDAN TRACTOR & EQUIPMENT CO.	JORDAN	AMMAN	ASIMAH MUHAFAZAH	962 (6) 516-1141 GENERAL INFO
JORDAN TRACTOR & EQUIPMENT CO.	JORDAN	AMMAN	ASIMAH MUHAFAZAH	962 (6) 661141 GENERAL INFO
MACHINE INTERNATIONAL TRADE	KAZAKHSTAN	VALETTA	MALTA I.	7 (3272) 73 477 GENERAL INFO
MACHINE INTERNATIONAL TRADE	KAZAKHSTAN	VALETTA	MALTA I.	7 (3212) 440 988 GENERAL INFO
MACHINE INTERNATIONAL TRADE	KAZAKHSTAN	VALETTA	MALTA I.	7 (3122) 355 057 GENERAL INFO
MACHINE INTERNATIONAL TRADE	KAZAKHSTAN	VALETTA	MALTA I.	7 (3272) 73 477 GENERAL INFO
MANTRAC KENYA	KENYA	MOMBASA	COAST PROVINCE	254 (041) 223442 GENERAL INFO
MANTRAC KENYA	KENYA	NAIROBI	NAIROBI DISTRICT	254 (2) 530903 GENERAL INFO
MANTRAC KENYA	KENYA	KISUMU	NYANZA PROVINCE	254 (57) 232284 GENERAL INFO
HAE IN CORPORATION	KOREA SOUTH	JEONJU	CHOLLA-BUKTO	82 (63) 245-1777 GENERAL INFO
HAE IN CORPORATION	KOREA SOUTH	JECHON-SHI	CHUNGCHONG-BUKTO	82 (43) 643-3307 GENERAL INFO
HAE IN CORPORATION	KOREA SOUTH	CHEONAN	CHUNGCHONG-NAMDO	82 (41) 559-1554 GENERAL INFO
HAE IN CORPORATION	KOREA SOUTH	INCHON	INCHON-JIKHALSI	82 (32) 761-0564 GENERAL INFO
HAE IN CORPORATION	KOREA SOUTH	DONGHAE	KANGWON-DO	82 (33) 522-5211 GENERAL INFO
HAE IN CORPORATION	KOREA SOUTH	KWANGJU	KWANGJU-JIKHALSI	82 (62) 526-3895 GENERAL INFO
HAE IN CORPORATION	KOREA SOUTH	UIJUNGBU	KYONGGI-DO	82 (31) 826-0966 GENERAL INFO
HAE IN CORPORATION	KOREA SOUTH	DAEGU	KYONGSANG-BUKTO	82 (53) 521-8072 GENERAL INFO
HAE IN CORPORATION	KOREA SOUTH	JINJU	KYONGSANG-NAMDO	82 (55) 755-9669 GENERAL INFO
HAE IN CORPORATION	KOREA SOUTH	PUSAN	PUSAN-JIKHALSI	82 (51) 517-7060 GENERAL INFO
HAE IN CORPORATION	KOREA SOUTH	SEOCHO-GU	SOUL-T'UKPYOLSI	82 (2) 3498-4500 GENERAL INFO
HAE IN CORPORATION	KOREA SOUTH	SEOCHO-GU	SOUL-T'UKPYOLSI	82 (54) 262-7551 GENERAL INFO
HAE IN CORPORATION	KOREA SOUTH	SEOCHO-GU	SOUL-T'UKPYOLSI	82 (31) 667-2062 GENERAL INFO
HAE IN CORPORATION	KOREA SOUTH	YOUNGDEUNGPO-GU	SOUL-T'UKPYOLSI	82 (2) 2636-2891 GENERAL INFO
HAE IN CORPORATION	KOREA SOUTH	DAEJEON	TAEJON-JIKHALSI	82 (42) 531-6518 GENERAL INFO

Table 1. Caterpillar Dealers - Continued.

Dealer Name	Country	City	State/Province/Region	Phone
MOHAMED ABDULRAHMAN AL BAHAR	KUWAIT	SAFAT	KUWAIT CAPITAL	965 (4) 810855 GENERAL INFO
MOHAMED ABDULRAHMAN AL-BAHAR	KUWAIT	SAFAT	KUWAIT CAPITAL	965 (4) 810855 GENERAL INFO
LAO-METRO CO., LTD.	LAO DEM. REPUB.	BAN NONG PHA NAI	VIENTIANE KHOUENG	856 (21) 215-160 GENERAL INFO
LAO-METRO CO., LTD.	LAO DEM. REPUB.	PAKSA	VIENTIANE KHOUENG	856 (31) 212-152 GENERAL INFO
CRAMO BALTIC	LATVIA	SOLLENTUNA	STOCKHOLM LAN	371 (7) 38 75 55 GENERAL INFO
SIA WITRAKTOR (LATVIA)	LATVIA	MARUPE		371 () 770 35 13 GENERAL INFO
M. EZZAT JALLAD & FILS	LEBANON	BEIRUT	BEIRUT CITY	961 (9) 212 077 GENERAL INFO
M. EZZAT JALLAD & FILS	LEBANON	BEIRUT	BEIRUT CITY	961 (9) 901521 GENERAL INFO
MEDITRAC	LIBYAN ARAB JAM	TRIPOLI	TRIPOLI BALADIYAH	218 (21) 481 3360 GENERAL INFO
UAB WITRAKTOR (LITHUANIA)	LITHUANIA	VILNIUS	LITHUANIA	370 (2) 5260 3259 GENERAL INFO
CRAMO BALTIC	LITHUANIA	SOLLENTUNA	STOCKHOLM LAN	370 (5) 264 1903 GENERAL INFO
CRAMO BALTIC	LITHUANIA	SOLLENTUNA	STOCKHOLM LAN	370 (37) 457 943 GENERAL INFO
CRAMO BALTIC	LITHUANIA	SOLLENTUNA	STOCKHOLM LAN	37 (46) 313 003 GENERAL INFO
BERGERAT-DUTRY, S.A.	LUXEMBOURG	EHLANGE		352 () 370837 GENERAL INFO
TEKNOX MACHINERY D.O.O.	MACEDONIA	SKOPJE	MACEDONIA REPUBLIKA	389 (2) 52 72 05 GENERAL INFO
TEKNOXGROUP SA	MACEDONIA	LUGANO	TICINO CANTON	389 (2) 52 72 05 GENERAL INFO
HENRI FRAISE FILS & CIE	MADAGASCAR	ANTANANARIVO	ANTANANARIVO FARITANIN	261 (20) 22 227 21 GENERAL INFO
BARLOWORLD EQUIPMENT MALAWI	MALAWI	LILONGWE	CENTRAL REGION	265 () 710-344 GENERAL INFO
BARLOWORLD EQUIPMENT MALAWI	MALAWI	BLANTYRE	SOUTHERN REGION	265 (1) 670-666 GENERAL INFO
TRACTORS MALAYSIA (1982)	MALAYSIA	JOHORE BAHRU	JOHORE NEGERI	60 (07) 237-5305 GENERAL INFO
TRACTORS MALAYSIA (1982)	MALAYSIA	KLUANG	JOHORE NEGERI	60 (07) 772-3387 GENERAL INFO
TRACTORS MALAYSIA (1982)	MALAYSIA	ALOR SETAR	KEDAH NEGERI	60 (04) 733-6813 GENERAL INFO
TRACTORS MALAYSIA (1982)	MALAYSIA	PULAU LANGKAWI	KEDAH NEGERI	60 (04) 966-2202 GENERAL INFO
TRACTORS MALAYSIA (1982)	MALAYSIA	KOTA BHARU	KELANTAN NEGERI	60 (09) 773-7405 GENERAL INFO

Table 1. Caterpillar Dealers - Continued.

Dealer Name	Country	City	State/Province/Region	Phone
TRACTORS MALAYSIA (1982)	MALAYSIA	MELAKA	MELAKA NEGERI	60 (06) 336-2630 GENERAL INFO
TRACTORS MALAYSIA (1982)	MALAYSIA	KUANTAN	PAHANG NEGERI	60 (09) 566-1813 GENERAL INFO
TRACTORS MALAYSIA (1982)	MALAYSIA	IPOH	PERAK NEGERI	60 (05) 322-4133 GENERAL INFO
TRACTORS MALAYSIA (1982)	MALAYSIA	PERAI	PINANG NEGERI	60 (04) 390-6428 GENERAL INFO
TRACTORS MALAYSIA (1982)	MALAYSIA	KENINGAU	SABAH NEGERI	60 (087) 33-3420 GENERAL INFO
TRACTORS MALAYSIA (1982)	MALAYSIA	KOTA KINABALU	SABAH NEGERI	60 (088) 440778 GENERAL INFO
TRACTORS MALAYSIA (1982)	MALAYSIA	LABUAN	SABAH NEGERI	60 (087) 422399 GENERAL INFO
TRACTORS MALAYSIA (1982)	MALAYSIA	LAHAD DATU	SABAH NEGERI	60 (089) 88-1733 GENERAL INFO
TRACTORS MALAYSIA (1982)	MALAYSIA	SANDAKAN	SABAH NEGERI	60 (089) 201-717 GENERAL INFO
TRACTORS MALAYSIA (1982)	MALAYSIA	TAWAU	SABAH NEGERI	60 (089) 917-800 GENERAL INFO
TRACTORS MALAYSIA (1982)	MALAYSIA	BINTULU	SARAWAK NEGERI	60 (086) 255006 GENERAL INFO
TRACTORS MALAYSIA (1982)	MALAYSIA	KUCHING	SARAWAK NEGERI	60 (082) 485667 GENERAL INFO
TRACTORS MALAYSIA (1982)	MALAYSIA	MIRI	SARAWAK NEGERI	60 (085) 655950 GENERAL INFO
TRACTORS MALAYSIA (1982)	MALAYSIA	SIBU	SARAWAK NEGERI	60 (084) 211979 GENERAL INFO
TRACTORS MALAYSIA	MALAYSIA	PUCHONG	SELANGOR NEGERI	60 (03) 8060-1001 GENERAL INFO
TRACTORS MALAYSIA (1982)	MALAYSIA	PUCHONG	SELANGOR NEGERI	60 (03) 8060-1000 GENERAL INFO
TRACTORS MALAYSIA (1982)	MALAYSIA	PUCHONG	SELANGOR NEGERI	60 (03) 8060-1003 GENERAL INFO
TRACTORS MALAYSIA (1982)	MALAYSIA	KEMAMAN	TERENGGANU NEGERI	60 (09) 863-1518 GENERAL INFO
TRACTORS MALAYSIA (1982)	MALAYSIA	KUALA TRENGGANU	TERENGGANU NEGERI	60 (09) 623-1342 GENERAL INFO
MANUTENTION AFRICAINE	MALI	BAMAKO	CAPITAL DISTRICT	223 () 221 25 69 GENERAL INFO
MACHINE INTERNATIONAL TRADE	MALTA	VALETTA	MALTA I.	44 (207) 222-5562 GENERAL INFO
UNEC LTD	MALTA	VALETTA	MALTA I.	356 (21) 57.64.09 GENERAL INFO
BAMITEL S.A.S.	MARTINIQUE	LAMENTIN		596 () 57 01 70 GENERAL INFO
BAMITEL S.A.S.	MARTINIQUE	LAMENTIN		596 () 57 01 70 GENERAL INFO

Table 1. Caterpillar Dealers - Continued.

Dealer Name	Country	City	State/Province/Region	Phone
HENRI FRAISE FILS & CIE	MAYOTTE	MAMOUDZOU		269 () 62.11.46 GENERAL INFO
TRACSA, S.A. DE C.V.	MEXICO	AGUASCALIENTES	AGUASCALIENTES	52 (49) 71-15-71 GENERAL INFO
TRACSA, S.A. DE C.V.	MEXICO	LEON	BAJA CALIFORNIA	52 (36) 788088 GENERAL INFO
EMPIRE RIO COLORADO S.A. DE	MEXICO	MEXICALI	BAJA CALIFORNIA	1 (480) 633-4527 GENERAL INFO
HAWTHORNE DE MEXICO S. DE R.L.	MEXICO	TIJUANA	BAJA CALIFORNIA	52 (66) 86-2166 GENERAL INFO
EMPRESAS MATCO, S.A. DE C.V.	MEXICO	LA PAZ	BAJA CALIFORNIA SUR	52 (115) 7-11-40 GENERAL INFO
EMPRESAS MATCO, S.A. DE C.V.	MEXICO	LA PAZ	BAJA CALIFORNIA SUR	52 (112) 2-89-89 GENERAL INFO
HAWTHORNE DE MEXICO S.R.L.	MEXICO	NATIONAL CITY	CALIFORNIA	52 (664) 454-2000 GENERAL INFO
MAQUINARIA, S.A. DE C.V.	MEXICO	CHIHUAHUA	CHIHUAHUA	52 (614) 420-9900 PRIMARY BUSINESS
MAQUINARIA, S.A. DE C.V.	MEXICO	CHIHUAHUA	CHIHUAHUA	52 (614) 442-3900 GENERAL INFO
MAQUINARIA, S.A. DE C.V.	MEXICO	CIUDAD JUAREZ	CHIHUAHUA	52 (656) 637-5000 GENERAL INFO
MAQUINARIA, S.A. DE C.V.	MEXICO	CUAUHTEMOC	CHIHUAHUA	52 (625) 586-3248 GENERAL INFO
MAQUINARIA, S.A. DE C.V.	MEXICO	DELICIAS	CHIHUAHUA	52 (639) 467-4525 GENERAL INFO
MAQUINARIA, S.A. DE C.V.	MEXICO	HIDALGO DEL PARRAL	CHIHUAHUA	52 (627) 523 0963 GENERAL INFO
TRACSA, S.A. DE C.V.	MEXICO	COLIMA	COLIMA	52 (331) 42220 GENERAL INFO
MAQUINARIA DIESEL S.A. DE C.V.	MEXICO	MEXICO CITY	DISTRITO FEDERAL	52 (8) 400-2091 GENERAL INFO
GRUPO FINANCIERO CATERPILLAR	MEXICO	SANTE FE	DISTRITO FEDERAL	52 (5) 237-2983 GENERAL INFO
MAQUINARIA, S.A. DE C.V.	MEXICO	DURANGO	DURANGO	52 (618) 814-0933 GENERAL INFO
MAQUINARIA, S.A. DE C.V.	MEXICO	GOMEZ PALACIO	DURANGO	52 (817) 748-1700 GENERAL INFO
TRACSA ENERGIA, S.A. DE C.V.	MEXICO	TLAQUEPAQUE	JALISCO	52 (36) 78-8000 GENERAL INFO
TRACSA, S.A. DE C.V.	MEXICO	TLAQUEPAQUE	JALISCO	52 (36) 78-8052 FINANCE
TRACSA, S.A. DE C.V.	MEXICO	LAZARO CARDENAS	MICHOACAN	52 (753) 2-03-12 GENERAL INFO
TRACSA, S.A. DE C.V.	MEXICO	MORELIA	MICHOACAN	52 (43) 163279 GENERAL INFO
TRACSA, S.A. DE C.V.	MEXICO	TEPIC	NAYARIT	52 (32) 115747 GENERAL INFO

Table 1. Caterpillar Dealers - Continued.

Dealer Name	Country	City	State/Province/Region	Phone
MAQUINARIA DIESEL S.A. DE C.V.	MEXICO	MONTERREY	NUEVO LEON	52 (8) 400-2091 GENERAL INFO
MAQUINARIA DIESEL S.A.	MEXICO	SANTA CATARINA	NUEVO LEON	52 (81) 8400-2000 GENERAL INFO
MAQUINARIA DIESEL S.A.	MEXICO	SANTA CATARINA	NUEVO LEON	52 (81) 8400-2000 GENERAL INFO
MAQUINARIA DIESEL S.A. DE C.V.	MEXICO	SANTA CATARINA	NUEVO LEON	52 (8) 400-4000 PRIMARY BUSINESS
MAQUINARIA DIESEL S.A. DE C.V.	MEXICO	SANTA CATARINA	NUEVO LEON	52 (88) 17 22 58 GENERAL INFO
MAQUINARIA DIESEL S.A. DE C.V.	MEXICO	SANTA CATARINA	NUEVO LEON	52 (861) 3 05 25 GENERAL INFO
MAQUINARIA DIESEL S.A. DE C.V.	MEXICO	SANTA CATARINA	NUEVO LEON	52 (12) 265800 GENERAL INFO
MAQUINARIA DIESEL S.A. DE C.V.	MEXICO	SANTA CATARINA	NUEVO LEON	52 (123) 21294 GENERAL INFO
MAQUINARIA DIESEL S.A. DE C.V.	MEXICO	SANTA CATARINA	NUEVO LEON	52 (86) 33 20 07 GENERAL INFO
MAQUINARIA DIESEL S.A. DE C.V.	MEXICO	SANTA CATARINA	NUEVO LEON	52 (89) 24 36 78 GENERAL INFO
MAQUINARIA DIESEL S.A. DE C.V.	MEXICO	SANTA CATARINA	NUEVO LEON	52 (138) 20464 GENERAL INFO
MAQUINARIA DIESEL S.A. DE C.V.	MEXICO	SANTA CATARINA	NUEVO LEON	52 (12) 12 77 71 GENERAL INFO
MAQUINARIA DIESEL S.A. DE C.V.	MEXICO	SANTA CATARINA	NUEVO LEON	52 (13) 154845 GENERAL INFO
MAQUINARIA DIESEL S.A. DE C.V.	MEXICO	SANTA CATARINA	NUEVO LEON	52 (8) 400-2091 GENERAL INFO
MAQUINARIA DIESEL S.A. DE C.V.	MEXICO	SANTA CATARINA	NUEVO LEON	52 (8) 400-2000 GENERAL INFO
MAQUINARIA DIESEL S.A. DE C.V.	MEXICO	SANTA CATARINA	NUEVO LEON	52 (87) 13 42 62 GENERAL INFO
MAQUINARIA DIESEL S.A. DE C.V.	MEXICO	SANTA CATARINA	NUEVO LEON	52 (84) 30 10 48 GENERAL INFO
MAQUINARIA DIESEL S.A. DE C.V.	MEXICO	SANTA CATARINA	NUEVO LEON	52 (878) 345 28 GENERAL INFO
MAQUINARIA DIESEL S.A. DE C.V.	MEXICO	SANTA CATARINA	NUEVO LEON	52 (5) 133-3600 GENERAL INFO
MAQUINARIA DIESEL S.A. DE C.V.	MEXICO	SANTA CATARINA	NUEVO LEON	52 (992) 71111 GENERAL INFO
MAQUINARIA DIESEL S.A. DE C.V.	MEXICO	SANTA CATARINA	NUEVO LEON	52 (9) 612-2205 GENERAL INFO
MAQUINARIA DIESEL S.A. DE C.V.	MEXICO	SANTA CATARINA	NUEVO LEON	52 (9) 382-1332 GENERAL INFO
MAQUINARIA DIESEL S.A. DE C.V.	MEXICO	SANTA CATARINA	NUEVO LEON	52 (9) 215-7667 GENERAL INFO
MAQUINARIA DIESEL S.A. DE C.V.	MEXICO	SANTA CATARINA	NUEVO LEON	52 (7) 822-0968 GENERAL INFO

Table 1. Caterpillar Dealers - Continued.

Dealer Name	Country	City	State/Province/Region	Phone
MAQUINARIA DIESEL S.A. DE C.V.	MEXICO	SANTA CATARINA	NUEVO LEON	52 (2) 716-4011 GENERAL INFO
MAQUINARIA DIESEL S.A. DE C.V.	MEXICO	SANTA CATARINA	NUEVO LEON	52 (9) 714-2448 GENERAL INFO
MAQUINARIA DIESEL S.A. DE C.V.	MEXICO	SANTA CATARINA	NUEVO LEON	52 (9) 812-5257 GENERAL INFO
MAQUINARIA DIESEL S.A. DE C.V.	MEXICO	SANTA CATARINA	NUEVO LEON	52 (931) 2-96-22 GENERAL INFO
MAQUINARIA DIESEL S.A. DE C.V.	MEXICO	SANTA CATARINA	NUEVO LEON	52 (2) 231-0726 GENERAL INFO
MAQUINARIA DIESEL S.A. DE C.V.	MEXICO	SANTA CATARINA	NUEVO LEON	52 (7) 466-0958 GENERAL INFO
MAQUINARIA DIESEL S.A. DE C.V.	MEXICO	SANTA CATARINA	NUEVO LEON	52 (9) 517-6122 GENERAL INFO
MAQUINARIA DIESEL S.A. DE C.V.	MEXICO	SANTA CATARINA	NUEVO LEON	52 (5) 565-4329 GENERAL INFO
MAQUINARIA DIESEL S.A. DE C.V.	MEXICO	SANTA CATARINA	NUEVO LEON	52 (2) 981-0117 GENERAL INFO
MAQUINARIA DIESEL S.A. DE C.V.	MEXICO	SANTA CATARINA	NUEVO LEON	52 (7) 212-7824 GENERAL INFO
TRACSA, S.A. DE C.V.	MEXICO	QUERETARO	QUERETARO	52 (42) 110300 GENERAL INFO
TRACSA, S.A. DE C.V.	MEXICO	SAN LUIS POTOSI	SAN LOUIS POTOSI	52 (48) 24-76-25 GENERAL INFO
EMPRESAS MATCO, S.A. DE C.V.	MEXICO	CULIACAN	SINALOA	52 (67) 14-12-00 GENERAL INFO
EMPRESAS MATCO, S.A. DE C.V.	MEXICO	LOS MOCHIS	SINALOA	52 (681) 2-38-37 GENERAL INFO
EMPRESAS MATCO, S.A. DE C.V.	MEXICO	MAZATLAN	SINALOA	52 (69) 82-77-42 GENERAL INFO
EMPRESAS MATCO, S.A. DE C.V.	MEXICO	CANANEA	SONORA	52 (633) 2-38-87 GENERAL INFO
EMPRESAS MATCO, S.A. DE C.V.	MEXICO	CIUDAD OBREGON	SONORA	52 (641) 4-32-12 GENERAL INFO
EMPRESAS MATCO, S.A. DE C.V.	MEXICO	CIUDAD OBREGON	SONORA	1 (644) 410 7018 GENERAL INFO
EMPRESAS MATCO, S.A. DE C.V.	MEXICO	GUAYMAS	SONORA	52 (622) 2-23-25 GENERAL INFO
EMPRESAS MATCO, S.A. DE C.V.	MEXICO	HERMOSILLO	SONORA	52 (62) 61-00-21 GENERAL INFO
WAGNER ASIA EQUIPMENT, XXK	MONGOLIA	ULAANBAATAR	ULAANBAATAR HOT	976 (1) 687588 GENERAL INFO
TRACTAFRIC S.A.	MOROCCO	AGADIR	AGADIR PROVINCE	212 (8) 84.77.59 GENERAL INFO
TRACTAFRIC S.A.	MOROCCO	AIN SEBAA	CASABLANCA-ANFA WILAYA	212 (2) 276 30 00 GENERAL INFO
TRACTAFRIC S.A.	MOROCCO	MEKNES	MEKNES PROVINCE	212 (5) 51.67.15 GENERAL INFO

Table 1. Caterpillar Dealers - Continued.

Dealer Name	Country	City	State/Province/Region	Phone
BARLOWORLD EQUIPAMENTOS	MOZAMBIQUE	MAPUTO	MAPUTO CITY	258 (1) 430-184 GENERAL INFO
BARLOWORLD EQUIPMENTOS	MOZAMBIQUE	BEIRA	SOFALA PROVINCIA	258 (76) 2017757 AFTER HOURS
MYANMAR TRACTORS LTD. (MTL)	MYANMAR	YANGON	RANGOON YIN	95 (1) 547310 GENERAL INFO
MYANMAR TRACTORS LTD. (MTL)	MYANMAR	YANGON	RANGOON YIN	95 (2) 22083 GENERAL INFO
BARLOWORLD EQUIPMENT PTY	NAMIBIA	OTJIWARONGO	OTJIWARONGO DISTRICT	264 (67) 303121 GENERAL INFO
BARLOWORLD EQUIPMENT PTY LTD	NAMIBIA	WALVIS BAY	WINDHOEK DISTRICT	27 (64) 20 3454 GENERAL INFO
BARLOWORLD NAMIBIA PTY LTD	NAMIBIA	WINDHOEK	WINDHOEK DISTRICT	264 (61) 2804600 GENERAL INFO
TIL LIMITED	NEPAL	KATHMANDU	BAGMATI ANCHAL	977 (1) 41-2127 GENERAL INFO
TRACTORS NEPAL PRIVATE LIMITED	NEPAL	THANKOT	BAGMATI ANCHAL	977 (1) 31 2254 GENERAL INFO
PON EQUIPMENT BV	NETHERLANDS	BEILEN	DRENTHE PROVINCIEN	31 (593) 538255 GENERAL INFO
PON EQUIPMENT BV	NETHERLANDS	ALMERE	FLEVOLAND PROVINCIEN	31 (88) 73.77.500 GENERAL INFO
PON EQUIPMENT BV	NETHERLANDS	ARNHEM	GELDERLAND PROVINCIEN	31 (26) 389 1277 GENERAL INFO
PON POWER BV	NETHERLANDS	DEVENTER	GELDERLAND PROVINCIEN	31 (570) 676935 GENERAL INFO
PON POWER BV	NETHERLANDS	GRONINGEN	GRONINGEN PROVINCIEN	31 (50) 5424833 GENERAL INFO
PON POWER BV	NETHERLANDS	MAASBRACHT	LIMBURG PROVINCIEN	31 (475) 461710 GENERAL INFO
ENERGYST CAT RENTAL POWER	NETHERLANDS	BLADEL	NOORD-BRABANT PROVINCIEN	31 (497) 532-500 GENERAL INFO
PON EQUIPMENT BV	NETHERLANDS	VALKENSWAARD	NOORD-BRABANT PROVINCIEN	31 (40) 2082588 GENERAL INFO
PON POWER BV	NETHERLANDS	AALSMEER	NOORD-HOLLAND PROVINCIEN	31 (297) 380000 GENERAL INFO
CRAMO NEDERLAND B.V.	NETHERLANDS	SOLLENTUNA	STOCKHOLM LAN	31 (45) 5411930 GENERAL INFO
CRAMO NEDERLAND B.V.	NETHERLANDS	SOLLENTUNA	STOCKHOLM LAN	31 (43) 3684440 GENERAL INFO
CRAMO NEDERLAND B.V.	NETHERLANDS	SOLLENTUNA	STOCKHOLM LAN	31 (168) 388116 GENERAL INFO
CRAMO NEDERLAND B.V.	NETHERLANDS	SOLLENTUNA	STOCKHOLM LAN	31 (180) 411007 GENERAL INFO
CRAMO NEDERLAND B.V.	NETHERLANDS	SOLLENTUNA	STOCKHOLM LAN	31 (182) 68 90 80 GENERAL INFO
CRAMO NEDERLAND B.V.	NETHERLANDS	SOLLENTUNA	STOCKHOLM LAN	31 (182) 64 00 50 GENERAL INFO

Table 1. Caterpillar Dealers - Continued.

Dealer Name	Country	City	State/Province/Region	Phone
CRAMO NEDERLAND B.V.	NETHERLANDS	SOLLENTUNA	STOCKHOLM LAN	31 (79) 360 12 60 GENERAL INFO
GUNCO BV	NETHERLANDS	SOLLENTUNA	STOCKHOLM LAN	31 (20) 584 03 03 GENERAL INFO
GUNCO BV	NETHERLANDS	SOLLENTUNA	STOCKHOLM LAN	31 (10) 208 15 00 GENERAL INFO
GUNCO BV	NETHERLANDS	SOLLENTUNA	STOCKHOLM LAN	31 (499) 47 71 01 GENERAL INFO
GUNCO BV	NETHERLANDS	SOLLENTUNA	STOCKHOLM LAN	31 (38) 465 37 77 GENERAL INFO
GUNCO BV	NETHERLANDS	SOLLENTUNA	STOCKHOLM LAN	31 (38) 465 37 77 GENERAL INFO
SIEBERG B.V.	NETHERLANDS	VEENENDAAL	UTRECHT PROVINCIEN	31 (318) 562 211 GENERAL INFO
PON EQUIPMENT BV	NETHERLANDS	PAPENDRECHT	ZUID-HOLLAND PROVINCIEN	31 (78) 6417800 GENERAL INFO
PON POWER BV	NETHERLANDS	PAPENDRECHT	ZUID-HOLLAND PROVINCIEN	31 (78) 6-420-420 PRIMARY BUSINESS
VENEQUIP CURACAO, N.V.	NETHERLNDS ANT	CURACAO	CURACAO I.	599 (9) 888-3000 GENERAL INFO
SOCIETE CALEDONIENNE DE	NEW CALEDONIA	NOUMEA	SUD PROVINCE	687 () 43.81.81 GENERAL INFO
GOUGH GOUGH & HAMER LTD	NEW ZEALAND	AUCKLAND	AUCKLAND REGION	64 (9) 358-4149 GENERAL INFO
GOUGH GOUGH & HAMER LTD	NEW ZEALAND	SOUTH AUCKLAND	AUCKLAND REGION	64 (9) 979-9333 GENERAL INFO
GOUGH GOUGH & HAMER LTD	NEW ZEALAND	ROTORUA	BAY OF PLENTY REGION	64 (7) 575 2800 ECAP
GOUGH GOUGH & HAMER LTD	NEW ZEALAND	CHRISTCHURCH	CANTERBURY REGION	64 (3) 983-2333 GENERAL INFO
GOUGH GOUGH & HAMER LTD	NEW ZEALAND	CHRISTCHURCH	CANTERBURY REGION	64 (6) 843-7747 GENERAL INFO
GOUGH GOUGH & HAMER LTD	NEW ZEALAND	CHRISTCHURCH	CANTERBURY REGION	64 (3) 983-2300 GENERAL INFO
GOUGH GOUGH & HAMER LTD	NEW ZEALAND	GISBORNE	HAWKE'S BAY REGION	64 (6) 867-6569 GENERAL INFO
GOUGH GOUGH & HAMER LTD	NEW ZEALAND	RICHMOND	MARLBOROUGH REGION	64 (3) 544-8192 GENERAL INFO
GOUGH GOUGH & HAMER LTD	NEW ZEALAND	WHANGAREI	NORTHLAND REGION	64 (9) 438-3920 GENERAL INFO
GOUGH GOUGH & HAMER LTD	NEW ZEALAND	DUNEDIN	SOUTHLAND REGION	64 (3) 455-1003 GENERAL INFO
GOUGH GOUGH & HAMER LTD	NEW ZEALAND	INVERCARGILL	SOUTHLAND REGION	64 (3) 215-9089 GENERAL INFO
GOUGH GOUGH & HAMER LTD	NEW ZEALAND	NEW PLYMOUTH	TARANAKI REGION	64 (6) 759-2103 GENERAL INFO
GOUGH GOUGH & HAMER LTD	NEW ZEALAND	HAMILTON	WAIKATO REGION	64 (7) 847-1979 GENERAL INFO

Table 1. Caterpillar Dealers - Continued.

Dealer Name	Country	City	State/Province/Region	Phone
GOUGH GOUGH & HAMER LTD	NEW ZEALAND	PALMERSTON NORTH	WANGANUI REGION	64 (6) 354-8029 GENERAL INFO
GOUGH GOUGH & HAMER LTD	NEW ZEALAND	LOWER HUTT	WELLINGTON REGION	64 (4) 569-1099 GENERAL INFO
GOUGH GOUGH & HAMER LTD	NEW ZEALAND	LOWER HUTT	WELLINGTON REGION	64 (4) 569-1099 GENERAL INFO
GOUGH GOUGH & HAMER LTD	NEW ZEALAND	GREYMOUTH	WEST COAST REGION	64 (3) 768-4405 GENERAL INFO
NICARAGUA MACHINERY CO.	NICARAGUA	MANAGUA	MANAGUA REGION	505 () 263-1151 GENERAL INFO
MANUTENTION AFRICAINE	NIGER	NIAMEY	NIAMEY DEPARTEMENT	227 () 73 36 10 GENERAL INFO
TRACTOR & EQUIPMENT NIGERIA	NIGERIA	ABUJA	ABUJA CAPITAL TERR	234 (09) 5239290 GENERAL INFO
TRACTOR & EQUIPMENT NIGERIA	NIGERIA	EKET	AKWA IBOM STATE	234 (085) 701703 GENERAL INFO
TRACTOR & EQUIPMENT NIGERIA	NIGERIA	ENUGU	ANAMBRA STATE	234 (042) 254520 GENERAL INFO
TRACTOR & EQUIPMENT NIGERIA	NIGERIA	WARRI	DELTA STATE	234 (053) 250673 GENERAL INFO
TRACTOR & EQUIPMENT NIGERIA	NIGERIA	KADUNA	KADUNA STATE	234 (062) 244122 GENERAL INFO
TRACTOR & EQUIPMENT NIGERIA	NIGERIA	KANO	KANO STATE	234 (064) 647209 GENERAL INFO
TRACTOR & EQUIPMENT NIGERIA	NIGERIA	APAPA	LAGOS STATE	234 (1) 545-3979 GENERAL INFO
TRACTOR & EQUIPMENT	NIGERIA	IKEJA	LAGOS STATE	234 (1) 3451331-9 GENERAL INFO
TRACTOR & EQUIPMENT NIGERIA	NIGERIA	IKEJA	LAGOS STATE	234 (01) 3451331-5 GENERAL INFO
TRACTOR & EQUIPMENT NIGERIA	NIGERIA	PORT HARCOURT	RIVERS STATE	234 (084) 238853 GENERAL INFO
PON EQUIPMENT AS	NORWAY	KONGSVINGER	HEDMARK FYLKE	47 (815) 66 500 GENERAL INFO
PON POWER AS	NORWAY	EIDSNES	HORDALAND FYLKE	47 (70) 197540 GENERAL INFO
PON EQUIPMENT AS	NORWAY	OEVRE ERVIK	HORDALAND FYLKE	47 (55) 392660 GENERAL INFO
PON POWER AS	NORWAY	OEVRE ERVIK	HORDALAND FYLKE	47 (55) 390705 GENERAL INFO
PON EQUIPMENT AS	NORWAY	BRUMUNDDAL	OSLO FYLKE	47 (62) 334780 GENERAL INFO
PON EQUIPMENT AS	NORWAY	OSLO	OSLO FYLKE	47 (815) 66 500 GENERAL INFO
PON POWER AS	NORWAY	OSLO	OSLO FYLKE	47 (23) 170500 GENERAL INFO
PON EQUIPMENT AS	NORWAY	SANDNES	ROGALAND FYLKE	47 (51) 681730 GENERAL INFO

Table 1. Caterpillar Dealers - Continued.

Dealer Name	Country	City	State/Province/Region	Phone
CRAME AS (N) (VESTFOLD)	NORWAY	SOLLENTUNA	STOCKHOLM LAN	47 (33) 00 48 30 GENERAL INFO
CRAMO AS (N)	NORWAY	SOLLENTUNA	STOCKHOLM LAN	47 (32) 23 50 50 GENERAL INFO
CRAMO AS (N)	NORWAY	SOLLENTUNA	STOCKHOLM LAN	47 (71) 20 05 08 GENERAL INFO
CRAMO AS (N)	NORWAY	SOLLENTUNA	STOCKHOLM LAN	47 (69) 20 82 82 GENERAL INFO
CRAMO AS (N)	NORWAY	SOLLENTUNA	STOCKHOLM LAN	47 (55) 53 87 50 GENERAL INFO
CRAMO AS (N)	NORWAY	SOLLENTUNA	STOCKHOLM LAN	47 (23) 06 76 00 GENERAL INFO
CRAMO AS (N)	NORWAY	SOLLENTUNA	STOCKHOLM LAN	47 (62) 52 09 92 GENERAL INFO
CRAMO AS (N)	NORWAY	SOLLENTUNA	STOCKHOLM LAN	47 (69) 39 93 33 GENERAL INFO
CRAMO AS (N)	NORWAY	SOLLENTUNA	STOCKHOLM LAN	47 (67) 15 41 50 GENERAL INFO
CRAMO AS (N)	NORWAY	SOLLENTUNA	STOCKHOLM LAN	47 (67) 15 41 40 GENERAL INFO
CRAMO AS (N)	NORWAY	SOLLENTUNA	STOCKHOLM LAN	47 (51) 80 01 51 GENERAL INFO
CRAMO AS (N)	NORWAY	SOLLENTUNA	STOCKHOLM LAN	47 (38) 09 06 70 GENERAL INFO
CRAMO AS (N)	NORWAY	SOLLENTUNA	STOCKHOLM LAN	47 (22) 19 46 00 GENERAL INFO
CRAMO AS (N) TRONDHEIM	NORWAY	SOLLENTUNA	STOCKHOLM LAN	47 (73) 57 04 90 GENERAL INFO
CRAMO AS NORWAY	NORWAY	SOLLENTUNA	STOCKHOLM LAN	47 (75) 52 98 00 GENERAL INFO
CRAMO AS NORWAY	NORWAY	SOLLENTUNA	STOCKHOLM LAN	47 (32) 23 50 00 GENERAL INFO
CRAMO SWEDEN	NORWAY	SOLLENTUNA	STOCKHOLM LAN	47 (78) 42 17 15 GENERAL INFO
PON EQUIPMENT AS	NORWAY	TROMSOE	TROMS FYLKE	47 (77) 607480 GENERAL INFO
ENERGYST CAT RENTAL POWER	NORWAY	TONSBERG	VESTFOLD FYLKE	47 () 33 01 97 50 GENERAL INFO
OASIS TRADING & EQUIPMENT CO.	OMAN	JABROO		968 () 509 000 GENERAL INFO
OASIS TRADING & EQUIPMENT CO.	OMAN	MUSCAT		968 () 509 000 GENERAL INFO
OASIS TRADING & EQUIPMENT CO.	OMAN	SALALAH		968 () 290637 GENERAL INFO
ALLIED ENGINEERING & SERVICES	PAKISTAN	QUETTA	BALUCHISTAN PROVINCE	92 (81) 822196 GENERAL INFO
ALLIED ENGINEERING & SERVICES	PAKISTAN	ISLAMABAD	FEDERAL CAPITAL TERR	92 (51) 295447 GENERAL INFO

Table 1. Caterpillar Dealers - Continued.

Dealer Name	Country	City	State/Province/Region	Phone
ALLIED ENGINEERING & SERVICES	PAKISTAN	PESHAWAR	NORTH-WEST FRONTIER PROVINCE	92 (091) 811654 GENERAL INFO
ALLIED ENGINEERING & SERVICES	PAKISTAN	FAISALABAD	PUNJAB PROVINCE	92 (41) 730667 GENERAL INFO
ALLIED ENGINEERING & SERVICES	PAKISTAN	LAHORE	PUNJAB PROVINCE	92 (42) 751-0614 GENERAL INFO
ALLIED ENGINEERING & SERVICES	PAKISTAN	MULTAN	PUNJAB PROVINCE	92 (61) 570809 GENERAL INFO
ALLIED ENGINEERING & SERVICES	PAKISTAN	KARACHI	SIND PROVINCE	92 (21) 5066901 GENERAL INFO
ALLIED ENGINEERING & SERVICES	PAKISTAN	KARACHI	SIND PROVINCE	92 (21) 5066901 GENERAL INFO
PALESTINIAN TRACTOR &	PALESTINIAN TER	JERUSALEM	JERUSALEM MEHOZ	972 (2) 290-1990 GENERAL INFO
PALESTINIAN TRACTOR &	PALESTINIAN TER	JERUSALEM	JERUSALEM MEHOZ	972 (2) 9956-285 GENERAL INFO
PALESTINIAN TRACTOR &	PALESTINIAN TER	GAZA		972 (7) 2824889 GENERAL INFO
PALESTINIAN TRACTOR &	PALESTINIAN TER	GAZA		972 (7) 824 889 GENERAL INFO
CARDOZE & LINDO S.A.	PANAMA	DAVID	CHIRIQUI PROVINCIA	507 () 775-5451 GENERAL INFO
CARDOZE & LINDO S.A.	PANAMA	EL DORADO	PANAMA PROVINCIA	507 () 274-9316 CORP OFFICE
CARDOZE & LINDO S.A.	PANAMA	EL DORADO	PANAMA PROVINCIA	507 () 959-0173 GENERAL INFO
HASTINGS DEERING (PNG) LIMITED	PAPUA NEW GUINE	LAE	MOROBE PROVINCE	675 () 472 2355 GENERAL INFO
HASTINGS DEERING (PNG) LIMITED	PAPUA NEW GUINE	LAE	MOROBE PROVINCE	675 () 547 8627 GENERAL INFO
ENERGY POWER SYSTEMS PNG	PAPUA NEW GUINE	BOROKO	NATIONAL CAPITAL DISTRICT	675 () 300 8358 GENERAL INFO
HASTINGS DEERING (PNG) LIMITED	PAPUA NEW GUINE	BOROKO	NATIONAL CAPITAL DISTRICT	675 () 325 6422 GENERAL INFO
HASTINGS DEERING (PNG) LIMITED	PAPUA NEW GUINE	BOROKO	NATIONAL CAPITAL DISTRICT	675 () 986 4105 GENERAL INFO
HASTINGS DEERING (PNG) LIMITED	PAPUA NEW GUINE	RABAUL	NEW IRELAND PROVINCE	675 () 982 1244 GENERAL INFO
HASTINGS DEERING (PNG) LIMITED	PAPUA NEW GUINE	TABUBIL	WESTERN PROVINCE	675 () 548 9045 GENERAL INFO
S.A.C.I.H. PETERSEN	PARAGUAY	ASUNCION	ORIENTE PROVINCE	595 (21) 202-615 GENERAL INFO
FERREYROS S.A.A.	PERU	CHIMBOTE	ANCASH DEPARTAMENTO	51 (44) 31-1411 GENERAL INFO
FERREYROS S.A.A.	PERU	MIRAFLORES	AREQUIPA DEPARTAMENTO	51 (54) 28-7578 GENERAL INFO
FERREYROS S.A.A.	PERU	CUZCO	CUZCO DEPARTAMENTO	51 (84) 22-3321 GENERAL INFO

Table 1. Caterpillar Dealers - Continued.

Dealer Name	Country	City	State/Province/Region	Phone
FERREYROS S.A.A.	PERU	ICA	ICA DEPARTAMENTO	51 (34) 23-3952 GENERAL INFO
FERREYROS S.A.A.	PERU	TRUJILLO	LA LIBERTAD DEPARTAMENTO	51 (44) 22-3338 GENERAL INFO
FERREYROS S.A.A.	PERU	CHICLAYO	LAMBAYEQUE DEPARTAMENTO	51 (74) 23-4590 GENERAL INFO
FERREYROS S.A.A.	PERU	LIMA	LIMA DEPARTAMENTO	51 (1) 336-7070 GENERAL INFO
RENTANDO	PERU	LIMA	LIMA DEPARTAMENTO	51 (1) 437-4080 GENERAL INFO
ORVISA SOCIEDAD ANONIMA	PERU	IQUITOS	LORETO DEPARTAMENTO	51 (94) 26-3710 GENERAL INFO
ORGANIZACION VICTORIA S.A.	PERU	PUCALLPA	LORETO DEPARTAMENTO	51 (64) 57-1694 GENERAL INFO
FERREYROS S.A.A.	PERU	PIURA	PIURA DEPARTAMENTO	51 (74) 30-3049 GENERAL INFO
MONARK EQUIPMENT	PHILIPPINES	SAN PEDRO	CENTRAL LUZON REGION	63 (02) 869 6748 GENERAL INFO
MONARK EQUIPMENT	PHILIPPINES	ILIGAN CITY	CENTRAL MINDANAO REGION	
MONARK EQUIPMENT	PHILIPPINES	MANDAUE CITY	CENTRAL VISAYAS REGION	63 (02) 346-5534 GENERAL INFO
MONARK EQUIPMENT	PHILIPPINES	KALOOKAN CITY	NATIONAL CAPITAL REGION	63 (02) 364-9027 GENERAL INFO
MONARK EQUIPMENT	PHILIPPINES	QUEZON CITY	NATIONAL CAPITAL REGION	63 (2) 635-0901 GENERAL INFO
MONARK EQUIPMENT	PHILIPPINES	CAGAYAN DE ORO CITY	NORTHERN MINDANAO REGION	63 (088) 858-4115 GENERAL INFO
MONARK EQUIPMENT	PHILIPPINES	SURIGAO CITY	NORTHERN MINDANAO REGION	63 (086) 826-0222 GENERAL INFO
MONARK EQUIPMENT	PHILIPPINES	DAVAO CITY	SOUTHERN MINDANAO REGION	63 (082) 235-2266 GENERAL INFO
MONARK EQUIPMENT	PHILIPPINES	GENERAL SANTOS	SOUTHERN MINDANAO REGION	63 (2) 635-0901 GENERAL INFO
MONARK EQUIPMENT	PHILIPPINES	BATARASA	SOUTHERN TAGALOG REGION	63 (2) 635-0901 GENERAL INFO
MONARK EQUIPMENT	PHILIPPINES	BACOLOD CITY	WESTERN VISAYAS REGION	63 (034) 434-0024 GENERAL INFO
BERGERAT MONNOYEUR S.P.Z.O.O.	POLAND	BIALYSTOK	BIALYSTOK WOJEWODZTWO	48 (85) 652 01 92 GENERAL INFO
BERGERAT MONNOYEUR S.P.Z.O.O.	POLAND	GDANSK	GDANSK WOJEWODZTWO	48 (58) 769 36 66 GENERAL INFO
ENERIA SP. ZO.O.	POLAND	MONTLHERY	ILE-DE-FRANCE REGION	48 (22) 751-9700 GENERAL INFO
BERGERAT MONNOYEUR S.P.Z.O.O.	POLAND	CZELADZ	KATOWICE WOJEWODZTWO	48 (32) 363 27 60 GENERAL INFO
BERGERAT MONNOYEUR S.P.Z.O.O.	POLAND	POZNAN	POZNAN WOJEWODZTWO	48 (61) 825 80 90 GENERAL INFO
BERGERAT MONNOYEUR S.P.Z.O.O.	POLAND	RZESZOW	RZESZOW WOJEWODZTWO	48 (17) 850 91 00 GENERAL INFO

Table 1. Caterpillar Dealers - Continued.

Dealer Name	Country	City	State/Province/Region	Phone
CRAMO SP. ZO.O. (PL)	POLAND	SOLLENTUNA	STOCKHOLM LAN	48 (12) 292 53 00 GENERAL INFO
CRAMO SP. ZO.O. (PL)	POLAND	SOLLENTUNA	STOCKHOLM LAN	48 (32) 738 48 56 GENERAL INFO
CRAMO SP. ZO.O. (PL)	POLAND	SOLLENTUNA	STOCKHOLM LAN	48 (22) 816 57 67 GENERAL INFO
CRAMO SP. ZO.O. (PL)	POLAND	SOLLENTUNA	STOCKHOLM LAN	48 (22) 643 51 41 GENERAL INFO
CRAMO SP. ZO.O. (PL)	POLAND	SOLLENTUNA	STOCKHOLM LAN	48 (22) 676 77 20 GENERAL INFO
CRAMO SP. ZO.O. (PL)	POLAND	SOLLENTUNA	STOCKHOLM LAN	48 (71) 325 32 78 GENERAL INFO
BERGERAT MONNOYEUR S.P.Z.O.O.	POLAND	SZCZECIN	SZCZECIN WOJEWODZTWO	48 (91) 462 15 93 GENERAL INFO
BERGERAT MONNOYEUR S.P.Z.O.O.	POLAND	LOMIANKI	WARSZAWA WOJEWODZTWO	48 (22) 751 97 00 GENERAL INFO
BERGERAT MONNOYEUR S.P.Z.O.O.	POLAND	LOMIANKI	WARSZAWA WOJEWODZTWO	48 (22) 732 16 20 GENERAL INFO
BERGERAT MONNOYEUR S.P.Z.O.O.	POLAND	NOWA WIES WROCLAWSKA		48 (71) 364 77 41 GENERAL INFO
STET-SOCIEDADE TECNICA DE	PORTUGAL	LAGOA	AZORES REGIAO AUTONOMA	351 (96) 636425 GENERAL INFO
STET-SOCIEDADE TECNICA DE	PORTUGAL	BEJA	BEJA DISTRITO	351 (84) 324-076 GENERAL INFO
STET-SOCIEDADE TECNICA DE	PORTUGAL	CASTELO BRANCO	CASTELO BRANCO DISTRITO	351 (72) 331903 GENERAL INFO
STET-SOCIEDADE TECNICA DE	PORTUGAL	COIMBRA	COIMBRA DISTRITO	351 (39) 431282 GENERAL INFO
STET-SOCIEDADE TECNICA DE	PORTUGAL	ALBUFEIRA	FARO DISTRITO	351 (89) 571-265 GENERAL INFO
STET-SOCIEDADE TECNICA DE	PORTUGAL	LEIRIA	LEIRIA DISTRITO	351 (44) 830120 GENERAL INFO
BARLOWORLD MERA LISBOA	PORTUGAL	PRIOR VELHO	LISBOA DISTRITO	351 (9) 128 1465 GENERAL INFO
STET-SOCIEDADE TECNICA DE	PORTUGAL	PRIOR VELHO	LISBOA DISTRITO	351 (1) 940-9300 GENERAL INFO
BARLOWORLD MERA OPORTO	PORTUGAL	MAIA	PORTO DISTRITO	351 (22) 943 7500 GENERAL INFO
STET-SOCIEDADE TECNICA DE	PORTUGAL	MAIA	PORTO DISTRITO	351 (2) 943-7500 GENERAL INFO
RIMCO INC.	PUERTO RICO	SAN JUAN	SAN JUAN MUNICIPALITY	1 (787) 273-5710 ENGINES
RIMCO INC.	PUERTO RICO	SAN JUAN	SAN JUAN MUNICIPALITY	1 (787) 816-4300 GENERAL INFO
RIMCO INC.	PUERTO RICO	SAN JUAN	SAN JUAN MUNICIPALITY	1 (787) 816-4300 GENERAL INFO
MOHAMED ABDULRAHMAN AL BAHAR	QATAR	DOHA		974 () 4600222 GENERAL INFO

Table 1. Caterpillar Dealers - Continued.

Dealer Name	Country	City	State/Province/Region	Phone
MOHAMED ABDULRAHMAN AL-BAHAR	QATAR	DOHA		974 () 4600222 GENERAL INFO
SCIMAT	REUNION	LE PORT	REUNION IS.	262 (262) 42 44 00 GENERAL INFO
SCIMAT	REUNION	LE PORT	REUNION IS.	262 (262) 42 44 00 GENERAL INFO
BERGERAT MONNOYEUR	ROMANIA	MOGOSOAIA	BUCURESTI MUNICIPIU	40 (21) 202 7600 GENERAL INFO
BERGERAT MONNOYEUR S.R.L.	ROMANIA	MOGOSOAIA	BUCURESTI MUNICIPIU	40 (21) 202 7600 GENERAL INFO
BERGERAT MONNOYEUR S.R.L.	ROMANIA	CLUJ-NAPOCA	CLUJ JUDET	40 (264) 441 163 GENERAL INFO
ENERIA SRL	ROMANIA	MONTLHERY	ILE-DE-FRANCE REGION	40 (21) 202 7680 GENERAL INFO
BERGERAT MONNOYEUR S.R.L.	ROMANIA	TIMISOARA	TIMIS JUDET	40 (256) 204 204 GENERAL INFO
ZEPPELIN RUSSLAND OOO	RUSSIA	ARKHANGELSK	ARKHANGELSKAYA OBLAST	7 (8182) 66 62 16 GENERAL INFO
VOSTOCHNAYA TECHNICA UK	RUSSIA	IRKUTSK	IRKUTSKAYA OBLAST	7 (3952) 211201 GENERAL INFO
ZEPPELIN RUSSLAND OOO	RUSSIA	KOSTOMUKSHA	KARELIA REPUBLIC	7 (095) 745 8470 GENERAL INFO
AMUR MACHINERY & SERVICES LLC	RUSSIA	KHABAROVSK	KHABAROVSKIY OBLAST	7 (4212) 78 3335 GENERAL INFO
VOSTOCHNAYA TECHNICA UK	RUSSIA	TALNAKH	KRASNOYARSKIY OBLAST	7 (3919) 452335 GENERAL INFO
ZEPPELIN RUSSLAND GMBH	RUSSIA	ST. PETERSBURG	LENINGRADSKAYA OBLAST	7 (812) 269 1617 GENERAL INFO
VOSTOCHNAYA TECHNICA UK	RUSSIA	MAGADAN	MAGADANSKAIA OBLAST	7 (41322)99890 GENERAL INFO
VOSTOCHNAYA TECHNICA UK	RUSSIA	MAGADAN	MAGADANSKAIA OBLAST	7 (41322)99890 GENERAL INFO
ZEPPELIN RUSSLAND OOO	RUSSIA	MOSCOW	MOSKOVSKAYA OBLAST	7 (095) 745 8472 GENERAL INFO
ZEPPELIN RUSSLAND OOO	RUSSIA	MOSCOW	MOSKOVSKAYA OBLAST	7 (095) 745 8470 GENERAL INFO
ZEPPELIN RUSSLAND OOO	RUSSIA	MOSCOW	MOSKOVSKAYA OBLAST	7 (095) 745 8470 GENERAL INFO
ZEPPELIN RUSSLAND OOO	RUSSIA	MOSCOW	MOSKOVSKAYA OBLAST	7 (095) 745 8470 GENERAL INFO
ZEPPELIN RUSSLAND OOO	RUSSIA	MOSCOW	MOSKOVSKAYA OBLAST	7 (095) 745 8472 GENERAL INFO
ZEPPELIN RUSSLAND OOO	RUSSIA	KIROVSK	MURMANSKAYA OBLAST	7 (095) 745 8470 GENERAL INFO
VOSTOCHNAYA TECHNICA UK	RUSSIA	NOVOSIBIRSK	NOVOSIBIRSKAYA OBLAST	7 (3832) 125611 GENERAL INFO
VOSTOCHNAYA TECHNICA UK	RUSSIA	NOVOSIBIRSK	NOVOSIBIRSKAYA OBLAST	7 (3832) 125611 GENERAL INFO

Table 1. Caterpillar Dealers - Continued.

Dealer Name	Country	City	State/Province/Region	Phone
TIGER MACHINERY LLC	RUSSIA	VLADIVOSTOK	PRIMORSKIY OBLAST	7 (4232) 40 79 31 GENERAL INFO
VOSTOCHNAYA TECHNICA UK	RUSSIA	UDACHNY	SAKHA (YAKUTIA) OBLAST	7 (41136)50022 GENERAL INFO
SAKHALIN MACHINERY OOO	RUSSIA	YUZHNO SAKHALINSK	SAKHALINSKAYA OBLAST	7 (4242) 429492 GENERAL INFO
TIGER MACHINERY LLC	RUSSIA	YUZHNO SAKHALINSK	SAKHALINSKAYA OBLAST	7 (4242) 46 21 81 GENERAL INFO
TIGER MACHINERY LLC	RUSSIA	YUZHNO SAKHALINSK	SAKHALINSKAYA OBLAST	7 (4242) 46 21 81 GENERAL INFO
UNATRAC VOSTOK	RUSSIA	EKATERINBURG	SVERDLOVSKAYA OBLAST	7 (3432) 566019 EMERGENCY
UNATRAC VOSTOK	RUSSIA	SURGUT-TIUMENSKAIA	TYUMENSKAYA OBLAST	7 (3462) 31-72-20 GENERAL INFO
ZAHID TRACTOR & HEAVY	SAUDI ARABIA	MADINA	AL MADINAH MINTAQAH	966 (4) 861 5922 GENERAL INFO
ZAHID TRACTOR & HEAVY	SAUDI ARABIA	YANBU	AL MADINAH MINTAQAH	966 (4) 3960862 GENERAL INFO
ZAHID TRACTOR & HEAVY	SAUDI ARABIA	GASSIM/BURAIDAH	AL QASIM MINTAQAH	966 (6) 3810819 GENERAL INFO
ZAHID TRACTOR & HEAVY	SAUDI ARABIA	DAMMAM	AR RIYAD MINTAQAH	966 (3) 8572595 GENERAL INFO
ZAHID TRACTOR & HEAVY	SAUDI ARABIA	DAMMAM	AR RIYAD MINTAQAH	966 (3) 8572595 GENERAL INFO
ZAHID TRACTOR & HEAVY	SAUDI ARABIA	JUBAIL	AR RIYAD MINTAQAH	966 (3) 3416720 GENERAL INFO
ZAHID TRACTOR & H.M. CO. LTD.	SAUDI ARABIA	RIYADH	AR RIYAD MINTAQAH	966 (1) 4489737 GENERAL INFO
ZAHID TRACTOR & HEAVY	SAUDI ARABIA	RIYADH	AR RIYAD MINTAQAH	966 (1) 2319984 GENERAL INFO
ZAHID TRACTOR & HEAVY	SAUDI ARABIA	RIYADH	AR RIYAD MINTAQAH	966 (1) 2319984 GENERAL INFO
ZAHID TRACTOR & HEAVY	SAUDI ARABIA	ABHA-KHAMEES	'ASIR MINTAQAH	966 (7) 2271277 GENERAL INFO
ZAHID TRACTOR & HEAVY	SAUDI ARABIA	HAIL	HA'IL MINTAQAH	966 (6) 5327467 GENERAL INFO
ZAHID TRACTOR & HEAVY	SAUDI ARABIA	EL JOUF	MAKKAH MINTAQAH	966 (4) 6245008 GENERAL INFO
ZAHID TRACTOR & HEAVY	SAUDI ARABIA	EL JOUF	MAKKAH MINTAQAH	966 (4) 6251316 GENERAL INFO
ZAHID TRACTOR & H.M. CO. LTD.	SAUDI ARABIA	JEDDAH	MAKKAH MINTAQAH	966 (2) 6911846 GENERAL INFO
ZAHID TRACTOR & HEAVY	SAUDI ARABIA	JEDDAH	MAKKAH MINTAQAH	966 (2) 6671156 GENERAL INFO
ZAHID TRACTOR & HEAVY	SAUDI ARABIA	JEDDAH	MAKKAH MINTAQAH	966 (2) 6876366 GENERAL INFO
ZAHID TRACTOR & HEAVY	SAUDI ARABIA	JEDDAH	MAKKAH MINTAQAH	966 (2) 6876366 GENERAL INFO

Table 1. Caterpillar Dealers - Continued.

Dealer Name	Country	City	State/Province/Region	Phone
ZAHID TRACTOR & H.M. CO. LTD.	SAUDI ARABIA	MECCA	MAKKAH MINTAQAH	966 (2) 5435824 GENERAL INFO
ZAHID TRACTOR & HEAVY	SAUDI ARABIA	WADI EL DAWASSIR	MAKKAH MINTAQAH	966 (1) 7861228 GENERAL INFO
ZAHID TRACTOR & HEAVY	SAUDI ARABIA	TABUK	TABUK MINTAQAH	966 (4) 422 8392 GENERAL INFO
ZAHID TRACTOR & HEAVY	SAUDI ARABIA	AL HOFUF		966 (3) 5927889 GENERAL INFO
SOCIETE AUXILIAIRE (SENEGAL)	SENEGAL	DAKAR	DAKAR REGION	221 () 832 06 83 GENERAL INFO
HENRI FRAISE FILS & CIE	SEYCHELLES	VICTORIA	MAHE ISL GROUP	261 (248) 37.47.78 GENERAL INFO
TRACTOR & EQUIPMENT	SIERRA LEONE	FREETOWN	WESTERN AREA PROVINCE	232 (22) 223317 GENERAL INFO
TRACTORS SINGAPORE LIMITED	SINGAPORE	JURONG		65 () 6261-2222 GENERAL INFO
TRAKINDO UTAMA SERVICES (S)	SINGAPORE	JURONG		86 (21) 23001 GENERAL INFO
TRAKINDO UTAMA SERVICES (S)	SINGAPORE	JURONG		65 () 6862-3001 GENERAL INFO
TRAKINDO UTAMA SERVICES (S)	SINGAPORE	JURONG		65 () 6862-3001 GENERAL INFO
PHOENIX-ZEPPELIN SPOL.S R.O.	SLOVAKIA	BANSKA BYSTRICA	SLOVAK REPUBLIC	421 (48) 414 6661 GENERAL INFO
PHOENIX-ZEPPELIN SPOL.S.R.O.	SLOVAKIA	BANSKA BYSTRICA	SLOVAK REPUBLIC	421 (48) 414 66 58 GENERAL INFO
PHOENIX-ZEPPELIN SPOL.S R.O.	SLOVAKIA	BRATISLAVA	SLOVAK REPUBLIC	421 (2) 4487 1763 GENERAL INFO
PHOENIX-ZEPPELIN SPOL.S R.O.	SLOVAKIA	KOSICE	SLOVAK REPUBLIC	421 (55) 632 0929 GENERAL INFO
PHOENIX-ZEPPELIN SPOL.S R.O.	SLOVAKIA	ZILINA	SLOVAK REPUBLIC	421 () 7342152 GENERAL INFO
AVTEK D.O.O.	SLOVENIA	LIMBUS	SLOVENIA REPUBLIKA	386 (2) 42 95 090 GENERAL INFO
TEKNOXGROUP SA	SLOVENIA	LUGANO	TICINO CANTON	386 (1) 78 18 210 GENERAL INFO
TEKNOXGROUP SA	SLOVENIA	LUGANO	TICINO CANTON	386 (1) 78 18 210 GENERAL INFO
AVTEK D.O.O.	SLOVENIA	GROSUPLJE		386 (1) 78 18 210 GENERAL INFO
HASTINGS DEERING	SOLOMON ISLANDS	HONIARA	GUADACANAL PROVINCE	677 () 30274 GENERAL INFO
BARLOWORLD EQUIPMENT PTY LTD	SOUTH AFRICA	BELLVILLE	CAPE OF GOOD HOPE PROVINCE	27 (21) 951-4113 GENERAL INFO
BARLOWORLD EQUIPMENT PTY LTD	SOUTH AFRICA	EAST LONDON	CAPE OF GOOD HOPE PROVINCE	27 (43) 7311683 GENERAL INFO
BARLOWORLD EQUIPMENT PTY LTD	SOUTH AFRICA	GEORGE	CAPE OF GOOD HOPE PROVINCE	27 (448) 74-2227 GENERAL INFO

Table 1. Caterpillar Dealers - Continued.

Dealer Name	Country	City	State/Province/Region	Phone
BARLOWORLD EQUIPMENT PTY LTD	SOUTH AFRICA	KIMBERLEY	CAPE OF GOOD HOPE PROVINCE	27 (531) 82-1311 GENERAL INFO
BARLOWORLD EQUIPMENT PTY LTD	SOUTH AFRICA	KURUMAN	CAPE OF GOOD HOPE PROVINCE	27 (53) 7122163 GENERAL INFO
BARLOWORLD EQUIPMENT PTY LTD	SOUTH AFRICA	PORT ELIZABETH	EASTERN CAPE PROVINCE	27 (41) 4861303 GENERAL INFO
BARLOWORLD EQUIPMENT PTY LTD	SOUTH AFRICA	NEW GERMANY	NATAL PROVINCE	27 (31) 705-8341 GENERAL INFO
BARLOWORLD EQUIPMENT PTY LTD	SOUTH AFRICA	RICHARD'S BAY	NATAL PROVINCE	27 (35) 97-4711 GENERAL INFO
BARLOWORLD EQUIPMENT PTY LTD	SOUTH AFRICA	VRYHEID	NATAL PROVINCE	27 (34) 9813011 GENERAL INFO
BARLOWORLD EQUIPMENT PTY LTD	SOUTH AFRICA	ISANDO	TRANSVAAL PROVINCE	27 (11) 929-0000 GENERAL INFO
BARLOWORLD POWER SYSTEMS	SOUTH AFRICA	ISANDO	TRANSVAAL PROVINCE	27 (11) 898-0222 GENERAL INFO
BARLOWORLD EQUIPMENT PTY LTD	SOUTH AFRICA	MIDDELBURG	TRANSVAAL PROVINCE	27 (13) 2835500 GENERAL INFO
BARLOWS EQUIPMENT CO.	SOUTH AFRICA	NELSPRUIT	TRANSVAAL PROVINCE	27 (13) 752-3264 GENERAL INFO
BARLOWS EQUIPMENT CO.	SOUTH AFRICA	PHALABORWA	TRANSVAAL PROVINCE	27 (1524) 4541 GENERAL INFO
BARLOWS EQUIPMENT CO.	SOUTH AFRICA	PIETERSBURG	TRANSVAAL PROVINCE	27 (152) 297-3603 GENERAL INFO
BARLOWORLD EQUIPMENT PTY LTD	SOUTH AFRICA	RUSTENBURG	TRANSVAAL PROVINCE	27 (142) 29554 GENERAL INFO
BARLOWORLD EQUIPMENT (PTY)	SOUTH AFRICA	SANDTON	TRANSVAAL PROVINCE	27 (11) 301-4000 GENERAL INFO
BARLOWS EQUIPMENT CO.	SOUTH AFRICA	SILVERTON	TRANSVAAL PROVINCE	27 (12) 800-1024 GENERAL INFO
BARLOWORLD EQUIPMENT PTY LTD	SOUTH AFRICA	EHRLICH PARK		27 (51) 409-1200 GENERAL INFO
BARLOWORLD MERA GRANADA	SPAIN	ALBOLOTE	ANDALUSIA COMUNIDAD	34 (95) 217 6440 GENERAL INFO
FINANZAUTO S.A.	SPAIN	ALBOLOTE	ANDALUSIA COMUNIDAD	34 (958) 46-62-87 GENERAL INFO
FINANZAUTO S.A.	SPAIN	CORDOBA	ANDALUSIA COMUNIDAD	34 (957) 32-58-66 GENERAL INFO
BARLOWORLD MERA SEVILLA	SPAIN	DOS HERMANAS	ANDALUSIA COMUNIDAD	34 (95) 567 5333 GENERAL INFO
BARLOWORLD MERA HUELVA	SPAIN	HUELVA	ANDALUSIA COMUNIDAD	34 (95) 567 5333 GENERAL INFO
BARLOWORLD MERA JEREZ	SPAIN	JEREZ DE LA FRONTERA	ANDALUSIA COMUNIDAD	34 (95) 614 0650 GENERAL INFO
BARLOWORLD MERA ALGECIRAS	SPAIN	LOS BARRIOS	ANDALUSIA COMUNIDAD	34 (95) 217 6440 GENERAL INFO
FINANZAUTO S.A.	SPAIN	MACAEL	ANDALUSIA COMUNIDAD	34 (950) 12-81-07 GENERAL INFO

Table 1. Caterpillar Dealers - Continued.

Dealer Name	Country	City	State/Province/Region	Phone
BARLOWORLD MERA MALAGA	SPAIN	MALAGA	ANDALUSIA COMUNIDAD	34 (95) 217 6440 GENERAL INFO
FINANZAUTO S.A.	SPAIN	MALAGA	ANDALUSIA COMUNIDAD	34 (95) 224-31-50 GENERAL INFO
FINANZAUTO S.A.	SPAIN	SEVILLA	ANDALUSIA COMUNIDAD	34 (95) 566-4400 GENERAL INFO
BARLOWORLD MERA ZARAGOZA	SPAIN	ZARAGOZA	ARAGON COMUNIDAD	34 (97) 654 1137 GENERAL INFO
FINANZAUTO S.A.	SPAIN	ZARAGOZA	ARAGON COMUNIDAD	34 (976) 31-10-65 GENERAL INFO
FINANZAUTO S.A.	SPAIN	OVIEDO	ASTURIAS COMUNIDAD	34 (985) 26-20-08 GENERAL INFO
FINANZAUTO S.A.	SPAIN	PALMA DE MALLORCA	BALEARES COMUNIDAD	34 (971) 43-21-46 GENERAL INFO
FINANZAUTO S.A.	SPAIN	BILBAO	BASQUE COUNTRY COMUNIDAD	34 (94) 673-0500 GENERAL INFO
FINANZAUTO S.A.	SPAIN	SANTA CRUZ DE LA PALMA	CANARY IS COMUNIDAD	34 (922) 41-11-44 GENERAL INFO
FINANZAUTO S.A.	SPAIN	SANTA CRUZ DE TENERIFE	CANARY IS COMUNIDAD	34 (922) 61-31-00 GENERAL INFO
FINANZAUTO S.A.	SPAIN	TELDE	CANARY IS COMUNIDAD	34 (928) 70-01-12 GENERAL INFO
BARLOWORLD MERA CUENCA	SPAIN	CUENCA	CASTILLA-LA-MANCHA COMUNIDAD	34 (91) 683 0847 GENERAL INFO
BARLOWORLD MERA VALLADOLID	SPAIN	LA FLECHA	CASTILLA-LEON COMUNIDAD	34 (98) 340 9950 GENERAL INFO
FINANZAUTO S.A.	SPAIN	LA FLECHA	CASTILLA-LEON COMUNIDAD	34 (983) 40-73-11 GENERAL INFO
BARLOWORLD MERA LEON	SPAIN	ONZONILLA	CASTILLA-LEON COMUNIDAD	34 (98) 340 9950 GENERAL INFO
FINANZAUTO S.A.	SPAIN	ONZONILLA	CASTILLA-LEON COMUNIDAD	34 (987) 28-21-85 GENERAL INFO
FINANZAUTO S.A.	SPAIN	PONFERRADA	CASTILLA-LEON COMUNIDAD	34 (987) 41-36-88 GENERAL INFO
FINANZAUTO S.A.	SPAIN	BARCELONA	CATALONIA COMUNIDAD	34 (93) 574-0090 GENERAL INFO
FINANZAUTO S.A.	SPAIN	CELRA	CATALONIA COMUNIDAD	34 (972) 49-40-40 GENERAL INFO
FINANZAUTO S.A.	SPAIN	LERIDA	CATALONIA COMUNIDAD	34 (973) 20-05-94 GENERAL INFO
BARLOWORLD MERA BARCELONA	SPAIN	SANTA PERPETUA DE MOGODA	CATALONIA COMUNIDAD	34 (93) 574 5838 GENERAL INFO
BARLOWORLD MERA NAVARRA	SPAIN	TORRES DE ELORZ	CATALONIA COMUNIDAD	34 (97) 654 1137 GENERAL INFO
FINANZAUTO S.A.	SPAIN	MERIDA	EXTREMADURA COMUNIDAD	34 (924) 37-26-26 GENERAL INFO
FINANZAUTO S.A.	SPAIN	BERGONDO	GALACIA COMUNIDAD	34 (981) 79-51-33 GENERAL INFO

Table 1. Caterpillar Dealers - Continued.

Dealer Name	Country	City	State/Province/Region	Phone
FINANZAUTO S.A.	SPAIN	VIGO	GALACIA COMUNIDAD	34 (986) 20-11-14 GENERAL INFO
FINANZAUTO S.A.	SPAIN	AGONCILLO	LA RIOJA COMUNIDAD	34 (941) 43-70-88 GENERAL INFO
FINANZAUTO S.A.	SPAIN	ARGANDA DEL REY	MADRID COMUNIDAD	34 (91) 874 0000 GENERAL INFO
BARLOWORLD MERA MADRID	SPAIN	GETAFE	MADRID COMUNIDAD	34 (91) 683 0847 GENERAL INFO
FINANZAUTO S.A.	SPAIN	MADRID	MADRID COMUNIDAD	34 (91) 871-2612 GENERAL INFO
FINANZAUTO S.A.	SPAIN	MADRID	MADRID COMUNIDAD	34 (91) 874 0000 GENERAL INFO
BARLOWORLD MERA MURCIA	SPAIN	MOLINA DE SEGURA	MURCIA COMUNIDAD	34 (96) 868 7984 GENERAL INFO
FINANZAUTO S.A.	SPAIN	MOLINA DE SEGURA	MURCIA COMUNIDAD	34 (968) 69-23-84 GENERAL INFO
FINANZAUTO S.A.	SPAIN	PAMPLONA	NAVARRA COMUNIDAD	34 (948) 31-76-71 GENERAL INFO
BARLOWORLD MERA ALICANTE	SPAIN	ALICANTE	VALENCIA COMUNIDAD	34 (96) 511 5164 GENERAL INFO
FINANZAUTO S.A.	SPAIN	VALENCIA	VALENCIA COMUNIDAD	34 (96) 180-4585 GENERAL INFO
ENERGYST CAT RENTAL POWER	SPAIN	PARETS DEL VALLES		34 (902) 322 224 GENERAL INFO
UNITED TRACTOR & EQUIPMENT LTD	SRI LANKA	ANURADHAPURA	NORTH-CENTRAL PROVINCE	94 (25) 2222718 GENERAL INFO
UNITED TRACTOR & EQUIPMENT LTD	SRI LANKA	GALLE	SOUTHERN PROVINCE	94 (91) 4380057 GENERAL INFO
UNITED TRACTOR & EQUIPMENT LTD	SRI LANKA	COLOMBO	WESTERN PROVINCE	94 (11) 2472610 GENERAL INFO
UNITED TRACTOR & EQUIPMENT LTD	SRI LANKA	WATTALA	WESTERN PROVINCE	94 (1) 932 109 GENERAL INFO
UNITED TRACTOR & EQUIPMENT LTD	SRI LANKA	WATTALA	WESTERN PROVINCE	94 (1) 938786 FINANCE
CKC MACHINE HANDEL SURMAC N.V.	SURINAME	NICKERIE	NICKERIE DISTRIKT	597 () 231560 GENERAL INFO
CKC MACHINEHANDEL SURMAC N.V.	SURINAME	PARAMARIBO	PARAMARIBO URBAN DISTRIKT	597 () 404111 GENERAL INFO
SURMAC/SURALCO	SURINAME	PARAMARIBO	PARAMARIBO URBAN DISTRIKT	597 () 404111 GENERAL INFO
BARLOWORLD EQUIPMENT PTY LTD	SWAZILAND	MANZINI	MANZINI DISTRICT	268 () 5187049 GENERAL INFO
PON EQUIPMENT AB	SWEDEN	OSTERFARNEBO	GAVLEBORG LAN	46 (291) 20260 GENERAL INFO
ENERGYST CAT RENTAL POWER	SWEDEN	GOETEBORG	GOTEBORG OCH BOHUS LAN	46 (31) 339 0780 GENERAL INFO
PON POWER AB (SWEDEN)	SWEDEN	GOETEBORG	GOTEBORG OCH BOHUS LAN	46 (85) 909-9600 GENERAL INFO

Table 1. Caterpillar Dealers - Continued.

Dealer Name	Country	City	State/Province/Region	Phone
PON EQUIPMENT AB	SWEDEN	HISINGS KAERRA	GOTEBORG OCH BOHUS LAN	46 (31) 57 82 61 GENERAL INFO
ENERGYST CAT RENTAL POWER	SWEDEN	VASTRA FROLUNDA	GOTEBORG OCH BOHUS LAN	46 (31) 748 3305 GENERAL INFO
PON EQUIPMENT AB	SWEDEN	OSTERSUND	JAMTLAND LAN	46 (63) 13 24 10 GENERAL INFO
PON EQUIPMENT AB	SWEDEN	BODEN	NORRBOTTEN LAN	46 (921) 1-36-60 GENERAL INFO
PON EQUIPMENT AB	SWEDEN	KIRUNA	NORRBOTTEN LAN	46 (980) 18630 GENERAL INFO
PON EQUIPMENT AB	SWEDEN	LINKOEPING	OSTERGOTLAND LAN	46 (13) 16 24 50 GENERAL INFO
PON EQUIPMENT AB	SWEDEN	ESLOEV	SKANE	46 (413) 13070 GENERAL INFO
CRAMO AB SWEDEN	SWEDEN	SOLLENTUNA	STOCKHOLM LAN	46 (8) 623 54 00 GENERAL INFO
CRAMO ENTREPRENADMASKINER AB	SWEDEN	SOLLENTUNA	STOCKHOLM LAN	46 (8) 96 82 50 GENERAL INFO
CRAMO INSTANT	SWEDEN	SOLLENTUNA	STOCKHOLM LAN	46 (36) 690 30 GENERAL INFO
CRAMO INSTANT	SWEDEN	SOLLENTUNA	STOCKHOLM LAN	46 (54) 15 15 27 GENERAL INFO
CRAMO SWEDEN	SWEDEN	SOLLENTUNA	STOCKHOLM LAN	46 (322) 62 07 40 GENERAL INFO
CRAMO SWEDEN	SWEDEN	SOLLENTUNA	STOCKHOLM LAN	46 (476) 480 30 GENERAL INFO
CRAMO SWEDEN	SWEDEN	SOLLENTUNA	STOCKHOLM LAN	46 (371) 58 63 50 GENERAL INFO
CRAMO SWEDEN	SWEDEN	SOLLENTUNA	STOCKHOLM LAN	46 (922) 149 70 GENERAL INFO
CRAMO SWEDEN	SWEDEN	SOLLENTUNA	STOCKHOLM LAN	46 (40) 43 97 50 GENERAL INFO
CRAMO SWEDEN	SWEDEN	SOLLENTUNA	STOCKHOLM LAN	46 (570) 72 76 60 GENERAL INFO
CRAMO SWEDEN	SWEDEN	SOLLENTUNA	STOCKHOLM LAN	46 (226) 671 50 GENERAL INFO
CRAMO SWEDEN	SWEDEN	SOLLENTUNA	STOCKHOLM LAN	46 (921) 538 00 GENERAL INFO
CRAMO SWEDEN	SWEDEN	SOLLENTUNA	STOCKHOLM LAN	46 (33) 29 05 30 GENERAL INFO
CRAMO SWEDEN	SWEDEN	SOLLENTUNA	STOCKHOLM LAN	46 (243) 21 78 80 GENERAL INFO
CRAMO SWEDEN	SWEDEN	SOLLENTUNA	STOCKHOLM LAN	46 (8) 564 506 40 GENERAL INFO
CRAMO SWEDEN	SWEDEN	SOLLENTUNA	STOCKHOLM LAN	46 (586) 416 00 GENERAL INFO
CRAMO SWEDEN	SWEDEN	SOLLENTUNA	STOCKHOLM LAN	46 (171) 41 51 10 GENERAL INFO

Table 1. Caterpillar Dealers - Continued.

Dealer Name	Country	City	State/Province/Region	Phone
CRAMO SWEDEN	SWEDEN	SOLLENTUNA	STOCKHOLM LAN	46 (16) 10 88 90 GENERAL INFO
CRAMO SWEDEN	SWEDEN	SOLLENTUNA	STOCKHOLM LAN	46 (413) 688 15 GENERAL INFO
CRAMO SWEDEN	SWEDEN	SOLLENTUNA	STOCKHOLM LAN	46 (23) 70 53 40 GENERAL INFO
CRAMO SWEDEN	SWEDEN	SOLLENTUNA	STOCKHOLM LAN	46 (122) 831 30 GENERAL INFO
CRAMO SWEDEN	SWEDEN	SOLLENTUNA	STOCKHOLM LAN	46 (157) 154 00 GENERAL INFO
CRAMO SWEDEN	SWEDEN	SOLLENTUNA	STOCKHOLM LAN	46 (26) 64 72 50 GENERAL INFO
CRAMO SWEDEN	SWEDEN	SOLLENTUNA	STOCKHOLM LAN	46 (35) 15 31 60 GENERAL INFO
CRAMO SWEDEN	SWEDEN	SOLLENTUNA	STOCKHOLM LAN	46 (611) 55 44 30 GENERAL INFO
CRAMO SWEDEN	SWEDEN	SOLLENTUNA	STOCKHOLM LAN	46 (451) 495 50 GENERAL INFO
CRAMO SWEDEN	SWEDEN	SOLLENTUNA	STOCKHOLM LAN	46 (225) 59 55 60 GENERAL INFO
CRAMO SWEDEN	SWEDEN	SOLLENTUNA	STOCKHOLM LAN	46 (42) 25 15 80 GENERAL INFO
CRAMO SWEDEN	SWEDEN	SOLLENTUNA	STOCKHOLM LAN	46 (42) 32 94 40 GENERAL INFO
CRAMO SWEDEN	SWEDEN	SOLLENTUNA	STOCKHOLM LAN	46 (31) 748 33 10 GENERAL INFO
CRAMO SWEDEN	SWEDEN	SOLLENTUNA	STOCKHOLM LAN	46 (290) 202 22 GENERAL INFO
CRAMO SWEDEN	SWEDEN	SOLLENTUNA	STOCKHOLM LAN	46 (8) 556 405 30 GENERAL INFO
CRAMO SWEDEN	SWEDEN	SOLLENTUNA	STOCKHOLM LAN	46 (650) 54 76 60 GENERAL INFO
CRAMO SWEDEN	SWEDEN	SOLLENTUNA	STOCKHOLM LAN	46 (663) 190 32 GENERAL INFO
CRAMO SWEDEN	SWEDEN	SOLLENTUNA	STOCKHOLM LAN	46 (8) 580 835 00 GENERAL INFO
CRAMO SWEDEN	SWEDEN	SOLLENTUNA	STOCKHOLM LAN	46 (647) 66 55 50 GENERAL INFO
CRAMO SWEDEN	SWEDEN	SOLLENTUNA	STOCKHOLM LAN	46 (36) 30 57 90 GENERAL INFO
CRAMO SWEDEN	SWEDEN	SOLLENTUNA	STOCKHOLM LAN	46 (480) 42 56 40 GENERAL INFO
CRAMO SWEDEN	SWEDEN	SOLLENTUNA	STOCKHOLM LAN	46 (454) 30 50 40 GENERAL INFO
CRAMO SWEDEN	SWEDEN	SOLLENTUNA	STOCKHOLM LAN	46 (586) 72 11 50 GENERAL INFO
CRAMO SWEDEN	SWEDEN	SOLLENTUNA	STOCKHOLM LAN	46 (455) 30 28 30 GENERAL INFO

Table 1. Caterpillar Dealers - Continued.

Dealer Name	Country	City	State/Province/Region	Phone
CRAMO SWEDEN	SWEDEN	SOLLENTUNA	STOCKHOLM LAN	46 (54) 69 07 60 GENERAL INFO
CRAMO SWEDEN	SWEDEN	SOLLENTUNA	STOCKHOLM LAN	46 (150) 34 99 99 GENERAL INFO
CRAMO SWEDEN	SWEDEN	SOLLENTUNA	STOCKHOLM LAN	46 (221) 276 60 GENERAL INFO
CRAMO SWEDEN	SWEDEN	SOLLENTUNA	STOCKHOLM LAN	46 (44) 20 68 40 GENERAL INFO
CRAMO SWEDEN	SWEDEN	SOLLENTUNA	STOCKHOLM LAN	46 (550) 41 26 90 GENERAL INFO
CRAMO SWEDEN	SWEDEN	SOLLENTUNA	STOCKHOLM LAN	46 (300) 56 66 90 GENERAL INFO
CRAMO SWEDEN	SWEDEN	SOLLENTUNA	STOCKHOLM LAN	46 (523) 709 70 GENERAL INFO
CRAMO SWEDEN	SWEDEN	SOLLENTUNA	STOCKHOLM LAN	46 (418) 44 90 30 GENERAL INFO
CRAMO SWEDEN	SWEDEN	SOLLENTUNA	STOCKHOLM LAN	46 (510) 48 48 50 GENERAL INFO
CRAMO SWEDEN	SWEDEN	SOLLENTUNA	STOCKHOLM LAN	46 (13) 25 33 80 GENERAL INFO
CRAMO SWEDEN	SWEDEN	SOLLENTUNA	STOCKHOLM LAN	46 (372) 845 35 GENERAL INFO
CRAMO SWEDEN	SWEDEN	SOLLENTUNA	STOCKHOLM LAN	46 (651) 105 60 GENERAL INFO
CRAMO SWEDEN	SWEDEN	SOLLENTUNA	STOCKHOLM LAN	46 (240) 183 40 GENERAL INFO
CRAMO SWEDEN	SWEDEN	SOLLENTUNA	STOCKHOLM LAN	46 (920) 23 35 80 GENERAL INFO
CRAMO SWEDEN	SWEDEN	SOLLENTUNA	STOCKHOLM LAN	46 (46) 12 41 20 GENERAL INFO
CRAMO SWEDEN	SWEDEN	SOLLENTUNA	STOCKHOLM LAN	46 (40) 21 33 77 GENERAL INFO
CRAMO SWEDEN	SWEDEN	SOLLENTUNA	STOCKHOLM LAN	46 (40) 14 32 40 GENERAL INFO
CRAMO SWEDEN	SWEDEN	SOLLENTUNA	STOCKHOLM LAN	46 (40) 22 83 30 GENERAL INFO
CRAMO SWEDEN	SWEDEN	SOLLENTUNA	STOCKHOLM LAN	46 (501) 27 83 90 GENERAL INFO
CRAMO SWEDEN	SWEDEN	SOLLENTUNA	STOCKHOLM LAN	46 (8) 594 406 80 GENERAL INFO
CRAMO SWEDEN	SWEDEN	SOLLENTUNA	STOCKHOLM LAN	46 (142) 170 95 GENERAL INFO
CRAMO SWEDEN	SWEDEN	SOLLENTUNA	STOCKHOLM LAN	46 (250) 287 40 GENERAL INFO
CRAMO SWEDEN	SWEDEN	SOLLENTUNA	STOCKHOLM LAN	46 (141) 23 56 50 GENERAL INFO
CRAMO SWEDEN	SWEDEN	SOLLENTUNA	STOCKHOLM LAN	46 (8) 556 097 70 GENERAL INFO

Table 1. Caterpillar Dealers - Continued.

Dealer Name	Country	City	State/Province/Region	Phone
CRAMO SWEDEN	SWEDEN	SOLLENTUNA	STOCKHOLM LAN	46 (11) 32 15 70 GENERAL INFO
CRAMO SWEDEN	SWEDEN	SOLLENTUNA	STOCKHOLM LAN	46 (176) 102 20 GENERAL INFO
CRAMO SWEDEN	SWEDEN	SOLLENTUNA	STOCKHOLM LAN	46 (155) 26 22 38 GENERAL INFO
CRAMO SWEDEN	SWEDEN	SOLLENTUNA	STOCKHOLM LAN	46 (8) 520 111 40 GENERAL INFO
CRAMO SWEDEN	SWEDEN	SOLLENTUNA	STOCKHOLM LAN	46 (911) 23 27 50 GENERAL INFO
CRAMO SWEDEN	SWEDEN	SOLLENTUNA	STOCKHOLM LAN	46 (19) 16 40 40 GENERAL INFO
CRAMO SWEDEN	SWEDEN	SOLLENTUNA	STOCKHOLM LAN	46 (660) 29 50 40 GENERAL INFO
CRAMO SWEDEN	SWEDEN	SOLLENTUNA	STOCKHOLM LAN	46 (63) 55 69 50 GENERAL INFO
CRAMO SWEDEN	SWEDEN	SOLLENTUNA	STOCKHOLM LAN	46 (414) 41 21 00 GENERAL INFO
CRAMO SWEDEN	SWEDEN	SOLLENTUNA	STOCKHOLM LAN	46 (910) 73 31 50 GENERAL INFO
CRAMO SWEDEN	SWEDEN	SOLLENTUNA	STOCKHOLM LAN	46 (8) 448 32 00 GENERAL INFO
CRAMO SWEDEN	SWEDEN	SOLLENTUNA	STOCKHOLM LAN	46 (500) 46 97 90 GENERAL INFO
CRAMO SWEDEN	SWEDEN	SOLLENTUNA	STOCKHOLM LAN	46 (270) 170 90 GENERAL INFO
CRAMO SWEDEN	SWEDEN	SOLLENTUNA	STOCKHOLM LAN	46 (8) 554 232 80 GENERAL INFO
CRAMO SWEDEN	SWEDEN	SOLLENTUNA	STOCKHOLM LAN	46 (8) 564 707 30 GENERAL INFO
CRAMO SWEDEN	SWEDEN	SOLLENTUNA	STOCKHOLM LAN	46 (303) 844 00 GENERAL INFO
CRAMO SWEDEN	SWEDEN	SOLLENTUNA	STOCKHOLM LAN	46 (8) 619 81 60 GENERAL INFO
CRAMO SWEDEN	SWEDEN	SOLLENTUNA	STOCKHOLM LAN	46 (152) 124 40 GENERAL INFO
CRAMO SWEDEN	SWEDEN	SOLLENTUNA	STOCKHOLM LAN	46 (526) 120 50 GENERAL INFO
CRAMO SWEDEN	SWEDEN	SOLLENTUNA	STOCKHOLM LAN	46 (60) 52 41 40 GENERAL INFO
CRAMO SWEDEN	SWEDEN	SOLLENTUNA	STOCKHOLM LAN	46 (565) 139 55 GENERAL INFO
CRAMO SWEDEN	SWEDEN	SOLLENTUNA	STOCKHOLM LAN	46 (8) 544 430 90 GENERAL INFO
CRAMO SWEDEN	SWEDEN	SOLLENTUNA	STOCKHOLM LAN	46 (502) 107 05 GENERAL INFO
CRAMO SWEDEN	SWEDEN	SOLLENTUNA	STOCKHOLM LAN	46 (410) 36 37 60 GENERAL INFO

Table 1. Caterpillar Dealers - Continued.

Dealer Name	Country	City	State/Province/Region	Phone
CRAMO SWEDEN	SWEDEN	SOLLENTUNA	STOCKHOLM LAN	46 (520) 49 41 90 GENERAL INFO
CRAMO SWEDEN	SWEDEN	SOLLENTUNA	STOCKHOLM LAN	46 (522) 64 56 30 GENERAL INFO
CRAMO SWEDEN	SWEDEN	SOLLENTUNA	STOCKHOLM LAN	46 (321) 163 63 GENERAL INFO
CRAMO SWEDEN	SWEDEN	SOLLENTUNA	STOCKHOLM LAN	46 (90) 70 22 30 GENERAL INFO
CRAMO SWEDEN	SWEDEN	SOLLENTUNA	STOCKHOLM LAN	46 (18) 56 11 30 GENERAL INFO
CRAMO SWEDEN	SWEDEN	SOLLENTUNA	STOCKHOLM LAN	46 (370) 784 91 GENERAL INFO
CRAMO SWEDEN	SWEDEN	SOLLENTUNA	STOCKHOLM LAN	46 (340) 64 14 80 GENERAL INFO
CRAMO SWEDEN	SWEDEN	SOLLENTUNA	STOCKHOLM LAN	46 (370) 194 55/56 GENERAL INFO
CRAMO SWEDEN	SWEDEN	SOLLENTUNA	STOCKHOLM LAN	46 (21) 81 54 50 GENERAL INFO
CRAMO SWEDEN	SWEDEN	SOLLENTUNA	STOCKHOLM LAN	46 (490) 374 30 GENERAL INFO
CRAMO SWEDEN	SWEDEN	SOLLENTUNA	STOCKHOLM LAN	46 (31) 748 33 00 GENERAL INFO
CRAMO SWEDEN	SWEDEN	SOLLENTUNA	STOCKHOLM LAN	46 (470) 70 76 80 GENERAL INFO
CRAMO SWEDEN	SWEDEN	SOLLENTUNA	STOCKHOLM LAN	46 (492) 759 01 GENERAL INFO
CRAMO SWEDEN	SWEDEN	SOLLENTUNA	STOCKHOLM LAN	46 (498) 29 10 90 GENERAL INFO
CRAMO SWEDEN	SWEDEN	SOLLENTUNA	STOCKHOLM LAN	46 (411) 139 10 GENERAL INFO
CRAMO SWEDEN	SWEDEN	SOLLENTUNA	STOCKHOLM LAN	46 (40) 43 97 50 GENERAL INFO
CRAMO SWEDEN	SWEDEN	SOLLENTUNA	STOCKHOLM LAN	46 (411) 53 65 00 GENERAL INFO
CRAMO SWEDEN	SWEDEN	SOLLENTUNA	STOCKHOLM LAN	46 (526) 120 50 GENERAL INFO
CRAMO SWEDEN	SWEDEN	SOLLENTUNA	STOCKHOLM LAN	46 (8) 523 13 970 GENERAL INFO
CRAMO SWEDEN	SWEDEN	SOLLENTUNA	STOCKHOLM LAN	46 (321) 163 63 GENERAL INFO
CRAMO SWEDEN	SWEDEN	SOLLENTUNA	STOCKHOLM LAN	46 (570) 72 76 60 GENERAL INFO
CRAMO SWEDEN	SWEDEN	SOLLENTUNA	STOCKHOLM LAN	46 (647) 66 47 24 GENERAL INFO
CRAMO SWEDEN	SWEDEN	SOLLENTUNA	STOCKHOLM LAN	46 (247) 123 06 GENERAL INFO
CRAMO TRADE	SWEDEN	SOLLENTUNA	STOCKHOLM LAN	46 (36) 36 30 30 GENERAL INFO

Table 1. Caterpillar Dealers - Continued.

Dealer Name	Country	City	State/Province/Region	Phone
LAPPRI AB	SWEDEN	SOLLENTUNA	STOCKHOLM LAN	46 (21) 31 33 50 GENERAL INFO
PON EQUIPMENT AB	SWEDEN	UPPLANDS VAESBY	STOCKHOLM LAN	46 (8) 590 99600 GENERAL INFO
PON EQUIPMENT AB	SWEDEN	UPPLANDS VAESBY	STOCKHOLM LAN	46 (8) 590 99500 GENERAL INFO
PON EQUIPMENT AB	SWEDEN	UMEA	VASTERBOTTEN LAN	46 (90) 13 72 35 GENERAL INFO
PON EQUIPMENT AB	SWEDEN	SUNDSVALL	VASTERNORRLAND LAN	46 (60) 10 19 20 GENERAL INFO
AVESCO RENT AG	SWITZERLAND	PRATTELN	BASEL-LANDSCHAFT CANTON	41 (61) 823 03 45 GENERAL INFO
AVESCO RENT AG	SWITZERLAND	ITTIGEN	BERN CANTON	41 (31) 928 26 26 GENERAL INFO
AVESCO AG	SWITZERLAND	LANGENTHAL	BERN CANTON	41 (62) 915 80 80 GENERAL INFO
AVESCO RENT AG	SWITZERLAND	LANGENTHAL	BERN CANTON	41 (62) 915 80 25 GENERAL INFO
AVESCO RENT AG	SWITZERLAND	GENEVA	GENEVA CANTON	41 (22) 300 50 40 GENERAL INFO
NEAR EAST FINANCIAL CORP.	SWITZERLAND	GENEVA	GENEVA CANTON	41 (22) 716-0999 GENERAL INFO
NEAR EAST FINANCIAL CORP.	SWITZERLAND	GENEVA	GENEVA CANTON	41 (22) 716-0999 GENERAL INFO
OVERSEAS TRACTORS S.A.	SWITZERLAND	GENEVA	GENEVA CANTON	41 (22) 704-1330 GENERAL INFO
OVERSEAS TRACTORS S.A.	SWITZERLAND	GENEVA	GENEVA CANTON	41 (22) 704-1330 GENERAL INFO
OVERSEAS TRACTORS S.A.	SWITZERLAND	GENEVA	GENEVA CANTON	41 (22) 704-1330 GENERAL INFO
AVESCO AG	SWITZERLAND	LANDQUART	GRABUNDEN CANTON	41 (81) 300 60 90 GENERAL INFO
AVESCO RENT AG	SWITZERLAND	LANDQUART	GRABUNDEN CANTON	41 (81) 330 62 00 GENERAL INFO
AVESCO RENT AG	SWITZERLAND	DELEMONT	JURA CANTON	41 (32) 423 51 11 GENERAL INFO
AVESCO RENT AG	SWITZERLAND	PORRENTRUY	JURA CANTON	41 (32) 466 49 74 GENERAL INFO
AVESCO RENT AG	SWITZERLAND	EMMEN	LUCERNE CANTON	41 (41) 262 16 70 GENERAL INFO
AVESCO RENT AG	SWITZERLAND	SERRIERES	NEUCHATEL CANTON	41 (32) 740 19 00 GENERAL INFO
TEKNOXGROUP S.A.	SWITZERLAND	LUGANO	TICINO CANTON	41 (91) 973 5040 GENERAL INFO
TEKNOXGROUP S.A.	SWITZERLAND	LUGANO	TICINO CANTON	41 (91) 973 5040 GENERAL INFO
TEKNOXGROUP S.A.	SWITZERLAND	LUGANO	TICINO CANTON	41 (91) 973 5040 GENERAL INFO

Table 1. Caterpillar Dealers - Continued.

Dealer Name	Country	City	State/Province/Region	Phone
TEKNOXGROUP S.A.	SWITZERLAND	LUGANO	TICINO CANTON	381 (38) 66544 GENERAL INFO
TEKNOXGROUP S.A.	SWITZERLAND	LUGANO	TICINO CANTON	381 (11) 318 5818 GENERAL INFO
TEKNOXGROUP S.A.	SWITZERLAND	LUGANO	TICINO CANTON	41 (91) 973 5040 GENERAL INFO
TEKNOXGROUP S.A.	SWITZERLAND	LUGANO	TICINO CANTON	41 (91) 973 5040 GENERAL INFO
AVESCO RENT AG	SWITZERLAND	CONTHEY	VALAIS CANTON	41 (27) 346 66 51 GENERAL INFO
AVESCO RENT AG	SWITZERLAND	RARON	VALAIS CANTON	41 (27) 934 13 21 GENERAL INFO
AVESCO RENT AG	SWITZERLAND	ECHANDENS	VAUD CANTON	41 (21) 702 29 26 GENERAL INFO
AVESCO RENT AG	SWITZERLAND	PAYERNE	VAUD CANTON	41 (26) 660 07 63 GENERAL INFO
AVESCO AG	SWITZERLAND	PUIDOUX	VAUD CANTON	41 (21) 946 00 46 GENERAL INFO
AVESCO RENT SA	SWITZERLAND	PUIDOUX	VAUD CANTON	41 (21) 946 00 64 GENERAL INFO
AVESCO RENT AG	SWITZERLAND	ROCHE	VAUD CANTON	41 (21) 960 22 60 GENERAL INFO
AVESCO RENT AG	SWITZERLAND	YVERDON-LES-BAINS	VAUD CANTON	41 (24) 420 31 05 GENERAL INFO
AVESCO AG	SWITZERLAND	HEGNAU	ZURICH CANTON	41 (1) 908 57 77 GENERAL INFO
AVESCO RENT AG	SWITZERLAND	VOLKETSWIL	ZURICH CANTON	41 (1) 433 90 00 GENERAL INFO
ZEPPELIN INTERNATIONAL AG	SWITZERLAND	ZUG		41 (41) 747 00 30 PRIMARY BUSINESS
CAPITAL MACHINERY LIMITED	TAIWAN	HUALIEN	HUALIEN-HSIEN	886 (38) 561-701 GENERAL INFO
CAPITAL MACHINERY LIMITED	TAIWAN	KAOHSIUNG	KAOHSIUNG-HSIEN	886 (7) 332-8088 GENERAL INFO
CAPITAL MACHINERY LIMITED	TAIWAN	TAICHUNG	TAICHUNG-HSIEN	886 (4) 2461-2850 GENERAL INFO
CAPITAL MACHINERY LIMITED	TAIWAN	SHAN-HUA TOWN	TAINAN-HSIEN	886 (6) 583-8217 GENERAL INFO
CAPITAL MACHINERY LIMITED	TAIWAN	TAIPEI	TAIPEI-HSIEN	886 (2) 2717-0880 GENERAL INFO
CAPITAL MACHINERY LIMITED	TAIWAN	TAOYUAN	TAOYUAN-HSIEN	886 (3) 386-6688 GENERAL INFO
ZEPPELIN INTERNATIONAL AG	TAJIKISTAN	ZUG		41 (41) 747 00 30 GENERAL INFO
MANTRAC TANZANIA	TANZANIA	DAR ES SALAAM	DAR ES SALAAM REGION	255 (22) 2860160 GENERAL INFO
MANTRAC TANZANIA	TANZANIA	MOSHI	KILIMANJARO REGION	255 (27) 2751711 GENERAL INFO

Table 1. Caterpillar Dealers - Continued.

Dealer Name	Country	City	State/Province/Region	Phone
MANTRAC TANZANIA LTD	TANZANIA	MWANZA	MWANZA REGION	255 (28) 2572205 GENERAL INFO
MANTRAC TANZANIA	TANZANIA	TANGA	TANGA REGION	255 (27) 2642987 GENERAL INFO
METRO MACHINERY COMPANY LTD.	THAILAND	CHANTHABURI	CHANTHABURI CHANGWAT	66 (039) 322-715 GENERAL INFO
METRO MACHINERY COMPANY LTD.	THAILAND	CHIANG MAI	CHIANG MAI CHANGWAT	66 (053) 260-629 GENERAL INFO
METRO MACHINERY COMPANY LTD.	THAILAND	CHIANG RAI	CHIANG RAI CHANGWAT	66 (053) 748-081 GENERAL INFO
METRO MACHINERY COMPANY LTD.	THAILAND	KANCHANABURI	KANCHANABURI CHANGWAT	66 (034) 512-223 GENERAL INFO
METRO MACHINERY COMPANY LTD.	THAILAND	KHON KAEN	KHON KAEN CHANGWAT	66 (043) 325-202 GENERAL INFO
METRO MACHINERY COMPANY LTD.	THAILAND	BANGKOK	KRUNG THEP MAHANAKHON CHANGWAT	66 (02) 742-8000 GENERAL INFO
METRO MACHINERY COMPANY LTD.	THAILAND	BANGKOK	KRUNG THEP MAHANAKHON CHANGWAT	66 (02) 214-1361 GENERAL INFO
METRO MACHINERY COMPANY LTD.	THAILAND	CHON BURI	KRUNG THEP MAHANAKHON CHANGWAT	66 (038) 765-714 GENERAL INFO
METRO MACHINERY COMPANY LTD.	THAILAND	LAK SI	KRUNG THEP MAHANAKHON CHANGWAT	66 (02) 521-0790 GENERAL INFO
METRO MACHINERY COMPANY LTD.	THAILAND	LAMPANG	LAMPANG CHANGWAT	66 (054) 226-069 GENERAL INFO
METRO MACHINERY COMPANY LTD.	THAILAND	NAKHON PATHOM	NAKHON PATHOM CHANGWAT	66 (034) 200-402 GENERAL INFO
METRO MACHINERY COMPANY LTD.	THAILAND	KORAT	NAKHON RATCHASIMA CHANGWAT	66 (044) 353-965 GENERAL INFO
METRO MACHINERY COMPANY LTD.	THAILAND	PHITSANULOK	PHITSANULOK CHANGWAT	66 (055) 280-198 GENERAL INFO
METRO MACHINERY COMPANY LTD.	THAILAND	PHUKET	PHUKET CHANGWAT	66 (076) 214-202 GENERAL INFO
METRO MACHINERY COMPANY LTD.	THAILAND	RAYONG	RAYONG CHANGWAT	66 (038) 664-191 GENERAL INFO
METRO MACHINERY COMPANY LTD.	THAILAND	SAKON NAKHON	SAKON NAKHON CHANGWAT	66 (042) 730865 GENERAL INFO
METRO MACHINERY COMPANY LTD.	THAILAND	BANG PHLI	SAMUT PRAKAN CHANGWAT	66 (2) 7400481 GENERAL INFO
METRO MACHINERY COMPANY LTD.	THAILAND	SAMUT SAKHON	SAMUT SAKHON CHANGWAT	66 (034) 411-706 GENERAL INFO
METRO MACHINERY COMPANY LTD.	THAILAND	SARABURI	SARABURI CHANGWAT	66 (036) 223-632 GENERAL INFO
METRO MACHINERY COMPANY LTD.	THAILAND	HAT YAI	SONGKHLA CHANGWAT	66 (074) 210-396 GENERAL INFO
METRO MACHINERY COMPANY LTD.	THAILAND	SURAT THANI	SURAT THANI CHANGWAT	66 (077) 200-166 GENERAL INFO
METRO MACHINERY COMPANY LTD.	THAILAND	TAK	TAK CHANGWAT	66 (055) 511-931 GENERAL INFO

Table 1. Caterpillar Dealers - Continued.

Dealer Name	Country	City	State/Province/Region	Phone
METRO MACHINERY COMPANY LTD.	THAILAND	UBON RATCHATHANI	UBON RATCHATHANI CHANGWAT	66 (045) 311-902 GENERAL INFO
METRO MACHINERY COMPANY LTD.	THAILAND	UDON THANI	UDON THANI CHANGWAT	66 (042) 206-286 GENERAL INFO
METRO MACHINERY COMPANY LTD.	THAILAND	CHUMPHON		66 (077) 501-997 GENERAL INFO
METRO MACHINERY COMPANY LTD.	THAILAND	NAKHON SAWAN		66 (056) 222-065 GENERAL INFO
METRO MACHINERY COMPANY LTD.	THAILAND	NAKHON SI THAMMARAT		66 (075) 420-489-40 GENERAL INFO
TOGO EQUIPEMENTS	TOGO	LOME	MARITIME REGION	228 () 227 03 12 GENERAL INFO
HAWTHORNE MACHINERY LTD	TONGA	NUKU'ALOFA	TONGATAPU DIVISION	676 () 24114 GENERAL INFO
TRACMAC ENGINEERING LTD.	TRINIDAD-TOBAGO	PORT-OF-SPAIN	TRINIDAD I.	1 (868) 665-5555 GENERAL INFO
TRACMAC ENGINEERING LTD.	TRINIDAD-TOBAGO	PORT-OF-SPAIN	TRINIDAD I.	1 (868) 665-5555 GENERAL INFO
PARENIN S.A.	TUNISIA	LE BARDO	TUNIS WILAYAH	216 (1) 592300 GENERAL INFO
BORUSAN MAKINA SERVIS VE	TURKEY	ADANA	ADANA IL	90 (322) 455 2600 GENERAL INFO
BORUSAN MAKINA SERVIS VE	TURKEY	SEYHAN	ADANA IL	90 (322) 458 1120 GENERAL INFO
BORUSAN MAKINA SERVIS VE	TURKEY	ANKARA	ANKARA IL	90 (312) 592 9200 GENERAL INFO
BORUSAN MAKINA SERVIS VE	TURKEY	CANKAYA	ANKARA IL	90 (312) 583 9000 GENERAL INFO
LEVENT MAKINA SERVIS INSAAT	TURKEY	ANTALYA	ANTALYA IL	90 (242) 221 4820 GENERAL INFO
BORUSAN MAKINA SERVIS VE	TURKEY	BURSA	BURSA IL	90 (224) 413 2290 GENERAL INFO
BORUSAN MAKINA SERVIS VE	TURKEY	DIYARBAKIR	DIYARBAKIR IL	90 (412) 255 0832 GENERAL INFO
BORUSAN MAKINA SERVIS VE	TURKEY	ESKISEHIR	ESKISEHIR IL	90 (222) 228 1760 GENERAL INFO
BORUSAN MAKINA SERVIS VE	TURKEY	NIZIP	GAZIANTEP IL	90 (342) 235 1883 GENERAL INFO
BORUSAN GUC SISTEMLERI	TURKEY	ISTANBUL	ISTANBUL IL	90 (212) 393 5500 GENERAL INFO
BORUSAN MAKINA SERVIS VE	TURKEY	ISTANBUL	ISTANBUL IL	90 (212) 393 5500 GENERAL INFO
BORUSAN MAKINA SERVIS VE	TURKEY	ISTANBUL	ISTANBUL IL	90 (212) 71 7080 GENERAL INFO
BORUSAN MAKINA SERVIS VE	TURKEY	LEVENT	ISTANBUL IL	90 (212) 283 5760 GENERAL INFO
BORUSAN MAKINA SERVIS VE	TURKEY	KEMALPASA	IZMIR IL	90 (232) 397 0100 GENERAL INFO

Table 1. Caterpillar Dealers - Continued.

Dealer Name	Country	City	State/Province/Region	Phone
DEMSAC CATI KAPLAMA VE	TURKEY	KAYSERI	KAYSERI IL	90 (352) 311 4057 GENERAL INFO
BORUSAN MAKINA SERVIS VE	TURKEY	GEBZE	KOCAELI IL	90 (262) 653 8070 GENERAL INFO
BORUSAN MAKINA SERVIS VE	TURKEY	TRABZON	TRABZON IL	90 (462) 325 5929 GENERAL INFO
ZEPPELIN INTERNATIONAL AG	TURKMENISTAN	ASHGABAT	TURKMENISTAN	7 (993) 12 455 116 GENERAL INFO
ZEPPELIN INTERNATIONAL AG	TURKMENISTAN	ZUG		7 (993) 12 455 116 GENERAL INFO
MACHINERY & ENERGY LIMITED	TURKS-CAICOS IS	NASSAU	NEW PROVIDENCE I. DISTRICT	1 (809) 3201 GENERAL INFO
MOHAMED ABDULRAHMAN AL BAHAR	UAE	ABU DHABI	ABU DHABI IMARAH	971 (2) 5554200 GENERAL INFO
MOHAMED ABDULRAHMAN AL-BAHAR	UAE	ABU DHABI	ABU DHABI IMARAH	971 (2) 5554200 GENERAL INFO
MOHAMED ABDULRAHMAN AL-BAHAR	UAE	AL AIN	ABU DHABI IMARAH	971 (3) 7825060 GENERAL INFO
MOHAMED ABDULRAHMAN AL BAHAR	UAE	SHARJAH	SHARJAH IMARAH	971 (6) 543.3555 GENERAL INFO
MOHAMED ABDULRAHMAN AL-BAHAR	UAE	SHARJAH	SHARJAH IMARAH	971 (6) 543.3555 GENERAL INFO
MANTRAC UGANDA	UGANDA	KAMPALA	CENTRAL PROVINCE	256 (41) 304000 GENERAL INFO
ZEPPELIN INTERNATIONAL AG	UKRAINE	DNEPROPETROVSK	DNEPROPETROVSK OBLAST	380 (562) 34 96 41 GENERAL INFO
ZEPPELIN INTERNATIONAL AG	UKRAINE	ODESSA	ODESSA OBLAST	380 (482) 21 00 80 GENERAL INFO
ZEPPELIN INTERNATIONAL AG	UKRAINE	ZUG		380 (44) 228 3578 GENERAL INFO
ZEPPELIN INTERNATIONAL AG	UKRAINE	ZUG		380 (44) 228 3578 GENERAL INFO
HEWDEN STUART PLC.	UNITED KINGDOM	ABINGDON OXFORD	ENGLAND	44 (1235) 532 799 GENERAL INFO
HEWDEN PLANT HIRE LTD	UNITED KINGDOM	ASHFORD	ENGLAND	44 (1784) 422358 GENERAL INFO
HEWDEN STUART PLC.	UNITED KINGDOM	ASHFORD	ENGLAND	44 (1233) 624444 GENERAL INFO
HEWDEN STUART PLC.	UNITED KINGDOM	ASHFORD	ENGLAND	44 (1784) 422 358 GENERAL INFO
HEWDEN STUART PLC.	UNITED KINGDOM	AVONMOUTH	ENGLAND	44 (117) 982 6918 GENERAL INFO
HEWDEN STUART PLC.	UNITED KINGDOM	BARNSLEY	ENGLAND	44 (1226) 731 644 GENERAL INFO
HEWDEN STUART PLC.	UNITED KINGDOM	BARNSTAPLE	ENGLAND	44 (1271) 321 221 GENERAL INFO
HEWDEN STUART PLC.	UNITED KINGDOM	BASILDON	ENGLAND	44 (1268) 727441 GENERAL INFO

Table 1. Caterpillar Dealers - Continued.

Dealer Name	Country	City	State/Province/Region	Phone
HEWDEN STUART PLC.	UNITED KINGDOM	BELVEDERE	ENGLAND	44 (208) 311 9796 GENERAL INFO
HEWDEN STUART PLC.	UNITED KINGDOM	BEXHILL-ON-SEA	ENGLAND	44 (1424) 210 601 GENERAL INFO
HEWDEN STUART PLC.	UNITED KINGDOM	BIRKENHEAD	ENGLAND	44 (151) 666 1711 GENERAL INFO
HEWDEN STUART PLC.	UNITED KINGDOM	BIRMINGHAM	ENGLAND	44 (121) 359 4282 GENERAL INFO
HEWDEN STUART PLC.	UNITED KINGDOM	BIRMINGHAM	ENGLAND	44 (121) 707 3434 GENERAL INFO
FINNING (U.K.) LTD.	UNITED KINGDOM	BIRTLEY	ENGLAND	44 (191) 410-2683 GENERAL INFO
HEWDEN STUART PLC.	UNITED KINGDOM	BOURNEMOUTH	ENGLAND	44 (1202) 579 728 GENERAL INFO
HEWDEN STUART PLC.	UNITED KINGDOM	BRIDGWATER	ENGLAND	44 (1278) 683888 GENERAL INFO
HEWDEN STUART PLC.	UNITED KINGDOM	BRIDGWATER	ENGLAND	44 (1278) 420 480 GENERAL INFO
FINNING (U.K.) LTD.	UNITED KINGDOM	BRISTOL	ENGLAND	44 (117) 980 2170 GENERAL INFO
HEWDEN STUART PLC.	UNITED KINGDOM	BRISTOL	ENGLAND	44 (1275) 848866 GENERAL INFO
HEWDEN STUART PLC.	UNITED KINGDOM	BROADSTAIRS	ENGLAND	44 (1843) 604 888 GENERAL INFO
HEWDEN STUART PLC.	UNITED KINGDOM	BROMLEY	ENGLAND	44 (20) 8460 9111 GENERAL INFO
HEWDEN STUART PLC.	UNITED KINGDOM	BROWNHILLS	ENGLAND	44 (1543) 452 050 GENERAL INFO
HEWDEN STUART PLC.	UNITED KINGDOM	BRUTON	ENGLAND	44 (1749) 812267 GENERAL INFO
FINNING (U.K.) LTD.	UNITED KINGDOM	CANNOCK	ENGLAND	44 (1543) 461461 GENERAL INFO
FINNING (U.K.) LTD.	UNITED KINGDOM	CANNOCK	ENGLAND	44 (870) 850 2244 GENERAL INFO
FINNPAVE	UNITED KINGDOM	CANNOCK	ENGLAND	44 (1354) 658 600 GENERAL INFO
HEWDEN STUART PLC.	UNITED KINGDOM	CHELTENHAM	ENGLAND	44 (1242) 248 128 GENERAL INFO
FINNING (U.K.) LTD.	UNITED KINGDOM	CHESTERFIELD	ENGLAND	44 (1246) 541541 GENERAL INFO
FINNING (U.K.) LTD.	UNITED KINGDOM	CHESTERFIELD	ENGLAND	44 (1246) 541541 GENERAL INFO
HEWDEN STUART PLC.	UNITED KINGDOM	CORSHAM	ENGLAND	44 (1249) 712362 GENERAL INFO
HEWDEN STUART PLC.	UNITED KINGDOM	CRAWLEY	ENGLAND	44 (1293) 542 520 GENERAL INFO
SUTRAC CO. (U.K.) LTD.	UNITED KINGDOM	CRAWLEY W. SUSSEX	ENGLAND	44 (129)55-4950 GENERAL INFO

Table 1. Caterpillar Dealers - Continued.

Dealer Name	Country	City	State/Province/Region	Phone
HEWDEN STUART PLC.	UNITED KINGDOM	DAGENHAM	ENGLAND	44 (208) 697 7413 GENERAL INFO
HEWDEN STUART PLC.	UNITED KINGDOM	DARTFORD	ENGLAND	44 (1322) 222221 GENERAL INFO
HEWDEN STUART PLC.	UNITED KINGDOM	EASTLEIGH	ENGLAND	44 (2380) 618733 GENERAL INFO
HEWDEN STUART PLC.	UNITED KINGDOM	EXETER	ENGLAND	44 (1392) 434 500 GENERAL INFO
HEWDEN STUART PLC.	UNITED KINGDOM	GLOUCESTER	ENGLAND	44 (1452) 500959 GENERAL INFO
HEWDEN STUART PLC.	UNITED KINGDOM	GRAYS	ENGLAND	44 (1375) 374 022 GENERAL INFO
HEWDEN STUART PLC.	UNITED KINGDOM	HALIFAX	ENGLAND	44 (1422) 349 696 GENERAL INFO
FINNING (U.K.) LTD.	UNITED KINGDOM	HALSTEAD	ENGLAND	44 (1787) 472678 GENERAL INFO
HEWDEN STUART PLC.	UNITED KINGDOM	HARLOW ESSEX	ENGLAND	44 (1279) 420 002 GENERAL INFO
HEWDEN STUART PLC.	UNITED KINGDOM	HARROGATE	ENGLAND	44 (1423) 883 244 GENERAL INFO
HEWDEN STUART PLC.	UNITED KINGDOM	HUDDERSFIELD	ENGLAND	44 (1484) 513 778 GENERAL INFO
HEWDEN STUART PLC.	UNITED KINGDOM	HULL	ENGLAND	44 (1482) 324 025 GENERAL INFO
ENERGYST CAT RENTAL POWER	UNITED KINGDOM	LEEDS	ENGLAND	44 (113) 238 2218 GENERAL INFO
FINNING (U.K.) LTD.	UNITED KINGDOM	LEEDS	ENGLAND	44 (113) 2534221 GENERAL INFO
FINNING (U.K.) LTD.	UNITED KINGDOM	LEICESTERSHIRE	ENGLAND	44 (1530) 249605 GENERAL INFO
HEWDEN STUART PLC.	UNITED KINGDOM	LINCOLN	ENGLAND	44 (1522) 522 833 GENERAL INFO
ENERGYST CAT RENTAL POWER	UNITED KINGDOM	LONDON	ENGLAND	44 (207) 473 3219 GENERAL INFO
HEWDEN STUART PLC.	UNITED KINGDOM	LONDON	ENGLAND	44 (20) 8297 9118 GENERAL INFO
HEWDEN STUART PLC.	UNITED KINGDOM	LONDON	ENGLAND	44 (20) 8840 8600 GENERAL INFO
BARLOWORLD EQUIPAMENTOS	UNITED KINGDOM	MAIDENHEAD	ENGLAND	44 (1753) 824311 GENERAL INFO
BARLOWORLD EQUIPAMENTOS ANGOLA	UNITED KINGDOM	MAIDENHEAD	ENGLAND	44 (1753) 824311 GENERAL INFO
BARLOWORLD EQUIPMENT MALAWI	UNITED KINGDOM	MAIDENHEAD	ENGLAND	44 (1753) 824311 GENERAL INFO
BARLOWORLD EQUIPMENT UK LTD	UNITED KINGDOM	MAIDENHEAD	ENGLAND	44 (1753) 824311 GENERAL INFO
BARLOWORLD EQUIPMENT ZAMBIA	UNITED KINGDOM	MAIDENHEAD	ENGLAND	44 (1753) 824311 GENERAL INFO

Table 1. Caterpillar Dealers - Continued.

Dealer Name	Country	City	State/Province/Region	Phone
BARLOWORLD NAMIBIA PTY LTD	UNITED KINGDOM	MAIDENHEAD	ENGLAND	44 (1753) 824311 GENERAL INFO
BARLOWORLD TRADING BOTSWANA	UNITED KINGDOM	MAIDENHEAD	ENGLAND	44 (1753) 824311 GENERAL INFO
VOSTOCHNAYA TECHNICA UK	UNITED KINGDOM	MAIDENHEAD	ENGLAND	44 (1628) 620008 GENERAL INFO
VOSTOCHNAYA TECHNICA UK	UNITED KINGDOM	MAIDENHEAD	ENGLAND	44 (1628) 620008 GENERAL INFO
HEWDEN STUART PLC.	UNITED KINGDOM	MITCHAM	ENGLAND	44 (208) 648 7070 GENERAL INFO
HEWDEN STUART PLC.	UNITED KINGDOM	MORECAMBE	ENGLAND	44 (1524) 67810 GENERAL INFO
HEWDEN STUART PLC.	UNITED KINGDOM	NEWBURY	ENGLAND	44 (1635) 868088 GENERAL INFO
HEWDEN STUART PLC.	UNITED KINGDOM	NEWPORT	ENGLAND	44 (1983) 530988 GENERAL INFO
HEWDEN STUART PLC.	UNITED KINGDOM	NEWTON ABBOT	ENGLAND	44 (1626) 352596 GENERAL INFO
HEWDEN STUART PLC.	UNITED KINGDOM	NOTTINGHAM	ENGLAND	44 (1159) 761 234 GENERAL INFO
HEWDEN STUART PLC.	UNITED KINGDOM	ORPINGTON	ENGLAND	44 (1689) 822 242 GENERAL INFO
HEWDEN STUART PLC.	UNITED KINGDOM	PAIGNTON	ENGLAND	44 (1803) 524 137 GENERAL INFO
HEWDEN STUART PLC.	UNITED KINGDOM	PENRITH	ENGLAND	44 (1768) 899 799 GENERAL INFO
HEWDEN STUART PLC.	UNITED KINGDOM	PENZANCE	ENGLAND	44 (1736) 365 317 GENERAL INFO
FINNING (U.K.) LTD.	UNITED KINGDOM	PETERBOROUGH	ENGLAND	44 (1775) 761100 GENERAL INFO
HEWDEN STUART PLC.	UNITED KINGDOM	PLYMOUTH	ENGLAND	44 (1752) 491 400 GENERAL INFO
FINNING (U.K.) LTD.	UNITED KINGDOM	POOLE	ENGLAND	44 (1202) 330700 GENERAL INFO
HEWDEN STUART PLC.	UNITED KINGDOM	POOLE	ENGLAND	44 (1202) 674371 GENERAL INFO
FINNING (U.K.) LTD.	UNITED KINGDOM	POOLE DOR.	ENGLAND	44 (1202) 670900 GENERAL INFO
HEWDEN STUART PLC.	UNITED KINGDOM	PORTSMOUTH	ENGLAND	44 (2392) 821169 GENERAL INFO
HEWDEN STUART PLC.	UNITED KINGDOM	REDRUTH	ENGLAND	44 (1209) 218730 GENERAL INFO
HEWDEN STUART PLC.	UNITED KINGDOM	ROCHESTER	ENGLAND	44 (1634) 722223 GENERAL INFO
HEWDEN STUART PLC.	UNITED KINGDOM	SANDOWN	ENGLAND	44 (1010) 00 000 GENERAL INFO
HEWDEN STUART PLC.	UNITED KINGDOM	SCARBOROUGH	ENGLAND	20 (1723) 584 777 GENERAL INFO

Table 1. Caterpillar Dealers - Continued.

Dealer Name	Country	City	State/Province/Region	Phone
HEWDEN STUART PLC.	UNITED KINGDOM	SCUNTHORPE	ENGLAND	44 (1724) 840 222 GENERAL INFO
HEWDEN STUART PLC.	UNITED KINGDOM	SHREWSBURY	ENGLAND	44 (1743) 270128 GENERAL INFO
HEWDEN STUART PLC.	UNITED KINGDOM	SHREWSBURY	ENGLAND	44 (1743) 241 441 GENERAL INFO
FINNING (U.K.) LTD.	UNITED KINGDOM	SILVERTOWN	ENGLAND	44 (2074) 733 219 GENERAL INFO
BARLOWORLD EQUIPMENT UK	UNITED KINGDOM	SLOUGH	ENGLAND	44 (1753) 824311 GENERAL INFO
BARLOWORLD EQUIPMENT UK	UNITED KINGDOM	SLOUGH	ENGLAND	44 (1753) 824311 GENERAL INFO
FINNING (U.K.) LTD.	UNITED KINGDOM	SLOUGH	ENGLAND	44 (1753) 497300 GENERAL INFO
FINNING (U.K.) LTD.	UNITED KINGDOM	SLOUGH	ENGLAND	44 (1753) 497300 GENERAL INFO
UNATRAC LIMITED	UNITED KINGDOM	SLOUGH	ENGLAND	44 (1753) 695555 GENERAL INFO
UNATRAC LIMITED	UNITED KINGDOM	SLOUGH	ENGLAND	44 (1753) 695555 GENERAL INFO
UNATRAC LIMITED	UNITED KINGDOM	SLOUGH	ENGLAND	44 (1753) 695555 GENERAL INFO
UNATRAC LIMITED	UNITED KINGDOM	SLOUGH	ENGLAND	44 (1753) 695555 GENERAL INFO
UNATRAC LIMITED	UNITED KINGDOM	SLOUGH	ENGLAND	44 (1753) 695555 GENERAL INFO
UNATRAC LIMITED	UNITED KINGDOM	SLOUGH	ENGLAND	44 (1753) 695555 GENERAL INFO
ENERGYST CAT RENTAL POWER	UNITED KINGDOM	SOUTHAMPTON	ENGLAND	44 (2380) 860 596 GENERAL INFO
HEWDEN STUART PLC.	UNITED KINGDOM	SOUTHEND-ON-SEA	ENGLAND	44 (1702) 617 995 GENERAL INFO
FINNING (U.K.) LTD.	UNITED KINGDOM	ST. AUSTELL	ENGLAND	44 (1726) 823322 GENERAL INFO
FINNING (U.K.) LTD.	UNITED KINGDOM	ST. AUSTELL	ENGLAND	44 (1726) 823322 GENERAL INFO
HEWDEN STUART PLC.	UNITED KINGDOM	STOKE ON TRENT	ENGLAND	44 (1782) 412223 GENERAL INFO
HEWDEN STUART PLC.	UNITED KINGDOM	STOKE ON TRENT	ENGLAND	44 (1782) 271 333 GENERAL INFO
HEWDEN STUART PLC.	UNITED KINGDOM	SWINDON	ENGLAND	44 (1793) 611629 GENERAL INFO
HEWDEN STUART PLC.	UNITED KINGDOM	TAUNTON SOM.	ENGLAND	44 (1823) 331 920 GENERAL INFO
HEWDEN STUART PLC.	UNITED KINGDOM	THATCHAM	ENGLAND	44 (1635) 864418 GENERAL INFO
HEWDEN STUART PLC.	UNITED KINGDOM	TIPTON	ENGLAND	44 (121) 557 7271 GENERAL INFO

Table 1. Caterpillar Dealers - Continued.

Dealer Name	Country	City	State/Province/Region	Phone
HEWDEN STUART PLC.	UNITED KINGDOM	TRURO	ENGLAND	44 (1872) 276262 GENERAL INFO
HEWDEN STUART PLC.	UNITED KINGDOM	TUNBRIDGE WELLS	ENGLAND	44 (1892) 616 318 GENERAL INFO
HEWDEN STUART PLC.	UNITED KINGDOM	WALLINGTON	ENGLAND	44 (20) 8669 9151 GENERAL INFO
HEWDEN STUART PLC.	UNITED KINGDOM	WALTHAM CROSS	ENGLAND	44 (1992) 763008 GENERAL INFO
HEWDEN STUART PLC.	UNITED KINGDOM	WASHINGTON	ENGLAND	44 (191) 417 0111 GENERAL INFO
HEWDEN STUART PLC.	UNITED KINGDOM	WELWYN GARDEN CITY	ENGLAND	44 (1707) 393660 GENERAL INFO
HEWDEN STUART PLC.	UNITED KINGDOM	WIGAN	ENGLAND	44 (1942) 495 293 GENERAL INFO
HEWDEN STUART PLC.	UNITED KINGDOM	WILLENHALL	ENGLAND	44 (1902) 604564 GENERAL INFO
FINNING (U.K.) LTD.	UNITED KINGDOM	WINSFORD	ENGLAND	44 (1606) 594311 GENERAL INFO
HEWDEN STUART PLC.	UNITED KINGDOM	WITNEY	ENGLAND	44 (1993) 883733 GENERAL INFO
HEWDEN STUART PLC.	UNITED KINGDOM	WOKINGHAM	ENGLAND	44 (1189) 783 783 GENERAL INFO
ENERGYST CAT RENTAL POWER	UNITED KINGDOM	WOLVERHAMPTON	ENGLAND	44 (1902) 797-000 GENERAL INFO
MC CORMICK MACNAUGHTON, LTD.	UNITED KINGDOM	BELFAST	NORTHERN IRELAND	44 (28) 90 435 355 GENERAL INFO
MC CORMICK MACNAUGHTON, LTD.	UNITED KINGDOM	BELFAST	NORTHERN IRELAND	44 (28) 90 381 282 GENERAL INFO
MC CORMICK MACNAUGHTON, LTD.	UNITED KINGDOM	BELFAST	NORTHERN IRELAND	44 (28) 90 467 390 GENERAL INFO
MC CORMICK MACNAUGHTON, LTD.	UNITED KINGDOM	LISBURN	NORTHERN IRELAND	44 (28) 9266 1221 GENERAL INFO
MC CORMICK MACNAUGHTON, LTD.	UNITED KINGDOM	LISBURN	NORTHERN IRELAND	44 (28) 9266 1221 GENERAL INFO
MC CORMICK MACNAUGHTON, LTD.	UNITED KINGDOM	LISBURN	NORTHERN IRELAND	44 (28) 92 601 275 GENERAL INFO
MC CORMICK MACNAUGHTON, LTD.	UNITED KINGDOM	NEWTOWNABBEY	NORTHERN IRELAND	44 (28) 90 843 767 GENERAL INFO
FINNING (U.K.) LTD.	UNITED KINGDOM	ABERDEEN	SCOTLAND	44 (1224) 820000 GENERAL INFO
HEWDEN STUART PLC.	UNITED KINGDOM	ARBROATH	SCOTLAND	44 (1241) 872 227 GENERAL INFO
HEWDEN STUART PLC.	UNITED KINGDOM	DUNDEE	SCOTLAND	44 (1382) 459 169 GENERAL INFO
HEWDEN STUART PLC.	UNITED KINGDOM	DUNFERMLINE	SCOTLAND	44 (1383) 624 800 GENERAL INFO
HEWDEN STUART PLC.	UNITED KINGDOM	FORFAR	SCOTLAND	44 (1307) 461 666 GENERAL INFO

Table 1. Caterpillar Dealers - Continued.

Dealer Name	Country	City	State/Province/Region	Phone
FINNING (U.K.) LTD.	UNITED KINGDOM	GLASGOW	SCOTLAND	44 (1698) 713713 GENERAL INFO
HEWDEN STUART PLC.	UNITED KINGDOM	GLASGOW	SCOTLAND	44 (141) 550 0300 GENERAL INFO
HEWDEN STUART PLC.	UNITED KINGDOM	HELENSBURGH	SCOTLAND	44 (1436) 676 883 GENERAL INFO
HEWDEN STUART PLC.	UNITED KINGDOM	KILMARNOCK	SCOTLAND	44 (1563) 522 712 GENERAL INFO
FINNING (U.K.) LTD.	UNITED KINGDOM	MUIR OF ORD	SCOTLAND	44 (1463) 870575 GENERAL INFO
FINNING (U.K.) LTD.	UNITED KINGDOM	PERTH	SCOTLAND	44 (1738) 623181 GENERAL INFO
HEWDEN STUART PLC.	UNITED KINGDOM	PERTH	SCOTLAND	44 (1738) 634 968 GENERAL INFO
HEWDEN STUART PLC.	UNITED KINGDOM	PETERHEAD	SCOTLAND	44 (1779) 472 030 GENERAL INFO
HEWDEN STUART PLC.	UNITED KINGDOM	STIRLING	SCOTLAND	44 (1786) 463 216 GENERAL INFO
HEWDEN PLANT HIRE LTD.	UNITED KINGDOM	UDDINGSTON	SCOTLAND	44 (1698) 805 700 GENERAL INFO
HEWDEN STUART PLC.	UNITED KINGDOM	UDDINGSTON	SCOTLAND	44 (1772) 459460 GENERAL INFO
HEWDEN STUART PLC.	UNITED KINGDOM	UDDINGSTON	SCOTLAND	44 (1512) 678 5777 GENERAL INFO
HEWDEN STUART PLC.	UNITED KINGDOM	UDDINGSTON	SCOTLAND	44 (1606) 834518 GENERAL INFO
HEWDEN STUART PLC.	UNITED KINGDOM	UDDINGSTON	SCOTLAND	44 (1524) 398728 GENERAL INFO
HEWDEN STUART PLC.	UNITED KINGDOM	UDDINGSTON	SCOTLAND	44 (1706) 641531 GENERAL INFO
HEWDEN STUART PLC.	UNITED KINGDOM	UDDINGSTON	SCOTLAND	44 (1642) 604441 GENERAL INFO
HEWDEN STUART PLC.	UNITED KINGDOM	UDDINGSTON	SCOTLAND	44 (1925) 725 541 GENERAL INFO
HEWDEN STUART PLC.	UNITED KINGDOM	UDDINGSTON	SCOTLAND	44 (1946) 694311 GENERAL INFO
HEWDEN STUART PLC.	UNITED KINGDOM	UDDINGSTON	SCOTLAND	44 (1332) 341 089 GENERAL INFO
HEWDEN STUART PLC.	UNITED KINGDOM	UDDINGSTON	SCOTLAND	44 (1827) 715 363 GENERAL INFO
HEWDEN STUART PLC.	UNITED KINGDOM	UDDINGSTON	SCOTLAND	44 (1234) 340801 GENERAL INFO
HEWDEN STUART PLC.	UNITED KINGDOM	UDDINGSTON	SCOTLAND	44 (1502) 7145745 GENERAL INFO
HEWDEN STUART PLC.	UNITED KINGDOM	UDDINGSTON	SCOTLAND	44 (121) 772 5900 GENERAL INFO
HEWDEN STUART PLC.	UNITED KINGDOM	UDDINGSTON	SCOTLAND	44 (1223) 837075 GENERAL INFO

Table 1. Caterpillar Dealers - Continued.

Dealer Name	Country	City	State/Province/Region	Phone
HEWDEN STUART PLC.	UNITED KINGDOM	UDDINGSTON	SCOTLAND	44 (1480) 890205 GENERAL INFO
HEWDEN STUART PLC.	UNITED KINGDOM	UDDINGSTON	SCOTLAND	44 (1473) 216076 GENERAL INFO
HEWDEN STUART PLC.	UNITED KINGDOM	UDDINGSTON	SCOTLAND	44 (116) 269 4881 GENERAL INFO
HEWDEN STUART PLC.	UNITED KINGDOM	UDDINGSTON	SCOTLAND	44 (121) 505 2212 GENERAL INFO
HEWDEN STUART PLC.	UNITED KINGDOM	UDDINGSTON	SCOTLAND	44 (115) 943 0022 GENERAL INFO
HEWDEN STUART PLC.	UNITED KINGDOM	UDDINGSTON	SCOTLAND	44 (1234) 711711 GENERAL INFO
HEWDEN STUART PLC.	UNITED KINGDOM	UDDINGSTON	SCOTLAND	44 (1733) 564378 GENERAL INFO
HEWDEN STUART PLC.	UNITED KINGDOM	UDDINGSTON	SCOTLAND	44 (1978) 821 717 GENERAL INFO
HEWDEN STUART PLC.	UNITED KINGDOM	UDDINGSTON	SCOTLAND	44 (1527) 524020 GENERAL INFO
HEWDEN STUART PLC.	UNITED KINGDOM	UDDINGSTON	SCOTLAND	44 (1698) 230222 GENERAL INFO
HEWDEN STUART PLC.	UNITED KINGDOM	UDDINGSTON	SCOTLAND	44 (1506) 654581 GENERAL INFO
HEWDEN STUART PLC.	UNITED KINGDOM	UDDINGSTON	SCOTLAND	44 (1698) 853939 GENERAL INFO
HEWDEN STUART PLC.	UNITED KINGDOM	UDDINGSTON	SCOTLAND	44 (1382) 889922 GENERAL INFO
HEWDEN STUART PLC.	UNITED KINGDOM	UDDINGSTON	SCOTLAND	44 (131) 452 3000 GENERAL INFO
HEWDEN STUART PLC.	UNITED KINGDOM	UDDINGSTON	SCOTLAND	44 (1343) 500400 GENERAL INFO
HEWDEN STUART PLC.	UNITED KINGDOM	UDDINGSTON	SCOTLAND	44 (141) 771 1777 GENERAL INFO
HEWDEN STUART PLC.	UNITED KINGDOM	UDDINGSTON	SCOTLAND	44 (1463) 234582 GENERAL INFO
HEWDEN STUART PLC.	UNITED KINGDOM	UDDINGSTON	SCOTLAND	44 (141) 764 0590 GENERAL INFO
HEWDEN STUART PLC.	UNITED KINGDOM	UDDINGSTON	SCOTLAND	44 (1698) 861686 GENERAL INFO
HEWDEN STUART PLC.	UNITED KINGDOM	UDDINGSTON	SCOTLAND	44 (1698) 861686 GENERAL INFO
HEWDEN STUART PLC.	UNITED KINGDOM	UDDINGSTON	SCOTLAND	44 (1745) 583121 GENERAL INFO
HEWDEN STUART PLC.	UNITED KINGDOM	UDDINGSTON	SCOTLAND	44 (1942) 882661 GENERAL INFO
HEWDEN STUART PLC.	UNITED KINGDOM	UDDINGSTON	SCOTLAND	44 (1248) 364944 GENERAL INFO
HEWDEN STUART PLC.	UNITED KINGDOM	UDDINGSTON	SCOTLAND	44 (1226) 288246 GENERAL INFO

Table 1. Caterpillar Dealers - Continued.

Dealer Name	Country	City	State/Province/Region	Phone
HEWDEN STUART PLC.	UNITED KINGDOM	UDDINGSTON	SCOTLAND	44 (1229) 821819 GENERAL INFO
HEWDEN STUART PLC.	UNITED KINGDOM	UDDINGSTON	SCOTLAND	44 (2890) 617231 GENERAL INFO
HEWDEN STUART PLC.	UNITED KINGDOM	UDDINGSTON	SCOTLAND	44 (1642) 370511 GENERAL INFO
HEWDEN STUART PLC.	UNITED KINGDOM	UDDINGSTON	SCOTLAND	44 (0191) 492 9900 GENERAL INFO
HEWDEN STUART PLC.	UNITED KINGDOM	UDDINGSTON	SCOTLAND	44 (1977) 664382 GENERAL INFO
HEWDEN STUART PLC.	UNITED KINGDOM	UDDINGSTON	SCOTLAND	44 (1385) 269311 GENERAL INFO
HEWDEN STUART PLC.	UNITED KINGDOM	UDDINGSTON	SCOTLAND	44 (1977) 600711 GENERAL INFO
HEWDEN STUART PLC.	UNITED KINGDOM	UDDINGSTON	SCOTLAND	44 (1469) 576212 GENERAL INFO
HEWDEN STUART PLC.	UNITED KINGDOM	BRIDGEND	WALES	44 (1656) 745315 GENERAL INFO
HEWDEN STUART PLC.	UNITED KINGDOM	CARDIFF	WALES	44 (2920) 233491 GENERAL INFO
HEWDEN STUART PLC.	UNITED KINGDOM	CARDIFF	WALES	44 (29) 2048 6321 GENERAL INFO
HEWDEN STUART PLC.	UNITED KINGDOM	LLANTRISANT	WALES	44 (1443) 228186 GENERAL INFO
HEWDEN STUART PLC.	UNITED KINGDOM	MERTHYR TYDFIL	WALES	44 (1685) 370 470 GENERAL INFO
HEWDEN STUART PLC.	UNITED KINGDOM	NEWPORT GWENT	WALES	44 (1633) 855 444 GENERAL INFO
FINNING (U.K.) LTD.	UNITED KINGDOM	PONTYCLUN	WALES	44 (1443) 223456 GENERAL INFO
HEWDEN STUART PLC.	UNITED KINGDOM	RHYL	WALES	44 (1745) 342 222 GENERAL INFO
HEWDEN STUART PLC.	UNITED KINGDOM	BARBOURNE		44 (1905) 29371 GENERAL INFO
HEWDEN STUART PLC.	UNITED KINGDOM	LEWES		44 (1273) 472177 GENERAL INFO
HEWDEN STUART PLC.	UNITED KINGDOM	LLANDARCY		44 (1792) 321111 GENERAL INFO
HEWDEN STUART PLC.	UNITED KINGDOM	WOKINGHAM		44 (118) 978 5555 GENERAL INFO
HEWDEN STUART PLC.	UNITED KINGDOM	YEOVIL		44 (1935) 425242 GENERAL INFO
FINNING URUGUAY S.A.	URUGUAY	MONTEVIDEO	MONTEVIDEO DEPARTAMENTO	598 (2) 313-0131 GENERAL INFO
THOMPSON TRACTOR CO., INC.	USA	ATTALLA	ALABAMA	1 (256) 570-1100 GENERAL INFO
THOMPSON POWER SYSTEMS	USA	BIRMINGHAM	ALABAMA	1 (205) 849-4361 GENERAL INFO

Table 1. Caterpillar Dealers - Continued.

Dealer Name	Country	City	State/Province/Region	Phone
THOMPSON TRACTOR CO., INC.	USA	BIRMINGHAM	ALABAMA	1 (205) 841-8601 GENERAL INFO
THOMPSON TRACTOR CO., INC.	USA	BIRMINGHAM	ALABAMA	1 (205) 326-0334 GENERAL INFO
THOMPSON TRACTOR CO., INC.	USA	BIRMINGHAM	ALABAMA	1 (334) 262-1101 GENERAL INFO
THOMPSON TRACTOR CO., INC.	USA	BIRMINGHAM	ALABAMA	1 (205) 849-4545 GENERAL INFO
TIGER MACHINERY	USA	BIRMINGHAM	ALABAMA	1 (205) 849-3693 GENERAL INFO
TIGER MACHINERY LLC	USA	BIRMINGHAM	ALABAMA	7 (4242) 429492 GENERAL INFO
THOMPSON TRACTOR CO., INC.	USA	DECATUR	ALABAMA	1 (256) 353-7721 GENERAL INFO
THOMPSON TRACTOR CO., INC.	USA	DOTHAN	ALABAMA	1 (334) 671-1040 GENERAL INFO
THOMPSON TRACTOR CO., INC.	USA	DOTHAN	ALABAMA	1 (334) 673-3300 GENERAL INFO
THOMPSON TRACTOR CO., INC.	USA	MADISON	ALABAMA	1 (256) 772-0034 GENERAL INFO
THOMPSON TRACTOR CO., INC.	USA	MOBILE	ALABAMA	1 (251) 626-5100 GENERAL INFO
THOMPSON TRACTOR CO., INC.	USA	MOBILE	ALABAMA	1 (251) 452-1180 GENERAL INFO
THOMPSON TRACTOR CO., INC.	USA	MONTGOMERY	ALABAMA	1 (334) 215-5000 GENERAL INFO
THOMPSON TRACTOR CO., INC.	USA	OPELIKA	ALABAMA	1 (334) 749-3359 GENERAL INFO
THOMPSON TRACTOR CO., INC.	USA	OXFORD	ALABAMA	1 (256) 831-4104 GENERAL INFO
THOMPSON TRACTOR CO., INC.	USA	OXFORD	ALABAMA	1 (256) 835-5737 GENERAL INFO
THOMPSON TRACTOR CO., INC.	USA	THOMASVILLE	ALABAMA	1 (334) 636-0420 GENERAL INFO
THOMPSON TRACTOR CO., INC.	USA	THOMASVILLE	ALABAMA	1 (334) 636 2903 GENERAL INFO
THOMPSON TRACTOR CO., INC.	USA	TUSCALOOSA	ALABAMA	1 (205) 247-2839 GENERAL INFO
THOMPSON TRACTOR CO., INC.	USA	TUSCALOOSA	ALABAMA	1 (205) 247 3402 GENERAL INFO
THOMPSON TRACTOR CO., INC.	USA	TUSCUMBIA	ALABAMA	1 (256) 381-2771 GENERAL INFO
N C MACHINERY CO.	USA	ANCHORAGE	ALASKA	1 (907) 561-1766 GENERAL INFO
N C MACHINERY CO.	USA	DUTCH HARBOR	ALASKA	1 (907) 581-1367 GENERAL INFO
N C MACHINERY CO.	USA	FAIRBANKS	ALASKA	1 (907) 452-7251 GENERAL INFO

Table 1. Caterpillar Dealers - Continued.

Dealer Name	Country	City	State/Province/Region	Phone
N C MACHINERY CO.	USA	JUNEAU	ALASKA	1 (907) 789-0181 GENERAL INFO
EMPIRE MACHINERY	USA	FLAGSTAFF	ARIZONA	1 (928) 526-2800 GENERAL INFO
EMPIRE MACHINERY	USA	KINGMAN	ARIZONA	1 (928) 757-1159 GENERAL INFO
EMPIRE DEER VALLEY	USA	PHOENIX	ARIZONA	1 (623) 760-1140 GENERAL INFO
EMPIRE MACHINERY	USA	PHOENIX	ARIZONA	1 (480) 633-4000 GENERAL INFO
EMPIRE MACHINERY	USA	PHOENIX	ARIZONA	1 (520) 677-3375 GENERAL INFO
EMPIRE MACHINERY	USA	PHOENIX	ARIZONA	1 (602) 253-6851 GENERAL INFO
EMPIRE MACHINERY	USA	PHOENIX	ARIZONA	1 (480) 633-4000 GENERAL INFO
EMPIRE MACHINERY	USA	PHOENIX	ARIZONA	1 (480) 633 4315 GENERAL INFO
EMPIRE MACHINERY	USA	PHOENIX	ARIZONA	1 (480) 633 4352 GENERAL INFO
EMPIRE POWER SYSTEMS	USA	PHOENIX	ARIZONA	1 (602) 333-5600 GENERAL INFO
EMPIRE RENTAL	USA	PHOENIX	ARIZONA	1 (928) 499-6003 GENERAL INFO
EMPIRE MACHINERY	USA	SHOW LOW	ARIZONA	1 (928) 537-7798 GENERAL INFO
EMPIRE MACHINERY	USA	TUCSON	ARIZONA	1 (520) 746-8200 GENERAL INFO
EMPIRE POWER SYSTEMS	USA	TUCSON	ARIZONA	1 (520) 407-3100 GENERAL INFO
EMPIRE MACHINERY	USA	YUMA	ARIZONA	1 (928) 317-7800 GENERAL INFO
J.A. RIGGS TRACTOR COMPANY	USA	EL DORADO	ARKANSAS	1 (870) 881-0800 GENERAL INFO
J.A. RIGGS TRACTOR COMPANY	USA	EL DORADO	ARKANSAS	1 (870) 881-0800 GENERAL INFO
J.A. RIGGS TRACTOR COMPANY	USA	FORT SMITH	ARKANSAS	1 (501) 646-4755 GENERAL INFO
J.A. RIGGS TRACTOR COMPANY	USA	FORT SMITH	ARKANSAS	1 (888) 494-5013 AFTER HOURS
J.A. RIGGS TRACTOR COMPANY	USA	HARRISON	ARKANSAS	1 (870) 743-2000 GENERAL INFO
J.A. RIGGS TRACTOR COMPANY	USA	HARRISON	ARKANSAS	1 (870) 743-2000 GENERAL INFO
J.A. RIGGS TRACTOR COMPANY	USA	JONESBORO	ARKANSAS	1 (870) 932-5473 GENERAL INFO
J.A. RIGGS TRACTOR COMPANY	USA	JONESBORO	ARKANSAS	1 (870) 933-0020 GENERAL INFO

Table 1. Caterpillar Dealers - Continued.

Dealer Name	Country	City	State/Province/Region	Phone
J.A. RIGGS TRACTOR COMPANY	USA	LITTLE ROCK	ARKANSAS	1 (501) 570-3100 GENERAL INFO
J.A. RIGGS TRACTOR COMPANY	USA	LITTLE ROCK	ARKANSAS	1 (866) 294-4300 GENERAL INFO
J.A. RIGGS TRACTOR COMPANY	USA	MCGEHEE	ARKANSAS	1 (501) 222-3566 GENERAL INFO
J.A. RIGGS TRACTOR COMPANY	USA	RUSSELLVILLE	ARKANSAS	1 (501) 968-3304 GENERAL INFO
J.A. RIGGS TRACTOR COMPANY	USA	SPRINGDALE	ARKANSAS	1 (479) 756-8080 GENERAL INFO
J.A. RIGGS TRACTOR COMPANY	USA	SPRINGDALE	ARKANSAS	1 (479) 756-8080 GENERAL INFO
J.A. RIGGS TRACTOR COMPANY	USA	WEST MEMPHIS	ARKANSAS	1 (501) 732-3944 AFTER HOURS
QUINN COMPANY	USA	BAKERSFIELD	CALIFORNIA	1 (661) 393-0811 ENGINES
QUINN ENGINE SYSTEMS	USA	BAKERSFIELD	CALIFORNIA	1 (661) 393-5800 GENERAL INFO
HAWTHORNE RENT-IT SERVICE	USA	CARLSBAD	CALIFORNIA	1 (760) 431-7000 GENERAL INFO
PETERSON TRACTOR CO.	USA	CHICO	CALIFORNIA	1 (530) 343-1911 GENERAL INFO
QUINN COMPANY	USA	CORCORAN	CALIFORNIA	1 (559) 992-2193 GENERAL INFO
HAWTHORNE RENT-IT SERVICE	USA	ESCONDIDO	CALIFORNIA	1 (760) 745-8775 GENERAL INFO
QUINN COMPANY	USA	FIREBAUGH	CALIFORNIA	1 (559) 659-3444 GENERAL INFO
JOHNSON MACHINERY CO.	USA	FONTANA	CALIFORNIA	1 (909) 574-6601 GENERAL INFO
QUINN COMPANY	USA	FOOTHILL RANCH	CALIFORNIA	1 (949) 768-1777 GENERAL INFO
PETERSON TRACTOR CO.	USA	FORTUNA	CALIFORNIA	1 (707) 725-1888 GENERAL INFO
QUINN COMPANY	USA	FRESNO	CALIFORNIA	1 (559) 891-2425 GENERAL INFO
QUINN COMPANY	USA	FRESNO	CALIFORNIA	1 (559) 896-4040 GENERAL INFO
QUINN ENGINE SYSTEMS	USA	FRESNO	CALIFORNIA	1 (559) 896-4040 GENERAL INFO
JOHNSON MACHINERY CO.	USA	HESPERIA	CALIFORNIA	1 (760) 947-0967 GENERAL INFO
EMPIRE MACHINERY	USA	IMPERIAL	CALIFORNIA	1 (760) 355-2443 GENERAL INFO
JOHNSON RENTAL SERVICES	USA	INDIO	CALIFORNIA	1 (760) 342-1597 GENERAL INFO
HAWTHORNE RENT-IT SERVICE	USA	LAKESIDE	CALIFORNIA	1 (619) 561-8700 GENERAL INFO

Table 1. Caterpillar Dealers - Continued.

Dealer Name	Country	City	State/Province/Region	Phone
QUINN COMPANY	USA	LANCASTER	CALIFORNIA	1 (661) 723-3125 GENERAL INFO
QUINN COMPANY	USA	LANCASTER	CALIFORNIA	1 (661) 942-7777 GENERAL INFO
QUINN COMPANY	USA	LOS ANGELES	CALIFORNIA	1 (562) 463-6000 GENERAL INFO
QUINN COMPANY	USA	LOS ANGELES	CALIFORNIA	1 (562) 463-4000 GENERAL INFO
HOLT OF CALIFORNIA	USA	LOS BANOS	CALIFORNIA	1 (209) 826-4919 GENERAL INFO
CASHMAN RENTALS	USA	MAMMOTH LAKES	CALIFORNIA	1 (760) 934-8239 GENERAL INFO
JOHNSON MACHINERY CO.	USA	MURRIETA	CALIFORNIA	1 (951) 677-3787 GENERAL INFO
JOHNSON RENTALS	USA	MURRIETA	CALIFORNIA	1 (951) 696-1063 GENERAL INFO
HAWTHORNE RENT-IT SERVICE	USA	NATIONAL CITY	CALIFORNIA	1 (619) 336-2550 GENERAL INFO
QUINN COMPANY	USA	OXNARD	CALIFORNIA	1 (805) 485-2171 GENERAL INFO
HOLT OF CALIFORNIA	USA	PLEASANT GROVE	CALIFORNIA	1 (916) 991-8222 GENERAL INFO
PETERSON TRACTOR CO.	USA	REDDING	CALIFORNIA	1 (530) 243-5410 GENERAL INFO
HOLT OF CALIFORNIA	USA	RIO VISTA	CALIFORNIA	1 (707) 374-7550 GENERAL INFO
JOHNSON MACHINERY CO.	USA	RIVERSIDE	CALIFORNIA	1 (951) 686-4560 GENERAL INFO
JOHNSON MACHINERY CO.	USA	RIVERSIDE	CALIFORNIA	1 (951) 683-5960 GENERAL INFO
JOHNSON MACHINERY CO.	USA	RIVERSIDE	CALIFORNIA	1 (951) 774-3274 GENERAL INFO
HOLT OF CALIFORNIA	USA	ROSEVILLE	CALIFORNIA	1 (916) 772-9600 GENERAL INFO
HOLT OF CALIFORNIA	USA	SACRAMENTO	CALIFORNIA	1 (916) 381-9940 GENERAL INFO
HOLT OF CALIFORNIA	USA	SACRAMENTO	CALIFORNIA	1 (916) 991-8200 GENERAL INFO
QUINN COMPANY	USA	SALINAS	CALIFORNIA	1 (831) 758-8461 GENERAL INFO
HAWTHORNE MACHINERY CO.	USA	SAN DIEGO	CALIFORNIA	1 (858) 674-7000 GENERAL INFO
HAWTHORNE MACHINERY CO.	USA	SAN DIEGO	CALIFORNIA	1 (619) 336-2550 GENERAL INFO
HAWTHORNE MACHINERY CO.	USA	SAN DIEGO	CALIFORNIA	1 (619) 561-9094 GENERAL INFO
HAWTHORNE MACHINERY CO.	USA	SAN DIEGO	CALIFORNIA	1 (760) 740-2911 GENERAL INFO

Table 1. Caterpillar Dealers - Continued.

Dealer Name	Country	City	State/Province/Region	Phone
HAWTHORNE MACHINERY OF SAMOA,	USA	SAN DIEGO	CALIFORNIA	1 (858) 674-7001 GENERAL INFO
HAWTHORNE POWER SYSTEMS	USA	SAN DIEGO	CALIFORNIA	1 (858) 974-6800 GENERAL INFO
HAWTHORNE RENT-IT SERVICE	USA	SAN DIEGO	CALIFORNIA	1 (619) 232-2084 GENERAL INFO
HAWTHORNE RENT-IT SERVICE	USA	SAN DIEGO	CALIFORNIA	1 (858) 566-9966 GENERAL INFO
HAWTHORNE RENT-IT SERVICE	USA	SAN DIEGO	CALIFORNIA	1 (858) 207-2900 GENERAL INFO
PETERSON MACHINERY CO.	USA	SAN LEANDRO	CALIFORNIA	1 (541) 302-9199 GENERAL INFO
PETERSON MACHINERY CO.	USA	SAN LEANDRO	CALIFORNIA	1 (541) 756-8708 GENERAL INFO
PETERSON MACHINERY CO.	USA	SAN LEANDRO	CALIFORNIA	1 (541) 850-8658 GENERAL INFO
PETERSON MACHINERY CO.	USA	SAN LEANDRO	CALIFORNIA	1 (541) 548-8566 GENERAL INFO
PETERSON MACHINERY CO.	USA	SAN LEANDRO	CALIFORNIA	1 (541) 282-8551 GENERAL INFO
PETERSON MACHINERY CO.	USA	SAN LEANDRO	CALIFORNIA	1 (541) 791-9133 GENERAL INFO
PETERSON POWER SYSTEMS, INC.	USA	SAN LEANDRO	CALIFORNIA	1 (510) 895-8400 GENERAL INFO
PETERSON TRACTOR CO.	USA	SAN LEANDRO	CALIFORNIA	1 (510) 357-6200 GENERAL INFO
PETERSON TRACTOR CO.	USA	SAN MARTIN	CALIFORNIA	1 (408) 686-1195 GENERAL INFO
QUINN COMPANY	USA	SANTA MARIA	CALIFORNIA	1 (805) 925-8611 GENERAL INFO
PETERSON TRACTOR CO.	USA	SANTA ROSA	CALIFORNIA	1 (707) 576-1616 GENERAL INFO
HOLT OF CALIFORNIA	USA	STOCKTON	CALIFORNIA	1 (209) 466-6000 PRIMARY BUSINESS
HOLT OF CALIFORNIA	USA	STOCKTON	CALIFORNIA	1 (209) 946-1776 GENERAL INFO
HOLT OF CALIFORNIA	USA	STOCKTON	CALIFORNIA	1 (209) 463-3660 GENERAL INFO
QUINN COMPANY	USA	SUN VALLEY	CALIFORNIA	1 (818) 767-7171 GENERAL INFO
HOLT OF CALIFORNIA	USA	TURLOCK	CALIFORNIA	1 (209) 664-3875 GENERAL INFO
HOLT OF CALIFORNIA	USA	WEST SACRAMENTO	CALIFORNIA	1 (916) 373-4141 GENERAL INFO
HOLT OF CALIFORNIA	USA	WILLIAMS	CALIFORNIA	1 (530) 473-2866 GENERAL INFO
PETERSON TRACTOR CO.	USA	WILLITS	CALIFORNIA	1 (707) 459-9006 GENERAL INFO

Table 1. Caterpillar Dealers - Continued.

Dealer Name	Country	City	State/Province/Region	Phone
PETERSON TRACTOR CO.	USA	WILLOWS	CALIFORNIA	1 (530) 934-8839 GENERAL INFO
HOLT OF CALIFORNIA	USA	YUBA CITY	CALIFORNIA	1 (530) 755-3363 GENERAL INFO
HOLT OF CALIFORNIA	USA	YUBA CITY	CALIFORNIA	1 (530) 755-9972 GENERAL INFO
WAGNER EQUIPMENT CO.	USA	BURLINGTON	COLORADO	1 (719) 346-7880 GENERAL INFO
WAGNER RENTS, INC.	USA	CARBONDALE	COLORADO	1 (970) 963-7368 GENERAL INFO
WAGNER RENTS, INC.	USA	COLORADO SPRINGS	COLORADO	1 (719) 634-0093 GENERAL INFO
WAGNER RENTS, INC.	USA	COLORADO SPRINGS	COLORADO	1 (719) 390-7316 GENERAL INFO
WAGNER EQUIPMENT CO.	USA	DENVER	COLORADO	1 (303) 739-3000 GENERAL INFO
WAGNER EQUIPMENT CO.	USA	DENVER	COLORADO	1 (303) 739-3003 AFTER HOURS
WAGNER INTERNATIONAL LLC	USA	DENVER	COLORADO	1 (303) 739-3000 GENERAL INFO
WAGNER RENTS, INC.	USA	DENVER	COLORADO	1 (303) 251-1441 AFTER HOURS
WAGNER RENTS, INC.	USA	DENVER	COLORADO	1 (303) 433-2727 GENERAL INFO
WAGNER EQUIPMENT CO.	USA	DURANGO	COLORADO	1 (970) 259-2001 GENERAL INFO
WAGNER RENTS, INC.	USA	FORT COLLINS	COLORADO	1 (970) 493-5005 GENERAL INFO
WAGNER RENTS, INC.	USA	GRANBY	COLORADO	1 (970) 887-2516 GENERAL INFO
WAGNER EQUIPMENT CO.	USA	GRAND JUNCTION	COLORADO	1 (970) 242-2834 AFTER HOURS
WAGNER RENTS, INC.	USA	GRAND JUNCTION	COLORADO	1 (970) 245-6546 GENERAL INFO
WAGNER RENTS, INC.	USA	GYPSUM	COLORADO	1 (970) 328-2080 PRIMARY BUSINESS
WAGNER EQUIPMENT CO.	USA	HAYDEN	COLORADO	1 (970) 276-3781 GENERAL INFO
WAGNER EQUIPMENT CO.	USA	PUEBLO	COLORADO	1 (719) 544-4433 AFTER HOURS
WAGNER RENTS, INC.	USA	PUEBLO	COLORADO	1 (719) 544-0088 GENERAL INFO
WAGNER RENTS, INC.	USA	SILVERTHORNE	COLORADO	1 (970) 262-3788 GENERAL INFO
WAGNER RENTS, INC.	USA	STEAMBOAT SPRINGS	COLORADO	1 (970) 871-1990 GENERAL INFO
H.O. PENN MACHINERY CO., INC.	USA	NEWINGTON	CONNECTICUT	1 (860) 666-8407 AFTER HOURS

Table 1. Caterpillar Dealers - Continued.

Dealer Name	Country	City	State/Province/Region	Phone
GILES & RANSOME INC.	USA	BEAR	DELAWARE	1 (302) 328-4131 GENERAL INFO
ALBAN TRACTOR COMPANY, INC.	USA	FELTON	DELAWARE	1 (302) 284-4100 GENERAL INFO
RANSOME RENTS	USA	NEW CASTLE	DELAWARE	1 (302) 777-5800 GENERAL INFO
RING POWER CAT RENTAL STORE	USA	BROOKSVILLE	FLORIDA	1 (352) 797-9500 GENERAL INFO
RING POWER CORPORATION	USA	BROOKSVILLE	FLORIDA	1 (352) 796-4978 GENERAL INFO
KELLY TRACTOR CAT RENTAL STORE	USA	CLEWISTON	FLORIDA	1 (863) 983-8177 GENERAL INFO
KELLY TRACTOR CO.	USA	CLEWISTON	FLORIDA	1 (863) 983-8177 GENERAL INFO
THOMPSON TRACTOR CO., INC.	USA	CRESTVIEW	FLORIDA	1 (850) 682-6510 GENERAL INFO
KELLY TRACTOR CAT RENTAL STORE	USA	DAVIE	FLORIDA	1 (954) 581-8181 GENERAL INFO
KELLY TRACTOR CO.	USA	DAVIE	FLORIDA	1 (954) 581-8181 GENERAL INFO
RING POWER CAT RENTAL STORE	USA	DAYTONA BEACH	FLORIDA	1 (904) 947-4939 GENERAL INFO
RING POWER CORPORATION	USA	DAYTONA BEACH	FLORIDA	1 (904) 947-3363 GENERAL INFO
PANTROPIC POWER PRODUCTS INC.	USA	FORT LAUDERDALE	FLORIDA	1 (954) 797-7972 GENERAL INFO
KELLY TRACTOR CAT RENTAL STORE	USA	FORT MYERS	FLORIDA	1 (239) 693-9233 GENERAL INFO
KELLY TRACTOR CO.	USA	FORT MYERS	FLORIDA	1 (239) 693-9233 GENERAL INFO
PANTROPIC POWER PRODUCTS INC.	USA	FORT MYERS	FLORIDA	1 (239) 337-4222 GENERAL INFO
RING POWER CORPORATION	USA	GAINESVILLE	FLORIDA	1 (352) 371-9983 GENERAL INFO
RING POWER CAT RENTAL STORE	USA	JACKSONVILLE	FLORIDA	1 (904) 714-3517 GENERAL INFO
RING POWER CORPORATION	USA	JACKSONVILLE	FLORIDA	1 (904) 714-2612 GENERAL INFO
RING POWER CAT RENTAL STORE	USA	LAKE CITY	FLORIDA	1 (904) 755-3997 GENERAL INFO
RING POWER CORPORATION	USA	LAKE CITY	FLORIDA	1 (386) 755-3997 GENERAL INFO
THOMPSON TRACTOR CO., INC.	USA	MARIANNA	FLORIDA	1 (850) 526-2241 GENERAL INFO
KELLY TRACTOR CAT RENTAL STORE	USA	MIAMI	FLORIDA	1 (305) 592-7184 GENERAL INFO
KELLY TRACTOR CO.	USA	MIAMI	FLORIDA	1 (305) 592-5360 GENERAL INFO

Table 1. Caterpillar Dealers - Continued.

Dealer Name	Country	City	State/Province/Region	Phone
MACHINERY CORP. OF AMERICA,	USA	MIAMI	FLORIDA	1 (305) 593-2005 GENERAL INFO
PANTROPIC POWER PRODUCTS INC.	USA	MIAMI	FLORIDA	1 (305) 592-4944 GENERAL INFO
VENEQUIP MACHINERY SALES CORP.	USA	MIAMI	FLORIDA	1 (305) 554-5222 GENERAL INFO
RING POWER CAT RENTAL STORE	USA	MULBERRY	FLORIDA	1 (941) 425-9618 GENERAL INFO
RING POWER CORPORATION	USA	MULBERRY	FLORIDA	1 (863) 425-4951 GENERAL INFO
KELLY TRACTOR CAT RENTAL STORE	USA	NAPLES	FLORIDA	1 (239) 593-3933 GENERAL INFO
RING POWER CAT RENTAL STORE	USA	OCALA	FLORIDA	1 (352) 620-0660 GENERAL INFO
RING POWER CORPORATION	USA	OCALA	FLORIDA	1 (352) 732-2800 GENERAL INFO
PIONEER MACHINERY, INC	USA	ORLANDO	FLORIDA	1 (407) 857-9700 GENERAL INFO
RING POWER CAT RENTAL STORE	USA	ORLANDO	FLORIDA	1 (407) 856-4851 GENERAL INFO
RING POWER CORPORATION	USA	ORLANDO	FLORIDA	1 (407) 855-6195 GENERAL INFO
RING POWER CAT RENTAL STORE	USA	PALM BAY	FLORIDA	1 (407) 725-6420 GENERAL INFO
RING POWER CORPORATION	USA	PALM BAY	FLORIDA	1 (321) 952-3001 GENERAL INFO
THOMPSON TRACTOR CO., INC.	USA	PANAMA CITY	FLORIDA	1 (850) 873 6540 GENERAL INFO
THOMPSON TRACTOR CO., INC.	USA	PANAMA CITY	FLORIDA	1 (850) 785-4007 GENERAL INFO
THOMPSON TRACTOR CO., INC.	USA	PENSACOLA	FLORIDA	1 (850) 471-6710 GENERAL INFO
THOMPSON TRACTOR CO., INC.	USA	PENSACOLA	FLORIDA	1 (850) 471-6700 GENERAL INFO
PIONEER MACHINERY, INC	USA	PERRY	FLORIDA	1 (850) 584-5469 GENERAL INFO
RING POWER CORPORATION	USA	PERRY	FLORIDA	1 (850) 584-9116 AFTER HOURS
KELLY TRACTOR CO.	USA	PUNTA GORDA	FLORIDA	1 (941) 639-7772 GENERAL INFO
RING POWER CAT RENTAL STORE	USA	RIVERVIEW	FLORIDA	1 (813) 671-3200 GENERAL INFO
RING POWER CAT RENTAL STORE	USA	SAINT AUGUSTINE	FLORIDA	1 (904) 737-7735 GENERAL INFO
RING POWER CORPORATION	USA	SAINT AUGUSTINE	FLORIDA	1 (904) 737-7730 GENERAL INFO
RING POWER CAT RENTAL STORE	USA	SARASOTA	FLORIDA	1 (941) 751-0409 GENERAL INFO

Table 1. Caterpillar Dealers - Continued.

Dealer Name	Country	City	State/Province/Region	Phone
RING POWER CORPORATION	USA	SARASOTA	FLORIDA	1 (941) 359-6000 GENERAL INFO
PIONEER MACHINERY, INC	USA	STARKE	FLORIDA	1 (904) 964-7757 GENERAL INFO
RING POWER CAT RENTAL STORE	USA	TALLAHASSEE	FLORIDA	1 (850) 514-1958 GENERAL INFO
RING POWER CORPORATION	USA	TALLAHASSEE	FLORIDA	1 (850) 562-2121 GENERAL INFO
RING POWER CORPORATION	USA	TAMPA	FLORIDA	1 (813) 671-3700 GENERAL INFO
RING POWER CAT RENTAL STORE	USA	TARPON SPRINGS	FLORIDA	1 (727) 938-1613 GENERAL INFO
RING POWER CORPORATION	USA	TARPON SPRINGS	FLORIDA	1 (727) 938-1515 GENERAL INFO
KELLY TRACTOR CAT RENTAL STORE	USA	WEST PALM BEACH	FLORIDA	1 (561) 683-1231 GENERAL INFO
KELLY TRACTOR CO.	USA	WEST PALM BEACH	FLORIDA	1 (561) 683-1231 GENERAL INFO
PANTROPIC POWER PRODUCTS INC.	USA	WEST PALM BEACH	FLORIDA	1 (561) 640-0818 GENERAL INFO
THE CAT RENTAL STORE, YANCEY	USA	ALBANY	GEORGIA	1 (912) 435-1300 GENERAL INFO
YANCEY BROS. CO.	USA	ALBANY	GEORGIA	1 (229) 435-6262 GENERAL INFO
YANCEY BROS. CO.	USA	ATLANTA	GEORGIA	1 (770) 941-2300 GENERAL INFO
YANCEY BROS. CO.	USA	AUGUSTA	GEORGIA	1 (706) 790-1300 GENERAL INFO
YANCEY POWER SYSTEMS	USA	AUGUSTA	GEORGIA	1 (706) 729-0933 GENERAL INFO
THE CAT RENTAL STORE, YANCEY	USA	AUSTELL	GEORGIA	1 (770) 819-5208 GENERAL INFO
YANCEY BUILDING CONSTRUCTION	USA	AUSTELL	GEORGIA	1 (678) 718-6500 GENERAL INFO
YANCEY POWER SYSTEMS	USA	AUSTELL	GEORGIA	1 (229) 420-8596 GENERAL INFO
YANCEY POWER SYSTEMS	USA	AUSTELL	GEORGIA	1 (912) 525-1225 GENERAL INFO
YANCEY POWER SYSTEMS	USA	AUSTELL	GEORGIA	1 (770) 941-2424 GENERAL INFO
YANCEY BROS. CO.	USA	BRUNSWICK	GEORGIA	1 (912) 265-5010 GENERAL INFO
THE CAT RENTAL STORE, YANCEY	USA	BUFORD	GEORGIA	1 (678) 442-1982 GENERAL INFO
YANCEY BROS. CO.	USA	CALHOUN	GEORGIA	1 (404) 629-0776 GENERAL INFO
THE CAT RENTAL STORE, YANCEY	USA	COLUMBUS	GEORGIA	1 (706) 649-0054 GENERAL INFO

Table 1. Caterpillar Dealers - Continued.

Dealer Name	Country	City	State/Province/Region	Phone
YANCEY BROS. CO.	USA	COLUMBUS	GEORGIA	1 (706) 569-6565 GENERAL INFO
YANCEY POWER SYSTEMS	USA	CONLEY	GEORGIA	1 (404) 361-2424 GENERAL INFO
THE CAT RENTAL STORE, YANCEY	USA	CUMMING	GEORGIA	1 (770) 205-1201 GENERAL INFO
YANCEY BROS. CO.	USA	DACULA	GEORGIA	1 (770) 963-6868 GENERAL INFO
YANCEY BROS. CO.	USA	DACULA	GEORGIA	1 (678) 376-1778 GENERAL INFO
YANCEY BROS. CO.	USA	DUBLIN	GEORGIA	1 (478) 272-1661 GENERAL INFO
PIONEER MACHINERY, INC	USA	GAINESVILLE	GEORGIA	1 (770) 535-7702 GENERAL INFO
YANCEY POWER SYSTEMS	USA	JEFFERSON	GEORGIA	1 (706) 367-1065 GENERAL INFO
THE CAT RENTAL STORE, YANCEY	USA	KENNESAW	GEORGIA	1 (678) 290-1248 GENERAL INFO
PIONEER MACHINERY, INC	USA	MACON	GEORGIA	1 (478) 784-1120 GENERAL INFO
YANCEY BROS. CO.	USA	MACON	GEORGIA	1 (478) 788-1773 GENERAL INFO
PIONEER MACHINERY, INC	USA	MOULTRIE	GEORGIA	1 (229) 890-9970 GENERAL INFO
YANCEY POWER SYSTEMS	USA	RESACA	GEORGIA	1 (706) 602-7283 GENERAL INFO
YANCEY BROS. CO.	USA	SAVANNAH	GEORGIA	1 (912) 964-7150 GENERAL INFO
PIONEER MACHINERY, INC	USA	STATESBORO	GEORGIA	1 (912) 764-6506 GENERAL INFO
THE CAT RENTAL STORE, YANCEY	USA	VALDOSTA	GEORGIA	1 (229) 671-4720 GENERAL INFO
YANCEY BROS. CO.	USA	VALDOSTA	GEORGIA	1 (229) 242-8610 GENERAL INFO
PIONEER MACHINERY, INC	USA	WASHINGTON	GEORGIA	1 (706) 678-3211 GENERAL INFO
PIONEER MACHINERY, INC	USA	WAYCROSS	GEORGIA	1 (912) 283-9321 GENERAL INFO
HAWTHORNE PACIFIC CORP.	USA	HILO	HAWAII	1 (808) 961-3437 GENERAL INFO
HAWTHORNE PACIFIC CORP.	USA	KAHULUI	HAWAII	1 (808) 877-6538 GENERAL INFO
HAWTHORNE PACIFIC CORP.	USA	KAILUA KONA	HAWAII	1 (808) 329-4521 GENERAL INFO
HAWTHORNE PACIFIC CORP.	USA	LIHUE	HAWAII	1 (808) 245-4057 GENERAL INFO
HAWTHORNE PACIFIC CORP.	USA	WAIPAHU	HAWAII	1 (808) 677-9111 GENERAL INFO

Table 1. Caterpillar Dealers - Continued.

Dealer Name	Country	City	State/Province/Region	Phone
WESTERN STATES EQUIPMENT	USA	BOISE	IDAHO	1 (208) 888-2287 GENERAL INFO
WESTERN STATES EQUIPMENT	USA	BOISE	IDAHO	1 (208) 947-4501 GENERAL INFO
WESTERN STATES EQUIPMENT	USA	IDAHO FALLS	IDAHO	1 (208) 552-3400 GENERAL INFO
WESTERN STATES EQUIPMENT	USA	LEWISTON	IDAHO	1 (208) 746-3304 AFTER HOURS
THE CAT RENTAL STORE	USA	MERIDIAN	IDAHO	1 (208) 884-2300 GENERAL INFO
WESTERN STATES EQUIPMENT	USA	POCATELLO	IDAHO	1 (208) 232-2640 GENERAL INFO
WESTERN STATES EQUIPMENT	USA	TWIN FALLS	IDAHO	1 (208) 734-7330 GENERAL INFO
ALTORFER INC.	USA	BARTONVILLE	ILLINOIS	1 (309) 697-1234 GENERAL INFO
ALTORFER INC.	USA	CLINTON	ILLINOIS	1 (217) 935-8550 GENERAL INFO
ALTORFER INC.	USA	EAST PEORIA	ILLINOIS	1 (309) 694-1234 GENERAL INFO
ALTORFER INC.	USA	EAST PEORIA	ILLINOIS	1 (309) 694-1234 GENERAL INFO
ALTORFER INC., RENTS	USA	EAST PEORIA	ILLINOIS	1 (309) 694-9898 GENERAL INFO
PATTEN INDUSTRIES, INC.	USA	ELBURN	ILLINOIS	1 (630) 365-2360 GENERAL INFO
PATTEN INDUSTRIES, INC.	USA	ELMHURST	ILLINOIS	1 (630) 279-4400 GENERAL INFO
PATTEN POWER SYSTEMS	USA	ELMHURST	ILLINOIS	1 (630) 530-4747 AFTER HOURS
PATTEN RENTAL	USA	ELMHURST	ILLINOIS	1 (800) 736-8121 AFTER HOURS
PATTEN INDUSTRIES, INC.	USA	GRAYSLAKE	ILLINOIS	1 (847) 548-1177 GENERAL INFO
PATTEN INDUSTRIES, INC.	USA	JOLIET	ILLINOIS	1 (815) 726-4248 GENERAL INFO
FABICK MACHINERY COMPANY	USA	MARION	ILLINOIS	1 (618) 997-1881 GENERAL INFO
PATTEN INDUSTRIES, INC.	USA	OGLESBY	ILLINOIS	1 (815) 883-3336 GENERAL INFO
ALTORFER INC.	USA	ROCK FALLS	ILLINOIS	1 (815) 625-8774 GENERAL INFO
PATTEN INDUSTRIES, INC.	USA	ROCKFORD	ILLINOIS	1 (815) 965-8631 GENERAL INFO
FABICK TRACTOR COMPANY	USA	SALEM	ILLINOIS	1 (618) 548-1400 GENERAL INFO
ALTORFER INC.	USA	SPRINGFIELD	ILLINOIS	1 (217) 529-5541 GENERAL INFO

Table 1. Caterpillar Dealers - Continued.

Dealer Name	Country	City	State/Province/Region	Phone
ALTORFER INC.	USA	SPRINGFIELD	ILLINOIS	1 (217) 529-1903 PRIMARY BUSINESS
JOHN FABICK TRACTOR COMPANY	USA	TROY	ILLINOIS	1 (618) 288-4060 GENERAL INFO
ALTORFER INC.	USA	URBANA	ILLINOIS	1 (217) 359-1671 GENERAL INFO
MACALLISTER RENTAL AND SUPPLY	USA	BLOOMINGTON	INDIANA	1 (812) 349-9220 GENERAL INFO
MACALLISTER MACHINERY CO., INC	USA	CARMEL	INDIANA	1 (317) 870-2360 GENERAL INFO
WHAYNE - THE CAT RENTAL STORE	USA	EVANSVILLE	INDIANA	1 (812) 422-1636 GENERAL INFO
WHAYNE SUPPLY COMPANY	USA	EVANSVILLE	INDIANA	1 (812) 425-4651 GENERAL INFO
MACALLISTER MACHINERY CO., INC	USA	FORT WAYNE	INDIANA	1 (260) 483-6469 GENERAL INFO
PATTEN INDUSTRIES, INC.	USA	HAMMOND	INDIANA	1 (219) 932-6600 GENERAL INFO
MACALLISTER MACHINERY CO., INC	USA	INDIANAPOLIS	INDIANA	1 (317) 543-0423 ENGINES
MACALLISTER MACHINERY CO., INC	USA	INDIANAPOLIS	INDIANA	1 (317) 860-4423 GENERAL INFO
MACALLISTER MACHINERY CO., INC	USA	INDIANAPOLIS	INDIANA	1 (317) 788-4624 GENERAL INFO
MACALLISTER RENTAL AND SUPPLY	USA	INDIANAPOLIS	INDIANA	1 (317) 244-7368 GENERAL INFO
MACALLISTER MACHINERY CO., INC	USA	LAFAYETTE	INDIANA	1 (765) 449-8191 GENERAL INFO
MACALLISTER MACHINERY CO., INC	USA	SOUTH BEND	INDIANA	1 (574) 288-6622 GENERAL INFO
MACALLISTER MACHINERY CO., INC	USA	TERRE HAUTE	INDIANA	1 (812) 478-3155 GENERAL INFO
MACALLISTER MACHINERY CO., INC	USA	WASHINGTON	INDIANA	1 (812) 254-1712 GENERAL INFO
MACALLISTER RENTAL AND SUPPLY	USA	YORKTOWN	INDIANA	1 (765) 759-2CAT GENERAL INFO
ZIEGLER RENTAL	USA	ALTOONA	IOWA	1 (515) 957-3828 GENERAL INFO
ALTORFER INC., RENTS	USA	BETTENDORF	IOWA	1 (563) 355-9898 GENERAL INFO
ALTORFER INC.	USA	CEDAR RAPIDS	IOWA	1 (319) 365-0551 GENERAL INFO
ALTORFER INC.	USA	CEDAR RAPIDS	IOWA	1 (319) 363-2882 GENERAL INFO
ALTORFER POWER SYSTEMS	USA	CEDAR RAPIDS	IOWA	1 (319) 389-9127 AFTER HOURS
ALTORFER INC.	USA	DAVENPORT	IOWA	1 (563) 326-3513 ENGINES

Table 1. Caterpillar Dealers - Continued.

Dealer Name	Country	City	State/Province/Region	Phone
ALTORFER INC.	USA	DAVENPORT	IOWA	1 (319) 326-3513 GENERAL INFO
ZIEGLER INC.	USA	DES MOINES	IOWA	1 (515) 957-3800 GENERAL INFO
ZIEGLER POWER SYSTEMS	USA	DES MOINES	IOWA	1 (515) 957-3800 GENERAL INFO
ZIEGLER INC.	USA	FORT DODGE	IOWA	1 (800) 452-4507 AFTER HOURS
ZIEGLER INC.	USA	MASON CITY	IOWA	1 (800) 452-4507 AFTER HOURS
ZIEGLER INC.	USA	POSTVILLE	IOWA	1 (800) 452-4507 AFTER HOURS
ZIEGLER INC.	USA	SIOUX CITY	IOWA	1 (800) 452-4507 AFTER HOURS
ZIEGLER RENTAL	USA	SIOUX CITY	IOWA	1 (712) 252-4401 GENERAL INFO
ALTORFER INC.	USA	WEST BURLINGTON	IOWA	1 (319) 752-6123 GENERAL INFO
MARTIN TRACTOR COMPANY, INC.	USA	CHANUTE	KANSAS	1 (620) 431-3600 GENERAL INFO
MARTIN TRACTOR COMPANY, INC.	USA	COLBY	KANSAS	1 (785) 462-3913 GENERAL INFO
MARTIN TRACTOR COMPANY, INC.	USA	CONCORDIA	KANSAS	1 (785) 243-1960 GENERAL INFO
FOLEY EQUIPMENT COMPANY	USA	DODGE CITY	KANSAS	1 (620) 225-4121 GENERAL INFO
MARTIN TRUCK SERVICE	USA	EMPORIA	KANSAS	1 (316) 343-6303 GENERAL INFO
FOLEY EQUIPMENT COMPANY	USA	GREAT BEND	KANSAS	1 (620) 792-5246 GENERAL INFO
FOLEY SUPPLY, LLC	USA	GREAT BEND	KANSAS	1 (302) 792-5246 GENERAL INFO
FOLEY EQUIPMENT COMPANY	USA	LIBERAL	KANSAS	1 (620) 626-6555 GENERAL INFO
MARTIN RENTS	USA	MANHATTAN	KANSAS	1 (785) 537-2101 GENERAL INFO
DEAN RENTAL SERVICES	USA	OLATHE	KANSAS	1 (913) 393-0303 GENERAL INFO
FOLEY EQUIPMENT COMPANY	USA	SALINA	KANSAS	1 (785) 825-4661 GENERAL INFO
MARTIN ENGINE SYSTEMS	USA	TOPEKA	KANSAS	1 (785) 266-5784 AFTER HOURS
MARTIN RENTS	USA	TOPEKA	KANSAS	1 (785) 267-8129 GENERAL INFO
MARTIN TRACTOR COMPANY, INC.	USA	TOPEKA	KANSAS	1 (785) 266-5770 GENERAL INFO
FOLEY EQUIPMENT COMPANY	USA	WICHITA	KANSAS	1 (316) 943-4211 GENERAL INFO

Table 1. Caterpillar Dealers - Continued.

Dealer Name	Country	City	State/Province/Region	Phone
FOLEY SUPPLY, LLC	USA	WICHITA	KANSAS	1 (316) 944-7368 GENERAL INFO
WHAYNE - THE CAT RENTAL STORE	USA	ASHLAND	KENTUCKY	1 (606) 928-3444 GENERAL INFO
WHAYNE SUPPLY COMPANY	USA	ASHLAND	KENTUCKY	1 (800) 494-2963 AFTER HOURS
WHAYNE - THE CAT RENTAL STORE	USA	BOWLING GREEN	KENTUCKY	1 (270) 782-6056 GENERAL INFO
WHAYNE SUPPLY COMPANY	USA	BOWLING GREEN	KENTUCKY	1 (800) 494-2963 AFTER HOURS
WHAYNE SUPPLY COMPANY	USA	CORBIN	KENTUCKY	1 (800) 494-2963 AFTER HOURS
WHAYNE - THE CAT RENTAL STORE	USA	DRY RIDGE	KENTUCKY	1 (859) 823 1500 GENERAL INFO
WHAYNE POWER SYSTEMS	USA	DRY RIDGE	KENTUCKY	1 (859) 823 1500 GENERAL INFO
WHAYNE SUPPLY COMPANY	USA	HAZARD	KENTUCKY	1 (800) 494-2963 AFTER HOURS
WHAYNE - THE CAT RENTAL STORE	USA	LEXINGTON	KENTUCKY	1 (859) 254-0188 GENERAL INFO
WHAYNE SUPPLY COMPANY	USA	LEXINGTON	KENTUCKY	1 (800) 494-2963 AFTER HOURS
WHAYNE - THE CAT RENTAL STORE	USA	LOUISVILLE	KENTUCKY	1 (606) 528-3178 GENERAL INFO
WHAYNE - THE CAT RENTAL STORE	USA	LOUISVILLE	KENTUCKY	1 (502) 244-5700 GENERAL INFO
WHAYNE - THE CAT RENTAL STORE	USA	LOUISVILLE	KENTUCKY	1 (812) 284-1217 GENERAL INFO
WHAYNE - THE CAT RENTAL STORE	USA	LOUISVILLE	KENTUCKY	1 (502) 774 4441 GENERAL INFO
WHAYNE POWER SYSTEMS	USA	LOUISVILLE	KENTUCKY	1 (800) 494-2963 AFTER HOURS
WHAYNE SUPPLY COMPANY	USA	LOUISVILLE	KENTUCKY	1 (800) 494-2963 AFTER HOURS
WHAYNE - THE CAT RENTAL STORE	USA	PADUCAH	KENTUCKY	1 (270) 575-3968 GENERAL INFO
WHAYNE SUPPLY COMPANY	USA	PADUCAH	KENTUCKY	1 (800) 494-2963 AFTER HOURS
WHAYNE SUPPLY COMPANY	USA	PIKEVILLE	KENTUCKY	1 (800) 494-2963 AFTER HOURS
OHIO MACHINERY CO.	USA	RICHWOOD	KENTUCKY	1 (859) 372-4650 GENERAL INFO
LOUISIANA MACHINERY COMPANY	USA	ALEXANDRIA	LOUISIANA	1 (318) 443-2577 GENERAL INFO
LOUISIANA MACHINERY COMPANY	USA	BATON ROUGE	LOUISIANA	1 (225) 296-0020 GENERAL INFO
LOUISIANA MACHINERY CO. L.L.C.	USA	BELLE CHASSE	LOUISIANA	1 (504) 433-1350 GENERAL INFO

Table 1. Caterpillar Dealers - Continued.

Dealer Name	Country	City	State/Province/Region	Phone
LOUISIANA MACHINERY CO. L.L.C.	USA	BOSSIER CITY	LOUISIANA	1 (318) 747-1300 GENERAL INFO
LOUISIANA MACHINERY COMPANY	USA	BOSSIER CITY	LOUISIANA	1 (318) 746-2341 GENERAL INFO
LOUISIANA MACHINERY COMPANY	USA	BOSSIER CITY	LOUISIANA	1 (318) 746-2356 GENERAL INFO
LOUISIANA MACHINERY COMPANY	USA	BROUSSARD	LOUISIANA	1 (337) 837-2476 GENERAL INFO
LOUISIANA MACHINERY COMPANY	USA	CARENCRO	LOUISIANA	1 (337) 896 7211 GENERAL INFO
LOUISIANA MACHINERY COMPANY	USA	GOLDEN MEADOW	LOUISIANA	1 (985) 396-3908 GENERAL INFO
LOUISIANA MACHINERY CO. L.L.C.	USA	GONZALES	LOUISIANA	1 (225) 644-6600 GENERAL INFO
LOUISIANA MACHINERY CO. L.L.C.	USA	LAFAYETTE	LOUISIANA	1 (337) 593-0220 GENERAL INFO
LOUISIANA MACHINERY CO. L.L.C.	USA	LAKE CHARLES	LOUISIANA	1 (337) 437-7117 GENERAL INFO
LOUISIANA MACHINERY COMPANY	USA	LAKE CHARLES	LOUISIANA	1 (337) 439-3601 GENERAL INFO
LOUISIANA MACHINERY COMPANY	USA	MANSFIELD	LOUISIANA	1 (318) 872-9700 GENERAL INFO
LOUISIANA MACHINERY CO. L.L.C.	USA	MONROE	LOUISIANA	1 (318) 323-7799 GENERAL INFO
LOUISIANA MACHINERY COMPANY	USA	MONROE	LOUISIANA	1 (318) 323-1345 GENERAL INFO
LOUISIANA MACHINERY COMPANY	USA	MORGAN CITY	LOUISIANA	1 (985) 631-0561 GENERAL INFO
LOUISIANA MACHINERY COMPANY	USA	RESERVE	LOUISIANA	1 (985) 536-1121 GENERAL INFO
SOUTHWORTH-MILTON, INC.	USA	BREWER	MAINE	1 (207) 989-1890 GENERAL INFO
SOUTHWORTH-MILTON, INC.	USA	SCARBOROUGH	MAINE	1 (207) 883-9586 GENERAL INFO
ALBAN TRACTOR COMPANY, INC.	USA	ABINGDON	MARYLAND	1 (410) 679-7800 GENERAL INFO
ALBAN RENTS, LLC	USA	ANNAPOLIS JUNCTION	MARYLAND	1 (301) 362-0365 GENERAL INFO
ALBAN TRACTOR COMPANY, INC.	USA	ANNAPOLIS JUNCTION	MARYLAND	1 (410) 792-2007 GENERAL INFO
ALBAN ATTACHMENTS AND USED PARTS	USA	BALTIMORE	MARYLAND	1 (410) 687-3689 GENERAL INFO
ALBAN RENTS, LLC	USA	BALTIMORE	MARYLAND	1 (410) 687-3689 GENERAL INFO
ALBAN TRACTOR COMPANY, INC.	USA	BALTIMORE	MARYLAND	1 (410) 686-7777 GENERAL INFO
ALBAN ENGINE POWER SYSTEMS	USA	ELKRIDGE	MARYLAND	1 (410) 796-8000 PRIMARY BUSINESS

Table 1. Caterpillar Dealers - Continued.

Dealer Name	Country	City	State/Province/Region	Phone
ALBAN RENTS, LLC	USA	ELKRIDGE	MARYLAND	1 (410) 796-8000 GENERAL INFO
ALBAN TRACTOR COMPANY, INC.	USA	ESSEX	MARYLAND	1 (410) 780-4507 GENERAL INFO
ALBAN TRACTOR COMPANY, INC.	USA	ESSEX	MARYLAND	1 (410) 780-7777 GENERAL INFO
ALBAN TRACTOR COMPANY, INC.	USA	LA PLATA	MARYLAND	1 (301) 934-2622 GENERAL INFO
ALBAN TRACTOR COMPANY, INC.	USA	MYERSVILLE	MARYLAND	1 (301) 293-2377 GENERAL INFO
ALBAN ENGINE POWER SYSTEMS	USA	OCEAN CITY	MARYLAND	1 (410) 213-9373 GENERAL INFO
ALBAN RENTS, LLC	USA	UPPER MARLBORO	MARYLAND	1 (301) 420-3700 GENERAL INFO
ALBAN TRACTOR COMPANY, INC.	USA	UPPER MARLBORO	MARYLAND	1 (301) 420 3700 GENERAL INFO
SOUTHWORTH-MILTON, INC.	USA	MILFORD	MASSACHUSETTS	1 (508) 634-3400 GENERAL INFO
SOUTHWORTH-MILTON, INC.	USA	MILFORD	MASSACHUSETTS	1 (508) 634-3400 GENERAL INFO
SOUTHWORTH-MILTON, INC.	USA	MILFORD	MASSACHUSETTS	1 (508) 634-5559 GENERAL INFO
SOUTHWORTH-MILTON, INC.	USA	WAREHAM	MASSACHUSETTS	1 (508) 291-1200 GENERAL INFO
MICHIGAN CAT	USA	BROWNSTOWN TOWNSHIP	MICHIGAN	1 (734) 479-5800 GENERAL INFO
THE CAT RENTAL STORE	USA	BROWNSTOWN TOWNSHIP	MICHIGAN	1 (734) 479-5800 GENERAL INFO
MICHIGAN CAT	USA	GRAND RAPIDS	MICHIGAN	1 (616) 827-3406 ENGINES
THE CAT RENTAL STORE	USA	GRAND RAPIDS	MICHIGAN	1 (616) 827-8000 GENERAL INFO
MICHIGAN CAT	USA	KALKASKA	MICHIGAN	1 (231) 258-8265 GENERAL INFO
THE CAT RENTAL STORE	USA	KALKASKA	MICHIGAN	1 (231) 258-8265 GENERAL INFO
FABCO EQUIPMENT, INC.	USA	MARQUETTE	MICHIGAN	1 (906) 475-4191 GENERAL INFO
MICHIGAN CAT	USA	MASON	MICHIGAN	1 (517) 699-4800 GENERAL INFO
THE CAT RENTAL STORE	USA	MASON	MICHIGAN	1 (517) 699-4800 GENERAL INFO
MICHIGAN CAT	USA	NOVI	MICHIGAN	1 (248) 349-4800 PRIMARY BUSINESS
MICHIGAN CAT	USA	NOVI	MICHIGAN	1 (248) 349-7050 GENERAL INFO
THE CAT RENTAL STORE	USA	NOVI	MICHIGAN	1 (248) 349-4800 GENERAL INFO

Table 1. Caterpillar Dealers - Continued.

Dealer Name	Country	City	State/Province/Region	Phone
MICHIGAN CAT	USA	SAGINAW	MICHIGAN	1 (989) 752-7300 GENERAL INFO
THE CAT RENTAL STORE	USA	SAGINAW	MICHIGAN	1 (989) 752-7300 GENERAL INFO
MICHIGAN CAT	USA	SHELBY TOWNSHIP	MICHIGAN	1 (586) 997-5300 GENERAL INFO
THE CAT RENTAL STORE	USA	SHELBY TOWNSHIP	MICHIGAN	1 (586) 997-5300 GENERAL INFO
ZIEGLER INC.	USA	BUHL	MINNESOTA	1 (800) 452-4507 AFTER HOURS
ZIEGLER INC.	USA	CROOKSTON	MINNESOTA	1 (800) 452-4507 AFTER HOURS
ZIEGLER INC.	USA	DULUTH	MINNESOTA	1 (800) 452-4507 AFTER HOURS
ZIEGLER RENTAL	USA	DULUTH	MINNESOTA	1 (218) 727-8991 GENERAL INFO
ZIEGLER INC.	USA	FERGUS FALLS	MINNESOTA	1 (800) 452-4507 AFTER HOURS
ZIEGLER RENTAL	USA	FERGUS FALLS	MINNESOTA	1 (218) 736-2680 GENERAL INFO
ZIEGLER INC.	USA	JACKSON	MINNESOTA	1 (507) 847-7600 GENERAL INFO
ZIEGLER RENTAL	USA	MAPLE GROVE	MINNESOTA	1 (763) 315-2727 GENERAL INFO
ZIEGLER INC.	USA	MARSHALL	MINNESOTA	1 (800) 452-4507 AFTER HOURS
ZIEGLER INC.	USA	MINNEAPOLIS	MINNESOTA	1 (952) 888-4121 PRIMARY BUSINESS
ZIEGLER INC.	USA	MINNEAPOLIS	MINNESOTA	1 (952) 887-5815 AFTER HOURS
ZIEGLER INC.	USA	ROCHESTER	MINNESOTA	1 (800) 452-4507 AFTER HOURS
ZIEGLER RENTAL	USA	ROCHESTER	MINNESOTA	1 (507) 285-1775 GENERAL INFO
ZIEGLER INC.	USA	SAINT CLOUD	MINNESOTA	1 (800) 452-4507 AFTER HOURS
ZIEGLER RENTAL	USA	SAINT CLOUD	MINNESOTA	1 (320) 253-2234 GENERAL INFO
ZIEGLER INC.	USA	SHAKOPEE	MINNESOTA	1 (952) 888-4121 GENERAL INFO
ZIEGLER POWER SYSTEMS	USA	SHAKOPEE	MINNESOTA	1 (952) 445-4292 GENERAL INFO
ZIEGLER RENTAL	USA	SHAKOPEE	MINNESOTA	1 (952) 887-4488 GENERAL INFO
PUCKETT RENTS	USA	BILOXI	MISSISSIPPI	1 (228) 392-2211 GENERAL INFO
PUCKETT MACHINERY COMPANY	USA	BROOKHAVEN	MISSISSIPPI	1 (601) 833-5115 GENERAL INFO

Table 1. Caterpillar Dealers - Continued.

Dealer Name	Country	City	State/Province/Region	Phone
THOMPSON MACHINERY COMMERCE	USA	COLUMBUS	MISSISSIPPI	1 (662) 327-3083 GENERAL INFO
THOMPSON POWER CORPORATION	USA	COLUMBUS	MISSISSIPPI	1 (662) 327-3083 GENERAL INFO
THOMPSON MACHINERY COMMERCE	USA	GREENWOOD	MISSISSIPPI	1 (662) 453-5233 GENERAL INFO
THOMPSON POWER CORPORATION	USA	GREENWOOD	MISSISSIPPI	1 (662) 459-7207 GENERAL INFO
PUCKETT MACHINERY COMPANY	USA	GULFPORT	MISSISSIPPI	1 (601) 832-1711 GENERAL INFO
PUCKETT MACHINERY COMPANY	USA	HATTIESBURG	MISSISSIPPI	1 (601) 268-2000 GENERAL INFO
PUCKETT RENTS	USA	HATTIESBURG	MISSISSIPPI	1 (601) 264-1111 GENERAL INFO
PUCKETT MACHINERY COMPANY	USA	JACKSON	MISSISSIPPI	1 (601) 969-6000 GENERAL INFO
PUCKETT MACHINERY COMPANY	USA	MERIDIAN	MISSISSIPPI	1 (601) 483-4511 GENERAL INFO
PUCKETT MACHINERY COMPANY	USA	NATCHEZ	MISSISSIPPI	1 (601) 442-1633 GENERAL INFO
PUCKETT RENTS	USA	RICHLAND	MISSISSIPPI	1 (601) 939-5151 GENERAL INFO
THOMPSON MACHINERY COMMERCE	USA	TUPELO	MISSISSIPPI	1 (662) 844-1634 GENERAL INFO
THOMPSON POWER CORPORATION	USA	TUPELO	MISSISSIPPI	1 (662) 680-1634 GENERAL INFO
DEAN MACHINERY CO.	USA	CHILLICOTHE	MISSOURI	1 (660) 646-2080 GENERAL INFO
FABICK & COMPANY	USA	COLUMBIA	MISSOURI	1 (573) 442-6880 PRIMARY BUSINESS
FABICK POWER SYSTEMS	USA	FENTON	MISSOURI	1 (636) 349-5500 GENERAL INFO
JOHN FABICK TRACTOR COMPANY	USA	FENTON	MISSOURI	1 (636) 343-5900 GENERAL INFO
FABICK RENTAL SERVICES	USA	FORISTELL	MISSOURI	1 (800) 539-9217 GENERAL INFO
ALTORFER INC.	USA	HANNIBAL	MISSOURI	1 (217) 437-5421 AFTER HOURS
FABICK AND COMPANY	USA	JEFFERSON CITY	MISSOURI	1 (573) 636-3184 GENERAL INFO
FABICK SOUTHWEST CO.	USA	JOPLIN	MISSOURI	1 (417) 624-3010 GENERAL INFO
FABICK SOUTHWEST CO.	USA	JOPLIN	MISSOURI	1 (417) 624-3010 GENERAL INFO
DEAN MACHINERY CO.	USA	KANSAS CITY	MISSOURI	1 (816) 753-5300 GENERAL INFO
DEAN MACHINERY CO.	USA	KANSAS CITY	MISSOURI	1 (816) 753-5355 GENERAL INFO

Table 1. Caterpillar Dealers - Continued.

Dealer Name	Country	City	State/Province/Region	Phone
DEAN RENTAL SERVICES	USA	KANSAS CITY	MISSOURI	1 (816) 756-1515 GENERAL INFO
DEAN RENTAL SERVICES	USA	LEES SUMMIT	MISSOURI	1 (816) 554-4700 GENERAL INFO
ALTORFER INC.	USA	MOBERLY	MISSOURI	1 (660) 263-8200 GENERAL INFO
DEAN MACHINERY CO.	USA	SAINT JOSEPH	MISSOURI	1 (816) 233-2516 GENERAL INFO
DEAN RENTAL SERVICES	USA	SAINT JOSEPH	MISSOURI	1 (816) 233-2516 GENERAL INFO
FABICK CAT	USA	SCOTT CITY	MISSOURI	1 (800) 845-9175 PRIMARY BUSINESS
DEAN MACHINERY CO.	USA	SEDALIA	MISSOURI	1 (660) 829-7400 GENERAL INFO
FABICK SOUTHWEST CO.	USA	SPRINGFIELD	MISSOURI	1 (417) 866-6652 AFTER HOURS
FABICK SOUTHWEST CO.	USA	SPRINGFIELD	MISSOURI	1 (417) 866-2100 GENERAL INFO
DEAN RENTAL SERVICES	USA	SUNRISE BEACH	MISSOURI	1 (573) 374-2266 GENERAL INFO
FABICK SOUTHWEST CO.	USA	WEST PLAINS	MISSOURI	1 (417) 256-6138 GENERAL INFO
FABICK SOUTHWEST CO.	USA	WEST PLAINS	MISSOURI	1 (417) 256-6138 GENERAL INFO
MACHINERY POWER & EQUIPMENT CO.	USA	BILLINGS	MONTANA	1 (406) 245-4426 GENERAL INFO
TRACTOR & EQUIPMENT COMPANY	USA	BILLINGS	MONTANA	1 (406) 656-0202 GENERAL INFO
TRACTOR & EQUIPMENT COMPANY	USA	BILLINGS	MONTANA	1 (406) 256-0707 PRIMARY BUSINESS
MACHINERY POWER & EQUIPMENT CO.	USA	BOZEMAN	MONTANA	1 (406) 585-5800 GENERAL INFO
MACHINERY POWER & EQUIPMENT CO.	USA	GREAT FALLS	MONTANA	1 (406) 761-7900 GENERAL INFO
TRACTOR & EQUIPMENT COMPANY	USA	GREAT FALLS	MONTANA	1 (406) 761-7900 GENERAL INFO
MACHINERY POWER & EQUIPMENT CO.	USA	HELENA	MONTANA	1 (406) 442-2990 GENERAL INFO
WESTERN STATES EQUIPMENT	USA	KALISPELL	MONTANA	1 (406) 752-2804 AFTER HOURS
WESTERN STATES EQUIPMENT	USA	MISSOULA	MONTANA	1 (406) 721-4050 GENERAL INFO
WESTERN STATES EQUIPMENT	USA	MISSOULA	MONTANA	1 (406) 721-4050 GENERAL INFO
HIGH PLAINS POWER SYSTEMS	USA	DONIPHAN	NEBRASKA	1 (402) 845-6503 GENERAL INFO
NEBRASKA MACHINERY COMPANY	USA	DONIPHAN	NEBRASKA	1 (402) 845-6503 GENERAL INFO

Table 1. Caterpillar Dealers - Continued.

Dealer Name	Country	City	State/Province/Region	Phone
HIGH PLAINS POWER SYSTEMS	USA	LINCOLN	NEBRASKA	1 (402) 473-1080 GENERAL INFO
NEBRASKA MACHINERY COMPANY	USA	LINCOLN	NEBRASKA	1 (402) 474-5566 GENERAL INFO
NEBRASKA RENTS	USA	LINCOLN	NEBRASKA	1 (402) 472-4448 GENERAL INFO
HIGH PLAINS POWER SYSTEMS	USA	NORFOLK	NEBRASKA	1 (402) 379-1699 GENERAL INFO
NEBRASKA MACHINERY COMPANY	USA	NORFOLK	NEBRASKA	1 (402) 379-1699 GENERAL INFO
NEBRASKA RENTS	USA	NORFOLK	NEBRASKA	1 (402) 379-1699 GENERAL INFO
HIGH PLAINS POWER SYSTEMS	USA	NORTH PLATTE	NEBRASKA	1 (308) 532-3100 GENERAL INFO
NEBRASKA MACHINERY COMPANY	USA	NORTH PLATTE	NEBRASKA	1 (308) 532-3100 GENERAL INFO
NEBRASKA RENTS	USA	NORTH PLATTE	NEBRASKA	1 (308) 532-3100 GENERAL INFO
HIGH PLAINS POWER SYSTEMS	USA	OMAHA	NEBRASKA	1 (402) 346-6500 GENERAL INFO2
NEBRASKA MACHINERY COMPANY	USA	OMAHA	NEBRASKA	1 (402) 891-8600 PRIMARY BUSINESS
NEBRASKA RENTS	USA	OMAHA	NEBRASKA	1 (402) 861-9090 GENERAL INFO
HIGH PLAINS POWER SYSTEMS	USA	SCOTTSBLUFF	NEBRASKA	1 (308) 632-6163 GENERAL INFO
NEBRASKA MACHINERY COMPANY	USA	SCOTTSBLUFF	NEBRASKA	1 (308) 632-6163 GENERAL INFO
CASHMAN EQUIPMENT COMPANY	USA	ELKO	NEVADA	1 (775) 738-9871 GENERAL INFO
CASHMAN RENTALS	USA	HENDERSON	NEVADA	1 (702) 566-4240 GENERAL INFO
CASHMAN EQUIPMENT COMPANY	USA	LAS VEGAS	NEVADA	1 (702) 649-8777 GENERAL INFO
CASHMAN RENTALS	USA	NORTH LAS VEGAS	NEVADA	1 (702) 633-4637 GENERAL INFO
CASHMAN EQUIPMENT COMPANY	USA	RENO	NEVADA	1 (775) 358-5111 GENERAL INFO
CASHMAN RENTALS	USA	SPARKS	NEVADA	1 (775) 332-5450 GENERAL INFO
CASHMAN EQUIPMENT COMPANY	USA	WINNEMUCCA	NEVADA	1 (775) 623-1121 GENERAL INFO
SOUTHWORTH-MILTON, INC.	USA	HOPKINTON	NEW HAMPSHIRE	1 (603) 746-4611 GENERAL INFO
GILES & RANSOME INC.	USA	HAMMONTON	NEW JERSEY	1 (609) 561-0308 GENERAL INFO
RANSOME ENGINE	USA	HAMMONTON	NEW JERSEY	1 (215) 245-2794 AFTER HOURS - EN

Table 1. Caterpillar Dealers - Continued.

Dealer Name	Country	City	State/Province/Region	Phone
FOLEY RENTS	USA	MONROE TOWNSHIP	NEW JERSEY	1 (609) 371-5200 AFTER HOURS
FOLEY RENTS	USA	PISCATAWAY	NEW JERSEY	1 (609) 371-5200 AFTER HOURS
FOLEY, INCORPORATED	USA	PISCATAWAY	NEW JERSEY	1 (732) 885-5555 GENERAL INFO
FOLEY, INCORPORATED	USA	PISCATAWAY	NEW JERSEY	1 (732) 885-5555 AFTER HOURS
RANSOME RENTS	USA	PLEASANTVILLE	NEW JERSEY	1 (609) 272-8770 GENERAL INFO
GILES & RANSOME INC.	USA	TOMS RIVER	NEW JERSEY	1 (732) 341-0404 GENERAL INFO
WAGNER EQUIPMENT CO.	USA	ALBUQUERQUE	NEW MEXICO	1 (505) 343-2724 GENERAL INFO2
WAGNER RENTS, INC.	USA	ALBUQUERQUE	NEW MEXICO	1 (915) 771-6000 GENERAL INFO
WAGNER RENTS, INC.	USA	ALBUQUERQUE	NEW MEXICO	1 (505) 938-2000 GENERAL INFO
WAGNER EQUIPMENT CO.	USA	FARMINGTON	NEW MEXICO	1 (505) 327-5331 GENERAL INFO
WAGNER RENTS, INC.	USA	FARMINGTON	NEW MEXICO	1 (505) 327-5331 GENERAL INFO
WAGNER EQUIPMENT CO.	USA	HOBBS	NEW MEXICO	1 (505) 393-2148 GENERAL INFO
SOUTHWORTH-MILTON, INC.	USA	BINGHAMTON	NEW YORK	1 (607) 772-6500 GENERAL INFO
H.O. PENN MACHINERY CO., INC.	USA	BLOOMINGBURG	NEW YORK	1 (845) 733-6400 GENERAL INFO
H.O. PENN MACHINERY CO., INC.	USA	BRONX	NEW YORK	1 (718) 863-3800 GENERAL INFO
SOUTHWORTH-MILTON, INC.	USA	BUFFALO	NEW YORK	1 (716) 694-7200 GENERAL INFO
SOUTHWORTH-MILTON, INC.	USA	CLIFTON PARK	NEW YORK	1 (518) 877-8000 GENERAL INFO
H.O. PENN MACHINERY CO., INC.	USA	HOLTSVILLE	NEW YORK	1 (631) 758-7500 PRIMARY BUSINESS
H.O. PENN MACHINERY CO., INC.	USA	POUGHKEEPSIE	NEW YORK	1 (845) 452-1200 GENERAL INFO
PENN RENTS, L.L.C.	USA	POUGHKEEPSIE	NEW YORK	1 (860) 525-8000 GENERAL INFO
SOUTHWORTH-MILTON, INC.	USA	ROCHESTER	NEW YORK	1 (585) 475-1330 GENERAL INFO
SOUTHWORTH-MILTON, INC.	USA	SYRACUSE	NEW YORK	1 (315) 426-1358 GENERAL INFO
SOUTHWORTH-MILTON, INC.	USA	SYRACUSE	NEW YORK	1 (315) 476-9981 GENERAL INFO
CAROLINA TRACTOR & EQUIPMENT	USA	ASHEVILLE	NORTH CAROLINA	1 (828) 251-2500 GENERAL INFO

Table 1. Caterpillar Dealers - Continued.

Dealer Name	Country	City	State/Province/Region	Phone
PIONEER MACHINERY, INC	USA	ASHEVILLE	NORTH CAROLINA	1 (828) 252-8550 GENERAL INFO
GREGORY POOLE POWER SYSTEMS	USA	BEAUFORT	NORTH CAROLINA	1 (252) 504-5114 GENERAL INFO
CAROLINA TRACTOR & EQUIPMENT	USA	BOONE	NORTH CAROLINA	1 (828) 268 9992 GENERAL INFO
CAROLINA TRACTOR & EQUIPMENT	USA	BRYSON CITY	NORTH CAROLINA	1 (828) 488-1314 GENERAL INFO
CAROLINA TRACTOR & EQUIPMENT	USA	CHARLOTTE	NORTH CAROLINA	1 (704) 596-6700 GENERAL INFO
CAROLINA TRACTOR & EQUIPMENT	USA	CHARLOTTE	NORTH CAROLINA	1 (704) 598-2200 GENERAL INFO
CAROLINA TRACTOR & EQUIPMENT	USA	CHARLOTTE	NORTH CAROLINA	1 (704) 509-1971 GENERAL INFO
ARROW EQUIPMENT, LLC	USA	GREENSBORO	NORTH CAROLINA	1 (336) 294-2326 GENERAL INFO
CAROLINA TRACTOR & EQUIPMENT	USA	GREENSBORO	NORTH CAROLINA	1 (336) 547-8800 GENERAL INFO
PIONEER MACHINERY, INC	USA	GREENVILLE	NORTH CAROLINA	1 (252) 752-3105 GENERAL INFO
GREGORY POOLE EQUIPMENT CO.	USA	HOPE MILLS	NORTH CAROLINA	1 (910) 424-4400 GENERAL INFO
GREGORY POOLE EQUIPMENT CO.	USA	LELAND	NORTH CAROLINA	1 (910) 763-7809 EMERGENCY
CAROLINA TRACTOR & EQUIPMENT	USA	MONROE	NORTH CAROLINA	1 (704) 292-1555 GENERAL INFO
CAROLINA TRACTOR & EQUIPMENT	USA	NEWTON	NORTH CAROLINA	1 (828) 464-7045 GENERAL INFO
GREGORY POOLE EQUIPMENT CO.	USA	RALEIGH	NORTH CAROLINA	1 (919) 828-0641 PRIMARY BUSINESS
GREGORY POOLE POWER SYSTEMS	USA	RALEIGH	NORTH CAROLINA	1 (919) 890-4299 EMERGENCY
CAROLINA TRACTOR & EQUIPMENT	USA	ROBBINSVILLE	NORTH CAROLINA	1 (828) 479-4143 GENERAL INFO
CAROLINA TRACTOR & EQUIPMENT	USA	STATESVILLE	NORTH CAROLINA	1 (866) 228-5508 GENERAL INFO
PIONEER MACHINERY, INC	USA	STATESVILLE	NORTH CAROLINA	1 (704) 924-8000 GENERAL INFO
GREGORY POOLE POWER SYSTEMS	USA	WANCHESE	NORTH CAROLINA	1 (252) 473-1501 GENERAL INFO
GREGORY POOLE EQUIPMENT CO.	USA	WASHINGTON	NORTH CAROLINA	1 (919) 797-4017 EMERGENCY
BUTLER MACHINERY COMPANY	USA	BISMARCK	NORTH DAKOTA	1 (701) 223-0890 GENERAL INFO
NORTH CENTRAL RENTAL AND	USA	BISMARCK	NORTH DAKOTA	1 (701) 223-0890 GENERAL INFO
BUTLER MACHINERY COMPANY	USA	FARGO	NORTH DAKOTA	1 (701) 280-3100 GENERAL INFO

Table 1. Caterpillar Dealers - Continued.

Dealer Name	Country	City	State/Province/Region	Phone
NORTH CENTRAL RENTAL AND	USA	FARGO	NORTH DAKOTA	1 (701) 232-0033 GENERAL INFO
NORTH CENTRAL RENTAL AND	USA	FARGO	NORTH DAKOTA	1 (701) 280-3100 GENERAL INFO
BUTLER MACHINERY COMPANY	USA	GRAND FORKS	NORTH DAKOTA	1 (701) 775-4238 GENERAL INFO
NORTH CENTRAL RENTAL AND	USA	GRAND FORKS	NORTH DAKOTA	1 (701) 775-4238 GENERAL INFO
BUTLER MACHINERY COMPANY	USA	JAMESTOWN	NORTH DAKOTA	1 (701) 251-1400 GENERAL INFO
NORTH CENTRAL RENTAL AND	USA	JAMESTOWN	NORTH DAKOTA	1 (701) 251-1400 GENERAL INFO
BUTLER MACHINERY COMPANY	USA	MINOT	NORTH DAKOTA	1 (701) 852-3508 GENERAL INFO
NORTH CENTRAL RENTAL AND	USA	MINOT	NORTH DAKOTA	1 (701) 858-1100 GENERAL INFO
TRACTOR & EQUIPMENT COMPANY	USA	WILLISTON	NORTH DAKOTA	1 (701) 572-8377 GENERAL INFO
WALKER EXPRESS	USA	ATHENS	OHIO	1 (740) 593-6100 GENERAL INFO
OHIO MACHINERY CO.	USA	BOLIVAR	OHIO	1 (330) 874-1003 GENERAL INFO
OHIO MACHINERY CO.	USA	BROADVIEW HEIGHTS	OHIO	1 (440) 526-6200 GENERAL INFO
OHIO MACHINERY CO.	USA	BROADVIEW HEIGHTS	OHIO	1 (440) 842-8200 AFTER HOURS
OHIO MACHINERY CO.	USA	CADIZ	OHIO	1 (740) 942-4626 GENERAL INFO
OHIO MACHINERY CO.	USA	CANTON	OHIO	1 (330) 478-6525 GENERAL INFO
OHIO MACHINERY CO.	USA	COLUMBUS	OHIO	1 (614) 878-2287 GENERAL INFO
OHIO MACHINERY CO.	USA	COLUMBUS	OHIO	1 (614) 878-2287 GENERAL INFO
OHIO MACHINERY CO.	USA	COLUMBUS	OHIO	1 (614) 851-3737 GENERAL INFO
OHIO MACHINERY CO.	USA	GIRARD	OHIO	1 (330) 530-9010 GENERAL INFO
CECIL I. WALKER MACHINERY CO.	USA	JACKSON	OHIO	1 (740) 286-7566 GENERAL INFO
WALKER EXPRESS	USA	JACKSON	OHIO	1 (740) 286-8330 GENERAL INFO
OHIO MACHINERY CO.	USA	LUCASVILLE	OHIO	1 (740) 259-2350 GENERAL INFO
OHIO MACHINERY CO.	USA	OAKWOOD VILLAGE	OHIO	1 (440) 658-2000 GENERAL INFO
OHIO MACHINERY CO.	USA	PAINESVILLE	OHIO	1 (440) 358-7260 GENERAL INFO

Table 1. Caterpillar Dealers - Continued.

Dealer Name	Country	City	State/Province/Region	Phone
OHIO MACHINERY CO.	USA	PERRYSBURG	OHIO	1 (419) 874-7975 GENERAL INFO
OHIO MACHINERY CO.	USA	PERRYSBURG	OHIO	1 (419) 874-7975 GENERAL INFO
OHIO MACHINERY CO.	USA	SHARONVILLE	OHIO	1 (513) 771-0515 GENERAL INFO
OHIO MACHINERY CO.	USA	SHARONVILLE	OHIO	1 (513) 612-5600 GENERAL INFO
OHIO MACHINERY CO.	USA	TROY	OHIO	1 (937) 335-7660 GENERAL INFO
OHIO MACHINERY CO.	USA	ZANESVILLE	OHIO	1 (740) 453-0563 GENERAL INFO
WARREN POWER & MACHINERY, L.P.	USA	ARDMORE	OKLAHOMA	1 (580) 226-1400 GENERAL INFO
WARREN POWER & MACHINERY, L.P.	USA	ELK CITY	OKLAHOMA	1 (580) 243-0060 GENERAL INFO
WARREN POWER & MACHINERY, L.P.	USA	ENID	OKLAHOMA	1 (580) 234-0448 GENERAL INFO
WARREN POWER & MACHINERY, L.P.	USA	GUYMON	OKLAHOMA	1 (580) 468-4600 GENERAL INFO
WARREN POWER & MACHINERY, L.P.	USA	OKLAHOMA CITY	OKLAHOMA	1 (405) 947-6771 GENERAL INFO
WARREN POWER & MACHINERY, L.P.	USA	POTEAU	OKLAHOMA	1 (918) 647-8211 GENERAL INFO
WARREN POWER & MACHINERY, L.P.	USA	TULSA	OKLAHOMA	1 (918) 660-5427 ENGINES
WESTERN STATES EQUIPMENT	USA	LA GRANDE	OREGON	1 (541) 963-3101 GENERAL INFO
WESTERN STATES EQUIPMENT	USA	PENDLETON	OREGON	1 (541) 276-5812 GENERAL INFO
HALTON CO.	USA	PORTLAND	OREGON	1 (503) 288-6411 GENERAL INFO
HALTON CO.	USA	PORTLAND	OREGON	1 (503) 288-6411 AFTER HOURS
HALTON CO.	USA	SALEM	OREGON	1 (503) 364-0602 GENERAL INFO
HALTON CO.	USA	THE DALLES	OREGON	1 (541) 296-4642 GENERAL INFO
HALTON CO.	USA	WILSONVILLE	OREGON	1 (888) 818-8000 GENERAL INFO
RANSOME RENTS	USA	ALLENTOWN	PENNSYLVANIA	1 (610) 266-1029 GENERAL INFO
GILES & RANSOME INC.	USA	BENSALEM	PENNSYLVANIA	1 (215) 639-4300 GENERAL INFO
RANSOME ENGINE	USA	BENSALEM	PENNSYLVANIA	1 (215) 245-2794 AFTER HOURS - EN
BECKWITH MACHINERY COMPANY	USA	BLAWNOX	PENNSYLVANIA	1 (412) 828-7810 GENERAL INFO

Table 1. Caterpillar Dealers - Continued.

Dealer Name	Country	City	State/Province/Region	Phone
BECKWITH MACHINERY COMPANY	USA	CLEARFIELD	PENNSYLVANIA	1 (800) 442-8026 AFTER HOURS
BECKWITH MACHINERY COMPANY	USA	CRANBERRY TOWNSHIP	PENNSYLVANIA	1 (800) 442-8026 AFTER HOURS
BECKWITH MACHINERY COMPANY	USA	DUNCANSVILLE	PENNSYLVANIA	1 (800) 442-8026 AFTER HOURS
CLEVELAND BROTHERS EQUIPMENT	USA	EPHRATA	PENNSYLVANIA	1 (717) 859-4905 GENERAL INFO
BECKWITH MACHINERY COMPANY	USA	ERIE	PENNSYLVANIA	1 (800) 442-8026 AFTER HOURS
GILES & RANSOME INC.	USA	FLEETWOOD	PENNSYLVANIA	1 (610) 926-5858 GENERAL INFO
CLEVELAND BROTHERS EQUIPMENT	USA	FRACKVILLE	PENNSYLVANIA	1 (570) 874-3560 GENERAL INFO
CLEVELAND BROTHERS	USA	HARRISBURG	PENNSYLVANIA	1 (717) 564-0598 GENERAL INFO
CLEVELAND BROTHERS EQUIPMENT	USA	HARRISBURG	PENNSYLVANIA	1 (717) 564-2121 GENERAL INFO
CLEVELAND BROTHERS EQUIPMENT	USA	HARRISBURG	PENNSYLVANIA	1 (717) 526-2121 GENERAL INFO
CLEVELAND BROTHERS EQUIPMENT	USA	HARRISBURG	PENNSYLVANIA	1 (717) 558-1200 GENERAL INFO
BECKWITH MACHINERY COMPANY	USA	INDIANA	PENNSYLVANIA	1 (724) 463-8743 GENERAL INFO
BECKWITH MACHINERY COMPANY	USA	KANE	PENNSYLVANIA	1 (814) 778-5250 GENERAL INFO
RANSOME RENTS	USA	LEVITTOWN	PENNSYLVANIA	1 (214) 943-4800 GENERAL INFO
CLEVELAND BROTHERS EQUIPMENT	USA	MANSFIELD	PENNSYLVANIA	1 (570) 662-7171 GENERAL INFO
CLEVELAND BROTHERS EQUIPMENT	USA	MILESBURG	PENNSYLVANIA	1 (814) 574-4457 EMERGENCY
BECKWITH MACHINERY COMPANY	USA	MURRYSVILLE	PENNSYLVANIA	1 (800) 442-8026 AFTER HOURS
BECKWITH MACHINERY COMPANY	USA	MURRYSVILLE	PENNSYLVANIA	1 (724) 327-1300 GENERAL INFO
ONE CALL RENTALS, L.P.	USA	NEVILLE ISLAND	PENNSYLVANIA	1 (412) 299-7530 GENERAL INFO
ONE CALL RENTALS, L.P.	USA	NEVILLE ISLAND	PENNSYLVANIA	1 (724) 696-4080 GENERAL INFO
ONE CALL RENTALS, L.P.	USA	NEVILLE ISLAND	PENNSYLVANIA	1 (304) 592-5855 GENERAL INFO
CLEVELAND BROTHERS EQUIPMENT	USA	PHILIPSBURG	PENNSYLVANIA	1 (814) 342-4210 GENERAL INFO
CLEVELAND BROTHERS	USA	PITTSTON	PENNSYLVANIA	1 (717) 697-5672 AFTER HOURS
GILES & RANSOME INC.	USA	POTTSTOWN	PENNSYLVANIA	1 (610) 495-9500 GENERAL INFO

Table 1. Caterpillar Dealers - Continued.

Dealer Name	Country	City	State/Province/Region	Phone
RANSOME RENTS	USA	POTTSTOWN	PENNSYLVANIA	1 (610) 495-9500 GENERAL INFO
BECKWITH MACHINERY COMPANY	USA	SOMERSET	PENNSYLVANIA	1 (800) 442-8026 AFTER HOURS
CLEVELAND BROTHERS EQUIPMENT	USA	STATE COLLEGE	PENNSYLVANIA	1 (814) 237-8338 GENERAL INFO
CLEVELAND BROTHERS EQUIPMENT	USA	TURBOTVILLE	PENNSYLVANIA	1 (570) 538-2551 AFTER HOURS
GILES & RANSOME INC.	USA	WHITEHALL	PENNSYLVANIA	1 (610) 261-4887 GENERAL INFO
CLEVELAND BROTHERS EQUIPMENT	USA	WILKES-BARRE	PENNSYLVANIA	1 (717) 925-6179 AFTER HOURS
SOUTHWORTH-MILTON, INC.	USA	CRANSTON	RHODE ISLAND	1 (401) 946-6350 GENERAL INFO
BLANCHARD MACHINERY CO.	USA	CHARLESTON	SOUTH CAROLINA	1 (843) 266-2600 GENERAL INFO
ARROW EQUIPMENT, LLC	USA	COLUMBIA	SOUTH CAROLINA	1 (803) 765-2040 GENERAL INFO
BLANCHARD MACHINERY CO.	USA	COLUMBIA	SOUTH CAROLINA	1 (803) 690-7729 AFTER HOURS - EA
BLANCHARD MACHINERY CO.	USA	COLUMBIA	SOUTH CAROLINA	1 (803) 799-2286 GENERAL INFO
BLANCHARD RENTAL SERVICES	USA	COLUMBIA	SOUTH CAROLINA	1 (803) 754-7368 GENERAL INFO
BLANCHARD MACHINERY CO.	USA	FLORENCE	SOUTH CAROLINA	1 (843) 660-2316 AFTER HOURS - EA
PIONEER MACHINERY, INC	USA	FLORENCE	SOUTH CAROLINA	1 (843) 678-8900 GENERAL INFO
PIONEER MACHINERY, INC	USA	GEORGETOWN	SOUTH CAROLINA	1 (843) 527-4446 GENERAL INFO
BLANCHARD MACHINERY CO.	USA	GREENVILLE	SOUTH CAROLINA	1 (864) 235-1076 GENERAL INFO
BLANCHARD MACHINERY CO.	USA	GREENVILLE	SOUTH CAROLINA	1 (864) 672 0500 GENERAL INFO
BLANCHARD MACHINERY CO.	USA	HARDEEVILLE	SOUTH CAROLINA	1 (843) 784-6766 GENERAL INFO
IRON MART	USA	LEXINGTON	SOUTH CAROLINA	1 (803) 808-1115 GENERAL INFO
PIONEER MACHINERY, INC	USA	LEXINGTON	SOUTH CAROLINA	1 (803) 356-0123 PRIMARY BUSINESS
PIONEER MACHINERY, INC	USA	LEXINGTON	SOUTH CAROLINA	1 (803) 356-0123 GENERAL INFO
BLANCHARD MACHINERY CO.	USA	LONGS	SOUTH CAROLINA	1 (843) 399-1692 GENERAL INFO
BLANCHARD RENTAL SERVICES	USA	LONGS	SOUTH CAROLINA	1 (843) 399-1692 GENERAL INFO
PIONEER MACHINERY, INC	USA	PIEDMONT	SOUTH CAROLINA	1 (864) 269-7995 GENERAL INFO

Table 1. Caterpillar Dealers - Continued.

Dealer Name	Country	City	State/Province/Region	Phone
BLANCHARD MACHINERY CO.	USA	ROCK HILL	SOUTH CAROLINA	1 (803) 328-7084 AFTER HOURS - EA
BLANCHARD MACHINERY CO.	USA	SIMPSONVILLE	SOUTH CAROLINA	1 (864) 390-4210 AFTER HOURS - EA
BLANCHARD RENTAL SERVICES	USA	SIMPSONVILLE	SOUTH CAROLINA	1 (864) 672-0400 GENERAL INFO
BLANCHARD MACHINERY CO.	USA	SPARTANBURG	SOUTH CAROLINA	1 (864) 582-1245 GENERAL INFO
BLANCHARD MACHINERY CO.	USA	SUMMERVILLE	SOUTH CAROLINA	1 (843) 570-9357 AFTER HOURS - EA
BLANCHARD RENTAL SERVICES	USA	SUMMERVILLE	SOUTH CAROLINA	1 (843) 871-2000 GENERAL INFO
PIONEER MACHINERY, INC	USA	WALTERBORO	SOUTH CAROLINA	1 (843) 538-2595 GENERAL INFO
PIONEER MACHINERY, INC	USA	WEST COLUMBIA	SOUTH CAROLINA	1 (803) 936-9990 GENERAL INFO
BUTLER MACHINERY COMPANY	USA	ABERDEEN	SOUTH DAKOTA	1 (605) 225-6240 GENERAL INFO
NORTH CENTRAL RENTAL AND	USA	ABERDEEN	SOUTH DAKOTA	1 (605) 225-6240 GENERAL INFO
BUTLER MACHINERY COMPANY	USA	RAPID CITY	SOUTH DAKOTA	1 (605) 342-4850 GENERAL INFO
NORTH CENTRAL RENTAL AND	USA	RAPID CITY	SOUTH DAKOTA	1 (605) 342-4850 GENERAL INFO
BUTLER MACHINERY COMPANY	USA	SIOUX FALLS	SOUTH DAKOTA	1 (605) 336-3010 GENERAL INFO
NORTH CENTRAL RENTAL AND	USA	SIOUX FALLS	SOUTH DAKOTA	1 (605) 336-3010 GENERAL INFO
THOMPSON MACHINERY COMMERCE	USA	CAMDEN	TENNESSEE	1 (901) 584-2732 GENERAL INFO
STOWERS MACHINERY CORPORATION	USA	CHATTANOOGA	TENNESSEE	1 (423) 698-6943 GENERAL INFO
STOWERS RENTAL & SUPPLY, INC.	USA	CHATTANOOGA	TENNESSEE	1 (423) 622-9933 GENERAL INFO
THOMPSON MACHINERY COMMERCE	USA	CLARKSVILLE	TENNESSEE	1 (615) 552-5496 GENERAL INFO
THOMPSON MACHINERY COMMERCE	USA	CLARKSVILLE	TENNESSEE	1 (931) 552-5496 GENERAL INFO
THOMPSON MACHINERY COMMERCE	USA	CLARKSVILLE	TENNESSEE	1 (931) 552-5496 GENERAL INFO
THOMPSON MACHINERY COMMERCE	USA	COOKEVILLE	TENNESSEE	1 (931) 528-2270 GENERAL INFO
THOMPSON POWER CORPORATION	USA	COOKEVILLE	TENNESSEE	1 (931) 646-3200 GENERAL INFO
STOWERS RENTAL & SUPPLY, INC.	USA	CROSSVILLE	TENNESSEE	1 (931) 484-4040 GENERAL INFO
THOMPSON POWER CORPORATION	USA	HOLLADAY	TENNESSEE	1 (731) 584-3631 GENERAL INFO

Table 1. Caterpillar Dealers - Continued.

Dealer Name	Country	City	State/Province/Region	Phone
THOMPSON MACHINERY COMMERCE	USA	JACKSON	TENNESSEE	1 (901) 988-4240 GENERAL INFO
THOMPSON POWER CORPORATION	USA	JACKSON	TENNESSEE	1 (901) 988-4240 GENERAL INFO
STOWERS MACHINERY CORPORATION	USA	KINGSPORT	TENNESSEE	1 (423) 323-0400 GENERAL INFO
STOWERS RENTAL & SUPPLY, INC.	USA	KINGSPORT	TENNESSEE	1 (423) 323-4445 GENERAL INFO
STOWERS MACHINERY CORPORATION	USA	KNOXVILLE	TENNESSEE	1 (865) 546-1414 GENERAL INFO
STOWERS RENTAL & SUPPLY, INC.	USA	KNOXVILLE	TENNESSEE	1 (865) 588-4500 GENERAL INFO
THOMPSON MACHINERY COMMERCE	USA	LA VERGNE	TENNESSEE	1 (615) 251-8641 GENERAL INFO2
THOMPSON MACHINERY COMMERCE	USA	LA VERGNE	TENNESSEE	1 (615) 744-7800 GENERAL INFO
THOMPSON POWER CORPORATION	USA	LA VERGNE	TENNESSEE	1 (615) 251-8660 GENERAL INFO
THOMPSON MACHINERY COMMERCE	USA	MANCHESTER	TENNESSEE	1 (931) 461-5000 GENERAL INFO
THOMPSON POWER CORPORATION	USA	MANCHESTER	TENNESSEE	1 (931) 461-5000 GENERAL INFO
THOMPSON MACHINERY COMMERCE	USA	MEMPHIS	TENNESSEE	1 (901) 332-3051 GENERAL INFO
THOMPSON POWER CORPORATION	USA	MEMPHIS	TENNESSEE	1 (901) 346-5140 GENERAL INFO
WARREN POWER & MACHINERY, L.P.	USA	ABILENE	TEXAS	1 (325) 692-1600 GENERAL INFO
WARREN POWER & MACHINERY, L.P.	USA	AMARILLO	TEXAS	1 (806) 335-1511 GENERAL INFO
HOLT TEXAS LTD.	USA	AUSTIN	TEXAS	1 (512) 282-2011 GENERAL INFO
MUSTANG TRACTOR & EQUIPMENT CO	USA	BEAUMONT	TEXAS	1 (409) 892-8412 GENERAL INFO
HOLT TEXAS LTD.	USA	BRIDGEPORT	TEXAS	1 (940) 683-6298 GENERAL INFO
HOLT TEXAS LTD.	USA	BROWNSVILLE	TEXAS	1 (956) 831-9336 GENERAL INFO
MUSTANG CAT RENTAL STORE LTD	USA	BRYAN	TEXAS	1 (979) 775-7368 GENERAL INFO
MUSTANG TRACTOR & EQUIPMENT CO	USA	BRYAN	TEXAS	1 (979) 775-0639 GENERAL INFO
MUSTANG CAT RENTAL STORE LTD.	USA	CHANNELVIEW	TEXAS	1 (281) 452-7368 GENERAL INFO
MUSTANG CAT RENTAL STORE LTD.	USA	CONROE	TEXAS	1 (936) 441-7368 GENERAL INFO
MUSTANG TRACTOR & EQUIPMENT CO	USA	CONROE	TEXAS	1 (936) 756-1110 GENERAL INFO

Table 1. Caterpillar Dealers - Continued.

Dealer Name	Country	City	State/Province/Region	Phone
HOLT RENTAL SERVICE	USA	CORPUS CHRISTI	TEXAS	1 (361) 852-2200 GENERAL INFO
HOLT TEXAS LTD.	USA	CORPUS CHRISTI	TEXAS	1 (361) 852-2200 GENERAL INFO
WARREN POWER & MACHINERY, L.P.	USA	DALHART	TEXAS	1 (806) 249-8772 GENERAL INFO
HOLT RENTAL SERVICE	USA	DALLAS	TEXAS	1 (972) 785-6565 GENERAL INFO
HOLT TEXAS LTD.	USA	DALLAS	TEXAS	1 (972) 785-6565 GENERAL INFO
HOLT TEXAS LTD.	USA	EDINBURG	TEXAS	1 (956) 383-5648 GENERAL INFO
MUSTANG TRACTOR & EQUIPMENT CO	USA	EL CAMPO	TEXAS	1 (979) 543-3389 GENERAL INFO
WAGNER EQUIPMENT CO.	USA	EL PASO	TEXAS	1 (915) 821-7651 GENERAL INFO
HOLT RENTAL SERVICE	USA	FORT WORTH	TEXAS	1 (817) 847-8880 GENERAL INFO
HOLT TEXAS LTD.	USA	FORT WORTH	TEXAS	1 (817) 246-6651 GENERAL INFO
MUSTANG CAT RENTAL STORE LTD.	USA	FREEPORT	TEXAS	1 (979) 233-7368 GENERAL INFO
HOLT RENTAL SERVICE	USA	GRAND PRAIRIE	TEXAS	1 (972) 647-4140 GENERAL INFO
HOLT TEXAS LTD.	USA	GRAND PRAIRIE	TEXAS	1 (972) 721-2089 GENERAL INFO
MUSTANG CAT RENTAL STORE LTD.	USA	HOUSTON	TEXAS	1 (713) 462-9993 GENERAL INFO
MUSTANG HYDRAULIC SERVICES	USA	HOUSTON	TEXAS	1 (713) 856-7500 GENERAL INFO
MUSTANG POWER SYSTEMS	USA	HOUSTON	TEXAS	1 (713) 861-0777 GENERAL INFO
MUSTANG POWER SYSTEMS	USA	HOUSTON	TEXAS	1 (713) 460-2000 GENERAL INFO
MUSTANG TRACTOR & EQUIPMENT CO	USA	HOUSTON	TEXAS	1 (713) 460-2000 GENERAL INFO
MUSTANG TRACTOR & EQUIPMENT CO	USA	HOUSTON	TEXAS	1 (713) 861-7727 GENERAL INFO
MUSTANG TRACTOR & EQUIPMENT CO	USA	HOUSTON	TEXAS	1 (281) 357-0339 GENERAL INFO
PIPELINE MACHINERY	USA	HOUSTON	TEXAS	1 (713) 939-0007 GENERAL INFO
HOLT TEXAS LTD.	USA	IRVING	TEXAS	1 (972) 721-2000 GENERAL INFO
HOLT TEXAS LTD.	USA	IRVING	TEXAS	1 (972) 721-2065 GENERAL INFO
MUSTANG TRACTOR & EQUIPMENT CO	USA	LA MARQUE	TEXAS	1 (409) 935-7000 GENERAL INFO

Table 1. Caterpillar Dealers - Continued.

Dealer Name	Country	City	State/Province/Region	Phone
HOLT RENTAL SERVICE	USA	LAREDO	TEXAS	1 (956) 796-9090 GENERAL INFO
HOLT TEXAS LTD.	USA	LAREDO	TEXAS	1 (956) 722-0075 GENERAL INFO
HOLT TEXAS LTD.	USA	LEWISVILLE	TEXAS	1 (972) 785-6571 GENERAL INFO
HOLT RENTAL SERVICE	USA	LONGVIEW	TEXAS	1 (903) 234-4747 GENERAL INFO
HOLT TEXAS LTD.	USA	LONGVIEW	TEXAS	1 (903) 758-6175 GENERAL INFO
WARREN POWER & MACHINERY, L.P.	USA	LUBBOCK	TEXAS	1 (806) 745-4495 GENERAL INFO
MUSTANG CAT RENTAL STORE LTD.	USA	LUFKIN	TEXAS	1 (936) 632-6775 GENERAL INFO
MUSTANG TRACTOR & EQUIPMENT CO	USA	LUFKIN	TEXAS	1 (936) 639-5551 GENERAL INFO
WARREN POWER & MACHINERY, L.P.	USA	MIDLAND	TEXAS	1 (432) 563-1863 GENERAL INFO
WARREN POWER & MACHINERY, L.P.	USA	MIDLAND	TEXAS	1 (432) 563-1863 GENERAL INFO
WARREN POWER & MACHINERY, L.P.	USA	MIDLAND	TEXAS	1 (432) 563-9228 GENERAL INFO
HOLT TEXAS LTD.	USA	NASH	TEXAS	1 (903) 832-7535 GENERAL INFO
MUSTANG CAT RENTAL STORE LTD.	USA	NEDERLAND	TEXAS	1 (409) 722-7368 GENERAL INFO
WARREN POWER & MACHINERY, L.P.	USA	ODESSA	TEXAS	1 (432) 332-1681 GENERAL INFO
HOLT RENTAL SERVICE	USA	PFLUGERVILLE	TEXAS	1 (512) 252-9696 GENERAL INFO
HOLT TEXAS LTD.	USA	PFLUGERVILLE	TEXAS	1 (512) 252-1183 GENERAL INFO
HOLT TEXAS LTD.	USA	PFLUGERVILLE	TEXAS	1 (512) 990-7743 GENERAL INFO
WARREN POWER & MACHINERY, L.P.	USA	SAN ANGELO	TEXAS	1 (325) 655-1100 GENERAL INFO
HOLT POWER SYSTEMS	USA	SAN ANTONIO	TEXAS	1 (210) 648-8407 GENERAL INFO
HOLT RENTAL SERVICE	USA	SAN ANTONIO	TEXAS	1 (210) 333-8505 GENERAL INFO
HOLT TEXAS LTD.	USA	SAN ANTONIO	TEXAS	1 (210) 648-8854 PARTS
HOLT TEXAS LTD.	USA	SONORA	TEXAS	1 (325) 387-5303 GENERAL INFO
J.A. RIGGS TRACTOR COMPANY	USA	TEXARKANA	TEXAS	1 (870) 773-5621 GENERAL INFO
HOLT TEXAS LTD.	USA	TYLER	TEXAS	1 (903) 595-6424 GENERAL INFO

Table 1. Caterpillar Dealers - Continued.

Dealer Name	Country	City	State/Province/Region	Phone
HOLT TEXAS LTD.	USA	VICTORIA	TEXAS	1 (800) 683-2284 AFTER HOURS
HOLT RENTAL SERVICE	USA	WACO	TEXAS	1 (254) 662-7373 GENERAL INFO
HOLT TEXAS LTD.	USA	WACO	TEXAS	1 (254) 662-4911 GENERAL INFO
HOLT RENTAL SERVICE	USA	WESLACO	TEXAS	1 (956) 447-9105 GENERAL INFO
HOLT TEXAS LTD.	USA	WESLACO	TEXAS	1 (956) 968-2161 GENERAL INFO
WARREN POWER & MACHINERY, L.P.	USA	WICHITA FALLS	TEXAS	1 (940) 767-4384 GENERAL INFO
WHEELER MACHINERY CO.	USA	CEDAR CITY	UTAH	1 (435) 586-6323 GENERAL INFO
WHEELER MACHINERY CO.	USA	OGDEN	UTAH	1 (801) 732-9100 GENERAL INFO
WHEELER POWER SYSTEMS	USA	SALINA	UTAH	1 (435) 529-7423 GENERAL INFO
WHEELER MACHINERY CO.	USA	SALT LAKE CITY	UTAH	1 (801) 974-0511 PRIMARY BUSINESS
WHEELER MACHINERY CO.	USA	SALT LAKE CITY	UTAH	1 (801) 974-0511 GENERAL INFO
WHEELER POWER SYSTEMS	USA	VERNAL	UTAH	1 (435) 789-0635 GENERAL INFO
WHEELER MACHINERY CO.	USA	WASHINGTON	UTAH	1 (435) 634-9904 GENERAL INFO
SOUTHWORTH-MILTON, INC.	USA	RICHMOND	VERMONT	1 (802) 434-4228 GENERAL INFO
CARTER MACHINERY COMPANY, INC.	USA	ABINGDON	VIRGINIA	1 (276) 669-7222 GENERAL INFO
CARTER MACHINERY COMPANY, INC.	USA	ASHLAND	VIRGINIA	1 (804) 752-6070 GENERAL INFO
CARTER MACHINERY COMPANY, INC.	USA	CHESAPEAKE	VIRGINIA	1 (757) 424-1444 GENERAL INFO
CARTER MACHINERY COMPANY, INC.	USA	CHESAPEAKE	VIRGINIA	1 (757) 558-6545 GENERAL INFO
CARTER MACHINERY COMPANY, INC.	USA	CHESAPEAKE	VIRGINIA	1 (757) 485-4895 GENERAL INFO
ALBAN TRACTOR COMPANY, INC.	USA	DUMFRIES	VIRGINIA	1 (703) 221-8325 GENERAL INFO
CARTER MACHINERY COMPANY, INC.	USA	FISHERSVILLE	VIRGINIA	1 (540) 337-4220 GENERAL INFO
CARTER MACHINERY COMPANY, INC.	USA	FREDERICKSBURG	VIRGINIA	1 (540) 371-2844 GENERAL INFO
CARTER MACHINERY COMPANY, INC.	USA	LA CROSSE	VIRGINIA	1 (434) 447-3333 GENERAL INFO
CARTER MACHINERY COMPANY, INC.	USA	LYNCHBURG	VIRGINIA	1 (434) 821-7701 GENERAL INFO

Table 1. Caterpillar Dealers - Continued.

Dealer Name	Country	City	State/Province/Region	Phone
ALBAN TRACTOR COMPANY, INC.	USA	MANASSAS	VIRGINIA	1 (703) 368-7700 GENERAL INFO
CARTER MACHINERY COMPANY, INC.	USA	MECHANICSVILLE	VIRGINIA	1 (804) 730-1810 GENERAL INFO
CARTER MACHINERY COMPANY, INC.	USA	NEWPORT NEWS	VIRGINIA	1 (757) 874-2340 GENERAL INFO
CARTER MACHINERY COMPANY, INC.	USA	NORTON	VIRGINIA	1 (276) 679-1010 GENERAL INFO
CARTER MACHINERY COMPANY, INC.	USA	OAKWOOD	VIRGINIA	1 (276) 498-4586 GENERAL INFO
CARTER MACHINERY COMPANY, INC.	USA	RICHMOND	VIRGINIA	1 (804) 271-5952 GENERAL INFO
PIONEER MACHINERY, INC	USA	RICHMOND	VIRGINIA	1 (804) 266-4911 GENERAL INFO
CARTER MACHINERY COMPANY, INC.	USA	ROANOKE	VIRGINIA	1 (540) 563-0402 GENERAL INFO
CARTER MACHINERY COMPANY, INC.	USA	SALEM	VIRGINIA	1 (540) 387-1111 GENERAL INFO
CARTER MACHINERY COMPANY, INC.	USA	SALEM	VIRGINIA	1 (540) 562-5133 GENERAL INFO
PIONEER MACHINERY, INC	USA	SALEM	VIRGINIA	1 (540) 387-3965 GENERAL INFO
PIONEER MACHINERY, INC	USA	SOUTH HILL	VIRGINIA	1 (804) 447-2400 GENERAL INFO
ALBAN RENTS, LLC	USA	STERLING	VIRGINIA	1 (703) 450-7875 GENERAL INFO
ALBAN TRACTOR COMPANY, INC.	USA	STERLING	VIRGINIA	1 (703) 450-6700 GENERAL INFO
CARTER MACHINERY COMPANY, INC.	USA	WARRENTON	VIRGINIA	1 (540) 349-1100 GENERAL INFO
ALBAN TRACTOR COMPANY, INC.	USA	WINCHESTER	VIRGINIA	1 (540) 667-4200 GENERAL INFO
CARTER MACHINERY COMPANY, INC.	USA	YORKTOWN	VIRGINIA	1 (757) 877-8182 GENERAL INFO
MACHINERY POWER & EQUIPMENT CO.	USA	CHEHALIS	WASHINGTON	1 (360) 748-0132 GENERAL INFO
MACHINERY POWER & EQUIPMENT CO.	USA	EAST WENATCHEE	WASHINGTON	1 (509) 886-3271 GENERAL INFO
N C MACHINERY CO.	USA	EAST WENATCHEE	WASHINGTON	1 (509) 884-6972 AFTER HOURS
MACHINERY POWER & EQUIPMENT CO.	USA	EVERETT	WASHINGTON	1 (425) 258-2102 GENERAL INFO
MACHINERY POWER & EQUIPMENT CO.	USA	FIFE	WASHINGTON	1 (253) 896-0890 GENERAL INFO
N C MACHINERY CO.	USA	FIFE	WASHINGTON	1 (253) 896-0878 GENERAL INFO
HALTON CO.	USA	LONGVIEW	WASHINGTON	1 (360) 423-5760 GENERAL INFO

Table 1. Caterpillar Dealers - Continued.

Dealer Name	Country	City	State/Province/Region	Phone
N C MACHINERY CO.	USA	MOUNT VERNON	WASHINGTON	1 (360) 424-4292 GENERAL INFO
WESTERN STATES EQUIPMENT	USA	PASCO	WASHINGTON	1 (509) 547-9541 GENERAL INFO
N C MACHINERY CO.	USA	PORT ANGELES	WASHINGTON	1 (360) 452-9222 GENERAL INFO
N C MACHINERY CO.	USA	SEATLE	WASHINGTON	1 (360) 748-8845 GENERAL INFO
N C MACHINERY CO.	USA	SEATTLE	WASHINGTON	1 (425) 251-9800 PRIMARY BUSINESS
N C MACHINERY CO.	USA	SEATTLE	WASHINGTON	1 (425) 251-5800 GENERAL INFO
N C POWER SYSTEMS CO.	USA	SEATTLE	WASHINGTON	1 (425) 251-5877 PRIMARY BUSINESS
WESTERN STATES EQUIPMENT	USA	SPOKANE	WASHINGTON	1 (509) 535-1744 GENERAL INFO
WESTERN STATES EQUIPMENT	USA	SPOKANE	WASHINGTON	1 (509) 535-2287 GENERAL INFO
MACHINERY POWER & EQUIPMENT CO.	USA	TUKWILA	WASHINGTON	1 (425) 251-6400 GENERAL INFO
MACHINERY POWER & EQUIPMENT CO.	USA	YAKIMA	WASHINGTON	1 (509) 457-3965 GENERAL INFO
N C MACHINERY CO.	USA	YAKIMA	WASHINGTON	1 (509) 248-2371 GENERAL INFO
CECIL I. WALKER MACHINERY CO.	USA	BECKLEY	WEST VIRGINIA	1 (304) 253-2706 GENERAL INFO
WALKER EXPRESS	USA	BECKLEY	WEST VIRGINIA	1 (304) 255-8989 GENERAL INFO
CARTER MACHINERY COMPANY, INC.	USA	BLUEFIELD	WEST VIRGINIA	1 (304) 325-5411 GENERAL INFO
BECKWITH MACHINERY COMPANY	USA	BRIDGEPORT	WEST VIRGINIA	1 (800) 442-8026 AFTER HOURS
CECIL I. WALKER MACHINERY CO.	USA	CHARLESTON	WEST VIRGINIA	1 (304) 949-6400 GENERAL INFO
CECIL I. WALKER MACHINERY CO.	USA	CRAB ORCHARD	WEST VIRGINIA	1 (304) 683-3222 GENERAL INFO
CECIL I. WALKER MACHINERY CO.	USA	HUNTINGTON	WEST VIRGINIA	1 (304) 526-4800 GENERAL INFO
WALKER EXPRESS	USA	HUNTINGTON	WEST VIRGINIA	1 (304) 523-9800 GENERAL INFO
CECIL I. WALKER MACHINERY CO.	USA	LYBURN	WEST VIRGINIA	1 (304) 752-0300 GENERAL INFO
WALKER EXPRESS	USA	NITRO	WEST VIRGINIA	1 (304) 759-6400 GENERAL INFO
CECIL I. WALKER MACHINERY CO.	USA	PARKERSBURG	WEST VIRGINIA	1 (304) 424-5505 AFTER HOURS
WALKER EXPRESS	USA	PARKERSBURG	WEST VIRGINIA	1 (304) 424-0230 GENERAL INFO

Table 1. Caterpillar Dealers - Continued.

Dealer Name	Country	City	State/Province/Region	Phone
CARTER MACHINERY COMPANY, INC.	USA	PINEVILLE	WEST VIRGINIA	1 (304) 732-8646 GENERAL INFO
CECIL I. WALKER MACHINERY CO.	USA	SUMMERSVILLE	WEST VIRGINIA	1 (304) 872-4303 GENERAL INFO
WALKER EXPRESS	USA	SUMMERSVILLE	WEST VIRGINIA	1 (304) 872-8822 GENERAL INFO
FABCO RENTS	USA	APPLETON	WISCONSIN	1 (920) 757-7447 GENERAL INFO
FABCO EQUIPMENT, INC.	USA	EAU CLAIRE	WISCONSIN	1 (715) 832-6647 GENERAL INFO
FABCO POWER SYSTEMS	USA	EAU CLAIRE	WISCONSIN	1 (715) 874-5100 GENERAL INFO
FABCO RENTS	USA	EAU CLAIRE	WISCONSIN	1 (715) 874-6440 GENERAL INFO
FABCO EQUIPMENT, INC.	USA	GREEN BAY	WISCONSIN	1 (920) 498-8000 GENERAL INFO
FABCO POWER SYSTEMS	USA	GREEN BAY	WISCONSIN	1 (920) 498-8000 GENERAL INFO
FABCO POWER SYSTEMS	USA	GREEN BAY	WISCONSIN	1 (920) 869-2500 GENERAL INFO
FABCO RENTS	USA	GREEN BAY	WISCONSIN	1 (920) 432-0100 GENERAL INFO
FABCO RENTS	USA	KENOSHA	WISCONSIN	1 (262) 605-0000 GENERAL INFO
FABCO EQUIPMENT, INC.	USA	LA CROSSE	WISCONSIN	1 (608) 783-4891 GENERAL INFO
FABCO EQUIPMENT, INC.	USA	MADISON	WISCONSIN	1 (608) 271-6200 GENERAL INFO
FABCO RENTS	USA	MADISON	WISCONSIN	1 (608) 241-0500 GENERAL INFO
FABCO POWER SYSTEMS	USA	MENOMONEE FALLS	WISCONSIN	1 (262) 252-8700 GENERAL INFO
FABCO EQUIPMENT, INC.	USA	MILWAUKEE	WISCONSIN	1 (414) 461-9100 GENERAL INFO
FABCO RENTS	USA	MILWAUKEE	WISCONSIN	1 (414) 321-0100 GENERAL INFO
FABCO RENTS	USA	MILWAUKEE	WISCONSIN	1 (414) 355-0101 GENERAL INFO
FABCO RENTS	USA	MILWAUKEE	WISCONSIN	1 (414) 933-9000 GENERAL INFO
FABCO RENTS	USA	OSHKOSH	WISCONSIN	1 (920) 237-0000 GENERAL INFO
FABCO EQUIPMENT, INC.	USA	SCHOFIELD	WISCONSIN	1 (715) 359-6220 GENERAL INFO
FABCO RENTS	USA	SCHOFIELD	WISCONSIN	1 (715) 359-5050 GENERAL INFO
FABCO RENTS	USA	STURTEVANT	WISCONSIN	1 (262) 321-0000 GENERAL INFO

Table 1. Caterpillar Dealers - Continued.

Dealer Name	Country	City	State/Province/Region	Phone
FABCO EQUIPMENT, INC.	USA	SUPERIOR	WISCONSIN	1 (715) 398-9696 GENERAL INFO
FABCO RENTS	USA	WAUKESHA	WISCONSIN	1 (262) 513-6666 GENERAL INFO
WYOMING MACHINERY COMPANY	USA	CASPER	WYOMING	1 (307) 472-1000 GENERAL INFO
WYOMING RENTS, LLC	USA	CASPER	WYOMING	1 (307) 473-7300 GENERAL INFO
WYOMING MACHINERY COMPANY	USA	CHEYENNE	WYOMING	1 (307) 634-1561 GENERAL INFO
WYOMING MACHINERY COMPANY	USA	GILLETTE	WYOMING	1 (307) 686-1500 GENERAL INFO
WYOMING RENTS, LLC	USA	GILLETTE	WYOMING	1 (307) 682-1362 GENERAL INFO
WYOMING RENTS, LLC	USA	LANDER	WYOMING	1 (307) 332-5120 GENERAL INFO
WYOMING RENTS, LLC	USA	RAWLINS	WYOMING	1 (307) 324-2075 GENERAL INFO
WYOMING RENTS, LLC	USA	RIVERTON	WYOMING	1 (307) 857-2802 GENERAL INFO
WYOMING RENTS, LLC	USA	ROCK SPRINGS	WYOMING	1 (307) 382-3300 GENERAL INFO
WYOMING RENTS, LLC	USA	SHERIDAN	WYOMING	1 (307) 673-0026 GENERAL INFO
MACHINERY POWER & EQUIPMENT CO.	USA	WORLAND	WYOMING	1 (307) 347-4747 GENERAL INFO
ZEPPELIN INTERNATIONAL AG	UZBEKISTAN	ZUG		7 (99871)191 94 37 GENERAL INFO
ZEPPELIN INTERNATIONAL AG	UZBEKISTAN	ZUG		7 (99871)191 94 37 GENERAL INFO
VENEQUIP S.A.	VENEZUELA	EL TIGRE	ANZOATEGUI ESTADO	58 (283) 241-8055 GENERAL INFO
VENEQUIP S.A.	VENEZUELA	PUERTO LA CRUZ	ANZOATEGUI ESTADO	58 (281) 266-2150 GENERAL INFO
VENEQUIP S.A.	VENEZUELA	PUERTO ORDAZ	BOLIVAR ESTADO	58 (286) 923-3028 GENERAL INFO
VENEQUIP S.A.	VENEZUELA	VALENCIA	CARABOBO ESTADO	58 (241) 874-9600 GENERAL INFO
VENEQUIP S.A.	VENEZUELA	CARACAS	DISTRITO FEDERAL	58 (212) 257-3436 GENERAL INFO
VENEQUIP S.A.	VENEZUELA	PUNTO FIJO	FALCON ESTADO	58 (269) 245-0332 GENERAL INFO
VENEQUIP S.A.	VENEZUELA	BARQUISIMETO	LARA ESTADO	58 (251) 237-5422 GENERAL INFO
VENEQUIP S.A.	VENEZUELA	MARACAIBO	ZULIA ESTADO	58 (261) 734-2589 GENERAL INFO
V-TRAC INFRASTRUCTURE	VIETNAM	BIEN-HOA	DONG NAI TINH	84 (61) 991880 GENERAL INFO

Table 1. Caterpillar Dealers - Continued.

Dealer Name	Country	City	State/Province/Region	Phone
V-TRAC INFRASTRUCTURE	VIETNAM	HANOI	HA NOI TINH	84 (4) 852-6404 GENERAL INFO
V-TRAC INFRASTRUCTURE	VIETNAM	HO CHI MINH CITY	HO CHI MINH TINH	84 (8) 827-2050 GENERAL INFO
V-TRAC INFRASTRUCTURE	VIETNAM	DA-NANG	QUANG NAM-DA NANG TINH	84 (511) 829176 GENERAL INFO
V-TRAC INFRASTRUCTURE	VIETNAM	CAM PHA	QUANG NINH TINH	84 (33) 718855 GENERAL INFO
TEHAMA TRADING CO.	YEMEN	MAALLA	'ADAN MUHAFAZAH	967 (2) 241736 GENERAL INFO
TEHAMA TRADING CO.	YEMEN	HODEIDAH	AL HUDAYDAH MUHAFAZAH	967 (3) 228346 GENERAL INFO
TEHAMA TRADING CO., LTD.	YEMEN	HODEIDAH	AL HUDAYDAH MUHAFAZAH	967 (3) 228346 GENERAL INFO
TEHAMA TRADING CO.	YEMEN	AL MUKALLA	HADRAMAWT MUHAFAZAH	967 () 7952893 GENERAL INFO
TEHAMA TRADING CO.	YEMEN	SANA'A	SAN'A MUHAFAZAH	967 (1) 208916 GENERAL INFO
TEHAMA TRADING CO.	YEMEN	TAIZ	TA'IZZ MUHAFAZAH	967 (4) 230200 GENERAL INFO
BARLOWORLD EQUIPMENT PTY LTD	ZAMBIA	KITWE	COPPERBELT PROVINCE	260 (2) 211311 GENERAL INFO
BARLOWORLD EQUIPAMENTOS ZAMBIA	ZAMBIA	LUSAKA	LUSAKA PROVINCE	260 (1) 288516 GENERAL INFO
BARZEM ENTERPRISES	ZIMBABWE	HARARE	MASHONALAND CENTRAL PROVINCE	263 (4) 486600 GENERAL INFO
ZIMBABWE EARTHMOVING MACHINERY	ZIMBABWE	BULAWAYO	MATABELELAND NORTH PROVINCE	263 (9) 67781 GENERAL INFO
TEKNOXGROUP S.A.		PRISTINA	KOSOVO AUTONOMNA POKAJINA	381 (11) 318 5818 GENERAL INFO
TEKNOX D.O.O.		BEOGRAD	SERBIA REPUBLIKA	381 (11) 318 5818 GENERAL INFO
TEKNOX D.O.O.		NIS	SERBIA REPUBLIKA	381 (18) 581 036 GENERAL INFO
TEKNOXGROUP SA		LUGANO	TICINO CANTON	381 (11) 318 5818 GENERAL INFO
TEKNOXGROUP SA		LUGANO	TICINO CANTON	381 (11) 318 5818 GENERAL INFO

END OF WORK PACKAGE

EQUIPMENT DESCRIPTION AND DATA 0002 00

EQUIPMENT CHARACTERISTICS, CAPABILITIES, AND FEATURES

1. **Characteristics.**

   a. The 966H Wheel Loader is an integral part of the Army's mission to efficiently build roads, airstrips, and other engineering assets in a wide variety of geographic, environmental, and tactical situations:

      (1) The 966H Type I Wheel Loader uses a 4.5 yd^3 (3.5 m^3) Rock Bucket to operate in quarries to lift and stockpile blast rock.

      (2) The 966H Type II Wheel Loader uses a 5.0 yd^3 (3.8 m^3) GP Bucket to excavate, dig, lift/load, strip, level, and perform stockpiling operations.

   b. The buckets can be interchanged with forklift pallet forks and a rotary sweeper to further increase machine versatility.

2. **Capabilities and Features.**

NOTE

Refer to *Equipment Data* at the end of this work package for machine dimensions, weights, fluid capacities, and other miscellaneous equipment data.

   a. The loader consists of two sections, front frame section and rear frame section, with center-point frame articulation.

   b. The loader is capable of lifting, clearing, and dumping loads into the following dump trucks/bodies:

      (1) M917 Series, with 114 in. (2.90 m) sideboard height;

      (2) Palletized Load System-Engineer Mission Module-Dump Body (PLS-EMM-DB): Truck-Mounted, with 124 in. (3.15 m) sideboard height; and Trailer-Mounted, with 112 in. (2.84 m) sideboard height.

   c. The machine has the following capabilities and features:

      (1) Caterpillar C11 heavy-duty EPA Tier III compliant turbocharged diesel engine with six inline cylinders, generating 259 hp (net) and 283 hp (gross) (193 and 211 kW) @ 1,800 rpm;

      (2) Capable of operating for 10 hours on a tank of fuel;

      (3) Ether assist in cold weather starting down to -25°F (-32°C);

      (4) Caterpillar autoshift transmission with four forward and four reverse speeds;

      (5) 4-wheel drive: front fixed and rear oscillating axles with outboard planetary final drives;

      (6) Self-adjusting service brakes with secondary and parking brake systems;

      (7) Articulated frame steering with two double-acting steering cylinders;

      (8) AC enclosed cab with adjustable seat and tilt steering wheel, gages and warning indicators, work tool hydraulic controls, and heater/defroster/AC controls;

      (9) Removable bolt-on Rollover Protective Structure/Falling Object Protective Structure (ROPS/FOPS);

      (10) Interchangeable work tools, including forklift pallet forks and rotary sweeper;

      (11) Z-bar loader arm with hydraulically-activated quick coupler, that allows for easy and quick connection and disconnection of work tools without the need for operator to leave cab;

      (12) Lift and tiedown provisions conforming to MIL-STD-209K, *Department of Defense Interface Standard for Lifting and Tiedown Provisions*;

      (13) NATO slave receptacle;

      (14) One toolbox, located below the battery box (LH side); and

      (15) Mounting provisions for M16A1, M16A2, or M4 rifle; portable fire extinguisher; and Sorbent Decontamination System (SDS): M100.

EQUIPMENT CHARACTERISTICS, CAPABILITIES, AND FEATURES - CONTINUED

d. The loader is transportable as follows:

(1) RO/RO onto C-5 and C-17 for aircraft transport.

(2) RO/RO onto marine vessels.

(3) Remove ROPS/FOPS, exhaust stack, and rear handrails for highway transport when using M870 Series Semi-trailer. A permit for width or removal of bucket may also be necessary.

(4) Remove ROPS/FOPS and exhaust stack for CONUS and NATO rail transport. OCONUS requires removal of front and rear handrails.

e. The loader can fresh-water ford to a depth of 30 in. (76 cm) without damage or contamination of lubricants.

f. Machines that operate in extreme cold weather, from -25 to -40°F (-32 to -40°C), are factory equipped with an arctic cold weather starting aid system which includes:

(1) Diesel-fired engine coolant heater and

(2) Four heavy-duty batteries.

EQUIPMENT DESCRIPTION AND DATA - CONTINUED **0002 00**

LOCATION AND DESCRIPTION OF MAJOR COMPONENTS

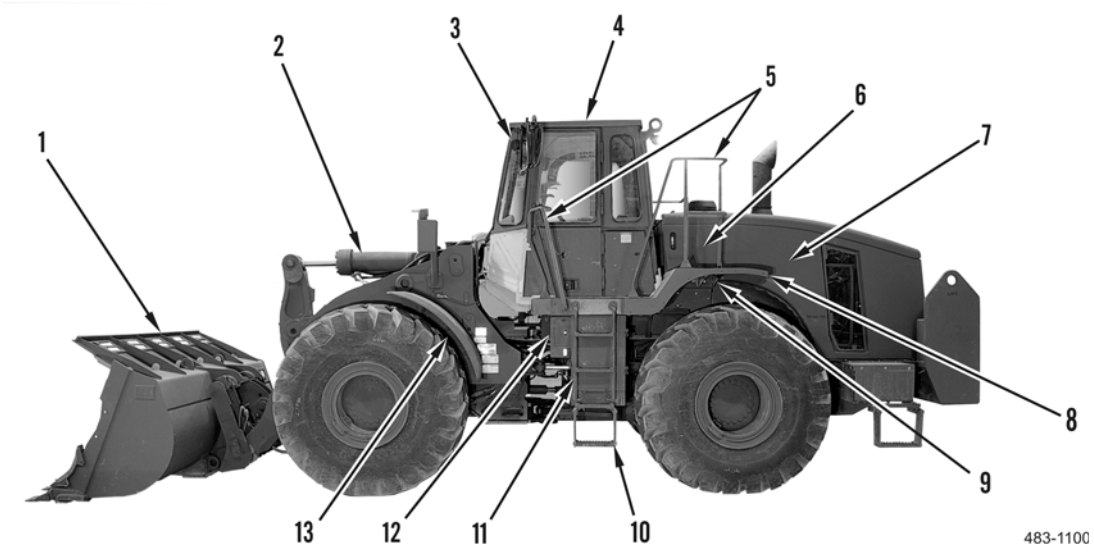

KEY	COMPONENT	DESCRIPTION
1	Bucket	Hardened steel bucket has teeth, bolt-on segments, and corner guards. The Type I machine uses a 4.5 yd^3 (3.5 m^3) Rock bucket. The Type II machine uses a 5.0 yd^3 (3.8 m^3) GP bucket. Refer to *Equipment Data* in this work package for more information.
2	Tilt Cylinder	Single hydraulic cylinder tilts work tool.
3	Front Worklights	Illuminate work area to front of machine. Mounted to roof bracket on both sides of machine.
4	ROPS/FOPS	Bolt-on structure provides rollover and falling object protection for operator. Must be removed for transport by M870 Series Semitrailer and AAR rail.
5	Grabhandle/Hand Rails	Provides a handhold for personnel climbing on machine.
6	Hydraulic Tank	Stores hydraulic fluid used in machine hydraulic systems. Contains sight gage for fluid level check.
7	Hood	Electrically activated tilt design opens for access to engine compartment.
8	Fender	Located over rear tire, on both sides of machine.
9	Platform	Skid-free surface for gaining access to cab and top of machine. Located on both sides of machine.
10	Ladder	Provides access to cab and platform. Located at front and rear, on both sides of machine.
11	Battery Box	Provides protection for batteries.
12	NATO Slave Receptacle	Provides connection point for NATO slave cable to slave start machine.
13	Fender	Located over front tire, on both sides of machine.

LOCATION AND DESCRIPTION OF MAJOR COMPONENTS - CONTINUED

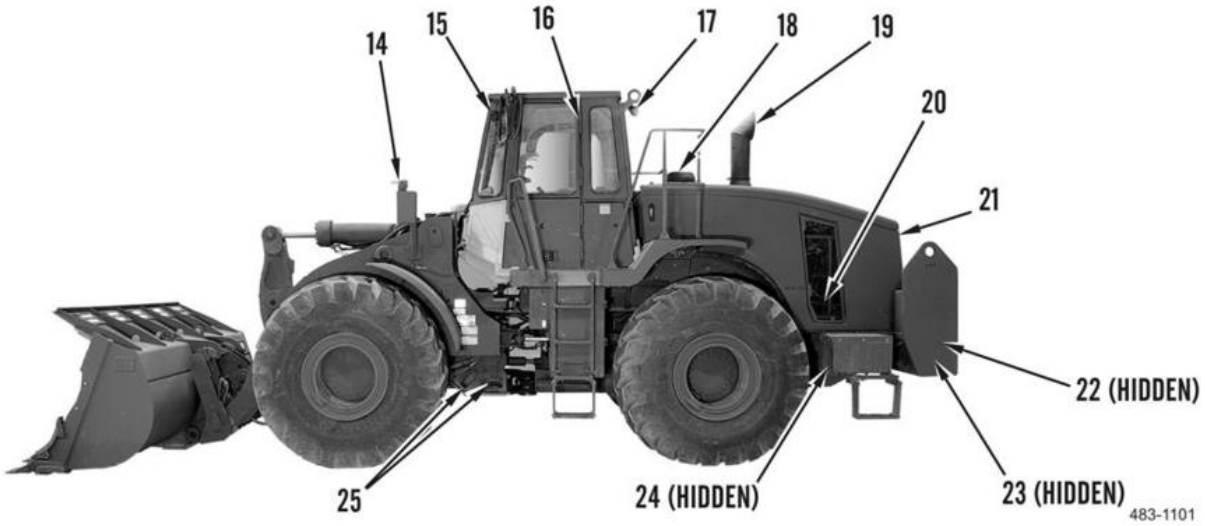

KEY	COMPONENT	DESCRIPTION
14	Blackout (B.O.) Drive Light	Used when operating in blackout mode.
15	Interior Rearview Mirror	Provides operator with a view to rear and side of machine. Located on both sides of machine, inside cab.
16	Cab	AC/heated enclosure contains operator's seat and all driving and hydraulic controls.
17	Rear Worklights	Illuminate work area to rear of machine. Mounted to roof bracket on both sides of machine.
18	Engine Air Precleaner	Self-cleaning precleaner removes debris filtered from incoming air to engine.
19	Exhaust Stack	Directs exhaust away from machine. Must be removed for transport by M870 Series Semitrailer and rail.
20	Backup Alarm	Sounds when transmission is in reverse. Alerts personnel behind machine that machine is backing up. Disabled in blackout mode.
21	Fan Housing	Housing opens to provide access to cooling fan. Tilt hood must be closed before fan housing can be opened.
22	Towing Lugs	Provide attachment points for towbar.
23	Rear Tiedown Points	Used to tie machine down when being transported. There is one tiedown point on each side of rear frame section. Refer to TM 5-3805-291-10, for an illustration of all tiedown points.
24	Arctic Heater (Optional)	Aids in starting engine in extreme cold temperatures.
25	Front Tiedown Points	Used to tie machine down when being transported. There is one tiedown point on each side of front frame section. Refer to TM 5-3805-291-10, for an illustration of all tiedown points.

LOCATION AND DESCRIPTION OF MAJOR COMPONENTS - CONTINUED

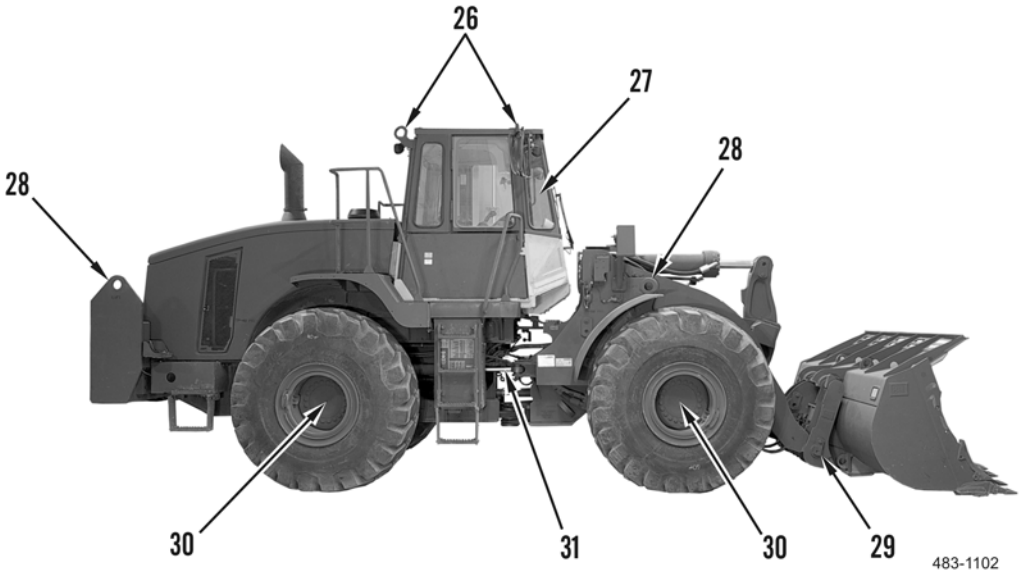

KEY	COMPONENT	DESCRIPTION
26	ROPS/FOPS Lift Points (4)	Attachment points for removing ROPS/FOPS for highway and rail transport (two on each side).
27	Windshield	Protects operator from inclement weather and flying objects. Includes windshield wipers/washers.
28	Lift Points	Attachment points for overhead lifting equipment. There is one lift point on each side of front and rear frame sections. Refer to TM 5-3805-291-10, for an illustration of all lift points.
29	Quick Coupler	Equipped with hydraulically-activated pins to connect/disconnect buckets, forks, or sweepers.
30	Axles	Powered by planetary final drives inboard from wheel ends.
31	Steering Cylinders	Two hydraulic cylinders provide for 40 degree right or left turns with articulated frame steering system.

LOCATION AND DESCRIPTION OF MAJOR COMPONENTS - CONTINUED

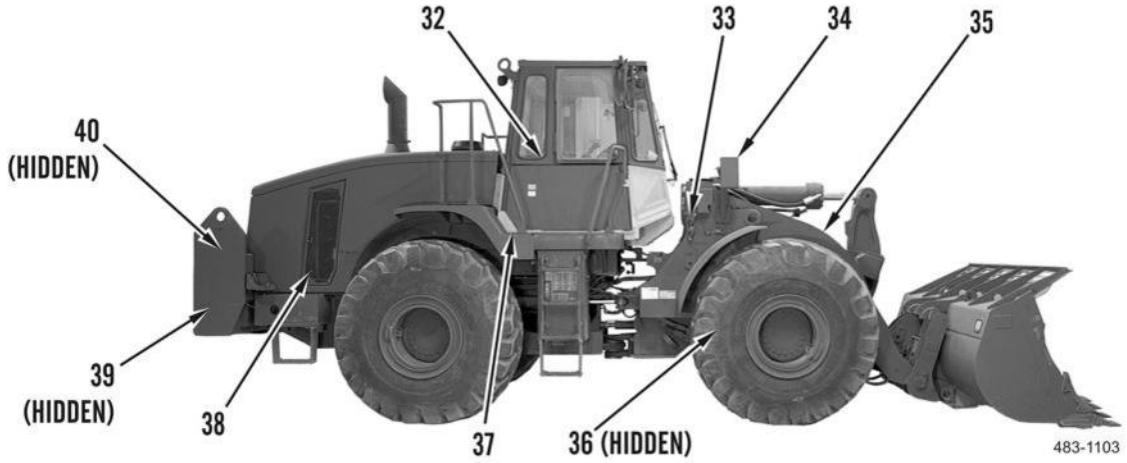

KEY	COMPONENT	DESCRIPTION
32	Fuse Panel	Provides access to fuses.
33	Horns	Horns sound to alert personnel near machine.
34	Front Service Lights	Inside light with white lens is service light. Outside amber light is turnlamp. Located on both sides.
35	Loader Arm	One-piece steel construction, mounted to front frame section.
36	Lift Cylinders	Two hydraulic cylinders raise and lower loader arm.
37	Windshield Washer Fill	Provides a means to fill windshield washer reservoir.
38	Oil Fill Tube	Used to add engine oil to engine crankcase.
39	Fuel Tank Filler	Provides a means to fill fuel tank.
40	Rear Composite Lights	Contain the following lights: blackout marker, tail, parking, and directional signals. Located on both sides.

LOCATION AND DESCRIPTION OF MAJOR COMPONENTS - CONTINUED

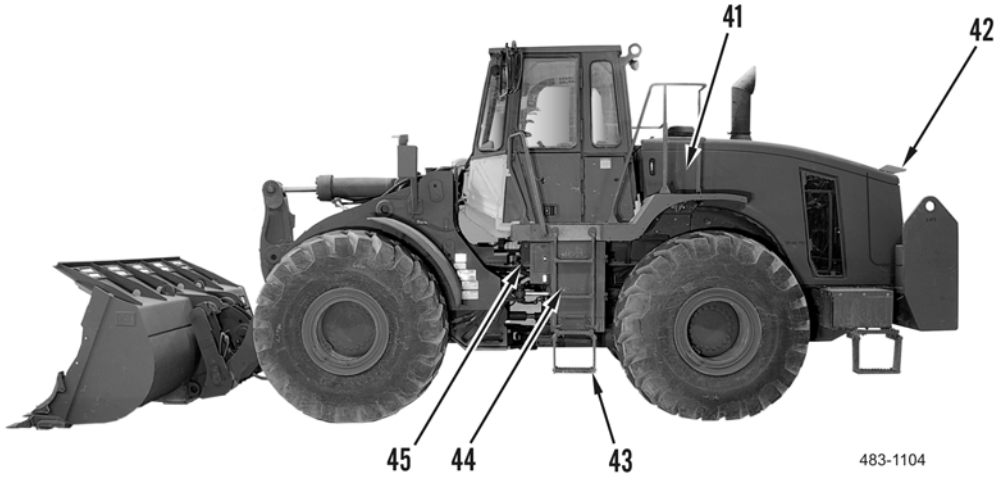

KEY	COMPONENT	DESCRIPTION
41	Ether Starting Aid	Aids in starting engine in very cold weather.
42	Camera	Provide means of seeing ground behind loader when backing up.
43	Steering Lock Link	Stops all articulation when machine is being serviced, lifted, or transported.
44	BII Box	Storage compartment for BII.
45	Emergency Shutoff Switch	Provides a means to shut down engine if engine does not shut down when engine start switch is turned to OFF position.

LOCATION AND DESCRIPTION OF MAJOR COMPONENTS - CONTINUED

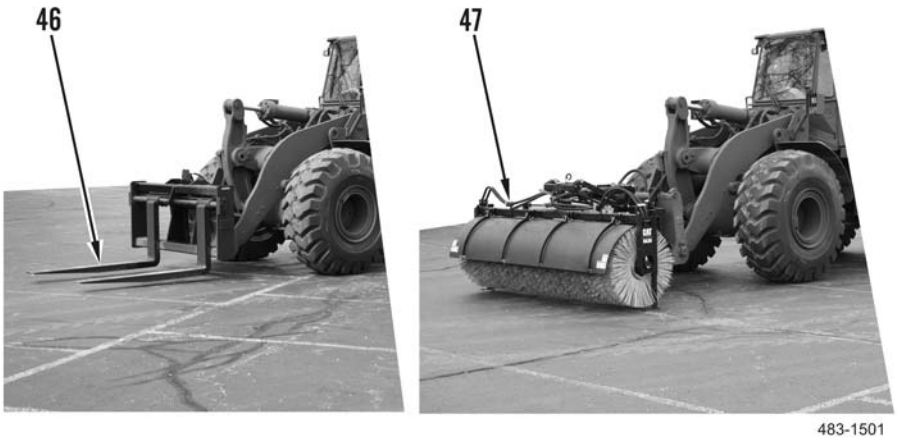

KEY	COMPONENT	DESCRIPTION
46	Forklift Attachment	Attachment that allows loader to function as a forklift. Refer to *Equipment Data* later in this work package for more information.
47	Rotary Sweeper Attachment	Hydraulically powered attachment clears debris or snow from roadways. Sweeper can operate in forward or reverse direction.

EQUIPMENT DATA

Machine Dimensions (with Rock Bucket)

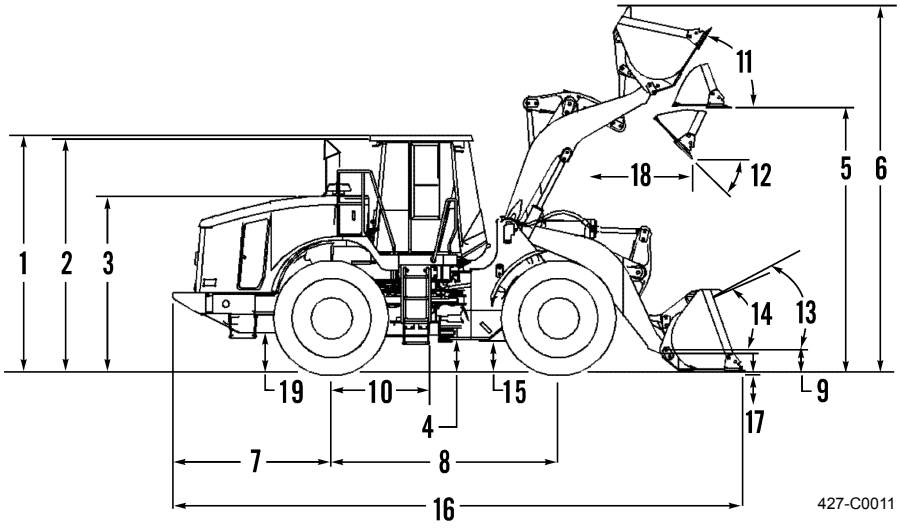

KEY	DESCRIPTION	DIMENSION
1	Height to top of ROPS/FOPS cab	142 in. (3.61 m)
2	Height to top of exhaust stack	139 in. (3.53 m)
3	Height to top of hood	101 in. (2.57 m)
4	Ground clearance	18.5 in. (47.0 cm)
5	Bucket pin height at maximum lift	166 in. (4.22 m)
6	Overall height - bucket raised	225 in. (5.72 m)
7	Length - rear axle to bumper	100 in. (2.54 m)
8	Wheelbase	136 in. (3.45 m)
9	Bucket pin height at carry	19 in. (48.3 cm)
10	Length - rear axle to articulation point	68 in. (1.73 m)
11	Rack back (tilt) angle at maximum lift	55 degrees
12	Dump angle at maximum lift	50 degrees
13	Rack back (tilt) angle at carry	47 degrees
14	Rack back (tilt) angle at ground	42 degrees
15	Axle housing clearance	17 in. (43.2 cm)
16	Overall length	372 in. (9.45 m)
17	Digging depth	4 in. (10.2 cm)
18	Reach at maximum lift and 45 degree dump	58 in. (1.47 m)
19	Height to center of axle	32 in. (81.3 cm)

EQUIPMENT DATA - Continued

Machine Dimensions (with GP Bucket)

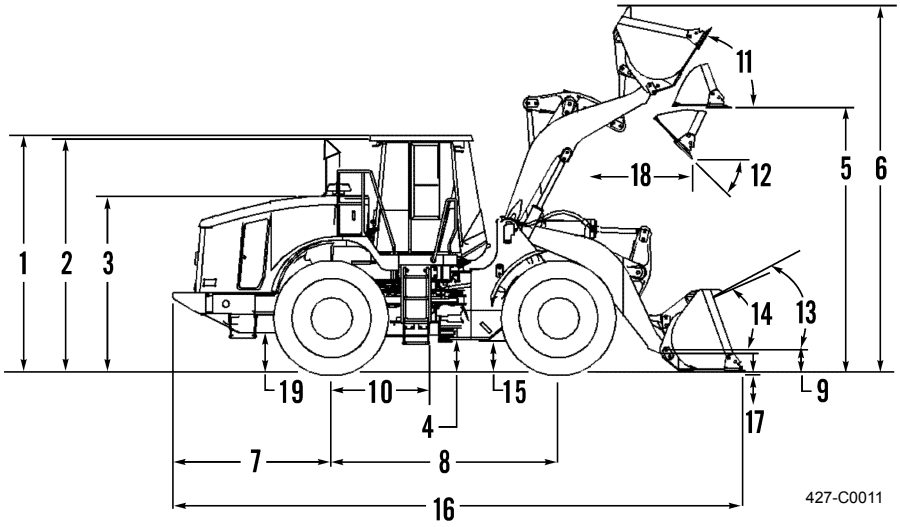

KEY	DESCRIPTION	DIMENSION
1	Height to top of ROPS/FOPS cab	141 in. (3.58 m)
2	Height to top of exhaust stack	138 in. (3.54 m)
3	Height to top of hood	100 in. (2.54 m)
4	Ground clearance	17.5 in. (44.5 cm)
5	Bucket pin height at maximum lift	165 in. (4.19 m)
6	Overall height - bucket raised	224 in. (5.69 m)
7	Length - rear axle to bumper	100 in. (2.54 m)
8	Wheelbase	136 in. (3.45 m)
9	Bucket pin height at carry	18 in. (45.7 cm)
10	Length - rear axle to articulation point	68 in. (1.73 m)
11	Rack back (tilt) angle at maximum lift	55 degrees
12	Dump angle at maximum lift	50 degrees
13	Rack back (tilt) angle at carry	47 degrees
14	Rack back (tilt) angle at ground	42 degrees
15	Axle housing clearance	16 in. (40.6 cm)
16	Overall length	372 in. (9.45 m)
17	Digging depth	5 in. (12.7 cm)
18	Reach at maximum lift and 45 degree dump	60 in. (1.27 m)
19	Height to center of axle	31 in. (78.7 cm)

EQUIPMENT DATA - CONTINUED

Machine Dimensions with Pallet Forks

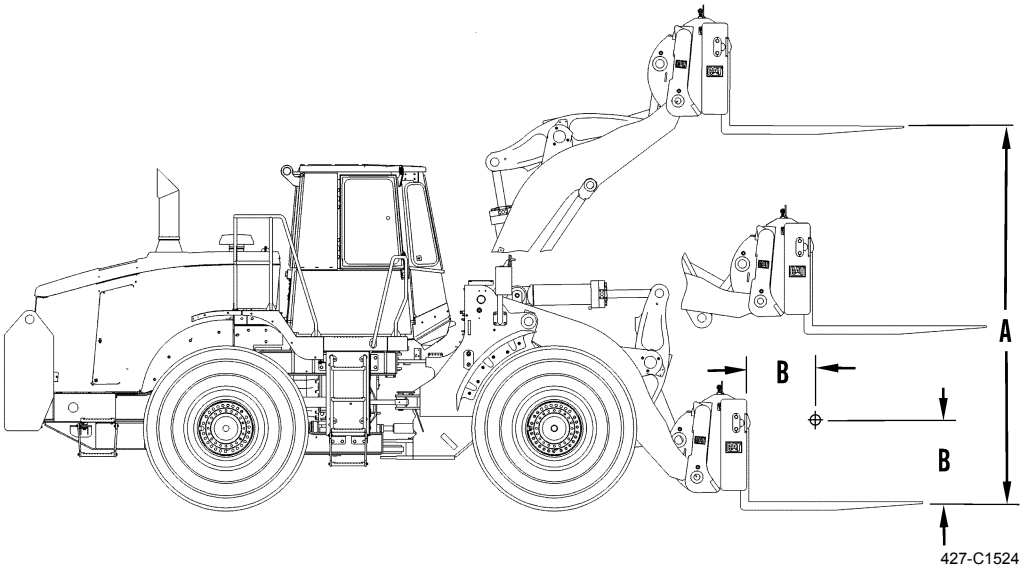

966H Rated Loads for Pallet Forks per SAE J1197 (50% of Full Turn Tipping Load).

FORK PART NUMBER	FORK TINE LENGTH	PLACEMENT HEIGHT (A)	RATED OPERATING LOAD	LOAD CENTER (B)
164-4069	72 in. (1.83 m)	159 in. (4.04 m)	10,000 lb (4,536 kg)	48 in. (1.22 m)

EQUIPMENT DATA - CONTINUED

Machine Dimensions with Rotary Sweeper

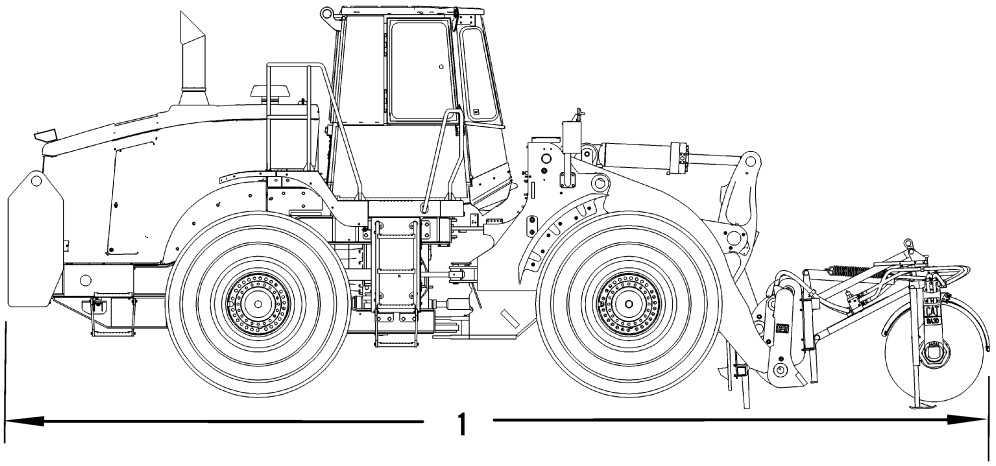

KEY	DESCRIPTION	DIMENSION
1	Overall length	30 ft (9.14 m)

EQUIPMENT DATA - CONTINUED

Refill Capacities

Fuel Tank	106 gal. (404 L)
Cooling System	11.2 gal. (42.3 L)
Front Drive Axle	16.9 gal. (64 L)
Rear Drive Axle	16.9 gal. (64 L)
Hydraulic Tank	29 gal. (110 L)
Hydraulic System (Including Tank)	52.3 gal. (198 L)
Engine Crankcase	9.25 gal. (35 L)
Transmission	13.2 gal. (50 L)

Engine

Manufacturer	Caterpillar Inc.
Model	C11
Type	Diesel, turbocharged, after-cooled
Horsepower	259 hp (net) 283 hp (gross) (193 and 211 kW) @ 1,800 rpm
Engine rpm	2,450 (high idle); 825 (low idle)
Cylinders	6, inline
Displacement	680 CID (11.1 L)
Type of Combustion	Direct injection
Compression Ratio	17:1
Valves per Cylinder	4
Valve Lash	
Inlet Valve	0.015 ± 0.003 in. (0.38 ± 0.08 mm)
Exhaust Valve	0.025 ± 0.003 in. (0.64 ± 0.08 mm)
Firing Order	1, 5, 3, 6, 2, 4
Bore	5.12 in. (13.00 cm)
Stroke	5.51 in. (14.00 cm)
Weight	2,270 lb (1,030 kg)
Fuel System	Direct injection with electronic fuel injectors
Cooling System, Water Temperature Regulator Range	178 to 198°F (81 to 92°C)

Transmission

Manufacturer	Caterpillar Inc.
Type	4 speeds forward, 4 reverse
Range Selection	Autoshift; single lever control with remote F/N/R

Axles

Manufacturer	Caterpillar Inc.
Type	
Front	Fixed
Rear	Oscillating (±13 degrees)

Front and Rear Differentials

Manufacturer	Caterpillar Inc.
Type	
Front	Limited slip
Rear	Conventional

EQUIPMENT DATA - CONTINUED

Brakes

Service . . . . . Enclosed wet-disc; fully hydraulic
Secondary . . . . . Provided by nitrogen-charged accumulators
Parking . . . . . Brake actuator

Machine Shipping Weight

Rock Bucket . . . . . 53,500 lb (24,267 kg)
General Purpose Bucket . . . . . 52,500 lb (23,814 kg)

Miscellaneous

Fording Depth . . . . . 30 in. (76.2 cm)
Maximum Travel Speed (Empty) . . . . . 23 mph (37 kph)
Location of Center of Gravity (CG): . . . . . 68 in. (1.73 m) forward of rear axle centerline; 52 in. (1.32 m) above ground level; 0 in. (0 mm) left or right of machine front-to-rear centerline

Bucket (Rock)

Type I . . . . . Heavy duty, rock
Ground-Engaging Tools . . . . . Teeth and segments
Width . . . . . 128 in. (3.25 m)
Rated Volume . . . . . 4.5 yd^3 (3.5 m^3)
Weight . . . . . 5,200 lb (2,330 kg)

Bucket (GP)

Type II . . . . . General purpose
Ground-Engaging Tools . . . . . Teeth and segments
Width . . . . . 119 in. (3.02 m)
Rated Volume . . . . . 5.0 yd^3 (3.8 m^3)
Weight . . . . . 4,200 lb (1,905 kg)

Fork

Width . . . . . 87 in. (2.21 m)
Weight . . . . . 2,650 lb (1,202 kg)
Capacity . . . . . 10,000 lb (4,536 kg)
Load Center . . . . . 48 in. (1.2 m)

Sweeper

Width . . . . . 126 in. (3.20 m)
Weight . . . . . 1,450 lb (658 kg)

Tires

Size 26.5-25
Ply Rating . . . . . 20 PR; L-4 (Rock Bucket), L-3 (GP Bucket)
Load Rating
Front (Each Tire) . . . . . 41,000 lb (18,597 kg)
Rear (Each Tire) . . . . . 18,000 lb (8,165 kg)
Inflation Pressure
Front . . . . . 60 psi (414 kPa)
Rear . . . . . 40 psi (276 kPa)

EQUIPMENT DATA - CONTINUED

Tires - Continued

Axle Load

Front (Rock Bucket)	28,000 lb (12,701 kg)
Front (GP)	27,500 lb (12,474 kg)
Rear (Rock Bucket)	25,500 lb (11,567 kg)
Rear (GP)	25,000 lb (11,340 kg)

Average Tire Contact Area

Rock Bucket	390 $in.^2$ (1,374 cm^2) each tire
GP	450 $in.^2$ (2,903 cm^2) each tire

Steering

Type	Center-point frame articulation, load sensing primary and secondary systems
Number of Cylinders	2

Electrical System

System Voltage	24
Batteries:	
Quantity	2
Voltage	12
Cold Cranking Amps Rating:	
Standard Machine: Down to -25°F (-32°C)	2 @ 1,400 CCA
Batteries (-40°F Arctic Kit):	
Quantity	4
Voltage	12
Cold Cranking Amps Rating	2 @ 1,400 CCA 2 @ 1,000 CCA

END OF WORK PACKAGE

THEORY OF OPERATION 0003 00

Maintenance Task Title **Page**

Introduction 0003 00-1
Engine 0003 00-2
Oil Coolers and Cooling System Operation. 0003 00-61
Brake and Hydraulic Fan System. 0003 00-67
Steering System 0003 00-105
Electro-hydraulic System. 0003 00-136

INTRODUCTION

This work package explains how 966H Wheel Loader components work together. A functional description of equipment operation is given for:

- Engine
- Powertrain
- Oil coolers and cooling system operation
- Brake and hydraulic fan system
- Steering system
- Electro-hydraulic system

ENGINE

1. **General.** Engine consists of five major components: cylinder block, pistons, rings, and connecting rods, crankshaft, camshaft, and vibration damper. Engine lubrication, cooling, and air inlet/exhaust are covered in separate subsections.

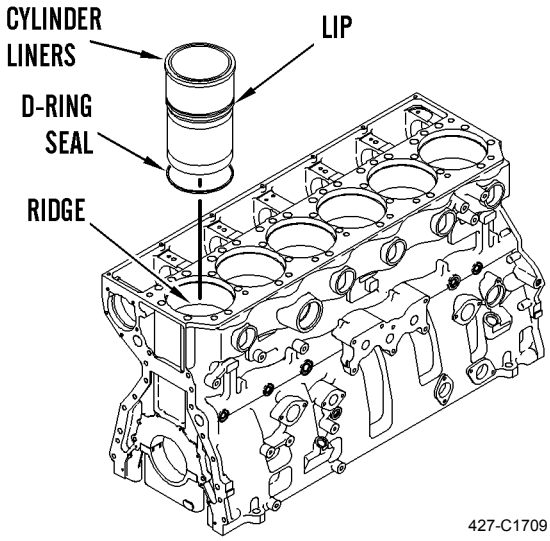

2. **Cylinder Block.**

   a. Cylinder block is a unique design with a deep counterbore that supports a cylinder liner. Cylinder block also forms a coolant jacket. Two oil manifolds are provided in cylinder block for engine lubrication. Manifold on lower right side of cylinder block provides oil to these components:

      - Piston cooling jets
      - Crankshaft bearings
      - Oil filter base

   b. Manifold on upper left side of cylinder block provides oil to these components:

      - Camshaft bearings
      - Valve mechanism

   c. Right side manifold supplies oil to left side manifold. Oil travels through a cut above No. 1 main bearing and a cut above No. 4 main bearing.

   d. Cylinder liners are seated on a ridge in middle of cylinder wall between crankcase and coolant jacket. Ridge is created by a counterbore in cylinder block. Cylinder liners have a lip which rests on ridge. Coolant jacket seals are located in upper and middle regions of cylinder liners. Lower barrier uses a D-ring seal located above cylinder liner seating surface. Upper barrier is head gasket which is above coolant jacket.

   e. Cylinder block has seven main bearings to support crankshaft. Each main bearing cap is fastened to cylinder block with two bolts.

3. **Pistons, Rings, and Connecting Rods.**

   a. Engine's high compression ratio requires use of steel one-piece pistons. Each piston has three rings:

      - Compression ring
      - Intermediate ring
      - Oil ring

   b. Rings are located in piston grooves. Rings seal crankcase from combustion gases and provide control of engine oil. Compression ring design is a barrel face with a plasma face coating. Intermediate ring design is a tapered shape with a chrome finish. Oil ring is double-railed with a coil spring expander. Oil ring has a ground profile and a chrome finish.

   c. Connecting rod is a conventional design. Cap is fastened to shank by two bolts threaded into shank. Each side of connecting rod small end is machined at an angle of 12 degrees to fit within piston cavity. This design allows a larger surface area on each piston and connecting rod, which minimizes bearing load.

ENGINE - CONTINUED

4. **Crankshaft.**
   a. Crankshaft converts linear piston motion into rotational motion. Crankshaft drives a group of gears (front gear train) on engine's front. Front gear train provides power for these components:
      - Camshaft
      - Water pump
      - Engine oil pump
      - Fuel transfer pump
      - Accessory drive
   b. Crankshaft is held in place by seven main bearings. Oil holes and grooves in shells of upper bearings supply oil to connecting rod bearings. Connecting rod bearing oil holes are located in main bearing journals 2, 3, 5, and 6.
   c. Hydrodynamic seals are used at both ends of crankshaft to control oil leakage. Hydrodynamic grooves in seal lips move lubrication oil back into crankcase as crankshaft turns. Front seal is located in engine front housing. Rear seal is installed in flywheel housing.
5. **Camshaft.**
   a. Camshaft has three lobes at each cylinder to operate fuel injector, exhaust valves, and inlet valves. Seven bearings support camshaft, which is driven by an idler gear turned by crankshaft in front gear train. Each bearing journal is lubricated from oil manifold in cylinder block. A thrust pin located at rear of block positions camshaft through a circumferential groove. Groove is machined at rear of camshaft. Camshaft timing is accomplished by aligning marks on crankshaft gear, idler gear, and camshaft gear.
   b. Camshaft injector lobe has a modified profile. Modified profile produces multiple injections.
6. **Vibration Damper.** Combustion force from cylinders and driveline components will cause crankshaft to twist. This is called torsional vibration. If vibration is severe, crankshaft will be damaged. Driveline components can excite torsional stress, which can damage components. Vibration damper limits torsional vibrations to an acceptable level to prevent damage to crankshaft.

THEORY OF OPERATION - CONTINUED **0003 00**

ENGINE - CONTINUED

7. **Engine Lubrication System.**

LUBRICATION SYSTEM SCHEMATIC

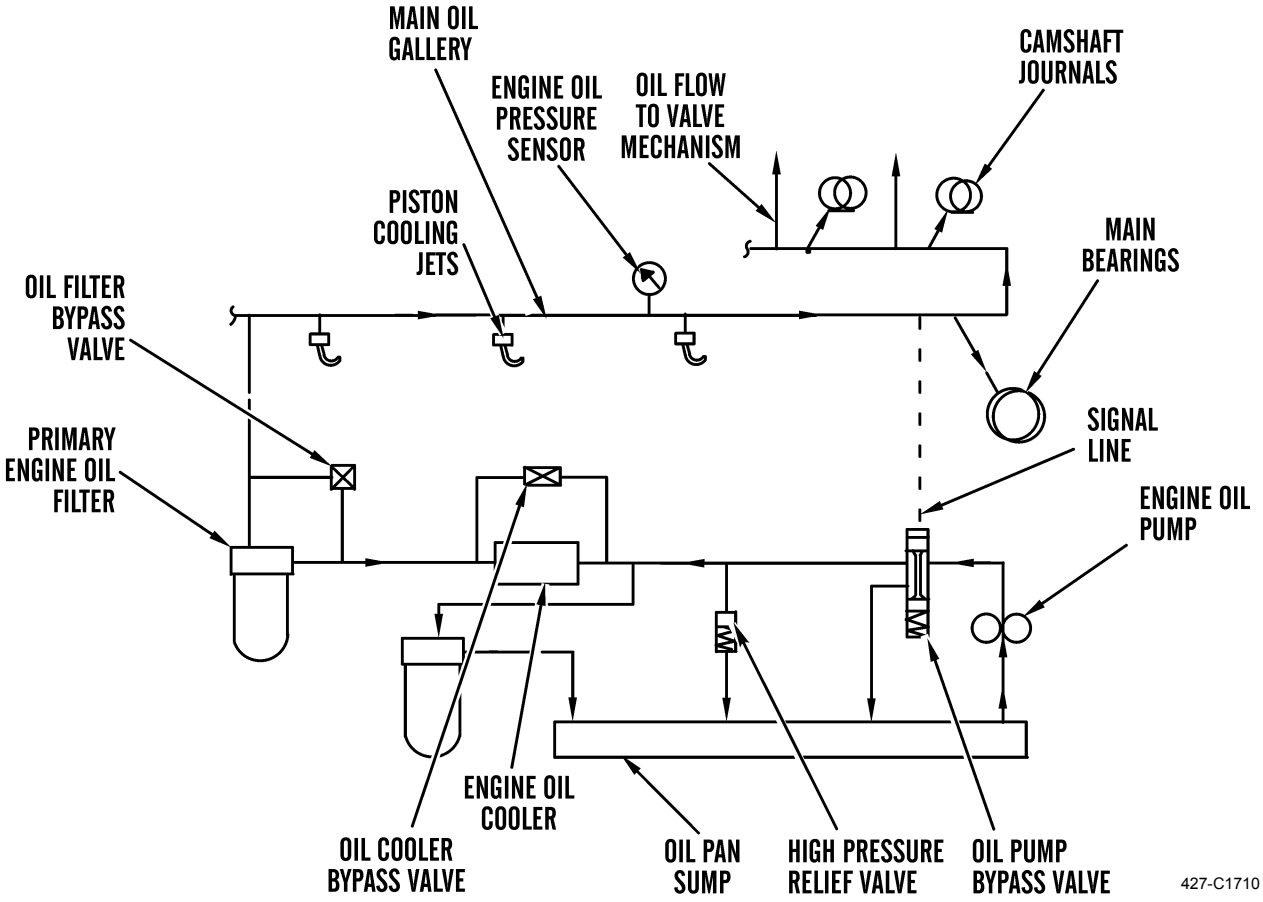

a. **General.**

(1) Lubrication system supplies 230°F (110°C) filtered oil at approximately 40 psi (275 kPa) at rated engine operating conditions. Oil pump bypass valve is controlled by engine oil manifold pressure, rather than oil pump pressure. Engine oil manifold pressure is independent of pressure drops caused by engine oil filter and engine oil cooler.

(2) Oil cooler bypass valve maintains engine oil temperature at 230°F (110°C). High pressure relief valve, located in filter base, protects filters and other components during cold starts. Opening pressure of high pressure relief valve is 100 psi (690 kPa). Opening pressure of oil filter bypass valve is 25 psi (170 kPa). Engine oil pressure sensor is part of engine protection system.

(3) Turbocharger cartridge bearings are lubricated by oil supply line from main oil gallery and oil drain line returns oil flow to sump.

ENGINE - CONTINUED

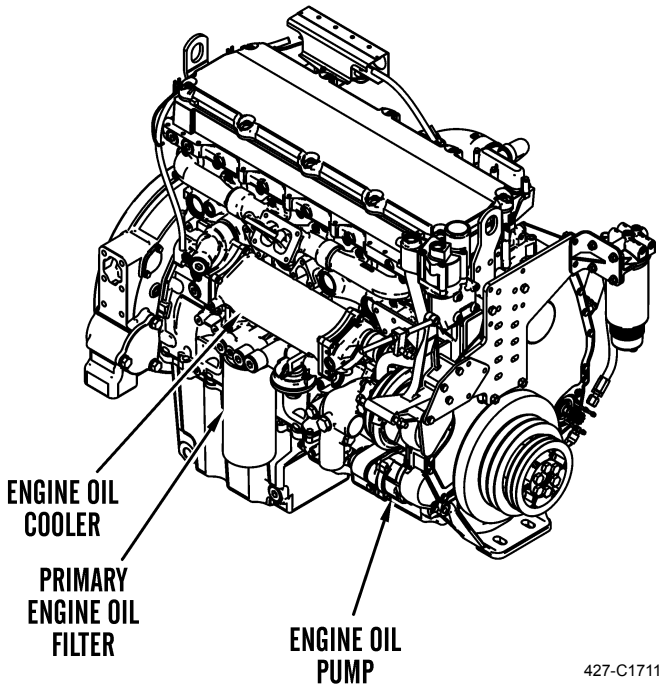

b. **Oil Flow Through Lubrication System.**

(1) Engine oil pump is mounted to back of front gear train on lower right hand side of engine. Engine oil pump is driven by an idler gear from crankshaft gear. Oil is pulled from sump through oil pump bypass valve on its way to engine oil cooler. Bypass valve controls oil pressure from engine oil pump. Engine oil pump can supply excess oil for lubricating system. When excess oil is necessary, oil pressure increases and bypass valve opens. Open bypass valve allows excess oil to return to sump.

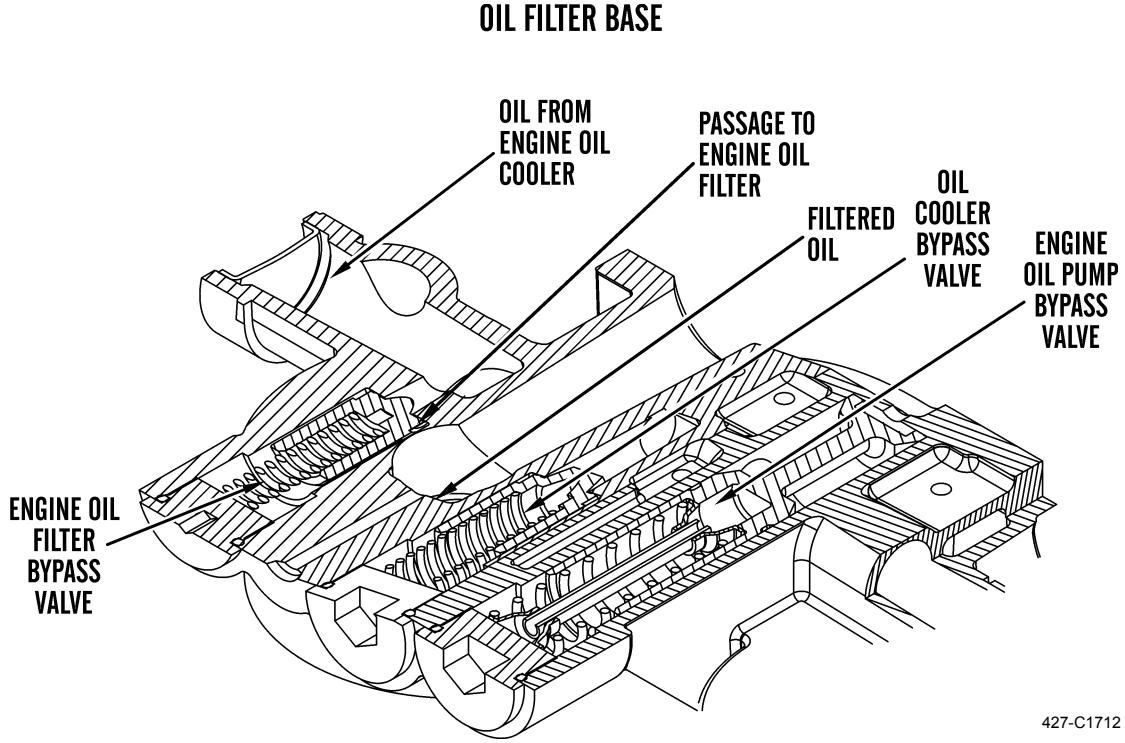

ENGINE - CONTINUED

(2) High pressure relief valve regulates high pressure in system. Valve allows oil to return to sump when oil pump discharge pressure reaches 100 psi (690 kPa). Oil then flows through engine oil cooler, which uses engine coolant to cool oil. Oil cooler bypass valve directs oil flow through engine oil cooler by two different methods:

(a) Oil cooler bypass valve will open when oil pressure exceeds 29 psi (200 kPa). Opening bypass valve will bypass oil through engine oil cooler.

(b) Oil flows toward primary engine oil filter. When oil pressure differential across oil filter bypass valve reaches 29 psi (200 kPa), valve allows oil flow to bypass primary engine oil filter to lubricate engine parts. Bypass valve provides immediate lubrication to engine components when there is a restriction in primary engine oil filter due to cold oil with high viscosity or a plugged primary engine oil filter.

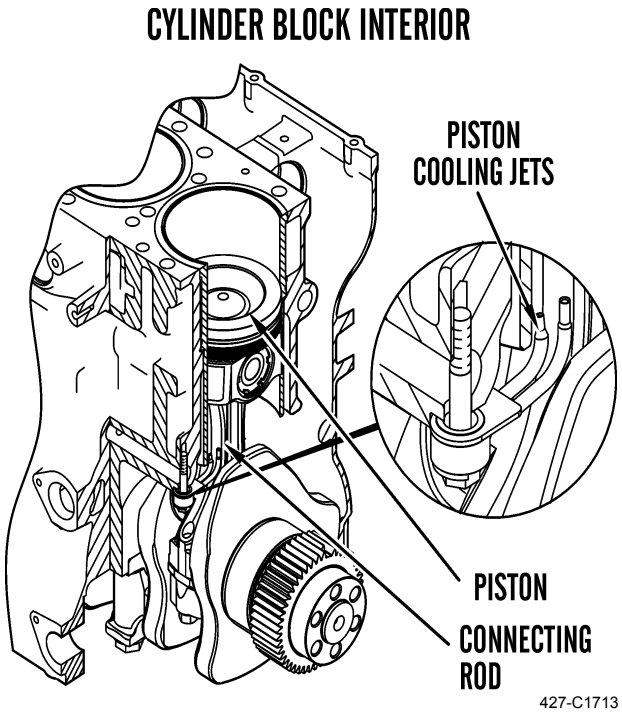

(3) Filtered oil flows through main oil gallery in cylinder block to these components:

- Piston cooling jets
- Valve mechanisms
- Camshaft bearings
- Crankshaft main bearings
- Turbocharger

(4) Piston cooling jets provide piston undersides with liberal amounts of oil to remove heat from pistons. Oil is also used as a lubricant.

(5) Breather allows engine blowby to escape from crankcase. Engine blowby is discharged into atmosphere through a hose. This prevents pressure from building up inside crankcase that could cause seals or gaskets to leak.

ENGINE - CONTINUED

8. **Engine Cooling System.**

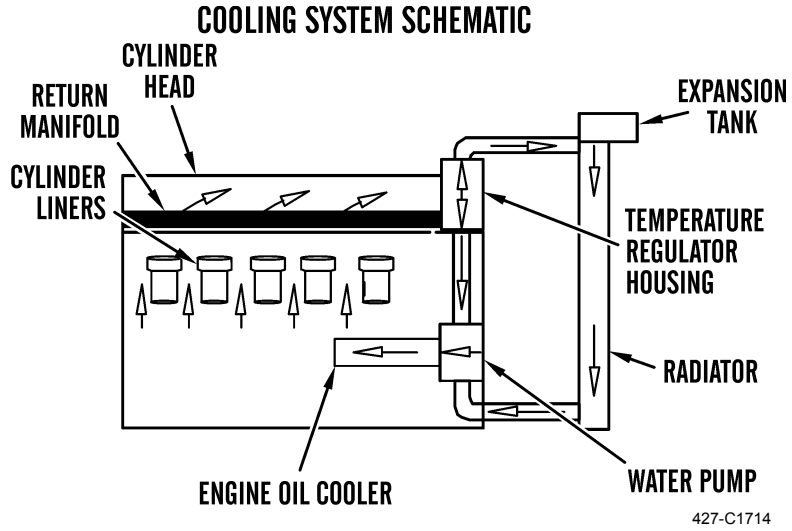

a. **General.** Water pump is gear-driven and located on right hand side of engine. Water pump supplies coolant for engine cooling system. Coolant is supplied to these components:

- Cylinder head
- Cylinder liners
- Engine oil cooler

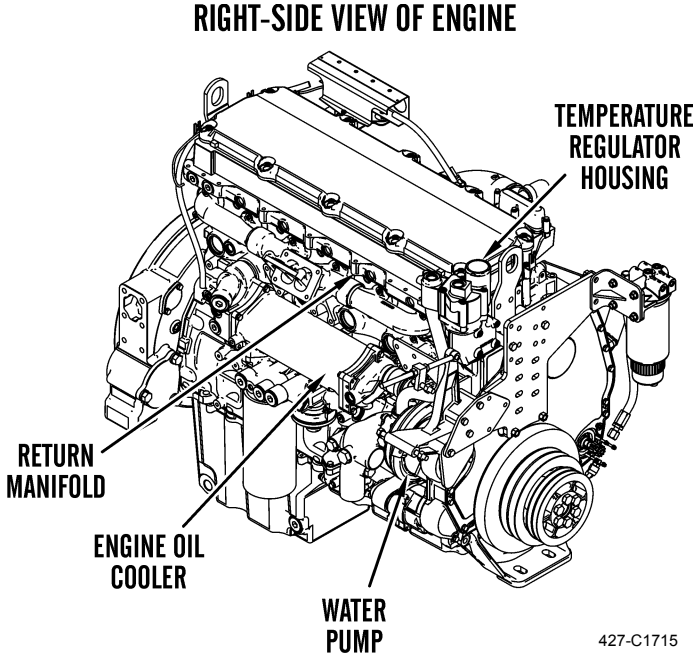

ENGINE - CONTINUED

b. **Coolant Flow.**

(1) Water pump pulls coolant from bottom of radiator. Water pump is located on right hand side of front timing gear housing.

(2) Water pump impeller rotates at 1.17 times engine speed. Water pump is driven by an idler gear which is turned by crankshaft gear. Water pump shaft is supported by two ball bearings. One ball bearing is located in water pump housing and one is located in front timing gear housing. Water pump impeller face is open. Impeller is made of cast iron with a rear cover that is an aluminum die casting. Water pump seal is a cartridge seal located on inlet side of water pump. Seal provides good water flow around itself for cooling.

(3) Coolant is pumped through engine oil cooler, then flows to supply manifold located in cylinder block, which distributes coolant around upper portion of cylinder liners. At each cylinder, coolant flows from cylinder liner to cylinder head. Cylinder head is divided into single-cylinder cooling sections. In cylinder head, coolant flows across center of cylinder and across injector seat boss. At center of cylinder, coolant flows around injector sleeve over exhaust port. Coolant then exits into return manifold. Return manifold collects coolant from each cylinder and directs flow to temperature regulator housing. When coolant temperature regulator is closed, coolant flows through bypass tube, allowing coolant to flow directly back to water pump for recirculation by bypassing radiator. When coolant temperature regulator is open, coolant flows through radiator and back to water pump inlet.

c. **Supply Manifold.** Cooling is only provided for upper portion of cylinder liner above seal in cylinder block. Coolant enters cylinder block at each cylinder through slits in supply manifold. Supply manifold is an integral casting in cylinder block. Coolant flows around cylinder liner circumference and into cylinder head through a single drilled passage for each liner. Coolant flow is split at each cylinder liner to 60 percent flows around cylinder liner and remainder flows directly to cylinder head.

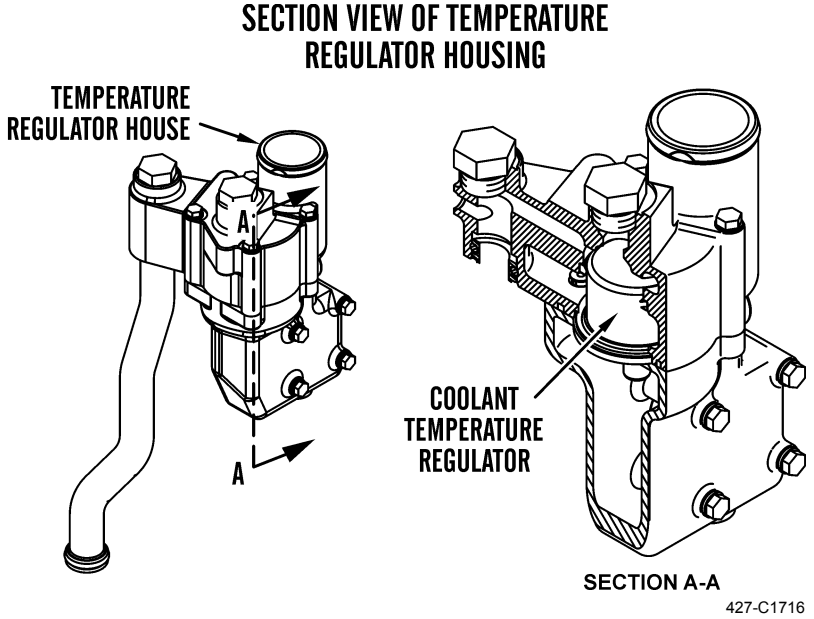

ENGINE - CONTINUED

d. **Coolant Temperature Regulator.** Coolant temperature regulator is a full flow bypass type used to control coolant outlet temperature. When engine is cold, coolant temperature regulator is closed, allowing coolant to flow through bypass tube from return manifold, bypassing radiator. Coolant goes directly to water pump for recirculation. As coolant temperature increases, coolant temperature regulator begins to open, directing some coolant to radiator and bypassing remainder to water pump inlet. At full engine operating temperature, coolant temperature regulator opens, allowing all coolant flow to radiator and water pump. This route provides maximum heat release from coolant. A vent line is recommended from manifold to radiator overflow tank to provide cooling system venting.

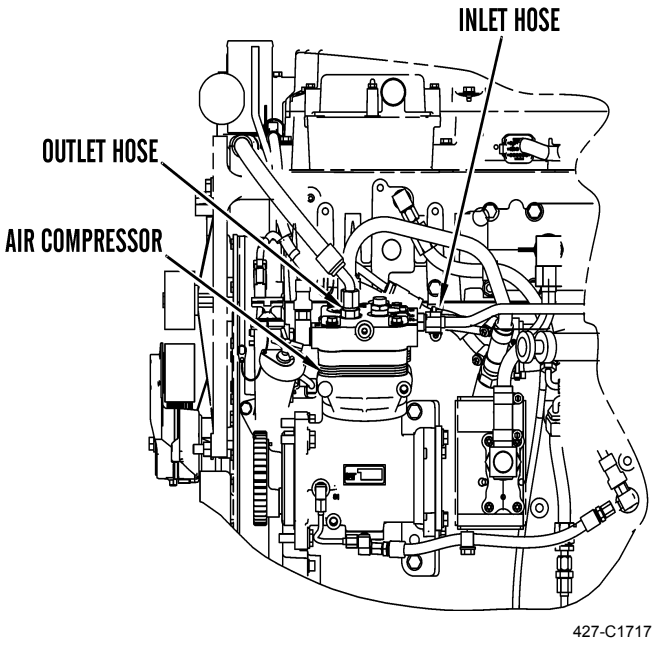

ENGINE - CONTINUED

9. **Engine Air Inlet and Exhaust System.**

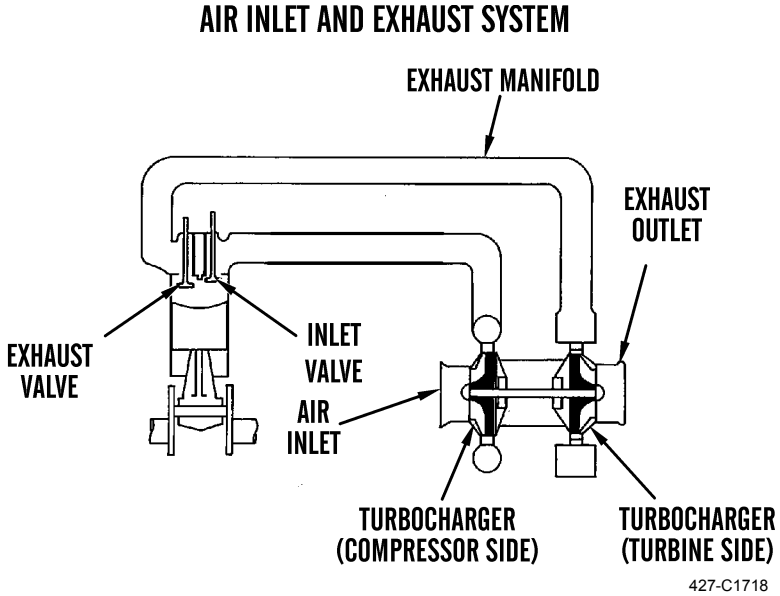

a. **General.** Air inlet and exhaust system is made up of these components:

- Turbocharger
- Cylinder head
- Valves and valve train components
- Piston and cylinder (see item three)
- Exhaust manifold

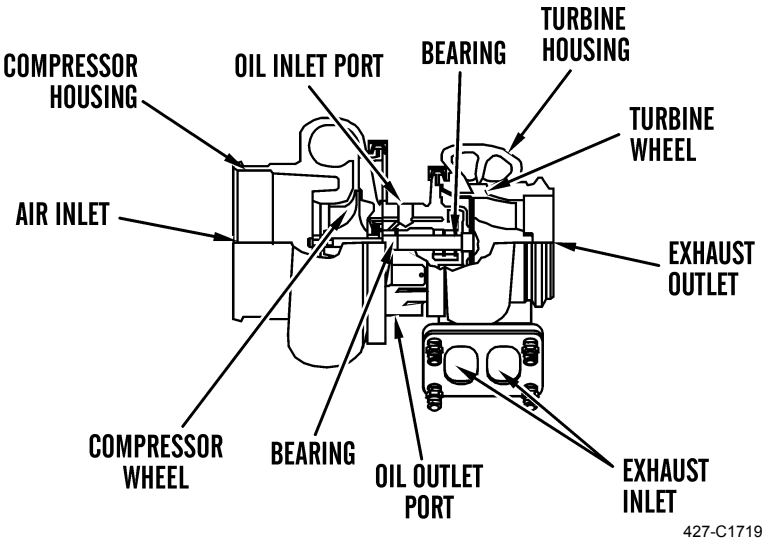

ENGINE - CONTINUED

b. **Turbocharger.**

(1) Turbocharger produces boost across entire engine rpm range. Increased boost at low rpm fills combustion chamber with dense air. Dense air mixes with fuel to promote a complete combustion.

(2) Turbocharger has a compressor wheel and a turbine wheel, both connected to a common shaft supported by two bearings. Bearings are lubricated by pressurized engine oil which enters through oil inlet port. Engine oil lubricates bearings and removes heat. Oil returns to oil sump through oil outlet port.

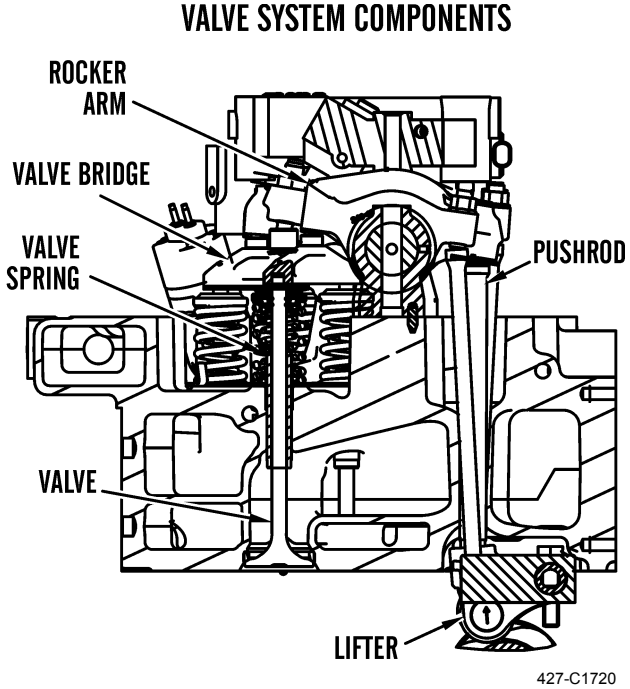

c. **Cylinder Head.**

Cylinder head houses all valves and is ported to allow for cooling, air intake, and lubrication.

d. **Valve System Components.**

(1) Valve system components control inlet air flow into and out of cylinders during engine operation. Valve mechanism also operates fuel injector.

(2) Camshaft must be timed to crankshaft to get correct relation between piston movement and valve movement.

(3) Camshaft has three camshaft lobes for each cylinder. Lobes operate fuel injectors, inlet valves, and exhaust valves. As camshaft turns, camshaft lobes cause lifters to move pushrods up and down. Upward pushrod movement against rocker arms results in downward movement (opening) of valves.

(4) Each cylinder has two inlet and exhaust valves. Valves are actuated simultaneously by a valve bridge. Valve springs close valves when lifters move down.

e. **Exhaust Manifold.**

(1) Exhaust manifold channels engine exhaust through wastegate valve.

(2) Wastegate valve in turbocharger directs engine exhaust through turbocharger or allows exhaust to bypass turbocharger when boost pressure reaches maximum.

ENGINE - CONTINUED

10. **Electronic Control System Components.**
    a. Electronic control system consists of these components:
        - Electronic Control Module (ECM)
        - Pressure sensors
        - Temperature sensors
        - Speed/Timing sensors
        - Solenoids
    b. ECM functions as an engine "throttle," modulating fuel quantity and injection timing to regulate engine performance. ECM can activate ether injection and injector solenoid cycling to aid in starting. ECM will provide operators with an illuminated warning light if engine senses a problem. Operator may also experience an automated engine derate. Warning light or engine derate could turn off during engine operation. Diagnostic codes will be logged in ECM for diagnosis at later time.
    c. ECM is password-protected to secure ECM calibration and user-programmed information. Calibration can be adjusted with flash files by authorized dealers. Flash files are programmed into personality module.
11. **Fuel Injector System.**
    a. **General.** Electronic Fuel Injector (EFI) system consists of a mechanical and electronic system. Mechanical components include a low pressure fuel supply system and electronic fuel injectors. Electrical system provides complete electronic control of all engine functions using three types of signal: input, control, and output. Five major components make up an EFI fuel system:
        - EFIs
        - Fuel transfer pump
        - ECM
        - Sensors
        - Solenoids

ENGINE - CONTINUED

b. **Electronic Controls.**

(1) ECM has three main functions: providing power for engine electronics, monitoring input signals from engine sensors, and acting as a throttle to control engine rpm. ECM stores active faults, logged faults, and logged events. Personality module is ECM software which contains specific maps to define power, torque, and engine rpm.

(2) ECM sends electrical current to output components to control engine operation. ECM has two 70-pin harness connectors, engine harness connector, and machine harness connector. Machine harness connects ECM to engine control portion of machine harness. Engine control portion includes these components:

- Transmission
- Brake
- Clutch switches
- Data links
- CHECK ENGINE light
- WARNING light
- Engine retarded switch
- Speedometer
- Tachometer
- Cooling fan solenoid

(3) These features are also electronic control system responsibilities:

- Cold start strategy
- Oil pressure
- Coolant temperature warning indicator
- Automatic altitude compensation
- Variable injection timing
- Electronic engine speed governing

(4) These features result in precise engine speed control, very little smoke, faster cold starting, and built-in engine protection. There are two main ECM components: ECM itself and personality module. ECM is a computer and personality module is computer software. Personality module contains operating maps which define engine characteristics such as horsepower, torque curves, and rpm.

(5) ECM determines desired engine rpm based on these criteria: throttle signal, certain diagnostic codes, and machine speed signal. ECM maintains desired engine rpm by sensing actual engine rpm and calculating amount of fuel injection necessary to achieve desired rpm.

ENGINE - CONTINUED

c. **Fuel Injection Timing and Delivery.**

(1) ECM controls injected fuel amount by varying signals to fuel injectors. EFIs will inject fuel ONLY if fuel injector solenoid is energized. ECM sends a 90V signal to solenoid to energize it. By controlling 90V signal timing, ECM controls injection timing. By controlling 90V signal duration, ECM controls injected fuel amount.

(2) Injection timing is determined by engine rpm and other engine data. ECM senses top center position of cylinder No. 1 from signal provided by engine speed sensor. ECM decides when injection should occur relative to top center position and provides signal to fuel injector at desired time.

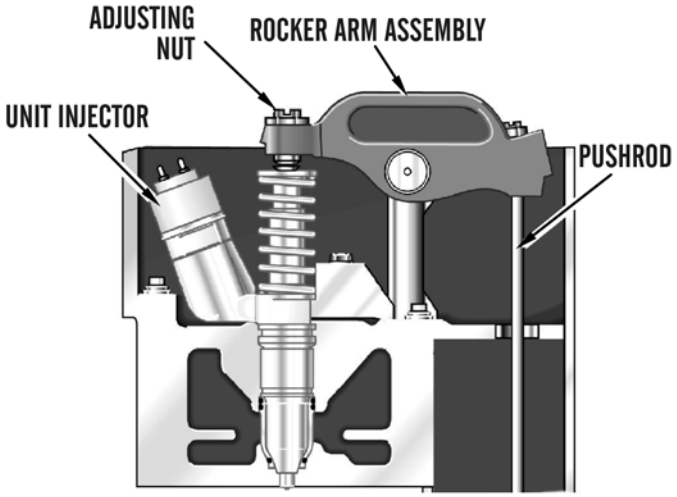

EXAMPLE OF AN ELECTRONIC UNIT INJECTOR FUEL SYSTEM
427-C1721

ENGINE - CONTINUED

d. **Fuel Injector Mechanism.** Fuel injector pressurizes fuel. Correct amount of fuel is then injected into cylinder block at precise times determined by ECM. EFI is operated by camshaft lobe and rocker arm. Camshaft has three camshaft lobes for each cylinder. Two lobes operate inlet and exhaust valves and one lobe operates EFI mechanism. Force is transferred from EFI lobe on camshaft through lifter to pushrod. Pushrod force is transferred through rocker arm assembly to top of EFI. Adjusting nut allows setting of EFI adjustment.

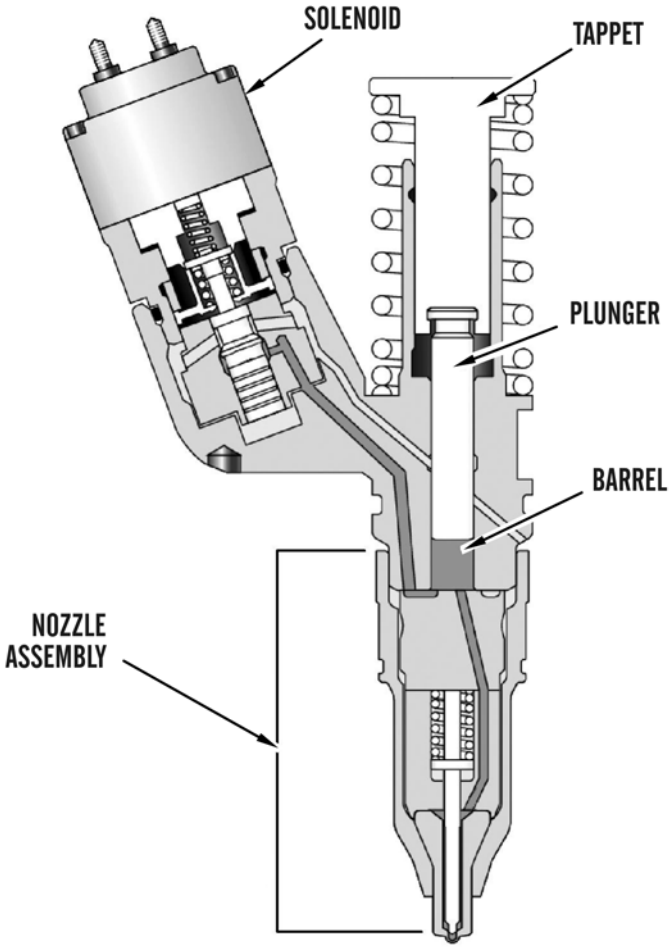

ELECTRONIC UNIT INJECTOR
427-C1734

THEORY OF OPERATION - CONTINUED 0003 00

ENGINE - CONTINUED

e. **EFI Operation.** EFI operation consists of four stages: pre-injection, injection, end of injection, and fill. EFIs use plunger and barrel to pump high-pressure fuel into combustion chamber. EFI components include solenoid, tappet, plunger, barrel, and nozzle assembly made up of spring, nozzle check, and nozzle tip. Cartridge valve is made up of solenoid, armature, poppet valve, and poppet spring.

Injector is mounted in an injector bore in cylinder head which has an integral fuel supply passage. Injector sleeve separates injector from engine coolant in water jacket. Some engines use stainless steel sleeve which fits into cylinder head with light press fit.

(1) Pre-injection metering starts with plunger and tappet at top of fuel injection stroke. When plunger cavity is full of fuel, poppet valve and nozzle check are both open. Fuel leaves plunger cavity when rocker arm pushes down on tappet and plunger. Fuel flow blocked by closed nozzle check valve flows past open poppet valve to fuel supply passage in cylinder head. If solenoid is energized, poppet valve remains open and fuel from plunger cavity continues flowing into fuel supply passage.

(2) To start injection, ECM sends current to solenoid on cartridge valve. Solenoid creates magnetic field which attracts armature. When solenoid is energized, armature assembly lifts poppet valve so it contacts poppet seat (closed position). Once poppet valve closes, fuel flow path leaving plunger cavity is blocked. Plunger continues to push fuel from plunger cavity and fuel pressure increases. When fuel pressure reaches approximately 5,000 psi (34,500 kPa), high-pressure fuel force overcomes spring force. This holds nozzle check closed. Nozzle check moves off nozzle seat and fuel flows out of injector tip. This starts injection.

(3) Injection is continuous while injector plunger moves in downward motion and energized solenoid holds poppet valve closed. When injection pressure is no longer required, ECM stops current flow to solenoid. When current flow to solenoid stops, fuel injector spring and fuel pressure opens poppet valve. High-pressure fuel can now flow around open poppet valve and into fuel supply passage, resulting in rapid drop in injection pressure. When injection pressure drops to approximately 3,500 psi (24,000 kPa), nozzle check closes and injection stops.

(4) When plunger reaches end of its stroke, fuel is no longer forced from plunger cavity. Plunger is pulled up by tappet and tappet spring. Upward plunger movement causes plunger cavity pressure to drop below fuel supply pressure. Fuel flows from fuel supply passage around open poppet and into plunger cavity as plunger travels upward. When plunger reaches top of stroke, plunger cavity is full of fuel and fuel flow into plunger cavity stops. This begins pre-injection.

ENGINE - CONTINUED

12. **Engine Electrical System.**

a. **Grounding Practices.**

(1) Proper engine electrical system grounding is necessary for proper engine performance and reliability. Improper grounding will result in uncontrolled electrical circuit paths and unreliable electrical circuit paths. Uncontrolled electrical circuit paths can result in damage to main bearings, crankshaft bearing journal surfaces, and aluminum components.

(2) To ensure proper functioning of engine electrical systems, an engine-to-frame ground strap with direct path to negative battery post must be used. This may be provided by way of starting motor ground, frame-to-starting motor ground, or direct frame-to-engine ground. Engine-to-frame ground strap must be used to connect engine grounding stud to machine frame and negative battery post. Engine must have wire grounded to battery.

(3) Ground wires or ground straps should be combined at ground studs that are solely for ground use. All grounds should be tight and free of corrosion. All ground paths must be capable of carrying any likely current faults. An AWG #0 or larger wire is recommended for grounding strap to cylinder head. Engine alternator should be battery ground with a wire size capable of managing full alternator charging current.

b. Engine electrical system has these separate circuits:

- Charging
- Starting
- Low amperage accessories

c. Some electrical system components are used in more than one circuit. These components are common in more than one circuit:

- Battery or batteries
- Circuit breakers
- Battery cables
- Ammeter

d. Charging circuit is in operation when engine is running. An alternator makes electricity for charging circuit. A voltage regulator in circuit controls electrical output to keep battery at full charge. Starting circuit is activated only when engine start switch is activated. Low amperage accessory circuit and charging circuit are connected through ammeter. Starting circuit is not connected through ammeter.

e. **Charging System Components.**

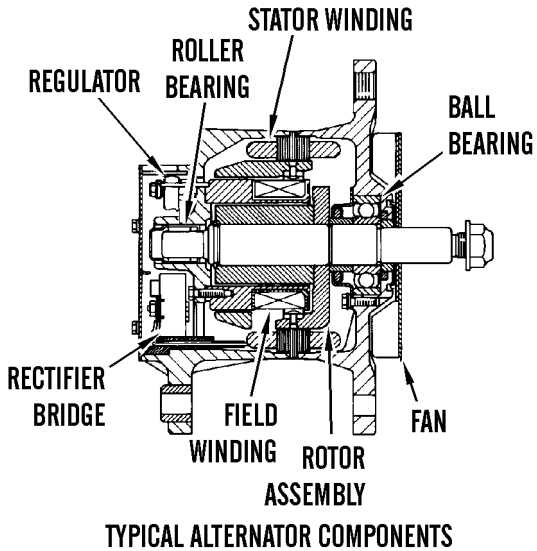

TYPICAL ALTERNATOR COMPONENTS

427-C1722

ENGINE - CONTINUED

(1) **Alternator.** Alternator is driven by a belt from crankshaft pulley. This alternator is a three-phase, self-rectifying charging unit, and regulator is part of alternator. Alternator design has no need for slip rings and rotor assembly is the only moving part. All conductors that carry current are stationary. These conductors are in circuit:

- Field winding
- Stator windings
- Six rectifying diodes
- Regulator circuit components

(2) **Rotor Assembly.** Rotor assembly has many magnetic poles that resemble fingers with air space between each opposite pole. Poles have residual magnetism which produces a small magnetic field between poles. As rotor assembly begins to turn between field winding and stator windings, a small amount of alternating current (ac) is produced in stator windings from small magnetic field. Ac current is changed to direct current (DC) when it passes through rectifier bridge diodes. DC current is used for charging battery, supply low amperage accessory circuit, and strengthening magnetic field.

(3) **Voltage Regulator.** Voltage regulator is a solid-state electronic switch which senses system voltage. Voltage regulator switches ON and OFF many times per second to control alternator field current. Alternator uses field current to generate required voltage output.

f. **Starting System Components.**

TYPICAL STARTING MOTOR COMPONENTS

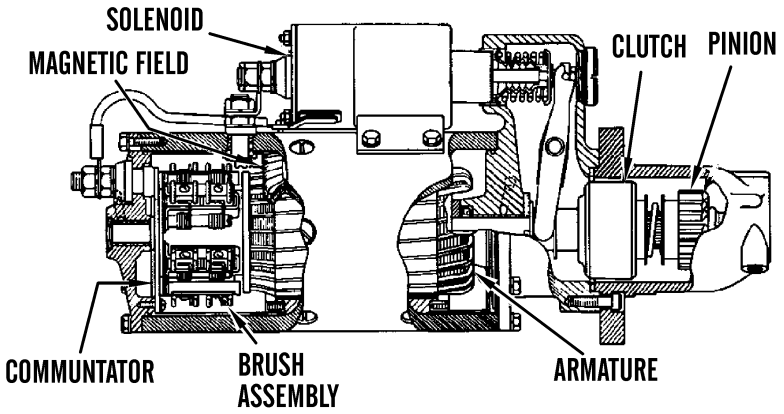

427-C1723

ENGINE - CONTINUED

(1) **Starting Solenoid.** Starting solenoid is an electromagnetic switch which closes high-current starting motor circuit with a low-current start switch circuit, and engages starter motor pinion with ring gear. Solenoid has windings (one or two sets) around a hollow cylinder. A spring-loaded plunger rests inside cylinder. Plunger can move forward and backward. When start switch is closed and electricity is sent through windings, a magnetic field is created which pulls plunger forward in cylinder. This moves shift lever to engage pinion drive gear with ring gear. Front end of plunger then makes contact across battery and motor terminals of solenoid. Next, starting motor begins to turn engine flywheel.

(2) **Windings.**

(a) When start switch is opened, current no longer flows through windings. Spring now pushes plunger back to original position while moving pinion gear away from flywheel. When two sets of solenoid windings are used, they are called “hold-in” and “pull-in” windings, respectively. Both sets of windings take an equal number of turns around cylinder, but pull-in winding uses a wire with a larger diameter which produces a greater magnetic field.

(b) When start switch is closed, part of current flows from battery through hold-in windings. Rest of current flows through pull-in windings to motor terminal. Current then flows through motor to ground. Solenoid is fully activated when connection across battery and motor terminal is complete. When solenoid is fully activated, current is shut off through pull-in windings. At this point, only smaller hold-in windings are in operation. Hold-in windings operate as long as required to start engine. Solenoid will draw less current from battery and heat generated by solenoid will be kept at an acceptable level.

POWERTRAIN

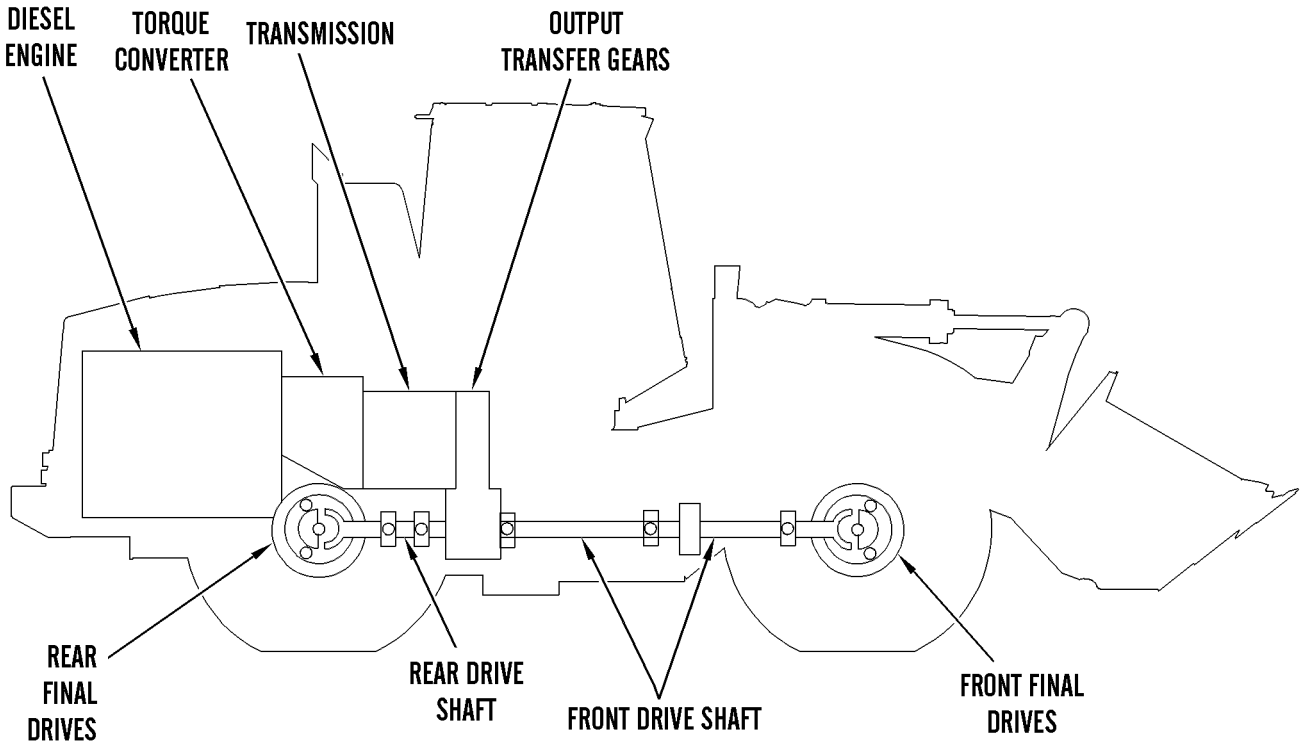

LOCATION OF POWERTRAIN COMPONENTS

1. **General.**

   a. Power from diesel engine is sent from flywheel to torque converter. Torque converter is splined to transmission and fastened to engine flywheel with bolts. Power flows directly from torque converter to transmission front pump.

   b. Transmission output shaft is connected to input gear in output transfer gear case by splines. Power is sent through input gear to output gear. Output gear sends power through rear drive shaft to rear differential and to front differential through front drive shafts. Bevel gear and pinion of each differential sends power to final drives through differentials and sun gear shafts. Axle shafts transfer power from final drives and to wheels.

THEORY OF OPERATION - CONTINUED **0003 00**

POWERTRAIN - CONTINUED

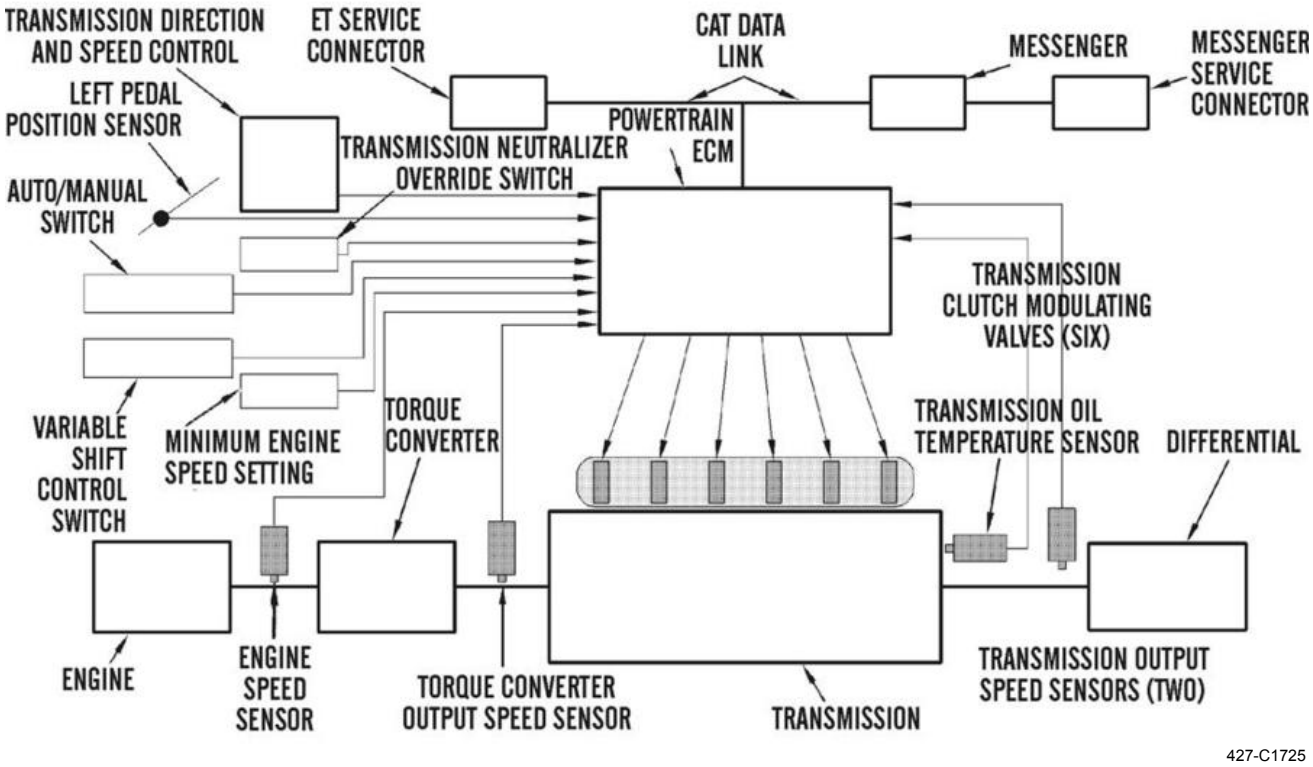

POWERTRAIN ELECTRONIC CONTROL SYSTEM DIAGRAM

POWERTRAIN - CONTINUED

c. Six hydraulically activated clutches in transmission provide four forward and four reverse speeds. Speed and direction selections are made manually with transmission direction and speed control. Autoshift control makes speed selections if machine is in AUTOMATIC mode. Variable shift control uses position of variable shift control switch and engine speed to provide alternate autoshift points.

d. Powertrain ECM electronically controls transmission shifts using operator input from transmission direction and speed control and left brake pedal position sensor. Powertrain ECM signals transmission clutch modulating valves on selected speed clutch and selected direction clutch. Output signal energizes selected modulating valve solenoids. Energized transmission clutch modulating valves electronically modulate oil pressure for selected clutches. Powertrain ECM can request automatic shifts.

e. Powertrain ECM uses these input signals to ensure steady clutch engagement: engine speed sensor, torque converter output speed sensor, transmission speed sensors, and transmission oil temperature sensor.

f. Powertrain ECM main functions include: neutral start, manual shift, automatic shift, transmission neutralizer, parking brake, backup alarm, secondary steering, ride control, speed limiter (if equipped), and diagnostic operation.

2. **Neutral Start Function.**

a. Start relay is powertrain ECM output which turns start solenoid ON and OFF. Start solenoid controls starting motor. When an operator turns engine start switch to START position and conditions are satisfied, powertrain ECM energizes start relay with a +battery signal. Powertrain ECM will not allow engine to start unless transmission direction and shift lever is in NEUTRAL. If transmission direction and shift lever is in NEUTRAL, powertrain ECM activates start relay. Start relay allows starting motor to turn. Powertrain ECM will not allow starter to activate if engine is running. Also, high battery voltage can prevent starter activation.

b. Start relay has a connector with two contacts. One contact receives power from powertrain ECM connector contact J1-1 and one contact returns power to powertrain ECM connector contact J2-1.

c. Start relay Terminal 3 connects to a +battery source. Terminal 4 connects to start solenoid.

3. **Manual Shift Function.**

Table 1. Modulating Valve (Transmission Clutch).

Speed and Direction	Clutch(es) Engaged
Fourth Speed Forward	3 and 2
Third Speed Forward	4 and 2
Second Speed Forward	5 and 2
First Speed Forward	6 and 2
Neutral	3
First Speed Reverse	6 and 1
Second Speed Reverse	5 and 1
Third Speed Reverse	4 and 1
Fourth Speed Reverse	3 and 1

POWERTRAIN - CONTINUED

a. To manually shift transmission, autoshift switch must be in MANUAL position (TM 5-3805-291-10). Shifting transmission is powertrain ECM's main function. Powertrain ECM interprets changes in switch position and shifts transmission accordingly.

b. Operator can set transmission direction with transmission direction and shift lever. Selected gear and direction will be displayed on speedometer/tachometer dashboard display.

c. Transmission direction and shift lever is a sealed unit mounted on steering column which allows operators to select speed range by rotating control lever. Operators can select direction by moving transmission direction and shift lever forward or backward. Transmission will remain in selected direction until lever is moved forward or backward. Transmission will remain in selected speed until lever is rotated to different speed.

d. When transmission downshift switch (TM 5-3805-291-10) is depressed, it signals powertrain ECM to downshift transmission by one speed. If second speed forward or second speed reverse is selected, transmission will shift to first speed when switch is depressed. Transmission will remain in first speed until transmission direction and shift lever is shifted to opposite direction or to NEUTRAL.

e. When engine start switch is turned from OFF to ON, powertrain ECM is activated. When powertrain ECM is first activated, all clutch solenoid modulating valves are de-energized regardless of transmission direction and shift lever or transmission direction control switch position. Powertrain ECM then determines if transmission direction and shift lever is in NEUTRAL and disables transmission if NEUTRAL is NOT selected. Lever must be in NEUTRAL position before direction can be selected. Powertrain ECM activates start relay and allows engine to start if lever is in NEUTRAL. Powertrain ECM allows initial selected speed to be changed if lever is in NEUTRAL.

4. **Automatic Shift Function.**

NOTE

- **If downshift would cause an engine overspeed condition, the powertrain ECM will prevent the downshift from occurring.**
- **The setting of the transmission direction and shift lever will limit the top gear.**

a. Transmission can be shifted automatically. There are two modes of automatic operation: "1-4" and "2-4". Automatic operation mode is represented by two numbers separated by a dash. First number indicates transmission speed when transmission is placed in gear and second number indicates highest transmission speed when machine is traveling.

b. For example, place autoshift control switch in "2-4" position. Machine will automatically shift into second gear when transmission is placed in gear. Transmission will automatically upshift into fourth gear as machine accelerates.

c. Use transmission downshift switch located on lift lever on right side of operator's compartment to downshift transmission (TM 5-3805-291-10). This switch is normally used to downshift from second speed to first speed to load a bucket. Transmission will remain in downshifted gear for three seconds after switch is released, then automatic shifting will resume. If transmission is downshifted to first speed, machine remains there until there is a direction change.

POWERTRAIN - CONTINUED

5. **Transmission Neutralizer Function.**

NOTE

- **When the transmission is neutralized, the readout on the Monitoring Messenger System continues to show the selected speed but the direction will read Neutral.**
- **When the transmission neutralizer is disabled, the neutralizer disable indicator on the dash is activated.**

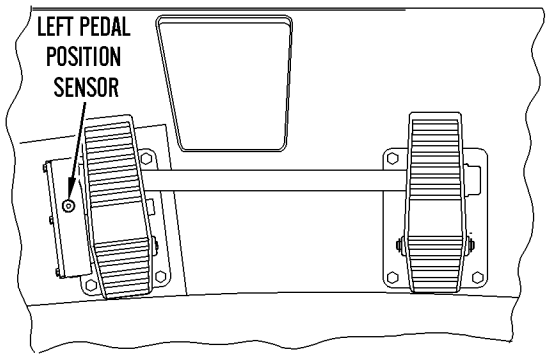

427-C1726

a. Left pedal position sensor is located in the cab in the left brake pedal assembly. Left pedal position sensor is a pulse width modulated (PWM) sensor which informs powertrain ECM of left brake pedal position. When left brake pedal is depressed, left pedal position sensor sends a PWM signal to powertrain ECM, which uses PWM input to neutralize transmission.

b. Transmission neutralizer override soft-switch is an input of powertrain ECM used to decide if transmission neutralizer should be disabled. Transmission neutralizer override switch is a momentary rocker switch.

c. Left pedal position sensor signals powertrain ECM to neutralize transmission if transmission neutralizer is enabled. When machine is started, transmission neutralizer is enabled. When transmission neutralizer override soft switch is depressed and released, transmission neutralizer is alternately enabled or disabled.

d. Transmission is neutralized by de-energizing selected direction clutch solenoid. Selected speed clutch solenoid is still energized. Engine rpm will increase when transmission is neutralized to no-load condition from transmission. This allows full hydraulic power for bucket operation.

POWERTRAIN - CONTINUED

6. **Parking Brake Function.**

   a. Parking brake function prevents an operator from operating machine while parking brake is engaged. Driving through parking brake causes accelerated wear to parking brake friction components.

   b. When parking brake control is disengaged, transmission will shift normally. When parking brake control is engaged, transmission will not shift out of NEUTRAL to first speed forward or first speed reverse. If transmission is in first speed forward or first speed reverse and parking brake is moved to engaged position, transmission will shift into NEUTRAL. All transmission clutch modulating valves are de-energized. If transmission is in second speed forward or third speed forward, transmission will remain engaged.

   c. Parking brake function activates a warning on Messenger whenever parking brake is engaged. Parking brake indicator will flash (TM 5-3805-291-10).

   d. When parking brake is engaged and transmission is in first speed, powertrain ECM shifts transmission to NEUTRAL and sends parking brake status to Messenger via CAT Data Link. When parking brake is engaged, alert indicator for parking brake flashes on Messenger (TM 5-3805-291-10). If operator selects FORWARD or REVERSE and parking brake is engaged, Messenger causes parking break indicator and action lamp to flash, and action alarm to sound.

   e. **Driving Through Parking Brake.**

      (1) Driving through parking brake will damage parking brake and other components. Always come to a complete stop before applying parking brake.

      (2) Powertrain ECM will allow operator to drive through parking brake. Machine should be moved only for a short distance.

      (3) To drive through parking brake, operator must select first speed forward or reverse, and move transmission shift lever to NEUTRAL, then move transmission shift lever to previous selected direction.

7. **Backup Alarm Function.** Backup alarm function alerts surrounding personnel that machine is backing up. Backup alarm is an output of powertrain ECM, which activates backup alarm relay when transmission shift lever is in REVERSE. Backup alarm relay then activates backup alarm. Backup alarm receives a +battery signal from powertrain ECM when backup alarm is activated. Backup alarm is connected to powertrain ECM connector contact J1-12 of powertrain ECM.

8. **Secondary Steering.** Secondary steering system provides steering control of machine when primary steering system has failed. Secondary steering system is intended for emergency use only.

POWERTRAIN - CONTINUED

9. **Ride Control Function.**

   a. Ride control is enabled by a programmable parameter via Electronic Technician (ET). Ride control is enabled when operator places ride control switch in ON or AUTO position (TM 5-3805-291-10). In ON position, ride control is activated at all times and powertrain ECM continuously energizes ride control solenoid. This mode should only be used when machine is being serviced. Never operate machine with ride control switch in ON position. In AUTO position, ride control is activated when machine ground speed increases above approximately 6 mph (10 kph). In AUTO position, ride control is deactivated when machine ground speed is below approximately 5.5 mph (8.9 kph). Default speed can be changed in ET configuration screen.

   b. Three ride control solenoids are powertrain ECM outputs which turn ride control system ON and OFF. When ride control is disabled, number one and number three ride control solenoids are de-energized and number two ride control solenoid is energized. When ride control is enabled, number one and number three ride control solenoids are energized one second after number two ride control solenoid is de-energized. Delay time can be changed in ET ride control equalization pressure time parameter.

   c. All ride control solenoids have a connector with two contacts. Number one ride control solenoid receives power from powertrain ECM connector contact J2-5. Number two ride control solenoid receives power from powertrain ECM connector contact J2-6. Number three ride control solenoid receives power from powertrain ECM connector contact J2-3. All ride control solenoids return power to powertrain ECM connector contact J2-4.

NOTE

- **Speed limiter software will not prevent a machine from exceeding the speed limit during downhill travel because weight of machine pushes machine.**
- **Use same gear (or lower) to go down a grade that would be used to go up same grade.**

10. **Speed Limiter.** Speed limiter software allows an operator to limit maximum ground speed for a machine operating on a level surface. Speed limiter software uses these inputs to control machine ground speed: engine speed, machine acceleration, and ground speed.

POWERTRAIN - CONTINUED

11. **Autoshift Control.**

a. For transmission to shift automatically, autoshift switch must be in one of two AUTO positions and left brake pedal must be fully released. Powertrain ECM shifts transmission automatically after evaluating input sent from engine speed sensor, transmission speed sensors, torque converter output speed sensor, and left brake pedal position sensor to regulate transmission shifts. Powertrain ECM does not allow upshifts to a speed higher than speed selected by transmission direction and shift lever. An automatic downshift from second to first speed occurs only if autoshift switch is in "1-4" position (TM 5-3805-291-10).

Table 2. Automatic Upshift and Downshift.

Speed Range and Direction Shift	Rpm (Without Freewheel Stator)	Rpm (With Freewheel Stator)
1F to 2F	314	311
2F to 3F	561	555
3F to 4F	993	983
4F to 3F	904	895
3F to 2F	509	505
2F to 1F	288	283
1R to 2R	359	355
2R to 3R	641	635
3R to 4R	1,135	1,123
4R to 3R	1,032	1,022
3R to 2R	582	577
2R to 1R	329	323
The speeds listed are approximate and should be used for reference only.		

b. When transmission downshift switch is depressed, transmission downshift switch signals powertrain ECM to downshift transmission by one speed. Pressing and holding transmission downshift switch signals powertrain ECM to continue to downshift transmission as machine speed decreases. Powertrain ECM delays resuming automatic upshifts for five seconds after transmission downshift switch is released. Automatic upshifts are enabled if transmission direction and shift lever is moved from current direction and left brake pedal is not depressed. Moving transmission direction and shift lever or five-second delay will enable automatic upshifts.

c. When engine start switch is turned from OFF to ON, powertrain ECM is activated. When powertrain ECM is first activated, all modulating valves (transmission clutch) are de-energized regardless of transmission direction and shift lever position. Powertrain ECM then determines if transmission direction and shift lever is in NEUTRAL. If NEUTRAL is not selected, powertrain ECM disables transmission. Transmission direction and shift lever must be returned to NEUTRAL before a direction can be selected. Powertrain ECM activates start relay, allows engine to start, and allows initial selected speed to be changed if transmission direction and shift lever is in NEUTRAL.

POWERTRAIN - CONTINUED

12. **Variable Shift Control.**

    a. Variable shift control uses engine speed to provide optional autoshift points. Powertrain ECM uses position of variable shift control switch (TM 5-3805-291-10) and engine speed to determine transmission autoshift points.

    b. Variable shift control switch has three powertrain ECM inputs and allows an operator to select a range of operation for system.

    c. Variable shift control switch has three settings: STANDARD, INTERMEDIATE, and ECONOMY. ECONOMY position allows powertrain ECM to determine shift points at a lower engine speed. Both other positions increase shift speeds. STANDARD forces transmission to shift at a higher rpm than INTERMEDIATE.

13. **Integrated Braking System.**

    a. Integrated Braking System (IBS) enables operator to downshift transmission by depressing left brake pedal. Downshifting transmission reduces machine ground speed before brakes are actually applied. IBS only changes transmission speed; it does not change transmission direction. IBS neutralizes transmission if these conditions are met:

    - First or second speed is engaged
    - Transmission neutralizer is enabled
    - Left brake pedal is depressed past transmission neutralization point

POWERTRAIN - CONTINUED

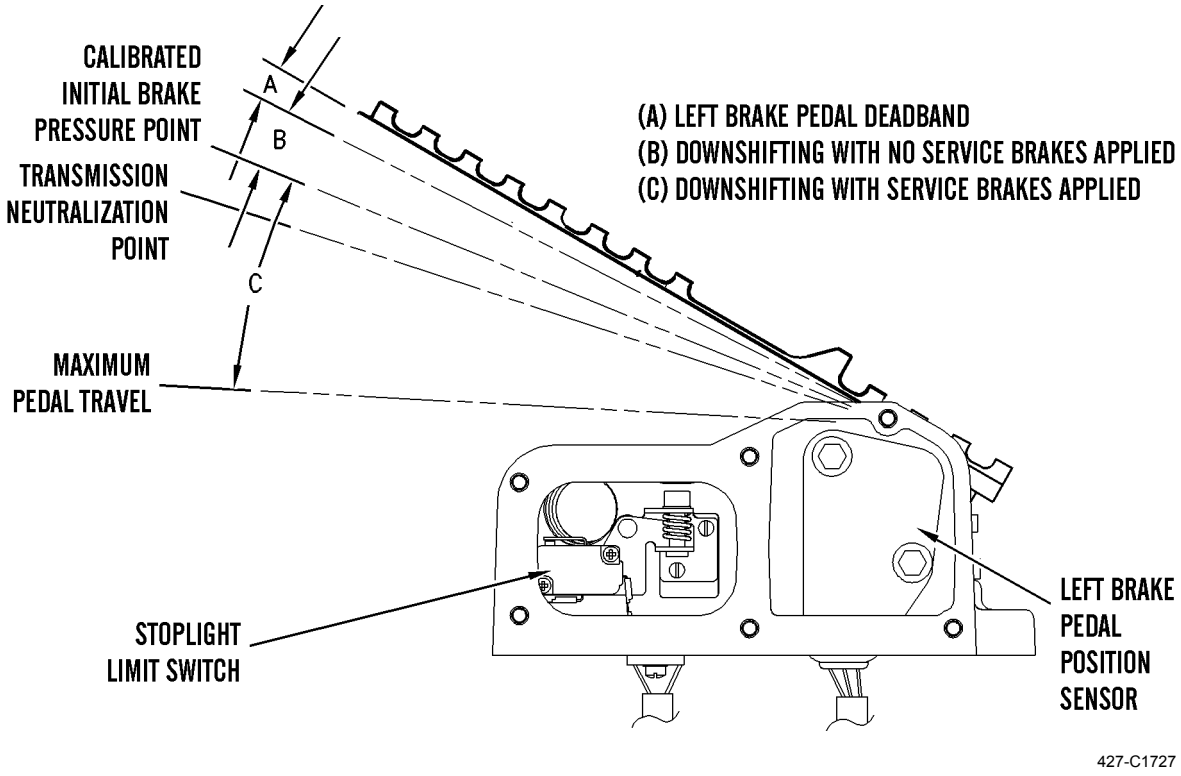

POWERTRAIN - CONTINUED

b. IBS uses these inputs to downshift transmission:

- "Integrated Braking System Manual Mode Enable Status" in powertrain ECM
- Left brake pedal position
- Autoshift switch position
- Actual transmission speed
- Calibrated initial brake pressure point
- Torque converter output speed
- Transmission output speed
- Engine speed

c. IBS is enabled if these conditions are met:

- "Integrated Braking System Manual Mode Enable Status" is set to "Enable"
- Left brake pedal position sensor has been calibrated
- Engine speed is below 2,425 rpm
- Left brake pedal is depressed beyond left brake pedal deadband
- Torque converter output speed sensor, transmission output speed sensors, and left brake pedal position sensors do not show any diagnostic codes

d. **Initial Mode and Normal Mode.**

(1) IBS is in initial mode when operator depresses left brake pedal between deadband and calibrated initial brake pressure point. IBS is in normal mode when operator depresses left brake pedal between calibrated initial brake pressure point and point of maximum pedal travel.

(2) IBS performs these functions when operator depresses left brake pedal in initial or normal mode:

(a) If transmission is in third or fourth speed, transmission will downshift one speed at a time until second speed is reached. Transmission will downshift regardless of autoshift switch position. Each downshift will occur when transmission output speed decreases to shift point for current transmission speed.

(b) Transmission will downshift from second to first speed if autoshift switch is in "AUTO 1-4" position. Transmission will downshift when transmission output speed decreases to "2-1" shift point for initial or normal mode.

(c) If autoshift switch is not in "AUTO 1-4" position, transmission will not downshift from second to first speed unless operator depresses transmission downshift switch. Operator may need to depress switch twice. Machine ground speed determines if transmission downshift switch is depressed once or twice. (Depress switch once if ground speed is below "AUTO 2-1" speed, and twice if ground speed is above "AUTO 2-1" speed.)

(3) After operator releases left brake pedal and pedal returns beyond deadband, these events occur:

(a) If autoshift switch is in MANUAL position, IBS shuts off. Powertrain ECM upshifts transmission sequentially to speed selected by transmission direction and speed control.

(b) If autoshift switch is in any "AUTO" position, IBS shuts off. Transmission resumes automatic control of speed shifts.

POWERTRAIN - CONTINUED

e. **Safe Mode.**

(1) IBS will enter safe mode if engine speed exceeds 2,550 rpm or torque converter output speed exceeds 3,500 rpm. If IBS enters safe mode, IBS will signal powertrain ECM to upshift transmission speed.

NOTE

IBS is disabled if the left brake pedal is released beyond deadband. After IBS is disabled, the powertrain ECM controls the transmission shifts according to normal powertrain ECM logic.

(2) When transmission output speed is less than corresponding safe mode shift point, IBS signals powertrain ECM to downshift transmission speed. IBS will return to initial or normal mode, dependent upon left brake pedal position.

f. **Transmission Neutralizer.**

(1) Transmission neutralizer override switch is only input to transmission neutralizer control. Transmission neutralizer control is enabled when machine is started. Indicator for transmission neutralizer is dark when control is enabled.

(2) Transmission neutralizer control is alternately enabled or disabled when momentary transmission neutralizer override switch is depressed. Control is disabled if there are any diagnostic codes in left brake pedal position sensor.

(3) Transmission neutralizer control uses these inputs: left brake pedal position, engaged transmission speed, transmission neutralization setpoint, transmission neutralizer control status, and machine ground speed.

(4) These conditions must be met for transmission to be neutralized:

(a) First speed must be engaged for transmission mode “AUTO 1-4.”

(b) Second speed must be engaged for all positions of transmission speed switch except “AUTO 1-4.”

(c) Left brake pedal must be depressed beyond transmission neutralization setpoint.

(d) Transmission neutralizer control must be enabled.

(5) Transmission engages after neutralization if left brake pedal is released and travels at least four degrees upward from maximum depressed position. Transmission will be neutralized again if left brake pedal is depressed two degrees from current left pedal position.

(6) Transmission engages after neutralization if transmission neutralizer control is disabled.

14. **Powertrain Electronic Control Module (ECM).**

a. **General.** Powertrain ECM is located on cab back wall to right of operator’s station. Powertrain ECM shifts transmission. Operator input indicates desired transmission speed and direction. Powertrain ECM makes decisions based on input and memory information, sending a corresponding response via outputs. Powertrain ECM inputs and outputs are connected to wiring harness using contact connectors J1 and J2.

b. **Inputs.** Machine has inputs from switches and sensors. Switches provide an open, a ground, or a +battery to implement ECM inputs. Sensors provide a constantly changing signal to powertrain ECM. Inputs into powertrain ECM are listed in Tables 3 and 4.

c. **Outputs.** Powertrain ECM responds to decisions by sending electrical signals via outputs. Outputs can create an action or provide information to powertrain ECM. Outputs for powertrain ECM are listed in Tables 3 and 4.

POWERTRAIN - CONTINUED

d. **Input/Output.** CAT Data Link is used to communicate with other machine ECMs. CAT Data Link is bidirectional, allowing powertrain ECM to receive and send information. CAT Data Link allows information to be shared with other electronic controls. A Module Identifier (MID) is assigned to every electronic control using CAT Data Link. Powertrain ECM's MID is 081.

Table 3. J1 Connector (Powertrain ECM).

No.	Function	Type
1	Engine Start Switch ON	Switch Input
2	Transmission Output Speed Sensor (+)	Frequency Input
3	Transmission Output Speed Sensor (-)	Frequency Input
4	Transmission Output Speed Sensor (+)	Frequency Input
5	Transmission Output Speed Sensor (-)	Frequency Input
6	Unused(1)	-
10	CAT Data Link (+)	Input/Output
12	Backup Alarm	Solenoid Output
13	Battery 1 (-)	Ground
15	Torque Converter Output Speed Sensor (+)	Frequency Input
16	Torque Converter Output Speed Sensor (-)	Frequency Input
20	CAT Data Link (-)	Input/Output
22	Transmission Oil Temperature Sensor	Output
23	Battery 2 (-)	Ground
27	ECM Location Code 2	Ground
29	Torque Converter Temperature Sensor	
30	Front Axle Oil Temperature Sensor	
31	Battery 1 (+)	Power
32	ECM Location Code Enable	Ground
33	Autoshift Control Switch (2-4)	Switch Input
34	Autoshift Control Switch (MANUAL)	Switch Input
35	Autoshift Control Switch (1-4)	Switch Input
39	Battery 2 (+)	Power
40	First Gear Switch	Switch Input
41	Second Gear Switch	Switch Input

POWERTRAIN - CONTINUED

Table 3. J1 Connector (Powertrain ECM) - Continued.

No.	Function	Type
42	Third Gear Switch	Switch Input
43	Fourth Gear Switch	Switch Input
45	Sensor Return (+8V)	Sensor Return
47	Battery 3 (+)	Power
48	Clutch 6 (First Gear)	Solenoid Output
49	Clutch 4 (Third Gear)	Solenoid Output
50	Return for Speed 1-3 Clutches	Solenoid Return
51	Clutch 5 (Second Gear)	Solenoid Output
53	Rear Axle Oil Temperature Sensor	
54	Park Brake Return	
55	Return for Speed 4 Clutch and Reverse Clutch	Solenoid Return
57	Battery 3 (-)	Ground
60	Return for Forward Clutch	Solenoid Return
62	Clutch 2 (Forward)	Solenoid Output
63	Implement Control Downshift Switch (N/O)	Switch Input
64	Transmission Oil Filter Bypass Switch	
65	Clutch 1 (Reverse)	Solenoid Output
66	Clutch 3 (Fourth Gear)	Solenoid Output
68	Park Brake Solenoid	
70	Battery 4 (-)	Ground
(1) All other pins not listed are also unused.		

POWERTRAIN - CONTINUED

Table 4. J2 Connector (Powertrain ECM).

No.	Function	Type
1	Engine Start Switch	Switch Input
3	Ride Control Solenoid 3 (ON/OFF)	Solenoid Output
4	Ride Control	Solenoid Return
5	Ride Control Solenoid 1 (ON/OFF)	Solenoid Output
6	Ride Control Solenoid 2 (ON/OFF)	Solenoid Output
7	Start Relay	Solenoid Output
8	Start Relay/Backup Alarm Return	Solenoid Output
9	Secondary Steering Intermediate Relay	Sinking Driver Output
12	Unused(1)	-
14	Alternator R Terminal	Output
18	Left Hand Brake Pedal Sensor	
23	Transmission Direction Control Switch (Neutral)	Switch Input
28	Transmission Direction Control Switch (Reverse)	Switch Input
36	Secondary Steering Test Switch	Switch Input
37	Primary Steering Pressure Switch (N/O)	Switch Input
38	Primary Steering Pressure Switch (N/C)	Switch Input
40	Remote Input 1 (FNR)	Switch Input
41	Remote Input 3 (FNR)	Switch Input
42	Remote Input 4 (FNR)	Switch Input
43	Remote Input 6 (FNR)	Switch Input
45	Ride Control Switch (ON)	Switch Input
46	Ride Control Switch (AUTO)	Switch Input
47	Low Brake Oil Pressure Switch	
49	Transmission Direction Control Switch (Forward)	Switch Input
50	Engine Speed Tach	
52	Parking Brake Switch (Engaged)	Switch Input

POWERTRAIN - CONTINUED

Table 4. J2 Connector (Powertrain ECM) - Continued.

No.	Function	Type
53	Parking Brake Switch (Disengaged)	Switch Input
58	Park Brake Switch (N/O)	
59	Park Brake Switch (N/C)	
60	Secondary Steering Pressure Switch (N/O)	Switch Input
61	Secondary Steering Pressure Switch (N/C)	Switch Input
67	CAN A +	Power
68	CAN A -	Ground
(1) All other pins not listed are also unused.		

e. **Switches.** Switches can provide three types of switch inputs to powertrain ECM: an open signal, a ground signal, and a +battery signal. Switches are open or closed. When a switch is open, no signal is provided to corresponding powertrain ECM input. When a switch is closed, a ground or +battery signal is provided to corresponding powertrain ECM input.

(1) **Rocker Switch (Ride Control).**

(a) Ride control switch informs powertrain ECM of selected ride control mode. There are three ride control modes: AUTO, ON, and OFF.

(b) Ride control switch has two powertrain ECM input connections at connector J2: input 1 at contact 46 and input 2 at contact 45. When operator selects AUTO, input 1 is closed to ground and input 2 is open. When ON is selected, input 1 is open and input 2 is closed to ground. When OFF is selected, inputs 1 and 2 are closed to ground.

(2) **Rocker Switch (Secondary Steering Test Switch).**

(a) Secondary steering test switch informs powertrain ECM that operator wishes to test secondary steering system. Switch is spring loaded and will return to OFF position when released by operator.

(b) Secondary steering test switch has one input connection to powertrain ECM at connector J2 at contact 36. When operator presses switch, input to powertrain ECM connection J2-36 is closed. When switch is released, input to powertrain ECM connection J2-36 is open.

POWERTRAIN - CONTINUED

(3) **Pressure Switch (Parking Brake).**

(a) Parking brake pressure switch is an input of powertrain ECM which informs powertrain ECM when parking brake is engaged.

NOTE

The normally closed (N/C) circuit and normally open (N/O) circuit of the parking brake pressure switch are used for diagnostic purposes. A circuit failure is present if the two circuits are open at the same time or if the two circuits are grounded at the same time. This fault is then shown on the powertrain ECM display.

(b) Parking brake pressure switch is a double-pole, single-throw pressure switch. When an operator disengages parking brake, normally open (N/O) pole opens and normally closed (N/C) pole closes to ground. This tells powertrain ECM that parking brake is disengaged. When parking brake is engaged, N/O pole is closed and N/C pole is open. This tells powertrain ECM that parking brake pressure switch circuit is operating correctly and parking brake is engaged. No action is required.

(c) N/C pole connects to powertrain ECM connector contact J2-53. N/O pole connects to powertrain ECM connector contact J2-52. Switch common terminal connects to ground.

(4) **Pressure Switch (Primary Steering).**

(a) Primary steering pressure switch is an input of powertrain ECM which informs powertrain ECM of primary steering system status.

(b) Primary steering pressure switch is a double-pole, single-throw pressure switch. When primary steering pressure drops below threshold pressure of 102 ± 15 psi (700 ± 100 kPa), primary steering pressure switch will change. Powertrain ECM will activate primary steering warning indicator and engage secondary steering system. When primary steering system functions correctly, N/O pole is closed and N/C pole is open. No action is required.

NOTE

The normally closed (N/C) circuit and normally open (N/O) circuit of the primary steering pressure switch are used for diagnostic purposes. A circuit failure is present if the two circuits are open at the same time or if the two circuits are grounded at the same time. This fault is then shown on the powertrain ECM display.

(c) N/C pole connects to powertrain ECM connector contact J2-38. N/O pole connects to powertrain ECM connector contact J2-37. Switch common terminal connects to ground.

POWERTRAIN - CONTINUED

(5) **Pressure Switch (Secondary Steering).**

(a) Secondary steering pressure switch is an input of powertrain ECM which informs powertrain ECM of secondary steering system status.

(b) Secondary steering pressure switch is a double-pole, single-throw pressure switch. When secondary steering pressure switch indicates pressure in secondary steering system, switch will change. Powertrain ECM will activate secondary steering warning indicator and set EMS warning level to Category 3. When secondary steering system functions correctly, N/O pole is closed and N/C pole is open.

NOTE

The normally closed (N/C) circuit and normally open (N/O) circuit of the secondary steering pressure switch are used for diagnostic purposes. A circuit failure is present if the two circuits are open at the same time or if the two circuits are grounded at the same time. This fault is then shown on the powertrain ECM display.

(c) N/C pole connects to powertrain ECM connector contact J2-61. N/O pole connects to powertrain ECM connector contact J2-60. Switch common terminal connects to ground.

(6) **Engine Start Switch.**

(a) Engine start switch is an input of powertrain ECM which informs powertrain ECM of an attempt to start engine. Powertrain ECM then initiates neutral start function.

NOTE

- **When the engine start switch is initially turned to the START position, the switch will not return to the START position from the ON position. The switch must be turned to the OFF position first before it can be turned to the START position.**
- **When the engine start switch is in the ON position, a +battery signal is sent to connector contact J1-1. This activates the powertrain ECM.**

(b) During normal machine operation, start terminal of engine start switch is open. When engine start switch is turned to START position, start terminal closes to +battery and +battery voltage is present at powertrain ECM connector contact J2-1. When all starting conditions are satisfied, powertrain ECM sends a +battery signal to start relay connect contact J2-7 and engine cranking begins.

(7) **Switch (Transmission Direction and Shift Lever).** Switches in transmission direction and shift lever are powertrain ECM inputs which send information to powertrain ECM about selected speed and direction. Switches close direction/speed inputs to ground on powertrain ECM.

(8) **Switch (Transmission Downshift).** Downshift switch signals powertrain ECM to downshift transmission by one speed. To downshift, operator depresses downshift switch. Switch has one input connection to powertrain ECM on connector J1: downshift N/O at contact 63. When operator presses downshift switch, downshift N/O circuit is closed to ground. When downshift switch is not activated, downshift N/O circuit is open or floating.

(9) **Rotary Switch (Autoshift Control).** Autoshift switch tells powertrain ECM desired shift mode, AUTO or MANUAL. Switch has three input connections to powertrain ECM on connector J1. Two switch contacts are used for diagnosing a switch failure. A circuit failure is present if all three switch contacts are open simultaneously, or if any two switch contacts are grounded simultaneously.

POWERTRAIN - CONTINUED

f. **Sensors.** Sensors provide information to powertrain ECM about changing conditions. Sensor signals change proportionally to changing conditions. Powertrain ECM recognizes frequency signals (frequency (Hz) of sensor signal varies as condition changes) and pulse width modulated (PWM) signals (duty cycle of sensor signal varies as condition changes; frequency of this signal is constant).

(1) There are two transmission speed sensors and torque converter output speed sensor on machine. Speed sensors are powertrain ECM inputs. These speed sensors are frequency sensors which produce a signal (Hz) which varies as conditions change. Sensor generates an approximate sine wave signal from gear teeth as gear teeth pass sensor. Sensor produces a signal equal to one pulse per gear tooth. This signal is sent to powertrain ECM, which measures signal frequency to determine speed. With dual sensors, powertrain ECM receives signals from speed sensors and uses difference in input from speed sensors to determine system direction. Powertrain ECM uses speed sensor input to regulate transmission shifts. Each speed sensor has two powertrain ECM connections (+ and -).

NOTE

The speed sensors are used to diagnose each other during normal operation. The powertrain ECM periodically checks the value from the speed sensor. If an incorrect value is found, the powertrain ECM will log a service code that indicates a fault for a speed sensor circuit.

(2) Powertrain ECM sends speed information to other ECMs via CAT Data Link. For all speed sensors, connector contact 2 is signal line and connector contact 1 is return line. Two intermediate speed sensors measure intermediate transmission speed. Two transmission speed sensors measure transmission output speed. Powertrain ECM uses pairs of speed sensors to determine rotation direction.

(3) **Temperature Sensor (Transmission Oil).** Transmission oil temperature sensor is a passive sensor. As oil temperature changes, sensor resistance will change. This change in resistance changes voltage seen by powertrain ECM. Powertrain ECM measures transmission oil temperature from voltage of transmission oil temperature sensor. Powertrain ECM uses oil temperature reading to adjust transmission shift times. Powertrain ECM adjusts transmission shift times to provide smooth shifts over various ranges of transmission oil temperature.

(4) **Position Sensor (Left Brake Pedal).**

(a) Position sensor (left brake pedal) sends an input to ECM. Sensor will continuously update powertrain ECM on position of left brake pedal. Left pedal position sends a change in input signal to powertrain ECM, which records change of position, then activates appropriate solenoid valve.

(b) Position sensor (left brake pedal) is a PWM sensor which continuously generates a PWM signal. Duty cycle varies in proportion to lever position. ECM receives PWM signal from position sensor and measures duty cycle to determine lever position. Sensor signal frequency is constant at 500 Hz. Machine electrical system provides +battery voltage to lever position sensor for operating power.

g. **Start Relay.**

(1) Start relay is a powertrain ECM output. Activation and deactivation of start solenoid is start relay's purpose. Start solenoid controls starting motor.

(2) When operator turns engine start switch to START and powertrain ECM decides all starting conditions are satisfied, powertrain ECM activates start relay with a +battery signal at connector contact J2-1. Operator must also have direction switch in NEUTRAL. When all starting conditions are satisfied, powertrain ECM sends a +battery signal to connector contact J2-7 for start relay and engine cranking begins.

(3) Terminal 3 of start relay contacts to a +battery source. Terminal 4 connects to start solenoid.

POWERTRAIN - CONTINUED

15. **CAT Data Link.**

a. CAT Data Link is a communication link used for data movement between electronic controls. CAT Data Link allows communication between powertrain ECM and Messenger. CAT Data Link is bidirectional, allowing powertrain ECM to input and output information. CAT Data Link is not a visible component; it consists of internal powertrain ECM circuits, related harness wiring, and diagnostic connector. CAT Data Link and powertrain ECM are connected at pin-out J1-10 and pin-out J1-20.

b. Powertrain ECM and Messenger use data that are sent back and forth on CAT Data Link. Some of this information is shared:

(1) Powertrain ECM receives service commands from Messenger to change powertrain electronic control system operating modes. Service commands can direct powertrain ECM to read and clear service codes stored in powertrain ECM memory.

(2) Powertrain ECM receives harness code input from Messenger. Powertrain ECM determines sales model of machine from harness code input.

(3) Powertrain ECM sends signals to Messenger, which uses signals to report on powertrain electronic control system status. Messenger alerts operators of status by illuminating corresponding alert indicators.

(4) Powertrain ECM sends this information to Messenger: parking brake status, transmission direction, and transmission speed. Messenger displays selected transmission direction and speed and uses this information to show operator if parking brake is engaged or disengaged (TM 5-3805-291-10).

16. **Torque Converter and Pump Drive Housing.**

a. **General.**

(1) Transmission oil pump and hydraulic implement pump are mounted on torque converter housing. Torque converter housing is between engine flywheel housing and transmission housing.

(2) Gear turns drive gear for transmission oil pump and hydraulic implement pump. Pump drive flange is connected to transmission oil pump by splines. Hydraulic implement pump is fastened to transmission oil pump. Torque converter output gear sends power to input gear for planetary transmission.

b. **Torque Converter (Freewheel Stator).**

(1) Torque converter is located at transmission input end. Housing is bolted to flywheel housing. Output torque from torque converter enters planetary transmission through either Number 1 or Number 2 sun gear. Gear that receives output is dependent upon direction clutch engaged.

(2) Oil for torque converter operation is supplied by transmission oil pump. Oil from transmission oil pump flows to torque converter housing where oil flow is divided. Transmission hydraulic control relief valve and clutch solenoid modulating valves receive divided oil flow. Transmission hydraulic control relief valve regulates P3 torque converter inlet oil to flow to torque converter at a nominal pressure of 80 psi (552 kPa). Torque converter inlet relief valve limits oil flow to torque converter to a maximum pressure of 130 ± 10 psi (900 ± 70 kPa). Torque converter inlet relief valve is located in torque converter housing. Transmission hydraulic control relief valve is located above torque converter inlet relief valve.

(3) Torque converter outlet pressure is 60 psi (414 kPa).

POWERTRAIN - CONTINUED

17. **Transmission Hydraulic System.**

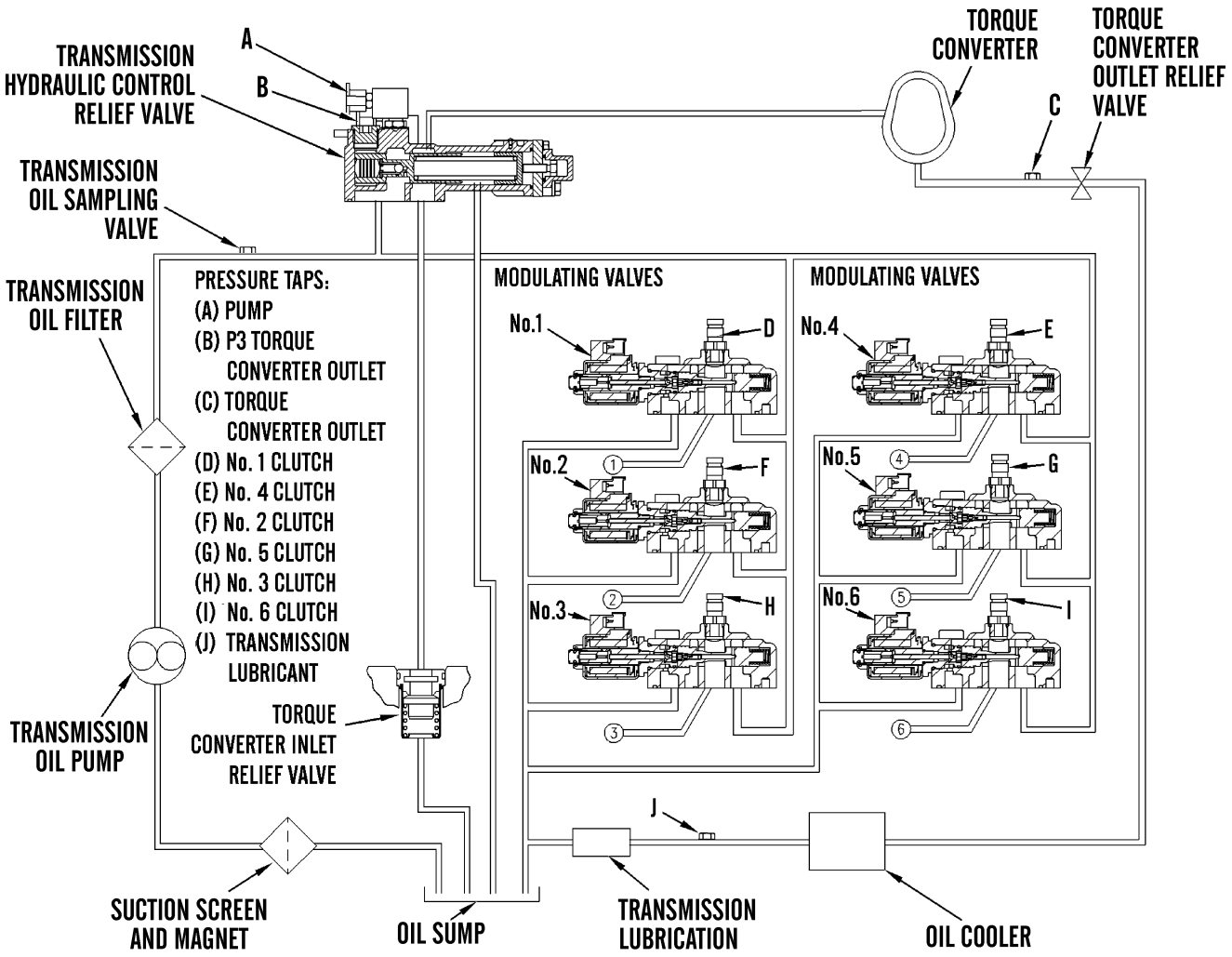

POWERTRAIN - CONTINUED

a. **General.**

(1) Transmission hydraulic system consists of these components: suction screen and magnet, transmission oil pump, transmission oil filter, transmission hydraulic control relief valve, transmission clutch modulating valves for clutches 1 thru 6, torque converter, torque converter inlet relief valve, torque converter outlet relief valve, and oil cooler.

(2) Bottom of output transfer gear case contains oil sump. Transmission oil pump is a one-section gear type positive displacement pump which supplies oil to transmission hydraulic system. Transmission oil pump pulls oil from oil sump. Oil flows through suction screen and magnet and is supplied to pump inlet through a tube mounted to pump inlet and output transfer gear case. Pressurized oil exits pump outlet and flows to externally mounted transmission oil filter. Pressurized oil flows from transmission oil filter through an external hose to torque converter housing. Pressurized oil then flows through internal passages in torque converter housing. Transmission hydraulic control relief valve receives some pressurized oil flow, as do modulating valves for clutches 1 thru 6.

(3) Modulating valves are mounted on top of transmission under cab. Six transmission clutches have an individual modulating valve. To move machine, a direction clutch solenoid and a speed clutch solenoid must be energized. Modulating valves are used to directly modulate oil pressure sent to each individual clutch. Leakage oil and return oil from clutches flows to bottom of transmission. Nonenergized modulating valves return oil flow to bottom of transmission, where it flows to oil sump in bottom of output transfer gear case.

(4) Transmission hydraulic control relief valve controls pressure of oil flowing to clutch modulating valves. Oil flows into transmission hydraulic control relief valve at a maximum pressure of 425 psi (2,930 kPa). Oil pressure overcomes transmission hydraulic control relief valve spring force. Torque converter inlet oil then flows to torque converter at 80 psi (552 kPa).

(5) Torque converter inlet relief valve limits P3 torque converter inlet oil to a maximum pressure of 130 ± 10 psi (900 ± 70 kPa). Torque converter inlet relief valve is located in torque converter housing. Transmission hydraulic control relief valve is located above torque converter inlet relief valve. Transmission hydraulic control relief valve must be removed to access torque converter inlet relief valve.

(6) Outlet oil from torque converter flows to torque converter outlet relief valve, which maintains oil pressure inside torque converter at 60 ± 20 psi (415 ± 140 kPa). Oil flows from torque converter outlet relief valve to oil cooler.

(7) Oil cooler is located on right-hand side of engine. After oil has been cooled, oil flows to transmission, providing lubrication and cooling. Oil flows through internal passages in transmission bearings, gears, and clutches, then to bottom of transmission where it flows to oil sump in bottom of output transfer gear case.

POWERTRAIN - CONTINUED

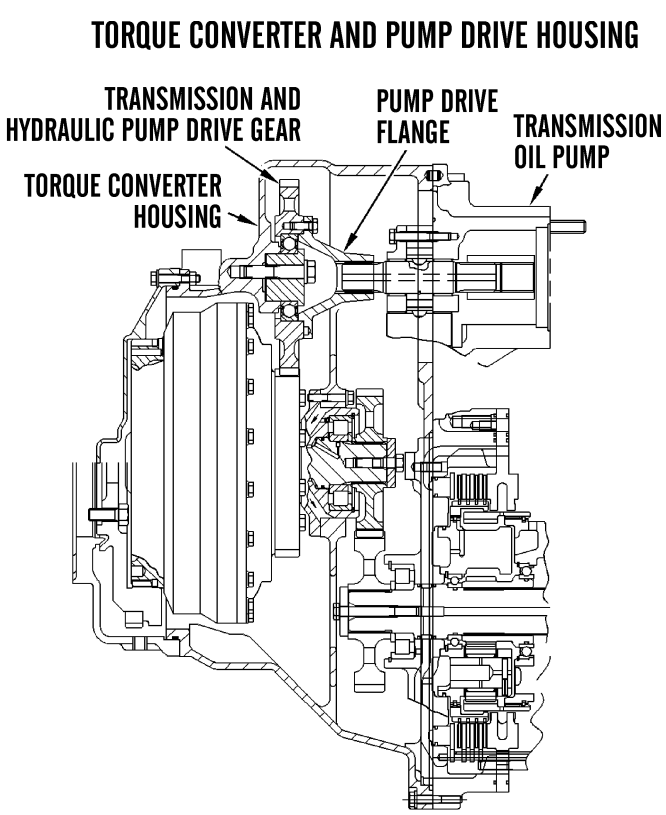

427-C1729

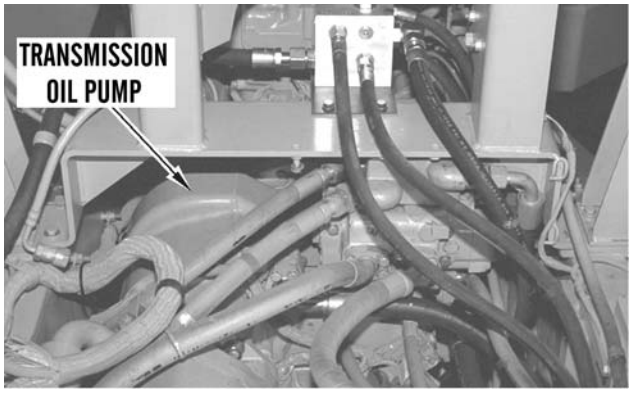

427-C1730

POWERTRAIN - CONTINUED

b. **Transmission Oil Pump.**

(1) Transmission oil pump is mounted on left side of torque converter housing under cab.

(2) Transmission oil pump is a positive displacement type, one-section gear pump bolted to torque converter housing. These pumps are mounted on and driven by transmission oil pump: steering pump, implement pump, and pilot/brake pump.

(3) Pump drive gear is fastened to torque converter impeller and drives transmission and hydraulic pump drive gear. Transmission and hydraulic pump drive gear is fastened to pump drive flange. Pump drive flange is connected to transmission oil pump by splines. Splined shaft of transmission oil pump drives transmission oil pump.

TRANSMISSION OIL PUMP

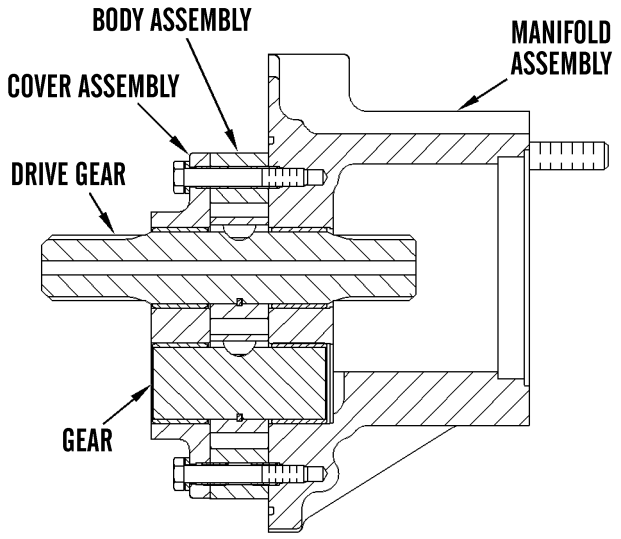

(4) Transmission oil pump main components are: cover assembly, body assembly, manifold assembly, drive gear, and gear.

POWERTRAIN - CONTINUED

c. **Oil Filter (Powertrain).**

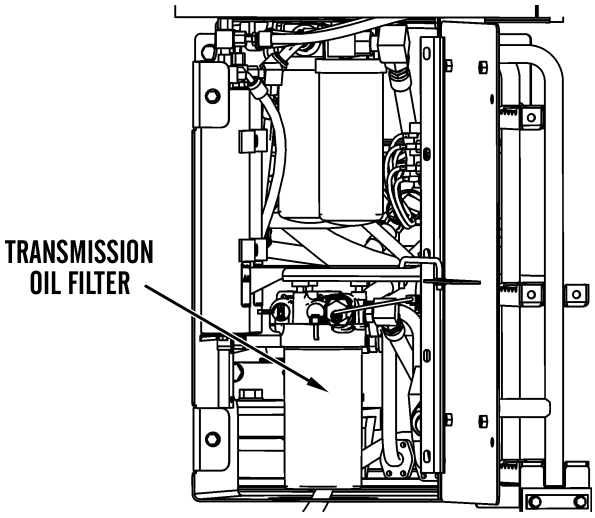

(1) Powertrain oil filter is mounted on right side of machine frame under platform.

(2) Externally mounted oil filter has a bypass valve. If there is a restriction in oil filter or if oil viscosity is high, bypass valve in filter housing will open.

(3) If inlet pressure to oil filter is 50 ± 3 psi (345 ± 21 kPa) greater than outlet pressure, bypass valve will open. When oil does not flow through filter element, debris in oil could cause damage to other hydraulic system components.

(4) Correct maintenance recommendations must be followed to ensure element does not fill with debris. If element is full of debris, flow of clean oil to hydraulic system stops.

POWERTRAIN - CONTINUED

d. **Transmission Oil Cooler.**

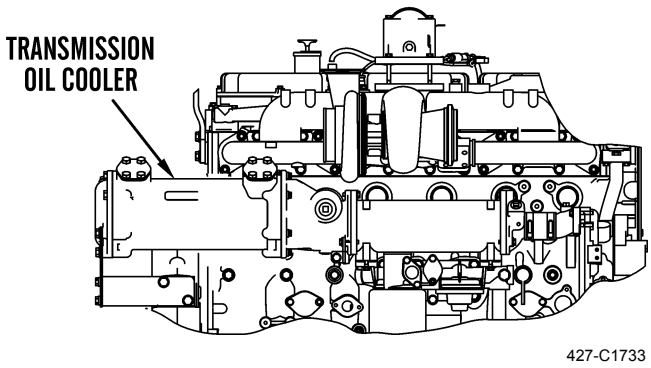

(1) Coolant from engine enters one end of oil cooler and flows through many long oil cooler tubes. Coolant then exits opposite end of oil cooler and returns to engine cylinder block. Coolant is then cooled by engine cooling system.

(2) Transmission system oil with a high temperature comes from torque converter outlet relief valve, then enters oil cooler inlet. Flow of oil is around and along tubes inside oil cooler. As oil flows through tubes, heat is removed from oil and given to engine coolant. After oil flows through oil cooler tubes it flows through bottom outlet with a lower temperature. Components in transmission are then cooled and lubricated by this oil.

THEORY OF OPERATION - CONTINUED 0003 00

POWERTRAIN - CONTINUED

18. **Transmission Lubrication.**

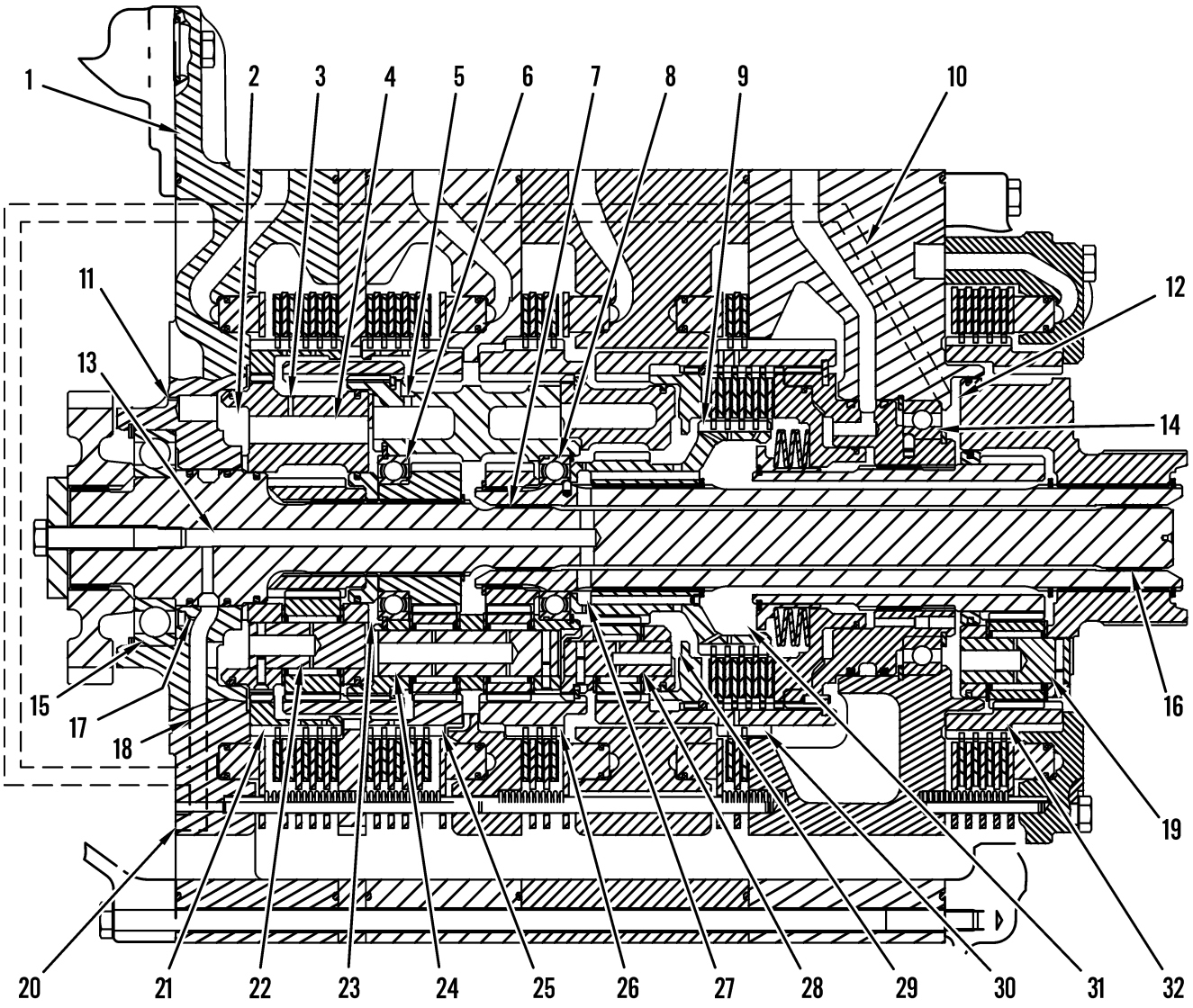

POWERTRAIN - CONTINUED

Transmission Lubrication.

(1) Housing assembly	(12) Oil chamber	(23) Oil chamber
(2) Oil chamber	(13) Passage	(24) No. 2 and No. 3 planetary shafts
(3) Passage	(14) Bearing	(25) Ring gear for No. 2 clutch
(4) Passage	(15) Bearing	(26) Ring gear for No. 3 clutch
(5) Passage	(16) Bearing	(27) Passage
(6) Bearing	(17) Passage	(28) No. 4 planetary shafts
(7) Bearing	(18) Passage	(29) Oil chamber
(8) Bearing	(19) No. 6 planetary shafts	(30) Ring gear for No. 4 clutch
(9) Rotating hub	(20) Oil inlet	(31) Oil chamber
(10) Passage	(21) Coupling	(32) Ring gear for No. 6 clutch
(11) Orifice	(22) No. 1 planetary shafts	

THEORY OF OPERATION - CONTINUED 0003 00

POWERTRAIN - CONTINUED

a. All outlet oil from torque converter oil cooler goes through a line to oil inlet port (20) on housing assembly (1). Oil goes through passage (18) in housing assembly, where some oil flows into passage (17), and from there, flows to bearing (15). Remaining oil flowing through passage (18) flows into oil chamber (2) at front of transmission.

b. Some oil from oil chamber (2) flows to No. 1 planetary shafts (22), which have drilled passages to allow oil to flow to bearings. Oil flows around shaft bearings, then through holes in coupling (21) to help lubricate discs and plates of No. 1 clutch.

c. Remaining oil from oil chamber (2) flows into passage (4) in reverse carrier. Some oil flows through passage (3) to lubricate No. 1 clutch discs and plates. Remaining oil from passage (4) fills oil chamber (23).

d. Some oil from oil chamber (23) flows to No. 2 and 3 planetary shafts (24), which have drilled passages to allow oil to flow to bearings. Oil flows around shaft bearings, then through holes in ring gears (25 and 26) to help lubricate No. 2 and No. 3 clutch discs and plates. Some oil from oil chamber (23) lubricates bearing (6) and flows through passage (5) in carrier to lubricate No. 2 clutch discs and plates.

e. Some oil from passage (18) also flows through passage (13) of input shaft. Next, oil flows into an area between input shaft and output shaft. This oil lubricates bearings (7 and 16). Oil flows from an area between input shaft and output shaft through passage (27). Some of this oil lubricates bearing (8). From passage (27), oil flows into oil chambers (29 and 31). Some oil in chamber (29) flows into No. 4 planetary shafts (28).

f. No. 4 planetary shafts (28) have drilled passages which allow oil to flow to bearings. Oil flows around shaft bearings, then some oil flows to bearing (8). Oil flows from oil chamber (31) through holes in rotating hub (9) to lubricates No. 5 clutch discs and plates. Then, this oil flows through holes in ring gear (30) to lubricate No. 4 clutch discs and plates.

g. Some oil from passage (18) flows through passage (10) to fill oil chamber (12). Oil in oil chamber (12) lubricates bearing (14). Most oil in oil chamber (12) flows to No. 6 planetary shafts (19), which have drilled passages to allow oil to flow to bearings. Oil flows around planetary shaft bearings and through holes in ring gear (32). This oil lubricates No. 6 clutch discs and plates.

h. Restrictions inside transmission keep lubrication pressure of warm oil at approximately 20 psi (138 kPa). All leakage oil from clutches and return lubrication oil goes to bottom of transmission case. This oil goes to main oil reservoir in output gear case.

POWERTRAIN - CONTINUED

19. **Transmission Hydraulic Control.**

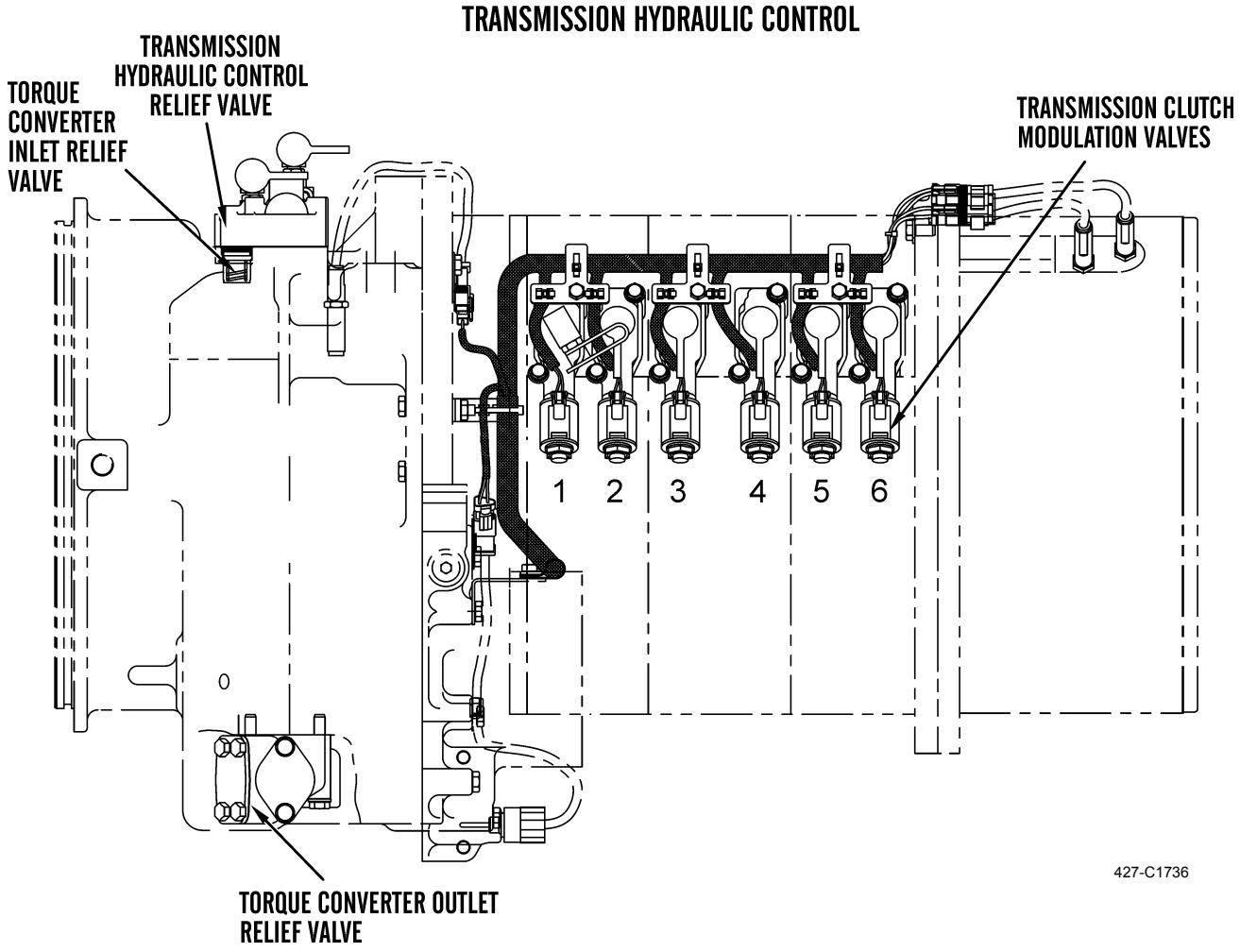

POWERTRAIN - CONTINUED

a. **General.**

(1) Transmission hydraulic control controls oil pressure to torque converter, transmission clutches, and lubrication circuits, as well as controlling oil flow to clutches. Transmission hydraulic control is installed on top of transmission planetary group and on side of torque converter housing. Transmission hydraulic control consists of these components: transmission hydraulic control relief valve, six modulating valves, torque converter inlet relief valve, and torque converter outlet relief valve.

(2) Pressurized oil for transmission hydraulic control operation flows from transmission oil pump to transmission oil filter, then through a hose to torque converter housing oil inlet. Oil flows through internal passages in torque converter housing to supply transmission hydraulic control relief valve with oil. Oil also flows through internal passages in transmission housing to supply six modulating valves with oil.

(3) Six modulating valves are mounted on top of transmission under cab. Six transmission clutches have an individual modulating valve. To move machine, a direction clutch solenoid and a speed clutch solenoid must be energized. Modulating valves are used to directly modulate oil pressure sent to each individual clutch.

(4) Table 5 provides combinations of energized solenoids and engaged clutches for each forward and reverse speed.

Table 5. Solenoid/Clutch Combinations.

Speed Range and Direction	Engaged Clutches and Energized Solenoids
Fourth Speed Forward	3 and 2
Third Speed Forward	4 and 2
Second Speed Forward	5 and 2
First Speed Forward	6 and 2
Neutral	3
First Speed Reverse	6 and 1
Second Speed Reverse	5 and 1
Third Speed Reverse	4 and 1
Fourth Speed Reverse	3 and 1

(5) Transmission hydraulic control relief valve controls oil pressure supplied to modulating valves. Oil pressure overcomes spring force of transmission hydraulic control relief valve. Torque converter inlet P3 oil then flows to torque converter.

(6) Torque converter inlet relief valve limits P3 torque converter inlet oil pressure to a maximum of 130 ± 10 psi (900 ± 70 kPa). Torque converter inlet relief valve is located in torque converter housing. Transmission hydraulic control relief valve is located above torque converter inlet relief valve and must be removed to access torque converter inlet relief valve.

POWERTRAIN - CONTINUED

b. **Modulating Valve (Transmission Clutch).**

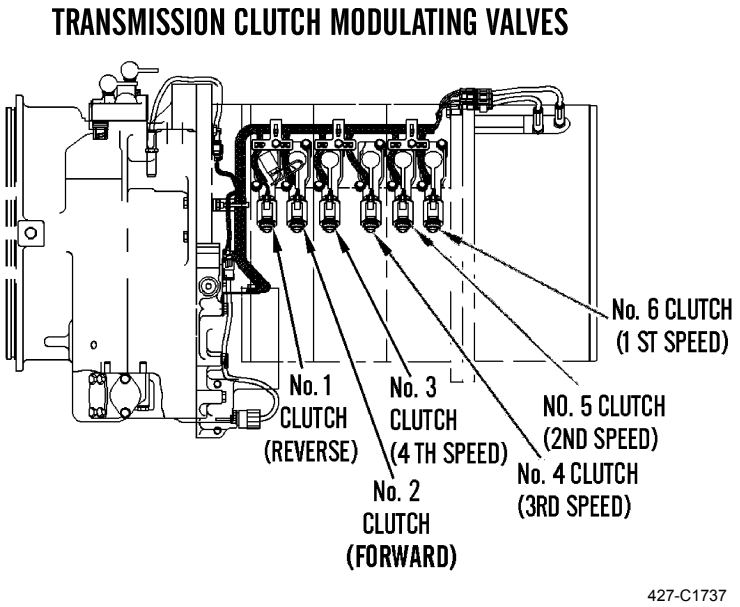

(1) Transmission clutch solenoid modulating valves are mounted on top of transmission under cab. There is one modulating valve for each of six transmission clutches.

(2) Modulating valves are powertrain ECM outputs. Transmission clutch solenoid modulating valves are proportional solenoid valves used by powertrain ECM to directly modulate oil pressure sent to each individual clutch. When an operator selects a direction or speed, powertrain ECM sends a PWM to vary current to clutch solenoid. Distance travelled by solenoid plunger (valve) is proportional to solenoid electrical current. Position of solenoid plunger (valve) controls oil pressure of selected clutch. Amount of current sent to modulating valve regulates amount of oil pressure supplied to selected clutch. When powertrain ECM sends maximum current to modulating valve, oil pressure in clutch is at maximum. When no current is sent to modulating valve, oil pressure in clutch is at minimum.

(3) Powertrain ECM will activate modulating valves selected by operator. Modulating valves (1 and 2) supply oil to direction clutches. Modulating valves (3, 4, 5, and 6) supply oil to speed clutches. To move machine, one speed clutch solenoid and one direction clutch solenoid must be energized. When transmission is in NEUTRAL, only one modulating valve (3) is energized. When transmission is shifted to NEUTRAL, direction clutch solenoid is de-energized and present speed clutch solenoid is energized.

CAUTION

The solenoid coils are not designed to be operated at 24 DCV directly. The powertrain ECM sends a 24V PWM signal at a duty cycle which provides an average voltage of about 12V to the solenoid coils. DO NOT ENERGIZE THE SOLENOID COILS WITH 24 DCV (+battery). The life of the solenoid coils will be drastically reduced if they are energized with 24 DCV (+battery). If the solenoid coils must be energized by a source different from the powertrain ECM, use 12 DCV to energize them.

(4) Modulating valves have a connector with two contacts. One contact receives power from corresponding powertrain ECM connector contact (J1-48, J1-49, J1-51, J1-62, J1-65, and J1-66). Other modulating valve contacts join together. Contacts return power to powertrain ECM connector contacts J1-50, J1-55, and J1-60.

POWERTRAIN - CONTINUED

20. **Transmission Planetary.**

TRANSMISSION COMPONENTS

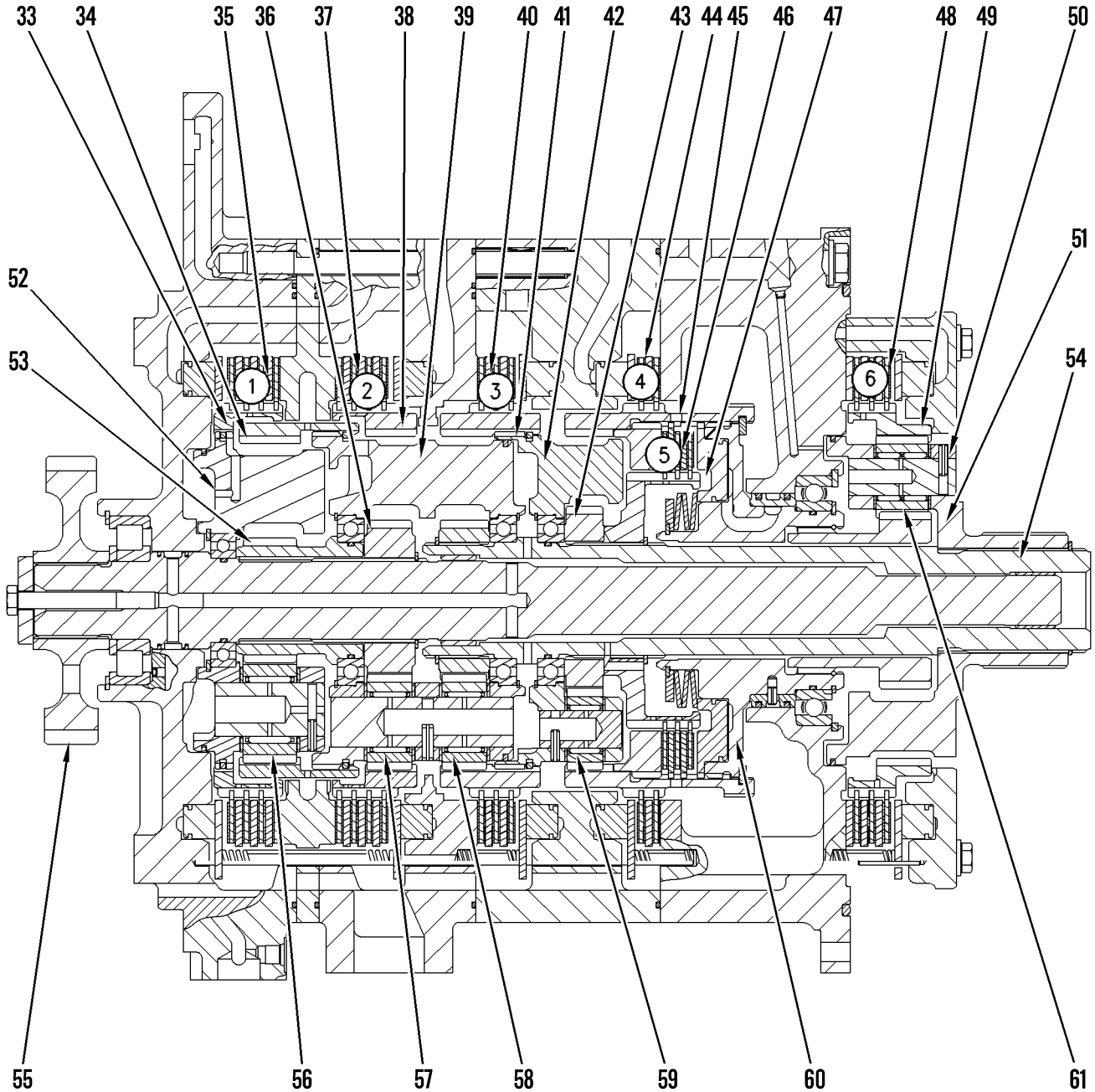

427-C1738

POWERTRAIN - CONTINUED

Transmission Components.

(33) Coupling	(43) No. 4 Sun Gear	(53) No. 1 Sun Gear
(34) Ring Gear for No. 1 Clutch	(44) No. 4 Clutch	(54) Output Shaft
(35) No. 1 Clutch	(45) Ring Gear for No. 4 Clutch	(55) Input Gear and Shaft
(36) No. 2 Sun Gear	(46) No. 5 Clutch	(56) No. 1 Planetary Gears
(37) No. 2 Clutch	(47) Rotating Hub (Sun Gear)	(57) No. 2 Planetary Gears
(38) Ring Gear for No. 2 Clutch	(48) No. 6 Clutch	(58) No. 3 Planetary Gears
(39) No. 2 and No. 3 Carrier	(49) Ring Gear for No. 6 Clutch	(59) No. 4 Planetary Gears
(40) No. 3 Clutch	(50) No. 6 Carrier	(60) Housing Assembly
(41) Ring Gear for No. 3 Clutch	(51) No. 6 Sun Gear	(61) No. 6 Planetary Gears
(42) No. 4 Carrier	(52) No. 1 Carrier	

a. Transmission has six hydraulically activated clutches which provide four forward and four reverse speeds. Transmission direction and shift lever is used to select speed and direction manually.

b. Transmission is fastened between torque converter housing and output transfer gear case. Input power to transmission flows from torque converter through transmission input gear.

c. A speed clutch and a direction clutch must be engaged for power to be sent through transmission. Speed clutch engages before direction clutch. Table 6 lists clutch modulating valves energized for each forward and reverse speed.

POWERTRAIN - CONTINUED

Table 6. Transmission Clutch Modulating Valve Logic.

Speed Range and Direction	Transmission Clutch Modulating Valves Energized(1) (Direction and Speed)
Fourth Speed Forward	2 and 3
Third Speed Forward	2 and 4
Second Speed Forward	2 and 5
First Speed Forward	2 and 6
Neutral	None and 3
First Speed Reverse	1 and 6
Second Speed Reverse	1 and 5
Third Speed Reverse	1 and 4
Fourth Speed Reverse	1 and 3
(1) Engaged clutches are identical to listed energized solenoid valves.	

d. Number 1 clutch and Number 2 clutch are nearest to input end of transmission. Number 1 clutch is reverse direction clutch. Number 2 clutch is forward direction clutch.

e. Number 3, 4, 5, and 6 clutches are speed clutches. Number 3 clutch provides fourth speed. Number 4 clutch provides third speed. Number 5 clutch provides second speed. Number 6 clutch provides first speed.

POWERTRAIN - CONTINUED

21. **Output Transfer Gears.**

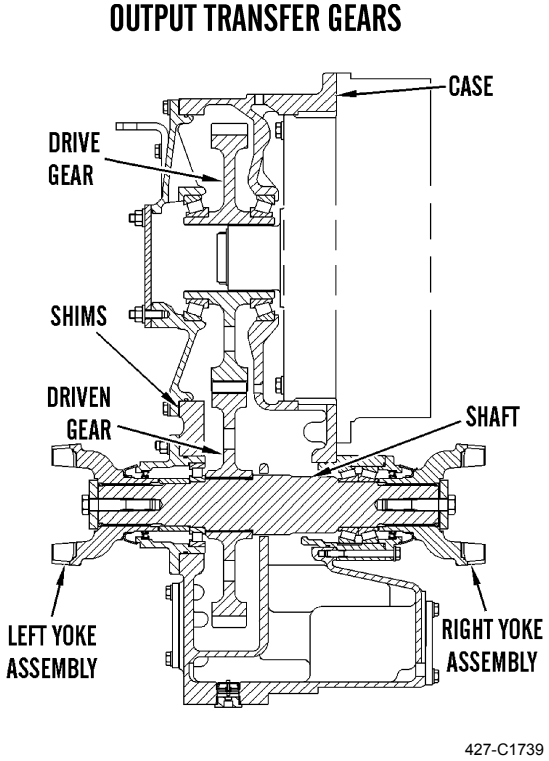

a. **General.**

(1) Output transfer gears are at output side of transmission. Transmission output shaft is connected to drive gear by splines.

(2) Drive gear is engaged with driven gear, which is connected to shaft by splines. Yoke assemblies are connected to shaft by splines. Left yoke assembly is connected to short drive shaft that is connected to rear differential. Right yoke assembly is connected to drive shaft, which is connected to pillow block bearing and front differential.

(3) Power flow in output transfer gears goes from transmission output shaft to drive gear, to driven gear, to shaft. At shaft, power flow divides. Some power goes from left yoke assembly through a drive shaft to rear differential. Some power goes from right yoke assembly through a drive shaft, through bearing cage, to front differential.

(4) Shims are used to adjust end play of gear.

POWERTRAIN - CONTINUED

b. **Magnetic Screen.**

MAGNETIC SCREEN ASSEMBLY

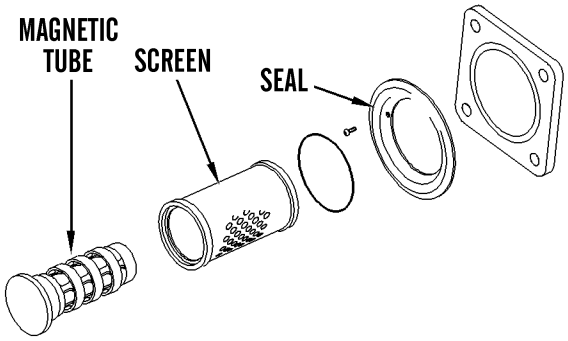

427-C1740

(1) Magnetic screen assembly is located on bottom right side of rear of transfer gear case. Oil from bottom of transfer gear case flows through an inlet passage. As oil flows through screen, foreign particles in oil are stopped by screen. This keeps foreign particles from going into transmission hydraulic system.

(2) After oil flows through screen, oil flows through magnets. Magnets are installed on tube assembly so same magnetic ends are next to each other. Smaller metal particles that pass through screen are captured by magnets. Magnets will not allow metal particles to go with oil through transmission hydraulic system.

(3) Oil then flows through tube assembly to transmission pump.

c. **Output Transfer Gear Lubrication.** Oil enters output transfer gear case through a passage between Number 6 carrier and transmission output shaft. Transfer gear case also serves as a reservoir for transmission circuit. All return oil goes to bottom of transfer gear case. Movement of output transfer gears in oil causes oil to be thrown on all components.

POWERTRAIN - CONTINUED

22. **Limited Slip Differential.**

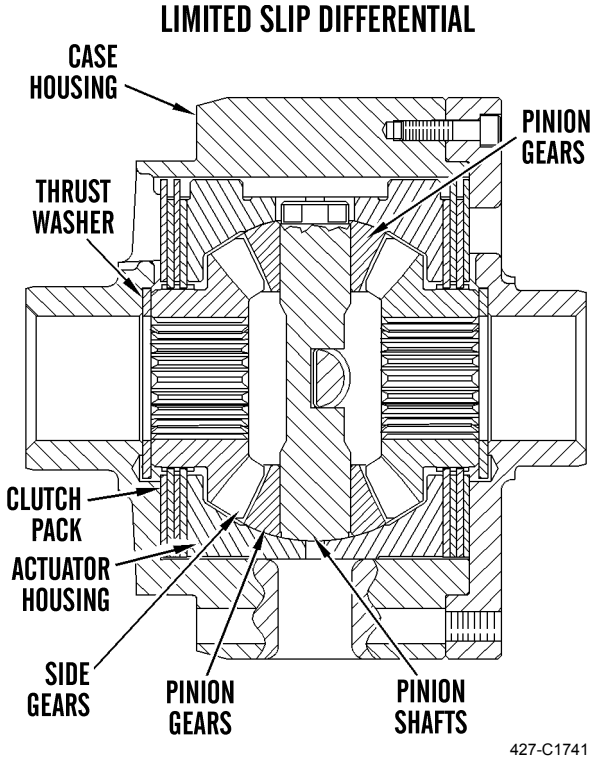

a. **General.**

(1) A limited slip differential combines standard differential components with a special multi-disc clutch arrangement designed to provide equal power to both wheels until ground conditions cause a difference in traction between left wheel and right wheel. Limited slip differential transfers power from wheel with least traction to wheel with most traction.

(2) A limited slip differential is a direct replacement for a standard differential. Limited slip differential is available in both front and rear axle groups.

POWERTRAIN - CONTINUED

DISASSEMBLED LIMITED SLIP DIFFERENTIAL

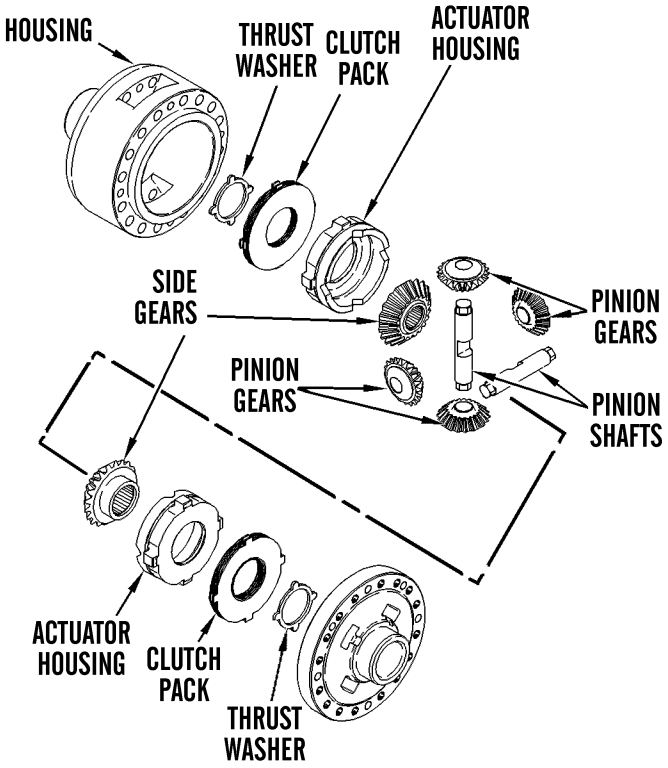

427-C1742

(3) When wheels have equal traction, limited slip differential sends an equal amount of power to both wheels (like a standard differential). One wheel begins to turn faster than another if there is a loss of traction. When this occurs, internal forces present between shaft and actuator housings will react on a 45 degree angle. Internal forces push actuator housings against clutch packs. Clutch pack torque limits loss of traction to wheel that is turning faster.

(4) Limited loss of traction is due to internal differential friction. This effect is produced by two clutch packs arranged symmetrically in differential housing. Limited slip differential is identical on left and right side of two pinion shafts. Limited slip differential contains two thrust washers, two clutch packs, two actuator housings, two bevel gears, and four pinion gears.

(5) Inside side gear splines are connected to sun gears for final drives. Outside side gear splines are meshed with inner friction discs in clutch packs. Side gears send power through sun gears to final drives.

(6) Housing is fastened to bevel gear. Housing has inner grooves which hold outer discs in clutch pack. Clutch pack also has inner discs between outer discs. Inner discs are splined to side gears. Actuator housings fit in same grooves and are held with discs from moving radially. Side gears fit into actuator housings with pinion shafts. Pinion shafts lie in 45 degree notches in actuator housings. Both pinion gears are installed on pinion shafts.

POWERTRAIN - CONTINUED

b. **Limited Slip Differential Operation.**

(1) Limited slip differential operates identically to a standard differential during straight forward or reverse operation. Limited slip differential provides 50 percent torque to each wheel.

(2) When one wheel begins to turn faster than another wheel, clutch pack on faster turning wheel is slipping. This means that only 28 percent input torque is available at that wheel. 72 percent input torque is available to slower turning wheel. For example, inside tire during a turn provides 72 percent of traction.

(3) Advantage of a limited slip differential over a standard differential is shown by difference in torque. A standard differential could only transfer an equal amount of torque from slipping side to opposite side. Limited slip differential can transfer 2.6 times amount of torque to slipping side. Overall advantage of a limited slip differential would be a 45 percent increase in traction to slipping side.

23. **Axle Group.**

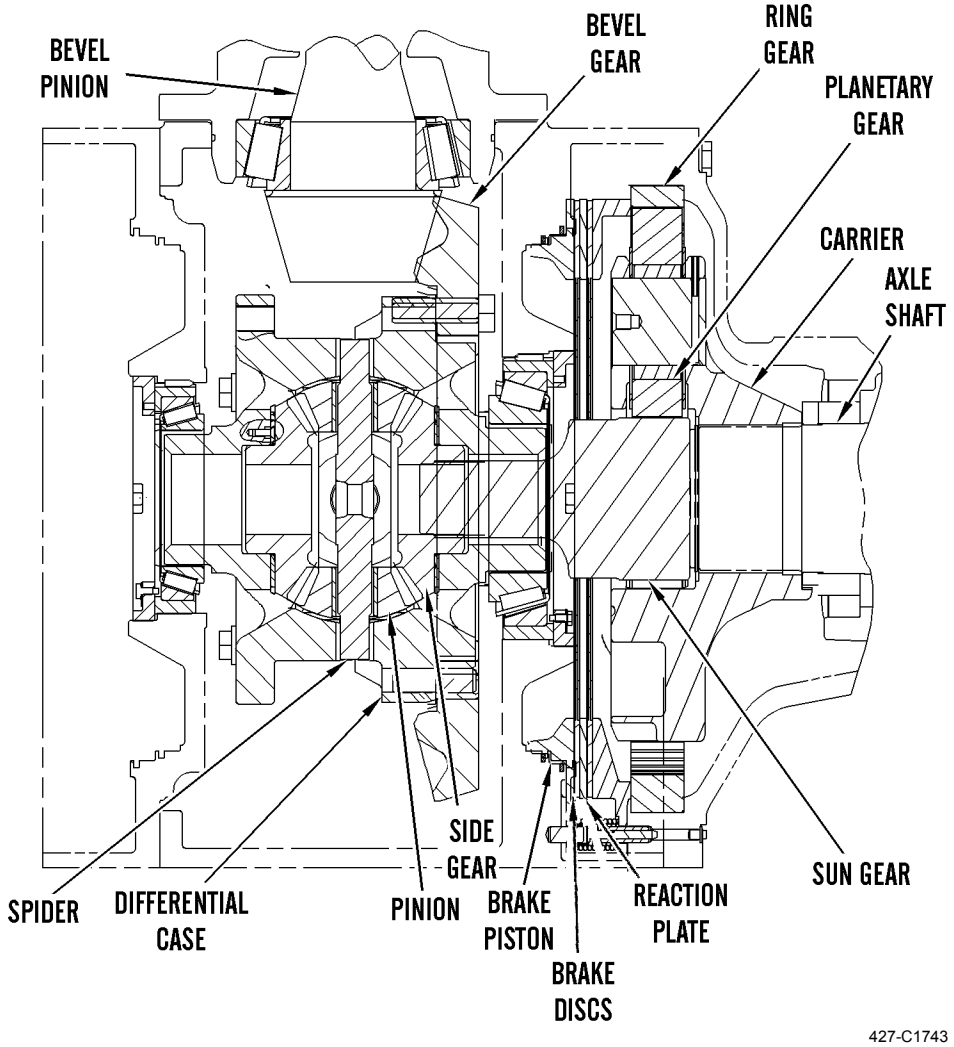

POWERTRAIN - CONTINUED

a. Front and rear axle groups incorporate pinion and bevel gear sets, differential, final drives, and disc brakes. Front and rear axle housings are slightly different, but internal components and operation are identical.

b. Power from transmission output shaft is transferred to front and rear axle groups by drive shafts. Power enters axle groups through bevel pinion. Bevel pinion turns bevel gear. Bevel gear is fastened to differential case.

c. Power is transferred through differential by pinions and side gears to final drives. Final drive main components are a carrier, planetary gears, ring gear, and sun gear. Each final drive has identical components. Final drives cause less speed reduction and torque increase in drive train.

d. Sun gear is splined into differential side gear. Ring gear is pressed into axle housing. Three planetary gears are mounted in carrier. Carrier has internal splines which mesh with splines of axle shaft.

e. As sun gear is driven by differential, planetary gears are forced to revolve around inside of ring gear. Movement of planetary gears around ring gear causes carrier and axle shaft to rotate. This transfers power to rim and tire, which bolt to flange on axle shaft.

f. Axle groups contain service brakes. Brake discs are splined to sun gear shaft. Brake discs rotate at a speed identical to that of sun gear. When brakes are applied, a cavity behind brake piston is pressurized, causing brake piston to clamp brake discs between piston and brake reaction plate.

OIL COOLERS AND COOLING SYSTEM OPERATION

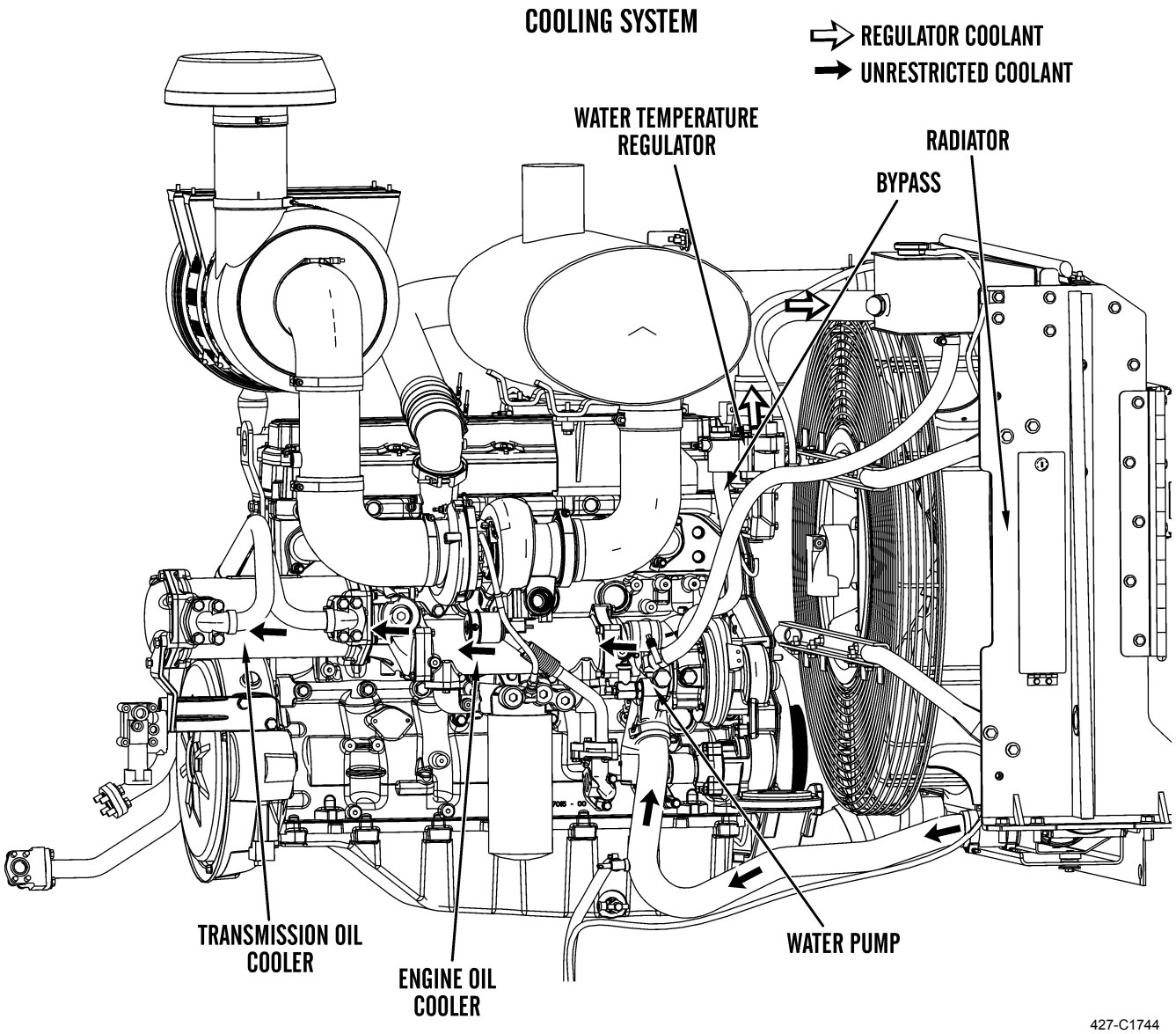

1. **General.**

   a. Water pump draws coolant directly from radiator. Coolant is pumped through engine oil cooler and transmission oil cooler. Then, coolant flows into engine block, around cylinder liners, through water directors, and into cylinder head. Water directors send coolant flow around valves and passages for exhaust gases in cylinder head. Coolant then goes to front of cylinder head and into water regulator housing. When coolant is inside housing, water regulator controls direction of coolant flow within housing.

OIL COOLERS AND COOLING SYSTEM OPERATION - CONTINUED

NOTE

The water temperature regulator is an important part of the cooling system. The water temperature regulator divides the coolant flow between radiator and bypass. Normal operating temperature is maintained. If the water temperature regulator is not installed in the system, the flow of coolant is not regulated. Most of the coolant will bypass the radiator. The engine, the transmission, and the hydraulic oil may overheat during high ambient temperatures.

b. When coolant temperature is below 178°F (81°C), water regulator will be closed. Path for coolant return to radiator is blocked. Coolant flows through bypass and back to water pump.

c. As coolant temperature reaches 181 ± 2°F (83 ± 1°C), water temperature regulator begins to open. Coolant begins to flow to radiator. When coolant temperature reaches 198°F (92°C), coolant is at normal operating temperature. Water temperature regulator is fully open and flow of coolant to bypass is blocked. Path for coolant to radiator is open. Temperature of returned coolant will be reduced as coolant flows through radiator.

OIL COOLERS AND COOLING SYSTEM OPERATION - CONTINUED

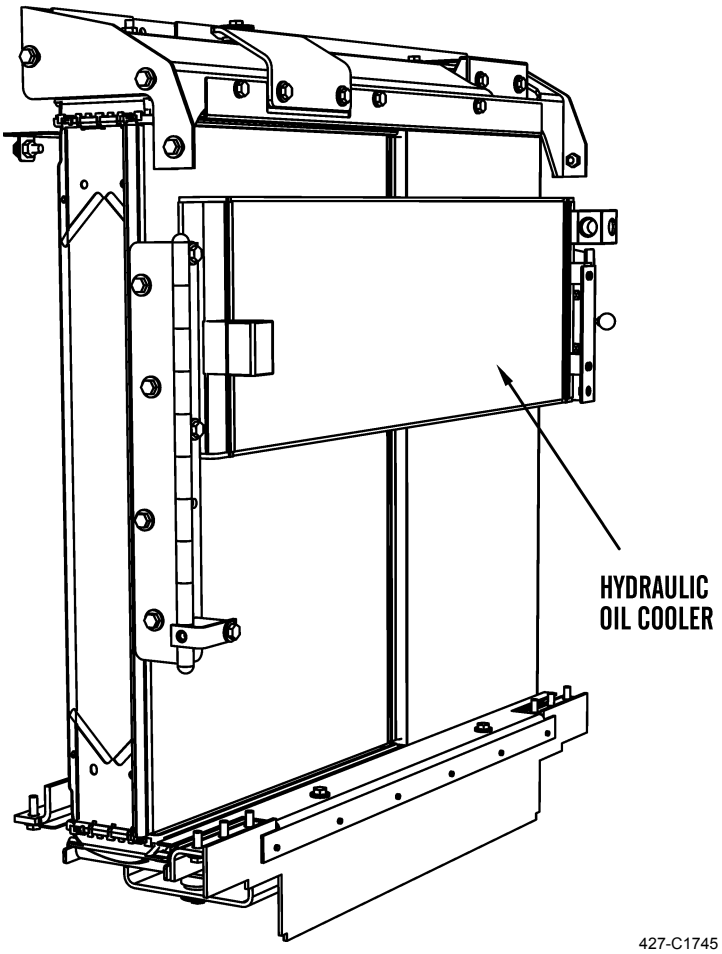

2. **Radiator Assembly.** Radiator assembly is source of coolant for cooling system. Radiator is made up of radiator top tank, radiator bottom tank, and radiator core assemblies. Also, radiator assembly includes air aftercooler and hydraulic air cooler. Radiator top tank accepts return coolant from water regulator housing. Coolant flows from radiator top tank down tubes of radiator core, then into bottom tank. As coolant flows through radiator core, air is pulled around core and coolant temperature is reduced.

OIL COOLERS AND COOLING SYSTEM OPERATION - CONTINUED

3. **Air-to-Air Aftercooler.**

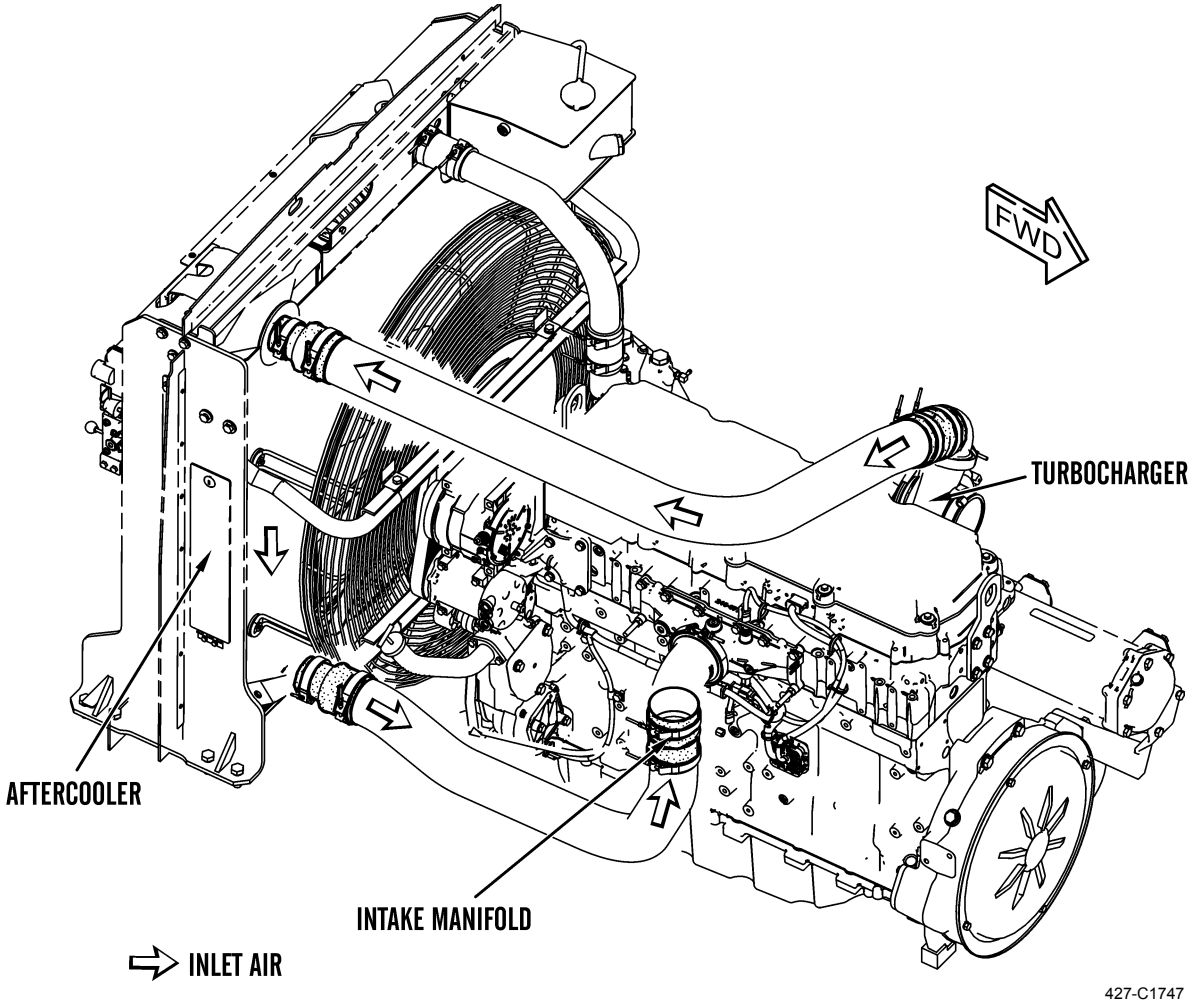

OIL COOLERS AND COOLING SYSTEM OPERATION - CONTINUED

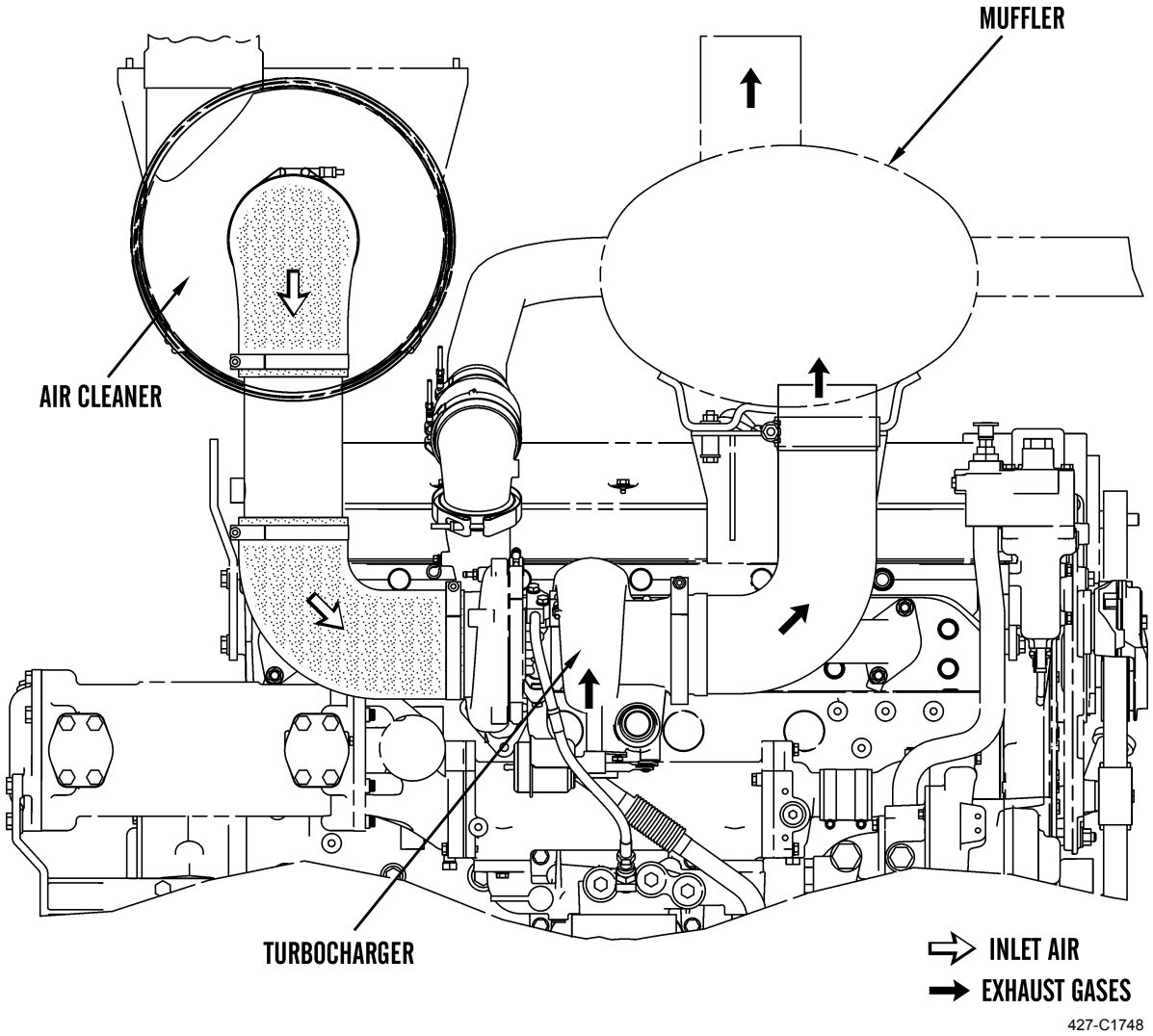

a. Air-to-air aftercooler system (ATAAC system) provides cooled air to air intake manifold on right side of machine. Air is drawn in through air cleaner and into turbocharger. Turbocharger increases air pressure and temperature. Air is sent through tube into aftercooler core. From core, air flows into air intake manifold. The aftercooler cools pressurized air from turbocharger to increase air density and provide more oxygen for combustion.

b. Airflow from inlet port into cylinders is controlled by inlet valves. Each cylinder has inlet and exhaust valves in cylinder head. Inlet valves open when piston moves downward on inlet stroke. When inlet valves open, cooled compressed air from intake manifold is pulled into cylinder. Inlet valves close when piston begins to move upon compression stroke.

c. Air in cylinder is compressed and fuel is injected into cylinder when piston is near top of compression stroke. Combustion begins when fuel mixes with air. Force of combustion pushes piston downward on power stroke. Exhaust valves open and exhaust gases are pushed through exhaust port.

d. Exhaust gases from exhaust manifold flow into turbine side of turbocharger. High pressure exhaust gases cause turbocharger turbine wheel to rotate. Turbine wheel is connected to shaft that drives compressor wheel. Exhaust gases from turbocharger pass through exhaust outlet, through a muffler, and through exhaust stack.

e. Engine efficiency will increase due to cooler inlet air. This helps to provide lowered fuel consumption and increased horsepower output.

OIL COOLERS AND COOLING SYSTEM OPERATION - CONTINUED

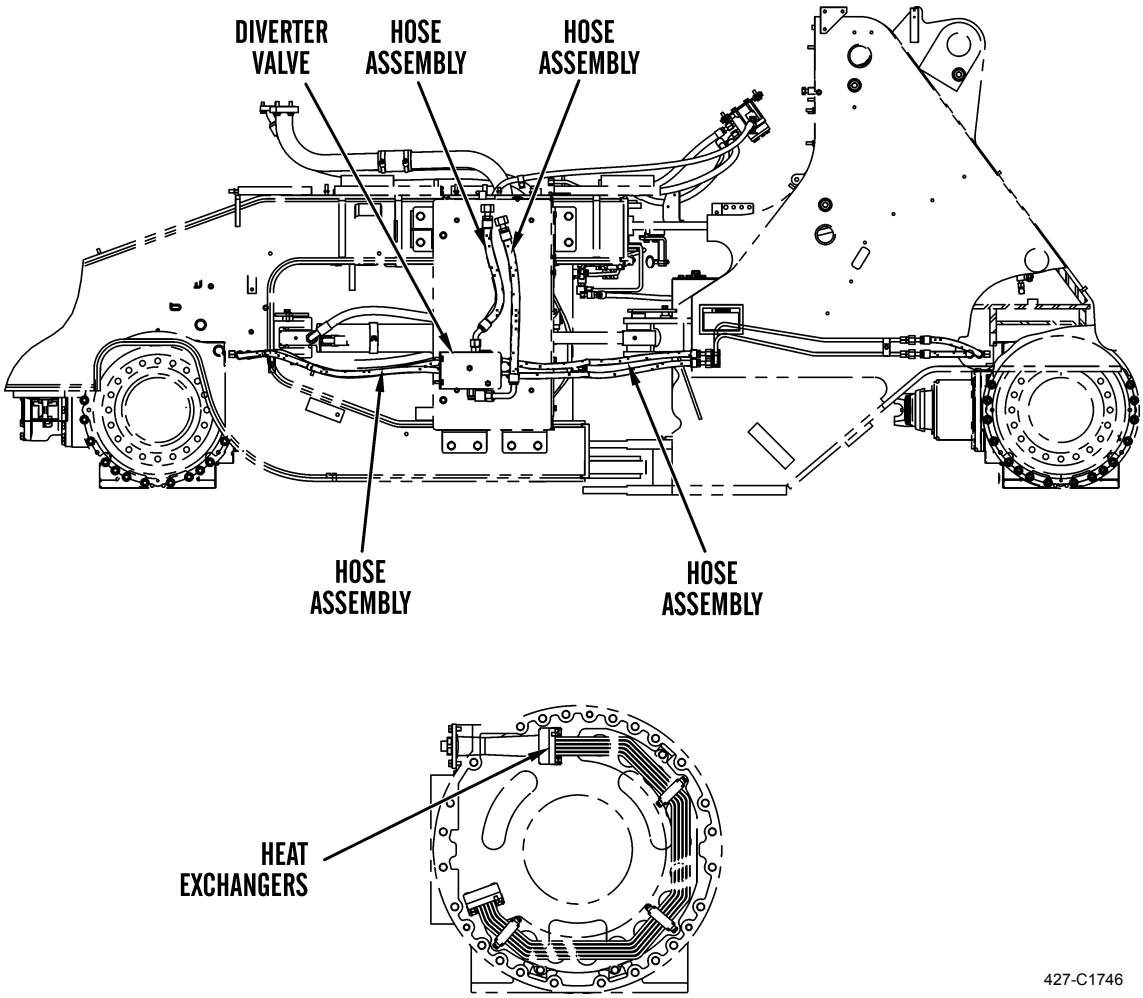

4. **Axle Oil Cooler.**

   a. Axle oil cooler system consists of diverter valve, two heat exchangers, and four hose assemblies.

   b. Rear axle has a temperature set switch which monitors axle oil temperature. Contacts for temperature switch close when axle oil reaches switch actuation temperature of 257 ± 5°F (125 ± 3°C). When temperature switch contacts close, an alert indicator in cab will activate.

   c. Hydraulic oil cooler core is mounted on back of radiator group and continuously supplies cool hydraulic oil to axle oil cooler system. Hydraulic oil flows through upper left hose assembly to diverter valve. At diverter valve, hydraulic oil flows to front and rear axles through two lower hose assemblies.

   d. At each axle, hydraulic oil flows through heat exchangers. Heat from axle oil is transferred to hydraulic oil in heat exchangers. Hydraulic oil then flows through two lower hose assemblies to diverter valve. This oil flows through upper right hose assembly to hydraulic tank.

   e. Two bypass check valves for axle oil cooler system are located in diverter valve. Bypass check valves limit oil pressure in heat exchangers. Bypass check valves are rated at 25 psi (172 kPa) at 0.25 US gpm (0.95 L/min). If bypass check valves open, hydraulic oil bypasses heat exchangers.

BRAKE AND HYDRAULIC FAN SYSTEM

1. **General.**

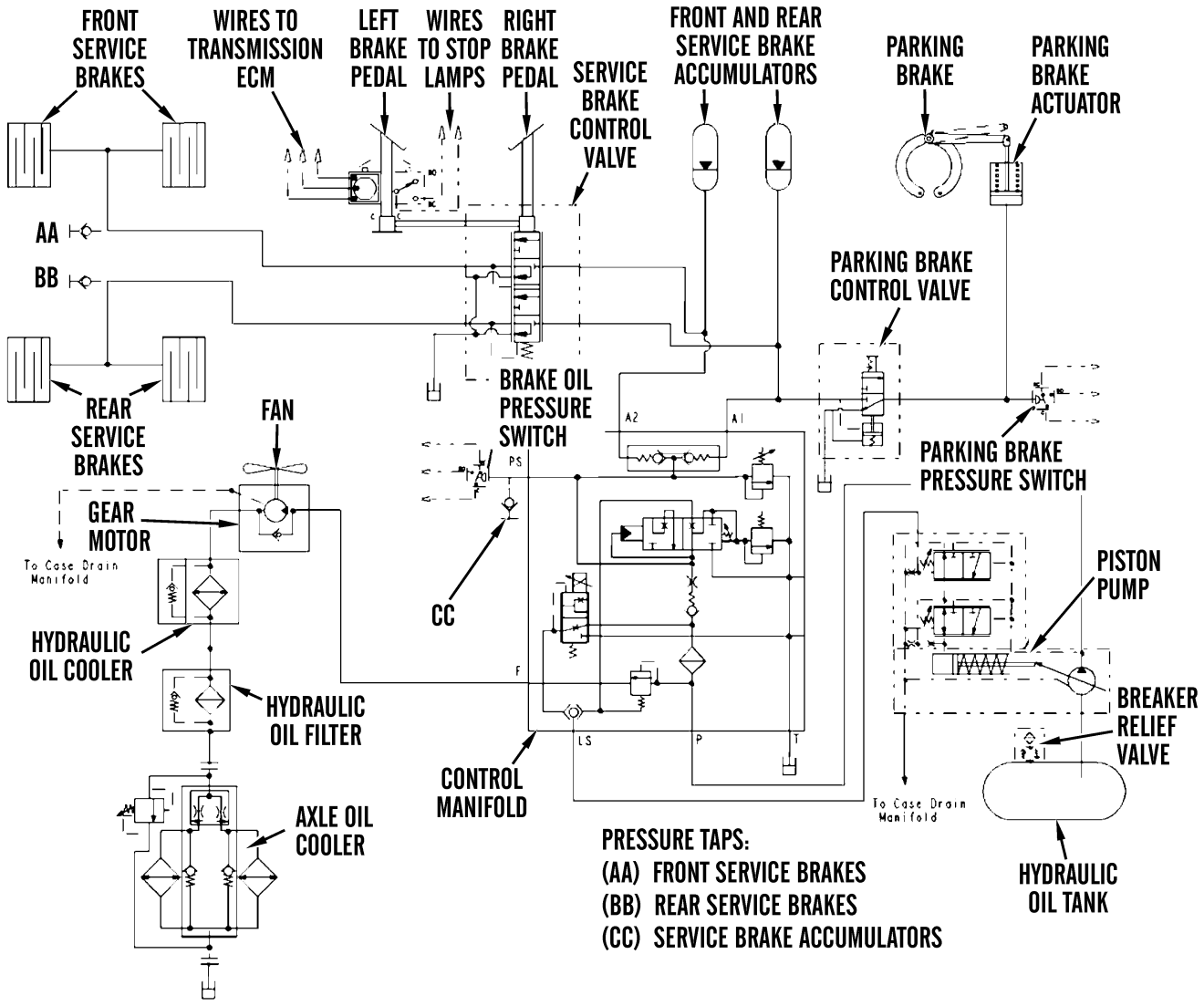

427-C1749

BRAKE AND HYDRAULIC FAN SYSTEM - CONTINUED

a. Piston pump supplies hydraulic oil required to operate brake and hydraulic fan system. Oil flows from pump to control manifold. Control manifold includes a pressure relief valve, a shuttle valve, an inverse shuttle valve, a cut-in valve, a cut-out valve, and a priority valve.

b. Control manifold controls oil flow from pump to front and rear service brake accumulators. Control manifold also controls oil flow to gear motor for hydraulic fan. A pressure relief valve located in control manifold limits oil pressure that flows from pump.

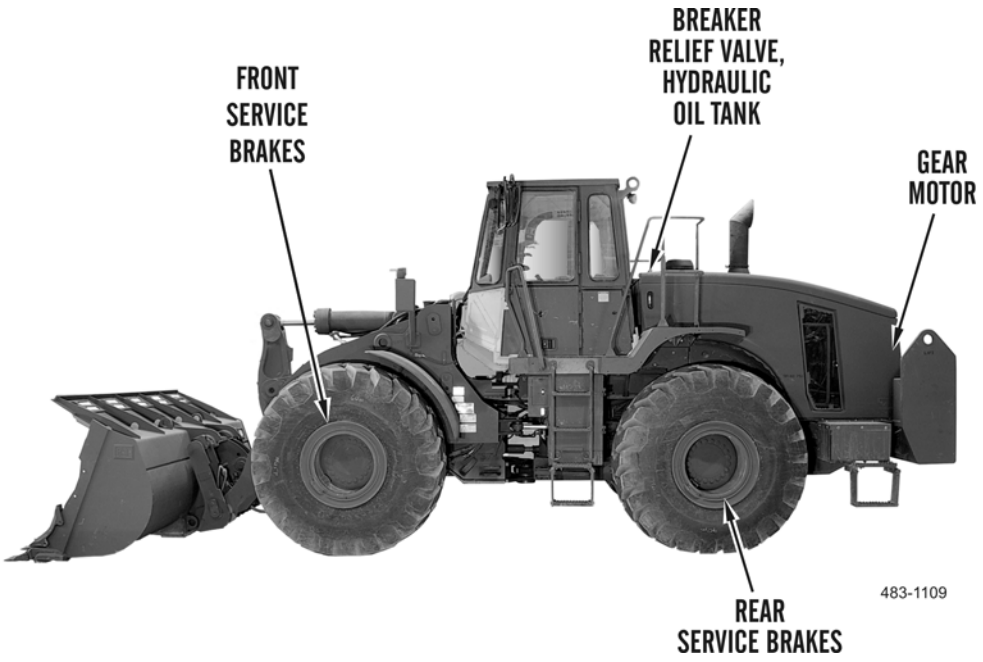

THEORY OF OPERATION - CONTINUED 0003 00

BRAKE AND HYDRAULIC FAN SYSTEM - CONTINUED

c. Control manifold contains a priority valve. When this valve is closed, oil flows to an inverse shuttle valve located in control manifold. Oil then flows to front and rear service brake accumulators. When accumulators are charged, priority valve opens. Oil then flows to gear motor for hydraulic fan system. A port in control manifold connects to brake oil pressure switch. Brake oil pressure switch monitors oil pressure in brake accumulators. If oil pressure in either brake accumulator drops below a minimum threshold, switch actuates.

d. Brake accumulators contain a precharge of dry nitrogen. When oil flows into an accumulator, pressure oil moves piston inside accumulator. Piston moves against charge of dry nitrogen gas. This puts compression on dry nitrogen until oil pressure reaches cut-out pressure. Oil also flows to service brake control valve.

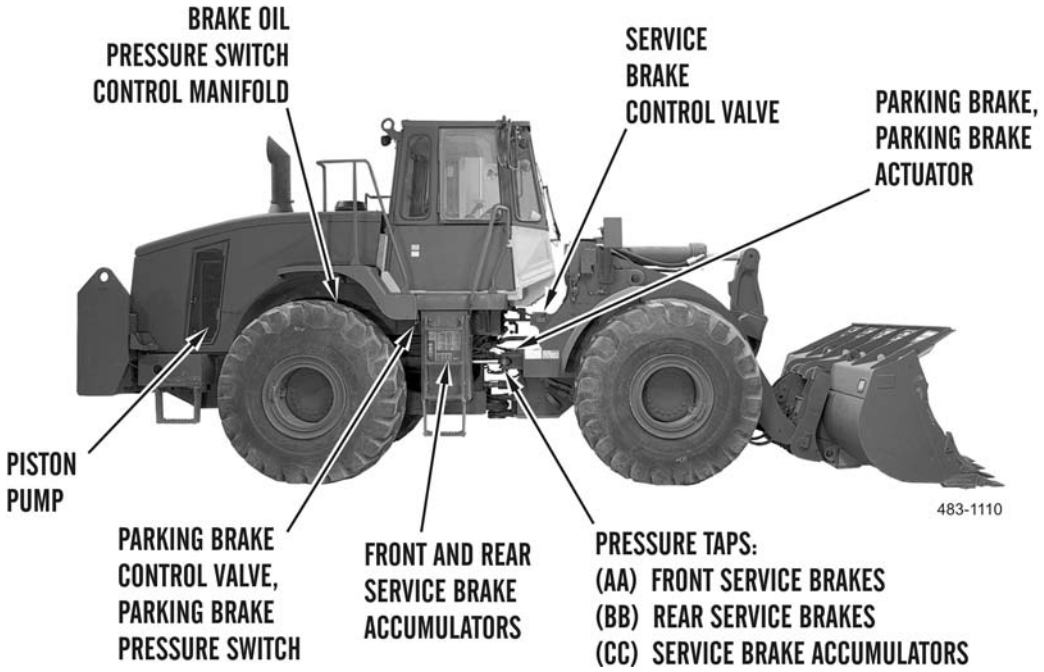

e. Service brake control valve is in circuit from accumulators to service brakes. When a brake pedal is pushed, oil from each accumulator flows to service brakes. Service brakes are then applied.

f. When service brake control valve is released, lines from accumulators are blocked. Brake lines are connected to drain port. This allows service brakes to release. Supply oil is then dumped back into hydraulic oil tank.

g. Each brake application removes a quantity of oil from accumulators. Piston in each accumulator moves toward oil end until oil pressure decreases to cut-in pressure. Control manifold then permits oil from pump to flow to brake accumulators. This occurs until pressure increases to cut-out pressure.

h. Hydraulic circuits for front and rear service brakes are completely separate. Applying force to a brake pedal causes tandem spools in service brake control valve to move. This allows oil from both front and rear accumulators to flow to disc brakes in each axle housing. Oil pressure causes wet disc brakes enclosed in each axle to engage. Heat from brake friction is removed by oil in axle housings.

i. Parking brake control valve connects to rear service brakes accumulator. Parking brake control valve can be actuated by activating parking brake control switch (TM 5-3805-291-10).

BRAKE AND HYDRAULIC FAN SYSTEM - CONTINUED

j. A decrease in brake oil pressure causes pressure switch to actuate. Simultaneously, a spool in parking brake control valve is overcome by spring force in control valve. This spool movement is due to a lack of adequate oil pressure. With no oil pressure in brake system, actuator engages parking brake.

k. If brake oil pressure is lost during machine operation, transmission shifts to NEUTRAL; however, transmission only shifts to NEUTRAL when machine is in either first speed forward or reverse.

l. A drive-through feature allows an operator to engage transmission in either first speed forward or reverse. This can be accomplished by first moving transmission direction selector to NEUTRAL, then moving transmission direction selector to either first speed forward or reverse.

2. **Brake and Hydraulic Fan System Piston Pump.**

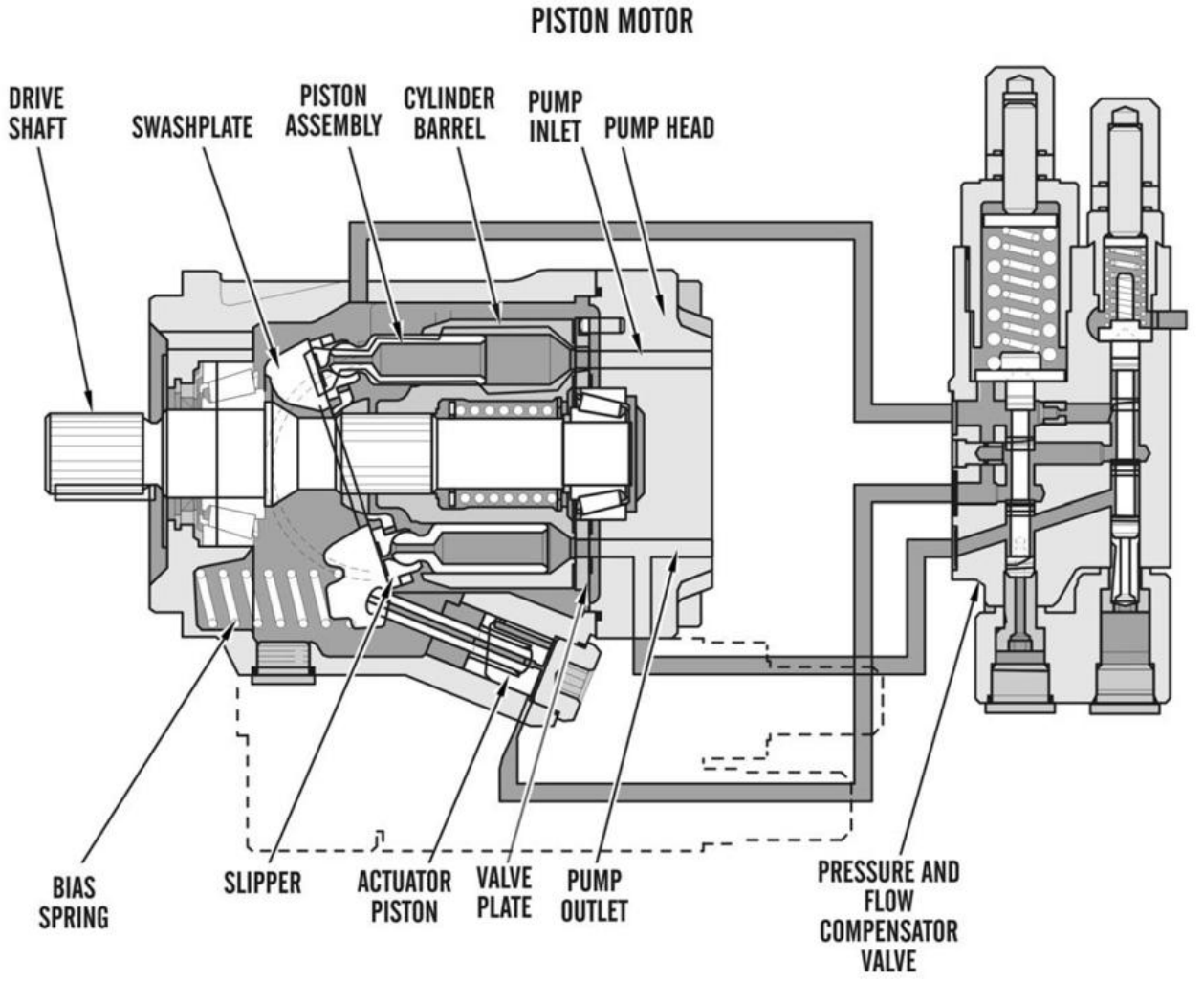

BRAKE AND HYDRAULIC FAN SYSTEM - CONTINUED

a. Pump is a variable displacement, axial piston type pump used to supply oil flow to control manifold. Movement of piston assembly in pump draws oil from hydraulic tank. Oil is pressurized in pump. High pressure oil flows from pump to control manifold to operate brakes and hydraulic fan.

b. When engine is in operation and drive shaft is driven by gears in engine, components that rotate are cylinder barrel, piston assemblies, and slipper. There are nine piston assemblies in cylinder barrel.

c. Oil from hydraulic tank flows into pump head through pump inlet, then through inlet passages in valve plate. When drive shaft rotates, cylinder barrel openings move toward valve plate inlet passages.

d. Each piston assembly inside cylinder barrel is held against swashplate by slipper. Swashplate angle determines amount of oil pushed out of each cylinder barrel. Swashplate can be at any angle between maximum and neutral. Neutral angle is perpendicular with drive shaft. When swashplate is at neutral angle, piston assemblies do not move in and out of rotating cylinder barrel, therefore, no oil is drawn into or pushed out of pump. Pump has zero displacement and zero flow.

BRAKE AND HYDRAULIC FAN SYSTEM - CONTINUED

e. When swashplate is at maximum angle, piston assemblies move in and out of cylinder barrel. Movement of piston assemblies allows maximum amount of oil to be drawn into cylinder barrel. Pump produces maximum displacement.

f. Swashplate angle is controlled by actuator piston. Actuator piston movement is regulated by oil pressure from pressure and flow compensator valve.

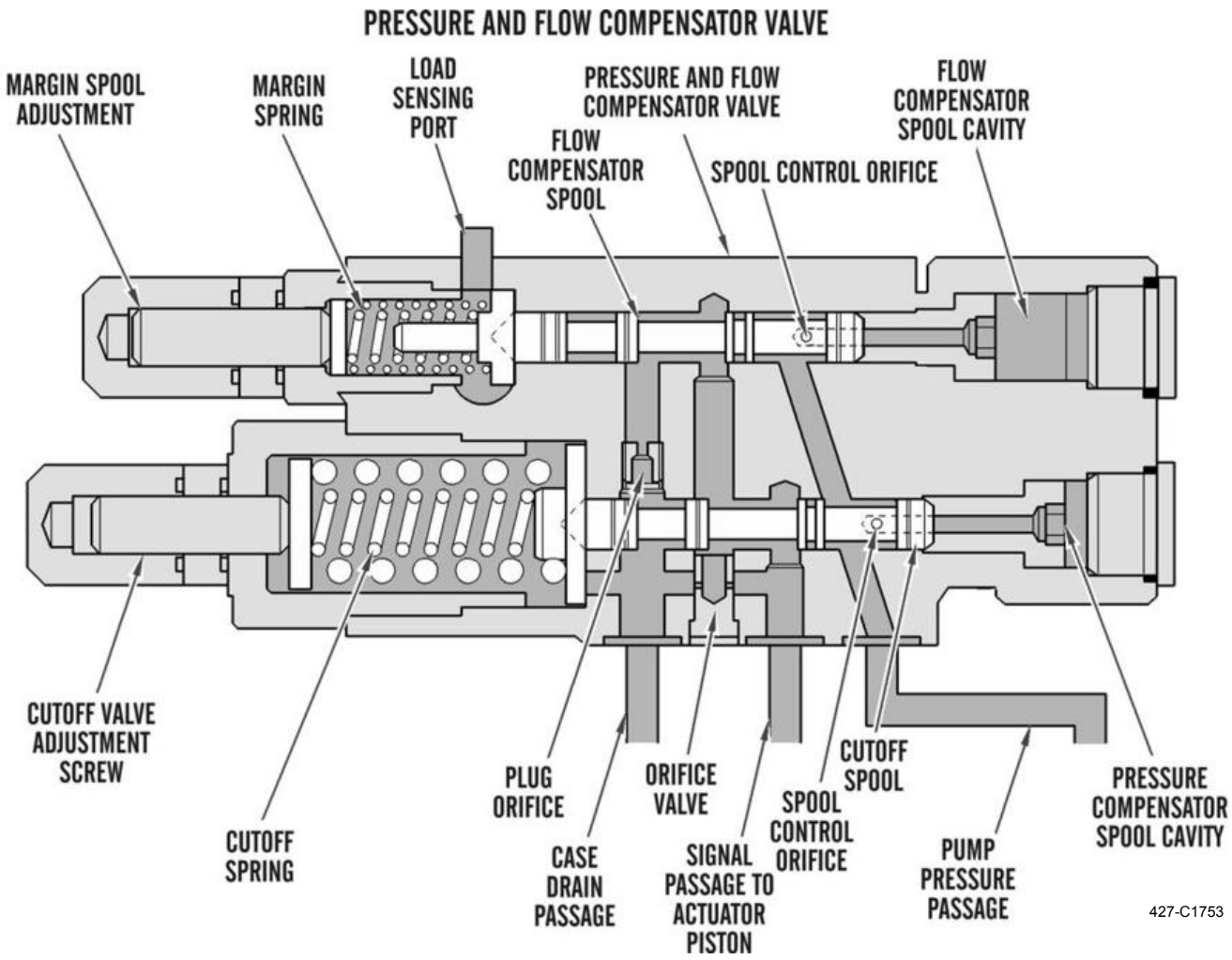

BRAKE AND HYDRAULIC FAN SYSTEM - CONTINUED

g. Pressure and flow compensator valve is mounted to pump and contains two spools. Flow compensator spool regulates pump output flow in response to load sensing port.

h. Pressure and flow compensator valve correct pressure and oil flow. Pump flow and pressure are maintained by either sending pump oil to actuator piston or by draining pump oil from actuator piston.

i. Actuator piston and bias spring work together to adjust swashplate angle. Pressure and flow compensator valve prevents pump overloading.

BRAKE AND HYDRAULIC FAN SYSTEM - CONTINUED

j. **Pump Destroke.**

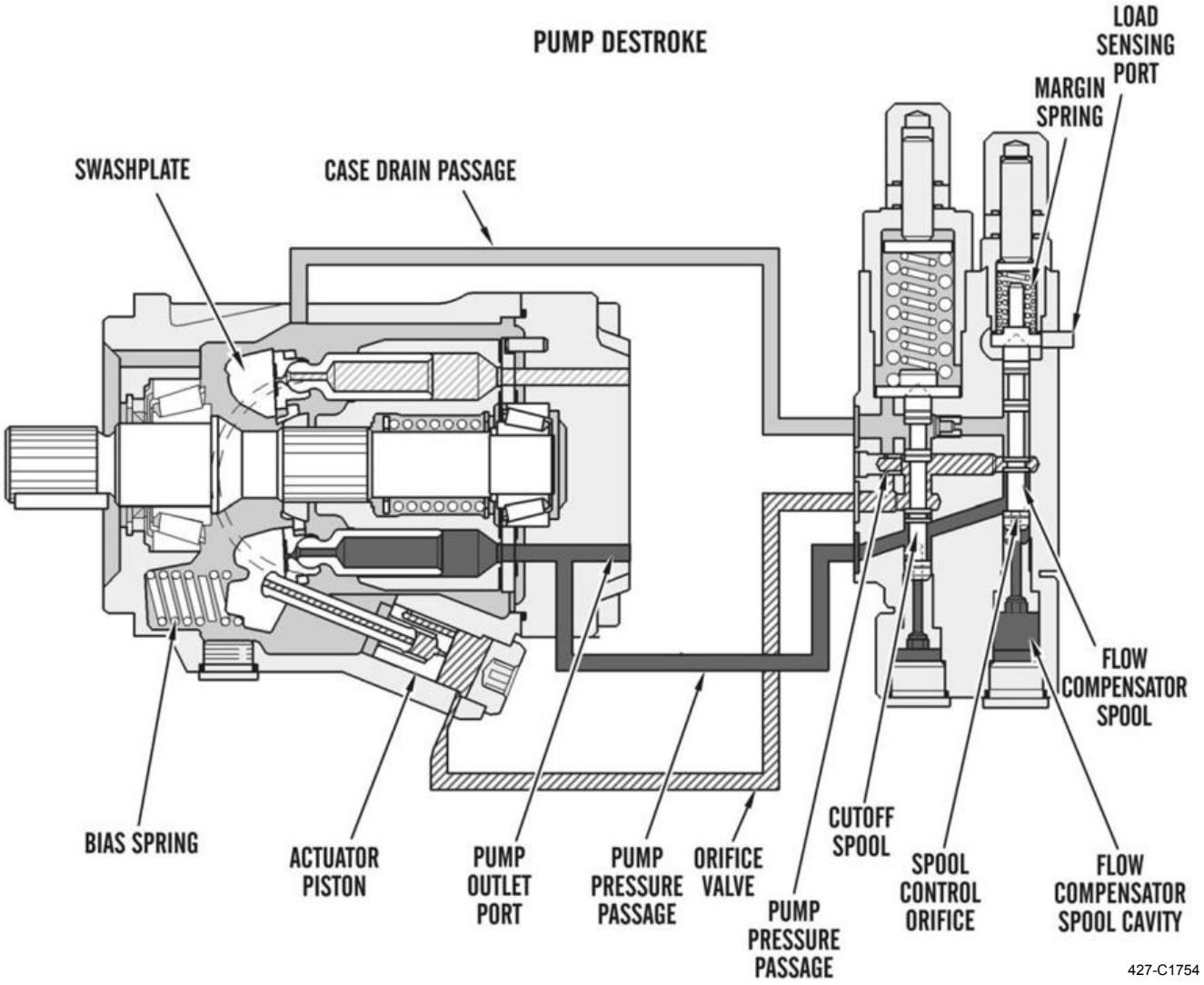

(1) When hydraulic system requires a reduction in flow, a signal is sent to load sensing port. High pressure oil flows to flow compensator spool through pump pressure passage. High pressure oil flows through spool control orifice and into flow compensator spool cavity.

BRAKE AND HYDRAULIC FAN SYSTEM - CONTINUED

(2) When pressure in cavity overcomes force of both load sensing signal and margin spring, oil will flow around cutoff spool, then over orifice valve, and into signal passage to actuator piston.

(3) Orifice valve will allow a metered amount of oil to flow to actuator piston. When oil pressure behind actuator piston is sufficient, piston will start to move. Piston rod will push swashplate against bias spring.

(4) Swashplate will overcome bias spring, angle of swashplate will start to decrease, and piston pump will destroke. When piston pump has destroked to desired flow, pump will provide a constant flow.

BRAKE AND HYDRAULIC FAN SYSTEM - CONTINUED

k. **Pump Upstroke.**

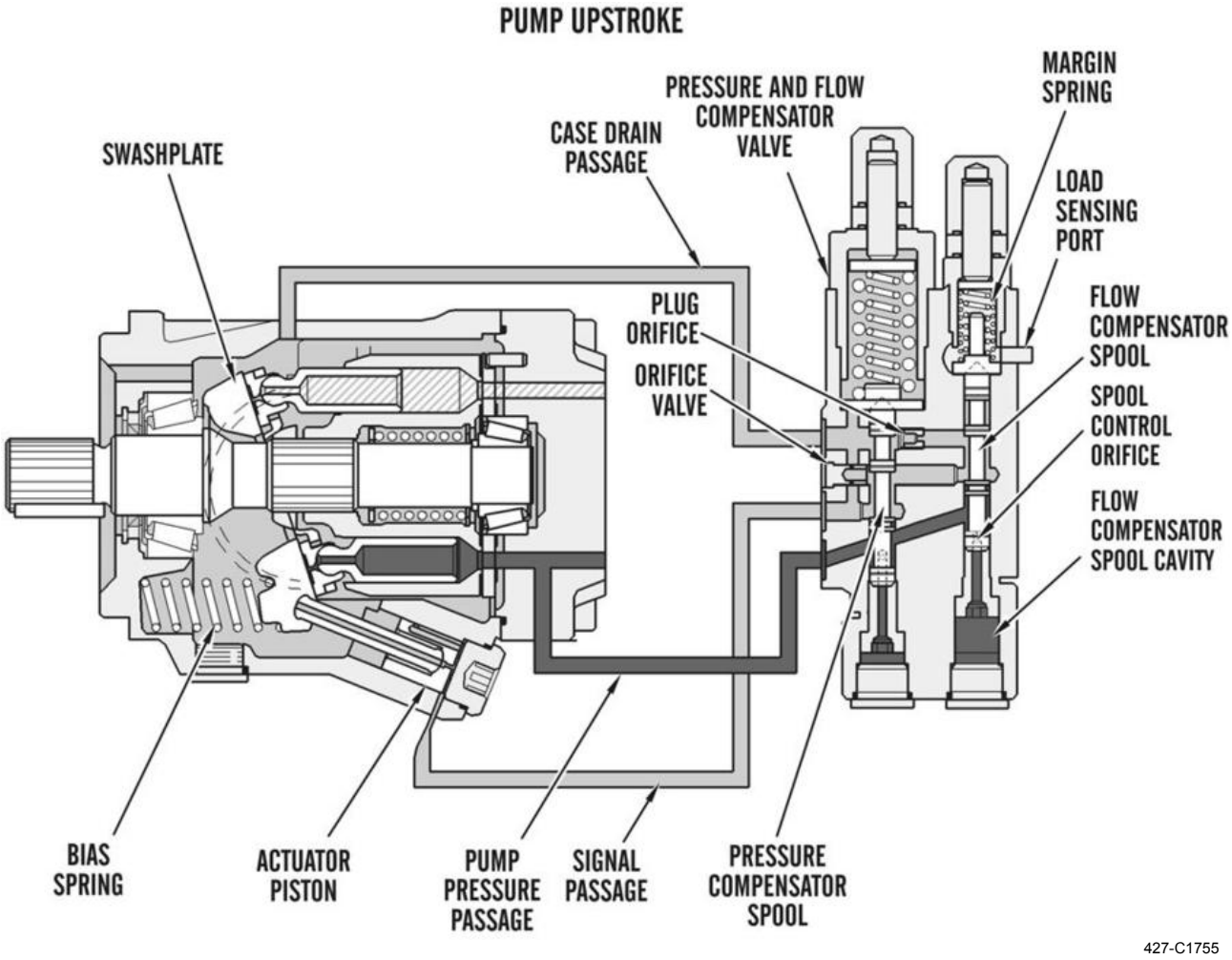

(1) When hydraulic system requires an increase in oil flow, a signal is sent to load sensing port.

(2) When signal is sent to load sensing port, pressure at load sensing port is increased. Combination of margin spring force and increased pressure at load sensing port will overcome oil pressure in flow compensator spool cavity. Flow compensator spool will move. This will allow oil behind actuator piston to flow through signal passage.

BRAKE AND HYDRAULIC FAN SYSTEM - CONTINUED

(3) Oil will flow over orifice valve and around pressure compensator spool. Flow compensator spool will move downward and oil will flow around it. Oil will flow through plug orifice and continue through passage to case drain.

(4) As oil is metered out of actuator piston, bias spring force overcomes pressure behind actuator piston. Swashplate angle begins to increase, causing piston pump to upstroke.

(5) When piston pump has upstroked to desired flow, pump will provide a constant flow.

BRAKE AND HYDRAULIC FAN SYSTEM - CONTINUED

1. **Constant Flow.**

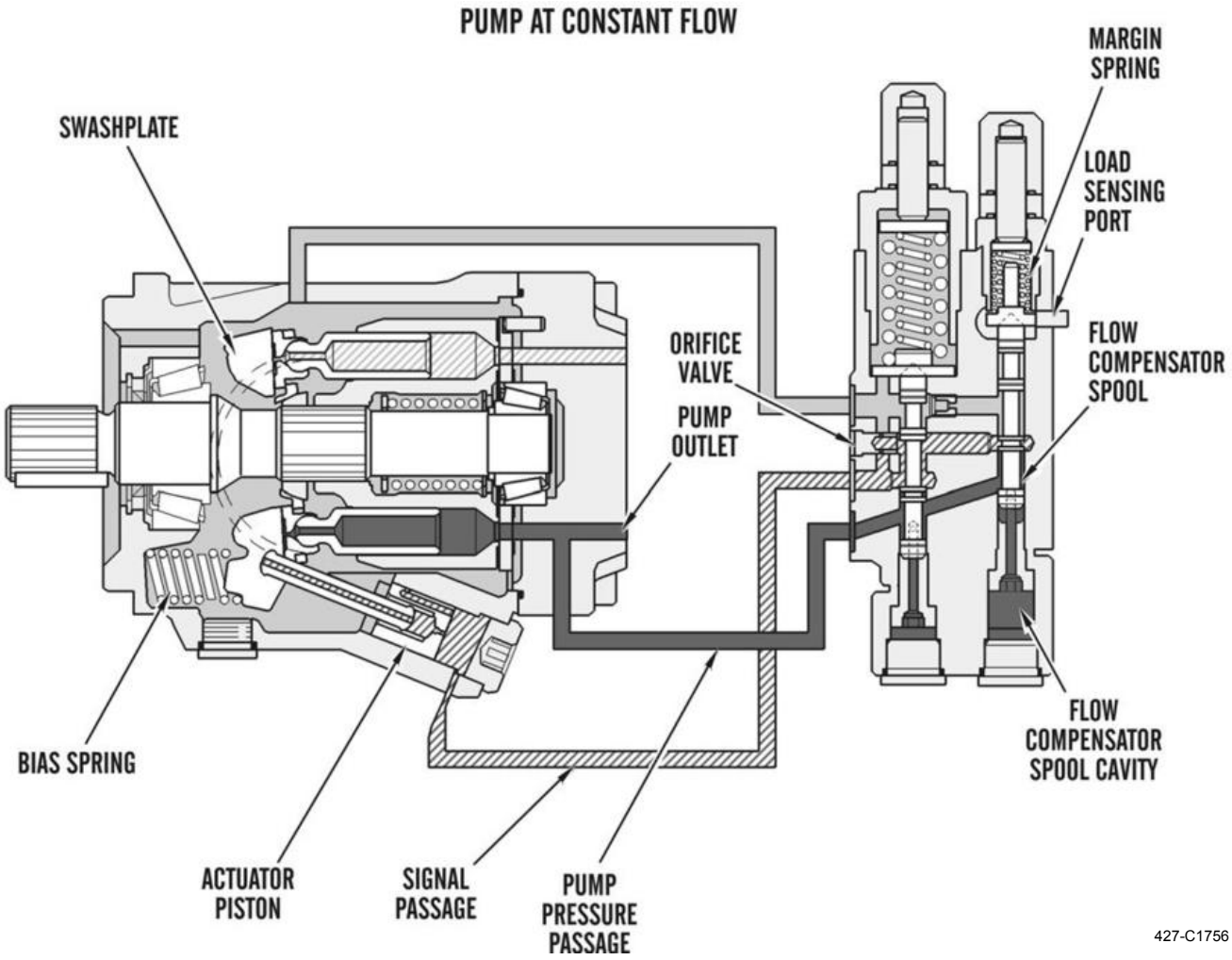

BRAKE AND HYDRAULIC FAN SYSTEM - CONTINUED

(1) When a constant flow of hydraulic oil is demanded by hydraulic system, supply oil pressure from pump outlet will be constant. Oil supply will flow at a constant rate until pressure at load sensing port changes.

(2) Margin spring force and pressure from load sensing port act on one end of flow compensator spool. Pump outlet pressure acts on opposite end of flow compensator spool.

(3) When pressures acting on ends of flow compensator spool equalize, flow compensator spool will meter oil to actuator piston through signal passage. Force behind actuator piston will equalize with bias spring force. Swashplate will be held at a relative constant angle to maintain required oil flow. Flow of hydraulic oil to system will stabilize.

BRAKE AND HYDRAULIC FAN SYSTEM - CONTINUED

m. **High Pressure Cutoff.**

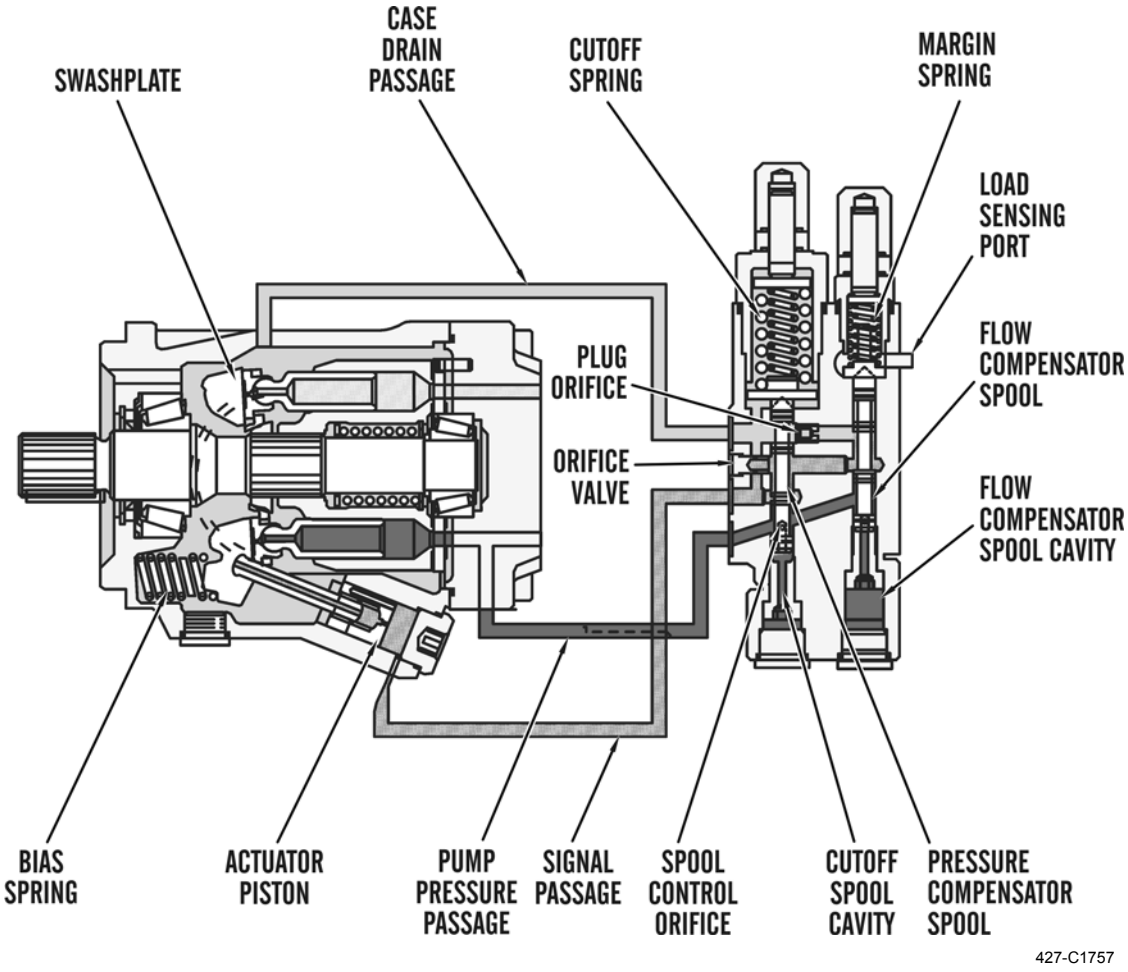

BRAKE AND HYDRAULIC FAN SYSTEM - CONTINUED

(1) High pressure cutoff in a piston pump limits maximum pressure at any pump displacement. During normal piston pump operation, pressure compensator spool is forced down by cutoff spring.

(2) As pressure in pump pressure passage increases, oil flows through spool control orifice into cavity for cut-off spool. As oil pressure in cavity increases, force behind cutoff spool also increases, moving cutoff spool against force of cutoff spring.

(3) As pressure behind cutoff spool becomes greater than force of cutoff spring, cutoff spool overrides spring and spool moves up, allowing oil to flow around spool. Oil will flow through signal passage, extending actuator piston. Swashplate angle will decrease, causing pump to maintain cutoff pressure.

BRAKE AND HYDRAULIC FAN SYSTEM - CONTINUED

3. **Brake Accumulator.**



427-C1758

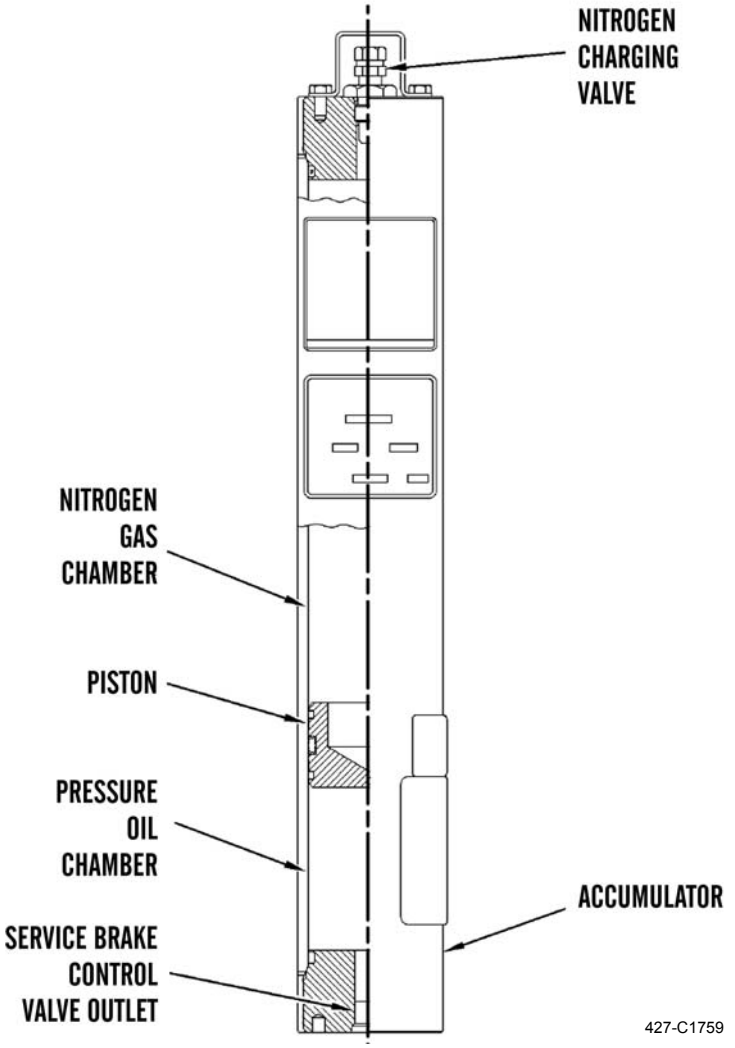

427-C1759

a. Accumulators for both front and rear service brakes are located behind ladder on right side of machine. Accumulators are mounted in a vertical position. Accumulator for front service brakes is positioned outside of accumulator for rear service brakes.

b. Both service brake accumulators have a piston, which is sealed. Piston moves back and forth inside accumulator bore. Nitrogen gas chamber contains a charge of approximately 900 psi (6,205 kPa) of dry nitrogen gas. Dry nitrogen gas is added to accumulator through nitrogen charging valve.

c. Oil from accumulator charging valve flows through outlet, then enters pressure oil chamber. Oil then pushes piston, causing dry nitrogen gas to compress. When pressure in accumulator reaches cutout pressure, oil supply is stopped by accumulator charging valve.

d. When a brake pedal is pushed, oil from chamber flows outward through outlet to service brake control valve, where oil applies service brakes.

BRAKE AND HYDRAULIC FAN SYSTEM - CONTINUED

4. **Brake and Hydraulic Fan System Control Manifold.**

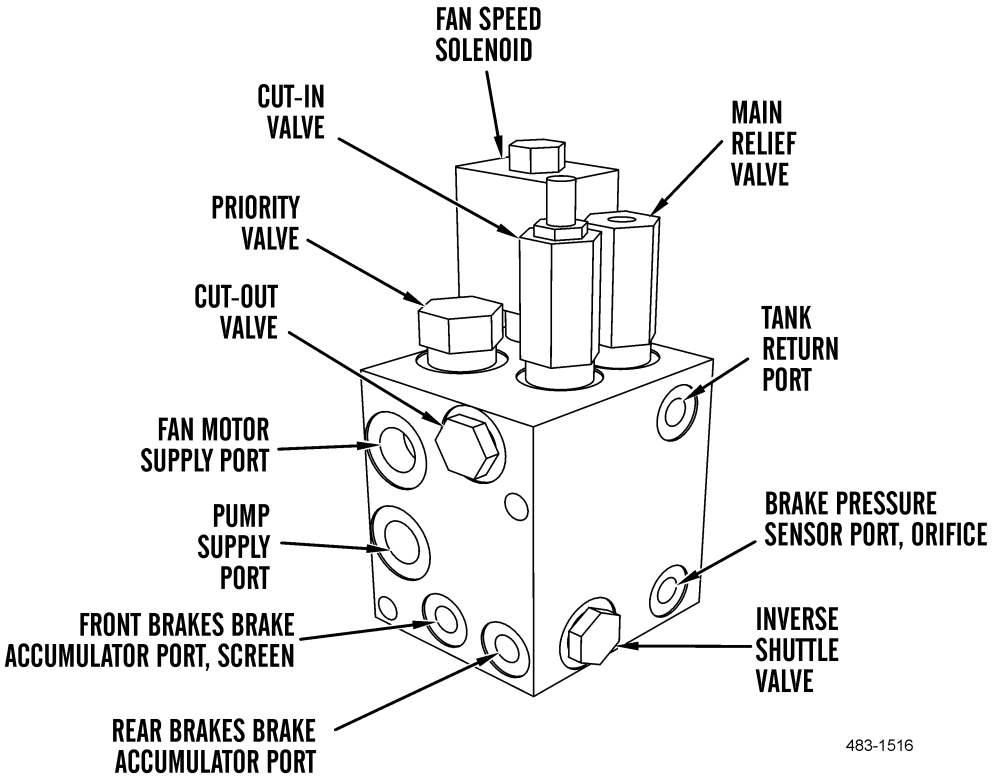

BRAKE AND HYDRAULIC FAN SYSTEM - CONTINUED

a. Control manifold controls brake and hydraulic fan system. Brake system has priority over hydraulic fan system. Brake system is only used on demand.

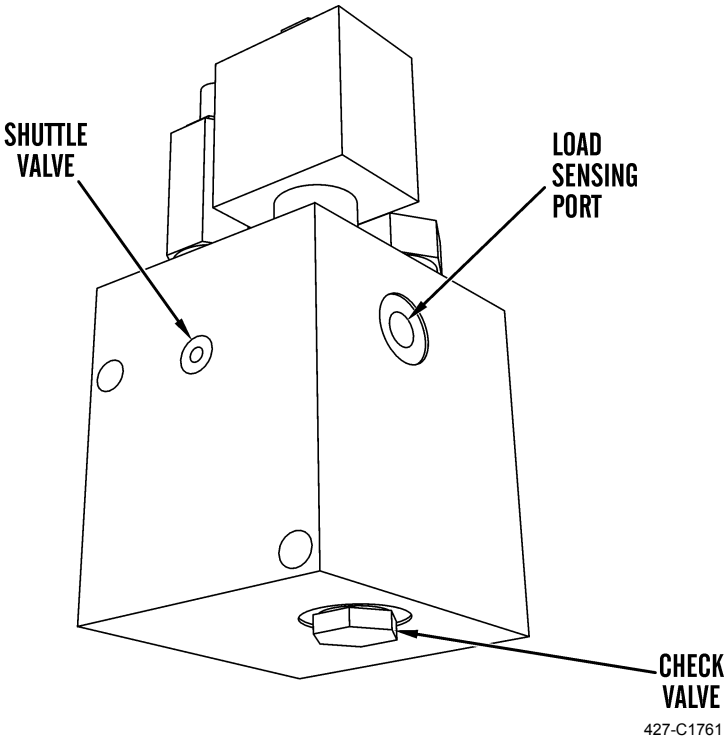

BRAKE AND HYDRAULIC FAN SYSTEM - CONTINUED

b. **Service Brake Operation.**

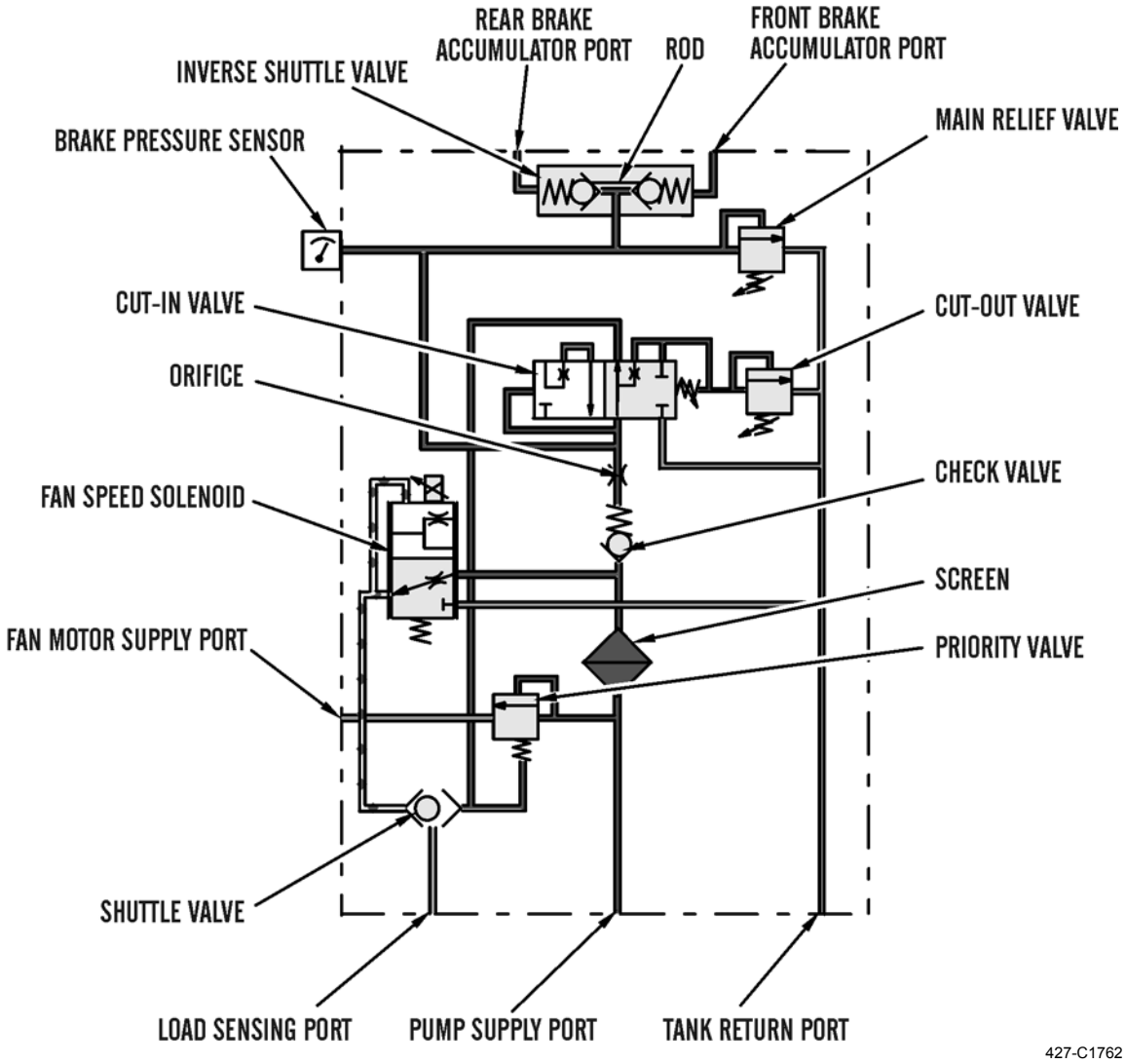

BRAKE AND HYDRAULIC FAN SYSTEM - CONTINUED

(1) **Brake Operation Below Cut-In Pressure.**

(a) Cut-in valve controls minimum braking system pressure. When service brake pressure is below cut-in pressure, cut-in valve allows pressurized oil to flow to shuttle valve. Shuttle valve shifts left and allows pressurized oil to exit load sensing port to upstroke pump. Pressurized oil and spring pressure hold priority valve closed. Full pump flow is directed to brake section of control manifold to satisfy brake system demand.

(b) Pump flow enters control manifold through pump supply port. Pump flow passes through screen, check valve, and orifice to inverse shuttle valve. Inverse shuttle valve senses brake accumulator port that has highest pressure. Accumulator port with highest pressure seats check valve. Rod opens check valve with lowest accumulator pressure. Brake accumulator can be charged with check valve in open position. Brake pressure sensor senses pressure in brake accumulators. When pressure is low, sensor activates a warning lamp (TM 5-3805-291-10).

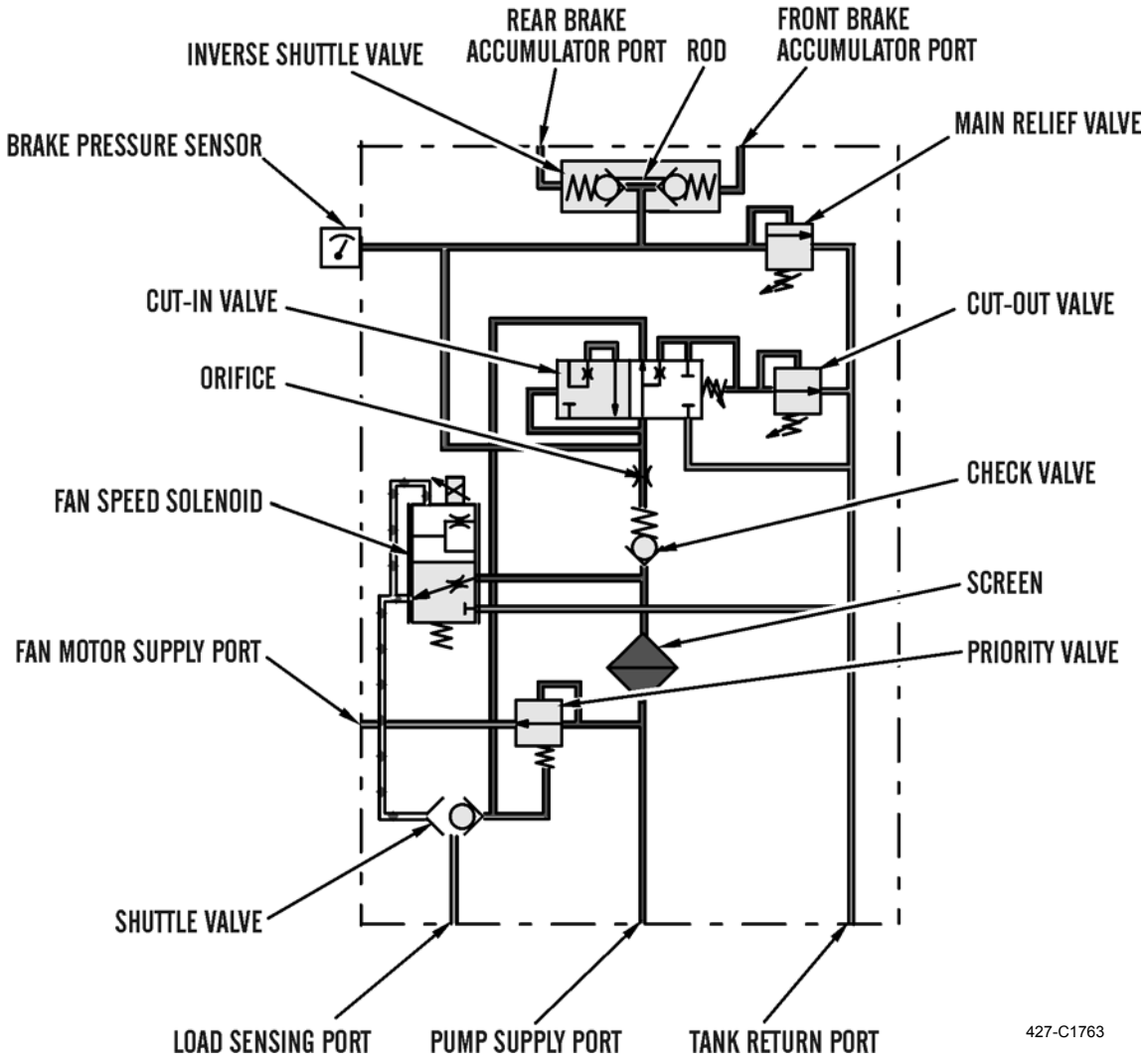

BRAKE AND HYDRAULIC FAN SYSTEM - CONTINUED

(2) **Brake Operation at Cut-Out Pressure.** When brake system pressure reaches cut-out pressure, cut-out valve opens. Cut-out valve drains spring side of cut-in valve to tank return port. System pressure overcomes spring pressure on cut-in valve, shifting cut-in valve right. When cut-in valve shifts right, pressurized oil from right side of shuttle valve and spring side of priority valve is metered to tank return port. System pressure overcomes spring pressure on priority valve, opening priority valve and allowing pump flow to fan system. Simultaneously, shuttle valve shifts right, allowing pump to sense fan system pressure requirements. Check valve closes and check valve maintains brake system pressure.

c. **Hydraulic Fan System Operation.**

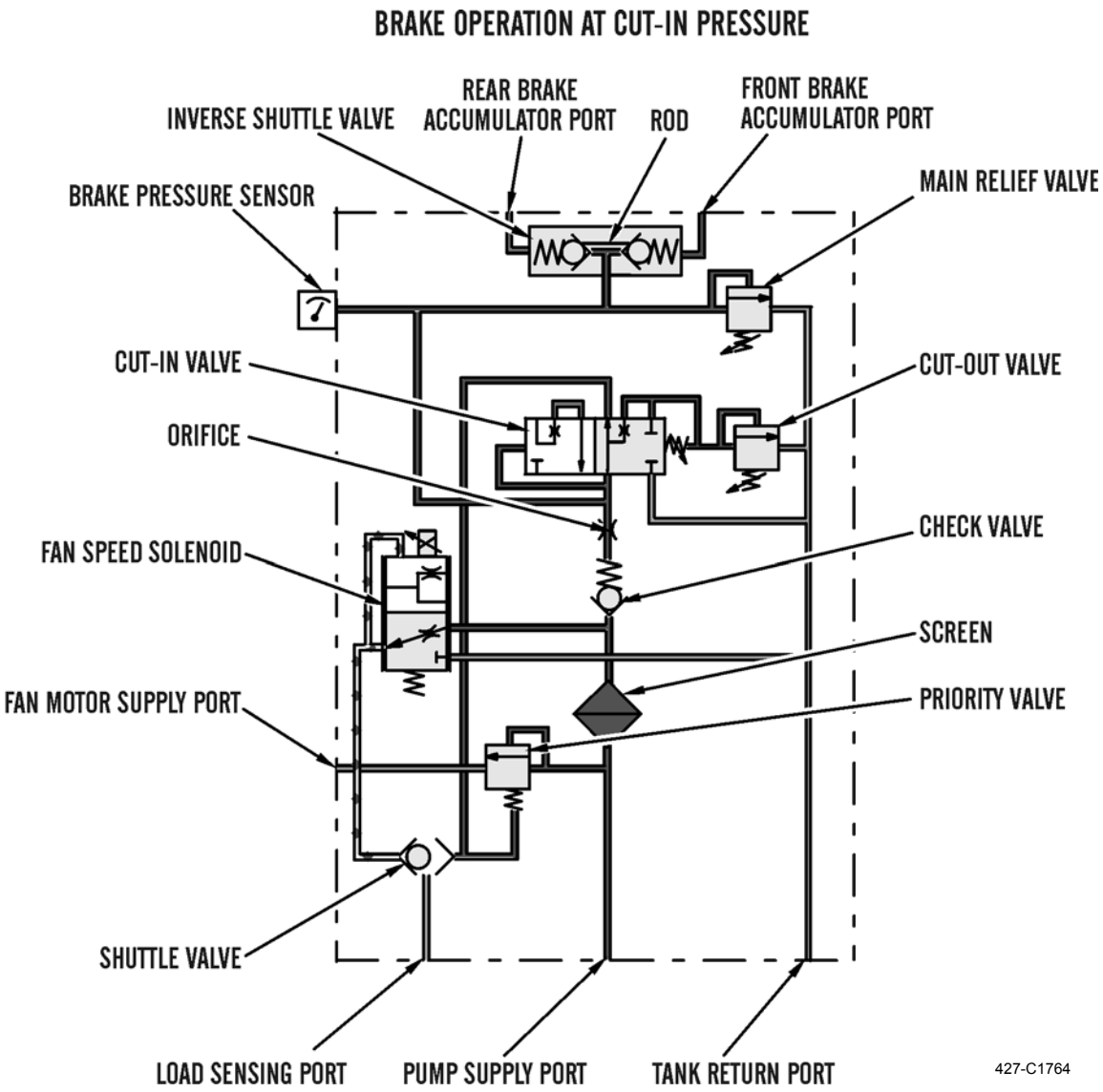

BRAKE AND HYDRAULIC FAN SYSTEM - CONTINUED

(1) **Operation at Brake Cut-In Pressure.** When brake system pressure is below cut-in pressure, brake system receives a higher priority than fan system. Priority valve is closed and pump flow to fan motor is blocked.

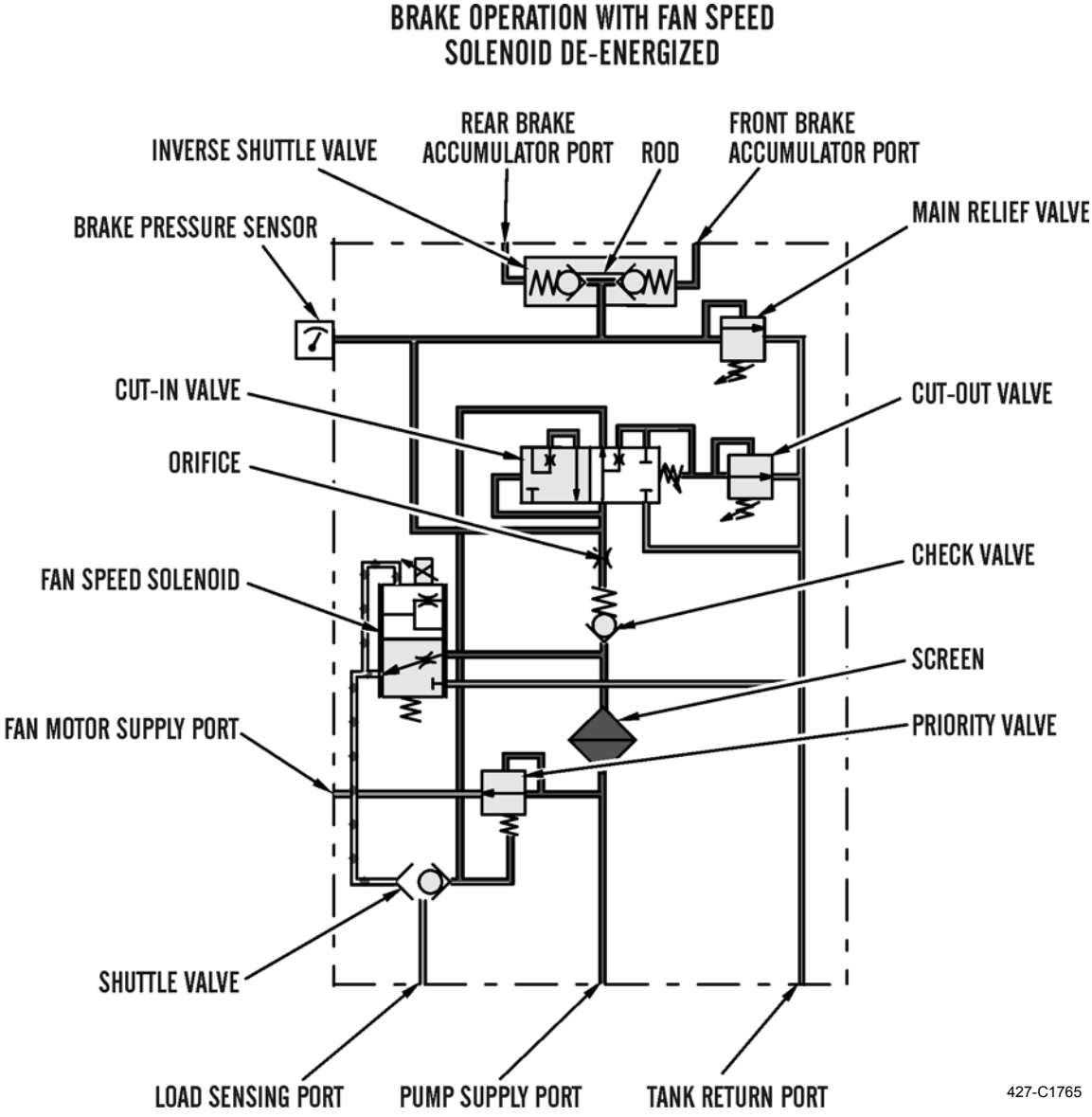

(2) **Operation with Fan Speed Solenoid De-Energized.**

(a) Fan system has priority when brake system pressure is at cut-out pressure. Fan speed solenoid controls pump load sensing pressure when brake system is fully charged. Fan speed solenoid is a proportional solenoid. As current to fan speed solenoid increases, output pressure decreases. When fan speed solenoid is de-energized, output pressure to load sensing port is at maximum. Pump will be fully stroked and send maximum flow to fan motor. Thus, fan motor is turning at maximum speed.

BRAKE AND HYDRAULIC FAN SYSTEM - CONTINUED

(b) Pump flow enters control manifold through load sensing port. Oil flow from pump flows through priority valve and exits supply port for fan motor. A small amount of pressurized oil flows through fan speed solenoid, a pressure-reducing valve which assists in reducing pressure. If fan system pressure is above pressure reducing pressure of fan speed solenoid, solenoid shifts to meter output pressure to tank return port. Output pressure of fan speed solenoid is then reduced. Oil at a reduced pressure flows to shuttle valve, which shifts right. Pressurized oil exits through load sensing port to upstroke pump.

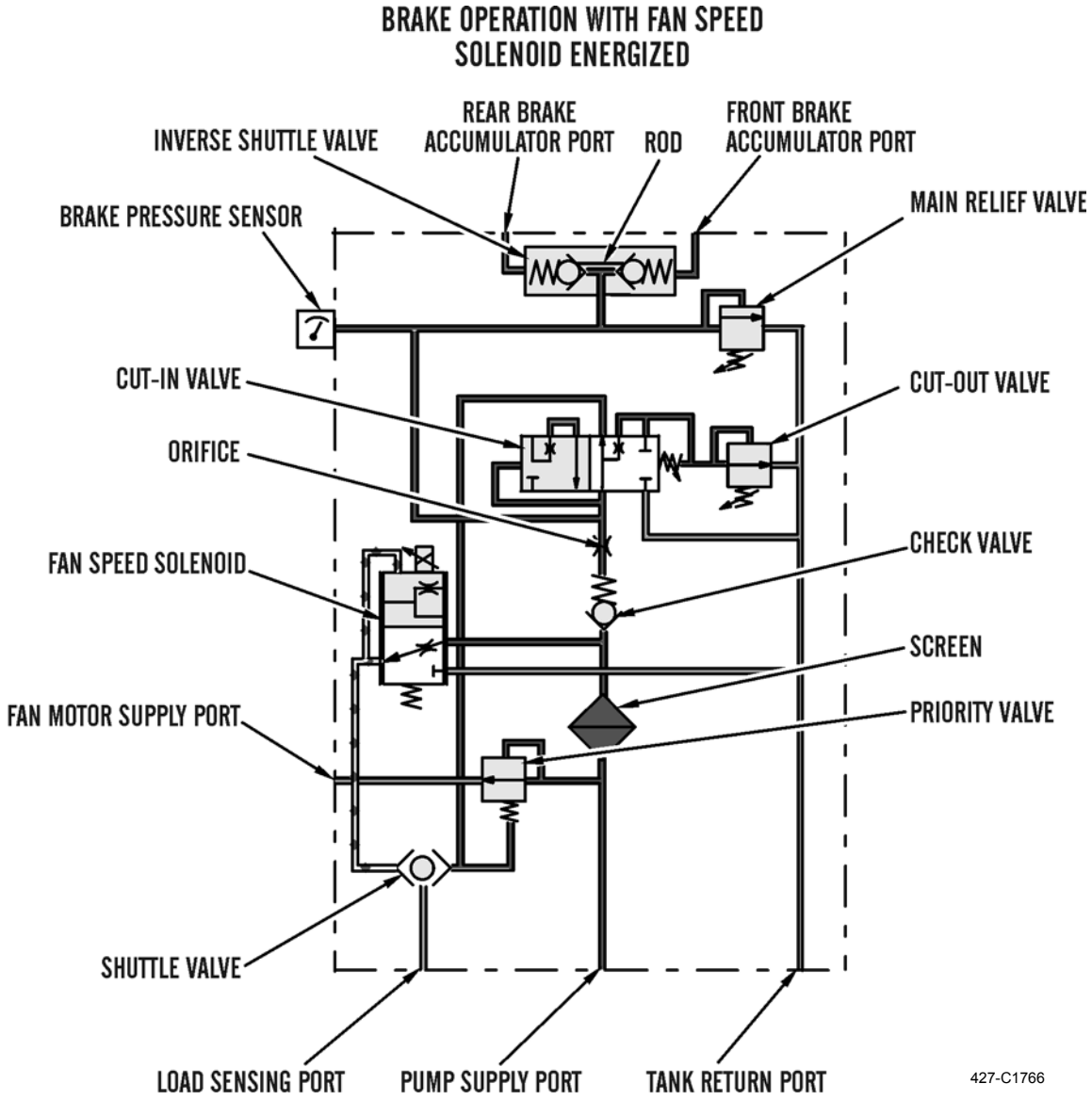

BRAKE AND HYDRAULIC FAN SYSTEM - CONTINUED

(3) **Operation with Fan Speed Solenoid Energized.**

(a) Fan system has priority when brake system pressure is at cut-out pressure. Fan speed solenoid controls pump load sensing pressure when brake system is fully charged. Fan speed solenoid is a proportional solenoid. As current to fan speed solenoid increases, output pressure decreases. When fan speed solenoid is energized, output pressure to pump load sensing port is at reduced. Thus, fan motor is turning below maximum speed.

(b) Amount of current applied to fan speed solenoid is controlled by engine ECM using three inputs: hydraulic oil temperature sensor, engine coolant temperature sensor, and inlet air manifold temperature sensor. If engine ECM determines that fan speed should be at minimum, maximum current is sent to fan speed solenoid. If one of these three sensors shows there is a demand for more cooling, engine ECM will reduce amount of current sent to fan speed solenoid. By decreasing current to fan speed solenoid, pump will upstroke to provide more cooling capacity.

(c) Pump flow enters control manifold through load sensing port. Oil flow from pump flows through priority valve and exits supply port for fan motor. A small amount of pressurized oil flows through fan speed solenoid, a pressure-reducing valve which assists in reducing pressure. If fan system pressure is above pressure-reducing pressure of fan speed solenoid, solenoid shifts to meter output pressure to tank return port. Engine ECM sends current to fan speed solenoid to further reduce output pressure. Output pressure of fan speed solenoid is then reduced. Oil at a reduced pressure flows to shuttle valve, which shifts right. Pressurized oil exits through load sensing port to meet system demands.

d. **Service Brake Control Valve.**

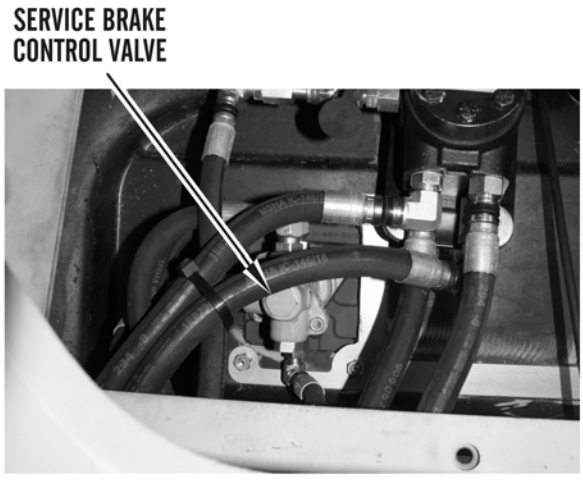

483-1111

BRAKE AND HYDRAULIC FAN SYSTEM - CONTINUED

(1) Service brake control valve is located on front right side underneath operator's platform. A mechanical link connects two brake pedals to each other. When one brake pedal is depressed, a lever and cam assembly actuates service brake control valve. Valve is a fully split modulating valve with two independent output pressures.

(2) Service brake control valve modulates pressurized oil flow between brake accumulators and service brakes. Position of either brake pedal causes a specific pressure at service brakes. As pedal position changes, pressure at service brake also changes.

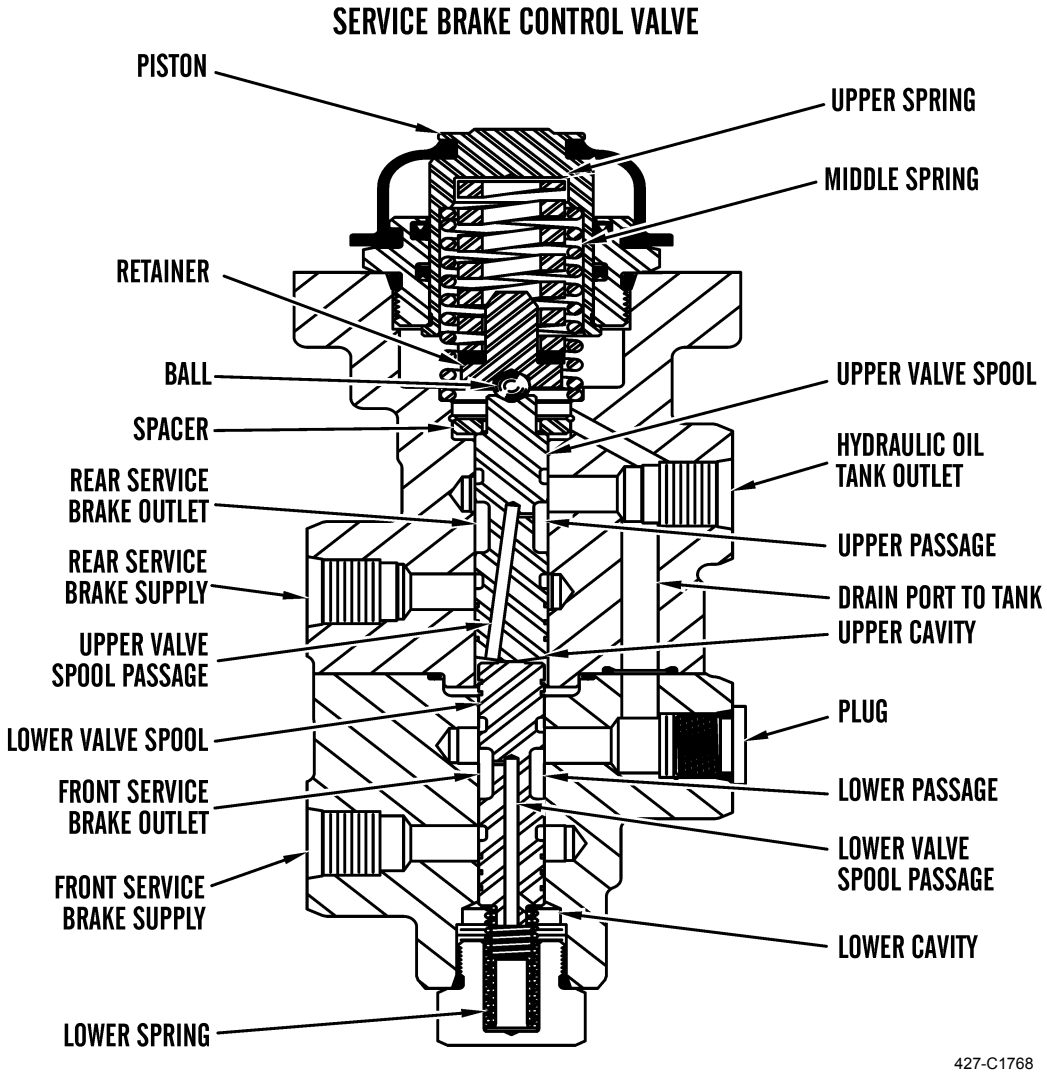

(3) When one brake pedal is depressed, a roller in brake pedal assembly pushes down on piston, which applies a force on upper and middle springs. Spring force moves retainer and ball, causing upper valve spool to move away from its seat in spacer.

(4) Upper valve spool movement causes lower valve spool to move and compress lower spring. When valve spools move, oil flow through upper and lower passages and tank drain port to hydraulic oil tank is blocked.

BRAKE AND HYDRAULIC FAN SYSTEM - CONTINUED

(5) This allows pressurized oil from front and rear brake accumulator ports to flow through upper and lower passages and upper and lower valve spool passages. Oil then flows through front and rear service brake outlets to apply service brakes. Simultaneously, pressurized oil flows into upper and lower cavities and through upper and lower valve spool passages. Oil pressure at service brakes is equal to oil pressure in upper and lower cavities.

(6) Oil pressure in lower cavity and force from lower spring act to balance lower valve spool against force of pressure in upper cavity, just as pressure in upper cavity creates a force against bottom of upper valve spool. Upper valve spool is balanced by upper spring force at top of spool.

(7) Force from upper and middle springs is balanced by force applied to pedal. Upward movement of upper and lower valve spools causes front and rear brake accumulator ports to be covered. Pressure in independent valve sections creates feedback force, allowing operator to modulate pressure to service brakes.

(8) Upper and lower valve spools balance between ports for hydraulic oil tank and ports for service brakes to maintain brake pressure until pedal position changes. A change in pedal position means more or less brake pressure is necessary.

(9) If piston moves down to apply more compression on upper spring, upper and lower valve spools will move to allow more pressure oil to flow to front and rear brake outlets to service brakes. This results in a higher oil pressure in upper and lower cavities, which is necessary to maintain balance in upper and lower valve spools.

e. **Transmission Neutralizer Override Control Rocker Switch.**

(1) Transmission neutralizer override switch is located on switch panel on upper right side of cab (TM 5-3805-291-10). Switch is a momentary rocker switch. Transmission neutralizer override switch allows an operator to disable functioning of transmission neutralizer.

NOTE

The transmission neutralizer's default status is active. Whenever the machine is turned on, the transmission neutralizer will be enabled. Indicator light on dash panel display will illuminate when transmission neutralizer is disabled.

(2) Press top of switch to disable transmission neutralizer. When transmission neutralizer is disabled, use of left brake pedal will not disengage transmission. Left brake pedal will function as a conventional brake pedal. Transmission neutralizer indicator light on dash panel display will illuminate (TM 5-3805-291-10).

(3) If transmission neutralizer has been disabled, press top of switch to activate it. When neutralizer is active, operator may depress left brake pedal to engage transmission neutralizer. Transmission neutralizer will disengage transmission as service brakes are applied. This allows an operator to use accelerator pedal to increase engine speed for better hydraulic response. There is also a gain in fuel efficiency and a reduction in transmission oil temperatures.

f. **Left Brake Pedal Position Sensor.**

(1) Left brake pedal position sensor sends an input to powertrain ECM, continuously updating ECM on left brake pedal position. ECM records changes in position, then activates appropriate solenoid valve.

(2) Left brake pedal position sensor is a PWM sensor, continuously generating a PWM signal. Duty cycle varies in proportion to pedal position. ECM receives PWM signal from position sensor and measures duty cycle to determine pedal position. Sensor signal frequency is constant at 5,000 Hz. Machine electrical system provides +battery voltage to pedal position sensor for operating power.

BRAKE AND HYDRAULIC FAN SYSTEM - CONTINUED

g. **Parking Brake Control Valve.**

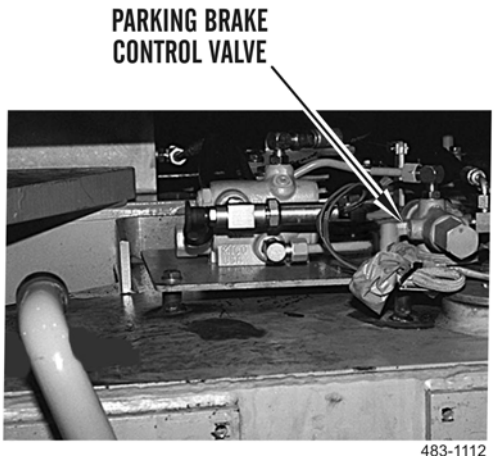

483-1112

NOTE

In the above illustration, the operator's platform has been removed for clarity.

(1) Parking brake control valve is located next to accumulator charging valve on left side of machine. Both parking brake control valve and accumulator charging valve are mounted on a plate fastened to top of fuel tank.

BRAKE AND HYDRAULIC FAN SYSTEM - CONTINUED

(2) Parking brake control valve controls pressure oil flow for parking brake actuator.

PARKING BRAKE CONTROL VALVE

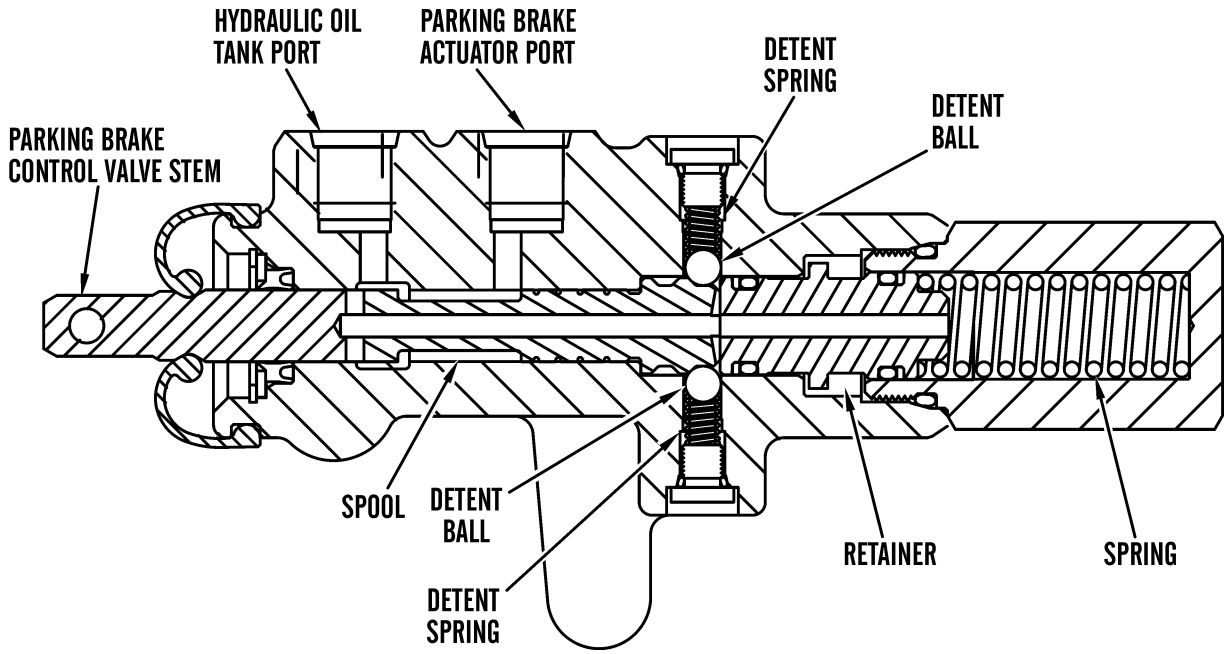

427-C1770

BRAKE AND HYDRAULIC FAN SYSTEM - CONTINUED

(3) Push bottom of parking brake switch to disengage parking brake (TM 5-3805-291-10). This causes spool and retainer to move right. This movement compresses spring.

(4) This allows pressure oil to flow into pressure port from rear service brakes brake accumulator. Oil then flows out of parking brake actuator port and into a cavity in parking brake actuator assembly.

(5) When oil pressure in parking brake actuator port cavity is high enough to compress actuator spring, parking brake disengages. Oil pressure keeps parking brake in DISENGAGED position.

(6) Push top of parking brake switch to engage parking brake (TM 5-3805-291-10). This causes stem to move spool left. This stops pressure oil flow to parking brake actuator, allowing oil in parking brake actuator cavity to flow back to hydraulic oil tank.

(7) With a decrease in oil pressure for parking brake circuit, spring force in parking brake actuator is greater than oil pressure in parking brake actuator cavity. This allows spring to engage parking brake.

(8) If there is a decrease in hydraulic oil pressure for service brake circuit during machine operation, parking brake control valve will automatically engage parking brake. If machine is in either first speed forward or reverse, transmission will also shift to NEUTRAL.

(9) With a loss of hydraulic oil pressure, spring force moves spool left. This blocks any flow of oil that would normally help keep spring compressed, and causes spring retainer, spool, and stem to move left.

(10) Detent springs and detent balls move in and out of grooves machined into spool. This allows an operator to feel internal locking mechanism of parking brake control valve.

NOTE

- **Parking brake can be manually engaged or disengaged when system pressure is above 1,495 psi (10,300 kPa). However, if system pressure is below 1,495 psi (10,300 kPa), actuation force increases.**
- **If parking brake is DISENGAGED, parking brake control valve will move to ENGAGED position when pressure difference between pressure port and tank port is approximately 350 psi (2,400 kPa).**
- **Hydraulic tank pressure above 100 psi (700 kPa) may cause stem to extend to ENGAGED position.**

(11) When parking brake actuator oil pressure decreases below a preset value, transmission returns to NEUTRAL if in either first speed forward or reverse. Parking brake will automatically engage when this occurs. An alert indicator for brakes will flash and an alarm will sound (TM 5-3805-291-10).

h. **Parking Brake.**

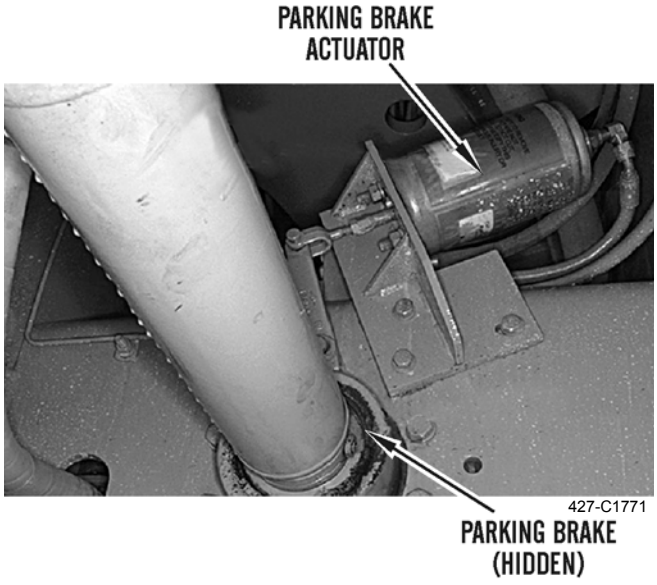

BRAKE AND HYDRAULIC FAN SYSTEM - CONTINUED

(1) Parking brake is located in drive line on front end of machine just ahead of articulated hitch. When brake system oil pressure drops below a given level, parking brake actuator engages parking brake. Parking brake indicator light is located on dash panel display and will illuminate when parking brake is engaged (TM 5-3805-291-10). Parking brake indicator light should flash during engine start-up.

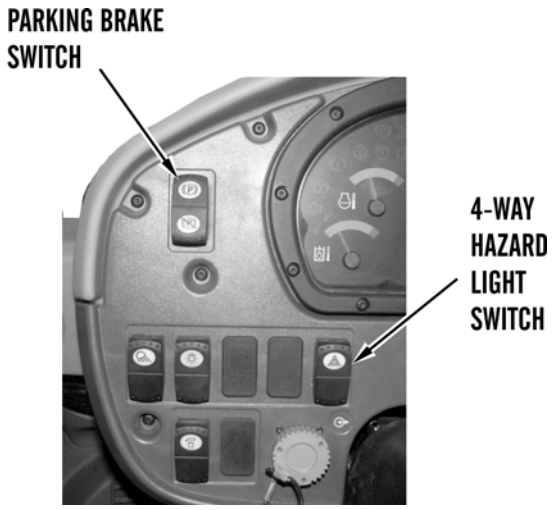

427-C0472

(2) Parking brake can be engaged manually by pushing top of parking brake switch. Parking brake switch is located on dashboard to left of steering column (TM 5-3805-291-10).

(3) A normally closed pressure switch is located on parking brake control valve. When parking brake engages, pressure switch sends a signal to transmission ECM. When parking brake engages, pressure switch activates parking brake indicator light.

(4) When parking brake engages, transmission will shift into NEUTRAL if transmission is in first speed forward or reverse.

BRAKE AND HYDRAULIC FAN SYSTEM - CONTINUED

i. **Service Brakes.**

SERVICE BRAKES

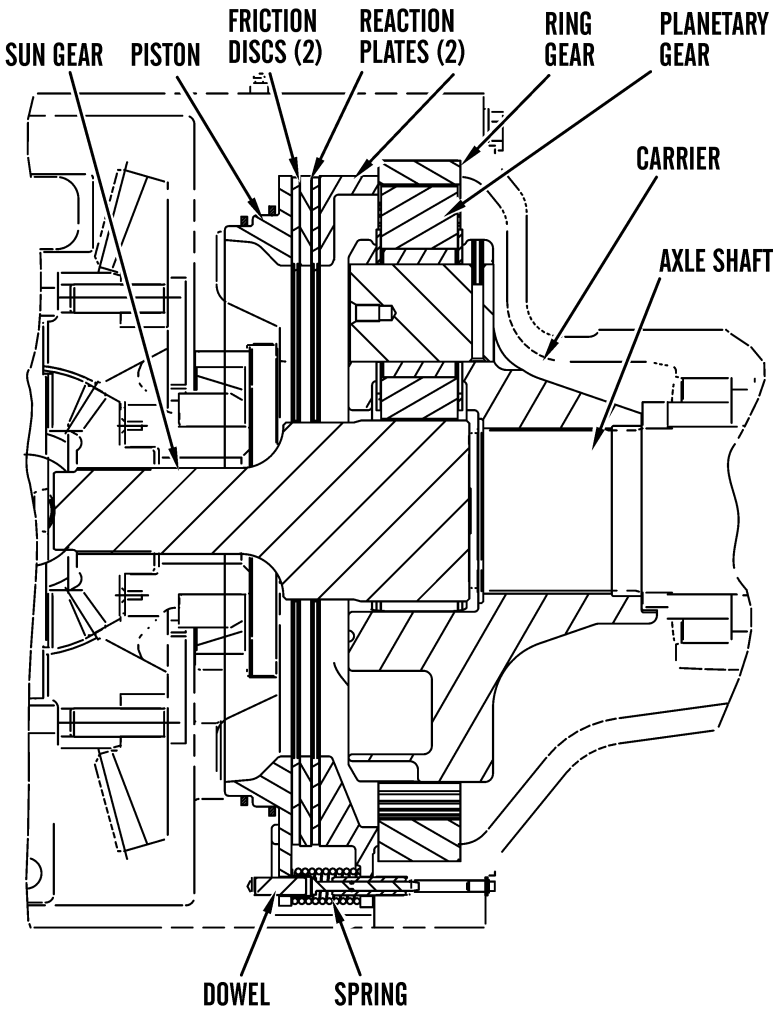

BRAKE AND HYDRAULIC FAN SYSTEM - CONTINUED

(1) All four service brakes are located in axle assemblies. Service brakes are actuated by either left or right brake pedal. Service brakes are in both front and rear axles.

(2) Each service brake consists of a piston, two friction discs, two reaction plates, three dowels, and three springs.

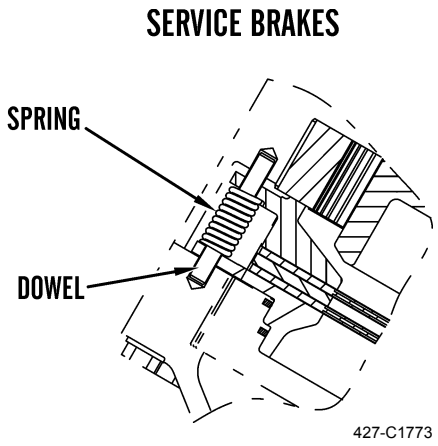

(3) Reaction plates and piston are held stationary by dowels. Dowels are fastened in differential housing and axle shaft housing. Piston and reaction plates are able to slide on three dowels, but piston and reaction plates do not rotate. Springs keep piston in RETRACTED position so long as oil behind piston is not pressurized.

(4) Friction discs have splines on inside diameter that fit on splines of sun gear. This causes friction discs to rotate at a speed equal to that of sun gear. Grooves are cut into faces of friction discs to allow passage of cooling oil between reaction plates and friction discs, and between piston and friction discs.

(5) Coolant passage will occur even when service brakes are applied. If groove depths in friction discs are within specifications, cooling oil will constantly flow between friction discs, reaction plates, and piston as friction discs rotate.

(6) Carrier is fastened with splines to axle shaft. Axle shaft turns with carrier. Planetary gears in carrier rotate between sun gear and stationary ring gear.

(7) When an operator depresses a brake pedal, pressurized oil from service brake control valve flows through an oil passage in differential housing. Force of oil behind piston moves piston against force of springs.

(8) Force of oil also pushes friction discs against reaction plates. This causes friction between friction discs and piston, and between friction discs and reaction plates. This friction causes sun gear, axle shaft, carrier, and wheels to stop.

(9) Heat created by friction of service brakes is removed by oil in axle housings.

BRAKE AND HYDRAULIC FAN SYSTEM - CONTINUED

(10) When brake pedal is released, oil behind piston flows through an oil passage in differential housing to service brake control valve, then returns to hydraulic oil tank. With no oil pressure behind piston, springs move piston to RETRACTED position and service brakes are released.

(11) Service brakes can be actuated by either left or right brake pedal. When transmission neutralizer is disabled, both brake pedals apply service brakes; however, only left pedal may be used to neutralize transmission. This allows full engine power to be used in hydraulic system.

(12) If machine loses power or if hydraulic pump fails, service brakes can still be applied. Pressure in nitrogen-charged service brake accumulators allows several applications of brake pedals. This is for stopping or slowing machine enough to engage parking brake.

j. **Service Brake Wear Indicator.**

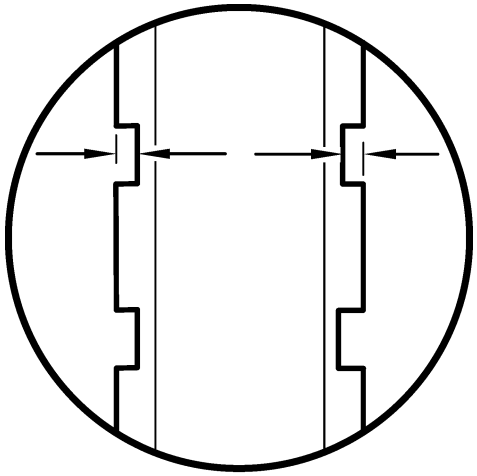

BRAKE AND HYDRAULIC FAN SYSTEM - CONTINUED

(1) Each individual service brake uses an indicator pin to help determine amount of wear on an existing service brake disc.

(2) Oil groove depth is a critical dimension. If oil groove depth on a brake disc is too shallow, oil flow will be inadequate, causing wear and abrasion.

(3) An indicator pin is located on each side of front and rear axle center housings. When a service brake disc wears, distance between piston and plate decreases, causing indicator pin to move closer to flange face of axle housing.

SERVICE BRAKE AXLE HOUSING END VIEW

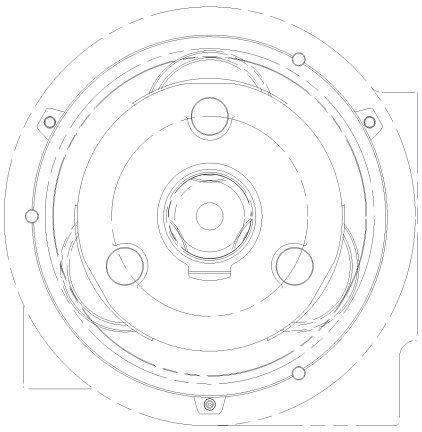

427-C1775

BRAKE AND HYDRAULIC FAN SYSTEM - CONTINUED

(4) Dimension (A) equals distance from flange face of axle housing to end of pin. Value of dimension (A) can be used to determine amount of service life available for service brake disc.

NOTE

When a new brake disc is installed, the baseline value for that service brake must be changed.

(5) Baseline values for dimension (A) of each service brake were originally measured when machine was new and stored electronically on machine's transmission ECM. Baseline values for dimension (A) can be retrieved using ET. Subtract current value of dimension (A) from baseline value. Difference indicates amount of wear on service brake disc.

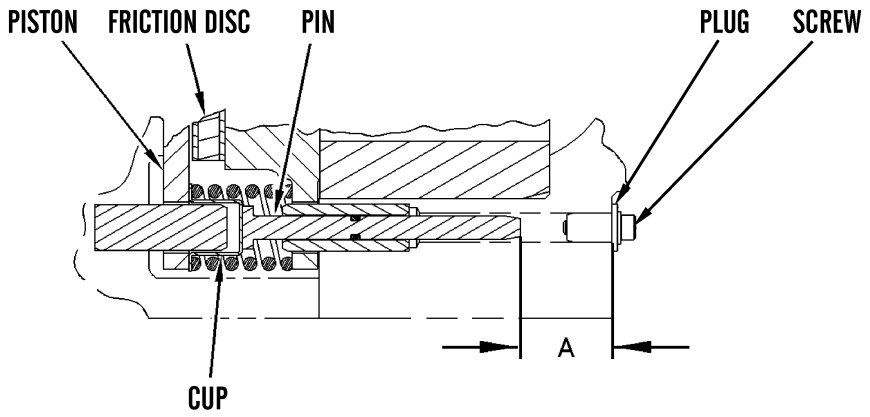

427-C1776

BRAKE AND HYDRAULIC FAN SYSTEM - CONTINUED

k. **Hydraulic Fan System.**

HYDRAULIC FAN SYSTEM SCHEMATIC

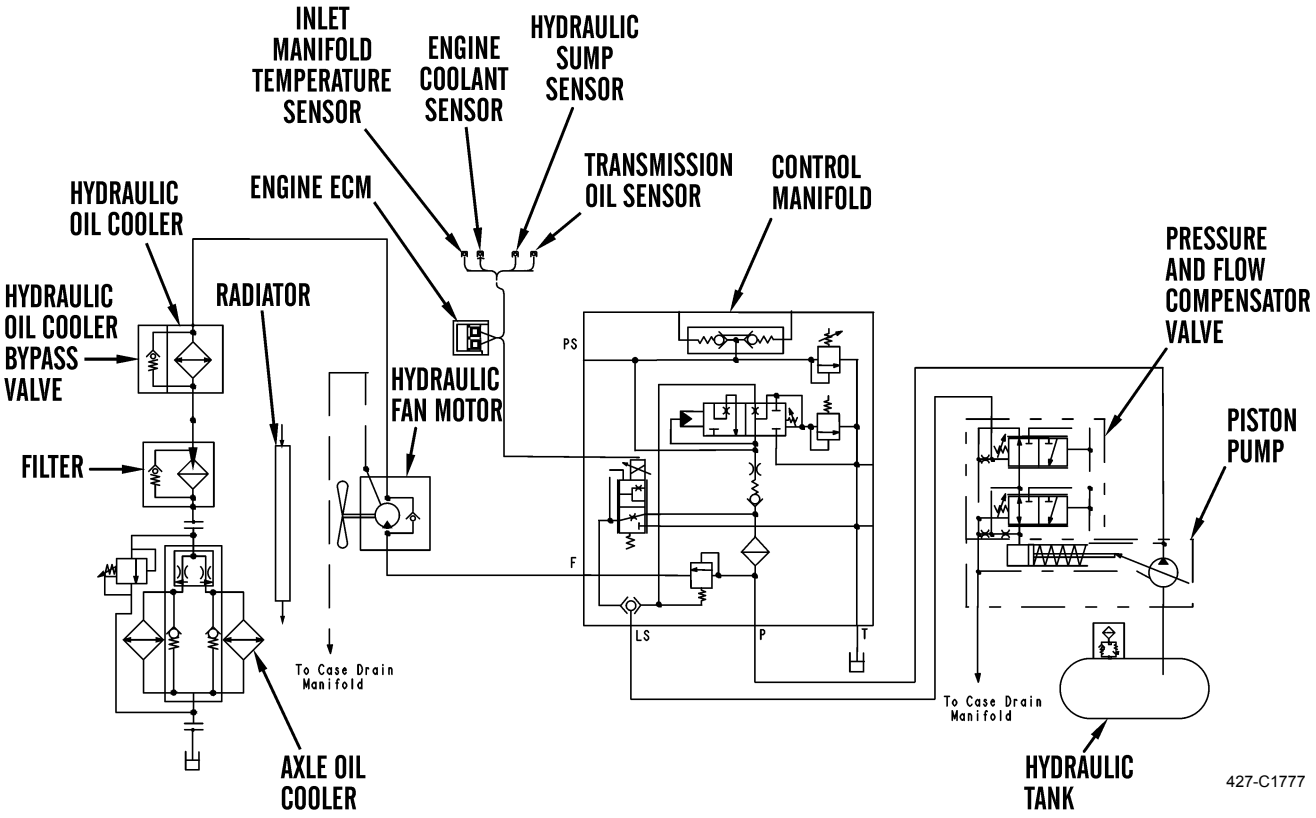

BRAKE AND HYDRAULIC FAN SYSTEM - CONTINUED

(1) Hydraulic fan system is used to meet cooling requirements by reducing horsepower driving hydraulic fan in a cooler condition or light application. Hydraulic fan system controls fan speed through use of a piston pump which drives a fixed displacement gear motor.

(2) Piston pump is mounted to front engine housing on left side of machine. Piston pump draws oil from hydraulic oil tank through pump inlet. High-pressure oil then flows to control manifold, which directs oil to either braking system or hydraulic fan motor. Braking system has priority. When oil is not required by braking system, oil is directed to hydraulic fan motor, located at rear of machine between radiator and engine. Pressurized oil from control manifold flows into hydraulic fan motor inlet, causing hydraulic fan motor to rotate fan blades. Fan rotation forces cool air to flow through cooling package.

(3) After hydraulic oil exits hydraulic fan motor, it flows through a hydraulic oil line to hydraulic oil cooler. When engine is first started and hydraulic oil is cold, oil from piston motor can not flow easily through hydraulic oil cooler. Oil pressure will increase in hydraulic oil cooler and hydraulic oil cooler bypass valve will open. Valve limits maximum oil pressure in hydraulic oil cooler to 65 psi (450 kPa). Case drain oil from piston pump and hydraulic fan motor flows through a hydraulic oil line to hydraulic oil tank, where it is filtered through a screen.

BRAKE AND HYDRAULIC FAN SYSTEM - CONTINUED

(4) When oil temperature increases and oil pressure decreases, spring force in hydraulic oil cooler bypass valve is greater than force of oil pressure acting on spring. This allows bypass valve to close. Hydraulic oil flows through hydraulic oil cooler and hydraulic oil filter, through axle oil cooler, and into hydraulic tank.

(5) Hydraulic fan system controls fan speed, allowing fan speed to decrease in cool ambient temperature or a light work application. Fan speed is controlled by four temperature sensors which send data to engine ECM. Engine ECM interprets data from all four sensors and sends any change in current to control manifold. A change in current to valve will change oil flow from control manifold to spools in pressure and flow compensator valve. Spool movement in pressure and flow compensator valve will decrease swashplate angle in hydraulic fan pump. By changing swashplate angle, oil volume from hydraulic pump will decrease and swashplate angle will slow oil flow to hydraulic fan motor.

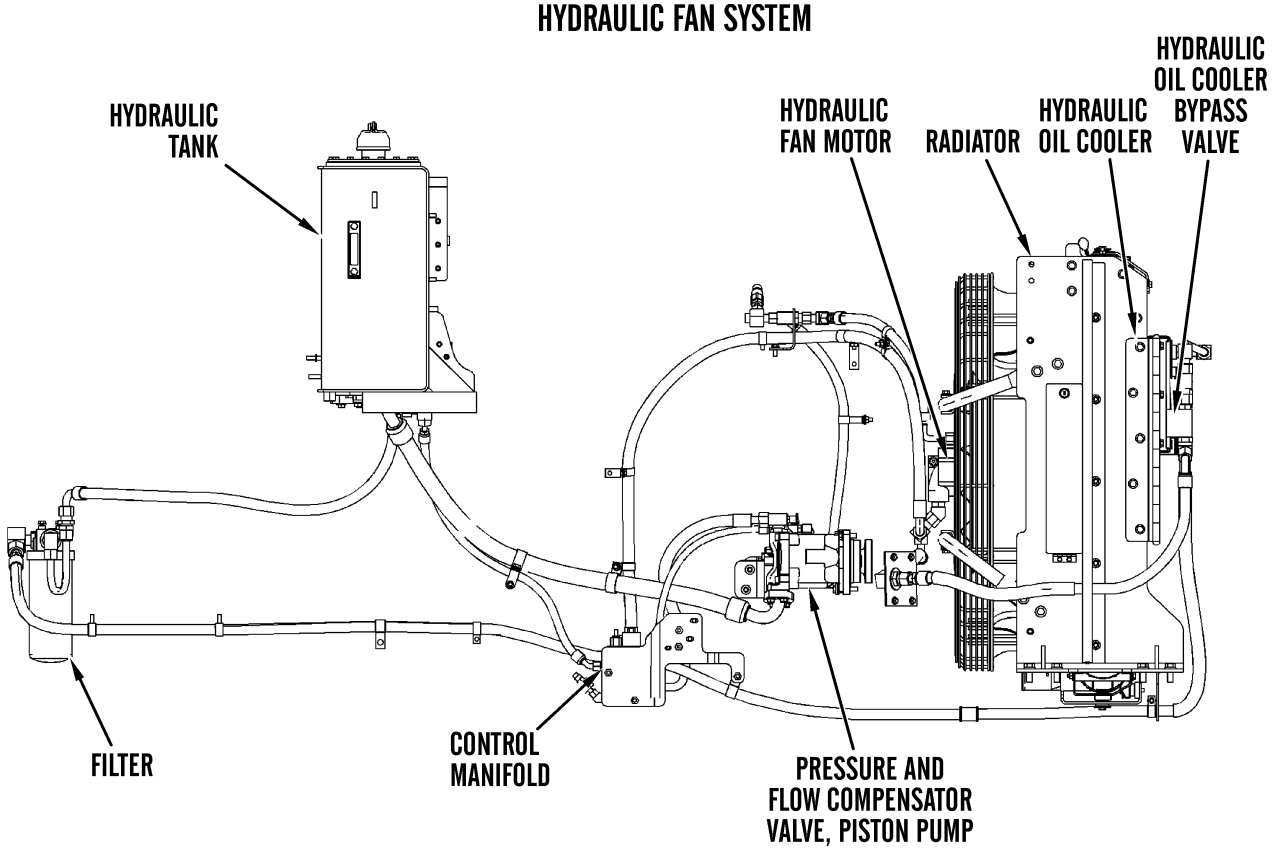

(6) Pressure and flow compensator valve, which controls pump flow, is mounted on top of hydraulic fan pump. Valve contains a flow control spool and a pressure cutoff spool. Settings on both spools can be adjusted.

STEERING SYSTEM

1. **General.**

METERING PUMP STEERING SYSTEM
HYDRAULIC SCHEMATIC

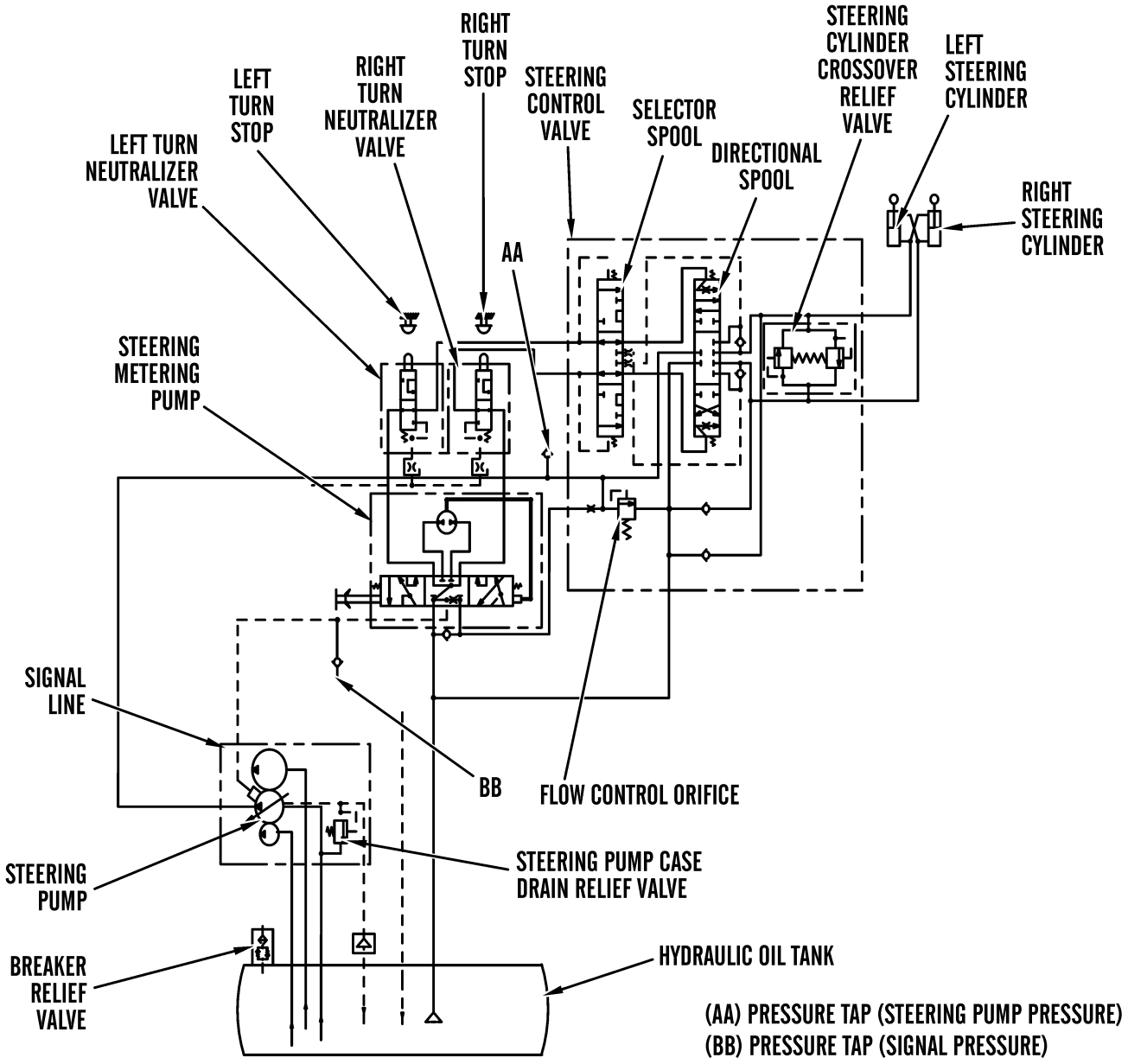

STEERING SYSTEM - CONTINUED

a. Primary steering system is made up of two basic circuits: pilot circuit and high pressure circuit. When a machine is equipped with secondary steering attachment, steering system includes one additional circuit.

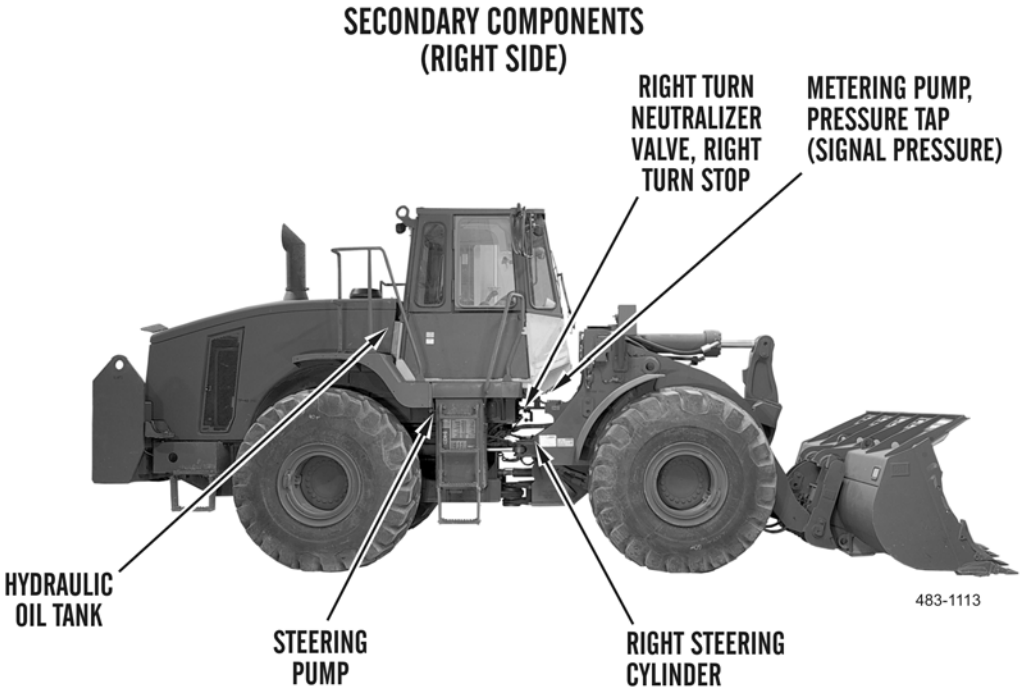

b. Metering pump is attached to bottom of steering column, located under floor of operator's cab. Left and right turn neutralizer valves are located on front center section of upper frame, under operator's compartment, and near upper hitch.

c. Steering control valve is located on left side of machine behind operator's cab. Hydraulic oil tank is located on right side of machine.

d. Steering pump is located under operator's cab on right side of machine. A pressure and flow compensator valve is attached to steering pump.

STEERING SYSTEM - CONTINUED

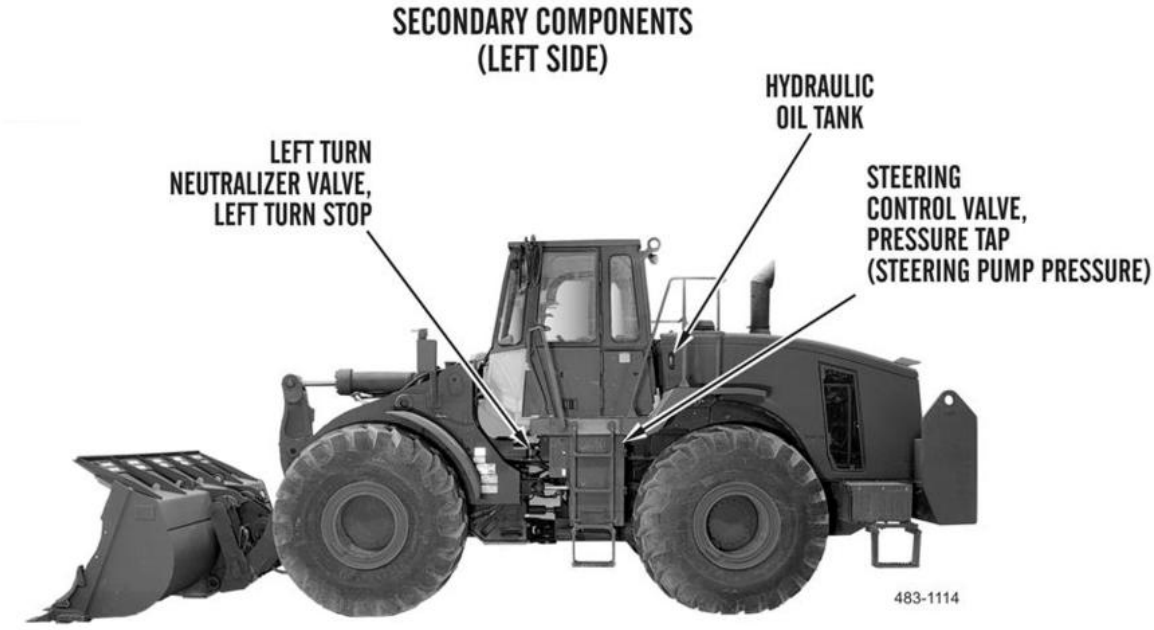

2. **Pilot Circuit.**
   a. Pilot circuit consists of a metering pump, neutralizer valve for a left turn, neutralizer valve for a right turn, selector spool, directional spool, steering pump, flow control orifice, and hydraulic oil tank.
   b. Pilot system controls spool movement in steering control valve. Steering pump draws oil from hydraulic oil tank. Pressure oil from steering pump flows to steering control valve, then through flow control orifice. Flow control orifice reduces amount of oil flow to metering pump.
   c. Metering pump is a small hydraulic pump used as a metering valve and directional control valve. When an operator turns steering wheel, a spool and sleeve rotates inside metering pump, allowing oil to flow to either right-turn or left-turn neutralizer valve. Turning steering wheel faster causes more oil to flow to neutralizer valve.
   d. Oil then flows to steering control valve. Oil pressure causes selector spool to move either right or left. This causes directional spool to move in same direction as selector spool. Directional spool allows high-pressure oil to flow to steering cylinders.
3. **High Pressure Circuit.**
   a. High pressure circuit consists of a steering control valve, crossover relief valve for steering cylinders, left steering cylinder, right steering cylinder, steering pump, backup relief valve, and hydraulic oil tank.
   b. High pressure circuit provides high-pressure oil for steering cylinders. Oil is drawn from hydraulic oil tank by steering pump. Steering pump is a variable piston pump. A pressure and flow compensator valve is attached to steering pump to help control pump output.
   c. A backup relief valve in steering control valve prevents excessive pressure in high pressure circuit if there is a malfunction in pressure and flow compensator valve.
   d. When pilot oil moves directional spool, pressure oil is directed to steering cylinders. When a right turn is made, pressure oil flows to head end of left-hand steering cylinder and rod end of right-hand steering cylinder. This causes machine to turn right. When a left turn is made, pressure oil flows to head end of right-hand steering cylinder and rod end of left-hand steering cylinder. This causes machine to turn left.
   e. Crossover relief valve prevents excessive pressure spikes in steering cylinders. Pressure spikes could develop if a front tire hits an object.

STEERING SYSTEM - CONTINUED

4. **Steering Piston Pump.**

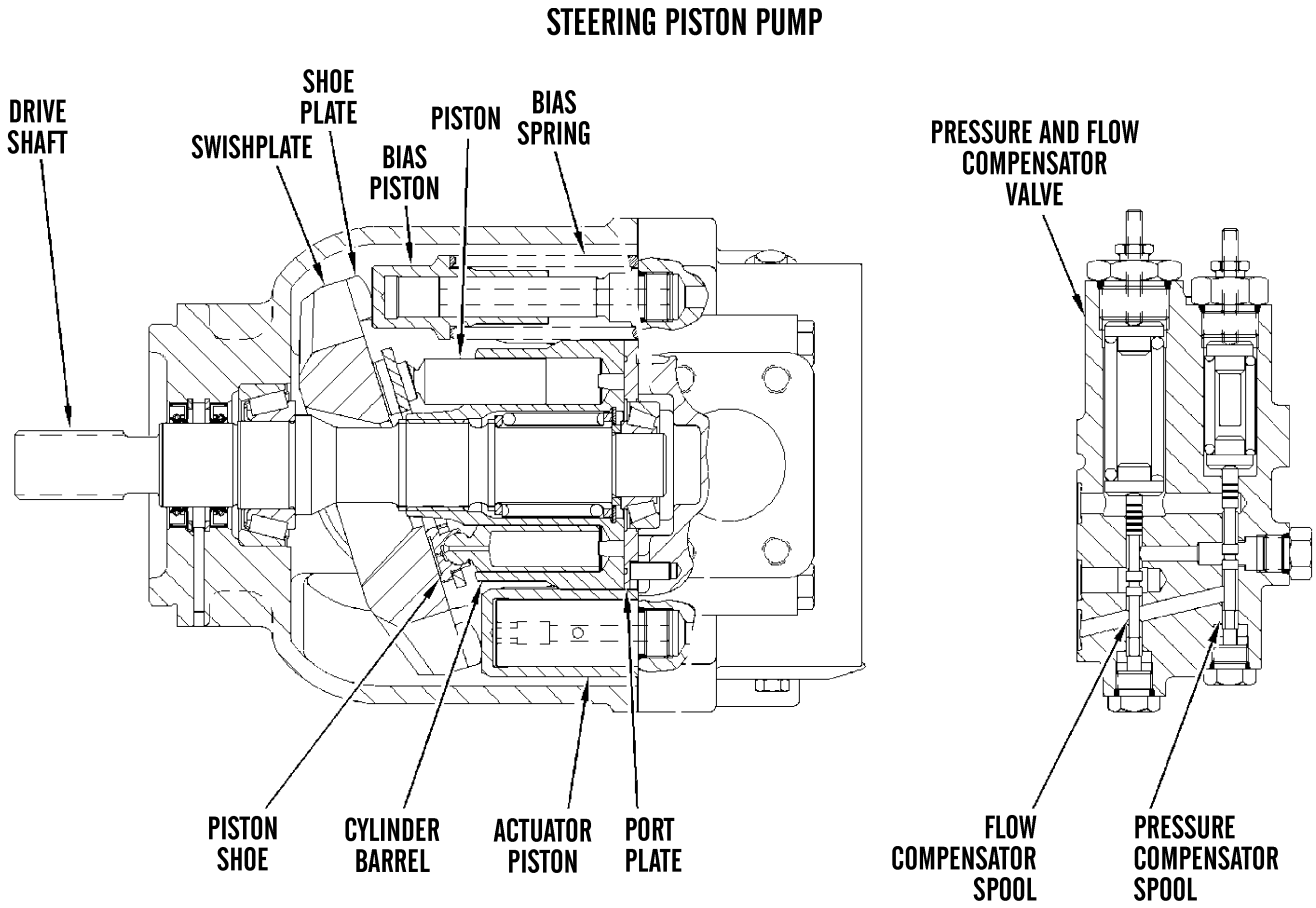

a. Steering system pump is an automatic piston pump which senses pressure and flow requirements. When steering circuit is not being used, pump is at low-pressure standby.

b. Single highest pressure sensed flows to pressure compensator spool. This spool keeps pump output at a level necessary to fulfill requirements for system flow and pressure.

STEERING SYSTEM - CONTINUED

c. Actual system pressure will be greater than highest work port pressure requirements unless pump is at full stroke. Difference between work port requirement and higher main system pressure is called margin pressure.

d. Pressure compensator valve also limits maximum system pressure to prevent damage to steering system components caused by excessive pressure.

e. Pump is controlled by bias piston and actuator piston. Bias spring causes swashplate to move, which causes pump to upstroke.

f. Actuator piston has a larger area than bias piston. Actuator piston causes swashplate to destroke pump. Flow compensator spool and/or pressure compensator spool changes pump output by regulating pump discharge pressure acting on actuator piston.

g. Pressure and flow compensator valve routes pump discharge pressure to actuator piston. Because actuator piston is larger than bias piston, oil pressure acting against piston overcomes force of bias spring, causing pump to destroke.

h. Flow compensator spool maintains pump outlet pressure at 350 ± 15 psi (2,400 ± 100 kPa) above work port pressure requirements.

i. Pressure and flow compensator valve also controls maximum output pump pressure. When work port pressure rises above 3,046 ± 51 psi (21,000 ± 350 kPa), pressure compensator spool overrides flow compensator spool, causing pump to destroke. This occurs at approximately 100 psi (700 kPa) below maximum pressure setting.

STEERING SYSTEM - CONTINUED

j. **Upstroking.**

PUMP AND COMPENSATOR OPERATION (UPSTROKING)

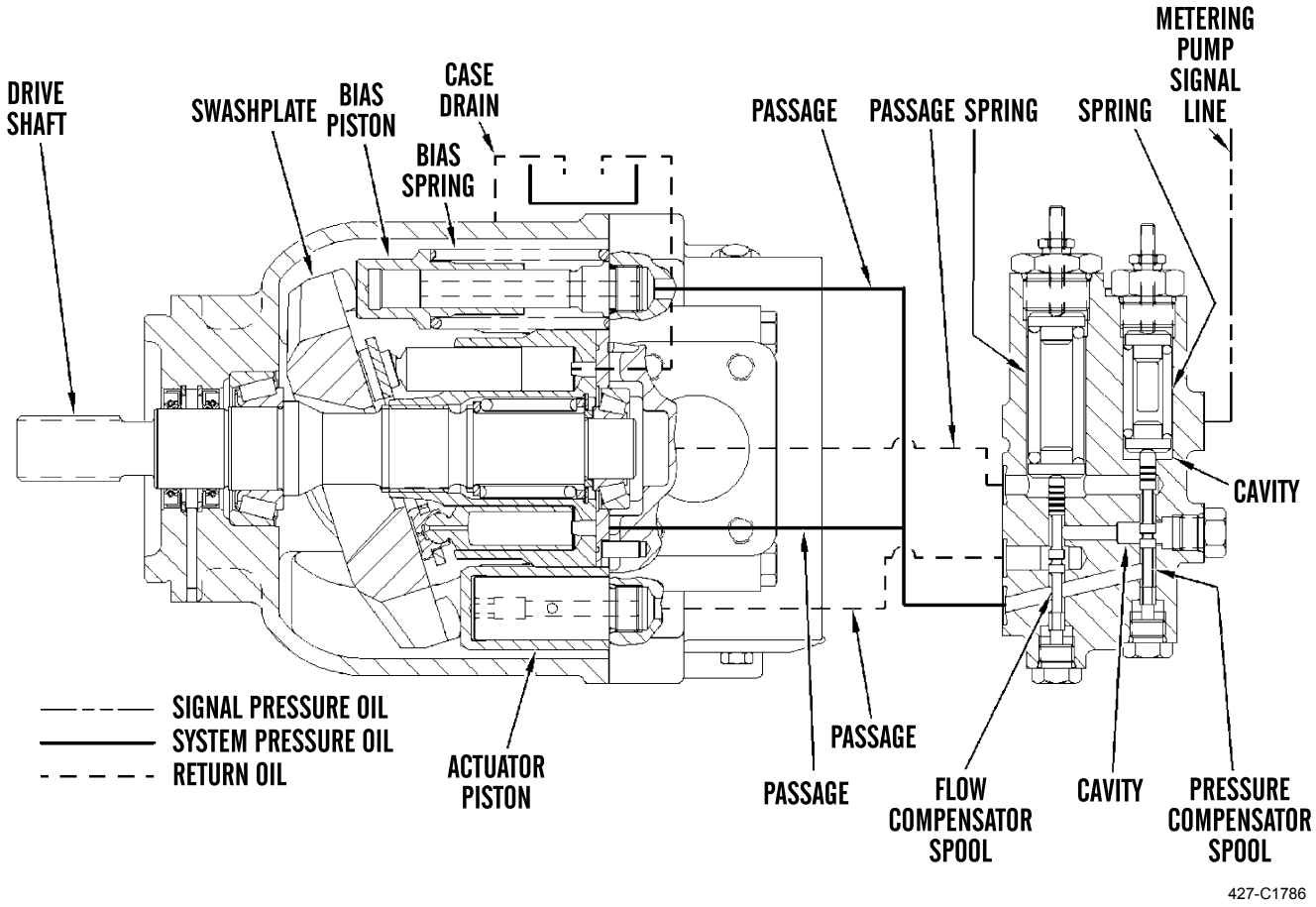

427-C1786

STEERING SYSTEM - CONTINUED

(1) Pump upstroking occurs because of increased flow demand. Increased flow demand is met by increased pump output.

(2) Increased flow demand causes a signal pressure in signal line from metering pump which combines with force of pressure compensator spring in cavity, causing pump pressure to be 350 ± 15 psi (2,400 ± 100 kPa) greater than signal pressure. However, combination of signal pressure and spring force is greater than pump discharge pressure. This difference is called margin pressure.

(3) Pressure causes pressure compensator spool to move down, blocking flow of supply oil to actuator piston. When oil flow to actuator piston is blocked, oil in passage from actuator piston drains to passage, then flows past flow compensator spool, pressure compensator spool, and through passage into case drain.

(4) Supply oil flows through passage to bias piston. Oil acts against bias piston and combines with force of bias spring, causing swashplate to upstroke.

(5) This also causes pump flow to increase. As flow requirements are satisfied, pump output pressure increases until pressure in passage moves flow compensator spool up to metering position.

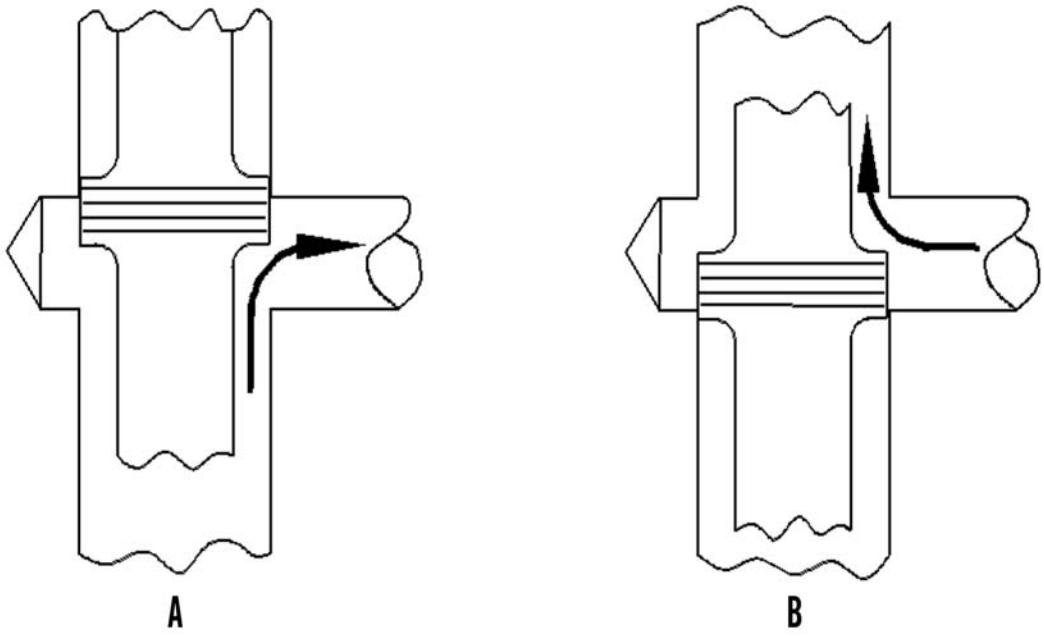

METERING POSITIONS 427-C1787

(6) Slight upward and downward movement is called metering. Metering maintains equal pressure on each end of flow compensator spool.

(7) With flow compensator spool in position A, pump pressure is greater than combined force of spring and signal oil pressure in pressure compensator spool cavity. This forces spool to move upward.

(8) When flow compensator spool moves upward, pressure oil flows past spool and through passage, past flow compensator spool, and into passage to actuator piston, causing pump to destroke.

(9) Area of actuator piston is larger than area of bias piston. This causes force of oil acting against actuator piston to overcome combined force of spring and oil acting against bias piston. Actuator piston moves leftward, causing swashplate to move toward minimum angle.

STEERING SYSTEM - CONTINUED

(10) As swashplate angle decreases, pump output also decreases. When pump pressure is low enough, combined force of signal oil pressure in pressure compensator cavity and of pressure compensator spring causes pressure compensator spool to move downward into position B.

(11) When pressure compensator spool moves down, flow of pump output oil into pressure compensator passage is blocked. Oil in actuator piston passage flows from actuator piston past flow compensator spool, then returns to case drain.

k. **Destroking.**

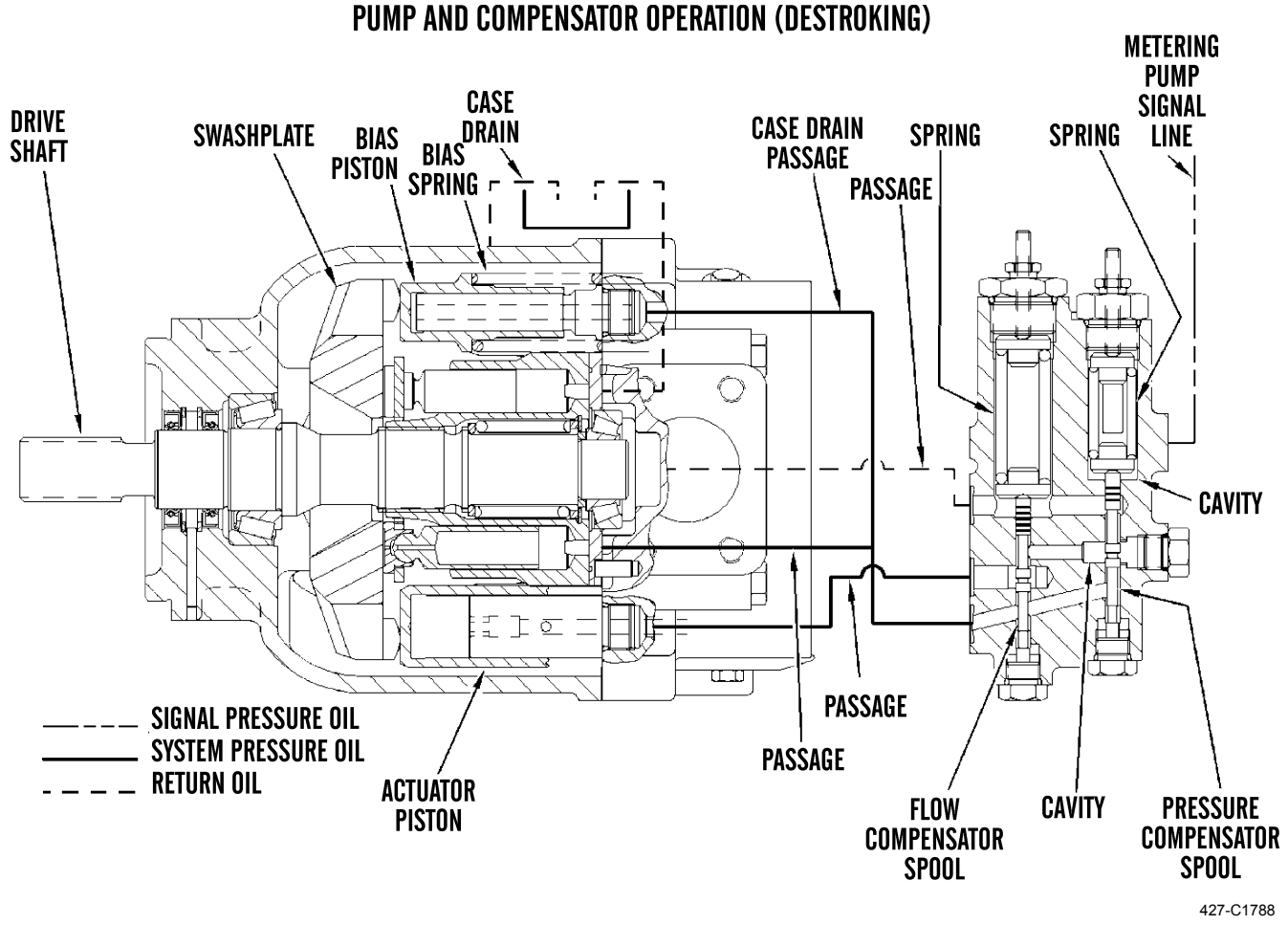

STEERING SYSTEM - CONTINUED

(1) Decreased flow demand causes a signal pressure in metering pump signal line. Signal pressure in line combines with force of spring in pressure compensator cavity. This combined force is less than pump pressure in passage, causing pressure compensator spool to move upward.

(2) Oil behind actuator piston cannot flow through passage to case drain. Pump oil now flows through passage to pressure compensator spool, then past spool, through passage, and to actuator piston.

(3) Pump pressure behind actuator piston is now greater than combined force of bias piston and bias spring. Swashplate angle decreases, decreasing pump output and system pressure.

(4) When lower flow requirements are met, flow compensator spool moves down to metering position. Swashplate maintains an angle sufficient to provide lower required pressure. If operator does not turn steering wheel, pump will return to low-pressure standby.

l. **Low-Pressure Standby.**

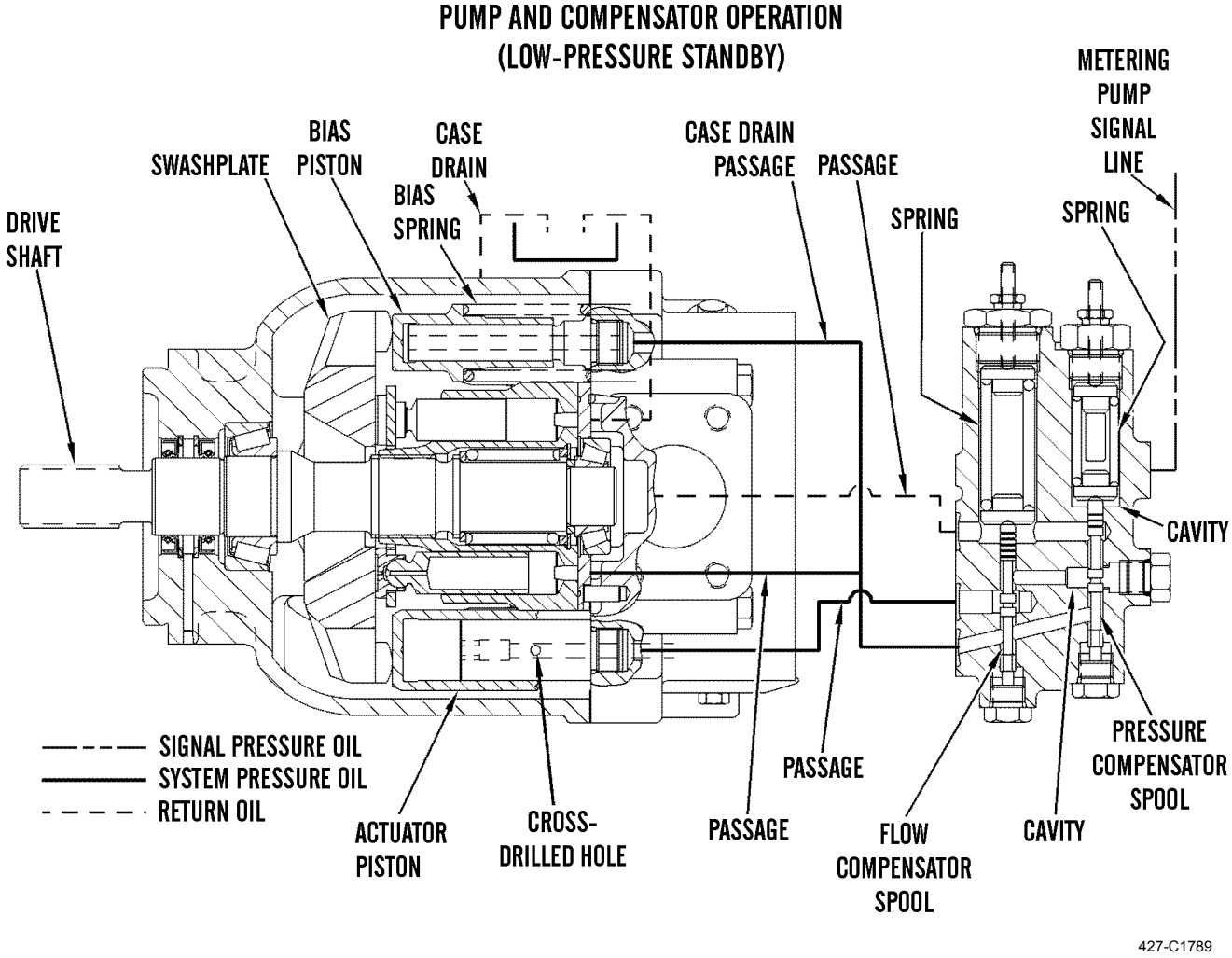

STEERING SYSTEM - CONTINUED

(1) Low-pressure standby describes a running engine and inactive steering. There are no flow or pressure demands on pump, therefore there is no signal pressure in metering pump signal line.

(2) Before engine is started, bias spring holds swashplate at maximum angle. As pump begins to turn, oil begins to flow and system pressure increases because of closed centered steering control valves.

(3) Pressure in flow compensator spool passage is sensed at bottom of flow compensator spool and bottom of pressure compensator spool. As this pressure increases, it pushes flow compensator spool against flow compensator spring, causing spool to move upward. This opens passage to allow pressure oil to flow to actuator piston.

(4) Oil acts against actuator piston to overcome force of bias spring, moving actuator piston left which moves swashplate toward minimum angle. Actuator piston continues to move leftward until cross-drilled hole is uncovered, allowing oil to drain to case.

NOTE

Low-pressure standby will vary in the same pump as the system leakage or pump leakage increases. The pump will upstroke slightly to compensate for increasing leakage. Actuator piston will cover more of the cross-drilled hole. As this happens, low-pressure standby will drop toward margin pressure. The leakage will reach a point when the piston completely covers the cross-drilled hole. This is necessary because of the increased swashplate angle required. When this happens, low-pressure standby will equal the margin pressure.

(5) Cross-drilled hole limits maximum leftward actuator piston travel. Pump supplies an amount of flow sufficient to compensate for system leakage and leakage to pump case as a result of cross-drilled hole. Pump maintains low-pressure standby. Low-pressure standby pressure should not exceed 580 psi (4,000 kPa).

STEERING SYSTEM - CONTINUED

m. **High-Pressure Stall.**

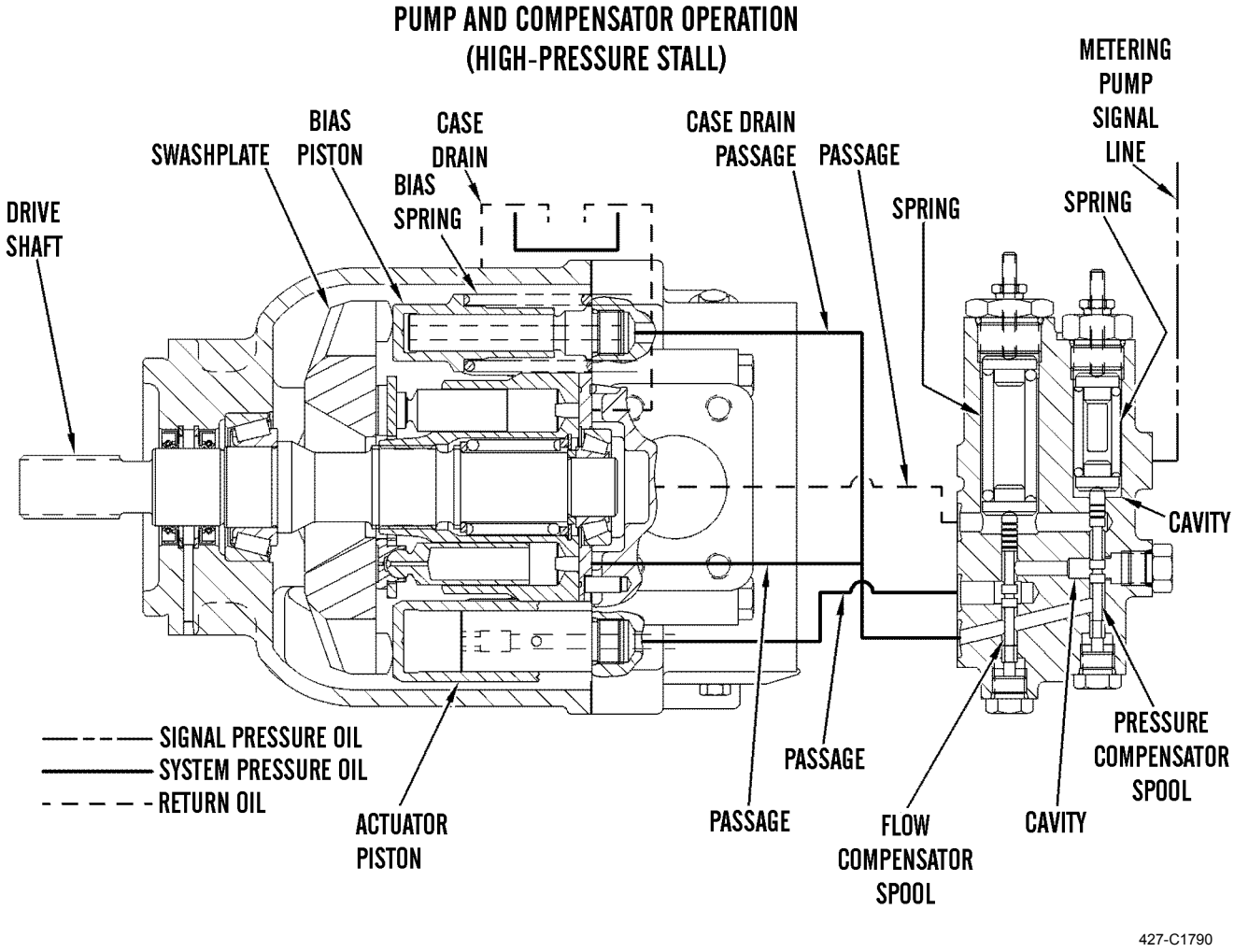

STEERING SYSTEM - CONTINUED

(1) When hydraulic system stalls under load or when cylinders reach end of stroke, main system pressure increases. Signal pressure in metering pump signal line and pressure compensator cavity becomes equal to pump output pressure. Flow compensator spring keeps flow compensator spool shifted downward.

(2) When main system pressure reaches 3,046 ± 51 psi (21,000 ± 350 kPa) in passage, pressure acts upon pressure compensator spool to overcome force of pressure compensator spring. Pressure then causes spool to move upward. Supply oil now flows past flow compensator spool and through passage to pressure compensator spool. Oil flows past pressure compensator spool and into passage, then flows to actuator piston.

(3) Pressure sensed on actuator piston causes pump to destroke. If operator does not turn steering wheel, pump will return to low-pressure standby.

5. **Steering Metering Pump.**

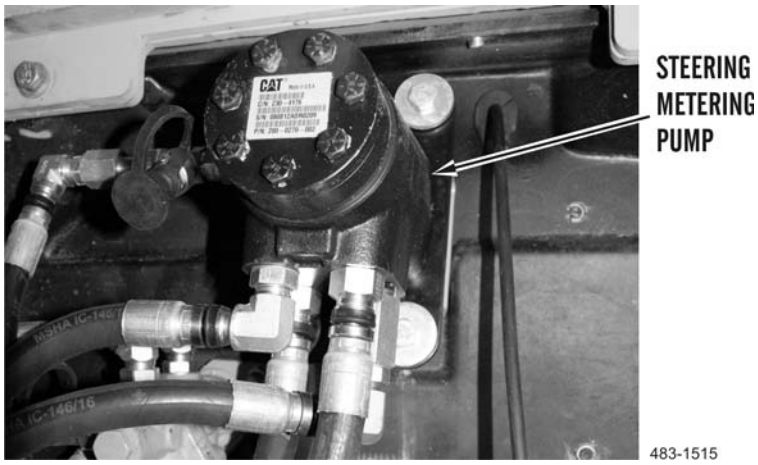

STEERING SYSTEM - CONTINUED

a. Steering metering pump is attached to bottom of steering column, located under floor of operator's cab.

b. Control section (A) consists of spool, sleeve, and housing. Sleeve is connected to spool by pin. Pin is installed through a slot in spool and a hole in sleeve. Centering springs are installed through both spool and sleeve.

c. Metering section (B) consists of a rotor ring and rotor. Spool is connected to rotor by drive shaft, which has a slot that engages with pin. Drive shaft is splined to rotor.

STEERING METERING PUMP

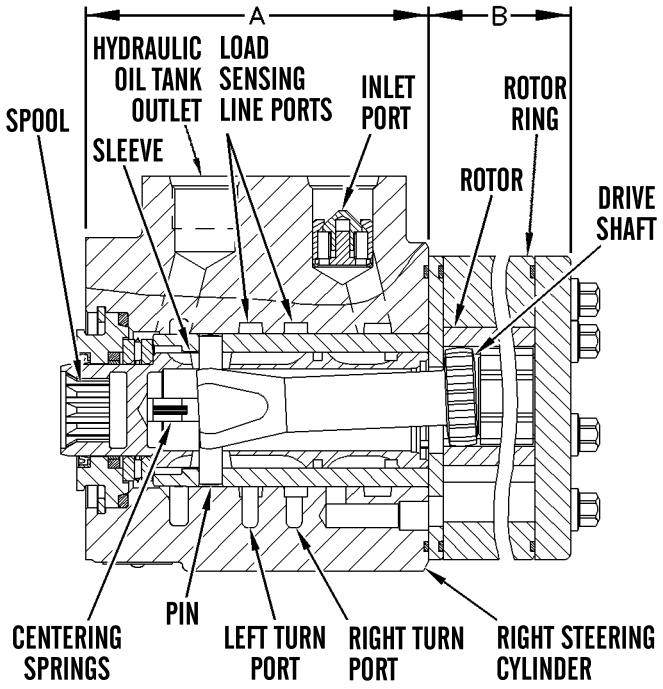

427-C1792

STEERING SYSTEM - CONTINUED

d. Steering column is connected to spool by a spline coupling. Pump oil flows into control section through inlet port.

e. When steering wheel is not being turned, most flow is blocked by spool and sleeve. A small amount of oil flows through a restriction on its way to hydraulic oil tank. This ensures a supply of oil at operating temperature is always available to metering pump.

f. When steering wheel is turned, spool turns a small amount until centering springs are compressed. When pin contacts ends of slots, sleeve also turns.

g. While steering wheel is turning, spool and sleeve turn as one unit. Centering springs are compressed.

h. This initial movement of spool opens passages between control section and metering section, allowing oil to flow from inlet port to metering section.

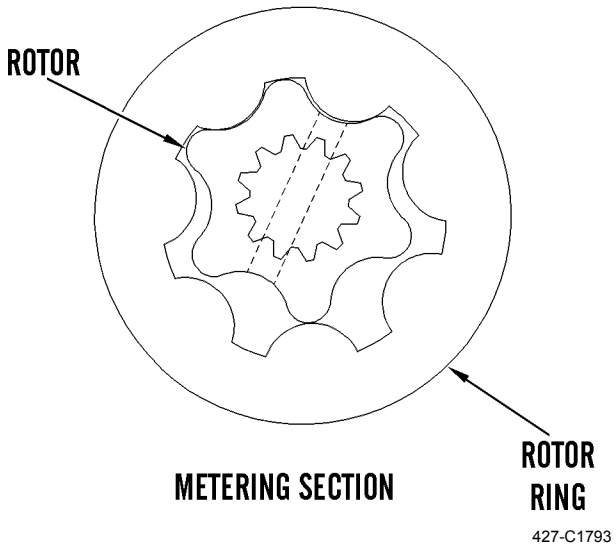

i. Steering wheel rotation causes rotor to rotate inside rotor ring. As rotor turns, a controlled flow of oil flows through housing. This oil flows to right-turn port or left-turn port, then to steering control valve.

j. When steering wheel rotation is stopped, centering springs move both spool and sleeve into alignment. This closes passages between metering section and control section.

STEERING SYSTEM - CONTINUED

6. **Steering Control Valve.**

NOTE

In the illustration below, the operator's cab is removed for clarity.

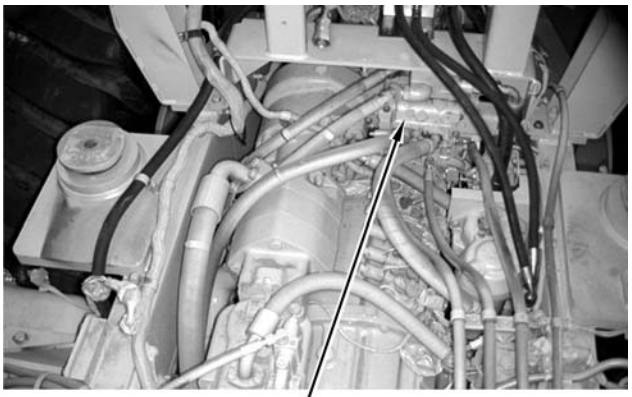

STEERING SYSTEM - CONTINUED

a. Steering control valve is located between operator's cab and engine on left side of machine.

b. NEUTRAL position.

STEERING CONTROL VALVE SCHEMATIC

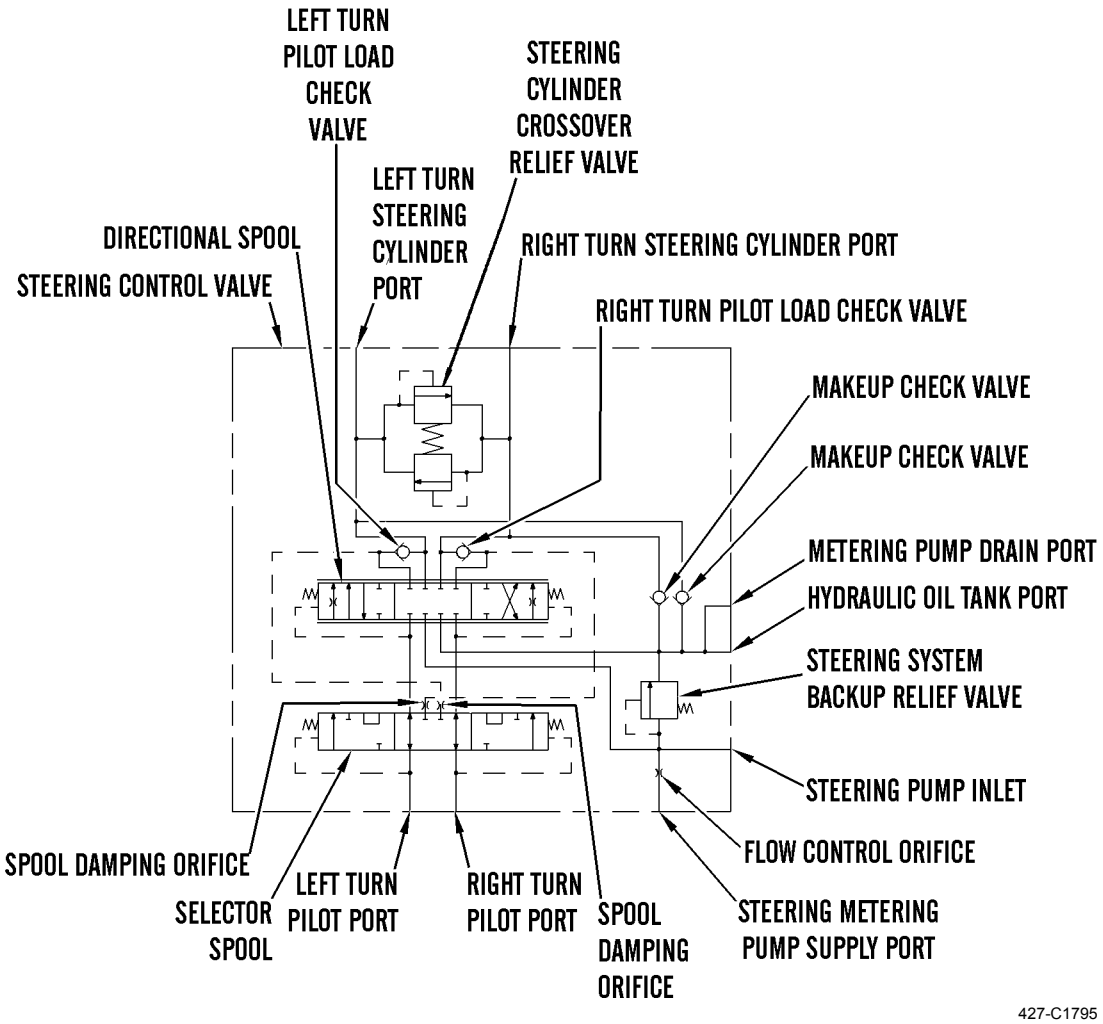

STEERING SYSTEM - CONTINUED

(1) With engine in operation, oil is drawn from hydraulic oil tank to steering pump. Pressure oil then flows to steering control valve.

NOTE

Machines equipped with the secondary steering attachment have several additional components, including the secondary steering pump and secondary steering valve. When the secondary steering attachment is present, pressure oil from the steering pump flows to the secondary steering valve before flowing to the steering control valve.

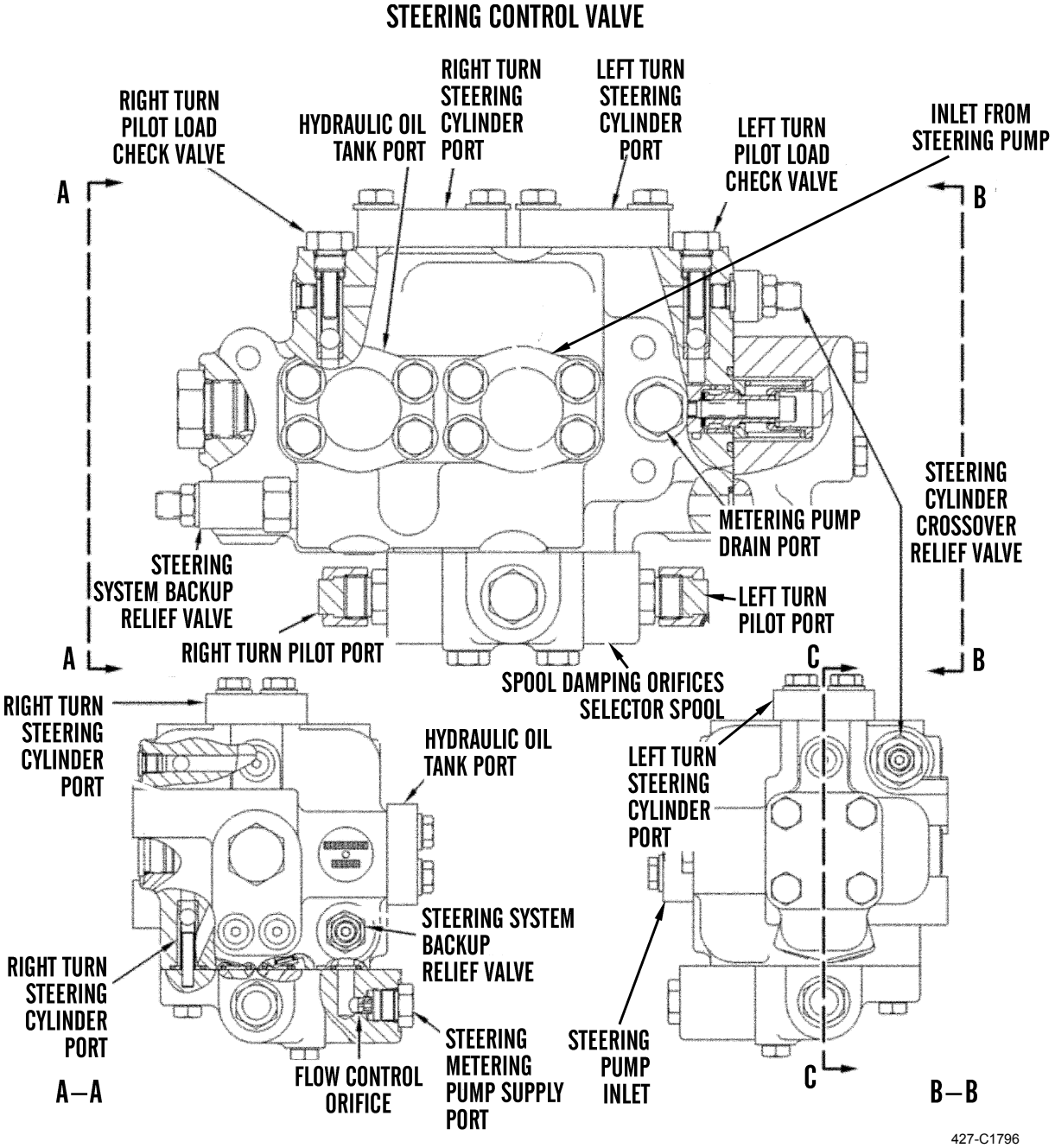

STEERING SYSTEM - CONTINUED

(2) When steering wheel is stationary, steering control valve is in NEUTRAL. Pressure oil from steering pump enters steering control valve through steering pump inlet.

(3) From steering pump inlet, pressure oil flows through flow control orifice. Flow control orifice reduces amount of oil flow directed to metering pump. Pressure oil also flows to steering backup relief valve and directional spool.

(4) Because steering wheel is stationary, there is no flow of steering pilot oil from metering pump. However, a small quantity of oil flows to hydraulic oil tank through orifices located in steering metering pump.

(5) Any pilot oil that had been acting on an end of selector spool is forced across an orifice, then back to hydraulic oil tank.

(6) Because there is no pilot oil flow, directional spool is kept in center of steering control valve by spring. This causes directional spool to block pressure oil flow from steering pump. Because no pressure oil is allowed to flow through right or left turn steering cylinder passages, steering cylinders do not actuate.

(7) Similarly, if left- or right-turn steering neutralizer valve is actuated, steering pilot oil flow to either end of selector spool stops.

(8) Pump standby pressure is sensed by steering backup relief valve. Pump standby pressure is connected to steering metering pump through flow control orifice.

(9) If an operator does not turn steering wheel, steering cylinder position will not change because oil is blocked in left and right turn steering cylinder passages.

(10) When steering wheel is held stationary, there is no demand for pressure oil. Low signal pressure causes steering pump to destroke. A small amount of oil flow will still compensate for system leakage.

(11) A hydraulic oil line connects metering pump and steering pump, allowing signal pressure oil to flow to pressure and flow compensator valve attached to steering pump. If signal oil pressure is low, steering pump will destroke. If signal oil pressure is high, steering pump will upstroke.

(12) When wheels contact a stationary object, steering cylinders may experience a sudden shock load. Any pressure generated in steering cylinders from a shock load is sensed in left and right turn steering cylinder passages. Crossover relief valve senses oil pressure in those passages.

(13) If pressure exceeds steering cylinder crossover relief valve settings, valve opens. This causes oil to flow to passage with lower pressure.

(14) Makeup check valves connect with left and right turn steering cylinder passages, allowing oil to be drawn through hydraulic oil tank port. This prevents voiding in steering cylinder that causes crossover relief valve to open. Makeup check valves are normally seated by spring force.

THEORY OF OPERATION - CONTINUED 0003 00

STEERING SYSTEM - CONTINUED

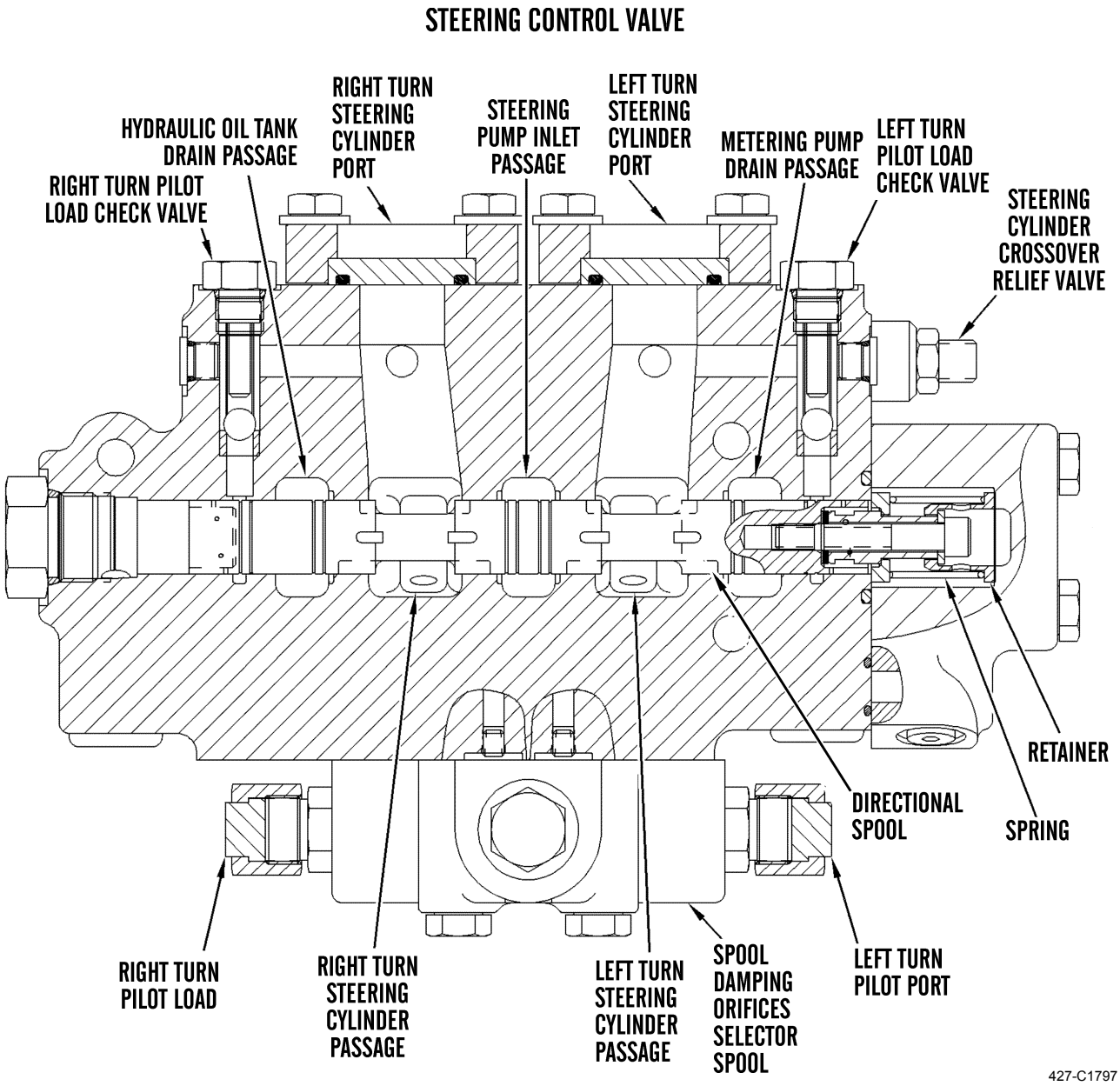

STEERING SYSTEM - CONTINUED

c. **RIGHT TURN Position.**

RIGHT TURN POSITION

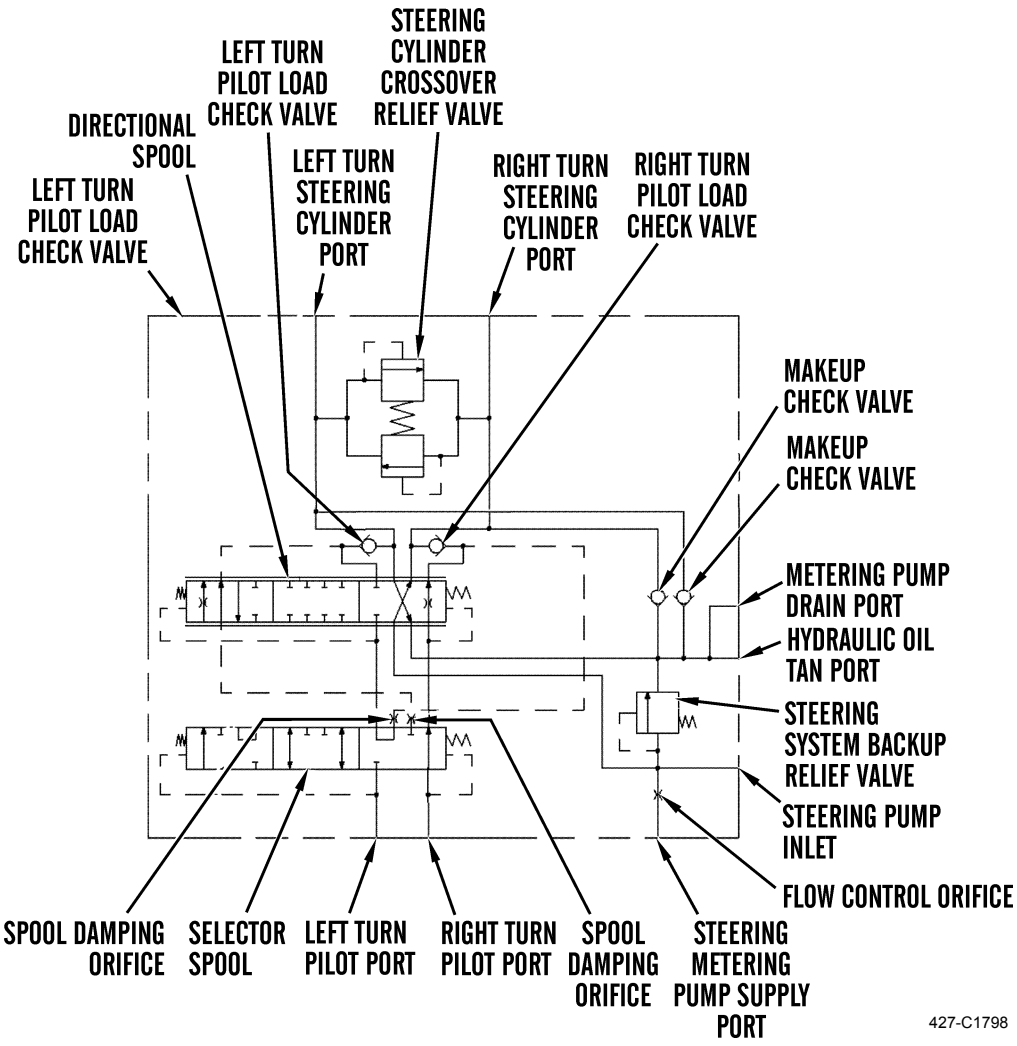

STEERING SYSTEM - CONTINUED

(1) When steering wheel is turned clockwise to execute a right turn, pilot oil flows from steering metering pump through right turn pilot port.

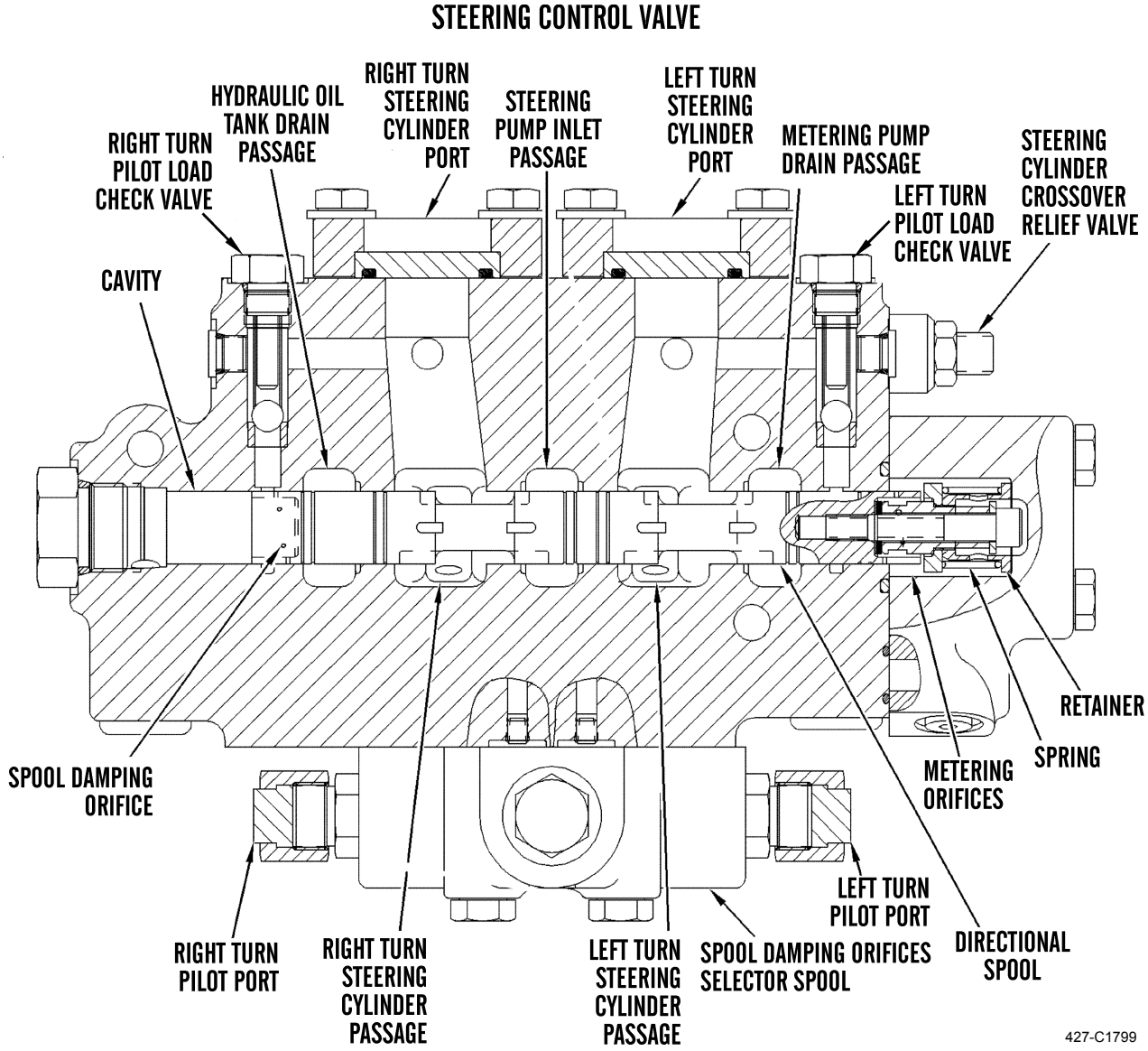

STEERING SYSTEM - CONTINUED

(2) Pilot oil then flows through an orifice, causing selector spool to move leftward, allowing oil to flow through a passage to fill hydraulic oil tank drain passage cavity.

(3) Oil pressure in hydraulic oil tank drain passage cavity causes directional spool to move left, compressing spring. Movement of directional spool causes metering orifices to open into a passage. Right turn pilot load check valve is located inside passage. This causes pilot oil pressure to unseat right turn pilot load check valve.

(4) Oil displaced from chamber by movement of directional spool flows back to hydraulic oil tank.

(5) As directional spool moves left, pressure oil from steering pump flows through steering pump inlet passage. Oil then fills right turn steering cylinder passage.

(6) Pressure oil then flows out of right turn steering cylinder port to rod end of right-side steering cylinder. Pressure oil also flows to head end of left-side steering cylinder.

(7) Simultaneously, return oil from rod end of left-side steering cylinder flows through left turn steering cylinder port. Return oil from head end of right-side steering cylinder flows through left turn steering cylinder port, causing machine to articulate right.

(8) Oil then flows into left turn steering cylinder passage. From passage, oil flows through a passage to hydraulic oil tank port.

(9) Steering metering pump supply port is connected to control section of steering pump. Control section consists of a pressure and flow compensator valve which regulates steering pump output.

(10) Movement of directional spool and turning speed of machine depend on two factors: steering wheel turning speed and engine speed.

(11) Flow control orifice regulates oil supply to steering metering pump, therefore, it also regulates maximum steering wheel turning speed.

(12) As maximum speed is reached, pilot oil pressure between steering metering pump and directional spool decreases. Pump output decreases slightly as sensing line signal pressure decreases. This causes greater effort to be required to turn steering wheel, resulting in slower steering wheel rotation.

(13) When operator stops turning steering wheel, pilot oil flow to steering control valve is cut off. Oil flow stops because spool in steering metering pump is spring-centered. Also, if left- or right-turn steering neutralizer valve is actuated, flow of steering pilot oil to either end of selector spool stops.

(14) Steering cylinder pressure closes right turn pilot load check valve, causing spring to move directional spool to NEUTRAL position. Pilot oil in hydraulic oil tank drain passage is displaced through metering orifices.

(15) When wheels contact a stationary object, steering cylinders may experience a sudden shock load. Any pressure generated in steering cylinders from a shock load is sensed in right and left turn steering cylinder passages. Steering cylinder crossover relief valve senses oil pressure in those passages.

(16) If pressure exceeds steering cylinder crossover relief valve settings, valve opens. This causes oil to flow to passage with lower pressure.

(17) Makeup check valves connect with right and left turn steering cylinder passages, allowing oil to be drawn through hydraulic oil tank port. This prevents voiding in steering cylinder that causes steering cylinder crossover relief valve to open. Makeup check valves are normally seated by spring force.

STEERING SYSTEM - CONTINUED

d. **LEFT TURN Position.**

(1) When machine is turned left, steering control valve operates in a similar manner to a right turn.

(2) For a left turn, pilot oil enters left turn pilot port. Pressure oil from steering pump inlet port flows through metering pump drain passage, then past directional spool. From directional spool, oil flows out of left turn steering cylinder port.

(3) Pressure oil then flows to rod end of left-side steering cylinder, and head end of right-side steering cylinder.

(4) Simultaneously, return oil flows from head end of left-side steering cylinder and rod end of right-side steering cylinder. This causes machine to articulate left.

e. **Steering Cylinders Crossover Relief Valve.**

NOTE

In the illustration below, the operator's cab is removed for clarity.



STEERING SYSTEM - CONTINUED

(1) Steering cylinders crossover relief valve is located on back left side of steering control valve when facing back left side of machine.

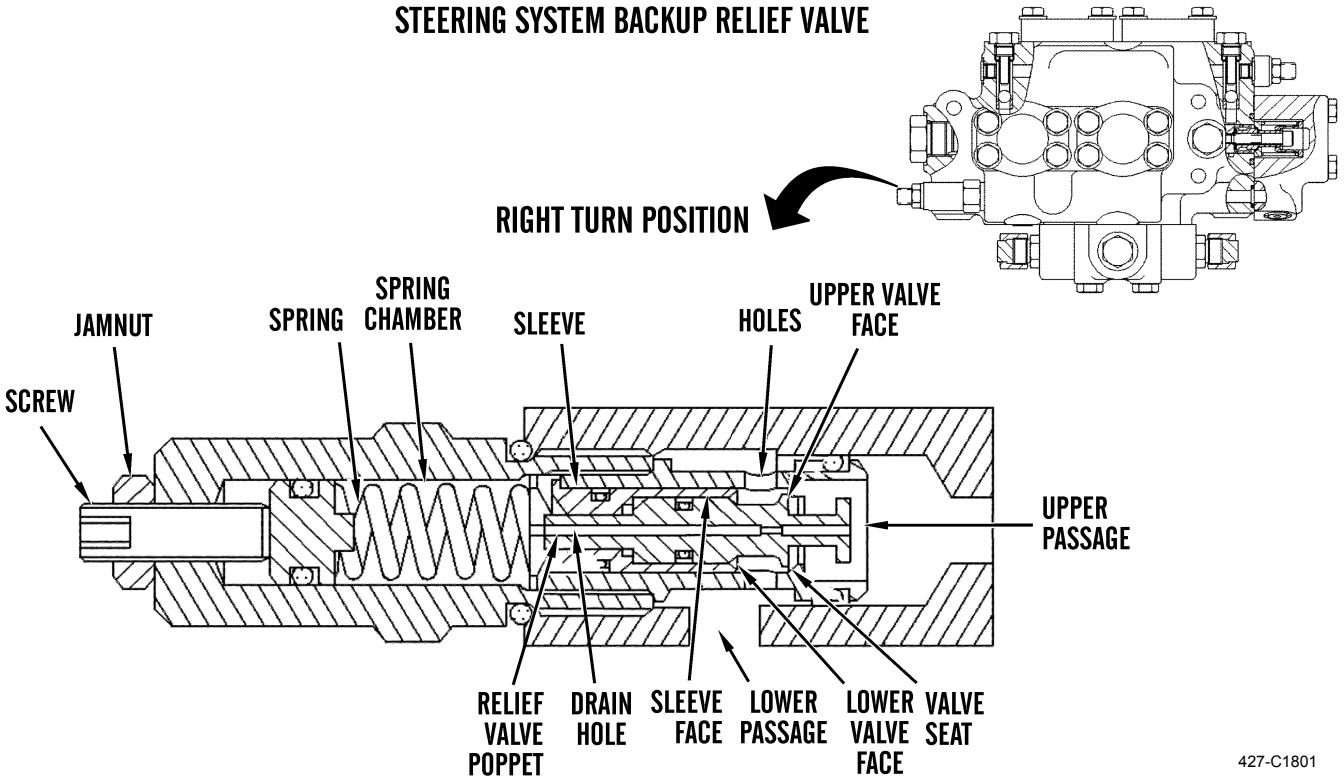

(2) Steering cylinders crossover relief valve relieves shock loading in steering system. Crossover relief valve operates when steering system is in NEUTRAL or when steering system is articulating machine.

(3) Steering cylinder pressure is sensed in two steering control valve passages. Steering cylinder pressure is also sensed on two valve faces.

(4) When steering cylinders are moved by external steering forces, pressure in passages can increase suddenly.

(5) A pressure increase in upper passage acts on upper valve face. If pressure is greater than valve setting, poppet moves left, compressing spring. Pressure is relieved to lower passage through holes.

(6) If pressure in lower passage is greater than pressure setting of crossover relief valve, pressure acts on lower valve face and sleeve face.

(7) Sleeve and poppet move left against spring. Pressure in lower passage is relieved to upper passage through holes.

(8) Spring chamber is connected to hydraulic oil tank through drain hole.

(9) Pressure setting of steering cylinders crossover relief valve is adjustable.

STEERING SYSTEM - CONTINUED

f. **Steering System Backup Relief Valve.**

(1) Steering system backup relief valve is located on right side of steering control valve.

STEERING SYSTEM BACKUP RELIEF VALVE

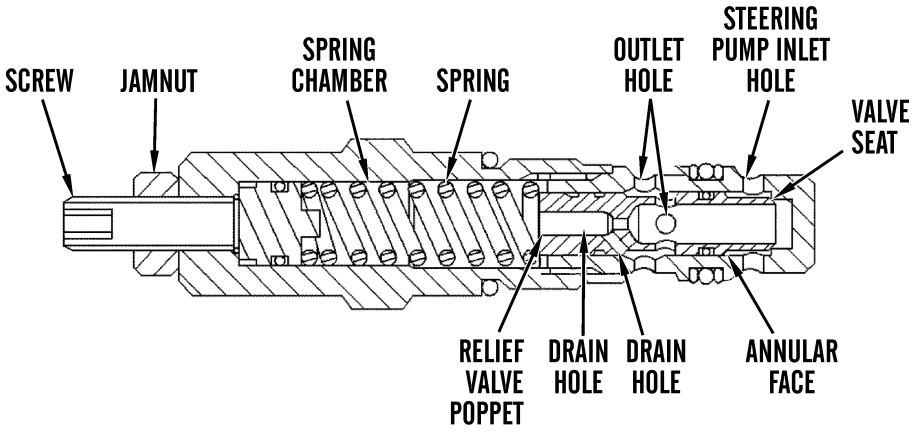

STEERING SYSTEM - CONTINUED

(2) Pressure may suddenly increase due to steering resistance. Steering pump load control may not regulate pump output at a fast enough rate. If this occurs, steering system backup relief valve connects steering control valve inlet passage to hydraulic oil tank.

(3) Spring holds steering relief valve poppet against valve seat.

(4) Steering pump pressure is sensed in backup relief valve through steering pump inlet hole. This pressure acts on annular face.

(5) If pressure acting on annular face exceeds pressure setting on backup relief valve, poppet moves left against spring. Pressure is then relieved to hydraulic oil tank through two outlet holes.

(6) Drain holes connect spring chamber to hydraulic oil tank.

(7) Pressure setting of steering system backup relief valve is adjustable.

STEERING SYSTEM - CONTINUED

7. **Secondary Steering System.**

METERING PUMP SECONDARY STEERING SYSTEM
HYDRAULIC SCHEMATIC

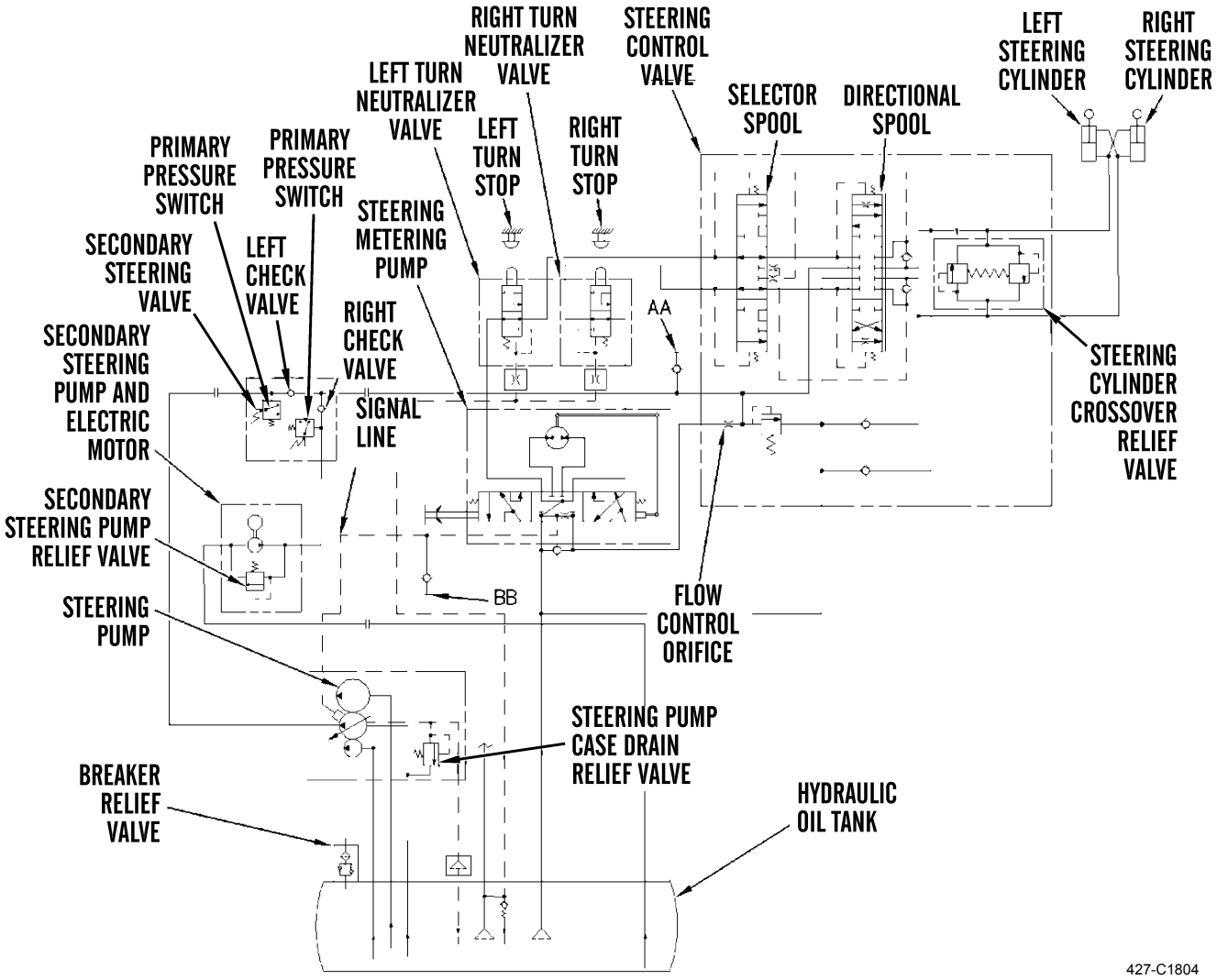

STEERING SYSTEM - CONTINUED

NOTE

The secondary steering system is an attachment for these machines and should only be used if there is a failure of the primary steering system. Additionally, only use the secondary steering system to steer the machine off the road.

a. **General.**

(1) Secondary steering circuit consists of a secondary steering valve, steering metering pump, steering control valve, left steering cylinder, right steering cylinder, secondary steering pump and electric motor, and hydraulic oil tank.

SECONDARY STEERING SYSTEM COMPONENT LOCATIONS
(LEFT SIDE)

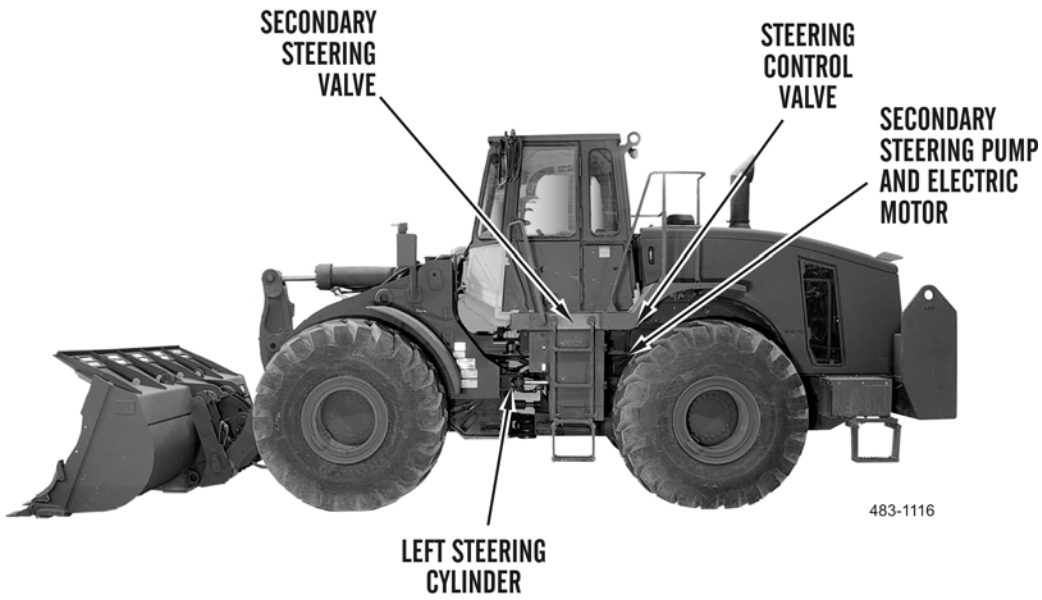

STEERING SYSTEM - CONTINUED

SECONDARY STEERING SYSTEM COMPONENT LOCATIONS
(RIGHT SIDE)

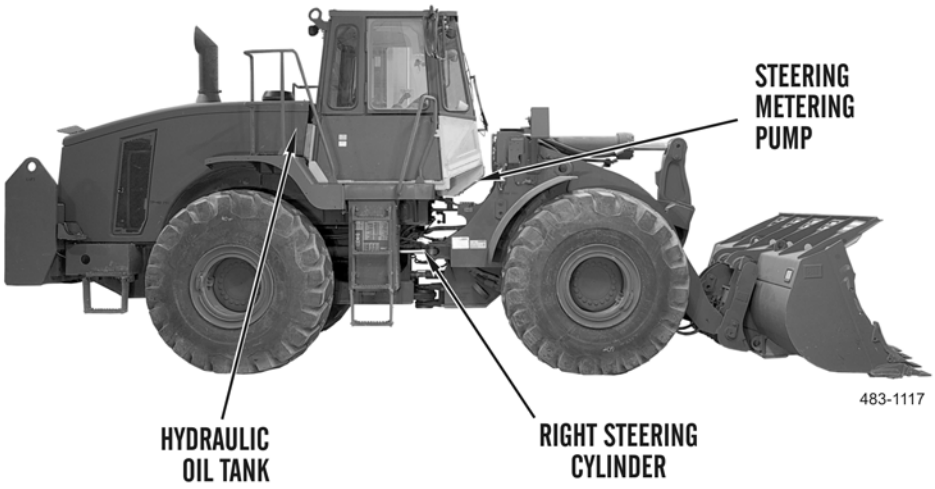

STEERING SYSTEM - CONTINUED

(2) Secondary steering valve is located on upper left frame above secondary steering pump and electric motor. Steering metering pump is attached to bottom of steering column, and located under floor of operator's cab.

(3) Steering control valve is located below operator's cab, between engine and cab.

(4) During normal machine operation, left check valve is off seat, while right check valve is seated. Right check valve prevents pressure oil from flowing back to secondary steering pump.

(5) If steering pump fails or engine fails, primary steering pressure switch changes state due to low oil pressure in steering system. Primary steering pressure switch sends a signal to monitoring system, which triggers an alarm.

(6) Alarm alerts operator that engine shutdown should occur as soon as possible. This helps prevent injury to personnel and potential damage to machine. Do not operate machine until cause of failure has been corrected.

(7) After a one-second delay, relay for secondary steering pump actuates and secondary steering indicator illuminates.

(8) Secondary steering pump draws oil from hydraulic oil tank. Oil then flows to secondary steering valve, causing right check valve to unseat. Oil pressure then causes left check valve to seat, preventing pressure oil from flowing back to steering pump. Oil pressure then flows to steering control valve.

(9) Oil pumped from secondary steering pump causes secondary steering pressure switch to change state, activating secondary steering indicator.

NOTE

The machine can be articulated during the three-second engine start-up test.

(10) Condition of secondary steering is tested during engine start-up. During three-second test, secondary steering indicator illuminates and action alarm sounds. This verifies steering system is pressurized.

b. **Secondary Steering Pump and Electric Motor.**

THEORY OF OPERATION - CONTINUED **0003 00**

STEERING SYSTEM - CONTINUED

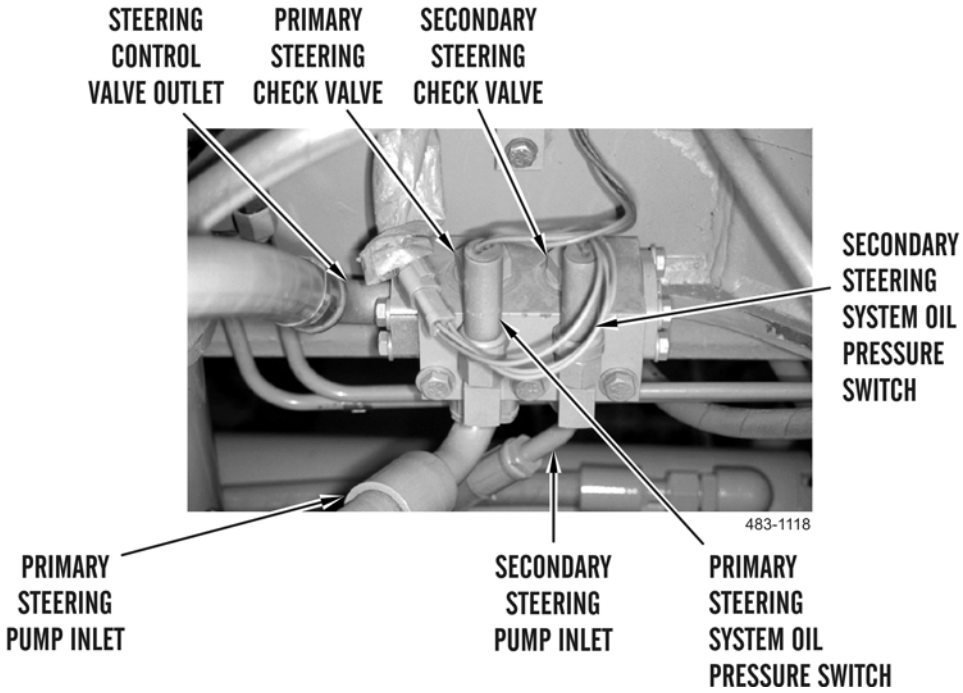

(1) Secondary steering valve is located on upper left inside frame above secondary steering pump.

(2) Secondary valve contains two check valves which act as a selector valve. Primary steering check valve monitors primary steering oil pressure. Secondary steering check valve monitors secondary steering oil pressure.

(3) During normal operating conditions, oil pressure from primary steering pump keeps primary steering check valve unseated while keeping secondary steering check valve seated. This allows pressure oil to flow from primary steering pump, through secondary steering valve, and to steering control valve through outlet. With secondary steering check valve seated, no pressure oil flows to secondary steering pump.

(4) If primary steering pump fails, flow of pressure oil from primary steering pump stops. After a brief pause, electric motor attached to secondary steering pump starts, causing secondary steering pump to pump oil.

(5) Pressure oil from secondary steering pump flows to secondary steering valve, causing secondary steering check valve to unseat. With no oil pressure from primary steering pump, pressure from secondary steering pump causes primary steering check valve to seat.

(6) Oil then flows to steering control valve through outlet. With primary steering check valve seated, no oil is allowed to flow to primary steering pump.

(7) Secondary steering valve also contains two pressure switches. Primary oil pressure switch senses pressure in primary steering circuit. If primary oil pressure switch detects a loss of oil pressure from primary steering pump, pressure switch sends a signal to monitoring system and illuminates primary steering alert indicator to alert operator of a loss of primary steering pressure.

(8) Secondary oil pressure switch senses pressure in secondary steering circuit. When secondary oil pressure switch detects oil pressure from secondary steering pump, pressure switch sends a signal to monitoring system and illuminates secondary steering warning indicator to alert operator that secondary steering system is in operation.

ELECTRO-HYDRAULIC SYSTEM

1. **General.**
   a. Electro-hydraulic system is composed of these systems:
      - Implement electronic control system
      - Main hydraulic system
      - Ride control system
      - Kickout system
      - Hydraulic fan system

   b. Hydraulic tank is common to all systems.
      (1) Implement electronic control system is made up of these components:
         - Hydraulic lockout solenoid valve
         - Pilot proportioning solenoid valves
         - Pressure reducing valve
         - Implement piston pump
         - Implement ECM
         - Control levers or joystick control
         - Switches
         - Sensors

      (2) Main hydraulic system is made up of these components:
         - Main control valve
         - Tilt cylinder
         - Lift cylinders
         - Auxiliary cylinders
         - Main load sensing relief valve
         - Implement piston pump

      (3) Ride control system is made up of these components:
         - Lift cylinders
         - Ride control valve
         - Ride control accumulator
         - Powertrain ECM

      (4) Kickout system is made up of these components:
         - Pressure reducing valve
         - Implement ECM
         - Control levers or joystick control
         - Lift linkage position sensor
         - Tilt linkage position sensor

      (5) Hydraulic fan system is made up of these components:
         - Hydraulic fan motor
         - Hydraulic oil cooler
         - Hydraulic fan solenoid valve
         - Hydraulic oil filter
         - Hydraulic fan pump
         - Engine ECM

ELECTRO-HYDRAULIC SYSTEM - CONTINUED

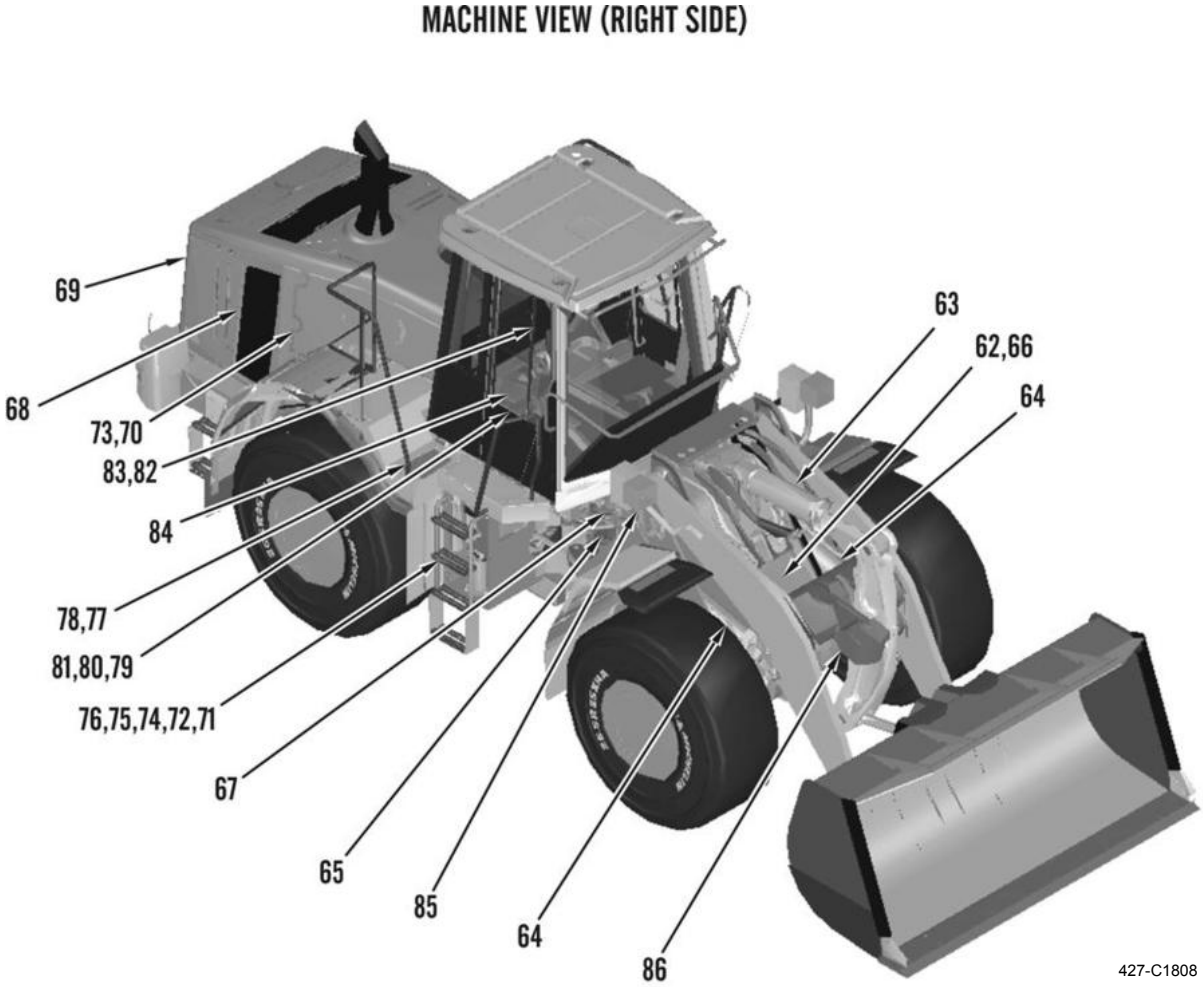

Electro-hydraulic System Components (Right Side).

(62) 3-Function main control valve with ride control	(71) Hydraulic oil filter	(80) Lift lever position sensor
(63) Tilt cylinder	(72) Hydraulic case drain oil filter	(81) Auxiliary lever position sensor
(64) Lift cylinders	(73) Brake and hydraulic fan piston pump	(82) Fine modulation switch
(65) Ride control accumulator	(74) Hydraulic tank breaker relief valve	(83) Hydraulic lockout switch
(66) Dead engine lower pilot oil accumulator	(75) Hydraulic tank	(84) Kickout set switch
(67) Dead engine lower manual valve	(76) Hydraulic oil fluid sampling valve	(85) Lift position sensor
(68) Hydraulic fan piston motor	(77) Implement ECM	(86) Tilt position sensor
(69) Axle oil cooler bypass and hydraulic oil cooler check valve	(78) Powertrain ECM	
(70) Brake charge and hydraulic fan control manifold	(79) Tilt lever position sensor	

THEORY OF OPERATION - CONTINUED 0003 00

ELECTRO-HYDRAULIC SYSTEM - CONTINUED

c. Implement piston pump and steering piston pump are located under cab, mounted in-line to torque converter housing.

d. Hydraulic tank (75) is located on right side of machine. Breaker relief valve (74) is mounted on hydraulic tank. When an operator depresses breaker relief valve, pressure inside hydraulic tank is released.

e. Ride control system provides a means for dampening bucket forces which produce a pitching motion as machine travels over rough terrain.

f. Dead engine lower manual valve (67) is located in front of articulation joint. Manual valve is used to lower lift arms when there is an electrical failure.

g. Implement ECM (77) is located on right side and to rear of cab.

h. Implement piston pump provides pump supply oil to main control valve (62). A remote pressure tap for measuring implement pressure is located at articulation joint on right side.

i. Implement piston pump also supplies pilot oil pressure to pilot system. A pressure tap for measuring pilot pressure is located by main control valve near pilot oil accumulator.

j. Main control valve (62) is mounted on front end of frame.

k. Main load sensing relief valve is mounted on main control valve (62). Line relief valves are also attached to main control valve. Main control valve controls pump supply oil to implement cylinders.

l. Joystick control is equipped with three-position sensors. Third function sensor is controlled by a thumb wheel built into joystick handle. Position sensors send joystick handle position to implement ECM. Joystick control is not equipped with electromagnets for detents. Joystick control is equipped with soft detents (refer to *Sensors*) in this work package.

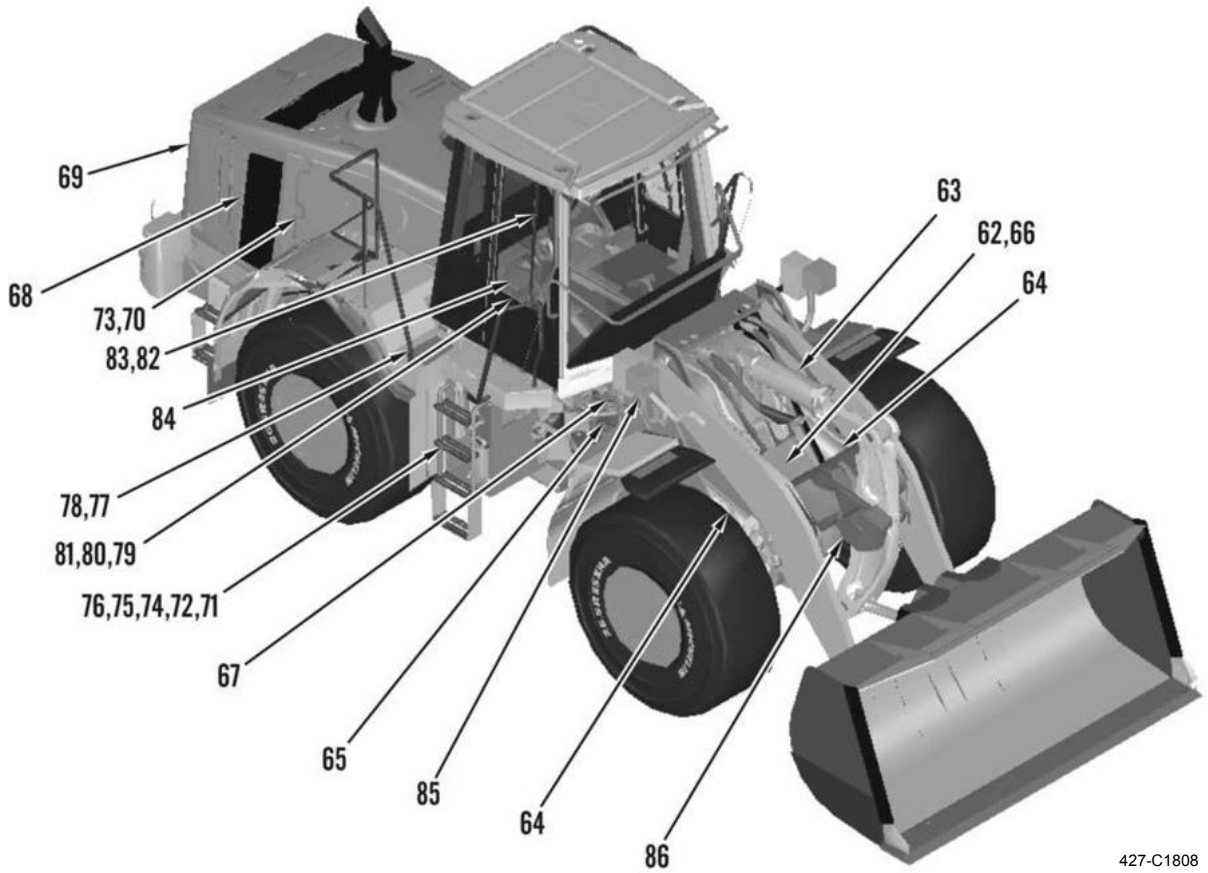

ELECTRO-HYDRAULIC SYSTEM - CONTINUED

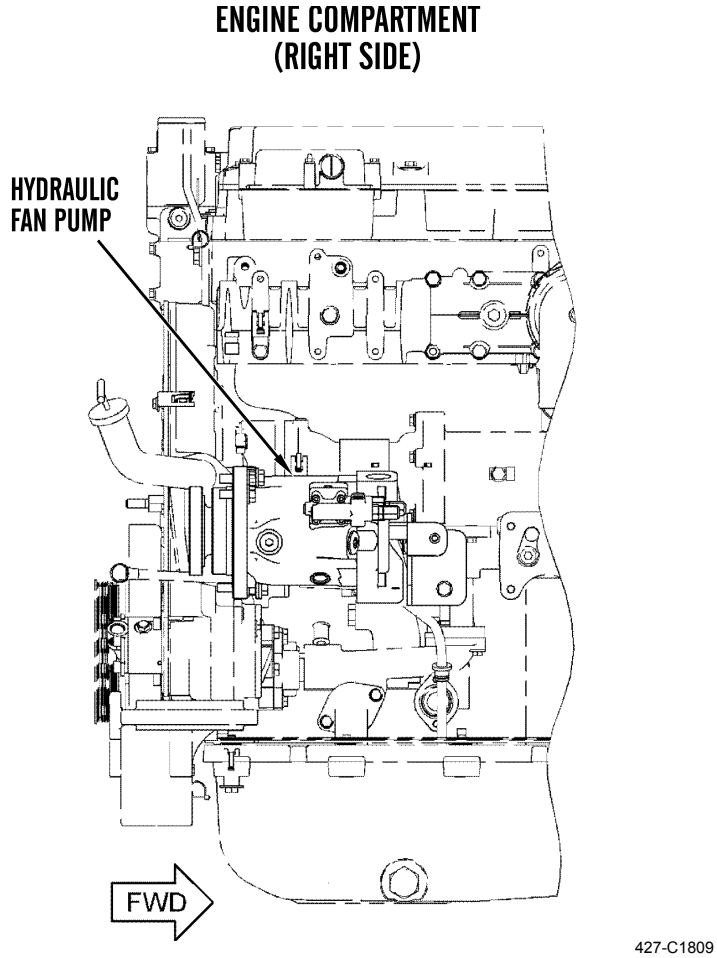

m. Hydraulic fan pump (73) is located on right side of engine. Fan pump supplies high-pressure oil to fan motor (68). Solenoid valve controls signal pressure to fan pump. Fan motor rotates fan to cool hydraulic oil. Hydraulic oil cooler and oil cooler bypass valve (69) are located to rear of engine.

ELECTRO-HYDRAULIC SYSTEM - CONTINUED

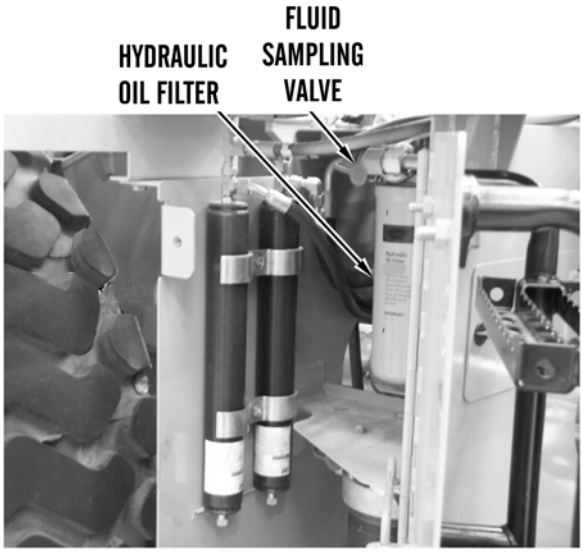

427-C1810

n. Hydraulic oil filter is located on right side of machine behind service door. Sampling valve is located on hydraulic oil filter. Hydraulic oil filter is in return line from hydraulic fan system. Fluid sampling valve is located above hydraulic oil filter, and is available to check hydraulic oil quality.

2. **Implement Electronic Control System.**

a. Implement ECM monitors position of joystick position sensors located in operator compartment. When joystick is moved, implement ECM detects amount of position sensor movement, then activates corresponding solenoid valve. Implement ECM activates solenoid valve in proper amount to move work tool at appropriate speed.

b. Implement ECM electronically controls pilot proportioning solenoid valves, then solenoid valves control movement of stems in main control valve for work tool and any auxiliary hydraulic attachments. Position sensors detect movement in joystick and sensors will develop a signal. Implement ECM reads signals and activates appropriate pilot proportioning solenoid valve. As a position sensor begins to rotate, implement ECM sends a small amount of current to solenoid valve to move cylinder. As rotation of position sensor begins to increase, implement ECM increases amount of current to solenoid valve. Speed of cylinder increases proportionally in response.

c. Hydraulic lockout solenoid valve is activated by implement ECM whenever engine is running. Hydraulic lockout solenoid valve is an ON/OFF valve that controls pilot oil flow through oil manifold pilot valve. If hydraulic lockout switch is in LOCKED position, implement ECM will not supply current to hydraulic lockout solenoid valve.

ELECTRO-HYDRAULIC SYSTEM - CONTINUED

NOTE

- **The Start of Modulation Current provides pilot pressure to shift the main valve spool. When the main spool is shifted, hydraulic oil will flow to the cylinders. The Start of Modulation Current varies for each valve and must be adjusted for each valve. The modulation current must be calibrated on each individual machine.**
- **The Maximum Modulation Current provides enough pilot pressure to fully shift the main valve spool. When the main valve spool is fully shifted, the cylinder will reach maximum velocity.**

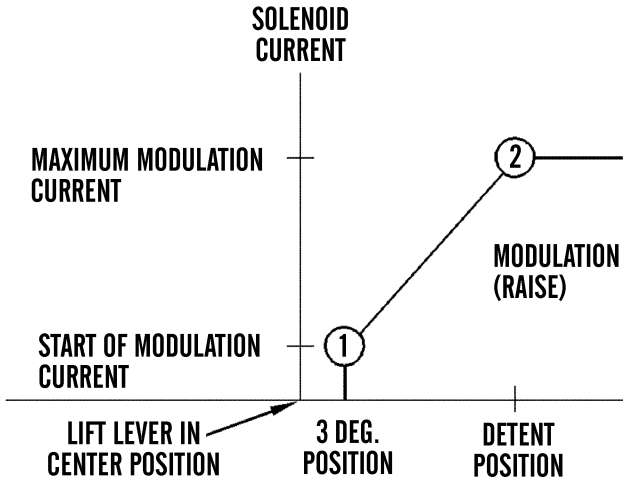

d. Above illustration represents an interpretation by implement ECM of signal from lift lever when joystick is in RAISE position. As joystick is moved from HOLD position, no current is supplied to lift linkage raise solenoid until sensor is approximately three degrees from center. At approximately three degrees of travel, ECM supplies Start of Modulation Current (1) to raise solenoid. As joystick is moved toward detent, current supplied to raise solenoid increases. Increase is linear up to Raise Maximum Modulation Current (2). Maximum modulation current is reached just before joystick enters detent position. Entering detent position will not cause a further increase in current.

ELECTRO-HYDRAULIC SYSTEM - CONTINUED

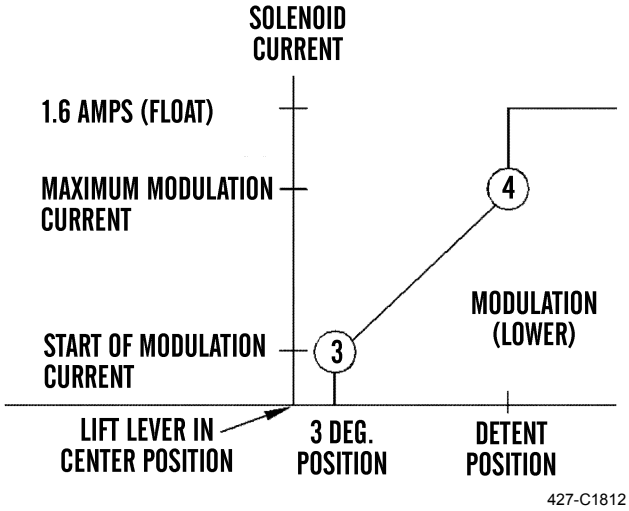

e. Above illustration represents an interpretation by implement ECM of signal from lift lever when joystick is in LOWER position. As joystick is moved away from center, no current is supplied to solenoid valve until joystick is approximately three degrees from center. At approximately three degrees of travel, implement ECM supplies Start of Modulation Current (3) to lower solenoid. As joystick is moved toward detent, current supplied to lower solenoid increases. Increase is linear up to Lower Maximum Modulation Current (4). Maximum modulation current is reached just before joystick enters detent position. As position sensor is moved into detent position, implement ECM will increase current. Current will increase until pilot pressure shifts main valve into FLOAT position.

ELECTRO-HYDRAULIC SYSTEM - CONTINUED

3. **Implement Electronic Control Module.**

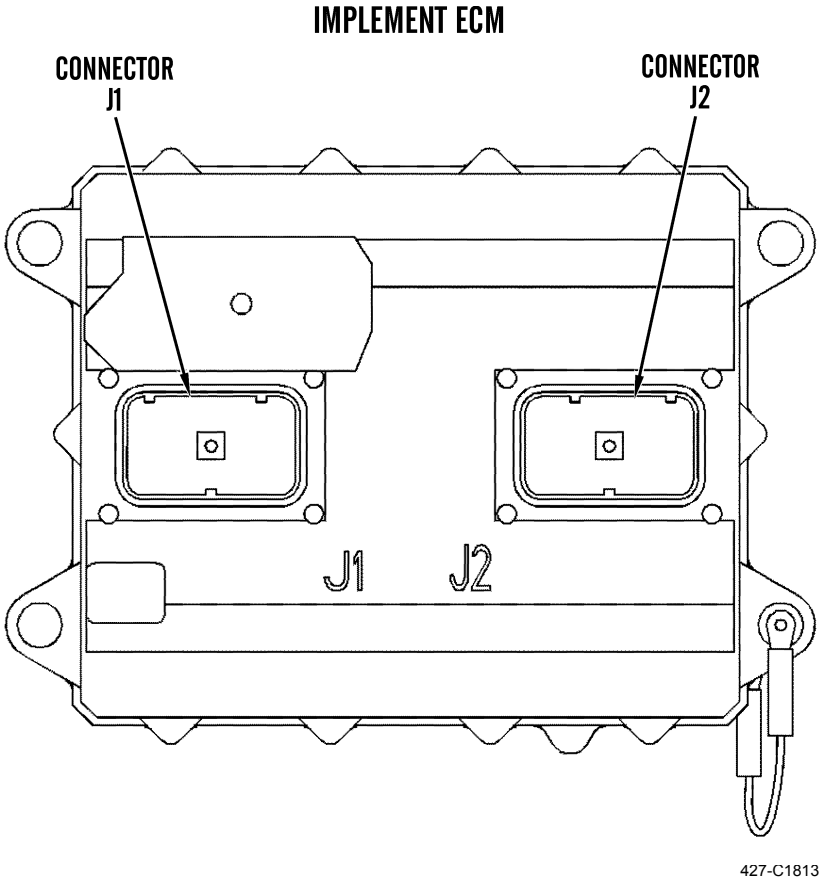

a. **General.** Implement ECM makes decisions based on information input to ECM and information in memory. Implement ECM then sends a corresponding response through outputs. Implement ECM inputs and outputs are connected to machine harness using contact connectors J1 and J2.

ELECTRO-HYDRAULIC SYSTEM - CONTINUED

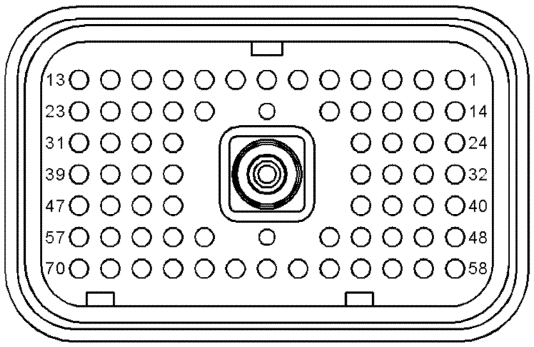

IMPLEMENT CONTROL CONNECTOR

427-C1814

b. **Inputs.** Machine has several input equipment which inform implement ECM of machine operating conditions. Machine has inputs from switches and sensors. Switches provide an open, a ground, or a +battery to implement ECM inputs. Sensors provide a constantly changing signal to implement ECM. Inputs into implement ECM are listed in Tables 7 and 8.

c. **Outputs.** Implement ECM responds to decisions by sending electrical signals through outputs. Outputs can create an action or provide information to implement ECM. Implement ECM outputs are listed in Tables 7 and 8.

d. **Input/Output.** CAT Data Link is used to communicate with other ECMs on machine. Data link is bidirectional, both sending and receiving information. CAT Data Link allows information sharing with other ECMs. CAN Data Link is used for programming application software into ECMs. CAN Data Link is bidirectional, both sending and receiving information.

ELECTRO-HYDRAULIC SYSTEM - CONTINUED

Table 7. J1 Connector (Implement ECM).

No.(1)	Function	Type
1	Engine Start Switch ON	Power
10	CAT Data Link +	Input/ Output
12	Pilot Solenoid	Output
13	Battery –	Ground
20	CAT Data Link –	Input/ Output
22	Fuel Level Sending Unit	
23	Battery –	Ground
26	ECM Location Code 1	Ground
29	Hydraulic Oil Temperature	
31	Battery +	Power
32	ECM Location Code Enable	Ground
33	Implement Lockout Switch (N/O)	Input
34	Implement Lockout Switch (N/C)	Input
35	Kickout Set Switch (Lift)	Input
39	Battery +	Power
40	Kickout Set Switch (Tilt)	Input
43	Hydraulic Filter Bypass	Input
44	8V Sensor Power	Power
45	8V Sensor Return	
47	Battery +	Power
48	Raise Solenoid	Output
49	Lower Solenoid	Output
50	Proportional Solenoid Return	Output Return
51	Rack Solenoid	Output
52	Dump Solenoid	Output
57	Battery –	Power
58	Third HE Solenoid	Output
59	Third RE Solenoid	Output

ELECTRO-HYDRAULIC SYSTEM - CONTINUED

Table 7. J1 Connector (Implement ECM) - Continued.

No.(1)	Function	Type
60	Auxiliary Solenoid	Output Return
61	Anti-Drift Lower Solenoid	Output
62	Anti-Drift Dump Solenoid	Output
70	Battery –	Power
(1) Connector contacts that are not listed are not used.		

Table 8. J2 Connector (Implement ECM).

No.(1)	Function	Type
2	Pilot Hydraulic Supply Solenoid	
4	Pilot Solenoid Return	Output Return
8	Solenoid Return	
24	Lift Lever Position Sensor	Input (PWM)
25	Tilt Lever Position Sensor	Input (PWM)
26	Third Lever Position Sensor	Input (PWM)
30	Auxiliary Function Continued Flow (N/O)	Input
31	Auxiliary Function Continued Flow (N/C)	Input
32	Rotary Lift Linkage Position Sensor	Input (PWM)
33	Rotary Tilt Linkage Position Sensor	Input (PWM)
67	Machine CAN Data Link	Input/Output
68	Machine CAN Data Link	Input/Output
(1) Connector contacts that are not listed are not used.		

ELECTRO-HYDRAULIC SYSTEM - CONTINUED

4. **Switches.**

a. **General.**

(1) Switch inputs provide one of these input signals to implement ECM:

- Open
- Ground
- +Battery

(2) Switch inputs are two-state equipment. Switches are either open or closed.

- When a switch is open, no signal is provided to corresponding implement ECM input.
- When a switch is closed, either a ground signal or a +battery signal is provided to corresponding implement ECM input.
- Switches may have a combination of switch inputs in one component.

b. **Implement Control Switches.**

(1) **Hydraulic Lockout Switch.**

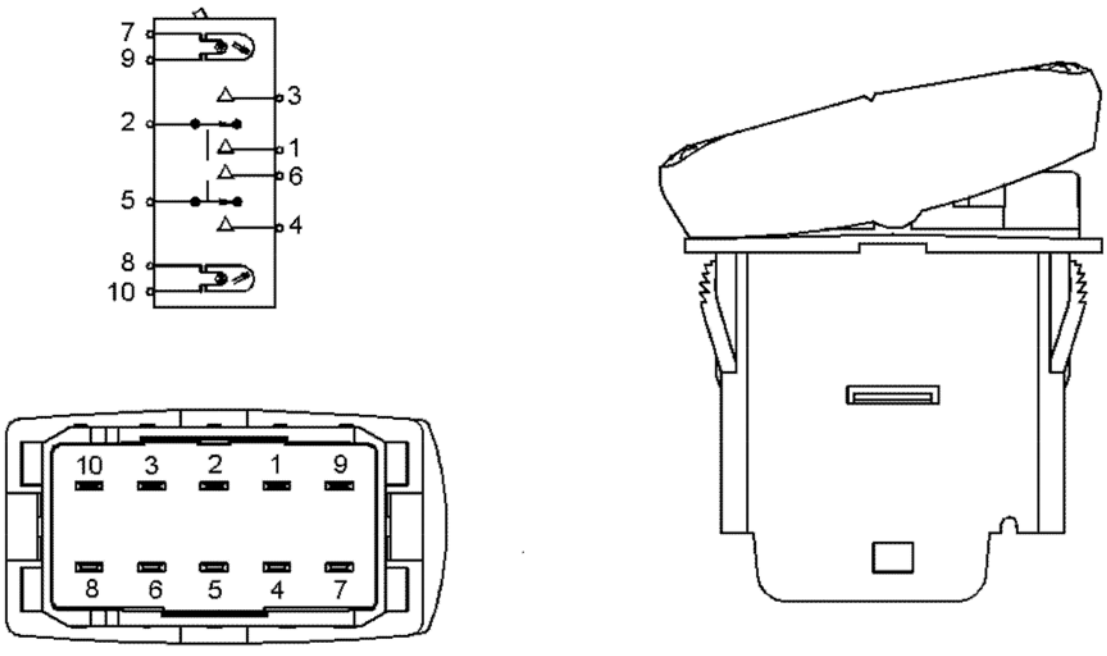

HYDRAULIC LOCKOUT SWITCH

427-C1815

ELECTRO-HYDRAULIC SYSTEM - CONTINUED

(a) Hydraulic lockout switch is an implement ECM input. Switch sends a signal to ECM to disable hydraulic system. ECM disables pilot hydraulics by deactivating hydraulic lockout solenoid valve and all other proportional solenoids for implements.

(b) Hydraulic lockout switch is a two-position rocker switch located on right hydraulic electronic control. Switch has two input connections to ECM. Switch terminal 1 connects to J1-34. This is NC input connection for hydraulic lockout. Switch terminal 3 connects to J1-33. This is NO input connection for hydraulic lockout. When switch is in LOCK position, NC circuit is open or floating. NO is closed to ground. When switch is in UNLOCKED position, NC circuit is closed to ground and NO circuit is open or floating.

(2) **Kickout Set Switch.**

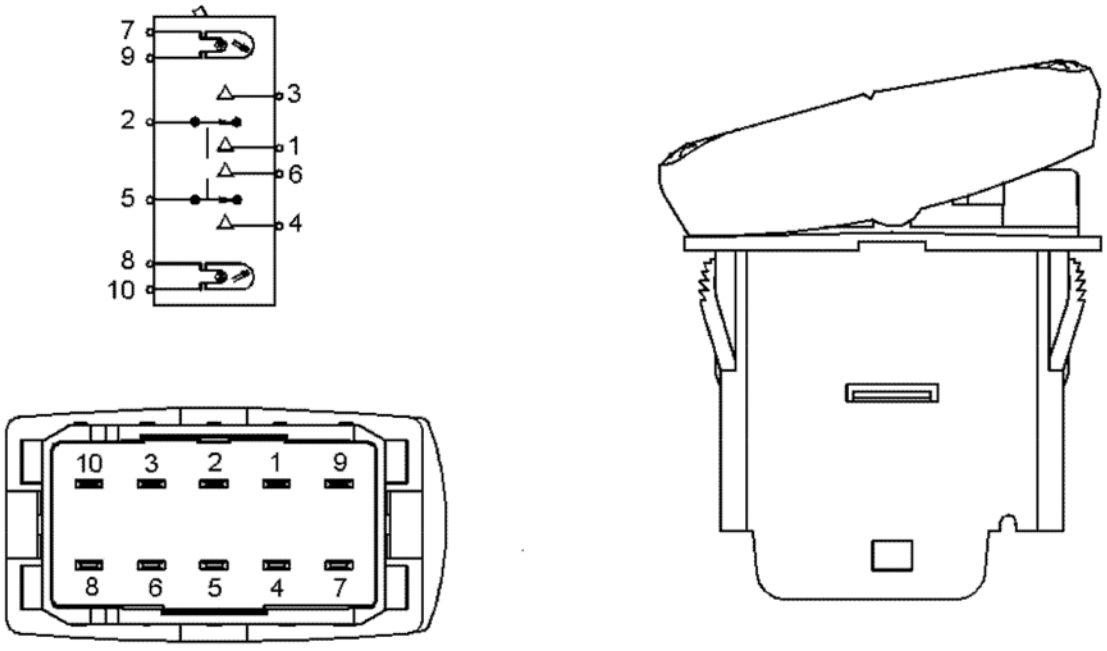

KICKOUT SET SWITCH 427-C1816

(a) Kickout set switch is a momentary rocker switch located in operator compartment (TM 5-3805-291-10). Kickout set switch is used by an operator to set kickout positions for lift lower, lift raise, and bucket tilt. When switch is pushed, ECM records current lift arm position, then uses recorded position for lift kickout position or lower kickout position. If upper position of kickout set switch is depressed and lift arm is above midway, kickout will be set for raising lift arm. If upper position of kickout set switch is depressed and lift arm is midway below halfway, lower kickout will be set. If lower position of kickout set switch is depressed, tiltback rotation will be set.

(b) Switch has two input connections to implement ECM. Switch terminal 1 connects to J1-40. Switch terminal 3 connects to J1-35. Both of these connections are NO. When switch is in LIFT position, switch terminal 3 is closed to ground and switch terminal 1 is open or floating. When switch is in TILT position, switch terminal 1 is closed to ground and switch terminal 3 is open or floating.

ELECTRO-HYDRAULIC SYSTEM - CONTINUED

5. **Sensors.**

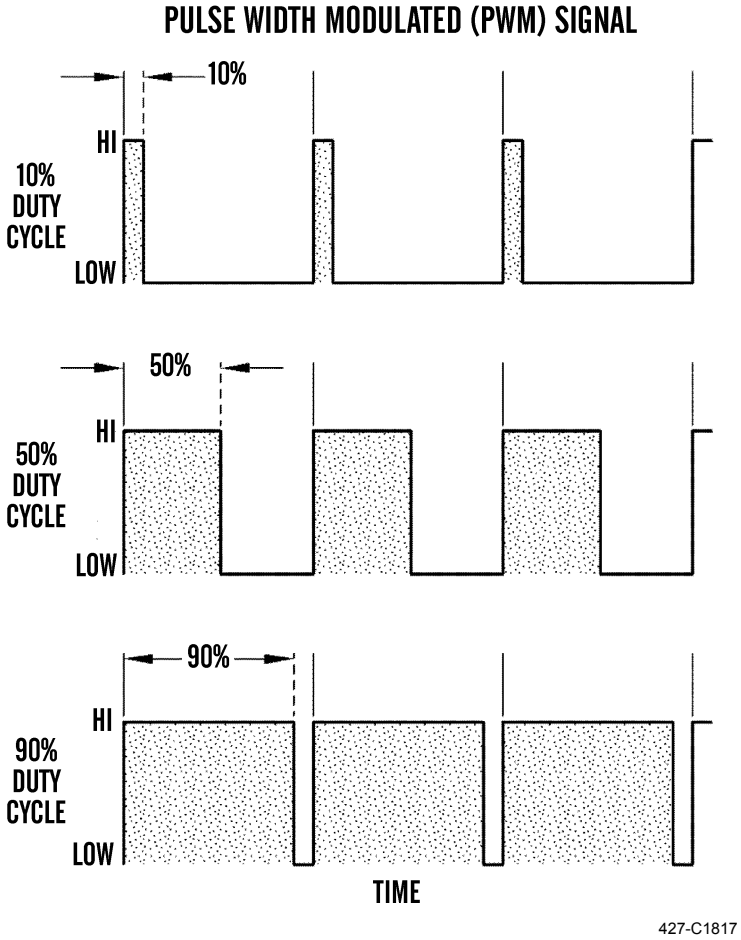

a. **General.** Sensors provide information to implement ECM about changing conditions such as speed. Changing sensor signals reflect changing conditions. ECM uses PWM sensors. PWM sensors have a duty cycle signal that varies as conditions change. Signal frequency is constant.

ELECTRO-HYDRAULIC SYSTEM - CONTINUED

b. **Joystick Position Sensors.**

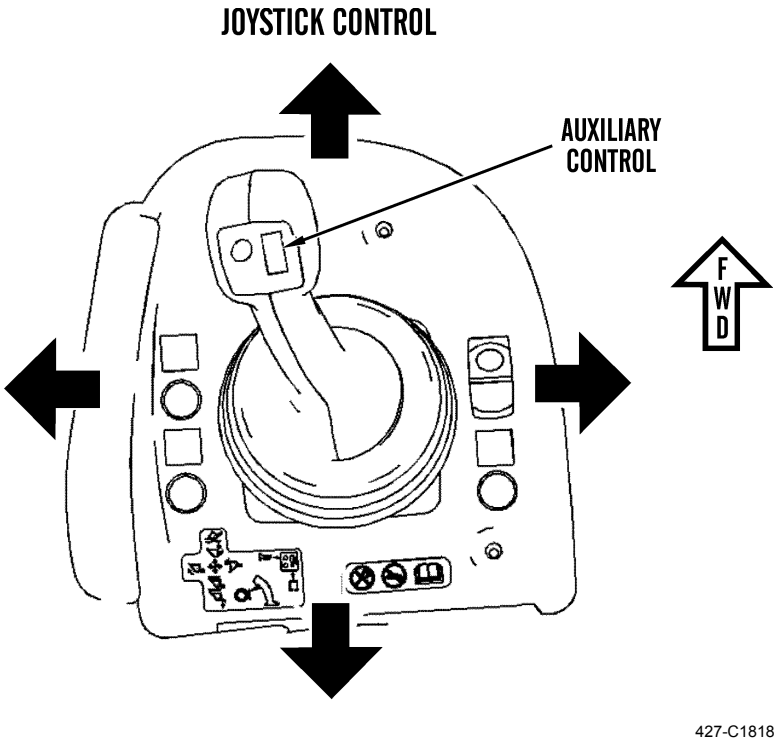

(1) Joystick position sensors are implement ECM inputs which continuously communicate joystick control position to ECM. When an operator moves left or right joystick control tilt feature, tilt position sensor informs ECM that duty cycle of a tilt sensor has changed. When an operator moves front or rear joystick control lift feature, lift position sensor has changed. ECM sends appropriate current to appropriate proportioning solenoid in oil manifold pilot valve. Current to valve regulates amount of pilot oil through proportional solenoid valve. If pilot oil flows to tilt valve spool in main control valve, tilt cylinder moves. With joystick control, an operator can send changes in duty cycle of both sensors with one motion.

ELECTRO-HYDRAULIC SYSTEM - CONTINUED

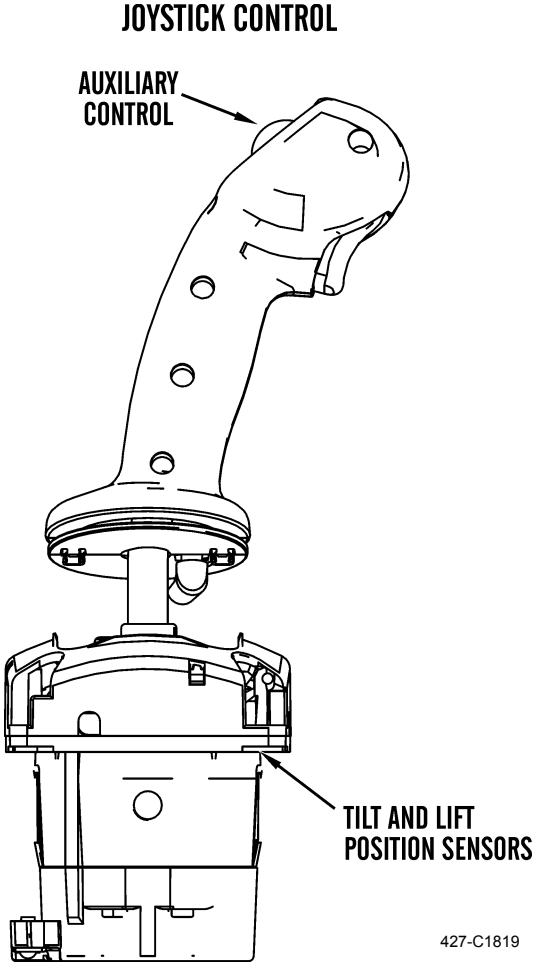

(2) Position sensors for lift and tilt features are PWM sensors. This sensor signal's frequency is constant at approximately 500 Hz. Machine electrical system provides +battery voltage to joystick control sensors for operating power. Power is supplied to thumbwheel by 8V ECM sensor supply.

(3) **Soft Detents.** Soft detents in joystick control are mechanical, but detents do not latch. Joystick control detents are controlled by software within implement ECM. As joystick control is moved into detent position, linkage will travel to a preprogrammed kickout position. Joystick should be released to HOLD position. Linkage movement will continue until kickout is reached. Any 6 degree movement of joystick control from HOLD position will override detents. Kickouts will not be activated if joystick control is held in detent position for more than one second. If control is not returned to HOLD position within 0.75 seconds, kickout will not continue.

ELECTRO-HYDRAULIC SYSTEM - CONTINUED

c. **Lift Linkage Rotary Position Sensor.**

(1) Lift linkage position sensor is an implement ECM input which continuously communicates lift linkage position to ECM. ECM changes lift linkage position by activating lift lower solenoid and lift raise solenoid. Changes are based on joystick position. ECM uses lift linkage sensor input to control lift kickouts. ECM uses sensor input to cushion lift linkage stops. This position sensor has one input connection to ECM at connector contact J2-32.

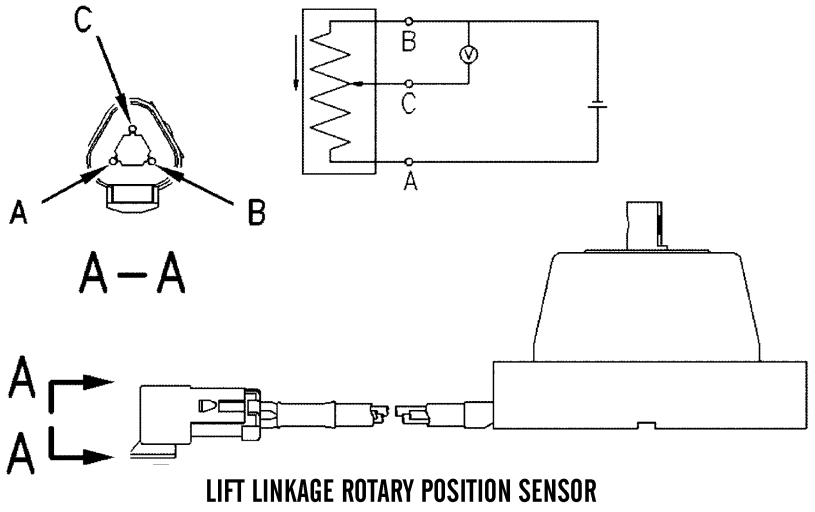

LIFT LINKAGE ROTARY POSITION SENSOR

427-C1820

(2) Lift linkage position sensor is a PWM sensor. When ECM receives PWM signal, it measures duty cycle to determine joystick position. When lift linkage is at fully raised position, duty cycle should be less than 90 percent. When lift linkage is at full lower position, duty cycle should never be below 10 percent. Frequency of this sensor signal is constant at approximately 500 Hz. Machine electrical system provides +battery voltage to lift linkage position sensor for operating power.

ELECTRO-HYDRAULIC SYSTEM - CONTINUED

d. **Tilt Linkage Rotary Position Sensor.**

(1) Tilt linkage position sensor is an implement ECM input which continuously communicates tilt linkage position to ECM. ECM uses input from both lift linkage sensor and tilt linkage sensor to control tilt kick-out. ECM uses sensor input to cushion tilt linkage stops. This position sensor has one input connection to ECM at connector contact J2-33.

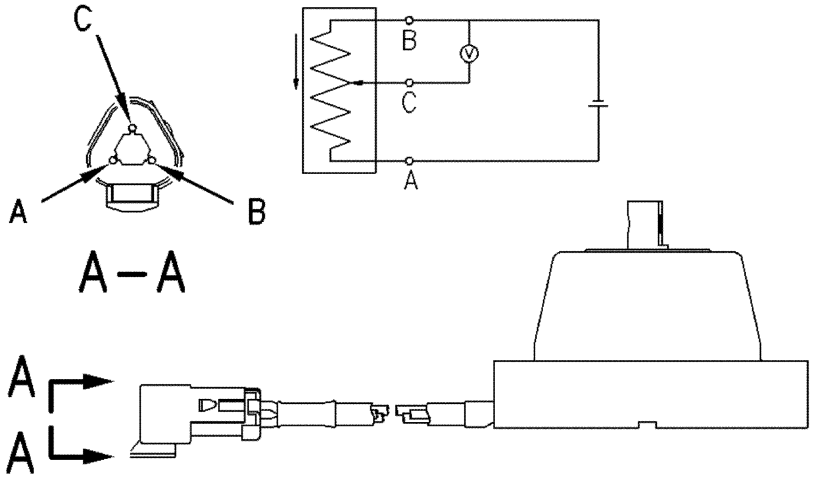

TILT LINKAGE ROTARY POSITION SENSOR

427-C1821

(2) Tilt linkage position sensor is a PWM sensor. When ECM receives PWM signal, it measures duty cycle to determine joystick position. When tilt linkage is at full tilt back position, duty cycle should be no less than 90 percent. When tilt linkage is at full dump position, duty cycle should never be below 10 percent. Frequency of this sensor signal is constant at approximately 500 Hz. Machine electrical system provides +battery voltage to tilt linkage position sensor for operating power.

ELECTRO-HYDRAULIC SYSTEM - CONTINUED

6. **CAT Data Link.**

   a. CAT Data Link is an input/output of implement ECM which communicates with other ECMs on machine or with a service tool. This allows implement ECM to input and output information. CAT Data Link consists of internal ECM circuits, related harness wiring, and diagnostic connector. CAT Data Link connects to J1-10 and J1-20 of ECM.

   b. Service code information and real-time data can be shown on ET.

   c. All ECMs that use CAT Data Link have an MID. Implement ECM is MID 082.

   d. **Implement ECM Inputs.** Implement ECM receives information from these sources via CAT Data Link.

      (1) **Engine ECM.**

      - Engine speed
      - Engine warning status

      (2) **Transmission ECM.**

      - Engine start switch position
      - Parking brake status
      - Transmission gear
      - Torque converter output torque
      - Torque converter output speed
      - Ground speed
      - Ride control status

   e. **Implement ECM Outputs.** Implement ECM sends information to these sources via CAT Data Link.

      (1) **Engine ECM.** Implement operation status.

      (2) **Transmission ECM.**

      - Dump solenoid current
      - Lift cylinder head end pressure

ELECTRO-HYDRAULIC SYSTEM - CONTINUED

7. **Electro-hydraulic Control.**

   a. Joystick control combines three-function levers into one control. Joystick is equipped with a PWM sensor for lift, tilt, and auxiliary functions. Arrows going from right to left describe lift functions. Arrows going up and down are for tilt functions. Thumb lever controls auxiliary or third function. Joystick control has soft detents controlled by software within implement ECM. As joystick control is moved into detent position, linkage will travel to preprogrammed kickout position. Joystick control should be released to automatically return to HOLD position. Linkage movement will continue until kickout is reached. Any 6 degree movement of joystick control from HOLD position will disable detent. Soft detents will not be activated if joystick control is held in detent position for more than one second.

   b. Fine modulation switch allows operator to control amount of current sent to proportional valves solenoid. Fine modulation mode enables a different joystick modulation map that provides less current during initial joystick travel before current ramps up to full command value. Activating fine modulation will allow more accurate implement control.

   c. Hydraulic lockout switch is used to disable implement pilot system. When switch is in LOCKED position, hydraulic lockout solenoid valve is de-energized. No pilot oil is allowed to flow through oil manifold pilot valve. When switch is in UNLOCKED position, hydraulic lockout solenoid valve is energized. Pilot oil is allowed to flow through oil manifold pilot valve.

8. **Implement Solenoid Valves.**

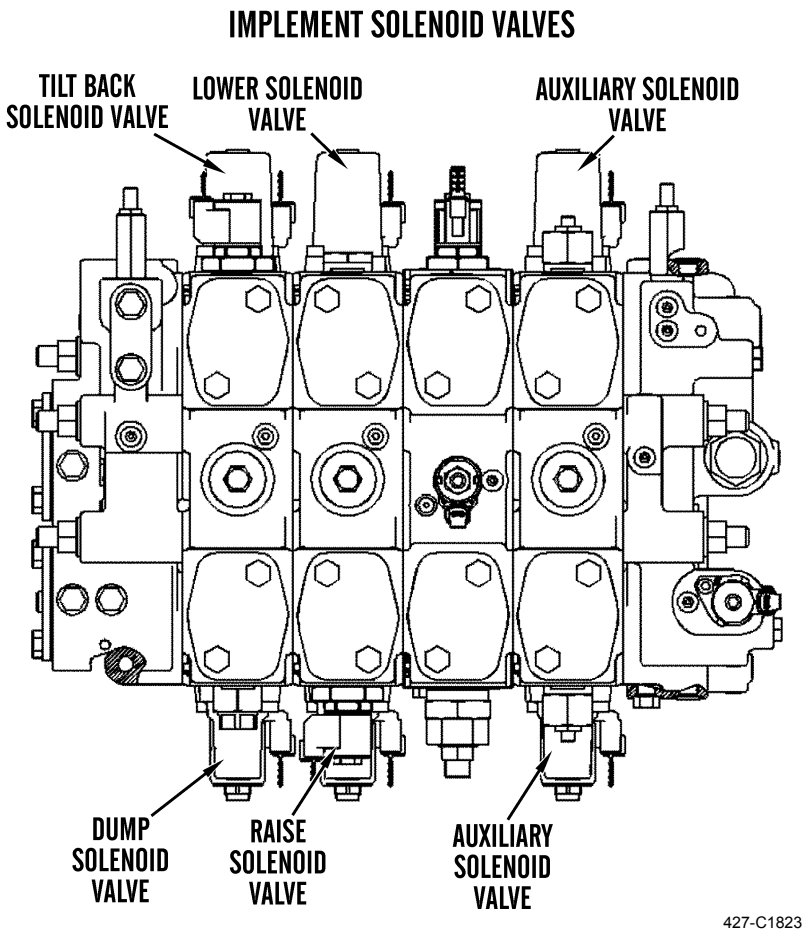

ELECTRO-HYDRAULIC SYSTEM - CONTINUED

NOTE

Never activate solenoids with voltage or a signal that does not originate from the ECM or coils will be damaged.

a. **General.** These valves are pilot proportioning solenoid valves:

- Raise Solenoid Valve
- Lower Solenoid Valve
- Dump Solenoid Valve
- Tilt Back Solenoid Valve
- Auxiliary or Third Function Solenoid Valves

b. **Pilot Proportioning Solenoid Valve.**

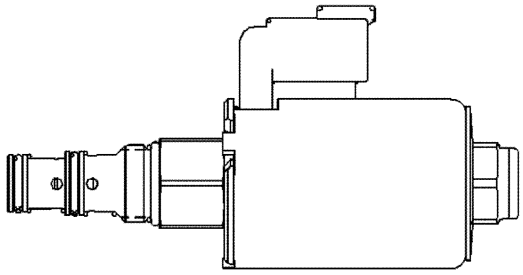

PILOT PROPORTIONING SOLENOID VALVE

427-C1824

(1) Pilot proportioning solenoid valves are implement ECM outputs which direct a proportional amount of pilot oil to main control valve. Stems in main control valve shift to allow pump supply oil to corresponding cylinder. When an operator moves joystick control, implement ECM activates appropriate solenoid valve. Solenoid valves are energized with a PWM signal sent by implement ECM. PWM signal acts as a source of variable current to activate solenoid.

(2) Solenoid valves have a connector with two contacts. One contact receives input from corresponding implement ECM contact (J1-48, J1-49, J1-51, J1-52, J1-58, and J1-59). Output returns for solenoid valves are contacts J1-50 and J1-60 of implement ECM (see Table 9).

ELECTRO-HYDRAULIC SYSTEM - CONTINUED

Table 9. ECM Pin Terminal and Corresponding Description for Main Control Valve Pilot Proportioning Solenoids.

Pin	Description
J1-48	Raise Solenoid
J1-49	Lower Solenoid
J1-50	Return for Lift and Tilt Solenoids
J1-51	Rack Back Solenoid
J1-52	Dump Solenoid
J1-58	Auxiliary “HE” Solenoid
J1-59	Auxiliary “RE” Solenoid
J1-60	Return for Auxiliary Solenoid

(3) Table 10 shows relationship between current going to solenoid and output pressure that results. As current increases, pilot pressure increases. A pressure value outside of upper and lower limits indicates there is a problem in hydraulic system. Pilot pressure can be monitored by attaching a pressure gage to main control valve end caps.

Table 10. Output Envelope.

Current (Amp)	Lower (psi-kPa)	Mean (psi-kPa)	Upper (psi-kPa)
0	0	0	3.5 psi (25 kPa)
0.2	0	0	3.5 psi (25 kPa)
0.3	0	0	25 psi (170 kPa)
0.4	0	15 psi (100 kPa)	47 psi (325 kPa)
0.5	0	47 psi (325 kPa)	80 psi (550 kPa)
0.6	47 psi (325 kPa)	80 psi (550 kPa)	110 psi (775 kPa)
0.7	80 psi (550 kPa)	110 psi (775 kPa)	145 psi (1,000 kPa)
1.0	180 psi (1,225 kPa)	210 psi (1,450 kPa)	245 psi (1,675 kPa)
1.3	275 psi (1,900 kPa)	310 psi (2,125 kPa)	340 psi (2,350 kPa)
1.6	375 psi (2,575 kPa)	405 psi (2,800 kPa)	440 psi (3,025 kPa)
1.9	470 psi (3,250 kPa)	505 psi (3,475 kPa)	535 psi (3,700 kPa)

ELECTRO-HYDRAULIC SYSTEM - CONTINUED

c. **Hydraulic Lockout Solenoid Valve.**

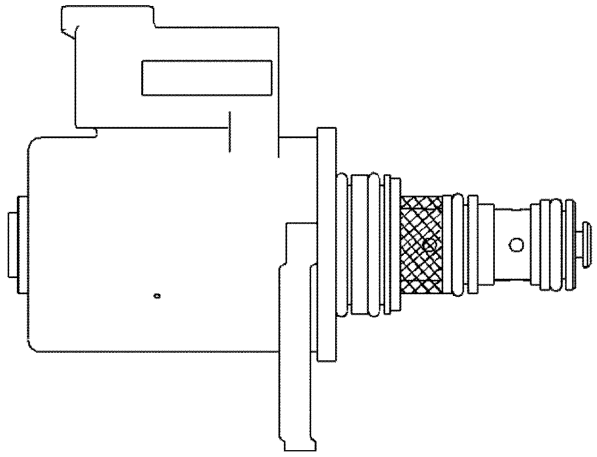

HYDRAULIC LOCKOUT SOLENOID VALVE

427-C1825

(1) Hydraulic lockout solenoid valve is an implement ECM output. Solenoid valve will disable pilot hydraulics in failure mode and enable pilot hydraulics when energized by current from implement ECM.

(2) Solenoid valve has a connector with two contacts. One contact receives power from implement ECM connector contact J2-2, while one joints with other solenoid valves and returns to implement ECM connector contact J2-4. Pin J1-47 supplies power to pin J2-2 within implement ECM. If input to J1-47 does not have battery voltage, then solenoid valve will not be energized.

ELECTRO-HYDRAULIC SYSTEM - CONTINUED

9. **Main Control Valve.**

3-FUNCTION MAIN CONTROL VALVE
(WITH RIDE CONTROL) SCHEMATIC

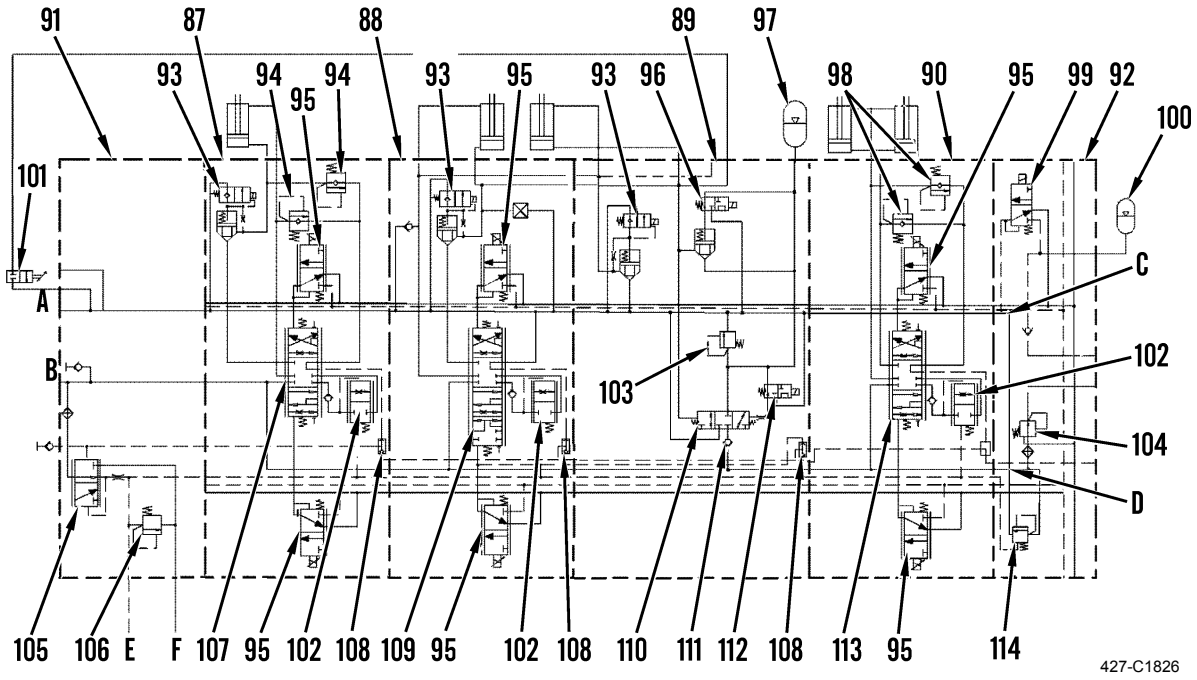

3-Function Main Control Valve with Ride Control Schematic.

(87) Tilt control valve	(99) Hydraulic lockout solenoid valve	(111) Check valve
(88) Lift control valve	(100) Dead engine lower pilot oil accumulator	(112) Ride control ON/OFF solenoid valve
(89) Ride control valve	(101) Dead engine lower manual valve	(113) Auxiliary valve stem
(90) Auxiliary control valve	(102) Compensation and load check valve	(114) Pump margin pressure relief valve
(91) Inlet valve manifold	(103) Ride control relief valve	(A) Hydraulic tank
(92) End cover valve manifold	(104) Pressure reducing valve	(B) Pump port
(93) Drift reduction solenoid valve	(105) Signal duplication pressure reducing valve	(C) Tank port
(94) Line relief valve	(106) Main, load sensing relief valve	(D) Tank port
(95) Pilot proportioning solenoid valve	(107) Tilt valve stem	(E) Signal oil to pump
(96) Ride control, lift cylinder solenoid valve	(108) Shuttle valve load signal resolver	(F) Load sensing relief drain
(97) Ride control accumulator	(109) Lift valve stem	
(98) Line relief valve	(110) Shuttle valve	

THEORY OF OPERATION - CONTINUED **0003 00**

ELECTRO-HYDRAULIC SYSTEM - CONTINUED

a. Supply oil flows from implement piston pump to main control valve at point (B). Main control valve controls hydraulic oil flow to cylinders and ride control system. Most supply oil flows to implement circuit control valves. Oil returns from control valve and flows to tank at point (A).

3-FUNCTION MAIN CONTROL VALVE
(WITH RIDE CONTROL)

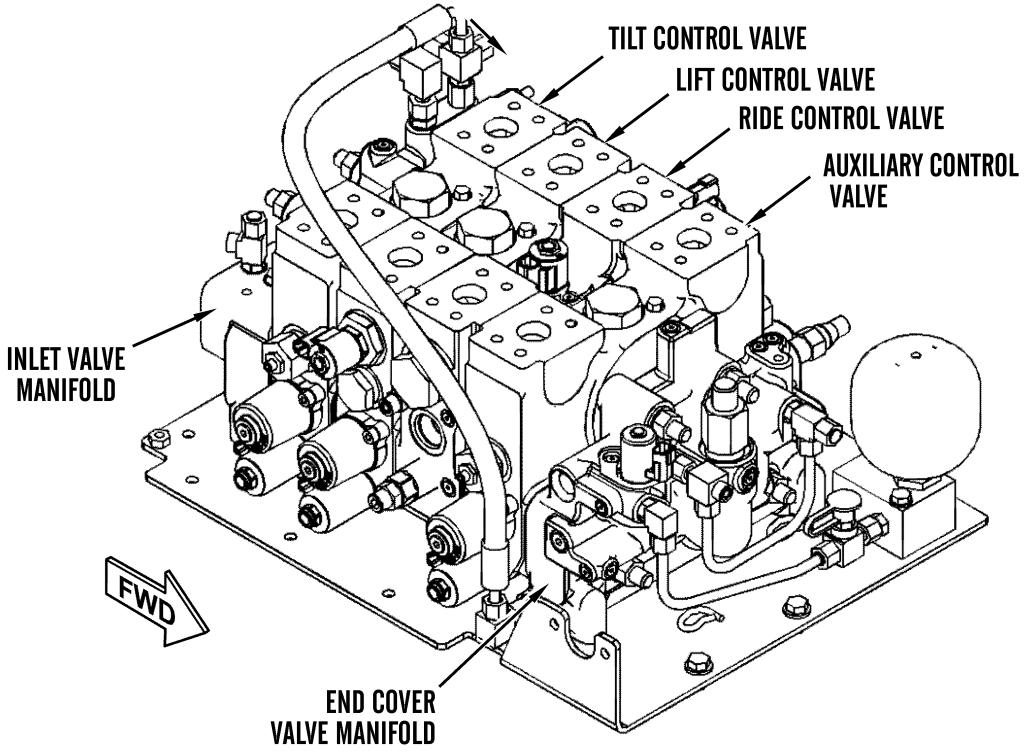

427-C1827

ELECTRO-HYDRAULIC SYSTEM - CONTINUED

b. Supply oil flows to these components: tilt control valve (87), lift control valve (88), ride control valve (89), and auxiliary valve (90).

c. Supply oil flows to pressure reducing valve (104), which reduces oil pressure to pilot pressure. Pressure reducing valve provides oil to pilot system.

d. Oil flowing to pilot oil accumulator (100) charges pilot oil accumulator. This allows bucket to be lowered if engine stops. Oil then flows through main control valve as pilot oil. Pilot oil flows through solenoid valves to move spools to correct positions. Engine start switch must be in ON position for this function to work. Manual valve (101) can be used to lower bucket if no power can be supplied to solenoids.

e. Oil flowing to load sensing circuit enters signal duplicating reducing valve (105). Normally, oil flows through signal duplicating reducing valve.

f. Signal duplicating reducing valve (105) and load sensing relief valve (106) operate for all control valves in main control valve. Load sensing relief valve limits maximum signal pressure to pump at point (E) by draining excess signal oil to tank at point (F). Signal duplicating reducing valve sends signal oil back to implement piston pump at point (E).

g. Control valves are proportional priority and pressure compensated. If a circuit is active, or if more than one circuit is active, signal duplicating reducing valve (105) duplicates highest signal oil pressure and applies it to all control valves.

h. Oil flow enters control valve and flows through a parallel feeder passage to all circuits. All four circuits can be operated independently.

i. Both tilt control valve (87) and auxiliary control valve (90) have two line relief valves. One relief valve is for each end of cylinders. Also, tilt, lift, and ride control valves have an identical solenoid valve. Solenoids for tilt and lift control valves are for drift reduction (93).

10. **Tilt Control Valve.**

a. **General.** Oil from implement piston pump flows to tilt control valve (87) at port (B). Tilt valve stem (107) is controlled by solenoids (95). Implement pump oil flows through tilt control valve to lift control valve (88) at pump port (B). Tilt valve stem is spring centered with a closed center. Tilt valve stem has three positions: HOLD, TILT BACK, and DUMP.

b. **HOLD Position.**

(1) Springs keep tilt valve stem (107) in HOLD position when solenoids (95) have not been actuated. Stem movement is controlled by actuation of pilot proportioning solenoids that allow oil to flow to either end of tilt valve stem.

(2) Tilt valve stem (107) in HOLD position blocks oil in both ends of tilt cylinder. This keeps tilt cylinder from moving. Drift reduction solenoid valve (93) in tilt control valve (87) further limits cylinder movement toward DUMP position if leakage occurs between valve stem and valve body.

ELECTRO-HYDRAULIC SYSTEM - CONTINUED

TILT CONTROL VALVE IN HOLD POSTITON
WITH TILT VALVE STEM CENTERED

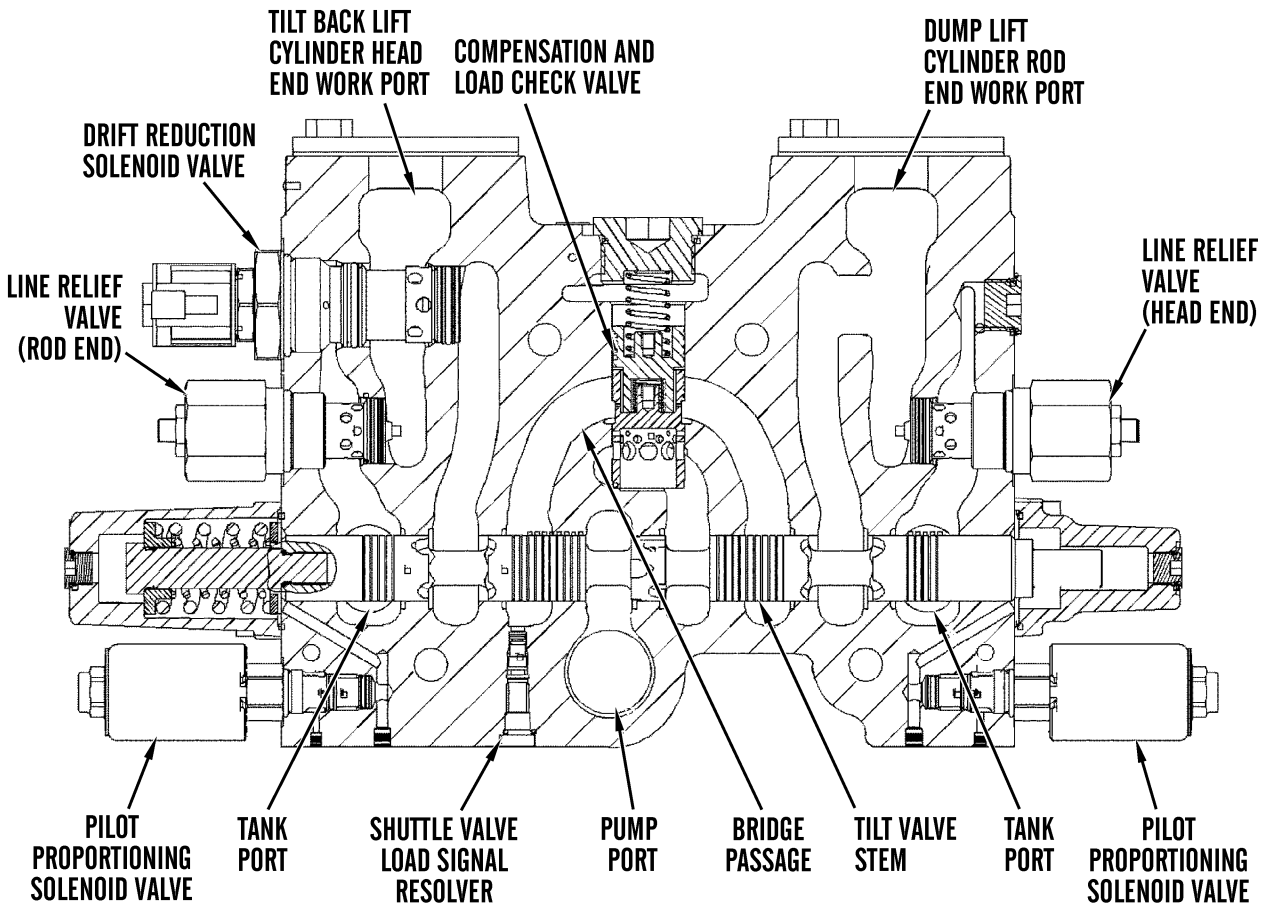

427-C1828

ELECTRO-HYDRAULIC SYSTEM - CONTINUED

c. **TILT BACK Operation.**

(1) When joystick control is moved to TILT BACK position, pilot oil is sent to left end of tilt valve stem (107), moving it right. Implement pump oil is sent through tilt control valve from pump port (B) around tilt valve stem to bottom of compensation and load check valve (102). Compensation and load check valve is pushed up and flow goes through openings in load check valve to bridge passage. Oil flows around tilt valve stem and through drift reduction solenoid valve (93) to lift cylinder head end work port.

(2) Oil flows to lift cylinder head end work port to head end of tilt cylinder. This causes bucket to tilt back. Solenoid valves (95) and tilt valve stem (107) respond in proportion to signal received from operator controls.

(3) Oil from rod end of tilt cylinder enters through lift cylinder rod end work port and exits to hydraulic tank through tank port (C).

d. **DUMP Operation.**

(1) When joystick control is moved to DUMP position, pilot oil is sent to right end of tilt valve stem (107), moving it left. Implement oil is sent from pump port (B) around tilt valve stem to bottom of compensation and load check valve (102). Compensation and load check valve is pushed up and flow goes through openings in load check valve to bridge passage. Oil flows around tilt valve stem to lift cylinder rod end work port.

(2) Oil flows through rod end work port to rod end of tilt cylinder. This causes bucket to dump. Solenoid valves (95) and tilt valve stem (107) respond in proportion to movement of operator controls.

(3) Oil from head end of tilt cylinder comes through lift cylinder head end work port, flows through energized drift reduction solenoid valve (93), and exits through tank port (D) to hydraulic tank.

ELECTRO-HYDRAULIC SYSTEM - CONTINUED

11. **Lift Control Valve.**

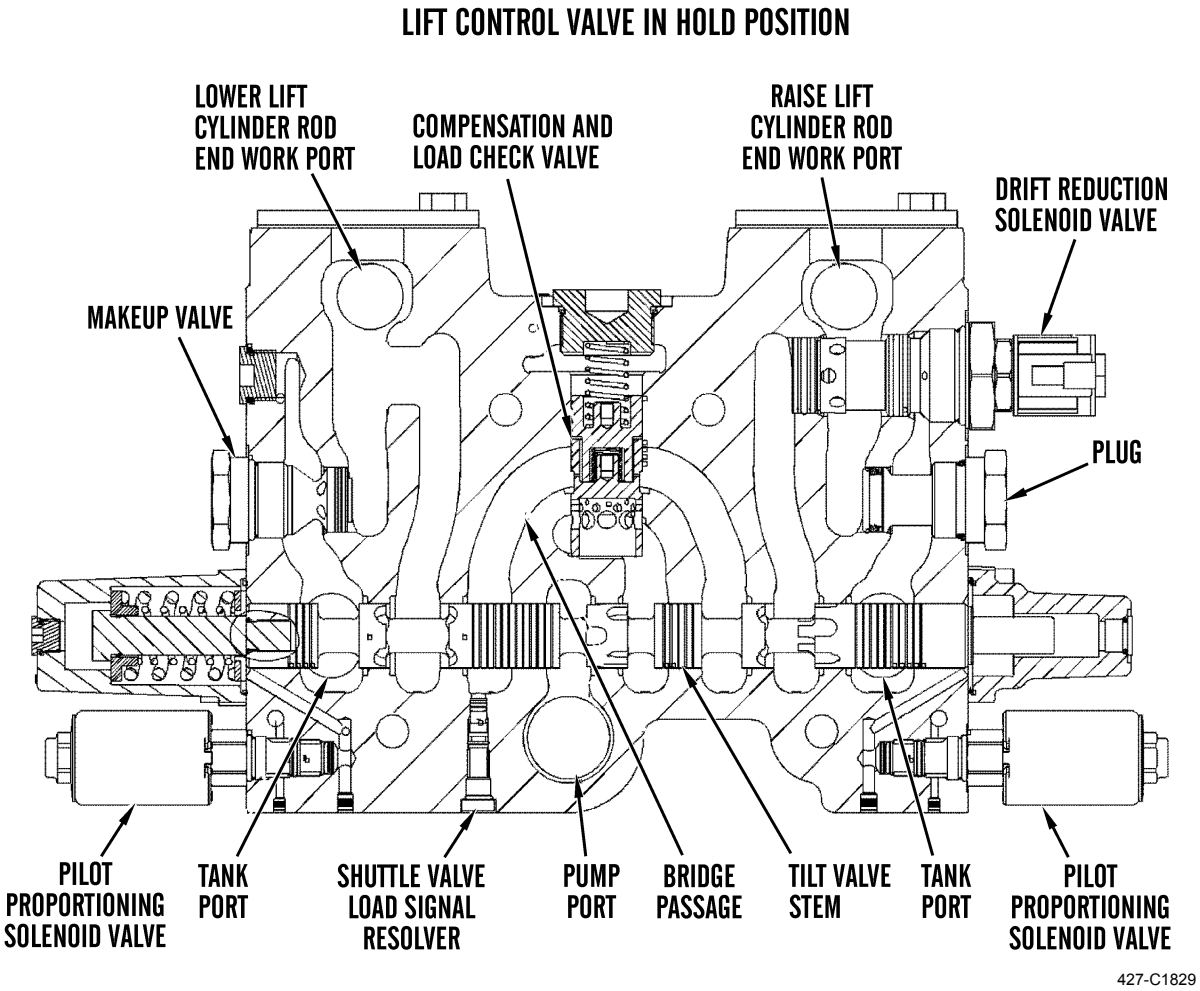

ELECTRO-HYDRAULIC SYSTEM - CONTINUED

a. **General.** Oil from implement piston pump flows to lift control valve (88) at pump port (B). Pump oil flows from pump port (B) through lift control valve to ride control valve (89) and auxiliary control valve (90). Lift valve stem (109) is controlled by pilot proportioning solenoids (95). Lift valve stem is spring centered with a closed center. Lift valve stem has four positions: RAISE, HOLD, LOWER, and FLOAT.

b. **HOLD Position.**

(1) Springs keep lift valve stem (109) in HOLD position when solenoid valves (95) have not been actuated. Lift valve stem in HOLD position blocks oil in both ends of lift cylinders, which keeps them from moving.

(2) Drift reduction solenoid valve (93) in lift control valve (88) further limits lift cylinder drift toward LOWER position if leakage occurs between lift valve stem (109) and valve body.

(3) Stem movement is controlled by actuation of pilot proportioning solenoids (95) that allow oil to flow to either end of lift valve stem (109).

c. **RAISE Operation.**

(1) When joystick control is moved to RAISE position, pilot oil is sent to right end of lift valve stem (109), moving it left. Implement pump oil is sent from pump port (B) around lift valve stem to bottom of compensation and load check valve (102). Compensation and load check valve is pushed up and flow goes through openings in load check valve to bridge passage. Oil flows around lift valve stem and through drift reduction solenoid valve (93) to raise lift cylinder head end work port.

(2) Oil is allowed to flow to head end of lift cylinders. This causes bucket to rise. Solenoid valves (95) and lift valve stem (109) respond in proportion to movement of operator controls.

(3) Oil from rod end of lift cylinders enters through lower lift cylinder rod end work port and exits through tank port (D) to hydraulic tank.

ELECTRO-HYDRAULIC SYSTEM - CONTINUED

d. **LOWER Operation.**

(1) When joystick control is moved to LOWER position, pilot oil is sent to left end of lift valve stem (109), moves partially right. Implement pump oil is sent from pump port (B) around lift valve stem to bottom of compensation and load check valve (102). Compensation and load check valve is pushed up and flow goes through openings in load check valve to bridge passage. Oil flows around lift valve stem and through drift reduction solenoid valve (93) to lower lift cylinder rod end work port.

(2) Oil is allowed to flow to rod end of lift cylinders. This causes bucket to lower. Solenoid valves (95) and lift valve stem (109) respond in proportion to movement of operator controls.

(3) Oil from head end of lift cylinders enters through raise lift cylinder head end work port, flows through energized drift reduction solenoid valve (93), and exits at tank port (C) to hydraulic tank.

e. **FLOAT Operation.**

(1) When joystick control is moved to FLOAT position, pilot oil is sent to left end of lift valve stem (109), moving it fully right. Joystick is held in FLOAT position by a soft detent. Lift valve stem remains in FLOAT position until bucket reaches preset kickout position. Lift control valve will then return to HOLD position.

(2) When an operator moves pilot valve to FLOAT position, lower lift cylinder rod end work port is connected to tank at tank port (D) through completely shifted lift valve stem (109). Complete movement of lift valve stem right closes off implement pump oil flow from pump port (B) to bridge passage. Raise lift cylinder head end work port continues to be connected to tank through energized drift reduction solenoid valve (93) and lift valve stem at tank port (C).

(3) Oil from both rod and head end of lift cylinder drains to tank. This allows weight of lift arm assembly to lower lift arm assembly to ground. Lift arm assembly will follow ground contour. Neither rod nor head end of lift cylinder is under hydraulic pressure. Lift cylinders can move freely in either direction according to force on bucket.

ELECTRO-HYDRAULIC SYSTEM - CONTINUED

12. **Ride Control Valve.**

RIDE CONTROL VALVE

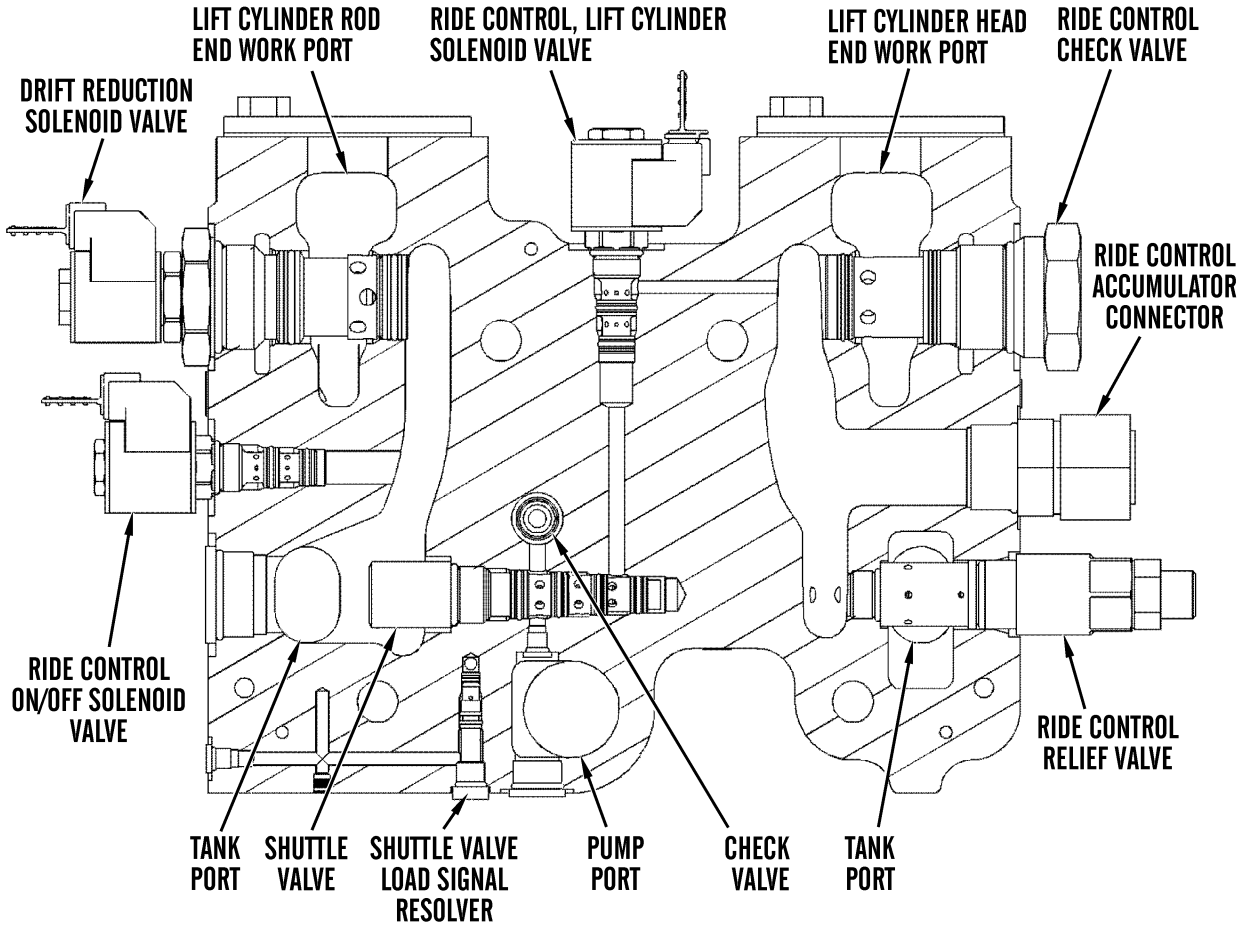

427-C1830

ELECTRO-HYDRAULIC SYSTEM - CONTINUED

a. Ride control valve (89) provides dampening for forces produced by bucket as machine travels over rough terrain. Ride control valve has three positions: AUTO, OFF, and SERVICE.

b. Ride control valve (89) contains ON/OFF solenoid valve (112), which is an ON/OFF switch which works with shuttle valve (110) to charge ride control accumulator (97). When accumulator is being charged, check valve (111) allows pump oil to enter ride control valve through shuttle valve. Oil exits ride control valve through connector to charge ride control accumulator.

c. When ride control accumulator (97) is not being charged, check valve (111) keeps oil from ride control circuit from returning to main hydraulic system. If oil pressure rises above ride control relief valve (103) setting, relief valve opens to allow excess pressure to drain to hydraulic tank through tank port (C).

d. Ride control valve also contains solenoid valves (93 and 96). When ride control system is activated, drift reduction solenoid valve (93) allows oil to enter ride control valve from rod end of tilt cylinder at work port. Oil exits ride control valve at tank port (D). Solenoid valve (96) works with ride control check valve to allow oil from head end of lift cylinder to mix with oil from ride control accumulator (97) at head end lift cylinder work port. Nitrogen gas in ride control accumulator acts as a shock absorber for lift circuit.

ELECTRO-HYDRAULIC SYSTEM - CONTINUED

13. **Auxiliary Control Valve.**

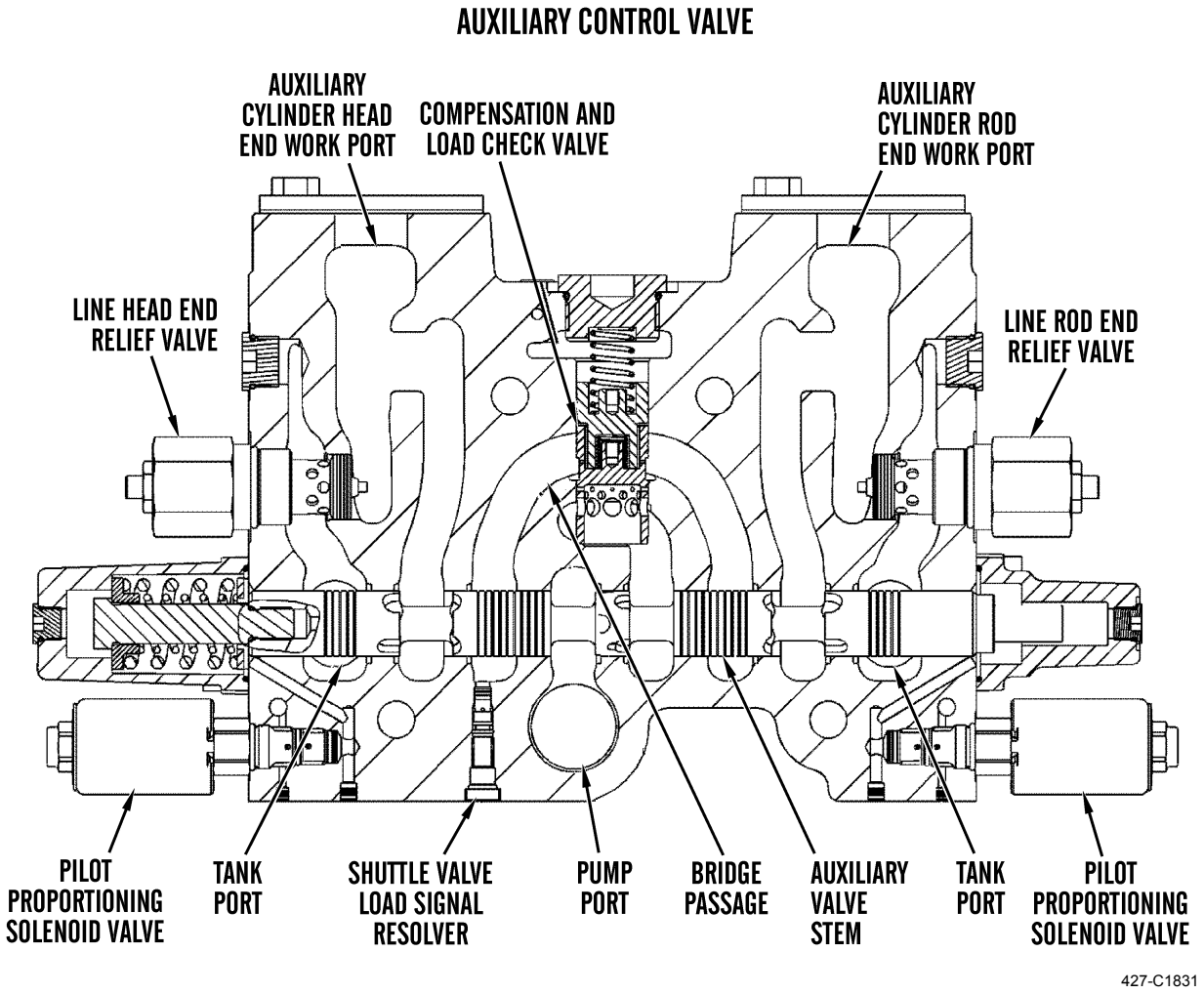

ELECTRO-HYDRAULIC SYSTEM - CONTINUED

a. **General.**

(1) Auxiliary control valve (90) has all components in tilt control valve minus drift reduction solenoid valve (93). Auxiliary valve controls auxiliary implements such as a logging fork, a side dump bucket, or a multi-purpose bucket.

(2) Oil from implement piston pump flows to auxiliary control valve at port (B). Auxiliary valve stem (113) is controlled by pilot proportioning solenoids (95). Auxiliary valve stem is spring centered with a closed center. Auxiliary valve stem has three positions: CLOSE, HOLD, and OPEN.

b. **HOLD Position.**

(1) Springs keep auxiliary valve stem (113) in HOLD position when pilot proportioning solenoids (95) have not been actuated. Implement pump oil flows to auxiliary control valve (90) at pump port (B). Stem movement is controlled by actuation of pilot proportioning solenoids that allow oil to flow to either end of auxiliary valve stem.

(2) Position of auxiliary valve stem blocks oil in both ends of auxiliary cylinder, keeping cylinder from moving.

c. **CLOSE Position.**

(1) When joystick thumb lever is moved to CLOSE position, pilot oil is sent to left end of auxiliary valve stem (113), moving it right. Implement oil is sent from pump port (B) around auxiliary valve stem to bottom of compensation and load check valve (102). Compensation and load check valve is pushed up and flow goes through openings in load check valve to bridge passage. Oil flows around auxiliary valve stem to auxiliary cylinder head end work port.

(2) Oil is allowed to flow to head end of auxiliary cylinder, causing it to extend. Solenoid valves (95) and auxiliary valve stem (113) respond in proportion to signal received from operator controls.

(3) Oil from rod end of auxiliary cylinder enters through rod end work port and exits through tank port (C) to hydraulic tank.

d. **OPEN Position Operation.**

(1) When joystick thumb lever is moved to OPEN position, pilot oil is sent to right end of auxiliary valve stem (113), moving it left. Implement oil is sent from pump port (B) around auxiliary valve stem to bottom of compensation and load check valve (102). Compensation and load check valve is pushed up and flow goes through openings in load check valve to bridge passage. Oil flows around auxiliary valve stem to rod end work port.

(2) Oil flows to rod end of auxiliary cylinder, causing cylinder to retract. Solenoid valves (95) and auxiliary valve stem (113) respond in proportion to movement of operator controls.

(3) Oil from head end of auxiliary cylinder enters through head end work port and exits through tank port (D) to hydraulic tank.

14. **Inlet Valve Manifold.**

a. Inlet valve manifold (91) contains signal duplicating reducing valve (105) and relief valve for load sensing (106). Signal duplicating reducing valve reduces supply oil to signal pressure.

b. When a circuit is active, signal duplicating reducing valve (105) duplicates pressure received from load signal resolvers of active circuit with highest pressure. This signal pressure is then sent to implement piston pump at point (E). Implement piston pump is upstroked in proportion to signal pressure received.

c. Relief valve for load sensing (106) limits maximum signal pressure by draining oil above maximum signal pressure back to hydraulic tank at point (F).

ELECTRO-HYDRAULIC SYSTEM - CONTINUED

15. **End Cover Valve Manifold.**

    a. End cover valve manifold (92) contains hydraulic lockout solenoid valve (99), pilot pressure reducing valve (104), and margin pressure relief valve (114).

    b. Pilot pressure reducing valve (104) receives oil from implement piston pump through tank port (B). Valve reduces pressure of system oil to pilot pressure. Pilot pressure oil is sent to pilot circuit.

    c. Margin pressure relief valve (114) receives pump oil from pump port (B) and load sensing oil from signal duplicating reducing valve. Relief valve allows system oil at pressure above margin pressure setting over signal oil to drain to hydraulic tank through tank port (C).

    d. Hydraulic lockout solenoid valve (99) is controlled by an implement ECM output. Hydraulic lockout switch in operator's cab provides input to implement ECM regarding desired pilot hydraulic system status. When solenoid valve is energized, pilot hydraulics are enabled. Pilot hydraulics are disabled when solenoid is de-energized.

ELECTRO-HYDRAULIC SYSTEM - CONTINUED

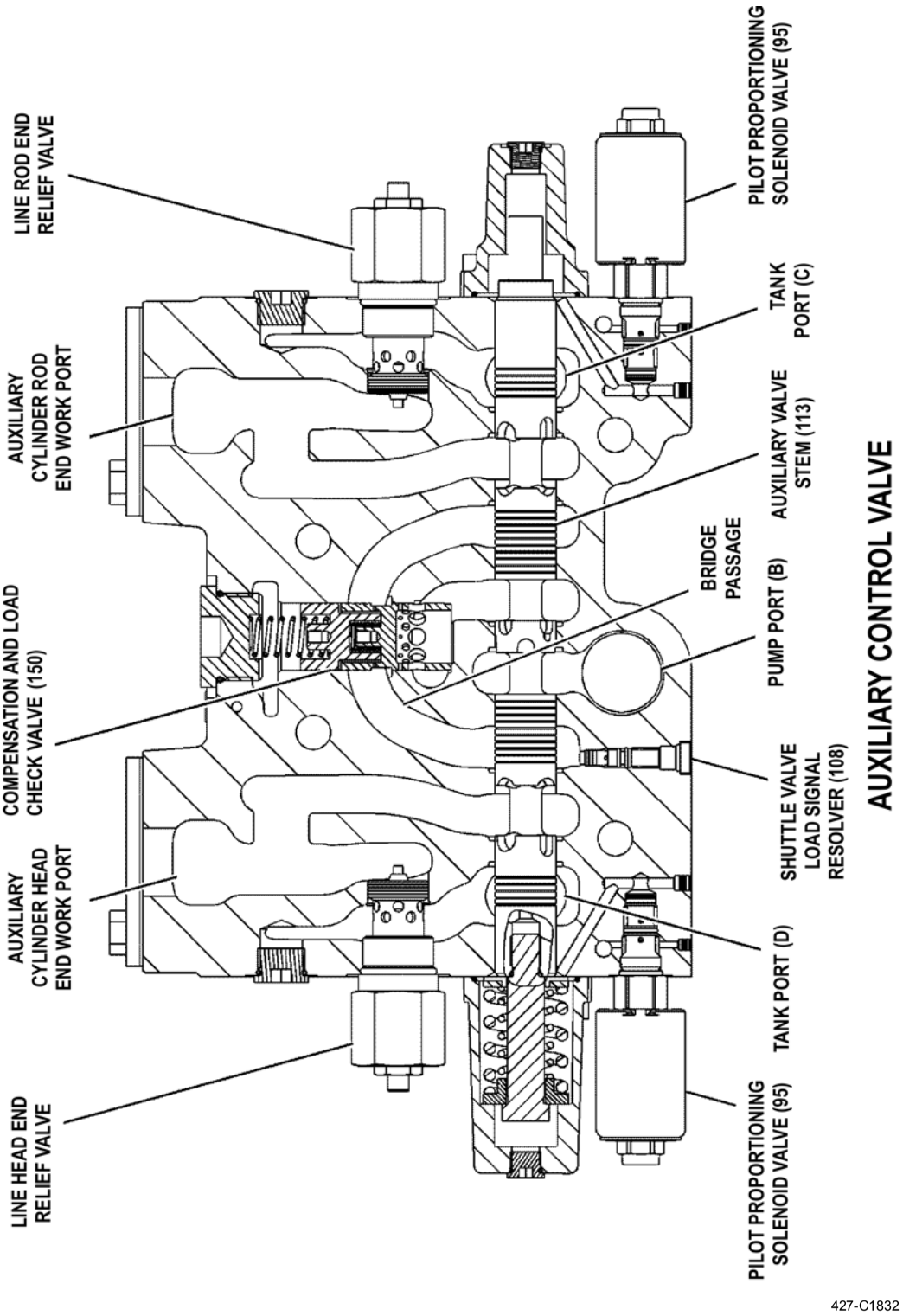

ELECTRO-HYDRAULIC SYSTEM - CONTINUED

16. **Main Load Sensing Relief Valve.**

a. Standard main control valve is equipped with one main relief valve which limits oil pressure to main hydraulic system from implement pump.

MAIN RELIEF VALVE

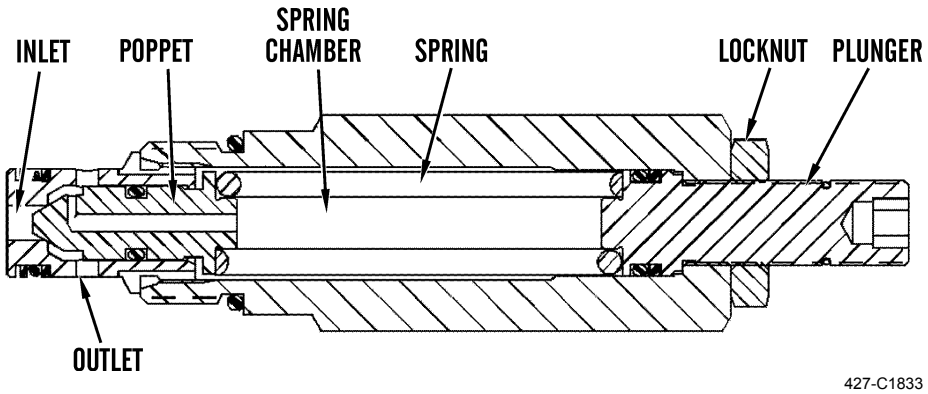

b. When pressure at inlet of main control valve exceeds pressure setting of main relief valve, main relief valve opens. Excess hydraulic oil then flows through main relief valve to hydraulic tank.

c. Main relief valve is a direct operated cartridge type valve with a pressure setting of approximately 4,500 ± 100 psi (31,000 ± 690 kPa).

d. Implement system oil flows into inlet, causing poppet to unseat. Oil then drains back to tank through outlet.

e. When oil pressure in circuit is greater than relief valve setting, oil pressure overcomes force of poppet spring, causing poppet to unseat. Oil will then flow out of outlet and back to hydraulic tank. Simultaneously, oil will flow through a passageway in poppet and into spring chamber.

f. Oil pressure in spring chamber will stabilize poppet during relief valve operation.

g. When oil pressure in circuit is less than relief valve setting, force of spring keeps poppet closed.

h. Relief valve setting can be adjusted by changing force of spring keeping poppet closed. Loosen locknut and turn plunger clockwise to increase relief valve setting. Turning plunger counterclockwise decreases relief valve setting.

ELECTRO-HYDRAULIC SYSTEM - CONTINUED

17. **Line Relief Valve.**

    a. Main control valve is equipped with line relief valves for head end of tilt cylinder, rod end of tilt cylinder, ride control valve, head end of auxiliary cylinder, and rod end of auxiliary cylinder.

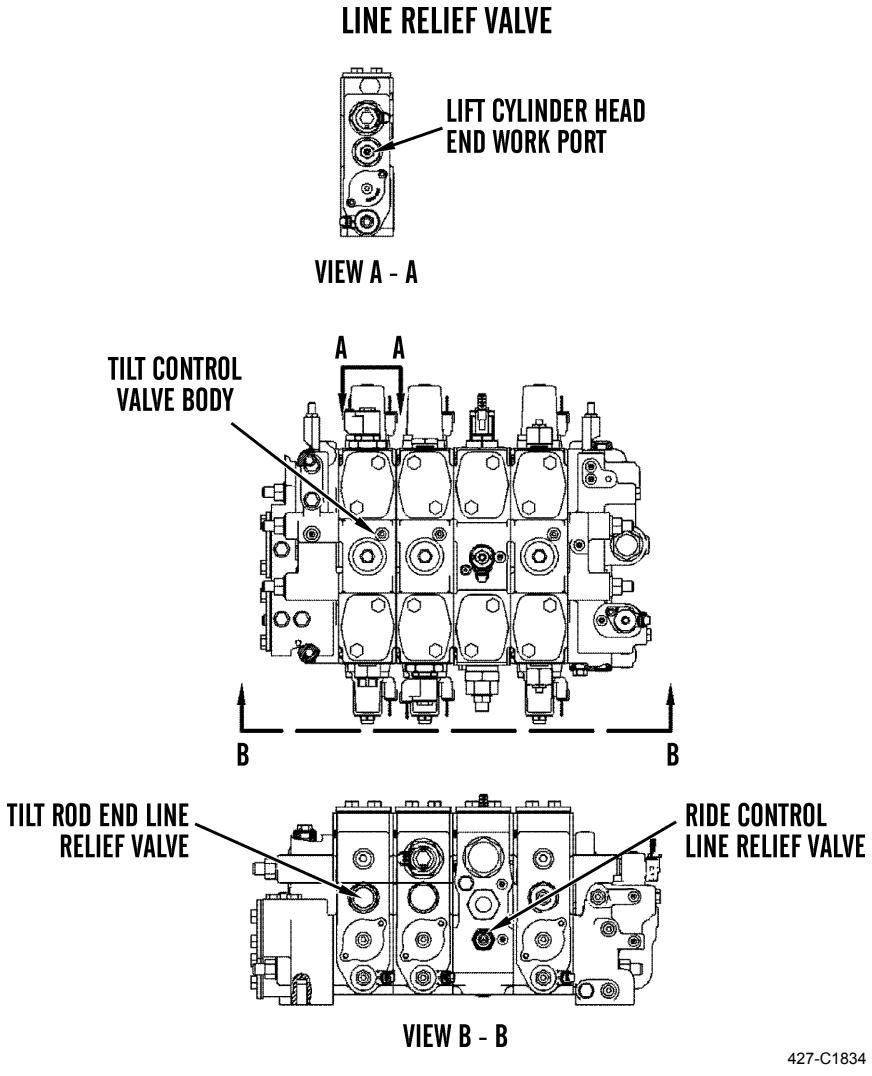

ELECTRO-HYDRAULIC SYSTEM - CONTINUED

b. Line relief valve regulates pressure spikes from either implement pump or any unusual outside forces acting on work tool. When pressure is higher than line relief valve setting, relief valve opens. This allows high pressure to return to hydraulic tank. Line relief valves prevent high pressure from damaging any hydraulic system components.

LINE RELIEF VALVE (TILT CONTROL VALVE)
(AUXILIARY CONTROL VALVE)

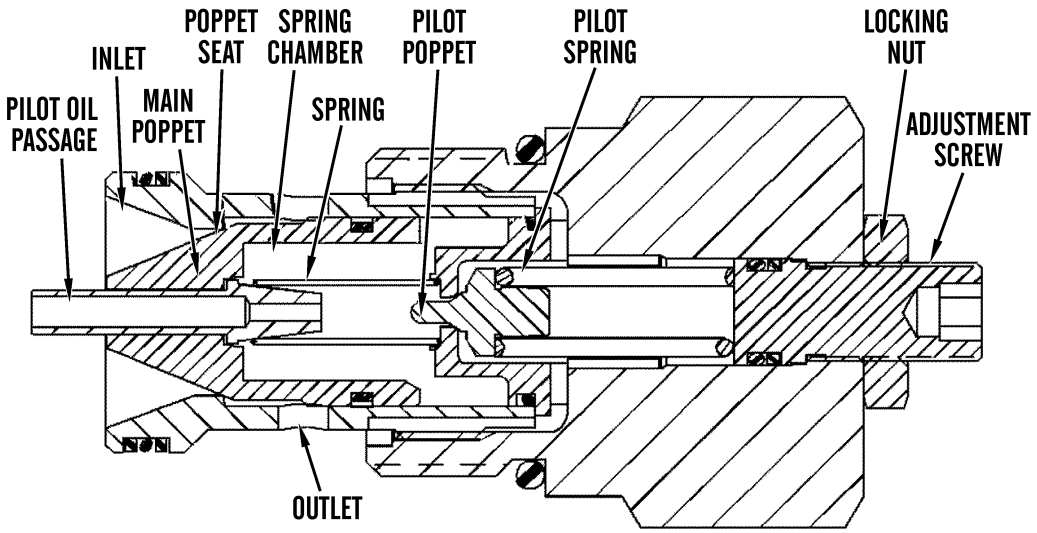

427-C1835

ELECTRO-HYDRAULIC SYSTEM - CONTINUED

c. When oil pressure in circuit is less than relief valve setting, force of spring on poppet keeps poppet in contact with seat. No oil is allowed to flow to hydraulic tank.

d. If there is any outside force on work tool, oil pressure at inlet and in spring chamber will increase. If oil pressure in spring chamber exceeds relief valve setting, oil pressure overcomes force of pilot spring, causing pilot poppet to move off seat and main poppet to move off poppet seat. Oil then flows through outlet to hydraulic tank.

e. These line relief valves are engineered to have reverse free flow. If there is a loss of cylinder oil pressure, makeup oil can flow back through valve outlet and out of valve inlet to prevent cylinder drift.

RIDE CONTROL LINE RELIEF VALVE

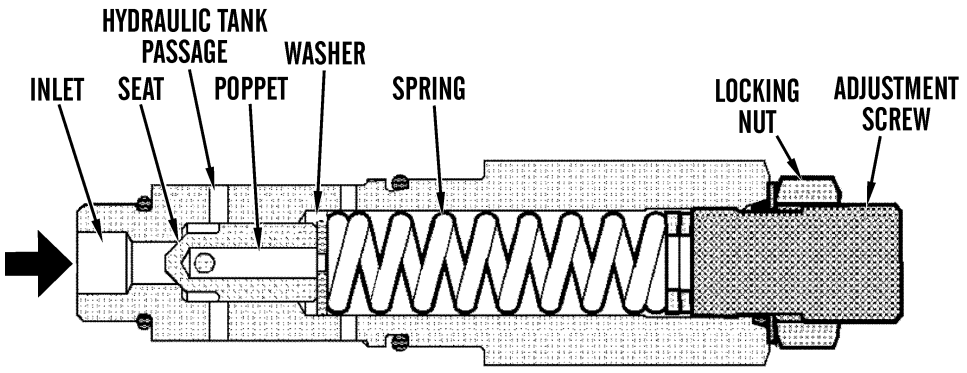

427-C1836

f. Adjustment of line relief valve is made by loosening locking nut. To raise pressure adjustment, turn adjustment screw clockwise. Turn adjustment screw counterclockwise to lower pressure adjustment.

RIDE CONTROL LINE RELIEF VALVE

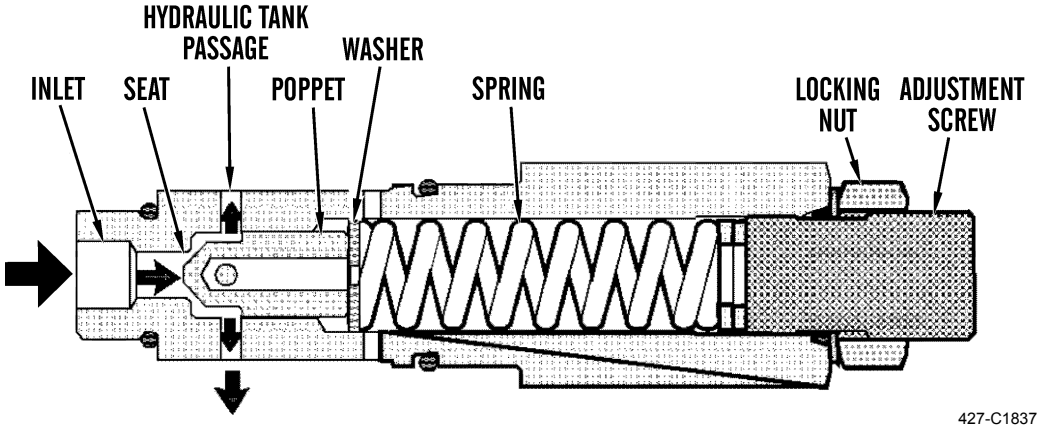

427-C1837

ELECTRO-HYDRAULIC SYSTEM - CONTINUED

g. **Ride Control Line Relief Valve.**

(1) When oil pressure in circuit is less than relief valve setting, force of spring on poppet keeps poppet in contact with seat. No oil is allowed to flow to hydraulic tank.

(2) If there is any outside force on work tool, oil pressure at inlet will increase. If high pressure oil in inlet exceeds relief valve setting, oil pressure overcomes force of spring. This causes poppet to move off seat. Oil then flows through passage to hydraulic tank.

(3) Adjustment of ride control line relief valve is made by loosening locking nut. To raise pressure adjustment, turn adjustment screw clockwise. Turn adjustment screw counterclockwise to lower pressure adjustment.

18. **Ride Control System.**

a. Ride control system provides a means to absorb forces from lift cylinders while machine is traveling. These forces cause machine to pitch when moving over rough terrain. Main ride control system components are a ride control valve, accumulator, and lift cylinders.

POSITION OF RIDE CONTROL VALVE IN LOADER FRAME

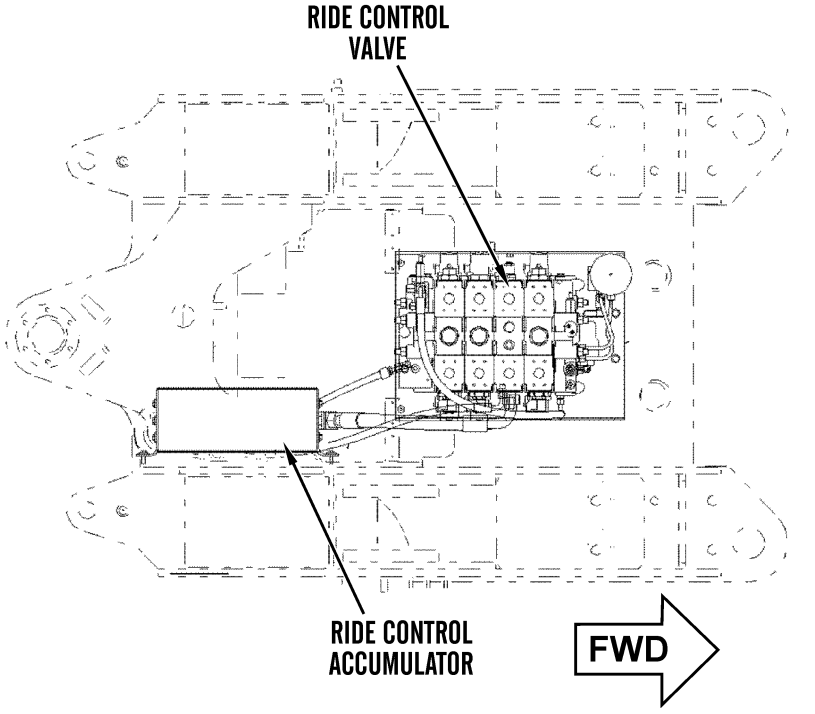

427-C1838

ELECTRO-HYDRAULIC SYSTEM - CONTINUED

b. Ride control accumulator is located at articulation joint on right side of front end frame. Accumulator contains a precharge of nitrogen gas. Ride control valve will control oil flow between ride control accumulator and lift cylinders.

c. When ride control system is activated and machine travels over rough terrain with a loaded implement, forces of load act against lift cylinders. When load acts against head end of lift cylinders, oil from head end will try to flow into accumulator. Accumulator will act as a shock absorber.

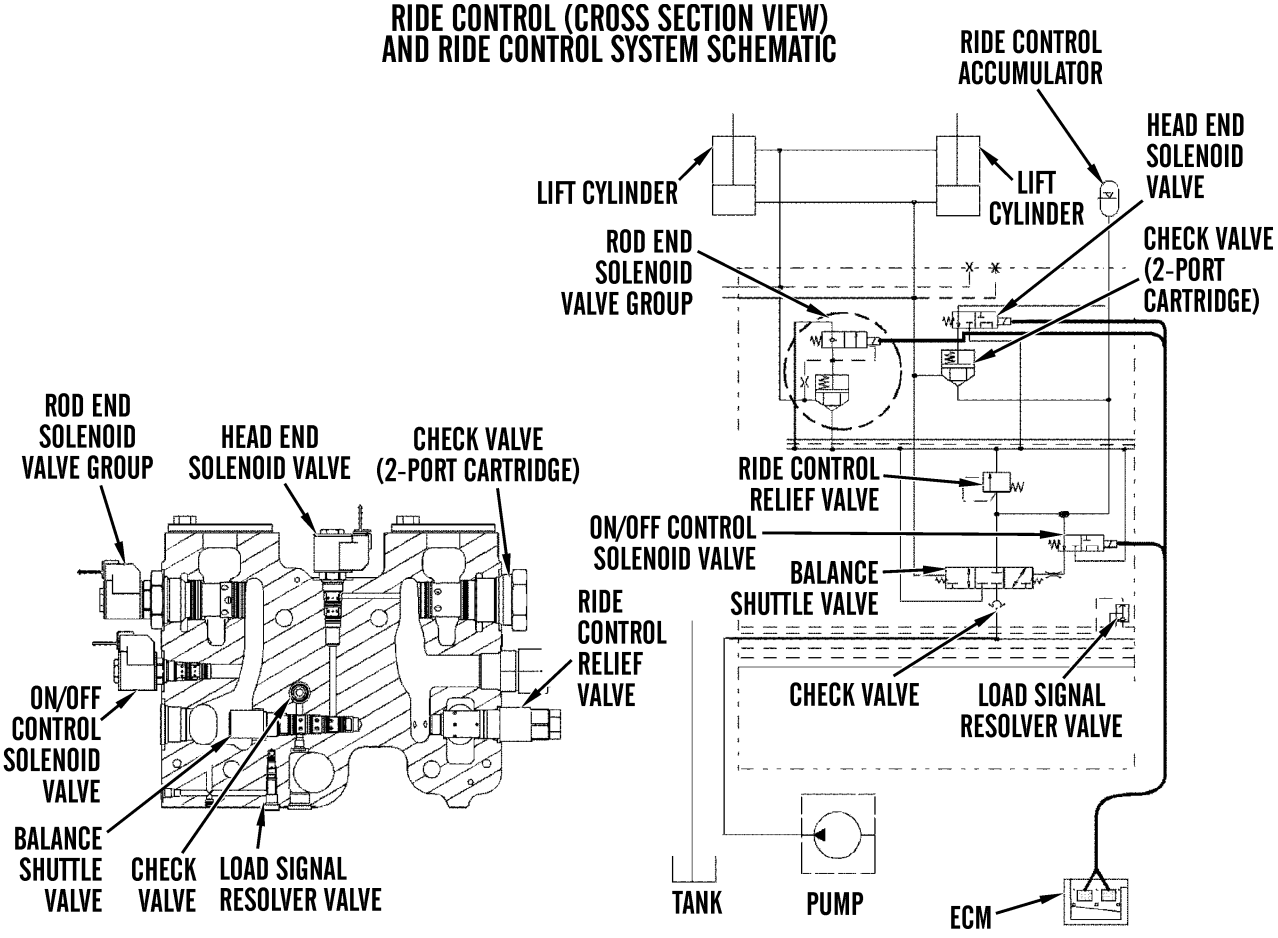

427-C1839

ELECTRO-HYDRAULIC SYSTEM - CONTINUED

d. Ride control system is made up of lift cylinders, ride control accumulator, ride control solenoid valve, shuttle valve, head end solenoid valve, head end check valve, and rod end solenoid valve.

e. Ride control system is controlled by ride control switch (TM 5-3805-291-10).

f. **OFF Position.**

(1) When engine start switch in set to ON and ride control is OFF, ride control solenoid valve is actuated. Valve spool in solenoid valve shifts left. Head end solenoid valve and rod end solenoid valve are not actuated. In this position, oil flow from accumulator to valve spool of shuttle valve is blocked. This prevents oil from head end of lift cylinders from flowing to accumulator, which may eventually cause damage to ride control system components.

(2) Oil pressure in head end of lift cylinders will move spool in shuttle valve right. Pump supply oil flows to check valve. Check valve opens and pump supply oil fills accumulator.

(3) When engine start switch is set to OFF, solenoid valve is de-energized and spool in solenoid valve is moved right. Oil pressure in accumulator acts against right end of valve spool in shuttle valve.

(4) If oil pressure in head end of lift cylinders has decreased, valve spool in shuttle valve moves left, opening path for oil from accumulator to hydraulic tank. Oil in accumulator will flow to hydraulic tank. Spool in shuttle valve will stay left until pressures on each end are equalized. Spool will be centered when pressure between accumulator and head end of lift cylinders is equal.

g. **Automatic Ride Control.**

(1) To initiate automatic ride control, push top of ride control switch (TM 5-3805-291-10). In AUTO position, ride control system functions automatically when machine's ground speed increases above approximately 6.0 mph (9.5 km/h). There is a one-second delay for pressure equalization before ride control is initiated.

(2) When ride control switch is in AUTO and machine's ground speed increases above approximately 6.0 mph (9.5 km/h), system will initiate ride control after one-second pressure equalization delay. Solenoid valve will de-energize. Valve spool in solenoid valve moves right. A path of oil from ride control accumulator will flow through solenoid valve, acting as pilot pressure on right side of shuttle valve. If accumulator pressure is greater than cylinders' head end pressure, spool of shuttle valve will move left. With spool in this position, accumulator will drain back to hydraulic tank.

(3) Oil pressure in head end of lift cylinders acts as pilot pressure on left side of shuttle valve. If head end pressure is greater than accumulator pressure, spool will move right. When spool is in this position, supply oil from hydraulic pump flows through check valve to fill accumulator.

(4) Spool in shuttle valve will move right to left and left to right to equalize pressure between head end of lift cylinders and accumulator. When pressure in accumulator is equal to pressure in head end of lift cylinders, valve spool for shuttle valve will be centered.

NOTE

The one-second pressure equalization period is the default, and can be changed using ET.

(5) After a one-second pressure equalization period, rod and head end solenoid valves will energize. Valve spool in head end solenoid valve will move left. In this position, pilot oil in spring chamber of 2-port cartridge check valve can flow back to tank to allow poppet of check valve to rise.

(6) When valve poppet in 2-port cartridge check valve is raised, path of oil between head end of lift cylinders and ride control accumulator is open. Oil flow from head end of lift cylinders acts against accumulator, which works as a shock absorber. Oil entering accumulator is resisted by nitrogen precharge and forces of work tool are dampened. This allows accumulator to act as a dampener to lift cylinders.

(7) Simultaneously, rod end solenoid valve is energized. Oil from rod end of lift cylinders may flow back to hydraulic tank. Hydraulic oil can flow from tank line to rod end of lift cylinders as makeup oil.

ELECTRO-HYDRAULIC SYSTEM - CONTINUED

NOTE

The ride control activation speed of 6.0 mph (9.5 km/h) is the default, and can be changed using ET.

(8) As machine approaches load site, operator decreases machine ground speed. When ground speed falls below approximately 6.0 mph (9.5 km/h), ride control system shuts off.

NOTE

If the work tool is loaded from an external source (a hopper or another machine), the pressure in the head end of the lift cylinders will increase. The operator must move the joystick lift control to the RAISE position or move the joystick tilt control to the TILT BACK position in order to create pressure in the implement hydraulic system. This will cause the implement pump to charge the accumulator (TM 5-3805-291-10).

(9) No oil will flow from lift cylinders to ride control accumulator while operator loads work tool. This allows a greater breakout force for loading work tool.

(10) After bucket is filled and operator increases machine ground speed, ride control system functions again. Pitching motion of bucket is dampened.

AIR CONDITIONING SYSTEM

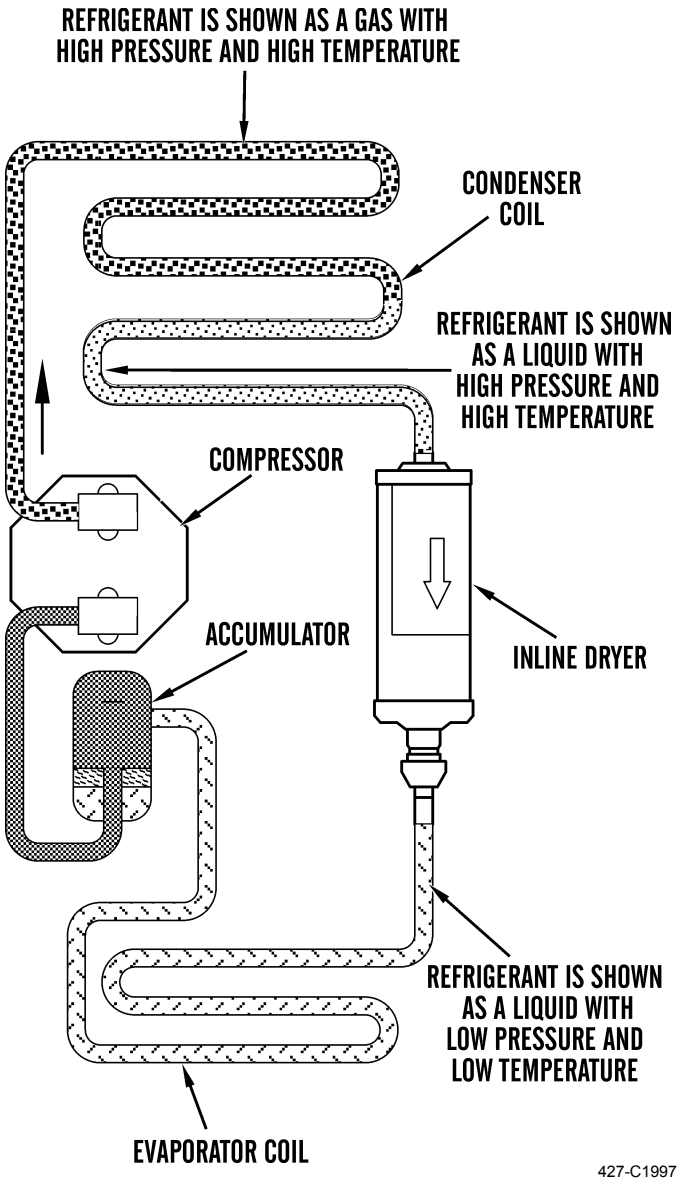

AIR CONDITIONING SYSTEM - CONTINUED

NOTE

- **In an orifice tube system that is properly charged, frost may form between the orifice tube and the compressor. The frost may be present if the system is operating properly and if the system is properly charged.**
- **In an orifice tube system, a combination of abnormal pressure and frost may indicate blockage in the system.**

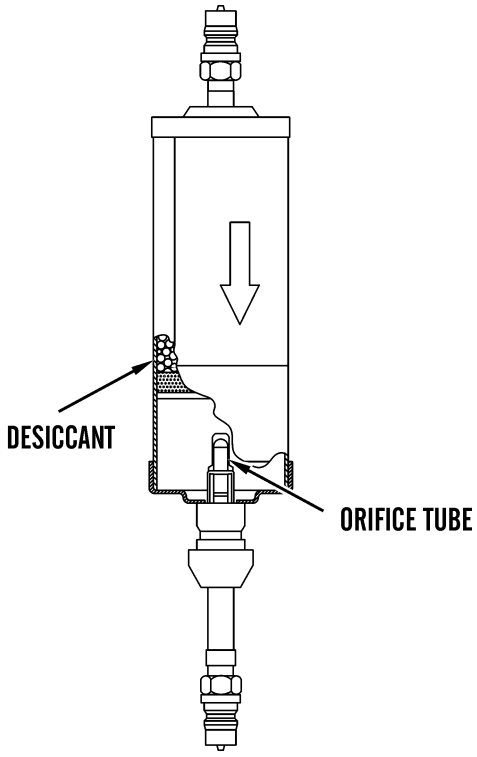

AIR CONDITIONING SYSTEM - CONTINUED

General

1. The orifice tube system uses an orifice tube in place of the expansion valve. The accumulator and the inline dryer with orifice tube replace the receiver/dryer.
2. The orifice tube assembly is located in one end of the inline dryer. The inline dryer is located in the line that goes from the condenser coil to the evaporator coil.
3. The desiccant is located in the inline dryer. The accumulator is located in the line that extends from the evaporator coil to the compressor. The orifice tube assembly is before the inlet of the evaporator coils.

NOTE

The orifice tube systems do not have a sight glass for determining whether the system is low on refrigerant.

Orifice Tube

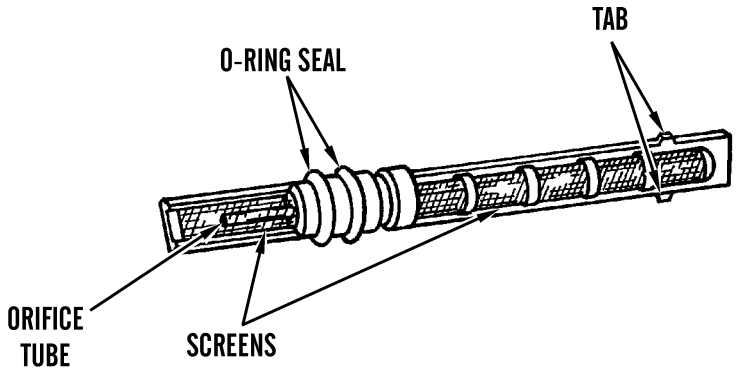

427-C1999

1. The orifice tube assembly has a plastic body, two screens, and a small brass tube located in the center of the body. The O-ring seals are positioned on the body of the orifice tube to seal against leakage. The orifice tube assembly is contained in the dryer. The orifice tube assembly is used in place of the thermostatic expansion valve.
2. The orifice tube assembly changes the refrigerant from a high pressure and high temperature refrigerant into a low pressure and low temperature liquid. The orifice tube has a restriction. The restriction in the orifice tube assembly allows the liquid refrigerant to be reduced from a high pressure to a low pressure. The flow rate is controlled by pressure differences across the orifice. The flow rate is also controlled by the temperature of the liquid refrigerant in the bottom of the condenser. The flow rate is sensitive to temperature and pressure differences. The flow rate is more sensitive to temperature differences.

AIR CONDITIONING SYSTEM - CONTINUED

Refrigerant Accumulator

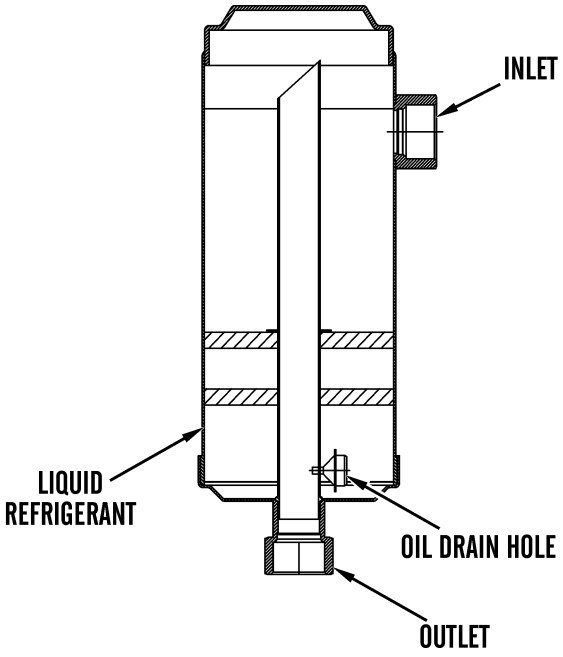

1. The accumulator is located at the outlet of the evaporator coil. The accumulator separates the liquid refrigerant from the refrigerant vapor that passes through the evaporator coil. The accumulator retains the liquid refrigerant that is separated. Also, the accumulator releases the vapor to the compressor.
2. The oil drain hole is located in the bottom of the accumulator. The oil drain hole will drain refrigerant oil that is separated. The oil drain hole will also drain some of the liquid refrigerant. This liquid refrigerant will go back to the compressor.
3. The flow of refrigerant out of the accumulator to the compressor is mostly vapor. The vapor contains a small amount of liquid refrigerant. This liquid refrigerant comes from the oil drain hole.

AIR CONDITIONING SYSTEM - CONTINUED

Refrigerant Compressor

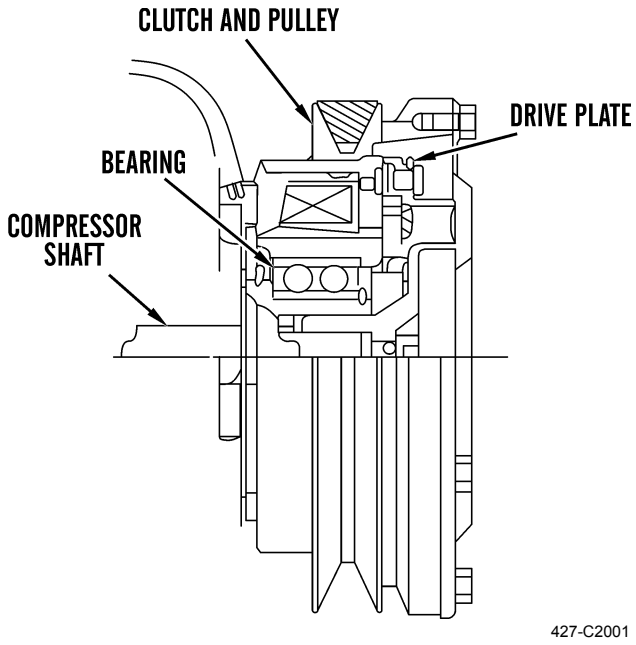

1. The compressor is driven by the engine. A belt connects the engine to the clutch and pulley assembly. The pulley is located on the clutch. The drive plate is fastened to the shaft of the compressor. The clutch and pulley assembly turns on the bearing. The clutch and pulley assembly are not connected to the shaft. The electric current from the thermostat controls a magnetic field in the coil assembly.
2. The magnetic field pulls the drive plate against the clutch and pulley assembly. The clutch and the pulley assembly turns the shaft that operates the compressor. When the current to the coil assembly is stopped, the magnetic field is removed. This allows the drive plate to move away from the clutch and pulley assembly. The clutch and the pulley assembly will turn freely on the bearing. The sequence of connecting and disconnecting the pulley to the compressor shaft is called compressor cycling. The compressor cycling is controlled by the thermostat. The thermostat is controlled by the capillary tube, which is installed between the fins of the evaporator coil.

AIR CONDITIONING SYSTEM - CONTINUED

Refrigerant Condenser

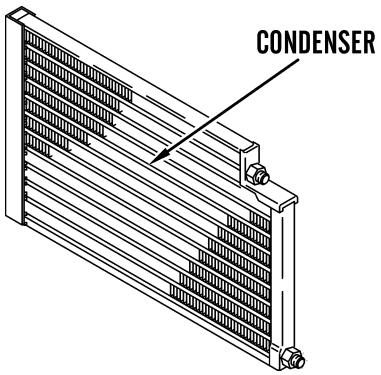

427-C2002

1. When the refrigerant leaves the compressor, the refrigerant is a vapor. The temperature of the refrigerant is high and the pressure of the refrigerant is high when the refrigerant leaves the compressor. The increase in pressure of the refrigerant causes an increase in temperature of the refrigerant. The refrigerant vapor leaves the compressor and the refrigerant enters the condenser.
2. The refrigerant must be converted into a liquid that has high temperature and high pressure. The refrigerant must be converted into a liquid in order to increase the efficiency of the AC system. The condenser converts the refrigerant vapor into a liquid that has high temperature and high pressure.
3. When the refrigerant vapor leaves the compressor, the refrigerant vapor enters the condenser. The condenser is in a location that is exposed to outside air. In order to convert the refrigerant into a liquid, the refrigerant must lose heat. The refrigerant must reach the temperature of saturation. At the temperature of saturation, the refrigerant vapor will become a liquid. The temperature of saturation of the refrigerant depends on the pressure of the refrigerant.
4. As the high temperature, high pressure refrigerant vapor passes through the condenser, the condenser absorbs heat from the refrigerant vapor. The condenser transfers the heat to the outside air. The temperature of the refrigerant and the pressure of the refrigerant decrease until the temperature of saturation is reached. When the temperature of the refrigerant vapor is equal to the temperature of saturation, the refrigerant becomes a high temperature and high pressure liquid. When the refrigerant is converted into a liquid, the refrigerant leaves the condenser.

AIR CONDITIONING SYSTEM - CONTINUED

Evaporator Coil

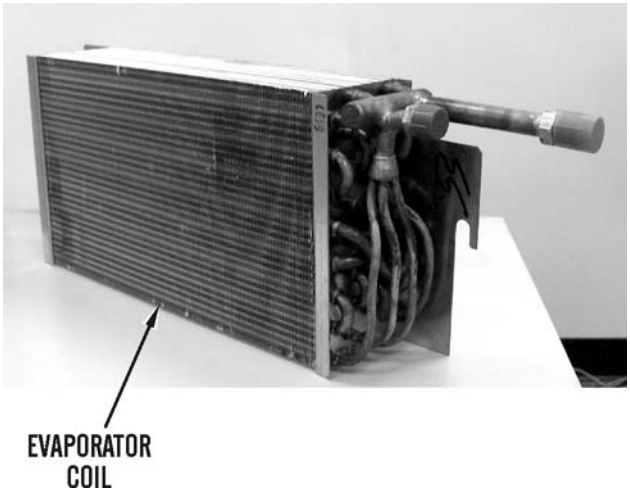

427-C2003

1. The evaporator receives liquid refrigerant from the orifice tube assembly. The liquid refrigerant that is received by the evaporator has low pressure and low temperature. Since the pressure of the liquid refrigerant is low, the temperature of saturation of the refrigerant is low. At the temperature of saturation, the refrigerant changes from a liquid into a vapor. The temperature of saturation of a fluid increases when the pressure of a fluid increases.
2. The evaporator coil is exposed to the air inside of the cab. The heat from the air inside of the cab is absorbed by the evaporator. The evaporator transfers the heat to the refrigerant. The amount of heat required to reach the temperature of saturation is called the latent heat of vaporization. When this heat is absorbed by the refrigerant, the temperature of the refrigerant will reach the temperature of saturation. The refrigerant will change from a liquid into a vapor. The vaporized refrigerant will leave the evaporator. The vaporized refrigerant will carry away heat from the cab. The vaporized refrigerant will return to the compressor when the refrigerant leaves the evaporator. This process is repeated continuously.

END OF WORK PACKAGE

CHAPTER 2

TROUBLESHOOTING PROCEDURES

TROUBLESHOOTING INTRODUCTION 0004 00

TROUBLESHOOTING INTRODUCTION

This Troubleshooting Chapter contains information needed to locate fault malfunctions on the 966H Wheel Loader and its components and is organized as follows:

1. **Troubleshooting Introduction.** *Troubleshooting Introduction* gives a description of troubleshooting work packages, provides a troubleshooting flow chart, identifies preliminary troubleshooting procedures, addresses operational tests, and provides a glossary. Use the chart on the following page to start troubleshooting.
2. **How To Use On-board Diagnostics.** *How to Use On-Board Diagnostics* (WP 0006 00) gives an overview of the capabilities and features that are part of the machine's electronic system.
3. **How To Connect To MSD With ET.** *How to Connect to MSD with ET* (WP 0005 00) gives an overview of how to install the software and how to connect the hardware for the MSD with ET.
4. **Troubleshooting Symptom Index.** *Troubleshooting Symptom Index* is located in WP 0007 00. This directs you to the appropriate troubleshooting procedure in WP 0008 00 or WP 0009 00.
5. **Troubleshooting Without a Diagnostic Code.** Troubleshooting without a diagnostic code is located in Tables 1 thru 8 of WP 0008 00.
6. **Troubleshooting With a Diagnostic Code.** Troubleshooting with a diagnostic code is located in Tables 1 thru 15 of WP 0009 00.
7. **Test, Inspections, and Adjustments.** Identifies additional tests, inspections, and adjustments required as part of the troubleshooting procedures (WP 0010 00 thru WP 0018 00).

Troubleshooting procedures in this manual cannot provide all the answers or correct all malfunctions encountered. However, these procedures provide an organized step-by-step approach to a problem, that directs inspections and tests toward the source of the problem and its successful resolution.

Before performing troubleshooting, read and follow all safety instructions found in the *Warning Summary* at the front of this manual.

Theory of Operation (WP 0003 00) and *Schematics* (WP 0237 00) provide useful information to aid in troubleshooting. *Theory of Operation* (WP 0003 00) presents a systems overview and provides a description and use of each component. *Schematics* (WP 0237 00) provides a detailed map of the electrical and hydraulic components.

TROUBLESHOOTING FLOW CHART

Use the *General Troubleshooting Flow Chart* in this work package to start troubleshooting.

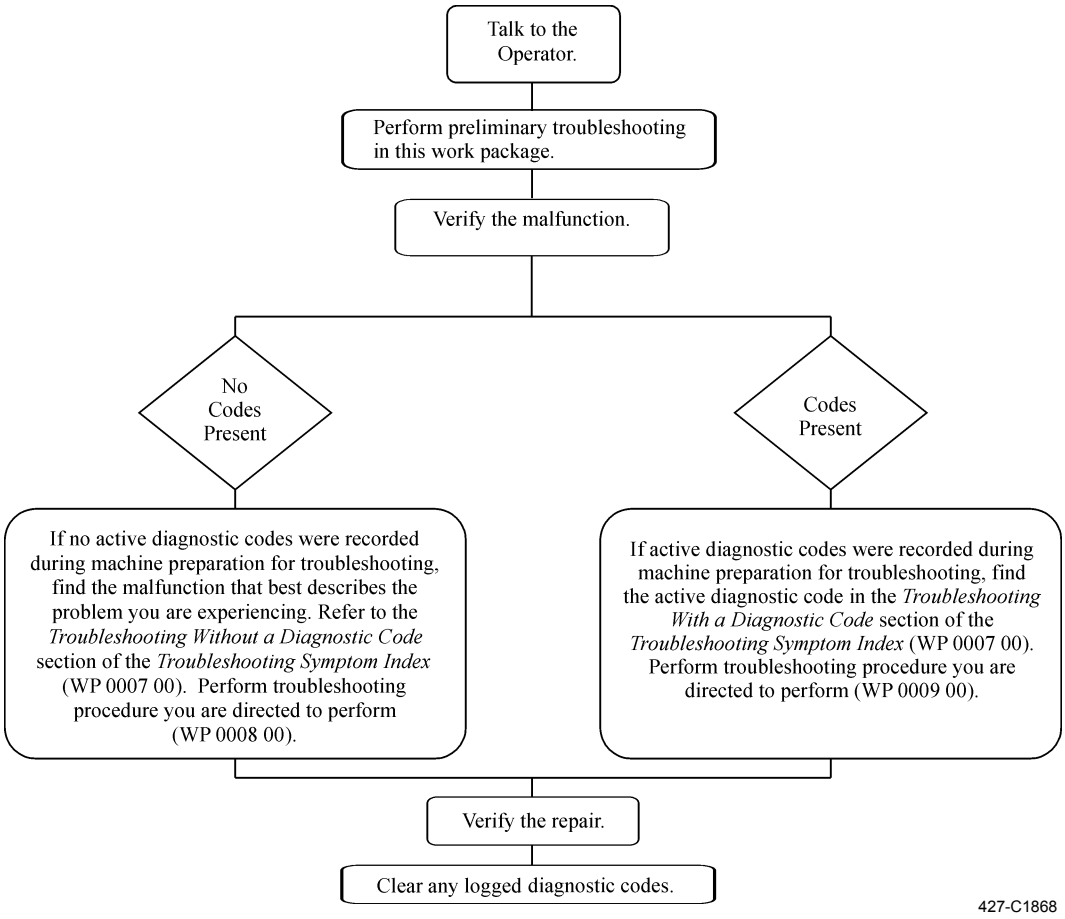

PRELIMINARY TROUBLESHOOTING PROCEDURES

NOTE

Fluid leaks are classified as either Class I, Class II, or Class III.

Class I: Seepage of fluid (as indicated by wetness or discoloration) not great enough to form drops.

Class II: Leakage of fluid great enough to form drops, but not enough to cause drops to drip from item being checked/inspected.

Class III: Leakage of fluid great enough to form drops that fall from item being checked/inspected.

1. Visually check for ruptured fluid hoses or tubes and for Class II or Class III leaks.
2. Check for mechanical jamming or binding caused by rocks or other foreign matter.
3. Check fluid levels in subject area and service as required (TM 5-3805-291-10).
4. Ensure all applicable Operator Troubleshooting procedures have been performed before proceeding (TM 5-3805-291-10).

EXPLANATION OF TROUBLESHOOTING TABLE COLUMNS

The columns in troubleshooting Tables 1 thru 8 in WP 0008 00 and Tables 1 thru 15 in WP 0009 00 are defined as follows:

1. **MALFUNCTION.** Indicates fault that has occurred in system/equipment.
2. **INSPECTION OR TEST.** Indicates inspection or test to be performed to isolate probable cause for fault symptom.
3. **CORRECTIVE ACTION.** Indicates procedure to correct the problem.

VISUAL INSPECTION OF AC SYSTEM

1. Check condenser and evaporator.
   a. Check for any type of restriction that will obstruct air flow. Check for dirt, insects, plastic bags, etc.
   b. Check for restrictions. A clean condenser will lead to longer life for compressor.
2. Clean fresh air filters and clean recirculation filters (TM 5-3805-291-10).
3. Check for a loose belt on compressor (WP 0048 00).
4. Check drain tube on evaporator. Drain plug should not be obstructed (WP 0227 00).
5. Start machine. Set AC on HIGH (TM 5-3805-291-10). Feel accumulator with hand. In a properly charged system, entire accumulator will be cooled or cold to touch.

GENERAL INFORMATION

Glossary

1. **Active Diagnostic Code.** An active diagnostic code describes a condition currently present in order to alert operator or service technician of an electronic system malfunction. Refer to *Diagnostic Code* in this glossary.
2. **Alternating Current (ac).** Alternating current is an electric current that reverses direction at a regular, recurring interval.
3. **American Wire Gauge (AWG).** AWG is a measure of electrical wire diameter. AWG is also a measure of electrical wire current carrying capacity. When AWG number is smaller, diameter of wire is larger. When AWG number is larger, diameter of wire is smaller.
4. **Before Top Center (BTC).** BTC is 180 degrees of crankshaft rotation before piston reaches top center position in normal direction of rotation.
5. **Boost Pressure Sensor.** Difference between turbocharger outlet pressure and atmospheric pressure is commonly referred to as “boost”.
6. **Breakout Harness.** Breakout harness is a test harness designed to connect into vehicle harness or engine harness. This connection allows a normal circuit operation and simultaneously provides a breakout T in order to measure signals.
7. **Bypass Circuit.** A bypass circuit is a circuit used as a substitute circuit for an existing circuit. A bypass circuit is typically used as a test circuit.
8. **CAN Data Link.** CAN data link is a serial communications port used for communication with other microprocessor-based equipment. Also referred to as J1939 data link.
9. **CAT Data Link.** CAT Data Link is a serial communication port used for communication with other microprocessor-based equipment.
10. **Code.** Refer to *Diagnostic Codes* or *Event Code* in this glossary.
11. **Cold Mode.** Cold mode is a mode for cold starting and cold engine operation that includes retarded timing and raised low idle. This mode is used for engine protection, reduced smoke emission, and faster warmup time.
12. **Communication Adaptor Tool.** Communication adapter provides a communication link between ECM and ET.
13. **Component Identifier (CID).** CID is a number that identifies specific electronic control system component that has experienced a diagnostic code.

GENERAL INFORMATION - CONTINUED

Glossary - Continued

14. **Coolant Level Sensor.** Coolant level sensor detects absence or presence of coolant at probe. Sensor then sends a signal to ECM.
15. **Coolant Temperature Sensor.** Coolant temperature sensor detects engine coolant temperature for cold mode operation and **Caterpillar** Engine Monitoring.
16. **Desired Engine Speed.** Desired engine speed is input to electronic governor within ECM. Electronic governor uses signal from throttle position sensor, engine speed/timing sensor, and other sensors in order to determine desired engine speed.
17. **Diagnostic Code.** A diagnostic code is sometimes referred to as a fault code. These codes indicate electronic system malfunction.
18. **Diagnostic Lamp.** A diagnostic lamp is sometimes called “check engine light.” Diagnostic lamp is used to warn operator of presence of an active diagnostic code.
19. **Digital Sensor Return.** Common line (group) from ECM is used as a ground for digital sensors.
20. **Digital Sensors.** Digital sensors produce a pulse width modulated (PWM) signal. Digital sensors are supplied with +8 VDC from ECM.
21. **Digital Sensor Supply.** +8 VDC supply from ECM is used to power digital sensor.
22. **Direct Current (DC).** Direct current is a type of current that flows consistently in only one direction.
23. **DT, DT Connector, or Deutsch DT.** This is a type of connector used on **CAT** machines. Connectors are manufactured by Deutsch.
24. **Duty Cycle.** Refer to *Pulse Width Modulation* in this glossary.
25. **Electronic Control Module (ECM).** ECM is an engine control computer. ECM provides power to electronics. ECM monitors data input from engine sensors. ECM acts as a governor to control engine speed.
26. **Electronic Engine Control (EEC).** Electronic engine control (EEC) is a complete electronic system. Electronic engine control monitors engine operation under all conditions. Electronic engine control also controls engine operation under all conditions.
27. **Electronic Technician (ET).** ET is a service tool that uses a software program to run on an MSD.
28. **Engine Monitoring.** Engine Monitoring is part of electronic engine control that monitors sensors and warns operator of detected problems.
29. **Engine Oil Pressure Sensor.** Engine oil pressure sensor measures engine oil pressure. Sensor sends its signal to ECM.
30. **Engine Speed/Timing Sensor.** Engine speed/timing sensor provides a variable amplitude and pulse width modulated (PWM) signal to ECM. ECM interprets this signal as crankshaft position and engine speed.
31. **Event Code.** An event code may be activated to indicate an abnormal engine operating condition. These codes usually indicate a mechanical problem instead of an electrical system problem.
32. **Failure Mode Identifier (FMI).** This identifier indicates type of failure experienced by components. FMI has been adopted from SAE practice of J1587 diagnostics.
33. **Flash Programming.** Flash programming is a method of programming or updating an ECM with an electronic service tool over data link instead of replacing components.
34. **Fuel Ratio Control (FRC).** FRC is a limit based on control of fuel air ratio. FRC is used to control emission. When ECM senses a higher boost pressure (more air into cylinder), FRC increases FRC Limit (more fuel into cylinder).
35. **Fuel Temperature Sensor.** Fuel temperature sensor detects fuel temperature. ECM monitors fuel temperature and adjusts calculated fuel rate accordingly.

GENERAL INFORMATION - CONTINUED

Glossary - Continued

36. **Full Load Setting (FLS).** FLS is a number that represents fuel system adjustment. This adjustment is made at factory in order to fine tune fuel system. Correct value for this parameter is stamped on engine information ratings plate. This parameter must be programmed.
37. **Full Torque Setting (FTS).** FTS is similar to full load setting. Parameter must be programmed.
38. **Harness.** Harness is a bundle of wiring (loom) that connects all electronic system components.
39. **Hertz (Hz).** Hertz measures electrical frequency in cycles per second.
40. **Intake Manifold Temperature Sensor.** This sensor detects intake manifold temperature. ECM monitors intake manifold temperature and other data in order to adjust injection timing and other performance functions.
41. **Integrated Electronic Controls.** Engine is designed with electronic controls as necessary part of system. Engine will not operate without electronic controls.
42. **J1939 CAN Data Link.** Data link is an SAE diagnostic communications data link used to communicate between electronic engine and instrument clusters.
43. **Logged Diagnostic Codes.** Logged diagnostic codes are codes stored in memory. These codes are meant to be an indicator of possible causes for intermittent problems. Refer to *Diagnostic Code* in this glossary for more information.
44. **Open Circuit.** An open circuit is a condition caused by an open switch or a broken electrical wire or connection. When this condition exists, signal or supply voltage can no longer reach its intended destination.
45. **Parameter.** A parameter is a value or limit programmable. This helps determine specific engine characteristics or behaviors.
46. **Password.** A password is a group of numeric or alphanumeric characters designed to restrict access to parameters. Electronic system requires correct passwords in order to change some parameters (Factory Passwords).
47. **Personality Module.** This module is attached to inside of ECM. Module contains all instructions (software) for ECM and performance maps for a specific horsepower family. Personality module may be reprogrammed through flash programming.
48. **Power Cycle.** Power cycle happens when power to ECM is cycled: ON, OFF, and ON. Power cycle refers to action of cycling engine start switch from any position to OFF position and to START/RUN position.

GENERAL INFORMATION - CONTINUED

Glossary - Continued

49. **Pulse Width Modulation (PWM).** PWM is a signal that consists of pulses of variable width. These pulses occur at fixed intervals. Ratio of "TIME ON" versus total "TIME OFF" can be varied. This ratio is also referred to as a duty cycle.

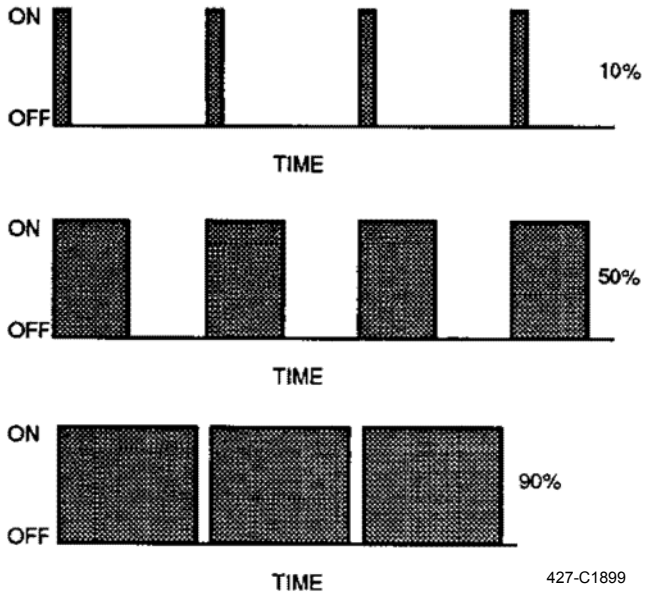

50. **Rated Fuel Limit.** This term indicates maximum allowable fuel position (longest injection pulse). This position will produce rated power for this engine configuration.
51. **Reference Voltage.** Reference voltage is a regulated and steady voltage supplied by ECM to a sensor. Reference voltage is used by sensor to generate a signal voltage.
52. **Sensor.** A sensor is a equipment used to detect a change in pressure, temperature, or mechanical movement. Information detected is converted into an electrical signal.
53. **Short Circuit.** A short circuit is a condition where an electrical circuit is inadvertently connected to an undesirable point. An example of a short circuit is a wire which rubs against a vehicle frame and this rubbing eventually wears off wire insulation. Electrical contact with frame is made and a short circuit results.
54. **Signal.** Signal is a voltage or waveform used to transmit information, typically from a sensor to ECM.
55. **Supply Voltage.** Supply voltage is a constant voltage supplied to a component to provide electrical power required for component to operate. Power may be generated by ECM or battery voltage supplied by vehicle wiring.
56. **System Configuration Parameters.** System configuration parameters are parameters that affect emissions and/or operating engine characteristics.
57. **Throttle Position.** Throttle position is interpretation by ECM of signal from throttle position sensor of throttle switch.
58. **Throttle Position Sensor.** Throttle position sensor is an electronic sensor connected to an accelerator pedal or hand lever. This sensor sends a PWM signal to ECM used to calculate desired engine speed.
59. **Top Center.** Top center refers to crankshaft position when engine piston position is at highest point of travel. Engine must be turned in normal direction of rotation to reach this point.
60. **Total Tattletale.** Total tattletale is total number of changes to all parameters stored in ECM.
61. **Voltage Load Protection Module (VLPM).** VLPM monitors electronic system voltage. VLPM will prevent fuel injection pump from injecting fuel if a high voltage condition occurs.

END OF WORK PACKAGE

HOW TO USE MSD WITH ET 0005 00

THIS WORK PACKAGE COVERS

Software Installation and Connecting MSD, Using ET Software with MSD to Monitor Codes, Status Groups

INITIAL SETUP

Maintenance Level

Unit

Test Equipment

Test set, electronic systems (MSD) (Item 86, WP 0232 00)

Tools and Special Tools

Adapter, test (Item 3, WP 0232 00)

Software kit (Item 75, WP 0232 00)

Personnel Required

MOS 62B, Construction Equipment Repairer

References

WP 0006 00

WP 0013 00

Equipment Conditions

Machine parked on level ground (TM 5-3805-291-10)

Work tool lowered to ground (TM 5-3805-291-10)

Parking brake engaged (TM 5-3805-291-10)

Wheels chocked (TM 5-3805-291-10)

Battery disconnect switch in OFF position (TM 5-3805-291-10)

Engine start switch on OFF position (TM 5-3805-291-10)

Drawings Required

TM 5-3805-291-23P, Figures 182 and 183

SOFTWARE INSTALLATION AND CONNECTING MSD

NOTE

- **For first time users, review MSD operator's training which is already installed on MSD.**
- **If this is the first use of ET, perform steps 1 thru 3 as necessary.**

1. Install communication adapter driver software (1) on MSD (2).
2. Install ET software (3) on MSD (2).
3. Review tutorial on ET CD.
4. Connect cable (4) to "COMPUTER" end of communication adapter (5) and to RS232 serial com port 1 (6) of MSD (2).

NOTE

Remove diagnostic connector cap and set aside.

5. Connect cable (7) to "DATA LINK" end of communication adapter (8) and diagnostic connector (9) on front of pilot operator control console.



427-C1900-1

SOFTWARE INSTALLATION AND CONNECTING MSD - CONTINUED



6. Turn engine start switch and battery disconnect switch to ON position (TM 5-3805-291-10) to establish communication with ECMs.

NOTE

- **If ET and communication adapter do not communicate with ECM, refer to "*CAT Data Link Circuit Test*" (WP 0013 00).**
- **ET will list ECMs.**

7. Select ET from Windows Desktop.
8. Click OK if the "What's new..." Dialog box pops up.

NOTE

Software will display fault codes for all ECMs.

9. Select desired ECM.
10. To display active codes, active events, or status flags, click the buttons on bottom of screen. For a complete list of diagnostic codes and their meanings, refer to WP 0007 00.
11. If fault codes are logged or active on your machine, but no troubleshooting steps appear in this manual, contact your local Caterpillar dealer.

STATUS GROUPS

Refer to Table 1 thru Table 4 for a list of parameters that ET monitors in real time. Access the status groups from the toolbar or the drop down menus in ET.

Table 1. Engine ECM.

Status Screen	Parameters
Screen 1 (General Data)	Engine Speed
	Desired Engine Speed
	Throttle Position
	Fuel Position
	Boost Pressure
	Engine Oil Pressure (abs)
	Engine Load Factor
	Engine Power Derate
	Shutdown Switch
	Fuel Rate Based Percent Engine Load Factor
Screen 2 (Fuel Delivery)	Engine Speed
	Desired Engine Speed
	Throttle Position
	Boost Pressure
	Fuel Position
	FRC Fuel Limit
	Rated Fuel Limit
	Fuel Pressure
	Percent Engine Load at Current Engine Speed
	Engine Power Derate
	Fuel Filter
Screen 3 (Temperatures)	Engine Speed
	Desired Engine Speed
	Engine Coolant Temperature
	Fuel Temperature
	Inlet Air Temperature
Screen 4 (Pressures)	Engine Speed
	Desired Engine Speed
	Atmospheric Pressure
	Engine Oil Pressure

STATUS GROUPS - CONTINUED.

Table 1. Engine ECM - Continued.

Status Screen	Parameters
Screen 4 (Pressures) - Continued	Engine Oil Pressure (abs)
	Fuel Pressure
	Fuel Pressure (abs)
	Turbo Outlet Pressure (abs)
	Boost Pressure
	Turbo Inlet Pressure (abs)
Screen 5 (Engine Starting)	Engine Speed
	Desired Engine Speed
	Battery Voltage
	Ether Injection
	Fuel Pressure (abs)
	Engine Oil Pressure (abs)
	Fuel Consumption Rate
	Security System Immobilizer Status
	Shutdown Switch
Screen 6 (Variable Speed Fan)	Engine Speed
	Desired Engine Speed
	Engine Fan Bypass
	Engine Coolant Temperature
	Inlet Air Temperature
	Engine Fan Reverse Switch Position
	Engine Fan Reversing Solenoid Status
Screen 7 (Air Filter Restriction)	Engine Speed
	Atmospheric Pressure
	Turbo Inlet Pressure (abs)
	Air Filter Restriction
	Peak Air Filter Restriction
	Engine Power Derate
Screen 8 (MISC Group #1)	Throttle Duty Cyc
	Hydr Oil Temp

STATUS GROUPS - CONTINUED

Table 2. Messenger.

Status Screen	Parameters
Screen 1 (Gauges and LCDs)	Engine Speed From: Engine
	Engine Coolant Temperature From: Engine
	Diagnostic Clock From: Engine
	Torque Conv Outlet Temp From: Transmission
	Ground Speed/Direction From: Transmission
	Actual Gear From: Transmission
	Hydraulic Oil Temperature From: Implement Control
	Fuel Gauge From: Implement Control
Screen 2 (System Warnings)	Transmission System Warning Indicator Status
	Engine System Warning Indicator Status
	Action Lamp
	Action Alarm
	Brake/Axle Warning Indicator Status
	Hydraulic System Warning Indicator
	Primary Steering System Warning Indicator Status
	Secondary Steering Warning Indicator Status
	Parking Brake Warning Indicator Status
Screen 3 (System Information)	Start Aid Indicator Status
	Ride Control Active Indicator Status
	Neutralizer Disable Indicator Status
	Machine Security System Indicator Status
Screen 4 (Engine Parameters)	Engine Speed From: Engine
	Desired Engine Speed From: Engine
	Boost Pressure From: Engine
	Engine Oil Pressure From: Engine
	Fuel Rate Based Percent Engine Load Factor From: Engine
	Engine Power Derate From: Engine
	Shutdown Switch From: Engine
	Engine Coolant Temperature From: Engine
	Inlet Air Temperature From: Engine
	Fuel Pressure From: Engine
	Fuel Temperature From: Engine

STATUS GROUPS - CONTINUED

Table 2. Messenger - Continued.

Status Screen	Parameters
Screen 5 (Transmission Parameters)	Actual Gear From: Transmission
	Shift Lever Position From: Transmission
	Ground Speed/Direction From: Transmission
	Engine Speed From: Transmission
	Torque Conv Outlet Temp From: Transmission
	Transmission Oil Temperature From: Transmission
	Ride Control From: Transmission
Screen 6 (Transmission Operator Input)	Actual Gear From: Transmission
	Shift Lever Position From: Transmission
	Direction Switch Position From: Transmission
	Transmission Direction Switch #2 Position From: Transmission
	Upshift Switch From: Transmission
	Downshift Switch From: Transmission
	Transmission Switch From: Transmission
	Variable Shift Control Selector Switch Position From: Transmission
	Left Brake Pedal Position From: Transmission
	Transmission Override Input Status From: Transmission
	Ride Control Switch From: Transmission
Screen 7 (Implement Parameters)	Lift Lever Position From: Implement Control
	Tilt Lever Position From: Implement Control
	3rd Lever Position From: Implement Control
	Implement Lockout Switch Position From: Implement Control
	Kickout Set Switch From: Implement Control
	Fine Modulation Mode Switch Position From: Implement Control
	Autodig Operation Mode Switch Status From: Implement Control
	Autodig Mode Switch Position From: Implement Control
	Autodig Trigger Switch Status From: Implement Control
	Continuous Flow Switch From: Implement Control

STATUS GROUPS - CONTINUED

Table 2. Messenger - Continued.

Status Screen	Parameters
Screen 8 (Brake/Axle Parameters)	Parking Brake Switch From: Transmission
	Parking Brake From: Transmission
	Front Axle Oil Temperature From: Transmission
	Rear Axle Oil Temperature From: Transmission
	Differential Lock Switch
	Left Front Wheel Speed
	Right Front Wheel Speed
	Left Rear Wheel Speed
	Right Rear Wheel Speed
	Vehicle Articulation Angle
Screen 9 (Starting System Parameters)	Shutdown Switch From: Engine
	Ignition Switch From: Transmission
	Starter Relay From: Transmission
	Security System Status From: Transmission
	Shift Lever Position From: Transmission
	Direction Switch Position From: Transmission
	Transmission Direction Switch #2 Position From: Transmission

STATUS GROUPS - CONTINUED

Table 3. Powertrain ECM.

Status Screen	Parameters
Screen 1 (Operator Input)	Actual Gear
	Transmission Switch
	Variable Shift Control Selector Switch Position
	Left Brake Pedal Position
	Direction Switch Position
	Upshift Switch
	Downshift Switch
	Shift Lever Position
	Transmission Direction Switch #2 Position
	Transmission Override Input Status
	Parking Brake
	Backup Alarm
Screen 2 (Parking Brake)	Actual Gear
	Direction Switch Position
	Shift Lever Position
	Ground Speed/Direction
	Parking Brake Switch
	Parking Brake
	Parking Brake Pressure Switch
	Parking Brake Solenoid
	Parking Brake Warning Indicator Status From: Graphical Display Module
	Brake/Axle Warning Indicator Status From: Graphical Display Module
	Engine Speed From: Engine
Screen 3 (Brake System)	Actual Gear
	Transmission Switch
	Left Brake Pedal Position
	Left Brake Pedal Duty Cycle
	Neutralizer Operation Mode Status
	Transmission Output Speed #1
	Transmission Output Speed #2
	Ground Speed/Direction

STATUS GROUPS - CONTINUED

Table 3. Powertrain ECM - Continued.

Status Screen	Parameters
Screen 3 (Brake System) - Continued	Brake Oil Pressure Status
	Brake/Axle Warning Indicator Status From: Graphical Display Module
	Neutralizer Disable Indicator Status From: Graphical Display Module
Screen 4 (Axle)	Ground Speed/Direction
	Front Axle Differential Lock
	Rear Axle Differential Lock
	Differential Lock Pressure Solenoid Current Status
	Neutralizer Operation Mode Status
	Vehicle Articulation Angle
	Left Front Wheel Speed
	Right Front Wheel Speed
	Left Rear Wheel Speed
	Right Rear Wheel Speed
	Lift Link Position
Screen 5 (Transmission Status)	Actual Gear
	Engine Speed
	Torque Converter Speed
	Transmission Output Speed #1
	Transmission Output Speed #2
	Ground Speed/Direction
	Transmission Oil Temperature
	Powertrain Filter Bypass Status
	Torque Conv Outlet Temp
	Transmission System Warning Indicator Status From: Graphical Display Module
Screen 6 (General Speeds)	Actual Gear
	Engine Speed
	Torque Converter Speed
	Transmission Output Speed #1
	Transmission Output Speed #2
	Ground Speed/Direction

STATUS GROUPS - CONTINUED

Table 3. Powertrain ECM - Continued.

Status Screen	Parameters
Screen 6 (General Speeds) - Continued	Trans Requested Eng Speed Limit
	Engine Speed From: Engine
Screen 7 (Clutch Currents)	Actual Gear
	Transmission Solenoid 1 Current Percentage
	Transmission Solenoid 2 Current Percentage
	Transmission Solenoid 3 Current Percentage
	Transmission Solenoid 4 Current Percentage
	Transmission Solenoid 5 Current Percentage
	Transmission Solenoid 6 Current Percentage
Screen 8 (Cooling System)	Engine Speed
	Torque Converter Speed
	Transmission Oil Temperature
	Rear Axle Oil Cooler Bypass Solenoid Status
	Torque Conv Outlet Temp
	Rear Axle Oil Temperature
	Front Axle Oil Temperature
	Brake/Axle Warning Indicator Status From: Graphical Display Module
	Engine Coolant Temperature From: Engine
	Inlet Air Temperature From: Engine
	Hydraulic Oil Temperature From: Implement Control
Screen 9 (Ignition)	Engine Speed
	System Voltage
	Ignition Switch
	Starter Relay
	Direction Switch Position
	Shift Lever Position
	Transmission Direction Switch #2 Position
	Security System Status
	Machine Security System Indicator Status
	Security System Immobilizer Status From: Engine
	Shutdown Switch From: Engine

STATUS GROUPS - CONTINUED

Table 3. Powertrain ECM - Continued.

Status Screen	Parameters
Screen 10 (Ride Control)	Actual Gear
	Ground Speed/Direction
	Ride Control Switch
	Ride Control
	Ride Control Solenoid Status
	Ride Control Solenoid #2 Status
	Ride Control Solenoid #3 Status
	Ride Control Forward Activation Speed
	Ride Control Reverse Activation Speed
	Ride Control Active Indicator Status From: Graphical Display Module
Screen 11 (Steering)	Actual Gear
	Engine Speed
	Ground Speed/Direction
	Primary Steering Pressure Status
	Secondary Steering Relay
	Secondary Steering Pressure Status
	Secondary Steering Test Switch Position
	Primary Steering System Warning Indicator Status From: Graphical Display Module
	Secondary Steering Warning Indicator Status From: Graphical Display Module
Screen 12 (Cab Features)	Actual Gear
	Side Rear View Mirrors Heater Status
	Side Rear View Mirrors Remaining Heat Time
	Side Rear View Mirrors Heater Switch Status
Screen 13 (MISC Group #1)	VSC Sw Chng
	Autshft Sw Chng
	Neut Dsbl Sw Chng
	Ride Ctrl Sw Chng

STATUS GROUPS - CONTINUED

Table 4. Implement ECM.

Status Screen	Parameters
Screen 1 (Lift Function)	Lift Lever Position Sensor Duty Cycle
	Lift Lever Position
	Raise Solenoid #1 Current Command
	Lower Solenoid #1 Current Command
	Lower Anti Drift Solenoid Status
	Lift Cylinder Position Sensor Duty Cycle
	Lift Linkage Position Sensor Duty Cycle
	Lift Cylinder Extension (absolute)
	Implement Pilot Supply Solenoid
	Implement Lockout Switch Position
Screen 2 (Tilt Function)	Tilt Lever Position Sensor Duty Cycle
	Tilt Lever Position
	Rackback Solenoid #1 Current Command
	Dump Solenoid #1 Current Command
	Dump Anti Drift Solenoid Status
	Tilt Cylinder Position Sensor Duty Cycle
	Tilt Linkage Position Sensor Duty Cycle
	Tilt Cylinder Extension (absolute)
	Implement Pilot Supply Solenoid
	Implement Lockout Switch Position
Screen 3 (Lift and Tilt Functions)	Lift Lever Position
	Raise Solenoid #1 Current Command
	Lower Solenoid #1 Current Command
	Lift Cylinder Extension (absolute)
	Tilt Lever Position
	Rackback Solenoid #1 Current Command
	Dump Solenoid #1 Current Command
	Tilt Cylinder Extension (absolute)
Screen 4 (3rd Function)	3rd Lever Position
	3rd Lever Position Sensor Duty Cycle
	3rd Function Rearward Solenoid Command

STATUS GROUPS - CONTINUED

Table 4. Implement ECM - Continued.

Status Screen	Parameters
Screen 4 (3rd Function) - Continued	3rd Function Forward Solenoid Command
	Continuous Flow Switch
	Continuous Flow
	Implement Pilot Supply Solenoid
	Implement Lockout Switch Position
Screen 5 (Autodig Input/Output)	Lift Cylinder Head Pressure
	Autodig Operation Mode Switch Status
	Autodig Mode Switch Position
	Autodig Trigger Switch Status
	Autodig Kickout Set Switch Status
	Autodig Automatic Trigger Mode Indicator Status
	Autodig Operator Trigger Mode Indicator Status
	Autodig Record Mode Indicator Status
Screen 6 (Autodig System)	Lift Cylinder Head Pressure
	Autodig Mode Switch Position
	Autodig Trigger Switch Status
	Raise Solenoid #1 Current Command
	Lower Solenoid #1 Current Command
	Rackback Solenoid #1 Current Command
	Dump Solenoid #1 Current Command
	Ground Speed/Direction **From: Transmission
	Actual Gear **From: Transmission
	Engine Speed **From: Engine
Screen 7 (Operator Input)	Implement Lockout Switch Position
	Kickout Set Switch
	Fine Modulation Mode Switch Position
	Continuous Flow Switch
	Lift Lever Position Sensor Duty Cycle
	Tilt Lever Position Sensor Duty Cycle
	3rd Lever Position Sensor Duty Cycle

STATUS GROUPS - CONTINUED

Table 4. Implement ECM - Continued.

Status Screen	Parameters
Screen 8 (System Input)	System Voltage
	Fuel Gauge
	Implement Pilot Supply Solenoid
	Implement Lockout Switch Position
	Hydraulic Oil Temperature
	Hydraulic Filter Bypass Status
	Security System Immobilizer Status
	Hydraulic System Warning Indicator **From: Graphical Display Module
Screen 9 (Payload Control Loading Status)	Bucket Payload Data
	Bucket Payload
	Weigh Cycle Total Truck Payload
	Target Payload
	Remaining Payload To Load
	Load Cycle Pass Count
	Load Cycle Start Time
	Load Cycle End Time
Screen 10 (Payload Control System Status)	Lift Cylinder Head Pressure
	Lift Cylinder Rod End Pressure
	Lift Cylinder Position
	Payload Store Switch
	Payload Re-weigh Switch Position
	Payload Zero Switch Position
Screen 11 (Payload Control Setting Status)	Automatic Operator ID Feature
	Automatic Truck ID Feature
	Automatic Material ID Feature
	Warmup Lifts Feature
	Zero Reminder Feature
	Tilt Sensor
	Payload Memory Remaining

END OF WORK PACKAGE

HOW TO USE ON-BOARD DIAGNOSTICS 0006 00

THIS WORK PACKAGE COVERS

General, Understanding the Diagnostic Code Breakdown, Diagnostic Codes, Failure Mode Identifiers (FMIs)

INITIAL SETUP

Maintenance Level

Unit

Test Equipment

Test set, electronic systems (MSD) (Item 86, WP 0232 00)

Tools and Special Tools

Adapter, test (Item 3, WP 0232 00)

Software kit (Item 75, WP 0232 00)

Personnel Required

MOS 62B, Construction Equipment Repairer

References

WP 0007 00

Equipment Conditions

Machine parked on level ground (TM 5-3805-291-10)

Work tool lowered to ground (TM 5-3805-291-10)

Parking brake engaged (TM 5-3805-291-10)

Wheels chocked

Battery disconnect switch in OFF position (TM 5-3805-291-10)

Engine start switch on OFF position (TM 5-3805-291-10)

GENERAL

The 966H Wheel Loader has four ECMs: Engine, Powertrain, Implement, and Messenger. Each ECM generates diagnostic fault codes indicating that an ECM has detected an electrical or electronic problem which may affect system performance. Often, these codes are generated even before the operator notices a difference. If the operator notices a difference in performance, the diagnostic code may indicate the cause of the problem.

UNDERSTANDING THE DIAGNOSTIC CODE BREAKDOWN

NOTE

Some procedures may generate new diagnostic codes. Before any procedures are performed, make a list of all diagnostic codes in order to determine system problems. Clear logged diagnostic codes caused by procedure when each procedure is complete.

When an ECM detects an engine problem, it generates a diagnostic code. There are two types of diagnostic codes: fault codes and event codes. Fault codes indicate a problem with an electronic control system. Event codes identify the symptom of the operational problem and indicate how the machine is being operated.

Fault and event codes may be classified as active or logged. For active codes, the ECM records the code and a description. For logged codes, the ECM records the hour of first occurrence, the hour of last occurrence, and the total number of occurrences, using the ECM's internal diagnostic clock.

A diagnostic code can be broken into four parts:

1. **Type of Code.** The screen display will show "A" for active, "E" for event, or Blank for logged.
2. **Module Identifier (MID) or Event Identifier (EID).**
   a. The MID identifies which ECM detected the diagnostic code. Each ECM on the machine has a unique two- or three-digit MID. The engine ECM designation is 036, and the machine/powertrain ECM designation is 081 for the 966H. Refer to Table 1 in WP 0007 00 for a complete list of fault codes for the engine ECM. Refer to Table 2 in WP 0007 00 for a complete list of fault codes for the machine/powertrain ECM.
   b. The EID identifies an abnormal operating condition. Refer to Table 4 in WP 0007 00 for a complete list of event codes.
3. **Component Identifier (CID).** A CID is a number with four digits which indicates which component generated the code. For example, CID number 0017 identifies the fuel shutoff valve. Any component that can generate a diagnostic code is assigned a CID number.
4. **Failure Mode Identifier (FMI).** An FMI is associated with either an engine or machine MID code and it indicates the type of sensor failure. The FMI is the last two digits of the diagnostic code. Refer to Table 1 in WP 0007 00 for an explanation of FMI codes. FMI codes are defined by SAE standards.

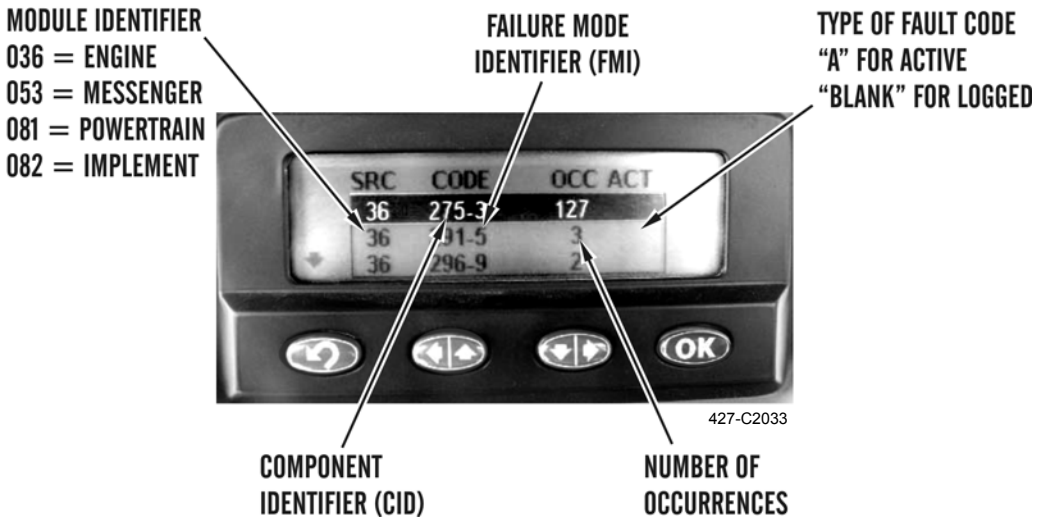

DIAGNOSTIC CODES

NOTE

For a complete list of diagnostic codes and how to find their diagnostic procedures, refer to *Troubleshooting Symptom Index* (WP 0007 00).

1. **Fault Codes.**

   a. **Active Diagnostic Codes.** An active diagnostic fault code represents a problem with an electronic control system. Correct the problem as soon as possible.

      (1) Before performing a procedure, always check all fuses and circuit breakers (TM 5-3805-291-10). Repair the cause of any tripped circuit breaker.

      (2) A screen is provided in ET for displaying active diagnostic codes. Active diagnostic codes shall include a component identifier (CID), a failure mode identifier (FMI), and a text description of the problem.

         (a) Purpose. The Active Diagnostic Codes function provides information to warn the vehicle operator of a potential problem and indicates to the service technician the nature of the problem. The codes that are diagnosed in this screen are active (occurring as you view them).

         (b) Accessing. To run the Active Diagnostic Codes function, select Active Diagnostic Codes from the Diagnostic menu.

         (c) Screen Layout. ET displays up to four status flag indicators across the top of the screen. These flags are used to notify you of currently active conditions, such as low oil pressure, engine overspeed, etc. When a warning condition exists, it is described in the appropriate flag indicator area. The name of the active ECM is displayed above the flags.

         The Active Diagnostic Codes display area has two columns, Code and Description. The code numbers that appear are used to identify the diagnostic codes. The Description column informs you of the problem that is occurring. The list of codes is grouped according to the ECM from which they are retrieved. The ECM names appear as subtitles in the list. If there is more than one ECM connected, the subtitles are arranged alphabetically.

         When the “Include All ECMs” check box is checked, active codes from all available ECMs are retrieved and displayed. When there is a single ECM on the data link, this check box is disabled. The push-buttons available in the Active Diagnostic Codes screen are: More Info and Print.

   b. **Logged Diagnostic Codes.** When an ECM generates a diagnostic code, it logs the code in permanent memory, using an internal diagnostic clock.

      (1) The ECM records the hour of first occurrence, the hour of last occurrence, and the total number of occurrences using the ECM’s internal diagnostic clock.

      (2) A screen is provided in ET for displaying logged diagnostic codes. Logged diagnostic information shall include a component identifier (CID), a failure mode identifier (FMI), and a text description of problem.

         (a) Purpose. The Logged Diagnostic Codes function provides a list of diagnostic codes logged by the ECM. These codes are similar to the active diagnostic codes except they are logged over time.

         (b) Accessing. To run the Logged Diagnostic Codes function, select Logged Diagnostic Codes from the Diagnostics menu.

DIAGNOSTIC CODES - CONTINUED

(c) Screen Layout. The Logged Diagnostic Codes display area has five columns: Code, Description, Occ., First, and Last. The code numbers that appear are used to identify the diagnostic codes. The Description column informs you of the problem that is occurring. The Occ. (occurrences) column informs you of the number of times that the problem occurred. The columns marked First and Last indicate the first and last ECM hour that the problem occurred.

The list of codes is grouped according to the ECM from which they are retrieved, and they appear ordered chronologically by the most recent ECM hour of last occurrence. The ECM names appear as subtitles in the list. On the same line as the ECM subtitle, the number of ECM diagnostic clock hours is displayed. These hours represent the time that the ECM has been connected and running.

When the "Include All ECMs" check box is checked, logged codes from all available ECMs are retrieved and displayed. When there is a single ECM on the data link, this check box is disabled. The push-buttons available in the Logged Diagnostic Codes screen are: Clear, More Info, and Print.

(3) This information is a valuable indicator for troubleshooting intermittent problems. Any logged diagnostic codes will automatically be deleted if no additional occurrences are recorded in 150 hours. Some diagnostic codes may be easily triggered. Some diagnostic codes may log occurrences that did not result in complaints. The most likely cause of an intermittent problem is a faulty connection or damaged wiring. The next likely cause is a component failure. The least likely cause is ECM failure. Diagnostic codes that are logged repeatedly may indicate a problem that needs special investigation.

2. **Event Codes.**

a. **Active Event Codes.**

(1) Purpose. The Active Event Codes function provides information about events currently occurring. These codes are similar to the active diagnostic codes, except that the event represents the symptom of an operational problem. These codes indicate to the manager or technician how the machine or equipment is being operated.

(2) Accessing. To run the Active Event Codes function: select Events from the Diagnostic menu, and then select Active Event Codes from the sub-menu. You may have to customize the tool bar to view active event codes.

(3) Screen Layout. The Active Event Codes display area has two columns: Code and Description. The code numbers that appear are used to identify the events. The Description column informs you of the event that is occurring.

A warning category indicator immediately follows the code number and is in parentheses. It is a number ranging from 1 to 3, where 3 is the most severe, and it indicates the severity of the associated code number. The warning category provides an indication of the type of behavior and/or actions which must be taken by the operator, or by the control system for some engine applications, to address the severity of the associated situation.

The list of codes is grouped according to the ECM from which they are retrieved. They appear in chronological order by the most recent ECM hour of last occurrence. The ECM names appear as subtitles in the list. If there is more than one ECM connected, the subtitles are arranged alphabetically.

When the "Include All ECMs" check box is checked, active codes from all available ECMs are retrieved and displayed. When there is a single ECM on the data link, this check box is disabled. The push-button available in the Active Event Codes screen is: Print.

b. **Logged Event Codes.**

(1) Purpose. The Logged Event Codes function provides a list of event codes logged by the ECM. These codes are similar to the logged diagnostic codes, except that the event represents the symptom of an operational problem. These codes indicate to the manager or technician how the machine/equipment is being operated.

DIAGNOSTIC CODES - CONTINUED

(2) Accessing. To view Logged Event Codes, select Events from the Diagnostics menu, and then select Logged Event Codes from the sub-menu.

(3) Screen Layout. The Logged Event Codes display area groups the codes according to the ECM from which they are retrieved. They appear in chronological order by the most recent ECM hour of last occurrence. The ECM names appear as subtitles in the list. If there is more than one ECM connected, the subtitles are arranged alphabetically. On the same line as the ECM subtitle, the number of ECM diagnostic clock hours is displayed. These hours represent the time that the ECM has been connected and running.

The Logged Event Codes screen has five columns: Code, Description, Occ., First, and Last. The code numbers that appear are used to identify the events. The Description column informs you of the symptom that is occurring. The Occ. (occurrences) column informs you of the number of times that the symptom occurred. The columns marked First and Last indicate the first and last ECM hour when the problem occurred.

NOTE

On some ECMs, a warning category indicator may immediately follow the code number and is in parentheses. It is a number ranging from 1 to 3, where 3 is the most severe, and it indicates the severity of the associated code number. The warning category provides an indication to the type of behavior and/or actions which must be taken by the operator, or by the control system for engine applications, to address the severity of the associated situation.

When the “Include All ECMs” check box is checked, logged codes from all available ECMs are retrieved and displayed. When there is a single ECM on the data link, this check box is disabled. The push-buttons available in the Logged Event Codes screen are: View Histogram and Print.

(4) An event code is generated by detection of an abnormal operating condition. Logged codes may be useful to help troubleshoot intermittent problems. Logged codes can also be used to review engine and electronic system performance. For example, an event code will be generated if oil pressure is too low. In this case, the event code indicates a symptom of a problem. Logged codes may not indicate a repair is needed. The problem may have been temporary or may have been resolved since logging the code. If the system is powered, it is possible to generate an active diagnostic code whenever a component is disconnected. When the component is reconnected, the code is no longer active. Logged events are provided with an indicator used to keep track of recurring or intermittent events.

FAILURE MODE IDENTIFIERS (FMIs)

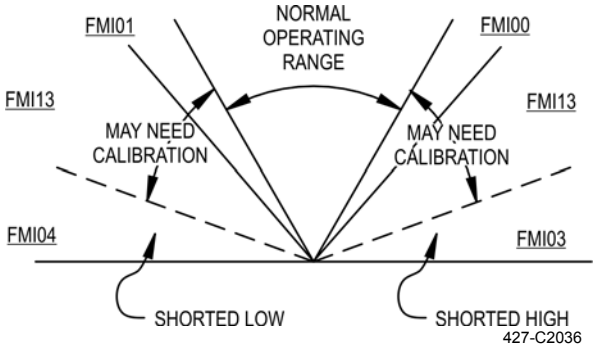

Table 1. Detailed FMI Explanation.

FMI	DESCRIPTION	EXPLANATION
00	Data Valid but Above Normal Operating Range (may need calibration).	Every electronic control system sets a high limit for expected signal operating range. High limit includes over range signals. This could be a high temperature. A sensor that is still operating but sending a signal above expected limit will cause an FMI 00 to be stored. Some possible causes of an FMI 00 diagnostic code are: • Signal is above normal. • Signal is shorted to +batt. • Sensor needs to be calibrated so that a PWM signal at a duty cycle of 80 percent is a valid signal. If PWM signal has a duty cycle of 81 percent, sensor is still working, but sensor signal is above expected signal limits.
01	Data Valid but Below Normal Operating Range (may need calibration).	Every electronic control system sets a low limit for expected signal operating range. Low limit includes signals under lower limit. Low signal could be oil pressure signal. Sensor is still working, but sending a signal below expected limit will cause an FMI 01 to be stored. Some possible causes of an FMI 01 diagnostic code are: • Timing is retarded. • Signal is below normal range so that a PWM sensor is not expected to generate a PWM signal below a duty cycle of 5 percent with zero air pressure. If sensor generates a signal with a duty cycle of 4 percent when engine is shut down, sensor is still working but sending a signal below expected limit, which will cause an FMI 01 to be stored.

FAILURE MODE IDENTIFIERS (FMIs) - CONTINUED

Table 1. Detailed FMI Explanation - Continued.

FMI	DESCRIPTION	EXPLANATION
02	Data Erratic, Intermittent, or Incorrect.	A signal from a component is present. Control that reads diagnostic information can not read signal properly. Signal appears to be gone, unstable, or invalid. Data can be correct or incorrect intermittently. Also, this condition relates to communication between controls. For example, when monitoring system is looking for engine speed from engine ECM over CAT data link. Some possible causes of an FMI 02 diagnostic code are: • There is a faulty connection. • Signal is intermittent or erratic. • Software has been changed. • Signal is noisy. • Signal is out of range.
03	Voltage Above Normal or Shorted High.	A component or system voltage is higher than limit. FMI 03 most often relates to a signal circuit. Some components that could cause an FMI 03 diagnostic code are: • Sensor or switch is faulty. Some possible causes of an FMI 03 diagnostic code are: • Wiring harness is damaged. • Electronic control has failed. • A sensor has failed and voltage output is high. • Any wiring harness has a sensor signal wire shorted to a high voltage. A high voltage is any voltage greater than sensor supply voltage. • A wiring harness that has an open circuit in sensor signal wire will cause control to pull up. When this occurs, input circuit is pulled up to supply voltage. A faulty control will also cause an FMI 03, although this is very unlikely.
04	Voltage Below Normal or Shorted Low.	A component or system voltage is lower than limit. FMI 04 most often relates to a signal circuit. Some components that could cause an FMI 04 diagnostic code are: • Sensor or switch is faulty. Some possible causes of an FMI 04 diagnostic code are: • Wiring harness is damaged. • Electronic control has failed. • A sensor has failed and voltage output is low. • Any wiring harness has a sensor signal wire shorted to ground. A faulty control will also cause an FMI 04, although this is very unlikely.

FAILURE MODE IDENTIFIERS (FMIs) - CONTINUED

Table 1. Detailed FMI Explanation - Continued.

FMI	DESCRIPTION	EXPLANATION
05	Current Below Normal or Open Circuit.	Current through component or system is lower than limit. FMI 05 is most often related to a driver circuit. Some possible causes of an FMI 05 diagnostic code are: • There is an open circuit or a poor wiring harness connection. • There is an open relay. • There is a switch in OPEN position.
06	Current Above Normal or Grounded Circuit.	Current through component or system is higher than limit. FMI 06 is most often related to a driver circuit. This fault is very similar to FMI 04. Some possible causes of an FMI 06 diagnostic code are: • There is a short to ground in wiring harness connection. • There is a shorted relay. A faulty control will also cause an FMI 06, although this is very unlikely.
07	Mechanical System Not Responding Properly.	Control detects a signal sent to a mechanical system and response is not correct. Some possible causes of an FMI 07 diagnostic code are: • Component responds improperly. • Component is stuck in a position. • Component has failed. • Engine is shut down. • Machine is being used improperly.
08	Abnormal Frequency, Pulse Width, or Period.	This code occurs when signal is not in expected range. FMI 08 can also relate to a faulty sensor. Some possible causes of an FMI 08 diagnostic code are: • Wiring harness connections are intermittent or poor. • Engine misfired. • Signal is noisy due to nearby interference. • There are loose mechanical devices.
09	Abnormal Update.	This relates to communications on data link. FMI 09 occurs when a control is not able to get information from another control. Some possible causes of an FMI 09 diagnostic code are: • Control module is not communicating on data link correctly. • Rate of data transmission is abnormal. • Data link has failed. • There is a mismatch of software.
10	Abnormal Rate of Change.	This relates to a signal that changes too quickly. Rate of change is outside of expected limit.
11	Failure Mode Not Identifiable.	Control identifies more than one FMI as being responsible for a single failure. Some possible causes of an FMI 11 diagnostic code are: • There is a mechanical failure. • There is damage to multiple circuits.

FAILURE MODE IDENTIFIERS (FMIs) - CONTINUED

Table 1. Detailed FMI Explanation - Continued.

FMI	DESCRIPTION	EXPLANATION
12	Bad Equipment or Component.	Electronic control sends a signal and electronic control expects a response. Control receives no response or response is incorrect. Some possible causes of an FMI 12 diagnostic code are: • There is a failure of electronic control. • There is a failure on data link. • There are one or more controls with mismatched software.
13	Out of Calibration.	An electrical signal is not within limits for a specific mechanical condition. Some possible causes of an FMI 13 diagnostic code are: • Calibration is required. • Data are out of range.
14		This code is not active.
15		This code is not active.
16	Parameter Not Available.	Control does not support requested parameter.
17	Module Not Responding.	Control does not respond to request for data.
18	Sensor Supply Failure.	Sensor power supply in control has failed.
19	Condition Not Met.	Conditions defined by software were not met.
20		This code is not active.

END OF WORK PACKAGE

TROUBLESHOOTING SYMPTOM INDEX 0007 00

TROUBLESHOOTING WITHOUT A DIAGNOSTIC CODE

Malfunction/Symptom **Troubleshooting Procedure Page**

Engine

1. Engine Cannot Reach Top RPM. . . . 0008 00-1
2. Engine Cranks but Will Not Start. . . . 0008 00-2
3. Engine Misfires, Runs Rough, or is Unstable. . . . 0008 00-4
4. Mechanical Noise (Knock) in Engine. . . . 0008 00-6
5. Noise Coming from Cylinder. . . . 0008 00-6
6. Engine Vibration. . . . 0008 00-7
7. Excessive Valve Lash. . . . 0008 00-7
8. Excessive Fuel Consumption. . . . 0008 00-8
9. Excessive Engine Oil Consumption. . . . 0008 00-9
10. Low Engine Oil Pressure. . . . 0008 00-11
11. Excessive Black Smoke. . . . 0008 00-11
12. Excessive White Smoke. . . . 0008 00-13
13. Elevated Idle. . . . 0008 00-14
14. Engine Stalls at Low RPM. . . . 0008 00-14
15. Poor Acceleration or Response. . . . 0008 00-15
16. Low Power/Poor or No Response to Throttle. . . . 0008 00-18
17. Intermittent Low Power or Power Cutout. . . . 0008 00-20
18. Intermittent Engine Shutdown. . . . 0008 00-21
19. Coolant Temperature is Too High. . . . 0008 00-22
20. Exhaust Temperature is Too High. . . . 0008 00-23
21. Engine Oil in Cooling System. . . . 0008 00-24
22. Coolant in Engine Oil. . . . 0008 00-25
23. Engine Oil Temperature is Too High. . . . 0008 00-25
24. Fuel in Cooling System. . . . 0008 00-25
25. Fuel Dilution of Engine Oil. . . . 0008 00-25
26. Valve Rotator or Spring Lock is Free. . . . 0008 00-25
27. Engine ECM Will Not Communicate with Other Systems or Display Modules. . . . 0008 00-25
28. MSD Will Not Communicate with ECM. . . . 0008 00-26

Electrical

1. Alternator (Charging Problem). . . . 0008 00-28
2. Engine Will Not Crank. . . . 0008 00-28
3. Rear View Camera Inoperative 0008 00-29
4. Backup Alarm Always Off. . . . 0008 00-33
5. Backup Alarm Always On. . . . 0008 00-35
6. One or More Worklights Are Inoperative. . . . 0008 00-36
7. One or Both Service Lights Are Inoperative. . . . 0008 00-40
8. One Service Stoplamp or One or More Turnlamps Are Inoperative. . . . 0008 00-42
9. All Stoplamps Are Inoperative. . . . 0008 00-45
10. One or Both Taillights Are Inoperative. . . . 0008 00-46

TROUBLESHOOTING WITHOUT A DIAGNOSTIC CODE - CONTINUED

Malfunction/Symptom **Troubleshooting Procedure Page**

Electrical - Continued

11. One or Both Blackout Taillights Are Inoperative. . . . 0008 00-47
12. One or Both Blackout Stoplamps Are Inoperative. . . . 0008 00-47
13. All Rear Lights Are Inoperative. . . . 0008 00-48
14. Blackout Drivelight is Inoperative. . . . 0008 00-48
15. Quick Coupler Switch/Alarm is Inoperative. . . . 0008 00-48
16. Arctic Heater is Inoperative. . . . 0008 00-50
17. AC Compressor Does Not Run (Blower Operates Correctly). . . . 0008 00-52
18. One or More Blower Motor Speeds Are Inoperative. . . . 0008 00-54
19. Wipers/Washers Do Not Operate or Do Not Operate Correctly. . . . 0008 00-58
20. Horn/Dome Light(s) is Inoperative. . . . 0008 00-65

Transmission

1. Low Stall Speed. . . . 0008 00-68
2. High Stall Speed in Both Directions. . . . 0008 00-68
3. High Stall Speed in One Gear or in One Direction. . . . 0008 00-69
4. There is High Converter Pressure. . . . 0008 00-69
5. There is Low Converter Pressure. . . . 0008 00-70
6. Torque Converter Gets Hot. . . . 0008 00-70
7. Transmission Does Not Operate in Any Speed or Slips in All Speeds. . . . 0008 00-70
8. Transmission Gets Hot. . . . 0008 00-71
9. Pump Noise is Not Normal. . . . 0008 00-72
10. Noise in Transmission is Not Normal. . . . 0008 00-72
11. Transmission Operates in Forward Only. . . . 0008 00-72
12. Transmission Operates in Reverse Only. . . . 0008 00-72
13. Transmission Does Not Operate in First Gear, Forward, or Reverse. . . . 0008 00-72
14. Transmission Does Not Operate in Second Gear, Forward, or Reverse. . . . 0008 00-72
15. Transmission Does Not Operate in Third Gear, Forward, or Reverse. . . . 0008 00-72
16. Transmission Does Not Operate in Fourth Gear, Forward, or Reverse. . . . 0008 00-72
17. Transmission Does Not Disengage When Remote F/N/R Switch and Shift Lever are in Neutral Position. . . . 0008 00-73
18. Transmission Does Not Disengage When Direction Control Switch is in Neutral Position. . . . 0008 00-73
19. Transmission Will Not Upshift to Maximum Selected Gear in Auto or Manual Mode. . . . 0008 00-73
20. Pressure is Low at Any Modulating Valve. . . . 0008 00-73
21. Pressure is High at Any Modulating Valve. . . . 0008 00-73
22. Clutch Engagement is Sudden. . . . 0008 00-73
23. Clutch Engagement is Slow for All Gears. . . . 0008 00-74

TROUBLESHOOTING SYMPTOM INDEX - CONTINUED 0007 00

TROUBLESHOOTING WITHOUT A DIAGNOSTIC CODE - CONTINUED

Malfunction/Symptom **Troubleshooting Procedure Page**

Transmission - Continued

24. Clutch Engagement is Slow for All Forward Gears or All Reverse Gears or Clutch Engagement is Slow for Any One Gear in Both Forward and Reverse. . . . 0008 00-74
25. Transmission Neutralizer is Actuated and Transmission Remains Engaged. . . . 0008 00-74
26. Transmission Engages but Machine Does Not Move. . . . 0008 00-74
27. There is Low Lubrication Pressure. . . . 0008 00-74
28. There is High Lubrication Pressure. . . . 0008 00-74

Differential and Final Drive

1. There is a Constant Noise in Differential. . . . 0008 00-75
2. Lubricant is Leaking. . . . 0008 00-75
3. There is Noise at Different Intervals. . . . 0008 00-75
4. There is Noise When Machine Turns. . . . 0008 00-75
5. Drive Wheels Do Not Turn, but Universal Joint Turns. . . . 0008 00-75

Steering System

1. Too Much Force is Needed to Turn Steering Wheel. . . . 0008 00-76
2. Machine Does Not Turn When Steering Wheel is Turned. . . . 0008 00-77
3. Machine Turns Slowly in Both Directions. . . . 0008 00-77
4. Machine Turns Slowly in One Direction. . . . 0008 00-77
5. Machine Does Not Turn Evenly. . . . 0008 00-77
6. Machine Turns Without Operator Turning Steering Wheel. . . . 0008 00-78
7. Machine Turns Slowly in Both Directions Only When Turning Against a Load (High Resistance). . . . 0008 00-78
8. Steering Wheel Turns With Slight Resistance but Machine Will Not Turn. . . . 0008 00-78
9. When at Fast Speeds, Machine Turns Too Quickly with Small Corrections. . . . 0008 00-78
10. Steering Metering Pump Makes Noise and Steering Cylinder Rods Do Not Move Freely. . . . 0008 00-78

Braking and Hydraulic Fan System

1. Accumulator Pressure Will Not Reach Cutout Pressure at Low Idle. . . . 0008 00-81
2. Front Service Brakes Do Not Operate and Warning System is Not Activated. . . . 0008 00-81
3. Rear Service Brakes Do Not Operate and Warning System is Not Activated. . . . 0008 00-81
4. Service Brakes Slip and Warning System is Not Activated. . . . 0008 00-81
5. Service Brakes are Not Applied Evenly. . . . 0008 00-81
6. Too Much Force is Needed to Push Brake Pedal. . . . 0008 00-81
7. Parking Brake Does Not Hold Machine Stationary. . . . 0008 00-81
8. Parking Brake Does Not Engage When Parking Brake Control Lever is Actuated. . . . 0008 00-82
9. Low Oil Pressure Warning Indicator Will Not Turn Off. . . . 0008 00-82
10. Fan Speed Will Not Adjust to Demands of Machine. . . . 0008 00-82
11. Fan Will Not Spin or Stops Spinning After Machine Starts. . . . 0008 00-82
12. Fan Spins When Machine is Cold or Acts Erratically When Machine is Hot. . . . 0008 00-82
13. Calibration Cannot Achieve Minimum Fan Speed. . . . 0008 00-82
14. Fan Spins at Maximum Speed at All Times. . . . 0008 00-82
15. Braking and Hydraulic Fan System Was Serviced and Fan Speed is Incorrect. . . . 0008 00-82

TROUBLESHOOTING WITHOUT A DIAGNOSTIC CODE - CONTINUED

Hydraulic System

Malfunction/Symptom **Troubleshooting Procedure Page**

1. Pump is Noisy and Cylinder Rods Do Not Move Evenly. . . . 0008 00-84
2. Oil Temperature is Too High. . . . 0008 00-84
3. Pump Output is Low. . . . 0008 00-84
4. Oil Pressure is Low. . . . 0008 00-85
5. Work Tool Moves While Control Lever is in HOLD Position. . . . 0008 00-85
6. Lift Cylinder Droops When Lift Control Lever is Moved from HOLD to RAISE Position. . . . 0008 00-86
7. Hydraulic Force is Too Low When Lift Control Lever is Moved to RAISE or LOWER Positions. . . . 0008 00-86
8. One Implement Function is Sluggish or Nonfunctional. . . . 0008 00-86
9. All Implement Functions Are Sluggish. . . . 0008 00-87
10. Implement Functions Are Erratic or Intermittent. . . . 0008 00-87
11. No Implements Are Functioning. . . . 0008 00-87
12. There is Too Much Lift Cylinder Drift. . . . 0008 00-88
13. There is Too Much Tilt Cylinder Drift. . . . 0008 00-88
14. Hydraulic Force is Too Low When Tilt Control Lever is Moved to TILT BACK or DUMP Positions. . . . 0008 00-89
15. Lift Cylinders Collapse During Raise Operation. . . . 0008 00-89
16. There is Low Power to Implements. . . . 0008 00-90
17. Tilt Cylinders Collapse During Tilt Function. . . . 0008 00-91
18. Tilt Cylinder Droops During Tilt Function. . . . 0008 00-91

A/C System

1. Temperature of Air Flow is Partially Cool. . . . 0008 00-92
2. Temperature of Air Flow is Warm 0008 00-97
3. System Only Cools Cab in Morning and in Evening Not During Hot Part of Day. Air Flow is Very Cold but Airflow Becomes Warm 0008 00-99
4. High Pressure (Liquid Line) is Very Hot. Compressor May Become Noisy and Drive Belt May Slip. . . . 0008 00-99
5. Water is in Vents and Leaking From Unit 0008 00-99
6. Compressors Will Not Engage. Air Flow to Operator's Compartment is Warm. . . . 0008 00-100
7. Compressor Continues to Cycle or Clutch Will Not Disengage. Air Flow to Operator's Compartment is Very Cold or Air Flow May be Restricted Completely at Times 0008 00-100
8. Compressor Clutch is Engaged but System has Insufficient Cooling 0008 00-101

TROUBLESHOOTING WITH A DIAGNOSTIC CODE

NOTE

If fault code(s) to be trouble shot are not located in this table, contact your local Caterpillar Dealer.

Table 1. MID 036 Engine Control.

CID FMI CODE	FAULT DESCRIPTION	FAULT CONDITIONS/EFFECTS	TROUBLE-SHOOTING PROCEDURE PAGE
0001 05	Injector Cylinder 1 Open Circuit	This code is generated when the engine ECM is attempting to operate the injector and detects an open circuit for the injector. The engine ECM will log the diagnostic code and continue to attempt to operate the injector after the code has been logged. When this code is generated, the engine will misfire and have low power.	0009 00-1
0001 06	Injector Cylinder 1 Short	This code is generated when the engine ECM is attempting to operate the injector and detects short circuit for the injector. The engine ECM will log the diagnostic code and continue to attempt to operate the injector after the code has been logged. When this code is generated, the engine will misfire and have low power.	0009 00-1
0002 05	Injector Cylinder 2 Open Circuit	This code is generated when the engine ECM is attempting to operate the injector and detects an open circuit for the injector. The engine ECM will log the diagnostic code and continue to attempt to operate the injector after the code has been logged. When this code is generated, the engine will misfire and have low power.	0009 00-1
0002 06	Injector Cylinder 2 Short	This code is generated when the engine ECM is attempting to operate the injector and detects short circuit for the injector. The engine ECM will log the diagnostic code and continue to attempt to operate the injector after the code has been logged. When this code is generated, the engine will misfire and have low power.	0009 00-1
0003 05	Injector Cylinder 3 Open Circuit	This code is generated when the engine ECM is attempting to operate the injector and detects an open circuit for the injector. The engine ECM will log the diagnostic code and continue to attempt to operate the injector after the code has been logged. When this code is generated, the engine will misfire and have low power.	0009 00-1
0003 06	Injector Cylinder 3 Short	This code is generated when the engine ECM is attempting to operate the injector and detects short circuit for the injector. The engine ECM will log the diagnostic code and continue to attempt to operate the injector after the code has been logged. When this code is generated, the engine will misfire and have low power.	0009 00-1
0004 05	Injector Cylinder 4 Open Circuit	This code is generated when the engine ECM is attempting to operate the injector and detects an open circuit for the injector. The engine ECM will log the diagnostic code and continue to attempt to operate the injector after the code has been logged. When this code is generated, the engine will misfire and have low power.	0009 00-1

Table 1. MID 036 Engine Control - Continued.

CID FMI CODE	FAULT DESCRIPTION	FAULT CONDITIONS/EFFECTS	TROUBLE-SHOOTING PROCEDURE PAGE
0004 06	Injector Cylinder 4 Short	This code is generated when the engine ECM is attempting to operate the injector and detects short circuit for the injector. The engine ECM will log the diagnostic code and continue to attempt to operate the injector after the code has been logged. When this code is generated, the engine will misfire and have low power.	0009 00-1
0005 05	Injector Cylinder 5 Open Circuit	This code is generated when the engine ECM is attempting to operate the injector and detects an open circuit for the injector. The engine ECM will log the diagnostic code and continue to attempt to operate the injector after the code has been logged. When this code is generated, the engine will misfire and have low power.	0009 00-1
0005 06	Injector Cylinder 5 Short	This code is generated when the engine ECM is attempting to operate the injector and detects short circuit for the injector. The engine ECM will log the diagnostic code and continue to attempt to operate the injector after the code has been logged. When this code is generated, the engine will misfire and have low power.	0009 00-1
0006 05	Injector Cylinder 6 Open Circuit	This code is generated when the engine ECM is attempting to operate the injector and detects an open circuit for the injector. The engine ECM will log the diagnostic code and continue to attempt to operate the injector after the code has been logged. When this code is generated, the engine will misfire and have low power.	0009 00-1
0006 06	Injector Cylinder 6 Short	This code is generated when the engine ECM is attempting to operate the injector and detects short circuit for the injector. The engine ECM will log the diagnostic code and continue to attempt to operate the injector after the code has been logged. When this code is generated, the engine will misfire and have low power.	0009 00-1
0041 03	8V Sensor Power Supply Short to +Battery	Engine ECM will log diagnostic code. This code is generated when engine ECM has been powered for at least three seconds or engine ECM reads signal voltage above normal. Engine ECM will return engine to low idle or safe speed. Engine will remain at low idle or safe speed while diagnostic code remains active. When this code is generated, a low power condition may also be present.	0009 00-1
0041 04	8V Sensor Power Supply Short to Ground	Engine ECM will log diagnostic code. This code is generated when the engine ECM has been powered for at least three seconds or engine ECM reads signal voltage above normal. Engine ECM will return engine to low idle or safe speed. Engine will remain at low idle or safe speed while diagnostic code remains active. When this code is generated, a low power condition may also be present.	0009 00-1

Table 1. MID 036 Engine Control - Continued.

CID FMI CODE	FAULT DESCRIPTION	FAULT CONDITIONS/EFFECTS	TROUBLE-SHOOTING PROCEDURE PAGE
0091 08	Throttle Position Signal Abnormal	This code is generated when the engine ECM detects an incorrect frequency on the throttle signal. The code is logged and the engine ECM flags the throttle position as invalid data and a default value of zero percent is used. When this code is generated, the engine speed is limited to low idle.	0009 00-1
0094 03	Fuel Pressure Open/ Short to +Battery	This code is generated when the engine ECM detects a signal voltage from the sensor that is above normal. The code is logged. The engine ECM flags fuel pressure as invalid data and a default value is used. This code has no effect on system performance.	0009 00-1
0094 04	Fuel Pressure Short to Ground	This code is generated when the engine ECM detects a signal voltage from the sensor that is below normal. The code is logged. The engine ECM flags fuel pressure as invalid data and a default value is used. This code has no effect on system performance.	0009 00-1
0100 03	Engine Oil Pressure Open/Short to +Battery	This code is generated when the engine ECM detects a signal voltage from the sensor that is above normal. The code is logged. The engine ECM flags oil pressure as invalid data and a default value is used. This code has no effect on system performance.	0009 00-1
0100 04	Engine Oil Pressure Short to Ground	This code is generated when the engine ECM detects a signal voltage from the sensor that is below normal. The code is logged. The engine ECM flags oil pressure as invalid data and a default value is used. This code has no effect on system performance.	0009 00-1
0100 10	Engine Oil Pressure Sensor Abnormal Rate of Change	This diagnostic code is designed to detect the loss of the 5 volt supply at the sensor connector. The engine ECM will log the diagnostic code, will flag the engine oil pressure as invalid data and a default value is used.	0009 00-1
0110 03	Engine Coolant Temperature Open/Short to +Battery	This code is generated when the engine ECM detects a signal voltage that is above normal. The code is logged if the engine has been running for more than seven minutes. The check engine lamp will illuminate while this diagnostic code is active. The engine ECM uses the last valid engine coolant temperature. If the diagnostic code is active at start-up the engine ECM will use intake manifold temperature. If intake manifold air temperature is not valid, the engine ECM will default to 194 °F (90 °C) for engine coolant temperature. The engine will not go into cold mode while the diagnostic code is active. The engine ECM will activate the cooling fan after this code has been active for more than eight seconds. This code has no effect on system performance.	0009 00-1

Table 1. MID 036 Engine Control - Continued.

CID FMI CODE	FAULT DESCRIPTION	FAULT CONDITIONS/EFFECTS	TROUBLE-SHOOTING PROCEDURE PAGE
0110 04	Engine Coolant Temperature Short to Ground	This code is generated when the engine ECM detects a signal voltage that is below normal. The code is logged. The engine ECM uses the last valid engine coolant temperature. The check engine lamp will illuminate while this diagnostic code is active. If the diagnostic code is active at start-up the engine ECM will use intake manifold temperature. If intake manifold air temperature is not valid, the engine ECM will default to 194°F (90°C) for engine coolant temperature. The engine will not go into cold mode while the diagnostic code is active. The engine ECM will activate the cooling fan after this code has been active for more than eight seconds. This code has no effect on system performance.	0009 00-1
0168 00	System Voltage High	This code is generated when the engine ECM detects battery voltage that is above 32 VDC. Excessive voltage to the engine ECM may damage the engine ECM. The engine ECM will log the diagnostic code.	0009 00-1
0168 01	System Voltage Low	This code is generated when the engine ECM detects battery voltage that is below 18 VDC. When this code is generated, the engine ECM will log the diagnostic code and The check engine lamp will illuminate while active. The engine will be derated 100 percent and will be shutdown.	0009 00-1
0168 02	System Voltage Intermittent/Erratic	This code is generated when the engine ECM detects battery voltage below 6 VDC while the engine is running. The engine ECM will log the diagnostic code. When this code is generated, the engine will misfire and shutdown.	0009 00-1
0172 03	Intake Manifold Air Temp Open/Short to +Battery	This code is generated when the engine ECM detects a signal voltage that is above normal.The code is logged. The engine ECM will flag the intake manifold air temperature as invalid data and the intake manifold air temperature is set to a default value. This code has no effect on performance.	0009 00-1
0172 04	Intake Manifold Air Temp Short to Ground	This code is generated when the engine ECM detects a signal voltage that is below normal. The code is logged. The engine ECM will flag the intake manifold air temperature as invalid data and the intake manifold air temperature is set to a default value. This code has no effect on performance.	0009 00-1
0174 03	Fuel Temperature Open/ Short to +Battery	This code is generated when the engine ECM detects a signal voltage that is above normal. The code is logged. The engine ECM will flag the fuel temperature as invalid data and the intake manifold air temperature is set to a default value. This code has no effect on performance.	0009 00-1
0174 04	Fuel Temperature Short to Ground	This code is generated when the engine ECM detects a signal voltage that is below normal. The code is logged. The engine ECM will flag the fuel temperature as invalid data and the intake manifold air temperature is set to a default value. This code has no effect on performance.	0009 00-1

Table 1. MID 036 Engine Control - Continued.

CID FMI CODE	FAULT DESCRIPTION	FAULT CONDITIONS/EFFECTS	TROUBLE-SHOOTING PROCEDURE PAGE
0190 08	Engine Speed Abnormal	This code is generated when the signal from the primary engine speed/timing sensor is intermittent or the signal has been lost. The code is logged. If a valid signal is not received from the primary engine speed/timing sensor, engine ECM will default to the secondary engine speed/timing sensor. This code has no effect on performance. The engine will shut down only if the signals from the primary engine speed/timing sensor and the secondary engine speed/timing sensor are abnormal.	0009 00-1
0261 13	Engine Timing Calibration Required	This code is generated when the engine ECM detects that a timing calibration was not performed. A timing calibration is required for a new engine, replacing an engine ECM that fails to communicate or following work on the front gear train, the camshaft, or the crankshaft. When this code is generated, the check engine lamp will illuminate while active, the engine ECM uses default timing, timing may be off as much as three degrees, and the engine may run rough or emit white smoke in the exhaust.	0009 00-2
0262 03	5V Sensor DC Power Supply Short to +Battery	This code is generated when the engine ECM detects an above normal voltage on the 5 volt supply. When this code is generated, the code is logged, the check engine lamp will illuminate while active, the engine ECM sets all of the pressure sensors to the default values, and the engine power is derated.	0009 00-2
0262 04	5V Sensor DC Power Supply Short to Ground	This code is generated when the engine ECM detects below normal voltage on the 5 volt supply. When this code is generated, the code is logged, the check engine lamp will illuminate while active, the engine ECM sets all of the pressure sensors to the default values, and the engine power is derated.	0009 00-2

Table 1. MID 036 Engine Control - Continued.

CID FMI CODE	FAULT DESCRIPTION	FAULT CONDITIONS/EFFECTS	TROUBLE-SHOOTING PROCEDURE PAGE
0267 02	Incorrect Engine Shutdown Switch Inputs	This code is generated when the engine ECM detects one of the following conditions: • Both of the switch inputs from the engine shutdown switch are in the open state. • Both of the switch inputs from the engine shutdown switch are in the closed state. If both of the switch inputs from the engine shutdown switch change to the same state and the engine is running, the engine will continue to run. If both of the switch inputs from the engine shutdown switch change to the same state and the engine is not running, the engine will not start.	0009 00-2
0274 03	Atmospheric Pressure Open/Short to +Battery	This code is generated when the engine ECM detects a signal voltage that is above normal. When this code is generated, the code is logged, the engine ECM will use the default value for atmospheric pressure, and the engine power is derated.	0009 00-2
0274 04	Atmospheric Pressure Short to Ground	This code is generated when the engine ECM detects a signal voltage that is below normal. When this code is generated, the code is logged, the engine ECM will use the default value for atmospheric pressure, and the engine power is derated.	0009 00-2
0275 03	Right Turbo Inlet Pressure Open/Short to +Battery	This code is generated when the engine ECM detects a signal voltage that is above normal. When this code is generated, the code is logged, the engine ECM flags turbocharger inlet pressure as invalid data and a default value is used, and the engine power will be derated.	0009 00-2
0275 04	Right Turbo Inlet Pressure Short to Ground	This code is generated when the engine ECM detects a signal voltage that is below normal. When this code is generated, the code is logged, the engine ECM flags turbocharger inlet pressure as invalid data and a default value is used, and the engine power will be derated.	0009 00-2
0291 05	Engine Cooling Fan Solenoid Open Circuit	This code is generated when the engine ECM detects an open circuit or a short to +Battery condition in the circuit for the engine cooling fan solenoid. When this code is generated, the engine ECM logs the diagnostic code. While the condition is present, the engine ECM loses the ability to control the engine cooling fan and overheating or over-cooling of the engine may occur.	0009 00-2
0291 06	Engine Cooling Fan Solenoid Short to Ground	This code is generated when the engine ECM detects a short to ground condition in the circuit for the engine cooling fan solenoid. When this code is generated, the engine ECM logs the diagnostic code. While the condition is present, the engine ECM loses the ability to control the engine cooling fan and overheating or over-cooling of the engine may occur.	0009 00-2

Table 1. MID 036 Engine Control - Continued.

CID FMI CODE	FAULT DESCRIPTION	FAULT CONDITIONS/EFFECTS	TROUBLE-SHOOTING PROCEDURE PAGE
0296 09	Unable to Communicate with Transmission ECM	This code is generated when the engine ECM detects one of the following conditions: • Communication with the transmission cannot be established within three seconds after engine ECM power up. • After communication with the transmission has been established, communication stops for one second. When this code is generated, the engine ECM will log the diagnostic code and all transmission features that rely on the data link are disabled.	0009 00-2
0296 12	Transmission ECM Failed	This code is generated when the engine ECM for the engine is not receiving complete information from the transmission engine ECM. When this code is generated, the code is logged and all features that depend on the Data Link will be disabled.	0009 00-2
0342 08	Secondary Engine Speed Signal Abnormal	This code is generated when the signal from the secondary engine speed/timing sensor is intermittent or the signal has been lost. The code is logged. If a valid signal is not received from the secondary engine speed/timing sensor, the engine ECM will default to the primary engine speed/timing sensor. The engine will shut down only if the signals from the primary engine speed/timing sensor and the secondary engine speed/timing sensor are abnormal.	0009 00-2
0596 09	Unable to Communicate with Implement ECM	This code is generated when the engine ECM loses communication with the implement ECM. When this code is generated, the code is logged and all features that depend on input from the implement ECM will be disabled. This code has no effect on engine performance.	0009 00-2

Table 1. MID 036 Engine Control - Continued.

CID FMI CODE	FAULT DESCRIPTION	FAULT CONDITIONS/EFFECTS	TROUBLE-SHOOTING PROCEDURE PAGE
0596 12	Wrong Response from Implement ECM	This code is generated when the engine ECM for the engine is not receiving complete information from the implement ECM. When this code is generated, the code is logged and all features that depend on input from the implement ECM will be disabled. This code has no effect on engine performance.	0009 00-3
1785 03	Intake Manifold Pressure Sensor Voltage High	This code is generated when the engine ECM detects a signal voltage above normal. When this code is generated, the code is logged, the engine ECM flags intake manifold pressure as invalid data and a default value is used, and the engine power will be derated.	0009 00-3
1785 04	Intake Manifold Pressure Sensor Voltage Low	This code is generated when the engine ECM detects a signal voltage below normal. When this code is generated, the code is logged, the engine ECM flags intake manifold pressure as invalid data and a default value is used, and the engine power will be derated.	0009 00-3
1785 10	Intake Manifold Pressure Signal Abnormal Rate of Change	This code is generated when the engine ECM no change in the signal from the sensor. When this code is generated, the code is logged, the engine ECM flags intake manifold pressure as invalid data and a default value is used, and the engine power will be derated.	0009 00-3
2417 05	Ether Injection Control Solenoid Current Low	This code is generated when the engine ECM detects low current in the circuit. When this code is generated, the code is logged and the engine may be difficult to start.	0009 00-3
2417 06	Ether Injection Control Solenoid Current High	This code is generated when the engine ECM detects excessive current flow in the circuit. When this code is generated, the code is logged and the engine may be difficult to start.	0009 00-3

TROUBLESHOOTING WITH A DIAGNOSTIC CODE - CONTINUED

Table 2. MID 081 Powertrain System.

CID FMI CODE	FAULT DESCRIPTION	FAULT CONDITIONS/EFFECTS	TROUBLE-SHOOTING PROCEDURE PAGE
0168 00	Electrical System Voltage Data Valid but Above Normal Operational Range	This diagnostic code is generated when the powertrain ECM identifies a system voltage that is above 35.0 DCV. When this code is generated, starting is disabled.	0009 00-7
0168 01	Electrical System Voltage Data Valid but Below Normal Operational Range	This diagnostic code is generated when the diagnostic circuit of the powertrain ECM identifies a system voltage that is below 18.0 DCV. The system voltage remains low for an extended time after the engine is started. There is an open circuit on one or more wires between the battery and the powertrain ECM. There is an open circuit on one or more wires providing ground to the powertrain ECM. One set of batteries is disconnected with the key in the ON position. Also, the engine must not be running. When this code is generated, the functions of the transmission are disabled until the voltage is above 18.0 DCV and the direction switch is placed in neutral.	0009 00-8
0177 03	Transmission Oil Temperature Sensor Voltage Above Normal or Shorted High	This diagnostic code is generated when the powertrain ECM reads the signal voltage of the transmission oil temperature sender and the voltage is too high. The operating range for the output voltage of the sensor is approximately 0.5 DCV to 5 DCV.	0009 00-9
0177 04	Transmission Oil Temperature Sensor Voltage Below Normal or Shorted Low	This diagnostic code is generated when the powertrain ECM reads the signal voltage of the temperature sender and the voltage is too low. The operating range for the output voltage of the sensor is approximately 0.5 DCV to 5 DCV.	0009 00-10
0190 02	Speed Sensor (Engine) Data Erratic, Intermittent, or Incorrect	This diagnostic code is generated when the powertrain ECM fails to receive an engine speed signal from the engine ECM on all of the following signal paths through engine speed tach wire, CAT data link, and CAN data link. The engine must be running in order for the powertrain ECM to show this diagnostic code. When this code is generated, transmission shift points will be affected and calibrations will be disabled.	0009 00-12
0367 03	Rocker Switch (Ride Control) Voltage Above Normal or Shorted High	This diagnostic code is associated with the rocker switch for ride control. The switch is connected to two inputs of the powertrain ECM. Both contacts are closed when the switch is in the OFF position. Wire G766 GN is open and wire G767 WH is closed, when the ride control switch is in the ON position. Wire G767 WH is open and wire G766 GN is closed, when the ride control switch is in the AUTO position. This FMI 03 indicates that the powertrain ECM has determined that both contacts are open.	0009 00-16

Table 2. MID 081 Powertrain System - Continued.

CID FMI CODE	FAULT DESCRIPTION	FAULT CONDITIONS/EFFECTS	TROUBLE-SHOOTING PROCEDURE PAGE
0368 02	Switch (Transmission AUTO/MAN) Data Erratic, Intermittent, or Incorrect	The transmission auto/manual HMU switch has three inputs to the powertrain ECM. During normal operation, one input is grounded and the other inputs are open. If the powertrain ECM detects more than one input is grounded, a circuit failure is present. This code is generated when there is a faulty harness.	0009 00-19
0368 03	Switch (Transmission AUTO/MAN) Voltage Above Normal or Shorted High	The transmission auto/manual HMU switch has three inputs to the powertrain ECM. During normal operation, one input is grounded and the other inputs are open. This diagnostic code of FMI 03 means that the powertrain ECM has determined that all contacts are open.	0009 00-21
0444 03	Starter Relay Voltage Above Normal or Shorted High	This diagnostic code is associated with the start relay. The FMI 03 means that the powertrain ECM has determined that the voltage of the relay circuit is above normal. This code is generated when the relay circuit is shorted to the +battery circuit or the powertrain ECM has failed. When this code is generated, the powertrain ECM will turn off the current to the failed relay.	0009 00-23
0444 05	Starter Relay Current Below Normal or Open Circuit	This diagnostic code is associated with the start relay. The FMI 05 means that the powertrain ECM has determined that the current of the relay is below normal. This code is generated when the energizer circuit of the relay is open, the return circuit of the relay is open, the relay has failed, or the powertrain ECM has failed. When this diagnostic code is active, the powertrain ECM will turn off the current to the failed relay.	0009 00-24
0444 06	Starter Relay Current Above Normal or Grounded Circuit	This diagnostic code is associated with the start relay. The FMI 06 means that the powertrain ECM has determined that the current of the relay is above normal. This code is generated when the energizer circuit of the relay is shorted to ground, the relay has failed, or the powertrain ECM has failed. When this diagnostic code is active, the powertrain ECM will turn off the current to the failed relay.	0009 00-26
0562 02	Caterpillar Monitoring System Data Erratic, Intermittent, or Incorrect	This diagnostic code is associated with the Cat Data Link. The FMI 02 means the powertrain ECM is experiencing intermittent communications with the Caterpillar Monitoring System. This intermittent communication may be the result of a wiring problem or other interruption of the Cat Data Link.	0009 00-28
0562 09	Caterpillar Monitoring System Abnormal Update	This diagnostic code is generated when the powertrain ECM cannot communicate with the Caterpillar Monitoring System via the Cat Data Link. The Cat Data Link is an input and an output of all modules. The Cat Data Link is designed to enable communications for all electronic control modules and service tools. The Cat Data Link is not a visible component. The data link consists of internal control circuits and the connecting harness wiring. Other FMI 09 diagnostic codes may help determine the possible causes of the diagnostic code. This code is generated when there is powertrain ECM Software incompatibility, wiring harness failure, or the powertrain ECM has failed.	0009 00-32

Table 2. MID 081 Powertrain System - Continued.

CID FMI CODE	FAULT DESCRIPTION	FAULT CONDITIONS/EFFECTS	TROUBLE-SHOOTING PROCEDURE PAGE
0562 14	Caterpillar Monitoring System Special Instruction	This diagnostic code is recorded when the powertrain ECM can not communicate properly with the monitoring system powertrain ECM. A portion of the Data Link information requested by the powertrain ECM is not being received. This code is generated when the powertrain ECM has the incorrect software installed, the Caterpillar Monitoring System ECM has the incorrect software installed, or incompatible software is installed.	0009 00-35
0585 02	Speed Sensor (Transmission Output Speed 1) Data Erratic, Intermittent, or Incorrect	This code is recorded when the powertrain ECM reads the speed sensor signal as being erratic, intermittent, or incorrect. There are two speed sensors for transmission output speed, the transmission output speed (TOS) sensor 1 (leading) and the transmission output speed (TOS) sensor 2 (trailing). The powertrain ECM determines the existence of this diagnostic code by comparing the signals from sensor 1 and the signals from sensor 2. This diagnostic code is recorded when one of the sensors shows a valid speed signal above the minimum and the other sensor signal is zero. The diagnostic code will be active when the signal from TOS Sensor 1 (leading) to the powertrain ECM is incorrect. when this code is generated, transmission control may be unable to determine the direction of travel, shift quality may be reduced. and the transmission control will be unable to determine ground speed.	0009 00-36
0590 02	Electronic Control Module (Engine) Data Erratic, Intermittent, or Incorrect	This failure results in events that are logged against an ECM that can not be explained. The powertrain ECM cannot communicate with the engine ECM or the powertrain ECM appears to work intermittently.	0009 00-38
0590 09	Electronic Control Module (Engine) Abnormal Update	This diagnostic code is recorded when the powertrain ECM does not receive expected information from the engine ECM for a period of more than five seconds. when this code is generated, the failure results in events that are logged against an ECM that can not be explained directly. The Engine ECM cannot communicate with this ECM or the ECM appears to communicate intermittently.	0009 00-42
0590 14	Electronic Control Module (Engine) Special Instruction	This diagnostic code is recorded when the powertrain ECM is not sending the necessary parameters to the implement ECM at the proper rate. The update rate for parameters that are generated by the powertrain ECM is not correct. The communication failure may be due to disconnected connectors or a faulty wiring harness. This code is generated when the powertrain ECM has the incorrect software installed, the implement ECM has the incorrect software installed, incompatible software may be installed, or the fuse for the powertrain ECM may have failed. When this code is generated, some implement functions may not work properly.	0009 00-46

Table 2. MID 081 Powertrain System - Continued.

CID FMI CODE	FAULT DESCRIPTION	FAULT CONDITIONS/EFFECTS	TROUBLE-SHOOTING PROCEDURE PAGE
0596 02	Electronic Control Module (Implement) Data Erratic, Intermittent, or Incorrect	This failure results in diagnostic codes that are logged against an ECM that can not be explained. The powertrain ECM cannot communicate with the implement ECM or the ECM appears to work intermittently.	0009 00-47
0596 09	Electronic Control Module (Implement) Abnormal Update	This diagnostic code is recorded when the powertrain ECM cannot communicate with the implement ECM via the Cat Data Link. The update rate from the ECM is not correct. The Cat Data Link is an input and an output of all modules. The Cat Data Link is designed to enable communications for all electronic control modules and service tools. The Cat Data Link is not a visible component. The data link consists of internal control circuits and the connecting harness wiring. When this code is generated, digging performance may be reduced.	0009 00-51
0596 14	Electronic Control Module (Implement) Special Instruction	This diagnostic code is recorded when the powertrain ECM cannot communicate properly with the implement ECM. The implement ECM and the powertrain ECM communicate via the Cat Data Link. This code is generated when the implement ECM or the powertrain ECM have incorrect software or hardware installed.	0009 00-54
0627 03	Parking Brake Pressure Switch Voltage Above Normal or Shorted High	This diagnostic code is associated with the parking brake pressure switch. The switch is connected to two inputs of the powertrain ECM. One contact is open and the other contact is grounded during proper operation. This FMI 03 means that the powertrain ECM has determined that the normally open contact and the normally closed contact are open.	0009 00-55
0627 04	Parking Brake Pressure Switch Voltage Below Normal or Shorted Low	This diagnostic code is associated with the parking brake pressure switch. The switch is connected to two inputs of the powertrain ECM. The inputs are “Normally Open” and “Normally Closed”. One of the inputs is open and the other input is grounded during proper operation. The FMI 04 means that the powertrain ECM has determined that the “Normally Open” and “Normally Closed” circuits are grounded.	0009 00-58
0672 01	Speed Sensor (Torque Converter Output Speed) Data Valid but Below Normal Operational Range	This code is generated when the powertrain ECM reads the speed sensor signal as being valid but below the normal operational range with the engine speed greater than 800 rpm, the transmission in neutral, and no speed signal from torque converter output.	0009 00-61

Table 2. MID 081 Powertrain System - Continued.

CID FMI CODE	FAULT DESCRIPTION	FAULT CONDITIONS/EFFECTS	TROUBLE-SHOOTING PROCEDURE PAGE
0673 02	Speed Sensor (Transmission Output Speed 2) Data Erratic, Intermittent, or Incorrect	This code is recorded when the powertrain ECM reads the speed sensor signal as being erratic, intermittent, or incorrect. There are two speed sensors for transmission output speed, the transmission output speed (TOS) sensor 1 (leading) and the transmission output speed (TOS) sensor 2 (trailing). The powertrain ECM determines the existence of this diagnostic code by comparing the signals from sensor 1 and the signals from sensor 2. This diagnostic code is recorded when one of the sensors shows a valid speed signal above the minimum and the other sensor signal is below the dropout signal level. Failures of the transmission output speed sensor will be shown only while the machine is moving. This code is generated when the signal from TOS Sensor 2 (trailing) to the powertrain ECM is incorrect. When this code is generated, transmission shifting may be harsh, transmission control may be unable to determine the direction of travel and/or transmission control will be unable to determine the ground speed of the machine.	0009 00-64
0702 02	Lever Switch (Transmission Shifting/ Direction) Data Erratic, Intermittent, or Incorrect	The transmission gear selector switch has seven inputs to the powertrain ECM. During normal operation, one input is grounded and the other inputs are open. If the powertrain ECM detects more than one input is grounded, a circuit failure is present. This code is generated when there is a harness fault or a failed switch.	0009 00-67
0702 03	Lever Switch (Transmission Shifting/ Direction) Voltage Above Normal or Shorted High	The transmission gear selector switch has seven inputs to the powertrain ECM. During normal operation, one input is grounded and the other inputs are open. This diagnostic code of FMI 03 means that the powertrain ECM has determined that all contacts are open.	0009 00-68
0737 03	Position Sensor (Left Brake Pedal/Neutralizer) Voltage Above Normal or Shorted High	This diagnostic code is associated with the Left Brake Pedal Position Sensor. The FMI 03 means that the powertrain ECM has determined that the voltage of the circuit for the sensor is above normal. This code is generated when the signal circuit for the sensor is open, the signal circuit for the sensor is shorted to the +battery circuit, the sensor has failed, the power circuit or the ground circuit has failed, or the powertrain ECM has failed.	0009 00-70

Table 2. MID 081 Powertrain System - Continued.

CID FMI CODE	FAULT DESCRIPTION	FAULT CONDITIONS/EFFECTS	TROUBLE-SHOOTING PROCEDURE PAGE
0737 04	Position Sensor (Left Brake Pedal/Neutralizer) Voltage Below Normal or Shorted Low	This diagnostic code is recorded when the powertrain ECM reads the signal voltage of the left brake pedal position sensor and the voltage is too low. The operating range for the output voltage of the sensor is approximately 0 DCV to 5.0 DCV. The output frequency of the position sensor is approximately 500 hertz. The value of the sensor's duty cycle is approximately 50% in the depressed position. The duty cycle of the signal increases as the brake pedal is pressed. The value of the sensor's duty cycle is approximately 85% in the pressed position. The duty cycle of the signal decreases as the brake pedal is moved from the pressed position to depressed. The value of the sensor's duty cycle is approximately 15% in the pressed position. This code is generated when the sensor has failed, the signal circuit in the harness is shorted to ground, or the powertrain ECM has failed.	0009 00-73
0793 03	Pressure Switch (Primary Steering) Voltage Above Normal or Shorted High	The primary steering pressure switch is connected to two inputs of the powertrain ECM. One contact is open and the other contact is grounded during correct operation. This FMI 03 means that the powertrain ECM has determined that both contacts are open.	0009 00-74
0793 04	Pressure Switch (Primary Steering) Voltage Below Normal or Shorted Low	The primary steering pressure switch is connected to two inputs of the powertrain ECM. One contact is open and the other contact is grounded during proper operation. This FMI 04 means that the powertrain ECM has determined that both contacts are grounded.	0009 00-78
0794 03	Secondary Steering Pressure Switch Voltage Above Normal or Shorted High	The primary steering pressure switch is connected to two inputs of the powertrain ECM. One contact is open and the other contact is grounded during proper operation. This FMI 03 means that the powertrain ECM has determined that both contacts are open.	0009 00-81
0794 04	Secondary Steering Pressure Switch Voltage Below Normal or Shorted Low	The secondary steering pressure switch is connected to two inputs of the powertrain ECM. One contact is open and the other contact is grounded during proper operation. This FMI 04 means that the powertrain ECM has determined that both contacts are grounded.	0009 00-85
0794 07	Secondary Steering Pressure Switch Mechanical System not Responding	The CID 0794 FMI 07 diagnostic code is recorded if there is secondary steering pressure when the relay is deactivated.	0009 00-88
0795 07	Secondary Steering Intermediate Relay Mechanical System not Responding	This diagnostic code is generated when the powertrain ECM determines that the machine is moving via the transmission output speed sensor and there is no secondary steering pressure when the relay is energized. When the machine is at rest, this diagnostic code will always be inactive.	0009 00-90

Table 2. MID 081 Powertrain System - Continued.

CID FMI CODE	FAULT DESCRIPTION	FAULT CONDITIONS/EFFECTS	TROUBLE-SHOOTING PROCEDURE PAGE
0967 02	Machine Application Data Erratic, Intermittent, or Incorrect	This diagnostic code is recorded when the powertrain ECM reads an incorrect harness code from the Messenger via the Cat Data Link. One possible cause for this diagnostic code is intermittent Cat Data Link connection. The Cat Data Link is an input and an output of all electronic control modules. It is designed to enable communications with all electronic control modules and service tools. The Cat Data Link is not a visible component. It consists of internal control circuits and the connecting harness wiring. When this code is generated, the identification code from the Messenger is not available. If the powertrain ECM had never been able to communicate with the monitoring system, the powertrain ECM would not have allowed the machine to start, shift, or disengage the parking brake.	0009 00-95
0967 09	Machine Application Voltage Below Normal or Shorted Low	This diagnostic code is recorded when the powertrain ECM does not receive the harness code information. The Cat Data Link is an input and an output of all electronic control modules. It is designed to enable communications with all electronic control modules and service tools. The Cat Data Link is not a visible component. It consists of internal control circuits and the connecting harness wiring. When this code is generated, the identification code from the monitoring system is not available. If the ECM had never been able to communicate with the Messenger, the ECM would not have allowed the machine to start, shift, or disengage the parking brake.	0009 00-99
0967 12	Machine Application Bad Component	This diagnostic code is recorded when the powertrain ECM reads an incorrect harness code from the Cat Monitoring System via the Cat Data Link. A possible cause for this diagnostic code is and intermittent Cat Data Link connection. The Cat Data Link is an input and an output of all electronic control modules and service tools. The Cat Data Link is not a visible component. The Cat Data Link consists of internal control circuits and the connecting harness wiring. **NOTE** **The following test procedure may create other diagnostic codes. Ignore these created diagnostic codes and clear these diagnostic codes when the original diagnostic code has been corrected.** The identification code from the Cat Monitoring System is not available. If the ECM had never been able to communicate with the Cat Monitoring System the ECM would not have allowed the machine to start, shift, or disengage the parking brake.	0009 00-104

Table 2. MID 081 Powertrain System - Continued.

CID FMI CODE	FAULT DESCRIPTION	FAULT CONDITIONS/EFFECTS	TROUBLE-SHOOTING PROCEDURE PAGE
1326 02	ECM Location Code Data Erratic, Intermittent, or Incorrect	This diagnostic code is recorded when the powertrain ECM receives an incorrect harness code via the Cat Data Link. The Cat Data Link is an input and an output of all electronic control modules. It is designed to enable communications with all electronic control modules and service tools. The Cat Data Link is not a visible component. It consists of internal control circuits and the connecting harness wiring.	0009 00-106
1400 03	Rear Axle Oil Cooler Solenoid Voltage Above Normal or Shorted High	This diagnostic code is associated with the axle cooler relay. The FMI 03 means that the powertrain ECM has determined that the voltage of the relay circuit is above normal. This code is generated when the relay circuit is shorted to the +battery circuit, or the powertrain ECM has failed.	0009 00-108
1400 06	Rear Axle Oil Cooler Solenoid Current Above Normal or Grounded Circuit	This diagnostic code is associated with the axle cooler relay. The FMI 06 means that the powertrain ECM has determined that the current of the relay is above normal. This code is generated when the energizer circuit of the relay is shorted to ground, the relay has failed, or the powertrain ECM has failed.	0009 00-109
1401 03	Solenoid Valve (No. 1) (Transmission) Voltage Above Normal or Shorted High	This diagnostic code is associated with the Modulating Valve “Transmission Reverse Clutch”. The FMI 03 means that the powertrain ECM has determined that the voltage is above normal. This code is generated when the solenoid has failed, the solenoid energizer circuit of the modulating valve is shorted to the +battery circuit, or the powertrain ECM has failed. When this diagnostic code is active, the powertrain ECM will turn off the current to the failed solenoid.	0009 00-110
1401 05	Solenoid Valve (No. 1) (Transmission) Current Below Normal or Open Circuit	This diagnostic code is associated with the Modulating Valve “Transmission Reverse Clutch”. The FMI 05 means that the powertrain ECM has determined that the current is below normal. This code is generated when the solenoid energizer circuit of the modulating valve is open, the return circuit of the modulating valve is open, the solenoid has failed, or the powertrain ECM has failed. When this diagnostic code is active, the powertrain ECM will turn off the current to the failed solenoid.	0009 00-111
1401 06	Solenoid Valve (No. 1) (Transmission) Current Above Normal or Grounded Circuit	This diagnostic code is associated with the Modulating Valve “Transmission Reverse Clutch”. The FMI 06 means that the powertrain ECM has determined that the current of the solenoid is above normal. This code is generated when the solenoid energizer circuit of the modulating valve is shorted to ground, the solenoid has failed, or the powertrain ECM has failed. When this diagnostic code is active, the powertrain ECM will turn off the current to the failed solenoid.	0009 00-113

Table 2. MID 081 Powertrain System - Continued.

CID FMI CODE	FAULT DESCRIPTION	FAULT CONDITIONS/EFFECTS	TROUBLE-SHOOTING PROCEDURE PAGE
1401 13	Solenoid Valve (No. 1) (Transmission) Out of Calibration	This diagnostic code is associated with the Modulating Valve (No. 1) (Transmission Reverse Clutch). The FMI 13 means that the powertrain ECM has determined that the modulating valve needs calibration. Once the calibration for the modulating valve (No. 1) has been performed successfully, this diagnostic code will disappear. This failure is active on a new powertrain ECM. This code is generated when the solenoid has failed, the powertrain ECM has been replaced, new software has been installed, or the powertrain ECM has failed. When this code is generated, shifting may be harsh or sluggish.	0009 00-114
1402 03	Solenoid Valve (No. 2) (Transmission) Voltage Above Normal or Shorted High	This diagnostic code is associated with the Modulating Valve “Transmission Forward Clutch”. The FMI 03 means that the powertrain ECM has determined that the voltage is above normal. This code is generated when the solenoid has failed, the solenoid energizer circuit of the modulating valve is shorted to the +battery circuit, or the powertrain ECM has failed. When this diagnostic code is active, the powertrain ECM will turn off the current to the failed solenoid.	0009 00-115
1402 05	Solenoid Valve (No. 2) (Transmission) Current Below Normal or Open Circuit	This diagnostic code is associated with the Modulating Valve “Transmission Forward Clutch”. The FMI 05 means that the powertrain ECM has determined that the current is below normal. This code is generated when the solenoid energizer circuit of the modulating valve is open, the return circuit of the modulating valve is open, the solenoid has failed, or the powertrain ECM has failed. When this diagnostic code is active, the powertrain ECM will turn off the current to the failed solenoid.	0009 00-116
1402 06	Solenoid Valve (No. 2) (Transmission) Current Above Normal or Grounded Circuit	This diagnostic code is associated with the Modulating Valve “Transmission Forward Clutch”. The FMI 06 means that the powertrain ECM has determined that the current of the solenoid is above normal. This code is generated when the solenoid energizer circuit of the modulating valve is shorted to ground, the solenoid has failed, or the powertrain ECM has failed. When this diagnostic code is active, the powertrain ECM will turn off the current to the failed solenoid.	0009 00-118
1402 13	Solenoid Valve (No. 2) (Transmission) Out of Calibration	This diagnostic code is associated with the Modulating Valve (No. 2) (Transmission Forward Clutch). The FMI 13 means that the powertrain ECM has determined that the modulating valve needs calibration. Once the calibration for the modulating valve (No. 2) has been performed successfully, this diagnostic code will disappear. This failure is active on a new powertrain ECM. This code is generated when the solenoid has failed, the powertrain ECM has been replaced, new software has been installed, or the powertrain ECM has failed. When this code is generated, shifting may be harsh or sluggish.	0009 00-120

Table 2. MID 081 Powertrain System - Continued.

CID FMI CODE	FAULT DESCRIPTION	FAULT CONDITIONS/EFFECTS	TROUBLE-SHOOTING PROCEDURE PAGE
1403 03	Solenoid Valve (No. 3) (Transmission) Voltage Above Normal or Shorted High	This diagnostic code is associated with the Modulating Valve "Transmission Fourth Speed Clutch". The FMI 03 means that the powertrain ECM has determined that the voltage is above normal. This code is generated when the solenoid has failed, the solenoid energizer circuit of the modulating valve is shorted to the +battery circuit, or the powertrain ECM has failed. When this diagnostic code is active, the powertrain ECM will turn off the current to the failed solenoid.	0009 00-120
1403 05	Solenoid Valve (No. 3) (Transmission) Current Below Normal or Open Circuit	This diagnostic code is associated with the Modulating Valve "Transmission Fourth Speed Clutch". The FMI 05 means that the powertrain ECM has determined that the current is below normal. This code is generated when the solenoid energizer circuit of the modulating valve is open, the return circuit of the modulating valve is open, the solenoid has failed, or the powertrain ECM has failed. When this diagnostic code is active, the powertrain ECM will turn off the current to the failed solenoid.	0009 00-121
1403 06	Solenoid Valve (No. 3) (Transmission) Current Above Normal or Grounded Circuit	This diagnostic code is associated with the Modulating Valve "Transmission Fourth Speed Clutch". The FMI 06 means that the powertrain ECM has determined that the current of the solenoid is above normal. This code is generated when the solenoid energizer circuit of the modulating valve is shorted to ground, the solenoid has failed, or the powertrain ECM has failed. When this diagnostic code is active, the powertrain ECM will turn off the current to the failed solenoid.	0009 00-123
1403 13	Solenoid Valve (No. 3) (Transmission) Out of Calibration	This diagnostic code is associated with the Modulating Valve (No. 3) (Transmission Fourth Speed Clutch). The FMI 13 means that the powertrain ECM has determined that the modulating valve needs calibration. Once the calibration for the modulating valve (No. 3) has been performed successfully, this diagnostic code will disappear. This failure is active on a new powertrain ECM. This code is generated when the solenoid has failed, the powertrain ECM has been replaced, new software has been installed, or the powertrain ECM has failed. When this code is generated, shifting may be harsh or sluggish.	0009 00-125
1404 05	Solenoid Valve (No. 4) (Transmission) Current Below Normal or Open Circuit	This diagnostic code is associated with the Modulating Valve "Third Speed Clutch". The FMI 05 means that the powertrain ECM has determined that the current is below normal. This code is generated when the solenoid energizer circuit of the modulating valve is open, the return circuit of the modulating valve is open, the solenoid has failed, or the powertrain ECM has failed. When this diagnostic code is active, the powertrain ECM will turn off the current to the failed solenoid.	0009 00-125
1404 06	Solenoid Valve (No. 4) (Transmission) Current Above Normal or Grounded Circuit	This diagnostic code is associated with the Modulating Valve "Third Speed Clutch". The FMI 06 means that the powertrain ECM has determined that the current of the solenoid is above normal. This code is generated when the solenoid energizer circuit of the modulating valve is shorted to ground, the solenoid has failed, or the powertrain ECM has failed. When this diagnostic code is active, the powertrain ECM will turn off the current to the failed solenoid.	0009 00-127

Table 2. MID 081 Powertrain System - Continued.

CID FMI CODE	FAULT DESCRIPTION	FAULT CONDITIONS/EFFECTS	TROUBLE-SHOOTING PROCEDURE PAGE
1404 13	Solenoid Valve (No. 4) (Transmission) Out of Calibration	This diagnostic code is associated with the Modulating Valve (No. 4) (Third Speed Clutch). The FMI 13 means that the powertrain ECM has determined that the modulating valve needs calibration. Once the calibration for the modulating valve (No. 4) has been performed successfully, this diagnostic code will disappear. This failure is active on a new powertrain ECM. This code is generated when the solenoid has failed, the powertrain ECM has been replaced, new software has been installed, or the powertrain ECM has failed. When this code is generated, shifting may be harsh or sluggish.	0009 00-129
1405 03	Solenoid Valve (No. 5) (Transmission) Voltage Above Normal or Shorted High	This diagnostic code is associated with the Modulating Valve “Transmission Second Speed Clutch”. The FMI 03 means that the powertrain ECM has determined that the voltage is above normal. This code is generated when the solenoid has failed, the solenoid energizer circuit of the modulating valve is shorted to the +battery circuit, or the powertrain ECM has failed. When this diagnostic code is active, the powertrain ECM will turn off the current to the failed solenoid.	0009 00-129
1405 05	Solenoid Valve (No. 5) (Transmission) Current Below Normal or Open Circuit	This diagnostic code is associated with the Modulating Valve “Transmission Second Speed Clutch”. The FMI 05 means that the powertrain ECM has determined that the current is below normal. This code is generated when the solenoid energizer circuit of the modulating valve is open, the return circuit of the modulating valve is open, the solenoid has failed, or the powertrain ECM has failed. When this diagnostic code is active, the powertrain ECM will turn off the current to the failed solenoid.	0009 00-130
1405 06	Solenoid Valve (No. 5) (Transmission) Current Above Normal or Grounded Circuit	This diagnostic code is associated with the Modulating Valve “Transmission Second Speed Clutch”. The FMI 06 means that the powertrain ECM has determined that the current of the solenoid is above normal. This code is generated when the solenoid energizer circuit of the modulating valve is shorted to ground, the solenoid has failed, or the powertrain ECM has failed. When this diagnostic code is active, the powertrain ECM will turn off the current to the failed solenoid.	0009 00-132
1405 13	Solenoid Valve (No. 5) (Transmission) Out of Calibration	This diagnostic code is associated with the Modulating Valve (No. 5) (Transmission Second Speed Clutch). The FMI 13 means that the powertrain ECM has determined that the modulating valve needs calibration. Once the calibration for the modulating valve (No. 2) has been performed successfully, this diagnostic code will disappear. This failure is active on a new powertrain ECM. This code is generated when the solenoid has failed, the powertrain ECM has been replaced, new software has been installed, or the powertrain ECM has failed. When this code is generated, shifting may be harsh or sluggish.	0009 00-133

Table 2. MID 081 Powertrain System - Continued.

CID FMI CODE	FAULT DESCRIPTION	FAULT CONDITIONS/EFFECTS	TROUBLE-SHOOTING PROCEDURE PAGE
1406 03	Solenoid Valve (No. 6) (Transmission) Voltage Above Normal or Shorted High	This diagnostic code is associated with the Modulating Valve "Transmission First Speed Clutch". The FMI 03 means that the powertrain ECM has determined that the voltage is above normal. This code is generated when the solenoid has failed, the solenoid energizer circuit of the modulating valve is shorted to the +battery circuit, or the powertrain ECM has failed. When this diagnostic code is active, the powertrain ECM will turn off the current to the failed solenoid.	0009 00-134
1406 05	Solenoid Valve (No. 6) (Transmission) Current Below Normal or Open Circuit	This diagnostic code is associated with the Modulating Valve "Transmission First Speed Clutch". The FMI 05 means that the powertrain ECM has determined that the current is below normal. This code is generated when the solenoid energizer circuit of the modulating valve is open, the return circuit of the modulating valve is open, the solenoid has failed, or the powertrain ECM has failed. When this diagnostic code is active, the powertrain ECM will turn off the current to the failed solenoid.	0009 00-135
1406 06	Solenoid Valve (No. 6) (Transmission) Current Above Normal or Grounded Circuit	This diagnostic code is associated with the Modulating Valve "Transmission First Speed Clutch". The FMI 06 means that the powertrain ECM has determined that the current of the solenoid is above normal. This code is generated when the solenoid energizer circuit of the modulating valve is shorted to ground, the solenoid has failed, or the powertrain ECM has failed. When this diagnostic code is active, the powertrain ECM will turn off the current to the failed solenoid.	0009 00-137
1406 13	Solenoid Valve (No. 6) (Transmission) Out of Calibration	This diagnostic code is associated with the modulating valve (No. 6) (Transmission First Speed Clutch). The FMI 13 means that the powertrain ECM has determined that the modulating valve needs calibration. Once the calibration for the modulating valve (No. 6) has been performed successfully, this diagnostic code will disappear. This failure is active on a new powertrain ECM. This code is generated when the solenoid has failed, the powertrain ECM has been replaced, new software has been installed, or the powertrain ECM has failed. When this code is generated, shifting may be harsh or sluggish.	0009 00-138
1521 02	Rotary Switch (Variable Shift Control Selector) Data Erratic, Intermittent, or Incorrect	This diagnostic code is associated with the rotary switch (Variable Shift Control). The rotary switch is connected to three inputs of the powertrain ECM. Two contacts are open and the other contact is grounded during proper operation. If the powertrain ECM detects that more than one input is grounded, a circuit failure is present. This code is generated when, there is a harness fault or a failed switch.	0009 00-139

Table 2. MID 081 Powertrain System - Continued.

CID FMI CODE	FAULT DESCRIPTION	FAULT CONDITIONS/EFFECTS	TROUBLE-SHOOTING PROCEDURE PAGE
1521 03	Rotary Switch (Variable Shift Control Selector) Voltage Above Normal or Shorted High	This diagnostic code is associated with the rotary switch (Variable Shift Control). The rotary switch is connected to three inputs of the powertrain ECM. Two contacts are open and the other contact is grounded during proper operation. This FMI 03 means that the powertrain ECM has determined that the normally open contacts and the normally closed contact are open.	0009 00-141
2129 03	Solenoid Valve (Ride Control Solenoid #1) Voltage Above Normal or Shorted High	This diagnostic code is associated with the ride control solenoid valve #1. The FMI 03 means that the powertrain ECM has determined that the voltage of the circuit for Ride Control Solenoid Valve #1 is above normal. This code is generated when ride control solenoid valve #1 has failed, the energize circuit of ride control solenoid valve #1 is shorted to the +battery circuit, or the powertrain ECM has failed. When this diagnostic code occurs, the ride control function will always remain active.	0009 00-142
2129 05	Solenoid Valve (Ride Control Solenoid #1) Current Below Normal or Open Circuit	This diagnostic code is associated with the ride control solenoid valve #1. The FMI 05 means that the powertrain ECM has determined that the current of Ride Control Solenoid Valve #1 is below normal. This code is generated when the energizer circuit of ride control solenoid valve #1 is open, the return circuit of ride control solenoid valve #1 is open, ride control solenoid valve #1 has failed, or the powertrain ECM has failed. When this diagnostic code occurs, the ride control function will always remain active.	0009 00-144
2129 06	Solenoid Valve (Ride Control Solenoid #1) Current Above Normal or Grounded Circuit	This diagnostic code is associated with ride control solenoid valve #1. The FMI 06 means that the powertrain ECM has determined that the current of ride control solenoid valve #1 is above normal. This code is generated when the energizer circuit of ride control solenoid valve #1 is shorted to ground, ride control solenoid valve #1 has failed, or the powertrain ECM has failed. When this diagnostic code occurs, the ride control function will always remain active.	0009 00-146
2274 02	Transmission Direction Switch #2 Data Erratic, Intermittent, or Incorrect	This diagnostic code is associated with the transmission direction switch #2. This FMI 02 is recorded when the powertrain ECM receives an incorrect signal (1 or more incorrect pins grounded) from the transmission direction switch #2.	0009 00-148
2347 03	Solenoid Valve (Ride Control Solenoid #2) Voltage Above Normal or Shorted High	This diagnostic code is associated with the ride control solenoid valve #2. The FMI 03 means that the powertrain ECM has determined that the voltage of the circuit for ride control solenoid valve #2 is above normal. This code is generated when ride control solenoid valve #2 has failed, the energize circuit of ride control solenoid valve #2 is shorted to the +battery circuit, or the powertrain ECM has failed. When this diagnostic code occurs, the ride control function will always remain active.	0009 00-150

Table 2. MID 081 Powertrain System - Continued.

CID FMI CODE	FAULT DESCRIPTION	FAULT CONDITIONS/EFFECTS	TROUBLE-SHOOTING PROCEDURE PAGE
2347 05	Solenoid Valve (Ride Control Solenoid #2) Current Below Normal or Open Circuit	This diagnostic code is associated with the ride control solenoid valve #2. The FMI 05 means that the powertrain ECM has determined that the current of ride control solenoid valve #2 is below normal. This code is generated when the energizer circuit of ride control solenoid valve #2 is open, the return circuit of ride control solenoid valve #2 is open, ride control solenoid valve #2 has failed, or the powertrain ECM has failed. When this diagnostic code occurs, the ride control function will always remain active.	0009 00-152
2347 06	Solenoid Valve (Ride Control Solenoid #2) Current Above Normal or Grounded Circuit	This diagnostic code is associated with ride control solenoid valve #2. The FMI 06 means that the powertrain ECM has determined that the current of Ride Control Solenoid Valve #2 is above normal.This code is generated when the energizer circuit of ride control solenoid valve #2 is shorted to ground, ride control solenoid valve #2 has failed, or the powertrain ECM has failed. When this diagnostic code occurs, the ride control function will always remain active.	0009 00-154
2684 03	Solenoid Valve (Ride Control Solenoid #3) Voltage Above Normal or Shorted High	This diagnostic code is associated with the ride control solenoid valve #3. The FMI 03 means that the powertrain ECM has determined that the voltage of the circuit for ride control solenoid valve #3 is above normal. This code is generated when ride control solenoid valve #3 has failed, the energize circuit of ride control solenoid valve #3 is shorted to the +battery circuit, or the powertrain ECM has failed. When this diagnostic code occurs, the ride control function will always remain active.	0009 00-156
2684 05	Solenoid Valve (Ride Control Solenoid #3) Current Below Normal or Open Circuit	This diagnostic code is associated with the ride control solenoid valve #3. The FMI 05 means that the powertrain ECM has determined that the current of ride control solenoid valve #3 is below normal. This code is generated when the energizer circuit of ride control solenoid valve #3 is open, the return circuit of ride control solenoid valve #3 is open, ride control solenoid valve #3 has failed, or the powertrain ECM has failed. When this diagnostic code occurs, the ride control function will always remain active.	0009 00-158
2684 06	Solenoid Valve (Ride Control Solenoid #3) Current Above Normal or Grounded Circuit	This diagnostic code is associated with ride control solenoid valve #3. The FMI 06 means that the powertrain ECM has determined that the current of ride control solenoid valve #3 is above normal. This code is generated when the energizer circuit of ride control solenoid valve #3 is shorted to ground, ride control solenoid valve #3 has failed, or the powertrain ECM has failed. When this diagnostic code occurs, the ride control function will always remain active.	0009 00-160

TROUBLESHOOTING WITH A DIAGNOSTIC CODE - CONTINUED

Table 3. MID 082 Implement.

CID FMI CODE	FAULT DESCRIPTION	FAULT CONDITIONS/EFFECTS	TROUBLE-SHOOTING PROCEDURE PAGE
0041 03	8 VDC Supply Voltage Above Normal or Shorted High	This code is recorded when the implement ECM reads the voltage of the sensor supply circuit (wire A105 OR) as higher than normal. The sensor supply circuit (wire A105 OR) is shorted to the +battery, a sensor has failed, or the implement ECM has failed. When this code is generated, components that receive power from the sensor supply will not be available, the steering pump will be full on, and the steering pressure will be at relief.	0009 00-162
0041 04	8 VDC Supply Voltage Below Normal or Shorted Low	This diagnostic code is recorded when the implement ECM reads the voltage of the sensor supply circuit (A105 OR) and the voltage is below normal. When this code is generated, components that receive power from the sensor supply will not be available.	0009 00-163
0168 00	Battery Voltage Above Normal	This diagnostic code is recorded when the implement ECM identifies a system voltage that is above 24.0 DCV. This code is generated when the voltage regulator is not operating properly, or jump starting. This code has no effect on performance.	0009 00-164
0168 01	Battery Voltage Below Normal	The diagnostic circuit of the implement ECM identifies a system voltage that is below 18 DCV. This code is generated, the system voltage remains low for an extended time after the engine is started, there is a connection with high impedance between the battery and the implement ECM, there is a connection with high impedance between the implement ECM and system ground, or one set of batteries is disconnected with the key in the ON position. The engine must not be running. When this code is generated, implement functions will not work and the pilot on/off solenoid valve for the implements will de-energize.	0009 00-165
0268 02	Programmed Parameter Fault Data Erratic, Intermittent, or Incorrect	The implement ECM detects that one or more of the programmable parameters are not properly configured. When this code is generated, any unprogrammed parameters are set to the default value, if the default setting of the configuration is not changed to the appropriate model, a diagnostic code is generated. The diagnostic code is generated in order to warn the service personnel that the module must be configured.	0009 00-166

Table 3. MID 082 Implement - Continued.

CID FMI CODE	FAULT DESCRIPTION	FAULT CONDITIONS/EFFECTS	TROUBLE-SHOOTING PROCEDURE PAGE
0296 02	Cat Data Link Communication with Powertrain Electronic Control Module Data Erratic, Intermittent, or Incorrect	This failure results in diagnostic codes that are logged against an ECM that can not be explained. The Powertrain ECM cannot communicate with the implement ECM or the ECM appears to work intermittently.	0009 00-166
0296 09	Cat Data Link Communication with Powertrain Electronic Control Module Abnormal Update	This diagnostic code is recorded when the powertrain ECM is not sending parameters to the implement ECM at the proper rate and the update rate for parameters that are generated by the powertrain ECM is not correct. This code is generated when the data link circuit has an open circuit, the data link circuit is shorted to battery ground, the powertrain ECM is not operating properly, the software for the powertrain ECM has been erased, or the powertrain ECM has the wrong software. When this code is generated, the pilot supply ON/OFF solenoid may de-energize when all levers are centered, implements may seem sluggish, the kickouts may stop before the preset location is reached, or when the engine is being started, the implements will not be locked out.	0009 00-169
0296 14	Cat Data Link Communication with Powertrain Electronic Control Module Parameter Failure	This diagnostic code is recorded when the powertrain ECM is not sending the necessary parameters to the implement ECM at the proper rate and the update rate for parameters that are generated by the powertrain ECM is not correct. The communication failure may be due to disconnected connectors or a faulty wiring harness, the implement or powertrain ECM has the incorrect or incompatible software installed, or the fuse for the powertrain ECM may have failed. When this code is generated, some implement functions may not work properly.	0009 00-172
0350 00	Lift Linkage Position Sensor Data Valid but Above Normal Operating Range	This diagnostic code is recorded when the implement EC determines that the signal for the lift linkage position sensor is too high. The implement ECM has read a sensor value that is greater than the calibrated upper range of the sensor. The lift linkage position sensor is a PWM sensor. The signal wire for the lift linkage position sensor connected to connector contact J2-32 (wire C530 BU) of the implement ECM. Possible cause are the rotation or replacement of the lift linkage position sensor without proper recalibration may cause a diagnostic code or position sensor could rotate farther than normal in one direction. When this code is generated, the lift cylinder snubbing, lift kickouts, and the lower kickouts may not work correctly and if the diagnostic code is active for three seconds, then the 350-13 diagnostic code will become active.	0009 00-173

Table 3. MID 082 Implement - Continued.

CID FMI CODE	FAULT DESCRIPTION	FAULT CONDITIONS/EFFECTS	TROUBLE-SHOOTING PROCEDURE PAGE
0350 01	Lift Linkage Position Sensor Data Valid but Below Normal Operating Range	This diagnostic code is recorded when the implement ECM determines that the signal for the lift linkage position sensor is too low. The diagnostic code is recorded when the implement ECM reads a value that is lower than the calibrated value. The lift linkage position sensor is a PWM sensor. The signal wire for the lift linkage position sensor connects to connector contact J2-32 (wire C530 BU) of the implement ECM. Possible causes of this code are the rotation or replacement of the lift linkage position sensor without proper calibration or position sensor could rotate farther than normal in one direction. When this code is generated, the lift cylinder snubbing, lift kickouts, and the lower kickout may not work correctly, or if the diagnostic code is active for three seconds, then the 350-13 diagnostic code will become active.	0009 00-173
0350 03	Lift Linkage Position Sensor Voltage Above Normal or Shorted High	This diagnostic code is recorded when the implement ECM determines that the signal for the lift linkage position sensor is stuck at a high voltage for has an open circuit. The lift linkage position sensor is a PWM sensor. The signal wire for the lift linkage position sensor connects to a connector contact J2-32 (wire C530 BU) of the implement ECM. Possible causes of this diagnostic code are a shorted harness, a failed sensor, and open circuit, or the implement ECM has failed. When this code is generated, lift kickouts, snubbing, and float will not operate and tilt kickouts, dump rate control, FRAC, and dump stop snubbing will not operate. The active fault must be removed before the implement features will work properly.	0009 00-174
0350 04	Lift Linkage Position Sensor Voltage Below Normal or Shorted Low	This diagnostic code is recorded when the implement ECM determines that the voltage for the lift linkage position sensor is below normal. The lift linkage position sensor is a PWM sensor. The signal wire for the lift linkage position sensor connects to connector contact J2-32 (wire C530 BU) of the implement ECM. Possible causes of this diagnostic code are a shorted harness, an open circuit in the power supply wiring for the lift linkage position sensor, a failed sensor, or the implement ECM may have failed. When this code is generated, lift kickouts, snubbing, and float will not operate and tilt kickouts, dump rate control, FRAC, and dump stop snubbing will not operate. The active fault must be removed before the implement features will work properly.	0009 00-177

Table 3. MID 082 Implement - Continued.

CID FMI CODE	FAULT DESCRIPTION	FAULT CONDITIONS/EFFECTS	TROUBLE-SHOOTING PROCEDURE PAGE
0350 08	Lift Linkage Position Sensor Abnormal Frequency, Pulse, or Period	This diagnostic code is recorded when the implement ECM records a signal from the rotary position sensor for the lift linkage that has an abnormal frequency, abnormal pulse width or an abnormal period. The rotary position sensor is Pulse Width Modulation (PWM). The signal wire for the sensor connects to contact J2-32 (wire C530 BU) of the implement ECM. The possible causes of this diagnostic code are the circuit for the +battery to the sensor has a intermittent connection, the return circuit from the sensor has a intermittent connection, the signal circuit from the sensor has a intermittent connection, or the sensor has failed. When this code is generated, lift kickouts, snubbing, and float will not operate, or tilt kickouts, dump rate control, FRAC, and dump stop snubbing will not operate. The active fault must be removed before the implement features will work properly.	0009 00-179
0350 13	Lift Linkage Position Sensor Out of Calibration	This diagnostic code is recorded when the implement ECM records a signal from the rotary position sensor for the lift linkage that is out of calibration. The rotary position sensor is pulse width modulation (PWM). The signal wire for the rotary position sensor connects to contact J2-32 (wire C530 BU) of the implement ECM. The possible causes of this diagnostic code are new software has been installed, and the sensor has not been calibrated or the position sensor is above or the position sensor is below the calibration range for more than three seconds. When this code is generated, lift kickouts, snubbing, and float will not operate, or tilt kickouts, dump rate control, FRAC, and dump stop snubbing will not operate. The active fault must be removed before the implement features will work properly. The calibration procedure for the implement valves may not function properly.	0009 00-180
0351 00	Tilt Linkage Position Sensor Data Valid but Above Normal Operating Range	This diagnostic code is recorded when the implement ECM determines that the signal for the tilt linkage position sensor is too high. This diagnostic code is recorded when the implement ECM has read a sensor value that is greater than the calibrated upper range of the sensor. The tilt linkage position sensor is a PWM sensor. The signal wire for the tilt linkage position sensor connects to connector contact J2-33 (wire H718 GY) of the implement ECM. The possible causes of this diagnostic code are the rotation or replacement of the tilt linkage position sensor without proper recalibration or the position sensor could rotate farther than normal in one direction. When this code is generated, the tilt kickouts, dump stop snubbing, FRAC, and dump rate control may not work correctly, or if the diagnostic code is active for three seconds, the 35013 diagnostic code will become active.	0009 00-181

Table 3. MID 082 Implement - Continued.

CID FMI CODE	FAULT DESCRIPTION	FAULT CONDITIONS/EFFECTS	TROUBLE-SHOOTING PROCEDURE PAGE
0351 01	Tilt Linkage Position Sensor Data Valid but Below Normal Operating Range	This diagnostic code is recorded when the implement ECM determines that the signal for the tilt linkage position sensor is too low. The diagnostic code is recorded when the implement ECM reads a value that is lower than the calibrated value. The tilt linkage position sensor is a PWM sensor. The signal wire for the tilt linkage position sensor connects to connector contact J2-33 (wire H718 GY) of the implement ECM. The possible causes of this diagnostic code are the rotation or replacement of the tilt linkage position sensor without proper recalibration or the position sensor could rotate farther than normal in one direction the implement ECM would then record a FMI 01 fault). The tilt cylinder snubbing, and the tilt kickouts may not work correctly. If the diagnostic code is active for three seconds, then the 351-13 diagnostic code will become active. When this code is generated, the tilt kickouts, dump stop snubbing, FRAC, and dump rate control may not work correctly, or if the diagnostic code is active for three seconds, the 350-13 diagnostic code will become active.	0009 00-181
0351 03	Tilt Linkage Position Sensor Voltage Above Normal or Shorted High	This diagnostic code is recorded when the implement ECM determines that the signal for the tilt linkage position sensor is stuck at a high voltage or has an open circuit. The tilt linkage position sensor is a PWM sensor. The signal wire for the tilt linkage position sensor connects to connector contact J2-33 (wire H718 GY) of the implement ECM. The possible causes of this diagnostic code are a shorted harness, an open circuit, a failed sensor, the implement ECM has failed. When this code is generated, tilt kickouts, dump rate control, FRAC, and dump stop snubbing will not operate. The active fault must be removed before the implement features will work properly.	0009 00-182
0351 04	Tilt Linkage Position Sensor Voltage Below Normal or Shorted Low	This diagnostic code is recorded when the implement ECM determines that the voltage for the tilt linkage position sensor is below normal. The tilt linkage position sensor is a PWM sensor. The signal wire for the tilt linkage position sensor connects to connector contact J2-33 (wire H718 GY) of the implement ECM. The possible causes of this diagnostic code are a shorted harness, an open circuit in the power supply wiring for the tilt linkage position sensor, a failed sensor, or the implement ECM may have failed. When this code is generated, tilt kickouts, dump rate control, FRAC, and dump stop snubbing will not operate. The active fault must be removed before the implement features will work properly.	0009 00-185

Table 3. MID 082 Implement - Continued.

CID FMI CODE	FAULT DESCRIPTION	FAULT CONDITIONS/EFFECTS	TROUBLE-SHOOTING PROCEDURE PAGE
0351 08	Tilt Linkage Position Sensor Abnormal Frequency, Pulse, or Period	This diagnostic code is recorded when the implement ECM determines that the signal for the tilt linkage position sensor has an abnormal pulse width, abnormal frequency, or an abnormal period. The tilt linkage position sensor is a PWM sensor. The signal wire for the tilt linkage position sensor connects to connector contact J2-33 (wire H718 GY) of the implement ECM. The possible causes for this diagnostic code are the circuit for the +battery to the sensor has a intermittent connection, the return circuit from the sensor has a intermittent connection, the signal circuit from the sensor has a intermittent connection, or the sensor has failed. When this code is generated, tilt kickouts, dump rate control, FRAC, and dump stop snubbing will not operate. The active fault must be removed before the implement features will work properly.	0009 00-187
0351 13	Tilt Linkage Position Sensor Out of Calibration	This diagnostic code is recorded when the implement ECM determines that the tilt linkage position sensor is out of calibration. The tilt linkage position sensor is a PWM sensor. The possible causes for this diagnostic code are the sensor harness was disconnected for more than 5 seconds while the system was powered or the signal for the rotary position sensor was lost for more than 5 seconds. When this code is generated, tilt kickouts, dump rate control, FRAC, and dump stop snubbing will not operate and the valve calibration will not work.	0009 00-188
0352 00	Lift Lever Position Sensor Data Valid but Above Normal Operating Range	This diagnostic code is recorded when the implement ECM determines that the signal from the lift lever position sensor is too high. The lift lever position sensor is a 500 Hz PWM sensor. One possible cause is the lift lever position sensor needs recalibrated. When this code is generated, if 0352 00 is active for at least three seconds, the 352-13 diagnostic code will be active and the 352-00 diagnostic code will become inactive.	0009 00-189
0352 01	Lift Lever Position Sensor Data Valid but Below Normal Operating Range	This diagnostic code is recorded when the implement ECM determines that the signal for the lift lever position sensor is too low. The lift lever position sensor is a pulse width modulated sensor. One possible cause is the lift lever position sensor needs recalibrated. When this code is generated, if 0352 01 is active for at least three seconds, then the 35213 diagnostic code will become active and the 352-01 diagnostic code will become inactive.	0009 00-189
0352 03	Lift Lever Position Sensor Voltage Above Normal or Shorted High	This diagnostic code is recorded when the ECM determines that the voltage for the lift lever position sensor is too high. The signal wire connects to connector contact J2-24 (wire H710 PK) of the implement ECM. The lift lever position sensor is a 500 Hz PWM sensor. The possible causes for this diagnostic code are the signal circuit is shorted to the +battery, the signal circuit is open, the ground circuit is open, or the sensor has failed. When this code is generated, the lift function will be disabled until the diagnostic code is cleared. Also, the lift lever must be recentered.	0009 00-190

Table 3. MID 082 Implement - Continued.

CID FMI CODE	FAULT DESCRIPTION	FAULT CONDITIONS/EFFECTS	TROUBLE-SHOOTING PROCEDURE PAGE
0352 04	Lift Lever Position Sensor Voltage Below Normal or Shorted Low	This diagnostic code is recorded when implement ECM determines that the voltage for the lift lever position sensor is too low or shorted low. The lift lever position sensor is a pulse width modulated sensor. The possible causes for this diagnostic code are the harness between the implement ECM and the sensor has a short to ground, the sensor has failed, or the + battery circuit has an open. When this code is generated, the lift function will be disabled until the diagnostic code is cleared and the lift lever position sensor must be centered.	0009 00-193
0352 08	Lift Lever Position Sensor Abnormal Frequency, Pulse, or Period	This diagnostic code is recorded when the implement ECM determines that the signal for the lift lever position sensor has an abnormal pulse width, abnormal frequency, or an abnormal period. The lift lever position sensor is a PWM sensor. The signal wire for the lift lever position sensor connects to connector contact J2-24 (wire H710 PK) of the implement ECM. The possible causes for this diagnostic code are the circuit for the +battery to the sensor has a intermittent connection, the return circuit from the sensor has a intermittent connection, the signal circuit from the sensor has a intermittent connection, or the sensor has failed. The lift function will not operate while the diagnostic code is active.	0009 00-195
0352 13	Lift Lever Position Sensor Out of Calibration	This diagnostic code is recorded when the implement ECM determines that the lift lever position sensor is out of calibration. The lift lever position sensor is a PWM sensor. The possible causes for this diagnostic code are the lift lever has operated outside the calibrated range for more than three seconds. When this code is generated, implement features will not operate and lever will operate with increased deadband.	0009 00-197
0353 00	Tilt Lever Position Sensor Data Valid but Above Normal Operating Range	This diagnostic code is recorded when the implement ECM determines that the signal from the tilt lever position sensor is out of location. The tilt lever sensor is a 500 Hz PWM sensor. One possible cause is the tilt lever position sensor needs recalibrated. If 353-00 is active for at least three seconds, then the 353-13 diagnostic code will become active and 353-00 diagnostic code will become inactive.	0009 00-197
0353 01	Tilt Lever Position Sensor Data Valid but Below Normal Operating Range	This diagnostic code is recorded when the implement ECM determines that the signal for the tilt lever position sensor is too low. The lift lever position sensor is a pulse width modulated sensor. One possible cause is the tilt lever sensor needs recalibrated. If 35301 is active for at least three seconds, then the 353-13 diagnostic code will become active and 353-01 diagnostic code will become inactive.	0009 00-197

Table 3. MID 082 Implement - Continued.

CID FMI CODE	FAULT DESCRIPTION	FAULT CONDITIONS/EFFECTS	TROUBLE-SHOOTING PROCEDURE PAGE
0353 03	Tilt Lever Position Sensor Voltage Above Normal or Shorted High	This diagnostic code is recorded when the implement ECM determines that the voltage for the tilt lever position sensor is too high. The signal wire for the tilt lever position sensor connects to connector contact J2-25 (wire H711 GN) of the implement ECM. The tilt lever position sensor is a 500 Hz PWM sensor. The possible causes are the signal circuit is shorted to the +battery circuit, the sensor has failed, the signal circuit is open, or the ground circuit is open. When this code is generated, the tilt function will be disabled until the diagnostic code is cleared and the tilt lever must be recentered.	0009 00-198
0353 04	Tilt Lever Position Sensor Voltage Below Normal or Shorted Low	This diagnostic code is recorded when the implement ECM determines that the voltage for the tilt lever position sensor is too low. The tilt lever position sensor is a PWM sensor. The possible causes are the harness between the implement ECM and the sensor has a short to ground, the sensor has failed, or the + battery circuit has an open. When this code is generated, the tilt function will be disabled until the diagnostic code is cleared and the tilt lever must be recentered.	0009 00-201
0353 08	Tilt Lever Position Sensor Abnormal Frequency, Pulse, or Period	This diagnostic code is recorded when the implement ECM determines that the signal for the tilt lever position sensor has an abnormal pulse width, abnormal frequency, or an abnormal period. The tilt lever position sensor is a PWM sensor. The signal wire for the tilt lever position sensor connects to connector contact J2-25 (wire H711 GN) of the implement ECM. The possible causes are the circuit for the +battery to the sensor has a intermittent connection, the return circuit from the sensor has a intermittent connection, the signal circuit from the sensor has a intermittent connection, or the sensor has failed. The tilt function will not operate while the diagnostic code is active.	0009 00-203
0353 13	Tilt Lever Position Sensor Out of Calibration	This diagnostic code is recorded when the implement ECM determines that the tilt lever position sensor is out of calibration. The tilt lever position sensor is a PWM sensor. One possible cause is the tilt lever has operated outside the calibrated range for more than three seconds. When this code is generated, implement features will not operate and the lever will operate with increased deadband.	0009 00-204

Table 3. MID 082 Implement - Continued.

CID FMI CODE	FAULT DESCRIPTION	FAULT CONDITIONS/EFFECTS	TROUBLE-SHOOTING PROCEDURE PAGE
0354 03	Lift Pilot Control Valve Solenoid 1 Voltage Above Normal or Shorted High	This diagnostic code is recorded when the implement ECM detects a short to the +battery in the electrical path. The electrical path goes from the implement ECM to the solenoid and back to the implement ECM. The return circuit is connected for all solenoids. The return circuit connects to contacts J1-50 (wire H716 WH) of the implement ECM. The possible causes of this diagnostic code are the signal circuit from the implement ECM to the solenoid valve is shorted to the +battery and the return circuit from the solenoid valve is shorted to the +battery. When this code generated, all electro-hydraulic valves are turned off, the pilot on/off solenoid valve is turned off, and implement functions are disabled until the fault is corrected and the levers are centered.	0009 00-205
0354 05	Lift Pilot Control Valve Solenoid 1 Current Below Normal or Open Circuit	This diagnostic code is recorded when the implement ECM detects an incomplete electrical path from the implement ECM to the solenoid and back to the implement ECM. The return circuit is connected for all solenoids. The return circuit connects to contact J1-50 (wire H716 WH) of the implement ECM. The possible causes of the diagnostic code are: • The signal circuit from the implement ECM to the solenoid is open. • The return circuit from the solenoid is open. An open in the return circuit may result in an open circuit diagnostic code for all the implement solenoid valves. • The solenoid winding has high impedance or the solenoid winding is open. When this code is generated, the lift linkage will not raise and the raise function will be disabled until the fault is corrected and the levers are centered.	0009 00-207
0354 06	Lift Pilot Control Valve Solenoid 1 Current Above Normal or Grounded Circuit	This diagnostic code is recorded when the implement ECM detects a short to ground in the electrical path from the implement ECM to the solenoid. The return circuit is connected for all solenoids. The return circuit connects to contacts J1-50 (wire H716 WH) of the implement ECM. The possible causes of this diagnostic code are the solenoid winding has low impedance or is shorted and the signal circuit from the implement ECM for the solenoid is shorted to ground. When this code is generated, the lift linkage will not raise and the raise function will be disabled until the fault is corrected and the levers are centered.	0009 00-208

Table 3. MID 082 Implement - Continued.

CID FMI CODE	FAULT DESCRIPTION	FAULT CONDITIONS/EFFECTS	TROUBLE-SHOOTING PROCEDURE PAGE
0354 13	Lift Pilot Control Valve Solenoid 1 Out of Calibration	This diagnostic code is recorded when implement ECM determines that the solenoid valve is out of calibration. The possible causes for this diagnostic code are new software has been flashed and the calibration of the valve has failed. When this code is generated, the implement features will not operate efficiently.	0009 00-209
0355 03	Lower Pilot Control Valve Solenoid 1 Voltage Above Normal or Shorted High	This diagnostic code is recorded when the implement ECM detects a short to the +battery in the electrical path that goes from the implement ECM to the solenoid back to the implement ECM. The possible causes for this diagnostic code are the signal circuit from the implement ECM to the solenoid is shorted to the +battery and the return circuit from the solenoid is shorted to the +battery. When this code is generated, all electro-hydraulic valves are turned off, the pilot on/off solenoid valve is turned off, and implement functions are disabled until the fault is corrected and the levers are centered.	0009 00-210
0355 05	Lower Pilot Control Valve Solenoid 1 Current Below Normal Or Open Circuit	This diagnostic code is recorded when the implement ECM detects a incomplete electrical path. The electrical path from the implement ECM to the solenoid and back to the implement ECM is incomplete. The possible causes for this diagnostic code are: • The signal circuit from the implement ECM to the solenoids is open. • The return circuit from the solenoid is open. • The internal windings for the solenoid have high impedance. • The internal windings for the solenoid are open. When this code is generated, the lift linkage will not lower, the lower detent coil will be disabled, and the implements will be disabled until the fault is corrected and the levers are centered.	0009 00-212
0355 06	Lower Pilot Control Valve Solenoid 1 Current Above Normal or Grounded Circuit	This diagnostic code is recorded when the implement ECM detects a short to ground in the electrical path from the implement ECM to the solenoid. The possible causes for this diagnostic code are the internal windings for the solenoid have low impedance, the internal windings for the solenoid are shorted, and the signal circuit from the implement ECM to the solenoid is shorted to ground. When this code is generated, the lift linkage will not lower, the lower detent coil will be disabled, and the implements will be disabled until the fault is corrected and the levers are centered.	0009 00-213

Table 3. MID 082 Implement - Continued.

CID FMI CODE	FAULT DESCRIPTION	FAULT CONDITIONS/EFFECTS	TROUBLE-SHOOTING PROCEDURE PAGE
0355 13	Lower Pilot Control Valve Solenoid 1 Out of Calibration	This diagnostic code is recorded when the implement ECM determines that the solenoid valve is out of calibration. The possible causes for this diagnostic code are new software has been flashed and the calibration of the valve has failed. When this code is generated, the implement features will not operate efficiently.	0009 00-214
0356 03	Dump Pilot Control Valve Solenoid 1 Voltage Above Normal or Shorted High	This diagnostic code is recorded when the ECM detects a short to the +battery in the electrical path that goes from the ECM to the solenoid back to the ECM. The possible causes for this diagnostic code are the signal circuit from the ECM to the solenoid is shorted to the +battery and the return circuit from the solenoid is shorted to the +battery. When this code is generated, all electro-hydraulic valves are turned off, the pilot on/off solenoid valve is turned off, and implement functions are disabled until the fault is corrected and the levers are centered.	0009 00-215
0356 05	Dump Pilot Control Valve Solenoid l Current Below Normal or Open Circuit	This diagnostic code is recorded when the ECM detects an incomplete electrical path. The electrical path from the ECM to the solenoid back to the ECM is incomplete. The possible causes for this diagnostic code are: • The signal circuit from the ECM to the solenoids is open. • The return circuit from the solenoid is open. • The internal windings for the solenoid have high impedance. • The internal windings for the solenoid are open. When this code is generated, the tilt linkage will not dump and the implements will be disabled until the fault is corrected and the levers are centered.	0009 00-217
0356 06	Dump Pilot Control Valve Solenoid l Current Above Normal or Grounded Circuit	This diagnostic code is recorded when the ECM detects a short to ground in the electrical path from the ECM to the solenoid. The possible causes for this diagnostic code are the internal windings for the solenoid have low impedance, the internal windings for the solenoid are shorted, and the signal circuit from the ECM to the solenoid is shorted to ground. when this code is generated, the tilt linkage will not dump and the implements will be disabled until the fault is corrected and the levers are centered.	0009 00-218
0356 13	Dump Pilot Control Valve Solenoid 1 Out of Calibration	This diagnostic code is recorded when the implement ECM determines that the solenoid valve is out of calibration. The possible causes for this diagnostic code are new software has been flashed and the calibration of the valve has failed. When this code is generated, the implement features will not operate efficiently.	0009 00-219

Table 3. MID 082 Implement - Continued.

CID FMI CODE	FAULT DESCRIPTION	FAULT CONDITIONS/EFFECTS	TROUBLE-SHOOTING PROCEDURE PAGE
0357 03	Tilt Back Pilot Control Valve Solenoid 1 Voltage Above Normal or Shorted High	This diagnostic code is recorded when the ECM detects a short to the +battery in the electrical path that goes from the ECM to the solenoid back to the ECM. The possible causes for this diagnostic code are the signal circuit from the ECM to the solenoid is shorted to the +battery and the return circuit from the solenoid is shorted to the +battery. When this code is generated, all electro-hydraulic valves are turned off, the pilot on/off solenoid valve is turned off, and implement functions are disabled until the fault is corrected and the levers are centered.	0009 00-220
0357 05	Tilt Back Pilot Control Valve Solenoid 1 Current Below Normal or Open Circuit	This diagnostic code is recorded when the ECM detects an incomplete electrical path. The electrical path from the ECM to the solenoid back to the ECM is incomplete. The possible causes for this diagnostic code are: • The signal circuit from the ECM to the solenoids is open. • The return circuit from the solenoid is open. • The internal windings for the solenoid have high impedance. • The internal windings for the solenoid are open. When this code is generated, the tilt linkage will not tilt back, the tiltback detent coil will be disabled, and the implements will be disabled until the fault is corrected and the levers are centered.	0009 00-222
0357 06	Tilt Back Pilot Control Valve Solenoid 1 Current Above Normal or Grounded Circuit	This diagnostic code is recorded when the ECM detects a short to ground in the electrical path from the ECM to the solenoid. The possible causes for this diagnostic code are, the internal windings for the solenoid have low impedance, the internal windings for the solenoid are shorted, and the signal circuit from the ECM to the solenoid is shorted to ground. When this code is generated, the tilt linkage will not tilt back, the tilt back detent coil will be disabled, and the implements will be disabled until the fault is corrected and the levers are centered.	0009 00-223
0357 13	Tilt Back Pilot Control Valve Solenoid 1 Out of Calibration	This diagnostic code is recorded when the implement ECM determines that the tilt solenoid valve is out of calibration. The possible causes for this diagnostic code are new software has been flashed and the calibration of the valve has failed. When this code is generated, the implement features will not operate efficiently.	0009 00-224
0358 03	Pilot On/Off Control Valve Solenoid Voltage Above Normal or Shorted High	This diagnostic code is recorded when the ECM detects a short to the +battery in the electrical path that goes from the ECM to the solenoid back to the ECM. The possible causes for this diagnostic code are the signal circuit from the ECM to the solenoid is shorted to the +battery and the return circuit from the solenoid is shorted to the +battery. When this code is generated, the implement hydraulic operation is derated by the implement ECM.	0009 00-225

Table 3. MID 082 Implement - Continued.

CID FMI CODE	FAULT DESCRIPTION	FAULT CONDITIONS/EFFECTS	TROUBLE-SHOOTING PROCEDURE PAGE
0358 05	Pilot On/Off Control Valve Solenoid Current Below Normal or Open Circuit	This diagnostic code is recorded when the ECM detects an incomplete electrical path. The electrical path from the ECM to the solenoid back to the ECM is incomplete. The possible causes for this diagnostic code are: • The signal circuit from the ECM to the solenoids is open. • The return circuit from the solenoid is open. • The internal windings for the solenoid have high impedance. • The internal windings for the solenoid are open. When this code is generated, the implement features do not function and the pilot on/ off solenoid valve will not operate.	0009 00-227
0358 06	Pilot On/Off Control Valve Solenoid Current Above Normal or Grounded Circuit	This diagnostic code is recorded when the ECM detects a short to ground in the electrical path from the ECM to the solenoid. The possible causes for this diagnostic code are the internal windings for the solenoid have low impedance, the internal windings for the solenoid are shorted, the signal circuit from the ECM to the solenoid is shorted to ground. When this code is generated, the implement features will not operate and the pilot on/ off solenoid valve is OFF.	0009 00-229
0365 04	Lift, Lower and Bucket Kickout Set Switch Voltage Below Normal or Shorted Low	This switch has two inputs to the ECM. Both inputs are normally open. During proper operation, both inputs are normally open. This diagnostic code is recorded when the status of both the inputs are grounded. The possible causes of this diagnostic code are: • Both inputs are shorted to ground in the harness. • Both inputs are shorted together. The switch must be in one specific position. • The switch has failed. When this code is generated, the switch will not change the kickout position.	0009 00-230
0487 00	Position Sensor (Auxiliary Lever) Data Valid but Above Normal Operating Range	This diagnostic code is recorded when the ECM determines that the signal from the auxiliary lever position sensor is out of location. The auxiliary lever position sensor is a 500 Hz PWM sensor. The possible cause for this diagnostic code is the auxiliary lever position sensor needs recalibrated. When this code is generated, if the diagnostic code is active for at least three seconds, then the 487-13 diagnostic code will become active. The 487-00 diagnostic code will become inactive.	0009 00-232

Table 3. MID 082 Implement - Continued.

CID FMI CODE	FAULT DESCRIPTION	FAULT CONDITIONS/EFFECTS	TROUBLE-SHOOTING PROCEDURE PAGE
0487 01	Position Sensor (Auxiliary Lever) Data Valid but Below Normal Operating Range	This diagnostic code is recorded when the implement ECM determines that the signal for the auxiliary lever position sensor is too low. The auxiliary lever position sensor is a 500 Hz pulse width modulated sensor. The possible causes for this diagnostic code are the auxiliary lever sensor needs recalibrated. The signal circuit is shorted to ground. When this code is generated, the auxiliary function will not operate and the auxiliary lever must be recentered before movement of the auxiliary function is allowed.	0009 00-232
0487 03	Position Sensor (Auxiliary Lever) Voltage Above Normal or Shorted High	This diagnostic code is recorded when the ECM reads the voltage of the circuit for the position sensor as being above normal. The signal wire for the position sensor connects to connector contact J2-26 (wire H722 GN) of the ECM. The auxiliary lever position sensor is a 500 Hz PWM sensor. The causes for this diagnostic code are: • The signal circuit is shorted to the +battery circuit. • The sensor has failed. • The signal circuit is open. • The ground circuit is open. When this code is generated, the auxiliary function will be disabled until the diagnostic code is cleared and the lever must be recentered.	0009 00-233
0487 04	Position Sensor (Auxiliary Lever) Voltage Below Normal or Shorted Low	This diagnostic code is recorded when the implement ECM determines that the voltage for the auxiliary lever position sensor is too low. The auxiliary lever position sensor is a pulse width modulated sensor. The possible causes for this diagnostic code are the harness between the ECM and the sensor has a short, the sensor has failed, and the + battery circuit has an open. When this code is generated, the auxiliary function will be disabled until the diagnostic code is cleared and the auxiliary lever must be centered.	0009 00-236

Table 3. MID 082 Implement - Continued.

CID FMI CODE	FAULT DESCRIPTION	FAULT CONDITIONS/EFFECTS	TROUBLE-SHOOTING PROCEDURE PAGE
0487 08	Position Sensor (Auxiliary Lever) Abnormal Frequency, Pulse, or Period	This diagnostic code is recorded when the ECM determines that the signal for the auxiliary lever position sensor has an abnormal pulse width, abnormal frequency, or an abnormal period. The auxiliary lever position sensor is a PWM sensor. The signal wire for the auxiliary lever position sensor connects to connector contact J2-26 (wire H722 GN) of the ECM. The possible causes for this diagnostic code are: • The +battery circuit to the sensor has a intermittent connection. • The return circuit from the sensor has a intermittent connection. • The signal circuit from the sensor has a intermittent connection. • The sensor has failed. • The wrong sensor is installed. When this code is generated, the auxiliary function will not operate while the diagnostic code is active.	0009 00-238
0487 13	Position Sensor (Auxiliary Lever) Out of Calibration	This diagnostic code is recorded when the implement ECM determines that the auxiliary lever position sensor is out of calibration. The auxiliary lever position sensor is a PWM sensor. The possible cause for this diagnostic code is the auxiliary lever has operated outside the calibrated range for more than three seconds. When this code is generated, implement features will not operate and the machine must be restarted in order to allow the auxiliary function to operate.	0009 00-239
0490 03	Rocker Switch (Implement Lockout) Voltage Above Normal or Shorted High	This diagnostic code is recorded when both inputs are either open or both inputs are shorted to the +battery circuit. This switch has two inputs to the ECM. The inputs are normally open and normally closed. During proper operation, one input is open and the other input is grounded. The possible causes for this diagnostic code are: • The switch is disconnected. • There is an open circuit in the wiring harness. • Short to the +battery circuit in the wiring harness. • The switch has failed. When this code is generated, the implements will not work.	0009 00-240

Table 3. MID 082 Implement - Continued.

CID FMI CODE	FAULT DESCRIPTION	FAULT CONDITIONS/EFFECTS	TROUBLE-SHOOTING PROCEDURE PAGE
0490 04	Rocker Switch (Implement Lockout) Voltage Below Normal or Shorted Low	This diagnostic code is recorded when the status of both the normally open inputs and normally closed inputs are grounded. This switch has two inputs to the ECM. The inputs are normally open and normally closed. During proper operation, one input is open and the other input is grounded. The possible causes of this diagnostic code are: • The normally open circuit is shorted to ground while the normally closed circuit is grounded through the switch. • The normally closed circuit is shorted to ground while the normally open circuit is grounded through the switch. • The normally open circuits and the normally closed circuits are shorted to ground in the harness. • The normally open circuits and normally closed circuits are shorted together. The switch must be in one specific position. • The switch has failed. When this code is generated, the implements will not work.	0009 00-242
0491 03	Auxiliary Lever Forward Solenoid Valve Voltage Above Normal or Shorted High	This diagnostic code is recorded when the ECM detects a short to +battery in the electrical path that goes from the ECM to the solenoid back to the ECM. The possible causes for this diagnostic code are the signal circuit from the ECM to the solenoid is shorted to +battery and the return circuit from the solenoid is shorted to +battery. When this code is generated, the implement function that is associated with the third function lever and the implement function that is associated with the third function lever FORWARD will operate continuously.	0009 00-243

Table 3. MID 082 Implement - Continued.

CID FMI CODE	FAULT DESCRIPTION	FAULT CONDITIONS/EFFECTS	TROUBLE-SHOOTING PROCEDURE PAGE
0491 05	Auxiliary Lever Forward Solenoid Valve Current Below Normal or Open Circuit	This diagnostic code is recorded when the ECM detects an incomplete electrical path. The electrical path from the ECM to the solenoid back to the ECM is incomplete. The possible causes for this diagnostic code are: • The signal circuit from the ECM to the solenoid is open. • The return circuit from the solenoid is open. • The internal windings for the solenoid have high impedance. • The internal windings for the solenoid are open. When this code is generated, the implement function that is associated with the third function lever FORWARD will not operate and after clearing the diagnostic code, the third function lever must be recentered before movement of the third function is allowed.	0009 00-245
0491 06	Auxiliary Lever Forward Solenoid Valve Current Above Normal or Grounded Circuit	This diagnostic code is recorded when the ECM detects a short to ground in the electrical path from the ECM to the solenoid. The possible causes for this diagnostic code are the internal windings for the solenoid have low impedance, the internal windings for the solenoid are shorted, and the signal circuit from the ECM to the solenoid is shorted to ground. When this code is generated, the implement function that is associated with the third function lever FORWARD will not operate and after clearing the diagnostic code, the third function lever must be recentered before movement of the third function is allowed.	0009 00-247
0491 13	Auxiliary Lever Forward Solenoid Valve Out of Calibration	This diagnostic code is recorded when the implement ECM determines that the solenoid valve is out of calibration. The possible causes for this diagnostic code are new software has been flashed and the calibration of the valve has failed.	0009 00-248
0492 03	Auxiliary Lever Rearward Solenoid Valve Voltage Above Normal or Shorted High	This diagnostic code is recorded when the ECM detects a short to +battery in the electrical path that goes from the ECM to the solenoid back to the ECM. The possible causes for this diagnostic code are the signal circuit from the ECM to the solenoid is shorted to +battery and the return circuit from the solenoid is shorted to +battery. When this code is generated, the implement function that is associated with the third function lever REARWARD will operate continuously.	0009 00-249

Table 3. MID 082 Implement - Continued.

CID FMI CODE	FAULT DESCRIPTION	FAULT CONDITIONS/EFFECTS	TROUBLE-SHOOTING PROCEDURE PAGE
0492 05	Auxiliary Lever Rearward Solenoid Valve Current Below Normal or Open Circuit	This diagnostic code is recorded when the ECM detects an incomplete electrical path. The electrical path from the ECM to the solenoid back to the ECM is incomplete. The possible causes for this diagnostic code are: • The signal circuit from the ECM to the solenoid is open. • The return circuit from the solenoid is open. • The internal windings for the solenoid have high impedance. • The internal windings for the solenoid are open. When this code is generated, the implement function that is associated with the third function lever REARWARD will not operate and after clearing the diagnostic code, the third function lever must be recentered before movement of the third function is allowed.	0009 00-251
0492 06	Auxiliary Lever Rearward Solenoid Valve Current Above Normal or Grounded Circuit	This diagnostic code is recorded when the ECM detects a short to ground in the electrical path from the ECM to the solenoid. The possible causes for this diagnostic code are the internal windings for the solenoid have low impedance, the internal windings for the solenoid are shorted, and the signal circuit from the ECM to the solenoid is shorted to ground. When this code is generated, the implement function that is associated with the third function lever REARWARD will not operate and after clearing the diagnostic code, the third function lever must be recentered before movement of the third function is allowed.	0009 00-252
0492 13	Auxiliary Lever Rearward Solenoid Valve Out of Calibration	This diagnostic code is recorded when the implement ECM determines that the solenoid valve is out of calibration. The possible causes for this diagnostic code are new software has been flashed and the calibration of the valve has failed.	0009 00-253
0590 02	Cat Data Link Communication with Engine EC Data Erratic, Intermittent, or Incorrect	This failure results in events that are logged against an ECM that can not be explained. The Implement ECM cannot communicate with the Engine ECM or the ECM appears to work intermittently.	0009 00-254
0590 09	Cat Data Link Communication with Engine EC Abnormal Update	This diagnostic code is recorded when the implement ECM is unable to communicate with the engine ECM. The possible cause of this diagnostic code is the data link wire between the implement ECM and the engine ECM has failed. When this code is generated, implement valve calibrations will not work due to unavailable engine speed input, and the pilot on/off solenoid valve will shut off when all the levers are in the HOLD position.	0009 00-257

Table 3. MID 082 Implement - Continued.

CID FMI CODE	FAULT DESCRIPTION	FAULT CONDITIONS/EFFECTS	TROUBLE-SHOOTING PROCEDURE PAGE
0590 14	Cat Data Link Communication with Engine EC Parameter Failure	This diagnostic code is recorded when the engine ECM is not sending the necessary parameters to the implement ECM at the proper rate. The update rate for parameters that are generated by the engine ECM is not correct. The communication failure may be due to disconnected connectors or a faulty wiring harness. The possible causes of this diagnostic code are: • The power train ECM has the incorrect software installed. • The implement ECM has the incorrect software installed. • Incompatible software may be installed. • The fuse for the power train ECM may have failed. When this code is generated, some implement functions may not work properly.	0009 00-260
0967 09	Machine Application Abnormal Update	This diagnostic code is recorded when the implement ECM receives information from the monitoring system ECM and the information is NOT correct. The possible causes of this diagnostic code are a problem with the data link harness, the monitoring system is not operational, and the monitoring system has not been programmed with the correct application software. **NOTE** **Other related diagnostic codes may cause this diagnostic code. Check for other related diagnostic codes.** When this code is generated, if the ECM has never been flashed, all implement functions will be disabled. There is a 10 second delay before implement functions are active.	0009 00-261
0967 12	Machine Application Bad Equipment or Component	This diagnostic code is recorded when the implement ECM is receiving the incorrect harness code information from the monitoring system. The possible causes for this diagnostic code are incorrect implement software is installed and incorrect monitoring system software is installed. When this code is generated, implement functions are disabled.	0009 00-266

Table 3. MID 082 Implement - Continued.

CID FMI CODE	FAULT DESCRIPTION	FAULT CONDITIONS/EFFECTS	TROUBLE-SHOOTING PROCEDURE PAGE
1187 03	Continuous Flow Rocker Switch Voltage Above Normal or Shorted High	This diagnostic code is recorded when both inputs are either open or both inputs are shorted to the +battery circuit. This switch has two inputs to the ECM. The inputs are normally open and normally closed. During proper operation, one input is open and the other input is grounded. The possible causes for this diagnostic code are: • The switch is disconnected. • There is an open circuit in the wiring harness. • Short to the +battery circuit in the wiring harness. • The switch has failed. When this code is generated, the implements will not work.	0009 00-268
1187 04	Continuous Flow Rocker Switch Voltage Below Normal or Shorted Low	This diagnostic code is recorded when the status of both the normally open inputs and normally closed inputs are grounded. This switch has two inputs to the ECM. The inputs are normally open and normally closed. During proper operation, one input is open and the other input is grounded. The possible causes of this diagnostic code are: • The normally open circuit is shorted to ground while the normally closed circuit is grounded through the switch. • The normally closed circuit is shorted to ground while the normally open circuit is grounded through the switch. • The normally open circuits and the normally closed circuits are shorted to ground in the harness. • The normally open circuits and normally closed circuits are shorted together. The switch must be in one specific position. • The switch has failed. When this code is generated, the implements will not work.	0009 00-269
1326 02	ECM Location Code Data Erratic, Intermittent, or Incorrect	This diagnostic code is recorded when the software location code for the implement ECM does not match the hardware location codes. The probable cause of this diagnostic code is software. The wrong software has been flashed into the ECM.	0009 00-270

Table 3. MID 082 Implement - Continued.

CID FMI CODE	FAULT DESCRIPTION	FAULT CONDITIONS/EFFECTS	TROUBLE-SHOOTING PROCEDURE PAGE
2326 03	Lower Anti-Drift Solenoid Valve Voltage Above Normal or Shorted High	This diagnostic code is recorded when the ECM detects a short to +battery in the electrical path that goes from the ECM to the solenoid back to the ECM. The possible causes for this diagnostic code are the signal circuit from the ECM to the solenoid is shorted to +battery and the return circuit from the solenoid is shorted to +battery. When this code is generated, the lift arms may have excessive drift.	0009 00-273
2326 05	Lower Anti-Drift Solenoid Valve Current Below Normal or Open Circuit	This diagnostic code is recorded when the ECM detects an incomplete electrical path. The electrical path from the ECM to the solenoid back to the ECM is incomplete. The possible causes for this diagnostic code are: • The signal circuit from the ECM to the solenoid is open. • The return circuit from the solenoid is open. • The internal windings for the solenoid have high impedance. • The internal windings for the solenoid are open. When this code is generated, the lift linkage will not lower.	0009 00-275
2326 06	Lower Anti-Drift Solenoid Valve Current Above Normal or Grounded Circuit	This diagnostic code is recorded when the ECM detects a short to ground in the electrical path from the ECM to the solenoid. The possible causes for this diagnostic code are the internal windings for the solenoid have low impedance, the internal windings for the solenoid are shorted, and the signal circuit from the ECM to the solenoid is shorted to ground. When this code is generated, the lift linkage will not lower.	0009 00-277
2328 03	Dump Anti-Drift Solenoid Valve Voltage Above Normal or Shorted High	This diagnostic code is recorded when the ECM detects a short to +battery in the electrical path that goes from the ECM to the solenoid back to the ECM. The possible causes for this diagnostic code are the signal circuit from the ECM to the solenoid is shorted to +battery and the return circuit from the solenoid is shorted to +battery. When this code is generated, the bucket may have excessive drift.	0009 00-278

Table 3. MID 082 Implement - Continued.

CID FMI CODE	FAULT DESCRIPTION	FAULT CONDITIONS/EFFECTS	TROUBLE-SHOOTING PROCEDURE PAGE
2328 05	Dump Anti-Drift Solenoid Valve Current Below Normal or Open Circuit	This diagnostic code is recorded when the ECM detects an incomplete electrical path. The electrical path from the ECM to the solenoid back to the ECM is incomplete. The possible causes for this diagnostic code are: • The signal circuit from the ECM to the solenoid is open. • The return circuit from the solenoid is open. • The internal windings for the solenoid have high impedance. • The internal windings for the solenoid are open. When this code is generated, the bucket will not dump.	0009 00-280
2328 06	Dump Anti-Drift Solenoid Valve Current Above Normal or Grounded Circuit	This diagnostic code is recorded when the ECM detects a short to ground in the electrical path from the ECM to the solenoid. The possible causes for this diagnostic code are the internal windings for the solenoid have low impedance, the internal windings for the solenoid are shorted, and the signal circuit from the ECM to the solenoid is shorted to ground. When this code is generated, the bucket will not dump.	0009 00-282

TROUBLESHOOTING WITH AN EVENT CODE

Table 4. Event Codes.

EVENT CODE	FAULT DESCRIPTION	FAULT CONDITIONS/EFFECTS	TROUBLE-SHOOTING PROCEDURE PAGE
E096	High Fuel Pressure	This code is generated when the fuel pressure is above the trip point. The ECM will log the code. This code has no effect on performance.	0009 00-4
E172	High Air Filter Restriction	This code is generated when the ECM detects excessive pressure drop across the air cleaner element. When this code is generated, the event code is logged. E172-1 (Warning) has no effect on performance. E172-2 (Derate) the engine power is derated.	0009 00-4
E194	High Exhaust Temperature	This code is generated when the engine has been running for at least three minutes and the calculated exhaust temperature has exceeded the trip point for ten seconds. The ECM calculates the exhaust temperature according to the values of the following operating parameters: • Engine speed. • Atmospheric pressure. • Intake manifold air temperature. When this code is generated, the event code is logged. E194-2 (Derate) the engine power will be derated.	0009 00-4
E265	User Defined Shutdown	This code is generated when the user defined shutdown switch has been activated. Certain conditions must be met on some applications prior to the activation of the user defined shutdown switch. These conditions may include setting the parking brake and/ or placing the transmission in neutral. When this code is generated, the ECM will log the event and the engine will shutdown.	0009 00-4
E360	Low Engine Oil Pressure	This code is generated when the ECM detects a problem with the engine oil pressure. When this code is generated, the event code will be logged. E360-1 (Warning) has no effect on performance. E360-3 (Shutdown) the engine will shut down. Contact your local Caterpillar Dealer to clear this event code.	0009 00-5
E361	High Engine Coolant Temperature	This code is generated when the ECM detects a problem with the engine's cooling system. When this code is generated, the event code is logged. E361-1 (Warning) has no effect on performance. E361-2 (Derate) the engine power is derated. E361-3 (Shutdown) the engine is shut down. Contact your local Caterpillar dealer to clear this event code.	0009 00-5

Table 4. Event Codes - Continued.

EVENT CODE	FAULT DESCRIPTION	FAULT CONDITIONS/EFFECTS	TROUBLE-SHOOTING PROCEDURE PAGE
E362	Engine Overspeed	This code is generated when the ECM detects an overspeed condition. When this code is generated, the event code will be logged. The engine can experience the following performance effects: E362-1 (Warning) has no effect on performance. E362-2 (Derate) the engine power is derated. Contact your local Caterpillar Dealer to clear this event code.	0009 00-6
E363	High Fuel Temperature	This code is generated when the temperature of the fuel has exceeded the trip point. When this code is generated, the event code is logged. E363-1 (Warning) has no effect on performance. E363-2 (Derate) the engine power is derated. Contact your local Caterpillar Dealer to clear this event code.	0009 00-6
E390	Fuel Filter Restriction	This code is generated when the ECM detects an abnormal fuel filter differential pressure. When this code is generated, the event code will be logged. The engine can experience the following performance effects: E390-1 (Warning) has no effect on performance. E390-2 (Derate) The ECM will derate power.	0009 00-6
E441	Idle Elevated to Increase Battery Voltage	This code is generated when engine has been running for at least three seconds and fuel temperature is above trip point for machine application. When this code is generated, warning lamp will flash while “Derate” is active. ET will display “Engine Derate” in first engine status box on any ET status screen. ECM will generate an EID E054 event code on data link. Event code will be displayed on a ET diagnostic screen.	0009 00-6
E539	High Intake Manifold Air Temperature	This code is generated when ECM detects a problem with the engine's intake manifold air temperature. When this code is generated, the event code will be logged. The engine can experience the following performance effects: E539-1 (Warning) has no effect on performance. E539-2 (Derate) the engine power will be derated. Contact your local Caterpillar dealer to clear this event code.	0009 00-6

END OF WORK PACKAGE

NOTE

- **For a better understanding of each system, review the appropriate section in *Theory of Operation* (WP 0003 00).**
- **These procedures may give direction to replace wiring harness. However, limited repair of wiring harness is authorized. Refer to *Electrical General Maintenance Instructions* (WP 0022 00) for the correct repair procedures.**
- **When directed to use a bypass harness and breakout Ts, refer to *Electrical General Maintenance Instructions* (WP 0022 00) for the correct hook-up procedures.**
- **For location of Controls and Indicators, refer to TM 5-3805-291-10.**

Table 1. Engine Troubleshooting.

MALFUNCTION	TEST OR INSPECTION	CORRECTIVE ACTION
1. Engine Cannot Reach Top RPM.	**CAUTION** **Do not crank engine continuously for more than 30 seconds. Allow starting motor to cool for two minutes before cranking engine again. Failure to comply with this caution may result in damage to equipment.** **NOTE** **If this problem occurs only under load, refer to Malfunction 16. *Low Power/ Poor or No Response to Throttle*.**	
	1. Ensure all fuel lines are tight, properly secured, and free of restrictions.	1. Replace, tighten, secure, or clean fuel lines, as necessary (WP 0034 00). 2. If problem still exists, go to Test 2.
	2. Check fuel tank for foreign objects (WP 0033 00).	1. Remove any foreign objects. 2. If problem still exists, go to Test 3.
	3. If temperature is below 32°F (0°C), check for solidified fuel (wax) in tank.	1. If solidified fuel is present, drain and fill tank (WP 0032 00). 2. If problem still exists, go to Test 4.
	4. Check to see if any of the following procedures have been performed: replacement of fuel filters, service on low pressure fuel supply circuit, or replacement of fuel injectors.	1. If procedures have been performed, prime fuel system (TM 5-3805-291-10). 2. If problem still exists, go to Test 5.
	5. Check fuel pressure after the fuel filter. Perform *Fuel System Pressure Test* (WP 0011 00).	If problem still exists, go to Test 6.
	6. Observe the check engine lamp. Check for an air filter restriction indicator.	1. If restriction is indicated, clean or replace air cleaner elements (WP 0030 00). 2. If problem still exists, go to Test 7.

Table 1. Engine Troubleshooting - Continued.

MALFUNCTION	TEST OR INSPECTION	CORRECTIVE ACTION
1. Engine Cannot Reach Top RPM - Continued.	7. Check the air intake and exhaust system for restrictions and/or leaks (WP 0031 00 and WP 0040 00).	1. Remove any blockages or restrictions and replace damaged air intake and exhaust system lines or hoses (WP 0031 00 and WP 0040 00). 2. If problem still exists, go to Test 8.
	8. Check all accessory equipment for problems that may create excessive load on the engine.	1. Repair or replace any damaged components. 2. If problem still exists, go to Test 9.
	9. Connect MSD (WP 0005 00) and monitor the status for "Throttle Position." Verify the status for "Throttle Position" is stable and the engine is able to reach high idle speed.	1. If signal is erratic, perform *Throttle Position Sensor Circuit Test* (WP 0013 00). 2. If problem still exists, go to Test 10.
	10. Use MSD to monitor the status of "Fuel Position", "Rated Fuel Limit", and "FRC Fuel Limit" on ET while the engine is operating under full load. These parameters should reflect the following information: "Fuel Position" equals "Related Fuel Limit" and "Fuel Position" is less than "FRC Fuel Limit."	1. If "Fuel Position" equals "Rated Fuel Limit" and "Fuel Position" is less than "FRC Fuel Limit", the ECM is operating correctly. 2. If problem still exists, go to Test 11.
	11. Use MSD to monitor the status of "Intake Manifold Pressure" and "Atmospheric Pressure" for normal operation. When the engine is not running, the correct intake manifold pressure is 0 psi (0 kPa). The correct atmospheric pressure is 7.25 to 14.5 psi (50 to 100 kPa).	If readings are incorrect, replace boost pressure sensor (WP 0074 00).
2. Engine Cranks but Will Not Start.	1. Visually check for fuel in tank (fuel tank may be empty).	1. Add fuel if necessary and prime fuel system (TM 5-3805-291-10). 2. If problem still exists, go to Test 2.
	2. If temperature is below 32°F (0°C), check for solidified fuel (wax) in tank.	1. If solidified fuel is present, drain and fill tank (WP 0033 00). 2. If problem still exists, go to Test 3.
	3. Ensure all fuel lines are tight, properly secured, and free of restrictions.	1. Replace, tighten, secure, or clear fuel lines as necessary (WP 0033 00). 2. If problem still exists, go to Test 4.
	4. Check fuel tank for foreign objects.	1. Remove any foreign objects. 2. If problem still exists, go to Test 5.
	5. Perform *Air in Fuel Test* (WP 0011 00).	If problem still exists, go to Test 6.

Table 1. Engine Troubleshooting - Continued.

MALFUNCTION	TEST OR INSPECTION	CORRECTIVE ACTION
2. Engine Cranks but Will Not Start - Continued.	6. Perform *Fuel System Pressure Test* (WP 0011 00).	If problem still exists, go to Test 7.
	7. Check for air in the low pressure supply system if any of the following procedures have been performed: replacement of the fuel filters, service on the low pressure fuel supply circuit, or replacement of the fuel injectors.	1. Prime fuel system (TM 5-3805-291-10). 2. If problem still exists, go to Test 8.
	8. Connect MSD (WP 0005 00) and check for active diagnostic codes.	1. Troubleshoot any active codes before continuing with the procedure. Refer to WP 0009 00. 2. If problem still exists, go to Test 9.
	9. Crank the engine and observe the engine speed on the ET status screen. (Initial cranking may indicate engine speed is abnormal. Message will be replaced when ECM calculates speed from signal).	1. If engine speed is present, confirm crankshaft and camshaft speed timing sensor are flush against the housing (WP 0076 00 and WP 0078 00). 2. If engine speed is not present, perform *Engine Speed Timing Sensor Circuit Test* (WP 0013 00). 3. If problem still exists, go to Test 10.
	10. If an erratic noise occurs during cranking, remove starter motor (WP 0051 00) and check starter motor pinion and flywheel ring gear for damage (WP 0177 00).	1. If damaged, replace starter motor (WP 0051 00) or flywheel (WP 0177 00). 2. If problem still exists, go to Test 11.
	11. Perform *Electrical Power Supply Circuit Test* (WP 0013 00).	If problem still exists, go to Test 12.
	12. If cold conditions exist, check operation of starting aid (TM 5-3805-291-10).	1. If starting aid is inoperative, perform *Ether Injection System Test* (WP 0013 00). 2. If problem still exists, go to Test 13.
	13. Ensure injector wiring harness is fully connected and free of corrosion (WP 0187 00).	1. Verify harness connection is not faulty. Replace, if necessary (WP 0187 00). 2. If problem still exists, go to Test 14.
	14. Use MSD to perform *Injector Solenoid Test* to confirm that all injector solenoids are being energized by the ECM. If not, perform *Injector solenoid Circuit Test* (WP 0013 00).	If problem still exists, go to Test 15.
	15. Remove valve cover and look for obvious signs of mechanical problems.	1. Repair any damage. 2. If problem still exists, go to Test 16.

Table 1. Engine Troubleshooting - Continued.

MALFUNCTION	TEST OR INSPECTION	CORRECTIVE ACTION
2. Engine Cranks but Will Not Start - Continued.	16. Check valve lash (WP 0179 00).	1. Adjust valve lash if necessary (WP 0179 00). 2. If problem still exist, go to Test 17.
	17. Remove the cylinder head (WP 0172 00) and check for obvious signs of mechanical damage to cylinder block and head including camshaft valve mechanism, cylinders, valves, head, and block.	1. Replace any damage or defective parts. 2. If problem still exists, go to Test 18.
	18. Remove oil pan (WP 0181 00) and inspect for internal problems with crankshaft, bearings, cylinders, pistons and connecting rods.	If problems are found, replace engine (WP 0171 00).
3. Engine Misfires, Runs Rough, or is Unstable.	**NOTE** **If problem only occurs under certain conditions (high rpm, full load, and certain engine operating temperatures), test engine under those conditions. Troubleshoot symptoms under other conditions can give misleading results.**	
	1. Ensure all fuel lines are tight, properly secured, and free of restrictions.	1. Replace or repair any restricted fuel lines (WP 0034 00). 2. If problem still exists, go to Test 2.
	2. Check fuel tank for foreign objects.	1. Remove any foreign objects. 2. If problem still exists, go to Test 3.
	3. If temperature is below 32°F (0°C), check for solidified fuel.	1. If solidified fuel is present, drain and fill tank (WP 0033 00). 2. If problem still exists, go to Test 4.
	4. Connect MSD (WP 0005 00) and check for active diagnostic codes.	1. Troubleshoot any active codes before continuing with this procedure. Refer to WP 0009 00. 2. If problem still exists, go to Test 5.
	5. Perform *Fuel System Pressure Test* (WP 0011 00).	If problem still exists, go to Test 6.
	6. Check for correct installation of J1/P1 and J2/P2 ECM connectors and fuel injector connectors. Refer to *Electrical Connectors Inspection* (WP 0022 00).	If problem still exists, go to Test 7.
	7. Observe the check engine lamp. Check for an air filter restriction indicator.	1. If restriction is indicated, clean or replace air cleaner elements (WP 0030 00). 2. If problem still exists, go to Test 8.

Table 1. Engine Troubleshooting - Continued.

MALFUNCTION	TEST OR INSPECTION	CORRECTIVE ACTION
3. Engine Misfires, Runs Rough, or is Unstable - Continued.	8. Check the air intake and exhaust system for restriction and/or leaks (WP 0031 00 and WP 0040 00).	1. Remove any blockages or restrictions and replace damaged air intake and exhaust system lines or hoses (WP 0031 00 and WP 0040 00). 2. If problem still exists, go to Test 9.
	9. Perform *Electrical Power Supply Circuit Test* (WP 0013 00).	If problem still exists, go to Test 10.
	10. Use MSD to verify throttle signal is smooth from low to high idle positions. If not smooth, perform *Throttle Position Sensor Circuit Test* (WP 0013 00).	If problem still exists, go to Test 11.
	11. Use MSD to determine if there are any active diagnostic codes for the fuel injectors.	1. Troubleshoot any active diagnostic codes. 2. If problem still exists, go to Test 12.
	12. Use MSD to perform *Injector Solenoid Test*. Determine if all injector solenoids are being energized by the ECM. If not, perform *Injector Solenoid Circuit Test* (WP 0013 00).	If problem still exists, go to Test 13.
	NOTE **It is not necessary to swap the injector trim files for this temporary exchange of two injectors. Injectors must be properly installed and adjusted for this test.**	
	13. Use MSD to perform *Cylinder Cutout Test*. Identify any misfiring cylinders. Temporarily swap suspect injector from the misfiring cylinder with an injector from a cylinder that is not misfiring (WP 0187 00). Repeat the cylinder cutout test to determine whether the misfire stays with the suspect injector or with the original cylinder.	1. If misfire problem stays with the suspect injector, replace the suspect injector and install the new trim file for it (WP 0187 00). The other good injector that was moved must first be returned to its original position or its trim file must be moved to its new location. 2. If cylinder cutout test indicates that misfire continues to be in same cylinder, injector is not the problem. Return the injectors to their original position or move the trim files to the new location. Investigate other possible causes of misfire for the problem cylinder, check valve lash (WP 0179 00). If problem still exists, go to Test 14.

Table 1. Engine Troubleshooting - Continued.

MALFUNCTION	TEST OR INSPECTION	CORRECTIVE ACTION
3. Engine Misfires, Runs Rough, or is Unstable - Continued.	14. Remove valve cover (WP 0024 00) and oil pan (WP 0181 00). Check for worn cam lobes, lifters, or push rods for the misfiring cylinder. Check for mechanical problems.	Make any necessary repairs.
4. Mechanical Noise (Knock) in Engine.	1. Isolate source of noise and remove and inspect suspect engine driven accessories.	1. If damaged, replace engine accessories. 2. If problem still exists, go to Test 2.
	2. Remove valve cover (WP 0024 00), check valve lash (WP 0179 00), and look for obvious signs of mechanical problems.	1. Replace any faulty valve train parts (WP 0180 00) or replace cylinder head (WP 0172 00). 2. Set valve lash if necessary (WP 0179 00). 3. If problem still exists, go to Test 3.
	3. Remove cylinder head (WP 0172 00) and visually check for obvious signs of damage to cylinder block and head. Including camshaft and valve mechanism, cylinders, valves, head, and block.	1. Repair as necessary. 2. If problem still exists, go to Test 4.
	4. Remove oil pan (WP 0181 00), inspect for internal problems with crankshaft, bearings, cylinders, pistons, and connecting rods etc.	If damaged replace engine (WP 0171 00).
5. Noise Coming from Cylinder.	1. Connect MSD (WP 0005 00) and check for active diagnostic codes.	1. Troubleshoot any active codes before continuing with this procedure. Refer to WP 0009 00. 2. If problem still exists, go to Test 2.
	2. Perform *Fuel Quality Test* (WP 0011 00).	1. Remove unsatisfactory fuel from fuel tank. Install new fuel filters (WP 0035 00 and WP 0036 00). Use proper grade of clean fuel in fuel tank (WP 0020 00). 2. If problem still exists, go to Test 3.
	3. Perform *Electrical Power Supply Circuit Test* (WP 0013 00).	If problem still exists, go to Test 4.
	4. Use MSD to perform *Injector Solenoid Test to* determine if all injector solenoids are being energized by the ECM. If not, perform *Injector Solenoid Circuit Test* (WP 0013 00).	1. If not all solenoid are being energized, perform *Injector Solenoid Circuit Test* (WP 0013 00). 2. If problem still exists, go to Test 5.

Table 1. Engine Troubleshooting - Continued.

MALFUNCTION	TEST OR INSPECTION	CORRECTIVE ACTION
5. Noise Coming from Cylinder - Continued.	**NOTE** **It is not necessary to swap the injector trim files for this temporary exchange of two injectors. Injectors must be properly installed and adjusted for this test.**	
	5. Use MSD to perform *Cylinder Cutout Test*. Identify any misfiring cylinders. Temporarily swap suspect injector from the misfiring cylinder with an injector from a cylinder that is not misfiring (WP 0187 00). Repeat the cylinder cutout test to determine whether the misfire stays with the suspect injector or with the original cylinder.	1. If misfire problem stays with the suspect injector, replace the suspect injector and install new trim file for it (WP 0187 00). The other good injector that was moved must first be returned to its original position or its trim file must be moved to its new location. 2. If cylinder cutout test indicates the misfire continues to be in the same cylinder, the suspect injector is not the problem. Return the injectors to their original position or move the trim files to the new location. Investigate other possible causes of misfire for the problem cylinder, check valve lash (WP 0179 00). 3. If problem still exists, go to Test 6.
	6. Remove valve cover (WP 0024 00) and oil pan (WP 0181 00). Check for worn cam lobes, lifters, or push rods for the misfiring cylinder. Check for mechanical problems.	Make any necessary repairs.
6. Engine Vibration.	1. Check vibration damper for damage (WP 0173 00).	1. Replace worn or damaged parts and tighten any loose bolts. 2. If problem still exists, go to Test 2.
	2. Inspect engine mounts and brackets (WP 0171 00) while engine is run through speed range.	1. Tighten loose bolts. If necessary, replace mounts (WP 0171 00). 2. If problem still exists, go to Test 3.
	3. Check alignment and balance of engine driven components.	Replace any suspect components.
7. Excessive Valve Lash.	1. Remove valve cover (WP 0024 00) and check lubrication in valve compartment. Ensure there is adequate engine oil flow in valve compartment. Passages for engine oil must be clean.	1. If oil flow is restricted, unblock passages to valve train. 2. If problem still exists, go to Test 2.
	2. Clean valve lash (WP 0179 00).	Adjust valve lash as necessary.
	3. Remove valve cover (WP 0024 00) and inspect valve train and cylinder head for obvious signs of damage.	If damaged, replace rocker arm shaft (WP 0180 00) or cylinder head (WP 0172 00).

Table 1. Engine Troubleshooting - Continued.

MALFUNCTION	TEST OR INSPECTION	CORRECTIVE ACTION
8. Excessive Fuel Consumption.	**NOTE** **Engine operation may also be affected by environmental conditions such as wind or snow.**	
	1. Connect MSD (WP 0005 00) and check "Current Totals" for excessive idle time and/or high load factor.	1. Each condition would indicate poor operating habits. 2. If problem still exists, go to Test 2.
	2. Check fuel pressure after the fuel filter. Refer to *Fuel System Pressure Test* (WP 0011 00).	1. If the fuel pressure is low, replace fuel filters (WP 0035 00 and WP 0036 00). If fuel pressure is still low, check these items: fuel transfer pump and coupling (WP 0011 00). 2. If problem still exists, go to Test 3.
	3. Perform *Fuel Quality Test* (WP 0011 00).	1. Remove unsatisfactory fuel from fuel tank. Install new fuel filters (WP 0035 00 and WP 0036 00). Use proper grade of clean fuel in fuel tank (WP 0020 00). 2. If problem still exists, go to Test 4.
	4. Check calibration of speed/timing sensors (WP 0010 00).	1. If faulty, recalibrate or replace speed/timing sensors (WP 0076 00 and WP 0078 00). 2. If problem still exists, go to Test 5.
	5. Check installation and perform *Electrical Connectors Inspection* (WP 0022 00) on ECM connectors (WP 0057 00) and fuel injector connectors (WP 0187 00).	If problem still exists, go to Test 6.
	6. Use MSD to perform *Injector Solenoid Test*. Determine if all injector solenoids are being energized by the ECM. If not, perform *Injector Solenoid Circuit Test* (WP 0013 00).	If problem still exists, go to Test 7.

Table 1. Engine Troubleshooting - Continued.

MALFUNCTION	TEST OR INSPECTION	CORRECTIVE ACTION
8. Excessive Fuel Consumption - Continued.	**NOTE** **It is not necessary to swap the injector trim files for this temporary exchange of two injectors. Injectors must be properly installed and adjusted for this test.**	
	7. Use MSD to perform Cylinder Cutout Test. Identify any misfiring cylinders. Temporarily swap suspect injector from the misfiring cylinder with an injector from a cylinder that is not misfiring (WP 0187 00).	1. If misfire problem stays with the suspect injector, replace the suspect injector and install new trim file for it (WP 0187 00).The other good injector that was moved must first be returned to its original position or its trim file must be moved to its new location. 2. If the cylinder cutout test indicates the misfire continues to be in the same cylinder, the suspect injector is not the problem. Return the injectors to their original position or move the trim files to the new location. Investigate other possible causes of misfire for the problem cylinder, check valve lash (WP 0179 00). 3. If problem still exists, go to Test 8.
	8. Remove valve cover (WP 0024 00) and oil pan (WP 0181 00). Check for worn cam lobes, lifters, or push rods for the misfiring cylinder. Check for mechanical problems.	1. Make any necessary repairs. 2. If problem still exists, go to Test 9.
	9. Inspect air filter for restriction.	1. If needed, clean or replace air cleaner elements (WP 0030 00). 2. If problem still exists, go to Test 10.
	10. Check the air intake and exhaust system for restrictions and/or leaks (TM 5-3805-291-10).	1. Remove any blockages or restrictions and replace damaged air intake and exhaust system lines or hoses (WP 0031 00 and WP 0040 00). 2. If problem still exists, go to Test 11.
	11. Check all accessory equipment for problems that may create excessive load on the engine.	Repair or replace any damaged components.
9. Excessive Engine Oil Consumption.	1. Check engine compartment for leaks.	1. Repair any leaks that are identified. 2. If problem still exists, go to Test 2.

Table 1. Engine Troubleshooting - Continued.

MALFUNCTION	TEST OR INSPECTION	CORRECTIVE ACTION
9. Excessive Engine Oil Consumption - Continued.	2. Check for overfilling of crankcase. (a) Park machine on known level surface (TM 5-3805-291-10). (b) Drain engine oil and install new oil filter (WP 0025 00). Add correct amount of oil (TM 5-3805-291-10). Run engine for 10 minutes. Shut off engine (TM 5-3805-291-10). (c) Wait at least 30 minutes to allow oil to drain into oil pan. (d) Check oil level on engine dipstick (TM 5-3805-291-10). Oil level should be at full mark or full range.	1. If oil level reads below the full mark, then dipstick calibration is incorrect, resulting in overfilling engine to reach the full mark. Re-mark the dipstick full mark at the actual oil level. 2. If problem still exists, go to Test 3.
	3. Remove air inlet, outlet, and exhaust tubes and inspect turbocharger, drain, wastegate, and mounting bolts for damage (WP 0032 00).	1. If necessary, replace turbocharger, tighten bolts, or unlock restricted drain. 2. If problem still exists, go to Test 4.
	NOTE **Do not add oil until oil level reaches add mark or level gage.**	
	4. Track oil consumption over a period of 200 hours to confirm that oil consumption is excessive. Use oil consumption daily log located at the end of this work package. This does not include the amount of oil added during an oil change. Oil consumption is considered excessive if the average oil consumed is more than 20 quarts per 200 hours operation.	If oil consumption is excessive, it can be caused by leaking turbocharger seal, allowing turbo boost to leak into turbo oil drain to crankcase, cylinder head cracked or core plug leaking manifold pressure (boost pressure) into crankcase; or worn or damaged piston rings or scored cylinders. Repair as needed.

Table 1. Engine Troubleshooting - Continued.

MALFUNCTION	TEST OR INSPECTION	CORRECTIVE ACTION
10. Low Engine Oil Pressure.	**CAUTION** **Do not operate engine with low oil pressure. Engine damage will result. If measured oil pressure is low, discontinue engine operation until problem is corrected. Failure to comply with this caution may result in damage to equipment.**	
	1. Inspect engine oil level (TM 5-3805-291-10).	If necessary, add oil (TM 5-3805-291-10).
	2. Perform *Engine Oil Pressure Test* (WP 0010 00).	1. Change engine oil and filters (WP 0025 00). 2. If problem still exists, go to Test 3.
	3. Check for presence of fuel in oil. Refer to Malfunction 26, *Fuel Dilution of Oil*.	1. Change engine oil and filters (WP 0025 00). 2. If problem still exists, go to Test 4.
	4. Check engine oil cooler for obstructions (WP 0027 00).	Clean or replace engine oil cooler (WP 0027 00).
	5. Inspect engine oil bypass valves (WP 0028 00).	1. Replace or clean engine oil bypass valves as necessary (WP 0028 00). 2. If problem still exists, go to Test 6.
	6. Inspect engine oil pump for excessive wear and check oil suction tube for build-up that restricts oil flow, cracks, or a damaged O-ring seal (WP 0182 00).	1. Remove any material from oil suction tube. If damaged, replace oil pump (WP 0182 00). 2. If problem still exists, replace engine (WP 0171 00).
11. Excessive Black Smoke.	1. Check restriction indicator on air cleaner (TM 5-3805-291-10).	1. If restriction is indicated, clean or replace air cleaner elements (WP 0030 00), remove any blockages or restrictions, and replace damaged air inlet lines or hoses (WP 0031 00). 2. If problem still exists, go to Test 2.
	2. Perform *Fuel Quality Test* (WP 0011 00).	If problem still exists, go to Test 3.
	3. Check atmospheric pressure sensor for dirt/debris and correct reading (WP 0013 00).	1. Clean atmospheric pressure sensor. Correct reading is between 7.25 to 145 psi (50 to 100 kPa). If faulty, replace atmospheric pressure sensor (WP 0073 00). 2. If problem still exists, go to Test 4.
	4. Inspect turbocharger, drain, wastegate, and mounting bolts (WP 0032 00).	1. If necessary, replace turbocharger (WP 0032 00), tighten bolts, or unblock restricted drain. 2. If problem still exists, go to Test 5.

Table 1. Engine Troubleshooting - Continued.

MALFUNCTION	TEST OR INSPECTION	CORRECTIVE ACTION
11. Excessive Black Smoke - Continued.	5. Check and adjust valve lash (WP 0179 00).	If problem still exists, go to Test 6.
	6. Check MSD (WP 0005 00) and verify correct flash file is installed.	1. If necessary, re-flash ECM (WP 0057 00). 2. If problem still exists, go to Test 7.
	NOTE **A problem with the "FRC Fuel Limit" will only cause black smoke during acceleration. A problem with the "FRC Fuel Limit" will not cause black smoke during steady state operation.**	
	7. Use MSD to monitor the status of "Fuel Position" and "Rated Fuel Limit" while the engine is operating under full load.	1. If "Fuel Position" equals "Rated Fuel Limit" and "Fuel Position" is less than "FRC Fuel Limit", the Electronic Control Module (ECM) is providing correct control. Go to Test 10. 2. If "Fuel Position" does not equal "Rated Fuel Limit" and "Fuel Position" is greater than "FRC Fuel Limit", go to Test 8.
	8. Verify that there are no active diagnostic codes for the intake manifold pressure sensor.	1. Troubleshoot any active diagnostic codes. 2. If problem still exists, go to Test 9.
	9. While engine is not running, monitor the status of "Intake Manifold Pressure" and "Atmospheric Pressure"on ET.	1. If "Intake Manifold Pressure" is not 0 psi (0 kPa) and "Atmosperic Pressure" is not between 7.25 psi (50 kPa) and 14.5 psi (100 kPa), replace the suspect sensor and verify sensor reading is correct (WP 0073 00 and WP 0084 00). 2. If "Intake Manifold Pressure" is 0 psi (0 kPa) and "Atmosperic Pressure" is between 7.25 psi (50 kPa) and 14.5 psi (100 kPa), go to Test 10.
	NOTE **A problem with the "FRC Fuel Limit" will only cause black smoke during acceleration, not during steady state operation.**	
	10. Use MSD to verify any active diagnostic codes for manifold pressure sensor.	1. If inlet pressure sensor codes are active, go to Test 11. 2. If inlet pressure sensor codes are not active, go to Test 12.
	11. Check atmospheric pressure sensor for dirt and debris.	1. Remove any debris. 2. If problem still exists, go to Test 12.

Table 1. Engine Troubleshooting - Continued.

MALFUNCTION	TEST OR INSPECTION	CORRECTIVE ACTION
11. Excessive Black Smoke - Continued.	12. Check calibration of speed/timing sensors (WP 0013 00).	1. If faulty, recalibrate or replace speed/timing sensors (WP 0076 00 and WP 0078 00). 2. If problem still exists, go to Test 13.
	13. Verify proper orientation of crankshaft and camshaft gears (WP 0186 00).	If problem still exists, replace engine (WP 0171 00).
12. Excessive White Smoke.	**NOTE** **Some white smoke may be present during cold start-up conditions when engine is operating normally. If white smoke persists, there may be a problem.**	
	1. Check for fuel supply lines that are restricted (WP 0034 00).	1. Replace or repair any restricted fuel lines. 2. If problem still exists, go to Test 2.
	2. Perform *Fuel System Pressure Test* (WP 0011 00).	If problem still exists, go to Test 3.
	3. If temperature is below 32°F (0°C), check for solidified fuel (wax) in tank.	1. If solidified fuel is present, drain and fill tank (WP 0033 00). 2. If problem still exists, go to Test 4.
	4. Perform *Fuel Quality Test* (WP 0011 00).	If problem still exists, go to Test 5.
	5. Check calibration of speed/timing sensors (WP 0013 00).	If faulty, recalibrate or replace speed/timing sensors (WP 0076 00 and WP 0078 00).
	6. Check for internal coolant leaks (WP 0010 00).	If problem still exists, go to Test 7.
	7. Connect MSD (WP 0005 00) and verify correct flash file is installed.	1. If necessary, re-flash ECM (WP 0057 00). 2. If problem still exists, go to Test 8.
	8. Use MSD to check coolant temperature sensor.	1. If faulty, replace coolant temperature sensor (WP 0077 00). 2. If problem still exists, go to Test 9.
	9. Use MSD to perform *Cylinder Cutout Test*.	1. Check and adjust valve lash (WP 0179 00). 2. If problem still exists, go to Test 10.
	10. Verify proper orientation of crankshaft and camshaft gears (WP 0186 00).	1. Re-time gears, if necessary (WP 0186 00). 2. If problem still exists, replace engine (WP 0171 00).

Table 1. Engine Troubleshooting - Continued.

MALFUNCTION	TEST OR INSPECTION	CORRECTIVE ACTION
13. Elevated Idle.	Refer to WP 0009 00, *E441*.	
14. Engine Stalls at Low RPM.	**CAUTION** **Do not crank engine continuously for more than 30 seconds. Allow starting motor to cool for two minutes before cranking engine again. Failure to comply with this caution may result in damage to equipment.**	
	1. Visually check fuel tank for fuel (fuel tank may be empty).	1. Add fuel if necessary (TM 5-3805-291-10). 2. If problem still exists, go to Test 2.
	2. Ensure all fuel lines are tight, properly secured, and free of restrictions.	1. Replace, tighten, secure, and clean fuel lines as necessary (WP 0034 00). 2. If problem still exists, go to Test 3.
	3. Check fuel tank for foreign objects.	1. Remove any foreign objects. 2. If problem still exists, go to Test 4.
	4. If temperature is below 32°F (0°C), check for solenoid fuel (wax) in tank.	1. If solidified fuel is present, drain and fill tank (WP 0033 00). 2. If problem still exists, go to Test 5.
	5. Check to see if any of the following procedures have been performed: replacement of fuel filters, service on low pressure fuel supply circuit, or replacement of fuel injectors.	1. If procedures are performed, prime fuel system (TM 5-3805-291-10). 2. If problem still exists, go to Test 6.
	6. Check all accessory equipment for problems that may create excessive load on engine.	1. Repair or replace any damaged components. 2. If problem still exists, go to Test 7.
	7. Perform *Fuel System Pressure Test* (WP 0011 00).	If problem still exists, go to Test 8.
	8. Connect MSD (WP 0005 00) and perform *Injector Solenoid Test* to confirm that all injector solenoids are being energized by the ECM and correct as necessary.	1. If not all solenoids are being energized, go to Test 9. 2. If all solenoids are being energized, go to Test 10.
	9. Perform *Injector Solenoid Circuit Test* (WP 0013 00).	If problem still exists, go to Test 10.
	NOTE **It is not necessary to swap the injector trim files for this temporary exchange of two injectors. Injectors must be properly installed and adjusted for this test.**	

Table 1. Engine Troubleshooting - Continued.

MALFUNCTION	TEST OR INSPECTION	CORRECTIVE ACTION
14. Engine Stalls at Low RPM - Continued.	10. Use MSD to perform *Cylinder Cutout Test*. Identify any misfiring cylinders. Temporarily swap suspect injector from the misfiring cylinder with an injector from a cylinder that is not misfiring (WP 0187 00). Repeat the cylinder cutout test to determine whether the misfire stays with the suspect injector or with the original cylinder.	1. If misfire problem stays with the suspect injector, replace the suspect injector and install new trim file for it (WP 0187 00). The other good injector that was moved must first be returned to its original position or its trim file must be moved to its new location. 2. If the cylinder cutout test indicates the misfire continues to be in the same cylinder, the suspect injector is not the problem. Return the injectors to their original position or move the trim files to the new location. Investigate other possible causes of misfire for the problem cylinder, check valve lash (WP 0179 00). 3. If problem still exists, go to Test 11.
	11. Remove valve cover (WP 0024 00) and oil pan (WP 0181 00). Check for worn cam lobes, lifters, or push rods for the misfiring cylinder. Check for mechanical problems.	Make any necessary repairs.
	12. Perform *Electrical Connectors Inspection* (WP 0022 00).	Confirm good connections at ECM and replace any wiring harnesses (WP 0195 00 thru WP 0201 00).
15. Poor Acceleration or Response.	**CAUTION** **Do not crank engine continuously for more than 30 seconds. Allow starting motor to cool for two minutes before cranking engine again. Failure to comply with this caution may result in damage to equipment.** **NOTE** **If problem occurs under certain conditions, perform tests under those conditions. Diagnosing under normal conditions could provide misleading results.**	
	1. Connect MSD (WP 0005 00) and check for active diagnostic codes.	1. Troubleshoot any active codes before continuing with this procedure. Refer to WP 0009 00. 2. If problem still exists, go to Test 2.
	2. Visually check fuel tank for fuel (fuel tank may be empty).	1. Add fuel if necessary (TM 5-3805-291-10). 2. If problem still exists, go to Test 3.

Table 1. Engine Troubleshooting - Continued.

MALFUNCTION	TEST OR INSPECTION	CORRECTIVE ACTION
15. Poor Acceleration or Response - Continued.	3. Ensure all fuel lines are tight, properly secured, and free of restrictions.	1. Replace, tighten, secure, or clean fuel lines, as necessary (WP 0034 00). 2. If problem still exists, go to Test 4.
	4. Check fuel tank for foreign objects.	1. Remove any foreign objects. 2. If problem still exists, go to Test 5.
	5. Check to see if any of the following procedures have been performed: replacement of fuel filters, service on low pressure fuel supply circuit, or replacement of fuel injectors.	1. If procedures have been performed, prime fuel system (TM 5-3805-291-10). 2. If problem still exists, go to Test 6.
	6. Perform *Fuel Quality Test* (WP 0011 00).	If problem still exists, go to Test 7.
	7. Perform *Air in Fuel System Test* (WP 0011 00).	If problem still exists, go to Test 8.
	8. Perform *Fuel System Pressure Test* (WP 0011 00).	If problem still exists, go to Test 9.
	9. If temperature is below 32°F (0°C), check for solenoid fuel (wax) in tank.	1. If solidified fuel is present, drain and fill tank (WP 0033 00). 2. If problem still exists, go to Test 10.
	10. Observe the check engine lamp. Check air filter restriction indicator.	1. If restriction is indicated, clean or replace air cleaner elements (WP 0030 00). 2. If problem still exists, go to Test 11.
	11. Check the air intake and exhaust system for restriction and/or leaks (WP 0031 00 and WP 0040 00).	1. Remove any blockage or restrictions and replace damaged air inlet and exhaust system lines or hoses. 2. If problem still exists, go to Test 12.
	12. Perform *Electrical Power Supply Circuit Test* (WP 0013 00).	If problem still exists, go to Test 13.
	13. Use MSD (WP 0005 00) to verify correct flash file is installed.	1. If necessary, re-flash ECM (WP 0057 00). 2. If problem still exists, go to Test 14.
	14. Use MSD to monitor the status of "Fuel Position", "Rated Fuel Limit", and "FRC Fuel Limit" on ET while the engine is operating under full load. These parameters should reflect the following information: "Fuel Position" equals "Rated Fuel Limit" and "Fuel Position" is less than "FRC Fuel Limit."	1. If "Fuel Position" equals "Rated Fuel Limit" and "Fuel Position" is less than "FRC Fuel Limit", the ECM is operating correctly. 2. If problem still exists, go to Test 15.

Table 1. Engine Troubleshooting - Continued.

MALFUNCTION	TEST OR INSPECTION	CORRECTIVE ACTION
15. Poor Acceleration or Response - Continued.	15. Use MSD to monitor the status of "Intake Manifold Pressure" and "Atmospheric Pressure" for normal operation.	1. When the engine is not running, the correct intake manifold pressure is 0 psi (0 kPa). 2. If problem still exists, go to Test 16.
	16. Use MSD to monitor the status for "Throttle Position." Verify the status for "Throttle Position" is stable and that the engine is able to reach high idle speed.	1. If signal is erratic, perform *Throttle Position Sensor Circuit Test* (WP 0013 00). 2. If problem still exists, go to Test 17.
	17. Use MSD to perform *Injector Solenoid Test.* Determine if all injector solenoids are being energized by the ECM and correct as necessary. If not, perform *Injector Solenoid Circuit Test* (WP 0013 00).	If problem still exists, go to Test 18.
	NOTE **It is not necessary to swap the injector trim files for this temporary exchange of two injectors. Injectors must be properly installed and adjusted for this test.**	
	18. Use MSD to perform *Cylinder Cutout Test*. Identify any misfiring cylinders. Temporarily swap suspect injector from the misfiring cylinder with an injector from a cylinder that is not misfiring (WP 0187 00). Repeat the cylinder cutout test to determine whether the misfire stays with the suspect injector or with the original cylinder.	1. If misfire problem stays with the suspect injector, replace the suspect injector and install new trim file for it (WP 0187 00). The other good injector that was moved must first be returned to its original position or its trim file must be moved to its new location. 2. If the cylinder cutout test indicates the misfire continues to be in the same cylinder, the suspect injector is not the problem. Return the injectors to their original position or move the trim files to the new location. Investigate other possible causes of misfire for the problem cylinder, check valve lash (WP 0179 00). 3. If problem still exists, go to Test 19.
	19. Remove valve cover (WP 0024 00) and oil pan (WP 0181 00). Check for worn cam lobes, lifters, or push rods for the misfiring cylinder. Check for mechanical problems.	Make any necessary repairs.

Table 1. Engine Troubleshooting - Continued.

MALFUNCTION	TEST OR INSPECTION	CORRECTIVE ACTION
16. Low Power/Poor or No Response to Throttle.	**CAUTION** **Do not crank engine continuously for more than 30 seconds. Allow starting motor to cool for two minutes before cranking engine again. Failure to comply with this caution may result in damage to equipment.** **NOTE** **If problem occurs under certain conditions, perform tests under those conditions. Diagnosing under normal conditions could provide misleading results.**	
	1. Connect MSD (WP 0005 00) and check for active diagnostic codes.	1. Troubleshoot any active codes before continuing with this procedure. Refer to WP 0009 00. 2. If problem still exists, go to Test 2.
	2. Check for fuel supply lines that are restricted (WP 0034 00).	1. Replace or repair any restricted fuel lines. 2. If problem still exists, go to Test 3.
	3. Check fuel tank for foreign objects.	1. Remove any foreign objects. 2. If problem still exists, go to Test 4.
	4. Perform *Fuel System Pressure Test* (WP 0011 00).	If problem still exists, go to Test 5.
	5. Check to see if any of the following procedures have been performed: replacement of fuel filters, service on low pressure fuel supply circuit, or replacement of fuel injectors.	1. If procedures have been performed, prime fuel system (TM 5-3805-291-10). 2. If problem still exists, go to Test 6.
	6. Observe the check engine lamp. Check for an air filter restriction indicator.	1. If restriction is indicated, clean or replace air cleaner elements (WP 0030 00). 2. If problem still exists, go to Test 7.
	7. Check the air intake and exhaust system for restrictions and/or leaks (WP 0031 00 and WP 0040 00).	1. Remove any blockage or restrictions and replace damaged air inlet and exhaust system lines or hoses. 2. If problem still exists, go to Test 8.
	8. Perform *Electrical Connectors Inspection* (WP 0022 00).	1. Clean any corroded or dirty connections, tighten any loose connections, and replace any faulty wiring harnesses (WP 0195 00 thru WP 0201 00). 2. If problem still exists, go to Test 9.

Table 1. Engine Troubleshooting - Continued.

MALFUNCTION	TEST OR INSPECTION	CORRECTIVE ACTION
16. Low Power/Poor or No Response to Throttle - Continued.	9. Use MSD to verify coolant temperature reading is correct.	1. If faulty, replace coolant temperature sensor (WP 0077 00). 2. If problem still exists, go to Test 10.
	10. Use MSD to monitor the status for "Throttle Position." Verify the status for "Throttle Position" is stable and that the engine is able to reach high idle speed.	1. If signal is erratic, perform *Throttle Position Sensor Circuit Test* (WP 0013 00). 2. If problem still exists, go to Test 11.
	11. Use MSD to perform *Injector Solenoid Test* to determine if all injector solenoids are being energized by the ECM and correct as necessary. If not, perform *Injector Solenoid Circuit Test* (WP 0013 00).	If problem still exists, go to Test 12.
	NOTE **It is not necessary to swap the injector trim files for this temporary exchange of two injectors. Injectors must be properly installed and adjusted for this test.**	
	12. Use MSD to perform *Cylinder Cutout Test*. Identify any misfiring cylinders. Temporarily swap suspect injector from the misfiring cylinder with an injector from a cylinder that is not misfiring (WP 0187 00). Repeat the cylinder cutout test to determine whether the misfire stays with the suspect injector or with the original cylinder.	1. If misfire problem stays with the suspect injector, replace the suspect injector and install new trim file for it (WP 0187 00). The other good injector that was moved must be first be returned to its original position or its trim file must be moved to its new location. 2. If the cylinder cutout test indicates the misfire continues be in the same cylinder, the suspect injector is not the problem. Return the injectors to their original position or move the trim files to the new location. Investigate other possible causes of misfire for the problem cylinder, check valve lash (WP 0179 00). 3. If problem still exists, go to Test 13.
	13. Remove valve cover (WP 0024 00) and oil pan (WP 0181 00). Check for worn cam lobes, lifters, or push rods for the misfiring cylinder. Check for mechanical problems.	1. Make any necessary repairs. 2. If problem still exists, go to Test 14.

Table 1. Engine Troubleshooting - Continued.

MALFUNCTION	TEST OR INSPECTION	CORRECTIVE ACTION
16. Low Power/Poor or No Response to Throttle - Continued.	14. Use MSD (WP 0005 00) to monitor the status of "Fuel Position", "Rated Fuel Limit", and "FRC Fuel Limit" on ET while the engine is operating under full load. These parameters should reflect the following information: "Fuel Position" equals "Rated Fuel Limit" and "Fuel Position" is less than "FRC Fuel Limit."	1. If "Fuel Position" equals "Rated Fuel Limit" and "Fuel Position" is less than "FRC Fuel Limit", the ECM is operating correctly. 2. If problem still exists, go to Test 15.
	15. Use MSD to monitor the status of "Intake Manifold Pressure" and "Atmospheric Pressure" for normal operation. When the engine is not running, the correct intake manifold pressure is 0 psi (0 kPa).	1. If readings do not agree, replace faulty sensor (WP 0073 00 or WP 0084 00). 2. If problem still exists, go to Test 16.
	16. If ECM has been replaced, use MSD to compare values on *Engine Information Film* to these parameters: FRC offset, Full Load Setting (FLS), and Full Torque Setting (FTS).	If values are incorrect, reset using ET.
17. Intermittent Low Power or Power Cutout.	**CAUTION** **Do not crank engine continuously for more than 30 seconds. Allow starting motor to cool for two minutes before cranking engine again. Failure to comply with this caution may result in damage to equipment.** **NOTE** • **Use this procedure only if engine does not shut down completely.** • **If problem occurs under certain conditions, perform tests under those conditions. Diagnosing under normal conditions could provide misleading results.**	
	1. Connect MSD (WP 0005 00) and check for active diagnostic codes.	1. Troubleshoot any active codes before continuing with this procedure. Refer to WP 0009 00. 2. If problem still exists, go to Test 2.
	2. Ensure all fuel lines are tight, properly secured, and free of restrictions.	1. Replace, tighten, secure, or clean fuel lines, as necessary (WP 0034 00). 2. If problem still exists, go to Test 3.
	3. Check fuel tank for foreign objects.	1. Remove any foreign objects. 2. If problem still exists, go to Test 4.

Table 1. Engine Troubleshooting - Continued.

MALFUNCTION	TEST OR INSPECTION	CORRECTIVE ACTION
17. Intermittent Low Power or Power Cutout - Continued.	4. Prime fuel system if any of these procedures have been performed: replacement of fuel filters, service on low pressure fuel supply circuit, or replacement of fuel injectors.	1. Prime fuel system (TM 5-3805-291-10). 2. If problem still exists, go to Test 5.
	5. Perform *Fuel System Pressure Test* (WP 0011 00).	If problem still exists, go to Test 6.
	6. Use MSD to monitor the status for "Throttle Position." Verify the status for "Throttle Position" is stable and that the engine is able to reach high idle speed.	1. If signal is erratic, perform *Throttle Position Sensor Circuit Test* (WP 0013 00). 2. If problem still exists, go to Test 7.
	7. Perform *Electrical Connectors Inspection* (WP 0022 00).	Clean any corroded or dirty connections, tighten any loose connections, and replace any faulty wiring harnesses (WP 0195 00 thru WP 0201 00).
18. Intermittent Engine Shutdown.	**CAUTION** **Do not crank engine continuously for more than 30 seconds. Allow starting motor to cool for two minutes before cranking engine again. Failure to comply with this caution may result in damage to equipment.** **NOTE** **Use this procedure only if engine does not shut down completely and must be restarted.**	
	1. Connect MSD (WP 0005 00) and check for active diagnostic codes.	1. Troubleshoot any active codes before continuing with this procedure. Refer to WP 0009 00. 2. If problem still exists, go to Test 2.
	2. Visually check fuel tank for fuel (fuel tank may be empty).	1. Add fuel if necessary (TM 5-3805-291-10). 2. If problem still exists, go to Test 3.
	3. Ensure all fuel lines are tight, properly secured, and free of restrictions.	1. Replace, tighten, secure, or clean fuel lines, as necessary (WP 0034 00). 2. If problem still exists, go to Test 4.
	4. Check fuel tank for foreign objects.	1. Remove any foreign objects. 2. If problem still exists, go to Test 5.
	5. Check to see if any of the following procedures have been performed: replacement of fuel filters, service on low pressure fuel supply circuit, or replacement of fuel injectors.	1. If procedures have been performed, prime fuel system (TM 5-3805-291-10). 2. If problem still exists, go to Test 6.

Table 1. Engine Troubleshooting - Continued.

MALFUNCTION	TEST OR INSPECTION	CORRECTIVE ACTION
18. Intermittent Engine Shutdown - Continued.	6. Perform *Air in Fuel System Test* (WP 0011 00).	If problem still exists, go to Test 7.
	7. Perform *Fuel Quality Test* (WP 0011 00).	If problem still exists, go to Test 8.
	8. Perform *Fuel System Pressure Test* (WP 0011 00).	If problem still exists, go to Test 9.
	9. Check J1/P1 and J2/P2 connectors for the ECMs (WP 0057 00). Refer to *Electrical Connector Inspection* (WP 0022 00).	1. If necessary, reconnect J1/P1 and J2/P2 connectors. 2. If problem still exists, go to Test 10.
	10. Perform *Electrical Power Supply Circuit Test* (WP 0013 00).	If problem still exists, go to Test 11.
	11. Check state of all circuit breakers (TM 5-3805-291-10).	Reset circuit breakers if tripped.
19. Coolant Temperature is Too High.	 **WARNING**  • **DO NOT service cooling system unless engine has been allowed to cool down. This is a pressurized cooling system and escaping steam or hot coolant may result in serious burns.** • **DO NOT remove radiator cap when engine is hot. Allow engine to cool down. Loosen cap to first stop and let any pressure out of cooling system, then remove cap. Failure to follow this warning may result in serious burns.** • **Wear effective eye, hand, and skin protection when handling coolants. Failure to follow this warning may result in injury to personnel.**	
	1. Inspect coolant level (TM 5-3805-291-10).	1. If necessary, add coolant (TM 5-3805-291-10). 2. If problem still exists, go to Test 2.
	2. Check radiator fins for dirt, debris, and/or damage.	1. Remove any dirt and/or debris and straighten any bent fins or replace radiator (WP 0191 00). 2. If problem still exists, go to Test 3.
	3. Check mix of antifreeze and water (TM 5-3805-291-10).	1. If incorrect, drain and refill with correct mixture (WP 0041 00). 2. If problem still exists, go to Test 4.

Table 1. Engine Troubleshooting - Continued.

MALFUNCTION	TEST OR INSPECTION	CORRECTIVE ACTION
19. Coolant Temperature is Too High - Continued.	4. Visually inspect cooling system for collapsed hoses and/or other restrictions.	1. If damaged, replace hoses (WP 0043 00). Clean and flush radiator (WP 0041 00). 2. If problem still exists, go to Test 5.
	5. Check cooling system for leaks by performing system pressure test. Refer to *Testing Radiator and Cooling System for Leaks (Pressure Test)* (WP 0012 00).	1. Repair any leaks immediately. 2. If problem still exists, go to Test 6.
	6. Check that cooling system fan is operating at proper speed. Refer to *Hydraulic Fan Speed Test and Adjustment* (WP 0015 00).	1. If faulty, replace fan (WP 0192 00). 2. If problem still exists, go to Test 7.
	7. Replace thermostat (WP 0044 00).	If problem still exists, go to Test 8.
	8. Remove water pump and inspect vanes of water pump (WP 0045 00).	1. If vanes are damaged and/or eroded, replace water pump (WP 0045 00). 2. If problem still exists, go to Test 9.
	9. With engine OFF and completely cool, remove pressure cap for coolant system. Start engine (TM 5-3805-291-10) and inspect coolant for presence of bubbles.	If bubbles are present in coolant, combustion gases may be entering cooling system. Replace cylinder head gasket (WP 0172 00).
20. Exhaust Temperature is Too High.	**NOTE** **ECM calculates exhaust temperatures, trips the E194 code if calculated temperature is too high for more than 10 seconds.**	
	1. Connect MSD (WP 0005 00) and check for active diagnostic codes for injector solenoids.	1. Troubleshoot any active diagnostic codes first (WP 0009 00). 2. If problem still exists, go to Test 2.
	2. Use MSD to check that injector trim codes have been entered.	1. Set trim codes if necessary (WP 0187 00). 2. If problem still exists, go to Test 3.

Table 1. Engine Troubleshooting - Continued.

MALFUNCTION	TEST OR INSPECTION	CORRECTIVE ACTION
20. Exhaust Temperature is Too High - Continued.	**NOTE** **It is not necessary to swap the injector trim files for this temporary exchange of two injectors. Injectors must be properly installed and adjusted for this test.**	
	3. Use MSD to perform *Cylinder Cutout Test*. Identify any misfiring cylinders. Temporarily swap suspect injector from the misfiring cylinder with an injector from a cylinder that is not misfiring (WP 0187 00). Repeat the cylinder cutout test to determine whether the misfire stays with the suspect injector or with the original cylinder.	1. If misfire problem stays with the suspect injector, replace the suspect injector and install new trim file for it (WP 0187 00). The other good injector that was moved must first be returned to its original position or its trim file must be moved to its new location. 2. If the cylinder cutout test indicates the misfire continues to be in the same cylinder, the suspect injector is not the problem. Return the injectors to their original position or move the trim files to the new location. Investigate other possible causes of misfire for the problem cylinder, check valve lash (WP 0179 00). 3. If problem still exists, go to Test 4.
	4. Remove valve cover (WP 0024 00) and oil pan (WP 0181 00). Check for worn cam lobes, lifters, or push rods for the misfiring cylinder. Check for mechanical problems.	Make any necessary repairs.
	5. Check for leaks between exhaust manifold and turbocharger (TM 5-3805-291-10).	1. Fix any leaks (WP 0032 00). 2. If problem still exists, go to Test 6.
	6. Check air intake and exhaust system for restrictions and/or leaks (TM 5-3805-291-10).	Remove any blockages or restrictions and replace damaged air intake and exhaust system lines or hoses (WP 0031 00 and WP 0040 00).
21. Engine Oil in Cooling System.	1. Inspect water pump weep hole for blockage and seals (WP 0045 00).	1. If weep hole is blocked, replace water pump. 2. If problem still exists, go to Test 2.
	2. Check for leaks in oil cooler core (WP 0027 00).	1. If a leak is found, install a new oil cooler core and change engine oil (WP 0025 00). 2. If problem still exists, go to Test 3.
	3. Remove cylinder head (WP 0172 00) and inspect for signs of damage.	1. If damaged, replace cylinder head. 2. If problem still exists, replace engine (WP 0171 00).

Table 1. Engine Troubleshooting - Continued.

MALFUNCTION	TEST OR INSPECTION	CORRECTIVE ACTION
22. Coolant in Engine Oil.	1. Check for leaks in oil core (WP 0027 00).	1. If a leak is found, install a new oil cooler core and change engine oil (WP 0025 00). 2. If problem still exists, go to Test 2.
	2. Remove cylinder head (WP 0172 00) and inspect for signs of damage.	1. If damaged, replace cylinder head. 2. If problem still exists, replace engine (WP 0171 00).
23. Engine Oil Temperature is Too High.	1. Check for proper engine oil level and grade (TM 5-3805-291-10).	1. Add or change engine oil, if needed (WP 0025 00). 2. If problem still exists, go to Test 2.
	2. Check engine oil cooler for obstructions (WP 0010 00).	1. Clean or replace engine oil cooler (WP 0027 00). 2. If problem still exists, go to Test 3.
	3. Inspect oil bypass valves (WP 0028 00).	1. If problem still exists, replace engine oil filter base (WP 0028 00). 2. If problem still exists, refer to Malfunction 20, *Coolant Temperature is Too High*.
24. Fuel in Cooling System.	Remove valve cover (WP 0024 00) and fuel supply and return lines (WP 0034 00) from cylinder head. Cap return connector and apply 100 psi (700 kPa) maximum air pressure to fuel supply connector.	If leakage is present around fuel injectors, replace seals on injectors (WP 0187 00).
25. Fuel Dilution of Engine Oil.	1. Check for leaking injectors (WP 0011 00).	1. If faulty, replace injectors (WP 0187 00). 2. If problem still exists, go to Test 2.
	2. Check for leaking fuel lines and fittings (WP 0011 00).	If damaged, replace lines and fittings (WP 0034 00).
26. Valve Rotator or Spring Lock is Free.	Remove valve cover (WP 0024 00) and inspect valve train and cylinder head for obvious signs of damage.	1. Replace faulty valve train parts (WP 0180 00) or cylinder head (WP 0172 00). 2. If cylinder walls are damaged, replace engine (WP 0171 00).
27. Engine ECM Will Not Communicate with Other Systems or Display Modules.	1. Connect MSD to diagnostic connector (WP 0005 00).	1. If engine ECM does not communicate with ET, refer to Malfunction 29, *MSD Will Not Communicate with Engine ECM*. 2. If problem still exists, go to Test 2.

Table 1. Engine Troubleshooting - Continued.

MALFUNCTION	TEST OR INSPECTION	CORRECTIVE ACTION
27. Engine ECM Will Not Communicate with Other Systems or Display Modules - Continued.	2. Ensure these items are correctly installed and undamaged (refer to *Electrical Connectors Inspection* (WP 0022 00): (a) J1/P1 engine ECM connector (WP 0057 00). (b) J20/P20 MIC (WP 0196 00). (c) wiring to instrument cluster (WP 0054 00). (d) wiring to other control modules (WP 0056 00, WP 0063 00, and WP 0060 00).	If problem still exists, perform *CAT Data Link Circuit Test* (WP 0013 00).
28. MSD Will Not Communicate with ECM	1. Start engine (TM 5-3805-291-10).	1. If engine starts, go to Test 2. 2. If engine will not start, refer to Malfunction 2, *Engine Cranks but Will Not Start*. If engine will not crank, refer to *Electrical System* Malfunction 2, *Engine Will Not Crank*.
	2. Perform *Electrical Connector Inspection* (WP 0022 00) for J1/P1 and J2/P2 connectors for the ECM (WP 0057 00).	1. If necessary, reconnect J1/P1 and J2/P2 connectors. 2. If problem still exists, go to Test 3.
	3. Perform *Electrical Power Supply Circuit Test* (WP 0013 00).	If problem still exists, go to Test 4.
	4. Check CAT Data Link for possible problems. Refer to *CAT Data Link Circuit Test* (WP 0013 00).	If problem still exists, go to Test 5.
	5. Confirm film wear and driver files are current for communication adapter and cables are properly connected and correct cables are being used (WP 0005 00).	If problem still exists, go to Test 6.
	6. Access "Preferences" under "Utilities" menu on ET and verify correct "Communications Interface Equipment" is being used.	If problem still exists, go to Test 7.
	7. Verify correct port is selected for use by communications adapter.	If problem still exists, go to Test 8.

Table 1. Engine Troubleshooting - Continued.

MALFUNCTION	TEST OR INSPECTION	CORRECTIVE ACTION
28. MSD Will Not Communicate with ECM - Continued.	**NOTE** **Most commonly used port is "Com 1".**	
	8. Check for hardware utilizing same port as communications adapter.	1. If any equipment is configured to use same port, exit or close software programs for that equipment. 2. If problem still exists, reflash ECM (WP 0057 00).

Table 2. Electrical System Troubleshooting.

MALFUNCTION	TEST OR INSPECTION	CORRECTIVE ACTION
1. Alternator (Charging Problem).	1. Check 100 A alternator fuse (WP 0053 00).	1. If blown, replace fuse (WP 0053 00). 2. If fuse is ok, go to Test 2.
	2. Inspect condition and tension of drive belt and tensioner (WP 0048 00 and WP 0047 00).	1. If alternator drive belts are worn, damaged, or loose, replace belt or tensioner. 2. If problem still exists, go to Test 3.
	3. Inspect battery cables, wiring, and connections in charging circuit. Refer to *Electrical System Schematic* (WP 0236 00).	1. Clean any corroded or dirty connections, tighten any loose connections, and replace any faulty wiring harnesses (WP 0195 00 thru WP 0201 00). 2. If problem still exists, go to Test 4.
	4. Perform *Battery Load Test* (TM 9-6140-200-14).	1. If batteries are damaged, defective, or do not pass load test, replace batteries (WP 0096 00). 2. If problem still exists, perform *Charging System Test* (WP 0013 00).
2. Engine Will Not Crank.	1. Inspect battery disconnect switch, battery posts, and battery cables for loose connections and corrosion.	1. If battery cables are corroded, remove and clean battery cables (WP 0097 00). Tighten and clean any loose or corroded connections. 2. If problem still exists, go to Test 2.
	2. Perform *Battery Load Test* (TM 9-6140-200-14).	1. If batteries are damaged, defective, or do not pass load test, replace batteries (WP 0096 00). 2. If problem still exists, go to Test 3.
	3. Ensure timing pin was not left in flywheel.	If problem still exists, go to Test 4.
	4. Check wiring to starting motor solenoid. Refer to *Electrical System Schematic* (WP 0236 00).	1. If damaged, replace wiring harness in question (WP 0195 00 thru WP 0201 00). 2. If problem still exists, go to Test 5.
	5. Inspect starter motor pinion (WP 0051 00) and flywheel ring gear (WP 0177 00) for damage.	1. If damaged, replace starter or flywheel. 2. If problem still exists, go to Test 6.
	6. Perform *Electrical Power Supply Circuit Test* (WP 0013 00).	If problem still exists, go to Test 7.

Table 2. Electrical System Troubleshooting - Continued.

MALFUNCTION	TEST OR INSPECTION	CORRECTIVE ACTION
2. Engine Will Not Crank - Continued.	7. Rotate engine manually at least one revolution clockwise, as viewed from rear of machine to ensure engine can be rotated. If engine or transmission is mechanically locked up, engine will not turn. Use engine turning tool and procedure to turn the engine, as described in *Finding Top Center for No. 1 Piston* (WP 0010 00), to turn the engine.	1. Replace any damaged components. 2. If problem still exists, go to Test 8.
	8. Remove any engine accessories that may lock engine, such as brake and hydraulic fan pump (WP 0215 00), AC compressor (WP 0221 00), engine oil pump (WP 0182 00), or other components driven by engine.	If problem still exists, go to Test 9.
	9. Remove fuel injectors and check for fluid in cylinders (WP 0187 00).	1. If fluid exists in cylinders, replace injectors (WP 0187 00). 2. If problem still exists, replace engine (WP 0171 00).
	NOTE **Following Troubleshooting Procedures require two personnel.**	
3. Rear View Camera Inoperative	1. Determine condition.	1. If display powers up, go to Test 2. 2. If display does not power up go to Test 7.
	2. Check camera power. (a) Disconnect camera display (WP 0050 00) from cab harness. (b) Turn battery disconnect switch and engine start switch to ON position (TM 5-3805-291-10). (c) Turn master lamp switch to stop or service mode (TM 5-3805-291-10).	
	(d) Measure voltage between 6-pin display connector pin 3 harness side and ground.	1. If battery voltage is present, go to Test 3. 2. If battery voltage is not present, there is an open circuit between the display and the backup alarm. Replace the harness in question (WP 0195 00 thru WP 0200 00).

Table 2. Electrical System Troubleshooting - Continued.

MALFUNCTION	TEST OR INSPECTION	CORRECTIVE ACTION
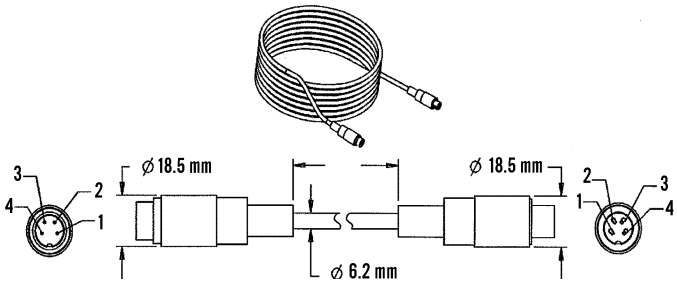		
3. Rear View Camera Inoperative - Continued.	3. Check 4-pin camera cable - display to camera. (a) Disconnect cable from rear camera and display (WP 0050 00). (b) Check for continuity between pin 1 of display connector, harness side and pin 1 of camera connector, harness side. (c) Check for continuity between pin 2 of display connector, harness side and pin 2 of camera connector, harness side. (d) Check for continuity between pin 3 of display connector, harness side and pin 3 of camera connector, harness side. (e) Check for continuity between pin 4 of display connector, harness side and pin 4 of camera connector, harness side.	1. If continuity is present, replace camera (WP 0050 00). 2. If no continuity is present, go to Test 4.

Table 2. Electrical System Troubleshooting - Continued.

MALFUNCTION	TEST OR INSPECTION	CORRECTIVE ACTION
3. Rear View Camera Inoperative - Continued.	4. Check 4-pin camera cable - rear of cab to camera. (a) Disconnect cable from rear of cab (WP 0050 00). (b) Check for continuity between pin 1 at each end of cab to camera cable. (c) Check for continuity between pin 2 at each end of cab to camera cable. (d) Check for continuity between pin 3 at each end of cab to camera cable. (e) Check for continuity between pin 4 at each end of cab to camera cable.	1. If continuity is present, go to Test 5. 2. If no continuity is present, replace rear of cab to camera cable (WP 0050 00).
	5. Check 4-pin camera cable - cab to pillar. (a) Disconnect cable from cab and pillar (WP 0050 00). (b) Check for continuity between pin 1 at each end of cab to pillar cable. (c) Check for continuity between pin 2 at each end of cab to pillar cable. (d) Check for continuity between pin 3 at each end of cab to pillar cable. (e) Check for continuity between pin 4 at each end of cab to pillar cable.	1. If continuity is present, go to Test 6. 2. If no continuity is present, replace cab to pillar cable (WP 0050 00).

Table 2. Electrical System Troubleshooting - Continued.

MALFUNCTION	TEST OR INSPECTION	CORRECTIVE ACTION
3. Rear View Camera Inoperative - Continued.	6. Check 4-pin camera cable - pillar to display. (a) Disconnect cable from pillar and display (WP 0050 00). (b) Check for continuity between pin 1 at each end of pillar to display cable. (c) Check for continuity between pin 2 at each end of pillar to display cable. (d) Check for continuity between pin 3 at each end of pillar to display cable. (e) Check for continuity between pin 4 at each end of pillar to display cable.	1. If continuity is present, remove camera from hood (WP 0050 00) and connect to display. 2. If camera operates correctly, go to Test 7. 3. If camera does not operate, replace camera (WP 0050 00).
	7. Check continuity of each pin of connector at rear of cab.	1. If continuity is present, go to Test 8. 2. If no continuity is present, replace connector.
	8. Check continuity of each pin of connector at right B-pillar.	1. If continuity is present, replace pillar to display cable (WP 0050 00). 2. If no continuity is present, replace connector.

Table 2. Electrical System Troubleshooting - Continued.

MALFUNCTION	TEST OR INSPECTION	CORRECTIVE ACTION
3. Rear View Camera Inoperative - Continued.	9. Check camera display power. (a) Disconnect camera display (WP 0050 00). (b) Turn battery disconnect switch and ignition switch to ON position (TM 5-3805-291-10). (c) Turn master lamp switch to stop or service mode (TM 5-3805-291-10). (d) Measure voltage between 6-pin display connector pin 1 harness side and ground.	1. If battery voltage is present, go to Test 10. 2. If battery voltage is not present, there is an open power circuit to the display. Replace the harness in question (WP 0195 00 thru WP 0201 00).
	10. Check camera display ground. (a) Turn battery ignition switch to OFF position (TM 5-3805-291-10). (b) Measure continuity between 6-pin display connector pin 2 harness side and ground.	1. If continuity is present, replace display (WP 0050 00). 2. If continuity is not present, there is an open ground circuit to the display. Replace the harness in question (WP 0195 00 thru WP 0200 00).
4. Backup Alarm Always Off.	1. Check backup alarm. (a) Disconnect backup alarm from wiring harness (WP 0094 00). (b) Use jumpers to connect respective backup alarm terminals to +battery circuit and ground (WP 0094 00).	1. If backup alarm operates correctly, go to Test 2. 2. If backup alarm is still inoperative, replace backup alarm (WP 0094 00).

Table 2. Electrical System Troubleshooting - Continued.

MALFUNCTION	TEST OR INSPECTION	CORRECTIVE ACTION
4. Backup Alarm Always Off. - Continued.	2. Check backup alarm circuit for a short to ground. (a) Wiring harness remains disconnected from backup alarm. (b) Turn engine start switch and battery disconnect switch to OFF position (TM 5-3805-291-10). (c) Disconnect wiring harness connectors J1 and J2 from powertrain ECM (WP 0063 00). (d) Bypass switch side of backup alarm relay with jumper wire.	1. If wiring harness is OK, go to Test 3. 2. If there is a short in wiring harness, short is between wire 321 BR (backup alarm signal) and circuit with low resistance measurement. Replace wiring harness in question (WP 0195 00 thru WP 0201 00).
	 483-1021	
	(e) At wiring harness connector J2, measure resistance from J1-12 (backup alarm signal) to all possible sources of ground. Check resistance to all other connectors used in ECM harness connector.	

Table 2. Electrical System Troubleshooting - Continued.

MALFUNCTION	TEST OR INSPECTION	CORRECTIVE ACTION
4. Backup Alarm Always Off - Continued.	3. Check backup alarm circuit for an open circuit. (a) Turn engine start switch and battery disconnect switch to OFF position (TM 5-3805-291-10). (b) Disconnect J1 and J2 wiring harness connectors from powertrain ECM (WP 0063 00). (c) At wiring harness connector for backup alarm, place a jumper from contact 1 to contact 2. (d) Bypass switch side of backup alarm relay with jumper wire. (e) At wiring harness connector J2, measure resistance from J1-12 (backup alarm signal) to J2-8 (return signal).	1. If wiring harness is OK, go to Test 4. 2. If there is an open circuit in wiring harness, open circuit is in wire 321 BR (backup alarm signal) or wire P990 BR (return signal). Replace wiring harness in question (WP 0195 00 thru WP 0201 00).
	4. Check if problem is still active. (a) Inspect and clean harness connector contacts. (b) Remove jumper from relay and reconnect all harness connectors. (c) Start engine (TM 5-3805-291-10).	1. If problem has been corrected, initial problem was probably caused by a poor electrical connection and/or a short in a harness connector that was disconnected and reconnected. Resume normal machine operation. 2. If problem still exists, replace backup alarm relay (WP 0053 00). 3. If problem still exists, replace powertrain ECM (WP 0063 00).
5. Backup Alarm Always On.	1. Check backup alarm circuit for a short to +battery circuit. (a) Turn engine start switch and battery disconnect switch to OFF position (TM 5-3805-291-10). (b) Disconnect wiring harness from backup alarm (WP 0094 00). (c) Disconnect wiring harness connector J1 and connector J2 from powertrain ECM (WP 0063 00). (d) At wiring harness connector J2, measure resistance from J1-12 (backup alarm signal) to all possible sources of + battery. Check resistance to all connectors used in ECM harness connector.	1. If wiring harness is OK, go to Test 2. 2. If there is a short in wiring harness, short is between wire 321 BR (backup alarm signal) and circuit with low resistance measurement. Replace wiring harness in question (WP 0195 00 thru WP 0201 00).

Table 2. Electrical System Troubleshooting - Continued.

MALFUNCTION	TEST OR INSPECTION	CORRECTIVE ACTION
5. Backup Alarm Always On - Continued.	2. Check if problem is still active. (a) Inspect and clean harness connector contacts. (b) Reconnect all harness connectors. (c) Start engine (TM 5-3805-291-10).	1. If problem still exists, replace backup alarm relay (WP 0053 00). 2. If problem still exists, replace powertrain ECM (WP 0063 00). 3. If problem is no longer active, initial problem was probably caused by a poor electrical connection and/or a short in a harness connector that was disconnected and reconnected. Resume normal machine operation.
6. One or More Worklights Are Inoperative.	1. Determine condition.	1. If one worklight is inoperative, replace worklight bulb (WP 0072 00). If problem still exists, go to Test 2. 2. If both front or both rear worklights are inoperative, check and replace worklight fuse(s) as necessary (TM 5-3805-291-10). If problem still exists, go to Test 4. 3. If all worklights are inoperative, go to Test 10.
	2. Check for open power circuit. (a) Disconnect wiring harness from worklight housing (WP 0072 00). (b) Turn battery disconnect, engine start, and worklight switches to ON position (TM 5-3805-291-10). (c) Select service drive mode on main light switch (TM 5-3805-291-10). (d) If rear worklight is inoperative, measure voltage at worklight between wiring harness pin 1, wire 619 (GN), and ground. (e) If front worklight is inoperative, measure voltage at worklight between wiring harness pin 1, wire 607 (PK), and ground.	1. If battery voltage is present, go to Test 3. 2. If battery voltage is not present, there is an open circuit between worklight switch and worklight housing. Replace wiring harness in question (WP 0195 00 thru WP 0201 00).

Table 2. Electrical System Troubleshooting - Continued.

MALFUNCTION	TEST OR INSPECTION	CORRECTIVE ACTION
6. One or More Worklights Are Inoperative - Continued.	3. Check for open ground circuit. (a) Battery disconnect switch remains in ON position (TM 5-3805-291-10). (b) Wiring harness remains disconnected from worklight housing. (c) Turn worklight and engine start switches to OFF position (TM 5-3805-291-10). (d) Check continuity at worklight housing between wiring harness pin 2, wire 200 (BK), and ground.	1. If continuity is present, replace worklight housing (WP 0072 00). 2. If continuity is not present, there is an open worklight ground circuit. Replace wiring harness in question (WP 0195 00 thru WP 0201 00).
	4. Check for open power circuits. (a) Disconnect wiring harness from inoperative worklight housing (WP 0072 00). (b) Turn battery disconnect, engine start, and worklight switches to ON position (TM 5-3805-291-10). (c) Select service drive mode on main light switch (TM 5-3805-291-10). (d) If rear worklights are inoperative, measure voltage at worklight housing between wiring harness pin 1, wire 608 (GN), and ground. (e) If front worklight is inoperative, measure voltage at worklight between wiring harness pin 1, wire 607 (PK), and ground.	1. If battery voltage is not present, go to Test 5. 2. If battery voltage is present, there is an open circuit in worklight housing ground circuit (200 (BK). Replace wiring harness in question (WP 0195 00 thru WP 0201 00).
	5. Check for continuity in power circuits. (a) Disconnect wiring harness from worklight switch (WP 0072 00). (b) Place battery disconnect and engine start switches in ON position (TM 5-3805-291-10). (c) Select service drive mode on main light switch (TM 5-3805-291-10). (d) If front worklights are inoperative, check continuity at worklight switch between wiring harness pin 3, wire 607 (PK), and ground. (e) If rear worklights are inoperative, check continuity at worklight switch between wiring harness pin 6, wire 608 (GN), and ground.	1. If continuity is not present, there is an open circuit between worklight and worklight switch. Replace wiring harness in question (WP 0195 00 thru WP 0201 00). 2. If continuity is present, go to Test 6.

Table 2. Electrical System Troubleshooting - Continued.

MALFUNCTION	TEST OR INSPECTION	CORRECTIVE ACTION
6. One or More Worklights Are Inoperative - Continued.	6. Check for open worklight switch power circuits. (a) Wiring harness remains disconnected from worklight switch. (b) Battery disconnect and engine start switches remain in ON position (TM 5-3805-291-10). (c) Select service drive mode on main light switch (TM 5-3805-291-10). (d) If front worklights are inoperative, measure voltage at worklight switch between wiring harness pin 2, wire 646 (OR), and ground. (e) If rear worklights are inoperative, measure voltage at worklight switch between wiring harness pin 5, wire 647 (GN), and ground.	1. If battery voltage is not present, go to Test 7. 2. If battery voltage is present, replace worklight switch (WP 0055 00).
	7. Check continuity of worklight switch power circuits. (a) Wiring harness remains disconnected from worklight switch. (b) Battery disconnect and engine start switches remain in ON position (TM 5-3805-291-10). (c) Remove worklight blackout relay (WP 0053 00). (d) If front worklights are inoperative, check continuity between worklight switch wiring harness pin 2, wire 646 (OR), and worklight blackout relay holder pin 87, wire 646 (OR). (e) If rear worklights are inoperative, measure voltage at worklight switch between wiring harness pin 5, wire 647 (GN), and worklight blackout relay holder pin 87, wire 647 (GN).	1. If continuity is not present, there is an open circuit between worklight blackout relay and worklight switch. Replace wiring harness in question (WP 0195 00 thru WP 0201 00). 2. If continuity is present, go to Test 8.

Table 2. Electrical System Troubleshooting - Continued.

MALFUNCTION	TEST OR INSPECTION	CORRECTIVE ACTION
6. One or More Worklights Are Inoperative - Continued.	8. Check for open worklight blackout relay power circuits. (a) Battery disconnect and engine start switches remain in ON position (TM 5-3805-291-10). (b) Select service drive mode on main light switch (TM 5-3805-291-10). (c) If front worklights are inoperative, measure voltage at worklight blackout relay holder between wiring harness pin 30, wire 129 (BU), and ground. (d) If rear worklights are inoperative, measure voltage at worklight blackout relay holder between wiring harness pin (30), wire 128 (PK), and ground.	1. If battery voltage is not present, there is an open circuit between worklight blackout relay and fuse. Replace wiring harness in question (WP 0195 00 thru WP 0201 00). 2. If battery voltage is present, go to Test 9.
	9. Perform relay test on worklight blackout relay (WP 0022 00).	1. Replace relay as necessary (WP 0053 00). 2. If relay is OK, go to Test 10.
	10. Check for open worklight relay coil power circuit. (a) Battery disconnect and engine start switches remain in ON position (TM 5-3805-291-10). (b) Select service drive mode on main light switch (TM 5-3805-291-10). (c) Measure voltage at worklight blackout relay holder between wiring harness pin 85, wire A652 (BU), and ground.	1. If battery voltage is present and not all worklights are inoperative, there is an open circuit in worklight blackout relay ground 200 (BK). Replace wiring harness in question (WP 0195 00 thru WP 0201 00). 2. If battery voltage is present and all worklights are inoperative, replace worklight switch (WP 0055 00). 3. If battery voltage is not present and not all worklights are inoperative, there is an open circuit between worklight blackout relay and main light switch. Replace wiring harness in question (WP 0195 00 thru WP 0201 00). 4. If battery voltage is not present and all worklights are inoperative, go to Test 11.

Table 2. Electrical System Troubleshooting - Continued.

MALFUNCTION	TEST OR INSPECTION	CORRECTIVE ACTION
6. One or More Worklights Are Inoperative - Continued.	11. Check worklight relay coil power circuit continuity. (a) Disconnect wiring harness from main light switch (WP 0061 00). (b) Worklight relay remains removed. (c) Battery disconnect switch remains in ON position (TM 5-3805-291-10). (d) Check continuity between worklight blackout relay holder wiring harness pin 85, wire A652 (BU), and main light switch wiring harness pin J, wire A652 (BU).	1. If continuity is not present, there is an open circuit between worklight relay and main light switch. Replace wiring harness in question (WP 0195 00 thru WP 0201 00). 2. If continuity is present, replace main light switch (WP 0061 00).
7. One or Both Service Lights Are Inoperative.	1. Determine condition.	1. If one service light is inoperative, replace service light bulb (WP 0071 00). If problem still exists, go to Test 2. 2. If both service lights are inoperative, go to Test 4.
	2. Check for open power circuit. (a) Disconnect wiring harness from service light housing (WP 0071 00). (b) Turn battery disconnect and engine start switches to ON position (TM 5-3805-291-10). (c) Select service drive mode on main light switch (TM 5-3805-291-10). (d) Measure voltage at service light between wiring harness pin 1, 619 (GN), and ground.	1. If battery voltage is present, go to Test 3. 2. If battery voltage is not present, there is an open circuit between service light relay and service light housing. Replace wiring harness in question (WP 0195 00 thru WP 0201 00).
	3. Check for open ground circuit. (a) Battery disconnect switch remains in ON position (TM 5-3805-291-10). (b) Wiring harness remains disconnected from service light housing. (c) Turn engine start switch to OFF position (TM 5-3805-291-10). (d) Check continuity at service light between wiring harness pin 2, wire 200 (BK), and ground.	1. If continuity is present, replace or repair service light housing and wiring. 2. If continuity is not present, there is an open service light ground circuit. Replace wiring harness in question (WP 0195 00 thru WP 0201 00).

Table 2. Electrical System Troubleshooting - Continued.

MALFUNCTION	TEST OR INSPECTION	CORRECTIVE ACTION
7. One or Both Service Lights Are Inoperative - Continued.	4. Check for power to service light relay. (a) Remove service light relay (WP 0053 00). (b) Turn battery disconnect and engine start switches to ON position (TM 5-3805-291-10). (c) Measure voltage at service light relay between wiring harness pin 30, wire 130 (GN), and ground.	1. If battery voltage is present, temporarily replace service light relay (WP 0053 00) with a new one. If problem still exists, reinstall old relay and go to Test 5. 2. If battery voltage is not present, there is an open circuit between service light breaker and service light relay. Replace wiring harness in question (WP 0195 00 thru WP 0201 00).
	5. Check service light power circuit continuity. (a) Service light relay remains removed. (b) Battery disconnect switch remains in ON position (TM 5-3805-291-10). (c) Turn engine start switch to OFF position (TM 5-3805-291-10). (d) Check continuity between service light relay wiring harness pin 4, wire 619 (GN), and ground.	1. If continuity is not present, there is an open circuit between service light relay and service lights. Replace wiring harness in question (WP 0195 00 thru WP 0201 00). 2. If continuity is present, go to Test 6.
	6. Check for an open service light relay coil power circuit. (a) Service light relay remains removed. (b) Battery disconnect switch remains in ON position (TM 5-3805-291-10). (c) Turn engine start switch to ON position (TM 5-3805-291-10). (d) Select service drive mode on main light switch (TM 5-3805-291-10). (e) Measure voltage at service light relay between wiring harness pin 85, wire 645 (PK), and ground.	1. If battery voltage is not present, go to Test 7. 2. If battery voltage is present, there is an open service light relay ground circuit. Replace wiring harness in question (WP 0195 00 thru WP 0201 00).

Table 2. Electrical System Troubleshooting - Continued.

MALFUNCTION	TEST OR INSPECTION	CORRECTIVE ACTION
7. One or Both Service Lights Are Inoperative - Continued.	7. Check service light relay coil power circuit continuity. (a) Disconnect wiring harness from main light switch (WP 0061 00). (b) Service light relay remains removed. (c) Turn battery disconnect and engine start switches to OFF position (TM 5-3805-291-10). (d) Check continuity between service light relay wiring harness pin 85, main light switch wiring harness pin M, and wire 645 (PK).	1. If continuity is not present, there is an open circuit between service light relay and main light switch. Replace wiring harness in question (WP 0195 00 thru WP 0201 00). 2. If continuity is present, replace main light switch (WP 0061 00).
8. One Service Stoplamp or One or More Turnlamps Are Inoperative.	1. Determine condition.	1. If two turnlamps on one side of machine are inoperative, go to Test 2. 2. If one service stoplamp or one front or both front turnlamps are inoperative, replace inoperative turnlamp bulb (WP 0071 00) or swap rear light housing covers side to side (WP 0070 00). If lamp remains inoperative, there is an open circuit between turnlamp switch and inoperative lamp. Replace wiring harness in question (WP 0195 00 thru WP 0201 00). 3. If one rear turnlamp is inoperative, swap rear light housing covers side to side (WP 0070 00). If lamp remains inoperative, replace right or left lamp diode (TM 5-3805-291-10). If problem still exists, there is an open circuit between turnlamp switch and inoperative lamp. Replace wiring harness in question (WP 0195 00 thru WP 0201 00). 4. If all turnlamps are inoperative, go to Test 3. 5. If all stoplamps are inoperative, refer to Malfunction 10, *All Stoplamps Are Inoperative*.

Table 2. Electrical System Troubleshooting - Continued.

MALFUNCTION	TEST OR INSPECTION	CORRECTIVE ACTION
8. One Service Stoplamp or One or More Turnlamps Are Inoperative - Continued.	2. Check for open power circuit. (a) Disconnect wiring harness from front turnlamp housing (WP 0071 00). (b) Disconnect wiring harness from front turnlamp housing (WP 0071 00). (c) For right side, check for continuity at turnlamp wiring harness pin 1, wire 606 (GY), and turnlamp switch harness pin 2, wire 606 (GY). (d) For left side, check continuity at turnlamp between wiring harness pin 1, wire 605 (YL), and turnlamp switch pin 3, wire 605 (YL).	1. If continuity is present, replace turnlamp switch (WP 0066 00). 2. If continuity is not present, there is an open circuit between inoperative turnlamp and turnlamp switch. Replace wiring harness in question (WP 0195 00 thru WP 0201 00).
	3. Check for open turnlamp switch power circuit. (a) Disconnect wiring harness from turnlamp switch (WP 0066 00). (b) Turn battery disconnect and engine start switches to ON position (TM 5-3805-291-10). (c) Select service drive mode on main light switch (TM 5-3805-291-10). (d) Measure voltage at turnlamp switch between wiring harness pin 1, wire 642 (WH), and ground.	1. If battery voltage is not present, go to Test 4. 2. If battery voltage is present, replace turnlamp switch (WP 0066 00).
	4. Check for open turnlamp switch power circuit. (a) Disconnect wiring harness from turnlamp flasher located under instrument cluster (WP 0065 00). (b) Turn battery disconnect and engine start switches to ON position (TM 5-3805-291-10). (c) Select service drive mode on main light switch (TM 5-3805-291-10). (d) Check for continuity at turnlamp flasher between wiring harness pin 2, wire 642 (WH), and turnlamp switch wiring harness pin 1, wire 642 (WH).	1. If continuity is not present, there is an open circuit between flasher and turnlamp switch. Replace wiring harness in question (WP 0195 00 thru WP 0201 00). 2. If battery voltage is present, go to Test 5.

Table 2. Electrical System Troubleshooting - Continued.

MALFUNCTION	TEST OR INSPECTION	CORRECTIVE ACTION
8. One Service Stoplamp or One or More Turnlamps Are Inoperative - Continued.	5. Check for open turnlamp flasher power circuit. (a) Battery disconnect and engine start switches remain in ON position (TM 5-3805-291-10). (b) Select service drive mode on main light switch (TM 5-3805-291-10). (c) Measure voltage at turnlamp flasher between wiring harness pin 3, wire 692 (YL), and ground.	1. If battery voltage is present, replace turnlamp flasher (WP 0065 00). 2. If battery voltage is not present, temporarily replace turnlamp hazard relay (WP 0066 00). If problem still exists, reinstall old turnlamp relay and go to Test 6.
	6. Check for open relay power circuit. (a) Remove turnlamp hazard relay (WP 0066 00). (b) Turn battery disconnect and engine start switches to ON position (TM 5-3805-291-10). (c) Select service drive mode on main light switch (TM 5-3805-291-10). (d) Measure voltage at turnlamp relay between wiring harness pin 86, wire A652 (BU), and ground.	1. If battery voltage is not present, there is an open circuit between turnlamp relay and main light switch. Replace wiring harness in question (WP 0195 00 thru WP 0201 00). 2. If battery voltage is present, go to Test 7.
	7. Check relay coil ground circuit. (a) Turnlamp hazard relay remains removed. (b) Battery disconnect switch remains in ON position (TM 5-3805-291-10). (c) Check continuity at turnlamp relay between wiring harness pin 86, wire 200 (BK), and ground.	1. If continuity is not present, there is an open turnlamp relay coil circuit. Replace wiring harness in question (WP 0195 00 thru WP 0201 00). 2. If continuity is present, go to Test 8.
	8. Check turnlamp hazard relay power circuit. (a) Turnlamp hazard relay remains removed. (b) Battery disconnect switch remains in ON position (TM 5-3805-291-10). (c) Measure voltage at turnlamp relay between wiring harness pin 30, wire 131 (BR), and ground.	1. If battery voltage is not present, there is an open circuit between turnlamp hazard relay and fuse box. Replace wiring harness in question (WP 0195 00 thru WP 0201 00). 2. If battery voltage is present, there is an open circuit in 692 (YL) between turnlamp hazard relay and flasher. Replace wiring harness in question (WP 0195 00 thru WP 0201 00).

Table 2. Electrical System Troubleshooting - Continued.

MALFUNCTION	TEST OR INSPECTION	CORRECTIVE ACTION
9. All Stoplamps Are Inoperative.	1. Check stoplamp power circuit. (a) Disconnect turnlamp switch from wiring harness (WP 0066 00). (b) Turn battery disconnect and engine start switches to ON position (TM 5-3805-291-10). (c) Select service drive mode on main light switch (TM 5-3805-291-10). (d) While pressing and holding brake pedal, measure voltage at turnlamp switch between wiring harness pin 4, wire 604 (OR), and ground.	1. If battery voltage is not present, go to Test 2. 2. If battery voltage is present, replace turnlamp switch (WP 0066 00).
	2. Check stoplamp power circuit continuity. (a) Disconnect main light switch (WP 0061 00). (b) Turnlamp switch remains disconnected. (c) Battery disconnect switch remains in ON position (TM 5-3805-291-10). (d) Turn engine start switch to OFF position (TM 5-3805-291-10). (e) Check continuity between main light switch wiring harness pin C, wire 604 (OR), and turnlamp switch wiring harness pin 4, wire 604 (OR).	1. If continuity is not present, there is an open circuit between main light switch and turnlamp switch. Replace wiring harness in question (WP 0195 00 thru WP 0201 00). 2. If continuity is present, go to Test 3.
	3. Check stoplamp switch output circuit for continuity. (a) Main light switch remains disconnected from wiring harness. (b) Disconnect stoplamp switch from wiring harness (WP 0064 00). (c) Turn battery disconnect switch to OFF position (TM 5-3805-291-10). (d) Check continuity between stoplamp switch wiring harness pin 2, wire 698 (PU), and main light switch wiring harness pin K, wire 698 (PU).	1. If continuity is not present, there is an open circuit between stoplamp switch and main light switch. Replace wiring harness in question (WP 0195 00 thru WP 0201 00). 2. If continuity is present, go to Test 4.

Table 2. Electrical System Troubleshooting - Continued.

MALFUNCTION	TEST OR INSPECTION	CORRECTIVE ACTION
9. All Stoplamps Are Inoperative - Continued.	4. Check stoplamp switch. (a) Stoplamp switch remains disconnected from wiring harness. (b) While pressing and holding brake pedal, check continuity at stoplamp switch between wiring harness pin 1, wire 697 (GN), and wiring harness pin 2, wire 698 (PU) (switch side).	1. If continuity is present, go to Test 5. 2. If continuity is not present, replace stoplamp switch (WP 0064 00).
	5. Check main light output circuit. (a) Main light switch remains disconnected from wiring harness. (b) Stoplamp switch remains disconnected from wiring harness. (c) Check continuity at main light switch between wiring harness pin A, wire 697 (GN), and stoplamp switch wiring harness pin 1, wire 697 (GN).	1. If continuity is present, replace main light switch (WP 0061 00). 2. If continuity is not present, there is an open circuit. Replace wiring harness in question (WP 0195 00 thru WP 0201 00).
10. One or Both Taillights Are Inoperative.	1. Determine condition.	1. If only one taillight is inoperative, temporarily swap rear light housing cover side to side (WP 0070 00). If problem still exists, there is an open circuit between rear light housing and main light switch. Reinstall old cover and replace wiring housing in question (WP 0195 00 thru WP 0201 00). 2. If both taillights are inoperative, but all other rear lights operate correctly, go to Test 2.
	2. Check for open power circuit. (a) Disconnect wiring harness from rear light housing (WP 0070 00). (b) Disconnect wiring harness from main light switch (WP 0061 00). (c) Check continuity between rear lamp wiring harness wire 614 (PU) and main light switch wiring harness pin H, wire 614 (PU).	1. If continuity is present, replace main light switch (WP 0061 00). 2. If continuity is not present, there is an open circuit between rear light housing and main light switch. Replace wiring harness in question (WP 0195 00 thru WP 0201 00).

Table 2. Electrical System Troubleshooting - Continued.

MALFUNCTION	TEST OR INSPECTION	CORRECTIVE ACTION
11. One or Both Blackout Taillights Are Inoperative.	1. Determine condition.	1. If only one blackout taillight is inoperative, temporarily swap rear light housing cover side to side (WP 0070 00). If problem still exists, there is an open circuit between rear light housing and main light switch. Reinstall old cover and replace wiring harness in question (WP 0195 00 thru WP 0201 00). 2. If both blackout taillights are inoperative, but all other rear lights operate correctly, go to Test 2.
	2. Check for open power circuit. (a) Disconnect wiring harness from rear light housing (WP 0070 00). (b) Disconnect wiring harness from main light switch (WP 0061 00). (c) Check for continuity between rear lamp wiring harness wire A654 (GY), and main light switch wiring harness pin E, wire A654 (GY).	1. If continuity is present, replace main light switch (WP 0061 00). 2. If continuity is not present, there is an open circuit between rear light housing and main light switch. Replace wiring harness in question (WP 0195 00 thru WP 0201 00).
12. One or Both Blackout Stoplamps Are Inoperative.	1. Determine condition.	1. If only one blackout stoplamp is inoperative, temporarily swap inoperative rear light housing cover side to side (WP 0070 00). If problem still exists, there is an open circuit between rear light housing and main light switch. Reinstall old cover (WP 0070 00) or replace wiring harness in question (WP 0195 00 thru WP 0201 00). 2. If both blackout stoplamps are inoperative, but all other rear lights operate correctly, go to Test 2. 3. If both blackout stoplamps and both service stoplamps are inoperative, refer to Malfunction 10, *All Stoplamps Are Inoperative.*

Table 2. Electrical System Troubleshooting - Continued.

MALFUNCTION	TEST OR INSPECTION	CORRECTIVE ACTION
12. One or Both Blackout Stoplamps Are Inoperative - Continued.	2. Check for open power circuit. (a) Disconnect wiring harness from rear light housing (WP 0070 00). (b) Disconnect wiring harness from main light switch (WP 0061 00). (c) Check for continuity between rear lamp wiring harness wire A653 (PK), and main light switch wiring harness pin N, wire A653 (PK).	1. If continuity is present, replace main light switch (WP 0055 00). 2. If continuity is not present, there is an open circuit between rear light housing and main light switch. Replace wiring harness in question (WP 0195 00 thru WP 0201 00).
13. All Rear Lights Are Inoperative.	There is an open rear light ground circuit.	Replace wiring harness in question (WP 0195 00 thru WP 0201 00).
14. Blackout Drivelight is Inoperative.	1. Check voltage to lamp. (a) Disconnect wiring harness from blackout drivelight (WP 0068 00). (b) Turn battery disconnect and engine start switches to ON position (TM 5-3805-291-10). (c) Select blackout drive on main light switch (TM 5-3805-291-10). (d) Measure voltage at blackout drivelight between wiring harness, wire A651 (BR), and ground.	1. If battery voltage is present, replace blackout drivelight or repair ground at light (WP 0068 00). 2. If battery voltage is not present, go to Test 2.
	2. Check continuity between main light switch and blackout drivelight. (a) Disconnect wiring harness from main light switch (WP 0061 00). (b) Turn battery disconnect and engine start switches to OFF position (TM 5-3805-291-10). (c) Check continuity at blackout drivelight between wiring harness, and main light switch wiring harness pin D, wire A651 (BR).	1. If continuity is present, replace main light switch (WP 0061 00). 2. If continuity is not present, there is an open circuit between blackout drivelight housing and main light switch. Replace wiring harness in question (WP 0195 00 thru WP 0201 00).
15. Quick Coupler Switch/ Alarm is Inoperative.	1. Check coupler fuse (TM 5-3805-291-10).	1. If fuse is open, replace it. 2. If fuse is OK, go to Test 2.

Table 2. Electrical System Troubleshooting - Continued.

MALFUNCTION	TEST OR INSPECTION	CORRECTIVE ACTION
15. Quick Coupler Switch/ Alarm is Inoperative - Continued.	2. Check voltage to coupler switch. (a) Disconnect wiring harness from coupler switch (WP 0055 00). (b) Turn battery disconnect and engine start switches to ON position (TM 5-3805-291-10). (c) Measure voltage at coupler switch between wiring harness pin 2, wire 168 (GN), and ground; and between pin 5, wire 168 (GN), and ground.	1. If battery voltage is present and alarm is inoperative, go to Test 3. 2. If battery voltage is present, and alarm works, go to Test 4. 3. If battery voltage is not present, there is an open circuit between coupler switch and coupler fuse. Replace wiring harness in question (WP 0195 00 thru WP 0201 00).
	3. Check coupler alarm power. (a) Disconnect quick coupler alarm (WP 0155 00). (b) Connect quick coupler switch (WP 0055 00). (c) Turn battery disconnect switch and engine start switch to ON position (TM 5-3805-291-10). (d) While holding the quick coupler switch in the disengage position, measure voltage between quick coupler alarm pin 1, circuit P976-UC114 (BR) harness side and ground.	1. If battery voltage is not present, go to Test 5. 2. If battery voltage is not present, go to Test 4.
	4. Check coupler alarm power circuit for an open circuit. (a) Disconnect quick coupler switch (WP 0055 00). (b) Check for continuity between quick coupler alarm pin 1, circuit P976-UC114 (BR) harness side and 4 quick coupler switch pin 6, circuit P976-UC114 (BR) harness side. (c) Check for continuity between 4-pin display connector pin 4 harness side and 4-pin camera connector pin 4 harness side.	1. If continuity is present, replace quick coupler switch (WP 0055 00). 2. If continuity is not present, there is an open circuit between the quick coupler switch and the quick coupler alarm. Replace the wiring harness in question (WP 0195 00 thru WP 0201 00).
	5. Check coupler alarm ground. (a) Turn battery disconnect switch to ON position (TM 5-3805-291-10). (b) Check for continuity between coupler alarm pin 2, circuit 200-UC117 (BY), harness side and ground.	1. If continuity is present, replace quick coupler alarm (WP 0055 00). 2. If continuity is not present, there is an open circuit between the quick coupler alarm and ground. Replace the wiring harness in question (WP 0195 00 thru WP 0201 00).

Table 2. Electrical System Troubleshooting - Continued.

MALFUNCTION	TEST OR INSPECTION	CORRECTIVE ACTION
15. Quick Coupler Switch/ Alarm is Inoperative - Continued.	6. Check coupler switch ground circuit. (a) Wiring harness remains disconnected from coupler switch. (b) Battery disconnect switch remains in ON position (TM 5-3805-291-10). (c) Turn engine start switch to OFF position (TM 5-3805-291-10). (d) Check continuity at coupler switch between wiring harness pin 9, wire 200 (BK), and ground.	1. If continuity is present, go to Test 7. 2. If continuity is not present, there is an open coupler switch ground circuit. Replace wiring harness in question (WP 0195 00 thru WP 0201 00).
	7. Check coupler solenoid circuits. (a) Wiring harness remains disconnected from coupler switch. (b) Battery disconnect switch remains in ON position (TM 5-3805-291-10). (c) Disconnect wiring harness from coupler solenoid (WP 0149 00). (d) Check continuity at coupler switch between wiring harness pin 3, wire 779 (WH), and coupler solenoid wiring harness pin 1, wire 779 (WH).	1. If continuity is present, replace coupler switch (WP 0055 00). If problem still exists, replace coupler valve (WP 0149 00). 2. If continuity is not present for all circuits, there is an open circuit between coupler switch and coupler valve. Replace wiring harness in question (WP 0195 00 thru WP 0201 00).
16. Arctic Heater is Inoperative.	1. Check for cooling or fuel system leaks.	Repair any leaks. If problem still exists, go to Test 2.
	2. Check arctic heater fuse (WP 0161 00).	1. If fuses are open, replace them. 2. If fuse is OK, go to Test 3.
	3. Check for power to arctic heater. (a) Disconnect wiring harness from arctic heater (WP 0161 00). (b) Turn battery disconnect arctic heater and engine start switches to ON position (TM 5-3805-291-10). (c) Measure voltage between arctic heater wiring harness pin A1, wire N725 (RD), and ground; and between arctic heater wiring harness pin C2, wire 117 (RD), and ground.	1. If battery voltage is present at both pins, go to Test 4. 2. If battery voltage is present at C2 only, go to Test 5. 3. If battery voltage is present on pin A1 only, there is an open circuit between arctic heater fuse and arctic heater. Replace wiring harness in question (WP 0195 00 thru WP 0201 00).

Table 2. Electrical System Troubleshooting - Continued.

MALFUNCTION	TEST OR INSPECTION	CORRECTIVE ACTION
16. Arctic Heater is Inoperative - Continued.	4. Check arctic heater ground circuit. (a) Battery disconnect switch remains in ON position (TM 5-3805-291-10). (b) Check continuity between arctic heater wiring harness pin 1, wire 200 (BK), and ground.	1. If continuity is present, go to Test 5. 2. If continuity is not present, there is an open arctic heater fuel pump ground circuit. Replace wiring harness in question (WP 0195 00 thru WP 0201 00).
	5. Check circuit to arctic heater switch. (a) Disconnect wiring harness from arctic heater switch (WP 0061 00). (b) Wiring harness remains disconnected from arctic heater. (c) Turn battery disconnect switch to OFF position (TM 5-3805-291-10). (d) Check continuity of wire N725 (RD) between arctic heater wiring harness pin 1, and arctic heater switch pin 1, wire N725 (RD).	1. If continuity is present, go to Test 6. 2. If continuity is not present, there is an open circuit between arctic heater and arctic heater switch. Replace wiring harness in question (WP 0195 00 thru WP 0201 00).
	6. Check arctic heater switch circuit. (a) Wiring harness remains disconnected from arctic heater switch. (b) Turn battery disconnect and engine start switches to ON position (TM 5-3805-291-10). (c) Check for continuity between arctic heater switch wiring harness pin 2, wire N726 (YL), and arctic heater wiring harness pin 2, wire N726 (YL).	1. If battery voltage is present, go to Test 7. 2. If battery voltage is not present, there is an open circuit between arctic heater and arctic heater fuse. Replace wiring harness (WP 0195 00 thru WP 0201 00).
	7. Check arctic heater switch. (a) Wiring harness remains disconnected from arctic heater switch. (b) Arctic heater switch remains in ON position. (c) With switch pressed, check continuity of arctic heater switch between pin 1 and pin 2.	1. If continuity is present across pins, replace arctic heater (WP 0161 00). 2. If continuity is not present, replace arctic heater switch (WP 0061 00).

Table 2. Electrical System Troubleshooting - Continued.

MALFUNCTION	TEST OR INSPECTION	CORRECTIVE ACTION
17. AC Compressor Does Not Run (Blower Operates Correctly).	**NOTE** **If AC compressor and condenser fan run at all, problem is most likely NOT electrical.**	
	1. Check AC fuse (TM 5-3805-291-10).	1. If fuse is open, replace it. 2. If fuse is OK, go to Test 2.
	2. Check AC system charge (WP 0222 00).	1. If AC system charge is low, find and repair system leak. 2. If AC system charge is OK, go to Test 3.
	3. Bypass AC pressure switch. (a) Disconnect wiring harness from AC pressure switch (WP 0221 00). (b) Use a jumper wire to short AC pressure switch wiring harness pins together. (c) Turn battery disconnect and engine start switches to ON position (TM 5-3805-291-10). (d) Turn AC/heater switch to AC ON position. (e) Verify AC clutch engages with switch bypassed.	1. If AC compressor clutch engages with switch bypassed, replace AC pressure switch (WP 0221 00). 2. If AC compressor clutch does not engage with switch bypassed, go to Test 4.
	4. Check for power to AC pressure switch. (a) Wiring harness remains disconnected from AC pressure switch. (b) Remove jumper wire from AC pressure switch wiring harness pins. (c) Battery disconnect, engine start, and AC switches remain in ON position (TM 5-3805-291-10). (d) Measure voltage between AC pressure switch wiring harness pin 2, wire 521 (YL), and ground.	1. If battery voltage is present, go to Test 7. 2. If battery voltage is not present, go to Test 5.

Table 2. Electrical System Troubleshooting - Continued.

MALFUNCTION	TEST OR INSPECTION	CORRECTIVE ACTION
17. AC Compressor Does Not Run (Blower Operates Correctly) - Continued.	5. Check for power to AC and heater select switch. (a) Disconnect wiring harness from AC and heater select switch (WP 0055 00). (b) Engine start and battery disconnect switches remain in ON position. (c) Measure voltage between AC and heater select switch wiring harness pin 5, wire 124 (GN), and ground.	1. If battery voltage is not present, there is an open circuit between switch and HVAC breaker. Replace wiring harness in question (WP 0195 00 thru WP 0201 00). 2. If battery voltage is present, go to Test 6.
	6. Check for continuity to pressure switch. (a) Wiring harness remains disconnected from pressure switch and selector switch. (b) Check continuity at pressure switch wiring harness pin 2, wire 521 (YL), and selector switch wiring harness pin 6, wire 521 (YL).	1. If continuity is present, replace AC and heater selector switch (WP 0055 00). 2. If continuity is not present, there is an open circuit between pressure switch and selector switch. Replace wiring harness in question (WP 0195 00 thru WP 0201 00).
	7. Check AC compressor clutch power circuit. (a) Wiring harness remains disconnected from AC pressure switch. (b) Disconnect wiring harness to AC compressor clutch (WP 0221 00). (c) Use a jumper wire to short AC pressure switch wiring harness pins together. (d) Turn battery disconnect and engine start switches to ON position (TM 5-3805-291-10). (e) Turn AC/heater switch to AC ON position. (f) Measure voltage between AC compressor clutch wiring harness 1, wire 513 (OR), and ground.	1. If battery voltage is present, go to Test 8. 2. If battery voltage is not present, there is an open circuit between AC compressor and AC pressure switch. Replace wiring harness in question (WP 0195 00 thru WP 0201 00).

Table 2. Electrical System Troubleshooting - Continued.

MALFUNCTION	TEST OR INSPECTION	CORRECTIVE ACTION
17. AC Compressor Does Not Run (Blower Operates Correctly) - Continued.	8. Check AC compressor clutch power circuit. (a) Jumper wire remains in place. (b) Connect wiring harness to AC compressor clutch (WP 0221 00). (c) Battery disconnect and engine start switches remain in ON position (TM 5-3805-291-10). (d) Turn AC/heater switch to AC ON position. (e) Measure voltage at back of connector between AC compressor clutch wiring harness pin 2, wire 522 (WH), and ground.	1. If battery voltage is present, go to Test 9. 2. If battery voltage is not present, replace AC compressor (WP 0221 00).
	9. Check AC compressor clutch ground circuit. (a) Jumper wire remains in place. (b) Battery disconnect and engine start switches remain in ON position (TM 5-3805-291-10). (c) AC/heater switch remains in AC ON position. (d) Measure voltage between thermostatic switch wiring harness, wire 522 (WH), and ground.	1. If battery voltage is present, go to Test 10. 2. If battery voltage is not present, there is an open circuit between thermostatic switch and compressor. Replace wiring harness in question (WP 0195 00 thru WP 0201 00).
	10. Check thermostatic switch ground circuit. (a) Battery disconnect switch remains in ON position. (b) Check continuity between thermostatic switch wiring harness, wire 200 (BK), and ground.	1. If continuity is present, replace thermostatic switch (WP 0220 00). 2. If continuity is not present, there is an open thermostatic switch ground circuit. Replace wiring harness in question (WP 0195 00 thru WP 0201 00).
18. One or More Blower Motor Speeds Are Inoperative.	1. Determine condition.	1. If only high speed is inoperative, go to Test 3. 2. If only medium speed is inoperative, go to Test 5. 3. If only low speed is inoperative, go to Test 6. 4. If only medium and low speeds are inoperative, go to Test 4. 5. If all blower speeds are inoperative, reset HVAC blower breaker (TM 5-3805-291-10). If problem still exists, go to Test 2.

Table 2. Electrical System Troubleshooting - Continued.

MALFUNCTION	TEST OR INSPECTION	CORRECTIVE ACTION
18. One or More Blower Motor Speeds Are Inoperative - Continued.	2. Check blower motor fuse (TM 5-3805-291-10).	1. If fuse is blown, replace fuse. 2. If fuse is OK, go to Test 3.
	3. Check blower switch (high). (a) Disconnect wiring harness from blower switch (WP 0198 00). (b) Place blower switch in HIGH SPEED position (TM 5-3805-291-10). (c) Check continuity between blower switch pins 5 and 6.	1. If continuity is present and only high speed is inoperative, go to Test 4. 2. If continuity is not present, replace blower switch (WP 0198 00).
	4. Check power to blower motor switch. (a) Disconnect wiring harness from blower switch (WP 0198 00). (b) Place battery disconnect and engine start switches in ON position (TM 5-3805-291-10). (c) Place AC/heater switch in AC ON position (TM 5-3805-291-10). (d) Measure voltage between blower switch wiring harness, pin 5, wire 567 (WH), and ground. (e) Measure voltage between blower switch wiring harness, pin 2, wire 567 (WH), and ground.	1. If battery voltage is present and only high speed is inoperative, there is an open circuit between blower motor and blower switch. Replace wiring harness (WP 0195 00 thru WP 0201 00). 2. If battery voltage is present and only low and medium speeds are inoperative, go to Test 7. 3. If battery voltage is present and all speeds are inoperative, go to Test 10. 4. If battery voltage is not present, go to Test 8.
	5. Check blower switch (medium). (a) Disconnect wiring harness from blower switch (WP 0198 00). (b) Place blower switch in MEDIUM SPEED position (TM 5-3805-291-10). (c) Check continuity between blower switch pins 2 and 3.	1. If continuity is present and only medium speed is inoperative, there is an open circuit between blower motor resistor and blower switch. Replace wiring harness (WP 0195 00 thru WP 0201 00). 2. If continuity is not present, replace blower switch (WP 0198 00).
	6. Check blower switch (low). (a) Disconnect wiring harness from blower switch (WP 0198 00). (b) Place blower switch in LOW SPEED position (TM 5-3805-291-10). (c) Check continuity between blower switch pins 1 and 2.	1. If continuity is present, go to Test 7. 2. If continuity is not present, replace blower switch (WP 0198 00).

Table 2. Electrical System Troubleshooting - Continued.

MALFUNCTION	TEST OR INSPECTION	CORRECTIVE ACTION
18. One or More Blower Motor Speeds Are Inoperative - Continued.	7. Check blower motor resistor. (a) Disconnect wiring harness from blower motor resistor. (b) Check continuity between blower motor resistor's two outermost pins.	1. If continuity is present and only low speed is inoperative, there is an open circuit between blower motor resistor and blower switch. Replace wiring harness (WP 0195 00 thru WP 0201 00). 2. If continuity is present and only medium and low speeds are inoperative, there is an open circuit between blower motor resistor and blower motor. Replace wiring harness (WP 0195 00 thru WP 0201 00). 3. If continuity is not present, replace blower motor resistor.
	8. Check power to AC/heater switch. (a) Turn battery disconnect and engine start switches to ON position (TM 5-3805-291-10). (b) Disconnect wiring harness from AC/heater switch (WP 0198 00). (c) Measure voltage between AC/heater switch wiring harness, pin 2, wire 124 (GN), and ground; and between AC/heater switch wiring harness, pin 5, wire 124 (GN), and ground.	1. If battery voltage is present, go to Test 9. 2. If battery voltage is not present, there is an open circuit between HVAC blower breaker and AC/heater switch. Replace wiring harness in question (WP 0195 00 thru WP 0201 00).
	9. Check power circuit to blower switch. (a) Wiring harness remains disconnected from blower switch. (b) Disconnect wiring harness to AC/heater switch (WP 0198 00). (c) Check continuity between blower switch wiring harness, pin 2, wire 567 (WH), and AC/heater switch wiring harness, pin 3, wire 567 (WH); and between blower switch wiring harness, pin 2, wire 567 (WH), and AC/heater switch wiring harness, pin 1, wire 567 (WH).	1. If continuity is present, replace AC/heater switch (WP 0198 00). 2. If continuity is not present, there is an open circuit between blower switch and AC/heater switch. Replace wiring harness in question (WP 0195 00 thru WP 0201 00).

Table 2. Electrical System Troubleshooting - Continued.

MALFUNCTION	TEST OR INSPECTION	CORRECTIVE ACTION
18. One or More Blower Motor Speeds Are Inoperative - Continued.	10. Check power to blower motor. (a) Connect wiring harness to blower switch (WP 0198 00). (b) Connect wiring harness to AC/ heater switch. (c) Disconnect wiring harness from blower motor (WP 0198 00). (d) Battery disconnect and engine start switches remain in ON position (TM 5-3805-291-10). (e) Place AC/heater switch in AC ON position (TM 5-3805-291-10). (f) Place blower switch in HIGH SPEED position (TM 5-3805-291-10). (g) Measure voltage between blower motor wiring harness, pin 1, wire A515 (BR), and ground.	1. If battery voltage is present, replace blower motor (WP 0198 00). 2. If battery voltage is not present, go to Test 11.
	11. Check ground to blower motor. (a) Wiring harness remains disconnected from blower motor (WP 0198 00). (b) Battery disconnect switch remains in ON position (TM 5-3805-291-10). (c) Check continuity between blower motor wiring harness, pin 2, wire 200 (BK), and ground.	1. If continuity is present, there is an open circuit between blower switch and blower motor. Replace wiring harness in question (WP 0195 00 thru WP 0201 00). 2. There is an open circuit in blower motor ground circuit. Replace wiring harness in question (WP 0195 00 thru WP 0201 00).

Table 2. Electrical System Troubleshooting - Continued.

MALFUNCTION	TEST OR INSPECTION	CORRECTIVE ACTION
19. Wipers/Washers Do Not Operate or Do Not Operate Correctly.	1. Determine condition.	1. If front and rear wipers and washers are all inoperative, go to Test 2. 2. If only front wiper and washer are inoperative, replace front wiper switch (WP 0067 00). 3. If front wiper is inoperative on HIGH SPEED only, go to Test 3. 4. If front wiper is inoperative on LOW SPEED only, go to Test 5. 5. If front wiper will not park, but operates in both HIGH and LOW speeds, go to Test 7. 6. If only front wiper is completely inoperative, go to Test 9. 7. If only front washer is inoperative, go to Test 11. 8. If only rear wiper and washer are inoperative, replace rear wiper switch (WP 0067 00). 9. If rear wiper is inoperative on HIGH SPEED only, go to Test 14. 10. If rear wiper is inoperative on LOW SPEED only, go to Test 16. 11. If rear wiper will not park, but operates in both HIGH and LOW speeds, go to Test 18. 12. If only rear wiper is completely inoperative, go to Test 20. 13. If only rear washer is inoperative, go to Test 22.
	2. Check wiper fuse (TM 5-3805-291-10).	1. If fuse is open, replace it. 2. If fuse is OK, there is an open circuit between wiper fuse and wiper switches. Replace wiring harness in question (WP 0195 00 thru WP 0201 00).
	3. Check front wiper motor high circuit. (a) Disconnect wiring harness from front wiper motor (WP 0145 00). (b) Turn battery disconnect and engine start switches to ON position (TM 5-3805-291-10). (c) Measure voltage at front wiper motor between wiring harness pin 5, wire 502 (OR), and ground.	1. If battery voltage is present, replace front wiper motor (WP 0145 00). 2. If battery voltage is not present, go to Test 4.

Table 2. Electrical System Troubleshooting - Continued.

MALFUNCTION	TEST OR INSPECTION	CORRECTIVE ACTION
19. Wipers/Washers Do Not Operate or Do Not Operate Correctly - Continued.	4. Check front wiper motor high circuit for continuity. (a) Disconnect wiring harness from front wiper switch (WP 0067 00). (b) Battery disconnect switch remains in ON position (TM 5-3805-291-10). (c) Turn engine start switch to OFF position (TM 5-3805-291-10). (d) Check continuity at front wiper motor between wiring harness pin 5, wire 502 (OR), and front wiper switch wiring harness pin 4, wire 502 (OR).	1. If continuity is present, replace front wiper switch (WP 0067 00). 2. If continuity is not present, there is an open circuit between wiper motor and wiper switch. Replace wiring harness in question (WP 0195 00 thru WP 0201 00).
	5. Check front wiper motor low circuit. (a) Disconnect wiring harness from front wiper motor (WP 0145 00). (b) Turn battery disconnect and engine start switches to ON position (TM 5-3805-291-10). (c) Turn front wiper switch to low speed position (TM 5-3805-291-10). (d) Measure voltage at front wiper motor between wiring harness pin 4, circuit 501 (GN), and ground.	1. If battery voltage is present, replace front wiper motor (WP 0145 00). 2. If battery voltage is not present, go to Test 6.
	6. Check front wiper motor low circuit for continuity. (a) Disconnect wiring harness from front wiper switch (WP 0067 00). (b) Battery disconnect switch remains in ON position (TM 5-3805-291-10). (c) Turn engine start switch to OFF position (TM 5-3805-291-10). (d) Check continuity at front wiper motor between wiring harness pin 4, wire 501 (GN), and front wiper switch wiring harness pin 5, wire 501 (GN).	1. If continuity is present, replace front wiper switch (WP 0067 00). 2. If continuity is not present, there is an open circuit between wiper motor and wiper switch. Replace wiring harness in question (WP 0195 00 thru WP 0201 00).

Table 2. Electrical System Troubleshooting - Continued.

MALFUNCTION	TEST OR INSPECTION	CORRECTIVE ACTION
19. Wipers/Washers Do Not Operate or Do Not Operate Correctly - Continued.	7. Check front wiper motor park circuit. (a) Disconnect wiring harness from front wiper motor (WP 0145 00). (b) Turn battery disconnect and engine start switches to ON position (TM 5-3805-291-10). (c) Turn front wiper switch to OFF position (TM 5-3805-291-10). (d) Measure voltage at front wiper motor between wiring harness pin 6, wire 118 (GY), and ground.	1. If battery voltage is present, go to Test 8. 2. If battery voltage is not present, there is an open circuit between wiper motor and wiper switch. Replace wiring harness in question (WP 0195 00 thru WP 0201 00).
	8. Check front wiper motor park circuit for continuity. (a) Disconnect wiring harness from front wiper switch (WP 0067 00). (b) Battery disconnect switch remains in ON position (TM 5-3805-291-10). (c) Turn engine start switch to OFF position (TM 5-3805-291-10). (d) Check continuity at front wiper motor between wiring harness pin 3, wire 500 (BR), and front wiper switch wiring harness pin 6, wire 500 (BR).	1. If continuity is present, replace front wiper switch (WP 0067 00). If problem still exists, replace front wiper motor (WP 0145 00). 2. If continuity is not present, there is an open circuit between wiper motor and wiper switch. Replace wiring harness in question (WP 0195 00 thru WP 0201 00).
	9. Check power to front wiper switch. (a) Disconnect wiring harness from front wiper switch (WP 0067 00). (b) Turn battery disconnect and engine start switches to ON position (TM 5-3805-291-10). (c) Measure voltage at front wiper switch between wiring harness pin 1, wire 118 (GY), and ground.	1. If battery voltage is present, go to Test 10. 2. If battery voltage is not present, there is an open circuit between wiper fuse and wiper switch. Replace wiring harness in question (WP 0195 00 thru WP 0201 00).
	10. Check front wiper motor ground circuit. (a) Disconnect wiring harness from front wiper motor (WP 0145 00). (b) Battery disconnect switch remains in ON position (TM 5-3805-291-10). (c) Turn engine start switch to OFF position (TM 5-3805-291-10). (d) Check continuity at front wiper motor between wiring harness pin 2, wire 200 (BK), and ground.	1. If continuity is present, replace front wiper switch (WP 0067 00). If problem still exists, replace front wiper motor (WP 0145 00). 2. If continuity is not present, there is an open wiper motor ground circuit. Replace wiring harness in question (WP 0195 00 thru WP 0201 00).

Table 2. Electrical System Troubleshooting - Continued.

MALFUNCTION	TEST OR INSPECTION	CORRECTIVE ACTION
19. Wipers/Washers Do Not Operate or Do Not Operate Correctly - Continued.	11. Check front washer motor ground circuit. (a) Disconnect wiring harness from front washer motor (WP 0144 00). (b) Battery disconnect switch remains in ON position (TM 5-3805-291-10). (c) Turn engine start switch to OFF position (TM 5-3805-291-10). (d) Check continuity at front washer motor between wiring harness pin 2, wire 200 (BK), and ground.	1. If continuity is present, go to Test 12. 2. If continuity is not present, there is an open wiper motor ground circuit. Replace wiring harness in question (WP 0195 00 thru WP 0201 00).
	12. Check power to front washer motor. (a) Wiring harness remains disconnected from front washer motor. (b) Turn battery disconnect and engine start switches to ON position (TM 5-3805-291-10). (c) Measure voltage at front washer motor between wiring harness pin 1, wire 506 (PU), and ground.	1. If battery voltage is present, replace washer pump (WP 0144 00). 2. If battery voltage is not present, go to Test 13.
	13. Check front washer motor power circuit for continuity. (a) Disconnect wiring harness from front wiper switch (WP 0067 00). (b) Wiring harness remains disconnected from front washer motor. (c) Turn engine start switch to OFF position (TM 5-3805-291-10). (d) Check continuity at front washer motor between wiring harness pin 1, wire 506 (PU), and front wiper switch wiring harness pin 7, wire 506 (PU).	1. If continuity is present, replace front wiper switch (WP 0067 00). If problem still exists, replace front wiper motor (WP 0145 00). 2. If continuity is not present, there is an open circuit between wiper motor and wiper switch. Replace wiring harness in question (WP 0195 00 thru WP 0201 00).

Table 2. Electrical System Troubleshooting - Continued.

MALFUNCTION	TEST OR INSPECTION	CORRECTIVE ACTION
19. Wipers/Washers Do Not Operate or Do Not Operate Correctly - Continued.	14. Check rear wiper motor high circuit. (a) Disconnect wiring harness from rear wiper motor (WP 0146 00). (b) Turn battery disconnect and engine start switches to ON position (TM 5-3805-291-10). (c) Turn rear wiper switch to HIGH SPEED position (TM 5-3805-291-10). (d) Measure voltage at rear wiper motor between wiring harness pin 5, wire 505 (BU), and ground.	1. If battery voltage is present, replace rear wiper motor (WP 0146 00). 2. If battery voltage is not present, go to Test 15.
	15. Check rear wiper motor high circuit for continuity. (a) Disconnect wiring harness from rear wiper switch (WP 0067 00). (b) Battery disconnect switch remains in ON position (TM 5-3805-291-10). (c) Turn engine start switch to OFF position (TM 5-3805-291-10). (d) Check continuity at rear wiper motor between wiring harness pin 5, wire 505 (BU), and rear wiper switch wiring harness pin 4, wire 504 (YL).	1. If continuity is present, replace rear wiper switch (WP 0067 00). 2. If continuity is not present, there is an open circuit between wiper motor and wiper switch. Replace wiring harness in question (WP 0195 00 thru WP 0201 00).
	16. Check rear wiper motor low circuit. (a) Disconnect wiring harness from rear wiper motor (WP 0146 00). (b) Turn battery disconnect and engine start switches to ON position (TM 5-3805-291-10). (c) Turn rear wiper switch to LOW SPEED position (TM 5-3805-291-10). (d) Measure voltage at rear wiper motor between wiring harness pin 4, wire 504 (YL), and ground.	1. If battery voltage is present, replace rear wiper motor (WP 0146 00). 2. If battery voltage is not present, go to Test 17.

Table 2. Electrical System Troubleshooting - Continued.

MALFUNCTION	TEST OR INSPECTION	CORRECTIVE ACTION
19. Wipers/Washers Do Not Operate or Do Not Operate Correctly - Continued.	17. Check rear wiper motor low circuit for continuity. (a) Disconnect wiring harness from rear wiper switch (WP 0067 00). (b) Battery disconnect switch remains in ON position (TM 5-3805-291-10). (c) Turn engine start switch to OFF position (TM 5-3805-291-10). (d) Check continuity at rear wiper motor between wiring harness pin 4, wire 504 (YL), and rear wiper switch wiring harness pin 5, wire 505 (BU).	1. If continuity is present, replace rear wiper switch (WP 0067 00). 2. If continuity is not present, there is an open circuit between wiper motor and wiper switch. Replace wiring harness in question (WP 0195 00 thru WP 0201 00).
	18. Check rear wiper motor park circuit. (a) Disconnect wiring harness from rear wiper motor (WP 0146 00). (b) Turn battery disconnect and engine start switches to ON position (TM 5-3805-291-10). (c) Turn rear wiper switch to OFF position (TM 5-3805-291-10). (d) Measure voltage at rear wiper motor between wiring harness pin 6, wire 118 (GY), and ground.	1. If battery voltage is present, go to Test 19. 2. If battery voltage is not present, there is an open circuit between wiper motor and wiper switch. Replace wiring harness in question (WP 0195 00 thru WP 0201 00).
	19. Check rear wiper motor park circuit for continuity. (a) Disconnect wiring harness from rear wiper switch (WP 0067 00). (b) Battery disconnect switch remains in ON position (TM 5-3805-291-10). (c) Turn engine start switch to OFF position (TM 5-3805-291-10). (d) Check continuity at rear wiper motor between wiring harness pin 3, wire 503 (BR), and rear wiper switch wiring harness pin 6, wire 503 (BR).	1. If continuity is present, replace rear wiper switch (WP 0067 00). If problem still exists, replace rear wiper motor (WP 0146 00). 2. If continuity is not present, there is an open circuit between wiper motor and wiper switch. Replace wiring harness in question (WP 0195 00 thru WP 0201 00).

Table 2. Electrical System Troubleshooting - Continued.

MALFUNCTION	TEST OR INSPECTION	CORRECTIVE ACTION
19. Wipers/Washers Do Not Operate or Do Not Operate Correctly - Continued.	20. Check power to rear wiper switch. (a) Disconnect wiring harness from rear wiper switch (WP 0067 00). (b) Turn battery disconnect and engine start switches to ON position (TM 5-3805-291-10). (c) Measure voltage at rear wiper switch between wiring harness pin 1, wire 118 (GY), and ground.	1. If battery voltage is present, go to Test 21. 2. If battery voltage is not present, there is an open circuit between wiper fuse and wiper switch. Replace wiring harness in question (WP 0195 00 thru WP 0201 00).
	21. Check rear wiper motor ground circuit. (a) Disconnect wiring harness from rear wiper motor (WP 0146 00). (b) Battery disconnect switch remains in ON position (TM 5-3805-291-10). (c) Turn engine start switch to OFF position (TM 5-3805-291-10). (d) Check continuity at rear wiper motor between wiring harness pin 2, wire 200 (BK), and ground.	1. If continuity is present, replace rear wiper switch (WP 0067 00). If problem still exists, replace rear wiper motor (WP 0146 00). 2. If continuity is not present, there is an open wiper motor ground circuit. Replace wiring harness in question (WP 0195 00 thru WP 0201 00).
	22. Check rear washer motor ground circuit. (a) Disconnect wiring harness from rear washer motor (WP 0144 00). (b) Battery disconnect switch remains in ON position (TM 5-3805-291-10). (c) Turn engine start switch to OFF position (TM 5-3805-291-10). (d) Check continuity at rear washer motor between wiring harness pin 2, wire 200 (BK), and ground.	1. If continuity is present, go to Test 23. 2. If continuity is not present, there is an open wiper motor ground circuit. Replace wiring harness in question (WP 0195 00 thru WP 0201 00).
	23. Check power rear washer motor. (a) Wiring harness remains disconnected from rear washer motor. (b) Turn battery disconnect and engine start switches to ON position (TM 5-3805-291-10). (c) Measure voltage at rear washer motor between wiring harness pin 1, wire 507 (WH), and ground.	1. If battery voltage is present, replace washer pump (WP 0144 00). 2. If battery voltage is not present, go to Test 24.

Table 2. Electrical System Troubleshooting - Continued.

MALFUNCTION	TEST OR INSPECTION	CORRECTIVE ACTION
19. Wipers/Washers Do Not Operate or Do Not Operate Correctly - Continued.	24. Check rear washer motor power circuit for continuity. (a) Disconnect wiring harness from rear wiper switch (WP 0067 00). (b) Wiring harness remains disconnected from rear washer motor. (c) Turn engine start switch to OFF position (TM 5-3805-291-10). (d) Check continuity at rear washer motor between wiring harness pin 1, wire 507 (WH), and rear wiper switch wiring harness pin 7, circuit 507 (WH).	1. If continuity is present, replace rear wiper switch (WP 0067 00). If problem still exists, replace rear wiper motor (WP 0146 00). 2. If continuity is not present, there is an open circuit between wiper motor and wiper switch. Replace wiring harness in question (WP 0195 00 thru WP 0201 00).
20. Horn/Dome Light(s) is Inoperative.	1. Check dome light operation (TM 5-3805-291-10).	1. If dome light operates correctly, go to Test 7. 2. If both dome lights and horn are inoperable, temporarily replace horn relay (WP 0053 00). If problem still exists, reinstall original relay and go to Test 2. 3. If dome light(s) only are inoperable, temporarily replace bulbs. If problem still exists, replace original bulbs and go to Test 10.
	2. Check horn fuse (TM 5-3805-291-10).	1. If fuse is OK, temporarily replace horn relay (WP 0053 00). If problem still exists, reinstall original relay and go to Test 3. 2. If fuse is open, replace it.
	3. Check power to relay. (a) Remove horn relay (WP 0053 00). (b) Turn battery disconnect and engine start switches to ON position (TM 5-3805-291-10). (c) Measure voltage at horn relay between wiring harness pin 30, wire 114 (RD), and ground.	1. If battery voltage is present, go to Test 4. 2. If battery voltage is not present, there is an open circuit between horn fuse and horn relay. Replace wiring harness in question (WP 0195 00 thru WP 0201 00).

Table 2. Electrical System Troubleshooting - Continued.

MALFUNCTION	TEST OR INSPECTION	CORRECTIVE ACTION
20. Horn/Dome Light(s) is Inoperative - Continued.	4. Check power to relay coil. (a) Horn relay remains removed. (b) Battery disconnect and engine start switches remain in ON position (TM 5-3805-291-10). (c) Select service drive mode on main light switch (TM 5-3805-291-10). (d) Measure voltage at horn relay between wiring harness pin 85, wire A652 (BU), and ground.	1. If battery voltage is present, go to Test 6. 2. If battery voltage is not present, go to Test 5.
	5. Check main light switch output circuit. (a) Turn battery disconnect and engine start switches to OFF position (TM 5-3805-291-10). (b) Horn relay remains removed. (c) Disconnect main light switch from wiring harness (WP 0061 00). (d) Check continuity at main light switch between wiring harness pin J, wire A652 (BU) and horn relay wiring harness pin 85, wire A652 (BU).	1. If continuity is present, replace main light switch (WP 0061 00). 2. If continuity is not present, there is an open circuit between main light switch and horn relay. Replace wiring harness in question (WP 0195 00 thru WP 0201 00).
	6. Check horn relay coil ground circuit. (a) Turn engine start switch to OFF position (TM 5-3805-291-10). (b) Battery disconnect switch remains in ON position (TM 5-3805-291-10). (c) Horn relay remains removed. (d) Check continuity at horn relay between wiring harness pin 86, wire 200 (BK), and ground.	1. If continuity is present, there is an open circuit between horn relay and horn. Replace wiring harness in question (WP 0195 00 thru WP 0201 00). 2. If continuity is not present, there is an open horn relay ground circuit. Replace wiring harness in question (WP 0195 00 thru WP 0201 00).
	7. Check power to horn. (a) Disconnect wiring harness from horn (WP 0095 00). (b) Turn battery disconnect and engine start switches to ON position (TM 5-3805-291-10). (c) Select service drive mode on main light switch (TM 5-3805-291-10). (d) Measure voltage at horn between wiring harness pin 1, wire 331 (OR), and ground.	1. If battery voltage is present, go to Test 8. 2. If battery voltage is not present, there is an open circuit between horn and horn relay. Replace wiring harness in question (WP 0195 00 thru WP 0201 00).

Table 2. Electrical System Troubleshooting - Continued.

MALFUNCTION	TEST OR INSPECTION	CORRECTIVE ACTION
20. Horn/Dome Light(s) is Inoperative - Continued.	8. Check continuity to horn switch. (a) Disconnect wiring harness from horn switch (WP 0095 00). (b) Wiring harness remains disconnected from horn. (c) Turn battery disconnect and engine start switches to OFF position (TM 5-3805-291-10). (d) Check continuity at horn between wiring harness pin 2, wire 322 (GY), and horn switch wiring harness pin, wire 322 (GY).	1. If continuity is present, go to Test 9. 2. If continuity is not present, there is an open circuit between horn and horn switch. Replace wiring harness in question (WP 0195 00 thru WP 0201 00).
	9. Check horn switch continuity. (a) Remove horn switch (WP 0095 00). (b) While holding horn switch in closed position, check continuity across horn switch.	1. If continuity is present, replace horn (WP 0095 00). If problem still exists, there is no continuity between horn switch and ground. Restore continuity between horn switch and ground. 2. If continuity is not present, replace horn switch (WP 0095 00).
	10. Check power to dome light. (a) Disconnect wiring harness from dome light (WP 0069 00). (b) Turn battery disconnect and engine start switches to ON position (TM 5-3805-291-10). (c) Select service drive mode on main light switch (TM 5-3805-291-10). (d) Measure voltage at dome light between wiring harness pin A, wire 331 (OR), harness side and ground.	1. If battery voltage is present, go to Test 11. 2. If battery voltage is not present, there is an open circuit between dome light and horn relay. Replace wiring harness in question (WP 0195 00 thru WP 0201 00).
	11. Check continuity to dome light and ground. (a) Wiring harness remains disconnected from horn. (b) Turn engine start switches to OFF position (TM 5-3805-291-10). (c) Check continuity between dome light pin C, wire 200 (BK), harness side and ground.	1. If continuity is present, replace dome light (WP 0069 00). 2. If continuity is not present, there is an open circuit between dome light and ground. Replace wiring harness in question (WP 0195 00 thru WP 0201 00).

Table 3. Transmission Troubleshooting.

MALFUNCTION	TEST OR INSPECTION	CORRECTIVE ACTION
	 **WARNING**  • **Personal injury or death can result from sudden machine movement.** • **DO NOT disconnect or remove any hydraulic system line or fitting unless engine is shut down and hydraulic system pressure has been relieved. Tighten all connections before applying pressure. Escaping hydraulic fluid under pressure can penetrate skin, causing injury to personnel.** • **At operating temperature, hydraulic oil is hot. Allow hydraulic oil to cool before disconnecting any hydraulic lines. Failure to follow this warning may result in injury to personnel.** **CAUTION** **Wipe area clean around all connections to be opened during removal. Cap lines and hoses and plug openings after removing lines. Contamination of system could result in premature failure.** **NOTE** • **Tag hoses prior to removal to ensure correct installation.** • **Use container to catch any fluid that may drain from hoses or system. Dispose of fluid IAW local policy and ordinances. Ensure all spills are cleaned up.** • **Many of these problems can create diagnostic or event codes in the ET. These codes can help find the root cause of a problem. ET should be used to retrieve logged and active codes.**	
1. Low Stall Speed.	1. Perform *Transmission Pressure Test and Adjustment* (WP 0014 00).	If problem still exists, go to Test 2.
	2. Run engine until normal operating temperature is reached (TM 5-3805-291-10).	If problem still exists, there is a problem with engine performance. Troubleshoot engine problems first.
2. High Stall Speed in Both Directions.	1. Check transmission oil level (TM 5-3805-291-10).	1. Add oil as necessary. 2. If problem still exists, go to Test 2.
	2. Check for air in transmission oil by visually looking at sight glass or pull dipstick out and look for bubbles on dipstick.	1. If air is present, find leak and repair air entry point. 2. If problem still exists, got o Test 3.
	3. Perform *Transmission Pressure Test and Adjustment* (WP 0014 00).	If problem still exists, replace transmission and torque converter (WP 0204 00).

Table 3. Transmission Troubleshooting - Continued.

MALFUNCTION	TEST OR INSPECTION	CORRECTIVE ACTION
3. High Stall Speed in One Gear or in One Direction.	1. Use a screw driver to verify that the solenoid is energized.	1. If screw driver does not indicate coil is energized, make certain the solenoid being checked is the correct one according to the Speed Range and Direction conditions. 2. If correct solenoid is being checked, go to Test 2.
	2. Check for diagnostic codes (WP 0006 00).	1. If there are no codes, the problem is in the electrical circuit. Troubleshoot the circuit using the *Electrical Schematic for Transmission* (WP 0236 00), repair or replace harness parts as needed (WP 0011 00 or WP 0195 00 thru WP 0201 00). 2. If a diagnostic code is present for each malfunctioning solenoid, perform the appropriate tests from *Troubleshooting With a Diagnostic Code* (WP 0009 00): (a) 1401 03 for solenoid valve #1 (b) 1401 05 for solenoid valve #1 (c) 1401 06 for solenoid valve #1 (d) 1402 03 for solenoid valve #2 (e) 1402 05 for solenoid valve #2 (f) 1402 06 for solenoid valve #2 (g) 1403 03 for solenoid valve #3 (h) 1403 05 for solenoid valve #3 (i) 1403 06 for solenoid valve #3 (j) 1404 03 for solenoid valve #4 (k) 1404 05 for solenoid valve #4 (l) 1404 06 for solenoid valve #4 (m) 1405 03 for solenoid valve #5 (n) 1405 05 for solenoid valve #5 (o) 1405 06 for solenoid valve #5 3. If problem still exists, replace transmission (WP 0204 00).
4. There is High Converter Pressure.	1. Check transmission oil passages and oil cooler for restriction (WP 0205 00).	1. Unblock passages or, if damaged, replace transmission oil cooler (WP 0205 00). 2. If problem still exists, go to Test 2.
	2. Perform *Transmission Pressure Test and Adjustment* (WP 0014 00).	If problem still exists, replace torque converter (WP 0204 00).

Table 3. Transmission Troubleshooting - Continued.

MALFUNCTION	TEST OR INSPECTION	CORRECTIVE ACTION
5. There is Low Converter Pressure.	Perform *Transmission Pressure Test and Adjustment* (WP 0014 00).	1. If necessary, replace transmission oil pump (WP 0206 00). 2. If problem still exists, refer to Malfunction 7, *Transmission Does Not Operate in Any Speed or Slips in All Speeds*.
6. Torque Converter Gets Hot.	1. Ensure operator is operating machine within specified parameters (TM 5-3805-291-10).	1. If there is too much load causing torque converter to slip, return to normal operation (TM 5-3805-291-10). 2. If problem still exists, go to Test 2.
	2. Check transmission oil level (TM 5-3805-291-10).	1. Add oil as necessary. 2. If problem still exists, go to Test 3.
	 **WARNING**  • **DO NOT service cooling system unless engine has been allowed to cool down. This is a pressurized cooling system and escaping steam or hot coolant may result in serious burns.** • **DO NOT remove cooling system radiator cap when engine is hot. Allow engine to cool down. Loosen cap to first stop and let any pressure out of cooling system, then remove cap. Failure to follow this warning may result in serious burns.** • **Wear effective eye, hand, and skin protection when handling coolants. Failure to do so may result in injury to personnel.**	
	3. Check radiator coolant level (TM 5-3805-291-10).	1. Add coolant as necessary. 2. If problem still exists, go to Test 4.
	4. Check transmission oil cooler and lines for restriction (WP 0102 00 and WP 0205 00).	Unblock or replace restricted or damaged oil cooler and lines (WP 0102 00 and WP 0205 00).
	5. Perform *Transmission Pressure Test and Adjustment* (WP 0014 00).	1. If necessary, replace transmission oil pump (WP 0206 00). 2. If problem still exists, replace transmission (WP 0204 00).
7. Transmission Does Not Operate in Any Speed or Slips in All Speeds.	1. Connect MSD (WP 0005 00) and check the status of transmission neutralizer switch (TM 5-3805-291-10).	If switch shows active, replace faulty wiring (WP 0195 00 thru WP 0201 00) or electrohydraulic control (WP 0219 00). If problem still exists, go to Test 2.
	2. Check fuse for shifter (WP 0053 00).	1. If fuse is open, replace fuse. 2. If problem still exists, go to Test 3.

Table 3. Transmission Troubleshooting - Continued.

MALFUNCTION	TEST OR INSPECTION	CORRECTIVE ACTION
7. Transmission Does Not Operate in Any Speed or Slips in All Speeds - Continued.	3. Check for active diagnostic codes.	1. Troubleshoot any active diagnostic codes (WP 0009 00). 2. If problem still exists, go to Test 4.
	4. Verify system voltage is not low with a multimeter.	1. If system voltage is OK, go to Test 5. 2. If system voltage is low, perform *Charging System Test* (WP 0013 00).
	5. Perform *Joystick Control Position Sensor Calibration* (WP 0014 00).	If problem still exists, go to Test 6.
	6. Perform *Transmission Pressure Test and Adjustment* (WP 0014 00).	If problem still exists, go to Test 7.
	7. Use *Electrical Schematic* to look for an electrical problem (WP 0236 00).	1. Correct any electrical problem found. 2. If problem still exists, replace transmission and torque converter (WP 0204 00).
8. Transmission Gets Hot.	1. Ensure operator is operating machine within specified parameters (TM 5-3805-291-10).	1. If there is too much load causing torque converter to slip, return to normal operation (TM 5-3805-291-10). 2. If problem still exists, go to Test 2.
	2. Check transmission oil level (TM 5-3805-291-10).	1. Add oil if necessary. 2. If problem still exists, go to Test 3.
	3. Check for air in transmission oil.	1. If air is present, find and repair source of air. 2. If problem still exists, go to Test 4.
	4. Check coolant level (TM 5-3805-291-10).	1. Add coolant if necessary. 2. If problem still exists, go to Test 5.
	5. Connect MSD (WP 0005 00) and monitor transmission temperature. Compare result to gage.	1. If gage is inaccurate, replace instrument cluster (WP 0054 00). 2. If problem still exists, go to Test 6.
	6. Check for restriction in transmission oil cooler and lines (WP 0102 00 and WP 0205 00).	1. Replace or unblock restricted or damaged components. 2. If problem still exists, go to Test 7.
	7. Check for leaks in transmission lines (WP 0102 00 and WP 0104 00).	1. Replace damaged lines. 2. If problem still exists, go to Test 8.
	8. Perform *Transmission Pressure Test and Adjustment* (WP 0014 00).	If problem still exists, replace transmission and torque converter (WP 0204 00).

Table 3. Transmission Troubleshooting - Continued.

MALFUNCTION	TEST OR INSPECTION	CORRECTIVE ACTION
9. Pump Noise is Not Normal.	Check for damaged or leaking line on inlet side of pump (WP 0102 00 and WP 0104 00).	1. Replace damaged lines. 2. If problem still exists, change transmission oil (WP 0100 00). 3. Replace transmission pump (WP 0206 00).
10. Noise in Transmission is Not Normal.	Perform *Transmission Oil Pump Pressure Test in Transmission Pressure Test and Adjustment* (WP 0014 00).	If problem still exists, replace transmission and torque converter (WP 0204 00).
11. Transmission Operates in Forward Only.	Check number 1 (reverse) modulating valve. Perform *Transmission Clutch Solenoid Modulating Valve Test* (WP 0014 00).	If problem still exists, the Reverse Clutch Pressure is low due to leaking seals, clutch discs, and plates have too much wear, or clutch components are broken. Replace transmission and torque converter (WP 0204 00).
12. Transmission Operates in Reverse Only.	Check number 2 (forward) modulating valve. Perform *Transmission Clutch Solenoid Modulating Valve Test* (WP 0014 00).	If problem still exists, the forward clutch pressure is low due to leaking seals, clutch discs, and plates have too much wear, or clutch components are broken. Replace transmission and torque converter (WP 0204 00).
13. Transmission Does Not Operate in First Gear, Forward, or Reverse.	Check number 6 (first speed) modulating valve. Perform *Transmission Clutch Solenoid Modulating Valve Test* (WP 0014 00).	If problem still exists, the first speed clutch pressure is low due to leaking seals, clutch discs, and plates have too much wear, or clutch components are broken. Replace transmission and torque converter (WP 0204 00).
14. Transmission Does Not Operate in Second Gear, Forward, or Reverse.	Check number 5 (second speed) modulating valve. Perform *Pressure Test - Solenoid Modulating Valve* (WP 0014 00).	If problem still exists, the second speed clutch pressure is low due to leaking seals, clutch discs, and plates have too much wear, or clutch components are broken. Replace transmission and torque converter (WP 0204 00).
15. Transmission Does Not Operate in Third Gear, Forward, or Reverse.	Check number 4 (third speed) modulating valve. Perform *Transmission Clutch Solenoid Modulating Valve Test* (WP 0014 00).	If problem still exists, the third speed clutch pressure is low due to leaking seals, clutch discs, and plates have too much wear, or clutch components are broken. Replace transmission and torque converter (WP 0204 00).
16. Transmission Does Not Operate in Fourth Gear, Forward, or Reverse.	Check number 3 (fourth speed) modulating valve. Perform *Transmission Clutch Solenoid Modulating Valve Test* (WP 0014 00).	If problem still exists, the fourth speed clutch pressure is low due to leaking seals, clutch discs, and plates have too much wear, or clutch components are broken. Replace transmission and torque converter (WP 0204 00).

Table 3. Transmission Troubleshooting - Continued.

MALFUNCTION	TEST OR INSPECTION	CORRECTIVE ACTION
17. Transmission Does Not Disengage When Remote F/N/R Switch and Shift Lever are in Neutral Position.	1. There maybe an electrical problem, check for diagnostics codes.	1. Troubleshoot any diagnostic codes. 2. If problem still exists, go to Test 2.
	2. A direction clutch did not disengage when shifted to Neutral. One of the direction clutch modulating valves (#1 or #2) is stuck. Determine which clutch (#1 or #2) has pressure while in Neutral. Perform *Transmission Clutch Solenoid Modulating Valve Test* (WP 0014 00).	If problem still exists, replace faulty transmission modulating valve (WP 0203 00).
18. Transmission Does Not Disengage When Direction Control Switch is in Neutral Position.	1. There maybe an electrical problem, check for diagnostics codes	If problem still exists, go to Test 2.
	2. A direction clutch did not disengage when shifted to Neutral. One of the direction clutch modulating valves #1 or #2 is stuck. Determine which clutch #1 or #2 has pressure while in Neutral. Perform *Transmission Clutch Solenoid Modulating Valve Test* (WP 0014 00).	If problem still exists, replace faulty transmission modulating valve (WP 0203 00).
19. Transmission Will Not Upshift to Maximum Selected Gear in Auto or Manual Mode.	1. Check for an electrical problem. 2. Check that left brake pedal is returning to fully released position.	If problem still exists, go to Test 2.
20. Pressure is Low at Any Modulating Valve.	1. Check for an electrical problem.	If problem still exists, go to Test 2.
	2. Check modulating valve. Perform *Transmission Clutch Solenoid Modulating Valve Test* (WP 0014 00).	If no electrical problem exists, replace transmission modulating valve (WP 0203 00).
21. Pressure is High at Any Modulating Valve.	1. Check for an electrical problem.	If problem still exists, go to Test 2.
	2. Check modulating valve. Perform *Fill Time for Transmission Clutch (MSD) Calibration* (WP 0014 00).	If no electrical problem exists, replace transmission modulating valve (WP 0203 00).
22. Clutch Engagement is Sudden.	1. Check modulating valve. Perform *Fill Time for Transmission Clutch (MSD) Calibration* (WP 0014 00).	If problem still exists, go to Test 2.

Table 3. Transmission Troubleshooting - Continued.

MALFUNCTION	TEST OR INSPECTION	CORRECTIVE ACTION
22. Clutch Engagement is Sudden - Continued.	2. Perform *Speed Sensor Adjustment* (WP 0014 00).	If problem still exists, replace sensor (WP 0091 00 and WP 0093 00).
23. Clutch Engagement is Slow for All Gears.	Perform *Transmission Pressure Test and Adjustment* (WP 0014 00).	
24. Clutch Engagement is Slow for All Forward Gears or All Reverse Gears or Clutch Engagement is Slow for Any One Gear in Both Forward and Reverse.	1. Perform *Transmission Pressure Test and Adjustment* (WP 0014 00).	If problem still exists, go to Test 2.
	2. Check for an electrical problem.	1. If no electrical problem exists, replace transmission modulating valve (WP 0203 00). 2. If problem still exists, replace transmission (WP 0204 00).
25. Transmission Neutralizer is Actuated and Transmission Remains Engaged.	1. Perform *Position Sensor (Left Brake Pedal)* (MSD) *Calibration* (WP 0014 00).	1. If faulty, replace brake pedal position sensor (WP 0075 00). 2. If problem still exists, go to Test 2.
	2. Check for active transmission diagnostic codes (WP 0006 00).	Troubleshoot any active diagnostic codes.
26. Transmission Engages but Machine Does Not Move.	Troubleshoot differential or final drive.	
27. There is Low Lubrication Pressure.	Perform *Transmission Pressure Test and Adjustment* (WP 0014 00).	
28. There is High Lubrication Pressure.	1. Perform *Transmission Pressure Test and Adjustmen*t (WP 0014 00).	If problem still exists, go to Test 2.
	2. Check transmission oil passages and oil cooler for restriction (WP 0205 00).	1. Unblock passages or, if damaged, replace transmission oil cooler (WP 0102 00 and WP 0205 00). 2. If problem still exists, replace torque converter (WP 0204 00).

Table 4. Differential and Final Drive Troubleshooting.

MALFUNCTION	TEST OR INSPECTION	CORRECTIVE ACTION
	 **WARNING**  • **Personal injury or death can result from sudden machine movement.** • **DO NOT disconnect or remove any hydraulic system line or fitting unless engine is shut down and hydraulic system pressure has been relieved. Tighten all connections before applying pressure. Escaping hydraulic fluid under pressure can penetrate skin, causing injury to personnel.** • **At operating temperature, hydraulic oil is hot. Allow hydraulic oil to cool before disconnecting any hydraulic lines. Failure to follow this warning may result in injury to personnel.** **CAUTION** **Wipe area clean around all connections to be opened during removal. Cap lines and hoses and plug openings after removing lines. Contamination of system could result in premature failure.** **NOTE** • **Tag hoses prior to removal to ensure correct installation.** • **Use container to catch any fluid that may drain from hoses or system. Dispose of fluid IAW local policy and ordinances. Ensure all spills are cleaned up.** • **Many of these problems can create diagnostic or event codes in ET. These codes can help find the root cause of a problem. ET should be used to retrieve logged and active codes.**	
1. There is a Constant Noise in Differential.	Check axle oil for correct level (TM 5-3805-291-10) and type (WP 0020 00).	1. Add, drain, or change oil as necessary (WP 0111 00). 2. If problem still exists, replace axle (WP 0207 00 and WP 0208 00).
2. Lubricant is Leaking.	1. Check axle oil for correct level (TM 5-3805-291-10) and type (WP 0020 00). 2. Check for leaks around axle.	Add, drain, or change oil as necessary (WP 0111 00). Replace axle (WP 0207 00 and WP 0208 00).
3. There is Noise at Different Intervals.	Replace axle (WP 0207 00 and WP 0208 00).	
4. There is Noise When Machine Turns.	Replace axle (WP 0207 00 and WP 0208 00).	
5. Drive Wheels Do Not Turn, but Universal Joint Turns.	Replace axle (WP 0207 00 and WP 0208 00).	

Table 5. Steering System Troubleshooting.

MALFUNCTION	TEST OR INSPECTION	CORRECTIVE ACTION
	 **WARNING**  • **Personal injury or death can result from sudden machine movement.** • **DO NOT disconnect or remove any hydraulic system line or fitting unless engine is shut down and hydraulic system pressure has been relieved. Tighten all connections before applying pressure. Escaping hydraulic fluid under pressure can penetrate skin, causing injury to personnel.** • **At operating temperature, hydraulic oil is hot. Allow hydraulic oil to cool before disconnecting any hydraulic lines. Failure to follow this warning may result in injury to personnel.** **CAUTION** **Wipe area clean around all connections to be opened during removal. Cap lines and hoses and plug openings after removing lines. Contamination of system could result in premature failure.** **NOTE** • **Tag hoses prior to removal to ensure correct installation.** • **Use container to catch any fluid that may drain from hoses or system. Dispose of fluid IAW local policy and ordinances. Ensure all spills are cleaned up.** • **Many of these problems can create diagnostic or event codes in ET. These codes can help find the root cause of a problem. ET should be used to retrieve logged and active codes.**	
1. Too Much Force is Needed to Turn Steering Wheel.	1. Check hydraulic oil level (TM 5-3805-291-10).	1. Add or change oil if necessary (WP 0148 00). 2. If problem still exists, go to Test 2.
	2. Allow hydraulic oil to reach normal operating temperature (TM 5-3805-291-10).	If problem still exists, go to Test 3.
	3. Check for blocked lines or hoses.	1. Unblock or replace lines and hoses as necessary (WP 0124 00). 2. If problem still exists, go to Test 4.

Table 5. Steering System Troubleshooting - Continued.

MALFUNCTION	TEST OR INSPECTION	CORRECTIVE ACTION
1. Too Much Force is Needed to Turn Steering Wheel - Continued.	4. Check if bolts on steering metering pump are too tight (WP 0128 00).	1. Torque steering metering pump bolts to correct specifications (WP 0128 00 and WP 0234 00). 2. If problem still exists, go to Test 5.
	5. Check adjustment of backup relief valve. Refer to *Relief Valve (Pump Backup) Test and Adjustment* (WP 0016 00).	1. Adjust backup relief valve as necessary. 2. If problem still exists, go to Test 6.
	6. Perform *Piston Pump (Steering) High Pressure Test and Adjustment* (WP 0016 00).	
2. Machine Does Not Turn When Steering Wheel is Turned.	1. Ensure steering frame lock is not connected (TM 5-3805-291-10).	1. Secure steering frame lock in stowed position (TM 5-3805-291-10). 2. If problem still exists, go to Test 2.
	2. Check hydraulic oil for correct level (TM 5-3805-291-10) and check for dirt in system.	1. Add or change oil if necessary (WP 0148 00). 2. If problem still exists, go to Test 3.
	3. Check steering linkage for mechanical failure.	1. If damaged, replace steering components. 2. If problem still exists, go to Test 4.
	4. Perform all *Steering Pressure Tests and Adjustments* (WP 0016 00).	1. If problem still exists, replace metering pump (WP 0128 00). 2. If problem still exists, replace steering control valve (WP 0127 00).
3. Machine Turns Slowly in Both Directions.	1. Perform *Adjusting Flow Compensator Valve* (WP 0016 00).	If problem still exists, go to Test 2.
	2. Perform *Piston Pump (Steering) Margin Pressure Test and Adjustment* (WP 0016 00).	If problem still exists, go to Test 3.
	3. Perform *Steering Control Valve Adjustment* (WP 0016 00).	If problem still exists, go to Test 4.
	4. Perform *Piston Pump (Steering) High Pressure Stall Test and Adjustment* (WP 0016 00).	If problem still exists, replace steering metering pump (WP 0128 00).
	5. Check pump pressure (WP 0016 00).	If faulty, replace pump (WP 0188 00).
4. Machine Turns Slowly in One Direction.	Perform *Steering Time Check* (WP 0016 00).	If faulty, replace steering control valve (WP 0127 00).
5. Machine Does Not Turn Evenly.	1. Perform *Pistons Pump (Steering) Margin Pressure Test and Adjustment* (WP 0016 00).	1. Adjust pressure as necessary. 2. If problem still exists, go to Test 2.

Table 5. Steering System Troubleshooting - Continued.

MALFUNCTION	TEST OR INSPECTION	CORRECTIVE ACTION
5. Machine Does Not Turn Evenly - Continued.	2. Perform S*teering Time Check* (WP 0016 00).	1. Adjust steering control valve (WP 0016 00). 2. Replace steering metering pump (WP 0128 00).
6. Machine Turns Without Operator Turning Steering Wheel.	Perform *Steering Time Check* (WP 0016 00).	1. If faulty, replace steering control valve (WP 0127 00). 2. If problem still exists, replace steering metering pump (WP 0128 00).
7. Machine Turns Slowly in Both Directions Only When Turning Against a Load (High Resistance).	1. Perform *Relief Valve (Pump Backup) Test and Adjustment* (WP 0016 00).	If problem still exists, go to Test 2.
	2. Perform *Steering Time Check* (WP 0016 00).	1. If faulty, replace steering control valve (WP 0127 00). 2. If problem still exists, go to Test 3.
	3. Perform *Piston Pump (Steering) High Pressure Stall Test and Adjustment* (WP 0016 00).	1. Adjust as necessary. 2. If faulty, replace pump (WP 0188 00).
8. Steering Wheel Turns With Slight Resistance but Machine Will Not Turn.	1. Perform *Steering Time Check* (WP 0016 00).	If faulty, replace control valve (WP 0127 00).
	2. Check for leaks in piston seals.	If faulty, replace steering cylinders (WP 0125 00).
9. When at Fast Speeds, Machine Turns Too Quickly with Small Corrections.	1. Perform *Steering Time Check* (WP 0016 00).	1. Adjust as necessary. 2. If faulty, replace control valve (WP 0127 00). 3. If problem still exists, go to Test 2.
	2. Perform *Pistons Pump (Steering) Margin Pressure Test and Adjustment* (WP 0016 00).	1. Adjust pressure as necessary. 2. If problem still exists, replace steering metering pump (WP 0128 00).
10. Steering Metering Pump Makes Noise and Steering Cylinder Rods Do Not Move Freely.	1. Check hydraulic oil for correct oil level (TM 5-3805-291-10), viscosity or grade (WP 0020 00), and contamination.	1. Add or change oil if necessary (WP 0148 00). 2. If problem still exists, go to Test 2.
	2. Check for a loose connection at oil line on inlet side of pump (WP 0124 00).	1. Tighten any loose connections or, if damaged, replace line(s) (WP 0124 00). 2. If problem still exists, go to Test 3.
	3. Check for air in steering hydraulic circuit by visually checking sight glass or pulling dipstick out and looking for bubbles on dipstick.	If problem still exists, go to Test 4.

Table 5. Steering System Troubleshooting - Continued.

MALFUNCTION	TEST OR INSPECTION	CORRECTIVE ACTION
10. Steering Metering Pump Makes Noise and Steering Cylinder Rods Do Not Move Freely - Continued.	4. Perform *Steering Time Check* (WP 0016 00).	If problem still exists, go to Test 5.
	5. Perform *Piston Pump (Steering) High Pressure Stall Test and Adjustment* (WP 0016 00).	If problem still exists, replace steering piston pump (WP 0216 00).
	6. Perform *Pistons Pump (Steering) Margin Pressure Test and Adjustment* (WP 0016 00).	
	7. Perform *Piston Pump (Steering) Low Pressure Stall Test and Adjustment* (WP 0016 00).	

Table 6. Braking and Hydraulic Troubleshooting.

MALFUNCTION	TEST OR INSPECTION	CORRECTIVE ACTION
	 **WARNING**  • **Personal injury or death can result from sudden machine movement.** • **DO NOT disconnect or remove any hydraulic system line or fitting unless engine is shut down and hydraulic system pressure has been relieved. Tighten all connections before applying pressure. Escaping hydraulic fluid under pressure can penetrate skin, causing injury to personnel.** • **At operating temperature, hydraulic oil is hot. Allow hydraulic oil to cool before disconnecting any hydraulic lines. Failure to follow this warning may result in injury to personnel.** **CAUTION** **Wipe area clean around all connections to be opened during removal. Cap lines and hoses and plug openings after removing lines. Contamination of system could result in premature failure.** **NOTE** • **Tag hoses prior to removal to ensure correct installation.** • **Use container to catch any fluid that may drain from hoses or system. Dispose of fluid IAW local policy and ordinances. Ensure all spills are cleaned up.** • **This section provides probable causes to known problems. Since there may be several probable causes, specific inspections or instrument tests may be recommended. These inspections and tests will help to identify causes that are the most probable.** • **Make sure you use an oil with the correct viscosity for operating conditions.** • **Ensure the tasks in *Brake System Tests, Inspections, and Adjustments* (WP 0015 00) have been performed before continuing with troubleshooting.** • **Many of these problems can create diagnostic or event codes in ET. These codes can help find the root cause of a problem. ET should be used to retrieve logged and active codes.**	

Table 6. Braking and Hydraulic Troubleshooting - Continued.

MALFUNCTION	TEST OR INSPECTION	CORRECTIVE ACTION
1. Accumulator Pressure Will Not Reach Cutout Pressure at Low Idle.	Perform *Brake Control Manifold Test* (WP 0015 00).	If faulty, replace piston pump (WP 0215 00).
2. Front Service Brakes Do Not Operate and Warning System is Not Activated.	1. Check lines to front service brakes for obstructions or leaks (WP 0117 00).	1. Replace damaged or leaking lines, tighten loose connections, and remove restrictions or reposition kinked lines. 2. If lines are OK, go to Test 2.
	2. Perform brake disc wear (existing) check (WP 0015 00).	1. Brakes are worn out, replace axle (WP 0207 00). 2. If problem still exists, replace brake control valve (WP 0116 00).
3. Rear Service Brakes Do Not Operate and Warning System is Not Activated.	1. Check lines to rear service brakes for obstructions or leaks (WP 0117 00).	1. Replace damaged or leaking lines, tighten loose connections, and remove restrictions or reposition kinked lines. 2. If lines are OK, go to Test 2.
	2. Perform brake disc wear (existing) check (WP 0015 00).	1. If a problem still exists, replace axle (WP 0208 00). 2. If are worn, replace brake control valve (WP 0116 00).
4. Service Brakes Slip and Warning System is Not Activated.	Additives in oil in one or both axles are incorrect.	1. Change differential and final drive oil (WP 0111 00). 2. If problem still exists, replace axle(s) (WP 0207 00 and WP 0208 00).
5. Service Brakes are Not Applied Evenly.	Change hydraulic oil and filter (WP 0148 00).	1. If problem still exists, replace brake control valve (WP 0116 00). 2. If problem still exists, replace axle(s) (WP 0207 00 and WP 0208 00).
6. Too Much Force is Needed to Push Brake Pedal.	1. Check service brake pedal and linkage for damage (WP 0118 00).	1. If damaged, replace brake pedal assembly. 2. If problem still exists, go to Test 2.
	2. Change hydraulic oil and filter (WP 0155 00 and WP 0154 00).	If problem still exists, replace brake control valve (WP 0116 00).
7. Parking Brake Does Not Hold Machine Stationary.	1. Check parking brake adjustment (WP 0112 00).	1. If parking brake is out of adjustment, adjust parking brake. 2. If problem still exists, go to Test 2.
	2. Check parking brake drum for grease or oil contamination (WP 0113 00).	1. If parking brake drum is contaminated, clean drum. 2. If problem still exists, go to Test 3.
	3. Check parking brake linings for wear (WP 0113 00).	If parking brake linings are worn, replace them.

Table 6. Braking and Hydraulic Troubleshooting - Continued.

MALFUNCTION	TEST OR INSPECTION	CORRECTIVE ACTION
8. Parking Brake Does Not Engage When Parking Brake Control Lever is Actuated.	Check parking brake actuator for incorrect adjustment, damage, or disconnection (WP 0112 00).	If damaged, stretched, or out of adjustment, adjust or replace parking brake cable as necessary.
9. Low Oil Pressure Warning Indicator Will Not Turn Off.	1. Check hydraulic system oil level (TM 5-3805-291-10).	1. Add oil as necessary. 2. If problem still exists, go to Test 2.
	2. Run engine at high rpm while observing warning indicator (TM 5-3805-291-10).	If warning indicator turns off with engine at high idle, replace braking and hydraulic fan gear pump (WP 0215 00).
10. Fan Speed Will Not Adjust to Demands of Machine.	1. Perform *Control Manifolds Test and Adjustment* (WP 0016 00).	If problem still exists, go to Test 2.
	2. Perform *Hydraulic Fan Speed Test and Adjustment* (WP 0015 00).	If fan speed cannot be adjusted, replace demand fan solenoid (WP 0217 00).
11. Fan Will Not Spin or Stops Spinning After Machine Starts.	1. Margin pressure must be set. Refer to *Hydraulic Fan Speed Test and Adjustment* (WP 0015 00).	If problem still exists, go to Test 2.
	2. Perform *High Pressure Cutoff Test* (WP 0015 00).	If problem still exists, go to Test 3.
	3. Perform *Brake Control Manifold Test* (WP 0015 00).	If problem still exists, replace brake control manifold (WP 0217 00).
12. Fan Spins When Machine is Cold or Acts Erratically When Machine is Hot.	Margin pressure must be set. Refer to *Hydraulic Fan Speed Test and Adjustment* (WP 0015 00).	
13. Calibration Cannot Achieve Minimum Fan Speed.	1. Set margin pressure (WP 0015 00). Refer to *Hydraulic Fan Speed Test and Adjustment*.	If problem still exists, go to Test 2.
	2. Perform *Brake Control Manifold Test* (WP 0015 00).	Replace control manifold (WP 0217 00).
14. Fan Spins at Maximum Speed at All Times.	1. Perform *Engine Temperature Sensor Open or Short Circuit Test* (WP 0013 00).	1. If faulty, replace temperature sensor (WP 0077 00). 2. If problem still exists, go to Test 2.
	2. Perform *Hydraulic Fan Speed Test and Adjustment* (WP 0015 00).	If problem still exists, go to Test 3.
	3. Perform *Brake Control Manifold Test* (WP 0015 00).	If faulty, replace fan control manifold (WP 0217 00).
15. Braking and Hydraulic Fan System Was Serviced and Fan Speed is Incorrect.	Perform *Hydraulic Fan Speed Test and Adjustment* (WP 0015 00).	

Table 7. Hydraulic System Troubleshooting.

MALFUNCTION	TEST OR INSPECTION	CORRECTIVE ACTION
	 **WARNING**  • **Personal injury or death can result from sudden machine movement.** • **DO NOT disconnect or remove any hydraulic system line or fitting unless engine is shut down and hydraulic system pressure has been relieved. Tighten all connections before applying pressure. Escaping hydraulic fluid under pressure can penetrate skin, causing injury to personnel.** • **At operating temperature, hydraulic oil is hot. Allow hydraulic oil to cool before disconnecting any hydraulic lines. Failure to follow this warning may result in injury to personnel.** **CAUTION** **Wipe area clean around all connections to be opened during removal. Cap lines and hoses and plug openings after removing lines. Contamination of system could result in premature failure.** **NOTE** • **Tag hoses prior to removal to ensure correct installation.** • **Use container to catch any fluid that may drain from hoses or system. Dispose of fluid IAW local policy and ordinances. Ensure all spills are cleaned up.** • **On 966H machines, each valve has poppets which act as load check valves. Poppets close ports so there is almost zero drift of implements. Relief valves in auxiliary circuit and in tilt circuit protect components from pressures in circuits when control valves are in HOLD position.** • **Oil pressure for opening relief valves for main system and auxiliary circuits must be within specifications. Pressures that are too low will cause a decrease in lifting force and dig characteristics. Pressures that are too high will cause a decrease in life of hoses and other components.** • **Circuit drift is caused by leakage past cylinder pistons, O-ring seals in control valves, check valves that do not seat correctly, or makeup valves that do not seat correctly. Poor adjustment of control valves or incorrect fit may also contribute to circuit drift.** • **Cycle times that are longer than normal can result from oil leakage, pump wear, or pump speed.** • **If basic tests indicate a leak in circuit, install a flow meter and perform a test.** • **Many of these problems can create diagnostic or event codes in ET. These codes can help find the root cause of a problem. ET should be used to retrieve logged and activate codes.**	

Table 7. Hydraulic System Troubleshooting - Continued.

MALFUNCTION	TEST OR INSPECTION	CORRECTIVE ACTION
1. Pump is Noisy and Cylinder Rods Do Not Move Evenly.	1. Check hydraulic oil for correct oil viscosity or grade and for air (WP 0020 00), contamination, and correct level (TM 5-3805-291-10).	1. Add or change oil and filter if necessary (WP 0148 00). If air is present replace any leaks. 2. If problem still exists, go to Test 2.
	2. Perform *Relief Valve* (*Main, Load Sensing*) *Test and Adjustment* (WP 0017 00).	1. Adjust as necessary. 2. If problem still exists, replace pump (WP 0215 00).
2. Oil Temperature is Too High.	1. Machine is being operated above intended capacity.	1. Make sure load limits of machine's capacity are not being exceeded. 2. If problem still exists, go to Test 2.
	2. Check hydraulic oil for correct oil viscosity or grade (WP 0020 00), contamination, and correct level (TM 5-3805-291-10).	1. Add or change oil if necessary (WP 0148 00). 2. If problem still exists, go to Test 3.
	3. Inspect hydraulic oil cooler fins and passages for restriction (WP 0193 00).	1. If damaged or restricted, clean or replace hydraulic oil cooler (WP 0193 00). 2. If problem still exists, go to Test 4.
	4. Check for any leaks in system.	1. Repair any leaks. 2. If problem still exists, go to Test 5.
	5. Check for oil passage restrictions.	1. Repair any restrictions. 2. If problem still exists, go to Test 6.
	6. Perform *Hydraulic Fan Speed Test and Adjustment* (WP 0015 00).	If problem still exists, go to Test 7.
	7. Inspect hydraulic oil cooler for restricted air-flow (WP 0193 00).	1. Remove any obstruction of air flow. 2. If problem still exists, go to Test 8.
	8. Use infrared thermometer to check surface temperature of hydraulic tank. Compare to reading displayed in messenger.	1. If temperature differential is more than 50°F (10°C) between the surface temperature of the hydraulic tank and the messenger read out, replace the hydraulic oil temperature sensor (WP 0083 00). 2. If problem still exists, go to Test 9.
	9. Perform *Relief Valve* (*Main, Load Sensing*) *Test and Adjustment* (WP 0017 00).	If problem still exists, or relief valves can't be adjusted, replace piston pimp (implement) (WP 0216 00).
3. Pump Output is Low.	1. Check hydraulic oil for correct oil viscosity or grade, contamination, and correct level (WP 0020 00).	1. Add or change oil and filter if necessary (WP 0148 00). 2. If problem still exists, go to Test 2.
	2. Perform *Implement Cycle Time Test* (WP 0017 00).	If problem still exists, go to Test 3.

Table 7. Hydraulic System Troubleshooting - Continued.

MALFUNCTION	TEST OR INSPECTION	CORRECTIVE ACTION
3. Pump Output is Low - Continued.	3. Perform *Relief Valve (Main, Load Sensing) Test and Adjustment* (WP 0017 00).	If problem still exists, perform *Relief Valve (Line) Test and Adjustment* (WP 0017 00).
4. Oil Pressure is Low.	1. Inspect hydraulic system for leaks.	1. Repair any leaks found. 2. If problem still exists, go to Test 2.
	2. Perform *Relief Valve* (*Main, Load Sensing*) *Test and Adjustment* (WP 0017 00).	1. Adjust as necessary. 2. If problem still exists, replace control valve (WP 0218 00). 3. If problem still exists, replace pump (WP 0215 00).
5. Work Tool Moves While Control Lever is in HOLD Position.	1. Check for oil leaks around piston seals of lift and tilt cylinders.	1. If leaks are present, replace the leaky cylinder (WP 0152 00 or WP 0153 00). 2. If problem still exists, go to Test 2.
	2. Check for leak in line(s) between control valve and cylinder that is drifting.	1. Repair any leaks present (WP 0156 00 or WP 0157 00). 2. If problem still exists, go to Test 3.
	3. Perform *Main Control Valve (MSD) Calibration* (WP 0017 00).	If problem still exists, go to Test 4.
	4. Perform *Joystick Control Position Sensor Calibration* (WP 0017 00).	If problem still exists, go to Test 5.
	5. Check for active diagnostic codes for the joystick position sensors (WP 0006 00).	1. Troubleshoot any active diagnostic codes. 2. If no codes are present and a joystick position sensors is suspected, use electrical schematic (WP 0236 00) to troubleshoot joystick position sensors. Replace joystick if sensor is faulty (WP 0219 00). 3. If problem still exists, go to Test 6.
	6. Check for active diagnostic codes for the pilot hydraulic solenoid (WP 0006 00).	1. Troubleshoot any active diagnostic codes. 2. If no codes are present and a pilot hydraulic solenoid is suspected, use electrical schematic (WP 0236 00) to troubleshoot pilot hydraulic solenoid. Replace solenoid if faulty (WP 0218 00). 3. If problem still exists, replace main control valve (WP 0218 00).

Table 7. Hydraulic System Troubleshooting - Continued.

MALFUNCTION	TEST OR INSPECTION	CORRECTIVE ACTION
6. Lift Cylinder Droops When Lift Control Lever is Moved from HOLD to RAISE Position.	**NOTE** **Droop is an initial movement of hydraulic cylinders. After joystick movement in opposite direction, cylinders will move in correct direction.**	
	1. Check operation when oil is warm (TM 5-3805-291-10).	If problem still exists, go to Test 2.
	2. Check for leaks or damage to lift cylinders.	1. If damaged, replace lift cylinder(s) (WP 0153 00). 2. If problem still exists, go to Test 3.
	3. Perform *Main Control Valve (MSD) Calibration* (WP 0017 00).	If faulty, replace control valve (WP 0218 00).
7. Hydraulic Force is Too Low When Lift Control Lever is Moved to RAISE or LOWER Positions.	1. Ensure machine is being operated within specified parameters (TM 5-3805-291-10).	1. Increased load could be impeding performance of machine. 2. If problem still exists, go to Test 2.
	2. Check for active diagnostic codes.	1. If any diagnostic codes exist, refer to *Troubleshooting with a Diagnostic Code* (WP 0009 00). 2. If there are no diagnostic codes, then perform *Main Control Valve (MSD) Calibration* (WP 0017 00). 3. If problem still exists, go to Test 3.
	3. Perform *Relief Valve* (*Main, Load Sensing*) *Test and Adjustment* (WP 0017 00).	1. Adjust as necessary. 2. If problem still exists, go to Test 4.
	4. Perform *Joystick Control Position Sensor Calibration* (WP 0017 00).	1. If damaged, replace lift sensor (WP 0085 00). 2. If problem still exists, go to Test 5.
	5. Perform *Pilot Pressure to Main Control Valve Check* (WP 0017 00).	If damaged, replace main control valve (WP 0218 00).
8. One Implement Function is Sluggish or Nonfunctional.	1. Perform *Joystick Control Position Sensor Test* with MSD.	If problem still exists, go to Test 2.
	2. Check for active diagnostic codes.	1. If any diagnostic codes exist, refer to *Troubleshooting with a Diagnostic Code* (WP 0009 00). 2. If there are no diagnostic codes, then perform *Main Control Valve (MSD) Calibration* (WP 0017 00). 3. If problem still exists, go to Test 3.
	3. Perform *Relief Valve* (*Main, Load Sensing*) *Test and Adjustment* (WP 0017 00).	1. Adjust as necessary. 2. If problem still exists, go to Test 4.

Table 7. Hydraulic System Troubleshooting - Continued.

MALFUNCTION	TEST OR INSPECTION	CORRECTIVE ACTION
8. One Implement Function is Sluggish or Nonfunctional - Continued.	4. Perform *Pilot Pressure to Main Control Valve Check* (WP 0017 00).	If damaged, replace main control valve (WP 0218 00).
9. All Implement Functions Are Sluggish.	1. Check hydraulic oil for correct oil viscosity or grade (WP 0020 00), contamination, and correct level (TM 5-3805-291-10).	1. Add or change oil and filter if necessary (WP 0148 00). 2. If problem still exists, go to Test 2.
	2. Perform *Main Control Valve (MSD) Calibration* (WP 0017 00).	If problem still exists, go to Test 3.
	3. Perform *Relief Valve* (*Main, Load Sensing*) *Test and Adjustment* (WP 0017 00).	1. Adjust as necessary. 2. If problem still exists, go to Test 4.
	4. Perform *Pressure Reducing Valve Adjustment* (WP 0017 00).	Adjust as necessary.
10. Implement Functions Are Erratic or Intermittent.	1. Check hydraulic oil for correct level (TM 5-3805-291-10).	1. Add oil, if necessary (TM 5-3805-291-10). 2. If problem still exists, go to Test 2.
	2. Check for air in system. See Malfunction 19, *There are Air Bubbles in Oil*.	If problem still exists, go to Test 3.
	3. Perform *Main Control Valve (MSD) Calibration* (WP 0017 00).	If problem still exists, go to Test 4.
	4. Perform *Pressure Reducing Valve Adjustment* (WP 0017 00).	1. Adjust as necessary. 2. If problem still exists, go to Test 5.
	5. Perform *Pilot Pressure to Main Control Valve Check* (WP 0017 00).	1. If damaged replace main control valve (WP 0218 00). 2. If problem still exists, replace pump (WP 0215 00).
11. No Implements Are Functioning.	1. Check that hydraulic lockout switch is not in LOCKED position (TM 5-3805-291-10).	If problem still exists, go to Test 2.
	2. Check fuses (TM 5-3805-291-10).	1. Replace fuses as necessary. 2. If problem still exists, go to Test 3.
	3. Perform *Pressure Reducing Valve Adjustment* (WP 0017 00).	1. Adjust as necessary. 2. If problem still exists, go to Test 4.
	4. Perform *Relief Valve* (*Main, Load Sensing*) *Test and Adjustment* (WP 0017 00).	1. Adjust as necessary. 2. If problem still exists, go to Test 5.

Table 7. Hydraulic System Troubleshooting - Continued.

MALFUNCTION	TEST OR INSPECTION	CORRECTIVE ACTION
11. No Implements Are Functioning - Continued.	5. Perform *Main Control Valve Calibration* (WP 0017 00).	1. If faulty, replace implement ECM (WP 0060 00). 2. If problem still exists, replace pump (WP 0215 00).
12. There is Too Much Lift Cylinder Drift.	**NOTE** **Drift is cylinder movement with pilot operated control in HOLD position.**	
	1. Check for active diagnostic codes.	1. If any diagnostic codes exist, refer to *Troubleshooting with a Diagnostic Code* (WP 0009 00). 2. If there are no diagnostic codes, then perform *Main Control Valve (MSD) Calibration* (WP 0017 00). 3. If problem still exists, go to Test 2.
	2. Check that lift sensor is properly mounted (WP 0085 00) and perform *Joystick Control Position Sensor Calibration* (WP 0017 00).	1. Readjust as necessary. 2. If problem still exists, go to Test 3.
	3. Check for leaks or damage to lift cylinders.	1. If damaged, replace lift cylinders (WP 0153 00). 2. If problem still exists, go to Test 4.
	4. Perform *Pilot Pressure to Main Control Valve Check* (WP 0017 00).	If damaged, replace main control valve (WP 0218 00).
13. There is Too Much Tilt Cylinder Drift.	**NOTE** **Drift is cylinder movement with pilot operated control in HOLD position.**	
	1. Check for active diagnostic codes.	1. If any diagnostic codes exist, refer to *Troubleshooting with a Diagnostic Code* (WP 0009 00). 2. If there are no diagnostic codes, then perform *Main Control Valve (MSD) Calibration* (WP 0017 00). 3. If problem still exists, go to Test 2.
	2. Perform *Relief Valve* (*Main, Load Sensing*) *Test and Adjustment* (WP 0017 00).	1. Adjust as necessary. 2. If problem still exists, go to Test 3.
	3. Check that tilt sensor is properly mounted (WP 0089 00) and perform *Joystick Control Position Sensor Calibration* (WP 0017 00).	1. Adjust as necessary. 2. If problem still exists, go to Test 4.
	4. Check for leaks or damage to lift cylinders.	1. If damaged, replace lift cylinders (WP 0153 00). 2. If problem still exists, go to Test 5.

Table 7. Hydraulic System Troubleshooting - Continued.

MALFUNCTION	TEST OR INSPECTION	CORRECTIVE ACTION
13. There is Too Much Tilt Cylinder Drift - Continued.	5. Perform *Pilot Pressure to Main Control Valve Check* (WP 0017 00).	If damaged replace main control valve (WP 0218 00).
14. Hydraulic Force is Too Low When Tilt Control Lever is Moved to TILT BACK or DUMP Positions.	1. Ensure machine is being operated within specified parameters (TM 5-3805-291-10).	1. Increased load could be impeding performance of machine. 2. If problem still exists, go to Test 2.
	2. Check for active diagnostic codes.	1. If any diagnostic code exist, refer to *Troubleshooting with a Diagnostic Code* (WP 0009 00). 2. If there are no diagnostic codes, then perform *Main Control Valve (MSD) Calibration* (WP 0017 00). 3. If problem still exists, go to Test 3.
	3. Perform *Relief Valve* (*Main, Load Sensing*) *Test and Adjustment* (WP 0017 00).	1. Adjust as necessary. 2. If problem still exists, go to Test 4.
	4. Perform *Pilot Pressure to Main Control Valve Check* (WP 0017 00).	1. Adjust as necessary. 2. If problem still exists, go to Test 5.
	5. Inspect tilt cylinder for damage.	1. If damaged, replace tilt cylinders (WP 0152 00). 2. If problem still exists, go to Test 6.
	6. Check for leaks or damage to lift cylinders.	If faulty, replace control valve (WP 0218 00).
15. Lift Cylinders Collapse During Raise Operation.	**NOTE** **Cylinder collapse is a sudden drop during normal operation.**	
	1. Test operation and check calibration of pilot operated control (WP 0017 00).	1. If faulty, replace pilot operated control (WP 0218 00). 2. If problem still exists, go to Test 2.
	2. Check for active diagnostic codes.	1. If any diagnostic codes exist, refer to *Troubleshooting with a Diagnostic Code* (WP 0009 00). 2. If there are no diagnostic codes, then perform *Main Control Valve (MSD) Calibration* (WP 0017 00). 3. If problem still exists, go to Test 3.
	3. Perform *Pressure Reducing Valve Adjustment* (WP 0017 00).	1. Adjust as necessary. 2. If problem still exists, go to Test 4.
	4. Check nitrogen precharge on ride control accumulator (WP 0151 00).	1. Adjust as necessary. 2. Go to Test 5.

Table 7. Hydraulic System Troubleshooting - Continued.

MALFUNCTION	TEST OR INSPECTION	CORRECTIVE ACTION
15. Lift Cylinders Collapse During Raise Operation - Continued.	5. Inspect lift cylinders for damage.	1. If damaged, replace lift cylinders (WP 0153 00). 2. If problem still exists, go to Test 6.
	6. Check for leaks or damage to lift cylinders.	1. If damaged, replace lift cylinders (WP 0153 00). 2. If faulty, replace control valve (WP 0218 00).
16. There is Low Power to Implements.	1. Ensure machine is being operated within specified parameters (TM 5-3805-291-10).	Increased load could be impeding performance of machine.
	2. Engine power is too low.	1. Increase engine rpm. 2. If problem still exists, go to Test 3.
	3. Check for active diagnostic codes.	1. If any diagnostic codes exist, refer to *Troubleshooting with a Diagnostic Code* (WP 0009 00). 2. If there are no diagnostic codes, then perform *Main Control Valve (MSD) Calibration* (WP 0017 00). 3. If problem still exists, go to Test 4.
	4. Perform *Main Control Valve (MSD) Calibration* (WP 0017 00).	If problem still exists, go to Test 5.
	5. Perform *Pressure Reducing Valve Adjustment* (WP 0017 00).	1. Adjust as necessary. 2. If problem still exists, go to Test 6.
	6. Perform *Relief Valve* (*Main, Load Sensing*) *Test and Adjustment* (WP 0017 00).	1. Adjust as necessary. 2. If problem still exists, go to Test 7.
	7. Check for leaks or damage to lift cylinders.	1. If damaged, replace lift cylinders (WP 0153 00). 2. If problem still exists, go to Test 8.
	8. Inspect lift and tilt cylinders for damage.	1. If damaged, replace lift or tilt cylinder(s) as necessary (WP 0152 00 and WP 0153 00). 2. If problem still exists, replace implement pump (WP 0216 00).

Table 7. Hydraulic System Troubleshooting - Continued.

MALFUNCTION	TEST OR INSPECTION	CORRECTIVE ACTION
17. Tilt Cylinders Collapse During Tilt Function.	**NOTE** **Cylinder collapse is a sudden drop during normal operation.**	
	1. Check for active diagnostic codes.	1. If any diagnostic codes exist, refer to *Troubleshooting with a Diagnostic Code* (WP 0009 00). 2. If there are no diagnostic codes, then perform *Main Control Valve (MSD) Calibration* (WP 0017 00). 3. If problem still exists, go to Test 2.
	2. Perform *Relief Valve* (*Main, Load Sensing*) *Test and Adjustment* (WP 0017 00).	1. Adjust as necessary. 2. If problem still exists, go to Test 3.
	3. Perform *Joystick Control Position Sensor Calibration* (WP 0017 00).	1. If faulty, replace pilot operated control (WP 0218 00). 2. If problem still exists, go to Test 4.
	4. Inspect tilt cylinders for damage.	1. If damaged, replace tilt cylinders (WP 0152 00). 2. If problem still exists, go to Test 5.
	5. Check for leaks or damage to lift cylinders.	If faulty, replace control valve (WP 0218 00).
18. Tilt Cylinder Droops During Tilt Function.	**NOTE** **Droop is an initial movement of hydraulic cylinders. After movement in opposite direction of operator's command, cylinders will move in correct direction.**	
	1. Check operation when oil is warm (TM 5-3805-291-10).	If problem still exists, go to Test 2.
	2. Check for leaks or damage to tilt cylinders.	1. If damaged, replace tilt cylinders (WP 0152 00). 2. If problem still exists, go to Test 3.
	3. Check for leaks or damage to lift cylinders.	If faulty, replace control valve (WP 0218 00).

Table 8. AC System Troubleshooting.

MALFUNCTION	TEST OR INSPECTION	CORRECTIVE ACTION
NOTE • **When ambient temperature is above 70°F (21°C), a low pressure gage reading of 10 to 20 psi (70 to 138 kPa) is a normal operating pressure for AC system. Also, when ambient temperature is above 70°F (21°C), a high pressure gage reading of 120 to 190 psi (820 to 1,300 kPa) is a normal operating pressure for AC system. In very hot weather, low pressure readings and high pressure readings will be at high end of normal operating range. In cooler weather, low pressure reading will be in middle to low end of normal operating range, while high pressure reading will be low. For correct gage reading in relation to ambient temperature condition, refer to table below. This table is only for reference.** • **All pressures are given as a guide only. Weight is only absolute means of determining proper refrigerant charge. Improper refrigerant charge will cause premature failure of compressor.** • **Unless directed otherwise, all troubleshooting listed requires that pressure gages be connected (WP 0222 00) to compare system pressures with table below.** • **Ambient temperature is above 70°F (21°C) in all malfunctions.**		
PRESSURE RANGE		
Ambient Air Temperature	High Pressure Test Fitting (Pressure May Be Slightly Higher in Very Humid Conditions and Lower in Very Dry Conditions)	Low Pressure Test Fitting (Pressure Before Clutch Disengagement)
70°F (21°C)	120 to 190 psi (820 to 1,300 kPa)	10 to 20 psi (70 to 138 kPa)
80°F (27°C)	140 to 210 psi (950 to 1,450 kPa)	10 to 25 psi (70 to 173 kPa)
90°F (32°C)	170 to 240 psi (1,175 to 1,650 kPa)	15 to 30 psi (105 to 210 kPa)
100°F (38°C)	190 to 270 psi (1,300 to 1,850 kPa)	15 to 30 psi (105 to 210 kPa)
110°F (43°C)	210 to 300 psi (1,450 to 2,075 kPa)	15 to 30 psi (105 to 210 kPa)
1. Temperature of Air Flow is Partially Cool.	1. Check blend door for movement. (a) Turn battery disconnect and engine start switches to ON position (TM 5-3805-291-10). (b) While moving the temperature control switch back and forth between full hot and full cold, listen for blend door movement.	1. If blend door opens and closes properly, go to Test 6. 2. If blend door does not appear to open and close properly, go to Test 2.
	2. Check power to blend door actuator. (a) Disconnect wiring harness from blend door actuator (WP 0052 00). (b) Turn battery disconnect and engine start switches to ON position (TM 5-3805-291-10). (c) Measure voltage between blend door actuator pin A, circuit 135 (BU), harness side and ground.	1. If voltage is present, go to Test 3. 2. If voltage is not present, there is an open circuit between power converter and blend door actuator. Replace wiring harness in question (WP 0195 00 thru WP 0201 00).

Table 8. AC System Troubleshooting - Continued.

MALFUNCTION	TEST OR INSPECTION	CORRECTIVE ACTION
1. Temperature of Air Flow is Partially Cool - Continued.	3. Check blend door actuator circuits. (a) Disconnect wiring harness from HVAC temperature control switch (WP 0055 00). (b) Check for continuity with resistance between blend door actuator pin 3, circuit 200 (BK), harness side and HVAC temperature control switch pin A, circuit A523 (PU), harness side.	1. If continuity is present, go to Test 4. 2. If continuity is not present, there is an open circuit between HVAC temperature control switch and blend door actuator. Replace wiring harness in question (WP 0195 00 thru WP 0201 00).
	4. Check blend door actuator circuits. (a) Check for continuity between blend door actuator pin 4, circuit A524 (BR), harness side and HVAC temperature control switch pin B, circuit A524 (BR), harness side.	1. If continuity is present, go to Test 5. 2. If continuity is not present, there is an open circuit between HVAC temperature control switch and blend door actuator. Replace wiring harness in question (WP 0195 00 thru WP 0201 00).
	5. Check blend door actuator circuits. (a) Check for continuity with resistance between blend door actuator pin 1, circuit 592 (BU), harness side and HVAC temperature control switch pin C, circuit A525 (GN), harness side.	1. If continuity is present, replace HVAC temperature control switch (WP 0055 00). 2. If continuity is not present, there is an open circuit between HVAC temperature control switch and blend door actuator. Replace wiring harness in question (WP 0195 00 thru WP 0201 00). 3. If problem still exists, replace blend door actuator (WP 0052 00).
	NOTE **Leaks in refrigerant circuit will cause system to be low on refrigerant.**	

Table 8. AC System Troubleshooting - Continued.

MALFUNCTION	TEST OR INSPECTION	CORRECTIVE ACTION
1. Temperature of Air Flow is Partially Cool - Continued.	6. Check low and high pressure gage during operation AC.	1. If both readings are below normal, go to Test 7. 2. If low pressure gage reading is normal but high pressure gage reading bounces or reading is unsteady, go to Test 8. 3. If low pressure gage reading is below normal but high pressure gage reading is normal to below normal range, go to Test 9. 4. If low pressure gage reading does not change, pressure gage reading is at high end of normal range, go to Test 12. 5. If low pressure gage reading is above normal, high pressure gage reading is below normal, and system is fully charge, go to Test 13.
	7. Perform *Refrigerant Leakage Test* (WP 0018 00) to determine location of leak.	1. Recover refrigerant (WP 0223 00) and repair leaks. 2. If a large amount of refrigerant was lost, perform *Refrigerant Compressor Oil Check* (WP 0018 00). 3. Evacuate system and re-charge system with correct amount of refrigerant (WP 0225 00). 4. After system is charged, operate for a minimum of 10 minutes (TM 5-3805-291-10) and perform *Performance Checks for AC System* (WP 0018 00) to verify correct operation of AC system.
	8. There is air in system.	Reclaim, evacuate, and recharge AC system (WP 0222 00).
	NOTE • **Restriction in high pressure liquid line can cause refrigerant to be removed from evaporator at a faster rate. Restriction can cause evaporator to be low on refrigerant from inline dryer. Clogged filters or a failure of blower motor can cause possible restrictions to air flow.** • **Restrictions of refrigerant flow are identified by frost or cold spots in line. Also, restrictions of refrigerant flow are identified by frost or cold spots in inline dryer.** • **Cap all open lines and fittings during repairs.** • **Ambient temperature is above 70°F (21°C).**	

Table 8. AC System Troubleshooting - Continued.

MALFUNCTION	TEST OR INSPECTION	CORRECTIVE ACTION
1. Temperature of Air Flow is Partially Cool - Continued.	9. Check for restriction at inline dryer.	1. If restriction is found, replace inline dryer (WP 0224 00). 2. Recover refrigerant, evacuate, and charge system with correct amount of refrigerant. Measure refrigerant by weight (WP 0225 00). 3. After system is charged, operate for a minimum of 10 minutes (TM 5-3805-291-10) and perform *Performance Checks For AC System* (WP 0018 00) to verify correct operation of AC system. 4. If problem still exists, go to Test 10.
	10. Check for restriction at liquid line.	1. If restriction is found, replace liquid line (WP 0223 00). 2. Recover refrigerant, evacuate, and charge system with correct amount of refrigerant. Measure refrigerant by weight (WP 0225 00). 3. After system is charged, operate for a minimum of 10 minutes (TM 5-3805-291-10) and perform *Performance Checks for AC System* (WP 0018 00) to verify correct operation of AC system. 4. If problem still exists, go to Test 11.
	11. Check for restriction at cab filters.	1. Replace cab filters or remove any restrictions found (TM 5-3805-291-10). 2. Recover refrigerant, evacuate, and charge system with correct amount of refrigerant. Measure refrigerant by weight (WP 0225 00). 3. After system is charged, operate for a minimum of 10 minutes (TM 5-3805-291-10) and perform *Performance Checks for AC System* (WP 0018 00) to verify correct operation of AC system.
	NOTE **Pressure should rise when compressor is not in operation.**	

Table 8. AC System Troubleshooting - Continued.

MALFUNCTION	TEST OR INSPECTION	CORRECTIVE ACTION
1. Temperature of Air Flow is Partially Cool - Continued.	12. The system has air or moisture and does not have a full charge of refrigerant. Perform *Refrigerant Leakage Test* (WP 0018 00) to determine location of leak.	1. Recover refrigerant (WP 0225 00) and repair leaks. 2. If a large amount of refrigerant was lost, perform *Refrigerant Compressor Oil Check* (WP 0018 00). 3. Evacuate system and re-charge system with correct amount of refrigerant (WP 0225 00). 4. After system is charged, operate for a minimum of 10 minutes (TM 5-3805-291-10) and perform *Performance Checks for AC System* (WP 0018 00) to verify correct operation of AC system.
	NOTE • **Compressor has internal leaks.** • **Read valve has leakage.** • **Compressor piston, rings, or cylinders are worn.**	
	13. Check drive belt for damage or looseness.	If belt is loose or damaged, replace belt tensioner (WP 0047 00) or belt (WP 0048 00) as necessary.
	14. Perform *Refrigerant Leakage Test* (WP 0018 00) to isolate problem.	1. If an internal leak is found, replace compressor (WP 0221 00). Replace in-line dryer (WP 0224 00). 2. If an external leak such as a hose connection is found, recover refrigerant (WP 0225 00) and repair leaks. 3. Evacuate and charge system with correct amount of refrigerant. Measure refrigerant by weight (WP 0225 00). 4. If a large amount of refrigerant was lost, perform *Refrigerant Compressor Oil Check* (WP 0018 00). 5. After system is charged, operate for a minimum of 10 minutes (TM 5-3805-291-10) and perform *Performance Checks for AC System* (WP 0018 00) to verify correct operation of AC system.

Table 8. AC System Troubleshooting - Continued.

MALFUNCTION	TEST OR INSPECTION	CORRECTIVE ACTION
2. Temperature of Air Flow is Warm.	1. Check blend door for movement (a) Turn battery disconnect and engine start switches to ON position (TM 5-3805-291-10). (b) While moving the temperature control switch back and forth between full hot and full cold, listen for blend door movement.	1. If blend door opens and closes properly, go to Test 6. 2. If blend door does not appear to open and close properly, go to Test 2.
	2. Check power to blend door actuator. (a) Disconnect wiring harness from blend door actuator (WP 0052 00). (b) Turn battery disconnect and engine start switches to ON position (TM 5-3805-291-10). (c) Measure voltage between blend door actuator pin A, circuit 135 (BU), harness side and ground.	1. If voltage is present, go to Test 3. 2. If voltage is not present, there is an open circuit between power converter and blend door actuator. Replace wiring harness in question (WP 0195 00 00 thru WP 0200 00).
	3. Check blend door actuator circuits. (a) Disconnect wiring harness from HVAC temperature control switch (WP 0055 00). (b) Check for continuity with resistance between blend door actuator pin 3, circuit 200 (BK), harness side and HVAC temperature control switch pin A, circuit A523 (PU), harness side.	1. If continuity is present, go to Test 4. 2. If continuity is not present, there is an open circuit between HVAC temperature control switch and blend door actuator. Replace wiring harness in question (WP 0195 00 00 thru WP 0200 00).
	4. Check blend door actuator circuits. (a) Check for continuity between blend door actuator pin 4, circuit A524 (BR), harness side and HVAC temperature control switch pin B, circuit A524 (BR), harness side.	1. If continuity is present, go to Test 5. 2. If continuity is not present, there is an open circuit between HVAC temperature control switch and blend door actuator. Replace wiring harness in question (WP 0195 00 00 thru WP 0200 00).
	5. Check blend door actuator circuits. (a) Check for continuity with resistance between blend door actuator pin 1, circuit 592 (BU), harness side and HVAC temperature control switch pin C, circuit A525 (GN), harness side.	1. If continuity is present, replace HVAC temperature control switch (WP 0052 00). 2. If continuity is not present, there is an open circuit between HVAC temperature control switch and blend door actuator. Replace wiring harness in question (WP 0195 00 thru WP 0200 00). 3. If problem still exists, replace blend door actuator (WP 0052 00).

Table 8. AC System Troubleshooting - Continued.

MALFUNCTION	TEST OR INSPECTION	CORRECTIVE ACTION
2. Temperature of Air Flow is Warm - Continued.	6. Check low and high pressure gage during operation of AC.	1. If low pressure gage reading is below normal and high pressure gage reading is above normal, go to Test 7. 2. If low and high pressure gage readings are too high, go to Test 8.
	7. There is air or moisture (water) in system.	1. The desiccant may be full of moisture. Recover refrigerant (WP 0225 00) and replace inline dryer (WP 0224 00). Evacuate and charge system with correct amount of refrigerant. Measure refrigerant by weight (WP 0225 00). 2. After system is charged, operate for a minimum of 10 minutes (TM 5-3805-291-10) and perform *Performance Checks for AC System* (WP 0018 00) to verify correct operation of AC system.
	NOTE • **Do not operate engine.** • **With ambient temperature above 21°F (70°F), normal gage reading for low pressure side is 10 to 20 psi (70 to 138 kPa) while normal gage reading for high pressure side is 120 to 190 psi (820 to 1,300 kPa).** • **The condenser is not functioning properly. System may have a normal or overcharge of refrigerant.**	
	8. Check for blockage in flow of air through condenser.	1. If a blockage is found in condenser, remove all blockages. 2. If low pressure gage reading and high pressure gage readings are too high, recover refrigerant (WP 0225 00) and replace inline dryer (WP 0224 00). Evacuate and charge system with correct amount of refrigerant. Measure refrigerant by weight (WP 0225 00). 3. After system is charged, operate for a minimum of 10 minutes (TM 5-3805-291-10) and perform *Performance Checks for AC System* (WP 0018 00) to verify correct operation of AC system.

Table 8. AC System Troubleshooting - Continued.

MALFUNCTION	TEST OR INSPECTION	CORRECTIVE ACTION
3. System Only Cools Cab in Morning and in Evening Not During Hot Part of Day. Air Flow is Very Cold but Air Flow Becomes Warm.	1. Check low and high pressure gage during operation of AC.	1. If low pressure gage reading is normal, (gage reading may drop into vacuum range during testing procedure) and high pressure gage reading is normal and is below normal when low pressure gage drops into vacuum range, go to Test 2. 2. If readings are not as specified, exit this test.
	2. The system has a large amount of moisture. Desiccant in receiver/dryer or inline dryer is full of water. Water is released during high ambient temperatures. Ice collects in orifice and ice can block flow of refrigerant.	1. Recover refrigerant (WP 0225 00) and replace inline dryer (WP 0224 00). Evacuate and charge system with correct amount of refrigerant. Measure refrigerant by weight (WP 0225 00). 2. After system is charged, operate for a minimum of 10 minutes (TM 5-3805-291-10) and perform *Performance Checks for AC System* (WP 0018 00) to verify correct operation of AC system.
4. High Pressure (Liquid Line) is Very Hot. Compressor May Become Noisy and Drive Belt May Slip.	**NOTE** **The compressor is not operating under ambient temperatures that are extreme. Compressor is not operating under high humidity that is extreme.**	
	1. Check low and high pressure gage during operation of AC.	1. If low pressure gage reading is above normal and high pressure gage reading is above normal, go to Test 2. 2. If readings are not as specified, exit this test.
	2. The system is overcharged.	1. Recover refrigerant (WP 0225 00) and replace inline dryer (WP 0224 00). Evacuate and charge system with correct amount of refrigerant. Measure refrigerant by weight (WP 0225 00). 2. After system is charged, operate for a minimum of 10 minutes (TM 5-3805-291-10) and perform *Performance Checks for AC System* (WP 0018 00) to verify correct operation of AC system.
5. Water is in Vents and Leaking From Unit.	Check non-return valve for proper positioning and direction.	

Table 8. AC System Troubleshooting - Continued.

MALFUNCTION	TEST OR INSPECTION	CORRECTIVE ACTION
6. Compressor Will Not Engage. Air Flow to Operator's Compartment is Warm.	1. Check low and high pressure gage during operation of AC.	1. If low pressure gage reading is above normal and high pressure gage reading is below normal, go to Test 2. 2. If readings are not as specified, exit this test.
	2. Check AC compressor. (a) Check wire connectors on thermostatic switch and on compressor clutch. (b) Check for insulation that is broken. (c) Check for clutch coil resistance of 17.6+/- 0.6 Ohms with a multimeter. (d) Check for proper electrical ground at magnetic clutch. (e) Touch two wires on switch together. Check for proper operation of magnetic clutch.	1. If problem is loose wire on switch or a loose wire on magnetic clutch, make repairs that are needed or replace compressor (WP 0221 00). 2. If wires to clutch were damaged, damaged wires can cause switch to remain open. Make needed repairs to damaged wires. 3. After system is charged, operate for a minimum of 10 minutes (TM 5-3805-291-10) and perform *Performance Checks for AC System* (WP 0018 00) to verify correct operation of AC system. 4. If problem still exists, go to Test 3.
	3. Refer to *Electrical System Troubleshooting* (Table 2 in this work package) to check the AC control system.	If problem still exists, go to Test 4.
	4. Check for lost charge of refrigerant in capillary tube.	1. If capillary tube has no charge or switch remains open, problem is in thermostatic switch, replace compressor (WP 0221 00). 2. After system is charged, operate for a minimum of 10 minutes (TM 5-3805-291-10) and perform *Performance Checks for AC System* (WP 0018 00) to verify correct operation of AC system.
7. Compressor Continues to Cycle or Clutch Will Not Disengage. Air Flow to Operator's Compartment is Very Cold or Air Flow May be Restricted Completely at Times.	**NOTE** **Cause of problem may be one of following conditions: low charge, over-charge, or evaporator freeze-up.**	
	1. Check low and high pressure gage during operation of AC.	1. If low pressure gage reading is below normal and high pressure gage reading is below normal, go to Test 2. 2. If readings are not as specified, exit this test.

Table 8. AC System Troubleshooting - Continued.

MALFUNCTION	TEST OR INSPECTION	CORRECTIVE ACTION
7. Compressor Continues to Cycle or Clutch Will Not Disengage. Air Flow to Operator's Compartment is Very Cold or Air Flow May be Restricted Completely at Times - Continued.	2. The thermostat switch is held closed or there is a short in wire to magnetic clutch and magnetic clutch will not release. Check wire that goes to magnetic clutch. Wire may have an electrical short.	Replace compressor as necessary (WP 0221 00).
8. Compressor Clutch is Engaged but System Has Insufficient Cooling.	**NOTE** **A restriction in liquid line can be detected by running a hand along line until there is a change in temperature. A change in temperature in line will usually indicate location of restriction.**	
	1. Check for proper restriction. (a) Check low and high pressure gage during operation of AC. (b) Start engine. Operate engine at 1,400 rpm. Move temperature control knob to Maximum position and fan to HIGH position. Close all windows and doors. In order to stabilize system, operate system for a minimum of 10 minutes (TM 5-3805-291-10).	
	(c) The outlet on accumulator should be cold to touch. If outlet is not cold, check readings on manifold gages.	1. If low side reading is above 50 psi (345 kPa), replace inline dryer (WP 0224 00). 2. If low side reading is into vacuum, check for a plugged orifice tube or a restriction inline (WP 0224 00). 3. If problem still exits, go to Test 2.
	2. Check that system is properly charged (WP 0222 00).	1. Recover refrigerant (WP 0225 00), evacuate, and charge system with correct amount of refrigerant. Measure refrigerant by weight (WP 0225 00). 2. After system is charged, operate for a minimum of 10 minutes (TM 5-3805-291-10) and perform *Performance Checks for AC System* (WP 0018 00) to verify correct operation of AC system. 3. If problem still exists, go to Test 3.
	3. Check drive belt for damage or looseness.	1. If belt is loose or damaged, replace belt tensioner (WP 0047 00) or adjust belt (WP 0048 00) as necessary. 2. If problem still exists, go to Test 4.

Table 8. AC System Troubleshooting - Continued.

MALFUNCTION	TEST OR INSPECTION	CORRECTIVE ACTION
8. Compressor Clutch is Engaged but System Has Insufficient Cooling - Continued.	4. Check for restrictions, insects, foreign material in condenser, or any restriction of air flow through condenser.	1. If a blockage is found in condenser, remove all blockages. 2. If problem still exists, go to Test 5.
	5. Check inlet and outlet on accumulator for warmth.	1. If inlet and outlet are warm, charge system with correct amount of refrigerant. Measure refrigerant by weight (WP 0225 00). 2. If problem still exists, go to Test 6.
	6. Perform *Refrigerant Leakage Test* (WP 0018 00) to determine location of leak.	1. Recover refrigerant (WP 0225 00) and repair leaks. 2. If a large amount of refrigerant was lost, perform *Refrigerant Compressor Oil Check* (WP 0018 00). 3. Evacuate system and re-charge system with correct amount of refrigerant (WP 0225 00). 4. After system is charged, operate for a minimum of 10 minutes (TM 5-3805-291-10) and perform *Performance Checks for AC System* (WP 0018 00) to verify correct operation of AC system.

OIL CONSUMPTION DAILY LOG

(For Owner/Operator Use)

Complete each entry for oil consumption verification. Record hourmeter reading each day even if no fuel or oil additions are made. Oil additions should be made only when oil reaches the "ADD" level on the engine dipstick.

MONTH	DATE	ODOMETER READING	FUEL ADDITIONS	OIL ADDITIONS
	1			
	2			
	3			
	4			
	5			
	6			
	7			
	8			
	9			
	10			
	11			
	12			
	13			
	14			
	15			
	16			
	17			
	18			
	19			
	20			
	21			
	22			
	23			
	24			
	25			
	26			
	27			
	28			
	29			
	30			
	31			

END OF WORK PACKAGE

Table 1. MID 036 Engine Control.

CID FMI CODE	TEST OR INSPECTION	CORRECTIVE ACTION
	NOTE • **For a better understanding of each system, review the appropriate section in *Theory of Operation* (WP 0003 00).** • **These procedures may give direction to replace wiring harnesses. However, limited repair of wiring harnesses is authorized. Refer to *Electrical General Maintenance Instruction* (WP 0022 00) for the correct repair procedures.** • **When directed to use a bypass harness and breakout Ts, refer to *Electrical General Maintenance Instructions* (WP 0022 00) for the correct hook-up procedures.**	
0001 05 0001 06 0002 05 0002 06 0003 05 0003 06 0004 05 0004 06 0005 05 0005 06 0006 05 0006 06	Perform *Injector Solenoid Circuit Test* (WP 0013 00).	
0041 03 0041 04 0091 08	Perform *Throttle Position Sensor Circuit Test* (WP 0013 00).	
0094 03 0094 04 0100 03 0100 04	Perform *Engine Pressure Sensor Open or Short Circuit Test* (WP 0013 00).	
0100 10	Check 5V supply wire for an open circuit.	
	Check for supply voltage on pin A of sensor connector.	1. If supply voltage is not 5.0 ± 0.2 VDC, open circuit may be in wire to sensor or in connector. Replace wiring harness in question (WP 0195 00 thru WP 0201 00). 2. If supply voltage is 5.0 ± 0.2 VDC, replace sensor (WP 0079 00).
0110 03 0110 04	Perform *Engine Temperature Sensor Open or Short Circuit Test* (WP 0013 00).	
0168 00 0168 01 0168 02	Perform *Electrical Power Supply Circuit Test* (WP 0013 00).	
0172 03 0172 04 0174 03 0174 04	Perform *Engine Temperature Sensor Open or Short Circuit Test* (WP 0013 00).	
0190 08	Perform *Engine Speed/Timing Sensor Circuit Test* (WP 0013 00).	

Table 1. MID 036 Engine Control - Continued.

CID FMI CODE	TEST OR INSPECTION	CORRECTIVE ACTION
0261 11	**NOTE** • **Connectors for engine speed/timing sensors are keyed to prevent installation of wrong connector on a sensor.** • **This code indicates wiring to sensors has wrong polarity.**	
	1. Check connections to engine speed/timing sensors (WP 0076 00 or WP 0078 00).	
	2. Verify wires between engine speed/timing sensors and ECM connector have not been switched. Refer to *Electrical Schematic* for more information (WP 0237 00).	If wires between engine speed/timing sensors and ECM connector have been switched, replace wiring harness in question (WP 0195 00 thru WP 0201 00).
0261 13	Perform *Engine Speed/Timing Sensor Calibration Test* (WP 0013 00).	
0262 03 0262 04	Perform *5V Engine Pressure Sensor Supply Circuit Test* (WP 0013 00).	
0267 02	Perform *User Defined Shutdown Input Circuit Test* (WP 0013 00).	
0274 03 0274 04 0275 03 0275 04	Perform *Engine Pressure Sensor Open or Short Circuit Test* (WP 0013 00).	
0291 05 0291 06	Perform *Engine Fan Control Solenoid Circuit Test* (WP 0013 00).	
0296 09	Perform *CAT Data Link Circuit Test* (WP 0013 00).	
0296 12	Connect MSD (WP 0005 00) and update ECM flash files. Check that correct version of flash files have been installed in both engine ECM and transmission ECM.	1. If flash files are correct version, there may be an electrical problem with CAT Data Link circuit or in a connector. Refer to *CAT Data Link Circuit Test* (WP 0013 00). 2. If flash files are not the latest version, connect MSD equipped with ET to diagnostic connector and install flash files. Verify original problem has been resolved.
0342 08	Perform *Engine Speed/Timing Sensor Calibration Test* (WP 0013 00).	
0596 09	Perform *CAT Data Link Circuit Test* (WP 0013 00).	

Table 1. MID 036 Engine Control - Continued.

CID FMI CODE	TEST OR INSPECTION	CORRECTIVE ACTION
0596 12	Connect MSD (WP 0005 00) and update ECM flash files. Check that correct version of flash files have been installed in both engine ECM and transmission ECM.	1. If flash files are correct version, there may be an electrical problem with CAT Data Link circuit or in a connector. Refer to *CAT Data Link Circuit Test* (WP 0013 00). 2. If flash files are not the latest version, connect MSD equipped with ET to diagnostic connector and install flash files. Verify original problem has been resolved.
1785 03 1785 04	Perform *Engine Pressure Sensor Open or Short Circuit Test* (WP 0013 00).	
1785 10	Check 5V supply wire for an open circuit (WP 0237 00).	
2417 05 2417 06	Perform *Ether Injection System Test* (WP 0013 00).	

Table 2. Troubleshooting With an Event Code.

EVENT CODES	TEST OR INSPECTION	CORRECTIVE ACTION
E096	Check fuel system components. (a) Verify pressure regulating valve in fuel filter base is operating correctly. Check for damage or dirt in valve assembly (WP 0025 00). (b) Check return line from fuel filter base to fuel tank for damage or collapse (WP 0036 00).	1. If pressure relief valve in the body of fuel transfer pump is damaged, replace pump (WP 0188 00). 2. If problem was found in pressure regulating valve, or in return line to fuel tank, replace all suspect parts.
E172	Check for restrictions in air cleaner.	If there was a problem with air cleaner element, clean or replace air cleaner element (WP 0030 00).
E194	Evaluate air inlet and exhaust system. Check air intake manifold pressure. Check for leaks between exhaust manifold and turbocharger. Check for exhaust restrictions (WP 0011 00).	
E265	Talk to operator to determine reason for activation of user defined shutdown.	1. If operator activated user defined shutdown switch, return machine to service. 2. If operator did not activate user defined shutdown, refer to *User Defined Shutdown Input Circuit Test* (WP 0013 00).

Table 2. Troubleshooting With an Event Code - Continued.

EVENT CODES	TEST OR INSPECTION	CORRECTIVE ACTION
E360	1. Check engine oil level (TM 5-3805-291-10).	If engine oil level is low, add engine oil to obtain correct engine oil level. If problem still exists, go to Test 2.
	2. Air leakage or restriction in oil pump or suction tube will cause cavitation and loss of oil pressure. Check oil pump and suction tube (WP 0182 00).	If damaged, replace engine oil pump and/ or suction tube (WP 0182 00). If problem still exists, go to Test 3.
	3. Check for engine oil bypass valves stuck in open position.	If engine oil bypass valves are stuck in open position, replace engine oil filter base (WP 0028 00). If problem still exists, go to Test 4.
	4. Check for engine oil that is contaminated with fuel or coolant. High engine oil level in crankcase can be an indication of contamination.	If engine oil is contaminated, change engine oil and filter (WP 0025 00). If problem still exists, go to Test 5.
	5. Check for an oil line that is open, broken, or disconnected.	Repair or replace lines as necessary (WP 0027 00).
E361	1. Verify cooling system is filled to proper level.	If coolant level is too low, add coolant (WP 0041 00). If problem still exists, go to Test 2.
	2. Check radiator between fins and inside radiator core for damage, debris, dirt, and deposits.	1. Remove all restrictions. 2. If problem still exists, go to Test 3
	3. Check mixture of anitfreeze and water (TB 750-651).	Add water or coolant as necessary (WP 0041 00). If problem still exists, go to Test 4.
	4. Check water temperature regulator by replacing it with a known good one.	If problem still exists, reinstall old regulator, go to Test 5.
	5. Remove water pump and check for damage to impeller (WP 0045 00).	If damaged, replace water pump. If problem still exists, go to Test 6.
	6. Check operation of fan (WP 0012 00).	1. If fan is inoperative, troubleshoot fan. 2. If problem still exists, go to Test 7.
	7. Check for combustion gas in cooling system.	If combustion gas is found, replace cylinder head and /or cylinder head gasket (WP 0172 00).
	8. Check cooling system hoses and clamps for damage, restriction, or softness (WP 0043 00).	If damaged, replace hose or clamps. If problem still exists, go to Test 9.
	9. Check for restriction in air inlet system (WP 0011 00).	1. Remove any restrictions. 2. If problem still exists, go to Test 10.
	10. Check for restriction in exhaust system (WP 0011 00).	Remove any restrictions.

Table 2. Troubleshooting With an Event Code - Continued.

EVENT CODES	TEST OR INSPECTION	CORRECTIVE ACTION
E362	Engine overspeed.	The operator may be operating machine incorrectly. Talk to operator to determine events that caused overspeed of engine.
E363	1. Top off fuel (TM 5-3805-291-10).	If problem still exists, go to Test 2.
	2. Check fuel return lines for restriction (WP 0034 00).	1. Remove restrictions from lines. 2. If problem still exists, go to Test 3.
	3. Check for engine overheating (WP 0012 00).	If problem still exists, replace fuel transfer pump (WP 0188 00).
E390	Replace fuel filter element (WP 0035 00 or WP 0036 00).	If problem still exists, go to *Fuel Filter Differential Pressure Switch Circuit Test* (WP 0013 00).
E441	If a problem with charging system is suspected, go to *Alternator Charging Problem* (WP 0007 00).	
E539	1. Check for plugged air filters and obstructions to air inlet (WP 0030 00 and WP 0034 00).	1. If restriction or plugging is found, replace air cleaner elements or remove restriction from air intake system. 2. If problem still exists, go to Test 2.
	2. Check for exhaust system restriction (WP 0011 00).	If problem still exists, connect MSD (WP 0005 00) and check for active diagnostic codes. If any diagnostic codes exist, refer to *Troubleshooting Without a Diagnostic Code* (WP 0008 00).

Table 3. Powertrain Control.

(MID 081) CID FMI CODE	TEST OR INSPECTION	CORRECTIVE ACTION
0168 00	1. Check charging system. (a) Turn engine start switch to ON position (TM 5-3805-291-10). (b) Using Messenger, ensure CID 0168 FMI 00 is active (TM 5-3805-291-10). (c) Ensure diagnostic code indicator is active.	1. If diagnostic code indicator is active, go to Test 3. 2. If diagnostic code indicator is not active, go to Test 2.
	2. Check charging system. (a) Start engine (TM 5-3805-291-10). (b) Ensure CID 0168 FMI 00 is active. (c) Observe status of diagnostic code indicator.	1. If diagnostic code indicator is active, charging system is charging at an excessive voltage. Check charging system (WP 0008 00). 2. If diagnostic code indicator is not active, there is no problem at this time. Watch for a recurrence of this diagnostic code.
	NOTE **Ensure CID 0168 FMI 00 is active and that diagnostic code indicator is active.**	
	3. With engine shut down, check battery voltage.	1. If voltage is less than 35.0 DCV, ECM must be incorrectly recording this problem. It is unlikely that ECM has failed. Perform previous tests again. If the cause of problem is not found, replace powertrain ECM (WP 0063 00). 2. If voltage is greater than 35.0 DCV, charging system is charging at an excessive voltage. Check charging system (WP 0008 00).

Table 3. Powertrain Control - Continued.

(MID 081) CID FMI CODE	TEST OR INSPECTION	CORRECTIVE ACTION
0168 01	1. With engine running at high idle for several minutes (TM 5-3805-291-10), check battery voltage. 2. Check system voltage at ECM. (a) Run engine at high idle (TM 5-3805-291-10). (b) Locate connector for powertrain ECM (WP 0063 00). (c) DO NOT disconnect powertrain ECM. (d) Measure system voltage between J1-31 (wire 170-RD) and J1-13 (wire 202 BK). Measure voltage between J1-39 (wire 170-RD) and J1-23 (wire 202 - BK). Measure voltage between J1-47 (wire 170-RD) and J1-57 (wire 202 - BK).	1. If voltage is greater than 18.0 DCV, go to Test 2. 2. If voltage is less than 18.0 DCV, check charging system (WP 0008 00).
	(e) Use Messenger to ensure diagnostic code is active (TM 5-3805-291-10).	1. If voltage for each measurement is less than 18.0 DCV, harness has failed. Replace wiring harness in question (WP 0195 00 thru WP 0201 00). 2. If voltage is greater than 18.0 DCV, ensure CID 0168 FMI 01 is active. Disconnect harness connector from powertrain ECM and inspect all power and ground contacts for corrosion or debris. Reconnect harness connector to ECM. If diagnostic code is active, replace ECM (WP 0063 00).

Table 3. Powertrain Control - Continued.

(MID 081) CID FMI CODE	TEST OR INSPECTION	CORRECTIVE ACTION
0177 03		
	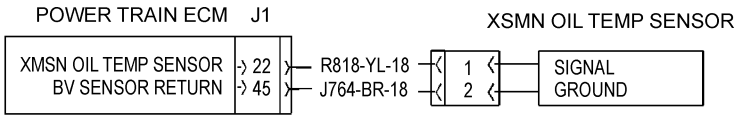 427-C1616	
	1. Check sensor. (a) Turn battery disconnect and engine start switches to ON position (TM 5-3805-291-10). (b) Disconnect wiring harness connector from transmission oil temperature sensor (WP 0092 00). (c) At sensor connector, measure resistance between signal contact 1 (wire R818-YL) and return contact 2 (wire J764-BR).	1. If resistance is NOT between 18 Ohms and 34k Ohms, replace transmission oil temperature sensor (WP 0092 00). 2. If resistance is between 18 Ohms and 34k Ohms, go to Test 2.
	2. Check harness return circuit. (a) Sensor remains disconnected. (b) Turn battery disconnect and engine start switches to OFF position (TM 5-3805-291-10). (c) Disconnect J1 and J2 wiring harness connectors from powertrain ECM (WP 0063 00). (d) Measure resistance of return circuit between contact 2 (wire J764-BR) of wiring harness for sensor and contact J1-45 of wiring harness for ECM.	1. If resistance is less than 5 Ohms, go to Test 3. 2. If resistance is greater than 5 Ohms, there is an open circuit between ground contact and frame ground. Replace wiring harness in question (WP 0195 00 thru WP 0201 00).
	3. Check for a shorted harness. (a) Sensor and ECM remain disconnected from wiring harness. (b) Battery disconnect and engine start switches remain in OFF position (TM 5-3805-291-10).	

Table 3. Powertrain Control - Continued.

(MID 081) CID FMI CODE	TEST OR INSPECTION	CORRECTIVE ACTION
01177 03 - Continued.	(c) At wiring harness connector for powertrain ECM, measure resistance between signal contact J1-22 (wire R818-YL) and all contacts used in wiring harness connector for ECM.	1. If each resistance measurement is greater than 5,000 Ohms, perform this diagnostic code procedure again. If failure is not found, replace powertrain ECM (WP 0063 00). 2. If one or more resistance measurements is less than 5,000 Ohms, the short is between the signal contact J1-22 (wire K977-PK) and the circuit with the low resistance measurement. Replace the wiring harness (WP 0195 00 thru WP 0201 00).
0177 04		

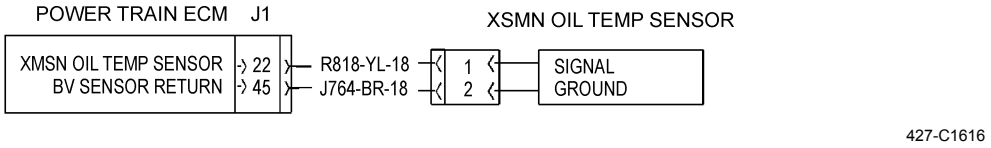

	1. Check sensor. Disconnect wiring harness from transmission oil temperature sensor (WP 0092 00). 2. Check harness. (a) Sensor remains disconnected from wiring harness. (b) Turn battery disconnect and engine start switches to OFF position (TM 5-3805-291-10). (c) Disconnect wiring harness connector from powertrain ECM (WP 0063 00).	1. If diagnostic code changed from CID 0177 FMI 04 to CID 0177 FMI 03, replace transmission oil temperature sensor (WP 0092 00). 2. If original diagnostic code remains active, go to Test 2.

Table 3. Powertrain Control - Continued.

(MID 081) CID FMI CODE	TEST OR INSPECTION	CORRECTIVE ACTION
0177 04 - Continued.	(d) At sensor wiring harness connector, measure resistance between signal contact 1 (wire R818-YL) and frame ground.	1. If resistance is greater than 5,000 Ohms, repeat this procedure again. If failure is not found, replace powertrain ECM (WP 0063 00). 2. If resistance is less than 5,000 Ohms, there is a short between frame ground and signal circuit in the wiring harness. Replace wiring harness in question (WP 0195 00 thru WP 0201 00).

Table 3. Powertrain Control - Continued.

(MID 081) CID FMI CODE	TEST OR INSPECTION	CORRECTIVE ACTION
0190 02		

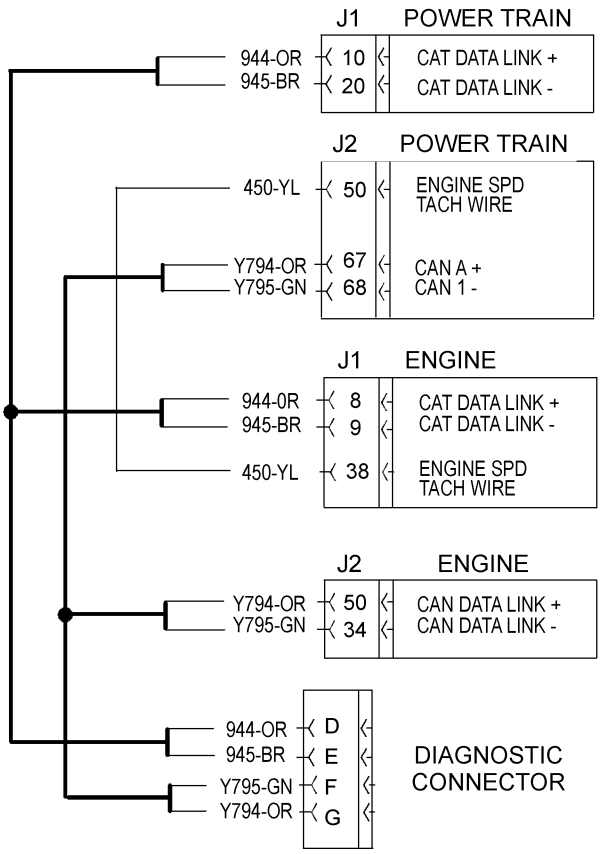

427-C1617

NOTE

The engine must be running for the powertrain ECM to show this diagnostic code.

1. Check for additional related diagnostic codes.
   (a) Ensure all ECMs using CAT Data Link are connected (WP 0056 00, WP 0057 00, WP 0060 00, and WP 0063 00).
   (b) Turn battery disconnect and engine start switches to ON position (TM 5-3805-291-10).

Table 3. Powertrain Control - Continued.

(MID 081) CID FMI CODE	TEST OR INSPECTION	CORRECTIVE ACTION
0190 02 - Continued.	(c) Acknowledge any active diagnostic codes currently displayed on Messenger (TM 5-3805-291-10).	
	(d) Verify no related diagnostic codes are active.	1. If no other diagnostic codes are active, go to Test 2. 2. If other related diagnostic codes are active, exit this procedure and perform test procedures for related diagnostic codes.
	2. Connect MSD (WP 0005 00) and verify the following hardware and software part numbers:	
	(a) Software part number for powertrain ECM.	
	(b) Software part number for engine ECM.	
	(c) Software part number for Messenger.	1. If all part numbers are correct, go to Test 3. 2. If all part numbers are not correct, an ECM may have wrong part number and/or software configuration. Appropriate flash file needs to be flashed into ECM (WP 0056 00, WP 0057 00, WP 0060 00, and WP 0063 00).
	3. Inspect harness connections.	
	(a) Turn engine start and battery disconnect switches to OFF position (TM 5-3805-291-10).	
	(b) Disconnect and inspect wiring harness connections related to CAT Data Link and engine speed tach wire (WP 0237 00). Make sure connectors are clean and tight. Refer to *Electrical Connectors Inspection* (WP 0022 00).	
	(c) Check mating of each connector.	
	(d) Check wires at each connector.	
	(e) Check each wire for nicks and/or signs of abrasion in insulation.	
	(f) Check for moisture at each connector.	
	(g) Check for dirty and/or corroded contacts.	

Table 3. Powertrain Control - Continued.

(MID 081) CID FMI CODE	TEST OR INSPECTION	CORRECTIVE ACTION
0190 02 - Continued.	(h) Check each pin and socket.	
	(i) Reconnect all connectors.	1. If wiring harness connectors are tightly connected and are free of corrosion, go to Test 4. 2. If wiring harness connections are damaged or corroded, replace wiring harness in question. Verify repair corrects problem (WP 0195 00 thru WP 0201 00).
	4. Check engine speed tach wire for an open circuit in wiring harness.	
	(a) Turn engine start and battery disconnect switches to OFF position (TM 5-3805-291-10).	
	(b) Disconnect wiring harness connector J2 from powertrain ECM (WP 0063 00).	
	(c) Disconnect wiring harness connector J1 from engine ECM (WP 0057 00).	
	(d) At wiring harness connectors, measure resistance from J2-50 of powertrain ECM to J1-38 of engine ECM.	1. If resistance is less than 5,000 Ohms, go to Test 5. 2. If resistance is greater than 5,000 Ohms, signal circuit (wire 450-YL) is open in wiring harness. Replace wiring harness in question (WP 0195 00 thru WP 0201 00).
	5. Check engine speed tach wire for a short in wiring harness.	
	(a) Turn engine start and battery disconnect switches to OFF position (TM 5-3805-291-10).	
	(b) Wiring harness connector J2 remains disconnected from powertrain ECM.	
	(c) Wiring harness connector J1 remains disconnected from engine ECM.	
	(d) At wiring harness connector for powertrain ECM, measure resistance between J2-50 (wire 450-YL) and all contacts used in wiring harness connectors.	

Table 3. Powertrain Control - Continued.

(MID 081) CID FMI CODE	TEST OR INSPECTION	CORRECTIVE ACTION
0190 02 - Continued.	(e) At wiring harness connector for engine ECM, measure resistance between J1-38 (wire 450-YL) and all contacts used in wiring harness connectors.	1. If each resistance is greater than 5,000 Ohms, go to Test 6. 2. If each resistance is not greater than 5,000 Ohms, short is between J2-25 or J1-38 and contact with low resistance. Replace wiring harness in question (WP 0195 00 thru WP 0201 00).
	6. Check signal frequency of engine speed tach wire. (a) Back-probe contact J1-38 (wire 450-YL) at back of wiring harness connector for engine ECM. (b) Connect multimeter probe to ground. (c) Turn battery disconnect and engine start switches to ON position (TM 5-3805-291-10). (d) Start engine and run at low idle (TM 5-3805-291-10). (e) Measure signal frequency.	
	(f) Compare signal frequency to rpm engine.	1. If frequency is 1/3 of engine rpm engine, go to Test 7. 2. If ECM cannot detect signal frequency, exit this procedure and repeat procedures. If cause of failure is not found, replace engine ECM (WP 0057 00). 3. If signal frequency is abnormally high, exit this procedure and repeat procedures. If cause of failure is not found, replace engine ECM (WP 0057 00).
	7. Check if diagnostic code is still present. (a) Clean harness connector contacts. (b) Reconnect all wiring harness connectors. (c) Turn engine start and battery disconnect switches to ON position (TM 5-3805-291-10). (d) Start engine and run at low idle (TM 5-3805-291-10).	

Table 3. Powertrain Control - Continued.

(MID 081) CID FMI CODE	TEST OR INSPECTION	CORRECTIVE ACTION
0190 02 - Continued.	(e) Use Messenger to check status of CID 0190 FMI 02 (TM 5-3805-291-10).	1. If CID 0190 FMI 02 is not active, diagnostic code does not exist at this time. Resume normal operation. 2. If CID 0190 FMI 02 is active, repeat Test 6.
0367 03	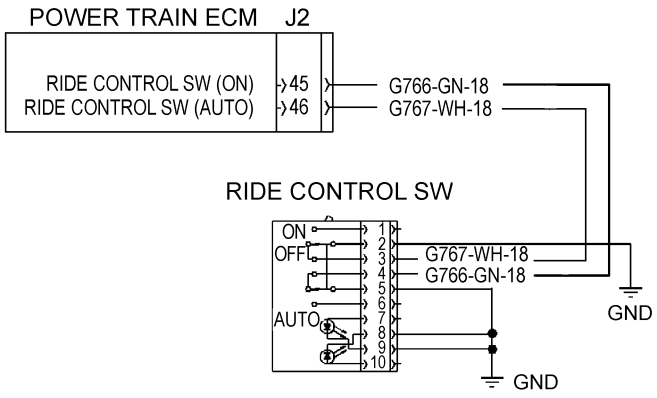 427-C1618 **NOTE** • **For status of ride control switch, please refer to table at end of this work package.** • **The following test procedure may create other diagnostic codes. Ignore these diagnostic codes and clear the diagnostic codes when the original diagnostic code is corrected. Ensure that diagnostic code CID 0367 FMI 03 is active before performing this procedure.** 1. Inspect harness connections. (a) Turn battery disconnect and engine start switches to OFF position (TM 5-3805-291-10). (b) Disconnect and inspect all harness connections associated with ride control rocker switch (WP 0237 00). Make sure connectors are clean and tight. Refer to *Electrical Connectors Inspection* (WP 0022 00) as necessary. (c) Check connectors for proper mating. (d) Check wires at connectors.	

Table 3. Powertrain Control - Continued.

(MID 081) CID FMI CODE	TEST OR INSPECTION	CORRECTIVE ACTION
0367 03 - Continued.	(e) Use Messenger to check each wire for nicks or signs of abrasion in insulation. (f) Check for moisture at connectors. (g) Check connectors for dirty or corroded contacts. (h) Check each pin and each socket of wiring harness connectors. (i) Reconnect all connectors.	1. If wiring harness connectors are tightly connected and free of corrosion, go to Test 2. 2. If wiring harness connectors are in need of repair, replace wiring harness in question (WP 0195 00 thru WP 0201 00).
	2. Check switch circuits in harness. (a) Battery disconnect and engine start switches remain in OFF position (TM 5-3805-291-10). (b) Disconnect wiring harness connectors from powertrain ECM and ride control switch (WP 0048 00 and WP 0063 00). (c) At harness connector for switch, connect a jumper wire between contact 4 (wire G766-GN) and contact 3 (wire G767-WH). (d) At harness connector for ECM, measure resistance from contact J2-46 (wire G767-WH) to contact J2-45 (wire G766-GN).	1. If resistance is less than 5 Ohms, go to Test 3. 2. If resistance is greater than 5,000 Ohms, circuit is open. Replace wiring harness in question (WP 0195 00 thru WP 0201 00).
	3. Check switch ground circuit. (a) Battery disconnect and engine start switches remain in OFF position (TM 5-3805-291-10). (b) Wiring harness connectors remain disconnected from ECM and switch. (c) Remove jumper installed in Test 2.	

Table 3. Powertrain Control - Continued.

(MID 081) CID FMI CODE	TEST OR INSPECTION	CORRECTIVE ACTION
0367 03 - Continued.	(d) Measure resistance between contact 2 (wire C216-BK) of wiring harness for switch to frame ground. Note resistance. (e) Measure resistance between contact 5 (wire C216-BK) of wiring harness for switch to frame ground. Note resistance. (f) Measure resistance between contact 8 (wire 200-BK) of wiring harness for switch to frame ground. Note resistance. (g) Measure the resistance between contact 9 (wire 200-BK) of the wiring harness for the switch to frame ground. Note resistance.	1. If resistance is less than 5 Ohms, go to Test 4. 2. If resistance measurement is 5,000 Ohms or greater, circuit with 5,000 Ohms or greater measurement is open. Replace wiring harness in question (WP 0195 00 thru WP 0201 00).
	4. Check switch operation. (a) Battery disconnect and engine start switches remain in OFF position (TM 5-3805-291-10). (b) Reconnect ride control switch (WP 0055 00). (c) Wiring harness connectors remain disconnected from powertrain ECM. (d) Check the continuity of contacts for each switch position. Activate and deactivate each switch position. Refer to Table 11, "*Ride Control Switch Status"* in this work package.	1. If continuity checks do not agree with Table 11, replace ride control switch (WP 0055 00). 2. If continuity checks agree with Table 11, go to Test 5.
	5. Check if diagnostic code remains active. (a) Inspect contacts of harness connectors and clean harness connectors. (b) Reconnect all harness connectors. (c) Operate machine (TM 5-3805-291-10).	

Table 3. Powertrain Control - Continued.

(MID 081) CID FMI CODE	TEST OR INSPECTION	CORRECTIVE ACTION
0367 03 - Continued.	(d) Use Messenger to check status of CID 0367 FMI 03 (TM 5-3805-291-10).	1. If CID 0367 FMI 03 is active, exit this procedure and repeat this procedure. If cause of diagnostic code is not found, replace powertrain ECM (WP 0063 00). 2. If CID 0367 FMI 03 is not active, diagnostic code does not exist at this time. Resume normal machine operation.
0368 02	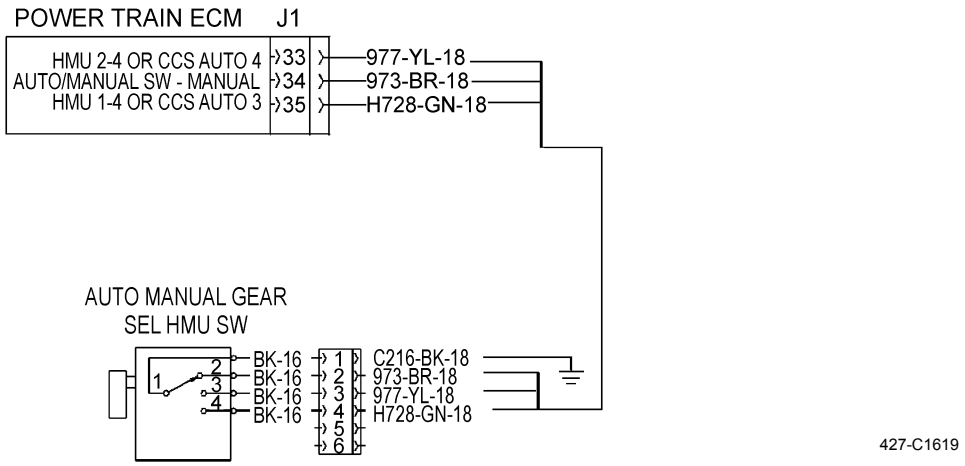 **NOTE** • **Ensure diagnostic code CID 0368 FMI 02 is active before performing this procedure.** • **The following procedure can create other faults that can be detected by the powertrain ECM. Ignore these created faults and clear the created faults when the original diagnostic code is corrected.** 1. Check switch circuits. (a) Turn battery disconnect and engine start switches to OFF position (TM 5-3805-291-10). (b) Disconnect wiring harness from powertrain ECM (WP 0063 00).	

Table 3. Powertrain Control - Continued.

(MID 081) CID FMI CODE	TEST OR INSPECTION	CORRECTIVE ACTION
0368 02 - Continued.	(c) At wiring harness connector for powertrain ECM, check continuity to ground of open contacts and grounded contact for each position of transmission autoshift switch. Activate and deactivate each position of transmission autoshift switch (WP 0237 00).	1. If continuity checks do not agree with schematic, go to Test 2. 2. If continuity checks agree with ground and open combinations, go to Test 3.
	2. Check transmission autoshift switch.	
	(a) Disconnect wiring harness from transmission autoshift switch (WP 0055 00).	
	(b) Check continuity of switch contacts for each position of transmission autoshift switch. Activate and deactivate each position of transmission autoshift switch.	1. If continuity checks do not agree with schematic, replace autoshift switch (WP 0055 00). 2. If continuity checks agree with schematic, replace wiring harness in question (WP 0195 00 thru WP 0201 00).
	3. Check for a short to +battery at wiring harness connector for powertrain ECM. Check continuity between each switch circuit and contacts J1-31, J1-39, and J2-47.	1. If continuity exists, wiring harness is faulty. Replace wiring harness in question (WP 0195 00 thru WP 0201 00). 2. If continuity does not exist, exit this procedure and repeat procedures. If cause is not found, replace powertrain ECM (WP 0063 00).

Table 3. Powertrain Control - Continued.

(MID 081) CID FMI CODE	TEST OR INSPECTION	CORRECTIVE ACTION
0368 03		

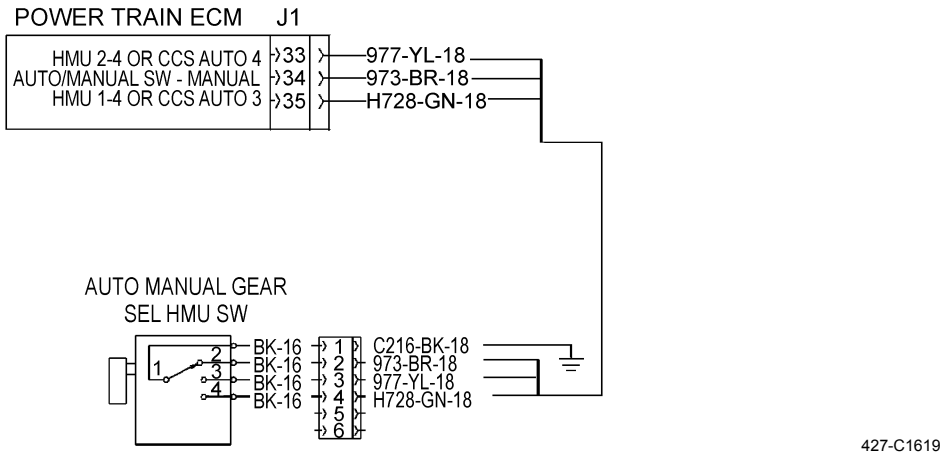

NOTE

- **Ensure diagnostic code CID 0368 FMI 03 is active before performing this procedure.**
- **The following procedure can create other faults that can be detected by powertrain ECM. Ignore these created faults and clear the created faults when original diagnostic code is corrected.**

1. Check for an open circuit.
   (a) Operate machine (TM 5-3805-291-10).
   (b) Connect MSD (WP 0005 00) and check status of CID 0368 FMI 03 while activating and deactivating each position of autoshift switch. Note results.

NOTE

If code does not remain active during operation of switch, this could indicate a possible open circuit (which corresponds to switch position) in harness.

   (c) Turn battery disconnect and engine start switches to OFF position (TM 5-3805-291-10).
   (d) Disconnect wiring harness connectors from powertrain ECM (WP 0063 00).

Table 3. Powertrain Control - Continued.

(MID 081) CID FMI CODE	TEST OR INSPECTION	CORRECTIVE ACTION
0368 03 - Continued.	(e) At wiring harness connector for powertrain ECM, check continuity to ground of open contacts and grounded contact for each position of transmission autoshift switch. Activate and deactivate each position of transmission autoshift switch.	1. If continuity checks do not agree with schematic, go to Test 2. 2. If continuity checks agree with schematic, go to Test 3.
	2. Check transmission autoshift switch.	
	(a) Battery disconnect and engine start switches remain in OFF position (TM 5-3805-291-10).	
	(b) Wiring harness connectors remain disconnected from the powertrain ECM.	
	(c) Disconnect wiring harness from transmission autoshift switch (WP 0055 00).	
	(d) Check continuity of contacts for each position of transmission autoshift switch. Activate and deactivate each position of transmission autoshift switch.	1. If continuity checks do not agree with schematic, replace autoshift switch (WP 0055 00). 2. If continuity checks agree with schematic, replace wiring harness in question (WP 0195 00 thru WP 0201 00).
	3. Check for a short to +battery.	
	At wiring harness connector for powertrain ECM, check continuity from each switch contact to all sources of battery voltage.	1. If continuity exists, wiring harness is faulty. Replace wiring harness in question (WP 0195 00 thru WP 0201 00). 2. If continuity does not exist, exit this procedure and repeat procedures. If cause is not found, replace powertrain ECM (WP 0063 00).

Table 3. Powertrain Control - Continued.

(MID 081) CID FMI CODE	TEST OR INSPECTION	CORRECTIVE ACTION
0444 03		

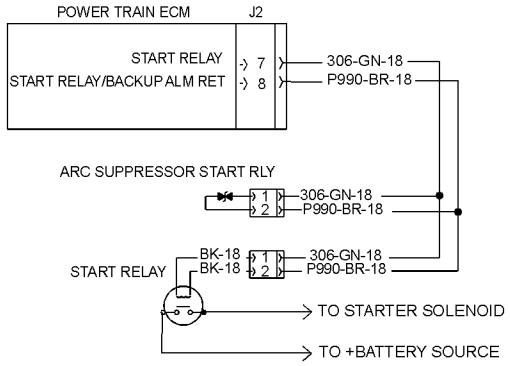

NOTE

The following test procedure may create other diagnostic codes. Ignore these created diagnostic codes and clear these diagnostic codes when the original diagnostic code is corrected. Ensure diagnostic code CID 0444 FMI 03 is active before performing this procedure.

1. Check relay circuit for a short to +battery circuit.
   (a) Turn engine start and battery disconnect switches to OFF position (TM 5-3805-291-10).
   (b) Disconnect wiring harness connectors from start relay and powertrain ECM (WP 0053 00 and WP 0063 00).
   (c) At wiring harness connector for ECM, measure resistance from contact J2-7 (wire 306-GN) to all other contacts used in wiring harness connector for ECM.

   1. If each resistance measurement is greater than 5,000 Ohms, go to Test 2.
   2. If each resistance measurement is not greater than 5000 Ohms, short is between J2-7 (306-GN) and circuit with low resistance measurement. Replace wiring harness in question (WP 0195 00 thru WP 0201 00).

2. Check if diagnostic code remains active.
   (a) Inspect and clean harness connector contacts.
   (b) Reconnect harness connector.
   (c) Operate machine (TM 5-3805-291-10).

Table 3. Powertrain Control - Continued.

(MID 081) CID FMI CODE	TEST OR INSPECTION	CORRECTIVE ACTION
0444 03 - Continued.	(d) Use messenger to determine if CID 0444 FMI 03 is active (TM 5-3805-291-10).	1. If CID 0444 FMI 03 is active, exit this procedure and repeat procedure. If cause of diagnostic code is not found, replace powertrain ECM (WP 0063 00). 2. If CID 0444 FMI 03 is not active, problem does not exist at this time. Resume normal machine operation.
0444 05		

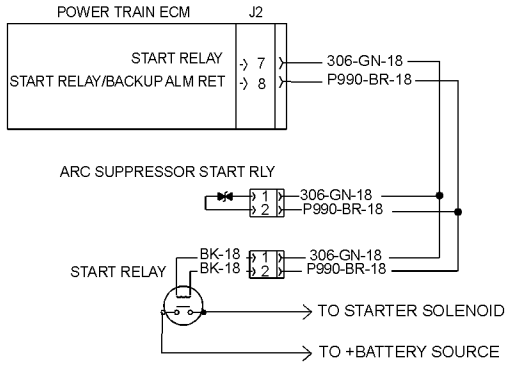

427-C1621

NOTE

The following test procedure may create other diagnostic codes. Ignore these created diagnostic codes and clear these diagnostic codes when the original diagnostic code is corrected. Ensure diagnostic code CID 0444 FMI 05 is active before performing this procedure.

1. Check relay. (a) Turn battery disconnect and engine start switches to ON position. Do not start engine (TM 5-3805-291-10). (b) Disconnect start relay from wiring harness (WP 0053 00). (c) At wiring harness connector for relay, place a jumper wire from contact 1 (wire 306-GN) to contact 2 (wire P990-BR).	
(d) Use messenger to observe status of CID 0444 FMI 05 (TM 5-3805-291-10).	1. If diagnostic code remains active, go to Test 2. 2. If diagnostic is no longer active, repeat this test to verify relay failure. Replace start relay. Verify that new relay corrects problem (WP 0053 00).

Table 3. Powertrain Control - Continued.

(MID 081) CID FMI CODE	TEST OR INSPECTION	CORRECTIVE ACTION
0444 05 - Continued.	2. Check harness for an open circuit. (a) Turn engine start and battery disconnect switches to OFF position (TM 5-3805-291-10). (b) Disconnect wiring harness connector(s) from powertrain ECM (WP 0063 00). (c) Jumper wire installed in previous Test 1 remains in place. (d) At wiring harness connector, measure resistance from signal contact J2-7 (wire 306-GN) to contact J2-8 (wire P990-BR).	1. If resistance is less than 5.0 Ohms, go to Test 3. 2. If resistance is greater than 5,000 Ohms, open circuit is in wire 306-GN or in wire P990-BR of wiring harness. Replace wiring harness in question (WP 0195 00 thru WP 0201 00).
	3. Check if diagnostic code remains active. (a) Inspect harness connector contacts and clean harness connectors. (b) Reconnect all wiring harness connectors. (c) Operate machine (TM 5-3805-291-10). (d) Use messenger to check status of CID 044 FMI 05.	1. If CID 0444 FMI 05 is active, exit this procedure and repeat this procedure. If cause of diagnostic code is not found, replace powertrain ECM (WP 0063 00). 2. If CID 0444 FMI 05 is not active, diagnostic code does not exist at this time. Resume normal machine operation.

Table 3. Powertrain Control - Continued.

(MID 081) CID FMI CODE	TEST OR INSPECTION	CORRECTIVE ACTION
0444 06		

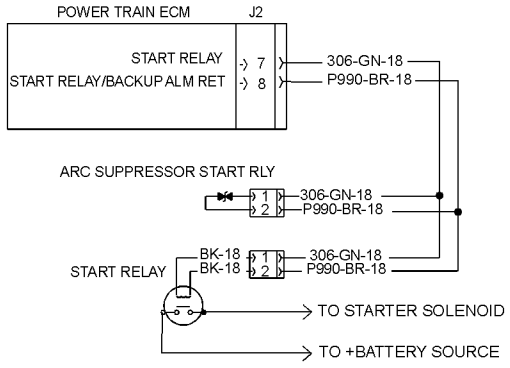

427-C1622

NOTE

The following test procedure may create other diagnostic codes. Ignore these created diagnostic codes and clear these diagnostic codes when original diagnostic code is corrected. Ensure diagnostic code CID 0444 FMI 06 is active before performing this procedure.

1. Check relay. (a) Turn battery disconnect and engine start switches to ON position. Do not start engine (TM 5-3805-291-10). (b) Use messenger to observe status of diagnostic code (TM 5-3805-291-10). (c) Disconnect start relay from wiring harness (WP 0053 00).	1. If CID 0444 FMI 06 changes to CID 0444 FMI 05 when relay is disconnected, repeat this test to verify failure of relay. Replace start relay (WP 0053 00). 2. If CID 0444 FMI 06 remains active, go to Test 2.
2. Check relay energizer circuit for a short to ground. (a) Turn engine start and battery disconnect switches to OFF position (TM 5-3805-291-10). (b) Relay remains disconnected from wiring harness.	

Table 3. Powertrain Control - Continued.

(MID 081) CID FMI CODE	TEST OR INSPECTION	CORRECTIVE ACTION
0444 06 - Continued.	(c) Disconnect wiring harness connector(s) from powertrain ECM (WP 0063 00).	
	(d) At wiring harness connector, measure resistance from signal contact J2-7 (wire 306-GN) to all contacts used in wiring harness connectors for ECM.	1. If each resistance measurement is greater than 5,000 Ohms, go to Test 3. 2. If each resistance measurement is not greater than 5,000 Ohms, short is between J2-7 (wire 306-GN) and circuit with low resistance measurement. Replace wiring harness in question (WP 0195 00 thru WP 0201 00).
	3. Check if diagnostic code remains active.	
	(a) Inspect and clean harness connector contacts.	
	(b) Reconnect all wiring harness connectors.	
	(c) Operate machine (TM 5-3805-291-10).	
	(d) Use messenger to check status of CID 0444 FMI 06 (TM 5-3805-291-10).	1. If CID 0444 FMI 06 is active, exit this procedure and repeat procedure. If cause of diagnostic code is not found, replace powertrain ECM (WP 0063 00). 2. If CID 0444 FMI 06 is not active, diagnostic code does not exist at this time.

Table 3. Powertrain Control - Continued.

(MID 081) CID FMI CODE	TEST OR INSPECTION	CORRECTIVE ACTION
0562 02	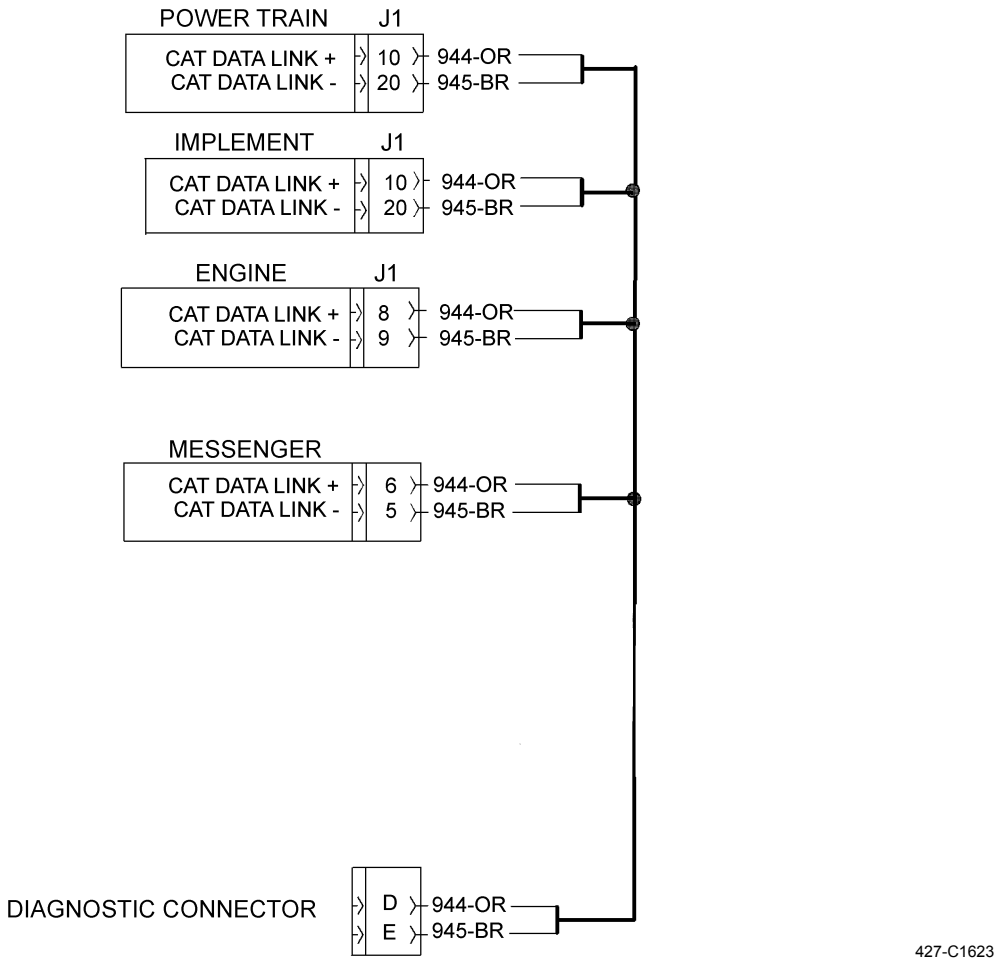 1. Connect MSD (WP 0005 00) and verify following hardware and software part numbers: (a) Part number of configuration software for powertrain ECM. (b) Part number of flash file for Messenger. (c) Part number of powertrain ECM.	

Table 3. Powertrain Control - Continued.

(MID 081) CID FMI CODE	TEST OR INSPECTION	CORRECTIVE ACTION
0562 02 - Continued.	(d) Part number of Messenger.	1. If all part numbers are correct, go to Test 2. 2. If all part numbers are not correct, replace incorrect ECM with an ECM that has correct part numbers. Flash correct configuration software (WP 0056 00, WP 0057 00, WP 0060 00, and WP 0063 00).
	2. Inspect harness connections. (a) Turn battery disconnect switch to OFF position (TM 5-3805-291-10). (b) Disconnect and inspect all harness connections related to CAT Data Link (WP 0237 00). Make sure connectors are clean and tight. Refer to *Electrical Connectors Inspection* as necessary (WP 0022 00). (c) Check connectors for proper mating. (d) Check wires at connector. (e) Check each wire for nicks or signs of abrasion in the insulation. (f) Check for moisture at connector. (g) Check for dirty or corroded contacts. (h) Check each pin and socket of wiring harness connectors.	
	(i) Reconnect all connectors.	1. If wiring harness connectors are tightly connected and free of corrosion, go to Test 3. 2. If wiring harness connectors are in need of repair, replace wiring harness in question (WP 0195 00 thru WP 0201 00).
	3. Check for shorts to ground. (a) Battery disconnect switch remains in OFF position (TM 5-3805-291-10). (b) Disconnect wiring harness from all ECMs that use CAT Data Link (WP 0056 00, WP 0057 00, WP 0060 00, and WP 0063 00).	

Table 3. Powertrain Control - Continued.

(MID 081) CID FMI CODE	TEST OR INSPECTION	CORRECTIVE ACTION
0562 02 - Continued.	(c) At wiring harness for powertrain ECM, measure resistance between frame ground and connector contacts 20 (wire 945-BR) and 10 (wire 944-OR) of CAT Data Link circuit.	1. If resistance is greater than 5,000 Ohms, go to Test 4. 2. If resistance is less than 5,000 Ohms, there is a short between frame ground and CAT Data Link circuit in the wiring harness. Replace wiring harness in question (WP 0195 00 thru WP 0201 00).
	4. Check for short to +battery circuit. (a) Battery disconnect switch remains in OFF position (TM 5-3805-291-10). (b) All related ECMs remain disconnected from wiring harness. (c) At wiring harness connector for powertrain ECM, perform these checks: (1) Measure the resistance between contact J1-31 (wire 170-RD) and contact J1-20 (wire 945-BR).	
	(2) Measure resistance between contact J1-31 (wire 170-RD) and contact J1-10 (wire 944-OR).	1. If resistance is greater than 5,000 Ohms, go to Test 5. 2. If resistance is less than 5,000 Ohms, there is a short between +battery circuit and CAT Data Link circuit in wiring harness. Replace wiring harness in question (WP 0195 00 thru WP 0201 00).
	5. Check for open circuit in harness. (a) Battery disconnect switch remains in OFF position (TM 5-3805-291-10). (b) All related ECMs remain disconnected from wiring harness. (c) Measure resistance of CAT Data Link circuit in wiring harness: (1) Measure resistance from contact J1-20 (wire 945-BR) of harness connector for powertrain ECM to contact 5 of harness connector for Messenger.	

Table 3. Powertrain Control - Continued.

(MID 081) CID FMI CODE	TEST OR INSPECTION	CORRECTIVE ACTION
0562 02 - Continued.	(2) Measure resistance from contact J1-10 (wire 944-OR) of harness connector for powertrain ECM to contact 66 of harness connector for Messenger.	1. If resistance is less than 5 Ohms, go to Test 6. 2. If resistance is greater than 5 Ohms, CAT Data Link circuit is open in wiring harness. Replace wiring harness in question (WP 0195 00 thru WP 0201 00).
	6. Check for additional diagnostic codes for other ECMs. (a) Connect MSD (WP 0005 00). (b) Turn engine start and battery disconnect switches to OFF position (TM 5-3805-291-10). (c) One at a time, reconnect ECMs that use CAT Data Link. (d) Turn battery disconnect and engine start switches to ON position (TM 5-3805-291-10).	
	(e) After each ECM has been reconnected, check event list for diagnostic codes logged against ECM.	1. If diagnostic codes are not present for other ECMs in event list, exit this procedure and repeat procedure. If failure is not found, check +battery contacts and ground contacts of ECM. If these contacts are correct, replace messenger ECM (WP 0056 00). 2. If diagnostic codes are present for other ECMs in event list, exit this procedure and repeat this procedure. If failure is not found, replace powertrain ECM (WP 0063 00).

Table 3. Powertrain Control - Continued.

(MID 081) CID FMI CODE	TEST OR INSPECTION	CORRECTIVE ACTION
0562 09		

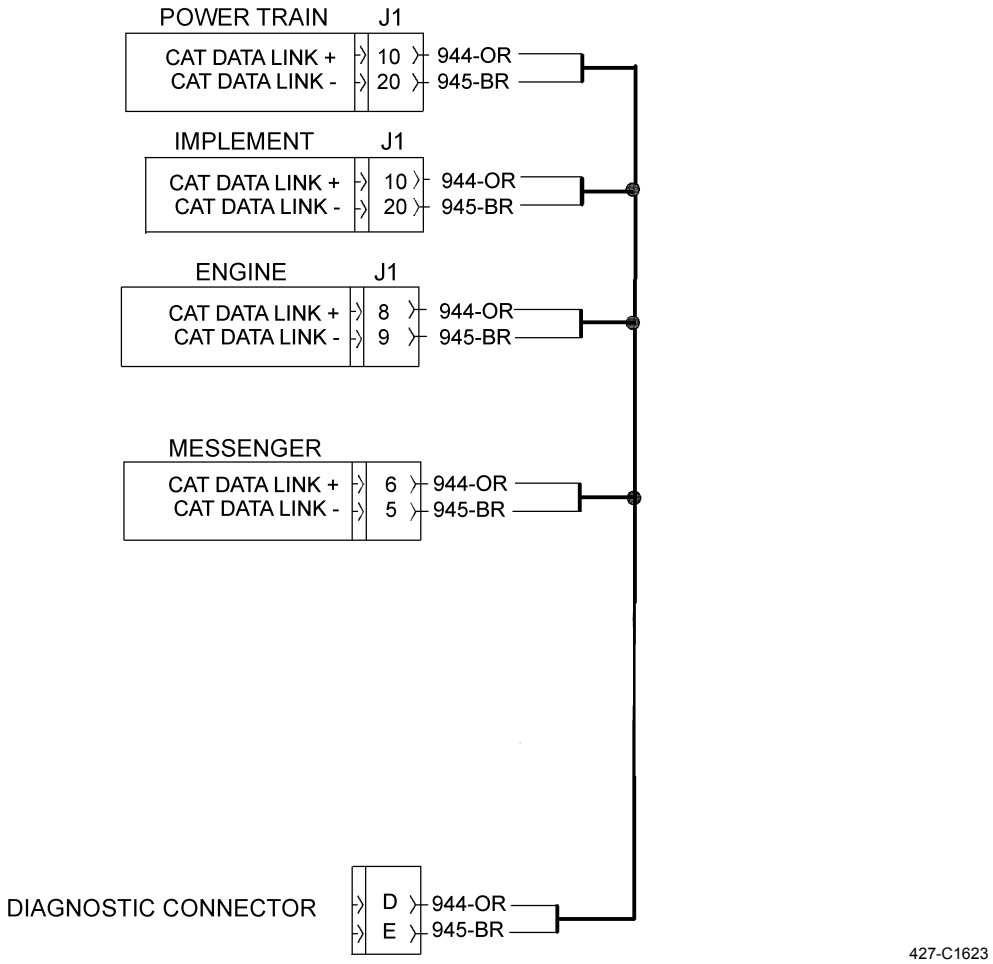

	1. Connect MSD (WP 0005 00) and verify software is compatible for correct software part numbers. 2. Check +battery circuit. (a) Turn engine start and battery disconnect switches to OFF position (TM 5-3805-291-10). (b) Disconnect connector J1 from powertrain ECM (WP 0063 00).	1. If software is compatible, go to Test 2. 2. If software is not compatible, ensure correct part number was used if any ECMs have been replaced. Continue testing if conditions are not resolved.

Table 3. Powertrain Control - Continued.

(MID 081) CID FMI CODE	TEST OR INSPECTION	CORRECTIVE ACTION
0562 09 - Continued.	(c) Turn battery disconnect and engine start switches to ON position (TM 5-3805-291-10).	
	(d) At connector J1, measure voltage from +battery terminals to negative battery terminals.	1. If voltage is correct, go to Test 3. 2. If voltage does not measure 18 to 35 DCV, ensure that proper ground is available. If ground is correct, repair power circuit. Also, check circuit breakers (WP 0195 00 thru WP 0201 00). 3. If conditions are not resolved, go to Test 3.
	3. Check CAT Data Link circuit for a short to ground. (a) Turn engine start and battery disconnect switches to OFF position (TM 5-3805-291-10).	
	(b) Disconnect and inspect wiring harness connectors related to circuits of CAT Data Link (WP 0237 00). Ensure connector contacts are clean and tight. Refer to *Electrical Connectors Inspection* (WP 0022 00) as necessary.	
	(c) Disconnect wiring harness from all modules (WP 0056 00, WP 0057 00, WP 0060 00, and WP 0063 00).	
	(d) At wiring harness for powertrain ECM, measure resistance from contact J1-20 (wire 945-BR) and contact J1-10 (wire 944-OR) to all possible sources of ground.	1. If resistance measurement is correct, go to Test 4. 2. If resistance measurement is not correct, short is between J1-20 (wire 945-BR) and circuit with low resistance measurement, or short is between J1-10 (wire 944-OR) and circuit with low resistance measurement. 3. Replace wiring harness in question (WP 0195 00 thru WP 0201 00). If conditions are not resolved, replace ECM powertrain (WP 0063 00). 4. If problem remains, exit this procedure and repeat.

Table 3. Powertrain Control - Continued.

(MID 081) CID FMI CODE	TEST OR INSPECTION	CORRECTIVE ACTION
0562 09 - Continued.	4. Check CAT Data Link for a short to positive voltage.	
	(a) Engine start and battery disconnect switches remain in OFF position (TM 5-3805-291-10).	
	(b) All modules remain disconnected from wiring harness.	
	(c) At wiring harness connector for powertrain ECM, measure resistance from contact J1-20 and contact J1-10 to all possible sources of positive voltage.	1. If resistance is correct, go to Test 5. 2. If resistance is not correct, short is between connector contact J1-20 and circuit with low resistance measurement or the short is between connector contact J1-10 and circuit with low resistance measurement. Replace wiring harness in question (WP 0195 00 thru WP 0201 00). 3. If conditions are not resolved, replace powertrain ECM (WP 0063 00).
	5. Check CAT Data Link for an open circuit.	
	(a) Engine start and battery disconnect switches remain in OFF position (TM 5-3805-291-10).	
	(b) At powertrain ECM, measure resistance from contact J1-20 (wire 945-BR) to corresponding contact 5 (wire 945-BR) of Messenger.	
	(c) At powertrain ECM, measure resistance from connector contact J1-10 (wire 944-OR) to corresponding connector contact 6 (wire 944-OR) of Messenger.	1. If CAT Data Link circuit in wiring harness is correct, exit this procedure and repeat this diagnostic code procedure again. If cause of problem is not found, replace powertrain ECM (WP 0063 00). 2. If there is an open circuit in harness, it is in wire (945-BR) or wire (944-OR) of CAT Data Link. Replace wiring harness in question (WP 0195 00 thru WP 0201 00).

Table 3. Powertrain Control - Continued.

(MID 081) CID FMI CODE	TEST OR INSPECTION	CORRECTIVE ACTION
0562 14		

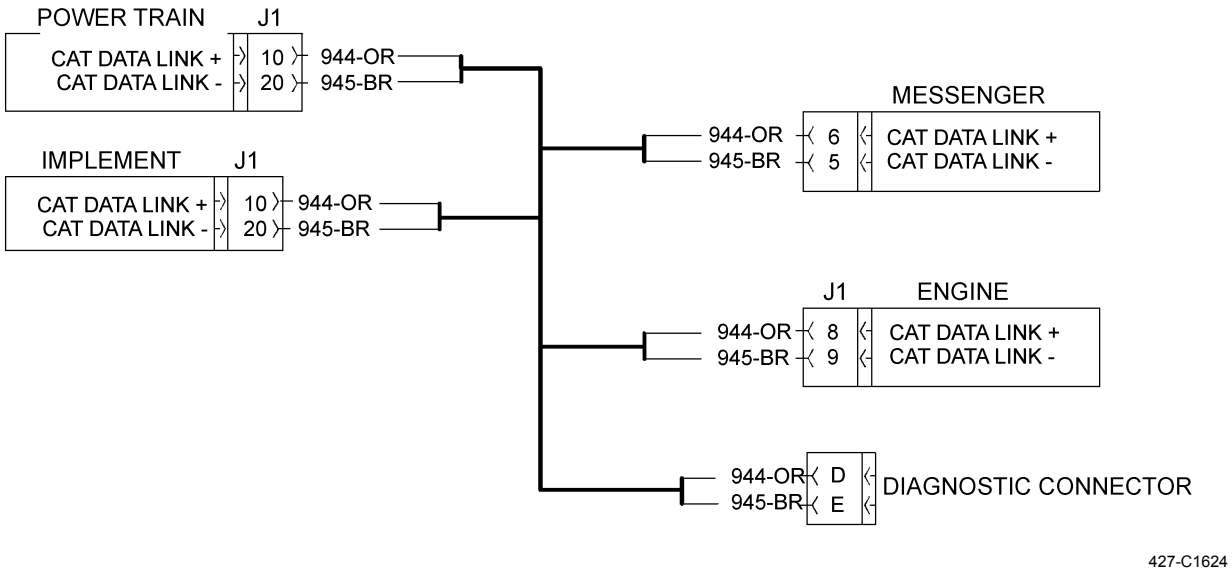

	1. Check powertrain ECM and Messenger for proper software versions.	
	Connect MSD (WP 0005 00) and verify software versions are compatible.	1. If software versions are compatible, go to Test 2. 2. If proper software is not installed, flash proper software to appropriate ECM. Cycle engine start switch to initialize new software. Ensure diagnostic code is no longer active.
	2. Recheck for diagnostic codes.	1. If diagnostic code indicator and diagnostic code are inactive, clear diagnostic code. 2. If diagnostic code is active, ensure proper software is installed before replacing ECM. If software is correct, replace powertrain ECM (WP 0063 00). If powertrain ECM was just replaced, install new Messenger (WP 0056 00).

Table 3. Powertrain Control - Continued.

(MID 081) CID FMI CODE	TEST OR INSPECTION	CORRECTIVE ACTION
0585 02		
	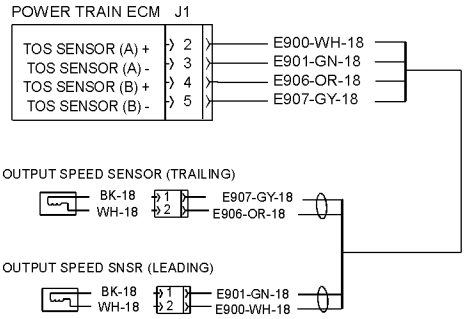 427-C1625	
	1. Check resistance of sensor. (a) Turn engine start and battery disconnect switches to OFF position (TM 5-3805-291-10). (b) Disconnect wiring harness connector from TOS Sensor 1 (leading) connector (WP 0093 00). (c) Measure resistance between contacts 1 and 2 of TOS Sensor 1 (leading) connector.	1. If resistance is between 800 and 1,800 Ohms, go to Test 2. 2. If resistance is not between 800 and 1,800 Ohms, replace speed sensor. Adjust speed sensor properly when installing (WP 0093 00).
	2. Check signal circuit for an open circuit in wiring harness. (a) Engine start and the battery disconnect switches remain in OFF position (TM 5-3805-291-10). (b) At wiring harness connector for speed sensor, place a jumper between contact 1 and contact 2. (c) Disconnect wiring harness connectors J1 and J2 from powertrain ECM (WP 0063 00).	

Table 3. Powertrain Control - Continued.

(MID 081) CID FMI CODE	TEST OR INSPECTION	CORRECTIVE ACTION
0585 02 - Continued.	(d) Measure resistance between contact J1-2 and contact J1-3.	1. If there is less than 5.0 Ohms resistance, go to Test 3. 2. If there is more than 5,000 Ohms resistance, there is an open circuit in wiring harness (wire E900-WH or wire E901-GN). Replace wiring harness in question (WP 0195 00 thru WP 0201 00).
	3. Check signal for a short. (a) Remove jumper between contact 1 and contact 2 of wiring harness connector for speed sensor. (b) Reconnect speed sensor to wiring harness (WP 0093 00). (c) At wiring harness connector J1, measure resistance between contact J1-2 and all possible sources of positive voltage and at all possible sources of ground.	
	(d) At wiring harness connector J1, measure resistance between contact J1-3 and all possible sources of positive voltage and at all possible sources of ground.	1. If resistance is greater than 5,000 Ohms, go to Test 4. 2. If resistance is less than 5 Ohms, short is between signal circuit (wire E900-WH or wire E901-GN) and circuit with low resistance. Replace wiring harness in question (WP 0195 00 thru WP 0201 00).
	4. Check if diagnostic code remains active. (a) Clean wiring harness connector contacts. (b) Reconnect all wiring harness connectors. (c) Start engine and run engine at low idle (TM 5-3805-291-10). (d) Operate machine. Transmission must be engaged in a direction, and in a speed, and machine must be moving (TM 5-3805-291-10).	

Table 3. Powertrain Control - Continued.

(MID 081) CID FMI CODE	TEST OR INSPECTION	CORRECTIVE ACTION
0585 02 - Continued.	(e) Use messenger to check if CID 0585 FMI 02 is present.	1. If CID 0585 FMI 02 is present, exit this procedure and repeat diagnostic code procedure. If problem persists, ECM may have failed. 2. IF CID 0585 FMI 02 is not present, problem does not exist at this time. Resume normal machine operation.
0590 02		

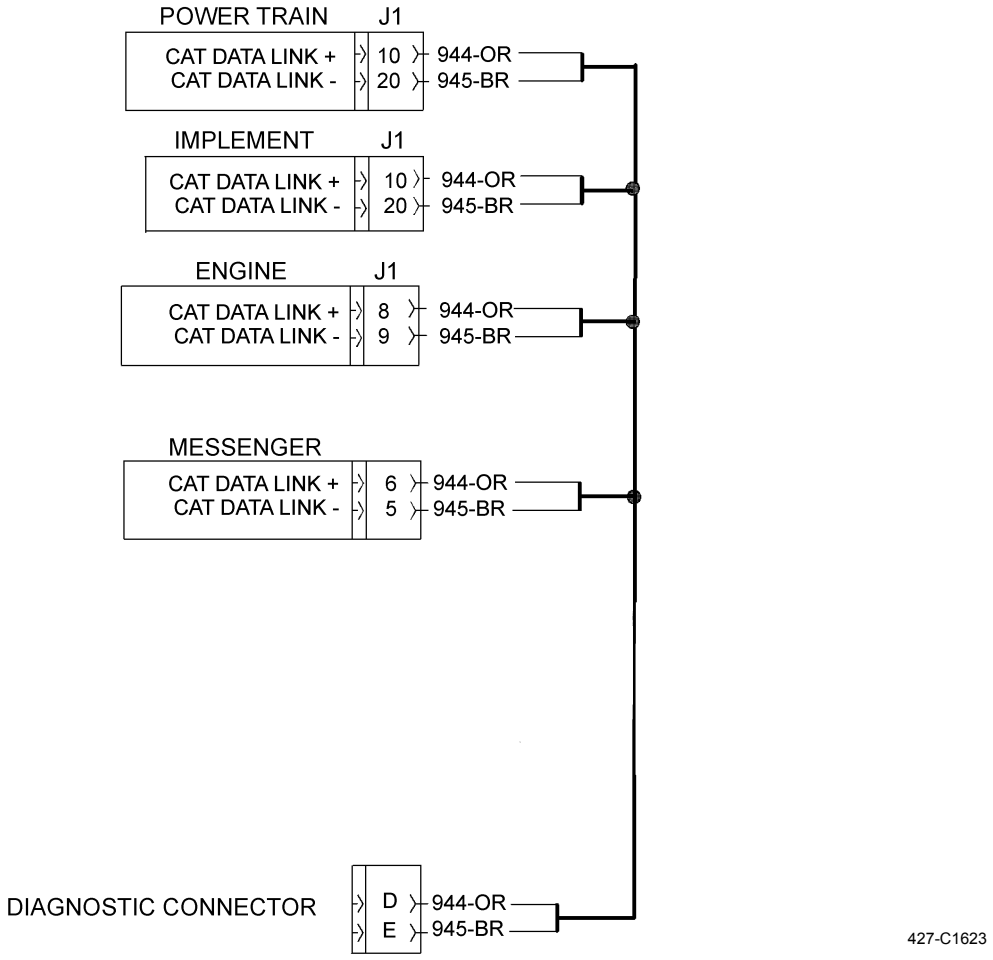

Table 3. Powertrain Control - Continued.

(MID 081) CID FMI CODE	TEST OR INSPECTION	CORRECTIVE ACTION
0590 02 - Continued.	1. Verify hardware and software part numbers. Connect MSD (WP 0005 00) and verify that following part numbers are correct: (1) Part number of software of the powertrain ECM. (2) Part number of powertrain ECM. (3) Part number of engine ECM.	1. If all part numbers are correct, go to Test 2. 2. If all part numbers are not correct, replace incorrect ECM with an ECM correct part number. Flash correct configuration software (WP 0056 00, WP 0057 00, WP 0060 00, and WP 0063 00).
	2. Inspect harness connections. (a) Turn battery disconnect switch to OFF position (TM 5-3805-291-10). (b) Disconnect and inspect all harness connections related to CAT Data Link (WP 0237 00). Make sure that connectors are clean and tight. Refer to *Electrical Connectors Inspection* (WP 0022 00) as necessary. (c) Check connectors for proper mating. (d) Check wires at the connector. (e) Check each wire for nicks or signs of abrasion in insulation. (f) Check for moisture at connector. (g) Check connectors for dirty contacts or corroded contacts. (h) Check each pin and socket of wiring harness connectors. (i) Reconnect all connectors.	1. If wiring harness connectors are tightly connected and free of corrosion, go to Test 3. 2. If wiring harness connectors are in need of repair, replace wiring harness in question (WP 0195 00 thru WP 0201 00).

Table 3. Powertrain Control - Continued.

(MID 081) CID FMI CODE	TEST OR INSPECTION	CORRECTIVE ACTION
0590 02 - Continued.	3. Check for shorts to ground. (a) Battery disconnect switch remains in OFF position (TM 5-3805-291-10). (b) Disconnect wiring harness from all ECMs that use CAT Data Link (WP 0056 00, WP 0057 00, WP 0060 00, and WP 0063 00). (c) At wiring harness for powertrain ECM, measure resistance between frame ground and connector contacts J1-10 (wire 944-OR) and J1-20 (wire 945-BR) of CAT Data Link circuit.	1. If resistance is greater than 5,000 Ohms, go to Test 4. 2. If resistance is less than 5,000 Ohms, wiring harness has failed and there is a short between frame ground and CAT Data Link circuit in wiring harness. Replace wiring harness in question (WP 0195 00 thru WP 0201 00).
	4. Check for a short to +battery circuit. (a) Battery disconnect switch remains in OFF position (TM 5-3805-291-10). (b) All related ECMs remain disconnected from wiring harness. (c) At wiring harness connector for powertrain ECM, measure resistance from contact J1-10 and contact J1-20 to all possible sources of +battery.	1. If harness circuit resistance is correct, go to Test 5. 2. If resistance is less than 5,000 Ohms, there is a short between the +battery circuit and CAT Data Link circuit in wiring harness. Replace wiring harness in question (WP 0195 00 thru WP 0201 00).
	5. Check for an open circuit in harness. (a) Battery disconnect switch remains in OFF position (TM 5-3805-291-10). (b) All related ECMs remain disconnected from wiring harness. (c) Check continuity of CAT Data Link circuit in the wiring harness: (1) Measure resistance between connector contact J1-10 (wire 944-OR) of powertrain ECM and connector contact J1-8 (wire 944-OR) of engine ECM.	

Table 3. Powertrain Control - Continued.

(MID 081) CID FMI CODE	TEST OR INSPECTION	CORRECTIVE ACTION
0590 02 - Continued.	(2) Measure resistance between connector contact J1-20 (wire 945-BR) of powertrain ECM and connector contact J1-9 (wire 945-BR) of engine ECM.	1. If resistance is less than 5 Ohms, go to Test 6. 2. If resistance is greater than 5,000 Ohms, CAT Data Link circuit is open in wiring harness. Replace wiring harness in question (WP 0195 00 thru WP 0201 00).
	6. Check for additional diagnostic codes for other ECMs. (a) Reconnect all ECMs that use CAT Data Link. (b) Turn battery disconnect and engine start switches to ON position (TM 5-3805-291-10).	
	(c) After ECMs have been reconnected, check event list for diagnostic codes logged against the ECM.	1. If diagnostic codes are not present for other ECMs in event list, exit this procedure and repeat this procedure. If failure is not found, replace engine ECM (WP 0057 00). 2. If diagnostic codes are present for other ECMs in event list, exit this procedure and repeat this procedure again. If failure is not found, replace powertrain ECM (WP 0063 00).

Table 3. Powertrain Control - Continued.

(MID 081) CID FMI CODE	TEST OR INSPECTION	CORRECTIVE ACTION
0590 09	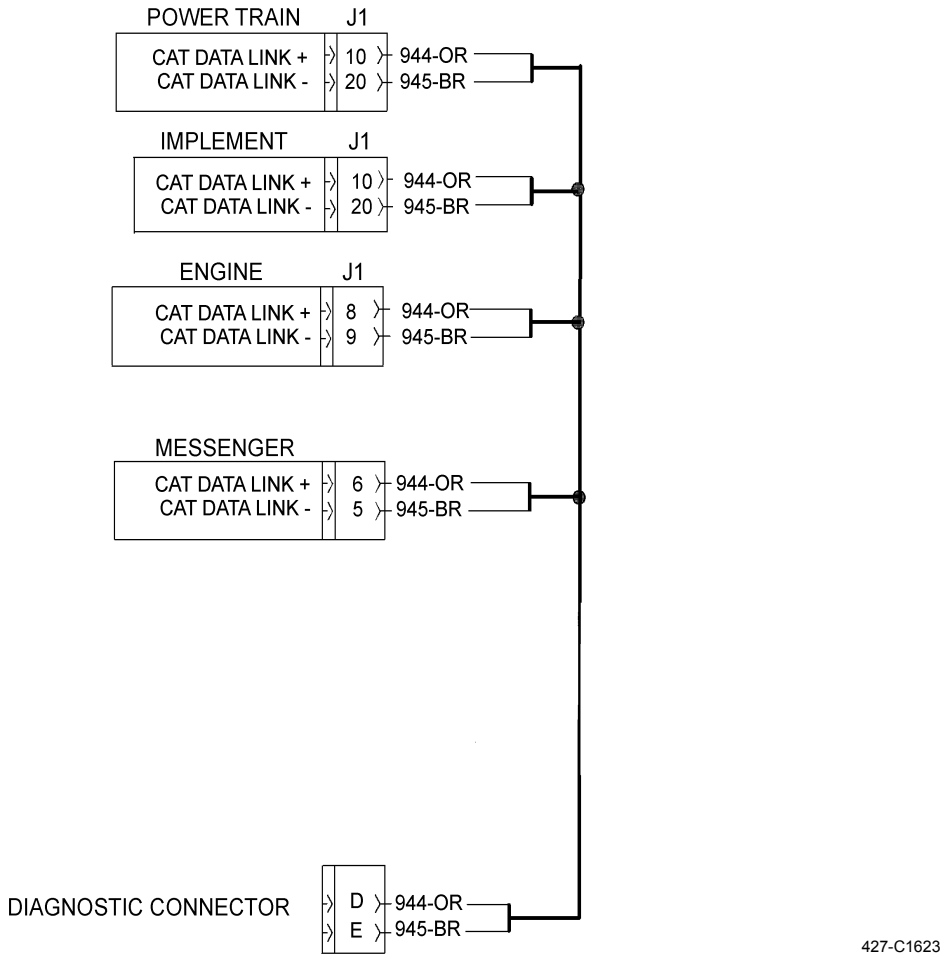	
	1. Connect MSD (WP 0005 00) and verify following hardware and software part numbers: (a) Part number of flash software for engine ECM. (b) Part number of flash software for powertrain ECM. (c) Part number of engine ECM. (d) Part number of powertrain ECM.	1. If all part numbers are correct, go to Test 2.

Table 3. Powertrain Control - Continued.

(MID 081) CID FMI CODE	TEST OR INSPECTION	CORRECTIVE ACTION
0590 09 - Continued.	2. Inspect harness connections. (a) Turn battery disconnect switch to OFF position (TM 5-3805-291-10). (b) Disconnect and inspect all harness connections related to CAT Data Link (WP 0237 00). Make sure connectors are clean and tight. Refer to *Electrical Connectors Inspection* (WP 0022 00) as necessary. (c) Check connectors for proper mating. Ensure all seals are present and in place. (d) Check harness for signs of damage or abrasion. (e) Check wires at connector. Ensure wires are secured tightly into connector. (f) Check exposed wires at connectors for nicks or signs of abrasion. (g) Check for moisture inside connector. (h) Check connectors for dirty or corroded contacts. (i) Check each pin and socket of wiring harness connectors. Ensure contacts are properly installed. Contacts should mate correctly when two pieces of connector are placed together.	2. If all part numbers are not correct, installed engine ECM or powertrain ECM has an incorrect part number or incorrect flash software installed. Replace incorrect engine ECM or powertrain ECM with a module that has correct part number. Flash correct software (WP 0056 00, WP 0057 00, WP 0060 00, and WP 0063 00).

Table 3. Powertrain Control - Continued.

(MID 081) CID FMI CODE	TEST OR INSPECTION	CORRECTIVE ACTION
0590 09 - Continued.	(j) Reconnect all connectors.	1. If wiring harness connectors are tightly connected and free of corrosion, go to Test 3. 2. If wiring harness connectors are in need of repair, replace wiring harness in question (WP 0195 00 thru WP 0201 00).
	3. Check for shorts to ground. (a) Battery disconnect switch remains in OFF position (TM 5-3805-291-10). (b) Disconnect wiring harness from all ECMs that use CAT Data Link (WP 0056 00, WP 0057 00, WP 0060 00, and WP 0063 00).	
	(c) At wiring harness for powertrain ECM, measure resistance between frame ground and connector contacts J1-10 (wire 944-OR) and J1-20 (wire 945-BR) of CAT Data Link circuit.	1. If resistance is greater than 5,000 Ohms, go to Test 4. 2. If resistance is less than 5,000 Ohms, there is a short between frame ground and powertrain ECM contacts J1-10 (wire 944-OR) and J1-20 (wire 945-BR) of CAT Data Link circuit in wiring harness. Replace wiring harness in question (WP 0195 00 thru WP 0201 00).
	4. Check for a short to +battery circuit. (a) Battery disconnect switch remains in OFF position (TM 5-3805-291-10). (b) All related ECMs remain disconnected from wiring harness.	
	(c) At wiring harness connector for powertrain ECM, measure resistance from contact J1-10 and contact J1-20 to all possible sources of +battery.	1. If harness circuit resistance is correct, go to test Test 5. 2. If resistance is less than 5,000 Ohms, there is a short between +battery circuit and contacts J1-10 (wire 944-OR) and J1-20 (wire 945-BR) of CAT Data Link circuit in wiring harness. Replace wiring harness in question (WP 0195 00 thru WP 0201 00).
	5. Check for an open circuit in harness. (a) Battery disconnect switch remains in OFF position (TM 5-3805-291-10).	

Table 3. Powertrain Control - Continued.

(MID 081) CID FMI CODE	TEST OR INSPECTION	CORRECTIVE ACTION
0590 09 - Continued.	(b) All related ECMs remain disconnected from wiring harness. (c) Check resistance of CAT Data Link circuit in the wiring harness: (1) Measure resistance between connector contact J1-8 (wire 944-OR) of engine ECM and connector contact J1-10 (wire 944-OR) of powertrain ECM. (2) Measure resistance between connector contact J1-9 (wire 945-BR) of engine ECM and connector contact J1-20 (wire 945-BR) of powertrain ECM.	1. If resistance is less than 5 Ohms, go to Test 6. 2. If resistance is greater than 5,000 Ohms, CAT Data Link circuit is open in wiring harness. Replace wiring harness in question (WP 0195 00 thru WP 0201 00).
	6. Check for additional diagnostic codes for other ECMs. (a) Turn engine start and battery disconnect switches to OFF position (TM 5-3805-291-10). (b) One at a time, reconnect each ECM that uses CAT Data Link. (c) Turn battery disconnect and engine start switches to ON position (TM 5-3805-291-10). (d) After each ECMs has been reconnected, check for diagnostic codes logged against that ECM.	1. If diagnostic codes are not present for the other ECMs, exit this procedure and repeat procedure again. If failure is not found, replace powertrain ECM (WP 0063 00). 2. If diagnostic codes are present for other ECMs, exit this procedure and repeat procedure. If failure is not found, replace engine ECM (WP 0057 00).

Table 3. Powertrain Control - Continued.

(MID 081) CID FMI CODE	TEST OR INSPECTION	CORRECTIVE ACTION
0590 14		

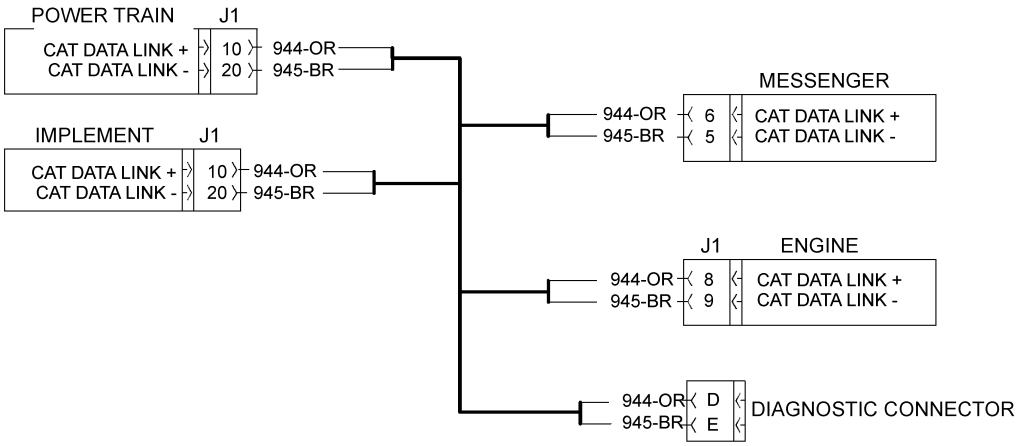

427-C1624

NOTE

Ensure diagnostic code indicator is active and diagnostic code is active.

1. Connect MSD (WP 0005 00) and check powertrain ECM and implement ECM for proper software versions.	1. If software versions are compatible, go to Test 2. 2. If proper software is not installed, flash proper software to appropriate ECM. Cycle engine start switch in order to initialize new software. Ensure that diagnostic code is no longer active.
2. Ensure CID 0596 FMI 14 is active and recheck for diagnostic codes.	1. If diagnostic code indicator and diagnostic code are inactive, clear diagnostic code. 2. If diagnostic code is active, ensure that proper software is installed before replacing ECM. If software is correct, replace implement ECM (WP 0060 00). If implement ECM was just replaced, install a new powertrain ECM (WP 0063 00).

Table 3. Powertrain Control - Continued.

(MID 081) CID FMI CODE	TEST OR INSPECTION	CORRECTIVE ACTION
0596 02		

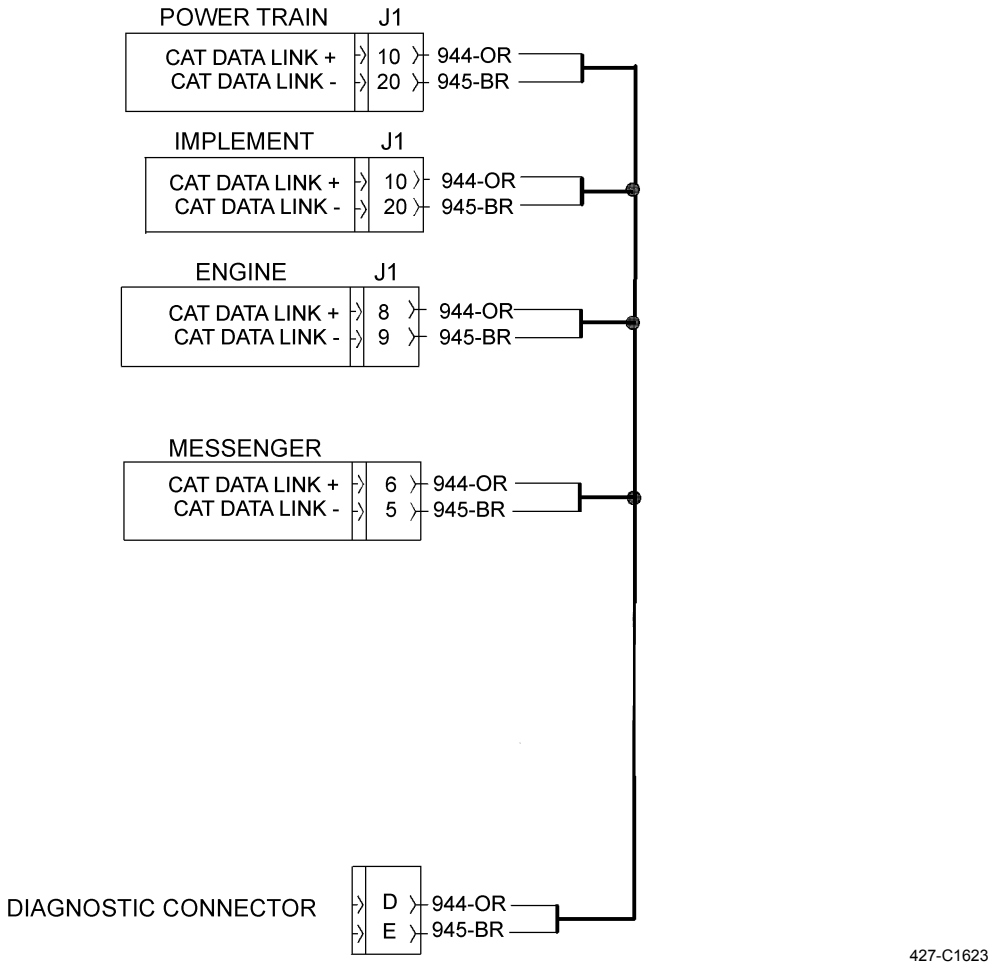

1. Connect MSD (WP 0005 00) and verify following hardware and software part numbers:
   (a) Part number of flash software for implement ECM.
   (b) Part number of flash software for powertrain ECM.
   (c) Part number of implement ECM.

Table 3. Powertrain Control - Continued.

(MID 081) CID FMI CODE	TEST OR INSPECTION	CORRECTIVE ACTION
0596 02 - Continued.	(d) Part number of powertrain ECM.	1. If all part numbers are correct, go to Test 2. 2. If all part numbers are not correct, part number of powertrain ECM or implement ECM may be incorrect. Incorrect configuration software may also be installed. Replace incorrect ECM with an ECM that has correct part number. Flash correct configuration software (WP 0056 00, WP 0057 00, WP 0060 00, and WP 0063 00).
	2. Inspect harness connections. (a) Turn battery disconnect switch to OFF position (TM 5-3805-291-10). (b) Disconnect and inspect all wiring harness connections related to CAT Data Link (WP 0237 00). Make sure connectors are clean and tight. Refer to *Electrical Connectors Inspection* (WP 0022 00) as necessary. (c) Check connectors for proper mating. (d) Check wires at connector. (e) Check each wire for nicks or signs of abrasion in insulation. (f) Check for moisture at connector. (g) Check connectors for dirty or corroded contacts. (h) Check each pin and socket of powertrain harness connectors.	
	(i) Reconnect all connectors.	1. If powertrain harness connectors are tightly connected and free of corrosion, go to Test 3. 2. If powertrain harness connectors are in need of repair, replace wiring harness in question (WP 0195 00 thru WP 0201 00).
	3. Check for shorts to ground. (a) Turn battery disconnect switch to OFF position (TM 5-3805-291-10).	

Table 3. Powertrain Control - Continued.

(MID 081) CID FMI CODE	TEST OR INSPECTION	CORRECTIVE ACTION
0596 02 - Continued.	(b) Disconnect powertrain wiring harness from all ECMs that use CAT Data Link (WP 0056 00, WP 0057 00, WP 0060 00, and WP 0063 00).	
	(c) At powertrain wiring harness for powertrain ECM, measure resistance between frame ground and connector contacts J1-10 (wire 944-OR) and J1-20 (wire 945-BR) of CAT Data Link circuit.	1. If resistance is greater than 5,000 Ohms, go to Test 4. 2. If resistance is less than 5,000 Ohms, there is a short between frame ground and CAT Data Link circuit in powertrain harness. Replace wiring harness in question (WP 0195 00 thru WP 0201 00).
	4. Check for a short to +battery circuit.	
	(a) Battery disconnect switch remains in OFF position (TM 5-3805-291-10).	
	(b) All related ECMs remain disconnected from powertrain wiring harness.	
	(c) At wiring harness connector for powertrain ECM, measure resistance from contact J1-10 and contact J1-20 to all possible sources of +battery.	1. If wiring harness circuit resistance is correct, go to Test 5. 2. If resistance is less than 5,000 Ohms, there is a short between the +battery circuit and the CAT Data Link circuit in powertrain wiring harness. Replace wiring harness in question (WP 0195 00 thru WP 0201 00).
	5. Check for an open circuit in harness.	
	(a) Battery disconnect switch remains in OFF position (TM 5-3805-291-10).	
	(b) All related ECMs remain disconnected from powertrain harness.	
	(c) Check continuity of CAT Data Link circuit in powertrain harness:	
	(1) Measure resistance between connector contact J1-10 (wire 944-OR) of powertrain ECM and connector contact J1-10 (wire 944-OR) of implement ECM.	

Table 3. Powertrain Control - Continued.

(MID 081) CID FMI CODE	TEST OR INSPECTION	CORRECTIVE ACTION
0596 02 - Continued.	(2) Measure resistance between connector contact J1-20 (wire 945-BR) of powertrain ECM and connector contact J1-20 (wire 945-BR) of implement ECM.	1. If resistance is less than 5 Ohms, go to Test 6. 2. If resistance is greater than 5 Ohms, CAT Data Link circuit is open in powertrain wiring harness. Replace powertrain wiring harness in question (WP 0195 00 thru WP 0201 00).
	6. Check for additional diagnostic codes for other ECMs. (a) Reconnect all ECMs that use CAT Data Link. (b) Turn battery disconnect and engine start switches to ON position (TM 5-3805-291-10).	
	(c) After each ECM has been reconnected, check for diagnostic codes logged against ECMs.	1. If diagnostic codes are not present for other ECMs, exit this procedure and repeat this procedure. If failure is not found, replace implement ECM (WP 0060 00). 2. If diagnostic codes are present for other ECMs, exit this procedure and repeat this procedure. If failure is not found, replace powertrain ECM (WP 0063 00).

Table 3. Powertrain Control - Continued.

(MID 081) CID FMI CODE	TEST OR INSPECTION	CORRECTIVE ACTION
0596 09		

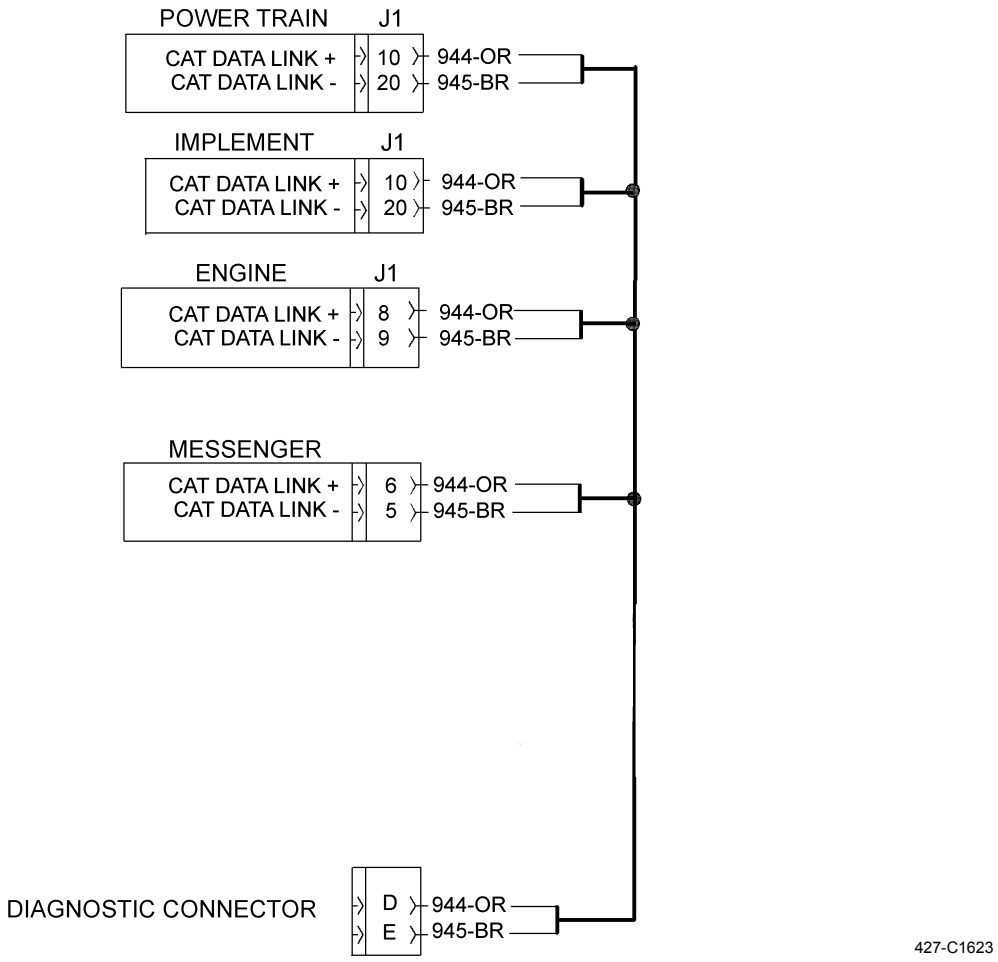

	1. Connect MSD (WP 0005 00) and check software compatibility and correct software part numbers. 2. Check +battery circuit. (a) Turn engine start and battery disconnect switches to OFF position (TM 5-3805-291-10).	1. If software is compatible, go to Test 2. 2. If software is not compatible, install correct software. Ensure correct part number was used if any ECMs have been replaced. Continue testing if conditions are not resolved.

Table 3. Powertrain Control - Continued.

(MID 081) CID FMI CODE	TEST OR INSPECTION	CORRECTIVE ACTION
0596 09 - Continued.	(b) Disconnect connector J1 from ECM (WP 0063 00). (c) Turn battery disconnect and engine start switches to ON position (TM 5-3805-291-10). (d) At connector J1, measure voltage from +battery terminals to negative battery terminals.	1. If voltage is correct, go to Test 3. 2. If voltage does not measure 18 to 35 DCV, ensure that proper ground is available. If ground is correct, repair power circuit. Also, check circuit breakers (WP 0195 00 thru WP 0201 00). 3. If conditions are not resolved, go to Test 3.
	3. Check CAT Data Link circuit for a short to ground. (a) Turn engine start and battery disconnect switches to OFF position (TM 5-3805-291-10). (b) Inspect wiring harness connectors related to circuits of CAT Data Link. Ensure connector contacts are clean and tight. (c) Disconnect wiring harness from all modules (WP 0056 00, WP 0057 00, WP 0060 00, and WP 0063 00). (d) At wiring harness connector for ECM, measure resistance from contact J1-20 (wire 945-BR) and contact J1-10 (wire 944-OR) to all possible sources of ground.	1. If resistance measurement is correct, go to Test 4. 2. If resistance measurement is not correct, short is between J1-20 (wire 945-BR) and circuit with low resistance measurement or short is between J1-10 (wire 944-OR) and circuit with low resistance measurement. Replace wiring harness in question (WP 0195 00 thru WP 0201 00). 3. If conditions are not resolved, replace powertrain ECM (WP 0063 00). 4. If problem remains present, exit this procedure and repeat this procedure.

Table 3. Powertrain Control - Continued.

(MID 081) CID FMI CODE	TEST OR INSPECTION	CORRECTIVE ACTION
0596 09 - Continued.	4. Check CAT Data Link for a short to positive voltage. (a) Engine start and battery disconnect switches remain in OFF position (TM 5-3805-291-10). (b) All modules remain disconnected from wiring harness. (c) At wiring harness connector for powertrain ECM, measure resistance from contact J1-20 and contact J1-10 to all possible sources of positive voltage.	1. If resistance is correct, go to Test 5. 2. If resistance is not correct, there is a short in wiring harness between connector contact J-20 and circuit with low resistance measurement or short is between connector contact J1-10 and circuit with low resistance measurement. Replace wiring harness in question (WP 0195 00 thru WP 0201 00). 3. If conditions are not resolved, replace powertrain ECM (WP 0063 00).
	5. Check CAT Data Link for an open circuit. (a) Engine start and battery disconnect switches remain in OFF position (TM 5-3805-291-10). (b) At powertrain ECM, measure resistance from contact J1-20 (wire 945-BR) to corresponding contact 5 (wire 945-BR) of Messenger. (c) At powertrain ECM, measure resistance from connector contact J1-10 (wire 944-OR) to corresponding connector contact 6 (wire 944-OR) of Messenger.	1. If CAT Data Link circuit in wiring harness is correct, exit this procedure and repeat this diagnostic code procedure. If cause of problem is not found, replace powertrain ECM (WP 0063 00). 2. If there is an open circuit in wiring harness, it is in wire (945-BR) or wire (944-OR) of CAT Data Link. Replace wiring harness in question (WP 0195 00 thru WP 0201 00). 3. If there is an open circuit in harness, it is in wire (945-BR) or wire (944-OR) of CAT Data Link. Replace wiring harness in question (WP 0195 00 thru WP 0201 00).

Table 3. Powertrain Control - Continued.

(MID 081) CID FMI CODE	TEST OR INSPECTION	CORRECTIVE ACTION
0596 14		
	1. Connect MSD (WP 0005 00) and verify following hardware and software part numbers: (a) Part number of flash software for implement ECM. (b) Part number of flash software for powertrain ECM. (c) Part number of implement ECM. (d) Part number of powertrain ECM.	1. If all part numbers are correct and CID 0596 FMI 14 is active, reflash ECM with correct software (WP 0056 00, WP 0057 00, WP 0060 00, and WP 0063 00). 2. If all part numbers are not correct, installed implement ECM or powertrain ECM have wrong part number or incorrect flash software is installed. Replace incorrect implement ECM or powertrain ECM with a module that has correct part number. Flash correct software (WP 0056 00, WP 0057 00, WP 0060 00, and WP 0063 00).

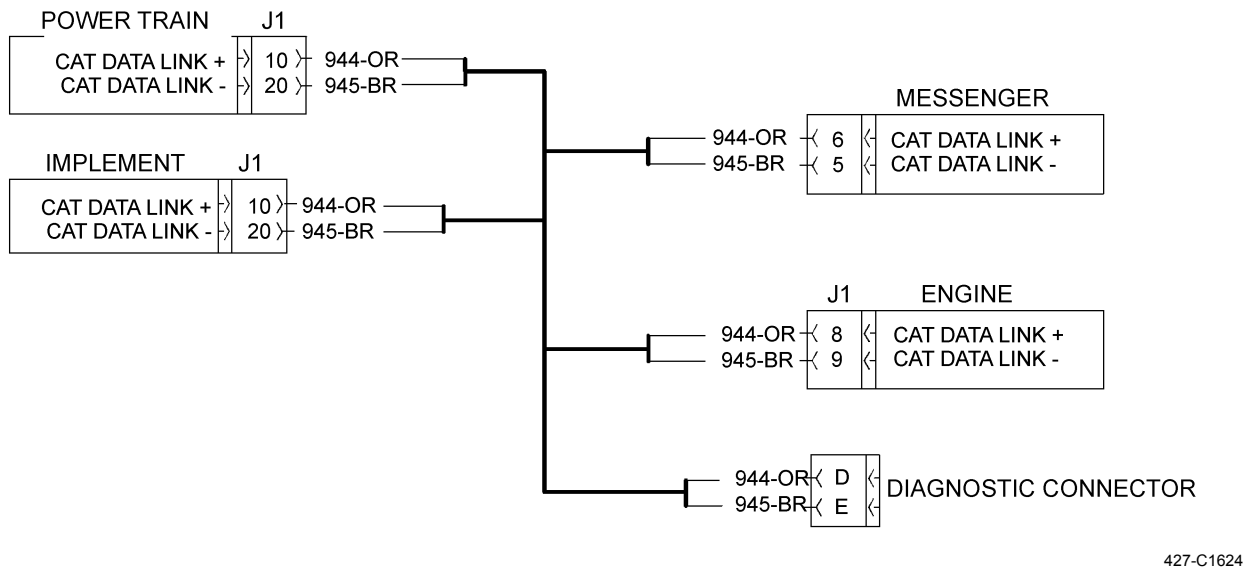

Table 3. Powertrain Control - Continued.

(MID 081) CID FMI CODE	TEST OR INSPECTION	CORRECTIVE ACTION
0627 03		

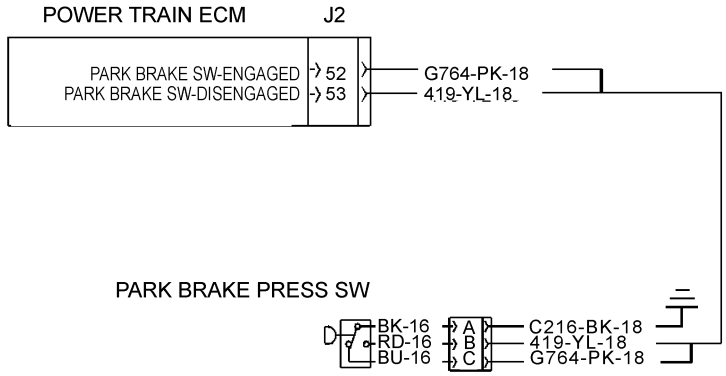

NOTE

The following test procedure may create other diagnostic codes. Ignore these diagnostic codes and clear the diagnostic codes when the original diagnostic code is corrected. Ensure diagnostic code CID 0627 FMI 03 is active before performing this procedure.

1. Check switch operation. (a) Disconnect wiring harness from parking brake oil pressure switch (WP 0086 00). (b) Connect one lead from a multimeter to contact A of harness connector on switch. (c) Connect other lead from a multimeter to contact B of harness connector of switch. (d) Measure resistance between contact A and contact B. Note resistance. (e) Disconnect multimeter lead from contact B and connect lead to contact C. (f) Measure resistance between contact A and contact C.	1. If resistance from contact A to contact B is greater than 5 Ohms, and resistance from contact A to contact C is less than 5 Ohms, go to Test 2. 2. If resistance measurements do not differ, the switch has failed. Replace parking brake oil pressure switch (WP 0086 00).

Table 3. Powertrain Control - Continued.

(MID 081) CID FMI CODE	TEST OR INSPECTION	CORRECTIVE ACTION
0627 03 - Continued.	2. Check switch operation. (a) Wiring harness remains disconnected from parking brake oil pressure switch. (b) Activate switch by starting engine and disengaging parking brake (TM 5-3805-291-10). (c) Connect one lead from a multimeter to contact A of harness connector on switch. (d) Connect other lead from a multimeter to contact B of harness connector on switch. (e) Measure resistance between contact A and contact B. Note resistance. (f) Disconnect multimeter lead from contact B and connect lead to contact C. (g) Measure resistance between contact A and contact C.	1. If resistance from contact A to contact B is less than 5 Ohms, and resistance from contact A to contact C is greater than 5 Ohms, go to Test 3. 2. If resistance measurements do not differ for both contacts or measurements have not changed from previous test, replace parking brake oil pressure switch (WP 0086 00).
	3. Check ground circuit of switch in wiring harness. (a) Turn engine start and battery disconnect switches to OFF position (TM 5-3805-291-10). (b) Disconnect wiring harness connector from pressure switch (WP 0086 00). (c) Measure resistance between frame ground of machine and contact A (wire C216-BK) of wiring harness connector for pressure switch.	1. If resistance is less than 5 Ohms, go to Test 4. 2. If resistance is greater than 5 Ohms, circuit is open. Replace wiring harness in question (WP 0195 00 thru WP 0201 00).

Table 3. Powertrain Control - Continued.

(MID 081) CID FMI CODE	TEST OR INSPECTION	CORRECTIVE ACTION
0627 03 - Continued.	4. Check wiring harness. (a) Turn battery disconnect and engine start switches to OFF position (TM 5-3805-291-10). (b) Wiring harness remains disconnected from switch. (c) Disconnect wiring harness connector(s) from powertrain ECM (WP 0063 00).	
	(d) Measure resistance between contacts J2-53 (wire 419-YL) and J2-52 (wire G764-PK) of the wiring harness to all contacts used in wiring harness connectors for ECM.	1. If each resistance measurement is less than 5 Ohms, go to Test 5. 2. If one or more resistance measurements is less than 5 Ohms, short is between J2-53 (wire 419-YL) and circuit with lowest resistance, or short is between J2-52 (wire G764-PK) and circuit with lowest resistance. Replace wiring harness in question (WP 0195 00 thru WP 0201 00).
	5. Check switch circuits in wiring harness. (a) Wiring harness remains disconnected from ECM and switch. (b) At wiring harness connector for switch, connect a jumper wire between contact B (wire 419-YL) and contact C (wire G764-PK).	
	(c) At wiring harness connector for ECM, measure resistance from contact J2-53 (wire 419-YL) to contact J2-52 (wire G764-PK).	1. If resistance is less than 5 Ohms, go to Test 6. 2. If resistance is greater than 5 Ohms, circuit is open. Replace wiring harness in question (WP 0195 00 thru WP 0201 00).
	6. Check if diagnostic code remains active. (a) Inspect and clean wiring harness connectors. (b) Reconnect all wiring harness connectors. (c) Operate machine (TM 5-3805-291-10).	

Table 3. Powertrain Control - Continued.

(MID 081) CID FMI CODE	TEST OR INSPECTION	CORRECTIVE ACTION
0627 03 - Continued.	(d) Use messenger to determine if CID 0627 FMI 03 is present (TM 5-3805-291-10).	1. If CID 0627 FMI 03 is active, exit this procedure and repeat procedure. If cause of diagnostic code is not found, replace ECM. 2. If CID 0627 FMI 03 is not active, diagnostic code does not exist at this time. Resume normal machine operation.
0627 04		

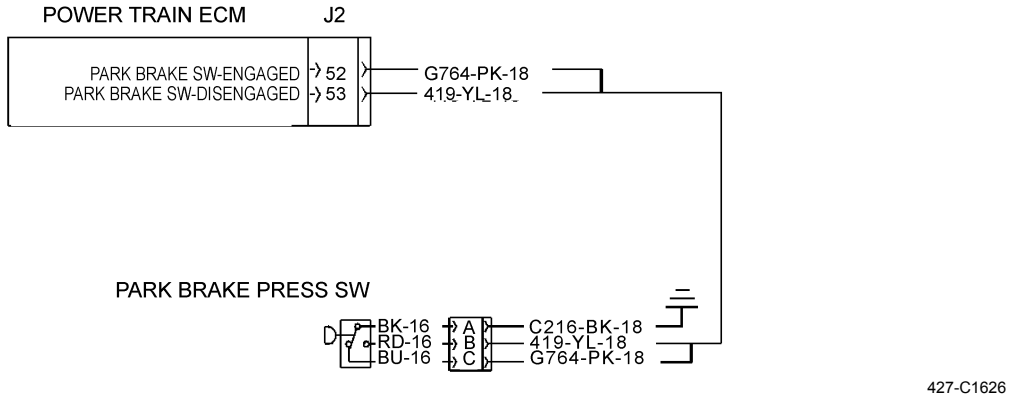

NOTE

The following test procedure may create other diagnostic codes. Ignore these diagnostic codes and clear the diagnostic codes when the original diagnostic code is corrected. Ensure diagnostic code CID 0627 FMI 04 is active before performing this procedure.

1. Check switch. (a) Turn engine start and battery disconnect switches to OFF position (TM 5-3805-291-10). (b) Disconnect wiring harness from parking brake oil pressure switch (WP 0086 00).	
(c) Turn engine start and battery disconnect switches to ON position (TM 5-3805-291-10).	1. If CID 0627 FMI 04 has been replaced by CID 0627 FMI 03, go to Test 3. 2. If CID 0627 FMI 04 is still active, go to Test 2.
2. Check wiring harness.	

Table 3. Powertrain Control - Continued.

(MID 081) CID FMI CODE	TEST OR INSPECTION	CORRECTIVE ACTION
0627 04 - Continued.	(a) Turn battery disconnect and engine start switches to OFF position (TM 5-3805-291-10). (b) Wiring harness remains disconnected from parking brake oil pressure switch. (c) Disconnect wiring harness connector(s) from powertrain ECM (WP 0063 00). (d) Measure resistance between contacts J2-53 (wire 419-YL) and J2-52 (wire G764-PK) of wiring harness to all contacts used in wiring harness connectors for ECM.	1. If each resistance measurement is greater than 5,000 Ohms, go to Test 3. 2. If one or more of resistance measurements is less than 5 Ohms, short is between J2-53 (wire 419-YL) and the circuit with lowest resistance, or short is between J2-52 (wire G764-PK) and circuit with lowest resistance. Replace wiring harness in question (WP 0195 00 thru WP 0201 00).
	3. Check switch operation. (a) Wiring harness remains disconnected from parking brake oil pressure switch. (b) Connect one lead from multimeter to contact A of harness connector on switch. (c) Connect other lead from multimeter to contact B of harness connector on switch. (d) Measure resistance between contact A and contact B. Note resistance. (e) Disconnect multimeter lead from contact B and connect lead to contact C. (f) Measure resistance between contact A and contact C.	1. If resistance from contact A to contact C is less than 5 Ohms and resistance from contact A to contact B is greater than 5,000 Ohms, go to Test 4. 2. If resistance measurements do not differ, replace parking brake oil pressure switch (WP 0086 00).

Table 3. Powertrain Control - Continued.

(MID 081) CID FMI CODE	TEST OR INSPECTION	CORRECTIVE ACTION
0627 04 - Continued.	4. Check switch operation. (a) Wiring harness remains disconnected from switch. (b) Activate parking brake oil pressure switch. (c) Connect one lead from multimeter to contact A (wire 202-BK) of wiring harness connector on switch. (d) Connect other lead from a multimeter to contact B (wire 419-YL) of harness connector on switch. (e) Measure resistance between contact A and contact B. Note resistance. (f) Disconnect multimeter lead from contact B and connect lead to contact C. (g) Measure resistance between contact A and contact C.	1. If resistance from contact A to contact B is less than 5 Ohms, and resistance from contact A to contact C is greater than 5 Ohms, go to Test 5. 2. If resistance measurements do not differ for both contacts or measurements have not changed from previous test, replace parking brake oil pressure switch (WP 0086 00).
	5. Check if diagnostic code remains active. (a) Inspect and clean harness connectors. (b) Reconnect all harness connectors. (c) Operate machine (TM 5-3805-291-10). (d) Use messenger to determine if CID 0627 FMI 04 is present (TM 5-3805-291-10).	1. If CID 0627 FMI 04 is active, exit this procedure and repeat procedure. If cause of diagnostic code is not found, replace powertrain ECM (WP 0063 00). 2. If CID 0627 FMI 04 is not active, diagnostic code does not exist at this time. Resume normal machine operation.

Table 3. Powertrain Control - Continued.

(MID 081) CID FMI CODE	TEST OR INSPECTION	CORRECTIVE ACTION
0672 01		
	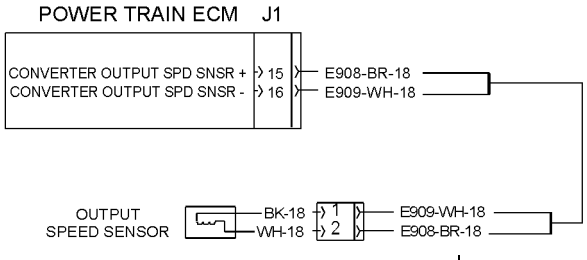 427-C1627	
	1. Check sensor resistance. (a) Turn engine start and battery disconnect switches to OFF position (TM 5-3805-291-10). (b) Disconnect wiring harness from torque converter output speed sensor (WP 0091 00). (c) Measure resistance between contacts 1 and 2 of speed sensor connector.	1. If resistance is between 800 and 1,800 Ohms, go to Test 2. 2. If resistance is not between 800 and 1,800 Ohms, replace speed sensor. Adjust speed sensor properly when installing (WP 0091 00).
	2. Check signal circuit for an open circuit wiring harness. (a) Engine start and battery disconnect switches remain in OFF position (TM 5-3805-291-10). (b) At wiring harness connector for speed sensor, place a jumper between contact 1 and contact 2. (c) Disconnect wiring harness connector J1 from powertrain ECM (WP 0063 00). (d) Measure resistance between contact J1-15 and contact J1-16.	1. If there is less than 5.0 Ohms resistance, go to Test 3. 2. If there is more than 5,000 Ohms resistance, there is an open circuit in wiring harness (wire E909-WH or wire E908-BR). Replace wiring harness in question (WP 0195 00 thru WP 0201 00).

Table 3. Powertrain Control - Continued.

(MID 081) CID FMI CODE	TEST OR INSPECTION	CORRECTIVE ACTION
0672 01 - Continued.	3. Check signal for a short. (a) Remove jumper between contact 1 and contact 2 of wiring harness connector for speed sensor. (b) Reconnect speed sensor to wiring harness. (c) At wiring harness connector J1, measure resistance between contact J1-15 and all possible sources of positive voltage and at all possible sources of ground. (d) At wiring harness connector J1, measure resistance between contact J1-16 and all possible sources of positive voltage and at all possible sources of ground.	1. If resistance is greater than 5,000 Ohms, go to Test 4. 2. If resistance is less than 5 Ohms, short is between signal circuit (wire E909-WH or wire E908-BR) and circuit with low resistance. Replace wiring harness in question (WP 0195 00 thru WP 0201 00).
	4. Check if diagnostic code remains active. (a) Clean contacts of harness connectors. (b) Reconnect all harness connectors. (c) Turn engine start and battery disconnect switches to ON position (TM 5-3805-291-10). (d) Start engine and run at low idle. (e) Operate machine. Transmission must be engaged in a direction and in a speed and machine must be moving (TM 5-3805-291-10). (f) Use messenger to determine if diagnostic code is present (TM 5-3805-291-10).	1. If diagnostic code is present, go to Test 5. 2. If diagnostic code is not present, diagnostic code does not exist at this time. Resume normal machine operation.

Table 3. Powertrain Control - Continued.

(MID 081) CID FMI CODE	TEST OR INSPECTION	CORRECTIVE ACTION
0672 01 - Continued.	5. Check sensor adjustment. (a) Check torque converter output speed sensor adjustment (WP 0091 00). (b) Repeat Test 4. Observe status of diagnostic code.	1. If diagnostic code is present, go to Test 6. 2. If diagnostic code is not present, diagnostic code does not exist at this time. Resume normal machine operation.
	6. Check if diagnostic code remains active. (a) Disconnect connectors J1 and J2 from powertrain ECM (WP 0063 00). Inspect and clean contacts of wiring harness connectors. (b) Reconnect all harness connectors. (c) Engine start and battery disconnect switches remain in ON position (TM 5-3805-291-10). (d) Use messenger to clear all inactive diagnostic codes. (e) Operate machine (TM 5-3805-291-10). (f) Check whether CID 0672 FMI 01 is present.	1. If CID 0672 FMI 01 is present, repeat diagnostic code procedure CID 0672 FMI 01. If cause of diagnostic code is not found, replace powertrain ECM (WP 0063 00). 2. If diagnostic code is not present, diagnostic code does not exist at this time. Resume normal machine operation.

Table 3. Powertrain Control - Continued.

(MID 081) CID FMI CODE	TEST OR INSPECTION	CORRECTIVE ACTION
0673 02		

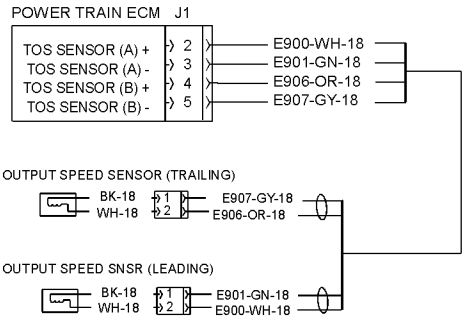

427-C1625

NOTE

Failure of transmission output speed sensor will be shown only while machine is moving. Signal from transmission output speed sensor 2 (trailing) to ECM is incorrect.

1. Check sensor. (a) Turn engine start and battery disconnect switches to OFF position (TM 5-3805-291-10). (b) Disconnect wiring harness connector from transmission output speed sensor 2 (WP 0093 00). (c) Measure resistance between contact 1 and contact 2.	1. If speed sensor has not failed, go to Test 2. 2. If speed sensor 2 has failed, replace transmission output speed sensor (WP 0093 00).
2. Check signal circuit for an open circuit in wiring harness. (a) Engine start and battery disconnect switches remain in OFF position (TM 5-3805-291-10). (b) At wiring harness connector for speed sensor 2, place a jumper between contact 1 and contact 2. (c) Disconnect wiring harness connector J1 and J2 from powertrain ECM (WP 0063 00).	

Table 3. Powertrain Control - Continued.

(MID 081) CID FMI CODE	TEST OR INSPECTION	CORRECTIVE ACTION
0673 02 - Continued.	(d) At wiring harness connector J1, measure resistance between contact J1-4 and contact J1-5.	1. If wiring harness is correct, go to Test 3. 2. If there is an open circuit in wiring harness (wire E906-OR or wire E907-GY), replace wiring harness in question (WP 0195 00 thru WP 0201 00).
	3. Check signal for short. (a) Remove jumper between contacts 1 and 2. (b) Reconnect speed sensor 2 to wiring harness (WP 0093 00). (c) At wiring harness connector J1, measure resistance between contact J1-4 and all possible sources of positive voltage and at all possible sources of ground.	
	(d) At wiring harness connector J1, measure resistance between contact J1-5 and all possible sources of positive voltage and at all possible sources of ground.	1. If wiring harness is correct, go to Test 4. 2. If there is a short in wiring harness, short is between signal circuit (wire E906-OR or wire E907-GY) and circuit with low resistance. Replace wiring harness in question (WP 0195 00 thru WP 0201 00).
	4. Check if diagnostic code is still present. (a) Clean wiring harness connector contacts. (b) Reconnect all wiring harness connectors. (c) Start engine and run at low idle (TM 5-3805-291-10). (d) Operate machine. Transmission must be engaged in a direction and in a speed and machine must be moving (TM 5-3805-291-10).	
	(e) Use messenger to check whether CID 0673 FMI 02 diagnostic code is present (TM 5-3805-291-10).	1. If diagnostic code is present, go to Test 5.

Table 3. Powertrain Control - Continued.

(MID 081) CID FMI CODE	TEST OR INSPECTION	CORRECTIVE ACTION
0673 02 - Continued.		2. If diagnostic code is not present, diagnostic code does not exist at this time. Resume normal machine operation.
	NOTE **Adjusting speed sensor requires removal of transmission.**	
	5. Check sensor adjustment.	
	(a) Check speed sensor 2 adjustment (WP 0093 00).	
	(b) Repeat Test 4. Check whether CID 0673 FMI 02 diagnostic code is present.	1. If diagnostic code remains present, replace speed sensor 2. Go to Test 6.
		2. If diagnostic code is not present, adjusting speed sensor 2 has corrected failure.
	6. Check if diagnostic code is still present.	
	(a) Remove connectors J1 and J2 from powertrain ECM. Inspect and clean wiring harness connector contacts (WP 0063 00).	
	(b) Reconnect all wiring harness connectors.	
	(c) Engine start and battery disconnect switches remain in ON position (TM 5-3805-291-10).	
	(d) Use messenger to clear all inactive diagnostic codes (TM 5-3805-291-10).	
	(e) Operate machine (TM 5-3805-291-10).	
	(f) Use messenger to check if diagnostic code is present (TM 5-3805-291-10).	1. If diagnostic code has not been corrected, perform test for diagnostic code again. If cause of diagnostic code is not found, replace powertrain ECM (WP 0063 00). 2. If diagnostic code is not present, diagnostic code does not exist at this time. Resume normal machine operation.

Table 3. Powertrain Control - Continued.

(MID 081) CID FMI CODE	TEST OR INSPECTION	CORRECTIVE ACTION
0702 02		

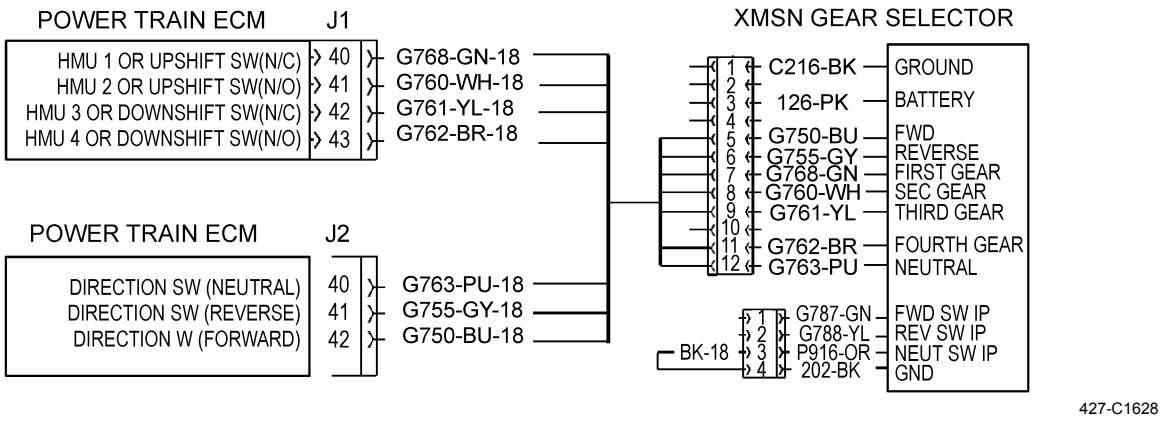

NOTE

- **Ensure diagnostic code CID 0702 FMI 02 is active before performing this procedure.**
- **The following procedure can create other faults that can be detected by powertrain ECM. Ignore created faults and clear created faults when original diagnostic code is corrected.**

1. Check switch circuits.
   (a) Turn battery disconnect and engine start switches to OFF (TM 5-3805-291-10).
   (b) Disconnect wiring harness from powertrain ECM (WP 0063 00).
   (c) At wiring harness connector for powertrain ECM, check continuity to ground of open contacts and grounded contact for each position of transmission shift lever. Activate and deactivate each position of transmission shift lever.
2. Check switch.
   (a) Disconnect wiring harness from transmission shift lever (WP 0101 00).

1. If continuity checks do not agree with schematic, go to Test 2.
2. If continuity checks agree with schematic, go to Test 3.

Table 3. Powertrain Control - Continued.

(MID 081) CID FMI CODE	TEST OR INSPECTION	CORRECTIVE ACTION
0702 02 - Continued.	(b) Check continuity to ground of open contacts and grounded contact for each position of transmission shift lever. Activate and deactivate each position of transmission shift lever.	1. If continuity checks do not agree with ground and open combinations, replace shift lever (WP 0101 00). 2. If continuity checks agree with schematic, replace wiring harness in question (WP 0195 00 thru WP 0201 00).
	3. Check for short to +battery. At wiring harness connector for powertrain ECM, check continuity from each switch contact to contacts J1-31, J1-39, and J2-47.	1. If continuity exists between one source of battery voltage, wiring harness is faulty. Replace wiring harness in question (WP 0195 00 thru WP 0201 00). 2. If continuity does not exist between one of source of battery voltage and switch circuit, exit this procedure and repeat these procedures. If cause is not found, replace powertrain ECM (WP 0063 00).
0702 03		

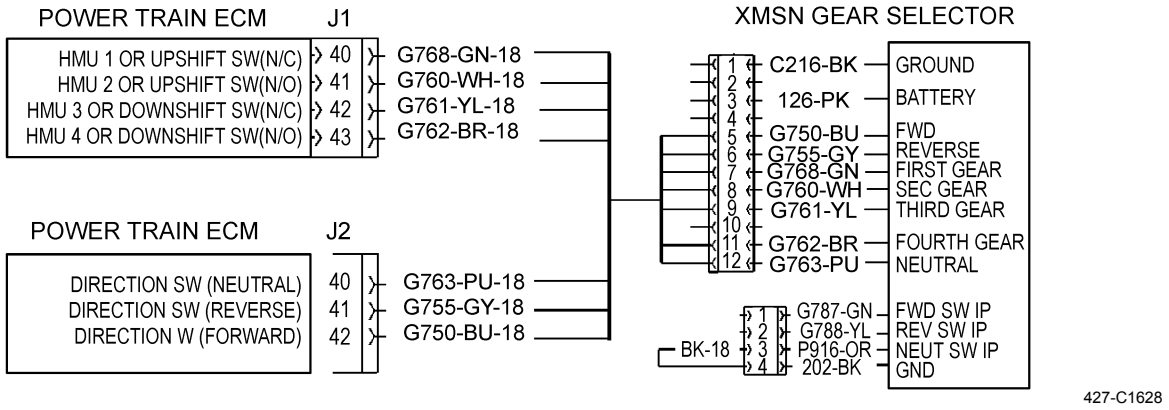

NOTE

- **Ensure diagnostic code CID 0702 FMI 03 is active before performing this procedure.**
- **The following procedure can create other faults that can be detected by powertrain ECM. Ignore created faults and clear created faults when original diagnostic code is corrected.**

1. Check for an open circuit.
   (a) Operate machine (TM 5-3805-291-10).

Table 3. Powertrain Control - Continued.

(MID 081) CID FMI CODE	TEST OR INSPECTION	CORRECTIVE ACTION
0702 03 - Continued.	(b) Use messenger to check status of CID 0702 FMI 03 while activating and deactivating each position of shift lever. Note results (TM 5-3805-291-10).	
	NOTE **If code does not remain active during operation of lever, this could indicate a possible open circuit (which corresponds to lever position) in wiring harness.**	
	(c) Turn battery disconnect and engine start switches to OFF position (TM 5-3805-291-10).	
	(d) Disconnect wiring harness connectors from the powertrain ECM (WP 0063 00).	
	(e) At wiring harness connector for powertrain ECM, check continuity to ground of open contacts and grounded contact for each position of transmission shift lever. Activate and deactivate each position of transmission shift lever.	1. If continuity checks do not agree with schematic, go to Test 2. 2. If continuity checks agree with the schematic, go to Test 3.
	2. Check switch.	
	(a) Battery disconnect and engine start switches remain in OFF position (TM 5-3805-291-10).	
	(b) Wiring harness connectors remain disconnected from powertrain ECM.	
	(c) Disconnect wiring harness from transmission shift lever (WP 0101 00).	
	(d) Check continuity to ground of open contacts and grounded contact for each position of transmission shift lever. Activate and deactivate each position of transmission shift lever.	1. If continuity checks do not agree with schematic, replace shift lever (WP 0101 00). 2. If continuity checks agree with schematic, replace wiring harness in question (WP 0195 00 thru WP 0201 00).

Table 3. Powertrain Control - Continued.

(MID 081) CID FMI CODE	TEST OR INSPECTION	CORRECTIVE ACTION
0702 03 - Continued.	3. Check for short to +battery. At wiring harness connector for powertrain ECM, check continuity from each switch contact to all sources of battery voltage.	1. If continuity exists between one source battery voltage and switch circuit, wiring harness is faulty. Replace wiring harness in question (WP 0195 00 thru WP 0201 00). 2. If continuity does not exist between one source of battery voltage and switch circuit, exit this procedure and repeat procedures. If cause is not found, replace powertrain ECM (WP 0063 00).
0737 03		

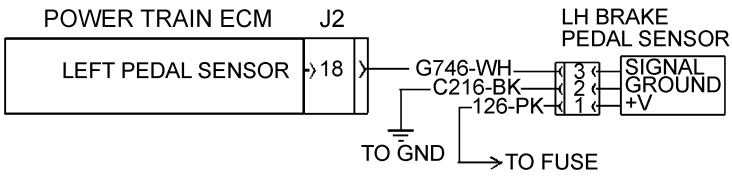

427-C1629

NOTE

The following test procedure may create other diagnostic codes. Ignore these created diagnostic codes and clear the diagnostic codes when the original diagnostic code is corrected. Ensure diagnostic code CID 0737 FMI 03 is active before performing this procedure.

1. Check voltage at sensor. (a) Turn battery disconnect and engine start switches to ON position (TM 5-3805-291-10). (b) Disconnect brake pedal position sensor from wiring harness (WP 0075 00). (c) At wiring harness connector for sensor, measure voltage between contact 1 (wire 126-PK) and contact 2 (wire C216-BK).	1. If voltage is approximately battery voltage, go to Test 4. 2. If voltage is not approximately battery voltage, go to Test 2.
2. Check for an open circuit in supply circuit. (a) Engine start and battery disconnect switches remain in ON position (TM 5-3805-291-10). (b) Sensor remains disconnected from wiring harness.	

Table 3. Powertrain Control - Continued.

(MID 081) CID FMI CODE	TEST OR INSPECTION	CORRECTIVE ACTION
0737 03 - Continued.	(c) At wiring harness connector for sensor, measure voltage from contact 1 (wire 126-PK) to ground.	1. If voltage measurement is approximately battery voltage, go to Test 3. 2. If voltage measurement is not approximately battery voltage, supply circuit is not correct. Replace wiring harness in question (WP 0195 00 thru WP 0201 00).
	3. Check for an open circuit in the return circuit. (a) Turn engine start and battery disconnect switches to OFF position (TM 5-3805-291-10). (b) Sensor remains disconnected from wiring harness. (c) Disconnect wiring harness connectors from powertrain ECM.	
	(d) At wiring harness connector for sensor, measure resistance from contact 2 (wire C216-BK) to ground.	1. If resistance measurement is less than 5,000 Ohms, recheck status of diagnostic code. If diagnostic code remains present, exit this procedure and repeat this procedure. If cause of diagnostic code is not found, replace powertrain ECM. 2. If resistance measured is not correct, open circuit is in return circuit with high resistance measurement. Replace wiring harness in question (WP 0195 00 thru WP 0201 00).
	4. Check for an open circuit in signal circuit. (a) Engine start and battery disconnect switches remain in OFF position (TM 5-3805-291-10). (b) Wiring harness connectors remain disconnected from ECM. (c) At wiring harness connector for sensor, install a jumper wire from contact 3 (wire G746-WH) to ground.	

Table 3. Powertrain Control - Continued.

(MID 081) CID FMI CODE	TEST OR INSPECTION	CORRECTIVE ACTION
0737 03 - Continued.	(d) At wiring harness connector J2, measure resistance from contact J2-35 (wire G746-WH) to ground.	1. If resistance measures less than 5.0 Ohms, go to Test 5. 2. If resistance measurement is greater than 5.0 Ohms, there is an open circuit in signal circuit. Replace wiring harness in question (WP 0195 00 thru WP 0201 00).
	5. Check signal circuit for short. (a) Battery disconnect and engine start switches remain in OFF position (TM 5-3805-291-10). (b) Wiring harness connectors remain disconnected from ECM. (c) Remove jumper wire from contact 3 to ground.	
	(d) At wiring harness connector for powertrain ECM, measure resistance for sensor signal contact J2-35 (wire G746-WH) to all other J1 and J2 contacts.	1. If each resistance measurement is greater than 5,000 Ohms, replace brake pedal position sensor (WP 0075 00). Perform calibration procedure for position sensor. Verify sensor corrected problem. If problem persists, exit this procedure and repeat this procedure. If problem has not been found, replace powertrain ECM (WP 0063 00). 2. If resistance measures less than 5,000 Ohms, short is between signal circuit and circuit with low resistance measurement. Replace wiring harness in question (WP 0195 00 thru WP 0201 00).

Table 3. Powertrain Control - Continued.

(MID 081) CID FMI CODE	TEST OR INSPECTION	CORRECTIVE ACTION
0737 04	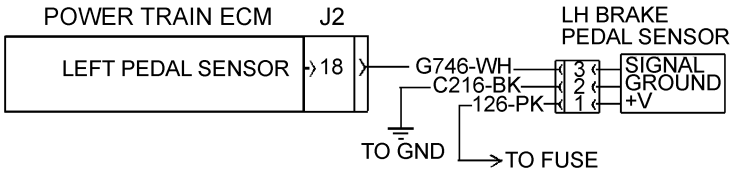 427-C1629	
	1. Check sensor. (a) Connect MSD (WP 0005 00). (b) Disconnect wiring harness from brake pedal position sensor (WP 0075 00).	1. If diagnostic code changed from CID 0737 FMI 04 to CID 0737 FMI 03, replace brake pedal position sensor (WP 0075 00). 2. If diagnostic code remains, go to Test 2.
	2. Check wiring harness. (a) Sensor remains disconnected from wiring harness. (b) Turn battery disconnect and engine start switches to OFF position (TM 5-3805-291-10). (c) Disconnect wiring harness connectors from powertrain ECM (WP 0063 00).	
	(d) At wiring harness connector for sensor, measure resistance between signal contact 3 (wire G746-WH) and frame ground.	1. If resistance is greater than 5,000 Ohms, exit this procedure and repeat this procedure. If failure is not found, replace powertrain ECM (WP 0063 00). 2. If resistance is less than 5,000 Ohms, there is a short between frame ground and signal circuit in wiring harness. Replace wiring harness in question (WP 0195 00 thru WP 0201 00).

Table 3. Powertrain Control - Continued.

(MID 081) CID FMI CODE	TEST OR INSPECTION	CORRECTIVE ACTION
0793 03		

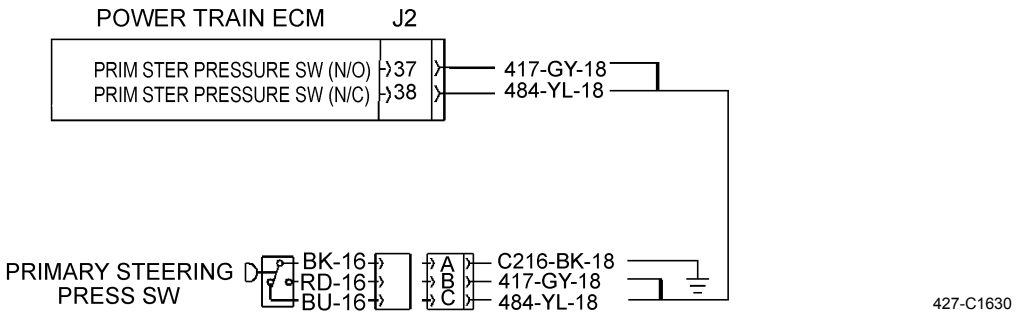

NOTE

- **The following test procedure may create other diagnostic codes. Ignore these created diagnostic codes and clear the diagnostic codes when the original code is corrected.**
- **Ensure diagnostic code indicator is active and diagnostic code is active.**
- **See *Primary Steering Pressure Switch* (Table 12) at end of this work package.**

1. Check ground circuit of switch in wiring harness. (a) Turn engine start and battery disconnect switches to OFF position (TM 5-3805-291-10). (b) Disconnect wiring harness connector from primary steering oil pressure switch (WP 0088 00). (c) Measure resistance between contact A (wire C216-BK) of wiring harness and cab ground.	1. If resistance is less than 5 Ohms, go to Test 2. 2. If resistance is greater than 5,000 Ohms, circuit is open. Replace wiring harness in question (WP 0195 00 thru WP 0201 00).
2. Check switch circuits for short to +battery circuit. (a) Wiring harness connector remains disconnected from the switch. (b) Battery disconnect and engine start switches remain in OFF position (TM 5-3805-291-10).	

Table 3. Powertrain Control - Continued.

(MID 081) CID FMI CODE	TEST OR INSPECTION	CORRECTIVE ACTION
0793 03 - Continued.	(c) Disconnect wiring harness connector(s) from powertrain ECM (WP 0063 00).	
	(d) At wiring harness connector for ECM, measure resistance from contact J2-38 (wire 484-YL) and contact J2-37 (wire 417-GY) of the wiring harness to all contacts that are used in wiring harness connectors for ECM.	1. If each resistance measurement is greater than 5,000 Ohms, go to Test 3. 2. If one or more of measurements were less than 5 Ohms, short is between wire 484-YL and circuit with lowest resistance measurement, or short is between wire 417-GY and circuit with lowest resistance measurement. Replace wiring harness in question (WP 0195 00 thru WP 0201 00).
	3. Check switch circuits in wiring harness.	
	(a) Battery disconnect and engine start switches remain in OFF position (TM 5-3805-291-10).	
	(b) Wiring harness remains disconnected from the ECM and the switch.	
	(c) At wiring harness connector for switch, connect a jumper wire between contact C (wire 484-YL) and contact B (wire 417-GY).	
	(d) At wiring harness connector for powertrain ECM, measure resistance from contact J2-38 (wire 484-YL) to contact J2-37 (wire 417-GY).	1. If resistance is less than 5 Ohms, go to Test 4. 2. If resistance is greater than 5,000 Ohms, circuit is open. Replace wiring harness in question (WP 0195 00 thru WP 0201 00).
	4. Check switch operation (low pressure).	
	NOTE **DO NOT run the engine during this test. This will cause low system pressure to the primary steering pressure switch.**	
	(a) Remove jumper installed in Test 3.	
	(b) Wiring harness remains disconnected from switch.	
	(c) Reconnect wiring harness to powertrain ECM (WP 0063 00).	

Table 3. Powertrain Control - Continued.

(MID 081) CID FMI CODE	TEST OR INSPECTION	CORRECTIVE ACTION
0793 03 - Continued.	(d) Battery disconnect and engine start switches remain in OFF position (TM 5-3805-291-10). (e) Connect one lead from a multimeter to contact A (wire C216-BK) of wiring harness connector for switch. (f) Connect other lead from a multimeter to contact B (wire 417-GY) of wiring harness connector for the switch. (g) Measure resistance between contact A (wire C216-BK) and contact B (wire 417-GY). Note resistance. (h) Disconnect multimeter lead from contact B (wire 417-GY) and connect lead to contact C (wire 484-YL). (i) Measure resistance between contact A (wire C216-BK) and contact C (wire 484-YL).	1. If resistance from contact A to contact C is less than 5 Ohms, and resistance from contact A to contact B is greater than 5,000 Ohms, go to Test 5. 2. If resistance from contact A to contact C is not less than 5 Ohms or resistance from contact A to contact B is not greater than 5,000 Ohms, replace primary steering oil pressure switch (WP 0088 00).
	5. Check switch operation (high pressure). (a) Start engine. This will cause system pressure to activate primary steering pressure switch (TM 5-3805-291-10). (b) Connect one lead from a multimeter to contact A (wire C216-BK) of wiring harness connector for the switch. (c) Connect other lead from a multimeter to contact B (wire 417-GY) of wiring harness connector for switch. (d) Measure resistance between contact A (wire C216-BK) and contact B (wire 417-GY). Note resistance. (e) Disconnect multimeter lead from contact B (wire 417-GY) and connect lead to contact C (wire 484-YL).	

Table 3. Powertrain Control - Continued.

(MID 081) CID FMI CODE	TEST OR INSPECTION	CORRECTIVE ACTION
0793 03 - Continued.	(f) Measure resistance between contact A (wire C216-BK) and contact C (wire 484-YL).	1. If resistance from contact A to contact B is less than 5 Ohms, and resistance from contact A to contact C is greater than 5,000 Ohms, go to Test 6. 2. If resistance from contact A to contact B is not less than 5 Ohms, or resistance from contact A to contact C is not greater than 5,000 Ohms, replace primary steering oil pressure switch (WP 0088 00).
	6. Check if diagnostic code remains active. (a) Inspect and clean wiring harness connectors. (b) Reconnect all wiring harness connectors. (c) Operate machine (TM 5-3805-291-10).	
	(d) Use messenger to check status of CID 0793 FMI 03 (TM 5-3805-291-10).	1. If CID 0793 FMI 03 is active, exit this procedure and repeat this procedure. If cause of diagnostic code is not found, replace powertrain ECM (WP 0063 00). 2. If CID 0793 FMI 03 is not active, diagnostic code does not exist at this time. Resume normal machine operation.

Table 3. Powertrain Control - Continued.

(MID 081) CID FMI CODE	TEST OR INSPECTION	CORRECTIVE ACTION
0793 04		

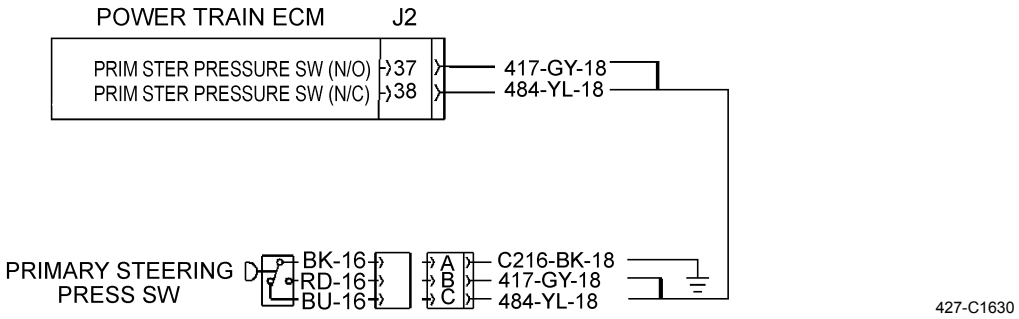

NOTE

- **The following test procedure may create other diagnostic codes. Ignore these diagnostic codes and clear these diagnostic codes when the original diagnostic code is corrected. Ensure that the diagnostic code CID 0793 FMI 04 is active before performing this procedure.**
- **See *Primary Steering Pressure Switch* (Table 12) at the end of this work package.**

1. Check switch. (a) Turn engine start and battery disconnect switches to OFF position (TM 5-3805-291-10). (b) Connect MSD (WP 0005 00). (c) Disconnect wiring harness from primary steering oil pressure switch (WP 0088 00). (d) Turn engine start and battery disconnect switches to ON position (TM 5-3805-291-10). 2. Check wiring harness. (a) Turn battery disconnect and engine start switches to OFF position (TM 5-3805-291-10). (b) Wiring harness remains disconnected from switch. (c) Disconnect wiring harness connector(s) from powertrain ECM (WP 0063 00).	1. If CID 0793 FMI 04 has been replaced by CID 0793 FMI 03, go to Test 3. 2. If CID 0793 FMI 04 is still active, go to Test 2.

Table 3. Powertrain Control - Continued.

(MID 081) CID FMI CODE	TEST OR INSPECTION	CORRECTIVE ACTION
0793 04 - Continued.	(d) At wiring harness connector for ECM, measure resistance from contact J2-38 (wire 484-YL) and contact J2-37 (wire 417-GY) of wiring harness to all contacts used in wiring harness connectors for ECM.	1. If each resistance measurement is greater than 5,000 Ohms, exit this procedure and repeat this procedure. If cause of diagnostic code is not found, replace powertrain ECM (WP 0063 00). 2. If one or more of measurements were less than 5 Ohms, short is between (wire 484-YL) and circuit with lowest resistance measurement, or short is between (wire 417-GY) and circuit with lowest resistance measurement. Replace wiring harness in question (WP 0195 00 thru WP 0201 00).
	3. Check switch operation (low pressure). (a) Battery disconnect and engine start switches remain in OFF position (TM 5-3805-291-10). (b) Wiring harness remains disconnected from switch and ECM. (c) Connect one lead from a multimeter to contact A (wire C216-BK) of connector on switch. (d) Connect other lead from a multimeter to contact B (wire 417-GY) of connector on switch. (e) Measure resistance between contact A (wire C216-BK) and contact B (wire 417-GY). Note resistance. (f) Disconnect multimeter lead from contact B (wire 417-GY) and connect lead to contact C (wire 484-YL).	
	(g) Measure resistance between contact A (wire C216-BK) and contact C (wire 484-YL).	1. If resistance from contact A to contact C is less than 5 Ohms and resistance from contact A to contact B is greater than 5,000 Ohms, go to Test 4. 2. If resistance from contact A to contact C is not less than 5 Ohms or resistance from contact A to contact B is not greater than 5,000 Ohms, replace primary steering oil pressure switch (WP 0088 00).

Table 3. Powertrain Control - Continued.

(MID 081) CID FMI CODE	TEST OR INSPECTION	CORRECTIVE ACTION
0793 04 - Continued.	4. Check of switch (high pressure) operation. (a) Start engine. This will cause system pressure to activate primary steering pressure switch (TM 5-3805-291-10). (b) Connect one lead from a multimeter to contact A (wire C216-BK) of wiring harness connector on the switch. (c) Connect other lead from a multimeter to contact B (wire 417-GY) of wiring harness connector on the switch. (d) Measure resistance between contact A (wire C216-BK) and contact B (wire 417-GY). Note resistance. (e) Disconnect multimeter lead from contact B (wire 417-GY) and connect lead to contact C (wire 484-YL). (f) Measure resistance between contact A (wire C216-BK) and contact C (wire 484-YL).	1. If resistance from contact A to contact B is less than 5 Ohms and resistance from contact A to contact C is greater than 5,000 Ohms, go to Test 5. 2. If resistance from contact A to contact B is not less than 5 Ohms or resistance from contact A to contact C is not greater than 5,000 Ohms, replace the primary steering oil pressure switch (WP 0088 00).
	5. Check if diagnostic code remains active. (a) Inspect and clean wiring harness connector contacts. (b) Reconnect all wiring harness connectors. (c) Operate machine (TM 5-3805-291-10). (d) Use messenger to determine if CID 0793 FMI 04 is present (TM 5-3805-291-10).	1. If CID 0793 FMI 04 is active, exit this procedure and repeat this procedure. If cause of diagnostic code is not found, replace powertrain ECM (WP 0063 00). 2. If CID 0793 FMI 04 is not active, diagnostic code is not present at this time. Resume normal machine operation.

Table 3. Powertrain Control - Continued.

(MID 081) CID FMI CODE	TEST OR INSPECTION	CORRECTIVE ACTION
0794 03		

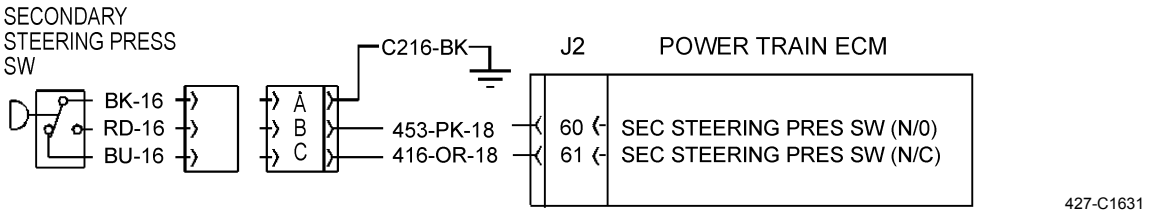

NOTE

- **The following test procedure may create other diagnostic codes. Ignore these created diagnostic codes and clear these diagnostic codes when original diagnostic code corrected.**
- **Ensure diagnostic code indicator is active and that diagnostic code is active.**

TEST OR INSPECTION	CORRECTIVE ACTION
1. Check ground circuit of switch in wiring harness. (a) Turn engine start and battery disconnect switches to OFF position (TM 5-3805-291-10). (b) Battery disconnect wiring harness connector(s) from powertrain ECM (WP 0063 00) and secondary steering oil pressure switch (WP 0088 00). (c) Measure resistance between contact A (wire C216-BK) of wiring harness connector for switch and ground.	1. If resistance is less than 5 Ohms, go to Test 2. 2. If resistance is greater than 5,000 Ohms, replace wiring harness in question (WP 0195 00 thru WP 0201 00).
2. Check switch circuits for short to +battery circuit. (a) Wiring harness connector(s) remains disconnected from ECM and switch. (b) Battery disconnect and engine start switches remain in OFF position (TM 5-3805-291-10).	

Table 3. Powertrain Control - Continued.

(MID 081) CID FMI CODE	TEST OR INSPECTION	CORRECTIVE ACTION
0794 03 - Continued.	(c) At wiring harness connector for ECM, measure resistance from contact J2-61 (wire 416-OR) and contact J2-60 (wire 453-PK) to all contacts used in wiring harness connectors for ECM.	1. If each resistance measurement is greater than 5,000 Ohms, go to Test 3. 2. If one or more of measurements were less than 5 Ohms, short is between (wire 416-OR) and circuit with lowest resistance measurement, or short is between (wire 453-PK) and the circuit with the lowest resistance measurement. Replace wiring harness in question (WP 0195 00 thru WP 0201 00).
	3. Check switch circuits in wiring harness. (a) Wiring harness remains disconnected from ECM and switch. (b) Battery disconnect and engine start switches remain in OFF position (TM 5-3805-291-10). (c) At wiring harness connector for switch, connect a jumper wire between contact C (wire 416-OR) and contact B (wire 453-PK).	
	(d) At wiring harness connector for ECM, measure resistance from contact J2-61 (wire 416-OR) to contact J2-60 (wire 453-PK).	1. If resistance is less than 5 Ohms, go to Test 4. 2. If resistance is greater than 5,000 Ohms, circuit is open. Replace wiring harness in question (WP 0195 00 thru WP 0201 00).
	4. Check switch operation (low pressure). (a) Wiring harness remains disconnected from ECM and switch. (b) Battery disconnect and engine start switches remain in OFF position (TM 5-3805-291-10). (c) Remove jumper installed in Test 3.	

Table 3. Powertrain Control - Continued.

(MID 081) CID FMI CODE	TEST OR INSPECTION	CORRECTIVE ACTION
0794 03 - Continued.	(d) Connect one lead from a multimeter to contact A (wire C216-BK) of connector on the switch. (e) Connect other lead from a multimeter to contact B (wire 453-PK) of connector on switch. (f) Measure resistance between contact A (wire C216-BK) and contact B (wire 453-PK). Note resistance. (g) Disconnect multimeter lead from contact B (wire C216-BK) and connect lead to contact C (wire 416-OR). (h) Measure resistance between contact A (wire C216-BK) and contact C (wire 416-OR).	1. If resistance from contact A to contact C is less than 5 Ohms and resistance from contact A to contact B is greater than 5,000 Ohms, go to Test 5. 2. If resistance from contact A to contact C is not less than 5 Ohms or resistance from contact A to contact B is not greater than 5,000 Ohms, replace secondary steering oil pressure switch (WP 0088 00).
	5. Check switch operation (high pressure). (a) Wiring harness remains disconnected from ECM and switch. (b) Turn battery disconnect and engine start switches to ON position (TM 5-3805-291-10). (c) Press secondary steering pressure switch to build up secondary steering pressure (TM 5-3805-291-10). (d) Connect one lead from a multimeter to contact A (wire C216-BK) of connector on switch. (e) Connect other lead from a multimeter to contact B (wire 453-PK) of connector on switch. (f) Measure resistance between contact A (wire C216-BK) and contact B (wire 453-PK). Note resistance.	

Table 3. Powertrain Control - Continued.

(MID 081) CID FMI CODE	TEST OR INSPECTION	CORRECTIVE ACTION
0794 03 - Continued.	(g) Disconnect multimeter lead from contact B (wire C216-BK) and connect lead to contact C (wire 416-OR).	
	(h) Measure resistance between contact A (wire C216-BK) and contact C (wire 416-OR).	1. If resistance from contact A to contact B is less than 5 Ohms and resistance from contact A to contact C is greater than 5,000 Ohms, go to Test 6. 2. If resistance from contact A to contact B is not less than 5 Ohms, or resistance from contact A to contact C is not greater than 5,000 Ohms, replace secondary steering oil pressure switch (WP 0088 00).
	6. Check if diagnostic code remains active.	
	(a) Inspect and clean wiring harness connector contacts.	
	(b) Reconnect all wiring harness connectors.	
	(c) Operate machine (TM 5-3805-291-10).	
	(d) Use messenger to check status of CID 0794 FMI 03 (TM 5-3805-291-10).	1. If CID 0794 FMI 03 is active, exit this procedure and repeat this procedure. If cause of diagnostic code is not found, replace powertrain ECM (WP 0063 00). 2. If CID 0794 FMI 03 is not active, diagnostic code does not exist at this time. Resume normal machine operation.

Table 3. Powertrain Control - Continued.

(MID 081) CID FMI CODE	TEST OR INSPECTION	CORRECTIVE ACTION
0794 04		

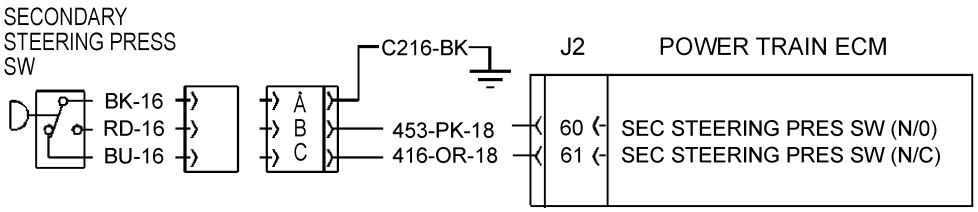

427-C1631

NOTE

The following test procedure may create other diagnostic codes. Ignore these created diagnostic codes and clear these diagnostic codes when original diagnostic code is corrected. Ensure diagnostic code CID 0794 FMI 04 is active before performing this procedure.

1. Check switch. (a) Turn engine start and battery disconnect switches to OFF position (TM 5-3805-291-10). (b) Disconnect wiring harness from secondary steering oil pressure switch (WP 0088 00). (c) Turn engine start and battery disconnect switches to ON position (TM 5-3805-291-10).	1. If CID 0794 FMI 04 has been replaced by CID 0794 FMI 03, go to Test 3. 2. If CID 0794 FMI 04 is still active, go to Test 2.
2. Check wiring harness. (a) Turn engine start and battery disconnect switches to OFF position (TM 5-3805-291-10). (b) Wiring harness remains disconnected from switch. (c) Disconnect wiring harness connector(s) from powertrain ECM (WP 0063 00).	

Table 3. Powertrain Control - Continued.

(MID 081) CID FMI CODE	TEST OR INSPECTION	CORRECTIVE ACTION
0794 04 - Continued.	(d) At wiring harness connector for ECM, measure resistance from contact J2-61 (wire 416-OR) and contact J2-60 (wire 453-PK) of wiring harness to all contacts used in wiring harness connectors for ECM.	1. If each resistance measurement is greater than 5,000 Ohms, exit this procedure and repeat procedure. If cause of diagnostic code is not found, replace powertrain ECM (WP 0063 00). 2. If one or more measurements were less than 5 Ohms, short is between (wire 453-PK) and circuit with lowest resistance measurement, or short is between (wire 416-OR) and circuit with lowest resistance measurement. Replace wiring harness in question (WP 0195 00 thru WP 0201 00).
	3. Check switch operation (low pressure). (a) Engine start and battery disconnect switches remain in OFF position (TM 5-3805-291-10). (b) Wiring harness remains disconnected from ECM and switch. (c) Connect one lead from a multimeter to contact A (wire C216-BK) of connector on switch. (d) Connect other lead from a multimeter to contact B (wire 453-PK) of connector on switch. (e) Measure resistance between contact A (wire C216-BK) and contact B (wire 453-PK). Note resistance. (f) Disconnect multimeter lead from contact B (wire 453-PK) and connect lead to contact C (wire 416-OR).	
	(g) Measure resistance between contact A (wire C216-BK) and contact C (wire 416-OR).	1. If resistance from contact A to contact C is less than 5 Ohms and resistance from contact A to contact B is greater than 5,000 Ohms, go to Test 4. 2. If resistance from contact A to contact C is not less than 5 Ohms or resistance from contact A to contact B is not greater than 5,000 Ohms, replace secondary steering oil pressure switch (WP 0088 00).

Table 3. Powertrain Control - Continued.

(MID 081) CID FMI CODE	TEST OR INSPECTION	CORRECTIVE ACTION
0794 04 - Continued.	4. Check switch operation (high pressure). (a) Turn engine start and battery disconnect switches to ON position (TM 5-3805-291-10). (b) Wiring harness remains disconnected from ECM and switch. (c) Press secondary steering pressure switch to build up secondary steering pressure (TM 5-3805-291-10). (d) Connect one lead from a multimeter to contact A (wire C216-BK) of the connector on switch. (e) Connect other lead from a multimeter to contact B (wire 453-PK) of connector on switch. (f) Measure resistance between contact A (wire C216-BK) and contact B (wire 453-PK). Note resistance. (g) Disconnect multimeter lead from contact B (wire 453-PK) and connect lead to contact C (wire 416-OR). (h) Measure resistance between contact A (wire C216-BK) and contact C (wire 416-OR).	1. If resistance from contact A to contact B is less than 5 Ohms and resistance from contact A to contact C is greater than 5,000 Ohms, go to Test 5. 2. If resistance from contact A to contact B is not less than 5 Ohms or resistance from contact A to contact C is not greater than 5,000 Ohms, replace secondary steering oil pressure switch (WP 0088 00).
	5. Check if diagnostic code remains active. (a) Inspect and clean wiring harness connector contacts. (b) Reconnect all wiring harness connectors. (c) Operate the machine (TM 5-3805-291-10).	

Table 3. Powertrain Control - Continued.

(MID 081) CID FMI CODE	TEST OR INSPECTION	CORRECTIVE ACTION
0794 04 - Continued.	(d) Use messenger to determine if CID 0794 FMI 04 is present (TM 5-3805-291-10).	1. If CID 0794 FMI 04 is active, exit this procedure and repeat this procedure. If cause of diagnostic code is not found, replace powertrain ECM (WP 0063 00). 2. If CID 0794 FMI 04 is not active, diagnostic code does not exist at this time. Resume normal machine operation.
0794 07		

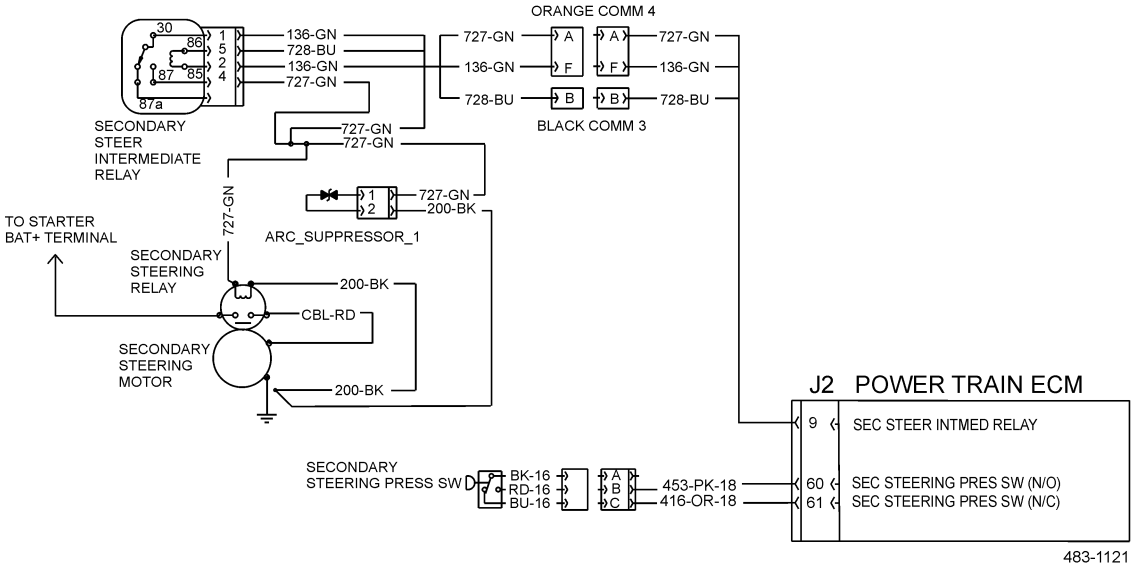

1. Check status of diagnostic code.

NOTE

CID 0794 FMI 07 service code cannot be deactivated until secondary steering system is activated and secondary steering pressure switch indicates that there is pressure in system.

(a) Start engine (TM 5-3805-291-10).

(b) Press and hold secondary steering test switch for 5 to 10 seconds (TM 5-3805-291-10).

Table 3. Powertrain Control - Continued.

(MID 081) CID FMI CODE	TEST OR INSPECTION	CORRECTIVE ACTION
0794 07 - Continued.	(c) Use messenger to check status of CID 0794 FMI 07 diagnostic code (TM 5-3805-291-10).	1. If diagnostic code indicator remains active and diagnostic code remains active, go to Test 2. 2. If diagnostic code indicator is inactive, repeat this test in order to verify result.
	2. Connect MSD (WP 0005 00) and check for other recorded diagnostic codes.	
	NOTE **Other recorded diagnostic codes may indicate reason for improper operation of secondary steering system.**	
		1. If there are not other recorded diagnostic codes, go to Test 3. 2. If there are other recorded diagnostic codes, exit CID 0794 FMI 07 procedure. Correct other recorded diagnostic codes. Return to CID 0794 FMI 07 procedure after other recorded diagnostic codes are corrected.
	NOTE **The secondary steering motor requires a large amount of current. A weak battery may have an effect on the operation of motor.**	
	3. Check battery voltage.	1. If battery voltage is correct, go to Test 4. 2. If battery voltage is not correct, go to Test 4. Correct cause of low battery voltage and verify battery voltage is correct. If conditions are not resolved, go to Test 4.
	NOTE **If switch is failed to ground, then powertrain ECM believes that operator is manually turning on secondary steering system. If pressure switch for secondary steering system is NOT indicating pressure, then CID 0794 FMI 07 diagnostic code will be active.**	
	4. Check operation of secondary steering test switch (TM 5-3805-291-10).	1. If secondary steering test switch is correct, go to Test 5. 2. If secondary steering test switch is not correct, replace wiring harness in question (WP 0195 00 thru WP 0201 00).

Table 3. Powertrain Control - Continued.

(MID 081) CID FMI CODE	TEST OR INSPECTION	CORRECTIVE ACTION
0794 07 - Continued.	5. Check secondary steering pressure (WP 0016 00).	1. If secondary steering pressure is correct, exit this procedure. Use procedure for CID 0794 FMI 03 and CID 0794 FMI 04 to verify that secondary steering pressure switch is operational. 2. If secondary steering pressure is not correct, repair the cause of incorrect secondary steering pressure (WP 0016 00).
0795 07	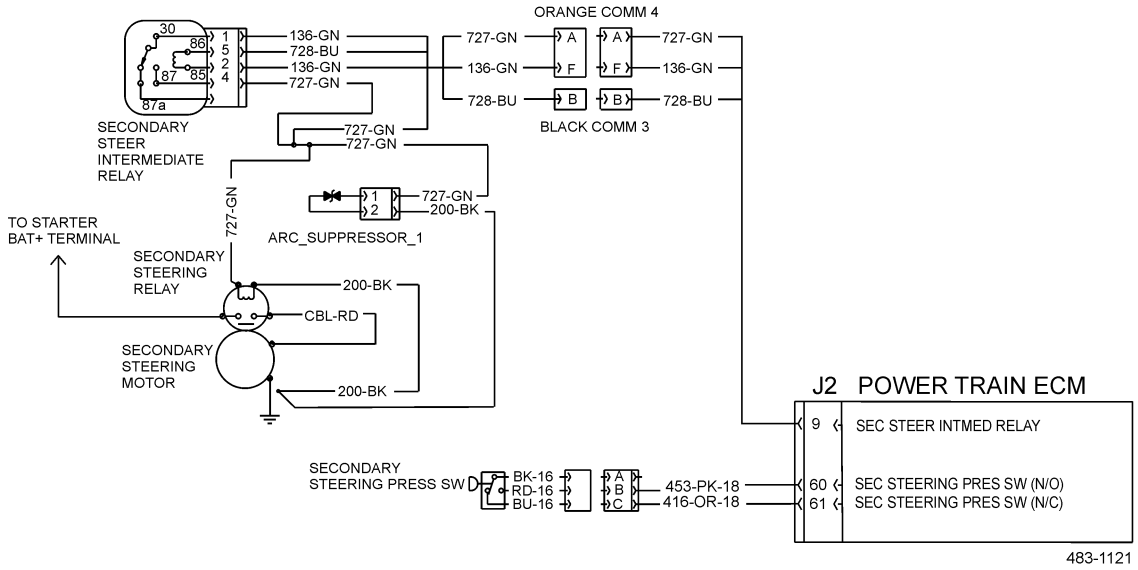	1. Check system during self-test.	

Table 3. Powertrain Control - Continued.

(MID 081) CID FMI CODE	TEST OR INSPECTION	CORRECTIVE ACTION
0795 07 - Continued.	Turn engine start switch to ON position. Wait for instrument cluster self-test to complete. Then, secondary steering system performs a self-test. For 3 seconds, secondary steering light should illuminate and wheel can be turned (TM 5-3805-291-10).	1. If secondary steering light illuminates and wheel can be turned, operate machine and check for a recurrence of diagnostic code. 2. If secondary steering light does not illuminate and wheel will not turn during self-test, go to Test 2. 3. If secondary steering light does not illuminate but wheel does turn during self-test, troubleshoot secondary steering pressure switch. 4. If secondary steering light illuminates but wheel does not turn during self-test, troubleshoot secondary steering pressure switch.
	2. Check secondary steering motor cables. (a) Turn battery disconnect switch to ON position (TM 5-3805-291-10).	
	(b) At secondary steering motor, check black ground cable. Check red power cable that connects other side of relay to starter +battery terminal. Check red power cable that connects other side of relay to secondary steering motor.	1. If cables are properly connected and not damaged, go to Test 3. 2. If cables are improperly connected or damaged, replace cables (WP 0123 00).
	3. Check secondary steering motor. (a) Battery disconnect switch remains ON and engine remains OFF (TM 5-3805-291-10).	
	(b) At secondary steering motor, connect a jumper cable from -battery to -battery terminal of motor.	
	(c) At secondary steering motor, briefly connect a jumper cable from +battery to motor +battery terminal.	1. If secondary steering motor turns normally, go to Test 4. 2. If secondary steering motor does not turn normally, replace secondary steering motor (WP 0123 00).

Table 3. Powertrain Control - Continued.

(MID 081) CID FMI CODE	TEST OR INSPECTION	CORRECTIVE ACTION
0795 07 - Continued.	4. Check relay at secondary steering motor. (a) Battery disconnect switch remains ON and engine remains OFF (TM 5-3805-291-10). (b) At relay by secondary steering motor, connect a jumper wire from +battery to wire 727-GN. (c) At relay by secondary steering motor, connect a jumper wire from -battery to wire 200-BK.	1. If relay energizes and secondary steering motor turns ON, go to Test 5. 2. If relay does not energize and secondary steering motor does not turn ON, replace secondary steering relay (WP 0053 00).
	5. Check wire from ECM to relay on secondary steering motor. (a) Turn engine start and battery disconnect switches to OFF position (TM 5-3805-291-10). (b) Disconnect wiring harness connector J2 from powertrain ECM (WP 0063 00). (c) Connect one lead from a multimeter to wire 727-GN at relay by secondary steering motor. (d) At wiring harness connector J2, connect the other lead from multimeter to contact J2-9. (e) Measure resistance of wire 727-GN from the ECM to relay.	1. If resistance is less than 5 Ohms, go to Test 6. 2. If resistance is greater than 5 Ohms, wire has failed. Replace wiring harness in question (WP 0195 00 thru WP 0201 00).
	6. Check ground circuit of relay at secondary steering motor. (a) Battery disconnect switch remains in OFF position (TM 5-3805-291-10). (b) At relay by secondary steering motor, connect one lead from a multimeter to terminal for wire 200-BK.	

Table 3. Powertrain Control - Continued.

(MID 081) CID FMI CODE	TEST OR INSPECTION	CORRECTIVE ACTION
0795 07 - Continued.	(c) Measure the resistance to frame ground.	1. If resistance is less than 5 Ohms, go to Test 7. 2. If resistance is over 5 Ohms, ground circuit for relay has failed. Replace wiring harness in question (WP 0195 00 thru WP 0201 00).
	7. Check signal wire between two relays. (a) At relay by secondary steering motor, connect one lead from multimeter to signal wire (727-GN). (b) Connect other lead from multimeter to the secondary steering intermediate relay (contact 4).	
	(c) Measure resistance between two relays.	1. If resistance is less than 5 Ohms, go to Test 8. 2. If resistance is over 5 Ohms, circuit has failed. Replace wiring harness in question (WP 0195 00 thru WP 0201 00).
	8. Check +battery circuit at secondary steering relay. (a) Reconnect wiring harness connector to connector J2 of powertrain ECM (WP 0063 00). (b) Turn battery disconnect and engine start switches to ON position (TM 5-3805-291-10). (c) At secondary steering relay, connect one lead from multimeter to contact 1 (wire 136-GN).	
	(d) Measure voltage from contact 1 to frame ground. Note voltage.	1. If voltage measurement is equal to system voltage, go to Test 9. 2. If voltage measurement is not equal to system voltage, power circuit to relay has failed. Replace wiring harness in question (WP 0195 00 thru WP 0201 00).
	9. Check circuit from ECM to relay. (a) Turn engine start switch to OFF position (TM 5-3805-291-10).	

Table 3. Powertrain Control - Continued.

(MID 081) CID FMI CODE	TEST OR INSPECTION	CORRECTIVE ACTION
0795 07 - Continued.	(b) Connect one end of a jumper wire to contact C2 at relay.	
	(c) Connect other end from jumper wire to frame ground.	
	(d) Turn engine start switch to ON position. During self-test for secondary steering system, monitor indicator for secondary steering system (TM 5-3805-291-10).	1. If, during self-test, indicator for secondary steering system illuminates, go to Test 10. 2. If, during self-test, indicator for secondary steering system does not illuminate, replace secondary steering relay (WP 0053 00).
	10.Check circuit from ECM to relay.	
	(a) Turn engine start switch to OFF position (TM 5-3805-291-10).	
	(b) Use contact removal tool to remove wire K748-OR from contact J2-9 at powertrain ECM.	
	(c) Using a jumper wire, connect wire K748-OR to frame ground.	
	(d) Turn engine start switch to ON position. During self-test for secondary steering system, monitor indicator for secondary steering system (TM 5-3805-291-10).	1. If, during self-test, indicator for secondary steering system illuminates, exit this procedure and repeat this procedure. If cause of problem is still not found, replace powertrain ECM (WP 0063 00). 2. If, during self-test, indicator for secondary steering system does not illuminate, wire K748-OR has failed. Replace wiring harness in question (WP 0195 00 thru WP 0201 00).

Table 3. Powertrain Control - Continued.

(MID 081) CID FMI CODE	TEST OR INSPECTION	CORRECTIVE ACTION
0967 02		

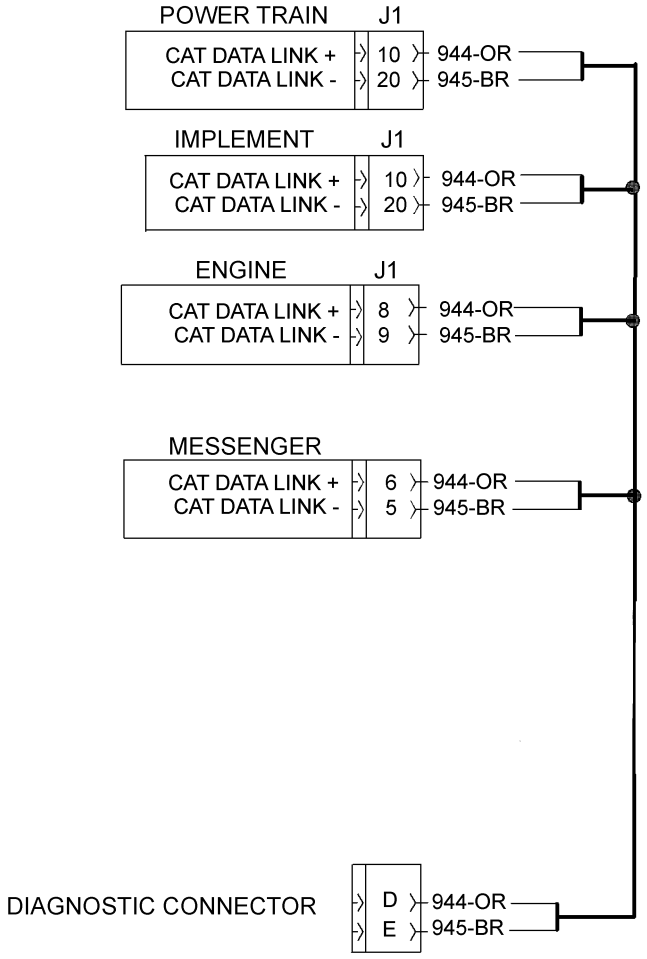

427-C1623

NOTE

The following test procedure may create other diagnostic codes. Ignore these created diagnostic codes and clear these diagnostic codes when the original diagnostic code is corrected. Ensure that diagnostic code CID 0967 FMI 02 is active before performing this procedure.

1. Connect MSD (WP 0005 00) and verify whether following part numbers are correct:
   (a) Software part number for powertrain ECM.

Table 3. Powertrain Control - Continued.

(MID 081) CID FMI CODE	TEST OR INSPECTION	CORRECTIVE ACTION
0967 02 - Continued.	(b) Software part number for Messenger.	1. If all part numbers are correct, go to Test 2. 2. If all part numbers are not correct, one ECM may have wrong part number and/or software configuration is not correct. Appropriate flash file needs to be flashed into ECM (WP 0056 00, WP 0057 00, WP 0060 00, and WP 0063 00).
	2. Inspect wiring harness connections. (a) Turn engine start and battery disconnect switches to OFF position (TM 5-3805-291-10). (b) Disconnect and inspect wiring harness connections related to CAT Data Link (WP 0237 00). Make sure connectors are clean and tight. Refer to *Electrical Connectors Inspections* (WP 0022 00) as necessary. (c) Check mating of connector. (d) Check wires at connector. (e) Check each wire for nicks and/or signs of abrasion in insulation. (f) Check for moisture at connector. (g) Check for dirty and/or corroded contacts. (h) Check each pin and socket. (i) Reconnect all connectors.	1. If wiring harness connectors are tightly connected and are free of corrosion, go to Test 3. 2. If wiring harness connectors require repair, replace the wiring harness in question (WP 0195 00 thru WP 0201 00).
	3. Check for additional related diagnostic codes. (a) Ensure that all ECMs that use CAT Data Link are connected. (b) Turn battery disconnect and engine start switches to ON position (TM 5-3805-291-10).	

Table 3. Powertrain Control - Continued.

(MID 081) CID FMI CODE	TEST OR INSPECTION	CORRECTIVE ACTION
0967 02 - Continued.	(c) Acknowledge any active diagnostic codes currently displayed on Messenger.	
	(d) Verify no related diagnostic codes are active.	1. If other diagnostic codes are not active, go to Test 4. 2. If other related diagnostic codes are active, exit this procedure and perform test procedures for related diagnostic codes.
	4. Check for shorts to ground. (a) Turn engine start and battery disconnect switches to OFF position (TM 5-3805-291-10).	
	(b) Disconnect wiring harness from all ECMs that use CAT Data Link (WP 0056 00, WP 0057 00, WP 0060 00, and WP 0063 00).	
	(c) At wiring harness connector for ECM, measure resistance from frame ground to all other contacts of CAT Data Link.	1. If resistance is greater than 5 Ohms, go to Test 5. 2. If resistance is not greater than 5 Ohms, there is a short between frame ground and the CAT Data Link circuit in wiring harness. Replace wiring harness in question (WP 0195 00 thru WP 0201 00).
	5. Check for a short to +battery circuit. (a) Engine start and battery disconnect switches remain in OFF position (TM 5-3805-291-10).	
	(b) All related ECMs remain disconnected from the wiring harness.	
	(c) At wiring harness connector for powertrain ECM, measure resistance from contact J1-10 (wire 944-OR) and contact J1-20 (wire 945-BR) to all possible sources of +battery.	1. If resistance is greater than 5 Ohms for each measurement, go to Test 6. 2. If resistance is less than 5 Ohms, there is a short between +battery circuit and CAT Data Link circuit in wiring harness. Replace wiring harness in question (WP 0195 00 thru WP 0201 00).

Table 3. Powertrain Control - Continued.

(MID 081) CID FMI CODE	TEST OR INSPECTION	CORRECTIVE ACTION
0967 02 - Continued.	6. Check for open circuit in wiring harness. (a) Engine start and battery disconnect switches remain in OFF position (TM 5-3805-291-10). (b) All related ECMs remain disconnected from wiring harness. (c) Check continuity of CAT Data Link circuit in wiring harness. (d) Perform the following measurements: (1) Measure resistance from contact J1-20 (wire 945-BR) of ECM to corresponding connector contacts of all other ECMs. (2) Measure resistance from contact J1-10 (wire 944-OR) of ECM to corresponding connector contacts of all other ECMs.	1. If resistance measures less than 5 Ohms, CAT Data Link circuit is correct. Go to Test 7. 2. If resistance measurement is greater than 5 Ohms, CAT Data Link circuit is open in wiring harness. Replace the wiring harness in question (WP 0195 00 thru WP 0201 00).
	7. Check if diagnostic code remains active. (a) Inspect and clean wiring harness connector contacts. (b) Reconnect all wiring harness connectors. (c) Operate machine (TM 5-3805-291-10). (d) Use messenger to check status of CID 0967 FMI 02 (TM 5-3805-291-10).	1. If CID 0967 FMI 02 is active, exit this procedure and repeat this procedure. If cause of diagnostic code is not found, replace powertrain ECM (WP 0063 00). 2. If CID 0967 FMI 02 is not active, diagnostic code does not exist at this time. Resume normal machine operation.

Table 3. Powertrain Control - Continued.

(MID 081) CID FMI CODE	TEST OR INSPECTION	CORRECTIVE ACTION
0967 09		

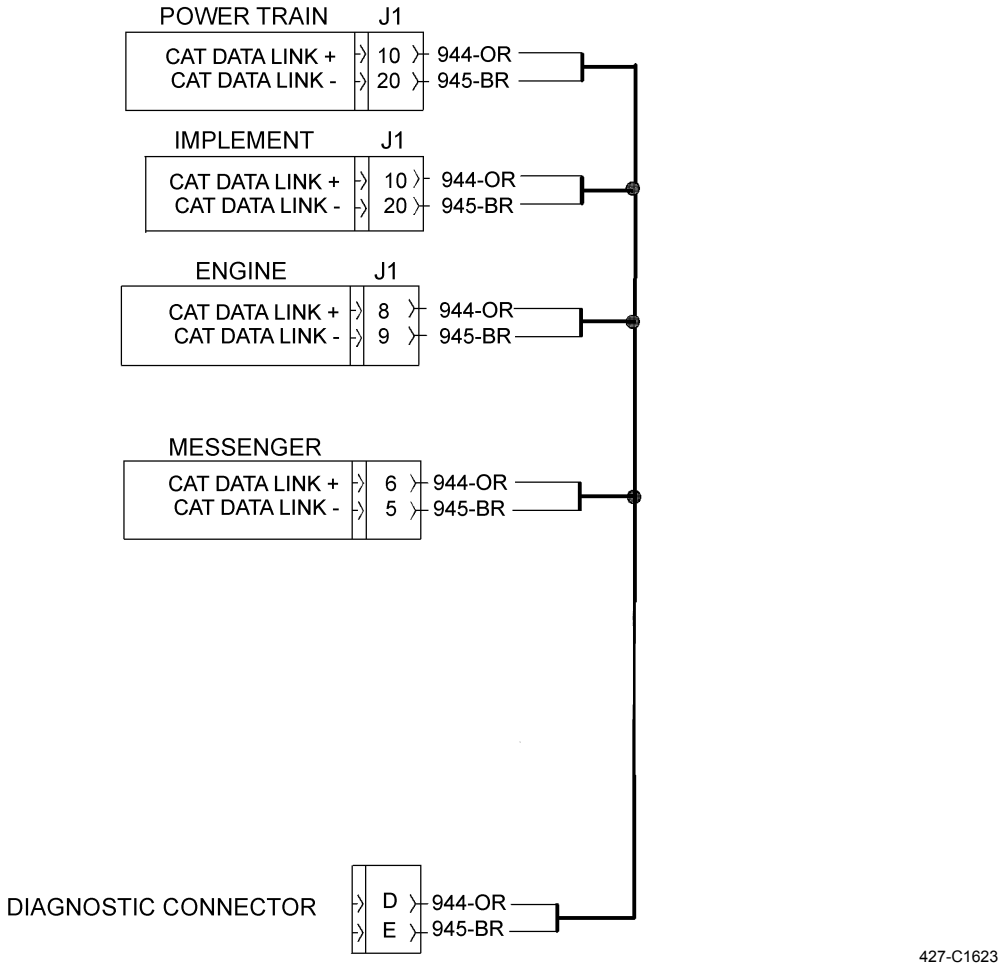

427-C1623

NOTE

The following test procedure may create other diagnostic codes. Ignore these created diagnostic codes and clear these diagnostic codes when original diagnostic code is corrected. Ensure diagnostic code CID 0967 FMI 09 is active before performing this procedure.

1. Connect MSD (WP 0005 00) and verify hardware and software part numbers:
   (a) Software part number for powertrain ECM.

Table 3. Powertrain Control - Continued.

(MID 081) CID FMI CODE	TEST OR INSPECTION	CORRECTIVE ACTION
0967 09 - Continued.	(b) Software part number for Messenger.	1. If all part numbers are correct, go to Test 2. 2. If all part numbers are not correct, one ECM may have wrong part number and/or software configuration is not correct. Appropriate flash file needs to be flashed into ECM (WP 0056 00, WP 0057 00, WP 0060 00, and WP 0063 00).
	2. Inspect wiring harness connections. (a) Turn engine start and battery disconnect switches to OFF position (TM 5-3805-291-10). (b) Disconnect and inspect wiring harness connections related to CAT Data Link (WP 0237 00). Make sure connectors are clean and tight. Refer to *Electrical Connectors Inspection* (WP 0022 00) as necessary. (c) Check mating of connector. (d) Check wires at connector. (e) Check each wire for nicks and/or signs of abrasion in insulation. (f) Check for moisture at connector. (g) Check for dirty and/or corroded contacts. (h) Check each pin and socket. (i) Reconnect all connectors.	1. If wiring harness connectors are tightly connected and free of corrosion, go to Test 3. 2. If wiring harness connectors require repair, replace wiring harness in question (WP 0195 00 thru WP 0201 00).
	3. Check for additional related diagnostic codes. (a) Ensure all ECMs that use CAT Data Link are connected. (b) Turn battery disconnect and engine start switches to ON position (TM 5-3805-291-10).	

Table 3. Powertrain Control - Continued.

(MID 081) CID FMI CODE	TEST OR INSPECTION	CORRECTIVE ACTION
0967 09 - Continued.	(c) Acknowledge any active diagnostic codes currently displayed on Messenger.	
	(d) Verify no related diagnostic codes are active.	1. If other diagnostic codes are not active, go to Test 4. 2. If other related diagnostic codes are active, exit this procedure and perform test procedures for related diagnostic codes. Verify other related diagnostic codes are not active. Observe status of CID 0967 FMI 09. If CID 0967 FMI 09 remains active, repeat CID 0967 FMI 09 procedure.
	4. Check for shorts to ground. (a) Turn engine start and battery disconnect switches to OFF position (TM 5-3805-291-10).	
	(b) Disconnect wiring harness from all ECMs that use CAT Data Link (WP 0056 00, WP 0057 00, WP 0060 00, and WP 0063 00).	
	(c) At wiring harness connector for ECM, measure resistance from frame ground to all other contacts of CAT Data Link.	1. If resistance is greater than 5 Ohms, go to Test 5. 2. If resistance is not greater than 5 Ohms, there is a short between frame ground and CAT Data Link circuit in wiring harness. Replace wiring harness in question (WP 0195 00 thru WP 0201 00).
	5. Check for short to +battery circuit. (a) Engine start and battery disconnect switches remain in OFF position (TM 5-3805-291-10).	
	(b) All related ECMs remain disconnected from wiring harness.	

Table 3. Powertrain Control - Continued.

(MID 081) CID FMI CODE	TEST OR INSPECTION	CORRECTIVE ACTION
0967 09 - Continued.	(c) At wiring harness connector for powertrain ECM, measure resistance from contacts J1-10 and J1-20 to all possible sources of +battery.	1. If resistance is greater than 5 Ohms for each measurement, go to Test 6. 2. If resistance is less than 5 Ohms, there is a short between +battery circuit and CAT Data Link circuit in wiring harness. Replace wiring harness in question (WP 0195 00 thru WP 0201 00).
	6. Check for open circuit in wiring harness. (a) Engine start and battery disconnect switches remain in OFF position (TM 5-3805-291-10). (b) All related ECMs remain disconnected from wiring harness. (c) Check continuity of CAT Data Link circuit in wiring harness. (d) Perform these measurements: (1) Measure resistance from contact J1-20 (wire 945-BR) of ECM to corresponding connector contacts of all other ECMs.	
	(2) Measure resistance from contact J1-10 (wire 944-OR) of ECM to corresponding connector contacts of all other ECMs.	1. If resistance measures less than 5 Ohms, go to Test 7. 2. If resistance measurement is greater than 5 Ohms, CAT Data Link circuit is open in wiring harness. Replace wiring harness in question (WP 0195 00 thru WP 0201 00).
	7. Check if diagnostic code remains active. (a) Inspect and clean wiring harness connector contacts. (b) Reconnect all wiring harness connectors. (c) Operate machine (TM 5-3805-291-10).	

Table 3. Powertrain Control - Continued.

(MID 081) CID FMI CODE	TEST OR INSPECTION	CORRECTIVE ACTION
0967 09 - Continued.	(d) Check status of CID 0967 FMI 09.	1. If CID 0967 FMI 09 is active, exit this procedure and repeat procedure. If cause of diagnostic code is not found, replace powertrain ECM (WP 0063 00). 2. If CID 0967 FMI 09 is not active, diagnostic code does not exist at this time. Resume normal machine operation.

Table 3. Powertrain Control - Continued.

(MID 081) CID FMI CODE	TEST OR INSPECTION	CORRECTIVE ACTION
0967 12		

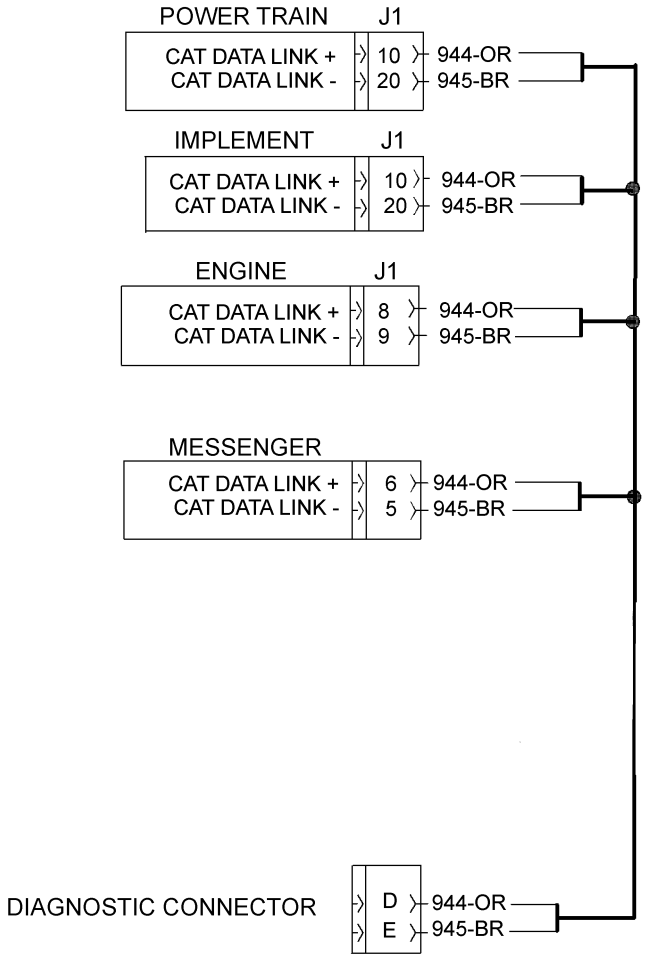

427-C1623

NOTE

The following test procedure may create other diagnostic codes. Ignore these created diagnostic codes and clear these diagnostic codes when original diagnostic code is corrected. Ensure that diagnostic code CID 0967 FMI 12 is active before performing this procedure.

1. Connect MSD (WP 0005 00) and verify following software part numbers:
   (a) Software part number for powertrain ECM.

Table 3. Powertrain Control - Continued.

(MID 081) CID FMI CODE	TEST OR INSPECTION	CORRECTIVE ACTION
0967 12 - Continued.	(b) Software part number for Messenger.	1. If all part numbers are correct, go to Test 2. 2. If all part numbers are not correct, one ECM may have wrong part number and/or software configuration is not correct. Appropriate flash file needs to be flashed into ECM (WP 0056 00, WP 0057 00, WP 0060 00, and WP 0063 00).
	2. Check for additional related diagnostic codes. (a) Ensure all ECMs that use CAT Data Link are connected. (b) Turn battery disconnect and engine start switches to ON position (TM 5-3805-291-10). (c) Acknowledge any active diagnostic codes currently displayed on Messenger.	
	(d) Verify no related diagnostic codes are active.	1. If other diagnostic codes are not active, go to Test 3. 2. If other related diagnostic codes are active, exit this procedure and perform test procedures for related diagnostic codes. Verify other related diagnostic codes are not active. Observe status of CID 0967 FMI 12. If CID 0967 FMI 12 remains active, repeat CID 0967 FMI 12 procedure.
	3. Check if diagnostic code remains active. (a) Inspect contacts of wiring harness connectors and clean wiring harness connectors. (b) Reconnect all wiring harness connectors. (c) Operate machine (TM 5-3805-291-10).	

Table 3. Powertrain Control - Continued.

(MID 081) CID FMI CODE	TEST OR INSPECTION	CORRECTIVE ACTION
0967 12 - Continued.	(d) Check status of CID 0967 FMI 12.	1. If CID 0967 FMI 12 is active, exit this procedure and repeat procedure. If cause of diagnostic code is not found, replace powertrain ECM (WP 0063 00). 2. If CID 0967 FMI is not active, diagnostic code does not exist at this time. Resume normal machine operation.
	NOTE **DO NOT change hard-wired location code if you have flashed incorrect software into control.**	
1326 02	1. Connect MSD (WP 0005 00) and verify following software part numbers: (a) Software part number for ECM. (b) Software part number for Messenger.	1. If all part numbers are correct for ECM, go to Test 2. 2. If all part numbers are not correct, installed ECM has wrong part number or incorrect configuration software is installed. Replace powertrain ECM with ECM that has correct part number or flash correct configuration software (WP 0063 00).
	2. Verify location code matches ET on status screen.	
	NOTE **To verify location code, a new status group with location code parameter may need to be created. Location code information is not available on a default status screen.**	
		1. If location codes in ET are correct, go to Test 3. 2. If location codes are not correct, repeat this test to verify that software and hardware part numbers are correct. Go to Test 3 if part numbers are correct.
	3. Inspect wiring harness connections. (a) Turn engine start and battery disconnect switches to OFF position (TM 5-3805-291-10).	

Table 3. Powertrain Control - Continued.

(MID 081) CID FMI CODE	TEST OR INSPECTION	CORRECTIVE ACTION
1326 02 - Continued.	(b) Disconnect and inspect wiring harness connections related to location codes (WP 0237 00). Make sure connectors are clean and tightly seated. Refer to *Electrical Connectors Inspection* (WP 0022 00) as necessary. (c) Check for proper mating of connector. (d) Check all wires at connector. (e) Check each wire for nicks. Check each wire for signs of abrasion in insulation. (f) Check for moisture at connector. (g) Check for dirty corroded contacts. (h) Check each pin and socket. (i) Reconnect all connectors.	1. If wiring harness connectors are tightly connected and wiring harness connectors are free from corrosion, go to Test 4. 2. If one or more wiring harness connectors are in need of repair, replace wiring harness in question (WP 0195 00 thru WP 0201 00).
	4. Check for shorts to ground. (a) Battery disconnect switch and engine start switches remain in OFF position (TM 5-3805-291-10). (b) Disconnect wiring harness connector from powertrain ECM (WP 0063 00). (c) At wiring harness for powertrain ECM, measure resistance between frame ground and pins for location code (for *Location Codes for Transmission ECM*, Table 7, in this work package).	1. If resistance is greater than 5,000 Ohms at contacts J1-26 and J1-28, and resistance measures less than 5 Ohms at contact J1-27 and J1-32, go to Test 5. 2. If one or more resistance measurements is not correct, replace wiring harness in question (WP 0195 00 thru WP 0201 00).
	5. Check for an open circuit in wiring harness. (a) Battery disconnect switch remains in OFF position (TM 5-3805-291-10). (b) ECM remains disconnected from wiring harness.	

Table 3. Powertrain Control - Continued.

(MID 081) CID FMI CODE	TEST OR INSPECTION	CORRECTIVE ACTION
1326 02 - Continued.	(c) At wiring harness for powertrain ECM, measure resistance between frame ground and J1-32.	1. If resistance is less than 5 Ohms, exit this procedure and repeat this diagnostic code procedure. If cause of diagnostic code is not found, replace powertrain ECM (WP 0063 00). 2. If resistance is greater than 5 Ohms, wiring harness has failed. Replace wiring harness in question (WP 0195 00 thru WP 0201 00).
1400 03		

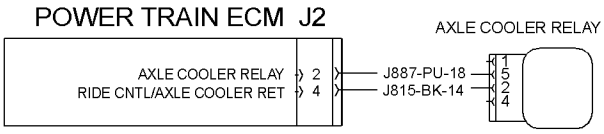

427-C1633

NOTE

The following procedure may create other diagnostic codes. Ignore these created diagnostic codes and clear these diagnostic codes when original diagnostic code is corrected. Ensure diagnostic code CID 1400 FMI 03 is active before performing this procedure.

1. Check relay circuit for a short to +battery circuit. (a) Turn engine start and battery disconnect switches to OFF position (TM 5-3805-291-10). (b) Disconnect wiring harness connectors from relay and powertrain ECM (WP 0063 00).	
(c) At wiring harness connector for ECM, measure resistance from contact J2-2 (wire J887-PU) to all other contacts that are used in wiring harness connector for ECM.	1. If each resistance measurement is greater than 5,000 Ohms, go to Test 2. 2. If each resistance measurement is not greater than 5,000 Ohms, short is between J2-2 (J8887-PU) and circuit that has a low resistance measurement. Replace wiring harness in question (WP 0195 00 thru WP 0201 00).

Table 3. Powertrain Control - Continued.

(MID 081) CID FMI CODE	TEST OR INSPECTION	CORRECTIVE ACTION
1400 03 - Continued.	2. Check if diagnostic code is still active (a) Inspect and clean wiring harness connector contacts. (b) Reconnect wiring harness connector. (c) Operate machine (TM 5-3805-291-10).	
	(d) Use messenger to determine if CID 1400 FMI 03 is active (TM 5-3805-291-10).	1. If CID 1400 FMI 03 is active, exit this procedure and repeat this procedure. If cause of diagnostic code is not found, replace the powertrain ECM (WP 0063 00). 2. If CID 1400 FMI 03 is not active, problem does not exist at this time. Resume normal machine operation.
1400 06	**NOTE** **The following procedure may create other diagnostic codes. Ignore these created diagnostic codes and clear these diagnostic codes when original diagnostic code is corrected. Ensure diagnostic code CID 1400 FMI 06 is active before performing this procedure.**	
	1. Check relay energizer circuit for a short to ground. (a) Turn engine start and battery disconnect switches to OFF position (TM 5-3805-291-10). (b) Relay remains disconnected from wiring harness. (c) Disconnect wiring harness connector(s) from powertrain ECM (WP 0063 00).	
	(d) At wiring harness connector, measure resistance from signal contact J2-2 (wire J887-PU) to all contacts used in wiring harness connectors for the ECM.	1. If each resistance measurement is greater than 5,000 Ohms, go to Test 2. 2. If each resistance measurement is not greater than 5,000 Ohms, short is between J2-2 (J887-PU) and circuit with low resistance measurement. Replace wiring harness in question (WP 0195 00 thru WP 0201 00).
	2. Check if diagnostic code remains active. (a) Inspect and clean wiring harness connector contacts.	

Table 3. Powertrain Control - Continued.

(MID 081) CID FMI CODE	TEST OR INSPECTION	CORRECTIVE ACTION
1400 06 - Continued.	(b) Reconnect wiring harness connectors. (c) Operate machine (TM 5-3805-291-10). (d) Use messenger to check status of CID 1400 FMI 06 (TM 5-3805-291-10).	1. If CID 1400 FMI 06 is active, exit this procedure and repeat this procedure. If cause of diagnostic code is not found, replace powertrain ECM (WP 0063 00). 2. If CID 1400 FMI 06 is not active, diagnostic code does not exist at this time. Resume normal machine operation.
1401 03		

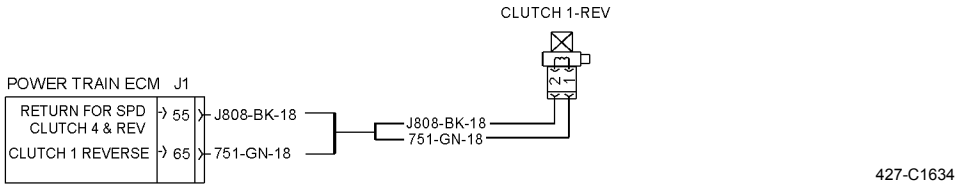

NOTE

The following procedure may create other diagnostic codes. Ignore these created diagnostic codes and clear these diagnostic codes when original diagnostic code is corrected. Ensure diagnostic code CID 1401 FMI 03 is active before performing this procedure.

1. Check solenoid energizer circuit for a short to +battery circuit. (a) Turn engine start and battery disconnect switches to OFF position (TM 5-3805-291-10). (b) Disconnect wiring harness connector(s) from clutch solenoid and powertrain ECM (WP 0056 00, WP 0057 00, WP 0060 00, and WP 0063 00).	
(c) At wiring harness connector for ECM, measure resistance from contact J1-65 (wire 751-GN) to all possible sources of +battery.	1. If each resistance measurement is greater than 5 Ohms, go to Test 2. 2. If each resistance measurement is not greater than 5 Ohms, short is between J1-65 (wire 751-GN) and +battery circuit. Replace wiring harness in question (WP 0195 00 thru WP 0201 00).

Table 3. Powertrain Control - Continued.

(MID 081) CID FMI CODE	TEST OR INSPECTION	CORRECTIVE ACTION
1401 03 - Continued.	2. Check if diagnostic code remains active. (a) Inspect and clean wiring harness connector contacts. (b) Reconnect all wiring harness connectors. (c) Operate machine (TM 5-3805-291-10). (d) Use messenger to check status of CID 1401 FMI 03 (TM 5-3805-291-10).	1. If CID 1401 FMI 03 is active, exit this procedure and repeat this procedure. If cause of diagnostic code is not found, replace powertrain ECM (WP 0063 00). 2. If CID 1401 FMI 03 is not active, problem does not exist at this time. Resume normal machine operation.
1401 05	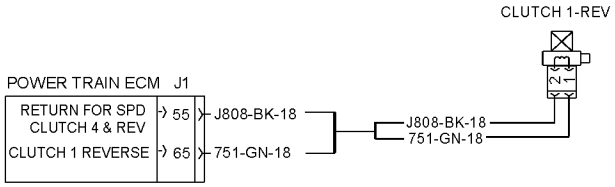 427-C1634 **NOTE** **The following test procedure may create other diagnostic codes. Ignore these created diagnostic codes and clear these diagnostic codes when original diagnostic code is corrected. Ensure diagnostic code CID 1401 FMI 05 is active before performing this procedure.** 1. Check solenoid. (a) Turn battery disconnect and engine start switches to ON position. Do not start engine (TM 5-3805-291-10). (b) Disconnect solenoid with active diagnostic code from wiring harness (WP 0203 00). (c) At wiring harness connector for solenoid, place a jumper wire from contact 1 (wire 751-GN) to contact 2 (J808-BK).	

Table 3. Powertrain Control - Continued.

(MID 081) CID FMI CODE	TEST OR INSPECTION	CORRECTIVE ACTION
1401 05 - Continued.	(d) Use messenger to check status of CID 1401 FMI 05 (TM 5-3805-291-10).	1. If diagnostic code remains active, go to Test 2. 2. If diagnostic is not active, repeat Test 1 to verify solenoid failure. Replace modulating valve with active code (WP 0203 00). Verify new solenoid corrects problem.
	2. Check wiring harness for an open circuit. (a) Turn engine start and battery disconnect switches to OFF position (TM 5-3805-291-10). (b) Disconnect wiring harness connector(s) from powertrain ECM (WP 0063 00). (c) Jumper wire installed in Test 1 remains in place.	
	(d) At wiring harness connector, measure resistance from signal contact J1-17 (wire 751-GN) to contact J1-55 (wire J808-BK).	1. If resistance is less than 5.0 Ohms, go to Test 3. 2. If resistance is greater than 5,000 Ohms, open circuit is in wire 751-GN or in wire J808-BK of wiring harness. Replace wiring harness in question (WP 0195 00 thru WP 0201 00).
	3. Check if diagnostic code remains active. (a) Inspect and clean wiring harness connector contacts. (b) Reconnect all wiring harness connectors. (c) Operate machine (TM 5-3805-291-10).	
	(d) Use messenger to check status of CID 1401 FMI 05 (TM 5-3805-291-10).	1. If CID 1401 FMI 05 is active, exit this procedure and repeat this procedure. If cause of diagnostic code is not found, replace powertrain ECM (WP 0063 00). 2. If CID 1401 FMI 05 is not active, diagnostic code does not exist at this time. Resume normal machine operation.

Table 3. Powertrain Control - Continued.

(MID 081) CID FMI CODE	TEST OR INSPECTION	CORRECTIVE ACTION
1401 06		
	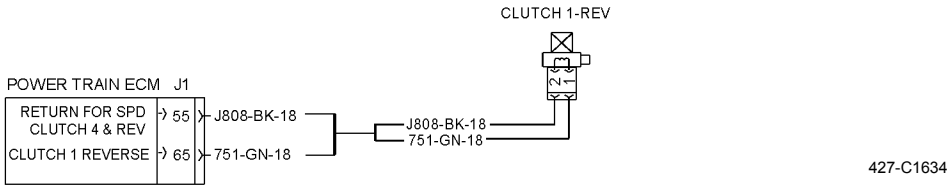	
	NOTE **The following test procedure may create other diagnostic codes. Ignore these created diagnostic codes and clear these diagnostic codes when original diagnostic code is corrected. Ensure diagnostic code CID 1401 FM 06 is active before performing this procedure.**	
	1. Check solenoid. (a) Turn battery disconnect and engine start switches to ON position. Do not start engine (TM 5-3805-291-10). (b) Connect MSD and observe status of diagnostic code. (c) Disconnect solenoid with active diagnostic code from wiring harness (WP 0203 00).	1. If CID 1401 FMI 06 changes to CID 1401 FMI 05 when solenoid is disconnected, repeat this test to verify solenoid failure. Replace modulating valve solenoid with active code (WP 0203 00). Verify new solenoid corrects problem. 2. If CID 1401 FMI 06 remains active, go to Test 2.
	2. Check solenoid energizer circuit for a short to ground. (a) Turn engine start and battery disconnect switches to OFF position (TM 5-3805-291-10). (b) Solenoid remains disconnected from wiring harness. (c) Disconnect wiring harness connector(s) from powertrain ECM (WP 0063 00).	

Table 3. Powertrain Control - Continued.

(MID 081) CID FMI CODE	TEST OR INSPECTION	CORRECTIVE ACTION
1401 06 - Continued.	(d) At wiring harness connector, measure resistance from signal contact J1-65 (wire 751-GN) to all contacts used in wiring harness connectors for ECM.	1. If each resistance measurement is greater than 5,000 Ohms, go to Test 3. 2. If each resistance measurement is not greater than 5,000 Ohms, short is between J1-65 (wire 751-GN) and circuit with low resistance measurement.
	3. Check if diagnostic code remains active. (a) Inspect and clean wiring harness connector contacts. (b) Reconnect all wiring harness connectors. (c) Operate machine (TM 5-3805-291-10).	
	(d) Check status of CID 1401 FMI 06.	1. If CID 1401 FMI 06 is active, exit this procedure and repeat this procedure. If cause of diagnostic code is not found, replace powertrain ECM (WP 0063 00). 2. If CID 1401 FMI 06 is not active, diagnostic code does not exist at this time. Resume normal machine operation.
1401 13	**NOTE** • **Ensure you have repaired any condition that would cause other active diagnostic codes related to this solenoid. For example, CID 1401 FMI 03 or FMI 05 is not active when CID 1401 FMI 13 is active. If other diagnostic codes are active, troubleshoot those codes first, then perform this procedure.** • **Ensure diagnostic code CID 1401 FM 13 is active before performing this procedure.**	
	Check calibration. Perform *Fill Time for Transmission Clutch MSD - Calibration* (WP 0014 00).	1. If CID 1401 FMI 13 is active, verify correct software has been flashed into ECM, or correct ECM is installed on machine, then repeat the calibration. If diagnostic code is still active and cause of diagnostic code is not found, replace powertrain ECM (WP 0063 00). Verify solenoid and associated circuits are correct before you replace ECM (WP 0063 00). 2. If CID 1401 FMI 13 is not active, resume normal operation.

Table 3. Powertrain Control - Continued.

(MID 081) CID FMI CODE	TEST OR INSPECTION	CORRECTIVE ACTION
1402 03		

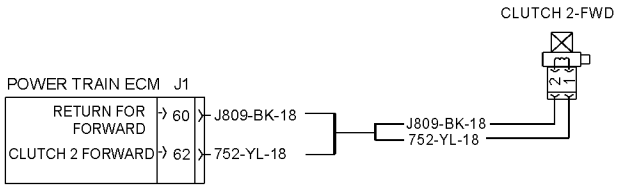

NOTE

The following test procedure may create other diagnostic codes. Ignore these created diagnostic codes and clear these diagnostic codes when original diagnostic code is corrected. Ensure diagnostic code CID 1402 FMI 03 is active before performing this procedure.

1. Check solenoid energizer circuit for a short to +battery circuit. (a) Turn engine start and battery disconnect switches to OFF position (TM 5-3805-291-10). (b) Disconnect wiring harness connectors from clutch 2 FWD solenoid and powertrain ECM (WP 0056 00, WP 0057 00, WP 0060 00, and WP 0063 00). (c) At wiring harness connector for ECM, measure resistance from contact J1-62 (wire 752-YL) to all sources of +battery.	1. If each measurement is greater than 5,000 Ohms, go to Test 2. 2. If each resistance measurement is not greater than 5,000 Ohms, short is between J1-62 (752-YL) and +battery circuit. Replace wiring harness in question (WP 0195 00 thru WP 0201 00).
2. Check if diagnostic code remains active. (a) Inspect and clean wiring harness connector contacts. (b) Reconnect all wiring harness connectors. (c) Turn the battery disconnect and engine start switches to ON position (TM 5-3805-291-10). (d) Operate machine (TM 5-3805-291-10).	

Table 3. Powertrain Control - Continued.

(MID 081) CID FMI CODE	TEST OR INSPECTION	CORRECTIVE ACTION
1402 03 - Continued.	(e) Use messenger to check status of CID 1402 FMI 03 (TM 5-3805-291-10).	1. If CID 1402 FMI 03 is active, exit this procedure and repeat this procedure. If cause of diagnostic code is not found, replace powertrain ECM (WP 0063 00). 2. If CID 1402 FMI 03 is not active, problem does not exist at this time. Resume normal machine operation.
1402 05	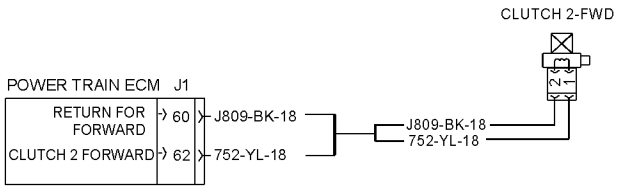 427-C1635	
	NOTE **The following test procedure may create other diagnostic codes. Ignore these created diagnostic codes and clear these diagnostic codes when original diagnostic code is corrected. Ensure diagnostic code CID 1402 FMI 05 is active before performing this procedure.**	
	1. Check solenoid. (a) Turn battery disconnect and engine start switches to ON position. Do not start engine (TM 5-3805-291-10). (b) Disconnect solenoid with active diagnostic code from wiring harness (WP 0203 00). (c) At wiring harness connector for solenoid, place a jumper wire from contact 1 (wire 752-YL) to contact 2 (wire J809-BK).	
	(d) Use messenger to check status of CID 1402 FMI 05 (TM 5-3805-291-10).	1. If diagnostic code remains active, go to Test 2. 2. If diagnostic code is not active, repeat this test to verify solenoid failure. Replace modulating valve with active code (WP 0203 00). Verify new solenoid corrects problem.

Table 3. Powertrain Control - Continued.

(MID 081) CID FMI CODE	TEST OR INSPECTION	CORRECTIVE ACTION
1402 05 - Continued.	2. Check wiring harness for open circuit. (a) Turn engine start and battery disconnect switches to OFF position (TM 5-3805-291-10). (b) Disconnect wiring harness connector(s) from powertrain ECM (WP 0063 00). (c) Jumper wire installed in Test 1 remains in place. (d) At wiring harness connector, measure resistance from signal contact J1-62 (wire 752-YL) to contact J1-60 (wire J809-BK).	1. If resistance is less than 5.0 Ohms, go to Test 3. 2. If resistance is greater than 5,000 Ohms, open circuit is in wire 752-YL or in wire J809-BK of wiring harness. Replace wiring harness in question (WP 0195 00 thru WP 0201 00).
	3. Check if diagnostic code remains active. (a) Inspect and clean wiring harness connector contacts. (b) Reconnect all wiring harness connectors. (c) Operate machine (TM 5-3805-291-10). (d) Use messenger to check status of CID 1402 FMI 05 (TM 5-3805-291-10).	1. If CID 1402 FMI 05 is active, exit this procedure and repeat this procedure. If cause of the diagnostic code is not found, replace powertrain ECM (WP 0063 00). 2. If CID 1402 FMI 05 is not active, diagnostic code does not exist at this time. Resume normal machine operation.

Table 3. Powertrain Control - Continued.

(MID 081) CID FMI CODE	TEST OR INSPECTION	CORRECTIVE ACTION
1402 06		

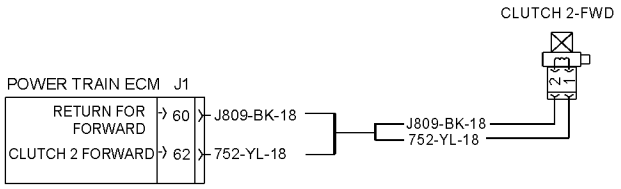

NOTE

The following test procedure may create other diagnostic codes. Ignore these created diagnostic codes and clear these diagnostic codes when original diagnostic code is corrected. Ensure diagnostic code CID 1402 FMI 06 is active before performing this procedure.

1. Check solenoid.
   (a) Turn battery disconnect and engine start switches to ON position. Do not start engine (TM 5-3805-291-10).
   (b) Connect MSD (WP 0005 00) and observe status of diagnostic code.
   (c) Disconnect solenoid with active diagnostic code from wiring harness (WP 0203 00).

   1. If diagnostic code remains active, go to Test 2.
   2. If diagnostic code is no longer active, repeat this test in order to verify solenoid failure. Replace modulating valve with active code (WP 0203 00). Verify new solenoid corrects problem.

2. Check solenoid energizer circuit for a short to ground.
   (a) Turn engine start and battery disconnect switches to OFF position (TM 5-3805-291-10).
   (b) Solenoid remains disconnected from wiring harness.
   (c) Disconnect wiring harness connector(s) from powertrain ECM (WP 0063 00).

Table 3. Powertrain Control - Continued.

(MID 081) CID FMI CODE	TEST OR INSPECTION	CORRECTIVE ACTION
1402 06 - Continued.	(d) At wiring harness connector, measure resistance from signal contact J1-62 (wire 752-YL) to all sources of ground.	1. If each resistance measurement is greater than 5,000 Ohms, go to Test 3. 2. If each resistance measurement is not greater than 5,000 Ohms, short is between J1-11 (wire 752-YL) and the ground circuit. Replace wiring harness in question (WP 0195 00 thru WP 0201 00).
	3. Check if diagnostic code remains active. (a) Inspect and clean wiring harness connector contacts. (b) Reconnect all wiring harness connectors. (c) Operate machine (TM 5-3805-291-10).	
	(d) Use messenger to check status of CID 1402 FMI 06 (TM 5-3805-291-10).	1. If CID 1402 FMI 06 is active, exit this procedure and repeat this procedure. If cause of the diagnostic code is not found, replace powertrain ECM (WP 0063 00). 2. If CID 1402 FMI 06 is not active, diagnostic code does not exist at this time. Resume normal machine operation.

Table 3. Powertrain Control - Continued.

(MID 081) CID FMI CODE	TEST OR INSPECTION	CORRECTIVE ACTION
1402 13	**NOTE** • **Ensure you have repaired any condition that would cause other active diagnostic codes related to this solenoid. For example, CID 1402 FMI 03 or FMI 05 are not active when CID 1402 FMI 13 is active. If other diagnostic codes are active, troubleshoot those codes first, then perform this procedure.** • **Ensure diagnostic code CID 1402 FMI 13 is active before performing this procedure.**	
	Check calibration. Perform *Fill Time for Transmission Clutch MSD - Calibration* (WP 0014 00).	1. If CID 1402 FMI 13 is active, verify that correct software has been flashed into powertrain ECM or correct powertrain ECM is installed on machine (WP 0063 00). Repeat calibration. If diagnostic code is still active and cause of diagnostic code is not found, replace powertrain ECM. It is unlikely that powertrain ECM has failed. Verify that solenoid and associated circuits are correct before you replace powertrain ECM (WP 0063 00). 2. If CID 1402 FMI 13 is not active, resume normal operation.
1403 03		
	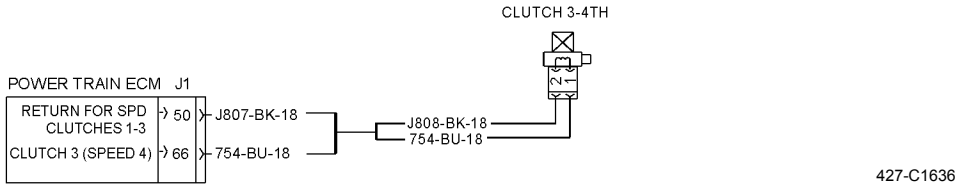	
	NOTE **The following test procedure may create other diagnostic codes. Ignore these created diagnostic codes and clear these diagnostic codes when the original diagnostic code is corrected. Ensure that the diagnostic code CID 1403 FMI 03 is active before performing this procedure.**	
	1. Check solenoid energizer circuit for a short to +battery circuit. (a) Turn engine start and battery disconnect switches to OFF position (TM 5-3805-291-10).	

Table 3. Powertrain Control - Continued.

(MID 081) CID FMI CODE	TEST OR INSPECTION	CORRECTIVE ACTION
1403 03 - Continued.	(b) Disconnect wiring harness connectors from clutch 3-4 solenoid (WP 0203 00) and powertrain ECM (WP 0063 00).	
	(c) At wiring harness connector for ECM, measure resistance from contact J1-66 (wire 754-BU) to all contacts that are sources of +battery.	1. If each resistance measurement is greater than 5,000 Ohms, go to Test 2. 2. If each resistance measurement is not greater than 5,000 Ohms, short is between J1-66 (754-BU) and +battery circuit. Replace the wiring harness in question (WP 0195 00 thru WP 0201 00).
	2. Check if diagnostic code remains active.	
	(a) Inspect and clean wiring harness connector contacts.	
	(b) Reconnect all wiring harness connectors.	
	(c) Operate machine (TM 5-3805-291-10).	
	(d) Use messenger to check status of CID 1403 FMI 03 (TM 5-3805-291-10).	1. If CID 1403 FMI 03 is active, exit this procedure and repeat this procedure. If cause of diagnostic code is not found, replace powertrain ECM (WP 0063 00). 2. If CID 1403 FMI 03 is not active, problem does not exist at this time. Resume normal machine operation.
1403 05		

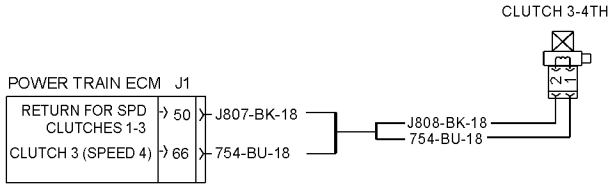

427-C1636

NOTE

The following test procedure may create other diagnostic codes. Ignore these created diagnostic codes and clear these diagnostic codes when original diagnostic code is corrected. Ensure diagnostic code CID 1403 FMI 05 is active before performing this procedure.

Table 3. Powertrain Control - Continued.

(MID 081) CID FMI CODE	TEST OR INSPECTION	CORRECTIVE ACTION
1403 05 - Continued.	1. Check solenoid. (a) Turn battery disconnect and engine start switches to ON position. Do not start engine (TM 5-3805-291-10). (b) Disconnect solenoid with active diagnostic code from wiring harness (WP 0203 00). (c) At wiring harness connector for solenoid, place a jumper wire from contact 1 (wire 754-BU) to contact 2 (wire J807-BK). (d) Use messenger to check status of CID 1403 FMI 05 (TM 5-3805-291-10).	1. If diagnostic code remains active, go to Test 2. 2. If diagnostic is not active, repeat this test to verify solenoid failure. Replace modulating valve with active code (WP 0203 00). Verify new solenoid corrects problem.
	2. Check wiring harness for open circuit. (a) Turn engine start and battery disconnect switches to OFF position (TM 5-3805-291-10). (b) Disconnect wiring harness connector(s) from powertrain ECM (WP 0063 00). (c) Jumper wire installed in previous Test 1 remains in place. (d) At wiring harness connector, measure resistance from signal contact J1-66 (wire 754-BU) to contact J1-50 (wire J807-BK).	1. If resistance is less than 5.0 Ohms, go to Test 3. 2. If resistance is greater than 5,000 Ohms, open circuit is in wire 754-BU or in wire J807-BK of wiring harness. Replace wiring harness in question (WP 0195 00 thru WP 0201 00).
	3. Check if diagnostic code remains active. (a) Inspect and clean wiring harness connector contacts. (b) Reconnect all wiring harness connectors.	

Table 3. Powertrain Control - Continued.

(MID 081) CID FMI CODE	TEST OR INSPECTION	CORRECTIVE ACTION
1403 05 - Continued.	(c) Operate machine (TM 5-3805-291-10).	
	(d) Use messenger to check status of CID 1403 FMI 05 (TM 5-3805-291-10).	1. If CID 1403 FMI 05 is active, exit this procedure and repeat this procedure. If the cause of diagnostic code is not found, replace powertrain ECM (WP 0063 00). 2. If CID 1403 FMI 05 is not active, diagnostic code does not exist at this time. Resume normal machine operation.
1403 06		
	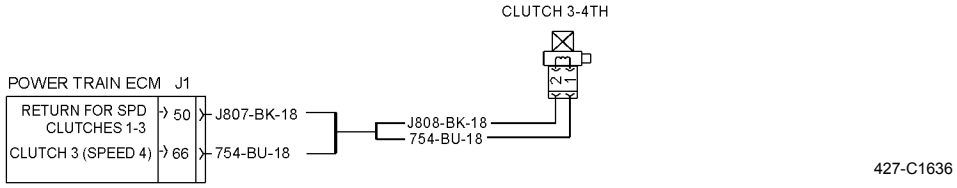 427-C1636	
	NOTE **The following test procedure may create other diagnostic codes. Ignore these created diagnostic codes and clear these diagnostic codes when original diagnostic code is corrected. Ensure diagnostic code CID 1403 FMI 06 is active before performing this procedure.**	
	1. Check solenoid. (a) Turn battery disconnect and engine start switches to ON position. Do not start engine (TM 5-3805-291-10). (b) Connect MSD (WP 0005 00) and observe status of diagnostic code. (c) Disconnect solenoid with active diagnostic code from wiring harness (WP 0203 00).	1. If CID 1403 FMI 06 changes to CID 1403 FMI 05 when solenoid is disconnected, repeat this test to verify solenoid failure. Replace modulating valve with active code (WP 0203 00). Verify new solenoid corrects problem. 2. If CID 1403 FMI 06 remains active, go to Test 2.

Table 3. Powertrain Control - Continued.

(MID 081) CID FMI CODE	TEST OR INSPECTION	CORRECTIVE ACTION
1403 06 - Continued.	2. Check solenoid energizer circuit for short. (a) Turn engine start and battery disconnect switches to OFF position (TM 5-3805-291-10). (b) Solenoid remains disconnected from wiring harness. (c) Disconnect wiring harness connector(s) from powertrain ECM (WP 0063 00). (d) At wiring harness connector, measure resistance from signal contact J1-66 (wire 754-BU) to all contacts used in wiring harness connectors for ECM.	1. If each resistance measurement is greater than 5,000 Ohms, go to Test 3. 2. If each resistance measurement is not greater than 5,000 Ohms, short is between J1-66 (wire 754-BU) and the circuit with low resistance measurement. Replace wiring harness in question (WP 0195 00 thru WP 0201 00).
	3. Check if diagnostic code remains active. (a) Inspect and clean wiring harness connector contacts. (b) Reconnect all wiring harness connectors. (c) Operate machine (TM 5-3805-291-10). (d) Check status of CID 1403 FMI 06.	1. If CID 1403 FMI 06 is active, exit this procedure and repeat this procedure. If cause of diagnostic code is not found, replace powertrain ECM (WP 0063 00). 2. If CID 1403 FMI 06 is not active, diagnostic code does not exist at this time. Resume normal machine operation.

Table 3. Powertrain Control - Continued.

(MID 081) CID FMI CODE	TEST OR INSPECTION	CORRECTIVE ACTION
1403 13	**NOTE** • **Ensure you have repaired any condition that would cause other active diagnostic codes related to this solenoid. For example, the CID 1403 FMI 03 or FMI 05 are not active when the CID 1403 FMI 13 is active. If the other diagnostic codes are active, troubleshoot those codes first, then perform this procedure.** • **Ensure diagnostic code CID 1403 FMI 13 is active before performing this procedure.**	
	Check calibration. Perform *Fill Time for Transmission Clutch MSD - Calibration* (WP 0014 00).	1. If CID 1403 FMI 13 is active, verify correct software has been flashed into powertrain ECM or correct ECM is installed on machine. Repeat calibration. If diagnostic code is still active and cause of diagnostic code is not found, replace powertrain ECM (WP 0063 00). Verify solenoid and associated circuits are correct before you replace powertrain ECM (WP 0063 00). 2. If CID 1403 FMI 13 is not active, resume normal operation.
1404 05		
	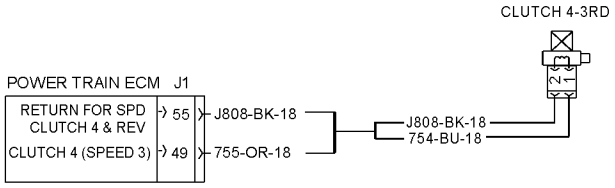 427-C1637	
	NOTE **The following test procedure may create other diagnostic codes. Ignore these created diagnostic codes and clear these diagnostic codes when original diagnostic code is corrected. Ensure diagnostic code CID 1404 FMI 05 is active before performing this procedure.**	
	1. Check solenoid. (a) Turn battery disconnect and engine start switches to ON position. Do not start engine (TM 5-3805-291-10).	

Table 3. Powertrain Control - Continued.

(MID 081) CID FMI CODE	TEST OR INSPECTION	CORRECTIVE ACTION
1404 05 - Continued.	(b) Disconnect solenoid with active diagnostic code from wiring harness (WP 0203 00). (c) At wiring harness connector for solenoid, place a jumper wire from contact 1 (wire 755-OR) to contact 2 (wire J808-BK). (d) Use messenger to check status of CID 1404 FMI 05 (TM 5-3805-291-10).	1. If diagnostic code remains active, go to Test 2. 2. If diagnostic is no longer active, repeat this test to verify solenoid failure. Replace modulating valve with active code (WP 0203 00). Verify new solenoid corrects problem.
	2. Check wiring harness for an open circuit. (a) Turn engine start and battery disconnect switches to OFF position (TM 5-3805-291-10). (b) Disconnect wiring harness connector(s) from powertrain ECM (WP 0063 00). (c) Jumper wire installed in previous Test 1 remains in place. (d) At wiring harness connector, measure resistance from signal contact J1-49 (wire 755-OR) to contact J1-55 (wire J808-BK).	1. If resistance is less than 5.0 Ohms, this wiring harness is correct, go to Test 3. 2. If resistance is greater than 5,000 Ohms, open circuit is in wire 755-OR or in wire J808-BK of wiring harness. Replace wiring harness in question (WP 0195 00 thru WP 0201 00).
	3. Check if diagnostic code remains active. (a) Inspect and clean wiring harness connector contacts. (b) Reconnect all wiring harness connectors. (c) Operate machine (TM 5-3805-291-10).	

Table 3. Powertrain Control - Continued.

(MID 081) CID FMI CODE	TEST OR INSPECTION	CORRECTIVE ACTION
1404 05 - Continued.	(d) Use messenger to check status of CID 1404 FMI 05 (TM 5-3805-291-10).	1. If CID 1404 FMI 05 is active, exit this procedure and repeat this procedure. If cause of diagnostic code is not found, replace powertrain ECM (WP 0063 00). 2. If CID 1404 FMI 05 is not active, diagnostic code does not exist at this time. Resume normal machine operation.
1404 06		

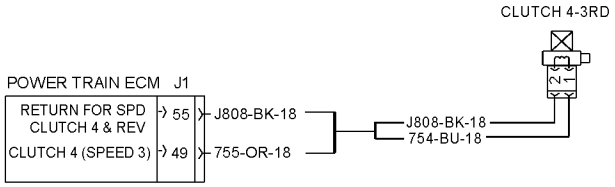

427-C1637

NOTE

The following test procedure may create other diagnostic codes. Ignore these created diagnostic codes and clear these diagnostic codes when original diagnostic code is corrected. Ensure diagnostic code CID 1404 FMI 06 is active before performing this procedure.

1. Check solenoid. (a) Turn battery disconnect and engine start switches to ON position. Do not start engine (TM 5-3805-291-10). (b) Connect MSD (WP 0005 00) and Observe status of diagnostic code. (c) Disconnect solenoid with active diagnostic code from wiring harness (WP 0203 00).	1. If CID 1404 FMI 06 changes CID 1404 FMI 05 when solenoid is disconnected, repeat this test to verify solenoid failure. Replace modulating valve with active code (WP 0203 00). Verify new solenoid corrects problem. 2. If 1404 FMI 06 remains active, go to Test 2.
2. Check solenoid energizer circuit for a short to ground. (a) Turn engine start and battery disconnect switches to OFF position (TM 5-3805-291-10).	

Table 3. Powertrain Control - Continued.

(MID 081) CID FMI CODE	TEST OR INSPECTION	CORRECTIVE ACTION
1404 06 - Continued.	(b) Solenoid remains disconnected from wiring harness.	
	(c) Disconnect wiring harness connector(s) from powertrain ECM (WP 0063 00).	
	(d) At wiring harness connector, measure resistance from signal contact J1-49 (wire 755-OR) to all contacts used in wiring harness connectors for the ECM.	1. If each resistance measurement is greater than 5,000 Ohms, go to Test 3. 2. If each resistance measurement is not greater than 5,000 Ohms, short is between J1-49 (wire 755-OR) and circuit with low resistance measurement. Replace wiring harness in question (WP 0195 00 thru WP 0201 00).
	3. Check if diagnostic code remains active.	
	(a) Inspect and clean wiring harness connector contacts.	
	(b) Reconnect all wiring harness connectors.	
	(c) Operate machine (TM 5-3805-291-10).	
	(d) Check status of CID 1404 FMI 06.	1. If CID 1404 FMI 06 is active, exit this procedure and repeat this procedure. If cause of diagnostic code is not found, replace powertrain ECM (WP 0063 00). 2. If CID 1404 FMI 06 is not active, diagnostic code does not exist at this time. Resume normal machine operation.

Table 3. Powertrain Control - Continued.

(MID 081) CID FMI CODE	TEST OR INSPECTION	CORRECTIVE ACTION
1404 13	**NOTE** **• Ensure you have repaired any condition that would cause other active diagnostic codes related to this solenoid. For example, CID 1404 FMI 03 or FMI 05 are not active when CID 1404 FMI 13 is active. If other diagnostic codes are active, troubleshoot those codes first, then perform this procedure.** **• Ensure diagnostic code CID 1404 FMI 13 is active before performing this procedure.**	
	Perform *Fill Time for Transmission Clutch MSD - Calibration* (WP 0014 00).	1. If CID 1404 FMI 13 is active, verify correct software has been flashed into the powertrain ECM, or correct ECM is installed on machine. Repeat calibration. If diagnostic code is still active and the cause of diagnostic code is not found, replace powertrain ECM. Verify that solenoid and associated circuits are correct before you replace powertrain ECM (WP 0063 00). 2. If CID 1404 FMI 13 is not active, resume normal operation.
1405 03		

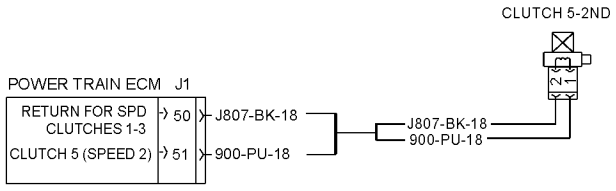

427-C1638

NOTE

The following test procedure may create other diagnostic codes. Ignore these created diagnostic codes and clear these diagnostic codes when the original diagnostic code is corrected. Ensure diagnostic code CID 1405 FMI 03 is active before performing this procedure.

1. Check solenoid energizer circuit for a short to +battery circuit.
   (a) Turn engine start and battery disconnect switches to OFF position (TM 5-3805-291-10).
   (b) Disconnect wiring harness connectors from clutch 5-2nd (WP 0203 00) solenoid and powertrain ECM (WP 0063 00).

Table 3. Powertrain Control - Continued.

(MID 081) CID FMI CODE	TEST OR INSPECTION	CORRECTIVE ACTION
1405 03 - Continued.	(c) At wiring harness connector for ECM, measure resistance from contact J1-51 (900-PU) to all contacts used in wiring harness connectors for ECM.	1. If each resistance measurement is greater than 5,000 Ohms, go to Test 2. 2. If each resistance measurement is not greater than 5,000 Ohms, short is between J1-51 (900-PU) and circuit with low resistance measurement. Replace wiring harness in question (WP 0195 00 thru WP 0201 00).
	2. Check if diagnostic code remains active. (a) Inspect and clean wiring harness connector contacts. (b) Reconnect all wiring harness connectors. (c) Operate machine (TM 5-3805-291-10).	
	(d) Use messenger to determine if CID 1405 FMI 03 is active (TM 5-3805-291-10).	1. If CID 1405 FMI 03 is active, exit this procedure and repeat this procedure. If cause of diagnostic code is not found, replace powertrain ECM (WP 0063 00). 2. If CID 1405 FMI 03 is not active, problem does not exist at this time. Resume normal machine operation.
1405 05		

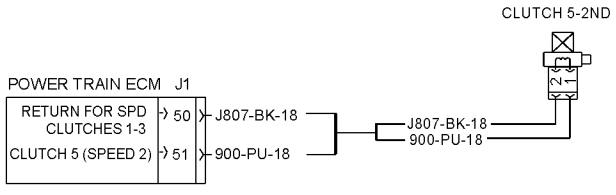

427-C1638

NOTE

The following test procedure may create other diagnostic codes. Ignore these created diagnostic codes and clear these diagnostic codes when original diagnostic code is corrected. Ensure diagnostic code CID 1405 FMI 05 is active before performing this procedure.

1. Check solenoid.
   (a) Turn battery disconnect and engine start switches to ON position. Do not start engine (TM 5-3805-291-10).

Table 3. Powertrain Control - Continued.

(MID 081) CID FMI CODE	TEST OR INSPECTION	CORRECTIVE ACTION
1405 05 - Continued.	(b) Disconnect solenoid with active diagnostic code from wiring harness (WP 0203 00). (c) At wiring harness connector for solenoid, place a jumper wire from contact 1 (wire 900-PU) to contact 2 (wire J807-BK). (d) Use messenger to observe status of CID 1405 FMI 05 (TM 5-3805-291-10).	1. If diagnostic code remains active, go to Test 2. 2. If diagnostic is no longer active, repeat this test to verify solenoid failure. Replace modulating valve with active code (WP 0203 00). Verify new solenoid corrects problem.
	2. Check wiring harness for an open circuit. (a) Turn engine start and battery disconnect switches to OFF position (TM 5-3805-291-10). (b) Disconnect wiring harness connector(s) from powertrain ECM (WP 0063 00). (c) Jumper wire installed in Test 1 remains in place. (d) At wiring harness connector, measure resistance from signal contact J1-51 (wire 900-PU) to contact J1-50 (wire J807-BK).	1. If resistance is less than 5.0 Ohms, go to Test 3. 2. If resistance is greater than 5,000 Ohms, open circuit is in wire 900-PU or in wire J807-BK of wiring harness. Replace wiring harness in question (WP 0195 00 thru WP 0201 00).
	3. Check if diagnostic code remains active. (a) Inspect and clean wiring harness connector contacts. (b) Reconnect all wiring harness connectors. (c) Turn battery disconnect and engine start switches to ON position (TM 5-3805-291-10). (d) Operate machine (TM 5-3805-291-10).	

Table 3. Powertrain Control - Continued.

(MID 081) CID FMI CODE	TEST OR INSPECTION	CORRECTIVE ACTION
1405 05 - Continued.	(e) Use messenger to check status of CID 1405 FMI 05 (TM 5-3805-291-10).	1. If CID 1405 FMI 05 is active, exit this procedure and repeat this procedure. If cause of diagnostic code is not found, replace powertrain ECM (WP 0063 00). 2. If CID 1405 FMI 05 is not active, diagnostic code does not exist at this time. Resume normal machine operation.
1405 06		

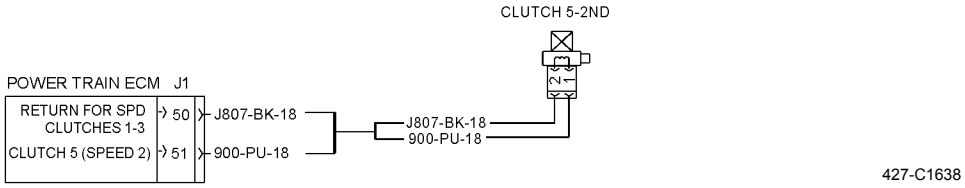

427-C1638

NOTE

The following test procedure may create other diagnostic codes. Ignore these created diagnostic codes and clear these diagnostic codes when original diagnostic code is corrected. Ensure diagnostic code CID 1405 FMI 06 is active before performing this procedure.

1. Check solenoid. (a) Turn battery disconnect and engine start switches to ON position. Do not start engine (TM 5-3805-291-10). (b) Connect MSD (WP 0005 00) and observe status of diagnostic code.	
(c) Disconnect solenoid with active diagnostic code from wiring harness (WP 0203 00).	1. If CID 1405 FMI 06 changes to CID 1405 FMI 05 when solenoid is disconnected, repeat this test to verify solenoid failure. Replace modulating value with active code (WP 0203 00). Verify new solenoid corrects problem. 2. If CID 1405 FMI 06 remains active, go to Test 2.
2. Check solenoid energizer circuit for a short to ground. (a) Turn engine start and battery disconnect switches to OFF position (TM 5-3805-291-10).	

Table 3. Powertrain Control - Continued.

(MID 081) CID FMI CODE	TEST OR INSPECTION	CORRECTIVE ACTION
1405 06 - Continued.	(b) Solenoid remains disconnected from wiring harness.	
	(c) Disconnect wiring harness connector(s) from powertrain ECM (WP 0063 00).	
	(d) At wiring harness connector, measure resistance from signal contact J1-51 (wire 900-PU) to all contacts that are used in wiring harness connectors for ECM.	1. If each resistance measurement is greater than 5,000 Ohms, go to Test 3. 2. If each resistance measurement is not greater than 5,000 Ohms, short is between J1-51 (wire 900-PU) and circuit with low resistance measurement. Replace wiring harness in question (WP 0195 00 thru WP 0201 00).
	3. Check if diagnostic code remains active.	
	(a) Inspect and clean wiring harness connector contacts.	
	(b) Reconnect all wiring harness connectors.	
	(c) Operate machine (TM 5-3805-291-10).	
	(d) Check status of CID 1405 FMI 06.	1. If CID 1405 FMI 06 is active, exit this procedure and repeat this procedure. If cause of diagnostic code is not found, replace powertrain ECM (WP 0063 00). 2. If CID 1405 FMI 06 is not active, diagnostic code does not exist at this time. Resume normal machine operation.
1405 13	**NOTE** • **Ensure you have repaired any condition that would cause other active diagnostic codes related to this solenoid. For example, CID 1405 FMI 03 or FMI 05 is not active when CID 1405 FMI 13 is active. If other diagnostic codes are active, troubleshoot those codes first, then perform this procedure.** • **Ensure diagnostic code CID 1405 FMI 13 is active before performing this procedure.**	

Table 3. Powertrain Control - Continued.

(MID 081) CID FMI CODE	TEST OR INSPECTION	CORRECTIVE ACTION
1405 13 - Continued.	Perform *Fill Time for Transmission Clutch MSD - Calibration* (WP 0014 00).	1. If CID 1405 FMI 13 is active, diagnostic code has not been corrected. Verify correct software has been flashed into powertrain ECM or correct ECM is installed on machine. Repeat calibration. If diagnostic code is still active and cause of diagnostic code is not found, replace powertrain ECM. Verify solenoid and associated circuits are correct before you replace powertrain ECM (WP 0063 00). 2. If CID 1405 FMI 13 is not active, resume normal machine operation.
1406 03		

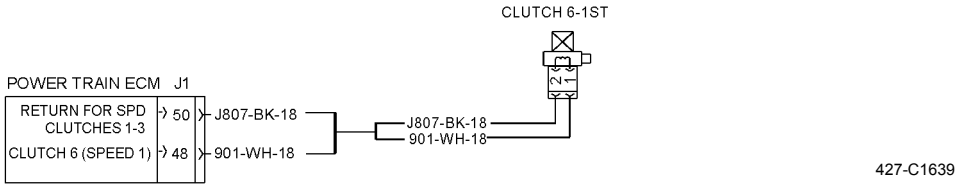

NOTE

The following test procedure may create other diagnostic codes. Ignore these created diagnostic codes and clear these diagnostic codes when original diagnostic code is corrected. Ensure diagnostic code CID 1406 FMI 03 is active before performing this procedure.

1. Check solenoid energizer circuit for a short to +battery circuit.	
(a) Turn engine start and battery disconnect switches to OFF position (TM 5-3805-291-10).	
(b) Disconnect wiring harness connectors from clutch 6-1st solenoid (WP 0203 00) and powertrain ECM (WP 0063 00).	
(c) At wiring harness connector for ECM, measure resistance from contact J1-48 (wire 901-WH) to all contacts used in wiring harness connectors for ECM.	1. If each measurement is greater than 5,000 Ohms, go to Test 2. 2. If each resistance measurement is not greater than 5,000 Ohms, short is between J1-48 (901-WH) and circuit with a low resistance measurement. Replace wiring harness in question (WP 0195 00 thru WP 0201 00).

Table 3. Powertrain Control - Continued.

(MID 081) CID FMI CODE	TEST OR INSPECTION	CORRECTIVE ACTION
1406 03 - Continued.	2. Check if diagnostic code remains active. (a) Inspect and clean wiring harness connector contacts. (b) Reconnect all wiring harness connectors. (c) Operate machine (TM 5-3805-291-10). (d) Use messenger to determine if CID 1406 FMI 03 is active (TM 5-3805-291-10).	1. If CID 1406 FMI 03 is active, exit this procedure and repeat this procedure. If the cause of the diagnostic code is not found, replace the powertrain ECM (WP 0063 00). 2. If CID 1406 FMI 03 is not active, resume normal machine operation.
1406 05		
	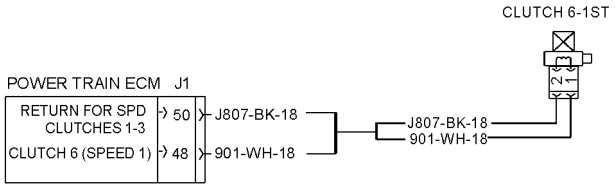 427-C1639	
	NOTE **The following test procedure may create other diagnostic codes. Ignore these created diagnostic codes and clear these diagnostic codes when original diagnostic code is corrected. Ensure diagnostic code CID 1406 FMI 05 is active before performing this procedure.**	
	1. Check solenoid. (a) Turn battery disconnect and engine start switches to ON position. Do not start engine (TM 5-3805-291-10). (b) Disconnect solenoid with active diagnostic code from wiring harness (WP 0203 00). (c) At wiring harness connector for solenoid, place a jumper wire from contact 1 (wire 901-WH) to contact 2 (wire J807-BK).	

Table 3. Powertrain Control - Continued.

(MID 081) CID FMI CODE	TEST OR INSPECTION	CORRECTIVE ACTION
1406 05 - Continued.	(d) Connect MSD (WP 0005 00) and observe status of CID 1406 FMI 05.	1. If diagnostic code remains active, go to Test 2. 2. If diagnostic is no longer active, repeat this test to verify solenoid failure. Replace modulating valve with active code (WP 0203 00). Verify new solenoid corrects problem.
	2. Check wiring harness for an open circuit.	
	(a) Turn engine start and battery disconnect switches to OFF position (TM 5-3805-291-10).	
	(b) Disconnect wiring harness connector(s) from powertrain ECM (WP 0063 00).	
	(c) Jumper wire installed in Test 1 remains in place.	
	(d) At wiring harness connector, measure resistance from signal contact J1-48 (wire 901-WH) to contact J1-50 (wire J807-BK).	1. If resistance is less than 5.0 Ohms, go to Test 3. 2. If resistance is greater than 5,000 Ohms, open circuit is in wire 901-WH or in wire J807-BK of wiring harness. Replace wiring harness in question (WP 0195 00 thru WP 0201 00).
	3. Check if diagnostic code remains active.	
	(a) Inspect and clean wiring harness connector contacts.	
	(b) Reconnect all wiring harness connectors.	
	(c) Operate machine (TM 5-3805-291-10).	
	(d) Check status of CID 1406 FMI 05.	1. If CID 1406 FMI 05 is active, exit this procedure and repeat this procedure. If cause of diagnostic code is not found, replace powertrain ECM (WP 0063 00). 2. If CID 1406 FMI 05 is not active, diagnostic code does not exist at this time. Resume normal machine operation.

Table 3. Powertrain Control - Continued.

(MID 081) CID FMI CODE	TEST OR INSPECTION	CORRECTIVE ACTION
1406 06		

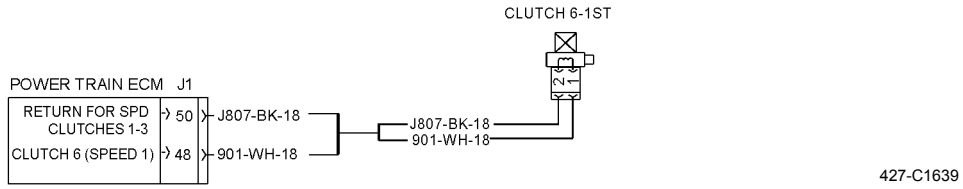

NOTE

The following test procedure may create other diagnostic codes. Ignore these diagnostic codes and clear the diagnostic codes when original diagnostic code is corrected. Ensure diagnostic code CID 1406 FMI 06 is active before performing this procedure.

1. Check solenoid. (a) Turn battery disconnect and engine start switches to ON position. Do not start engine (TM 5-3805-291-10). (b) Connect MSD (WP 0005 00) and Observe status of the diagnostic code. (c) Disconnect solenoid with active diagnostic code from wiring harness (WP 0203 00).	1. If CID 1406 FMI 06 changes to CID 1406 FMI 05 when solenoid is disconnected, repeat this test to verify solenoid failure. Replace modulating valve with active code (WP 0203 00). Verify new solenoid corrects problem. 2. If CID 1406 FMI 06 remains active, go to Test 2.
2. Check solenoid energizer circuit for a short to ground. (a) Turn engine start and battery disconnect switches to OFF position (TM 5-3805-291-10). (b) Solenoid remains disconnected from wiring harness. (c) Disconnect wiring harness connector(s) from powertrain ECM (WP 0063 00).	

Table 3. Powertrain Control - Continued.

(MID 081) CID FMI CODE	TEST OR INSPECTION	CORRECTIVE ACTION
1406 06 - Continued.	(d) At wiring harness connector, measure resistance from signal contact J1-48 (wire 901-WH) to all contacts used in wiring harness connectors for ECM.	1. If each resistance measurement is greater than 5,000 Ohms, go to Test 3. 2. If each resistance measurement is not greater than 5,000 Ohms, short is between J1-48 (wire 901-WH) and circuit with low resistance measurement. Replace wiring harness in question (WP 0195 00 thru WP 0201 00).
	3. Check if diagnostic code remains active. (a) Inspect and clean wiring harness connector contacts. (b) Reconnect all wiring harness connectors. (c) Operate machine (TM 5-3805-291-10).	
	(d) Check status of CID 1406 FMI 06.	1. If CID 1406 FMI 06 is active, exit this procedure and repeat this procedure. If cause of diagnostic code is not found, replace powertrain ECM (WP 0063 00). 2. If CID 1406 FMI 06 is not active, diagnostic code does not exist at this time. Resume normal machine operation.
1406 13	**NOTE** • **Ensure you have repaired any condition that would cause other active diagnostic codes related to this solenoid. For example, CID 1406 FMI 03 or FMI 05 is not active when CID 1406 FMI 13 is active. If other diagnostic codes are active, troubleshoot those codes first then, perform this procedure.** • **Ensure diagnostic code CID 1406 FM 13 is active before performing this procedure.**	
	Perform *Fill Time for Transmission Clutch MSD - Calibration* (WP 0014 00).	1. If CID 1406 FMI 13 is active, verify correct software has been flashed into powertrain ECM or correct ECM is installed on machine. Repeat calibration. If diagnostic code is still active and cause of diagnostic code is not found, replace powertrain ECM. Verify solenoid and associated circuits are correct before you replace powertrain ECM (WP 0063 00).

Table 3. Powertrain Control - Continued.

(MID 081) CID FMI CODE	TEST OR INSPECTION	CORRECTIVE ACTION
1406 13 - Continued.		2. If CID 1406 FMI 13 is not active, resume normal machine operation.
1521 02		

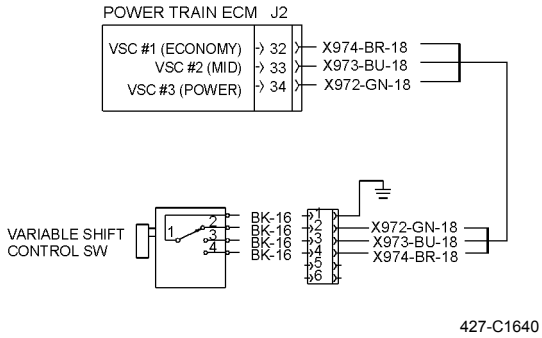

427-C1640

NOTE

- **Ensure diagnostic code CID 1521 FMI 02 is active before performing this procedure.**
- **Refer to Table 10, Status for Kickout Set Switch.**
- **The following procedure can create other faults that can be detected by powertrain ECM. Ignore these created faults and clear created faults when fault is corrected.**

1. Check for an open circuit.
   (a) Operate machine (TM 5-3805-291-10).
   (b) Connect MSD (WP 0005 00) and check status of the CID 1521 FMI 02 while activating and deactivating each position of autoshift switch. Note results

NOTE

If the code does NOT remain active during operation of the switch, this could indicate a possible open circuit (which corresponds to the switch position) in the wiring harness.

   (c) Turn battery disconnect and engine start switches to OFF position (TM 5-3805- 291-10).
   (d) Disconnect wiring harness connectors from powertrain ECM (WP 0063 00).

Table 3. Powertrain Control - Continued.

(MID 081) CID FMI CODE	TEST OR INSPECTION	CORRECTIVE ACTION
1521 02 - Continued.	(e) At wiring harness connector for powertrain ECM, check continuity to ground of open contacts and grounded contact for each position of transmission autoshift switch. Activate and deactivate each position of transmission autoshift switch.	1. If continuity checks do not agree with ground and open combinations, go to Test 2. 2. If continuity checks agree with ground and open combinations, go to Test 3.
	2. Check autoshift switch (variable shift control). (a) Disconnect wiring harness from autoshift switch (variable shift control) (WP 0055 00).	
	(b) Check continuity to ground of open contacts and grounded contact for each position of autoshift switch. Activate and deactivate each position of autoshift switch.	1. If continuity checks do not agree with ground and open combinations, replace autoshift switch (WP 0055 00). 2. If continuity checks agree with ground and open combinations, replace wiring harness in question (WP 0195 00 thru WP 0201 00).
	3. Check for a short to +battery.	
	At wiring harness connector for powertrain ECM, check continuity from each switch contact to +battery contacts.	1. If continuity exists between one source of +battery voltage, replace wiring harness in question (WP 0195 00 thru WP 0201 00). 2. If continuity does not exist between one source of +battery voltage and the switch circuit, exit this procedure and repeat tests for diagnostic code. If cause is not found, replace powertrain ECM (WP 0063 00).

Table 3. Powertrain Control - Continued.

(MID 081) CID FMI CODE	TEST OR INSPECTION	CORRECTIVE ACTION
1521 03	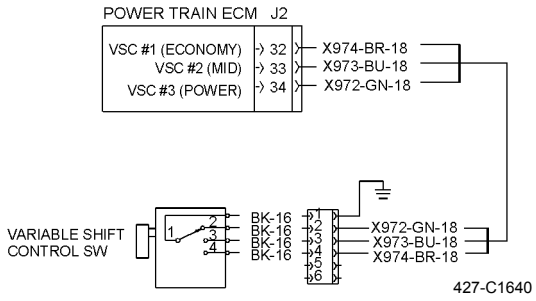	
	NOTE • **The following procedure can create other faults that can be detected by the powertrain ECM. Ignore these created faults and clear created faults when fault is corrected. Ensure diagnostic code CID 1521 FMI 03 is active before performing this procedure.** • **If code does NOT remain active during operation of switch, this could indicate a possible open circuit (which corresponds to switch position) in harness.**	
	1. Check for an open circuit. (a) Operate machine (TM 5-3805-291-10). (b) Connect MSD (WP 0005 00) and check status of CID 1521 FMI 03 while activating and deactivating each position of autoshift switch. Note results. (c) Turn battery disconnect and engine start switches to OFF position (TM 5-3805- 291-10). (d) Disconnect wiring harness connectors from powertrain ECM (WP 0063 00). (e) At wiring harness connector for powertrain ECM, check continuity to ground of open contacts and grounded contact for each position of transmission autoshift switch. Activate and deactivate each position of transmission autoshift switch.	1. If continuity checks do not agree with ground and open combinations, replace the autoshift switch (WP 0055 00). 2. If continuity checks agree with ground and open combinations, go to Test 2.

Table 3. Powertrain Control - Continued.

(MID 081) CID FMI CODE	TEST OR INSPECTION	CORRECTIVE ACTION
1521 03 - Continued.	2. Check switch. (a) Battery disconnect wiring harness from autoshift switch (WP 0055 00). (b) Check continuity to ground of open contacts and grounded contact for each position of autoshift. Activate and deactivate each position of autoshift switch.	1. If continuity exists between one of the sources of +battery voltage, replace wiring harness in question (WP 0195 00 thru WP 0201 00). 2. If continuity does not exist between one of sources of +battery voltage and switch circuit, exit this procedure and perform diagnostic code. If cause is not found, replace powertrain ECM (WP 0063 00).
2129 03		

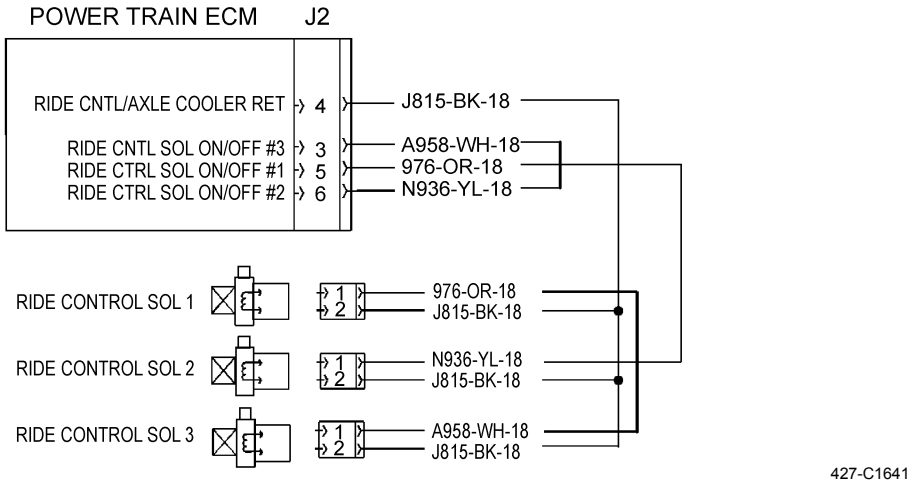

427-C1641

NOTE

The following procedure may create other diagnostic codes. Ignore these created diagnostic codes and clear these diagnostic codes when the original diagnostic code is corrected. Ensure diagnostic code CID 2129 FMI 03 is active before performing this procedure.

1. Check solenoid.
   (a) Turn battery disconnect and engine start switches to ON position. Do not start engine (TM 5-3805-291-10).
   (b) Disconnect ride control solenoid valve #1 from wiring harness (WP 0218 00).

Table 3. Powertrain Control - Continued.

(MID 081) CID FMI CODE	TEST OR INSPECTION	CORRECTIVE ACTION
2129 03 - Continued.	(c) At wiring harness connector for solenoid, place a jumper wire from contact 2 to contact 1.	
	(d) Connect MSD (WP 0005 00) and observe status of CID 2129 FMI 03.	1. If diagnostic code remains active, go to Test 2. 2. If diagnostic code is no longer active, solenoid has failed. Repeat this test to verify solenoid failure. Replace main control valve (WP 0218 00). Verify new solenoid corrects problem.
	2. Check solenoid energizer circuit for a short to +battery circuit.	
	(a) Turn engine start and battery disconnect switches to OFF position (TM 5-3805-291-10).	
	(b) Ride control solenoid valve #1 remains disconnected from wiring harness (WP 0218 00).	
	(c) Disconnect wiring harness connector(s) from powertrain ECM (WP 0063 00).	
	(d) At wiring harness connector for ECM, measure resistance from contact J2-5 (wire 976-OR) to all contacts used in wiring harness connectors for the ECM.	1. If each measurement is greater than 5,000 Ohms, go to Test 3. 2. If each resistance measurement is not greater than 5,000 Ohms, short is between J2-5 and circuit with low resistance measurement. Replace wiring harness in question (WP 0195 00 thru WP 0201 00).
	3. Check if diagnostic code remains active.	
	(a) Inspect and clean wiring harness connector contacts.	
	(b) Reconnect all harness connectors.	
	(c) Operate machine (TM 5-3805-291-10).	

Table 3. Powertrain Control - Continued.

(MID 081) CID FMI CODE	TEST OR INSPECTION	CORRECTIVE ACTION
2129 03 - Continued.	(d) Determine if CID 2129 FMI 03 is active.	1. If CID 2129 FMI 03 is active, exit this procedure and repeat this procedure. If the cause of diagnostic code is not found, replace powertrain ECM (WP 0063 00). 2. If CID 2129 FMI 03 is not active, problem does not exist at this time. Resume normal machine operation.
2129 05		

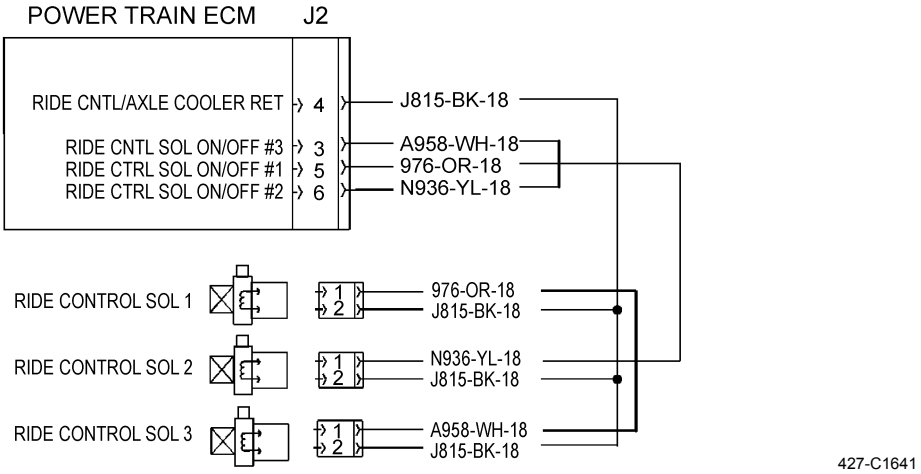

NOTE

The following test procedure may create other diagnostic codes. Ignore these created diagnostic codes and clear these diagnostic codes when original diagnostic code is corrected. Ensure diagnostic code CID 2129 FMI 05 is active before performing this procedure.

1. Check solenoid.
   (a) Turn battery disconnect and engine start switches to ON position. Do not start engine (TM 5-3805-291-10).
   (b) Disconnect ride control solenoid valve #1 from wiring harness (WP 0218 00).
   (c) At wiring harness connector for solenoid, place a jumper wire from contact 2 to contact 1.

Table 3. Powertrain Control - Continued.

(MID 081) CID FMI CODE	TEST OR INSPECTION	CORRECTIVE ACTION
2129 05 - Continued.	(d) Connect MSD (WP 0005 00) and observe status of CID 2129 FMI 05.	1. If diagnostic code remains active, go to Test 2. 2. If diagnostic is no longer active, solenoid has failed. Repeat this test to verify solenoid failure. Replace main control valve (WP 0218 00). Verify new solenoid corrects problem.
	2. Check wiring harness for an open circuit. (a) Turn engine start and battery disconnect switches to OFF position (TM 5-3805-291-10). (b) Ride control solenoid valve #1 remains disconnected from wiring harness. (c) Disconnect wiring harness connector(s) from powertrain ECM (WP 0063 00). (d) At wiring harness connector for ride control solenoid valve #1, place a jumper wire from contact 2 to contact 1.	
	(e) At wiring harness connector for ECM, measure resistance from J2-5 (wire 976-OR) to contact J2-4 (wire J815-BK).	1. If resistance is less than 5.0 Ohms, go to Test 3. 2. If resistance is greater than 5,000 Ohms, open circuit is in wire 976-OR or in J815-BK. Replace wiring harness in question (WP 0195 00 thru WP 0201 00).
	3. Check if diagnostic code remains active. (a) Inspect and clean wiring harness connector contacts. (b) Reconnect all wiring harness connectors. (c) Turn battery disconnect and engine start switches to ON position (TM 5-3805-291-10). (d) Operate machine (TM 5-3805-291-10).	

Table 3. Powertrain Control - Continued.

(MID 081) CID FMI CODE	TEST OR INSPECTION	CORRECTIVE ACTION
2129 05 - Continued.	(e) Determine if CID 2129 FMI 05 is active.	1. If CID 2129 FMI 05 is active, exit this procedure and repeat this procedure. If cause of diagnostic code is not found, replace powertrain ECM (WP 0063 00). 2. If CID 2129 FMI 05 is not active, problem does not exist at this time. Resume normal machine operation.
2129 06		

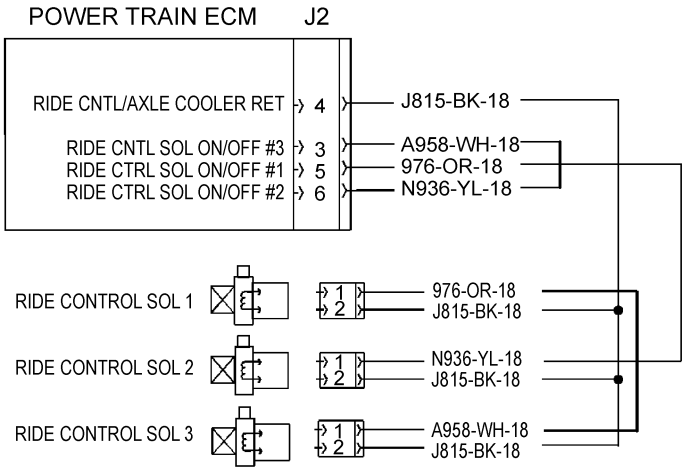

427-C1641

NOTE

The following test procedure may create other diagnostic codes. Ignore these created diagnostic codes and clear these diagnostic codes when original diagnostic code is corrected. Ensure diagnostic code CID 2129 FMI 06 is active before performing this procedure.

1. Check solenoid.
   (a) Turn battery disconnect and engine start switches to ON position. Do not start engine (TM 5-3805-291-10).
   (b) Disconnect ride control solenoid valve #1 from wiring harness (WP 0218 00).
   (c) At wiring harness connector for solenoid, place a jumper wire from contact 2 to contact 1.

Table 3. Powertrain Control - Continued.

(MID 081) CID FMI CODE	TEST OR INSPECTION	CORRECTIVE ACTION
2129 06 - Continued.	(d) Connect MSD (WP 0005 00) and observe status of CID 2129 FMI 06.	1. If diagnostic code remains active, go to Test 2. 2. If diagnostic code is not active, solenoid has failed. Repeat this test to verify solenoid failure. Replace main control valve (WP 0218 00). Verify new solenoid corrects problem.
	2. Check solenoid energizer circuit for a short to ground. (a) Turn engine start and battery disconnect switches to OFF position (TM 5-3805-291-10). (b) Ride control solenoid valve #1 remains disconnected from wiring harness (WP 0218 00). (c) Disconnect wiring harness connector(s) from powertrain ECM (WP 0063 00).	
	(d) At wiring harness connector for ECM, measure resistance from J2-5 (wire 976-OR) to all contacts used in wiring harness connectors for the machine.	1. If each resistance measurement is greater than 5,000 Ohms, go to Test 3. 2. If each resistance measurement is not greater than 5,000 Ohms, short is between signal circuit for ride control solenoid valve #1 and circuit with the low resistance measurement. Replace wiring harness in question (WP 0195 00 thru WP 0201 00).
	3. Check if diagnostic code remains active. (a) Inspect and clean harness connector contacts. (b) Reconnect all wiring harness connectors. (c) Operate machine (TM 5-3805-291-10).	

Table 3. Powertrain Control - Continued.

(MID 081) CID FMI CODE	TEST OR INSPECTION	CORRECTIVE ACTION
2129 06 - Continued.	(d) Check status of CID 2129 FMI 06.	1. If CID 2129 FMI 06 is active, exit this procedure and repeat this procedure. If cause of diagnostic code is not found, replace the powertrain ECM (WP 0063 00). 2. If CID 2129 FMI 06 is not active, diagnostic code does not exist at this time. Resume normal machine operation.
2274 02		

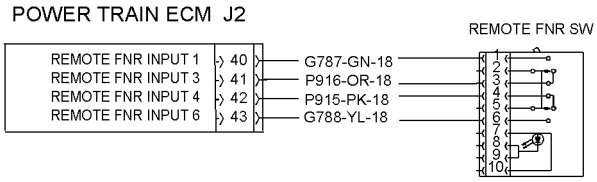

427-C1642

NOTE

- **Status for transmission direction switch #2 contains wire numbers and connector contacts. Use this information to troubleshoot failed circuit (please see table at the end of this work package).**
- **The following test procedure may create other diagnostic codes. Ignore these diagnostic codes and clear diagnostic codes when the original diagnostic code is corrected. Ensure diagnostic code CID 2274 FMI 02 is active before performing this procedure.**

1. Check for open circuit. (a) Turn engine start and battery disconnect switches to OFF position (TM 5-3805-291-10). (b) Disconnect harness from powertrain ECM (WP 0063 00). (c) Activate switch. At harness connector for the ECM, check resistance to ground of normally closed contacts and normally open contacts.	1. If resistance check does not agree with *Status for the Transmission Direction Switch #2* (Table 13) in this work package, go to Test 2. 2. If resistance agrees with values in the *Status for the Transmission Direction Switch #2* (Table 13) in this work package, go to Test 3.

Table 3. Powertrain Control - Continued.

(MID 081) CID FMI CODE	TEST OR INSPECTION	CORRECTIVE ACTION
2274 02 - Continued.	2. Check switch. (a) Engine start and battery disconnect switches remain in OFF position (TM 5-3805-291-10). (b) Wiring harness remains disconnected from ECM. (c) Disconnect wiring harness from FNR switch (WP 0219 00). (d) At wiring harness for switch, check resistance to ground of normally closed contacts and normally open contacts. Activate switch when this check is being performed.	1. If resistance check does not agree with the *Status for the Transmission Direction Switch #2* (Table 13) in this work package, replace joystick (WP 0219 00). 2. If resistance agrees with values in the *Status for the Transmission Direction Switch #2* (Table 13) in this work package, go to Test 3.
	3. Check for short. (a) Wiring harness remains disconnected from switch and ECM. (b) Engine start and battery disconnect switches remain in OFF position (TM 5-3805-291-10). (c) Check resistance from each switch contact at wiring harness connector for ECM to all other connector contacts in J1 and J2.	1. If resistance is less than 5 Ohms, replace wiring harness in question (WP 0195 00 thru WP 0201 00). 2. If resistance is greater than 5 Ohms, exit this procedure and repeat this troubleshooting procedure. If cause of diagnostic code is not found, replace powertrain ECM (WP 0063 00).

Table 3. Powertrain Control - Continued.

(MID 081) CID FMI CODE	TEST OR INSPECTION	CORRECTIVE ACTION
2347 03		

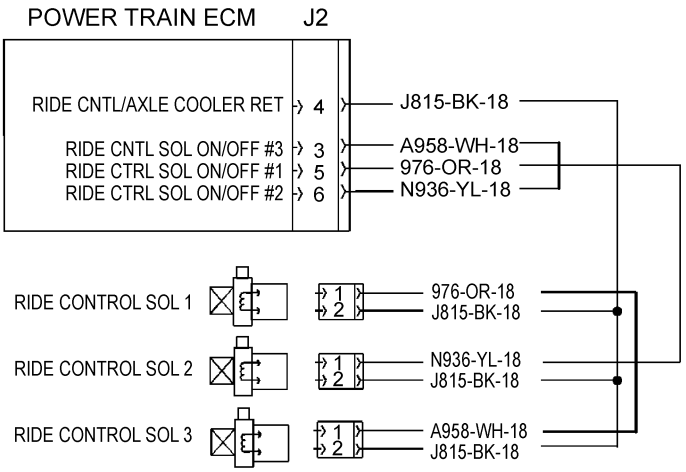

NOTE

The following test procedure may create other diagnostic codes. Ignore these created diagnostic codes and clear these diagnostic codes when the original diagnostic code is corrected. Ensure diagnostic code CID 2347 FMI 03 is active before performing this procedure.

1. Check solenoid. (a) Turn battery disconnect and engine start switches to ON position. Do not start engine (TM 5-3805-291-10). (b) Disconnect ride control solenoid valve #2 from the wiring harness (WP 0218 00). (c) At wiring harness connector for solenoid, place a jumper wire from contact 2 to contact 1. (d) Connect MSD (WP 0005 00) observe status of CID 2347 FMI 03.	1. If diagnostic code remains active, go to Test 2. 2. If diagnostic code is no longer active, solenoid has failed. Repeat this test to verify solenoid failure. Replace main control valve (WP 0218 00). Verify new solenoid corrects problem.
2. Check solenoid energizer circuit for a short to +battery circuit.	

Table 3. Powertrain Control - Continued.

(MID 081) CID FMI CODE	TEST OR INSPECTION	CORRECTIVE ACTION
2347 03 - Continued.	(a) Turn engine start and battery disconnect switches to OFF position (TM 5-3805-291-10).	
	(b) Ride control solenoid valve #2 remains disconnected from wiring harness.	
	(c) Disconnect wiring harness connector(s) from powertrain ECM (WP 0063 00).	
	(d) At wiring harness connector for ECM, measure resistance from contact J2-6 (wire N936-YL) to all contacts used in wiring harness connectors for ECM.	1. If each resistance measurement is greater than 5,000 Ohms, go to Test 3. 2. If each resistance measurement is not greater than 5,000 Ohms, short is between J2-6 and circuit with low resistance measurement. Replace wiring harness in question (WP 0195 00 thru WP 0201 00).
	3. Check if diagnostic code remains active.	
	(a) Inspect and clean wiring harness connector contacts.	
	(b) Reconnect all wiring harness connectors.	
	(c) Operate machine (TM 5-3805-291-10).	
	(d) Determine if CID 2347 FMI 03 is active.	1. IF CID 2347 FMI 03 is active, exit this procedure and repeat this procedure. If the cause of diagnostic code is not found, replace powertrain ECM (WP 0063 00). 2. If CID 2347 FMI 03 is not active, problem does not exist at this time. Resume normal machine operation.

Table 3. Powertrain Control - Continued.

(MID 081) CID FMI CODE	TEST OR INSPECTION	CORRECTIVE ACTION
2347 05		

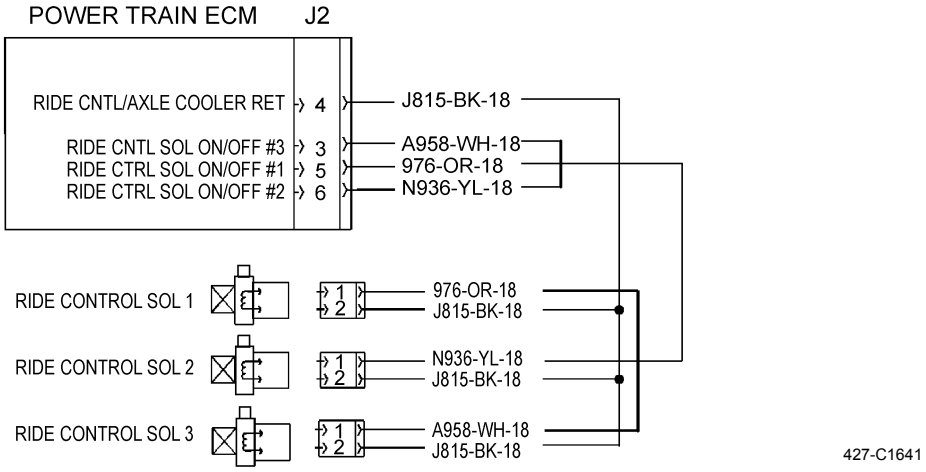

NOTE

The following test procedure may create other diagnostic codes. Ignore these created diagnostic codes and clear these diagnostic codes when original diagnostic code is corrected. Ensure diagnostic code CID 2347 FMI 05 is active before performing this procedure.

1. Check solenoid. (a) Turn battery disconnect and engine start switches to ON position. Do not start engine (TM 5-3805-291-10). (b) Disconnect ride control solenoid valve #2 from wiring harness (WP 0218 00). (c) At wiring harness connector for solenoid, place a jumper wire from contact 2 to contact 1. (d) Connect MSD (WP 0005 00) and observe status of CID 2347 FMI 05.	1. If diagnostic code remains active, go to Test 2. 2. If diagnostic code is not active, solenoid has failed. Repeat this test to verify solenoid failure. Replace main control valve (WP 0218 00). Verify that new solenoid corrects problem.
2. Check wiring harness for an open circuit. (a) Turn engine start and battery disconnect switches to OFF position (TM 5-3805-291-10).	

Table 3. Powertrain Control - Continued.

(MID 081) CID FMI CODE	TEST OR INSPECTION	CORRECTIVE ACTION
2347 05 - Continued.	(b) Ride control solenoid valve #2 remains disconnected from wiring harness. (c) Disconnect wiring harness connector(s) from powertrain ECM (WP 0063 00). (d) At wiring harness connector for ride control solenoid valve #2, place a jumper wire from contact 2 to contact 1. (e) At wiring harness connector for ECM, measure resistance from J2-6 (wire N936-YL) to contact J2-4 (wire J815-BK).	1. If resistance is less than 5.0 Ohms, go to Test 3. 2. If resistance is greater than 5,000 Ohms, open circuit is in wire N939-GN or in J815-BK. Replace wiring harness in question (WP 0195 00 thru WP 0201 00).
	3. Check if diagnostic code remains active. (a) Inspect and clean wiring harness connector contacts. (b) Reconnect all wiring harness connectors. (c) Operate machine (TM 5-3805-291-10). (d) Determine if CID 2347 FMI 05 is active.	1. If CID 2347 FMI 05 is active, problem has not been corrected. Exit this procedure and repeat this procedure. If cause of diagnostic code is not found, replace powertrain ECM (WP 0063 00). 2. If CID 2347 FMI 05 is not active, problem does not exist at this time. Resume normal machine operation.

Table 3. Powertrain Control - Continued.

(MID 081) CID FMI CODE	TEST OR INSPECTION	CORRECTIVE ACTION
2347 06		

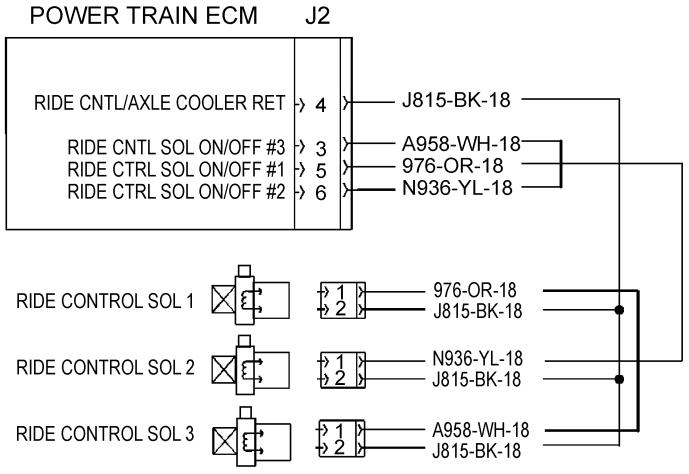

427-C1641

NOTE

The following test procedure may create other diagnostic codes. Ignore these created diagnostic codes and clear these diagnostic codes when original diagnostic code is corrected. Ensure diagnostic code CID 2347 FMI 06 is active before performing this procedure.

1. Check solenoid.
   (a) Turn battery disconnect and engine start switches to ON position. Do not start engine (TM 5-3805-291-10).
   (b) Disconnect ride control solenoid valve #2 from wiring harness.
   (c) At wiring harness connector for solenoid, place a jumper wire from contact 2 to contact 1.
   (d) Connect MSD (WP 0005 00) and observe status of CID 2347 FMI 06.

   1. If diagnostic code remains active, go to Test 2.
   2. If diagnostic code is not active, solenoid has failed. Repeat this test to verify solenoid failure. Replace main control valve (WP 0218 00). Verify new solenoid corrects problem.

2. Check solenoid energizer circuit for a short to ground.

Table 3. Powertrain Control - Continued.

(MID 081) CID FMI CODE	TEST OR INSPECTION	CORRECTIVE ACTION
2347 06 - Continued.	(a) Turn engine start and battery disconnect switches to OFF position (TM 5-3805-291-10).	
	(b) Ride control solenoid valve #2 remains disconnected from wiring harness.	
	(c) Disconnect wiring harness connector(s) from powertrain ECM (WP 0063 00).	
	(d) At wiring harness connector for ECM, measure resistance from J2-6 (wire N936-YL) to all contacts used in wiring harness connectors for ECM.	1. If each resistance is greater than 5,000 Ohms, go to Test 3. 2. If each resistance measurement is not greater than 5,000 Ohms, short is between signal circuit for ride control solenoid valve #2 and circuit with low resistance measurement. Replace wiring harness in question (WP 0195 00 thru WP 0201 00).
	3. Check if diagnostic code remains active.	
	(a) Inspect and clean wiring harness connector contacts.	
	(b) Reconnect all wiring harness connectors.	
	(c) Operate machine (TM 5-3805-291-10).	
	(d) Check status of CID 2347 FMI 06.	1. If CID 2347 FMI 06 is active, exit this procedure and repeat this procedure. If cause of diagnostic code is not found, replace powertrain ECM (WP 0063 00). 2. If CID 2347 FMI 06 is not active, diagnostic code does not exist at this time. Resume normal machine operation.

Table 3. Powertrain Control - Continued.

(MID 081) CID FMI CODE	TEST OR INSPECTION	CORRECTIVE ACTION
2684 03		

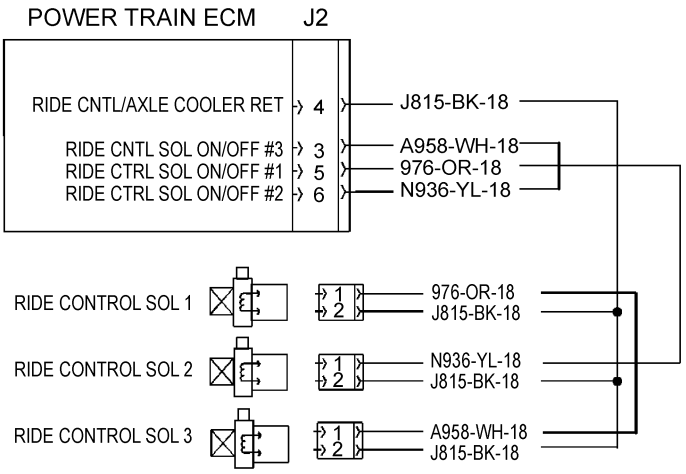

NOTE

The following test procedure may create other diagnostic codes. Ignore these created diagnostic codes and clear these diagnostic codes when original diagnostic code is corrected. Ensure diagnostic code CID 2684 FMI 03 is active before performing this procedure.

1. Check solenoid. (a) Turn battery disconnect and engine start switches to ON position. Do not start engine (TM 5-3805-291-10). (b) Disconnect ride control solenoid valve #3 from wiring harness (WP 0218 00). (c) At wiring harness connector for solenoid, place a jumper wire from contact 2 to contact 1. (d) Connect MSD (WP 0005 00) and observe status of CID 2684 FMI 03.	1. If diagnostic code remains active, go to Test 2. 2. If diagnostic code is no longer active, solenoid has failed. Repeat this test to verify solenoid failure. Replace main control valve (WP 0218 00). Verify that new solenoid corrects problem.

Table 3. Powertrain Control - Continued.

(MID 081) CID FMI CODE	TEST OR INSPECTION	CORRECTIVE ACTION
2684 03 - Continued.	2. Check solenoid energizer circuit for a short to +battery circuit. (a) Turn engine start and battery disconnect switches to OFF position (TM 5-3805-291-10). (b) Ride control solenoid valve #3 remains disconnected from wiring harness. (c) Disconnect wiring harness connector(s) from powertrain ECM (WP 0063 00). (d) At wiring harness connector for ECM, measure resistance from contact J2-3 (wire A958-WH) to all contacts used in the wiring harness connectors for ECM.	1. If each resistance measurement is greater than 5,000 Ohms, go to Test 3. 2. If each resistance measurement is not greater than 5,000 Ohms, short is between J2-3 and the circuit with low resistance measurement. Replace wiring harness in question (WP 0195 00 thru WP 0201 00).
	3. Check if diagnostic code remains active. (a) Inspect and clean wiring harness connector contacts. (b) Reconnect all wiring harness connectors. (c) Operate machine (TM 5-3805-291-10). (d) Determine if CID 2684 FMI 03 is active.	1. If CID 2684 FMI 03 is active, exit this procedure and repeat this procedure. If cause of diagnostic code is not found, replace powertrain ECM (WP 0063 00). 2. If CID 2684 FMI 03 is not active, problem does not exist at this time. Resume normal machine operation.

Table 3. Powertrain Control - Continued.

(MID 081) CID FMI CODE	TEST OR INSPECTION	CORRECTIVE ACTION
2684 05		

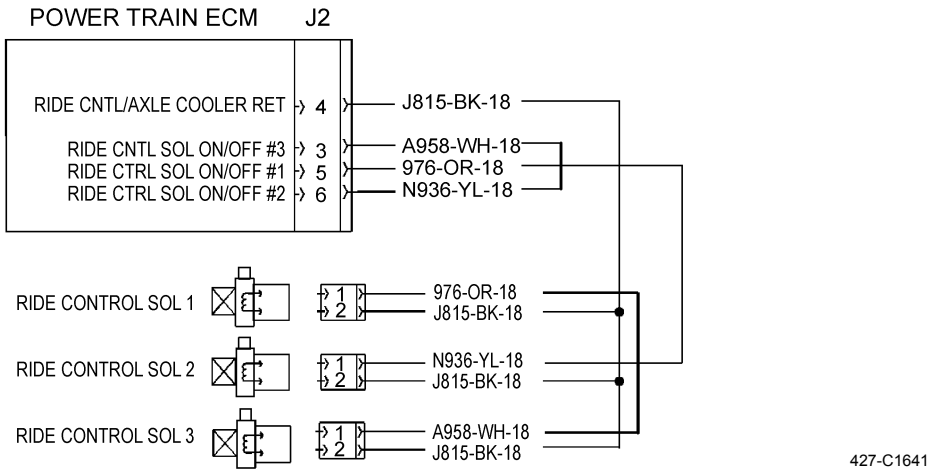

NOTE

The following test procedure may create other diagnostic codes. Ignore these created diagnostic codes and clear these diagnostic codes when the original diagnostic code is corrected. Ensure diagnostic code CID 2684 FMI 05 is active before performing this procedure.

1. Check solenoid. (a) Turn battery disconnect and engine start switches to ON position. Do not start engine (TM 5-3805-291-10). (b) Disconnect ride control solenoid valve #3 from wiring harness (WP 0218 00). (c) At wiring harness connector for solenoid, place a jumper wire from contact 2 to contact 1. (d) Connect MSD (WP 0005 00) and observe status of CID 2684 FMI 05.	1. If diagnostic code remains active, go Test 2. 2. If diagnostic code is no longer active, solenoid has failed. Repeat this test to verify solenoid failure. Replace main control valve (WP 0218 00). Verify new solenoid corrects problem.
2. Check wiring harness for an open circuit. (a) Turn engine start and battery disconnect switches to OFF position (TM 5-3805-291-10).	

Table 3. Powertrain Control - Continued.

(MID 081) CID FMI CODE	TEST OR INSPECTION	CORRECTIVE ACTION
2684 05 - Continued.	(b) Ride control solenoid valve #3 remains disconnected from wiring harness. (c) Disconnect wiring harness connector(s) from powertrain ECM (WP 0063 00). (d) At wiring harness connector for ride control solenoid valve #3, place a jumper wire from contact 2 to contact 1. (e) At wiring harness connector for ECM, measure resistance from J2-3 (wire A958-WH) to contact J2-4 (wire J815-BK).	1. If resistance is less than 5.0 Ohms, go to Test 3. 2. If resistance is greater than 5,000 Ohms, open circuit is in wire A958-WH or in J815-BK. Replace wiring harness in question (WP 0195 00 thru WP 0201 00).
	3. Check if diagnostic code remains active. (a) Inspect and clean wiring harness connector contacts. (b) Reconnect all wiring harness connectors. (c) Operate machine (TM 5-3805-291-10). (d) Determine if CID 2684 FMI 05 is active.	1. If CID 2684 FMI 05 is active, exit this procedure and repeat this procedure. If the cause of diagnostic code is not found, replace powertrain ECM (WP 0063 00). 2. If CID 2684 FMI 05 is not active, problem does not exist at this time. Resume normal machine operation.

Table 3. Powertrain Control - Continued.

(MID 081) CID FMI CODE	TEST OR INSPECTION	CORRECTIVE ACTION
2684 06		

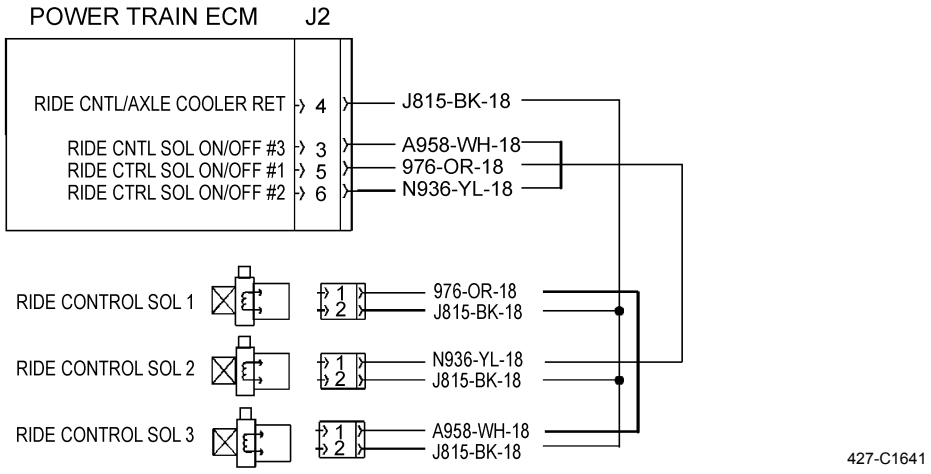

NOTE

The following test procedure may create other diagnostic codes. Ignore these created diagnostic codes and clear these diagnostic codes when original diagnostic code is corrected. Ensure diagnostic code CID 2684 FMI 06 is active before performing this procedure.

1. Check solenoid. (a) Turn battery disconnect and engine start switches to ON position. Do not start engine (TM 5-3805-291-10). (b) Disconnect ride control solenoid valve #3 from wiring harness (WP 0218 00). (c) At wiring harness connector for solenoid, place a jumper wire from contact 2 to contact 1. (d) Connect MSD (WP 0005 00) and observe status of CID 2684 FMI 06.	1. If diagnostic code remains active, go to Test 2. 2. If diagnostic code is no longer active, solenoid has failed. Repeat this test to verify solenoid failure. Replace main control valve (WP 0218 00). Verify new solenoid corrects problem.

Table 3. Powertrain Control - Continued.

(MID 081) CID FMI CODE	TEST OR INSPECTION	CORRECTIVE ACTION
2684 06 - Continued.	2. Check solenoid energizer circuit for a short to ground. (a) Turn engine start and battery disconnect switches to OFF position (TM 5-3805-291-10). (b) Ride control solenoid valve #3 remains disconnected from wiring harness. (c) Disconnect wiring harness connector(s) from powertrain ECM (WP 0063 00). (d) At wiring harness connector for ECM, measure resistance from contact J2-3 (wire A958-WH) to all contacts used in wiring harness connectors for ECM.	1. If each resistance measurement is greater than 5,000 Ohms, go to Test 3. 2. If each resistance measurement is not greater than 5,000 Ohms, short is between signal circuit for ride control solenoid valve #3 and circuit with low resistance measurement. Replace wiring harness in question (WP 0195 00 thru WP 0201 00).
	3. Check if diagnostic code remains active. (a) Inspect and clean wiring harness connector contacts. (b) Reconnect all harness connectors. (c) Operate machine (TM 5-3805-291-10). (d) Check status of CID 2684 FMI 06.	1. If CID 2684 FMI 06 is active, exit this procedure and repeat this procedure. If cause of diagnostic code is not found, replace powertrain ECM (WP 0063 00). 2. If CID 2684 FMI 06 is not active, problem does not exist at this time. Resume normal machine operation.

Table 4. Implement Control.

(MID 082) MALFUNCTION	TEST OR INSPECTION	CORRECTIVE ACTION
0041 03	1. Check for correct supply voltage at implement ECM. (a) Turn battery disconnect and engine start switches to ON position (TM 5-3805-291-10).	
	(b) Check voltage at connector of implement ECM from contact J1-44 (sensor supply) to contact J1-45 (ground). Do not disconnect wiring harness from implement ECM (WP 0060 00).	1. If voltage is 8.0 $\pm$ 0.5 DCV, implement ECM has failed. Exit and repeat this procedure. Recheck if diagnostic code is active. If cause of diagnostic code is not found, replace implement ECM (WP 0060 00). 2. If voltage is greater than 8.0 $\pm$ 0.5 DCV, sensor supply voltage is not correct. Go to Test 2.
	2. Check wiring harness for short to +battery circuit. (a) Battery disconnect and engine start switches remain in ON position (TM 5-3805-291-10).	
	(b) Disconnect wiring harness from implement ECM (WP 0060 00).	
	(c) At wiring harness connector for implement ECM, measure voltage from connector contact J1-44 (sensor supply) to frame ground.	1. If voltage is 0.0 $\pm$ 0.5 DCV, implement ECM has failed. Repeat this procedure. Also, recheck if diagnostic code is active. If cause of diagnostic code is not found, replace implement ECM (WP 0060 00). 2. If voltage is not 0.0 $\pm$ 0.5 DCV, wiring harness has failed. Replace wiring harness in question (WP 0195 00 thru WP 0201 00).

Table 4. Implement Control - Continued.

(MID 082) MALFUNCTION	TEST OR INSPECTION	CORRECTIVE ACTION
0041 04	1. Check supply voltage at implement ECM. (a) Turn battery disconnect and engine start switches to ON position (TM 5-3805-291-10). (b) Check voltage at connector of implement ECM from contact J1-44 (sensor supply) to contact J1-45 (ground). Do not disconnect wiring harness from implement ECM (WP 0060 00).	1. If voltage is 8.0 ± 0.5 DCV, sensor supply voltage is correct. If diagnostic code is still present, implement ECM has failed. It is unlikely that implement ECM has failed. Repeat this procedure. Also, recheck if diagnostic code is active. If cause of diagnostic code is not found, replace implement ECM (WP 0060 00). 2. If voltage is NOT 8.0 ± 0.5 DCV, sensor supply voltage is not correct. Go to Test 2.
	2. Check for a short to ground. (a) Turn engine start and battery disconnect switches to OFF position (TM 5-3805-291-10). (b) Disconnect wiring harness from implement ECM (WP 0060 00). (c) At wiring harness connector for implement ECM, measure resistance between frame ground and contact J1-44 of sensor supply circuit.	1. If resistance is greater than 5,000 Ohms, wiring harness circuit resistance is correct and implement ECM has failed. Exit this procedure and repeat this procedure. Also, recheck if diagnostic code is active. If cause of diagnostic code is not found, replace implement ECM (WP 0060 00). 2. If resistance is less than 5,000 Ohms, wiring harness or a sensor has failed. Go to Test 3.
	3. Disconnect sensors. (a) Engine start and battery disconnect switches remain in OFF position (TM 5-3805-291-10). (b) One at a time, disconnect any sensor that uses sensor supply voltage from wiring harness (WP 0237 00).	

Table 4. Implement Control - Continued.

(MID 082) MALFUNCTION	TEST OR INSPECTION	CORRECTIVE ACTION
0041 04 - Continued.	(c) After disconnecting sensor(s), check resistance from frame ground to contact J1-44 (sensor supply) of wiring harness connector for implement ECM.	1. If resistance is greater than 5,000 Ohms, wiring harness circuit resistance is correct. Sensor that was just disconnected has failed. Replace sensor. Refer to appropriate work package 2. If resistance is less than 5,000 Ohms after all sensors have been disconnected from wiring harness, wiring harness is shorted to ground. Replace wiring harness in question (WP 0195 00 thru WP 0201 00).
0168 00	**NOTE** **Ensure CID 0168 FMI 00 is active and diagnostic code indicator is active.**	
	1. Check charging system. (a) Turn engine start switch to ON position (TM 5-3805-291-10). (b) Connect MSD (WP 0005 00) and ensure CID 0168 FMI 00 is active.	
	(c) Ensure diagnostic code indicator is active.	1. If diagnostic code indicator is active, go to Test 3. 2. If diagnostic code indicator is not active, go to Test 2.
	2. Check charging system. (a) Start engine (TM 5-3805-291-10). (b) Ensure CID 0168 FMI 00 is active.	
	(c) Observe status of diagnostic code indicator.	1. If diagnostic code indicator is active, system is charging at an excessive voltage. Check charging system (WP 0008 00). 2. If diagnostic code indicator is not active, there is no problem at this time.

Table 4. Implement Control - Continued.

(MID 082) MALFUNCTION	TEST OR INSPECTION	CORRECTIVE ACTION
0168 00 - Continued.	3. Check battery. (a) Stop engine (TM 5-3805-291-10). (b) At battery, measure voltage across battery posts.	1. If voltage is less than 24.0 VDC, implement ECM must be incorrectly recording this problem. Repeat previous tests. If cause of problem is not found, replace implement ECM (WP 0060 00). 2. If voltage is greater than 24.0 VDC, charging system is charging at excessive voltage. Check charging system (WP 0008 00).
0168 01	**NOTE** **Ensure CID 0168 FMI 01 is active and diagnostic code indicator is active.**	
	1. Check battery voltage. (a) Start engine (TM 5-3805-291-10). (b) Run engine at high idle for several minutes. (c) Measure battery voltage at battery posts.	1. If voltage is greater than 18.0 DCV, go to Test 2. 2. If voltage is less than 18.0 DCV, check charging system (WP 0008 00).
	2. Check system voltage at implement ECM. (a) Run engine at high idle. (b) Locate connector for implement ECM (WP 0060 00). (c) Using multimeter, measure system voltage between J1-31 (wire 121-RD) and J1-13 (wire 210-BK). (d) Measure voltage between J1-39 (wire 121-RD) and J1-23 (wire 210-BK). (e) Measure system voltage between J1-47 (wire 121-RD) and J1-57 (wire 210-BK).	1. If voltage is less than 18.0 DCV, replace wiring harness in question (WP 0195 00 thru WP 0201 00). 2. If voltage is greater than 18.0 DCV, ensure CID 0168 FMI 01 is active. Disconnect wiring harness connector from implement ECM and inspect power and ground contacts for corrosion or debris. Reconnect wiring harness connector to implement ECM. If diagnostic code is active, replace implement ECM (WP 0060 00).

Table 4. Implement Control - Continued.

(MID 082) MALFUNCTION	TEST OR INSPECTION	CORRECTIVE ACTION
0268 02	System Configuration. Connect MSD (WP 0005 00) and verify configurable parameters for implement ECM are correct. If necessary, reconfigure ECM in question (WP 0056 00, WP 0057 00, WP 0060 00, and WP 0063 00).	
	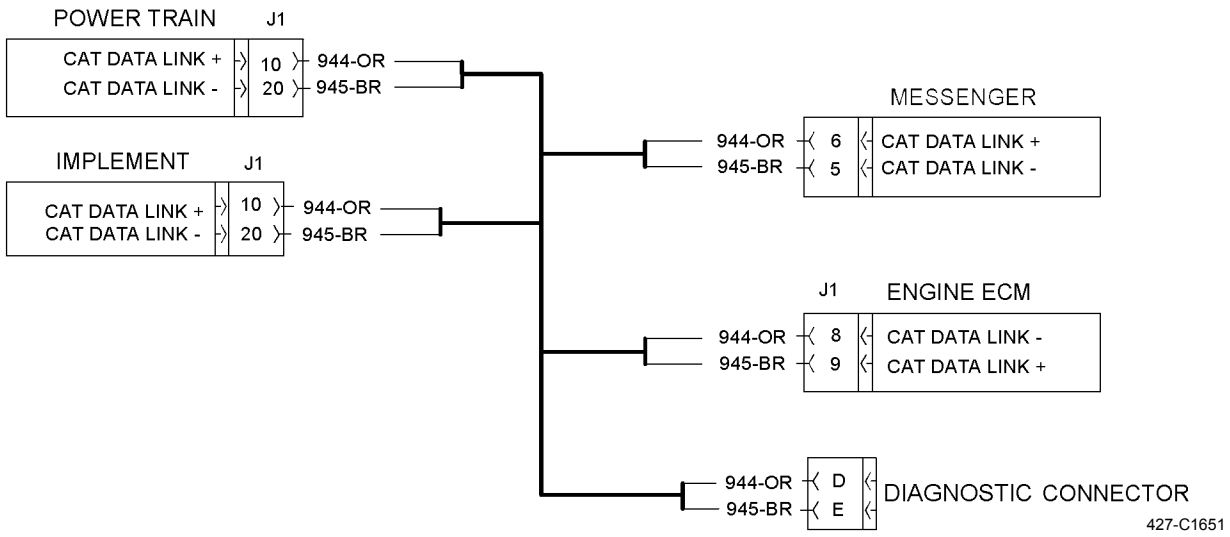	
0296 02	1. Connect MSD (WP 0005 00) and verify hardware and software part numbers. Verify this information is correct: (1) Part number for configuration software of powertrain ECM. (2) Part number of implement ECM flash software. (3) Part number of powertrain ECM. (4) Part number of implement ECM.	1. If all part numbers are correct, go to Test 2. 2. If all part numbers are not correct, incorrect configuration software may also be installed. Replace incorrect implement ECM with an implement ECM that has correct part number (WP 0056 00, WP 0057 00, WP 0060 00, and WP 0063 00).

Table 4. Implement Control - Continued.

(MID 082) MALFUNCTION	TEST OR INSPECTION	CORRECTIVE ACTION
0296 02 - Continued.	2. Inspect wiring harness connections. (a) Turn battery disconnect switch to OFF position (TM 5-3805-291-10). (b) Disconnect and inspect all wiring harness connections related to CAT Data Link (WP 0237 00). Make sure connectors are clean and tightly connected. Refer to *Electrical Connectors Inspection* (WP 0022 00) as necessary. (c) Check connectors for proper mating. (d) Check wires at connector. (e) Check each wire for nicks or signs of abrasion in insulation. (f) Check for moisture at connector. (g) Check connectors for dirty or corroded contacts. (h) Check each pin and socket of wiring harness connectors. (i) Reconnect all connectors.	1. If wiring harness connectors are tightly connected and free of corrosion, go to Test 3. 2. If wiring harness connectors are in need of repair, replace wiring harness in question (WP 0195 00 thru WP 0201 00).
	3. Check for shorts to ground. (a) Battery disconnect switch remains in OFF position (TM 5-3805-291-10). (b) Disconnect wiring harness from all ECMs that use CAT Data Link (WP 0056 00, WP 0057 00, WP 0060 00, and WP 0063 00). (c) At wiring harness for implement ECM, measure resistance between frame ground and connector contacts J1-10 (wire 944-OR) and J1-20 (wire 945-BR) of CAT Data Link circuit.	1. If resistance is greater than 5,000 Ohms, go to Test 4. 2. If resistance is less than 5,000 Ohms, wiring harness has failed. Replace wiring harness in question (WP 0195 00 thru WP 0201 00).

Table 4. Implement Control - Continued.

(MID 082) MALFUNCTION	TEST OR INSPECTION	CORRECTIVE ACTION
0296 02 - Continued.	4. Check for short to +battery circuit. (a) Battery disconnect switch remains in OFF position (TM 5-3805-291-10). (b) All related ECMs remain disconnected from wiring harness. (c) At wiring harness connector for implement ECM, perform these checks: (1) Measure resistance between connector contact J1-31 (wire 197-RD) and connector contact J1-10 (wire 944-OR). (2) Measure resistance between connector contact J1-31 (wire 197-RD) and connector contact J1-20 (wire 945-BR).	1. If wiring harness circuit resistance is correct, go to Test 5. 2. If resistance is less than 5,000 Ohms, wiring harness has failed. Replace wiring harness in question (WP 0195 00 thru WP 0201 00).
	5. Check for open circuit in wiring harness. (a) Battery disconnect switch remains in OFF position (TM 5-3805-291-10). (b) All related implement ECMs remain disconnected from wiring harness. (c) Check continuity of CAT Data Link circuit in wiring harness: (1) Measure resistance between connector contact J1-10 (wire 944-OR) and connector contact J1-10 (wire 944-OR) of powertrain ECM. (2) Measure resistance between connector contact J1-20 (wire 945-BR) of implement ECM and connector contact J1-20 (wire 945-BR).	1. If resistance is less than 5 Ohms, go to Test 6. 2. If resistance is greater than 5 Ohms, replace wiring harness in question (WP 0195 00 thru WP 0201 00).

Table 4. Implement Control - Continued.

(MID 082) MALFUNCTION	TEST OR INSPECTION	CORRECTIVE ACTION
0296 02 - Continued.	6. Check for additional diagnostic codes for other implement ECMs. (a) Reconnect all ECMs. (b) Turn battery disconnect and engine start switches to ON position (TM 5-3805-291-10). (c) After each of implement ECM has been reconnected, check for diagnostic codes logged against implement ECM.	1. If diagnostic codes are not present for other implement ECMs, exit this procedure. Repeat this procedure. If failure is not found, replace implement ECM (WP 0063 00). 2. If diagnostic codes are present for other implement ECMs, implement ECM may have failed. Repeat this procedure. If failure is not found, replace implement ECM (WP 0060 00).
	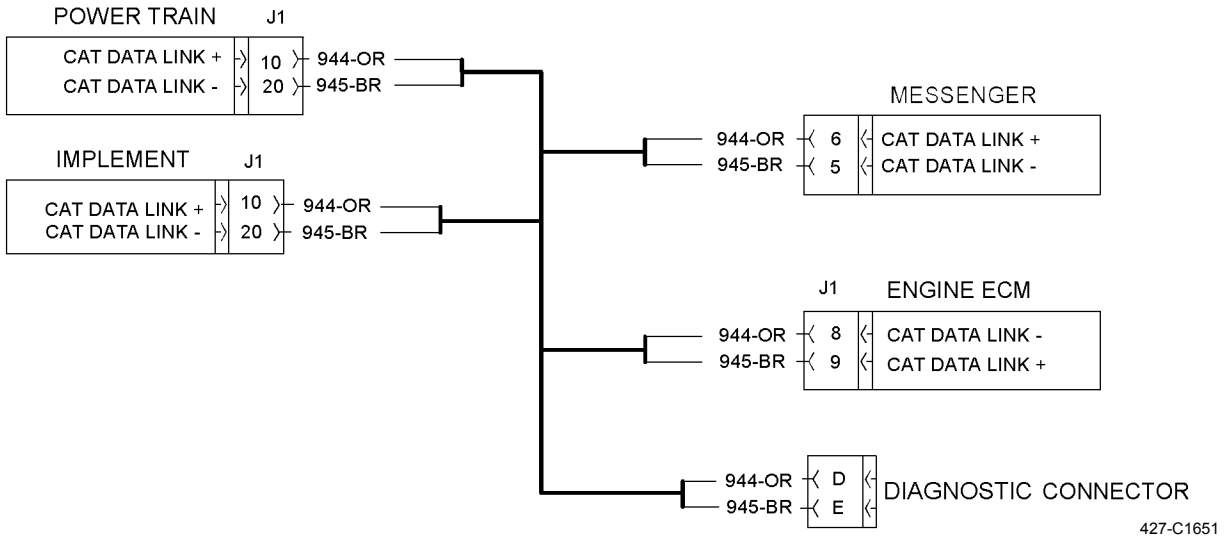	
0296 09	1. Inspect wiring harness connections. (a) Disconnect and inspect connections for wiring harnesses that are related to CAT Data Link (WP 0237 00). (b) Make sure connectors are clean and tightly connected. (c) If necessary, replace wiring harness.	

Table 4. Implement Control - Continued.

(MID 082) MALFUNCTION	TEST OR INSPECTION	CORRECTIVE ACTION
0296 09 - Continued.	(d) Reconnect all connectors	
	(e) Ensure CID 0296 FMI 09 is active.	1. If diagnostic code indicator is active and diagnostic code is active, go to Test 2. 2. If diagnostic code indicator is inactive, wiring harness connection has failed. Diagnostic code is inactive. An intermittent connection may exist in CAT Data Link circuits of wiring harness. Watch for a recurrence of this diagnostic code.
	2. Check for short in wiring harness.	
	(a) Battery disconnect switch remains in OFF position (TM 5-3805-291-10).	
	(b) Disconnect wiring harness from implement ECM (WP 0060 00) and powertrain ECM (WP 0063 00).	
	(c) At wiring harness connector for implement ECM, measure resistance between contacts J1-20 (wire 945-BR) and J1-10 (wire 944-OR).	1. If resistance is greater than 5,000 Ohms, wiring harness circuit resistance is correct. Go to Test 3. 2. If resistance is less than 5,000 Ohms, replace wiring harness in question (WP 0195 00 thru WP 0201 00).
	3. Check for open circuit in wiring harness.	
	(a) Battery disconnect switch remains in OFF position (TM 5-3805-291-10). (b) Implement ECM and powertrain ECM remain disconnected from wiring harness. (c) At wiring harness connector for powertrain ECM, place a jumper between contacts J1-20 (wire 945-BR) and J1-10 (wire 944-OR).	
	(d) At wiring harness connector for implement ECM, check resistance between contacts J1-20 (wire 945-BR) and J1-10 (wire 944-OR).	1. If resistance is less than 5 Ohms, go to Test 4. 2. If resistance is greater than 5 Ohms, replace wiring harness in question (WP 0195 00 thru WP 0201 00).
	4. Connect MSD (WP 0005 00) and check powertrain ECM.	

Table 4. Implement Control - Continued.

(MID 082) MALFUNCTION	TEST OR INSPECTION	CORRECTIVE ACTION
0296 09 - Continued.	(a) Ensure powertrain ECM is operational.	
	(b) Start machine (TM 5-3805-291-10).	1. If machine will start, go to Test 5. 2. If machine will not start, powertrain ECM is not operating properly. Check for these conditions with engine start switch in ON position (TM 5-3805-291-10): (a) Messenger illuminates. (b) Tachometer performs a self test, but gear indicator does not illuminate. (c) CID 0296 FMI 09 is active. 3. If any preceding conditions are present, powertrain ECM may have failed. Also, powertrain software may have been erased due to resetting system too many times. Troubleshoot powertrain ECM.
	5. Check powertrain ECM for diagnostic codes.	1. If related diagnostic codes are present, troubleshoot diagnostic codes. 2. If no related diagnostic codes are active, replace implement ECM (WP 0060 00).
	6. Verify powertrain ECM and implement ECM software versions are compatible.	1. If versions of software are compatible, go to Test 7. 2. If proper software is not installed, flash proper software to appropriate ECM (WP 0056 00, WP 0057 00, WP 0060 00, and WP 0063 00).
	7. Recheck for diagnostic codes. Ensure CID 0296 FMI 09 is active.	1. If diagnostic code indicator and diagnostic code are inactive, clear diagnostic code. 2. If diagnostic code is active, ensure proper software is installed before replacing implement ECM. If software is correct, replace implement ECM (WP 0060 00). If implement ECM was just replaced, install new powertrain ECM (WP 0063 00).

Table 4. Implement Control - Continued.

(MID 082) MALFUNCTION	TEST OR INSPECTION	CORRECTIVE ACTION
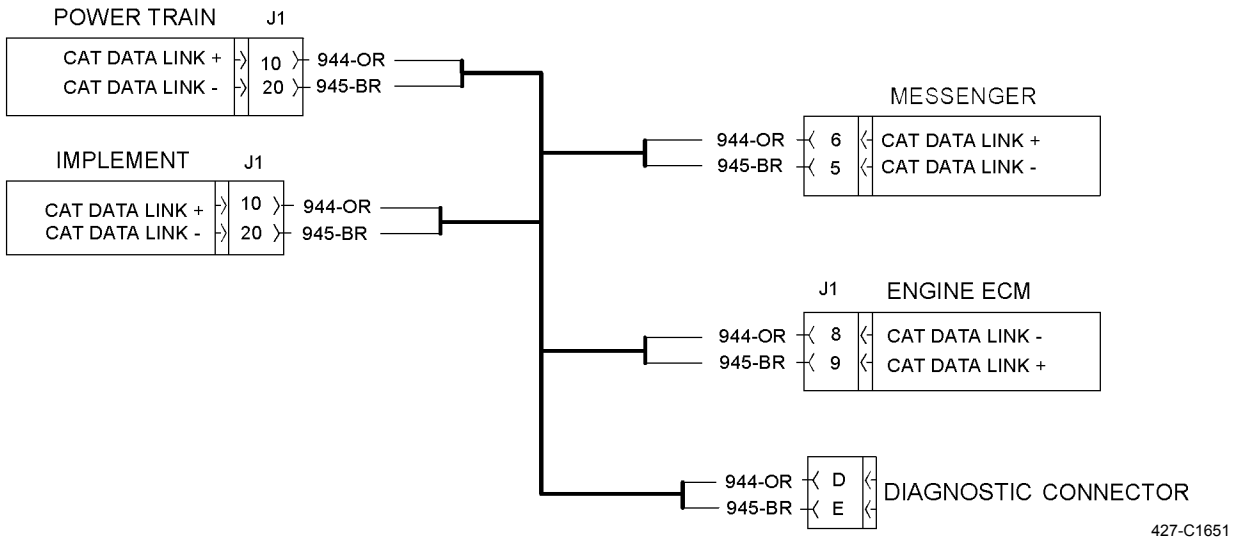		
0296 14	1. Connect MSD (WP 0005 00) and check powertrain ECM and implement ECM for proper software versions. Verify versions of software are compatible. 2. Recheck for diagnostic codes. Ensure CID 0296 FMI 14 is active.	1. If versions of software are compatible, go to Test 2. 2. If proper software is not installed, flash proper software to appropriate implement ECM (WP 0056 00, WP 0057 00, WP 0060 00, and WP 0063 00). 1. If diagnostic code indicator and diagnostic code are inactive, clear diagnostic code. 2. If diagnostic code is active, ensure proper software is installed before replacing implement ECM. If software is correct, replace implement ECM (WP 0060 00). If implement ECM was just replaced, install new powertrain ECM (WP 0063 00).

Table 4. Implement Control - Continued.

(MID 082) MALFUNCTION	TEST OR INSPECTION	CORRECTIVE ACTION
	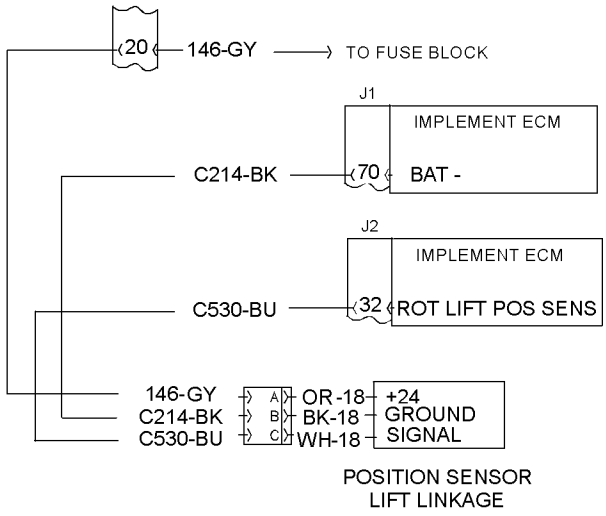 427-C1652	
0350 00 **0350 01**	**NOTE** **Ensure diagnostic code is active and diagnostic code indicator is active.**	
	1. Connect MSD (WP 0005 00) and check adjustment of lift linkage position sensor. (a) Check mounting hardware for lift linkage position sensor (WP 0085 00). Fasteners should be tight. If hardware shows any sign of damage, hardware should be replaced. (b) Ensure diagnostic code is active.	
	(c) Observe ON/OFF status of diagnostic code indicator as lift arm is fully raised and lowered.	1. If diagnostic code indicator is inactive, clear diagnostic code. 2. If diagnostic code indicator is active, go to Test 2.
	2. Check cycle time at sensor (WP 0017 00).	1. If cycle time is correct, go to Test 3. 2. If cycle time is not correct, ensure lift linkage position sensor is moving with lift linkage. Go to Test 4.
	3. Recalibrate position sensor and check for an active diagnostic code.	1. If diagnostic code is not inactive, calibration has repaired machine. 2. If diagnostic code is still active, go to Test 4.

Table 4. Implement Control - Continued.

(MID 082) MALFUNCTION	TEST OR INSPECTION	CORRECTIVE ACTION
0350 00, 0350 01 - Continued.	4. Replace sensor (WP 0085 00) and recalibrate sensor (WP 0017 00). Use messenger to recheck diagnostic code (TM 5-3805-291-10). Observe ON/OFF status of diagnostic code indicator as lift linkage position sensor is fully raised and lowered.	1. If new sensor corrected diagnostic code, resume normal machine operation. 2. If diagnostic code indicator is active, perform calibration for lift linkage position sensor test again. Also verify if diagnostic code indicator is active for this diagnostic code. If cause is not found, replace implement ECM (WP 0060 00).
	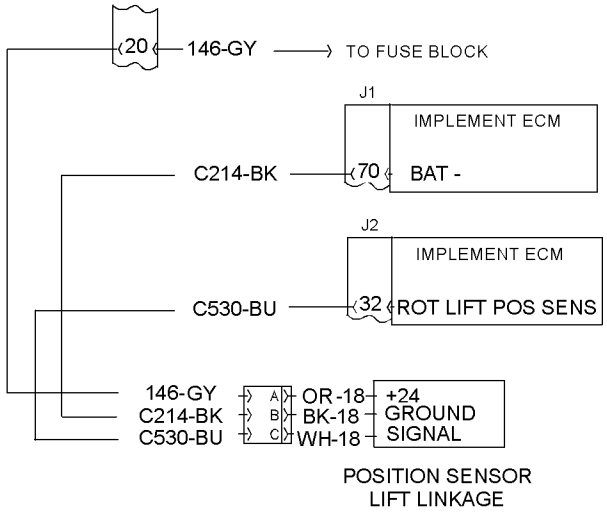 427-C1652	
0350 03	**NOTE** • **Ensure diagnostic code is active and that diagnostic code indicator is active.** • **The following procedure can create numerous related diagnostic codes. Reconnect all harnesses. Then, related diagnostic codes will be shown as being not active. Complete following procedure. Then, clear all of related diagnostic codes.**	
	1. Check for power at sensor. (a) Do not disconnect wiring harness connector from sensor. (b) Turn engine start and battery disconnect switches to ON position (TM 5-3805-291-10).	
	(c) At wiring harness connector for sensor, measure voltage from contact A to contact B (WP 0085 00).	1. If voltage is system voltage, go to Test 2. 2. If voltage is not system voltage, replace wiring harness in question (WP 0195 00 thru WP 0201 00).

Table 4. Implement Control - Continued.

(MID 082) MALFUNCTION	TEST OR INSPECTION	CORRECTIVE ACTION
0350 03 - Continued.	2. Check for proper ground at sensor. (a) Wiring harness remains connected to sensor. (b) Turn engine start and battery disconnect switches to OFF position (TM 5-3805-291-10). (c) At wiring harness connector for sensor, measure resistance from contact B to frame ground.	1. If resistance is less than 5 Ohms, go to Test 3. 2. If resistance is greater than 5 Ohms, replace wiring harness in question (WP 0195 00 thru WP 0201 00).
	3. Check wiring harness of position sensor for open circuit. (a) Turn engine start and battery disconnect switches to OFF position (TM 5-3805-291-10). (b) Disconnect wiring harness from position sensor (WP 0085 00). (c) At wiring harness connector for sensor, connect a jumper wire between contact B and contact C. (d) Disconnect wiring harness connectors from implement ECM (WP 0060 00). (e) At wiring harness connector for implement ECM, measure resistance between contact J2-32 (wire C530-BU) and contacts J1-28 and J1-70 (wire C214-BK).	1. If resistance measurement is less than 5 Ohms, go to Test 4. 2. If resistance is greater than 5 Ohms, replace wiring harness in question (WP 0195 00 thru WP 0201 00).
	4. Check wiring harness of position sensor for short to +battery circuit. (a) Engine start switch remains in OFF position (TM 5-3805-291-10). (b) Wiring harness remains disconnected from position sensor. Remove jumper wire that was installed in Test 3. (c) Wiring harness connectors remain disconnected from implement ECM.	

Table 4. Implement Control - Continued.

(MID 082) MALFUNCTION	TEST OR INSPECTION	CORRECTIVE ACTION
0350 03 - Continued.	(d) At wiring harness connector for implement ECM, measure resistance between contact J2-32 (wire C530 BU) of wiring harness to all possible sources of +battery in connectors J2 and J1.	1. If each resistance measurement is greater than 5,000 Ohms, go to Test 5. 2. If one or more resistance measurements is NOT correct, short is between signal contact J2-32 (wire C530 BU) and circuit with low resistance measurement. Replace wiring harness in question (WP 0195 00 thru WP 0201 00).
	5. Check sensor output. (a) Connect wiring harness connector to implement ECM and sensor. (b) At wiring harness connector for sensor, connect positive lead from multimeter to contact C. (c) At wiring harness connector for sensor, connect negative lead from multimeter to contact B. (d) Turn battery disconnect and engine start switches to ON position (TM 5-3805-291-10).	
	(e) Set multimeter to setting for frequency (Hz). Measure output of sensor.	1. If pulse-width modulated (PWM) signal from sensor is 500 Hz signal between 5% and 95%, go to Test 6. 2. If PWM signal from sensor is not 500 Hz signal or signal is NOT between 5% and 95%, replace sensor (WP 0085 00).
	6. Connect MSD (WP 0005 00) and check if diagnostic code remains active. (a) Disconnect, inspect, and clean contacts of wiring harness connectors. Refer to *Electrical Connectors Inspection* (WP 0022 00) as necessary. (b) Reconnect all wiring harness connectors. (c) Turn battery disconnect and engine start switches to ON position (TM 5-3805-291-10). (d) Operate machine (TM 5-3805-291-10).	

Table 4. Implement Control - Continued.

(MID 082) MALFUNCTION	TEST OR INSPECTION	CORRECTIVE ACTION
0350 03 - Continued.	(e) Check status of CID 0350 FMI 03.	1. If CID 0350 FMI 03 is not active, initial diagnostic code was probably caused by poor electrical connection or short at wiring harness connectors that was disconnected and reconnected. Resume normal machine operation. 2. If CID 0350 FMI 03 is active, exit this procedure and repeat this procedure. If cause of this diagnostic code is not found, replace implement ECM (WP 0060 00).
	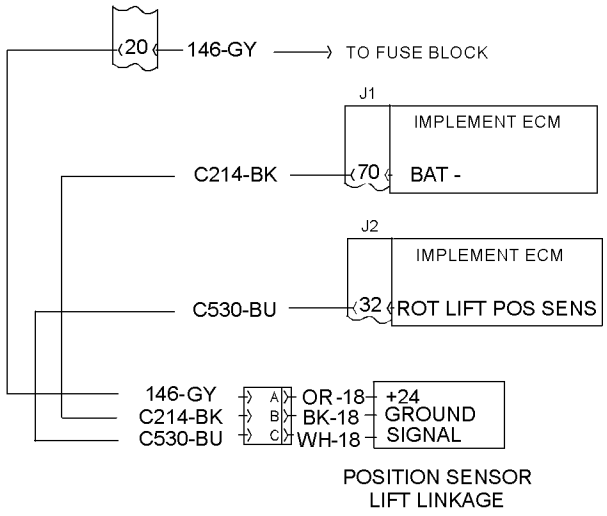 427-C1652	
0350 04	**NOTE** • **Ensure diagnostic code is active and diagnostic code indicator is active.** • **The following procedure can create numerous related diagnostic codes. Reconnect all harnesses. Then, related diagnostic codes will be shown as being NOT active. Complete following procedure. Then, clear all of related diagnostic codes.** 1. Connect MSD (WP 0005 00) and check for diagnostic codes.	1. If diagnostic code remains active, go to Test 2. 2. If diagnostic code is not active, wiring harness is correct and implement ECM is operating properly, sensor has failed. Replace sensor (WP 0085 00).

Table 4. Implement Control - Continued.

(MID 082) MALFUNCTION	TEST OR INSPECTION	CORRECTIVE ACTION
0350 04 - Continued.	2. Check signal circuit for short to ground. (a) Turn engine start and battery disconnect switches to OFF position (TM 5-3805-291-10). (b) Disconnect position sensor from wiring harness (WP 0085 00). (c) Disconnect wiring harness connectors J1 and J2 from implement ECM (WP 0060 00). (d) At connector for implement ECM, measure resistance between contact J2-32 (wire C530-BU) and ground in connector J1 and connector J2. Also, measure resistance between contact J2-32 and frame ground.	1. If resistance is greater than 5,000 Ohms, go to Test 3. 2. If resistance is less than 5,000 Ohms, short is between signal circuit (C530-BU) and a ground source. Replace wiring harness in question (WP 0195 00 thru WP 0201 00).
	3. Check for +battery at sensor. (a) Reconnect all wiring harness connectors. (b) Turn engine start and battery disconnect switches to ON position (TM 5-3805-291-10). (c) At wiring harness connector for sensor, measure voltage from contact A to contact B.	1. If voltage is correct, go to Test 4. 2. If +battery circuit has failed, replace wiring harness in question (WP 0195 00 thru WP 0201 00).
	4. Check if diagnostic code remains active. (a) Clean wiring harness connector contacts. (b) Reconnect all wiring harness connectors. (c) Observe status of diagnostic code. (d) Operate machine (TM 5-3805-291-10).	

Table 4. Implement Control - Continued.

(MID 082) MALFUNCTION	TEST OR INSPECTION	CORRECTIVE ACTION
0350 04 - Continued.	(e) Observe status of diagnostic code.	1. If diagnostic code is active, initial diagnostic code was probably caused by poor electrical connection or short at wiring harness connector that was disconnected and then reconnected. Resume normal machine operation. 2. If diagnostic code is not active, exit this diagnostic code and repeat this procedure. If cause of diagnostic code is not found, replace implement ECM (WP 0060 00).
	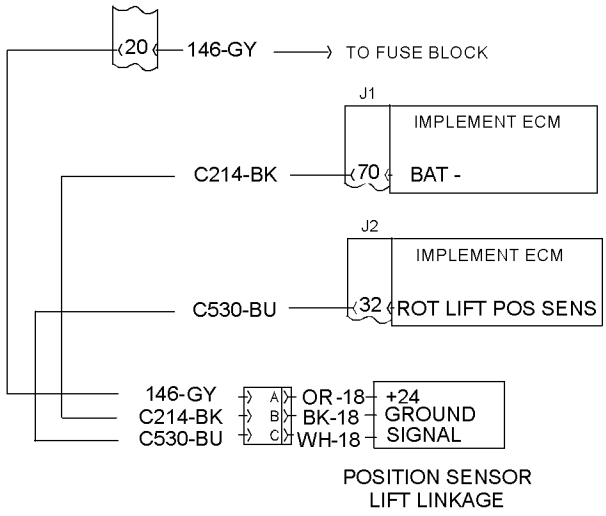 427-C1652	
0350 08	**NOTE** • **Ensure diagnostic code is active and diagnostic code indicator is active.** • **The following procedure can create numerous related diagnostic codes. Reconnect all harnesses. Then, related diagnostic codes will be shown as being NOT active. Complete following procedure. Then clear all of related diagnostic codes.** 1. Connect MSD (WP 0005 00) and check sensor. (a) Observe ON/OFF status of diagnostic code indicator. (b) Disconnect wiring harness from sensor.	1. If diagnostic code indicator is active, sensor is not causing diagnostic code. Go to Test 2. 2. If diagnostic code indicator is inactive, replace sensor (WP 0085 00).

Table 4. Implement Control - Continued.

(MID 082) MALFUNCTION	TEST OR INSPECTION	CORRECTIVE ACTION
0350 08 - Continued.	2. Check wiring harness.	
	(a) Sensor remains disconnected from wiring harness.	
	(b) Battery disconnect switch remains in OFF position (TM 5-3805-291-10).	
	(c) Disconnect wiring harness from implement ECM (WP 0060 00).	
	(d) At wiring harness connector for implement ECM, measure resistance between signal contact C (wire C530-BU) and frame ground.	1. If resistance is greater than 5,000 Ohms, exit this procedure and repeat this test. If diagnostic code is not found, replace implement ECM (WP 0060 00). 2. If resistance is less than 5,000 Ohms, short is between frame ground and signal circuit in wiring harness. Replace wiring harness in question (WP 0195 00 thru WP 0201 00).
0350 13	Connect MSD (WP 0005 00) and check calibration.	
	(a) Calibrate lift linkage position sensor (WP 0017 00).	
	(b) Ensure diagnostic code is active.	
	(c) Observe ON/OFF status of diagnostic code indicator as lift arm is fully raised and fully lowered.	1. If diagnostic code indicator is inactive, calibration corrected diagnostic code. Clear diagnostic code. 2. If diagnostic code indicator is active, perform calibration for rotary position sensor again. Also, ensure diagnostic code indicator is active for this diagnostic code. If cause is not found, replace sensor (WP 0085 00) and repeat calibration. If this does not eliminate diagnostic code, replace implement ECM (WP 0060 00). If fault becomes active, it is possible that mounting for sensor may be loose. Mounting should be checked.

Table 4. Implement Control - Continued.

(MID 082) MALFUNCTION	TEST OR INSPECTION	CORRECTIVE ACTION
	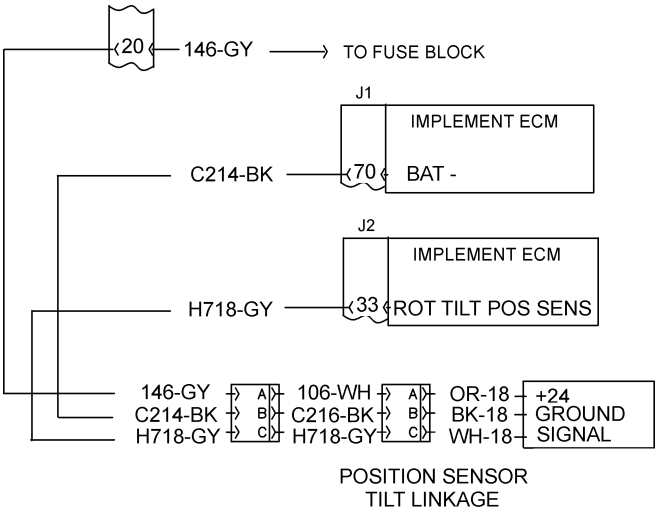 427-C1653	
0351 00	**NOTE** **Ensure diagnostic code is active and diagnostic code indicator is active.**	
	1. Connect MSD (WP 0005 00) and check adjustment of tilt linkage position sensor. (a) Check mounting hardware for tilt linkage position sensor. Fasteners should be tight. If hardware shows any sign of damage, hardware should be replaced (WP 0089 00). (b) Ensure diagnostic code is active. (c) Observe ON/OFF status of diagnostic code indicator as tilt arm is fully raised and lowered.	1. If diagnostic code is inactive, clear diagnostic code. 2. If diagnostic code indicator is active, go to Test 2.
	2. Check cycle time (WP 0017 00).	1. If cycle time is correct, go to Test 3. 2. If cycle time is not correct, ensure tilt linkage position sensor is moving with tilt linkage and go to Test 4.
	3. Recalibrate position sensor (WP 0017 00) and check for an active diagnostic code.	1. If diagnostic code is inactive, calibration has repaired machine. 2. If diagnostic code is inactive, go to Test 4.

Table 4. Implement Control - Continued.

(MID 082) MALFUNCTION	TEST OR INSPECTION	CORRECTIVE ACTION
0351 00 - Continued.	4. Replace sensor (WP 0089 00) and recalibrate sensor (WP 0017 00). Recheck diagnostic code. Observe ON/OFF status of diagnostic code indicator as tilt linkage position sensor is fully raised and lowered.	1. If new sensor corrected diagnostic code, resume machine operation. 2. If diagnostic code indicator is active, recalibrate sensor. Perform calibration for tilt linkage position sensor again. Also, verify if diagnostic code indicator is active for this diagnostic code. If cause is not found, replace implement ECM (WP 0060 00).
	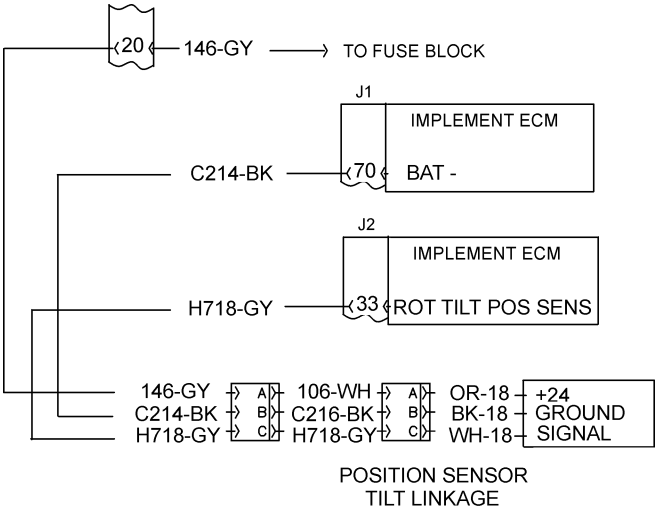 427-C1653	
0351 03	**NOTE** • **Ensure diagnostic code is active and diagnostic code indicator is active.** • **The following procedure can create numerous related diagnostic codes. Reconnect all harnesses. Then, related diagnostic codes will be shown as being not active. Complete following procedure. Then, clear all of related diagnostic codes.** 1. Check for power at sensor. (a) Do not disconnect wiring harness connector from sensor. (b) Turn engine start and battery disconnect switches to ON position (TM 5-3805-291-10). (c) At wiring harness connector for sensor, measure voltage from contact A to contact B.	1. If voltage is system voltage, go to Test 2. 2. If voltage is not system voltage, +battery circuit in wiring harness has failed. Replace wiring harness in question (WP 0195 00 thru WP 0201 00).

Table 4. Implement Control - Continued.

(MID 082) MALFUNCTION	TEST OR INSPECTION	CORRECTIVE ACTION
0351 03 - Continued.	2. Check for proper ground at sensor. (a) Wiring harness remains connected to sensor. (b) Turn engine start and battery disconnect switches to OFF position (TM 5-3805-291-10). (c) At wiring harness connector for sensor, measure resistance from contact B to frame ground.	1. If resistance is less than 5 Ohms, go to Test 3. 2. If resistance is greater than 5 Ohms, replace wiring harness in question (WP 0195 00 thru WP 0201 00).
	3. Check wiring harness of position sensor for open circuit. (a) Turn engine start and battery disconnect switches to OFF position (TM 5-3805-291-10). (b) Disconnect wiring harness from position sensor (WP 0089 00). (c) At wiring harness connector for sensor, connect a jumper wire between contact B and contact C. (d) Disconnect wiring harness connectors from implement ECM (WP 0060 00). (e) At wiring harness connector for implement ECM, measure resistance between contact J2-33 (wire H718-GY) and contact J1-70 (wire C214-BK).	1. If resistance measurement is less than 5 Ohms, go to Test 4. 2. If resistance is greater than 5 Ohms, replace wiring harness in question (WP 0195 00 thru WP 0201 00).
	4. Check wiring harness of position sensor for short to +battery circuit. (a) Turn engine start and battery disconnect switches to OFF position (TM 5-3805-291-10). (b) Wiring harness remains disconnected from position sensor. Remove jumper wire installed in Test 3. (c) Wiring harness connectors remain disconnected from implement ECM.	

Table 4. Implement Control - Continued.

(MID 082) MALFUNCTION	TEST OR INSPECTION	CORRECTIVE ACTION
0351 03 - Continued.	(d) At wiring harness connector for implement ECM, measure resistance from signal contact J2-33 (wire H718-GY) of wiring harness to all possible sources of +battery circuit. Measure resistance to all contacts used in J2 and J1 wiring harness connectors.	1. If each resistance measurement is greater than 5,000 Ohms, go to Test 5. 2. If one or more resistance measurements is not correct, short is between signal contact J2-33 (wire H718-GY) and circuit with low resistance measurement. Replace wiring harness in question (WP 0195 00 thru WP 0201 00).
	5. Check sensor output. (a) Reconnect wiring harness connectors to implement ECM. Reconnect wiring harness connector to sensor. (b) At wiring harness connector for sensor, connect positive lead from multimeter to contact C. (c) At wiring harness connector for sensor, connect negative lead from multimeter to contact B. (d) Turn battery disconnect and engine start switches to ON position (TM 5-3805-291-10).	
	(e) Set multimeter to setting for frequency (Hz). Measure output of sensor.	1. If PWM signal from sensor is 500 Hz signal between 5% and 95%, go to Test 6. 2. If PWM signal from sensor is not 500 Hz signal or signal is not between 5% and 95%, replace sensor (WP 0089 00).
	6. Connect MSD (WP 0005 00) and Check if diagnostic code remains active. (a) Disconnect, inspect, and clean wiring harness connector contacts. Refer to *Electrical Connectors Inspection* (WP 0022 00) as necessary. (b) Reconnect all wiring harness connectors. (c) Operate machine (TM 5-3805-291-10).	

Table 4. Implement Control - Continued.

(MID 082) MALFUNCTION	TEST OR INSPECTION	CORRECTIVE ACTION
0351 03 - Continued.	(d) Check status of CID 0351 FMI 03.	1. If CID 0351 FMI 03 is not active, initial diagnostic code was probably caused by poor electrical connection or short at wiring harness connector that was disconnected and reconnected. Resume normal machine operation. 2. If CID 0351 FMI 03 is active, exit this procedure and repeat procedure. If cause of diagnostic code is not found, replace implement ECM (WP 0060 00).
	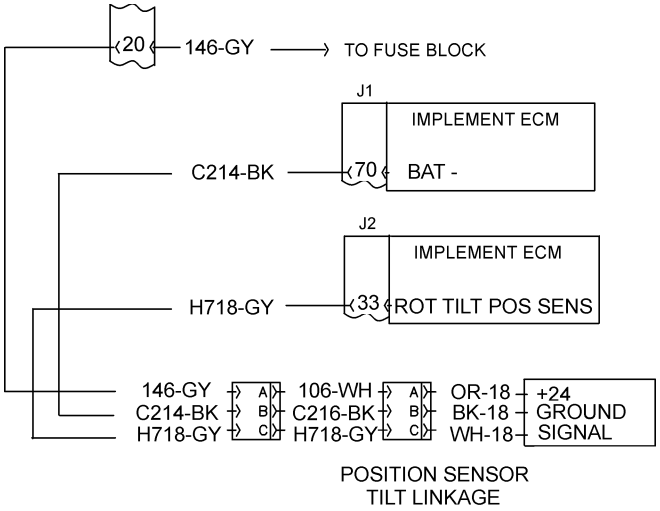	
0351 04	**NOTE** • **Ensure diagnostic code is active and diagnostic code indicator is active.** • **The following procedure can create numerous related diagnostic codes. Reconnect all harnesses. Then, related diagnostic codes will be shown as being not active. Complete following procedure. Then, clear all of related diagnostic codes.** 1. Connect MSD (WP 0005 00) and check sensor. (a) Turn battery disconnect and engine start switches to ON position (TM 5-3805-291-10).	

Table 4. Implement Control - Continued.

(MID 082) MALFUNCTION	TEST OR INSPECTION	CORRECTIVE ACTION
0351 04 - Continued.	(b) Observe status of diagnostic code. Then, disconnect wiring harness from sensor (WP 0089 00).	1. If diagnostic code remains active, go to Test 2. 2. If diagnostic code is not active, wiring harness is correct and implement ECM is operating properly. Replace sensor (WP 0089 00).
	2. Check signal circuit for short to ground. (a) Sensor remains disconnected from wiring harness. (b) Turn engine start and battery disconnect switches to OFF position (TM 5-3805-291-10). (c) Disconnect wiring harness connectors J1 and J2 from implement ECM (WP 0060 00).	
	(d) Measure resistance from J2-33 wire (H718-GY) to all possible sources of ground.	1. If resistance is greater than 5,000 Ohms, go to Test 3. 2. If resistance is less than 5,000 Ohms, short is between signal circuit (H718-GY) and ground source. Replace wiring harness in question (WP 0195 00 thru WP 0201 00).
	3. Check for +battery. (a) Reconnect all wiring harness connectors. (b) Turn engine start and battery disconnect switches to ON position (TM 5-3805-291-10).	
	(c) At wiring harness for sensor, measure voltage from contact A to contact B.	1. If voltage is correct, go to Test 4. 2. If voltage is not correct, +battery has failed. Replace wiring harness in question (WP 0195 00 thru WP 0201 00).
	4. Check if diagnostic code remains active. (a) Clean wiring harness connectors. (b) Observe status of diagnostic code. (c) Operate machine (TM 5-3805-291-10).	

Table 4. Implement Control - Continued.

(MID 082) MALFUNCTION	TEST OR INSPECTION	CORRECTIVE ACTION
0351 04 - Continued.	(d) Observe status of diagnostic code.	1. If diagnostic code is inactive, initial diagnostic code was probably caused by poor electrical connection or short at wiring harness connector that was disconnected and then reconnected. Resume normal machine operation. 2. If diagnostic code is active, exit this diagnostic code and repeat this procedure. If cause of diagnostic code is not found, then replace implement ECM (WP 0060 00).
	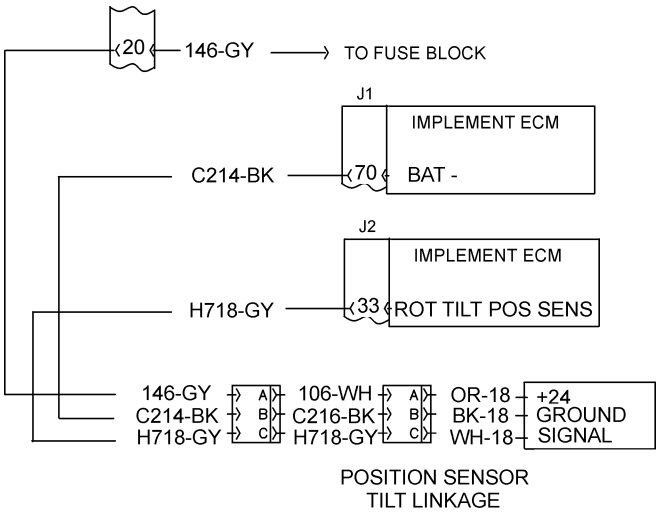 427-C1653	
0351 08	**NOTE** **Ensure CID 0351 FMI 08 is active and diagnostic code indicator is active.** 1. Connect MSD (WP 0005 00) and check sensor. (a) Observe ON/OFF status of diagnostic code indicator. (b) Disconnect wiring harness from sensor (WP 0089 00).	1. If diagnostic code indicator is active, go to Test 2. 2. If diagnostic code indicator is inactive, replace sensor (WP 0089 00).

Table 4. Implement Control - Continued.

(MID 082) MALFUNCTION	TEST OR INSPECTION	CORRECTIVE ACTION
0351 08 - Continued.	2. Check wiring harness. (a) Sensor remains disconnected from wiring harness. (b) Turn battery disconnect switch to OFF position (TM 5-3805-291-10). (c) Disconnect wiring harness from implement ECM (WP 0060 00). (d) At wiring harness connector for sensor, measure resistance between signal contact C (wire H718-GY) and frame ground.	1. If resistance is greater than 5,000 Ohms, exit this procedure and repeat this troubleshooting procedure again. If cause of diagnostic code is not found, replace implement ECM (WP 0060 00). 2. If resistance is less than 5,000 Ohms, replace wiring harness in question (WP 0195 00 thru WP 0201 00).
	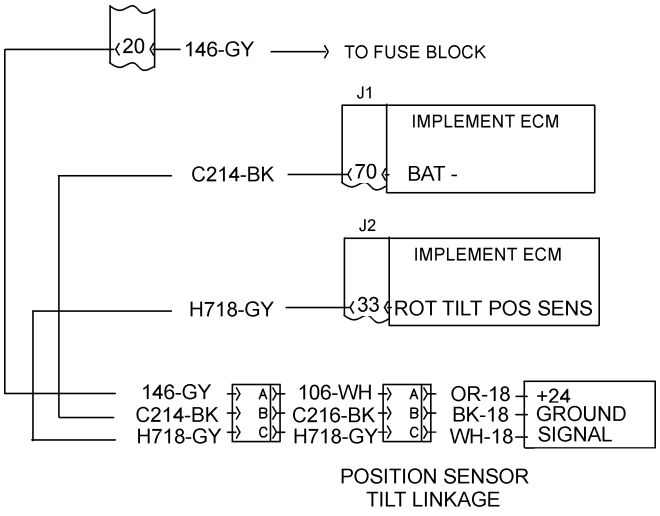 427-C1653	
0351 13	**NOTE** **Ensure CID 0351 FMI 13 is active and diagnostic code is active.** Connect MSD (WP 0005 00) and check calibration. (a) Calibrate tilt linkage position sensor (WP 0017 00). (b) Recheck diagnostic code. (c) Ensure diagnostic code is active.	

Table 4. Implement Control - Continued.

(MID 082) MALFUNCTION	TEST OR INSPECTION	CORRECTIVE ACTION
0351 13 - Continued.	(d) Observe ON/OFF status of diagnostic code indicator as bucket is tilted back and dumped fully.	1. If diagnostic code indicator is inactive, clear diagnostic code. 2. If diagnostic code indicator is active, perform calibration for tilt linkage position sensor again. Also, ensure diagnostic code is active. If cause is not found, replace sensor (WP 0089 00) and perform calibration again. If this does not eliminate diagnostic code, replace implement ECM (WP 0060 00).
	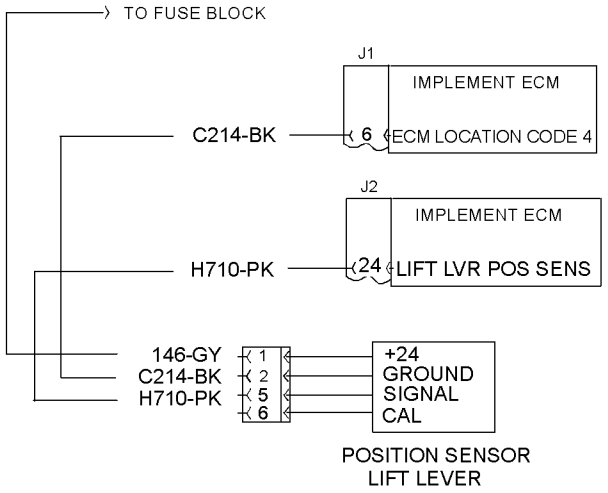	
0352 00 **0352 01**	**NOTE** • **The following procedure may create other diagnostic codes. Ignore these created diagnostic codes and clear diagnostic codes when original diagnostic code is corrected.** • **Ensure diagnostic code is active before performing procedure.** Recalibrate lever position sensor (WP 0017 00).	1. If calibration causes diagnostic code to become inactive, resume normal machine operation. 2. If calibration has not caused diagnostic code to become inactive, replace joystick (WP 0219 00).

Table 4. Implement Control - Continued.

(MID 082) MALFUNCTION	TEST OR INSPECTION	CORRECTIVE ACTION
	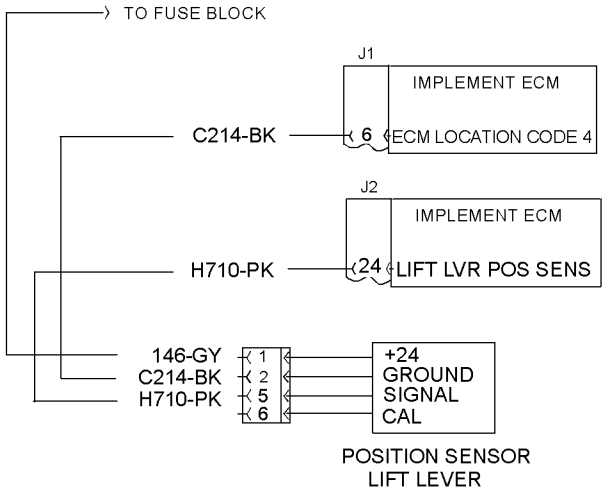 427-C1654	
0352 03	**NOTE** **• The following procedure may create other diagnostic codes. Ignore these created diagnostic codes and clear diagnostic codes when original diagnostic code is corrected.** **• Ensure diagnostic code is active.**	
	1. Check for power at sensor. (a) Do not disconnect wiring harness connector from sensor. (b) Turn engine start and battery disconnect switches to ON position (TM 5-3805-291-10). (c) At wiring harness connector for sensor, measure voltage from contact 1 to contact 2.	1. If resistance is less than 5 Ohms, go to Test 3. 2. If resistance is greater than 5 Ohms, replace wiring harness in question (WP 0195 00 thru WP 0201 00).
	2. Check for proper ground at sensor. (a) Wiring harness remains connected to sensor. (b) Turn engine start and battery disconnect switches to ON position (TM 5-3805-291-10).	

Table 4. Implement Control - Continued.

(MID 082) MALFUNCTION	TEST OR INSPECTION	CORRECTIVE ACTION
0352 03 - Continued.	(c) At wiring harness connector for sensor, measure resistance from contact 2 to frame ground.	1. If resistance is less than 5 Ohms, go to Test 3. 2. If resistance is greater than 5 Ohms, ground circuit in wiring harness has failed, replace wiring harness in question (WP 0195 00 thru WP 0201 00).
	3. Check wiring harness of position sensor for open circuit. (a) Turn engine start and battery disconnect switches to ON position (TM 5-3805-291-10). (b) Disconnect wiring harness from position sensor (WP 0219 00). (c) At wiring harness connector for sensor, connect a jumper wire between contact 2 and contact 5. (d) Disconnect wiring harness connectors from implement ECM (WP 0060 00).	
	(e) At wiring harness connector for implement ECM, measure resistance between contact J2-24 (wire H710-PK) and contact J1-26 (wire C214-BK).	1. If resistance measurement is less than 5 Ohms, go to Test 4. 2. If resistance is greater than 5 Ohms, there is an open circuit in wiring harness. Replace wiring harness in question (WP 0195 00 thru WP 0201 00).
	4. Check wiring harness of position sensor for short to +battery circuit. (a) Turn engine start and battery disconnect switches to OFF position (TM 5-3805-291-10). (b) Wiring harness remains disconnected from position sensor. Remove jumper wire that was installed in Test 3. (c) Wiring harness connectors remain disconnected from implement ECM.	

Table 4. Implement Control - Continued.

(MID 082) MALFUNCTION	TEST OR INSPECTION	CORRECTIVE ACTION
0352 03 - Continued.	(d) At wiring harness connector for implement ECM, measure resistance from signal contact J2-24 (wire H710-PK) of wiring harness to all possible sources of +battery circuit. Measure resistance to all contacts used in J2 and J1 wiring harness connectors.	1. If each resistance measurement is greater than 5,000 Ohms, go to Test 5. 2. If one or more resistance measurements is not correct, short is between signal contact J2-24 (wire H710-PK) and circuit with low resistance measurement. Replace wiring harness in question (WP 0195 00 thru WP 0201 00).
	5. Check sensor output. (a) Reconnect wiring harness connectors to implement ECM. Reconnect wiring harness connector to sensor. (b) At wiring harness connector for sensor, connect positive lead from multimeter to contact 5. (c) At wiring harness connector for sensor, connect negative lead from multimeter to contact 2. (d) Turn battery disconnect and engine start switches to ON position (TM 5-3805-291-10).	
	(e) Set multimeter to setting for frequency (Hz). Measure sensor output.	1. If PWM signal from sensor is a 500 Hz signal between 5% and 95%, go to Test 6. 2. If PWM signal from sensor is not a 500 Hz signal or signal is not between 5% and 95%, replace joystick (WP 0219 00).
	6. Check if diagnostic code remains active. (a) Disconnect, inspect, and clean all wiring harness connectors and reconnect. Refer to *Electrical Connectors Inspection* (WP 0022 00) as necessary. (b) Reconnect all wiring harness connectors. (c) Operate machine (TM 5-3805-291-10).	

Table 4. Implement Control - Continued.

(MID 082) MALFUNCTION	TEST OR INSPECTION	CORRECTIVE ACTION
0352 03 - Continued.	(d) Use messenger to check status of CID 0352 FMI 03 (TM 5-3805-291-10).	1. If CID 0352 FMI 03 is not active, initial diagnostic code was probably caused by poor electrical connection or short at wiring harness connector that was disconnected and reconnected. Resume normal machine operation. 2. If CID 0352 FMI 03 is active, diagnostic code has been corrected. Exit this procedure and repeat this procedure. If cause of diagnostic code is not found, replace implement ECM (WP 0060 00).
	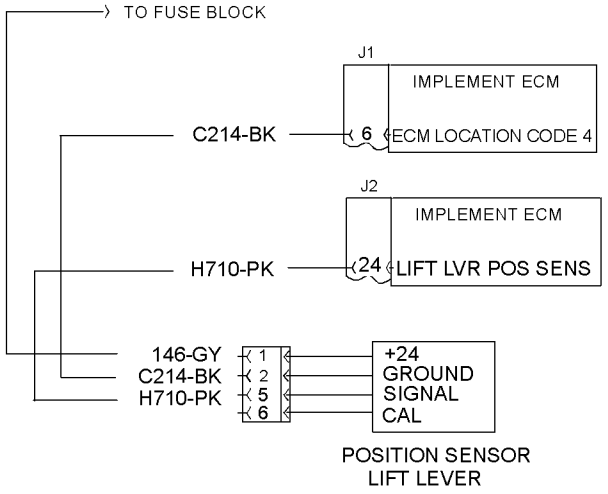 427-C1654	
0352 04	**NOTE** • **The following procedure may create other diagnostic codes. Ignore these created diagnostic codes and clear diagnostic codes when original diagnostic code is correct.** • **Ensure diagnostic code is active.**	
	1. Check sensor. Disconnect sensor from wiring harness (WP 0219 00)	1. If diagnostic code is still active, go to Test 2. 2. If diagnostic code is not active, replace sensor joystick (WP 0219 00).

Table 4. Implement Control - Continued.

(MID 082) MALFUNCTION	TEST OR INSPECTION	CORRECTIVE ACTION
0352 04 - Continued.	2. Check wiring harness. (a) Sensor remains disconnected from wiring harness. (b) Turn battery disconnect switch to OFF position (TM 5-3805-291-10). (c) Disconnect wiring harness implement ECM (WP 0060 00). (d) At wiring harness connector for implement ECM, measure resistance between connector J2-24 (wire H710-PK) and ground.	1. If resistance is greater than 5,000 Ohms, go to Test 3. 2. If resistance is less than 5,000 Ohms, replace wiring harness in question (WP 0195 00 thru WP 0201 00).
	3. Check +battery circuit. (a) Ensure engine start switch is in OFF position (TM 5-3805-291-10). (b) Connector for sensor remains disconnected. (c) Connector for implement ECM remains disconnected. (d) Measure resistance between fuse and contact 1 at connector for sensor.	1. If resistance is less than 5 Ohms, go to Test 4. 2. If resistance is greater than 5 Ohms, replace wiring harness in question (WP 0195 00 thru WP 0201 00).
	4. Check ground circuit. (a) Ensure engine start switch is in OFF position (TM 5-3805-291-10). (b) Connector for sensor remains disconnected. Connector for implement ECM remains disconnected. (c) Measure resistance between contact J1-26 at connector for implement ECM and contact 2 at connector for sensor.	1. If resistance is less than 5 Ohms, exit this procedure and repeat this troubleshooting procedure. If cause of diagnostic code is not found, replace implement ECM (WP 0060 00). 2. If resistance is greater than 5 Ohms, replace wiring harness in question (WP 0195 00 thru WP 0201 00).

Table 4. Implement Control - Continued.

(MID 082) MALFUNCTION	TEST OR INSPECTION	CORRECTIVE ACTION
	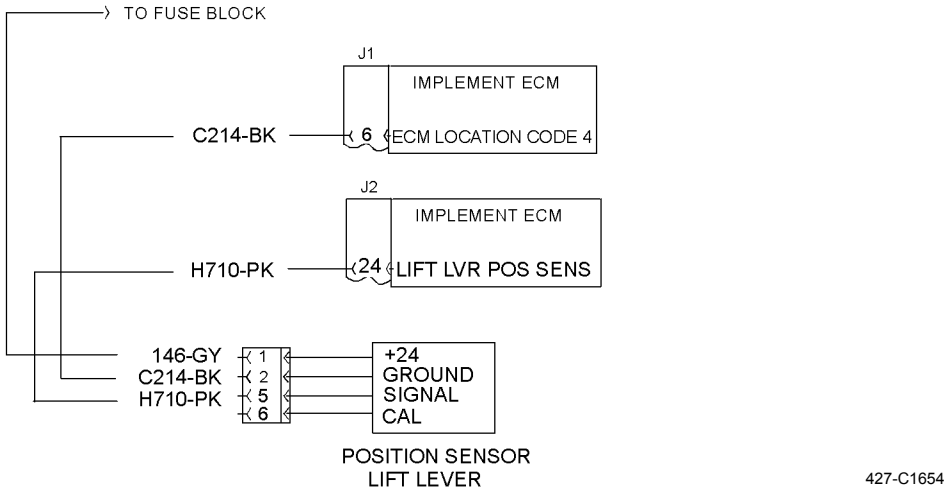	
0352 08	**NOTE** **Ensure diagnostic code CID 0352 FMI 08 is active.**	
	1. Check sensor. (a) Observe ON/OFF status of diagnostic code indicator. (b) Disconnect wiring harness from sensor.	1. If diagnostic code indicator is active, sensor is not causing diagnostic code. Go to Test 2. 2. If sensor has failed, replace sensor joystick (WP 0219 00).
	2. Check wiring harness. (a) Sensor remains disconnected from wiring harness. (b) Turn battery disconnect switch to OFF position (TM 5-3805-291-10). (c) Disconnect wiring harness from implement ECM (WP 0060 00). (d) At wiring harness connector for sensor, measure resistance between signal contact 5 (wire H710-PK) and ground.	1. If resistance is greater than 5,000 Ohms, exit this procedure and repeat this troubleshooting procedure. If diagnostic code is not found, replace implement ECM (WP 0060 00). 2. If resistance is less than 5,000 Ohms, replace wiring harness in question (WP 0195 00 thru WP 0201 00).

Table 4. Implement Control - Continued.

(MID 082) MALFUNCTION	TEST OR INSPECTION	CORRECTIVE ACTION
0352 08 - Continued.	3. Check sensor output. (a) Reconnect wiring harness connectors to implement ECM. Reconnect wiring harness connector to sensor. (b) At wiring harness connector for sensor, connect positive lead from multimeter to contact 5. (c) At wiring harness connector for sensor, connect negative lead from multimeter to contact 2. (d) Turn battery disconnect and engine start switches to ON position (TM 5-3805-291-10). (e) Set multimeter to setting for frequency (Hz). Measure sensor output.	1. If PWM signal from sensor is a 500 Hz signal between 5% and 95%, go to Test 4. 2. If PWM signal from sensor is not a 500 Hz signal or signal is not between 5% and 95%, replace joystick (WP 0219 00).
	4. Check if diagnostic code remains active. (a) Disconnect, inspect, and clean all wiring harness connectors and reconnect. Refer to *Electrical Connectors Inspection* (WP 0022 00) as necessary. (b) Reconnect all wiring harness connectors. (c) Operate machine (TM 5-3805-291-10). (d) Use messenger to check status of CID 0352 FMI 08 (TM 5-3805-291-10).	1. If CID 0352 FMI 08 is not active, initial diagnostic code was probably caused by poor electrical connection or short at wiring harness connector that was disconnected and reconnected. Resume normal machine operation. 2. If CID 0352 FMI 08 is active, exit this procedure and repeat this procedure. If cause of diagnostic code is not found, replace implement ECM (WP 0060 00).

Table 4. Implement Control - Continued.

(MID 082) MALFUNCTION	TEST OR INSPECTION	CORRECTIVE ACTION
0352 13	**NOTE** **• Use ET to verify cycle time of each lever position.** **• Ensure diagnostic code is active.**	
	Recalibrate lever position sensor (WP 0017 00).	1. If calibration causes this diagnostic code to become inactive, resume normal machine operation. 2. If calibration has not caused diagnostic code to become inactive, Connect MSD (WP 0005 00) and verify cycle time of each lever position. Refer to *Duty Cycle Signal as a Function of Control Lever* (Table 14) at the end of this work package, if cycle time values are not correct, replace joystick (WP 0219 00).
0353 00 **0353 01**	**NOTE** **• The following procedure may create other diagnostic codes. Ignore these created diagnostic codes and clear diagnostic codes when original diagnostic code is corrected.** **• Ensure diagnostic code is active.**	
	Recalibrate lever position sensor (WP 0017 00).	1. If calibration causes this diagnostic code to become inactive, resume normal machine operation. 2. If calibration has not caused diagnostic code to become inactive, replace joystick (WP 0219 00).

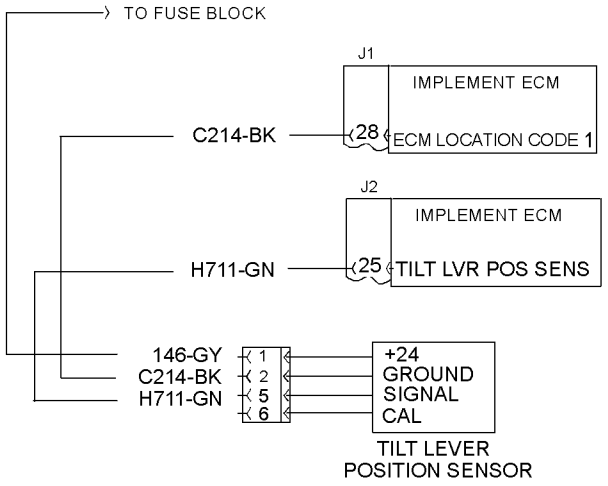

427-C1655

Table 4. Implement Control - Continued.

(MID 082) MALFUNCTION	TEST OR INSPECTION	CORRECTIVE ACTION
	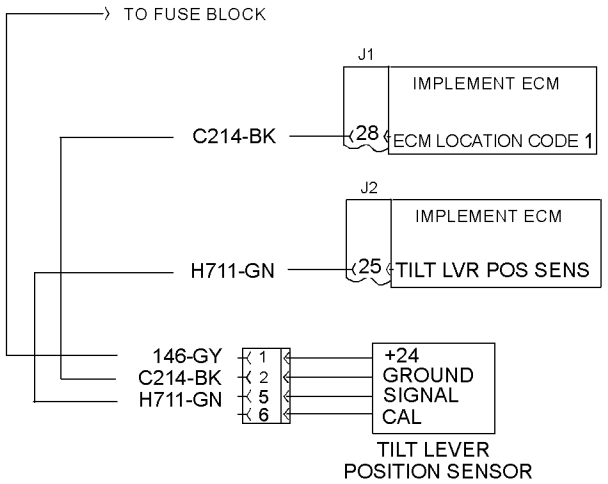	
0353 03	**NOTE** • **The following test procedure may create other diagnostic codes. Ignore these may create other diagnostic codes. Ignore these created diagnostic codes and clear diagnostic codes when original diagnostic code is corrected.** • **Ensure diagnostic code is active.** 1. Check for power at sensor. (a) Do not disconnect wiring harness connector from sensor. (b) Turn engine start and battery disconnect switches to ON position (TM 5-3805-291-10). (c) At wiring harness connector for sensor, measure voltage from contact 1 to contact 2. 2. Check for proper ground at sensor. (a) Wiring harness remains connected to sensor. (b) Turn engine start and battery disconnect switches to OFF position (TM 5-3805-291-10).	1. If voltage is system voltage, go to Test 2. 2. If voltage is not system voltage, +battery circuit in wiring harness has failed. Replace wiring harness in question (WP 0195 00 thru WP 0201 00).

Table 4. Implement Control - Continued.

(MID 082) MALFUNCTION	TEST OR INSPECTION	CORRECTIVE ACTION
0353 03 - Continued.	(c) At wiring harness connector for sensor, measure resistance from contact 2 to frame ground.	1. If resistance is less than 5 Ohms, go to Test 3. 2. If resistance is greater than 5 Ohms, replace wiring harness in question (WP 0195 00 thru WP 0201 00).
	3. Check wiring harness of position sensor for open circuit. (a) Turn engine start and battery disconnect switches to OFF position (TM 5-3805-291-10). (b) Disconnect wiring harness from position sensor (WP 0219 00). (c) At wiring harness connector for sensor, connect a jumper wire between contact 2 and contact 3. (d) Disconnect wiring harness connectors from implement ECM (WP 0060 00).	
	(e) At wiring harness connector for implement ECM, measure resistance between contact J2-25 (wire H711-GN) and contact J1-26 (wire C214-BK).	1. If resistance measurement is less than 5 Ohms, go to Test 4. 2. If resistance is greater than 5 Ohms, replace wiring harness in question (WP 0195 00 thru WP 0201 00).
	4. Check wiring harness of position sensor for short to +battery circuit. (a) Turn engine start and battery disconnect switches to OFF position (TM 5-3805-291-10). (b) Wiring harness remains disconnected from position sensor. Remove jumper wire that was installed in Test 3. (c) Wiring harness connectors remain disconnected from implement ECM.	

Table 4. Implement Control - Continued.

(MID 082) MALFUNCTION	TEST OR INSPECTION	CORRECTIVE ACTION
0353 03 - Continued.	(d) At wiring harness connector for implement ECM, measure resistance from signal contact J2-25 (wire H711-GN) of wiring harness to all possible sources of +battery circuit. Measure resistance to all contacts used in J2 and J1 wiring harness connectors.	1. If each resistance measurement is greater than 5,000 Ohms, go to Test 5. 2. If one or more resistance measurements is not correct, replace wiring harness in question (WP 0195 00 thru WP 0201 00).
	5. Check sensor output.	
	(a) Reconnect wiring harness connectors to implement ECM. Reconnect wiring harness connector to sensor.	
	(b) At wiring harness connector for sensor, connect positive lead from multimeter to contact 3.	
	(c) At wiring harness connector for sensor, connect negative lead from multimeter to contact 2.	
	(d) Turn battery disconnect and engine start switches to ON position (TM 5-3805-291-10).	
	(e) Set multimeter to setting for frequency (Hz). Measure sensor output.	1. If PWM signal from sensor is a 500 Hz signal between 5% and 95%, go to Test 6. 2. If PWM signal from sensor is not a 500 Hz signal, or signal is not between 5% and 95%, replace joystick (WP 0219 00).
	6. Check if diagnostic code remains active.	
	(a) Disconnect, inspect, and clean all wiring harness connectors and reconnect. Refer to *Electrical Connectors Inspection* (WP 0022 00) as necessary.	
	(b) Reconnect all wiring harness connectors.	
	(c) Operate machine (TM 5-3805-291-10).	

Table 4. Implement Control - Continued.

(MID 082) MALFUNCTION	TEST OR INSPECTION	CORRECTIVE ACTION
0353 03 - Continued.	(d) Use messenger to check status of CID 0353 FMI 03 (TM 5-3805-291-10).	1. If CID 0353 FMI 03 is not active, initial diagnostic code was probably caused by poor electrical connection or short at wiring harness connector that was disconnected and reconnected. Resume normal machine operation. 2. If CID 0353 FMI 03 is active, exit this procedure and repeat this procedure. If cause of diagnostic code is not found, replace implement ECM (WP 0060 00).
	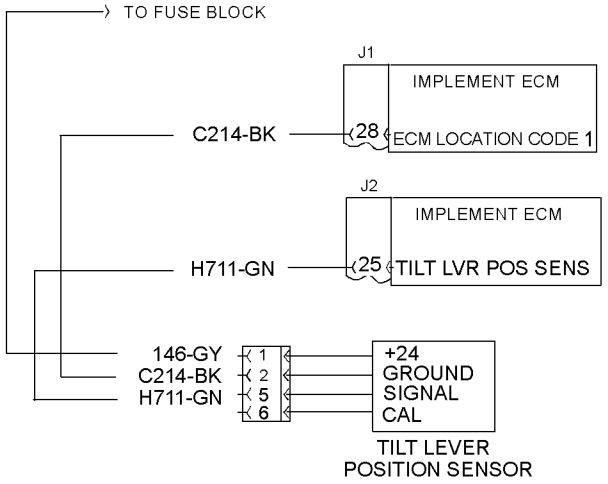 427-C1655	
0353 04	**NOTE** • **The following procedure may create other diagnostic codes. Ignore these created diagnostic codes and clear diagnostic codes when original diagnostic code is corrected.** • **Ensure diagnostic code is active.**	
	1. Check sensor. Disconnect sensor from wiring harness (WP 0219 00). 2. Check wiring harness. (a) Sensor remains disconnected. (b) Turn battery disconnect switch to OFF position (TM 5-3805-291-10).	1. If sensor is not cause of diagnostic code, go to Test 2. 2. If service code is inactive, replace joystick (WP 0219 00).

Table 4. Implement Control - Continued.

(MID 082) MALFUNCTION	TEST OR INSPECTION	CORRECTIVE ACTION
0353 04 - Continued.	(c) Disconnect wiring harness from implement ECM (WP 0060 00).	
	(d) At wiring harness connector for implement ECM, measure resistance between connector J2-25 (wire H711-GN) and ground.	1. If resistance is greater than 5,000 Ohms, go to Test 3. 2. If resistance is less than 5,000 Ohms, replace wiring harness in question (WP 0195 00 thru WP 0201 00).
	3. Check +battery circuit.	
	(a) Ensure engine start switch is in OFF position (TM 5-3805-291-10).	
	(b) Connector for sensor remains disconnected. Connector for implement ECM remains disconnected.	
	(c) Measure resistance between fuse and contact 1 at connector for sensor.	1. If resistance is less than 5 Ohms, go to Test 4. 2. If resistance is greater than 5 Ohms, replace wiring harness in question (WP 0195 00 thru WP 0201 00).
	4. Check ground circuit.	
	(a) Ensure engine start switch is in OFF position (TM 5-3805-291-10).	
	(b) Connector for sensor remains disconnected. Connector for implement ECM remains disconnected.	
	(c) Measure resistance between contact J1-26 at connector for implement ECM and contact 2 at connector for sensor.	1. If resistance is less than 5 Ohms, exit this procedure and repeat this troubleshooting procedure. If cause of diagnostic code is not found, replace implement ECM (WP 0060 00). 2. If resistance is greater than 5 Ohms, replace wiring harness in question (WP 0195 00 thru WP 0201 00).

Table 4. Implement Control - Continued.

(MID 082) MALFUNCTION	TEST OR INSPECTION	CORRECTIVE ACTION
	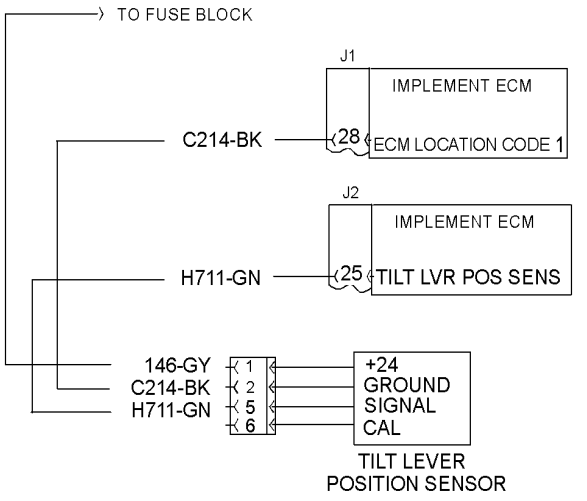	
0353 08	1. Check sensor. (a) Observe ON/OFF status of diagnostic code indicator.	
	(b) Disconnect wiring harness from sensor (WP 0219 00).	1. If diagnostic code is active, sensor is not causing diagnostic code. Go to Test 2. 2. If diagnostic code is inactive, replace joystick (WP 0219 00).
	2. Check wiring harness. (a) Sensor remains disconnected from wiring harness. (b) Turn battery disconnect switch to OFF position (TM 5-3805-291-10). (c) Disconnect wiring harness from implement ECM (WP 0060 00).	
	(d) At wiring harness connector for sensor, measure resistance between signal contact 3 (wire H711-GN) and ground.	1. If resistance is greater than 5,000 Ohms, exit this procedure and repeat this troubleshooting procedure. If diagnostic code is not found, replace implement ECM (WP 0060 00). 2. If resistance is less than 5,000 Ohms, replace wiring harness.
	3. Check sensor output. (a) Reconnect wiring harness connectors to implement ECM. Reconnect wiring harness connector to sensor.	

Table 4. Implement Control - Continued.

(MID 082) MALFUNCTION	TEST OR INSPECTION	CORRECTIVE ACTION
0353 08 - Continued.	(b) At wiring harness connector for sensor, connect positive lead from multimeter to contact 3.	
	(c) Turn battery disconnect and engine start switches to ON position (TM 5-3805-291-10).	
	(d) Set multimeter to setting for frequency (Hz). Measure sensor output.	1. If PWM signal from sensor is a 500 Hz signal between 5% and 95%, go to Test 4. 2. If PWM signal from sensor is not a 500 Hz signal or signal is not between 5% and 95%, replace joystick (WP 0219 00).
	4. Check if diagnostic code remains active.	
	(a) Disconnect, inspect, and clean all relevant wiring harness connector contacts (WP 0237 00).	
	(b) Reconnect all wiring harness connectors.	
	(c) Operate machine (TM 5-3805-291-10).	
	(d) Use messenger to check status of CID 0353 FMI 08 (TM 5-3805-291-10).	1. If CID 0353 FMI 08 is not active, initial diagnostic code was probably caused by poor electrical connection or short at wiring harness connector that was disconnected and reconnected. Resume normal machine operation. 2. If CID 0353 FMI 08 is active, exit this procedure and repeat this procedure. If cause of diagnostic code is not found, replace implement ECM (WP 0060 00).
0353 13	Recalibrate lever position sensor (WP 0017 00).	1. If calibration causes this diagnostic code to become inactive, resume normal machine operation. 2. If calibration has not caused diagnostic code to become inactive, connect MSD (WP 0005 00) and verify cycle time of each lever position. Refer to Table 14 in back of this work package if cycle time values are not correct, replace joystick (WP 0219 00).

Table 4. Implement Control - Continued.

(MID 082) MALFUNCTION	TEST OR INSPECTION	CORRECTIVE ACTION
	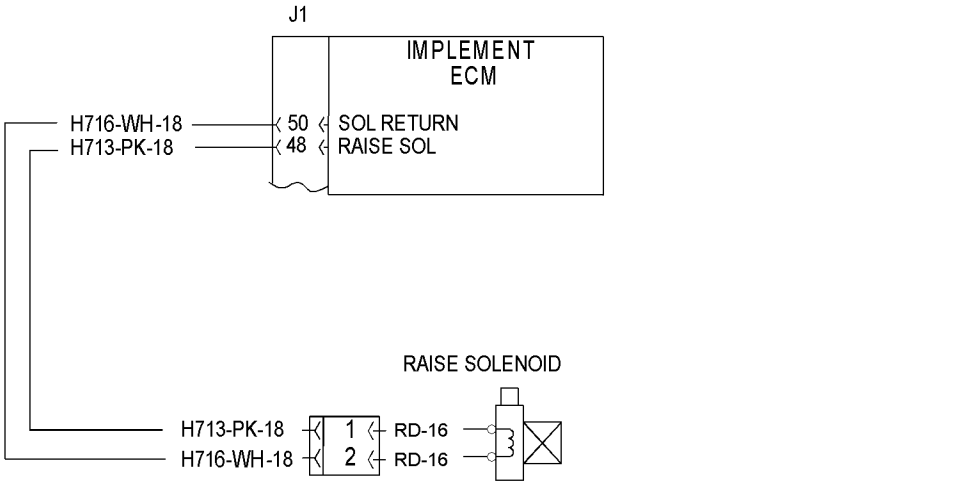	
0354 03	**NOTE** **This test causes implement ECM to log an open circuit diagnostic code for this solenoid. Clear this diagnostic code from implement ECM after troubleshooting.**	
	1. Check solenoid. (a) Turn engine start switch to OFF position (TM 5-3805-291-10). (b) Disconnect raise solenoid from wiring harness (WP 0218 00). (c) Turn engine start switch to ON position (TM 5-3805-291-10). (d) Place direction lever in NEUTRAL position. (e) At connector for solenoid, measure voltage from implement ECM between contact 1 (wire H713-PK) and contact 2 (wire H716-WH).	1. If voltage is approximately 5 DCV, replace solenoid (WP 0218 00). 2. If voltage is approximately battery voltage, go to Test 2.

Table 4. Implement Control - Continued.

(MID 082) MALFUNCTION	TEST OR INSPECTION	CORRECTIVE ACTION
0354 03 - Continued.	2. Check wiring harness. (a) Turn engine start switch to OFF position (TM 5-3805-291-10). (b) Disconnect wiring harness from implement ECM (WP 0060 00). (c) Turn engine start switch to ON position (TM 5-3805-291-10). (d) At wiring harness connector for implement ECM, measure voltage between contact J1-50 (wire H716-WH) and contact J1-48 (wire H713-PK).	1. If voltage is approximately battery voltage, replace wiring harness in question (WP 0195 00 thru WP 0201 00). 2. If voltage is approximately 0 DCV, go to Test 3.
	3. Ensure diagnostic code remains active. (a) Turn engine start switch to OFF position (TM 5-3805-291-10). (b) Disconnect and inspect all wiring harness connectors and reconnect. Refer to *Electrical Connectors Inspection* (WP 0022 00) as necessary. (c) Turn engine start switch to ON position (TM 5-3805-291-10). (d) Operate machine. Use messenger to ensure same diagnostic code is active (TM 5-3805-291-10).	1. If diagnostic code is active, exit this procedure and repeat this test procedure. If cause of diagnostic code is not found, replace implement ECM (WP 0060 00). 2. If diagnostic code is not active, initial diagnostic code was probably caused by a poor electrical connection wiring harness connector that was disconnected and reconnected. Resume normal machine operation.

Table 4. Implement Control - Continued.

(MID 082) MALFUNCTION	TEST OR INSPECTION	CORRECTIVE ACTION
	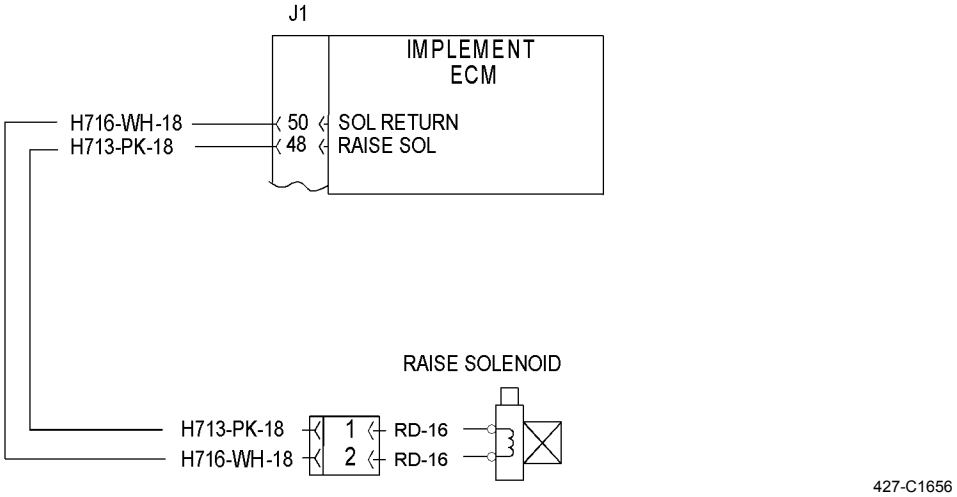	
0354 05	**NOTE** • **The following procedure may create other diagnostic codes. Ignore these created diagnostic codes. Clear these diagnostic codes when original code is corrected.** • **Ensure diagnostic code indicator is active and diagnostic code is active.**	
	1. Check solenoid. (a) Turn battery disconnect and engine start switches to ON position (TM 5-3805-291-10). (b) Disconnect raise solenoid from wiring harness (WP 0218 00). (c) Observe ON/OFF status of diagnostic code indicator. (d) At wiring harness connector for solenoid, place a jumper wire between contact 1 (wire H713-PK) and contact 2 (wire H716-WH).	1. If diagnostic code indicator remains active, go to Test 2. 2. If diagnostic code indicator is inactive, repeat this test in order to verify diagnostic code. Replace solenoid or harness at solenoid (WP 0218 00).
	2. Check wiring harness. (a) Turn battery disconnect switch to OFF position (TM 5-3805-291-10). (b) Remove jumper wire from contact 1 (wire H713-PK) to contact 2 (wire H716-WH).	

Table 4. Implement Control - Continued.

(MID 082) MALFUNCTION	TEST OR INSPECTION	CORRECTIVE ACTION
0354 05 - Continued.	(c) Reconnect solenoid valve to wiring harness. (d) Disconnect wiring harness from implement ECM (WP 0060 00). (e) At wiring harness connector for implement ECM, measure resistance between contacts J1-50 (wire H716-WH) and contact for failed solenoid J1-48 (wire H713-PK).	1. If resistance is greater than 5,000 Ohms (no continuity), wiring harness circuit has failed. Replace wiring harness in question (WP 0195 00 thru WP 0201 00). 2. If resistance is from 6 to 12 Ohms, exit this test and repeat test. Also, ensure diagnostic code indicator is active for this diagnostic code. If cause is not found, replace implement ECM (WP 0060 00).
	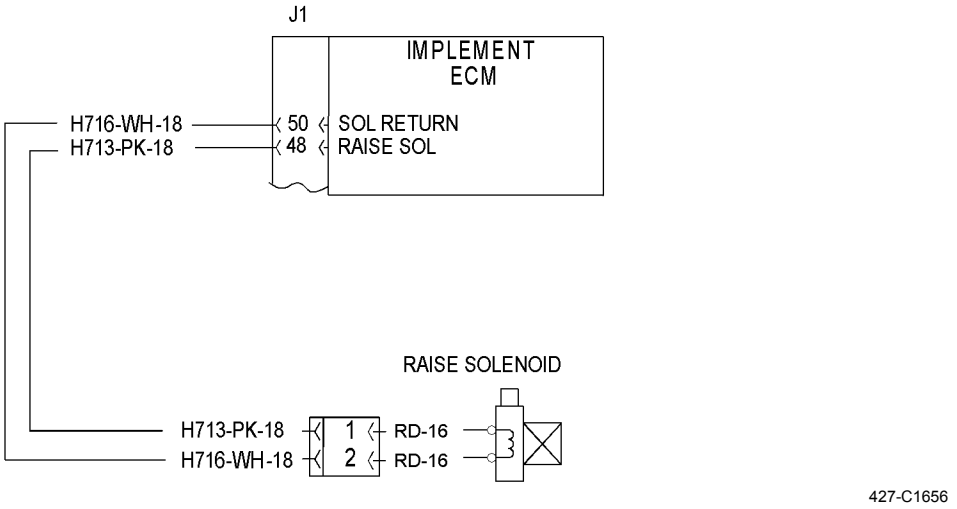	
0354 06	**NOTE** **• The following procedure may create other diagnostic codes. Ignore created diagnostic codes. Clear these diagnostic codes when optional diagnostic code has been corrected.** **• Ensure diagnostic code is active and diagnostic code indicator is active.**	

Table 4. Implement Control - Continued.

(MID 082) MALFUNCTION	TEST OR INSPECTION	CORRECTIVE ACTION
0354 06 - Continued.	1. Check solenoid. (a) Turn battery disconnect and engine start switches to ON position (TM 5-3805-291-10). (b) Observe ON/OFF status of diagnostic code indicator. (c) Disconnect raise solenoid from wiring harness (WP 0218 00).	1. If diagnostic code indicator remains active, go to Test 2. 2. If diagnostic code indicator is inactive, repeat this test to verify failure. Replace solenoid or wiring harness in question (WP 0195 00 thru WP 0201 00).
	2. Check for shorted wiring harness. (a) Turn battery disconnect switch to OFF position (TM 5-3805-291-10). (b) Solenoid valve remains disconnected. (c) Disconnect wiring harness from implement ECM (WP 0060 00). (d) At wiring harness connector for implement ECM, measure resistance between contacts for solenoid with failed circuit contact J1-48 (wire H713-PK) and J1-50 (wire H716-WH).	1. If resistance is less than 5,000 Ohms (continuity), replace wiring harness in question (WP 0195 00 thru WP 0201 00). 2. If resistance is greater than 5,000 Ohms (no continuity), repeat this procedure. Also, ensure diagnostic code indicator is active for this diagnostic code. If cause is not found, replace implement ECM (WP 0060 00).
0354 13	**NOTE** **Ensure diagnostic code indicator is active and diagnostic code is active.**	
	Check calibration of main control valve. (a) Calibrate main control valve (WP 0017 00). (b) Use messenger to recheck diagnostic code (TM 5-3805-291-10). (c) Ensure diagnostic code is active.	

Table 4. Implement Control - Continued.

(MID 082) MALFUNCTION	TEST OR INSPECTION	CORRECTIVE ACTION
0354 13 - Continued.	(d) Observe ON/OFF status of diagnostic code indicator as lift arm is fully raised and lowered.	1. If diagnostic code indicator is inactive, calibration corrected diagnostic code. Clear diagnostic code. 2. If diagnostic code indicator is active, perform calibration for main control valve again. Also, ensure diagnostic code indicator is active for this diagnostic code. If cause is not found, replace solenoid and repeat calibration. If this does not eliminate diagnostic code, replace implement ECM (WP 0060 00).
	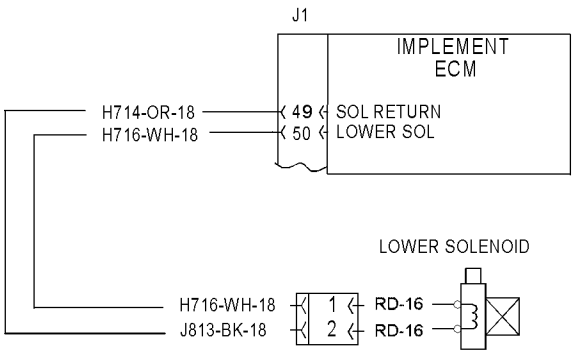 427-C1657	
0355 03	**NOTE** **• All solenoid return lines connect to contacts J1-49 (wire H714-OR and J1-50 wire H716-WH) of implement ECM.** **• The following procedure may create other diagnostic codes. Ignore these created diagnostic codes and clear diagnostic codes when original diagnostic code is corrected.** **• Ensure diagnostic code is active and that diagnostic code indicator is active.** 1. Check solenoid. (a) Turn engine start switch to OFF position (TM 5-3805-291-10). (b) Disconnect lower solenoid from wiring harness (WP 0218 00). (c) Turn engine start switch to ON position (TM 5-3805-291-10). (d) Place direction lever in NEUTRAL position (TM 5-3805-291-10).	

Table 4. Implement Control - Continued.

(MID 082) MALFUNCTION	TEST OR INSPECTION	CORRECTIVE ACTION
0355 03 - Continued.	(e) At wiring harness connector for solenoid, measure voltage from implement ECM between contact 1 (wire H714-OR) and contact 2 (wire H716-WH).	1. If voltage is approximately 5 DCV, replace solenoid (WP 0218 00). 2. If voltage is approximately battery voltage, go to Test 2.
	2. Check wiring harness. (a) Turn engine start switch to OFF position (TM 5-3805-291-10). (b) Disconnect wiring harness from implement ECM (WP 0060 00). (c) Turn engine start switch to ON position (TM 5-3805-291-10).	
	(d) At wiring harness connector for implement ECM, measure voltage between contact J1-50 (wire H716-WH) and contact J1-49 (wire H714-OR).	1. If voltage is approximately battery voltage, replace wiring harness in question (WP 0195 00 thru WP 0201 00). 2. If voltage is approximately 0 DCV, go to Test 3.
	3. Check if diagnostic code remains active. (a) Turn engine start switch to OFF position (TM 5-3805-291-10). (b) Disconnect and inspect all wiring harness connectors and reconnect. Refer to *Electrical Connectors Inspection* (WP 0022 00) as necessary. (c) Turn engine start switch to ON position (TM 5-3805-291-10).	
	(d) Operate machine and use messenger to ensure same diagnostic code is active (TM 5-3805-291-10).	1. If diagnostic code is active, exit this procedure and repeat this troubleshooting procedure. If cause of diagnostic code is not found, replace implement ECM (WP 0060 00). 2. If diagnostic code is inactive, initial diagnostic code was probably caused by poor electrical connection at wiring harness connector that was disconnected and reconnected. Resume normal machine operation.

Table 4. Implement Control - Continued.

(MID 082) MALFUNCTION	TEST OR INSPECTION	CORRECTIVE ACTION
	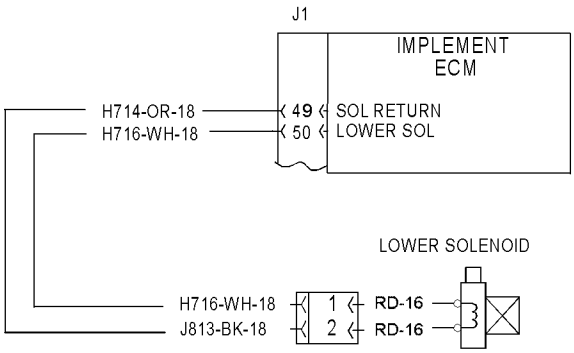 427-C1657	
0355 05	**NOTE** • **All solenoid return lines for solenoid are joined and return lines are connected to contact J1-50 (wire H716-WH) of implement ECM.** • **The following procedure may create other diagnostic codes. Ignore these created diagnostic codes and clear diagnostic codes when original diagnostic code is corrected.** • **Ensure diagnostic code is active and diagnostic code indicator is active.**	
	1. Check solenoid. (a) Turn battery disconnect and engine start switches to ON position (TM 5-3805-291-10). (b) Disconnect lower solenoid from wiring harness (WP 0218 00). (c) Observe ON/OFF status of diagnostic code indicator.	
	NOTE **Approximate resistance of a proportional solenoid valve is from 6 to 12 Ohms.**	
	(d) At wiring harness connector for solenoid, place a jumper wire between contact 1 (wire H714-OR) and contact 2 (wire H716-WH).	1. If diagnostic code indicator remains active, go to Test 2. 2. If diagnostic code indicator is inactive, repeat this test to verify failure. Replace solenoid (WP 0218 00) or wiring harness in question (WP 0195 00 thru WP 0201 00).

Table 4. Implement Control - Continued.

(MID 082) MALFUNCTION	TEST OR INSPECTION	CORRECTIVE ACTION
0355 05 - Continued.	2. Check wiring harness. (a) Turn battery disconnect and engine start switches to ON position (TM 5-3805-291-10). (b) Remove jumper wire from contact 1 (wire H714-OR) to contact 2 (wire H716-WH). (c) Reconnect solenoid valve to wiring harness. (d) Disconnect wiring harness from implement ECM (WP 0060 00). (e) At wiring harness connector for implement ECM, measure resistance between contacts J1-50 (wire H716-WH) and contact J1-49 (wire H714-OR).	1. If resistance is greater than 5,000 Ohms (no continuity), replace wiring harness in question (WP 0195 00 thru WP 0201 00). 2. If resistance is from 6 to 12 Ohms, wiring harness circuit resistance is correct, exit this procedure and repeat this troubleshooting procedure. Also, ensure diagnostic code indicator is active for this diagnostic code. If cause is not found, replace implement ECM (WP 0060 00).
	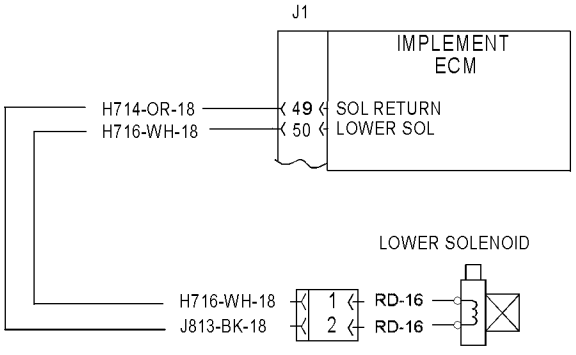 427-C1657	
0355 06	**NOTE** **• All solenoid return lines connect to contact J1-50 (wire H716-WH) of implement ECM.** **• The following procedure may create other diagnostic codes. Ignore these created diagnostic codes and clear diagnostic codes when original diagnostic code is corrected.** **• Ensure diagnostic code is active and diagnostic code indicator is active.**	

Table 4. Implement Control - Continued.

(MID 082) MALFUNCTION	TEST OR INSPECTION	CORRECTIVE ACTION
0355 06 - Continued.	1. Check solenoid. (a) Turn battery disconnect and engine start switches to ON position (TM 5-3805-291-10). (b) Observe ON/OFF status of diagnostic code indicator.	
	(c) Disconnect lower solenoid from wiring harness (WP 0218 00).	1. If diagnostic code indicator remains active, harness or implement ECM has failed. Go to Test 2. 2. If diagnostic code indicator is inactive, solenoid valve or connecting wiring harness has failed. Repeat this test to verify failure. Replace solenoid or connecting wiring harness in question (WP 0195 00 thru WP 0201 00).
	2. Check for shorted wiring harness. (a) Turn battery disconnect switch to OFF position (TM 5-3805-291-10). (b) Solenoid valve remains disconnected. (c) Disconnect wiring harness from implement ECM (WP 0060 00).	
	(d) At wiring harness connector for implement ECM, measure resistance between contact for failed solenoid circuit J1-49 (wire H714-OR) and contact J1-50 (ground) (wire H716-WH).	1. If resistance is less than 5,000 Ohms (continuity), replace wiring harness in question (WP 0195 00 thru WP 0201 00). 2. If resistance is greater than 5,000 Ohms (no continuity), exit this procedure and repeat this troubleshooting procedure. Also, recheck if diagnostic code indicator is active for this diagnostic code. If cause is not found, replace implement ECM (WP 0060 00).
0355 13	**NOTE** **Ensure diagnostic code is active and diagnostic code indicator is active.**	
	Check calibration of main control valve. (a) Calibrate main control valve (WP 0017 00). (b) Recheck diagnostic code. (c) Ensure diagnostic code is active.	

Table 4. Implement Control - Continued.

(MID 082) MALFUNCTION	TEST OR INSPECTION	CORRECTIVE ACTION
0355 13 - Continued.	(d) Observe ON/OFF status of diagnostic code indicator as lift arm is fully raised and lowered.	1. If diagnostic code indicator is inactive, calibration corrected diagnostic code. Clear diagnostic code. 2. If diagnostic code indicator is active, repeat calibration for main control valve. Also, ensure diagnostic code indicator is active for this diagnostic code. If cause is not found, replace solenoid (WP 0218 00) and perform calibration again. If this does not eliminate diagnostic code, replace implement ECM (WP 0060 00).
	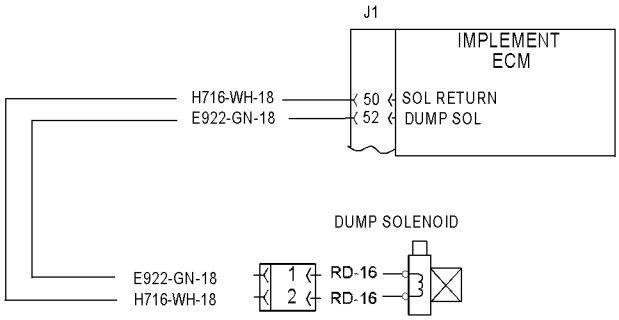	
0356 03	**NOTE** **• All solenoid return lines connect to J1-50 (wire H716-WH) of implement ECM.** **• The following procedure may create other diagnostic codes. Ignore these created diagnostic codes and clear diagnostic codes when original diagnostic code is corrected.** **• Ensure diagnostic code is active and that diagnostic code indicator is active.** **• This test causes implement ECM to log an open circuit diagnostic code for this solenoid. Clear this code from implement ECM after troubleshooting.**	
	1. Check solenoid. (a) Turn engine start switch to OFF position (TM 5-3805-291-10). (b) Disconnect dump solenoid from wiring harness (WP 0218 00). (c) Turn engine start switch to ON position (TM 5-3805-291-10). (d) Place direction lever in NEUTRAL position.	

Table 4. Implement Control - Continued.

(MID 082) MALFUNCTION	TEST OR INSPECTION	CORRECTIVE ACTION
0356 03 - Continued.	(e) At wiring harness connector for solenoid, measure voltage from implement ECM between contact 2 (wire H716-WH) and contact 1 (wire E922-GN).	1. If voltage is approximately 5 DCV, solenoid has failed. Replace solenoid (WP 0218 00). 2. If voltage is approximately battery voltage, go to Test 2.
	2. Check wiring harness. (a) Turn engine start switch to OFF position (TM 5-3805-291-10). (b) Disconnect wiring harness from implement ECM (WP 0060 00). (c) Turn engine start switch to ON position (TM 5-3805-291-10).	
	(d) At wiring harness connector for implement ECM, measure voltage between contact J-50 (wire H716-WH) and contact J1-52 (wire E922-GN).	1. If voltage is approximately battery voltage, replace wiring harness in question (WP 0195 00 thru WP 0201 00). 2. If voltage is approximately 0 DCV, go to Test 3.
	3. Check if diagnostic code remains active. (a) Turn engine start switch to OFF position (TM 5-3805-291-10). (b) Disconnect and inspect all wiring harness connectors and reconnect. Refer to *Electrical Connectors Inspection* (WP 0022 00) as necessary. (c) Turn engine start switch to ON position (TM 5-3805-291-10).	
	(d) Operate machine and use messenger to ensure diagnostic code is active (TM 5-3805-291-10).	1. If diagnostic code is active, exit this procedure and repeat this troubleshooting procedure. If cause of diagnostic code is not found, replace implement ECM (WP 0060 00). 2. If diagnostic code is not active, initial diagnostic code was probably caused by poor electrical connection at wiring harness connectors that was disconnected and reconnected. Resume normal machine operation.

Table 4. Implement Control - Continued.

(MID 082) MALFUNCTION	TEST OR INSPECTION	CORRECTIVE ACTION
	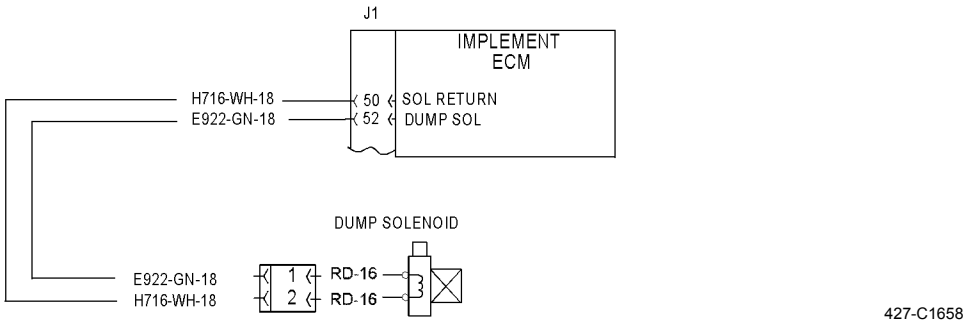	
0356 05	**NOTE** • **The following test procedure may create other diagnostic codes. Ignore these created diagnostic codes and clear diagnostic codes when original diagnostic code is corrected.** • **Return lines for solenoids are joined and return lines connect to contact J1-50 (wire H716-WH) of implement ECM.** • **Ensure diagnostic code indicator is active and diagnostic code is active.**	
	1. Check solenoid. (a) Turn battery disconnect and engine start switches to ON position (TM 5-3805-291-10). (b) Disconnect dump solenoid from wiring harness (WP 0218 00). (c) Observe ON/OFF status of diagnostic code indicator. (d) At wiring harness connector for solenoid, place a jumper wire between contact 2 (wire H716-WH) and contact 1 (wire E922-GN).	1. If diagnostic code indicator remains active, harness or implement ECM has failed. Go to Test 2. 2. If diagnostic code indicator is inactive, repeat this test to verify failure. Replace solenoid (WP 0218 00) or replace wiring harness in question (WP 0195 00 thru WP 0201 00). Approximate resistance of a proportional solenoid valve is from 6 to 12 Ohms.

Table 4. Implement Control - Continued.

(MID 082) MALFUNCTION	TEST OR INSPECTION	CORRECTIVE ACTION
0356 05 - Continued.	**NOTE** **Approximate resistance of a proportional solenoid valve is from 6 to 12 Ohms.**	
	2. Check wiring harness. (a) Turn battery disconnect switch to OFF position (TM 5-3805-291-10). (b) Remove jumper wire from contact 1 to 2. (c) Reconnect solenoid valve to wiring harness. (d) Disconnect wiring harness from implement ECM (WP 0060 00).	
	(e) At wiring harness connector for implement ECM, measure resistance between contacts J1-50 (wire H716-WH) and contact J1-52 (wire E922-GN).	1. If resistance is greater than 5,000 Ohms (no continuity), harness circuit has failed. Replace wiring harness in question (WP 0195 00 thru WP 0201 00). 2. If resistance is from 6 to 12 Ohms, exit this procedure and perform this troubleshooting procedure. Also, recheck if diagnostic code indicator is active for this diagnostic code. If cause is not found, replace implement ECM (WP 0060 00).
	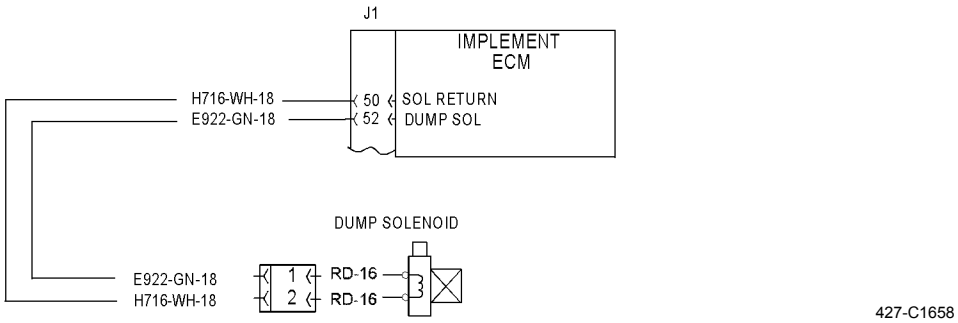	
0356 06	**NOTE** • **All solenoid return lines connect to contact J1-50 (wire H716-WH) of implement ECM.** • **The following test procedure may create other diagnostic codes. Ignore these created diagnostic codes and clear diagnostic codes when original diagnostic code is corrected.** • **Ensure diagnostic code indicator is active and diagnostic code is active.**	

Table 4. Implement Control - Continued.

(MID 082) MALFUNCTION	TEST OR INSPECTION	CORRECTIVE ACTION
0356 06 - Continued.	1. Check solenoid. (a) Turn battery disconnect and engine start switches to ON position (TM 5-3805-291-10). (b) Observe ON/OFF status of diagnostic code indicator. (c) Disconnect dump solenoid from wiring harness (WP 0218 00).	1. If diagnostic code indicator remains active, harness or implement ECM has failed. Go to Test 2. 2. If diagnostic code indicator is inactive, repeat this test to verify failure. Replace solenoid or wiring harness in question (WP 0195 00 thru WP 0201 00).
	2. Check for shorted wiring harness. (a) Turn battery disconnect switch to OFF position (TM 5-3805-291-10). (b) Solenoid valve remains disconnected. (c) Disconnect wiring harness from implement ECM (WP 0060 00). (d) At wiring harness connector for implement ECM, measure resistance between contact for failed solenoid circuit J1-52 (wire E922-GN) and contact J1-50 (ground) (wire H716-WH).	1. If resistance is less than 5,000 Ohms (continuity), harness has failed. Replace wiring harness in question (WP 0195 00 thru WP 0201 00). 2. If resistance is greater than 5,000 Ohms (no continuity), harness circuit resistance is correct. Exit this procedure and repeat this troubleshooting procedure. Also, recheck if diagnostic code indicator is active for this diagnostic code. If cause is not found, replace implement ECM (WP 0060 00).
0356 13	**NOTE** **Ensure diagnostic code is active and diagnostic code indicator is active.**	
	Check calibration of main control valve. (a) Calibrate main control valve (WP 0017 00). (b) Recheck diagnostic code. (c) Ensure diagnostic code is active.	

Table 4. Implement Control - Continued.

(MID 082) MALFUNCTION	TEST OR INSPECTION	CORRECTIVE ACTION
356 13 - Continued.	(d) Observe ON/OFF status of diagnostic code indicator as work tool is tilted back fully and work tool is dumped.	1. If diagnostic code indicator is inactive, calibration corrected diagnostic code. Clear diagnostic code 2. If diagnostic code indicator is active, perform calibration for main control valve again. Also, ensure diagnostic code indicator is active for this diagnostic code. If cause is not found, replace solenoid (WP 0218 00) and repeat calibration. If this does not eliminate diagnostic code, replace implement ECM (WP 0060 00).
	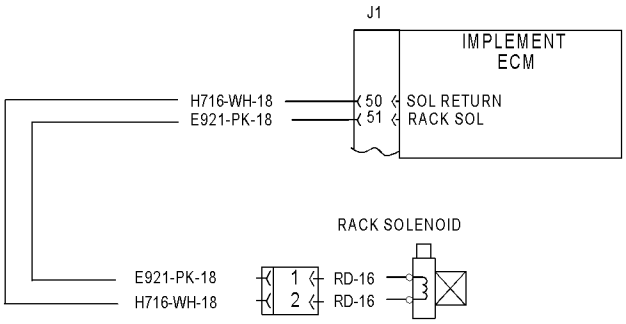 427-C1659	
0357 03	**NOTE** • **All solenoid return lines connect to contact J1-50 (wire H716-WH) of implement ECM.** • **The following test procedure may create other diagnostic codes. Ignore these created diagnostic codes and clear diagnostic codes when original diagnostic code is corrected.** • **Ensure diagnostic code is active and diagnostic code indicator is active.** • **The following test causes implement ECM to log an open circuit diagnostic code for this solenoid. Clear this code from implement ECM after troubleshooting.**	
	1. Check solenoid. (a) Turn engine start switch to OFF position (TM 5-3805-291-10). (b) Disconnect rack solenoid from wiring harness (WP 0218 00). (c) Turn engine start switch to ON position (TM 5-3805-291-10). (d) Place direction lever in NEUTRAL position.	

Table 4. Implement Control - Continued.

(MID 082) MALFUNCTION	TEST OR INSPECTION	CORRECTIVE ACTION
0357 03 - Continued.	(e) At wiring harness connector for solenoid, measure voltage from implement ECM between contact 1 (wire E921-PK) and contact 2 (wire H716-WH).	1. If voltage is approximately 5 DCV, solenoid has failed. Replace solenoid. 2. If voltage is approximately battery voltage, go to Test 2.
	2. Check wiring harness. (a) Turn engine start switch to OFF position (TM 5-3805-291-10). (b) Disconnect wiring harness from implement ECM (WP 0060 00). (c) Turn engine start switch to ON position (TM 5-3805-291-10).	
	(d) At wiring harness connector for implement ECM, measure voltage between contact J1-50 (wire H716-WH) and contact J1-51 (wire E921-GN).	1. If voltage is approximately battery voltage, replace wiring harness in question (WP 0195 00 thru WP 0201 00). 2. If voltage is approximately 0 DCV, go to Test 3.
	3. Check if diagnostic code remains active. (a) Turn engine start switch to OFF position (TM 5-3805-291-10). (b) Disconnect and inspect all wiring harness connectors and reconnect. Refer to *Electrical Connectors Inspection* (WP 0022 00) as necessary. (c) Turn engine start switch to ON position (TM 5-3805-291-10).	
	(d) Operate machine and use messenger to ensure diagnostic code is active (TM 5-3805-291-10).	1. If diagnostic code is active, exit this procedure and repeat this troubleshooting procedure. If cause of diagnostic code is not found, replace implement ECM (WP 0060 00). 2. If diagnostic code is not active, initial diagnostic code was probably caused by poor electrical connection at a wiring harness connector that was disconnected and reconnected. Resume normal machine operation.

Table 4. Implement Control - Continued.

(MID 082) MALFUNCTION	TEST OR INSPECTION	CORRECTIVE ACTION
	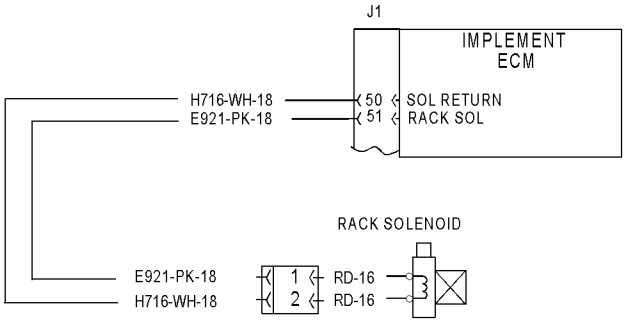	
0357 05	**NOTE** • **Return lines for solenoids are joined and return lines connect to contact J1-50 (wire H716-WH) of implement ECM.** • **The following test procedure may create other diagnostic codes. Ignore these created diagnostic codes and clear diagnostic codes when original diagnostic code is corrected.** • **Ensure diagnostic code indicator is active and diagnostic code is active.**	
	1. Check solenoid. (a) Turn battery disconnect and engine start switches to ON position (TM 5-3805-291-10). (b) Disconnect rack solenoid from wiring harness (WP 0218 00). (c) Observe ON/OFF status of diagnostic code indicator. (d) At wiring harness connector for solenoid, place a jumper wire between contact 2 (wire H716-WH) and contact 1 (wire E921-PK).	1. If diagnostic code indicator remains active, harness or implement ECM has failed. Go to Test 2. 2. If diagnostic code indicator is inactive, solenoid valve or connecting harness has failed. Repeat this test to verify failure. Replace solenoid (WP 0218 00) or wiring harness in question (WP 0195 00 thru WP 0201 00). Approximate resistance of a proportional solenoid valve is from 6 to 12 Ohms.
	NOTE **Approximate resistance of proportional solenoid valve is from 6 to 12 Ohms.**	

Table 4. Implement Control - Continued.

(MID 082) MALFUNCTION	TEST OR INSPECTION	CORRECTIVE ACTION
0357 05 - Continued.	2. Check wiring harness. (a) Turn battery disconnect switch to OFF position (TM 5-3805-291-10). (b) Remove jumper wire from contact 1 to 2. (c) Reconnect solenoid valve to wiring harness. (d) Disconnect wiring harness from implement ECM (WP 0060 00).	
	(e) At wiring harness connector for implement ECM, measure resistance between contacts J1-50 (wire H716-WH) and contact J1-51 (wire E921-PK).	1. If resistance is greater than 5,000 Ohms (no continuity), harness circuit has failed. Replace wiring harness in question (WP 0195 00 thru WP 0201 00). 2. If resistance is from 6 to 12 Ohms, harness circuit resistance is correct. Exit this procedure and repeat this troubleshooting procedure. Also, recheck if diagnostic code indictor is active for this diagnostic code. If cause is not found, replace implement ECM (WP 0060 00).
	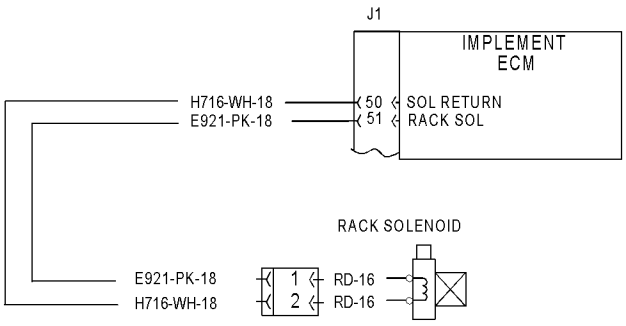 427-C1659	
0357 06	**NOTE** • **All solenoid return lines connect to contact J1-50 (wire H716-WH) of implement ECM.** • **The following procedure may create other diagnostic codes. Ignore these created diagnostic codes and clear diagnostic codes when original diagnostic code is corrected.** • **Ensure diagnostic code indicator is active and diagnostic code is active.**	
	1. Check solenoid. (a) Turn battery disconnect and engine start switches to ON position (TM 5-3805-291-10).	

Table 4. Implement Control - Continued.

(MID 082) MALFUNCTION	TEST OR INSPECTION	CORRECTIVE ACTION
0357 06 - Continued.	(b) Observe ON/OFF status of diagnostic code indicator.	
	(c) Disconnect rack solenoid from wiring harness (WP 0218 00).	1. If diagnostic code indicator remains active, harness or implement ECM has failed. Go to Test 2. 2. If diagnostic code indicator is inactive, solenoid or connecting harness has failed. Repeat this test to verify failure. Replace solenoid (WP 0218 00) or wiring harness in question (WP 0195 00 thru WP 0201 00).
	2. Check for shorted wiring harness.	
	(a) Turn battery disconnect switch to OFF position (TM 5-3805-291-10).	
	(b) Solenoid valve remains disconnected.	
	(c) Disconnect wiring harness from implement ECM (WP 0060 00).	
	(d) At wiring harness connector for implement ECM, measure resistance between contact to failed solenoid circuit J1-51 (wire E921-PK) and contact J1-50 (ground wire H716-WH).	1. If resistance is less than 5,000 Ohms, harness has failed. Replace wiring harness in question (WP 0195 00 thru WP 0201 00). 2. If resistance is greater than 5,000 Ohms (no continuity), harness circuit resistance is correct. Exit this procedure and repeat this troubleshooting procedure. Also, recheck if diagnostic code indicator is active for this diagnostic code. If cause is not found, replace implement ECM (WP 0060 00).
0357 13	**NOTE** **Ensure diagnostic code is active.**	
	Check calibration of main control valve.	
	(a) Calibrate main control valve (WP 0017 00).	
	(b) Ensure diagnostic code is active.	
	(c) Observe ON/OFF status of diagnostic code as work tool is tilted back fully and work tool is dumped.	1. If diagnostic indicator is inactive, calibration corrected diagnostic code. Clear diagnostic code.

Table 4. Implement Control - Continued.

(MID 082) MALFUNCTION	TEST OR INSPECTION	CORRECTIVE ACTION
0357 13 - Continued		2. If diagnostic code indicator is active, repeat calibration for main control valve. Also, ensure diagnostic code is active. If cause is not found, replace solenoid (WP 0218 00) and perform calibration again. If this does not eliminate diagnostic code, replace implement ECM (WP 0060 00).
	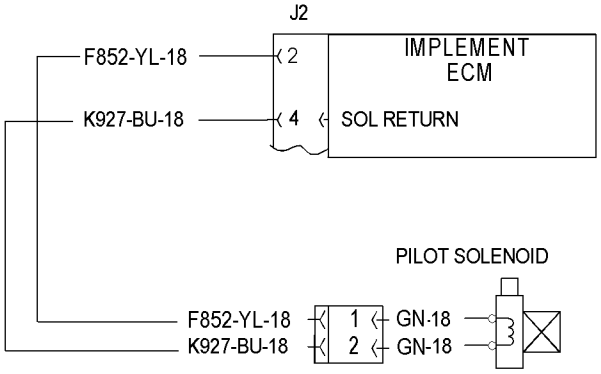	
0358 03	**NOTE** **• Solenoid return lines connect to contact J2-4 (wire K927-BU) of implement ECM.** **• The following procedure may create other diagnostic codes. Ignore these created diagnostic codes and clear diagnostic codes when original diagnostic code is corrected.** **• Ensure diagnostic code is active and diagnostic code indicator is active.** **• This test causes implement ECM to log an open circuit diagnostic code for this solenoid. Clear this code from implement ECM after troubleshooting.** 1. Check solenoid. (a) Turn engine start switch to OFF position (TM 5-3805-291-10). (b) Disconnect pilot solenoid from wiring harness (WP 0218 00). (c) Turn engine start switch to ON position (TM 5-3805-291-10).	

Table 4. Implement Control - Continued.

(MID 082) MALFUNCTION	TEST OR INSPECTION	CORRECTIVE ACTION
0358 03 - Continued.	(d) Place all levers in HOLD position. (e) At wiring harness connector for solenoid, measure voltage from implement ECM between contact 1 (wire F852-YL) and contact 2 (wire K927-BU).	1. If voltage is approximately 2.5 DCV, solenoid has failed. Replace solenoid (WP 0218 00). 2. If voltage is approximately battery voltage, go to Test 2.
	2. Check wiring harness. (a) Turn engine start switch to OFF position (TM 5-3805-291-10). (b) Disconnect wiring harness from implement ECM (WP 0060 00). (c) Turn engine start switch to ON position (TM 5-3805-291-10). (d) At wiring harness connector for implement ECM, measure voltage between contact J2-4 (wire K927-BU) and contact J2-2 (wire F852-YL).	1. If voltage is approximately battery voltage, replace wiring harness in question (WP 0195 00 thru WP 0201 00). 2. If voltage is approximately 0 DCV, go to Test 3.
	3. Check if diagnostic code remains active. (a) Turn engine start switch to OFF position (TM 5-3805-291-10). (b) Disconnect and inspect all wiring harness connectors and reconnect. Refer to *Electrical Connectors Inspection* (WP 0022 00) as necessary. (c) Operate machine (TM 5-3805-291-10).	

Table 4. Implement Control - Continued.

(MID 082) MALFUNCTION	TEST OR INSPECTION	CORRECTIVE ACTION
0358 03 - Continued.	(d) Use messenger to ensure diagnostic code is active (TM 5-3805-291-10).	1. If diagnostic code is active, exit this procedure and repeat this troubleshooting procedure. If cause of diagnostic code is not found, replace implement ECM (WP 0060 00). 2. If diagnostic code is not active, initial diagnostic code was probably caused by a poor electrical connection at a harness connector that was disconnected and reconnected. Resume normal machine operation.
	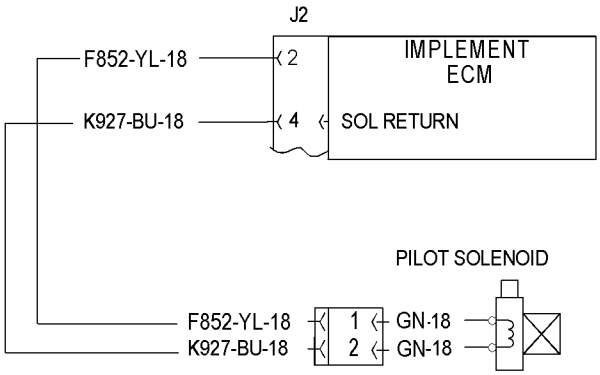 427-C1660	
0358 05	**NOTE** **• Return lines for solenoids are joined and return lines connect to contact J2-4 (wire K927-BU) of implement ECM.** **• The following test procedure may create other diagnostic codes. Ignore these created diagnostic codes and clear diagnostic codes when original diagnostic code is corrected.** **• Ensure diagnostic code indicator is active and diagnostic code is active.** 1. Check solenoid. (a) Turn battery disconnect and engine start switches to ON position (TM 5-3805-291-10). (b) Disconnect pilot solenoid from wiring harness (WP 0218 00).	

Table 4. Implement Control - Continued.

(MID 082) MALFUNCTION	TEST OR INSPECTION	CORRECTIVE ACTION
0358 05 - Continued.	(c) Observe ON/OFF status of diagnostic code indicator.	
	(d) At wiring harness connector for solenoid, place a jumper wire between contact 1 (wire F852-YL) and contact 2 (wire K927-BU).	1. If diagnostic code indicator remains active, harness or implement ECM has failed. Go to Test 2. 2. If diagnostic code indicator is inactive solenoid valve or connecting harness has failed. Repeat this test to verify failure. Replace solenoid (WP 0218 00) or wiring harness in question (WP 0195 00 thru WP 0201 00).
	2. Check wiring harness.	
	(a) Turn battery disconnect switch to OFF position (TM 5-3805-291-10).	
	(b) Remove jumper wire from contact 1 to 2.	
	(c) Reconnect solenoid valve to wiring harness.	
	(d) Disconnect wiring harness from implement ECM (WP 0060 00).	
	(e) At wiring harness connector for implement ECM, measure resistance between contacts J2-4 (wire K927-BU) and contact J2-2 (wire F852-YL).	1. If resistance is greater than 5,000 Ohms (no continuity), harness circuit has failed. Replace wiring harness in question (WP 0195 00 thru WP 0201 00). 2. If resistance is less than 5,000 Ohms, harness circuit resistance is correct. Exit this procedure and repeat this troubleshooting procedure. Also, recheck if diagnostic code indicator is active for this diagnostic code. If cause is not found, replace implement ECM (WP 0060 00).

Table 4. Implement Control - Continued.

(MID 082) MALFUNCTION	TEST OR INSPECTION	CORRECTIVE ACTION
	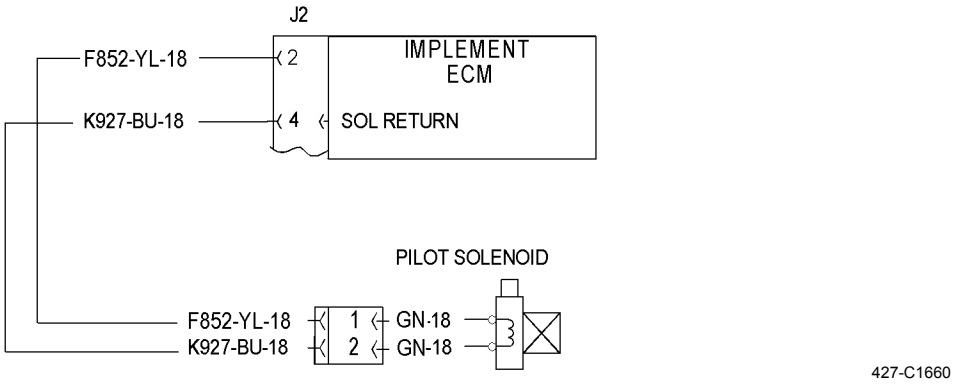	
0358 06	**NOTE** • **All solenoid return lines connect to contact J2-4 (wire K927-BU) of implement ECM.** • **The following test procedure may create other diagnostic codes. Ignore these created diagnostic codes and clear diagnostic codes when original diagnostic code has been corrected.** • **Ensure diagnostic code indicator is active and diagnostic code is active.**	
	1. Check solenoid. (a) Turn battery disconnect and engine start switches to ON position (TM 5-3805-291-10). (b) Observe ON/OFF status of diagnostic code indicator. (c) Disconnect pilot solenoid from wiring harness (WP 0218 00).	1. If diagnostic code indicator remains active, harness or implement ECM has failed. Go to Test 2. 2. If diagnostic code indicator is inactive, solenoid or connecting harness has failed. Repeat this test to verify failure. Replace solenoid (WP 0218 00) or replace wiring harness in question (WP 0195 00 thru WP 0201 00).

Table 4. Implement Control - Continued.

(MID 082) MALFUNCTION	TEST OR INSPECTION	CORRECTIVE ACTION
0358 06 - Continued.	2. Check for shorted wiring harness. (a) Turn battery disconnect switch to OFF position (TM 5-3805-291-10). (b) Solenoid valve remains disconnected. (c) Disconnect wiring harness from implement ECM (WP 0060 00). (d) At wiring harness connector for implement ECM, measure resistance between contact for failed solenoid circuit J2-2 (wire F852-YL) and contact J2-4 (ground wire K927-BU).	1. If resistance is less than 5,000 Ohms, harness has failed. Replace wiring harness in question (WP 0195 00 thru WP 0201 00). 2. If resistance is greater than 5,000 Ohms (no continuity), harness circuit resistance is correct. Exit this procedure and repeat this troubleshooting procedure. Also, recheck if diagnostic code indicator is active for this diagnostic code. If cause is not found, replace implement ECM (WP 0060 00).
	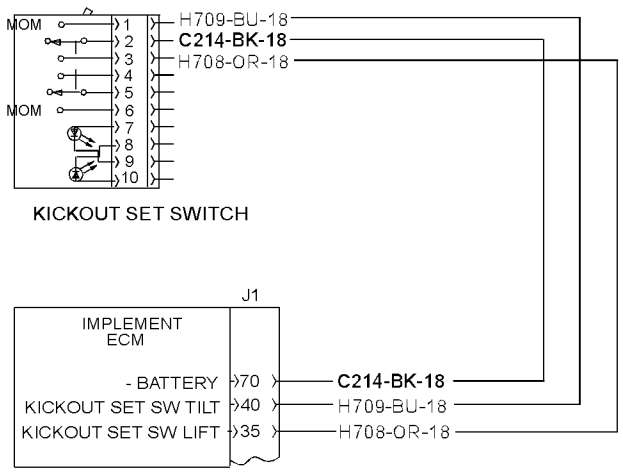 427-C1662	
0365 04	**NOTE** • ***Status for Kickout Set Switch,*** **Table 15 at the end of this work package, contains wire numbers and connector contacts. Use this information to troubleshoot failed circuit.** • **The following test procedure may create other diagnostic codes. Ignore these created diagnostic codes and clear diagnostic codes when original diagnostic code is corrected.** • **Ensure diagnostic code indicator is active and diagnostic code is active.**	

Table 4. Implement Control - Continued.

(MID 082) MALFUNCTION	TEST OR INSPECTION	CORRECTIVE ACTION
0365 04 - Continued.	1. Check switch. (a) Observe ON/OFF status of diagnostic code indicator. (b) Disconnect kickout set switch (WP 0055 00) from wiring harness.	1. If diagnostic code indicator remains active, go to Test 2. 2. If diagnostic code indicator is inactive, repeat this test to verify failure of switch. Replace switch (WP 0055 00) or replace wiring harness in question (WP 0195 00 thru WP 0201 00).
	2. Check wiring harness circuit. (a) This test checks continuity of entire wiring harness circuit that has failed. This test includes switch that was previously checked. (b) Turn battery disconnect switch to OFF position (TM 5-3805-291-10). (c) Reconnect kickout set switch. (d) Disconnect wiring harness from implement ECM (WP 0060 00). (e) Operate switch in tilt and lift positions.	1. If continuity agrees with values in *Status for Kickout Set Switch,* Table 10, harness circuit is correct. Exit this procedure and repeat this troubleshooting procedure. If cause of diagnostic code is not found, replace implement ECM (WP 0060 00). 2. If continuity check does not agree with values in *Status for Kickout Set Switch,* Table 10, harness circuit has failed. Replace wiring harness in question (WP 0195 00 thru WP 0201 00).

Table 4. Implement Control - Continued.

(MID 082) MALFUNCTION	TEST OR INSPECTION	CORRECTIVE ACTION
	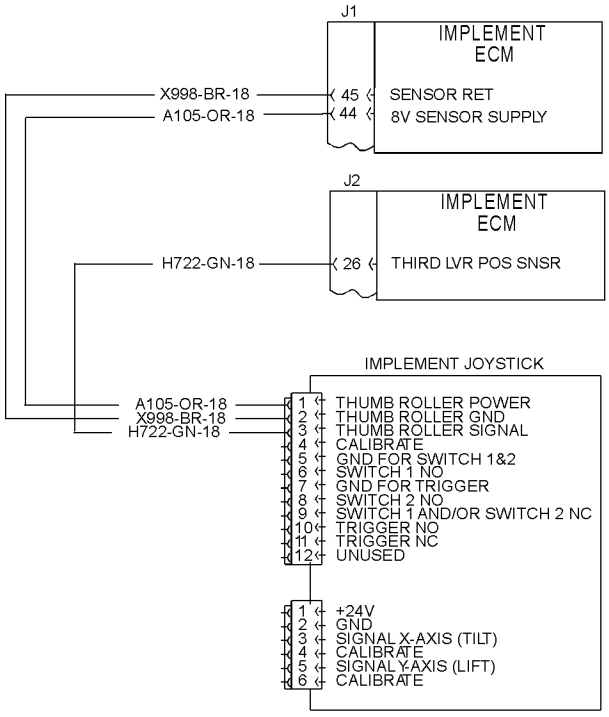 427-C1664	
0487 00 **0487 01**	**NOTE** • **The following test procedure may create other diagnostic codes. Ignore these created diagnostic codes and clear these diagnostic codes when original diagnostic code is corrected.** • **Ensure diagnostic code is active.** Recalibrate lever position sensor (WP 0017 00).	1. If calibration causes diagnostic code to become inactive, resume normal machine operation. 2. If calibration has not caused diagnostic code to become inactive, replace joystick (WP 0219 00).

Table 4. Implement Control - Continued.

(MID 082) MALFUNCTION	TEST OR INSPECTION	CORRECTIVE ACTION
	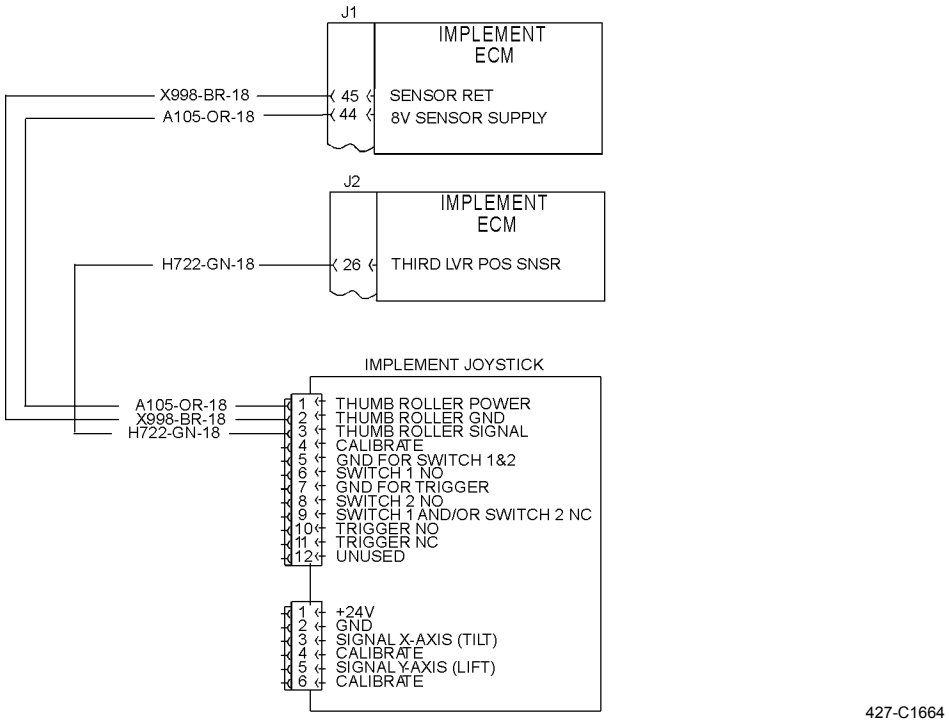		
0487 03	**NOTE** • **The following test procedure may create other diagnostic codes. Ignore these created diagnostic codes and clear these diagnostic codes when original diagnostic code is corrected.** • **Ensure diagnostic code is active.** • **Refer to *Schematic* in WP 0237 00 when performing this test. One joystick configuration receives system voltage and the other receives 8 volts.**	
	1. Check for power at sensor. (a) Do not disconnect wiring harness connector from sensor. (b) Turn engine start and battery disconnect switches to ON position (TM 5-3805-291-10). (c) At wiring harness connector for sensor, measure voltage from contact 1 to contact 2.	1. If voltage is system voltage, go to Test 2. 2. If voltage is not system voltage, +battery circuit in working harness has failed. Replace wiring harness in question (WP 0195 00 thru WP 0201 00).

Table 4. Implement Control - Continued.

(MID 082) MALFUNCTION	TEST OR INSPECTION	CORRECTIVE ACTION
0487 03 - Continued.	2. Check for proper ground at sensor. (a) Wiring harness remains connected to sensor. (b) Turn engine start and battery disconnect switches to OFF position (TM 5-3805-291-10). (c) At wiring harness connector for sensor, measure resistance from contact 2 to frame ground.	1. If resistance is less than 5 Ohms, go to Test 3. 2. If resistance is greater than 5 Ohms, replace wiring harness in question (WP 0195 00 thru WP 0201 00).
	3. Check wiring harness of position sensor for an open circuit. (a) Turn engine start and battery disconnect switches to OFF position (TM 5-3805-291-10). (b) Disconnect wiring harness from position 3rd lever position sensor (WP 0219 00). (c) At wiring harness connector for sensor, connect a jumper wire between contact 2 and contact 3. (d) Disconnect wiring harness from implement ECM (WP 0060 00). (e) At wiring harness connector for implement ECM, measure resistance between contact J2-26 (wire H722-GN) and contact J1-45 (wire X998-BR).	1. If resistance is less than 5 Ohms, go to Test 4. 2. If resistance is greater than 5 Ohms, replace wiring harness in question (WP 0195 00 thru WP 0201 00).
	4. Check wiring harness of position sensor for short to +battery circuit. (a) Turn engine start and battery disconnect switches to OFF position (TM 5-3805-291-10). (b) Wiring harness remains disconnected from position sensor. Remove jumper wire that was installed in Test 3.	

Table 4. Implement Control - Continued.

(MID 082) MALFUNCTION	TEST OR INSPECTION	CORRECTIVE ACTION
0487 03 - Continued.	(c) Wiring harness connectors remain disconnected from implement ECM.	
	(d) At wiring harness connector for implement ECM, measure resistance from signal contact J2-26 (wire H722-GN) of wiring harness to all possible sources of +battery circuit. Measure resistance to all contacts used in J2 and J1 wiring harness connectors.	1. If each resistance measurement is greater than 5,000 Ohms, go to Test 5. 2. If one or more resistance measurements is not correct, replace wiring harness in question (WP 0195 00 thru WP 0201 00).
	5. Check output of sensor.	
	(a) Reconnect wiring harness connectors to implement ECM. Reconnect wiring harness connector to sensor.	
	(b) At wiring harness connector for sensor, connect positive lead from multimeter to contact 3.	
	(c) At wiring harness connector for sensor, connect negative lead from multimeter to contact 2.	
	(d) Turn battery disconnect and engine start switches to ON position (TM 5-3805-291-10).	
	(e) Set multimeter to setting for frequency (Hz). Measure sensor output.	1. If PWM signal from sensor is a 500 Hz signal between 5% and 95%, go to Test 6. 2. If PWM signal from sensor is not a 500 Hz signal between 5% and 95%, replace joystick (WP 0219 00).
	6. Check if diagnostic code remains active.	
	(a) Inspect and clean wiring harness connector contacts.	
	(b) Reconnect all wiring harness connectors.	
	(c) Turn the battery disconnect and engine start switches to ON position (TM 5-3805-291-10).	
	(d) Operate machine (TM 5-3805-291-10).	

Table 4. Implement Control - Continued.

(MID 082) MALFUNCTION	TEST OR INSPECTION	CORRECTIVE ACTION
0487 03 - Continued.	(e) Use messenger to check status of CID 0487 FMI 03 (TM 5-3805-291-10).	1. If CID 0487 FMI 03 is not active, initial diagnostic code was probably caused by poor electrical connection or short at a wiring harness connector that was disconnected and reconnected. Resume normal machine operation. 2. If CID 0487 FMI 03 is active diagnostic code has not been corrected. Exit this procedure and repeat this procedure. If cause of diagnostic code is not found, replace implement ECM (WP 0060 00).
	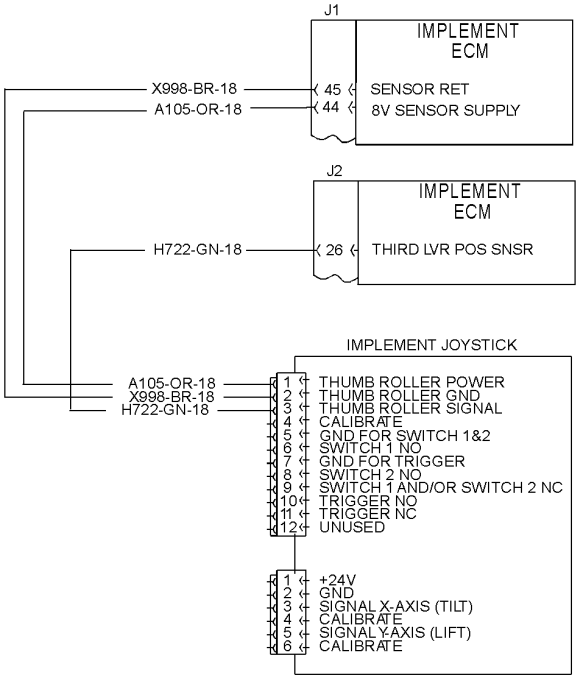 427-C1664	
0487 04	**NOTE** • **The following test procedure may create other diagnostic codes. Ignore these created diagnostic codes and clear diagnostic codes when original diagnostic code has been corrected.** • **Ensure diagnostic code is active.**	
	1. Check sensor. Disconnect 3rd lever position sensor from wiring harness (WP 0219 00).	1. If diagnostic code is still active, go to Test 2. 2. If diagnostic is inactive, sensor has failed. Replace joystick (WP 0219 00).

Table 4. Implement Control - Continued.

(MID 082) MALFUNCTION	TEST OR INSPECTION	CORRECTIVE ACTION
0487 04 - Continued.	2. Check wiring harness. (a) Sensor remains disconnected. (b) Turn battery disconnect switch to OFF position (TM 5-3805-291-10). (c) Disconnect wiring harness from implement ECM (WP 0060 00). (d) At wiring harness connector for implement ECM, measure resistance between connector J2-26 (wire H722-GN) and ground.	1. If resistance is greater than 5,000 Ohms, go to Test 3. 2. If resistance is less than 5.0 Ohms, harness has failed, replace wiring harness in question (WP 0195 00 thru WP 0201 00).
	3. Check +battery circuit. (a) Ensure engine start switch is in OFF position (TM 5-3805-291-10). (b) Connector for sensor remains disconnected. Connector for implement ECM remains disconnected. (c) Measure resistance between fuse and contact 1 at connector for sensor.	1. If resistance is less than 5 Ohms, go to Test 4. 2. If resistance is greater than 5 Ohms, replace wiring harness in question (WP 0195 00 thru WP 0201 00).
	4. Check ground circuit. (a) Ensure engine start switch is in OFF position (TM 5-3805-291-10). (b) Connector for sensor remains disconnected. Connector for implement ECM remains disconnected. (c) Measure resistance between contact J1-45 at connector for implement ECM and contact 2 at connector for sensor.	1. If resistance is less than 5 Ohms, harness circuit is correct. Ensure diagnostic code is still active. Exit this procedure and repeat this troubleshooting procedure. If cause of diagnostic code is not found, replace implement ECM (WP 0060 00). 2. If resistance is greater than 5 Ohms, replace wiring harness in question (WP 0195 00 thru WP 0201 00).

Table 4. Implement Control - Continued.

(MID 082) MALFUNCTION	TEST OR INSPECTION	CORRECTIVE ACTION
	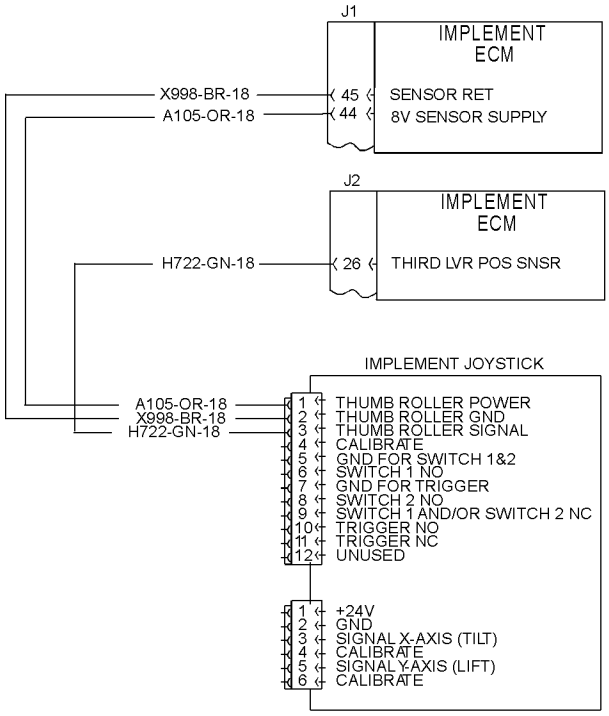 427-C1664		
0487 08	**NOTE** **Ensure diagnostic code is active.**	
	1. Check sensor. (a) Observe ON/OFF status of diagnostic code indicator. (b) Disconnect wiring harness from 3rd lever position sensor (WP 0219 00). 2. Check wiring harness. (a) Sensor remains disconnected from wiring harness. (b) Turn battery disconnect switch to OFF position (TM 5-3805-291-10). (c) Disconnect wiring harness from implement ECM (WP 0060 00).	1. If diagnostic code indicator is active, go to Test 2. 2. If diagnostic code indicator is inactive, replace joystick (WP 0219 00).

Table 4. Implement Control - Continued.

(MID 082) MALFUNCTION	TEST OR INSPECTION	CORRECTIVE ACTION
0487 08 - Continued.	(d) At wiring harness connector for sensor, measure resistance between signal contact 3 (wire H722-GN) and ground.	1. If resistance is greater than 5,000 Ohms, harness circuit resistance is correct. Exit this procedure and repeat troubleshooting procedure. If diagnostic code is not found, replace implement ECM (WP 0060 00). 2. If resistance is less than 5,000 Ohms, harness has failed. Replace wiring harness in question (WP 0195 00 thru WP 0201 00).
0487 13	**NOTE** **Ensure diagnostic code is active.**	
	Check adjustment for sensor. (a) Adjust auxiliary position sensor so duty cycle is within 43 to 57%. Lever must be centered when this adjustment is performed (WP 0017 00). (b) Ensure diagnostic code is active.	
	(c) Observe ON/OFF status of diagnostic code as auxiliary function is fully actuated.	1. If diagnostic code is inactive, adjustment corrected diagnostic code. Clear diagnostic code. 2. If diagnostic code is active, repeat calibration for lift lever position sensor (WP 0017 00). Also, ensure diagnostic code is active. If cause is not found, replace joystick (WP 0219 00) and perform calibration again. If this does not eliminate diagnostic code, replace implement ECM (WP 0060 00).

Table 4. Implement Control - Continued.

(MID 082) MALFUNCTION	TEST OR INSPECTION	CORRECTIVE ACTION
	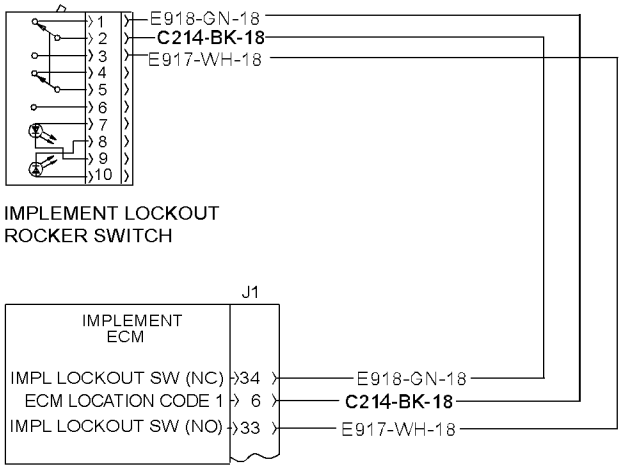 427-C1665	
0490 03	**NOTE** • ***Switch Continuity,* Table 5 at end of this work package, contains wire numbers and connector contacts. Use this information to troubleshoot failed circuit.** • **The following test procedure may create other diagnostic codes. Ignore these created diagnostic codes and clear diagnostic codes when original diagnostic code is corrected.** • **Ensure diagnostic code is active.**	
	1. Check for open circuit. (a) Turn engine start switch to OFF position (TM 5-3805-291-10). (b) Turn battery disconnect switch to OFF position (TM 5-3805-291-10). (c) Verify implement lockout switch is connected. (d) Disconnect wiring harness from implement ECM (WP 0060 00). (e) Activate switch. At wiring harness connector for implement ECM, check continuity to ground of normally closed contact and normally open contact.	1. If continuity check does not agree with *Switch Continuity*, Table 5 at end of this work package, go to Test 2. 2. If continuity agrees with values in *Switch Continuity*, Table 5 at end of this work package, go to Test 3.

Table 4. Implement Control - Continued.

(MID 082) MALFUNCTION	TEST OR INSPECTION	CORRECTIVE ACTION
0490 03 - Continued.	2. Check switch. (a) Disconnect wiring harness from implement lockout switch (WP 0055 00).	
	(b) At wiring harness connector for implement ECM, check continuity to ground of normally closed contact and normally open contact. Activate switch when this check is being performed.	1. If continuity check does not agree with *Switch Continuity,* Table 5 at end of this work package, switch has failed. Replace joystick (WP 0219 00). 2. If continuity check agrees with *Switch Continuity*, Table 5 at end of this work package, harness has failed. Replace wiring harness in question (WP 0195 00 thru WP 0201 00).
	3. Check for a short to +battery. Check continuity from each switch wire at wiring harness connector for implement ECM to contact J1-34.	1. If continuity exists between one source of battery voltage and switch circuit, has failed. Replace wiring harness in question (WP 0195 00 thru WP 0201 00). 2. If continuity does not exist between one of sources of battery voltage and switch circuit, exit this procedure and repeat this troubleshooting procedure. If cause of diagnostic code is not found, replace implement ECM (WP 0060 00).

Table 4. Implement Control - Continued.

(MID 082) MALFUNCTION	TEST OR INSPECTION	CORRECTIVE ACTION
	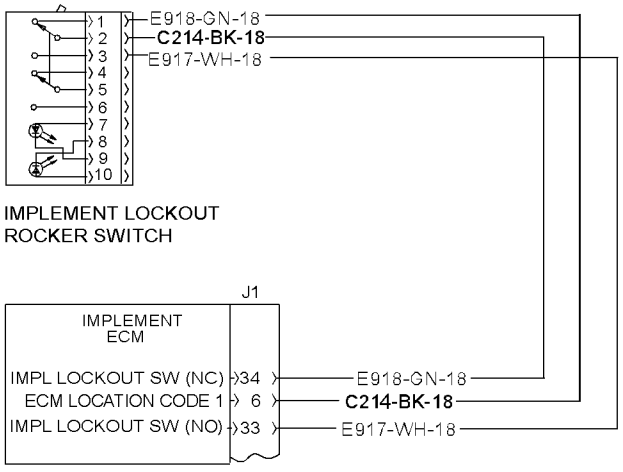	
0490 04	**NOTE** • **The following test procedure may create other diagnostic codes. Ignore these created diagnostic codes and clear diagnostic codes when original diagnostic code is corrected.** • **Ensure diagnostic code is active.** • ***Switch Continuity,* Table 5 found at end of this work package, contains wire numbers and connector contacts. Use this information to troubleshoot failed circuit.**	
	1. Check switch. (a) Observe ON/OFF status of diagnostic code indicator. (b) Disconnect implement lockout switch from wiring harness (WP 0055 00).	1. If diagnostic code remains active, go to Test 2. 2. If diagnostic code is inactive harness has failed. Repeat this test to verify failure of switch. Replace joystick (WP 0219 00) and/or replace wiring harness in question (WP 0195 00 thru WP 0201 00).
	2. Check wiring harness circuit. (a) This test checks continuity of entire wiring harness circuit has failed. This test includes switch that was previously checked. (b) Turn battery disconnect switch to OFF position (TM 5-3805-291-10).	

Table 4. Implement Control - Continued.

(MID 082) MALFUNCTION	TEST OR INSPECTION	CORRECTIVE ACTION
0490 04 - Continued.	(c) Reconnect implement lockout switch. (d) Disconnect wiring harness from implement ECM (WP 0060 00). (e) Activate switch. At wiring harness connector implement ECM, check continuity to ground of normally closed contact and normally open contact.	1. If continuity agrees with values in *Switch Continuity*, Table 5 at end of this work package, wiring harness circuit is correct. Exit this procedure and repeat this troubleshooting procedure. If cause of diagnostic code is not found, replace implement ECM (WP 0060 00). 2. If continuity check does not agree with values in *Switch Continuity*, Table 5 at end of this work package, replace wiring harness in question (WP 0195 00 thru WP 0201 00).
	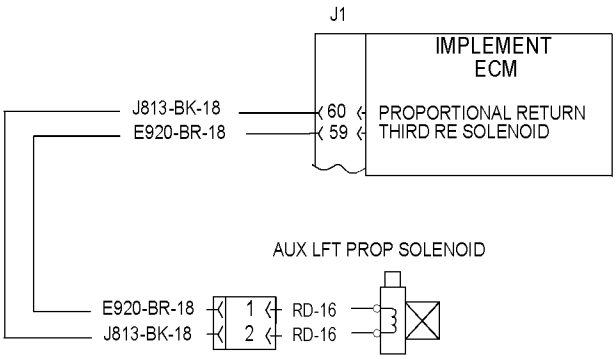 427-C1666	
0491 03	**NOTE** **• All solenoid return lines connect to contact J1-60 (wire J813-BK) of implement ECM.** **• The following test procedure may create other diagnostic codes. Ignore these created diagnostic codes and clear diagnostic codes when original diagnostic code has been corrected.** **• Ensure diagnostic code is active and diagnostic code indicator is active.** **• This test causes implement ECM to log an open circuit diagnostic code for this solenoid. Clear this code from implement ECM after troubleshooting.** 1. Check solenoid. (a) Turn engine start switch to OFF position (TM 5-3805-291-10).	

Table 4. Implement Control - Continued.

(MID 082) MALFUNCTION	TEST OR INSPECTION	CORRECTIVE ACTION
0491 03 - Continued.	(b) Disconnect auxiliary rearward proportioning solenoid from wiring harness (WP 0218 00).	
	(c) Turn engine start switch to ON position (TM 5-3805-291-10).	
	(d) Place direction lever in NEUTRAL position.	
	(e) At wiring harness connector for solenoid, measure voltage from implement ECM between contact 1 (wire E920-BR) and contact 2 (wire J813-BK).	1. If voltage is approximately 5 DCV, replace solenoid (WP 0218 00). 2. If voltage is approximately battery voltage, go to Test 2.
	2. Check wiring harness.	
	(a) Turn engine start switch to OFF position (TM 5-3805-291-10).	
	(b) Disconnect wiring harness from implement ECM (WP 0060 00).	
	(c) Turn engine start switch to ON position (TM 5-3805-291-10).	
	(d) At wiring harness connector, for implement ECM, measure voltage between contact J1-60 (wire J813-BK) and contact J1-59 (wire E920-BR).	1. If voltage is approximately battery voltage, replace wiring harness in question (WP 0195 00 thru WP 0201 00). 2. If voltage is approximately 0 DCV, go to Test 3.
	3. Check if diagnostic code remains active.	
	(a) Turn engine start switch to OFF position (TM 5-3805-291-10).	
	(b) Disconnect and inspect all wiring harness connectors and reconnect. Refer to *Electrical Connectors Inspection* (WP 0022 00) as necessary.	
	(c) Turn engine start switch to ON position (TM 5-3805-291-10).	
	(d) Operate machine and use messenger to ensure CID 491 FMI 03 is active (TM 5-3805-291-10).	1. If diagnostic code is active, exit this procedure and repeat this troubleshooting procedure. If cause of diagnostic code is not found, replace implement ECM (WP 0060 00).

Table 4. Implement Control - Continued.

(MID 082) MALFUNCTION	TEST OR INSPECTION	CORRECTIVE ACTION
0491 03 - Continued.		2. If diagnostic code is not active, initial diagnostic code was probably caused by poor electrical connection in a wiring harness connector that was disconnected and reconnected. Resume normal machine operation.
	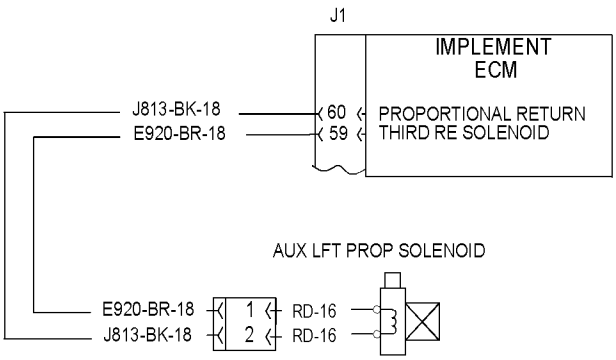 427-C1666	
0491 05	**NOTE** **• The following test procedure may create other diagnostic codes. Ignore these created diagnostic codes and clear diagnostic codes when original diagnostic code is corrected.** **• Return lines for solenoids are joined and return lines connect to contact J1-60 (wire J813-BK) of implement ECM.** **• Ensure diagnostic code indicator is active and diagnostic code is active.**	
	1. Check solenoid. (a) Turn battery disconnect and engine start switches to ON position (TM 5-3805-291-10). (b) Disconnect auxiliary rearward proportioning solenoid from wiring harness (WP 0218 00). (c) Observe ON/OFF status of diagnostic code indicator. (d) At wiring harness connector for solenoid, place a jumper wire between contact 1 (wire E920-BR) and contact 2 (wire J813-BK).	1. If diagnostic code indicator remains active and diagnostic code remains active, harness or implement ECM has failed. Go to Test 2.

Table 4. Implement Control - Continued.

(MID 082) MALFUNCTION	TEST OR INSPECTION	CORRECTIVE ACTION
0491 05 - Continued.		2. If diagnostic code indicator is inactive, repeat this test to verify failure. Replace solenoid (WP 0218 00). Replace connecting wiring harness in question (WP 0195 00 thru WP 0201 00). Approximate resistance of a proportional solenoid valve is from 6 to 12 Ohms.
	NOTE **Approximate resistance of proportional solenoid valve is from 6 to 12 Ohms.**	
	2. Check wiring harness. (a) Turn battery disconnect switch to OFF position (TM 5-3805-291-10). (b) Remove jumper wire from contact 1 to 2. (c) Reconnect solenoid valve to harness. (d) Disconnect wiring harness from implement ECM (WP 0060 00).	
	(e) At wiring harness connector for implement ECM, measure resistance between contacts J1-60 (wire J813-BK) and contact J1-59 (wire E920-BR).	1. If resistance is greater than 5,000 Ohms (no continuity), harness has failed. Replace wiring harness in question (WP 0195 00 thru WP 0201 00). 2. If resistance is from 6 to 12 Ohms, exit this procedure and perform this troubleshooting procedure again. Also, recheck if diagnostic code indicator is active for this diagnostic code. If cause is not found, replace implement ECM (WP 0060 00).

Table 4. Implement Control - Continued.

(MID 082) MALFUNCTION	TEST OR INSPECTION	CORRECTIVE ACTION
	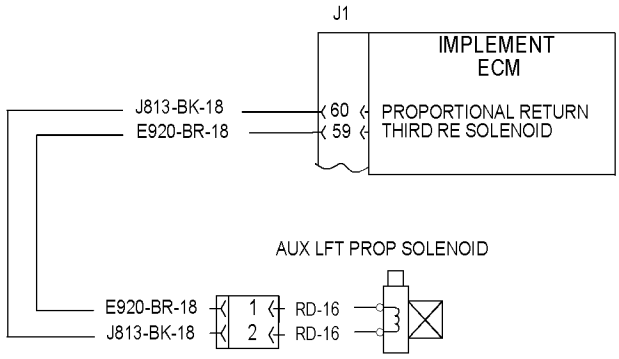 427-C1666	
0491 06	**NOTE** • **All solenoid return lines connect to contact J1-60 (wire J813-BK) of implement ECM.** • **The following test procedure may create other diagnostic codes. Ignore these created diagnostic codes and clear diagnostic codes when original diagnostic code is corrected.** • **Ensure diagnostic code indicator is active and diagnostic code is active.**	
	1. Check solenoid. (a) Turn battery disconnect and engine start switches to ON position (TM 5-3805-291-10). (b) Observe ON/OFF status of diagnostic code indicator. (c) Disconnect auxiliary rearward proportioning solenoid from wiring harness (WP 0218 00).	1. If diagnostic code indicator remains active, harness or implement ECM has failed. Go to Test 2. 2. If diagnostic code indicator is inactive, solenoid or connecting harness has failed. Repeat this test to verify failure. Replace solenoid (WP 0218 00). Replace wiring harness in question (WP 0195 00 thru WP 0201 00).
	2. Check for shorted wiring harness. (a) Turn battery disconnect switch to OFF position (TM 5-3805-291-10). (b) Solenoid valve remains disconnected.	

Table 4. Implement Control - Continued.

(MID 082) MALFUNCTION	TEST OR INSPECTION	CORRECTIVE ACTION
0491 06 - Continued.	(c) Disconnect wiring harness from implement ECM (WP 0060 00).	
	(d) At wiring harness connector for implement ECM, measure resistance between contact for failed solenoid circuit J1-59 (wire E920-BR) and contact J1-60 (ground) (wire J813-BK).	1. If resistance is less than 5,000 Ohms (continuity), harness has failed. Replace wiring harness in question (WP 0195 00 thru WP 0201 00). 2. If resistance is greater than 5,000 Ohms (no continuity), harness circuit resistance is correct. Exit this procedure and repeat this troubleshooting procedure. Also, recheck if diagnostic code indicator is active for this diagnostic code. If cause is not found, replace implement ECM (WP 0060 00).
0491 13	**NOTE** **Ensure diagnostic code is active.**	
	Check calibration of main control valve. (a) Calibrate main control valve (WP 0017 00). (b) Recheck diagnostic code. (c) Ensure diagnostic code is active.	
	(d) Observe ON/OFF status of diagnostic code indicator as auxiliary function is fully actuated.	1. If diagnostic code indicator is inactive, calibration corrected diagnostic code. Clear diagnostic code. 2. If diagnostic code indicator is active, repeat calibration for main control valve. Also, ensure diagnostic code indicator is active for this diagnostic code. If cause is not found, replace solenoid and perform calibration again. If this does not eliminate diagnostic code, replace implement ECM (WP 0060 00).

Table 4. Implement Control - Continued.

(MID 082) MALFUNCTION	TEST OR INSPECTION	CORRECTIVE ACTION
	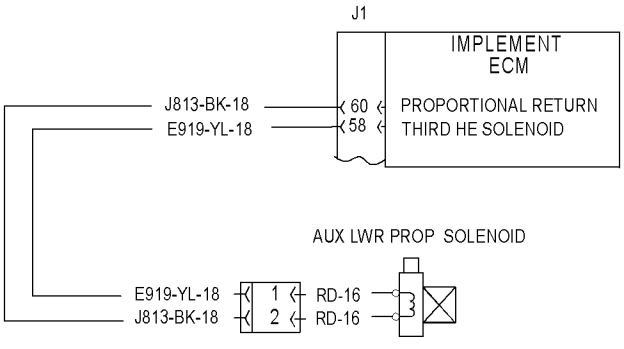	
0492 03	**NOTE** **• The following test procedure may create other diagnostic codes. Ignore these created diagnostic codes and clear these diagnostic codes when original diagnostic code has been corrected.** **• Return lines for solenoids are joined and return lines connect to contact J1-60 (wire J813-BK) of implement ECM.** **• Ensure diagnostic code indicator is active and diagnostic code is active.** **• This test causes implement ECM to log an open circuit diagnostic code for this solenoid. Clear this code from implement ECM after troubleshooting.**	
	1. Check solenoid. (a) Turn engine start switch to OFF position (TM 5-3805-291-10). (b) Disconnect auxiliary forward proportioning solenoid from wiring harness (WP 0218 00). (c) Turn engine start switch to ON position (TM 5-3805-291-10). (d) Place direction lever in NEUTRAL position.	
	(e) At wiring harness connector for solenoid, measure voltage from implement ECM between contact 1 (wire E919-YL) to contact 2 (wire J813-BK).	1. If voltage is approximately 5 DCV, solenoid has failed. Replace solenoid (WP 0218 00). 2. If voltage is approximately battery voltage, go to Test 2.
	2. Check wiring harness. (a) Turn engine start switch to OFF position (TM 5-3805-291-10). (b) Disconnect wiring harness from implement ECM (WP 0060 00).	

Table 4. Implement Control - Continued.

(MID 082) MALFUNCTION	TEST OR INSPECTION	CORRECTIVE ACTION
0492 03 - Continued.	(c) Turn engine start switch to ON position (TM 5-3805-291-10).	
	(d) At wiring harness connector for implement ECM, measure voltage between contact J1-60 (wire J813-BK) and contact J1-58 (wire E919-YL).	1. If voltage is approximately battery voltage, replace wiring harness in question (WP 0195 00 thru WP 0201 00). 2. If voltage is approximately 0 DCV, go to Test 3.
	3. Check if diagnostic code remains active.	
	(a) Turn engine start switch to OFF position (TM 5-3805-291-10).	
	(b) Disconnect and inspect all wiring harness connectors and reconnect. Refer to *Electrical Connectors Inspection* (WP 0022 00) as necessary.	
	(c) Turn engine start switch to ON position (TM 5-3805-291-10).	
	(d) Operate machine and use messenger to ensure CID 0492 FMI 03 is active (TM 5-3805-291-10).	1. If diagnostic code is active, exit this procedure and repeat this troubleshooting procedure. If cause of diagnostic code is not found, replace implement ECM (WP 0060 00). 2. If diagnostic code is not active, initial diagnostic code was probably caused by poor electrical connection at a wiring harness connector that was disconnected and reconnected. Resume normal machine operation.

Table 4. Implement Control - Continued.

(MID 082) MALFUNCTION	TEST OR INSPECTION	CORRECTIVE ACTION
	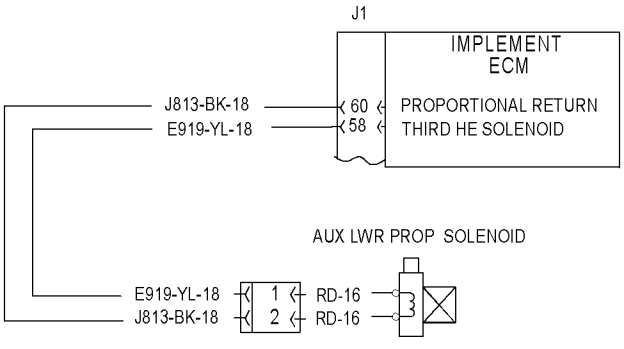	
0492 05	**NOTE** • **The following test procedure may create other diagnostic codes. Ignore these created diagnostic codes and clear diagnostic codes when original diagnostic code is corrected** • **Return lines for solenoids are joined and return lines connect to contact J1-60 (wire J813-BK) of implement ECM.** • **Ensure diagnostic code indicator is active and diagnostic code is active.**	
	1. Check solenoid. (a) Turn battery disconnect and engine start switches to ON position (TM 5-3805-291-10). (b) Disconnect auxiliary forward proportioning solenoid from wiring harness (WP 0218 00). (c) Observe ON/OFF status of diagnostic code indicator. (d) At wiring harness connector for solenoid, place a jumper wire between contact 1 (wire E919-YL) and contact 2 (wire J813-BK).	1. If diagnostic code indicator remains active, go to Test 2. 2. If diagnostic code indicator is inactive, solenoid or connecting harness has failed. Repeat this test to verify failure. Replace solenoid (WP 0218 00). Replace wiring harness in question (WP 0195 00 thru WP 0201 00). Approximate resistance of proportional solenoid valve is from 6 to 12 Ohms.
	2. Check wiring harness. (a) Turn battery disconnect switch to OFF position (TM 5-3805-291-10).	

Table 4. Implement Control - Continued.

(MID 082) MALFUNCTION	TEST OR INSPECTION	CORRECTIVE ACTION
0492 05 - Continued.	(b) Remove jumper wire from contact 1 to 2. (c) Reconnect solenoid valve to wiring harness. (d) Disconnect wiring harness from implement ECM (WP 0060 00). (e) At wiring harness connector for implement ECM, measure resistance between contacts J1-60 (wire J813-BK) and contact J1-58 (wire E919-YL).	1. If resistance is greater than 5,000 Ohms (no continuity), harness has failed. Replace wiring harness in question (WP 0195 00 thru WP 0201 00). 2. If resistance is from 6 to 12 Ohms, harness circuit resistance is correct. Exit this procedure and perform this troubleshooting procedure. Also, recheck if diagnostic code indicator is active for this diagnostic code. If cause is not found, replace implement ECM (WP 0060 00).
	NOTE **Approximate resistance of proportional solenoid valve is from 6 to 12 Ohms.**	
	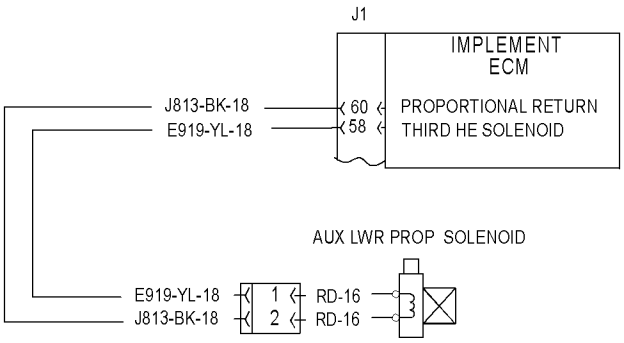 427-C1667	
0492 06	**NOTE** • **All solenoid return lines connect to contact J1-60 (wire J813-BK) of implement ECM.** • **The following test procedure may create other diagnostic codes. Ignore these created diagnostic codes and clear diagnostic codes when original diagnostic code is corrected.** • **Ensure diagnostic code indicator is active and diagnostic code is active.**	

Table 4. Implement Control - Continued.

(MID 082) MALFUNCTION	TEST OR INSPECTION	CORRECTIVE ACTION
0492 06 - Continued,	1. Check solenoid. (a) Turn battery disconnect and engine start switches to ON position (TM 5-3805-291-10). (b) Observe ON/OFF status of diagnostic code indicator.	
	(c) Disconnect auxiliary forward proportioning solenoid from wiring harness (WP 0218 00).	1. If diagnostic code indicator remains active, harness or implement ECM has failed. Go to Test 2. 2. If diagnostic code indicator is inactive, solenoid or connecting harness has failed. Repeat this test to verify failure. Replace solenoid (WP 0218 00). Replace wiring harness in question (WP 0195 00 thru WP 0201 00).
	2. Check for shorted wiring harness. (a) Turn battery disconnect switch to OFF position (TM 5-3805-291-10). (b) Solenoid valve remains disconnected. (c) Disconnect wiring harness from implement ECM (WP 0060 00).	
	(d) At wiring harness connector for implement ECM, measure resistance between contact for failed solenoid circuit J1-58 (wire E919-YL) and contact J1-60 (ground wire J813-BK).	1. If resistance is less than 5,000 Ohms, wiring harness has failed. Replace wiring harness in question (WP 0195 00 thru WP 0201 00). 2. If resistance is greater than 5,000 Ohms (no continuity), harness circuit resistance is correct. Exit this procedure and repeat this troubleshooting procedure. Also, recheck if diagnostic code indicator is active for this diagnostic code. If cause is not found, replace implement ECM (WP 0060 00).
0492 13	**NOTE** **Ensure diagnostic code is active.**	
	Check calibration of main control valve. (a) Calibrate main control valve (WP 0017 00). (b) Recheck diagnostic code. (c) Ensure diagnostic code is active.	

Table 4. Implement Control - Continued.

(MID 082) MALFUNCTION	TEST OR INSPECTION	CORRECTIVE ACTION
0492 13 - Continued	(d) Observe ON/OFF status of diagnostic code indicator as auxiliary function is fully actuated.	1. If diagnostic code indicator is inactive, calibration corrected diagnostic code. Clear diagnostic code. 2. If diagnostic code indicator is active, perform calibration for main control valve again. Also, ensure diagnostic code indicator is active for this diagnostic code. If cause is not found, replace solenoid (WP 0218 00) and perform calibration again. If this does not eliminate diagnostic code, replace implement ECM (WP 0060 00).
	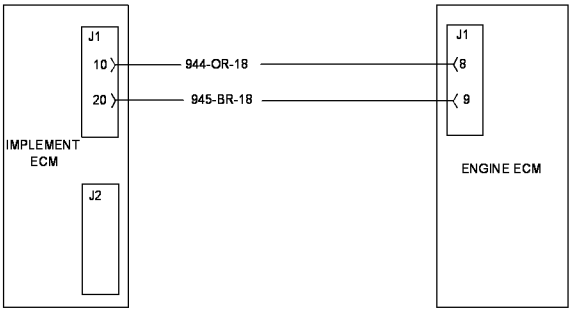 427-C1668	
0590 02	1. Connect MSD (WP 0005 00) and verify hardware and software part numbers. Verify the following information is correct: (a) Part number for configuration software of implement ECM. (b) Part number of engine ECM flash software. (c) Part number of implement ECM. (d) Part number of engine ECM.	1. If all part numbers are correct, go to Test 2. 2. If all part numbers are not correct, part numbers of implement ECM or engine ECM may be incorrect. Incorrect configuration software may also be installed. Replace incorrect implement ECM with an implement ECM that has correct part number (WP 0060 00).

Table 4. Implement Control - Continued.

(MID 082) MALFUNCTION	TEST OR INSPECTION	CORRECTIVE ACTION
0590 02 - Continued.	2. Inspect wiring harness connections. (a) Turn battery disconnect switch to OFF position (TM 5-3805-291-10). (b) Disconnect and inspect all wiring harness connections related to CAT Data Link (WP 0237 00). Make sure connectors are clean and tightly connected. Refer to *Electrical Connectors Inspection* (WP 0022 00) as necessary. (c) Check connectors for proper mating. (d) Check wires at connector. (e) Check each wire for nicks or signs of abrasion in insulation. (f) Check for moisture at connector. (g) Check connectors for dirty or corroded contacts. (h) Check each pin and socket of wiring harness connectors. (i) Reconnect all connectors.	1. If wiring harness connectors are tight and free of corrosion, go to Test 3. 2. If wiring harness connectors are in need of repair, replace wiring harness in question (WP 0195 00 thru WP 0201 00).
	3. Check for shorts to ground. (a) Battery disconnect switch remains in OFF position (TM 5-3805-291-10). (b) Disconnect wiring harness from all ECMs that use CAT Data Link (WP 0056 00, WP 0057 00, WP 0060 00, and WP 0063 00). (c) At wiring harness for implement ECM, measure resistance between frame ground and connector contacts J1-10 (wire 944-OR) and J1-20 (wire 945-BR) of CAT Data Link circuit.	1. If resistance is greater than 5,000 Ohms, harness circuit resistance is correct. Go to Test 4. 2. If resistance is less than 5,000 Ohms, wiring harness has failed. Replace wiring harness in question (WP 0195 00 thru WP 0201 00).

Table 4. Implement Control - Continued.

(MID 082) MALFUNCTION	TEST OR INSPECTION	CORRECTIVE ACTION
0590 02 - Continued.	4. Check for short to +battery circuit. (a) Battery disconnect switch remains in OFF position (TM 5-3805-291-10). (b) All related implement ECMs remain disconnected from wiring harness. (c) At wiring harness connector for implement ECM, perform these: (1) Measure resistance between connector contact J1-31 (wire 121-RD) and connector contact J1-10 (wire 944-OR). (2) Measure resistance between connector contact J1-31 (wire 121-RD) and connector contact J1-20 (wire 945-BR).	1. If harness circuit resistance is correct, go to Test 5. 2. If resistance is less than 5,000 Ohms, wiring harness has failed. Replace wiring harness in question (WP 0195 00 thru WP 0201 00).
	5. Check for open circuit in wiring harness. (a) Battery disconnect switch remains in OFF position (TM 5-3805-291-10). (b) All related implement ECMs remain disconnected from wiring harness. (c) Check continuity of CAT Data Link circuit in wiring harness: (1) Measure resistance between connector contact J1-10 (wire 944-OR) of implement ECM and connector contact J1-8 (wire 944-OR) of engine ECM. (2) Measure resistance between connector J1-20 (wire 945-BR) of implement ECM and connector contact J1-9 (wire 945-BR) of engine ECM.	1. If resistance is less than 5 Ohms, go to Test 6. 2. If resistance is greater than 5 Ohms, wiring harness has failed. Go to Test 6. Replace wiring harness in question (WP 0195 00 thru WP 0201 00).
	6. Check for additional diagnostic codes for other implement ECMs.	

Table 4. Implement Control - Continued.

(MID 082) MALFUNCTION	TEST OR INSPECTION	CORRECTIVE ACTION
0590 02 - Continued.	(a) Reconnect all ECMs that use CAT Data Link. (b) Turn battery disconnect and engine start switches to ON position (TM 5-3805-291-10). (c) After each ECM has been reconnected, check event list for diagnostic codes logged against implement ECM.	1. If diagnostic codes are not present for other implement ECMs in event list, engine ECM has failed. Exit this procedure and repeat this procedure. If failure is not found, replace implement ECM (WP 0060 00). 2. If diagnostic codes are present for other implement ECMs (implement ECM) in event list, exit this procedure. Perform this procedure again. If failure is not found, replace implement ECM (WP 0060 00).
	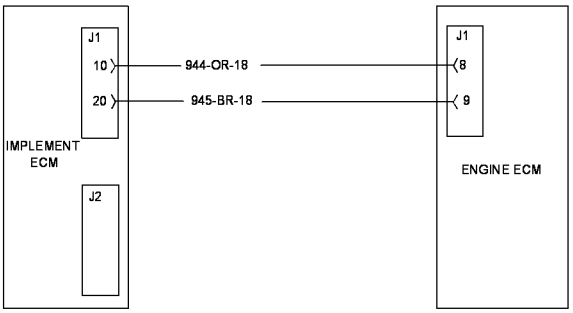 427-C1668	
0590 09	1. Use MSD (WP 0005 00) and check compatibility of software. 2. Check +battery circuit at implement ECM connectors. (a) Turn battery disconnect switch to OFF position (TM 5-3805-291-10). (b) Turn engine start switch to OFF position (TM 5-3805-291-10).	1. If software is compatible, go to Test 2. 2. If software is not compatible, flash proper software to appropriate implement ECM (WP 0056 00, WP 0057 00, WP 0060 00, and WP 0063 00). Ensure diagnostic code is no longer active. If this does not resolve problem, go to Test 2.

Table 4. Implement Control - Continued.

(MID 082) MALFUNCTION	TEST OR INSPECTION	CORRECTIVE ACTION
0590 09 - Continued	(c) Disconnect connector J1 from implement ECM (WP 0060 00).	
	(d) Turn battery disconnect and engine start switches to ON position (TM 5-3805-291-10).	
	(e) At connector J1, measure voltage between all possible sources of positive voltage to all possible sources of ground.	1. If voltage measures 18 DCV to 35 DCV, go to Test 3. 2. If voltage measures less than 18 DCV, ensure ground is proper. Also, check circuit breakers. If ground is OK, power circuit has failed. Replace wiring harness in question (WP 0195 00 thru WP 0201 00). If this does not resolve problem, go to Test 4.
	3. Check for a data link circuit short to ground.	
	(a) Turn battery disconnect switch to OFF position (TM 5-3805-291-10).	
	(b) Turn engine start switch to OFF position (TM 5-3805-291-10).	
	(c) Disconnect and inspect wiring harness connectors that are related to CAT Data Link circuits (WP 0237 00). Ensure connector contacts are clean and that connectors are tight. Reconnect all connectors. Refer to *Electrical Connectors Inspection* (WP 0022 00) as necessary.	
	(d) Disconnect wiring harness from all modules (WP 0056 00, WP 0057 00, WP 0060 00, and WP 0063 00).	
	(e) Measure resistance between CAT Data Link connectors and all possible sources of ground. CAT Data Link connectors are J1-8 and J1-9.	1. If resistance is greater than 5,000 Ohms for each measurement, go to Test 4. 2. If resistance is less than 5,000 Ohms for each measurement, short is between circuit with resistance that is less than 5,000 Ohms and contact 9 (wire 945-BR) and contact 8 (wire 944-OR). Replace wiring harness in question (WP 0195 00 thru WP 0201 00).

Table 4. Implement Control - Continued.

(MID 082) MALFUNCTION	TEST OR INSPECTION	CORRECTIVE ACTION
0590 09 - Continued.	4. Check for a data link circuit short to positive voltage. (a) Battery disconnect and engine start switches remain in OFF position (TM 5-3805-291-10). (b) All modules remain disconnected from wiring harness. (c) Measure resistance between data link and all possible sources of positive voltage at wiring harness connector for implement ECM. data link connectors are J1-8 and J1-9. 5. Check data link for an open circuit. (a) Battery disconnect switch remains OFF (TM 5-3805-291-10). (b) All ECMs remain disconnected from wiring harness. (c) At implement ECM, measure resistance between connector J1-20 (wire 945-BR) and connector J1-9 (wire 945-BR) for engine ECM. (d) At implement ECM, measure resistance to connector J1-10 (wire 944-OR) to corresponding connector J1-8 (wire 944-OR) for engine ECM.	1. If resistance is more than 5,000 Ohms, go to Test 5. 2. If resistance is less than 5,000 Ohms, and if diagnostic code is still active, go to Test 5. 1. If there is less than 5 Ohms of resistance for each measurement, circuit in wiring harness is correct. Exit this procedure and perform this troubleshooting step again. If cause of diagnostic code is not found, go to Test 6. 2. If resistance for each measurement is greater than 5 Ohms, replace wiring harness in question (WP 0195 00 thru WP 0201 00). Ensure diagnostic code is no longer active. If diagnostic code is active, go to Test 6.

Table 4. Implement Control - Continued.

(MID 082) MALFUNCTION	TEST OR INSPECTION	CORRECTIVE ACTION
0590 09 - Continued.	6. Recheck for diagnostic codes. Ensure diagnostic code is inactive.	1. If diagnostic code is inactive, no problems exist. 2. If diagnostic code is active, exit this procedure and perform this troubleshooting procedure again. If cause of diagnostic code is not found, replace implement ECM (WP 0060 00).
	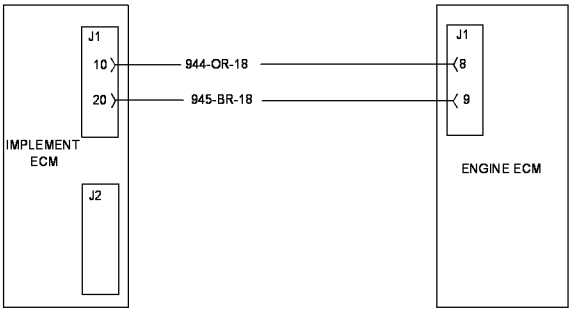 427-C1668	
0590 14	1. Check engine ECM and implement ECM for proper software versions. Connect MSD (WP 0005 00) and verify that versions of software are compatible.	1. If versions of software are compatible, go to Test 2. 2. If proper software is not installed, flash proper software to appropriate implement ECM (WP 0056 00, WP 0057 00, WP 0060 00, and WP 0063 00). Ensure diagnostic code is no longer active.
	2. Recheck for diagnostic codes. Ensure CID 0590 FMI 14 is active.	1. If diagnostic code is inactive. Clear diagnostic code. 2. If diagnostic code is active, ensure proper software is installed before replacing implement ECM. If software is correct, replace implement ECM (WP 0060 00). If implement ECM was just replaced, install new engine ECM (WP 0057 00).

Table 4. Implement Control - Continued.

(MID 082) MALFUNCTION	TEST OR INSPECTION	CORRECTIVE ACTION
	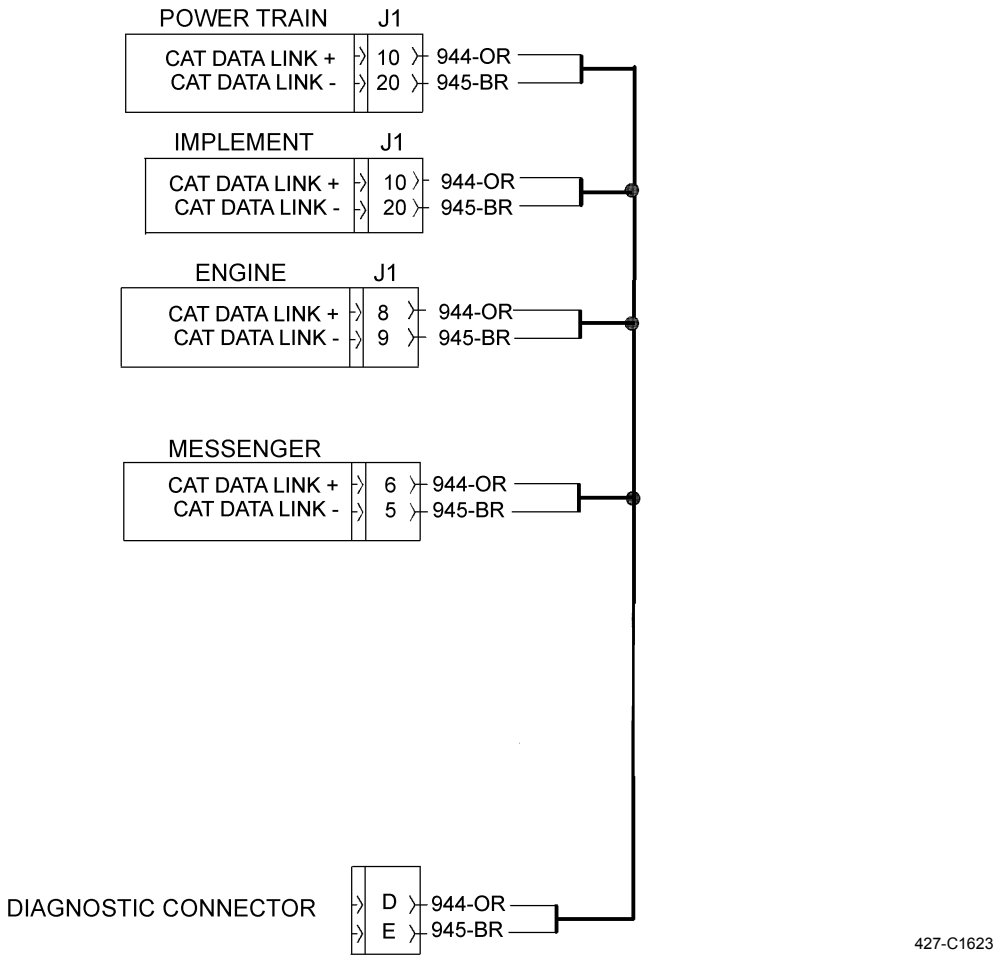	
0967 09	**NOTE** **Other related diagnostic codes may cause this diagnostic code. Check for other related diagnostic codes.** 1. Verify hardware and software part numbers. Connect MSD (WP 0005 00) and verify whether following part numbers are correct:	

Table 4. Implement Control - Continued.

(MID 082) MALFUNCTION	TEST OR INSPECTION	CORRECTIVE ACTION
0967 09 - Continued.	(1) Software part number for implement ECM. (2) Software part number for messenger.	1. If all part numbers are correct, go to Test 2. 2. If all part number are not correct, these modules may have an incorrect part number and/or software configuration: implement ECM (WP 0060 00), messenger (WP 0056 00), or powertrain ECM (WP 0063 00).
	2. Inspect wiring harness connections. (a) Turn engine start and battery disconnect switches to OFF position (TM 5-3805-291-10). (b) Inspect wiring harness connections related to CAT Data Link. Make sure connectors are clean and tightly connected. (c) Check mating of connector. (d) Check wires at connector. (e) Check each wire for nicks and/or signs of abrasion in insulation. (f) Check for moisture at connector. (g) Check for dirty contacts and/or corroded contacts. (h) Check each pin and socket.	1. If wiring harness connectors are tight and free of corrosion, go to Test 3. 2. If wiring harness connectors require repair, replace wiring harness(es) in question (WP 0195 00 thru WP 0201 00).
	3. Check for additional related diagnostic codes. (a) Ensure all ECMs that use CAT Data Link are connected. (b) Turn battery disconnect and engine start switches to ON position (TM 5-3805-291-10). (c) Acknowledge and troubleshoot any active diagnostic codes that are currently displayed on message center.	

Table 4. Implement Control - Continued.

(MID 082) MALFUNCTION	TEST OR INSPECTION	CORRECTIVE ACTION
0967 09 - Continued.	(d) Verify that no related diagnostic codes are present.	1. If no other diagnostic codes are present, go to Test 4. 2. If other related diagnostic codes are present, exit this procedure and perform tests again. Verify that other related diagnostic codes are not present.
	4. Check for shorts to ground. (a) Turn battery disconnect and engine start switches to OFF position (TM 5-3805-291-10). (b) Disconnect wiring harness from all ECMs that use CAT Data Link (WP 0056 00, WP 0057 00, WP 0060 00, and WP 0063 00). (c) At wiring harness for implement ECM, measure resistance between frame ground and following data link circuits. (1) Contact J1-10 (wire 944-OR) and contact J1-20 (wire 945-BR) of implement ECM. (2) Contact J1-6 (wire 944-OR) and contact J1-15 (wire 945-BR) of messenger.	
	(3) Contact J1-10 (wire 944-OR) and contact J1-5 (wire 945-BR) of powertrain ECM.	1. If resistance that is measured is greater than 5,000 Ohms for each measurement, go to Test 5. 2. If resistance that is measured is not greater than 5,000 Ohms for one or more of measurements, replace wiring harness in question (WP 0195 00 thru WP 0201 00).
	5. Check for a short to +battery. (a) Battery disconnect and engine start switches remain in OFF position (TM 5-3805-291-10). (b) All related control modules remain disconnected from wiring harness.	

Table 4. Implement Control - Continued.

(MID 082) MALFUNCTION	TEST OR INSPECTION	CORRECTIVE ACTION
0967 09 - Continued.	(c) Measure resistance between contact J1-31 (wire 121-RD-14) to contact J1-10 (wire 944-OR-18) and contact J1-20 (wire 945-BR-18) on implement ECM. 6. Check for an open wiring harness. (a) Battery disconnect and engine start switches remain in OFF position (TM 5-3805-291-10). (b) All related implement ECMs remain disconnected from wiring harness. (c) Check continuity of data link circuit in wiring harness. (d) Perform these measurements: (1) Measure resistance from connector contact J1-10 (wire 944-OR) of implement ECM to corresponding connector contacts, refer to table below.	1. If resistance that is measured is greater than 5,000 Ohms, go to Test 6. 2. If resistance measured is not greater than 5,000 Ohms for each measurement, replace wiring harness in question (WP 0195 00 thru WP 0201 00).

Module	Contact	Wire
Powertrain ECM	J1-10	944-OR
Messenger	J1-6	944-OR
Engine	J1-8	944-OR

(2) Measure resistance from connector J1-20 (wire 945-BR) of implement ECM to corresponding connector contacts, refer to table below.

Module	Contact	Wire
Powertrain ECM	J1-20	945-OR
Messenger	J1-5	945-OR
Engine	J1-9	945-OR

Table 4. Implement Control - Continued.

(MID 082) MALFUNCTION	TEST OR INSPECTION	CORRECTIVE ACTION
0967 09 - Continued.		1. If resistance measured is less than 5 Ohms for each measurement, implement ECM may have failed. Exit this procedure and perform this diagnostic code procedure again. Replace implement ECM (WP 0060 00) if cause of diagnostic code is not found. 2. If resistance measured is greater than 5,000 Ohms for one or more measurements, wiring harness has failed. Replace wiring harness in question (WP 0195 00 thru WP 0201 00).

Table 4. Implement Control - Continued.

(MID 082) MALFUNCTION	TEST OR INSPECTION	CORRECTIVE ACTION
	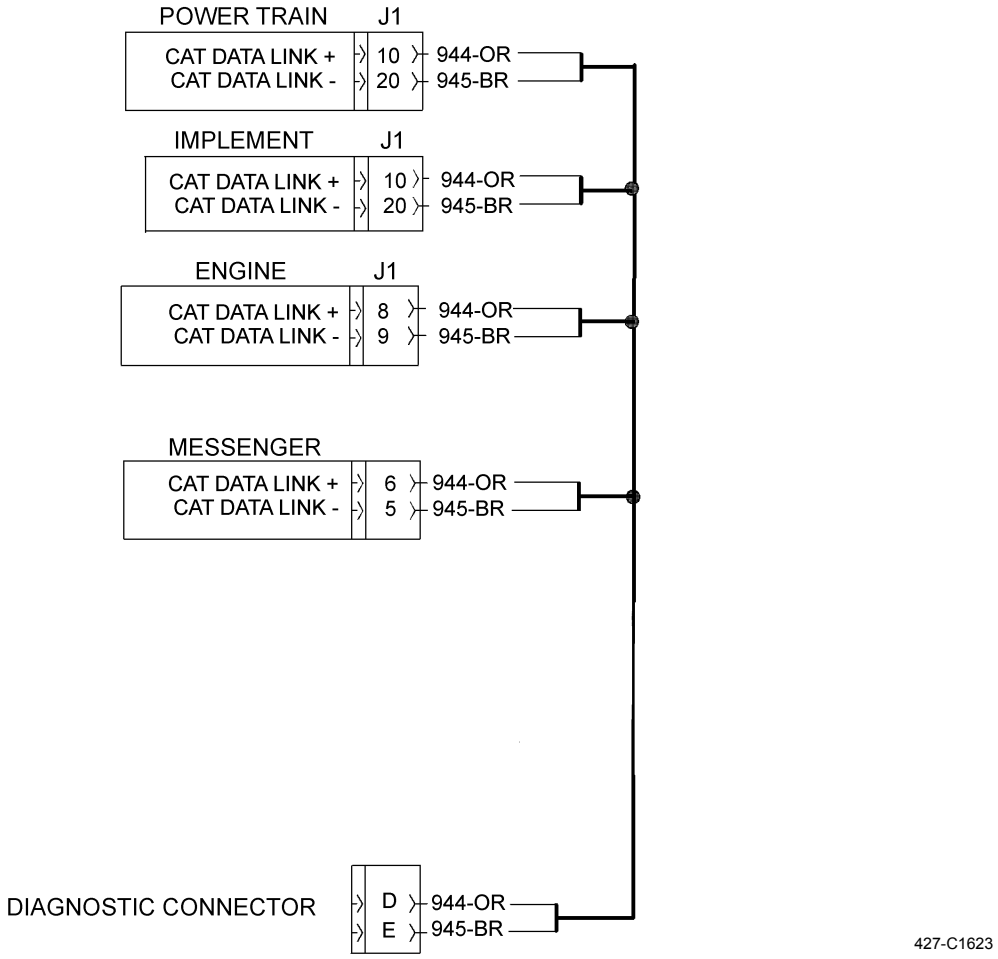	
0967 12	1. Verify hardware and software part numbers. Connect MSD (WP 0005 00) and verify whether following part numbers are correct: (1) Software part number for implement ECM. (2) Software part number for messenger.	1. If all part numbers are correct, go to Test 2. 2. If all part numbers are not correct, one of implement ECMs may have an incorrect part number and/or software configuration. Install appropriate flash file into implement ECM (WP 0060 00).

Table 4. Implement Control - Continued.

(MID 082) MALFUNCTION	TEST OR INSPECTION	CORRECTIVE ACTION
0967 12 - Continued.	2. Check for additional related diagnostic codes. (a) Ensure all ECMs that use CAT Data Link are connected. (b) Turn battery disconnect and engine start switches to ON position (TM 5-3805-291-10). (c) Acknowledge any active diagnostic codes that are currently displayed on messenger.	
	(d) Verify that no related diagnostic codes are active.	1. If other diagnostic codes are not active, go to Test 3. 2. If other related diagnostic codes are active, exit this procedure and perform test procedures for related diagnostic codes. Verify other related diagnostic codes are not active. Observe status of CID 0967 FMI 12. If CID 0967 FMI 12 remains active, perform CID 0967 FMI 12 again.
	3. Check if diagnostic code remains active. (a) Inspect contacts of wiring harness connectors and clean wiring harness connectors. (b) Reconnect all wiring harness connectors. (c) Operate machine (TM 5-3805-291-10).	
	(d) Use messenger to check status of CID 0967 FMI 12 (TM 5-3805-291-10).	1. If CID 0967 FMI 12 is active, exit this procedure and perform this procedure again. If cause of diagnostic code is not found, replace implement ECM (WP 0060 00). 2. If CID 0967 FMI 12 is not active, diagnostic code does not exist at this time.

Table 4. Implement Control - Continued.

(MID 082) MALFUNCTION	TEST OR INSPECTION	CORRECTIVE ACTION
1187 03	**NOTE** ***Switch Continuity,* Table 6 contains wire numbers and connector contacts. Use this information to troubleshoot the failed circuit.**	
	1. Check for open circuit. (a) Turn engine start switch to OFF position (TM 5-3805-291-10). (b) Turn battery disconnect switch to OFF position (TM 5-3805-291-10). (c) Verify that implement lockout switch is connected. (d) Disconnect harness from ECM (WP 0060 00). (e) Activate switch. At harness connector for ECM, check continuity to ground of normally closed contact and the normally open contact.	1. If continuity check does not agree with *Switch Continuity,* Table 6 at end of this work package, proceed to Test 2. 2. If continuity agrees with the values in *Switch Continuity,* Table 6 at the end of this work package, proceed to Test 3.
	2. Check switch. (a) Disconnect harness from switch (WP 0055 00). (b) At harness connector for ECM, check continuity to ground of normally closed contact and normally open contact. Activate switch when this check is being performed.	1. If continuity check does not agree with *Switch Continuity,* Table 6 at the end of this work package, switch has failed. Replace the switch. 2. If continuity check agrees with *Switch Continuity,* Table 6 at the end of this work package, harness has failed. Repair harness (WP 0022 00).

Table 4. Implement Control - Continued.

(MID 082) MALFUNCTION	TEST OR INSPECTION	CORRECTIVE ACTION
1187 03 - Continued.	3. Check for a short to + battery.	
	Check the continuity from each switch wire at harness connector for ECM to contacts J2-52.	1. If continuity exists between one source of battery voltage and switch circuit, harness has failed. Repair harness or replace harness. 2. If continuity does not exist between one source of battery voltage and switch circuit, harness circuit is OK. 3. It is unlikely that ECM has failed. Exit this procedure and perform this troubleshooting procedure again. If the cause of the diagnostic code is not found, replace ECM (WP 0060 00).
1187 04	**NOTE** **The following test procedure may create other diagnostic codes. Ignore these created diagnostic codes and clear the diagnostic codes when the original diagnostic code is corrected.**	
	1. Check switch.	
	(a) Observe ON/OFF status of diagnostic code indicator (WP 0055 00).	
	(b) Disconnect connector of switch from the harness (WP 0055 00).	1. If diagnostic code remains active, switch is not cause of diagnostic code. Go to Test 2. 2. If diagnostic code is inactive, the switch has failed or the harness has failed. 3. Repeat this test in order to verify failure of switch. Replace switch (WP 0055 00). Repair harness (WP 0022 00).
	2. Check harness circuit.	
	(a) This test checks continuity of entire harness circuit that has failed. This test includes switch that was previously checked.	
	(b) Turn battery disconnect switch to OFF position (TM 5-3805-291-10).	
	(c) Reconnect switch that was disconnected in previous step.	
	(d) Disconnect harness from ECM (WP 0060 00).	

Table 4. Implement Control - Continued.

(MID 082) MALFUNCTION	TEST OR INSPECTION	CORRECTIVE ACTION
1187 04 - Continued.	(e) Activate switch. At harness connector for ECM, check continuity to ground of normally closed contact and normally open contact.	1. If continuity agrees with values in Table 6, harness circuit is correct. 2. It is unlikely that ECM has failed. Exit this procedure and perform this troubleshooting procedure again. If cause of diagnostic code is not found, replace ECM (WP 0060 00). 3. If continuity check does not agree with values in *Switch Continuity,* Table 6 at the end of this work package, harness circuit has failed. There is a short to ground in harness between ECM and switch. Repair harness (WP 0022 00).
1326 02	**NOTE** **Do not change hard wired location code if you have flashed incorrect software into control.**	
	1. Verify hardware and software part numbers. Connect MSD (WP 0005 00) and verify whether part number of software for implement ECM is correct.	1. If all part numbers are correct for implement ECM, go to Test 2. 2. If part numbers are not correct, installed implement ECM has wrong part number or incorrect configuration software is installed. Replace implement ECM with a module that has correct part number or flash correct configuration software (WP 0060 00).
	2. Verify whether location code matches ET status screen. Check ET status screen in order to verify location code.	1. If location codes in ET are correct, go to Test 3. 2. If location codes are not correct, repeat this test to verify that software and hardware part numbers are correct, if so, go to Test 3.
	3. Inspect wiring harness connections. (a) Turn engine start and battery disconnect switches to OFF position (TM 5-3805-291-10).	

Table 4. Implement Control - Continued.

(MID 082) MALFUNCTION	TEST OR INSPECTION	CORRECTIVE ACTION
1326 02 - Continued.	(b) Disconnect and inspect wiring harness connections that are related to location codes (WP 0237 00). Make sure that connectors are clean and tight. Refer to *Electrical Connectors Inspection* (WP 0022 00) as necessary. (c) Check for proper mating of connector. (d) Check all wires at connector. (e) Check each wire for nicks. Check each wire for signs of abrasion in insulation. (f) Check all wires at connector. (g) Check each wire for nicks. Check each wire for signs of abrasion in insulation. (h) Check for moisture at connector. (i) Check for dirty contacts or corroded contacts. (j) Check each pin and check each socket.	
	(k) Reconnect all connectors.	1. If wiring harness connectors are tight and free from corrosion, go to Test 4. 2. If one or more wiring harness connectors are in need of repair, replace wiring harness in question (WP 0195 00 thru WP 0201 00).
	4. Check for shorts to ground. (a) Battery disconnect and engine start switches remain in OFF position (TM 5-3805-291-10). (b) Disconnect wiring harness from implement ECM (WP 0060 00).	
	(c) At wiring harness for implement ECM, measure resistance between frame ground and location code pins.	1. If resistance measured is greater than 5 Ohms at contacts J1-28 and J1-27 and resistance measures less than 5 Ohms at contact J1-26 and J1-32, go to Test 5. 2. If one or more resistance measurements is not correct, replace wiring harness in question (WP 0195 00 thru WP 0201 00).

Table 4. Implement Control - Continued.

(MID 082) MALFUNCTION	TEST OR INSPECTION	CORRECTIVE ACTION
1326 02 - Continued.	5. Check for shorts to +battery circuit.	
	(a) Battery disconnect switch remains OFF (TM 5-3805-291-10).	
	(b) Implement ECM remains disconnected from wiring harness connector.	
	(c) At wiring harness connector for implement ECM measure resistance between J1-26 and J1-32 to all possible sources of +battery circuit.	1. If resistance is greater than 5 Ohms, go to Test 6. 2. If resistance is less than 5,000 Ohms, replace wiring harness in question (WP 0195 00 thru WP 0201 00).
	6. Check for an open circuit in wiring harness.	
	(a) Battery disconnect switch remains in OFF position (TM 5-3805-291-10).	
	(b) Implement ECM remains disconnected from wiring harness.	
	(c) At wiring harness for implement ECM, measure resistance between frame ground and contacts J1-28 and J1-32.	1. If resistance is less than 5 Ohms, implement ECM has failed. Exit this procedure and perform this diagnostic code procedure again. If cause of diagnostic code is not found, replace implement ECM (WP 0060 00). 2. If resistance is greater than 5 Ohms, replace wiring harness in question (WP 0195 00 thru WP 0201 00).

Table 4. Implement Control - Continued.

(MID 082) MALFUNCTION	TEST OR INSPECTION	CORRECTIVE ACTION
	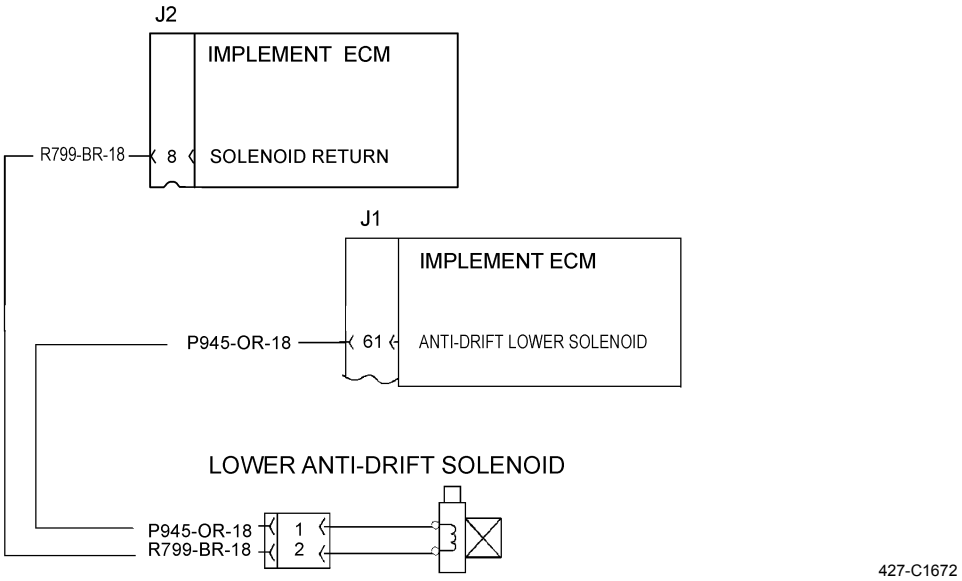	
2326 03	**NOTE** • **The following test procedure may create other diagnostic codes. Ignore these created diagnostic codes and clear diagnostic codes when original diagnostic code is corrected.** • **Ensure diagnostic code indicator is active and that diagnostic code is active.** • **This test causes implement ECM to log an open circuit diagnostic code for this solenoid. Clear this code from implement ECM after troubleshooting.**	
	1. Check solenoid. (a) Turn engine start switch to OFF position (TM 5-3805-291-10). (b) Disconnect lower anti-drift solenoid from wiring harness (WP 0219 00). (c) Turn engine start switch to ON position (TM 5-3805-291-10). (d) Place direction lever in NEUTRAL position. (e) At wiring harness connector for solenoid, measure voltage from implement ECM between contact 1 (wire P945-OR) and contact 2 (wire R799-BR).	1. If voltage is approximately 5 DCV, replace solenoid (WP 0218 00). 2. If voltage is approximately battery voltage, go to Test 2.

Table 4. Implement Control - Continued.

(MID 082) MALFUNCTION	TEST OR INSPECTION	CORRECTIVE ACTION
2326 03 - Continued.	2. Check wiring harness. (a) Turn engine start switch to OFF position (TM 5-3805-291-10). (b) Disconnect wiring harness from implement ECM (WP 0060 00). (c) Turn engine start switch to ON position (TM 5-3805-291-10). (d) At wiring harness connector for implement ECM, measure voltage between contact J2-8 (wire R799-BR) and contact J1-61 (wire P945-OR).	1. If voltage is approximately battery voltage, replace wiring harness in question (WP 0195 00 thru WP 0201 00). 2. If voltage is approximately 0 DCV, go to Test 3.
	3. Check if diagnostic code remains active. (a) Turn engine start switch to OFF position (TM 5-3805-291-10). (b) Disconnect and inspect all wiring harness connectors and reconnect. Refer to *Electrical Connectors Inspection* (WP 0022 00) as necessary. (c) Enter service mode. (d) Operate machine and use messenger to ensure CID 2326 FMI 03 is active (TM 5-3805-291-10).	1. If diagnostic code is active, exit this procedure and perform this troubleshooting procedure again. If cause of diagnostic code is not found, replace implement ECM (WP 0060 00). 2. If diagnostic code is not active, initial diagnostic code was probably caused by poor electrical connection at wiring harness connector that was disconnected and reconnected. Resume normal machine operation.

Table 4. Implement Control - Continued.

(MID 082) MALFUNCTION	TEST OR INSPECTION	CORRECTIVE ACTION
	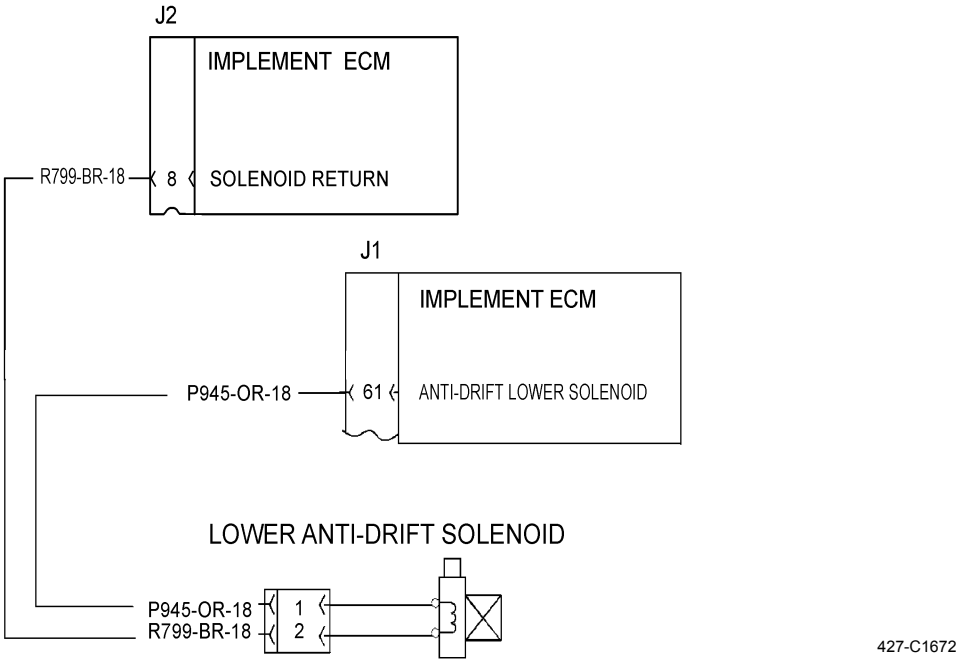	
2326 05	**NOTE** • **The following test procedure may create other diagnostic codes. Ignore these created diagnostic codes and clear diagnostic codes when original diagnostic code is corrected.** • **Ensure diagnostic code indicator is active and that diagnostic code is active.**	
	1. Check solenoid. (a) Turn battery disconnect and engine start switches to ON position (TM 5-3805-291-10). (b) Disconnect lower anti-drift solenoid from wiring harness (WP 0218 00). (c) Observe ON/OFF status of diagnostic code indicator. (d) At wiring harness connector for solenoid, place a jumper wire between contact 1 (wire P945-OR) and contact 2 (wire R799-BR).	1. If diagnostic code indicator remains active and diagnostic code remains active, go to Test 2. 2. If diagnostic code indicator is inactive, repeat this test to verify failure. Replace solenoid (WP 0218 00) or replace wiring harness in question (WP 0195 00 thru WP 0201 00). Approximate resistance of a proportional solenoid valve is from 6 to 12 Ohms.

Table 4. Implement Control - Continued.

(MID 082) MALFUNCTION	TEST OR INSPECTION	CORRECTIVE ACTION
2326 05 - Continued.	2. Check wiring harness. (a) Turn battery disconnect switch to OFF position (TM 5-3805-291-10). (b) Remove jumper wire from contact 1 to 2. (c) Reconnect solenoid valve to wiring harness. (d) Disconnect wiring harness from implement ECM (WP 0060 00).	
	(e) At wiring harness connector for implement ECM, measure resistance between contacts J2-8 (wire R799-BR) and contact J1-61 (wire P945-OR).	1. If resistance is greater than 5,000 Ohms (no continuity), replace wiring harness in question (WP 0195 00 thru WP 0201 00). 2. If resistance is from 6 to 12 Ohms, exit this procedure and perform this troubleshooting procedure again. Also, recheck if diagnostic code indicator is active for this diagnostic code. If cause is not found, replace implement ECM (WP 0060 00).

Table 4. Implement Control - Continued.

(MID 082) MALFUNCTION	TEST OR INSPECTION	CORRECTIVE ACTION
	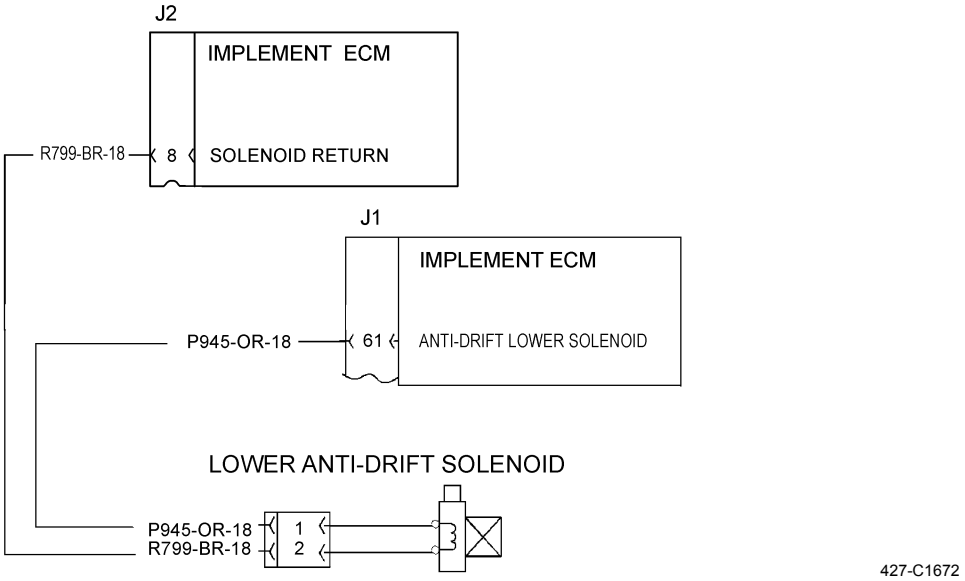	
2326 06	**NOTE** • **The following test procedure may create other diagnostic codes. Ignore these created diagnostic codes and clear diagnostic codes when original diagnostic code is corrected.** • **Ensure diagnostic code indicator is active and that diagnostic code is active.**	
	1. Check solenoid. (a) Turn battery disconnect and engine start switches to ON position (TM 5-3805-291-10). (b) Observe ON/OFF status of diagnostic code indicator. (c) Disconnect lower anti-drift solenoid from wiring harness (WP 0218 00).	1. If diagnostic code indicator remains active and diagnostic code remains active, go to Test 2. 2. If diagnostic code indicator is inactive, solenoid or connecting wiring harness has failed. Repeat this test in order to verify failure. Replace solenoid (WP 0218 00) or replace connecting wiring harness in question (WP 0195 00 thru WP 0201 00) at solenoid.
	2. Check for a shorted wiring harness. (a) Turn battery disconnect switch to OFF position (TM 5-3805-291-10).	

Table 4. Implement Control - Continued.

(MID 082) MALFUNCTION	TEST OR INSPECTION	CORRECTIVE ACTION
2326 06 - Continued.	(b) Solenoid valve from previous test remains disconnected. (c) Disconnect wiring harness from implement ECM (WP 0060 00). (d) At wiring harness connector for implement ECM, measure resistance between contact for failed solenoid circuit J1-61 (wire P945-OR) and contact J2-8 (ground wire R799-BR).	1. If resistance is less than 5,000 Ohms, replace wiring harness in question (WP 0195 00 thru WP 0201 00). 2. If resistance is greater than 5,000 Ohms (no continuity), exit this procedure and perform this troubleshooting procedure again. Also, recheck if diagnostic code indicator is active for this diagnostic code. If cause is not found, replace implement ECM (WP 0060 00).
	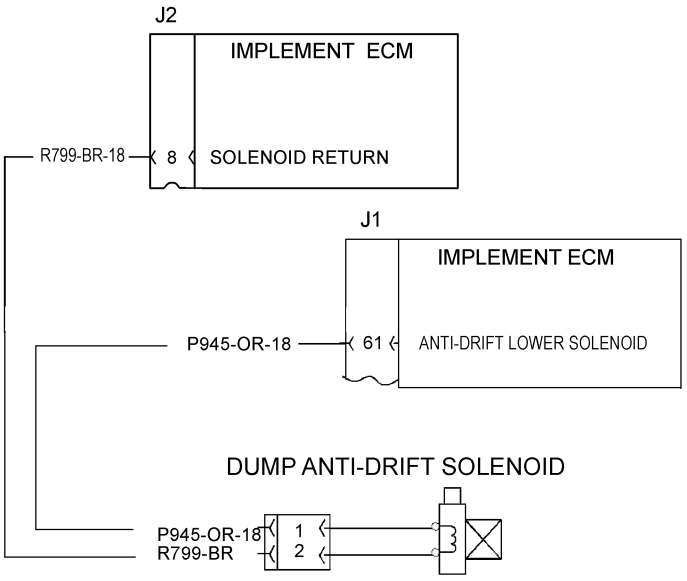 427-C1673	
2328 03	**NOTE** **• The following test procedure may create other diagnostic codes. Ignore these created diagnostic codes and clear diagnostic codes when original diagnostic code is corrected.** **• Ensure diagnostic code indicator is active and that diagnostic code is active.** **• This test causes implement ECM to log an open circuit diagnostic code for this solenoid. Clear this code from implement ECM after troubleshooting.** 1. Check solenoid. (a) Turn engine start switch to OFF position (TM 5-3805-291-10).	

Table 4. Implement Control - Continued.

(MID 082) MALFUNCTION	TEST OR INSPECTION	CORRECTIVE ACTION
2328 03 - Continued.	(b) Disconnect dump anti-drift solenoid from wiring harness (WP 0218 00). (c) Turn engine start switch to ON position (TM 5-3805-291-10). (d) Place direction lever in NEUTRAL position. (e) At wiring harness connector for solenoid, measure voltage from implement ECM between contact 1 (wire P946-BR) and contact 2 (wire R799-BR). 2. Check wiring harness. (a) Turn engine start switch to OFF position (TM 5-3805-291-10). (b) Disconnect wiring harness from implement ECM (WP 0060 00). (c) Turn engine start switch to ON position (TM 5-3805-291-10). (d) At wiring harness connector for implement ECM, measure voltage between contact J2-8 (wire R799-BR) and contact J1-62 (wire P946-BR). 3. Check if diagnostic code remains active. (a) Turn engine start switch to OFF position (TM 5-3805-291-10). (b) Disconnect and inspect all wiring harness connectors and reconnect. Refer to *Electrical Connectors Inspection* (WP 0022 00) as necessary.	1. If voltage is approximately 5 DCV, replace solenoid (WP 0218 00). 2. If voltage is approximately battery voltage, go to Test 2. 1. If voltage is approximately battery voltage, replace wiring harness in question (WP 0195 00 thru WP 0201 00). 2. If voltage is approximately 0 DCV, go to Test 3.

Table 4. Implement Control - Continued.

(MID 082) MALFUNCTION	TEST OR INSPECTION	CORRECTIVE ACTION
2328 03 - Continued.	(c) Operate machine and use messenger to ensure CID 2328 FMI 03 is active (TM 5-3805-291-10).	1. If diagnostic code is active, exit this procedure and perform this troubleshooting procedure again. If cause of diagnostic code is not found, replace implement ECM (WP 0060 00). 2. If diagnostic code is not active, initial diagnostic code was probably caused by a poor electrical connection at one of wiring harness connectors that was disconnected and reconnected. Resume normal machine operation.
	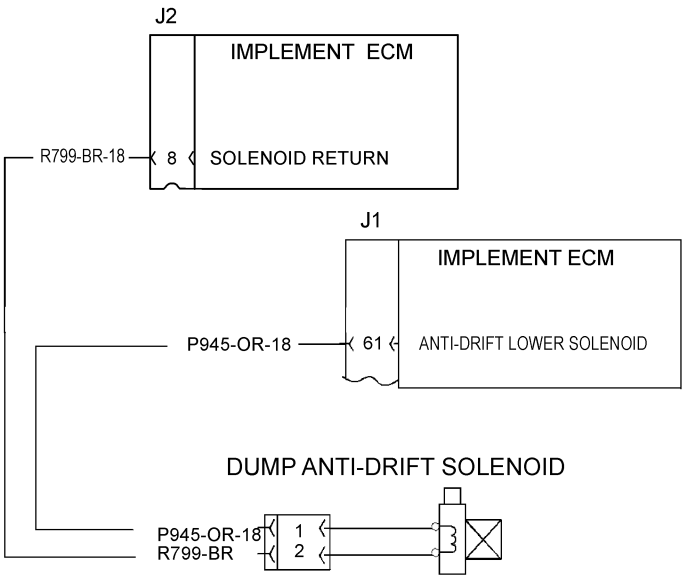 427-C1673	
2328 05	**NOTE** • **The following test procedure may create other diagnostic codes. Ignore these created diagnostic codes and clear diagnostic codes when original diagnostic code is corrected.** • **Ensure diagnostic code indicator is active and that diagnostic code is active.** 1. Check solenoid. (a) Turn battery disconnect and engine start switches to ON position (TM 5-3805-291-10). (b) Disconnect dump anti-drift solenoid from wiring harness (WP 0218 00).	

Table 4. Implement Control - Continued.

(MID 082) MALFUNCTION	TEST OR INSPECTION	CORRECTIVE ACTION
2328 05 - Continued.	(c) Observe ON/OFF status of diagnostic code indicator.	
	(d) At wiring harness connector for solenoid, place a jumper wire between contact 1 (wire P946-BR) and contact 2 (wire R799-BR).	1. If diagnostic code indicator remains active, go to Test 2. 2. If diagnostic code indicator is inactive, repeat this test in order to verify failure. Replace solenoid (WP 0218 00) or replace wiring harness in question (WP 0195 00 thru WP 0201 00). Approximate resistance of a proportional solenoid valve is from 6 to 12 Ohms.
	2. Check wiring harness.	
	(a) Turn battery disconnect switch to OFF position (TM 5-3805-291-10).	
	(b) Remove jumper wire from contact 1 to 2.	
	(c) Reconnect solenoid valve to wiring harness.	
	(d) Disconnect wiring harness from implement ECM (WP 0060 00).	
	(e) At wiring harness connector for implement ECM, measure resistance between contacts J2-8 (wire R799-BR) and contact J1-62 (wire P946-BR).	1. If resistance is greater than 5,000 Ohms (no continuity), replace wiring harness in question (WP 0195 00 thru WP 0201 00). 2. If resistance is from 6 to 12 Ohms, exit this procedure and perform this troubleshooting procedure again. Also, recheck if diagnostic code indicator is active for this diagnostic code. If cause is not found, replace implement ECM (WP 0060 00).

Table 4. Implement Control - Continued.

(MID 082) MALFUNCTION	TEST OR INSPECTION	CORRECTIVE ACTION
	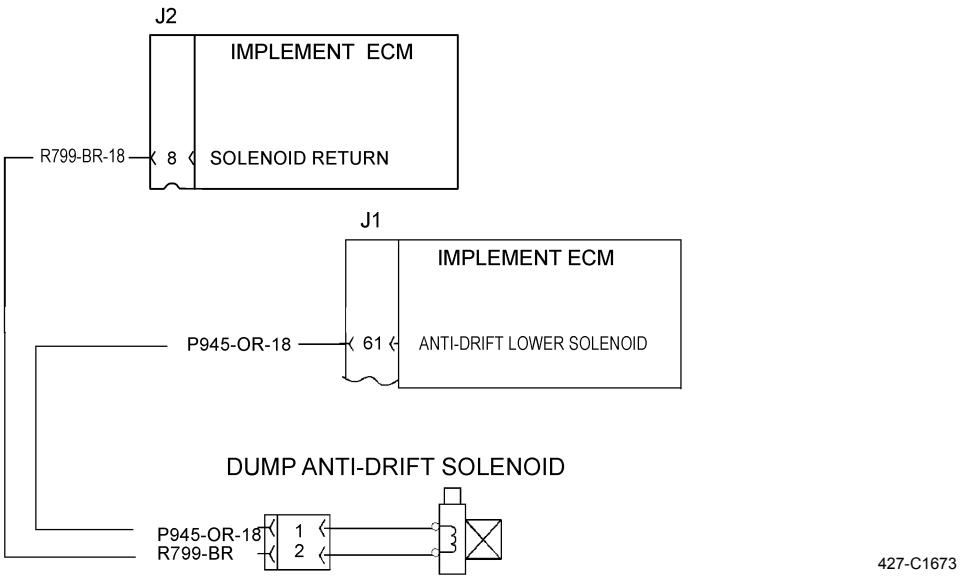	
2328 06	**NOTE** • **The following test procedure may create other diagnostic codes. Ignore these created diagnostic codes and clear diagnostic codes when original diagnostic code is corrected.** • **Ensure diagnostic code indicator is active and that diagnostic code is active.**	
	1. Check solenoid. (a) Turn battery disconnect and engine start switches to ON position (TM 5-3805-291-10). (b) Observe ON/OFF status of diagnostic code indicator. (c) Disconnect dump anti-drift solenoid from wiring harness (WP 0218 00).	1. If diagnostic code indicator remains active and diagnostic code remains active, go to Test 2. 2. If diagnostic code indicator is inactive, repeat this test in order to verify failure. Replace solenoid (WP 0195 00) or replace wiring harness in question (WP 0197 00 thru WP 0201 00).

Table 4. Implement Control - Continued.

(MID 082) MALFUNCTION	TEST OR INSPECTION	CORRECTIVE ACTION
2328 06 - Continued.	2. Check for a shorted wiring harness. (a) Turn battery disconnect switch to OFF position (TM 5-3805-291-10). (b) Solenoid valve from previous test remains disconnected. (c) Disconnect wiring harness from implement ECM (WP 0060 00). (d) At wiring harness connector for implement ECM, measure resistance between contact for failed solenoid circuit J1-62 (wire P946-BR) and contact J2-8 (ground wire R799-BR).	1. If resistance is less than 5,000 Ohms, replace wiring harness in question (WP 0195 00 thru WP 0201 00). 2. If resistance is greater than 5,000 Ohms (no continuity), exit this procedure and perform this troubleshooting procedure again. Also, recheck if diagnostic code indicator is active for this diagnostic code. If cause is not found, replace implement ECM (WP 0060 00).

Table 5. Switch Continuity - CID 0490 Implement Lockout Switch.

Switch/CID	Switch State	Implement ECM Connector Contact No.	Switch Contact	Wire No.	Status
CID 0490 Implement Lockout Switch	Not Locked	J1-33 N/O (1)	N/O	E917-WH	O(2)
		J1-34 N/C (3)	N/C	E918-GN	G(4)
	Locked	J1-33 N/O	N/O	E917-WH	G
		J1-34 N/C	N/C	E918-GN	O

(1) N/O = Normally Open
(2) O = Open (no continuity to ground)
(3) N/C = Normally Closed
(4) G = Grounded (continuity to ground)

Table 6. Switch Continuity - CID 1187 Continuous Flow Rocker Switch.

Switch/CID	Switch State	Implement ECM Connector Contact No.	Switch Contact	Wire No.	Status
CID 1187 Continuous Flow Rocker Switch	SET/ON	J2-31	N/C (3)	T969-YL	O(2)
		J2-30	N/O (1)	T970-GY	G(4)
	OFF	J2-31	N/C	T969-YL	G
		J2-30	N/O	T970-GY	O

(3) N/C = Normally Closed.
(2) O= Open (no continuity to ground).
(1) N/O = Normally Open.
(4) G = Grounded (continuity to ground).

Table 7. Location Codes for Implement ECM.

Hardware Location Code	Implement ECM	Pin Number
ET Location Code	14	-
LOC 1	Ground	J1-26
LOC 2	Open	J1-27
LOC 4	Open	J1-28

Table 8. Cycle Time Signal as a Function of Control Lever Position.

Lever	Position	Approximate Cycle Time
Tilt Lever	Full Forward Travel	10% to 15%
Tilt Lever	Full Rearward Travel	85% to 90%
Lift Lever	Full Forward Travel	10% to 15%
Lift Lever	Full Rearward Travel	85% to 90%
Auxiliary Lever	Full Forward Travel	10% to 15%
Auxiliary Lever	Full Rearward Travel	85% to 90%

Table 9. Cycle Time Signal as a Function of Control Lever Position.

Lever	Position	Approximate Cycle Time
Tilt Lever	Full Forward Travel	10% to 15%
Tilt Lever	Full Rearward Travel	85% to 90%
Lift Lever	Full Forward Travel	10% to 15%
Lift Lever	Full Rearward Travel	85% to 90%
Auxiliary Lever	Full Forward Travel	10% to 15%
Auxiliary Lever	Full Rearward Travel	85% to 90%

Table 10. Status for Kickout Set Switch.

Switch Position	J1-35 (wire H708-OR) Lift	J1-40 (wire H709-BU) Tilt
LIFT	Open	Ground
TILT	Ground	Open
OFF	Open	Open

Table 11. Ride Control Switch Status.

Mode	Switch Position	G766-GN Circuit J2-46 Input 1	G767-GN Circuit J2-45 Input 2
ON	Down	Open	Closed
OFF	Center	Closed	Closed
AUTO	Up	Closed	Open

Table 12. Primary Steering Pressure Switch.

Switch Position	417-GY Circuit N/O J2-37	484-YL Circuit N/C J2-45
Low Pressure	Open	Closed
High Pressure	Closed	Open

Table 13. Status for Transmission Direction Switch #2.

Switch Position	J2-41	J2-40	J2-43	J2-42
Forward	Closed	Open	Closed	Open
Neutral	Closed	Open	Open	Closed
Reverse	Open	Closed	Open	Closed

Table 14. Duty Cycle Signal as a Function of Control Lever Position.

Lever	Position	Approximate Duty Cycle
Tilt Lever	Full Forward Travel	10% to 15%
Tilt Lever	Full Rearward Travel	85% to 90%
Lift Lever	Full Forward Travel	10% to 15%
Lift Lever	Full Rearward Travel	85% to 90%
Auxiliary Lever	Full Forward Travel	10% to 15%
Auxiliary Lever	Full Rearward Travel	85% to 90%

Table 15. Status for Kickout Set Switch.

Switch Position	J1-35 (wire H708-OR) Lift	J1-40 (wire H709-BU) Tilt
LIFT	Open	Ground
TILT	Ground	Open
OFF	Ground	Ground

END OF WORK PACKAGE

ENGINE TESTS, INSPECTIONS, AND ADJUSTMENTS 0010 00

THIS WORK PACKAGE COVERS

Finding Top-Center Position for No. 1 Piston
Engine Oil Pressure Test
Excessive Engine Oil Consumption

INITIAL SETUP

Maintenance Level

Direct Support

Test Equipment

Adapter, test (Item 3, WP 0232 00)

Software kit (Item 75, WP 0232 00)

Tester, internal combustion engine (Item 84, WP 0232 00)

Test set, electronic systems (MSD) (Item 86, WP 0232 00)

Test stand, automotive (Item 87, WP 0232 00)

Tools and Special Tools

Tool kit, general mechanic's, automotive (Item 90, WP 0232 00)

Shop equipment, automotive maintenance and repair: field maintenance, basic, less power (Item 68, WP 0232 00)

Adapter, timing pin (Item 13, WP 0232 00)

Pinion turning tool (Item 49, WP 0232 00)

Timing pin (Item 89, WP 0232 00)

Materials/Parts

Oil, lubricating, OE/HDO-5/40 (Item 27, WP 0233 00)

Oil, lubricating, OE/HDO-15/40 (Item 28, WP 0233 00)

Rag, wiping (Item 35, WP 0233 00)

Personnel Required

MOS 62B, Construction Equipment Repairer (2)

References

WP 0003 00
WP 0005 00
WP 0020 00
WP 0024 00
WP 0025 00
WP 0026 00
WP 0028 00
WP 0032 00
WP 0171 00
WP 0174 00
WP 0175 00
WP 0181 00
WP 0182 00
WP 0183 00

Equipment Conditions

Machine parked on level ground (TM 5-3805-291-10)

Work tool lowered to ground (TM 5-3805-291-10)

Parking brake engaged (TM 5-3805-291-10)

Wheels chocked

Battery disconnect switch in OFF position (TM 5-3805-291-10)

Hood opened (TM 5-3805-291-10)

Drawings Required

TM 5-3805-291-23P, Figures 5 and 9

NOTE

For a better understanding of each system, review the appropriate section in Theory of Operation (WP 0003 00).

FINDING TOP-CENTER POSITION FOR NO. 1 PISTON

CAUTION

Never turn engine using crankshaft vibration damper. Crankshaft vibration damper is a precision part. Major engine failure may be caused by damage to crankshaft vibration damper.

1. Remove two bolts (1) and cover (2) from flywheel housing (3).

NOTE

Timing hole is located approximately 5.0 to 6.0 in. (127 to 152 mm) above turning hole in flywheel housing.

2. Remove plug (4) from timing hole.
3. Install timing pin with timing pin adapter in timing hole.

NOTE

- **Direction of engine rotation is counterclockwise, as the engine is viewed from the flywheel end. Turn flywheel in direction of engine rotation.**
- **If flywheel is turned beyond point of engagement with timing pin, turn flywheel clockwise approximately 30 degrees. Then turn flywheel counterclockwise until timing pin engages hole in flywheel. This procedure removes play from gears when No. 1 piston is at top-center position.**

4. Turn flywheel until timing pin engages with hole in flywheel.

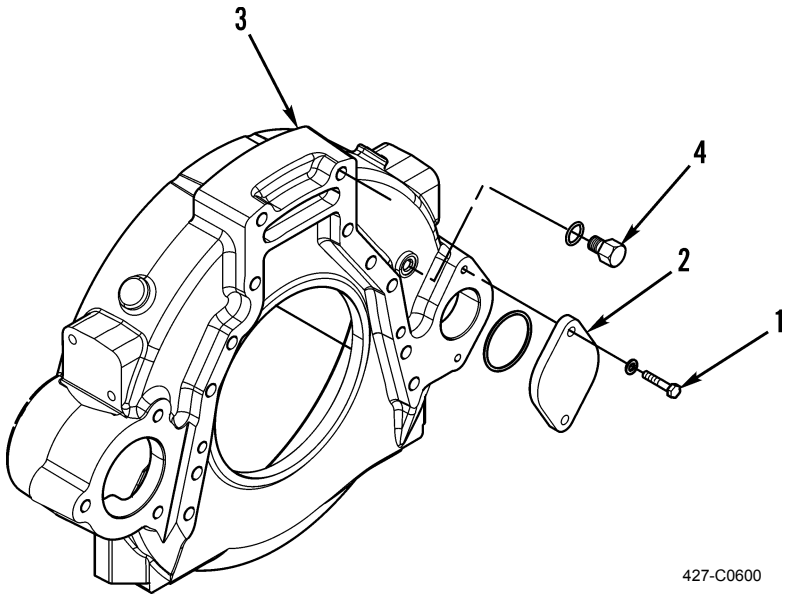

5. Remove valve cover from engine (WP 0024 00).

FINDING TOP-CENTER POSITION FOR NO. 1 PISTON - CONTINUED

NOTE

No. 1 piston is on compression stroke if valves for No. 1 cylinder are fully closed and valve rocker arms can be moved by hand. If valve rocker arms cannot be moved by hand and valves are slightly open, No. 1 piston is on exhaust stroke.

6. When the actual stroke position is identified and another stroke position is needed, remove timing pin from hole in flywheel. Then turn flywheel 360 degrees counterclockwise and reinstall timing pin into hole in flywheel.
7. Check stroke position.
8. Install valve cover on engine (WP 0024 00).
9. Remove timing pin with timing pin adapter from timing hole.
10. Install plug (4) in timing hole.
11. Install cover (2) on flywheel housing (3) with two bolts (1).

ENGINE OIL PRESSURE TEST

NOTE

Engine oil pressure may be checked electronically by using the MSD (WP 0005 00).

Measuring Engine Oil Pressure

WARNING

Work carefully around an engine that is running. Engine parts that are hot, or parts that are moving, can cause personal injury.

CAUTION

- **Keep all parts clean from contaminants. Contaminants may cause rapid wear and shortened component life.**
- **Wipe area clean around all connections to be opened during removal. Cap lines and hoses and plug openings after removing lines. Contamination of system could result in premature failure.**

NOTE

Use a container to catch any fluid that may drain from hoses or system. Dispose of fluid IAW local policy and ordinances. Ensure all spills are cleaned up.

ENGINE OIL PRESSURE TEST - CONTINUED

Measuring Engine Oil Pressure - Continued

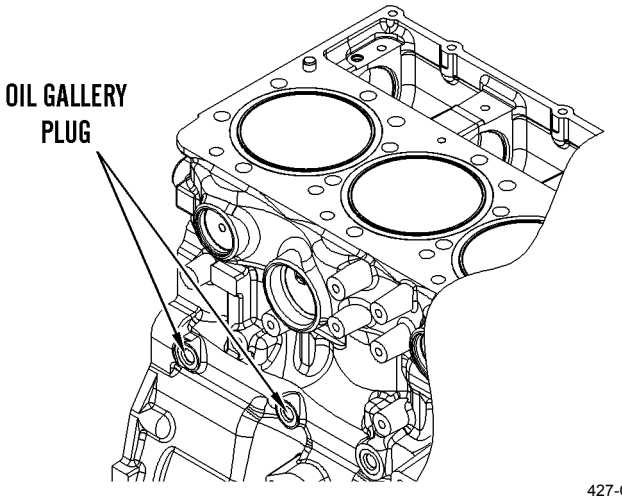

427-C1977

NOTE

Engine oil pressure to the camshaft and main bearings should be checked on each side of the cylinder block at oil gallery plug.

1. Start the engine. Run the engine with SAE 15W40 oil (TM 5-3805-291-10).
2. Record the value of the engine oil pressure when the engine is at operating temperature 212°F (100°C).

NOTE

- **The minimum engine oil pressure at 1800 rpm should be approximately 40 to 59 psi (275 to 414 kPa). Minimum engine oil pressure at low idle rpm (600 to 800 rpm) should be approximately 10 psi (68 kPa).**
- **An engine oil pressure indicator that has a defect or an engine oil pressure sensor that has a defect can give a false indication of a low oil pressure or a high oil pressure. If there is a notable difference between the engine oil pressure readings, make necessary repairs.**

3. Install internal combustion engine test IAW the instructions provided with the tool. Record oil pressure.
4. Compare the recorded engine oil pressure with the oil pressure indicators on messenger (TM 5-3805-291-10) and the engine oil pressure that is displayed on MSD.
5. If low engine oil pressure is determined, refer to *Reasons for Low Engine Oil Pressure* in this work package.
6. If high engine oil pressure is determined, refer to *Reasons for High Engine Oil Pressure* in this work package.

Reasons for Low Engine Oil Pressure

1. If engine oil level is low, refer to step 8.
2. If engine oil is contaminated, refer to step 9.
3. If engine oil bypass valves are open, refer to step 10.
4. If engine lubrication system is open, refer to step 11.

ENGINE OIL PRESSURE TEST - CONTINUED

Reasons for Low Engine Oil Pressure - Continued

5. If oil pickup tube has a leak or a restricted inlet screen, refer to step 12.
6. If engine oil pump is faulty, refer to step 13.
7. If engine bearings have excessive clearance, refer to step 14.
8. Check the engine oil level in the crankcase (TM 5-3805-291-10). The oil level can possibly be too far below the oil pump supply tube. This will cause the oil pump not to have the ability to supply enough lubrication to the engine components. If the engine oil levels is low, add engine oil in order to obtain the correct engine oil level (WP 0025 00).
9. Engine oil that is contaminated with fuel or coolant will cause low engine oil pressure. High engine oil level in the crankcase can be an indication of contamination. Determine the reason for contamination of the engine oil and make the necessary repairs. Replace the engine oil with the approved grade of engine oil (WP 0020 00).

CAUTION

Caterpillar oil filters are built to Caterpillar specifications. Use of an oil filter not recommended by Caterpillar could result in severe engine damage to the engine bearings, crankshaft, etc., as a result of the larger waste particles from unfiltered oil entering the engine lubricating system. Only use oil filters recommended by Caterpillar.

10. If the engine oil bypass valves are held in the open position, a reduction in the oil pressure can be the result. This may be due to debris in the engine oil. If the engine oil bypass valves are stuck in the open position, replace engine oil filter base (WP 0028 00) to correct this problem. Install new engine oil filter (WP 0025 00). New engine oil filters will prevent more debris from causing this problem.

NOTE

The piston cooling jets direct engine oil toward the bottom of the piston in order to cool the piston. This also provides lubrication for the piston pin. Breakage, a restriction or incorrect installation of the piston cooling jets will cause seizure of the piston.

11. An oil line or an oil passage that is open, broken, or disconnected will cause low engine oil pressure. An open lubrication system could be caused by a piston cooling jet that is missing or damaged. Check for an open lubrication system or damaged piston cooling jets (WP 0183 00) and make the necessary repairs.
12. The inlet screen of the oil pickup tube for the engine oil pump can have a restriction. This restriction will cause cavitation and a loss of engine oil pressure. Check the inlet screen on the oil pickup tube and remove any material that may be restricting engine oil flow. Low engine oil pressure may also be the result of the oil pickup tube that is drawing in air. Check the joints of the oil pickup tube for cracks or a damaged O-ring seal. Remove the engine oil pan (WP 0181 00) in order to gain access to the oil pickup tube and the oil screen.
13. Check the following problems that may occur to the engine oil pump:
    a. Air leakage in the supply side of the oil pump will also cause cavitation and loss of oil pressure. Check the supply side of the oil pump and replace oil pump if necessary (WP 0182 00).
    b. Oil pump gears that have too much wear will cause a reduction in oil pressure. Inspect oil pump and replace if necessary (WP 0182 00).
    c. Excessive clearance at engine bearings will cause low engine oil pressure. Check the engine components that have excessive bearing clearance and make the necessary repairs.

ENGINE OIL PRESSURE TEST - CONTINUED

Reason for High Pressure Oil Pressure

Engine oil pressure will be high if the engine oil bypass valves become stuck in the closed position and the engine oil flow is restricted. Foreign matter in the engine oil system could be the cause for the restriction of the oil flow and the movement of the engine oil bypass valves. If the engine oil bypass valves are stuck in the closed position, replace engine oil filter base (WP 0028 00) in order to correct this problem. Install new engine oil filters (WP 0025 00). New engine oil filters will prevent more debris from causing this problem.

EXCESSIVE ENGINE OIL CONSUMPTION

Engine Oil Leaks on the Outside of the Engine

1. Check for leakage at the seals at each end of the crankshaft and replace main seal if leaking (WP 0174 00 and WP 0175 00).
2. Look for leakage at the gasket for the engine oil pan and all lubrication system connections. Replace oil pan gasket if leaking (WP 0181 00).
3. Look for any engine oil that may be leaking from the crankcase breather. This can be caused by combustion gas leakage around the pistons. A dirty crankcase breather will cause high pressure in the crankcase. A dirty crankcase breather will cause the gaskets and the seals to leak. Replace or clean crankcase breather as necessary (WP 0026 00).

Engine Oil Leaks into Combustion Area of the Cylinders

NOTE

Engine oil that is leaking into the combustion area of the cylinders can be the cause of blue smoke. There are several possible ways for engine oil to leak into the combustion area of the cylinders.

1. Remove valve cover (WP 0024 00) and look for leaks between worn valve guides and valve stems.
2. Remove oil pan (WP 0181 00) and look for worn components or damaged components (pistons, piston rings, or dirty return holes for the engine oil).
3. Look for incorrect installation of the compression ring and/or the intermediate ring. If suspected, replace engine (WP 0171 00).
4. Look for leaks past the seal rings in the turbocharger shaft (WP 0032 00).
5. Check for overfilling of the crankcase (TM 5-3805-291-10).
6. Ask operator if there has been sustained operation at light loads.
7. Excessive consumption of engine oil can also result if engine oil with the wrong viscosity is used. Engine oil with a thin viscosity can be caused by fuel leakage into the crankcase or by increased engine temperature. Change engine oil (WP 0025 00) and use correct oil for the climate.

END OF WORK PACKAGE

FUEL SYSTEM TESTS, INSPECTIONS, AND ADJUSTMENTS 0011 00

THIS WORK PACKAGE COVERS

Air in Fuel Test

Fuel Quality Test

Fuel System Inspection

Fuel System Pressure Test

Air Inlet and Exhaust System Inspection

Exhaust Temperature Test

INITIAL SETUP

Maintenance Level

Unit

Test Equipment

Testing ICPT, petrole (Item 21, WP 0232 00)

Filter, fluid (Item 29, WP 0232 00)

Tester, internal combustion engine (Item 84, WP 0232 00)

Test stand, automotive (Item 87, WP 0232 00)

Thermometer, infrared (Item 88, WP 0232 00)

Tools and Special Tools

Tool kit, general mechanic's, automotive (Item 90, WP 0232 00)

Shop equipment, automotive maintenance and repair: organizational maintenance, common no. 1 (Item 70, WP 0232 00)

Materials/Parts

Rag, wiping (Item 35, WP 0233 00)

Personnel Required

MOS 62B, Construction Equipment Repairer (2)

References

WP 0003 00

WP 0020 00

WP 0030 00

WP 0033 00

WP 0034 00

WP 0035 00

WP 0036 00

WP 0188 00

Equipment Conditions

Machine parked on level ground (TM 5-3805-291-10)

Work tool lowered to ground (TM 5-3805-291-10)

Parking brake engaged (TM 5-3805-291-10)

Wheels chocked

Battery disconnect switch in OFF position (TM 5-3805-291-10)

Hood opened (TM 5-3805-291-10)

NOTE

For a better understanding of each system, review the appropriate section in *Theory of Operation* (WP 0003 00).

AIR IN FUEL TEST

1. Inspect fuel system for leaks. Replace or repair leaking fuel system components.
2. Ensure fuel line fittings are properly tightened (WP 0034 00).
3. Check fuel level in fuel tank (TM 5-3805-291-10).

NOTE

- **Air can enter fuel system on suction side between fuel transfer pump and fuel tank.**
- **When possible, install sight gage in straight section of fuel line that is at least 12 in. (304.8 mm) long. To avoid turbulence, DO NOT install sight gage near elbows, relief valves, and check valves.**

4. Install fluid filter (sight gage tool) in fuel return line.
5. Observe fuel flow during engine cranking. Check for air bubbles in fuel. If there is no fuel in sight gage, prime fuel system (TM 5-3805-291-10).
6. If engine starts, check for air in fuel at varying engine speeds. If possible, operate engine under conditions known to have problems.

NOTE

- **Steady stream of small bubbles with diameter of approximately 0.063 in. (1.60 mm) is acceptable amount of air in fuel.**
- **Bubbles with diameter of approximately 0.250 in. (6.35 mm) are also acceptable if there is a two-to-three second interval between bubbles.**
- **Excessive air bubbles in fuel are not acceptable.**

7. Observe amount of air in fuel.

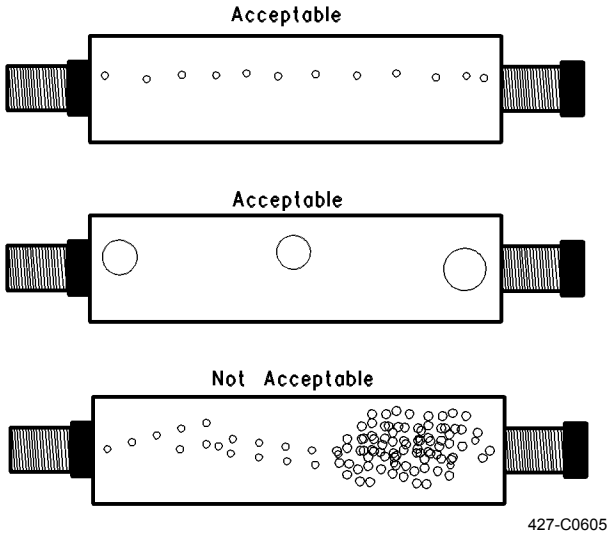

AIR IN FUEL TEST - CONTINUED

NOTE

If second sight gage is not available, move sight gage from fuel return line and install sight gage at inlet to fuel transfer pump.

8. If excessive air is seen in sight gage in fuel return line, install second sight gage at inlet to fuel transfer pump.
9. Observe fuel flow during engine cranking. Check for air bubbles in fuel.
10. If engine starts, check for air in fuel at varying engine speeds.

NOTE

- **If excessive air is not seen at inlet to fuel transfer pump, air is entering system after fuel transfer pump.**
- **If excessive air is seen at inlet to fuel transfer pump, air is entering through suction side of fuel system.**

11. Prime fuel system, if necessary (TM 5-3805-291-10).



WARNING

To avoid personal injury, always wear eye and face protection when using pressurized air.

CAUTION

To avoid equipment damage, never use more than 5 psi (34 kPa) to pressurize fuel tank.

12. Pressurize fuel tank with air to 5 psi (35 kPa). Check for leaks in fuel lines between fuel tank and fuel transfer pump. Replace any leaking or damaged fuel system components.
13. Check fuel pressure. Refer to *Fuel System Pressure Test* in this work package.

NOTE

If injector sleeve or injector sleeve O-ring is worn or damaged, combustion gases may leak into the fuel system.

14. If source of air is not found, disconnect supply line from fuel tank and connect external fuel supply to inlet of fuel transfer pump. If this corrects problem, replace fuel tank (WP 0033 00).

FUEL QUALITY TEST

1. Determine if water and/or contaminants are present in fuel by checking water separator (TM 5-3805-291-10).

NOTE

A full fuel tank minimizes potential for overnight condensation.

2. Drain water separator, if necessary (TM 5-3805-291-10).

NOTE

Water separator can appear to be full of fuel when water separator is actually full of water.

3. Determine if contaminants are present in fuel by removing sample of fuel from bottom of fuel tank (WP 0033 00).

NOTE

Color of fuel is not necessarily an indication of fuel quality. However, fuel that is black, brown, and/or similar to sludge can be an indication of bacteria or oil contamination. In cold temperatures, cloudy fuel indicates that fuel may not be suitable for operating conditions. Refer to *Preventive Maintenance Checks and Services* (PMCS) (WP 0020 00) for recommended fuels.

4. Visually inspect fuel sample for contaminants.

5. Check fuel gravity with calibration fluid and diesel fuel test kit. Acceptable range of fuel gravity is 30 to 45 when API is measured at 60°F (15°C), but there is a significant difference in energy within this range.

NOTE

- **Measured fuel API rating and corresponding fuel temperature must be corrected to 60°F (15°C) before selecting fuel correction factor. Use Table 1 for fuel density correction factor to determine fuel API rating at 60°F (15°C).**
- **A correction factor greater than 1.000 may cause low power and/or excessive fuel consumption.**

Table 1. Fuel Density (API).

API at 60°F (15°C)	Correction Factors
32.0	0.987
35.0	1.000
40.0	1.022
45.0	1.044

6. If fuel quality is still suspected as a possible cause of engine performance problems, disconnect fuel inlet line from tank (WP 0033 00). Temporarily operate engine from good source of fuel to determine if problem is caused by fuel quality.

7. If fuel quality is the problem, drain fuel system (WP 0020 00) and replace fuel filters (WP 0035 00 and WP 0036 00). Fill tank with good fuel (TM 5-3805-291-10). Engine performance can be affected by these characteristics:

   a. Cetane number of fuel.

   b. Air in fuel.

   c. Fuel mixed with other fluids.

FUEL SYSTEM INSPECTION

NOTE

A problem with components that send fuel to engine can cause low fuel pressure. This can decrease engine performance.

1. Check fuel level in fuel tank (TM 5-3805-291-10).
2. Ensure vent in fuel cap is not plugged with dirt (TM 5-3805-291-10).
3. Check all fuel lines for fuel leakage. Fuel lines must be free from dents, restrictions, and sharp bends. Verify fuel return line is not collapsed.
4. Install new fuel filters (WP 0035 00 and WP 0036 00).



WARNING

DO NOT use a tool that causes sparks to cut open fuel filter. Failure to follow this warning may result in death or injury to personnel.

5. Cut old filters open. Inspect filters for excess contamination. Determine source of contamination. Make necessary repairs.
6. To remove air from fuel system, prime fuel system (TM 5-3805-291-10).

FUEL SYSTEM PRESSURE TEST

NOTE

Refer to included manual, "*Using Tester, Internal Combustion Engine*" for Internal Combustion Engine Tester instructions.

Checking Fuel Pressure After Secondary Filter



WARNING

- **DO NOT perform fuel system checks, inspections, or maintenance while smoking or near fire, flames, or sparks. Fuel may ignite, causing injury or death to personnel or damage to equipment.**
- **Operating personnel must wear fuel-resistant gloves when handling fuels. If exposed to fuel, promptly wash exposed skin and change fuel-soaked clothing. Failure to follow this warning may result in injury to personnel.**

FUEL SYSTEM PRESSURE TEST - CONTINUED

Checking Fuel Pressure After Secondary Filter - Continued

CAUTION

- **Keep all parts clean from contaminants.**
- **Contaminants may cause rapid wear and shortened component life.**
- **Ensure fluids are contained during performance of inspection, maintenance, testing, adjusting, and repair.**
- **Dispose of all fluids according to local regulations.**

NOTE

Fuel pressure readings near fuel supply manifold have pressure spikes. Pressure spikes are caused by excess fuel returning to fuel system from injectors. Excessive needle movement at gage may be present. Connect gage with section of suitable hose. Air in the hose absorbs the spikes. This achieves an average reading and a steady needle. Keep gage above measuring point.

1. Install differential pressure gage in port (1).

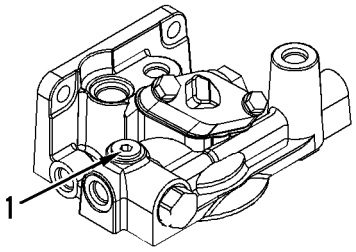

427-C0607

2. Start engine (TM 5-3805-291-10).
3. Run engine in no-load condition at 1,800 rpm (TM 5-3805-291-10).

NOTE

If excessive pressure is found, check the conditions listed under *High Fuel Pressure* in this work package.

4. Record pressure. Fuel pressure should be 85 psi (586 kPa) nominal.

FUEL SYSTEM PRESSURE TEST - CONTINUED

Checking Fuel Transfer Pump Output Pressure

1. Remove return fuel line (2).
2. Install differential pressure gage in return fuel line port.
3. Adjust engine speed to 600 rpm with no load.
4. Fuel pressure should be 100 to 105 psi (690 to 724 kPa).
5. If fuel pressure is within specified range, proceed to *Inspecting Fuel Pressure Regulator Valve* in this work package.

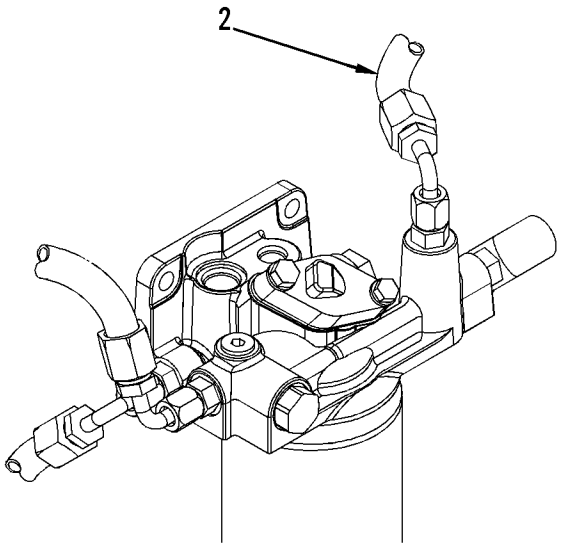

427-C0608

NOTE

If the pressure is less than 95 psi (655 kPa), the fuel transfer pump is weak. The pressure regulating valve in the pump may be stuck or worn.

6. Pressure regulating valve is located under access plug (3).
   a. Remove access plug (3).
   b. Remove pressure regulating valve, spring, and pin.
   c. Inspect pressure regulating valve.

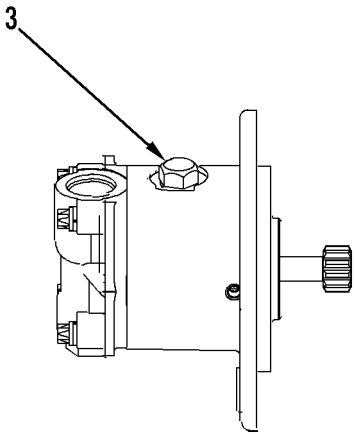

427-C0609

FUEL SYSTEM PRESSURE TEST - CONTINUED

Checking Fuel Transfer Pump Output Pressure - Continued

NOTE

- **If contamination is not found and pressure regulating valve is worn out, replace fuel transfer pump (WP 0188 00).**
- **Once the fuel transfer pump is operating properly, check fuel pressure again at secondary fuel filter base. Refer to *Checking Fuel Pressure After Secondary Filter* in this work package.**

d. If dirt is found, clean valve assembly and reinstall valve assembly.

e. Reinstall access plug.

f. Check fuel pressure again.

g. Replace fuel transfer pump (WP 0188 00) if fuel pressure still measures less than 95 psi (655 kPa).

NOTE

Return fuel pressure regulating valve is located on the bottom of fuel filter base.

Inspecting Fuel Pressure regulating Valve

1. Inspect return fuel pressure regulating valve for wear.
2. Check fuel pressure again at secondary fuel filter base. Refer to *Checking Fuel Pressure After Secondary Filter* in this work package. If fuel pressure is not up to 85 psi (586 kPa), perform *Measuring Vacuum at Primary Filter* in this work package.
3. If primary filter and fuel lines are sized correctly, replace secondary fuel filter base (WP 0036 00).

Measuring Vacuum at Primary Filter

1. Adjust engine speed to 1,800 rpm with no load.
2. Measure vacuum at outlet of primary filter.
3. Vacuum should be 3 to 4 inHg (10.14 to 13.52 kPa).
4. If vacuum is more than 9 inHg (30.42 kPa), measure vacuum at inlet of primary filter.
5. Differential across primary filter should be less than 1 inHg (3.38 kPa) with a new filter installed.
6. If differential is higher by more than 1 inHg (3.38 kPa), ensure filter, fittings, and lines are correctly sized. Fuel lines should be 0.5 in. (12.7 mm). Also check for debris in fuel tank that may be plugging supply tube.

FUEL SYSTEM PRESSURE TEST - CONTINUED

Low Fuel Pressure

Low fuel pressure can cause low power and fuel cavitation, which can damage fuel injectors. Check for these conditions which can cause low fuel pressure:

1. Plugged fuel filters (WP 0035 00 and WP 0036 00).
2. Contamination in check valves for fuel transfer pump (WP 0188 00).
3. Sticking or worn fuel pressure regulating valve in fuel transfer pump (WP 0188 00).
4. Severe wear on return fuel pressure regulating valve in fuel filter bases (WP 0035 00 and WP 0036 00).
5. Faulty fuel transfer pump (WP 0188 00).
6. Pinched fuel lines (WP 0034 00).
7. Undersized fuel line fittings (WP 0034 00).
8. Old fuel lines with a reduced interior diameter due to swelling (WP 0034 00).
9. Fuel lines with deteriorating interior surfaces (WP 0034 00).
10. Contamination in fuel tank, fuel lines, or fuel system components that create restrictions or blockage.

High Fuel Pressure

Excessive fuel pressure can cause fuel filter gaskets to rupture. Check for these conditions which can cause high fuel pressure:

1. Plugged orifices in fuel pressure regulating valve (WP 0188 00).
2. Stuck fuel pressure regulating valve in fuel transfer pump (WP 0188 00).
3. Pinched fuel return line (WP 0034 00).

AIR INLET AND EXHAUST SYSTEM INSPECTION

NOTE

Refer to included manual, "*Using Tester, Internal Combustion Engine*" for Internal Combustion Engine Tester instructions.

Air Inlet Restriction

NOTE

A restriction in the air inlet system or the exhaust system reduces engine performance.

1. Inspect engine air cleaner inlet and engine air cleaner tubing for passageway blockage or collapse (WP 0030 00).
2. Inspect engine air cleaner elements. Replace dirty or damaged engine air cleaner elements (WP 0030 00).
3. Check for dirt tracks on clean side of engine air cleaner elements. If dirt tracks are observed, contaminants are flowing past engine air cleaner elements and/or seal for engine air cleaner elements. Replace engine air cleaner elements (WP 0030 00).

AIR INLET AND EXHAUST SYSTEM INSPECTION - CONTINUED

Air Inlet Restriction - Continued



WARNING

- **Hot engine components can cause injury from burns. Before performing maintenance on engine, allow engine and components to cool.**
- **When working on a running engine, avoid contact with hot or rotating parts.**

NOTE

Test location can be anywhere along air inlet piping after engine air cleaner but before turbocharger.

4. Connect differential pressure gage vacuum port of internal combustion engine tester to test location (4).
   a. Leave differential pressure gage pressure port of internal combustion engine tester open to atmosphere.
   b. Start engine (TM 5-3805-291-10).
   c. Run engine in no-load condition at high idle (TM 5-3805-291-10).
   d. Record value.
   e. Multiply value from step 4d. by 1.8.
   f. Compare result from step 4e. to these values:
      (1) Used air cleaner element maximum restriction 25 in. of H2O (6.2 kPa).
      (2) New air cleaner element maximum restriction 15 in. of H2O (3.7 kPa).

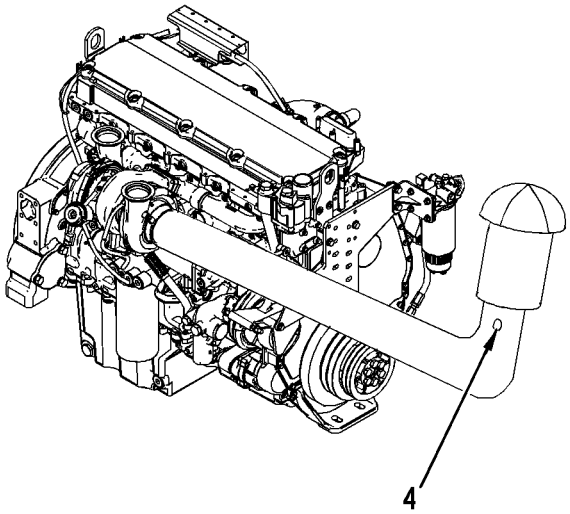

427-C0611

AIR INLET AND EXHAUST SYSTEM INSPECTION - CONTINUED

Exhaust Restriction



WARNING

- **Hot engine components can cause injury from burns. Before performing maintenance on engine, allow engine and components to cool.**
- **Making contact with a running engine can cause burns from hot parts and can cause injury from rotating parts. When working on a running engine, avoid contact with hot parts and rotating parts.**

NOTE

- **Back pressure is difference in pressure between exhaust pressure at outlet elbow and atmospheric air.**
- **Test location can be anywhere along the exhaust piping after turbocharger but before muffler.**

1. Connect differential pressure gage pressure port to test location (5).
2. Leave differential pressure gage vacuum port open to atmosphere.
3. Start engine (TM 5-3805-291-10).
4. Run engine in no-load condition at high idle (TM 5-3805-291-10).
5. Record value.
6. Maximum allowed back pressure: 50 in. of H2O (12.4 kPa).

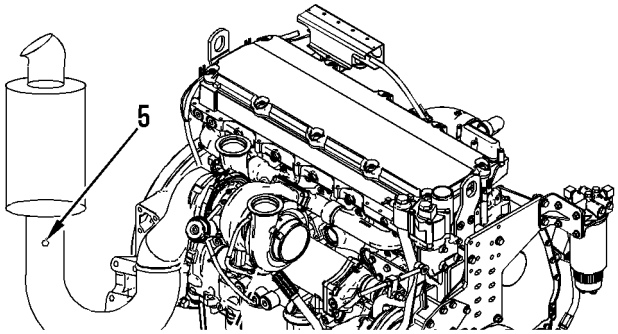

427-C0613

EXHAUST TEMPERATURE TEST

NOTE

- **When engine runs at low idle, temperature of an exhaust manifold port can indicate the condition of a fuel injection nozzle.**
- **A low temperature indicates that no fuel is flowing to cylinder. An inoperative fuel injection nozzle or a problem with fuel injection pump could cause this low temperature.**
- **A very high temperature can indicate that too much fuel is flowing to cylinder. A malfunctioning fuel injection nozzle could cause this very high temperature.**

1. Using thermometer, check exhaust temperature at each exhaust port of exhaust manifold.
2. Close hood (TM 5-3805-291-10).

END OF WORK PACKAGE

COOLING SYSTEM TESTS, INSPECTIONS, AND ADJUSTMENTS 0012 00

THIS WORK PACKAGE COVERS

Cooling System Inspection

Cooling System Test

INITIAL SETUP

Maintenance Level

Unit

Test Equipment

Test kit, radiator (Item 85, WP 0232 00)

Thermometer, infrared (Item 88, WP 0232 00)

Tools and Special Tools

Tool kit, general mechanic's, automotive (Item 90, WP 0232 00)

Shop equipment, automotive maintenance and repair: organizational maintenance, common no. 1 (Item 70, WP 0232 00)

Materials/Parts

Antifreeze (Item 1, WP 0233 00)

Detergent, general purpose, liquid (Item 9, WP 0233 00)

Rag, wiping (Item 35, WP 0233 00)

Personnel Required

MOS 62B, Construction Equipment Repairer

References

WP 0003 00

WP 0005 00

WP 0011 00

WP 0015 00

WP 0020 00

WP 0027 00

WP 0034 00

References - Continued

WP 0040 00

WP 0041 00

WP 0042 00

WP 0043 00

WP 0044 00

WP 0045 00

WP 0171 00

WP 0172 00

WP 0191 00

WP 0192 00

WP 0205 00

Equipment Conditions

Machine parked on level ground (TM 5-3805-291-10)

Work tool lowered to ground (TM 5-3805-291-10)

Parking brake engaged (TM 5-3805-291-10)

Wheels chocked

Battery disconnect switch in OFF position (TM 5-3805-291-10)

Hood opened (TM 5-3805-291-10)

COOLING SYSTEM INSPECTION



WARNING



- **DO NOT service cooling system unless engine has been cooled down. This is a pressurized cooling system and escaping steam or hot coolant may result in serious burns.**
- **DO NOT remove cooling system radiator cap when engine is hot. Allow engine to cool down. Loosen cap to let any pressure out of cooling system, then remove cap. Failure to follow this warning may result in serious burns.**
- **Wear effective eye, hand, and skin protection when handling coolants. Failure to do so may result in injury to personnel.**

CAUTION

If pressure is shown on the indicator, push the release valve to relieve pressure before removing any hose from the radiator.

NOTE

- **Coolant must be at correct level to check cooling system (TM 5-3805-291-10).**
- **Level of coolant should not be more than 0.5 in. (13 mm) from bottom of filler pipe.**
- **Engine has pressure-type cooling system that has two advantages: They can operate safely at temperatures higher than boiling point of water at range of atmospheric pressures and they reduce cavitation in water pump.**
- **Cavitation is formation of bubbles in liquids by mechanical forces. Forming of air bubbles or steam pockets is less common in pressure-type cooling systems.**
- **Regularly inspect cooling system to identify problems before damage occurs. Visually inspect cooling system before tests are made with test equipment.**
- **For a better understanding of each system, review the appropriate section in *Theory of Operation* (WP 0003 00).**

1. Check coolant level in cooling system (TM 5-3805-291-10).

NOTE

If coolant does not have the properties listed in step 2, drain and flush cooling system (WP 0041 00).

2. Check quality of coolant (WP 0020 00). Coolant should have these properties:
   a. Color similar to new coolant.
   b. Odor similar to new coolant.
   c. Free from dirt and debris.

COOLING SYSTEM INSPECTION - CONTINUED

NOTE

A small amount of coolant leakage across the surface of the water pump seals is normal. This leakage is required to provide lubrication for this type of seal. A hole is provided in the water pump housing to allow this coolant/seal lubricant to drain from the pump housing. Intermittent leakage of small amounts of coolant from this hole does not indicate water pump seal failure.

3. Look for leaks in cooling system.
4. Inspect radiator for bent fins and other debris, restricting airflow through radiator.
5. Inspect fan blades for damage.
6. Look for air or combustion gases in cooling system.
7. Inspect radiator filler cap for damage. Seal surface must be clean.
8. Inspect for loose or missing shrouds resulting in reduced air flow for cooling.

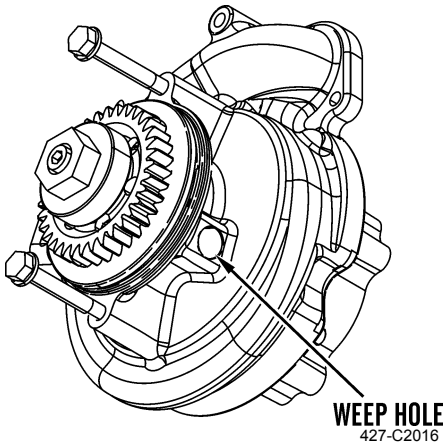

COOLING SYSTEM TEST

NOTE

- **This engine has a pressure type cooling system. A pressure type cooling system has two advantages. The cooling system can be operated in a safe manner at a temperature higher than the normal boiling point (steam) of water.**
- **This type of system prevents cavitation in the water pump. Cavitation is the forming of low pressure bubbles in liquids that are caused by mechanical forces. A pressure type cooling system helps to prevent pockets of air from forming.**

COOLING SYSTEM CHARACTERISTICS

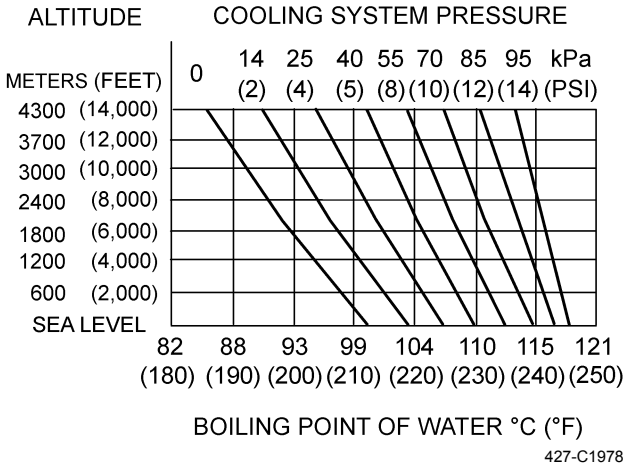

COOLING SYSTEM TEST - CONTINUED

Checking Filler Cap

NOTE

Pressure loss in cooling system can be caused by defective seal on radiator filler cap.

1. With engine cool, slowly loosen filler cap to release any pressure from cooling system and remove filler cap (TM 5-3805-291-10).
2. Inspect filler cap seal. Check for damage to seal and sealing surface of radiator.
3. Remove any debris on cap, seal, or sealing surface of radiator.
4. Install filler cap on cooling system pressure tester.
5. Check pressure that opens filler cap.
6. Compare pressure to pressure rating marked on top of filler cap.
7. If filler cap is damaged, replace filler cap (TM 5-3805-291-10).

Cooling System Check (Overheating)



WARNING



- **DO NOT service cooling system unless engine has been allowed to cool down. This is a pressurized cooling system and escaping steam or hot coolant may result in serious burns.**
- **DO NOT remove cooling system radiator cap when engine is hot. Allow engine to cool down. Loosen cap and let any pressure out of cooling system, then remove cap. Failure to follow this warning may result in serious burns.**
- **Wear effective eye, hand, and skin protection when handling coolants. Failure to do so may result in injury to personnel.**
- **If a pressure indication is shown on the indicator, push the release valve in order to relieve pressure before removing any hose from the radiator.**

NOTE

Above normal coolant temperatures can be caused by many conditions. Use the following procedure to determine the cause of above normal coolant temperatures.

1. Check the coolant level in the cooling system (TM 5-3805-291-10). If the coolant level is too low, air will get into the cooling system. Air in the cooling system will cause a reduction in coolant flow and bubbles in the coolant. Air bubbles will keep coolant away from the engine parts, which will prevent the transfer of heat to the coolant. Low coolant level is caused by leaks or incorrectly filling the radiator.
2. Check the mixture of antifreeze and water (WP 0020 00). The mixture should be approximately 50 percent water and 50 percent antifreeze. If the coolant mixture is incorrect, drain the system. Put the correct mixture of water and antifreeze in the cooling system (WP 0041 00).
3. Check for air in the cooling system. Air can enter the cooling system in different ways. The most common causes of air in the cooling system are not filling the cooling system correctly and combustion gas leakage into the cooling system. Combustion gas can get into the system through inside cracks, a damaged cylinder head, or a damaged cylinder head gasket. Air in the cooling system causes a reduction in coolant flow and bubbles in the coolant. Air bubbles keep coolant away from the engine parts, which prevents the transfer of heat to the coolant.

COOLING SYSTEM TEST - CONTINUED

Cooling System Check (Overheating) - Continued

4. Check for hydraulic driven fan that is not turning at the correct speed can cause improper air speed across the radiator core. Refer to *Hydraulic Fan Speed Test and Adjustment* (WP 0015 00). The lack of proper air flow across the radiator core can cause the coolant not to cool to the proper temperature differential.
5. Check the water temperature gage. A water temperature gage which does not work correctly, will not show the correct temperature. Refer to *Cooling System Inspection* in this work package. Connect MSD (WP 0005 00) and compare coolant temperature displayed in ET to temperature to actual coolant temperature. Use a thermometer to record temperature of coolant.
6. Check the radiator.
    a. Check the radiator for a restriction to coolant flow. Check the radiator for debris, dirt, or deposits on the inside of the radiator core. Debris, dirt, or deposits will restrict the flow of coolant through the radiator (WP 0191 00).
    b. Check for debris or damage between the fins of the radiator core. Debris between the fins of the radiator core restricts air flow through the radiator core. Refer to *Cooling System Inspection* in this work package.
7. Check the filler cap. A pressure drop in the radiator can cause the boiling point to be lower. This can cause the cooling system to boil. Refer to *Cooling System Test* in this work package.
8. Check the fan and/or the fan shroud. The fan shroud must be positioned correctly. Ensure that the position of the fan shroud is correct (WP 0192 00).
9. Check the cooling system hoses and clamps (WP 0043 00). Damaged hoses with leaks can normally be seen. Hoses that have no visual leaks can soften during operation. The soft areas of the hose can become kinked or crushed during operation. These areas of the hose can cause a restriction in the coolant flow. Hoses become soft and/or get cracks after a period of time. The inside of a hose can deteriorate and the loose particles of the hose can cause a restriction of the coolant flow.
10. Check for restriction in the air inlet system. A restriction of the air that is coming into the engine can cause high cylinder temperatures. High cylinder temperatures cause higher than normal temperatures in the cooling system. Refer to *Air Inlet and Exhaust System Inspection* (WP 0011 00).
    a. If the measured restriction is higher than the maximum permissible restriction, remove the foreign material from the engine air cleaner element or install a new engine air cleaner element (TM 5-3805-291-10).
    b. Check for a restriction in the air inlet system again.
    c. If the measured restriction is still higher than the maximum permissible restriction, check the air inlet piping for a restriction (WP 0034 00).
11. Check for restriction in the exhaust system. A restriction of the air that is coming out of the engine can cause higher cylinder temperatures. Refer to *Air Inlet and Exhaust System Inspection* (WP 0011 00).
    a. Make a visual inspection of the exhaust system. Check for damage to exhaust piping or for a damaged muffler.
    b. If the measured restriction is higher than the maximum permissible restriction, there is a restriction in the exhaust system. Repair the exhaust system, as required (WP 0040 00).
12. Check the shunt line, if the shunt system is used. The shunt line must be submerged in the expansion tank. A restriction of the shunt line from the radiator top tank to the engine water pump inlet will cause a reduction in water pump efficiency. A reduction in water pump efficiency will result in low coolant flow and overheating (WP 0042 00).
13. Check the thermostat. A water thermostat that does not open or a thermostat that only opens part of the way can cause overheating. Replace thermostat if necessary (WP 0044 00).
14. Check the water pump. A water pump with a damaged impeller does not pump enough coolant for correct engine cooling. Remove the water pump and check for damage to the impeller (WP 0045 00).

COOLING SYSTEM TEST - CONTINUED

Cooling System Check (Overheating) - Continued

15. Check the air flow through the engine compartment. The air flow through the radiator comes out of the engine compartment. Ensure that the filters, AC, and similar items are not installed in a way that prevents the free flow of air through the engine compartment.

16. Consider high outside temperatures. When outside temperatures are too high for the rating of the cooling system, there is not enough of a temperature difference between the outside air and coolant temperatures.

17. Consider high altitude operation. The cooling capacity of the cooling system goes down as the engine is operated at the higher altitudes. A pressurized cooling system that is large enough to keep the coolant from boiling must be used.

18. The engine may be running in the lug condition. When the load that is applied to the engine is too large, the engine will run in the lug condition. When the engine is running in the lug condition, engine rpm does not increase with an increase of fuel. This lower engine rpm causes a reduction in air flow through the radiator. This lower engine rpm also causes a reduction in coolant flow through the system. This combination of less air and less coolant flow during high input of fuel will cause above normal heating.

Testing Radiator and Cooling System for Leaks

1. When engine has cooled, loosen filler cap to release any remaining pressure from cooling system. Remove filler cap (TM 5-3805-291-10).

2. Check coolant level in cooling system (TM 5-3805-291-10).

3. Pressurize cooling system with cooling system pressure tester to 3 psi (20 kPa) over operating pressure of filler cap.

NOTE

- **If no leakage is observed or if cooling system pressure tester remains constant for five minutes, cooling system does not leak.**
- **Internal leakage of cooling system exists if reading on cooling system pressure tester goes down and no outside leakage is observed.**

4. Check outside of radiator for leakage. Replace radiator if necessary (WP 0191 00).

5. Check all connections and hoses of cooling system for leaks. Make repairs, as required.

6. If pressure reading decreases within a five minute period and no visible signs of external leakage exist, there is an internal leak. Inspect and/or replace engine oil cooler (WP 0027 00), transmission oil cooler (WP 0205 00), cylinder head gasket, cylinder head (WP 0172 00), or engine (WP 0171 00) as necessary. Coolant in transmission oil indicates an internal leak in transmission oil cooler. Coolant in engine oil indicates an internal leak in engine oil cooler, cylinder head gasket, cylinder head, or cylinder block.

7. Close hood (TM 5-3805-291-10).

END OF WORK PACKAGE

ELECTRICAL SYSTEM TESTS, INSPECTIONS, AND ADJUSTMENTS 0013 00

Wiring Harness (Open Circuit) Test. 0013 00-3
Wiring Harness (Short Circuit) Test. 0013 00-4
Test Procedure for Testing ARC Suppressor 0013 00-5
5V Engine Pressure Sensor Supply Circuit Test 0013 00-6
CAT Data Link Circuit Test 0013 00-13
Electrical Power Supply Circuit Test 0013 00-18
Engine Fan Control Solenoid Circuit Test 0013 00-22
Engine Pressure Sensor Open or Short Circuit Test. 0013 00-26
Engine Speed/Timing Sensor Circuit Test 0013 00-34
Engine Temperature Sensor Open or Short Circuit Test 0013 00-41
Ether Injection System Test 0013 00-46
Fuel Filter Differential Pressure Switch Circuit Test 0013 00-51
Injector Solenoid Circuit Test 0013 00-54
Throttle Position Sensor Circuit Test 0013 00-62
User Defined Shutdown Input Circuit Test 0013 00-68
Engine Speed/Timing Sensor Calibration 0013 00-71
Charging System Test 0013 00-74
Starting Motor Test 0013 00-75

THIS WORK PACKAGE COVERS

Wiring Harness (Open Circuit) Test
Wiring Harness (Short Circuit) Test
5V Engine Pressure Sensor Supply Circuit Test
CAT Data Link Circuit Test
Electrical Power Supply Circuit Test
Engine Fan Control Solenoid Circuit Test
Engine Pressure Sensor Open or Short Circuit Test
Engine Speed/Timing Sensor Circuit Test
Engine Temperature Sensor Open or Short Circuit Test
Ether Injection System Test
Fuel Filter Differential Pressure Switch Circuit Test
Injector Solenoid Circuit Test
Throttle Position Sensor Circuit Test
User Defined Shutdown Input Circuit Test
Engine Speed/Timing Sensor Calibration
Charging System Test
Starting Motor Test

INITIAL SETUP

Maintenance Level

Unit

Test Equipment

Adapter, cable, breakout (Item 1, WP 0232 00)
Adapter, cable, breakout (Item 2, WP 0232 00)
Adapter, test (Item 3, WP 0232 00)

Test Equipment - Continued

Ammeter (Item 14, WP 0232 00)
Cable assembly set (break out T) (Item 18, WP 0232 00)
Multimeter (Item 40, WP 0232 00)
Software kit (Item 75, WP 0232 00)
Tachometer, stroboscopic (Item 83, WP 0232 00)
Test set, electronic systems (MSD) (Item 86, WP 0232 00)

Tools and Special Tools

Tool kit, general mechanic's, automotive (Item 90, WP 0232 00)

Adapter, connector (Item 4, WP 0232 00)

Probe multimeter (Item 50, WP 0232 00)

Remover, electrical contact (Item 62, WP 0232 00)

Transducer, pressure (Item 91, WP 0232 00)

Wrench, torque, dial, 3/8" drive, 300 lb-in. (Item 97, WP 0232 00)

Wrench, torque, click, ratcheting, 3/8" drive, 75 lb-ft (Item 98, WP 0232 00)

Materials/Parts

Maintenance kit, electrical connector (Item 23, WP 0233 00)

Oil, lubricating, OEA-30, Arctic (Item 29, WP 0233 00)

Rag, wiping (Item 35, WP 0233 00)

Repair kit, diesel engine (Item 37, WP 0233 00)

Cable ties

Cotton swabs

Denatured alcohol

O-ring (2)

Personnel Required

MOS 62B, Construction Equipment Repairer

References

TM 9-6140-200-14

WP 0003 00

WP 0005 00

WP 0008 00

WP 0010 00

WP 0022 00

WP 0024 00

WP 0036 00

WP 0037 00

WP 0039 00

WP 0046 00

References - Continued

WP 0051 00

WP 0055 00

WP 0057 00

WP 0073 00

WP 0074 00

WP 0076 00

WP 0077 00

WP 0078 00

WP 0079 00

WP 0082 00

WP 0084 00

WP 0096 00

WP 0098 00

WP 0171 00

WP 0187 00

WP 0195 00

WP 0196 00

WP 0197 00

WP 0198 00

WP 0199 00

WP 0200 00

WP 0201 00

WP 0217 00

WP 0237 00

Equipment Conditions

Machine parked on level ground (TM 5-3805-291-10)

Work tool lowered to ground (TM 5-3805-291-10)

Parking brake engaged (TM 5-3805-291-10)

Wheels chocked

Battery disconnect switch in OFF position (TM 5-3805-291-10)

Hood opened (TM 5-3805-291-10)

WIRING HARNESS (OPEN CIRCUIT) TEST

NOTE

- **Open circuit results in no flow of electrical current. Open circuit is usually caused by failed or corroded electrical wires or poor connection of electrical connectors. If electrical wire or connection is broken, flow of electrical current through circuit is interrupted. Normally, closed circuit will have less than 5 Ohms of resistance.**
- **For complete electrical schematic, refer to *Schematics* (WP 0237 00).**
- **For a better understanding of each system, review appropriate section in *Theory of Operation* (WP 0003 00).**
- **These procedures may give direction to replace wiring harnesses. However, limited repair of wiring harnesses is authorized. Refer to *Electrical General Maintenance Instructions* (WP 0022 00) for correct repair procedures.**

1. Identify connectors and wire numbers of suspect circuits. Use *Schematics* (WP 0237 00) to identify circuits.
2. Turn engine start switch and battery disconnect switch to OFF position (TM 5-3805-291-10).
3. Disconnect component and Electronic Control Module (ECM) from wiring harness.
4. At one disconnected harness connection, place jumper wire from contact of suspect wire to frame ground.
5. At other wiring harness connector, use multimeter probes to measure resistance from contact of suspect wire to frame ground.
6. *Expected Results*. Resistance is less than 5 Ohms.
   a. If results are OK, circuit is correct. Connect component and ECM to wiring harness.
   b. If results are NOT OK, there is an open circuit in wiring harness. Replace wiring harness in question (WP 0195 00 thru WP 0201 00).

WIRING HARNESS (SHORT CIRCUIT) TEST

NOTE

- **Short circuit is failure of electrical circuit that results in undesired electrical current. Usually, short circuit is bypass of circuit across load. For example, short across wires in circuit for lamp produces too much current in wires but no current is felt at lamp. Lamp is shorted out. Resistance in normal circuit can vary, but resistance between particular circuit and other unrelated circuits is always greater than 5,000 Ohms. This test is for a short circuit.**
- **For complete electrical schematic, refer to WP 0237 00.**

1. Identify connectors and wire numbers of suspect circuits. Use *Schematics* (WP 0237 00) to identify circuits.
2. Turn engine start switch and battery disconnect switch to OFF position (TM 5-3805-291-10).
3. Disconnect component and ECM from wiring harness.
4. At wiring harness connector for ECM, place one multimeter probe on contact of suspect wire.
5. Use other multimeter probe to check resistance across all other contacts in connector(s) of ECM and frame ground.
6. *Expected Results.* Resistance is greater than 5,000 Ohms for all measurements.
   a. If results are OK, harness circuits are correct. Connect component and ECM to wiring harness.
   b. If results are NOT OK, a short exists in wiring harness between suspected wire and wire with lowest resistance measurement. Replace wiring harness in question (WP 0195 00 thru WP 0201 00).

TEST PROCEDURE FOR TESTING ARC SUPPRESSOR

NOTE

Arc suppressors protect electrical components in machine. Arc suppressors are applied in order to discharge electrical inductance of a component when other components within a circuit are operated.

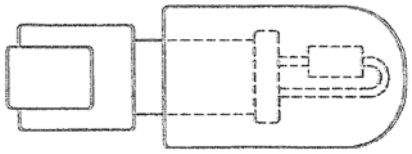

427-C2005

1. Place multimeter in DIODE test mode.
2. Place red probe in red terminal (positive terminal) of multimeter.
3. Place black probe in black terminal (negative terminal) of multimeter.
4. Place red probe on Pin 2 of connector on arc suppressor. Place black probe on Pin 1 of connector.
5. Multimeter should display a value between 0.5 and 1.0 VDC.
6. Place red probe on Pin 1 of connector on arc suppressor. Place black probe on Pin 2 of connector on arc suppressor.
7. Multimeter should display OL.
8. If conditions listed in steps 5 and 7 do not exist, component should be considered faulty. Component will not provide adequate protection.
9. Replace component if component has failed.

5V ENGINE PRESSURE SENSOR SUPPLY CIRCUIT TEST

NOTE

- **Use this procedure if another procedure has directed you here or if diagnostic code 262-03 (5V Sensor DC Power Supply Short to +Batt) or diagnostic code 262-04 (5V Sensor DC Power Supply short to Ground) is active.**
- **ECM supplies regulated +5 VDC to intake manifold pressure sensor, engine oil pressure sensor, fuel pressure sensor, atmospheric pressure sensor, and turbocharger inlet pressure sensor.**
- **Supply or +5V engine pressure sensor is routed from ECM, through ECM engine harness connector terminal 1, to terminal A of each pressure sensor connector. Supply voltage is 5.0 ± 0.5 VDC.**

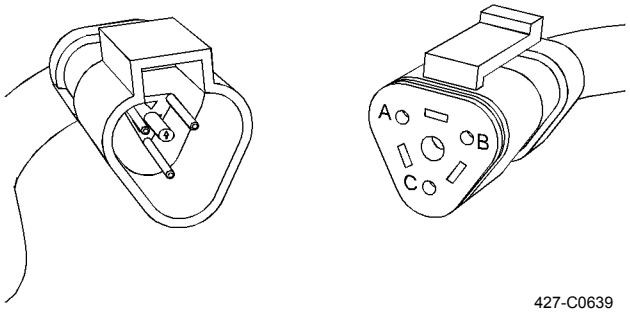

427-C0639

- **+5V short circuit diagnostic code is probably caused by short circuit or open circuit in harness. Next probable cause is sensor and least probable cause is ECM.**

5V ENGINE PRESSURE SENSOR SUPPLY CIRCUIT TEST - CONTINUED

1. Inspect electrical connectors and wiring. Refer to *Electrical Connector Inspection* (WP 0022 00).
   a. J2/P2 ECM engine harness connector (WP 0057 00).
   b. J1/P1 ECM engine harness connector (WP 0057 00).
   c. Intake manifold pressure sensor (WP 0084 00).
   d. Engine oil pressure sensor (WP 0079 00).
   e. Fuel pressure sensor (WP 0036 00).
   f. Atmospheric pressure sensor (WP 0073 00).
   g. Boost inlet pressure sensor (WP 0074 00).

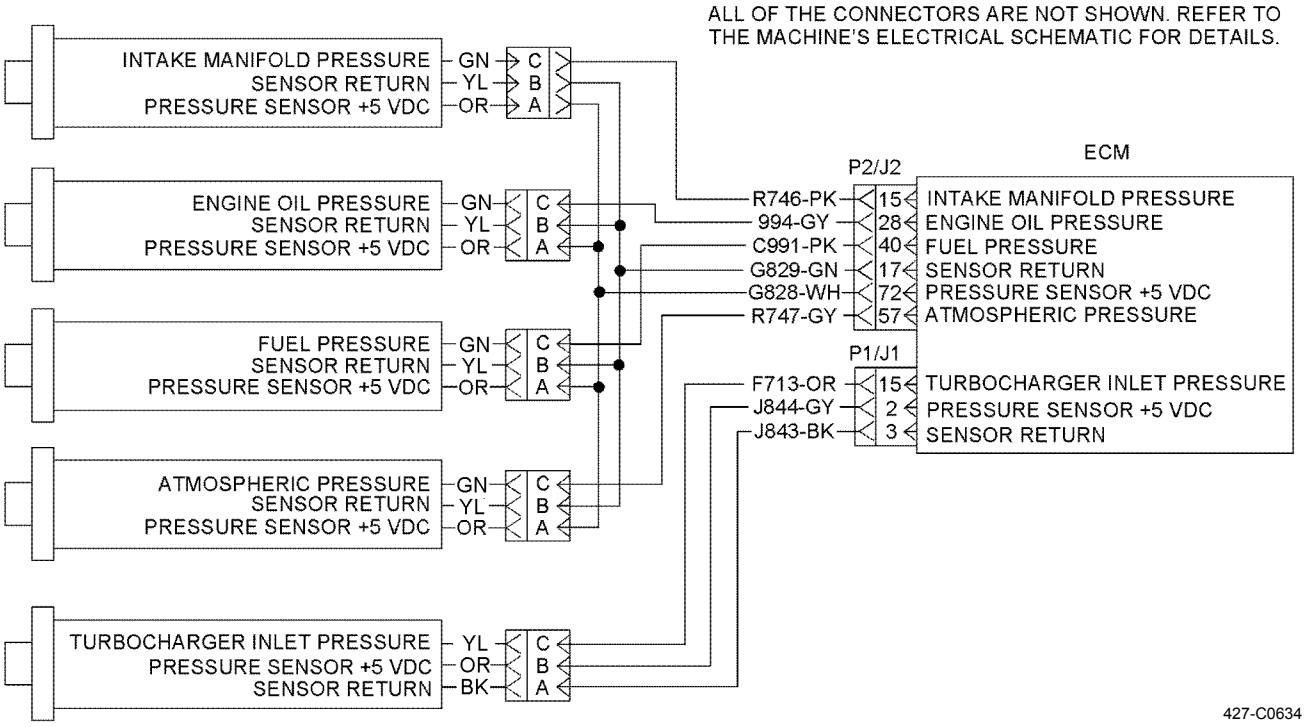

5V ENGINE PRESSURE SENSOR SUPPLY CIRCUIT TEST - CONTINUED

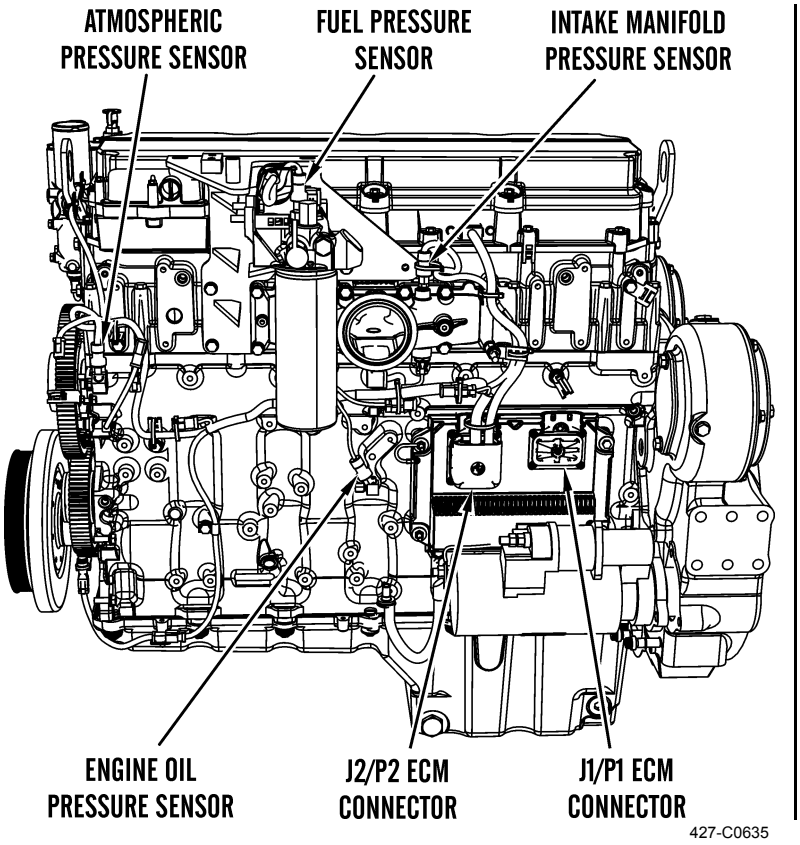

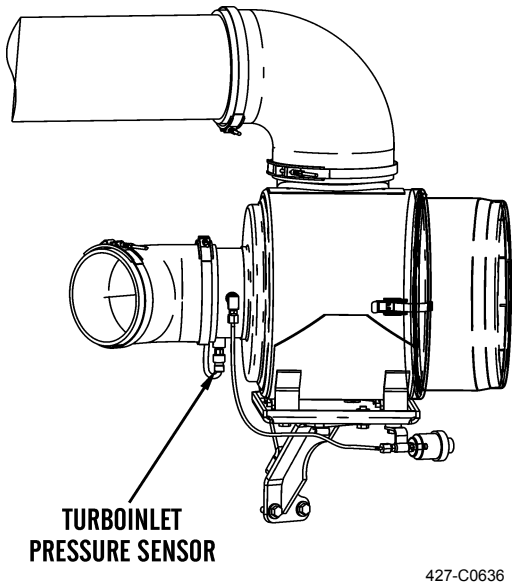

h. Perform 10 lb (45 N) pull test on each wire in ECM connector associated with +5V sensor supply.

i. Check J2/P2 ECM connector (socket-head screw) for proper torque of 60 lb-in. (7 Nm).

j. Check J1/P1 ECM connector (socket-head screw) for proper torque of 55 lb-in. (6 Nm).

k. Check harness and wiring for abrasion and pinch points from sensors back to ECM.

l. *Expected Results.* All connectors, pins, and sockets should be completely coupled and/or inserted and harness and wiring should be free of corrosion, abrasion, or pinch points.

(1) If results are OK, proceed to step 2.

(2) If results are not OK, replace wiring harness in question (WP 0195 00 thru WP 0201 00). Ensure seals are properly in place and connectors are securely connected. Verify repair eliminates problem.

2. Check for active diagnostic codes.

a. Connect MSD equipped with ET software to data link connector (WP 0005 00).

b. Turn engine start switch to ON position while engine is OFF (TM 5-3805-291-10).

c. Retrieve active and logged diagnostic codes on MSD. Check and record any diagnostic codes.

5V ENGINE PRESSURE SENSOR SUPPLY CIRCUIT TEST - CONTINUED

NOTE

Wait at least 15 seconds for diagnostic codes to become active.

d. Check for either of these codes. If diagnostic codes are active, proceed to step 3.
   (1) 262-03 5V Sensor DC Power Supply Short to +Batt
   (2) 262-04 5V Sensor DC Power Supply Short to Ground
e. If above diagnostic codes are logged ONLY, proceed to step 5.
f. If diagnostic codes are not active or logged, exit this test.

3. Disconnect pressure sensors and check for active diagnostic codes.
   a. Restore electrical power to engine ECM.
   b. Monitor active diagnostic code screen on ET while you disconnect each pressure sensor connector. Check for an active 262-03 code or an active 262-04 code.

NOTE

Wait at least 30 seconds in order for diagnostic codes to become active.

4. Disconnect the following sensors one at a time:
   (1) Atmospheric pressure sensor (WP 0073 00)
   (2) Intake manifold pressure sensor (WP 0084 00)
   (3) Engine oil pressure sensor (WP 0079 00)
   (4) Fuel pressure sensor (WP 0036 00)
   (5) Turbocharger inlet pressure sensor (WP 0074 00)

5V ENGINE PRESSURE SENSOR SUPPLY CIRCUIT TEST - CONTINUED

c. Place battery disconnect switch in OFF position (TM 5-3805-291-10).

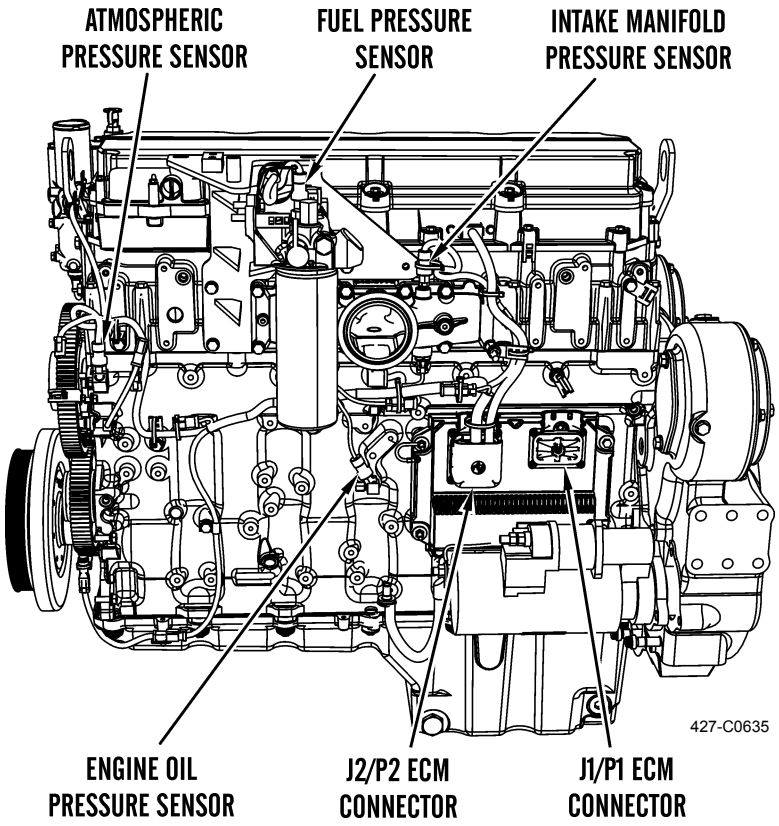

d. *Expected Results.* Diagnostic code deactivates when a particular sensor is disconnected.

If results are OK, the 262-03 or 262-04 diagnostic code deactivates when a particular sensor is disconnected.

e. *Repair.* Replace sensor. Connect all of the connectors. Verify the problem is resolved.

If results are not OK, the 262-03 or 262-04 diagnostic code remains active after all of the sensors are disconnected. Leave the sensors disconnected. Sensors are not the cause of the diagnostic code. Proceed to step 5.

5V ENGINE PRESSURE SENSOR SUPPLY CIRCUIT TEST - CONTINUED

5. Check Supply Voltages at ECM.

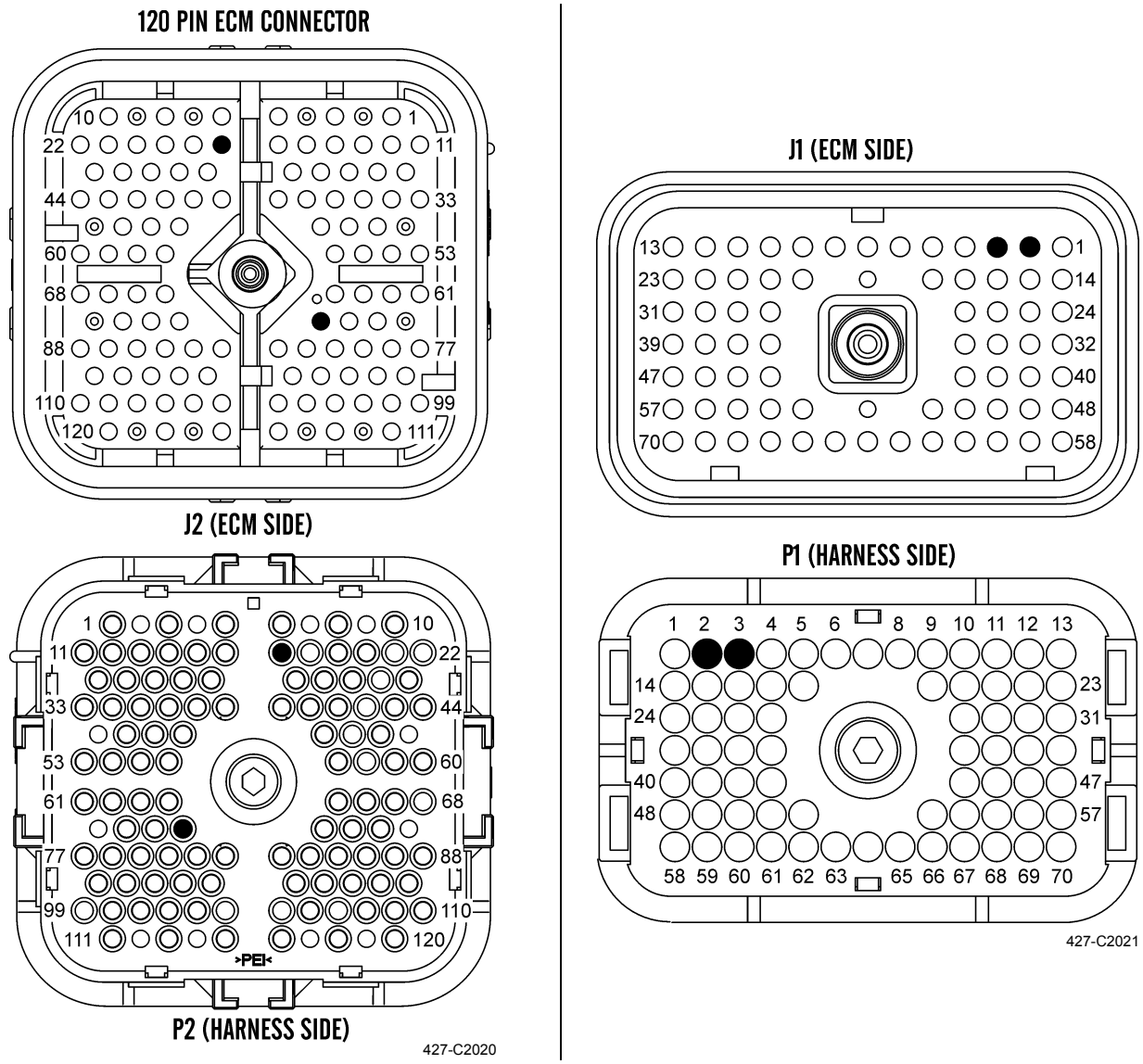

a. Disconnect J1/P1 and J2/P2 ECM connectors.

b. Fabricate four jumper wires that are long enough to be used to measure the supply voltage at ECM connectors. Crimp connector sockets to one end of each jumper wire.

c. Remove wires from terminal locations P1-2 (5V sensor supply) and P1-3 (sensor return). Install a jumper wire into each of these terminal locations.

d. Remove wires from terminal locations P2-72 (5V sensor supply) and P2-17 (sensor return). Install a jumper wire into each of these terminal locations.

5V ENGINE PRESSURE SENSOR SUPPLY CIRCUIT TEST - CONTINUED

e. Connect J1/P1 and J2/P2 ECM connectors.

f. Place battery disconnect switch in ON position (TM 5-3805-291-10).

g. Measure voltage between jumper wire in P1-2 (5V sensor supply) and jumper wire in P1-3 (sensor return).

h. Measure voltage between jumper wire in P2-72 (5V sensor supply) and jumper wire in P2-17 (sensor return).

i. Place battery disconnect switch in OFF position (TM 5-3805-291-10).

j. *Expected Results.* Each voltage measurement is 5.0 ± 0.2 VDC.

If results are OK, the voltage measurement is 5.0 ± 0.2 VDC. The ECM is operating correctly.

k. *Repair.* One of the supply wires is shorted to another wire in the harness or one of the supply wires is shorted to engine ground. To isolate the problem to a specific harness, perform the following test steps:

One at a time, install wiring for each 5V supply while you check ET for an active 262-03 or 262-04 diagnostic code.

(1) Disconnect particular ECM connectors.

(2) Install wires that were removed for 5V supply at this ECM connector.

(3) Connect ECM connectors.

(4) Place battery disconnect switch in ON position (TM 5-3805-291-10).

(5) Monitor active diagnostic code screen on ET. Check for an active 262-03 code or an active 262-04 code.

NOTE

Wait at least 30 seconds in order for diagnostic codes to become active.

(6) If a diagnostic code becomes active for this 5V supply, there is a problem in this harness between ECM and sensor connector.

l. *Repair.* Repair wiring and/or connector. Replace parts, if necessary. Verify problem is resolved.

If results are not OK, the voltage measurement is not 5.0 ± 0.2 VDC.

m. Replace engine ECM (WP 0057 00).

CAT DATA LINK CIRCUIT TEST

NOTE

- **Use this procedure to troubleshoot any suspect problems with CAT Data Link.**
- **Use this procedure to troubleshoot system when one of following diagnostic codes is active or easily repeated:**
  a. **296-09 Unable to communicate with Transmission ECM**
  b. **296-12 Transmission ECM Failed**
  c. **596-09 Unable to communicate with Implement ECM**
  d. **596-12 Wrong Response from Implement ECM**
- **This procedure checks for an open circuit or for a short circuit in CAT Data Link. If you are experiencing problems with communications between ET and ECM, refer to WP 0008 00.**
- **CAT Data Link is standard data link used by ECM to communicate with ET. ECM communicates with ET to share status information and diagnostic information. ET can also be used to configure ECM parameters. This information will not be available if communication fails between ECM and ET.**

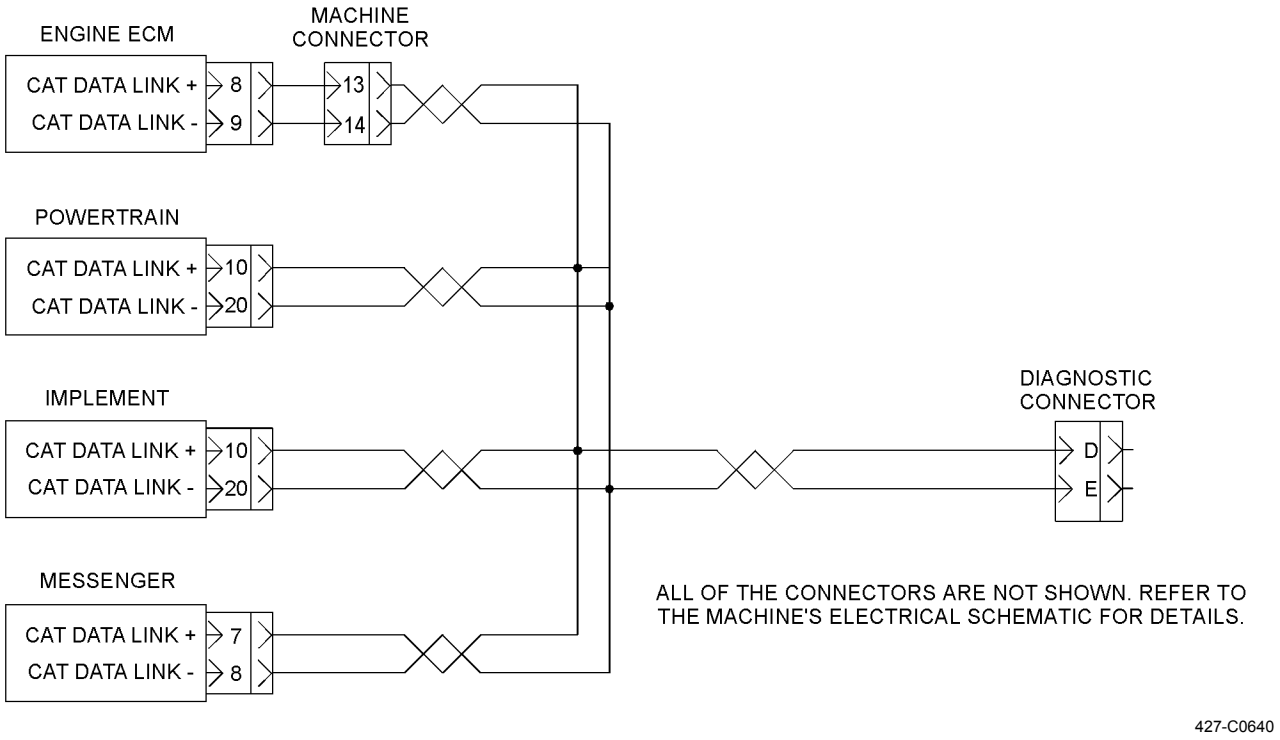

427-C0640

CAT DATA LINK CIRCUIT TEST - CONTINUED

1. Inspect J1/P1 and J2/P2 ECM electrical connectors and wiring. Refer to *Electrical Connector Inspection* (WP 0022 00).
   a. Place battery disconnect switch in OFF position (TM 5-3805-291-10).
   b. Perform 10 lb (45 N) pull test on each wire in ECM connectors associated with Data Link.
   c. Check J2/P2 ECM connector (socket-head screw) for proper torque of 60 lb-in. (7 Nm).
   d. Check J1/P1 ECM connector (socket-head screw) for proper torque of 55 lb-in. (6 Nm).
   e. Check harness and wiring for abrasion and pinch points from sensors back to ECM.
   f. *Expected Results.* All connectors, pins, and sockets should be completely coupled and/or inserted and harness and wiring should be free of corrosion, abrasion, or pinch points.
      (1) If results are OK, proceed to step 2.
      (2) If results are not OK, replace wiring harness in question (WP 0195 00 thru WP 0201 00). Ensure seals are properly in place and connectors are securely connected. Verify repair eliminates problem.

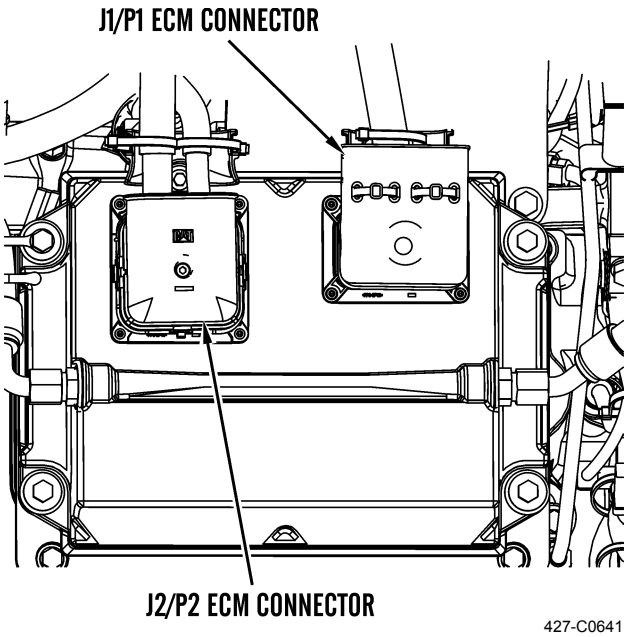

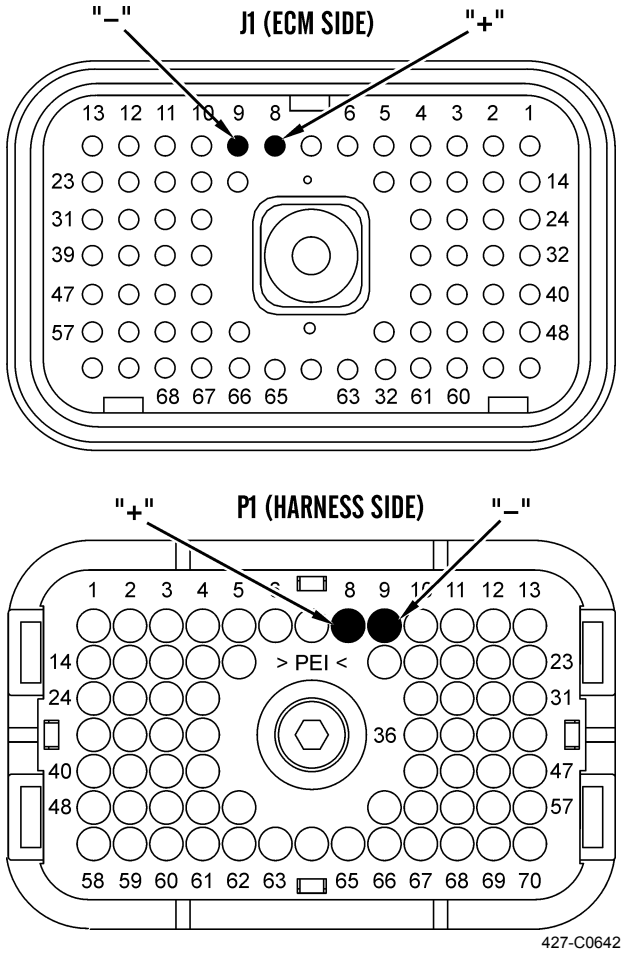

CAT DATA LINK CIRCUIT TEST - CONTINUED

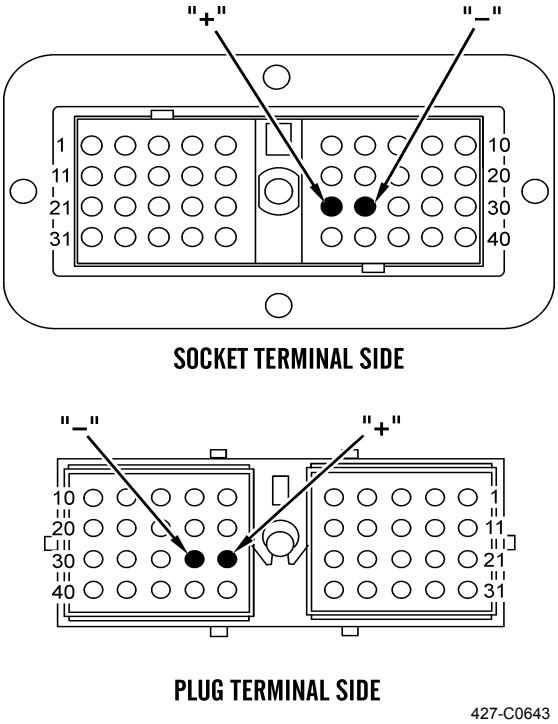

2. Check for a short circuit.
   a. Disconnect ET from diagnostic connector (WP 0005 00).
   b. Disconnect any other control modules from CAT Data Link.
   c. Measure resistance between points listed in Table 1. Be sure to wiggle wires in harnesses as you make each resistance measurement.

Table 1. Resistance Measurement for CAT Data Link.

P1-8 (Data Link +)	All other terminals on P1 connector
	Ground stud
P1-9 (Data Link -)	All other terminals on P1 connector
	Ground stud

   d. *Expected Result*s. Each resistance check indicates an open circuit.
      (1) If results are OK, proceed to step 3.
      (2) If results are not OK, replace wiring harness in question (WP 0195 00 thru WP 0201 00). Ensure seals are properly in place and connectors are securely connected. Verify repair eliminates problem.

CAT DATA LINK CIRCUIT TEST - CONTINUED

3. Check for an open circuit.
   a. Fabricate a jumper wire. Use jumper wire to create a short circuit between terminals D (Data Link +) and terminal E (Data Link -) on diagnostic connector.
   b. Measure resistance between P1-8 and P1-9.
   c. Measure resistance between terminals at connector for each control module that was connected to Data Link.
   d. *Expected Result*s. Each resistance check indicates an open circuit.
   e. If resistance check indicates a short circuit:
      (1) If results are OK, perform this procedure:
         (a) Connect J1/P1 connectors. Connect ET to diagnostic connector (WP 0005 00).
         (b) Check CAT Data Link for proper operation. If CAT Data Link does not operate correctly, there may be a problem with ECM.
         (c) Replace original ECM (WP 0057 00). Verify problem is resolved.
      (2) If results are not OK, replace wiring harness in question (WP 0195 00 thru WP 0201 00). Ensure seals are properly in place and connectors are securely connected. Verify repair eliminates problem.
4. Perform “wiggle test” with ET.
   a. Select “Wiggle Test” from diagnostic tests on ET.
   b. Choose appropriate group of parameters to monitor.
   c. Press “Start” button. Wiggle wiring harness to reproduce intermittent problems.
   d. Audible beep will be heard if an intermittent problem exists and status will be highlighted.
   e. *Expected Results*. No intermittent problems were indicated during “Wiggle Test”.
      (1) If results are OK, no intermittent problems were found. Harness and connectors appear to be OK. If you were sent from another procedure, return to procedure and continue testing. If this test has resolved problem, return engine to service.
      (2) If results are not OK, replace wiring harness in question (WP 0195 00 thru WP 0201 00). Ensure seals are properly in place and connectors are securely connected. Verify repair eliminates problem.

CAT DATA LINK CIRCUIT TEST - CONTINUED

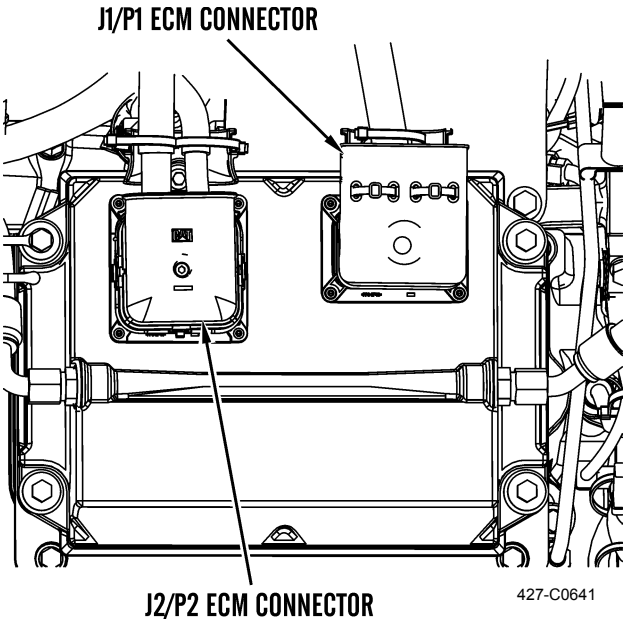

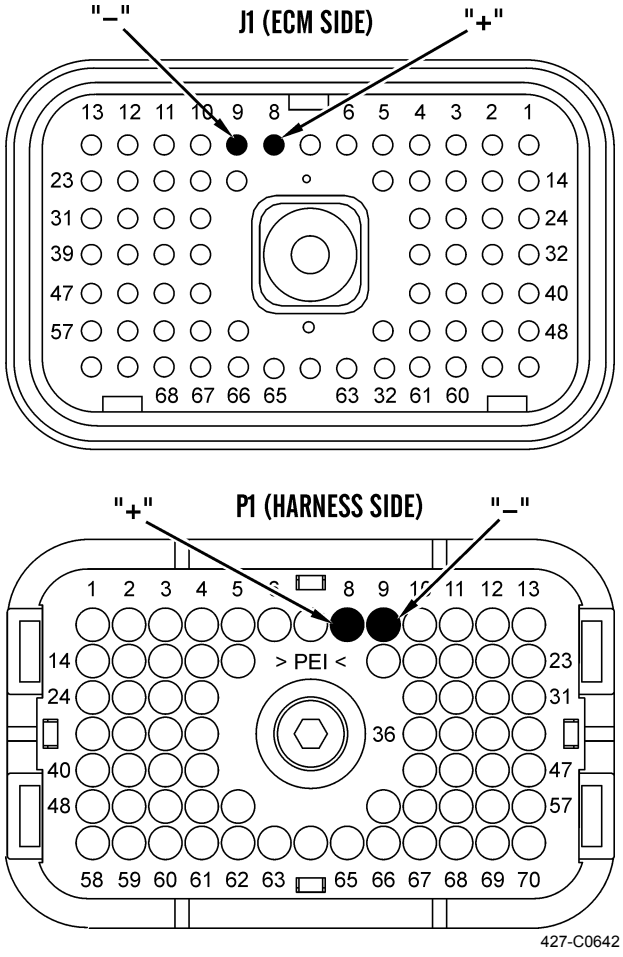

ELECTRICAL POWER SUPPLY CIRCUIT TEST

NOTE

- **Use this test to troubleshoot any suspected problems with power to ECM.**
- **This procedure covers following diagnostic codes:**
  a. **168-00 "System Voltage High"**
  b. **168-01 "System Voltage Low"**
  c. **168-02 "System Voltage Intermittent/Erratic"**
- **Use this test if there are intermittent engine shutdowns or if a difficulty in starting is not accompanied by loss of electrical accessories. Engine shutdowns accompanied by a loss of other electrical accessories indicates problem in engine start switch.**
- **This does not indicate a problem in wiring at engine's ECM. Verify there are no problems with starting system or charging system before you use this test.**
- **Unswitched battery voltage is supplied to ECM at P1-48, P1-52, and P1-53. Negative battery is supplied to ECM at P1-61, P1-63, and P1-65.**
- **ECM receives input from engine start switch at P1-70 when engine start switch is in ON or START position.**
- **When ECM detects battery voltage at this input, ECM will power up. When battery voltage is removed from this input, ECM will power down.**
- **ECM continuously receives battery voltage through unswitched cab buss circuit breaker and fuse for engine ECM.**
- **Engine ECM requires engine start switch to be in ON position to maintain communications with ET.**

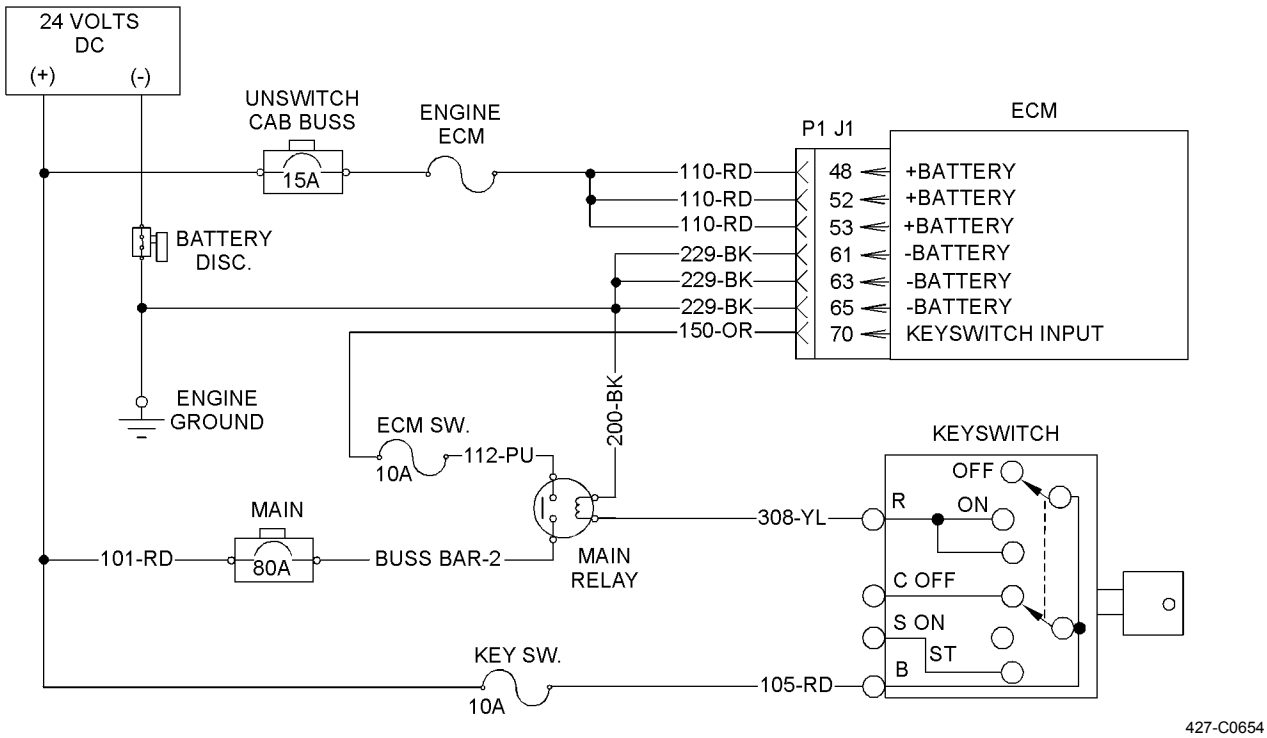

427-C0654

ELECTRICAL POWER SUPPLY CIRCUIT TEST - CONTINUED

1. Inspect electrical connectors and wiring. Refer to *Electrical Connector Inspection* (WP 0022 00).
   a. Place battery disconnect switch in OFF position (TM 5-3805-291-10).
   b. Perform 10 lb (45 N) pull test on each wire in ECM connectors associated with ECM power supply.
   c. Check J2/P2 ECM connector (socket-head screw) for proper torque of 60 lb-in. (7 Nm).
   d. Check J1/P1 ECM connector (socket-head screw) for proper torque of 55 lb-in. (6 Nm).
   e. Check harness and wiring for abrasion and pinch points from sensors back to ECM.
   f. *Expected Results.* All connectors, pins, and sockets should be completely coupled and/or inserted and harness and wiring should be free of corrosion, abrasion, or pinch points.
      (1) If results are OK, proceed to step 2.
      (2) If results are not OK, replace wiring harness in question (WP 0195 00 thru WP 0201 00). Ensure seals are properly in place and connectors are securely connected. Verify repair eliminates problem.

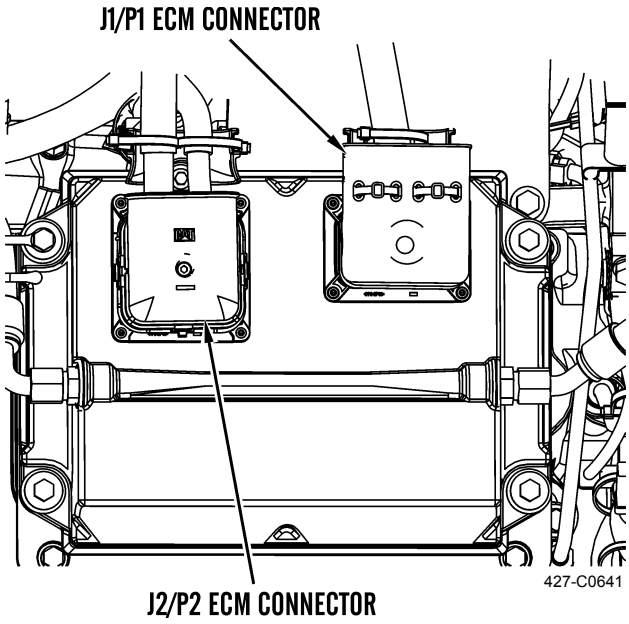

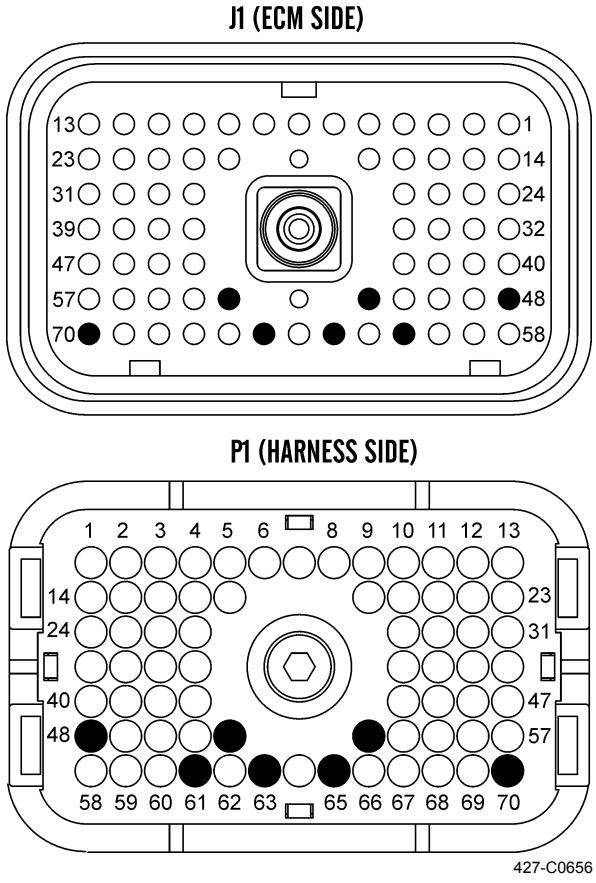

ELECTRICAL POWER SUPPLY CIRCUIT TEST - CONTINUED

2. Check battery voltage at ECM.
   a. Place battery disconnect switch in OFF position (TM 5-3805-291-10).
   b. Disconnect J1/P1 ECM connector.
   c. Place battery disconnect switch in ON position (TM 5-3805-291-10).
   d. Measure voltage between P1-48 and P1-61.
   e. Measure voltage between P1-52 and P1-63.
   f. Measure voltage between P1-53 and P1-65.
   g. Measure voltage between P1-70 and P1-63.
   h. *Expected Results*. Measured voltage is between 22 VDC and 27 VDC.
      (1) If results are OK, ECM is receiving correct voltage.
      (2) If results are not OK:
         (a) Unswitched power out of range - voltage is not correct for one unswitched battery circuit at ECM. Proceed to step 3.
         (b) Engine start switch voltage out of range - voltage is not correct for engine start switch circuit at ECM. Proceed to step 4.
3. Check batteries.
   a. Measure no-load battery voltage at battery posts.
   b. Load test batteries. Refer to TM 9-6140-200-14, *Operator's, Unit and Direct Support and General Maintenance Manual for Lead-Acid Storage Batteries* to test battery.
   c. *Expected Results*. Batteries pass load test. Measured voltage is minimum specification for 24V system.
      (1) If results are OK, batteries are OK.
         (a) There is open circuit or excessive resistance in wiring or connections between batteries and ECM. Verify 15-Amp circuit breaker for ECM is not tripped (TM 5-3805-291-10).
         (b) Verify connection at engine ground stud is clean and tight.
         (c) Verify battery disconnect switch is functioning properly (TM 5-3805-291-10). Replace as necessary (WP 0098 00).
         (d) Replace wiring harness in question (WP 0195 00 thru WP 0201 00). Ensure seals are properly in place and connectors are securely connected. Verify repair eliminates problem.
      (2) If results are not OK, battery voltage is low or battery did not pass load test. Recharge or replace faulty batteries (WP 0096 00). Verify repair eliminates problem.
4. Check voltage from engine start switch to ECM.
   a. Place battery disconnect switch in OFF position (TM 5-3805-291-10).
   b. Remove wire from terminal R of engine start switch (WP 0055 00).
   c. Place battery disconnect switch in ON position (TM 5-3805-291-10).
   d. Turn engine start switch to ON position (TM 5-3805-291-10).
   e. Measure voltage on terminal B of engine start switch to engine ground.
   f. Measure voltage on terminal R of engine start switch to engine ground.
   g. Place battery disconnect switch in OFF position (TM 5-3805-291-10).

ELECTRICAL POWER SUPPLY CIRCUIT TEST - CONTINUED

h. *Expected Results*. Battery voltage is present on terminal B and terminal R at engine start switch.

(1) If results are OK, voltage is present on terminal B and terminal R at engine start switch. Proceed to step 5.

(2) If results are not OK:

If battery voltage is not present on terminals B or R, replace wiring harness in question (WP 0195 00 thru WP 0201 00). Ensure seals are properly in place and connectors are securely connected. Verify repair eliminates problem.

(3) If battery voltage is present on terminal B of engine start switch but not present on terminal R, replace engine start switch. Return all wiring to original configuration. Verify problem is eliminated.

5. Check voltage from main relay to “ECM SWITCH FUSE”.

a. Remove wire 112 PU from normally open terminal of main relay.

b. Turn engine start switch to ON position (TM 5-3805-291-10).

c. Measure voltage between normally open terminal of main relay and engine ground.

d. Turn engine start switch to OFF position (TM 5-3805-291-10).

e. Reconnect all wires to original configuration.

f. *Expected Results*. Voltage measures 24 ± 3.0 VDC.

(1) If results are OK, verify “ECM Switch Fuse” is not blown. Replace wiring harness in question (WP 0195 00 thru WP 0201 00). Ensure seals are properly in place and connectors are securely connected. Verify repair eliminates problem.

(2) If results are not OK, proceed to step 6.

6. Check voltage at main relay.

a. Remove wire 308 YL from coil of main relay.

b. Remove wire buss bar-2 from normally open contact of main relay.

c. Turn engine start switch to ON position (TM 5-3805-291-10).

d. Measure voltage between wire 308 YL and engine ground.

e. Measure voltage between buss bar-2 and engine ground.

f. Reconnect all wires to original configuration.

g. *Expected Results.* Voltage measures 24 ± 3.0 VDC.

(1) If results are OK, verify wire 200 BK has continuity to engine ground. If wire 200 BK is OK, replace main relay. Verify problem is no longer present.

(2) If results are not OK, verify main circuit breaker is not tripped. Replace wiring harness in question (WP 0195 00 thru WP 0201 00). Ensure seals are properly in place and connectors are securely connected. Verify repair eliminates problem.

ENGINE FAN CONTROL SOLENOID CIRCUIT TEST

NOTE

- **Use this procedure to troubleshoot any suspect problems with engine fan control solenoid for engine cooling fan.**
- **This procedure covers following diagnostic codes:**
  a. **291-05 Engine Cooling Fan Solenoid Open Circuit**
  b. **291-06 Engine Cooling Fan Solenoid Short to Ground**
- **ECM controls speed of engine cooling fan to provide following benefits:**
  a. **Increased productivity.**
  b. **Reduced noise.**
  c. **Improved fuel economy.**
  d. **Reduced overcooling of engine.**
- **ECM monitors engine coolant temperature, intake manifold air temperature, and hydraulic oil temperature to determine correct speed for engine cooling fan.**
- **ECM controls fan speed by controlling current to engine fan control solenoid. As current to control solenoid is changed, angle of fan pump's swashplate changes proportionally. This changes output of hydraulic oil from fan pump to cooling fan.**
- **If ECM detects a system fault, ECM provides minimum current to solenoid. This ensures a maximum fan speed while fault condition exists.**
- **An override is available with ET. This allows fan to be manually changed from minimum to maximum possible rpm.**

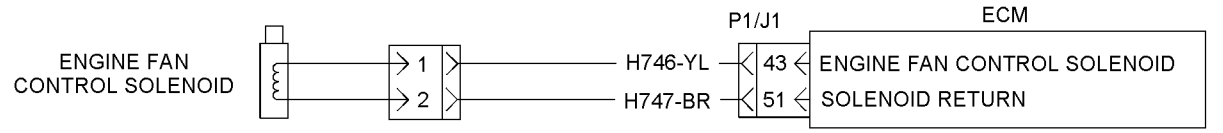

ALL OF THE CONNECTORS ARE NOT SHOWN. REFER TO THE MACHINE'S ELECTRICAL SCHEMATIC FOR DETAILS.

427-C0657

1. Inspect electrical connectors and wiring. Refer to *Electrical Connector Inspection* (WP 0022 00).
   a. Place battery disconnect switch in OFF position (TM 5-3805-291-10).
   b. Perform 10 lb (45 N) pull test on each wire in ECM connectors associated with ECM power supply.
   c. Check J2/P2 ECM connector (socket-head screw) for proper torque of 60 lb-in. (7 Nm).
   d. Check J1/P1 ECM connector (socket-head screw) for proper torque of 55 lb-in. (6 Nm).
   e. Check harness and wiring for abrasion and pinch points from sensors back to ECM.

ENGINE FAN CONTROL SOLENOID CIRCUIT TEST - CONTINUED

f. *Expected Results.* All connectors, pins, and sockets should be completely coupled and/or inserted and harness and wiring should be free of corrosion, abrasion, or pinch points.

(1) If results are OK, proceed to step 2.

(2) If results are not OK, replace wiring harness in question (WP 0195 00 thru WP 0201 00). Ensure seals are properly in place and connectors are securely connected. Verify repair eliminates problem.

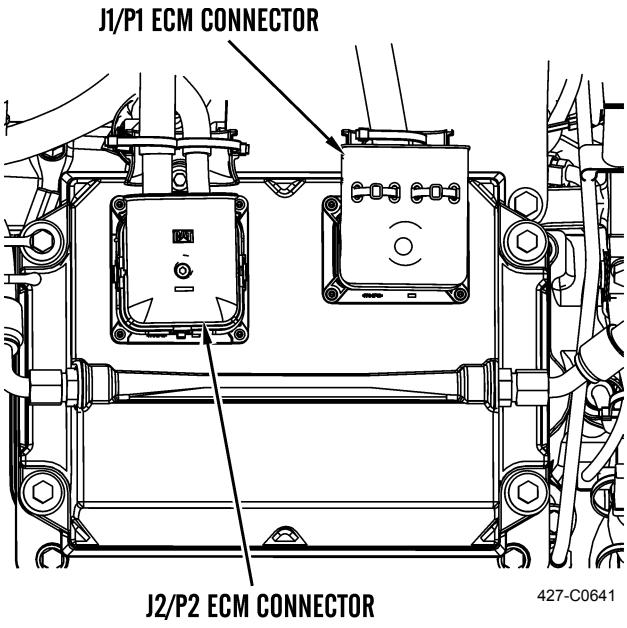

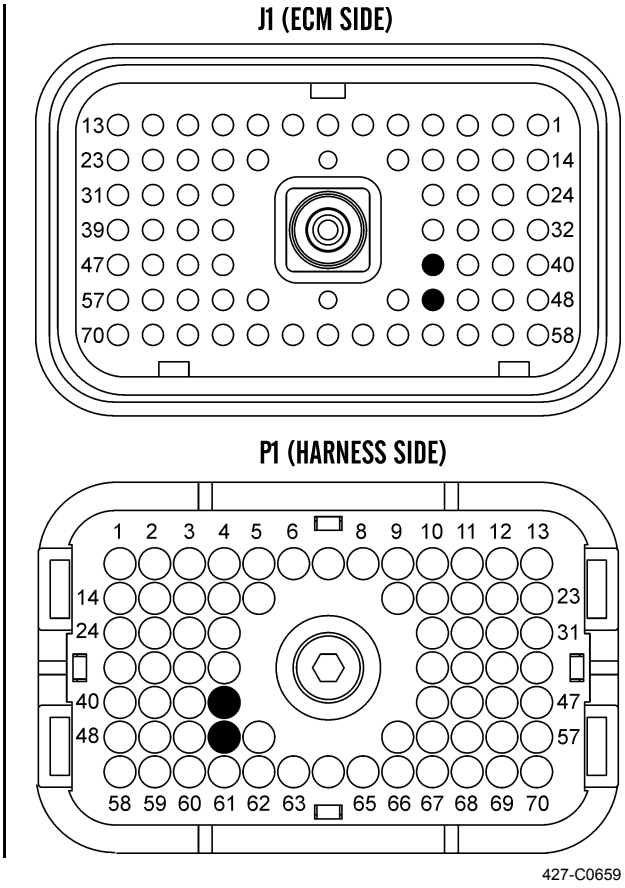

2. Check for active diagnostic codes.

a. Place battery disconnect switch in OFF position (TM 5-3805-291-10).

b. Connect ET to diagnostic connector (WP 0005 00).

c. Place battery disconnect switch in ON position (TM 5-3805-291-10).

d. Monitor Active Diagnostic Code screen on ET. Check and record any active diagnostic codes.

ENGINE FAN CONTROL SOLENOID CIRCUIT TEST - CONTINUED

NOTE

Wait at least 30 seconds for diagnostic codes to become active.

e. Determine if problem is related to an open circuit diagnostic code 05 or a short circuit diagnostic code 06.

f. *Expected Results.* No diagnostic codes are active.

(1) If results are OK, problem may have been related to faulty connection in harness. Carefully inspect connectors and wiring.

(2) If results are not OK:

(a) Short circuit diagnostic code 06 is active. Proceed to step 3.

(b) Open circuit diagnostic code 05 is active. Proceed to step 4.

3. Create open circuit at connector for engine fan control solenoid.

a. Place battery disconnect switch in OFF position (TM 5-3805-291-10).

b. Disconnect connector for engine fan control solenoid.

c. Place battery disconnect switch in ON position (TM 5-3805-291-10).

d. Access Active Diagnostic Code screen on ET. Check for an active open circuit diagnostic code 05 for engine fan control solenoid.

e. Place battery disconnect switch in OFF position (TM 5-3805-291-10).

f. *Expected Results.* Open circuit diagnostic code 05 is now active for engine fan control solenoid.

(1) If results are OK, short circuit diagnostic code 06 was active before disconnecting connector. Open circuit diagnostic code 05 became active after disconnecting connector.

Install new engine fan control solenoid (WP 0217 00). Clear any logged diagnostic codes.

(2) If results are not OK, there is a short circuit between harness connector for engine fan control solenoid and ECM. Leave connector disconnected, and proceed to step 5.

4. Create a short at connector for engine fan control solenoid.

a. Place battery disconnect switch in OFF position (TM 5-3805-291-10).

b. Fabricate jumper wire long enough to short terminals of connector for engine fan control solenoid. Crimp connector pins to each end of jumper wire.

c. Install jumper wire between terminals 1 and 2 on harness side of connector.

d. Place battery disconnect switch in ON position (TM 5-3805-291-10).

e. Access Active Diagnostic Code screen on ET. Check for an active short circuit diagnostic code 06 for engine fan control solenoid.

f. Remove jumper wire.

g. Place battery disconnect switch in OFF position (TM 5-3805-291-10).

ENGINE FAN CONTROL SOLENOID CIRCUIT TEST - CONTINUED

h. *Expected Results.* Short circuit diagnostic code 06 is active when jumper wire is installed. An open circuit diagnostic code 05 is active when jumper wire is removed.

(1) If results are OK, short circuit diagnostic code 06 is active when jumper wire is installed. An open circuit diagnostic code 05 is active when jumper wire is removed. Engine harness and ECM are OK.

Install new engine fan control solenoid (WP 0217 00). Clear any logged diagnostic codes.

(2) If results are not OK, open circuit diagnostic code 05 remains active with jumper in place. Open circuit is between ECM and connector for engine fan control solenoid. There may be a problem with ECM. Proceed to step 5.

5. Check operation of ECM.

a. Disconnect J1/P1 ECM connector.

b. Fabricate two jumper wires long enough to connect terminals of ECM connector. Crimp connector sockets to one end of each jumper wire.

c. Remove wire from terminal location P1-43 at ECM connector. Install a jumper wire into this terminal location.

d. Remove wire from terminal location P1-51 at ECM connector. Install a jumper wire into this terminal location.

e. Connect J1/P1 ECM connector.

f. Create an open circuit at ECM:

(1) Place battery disconnect switch in ON position (TM 5-3805-291-10) to ensure an open circuit condition exists. Do not allow loose ends of jumper wires to connect.

(2) Monitor Active Diagnostic Code screen on ET. Wait at least 30 seconds for activation of code. Correct status is an active open circuit diagnostic code 05 for engine fan control solenoid.

g. Create a short at ECM:

(1) Short jumper wires at ECM connector.

(2) Monitor Active Diagnostic Code screen on ET. Wait at least 30 seconds for activation of code. Correct status is an active short circuit diagnostic code 06 when wire jumper is installed.

(3) Place battery disconnect switch in OFF position (TM 5-3805-291-10).

h. Restore all wiring to original configuration.

i. *Expected Results.* Open circuit diagnostic code 05 is active when jumper wire from engine fan control solenoid is open. A short circuit diagnostic code 06 is active when wire for engine fan control solenoid is connected to jumper wire for digital return.

(1) If results are OK, replace wiring harness in question (WP 0195 00 thru WP 0201 00). Ensure seals are properly in place and connectors are securely connected. Verify repair eliminates problem.

(2) If results are not OK, one of these conditions exists:

(a) Open circuit diagnostic code 05 is not active when wire for engine fan control solenoid is disconnected.

(b) Short circuit diagnostic code 06 is not active when wire jumper is installed.

(c) ECM needs replacing (WP 0057 00). Verify repair eliminates problem.

ENGINE PRESSURE SENSOR OPEN OR SHORT CIRCUIT TEST

NOTE

- **Use this procedure to troubleshoot any suspect problems with following sensors:**
  a. **Fuel pressure sensor.**
  b. **Engine oil pressure sensor.**
  c. **Atmospheric pressure sensor.**
  d. **Right turbo inlet pressure sensor.**
  e. **Intake manifold pressure sensor.**
- **Use this procedure to troubleshoot system when one of following diagnostic codes is active or easily repeated:**
  a. **94-03 Fuel Pressure Open/Short to +Batt**
  b. **94-04 Fuel Pressure Short to Ground**
  c. **100-03 Engine Oil Pressure Open/Short to +Batt**
  d. **100-04 Engine Oil Pressure Short to Ground**
  e. **274-03 Atmospheric Pressure Open/Short to +Batt**
  f. **274-04 Atmospheric Pressure Short to Ground**
  g. **275-03 Right Turbo Inlet Pressure Open/Short to +Batt**
  h. **275-04 Right Turbo Inlet Pressure Short to Ground**
  i. **1785-03 Intake Manifold Pressure Sensor Voltage High**
  j. **1785-04 Intake Manifold Pressure Sensor Voltage Low**
- **5V sensor supply provides power to all 5V sensors. ECM supplies 5.0 ± 0.2 VDC to terminal A of each sensor connector.**
- **Sensor return from ECM connector goes to terminal B of each sensor connector.**
- **Sensor supply is output short circuit protected. A short circuit to battery will not damage circuit inside ECM.**
- **ECM continuously outputs a pull-up voltage on circuit for sensor signal wire.**
- **ECM uses this pull-up voltage to detect problem in signal circuit.**
- **When ECM detects presence of voltage that is above a threshold on signal circuit, ECM will generate an 03 diagnostic code for sensor.**
- **If sensor is disconnected at sensor connector, presence of pull-up voltage at sensor connector indicates that wires from sensor connector to ECM are OK.**
- **If sensor is disconnected at sensor connector, absence of pull-up voltage at sensor connector indicates problem in signal wire.**
- **If sensor is disconnected at sensor connector and voltage at sensor connector is different from pull-up voltage, signal wire may be shorted to another wire in harness.**

ELECTRICAL SYSTEM TESTS, INSPECTIONS, AND ADJUSTMENTS - CONTINUED 0013 00

ENGINE PRESSURE SENSOR OPEN OR SHORT CIRCUIT TEST - CONTINUED

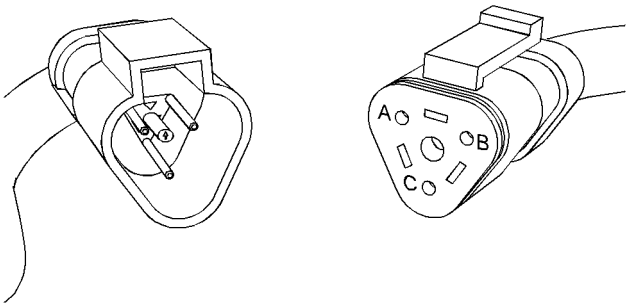

427-C0639

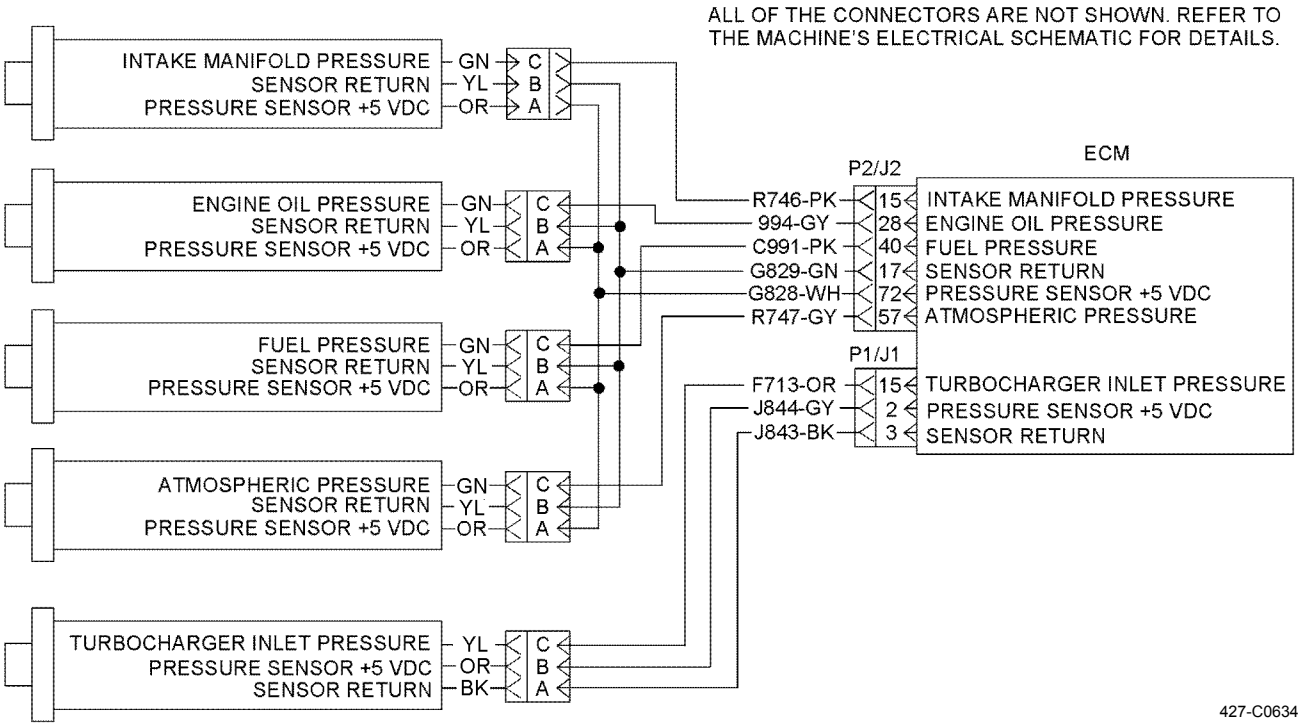

427-C0634

ENGINE PRESSURE SENSOR OPEN OR SHORT CIRCUIT TEST - CONTINUED

1. Inspect electrical connectors and wiring. Refer to *Electrical Connector Inspection* (WP 0022 00).
   a. Place battery disconnect switch in OFF position (TM 5-3805-291-10).
   b. Perform 10 lb (45 N) pull test on each wire in ECM connectors associated with Data Link.
   c. Check J2/P2 ECM connector (socket-head screw) for proper torque of 60 lb-in. (7 Nm).
   d. Check J1/P1 ECM connector (socket-head screw) for proper torque of 55 lb-in. (6 Nm).
   e. Check harness and wiring for abrasion and pinch points from sensors back to ECM.
   f. *Expected Results.* All connectors, pins, and sockets should be completely coupled and/or inserted and harness and wiring should be free of corrosion, abrasion, or pinch points.
      (1) If results are OK, proceed to step 2.
      (2) If results are not OK, replace wiring harness in question (WP 0195 00 thru WP 0201 00). Ensure seals are properly in place and connectors are securely connected. Verify repair eliminates problem.

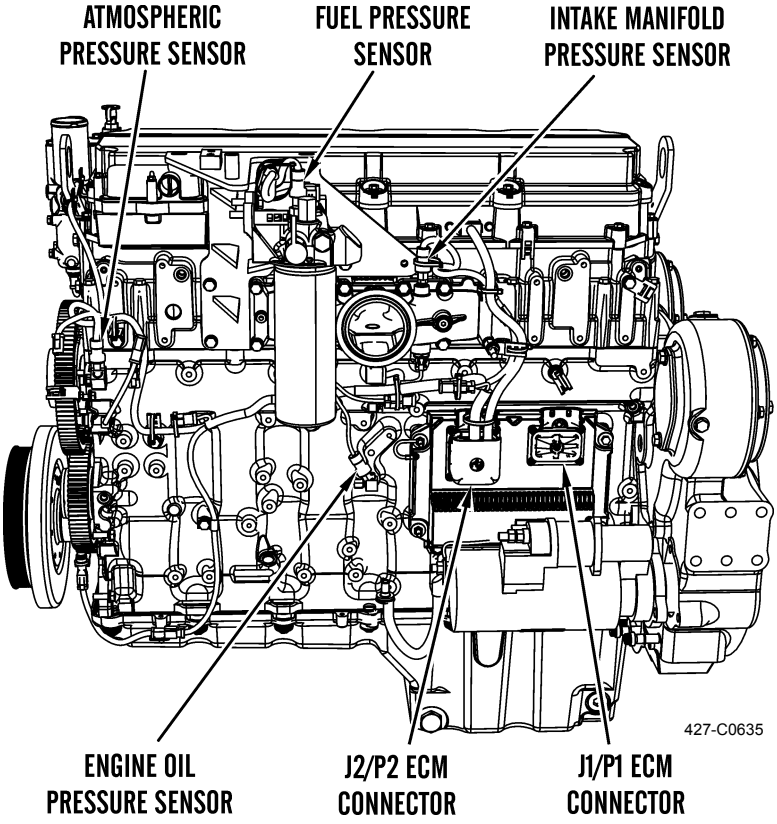

ENGINE PRESSURE SENSOR OPEN OR SHORT CIRCUIT TEST - CONTINUED

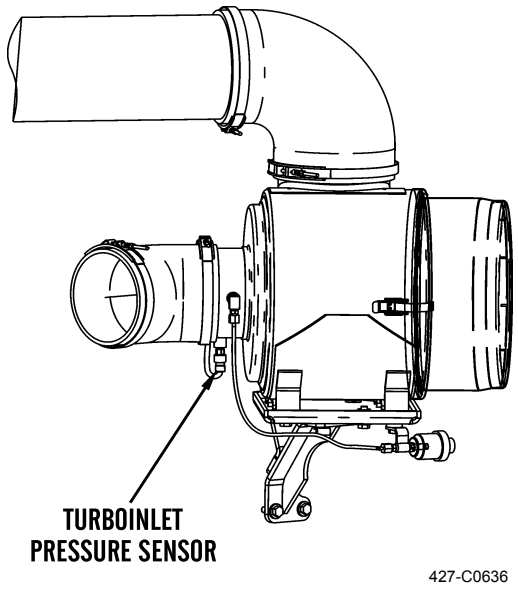

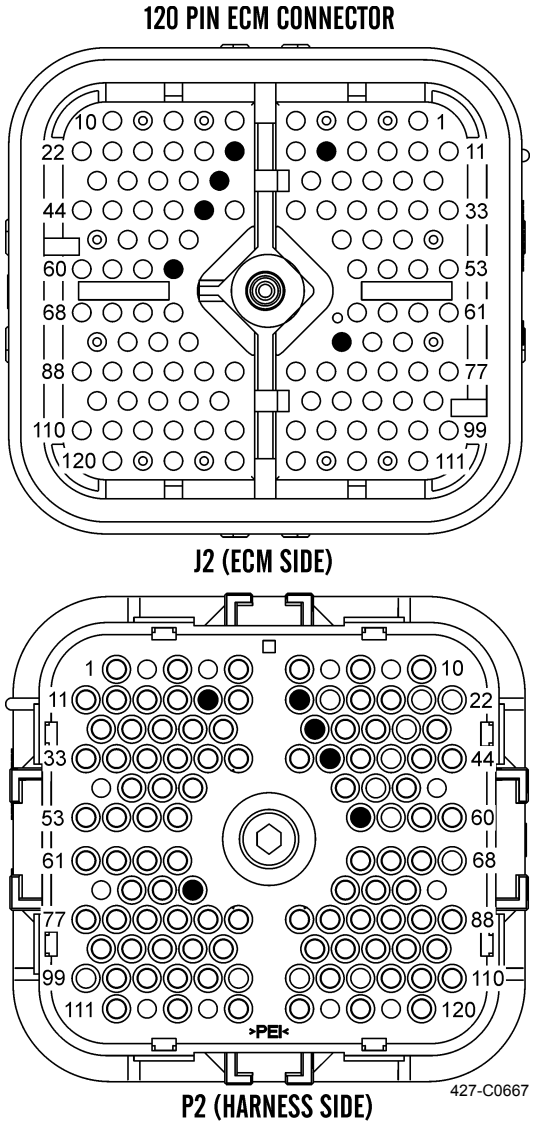

ENGINE PRESSURE SENSOR OPEN OR SHORT CIRCUIT TEST - CONTINUED

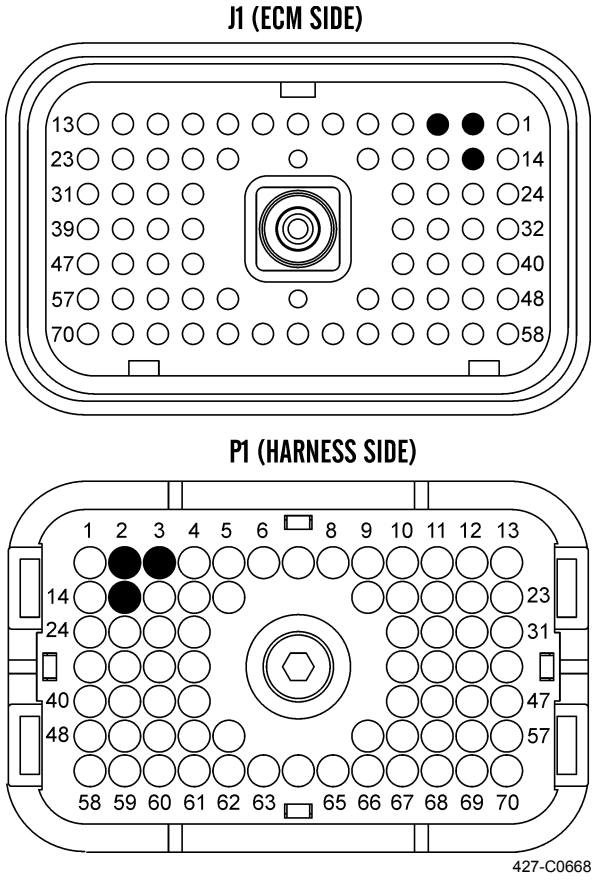

2. Check supply voltage at sensor connector.
   a. Place battery disconnect switch in OFF position (TM 5-3805-291-10).
   b. Disconnect harness connectors for these sensors:
      (1) Fuel pressure sensor (WP 0036 00).
      (2) Engine oil pressure sensor (WP 0079 00).
      (3) Intake manifold pressure sensor (WP 0084 00).
      (4) Atmospheric pressure sensor (WP 0073 00).
      (5) Right turbo inlet pressure sensor (WP 0074 00).
   c. Place battery disconnect switch in ON position (TM 5-3805-291-10).

ENGINE PRESSURE SENSOR OPEN OR SHORT CIRCUIT TEST - CONTINUED

NOTE

- **Original diagnostic code may not stay active. An open circuit diagnostic code for sensor supply may become active when all sensors are disconnected. Ignore active codes at this time and continue with this test step.**
- **Be sure to wiggle harness during following measurements to reveal an intermittent condition.**

d. Measure voltage between terminals A and B at each sensor connector on wiring harness.

e. Place battery disconnect switch in OFF position (TM 5-3805-291-10).

f. Connect all sensors.

g. Each voltage measurement is 5.0 ± 0.2 VDC.

h. *Expected Results*. Each voltage measurement is 5.0 ± 0.2 VDC.

(1) If results are OK, voltage is correct at sensor connectors. Proceed to step 3.

(2) If results are not OK, voltage is not 5.0 ± 0.2 VDC. Voltage is incorrect. Perform *5V Engine Pressure Sensor Supply Circuit Test* in this work package.

3. Check for active diagnostic codes.

a. Connect ET to diagnostic connector (WP 0005 00).

b. Place battery disconnect switch in ON position (TM 5-3805-291-10).

NOTE

Wait at least 30 seconds for any codes to become active.

c. Monitor Active Diagnostic Code screen on ET. Look for active diagnostic code for engine pressure sensor.

d. Determine if problem is related to open circuit diagnostic code 03 or short circuit diagnostic code 04.

e. *Expected Results*. No diagnostic codes are active.

NOTE

Problem may have been related to a faulty connection in harness. Carefully reinspect connectors and wiring. Refer to *Electrical Connector Inspection* (WP 0022 00).

(1) If results are OK, no diagnostic codes are active for engine pressure sensors.

(2) If results are not OK, an 03 diagnostic code is active at this time. Proceed to step 5.

(3) If results are not OK, an 04 diagnostic code is active at this time. Proceed to step 4.

4. Disconnect suspect sensor to create an open circuit.

a. Place battery disconnect switch in OFF position (TM 5-3805-291-10).

b. Disconnect harness connector of sensor with an 04 diagnostic code.

c. Place battery disconnect switch in ON position (TM 5-3805-291-10).

NOTE

Wait at least 30 seconds for any codes to become active.

d. Use ET to check for active diagnostic codes. Check for an active 03 diagnostic code for disconnected sensor.

e. Place battery disconnect switch in OFF position (TM 5-3805-291-10).

ENGINE PRESSURE SENSOR OPEN OR SHORT CIRCUIT TEST - CONTINUED

f. *Expected Results*. An 04 diagnostic code was active before sensor was disconnected. An 03 diagnostic code became active after sensor was disconnected.

(1) If results are OK, install a new sensor. Verify there are no active diagnostic codes for sensor. Clear any logged diagnostic codes.

(2) If results are not OK, when sensor is disconnected, an 04 diagnostic code remains active for suspect sensor. There is a short circuit between sensor harness connector and ECM. Leave sensor disconnected. Proceed to step 6.

5. Create a short at suspect sensor connector.

a. Place battery disconnect switch in OFF position (TM 5-3805-291-10).

b. Fabricate a jumper wire long enough to connect two terminals at sensor connector. Crimp connector sockets to each end of jumper wire.

c. Install jumper wire between terminal B (sensor return) and terminal C (sensor signal) on harness side of connector for suspect sensor.

d. Place battery disconnect switch in ON position (TM 5-3805-291-10).

NOTE

Wait at least 30 seconds for activation of diagnostic code.

e. Monitor Active Diagnostic Codes screen on ET before installing jumper wire and after installing jumper wire.

f. Check for an active short circuit diagnostic code 04 while jumper wire is installed.

g. Place battery disconnect switch in OFF position (TM 5-3805-291-10).

h. Remove jumper wire.

i. *Expected Results*. An 04 diagnostic code was active when jumper wire was installed. An 03 diagnostic code became active when jumper wire was removed.

(1) If results are OK, engine harness and ECM are OK. Install a new sensor in engine. Verify there are no active diagnostic codes for sensor. Clear any logged diagnostic codes.

(2) If results are not OK, an 03 diagnostic code remains active with jumper in place. There is a problem in circuit between ECM and sensor connector. There may be a problem with ECM. Proceed to step 6.

6. Test operation of ECM.

a. Place battery disconnect switch in OFF position (TM 5-3805-291-10).

b. Fabricate a jumper wire long enough to connect one terminal at ECM connector to engine ground stud. Crimp a connector socket to one end of jumper wire.

c. Disconnect appropriate ECM connector for signal wire of suspect sensor.

d. Remove signal wire for suspect sensor from ECM connector.

e. Install jumper wire into terminal location of suspect sensor’s signal wire at ECM connector.

f. Connect ECM connectors.

ENGINE PRESSURE SENSOR OPEN OR SHORT CIRCUIT TEST - CONTINUED

g. Check operation of ECM by creating an open circuit at ECM:
   (1) Hold loose end of jumper wire away from any components in order to create an open circuit condition.
   (2) Place battery disconnect switch in ON position (TM 5-3805-291-10).

NOTE

Wait at least 30 seconds so that any codes may become active.

   (3) Monitor Active Diagnostic Code screen on ET. Check suspect sensor for an active 03 diagnostic code while jumper wire is installed.

h. Place battery disconnect switch in OFF position (TM 5-3805-291-10).

i. Check operation of ECM by creating a short circuit at ECM:
   (1) Connect jumper wire to engine ground stud.
   (2) Place battery disconnect switch in ON position (TM 5-3805-291-10).

NOTE

Wait at least 30 seconds so that any codes may become active.

   (3) Monitor Active Diagnostic Code screen on ET.
   (4) Check suspect sensor for an active 04 diagnostic code while jumper wire is installed.

j. Place battery disconnect switch in OFF position (TM 5-3805-291-10).

k. Remove jumper wire. Return all wiring to original configuration.

l. *Expected Results*. An 03 diagnostic code is active when sensor signal wire is removed from ECM connector. An 04 diagnostic code is active when signal wire is connected to engine ground stud.
   (1) If results are OK, ECM is operating properly. Problem is in harness wiring between ECM and sensor connector. If code is active for more than one sensor, problem is most likely in return wire for sensor. If code is only active for one sensor, problem is most likely in signal wire for sensor. Replace wiring harness in question (WP 0195 00 thru WP 0201 00). Ensure seals are properly in place and connectors are securely connected. Verify repair eliminates problem.
   (2) If results are not OK, one of these conditions exists: an 03 diagnostic code is not active when sensor signal wire is disconnected or an 04 diagnostic code is not active when wire jumper is installed. Replace ECM (WP 0057 00). Verify problem is resolved.

ENGINE SPEED/TIMING SENSOR CIRCUIT TEST

NOTE

- **Use this procedure to troubleshoot any suspect problems with crankshaft (primary) speed/timing sensor or with camshaft (secondary) speed/timing sensor.**
- **This procedure covers following diagnostic codes:**
  a. **320-02 Speed/Timing Sensor Loss of Signal**
  b. **320-11 Speed/Timing Sensor mechanical failure**
  c. **342-02 Loss of Secondary Engine Speed signal**
  d. **342-11 Secondary Engine Speed Sensor mechanical failure**
- **Engine uses two engine speed/timing sensors. Secondary engine speed/timing sensor monitors camshaft gear and primary engine speed/timing sensor monitors crankshaft gear.**
- **Both engine speed/timing sensors detect reference for engine speed and timing from a unique pattern on respective gear.**
- **ECM counts time between pulses created by sensor as gear rotates to determine rpm.**
- **Under normal operation, secondary engine speed/timing sensor is used to determine timing for starting purposes.**
- **Secondary engine speed/timing sensor is used to determine when piston in No. 1 cylinder is at top of compression stroke.**
- **When timing has been established, primary engine speed/timing sensor is then used to determine engine speed and signal from secondary camshaft sensor is ignored.**
- **After locating No. 1 cylinder, ECM triggers each injector in correct firing order and at correct fuel injector timing.**
- **Actual timing and duration of each injection is based on engine rpm and load. If engine is running and signal from primary engine speed/timing sensor is lost, a slight change in engine performance will be noticed when ECM performs changeover to secondary engine speed/timing sensor. Loss of signal from secondary engine speed/timing sensor during engine operation will not result in any noticeable change in engine performance. However, if signal from secondary engine speed/timing sensor is not present during start-up following conditions may exist:**
  a. **Engine may require a slightly longer period of time to startup.**
  b. **Engine may run rough for a few seconds until ECM determines proper firing order by using primary engine speed/timing sensor only.**
- **Engine will start and run when only one sensor signal is present from either sensor.**
- **Loss of signal from both sensors during engine operation will result in termination of injection and shutting down of engine by ECM.**
- **Loss of signal from both sensors during start-up will prevent engine from starting.**
- **Both sensors are magnetic sensors with an integral connector. Sensors are not interchangeable. Do not switch positions of sensor. If sensors are replaced, a timing calibration is not necessary for engine.**
- **When sensors are being installed, complete all of following tasks:**
  a. **Lubricate O-ring with oil.**
  b. **Ensure sensor is fully seated into engine before tightening bracket bolt.**
  c. **Ensure connector is properly latched.**
  d. **Ensure harness is properly secured, and ensure tiedown straps are placed in correct location.**

ENGINE SPEED/TIMING SENSOR CIRCUIT TEST - CONTINUED

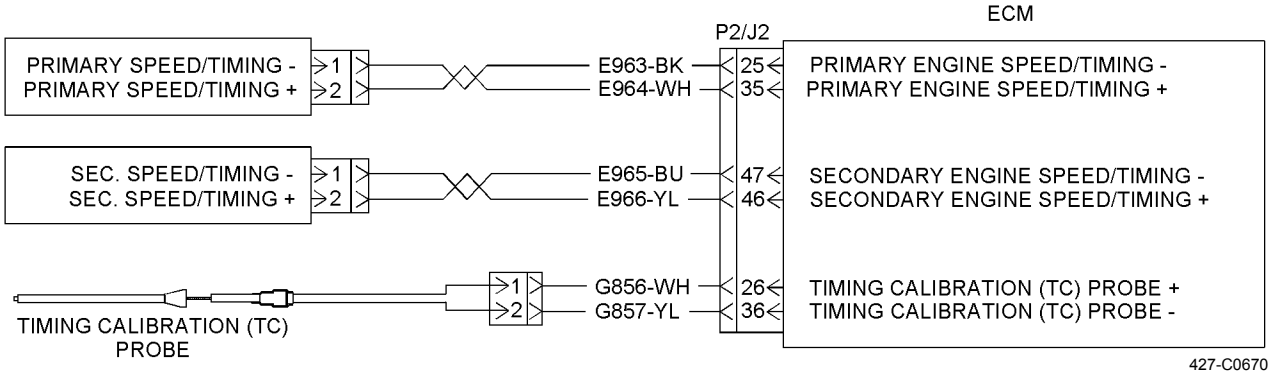

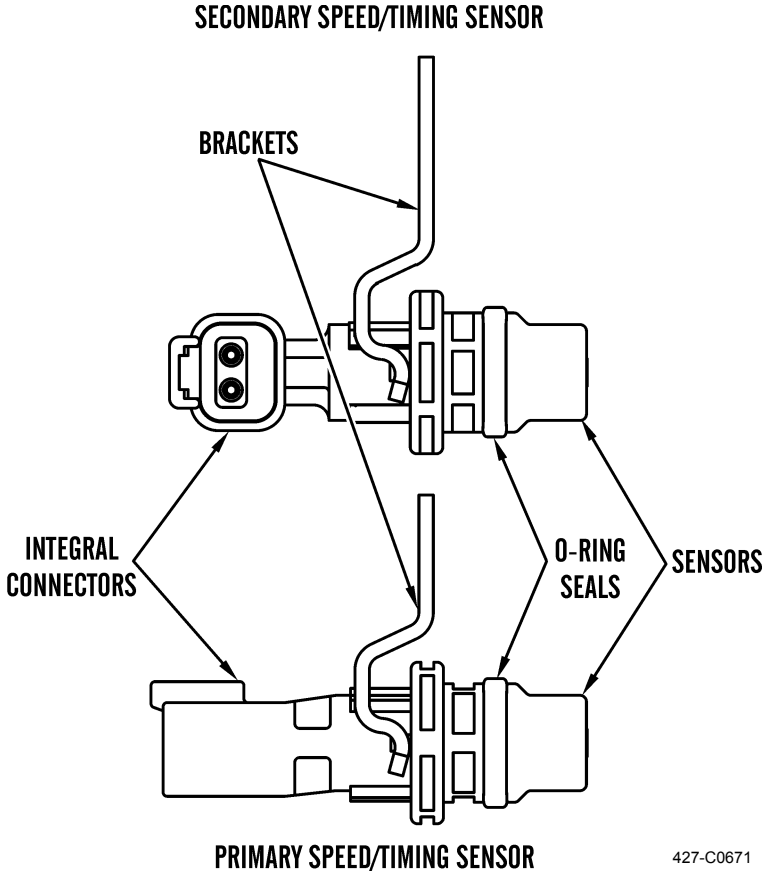

ENGINE SPEED/TIMING SENSOR CIRCUIT TEST - CONTINUED

1. Check for diagnostic codes.
   a. Connect ET to diagnostic connector (WP 0005 00).
   b. Place battery disconnect switch in ON position (TM 5-3805-291-10).
   c. Start engine and run engine. Problem may occur when engine is at any operating temperature. However, problem is more likely to occur when engine is at normal operating temperature.
   d. If engine will not start, monitor engine speed on ET while engine is being cranked. ET may need to be powered from another battery while engine is being cranked. This is done so that ET will not reset.

NOTE

Upon initial cranking, status for engine speed may indicate that engine speed signal is abnormal. This message should be replaced with an engine speed once ECM is able to calculate a speed from signal.

   e. Wait at least 30 seconds for activation of diagnostic codes. Look for these codes on ET:
      (1) 320-02 Speed/Timing Sensor Loss of Signal
      (2) 320-11 Speed/Timing Sensor mechanical failure
      (3) 342-02 Loss of Secondary Engine Speed signal
      (4) 342-11 Secondary Engine Speed Sensor mechanical failure
   f. *Expected Results*. One or more diagnostic codes listed above are logged or active.

NOTE

If engine will not start and ET displayed 0 rpm during cranking, select "No Engine rpm".

   g. *Results*.
      (1) No engine rpm - Engine rpm is not indicated on ET. Proceed to step 2.
      (2) Active code or logged code - There is an active diagnostic code or a logged diagnostic code for an engine speed/timing sensor. Proceed to step 2.
2. Inspect sensor assembly.
   a. Place battery disconnect switch in OFF position (TM 5-3805-291-10).
   b. Remove engine speed/timing sensor(s) with active diagnostic code from engine (WP 0076 00 and/or WP 0078 00).
   c. Ensure one O-ring seal is installed on each sensor, and ensure O-ring seals are free of damage.
   d. *Expected Results*. Two undamaged O-ring seals are properly installed. Brackets are not bent. Flange for each sensor can be flush against housing.
      (1) If results are OK, two undamaged O-ring seals are properly installed. Brackets are not bent. Flange for each sensor can be flush against housing. Proceed to step 3.
      (2) If results are not OK, sensor assembly has a mechanical problem. Replace sensor (WP 0076 00 or WP 0078 00). Verify problem is resolved.

ENGINE SPEED/TIMING SENSOR CIRCUIT TEST - CONTINUED

3. Inspect electrical connectors and wiring. Refer to *Electrical Connector Inspection* (WP 0022 00).
   a. Place battery disconnect switch in OFF position (TM 5-3805-291-10).
   b. Perform 10 lb (45 N) pull test on each wire in ECM connectors associated with Data Link.
   c. Check J2/P2 ECM connector (socket-head screw) for proper torque of 60 lb-in. (7 Nm).
   d. Check J1/P1 ECM connector (socket-head screw) for proper torque of 55 lb-in. (6 Nm).
   e. Check harness and wiring for abrasion and pinch points from sensors back to ECM.
   f. *Expected Results.* All connectors, pins, and sockets should be completely coupled and/or inserted, and harness and wiring should be free of corrosion, abrasion, or pinch points.
      (1) If results are OK, proceed to step 4.
      (2) If results are not OK, replace wiring harness in question (WP 0195 00 thru WP 0201 00). Ensure seals are properly in place and connectors are securely connected. Verify repair eliminates problem.

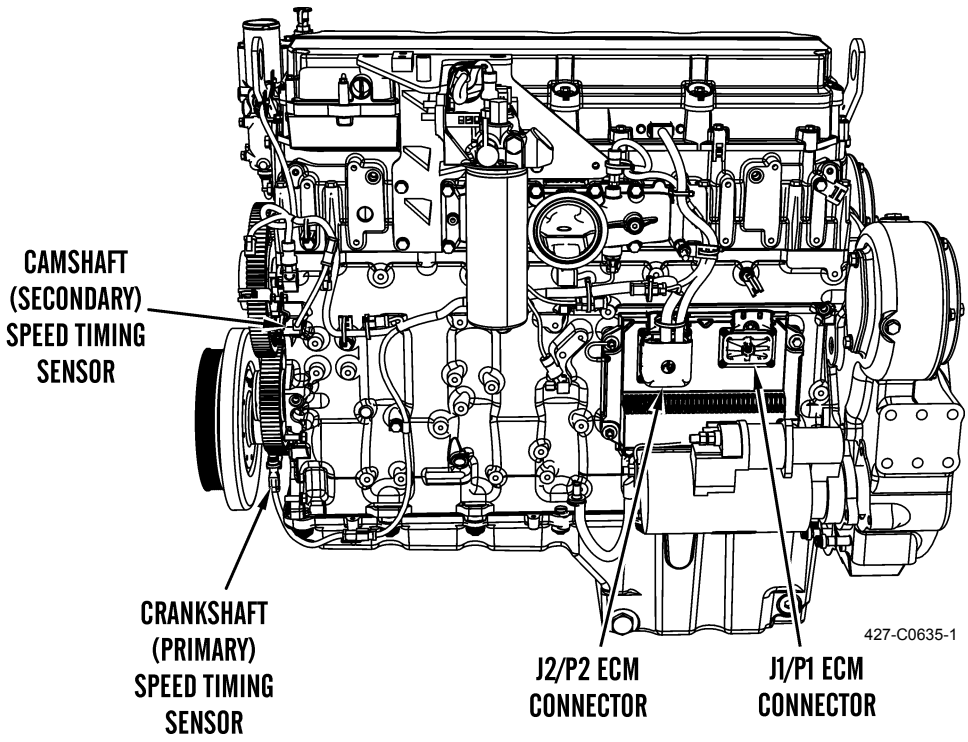

ENGINE SPEED/TIMING SENSOR CIRCUIT TEST - CONTINUED

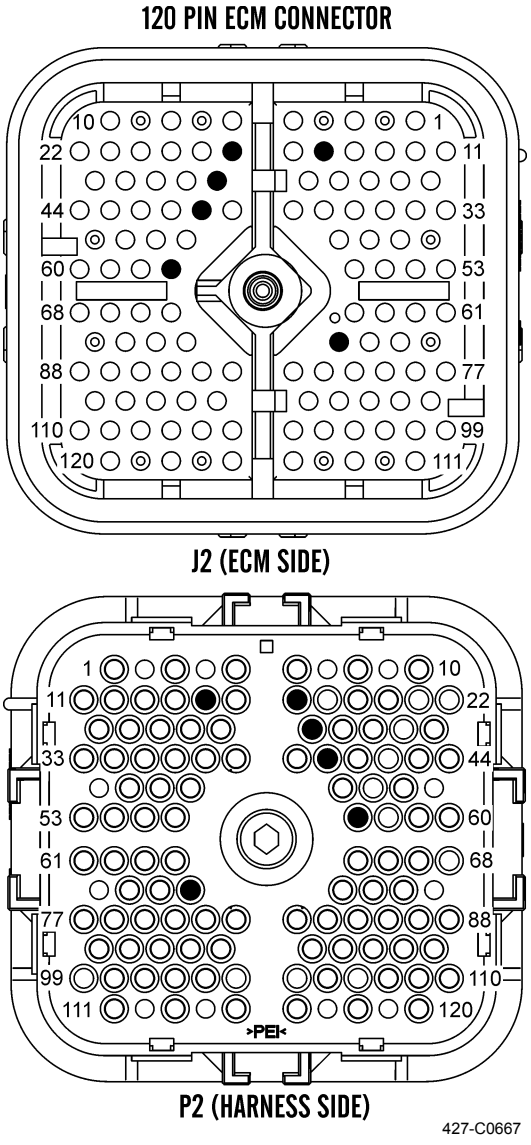

ENGINE SPEED/TIMING SENSOR CIRCUIT TEST - CONTINUED

120 PIN ECM CONNECTOR

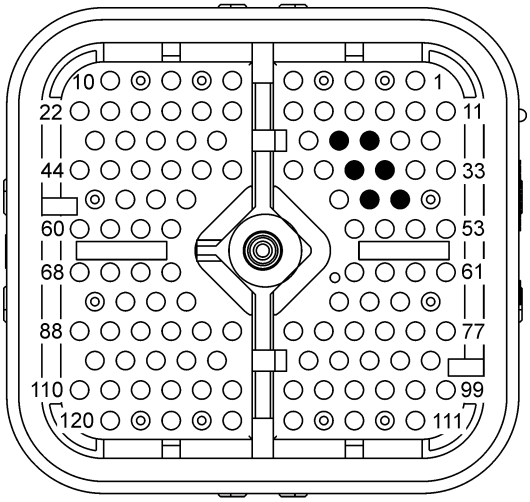

J2 (ECM SIDE)

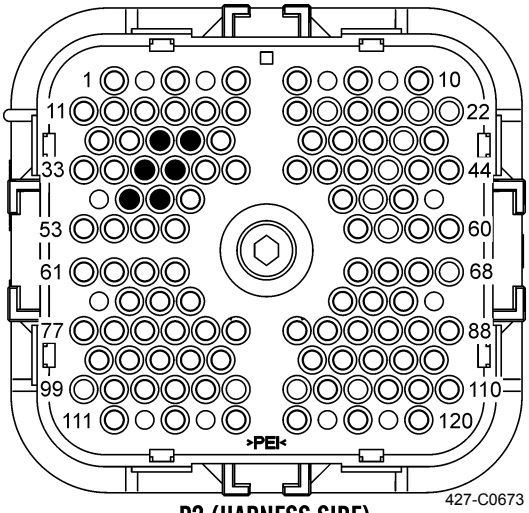

P2 (HARNESS SIDE)

ENGINE SPEED/TIMING SENSOR CIRCUIT TEST - CONTINUED

4. Measure sensor resistance through engine harness.
   a. Place battery disconnect switch in OFF position (TM 5-3805-291-10).
   b. Disconnect J2/P2 ECM connector.
   c. If you are troubleshooting a problem with crankshaft (primary) speed/timing sensor, perform this procedure:
      (1) Measure resistance from P2-35 (Primary engine speed/timing +) to P2-25 (Primary engine speed/timing -).
      (2) Check for an intermittent open or short circuit by moving harness while you take resistance measurement. Pull or shake wires that are directly behind sensor. Resistance should be 110 to 200 Ohms.
   d. If you are troubleshooting a problem with camshaft (secondary) speed/timing sensor, perform this procedure:
      (1) Measure resistance from P2-46 (secondary engine speed/timing +) to P2-47 (secondary engine speed/timing -).
      (2) Check for an intermittent open or short circuit by moving harness while you take resistance measurement. Pull or shake wires that are directly behind sensor. Resistance should be 1,000 to 1,200 Ohms.
   e. *Expected Results*. Resistance measurements are within specifications.
      (1) Replace engine ECM (WP 0057 00).
      (2) If results are not OK, at least one resistance measurement is not within specifications. Proceed to step 5.
5. Measure sensor resistance.
   a. Disconnect engine harness from suspect sensor.
   b. For crankshaft (primary) speed/timing sensor, measure resistance between terminal 2 (Primary engine speed/timing +) and terminal 1 (Primary engine speed/timing -).
   c. Resistance should be 110 to 200 Ohms.
   d. For camshaft (secondary) speed/timing sensor, measure resistance between terminal 2 (secondary engine speed/timing +) and terminal 1 (secondary engine speed/timing -).
   e. Resistance should be 1,000 to 1,200 Ohms.
   f. *Expected Results*. Resistance measurement for suspect sensor is within specification.
      (1) If results are OK, there is a problem with wiring or there may be a problem with a connector. Replace wiring harness in question (WP 0195 00 thru WP 0201 00). Ensure seals are properly in place and connectors are securely connected. Verify problem is resolved.
      (2) If results are not OK, there is a problem with sensor. Replace sensor assembly (WP 0076 00 and WP 0078 00).

ENGINE TEMPERATURE SENSOR OPEN OR SHORT CIRCUIT TEST

NOTE

- **Use this procedure to troubleshoot any suspect problems with following sensors:**
  a. **Intake manifold air temperature sensor.**
  b. **Coolant temperature sensor.**
  c. **Fuel temperature sensor.**
- **This procedure covers following diagnostic codes:**
  a. **110-03 Engine Coolant Temperature Open/Short to +Batt**
  b. **110-04 Engine Coolant Temperature Short to Ground**
  c. **172-03 Intake Manifold Air Temp Open/Short to +Batt**
  d. **172-04 Intake Manifold Air Temp Short to Ground**
  e. **174-03 Fuel Temperature Open/Short to +Batt**
  f. **174-04 Fuel Temperature Short to Ground**
- **Troubleshooting procedures for diagnostic codes of each temperature sensor are identical.**
- **Temperature sensors are passive sensors that have two terminals. Temperature sensors do not require supply voltage from ECM.**
- **ECM continuously outputs a pull-up voltage on circuit for sensor signal wire. ECM uses this pull-up voltage in order to detect an open signal circuit.**
- **When ECM detects presence of a voltage that is above a threshold on signal circuit, ECM will generate an open circuit diagnostic code 03 for sensor.**
- **If sensor is disconnected at sensor connector:**
  - **Presence of pull-up voltage at sensor connector indicates that wires from sensor connector to ECM are not open or Shorted to Ground.**
  - **Absence of pull-up voltage at sensor connector indicates an open signal wire or a Short to Ground.**
  - **Voltage at sensor connector is different from pull-up voltage, signal wire is Shorted to another wire in harness.**

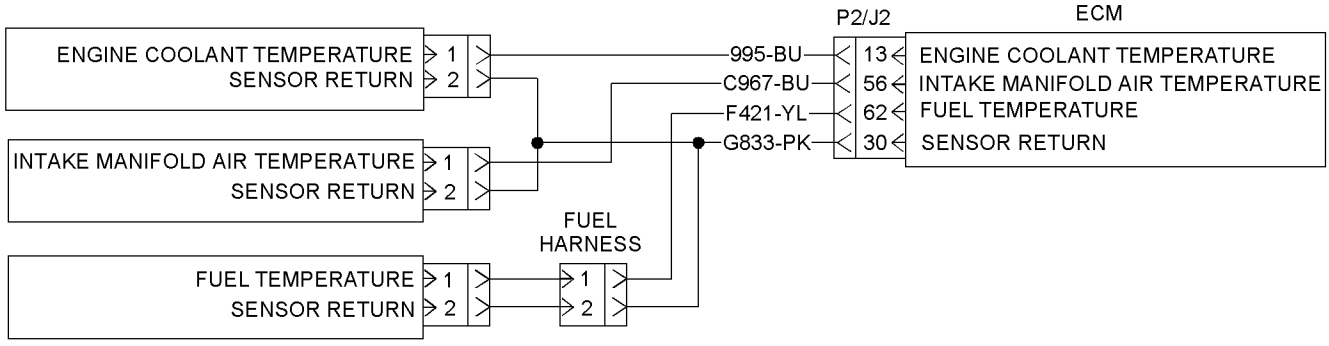

427-C0674

ENGINE TEMPERATURE SENSOR OPEN OR SHORT CIRCUIT TEST - CONTINUED

1. Inspect electrical connectors and wiring. Refer to *Electrical Connector Inspection* (WP 0022 00).
   a. Place battery disconnect switch in OFF position (TM 5-3805-291-10).
   b. Perform 10 lb (45 N) pull test on each wire in ECM connectors associated with ECM power supply.
   c. Check J2/P2 ECM connector (socket-head screw) for proper torque of 60 lb-in. (7 Nm).
   d. Check J1/P1 ECM connector (socket-head screw) for proper torque of 55 lb-in. (6 Nm).
   e. Check harness and wiring for abrasion and pinch points from sensors back to ECM.

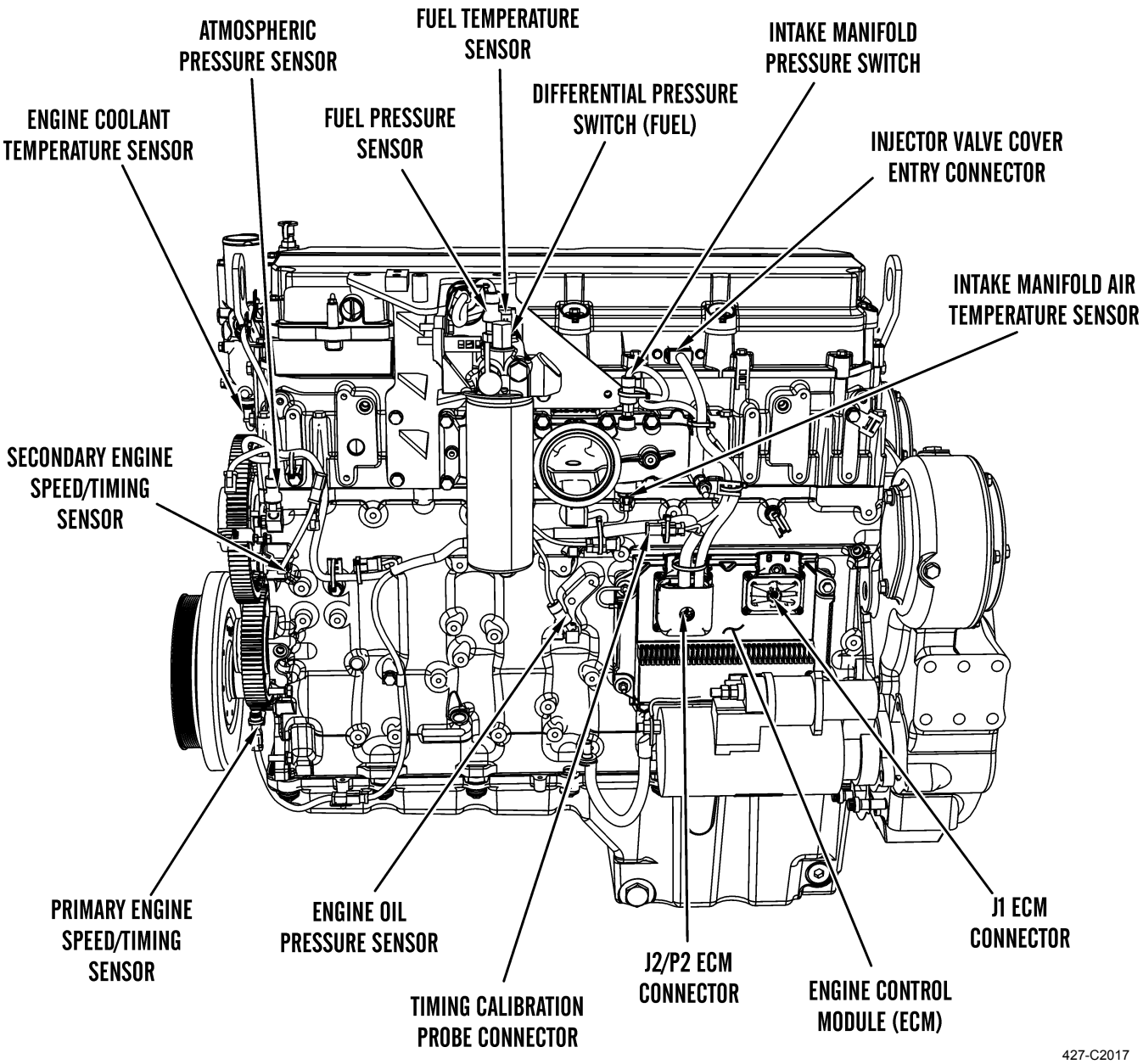

427-C2017

ENGINE TEMPERATURE SENSOR OPEN OR SHORT CIRCUIT TEST - CONTINUED

f. *Expected Results.* All connectors, pins, and sockets should be completely coupled and/or inserted and harness and wiring should be free of corrosion, abrasion, or pinch points.

(1) If results are OK, proceed to step 2.

(2) If results are not OK, replace wiring harness in question (WP 0195 00 thru WP 0201 00). Ensure seals are properly in place and connectors are securely connected. Verify repair eliminates problem.

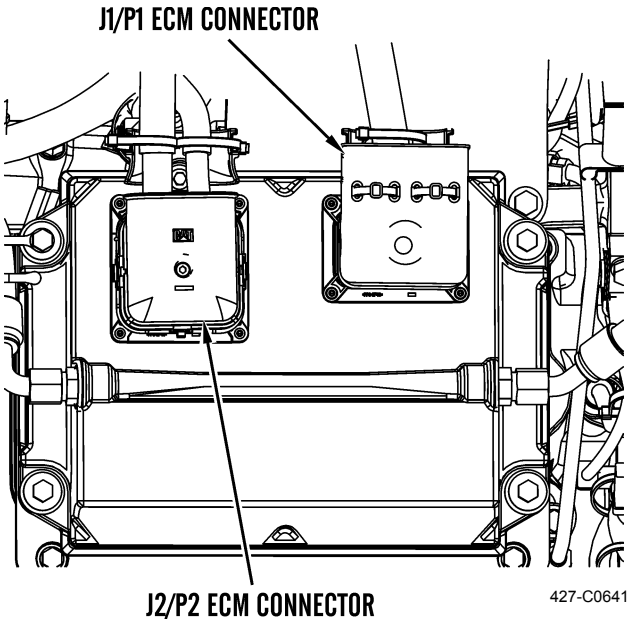

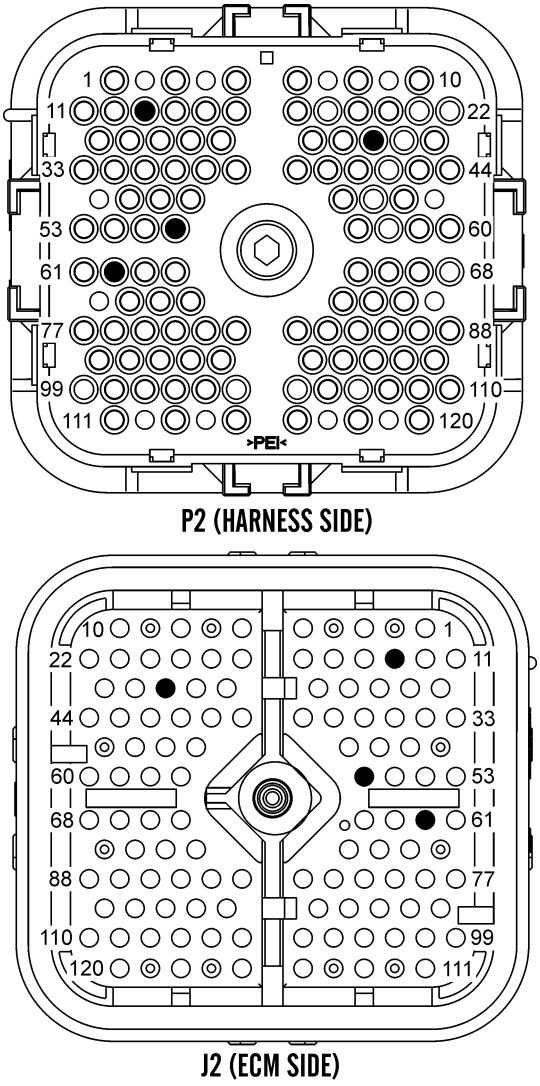

ENGINE TEMPERATURE SENSOR OPEN OR SHORT CIRCUIT TEST - CONTINUED

2. Check for active diagnostic codes.
   a. Connect ET to diagnostic connector (WP 0005 00).
   b. Place battery disconnect switch in ON position (TM 5-3805-291-10).
   c. Monitor Active Diagnostic Code screen on ET. Check and record any active diagnostic codes.

NOTE

Wait at least 30 seconds for diagnostic codes to become active.

   d. Look for an 03 diagnostic code or 04 diagnostic code.
   e. *Expected Results*. No diagnostic codes are active.
      (1) If results are OK, no diagnostic codes are active. Problem appears to be resolved. Problem may have been related to a faulty connection in harness. Carefully reinspect connectors and wiring. Refer to *Electrical Connector Inspection* (WP 0022 00).
      (2) If results are not OK, an 04 diagnostic code is active at this time. Proceed to step 3.
      (3) If results are not OK, an 03 diagnostic code is active at this time. Proceed to step 4.
3. Disconnect suspect sensor in order to create an open circuit.
   a. Place battery disconnect switch in OFF position (TM 5-3805-291-10).
   b. Disconnect suspect sensor from engine harness.
   c. Place battery disconnect switch in ON position (TM 5-3805-291-10).
   d. Access Active Diagnostic Codes screen on ET and check for an active 03 diagnostic code for suspect sensor.

NOTE

Wait at least 30 seconds for diagnostic codes to become active.

   e. Place battery disconnect switch in OFF position (TM 5-3805-291-10).
   f. *Expected Results*. An 03 diagnostic code is now active for suspect sensor.
      (1) If results are OK, an 04 diagnostic code was active before disconnecting sensor. An 03 diagnostic code became active after sensor was disconnected. There may be a problem with sensor. Install new sensor (WP 0077 00, WP 0082 00, and WP 0084 00). Clear any logged diagnostic codes.
      (2) If results are not OK, an 04 diagnostic code is still present. Leave sensor disconnected. Proceed to step 5.
4. Create a short at sensor connector.
   a. Place battery disconnect switch in OFF position (TM 5-3805-291-10).
   b. Disconnect suspect sensor at sensor connector.
   c. Fabricate a jumper wire that can be used to create a short between terminal 1 (signal) and terminal 2 (sensor return) at suspect sensor's connector. Crimp connector pins to each end of jumper wire.
   d. Install jumper into harness side of sensor connector.
   e. Place battery disconnect switch in ON position (TM 5-3805-291-10).
   f. Access Active Diagnostic Code screen on ET. Check for an active 04 diagnostic code for suspect sensor.

ENGINE TEMPERATURE SENSOR OPEN OR SHORT CIRCUIT TEST - CONTINUED

NOTE

Wait at least 30 seconds for diagnostic codes to become active.

g. Place battery disconnect switch in OFF position (TM 5-3805-291-10).

h. *Expected Results.* An 04 diagnostic code is now active for suspect sensor.

(1) If results are OK, an 03 diagnostic code was active before creating short at sensor connector. An 04 diagnostic code became active after creating short at sensor connector. Install new sensor (WP 0077 00, WP 0082 00, and WP 0084 00). Clear any logged diagnostic codes.

(2) If results are not OK, an 03 diagnostic code is still active for suspect sensor. Proceed to step 5.

5. Check operation of ECM.

a. Place battery disconnect switch in OFF position (TM 5-3805-291-10).

b. Check operation of ECM by creating an open circuit at ECM.

(1) Disconnect ECM connector for suspect sensor.

(2) Fabricate a jumper wire long enough to reach from a terminal at ECM connector to engine ground stud. Crimp a connector socket to one end of jumper wire.

(3) Remove signal wire for suspect sensor from ECM connector. Install jumper wire into terminal location for signal wire of suspect sensor.

(4) Connect ECM connectors.

(5) Place battery disconnect switch in ON position (TM 5-3805-291-10).

(6) Monitor Active Diagnostic Code screen on ET. Wait at least 30 seconds for activation of code.

(7) An open circuit diagnostic code 03 will be active for suspect sensor.

c. Check operation of ECM by creating a short at ECM.

(1) Short jumper wire installed into ECM connector to engine ground.

(2) Monitor Active Diagnostic Code screen on ET. Wait at least 30 seconds for activation of code.

(3) A short circuit diagnostic code 04 will be active for suspect sensor.

(4) Place battery disconnect switch in OFF position (TM 5-3805-291-10).

d. Remove wire jumper. Reconnect all wires and connectors.

e. *Expected Results*. An 03 diagnostic code is active when sensor signal wire is open. An 04 diagnostic code is active when jumper wire is shorted to engine ground.

(1) If results are OK, ECM is working properly. Problem is in wiring between ECM and sensor connector.

(a) If code is active for more than one sensor, problem is most likely in return wire for sensor. Replace wiring harness in question (WP 0195 00 thru WP 0201 00). Ensure seals are properly in place and connectors are securely connected. Verify repair eliminates problem.

(b) If code is only active for one sensor, problem is most likely in signal wire for sensor. Replace wiring harness in question (WP 0195 00 thru WP 0201 00). Ensure seals are properly in place and connectors are securely connected. Verify repair eliminates problem.

(2) If results are not OK, one of these conditions exists: An 03 diagnostic code is not active when sensor signal wire is disconnected. An 04 diagnostic code is not active when wire jumper is installed. Replace ECM (WP 0057 00). Verify original problem is resolved.

ETHER INJECTION SYSTEM TEST

WARNING

Breathing ether vapors or repeated contact of ether with skin can cause personal injury. Personal injury may occur from failure to adhere to following procedures:

- **Use ether only in well ventilated areas.**
- **Do not smoke while changing ether cylinders.**
- **Use ether with care to avoid fires.**
- **Do not store replacement ether cylinders in living areas or in operator's compartment.**
- **Do not store ether cylinders in direct sunlight or at temperatures above 120°F (49°C).**
- **Discard cylinders in a safe place. Do not puncture or burn cylinders.**

To avoid possible injury to personnel, be sure brakes are applied and all controls are in Hold or Neutral when starting engine.

NOTE

- **Use this procedure to troubleshoot any suspect problems with electrical circuit for ether injection system.**
- **This procedure covers following diagnostic codes:**
  a. **2417-05 Ether Injection Control Solenoid current high**
  b. **2417-06 Ether Injection Control Solenoid current low**
- **Ether injection system improves cold weather starting of engine. ECM controls ether injection system.**
- **Ether injection system is disabled if there is an active engine shutdown.**
- **A test on ET allows technician to activate ether system. Test is functional when engine speed is zero rpm. Access test via Override Parameters screen on ET.**

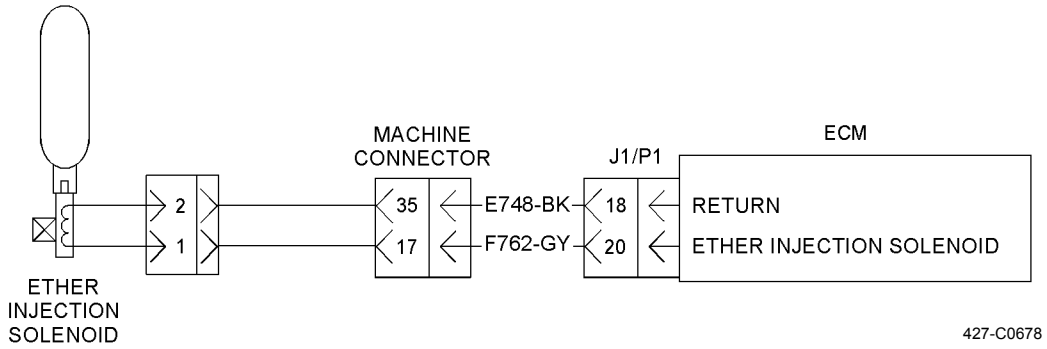

1. Inspect electrical connectors and wiring. Refer to *Electrical Connector Inspection* (WP 0022 00).
   a. Place battery disconnect switch in OFF position (TM 5-3805-291-10).
   b. Thoroughly inspect harness side and ECM side of connectors for ether solenoid. Refer to *Electrical Connector Inspection* (WP 0022 00) as necessary.
   c. Perform 10 lb (45 N) pull test on each wire in ECM connectors associated with ECM power supply.
   d. Check J2/P2 ECM connector (socket-head screw) for proper torque of 60 lb-in. (7 Nm).
   e. Check J1/P1 ECM connector (socket-head screw) for proper torque of 55 lb-in. (6 Nm).
   f. Check harness and wiring for abrasion and pinch points from sensors back to ECM.

ETHER INJECTION SYSTEM TEST - CONTINUED

g. *Expected Results.* All connectors, pins, and sockets should be completely coupled and/or inserted and harness and wiring should be free of corrosion, abrasion, or pinch points.

(1) If results are OK, proceed to step 2.

(2) If results are not OK, replace wiring harness in question (WP 0195 00 thru WP 0201 00). Ensure seals are properly in place and connectors are securely connected. Verify repair eliminates problem.

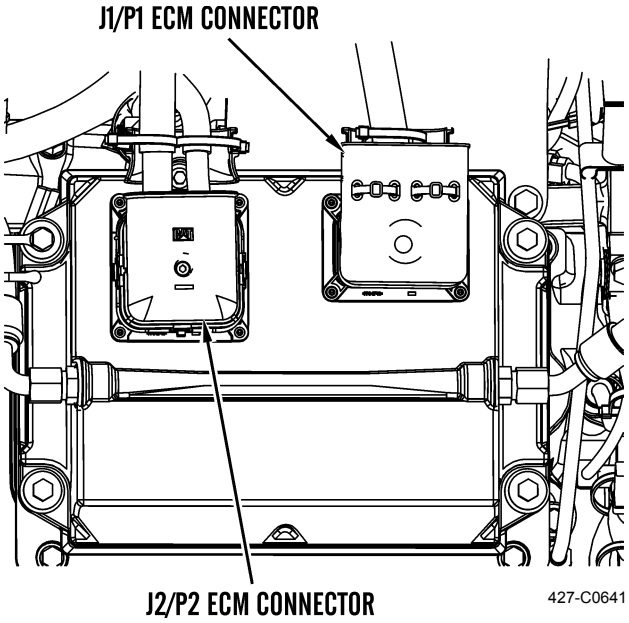

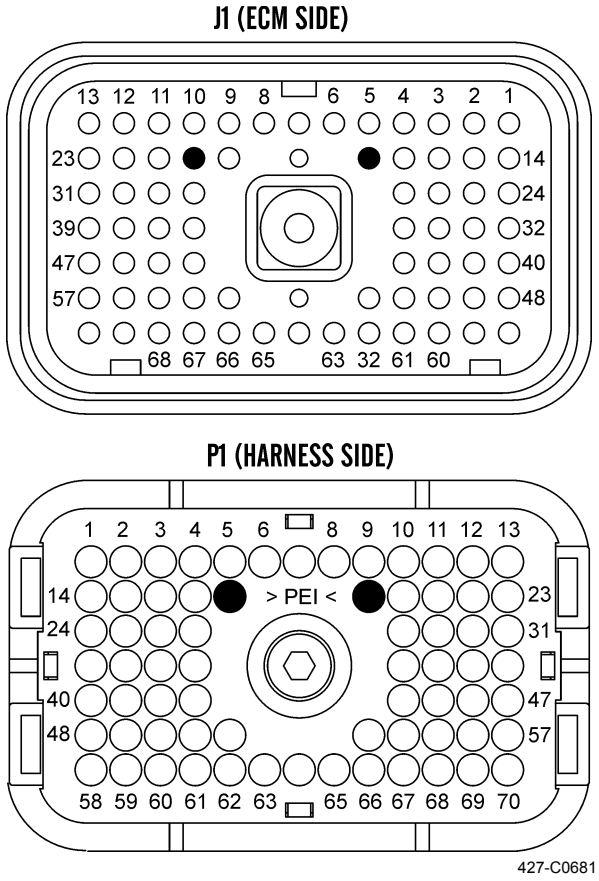

ETHER INJECTION SYSTEM TEST - CONTINUED

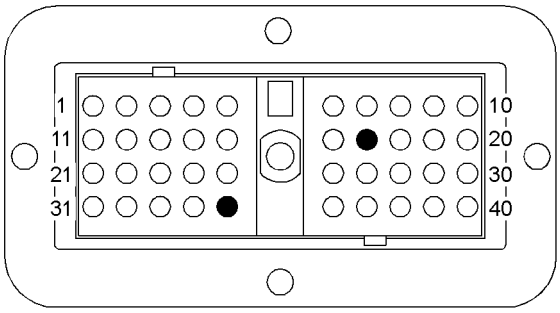

SOCKET TERMINAL SIDE

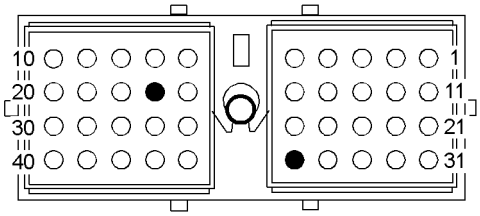

PLUG TERMINAL SIDE

427-C0682

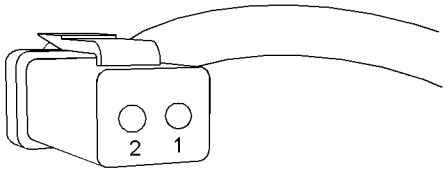

427-C0683

2. Check for active diagnostic codes.

NOTE

Remove ether canister before you perform this procedure.

a. Connect ET to diagnostic connector. Refer to WP 0005 00.

b. Place battery disconnect switch in ON position (TM 5-3805-291-10).

c. Proceed to Diagnostic Overrides screen on ET.

d. Activate ether injection system. System will activate for 10 seconds.

e. Monitor Active Diagnostic Code screen on ET. Check and record any active diagnostic codes.

NOTE

Wait at least 30 seconds for diagnostic codes to become active.

f. Look for an FMI 05 diagnostic code or an FMI 06 diagnostic code.

g. *Expected Results*. No diagnostic codes are active.

(1) If results are OK, neither diagnostic code is active. Problem may have been caused by a poor electrical connection. Carefully reinspect connectors and wiring. Refer to *Electrical Connector Inspection* (WP 0022 00).

(2) If results are not OK, an FMI 06 code is active at this time. Proceed to step 3.

(3) If results are not OK, an FMI 05 code is active at this time. Proceed to step 4.

ETHER INJECTION SYSTEM TEST - CONTINUED

3. Create an open circuit at harness connector for ether injection solenoid.
   a. Place battery disconnect switch in OFF position (TM 5-3805-291-10).
   b. Disconnect connector for solenoid (WP 0037 00).
   c. Place battery disconnect switch in ON position (TM 5-3805-291-10).
   d. Proceed to Diagnostic Overrides screen on ET.
   e. Activate ether injection system. System will activate for 10 seconds.
   f. Monitor Active Diagnostic Code screen on ET. Look for an FMI 05 code.

NOTE

Wait at least 30 seconds for diagnostic codes to become active.

   g. Place battery disconnect switch in OFF position (TM 5-3805-291-10).
   h. *Expected Results*. An FMI 05 code is now active.
      (1) If results are OK, an FMI 06 code was active before connector was disconnected. An FMI 05 code became active after connector was disconnected.

      Install new ether solenoid (WP 0037 00). Clear any logged diagnostic codes.

      (2) If results are not OK, an FMI 06 code was active before connector was disconnected. An FMI 06 code remained active after connector was disconnected. Leave connector for solenoid disconnected, and proceed to step 5.

4. Create a short at connector for ether injection solenoid.
   a. Place battery disconnect switch in OFF position (TM 5-3805-291-10).
   b. Disconnect connector for solenoid (WP 0037 00).
   c. Fabricate a jumper wire that can be used to create a short between terminal 1 and terminal 2 at connector for solenoid. Crimp connector pins to each end of jumper wire.
   d. Install jumper wire between terminals 1 and 2 of harness connector.
   e. Place battery disconnect switch in ON position (TM 5-3805-291-10).
   f. Proceed to Diagnostic Overrides screen on ET.
   g. Activate ether injection system. System will activate for 10 seconds.
   h. Monitor Active Diagnostic Code screen on ET. Look for an FMI 06 code.

NOTE

Wait at least 30 seconds for diagnostic codes to become active.

   i. Place battery disconnect switch in OFF position (TM 5-3805-291-10). Remove jumper wire from connector.
   j. *Expected Results*. An FMI 06 code is now active.
      (1) If results are OK, an FMI 05 code was active before jumper wire was installed. An FMI 06 code became active after jumper wire was installed. Engine harness and ECM are OK. Install new ether solenoid (WP 0039 00). Clear any logged diagnostic codes.
      (2) If results are not OK, an FMI 05 code was active before jumper wire was installed. An FMI 05 code remained active after jumper wire was installed. Remove jumper wire and connect connector, and proceed to step 5.

ETHER INJECTION SYSTEM TEST - CONTINUED

5. Check operation of ECM.
   a. Place battery disconnect switch in OFF position (TM 5-3805-291-10).
   b. Check operation of ECM by creating an open wire at ECM.
      (1) Disconnect J1/P1 ECM connectors.
      (2) Fabricate a jumper wire long enough to reach from a terminal at ECM connector to engine ground stud. Crimp a connector socket to one end of jumper wire.
      (3) Remove wire from terminal P1-20 at ECM connector. Install jumper wire into terminal location for solenoid. Ensure jumper wire is isolated from any other wire and from engine ground.
      (4) Connect J1/P1 ECM connectors.
      (5) Place battery disconnect switch in ON position (TM 5-3805-291-10).
      (6) Proceed to Diagnostic Overrides screen on ET.
      (7) Activate ether injection system. System will activate for 10 seconds.
      (8) Monitor Active Diagnostic Code screen on ET. Look for an FMI 05 code, and record result.

NOTE

Wait at least 30 seconds for diagnostic codes to become active.

   c. Check operation of ECM by creating a short at ECM.
      (1) Short jumper wire installed into ECM connector to engine ground.
      (2) Proceed to Diagnostic Overrides screen on ET.
      (3) Activate ether injection system. System will activate for 10 seconds.
      (4) Monitor Active Diagnostic Code screen on ET. Look for an FMI 06 code, and record result.

NOTE

Wait at least 30 seconds in order for diagnostic codes to become active.

   d. Place battery disconnect switch in OFF position (TM 5-3805-291-10).
   e. *Expected Results*. An FMI 05 code is active when solenoid wire is open. An FMI 06 code is active when jumper wire is shorted to engine ground.
      (1) If results are OK, an FMI 05 code is active when solenoid wire is open. An FMI 06 code is active when jumper wire is shorted to engine ground. ECM is operating properly. Problem is in wiring between ECM and connector for solenoid. Replace wiring harness in question (WP 0195 00 and WP 0201 00). Ensure seals are properly in place and connectors are securely connected. Verify repair eliminates problem.
      (2) If results are not OK, one of these conditions exists: An FMI 05 code is not active when wires are removed from ECM connector. An FMI 06 code is not active when wire jumper is shorted to engine ground. Replace ECM (WP 0057 00). Verify problem is resolved. If results are not OK, one of these conditions exists: An 05 code is not active when wires are removed from ECM connector. An FMI 06 code is not active when wire jumper is shorted to engine ground. Replace ECM (WP 0057 00). Verify problem is resolved.

FUEL FILTER DIFFERENTIAL PRESSURE SWITCH CIRCUIT TEST

1. System Operation Description:
   a. Perform this procedure if you suspect a problem in circuit for fuel filter differential pressure switch. Perform this procedure if E390 Fuel Filter Restriction event code is active.
   b. Fuel filter differential pressure switch is used to monitor differential pressure across filter element. Switch is normally closed. When differential pressure at switch reaches 15 ± 2 psi (103 ± 14 kPa), switch will open. ECM will alert operator of fuel restriction. Use this test to verify fuel filter differential pressure switch is operating correctly.

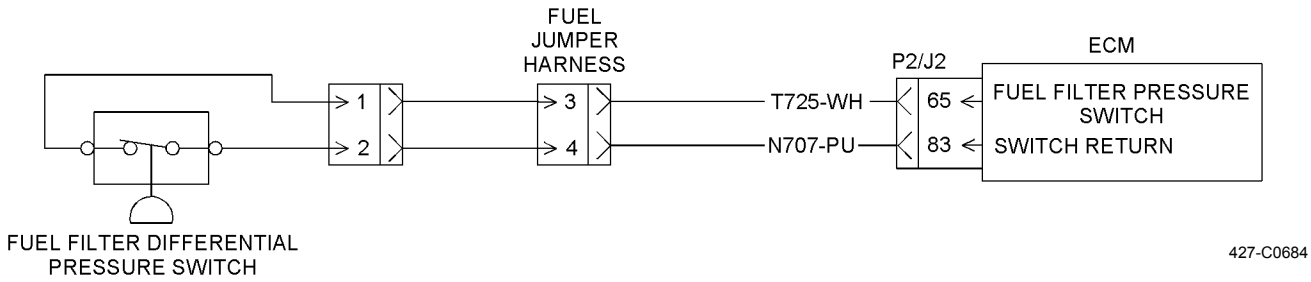

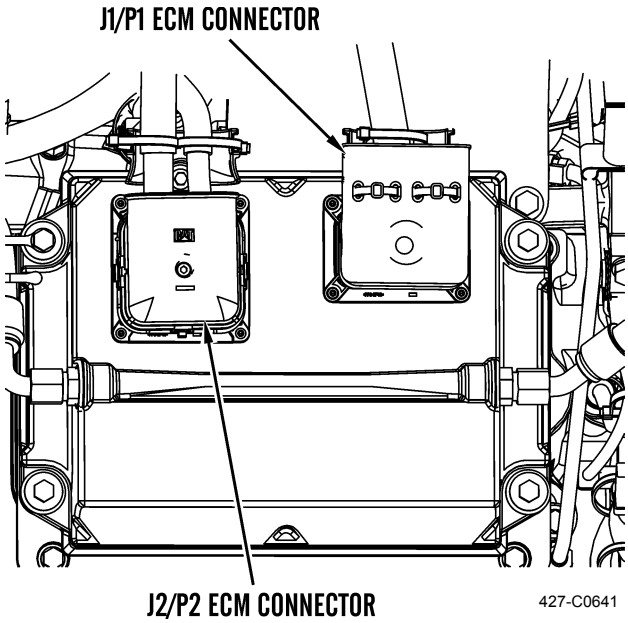

FUEL FILTER DIFFERENTIAL PRESSURE SWITCH CIRCUIT TEST - CONTINUED

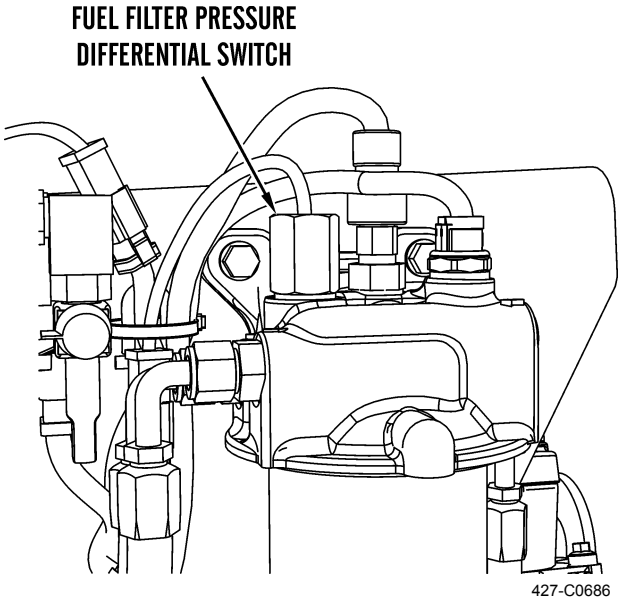

427-C0686

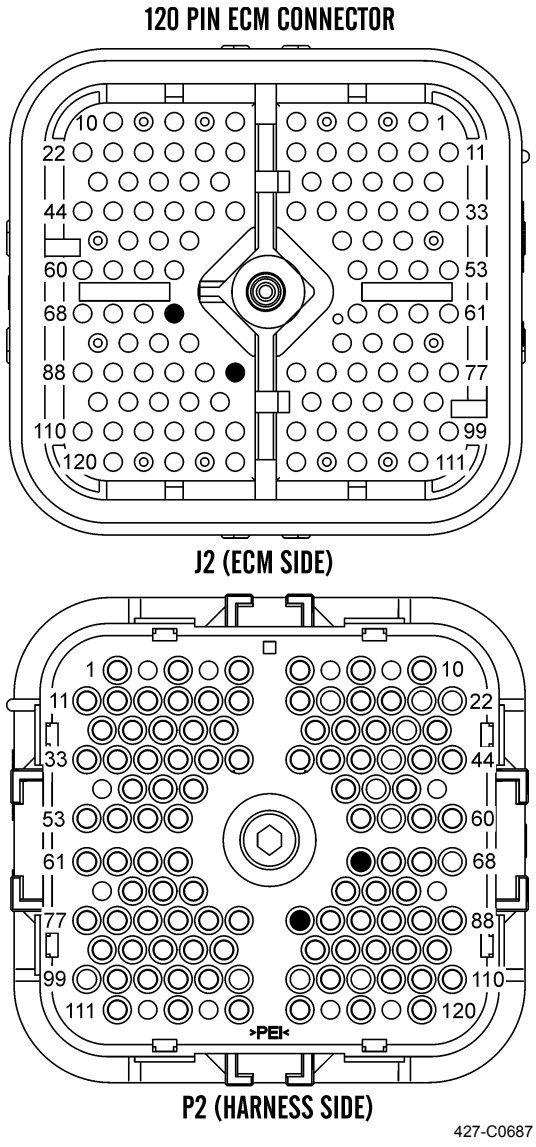

427-C0687

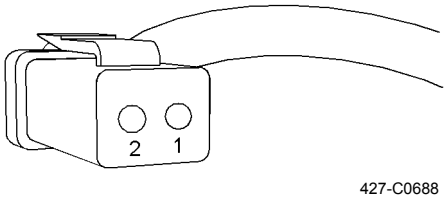

427-C0688

2. Inspect electrical connectors and wiring. Refer to *Electrical Connector Inspection* (WP 0022 00).

   a. Place battery disconnect switch in OFF position (TM 5-3805-291-10).

   b. Perform 10 lb (45 N) pull test on each wire in ECM connectors associated with ECM power supply.

FUEL FILTER DIFFERENTIAL PRESSURE SWITCH CIRCUIT TEST - CONTINUED

c. Check J2/P2 ECM connector (socket-head screw) for proper torque of 60 lb-in. (7 Nm).

d. Check J1/P1 ECM connector (socket-head screw) for proper torque of 55 lb-in. (6 Nm).

e. Check harness and wiring for abrasion and pinch points from sensors back to ECM.

f. *Expected Results*. All connectors, pins, and sockets are completely coupled and/or inserted. Harness and wiring are free of corrosion, abrasion, and pinch points.

(1) If results are OK, harness and wiring are OK. Proceed to step 3.

(2) If results are not OK, replace wiring harness in question (WP 0195 00 thru WP 0201 00). Ensure seals are properly in place and connectors are securely connected. Verify repair eliminates problem.

3. Check switch circuit.

a. Install a wire jumper between terminals of connector for fuel filter differential pressure switch.

b. Start engine. Increase engine speed to high idle (TM 5-3805-291-10).

c. Check for an event code for engine fuel filter restriction.

d. *Expected Results*. Event code is not active.

(1) If results are OK, wiring between connector and ECM is OK. Check for a plugged fuel filter. If fuel filter is OK, replace fuel filter differential pressure switch (WP 0036 00). Verify problem is resolved.

(2) If results are not OK, event code is still active. There is an open circuit in wiring for fuel filter differential pressure switch between connector and ECM. Proceed to step 4.

4. Check ECM.

a. Place battery disconnect switch in OFF position (TM 5-3805-291-10).

b. Disconnect J2/P2 ECM connector.

c. Fabricate a jumper wire with Deutsch sockets on each end that is long enough to reach from ECM connector to engine ground. Install jumper wire into socket for signal wire of fuel filter differential pressure switch.

d. Connect jumper wire to engine ground.

e. Start engine. Increase engine speed to high idle (TM 5-3805-291-10).

f. Check for an event code for engine fuel filter restriction.

g. *Expected Results*. Event code is not active.

(1) If results are OK, event code is not active. There is an open circuit in wiring between connector for fuel filter differential pressure switch and ECM connector P2. Check harness connector to fuel filter differential pressure switch for a good connection. Refer to *Electrical Connector Inspection* (WP 0022 00). Verify repair eliminates problem.

(2) If results are not OK, event code is still active. Replace ECM (WP 0057 00). Verify repair eliminates problem.

INJECTOR SOLENOID CIRCUIT TEST

1. System Operation Description:

   a. Use this procedure for these conditions:

      (1) A suspected problem with an injector solenoid.

      (2) You have been directed to this procedure from Troubleshooting, *Troubleshooting Without a Diagnostic Code* (WP 0008 00).

      (3) There is an active diagnostic code for an injector solenoid.

   b. Use this procedure for these diagnostic codes:

      (1) 1-05 Injector Cylinder 1 open circuit

      (2) 1-06 Injector Cylinder 1 short

      (3) 2-05 Injector Cylinder 2 open circuit

      (4) 2-06 Injector Cylinder 2 short

      (5) 3-05 Injector Cylinder 3 open circuit

      (6) 3-06 Injector Cylinder 3 short

      (7) 4-05 Injector Cylinder 4 open circuit

      (8) 4-06 Injector Cylinder 4 short

      (9) 5-05 Injector Cylinder 5 open circuit

      (10) 5-06 Injector Cylinder 5 short

      (11) 6-05 Injector Cylinder 6 open circuit

      (12) 6-06 Injector Cylinder 6 short

   c. Perform this procedure under conditions that are identical to conditions that exist when problem occurs. Typically, problems with injector solenoid occur when engine is warmed up and/or when engine is under vibration (heavy loads).

   d. These engines have Electronic Fuel Injectors (EFI) that are mechanically actuated and electronically controlled. ECM sends a 105V pulse to each injector solenoid. Pulse is sent at proper time and at correct duration for a given engine load and speed. Solenoid is mounted on top of fuel injector body.

   e. If an open circuit is detected in solenoid circuit, a diagnostic code is generated. ECM continues to try to fire injector. If a short is detected, a diagnostic code is generated. ECM will disable solenoid circuit. ECM will periodically try to fire injector. If short circuit remains, this sequence of events will be repeated until problem is corrected.

NOTE

Two injector solenoids share a supply wire. For this reason, an open or short circuit in a supply wire could cause diagnostic codes for two injector solenoids.

   f. When an injector is replaced, you must program new injector trim files into ECM. If ECM is replaced, all injector trim files must be programmed into new ECM (WP 0057 00).

INJECTOR SOLENOID CIRCUIT TEST - CONTINUED

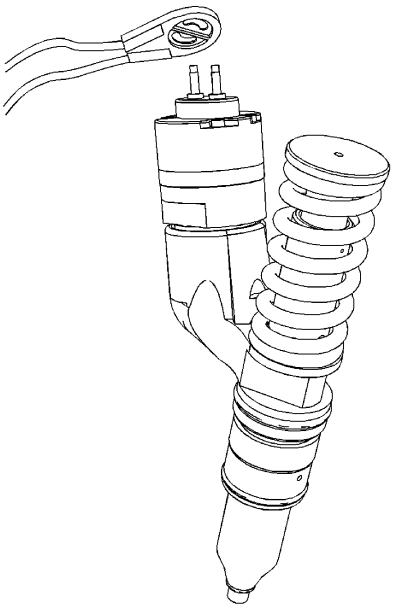

427-C0693

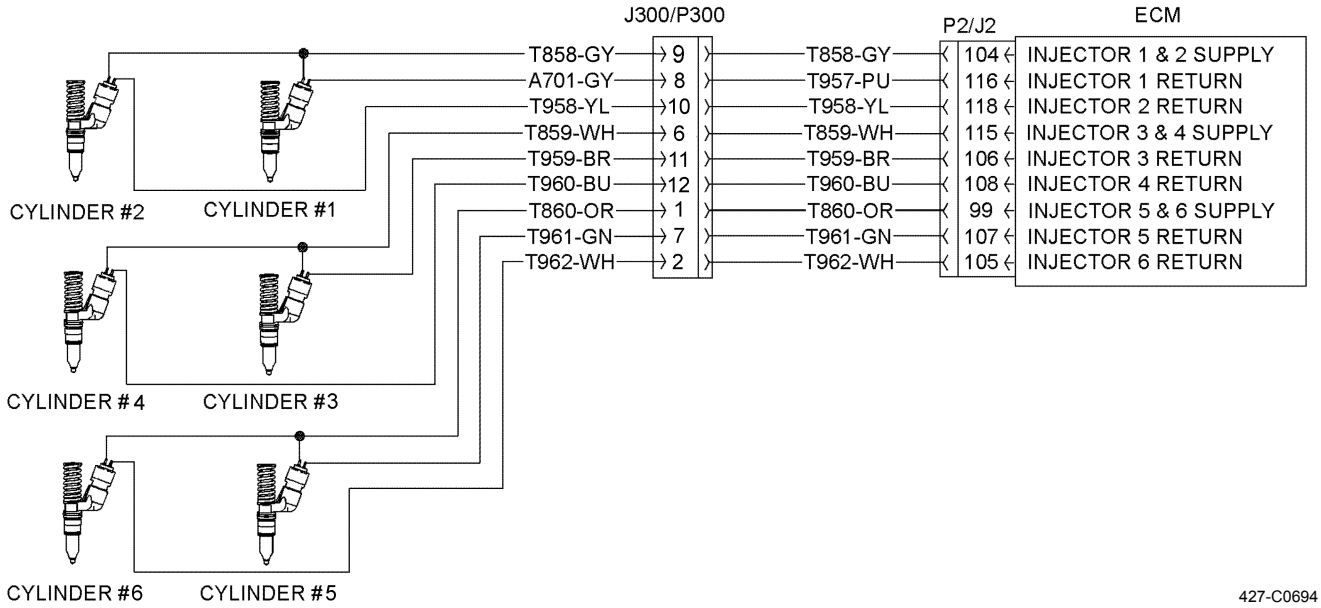

427-C0694

INJECTOR SOLENOID CIRCUIT TEST - CONTINUED

WARNING

Electronic fuel injector system uses 90 to 120V. Do not touch any components during testing. Failure to comply may result in injury to personnel or damage to equipment.

2. Inspect electrical connectors and wiring. Refer to *Electrical Connector Inspection* (WP 0022 00).
   a. Place battery disconnect switch in OFF position (TM 5-3805-291-10).
   b. Perform 10 lb (45 N) pull test on each wire in ECM connectors associated with ECM power supply.
   c. Check J2/P2 ECM connector (socket-head screw) for proper torque of 60 lb-in. (7 Nm).
   d. Check J1/P1 ECM connector (socket-head screw) for proper torque of 55 lb-in. (6 Nm).
   e. Check harness and wiring for abrasion and pinch points from sensors back to ECM.
   f. *Expected Results*. All connectors, pins, and sockets are completely coupled and/or inserted. Harness and wiring are free of corrosion, abrasion, and pinch points.
      (1) If results are OK, harness and wiring are OK. Proceed to step 3.
      (2) If results are not OK, replace wiring harness in question (WP 0195 00 thru WP 0201 00). Ensure seals are properly in place and connectors are securely connected. Verify repair eliminates problem.

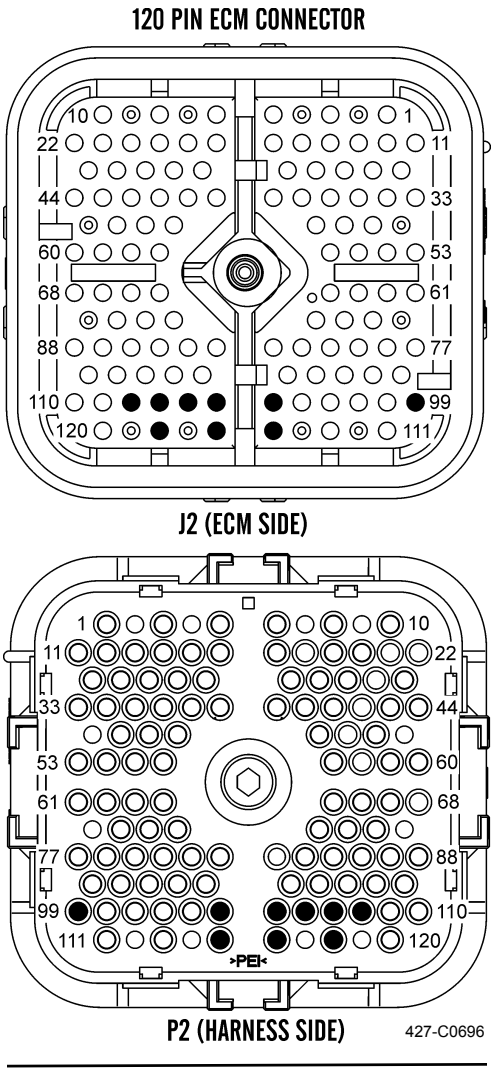

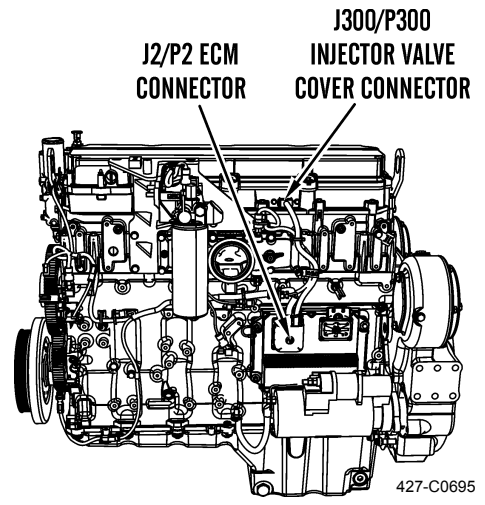

INJECTOR SOLENOID CIRCUIT TEST - CONTINUED

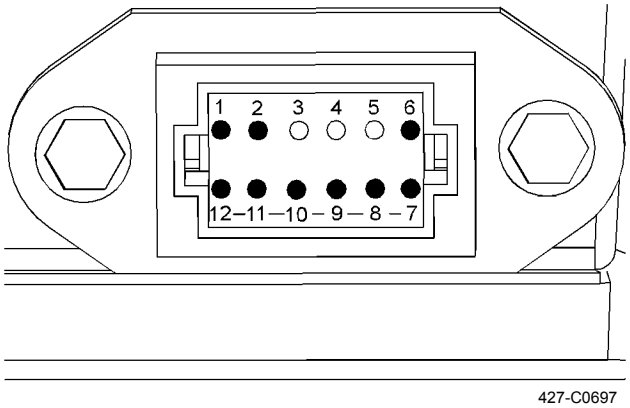

3. Check for logged diagnostic codes for injector solenoids.
   a. Connect ET to data link connector (WP 0005 00).
   b. Place battery disconnect switch in ON position (TM 5-3805-291-10).
   c. Check for logged diagnostic codes for injector solenoids on ET.
   d. *Expected Results*. There are no logged diagnostic codes for injector solenoids.
      (1) If results are OK, no diagnostic codes have been logged. Injector solenoids are operating correctly. There may be a mechanical problem with injector's fuel delivery. Proceed to step 4.
      (2) If results are not OK, one or more diagnostic codes have been logged. There may be an electrical problem in circuit for injector. Proceed to step 5.
4. Use MSD to perform cylinder cutout test.
   a. Start engine (TM 5-3805-291-10).
   b. Allow engine to warm up to normal operating temperature (approximately 171°F [77°C]).
   c. After engine is warmed to operating temperature, access cylinder cutout test by accessing these display screens in this order:
      (1) "Diagnostics"
      (2) "Diagnostic Tests"
      (3) "Cylinder Cutout Test"
   d. Shut off all parasitic loads such as air conditioning and air compressors which could affect results of test.
   e. Select Start button at bottom of screen for cylinder cutout test on ET.
   f. Follow instructions that are provided in cylinder cutout test. Cylinder cutout tests are interactive so procedure is guided to finish. Cylinder cutout test will set correct engine speed for application.
   g. *Expected Results*. Variation of fuel rate for all cylinders is within specifications.
      (1) If results are OK, a problem with fuel system is suspected and diagnostic codes are not active or logged. Refer to WP 0011 00 for information related to low pressure in fuel system. If a diagnostic code results from running cylinder cutout test, proceed to step 5.
      (2) If results are not OK, cylinder cutout test indicates at least one injector is not operating correctly. Proceed to step 5.

INJECTOR SOLENOID CIRCUIT TEST - CONTINUED

5. Perform injector solenoid test.
   a. Start engine (TM 5-3805-291-10).
   b. Allow engine to warm up to normal operating temperature (approximately 171°F [77°C]).
   c. Stop engine (TM 5-3805-291-10).
   d. Place battery disconnect switch in ON position (TM 5-3805-291-10).
   e. Access injector solenoid test by accessing these display screens in this order:
      (1) "Diagnostics"
      (2) "Diagnostic Tests"
      (3) "Injector Solenoid Test"
   f. Activate injector solenoid test.
   g. As each solenoid is energized by ECM an audible click can be heard at valve cover. Ensure activation of each solenoid by comparing location of click with progress that is displayed on ET.
   h. Perform injector solenoid test at least two times.
   i. *Expected Results*. All cylinders on ET are OK.
      (1) If results are OK, problem appears to be resolved. Problem was probably caused by poor electrical connection in a connector. If codes continue to be logged, refer to *Electrical Connector Inspection*. If engine is misfiring or if engine has low power, refer to Troubleshooting*, Engine Misfires, Runs Rough or Is Unstable* or Troubleshooting, *Low Power/Poor or No Response to Throttle* (WP 0008 00).
      (2) If results are not OK, record cylinder that indicates "Open". Proceed to step 6.
      (3) If results are not OK, record cylinder that indicates "Short". Proceed to step 7.
6. Check harness between ECM and valve cover base for an open circuit.



WARNING

Electronic fuel injector system uses 90 to 120V. Do not touch any components during testing. Failure to comply may result in injury to personnel or damage to equipment.

   a. Place battery disconnect switch in OFF position (TM 5-3805-291-10).
   b. Disconnect J300/P300 injector valve cover entry connector at valve cover base.
   c. Place battery disconnect switch in ON position (TM 5-3805-291-10).
   d. Fabricate a jumper wire long enough to short circuit different terminal locations at P300 connector. Crimp connector pins on both ends of jumper wire.

INJECTOR SOLENOID CIRCUIT TEST - CONTINUED

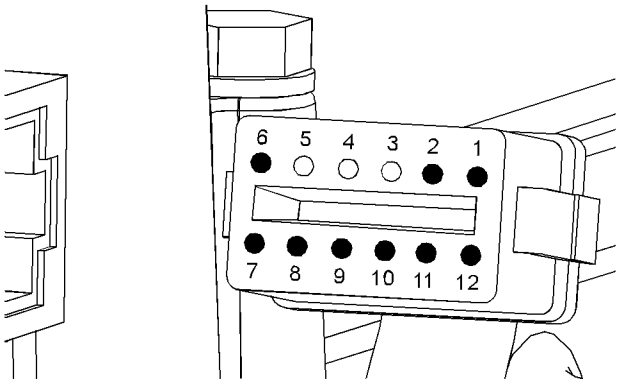

e. Insert one end of jumper wire into P300 connector socket for suspect injector's supply wire. Insert other end of jumper wire into P300 connector socket for suspect injector's return wire. This will replace injector solenoid with a short circuit.

f. Perform injector solenoid test at least two times.

g. Repeat this test two times for each suspect circuit. Stop injector solenoid test before handling jumper wire. Restore wiring to original configuration.

h. ET displays "Short" for each jumpered circuit.

i. *Expected Results*. Harness between ECM and P300 connector does not have an open circuit.

(1) If results are OK, ET displays "Short" for each circuit that was jumpered. Proceed to step 7.

(2) If results are not OK, ET displays "Open" for cylinder with jumper wire. There is a problem in wiring between ECM and P300 connector. Proceed to step 8.

7. Check harness between ECM and valve cover base for a short circuit.



WARNING

Electronic fuel injector system uses 90 to 120V. Do not touch any components during testing. Failure to comply may result in injury to personnel or damage to equipment.

a. Place battery disconnect switch in OFF position (TM 5-3805-291-10).

b. Disconnect P300 connector.

c. Place battery disconnect switch in ON position (TM 5-3805-291-10).

d. Perform injector solenoid test at least two times.

e. *Expected Results*. All cylinders indicate "Open" on ET.

(1) If results are OK, all cylinders indicate "Open" on ET. Proceed to step 8.

(2) If results are not OK, one or more cylinders indicate "Short" on ET. Record cylinders that indicate "Short". Proceed to step 9.

INJECTOR SOLENOID CIRCUIT TEST - CONTINUED

8. Check injector harness under valve cover for an open or short circuit.



WARNING

Electronic fuel injector system uses 90 to 120V. Do not touch any components during testing. Failure to comply may result in injury to personnel or damage to equipment.

a. Place battery disconnect switch in OFF position (TM 5-3805-291-10).

b. Remove valve cover to gain access to suspect injector (WP 0024 00).

c. Disconnect harness connector from suspect injector (WP 0187 00).

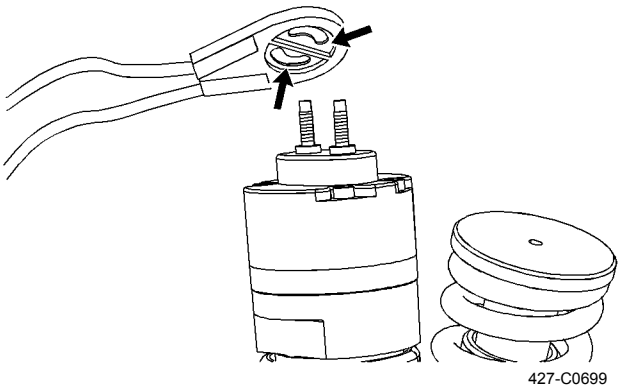

d. Thoroughly clean terminals on injector solenoid and on harness connector.

e. Use a jumper wire to short circuit connector terminals for suspect injector. This will effectively replace injector solenoid with a short circuit.

f. Place battery disconnect switch in ON position (TM 5-3805-291-10).

g. Perform injector solenoid test at least two times.

NOTE

Injector solenoid that shares supply wire of injector that is short circuited may indicate a false test result. Disregard this test result.

h. Place battery disconnect switch in OFF position (TM 5-3805-291-10).

i. Remove jumper wire from injector connector. This will effectively replace injector solenoid with an open circuit.

j. Place battery disconnect switch in ON position (TM 5-3805-291-10).

k. Perform injector solenoid test at least two times.

l. Place battery disconnect switch in OFF position (TM 5-3805-291-10).

INJECTOR SOLENOID CIRCUIT TEST - CONTINUED

m. *Expected Results*. ET displays “Short” for cylinder with jumper wire and “Open” when jumper wire is removed.

(1) If results are OK, use a multimeter to check resistance of suspect injector solenoid. Correct resistance of each injector solenoid is 1.06 ± 0.05 Ohms. If resistance of solenoid is not within specifications, replace faulty injector (WP 0187 00). Verify problem is resolved. If resistance is within specifications, problem may be intermittent. If problem is intermittent, refer to *Electrical Connector Inspection* (WP 0022 00). Verify repair eliminates problem.

(2) If results are not OK, ET did not display correct status during test. There is a problem with injector harness under valve cover. There may be a problem with a connector. Replace wiring harness in question (WP 0195 00 thru WP 0201 00). Ensure seals are properly in place and connectors are securely connected. Verify problem is resolved.

9. Check ECM for Proper Operation



WARNING

Electronic fuel injector system uses 90 to 120V. Do not touch any components during testing. Failure to follow warning may result in injury to personnel or damage to equipment.

a. Place battery disconnect switch in OFF position (TM 5-3805-291-10).

b. Fabricate a jumper that is long enough to reach from P2 ECM connector to engine ground stud. Crimp a socket terminal to one end of jumper wire.

c. Disconnect P2 connector.

d. Remove supply wire for suspect injector from ECM connector.

e. Install jumper wire into socket.

f. Connect J2/P2 ECM connector.

g. Verify that ECM will detect an open circuit for suspect injector:

(1) Ensure that jumper wire is not in contact with a ground source or another circuit. Do not touch jumper wire during test. A strong electrical shock hazard is present at jumper wire while test is running.

(2) Place battery disconnect switch in ON position (TM 5-3805-291-10).

(3) Perform injector solenoid test at least two times.

(4) Place battery disconnect switch in OFF position (TM 5-3805-291-10).

(5) ET displays “Open” for two injectors that share supply wire.

INJECTOR SOLENOID CIRCUIT TEST - CONTINUED

h. Verify ECM detects a short circuit for suspect injector:



WARNING

Do not touch jumper wire during test. A strong electrical shock hazard is present at jumper wire while test is running. Failure to follow this warning may result in injury to personnel or damage to equipment.

(1) Connect jumper wire to engine ground stud.

(2) Place battery disconnect switch in ON position (TM 5-3805-291-10).

(3) Perform injector solenoid test at least two times.

(4) Place battery disconnect switch in OFF position (TM 5-3805-291-10).

(5) ET displays “Short” for two injectors that share supply wire.

i. *Expected Results*. ET displays correct status for each test circuit.

(1) If results are OK, ECM detects correct status of circuit. There is an open circuit or a short circuit in engine harness. There may be a problem with a connector. Replace wiring harness in question (WP 0195 00 thru WP 0201 00). Ensure seals are properly in place and connectors are securely connected. Verify repair eliminates problem.

(2) If results are not OK, ECM does not detect correct status of circuit. There is a problem with ECM. Replace ECM (WP 0057 00). Verify problem is resolved.

THROTTLE POSITION SENSOR CIRCUIT TEST

1. System Operation Description:

a. Use this procedure to troubleshoot any suspected problems with circuit for throttle position sensor. This procedure covers these diagnostic codes:

(1) 41-03 8 Volt DC Supply Short to +Batt

(2) 41-04 8 Volt DC Supply Short to Ground

(3) 91-08 Throttle Position Signal Abnormal

b. Throttle position sensor provides throttle signal to ECM. Throttle position sensor is mounted to a pedal assembly that allows operator to control engine speed. Geometry of pedal assembly controls both travel of sensor and range of output signal. Throttle position sensor cannot be adjusted.

c. Output from throttle position sensor is a PWM signal that varies with position of throttle pedal. Throttle position sensor produces a minimum duty cycle in released position and a maximum duty cycle in fully depressed position. When pedal is released, ECM translates sensor's output signal to a throttle position of 0 percent.

d. When pedal is fully depressed, ECM translates output signal to a throttle position of 100 percent.

e. Throttle position sensor is powered by 8.0 ± 0.4 VDC provided by ECM. A digital return for sensor is also provided by ECM.

THROTTLE POSITION SENSOR CIRCUIT TEST - CONTINUED

f. ECM uses an automatic calibration function that allows ECM to minimize deadband of sensor. Automatic calibration function assumes a range of PWM duty cycle at powerup. If duty cycle of sensor exceeds this initial range, automatic calibration function adjusts limits of duty cycle to adjust for new range.

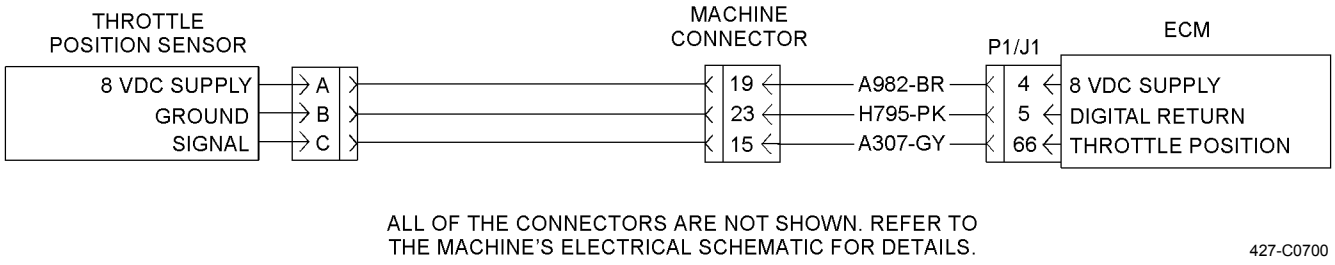

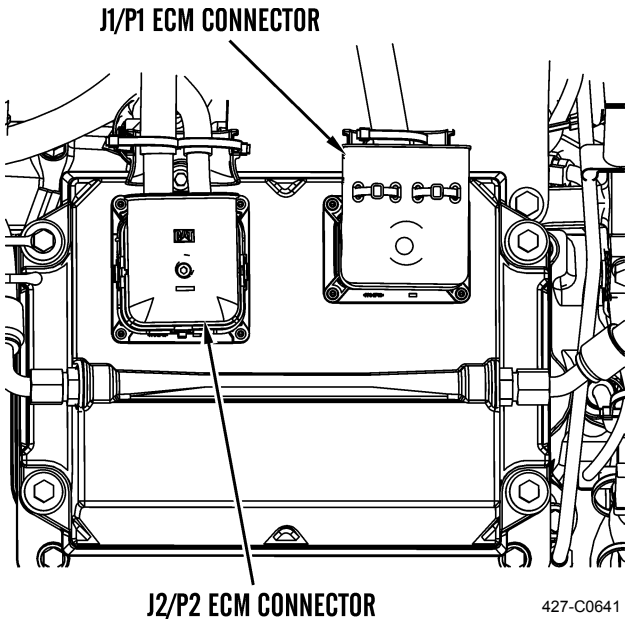

THROTTLE POSITION SENSOR CIRCUIT TEST - CONTINUED

2. Inspect electrical connectors and wiring. Refer to *Electrical Connector Inspection* (WP 0022 00).
   a. Place battery disconnect switch in OFF position (TM 5-3805-291-10).
   b. Perform 10 lb (45 N) pull test on each wire in ECM connectors associated with ECM power supply.
   c. Check J2/P2 ECM connector (socket-head screw) for proper torque of 60 lb-in. (7 Nm).
   d. Check J1/P1 ECM connector (socket-head screw) for proper torque of 55 lb-in. (6 Nm).
   e. Check harness and wiring for abrasion and pinch points from sensors back to ECM.
   f. *Expected Results*. All connectors, pins, and sockets are completely coupled and/or inserted. Harness and wiring are free of corrosion, abrasion, and pinch points.
      (1) If results are OK, harness and wiring are OK. Proceed to step 3.
      (2) If results are not OK, replace wiring harness in question (WP 0195 00 thru WP 0201 00). Ensure seals are properly in place and connectors are securely connected. Verify repair eliminates problem.

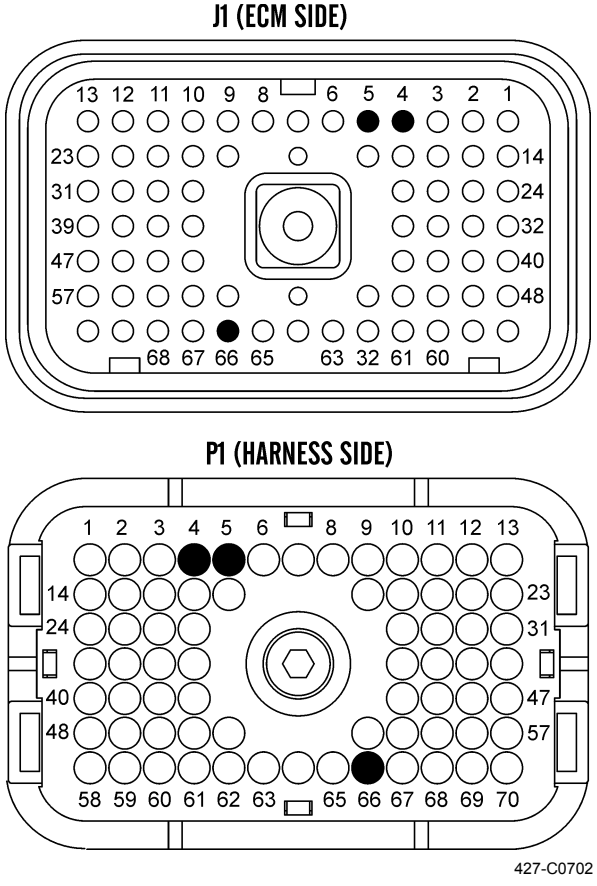

THROTTLE POSITION SENSOR CIRCUIT TEST - CONTINUED

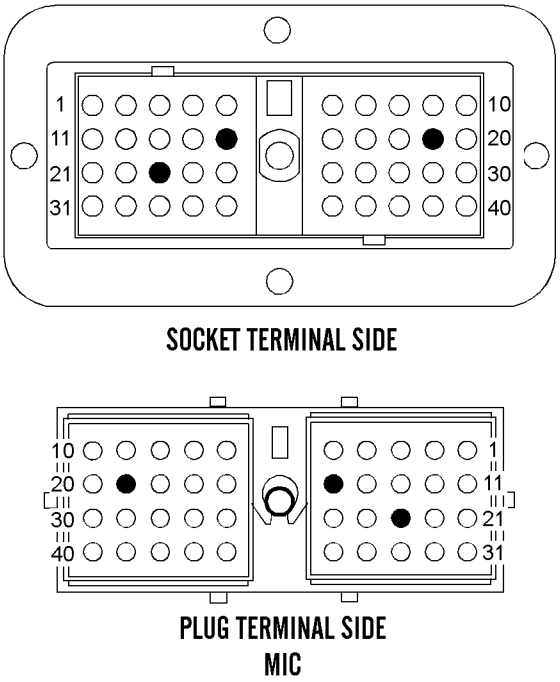

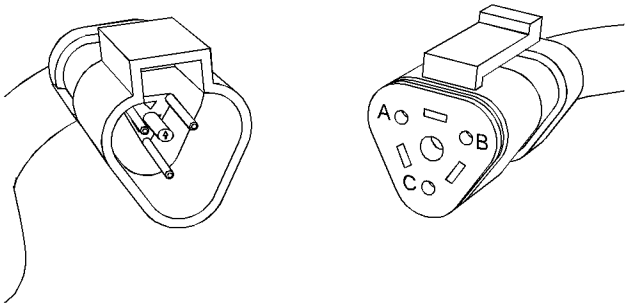

3. Inspect Throttle Pedal Assembly.
   a. Inspect throttle pedal assembly for components that are loose, bent, missing, or worn (WP 0039 00).
   b. Slowly depress and release pedal.
   c. Throttle pedal assembly should operate smoothly without excessive drag. Pedal should spring back smoothly to low idle position without assistance.
   d. *Expected Results*. Throttle pedal assembly functions properly.
      (1) If results are OK, proceed to step 4.
      (2) If results are not OK, throttle pedal assembly is in poor repair. Replace throttle pedal assembly (WP 0039 00).
4. Check status for “Throttle Position”.
   a. Connect ET to diagnostic connector (WP 0005 00).
   b. Turn engine start switch to ON position (TM 5-3805-291-10).
   c. Observe status for “Throttle Position” on ET while you operate throttle pedal through entire range of travel.
   d. *Expected Results*. Status is zero percent when throttle pedal is released. Status progressively increases to 100 percent when throttle pedal is pressed.
      (1) If results are OK, throttle position sensor is working properly. There may be an intermittent electrical problem with harness or connectors. Refer to *Electrical Connector Inspection* (WP 0022 00) if problem is intermittent.
      (2) If results are not OK, throttle position displayed on ET does not correspond to movement of throttle pedal. Proceed to step 5.

THROTTLE POSITION SENSOR CIRCUIT TEST - CONTINUED

5. Check supply voltage at sensor.
   a. Disconnect connector for throttle position sensor (WP 0039 00).
   b. Turn engine start switch and battery disconnect switch to ON position (TM 5-3805-291-10).
   c. Measure voltage across terminal A (8V supply) and terminal B (digital return) on harness side of connector.
   d. Turn engine start switch to OFF position (TM 5-3805-291-10).
   e. *Expected Results.* Supply voltage measures 8.0 ± 0.4 VDC at sensor connector.
      (1) If results are OK, correct voltage is measured at sensor connector. sensor is receiving correct supply voltage. Proceed to step 6.
      (2) If results are not OK, sensor is not receiving correct supply voltage. Proceed to step 8.
6. Check signal frequency and duty cycle at sensor.
   a. Install an Adapter, cable, breakout (Item 2, WP 0232 00) Assembly (3-PIN BREAKOUT) at connector for throttle position sensor.
   b. Remove signal wire from terminal C of connector for throttle position sensor. Remove wire from harness side of connector.
   c. Turn engine start switch to ON position (TM 5-3805-291-10).
   d. Measure frequency and duty cycle between terminal B (digital return) and terminal C (throttle position) at 7X-6370 Adapter Cable Assembly (3-PIN BREAKOUT) while you operate throttle pedal.
   e. Turn engine start switch to OFF position (TM 5-3805-291-10).
   f. Remove breakout harness. Restore wires to original configuration.
   g. *Expected Results*. Frequency is between 150 and 1,000 Hz. Duty cycle is between 7 and 95 percent.
      (1) If results are OK, sensor is producing a valid signal. Proceed to step 7.
      (2) If results are not OK, sensor is not producing a valid signal. Replace throttle position sensor (WP 0039 00). Verify repair eliminates problem.
7. Check signal frequency and duty cycle at ECM.
   a. Install a 208-0059 Adapter Cable Assembly (70-PIN BREAKOUT) between J1 and P1 ECM connectors.
   b. Turn engine start switch to ON position (TM 5-3805-291-10).
   c. Measure frequency between terminals P1-66 (throttle position) and P1-5 (digital return) on breakout harness while you operate throttle pedal.
   d. Measure duty cycle of sensor. Measure duty cycle between terminals P1-66 (throttle position) and P1-5 (digital return) on breakout harness while you operate throttle pedal.
   e. Turn engine start switch to OFF position (TM 5-3805-291-10).
   f. *Expected Results*. Frequency is between 150 and 1,000 Hz. Duty cycle is between 7 percent and 95 percent.
      (1) If results are OK, valid signal appears at ECM, but ECM is not reading signal properly. Replace ECM (WP 0057 00). Verify repair eliminates problem.
      (2) If results are not OK, there is not a valid signal at ECM connector. Replace wiring harness in question (WP 0195 00 thru WP 0201 00). Ensure seals are properly in place and connectors are securely connected. Verify repair eliminates problem.

THROTTLE POSITION SENSOR CIRCUIT TEST - CONTINUED

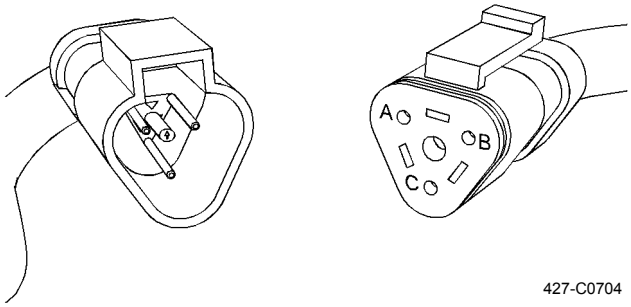

427-C0704

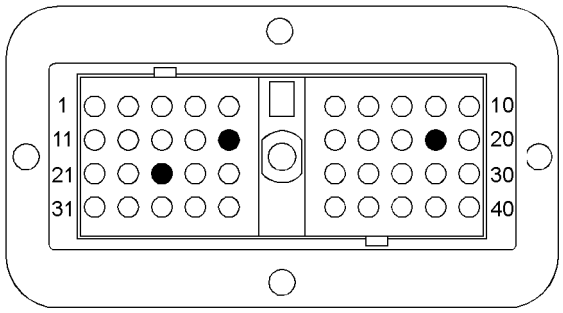

SOCKET TERMINAL SIDE

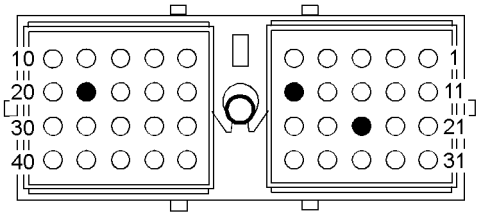

PLUG TERMINAL SIDE
MIC

427-C0703

J1 (ECM SIDE)

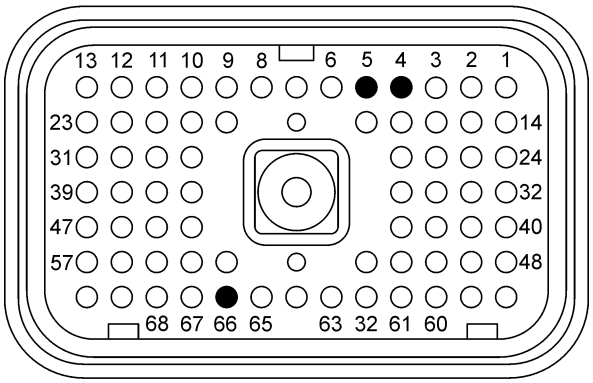

P1 (HARNESS SIDE)

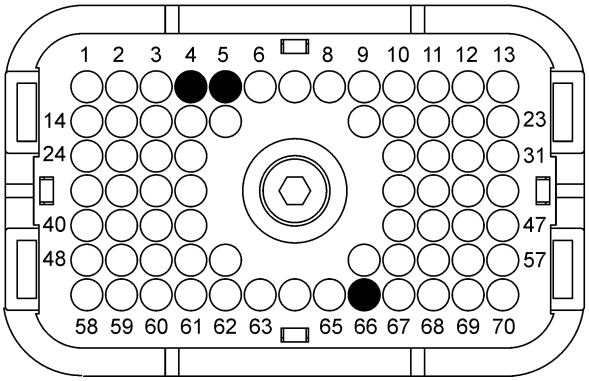

427-C0702

THROTTLE POSITION SENSOR CIRCUIT TEST - CONTINUED

8. Check supply voltage at ECM.

   a. Disconnect J1/P1 ECM connector.

   b. Remove wires from terminals P1-4 (8 VDC supply) and P1-5 (digital return). Install jumper wires into terminal locations for digital return wire and supply wire.

   c. Reconnect J1/P1 ECM connector.

   d. Turn engine start switch to ON position (TM 5-3805-291-10).

   e. Measure voltage between wire jumpers in terminals P1-4 (8 VDC supply) and P1-5 (digital return).

   f. Turn engine start switch to OFF position (TM 5-3805-291-10).

   g. *Expected Results*. Supply voltage measures 8.0 ± 0.4 VDC at ECM.

      (1) If results are OK, there is an open circuit or excessive resistance in harness between ECM and sensor. Replace wiring harness in question (WP 0195 00 thru WP 0201 00). Ensure seals are properly in place and connectors are securely connected. Verify repair eliminates problem.

      (2) If results are not OK, ECM does not appear to be producing correct supply voltage. Replace ECM (WP 0057 00). Verify repair eliminates problem.

USER DEFINED SHUTDOWN INPUT CIRCUIT TEST

1. System Operation Description:

   a. Use this procedure to troubleshoot problem with circuit for user defined shutdown switch. Use this procedure if 267-02 Incorrect Engine Shutdown Switch inputs diagnostic code is active or if E265 User Defined Shutdown event code is active.

   b. User defined shutdown switch provides ability to shut down engine. Engine's ECM remains active. ET can be used to communicate with ECM. User defined shutdown switch must be returned to RUN position and engine start switch must be cycled to OFF position before ECM will allow engine to start.

   c. To shut down engine, lift red cover guard and toggle user defined shutdown switch to SHUTDOWN position. ECM reads position of user defined shutdown switch. If engine is running, ECM disables fuel injection. ECM will not allow engine to start if engine is not running.

   d. Voltage at ECM input P1-40 of user defined shutdown switch should be 11.5 ± 0.5 VDC with user defined shutdown switch in RUN position. Voltage at ECM input P1-23 of user defined shutdown switch should be less than 0.5 VDC with user defined shutdown switch in RUN position.

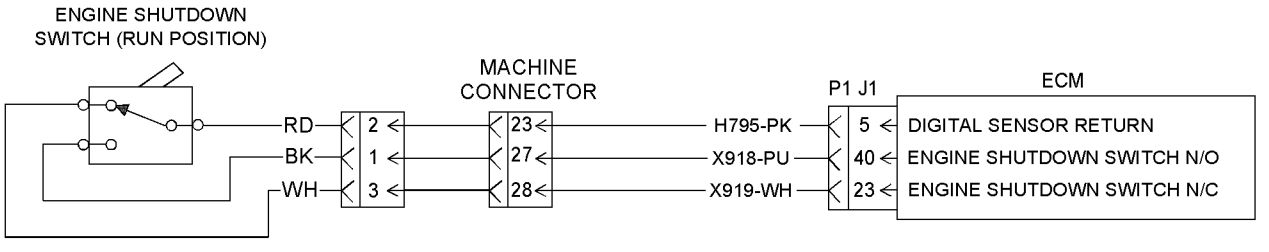

427-C0705

USER DEFINED SHUTDOWN INPUT CIRCUIT TEST - CONTINUED

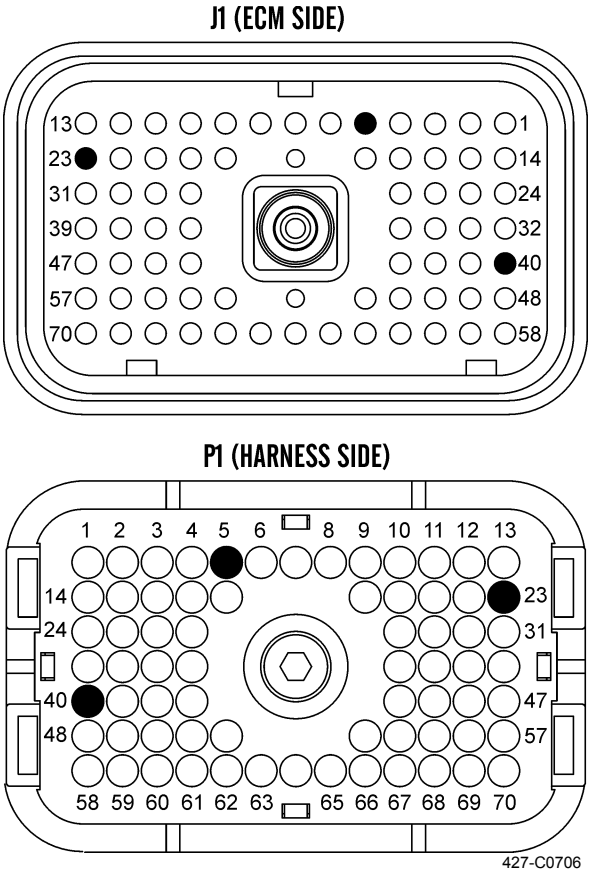

2. Inspect electrical connectors and wiring. Refer to *Electrical Connector Inspection* (WP 0022 00).
   a. Place battery disconnect switch in OFF position (TM 5-3805-291-10).
   b. Perform 10 lb (45 N) pull test on each wire in ECM connectors associated with ECM power supply.
   c. Check J2/P2 ECM connector (socket-head screw) for proper torque of 60 lb-in. (7 Nm).
   d. Check J1/P1 ECM connector (socket-head screw) for proper torque of 55 lb-in. (6 Nm).
   e. Check harness and wiring for abrasion and pinch points from sensors back to ECM.
   f. *Expected Results*. All connectors, pins, and sockets are completely coupled and/or inserted. Harness and wiring are free of corrosion, abrasion, and pinch points.
      (1) If results are OK, harness and wiring are OK. Proceed to step 3.
      (2) If results are not OK, replace wiring harness in question (WP 0195 00 thru WP 0201 00). Ensure seals are properly in place and connectors are securely connected. Verify repair eliminates problem.

USER DEFINED SHUTDOWN INPUT CIRCUIT TEST - CONTINUED

3. Check status of user defined shutdown switch on ET.
   a. Connect ET to diagnostic connector. Start ET (WP 0005 00).
   b. Turn engine start switch to ON position (TM 5-3805-291-10).
   c. Operate user defined shutdown switch. Observe status for user defined shutdown switch on ET.
   d. *Expected Results*. Status of user defined shutdown switch reads “ON” with user defined shutdown switch in SHUTDOWN position. Status of user defined shutdown switch reads “OFF” when user defined shutdown switch is in RUN position.
      (1) If results are OK, there may be an intermittent problem. If problem is intermittent, refer to *Electrical Connector Inspection* (WP 0022 00).
      (2) If results are not OK, proceed to step 4.
4. Short wires together at user defined shutdown switch.
   a. Turn engine start switch to OFF position (TM 5-3805-291-10).
   b. Record position of wiring on user defined shutdown switch before removing wires.
   c. Disconnect wires from user defined shutdown switch.
   d. Create a short circuit at user defined shutdown switch between wire X919 WH and digital return wire H795 PK. Leave wire X918 PU open.
   e. Turn engine start switch to ON position (TM 5-3805-291-10).
   f. Observe status of user defined shutdown switch on ET.
   g. Remove short between wire X919 WH and wire H795 PK.
   h. Create a short circuit at user defined shutdown switch between wire X918 PU and digital return wire H795PK.
   i. Observe status of user defined shutdown switch on ET.
   j. Turn engine start switch to OFF position (TM 5-3805-291-10).
   k. Remove wire short.
   l. *Expected Results*. Status of user defined shutdown switch reads “OFF” when wire X919-WH and wire H795 PK are shorted together. User defined shutdown switch status reads “ON” when wire X918 PU and wire H795 PK are shorted together.
      (1) If results are OK, problem is not with harness or ECM. Install new emergency shutdown switch.
      (2) If results are not OK, proceed to step 5.

USER DEFINED SHUTDOWN INPUT CIRCUIT TEST - CONTINUED

5. Short user defined shutdown switch at ECM.
   a. Disconnect ECM connector J1/P1.
   b. Remove wire X918 PU at ECM connector P1-40. Remove wire X919 WH at ECM connector P1-23 and digital return wire H795 PK from ECM connector P1-5.
   c. Insert a wire with socket terminals at each end into ECM connector P1-23, P1-40, and P1-5. Short wire jumpers in P1-23 and P1-5.
   d. Reconnect all connectors.
   e. Turn engine start switch to ON position (TM 5-3805-291-10).

NOTE

Digital return will no longer be connected to other sensors and switches. Additional diagnostic codes will be generated from ECM. Clear codes after you complete this test.

   f. Observe status of user defined shutdown switch on ET.
   g. Turn engine start switch to OFF position (TM 5-3805-291-10).
   h. Remove short between P1-23 and P1-5.
   i. Short wire jumpers in P1-40 and P1-5.
   j. Turn engine start switch to ON position (TM 5-3805-291-10).
   k. Observe status of user defined shutdown switch on ET.
   l. Turn engine start switch to OFF position (TM 5-3805-291-10).
   m. Remove short between P1-40 and P1-5.
   n. *Expected Results*. Status reads “OFF” when short is between P1-23 and P1-5. Status reads “ON” when short is between P1-40 and P1-5.
      (1) If results are OK, problem is in harness between ECM connector and user defined shutdown switch. Replace wiring harness in question (WP 0195 00 thru WP 0201 00). Ensure seals are properly in place and connectors are securely connected. Verify repair eliminates problem.
      (2) If results are not OK, replace ECM (WP 0057 00).

ENGINE SPEED/TIMING SENSOR CALIBRATION

1. System Operation Description:

NOTE

A timing calibration will not increase available engine power.

ECM can calibrate mechanical differences between Top Center (TC) of flywheel and TC of timing gear on camshaft. A magnetic transducer signals TC of flywheel to ECM when a notch on a counterweight passes by transducer. Engine speed/timing sensor signals TC of timing gear to ECM. Any offset between TC of flywheel and TC of timing gear is stored in ECM memory.

ENGINE SPEED/TIMING SENSOR CALIBRATION - CONTINUED

2. Find top-center position for No. 1 piston (WP 0010 00).
   a. Rotate crankshaft 75 degrees in normal rotation.
   b. Locate engine's timing calibration port on left side of engine.
   c. Remove plug from timing calibration port.

CAUTION

If crankshaft is not in correct position when transducer is installed, transducer will be damaged when engine is started.

   d. Thread transducer adapter into port. Insert probe until it touches crankshaft counterweight then back probe out 1/8 in.
3. Install transducer.
   a. Apply clean engine oil to a 2D-6392 O-ring seal. Install O-ring seal on end of 6V-2197 Transducer.
   b. Push transducer through transducer adapter until transducer contacts crankshaft counterweight.
   c. Withdraw transducer 0.04 in. (1.0 mm) and hand-tighten nut on adapter sleeve to secure transducer. Move O-ring seal against adapter.
4. Connect 7X-1695 Cable Assembly to connector for timing calibration and to transducer to engine wiring as shown.

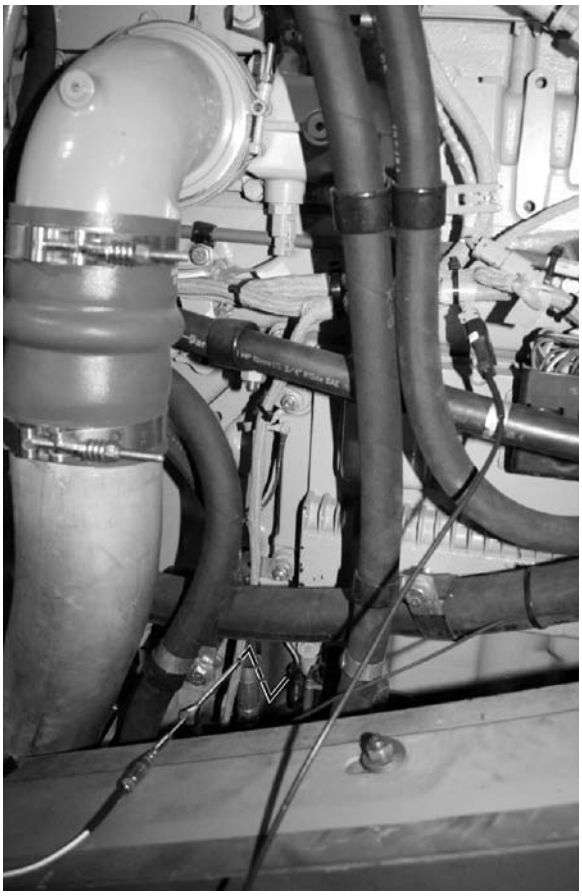

427-C2032

ENGINE SPEED/TIMING SENSOR CALIBRATION - CONTINUED

5. Start engine and check for diagnostic codes
   a. Connect ET to diagnostic connector (WP 0005 00).
   b. Start engine and run engine until engine is at normal operating temperature (TM 5-3805-291-10).
   c. Check for active diagnostic codes. Wait at least 30 seconds in order for codes to become active.

NOTE

Engine must not have any active diagnostic codes during timing calibration except for a 261-13 Engine Timing Calibration required.

   d. *Expected Results*. There are no active diagnostic codes or there is only an active 261-13 diagnostic code.
      (1) If results are OK, proceed to step 6.
      (2) If results are not OK, troubleshoot and repair any active diagnostic codes before you continue with this procedure.
6. Calibrate engine speed/timing sensor.
   a. Set engine speed to 1,100 ± 50 rpm. Engine speed must be steady within this rpm range for calibration to be successful.
   b. After engine has warmed up, access “Timing Calibration” screen on ET. Access these display screens in this order:
      (1) Service
      (2) Calibrations
      (3) Timing Calibration
   c. To calibrate timing, select “Continue” on ET. Wait until ET indicates timing is calibrated.
   d. *Expected Results*. ET indicates that timing is calibrated.
      (1) If results are OK, perform this procedure:
         (a) Set engine speed to low idle.

NOTE

Disconnect 7X-1695 Cable Assembly before you exit “Timing Calibration” screen. Otherwise, diagnostic codes may be activated.

         (b) Disconnect 7X-1695 Cable Assembly.
         (c) Exit “Timing Calibration” screen on ET.
         (d) Place battery disconnect switch in OFF position (TM 5-3805-291-10).
         (e) Remove transducer and remove adapter.
         (f) Install plug into timing calibration port.
      (2) If results are not OK, perform these checks:
         (a) If crankshaft and camshaft gears have been reassembled incorrectly, timing will not calibrate.
         (b) Verify timing calibration probe is installed correctly.
         (c) Verify engine speed is correct and engine speed is stable.
         (d) If engine speed is unstable, refer to Troubleshooting, *Engine Misfires, Runs Rough, or is Unstable* (WP 0008 00).
         (e) There may be a problem with transducer or with cables. Obtain a new transducer and/or new cable and repeat timing calibration.

CHARGING SYSTEM TEST

1. Verify alternator B+ terminal nut is tight and wire has a good connection to B+ terminal (WP 0046 00).
2. Start engine and set throttle to at least 75 percent. Turn ON all electrical accessories for all test steps below. Allow engine to run for at least 3 minutes before continuing to step 3. Following table will assist on making calculations during test.

TEST STOP	VOLTAGE READING	VOLTAGE SHOULD BE BELOW THIS
3		
4		
3 minus 4 =		2.0V
5		
6		
5 minus 6 =		1.0V
7		1.0V

3. Measure voltage between alternator B+ terminal and alternator case ground.
4. Measure voltage across the battery. Put red lead on positive battery terminal and put black lead on negative battery terminal. Step 4 should be completed as quickly as possible after step 3.

   Expected Results. Voltage is within 2V of voltage recorded in step 3.

   a. If voltage in step 3 is not more than 2V higher than voltage in step 4, this test is complete and related wiring is correct at this time. Replace alternator (WP 0046 00).

   b. If voltage in step 3 is more than 2V higher than voltage in step 4, there is high circuit resistance: corrosion, loose connections, and damaged wiring. Continue to step 5.
5. Check voltage between machine frame and alternator B+ terminal. Record voltage.
6. Check voltage between machine frame and positive battery post. Step 6 should be completed as quickly as possible after step 5.

   Expected Results. The voltage difference between step 5 and step 6 does not exceed 1V.

   a. If voltage difference does not exceed tolerance, charging circuit is good. Go to step 7.

   b. If voltage difference exceeds tolerance, there is high resistance in charging circuit: loose cables, corroded cables, damaged cables, and faulty circuit breaker. Correct problem and retest system.
7. Check voltage between negative battery post and alternator case ground.

   Expected Results. The voltage difference does not exceed 1V.

   a. If voltage difference does not exceed tolerance, ground circuit is good. There is an internal problem with alternator. Replace alternator (WP 0046 00).

   b. If voltage difference exceeds tolerance, there is high resistance in ground circuit: loose cables, corroded cables, loose alternator mounting, and poor engine ground. Correct problem and retest system.

STARTING MOTOR TEST

No Load Test

NOTE

The following procedure is used in order to perform no-load test after starting motor has been repaired. The test should also be performed when starting motor is removed from machine. In order to completely check a starting motor, the complete procedure should be followed.

1. Connect positive side of battery cable to "BAT" terminal of starting motor solenoid. Connect negative side of battery cable to negative terminal of starting motor.
2. Connect an open switch between "S" terminal and "BAT" terminal of solenoid.
3. Connect multimeter red lead to "Mtr" terminal on solenoid. Connect multimeter black lead to negative terminal of starting motor.
4. Use a phototach in order to measure the speed of armature.
5. Close the switch. The following measurements should be observed:

NO LOAD TEST	24V
Minimum Voltage	20V
Minimum Speed	5,500 rpm
Maximum Speed	7,500 rpm
Minimum Current Draw	95 Amp
Maximum Current Draw	120 Amp

NOTE

If voltage is higher, the speed will be proportionally higher.

6. If voltage is below minimum, batteries are low and batteries need to be charged (TM 9-6140-200-14).

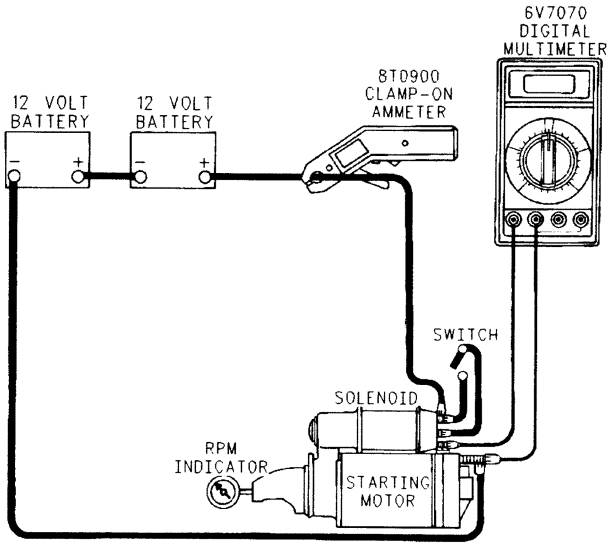

STARTING MOTOR TEST - CONTINUED

The following information provides some results of a no-load test and possible problems.

1. A rated current draw at a no-load speed indicates a normal starting motor.
2. A low free speed and a high current draw indicates:
   a. An increase in friction could be caused by tight bearings, dirty bearing, or worn bearings. A bent armature or loose field pole shoes that would allow armature to drag are possible causes of increased friction.
   b. A shorted armature could cause a high current draw.
   c. A grounded armature or a grounded field winding could cause a high current draw.
3. Failure to operate with a high current draw indicates:
   a. A direct ground in terminal or field windings.
   b. The bearings cease to operate properly. This can be seen by turning armature by hand.
4. Failure to operate with no current draw indicates:
   a. An open field circuit will cause a failure.
   b. An open armature will cause a failure.
   c. Broken bush springs, worn brushes, or high insulation between commutator bars could prevent good contact between brushes and commutator.
5. A low no-load speed and a low current draw indicates:

   An internal resistance that is high is possibly caused by poor connections, leads that are faulty, a commutator that is dirty, and/or causes that are listed in step 4.
6. A high free speed and a high current draw indicates:

   A shorted field circuit will cause a failure.

Starting Motor Solenoid Test

NOTE

A basic four terminal starting motor solenoid circuit is shown. The two windings that are found in solenoid are the hold-in winding and the pull-in winding. Windings can be checked by using procedures that follow.

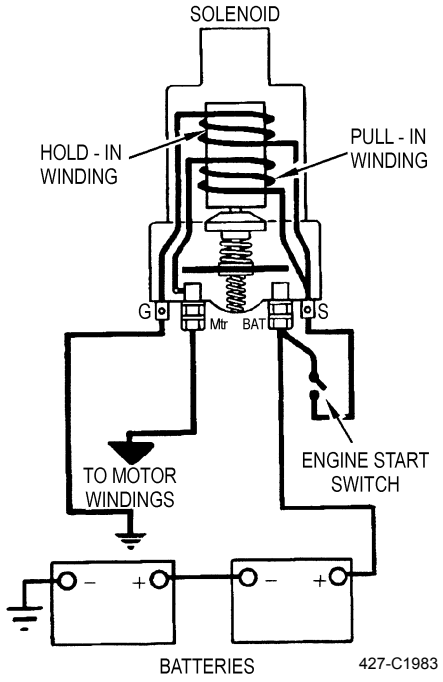

STARTING MOTOR TEST - CONTINUED

Hold-in Winding Test

1. Refer to illustration in order to make connections to solenoid. Disconnect all other leads to solenoid.
2. Close switch. Observe reading on multimeter. Use battery load tester to adjust battery voltage until voltage is 20V.
3. Observe reading on clamp-on ammeter. 6.8 amperes should be observed.

NOTE

A high reading indicates a shorted winding. A low reading indicates excessive resistance.

4. The hold-in winding can also be checked by measuring resistance. Disconnect batteries. Select "200 Ω" range on multimeter. Connect one of the leads of multimeter to "S" terminal and connect other lead to "G" terminal. 2.9 Ω minimum should be observed.
5. Replace starter (WP 0051 00) if any of the above readings are incorrect.

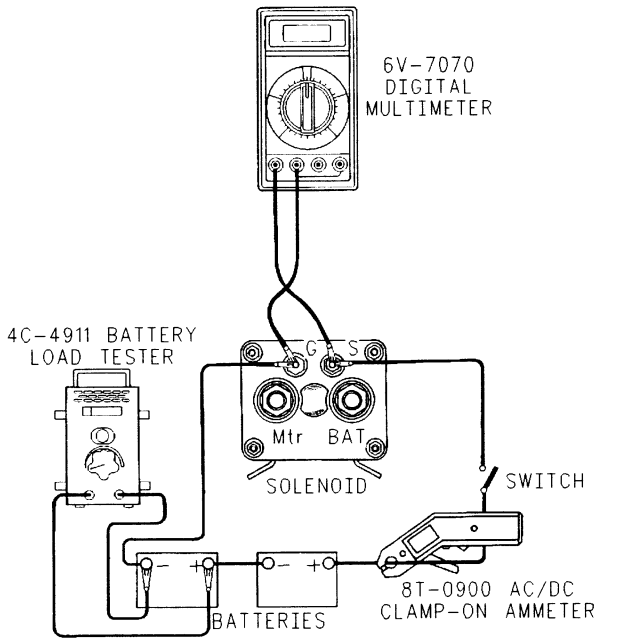

427-C1984

STARTING MOTOR TEST - CONTINUED

Pull-in Winding Test

1. Refer to illustration in order to make connections to solenoid. Disconnect all other leads to solenoid.
2. Close switch. Observe reading on multimeter. Use battery load tester to adjust battery voltage until voltage is 20V.

NOTE

A high reading indicates a shorted winding. A low reading indicates excessive resistance. To avoid excessive heat, do not leave switch closed for more than 10 seconds at a time. Current will decrease as heat increases.

3. Observe reading on clamp-on ammeter. 9.0 to 11.5 amperes should be observed.
4. Pull-in winding can also be checked by measuring resistance. Disconnect batteries. Select "200 Ω" range on multimeter. Connect one of the leads of multimeter to "S" terminal and connect other lead to "Mtr" terminal. 0.43 to 0.56 Ω should be observed:

24V	0.43 to 0.56 Ohms
32V	1.20 to 1.43 Ohms

5. Replace starter (WP 0051 00) if any of the above readings are incorrect.

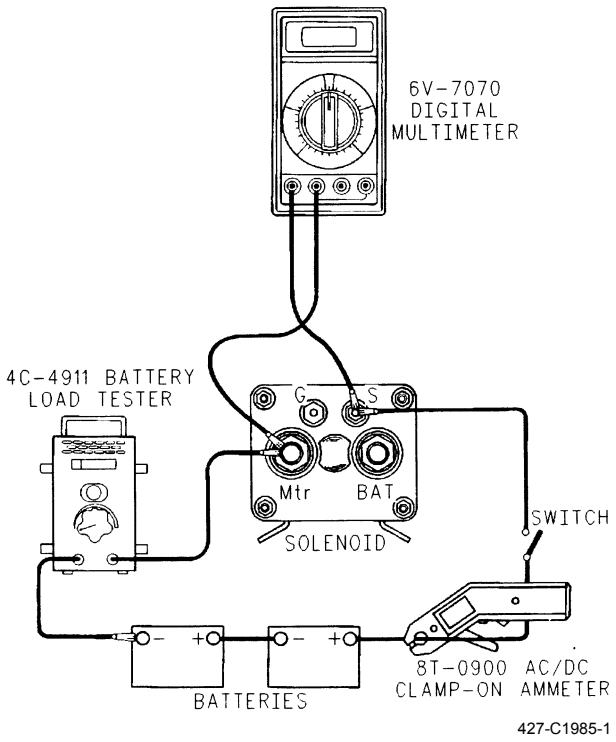

END OF WORK PACKAGE

Forward High Speed Lockout Program 0014 00-2
Reverse High Speed Lockout Program 0014 00-8
Ride Control Configuration Program. 0014 00-13
Secondary Steering Program 0014 00-19
Transmission Speed For Forward Directional Shift Program 0014 00-23
Transmission Speed For Reverse Directional Shift Program. 0014 00-27
Fill Time For Transmission Clutch (MSD) Calibration. 0014 00-32
Position Sensor (Left Brake Pedal) (MSD) Calibration. 0014 00-36
Transmission Neutralization Setpoint Adjustment 0014 00-39
Speed Sensor Adjustment 0014 00-44
Torque Converter Stall Test 0014 00-45
Transmission Pressures Test and Adjustment 0014 00-47

THIS WORK PACKAGE COVERS

Forward High Speed Lockout Program
Reverse High Speed Lockout Program
Ride Control Configuration Program
Secondary Steering Program
Transmission Speed for Forward Directional Shift Program
Transmission Speed for Reverse Directional Shift Program
Fill Time for Transmission Clutch (MSD) Calibration
Position Sensor (Left Brake Pedal) (MSD) Calibration
Transmission Neutralization Setpoint Adjustment
Speed Sensor Adjustment
Torque Converter Stall Test
Transmission Pressures Test and Adjustment:
Transmission Clutch Solenoid Modulating Valve Test
Transmission Clutch Pressure Test
Lubrication Oil Pressure Test
Torque Converter Outlet Pressure Test
Torque Converter Outlet Pressure Adjustment
Transmission Oil Pump Pressure Test
Transmission Oil Pump Pressure Adjustment
Torque Converter Inlet Pressure Test

INITIAL SETUP

Maintenance Level

Unit

Test Equipment

Test set, electronic systems (MSD) (Item 86, WP 0232 00)

Software kit (Item 75, WP 0232 00)

Adapter, test (Item 3, WP 0232 00)

Test stand, automotive (Item 87, WP 0232 00) (6)

Adapter, threaded (Item 12, WP 0232 00)

Tools and Special Tools

Tool kit, general mechanic's, automotive (Item 90, WP 0232 00)

Washer, flat (Item 95, WP 0232 00)

Materials/Parts

Oil, lubricating, OE/HDO-5/40 (Item 27, WP 0233 00)

Oil, lubricating, OE/HDO-15/40 (Item 28, WP 0233 00)

Rag, wiping (Item 35, WP 0233 00)

Personnel Required

MOS 62B, Construction Equipment Repairer (2)

References

WP 0003 00
WP 0005 00
WP 0009 00
WP 0022 00
WP 0091 00
WP 0195 00
WP 0196 00
WP 0197 00
WP 0198 00

References - Continued

WP 0199 00
WP 0200 00
WP 0201 00
WP 0237 00

Equipment Conditions

Machine parked on level ground (TM 5-3805-291-10)
Work tool lowered to ground (TM 5-3805-291-10)
Parking brake engaged (TM 5-3805-291-10)
Wheels chocked

FORWARD HIGH SPEED LOCKOUT PROGRAM

NOTE

This calibration procedure can be performed without running engine.

1. Turn engine start switch to ON position (TM 5-3805-291-10).

NOTE

Power to ECM must be cycled for calibration to take effect.

2. Connect MSD to diagnostic connector (WP 0005 00).

WARNING

- **Injury or death can result from sudden machine movement.**
- **Sudden movement of the machine can cause injury to persons on or near the machine.**
- **Prevent possible injury to personnel by performing the procedure that follows before working on the machine.**

NOTE

For a better understanding of each system, review the appropriate section in *Theory of Operation* (WP 0003 00).

FORWARD HIGH SPEED LOCKOUT PROGRAM - CONTINUED

3. Select “Transmission” (1) from “ECM Selector” menu and click “OK” (2).

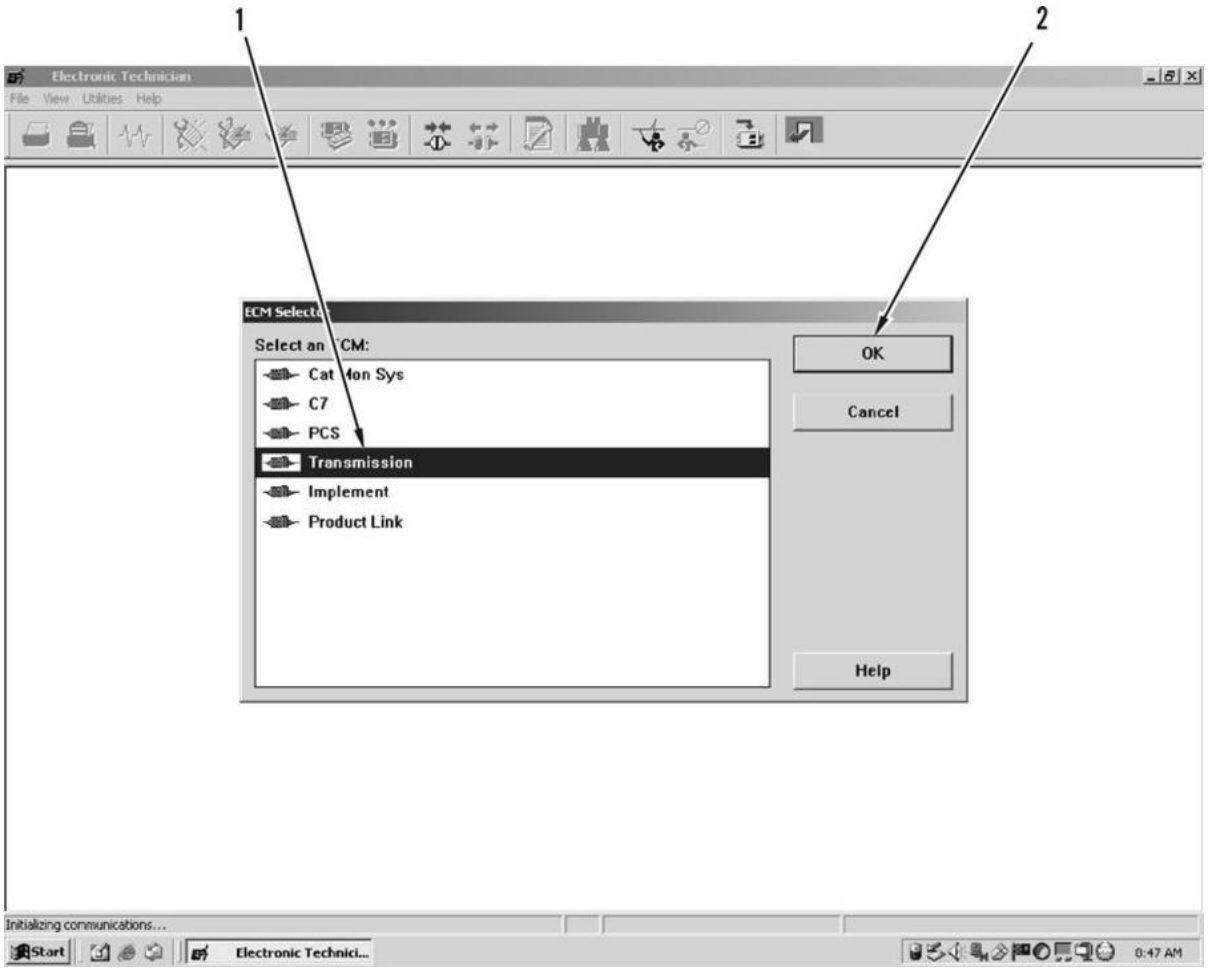

427-C0714

FORWARD HIGH SPEED LOCKOUT PROGRAM - CONTINUED

4. Select “Service” (3) menu from toolbar.
5. Select “Configuration” (4) from “Service” (3) menu.

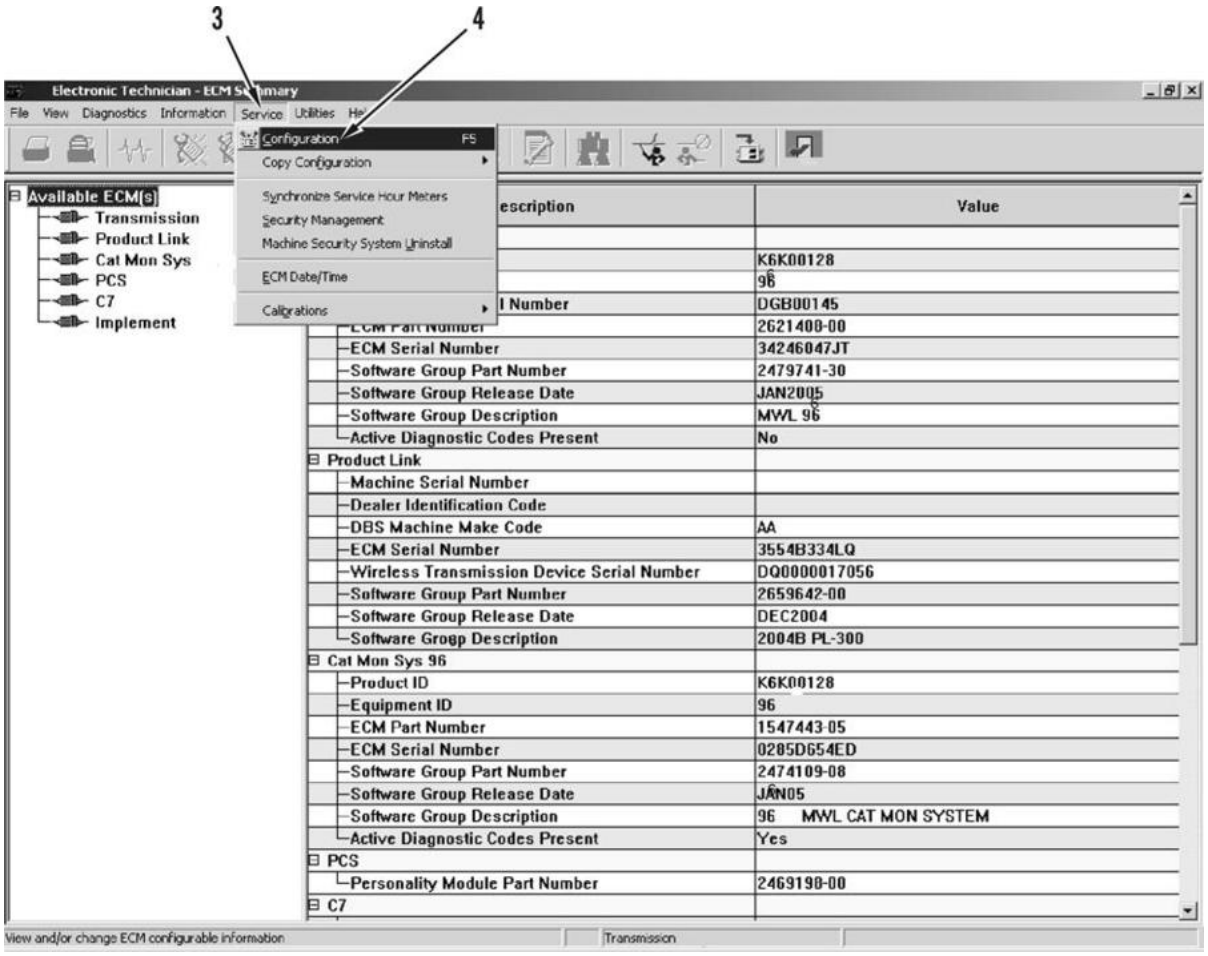

427-C0715

FORWARD HIGH SPEED LOCKOUT PROGRAM - CONTINUED

6. Click “Transmission Parameters” (5).
7. Highlight option for “Transmission Maximum Forward Gear” (6).
8. Click “Change” (7).

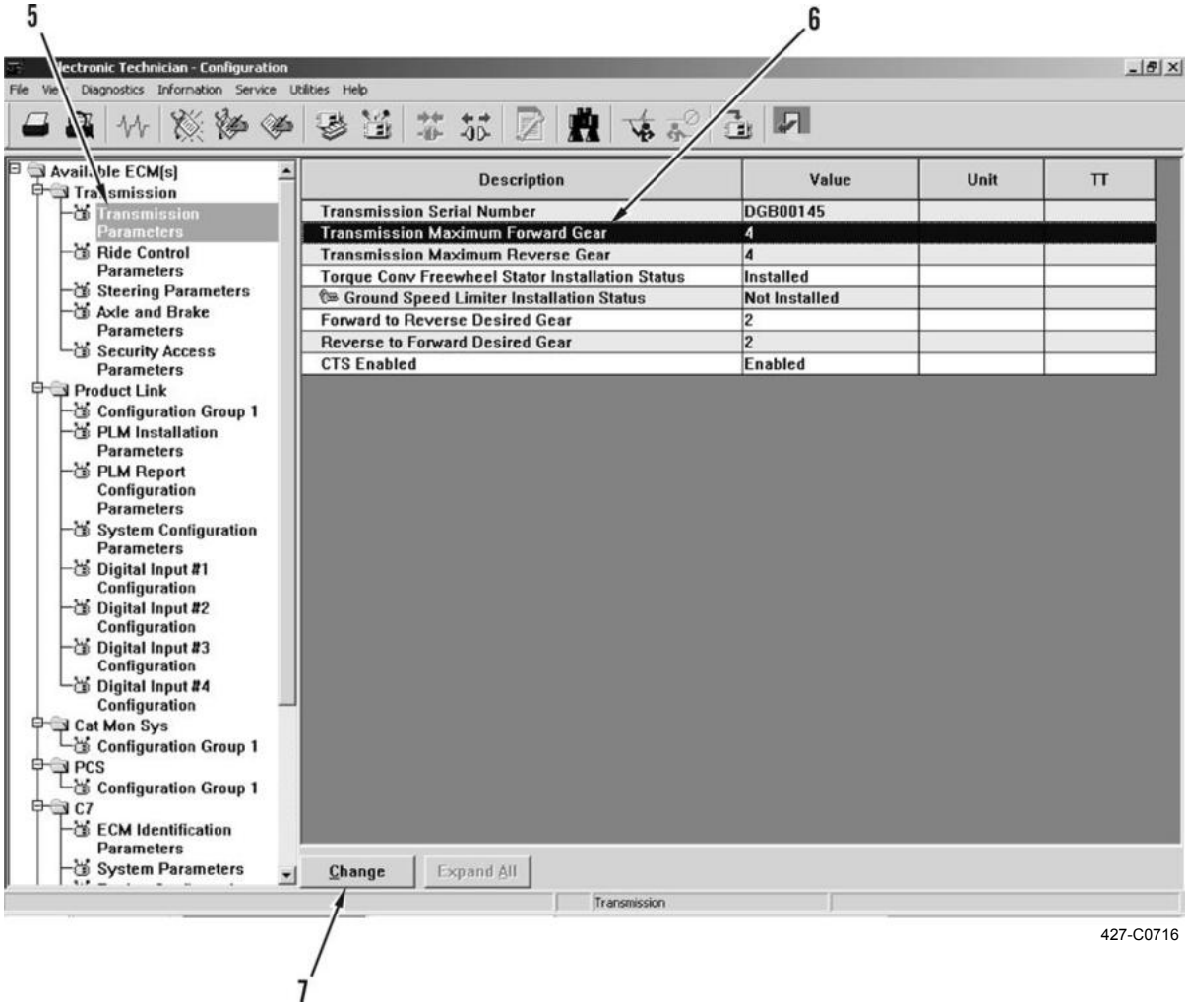

FORWARD HIGH SPEED LOCKOUT PROGRAM - CONTINUED

NOTE

See table for available gears.

Maximum Forward Gear	Minimum Forward Gear
4	2

9. Enter new value (8) for maximum forward gear.
10. Click “OK” (9).

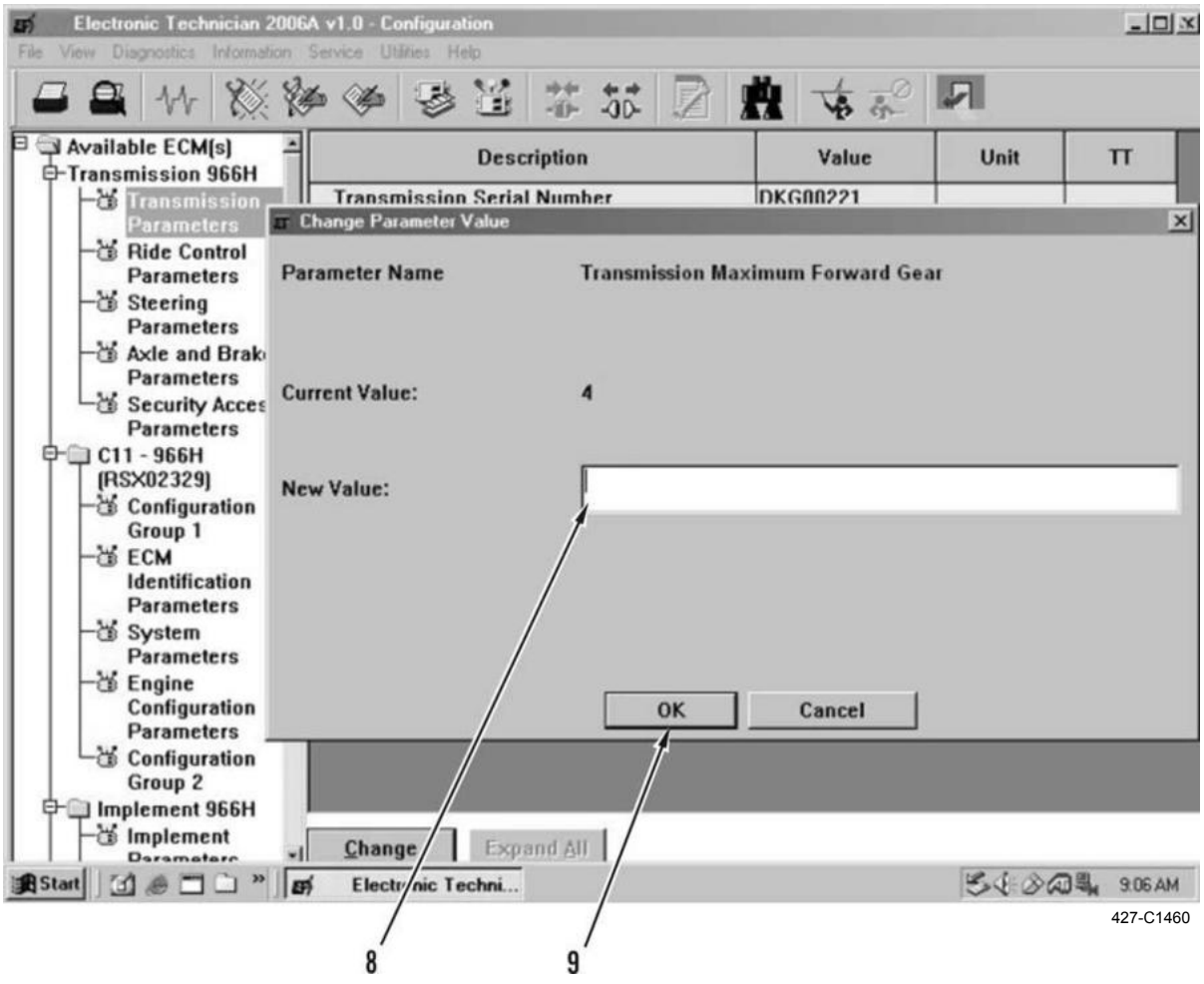

FORWARD HIGH SPEED LOCKOUT PROGRAM - CONTINUED

11. Click “Yes” (10).

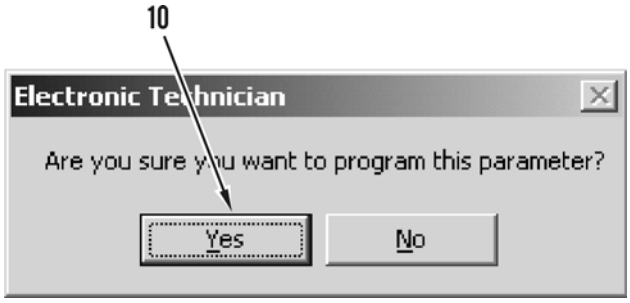

427-C0721

12. Close MSD.
13. Disconnect MSD from diagnostic connector (WP 0005 00).
14. Turn engine start switch to OFF position (TM 5-3805-291-10).

REVERSE HIGH SPEED LOCKOUT PROGRAM

NOTE

This calibration procedure can be performed without running engine.

1. Turn engine start switch to ON position (TM 5-3805-291-10).

NOTE

Power to ECM must be cycled for calibration to take effect.

2. Connect MSD to diagnostic connector (WP 0005 00).
3. Select “Transmission” (1) from “ECM Selector” menu and click “OK” (2).

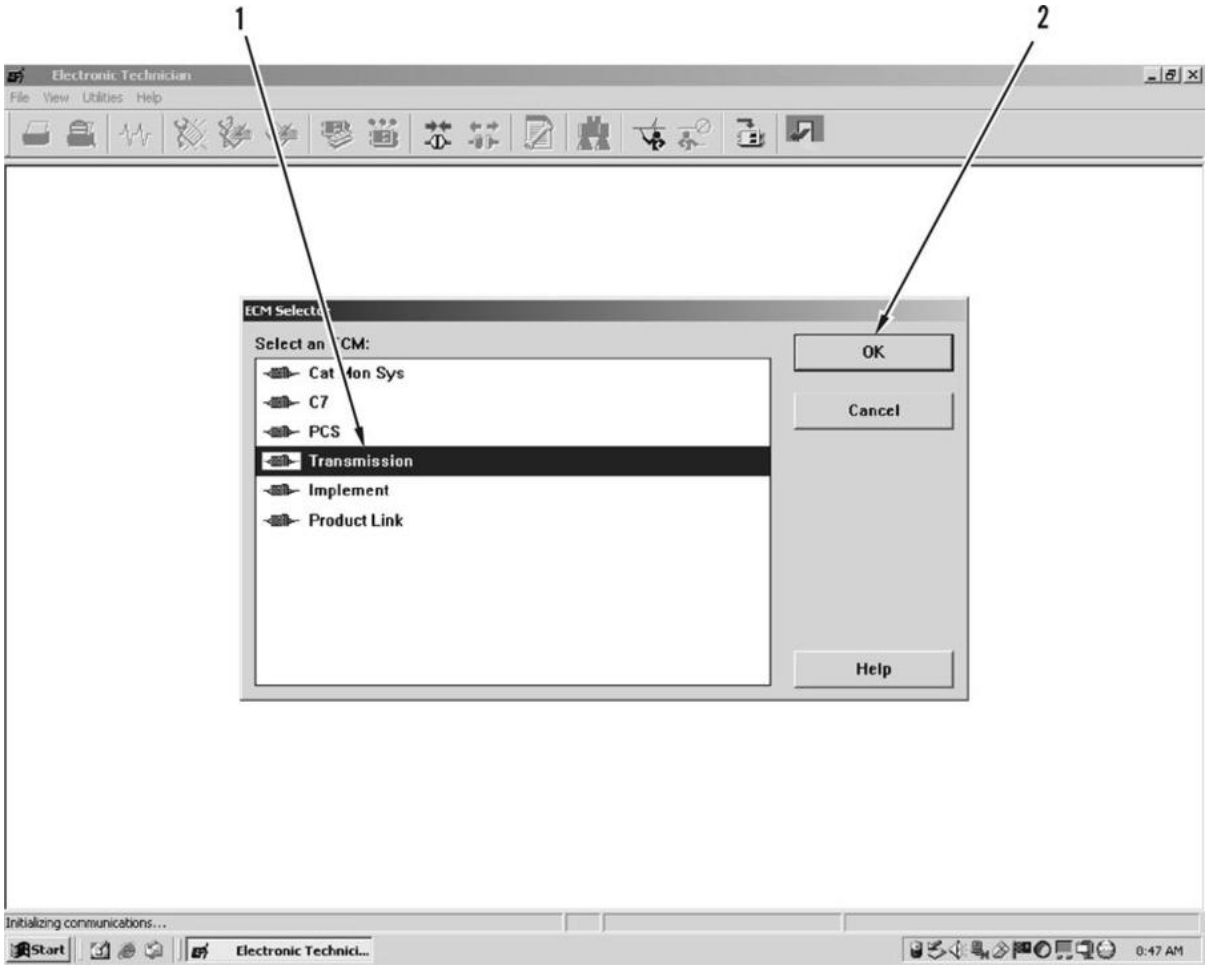

427-C0714

REVERSE HIGH SPEED LOCKOUT PROGRAM - CONTINUED

4. Select “Service” (3) menu from toolbar.
5. Select “Configuration” (4) from “Service” (3) menu.

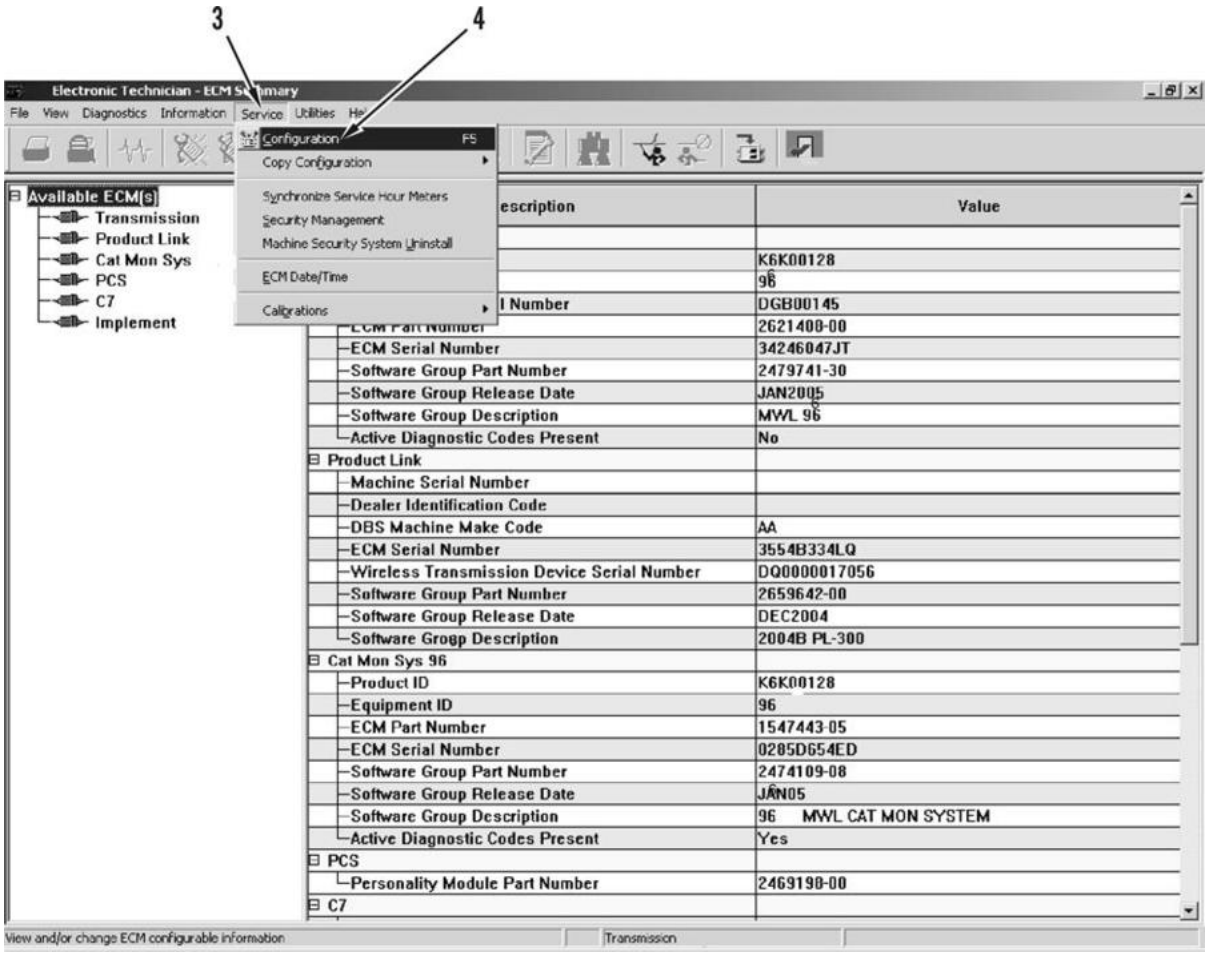

427-C0715

REVERSE HIGH SPEED LOCKOUT PROGRAM - CONTINUED

6. Click “Transmission Parameters” (5).
7. Highlight option for “Transmission Maximum Reverse Gear” (6).
8. Click “Change” (7).

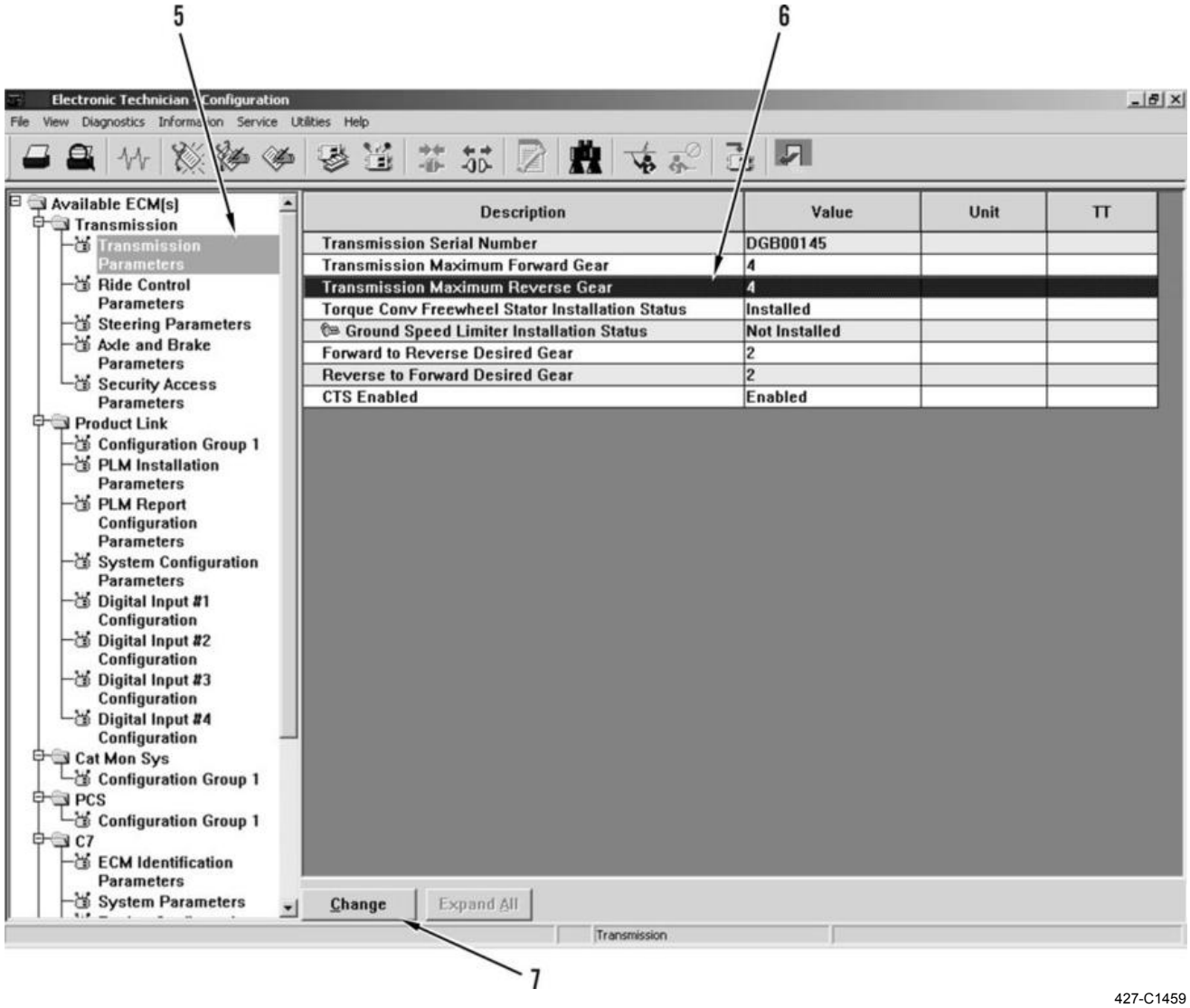

427-C1459

REVERSE HIGH SPEED LOCKOUT PROGRAM - CONTINUED

NOTE

See table for available gears.

Maximum Reverse Gear	Minimum Reverse Gear
4	2

9. Enter new value (8) for maximum reverse gear.
10. Click “OK” (9).

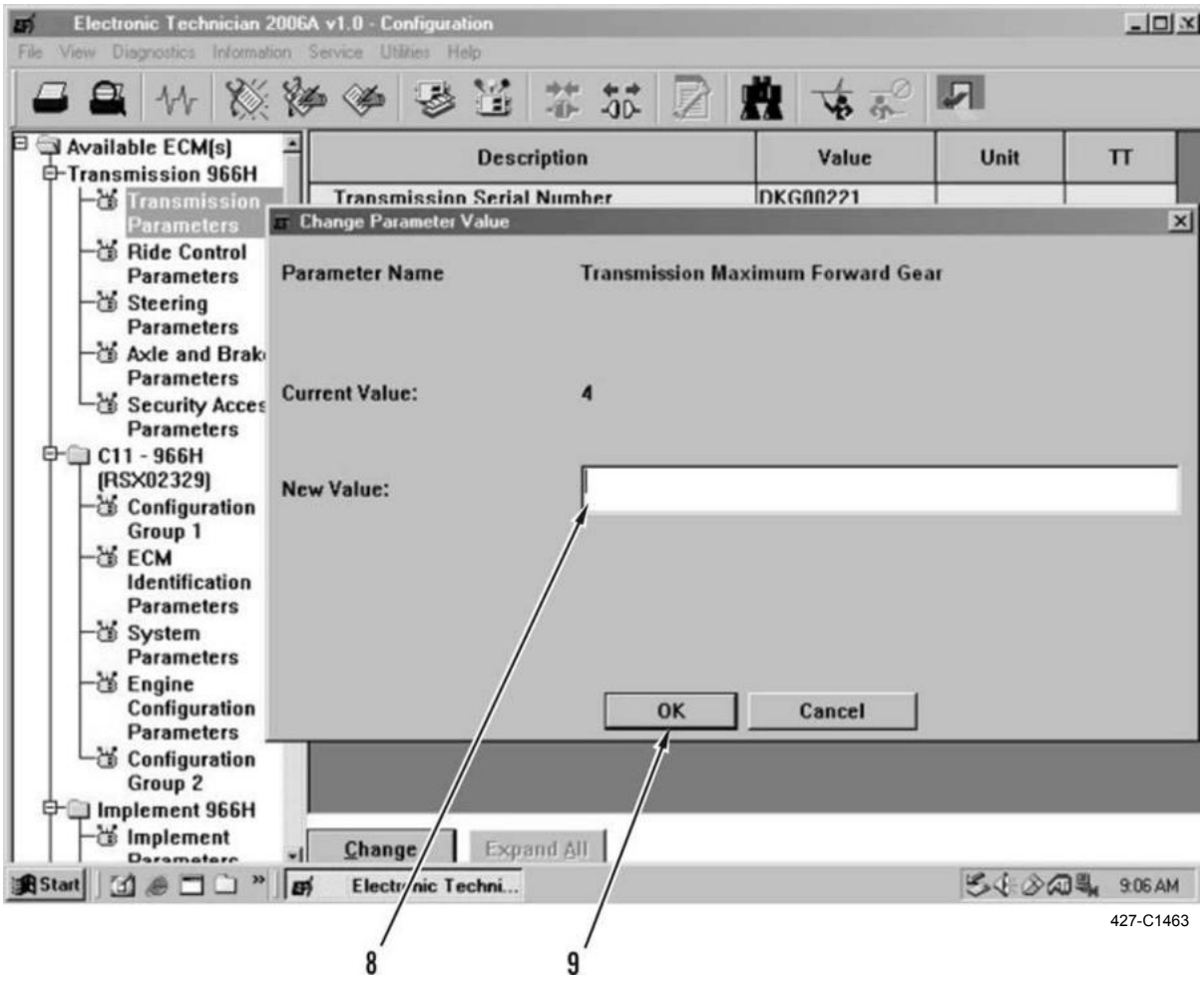

REVERSE HIGH SPEED LOCKOUT PROGRAM - CONTINUED

11. Click “Yes” (10).

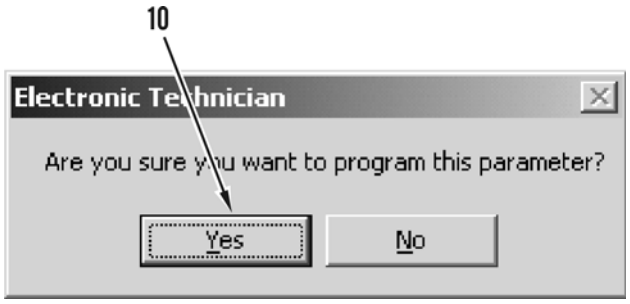

427-C0721

12. Close MSD.
13. Disconnect MSD from diagnostic connector (WP 0005 00).
14. Turn engine start switch to OFF position (TM 5-3805-291-10).

RIDE CONTROL CONFIGURATION PROGRAM

NOTE

This calibration procedure can be performed without running engine.

1. Turn engine start switch to ON position (TM 5-3805-291-10).
2. Connect MSD to diagnostic connector (WP 0005 00).

NOTE

- **Power to ECM must be cycled for calibration to take effect.**
- **MSD will allow activation speed for ride control to be adjusted in 0.6 mph (1 km/h) increments. Engagement speed may be adjusted between 1.2 mph (2 km/h) and 14.3 mph (23 km/h). Factory setting for activation speed (forward) is 6.0 mph (9.7 km/h) and for activation speed (reverse) is 2.0 mph (3.2 km/h).**

3. Select “Transmission” (1) from “ECM Selector” menu and click “OK” (2).

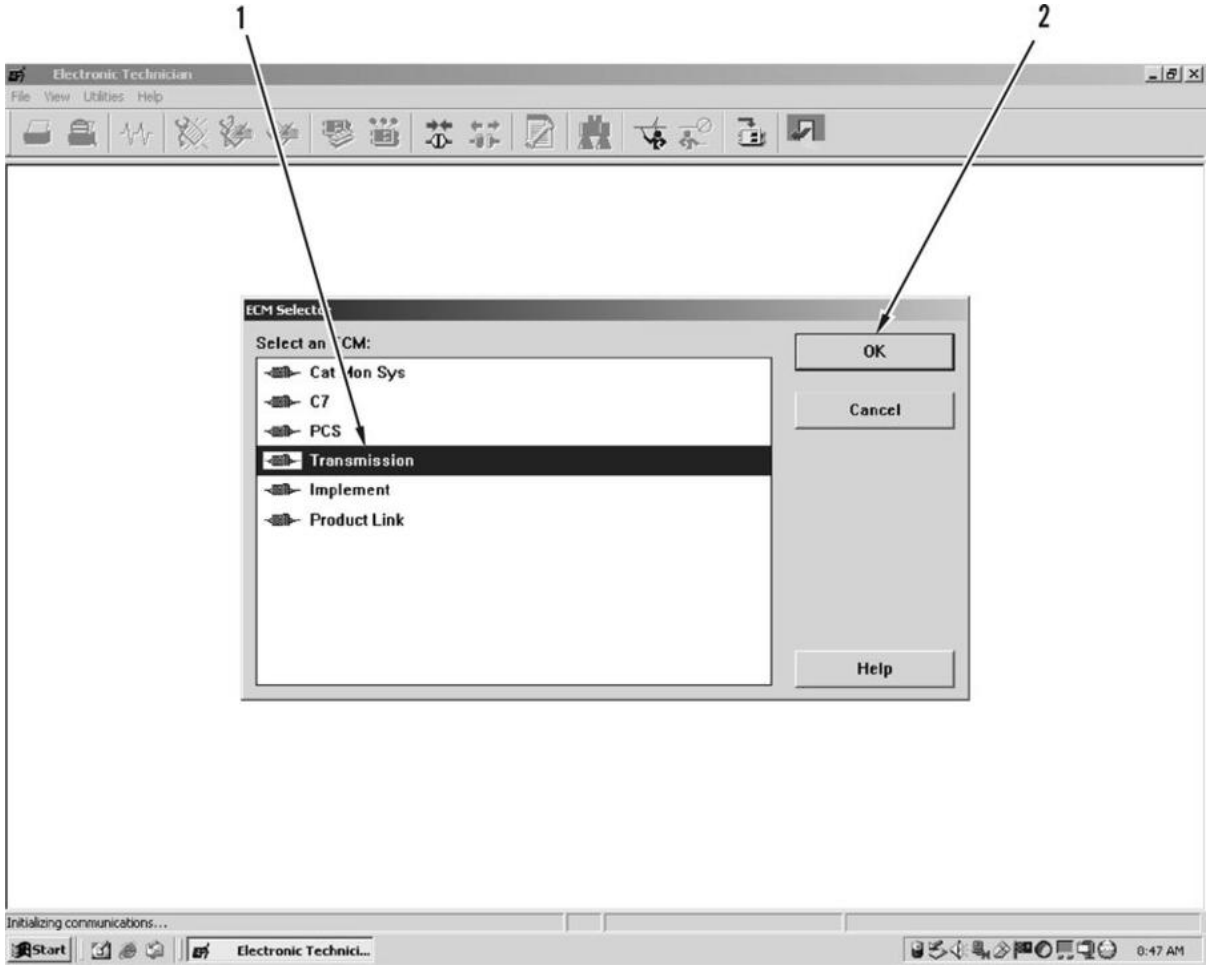

427-C0714

RIDE CONTROL CONFIGURATION PROGRAM - CONTINUED

4. Select “Service” (3) menu from toolbar.
5. Select “Configuration” (4) from “Service” (3) menu.

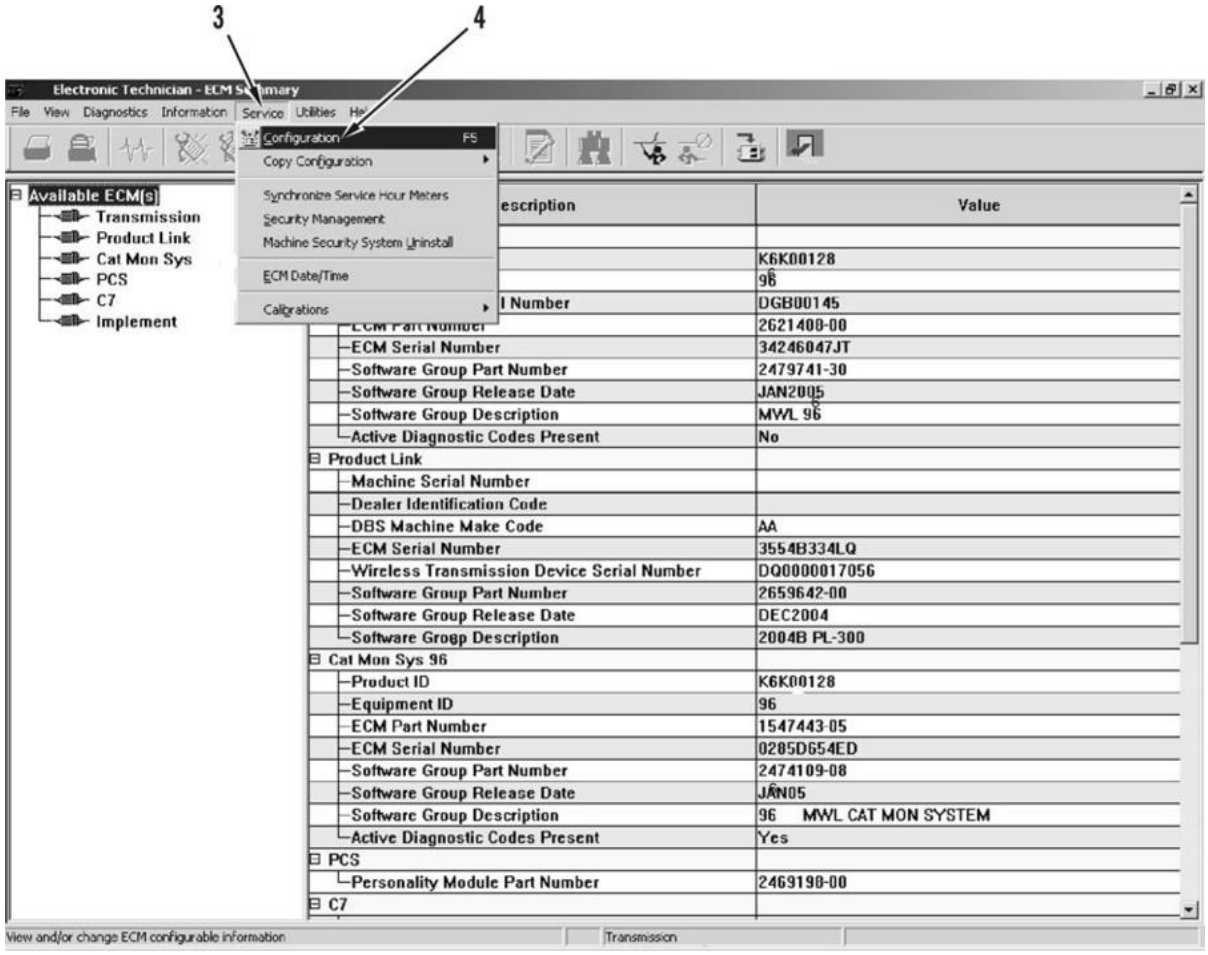

427-C0715

RIDE CONTROL CONFIGURATION PROGRAM - CONTINUED

CAUTION

Activation of software for ride control without installation of hardware for ride control will introduce faults for ride control switch and solenoid.

6. Highlight option for “Ride Control Parameters” (11).

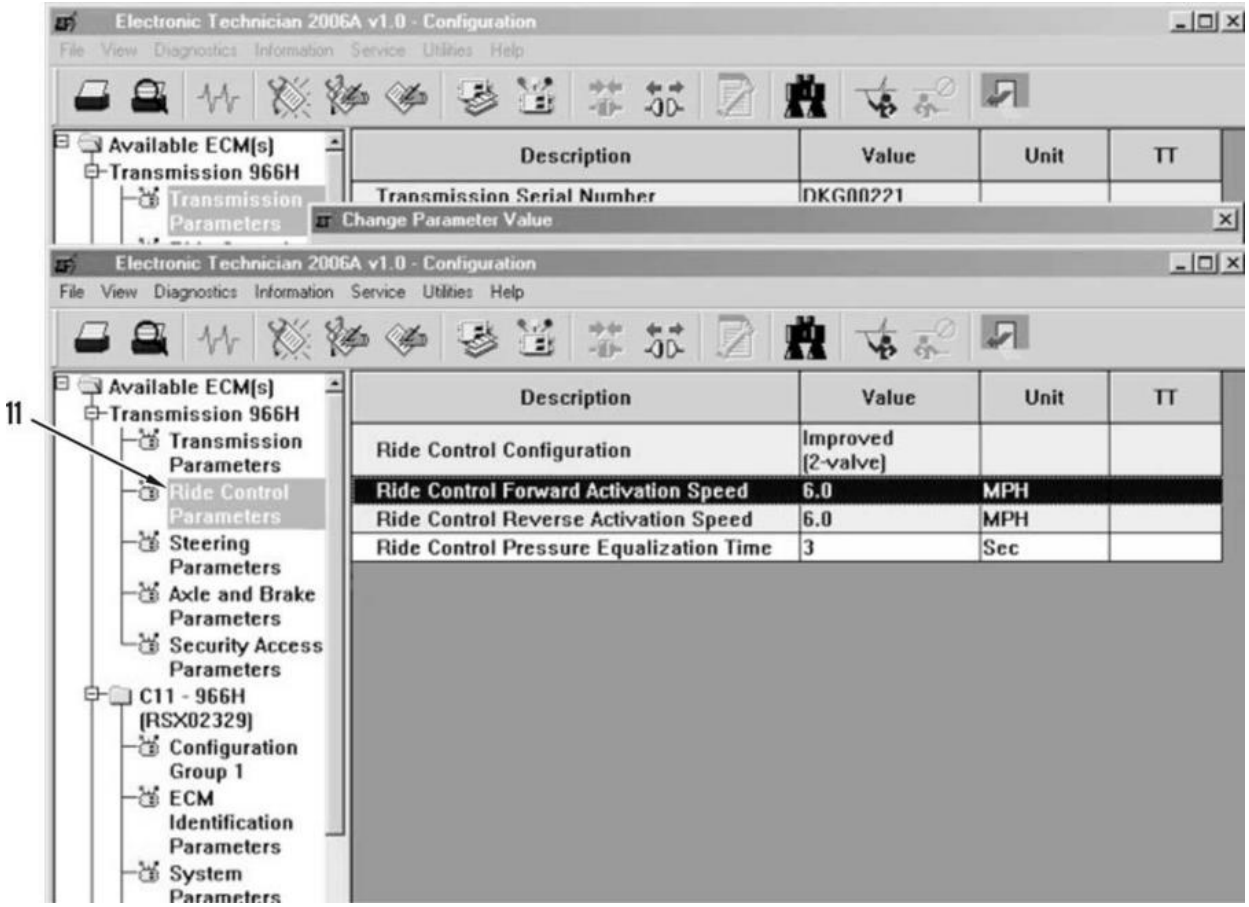

427-C1461

RIDE CONTROL CONFIGURATION PROGRAM - CONTINUED

7. Highlight option for “Ride Control Forward Activation Speed” (12).
8. Click “Change” (7).

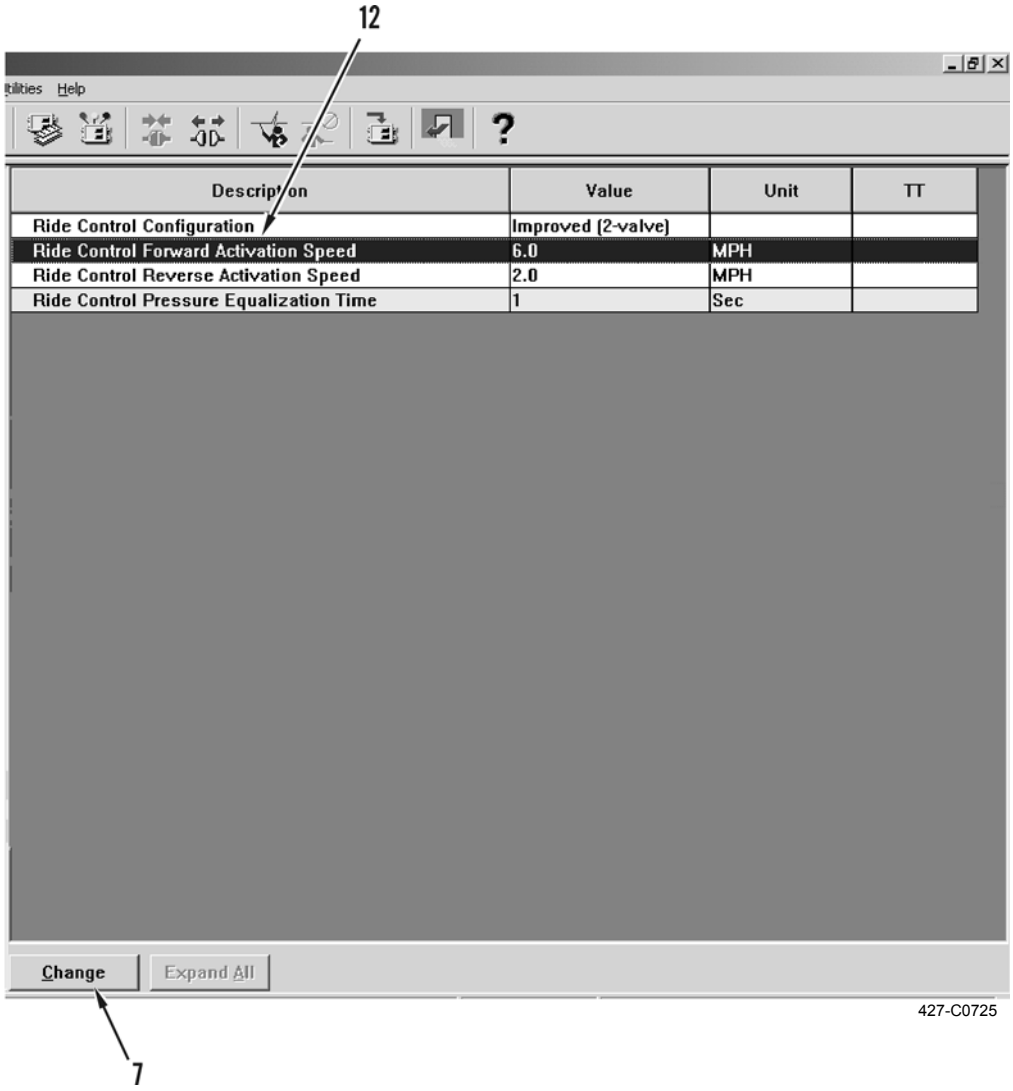

RIDE CONTROL CONFIGURATION PROGRAM - CONTINUED

9. Enter new value (13) for ride control forward activation speed.
10. Click “OK” (9).

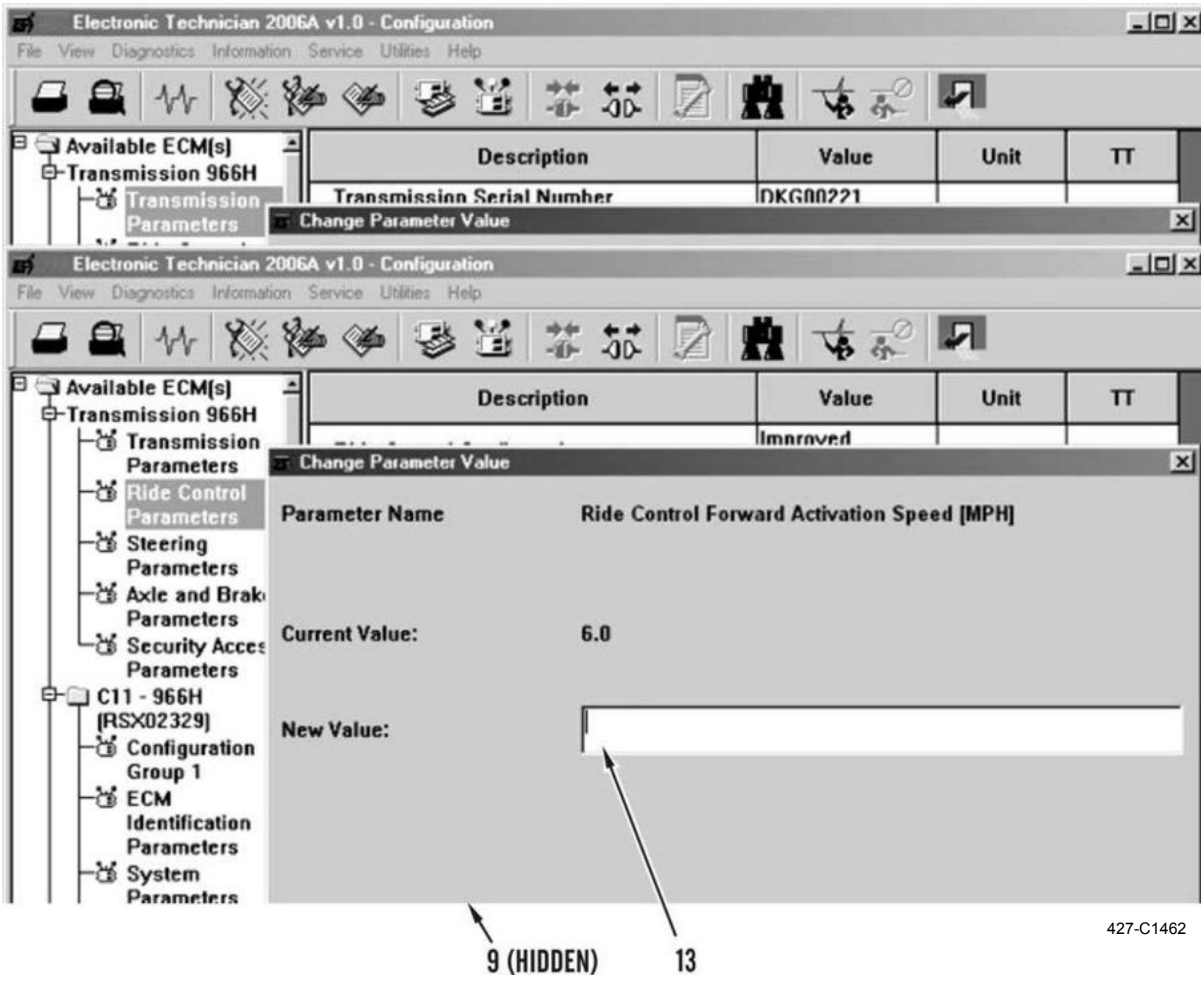

RIDE CONTROL CONFIGURATION PROGRAM - CONTINUED

11. Click “Yes” (10).

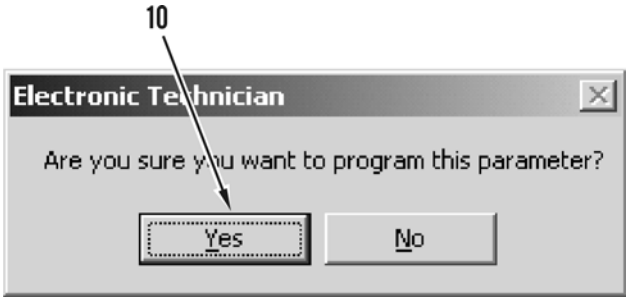

12. Repeat steps 7 thru 11 for ride control reverse activation speed.
13. Close MSD.
14. Disconnect MSD from diagnostic connector (WP 0005 00).
15. Turn engine start switch to OFF position (TM 5-3805-291-10).

SECONDARY STEERING PROGRAM

NOTE

This calibration procedure can be performed without running engine.

1. Turn engine start switch to ON position (TM 5-3805-291-10).

NOTE

Power to ECM must be cycled for calibration to take effect.

2. Connect MSD to diagnostic connector (WP 0005 00).
3. Select “Transmission” (1) from “ECM Selector” menu and click “OK” (2).

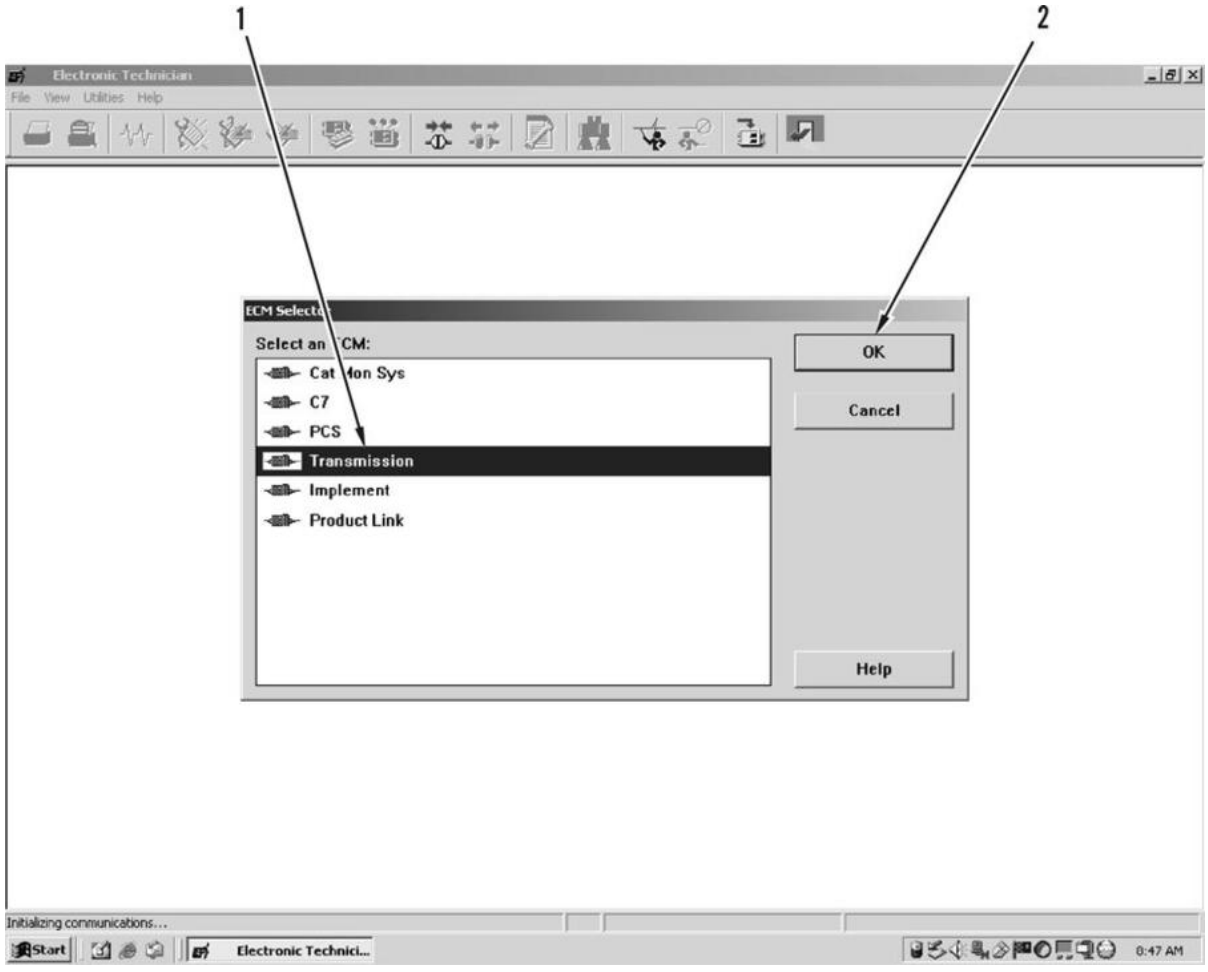

427-C0714

SECONDARY STEERING PROGRAM - CONTINUED

4. Select “Service” (3) menu from toolbar.
5. Select “Configuration” (4) from “Service” (3) menu.

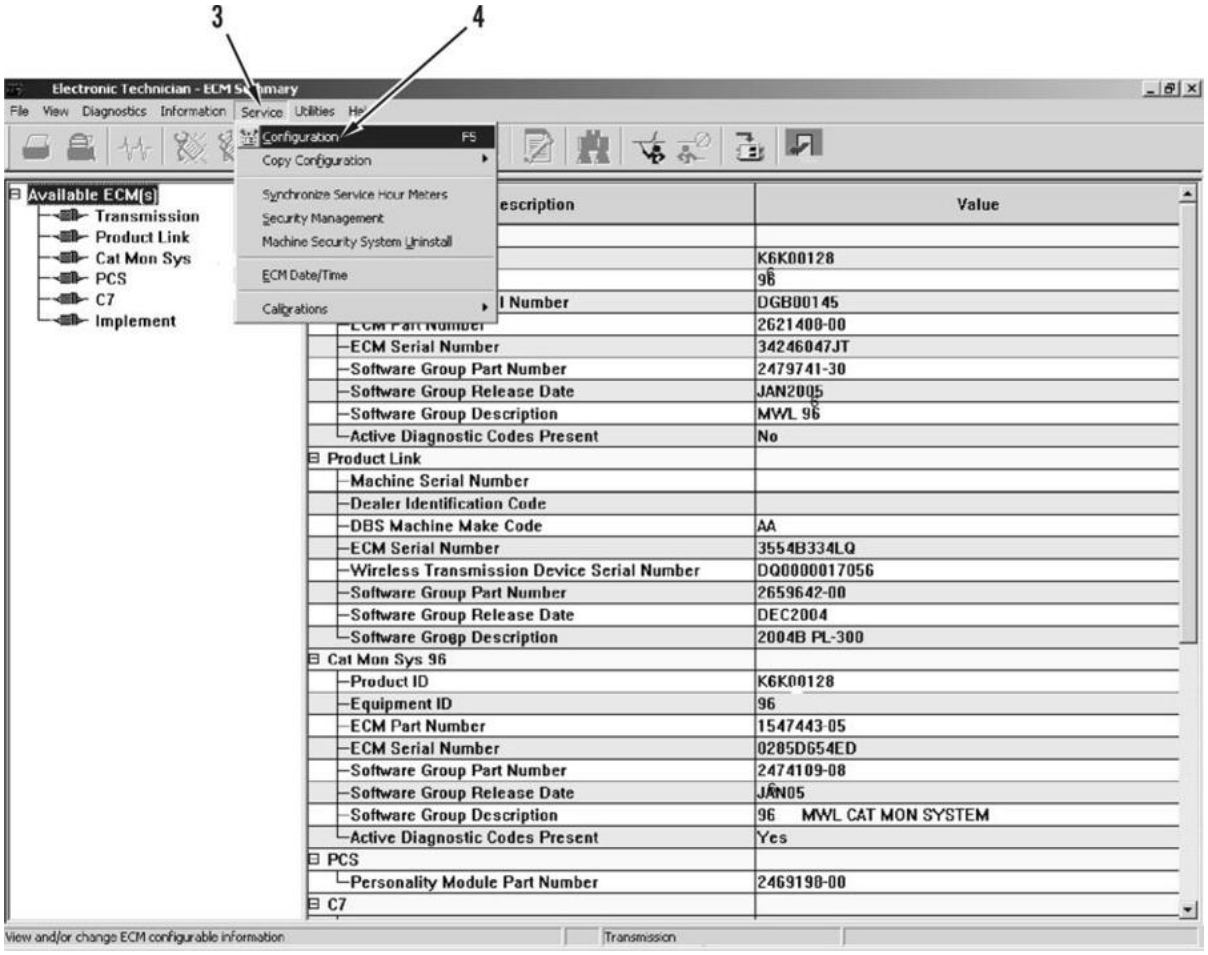

427-C0715

SECONDARY STEERING PROGRAM - CONTINUED

6. Click “Steering Parameters” (14).
7. Highlight option for “Secondary Steering” (15).
8. Click “Change” (7).

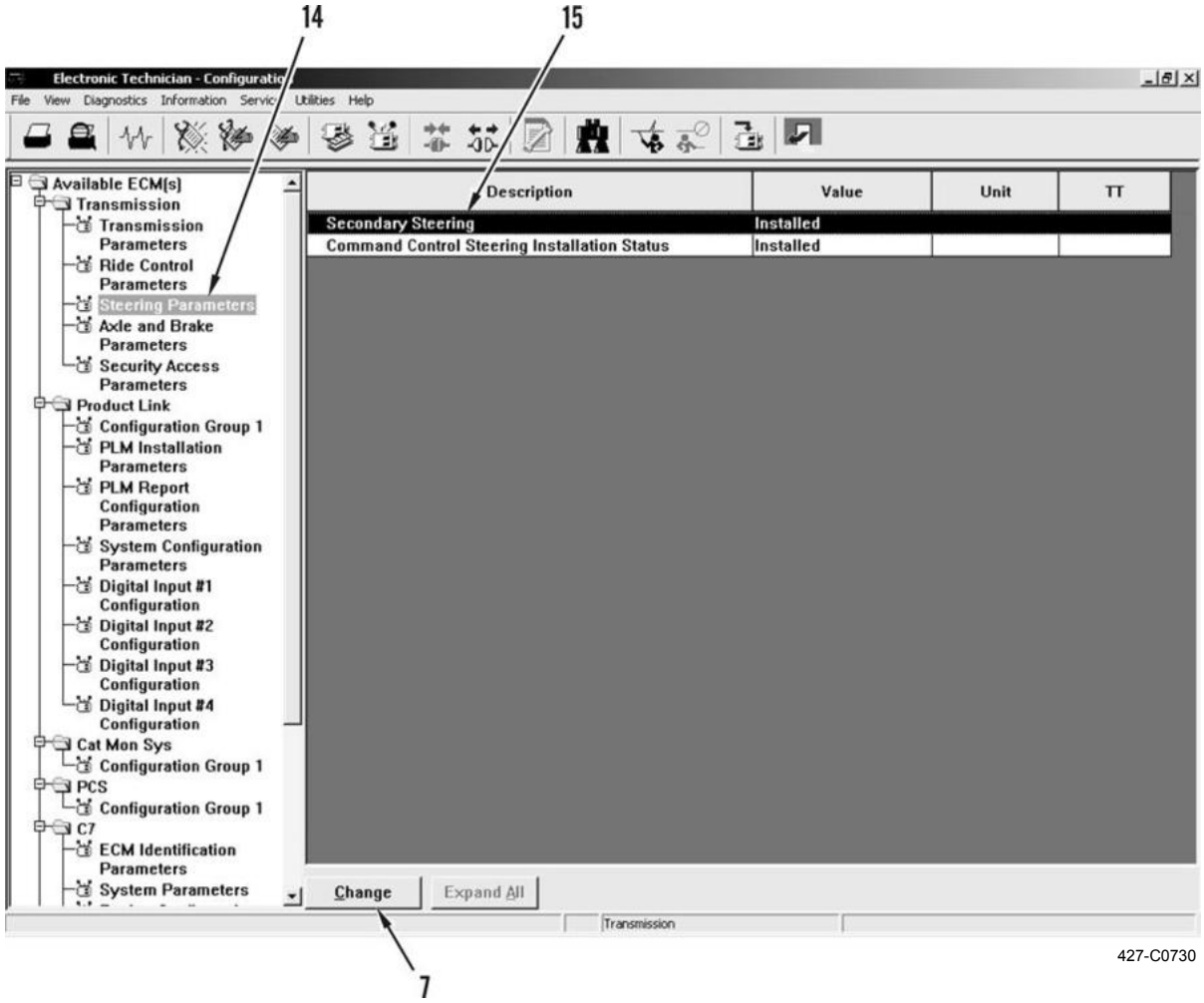

427-C0730

SECONDARY STEERING PROGRAM - CONTINUED

9. Enter new value (16) for secondary steering.
10. Click “OK” (9).

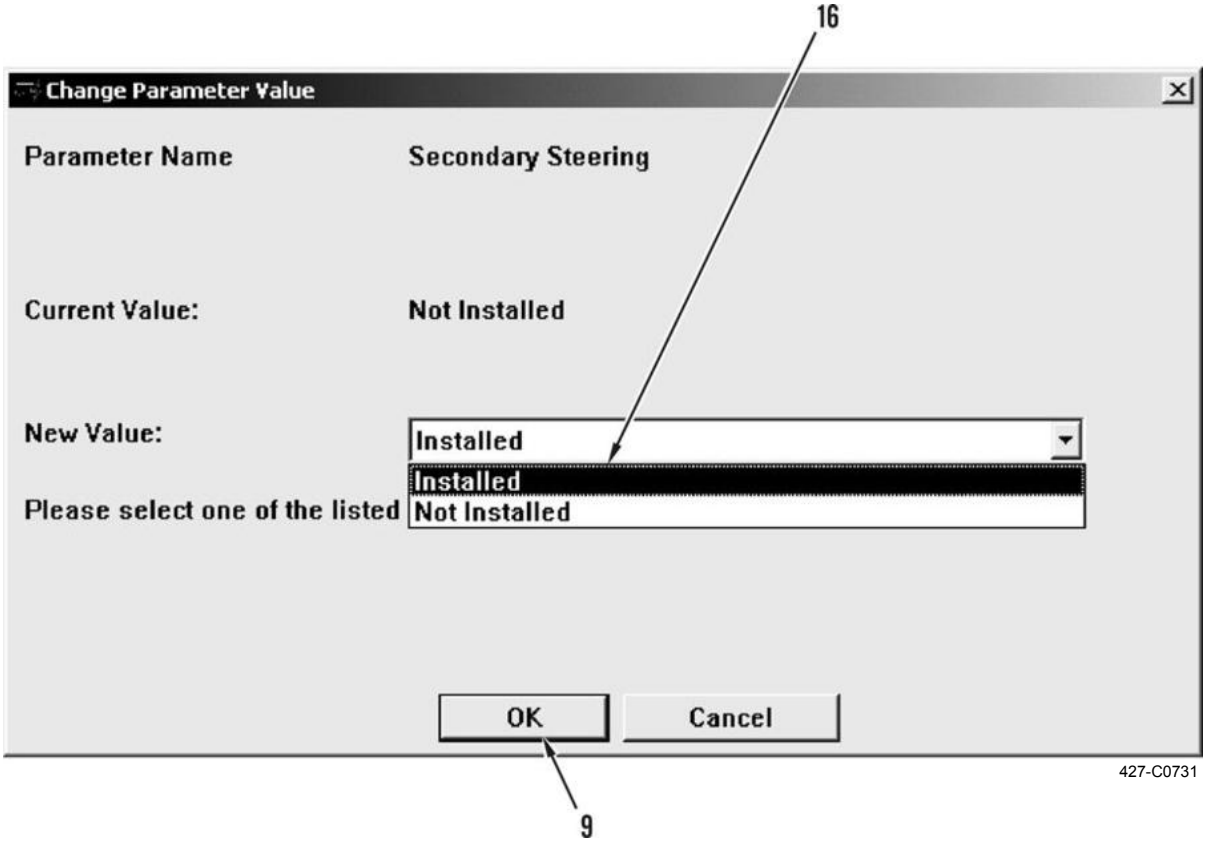

11. Click “Yes” (10).

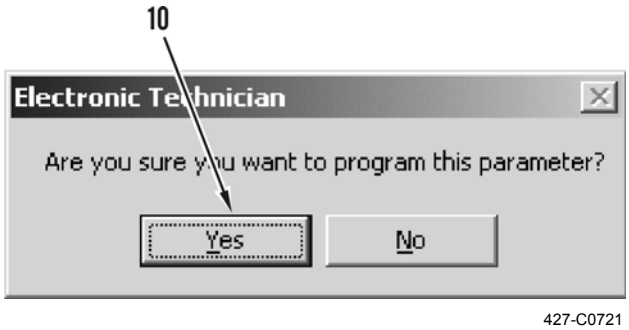

SECONDARY STEERING PROGRAM - CONTINUED

12. Close MSD.
13. Disconnect MSD from diagnostic connector (WP 0005 00).
14. Turn engine start switch to OFF position (TM 5-3805-291-10).

TRANSMISSION SPEED FOR FORWARD DIRECTIONAL SHIFT PROGRAM

NOTE

This calibration procedure can be performed without running engine.

1. Turn engine start switch to ON position (TM 5-3805-291-10).

NOTE

Power to ECM must be cycled for calibration to take effect.

2. Connect MSD to diagnostic connector (WP 0005 00).
3. Select “Transmission” (1) from “ECM Selector” menu and click “OK” (2).

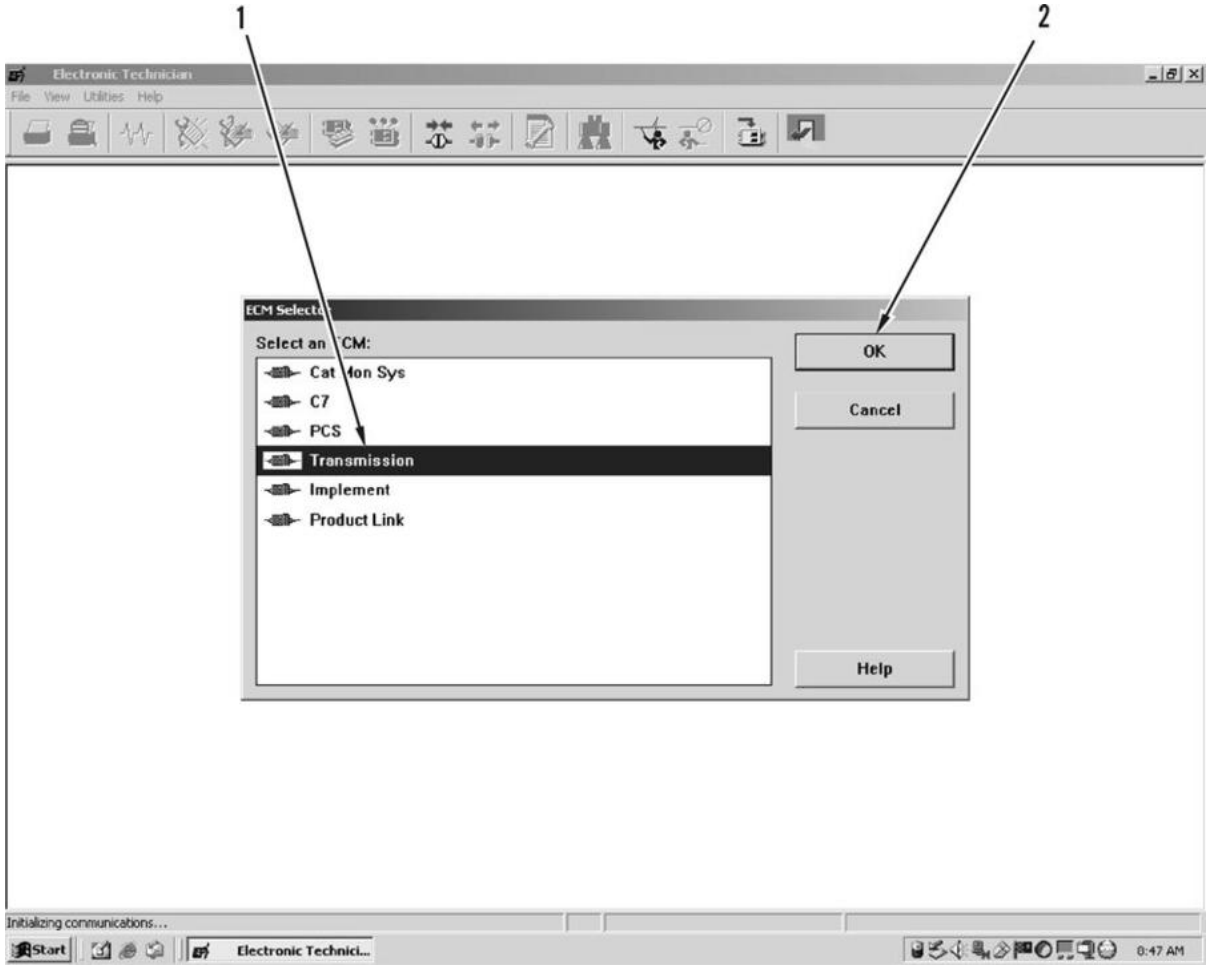

427-C0714

TRANSMISSION SPEED FOR FORWARD DIRECTIONAL SHIFT PROGRAM - CONTINUED

4. Select “Service” (3) menu from toolbar.
5. Select “Configuration” (4) from “Service” (3) menu.

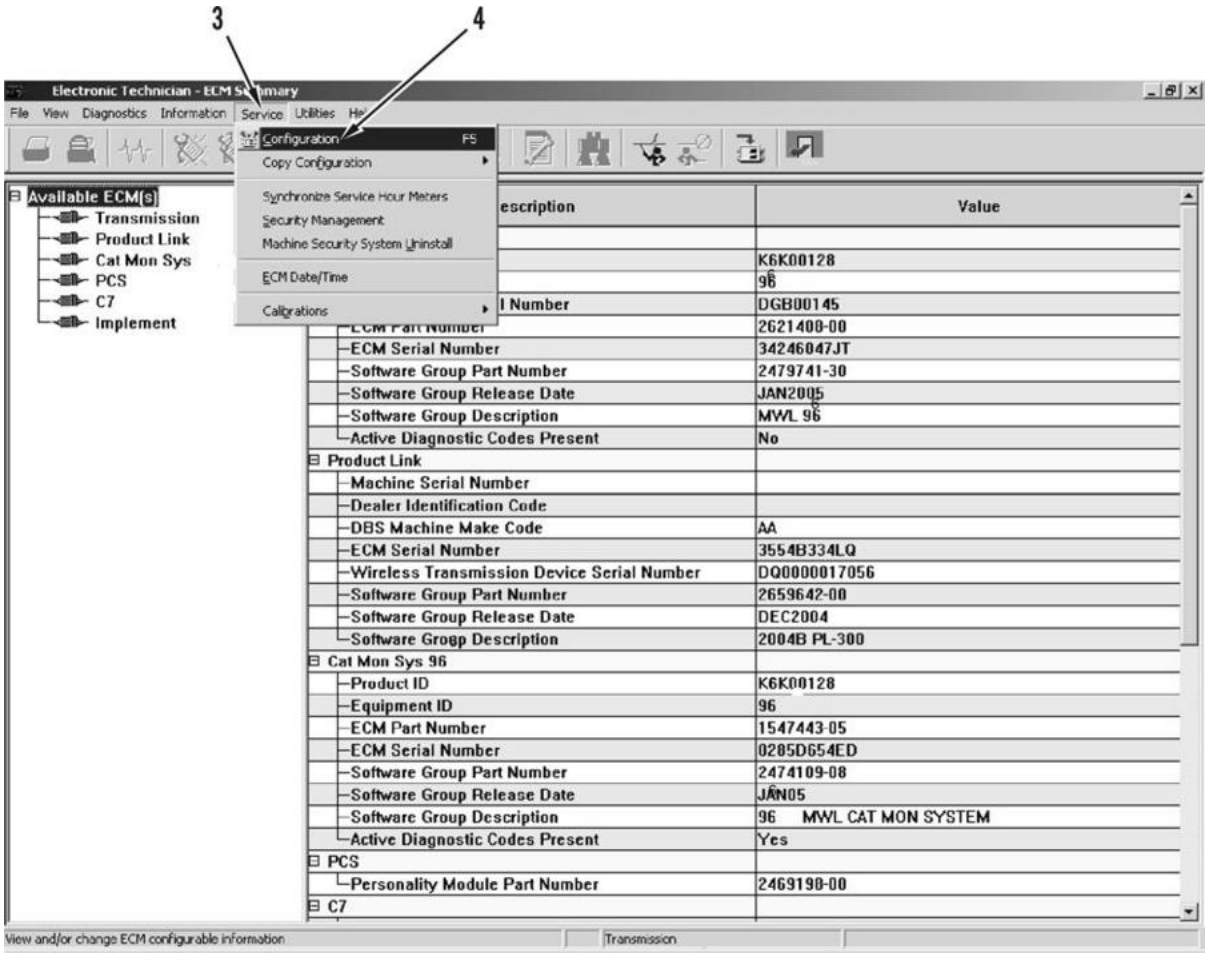

427-C0715

TRANSMISSION SPEED FOR FORWARD DIRECTIONAL SHIFT PROGRAM - CONTINUED

6. Click “Transmission Parameters” (5).
7. Highlight option for “Forward to Reverse Desired Gear” (17).
8. Click “Change” (7).

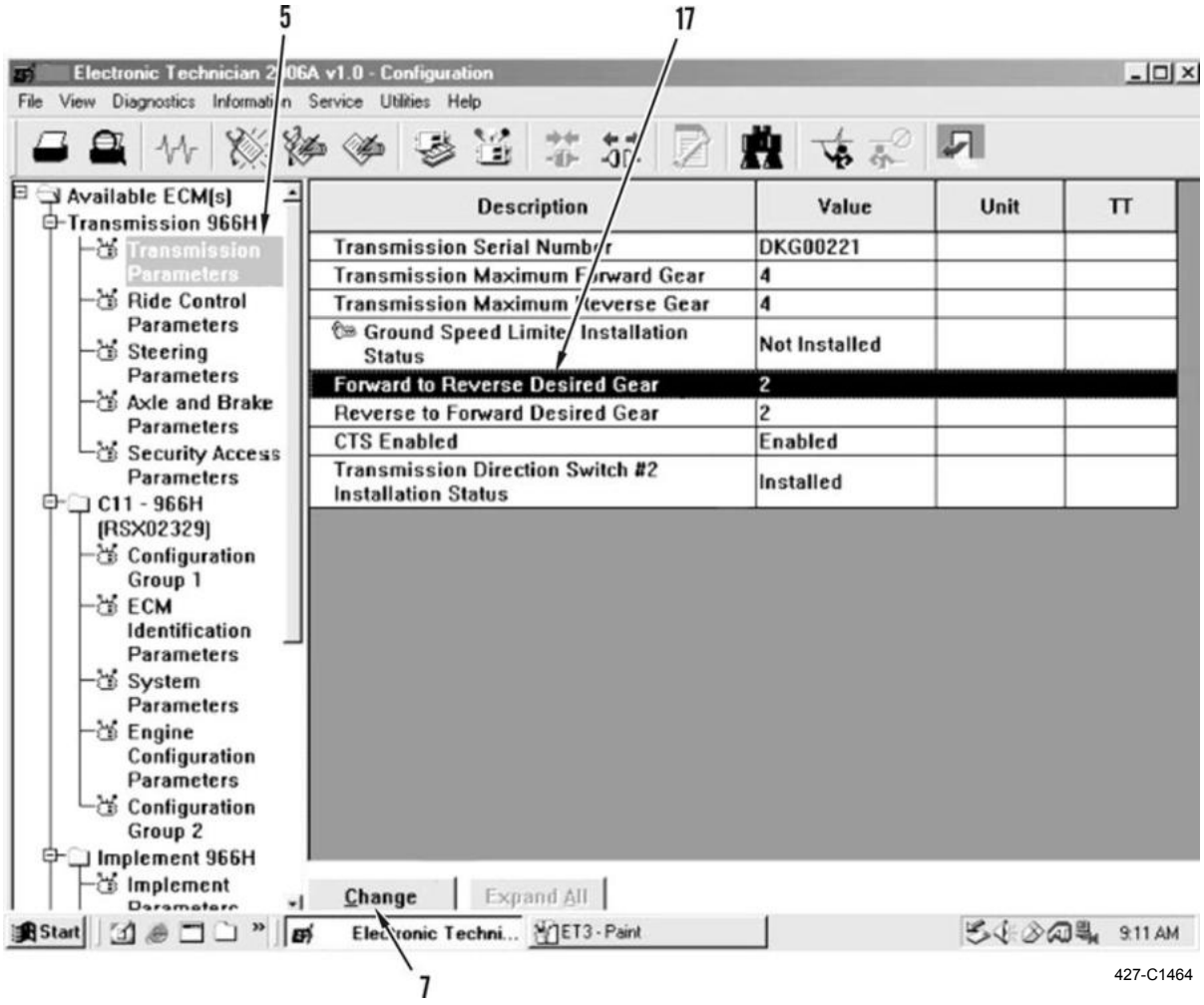

TRANSMISSION SPEED FOR FORWARD DIRECTIONAL SHIFT PROGRAM - CONTINUED

NOTE

New valve can be gear 1 to 2.

9. Enter new value (18) for forward to reverse desired gear.
10. Click “OK” (9).

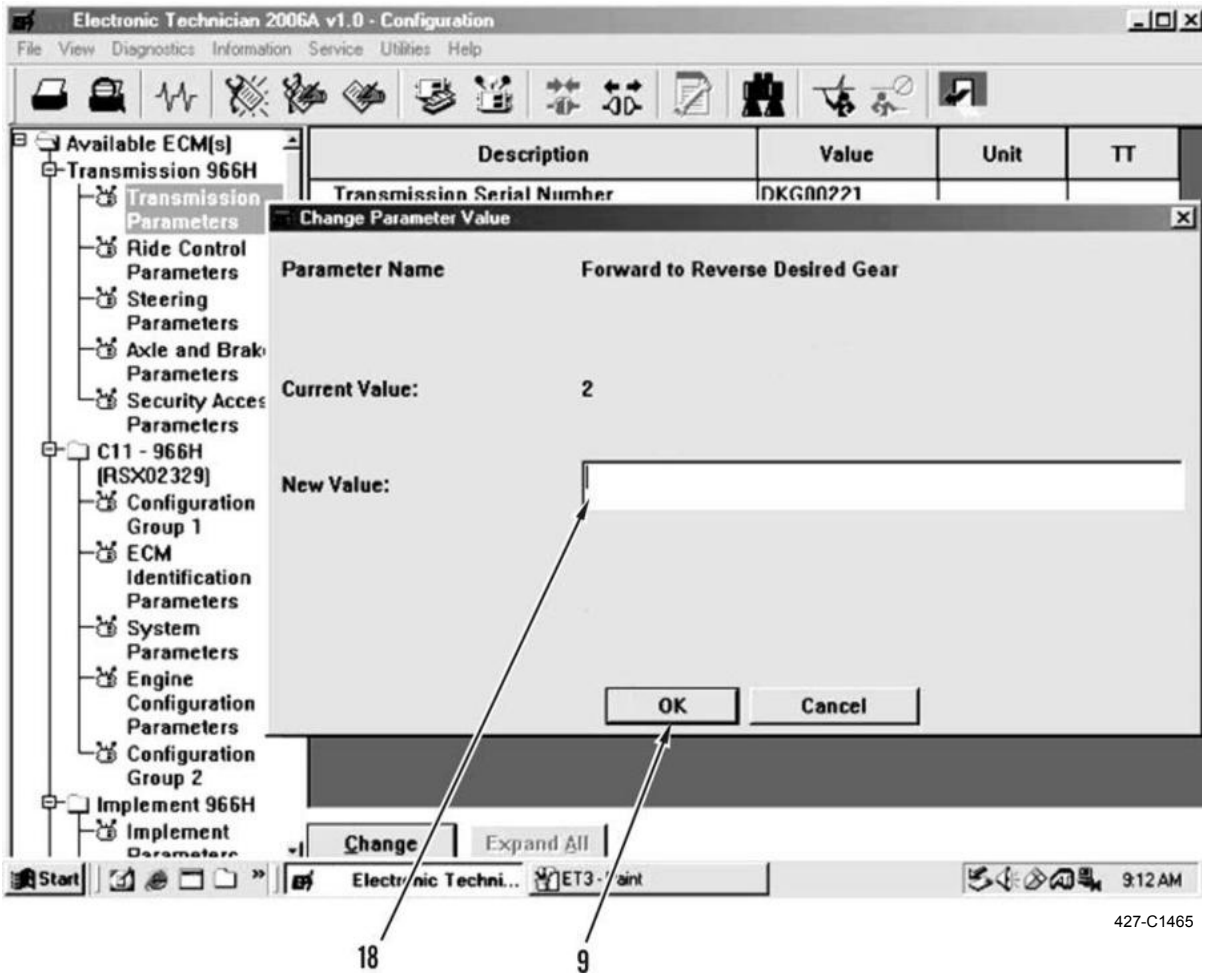

11. Click “Yes” (10).

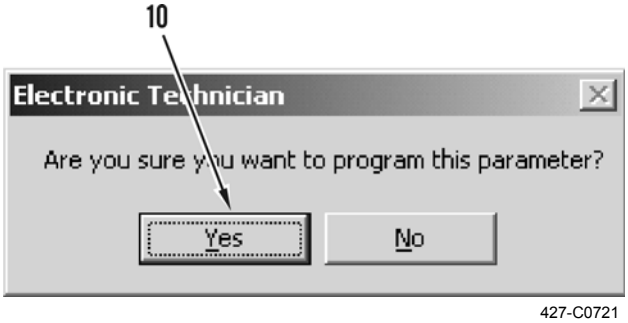

TRANSMISSION SPEED FOR FORWARD DIRECTIONAL SHIFT PROGRAM - CONTINUED

12. Close MSD.
13. Disconnect MSD from diagnostic connector (WP 0005 00).
14. Turn engine start switch to OFF position (TM 5-3805-291-10).

TRANSMISSION SPEED FOR REVERSE DIRECTIONAL SHIFT PROGRAM

NOTE

This calibration procedure can be performed without running engine.

1. Turn engine start switch to ON position (TM 5-3805-291-10).

NOTE

Power to ECM must be cycled for calibration to take effect.

2. Connect MSD to diagnostic connector (WP 0005 00).
3. Select “Transmission” (1) from “ECM Selector” menu and click “OK” (2).

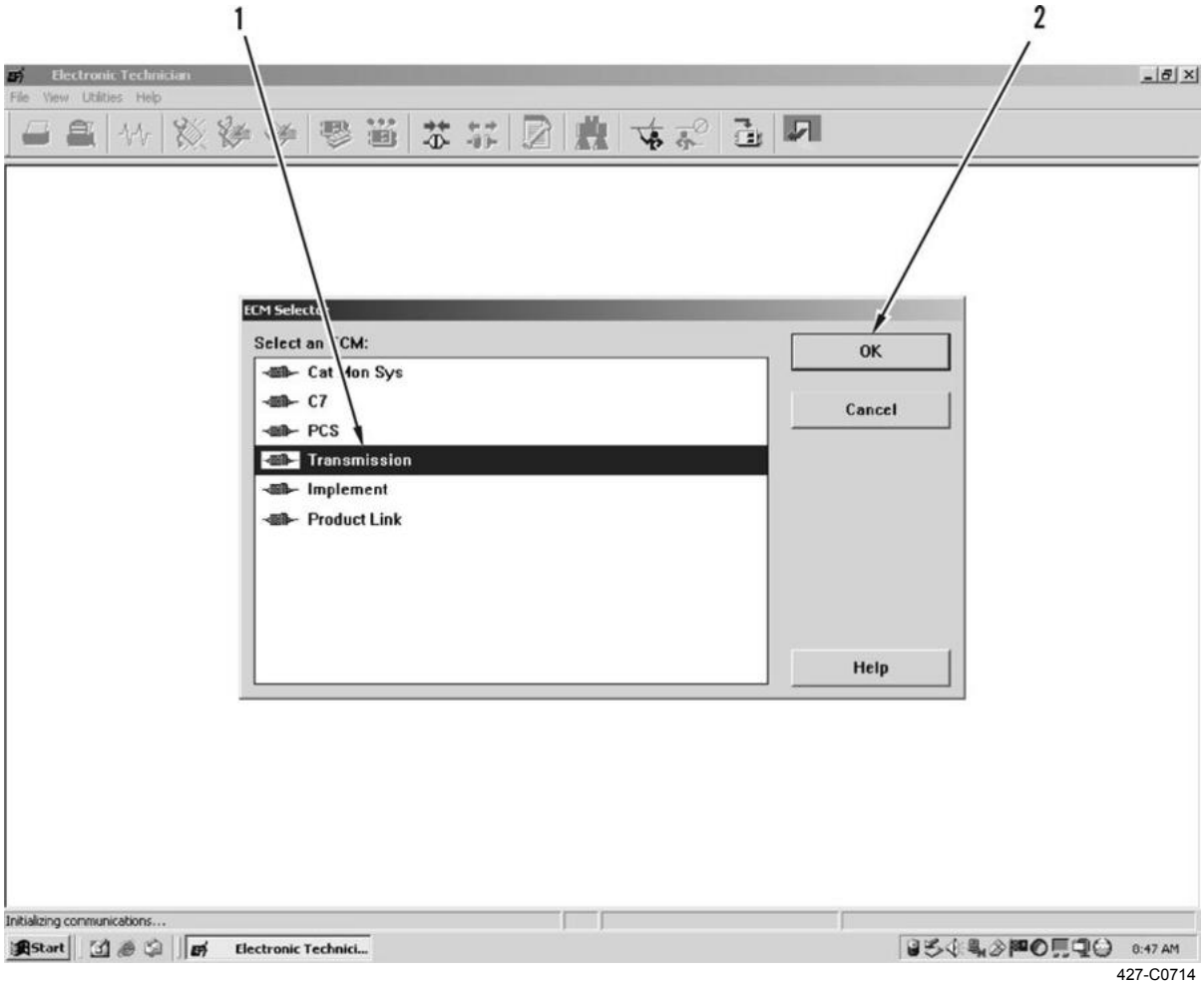

427-C0714

TRANSMISSION SPEED FOR REVERSE DIRECTIONAL SHIFT PROGRAM - CONTINUED

4. Select “Service” (3) menu from toolbar.
5. Select “Configuration” (4) from “Service” (3) menu.

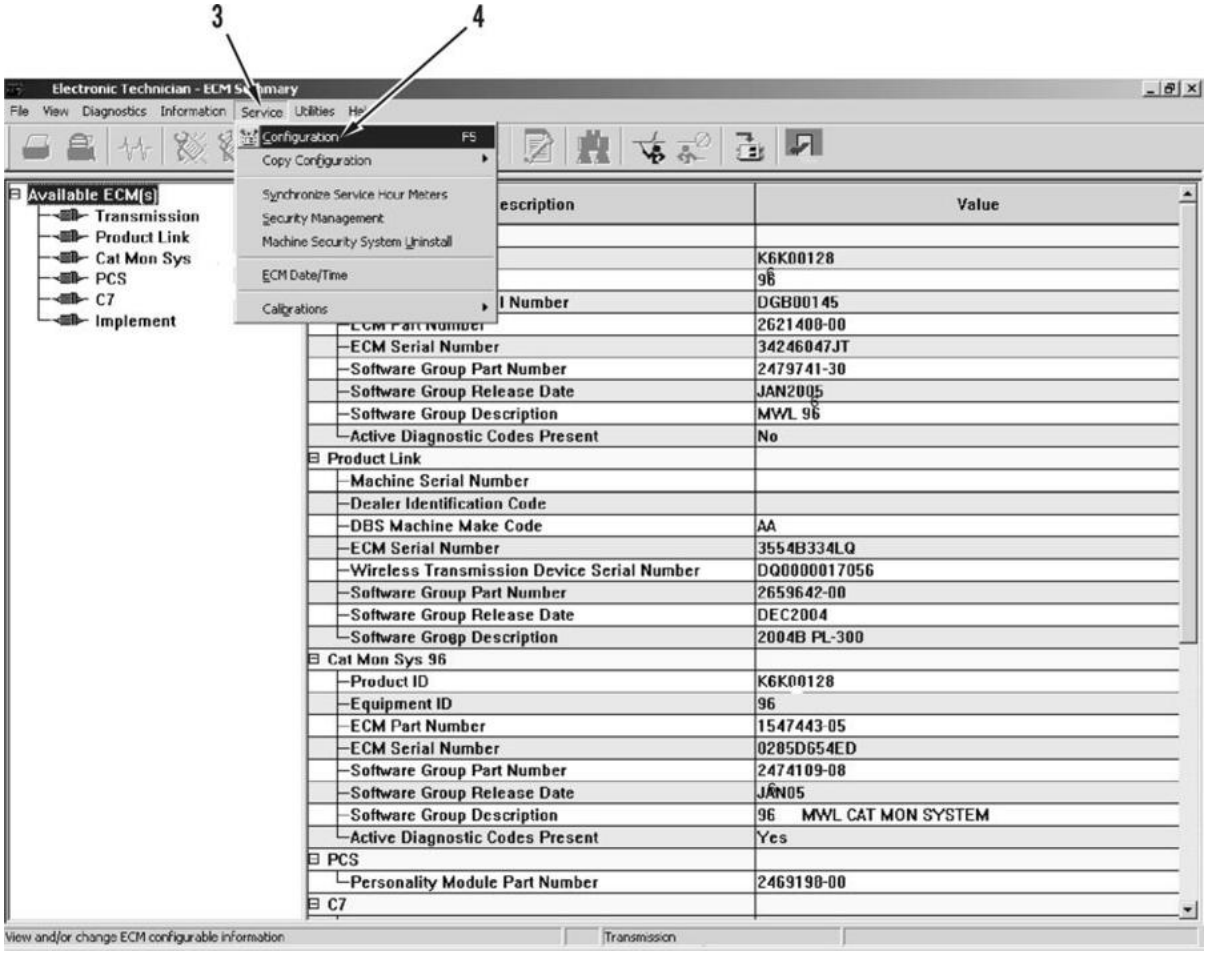

427-C0715

TRANSMISSION SPEED FOR REVERSE DIRECTIONAL SHIFT PROGRAM - CONTINUED

6. Click “Transmission Parameters” (5).
7. Highlight option for “Reverse to Forward Desired Gear” (19).
8. Click “Change” (7).

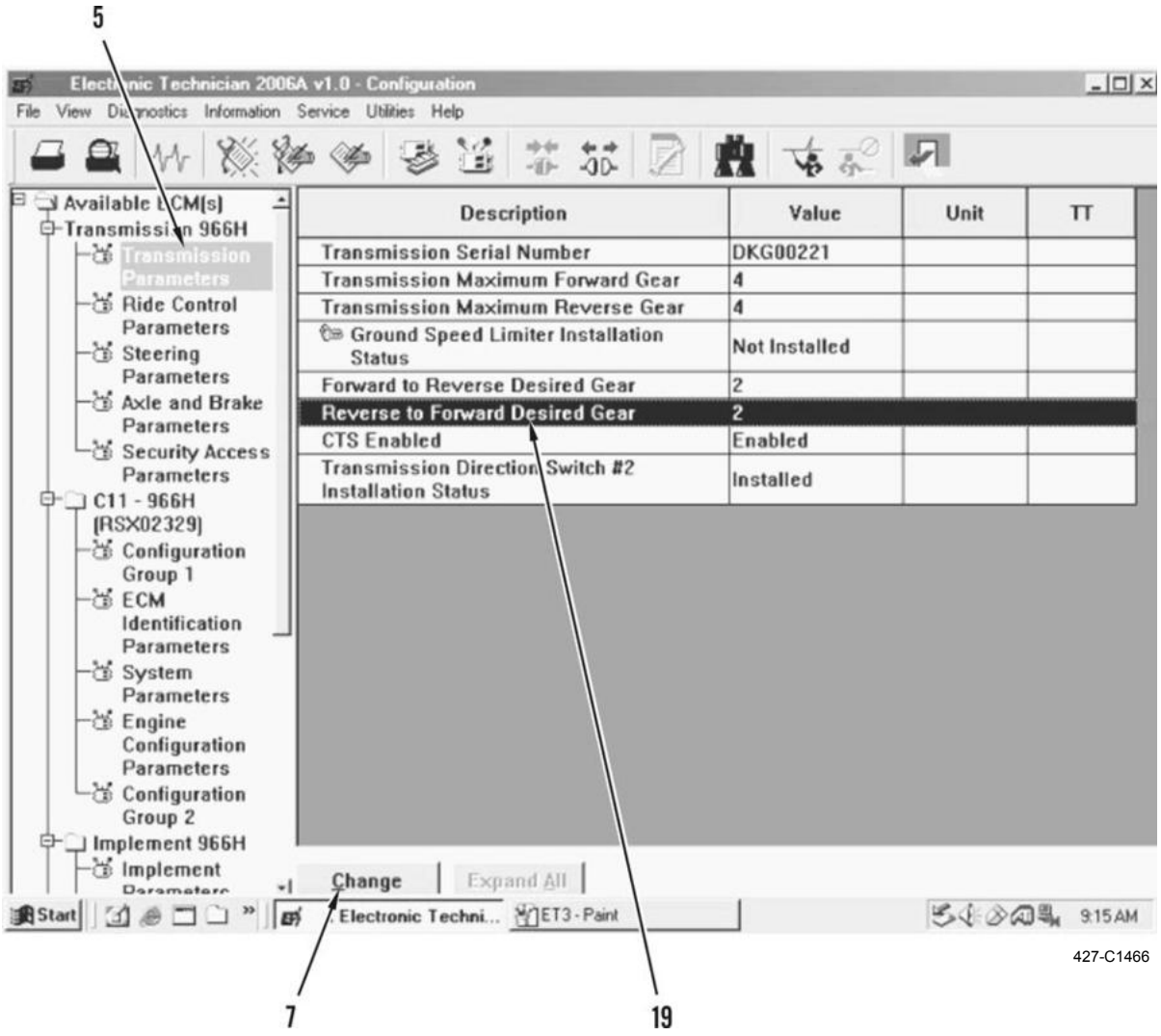

TRANSMISSION SPEED FOR REVERSE DIRECTIONAL SHIFT PROGRAM - CONTINUED

NOTE

New valve can be gear 1 to 2.

9. Enter new value (20) for reverse to forward desired gear.
10. Click “OK” (9).

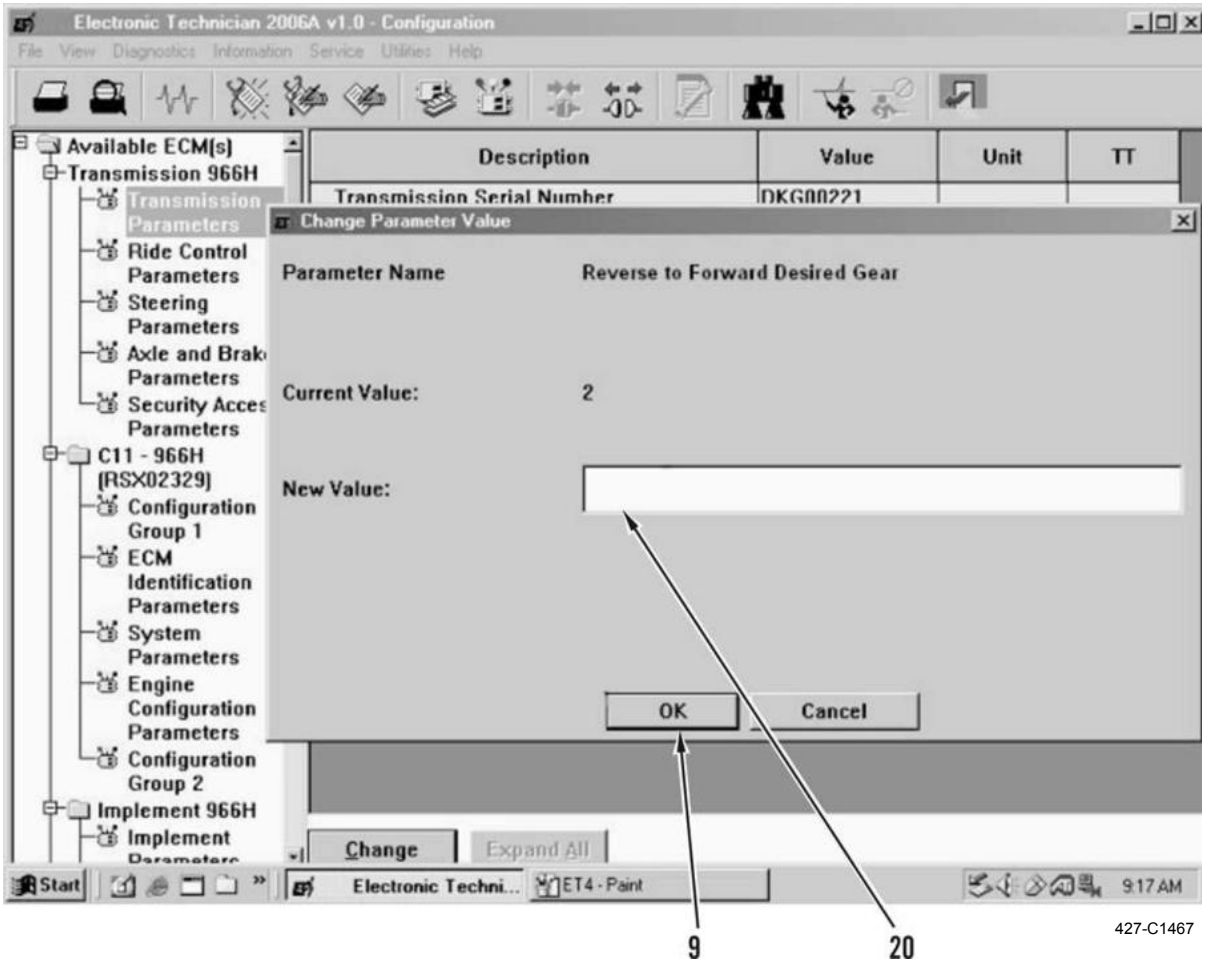

TRANSMISSION SPEED FOR REVERSE DIRECTIONAL SHIFT PROGRAM - CONTINUED

11. Click “Yes” (10).

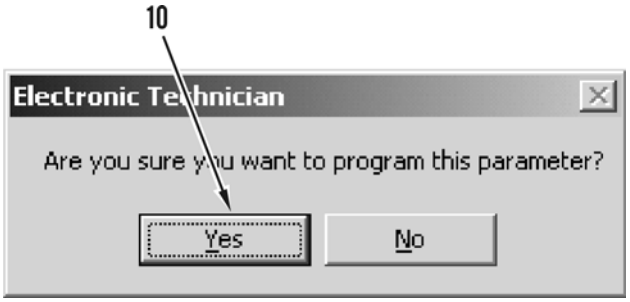

427-C0721

12. Close MSD.
13. Disconnect MSD from diagnostic connector (WP 0005 00).
14. Turn engine start switch to OFF position (TM 5-3805-291-10).

FILL TIME FOR TRANSMISSION CLUTCH (MSD) CALIBRATION

NOTE

Transmission clutch fill calibration will fine tune each valve to clutch controlled by valve. If parameters for clutch fill are not correct, quality of transmission shift can be greatly affected. To achieve greater consistency, calibration procedure is automatic.

1. Start engine (TM 5-3805-291-10).
2. Warm transmission oil to at least 144°F (62°C) (TM 5-3805-291-10).
3. Connect MSD to diagnostic connector (WP 0005 00).
4. Select “Transmission” (1) from “ECM Selector” menu and click “OK” button (2).

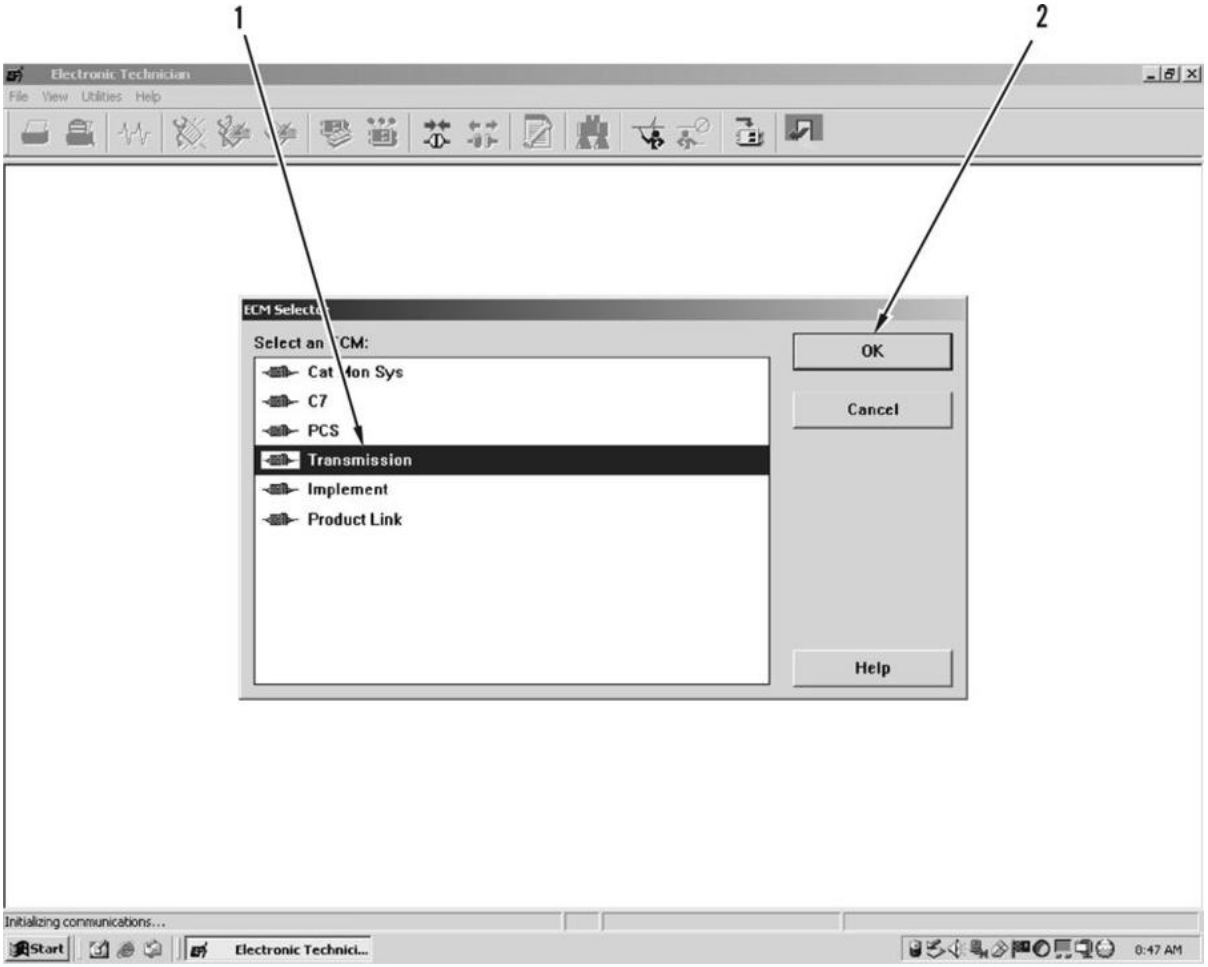

427-C0714

FILL TIME FOR TRANSMISSION CLUTCH (MSD) CALIBRATION - CONTINUED

5. Select “Service” (3) menu from toolbar.
6. Select “Calibrations” (21) submenu from “Service” (3) menu.
7. Select “Transmission Fill Calibration” (22) from “Calibrations” (21) submenu.

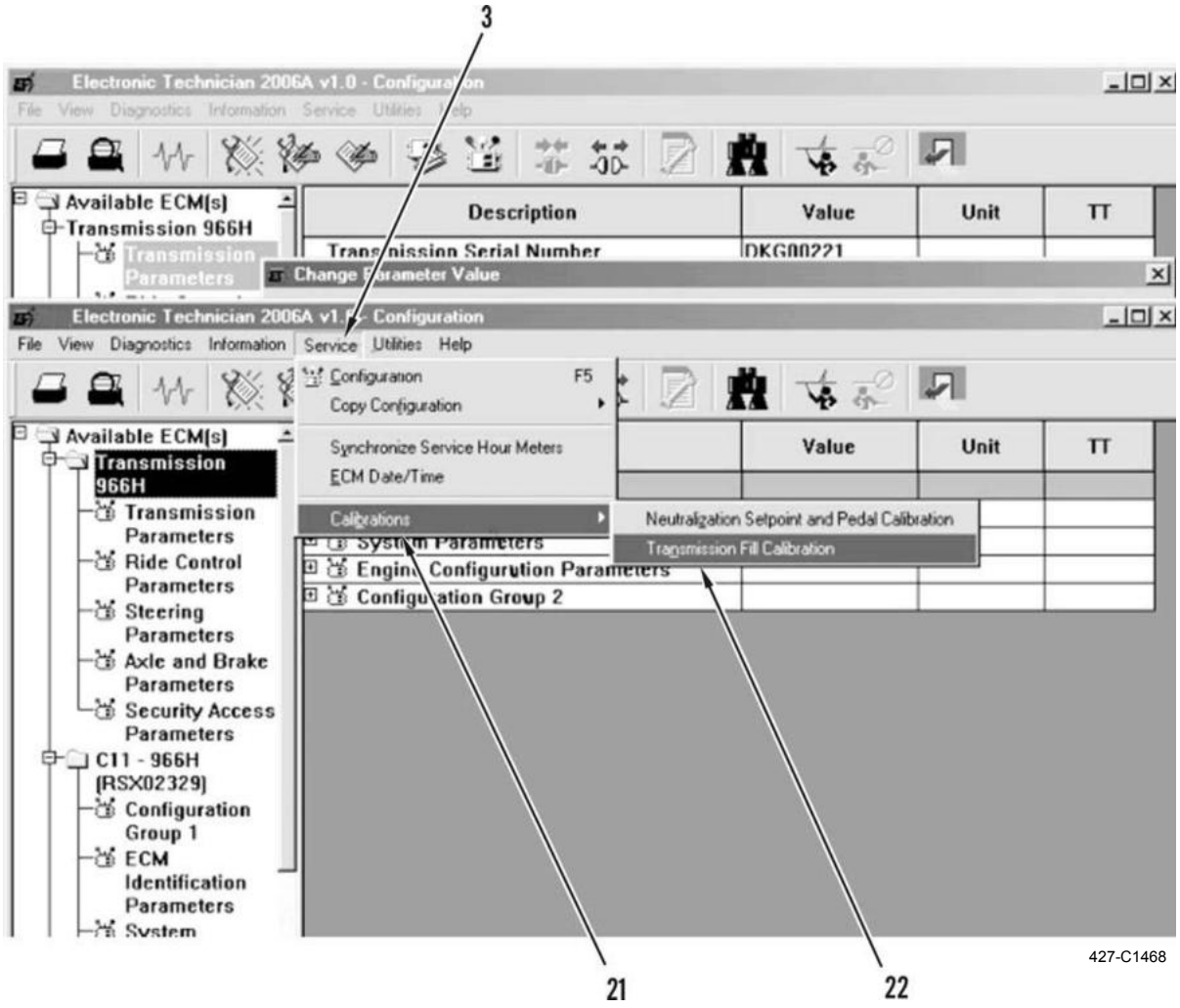

FILL TIME FOR TRANSMISSION CLUTCH (MSD) CALIBRATION - CONTINUED

NOTE

If new clutch solenoid modulating valve was installed, shift transmission 12 times into speed or direction that uses clutch solenoid modulating valve. Allow sufficient time for corresponding clutch to be fully pressurized.

8. Click “Next” (23) to start calibration.
9. Click “Next” (23) to begin next step. Continue this process to complete calibration procedure.

NOTE

- **Calibration procedure continues until ECM determines that one step does not meet specification. Middle display area will display message to alert error.**
- **After correcting any problems, calibration will proceed. After brief initialization, each clutch is calibrated in sequence without any input from user. Middle display area will inform user of progress of calibration. Calibration of each clutch takes approximately 90 seconds.**

10. Correct error described in middle display area or cancel calibration by clicking “Cancel” (24).

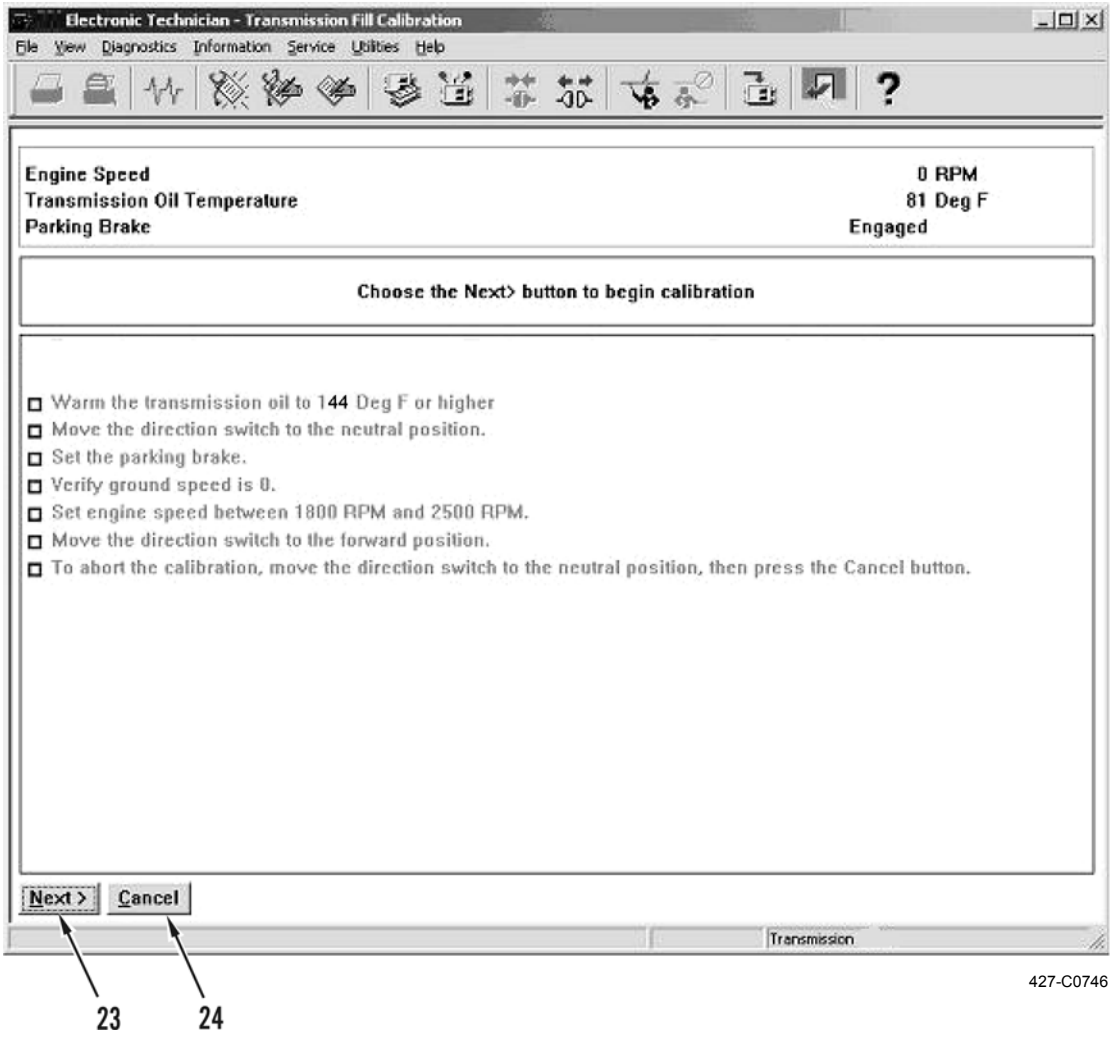

FILL TIME FOR TRANSMISSION CLUTCH (MSD) CALIBRATION - CONTINUED

NOTE

- **If some clutches reach limit during calibration, ECM will make a log.**
- **ECM will then move to next clutch.**
- **When calibration is performed on all clutches, dialog box will display results for each clutch.**
- **There are only two possible results: "Success" or "At a limit".**
- **Dialog box only appears if one or more clutches has "At a limit" error.**
- **Status of individual clutches is displayed in dialog box.**

11. Continue calibration.
12. If necessary, click "Restart" to repeat calibration.
13. Exit calibration.
14. Close MSD.
15. Disconnect MSD from diagnostic connector (WP 0005 00).
16. Stop engine (TM 5-3805-291-10).

POSITION SENSOR (LEFT BRAKE PEDAL) (MSD) CALIBRATION

1. Install test stand on pressure tap (25) of service brake control valve (26).

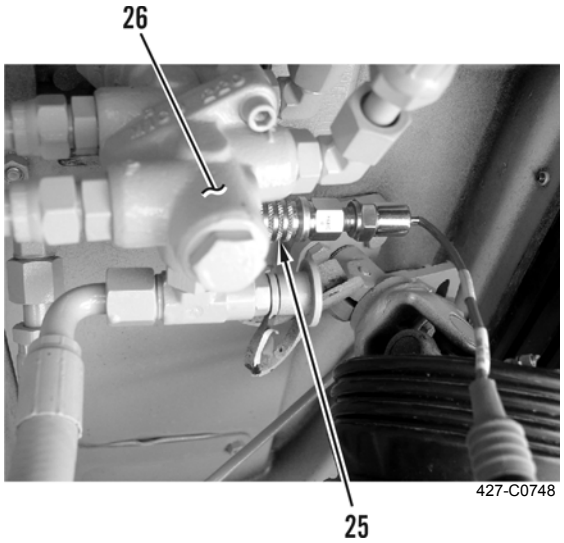

427-C0748

2. Start engine (TM 5-3805-291-10).
3. Connect MSD to diagnostic connector (WP 0005 00).
4. Select “Transmission” (1) from “ECM Selector” menu and click “OK” (2).

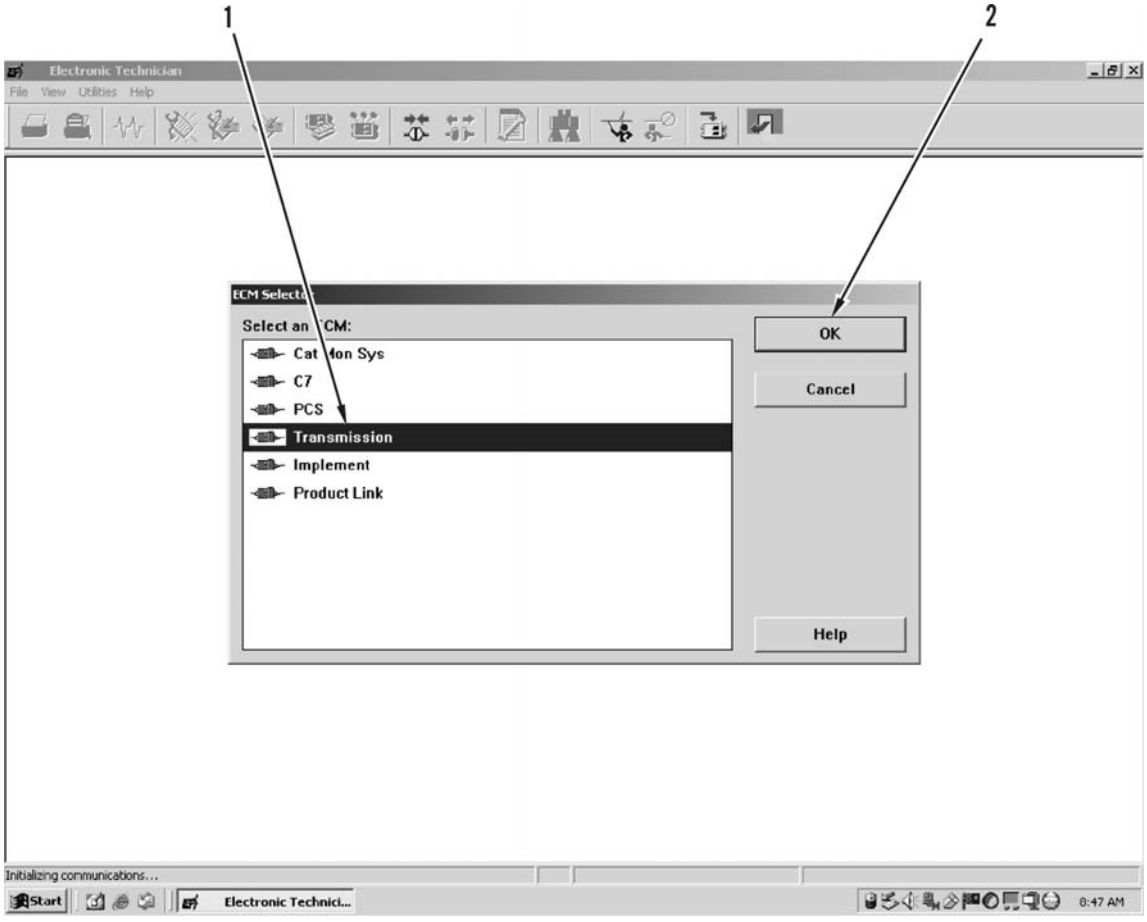

427-C0714

POSITION SENSOR (LEFT BRAKE PEDAL) (MSD) CALIBRATION - CONTINUED

5. Select “Service” (3) menu from toolbar.
6. Select “Calibrations” (21) submenu from “Service” (3) menu.
7. Select “Neutralization Setpoint and Pedal Calibration” (27) from “Calibrations” submenu.

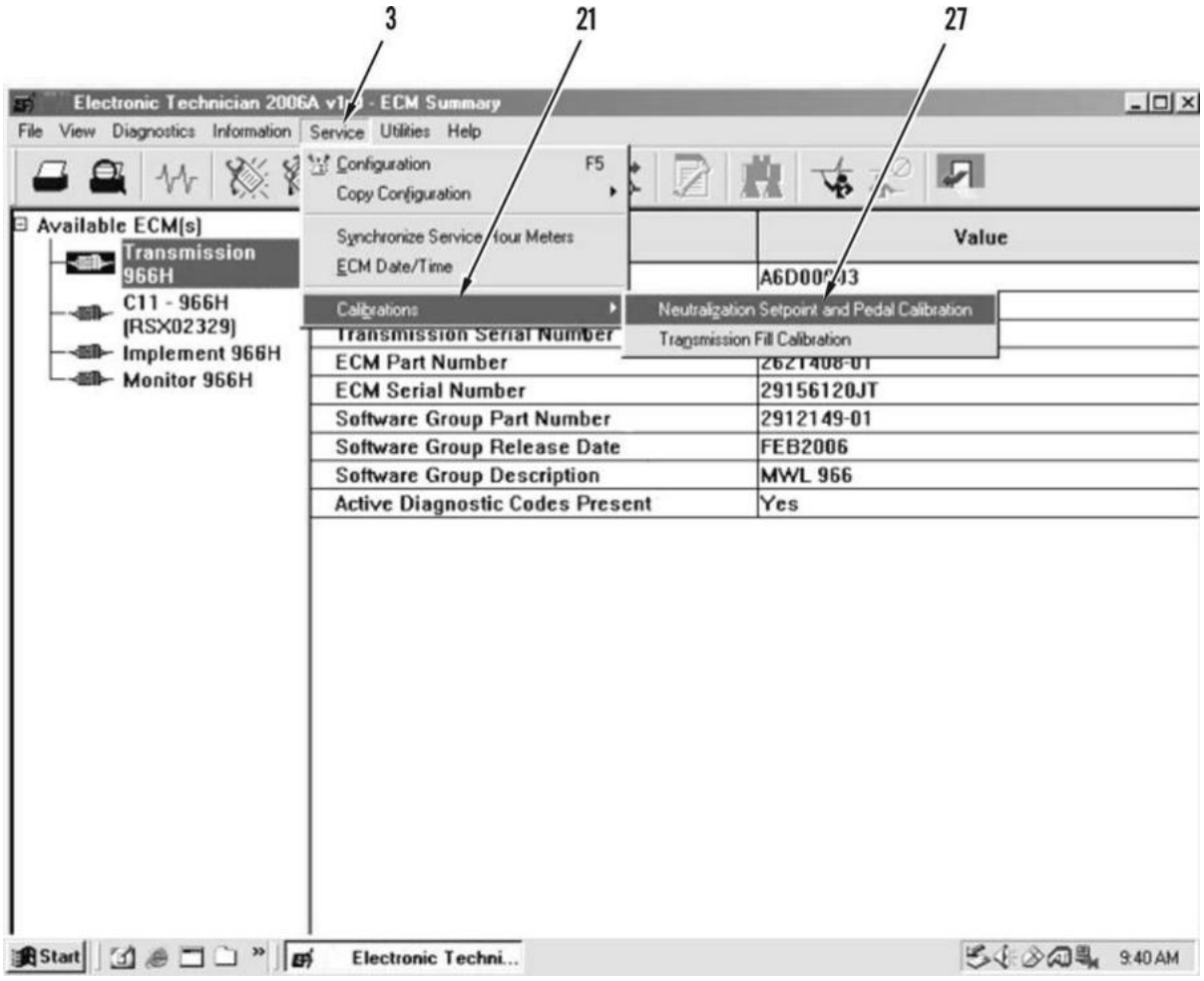

427-C0751

POSITION SENSOR (LEFT BRAKE PEDAL) (MSD) CALIBRATION - CONTINUED

NOTE

- **Once "Neutralization Setpoint and Pedal Calibration" has been selected, screen displays incremental instructions for calibration.**
- **Top display area displays status parameters monitored during calibration.**
- **Middle display area displays information about status of calibration.**
- **Bottom display area displays incremental instructions for calibration.**

8. Click "Next" (23) to start calibration.
9. Click "Next" (23) to begin next step. Continue this process to complete calibration procedure.

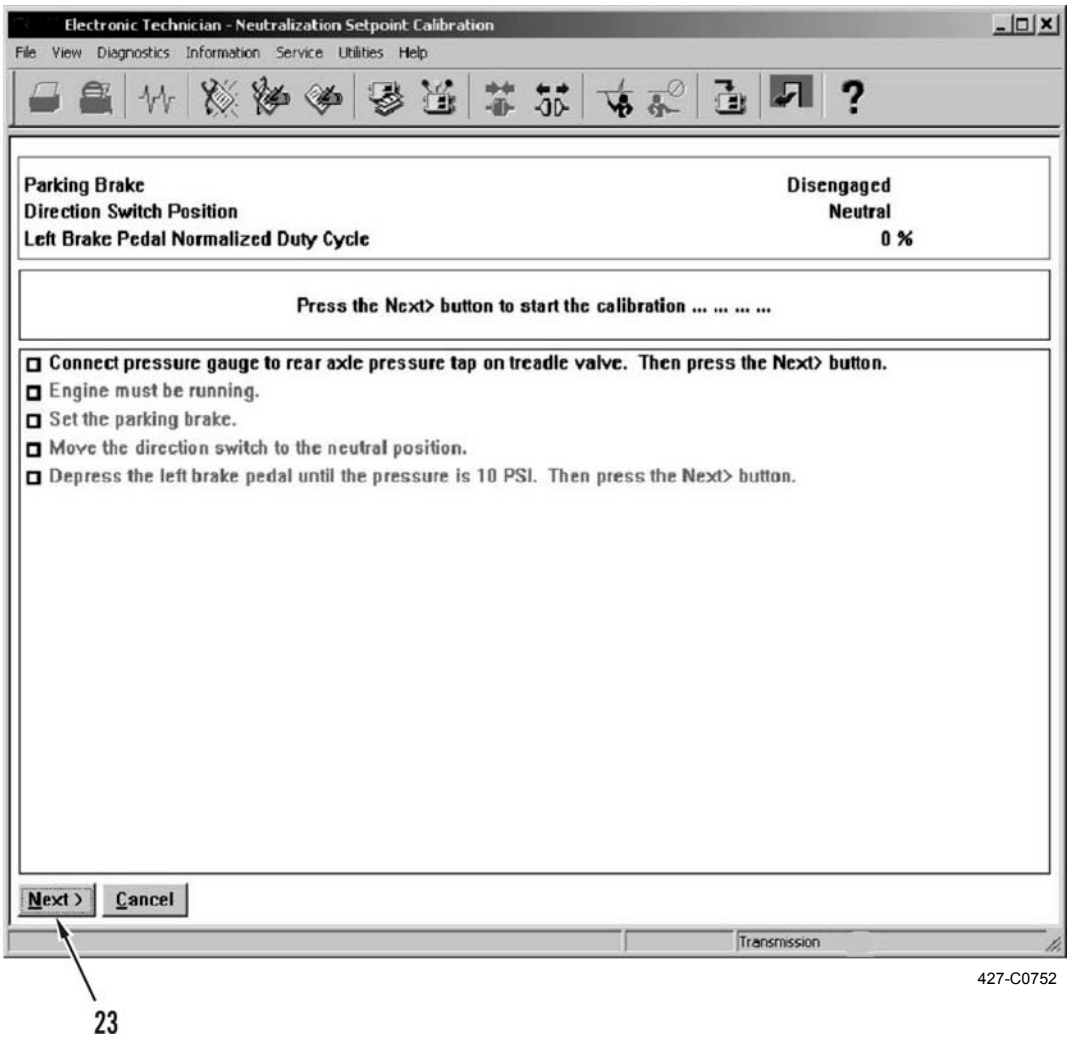

NOTE

- **ECM detects possible error messages during calibration. When an error is detected ECM will stop calibration.**
- **Error message will be displayed in middle display area.**

POSITION SENSOR (LEFT BRAKE PEDAL) (MSD) CALIBRATION - CONTINUED

10. If necessary, click “Restart” (29) to repeat test.
11. Click “Finish” (30) to finish calibration.

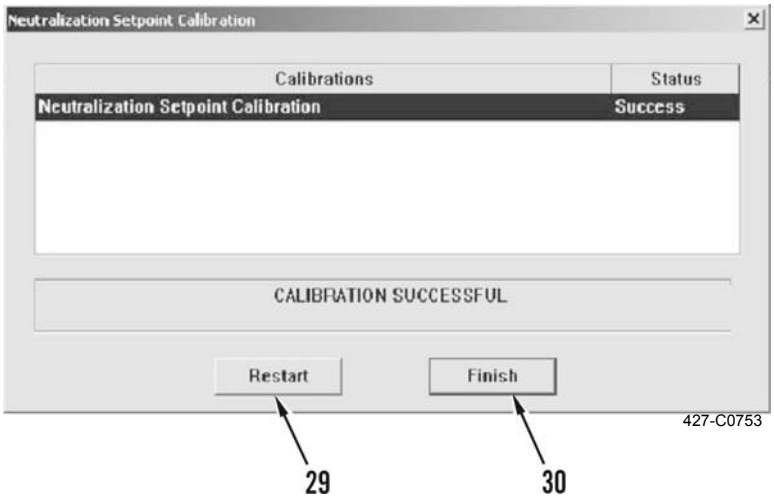

12. Exit calibration.
13. Close MSD.
14. Disconnect MSD from diagnostic connector (WP 0005 00).
15. Stop engine (TM 5-3805-291-10).
16. Release hydraulic system pressure (TM 5-3805-291-10).
17. Remove test stand from pressure tap (25) of service brake control valve (26).

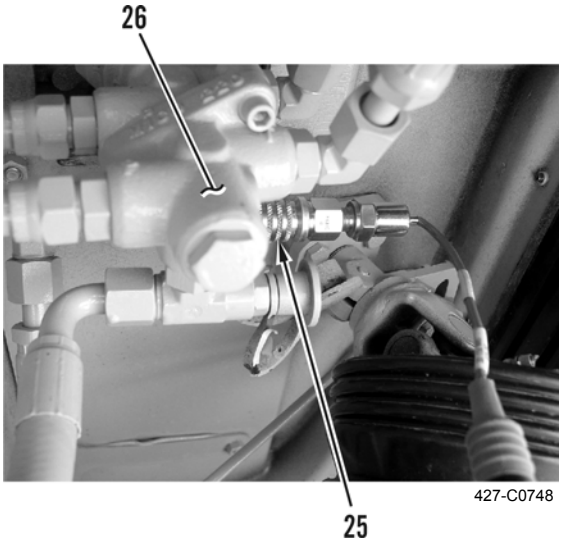

TRANSMISSION NEUTRALIZATION SETPOINT ADJUSTMENT

1. Install test stand on pressure tap (25) of service brake control valve (26).

TRANSMISSION NEUTRALIZATION SETPOINT ADJUSTMENT - CONTINUED

2. Start engine (TM 5-3805-291-10).
3. Connect MSD to diagnostic connector (WP 0005 00).
4. Select “Transmission” (1) from “ECM Selector” menu and click “OK” (2).

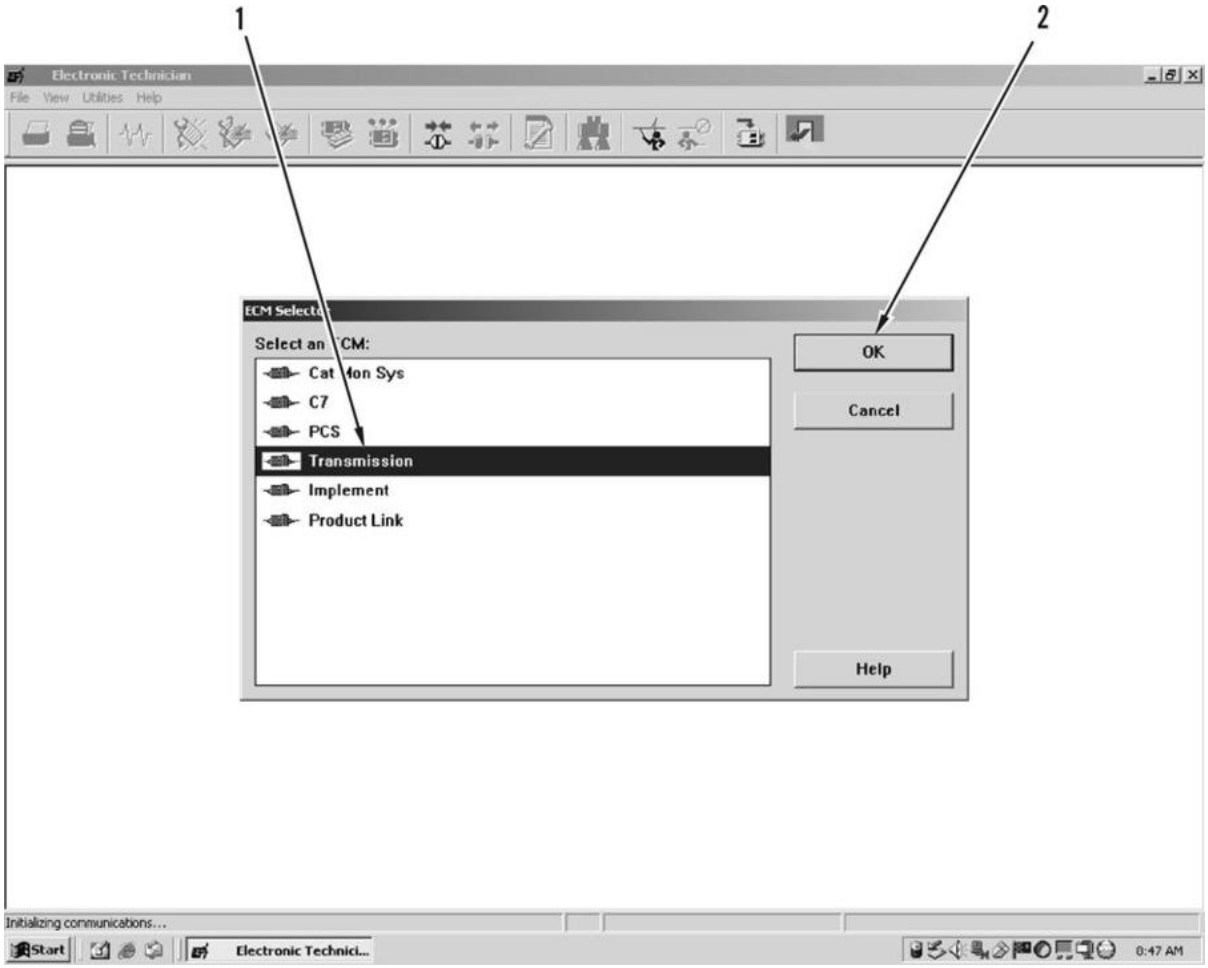

427-C0714

TRANSMISSION NEUTRALIZATION SETPOINT ADJUSTMENT - CONTINUED

5. Select “Service” (3) menu from toolbar.
6. Select “Calibrations” (21) submenu from “Service” (3) menu.
7. Select “Neutralization Setpoint Adjustment” (31) from “Calibrations” (21) submenu.

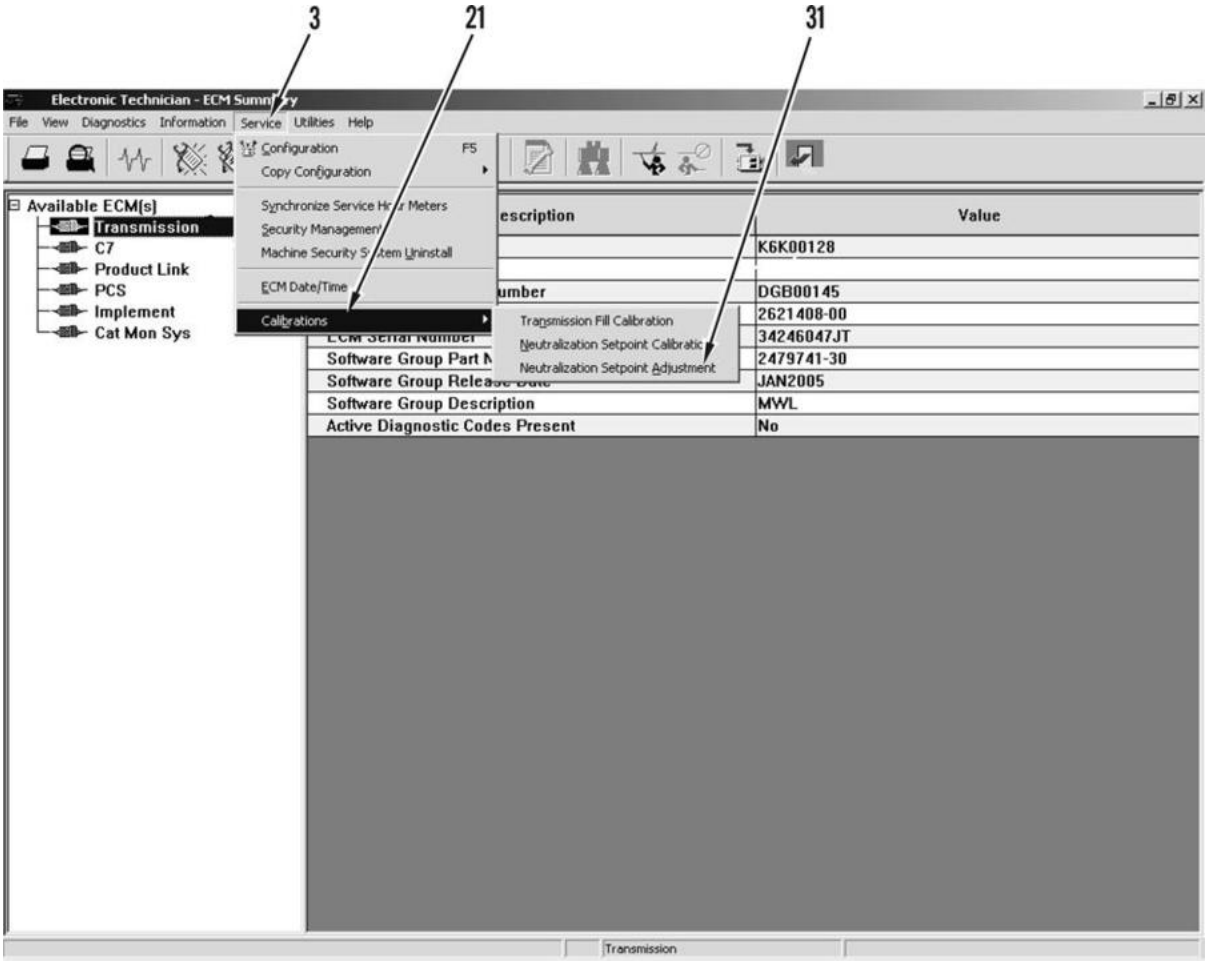

427-C0755-1

TRANSMISSION NEUTRALIZATION SETPOINT ADJUSTMENT - CONTINUED

NOTE

- **Once "Neutralization Setpoint Adjustment" has been selected, screen displays incremental instructions for adjustment.**
- **Top display area displays status parameters monitored during adjustment.**
- **Middle display area displays information about status of adjustment.**
- **Bottom display area displays incremental instructions for adjustment.**

8. Click "Next" (23) to start adjustment.
9. Click "Next" (23) to begin next step. Continue process to complete adjustment procedure.

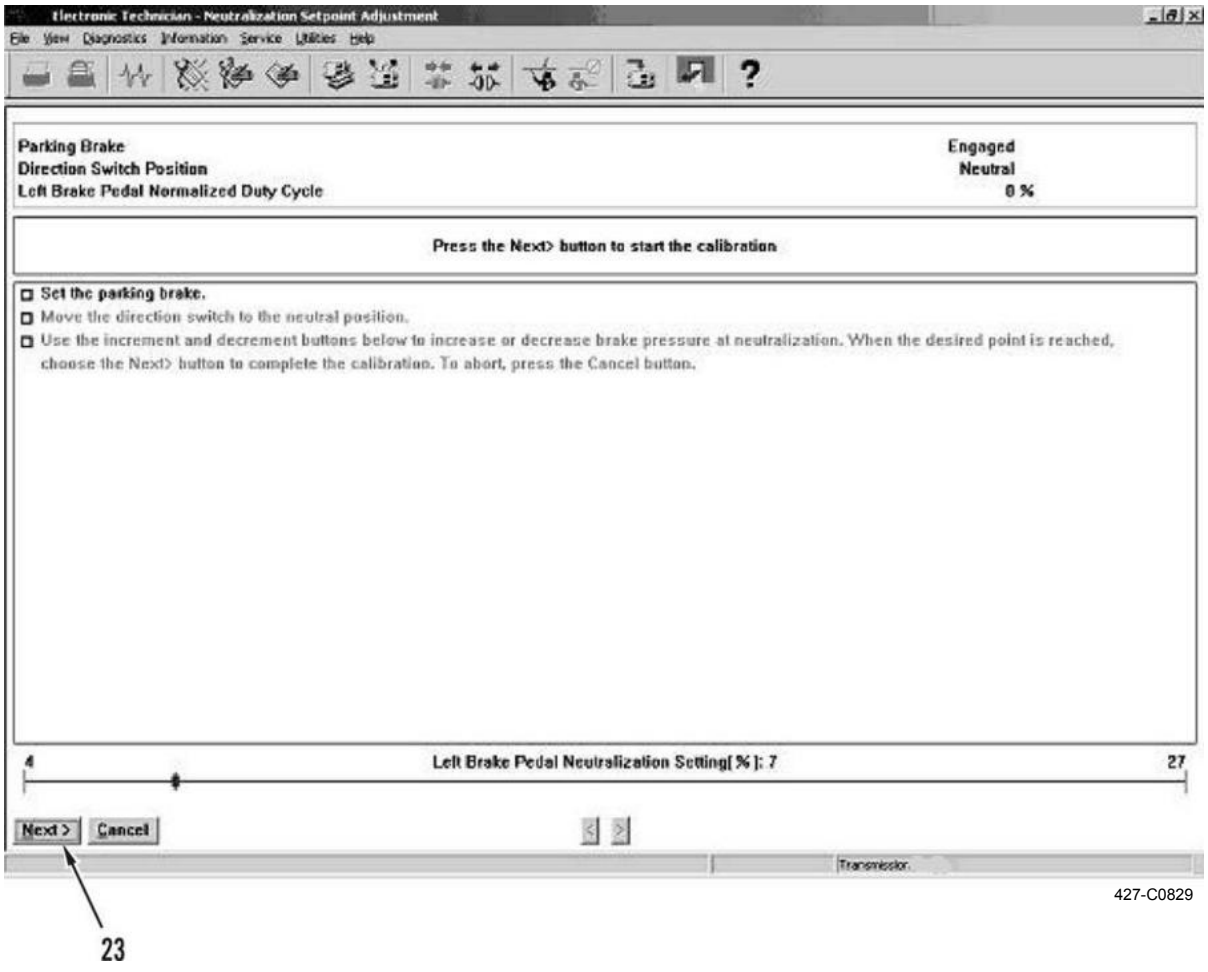

TRANSMISSION NEUTRALIZATION SETPOINT ADJUSTMENT - CONTINUED

NOTE

- **ECM detects possible error messages during adjustment. When an error is detected ECM will stop adjustment.**
- **Error message will be displayed in middle display area.**

10. If necessary, click “Restart” (29) to repeat test.
11. Click “Finish” (30) to finish calibration.

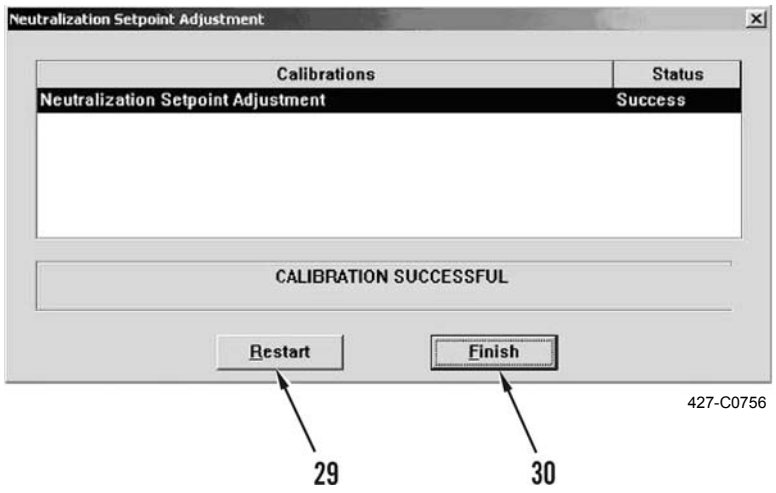

TRANSMISSION NEUTRALIZATION SETPOINT ADJUSTMENT - CONTINUED

12. Exit calibrations.
13. Close MSD.
14. Disconnect MSD from diagnostic connector (WP 0005 00).
15. Stop engine (TM 5-3805-291-10).
16. Release hydraulic system pressure (TM 5-3805-291-10).
17. Remove test stand from pressure tap (25) of service brake control valve (26).

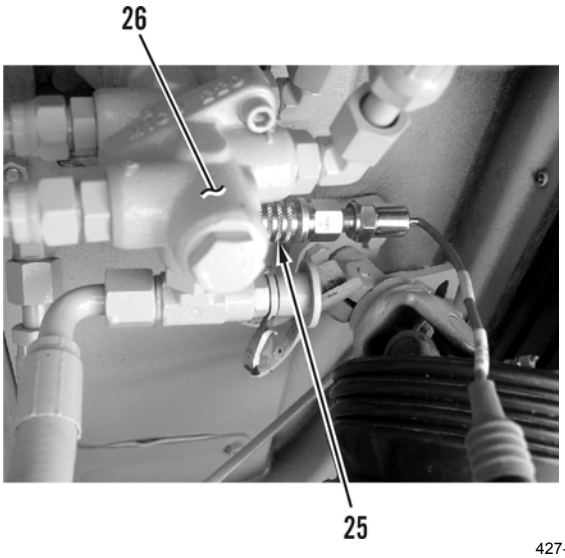

427-C0748

SPEED SENSOR ADJUSTMENT

1. Loosen locknut (32) on torque converter speed sensor (33).
2. Remove torque converter speed sensor (33) (WP 0091 00).
3. Align gear tooth (34) directly in center of threaded sensor opening.
4. Screw speed sensor (33) into hole by hand until end of sensor contacts gear tooth (34).
5. Turn speed sensor (33) counterclockwise 1/2 turn to set air gap (A) to 0.028 in. (0.71 mm).

NOTE

Do not allow speed sensor to turn as locknut is tightened.

SPEED SENSOR ADJUSTMENT - CONTINUED

6. Tighten locknut (32) to 18 ± 4 lb-ft (25 ± 5 Nm).

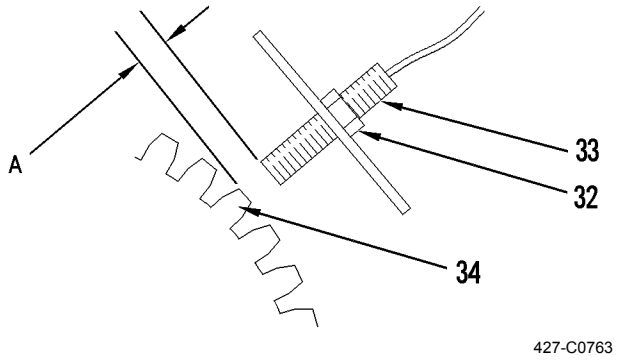

TORQUE CONVERTER STALL TEST

NOTE

- **Machines using quality fuel with transmission oil at normal operating temperatures should have engine stall speeds within the specified range. Refer to the factory test measurements to determine the appropriate specification for the machine being serviced. If the machine being serviced is outside the range of engine stall speeds, the powertrain components should be inspected. Use the component test specifications to determine the corrective action. These ranges of engine stall speed should not be used to adjust the engine power of the machine. If engine output is suspect, the engine should be tested on a dynamometer.**
- **The torque converter stall test helps determine if the engine is producing the correct power output. The torque converter stall test provides an engine speed for comparison with the torque converter stall speed measured at the factory. The engine stall speed should be in the range shown.**
- **The torque converter stall test helps determine if the engine is producing the correct power output. This stall test is used in many diagnostic procedures.**
- **The parking brake must be applied when the tests are performed. Ensure that the parking brakes are fully operational before performing any tests.**
- **The service brakes must be applied when the tests are performed. Ensure that the service brakes are fully operational before performing any tests.**
- **Ensure the transmission oil is at the normal operating temperature of 167° to 220 °F (75° to 105° C) before performing tests.**

TORQUE CONVERTER STALL TEST - CONTINUED

1. Disconnect wiring harness connector (35) from electro-hydraulic control valve (36).

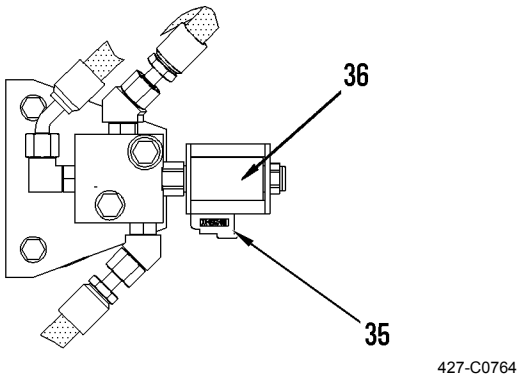

2. Start engine (TM 5-3805-291-10).
3. Warm transmission oil to normal operating temperature, approximately 167° to 220°F (75° to 105°C) (TM 5-3805-291-10).

NOTE

Hold brake pedal in depressed position for duration of test.

4. Fully depress right-side service brake pedal.
5. Shift transmission direction control and speed control to FOURTH SPEED FORWARD position (TM 5-3805-291-10).

NOTE

- **Do not use left brake pedal.**
- **Correct torque converter stall speed is 2,050 minimum rpm.**
- **If torque converter stall speed is too high, engine power output could be too high.**
- **If torque converter stall speed is too low, engine may not be developing full power. There may be parasitic load on engine.**

6. Fully depress throttle control pedal. Allow engine rpm to stabilize, then observe tachometer (TM 5-3805-291-10).

NOTE

Allow engine coolant and transmission oil to cool. Wait two minutes between tests to allow transmission oil to cool.

7. Shift transmission direction control and speed control to NEUTRAL position.
8. Stop engine (TM 5-3805-291-10).
9. Connect wiring harness connector (37) to electro-hydraulic control valve (38).

TRANSMISSION PRESSURES TEST AND ADJUSTMENT

Transmission Clutch Solenoid Modulating Valve Test

1. Install test stands on six pressure taps (37 thru 42).

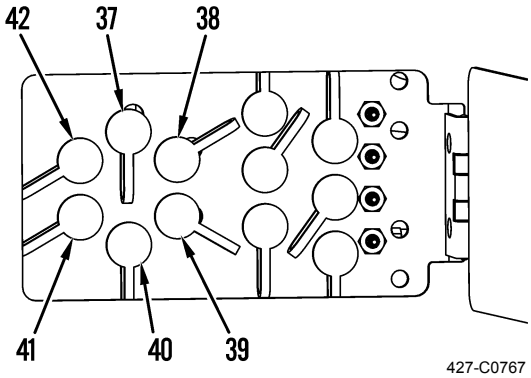

2. Start and run engine at low idle (TM 5-3805-291-10).

NOTE

Make sure transmission oil is at normal operating temperature.

3. Press transmission neutralizer override switch to disengage transmission neutralizer (TM 5-3805-291-10).
4. With assistance, depress and hold right service brake pedal (TM 5-3805-291-10).
5. With assistance, make sure machine is in FIRST SPEED. Disengage parking brake (TM 5-3805-291-10) and observe pressure gages.

WARNING

- **Injury or death can result from sudden machine movement.**
- **Sudden movement of the machine can cause injury to persons on or near the machine.**
- **Prevent possible injury to personnel by performing the procedure that follows before working on the machine.**

CAUTION

- **Care must be taken to ensure that fluids are contained during inspection, maintenance, testing, adjusting and repair. Be prepared to collect the fluid with suitable containers before opening any compartment or disassembling any component containing fluids.**
- **Do not connect or disconnect hose fittings to or from the quick disconnect nipples when there is pressure in the system. This will prevent damage to the seals that are in the fitting.**

TRANSMISSION PRESSURES TEST AND ADJUSTMENT - CONTINUED

Transmission Clutch Solenoid Modulating Valve Test - Continued

NOTE

- **Dispose of all fluids according to local regulations and mandates.**
- **All test and all adjustments must be made while the transmission oil is at normal operating temperatures.**
- **This test will determine whether the solenoid coil is energized and the solenoid plunger is shifting to permit the flow of oil through the transmission clutch solenoid modulating valve.**
- **Hearing the click of a solenoid or using a screwdriver to check that the solenoid coil is energized does not ensure that the solenoid plunger has shifted. The following test will determine if the solenoid plunger is shifting.**

Speed Range and Direction	Engaged Clutches and Energized Solenoids
Fourth Speed Forward	3 and 2
Third Speed Forward	4 and 2
Second Speed Forward	5 and 2
First Speed Forward	6 and 2
Neutral	3
First Speed Reverse	6 and 1
Second Speed Reverse	5 and 1
Third Speed Reverse	4 and 1
Fourth Speed Reverse	3 and 1

TRANSMISSION PRESSURES TEST AND ADJUSTMENT - CONTINUED

Transmission Clutch Solenoid Modulating Valve Test - Continued

NOTE

- **Pressure on pressure gages for pressure ports (38 and 42) should rise.**
- **Same pressure rise should be observed in each respective speed. This checks operation of speed clutches.**

6. With assistance, move transmission remote FNR and shift lever from NEUTRAL position to FORWARD position.
7. With transmission in FORWARD position, shift through remaining forward speeds and return to FIRST SPEED position.
8. Observe pressure gages.

Speed Range and Direction	Engaged Clutches and Energized Solenoids
Fourth Speed Forward	39 and 38
Third Speed Forward	40 and 38
Second Speed Forward	41 and 38
First Speed Forward	42 and 38
Neutral	39
First Speed Reverse	42 and 37
Second Speed Reverse	41 and 37
Third Speed Reverse	40 and 37
Fourth Speed Reverse	39 and 37

9. If pressure rise is noted, solenoid and related electrical circuit are functioning. Continue to *Transmission Clutch Pressure Test* in this work package.
10. If screw driver does not indicate coil is energized:
    a. Make certain the solenoid being checked is the correct one according to the speed range and direction conditions shown in table above.
    b. Check ECM for Diagnostic/Fault Codes.
    c. If there are no codes, the problem is in the electrical circuit. Troubleshoot the circuit using the *Electrical Schematic for Transmission* (WP 0237 00). Repair or replace harness parts as needed (WP 0022 00) or (WP 0195 00 thru WP 0201 00).
    d. If a diagnostic code is present, for each malfunctioning solenoid, perform the appropriate tests from *Troubleshooting a With Diagnostic Code* (WP 0009 00):

1401 03 for solenoid valve #1
1401 05 for solenoid valve #1
1401 06 for solenoid valve #1
1402 03 for solenoid valve #2
1402 05 for solenoid valve #2
1402 06 for solenoid valve #2
1403 03 for solenoid valve #3
1403 05 for solenoid valve #3
1403 06 for solenoid valve #3
1404 03 for solenoid valve #4
1404 05 for solenoid valve #4
1404 06 for solenoid valve #4
1405 03 for solenoid valve #5
1405 05 for solenoid valve #5
1405 06 for solenoid valve #5

TRANSMISSION PRESSURES TEST AND ADJUSTMENT - CONTINUED

Transmission Clutch Solenoid Modulating Valve Test - Continued

11. Perform steps 4 thru 7 for reverse speeds.
12. With assistance, move transmission shift lever and remote FNR switch from REVERSE position to NEUTRAL position.
13. Press transmission neutralizer override switch to engage transmission neutralizer (TM 5-3805-291-10).
14. Engage parking brake (TM 5-3805-291-10).
15. Stop engine (TM 5-3805-291-10).
16. Remove test stands from pressure taps (37 thru 42).

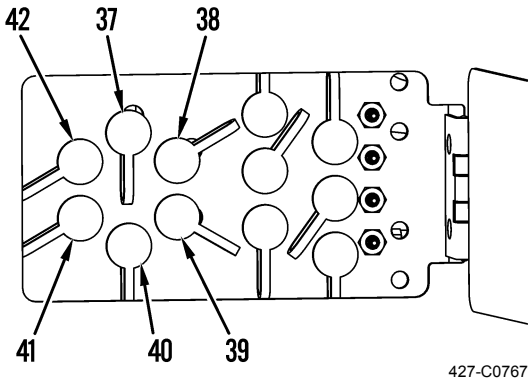

Transmission Clutch Pressure Test

NOTE

Use the following procedure to check the pressure of the direction clutch oil and the speed clutch oil.

1. Install test stands on six pressure taps (37 thru 42).
2. Start and run engine at low idle (TM 5-3805-291-10).

NOTE

Make sure transmission oil is at normal operating temperature.

3. Press transmission neutralizer override switch to disengage transmission neutralizer (TM 5-3805-291-10).
4. With assistance, depress and hold right service brake pedal (TM 5-3805-291-10).
5. With assistance, make sure machine is in FIRST SPEED. Disengage parking brake (TM 5-3805-291-10) and observe pressure gages.
6. With assistance, move transmission remote FNR and shift lever from NEUTRAL position to FORWARD position.
7. Run engine at high idle (TM 5-3805-291-10).

TRANSMISSION PRESSURES TEST AND ADJUSTMENT - CONTINUED

Transmission Clutch Pressure Test - Continued

NOTE

- **Pressure on pressure gages for pressure ports (38 and 42) should rise.**
- **Pressure readings must be within specifications below.**

8. Record pressures for clutches (38 and 42).

Clutch Pressure	Pressure
(37) Number 1	400 ± 20 psi (2,758 ± 140 kPa)
(38) Number 2	400 ± 20 psi (2,758 ± 140 kPa)
(39) Number 3	400 ± 20 psi (2,758 ± 140 kPa)
(40) Number 4	400 ± 20 psi (2,758 ± 140 kPa)
(41) Number 5	335 ± 20 psi (2,310 ± 140 kPa)
(42) Number 6	400 ± 20 psi (2,758 ± 140 kPa)

Speed Range and Direction	Engaged Clutches and Energized Solenoids
Fourth Speed Forward	39 and 38
Third Speed Forward	40 and 38
Second Speed Forward	41 and 38
First Speed Forward	42 and 38
Neutral	39
First Speed Reverse	42 and 37
Second Speed Reverse	41 and 37
Third Speed Reverse	40 and 37
Fourth Speed Reverse	39 and 37

TRANSMISSION PRESSURES TEST AND ADJUSTMENT - CONTINUED

Transmission Clutch Pressure Test - Continued

NOTE

This checks pressures of speed clutches. If pressures are not within specification, either pump pressure needs adjustment or solenoid modulating valves need replacing.

9. If pressures are not within specifications, adjust transmission oil pump pressure.
10. If the problem still exists, perform transmission clutch solenoid modulating valve test.
11. With transmission in FORWARD position, shift through remaining forward speeds and return to FIRST SPEED position. Record pressures for remaining forward clutches.
12. Perform steps 4 thru 9 for reverse speeds.
13. With assistance, move transmission remote FNR switch and shift lever from REVERSE position to NEUTRAL position.
14. Press transmission neutralizer override switch to engage transmission neutralizer (TM 5-3805-291-10).
15. Engage parking brake (TM 5-3805-291-10).
16. Stop engine (TM 5-3805-291-10).
17. Remove test stands from pressure taps (37 thru 42).

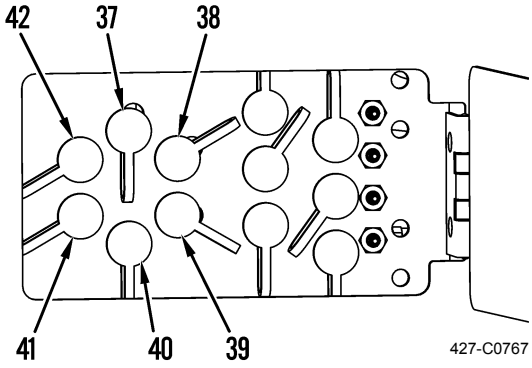

TRANSMISSION PRESSURES TEST AND ADJUSTMENT - CONTINUED

Lubrication Oil Pressure Test

NOTE

Use the following procedure to check the pressure of the direction clutch oil and the speed clutch oil.

1. Install test stand on pressure tap (43).

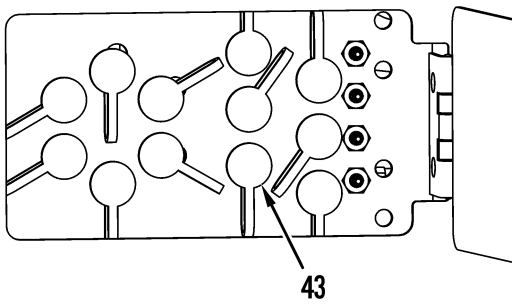

2. With assistance, start and run engine at high idle (TM 5-3805-291-10).

NOTE

Transmission lubrication pressure should be 15 psi (105 kPa) (minimum).

3. Observe pressure gage.
4. With assistance, stop engine (TM 5-3805-291-10).
5. Remove test stand from pressure tap (43).

TRANSMISSION PRESSURES TEST AND ADJUSTMENT - CONTINUED

Torque Converter Outlet Pressure Test

1. Install test stand on pressure tap (44).

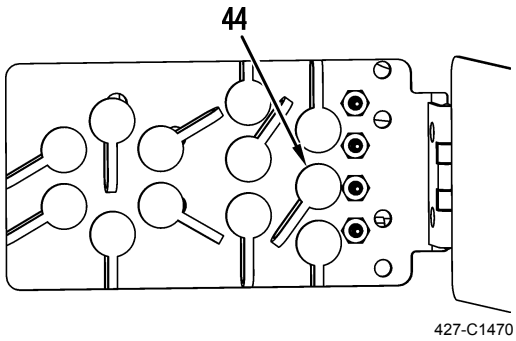

2. With assistance, start and run engine at torque converter stall speed. Refer to *Torque Converter Stall Test* in this work package.

NOTE

Torque converter outlet pressure should be 60 ± 20 psi (415 ± 140 kPa) (minimum). If torque converter outlet pressure is not within specification, perform torque converter outlet pressure adjustment.

3. Observe pressure gage.
4. With assistance, stop engine (TM 5-3805-291-10).
5. Remove test stand from pressure tap (44).

TRANSMISSION PRESSURES TEST AND ADJUSTMENT - CONTINUED

Torque Converter Outlet Pressure Adjustment

1. Remove two bolts (45) and cover (46) from torque converter outlet relief valve (47).

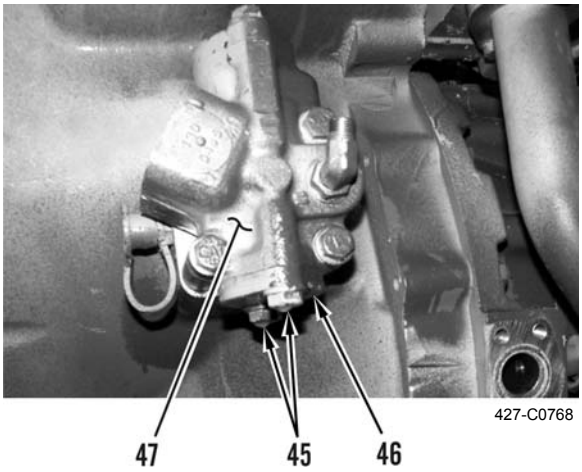

NOTE

Remove cover slowly to keep springs in housing.

2. Remove springs (48) and spacers (49) from spool (50) within torque converter outlet relief valve (47).

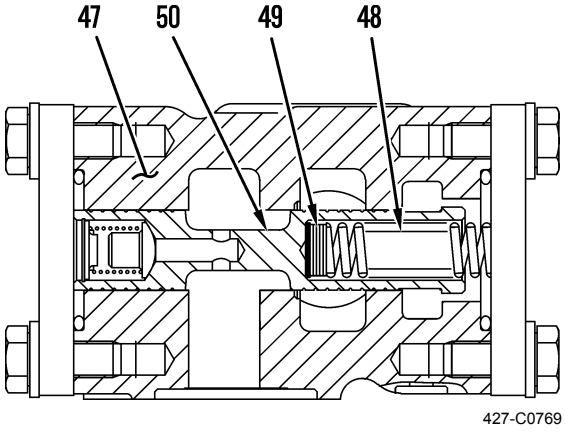

TRANSMISSION PRESSURES TEST AND ADJUSTMENT - CONTINUED

Torque Converter Outlet Pressure Adjustment - Continued

Spacers			
Pressure Change for Valve			
Description	Thickness	Pressure Change	Location of Spacers
4M - 1751 Spacer	.016 in. (0.41 mm)	2.7 psi (19 kPa)	Outlet Relief Valve
5S - 7001 Spacer	0.36 in. (0.91 mm)	6 psi (40 kPa)	

3. Add or remove spacers (49) from pack of springs (48) to change desired pressures as indicated in table above.
4. Install spacers (49) and springs (48) on spool (50).

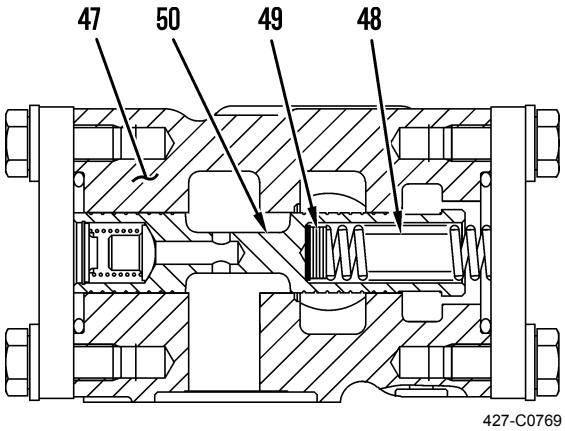

5. Install cover (46) and bolts (45) on torque converter outlet relief valve (47).

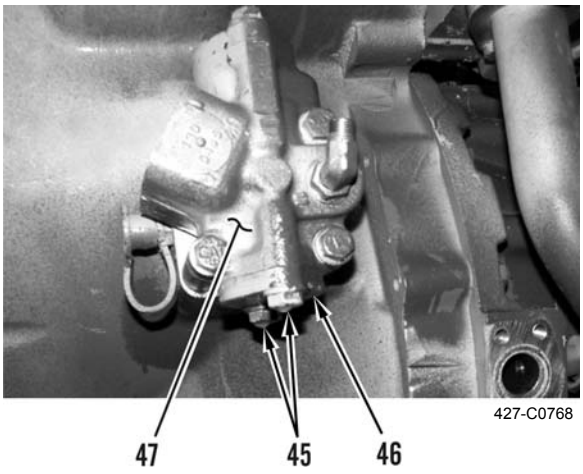

TRANSMISSION PRESSURES TEST AND ADJUSTMENT - CONTINUED

Transmission Oil Pump Pressure Test

1. Install test stand on pressure tap (51).

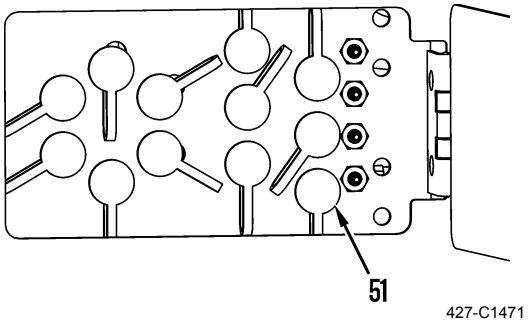

2. With assistance, start and run engine at high idle (TM 5-3805-291-10).

NOTE

Transmission oil pump pressure should be 400 ± 20 psi (2,758 ± 70 kPa).

3. Observe pressure gage.
4. If pressure does not equal 400 ± 20 psi, perform *Transmission Oil Pump Pressure Adjustment* in this work package.
5. With assistance, stop engine (TM 5-3805-291-10).
6. Remove test stand from pressure tap (51).

Transmission Oil Pump Pressure Adjustment

1. Remove cover (52) from transmission hydraulic control relief valve (53).

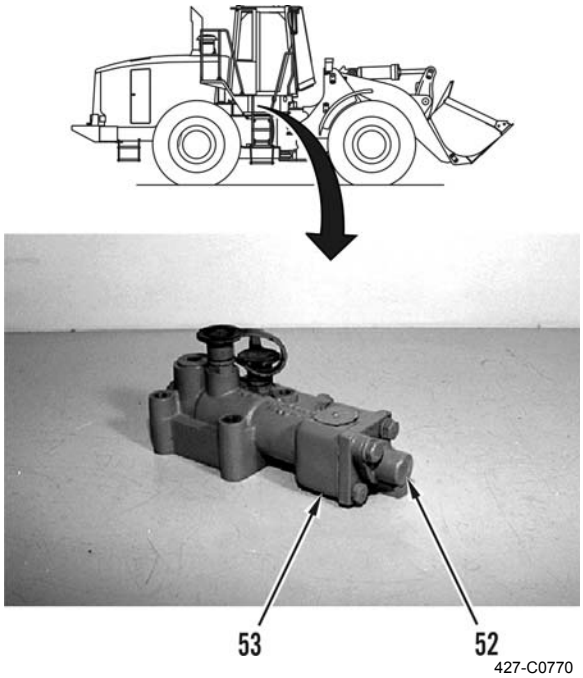

TRANSMISSION PRESSURES TEST AND ADJUSTMENT - CONTINUED

Transmission Oil Pump Pressure Adjustment - Continued

NOTE

- **Turning transmission hydraulic control relief valve adjustment screw clockwise increases pump pressure.**
- **Turning adjustment screw counterclockwise decreases pump pressure.**
- **One full turn of transmission hydraulic control relief valve adjustment screw changes pump pressure 23 psi (160 kPa).**

2. Adjust transmission hydraulic control relief valve adjustment screw (54).

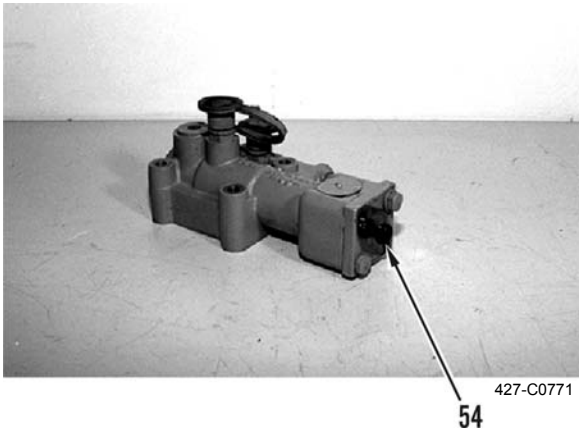

3. Install cover (52) on transmission hydraulic control relief valve (53).

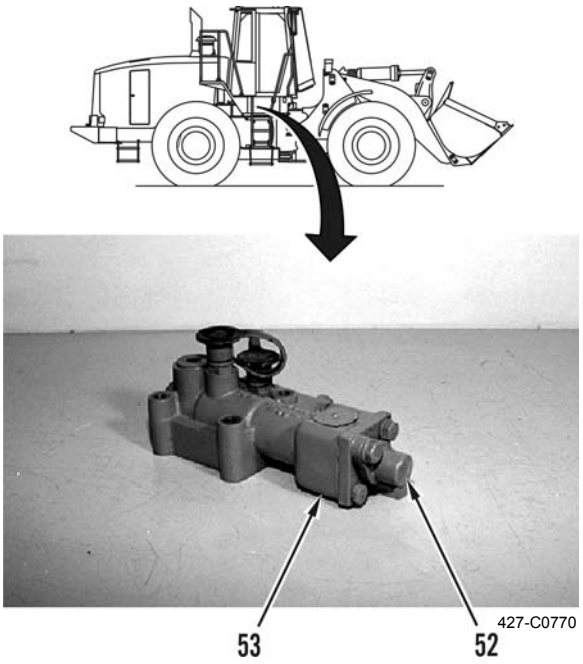

TRANSMISSION PRESSURES TEST AND ADJUSTMENT - CONTINUED

Transmission Oil Pump Pressure Adjustment - Continued

4. Check transmission oil pump pressure again. Make sure transmission oil pump pressure is within specifications.
5. If necessary, repeat steps 1 thru 4.

Torque Converter Inlet Pressure Test

1. Install test stand on pressure tap (55).

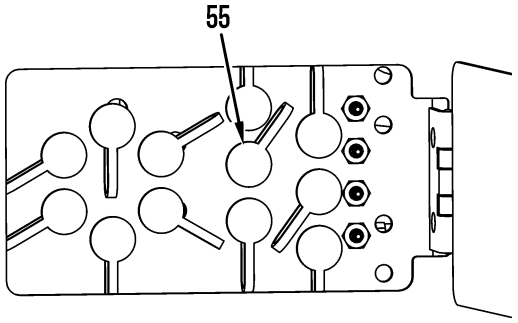

427-C1472

2. With assistance, start and run engine at high idle (TM 5-3805-291-10).

NOTE

Transmission oil pump pressure should be 80 psi (550 kPa).

3. Observe pressure gage.
4. With assistance, stop engine (TM 5-3805-291-10).
5. Remove test stand from pressure tap (55).

END OF WORK PACKAGE

BRAKE SYSTEM TESTS, INSPECTIONS, AND ADJUSTMENTS 0015 00

Brake System Air Purge 0015 00-2
Operational Checks (Braking and Hydraulic Fan System) 0015 00-3
Brake Control Manifold Test 0015 00-4
Service Brakes System Pressure Test 0015 00-6
Parking Brake Manual Release 0015 00-8
Service Brake Wear Indicator (New Brake Disc) Check 0015 00-9
Service Brake Wear Indicator (Existing Brake Disc) Check 0015 00-17
Hydraulic Fan Speed Test and Adjustment 0015 00-22

THIS WORK PACKAGE COVERS

Brake System Air Purge

Operational Checks (Braking and Hydraulic Fan System)

Brake Control Manifold Test

Service Brakes System Pressure Test

Parking Brake Manual Release

Service Brakes Wear Indicator (New Brake Disc) Check

Service Brakes Wear Indicator (Existing Brake Disc) Check

Hydraulic Fan Speed Test and Adjustment

INITIAL SETUP

Maintenance Level

Direct Support

Test Equipment

Gage, block (Item 30, WP 0232 00)

Indicator, point, (Multi Tach) (Item 34, WP 0232 00)

Software kit (Item 75, WP 0232 00)

Test stand, automotive (Item 87, WP 0232 00)

Tools and Special Tools

Tool kit, general mechanic's, automotive (Item 90, WP 0232 00)

Shop equipment, machine shop, field maintenance, heavy, less power (Item 69, WP 0232 00)

Adapter, test (Item 3, WP 0232 00)

Test set, electronic systems (MSD) (Item 86, WP 0232 00)

Materials/Parts

Oil, lubricating, OE/HDO-5/40 (Item 27, WP 0233 00)

Oil, lubricating, OE/HDO-15/40 (Item 28, WP 0233 00)

Rag, wiping (Item 35, WP 0233 00)

1/4 in. tube

Personnel Required

MOS 62B, Construction Equipment Repairer (2)

References

WP 0003 00

WP 0005 00

WP 0077 00

WP 0083 00

WP 0084 00

WP 0116 00

WP 0132 00

WP 0192 00

WP 0217 00

WP 0215 00

WP 0219 00

Equipment Conditions

Machine parked on level ground (TM 5-3805-291-10)

Work tool lowered to ground (TM 5-3805-291-10)

Parking brake engaged (TM 5-3805-291-10)

Wheels chocked

Hood opened (TM 5-3805-291-10)

Steering frame lock connected (TM 5-3805-291-10)

Side covers removed (WP 0135 00)



WARNING



- **DO NOT disconnect or remove any hydraulic system line or fitting unless engine is shut down and hydraulic system pressure has been relieved. Tighten all connections before applying pressure. Escaping hydraulic fluid under pressure can penetrate the skin, causing injury to personnel.**
- **At operating temperature, hydraulic oil is hot. Allow hydraulic oil to cool before disconnecting any hydraulic lines. Failure to follow this warning may result in injury to personnel.**

NOTE

- **Tag hoses prior to removal to ensure correct installation.**
- **Use a container to catch any fluid that may drain from hoses or system. Dispose of fluid IAW local policy and ordinances. Ensure all spills are cleaned up.**
- **Perform this procedure for one service brake at a time.**
- **For a better understanding of each system, review the appropriate section in *Theory of Operation* (WP 0003 00).**

BRAKE SYSTEM AIR PURGE

1. Remove implement cover (WP 0218 00).
2. Check oil level in hydraulic oil tank. Maintain correct oil level in hydraulic oil tank throughout air removal procedure (TM 5-3805-291-10).
3. Start engine and allow oil pressure to increase to the cut-out pressure.

NOTE

There are two purge screws on top of each axle.

4. Fasten one end of transparent tube 0.25 in. (6.4 mm) in diameter to one purge screw (1). Place other end of tube into container for collecting hydraulic oil. Loosen purge screw.
5. With assistance, slowly press service brake pedal. Hold pedal in this position throughout step 6.
6. As hydraulic oil flows through tube, check for air bubbles in oil. Allow oil to flow into container until no air bubbles are visible, then tighten purge screw. Release brake pedal.
7. Perform this procedure at each purge screw. Make sure to tighten each purge screw.
8. Check hydraulic oil tank level and fill hydraulic tank if necessary (TM 5-3805-291-10).
9. If service brake pedal is spongy, repeat steps 5 thru 7.

BRAKE SYSTEM AIR PURGE - CONTINUED

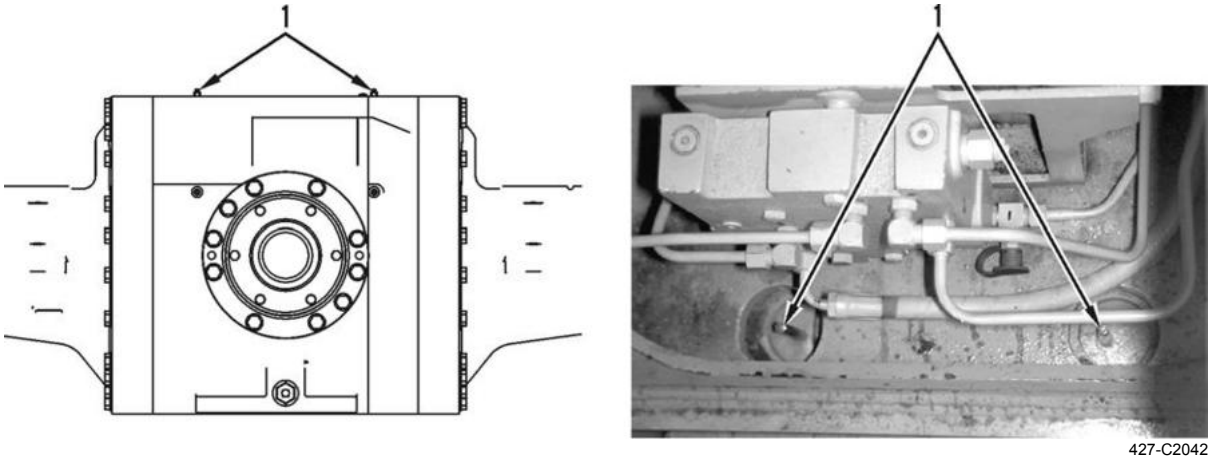

OPERATIONAL CHECKS (BRAKING AND HYDRAULIC FAN SYSTEM)

NOTE

When diagnosing problem in braking and hydraulic fan system, visual inspection of system is first step. Before any tests are performed, visually inspect entire brake and hydraulic fan systems for oil leaks and damaged parts.

1. Check oil level in sight gage (TM 5-3805-291-10).
2. Look for air in oil of hydraulic tank immediately after engine is stopped. Use clear container to obtain sample of oil. Look for air bubbles in oil.
3. Check all oil lines and connections for damage and leaks.
4. Inspect braking and hydraulic fan pump (WP 0215 00) for damage and inspect hydraulic fan motor (WP 0192 00) for damage.
5. Start engine and raise work tool (TM 5-3805-291-10).
6. Ensure fan is operating.
7. Disengage parking brake and activate service brakes while machine is moving in both directions. Listen for any unusual noises. Ensure brakes stop machine within acceptable distance.
8. Lower work tool and stop engine (TM 5-3805-291-10).

BRAKE CONTROL MANIFOLD TEST

WARNING

- **Escaping fluid under pressure, even a pinhole size leak, can penetrate body tissue, causing serious injury and possible death. If fluid is injected into your skin, it must be treated immediately by a doctor familiar with this type of injury.**
- **Always use a board or cardboard when checking for a leak.**
- **Injury or death can result if two persons are not used in this procedure.**

CAUTION

- **Care must be taken to ensure that fluids are contained during performance of inspection, maintenance, testing, adjusting, and repair of product. Be prepared to collect fluid with suitable containers before opening any compartment or disassembling any component containing fluids.**
- **Dispose of all fluids according to local regulations and mandates.**

1. Connect steering frame lock (1) (TM 5-3805-291-10).
2. Depress brake pedal repeatedly in order to release all oil pressure from brake circuit.
3. Remove protective cap from test port (2) to test service brake control manifold.



NOTE

Oil pressure must be 0 psi (0 kPa).

4. Install 0 to 5,800 psi (0 to 40,000 kPa) pressure gage on test port (2).
5. With assistance, start engine and immediately raise rpm to high idle (TM 5-3805-291-10).

NOTE

- **Correct service brake control manifold cut-out pressure should be 2,200 ± 50 psi (15,000 ± 345 kPa).**
- **Oil must increase to maximum. This is the cut-out pressure of the brake accumulator charging valve.**

6. Record highest pressure. This is service brake control manifold cut-out pressure.

NOTE

- **Correct service brake control manifold cut-in pressure should be 1,850 ± 50 psi (12,800 ± 345 kPa).**
- **Pressure should drop consistently every time brake pedal is depressed.**

BRAKE CONTROL MANIFOLD TEST - CONTINUED

7. With engine running, slowly apply brakes. Apply service brakes several times in succession. Verify pressure drops consistently. At this point of specified cut-in, pressure begins to increase quickly.

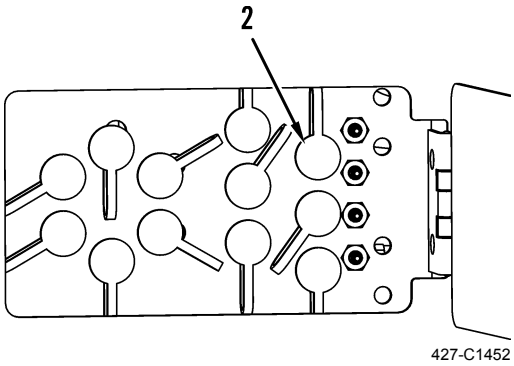

NOTE

Perform the following steps if service brake control manifold cut-in and cut-out pressures are not within specification.

8. Stop engine (TM 5-3805-291-10).
9. With assistance, depress brake pedal repeatedly in order to release all oil pressure from brake circuit.
10. Loosen hydraulic tank filler cap in order to make sure there is no residual pressure in hydraulic oil tank (TM 5-3805-291-10).
11. Loosen jamnut (4) on adjustment screw (5).

NOTE

- **Turning adjustment screw clockwise will increase service brake control manifold cut-in and cut-out pressures. Turning adjustment screw counterclockwise will decrease service brake control manifold cut-in and cut-out pressures.**
- **Range between service brake control manifold cut-in and cut-out pressures is not adjustable. Service brake control manifold cut-in and cut-out pressures move same amount.**
- **Adjust service brake control manifold in quarter-turn increments.**

12. Adjust cut-in valve (6) on service brake control manifold (7).
13. Tighten jamnut (4) on adjustment screw (5).

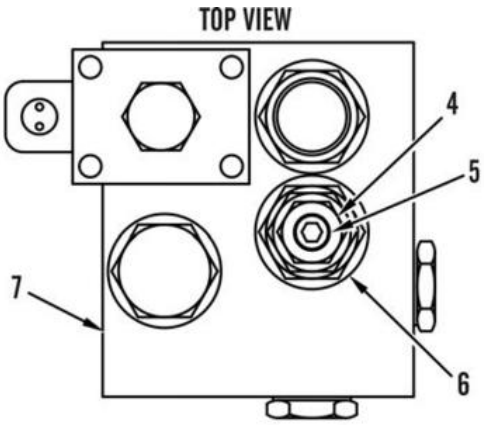



BRAKE CONTROL MANIFOLD TEST - CONTINUED

14. Repeat steps 5 thru 7.
15. If further adjustment is necessary, repeat steps 8 thru 13.
16. If service brake control manifold cut-in and cut-out pressures cannot meet specification, replace service brake control manifold (WP 0217 00).

WARNING

Before operating the machine, secure steering frame lock in stowed position. DO NOT operate machine with steering frame lock connected. Failure to lock steering frame lock into stowed position before operating can result in loss of steering and injury or death to personnel.

17. Secure steering frame lock (1) in stowed position (TM 5-3805-291-10).

SERVICE BRAKES SYSTEM PRESSURE TEST

WARNING

- **Escaping fluid under pressure, even a pinhole size leak, can penetrate body tissue, causing serious injury, and possible death. If fluid is injected into your skin, it must be treated immediately by a doctor familiar with this type of injury.**
- **Always use a board or cardboard when checking for a leak.**
- **Injury or death to personnel can result if two persons are not used in this procedure.**

CAUTION

- **Care must be taken to ensure that fluids are contained during performance of inspection, maintenance, testing, adjusting, and repair of product. Be prepared to collect fluid with suitable containers before opening any compartment or disassembling any component containing fluids.**
- **Dispose of all fluids according to local regulations and mandates.**

1. Connect steering frame lock (1) (TM 5-3805-291-10).

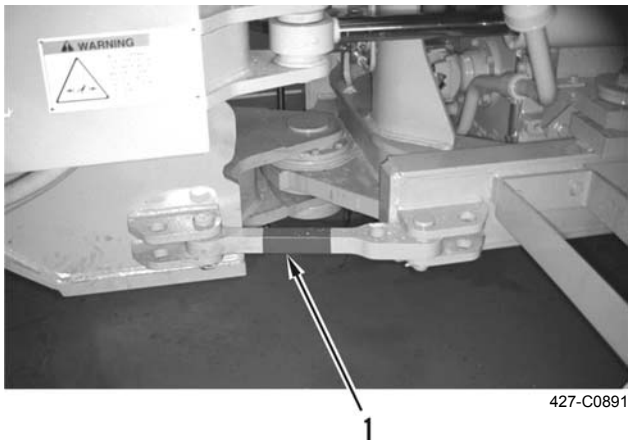

2. Remove front guard from machine (WP 0132 00).
3. Depress brake pedal repeatedly in order to release all oil pressure from brake circuit.
4. Remove protective cap from test port (7) to test oil pressure of rear service brakes.
5. Install 0 to 2,300 psi (0 to15,850 kPa) pressure gage on test port (7).

SERVICE BRAKES SYSTEM PRESSURE TEST - CONTINUED

NOTE

Look at pressure gage. Before you start engine, oil pressure must match pressure of hydraulic oil tank.

6. Start engine and allow hydraulic oil to reach normal operating temperature and pressure (TM 5-3805-291-10).
7. With assistance, hold down brake pedal and read pressure gage. Brake pressure should be 625 ± 50 psi (4,310 ± 345 kPa).
8. If brake pressure is not in correct range and service brake control manifold is functioning correctly, replace service brake control valve (WP 0116 00).

NOTE

The pressure from rear brake port should be approximately 50 psi (345 kPa) higher than pressure from front brake port.

9. Repeat this procedure at test port (8) to test oil pressure for front service brakes.

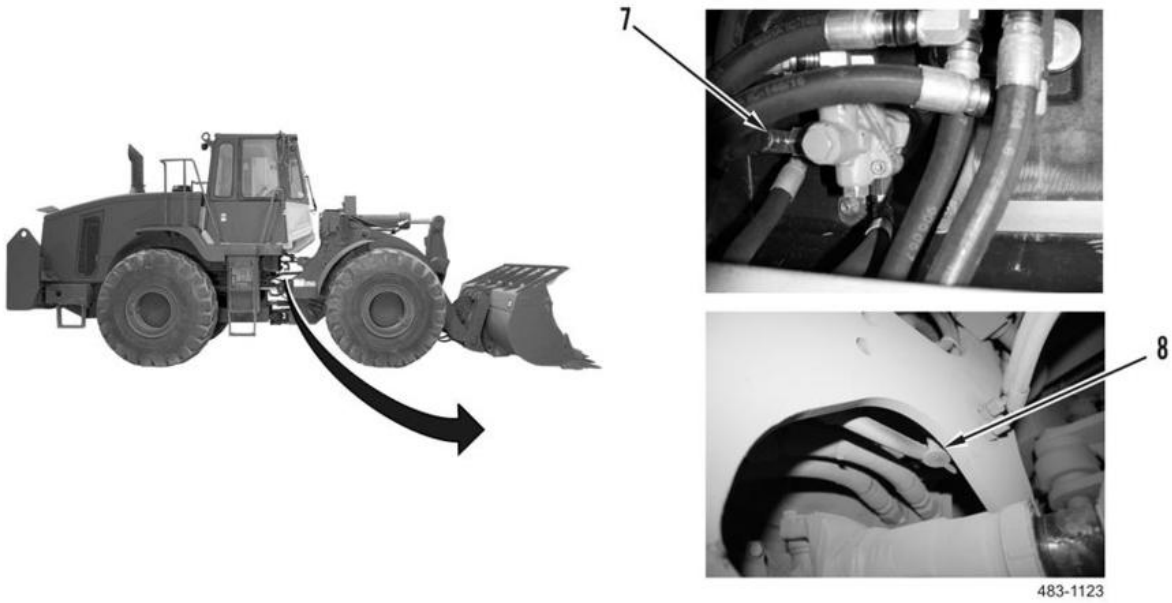

WARNING

Before operating the machine, secure steering frame lock in stowed position. DO NOT operate machine with steering frame lock connected. Failure to lock steering frame lock into stowed position before operating can result in loss of steering and injury or death to personnel.

10. Install front guard on machine (WP 0132 00).
11. Secure steering frame lock in stowed position (1) (TM 5-3805-291-10).

PARKING BRAKE MANUAL RELEASE

WARNING

- **Brake malfunction can result in personal injury or death. Do not operate machine if parking brake was engaged due to a malfunction of hydraulic oil system or service brakes.**
- **Correct any problem before attempting to operate machine.**

CAUTION

Before you operate machine, and after parking brake has been serviced, be sure you adjust parking brake mechanism. Failure to do so could damage the parking brake components or prevent parking brake from functioning correctly.

1. Connect steering frame lock (1) (TM 5-3805-291-10).
2. Loosen locknut (9). Turn actuator shaft (10) until rod end (11) moves out enough to disengage parking brake.

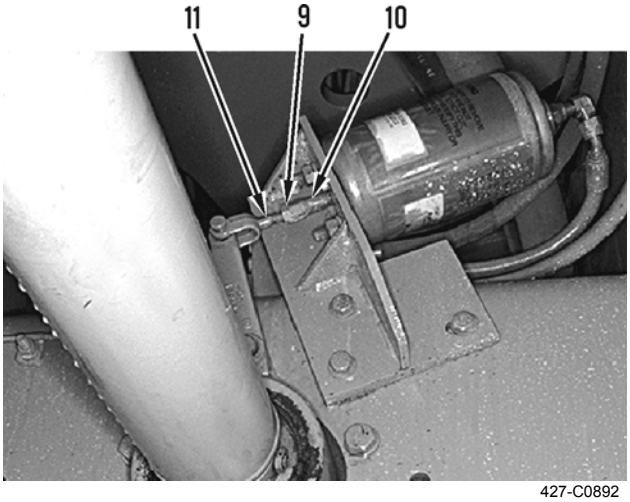

427-C0892

WARNING

Before operating the machine, secure steering frame lock in stowed position. DO NOT operate machine with steering frame lock connected. Failure to lock steering frame lock into stowed position before operating can result in loss of steering and injury or death to personnel.

3. Secure steering frame lock (1) in stowed position (TM 5-3805-291-10).



427-C0891

SERVICE BRAKE WEAR INDICATOR (NEW BRAKE DISC) CHECK

WARNING

Injury or death can result if two persons are not used in procedure.

CAUTION

- **Care must be taken to ensure that fluids are contained during performance of inspection, maintenance, testing, adjusting, and repair of product. Be prepared to collect fluid with suitable containers before opening any compartment or disassembling any component containing fluids.**
- **Dispose of all fluids according to local regulations and mandates.**

NOTE

- **When installing new brake discs, you must record new measurements for axle's service brake wear indicator. Use this procedure in order to record new measurements. The information will be recorded in powertrain electronic control module (ECM).**
- **Individual service brakes use indicator pins to determine amount of wear on existing service brake discs. Indicator pins are located on each side of front and rear axle center housings. When installing new brake discs, you must record these measurements immediately.**
- **Measurements must be recorded for each service brake containing new brake discs. Measurements are used as reference dimensions. Measurements are used to calculate amount of wear for a given brake disc.**
- **The following steps require accumulator pressure for service brakes:**

1. Start and run engine until brake accumulators reach cut-out pressure (less than 30 seconds) (TM 5-3805-291-10).
2. Stop engine (TM 5-3805-291-10).
3. Clean area around plug (12).
4. Remove excess paint from axle housing flange face (13).
5. Remove screw (14) and plug (12) from axle housing.
6. Apply light pressure to pin (15) to ensure pin is seated against cup (16).

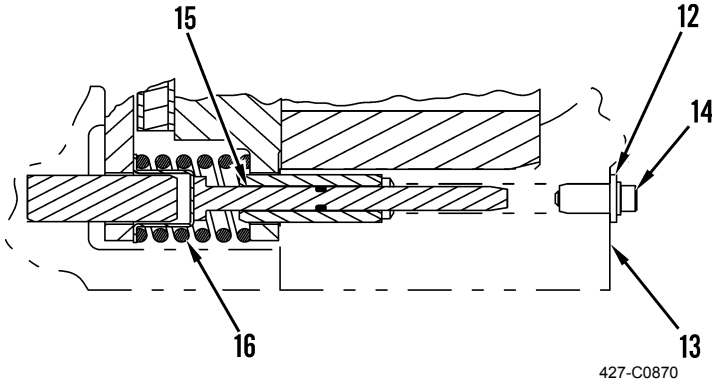

SERVICE BRAKE WEAR INDICATOR (NEW BRAKE DISC) CHECK - CONTINUED

NOTE

Measure dimension (C) with the service brakes APPLIED. Dimension (C) equals distance from axle housing flange face to end of pin.

7. Use caliper to measure exact thickness (D) of gage block.
8. Gage block is U shaped. Position gage block so slot straddles hole in axle housing flange face (13). Firmly hold gage block against axle housing flange face.
9. With assistance, apply service brakes (TM 5-3805-291-10).
10. Using depth micrometer, measure dimension (E).

NOTE

If gage block is not available, use a depth micrometer with a half of a base. Shorten the base on the micrometer by grinding. This will help allow the base of the micrometer to rest on flange face. Measure dimension directly from flange face.

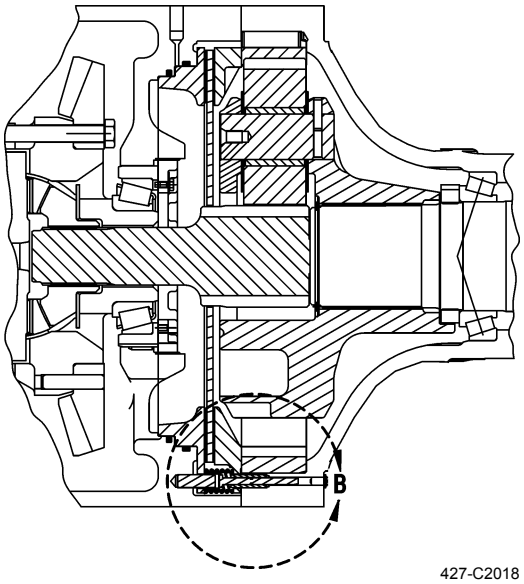

11. Value of dimension (C) equals value of dimension (E) minus value of dimension (D).
12. Record measurements for each brake that contains a new brake disc.
13. Record number of service hours shown on service meter unit (SMU).

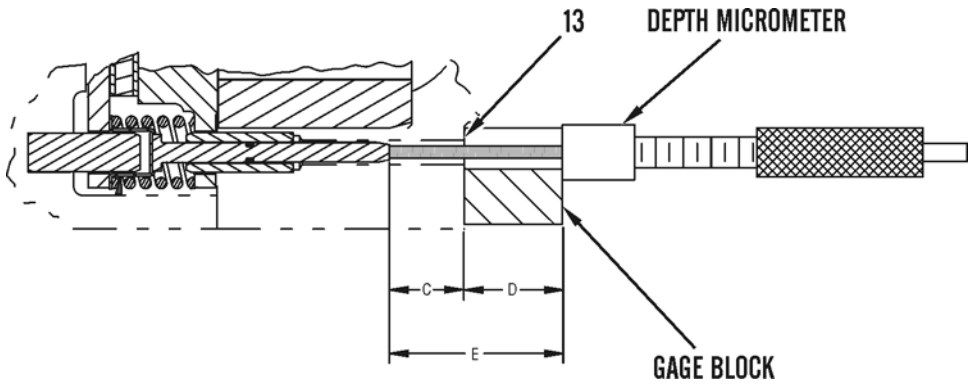

DETAIL B

SERVICE BRAKE WEAR INDICATOR (NEW BRAKE DISC) CHECK - CONTINUED

NOTE

The baseline value for dimension (C) must be recorded electronically on the machine's transmission ECM. Use MSD service tool to record baseline values of dimension (C).

14. Connect MSD to diagnostic connector (WP 0005 00).
15. Turn engine start switch to ON position, but do not start engine (TM 5-3805-291-10).
16. Start MSD software and select "Transmission" (17).
17. Click "OK" (18).

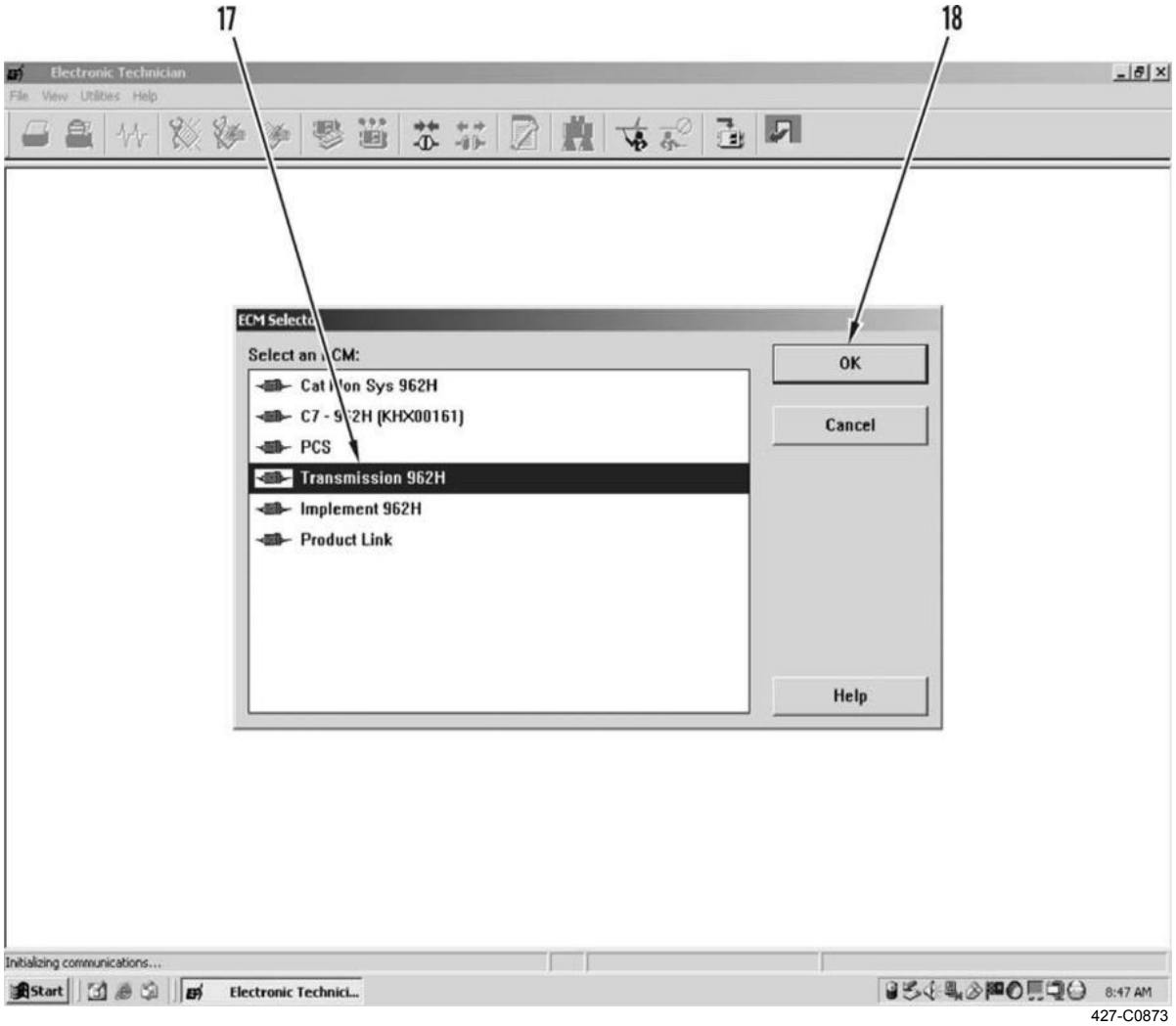

427-C0873

SERVICE BRAKE WEAR INDICATOR (NEW BRAKE DISC) CHECK - CONTINUED

NOTE

Record new baseline values ONLY for service brakes that received new brake discs. Baseline values should not be updated for service brakes that did not receive new brake discs.

18. Select “Axle and Brake Parameters” (19). Select a “Brake Measurement” description (20) that requires new baseline values. Highlight current value.

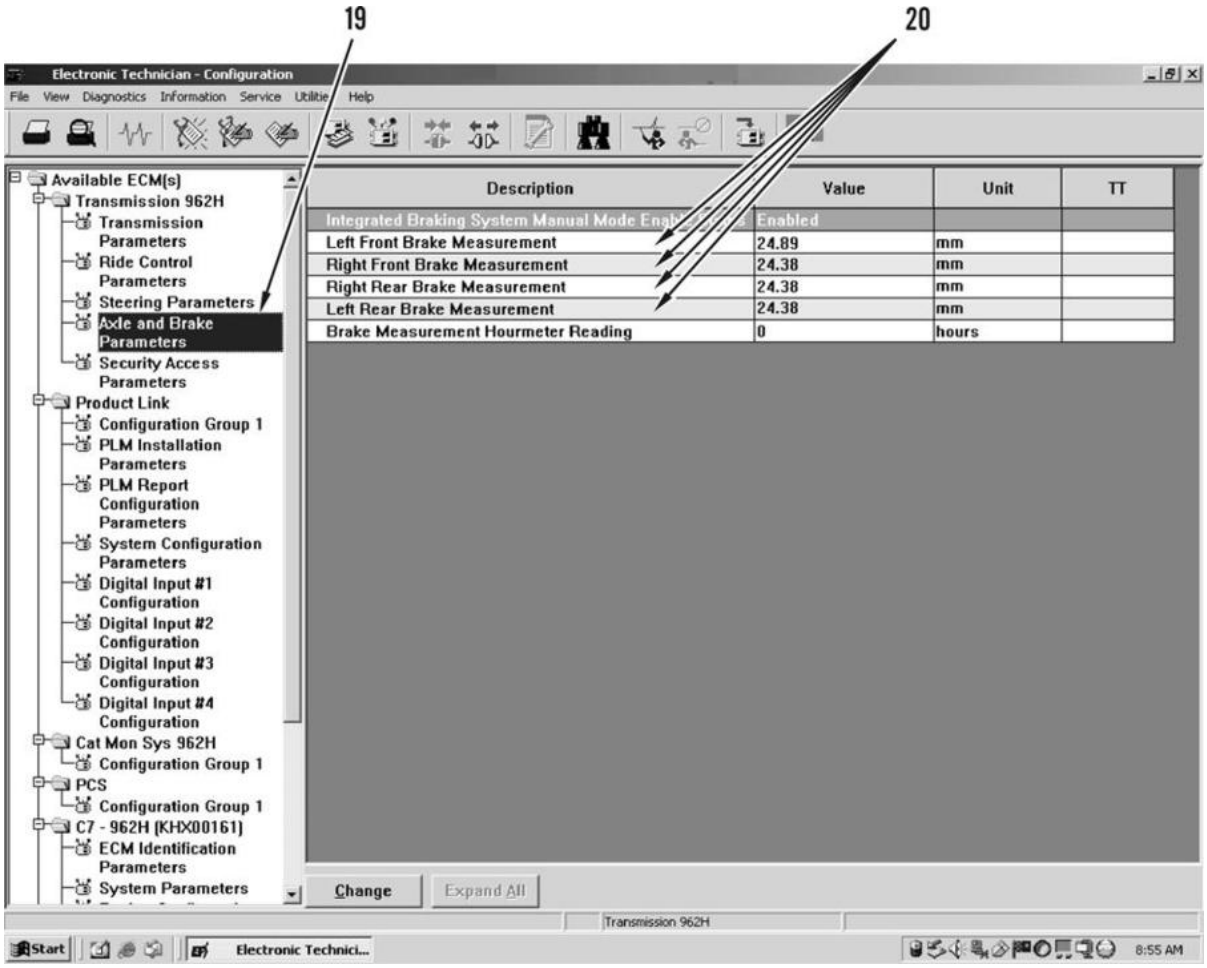

427-C0874

SERVICE BRAKE WEAR INDICATOR (NEW BRAKE DISC) CHECK - CONTINUED

19. Click “Change” (21). This displays “Change Parameter Value” screen.

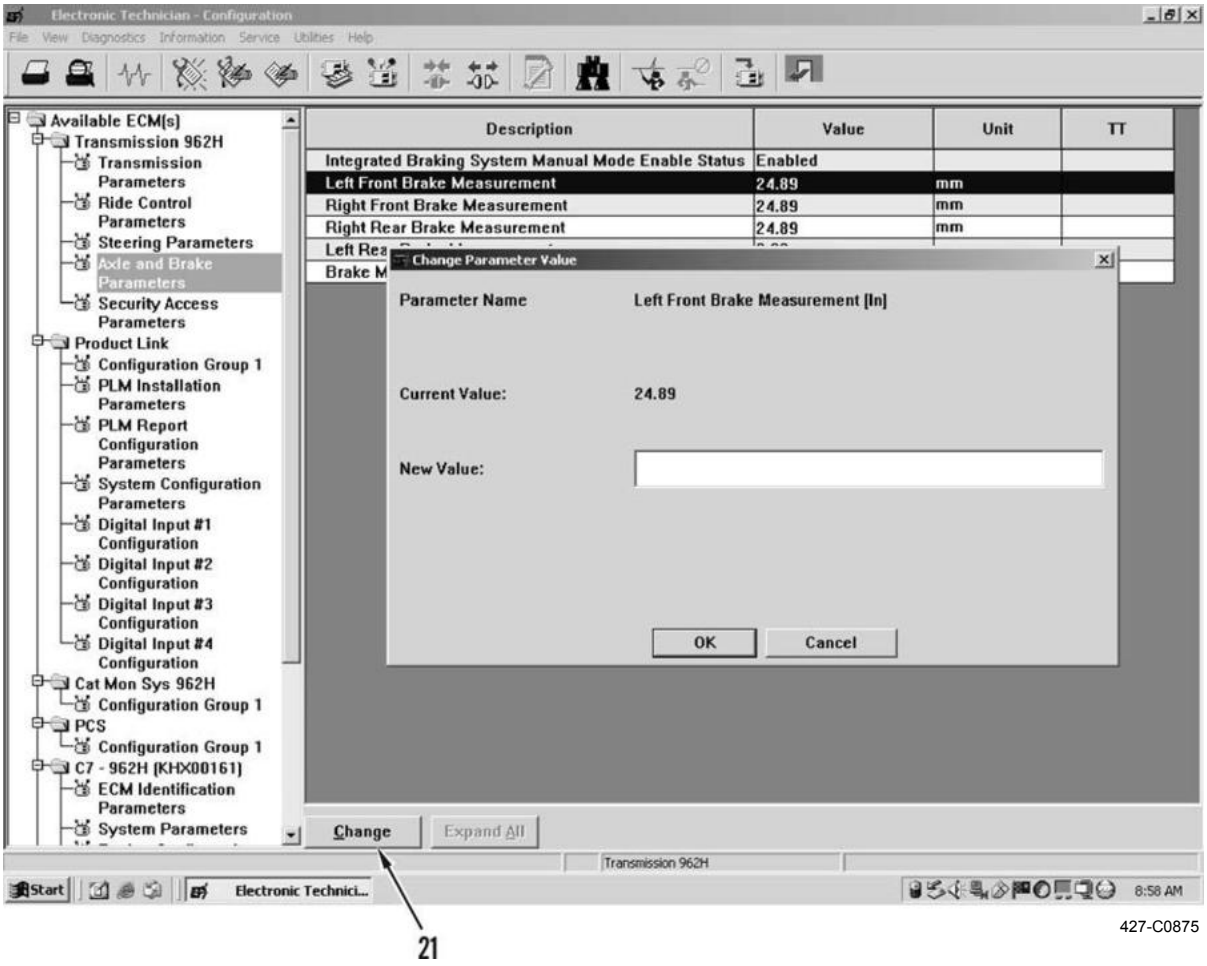

427-C0875

SERVICE BRAKE WEAR INDICATOR (NEW BRAKE DISC) CHECK - CONTINUED

NOTE

New values supersede previous values. If you did not install new brake disc on respective brake, DO NOT enter new baseline values.

20. Enter new value of dimension (C) for respective brake in “New Value” space (22).
21. Click “OK” (18).

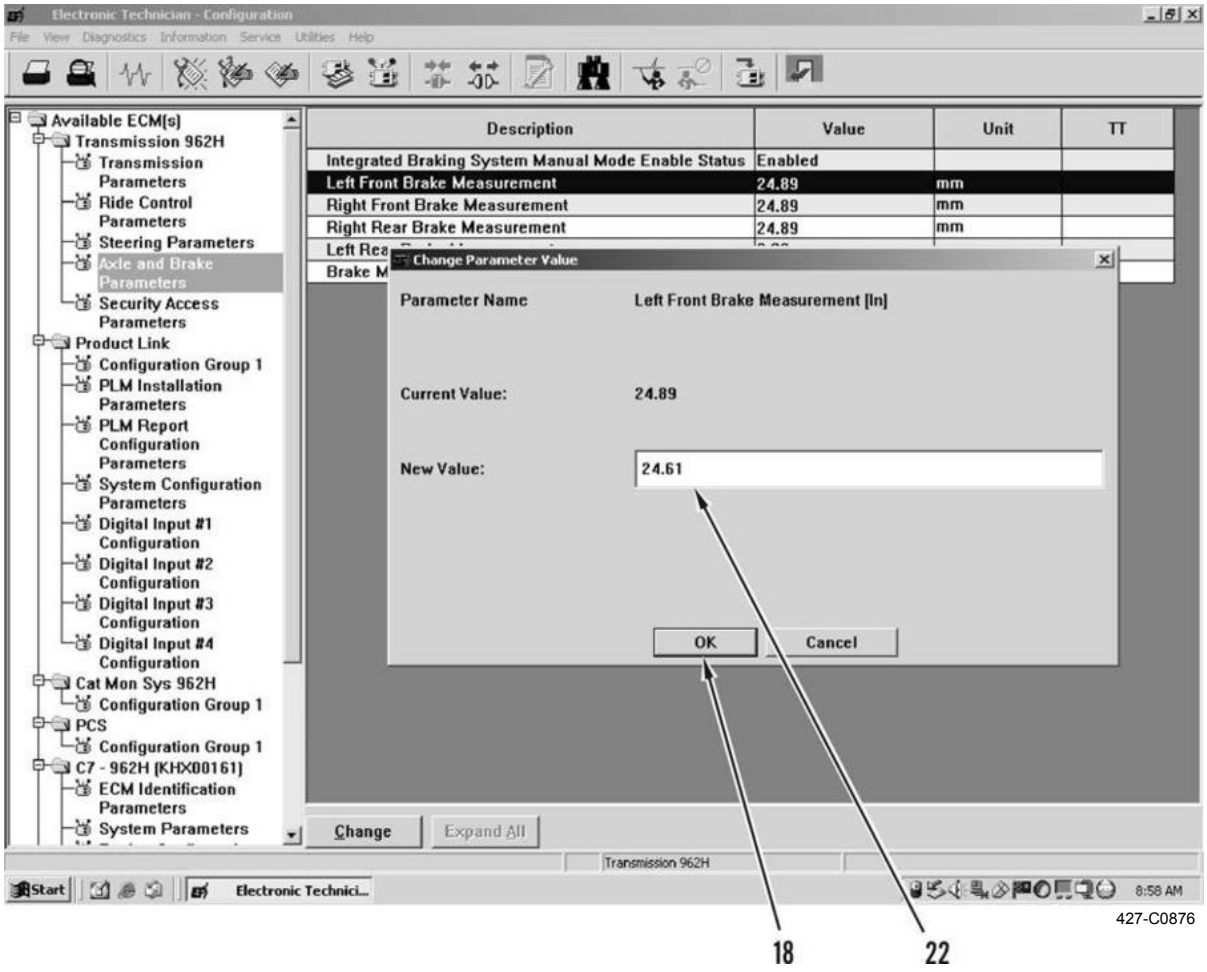

SERVICE BRAKE WEAR INDICATOR (NEW BRAKE DISC) CHECK - CONTINUED

NOTE

New values supersede previous values. If you did not install a new brake disc on the respective brake, DO NOT enter new baseline values.

22. When screen displays “Are you sure you want to program this parameter?”, click “Yes” (23) to save new value. If you click “No”, you will cancel change.

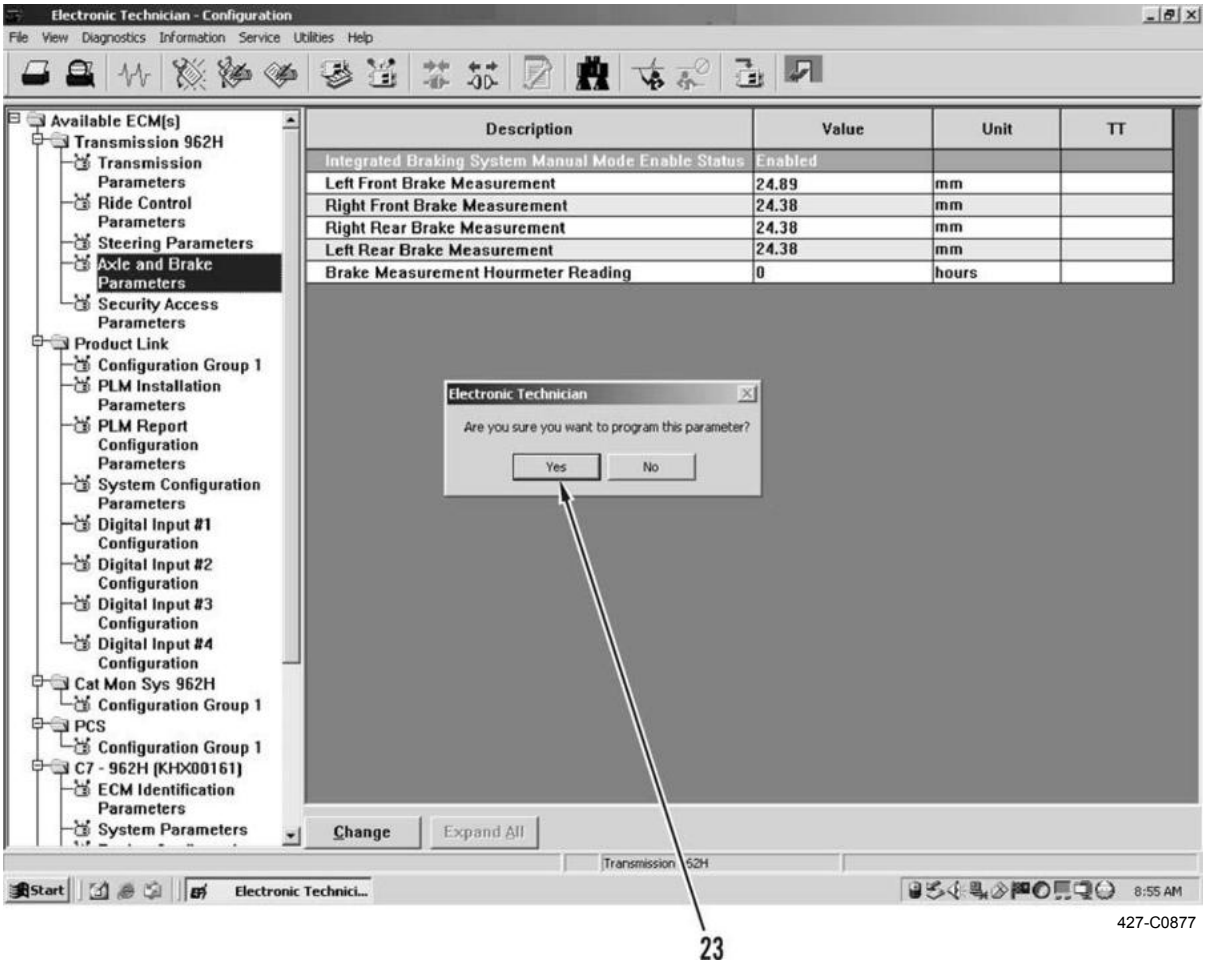

SERVICE BRAKE WEAR INDICATOR (NEW BRAKE DISC) CHECK - CONTINUED

NOTE

Print paper copy of each new baseline value that is displayed on screen. Insert paper copy of each new baseline value in machine's history folder.

23. Repeat steps 3 thru 21 for each brake that requires a new baseline value.
24. Update "Brake Measurement Hourmeter Reading." Record number of service hours from machine's SMU.

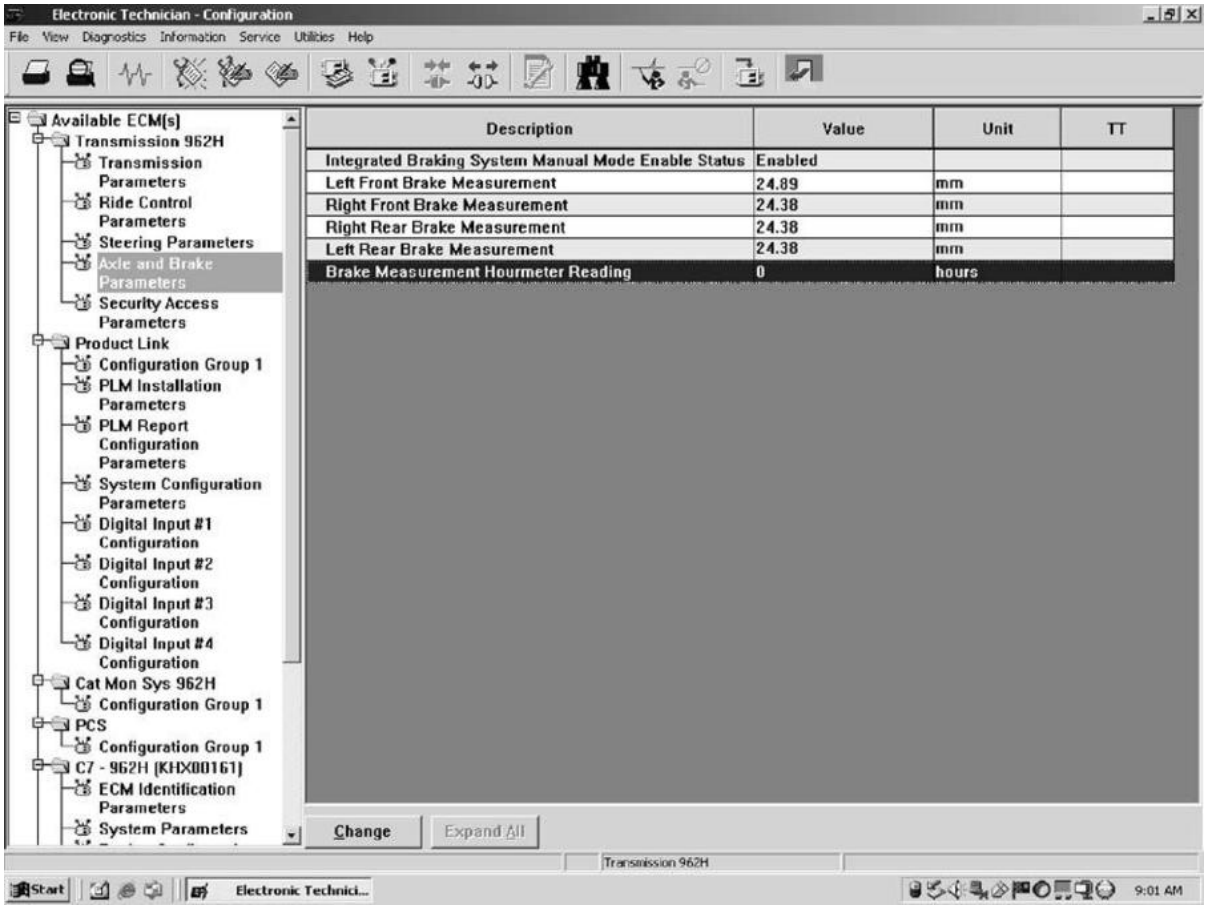

427-C0878

25. Exit MSD software.
26. Turn engine start switch to OFF position (TM 5-3805-291-10).
27. Disconnect MSD from diagnostic connector (WP 0005 00).

SERVICE BRAKE WEAR INDICATOR (EXISTING BRAKE DISC) CHECK

WARNING

Injury or death can result if two persons are not used in procedure.

CAUTION

- **Care must be taken to ensure that fluids are contained during performance of inspection, maintenance, testing, adjusting, and repair of product. Be prepared to collect fluid with suitable containers before opening any compartment or disassembling any component containing fluids.**
- **Dispose of all fluids according to local regulations and mandates.**

NOTE

- **When installing new brake discs, you must record new measurements for axle's service brake wear indicator. Use this procedure in order to record new measurements. The information will be recorded in powertrain ECM.**
- **Individual service brakes use indicator pins to determine amount of wear on existing service brake discs. Indicator pins are located on each side of front and rear axle center housings. When installing new brake discs, you must record these measurements immediately.**
- **Measurements must be recorded for each service brake containing new brake discs. Measurements are used as reference dimensions. Measurements are used to calculate amount of wear for a given brake disc.**
- **The following steps require accumulator pressure for service brakes.**

SERVICE BRAKE WEAR INDICATOR (EXISTING BRAKE DISC) CHECK - CONTINUED

1. Start and run engine until brake accumulators reach cut-out pressure (less than 30 seconds) (TM 5-3805-291-10).
2. Stop engine and engage parking brake (TM 5-3805-291-10).
3. Clean area around plug (12).
4. Remove excess paint from axle housing flange face (13).
5. Remove screw (14) and plug (12).
6. Apply light pressure to pin (15) to ensure pin is seated against cup (16).

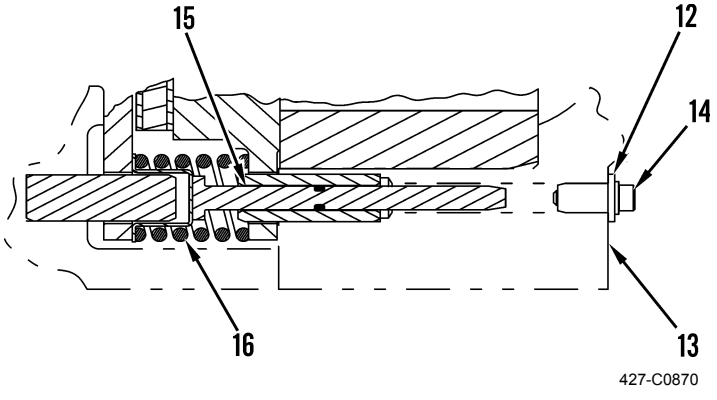

427-C0870

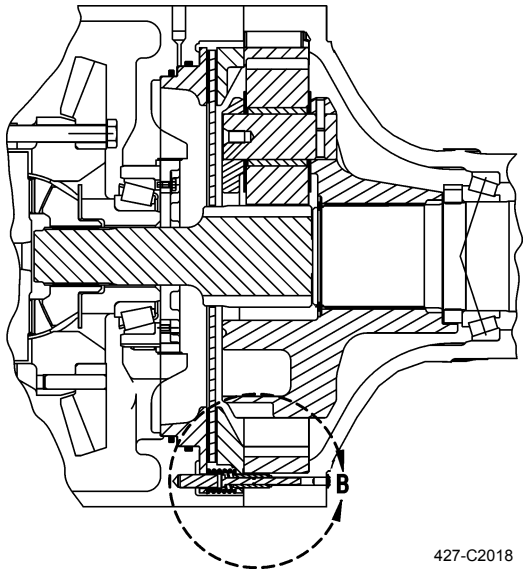

427-C2018

SERVICE BRAKE WEAR INDICATOR (EXISTING BRAKE DISC) CHECK - CONTINUED

NOTE

Measure dimension (C) with the service brakes applied. Dimension (C) equals distance from axle housing flange face to end of pin.

7. Use caliper to measure exact thickness (D) of gage block.
8. Gage block is U shaped. Position gage block so slot straddles hole in axle housing flange face (13). Firmly hold gage block against axle housing flange face.
9. With assistance, apply service brakes (TM 5-3805-291-10).
10. Using depth micrometer, measure dimension (E).

NOTE

If gage block is not available, use a depth micrometer with a half of a base to measure dimension (C) directly from flange face. Shorten the base on the micrometer by grinding. This will help allow the base of the micrometer to rest on flange face.

11. Value of dimension (C) equals value of dimension (E) minus value of dimension (D).
12. Record measurements for each brake that contains a new brake disc.
13. Record number of service hours shown on service meter unit (SMU).

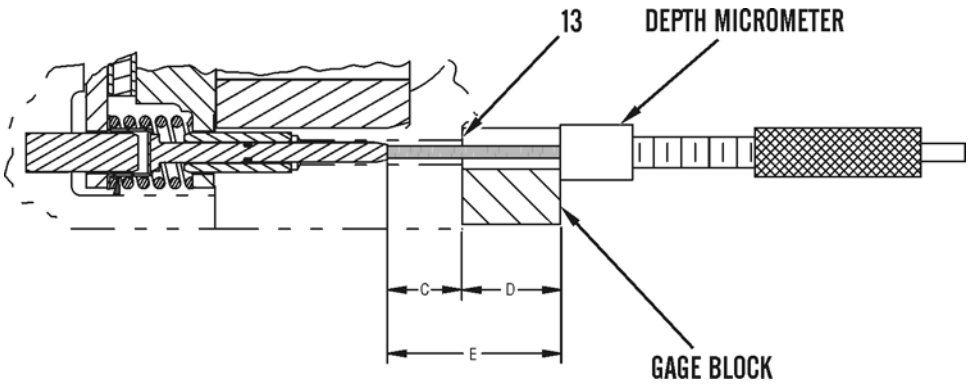

SERVICE BRAKE WEAR INDICATOR (EXISTING BRAKE DISC) CHECK - CONTINUED

NOTE

The baseline value for dimension (C) was originally measured at the factory when the machine was new. Baseline values for dimension (C) are stored electronically on the machine's powertrain ECM. Use MSD service tool to retrieve baseline values of dimension (C).

14. Connect MSD to diagnostic connector (WP 0005 00).
15. Turn engine start switch to ON position, but do not start engine (TM 5-3805-291-10).
16. Start ET software and select "Transmission" (17).
17. Click "OK" (18).
18. Select configuration tool icon.

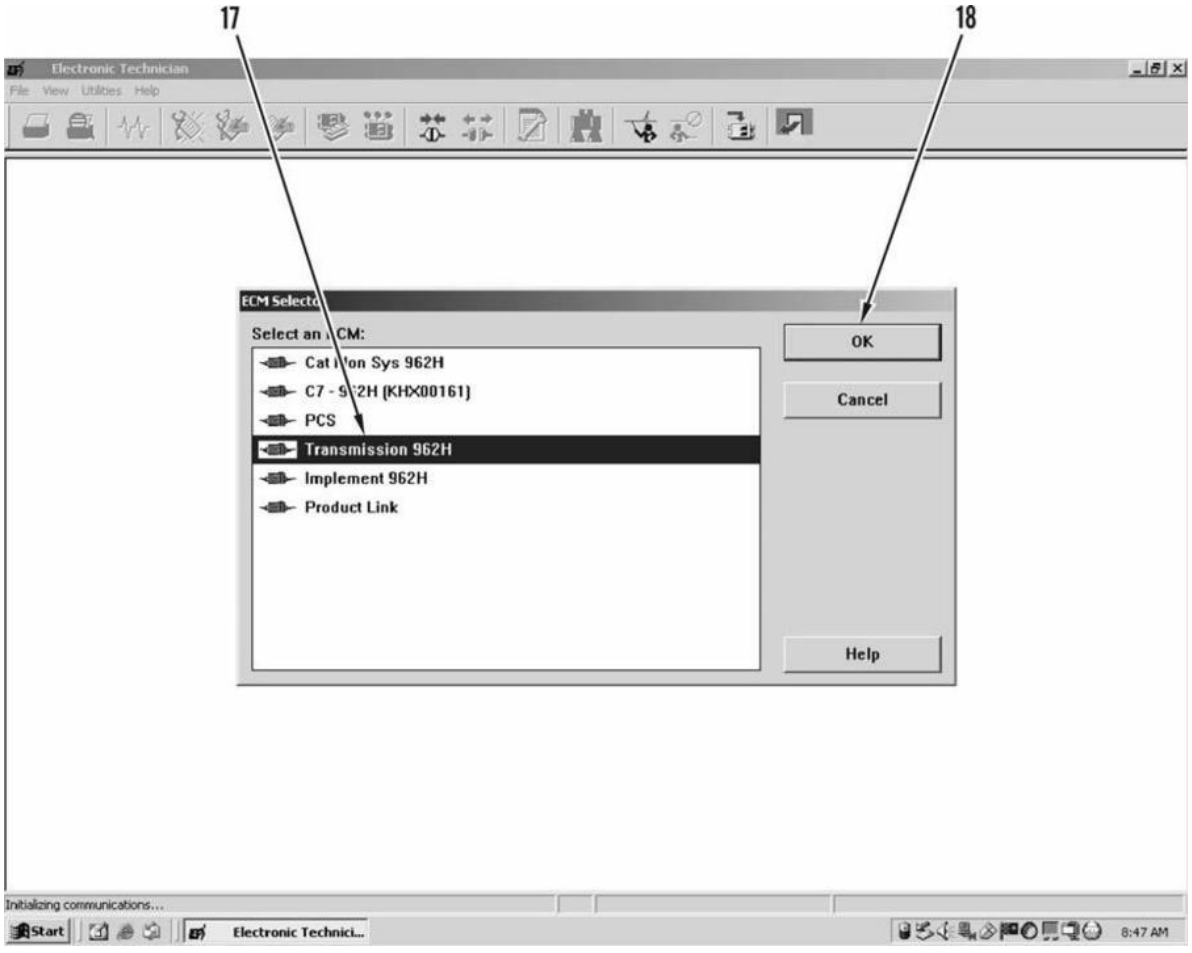

427-C0873

SERVICE BRAKE WEAR INDICATOR (EXISTING BRAKE DISC) CHECK - CONTINUED

NOTE

- **Values shown on screen are baseline values for each service brake. The "Brk Meas Hourmeter" value is reading on SMU. The SMU reading was recorded when new brake discs were installed on machine.**
- **DO NOT modify measurements or "Brk Meas Hourmeter" values stored in powertrain ECM. Change these values only when installing new brake discs.**

19. Record each value of dimension (C) on piece of paper.
20. Exit MSD software.
21. Turn engine start switch to OFF position (TM 5-3805-291-10).
22. Disconnect MSD from diagnostic connector (WP 0005 00).
23. Determine amount of service life available for left front service brake discs. Write down value of dimension (C) for left front service brake. Write down baseline value for left front service brake stored in powertrain ECM.
24. Subtract value of dimension (C) from baseline value. Difference indicates amount of wear that has occurred to service brake discs.

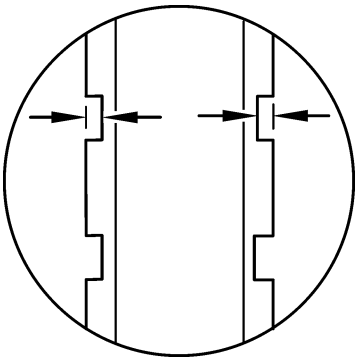

427-C2019

NOTE

- **A difference of 0.058 in. (1.46 mm) or more indicates that discs must be replaced.**
- **If you install a new brake disc in any of the four service brakes, you must enter a new baseline value.**

25. Repeat steps 3 thru 22 for other service brake discs.

NOTE

The oil groove depth is the most critical dimension. If the depth of the oil grooves on the brake disc is too shallow, oil flow will be inadequate. This can cause excessive wear and abrasion.

26. To provide an estimate on the amount of service life for a brake disc, refer to *Disc Thickness Wear Char*t.

DISC THICKNESS WEAR CHART		
ESTIMATED PERCENTAGE OF REMAINING BRAKE DISC LIFE	AMOUNT OF FRICTION MATERIAL THAT IS WORN FROM THE DISC	OIL GROOVE DEPTH
100	0.000 in. (0.00 mm)	0.041 in. (1.05 mm)
80	0.011 in. (0.29 mm)	0.036 in. (0.90 mm)
60	0.023 in. (0.58 mm)	0.030 in. (0.76 mm)
40	0.034 in. (0.88 mm)	0.024 in. (0.61 mm)
20	0.046 in. (1.17 mm)	0.018 in. (0.47 mm)
0	0.058 in. (1.46 mm)	0.013 in. (0.32 mm)

HYDRAULIC FAN SPEED TEST AND ADJUSTMENT

WARNING

- **Rotating fan blades can result in injury or death to personnel.**
- **Stop engine and allow fan to come to a complete stop before making any test or adjustment.**
- **Before starting engine, make sure all finger guards are installed securely. Do not allow any tools or test equipment to protrude or vibrate into path of rotating fan blades.**
- **Injury to personnel can result from hydraulic oil pressure and hot oil.**
- **Hydraulic oil pressure can remain in hydraulic system after engine has stopped. Serious injury can be caused if pressure is not released before service is done on hydraulic system.**
- **Make sure all attachments have been lowered and oil is cool before removing components or lines. Remove oil filler cap when the engine is stopped and filler cap is cool enough to touch with your bare hand.**
- **Sudden movement or accidental starting of machine can cause injury or death to personnel on or near machine.**
- **Before operating the machine, secure steering frame lock in stowed position. DO NOT operate machine with steering frame lock connected. Failure to lock steering frame lock into stowed position before operating can result in loss of steering and injury or death to personnel.**

CAUTION

- **Care must be taken to ensure that fluids are contained during performance of inspection, maintenance, testing, adjusting, and repair of the product. Be prepared to collect the fluid with suitable containers before opening any compartment or disassembling any component containing fluids.**
- **Dispose of all fluids according to local regulations and mandates.**

Machine Preparation

1. Connect steering frame lock (1) (TM 5-3805-291-10).

NOTE

- **If piece of reflective tape is already visible on one fan blade, proceed to step 5.**
- **Access to the fan blade is through door on either side of the radiator group.**

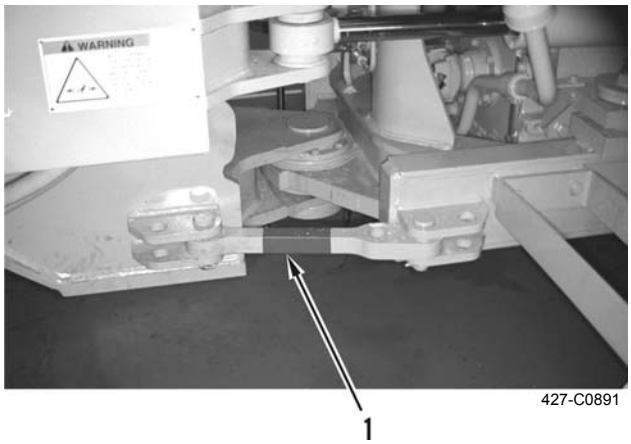

2. Ensure engine start switch is in OFF position (TM 5-3805-291-10).
3. Clean small area on surface of one fan blade.
4. Attach reflective tape to fan blade so tape is completely visible.
5. Place photo pickup (24) from indicator point kit into holder on magnetic base (25) and tighten screw. Attach magnetic base to fan guard assembly (26).

HYDRAULIC FAN SPEED TEST AND ADJUSTMENT - CONTINUED

Machine Preparation - Continued

NOTE

- **When reflective tape and photo pickup are in alignment, LED indicator (red light) will come on.**
- **When starting engine, vibration of machine may cause photo pickup to become misaligned. It may be necessary to adjust position of magnetic base in order to realign photo pickup.**

6. Position photo pickup (24).

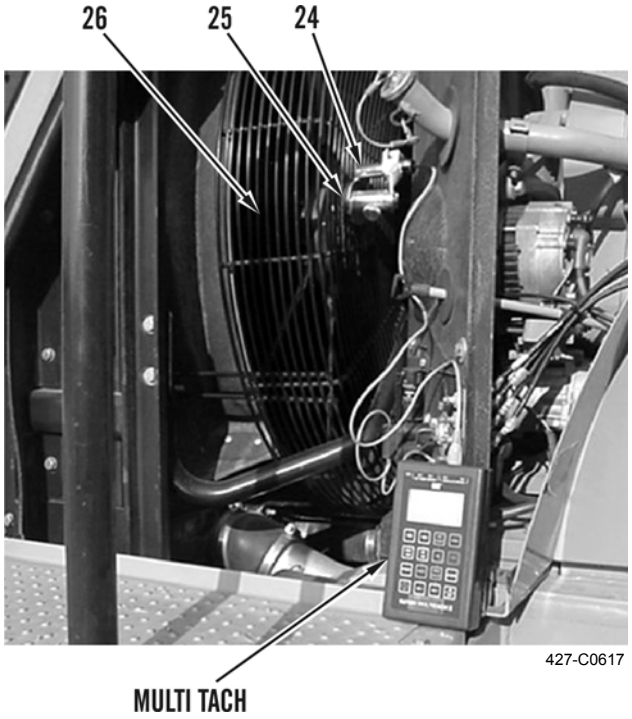

427-C0617

HYDRAULIC FAN SPEED TEST AND ADJUSTMENT - CONTINUED

Margin Pressure (Testing and Adjusting)

1. Connect 2,900 psi (20,000 kPa) pressure gage to pump discharge line (27).
2. Connect 2,900 psi (20,000 kPa) pressure gage to load sensing line (28).

NOTE

Ensure hydraulic oil is at operating temperature.

3. With assistance, start and run engine at low idle (TM 5-3805-291-10).

NOTE

Difference between gages is margin pressure. Margin pressure should be 335 ± 14 psi (2,300 ± 100 kPa).

4. If margin pressure is out of range, remove cap from margin spool (29) (low pressure) on pump compensator (30).
5. Adjust margin spool (29) until differential is 335 psi (2,300 kPa), by turning it clockwise to increase and counterclockwise to decrease.
6. Install cap on margin spool (29).
7. Disconnect pressure gage from pump discharge line (27).
8. Disconnect pressure gage from load sensing line (28).
9. With assistance, stop engine (TM 5-3805-291-10).

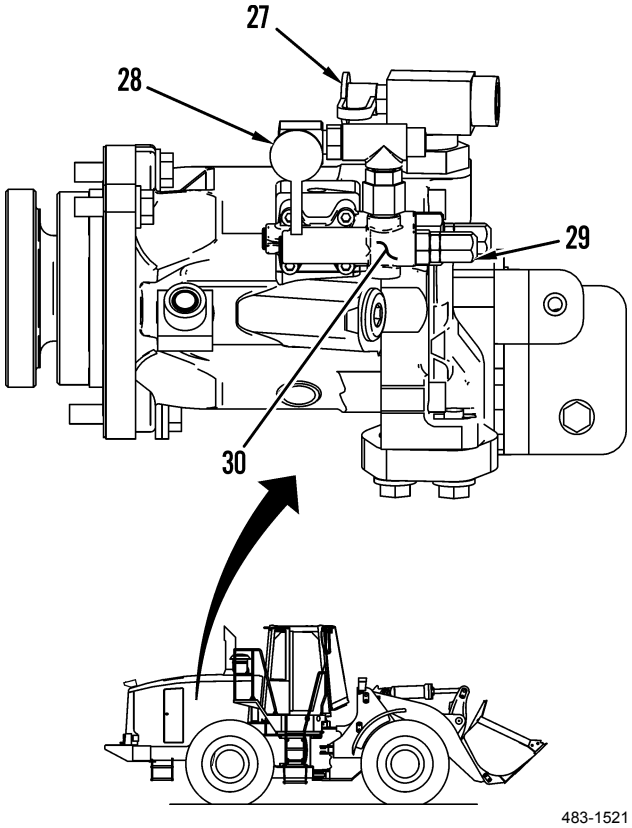

483-1521

HYDRAULIC FAN SPEED TEST AND ADJUSTMENT - CONTINUED

High Pressure Cutoff (Testing and Adjusting)

1. Connect 2,900 psi (20,000 kPa) test stand to pump discharge line (27).

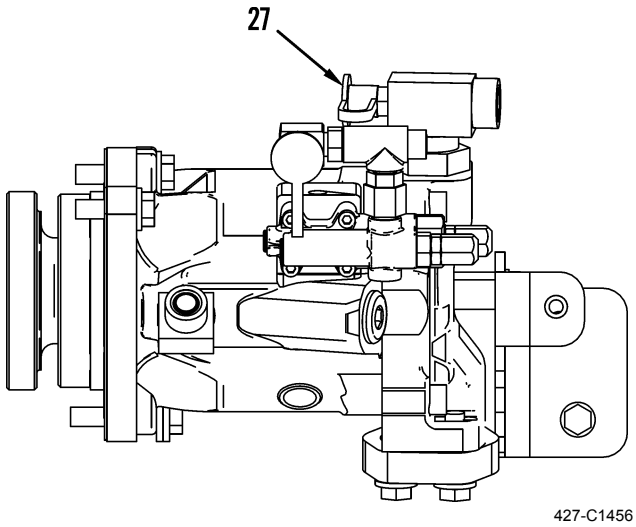

2. Disconnect fan solenoid connector (31) from fan solenoid (32).



HYDRAULIC FAN SPEED TEST AND ADJUSTMENT - CONTINUED

High Pressure Cutoff (Testing and Adjusting) - Continued

3. With assistance, start and run engine at high idle (TM 5-3805-291-10).

NOTE

Pressure at pump discharge port should be 2,700 psi (18,800 kPa).

4. If pressure at pump discharge port is not 2,700 psi (18,800 kPa), remove cap from high pressure spool (33) on pump compensator (30).
5. Continue to run machine at high idle.
6. Adjust high pressure spool (33) until gage reads 2,700 psi (18,800 kPa) by turning it clockwise to increase and counterclockwise to decrease.
7. Install cap on high pressure spool (33).
8. Connect fan solenoid connector (31) to fan solenoid (32).

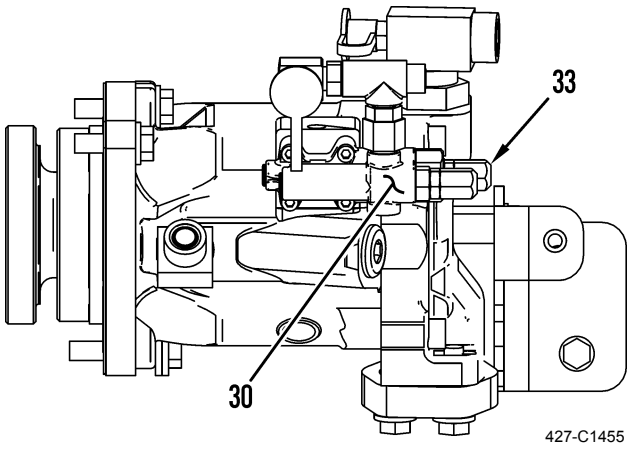



HYDRAULIC FAN SPEED TEST AND ADJUSTMENT - CONTINUED

High Pressure Cutoff (Testing and Adjusting) - Continued

9. Disconnect pressure gage from pump discharge line (27).

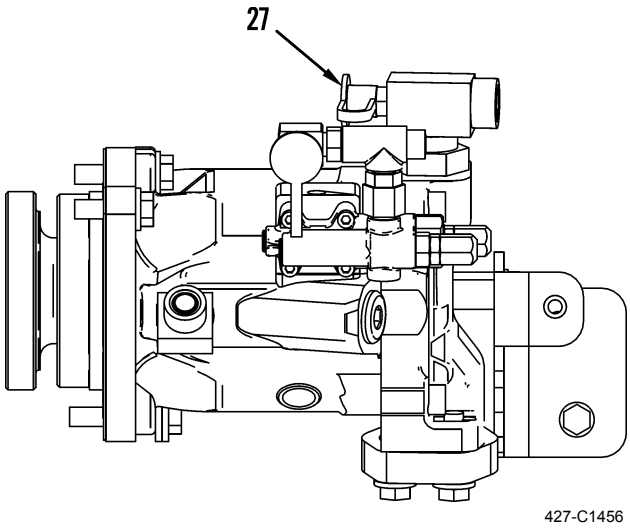

10. With assistance, return to low idle and stop engine (TM 5-3805-291-10).

Hydraulic Fan Speed (Testing and Adjusting)

1. Turn engine start switch to ON position (TM 5-3805-291-10), but do not start engine.
2. Connect MSD to diagnostic connector (WP 0005 00).

HYDRAULIC FAN SPEED TEST AND ADJUSTMENT - CONTINUED

Hydraulic Fan Speed (Testing and Adjusting) - Continued

3. Start MSD.
4. When MSD initializes, select engine ECM (34) from available choices and click “OK” (35).
5. Check all fault codes under engine ECM.
6. Ensure no faults are present in fan drive system.
7. Ensure no faults are present with hydraulic oil temperature sensor (WP 0083 00), engine coolant temperature sensor (WP 0077 00), or intake manifold temperature sensor (WP 0084 00).

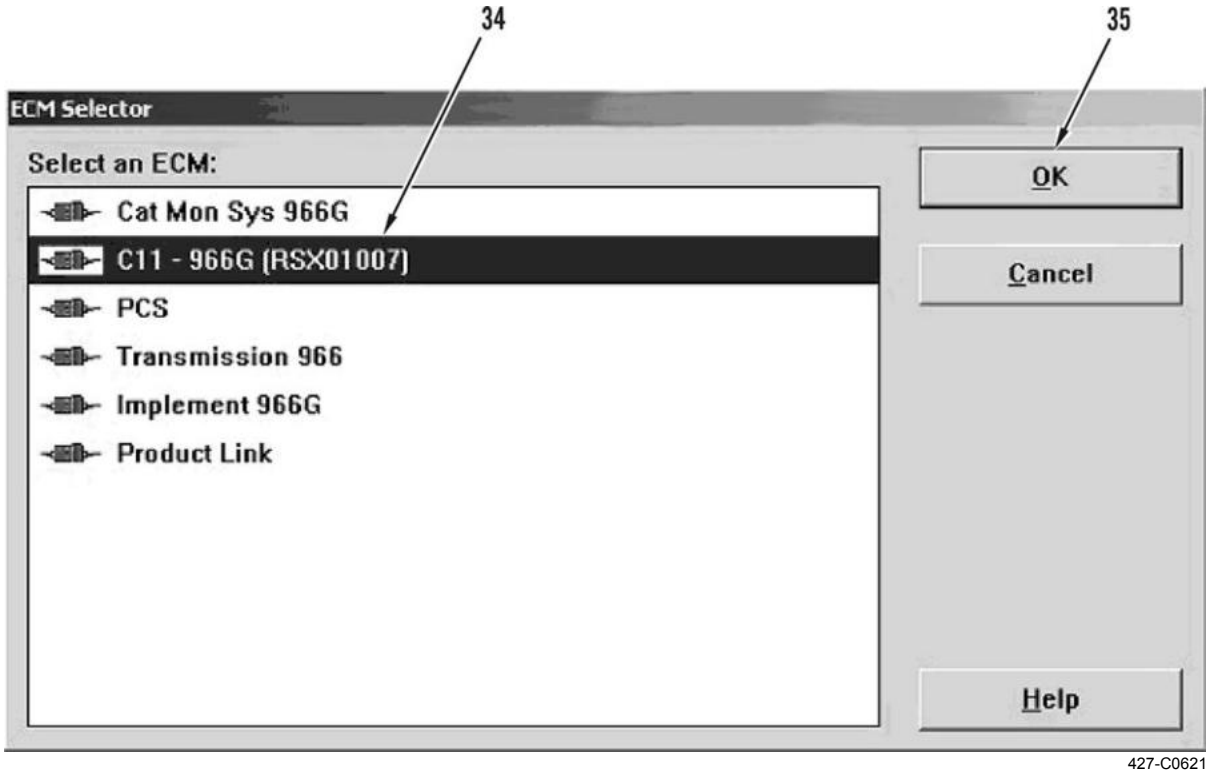

HYDRAULIC FAN SPEED TEST AND ADJUSTMENT - CONTINUED

Hydraulic Fan Speed (Testing and Adjusting) - Continued

NOTE

If no faults are present, begin the calibration.

8. Select “Service” (36), “Calibrations” (37), and “Engine Cooling Fan Calibration” (38) from toolbar menu.

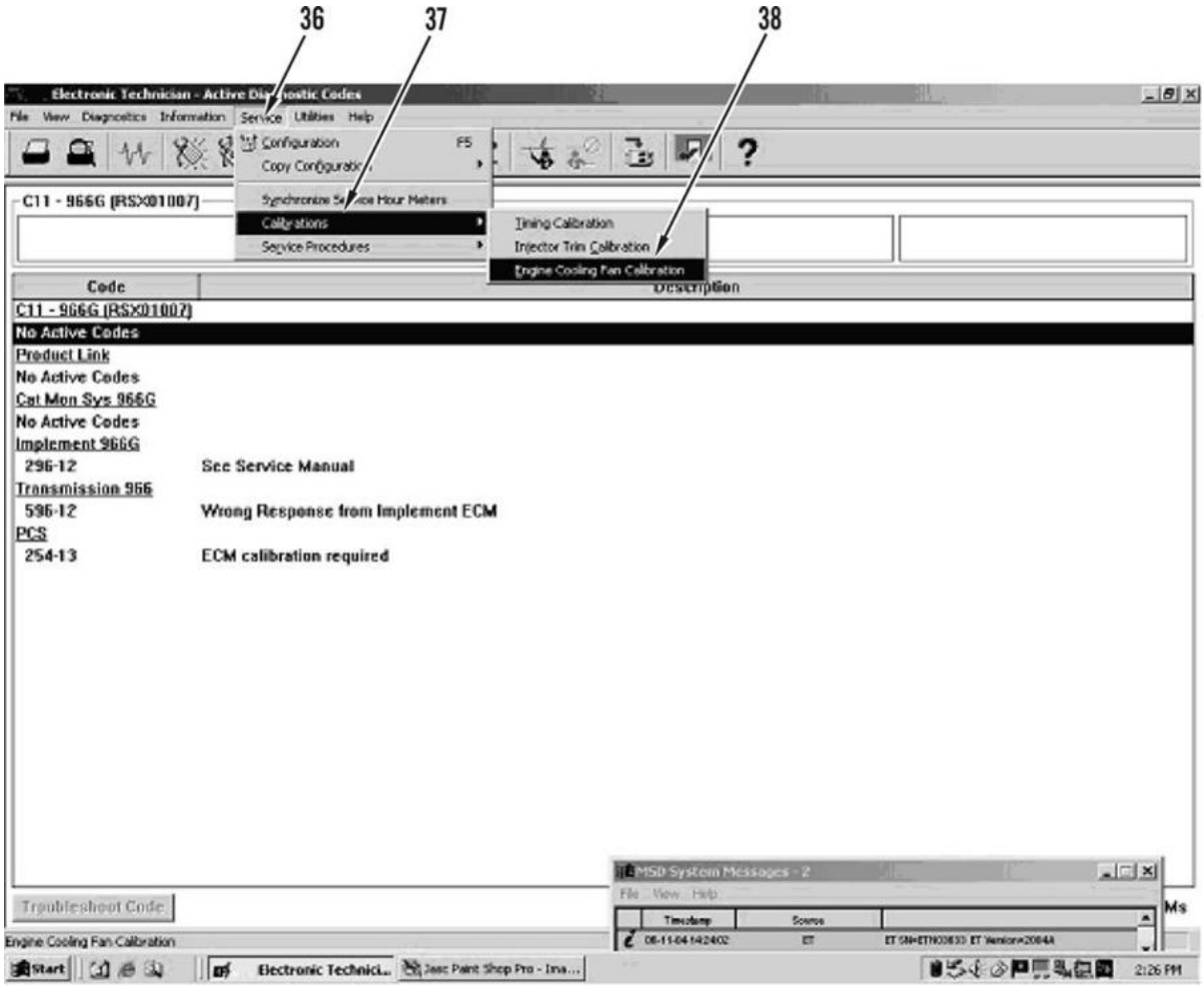

427-C0622

HYDRAULIC FAN SPEED TEST AND ADJUSTMENT - CONTINUED

Hydraulic Fan Speed (Testing and Adjusting) - Continued

9. Follow instructions on screen. Click “OK” (39).

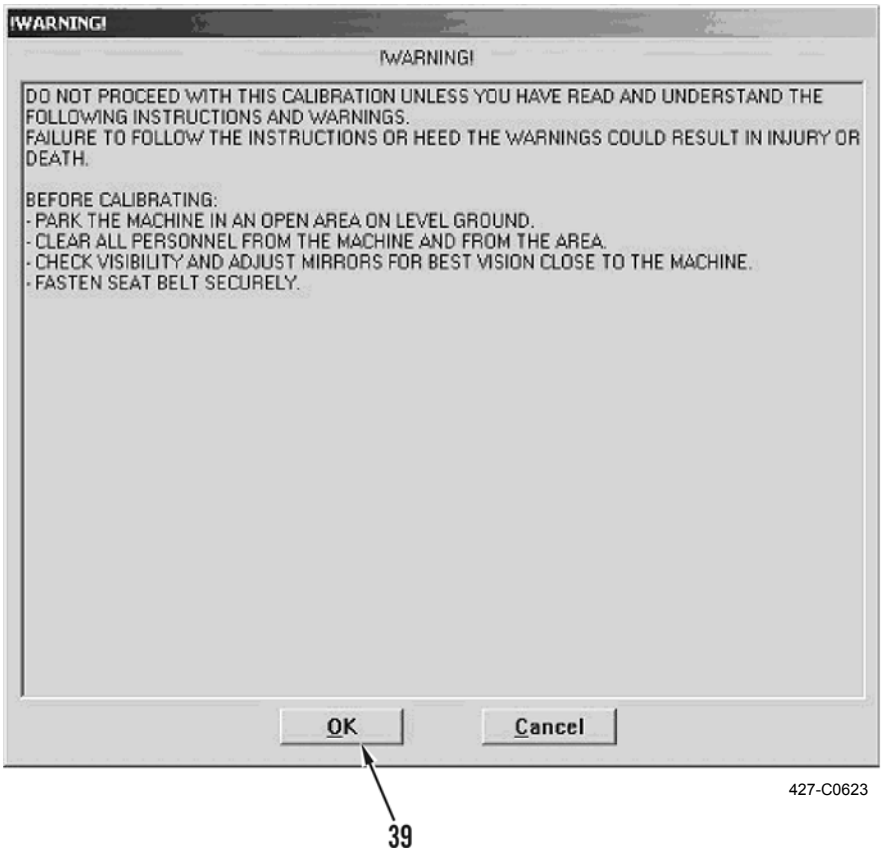

HYDRAULIC FAN SPEED TEST AND ADJUSTMENT - CONTINUED

Hydraulic Fan Speed (Testing and Adjusting) - Continued

10. "Calibrations" screen will appear. Select both check boxes (40) and click "Begin" (41).

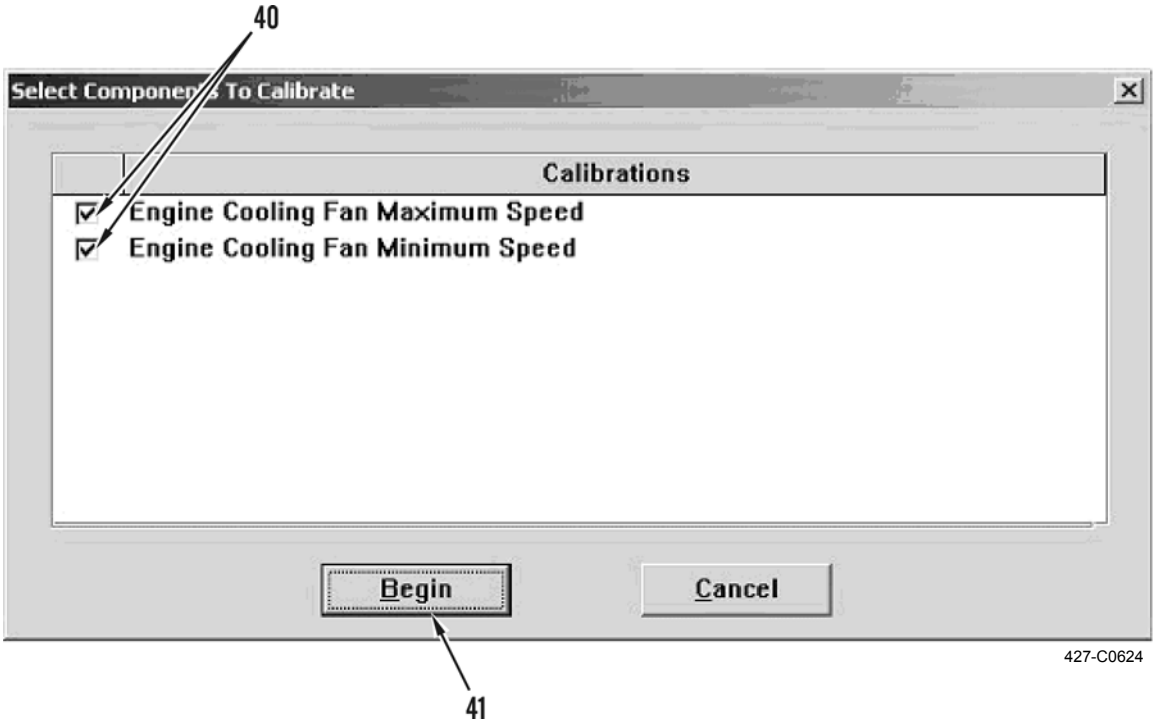

HYDRAULIC FAN SPEED TEST AND ADJUSTMENT - CONTINUED

Hydraulic Fan Speed (Testing and Adjusting) - Continued

11. With assistance, start and run engine at high idle (TM 5-3805-291-10).
12. Click “Next” (42).

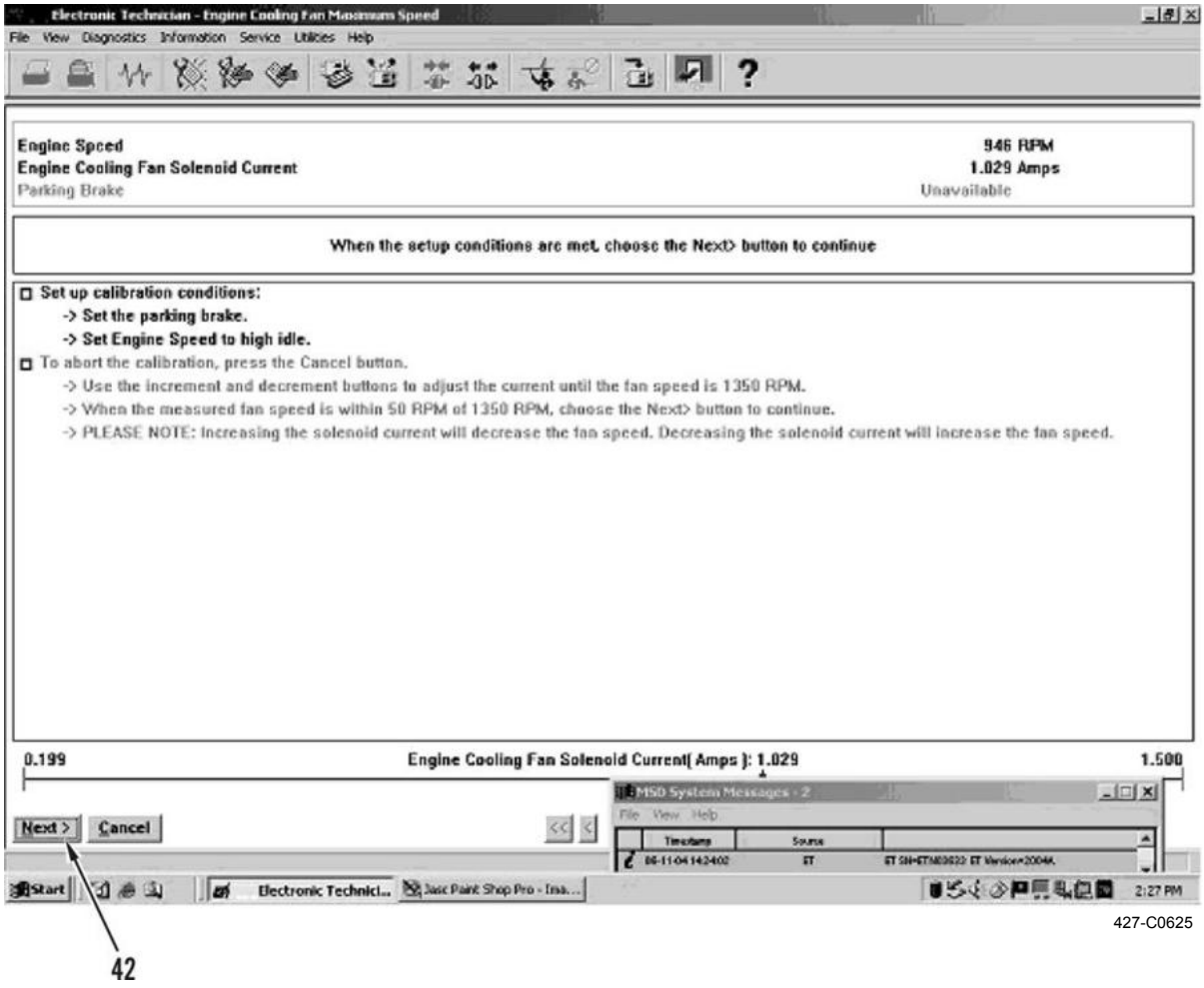

HYDRAULIC FAN SPEED TEST AND ADJUSTMENT - CONTINUED

Hydraulic Fan Speed (Testing and Adjusting) - Continued

NOTE

Procedure on screen may specify different value for fan speed. DO NOT use this value. Set the fan speed to 1,200 ± 50 rpm.

13. Continue running machine at high idle.
14. Use multi tach to measure fan speed.

NOTE

- **Increasing the current will decrease the fan speed. Decreasing the current will increase the fan speed.**
- **Adjust current for fan solenoid by using arrows at bottom of screen (43).**

15. Adjust current until fan speed is 1,200 ± 50 rpm.
16. When fan speed has been set properly, click “Next” (42).

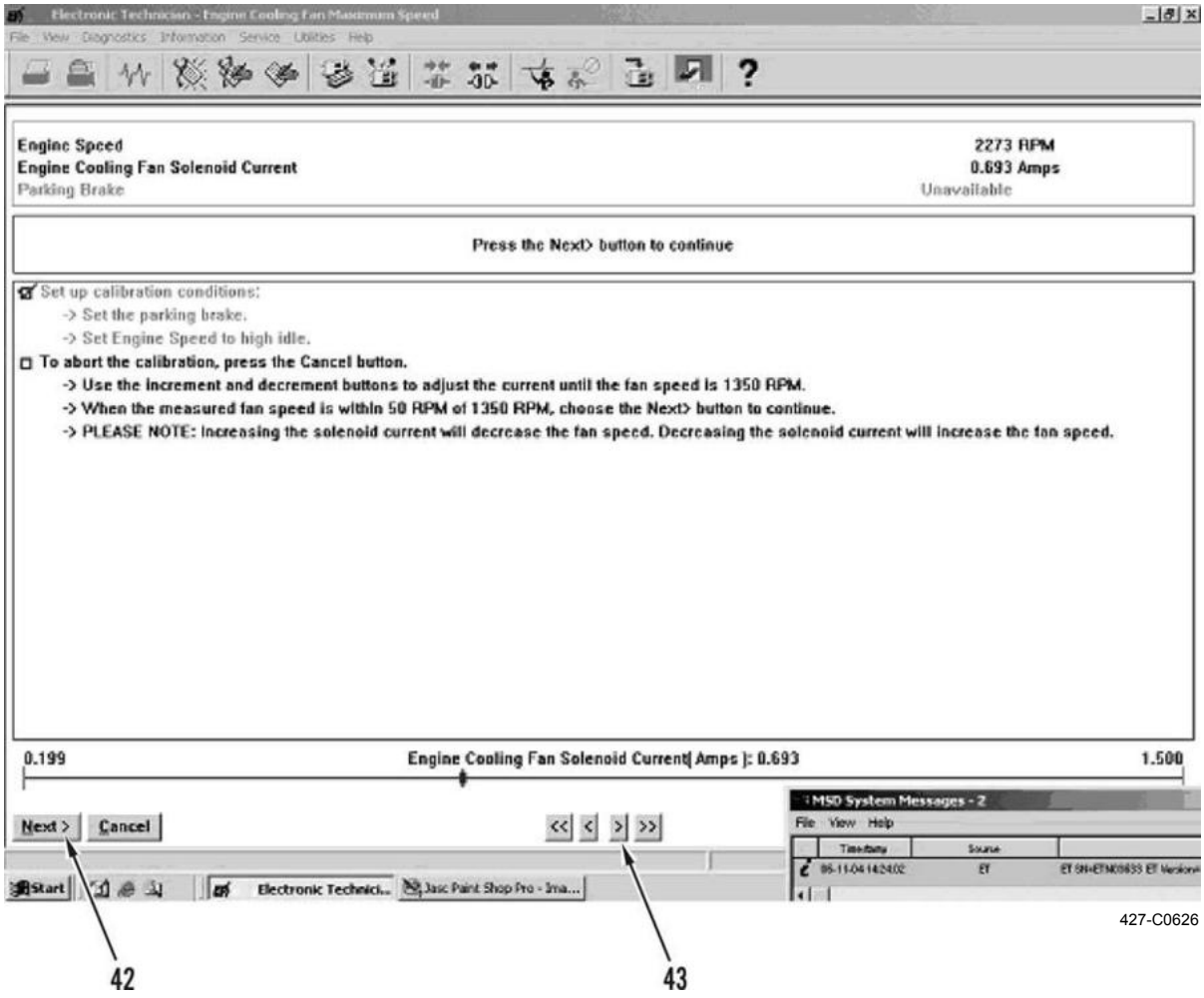

427-C0626

HYDRAULIC FAN SPEED TEST AND ADJUSTMENT - CONTINUED

Hydraulic Fan Speed (Testing and Adjusting) - Continued

17. After setting maximum fan speed, click “Continue” (44) to set minimum fan speed.

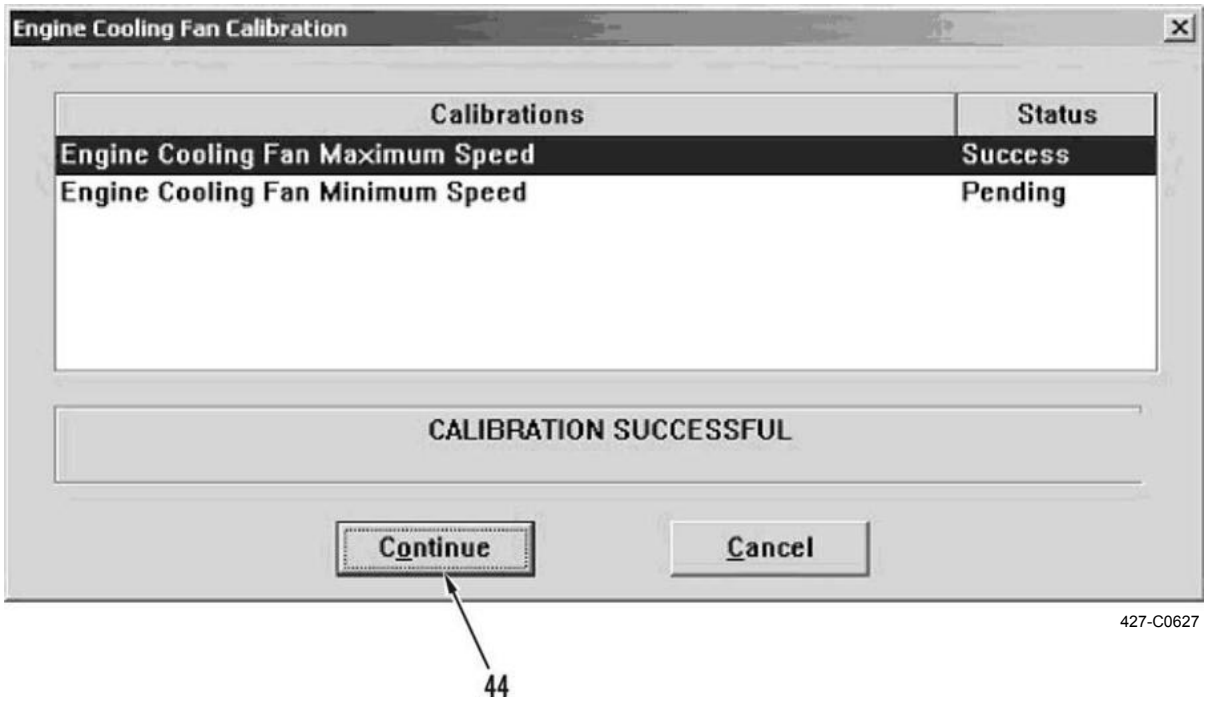

HYDRAULIC FAN SPEED TEST AND ADJUSTMENT - CONTINUED

Hydraulic Fan Speed (Testing and Adjusting) - Continued

18. Continue running machine at high idle.
19. Use multi tach to measure fan speed.

NOTE

- **Increasing the current will decrease the fan speed. Decreasing the current will increase the fan speed.**
- **Adjust current for fan solenoid by using arrows at bottom of screen (43).**
- **Procedure on screen may specify different value for fan speed. DO NOT use this value. Set fan speed to 500 ± 50 rpm.**

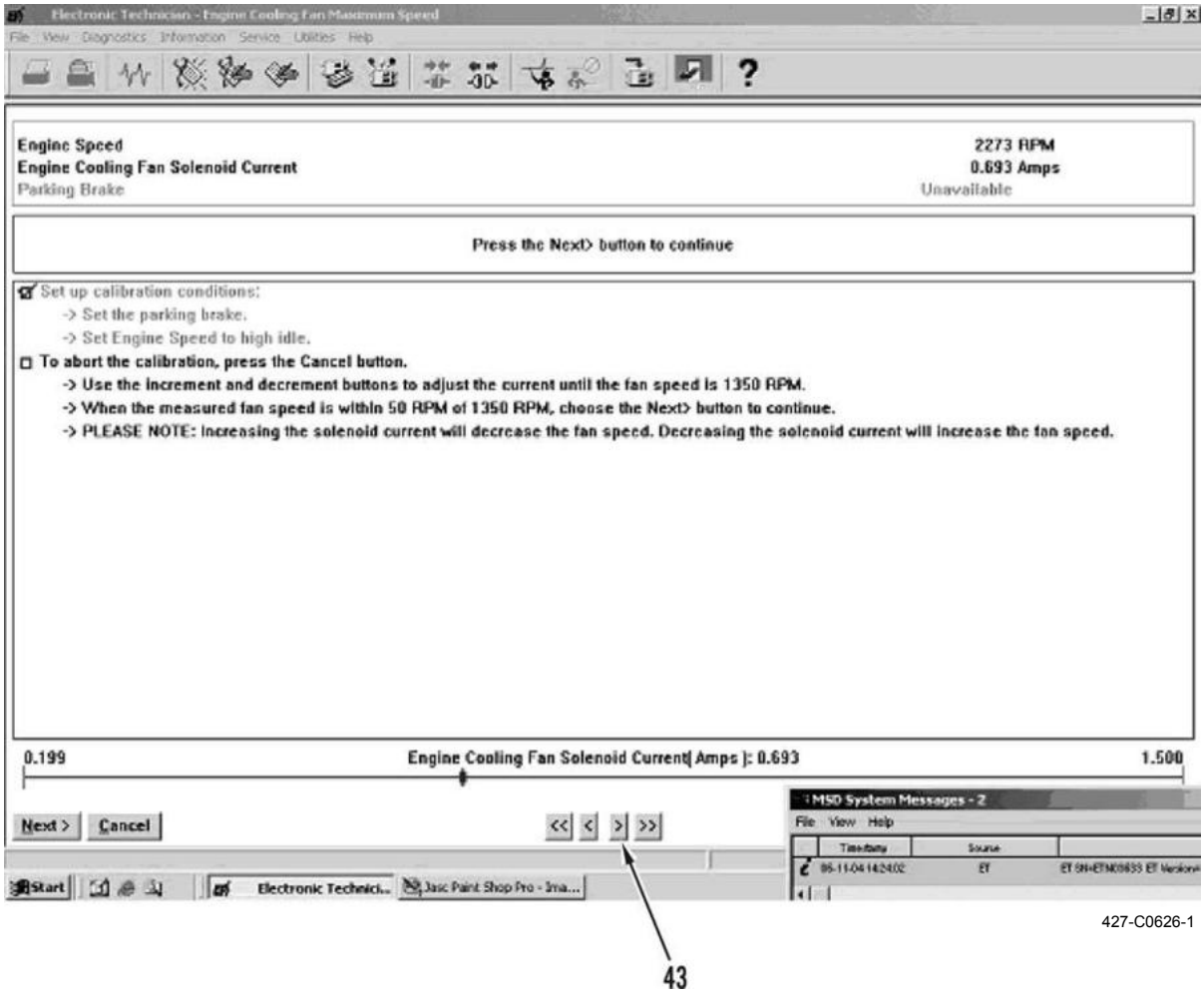

427-C0626-1

HYDRAULIC FAN SPEED TEST AND ADJUSTMENT - CONTINUED

Hydraulic Fan Speed (Testing and Adjusting) - Continued

20. Adjust current until fan speed is 500 ± 50 rpm.
21. When fan speed has been set properly, click “Next” (42).

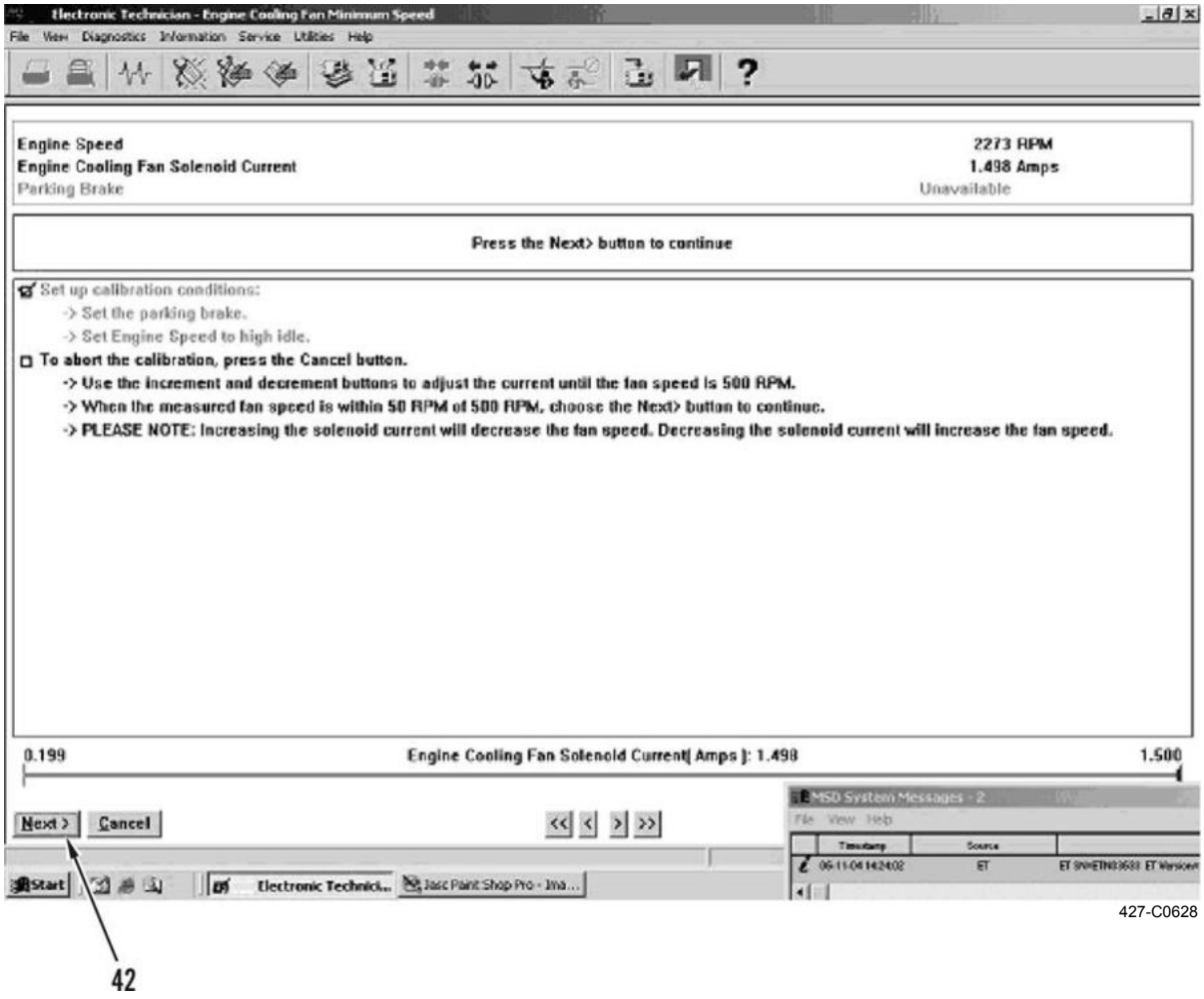

HYDRAULIC FAN SPEED TEST AND ADJUSTMENT - CONTINUED

Hydraulic Fan Speed (Testing and Adjusting) - Continued

22. After setting minimum fan speed, click “Finish” to save calibration values.
23. With assistance, return to low idle and stop engine (TM 5-3805-291-10).
24. Exit MSD.
25. Disconnect MSD from diagnostic connector (WP 0005 00).
26. Remove photo pickup (24) and magnetic base (25) from fan guard assembly (26).

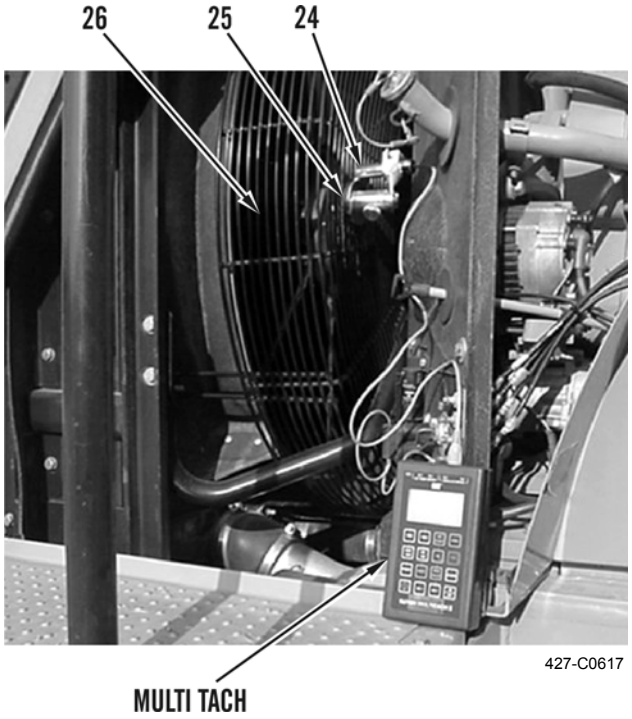

27. Install side covers (WP 0135 00).
28. Close hood (TM 5-3805-291-10)

WARNING

Before operating the machine, secure steering frame lock in stowed position. DO NOT operate machine with steering frame lock connected. Failure to lock steering frame lock into stowed position before operating can result in loss of steering and injury or death to personnel.

29. Secure steering frame lock in stowed position (TM 5-3805-291-10).

END OF WORK PACKAGE

STEERING SYSTEM TESTS, INSPECTIONS, AND ADJUSTMENTS 0016 00

THIS WORK PACKAGE COVERS

Piston Pump (Steering) High Pressure Stall Test and Adjustment

Adjusting Pressure Compensator Valve

Piston Pump (Steering) Margin Pressure Test and Adjustment

Adjusting Flow Compensator Valve

Piston Pump (Steering) Low Pressure Standby Test and Adjustment

Relief Valve (Pump Backup) Test and Adjustment

Steering Time Check

Steering Control Valve Adjustment

Steering Neutralizer Valve Check and Adjustment

Relief Valve (Steering Cylinder Crossover) Test and Adjustment

Articulated Hitch Adjustment

INITIAL SETUP

Maintenance Level

Unit

Test Equipment

Gage, pressure, differential, dial indicating (Item 31, WP 0232 00)

Test stand, automotive (Item 87, WP 0232 00)

Tools and Special Tools

Tool kit, general mechanic's, automotive (Item 90, WP 0232 00)

Driver plate (Item 27, WP 0232 00)

Pin, shoulder, headless (Item 48, WP 0232 00)

Saddle assembly, lifting block (Item 65, WP 0232 00)

Sleeve (Item 72, WP 0232 00)

Stand assembly (Item 79, WP 0232 00)

Tubing assembly set, nonmetallic (Item 93, WP 0232 00)

Wrench, torque, dial, 3/8" drive, 300 lb-in. (Item 97, WP 0232 00)

Wrench, torque, click, ratcheting, 3/8" drive, 75 lb-ft (Item 98, WP 0232 00)

Materials/Parts

Rag, wiping (Item 35, WP 0233 00)

Bolt, 1/4 NC x 3 3/4 in. (2)

Nut 1/4 NC (2)

Putty

Personnel Required

MOS 62B, Construction Equipment Repairer (2)

References

WP 0003 00

WP 0127 00

WP 0132 00

Equipment Conditions

Machine parked on level ground (TM 5-3805-291-10)

Work tool lowered to ground (TM 5-3805-291-10)

Parking brake engaged (TM 5-3805-291-10)

Wheels chocked

Steering frame lock connected (TM 5-3805-291-10)

Drawing Required

TM 5-3805-291-23P, Figure 126

WARNING

- **Injury or death to personnel can result from escaping fluid under pressure.**
- **Escaping fluid under pressure, even a very small pin-hole size leak, can penetrate body tissue and cause serious injury and possible death. If fluid is injected into your skin, it must be treated immediately by a doctor familiar with this type of injury.**
- **Always use a board or cardboard when checking for a leak.**
- **Injury or death to personnel can result from machine articulation or movement.**
- **Machine frames can move and personnel can be crushed.**

NOTE

- **Dispose of all fluids according to local regulations and mandates.**
- **For a better understanding of each system, review the appropriate section in *Theory of Operation* (WP 0003 00).**

PISTON PUMP (STEERING) HIGH PRESSURE STALL TEST AND ADJUSTMENT

1. Connect steering frame lock (TM 5-3805-291-10).
2. Engage parking brake (TM 5-3805-291-10).
3. Place transmission in NEUTRAL (TM 5-3805-291-10).
4. Attach test stand on pressure tap (1).



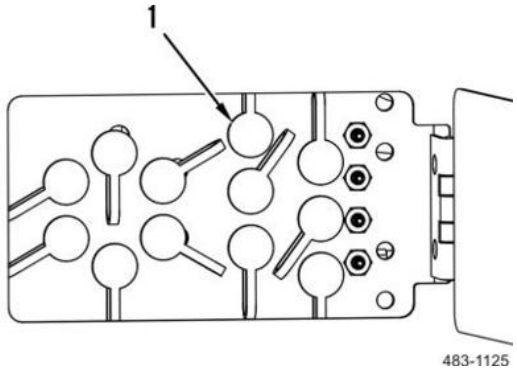

5. Start and run engine at high idle (TM 5-3805-291-10).
6. After oil has reached normal operating temperature, position bucket and any attachments slightly off ground (TM 5-3805-291-10).
7. Continue to run engine at high idle.

CAUTION

During the following procedure, do not keep steering pump at stall condition for more than ten seconds or damage to components may occur. If necessary, release steering wheel and wait for 30 seconds before repeating step.

8. With assistance, turn steering wheel to FULLY TURNED position to obtain high pressure reading.

PISTON PUMP (STEERING) HIGH PRESSURE STALL TEST AND ADJUSTMENT - CONTINUED

NOTE

- **Steering system pressure should be 3,050 ± 75 psi (20,865 ± 515 kPa).**
- **Adjust pressure and flow compensator valve if steering system pressure is not correct.**

9. Record reading on pressure gage.
10. With assistance, lower bucket and any attachment to ground and stop engine (TM 5-3805-291-10).

WARNING

Before operating the machine, secure the steering frame lock in the stowed position. DO NOT operate machine with steering frame lock connected. Failure to lock steering frame lock into the stowed position before operating can result in loss of steering and injury or death to personnel.

11. Secure steering frame lock in stowed position (TM 5-3805-291-10).
12. Remove test stand from pressure tap (1).

ADJUSTING PRESSURE COMPENSATOR VALVE

NOTE

If adjusting pressure compensator spool in steering pump's pressure and flow compensator valve, perform *Piston Pump (Steering) High Pressure Stall Test and Adjustment* procedure in this work package again.

1. Remove cover (2) from adjustment screw (3) on pressure and flow compensator valve (4). Loosen locknut (5).

NOTE

- **One turn of adjustment screw equals approximately 406 psi (2,800 kPa).**
- **Steering system pressure should be 3,050 ± 75 psi (20,865 ± 515 kPa).**

2. Turn adjustment screw (3) clockwise to increase high pressure stall. Turn adjustment screw counterclockwise to decrease high pressure stall.
3. Tighten locknut (5) to 150 ± 26 lb-in. (17 ± 3 Nm).
4. Install cover (2) on adjustment screw (3).

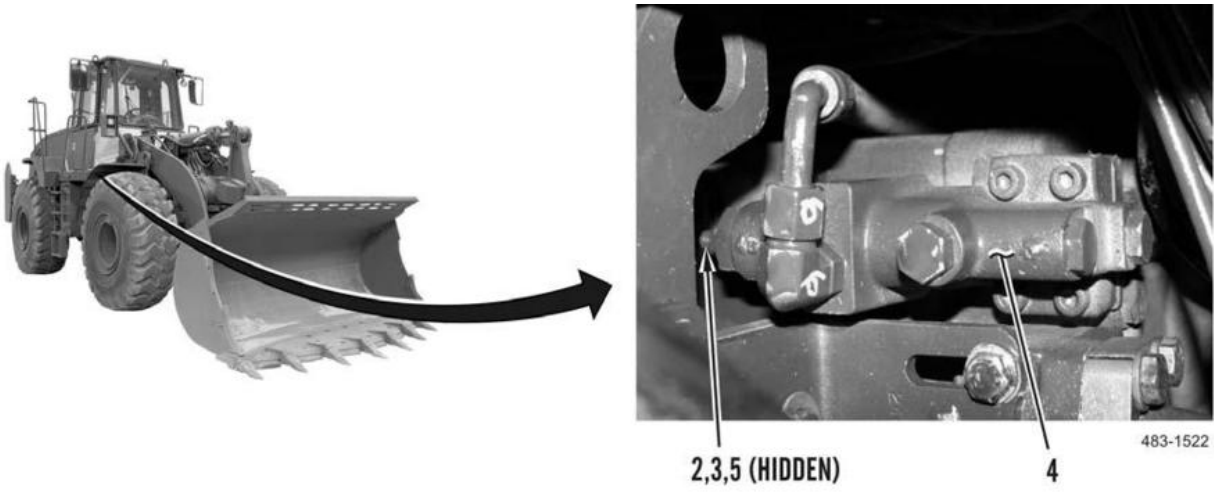

PISTON PUMP (STEERING) MARGIN PRESSURE TEST AND ADJUSTMENT

CAUTION

Position pressure differential gage group and two hydraulic lines to prevent damage from any machine movement.

1. Position test equipment to allow a second technician to safely observe and record pressure readings.
2. Connect steering frame lock (TM 5-3805-291-10).
3. Remove front guard from machine (WP 0132 00).
4. Engage parking brake (TM 5-3805-291-10).
5. Place transmission in NEUTRAL (TM 5-3805-291-10).
6. Attach test stand or individual pressure gage to T (6) on pressure differential gage group (7).

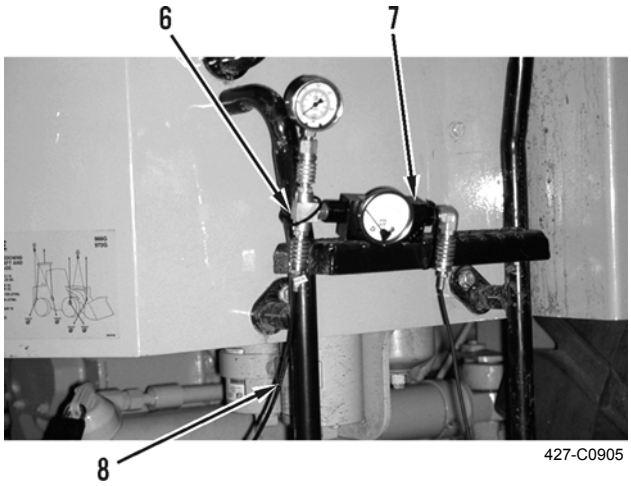

427-C0905

7. Connect one end of hydraulic line (8) to pressure tap (1).
8. Connect other end of hydraulic line (8) to T (6) on pressure differential gage group (7).



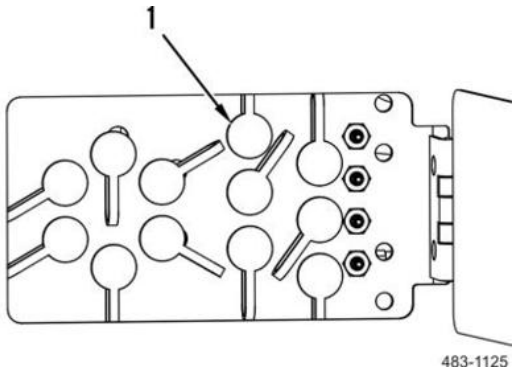

483-1125

PISTON PUMP (STEERING) MARGIN PRESSURE TEST AND ADJUSTMENT - CONTINUED

9. Connect hydraulic line (9) from signal pressure tap (10) on steering metering pump (11) to single pressure port on pressure differential gage group (7).

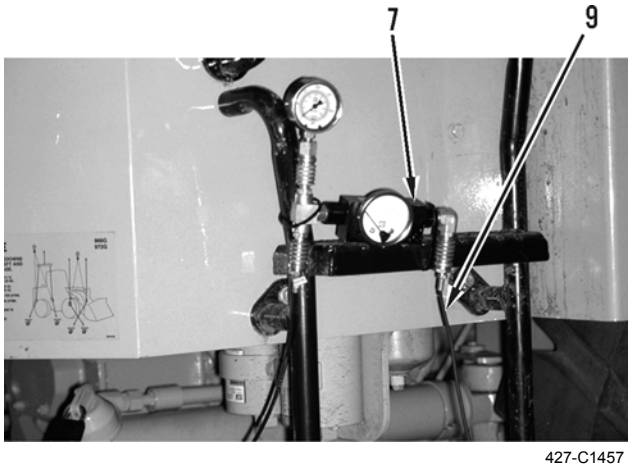

427-C1457

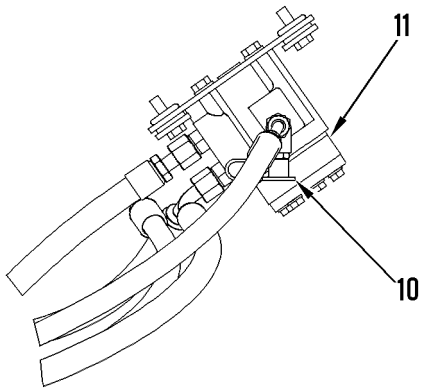

427-C0908

10. With assistance, start and run engine at high idle (TM 5-3805-291-10).

NOTE

Hydraulic oil is at normal operating temperature when hydraulic oil temperature is between the first and second hydraulic mark.

11. Move tilt control lever to tilt back position in order to increase temperature of hydraulic oil.
12. Check for oil leaks.
13. After oil has reached normal operating temperature, raise bucket slightly off ground (TM 5-3805-291-10).
14. Continue to run engine at high idle.

WARNING

Before operating the machine, secure the steering frame lock in the stowed position. DO NOT operate machine with steering frame lock connected. Failure to lock steering frame lock into the stowed position before operating can result in loss of steering and injury or death to personnel.

15. Install front guard on machine (WP 0132 00).
16. Stop engine and disconnect steering frame lock (TM 5-3805-291-10).
17. Raise bucket off ground (TM 5-3805-291-10).
18. Run engine at high idle (TM 5-3805-291-10).

PISTON PUMP (STEERING) MARGIN PRESSURE TEST AND ADJUSTMENT - CONTINUED

WARNING

- **Injury or death to personnel can result from escaping fluid under pressure.**
- **Escaping fluid under pressure, even a very small pin-hole size leak, can penetrate body tissue and cause serious injury and possible death. If fluid is injected into your skin, it must be treated immediately by a doctor familiar with this type of injury.**
- **Always use a board or cardboard when checking for a leak.**
- **Injury or death to personnel can result from machine articulation or movement.**
- **Machine frames can move and personnel can be crushed.**

NOTE

During the following procedure, do not turn steering wheel once machine ceases to articulate. Once machine ceases to articulate in one direction, immediately turn steering wheel in opposite direction. Make sure to turn steering wheel at a constant rate. Pressure will vary with speed of rotation. Slower rotation will cause lower pressure reading. Faster rotation will cause higher pressure reading.

19. With assistance, articulate machine to left or right. After machine ceases to articulate in one direction, immediately turn steering wheel in opposite direction. Turn steering wheel at a uniform rate.
20. If margin pressure is not 350 ± 20 psi (2,400 ± 150 kPa), adjust flow compensator valve.
21. If steering pump pressure does not equal 3,050 ± 75 psi (20,865 ± 515 kPa), adjust pressure compensator valve.

NOTE

Margin pressure is the difference between steering pump pressure and signal pressure from steering metering pump.

22. Record pressure reading on pressure gage (12). This reading is margin pressure.
23. Record reading on test stand. This reading is steering pump pressure.
24. With assistance, lower bucket and any attachment to ground and stop engine (TM 5-3805-291-10).
25. Relieve hydraulic system pressure (TM 5-3805-291-10).
26. Remove hydraulic lines (8 and 9) from pressure taps (1 and 10).
27. Remove test stand and pressure differential gage group (7) from machine.

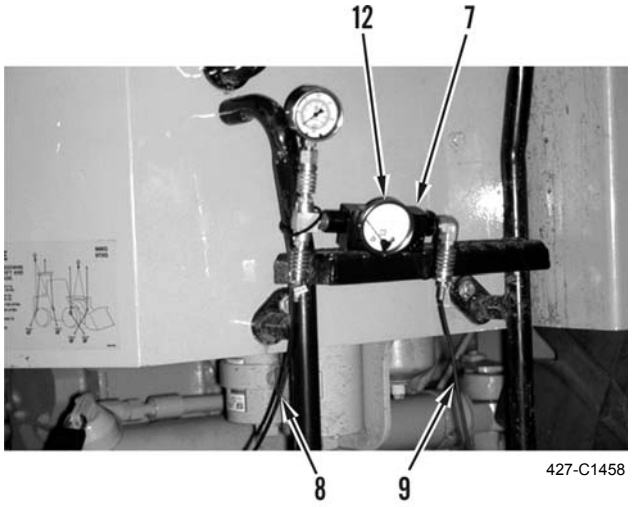

ADJUSTING FLOW COMPENSATOR VALVE

NOTE

If adjusting flow compensator spool in steering pump's pressure and flow compensator valve, perform *Piston Pump (Steering) Margin Pressure Test and Adjustment* procedure in this work package again.

1. Remove cover (2) from adjustment screw (3) on pressure and flow compensator valve (4). Loosen locknut (5).

NOTE

One turn of adjustment screw equals approximately 205 psi (1,415 kPa).

2. Turn adjustment screw (3) clockwise to increase margin pressure. Turn adjustment screw counterclockwise to decrease margin pressure.
3. Tighten locknut (5) to 150 ± 26 lb-in. (17 ± 3 Nm).
4. Install cover (2) on adjustment screw (3).

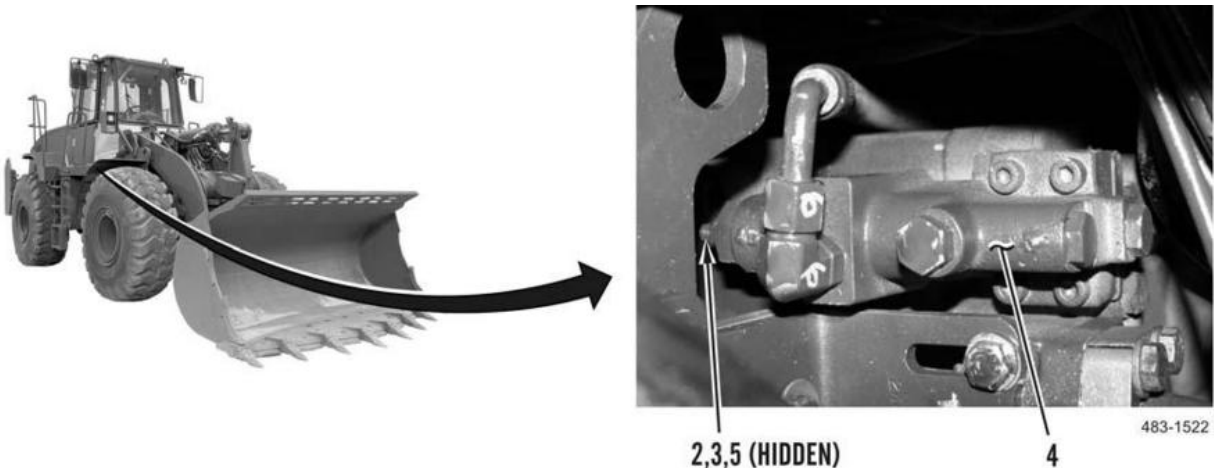

PISTON PUMP (STEERING) LOW PRESSURE STANDBY TEST AND ADJUSTMENT

1. Connect steering frame lock (TM 5-3805-291-10).
2. Engage parking brake (TM 5-3805-291-10).
3. Place transmission in NEUTRAL (TM 5-3805-291-10).
4. Attach test stand to pressure tap (1).

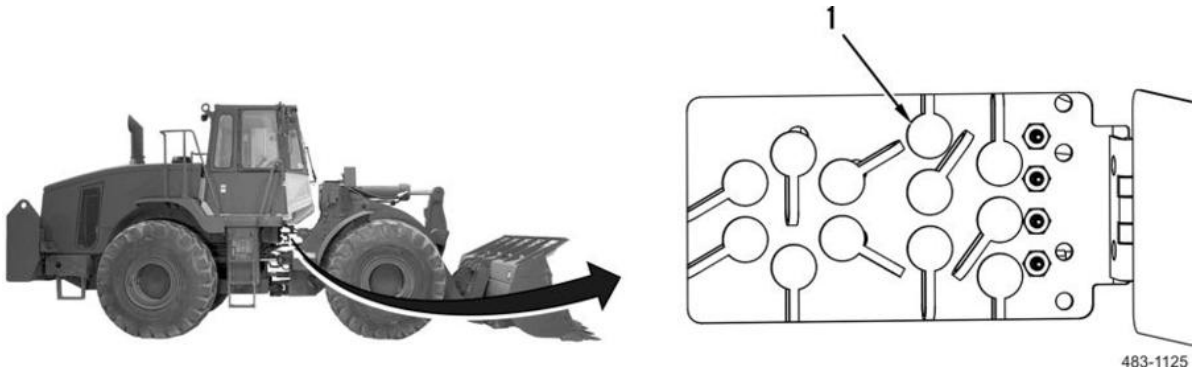

PISTON PUMP (STEERING) LOW PRESSURE STANDBY TEST AND ADJUSTMENT - CONTINUED

5. With assistance, start and run engine at high idle and move tilt control lever to tilt control position (TM 5-3805-291-10).
6. After oil has reached normal operating temperature, raise bucket slightly off ground (TM 5-3805-291-10).
7. Continue to run engine at high idle.

NOTE

- **The reading should not exceed 525 psi (3,600 kPa).**
- **If pressure is not correct, perform *Piston Pump (Steering) Margin Pressure Test and Adjustment* in this work package.**

8. Record pressure reading.
9. Adjust flow compensator valve if pressure is not correct.
10. With assistance, lower bucket and any attachment to ground and stop engine (TM 5-3805-291-10).
11. Remove test stand from pressure tap (1).



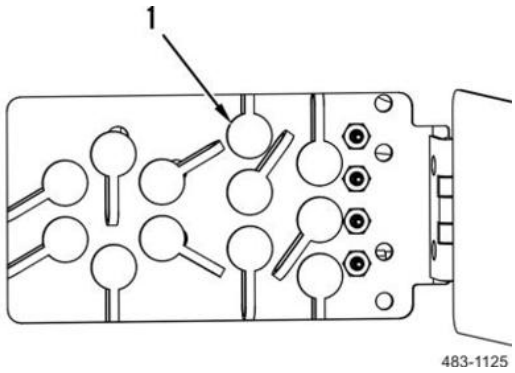

RELIEF VALVE (PUMP BACKUP) TEST AND ADJUSTMENT

1. Connect steering frame lock (TM 5-3805-291-10).
2. Engage parking brake (TM 5-3805-291-10).
3. Place transmission in NEUTRAL (TM 5-3805-291-10).
4. Attach test stand to pressure tap (1).
5. With assistance, start and run engine at high idle (TM 5-3805-291-10).
6. After oil has reached normal operating temperature, raise bucket slightly off ground (TM 5-3805-291-10).
7. Stop engine (TM 5-3805-291-10).

RELIEF VALVE (PUMP BACKUP) TEST AND ADJUSTMENT - CONTINUED

8. Loosen locknut (13) on steering backup relief valve (14).
9. Turn adjustment screw (15) counterclockwise by two full turns.

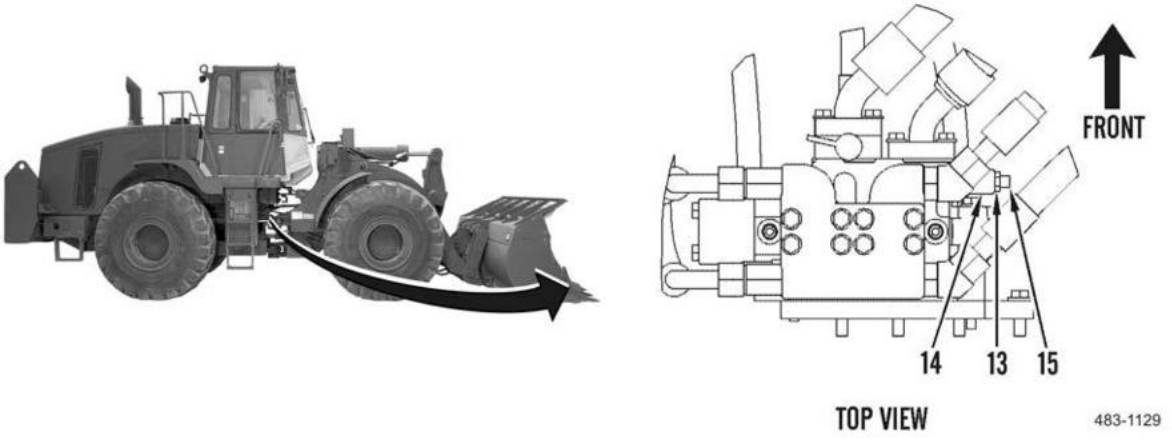

CAUTION

During the following procedure, do not keep steering pump at stall condition for more than ten seconds or damage to components may occur. If necessary, release steering wheel and wait for 30 seconds before repeating step.

NOTE

The pressure stops rising because the steering pump has reached a stall condition. This reduces the pump output.

10. With assistance, turn steering wheel against steering frame lock for ten seconds to obtain reliable pressure reading.
11. Record pressure reading. Reading should be lower than 3,026 ± 75 psi (20,865 ± 515 kPa).
12. Turn adjustment screw (15) slowly clockwise while observing test stand. Pressure should increase to 3,026 ± 75 psi (20,865 ± 515 kPa). Pressure should stop rising at 3,026 ± 75 psi (20,865 ± 515 kPa).
13. When stall pressure is reached, continue to turn adjustment screw (15) clockwise by one full turn.
14. Tighten locknut (13) to 115 ± 18 lb-in. (13 ± 2 Nm).
15. With assistance, lower bucket and any attachment to ground and stop engine (TM 5-3805-291-10).
16. Stop engine (TM 5-3805-291-10).
17. Relieve hydraulic system pressure (TM 5-3805-291-10).
18. Remove test stand from pressure tap (1).

STEERING TIME CHECK

NOTE

- **Difference between time for right and left turn must not be more than 0.3 seconds.**
- **With parking brake engaged, steering time must not increase by more than 0.2 seconds.**

1. Start engine (TM 5-3805-291-10).
2. Disengage parking brake (TM 5-3805-291-10).
3. Run engine at high idle (TM 5-3805-291-10).
4. Raise empty bucket to 11.8 in. (30.0 cm) (TM 5-3805-291-10).
5. Steer machine to left steering stop.

NOTE

Steering time for a full turn from stop to stop at high idle should not be more than 2.9 ± 0.5 seconds.

6. Record time it takes to steer machine to right steering stop.
7. Record time it takes to steer machine to left steering stop.
8. Steer machine straight ahead.
9. Run engine at low idle (TM 5-3805-291-10).
10. Steer machine to left steering stop.

NOTE

- **Steering time for a full turn from stop to stop at low idle should not be more than 4.9 ± 0.5 seconds.**
- **If times are not within specification, adjust steering control valve.**

11. Record time it takes to steer machine to right steering stop.
12. Record time it takes to steer machine to left steering stop.
13. Engage parking brake (TM 5-3805-291-10).
14. Repeat steps 3 thru 12 with parking brake engaged.

STEERING CONTROL VALVE ADJUSTMENT

NOTE

If both steering times are too slow, diameter of flow control orifice (16) is too small.

1. Remove four bolts (17) and end cover (18) from steering control valve assembly (19).

NOTE

- **Add flow balance shims to steering control valve assembly to decrease steering time for right turn.**
- **This causes the machine to steer to the right more quickly.**
- **Steering time for left turn will increase.**
- **This causes the machine to steer to the left more slowly.**
- **If you remove shim, the result will be the opposite.**
- **Use enough shims so steering times are nearly identical.**

STEERING CONTROL VALVE ADJUSTMENT - CONTINUED

2. Adjust flow balance shims (20) so steering times are within specification.

NOTE

- **Thickness of one new 6J-6516 Shim: 0.010 in. (0.254 mm).**
- **One 6J-6516 Shim changes steering time at high idle by approximately 0.4 seconds.**
- **Thickness of one new 6J-6517 Shim: 0.005 in. (0.12 mm).**
- **One 6J-6517 Shim changes steering time at high idle by approximately 0.2 seconds.**

3. Install end cover (18) and four bolts (17) on steering control valve assembly (19).

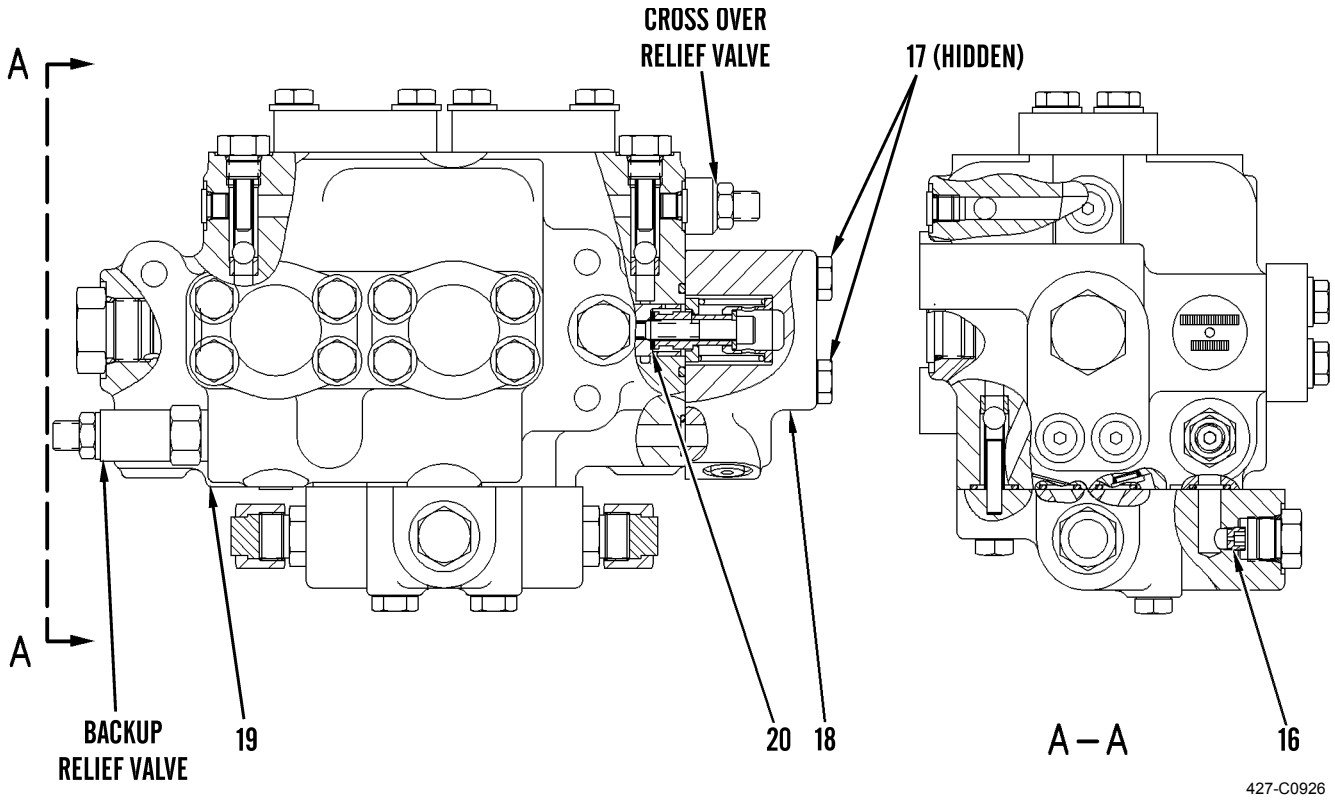

STEERING NEUTRALIZER VALVE CHECK AND ADJUSTMENT

1. Remove machine to a location that is smooth, level, and hard. The location should be dry and free of debris.
2. Disconnect steering frame lock (TM 5-3805-291-10).
3. Place ball of putty (21) on left engine end frame (23).
4. Start and run engine at high idle (TM 5-3805-291-10).
5. Raise empty bucket to 11.8 in. (30.0 cm).
6. Disengage parking brake (TM 5-3805-291-10).
7. Steer machine to left steering stop.
8. Steer machine straight ahead.
9. Engage parking brake (TM 5-3805-291-10).
10. Lower bucket to ground and stop engine (TM 5-3805-291-10).

NOTE

Putty ball should be pressed to 0.50 ± 0.12 in. (12.7 ± 3.0 mm).

11. Measure thickness of putty ball (21).

NOTE

- **Turn the striker counterclockwise if putty is being compressed too much.**
- **Turn the striker clockwise if putty is not being compressed enough.**

12. If necessary, adjust striker (23).
    a. Loosen locknut (24).
    b. Adjust striker (23).
    c. Tighten locknut (24).
13. If necessary, repeat steps 1 thru 12 until dimension of putty ball (21) is correct.
14. Repeat steps 1 thru 13 for opposite side.

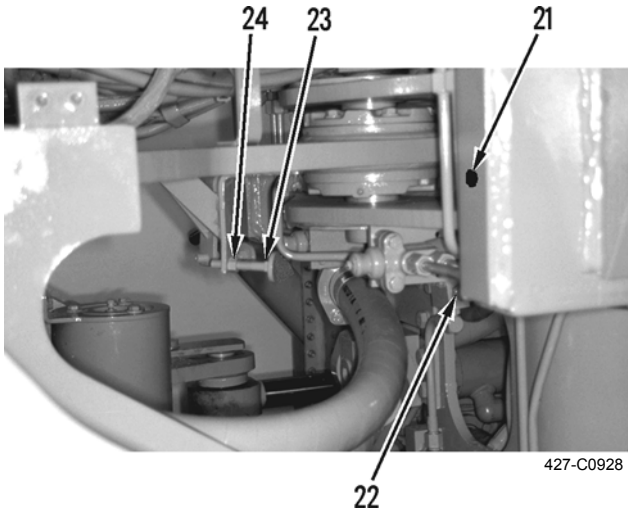

RELIEF VALVE (STEERING CYLINDER CROSSOVER) TEST AND ADJUSTMENT

WARNING

- **Injury or death to personnel can result from escaping fluid under pressure.**
- **Escaping fluid under pressure, even a small pin-hole size leak, can penetrate body tissue and cause serious injury and possible death. If fluid is injected into your skin, it must be treated immediately by a doctor familiar with this type of injury.**

CAUTION

Care must be taken to ensure that fluids are contained during performance of inspection, maintenance, testing, adjusting, and repair of the product. Be prepared to collect the fluid with suitable containers before opening any compartment or disassembling any components containing fluids.

NOTE

- **Always use a board or cardboard when checking for a leak.**
- **Dispose of all fluids according to local regulations and mandates.**

1. Connect steering frame lock (TM 5-3805-291-10).
2. Relieve hydraulic system pressure (TM 5-3805-291-10).

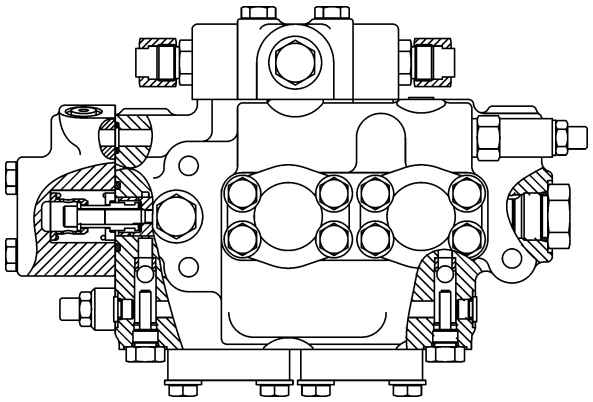

427-C1985

3. The steering cylinder crossover relief valve is located in the steering control valve. The steering control valve is located on the left side of the machine. The steering cylinder crossover relief valve needs to be bench tested. Loosen locknut (25) and remove the valve (26).
4. The pressure of the relief valve should be 3,713.02 ± 72.52 psi (25,600 ± 500 kPa). Adjust the valve pressure, if necessary. Loosen the locknut (27). Turn the adjustment screw (28) counterclockwise in order to lower the pressure of the valve. Turn the adjusting screw clockwise in order to increase the pressure of the valve. Tighten the locknut after the correct pressure is reached. The valve is faulty if the adjustment screw does not affect the pressure. Replace the valve (26) (WP 0127 00).
5. Install the relief valve into the steering control valve (26). The valve should be installed with a torque of 44.25 ± 5.16 lb-ft (60 ± 7 Nm).

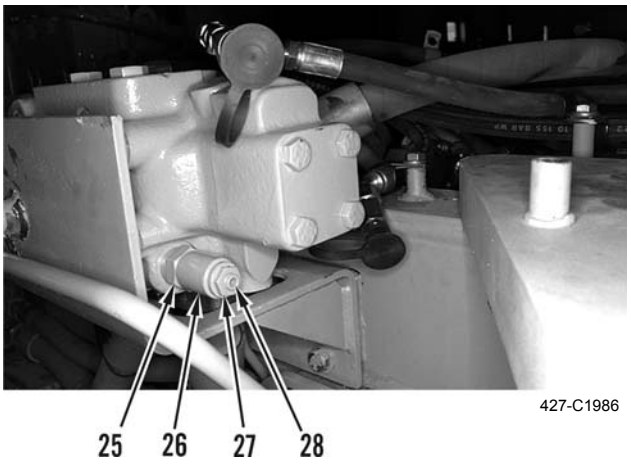

427-C1986

ARTICULATED HITCH ADJUSTMENT

NOTE

Articulated hitch adjustment is done while the machine is separated (refer to WP 0211 00).

Lower Hitch Adjustment

1. Install the original shim pack (29).

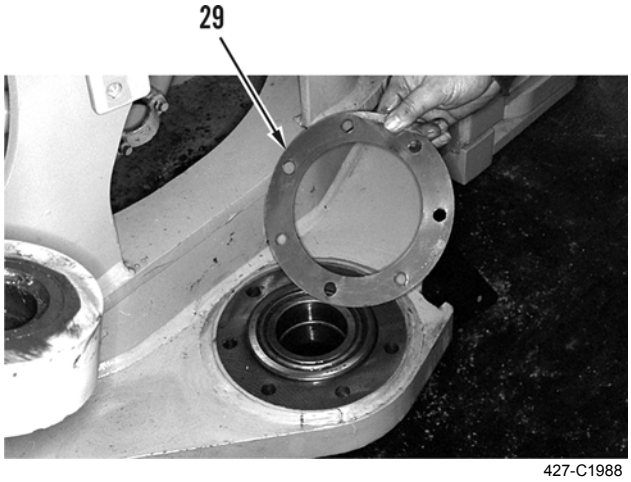

427-C1988

2. Install upper cap (30). Install four bolts (31) and the washers that are equally spaced at 90 degree intervals. The torque for bolts is 75 ± 15 lb-ft (100 ± 20 Nm).

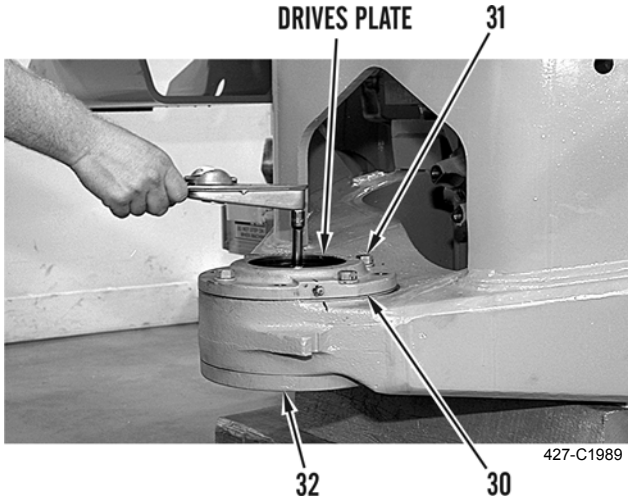

427-C1989

ARTICULATED HITCH ADJUSTMENT - CONTINUED

Lower Hitch Adjustment - Continued

3. Install driver plate, 2 1/4 bolts and nuts. Use torque wrench in order to determine the amount of torque that is needed in order to rotate the bearing cones. As required, adjust the number of shims in order to achieve a rolling torque between 70 lb-in. (7.9 Nm) and 200 lb-in. (22.6 Nm).
4. Remove driver plate, nuts, and bolt.
5. Install the proper amount of shims.
6. Install the lower cap (32), upper cap (30), and eight bolts (31).

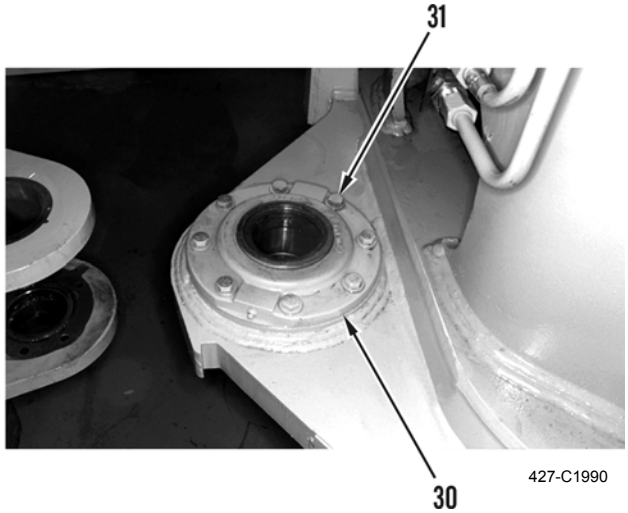

427-C1990

Upper Hitch adjustment

1. Install the original shim pack (33).

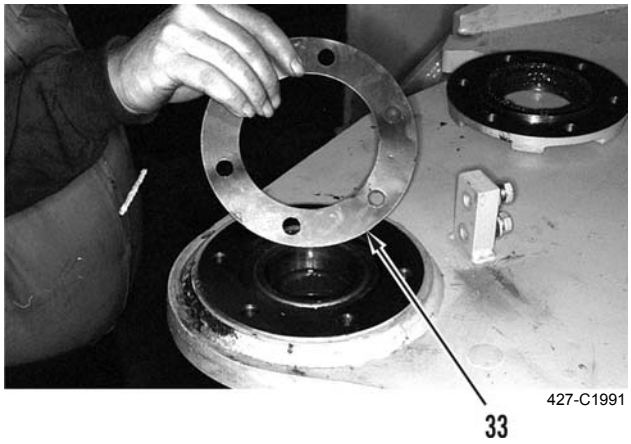

427-C1991

ARTICULATED HITCH ADJUSTMENT - CONTINUED

Upper Hitch Adjustment - Continued

NOTE

Install upper cap and lower cap in the original radial location.

2. Install upper cap (34). Install three bolts (36) that are equally spaced at 120 degree intervals. The torque for bolts is 75 ± 15 lb-ft (100 ± 20 Nm).
3. Install driver plate, 1/4 in. bolt, and nuts. Use a torque wrench and tooling in order to determine the amount of torque that is needed in order to rotate the bearing cones. As required, adjust the number of shims in order to achieve a rolling torque between 20 lb-in. (2.3 Nm) and 120 lb-in. (13.6 Nm).
4. Remove driver plate, nuts, and bolts.

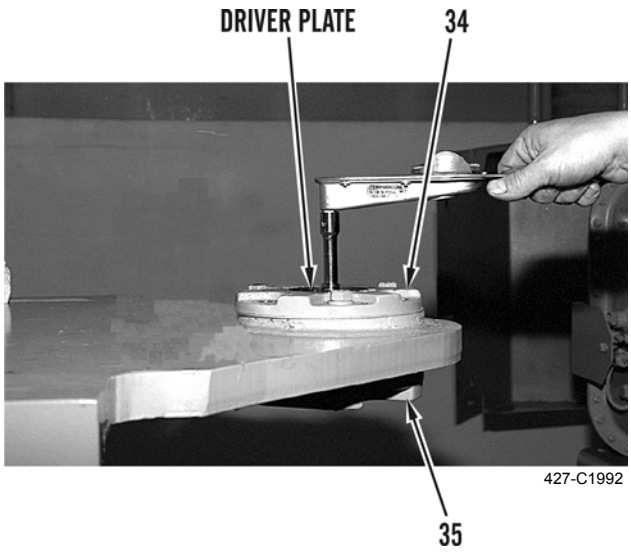

427-C1992

5. Install the proper amount of shims.
6. Install the lower cap (35), upper cap (34), and six bolts (36).

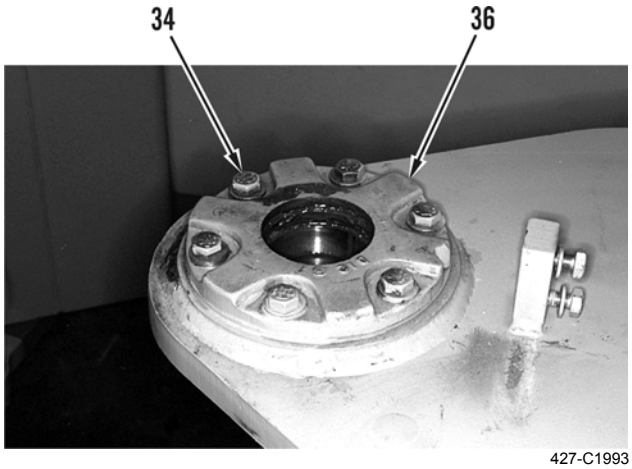

427-C1993

END OF WORK PACKAGE

HYDRAULIC SYSTEM TESTS, INSPECTIONS, AND ADJUSTMENTS 0017 00

Calibration 0017 00-2
Joystick Control Position Sensor Calibration With MSD 0017 00-6
Lift and Tilt Linkage Position Sensor (MSD) Calibration 0017 00-13
Main Control Valve (MSD) Calibration 0017 00-21
Implement Hydraulic Service Mode 0017 00-39
Implement Cycle Time Check 0017 00-43
Lift and Tilt Cylinder Drift Check 0017 00-45
Pilot Pressure to Main Control Valve Check 0017 00-47
Pressure Reducing Valve Adjustment 0017 00-52
Relief Valve (Main, Load Sensing) Test and Adjustment 0017 00-55
Relief Valve (Line) Test and Adjustment 0017 00-61
Ride Control Pressure Equalization Time Adjustment 0017 00-68

THIS WORK PACKAGE COVERS

Calibration
Joystick Control Position Sensor Calibration with MSD
Lift and Tilt Linkage Position Sensor (MSD) Calibration
Main Control Valve (MSD) Calibration
Implement Hydraulic Service Mode
Implement Cycle Time Check
Lift and Tilt Cylinder Drift Check
Pilot Pressure to Main Control Valve Check
Pressure Reducing Valve Adjustment
Relief Valve (Main, Load Sensing) Test and Adjustment
Relief Valve (Line) Test and Adjustment
Ride Control Pressure Equalization Time Adjustment

INITIAL SETUP

Maintenance Level

Direct Support

Test Equipment

Test set, electronic systems (MSD) (Item 86, WP 0232 00)

Test stand, automotive (Item 87, WP 0232 00)

Tools and Special Tools

Tool kit, general mechanic's, automotive (Item 90, WP 0232 00)

Shop equipment, automotive maintenance and repair: field maintenance, basic, less power (Item 68, WP 0232 00)

Adapter, test (Item 3, WP 0232 00)

Coupling, hose (Item 24, WP 0232 00)

Hose (Item 33, WP 0232 00)

Tools and Special Tools

Pin, shoulder, headless (Item 48, WP 0232 00)

Saddle assembly, lifting block (Item 65, WP 0232 00)

Sleeve (Item 72, WP 0232 00)

Software kit (Item 75, WP 0232 00)

Stand assembly (Item 79, WP 0232 00)

Tubing assembly set, nonmetallic (Item 93, WP 0232 00)

Wrench, torque, dial, 3/8" drive, 300 lb-in. (Item 97, WP 0232 00)

Materials/Parts

Oil, lubricating, OE/HDO-15/40 (Item 28, WP 0233 00)

Rag, wiping (Item 35, WP 0233 00)

Personnel Required

MOS 62B, Construction Equipment Repairer (2)

References

WP 0003 00
WP 0005 00
WP 0014 00
WP 0133 00
WP 0218 00

Equipment Conditions

Machine parked on level ground (TM 5-3805-291-10)
Work tool lowered to ground (TM 5-3805-291-10)
Parking brake engaged (TM 5-3805-291-10)
Wheels chocked

NOTE

For a better understanding of each system, review the appropriate section in *Theory of Operation* (WP 0003 00).

CALIBRATION

Conditions That Require Recalibrating

The implement electronic control system must be calibrated in order to obtain optimum performance. The procedure consists of the calibration procedure for the lift lever position sensors and the calibration procedure for the valve. The calibration procedure must be followed in order.

The implement electronic control system must be calibrated when the following conditions exist:

1. A new machine is received without a work tool and a work tool is installed.
2. A work tool is exchanged and the operator notices a different “feel”. This indicates an unacceptable change in hydraulic modulation.

If the machine requires frequent changing of the implement, calibration should be performed with the implement that is used most frequently. This calibration should be used with all other implements.

3. The configuration of the lift arm has changed.
4. Electronic components and hydraulic components are replaced or components are adjusted. This includes the following examples:
   a. Replacing the ECM
   b. Replacing or changing positions of the electro-hydraulic system's valves
   c. Replacing or changing positions of the solenoid valves
   d. Replacing a linkage position sensor
   e. Replacing a control lever
   f. Changing the position of a lever or changing the position of a linkage position sensor
   g. Replacing all of the main implement valve
   h. Replacing part of the main implement valve
5. Attachments have been added. The attachments increase the weight of the system: additional side plates, cutting edges, and liners.

NOTE

The implement electronic control system does not need to be calibrated when the same work tool is removed and installed.

CALIBRATION - CONTINUED

Calibration Problems

The following troubleshooting guide can be used to identify probable causes of calibration problem and the necessary corrective actions needed. Refer to the appropriate calibration procedure sections. Also, refer to Systems Operation, "Implement Electronic Control System".

Problem 1: The kickout position cannot be set according to the calibration procedure for the solenoid valve in the RAISE and in the LOWER positions. These calibrations are found in the *Main Control Valve (MSD) Calibration* in this work package.

Probable Cause 1 - Calibration of the lift linkage position sensor is required.

Corrective Action - Refer to *Lift and Tilt Linkage Position Sensor Calibration* in this work package.

Probable Cause 2 - Input from the lift linkage position sensor is not being read by the ECM.

Corrective Action - Check the options code for the implement ECM.

Problem 2: The value for the duty cycle did not appear in the display when the solenoid valve was being calibrated in the RAISE and in the LOWER positions. These calibration procedures can be found in *Main Control Valve (MSD) Calibration* in this work package.

Probable Cause 1 - Input from the lift linkage position sensor is not being read by the ECM.

Corrective Action - Check the options code for the implement ECM.

Probable Cause 2 - The CAT data link has an open circuit.

Corrective Action - Reconnect the data link.

Problem 3: The "READY" message does not appear in the display when the solenoid valve is being calibrated in the RAISE and in the LOWER positions. These calibrations are found in *Main Control Valve (MSD) Calibration* in this work package.

Probable Cause 1 - The engine speed is too low.

Corrective Action - Increase engine speed to high idle.

Probable Cause 2 - The lift arms are drifting excessively.

Corrective Action - Correct the drift problem.

Problem 4: The lift arms respond immediately to lever movement when the solenoid valve is being calibrated in the RAISE and in the LOWER positions. These calibrations are found in *Main Control Valve (MSD) Calibration in* this work package.

Probable Cause - The lift arms are drifting excessively.

Corrective Action - Correct the drift problem.

NOTE

Try starting calibration of the lift with the work tool on the ground. Lower the lift arms with the engine at low idle. For lower calibration, fully extend lift cylinders with the engine at low idle before starting calibration.

CALIBRATION - CONTINUED

Calibration Problems - Continued

Problem 5: The "DONE" message does not appear in the display when the solenoid valve is being calibrated in the RAISE and in the LOWER positions. These calibrations are found in *Main Control Valve (MSD) Calibration* in this work package.

Probable Cause - Erroneous data was recorded when the solenoid valve was being calibrated in the RAISE and in the LOWER positions. These calibrations are found in *Main Control Valve (MSD) Calibration* in this work package.

Corrective Action - Turn off the engine. Restart the calibration procedure.

Problem 6: The "READY" message never appeared in the display during *Maximum Modulation Current to Solenoid Valves Calibration* in this work package.

Probable Cause - The engine speed is too low.

Corrective Action - Increase engine speed to high idle.

Problem 7: Speed of dump too fast when the calibration is complete. Speed of dump is uncontrollable when the calibration is complete.

Probable Cause - Maximum dump modulation current is too high.

Corrective Action - Decrease the maximum dump modulation current accordingly to the direction in *Maximum Modulation Current to Solenoid Valves Calibration* in this work package.

Problem 8: The speed for the dump cycle is too slow when calibration is complete.

Probable Cause - Maximum dump modulation current is too low.

Corrective Action - Verify the maximum speed of the dump according to the directions in *Maximum Modulation Current to Solenoid Valves Calibration* in this work package.

Problem 9: Speed of tilt back is too fast when calibration is complete. Speed of tilt back is uncontrollable.

Probable Cause - Maximum modulation current for the tilt back is too high.

Corrective Action - Verify the maximum speed of the tilt back according to the direction in *Maximum Modulation Current to Solenoid Valves Calibration* in this work package.

Problem 10: Speed of tilt back is too slow when calibration is complete.

Probable Cause - Maximum modulation current for the tilt back is too low.

Corrective Action - Verify the maximum speed of tilt back according to the directions in *Maximum Modulation Current to Solenoid Valves Calibration* in this work package.

Problem 11: Lift speed too fast when calibration is complete. Lift speed is uncontrollable.

Probable Cause - Maximum lift modulation current is too high.

Corrective Action - Verify maximum lift speed according to the directions in *Maximum Modulation Current to Solenoid Valves Calibration* in this work package.

Problem 12: Lift speed is too slow when calibration is complete.

Probable Cause - Maximum lift modulation current is too low.

Corrective Action - Verify maximum lift speed according to the directions in *Maximum Modulation Current to Solenoid Valves Calibration* in this work package.

CALIBRATION - CONTINUED

Calibration Problems - Continued

Problem 13: After calibration is complete, the lift lowers too fast when the implement lever is not in the detent position. The lift speed is uncontrollable when the implement lever is not in the detent position.

Probable Cause - Maximum lower modulation current is too high.

Corrective Action - Verify maximum lower speed according to the directions in *Maximum Modulation Current to Solenoid Valves Calibration* in this work package.

Problem 14: After calibration is complete, the lift linkage lowers too slowly when the control lever is not in the FLOAT position.

Probable Cause - Maximum lower modulation current is too low.

Corrective Action - Verify maximum lower speed according to the directions in *Maximum Modulation Current to Solenoid Valves Calibration* in this work package.

JOYSTICK CONTROL POSITION SENSOR CALIBRATION WITH MSD

NOTE

- **Joystick sensors are factory calibrated and should not require calibration. However, calibration may be necessary if problems exist activating detents.**
- **Up arrow refers to LOWER position. Down arrow refers to RAISE position. Right arrow refers to DUMP position. Left arrow refers to TILT BACK position.**
- **For auxiliary control, up arrow refers to auxiliary lever in FORWARD position. Down arrow refers to auxiliary lever in REARWARD position.**
- **For additional information on joystick control, refer to TM 5-3805-291-10.**

1. Connect MSD to diagnostic connector (WP 0005 00).

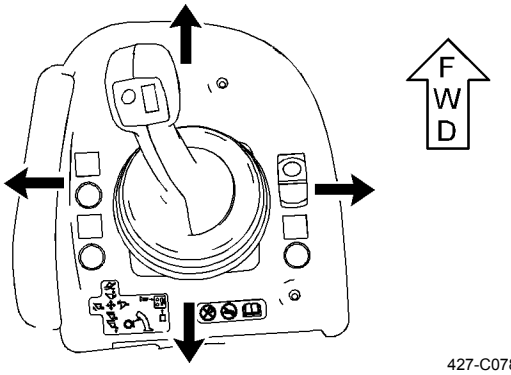

427-C0783

JOYSTICK CONTROL POSITION SENSOR CALIBRATION WITH MSD - CONTINUED

2. Turn engine start switch to ON position (TM 5-3805-291-10).
3. Select “Implement” (1) from “ECM Selector” screen and click “OK” (2).

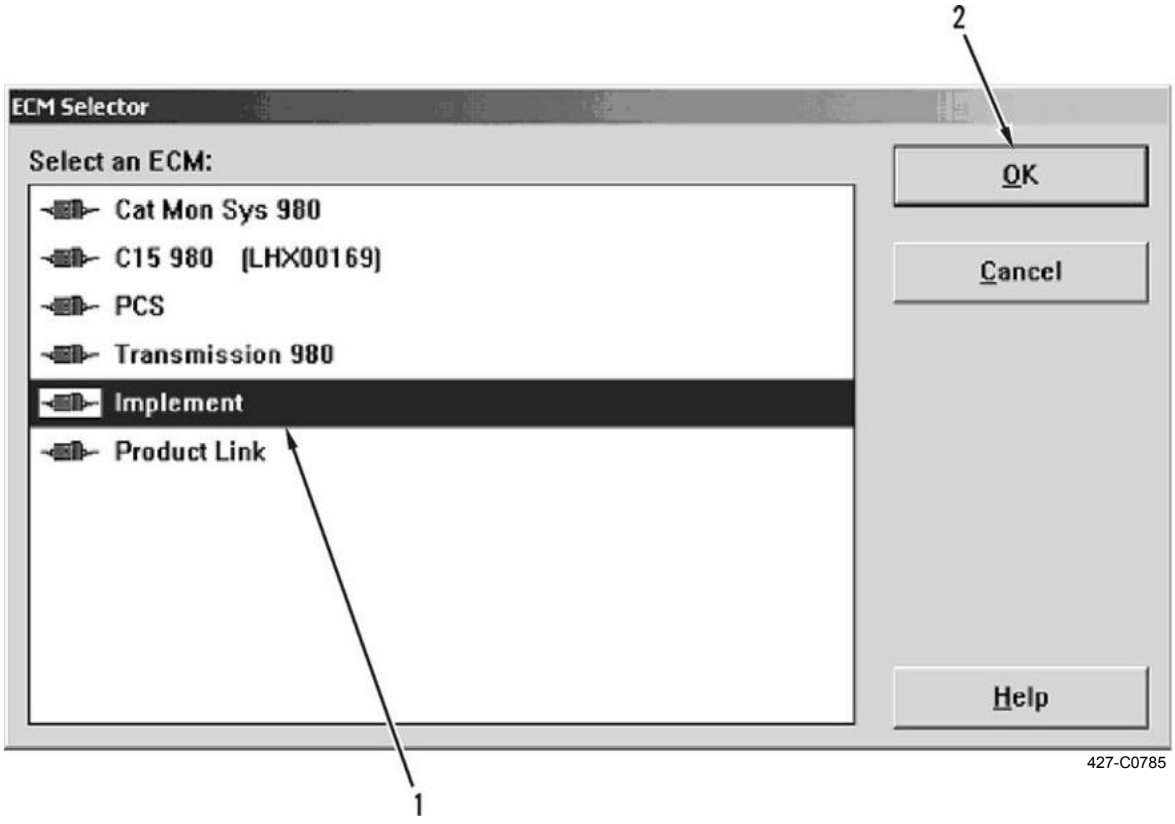

JOYSTICK CONTROL POSITION SENSOR CALIBRATION WITH MSD - CONTINUED

4. Select “Service” (3) menu from toolbar.
5. Select “Calibrations” (4) submenu from “Service” (3) menu.
6. Select “Lever Calibrations” (5) from “Calibrations” (4) submenu.

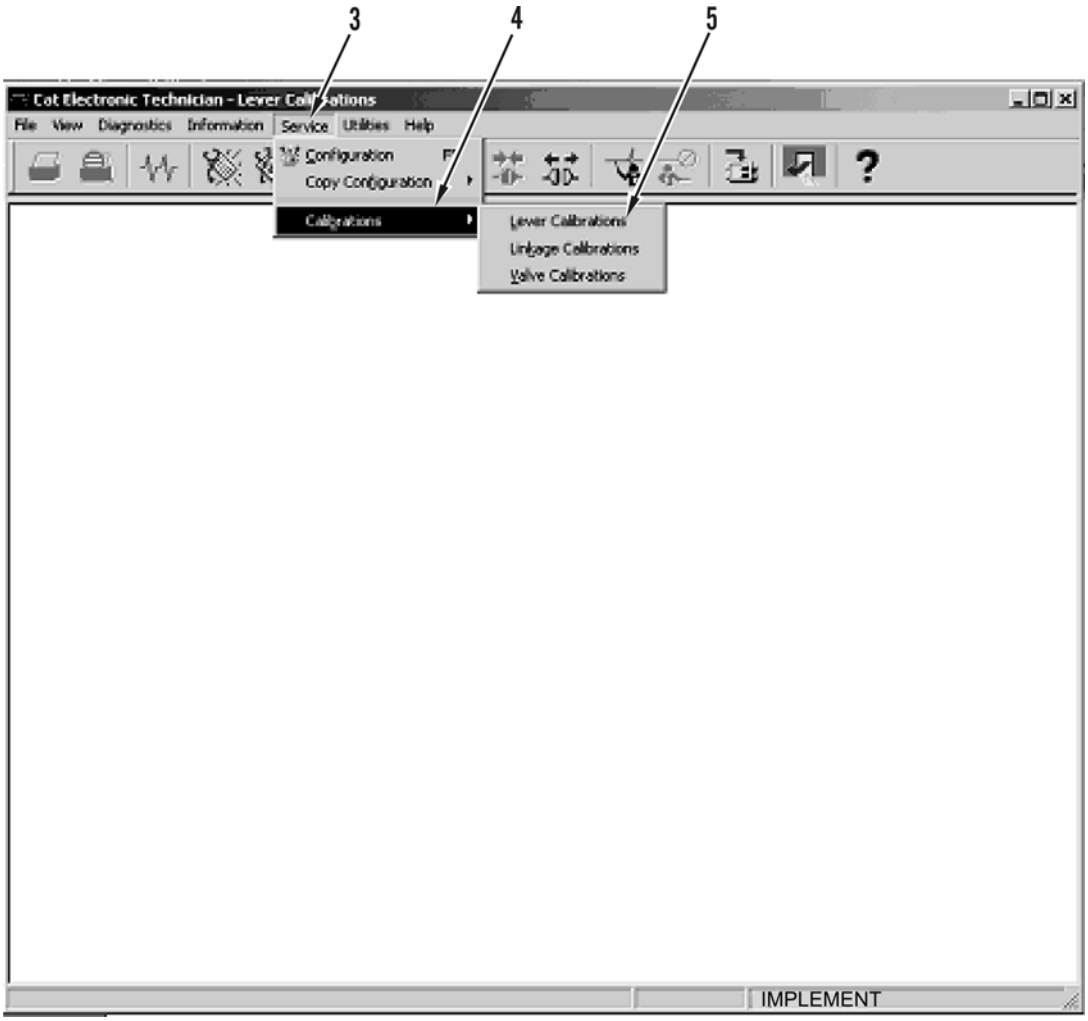

427-C0786

JOYSTICK CONTROL POSITION SENSOR CALIBRATION WITH MSD - CONTINUED

NOTE

- **MSD software defaults so all control levers will be selected for calibration. Select check mark next to individual control lever to remove control lever from calibration procedure.**
- **If machine is equipped with joystick control, follow same strategy that is used by control levers.**
- **Screen will change to display step-by-step instructions for calibrating control lever.**

7. Screen will display all control levers. Once you have selected control levers to calibrate, click “Begin” (6).

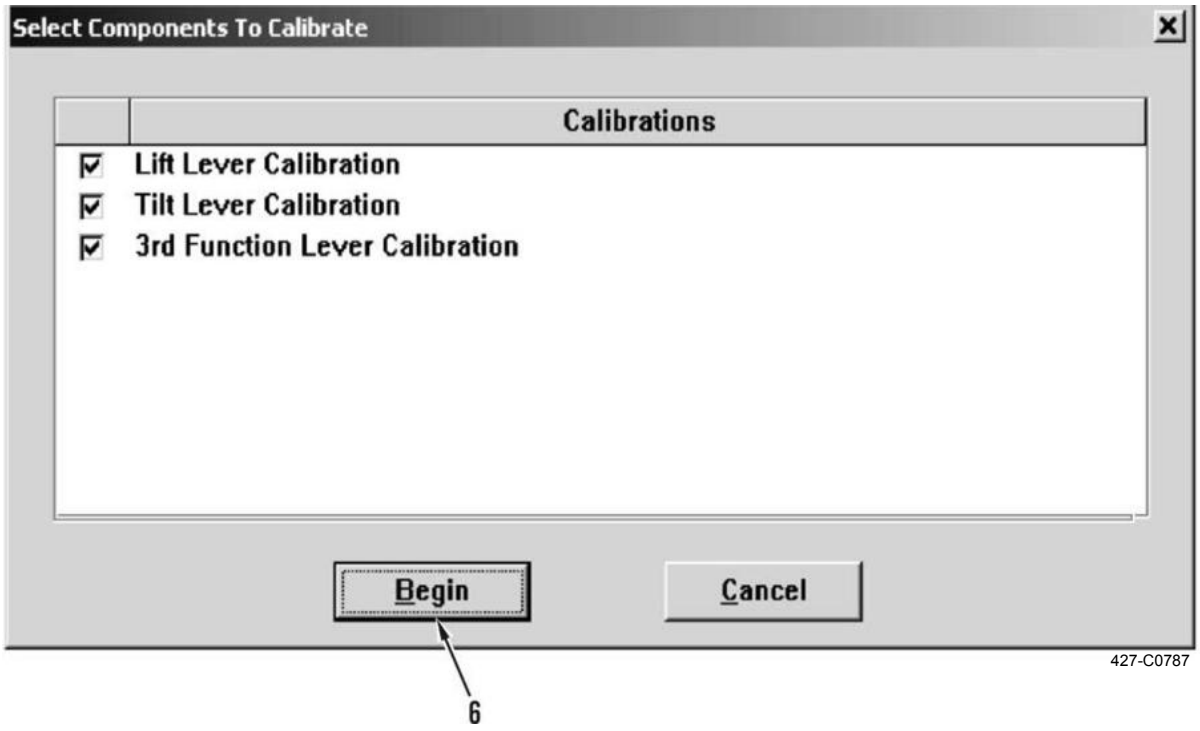

JOYSTICK CONTROL POSITION SENSOR CALIBRATION WITH MSD - CONTINUED

NOTE

MSD screen will be divided into three display areas. Top section of screen will be used to display important status parameters that are monitored during calibration. Middle section of screen displays information about calibration procedure. Bottom section of screen displays step-by-step instructions for calibration. Step that currently needs performing will be in bold text. All other steps will be displayed in gray text.

8. Click “Next” (7) to begin calibration. Check mark button will be placed to left of completed step and next step will be highlighted in bold text. After successful completion of step, you may need to click “Next” to begin the following step. The following steps listed in bottom section of screen until calibration procedure is complete.

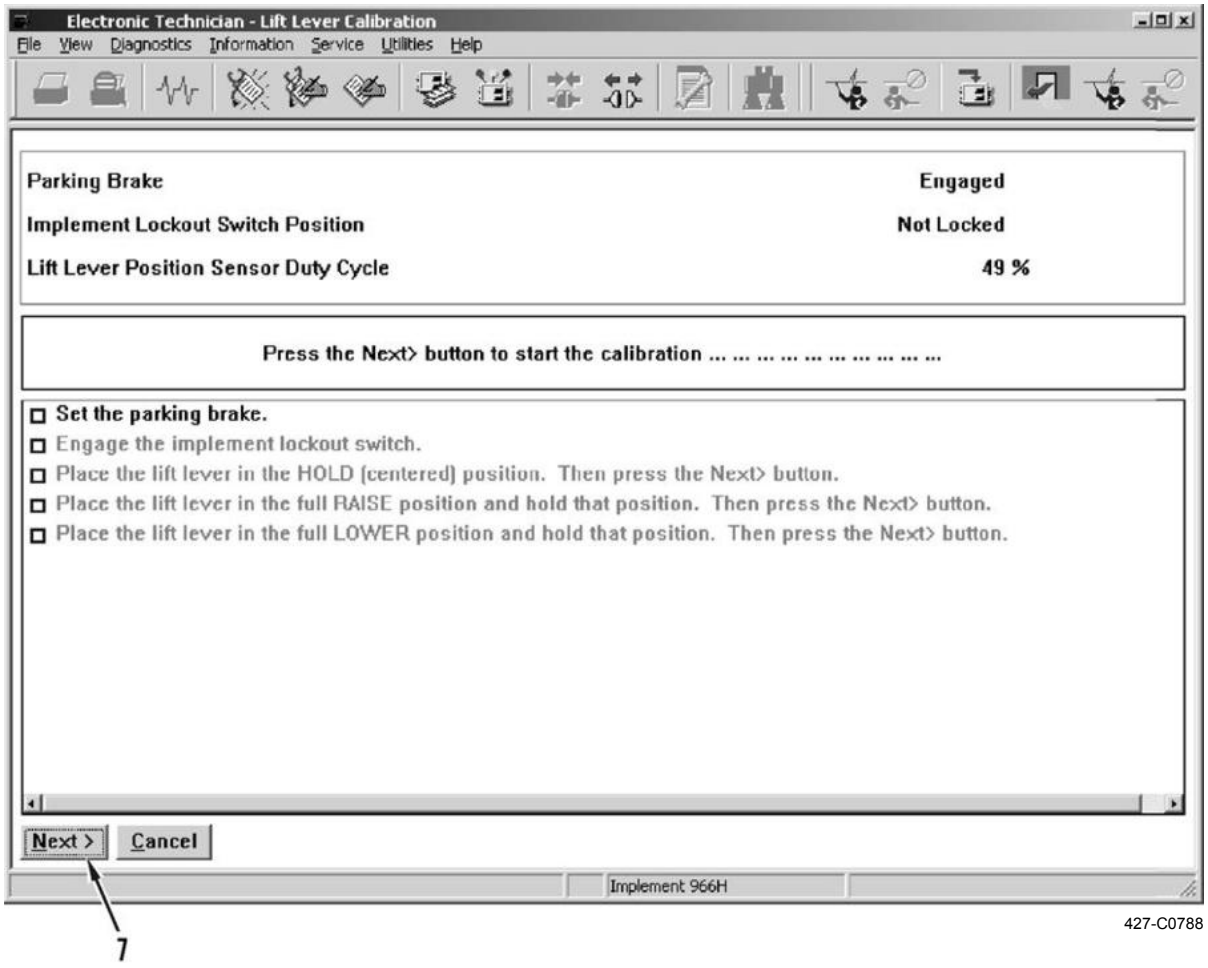

JOYSTICK CONTROL POSITION SENSOR CALIBRATION WITH MSD - CONTINUED

9. When calibration is complete, MSD will display a status screen. Status screen will inform you if calibration was successful. Click “Continue” (8) to go to next calibration or “Cancel” (9) to exit calibrations.

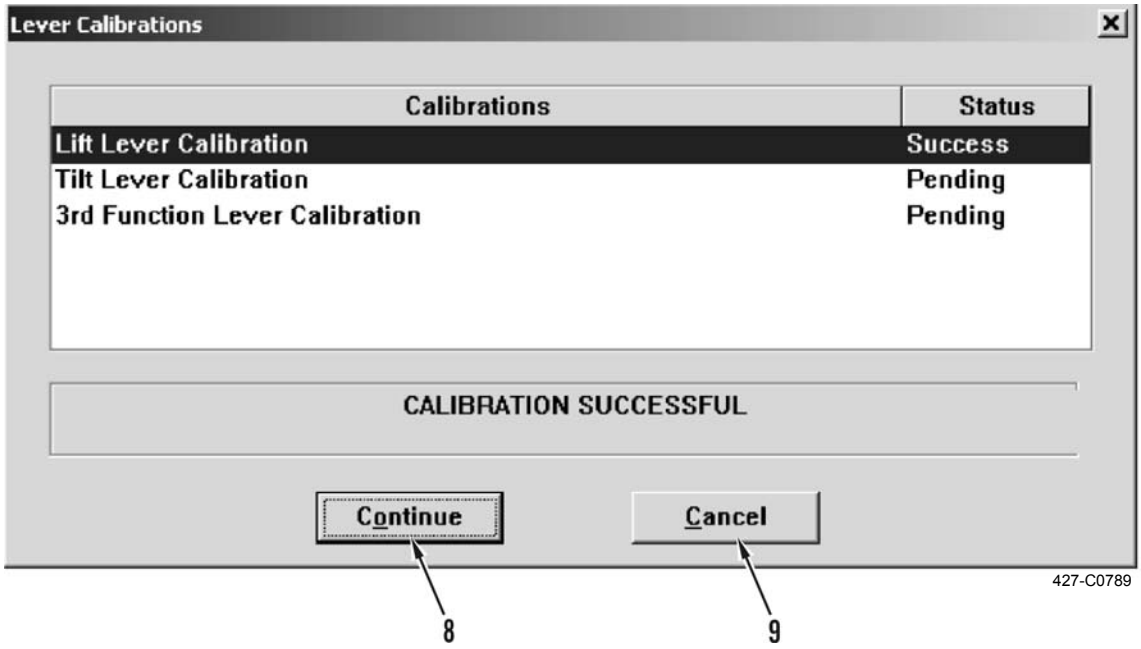

10. Click “Next” (7) to begin next calibration.
11. After each calibration has been completed, MSD will display a status screen. Click “Continue” (8) to go to next calibration or “Cancel” (9) to exit calibrations.

JOYSTICK CONTROL POSITION SENSOR CALIBRATION WITH MSD - CONTINUED

NOTE

Implement ECM will store new calibration data when calibration is successful.

12. When calibration is complete, status screen will inform you that calibration of control lever was successful. If unsuccessful, click “Restart” (10) to repeat sensor calibration or click “Finish” (11) to exit calibration.

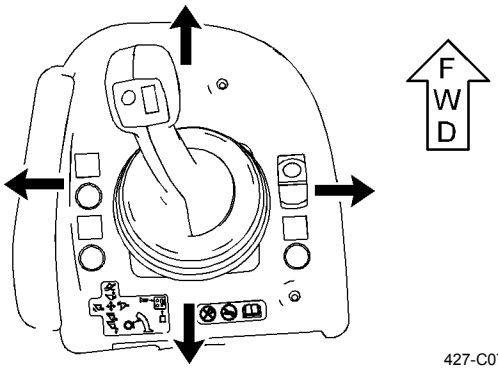

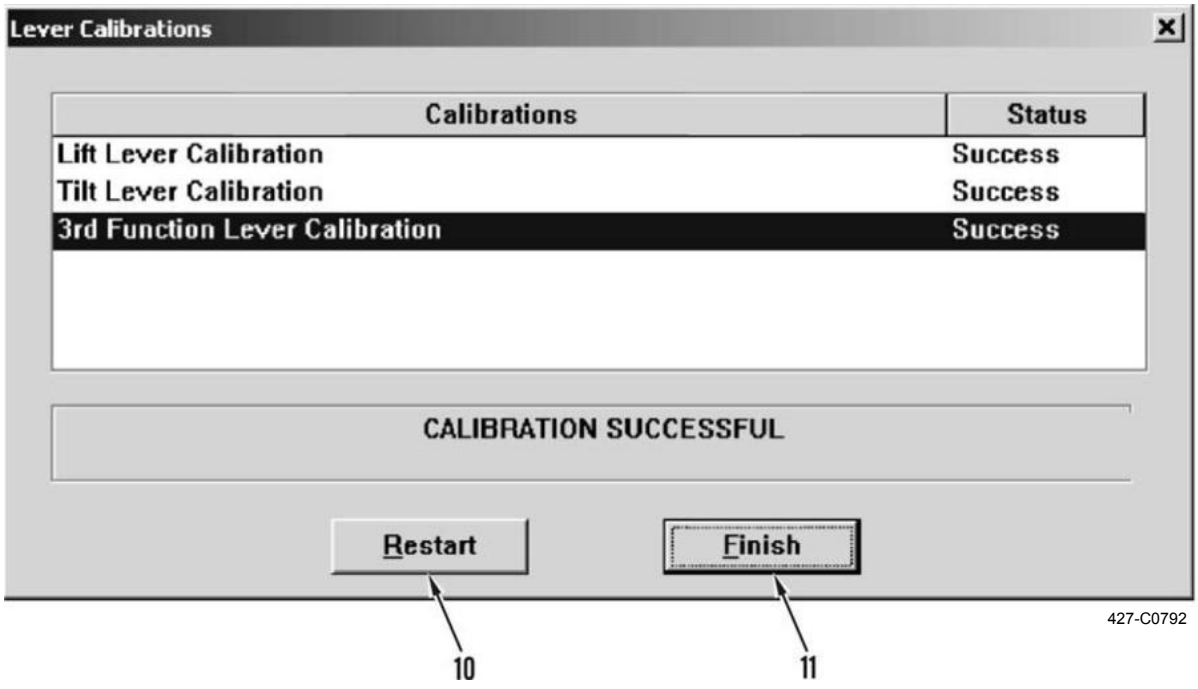

JOYSTICK CONTROL POSITION SENSOR CALIBRATION WITH MSD - CONTINUED

13. Turn engine start switch to OFF position. (TM 5-3805-291-10).
14. Disconnect MSD from diagnostic connector (WP 0005 00).

LIFT AND TILT LINKAGE POSITION SENSOR (MSD) CALIBRATION

NOTE

- **This calibration procedure will set signal limits for implement position sensors. Signal limits are maximum and minimum duty cycles that are sent from position sensors to implement ECM.**
- **Joystick sensors are factory calibrated and should not require calibration. However, calibration may be necessary if problems exist activating detents.**
- **Up arrow refers to LOWER position. Down arrow refers to RAISE position. Right arrow refers to DUMP position. Left arrow refers to TILT BACK position.**
- **For auxiliary control, up arrow refers to auxiliary lever in FORWARD position. Down arrow refers to auxiliary lever in REARWARD position.**
- **For additional information on joystick control, refer to TM 5-3805-291-10.**

1. Connect MSD to diagnostic connector (WP 0005 00).

LIFT AND TILT LINKAGE POSITION SENSOR (MSD) CALIBRATION - CONTINUED

2. Start and run engine at low idle (TM 5-3805-291-10).
3. Select “Implement” (1) from “ECM Selector” screen and click “OK” (2).

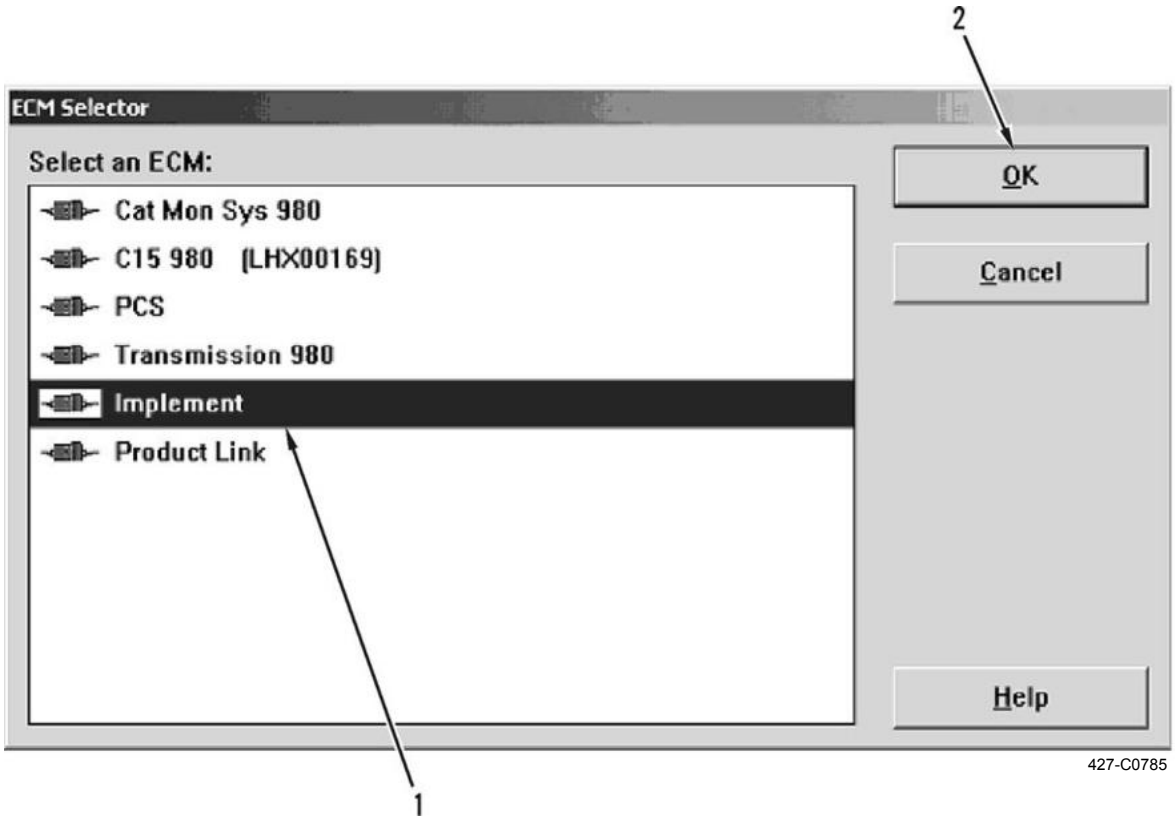

LIFT AND TILT LINKAGE POSITION SENSOR (MSD) CALIBRATION - CONTINUED

4. Select “Service” (3) menu from toolbar.
5. Select “Calibrations” (4) submenu from “Service” (3) menu.
6. Select “Linkage Calibrations” (5) from “Calibrations” (4) submenu.

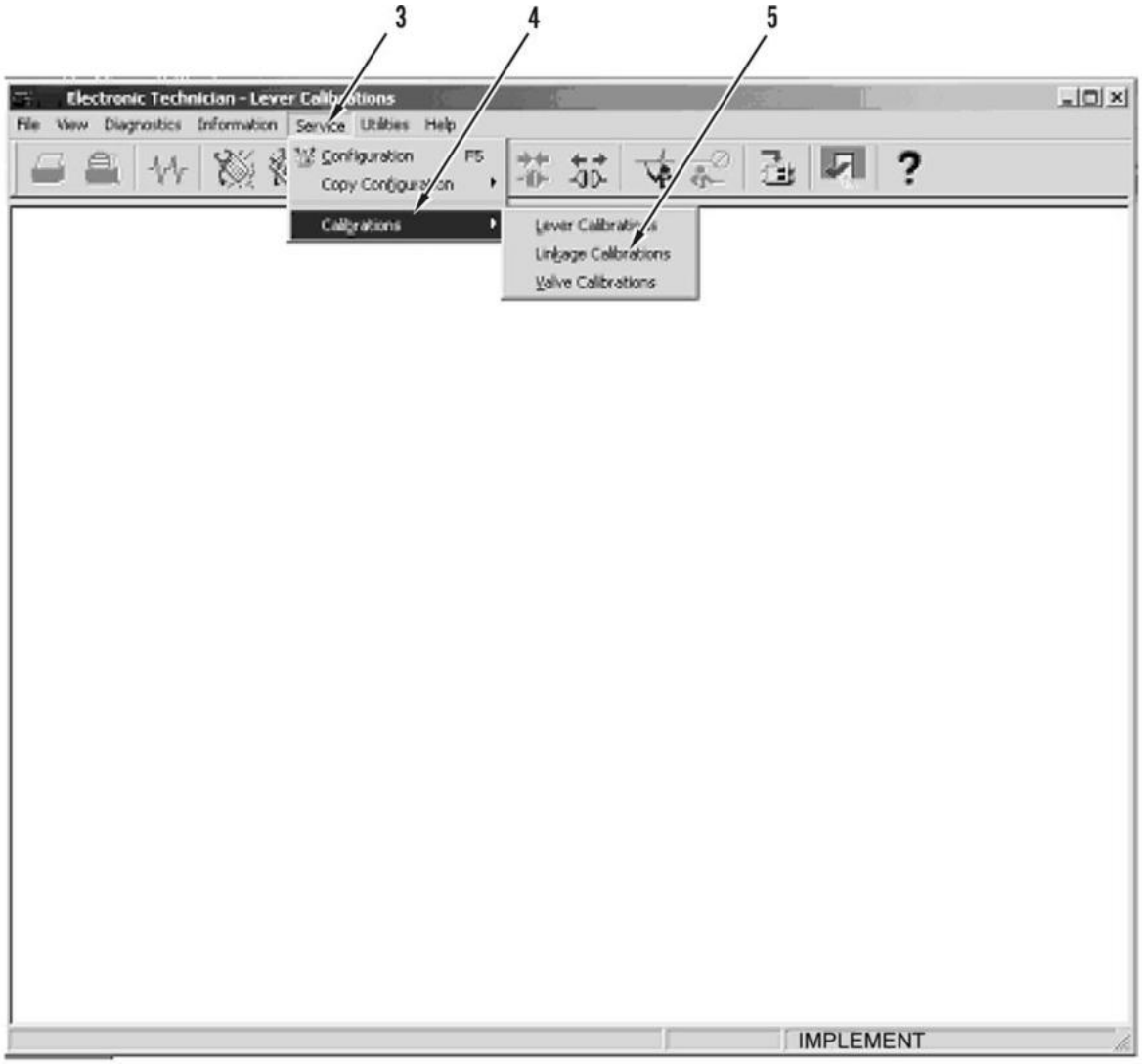

427-C0797

LIFT AND TILT LINKAGE POSITION SENSOR (MSD) CALIBRATION - CONTINUED

NOTE

- **MSD software defaults so that linkage position sensors will be selected for calibration. If an individual position sensor needs calibration, click in box to remove position sensor not required for calibration.**
- **If equipped with joystick control, follow same strategy that is used by control levers.**

7. Click “Begin” (6) to start calibration of position sensors. Screen will change to display step-by-step instructions for calibrating lift linkage position sensor.

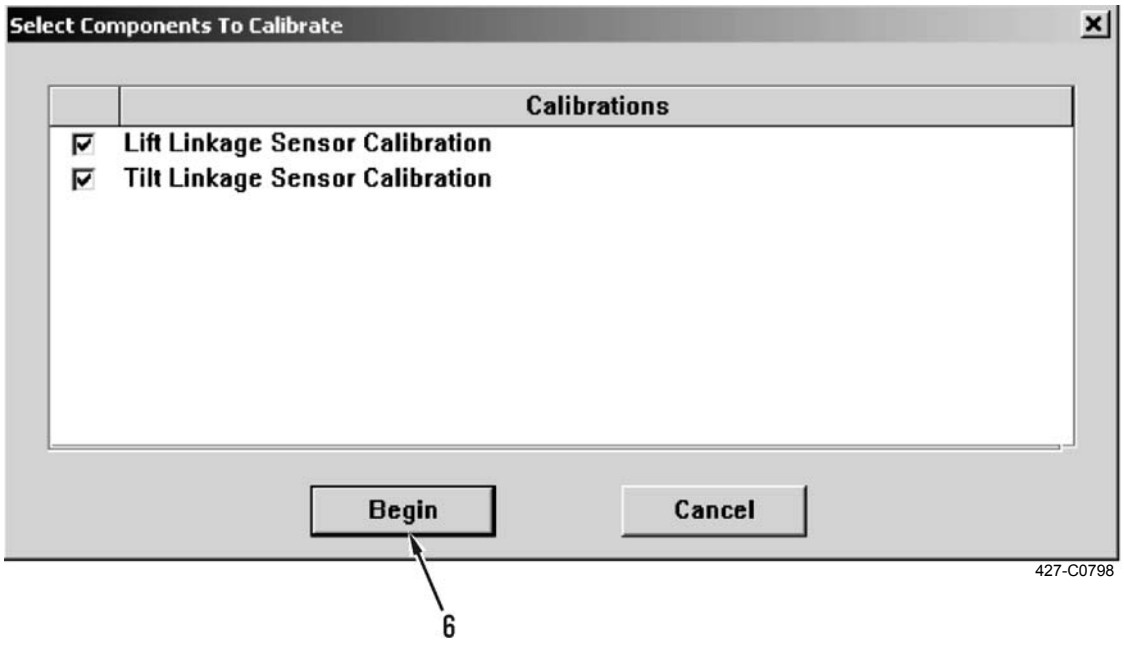

LIFT AND TILT LINKAGE POSITION SENSOR (MSD) CALIBRATION - CONTINUED

NOTE

MSD screen will be divided into three display areas. Top section of screen will be used to display important status parameters that are monitored during calibration. Middle section of screen displays information about calibration procedure. Bottom section of screen displays step-by-step instructions for calibration. Step that currently needs performing will be in bold text. All other steps will be displayed in gray text.

8. Click “Next” (7) to begin calibration. Check mark button will be placed to left of completed step and next step will be highlighted in bold text. After successful completion of step, you may need to click “Next” to begin the following step. Follow steps listed in bottom section of screen until calibration procedure is complete.

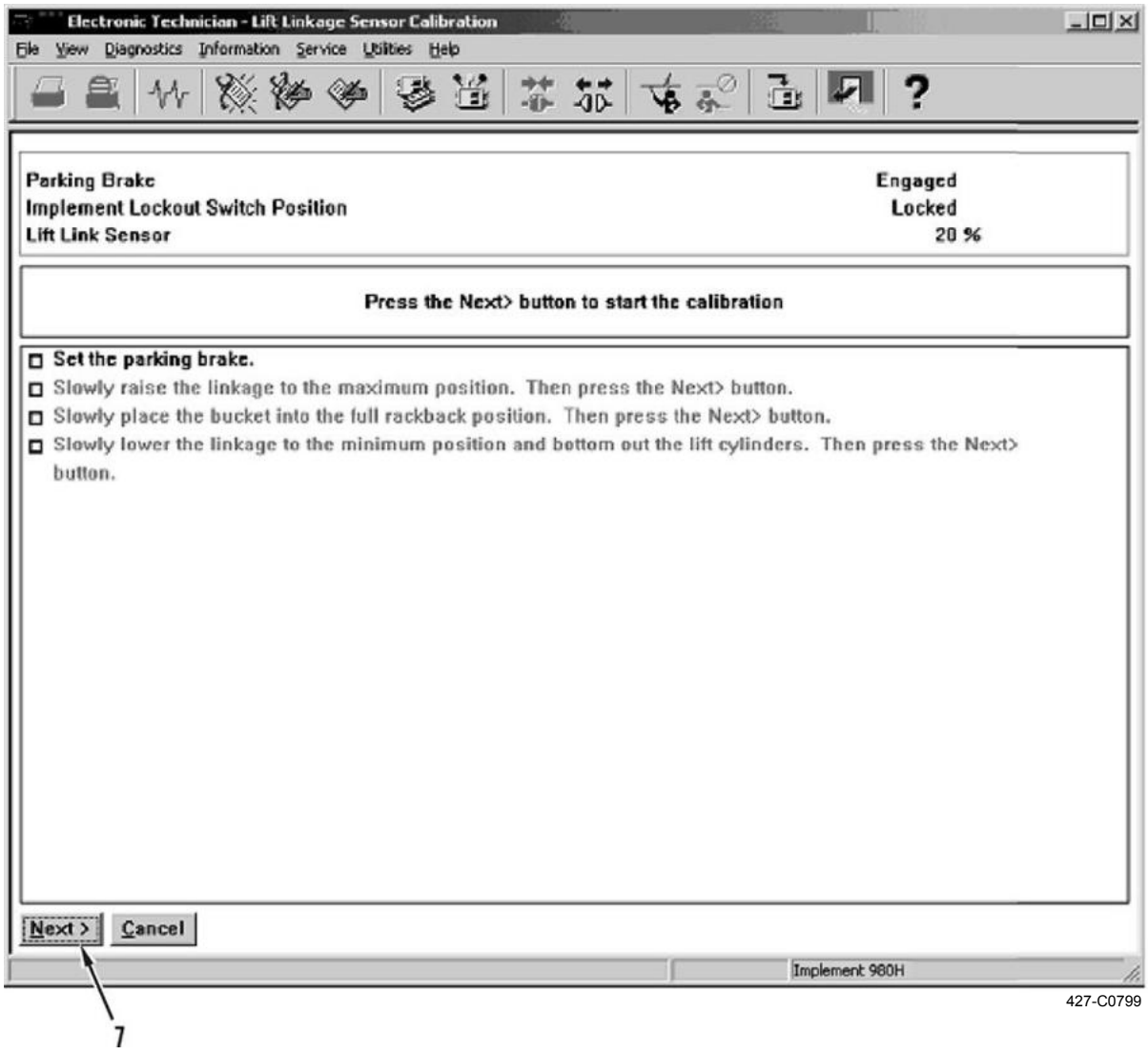

LIFT AND TILT LINKAGE POSITION SENSOR (MSD) CALIBRATION - CONTINUED

9. When calibration is complete, MSD will display a status screen. Status screen will inform you if calibration was successful. Click “Continue” (8) to go to next calibration or “Cancel” (9) to exit calibrations.

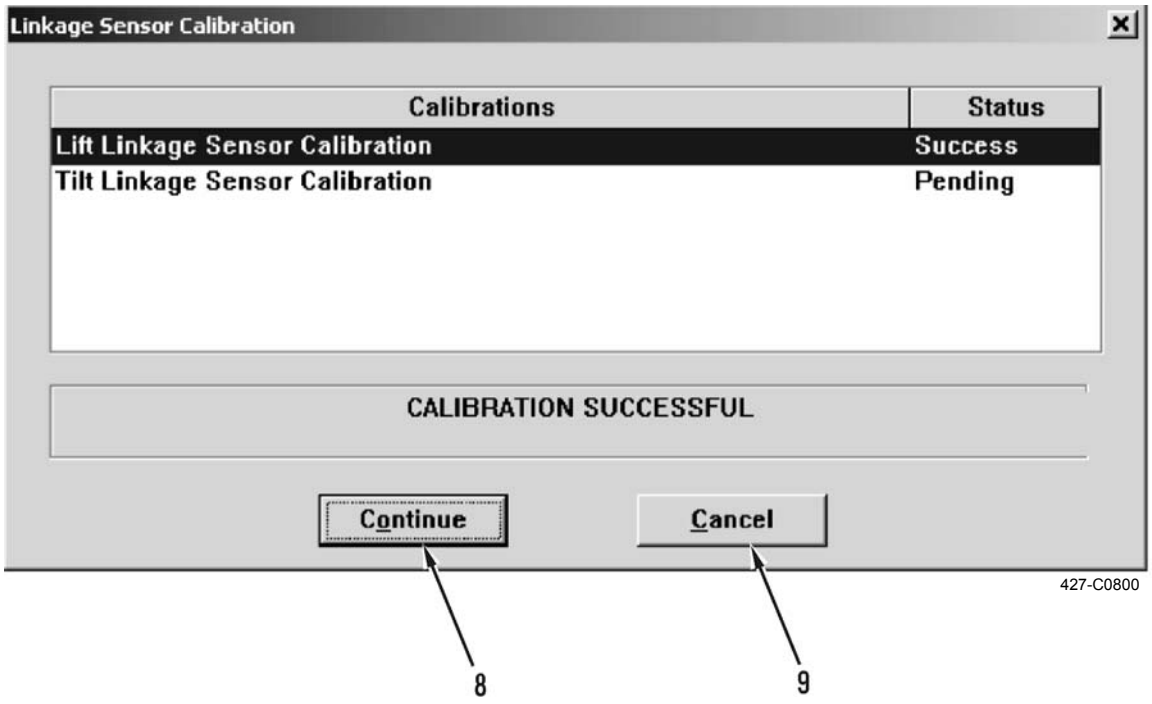

LIFT AND TILT LINKAGE POSITION SENSOR (MSD) CALIBRATION - CONTINUED

10. Click “Next” (7) to begin calibration. Check mark button will be placed to left of completed step and next step will be highlighted in bold text. After successful completion of step, you may need to click “Next” to begin the following step. Follow steps listed in bottom section of screen until calibration procedure is complete.

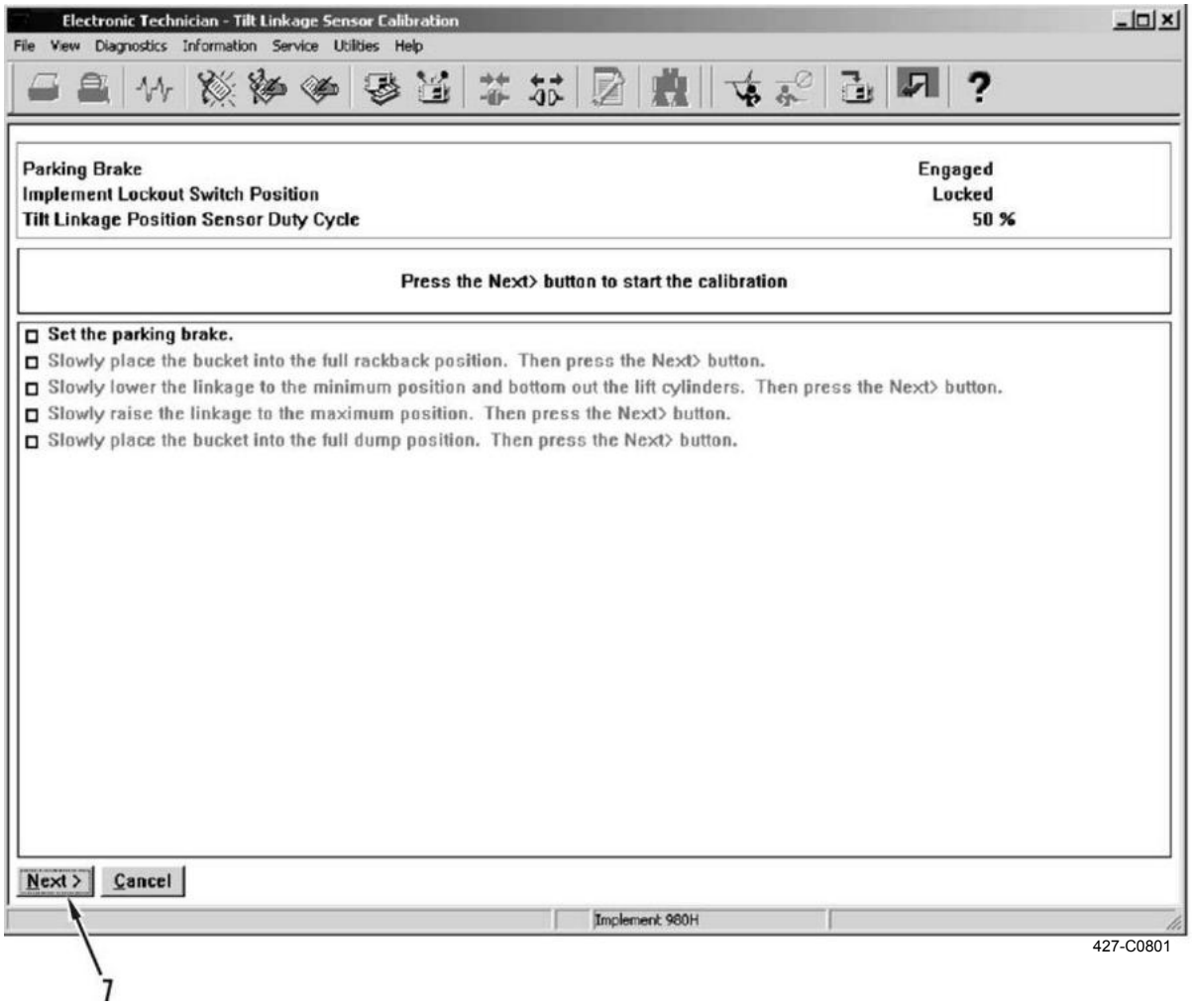

LIFT AND TILT LINKAGE POSITION SENSOR (MSD) CALIBRATION - CONTINUED

NOTE

Implement ECM will store new calibration data when calibrations are successful.

11. When calibration is complete, status screen will inform you that calibration of position sensors was successful. Click "Restart" (10) to repeat sensor calibration or click "Finish" (11) to exit calibration.

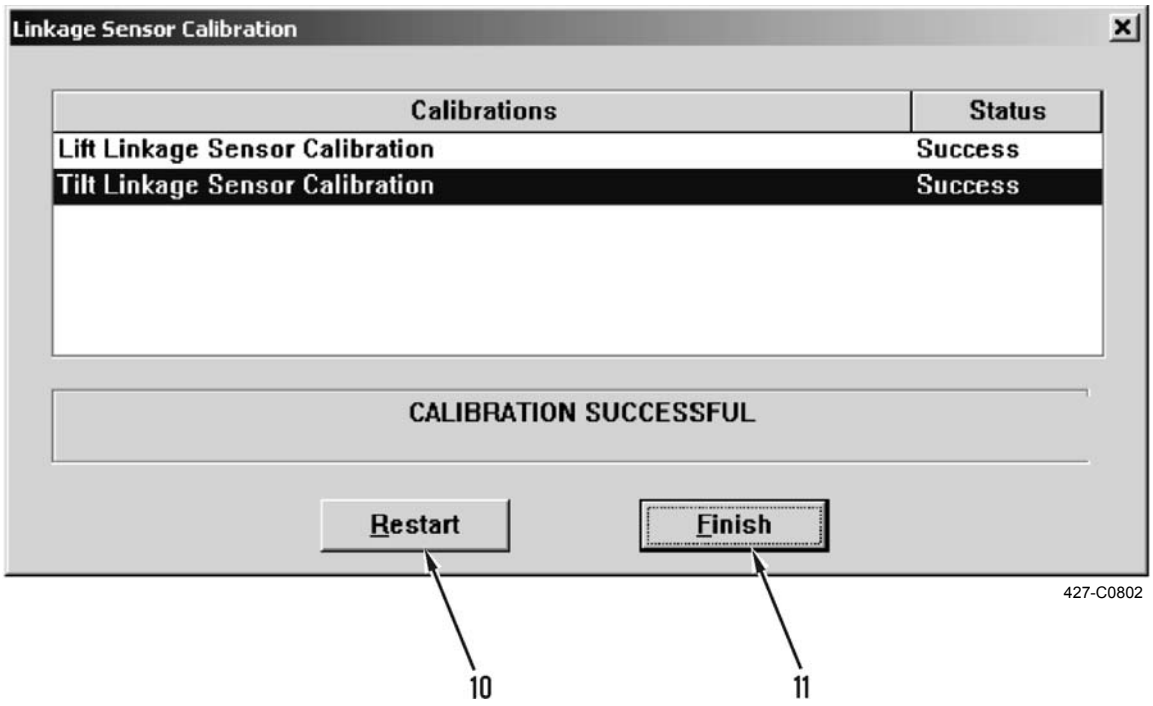

12. Stop engine (TM 5-3805-291-10).
13. Disconnect MSD from diagnostic connector (WP 0005 00).

MAIN CONTROL VALVE (MSD) CALIBRATION

NOTE

- **Calibrations are automatic.**
- **If equipped with linkage position sensors, calibrations for lift and tilt valves will be automatic. Auxiliary control is a manual calibration. However, the auxiliary control calibration is still described in section for automatic calibration since this is normal state for calibration of auxiliary control. Manual calibration starts same way as automatic calibration. MSD will automatically display appropriate calibrations.**
- **Ensure there are no active diagnostic codes for hardware faults.**
- **Joystick sensors are factory calibrated and should not require calibration. However, calibration may be necessary if problems exist activating detents.**
- **Up arrow refers to LOWER position. Down arrow refers to RAISE position. Right arrow refers to DUMP position. Left arrow refers to TILT BACK position.**
- **For auxiliary control, up arrow refers to auxiliary lever in FORWARD position. Down arrow refers to auxiliary lever in REARWARD position.**
- **For additional information on joystick control, refer to TM 5-3805-291-10.**

1. Connect MSD to diagnostic connector (WP 0005 00).

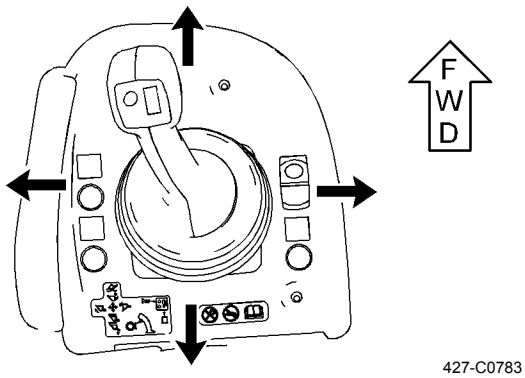

427-C0783

2. Start and run engine at low idle (TM 5-3805-291-10).

MAIN CONTROL VALVE (MSD) CALIBRATION - CONTINUED

3. Select “Implement” (1) from “ECM Selector” screen and click “OK” (2).

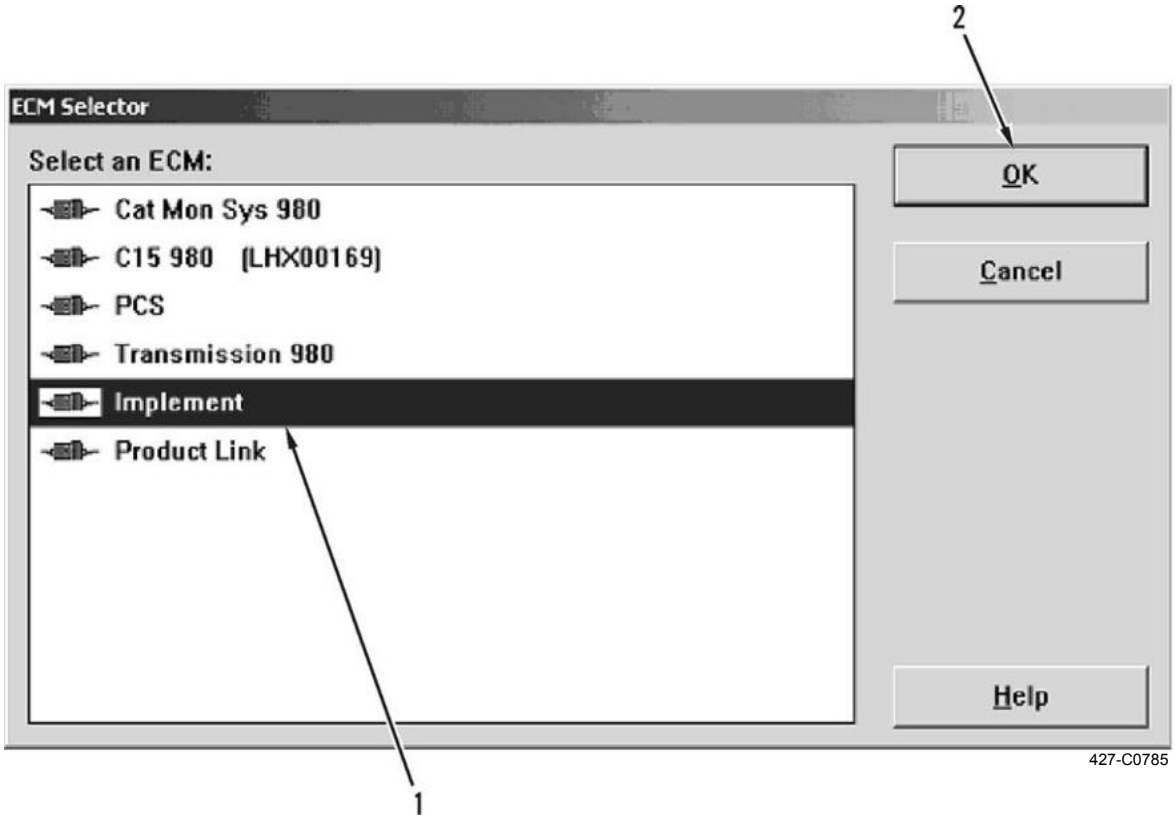

MAIN CONTROL VALVE (MSD) CALIBRATION - CONTINUED

4. Select “Service” (3) menu from toolbar.
5. Select “Calibrations” (4) submenu from “Service” (3) menu.
6. Select “Valve Calibrations” (13) from “Calibrations” (4) submenu.

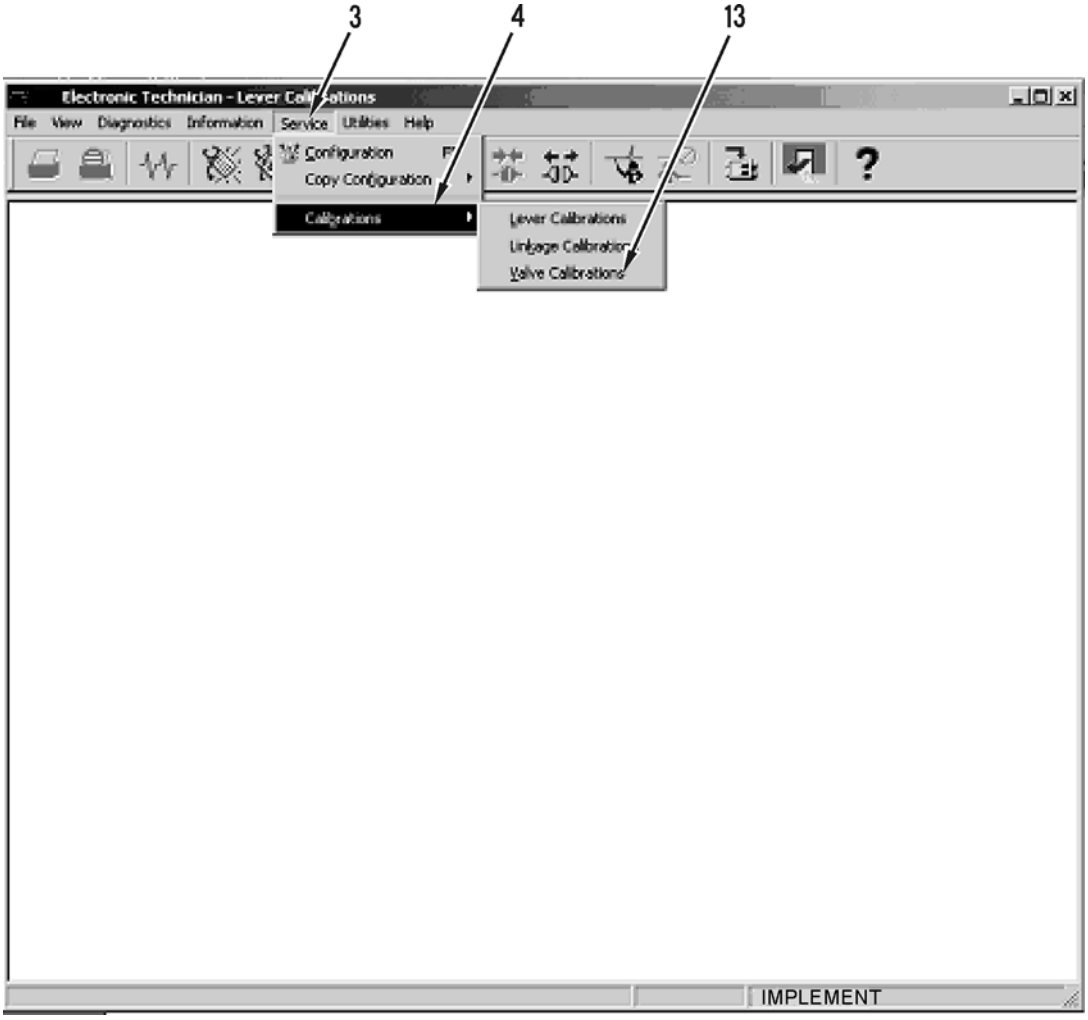

427-C0806

MAIN CONTROL VALVE (MSD) CALIBRATION - CONTINUED

NOTE

- **MSD software defaults so that all valve calibrations will be selected for calibration. If an individual valve needs calibration, click in box to remove valve not required for calibration.**
- **If equipped with joystick control, follow same strategy used by control levers.**

7. Click “Begin” (6) to start calibration of main control valve. Screen will change to display step-by-step instructions for main control valve.

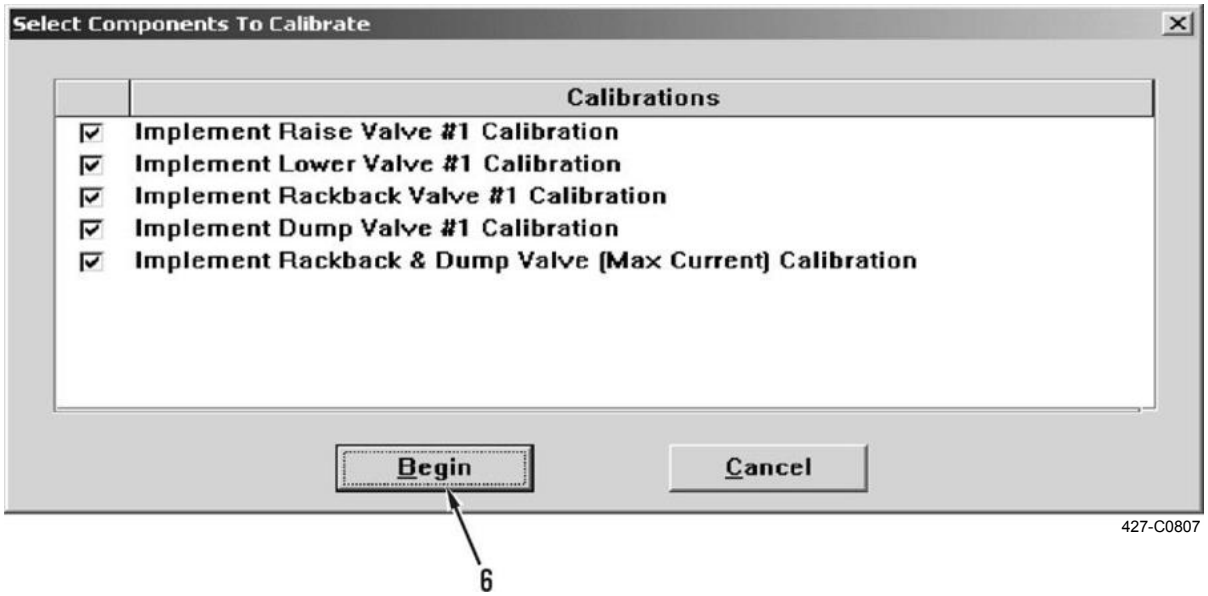

MAIN CONTROL VALVE (MSD) CALIBRATION - CONTINUED

NOTE

MSD screen will be divided into three display areas. Top section of screen will be used to display important status parameters that are monitored during calibration. Middle section of screen displays information about calibration procedure. Bottom section of screen displays step-by-step instructions for calibration. Step that currently needs performing will be in bold text. All other steps will be displayed in gray text.

8. Click “Next” (7) to begin calibration. Check mark button will be placed to left of completed step and next step will be highlighted in bold text. After successful completion of step, you may need to click “Next” to begin the following step. Follow steps listed in bottom section of screen until calibration procedure is complete.

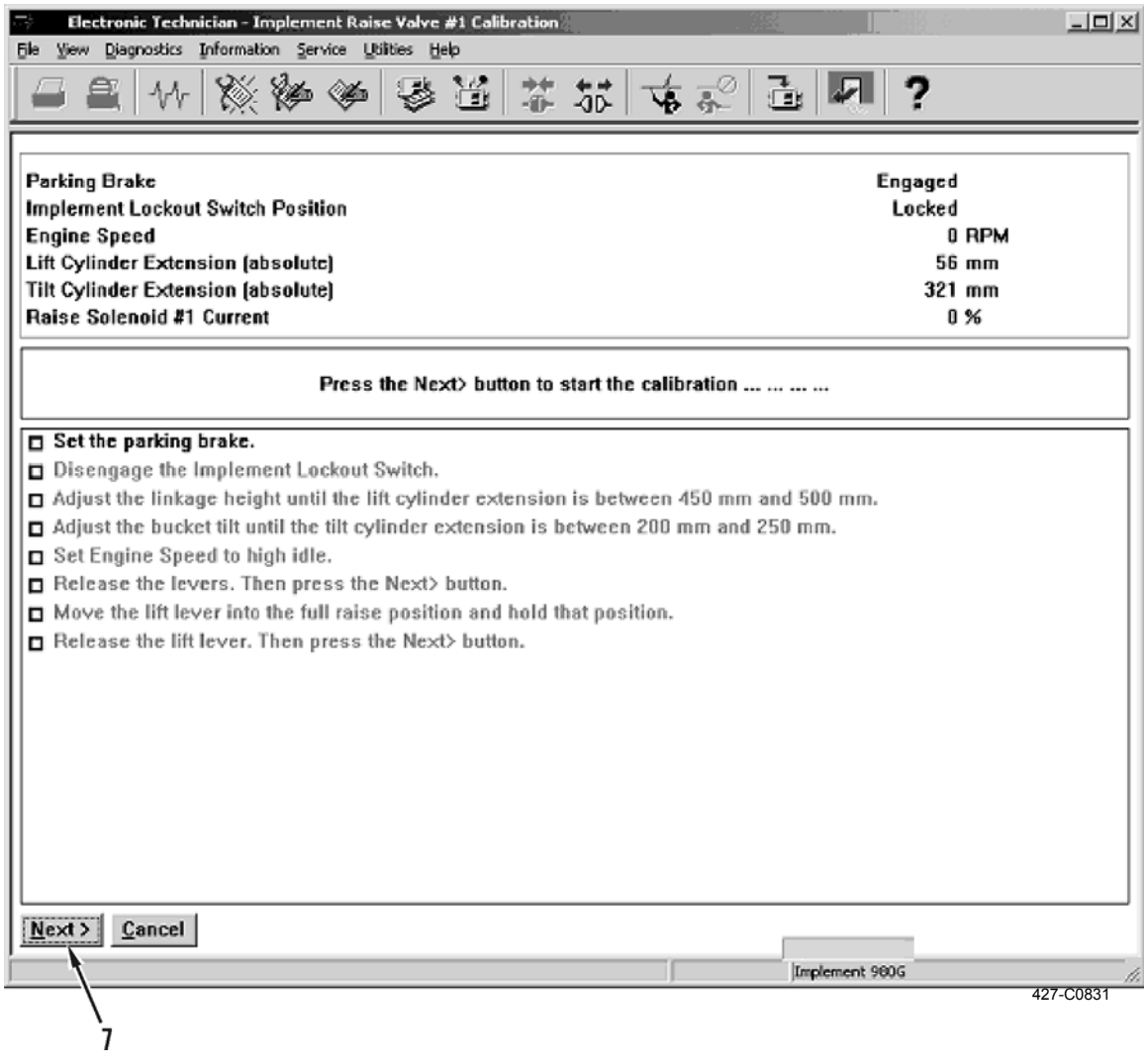

MAIN CONTROL VALVE (MSD) CALIBRATION - CONTINUED

NOTE

- **Implement ECM will store new calibration data when calibrations are successful.**
- **During lower and dump valve calibrations a 30 second drift check will be performed. Calibrated currents for solenoids may be adjusted according to drift rate.**
- **This check will only be performed once for each power cycle.**

9. After each individual valve calibration is complete, MSD will display a status screen. Status screen will inform you if calibration was successful. Click “Continue” (8) to go to next calibration or “Cancel” (9) to exit calibrations.

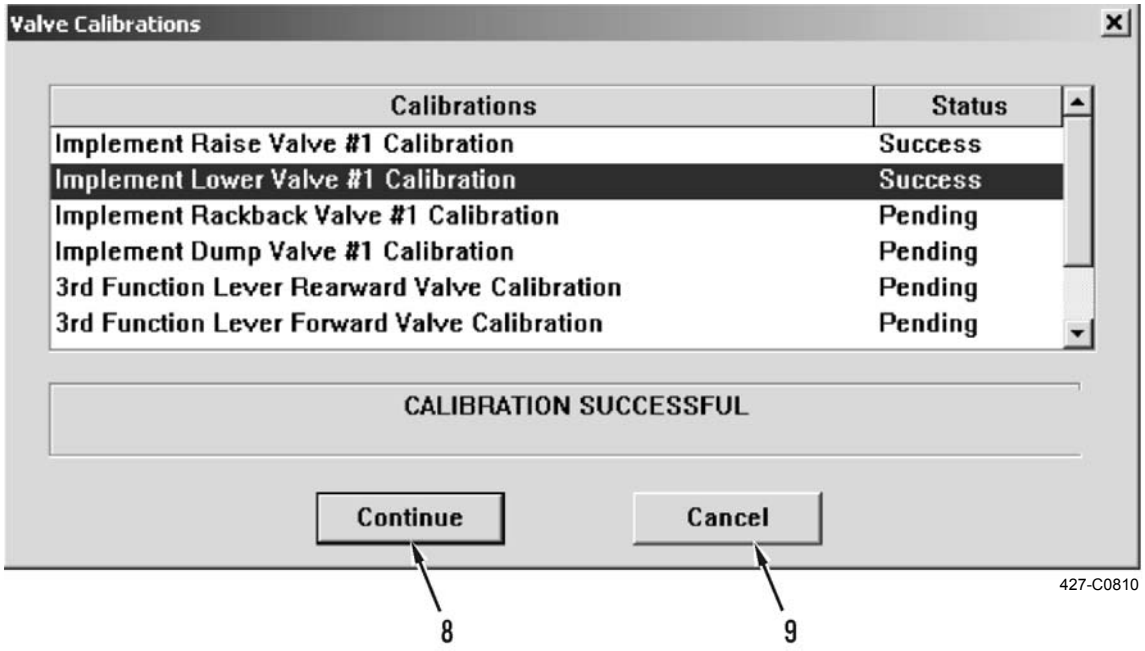

MAIN CONTROL VALVE (MSD) CALIBRATION - CONTINUED

10. When warning dialog box appears on screen, click “OK” (14) to begin test for engine stall speed.

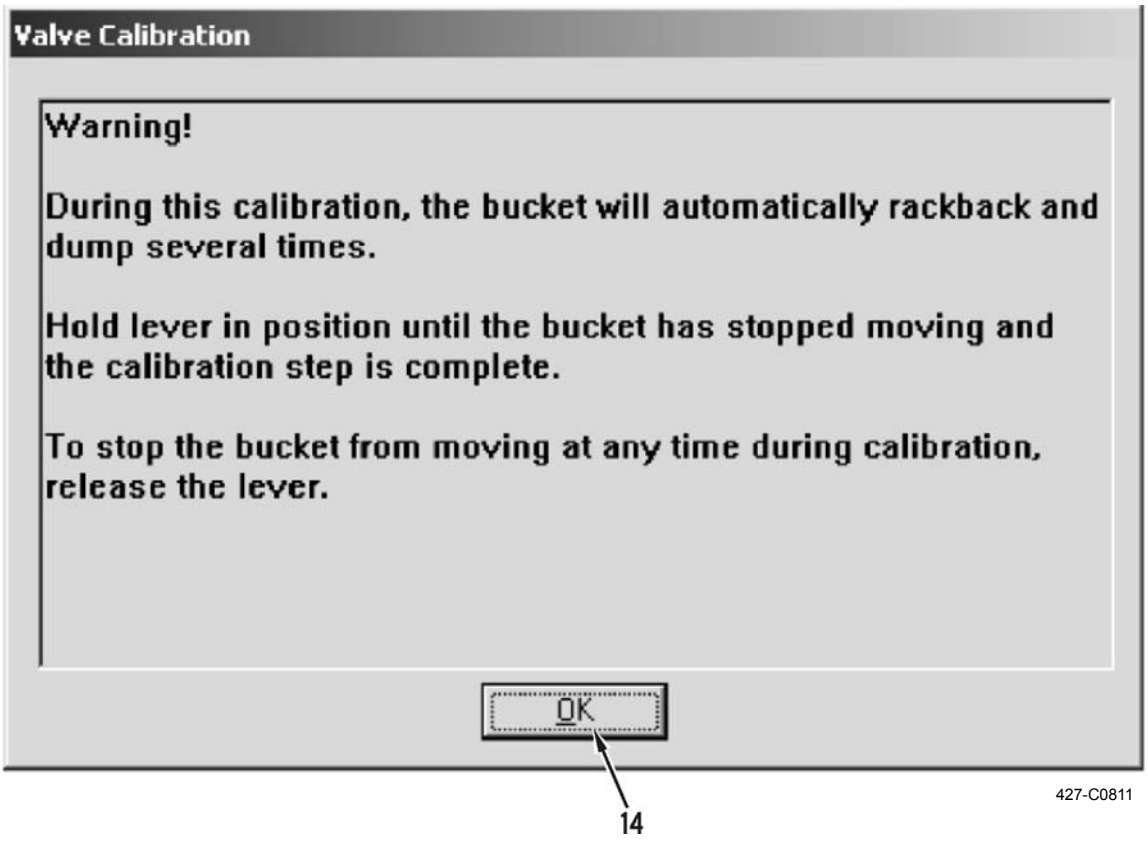

MAIN CONTROL VALVE (MSD) CALIBRATION - CONTINUED

11. Click “Next” (7) to begin next calibration. Check mark button will be placed to left of completed step and next step will be highlighted in bold text. After successful completion of step, you may need to click “Next” to begin the following step. Follow steps listed in bottom section of screen until calibration procedure is complete.

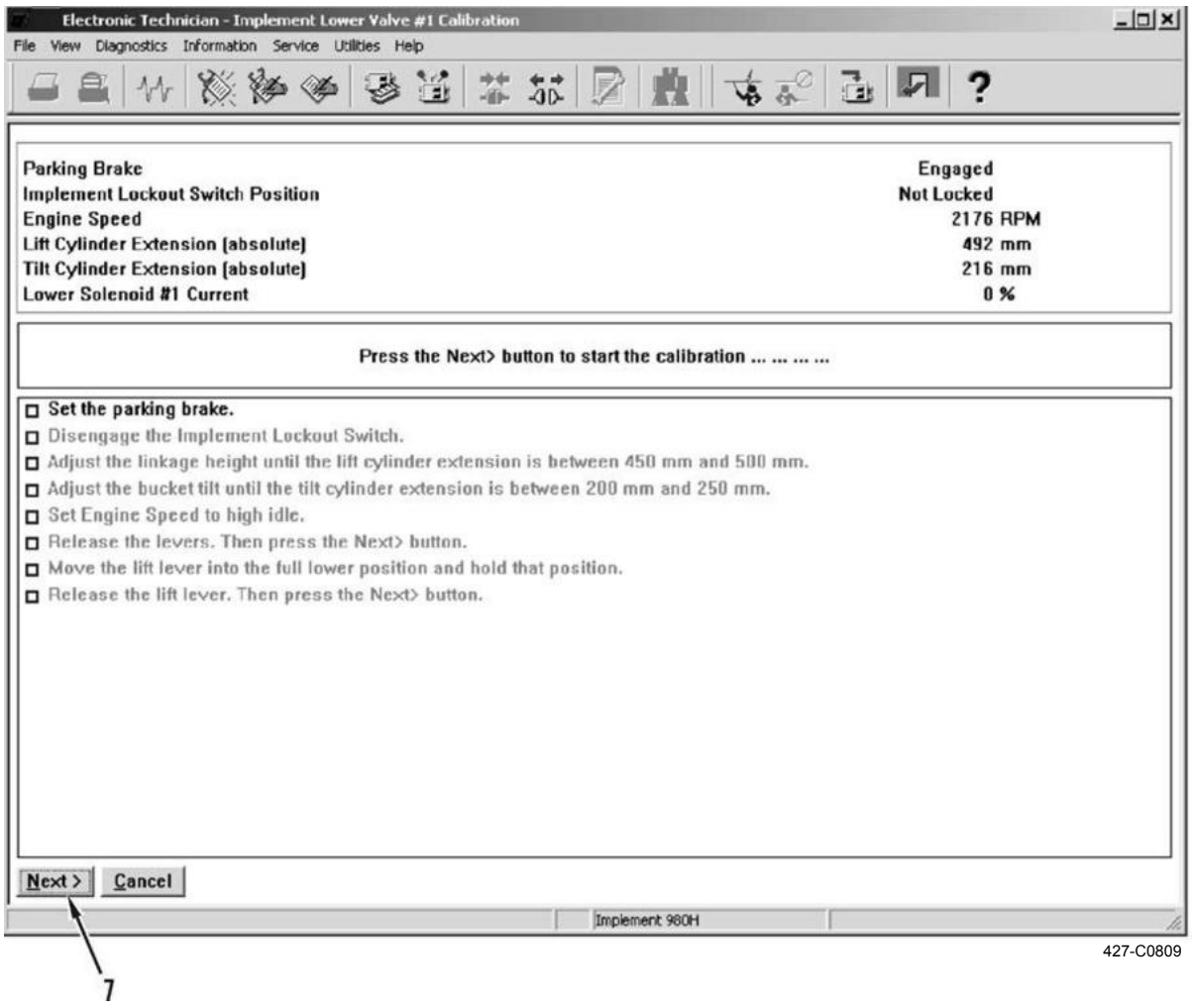

427-C0809

MAIN CONTROL VALVE (MSD) CALIBRATION - CONTINUED

12. After calibration procedures for valves have been completed, screen will display “Calibration Successful”. “Success” will appear on right side of dialog box. Click “Restart” (10) to repeat valve calibrations or click “Finish” (11) to exit status screen.

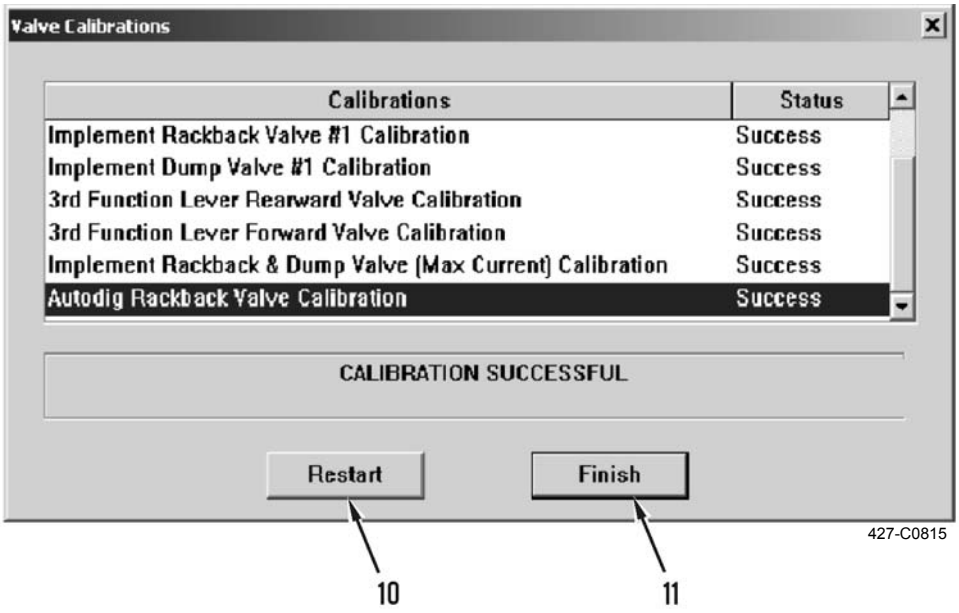

NOTE

Implement ECM will store new calibration data when calibration is successful.

MAIN CONTROL VALVE (MSD) CALIBRATION - CONTINUED

13. Stop engine (TM 5-3805-291-10).

14. Disconnect MSD from diagnostic connector (WP 0005 00).

Manual Calibration Procedure

NOTE

- **Calibrations can be automatic or manual.**
- **If equipped with linkage position sensors, calibrations for lift and tilt valves will be automatic. If not equipped with linkage position sensors, calibration will be manual. Auxiliary control is a manual calibration. However, the auxiliary control calibration is still described in section for automatic calibration since this is normal state for calibration of auxiliary control. Manual calibration starts same way as automatic calibration. MSD will automatically display appropriate calibrations.**
- **Manual calibration requires operator input to determine movement of linkage while automatic calibration determines movement with help of linkage position sensors.**
- **Procedure for calibrating current flow to solenoid valves in main control valve is automatic calibration. Solenoids for implement control valve are calibrated through MSD.**
- **Ensure there are no active diagnostic codes for hardware faults.**
- **Joystick sensors are factory calibrated and should not require calibration. However, calibration may be necessary if problems exist activating detents.**
- **Up arrow refers to LOWER position. Down arrow refers to RAISE position. Right arrow refers to DUMP position. Left arrow refers to TILT BACK position.**
- **For auxiliary control, up arrow refers to auxiliary lever in FORWARD position. Down arrow refers to auxiliary lever in REARWARD position.**
- **For additional information on joystick control, refer to TM 5-3805-291-10.**

1. Connect MSD to diagnostic connector (WP 0005 00).

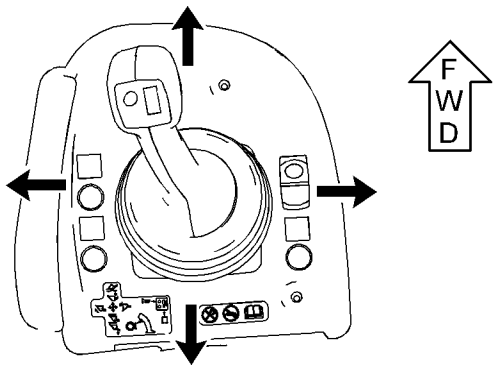

427-C0783

MAIN CONTROL VALVE (MSD) CALIBRATION - CONTINUED

Manual Calibration Procedure - Continued

2. Start and run engine at low idle (TM 5-3805-291-10).
3. Select “Implement” (1) from “ECM Selector” screen and click “OK” (2).

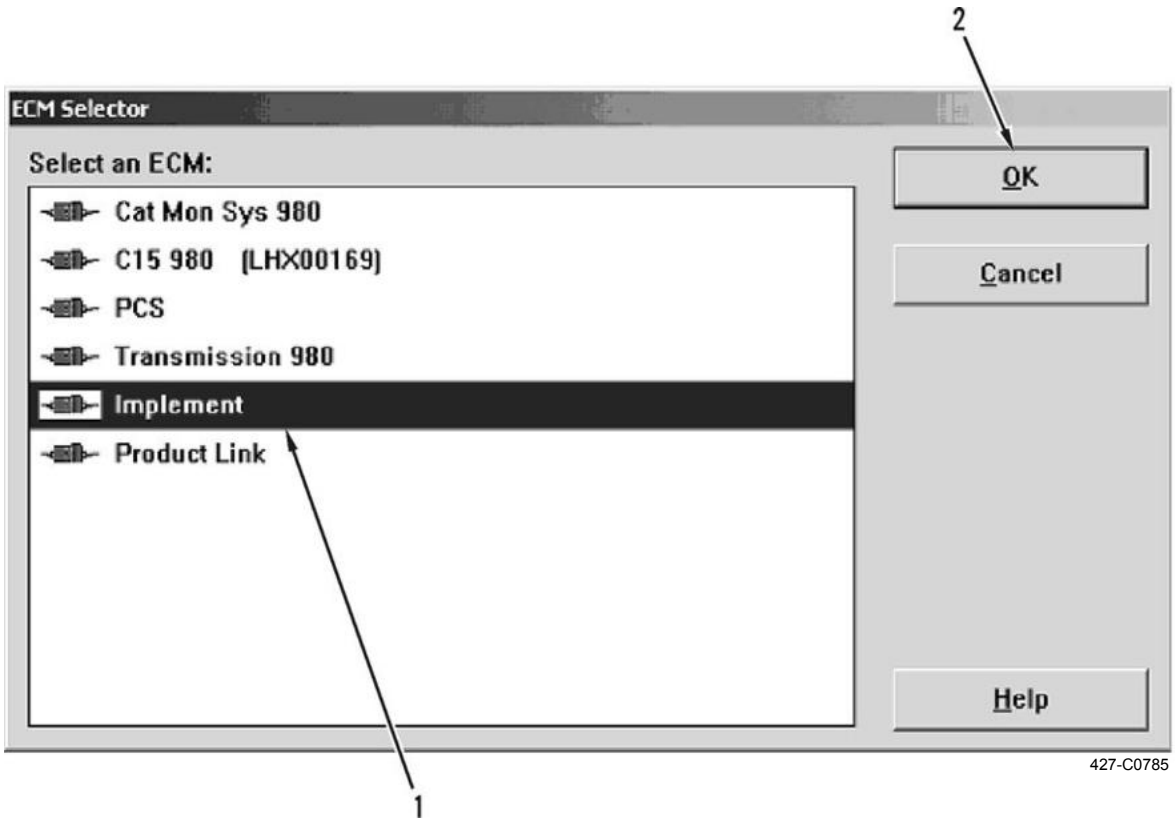

MAIN CONTROL VALVE (MSD) CALIBRATION - CONTINUED

Manual Calibration Procedure - Continued

4. Select “Service” (3) menu from toolbar.
5. Select “Calibrations” (4) submenu from “Service” (3) menu.
6. Select “Valve Calibrations” (13) from “Calibrations” (4) submenu.

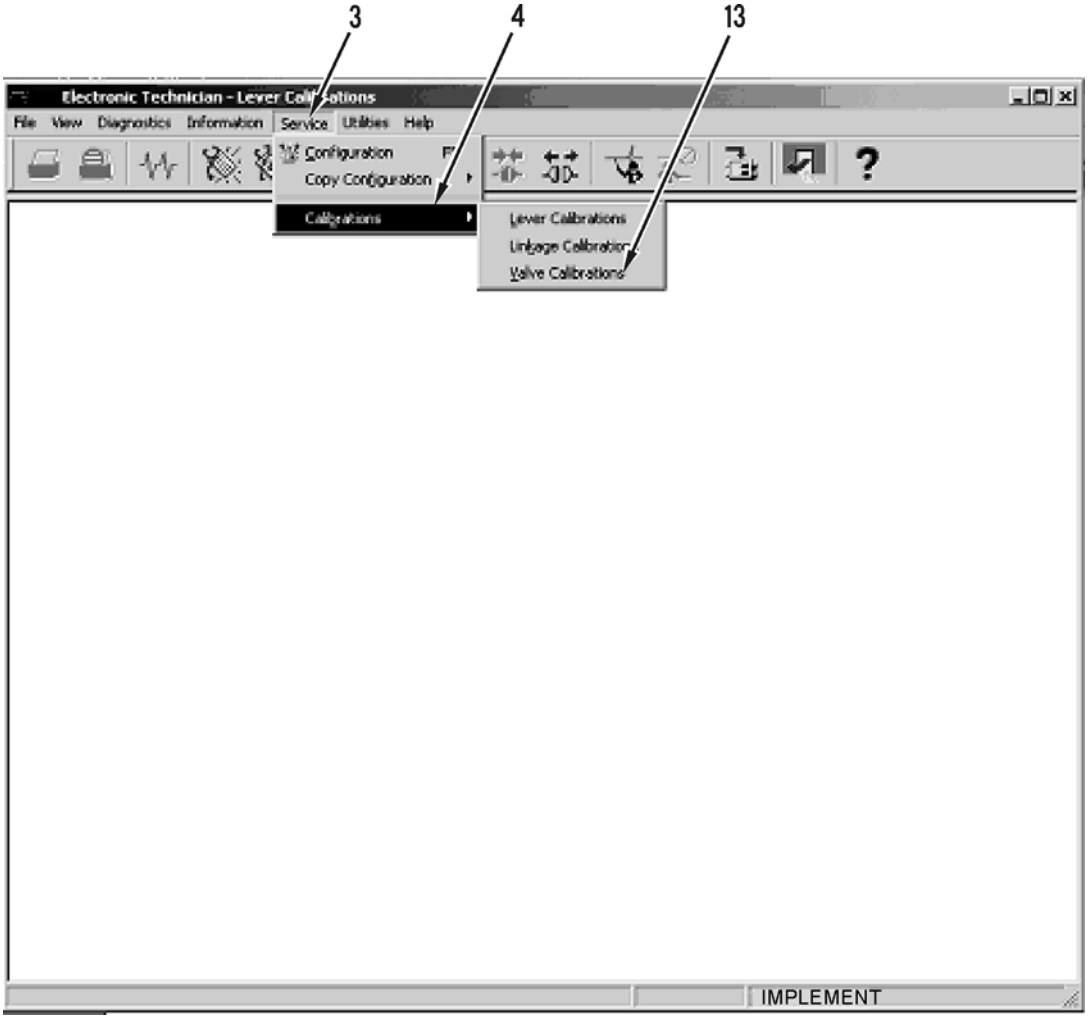

427-C0806

MAIN CONTROL VALVE (MSD) CALIBRATION - CONTINUED

Manual Calibration Procedure - Continued

NOTE

- **MSD software defaults so that all valve calibrations will be selected for calibration. If an individual valve needs calibration, click in box to remove valve not required for calibration.**
- **If equipped with joystick control, follow same strategy used by control levers.**

7. Click “Begin” (6) to start calibration of main control valve. Screen will change to display step-by-step instructions for main control valve.

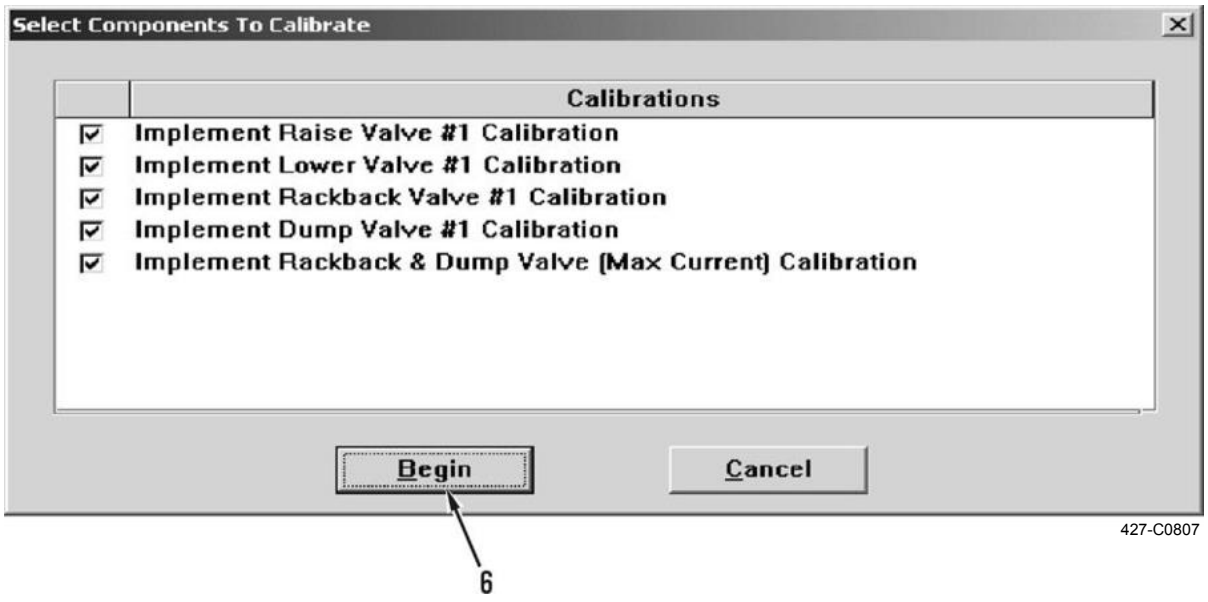

MAIN CONTROL VALVE (MSD) CALIBRATION - CONTINUED

Manual Calibration Procedure - Continued

NOTE

MSD screen will be divided into three display areas. Top section of screen will be used to display important status parameters that are monitored during calibration. Middle section of screen displays information about calibration procedure. Bottom section of screen displays step-by-step instructions for calibration. Step that currently needs performing will be in bold text. All other steps will be displayed in gray text.

8. Click “Next” (7) to begin first calibration. Check mark button will be placed to left of completed step and next step will be highlighted in bold text. After successful completion of step, you may need to click “Next” to begin the following step. The following steps listed in bottom section of screen until calibration procedure is complete.

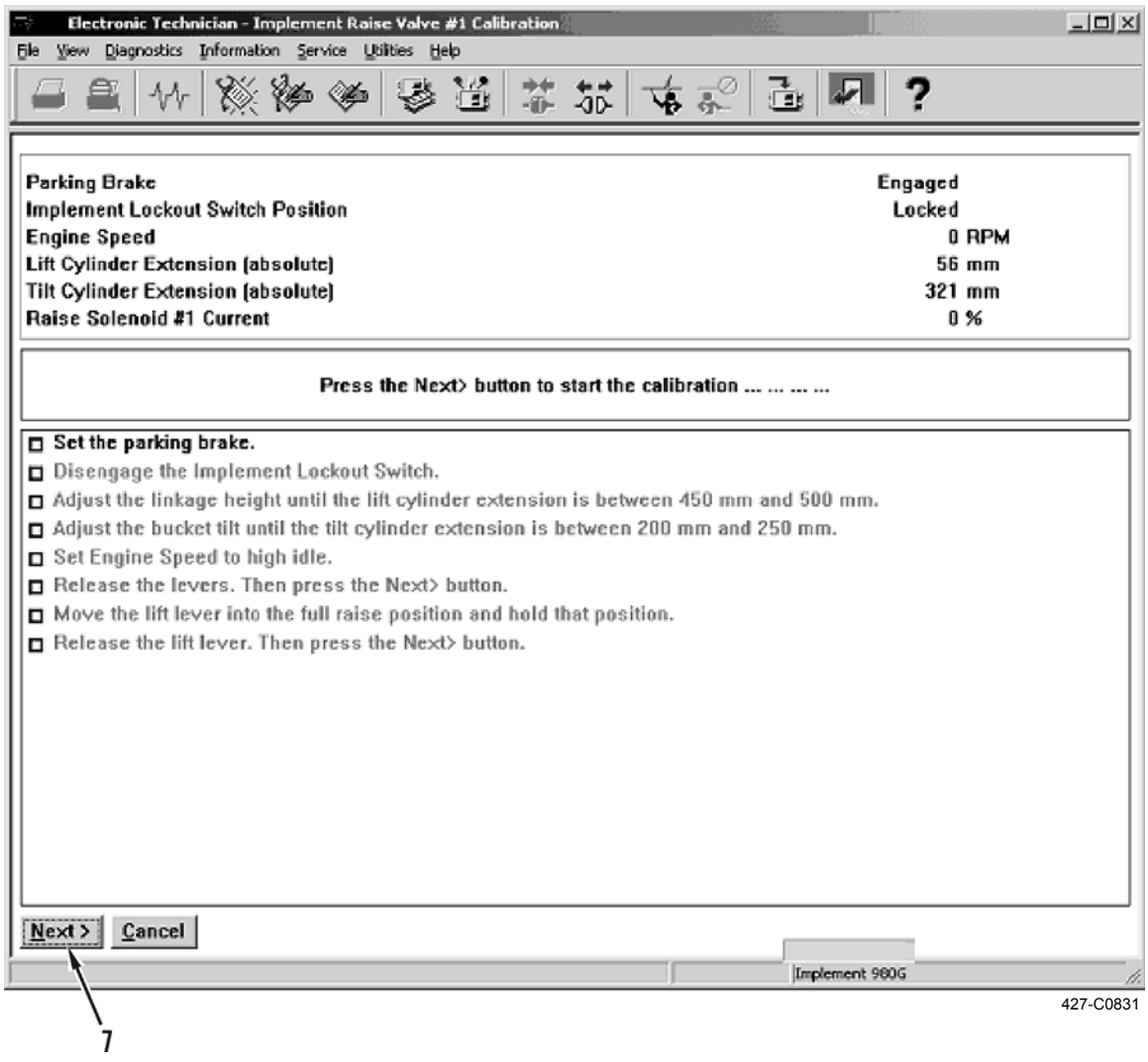

MAIN CONTROL VALVE (MSD) CALIBRATION - CONTINUED

Manual Calibration Procedure - Continued

NOTE

- **Implement ECM will store new calibration data when calibrations are successful.**
- **During lower and dump valve calibrations a 30 second drift check will be performed. Calibrated currents for solenoids may be adjusted according to drift rate.**
- **This check will only be performed once for each power cycle.**

9. After each individual valve calibration is complete, MSD will display a status screen. Status screen will inform you if calibration was successful. Click “Continue” (8) to go to next calibration or “Cancel” (9) to exit calibrations.

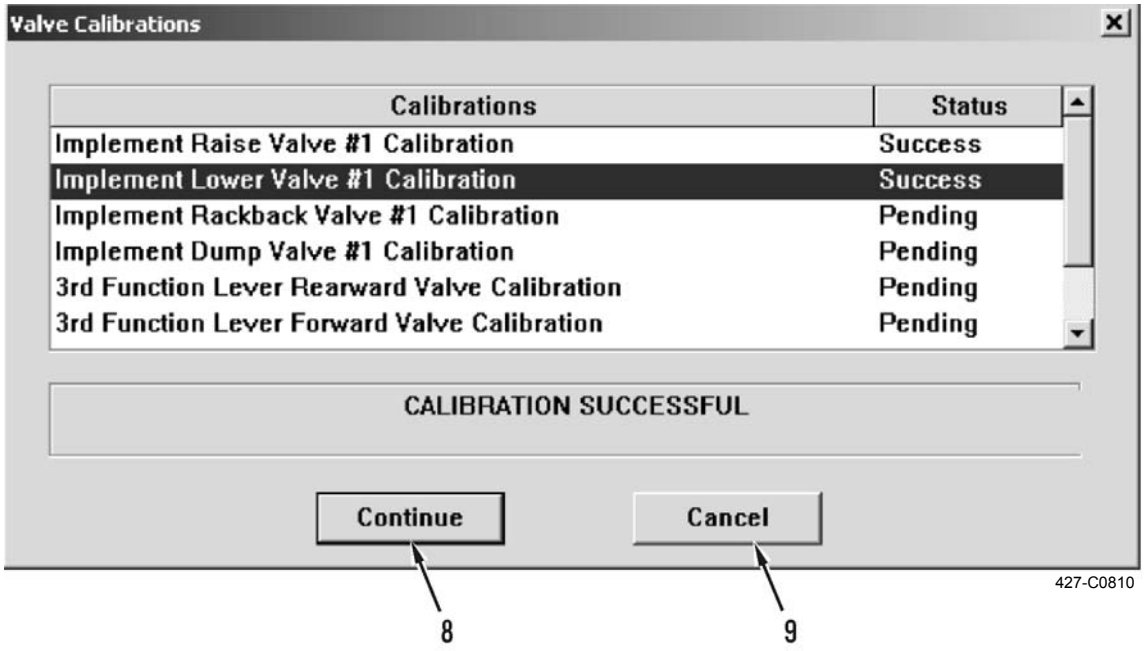

MAIN CONTROL VALVE (MSD) CALIBRATION - CONTINUED

Manual Calibration Procedure - Continued

10. Click “Next” (7) to begin next calibration. Check mark button will be placed to left of completed step and next step will be highlighted in bold text. After successful completion of step, you may need to click “Next” to begin the following step. Follow steps listed in bottom section of screen until calibration procedure is complete.

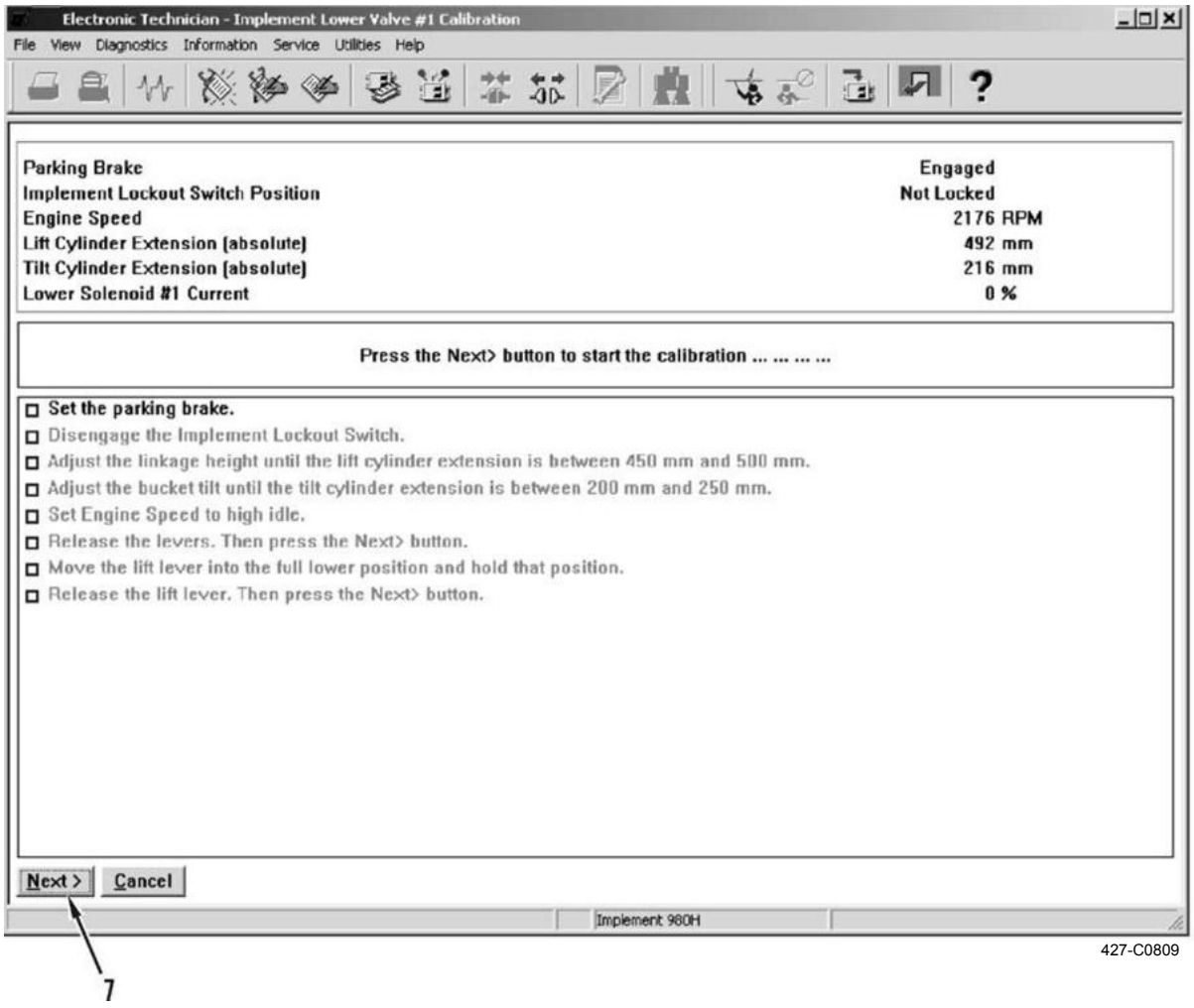

MAIN CONTROL VALVE (MSD) CALIBRATION - CONTINUED

Manual Calibration Procedure - Continued

NOTE

The manual calibration for the third function is identical to the previously described procedure.

11. After calibration procedures for valves have been completed, screen will display “Calibration Successful”. “Success” will appear on right side of dialog box. Click “Restart” (10) to repeat valve calibrations or click “Finish” (11) to exit status screen.

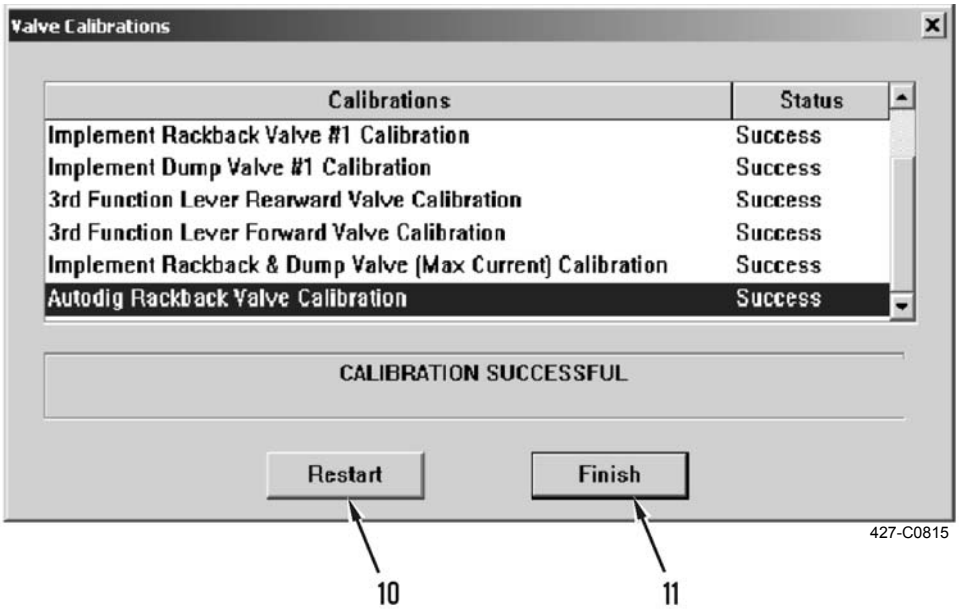

MAIN CONTROL VALVE (MSD) CALIBRATION - CONTINUED

Manual Calibration Procedure - Continued

12. Stop engine (TM 5-3805-291-10).
13. Disconnect MSD from diagnostic connector (WP 0005 00).

Effects of Poor Adjustment

1. Effects of Poor Adjustment of Minimum Modulation Current.
   a. Current is Adjusted Too Low.
      (1) Deadband in lever is too great when lever is moved from center position.
      (2) Implements may be sluggish. However, sluggish implements may also be caused by contamination in hydraulic system.
   b. Current is Adjusted Too High.

      Implements may be jerky. Implements may not modulate smoothly.
2. Effects of Poor Adjustment of Maximum Modulation Current.
   a. Current is Adjusted Too Low.

      Implement hydraulics will be slower. Maximum cylinder speed will be reduced.
   b. Current is Adjusted Too High.
      (1) Full hydraulic speed will be achieved before lever reaches detent position. This results in deterioration of implement modulation.
      (2) When lift arms are lowered, float feature may activate prematurely before detent is reached.

IMPLEMENT HYDRAULIC SERVICE MODE

WARNING

If machine is in Implement Hydraulic Service Mode and work tool is off ground, do not place control levers in FLOAT position. Placing levers in FLOAT position will cause work tool linkage to immediately fall. Injury or death to personnel can result from falling work tool linkage.

NOTE

- **Service mode for implement hydraulics is used for certain testing and adjustment procedures. Only basic functions of lift and tilt circuits will operate in this mode.**
- **All advanced implement control features will be disabled in service mode. Kickouts, cylinder snubbing, and dump rate control are features of implement control that will be disabled.**

1. Connect MSD to diagnostic connector (WP 0005 00).
2. Start and run engine at low idle (TM 5-3805-291-10).
3. Select “Implement” (1) from “ECM Selector” screen and click “OK” (2).

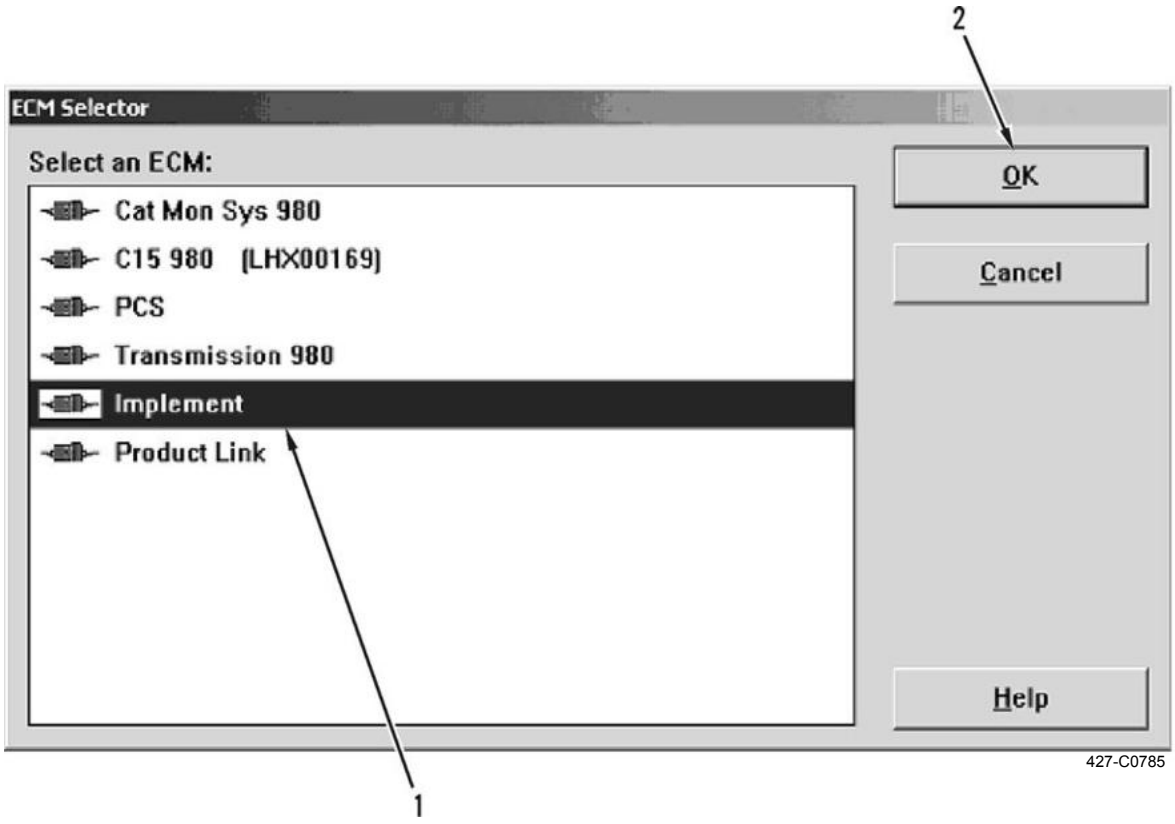

IMPLEMENT HYDRAULIC SERVICE MODE - CONTINUED

4. Select “Diagnostics” (15) menu from toolbar.
5. Select “Diagnostic Tests” (16) submenu from “Diagnostics” (15) menu.
6. Select “Implement Hydraulic Service Mode” (17) from “Diagnostic Tests” (16) submenu.

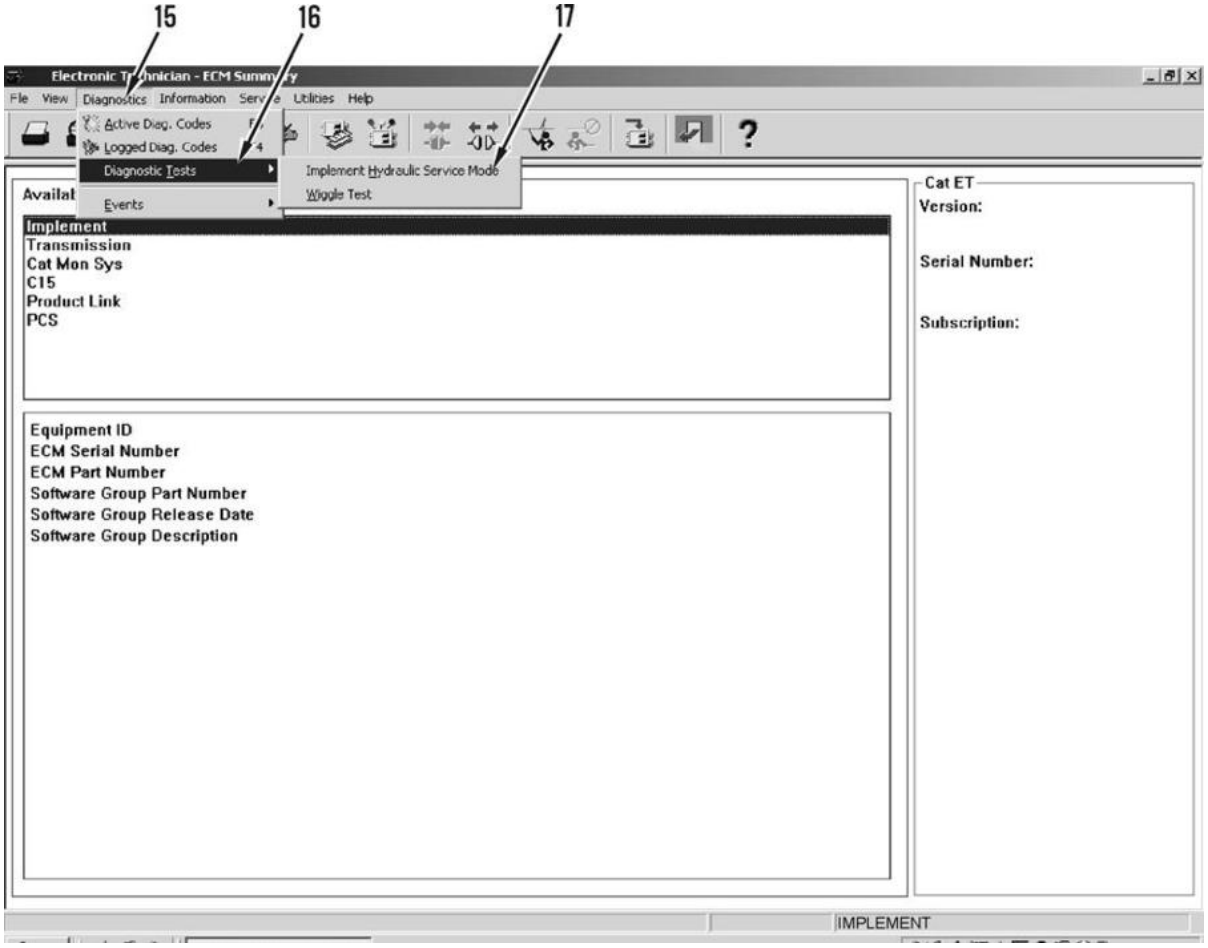

427-C0940

IMPLEMENT HYDRAULIC SERVICE MODE - CONTINUED

7. Click “OK” (18). Machine is now in service mode.

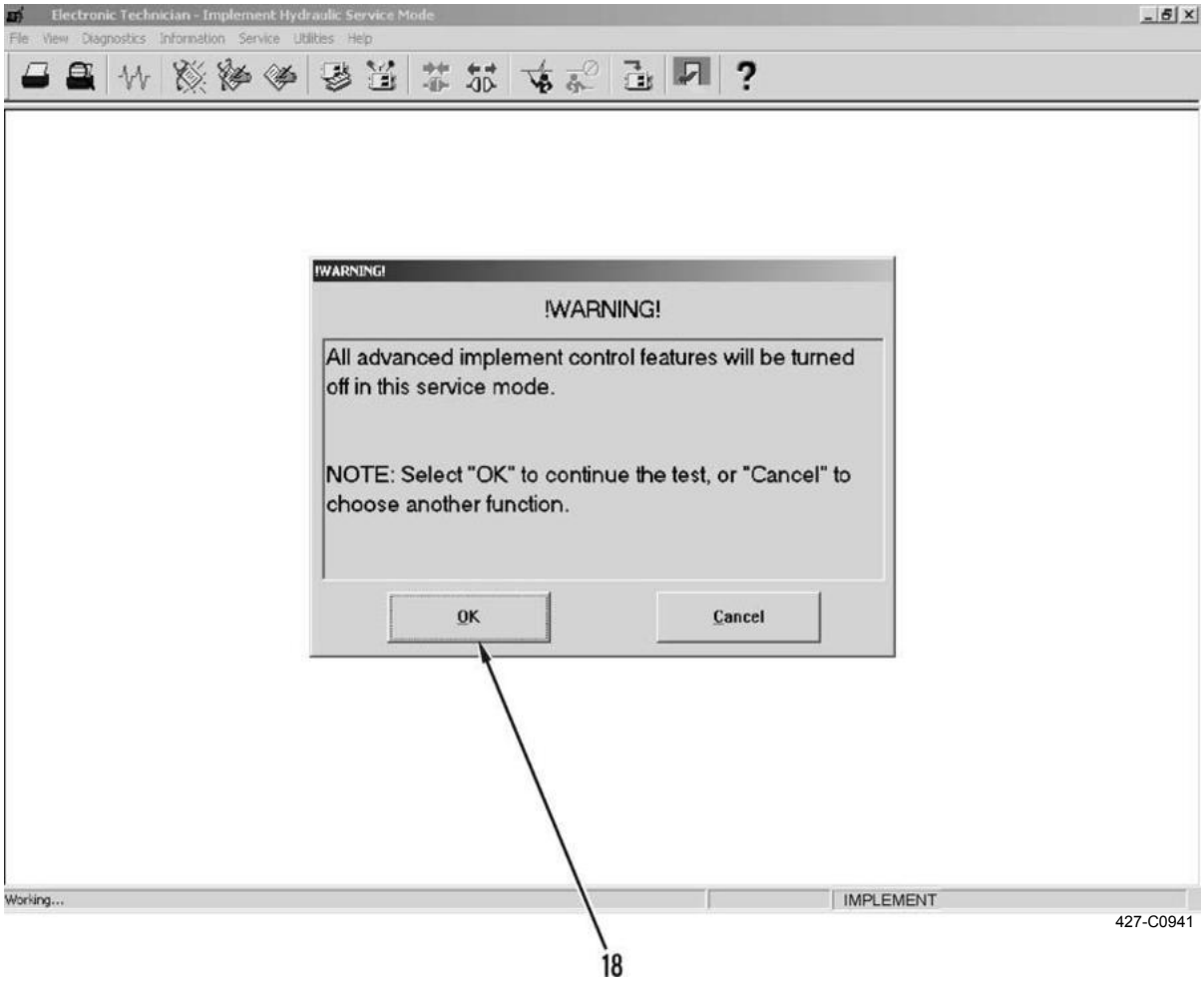

IMPLEMENT HYDRAULIC SERVICE MODE - CONTINUED

NOTE

Service mode will deactivate when you cancel or exit Implement Hydraulic Service Mode.

8. Click “Next” (7) to begin calibration. Follow instructions on screen.

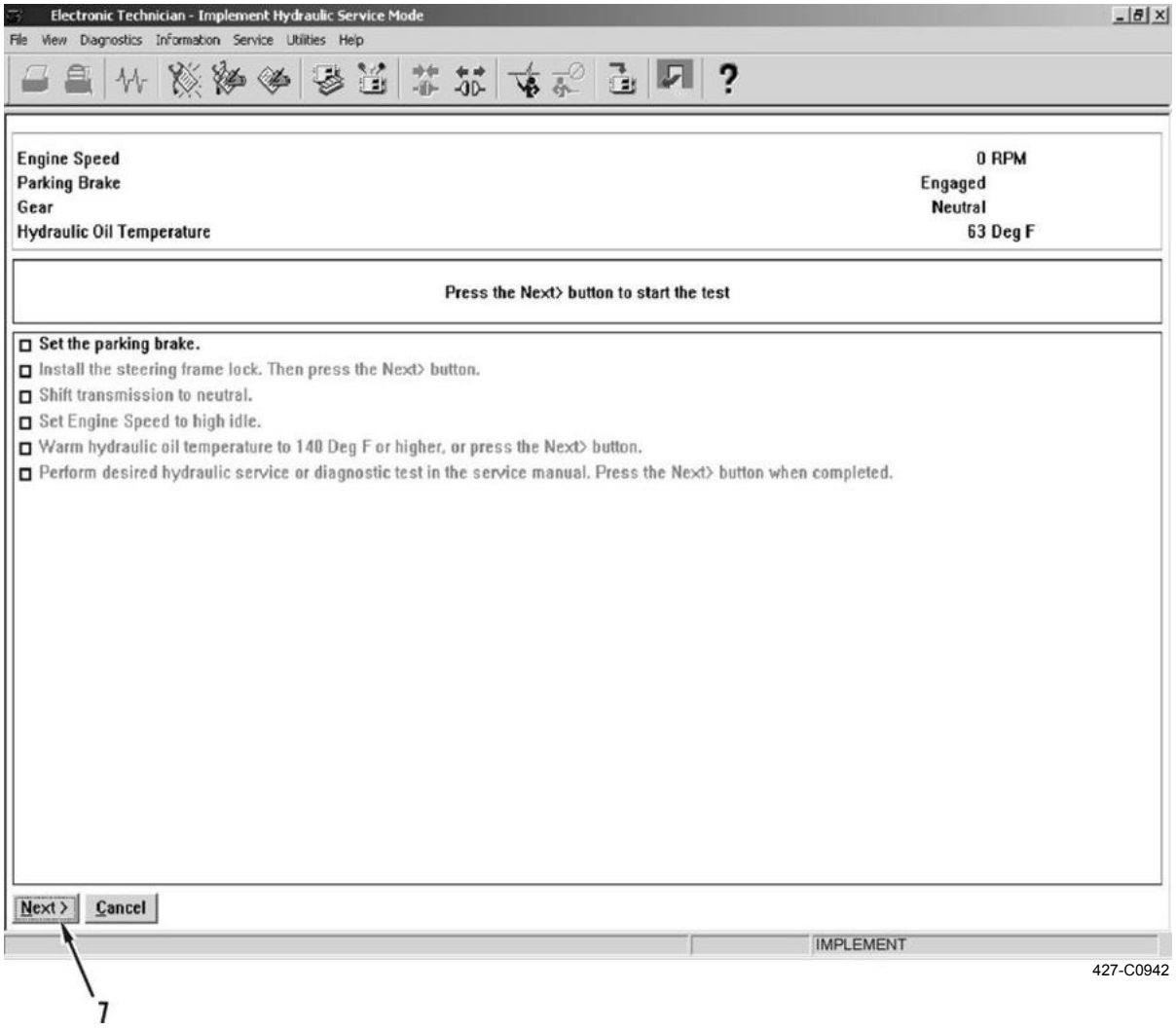

9. Stop engine (TM 5-3805-291-10).
10. Disconnect MSD from diagnostic connector (WP 0005 00).

IMPLEMENT CYCLE TIME CHECK

WARNING

Sudden movement or accidental starting of machine can cause injury or death to personnel on or near machine.

NOTE

- **Implement cycle time can be checked to verify complaint about slow implement speed. This test will also help to determine whether all functions are slow or only one function is slow.**
- **For all cycle time tests, work tool must be empty.**

1. Warm hydraulic oil to normal operating temperature of 150 ± 5°F (65 ± 3°C) for accurate results.
2. Perform torque converter stall test to verify engine is developing adequate power (WP 0014 00).
3. Perform calibration of main control valve to ensure solenoid valves are functioning properly. Refer to *Main Control Valve (MSD) Calibration* in this work package.
4. Start and run engine at low idle (TM 5-3805-291-10).

Implement Cycle Times (Seconds) for 966H				
Raise	Lower	Float	Tilt Back	Dump
6.5 ± 0.5	3.5 ± 0.5	2.8 ± 0.5	2.5 ± 0.5	2.2 ± 0.5

Raise

1. Move work tool to TILT BACK position (TM 5-3805-291-10).
2. Lower work tool completely (TM 5-3805-291-10).
3. Increase engine rpm to high idle (TM 5-3805-291-10).
4. Move lift control lever to RAISE position (TM 5-3805-291-10). Hold lift control lever in this position until lift cylinder reaches end of travel.

NOTE

Cycle time for full RAISE should be 6.5 ± 0.5 seconds.

5. Record amount of time required for work tool to travel from full LOWER position to full RAISE position.
6. Decrease engine rpm to low idle (TM 5-3805-291-10).

Lower

1. Position work tool flat on ground (TM 5-3805-291-10).
2. Raise work tool to full RAISE position (TM 5-3805-291-10).
3. Increase engine rpm to high idle (TM 5-3805-291-10).

NOTE

Ensure lift control lever is NOT in FLOAT position.

4. Move lift control lever to full LOWER position and hold (TM 5-3805-291-10).

IMPLEMENT CYCLE TIME CHECK - CONTINUED

Lower - Continued

NOTE

Cycle time for full LOWER should be 3.5 ± 0.5 seconds.

5. Record amount of time required for work tool to travel from full RAISE position to full LOWER position.
6. Decrease engine rpm to low idle (TM 5-3805-291-10).

Float

1. Position work tool flat on ground (TM 5-3805-291-10).
2. Raise work tool to full RAISE position (TM 5-3805-291-10).
3. Increase engine rpm to high idle (TM 5-3805-291-10).
4. Move lift control lever to full FLOAT/DETENT position and hold (TM 5-3805-291-10).

NOTE

Cycle time for full FLOAT/DETENT should be 2.8 ± 0.5 seconds.

5. Record amount of time required for work tool to travel from full RAISE position to full FLOAT/DETENT position.
6. Decrease engine rpm to low idle (TM 5-3805-291-10).

Tilt Back

1. Raise work tool to mid RAISE position (TM 5-3805-291-10).
2. Position work tool in full DUMP position (TM 5-3805-291-10).
3. Increase engine rpm to high idle (TM 5-3805-291-10).
4. Move lift control lever to full TILT BACK position and hold (TM 5-3805-291-10).

NOTE

Cycle time for full TILT BACK should be 2.5 ± 0.5 seconds.

5. Record amount of time required for work tool to travel from full DUMP position to full TILT BACK position.
6. Decrease engine rpm to low idle (TM 5-3805-291-10).

Dump

1. Raise work tool to full RAISE position (TM 5-3805-291-10).
2. Position work tool in full TILT BACK position (TM 5-3805-291-10).
3. Increase engine rpm to high idle (TM 5-3805-291-10).
4. Move lift control lever to full DUMP position and hold (TM 5-3805-291-10).

IMPLEMENT CYCLE TIME CHECK - CONTINUED

Dump - Continued

NOTE

Cycle time for full DUMP should be 2.2 ± 0.5 seconds.

5. Record amount of time required for work tool to travel from full TILT BACK position to full DUMP position.
6. Decrease engine rpm to low idle (TM 5-3805-291-10).
7. Stop engine (TM 5-3805-291-10).

LIFT AND TILT CYLINDER DRIFT CHECK

Lift Cylinder Drift Check

WARNING

Injury or death to personnel can result from sudden movement of lift or tilt cylinders. Do not stand under work tool while testing or adjusting lift or tilt cylinders.

NOTE

- **This test will check drift rate of lift cylinders. The drift rates will change according to conditions including: hydraulic oil temperature, type of bucket, load in bucket, etc.**
- **Bucket should be empty during tests.**
- **Auxiliary cylinders will drift in CLOSE (LOWER) direction because of orifice in rod end line. Orifice connects to tank.**

1. Start and run engine at low idle (TM 5-3805-291-10).
2. Warm hydraulic oil to 120 to 150°F (49 to 65°C) (TM 5-3805-291-10).
3. To check lift circuit, raise bucket to maximum height and move control lever to HOLD position (TM 5-3805-291-10).
4. Stop engine (TM 5-3805-291-10).

NOTE

If amount of cylinder drift is within specification, lift circuit is not causing drift problem.

5. Record cylinder rod movement. Maximum drift for different temperatures in Table 1 is 0.55 in. (14.0 mm).

Table 1. Lift Cylinder Drift.

Oil Temperature	Time for Drift
100 to 120°F (38 to 49°C)	5.0 minutes
122 to 149°F (50 to 65°C)	2.7 minutes
150°F (66°C) or more	1.7 minutes

6. If there is too much drift, check anti-drift valve for lift function (perform *Relief Valve (Line) Test And Adjustment*) in this work package and check ride control balance spool (perform *Ride Control Pressure Equalization Time Adjustment*) in this work package.

LIFT AND TILT CYLINDER DRIFT CHECK - CONTINUED

Lift Cylinder Drift Check - Continued

7. Start and run engine at low idle (TM 5-3805-291-10).
8. Lower bucket to ground (TM 5-3805-291-10).
9. Stop engine (TM 5-3805-291-10).

Tilt Cylinder Drift Check

WARNING

Injury or death to personnel can result from sudden movement of lift or tilt cylinders. Do not stand under work tool while testing or adjusting lift or tilt cylinders.

NOTE

- **This test will check drift rate of tilt cylinders. The drift rates will change according to conditions including: hydraulic oil temperature, type of bucket, load in bucket, etc.**
- **Bucket should be empty during tests.**
- **Auxiliary cylinders will drift in CLOSE (LOWER) direction because of orifice in rod end line. Orifice connects to tank.**

1. Start and run engine at low idle (TM 5-3805-291-10).
2. Warm hydraulic oil to 120 to 150°F (49 to 65°C) (TM 5-3805-291-10).
3. To check lift circuit, raise bucket to maximum height and keep bottom of bucket parallel to ground. Move control lever to HOLD position.
4. Stop engine (TM 5-3805-291-10).

NOTE

If amount of cylinder drift is within specification, tilt circuit is not causing drift problem.

5. Record cylinder rod movement. Maximum drift for different temperatures in Table 2 is 0.79 in. (20.0 mm).

Table 2. Lift Cylinder Drift.

Oil Temperature	Time for Drift
122 to 149°F (50 to 65°C)	2.7 minutes
150°F (66°C) or more	1.7 minutes

6. If there is too much drift, check anti-drift valve for tilt function and check tilt back line relief valves (perform *Relief Valve (Line*) *Set and Adjustment*) in this work package.
7. Start and run engine at low idle (TM 5-3805-291-10).
8. Lower bucket to ground (TM 5-3805-291-10).
9. Stop engine (TM 5-3805-291-10).

PILOT PRESSURE TO MAIN CONTROL VALVE CHECK

WARNING

- **Injury to personnel can result from hydraulic oil pressure and hot oil.**
- **Hydraulic oil pressure can remain in hydraulic system after engine has been stopped. Serious injury to personnel can result if pressure is not released before any service is done on hydraulic system.**
- **Make sure all attachments have been lowered and oil is cool before removing any components or lines.**
- **Remove oil filler cap only when engine is stopped and filler cap is cool enough to touch with your bare hand.**
- **Sudden movement or accidental starting of machine can cause injury or death to personnel on or near machine.**

1. Start and run engine at low idle (TM 5-3805-291-10).
2. Position lift arms (19) on jack stands.

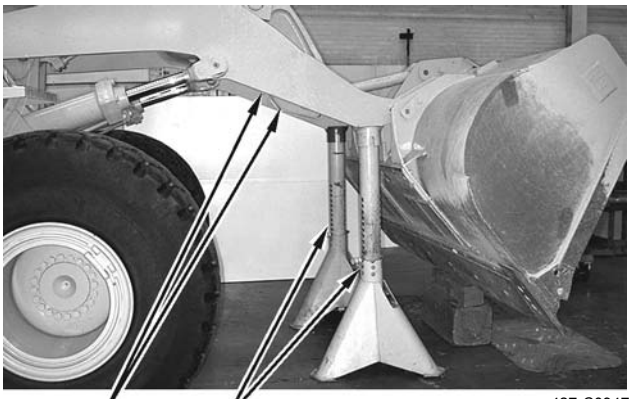

PILOT PRESSURE TO MAIN CONTROL VALVE CHECK - CONTINUED

3. Stop engine (TM 5-3805-291-10).
4. Remove front guard (WP 0133 00) (20) from machine to access main control valve (21).

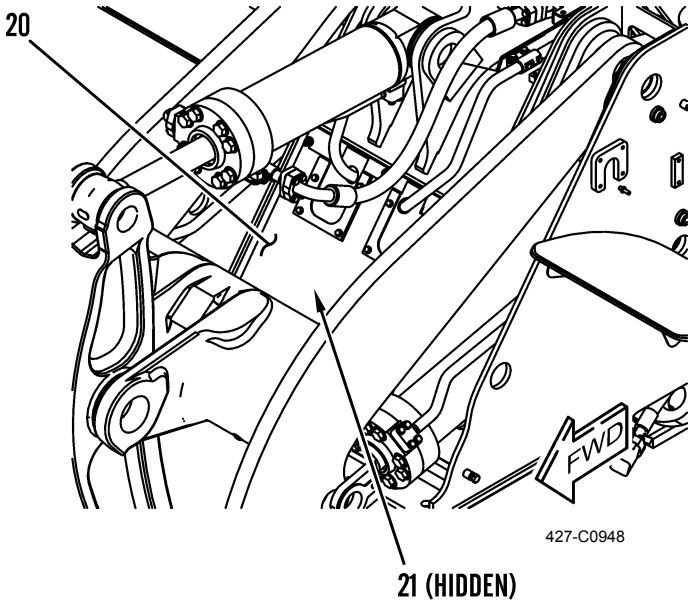

5. Ensure control levers are in HOLD position.
6. To relieve pressure in hydraulic tank (22), press and hold plunger on breaker relief valve (23).

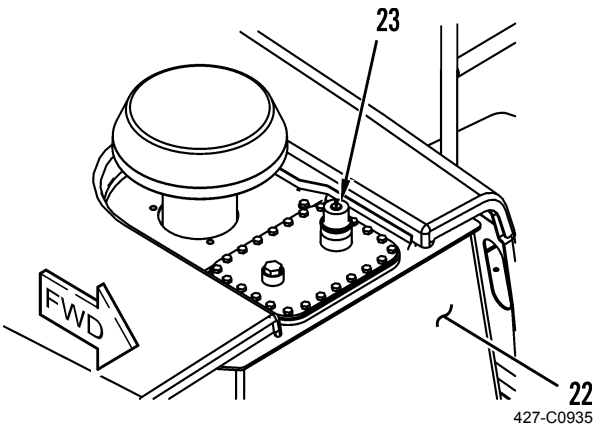

PILOT PRESSURE TO MAIN CONTROL VALVE CHECK - CONTINUED

7. Install test stand on pilot oil pressure tap (22) of main control valve (21).

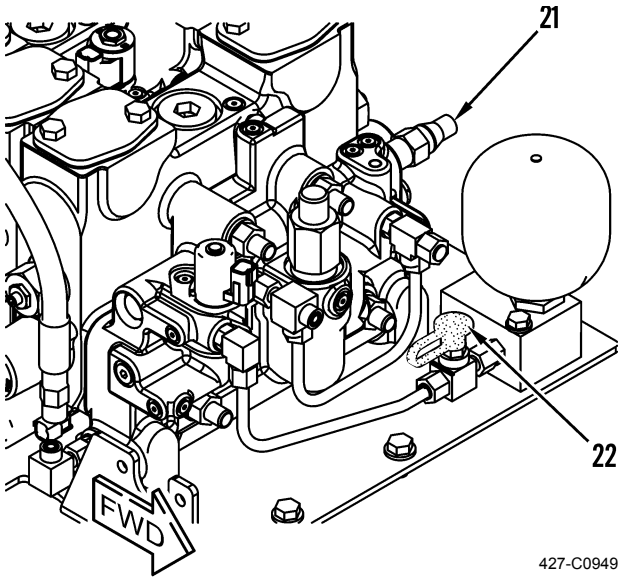

8. Start and run engine at low idle (TM 5-3805-291-10).
9. Warm hydraulic oil to 120 to 150°F (49 to 65°C) for accurate results (TM 5-3805-291-10).
10. Raise work tool to full RAISE position (TM 5-3805-291-10).

PILOT PRESSURE TO MAIN CONTROL VALVE CHECK - CONTINUED

NOTE

Pilot oil pressure should be at least 510 ± 50 psi (3,515 ± 345 kPa).

11. Note pilot oil pressure reading.
12. Position lift arms (19) on jack stands.

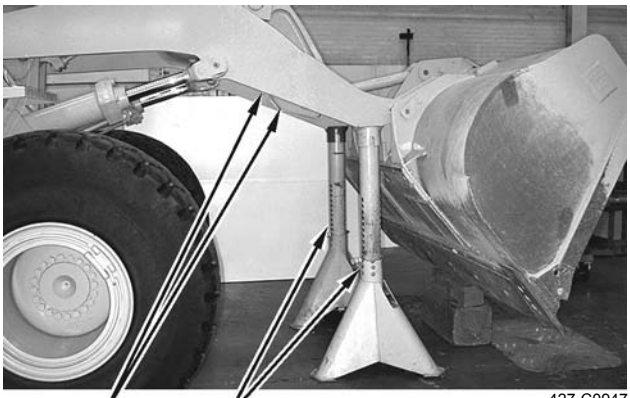

13. If pilot oil pressure is within specification:
    a. Stop engine (TM 5-3805-291-10).
    b. Ensure control levers are in HOLD position (TM 5-3805-291-10).
    c. To relieve pressure in hydraulic tank (22), press and hold plunger on breaker relief valve (23).

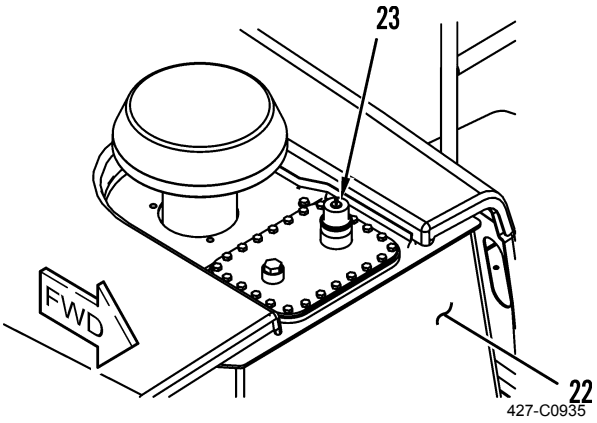

PILOT PRESSURE TO MAIN CONTROL VALVE CHECK - CONTINUED

d. Remove test stand from pressure tap (22) of main control valve (21).

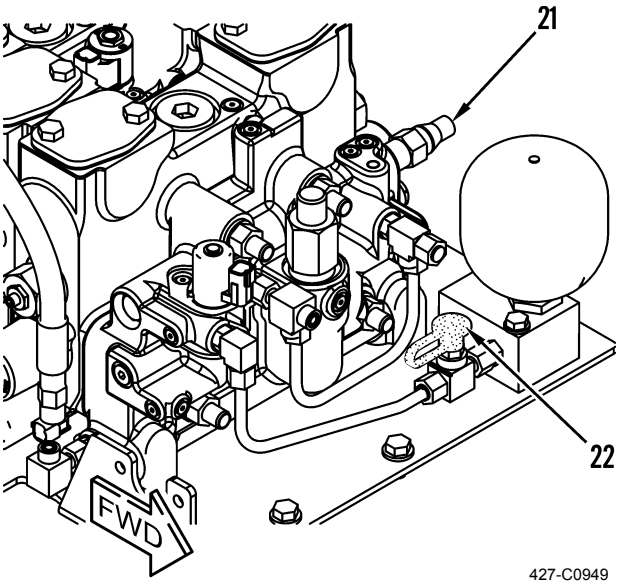

e. Install front guard (20) on machine.

f. Start and run engine at low idle (TM 5-3805-291-10).

g. Remove work tool from jack stands and position work tool on ground (TM 5-3805-291-10).

h. Stop engine (TM 5-3805-291-10).

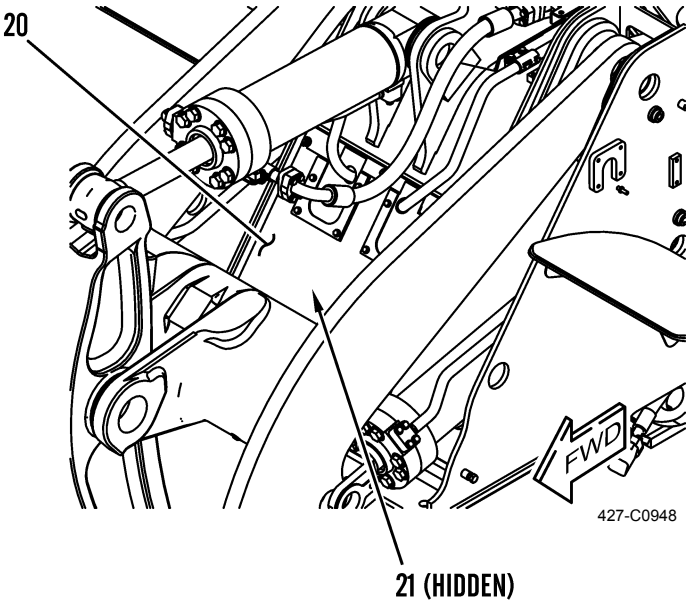

PILOT PRESSURE TO MAIN CONTROL VALVE CHECK - CONTINUED

14. If pressure still is not in specification, perform main control valve calibration.
15. If pressure still is not in specification, check dead engine lower valve for leaks and repair any leaks.
16. If pressure still is not in specification, check hydraulic lockout solenoid for leaks or damage and repair any leaks.
17. If pressure reducing valve(s) are damaged, replace main control valve (WP 0212 00).
18. If pressure still is not in specification, perform main relief valve (load sensing) test and adjustment. If system will not build correct pressure, replace piston pump (WP 0212 00).
19. If pilot oil pressure is NOT within specification:
    a. Stop engine (TM 5-3805-291-10).
    b. Adjust pressure reducing valve.

PRESSURE REDUCING VALVE ADJUSTMENT

NOTE

Pressure reducing valve reduces pressure to pilot system.

1. Start and run engine at low idle (TM 5-3805-291-10).
2. Position lift arms (19) on jack stands.

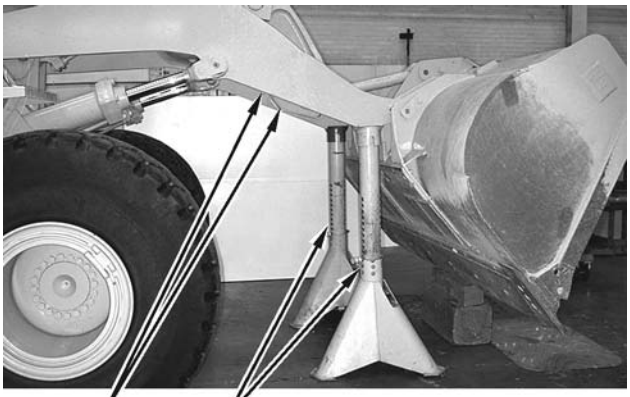

PRESSURE REDUCING VALVE ADJUSTMENT - CONTINUED

3. Stop engine (TM 5-3805-291-10).
4. Remove front guard (WP 0133 00) (20) from machine to access main control valve (21).

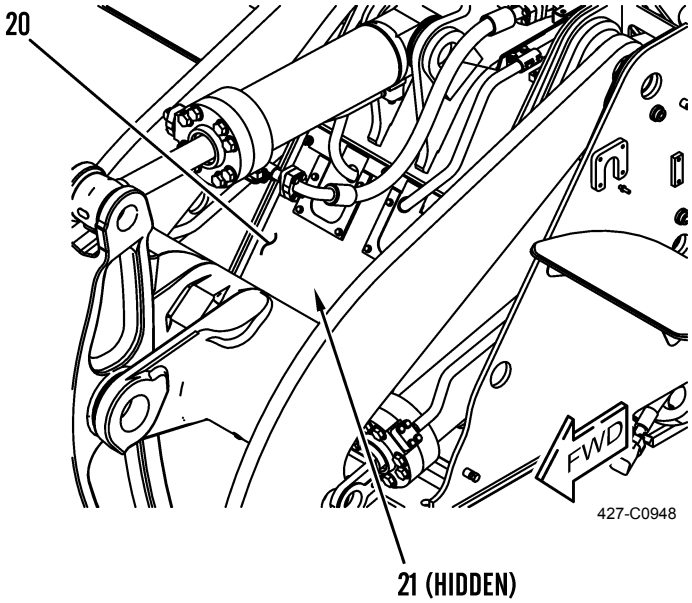

5. Ensure control levers are in HOLD position (TM 5-3805-291-10).
6. To relieve pressure in hydraulic tank (22), press and hold plunger on breaker relief valve (23).

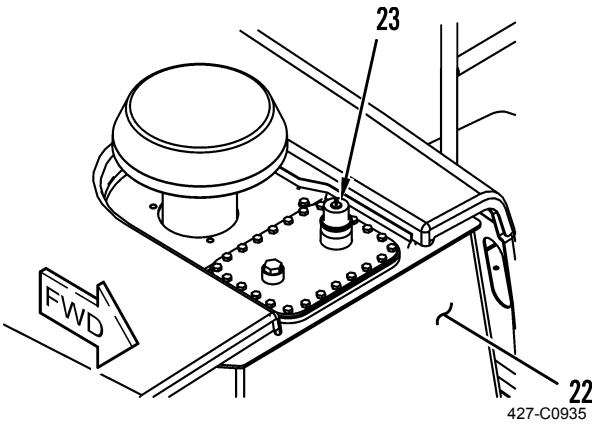

PRESSURE REDUCING VALVE ADJUSTMENT - CONTINUED

NOTE

Always turn adjustment screw clockwise to adjust pressure. This will compensate for any internal friction inside pressure reducing valve that would oppose setting of bias spring. For example, if adjustment screw needs to be turned counterclockwise by 1/2 turn to decrease pressure, turn adjustment screw counterclockwise by one full turn. Then, turn adjustment screw clockwise by 1/2 turn.

7. Adjust pressure reducing valve (23).
   a. Loosen locknut (24) and turn adjustment screw (25) clockwise to increase and counterclockwise to decrease pressure setting of pressure reducing valve (23). One turn of adjustment screw will change pressure reducing valve pressure by 100 psi (690 kPa).
   b. While holding adjustment screw (25), tighten locknut (24) to 106 ± 18 lb-in. (12 ± 2 Nm).

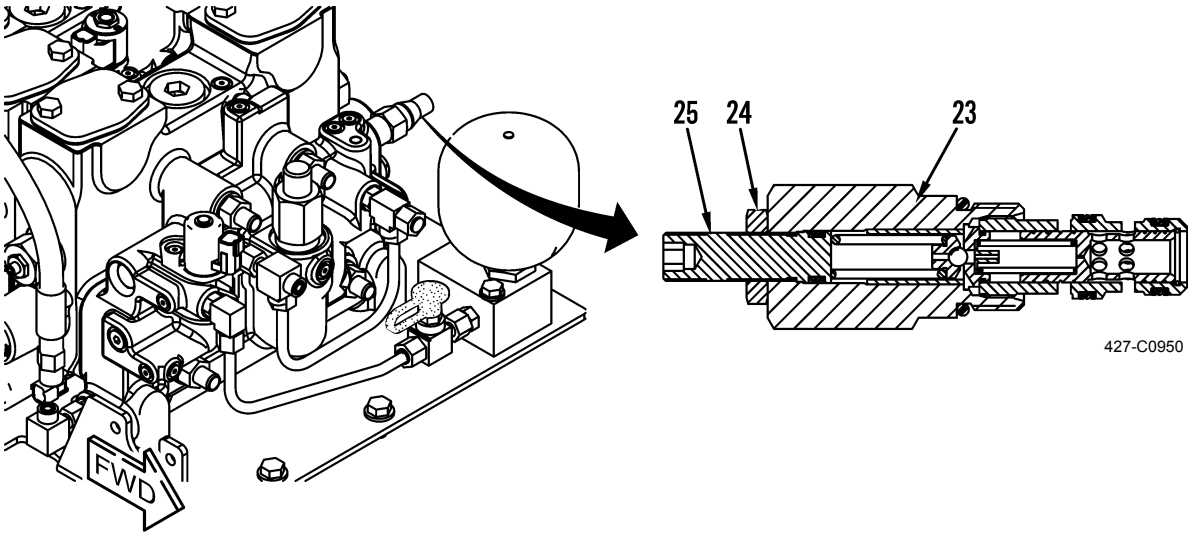

8. Repeat *Pilot Pressure to Main Control Valve Check* in this work package.
9. If pressure setting is not correct, repeat step 7.
10. Install front guard (20) on machine.
11. Start and run engine at low idle (TM 5-3805-291-10).
12. Remove work tool from jack stands and position work tool on ground (TM 5-3805-291-10).
13. Stop engine (TM 5-3805-291-10).

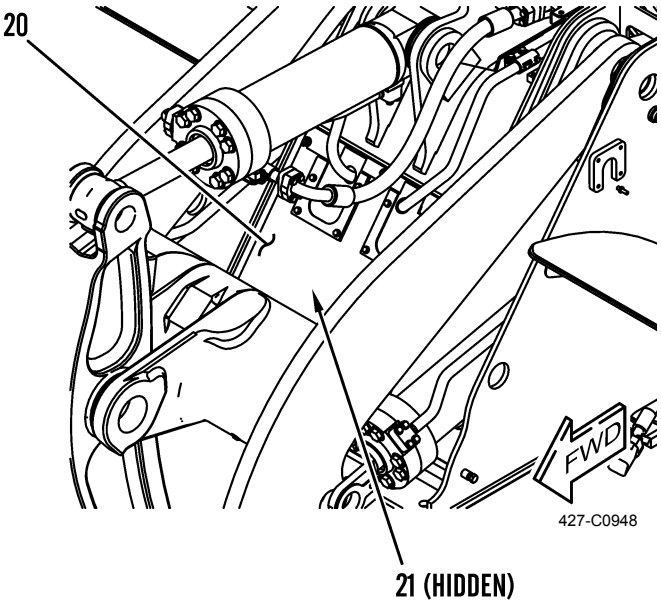

RELIEF VALVE (MAIN, LOAD SENSING) TEST AND ADJUSTMENT

WARNING

- **Injury to personnel can result from hydraulic oil pressure and hot oil.**
- **Hydraulic oil pressure can remain in hydraulic system after engine has been stopped. Serious injury to personnel can result if pressure is not released before any service is done on hydraulic system.**
- **Make sure all attachments have been lowered and oil is cool before removing any components or lines.**
- **Remove oil filler cap only when engine is stopped and filler cap is cool enough to touch with your bare hand.**
- **Sudden movement or accidental starting of machine can cause injury or death to personnel on or near machine.**

NOTE

Use a container to catch any fluid that may drain from hoses or systems. Dispose of fluid IAW local policy and ordinances. Ensure all spills are cleaned up.

1. Start and run engine at low idle (TM 5-3805-291-10).
2. Position lift arms (19) on jack stands.

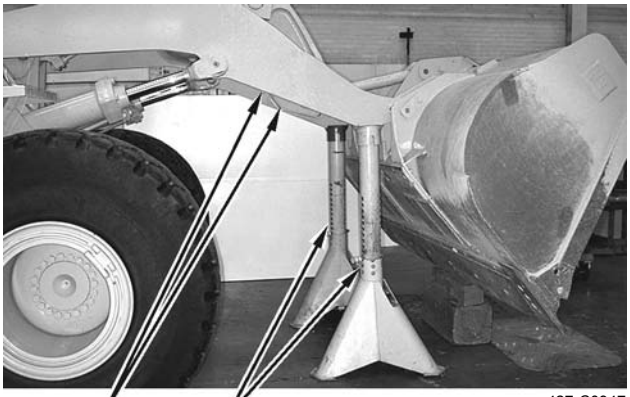

3. Stop engine (TM 5-3805-291-10).
4. Remove front guard (20) from machine to access main control valve (21).

RELIEF VALVE (MAIN, LOAD SENSING) TEST AND ADJUSTMENT - CONTINUED

5. Ensure control levers are in HOLD position.
6. To relieve pressure in hydraulic tank (22), press and hold plunger on breaker relief valve (23).

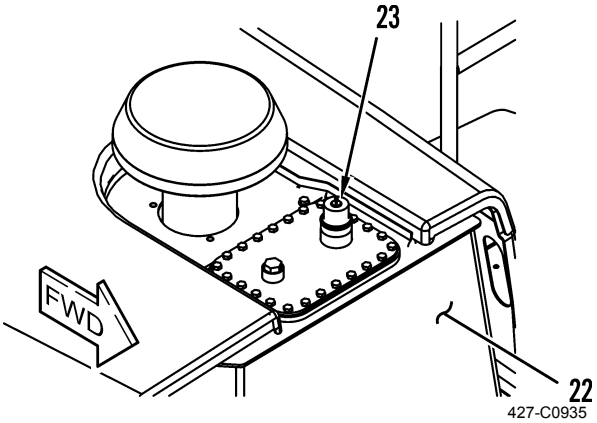

7. Install test stand on remote main relief valve (26) pressure tap (27).

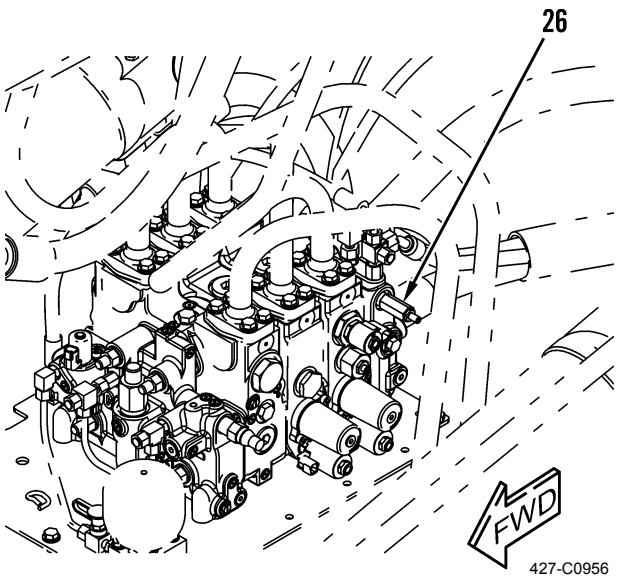

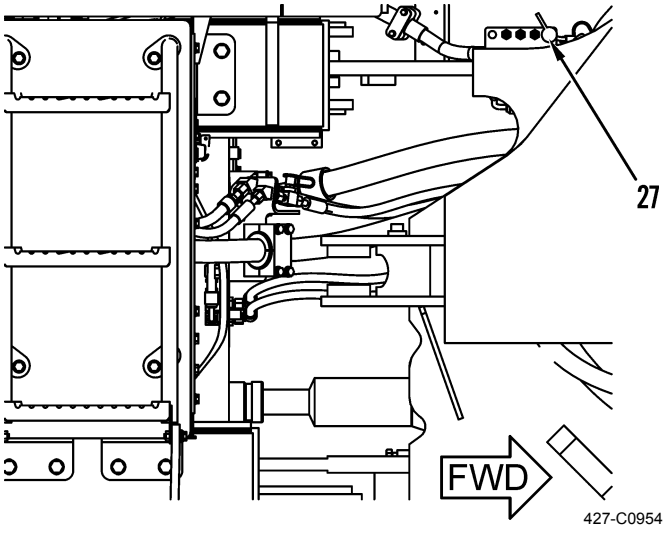

RELIEF VALVE (MAIN, LOAD SENSING) TEST AND ADJUSTMENT - CONTINUED

8. Warm hydraulic oil to 120 to 150°F (49 to 65°C) for accurate results.
9. Start and run engine at low idle (TM 5-3805-291-10).

NOTE

In the following steps, do not keep lift control lever in full RAISE position for more than five seconds while pressure is at relief setting.

10. Raise work tool to full RAISE position (TM 5-3805-291-10). Hold lift control lever in full RAISE position.
11. Increase engine speed to high idle (TM 5-3805-291-10).

NOTE

Main relief valve pressure setting should be 4,500 ± 100 psi (31,000 ± 690 kPa).

12. Record main relief valve pressure reading.
13. Decrease engine speed to low idle (TM 5-3805-291-10).
14. If main relief valve pressure setting is correct, proceed to step 24.
15. If main relief valve pressure setting is NOT correct, proceed with steps 16 thru 23.
16. Position lift arms (19) on jack stands.

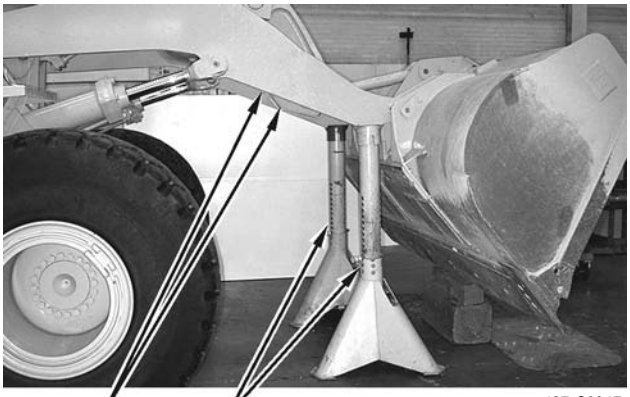

RELIEF VALVE (MAIN, LOAD SENSING) TEST AND ADJUSTMENT - CONTINUED

17. Stop engine (TM 5-3805-291-10).
18. Ensure control levers are in HOLD position (TM 5-3805-291-10).
19. To relieve pressure in hydraulic tank (22), press and hold plunger on breaker relief valve (23).

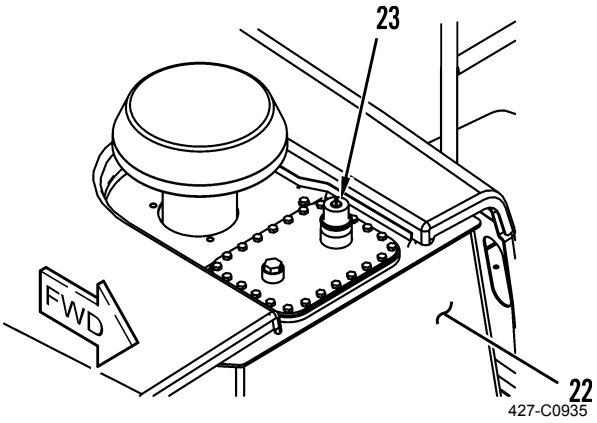

NOTE

Always turn adjustment screw clockwise to adjust pressure. This will compensate for any internal friction inside main relief valve that would oppose setting of bias spring. For example, if adjustment screw needs to be turned counterclockwise by 1/2 turn to decrease pressure, turn adjustment screw counterclockwise by one full turn. Then, turn adjustment screw clockwise by 1/2 turn.

20. Adjust main relief valve (26).
    a. Loosen locknut (28) and turn adjustment screw (29) clockwise to increase and counterclockwise to decrease pressure setting of main relief valve (26). One turn of adjustment screw will change main relief valve pressure by 190 psi (1,310 kPa).
    b. While holding adjustment screw (29), tighten locknut (28) to 106 ± 18 lb-in. (12 ± 2 Nm).

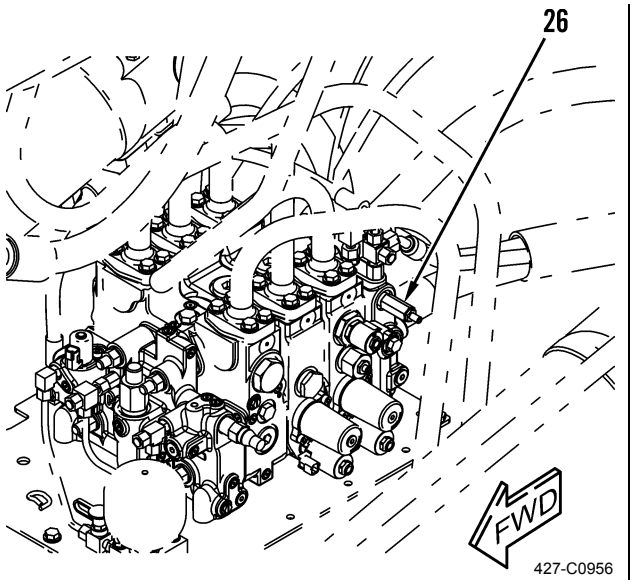

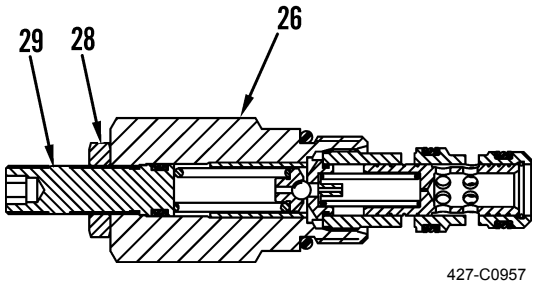

RELIEF VALVE (MAIN, LOAD SENSING) TEST AND ADJUSTMENT - CONTINUED

21. Repeat steps 8 thru 12.
22. If main relief valve pressure setting is NOT correct, repeat steps 19 and 20.
23. If main relief valve pressure setting is correct, proceed with next step.
24. Start and run engine at low idle (TM 5-3805-291-10).
25. Position lift arms (19) on jack stands.

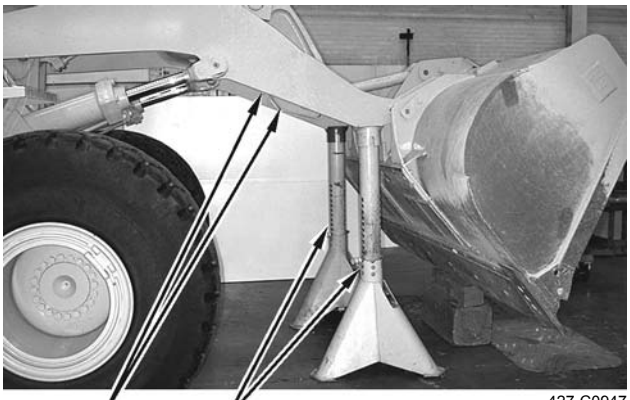

26. Stop engine (TM 5-3805-291-10).
27. Ensure control levers are in HOLD position (TM 5-3805-291-10).
28. To relieve pressure in hydraulic tank (22), press and hold plunger on breaker relief valve (23).

RELIEF VALVE (MAIN, LOAD SENSING) TEST AND ADJUSTMENT - CONTINUED

29. Remove test stand from main relief valve pressure port (27).

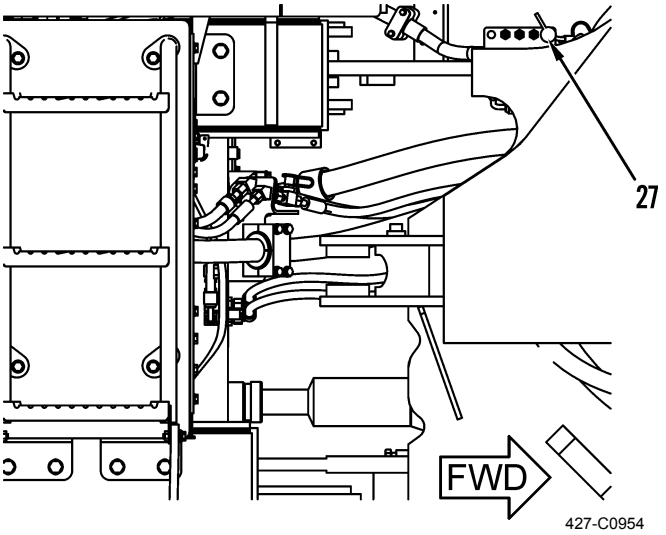

30. Install implement cover (WP 0218 00).
31. Start and run engine at low idle (TM 5-3805-291-10).
32. Remove work tool from jack stands and position work tool on ground (TM 5-3805-291-10).
33. Stop engine (TM 5-3805-291-10).

RELIEF VALVE (LINE) TEST AND ADJUSTMENT

WARNING

- **Injury to personnel can result from hydraulic oil pressure and hot oil.**
- **Hydraulic oil pressure can remain in hydraulic system after engine has been stopped. Serious injury to personnel can result if pressure is not released before any service is done on hydraulic system.**
- **Make sure all attachments have been lowered and oil is cool before removing any components or lines.**
- **Remove oil filler cap only when engine is stopped and filler cap is cool enough to touch with your bare hand.**
- **Sudden movement or accidental starting of machine can cause injury or death to personnel on or near machine.**

Testing Line Relief Valves (Tilt)

1. Enter service mode. Refer to *Implement Hydraulic Service Mode* in this work package.
2. Start and run engine at high idle with transmission in NEUTRAL (TM 5-3805-291-10).
3. Warm hydraulic oil to 120 to 150°F (49 to 65°C) (TM 5-3805-291-10).
4. Position lift arms on jack stand.
5. Record steady state engine rpm.

NOTE

In the following steps, do not keep tilt control lever in full TILT BACK position for more than five seconds while pressure is at relief setting.

6. With engine speed at high idle, hold tilt control lever in full TILT BACK position (TM 5-3805-291-10).

NOTE

- **Once engine rpm has stabilized, engine rpm should agree with reading recorded in step 3 (± 5 rpm).**
- **If reading does not agree with reading in step 3, replace tilt back line relief valve.**
- **If reading agrees with reading in step 3, proceed to step 6.**

7. Record steady state engine rpm.

NOTE

In the following steps, do not keep tilt control lever in full DUMP position for more than five seconds while pressure is at relief setting.

8. With engine speed at high idle, hold tilt control lever in full DUMP position (TM 5-3805-291-10).

NOTE

- **Once engine rpm has stabilized, engine rpm should agree with reading recorded in step 3 (± 5 rpm).**
- **If reading does not agree with reading in step 3, replace dump line relief valve.**
- **If reading agrees with reading in step 3, proceed to testing auxiliary line relief valve.**

9. Record steady state engine rpm.
10. Stop engine (TM 5-3805-291-10).

RELIEF VALVE (LINE) TEST AND ADJUSTMENT - CONTINUED

Testing Line Relief Valves (Auxiliary)

1. Enter service mode. Refer to *Implement Hydraulic Service Mode* in this work package.
2. Ensure control levers are in HOLD position.
3. To relieve pressure in hydraulic tank (22), press and hold plunger on breaker relief valve (23).

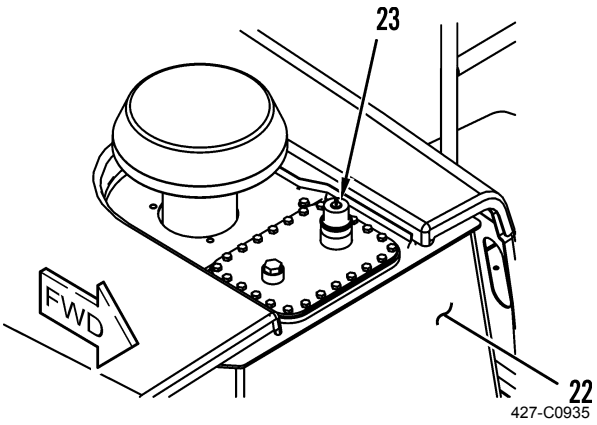

4. Install test stand on remote main relief valve (26) pressure tap (27).

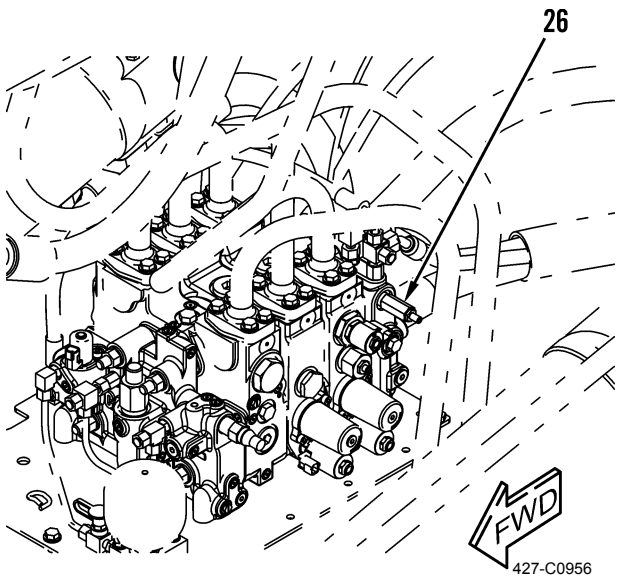

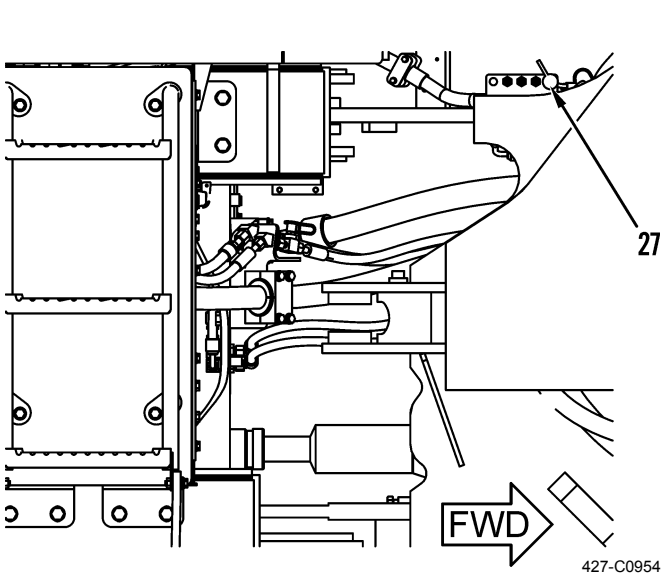

5. Start and run engine at low idle with transmission in NEUTRAL (TM 5-3805-291-10).

RELIEF VALVE (LINE) TEST AND ADJUSTMENT - CONTINUED

Testing Line Relief Valves (Auxiliary) - Continued

NOTE

In the following steps, do not keep auxiliary control lever in full FORWARD or REARWARD position for more than five seconds while pressure is at relief setting.

6. Place auxiliary control lever in full FORWARD position (TM 5-3805-291-10).

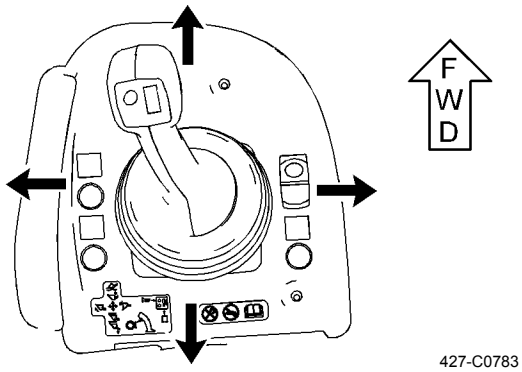

7. Record opening pressure for auxiliary line relief valve.
8. Place auxiliary control lever in full REARWARD position (TM 5-3805-291-10).

NOTE

- **Auxiliary line relief valve pressure should be 3,000 ± 50 psi (20,680 ± 345 kPa).**
- **If pressure readings are not within specification, proceed to *Line Relief Valves Adjustment* in this work package.**

9. Record opening pressure for auxiliary line relief valve.
10. Stop engine (TM 5-3805-291-10).
11. Ensure control levers are in HOLD position (TM 5-3805-291-10).
12. To relieve pressure in hydraulic tank (22), press and hold plunger on breaker relief valve (23).

RELIEF VALVE (LINE) TEST AND ADJUSTMENT - CONTINUED

Testing Line Relief Valves (Auxiliary) - Continued

13. Remove test stand from main relief valve pressure port (27).

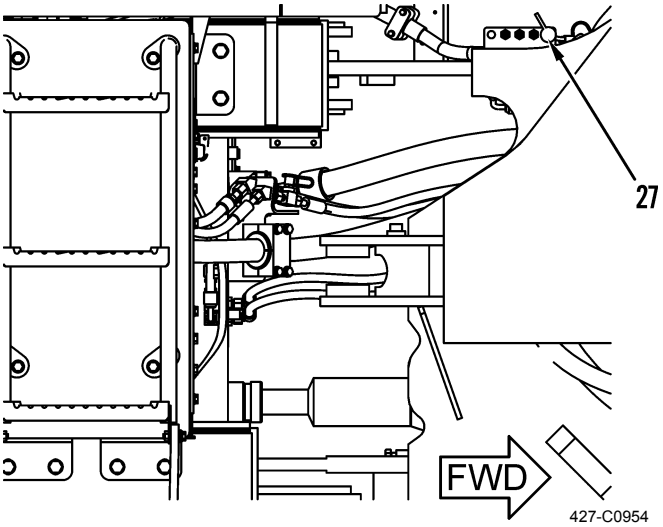

14. Exit service mode. Refer to *Implement Hydraulic Service Mode* in this work package.

Line Relief Valves Adjustment

1. Start and run engine at low idle (TM 5-3805-291-10).
2. Position lift arms (19) on jack stands.

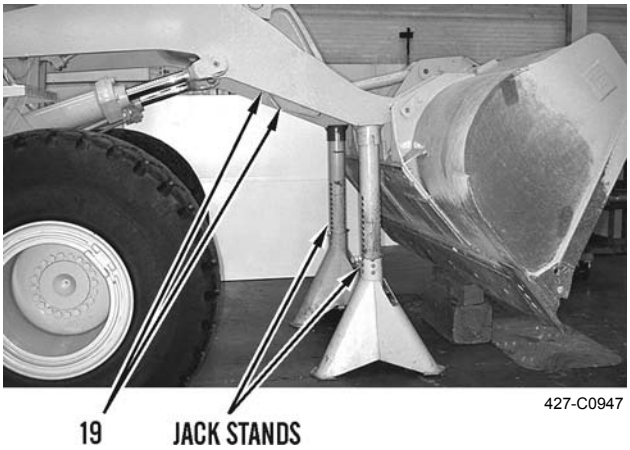

RELIEF VALVE (LINE) TEST AND ADJUSTMENT - CONTINUED

Line Relief Valves Adjustment - Continued

3. Stop engine (TM 5-3805-291-10).
4. Remove front guard (20) from machine to access main control valve (21).

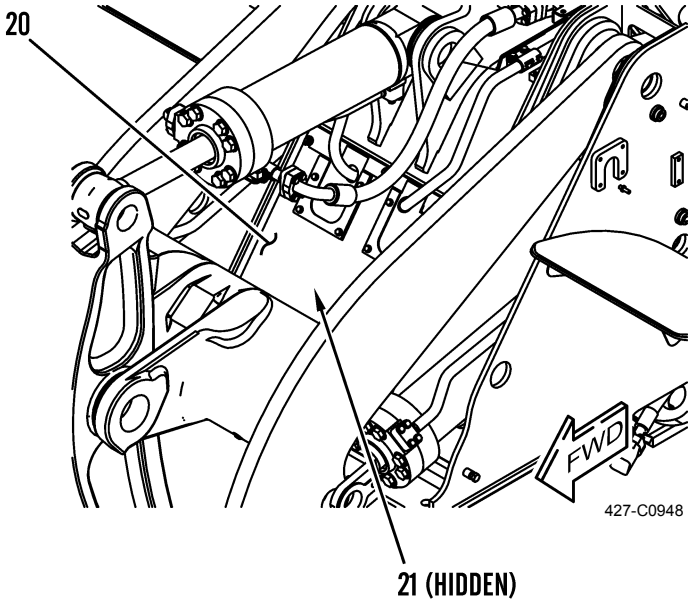

5. Ensure control levers are in HOLD position (TM 5-3805-291-10).
6. To relieve pressure in hydraulic tank (22), press and hold plunger on breaker relief valve (23).

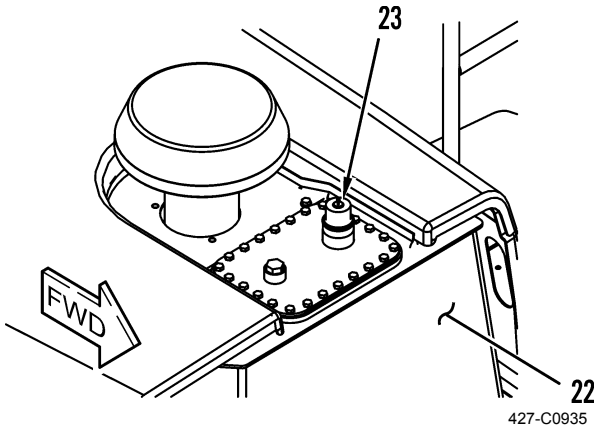

RELIEF VALVE (LINE) TEST AND ADJUSTMENT - CONTINUED

Line Relief Valves Adjustment - Continued

NOTE

Always turn adjustment screw clockwise to adjust pressure. This will compensate for any internal friction inside line relief valves that would oppose setting of bias spring. For example, if adjustment screw needs to be turned counterclockwise by 1/2 turn to decrease pressure, turn adjustment screw counterclockwise by one full turn. Then, turn adjustment screw clockwise by 1/2 turn.

7. Adjust line relief valves (30).

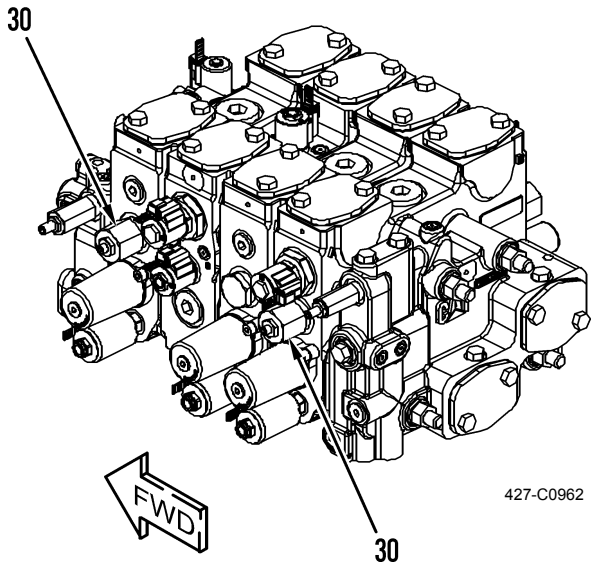

RELIEF VALVE (LINE) TEST AND ADJUSTMENT - CONTINUED

Line Relief Valves Adjustment - Continued

a. Loosen locknut (31) and turn adjustment screw (32) clockwise to increase and counterclockwise to decrease pressure setting of line relief valves (30). One turn of adjustment screw will change line relief valves pressure by 100 psi (690 kPa).

b. While holding adjustment screw (32), tighten locknut (31) to 106 ± 9 lb-in. (12 ± 1 Nm).

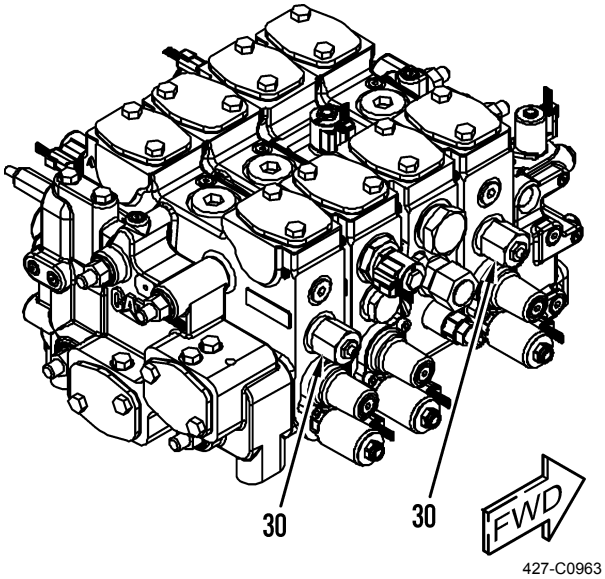

427-C0963

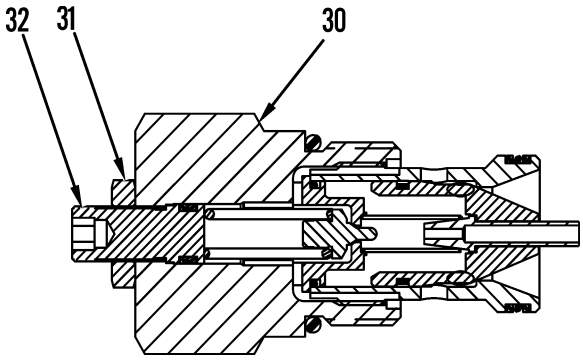

427-C0966

RELIEF VALVE (LINE) TEST AND ADJUSTMENT - CONTINUED

Line Relief Valves Adjustment - Continued

8. Repeat testing of line relief valves. Refer to *Testing Line Relief Valves (Tilt)* and *Testing Line Relief Valves (Auxiliary)* in this work package.
9. If necessary, repeat steps 5 thru 7.
10. Install implement cover (WP 0218 00).
11. Start and run engine at low idle (TM 5-3805-291-10).
12. Remove work tool from jack stands and position work tool on ground (TM 5-3805-291-10).
13. Stop engine (TM 5-3805-291-10).

RIDE CONTROL PRESSURE EQUALIZATION TIME ADJUSTMENT

NOTE

- **When ride control system is activated and pressure between ride control accumulator and lift cylinders is not equal, lift arms will raise or drop depending on load.**
- **Pressure equalization time for ride control is transition between OFF and ON. This transition is time required to equalize pressure between ride control accumulator and lift cylinders.**
- **Ride control system changes from OFF to ON more quickly when lower value is entered. Likewise, transition of ride control system from OFF to ON is slower when higher value is entered. For example, setting time to greater value will result in more time to balance ride control accumulator with lift cylinders. Now, more time is required for ride control system to go from OFF to ON after switch is placed in ON position. Ride control system requires more time to equalize when hydraulic oil is cold.**
- **Factory setting of pressure equalization time is 3 seconds. Range of 1 to 5 seconds is recommended.**

1. Connect MSD to diagnostic connector (WP 0005 00).

RIDE CONTROL PRESSURE EQUALIZATION TIME ADJUSTMENT - CONTINUED

2. Start and run engine at low idle (TM 5-3805-291-10).
3. Select “Transmission 966H” (33) from available ECMs.
4. Click “OK” (2).

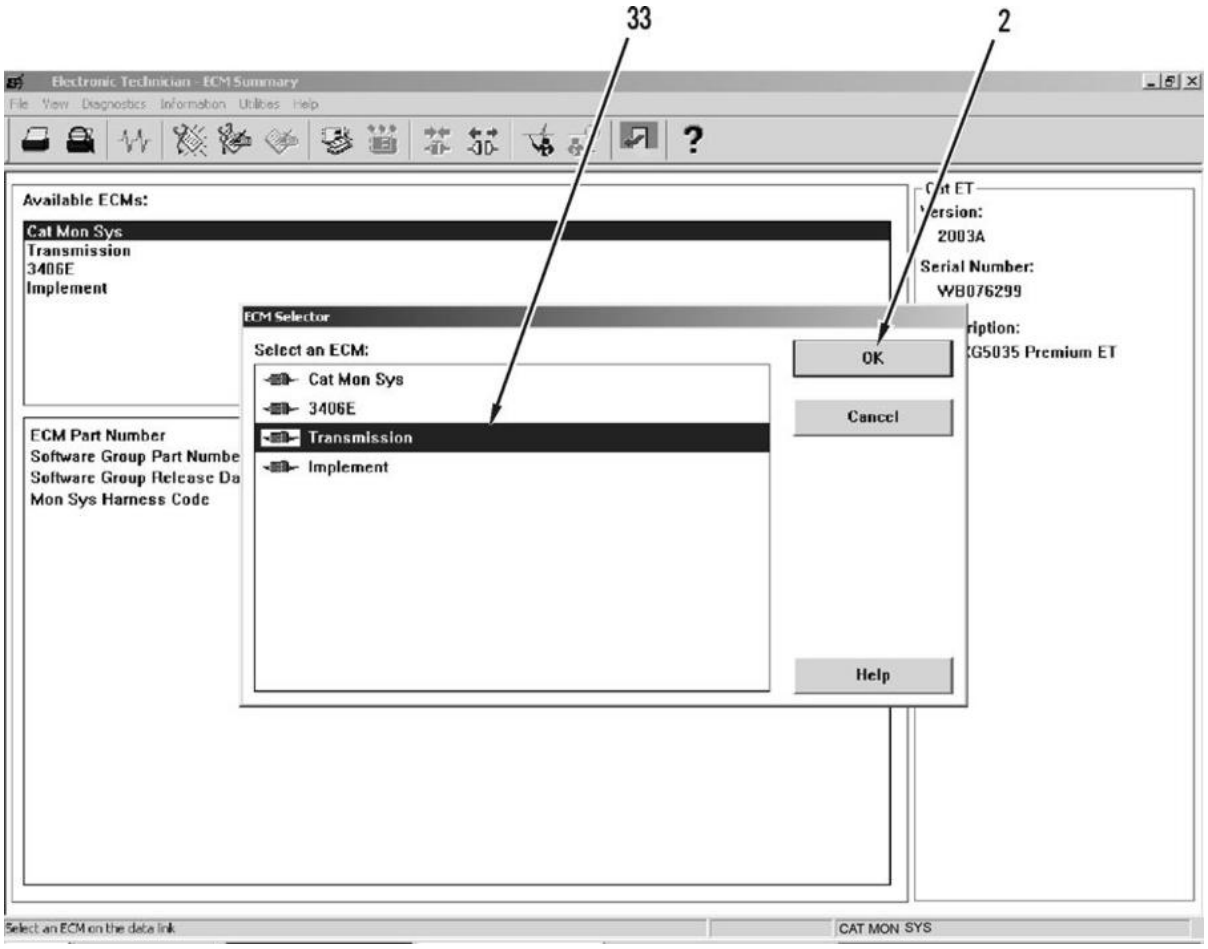

427-C0863

RIDE CONTROL PRESSURE EQUALIZATION TIME ADJUSTMENT - CONTINUED

5. Select “Service” (3) menu from toolbar.
6. Select “Configuration” (34) from “Service” (3) menu.
7. Select “Ride Control Pressure Equalization Time” (35).
8. Click “Change” (36).
9. Enter new value (37) in seconds.
10. Click “OK” (2).

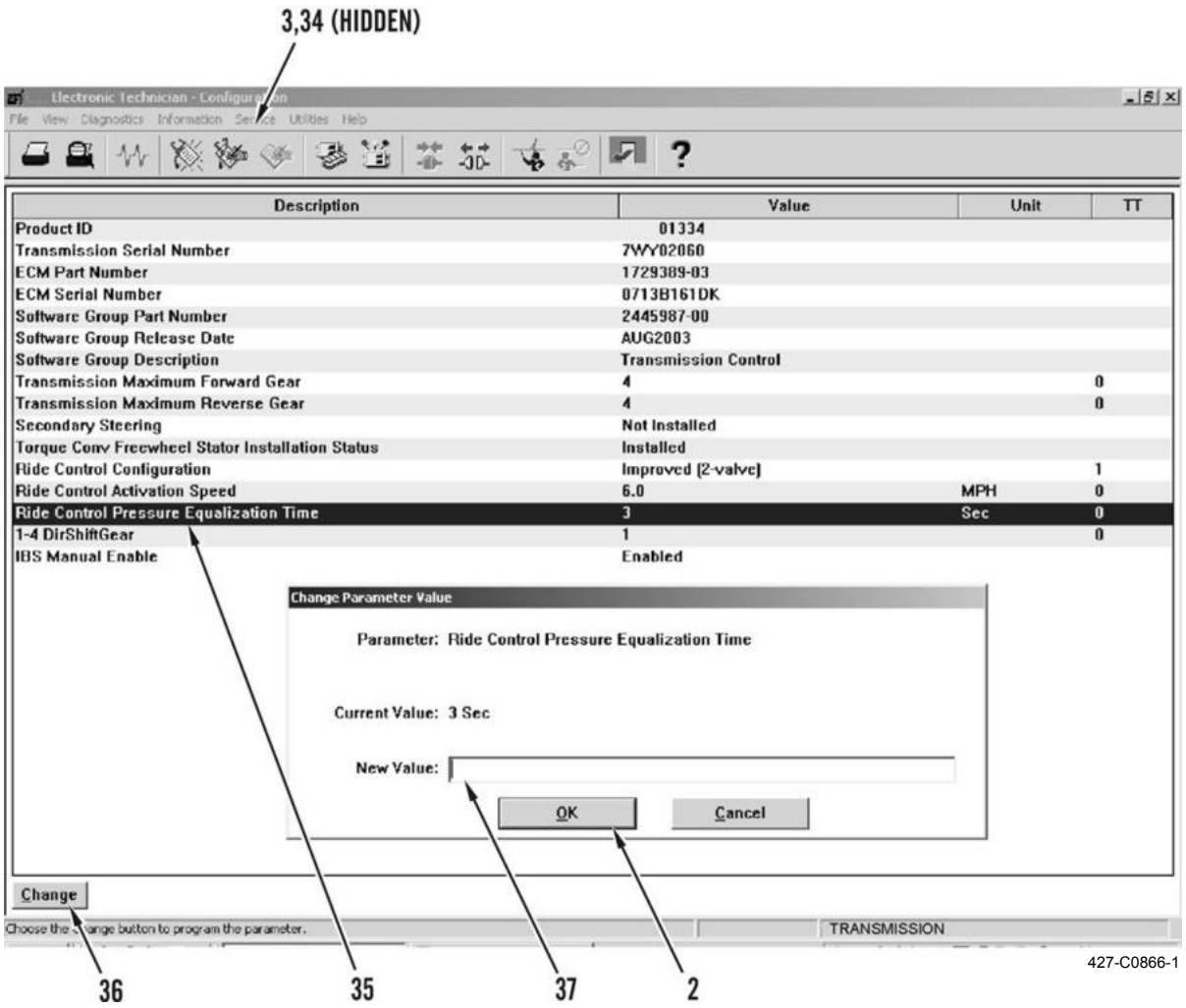

11. Stop engine (TM 5-3805-291-10).
12. Disconnect MSD from diagnostic connector (WP 0005 00).

END OF WORK PACKAGE

AIR CONDITIONING SYSTEM TESTS, INSPECTIONS, AND ADJUSTMENTS 0018 00

Refrigerant Quick-Check Procedure for R-134a Expansion Valve and Orifice Tube Systems 0018 00-5
Performance Checks for Air Conditioning System 0018 00-8
Test Procedure for Testing ARC Suppressor 0018 00-9
Refrigerant Leakage Test 0018 00-10
Refrigerant Compressor Oil Check 0018 00-11
Refrigerant System Charge 0018 00-14
Refrigerant Compressor Test 0018 00-20

THIS WORK PACKAGE COVERS

Refrigerant Quick-Check Procedure for R-134a Expansion Valve and Orifice Tube Systems

Performance Checks for Air Conditioning System

Test Procedure for Testing Arc Suppressor

Refrigerant Leakage Test

Refrigerant Compressor Oil Check

Refrigerant System Charge

Refrigerant Compressor Test

INITIAL SETUP

Maintenance Level

Direct Support

Testing Equipment

Leak detection lamp (Item 38, WP 0232 00)

Leak detector, refrigerant gas (Item 39, WP 0232 00)

Tools and Special Tools

Tool kit, general mechanic's, automotive (Item 90, WP 0232 00)

Shop equipment, automotive maintenance and repair: field maintenance, basic, less power (Item 68, WP 0232 00)

Reclaimer, refrigerant R-134a (Item 60, WP 0232 00)

Materials/Parts

Cap set, protective (Item 6, WP 0233 00)

Oil, lubricating, refrigerant compressor: Synthetic Ester (Item 30, WP 0233 00)

Refrigerant dye (Item 36, WP 0233 00)

Tetrafluoroethane, technical (Refrigerant, R-134a) (Item 46, WP 0233 00)

Personnel Required

MOS 52C, Utilities Equipment Repairer

References

WP 0003 00
WP 0008 00
WP 0047 00
WP 0221 00
WP 0222 00
WP 0223 00
WP 0224 00
WP 0225 00
WP 0226 00
WP 0227 00

Equipment Conditions

Machine parked on level ground (TM 5-3805-291-10)

Work tool lowered to ground (TM 5-3805-291-10)

Parking brake engaged (TM 5-3805-291-10)

Wheels chocked

Battery disconnect switch in OFF position (TM 5-3805-291-10)

Hood opened (TM 5-3805-291-10)

Side covers removed (WP 0135 00)

Estimated Time to Complete Task

2.0 hr



WARNING

- **Injury to personnel can result from contact with refrigerant.**
- **This system is under pressure at all times, even if engine is not running. Heat should never be applied to a charged system.**
- **Contact with refrigerant can cause frost bite. Keep face and hands away to help prevent injury to personnel.**
- **Protective goggles must always be worn when refrigerant lines are opened, even if gages indicate system is empty of refrigerant.**
- **Always use caution when a fitting is removed. Slowly loosen fitting. If system is still under pressure, evacuate system recovering refrigerant before removing fitting.**
- **Injury or death to personnel can result from inhaling refrigerant through a lit cigarette.**
- **Inhaling AC refrigerant gas through a lit cigarette or other smoking method or inhaling fumes released from a flame contacting AC refrigerant gas, can cause bodily harm or death to personnel.**
- **Do not smoke when servicing AC or whenever refrigerant gas may be present.**
- **Before any checks of AC and heating system are made, move machine to a smooth horizontal surface. Lower all implements to ground. Make sure transmission is in neutral or park and parking brake is engaged. Keep all other personnel away from machine or where they can be seen.**

CAUTION

- **Low refrigerant charge will cause a loss of cooling ability and a loss of lubrication in compressor, which will result in failure of compressor. Too much oil in system will contribute to a low refrigerant charge. Too much oil in system will contribute to a low refrigerant charge.**
- **Overcharge of refrigerant will cause a loss of cooling ability. A system that is overcharged will contain excess liquid refrigerant, which will severely damage compressor. An overcharged system will fail two times faster than an undercharged system. Too much oil in system will contribute to a low refrigerant charge.**

NOTE

A small amount of moisture will penetrate hoses used in R-134a systems. Change dryer and change accumulator and desiccant annually. Moisture causes sludge and moisture results in plugged systems. Moisture also causes formation of ice at orifice tube assembly.

- **Gage readings for an undercharged R-134a system may appear as symptoms of overcharge under certain conditions. This occurs when ambient temperature is above 90°F (32°C) or in high humidity. Gage readings that are incorrect lead to a loss of cooling ability and failure of compressor.**
- **Refrigerant removed from a system cannot be weighed accurately. A 20 to 30% error can occur. Error is a result of oil removed from system and a result of inaccuracies of equipment used for recovery.**
- **After recovering a system, if system pressure rises above 0 psi (0 kPa) within 5 minutes, system must be recovered again until pressure does not increase. Recovering system again will empty accumulator of refrigerant.**

NOTE - CONTINUED

- **Presence of frost on accumulator is a normal condition. Thickness of frost will depend on ambient temperature and humidity.**
- **Frost can appear anywhere on a R-134a AC system. Appearance of frost does not always indicate a failure. In order to diagnose a blockage in AC system properly, air temperature at evaporator must be checked and pressure readings must be taken.**
- **All charging and leak testing must be done in a well ventilated area.**
- **Avoid any physical contact with refrigerant.**
- **Place a clean cloth over any valve or any connection that is opened.**
- **Never weld any charged components.**
- **Never solder any charged components.**
- **Never steam clean any charged components.**
- **Do not leave refrigerant drums exposed to direct sunlight.**
- **Do not carry refrigerant drums into passenger compartment of machine.**
- **Dispose of any oil that is poly alkaline glycol (PAG) that has been opened but not used. Moisture will contaminate unused oil and air conditioning system.**
- **For a better understanding of each system, review the appropriate section in *Theory of Operation* (WP 0003 00).**
- **In order to check function of compressor, disconnect hose from inlet of inline dryer. Measure pressure of suction of compressor. Pressure should be a vacuum between 24 to 28 inHg (81 to 95 kPa). Do not operate compressor for more than 2 minutes when system pressure is below vacuum.**
- **Secure lines and wires in order to prevent damage to lines and wires.**
- **Formation of black sludge deposits in system is caused by presence of moisture in R-134a systems and by mixing charges of R-134a and R-12. Black sludge deposits can cause a blockage in system.**
- **Presence of white foam during recovery is normal. Foam is caused by mixing of oil and refrigerant.**
- **R-134a system charges must be within 1.000 to 2.000 oz (0.03 to 0.06 kg) of specified charge for machine.**
- **A drain line that is plugged or a drain line that is pinched may cause a backup of condensate and leakage into cab.**
- **Missing drain valves may cause a backup of condensate and leakage into cab.**
- **Missing drain valves will allow dust to be sucked into evaporator coil and heater coil.**

A cab pressure of 0.200 to 0.600 in. of H_2O (0.05 to 0.15 kPa) and proper maintenance of AC filter will result in the following conditions:

- Reduction of dust.
- Reduction of noise.
- More efficient HVAC performance.

A loss of cooling ability of system and failure of compressor may be caused by one or more of the following conditions:

- Low charge.
- Overcharge.
- Too much oil.
- Too little oil.
- Dirty filter or plugged filter.
- Dirty condenser or plugged condenser.
- Dirty evaporator or plugged evaporator.
- Dirty orifice tube or plugged orifice tube.
- Dirty expansion valve or plugged expansion valve.
- Too much moisture in system.
- Missing drain valves for evaporator.

REFRIGERANT QUICK-CHECK PROCEDURE FOR R-134A EXPANSION VALVE AND ORIFICE TUBE SYSTEMS

NOTE

In order to use this procedure, temperature of ambient air must be at least 70°F (21°C).

1. Start engine and run engine at approximately 1,000 rpm. Move control knob on AC to position of MAXIMUM so cooling is at a maximum in order to stabilize system, put fan switch in HIGH position and operate system for a minimum of 10 minutes (TM 5-3805-291-10).
2. Check for restrictions present in refrigerant lines from compressor to inline dryer. Refrigerant lines and components that are high pressure and high temperature come from outlet side of compressor. Lines go to inlet side of orifice tube. Outlet side will be warm during normal operation. Heavy frost or a decrease in temperature in a line or in a component on high pressure side may be an indication of a restriction or blockage.
   a. If there is no evidence of a restriction in condenser coil, inline dryer or refrigerant lines from compressor to inline dryer, use procedure in step 3.
   b. If there is a restriction in condenser coil, inline dryer, or refrigerant lines from compressor to inline dryer, perform the following procedures:
      (1) Recover refrigerant (WP 0222 00).
      (2) Remove restriction or replace component (WP 0223 00, WP 0224 00, and WP 0226 00).
      (3) Evacuate system (WP 0222 00).
      (4) Charge system with correct amount of refrigerant (WP 0222 00).
      (5) Perform a leak test. Refer to *Refrigerant Leakage Test* in this work package.
      (6) Perform a performance check. Refer to *Performance Checks for Air Conditioning System* in this work package.
      (7) If problem still exists, go to step 4.
3. Low system charge is indicated. Perform a leak test.

REFRIGERANT QUICK-CHECK PROCEDURE FOR R-134A EXPANSION VALVE AND ORIFICE TUBE SYSTEMS - CONTINUED

NOTE

If system is very low on refrigerant, a partial charge may be needed before you perform a leak test.

a. Recover remaining refrigerant (WP 0222 00).

b. Repair all leaks.

c. Evacuate system (WP 0222 00).

d. Charge system with correct amount of refrigerant. Measure refrigerant by weight (WP 0222 00).

e. Perform a performance check. Refer to *Performance Checks for Air Conditioning System* in this work package.

f. If problem still exist, go to step 6.

4. Feel low pressure line and feel high pressure line at compressor. In order to indicate normal systems operation, high pressure line to condenser coil must be warm, while low pressure line to evaporator coil must be cool.

   a. High pressure line and low pressure line at compressor have a minimal temperature difference between two lines. Use procedure in step 5.

   b. If there is a definite temperature difference between high pressure line and low pressure line at compressor, system is operating correctly. High pressure line will be warm. Low pressure line will be cool. Use procedure in step 6.

5. If system has no refrigerant charge or if system is nearly empty of refrigerant charge, perform the following procedure:

   a. Stop engine (TM 5-3805-291-10).

   b. Perform a partial charge of system (WP 0222 00).

   c. Perform a leak test. Refer to *Refrigerant Leakage Test* in this work package.

   d. Repair leaks.

   e. Evacuate system (WP 0222 00).

   f. Charge system with correct amount of refrigerant. Measure refrigerant by weight (WP 0222 00).

   g. Perform a performance check. Refer to *Performance Checks for Air Conditioning System* in this work package.

REFRIGERANT QUICK-CHECK PROCEDURE FOR R-134A EXPANSION VALVE AND ORIFICE TUBE SYSTEMS - CONTINUED

NOTE

Refer to Table 1.

6. An overcharge of system is possible even though system can have a definite difference in temperature at low pressure line and at high pressure line.
   a. Recover refrigerant (WP 0222 00).
   b. Evacuate system (WP 0222 00).

NOTE

All pressures are given as a guide only. Weight is only absolute means of determining proper refrigerant charge. Improper refrigerant charge will cause premature failure of compressor.

Table 1. Pressure Range.

Ambient Air Temperature	High Pressure Test Fitting (Pressure May Be Slightly Higher in Very Humid Conditions and Lower in Very Dry Conditions)	Low Pressure Test Fitting (Pressure Before Clutch Disengagement)
70°F (21°C)	120 to 190 psi (820 to 1,300 kPa)	10 to 20 psi (70 to 138 kPa)
80°F (27°C)	140 to 210 psi (950 to 1,450 kPa)	10 to 25 psi (70 to 173 kPa)
90°F (32°C)	170 to 240 psi (1,175 to 1,650 kPa)	15 to 30 psi (105 to 210 kPa)
100°F (38°C)	190 to 270 psi (1,300 to 1,850 kPa)	15 to 30 psi (105 to 210 kPa)
110°F (43°C)	210 to 300 psi (1,450 to 2,075 kPa)	15 to 30 psi (105 to 210 kPa)

   c. Charge system with correct amount of refrigerant. Measure refrigerant by weight (WP 0222 00).
   d. Perform a performance check. Refer to *Performance Checks for Air Conditioning System* in this work package.
   e. Determine level of system charge. When both inlet of accumulator and outlet of accumulator are cool to the touch, system is charged correctly.

NOTE

If outlet is warmer than inlet, system may not contain enough refrigerant.

   f. Recover refrigerant (WP 0222 00).
   g. Evacuate system (WP 0222 00).
   h. Charge system with correct amount of refrigerant. Measure refrigerant by weight (WP 0222 00).
   i. Perform a leak test. Refer to *Refrigerant Leakage Test* in this work package.
   j. Perform a performance check. Refer to *Performance Checks for Air Conditioning System* in this work package.

PERFORMANCE CHECKS FOR AIR CONDITIONING SYSTEM

NOTE

- **A performance check of AC system must be made with a manifold gage set. Manifold gage set must be connected to diagnostic connectors on compressor.**
- **Before you conduct a performance check, refer to *Visual Inspection* in this work package.**

1. Use refrigerant reclaimer as manifold gage set.

NOTE

Most system failures are caused by improper refrigerant charge. Refrigerant charge should be measured by weight only. Do not use gage pressure when you charge system with refrigerant.

2. Start engine and operate engine at 1,000 rpm. Move temperature control knob to maximum cool position. Put fan switch in HIGH position on AIR CONDITIONING side. In order to stabilize system, operate system for a minimum of 10 minutes. Operate engine at 1,000 rpm (TM 5-3805-291-10).
   a. During normal operation of AC system 70°F (21°C) weather, discharge (high pressure test fitting) pressure will be 120 to 190 psi (820 to 1,300 kPa). Pressure will be 10 to 20 psi (70 to 130 kPa). Refer to Table 1 for temperature range. Outside temperature and humidity will have an effect on pressures. If outside temperature is high, discharge pressure will be high.
   b. If very hot weather, suction and discharge pressures will be high. In cooler weather, suction (low pressure test fitting) and discharge pressure will be normal or pressure can be lower.
   c. If suction and discharge pressures are not within normal operating range, refer to *Troubleshooting,* Table 8 (WP 0008 00).

TEST PROCEDURE FOR TESTING ARC SUPPRESSOR

NOTE

AC systems use pressure switches in order to protect AC system. Arc suppressors protect other electrical components in AC system. Arc suppressors are applied in order to discharge electrical inductance when compressor disengages. Failure of arc suppressor can affect reliability of pressure switch. Failure of arc suppressor may cause failure of pressure switch.

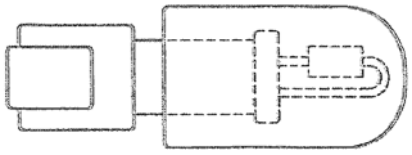

427-C2005

1. Place multimeter in DIODE test mode.
2. Place red probe in red terminal (positive terminal) of multimeter.
3. Place black probe in black terminal (negative terminal) of multimeter.
4. Place red probe on Pin 2 of connector on arc suppressor. Place black probe on Pin 1 of connector.
5. Multimeter should display a value between 0.5 and 1.0 VDC.
6. Place red probe on Pin 1 of connector on arc suppressor. Place black probe on Pin 2 of connector on arc suppressor.
7. Multimeter should display OL.
8. If conditions listed in steps 5 and 7 do not exist, component should be considered faulty. Component will not provide adequate protection.
9. Replace component if component has failed.

REFRIGERANT LEAKAGE TEST

NOTE

- **Finding leaks and repairing leaks from refrigerant is important since AC is a closed circuit system.**
- **System must contain at least 0.88 lb (0.4 kg) of refrigerant to perform leak test. Install manifold gage set to determine if pressure exists in system. Manifold gage set can determine if pressure exists in system. A leak test can be performed if system indicates pressure.**
- **Refrigerant vapor is heavier than air. For best results, place black light directly below possible leaks.**
- **Leaks in high pressure side of system are more easily found if AC is operated for 5 to 10 minutes. Leak test must be performed immediately after unit is turned OFF. Leak test for high pressure side is performed before pressures in system equalize. Leaks in low pressure side of system are more easily found if AC has been turned OFF for 5 to 10 minutes. Leak test for low pressure side is performed after pressures in system equalize.**
- **Under normal conditions, R-134a AC systems that have P80 hoses may lose as much as 0.0400 lb (0.018 kg) of refrigerant per foot of hose per year.**
- **Refrigerants which are not approved may have higher leakage rates.**

Dye

1. Move leak detection lamp along possible leak points. When a leak is present, lamp will illuminate dye in refrigerant.
2. If a leak is found in AC system, use a Refrigerant Leak Detector in order to confirm leak was detected by use of leak detection lamp.

REFRIGERANT COMPRESSOR OIL CHECK



- **Injury to personnel can result from contact with refrigerant.**
- **This system is under pressure at all times, even if engine is not running. Heat should never be applied to a charged system.**
- **Contact with refrigerant can cause frost bite. Keep face and hands away to help prevent injury to personnel.**
- **Protective goggles must always be worn when refrigerant lines are opened, even if gages indicate system is empty of refrigerant.**
- **Always use caution when a fitting is removed. Slowly loosen fitting. If system is still under pressure, evacuate system recovering refrigerant before removing fitting.**
- **Injury or death to personnel can result from inhaling refrigerant through a lit cigarette.**
- **Inhaling AC refrigerant gas through a lit cigarette or other smoking method or inhaling fumes released from a flame contacting AC refrigerant gas, can cause bodily harm or death to personnel.**
- **Do not smoke when servicing AC or whenever refrigerant gas may be present.**

NOTE

- **A special refrigerant oil is used in AC system. Oil mixes completely with refrigerant so all components receive lubrication. A check of refrigerant oil in compressor will give an indication of amount of the oil in system.**
- **Refer to *Theory of Operation* for more information (WP 0003 00).**
- **Generally, oil in compressor is checked when there is evidence of a major loss of oil. The following conditions may cause loss of oil:**
- **Broken refrigerant hose.**
- **Hose fitting (leaks).**
- **Badly leaking compressor seal.**
- **Component damage.**

REFRIGERANT COMPRESSOR OIL CHECK - CONTINUED

Complete Check of Compressor Oil

1. Operate engine at 1,000 rpm. Set temperature on maximum cooling setting. Move fan speed switch to HIGH. System will stabilize in a minimum of 10 minutes (TM 5-3805-291-10).

2. Stop engine. Remove refrigerant charge from system (WP 0222 00).

3. Remove compressor from machine (WP 0221 00). Place protective caps on all fittings and hoses.

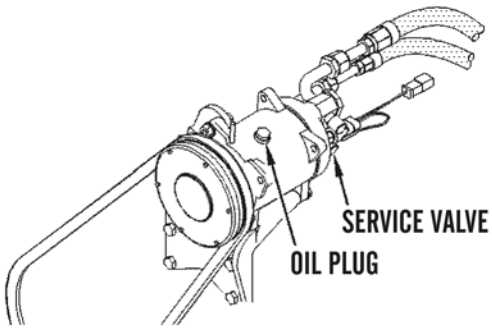

427-C2008

4. Place compressor in a horizontal position so oil plug is facing downward. Remove oil plug from compressor. Drain oil into a clean container. Rock compressor back and forth in order to remove all of oil. Also, rotate compressor shaft in order to drain rest of oil that is in oil sump. Record volume of drained refrigerant. Inspect oil for the following items:

    - Contaminants
    - Metal chips
    - Rubber particles
    - Foreign material

5. Dispose of oil in a suitable container. Use the following list as a guide for adding oil into compressor:

    - If amount of oil drained from compressor is 6 to 8 fl oz (177 to 237 ml), put same amount of new refrigerant oil in compressor. Never refill with more than 8 fl oz (237 ml) of oil to compressor unless system has been flushed.
    - If amount of oil is drained from compressor is less than 6 fl oz (177 ml), add 6 to 8 fl oz (177 to 237 ml) of new refrigerant oil to compressor.
    - If a new compressor or a rebuilt compressor is installed, drain all oil from compressor and add 6 to 8 fl oz (177 to 237 ml) of new refrigerant oil in compressor.
    - If system was flushed, do not remove oil from a new compressor.
    - Refer to Table 2 if individual components are replaced without charging compressor or without flushing system.

REFRIGERANT COMPRESSOR OIL CHECK - CONTINUED

Complete Check of Compressor Oil - Continued

Table 2. Oil Capacities for Component Replacement.

Accumulator	1 fl oz (30 ml)
Compressor	Refer to *Refrigerant Compressor Oil-Check* in this work package.
Condenser	1 fl oz (30 ml)
Evaporator	3 fl oz (90 ml)
Inline Dryer (1)	1 fl oz (30 ml)
Receiver/Dryer	1 fl oz (30 ml)

6. If failure of a component causes particles of metal or other foreign material to be present in system, it is necessary to flush system. Refer to *Troubleshooting Without a Diagnostic Code* (WP 0008 00).

NOTE

- **If too much oil has been added to system and a total of more than 11 fl oz (325 ml) of oil is in system, cooling capacity of system will be reduced. If too little oil has been added to system, compressor may fail due to a lack of lubrication.**
- **Add oil to compressor through opening for oil plug or inject oil through ports for charging. Compressor must be positioned so refrigerant oil will not flow out of service valves. Do not rest compressor on compressor shaft. Turn compressor shaft by hand when you fill compressor. Oil will slowly flow into compressor. Only use refrigerant oil approved and recommended.**
- **Add oil to any components being installed.**
- **Inject oil into pressurized system through port for low pressure charging while engine is running and compressor is operating.**

7. After correct amount of refrigerant oil has been added to system, install compressor and drive belt (WP 0221 00).

REFRIGERANT SYSTEM CHARGE

Relationship Between Temperature and Pressure (R-134a Refrigerant)

Table 3 can be used in order to determine pressure level and contamination level of a container of refrigerant. Table 3 can also be used for an AC system that is not operating. This same system must be stabilized to ambient temperature. In order to stabilize an AC system at ambient temperature, machine must not operate for 10 to 12 hours. Machine must not be stored in direct sunlight.

If pressure measured at any specific temperature does not match pressure given in chart, the following problems may exist:

- Contaminants in system.
- Incorrect refrigerant.
- Incorrect refrigerant charge.

REFRIGERANT SYSTEM CHARGE - CONTINUED

Relationship Between Temperature and Pressure (R-134a Refrigerant) - Continued

Table 3. Relationship Between Temperature and Pressure (R-134a Refrigerant).

Temperature °F (°C)	Pressure psi(1) (kPa)
0.0°F (-18°C)	6.4 psi (44 kPa)
2.0°F (-17°C)	7.4 psi (51 kPa)
4.0°F (-16°C)	8.5 psi (59 kPa)
6.0°F (-14°C)	9.6 psi (66 kPa)
8.0°F (-13°C)	10.7 psi (74 kPa)
10.0°F (-12°C)	11.9 psi (82 kPa)
12.0°F (-11°C)	13.1 psi (90 kPa)
14.0°F (-10°C)	14.3 psi (99 kPa)
16.0°F (-9°C)	15.6 psi (108 kPa)
18.0°F (-8°C)	17.0 psi (117 kPa)
20.0°F (-7°C)	18.4 psi (127 kPa)
21.0°F (-6°C)	19.1 psi (132 kPa)
22.0°F (-6°C)	19.8 psi (137 kPa)
23.0°F (-5°C)	20.5 psi (141 kPa)
24.0°F (-4°C)	21.3 psi (147 kPa)
25.0°F (-4°C)	22.0 psi (152 kPa)
26.0°F (-3°C)	22.8 psi (157 kPa)
27.0°F (-3°C)	23.6 psi (163 kPa)
28.0°F (-2°C)	24.4 psi (168 kPa)
29.0°F (-2°C)	25.2 psi (174 kPa)
30.0°F (-1°C)	26.0 psi (179 kPa)
31.0°F (-1°C)	26.8 psi (185 kPa)
32.0°F (0°C)	27.7 psi (191 kPa)
33.0°F (1°C)	28.5 psi (197 kPa)
34.0°F (1°C)	29.4 psi (203 kPa)
35.0°F (2°C)	30.3 psi (209 kPa)
36.0°F (2°C)	31.2 psi (215 kPa)
37.0°F (3°C)	32.1 psi (221 kPa)

REFRIGERANT SYSTEM CHARGE - CONTINUED

Relationship Between Temperature and Pressure (R-134a Refrigerant) - Continued

Table 3. Relationship Between Temperature and Pressure (R-134a Refrigerant) - Continued.

Temperature °F (°C)	Pressure psi(1) (kPa)
38.0°F (3°C)	33.0 psi (228 kPa)
39.0°F (4°C)	34.0 psi (234 kPa)
40.0°F (4°C)	34.9 psi (241 kPa)
41.0°F (5°C)	35.9 psi (248 kPa)
42.0°F (6°C)	36.9 psi (254 kPa)
43.0°F (6°C)	37.9 psi (261 kPa)
44.0°F (7°C)	38.9 psi (263 kPa)
45.0°F (7°C)	39.9 psi (275 kPa)
46.0°F (8°C)	41.0 psi (283 kPa)
47.0°F (8°C)	42.0 psi (290 kPa)
48.0°F (9°C)	43.1 psi (297 kPa)
49.0°F (9°C)	44.2 psi (305 kPa)
50.0°F (10°C)	45.3 psi (312 kPa)
51.0°F (11°C)	46.4 psi (320 kPa)
52.0°F (11°C)	47.5 psi (328 kPa)
53.0°F (12°C)	48.7 psi (336 kPa)
54.0°F (12°C)	49.9 psi (344 kPa)
55.0°F (13°C)	51.0 psi (352 kPa)
56.0°F (13°C)	52.2 psi (360 kPa)
57.0°F (14°C)	53.5 psi (369 kPa)
58.0°F (14°C)	54.7 psi (377 kPa)
59.0°F (15°C)	55.9 psi (385 kPa)
60.0°F (16°C)	57.2psi (394 kPa)
61.0°F (16°C)	58.2 psi (403 kPa)
62.0°F (17°C)	59.8 psi (412 kPa)
63.0°F (17°C)	61.1 psi (421 kPa)
64.0°F (18°C)	62.4 psi (430 kPa)
65.0°F (18°C)	63.8 psi (440 kPa)

REFRIGERANT SYSTEM CHARGE - CONTINUED

Relationship Between Temperature and Pressure (R-134a Refrigerant) - Continued

Table 3. Relationship Between Temperature and Pressure (R-134a Refrigerant) - Continued.

Temperature °F (°C)	Pressure psi(1) (kPa)
66.0°F (19°C)	65.2 psi (450 kPa)
67.0°F (19°C)	66.8 psi (459 kPa)
68.0°F (20°C)	68.0 psi (469 kPa)
69.0°F (21°C)	69.4 psi (478 kPa)
70.0°F (21°C)	70.8 psi (488 kPa)
71.0°F (22°C)	72.3 psi (498 kPa)
72.0°F (22°C)	73.8 psi (509 kPa)
73.0°F (23°C)	75.3 psi (519 kPa)
74.0°F (23°C)	76.8 psi (530 kPa)
75.0°F (24°C)	78.3 psi (540 kPa)
76.0°F (24°C)	79.9 psi (551 kPa)
77.0°F (25°C)	81.5 psi (562 kPa)
78.0°F (26°C)	83.1 psi (573 kPa)
79.0°F (26°C)	84.7 psi (584 kPa)
80.0°F (27°C)	86.3 psi (595 kPa)
81.0°F (27°C)	88.0 psi (607 kPa)
82.0°F (28°C)	89.7 psi (618 kPa)
83.0°F (28°C)	91.4 psi (630 kPa)
84.0°F (29°C)	93.1 psi (642 kPa)
85.0°F (29°C)	94.8 psi (654 kPa)
86.0°F (30°C)	96.6 psi (666 kPa)
87.0°F (31°C)	98.4 psi (678 kPa)
88.0°F (31°C)	100.2 psi (691 kPa)
89.0°F (32°C)	102.0 psi (703 kPa)
90.0°F (32°C)	103.8 psi (716 kPa)
91.0°F (33°C)	105.7 psi (729 kPa)
92.0°F (33°C)	107.6 psi (742 kPa)
93.0°F (34°C)	109.5 psi (755 kPa)

REFRIGERANT SYSTEM CHARGE - CONTINUED

Relationship Between Temperature and Pressure (R-134a Refrigerant) - Continued

Table 3. Relationship Between Temperature and Pressure (R-134a Refrigerant) - Continued.

Temperature °F (°C)	Pressure psi(1) (kPa)
94.0°F (34°C)	111.4 psi (768 kPa)
95.0°F (35°C)	113.4 psi (782 kPa)
96.0°F (36°C)	115.4 psi (796 kPa)
97.0°F (36°C)	117.4 psi (809 kPa)
98.0°F (37°C)	119.4 psi (823 kPa)
99.0°F (37°C)	121.5 psi (838 kPa)
100.0°F (38°C)	123.5 psi (852 kPa)
101.0°F (38°C)	125.6 psi (866 kPa)
102.0°F (39°C)	127.8 psi (881 kPa)
103.0°F (39°C)	129.9 psi (896 kPa)
104.0°F (40°C)	132.1 psi (911 kPa)
105.0°F (41°C)	134.3 psi (926 kPa)
106.0°F (41°C)	136.5 psi (941 kPa)
107.0°F (42°C)	138.7 psi (956 kPa)
108.0°F (42°C)	141.0 psi (972 kPa)
109.0°F (43°C)	143.3 psi (988 kPa)
110.0°F (43°C)	145.6 psi (1,004 kPa)
111.0°F (44°C)	147.9 psi (1,020 kPa)
112.0°F (44°C)	150.3 psi (1,036 kPa)
113.0°F (45°C)	152.7 psi (1,053 kPa)
114.0°F (46°C)	155.1 psi (1,069 kPa)
115.0°F (46°C)	157.6 psi (1,087 kPa)
116.0°F (47°C)	160.0 psi (1,103 kPa)
117.0°F (47°C)	162.5 psi (1,120 kPa)
118.0°F (48°C)	165.1 psi (1,138 kPa)
119.0°F (48°C)	167.6 psi (1,156 kPa)
120.0°F (49°C)	170.2 psi (1,173 kPa)
121.0°F (49°C)	172.8 psi (1,191 kPa)

REFRIGERANT SYSTEM CHARGE - CONTINUED

Relationship Between Temperature and Pressure (R-134a Refrigerant) - Continued

Table 3. Relationship Between Temperature and Pressure (R-134a Refrigerant) - Continued.

Temperature °F (°C)	Pressure psi(1) (kPa)
122.0°F (50°C)	175.4 psi (1,209 kPa)
123.0°F (51°C)	178.1 psi (1,228 kPa)
124.0°F (51°C)	180.8 psi (1,247 kPa)
125.0°F (52°C)	183.5 psi (1,265 kPa)
126.0°F (52°C)	186.3 psi (1,285 kPa)
127.0°F (53°C)	189.1 psi (1,304 kPa)
128.0°F (53°C)	191.9 psi (1,323 kPa)
129.0°F (54°C)	194.7 psi (1,342 kPa)
130.0°F (54°C)	197.6 psi (1,362 kPa)
131.0°F (55°C)	200.5 psi (1,382 kPa)
132.0°F (56°C)	203.4 psi (1,402 kPa)
133.0°F (56°C)	206.3 psi (1,422 kPa)
134.0°F (57°C)	209.3 psi (1,443 kPa)

(1) All pressures in Table 3 are gage pressures.

REFRIGERANT COMPRESSOR TEST

NOTE

If compressor fails one of the steps, then AC system should be diagnosed in order to find root cause of failure. Root cause of failure should be repaired.

Identifying compressors that function is purpose of this instruction. Compressors that function should be identified before compressors are removed from machine. Compressors that function should produce both high pressure and low pressure. If compressor fails any one of steps 3, 5, 7, or 8, compressor is considered to be a "failed" compressor.

Procedures

1. **Check air filters (TM 5-3805-291-10).** If complaint of customer is poor cooling of cab, past experience has shown plugged air filters can often be cause. Most AC systems have return air filters and fresh air filters. Be sure to check both return air filters and fresh air filters.
2. **Test voltage.** While engine is running and AC is switched ON, check voltage at compressor. Voltage at compressor should be a minimum 23V. Routinely used electrical loads should be turned ON. For example, a lighting system which is added by customer could cause available voltage to decrease below minimum specification.
3. **Test resistance.** Measure resistance of clutch coil at compressor connector. Measured resistance should be within -1.3 to +5.5 of 17.6 $\pm$ 0.6 Ohms. Resistance range which are listed above compensate for effect of temperature on clutch coil.
4. **Check belt tension (WP 0047 00).**

WARNING

- **Accidental machine starting can cause injury or death to personnel working on machine.**
- **To avoid accidental machine starting, turn battery disconnect switch to OFF position and remove key. If machine is not equipped with a battery disconnect switch, disconnect battery cables from battery and tape battery clamps.**
- **Place a do not operate tag at battery disconnect switch location to inform personnel that machine is being worked on.**

NOTE

Electrical power supply to compressor should be switched OFF in order to perform this test.

5. **Test rotation.** Rotate compressor in direction of belt travel by turning nut on end of main shaft of compressor. Rotation should be smooth with no binding. If not, replace AC system compressor (WP 0221 00).
6. **Check charge level (WP 0222 00).** AC system must be correctly charged per specification or an incorrect diagnosis will occur. Recovering, evacuating, and recharging with clean refrigerant to correct level is best method of achieving correct refrigerant charge for system. Charging AC system must be conducted by weighing refrigerant with a calibrated scale in order to ensure accuracy. Also, be sure to replace oil which was removed during refrigerant recovery with new oil.
7. **Test for low pressure (WP 0222 00).** Test for low pressure should be performed with ambient temperatures of less than 86°F (30°C). Park machine in an area not in direct sunlight. Close all cab doors and windows. Block flow of fresh air into cab. If AC system is equipped, bypass low pressure switch. Start machine. Operate machine at high idle. Turn ON AC (TM 5-3805-291-10). Set cab blower on LOW. After 10 to 15 minutes of operation, measure low-side pressure at refrigerant compressor. If pressure reading is less than 10 psi (69 kPa), then suction valves of compressor are operating correctly. If not, replace AC system compressor (WP 0221 00).

REFRIGERANT COMPRESSOR TEST - CONTINUED

Procedures - Continued

NOTE

If cab temperature is above 77°F (25°C), then cab blower may need to be set to HIGH in order to reduce temperature before starting procedure.

8. **Test for high pressure (WP 0222 00).** Start engine and set speed at approximately 1,200 rpm. Turn ON AC. Place a sheet of cardboard over condenser in order to block flow of air. Limiting flow of air over condenser will cause discharge pressure of compressor to increase. Check if discharge of compressor is able to increase up to 350 psi (2,414 kPa). Once specified pressure is reached, immediately remove cardboard. If compressor passes test, discharge valves are operating correctly. If not, replace AC system compressor (WP 0221 00).

END OF WORK PACKAGE

CHAPTER 3

UNIT MAINTENANCE INSTRUCTIONS

PREVENTIVE MAINTENANCE CHECKS AND SERVICES (PMCS) INTRODUCTION 0019 00

GENERAL

1. To ensure the 966H Wheel Loader is ready for operation at all times, it must be inspected on a regular basis so defects may be found and corrected before they result in injury, damage, or equipment failure.
2. Table 1 in WP 0020 00 contains systematic instructions on inspections, lubrications, services, tests, and corrections to be performed by Unit Maintenance to keep your equipment in good operating condition and ready for its primary mission.
3. Table 2 in WP 0020 00 lists mandatory replacement parts, by interval, for the loader.
4. The *KEY*, located with General Lubrication Procedures immediately after Table 2, lists the types, amounts, and temperature ranges of the lubricants required for specified intervals.
5. The Lubrication Chart following the *KEY* shows all Unit Maintenance level lubrication points for the 966H. Localized views follow the Lubrication Chart.
6. For information on Corrosion Prevention and Control (CPC), refer to WP 0001 00 in Volume 1.

EXPLANATION OF TABLE ENTRIES

1. **Item Number (Item No.) Column.** Numbers in this column are for reference. When completing DA Form 2404 or DA Form 5988-E *(Equipment Inspection and Maintenance Worksheet)*, include the item number for the check/service indicating a fault. Item numbers also appear in the order that you must perform checks and services for the interval listed.

NOTE

If both an hours and calender interval are provided, perform check or service at whichever interval comes first.

2. **Interval Column.** This column tells you when you must perform the procedure in the procedure column.
   a. *Hours* procedures must be performed at the hour interval specified.
   a. *Semiannual* procedures must be done once every six months.
   b. *Annual* procedures must be done once each year.
   c. *Biennial* procedures must be done once every two year.
   d. *Triennial* procedures must be done once every three years.
   e. *Hexannual* procedures must be done once every six years.
3. **Man-Hours Column.** This column indicates man-hours required to complete prescribed lubrication.
4. **Location, Item to Check/Service Column.** This column provides the location and item to be checked or serviced.

NOTE

The WARNINGs and CAUTIONs appearing in your PMCS table should always be observed. WARNINGs and CAUTIONs appear before applicable procedures. You must observe these WARNINGs to prevent serious injury to yourself and other, and CAUTIONs to prevent your equipment from being damaged.

5. **Procedure Column.** This column gives the procedure you must perform to check or service the item listed in the Item to Check/Service column, to know if the equipment is ready or available for its intended mission. You must perform the procedure at the time stated in the interval column.
6. **Not Fully Mission Capable If: Column.** Information in this column tells you what faults will keep your equipment from being capable of performing its primary mission. If you perform check/service procedures that show faults listed in this column, the equipment is not mission-capable. Follow standard operating procedures for maintaining the equipment or reporting equipment failure.

PREVENTIVE MAINTENANCE CHECKS AND SERVICES (PMCS) INTRODUCTION - CONTINUED 0019 00

GENERAL PMCS PROCEDURES

1. Always perform PMCS in the same order so it gets to be a habit. Once you have had some practice, you will spot anything wrong in a hurry. If any deficiency is discovered, perform the appropriate troubleshooting task in Chapter 2 of this manual. If any component or system is not serviceable or if the given service does not correct the deficiency, notify your supervisor.
2. Before performing preventive maintenance, read all the checks required for the applicable interval and prepare everything needed to make all the checks. Have several clean Rag, wiping (Item 35, WP 0233 00) handy. Perform ALL inspections at the applicable interval.



WARNING

Solvent cleaning compound MIL-PRF-680 Type III is an environmentally compliant and low toxic material. However, it may be irritating to the eyes and skin. Use protective gloves and goggles. Use in well-ventilated areas. Keep away from open flames and other sources of ignition.

a. **Keep It Clean.** Dirt, grease, oil, and debris get in the way and may cover up a serious problem. Clean as you work and as needed. Use Cleaning compound, solvent, type III (Item 7, WP 0233 00) on all metal surfaces. Use Detergent, general purpose, liquid (Item 9, WP 0233 00), and water when you clean rubber, plastic, and painted surfaces.



WARNING

When servicing this machine, performing maintenance or disposing of materials such as engine coolant, hydraulic fluid, lubricants, battery acids or batteries, windshield cleaning compound, and CARC paint, consult your unit/local hazardous waste disposal center or safety office for local regulatory guidance. If further information is needed, please contact The Army Environmental Hotline at 1-800-872-3845.

b. **Hazardous Waste Disposal.** Ensure all spills are cleaned up and disposed of IAW local policy and ordinances.

c. **Rust and Corrosion.** Check metal parts for rust and corrosion. If any bare metal or corrosion exists, clean and apply a light coat of Oil, lubricating, OEA-30, Arctic (Item 29, WP 0233 00). Report it to your supervisor.

d. **Bolts, Nuts, and Screws.** Check bolts, nuts, and screws for obvious looseness, missing, bent, or broken condition. You cannot try them all with a tool, but look for chipped paint, bare metal, or rust around bolt heads. If you find one is loose, tighten it.

e. **Welds.** Look for loose or chipped paint, rust, or gaps where parts are welded together. If you find a bad weld, report it to your supervisor.

f. **Electric Wires and Connectors.** Look for cracked or broken insulation, bare wires, and loose or broken connectors. Reconnect loose connectors. Ensure wires are in good condition.

g. **Hoses and Fluid Lines.** Look for wear, damage, and signs of leaks. Check for loose clamps and fittings. Wet spots indicate leaks, but a stain around a fitting or connector can also mean a leak. If a leak comes from a loose fitting or connector, tighten it. If something is broken or worn out, correct it if authorized by the Maintenance Allocation Chart (WP 0232 00). If not authorized, notify your supervisor.

h. **Fluid Leakage.** It is necessary for you to know how fluid leakage affects the status of your machine. The following are definitions of the types/classes of leakage you need to know to be able to determine the status of your machine. Learn and be familiar with them and remember: when in doubt, notify your supervisor.

PREVENTIVE MAINTENANCE CHECKS AND SERVICES (PMCS) INTRODUCTION - CONTINUED **0019 00**

GENERAL PMCS PROCEDURES - CONTINUED

CAUTION

Operation is allowable with Class I and Class II leakage, EXCEPT for fuel, where NO leaks are allowed. WHEN IN DOUBT, NOTIFY YOUR SUPERVISOR. When operating with Class I or Class II leaks, check fluid levels more frequently. Class III leaks must be reported immediately to your supervisor. Failure to do this will result in damage to machine and/or components.

NOTE

Notify your supervisor of any leaks you cannot fix.

Leakage Definitions for Unit PMCS

Class I	Leakage indicated by wetness or discoloration, but not great enough to form drops.
Class II	Leakage great enough to form drops, but not enough to cause drops to drip from the item being checked/inspected.
Class III	Leakage great enough to form drops that fall from the item being checked/ inspected.

END OF WORK PACKAGE

PREVENTIVE MAINTENANCE CHECKS AND SERVICES (PMCS) INCLUDING LUBRICATION INSTRUCTIONS 0020 00

INITIAL SETUP

Maintenance Level

Unit

Tools and Special Tools

Tool kit, general mechanic's, automotive (Item 90, WP 0232 00)

Shop equipment, automotive maintenance and repair: organizational maintenance, common no. 1 (Item 70, WP 0232 00)

Shop equipment, automotive maintenance and repair: organizational maintenance, common no. 2 (Item 71, WP 0232 00)

Materials/Parts

Antifreeze (Item 1, WP 0233 00)

Axle oil additive (Item 3, WP 0233 00)

Cleaning compound, solvent, type III (Item 7, WP 0233 00)

Cloth, abrasive (Item 8, WP 0233 00)

Detergent, general purpose, liquid (Item 9, WP 0233 00)

Diesel fuel, DF-1 (Item 10, WP 0233 00)

Fuel oil, diesel, DF-2 (Item 11, WP 0233 00)

Fuel, turbine, aviation (Item 12, WP 0233 00)

Grease, molybdenum (Item 17, WP 0233 00)

Nitrate test strips (Item 24, WP 0233 00)

Oil, lubricating, OE/HDO-40 (Item 26, WP 0233 00)

Oil, lubricating, OE/HDO-5/40 (Item 27, WP 0233 00)

Oil, lubricating, OE/HDO-15/40 (Item 28, WP 0233 00)

Oil, lubricating, OEA-30, Arctic (Item 29, WP 0233 00)

Petrolatum, technical (Item 33, WP 0233 00)

Rag, wiping (Item 35, WP 0233 00)

Personnel Required

MOS 62B, Construction Equipment Repairer (2)

References

DA PAM 738-750

FM 9-207

WP 0015 00

WP 0025 00

WP 0026 00

WP 0030 00

WP 0035 00

WP 0036 00

WP 0041 00

WP 0044 00

WP 0048 00

WP 0096 00

WP 0097 00

WP 0100 00

WP 0105 00

WP 0111 00

WP 0132 00

WP 0141 00

WP 0148 00

WP 0179 00

WP 0187 00

WP 0224 00

WP 0225 00

Equipment Conditions

Machine parked on level ground (TM 5-3805-291-10)

Work tool lowered to ground (TM 5-3805-291-10)

Parking brake engaged (TM 5-3805-291-10)

Engine shut down (TM 5-3805-291-10)

Wheels chocked

Battery disconnect switch in OFF position (TM 5-3805-291-10)

Hydraulic system pressure relieved (TM 5-3805-291-10)

Estimated Time to Complete Task

Refer to Table 1 for man-hours required to complete lubrication services

Table 1. Unit Preventive Maintenance Checks and Services (PMCS) Including Lubrication Instructions for the 966H.

ITEM NO.	INTERVAL	MAN-HOURS	LOCATION ITEM TO CHECK/ SERVICE	PROCEDURE	NOT FULLY MISSION CAPABLE IF:
				 **WARNING** **If machine is parked indoors during performance of PMCS, DO NOT run engine unless exhaust fumes are vented to the outside. Failure to follow this warning may cause injury or death due to carbon monoxide poisoning.** **NOTE** • **Review all WARNINGs, CAUTIONs, and NOTEs before performing PMCS on the 966H Wheel Loader.** • **Unless otherwise indicated, perform all lubrication and preventive maintenance with machine parked on level ground, parking brake engaged, transmission in N (Neutral), work tool lowered to the ground, engine shut down, wheels chocked, battery disconnect switch in OFF position, and hydraulic system pressure relieved (TM 5-3805-291-10).** • **Perform Operator PMCS prior to or in conjunction with Unit PMCS if:** **a. There is a delay between daily operation of the machine and Unit PMCS.** **b. The regular operator is not assisting.**	

Table 1. Unit Preventive Maintenance Checks and Services (PMCS) Including Lubrication Instructions for the 966H - Continued.

ITEM NO.	INTERVAL	MAN-HOURS	LOCATION ITEM TO CHECK/ SERVICE	PROCEDURE	NOT FULLY MISSION CAPABLE IF:
1	Initial 250 Hours		Fuel System	a. Notify Direct Support Maintenance to adjust electronic unit fuel injectors (WP 0187 00). b. Notify Direct Support Maintenance to adjust intake and exhaust valve lash (WP 0179 00).	
				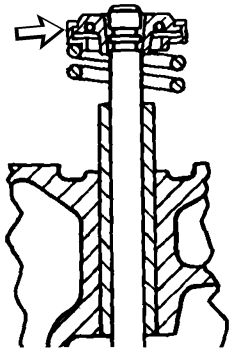 427-C1500	
2	Initial 250 Hours	0.2 Hour	Transmission	Replace transmission oil filter (WP 0105 00).	
3	250 Hours		Engine Crankcase Breather	Remove crankcase breather, clean, and reinstall (WP 0026 00).	
4	250 Hours		Serpentine Belt	Inspect condition of serpentine belt. Check for loose, torn, frayed, missing, excessively worn, or unevenly worn belt. Replace serpentine belt as needed (WP 0048 00).	

Table 1. Unit Preventive Maintenance Checks and Services (PMCS) Including Lubrication Instructions for the 966H - Continued.

ITEM NO.	INTERVAL	MAN-HOURS	LOCATION ITEM TO CHECK/ SERVICE	PROCEDURE	NOT FULLY MISSION CAPABLE IF:
5	250 Hours	0.2 Hour	Differential and Final Drive - Front and Rear Axles	Check oil level in front and rear axles. Add oil if level is low (WP 0111 00).	
6	250 Hours	0.2 Hour	Hood Tilt Actuator	a. Raise hood (TM 5-3805-291-10). b. Wipe two actuator grease fittings clean with a rag. Also wipe actuator inner post clean. c. Wipe GAA grease on inner post, then apply GAA grease to two grease fittings, until grease escapes back through each fitting, approximately 15 to 20 pumps. d. Close hood (TM 5-3805-291-10).	
					
7	500 Hours	0.5 Hour	Hydraulic System Oil Filters	Replace hydraulic system oil filter elements (WP 0148 00).	
8	500 Hours	1.0 Hour	Engine Oil and Filter	Change engine oil and replace engine oil filter element (WP 0025 00).	

Table 1. Unit Preventive Maintenance Checks and Services (PMCS) Including Lubrication Instructions for the 966H - Continued.

ITEM NO.	INTERVAL	MAN-HOURS	LOCATION / ITEM TO CHECK/ SERVICE	PROCEDURE	NOT FULLY MISSION CAPABLE IF:
9	500 Hours		Fuel System Primary Filter	 **WARNING** **DO NOT perform fuel system checks, inspections, or maintenance while smoking or near fire, flames, or sparks. Fuel may ignite, causing injury or death to personnel or damage to equipment.** Replace fuel system primary filter element (WP 0036 00).	
10	500 Hours or Semi-annual		Fuel System Secondary Filter	 **WARNING** **DO NOT perform fuel system checks, inspections, or maintenance while smoking or near fire, flames, or sparks. Fuel may ignite, causing injury or death to personnel or damage to equipment.** Replace fuel system secondary filter element (WP 0035 00).	
11	1,000 Hours or Semi-annual	1.0 Hour	Transmission	a. Drain transmission oil (WP 0100 00). b. Replace transmission oil filter element (WP 0105 00). c. Remove, clean, and reinstall transmission magnetic screen (WP 0100 00). d. Replace transmission breather (WP 0100 00). e. Refill transmission (WP 0100 00).	

Table 1. Unit Preventive Maintenance Checks and Services (PMCS) Including Lubrication Instructions for the 966H - Continued.

ITEM NO.	INTERVAL	MAN-HOURS	LOCATION / ITEM TO CHECK/ SERVICE	PROCEDURE	NOT FULLY MISSION CAPABLE IF:
12	1,000 Hours or Semi-annual		Rollover Protective Structure (ROPS)	**CAUTION** **DO NOT straighten ROPS. Do not repair ROPS by welding reinforcement plates to ROPS. Any repair to ROPS will not return ROPS to its original condition. A damaged ROPS must be replaced.**	
				a. Inspect ROPS for cracks, bends, or broken welds. Replace ROPS if cracks, breaks, or bends are evident (WP 0132 00).	If cracks, bends, or broken welds are evident.
				CAUTION **ROPS mounting bolt threads should be coated with oil before installing bolts. Failure to apply oil to bolt threads can result in improper bolt torque.**	
				b. At each corner of cab, inspect ROPS for loose or damaged mounting bolts (TM 5-3805-291-10).	
				c. Replace any damaged or missing bolts with original equipment parts ONLY. Tighten bolts to 340 lb-ft (461 Nm).	

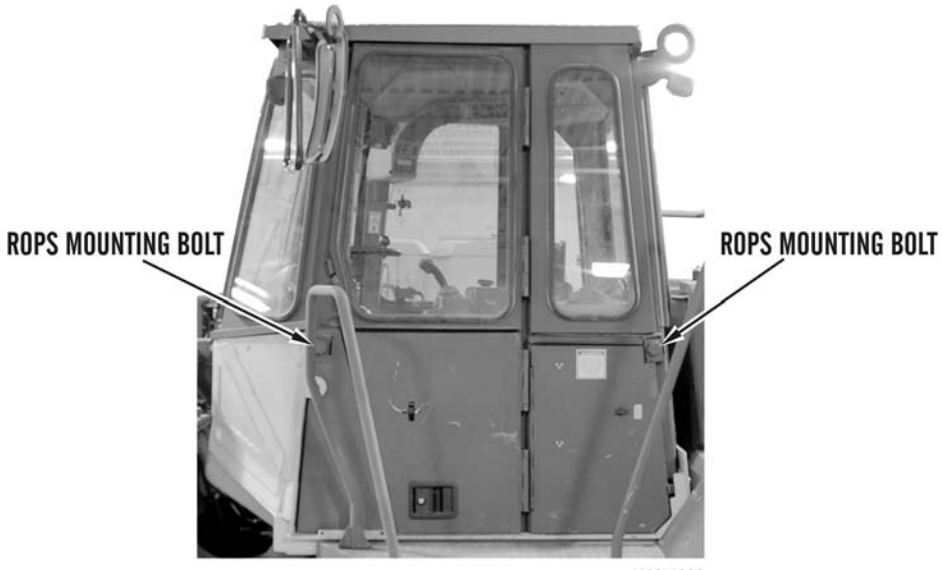

Table 1. Unit Preventive Maintenance Checks and Services (PMCS) Including Lubrication Instructions for the 966H - Continued.

ITEM NO.	INTERVAL	MAN-HOURS	LOCATION / ITEM TO CHECK/ SERVICE	PROCEDURE	NOT FULLY MISSION CAPABLE IF:
12 (Cont)	**1,000 Hours or Semi-annual**		**Rollover Protective Structure (ROPS)**	d. At each corner under cab, inspect for loose or damaged cab mounting bolt. Tighten each mounting bolt to 629 ± 74 lb-ft (850 ± 100 Nm).	Bolts are missing.
				e. Operate machine on a rough surface. Replace ROPS if ROPS emits a noise or rattles (TM 5-3805-291-10).	
13	**Semiannual**		**Road Test and Walk Around Inspection**	**NOTE** **Test drive machine over varied terrain for at least 15 minutes, until fully warmed up.**	
				a. Operate machine and check for proper operation of engine, transmission, steering, brakes, differentials and final drives, and work tool hydraulic system (TM 5-3805-291-10). Be alert for unusual noises, excessive vibration, hesitation/sluggish response, and improper instrument panel gage readings.	Machine systems do not operate properly. Unusual noises, excessive vibration, hesitation/sluggish response, or improper instrument panel gage readings are noted.
				b. Park machine and check around and under machine for evidence of leaks: oil, fuel, and engine coolant.	Any fuel leaks are evident. Class III oil or coolant leaks are evident.
				c. Ensure machine is clean, to provide good visibility for walk around inspection.	

Table 1. Unit Preventive Maintenance Checks and Services (PMCS) Including Lubrication Instructions for the 966H - Continued.

ITEM NO.	INTERVAL	MAN-HOURS	LOCATION ITEM TO CHECK/ SERVICE	PROCEDURE	NOT FULLY MISSION CAPABLE IF:
13 (Cont)	**Semiannual**		**Road Test and Walk Around Inspection**	d. Perform a walk around inspection of machine, to include opening all compartments and access doors. Include an inspection of underside of machine and cab interior. Check for: (1) loose, damaged, or missing parts (2) oil, fuel, and engine coolant leaks (3) pitting or corrosion on hydraulic cylinder rods (4) cracked or broken welds (5) corrosion (6) frayed, chafed, worn, or cut hoses and tubes (7) frayed, chafed, cut, or burned electrical wires (8) disconnected, loose, or damaged electrical connections	Any damage is noted that would impair operation. Any fuel leaks are evident. Class III oil or coolant leaks are evident.

Table 1. Unit Preventive Maintenance Checks and Services (PMCS) Including Lubrication Instructions for the 966H - Continued.

ITEM NO.	INTERVAL	MAN-HOURS	LOCATION ITEM TO CHECK/ SERVICE	PROCEDURE	NOT FULLY MISSION CAPABLE IF:
14	Semiannual		Batteries	 **WARNING** • To avoid injury, eye protection and acid-resistant gloves must be worn when working around batteries. Do not smoke, use open flame, make sparks, or create other ignition sources around batteries. If a battery is giving off gases, it can explode and cause injury to personnel. Remove all jewelry such as rings, ID tags, watches, and bracelets. If jewelry or a tool contacts a battery terminal, a direct short will result in instant heating, damage to equipment, and injury to personnel. • Ensure battery disconnect switch is in OFF position before performing this task. Failure to follow this warning may result in injury to personnel or damage to equipment. • Sulfuric acid contained in batteries can cause serious burns. If battery corrosion or electrolyte makes contact with skin, eyes, or clothing, take immediate action to stop the corrosive burning effects. Failure to follow these procedures may result in injury or death to personnel. a. Eyes. Flush with cold water for no less than 15 minutes and seek medical attention immediately. b. Skin. Flush with large amounts of cold water until all acid is removed. Seek medical attention as required. c. Internal. If corrosion or electrolyte is ingested, drink large amounts of water or milk. Follow with milk of magnesia, beaten egg, or vegetable oil. Seek medical attention immediately. d. Clothing/Equipment. Wash area with large amounts of cold water. Neutralize acid with baking soda or household ammonia. • Use extreme caution when handling heavy parts. Provide adequate support and use assistance during procedure. Ensure any lifting equipment used is in good condition and of suitable load capacity. Keep clear of heavy parts supported only by lifting equipment. Failure to follow this warning may result in injury or death to personnel.	

Table 1. Unit Preventive Maintenance Checks and Services (PMCS) Including Lubrication Instructions for the 966H - Continued.

ITEM NO.	INTERVAL	MAN-HOURS	LOCATION / ITEM TO CHECK/ SERVICE	PROCEDURE	NOT FULLY MISSION CAPABLE IF:
14 (Cont)	Semiannual		Batteries	**CAUTION** • **If battery compartment is corroded, it will be necessary to remove batteries and clean compartment to remove acid residues and corrosion.** • **Buildup of dirt or corrosion on batteries may lead to electrical malfunctions.**	
				a. Remove battery compartment door on left side of machine behind ladder (TM 5-3805-291-10).	
				b. Check battery hold-downs for looseness, corrosion, or damage. If loose, tighten (WP 0096 00).	Hold-down is damaged, loose, or missing.
				c. Clean tops of batteries with a clean rag.	
				d. Inspect batteries for evidence of a cracked case.	Battery is cracked, leaking, or missing.
				e. Disconnect battery cables (WP 0097 00).	Broken or corroded connections or frayed/burned/melted cables.
				f. Clean battery terminals with an abrasive cloth.	
				g. Connect battery cables (WP 0097 00). Coat terminal connections with petrolatum.	
				h. Install battery compartment door (TM 5-3805-291-10).	
15	Semiannual		Radiator	 **WARNING**  **DO NOT service cooling system unless engine has been allowed to cool down. This is a pressurized cooling system and escaping steam or hot coolant may result in serious burns.**	
				a. Open radiator screen at rear of machine (TM 5-3805-291-10).	

Table 1. Unit Preventive Maintenance Checks and Services (PMCS) Including Lubrication Instructions for the 966H - Continued.

ITEM NO.	INTERVAL	MAN-HOURS	LOCATION / ITEM TO CHECK/ SERVICE	PROCEDURE	NOT FULLY MISSION CAPABLE IF:
15 (Cont)	**Semiannual**		**Radiator**	b. Use control knob to release hydraulic oil cooler. Swing hydraulic oil cooler and AC condenser away from radiator (TM 5-3805-291-10).	

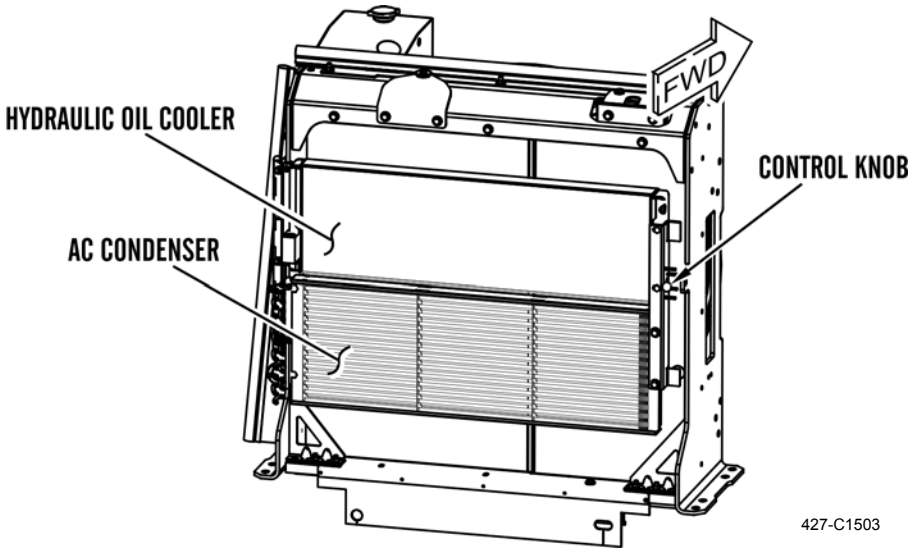



WARNING

Particles blown by compressed air are hazardous. Use a maximum of 30 psi (207 kPa) when cleaning components. DO NOT direct compressed air against human skin. Make sure air stream is directed away from user and other personnel in the area. To prevent injury, user must wear protective goggles or face shield. Failure to follow this warning may result in injury to personnel.

		c. Use compressed air to clean radiator cooling fins and hydraulic oil cooler.	Class III leaks are evident.

Table 1. Unit Preventive Maintenance Checks and Services (PMCS) Including Lubrication Instructions for the 966H - Continued.

ITEM NO.	INTERVAL	MAN-HOURS	LOCATION ITEM TO CHECK/ SERVICE	PROCEDURE	NOT FULLY MISSION CAPABLE IF:
15 (Cont)	Semiannual		Radiator	d. Swing hydraulic oil cooler and AC condenser back into operating position. Close radiator screen access door (TM 5-3805-291-10).	
16			Air Filter	Clean and inspect. Replace as necessary (WP 0030 00).	
17	2,000 Hours or Annual		Service Brake Discs - Front and Rear Axles	Notify direct support to perform service brake disc wear check (WP 0015 00).	
18	2,000 Hours or Annual	1.0 Hour	Differential and Final Drives - Front and Rear Axles	Change differential and final drive oil (WP 0111 00).	
19	2,000 Hours or Annual	1.0 Hour	Hydraulic System	a. Change hydraulic system oil and replace hydraulic system filter (WP 0148 00). b. Remove breaker relief valve from top of hydraulic tank.	

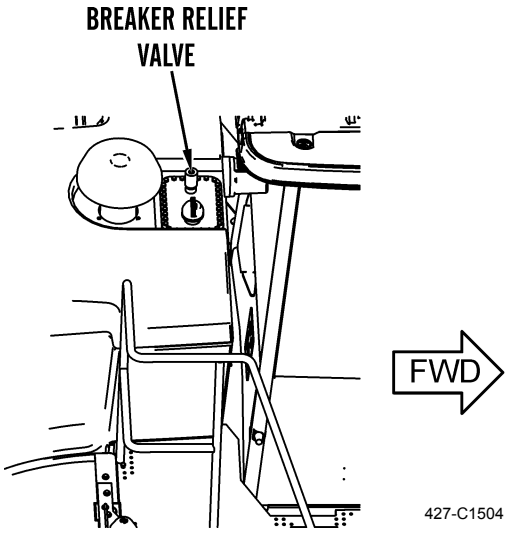

Table 1. Unit Preventive Maintenance Checks and Services (PMCS) Including Lubrication Instructions for the 966H - Continued.

ITEM NO.	INTERVAL	MAN-HOURS	LOCATION ITEM TO CHECK/ SERVICE	PROCEDURE	NOT FULLY MISSION CAPABLE IF:
19 (Cont)	2,000 Hours or Annual	1.0 Hour	Hydraulic System	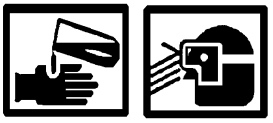 **WARNING**  **Solvent cleaning compound MIL-PRF-680 Type III is an environmentally compliant and low-toxic material. However, it may be irritating to the eyes and skin. Use protective gloves and goggles. Use in well-ventilated areas. Keep away from open flames and other sources of ignition. Failure to do so may result in injury or death to personnel.** c. Clean breaker relief valve in solvent cleaning compound.  **WARNING** **Particles blown by compressed air are hazardous. DO NOT exceed 15 psi (103 kPa) nozzle pressure when drying parts with compressed air. DO NOT direct compressed air against human skin. Make sure air stream is directed away from user and other personnel in the area. To prevent injury, user must wear protective goggles or face shield. Failure to follow this warning may result in injury to personnel.** d. Dry breaker relief valve using compressed air. e. Reinstall breaker relief valve on top of hydraulic tank.	

Table 1. Unit Preventive Maintenance Checks and Services (PMCS) Including Lubrication Instructions for the 966H - Continued.

ITEM NO.	INTERVAL	MAN-HOURS	LOCATION ITEM TO CHECK/ SERVICE	PROCEDURE	NOT FULLY MISSION CAPABLE IF:
20	**2,000 Hours or Annual**		**Fuel System**	a. Notify Direct Support Maintenance to adjust electronic unit fuel injectors (WP 0187 00). b. Notify Direct Support Maintenance to adjust intake and exhaust valve lash (WP 0179 00).	
				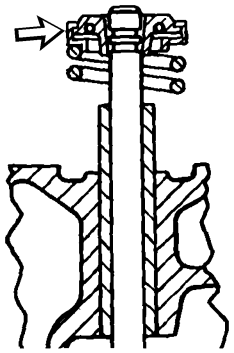 427-C1500	
21	**Annual**		**AC Inline Refrigerant Dryer and Accumulator (With Desiccant)**	**NOTE** **If operating in a high humidity climate, AC inline refrigerant dryer should be replaced every 1,000 hours or semiannually.** a. Notify Direct Support Maintenance to replace AC inline refrigerant dryer (WP 0224 00). b. Notify Direct Support Maintenance to replace AC refrigerant accumulator (with desiccant) (WP 0225 00).	

Table 1. Unit Preventive Maintenance Checks and Services (PMCS) Including Lubrication Instructions for the 966H - Continued.

ITEM NO.	INTERVAL	MAN-HOURS	LOCATION ITEM TO CHECK/ SERVICE	PROCEDURE	NOT FULLY MISSION CAPABLE IF:
22	2,000 Hours or Annual	1.0 Hour	Cooling System	 **WARNING**  **DO NOT service cooling system unless engine has been allowed to cool down. This is a pressurized cooling system and escaping steam or hot coolant may result in serious burns.** **NOTE** • **Cooling system is provided with ELC (pink colored) coolant from the factory. However, green coolant may be used to top off.** • **At first annual service, drain ELC and replace with A-A-52624 coolant (WP 0041 00).** • **A freeze protection indication other than -50°F (-47°C) requires corrective action. Partially drain coolant and replace with water or antifreeze to bring freeze protection to -50°F (-47°C).** • **Do not test strip at temperatures below 50°F (10°C) or above 85°F (30°C).** a. Use test strip to check for proper freeze point and nitrite level. If levels are out of specification, drain and refill cooling system (WP 0041 00). b. Test for reserve corrosion protection using test strip. c. Instructions for test strip use are as follows: (1) Dip test strip into coolant solution and remove immediately. (2) After 15 seconds, compare color of test strip with color chart on container. (a) Blue indicates coolant solution is safe to use.	

Table 1. Unit Preventive Maintenance Checks and Services (PMCS) Including Lubrication Instructions for the 966H - Continued.

ITEM NO.	INTERVAL	MAN-HOURS	LOCATION ITEM TO CHECK/ SERVICE	PROCEDURE	NOT FULLY MISSION CAPABLE IF:
22 (Cont)	2,000 Hours or Annual	1.0 Hour	Cooling System	(b) Green indicates coolant solution offers marginal protection, but is safe to use until next service inspection. (c) Yellowish green indicates coolant solution is unsafe to use. Drain and refill coolant system (WP 0041 00). d. Drain small amount of coolant into container and check for rust, foreign particles, and/or sediment. If any contamination is found, drain, flush, and refill coolant system (WP 0041 00).	
23	3,000 Hours or Biennial	1.0 Hour	Cooling System	a. Drain cooling system until coolant level is below thermostat housing (WP 0044 00). b. Replace thermostat (WP 0044 00). c. Refill cooling system with antifreeze (WP 0041 00).	
24	Triennial		Seat Belt	**NOTE** • **Seat belt should be replaced within 3 years of date of installation or within 5 years of date of manufacture, whichever interval comes first.** • **A date label determining age of seat belt is attached to seat belt.** Replace seat belt (WP 0141 00).	
25	6,000 Hours or Triennial	1.5 Hour	Cooling System	a. Drain and flush cooling system (WP 0041 00). b. Replace thermostat (WP 0044 00). c. Refill cooling system with antifreeze (WP 0041 00).	

Table 2. 966H PMCS Mandatory Replacement Parts List.

ITEM NO.	INTERVAL	PART NUMBER	NSN	NOMENCLATURE	QTY
1	Initial 250 Hours	1R-1809		Filter Element, Transmission Oil	1
2	250 Hours	9Y1758	5330-01-466-9290	Gasket, Engine Crankcase Breather	1
3	500 Hours	225-4118		Filter Element, Hydraulic System	1
4	500 Hours	144-0832		Filter Element, Hydraulic System	1
5	500 Hours	1R-1808	2940-01-533-3470	Filter Element, Engine Oil	1
6	500 Hours	8L-2786	5330-00-973-8301	Packing, Preformed	1
7	500 Hours	1R-0770	4330-01-530-2969	Filter Element, Fuel System, Primary	1
8	500 Hours/S	1R-0762	4330-01-530-0945	Filter Element, Fuel System, Secondary	1
9	1,000 Hours/S	1R-1809		Filter Element, Transmission Oil	1
10	1,000 Hours/S	9G-5127	2520-01-164-0077	Breather, Transmission	1
11	1,000 Hours/S	1H-8128	5331-00-555-3810	O-ring, Transmission Magnetic Screen Cover	1
12	2,000 Hours/A	225-4118		Filter Element, Hydraulic System	1
13	A	144-0832		Filter Assembly	1
14	A	257-3227	4440-01-545-2989	Dryer, Refrigerant, AC	1
15	A	9X-7383	5331-01-439-2614	O-ring, Refrigerant Dryer, AC	1
16	A	9X-7380	5330-01-439-2612	O-ring, Refrigerant Dryer, AC	1
17	A	186-6189		Accumulator, AC Refrigerant	1
18	A	9X-7382	5331-01-439-2615	O-ring, Accumulator	1
19	A	9X-7383	5330-01-439-2614	O-ring, Accumulator	1
20	6,000 Hours/TR	248-5513	6685-01-533-0759	Thermostat - Regulator, Water	1
21	6,000 Hours/TR	227-5075	5330-01-534-3935	Seal, Thermostat Housing - Gasket	1
22	6,000 Hours/TR	3S-9643	5330-00-246-6380	Seal, Lip-Type, Thermostat	1
23	TR	272-2272		Belt, Seat	1
24	12,000 Hours/HX	248-5513	6685-01-533-0759	Regulator, Water	1
25	12,000 Hours/HX	227-5075	5330-01-534-3935	Seal, Thermostat Housing - Gasket	1
26	12,000 Hours/HX	3S-9643	5330-00-246-6380	Seal, Plain Encased, Thermostat	1
27	12,000 Hours/HX	7L-6580	5331-01-351-5126	O-Ring	1

GENERAL LUBRICATION PROCEDURES

NOTE

- **Lubrication instructions contained in this PMCS are MANDATORY.**
- **Overall views of lubrication points are located at the end of this work package.**
- **Localized views are provided following the overall views. Reference to these localized views is provided from the overall views.**

1. Recommended intervals are based on normal conditions of operation, temperature, and humidity. When operating under extreme conditions, such as high or low temperatures or exposure to sand or dust, lubricants should always be changed more frequently. Lubricants that have become contaminated will be changed regardless of interval. When in doubt, notify your supervisor.



WARNING

When servicing this machine, performing maintenance or disposing of materials such as engine coolant, hydraulic fluid, lubricants, battery acids or batteries, and CARC paint, consult your unit/local hazardous waste disposal center or safety office for local regulatory guidance. If further information is needed, please contact The Army Environmental Hotline at 1-800-872-3845. Failure to do so may result in injury or death to personnel.

2. Ensure all fluids drained as a result of lubrication or maintenance are collected in a suitable container and disposed of in accordance with local policy and ordinances. Clean up any spills immediately.
3. Keep all lubricants in a closed container and store in a clean, dry place away from extreme heat. Keep container covers clean and do not allow dust, dirt, or other foreign material to mix with lubricants. Keep all lubrication equipment clean and ready for use.
4. Maintain a good record of all lubrication performed and report any problem noted during lubrication. Refer to DA PAM 738-750 for maintenance forms and procedures to record and report any findings.



WARNING

Solvent cleaning compound MIL-PRF-680 Type III is an environmentally compliant and low toxic material. However, it may be irritating to the eyes and skin. Use protective gloves and goggles. Use in well-ventilated areas. Keep away from open flames and other sources of ignition. Failure to do so may result in injury or death to personnel.

5. Keep all external parts of equipment not requiring lubrication free of lubricants. Before lubrication, wipe lubrication fittings with a clean rag and solvent cleaning compound. After lubrication, wipe off excess oil or grease to prevent accumulation of foreign matter.
6. Refer to FM 9-207, *Operation and Maintenance of Ordnance Materiel in Cold Weather* for lubrication instructions in cold weather.
7. For equipment under manufacturer's warranty, hardtime oil service intervals shall be followed. Intervals shall be shortened if lubricants are known to be contaminated or if operation is under adverse conditions (i.e., longer-than-usual operating hours, extended idling periods, or extreme dust).

NOTE

The 966H Wheel Loader is not enrolled in the Army Oil Analysis Program (AOAP).

8. Engine, transmission, and hydraulic system oil filters shall be changed when:
   a. They are known to be contaminated or clogged; or
   b. At prescribed hardtime intervals.

PREVENTIVE MAINTENANCE CHECKS AND SERVICES (PMCS) INCLUDING LUBRICATION INSTRUCTIONS - CONTINUED 0020 00

GENERAL LUBRICATION PROCEDURES - CONTINUED

- KEY-

LUBRICANT/ COMPONENT	REFILL CAPACITY	EXPECTED TEMPERATURES*	INTERVALS
OE/HDO Lubricating Oil, ICE, Tactical Service (MIL-PRF-2104)			H - Hourly S - Semiannual A - Annual B - Biennial TR - Triennial HX - Hexannual
Engine Crankcase	9.25 gal. (35 L)	See Chart A	
Transmission	13.2 gal. (50 L)	See Chart A	
Hydraulic Tank	29 gal. (110 L)	See Chart A	
Hydraulic System	52.3 gal. (198 L)		
GAA Grease, Automotive, and Artillery			
Remote Grease Fittings	As Required	See Chart A	
Lift Arms and Linkage	As Required	See Chart A	
Steering Cylinder Rod Ends	As Required	See Chart A	
Hood Tilt Actuator	As Required	All Temperatures	
ANTIFREEZE			
Cooling System	11.2 gal. (42.3 L)	See Chart B	

* For arctic operation, refer to FM 9-207.

GENERAL LUBRICATION PROCEDURES - CONTINUED

Chart A

Compartment	Commercial Lubricant	Viscosity Grade	Military Lubricant	Temperature Range
Engine	CF-4 or Better	SAE 5W-40	OE/HDO-5/40	-25 to 120°F (-32 to 49°C)
		SAE 15W-40	OE/HDO-15/40	15 to 120°F (-9 to 49°C)
		SAE 0W-30	OEA-30	-40 to 90°F (-40 to 32°C)
Transmission	TO-4	SAE 40	OE/HDO-40	40 to 120°F (4 to 49°C)
		SAE 50	TO-4	50 to 120°F (10 to 49°C)
		SAE 0W-30	OEA-30	-40 to 70°F (-40 to 21°C)
Hydraulic	CF or Better	SAE 5W-40	OE/HDO-5/40	-25 to 120°F (-32 to 49°C)
		SAE 15W-40	OE/HDO-15/40	-5 to 120°F (-15 to 49°C)
		SAE 0W-30	OEA-30	-40 to 100°F (-40 to 38°C)
Axles	TO-4	SAE 50	TO-4	50 to 120°F (-10 to 49°C)
		SAE 0W-30	OEA-30	-40 to 50°F (-40 to 10°C)
Grease	MPG NLGI	No. 2	GAA	-25°F to 120°F (-32 to 49°C)

Chart B

Coolant	Type	Mixture	Military Coolant	Temperature Range
Engine Coolant	I-Ethylene Glycol II-Propylene Glycol	60/40	A-A-52624	-50 to 120°F (-46 to 49°C)
Engine Coolant	I-Ethylene Glycol II-Propylene Glycol	50/50	A-A-52624	-30 to 120°F (-34 to 49°C)

**PREVENTIVE MAINTENANCE CHECKS AND SERVICES (PMCS)
INCLUDING LUBRICATION INSTRUCTIONS - CONTINUED** **0020 00**

GENERAL LUBRICATION PROCEDURES - CONTINUED

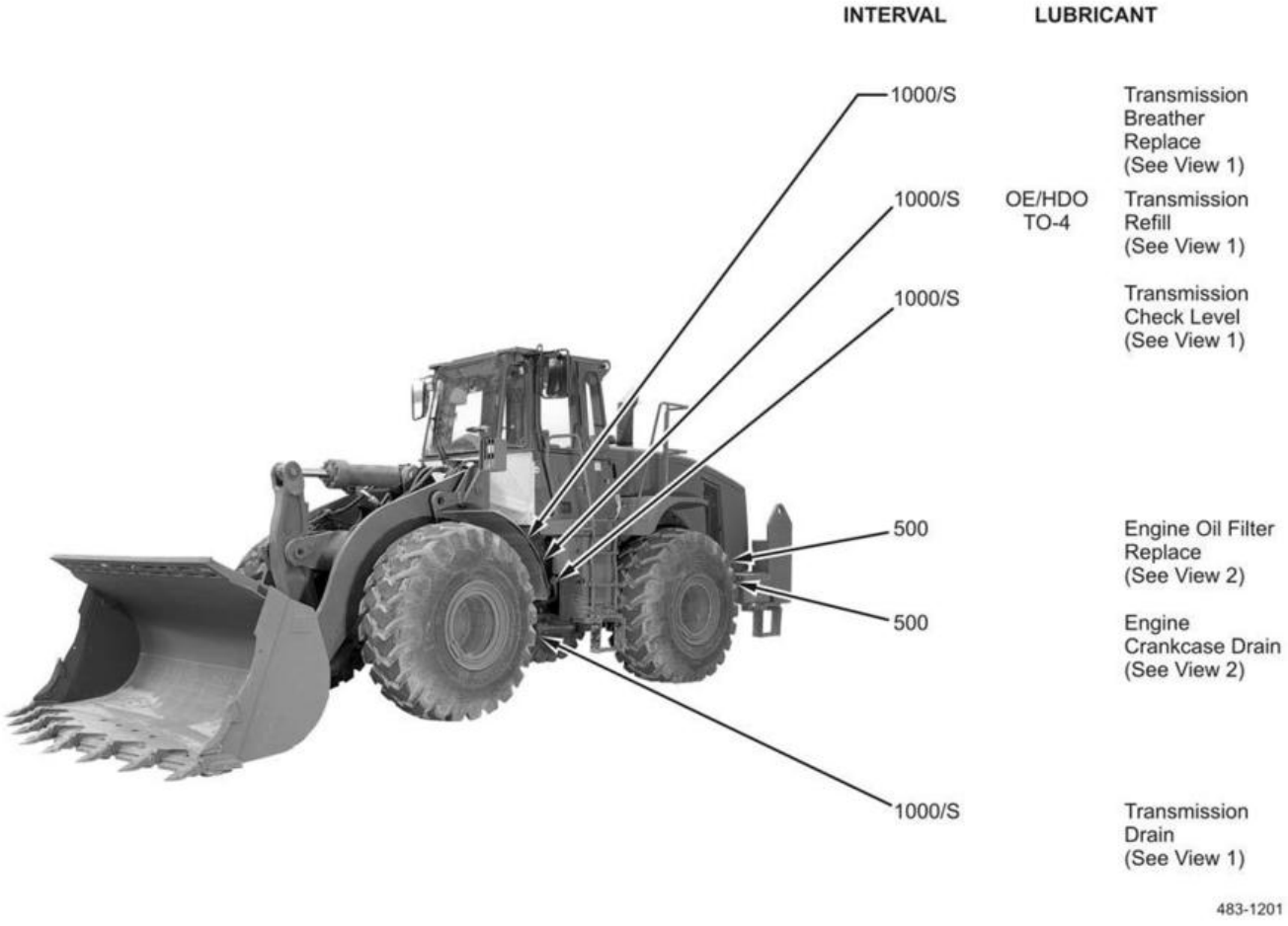

PREVENTIVE MAINTENANCE CHECKS AND SERVICES (PMCS) INCLUDING LUBRICATION INSTRUCTIONS - CONTINUED **0020 00**

GENERAL LUBRICATION PROCEDURES - CONTINUED

	LUBRICANT	INTERVAL
Engine Crankcase Refill (See View 2)	OE/HDO OEA-30	500
Engine Crankcase Check Level (See View 2)		500
Rear Axle Differential and Final Drives Check Level/Add (See View 3)	OE/HDO TO-4	250
Transmission Oil Filter Replace (See View 1)		Initial 250 and 1000/S
Transmission Magnetic Strainer Clean (See View 1)		1000/S
Front Axle Differential and Final Drives Check Level/Add (See View 3)	OE/HDO TO-4	250



483-1202

PREVENTIVE MAINTENANCE CHECKS AND SERVICES (PMCS) INCLUDING LUBRICATION INSTRUCTIONS - CONTINUED **0020 00**

GENERAL LUBRICATION PROCEDURES - CONTINUED

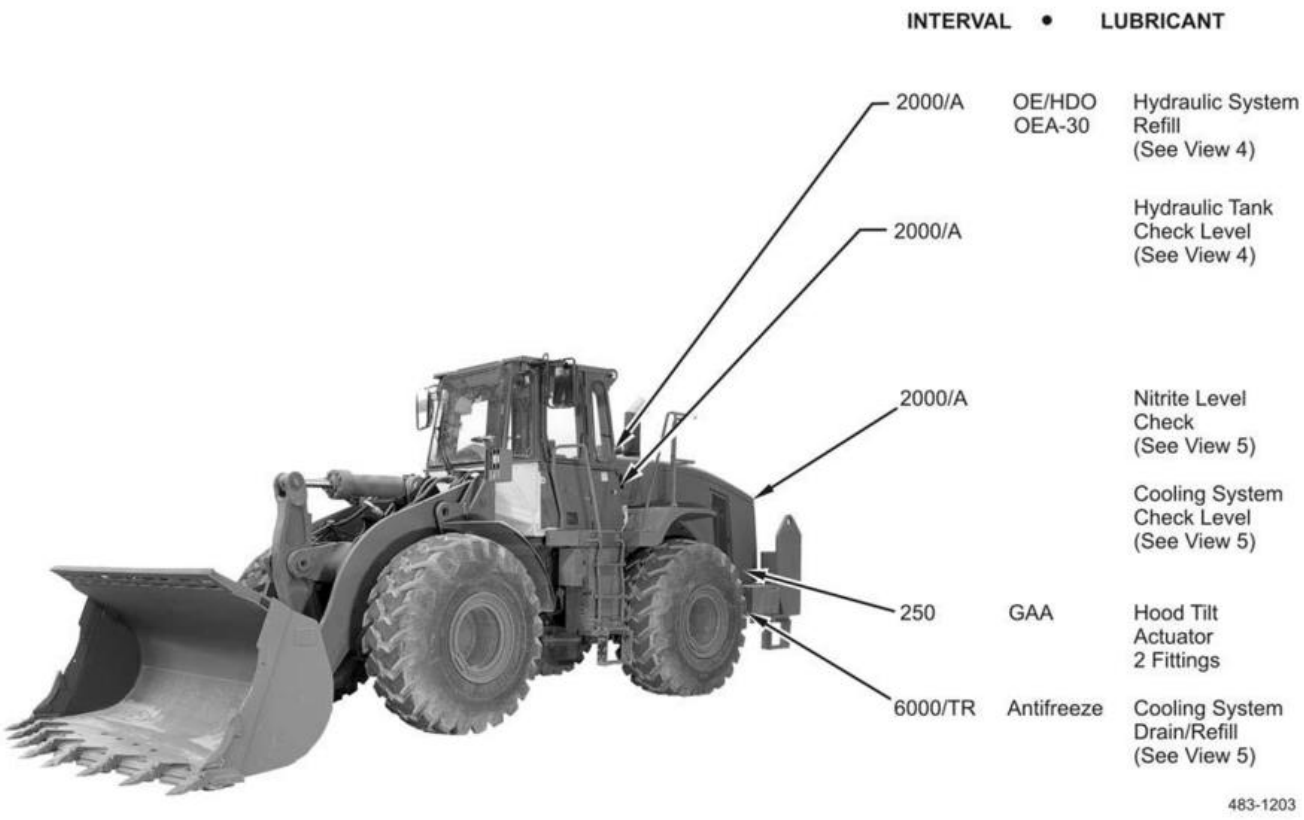

GENERAL LUBRICATION PROCEDURES - CONTINUED

	LUBRICANT	• INTERVAL
Hydraulic Tank Breather Relief Valve Clean		2000/A
Hydraulic System Oil Filters Replace (See View 4)		500 and 2000/A
Rear Axle Differential and Final Drives Drain/Refill (See View 3)	OE/HDO TO-4	2000/A
Hydraulic System Drain (See View 4)		2000/A
Front Axle Differential and Final Drives Check Level/Add (See View 3)	OE/HDO	250



VIEW 1 -- TRANSMISSION

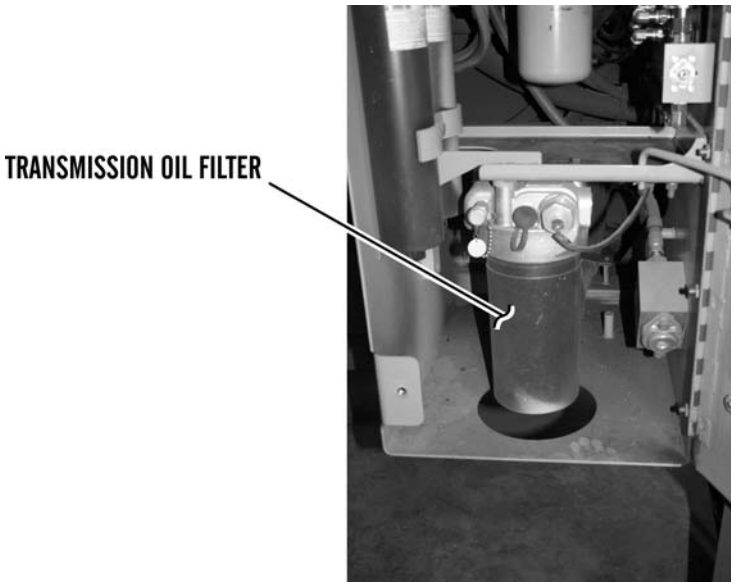

427-C1507

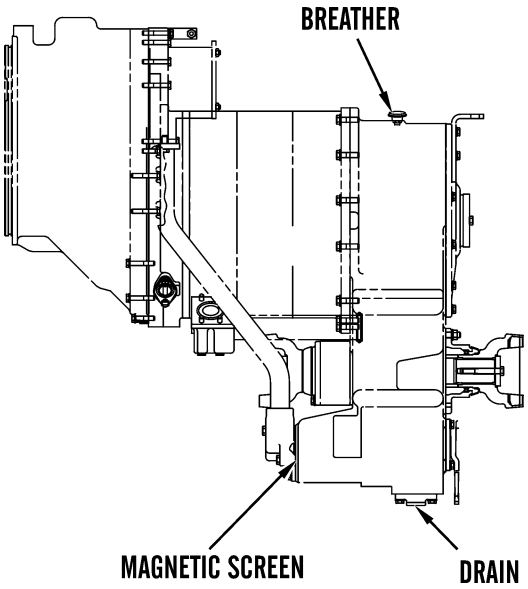

427-C1360

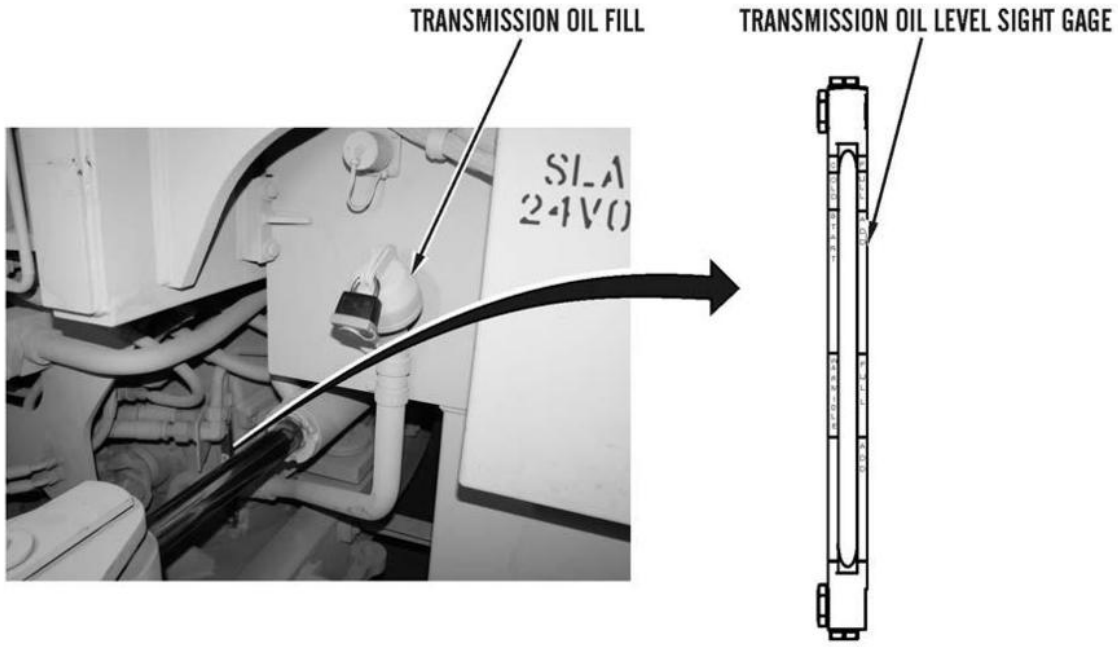

427-1517

VIEW 2 -- ENGINE

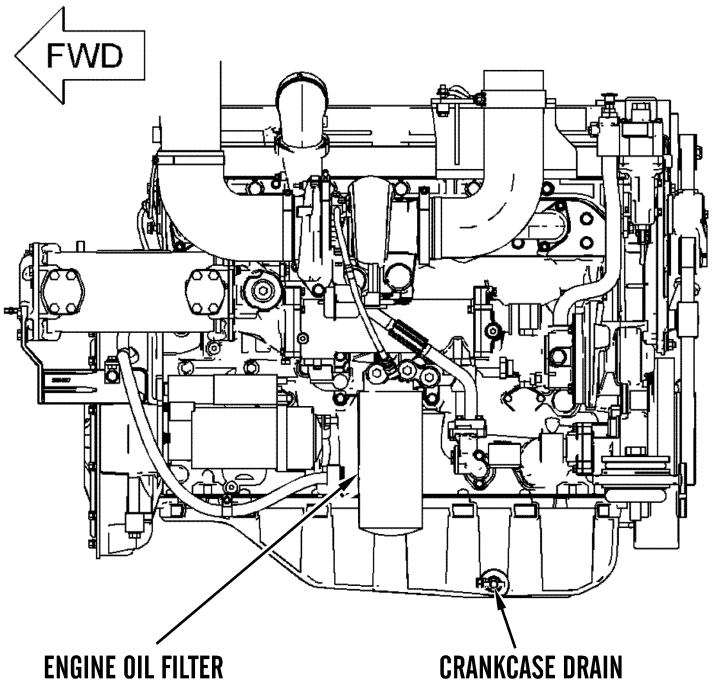

427-C1509

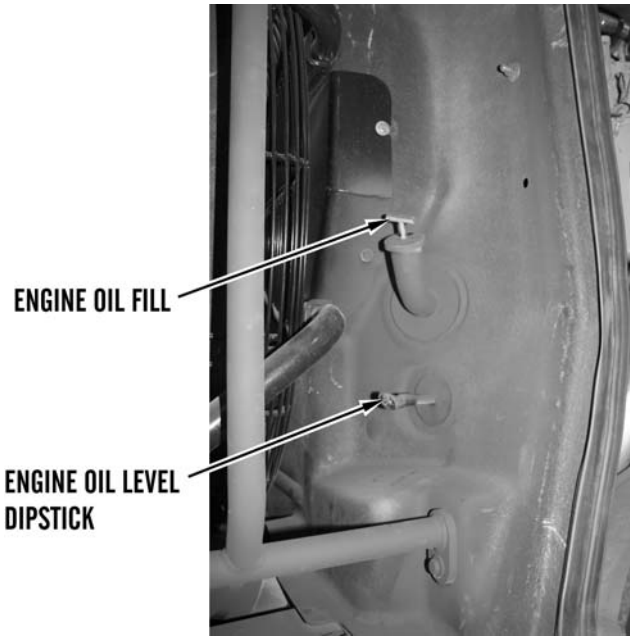

427-C1510

VIEW 3 -- FRONT AND REAR AXLE DIFFERENTIALS/FINAL DRIVES

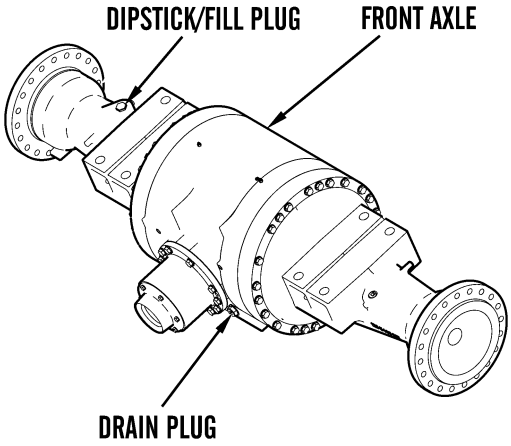

427-C1361

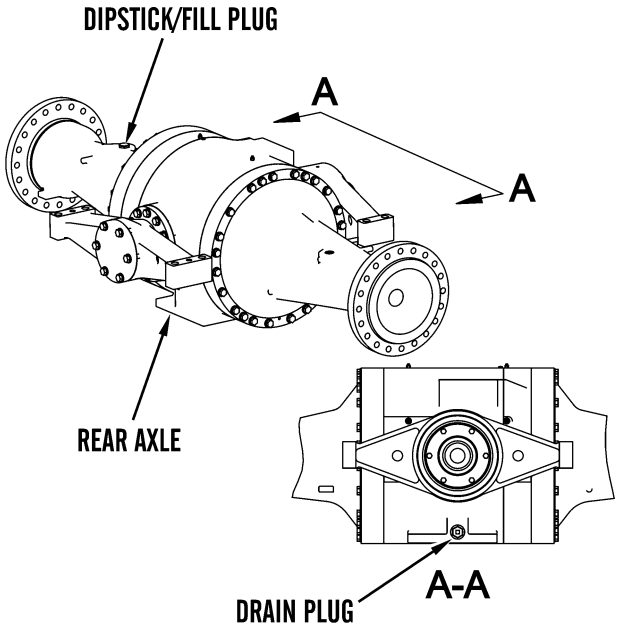

427-C1362

VIEW 4 -- HYDRAULIC SYSTEM

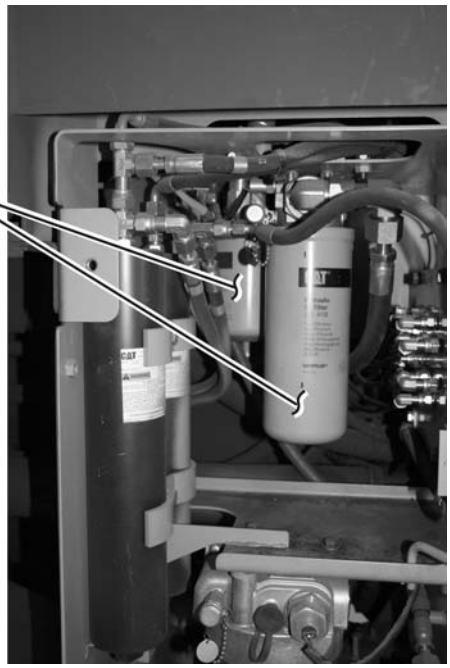

427-C1508



427-C1512



427-C1363

VIEW 5 -- COOLING SYSTEM

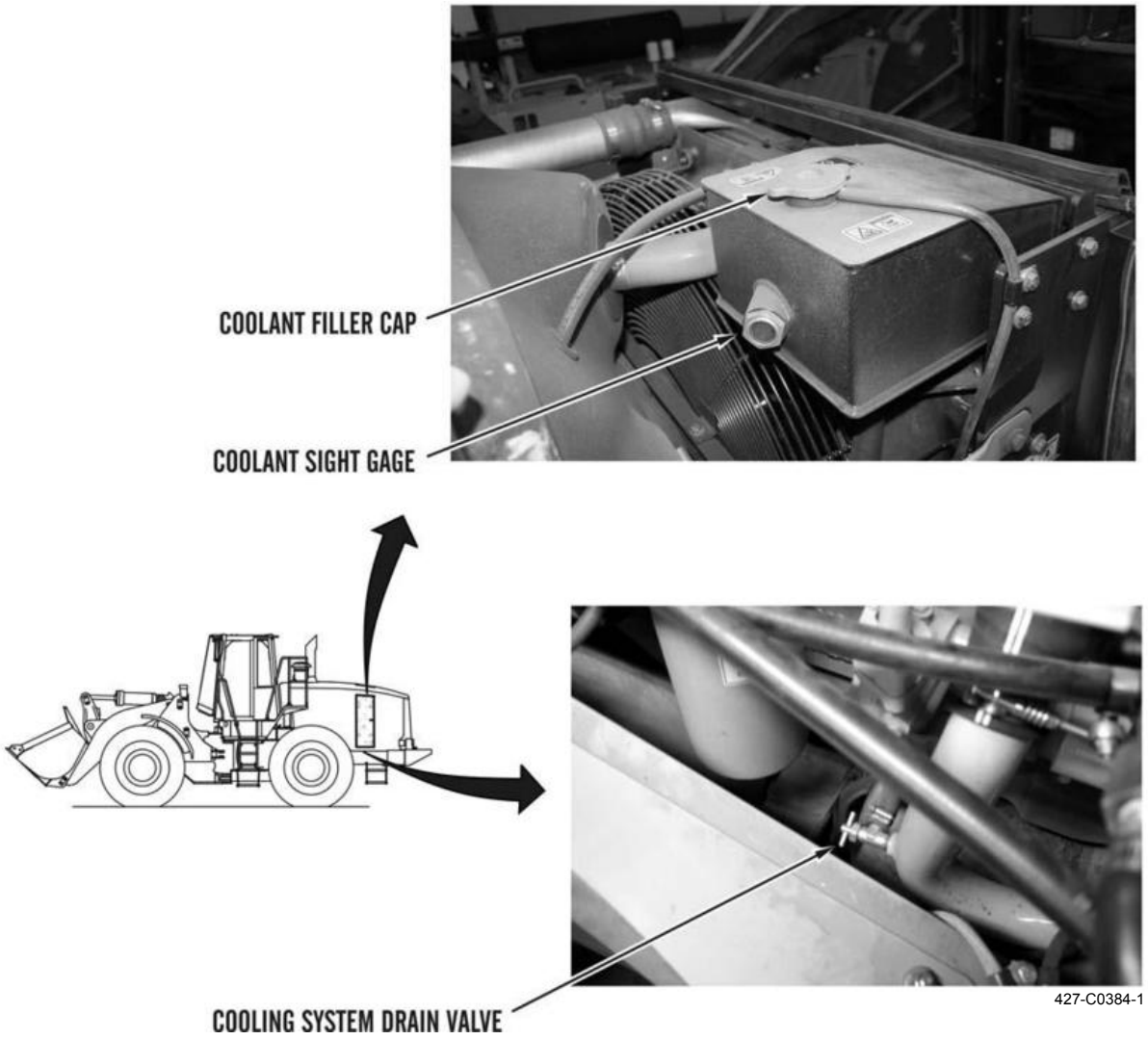

END OF WORK PACKAGE

SERVICE UPON RECEIPT 0021 00

GENERAL

1. When a 966H Wheel Loader is first received, determine whether it has been properly prepared for service and is in condition to perform its mission.

2. Follow these inspection and servicing instructions to assess the loader's condition.

INSPECTION INSTRUCTIONS

1. Read and follow all precautions and instructions on DD Form 1397, *Processing and Deprocessing Record for Shipment, Storage, and Issue of Vehicles and Spare Engines*.

2. Remove all packing and shipping material, such as tape, tiedown straps, protective covers, and shipping seals. Remove tape from exhaust pipe.



Solvent cleaning compound MIL-PRF-680 Type III is an environmentally compliant and low-toxic material. However, it may be irritating to the eyes and skin. Use protective gloves and goggles. Use in well-ventilated areas. Keep away from open flames and other sources of ignition. Failure to do so may result in injury or death to personnel.

3. Clean any exposed metal parts coated with rust preventive compound using Cleaning compound, solvent, type III (Item 7, WP 0233 00).

4. Inspect equipment for any damage incurred during shipment. Check if equipment has been modified.

5. Check equipment against packing slip to ensure shipment is complete. Report any discrepancies on SF Form 364, *Report of Discrepancy (ROD)*.

6. Clean all external surfaces as needed. Touch up any paint scratches (TM 43-0139, *Painting Instructions for Army Materiel,* and TB 43-0242, *CARC Spot Painting*).

7. Remove all Basic Issue Items (BII) and Components of End Item (COEI) items and stow in accordance with TM 5-3805-291-10.

SERVICING INSTRUCTIONS

1. Service machine in accordance with PMCS instructions in TM 5-3805-291-10 to include machine exercise and PMCS instructions in this manual (WP 0019 00 and WP 0020 00). Schedule the next PMCS on DA Form 2404 or DA Form 5988-E, *Equipment Inspection and Maintenance Worksheet*.

2. Refer to TM 5-3805-291-10 and perform functional checks of all major machine systems to ensure machine is ready for operation. Remove all warning tags.

END OF WORK PACKAGE

ELECTRICAL GENERAL MAINTENANCE INSTRUCTIONS 0022 00

THIS WORK PACKAGE COVERS

Cleaning and Inspection

Multiple-Pin Connector Identification Diagrams

Connector Repair

Sealed Connector Repair

Receptacle Connector Repair

Waterproof Connector Repair

Military Connector Repair

Ring Terminal Repair

Splicing Wires

Electrical Ground Points

Multimeter Usage

Relay Inspection and Test

Junction Box Inspection

Electrical Connectors Inspection (Engine)

Electrical Connectors Inspection (Powertrain)

Installation of Breakout T

INITIAL SETUP

Maintenance Level

Unit

Tools and Special Tools

Tool kit, general mechanic's, automotive (Item 90, WP 0232 00)

Shop equipment, automotive maintenance and repair: organizational maintenance, common no. 1 (Item 70, WP 0232 00)

Remover, electrical contact (Item 62, WP 0232 00)

Crimping tool, terminal

Materials/Parts

Cloth, abrasive (Item 8, WP 0233 00)

Detergent, general purpose, liquid (Item 9, WP 0233 00)

Materials/Parts - Continued

Flux, soldering (Item 13, WP 0233 00)

Grease, electrically conductive (Item 16, WP 0233 00)

Insulating sleeving, electrical (Item 19, WP 0233 00)

Insulating varnish, electrical (Item 20, WP 0233 00)

Maintenance kit, electrical connector (Item 23, WP 0233 00)

Rag, wiping (Item 35, WP 0233 00)

Repair kit, diesel engine (Item 37, WP 0233 00)

Tag, marker (Item 43, WP 0233 00)

References

WP 0039 00

WP 0057 00

NOTE

- **Use electrically conductive grease on unprotected (exposed to weather) electrical connectors before connections are made.**
- **Use electrical insulating varnish on all electrical connections mounted outside of machine which are exposed to harsh weather and/or road spray.**

CLEANING AND INSPECTION

CAUTION

Washing electrical wires with solvent cleaning compound or mineral spirits will cause serious damage or destroy the material.

1. Wash electrical wires with a mild solution of detergent and water and wipe dry.
2. Inspect electrical wires and repair if necessary as specified in accompanying diagrams.
3. Inspect all other components.

MULTIPLE-PIN CONNECTOR IDENTIFICATION DIAGRAMS

NOTE

The following diagrams illustrate typical multiple-pin connectors and identify pin numbers as viewed from wire side of connector.

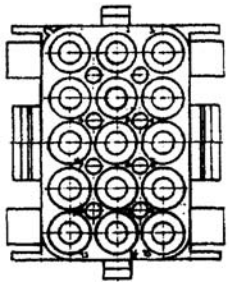

1	2	3
4	5	6
7	8	9
10	11	12
13	14	15

427-C1854

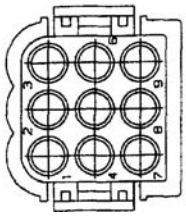

3	6	9
2	5	8
1	4	7

427-C1855

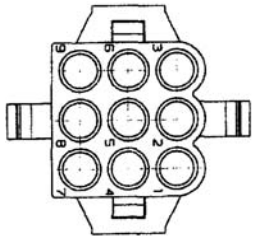

9	6	3
8	5	2
7	4	1

427-C1856

MULTIPLE-PIN CONNECTOR IDENTIFICATION DIAGRAMS - CONTINUED

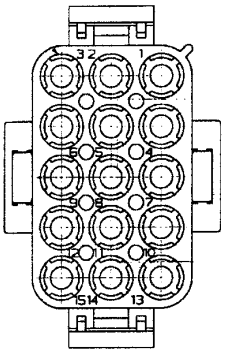

3	2	1
6	5	4
9	8	7
12	11	10
15	14	13

427-C1857

CONNECTOR REPAIR

NOTE

- **Perform this procedure for each wire of connector.**
- **Tag wires to aid in installation.**

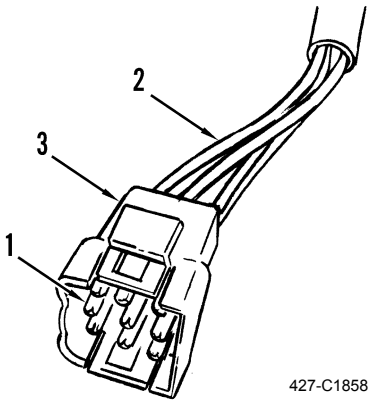

427-C1858

1. Using pin removal tool, position tool over pin (1) and push inward to retract two barbs of pin.
2. Remove wire (2) with pin (1) attached, from rear of connector (3).
3. If damaged, remove pin (1) from wire (2) by cutting through wire just behind pin.

NOTE

Perform steps 4 thru 6 only if pin was removed.

4. Using wire stripping tool, strip insulation from wire (2) to expose proper length of metal strands (4).
5. Using crimping tool, securely crimp tabs (5) of pin (1) over metal strands (4) of wire (2).

NOTE

The other two pin tabs may need to be crimped slightly to enter connector.

6. Using crimping tool, crimp tabs (6) at rear of pin (1) over insulation of wire (2).

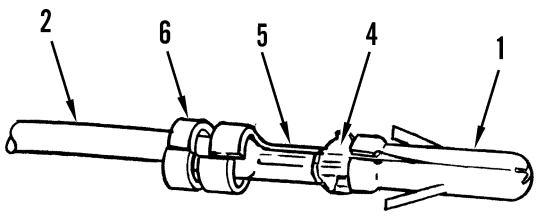

427-C1859

7. Push pin (1) into rear of connector (3) until fully seated.

SEALED CONNECTOR REPAIR

1. Open hinged cover (7) of connector (8) for access to rear of connector.

NOTE

- **Perform this procedure for each wire of connector.**
- **Tag wires to aid in installation.**

2. Using pin removal tool, position tool over pin (9) and push inward to retract two barbs of pin.
3. Remove wire (10), with pin (9) and seal (11) attached, from rear of connector (8).
4. If defective, remove pin (9) and seal (11) from wire (10) by cutting through wire just behind seal.

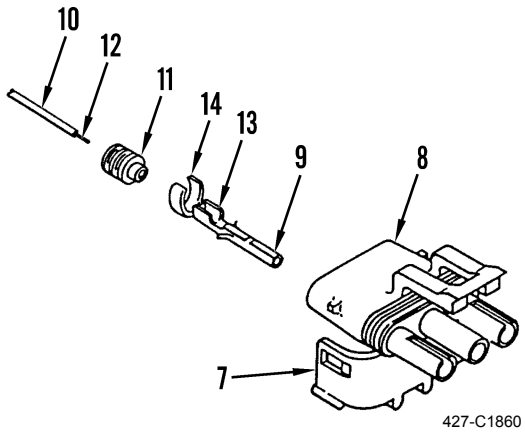

NOTE

Perform steps 5 thru 8 only if pin and seal were removed.

5. Position new seal (11) on wire (10).
6. Using wire stripping tool, strip insulation from wire (10) to expose 1/8 in. (3 mm) length of metal strands (12).
7. Using crimping tool, securely crimp tabs (13) of pin (9) over metal strands (12) of wire (10).
8. Slide seal (11) next to pin (9) and crimp tabs (14) of pin over end of seal.
9. Push pin (9) into rear of connector (8) until fully seated.
10. Close hinged cover (7) of connector (8).

RECEPTACLE CONNECTOR REPAIR

1. Using removal tool, insert tool into front of connector (15) and depress locking tab of receptacle (16).
2. Push wire (17), with receptacle (16) attached, through front of connector (15).
3. If defective, remove receptacle (16) from wire (17) by cutting through wire just behind receptacle.

NOTE

Perform steps 4 thru 7 only if receptacle was removed.

4. Slide connector (15) back on wire (17).

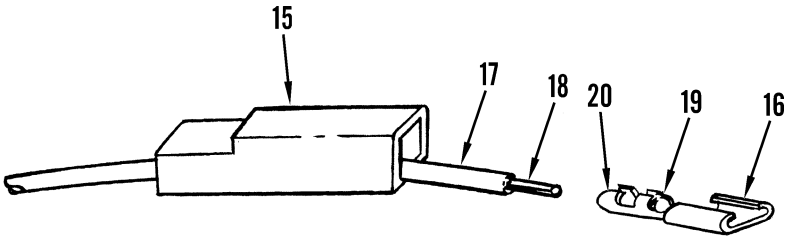

427-C1861

5. Using wire stripping tool, strip insulation from wire (17) to expose 1/4 in. (6 mm) length of metal strands (18).
6. Using crimping tool, securely crimp tabs (19) of receptacle (16) over metal strands (18).
7. Using crimping tool, crimp tabs (20) of receptacle (16) over insulation of wire (17).
8. Slide connector (15) forward over receptacle (16) until receptacle locking tab snaps into place.

WATERPROOF CONNECTOR REPAIR

1. Remove end cover (21) and gasket (22) from front of connector (23).
2. Remove seal (24) from rear of connector (23) and slide seal back on wire (25).

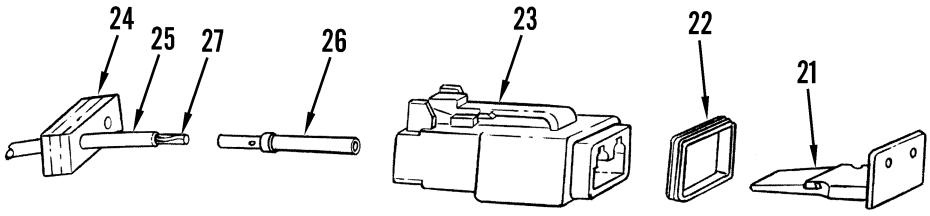

427-C1862

NOTE

- **Perform steps 3 thru 9 for each wire of connector.**
- **Tag wires to aid in installation.**

3. Using pin removal tool, insert tool into front of connector (23) and depress locking tab of connector.
4. Remove wire (25) with pin (26) from rear of connector (23).
5. If defective, remove pin (26) from wire (25) by cutting through wire just behind pin.

WATERPROOF CONNECTOR REPAIR - CONTINUED

NOTE

Perform steps 6 thru 9 only if pin was removed.

6. Using wire stripping tool, strip insulation from wire (25) to expose 1/4 in. (6 mm) length of metal strands (27).
7. Insert metal strands (27) of wire (25) fully into rear of pin (26).
8. Using crimping tool, securely crimp pin (26) to metal strands (27) of wire (25).
9. Push pin (26) into rear of connector (23) until fully seated.
10. Install seal (24) on rear of connector (23).
11. Install gasket (22) and end cover (21) on front of connector (23).

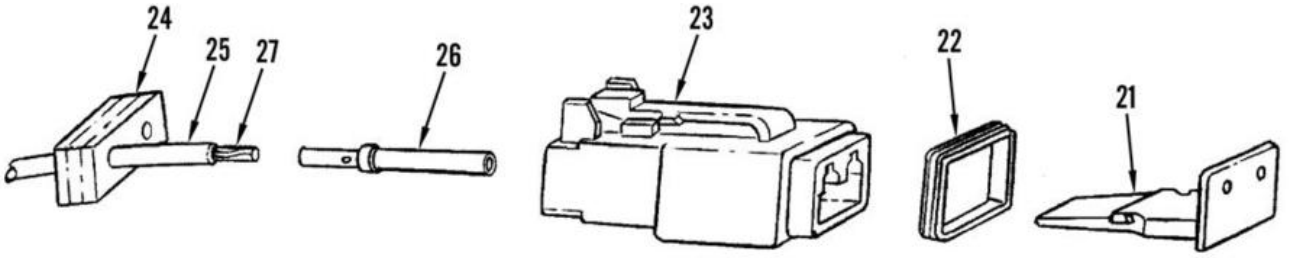

427-C1863

MILITARY CONNECTOR REPAIR

1. Slide shell (28) back on wire (29) to expose sleeve (30).
2. Remove sleeve (30) from terminal (31) by pulling sleeve forward.
3. If defective, remove terminal (31) from wire (29) by cutting through wire just behind terminal.

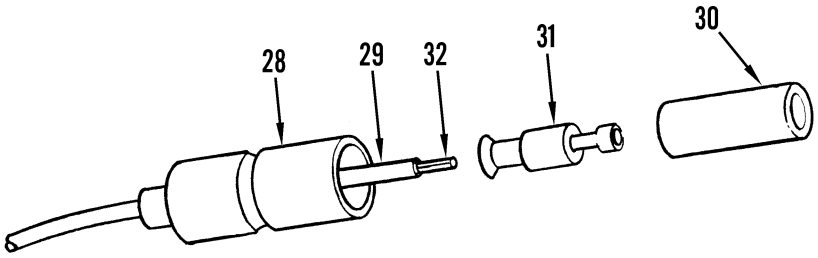

427-C1864

NOTE

Perform steps 4 thru 6 only if terminal was removed.

4. Using wire stripping tool, strip insulation from wire (29) to expose length of metal strands (32) equal to depth of terminal (31).
5. Using crimping tool, securely crimp terminal (31) to metal strands (32) of wire (29).
6. Install sleeve (30) on terminal (31) by pushing sleeve over front of terminal until fully seated.
7. Slide shell (28) up wire (29) and over sleeve (30).

RING TERMINAL REPAIR

1. Remove ring terminal (33) from wire (34) by cutting through wire just behind heat shrink tubing (35).
2. Cut heat shrink tubing (35) to length sufficient to cover tabs (36 and 37) of ring terminal (38) and 1/4 in. (6 mm) of wire (34).
3. Slide heat shrink tubing (35) back on wire (34).
4. Using wire stripping tool, strip insulation from wire (34) to expose proper length of metal strands (38).
5. Using crimping tool, securely crimp tabs (37) of ring terminal (33) over metal strands (38).
6. Using crimping tool, crimp tabs (36) of ring terminal (33) over insulation of wire (34).
7. Slide heat shrink tubing (35) over tabs (36 and 37) of ring terminal (33).
8. Use a heat gun to apply heat to heat shrink tubing (35) until tubing snugly conforms to ring terminal (33) and insulation of wire (34).

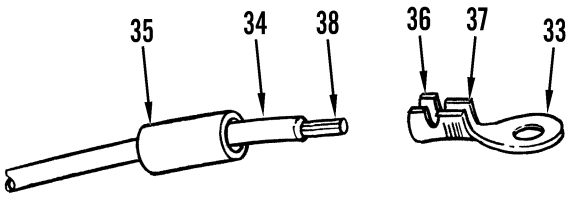

427-C1865

SPLICING WIRES

CAUTION

Do not splice any ECM data-dependent wires. Failure to follow this caution could result in erroneous codes and/or damage to equipment.

NOTE

The selection of crimping tool and type of splice connector is optional. High-quality splice connectors can be expected to last the life of the machine.

1. Inspect each end of wire (39). Trim insulation and metal strands (40) of wire back, as necessary, to ensure integrity of wire.
2. Using wire stripping tool, strip each end of wire (39) to expose length of metal strands (40) to suit type of splice connector (41) used.

NOTE

Perform steps 3 and 4 at each end of splice connector.

3. Insert metal strands (40) of wire (39) fully into splice connector (41).
4. Using crimping tool, securely crimp splice connector (41) to metal strands (40) of wire (39).

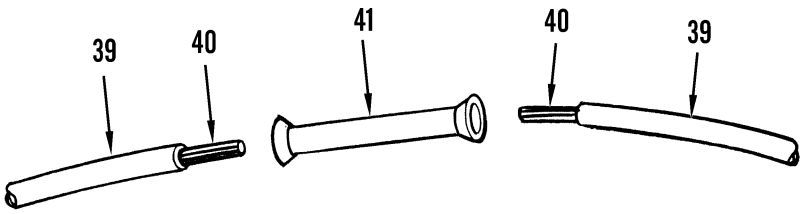

427-C1866

ELECTRICAL GROUND POINTS

Many electrical problems are the result of poor ground connections. Ensure ground connections are good by performing these steps.



WARNING

Although battery disconnect switch must be ON to test electrical circuit voltage, turn battery disconnect switch to OFF before performing resistance tests or replacing parts. Failure to follow this warning may result in injury to personnel and damage to equipment.

1. Remove any hardware connecting ground wire terminal to machine ground point.
2. If necessary, clean mounting hardware, wire terminal, and ground point with detergent and a scrub brush.
3. Remove any rust or corrosion from ground point with a wire brush and abrasive cloth.
4. Replace defective mounting hardware and wire terminal as necessary.
5. Install wire terminal at ground point with mounting hardware and tighten securely.

MULTIMETER USAGE

1. **General.** A multimeter is used to troubleshoot the electrical system of the machine. The multimeter Ohms scale is used to test for continuity, shorts, and resistance. The multimeter voltmeter scale is used to test voltage levels at any point in the electrical system.
2. **Continuity Tests.** Continuity tests are performed to check for breaks in a circuit (such as a fuse, switch, light bulb connector, or electrical wiring).

NOTE

If readout will not zero properly, replace batteries and repeat zeroing procedure. If readout will not zero after batteries have been replaced, notify your supervisor.

a. **Zero Multimeter.**

(1) Set multimeter to ON.

(2) Select OHMS.

(3) Select LOWEST OHMS scale.

(4) Touch black and red probes together and check for a zero indication on digital readout.

CAUTION

Before performing a continuity test, always place battery disconnect switch in OFF position and disconnect circuit to be tested. Failure to follow this caution may damage multimeter.

b. **Testing for Continuity.**

(1) Zero multimeter.

(2) Connect black and red probes to both terminals of circuit being tested.

(3) Observe readout and interpret results as follows:

(a) If readout indicates O.L. circuit is open.

(b) If readout indicates resistance, circuit has continuity.

MULTIMETER USAGE - CONTINUED

CAUTION

Before performing a continuity test, always place battery disconnect switch in OFF position and disconnect circuit to be tested. Failure to follow this caution may damage multimeter.

c. **Testing for Shorts.** A short (or short circuit) occurs when two circuits should not be connected have metal-to-metal contact with each other. A short also occurs when a circuit should not touch ground has metal-to-metal contact with ground.

(1) Zero multimeter.

(2) Connect black probe to one pin and red probe to either ground or another pin.

(3) Observe readout and interpret results as follows:

(a) If readout indicates O.L. circuits are not shorted.

(b) If readout indicates resistance, circuits are shorted or circuit is grounded, if testing to ground.

(c) If readout jumps or flickers, circuits are shorted or grounded intermittently.

CAUTION

Before performing a continuity test, always place battery disconnect switch in OFF position and disconnect circuit to be tested. Failure to follow this caution may damage multimeter.

d. **Testing for Resistance.** Allowable resistance readings depend on circuit being tested. Refer to the particular section dealing with that circuit or component for allowable readings.

(1) Zero multimeter.

(2) Select OHMS.

(3) Select LOWEST OHMS range. If test specifies Ohms range, select required range.

(4) Connect black and red probes across circuit to be tested.

(5) Observe readout and interpret results as circuit resistance.

3. **Measuring DC Voltage.**

a. Set multimeter to ON.

b. Select VOLTS.

c. Select volts DC.

d. Select LOWEST VOLTAGE/OHMS range for voltage range that is higher than Volts to be measured.

e. Connect red probe to positive (+) pin and black probe to negative (-) pin.

f. Observe readout and interpret results as DC voltage in circuit being tested.

RELAY INSPECTION AND TEST

1. **Inspecting Relays.**
   a. Check for bent or damaged pins.
   b. Check for burned or damaged relay case.
2. **Testing Relays.**

NOTE

When testing relays, always refer to the circuit diagram printed or stamped on relay case.

   a. Using a multimeter, check for continuity across relay coil.
   b. Using a multimeter, check open or closed contacts within relay.

JUNCTION BLOCK INSPECTION

1. Check for corrosion in fuse and relay holders.
2. Check for cracks or damage to junction block body.
3. Ensure that connectors are tight and free of corrosion.
4. Using a multimeter, check for good continuity across buss bars and connectors. Refer to *Electrical Schematics* (WP 0237 00).

ELECTRICAL CONNECTORS INSPECTION (ENGINE)

System Operation Description:

Most electrical problems are caused by poor connections. The following procedure will assist in detecting problems with connectors and with wiring. If a problem is found, correct the condition and verify the problem is resolved.

Intermittent electrical problems are sometimes resolved by disconnecting and reconnecting connectors. It is very important to check for diagnostic codes immediately before disconnecting a connector. Also check for diagnostic codes after reconnecting the connector. If the status of a diagnostic code is changed due to disconnecting and reconnecting a connector, there are several possible reasons. The likely reasons are loose terminals, improperly crimped terminals, moisture, corrosion, and inadequate mating of a connection.



WARNING



The connection of any electrical equipment and the disconnection of any electrical equipment may cause an explosion hazard which may result in injury or death. Do not connect any electrical equipment or disconnect any electrical equipment in an explosive atmosphere.

CAUTION

- **Always use a crimping tool to service Deutsch HD and DT connectors. Never solder the terminals onto the wires.**
- **Always use a wedge removal tool to remove wedges from DT connectors. Never use a screwdriver to pry a wedge from a connector.**
- **Always use a breakout harness for a voltmeter probe or a test light. Never break the insulation of a wire in order to access to a circuit for measurements.**
- **If a wire is cut, always install a new terminal for the repair.**

ELECTRICAL CONNECTORS INSPECTION (ENGINE) - CONTINUED

1. **Check Connectors for Moisture and Corrosion.**

   a. Inspect all wiring harnesses. Ensure routing of wiring harness allows wires to enter face of each connector at a perpendicular angle. Otherwise, wire will deform seal bore. This will create a path for entrance of moisture. Verify seals for wires are sealing correctly.

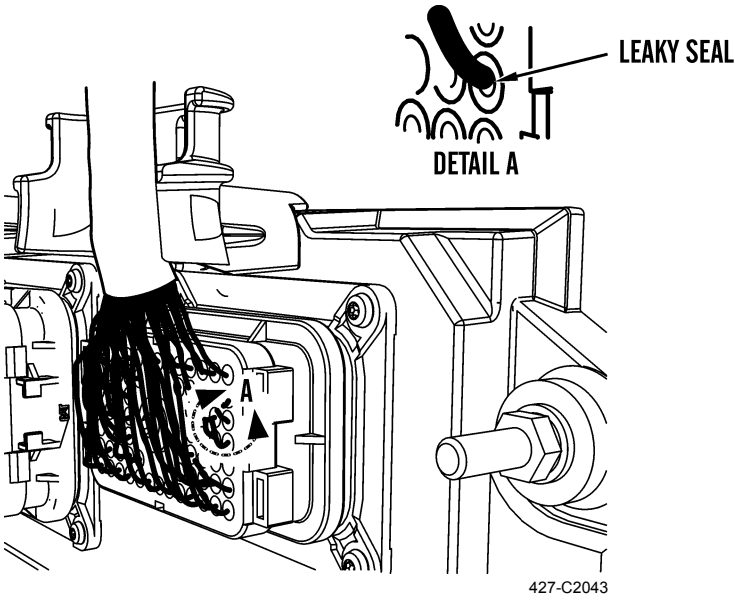

   b. Ensure sealing plugs are in place. If any plugs are missing, replace plug(s). Ensure plugs are inserted correctly into connector.

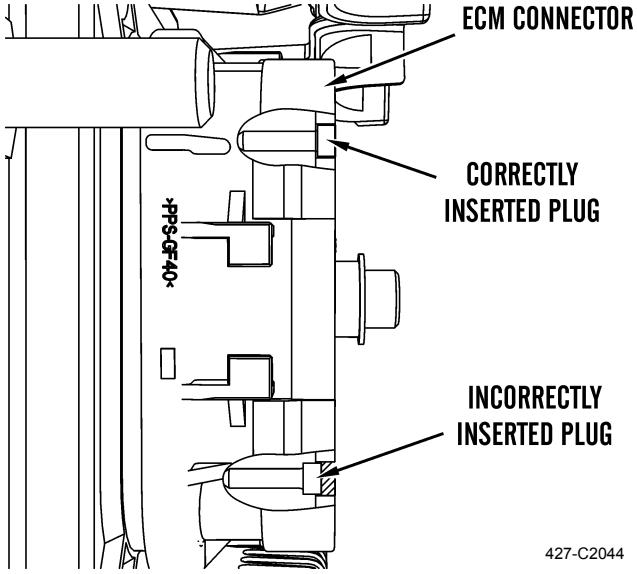

ELECTRICAL CONNECTORS INSPECTION (ENGINE) - CONTINUED

c. Disconnect suspect connector and inspect connector seal. Ensure seals are in good condition. If necessary, replace connector.

d. Thoroughly inspect connectors for evidence of moisture entry.

NOTE

It is normal to see some minor seal abrasion on connector seals. Minor seal abrasion will not allow the entry of moisture.

(1) If moisture or corrosion is evident in connector, source of moisture entry must be found and source of moisture entry must be repaired. If source of moisture entry is not repaired, problem will recur. Simply drying connector will not fix the problem. Check these items for possible moisture entry path:

(a) Missing seals

(b) Improperly installed seals

(c) Nicks in exposed insulation

(d) Improperly mated connectors

(2) Moisture can also travel to a connector through inside of a wire. If moisture is found in connector, thoroughly check connector's harness for damage. Also check other connectors that share harness for moisture.

NOTE

The Electronic Control Module (ECM) is a sealed unit. If moisture is found in ECM connector, ECM is not the source of moisture. Do not replace ECM.

e. **Expected Result.** The harness wiring, connectors, and seals are in good condition. There is no evidence of moisture in the connectors.

(1) If the harness wiring, connectors, and seals are in good condition, go to step 2.

(2) If a problem has been found with harness or connectors, repair connectors or wiring, as required. Ensure all seals are properly in place. Ensure connectors have been reattached. If corrosion is evident on pins, sockets, or connector, use only denatured alcohol to remove corrosion. Use a cotton swab or a soft brush to remove corrosion. If moisture was found in connectors, run engine for several minutes and check again for moisture. If moisture reappears, moisture is wicking into connector. Even if moisture entry path is repaired, it may be necessary to replace wires. Verify repair eliminates problem.

ELECTRICAL CONNECTORS INSPECTION (ENGINE) - CONTINUED

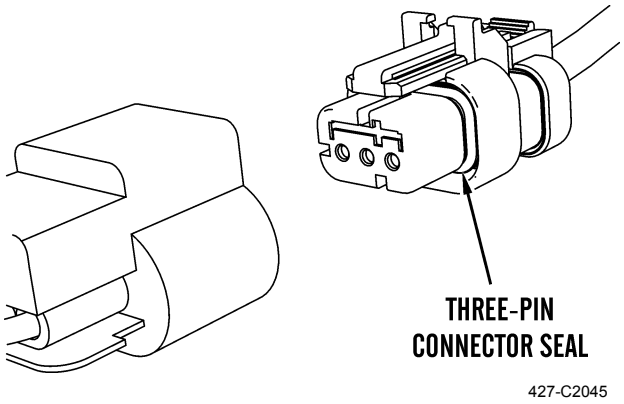

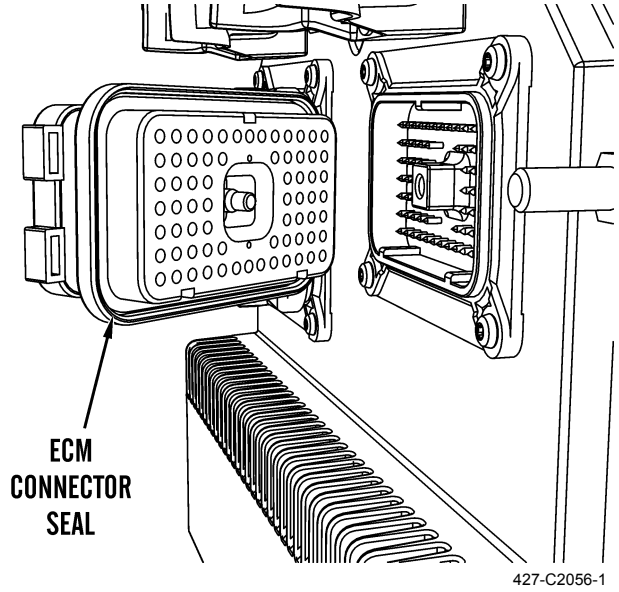

ELECTRICAL CONNECTORS INSPECTION (ENGINE) - CONTINUED

2. **Check Wires for Damage to Insulation.**
   a. Carefully inspect each wire for signs of abrasion, nicks, and cuts. Also, inspect wires for the following conditions:
      (1) Exposed insulation
      (2) Rubbing of wire against engine
      (3) Rubbing of wire against sharp point
   b. Check all wiring harness fasteners in order to verify harness is properly secured. Also check all fasteners in order to verify harness is not compressed. Pull back harness sleeves in order to check for a flattened portion of wire. A fastener that has been overtightened flattens harness. This damages wires that are inside harness.
   c. **Expected Result.** Wires are free of abrasion, nicks, and cuts and harness is properly clamped.
      (1) If the harness is OK, proceed to step 3.
      (2) If there is damage to harness, repair wires or replace wires, as required. Verify repair eliminates problem.
3. **Inspect Connector Terminals.**
   a. Visually inspect each terminal in connector. Verify terminals are not damaged. Verify terminals are properly aligned in connector and verify terminals are properly located in connector.
   b. **Expected Result.** The terminals are properly aligned and terminals appear undamaged.
      (1) If terminals are OK, go to step 4.
      (2) If terminals of connector are damaged, repair terminals and/or replace terminals, as required. Verify repair eliminates problem.
4. **Perform a Pull Test on Each Wire Terminal Connection.**
   a. Ensure locking wedge for connector is installed properly. Terminals cannot be retained inside connector if locking wedge is not installed properly.
   b. Perform the 10 lb (45 N) pull test on each wire. Each terminal and each connector should easily withstand 10 lb (45 N) of tension and each wire should remain in the connector body. This test checks whether wire was properly crimped in terminal and whether terminal was properly inserted into connector.
   c. **Expected Result.** Each terminal and each connector easily withstands 10 lb (45 N) of pull and each wire remains in connector body.
      (1) If all terminals pass the pull test, go to step 5.
      (2) If a wire has been pulled from a terminal or a terminal has been pulled from connector, use the crimping tool to replace terminal. Replace damaged connectors, as required. Verify repair eliminates the problem.

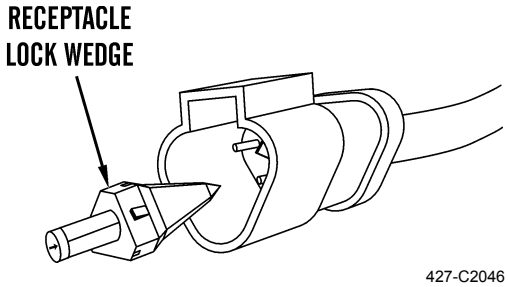

427-C2046

ELECTRICAL CONNECTORS INSPECTION (ENGINE) - CONTINUED

5. **Check Individual Pin Retention in Socket.**
   a. Verify sockets provide good retention for pins. Insert a new pin into each socket one at a time in order to check for a good grip on pin by socket.
   b. **Expected Result.** Sockets provide good retention for new pin.
      (1) If terminals are OK, go to step 6.
      (2) If terminals are damaged, use the crimping tool to replace damaged terminals. Verify repair eliminates problem.

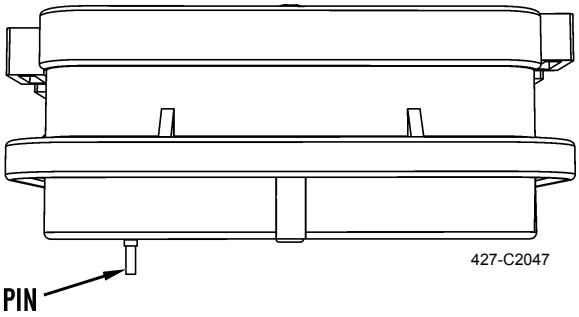

ELECTRICAL CONNECTORS INSPECTION (ENGINE) - CONTINUED

6. **Check Locking Mechanism of Connectors.**

   a. Ensure connectors lock properly. After locking connectors, ensure two halves cannot be pulled apart.

   b. Verify latch tab of connector is properly latched. Also verify latch tab of connector returns to locked position.

   c. **Expected Result.** Connector will securely lock. Connector and locking mechanism are without cracks or breaks.

      (1) If connectors are in good repair, go to step 7.

      (2) If connector's locking mechanism is damaged or missing, repair connector or replace connector, as required. Verify repair eliminates problem.

7. **Check Allen Head Screws on Connectors.**

   a. Visually inspect allen head screws for ECM connectors. Ensure threads on each allen head screw are not damaged. Connect ECM connectors.

      (1) Torque allen head bolt for the 120-pin ECM connector to 60 ± 4 lb-in. (7.0 ± 0.5 Nm).

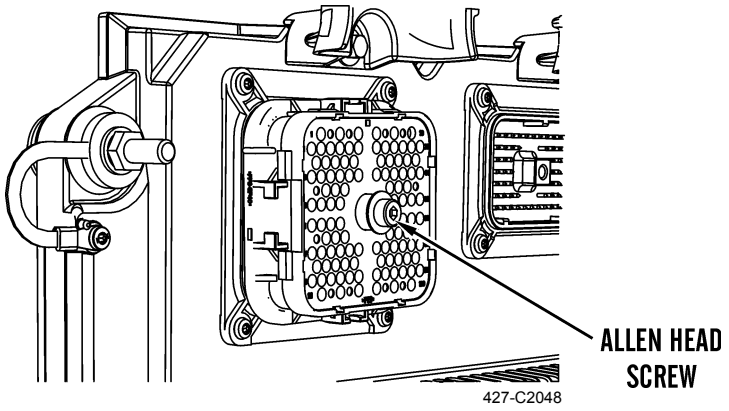

      (2) Torque allen head screw for 70-pin ECM connector to 55 ± 13 - 4 lb-in. (6.0 ± 1.5 - 0.5 Nm).

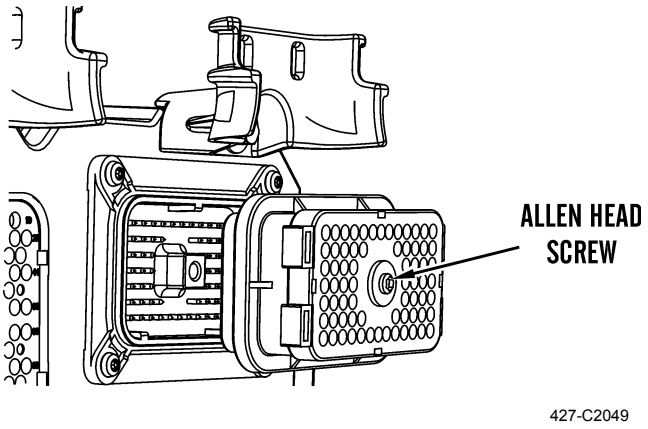

ELECTRICAL CONNECTORS INSPECTION (ENGINE) - CONTINUED

(3) Torque allen head screw for 40-pin ECM connector to 20 ± 2 lb-in. (2.25 ± 0.25 Nm).

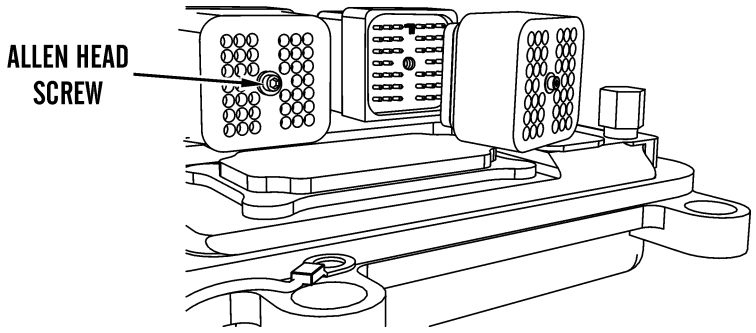

427-C2050

b. Connect machine interface connector (MIC). Torque allen head screw for 40-pin MIC and 70-pin MIC to 20 ± 2 lb-in. (2.25 ± 0.25 Nm).

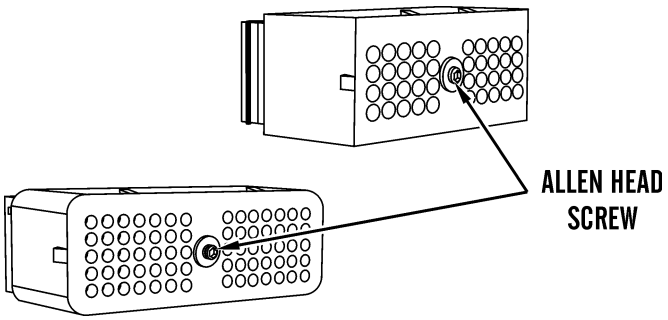

427-C2051

c. **Expected Result.** ECM connector is secure and allen head screws are properly torqued.

(1) If ECM connectors and customer connector is properly connected, go to step 8.

(2) If allen head screws for ECM connector or customer connector is damaged, repair connector or replace connector, as required. Verify repair eliminates problem.

8. **Perform "Wiggle Test" on Electronic Technician (ET).**

a. Select "Wiggle Test" from diagnostic tests on ET.

b. Choose appropriate group of parameters to monitor.

c. Press "Start" button. Wiggle wiring harness in order to reproduce intermittent problems.

If an intermittent problem exists, the status will be highlighted and an audible beep will be heard.

d. **Expected Result.** No intermittent problems were indicated during "Wiggle Test".

(1) If no intermittent problems were found, harness and connectors appear to be OK. If you were sent from another procedure, return to procedure and continue testing. If this test has resolved problem, return engine to service.

(2) If at least one intermittent problem was indicated, repair harness or connector. Verify repair eliminates problem.

ELECTRICAL CONNECTOR INSPECTION (POWERTRAIN)

1. **Background Information.**

NOTE

a. Use this procedure to help determine if connector is the cause of the problem. If a problem is found in electrical connector, repair connector and verify problem has been corrected.

b. Many of the operational procedures and diagnostic code procedures in this troubleshooting guide will instruct you to check a specific electrical connector.

c. Intermittent electrical problems are often caused by poor connections. Always check for an active diagnostic code before breaking any connections. Also, always check for an active diagnostic code after connector is reconnected in order to verify problem disappears.

d. Simply disconnecting connectors and then reconnecting the connectors can temporarily solve a problem at times. If this occurs, likely causes are loose terminals, bent terminals, improperly crimped terminals, corrosion, or harness routing is improper.

e. The original source of the problem must then be identified in order to ensure problem does not recur.

f. Follow this procedure to thoroughly inspect connectors in order to determine if connectors are the cause of the problem.

(1) Correctly Routed Harness

(2) Correctly Inserted Plug

(3) Incorrectly Routed Harness

(4) Incorrectly Inserted Plug

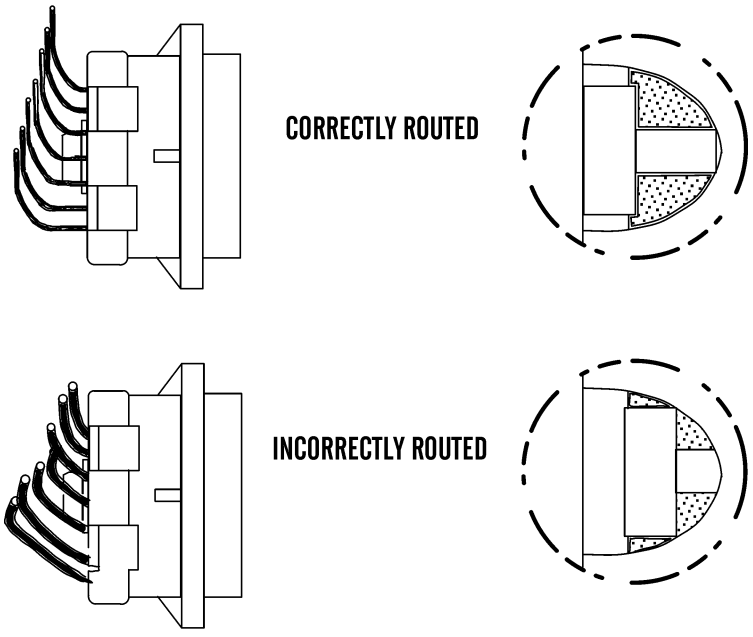

427-C2052

ELECTRICAL CONNECTOR INSPECTION (POWERTRAIN) - CONTINUED

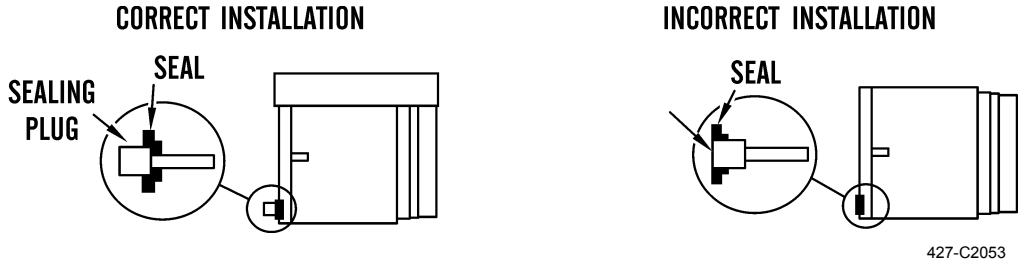

CAUTION

8T-8729 Connector Pin (2) and 8T-8730 Connector Socket (1) are designed to accept only one 16/18 AWG wire. Do not insert multiple wires of a smaller wire size. An incorrect method would be using two 24 AWG wires. 9W-0852 Connector Pin and the 9W-0844 Connector Socket are designed to accept only one 14 AWG wire. Do not insert multiple wires of a smaller wire size. An example of an incorrect method is the use of two 20 AWG wires.

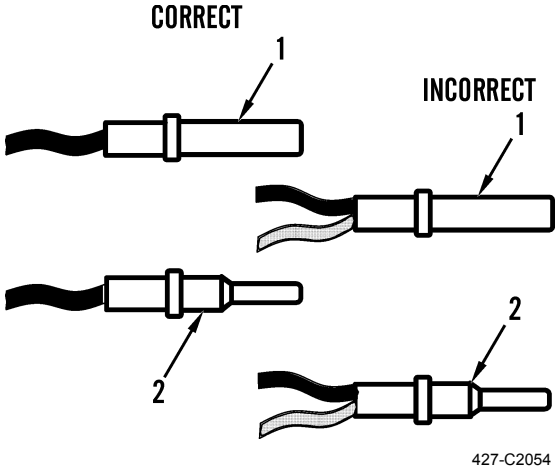

ELECTRICAL CONNECTOR INSPECTION (POWERTRAIN) - CONTINUED

2. **Check Connectors.**
   a. Ensure connector is properly locked. Also, ensure two halves of connector cannot be pulled apart.
   b. Verify latch tab of connector is properly latched.
   c. **Expected Result.** Connector will securely lock and connector and locking mechanism are without cracks or breaks.
      (1) If connector will securely lock and connector and locking mechanism are without cracks or breaks, proceed to step 3.
      (2) If a problem exists with connector, repair connector or replace connector, as required.
3. **Check Allen Head Screw on Harness Connector of ECM.**
   a. Ensure connector bolt is properly tightened. Be careful not to tighten bolt too much. Bolt may break.
   b. Do not exceed 53.0 lb-in. (6.0 Nm) of torque on connector bolt of harness when connector is being installed on ECM.
   c. **Expected Result.** Harness connector is secure and connector bolt of ECM is properly torqued.
      (1) If the harness connector is secure and the connector is properly torqued, go to step 4.
      (2) If a problem exists with the connector, go to step 3d.
   d. **Repair**: Secure harness connector of ECM, ensure connector bolt is properly torqued.
4. **Perform a Pull Test on Each Connector Contact.**

CAUTION

A crimping tool should ALWAYS be used in order to crimp wires on connector contacts. Do not solder terminals. Use proper crimping tool.

   a. Each connector contact should withstand 10 lb (45 N) of pull. Each wire should remain in connector body. This test checks whether wire was properly crimped in contact and whether contact was properly inserted into connector.
   b. DT connectors use an orange wedge to lock terminals in place.
   c. Ensure orange wedge is not missing and orange wedge is installed properly on DT connectors.
   d. **Expected Result.** Each connector contact should withstand 10 lb (45 N) of pull. Each wire remains in connector body.
      (1) If each connector contact withstands 10 lb (45 N) of pull and each wire remains in connector body, proceed to step 5.
      (2) If a problem exists with connector, repair wiring or replace connector contact.
5. **Check Wires for Nicks or Abrasions in Insulation.**
   a. Carefully inspect each wire for signs of abrasion, nicks, or cuts. These areas should be checked:
      (1) Exposed insulation
      (2) Points of rubbing wire
   b. Check all hold-down clamps for harness to verify harness is properly clamped. Also, check all hold-down clamps for harness in order to verify harness is not compressed by clamp. Pull back harness sleeves in order to check for a flattened portion of wire. Flattened portion of wire is caused by clamp that holds harness.

ELECTRICAL CONNECTOR INSPECTION (POWERTRAIN) - CONTINUED

c. **Expected Result.** Wires are free of abrasion, nicks, or cuts and harness is properly clamped.

(1) If wires are free of abrasion, nicks, or cuts and the harness is properly clamped, go to step 6.

(2) If a problem exists with wiring, repair wires or replace the wires, as required.

6. **Check Connectors for Moisture or Corrosion.**

a. Ensure connector seals and white sealing plugs are in place. If any seals or plugs are missing, replace seal or plug. If necessary, replace connector.

b. Check all wiring harnesses in order to verify harness does not make a sharp bend out of a connector. This will deform connector seal and create a path for the entrance of moisture.

NOTE

It is normal to see some minor seal abrasion on the ECM connector seals. Minor seal abrasion will not allow the entry of moisture.

c. Thoroughly inspect ECM connectors for evidence of moisture entry. If moisture or corrosion is evident in the connector, the source of moisture entry must be found and repaired. If source of the moisture entry is not repaired, the problem will recur. Simply drying connector will not fix the problem. Likely paths for entrance of moisture are from missing seals, improperly installed seals, nicks in exposed insulation, and improperly mated connectors.

CAUTION

- **Moisture can also travel from one connector through the inside of a wire to ECM connector. If moisture is found in ECM connector, thoroughly check all connectors and wires on the harness that connect to ECM. ECM is not the source of moisture. Do not replace an ECM if moisture is found in either ECM connector.**
- **If corrosion is evident on contacts or connector, use only denatured alcohol to remove corrosion. Use a cotton swab or a soft brush to remove corrosion. Do not use cleaners that contain trichloro-ethylene because trichloro-ethylene may damage connector.**

d. **Expected Result.** All connectors should be completely coupled and all seals should be completely inserted. Harness and wiring should be free of corrosion, moisture, abrasion or pinch points.

(1) If all connectors are completely coupled and all seals are completely inserted, and harness and wiring are free of corrosion, moisture, abrasions, or pinch points, go to step 7.

(2) If a problem exists with connector, wiring, or wiring harness, moisture is present. Repair connectors or wiring and/or replace connectors or wiring. Ensure all seals are properly in place and ensure connectors are completely coupled. Verify repair eliminates problem by operating machine for several minutes and by checking again for moisture.

7. **Inspect Connector Contacts.**

a. Verify contacts are not damaged. Verify contacts are properly aligned in connector and verify contacts are properly located in connector.

b. **Expected Result.** Contacts are properly aligned and contacts appear undamaged.

(1) If contacts are properly aligned and contacts appear undamaged, go to step 8.

(2) If a problem exists with connector contacts, repair contacts and wiring and/or replace the contacts and wiring.

ELECTRICAL CONNECTOR INSPECTION (POWERTRAIN) - CONTINUED

8. **Check Fit of Contacts.**

NOTE

This test is especially important for intermittent problems.

a. Use a new pin contact. Insert pin contact into each socket contact, one at a time, in order to check for a good grip on pin contact by socket contact.

b. Use a new socket contact. Insert pin contact into each socket contact, one at a time, in order to check for a good grip on pin contact by socket contact. Pin contacts are located on mating side of connector.

c. Connector contact should stay connected when connector is held in the position shown in illustration. Connector contact is pin contact or socket contact.

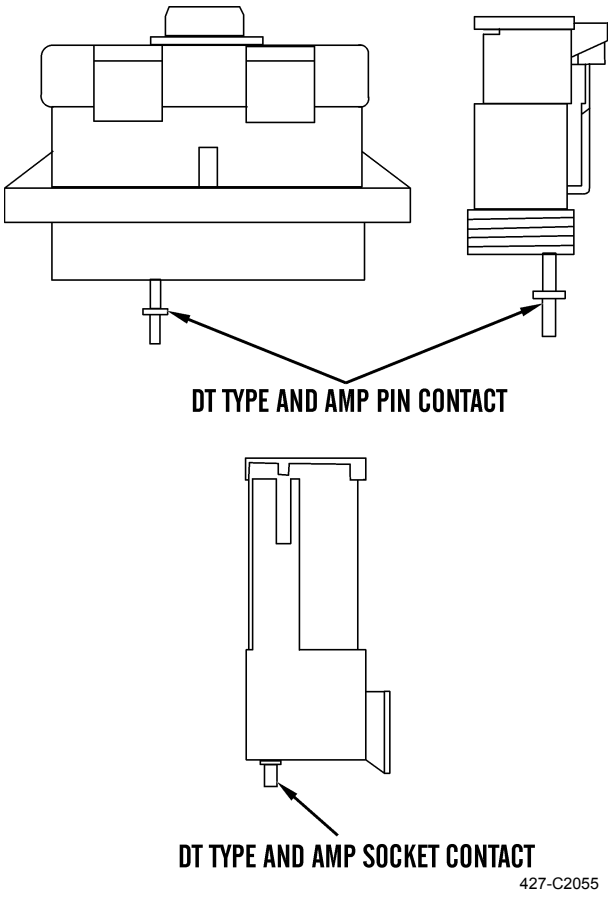

d. **Expected Result.** Pin contacts and socket contacts appear to be OK.

(1) If pin contacts and socket contacts appear to be OK, exit this procedure.

(2) If a problem exists with connector terminal, replace connector contact.

INSTALLATION OF BREAKOUT T

70-Pin Breakout T

1. Disconnect wiring harness from engine ECM (WP 0057 00).
2. Connect 70-pin breakout T to engine ECM and wiring harness as shown.

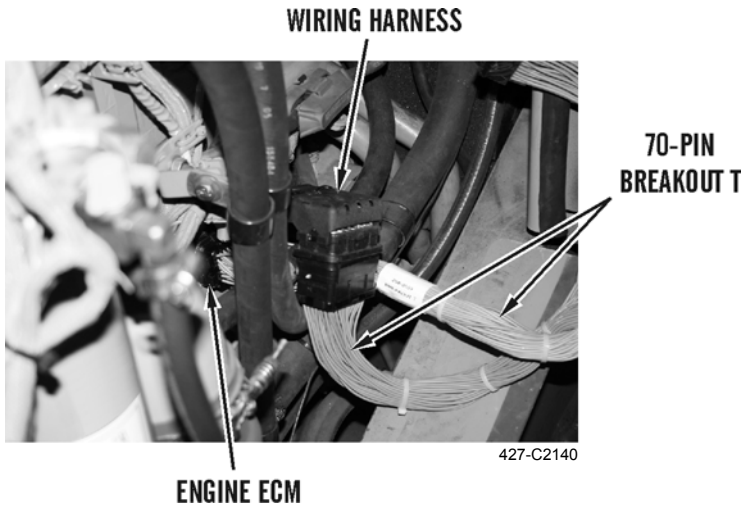

3-Pin Breakout T

1. Disconnect wiring harness from throttle position sensor (WP 0039 00).
2. Connect 3-pin breakout T to throttle position sensor and wiring harness as shown.



END OF WORK PACKAGE

MECHANICAL GENERAL MAINTENANCE INSTRUCTIONS 0023 00

THIS WORK PACKAGE COVERS

Scope
Work Safety
Relieving Hydraulic System Pressure
General Information
Cleaning Instructions
Inspection Instructions
Repair Instructions
Lubrication Instructions
Standard Tool Requirements
Applying Torque
Tagging Instructions
Lines and Ports
Fluid Disposal

INITIAL SETUP

Maintenance Level

Unit

Tools and Special Tools

Tool kit, general mechanic's, automotive (Item 90, WP 0232 00)

Shop equipment, automotive maintenance and repair: organizational maintenance, common no. 1 (Item 70, WP 0232 00)

Materials/Parts

Cap set, protective (Item 6, WP 0233 00)

Cleaning compound, solvent, type III (Item 7, WP 0233 00)

Detergent, general purpose, liquid (Item 9, WP 0233 00)

Oil, lubricating, OE/HDO-40 (Item 26, WP 0233 00)

Oil, lubricating, OE/HDO-5/40 (Item 27, WP 0233 00)

Oil, lubricating, OE/HDO-15/40 (Item 28, WP 0233 00)

Materials/Parts - Continued

Oil, lubricating, OEA-30, Arctic (Item 29, WP 0233 00)

Rag, wiping (Item 35, WP 0233 00)

Tag, marker (Item 43, WP 0233 00)

Tape, duct - Roll (Item 44, WP 0233 00)

References

TB 43-0209

TC 9-237

TM 5-3805-291-10

TM 9-214

TM 9-247

WP 0019 00

WP 0020 00

WP 0234 00

SCOPE

These general maintenance instructions contain general shop practices and specific methods you must be familiar with to properly maintain the 966H Wheel Loader. You should read and understand these practices and methods before starting maintenance tasks on the machine.

WORK SAFETY

1. Before starting a task, think about the risks and hazards to your safety as well as that of others. Wear protective gear such as safety goggles or lenses, safety shoes, rubber apron, or gloves. Protect yourself against injury.
2. Observe all WARNINGs, CAUTIONs, and NOTEs.

WORK SAFETY - CONTINUED

3. When lifting heavy parts, have someone help you. Make sure lifting equipment is working properly, suitable for the task assigned, of sufficient load capacity, and secured against slipping.
4. Always use power tools carefully.
5. Before beginning a procedure, ensure the following conditions have been observed, unless otherwise specified:
   a. Machine must be parked on level ground with parking brake engaged.
   b. Work tool must be lowered to the ground.
   c. Transmission must be in N (Neutral).
   d. Engine must be off.
   e. Components which are hot at operating temperatures (i.e., cooling, exhaust, and hydraulic systems) must cool down before they are removed.
   f. Components must, however, be at operating temperature to be tested.
   g. Battery disconnect switch must be in OFF position and/or batteries disconnected when performing electrical system maintenance.
   h. Hydraulic system pressure must be relieved before disconnecting any hydraulic system line or fitting. Refer to *Relieving Hydraulic System Pressure* in this work package.

RELIEVING HYDRAULIC SYSTEM PRESSURE



WARNING

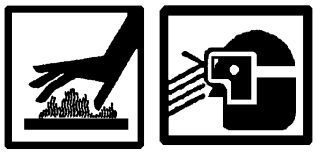

- **When servicing this machine, performing maintenance, or disposing of hazardous materials, consult your unit/local hazardous waste disposal center or safety office for local regulatory guidance. If further information is needed, please contact The Army Environmental Hotline at 1-800-872-3845.**
- **DO NOT disconnect or remove any hydraulic system lines or fitting unless engine is shut down and hydraulic system pressure has been relieved. Tighten all connections before applying pressure. Escaping hydraulic fluid under pressure can penetrate the skin, causing injury to personnel.**
- **At operating temperature, hydraulic oil is hot. Allow hydraulic oil to cool before removing any hydraulic fitting. Failure to follow this warning may result in injury to personnel.**
- **To prevent injury to personnel, wear protective eye covering and gloves.**
- **Sudden movement of machine can cause injury to personnel on or near the machine.**

1. **Relieving Hydraulic System Pressure.**
   a. Park machine on a smooth, level surface.
   b. Lower work tool to ground.
   c. Engage parking brake.
   d. If locked, press bottom of hydraulic lockout (IMPLEMENT DISABLE) switch to unlock hydraulic controls.
   e. Shut down engine.
   f. Turn engine start switch to ON position without starting engine.
   g. Move loader control joystick and auxiliary hydraulic control lever through all positions. This will relieve any pressure that may be present in hydraulic system.
   h. Slowly loosen hydraulic tank filler cap and allow any pressure to escape.

RELIEVING HYDRAULIC SYSTEM PRESSURE - CONTINUED

2. **Relieving Brake Hydraulic System Pressure.**
   a. Park machine on a smooth, level surface (TM 5-3805-291-10).
   b. Lower work tool to ground (TM 5-3805-291-10).
   c. Shut down engine (TM 5-3805-291-10).
   d. Engage parking brake (TM 5-3805-291-10).
   e. Turn engine start switch to ON position.
   f. Depress brake pedal 30 times, pausing 2 seconds between each application.
   g. Turn engine start switch to OFF position (TM 5-3805-291-10).

GENERAL INFORMATION

1. Before beginning a task, find out how much repair, modification, or replacement is needed to fix equipment as described in this manual. Sometimes the reason for equipment failure can be seen right away and complete teardown is not necessary. Disassemble equipment only as far as necessary to repair or replace damaged or broken parts.
2. All tags and forms attached to the equipment must be checked to learn the reason for removal from service. Check all Modification Work Orders (MWOs) and Technical Bulletins (TBs) for equipment changes and updates.
3. In some cases a part may be damaged by removal. If part appears to be good, and other parts behind it are not defective, leave it on and continue the procedure. Here are a few simple rules:
   a. Do not remove dowel pins or studs unless loose, bent, broken, or otherwise damaged.
   b. Do not pull bearings or bushings unless damaged. If you must get at parts behind them, pull out bearings or bushings carefully.
   c. Replace all gaskets, seals, preformed packings, O-rings, cotter pins, spring pins, self-locking nuts, and lockwashers.

CLEANING INSTRUCTIONS



- **Solvent cleaning compound MIL-PRF-680 Type III is an environmentally compliant and low-toxic material. However, it may be irritating to the eyes and skin. Use protective gloves and goggles. Use in well-ventilated areas. Keep away from open flames and other sources of ignition. Failure to do so may result in injury or death to personnel.**
- **Improper cleaning methods and use of unauthorized cleaning solvents may injure personnel and damage equipment. Refer to TM 9-247, *Materials Used for Cleaning, Preserving, Abrading, and Cementing Ordnance Materiels and Related Materiels Including Chemicals,* for correct information.**
- **Fire extinguishers should be placed nearby when using solvent cleaning compound.**
- **Cloths or rags saturated with solvent cleaning compound must be disposed of IAW authorized facilities' procedures.**
- **Eye shields must be worn when cleaning with a wire brush. Flying rust and metal particles may cause injury.**
- **Particles blown by compressed air are hazardous. Use a maximum of 30 psi (207 kPa) when cleaning components. DO NOT exceed 15 psi (103 kPa) nozzle pressure when drying parts with compressed air. DO NOT direct compressed air against human skin. Make sure air stream is directed away from user and other personnel in the area. To prevent injury, user must wear protective goggles or face shield. Failure to follow this warning may result in injury to personnel.**

1. **General.**
   a. Cleaning instructions are the same for the majority of parts and components of the machine.
   b. The importance of cleaning must be thoroughly understood by maintenance personnel. Great care and effort are required in cleaning. Dirt and foreign material are a constant threat to satisfactory maintenance. The following should apply to all cleaning, inspection, repair, and assembly operations:
      (1) Clean all parts before inspection, after repair, and before assembly.
      (2) To prevent contamination, hands should be kept free of any accumulation of grease, which can collect dust, dirt, or grit.
      (3) After cleaning, all parts should be covered or wrapped to protect them from dust and dirt. Parts that are subject to rust should be lightly oiled.
2. **External Engine Cleaning.**
   a. Protect all electrical equipment that could be damaged by steam or moisture before steam cleaning.
   b. Cover all openings before steam cleaning.
   c. After cleaning, dry and apply a light coat of oil to all parts subject to rust.
   d. Clear out all tapped (threaded) holes with compressed air to remove dirt and cleaning fluid.
3. **Cleaning Disassembled Parts.**
   a. Place all disassembled parts in wire baskets for cleaning.
   b. Dry and cover all cleaned parts.
   c. Place parts on or in "racks" and hold for inspection or repair.

CLEANING INSTRUCTIONS - CONTINUED

d. All parts subject to rusting must be lightly oiled and wrapped.

e. Keep all related parts and components together. Do not mix parts.

4. **Castings.**

   a. Clean inner and outer surfaces of castings and all areas subject to grease and oil with solvent cleaning compound.

   b. Use a stiff brush to remove sludge and gum deposits.

   c. Clear out all tapped (threaded) holes with compressed air to remove dirt and cleaning solvent.

5. **Oil Passages.** Particular attention must be given to all oil passages in castings and machined parts. Oil passages must be clean and free of any obstructions.

   a. Clean passages with wire probes to break up any sludge or gum deposits.

   b. Wash passages by flushing with solvent cleaning compound.

   c. Dry passages with compressed air.

6. **Oil Seals and Flexible Hoses.**

CAUTION

Washing flexible hoses and oil seals with solvent cleaning compound or mineral spirits will cause serious damage or destroy the material.

   a. Wash flexible hoses with a mild solution of detergent and water and wipe dry.

   b. Oil seals are generally damaged during removal; cleaning will not be necessary since new seals will be used in assembly.

7. **Bearings.** Refer to TM 9-214, *Inspection, Care, and Maintenance of Antifriction Bearings,* for complete instructions.

8. **Machined Surfaces.**

   a. Clean machined surfaces with solvent cleaning compound.

   b. Dry surfaces with compressed air.

9. **Mated Surfaces.**

   a. Remove old gasket and/or sealing compound using a wire brush and solvent cleaning compound.

   b. Lightly coat with oil and wrap all parts subject to rust before storing.

10. **Rusted Surfaces.** Clean all rusted surfaces using wire brush and crocus cloth.

11. **Oil-Bathed Internal Parts.** Wipe oil-bathed internal parts clean with a lint-free cloth.

12. **Air-Actuated Internal Parts.** Wash air-actuated internal parts clean with a lint-free cloth.

13. **Externally Exposed Parts.** Wash externally exposed parts with detergent and water. Rinse thoroughly and air dry.

INSPECTION INSTRUCTIONS

1. **General.** All components and parts must be carefully checked to determine if they are serviceable for reuse, if they can be repaired, or if they must be scrapped.

2. **Drilled and Tapped (Threaded) Holes.**

   a. Inspect for wear, distortion (stretching), cracks, or any other damage in or around holes.

   b. Inspect threaded areas for wear, distortion, or evidence of cross-threading.

   c. Mark all damaged areas for repair or replacement.

INSPECTION INSTRUCTIONS - CONTINUED

3. **Metal Lines, Flexible Lines (Hoses), and Fittings.**
   a. Inspect lines for sharp kinks, cracks, bends, or dents.
   b. Inspect flexible lines for fraying, evidence of leakage, or loose fittings or connectors.
   c. Check all fittings and connectors for thread damage. Check for hex heads that are worn or rounded by poorly fitting wrenches.
   d. Mark all damaged material for repair or replacement.
4. **Castings.**
   a. Inspect all ferrous and nonferrous castings for cracks using a magnifying glass and strong light. Particularly check areas around studs, pipe plugs, threaded inserts, and sharp corners. Replace all cracked castings.
   b. Inspect machined surfaces for nicks, burrs, or raised metal. Mark damaged areas for repair or replacement.
   c. Inspect all pipe plugs, pipe plug openings, screws, and screw openings for damaged or stripped threads.
   d. Check all gasket mating surfaces, flanges on housings, and supports for warpage with a straightedge or surface plate. Inspect mating flanges for discoloration that may indicate persistent oil leakage.
5. **Bearings.** Refer to TM 9-214, *Inspection, Care, and Maintenance of Antifriction Bearings,* for inspection of bearings. Damaged bearings must be replaced.
6. **Studs, Bolts, and Screws.** Replace if threads are damaged, bent, loose, or stretched.
7. **Gears.**

NOTE

When gear teeth wear limits are not established, good judgement is required to determine if gear replacement is necessary.

   a. Inspect all gears for cracks using a magnifying glass and strong light. No cracks are permissible.
   b. Inspect gear teeth for wear, sharp fins, burrs, and galled or pitted surfaces.
   c. Check keyway slots for wear or damage. If keyways are worn, damaged, or elongated, replace gear.
8. **Bushing and Bushing Type Bearings.**
   a. Check all bushings and bushing type bearings for secure fit, evidence of overheating, wear, burrs, nicks, and out-of-round condition. Replace as necessary.
   b. Check for dirt in lubrication holes or grooves. Holes and grooves must be clean and free from damage.
9. **Oil Seals.** Oil seals are mandatory replacement items.
10. **Core Hole Expansion Plugs.** Inspect for leakage. Replace plugs when leakage is present.
11. **Machine-Tooled Parts.** Inspect for cracks, breaks, elongated holes, wear, and chips. Replace any damaged parts.
12. **Machined Surfaces.** Inspect for cracks, evidence of wear, galled, or pitted surface, burrs, nicks, and scratches.
13. **Mating Surfaces.** Inspect for remains of old gasket, seal, secure fit, pitting, and evidence of leakage.
14. **Rusted Surfaces.** Inspect for pitting, holes, and severe damage.
15. **Oil-Bathed Internal Parts.** Inspect for cracks, nicks, burrs, evidence of overheating, and wear.
16. **Internal Parts.** Inspect for cracks, nicks, burrs, evidence of overheating, and wear.
17. **Externally Exposed Parts.** Inspect for breaks, cracks, rust damage, and wear.
18. **Springs.** Inspect for broken, collapsed, and twisted coils.

REPAIR INSTRUCTIONS

1. **General.**

   a. Any repair procedure peculiar to a specific part or component is covered in the work package relating to that item.

CAUTION

Repaired items must be thoroughly cleaned to remove metal chips and abrasives, to prevent them from entering working parts of the machine.

   b. After repair, clean all parts thoroughly to prevent dirt, metal chips, or other foreign material from entering any working parts.

2. **Castings.**

   a. Only minor repairs to machined surfaces, flanges, and gasket mating surfaces are permitted. Remove minor nicks, burrs, and scratches with:

      (1) Fine-mill file.

      (2) Crocus cloth dipped in solvent cleaning compound.

      (3) Lapping across a surface plate.

   b. Remachining of machined surfaces to repair damage, warpage, or uneven surfaces is not permitted. Replace castings.

   c. Repair damaged threaded pipe plug or screw threads with a tap or die. Repair oversized holes with threaded inserts.

3. **Studs.**

   a. Repair minor thread damage with a thread die.

   b. Replace studs having stripped or damaged threads as described below:

      (1) Remove using a stud remover. Back studs out slowly to avoid heat buildup and seizure that can cause stud to break off.

CAUTION

Refer to TC 9-237, *Operator's Circular for Welding Theory and Application*, to avoid damage to castings if welding method is used.

      (2) If studs break off too short to use a stud remover, use a stud extractor to remove or use "welding method": weld bar stock or a nut to stud and remove with a wrench.

      (3) Install replacement stud slowly to prevent heat buildup and break-off.

4. **Gears.**

   a. Remove gears using pullers.

   b. Only minor repairs to gears are permitted. Remove minor nicks, burrs, or scratches on gear teeth with:

      (1) Fine-mill file.

      (2) Crocus cloth dipped in solvent cleaning compound.

5. **Bushings and Bushing Type Bearings.**

   a. When bushings and bushing type bearings seize to a shaft and spin in the bore, associated parts must also be replaced.

   b. It may be necessary to heat bearings to aid in installation.

REPAIR INSTRUCTIONS - CONTINUED

6. **Oil Seals.**
    a. Remove oil seals by pressing or prying out, being careful not to damage casting or adapter bore.
    b. Always install new seal in bore using proper seal installation tool.
7. **Painting.** Upon installation, restored parts must be painted in accordance with TB 43-0209.

LUBRICATION INSTRUCTIONS

Refer to TM 5-3805-291-10 and to *Unit Maintenance PMCS* (WP 0019 00 and WP 0020 00) for detailed, illustrated instructions on proper lubrication. The following are some general practices to remember:

a. Use correct lubricant.
b. Keep lubricants clean.
c. Clean all fittings and area around fill and drain points before lubrication.
d. Lubricate clean disassembled and new parts to prevent rust.

STANDARD TOOL REQUIREMENTS

1. The following are general practices regarding the use of tools:
    a. Always use proper tool kit and tools for procedure being performed.
    b. Ensure tools are clean and lubricated to reduce wear and to prevent rust.
    c. Keep track of tools. Do not be careless with them.
    d. Return tools to toolbox when finished with repair or maintenance.
    e. Return toolboxes and tools to tool storage when not in use.
    f. Inventory tools before and after each use.
2. Some maintenance tasks may require special or fabricated tools. The “Initial Setup” of the procedure will specify any special or fabricated tools needed to perform that procedure. Use these special tools only for the maintenance procedures for which they are designed or called out. If you are unfamiliar with a required tool, see your supervisor.

APPLYING TORQUE

1. When tightening fasteners, use torque value as specified in *Torque Limits* (WP 0234 00).
2. If a unique torque value is required, it will be provided in a procedural step in the task.

TAGGING INSTRUCTIONS

1. Use marker tags to identify all electrical wires, fuel, oil, coolant, and hydraulic lines, and any other parts which may be hard to identify or replace later. Fasten tags to parts during removal by wrapping wire fasteners around or through parts and twisting ends together. Position tags to be out of the way during cleaning, inspection, and repair. Mark tags with a pencil, pen, or marker.
2. Whenever possible, identify electrical wires with the number of terminal or wire to which they connect. If no markings can be found, tag both wires or wire and terminal, and use the same identifying mark for both. If you cannot tag a wire because it must fit through a small hole or you cannot reach it, write down description of the wire and the point to which it connects, or draw a simple diagram on paper. Be sure to write down enough information for you to properly connect the wires during assembly. If you need to identify a loose wire, look for an identifying number near the end of the wire, stamped on a permanent metal tag. Compare the number to wire numbers on the appropriate electrical schematic.

TAGGING INSTRUCTIONS - CONTINUED

3. Identify fuel, oil, coolant, and hydraulic lines when you are taking off more than one line at the same time. Mark tags with points to which lines and hoses must be connected. If it is not obvious which end of a line goes where, tag each end of the line.
4. Identify and tag other parts by name and installed location as required.

LINES AND PORTS

To keep dirt from contaminating fluid systems when removing and installing fuel, oil, coolant, and hydraulic lines, perform these steps:

a. Clean fittings and surrounding area before disconnecting lines.

b. Cover, cap, plug, or tape lines and ports after disconnecting lines. When these specialized covers are not available, use plastic bags and rubber bands, clean rags, duct tape, or other similar materials to prevent dirt from entering system.

c. Ensure new and used parts are clean before installing.

d. Replace all removed tiedown straps.

e. Wait to remove covers, caps, plugs, or tape from lines and ports until just before installing lines.

FLUID DISPOSAL



- **When servicing equipment, performing maintenance, or disposing of materials such as engine coolant, hydraulic fluid, lubricants, battery acids or batteries, and CARC paint, consult your unit/local hazardous waste disposal center or safety office for local regulatory guidance. If further information is needed, please contact The Army Environmental Hotline at 1-800-872-3845.**
- **To prevent injury to personnel, wear protective eye covering and gloves.**

Dispose of contaminated drained fluids in accordance with the Standard Operating Procedures (SOP) of your unit.

END OF WORK PACKAGE

VALVE COVER AND BASE REPLACEMENT 0024 00

THIS WORK PACKAGE COVERS

Removal, Cleaning and Inspection, Installation

INITIAL SETUP

Maintenance Level

Unit

Tools and Special Tools

Tool kit, general mechanic's, automotive (Item 90, WP 0232 00)

Shop equipment, automotive maintenance and repair: organizational maintenance, common no. 1 (Item 70, WP 0232 00)

Materials/Parts

Cleaning compound, solvent, type III (Item 7, WP 0233 00)

Rag, wiping (Item 35, WP 0233 00)

Gasket (2)

Personnel Required

MOS 62B, Construction Equipment Repairer

References

TM 5-3805-291-10

Equipment Conditions

Muffler removed (WP 0040 00)

Upper tube from turbocharger to aftercooler removed (WP 0032 00)

Drawings Required

TM 5-3805-291-23P, Figures 11, 12, and 20

Estimated Time to Complete Task

1.5 hr

VALVE COVER AND BASE REPLACEMENT - CONTINUED 0024 00

REMOVAL

1. Remove 10 bolts (1) and washers (2) from valve cover (3).
2. Remove valve cover (3) and gasket (4) from machine. Discard gasket.
3. Remove 10 isolators (5) from valve covers (3).

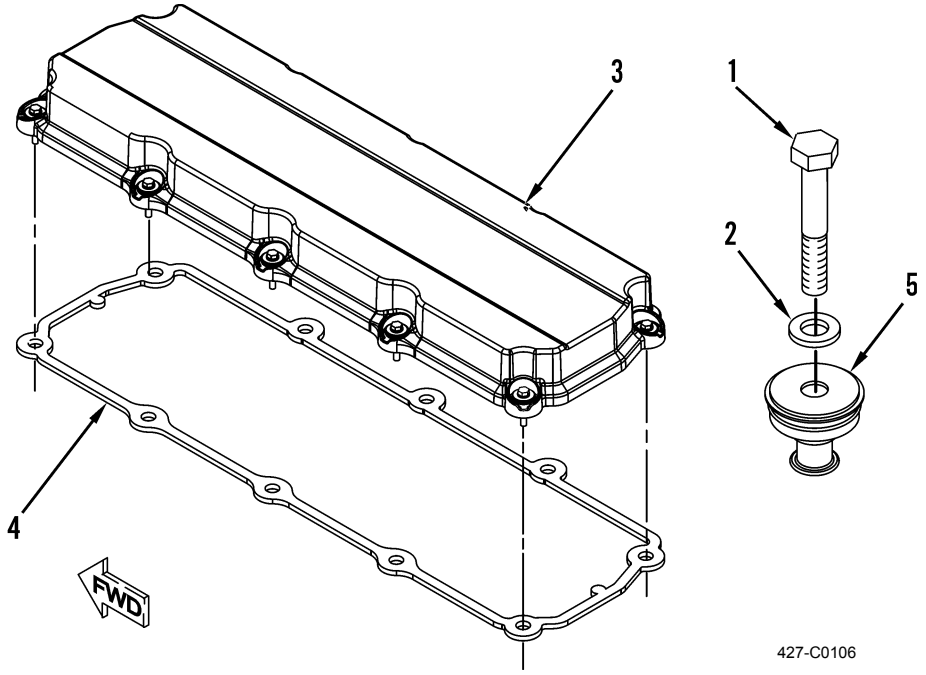

4. Remove five bolts (6), washers (7), clips (8), and four spacers (9) from valve cover base (10). Position wiring harness (11) aside.
5. Remove two bolts (12) and washers (13) and disconnect wiring harness (14) from wiring harness (11) and set both aside.

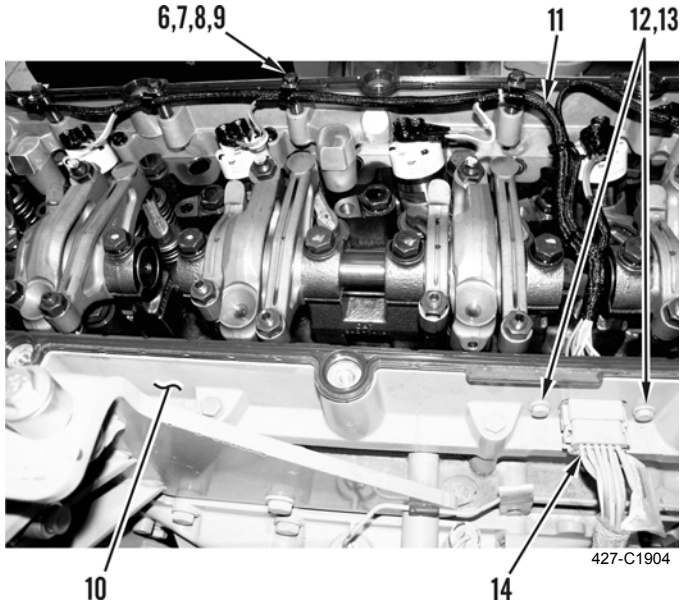

REMOVAL - CONTINUED

CAUTION

Wipe area clean around all connections to be opened during removal. Cap lines and hoses and plug openings after removing lines. Contamination of system could result in premature failure.

NOTE

- **Tag hoses prior to removal to ensure correct installation.**
- **Use a container to catch any fluid that may drain from hoses or system. Dispose of fluid IAW local policy and ordinances. Ensure all spills are cleaned up.**

6. Loosen clamp (15) and disconnect hose (16) from valve cover base (10).
7. Remove 15 bolts (17), washers (18), and clamp loop (19) from valve cover base (10).

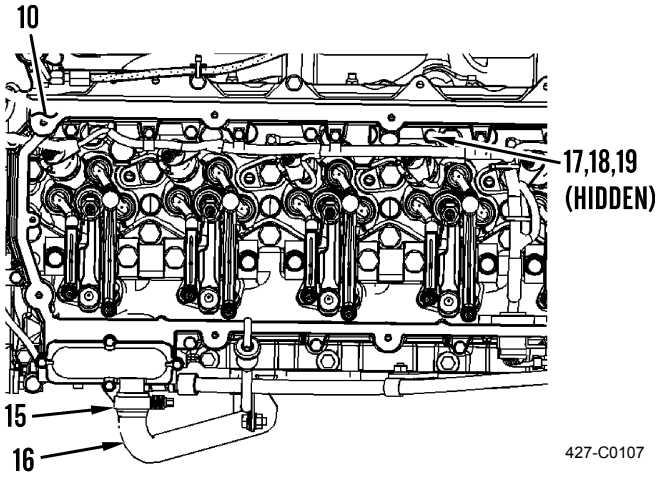

8. Remove valve cover base (10) and gasket (20) from machine. Discard gasket.

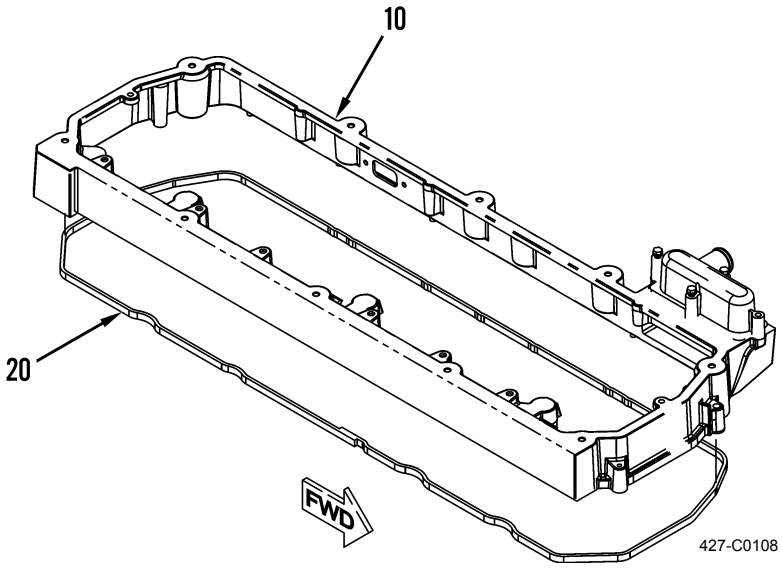

CLEANING AND INSPECTION



- **Solvent cleaning compound MIL-PRF-680 Type III is an environmentally compliant and low-toxic material. However, it may be irritating to the eyes and skin. Use protective gloves and goggles. Use in well-ventilated areas. Keep away from open flames and other sources of ignition. Failure to do so may result in injury or death to personnel.**
- **Particles blown by compressed air are hazardous. DO NOT exceed 15 psi (103 kPa) nozzle pressure when drying parts with compressed air. DO NOT direct compressed air against human skin. Make sure air stream is directed away from user and other personnel in the area. To prevent injury, user must wear protective goggles or face shield. Failure to follow this warning may result in injury to personnel.**

1. Remove all gasket material from mounting surfaces.
2. Clean all parts and mating surfaces with solvent cleaning compound.
3. Dry parts with compressed air.
4. Inspect all parts for wear, pitting, cracks, or corrosion and replace if necessary.
5. Inspect rubber grommets for damage and replace if necessary.

INSTALLATION

1. Install valve cover base (10) and new gasket (20) on machine.

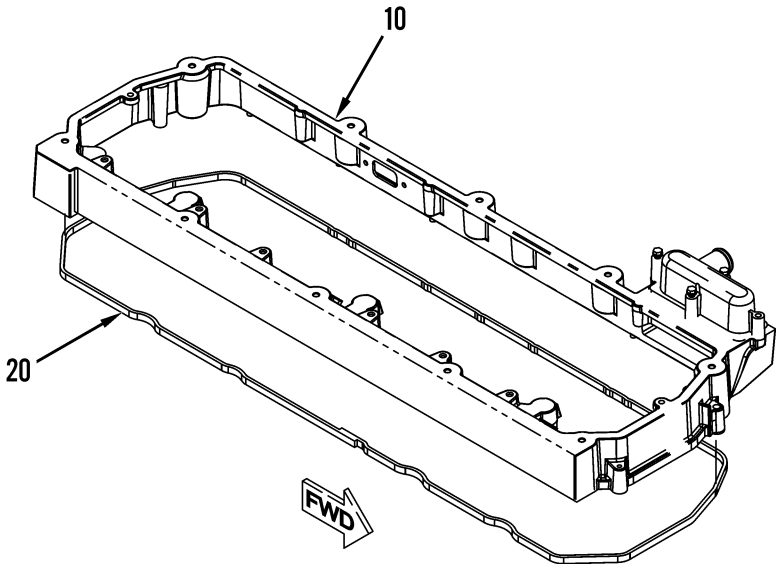

427-C0108

INSTALLATION - CONTINUED

2. Install clamp (19), 15 washers (18), and bolts (17) on machine.
3. Connect hose (11) to valve cover base (10) and tighten clamp (15).

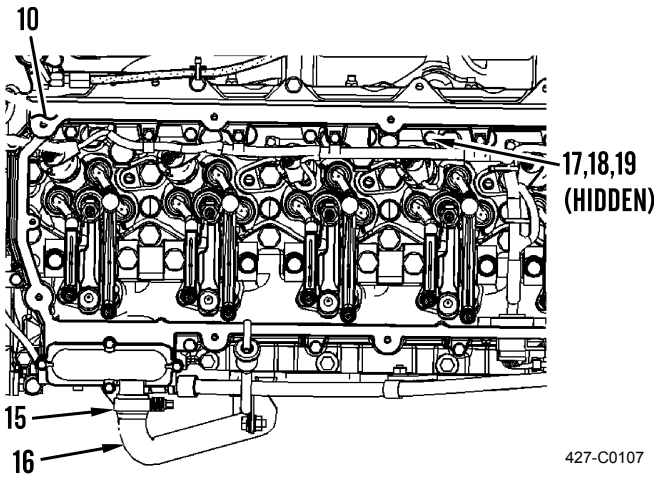

4. Connect wiring harness (14) to wiring harness (11) and install two washers (13) and bolts (12).
5. Position wiring harness (11) and install four spacers (9), five clips (8), washers (7), and bolts (6) on valve cover base (10).

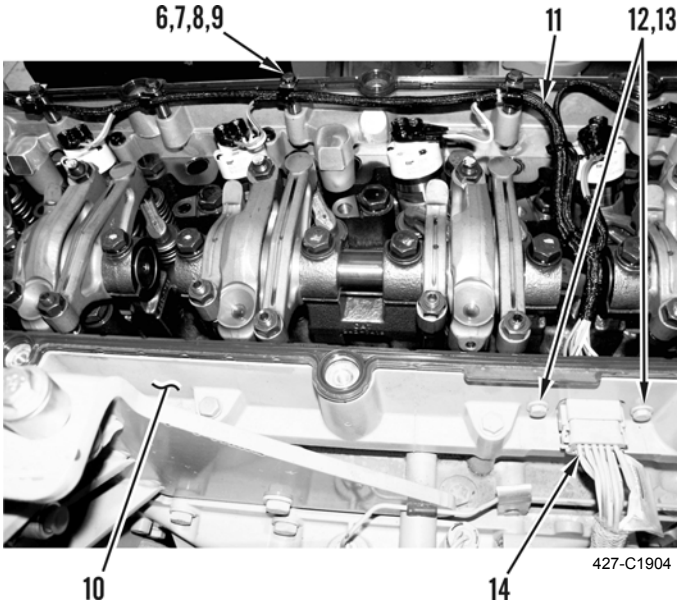

INSTALLATION - CONTINUED

6. Install 10 isolators (5) in valve cover (3).
7. Position new gasket (4) and valve cover (3) on machine.
8. Install 10 washers (2) and bolts (1) on valve cover (3).

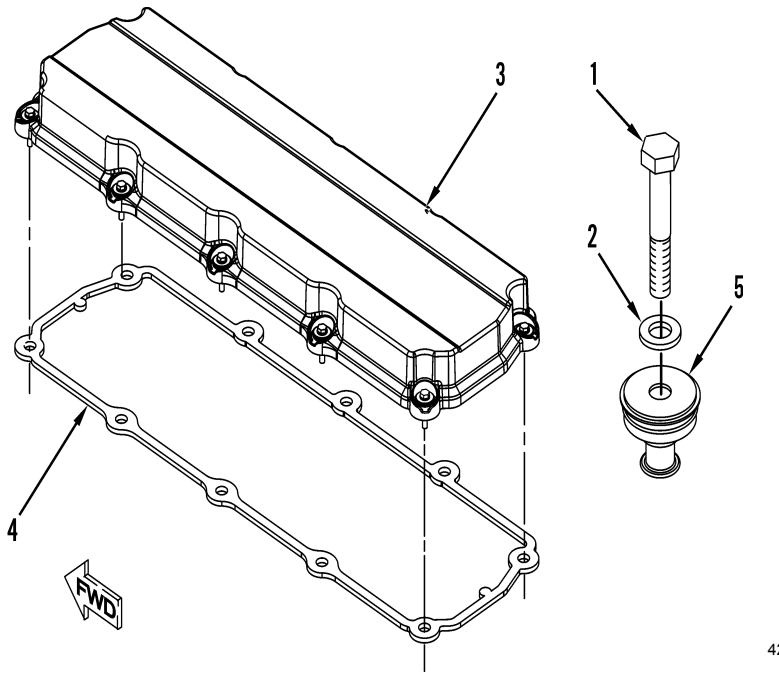

427-C0106

9. Tighten bolts (1) in a criss-cross sequence, starting with middle and working outward as shown.

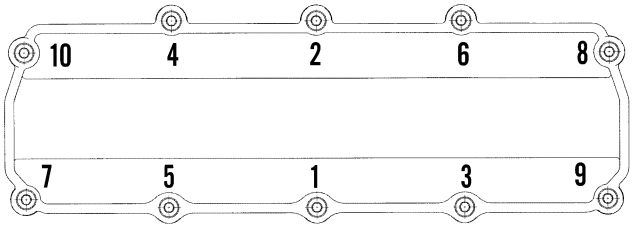

427-C1261

10. Connect tube to turbocharger and aftercooler (WP 0032 00).
11. Install muffler (WP 0040 00).
12. Run engine until normal operating temperature is reached (TM 5-3805-291-10).
13. Check for engine oil leaks.
14. Shut down engine (TM 5-3805-291-10).

END OF WORK PACKAGE

CHANGING ENGINE OIL AND FILTER 0025 00

THIS WORK PACKAGE COVERS

Removal, Cleaning and Inspection, Installation

INITIAL SETUP

Maintenance Level

Unit

Tools and Special Tools

Tool kit, general mechanic's, automotive (Item 90, WP 0232 00)

Shop equipment, automotive maintenance and repair: organizational maintenance, common no. 1 (Item 70, WP 0232 00)

Materials/Parts

Cleaning compound, solvent, type III (Item 7, WP 0233 00)

Oil, lubricating, OE/HDO-5/40 (Item 27, WP 0233 00)

Oil, lubricating, OE/HDO-15/40 (Item 28, WP 0233 00)

Oil, lubricating, OEA-30, Arctic (Item 29, WP 0233 00)

Rag, wiping (Item 35, WP 0233 00)

Filter, engine oil

Personnel Required

MOS 62B, Construction Equipment Repairer

Equipment Conditions

Machine parked on level ground (TM 5-3805-291-10)

Work tool lowered to ground (TM 5-3805-291-10)

Parking brake engaged (TM 5-3805-291-10)

Wheels chocked

Battery disconnect switch in OFF position (TM 5-3805-291-10)

Hood opened (TM 5-3805-291-10)

Drawings Required

TM 5-3805-291-23P, Figure 16

Estimated Time to Complete Task

1.0 hr

REMOVAL

NOTE

- **Use a container to catch any fluid that may drain from hoses or system. Dispose of fluid IAW local policy and ordinances. Ensure all spills are cleaned up.**
- **Drain cock is located on left side of engine oil pan toward rear of machine.**

1. Open drain cock (1) and allow oil to drain into container.
2. Close drain cock (1).
3. Use strap type wrench to remove engine oil filter (2) from left side of engine. Discard engine oil filter.
4. Clean filter mounting base (3).

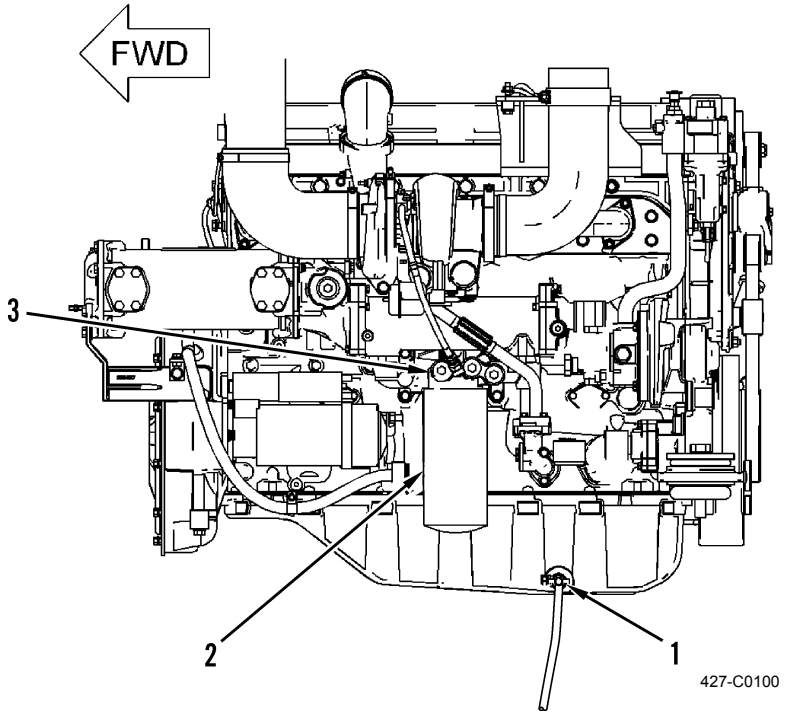

CLEANING AND INSPECTION



- **Solvent cleaning compound MIL-PRF-680 Type III is an environmentally compliant and low-toxic material. However, it may be irritating to the eyes and skin. Use protective gloves and goggles. Use in well-ventilated areas. Keep away from open flames and other sources of ignition. Failure to do so may result in injury or death to personnel.**
- **Particles blown by compressed air are hazardous. DO NOT exceed 15 psi (103 kPa) nozzle pressure when drying parts with compressed air. DO NOT direct compressed air against human skin. Make sure air stream is directed away from user and other personnel in the area. To prevent injury, user must wear protective goggles or face shield. Failure to follow this warning may result in injury to personnel.**

1. Clean all parts and mating surfaces with solvent cleaning compound.
2. Dry parts with compressed air.
3. Inspect all parts for wear, pitting, cracks, or corrosion and replace if necessary.

INSTALLATION

1. Apply a thin coat of clean oil to seal of new engine oil filter (2).
2. Install new engine oil filter (2) hand tight until seal contacts filter mounting base (3).
3. When new engine oil filter (2) seal contacts filter mounting base (3), hand tighten an additional 3/4 turn.
4. Remove oil filler cap (4) on right side of engine.
5. Fill engine crankcase with 9.25 gal. (35 L) of fresh oil.
6. Clean oil filler cap (4) and install on machine.
7. Run engine until normal operating temperature is reached (TM 5-3805-291-10).
8. Check for engine oil leaks.
9. Shut down engine and wait at least 3 minutes (TM 5-3805-291-10).
10. Check engine oil level on dipstick (5). Adjust oil level as necessary.
11. Close hood (TM 5-3805-291-10).

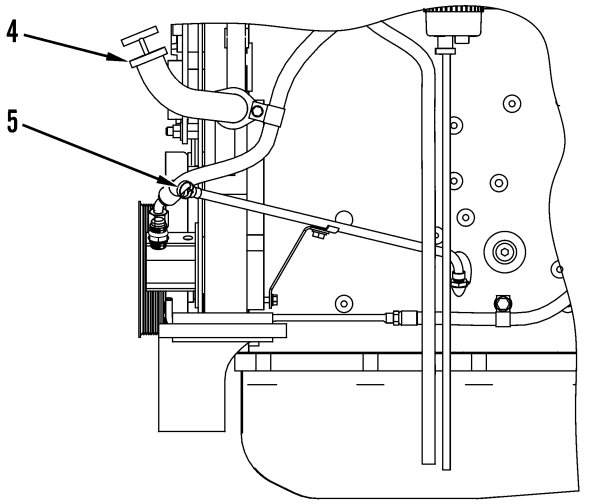

427-C0102

END OF WORK PACKAGE

CRANKCASE BREATHER REPLACEMENT 0026 00

THIS WORK PACKAGE COVERS

Removal, Cleaning and Inspection, Installation

INITIAL SETUP

Maintenance Level

Unit

Tools and Special Tools

Tool kit, general mechanic's, automotive (Item 90, WP 0232 00)

Shop equipment, automotive maintenance and repair: organizational maintenance, common no. 1 (Item 70, WP 0232 00)

Materials/Parts

Cleaning compound, solvent, type III (Item 7, WP 0233 00)

Rag, wiping (Item 35, WP 0233 00)

Gasket

Personnel Required

MOS 62B, Construction Equipment Repairer

References

TM 5-3805-291-10

Equipment Conditions

Muffler removed (WP 0040 00)

Drawings Required

TM 5-3805-291-23P, Figure 20

Estimated Time to Complete Task

0.7 hr

REMOVAL

1. Loosen clamp (1) and disconnect hose (2).
2. Remove four bolts (3) and washers (4) from crankcase breather (5).
3. Remove crankcase breather (5) and gasket (6) from valve cover base (7). Discard gasket.

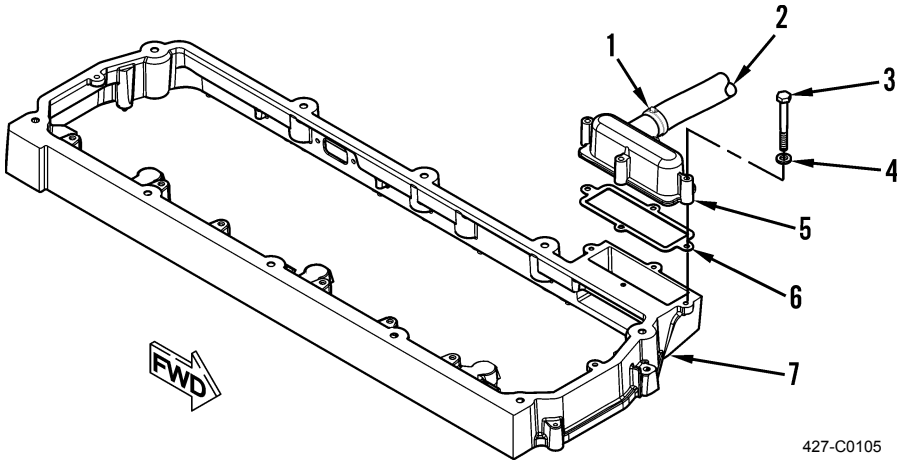

CLEANING AND INSPECTION



- **Solvent cleaning compound MIL-PRF-680 Type III is an environmentally compliant and low-toxic material. However, it may be irritating to the eyes and skin. Use protective gloves and goggles. Use in well-ventilated areas. Keep away from open flames and other sources of ignition. Failure to do so may result in injury or death to personnel.**
- **Particles blown by compressed air are hazardous. DO NOT exceed 15 psi (103 kPa) nozzle pressure when drying parts with compressed air. DO NOT direct compressed air against human skin. Make sure air stream is directed away from user and other personnel in the area. To prevent injury, user must wear protective goggles or face shield. Failure to follow this warning may result in injury to personnel.**

1. Remove all gasket material from mounting surfaces.
2. Clean all parts and mating surfaces with solvent cleaning compound.
3. Dry parts with compressed air.
4. Inspect all parts for wear, pitting, cracks, or corrosion and replace if necessary.

INSTALLATION

1. Install crankcase breather (5) and new gasket (6) on valve cover base (7).
2. Install four washers (4) and bolts (3) on crankcase breather (5).
3. Connect hose (2) and tighten clamp (1).

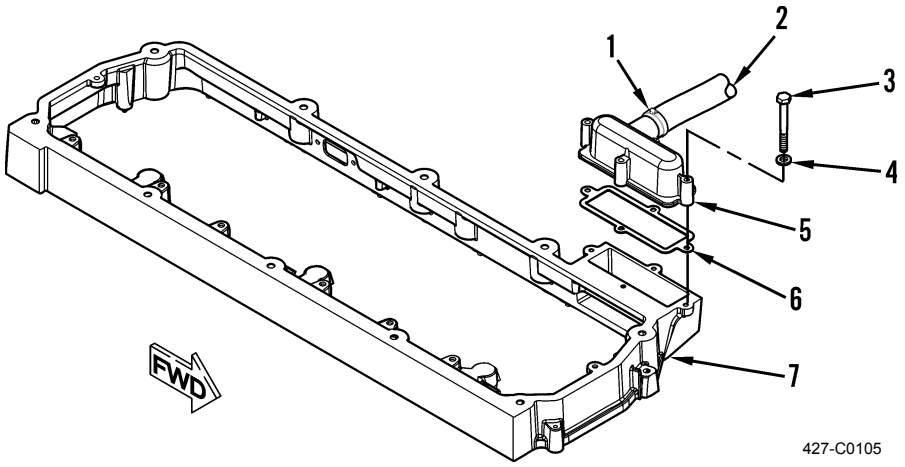

4. Install muffler (WP 0040 00).
5. Run engine until normal operating temperature is reached (TM 5-3805-291-10).
6. Shut down engine (TM 5-3805-291-10).
7. Check for leaks.

END OF WORK PACKAGE

ENGINE OIL COOLER CORE REPLACEMENT 0027 00

THIS WORK PACKAGE COVERS

Removal, Cleaning and Inspection, Installation

INITIAL SETUP

Maintenance Level

Unit

Tools and Special Tools

Tool kit, general mechanic's, automotive (Item 90, WP 0232 00)

Shop equipment, automotive maintenance and repair: organizational maintenance, common no. 1 (Item 70, WP 0232 00)

Materials/Parts

Cap set, protective (Item 6, WP 0233 00)

Cleaning compound, solvent, type III (Item 7, WP 0233 00)

Oil, lubricating, OE/HDO-5/40 (Item 27, WP 0233 00)

Oil, lubricating, OE/HDO-15/40 (Item 28, WP 0233 00)

Oil, lubricating, OEA-30, Arctic (Item 29, WP 0233 00)

Materials/Parts - Continued

Rag, wiping (Item 35, WP 0233 00)

Tag, marker (Item 43, WP 0233 00)

Seal (4)

O-ring (3)

Personnel Required

MOS 62B, Construction Equipment Repairer (2)

References

TM 5-3805-291-10

Equipment Conditions

Cooling system drained (WP 0041 00)

Drain tube removed from turbocharger (WP 0032 00)

Drawings Required

TM 5-3805-291-23P, Figure 17

Estimated Time to Complete Task

2.0 hr

CAUTION

Wipe area clean around all connections to be opened during removal. Cap lines and hoses and plug openings after removing lines. Contamination of system could result in premature failure.

NOTE

- **Tag hoses prior to removal to ensure correct installation.**
- **Use a container to catch any fluid that may drain from hoses or system. Dispose of fluid IAW local policy and ordinances. Ensure all spills are cleaned up.**

REMOVAL

1. Remove bolt (1) and washer (2) from engine oil cooler (3) and position bracket (4) aside.
2. Remove four bolts (5) and washers (6) from filter base (7).

WARNING

Use extreme caution when handling heavy parts. Provide adequate support and use assistance during procedure. Ensure that any lifting equipment used is in good condition and of suitable load capacity. Keep clear of heavy parts supported only by lifting equipment. Failure to follow this warning may result in injury or death to personnel.

NOTE

Engine oil cooler weighs 35 lb (16 kg).

3. Remove three bolts (8) and spacers (9) from engine oil cooler (3).
4. Remove seven bolts (10) and washers (11) from engine oil cooler (3).
5. Remove engine oil cooler (3), two seals (12), and seals (13) from engine. Discard seals.
6. Disconnect loose hose clamp (14) and hose (15) from cover (16).
7. Remove cover (16) from machine.
8. Remove dust cap (17), valve (18), O-ring (19), adapter (20), and O-ring (21) from cover (16). Discard O-rings.
9. Remove plug (22) and O-ring (23) from cover (16). Discard O-ring.

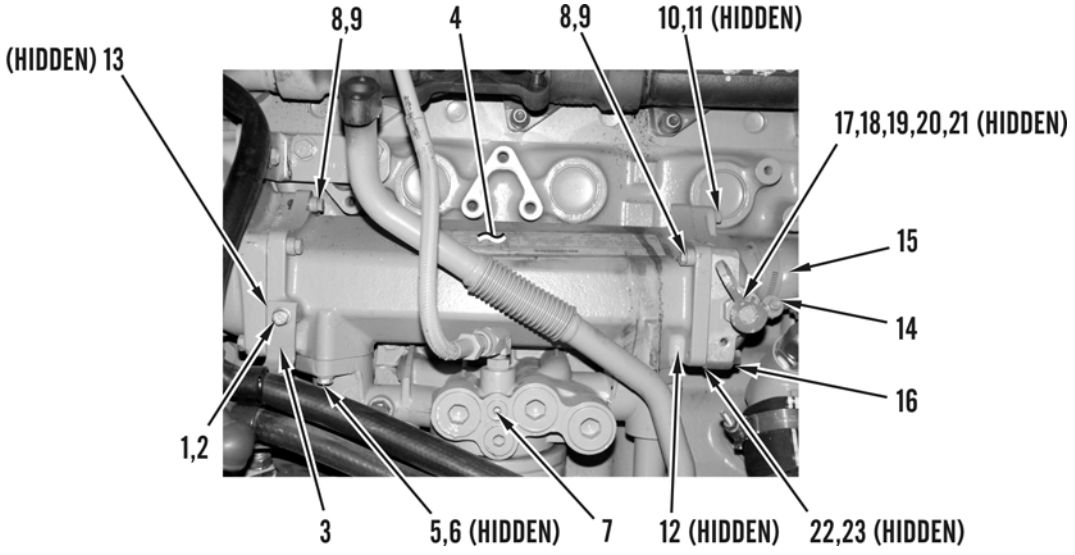

CLEANING AND INSPECTION



WARNING

- **Solvent cleaning compound MIL-PRF-680 Type III is an environmentally compliant and low-toxic material. However, it may be irritating to the eyes and skin. Use protective gloves and goggles. Use in well-ventilated areas. Keep away from open flames and other sources of ignition. Failure to do so may result in injury or death to personnel.**
- **Particles blown by compressed air are hazardous. DO NOT exceed 15 psi (103 kPa) nozzle pressure when drying parts with compressed air. DO NOT direct compressed air against human skin. Make sure air stream is directed away from user and other personnel in the area. To prevent injury, user must wear protective goggles or face shield. Failure to follow this warning may result in injury to personnel.**

1. Clean all parts and mating surfaces with solvent cleaning compound.
2. Dry parts with compressed air.
3. Inspect all parts for wear, pitting, cracks, or corrosion and replace if necessary.

INSTALLATION

1. Install new O-ring (23) and plug (22) in cover (16).
2. Install new O-ring (21), adapter (20), new O-ring (19), valve (18), and dust cap (17) in cover (16).
3. Install cover (16) in hose (15) and tighten hose clamp (14).



WARNING

Use extreme caution when handling heavy parts. Provide adequate support and use assistance during procedure. Ensure that any lifting equipment used is in good condition and of suitable load capacity. Keep clear of heavy parts supported only by lifting equipment. Failure to follow this warning may result in injury or death to personnel.

NOTE

- **Engine oil cooler weighs 35 lb (16 kg).**
- **Apply a thin coat of clean oil to all seals and O-rings before installation.**

4. Install engine oil cooler (3), two new seals (12), and new seals (13).
5. Install seven washers (11) and bolts (10) on engine oil cooler (3).
6. Install three spacers (9) and bolts (8) on engine oil cooler (3).
7. Install four washers (6) and bolts (5) on filter base (7).
8. Position bracket (4) and install washer (2) and bolt (1) on engine oil cooler (3).

INSTALLATION - CONTINUED

9. Install drain tube on turbocharger (WP 0032 00).
10. Fill coolant system (WP 0041 00).
11. Run engine until normal operating temperature is reached (TM 5-3805-291-10).
12. Shut down engine (TM 5-3805-291-10).
13. Check for engine oil leaks.

END OF WORK PACKAGE

ENGINE OIL FILTER BASE REPLACEMENT 0028 00

THIS WORK PACKAGE COVERS

Removal, Cleaning and Inspection, Specifications, Installation

INITIAL SETUP

Maintenance Level

Unit

Tools and Special Tools

Tool kit, general mechanic's, automotive (Item 90, WP 0232 00)

Shop equipment, automotive maintenance and repair: organizational maintenance, common no. 1 (Item 70, WP 0232 00)

Materials/Parts

Cap set, protective (Item 6, WP 0233 00)

Cleaning compound, solvent, type III (Item 7, WP 0233 00)

Rag, wiping (Item 35, WP 0233 00)

Tag, marker (Item 43, WP 0233 00)

Materials/Parts - Continued

Gasket

O-ring (8)

Personnel Required

MOS 62B, Construction Equipment Repairer

References

TM 5-3805-291-10

Equipment Conditions

Oil filter removed (WP 0025 00)

Drawings Required

TM 5-3805-291-23P, Figures 16, 19, and 32

Estimated Time to Complete Task

1.5 hr

REMOVAL

CAUTION

Wipe area clean around all connections to be opened during removal. Cap lines and hoses and plug openings after removing lines. Contamination of system could result in premature failure.

NOTE

- **Tag hoses prior to removal to ensure correct installation.**
- **Use a container to catch any fluid that may drain from hoses or system. Dispose of fluid IAW local policy and ordinances. Ensure all spills are cleaned up.**

1. Disconnect hose (1) and O-ring (2). Discard O-ring.
2. Remove two bolts (3) and washers (4).
3. Remove two bolts (5) and washers (6).
4. Remove two bolts (7) and washers (8).
5. Remove six bolts (9), washers (10), and oil filter base (11).
6. Remove and discard gasket (12).
7. Remove fitting (13) and O-ring (14). Discard O-ring.
8. Remove and discard three O-rings (15).
9. Remove sampling valve (16), fitting (17), and two O-rings (18). Discard O-rings.
10. Remove tube (19) and O-ring (20). Discard O-ring.

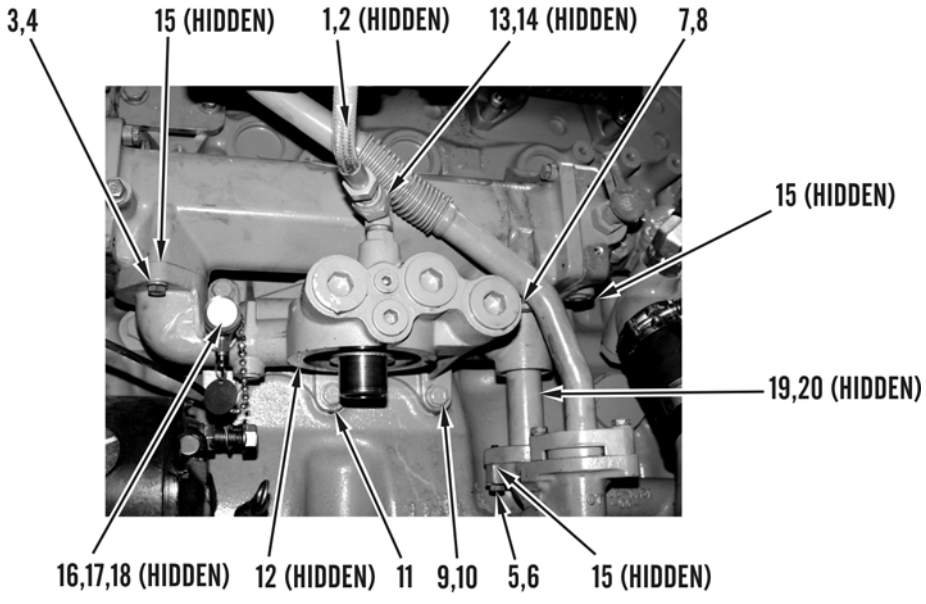

427-C1025

CLEANING AND INSPECTION



- **Solvent cleaning compound MIL-PRF-680 Type III is an environmentally compliant and low-toxic material. However, it may be irritating to the eyes and skin. Use protective gloves and goggles. Use in well-ventilated areas. Keep away from open flames and other sources of ignition. Failure to do so may result in injury or death to personnel.**
- **Particles blown by compressed air are hazardous. DO NOT exceed 15 psi (103 kPa) nozzle pressure when drying parts with compressed air. DO NOT direct compressed air against human skin. Make sure air stream is directed away from user and other personnel in the area. To prevent injury, user must wear protective goggles or face shield. Failure to follow this warning may result in injury to personnel.**

1. Clean all parts and mating surfaces of engine with solvent cleaning compound.
2. Dry parts with compressed air.
3. Inspect all parts for wear, pitting, cracks, or corrosion and replace if necessary.
4. Inspect oil passages to ensure they are clean and unobstructed.

SPECIFICATIONS

Oil Filter Bypass

4N-8150 Spring

Full open pressure . . . . . .28.508 psi (196.55 kPa)

Assembled length. . . . . .2.175 in. (55.25 mm)

Load at assembled length. . . . . 17 ± 1.3 lb (76 ± 6 N)

Free length after test . . . . . .3.69 in. (93.7 mm)

Outside diameter . . . . . .0.81 in. (20.6 mm)

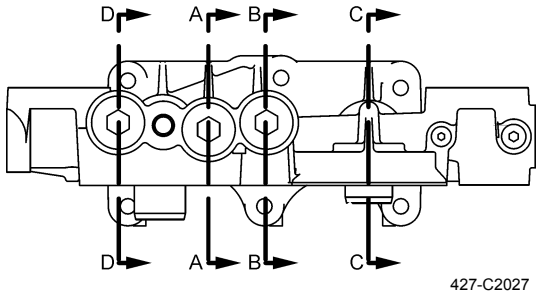

427-C2027

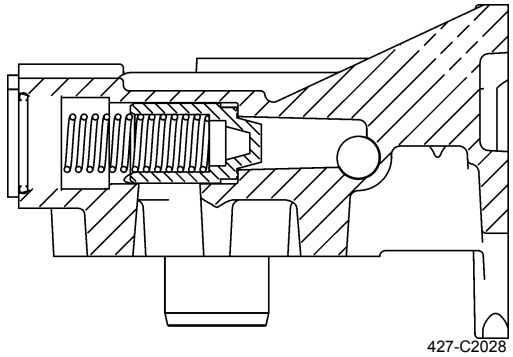
427-C2028

Oil Cooler Bypass

4N-8150 Spring

Full open pressure . . . . . .28.508 psi (196.55 kPa)

Assembled length. . . . . .2.175 in. (55.25 mm)

Load at assembled length. . . . . 17 ± 1.3 lb (76 ± 6 N)

Free length after test . . . . . .3.69 in. (93.7 mm)

Outside diameter . . . . . .0.81 in. (20.6 mm)

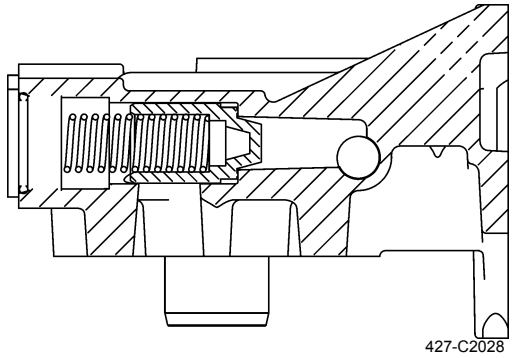
427-C2028

SPECIFICATIONS - CONTINUED

Pump Bypass Valve

7C-3954 Spring

Full open pressure . . . . . 54.346 psi (374.70 kPa)

Assembled length. . . . . 3.800 in. (96.52 mm)

Load at assembled length. . . . . 20.800 lb (92.52 N)

Free length after test . . . . . 4.910 in. (124.71 mm)

Outside diameter . . . . . 0.860 in. (21.84 mm)

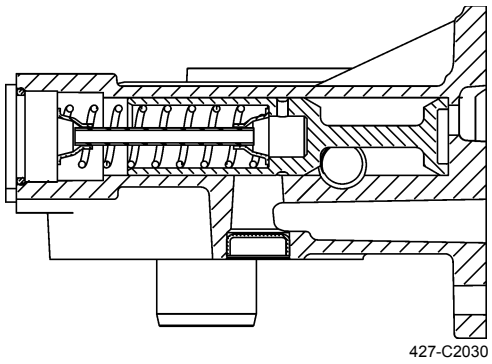

427-C2030

High Pressure Relief Valve

1A-2170 Retainer Spring

Relief pressure . . . . . 98.594 psi (679.77 kPa)

Assembled length. . . . . 0.843 in. (21.41 mm)

Load at assembled length. . . . . 45 ± 3.5 lb (200 ± 15 N)

Free length after test . . . . . 1.22 in. (31.0 mm)

Outside diameter . . . . . 0.668 in. (16.97 mm)

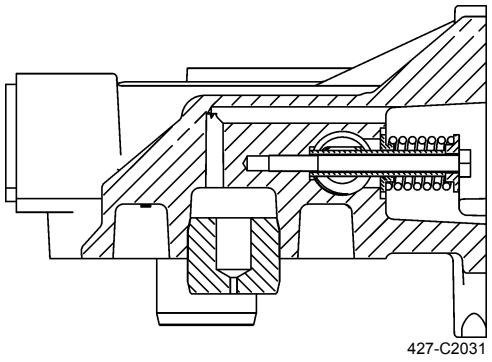

427-C2031

INSTALLATION

NOTE

Apply a thin coat of clean oil to all O-rings before installation.

1. Install new O-ring (20) and tube (19).
2. Install two new O-rings (18), fitting (17), and valve (16).
3. Install three new O-rings (15).
4. Install new O-ring (14) and fitting (13).
5. Install new gasket (12).
6. Install oil filter base (11), six washers (10), and bolts (9).
7. Install two washers (8) and bolts (7).
8. Install two washers (6) and bolts (5).
9. Install two washers (4) and bolts (3).
10. Install new O-ring (2) and connect hose (1).
11. Install oil filter (WP 0025 00).
12. Run engine until normal operating temperature is reached (TM 5-3805-291-10).
13. Shut down engine (TM 5-3805-291-10).
14. Check for engine oil leaks.

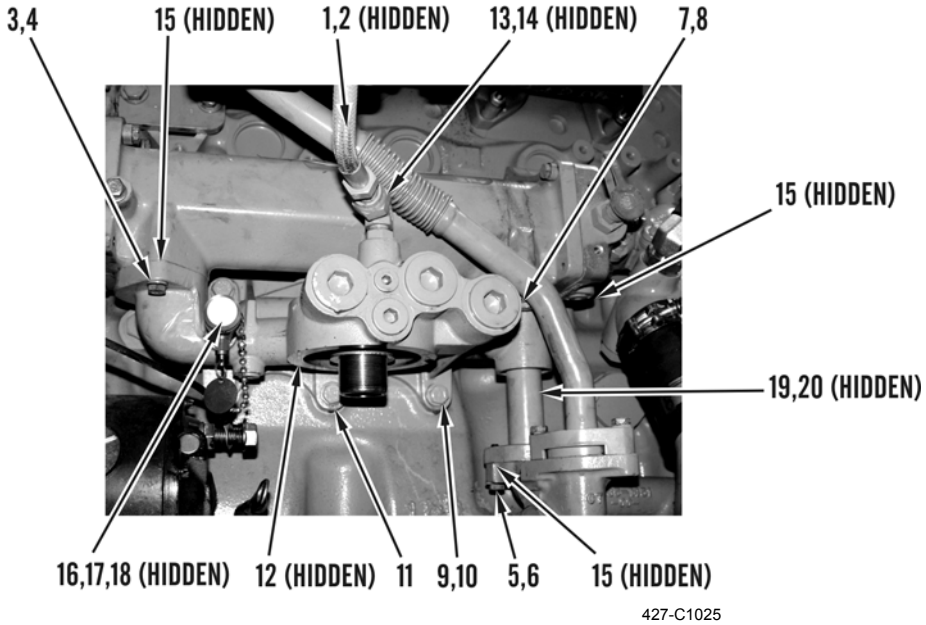

427-C1025

END OF WORK PACKAGE

ENGINE OIL FILLER TUBE AND DIPSTICK TUBE REPLACEMENT 0029 00

THIS WORK PACKAGE COVERS

Filler Tube Removal, Dipstick Tube Removal, Cleaning and Inspection, Dipstick Tube Installation, Filler Tube Installation

INITIAL SETUP

Maintenance Level

Unit

Tools and Special Tools

Tool kit, general mechanic's, automotive (Item 90, WP 0232 00)

Shop equipment, automotive maintenance and repair: organizational maintenance, common no. 1 (Item 70, WP 0232 00)

Materials/Parts

Cleaning compound, solvent, type III (Item 7, WP 0233 00)

Oil, lubricating, OE/HDO-5/40 (Item 27, WP 0233 00)

Oil, lubricating, OE/HDO-15/40 (Item 28, WP 0233 00)

Oil, lubricating, OEA-30, Arctic (Item 29, WP 0233 00)

Rag, wiping (Item 35, WP 0233 00)

O-ring (2)

Personnel Required

MOS 62B, Construction Equipment Repairer

Equipment Conditions

Machine parked on level ground (TM 5-3805-291-10)

Work tool lowered to ground (TM 5-3805-291-10)

Parking brake engaged (TM 5-3805-291-10)

Wheels chocked

Battery disconnect switch in OFF position (TM 5-3805-291-10)

Hood opened (TM 5-3805-291-10)

Drawings Required

TM 5-3805-291-23P, Figures 18 and 146

Estimated Time to Complete Task

0.7 hr

NOTE

- **Filler tube must be removed before dipstick tube.**
- **Use a container to catch any fluid that may drain from hoses or system. Dispose of fluid IAW local policy and ordinances. Ensure all spills are cleaned up.**

ENGINE OIL FILLER TUBE AND DIPSTICK TUBE REPLACEMENT - CONTINUED 0029 00

FILLER TUBE REMOVAL

1. Remove engine oil filler cap (1) from engine oil filler tube (2).
2. Remove two bolts (3) and washers (4) from engine oil filler tube (2).
3. Remove engine oil filler tube (2) and O-ring (5) from machine. Discard O-ring.

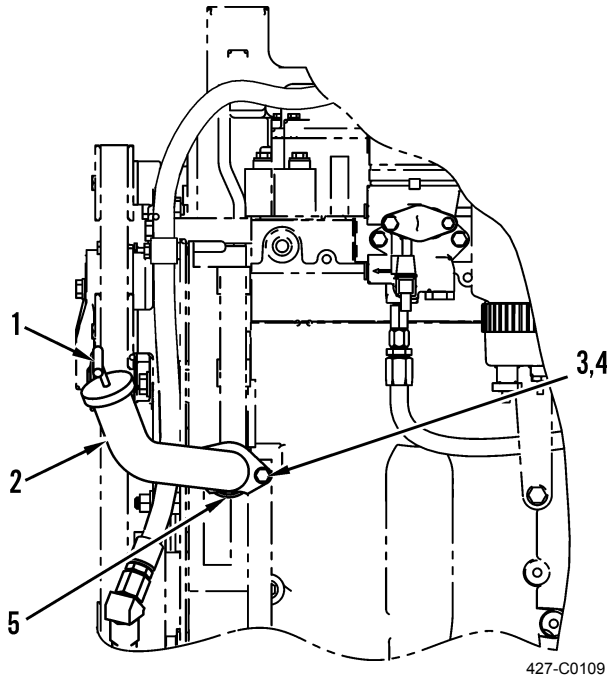

DIPSTICK TUBE REMOVAL

1. Remove dipstick (6) from dipstick tube (7).
2. Remove bolt (8) and washer (9) from bracket (10).
3. Remove four bolts (11), washers (12), and spacers (13) and position bracket (14) aside.
4. Remove dipstick tube (7) and O-ring (15) from machine. Discard O-ring.

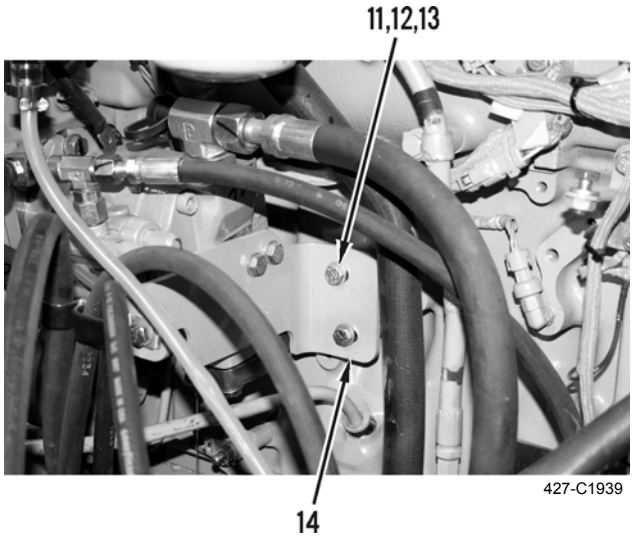

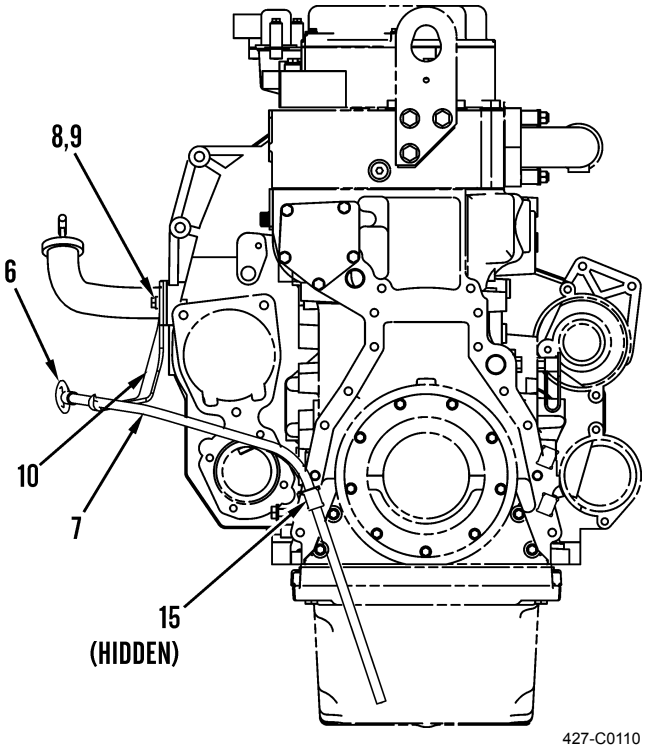

CLEANING AND INSPECTION



WARNING

- **Solvent cleaning compound MIL-PRF-680 Type III is an environmentally compliant and low-toxic material. However, it may be irritating to the eyes and skin. Use protective gloves and goggles. Use in well-ventilated areas. Keep away from open flames and other sources of ignition. Failure to do so may result in injury or death to personnel.**
- **Particles blown by compressed air are hazardous. DO NOT exceed 15 psi (103 kPa) nozzle pressure when drying parts with compressed air. DO NOT direct compressed air against human skin. Make sure air stream is directed away from user and other personnel in the area. To prevent injury, user must wear protective goggles or face shield. Failure to follow this warning may result in injury to personnel.**

1. Clean all parts and mating surfaces with solvent cleaning compound.
2. Dry parts with compressed air.
3. Inspect all parts for wear, pitting, cracks, or corrosion and replace if necessary.

DIPSTICK TUBE INSTALLATION

1. Lubricate new O-ring (15) and install with dipstick tube (7) on machine.
2. Position bracket (14) and install four spacers (13), washers (12), and bolts (11).

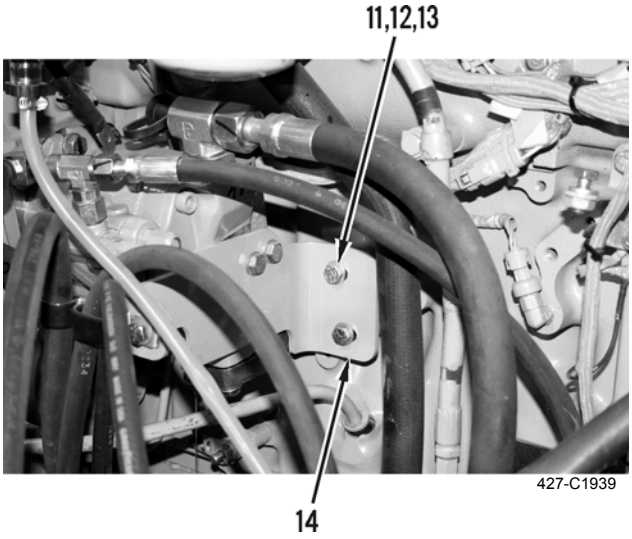

3. Install washer (9) and bolt (8) on bracket (10).
4. Install dipstick (6) in dipstick tube (7).

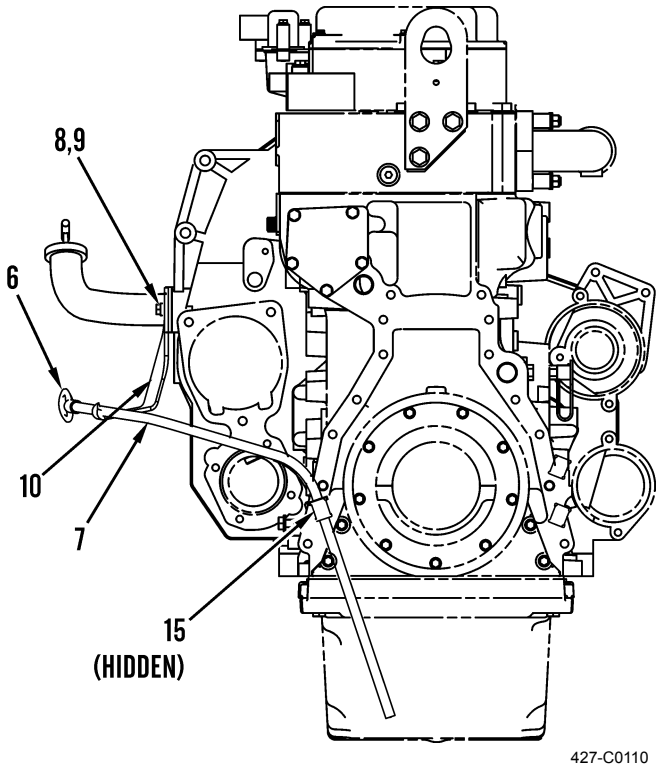

ENGINE OIL FILLER TUBE AND DIPSTICK TUBE REPLACEMENT - CONTINUED 0029 00

FILLER TUBE INSTALLATION

1. Lubricate new O-ring (5) and install with engine oil filler tube (2) on machine.
2. Install two washers (4) and bolts (3) on engine oil filler tube (2).
3. Install engine oil filler cap (1) on engine oil filler tube (2).

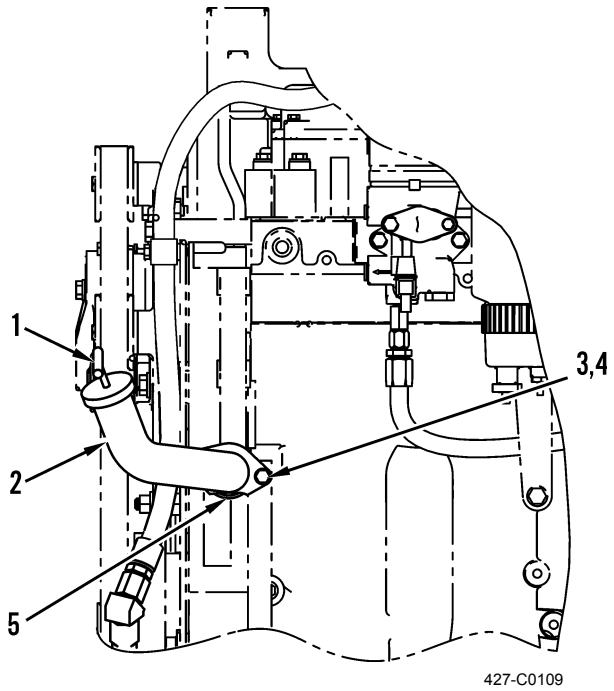

4. Run engine until normal operating temperature is reached (TM 5-3805-291-10).
5. Shut down engine (TM 5-3805-291-10).
6. Check for leaks.
7. Close hood (TM 5-3805-291-10).

END OF WORK PACKAGE

AIR CLEANER AND PRECLEANER REPLACEMENT 0030 00

THIS WORK PACKAGE COVERS

Removal, Cleaning and Inspection, Installation

INITIAL SETUP

Maintenance Level

Unit

Tools and Special Tools

Tool kit, general mechanic's, automotive (Item 90, WP 0232 00)

Shop equipment, automotive maintenance and repair: organizational maintenance, common no. 1 (Item 70, WP 0232 00)

Bracket, link (Item 17, WP 0232 00)

Lifting equipment, 180-lb capacity

Materials/Parts

Cleaning compound, solvent, type III (Item 7, WP 0233 00)

Rag, wiping (Item 35, WP 0233 00)

Personnel Required

MOS 62B, Construction Equipment Repairer (2)

Equipment Conditions

Machine parked on level ground (TM 5-3805-291-10)

Work tool lowered to ground (TM 5-3805-291-10)

Parking brake engaged (TM 5-3805-291-10)

Wheels chocked

Battery disconnect switch in OFF position (TM 5-3805-291-10)

Steering frame lock connected (TM 5-3805-291-10)

Hood opened (TM 5-3805-291-10)

Drawings Required

TM 5-3805-291-23P, Figure 27

Estimated Time to Complete Task

2.0 hr



- **If NBC exposure is suspected, personnel wearing protective equipment must handle all air cleaner media. Consult your NBC Officer or NBC NCO for appropriate handling or disposal procedures.**
- **Refer to FM 3-3, *Chemical and Biological Contamination Avoidance,* TM 3-4230-236-10, *Decontamination System, Sorbent,* and FM 3-3-1, *Nuclear Contamination Avoidance.***
- **NBC contaminated filters must be handled using adequate precautions and must be disposed of by trained personnel.**
- **Failure to follow these warnings may cause injury or death to personnel.**

REMOVAL

Air Cleaner and Precleaner

1. Remove ether canister if installed (TM 5-3805-291-10).
2. Disconnect wiring harness (1) and tube assembly (2) from solenoid (3).
3. Loosen clamp (4) and disconnect hose (5) from tube (6).

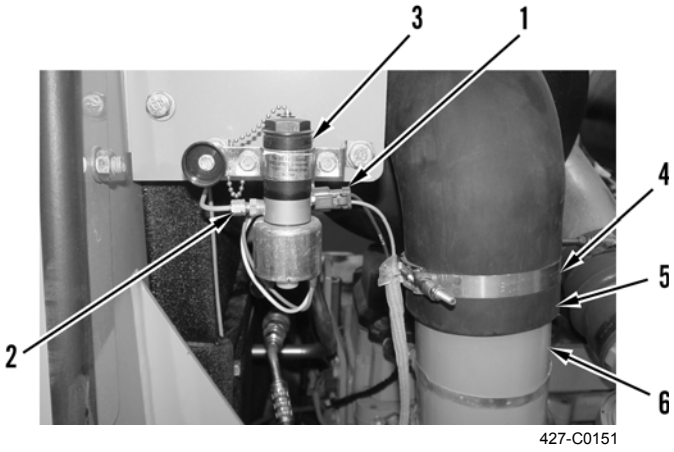

427-C0151

4. Remove two bolts (7) and washers (8) from clamp (9).
5. Remove clamp (9) from air cleaner assembly (10).

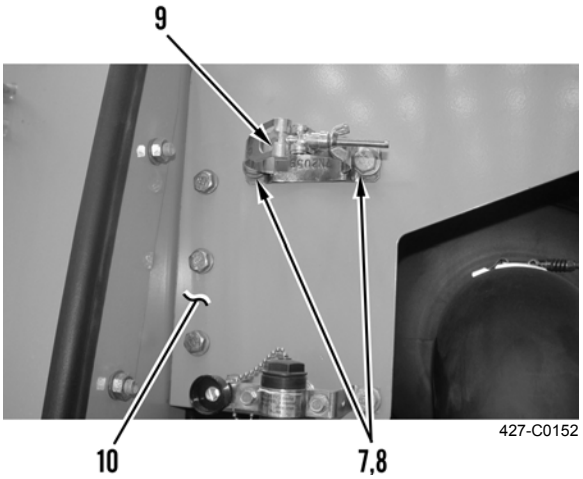

427-C0152

REMOVAL - CONTINUED

Air Cleaner and Precleaner - Continued

WARNING

Use extreme caution when handling heavy parts. Provide adequate support and use assistance during procedure. Ensure that any lifting equipment used is in good condition and of suitable load capacity. Keep clear of heavy parts supported only by lifting equipment. Failure to follow this warning may result in injury or death to personnel.

NOTE

Air cleaner assembly weighs 120 lb (54 kg).

6. Attach link bracket to air cleaner assembly (10).
7. Attach nylon strap or chain through opening of air cleaner assembly (10).
8. Attach lifting equipment to link bracket and nylon strap or chain.
9. Remove two bolts (11), washers (12), three bolts (13), and washers (14) from air cleaner assembly (10).

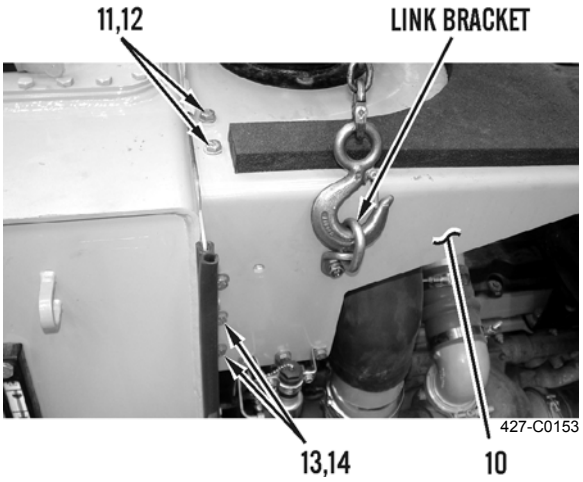

10. Remove two bolts (15), washers (16), three bolts (17), and washers (18) from air cleaner assembly (10).
11. With assistance, remove air cleaner assembly (10) from machine.

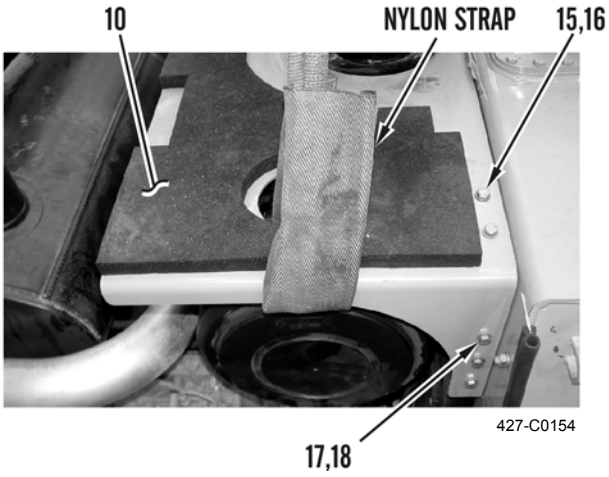

REMOVAL - CONTINUED

Air Cleaner and Precleaner - Continued

NOTE

When air cleaner is disconnected from engine, cover exposed engine opening to prevent dirt or debris from entering engine.

12. Loosen clamp (19) on precleaner assembly (20).
13. Remove three bolts (21), washers (22), and nuts (23) from air cleaner assembly (10).
14. Remove precleaner assembly (20) from air cleaner housing (24).
15. Remove four bolts (25) and washers (26) from air cleaner assembly (10).
16. Remove air cleaner housing (24) from air cleaner assembly (10).

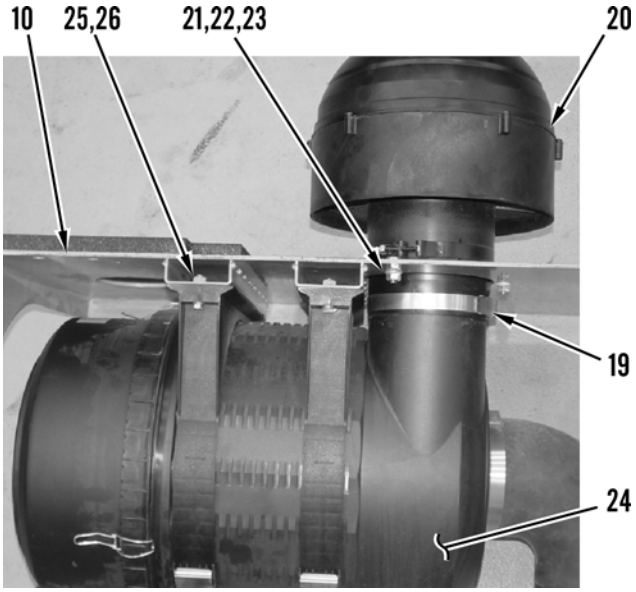

427-C0155

Air Filter Elements

1. Remove cover (27) from air cleaner housing (24).
2. Remove primary filter element (28) from air cleaner housing (24).
3. Remove secondary filter element (29) from air cleaner housing (24).
4. Clean inside of air cleaner housing (24).

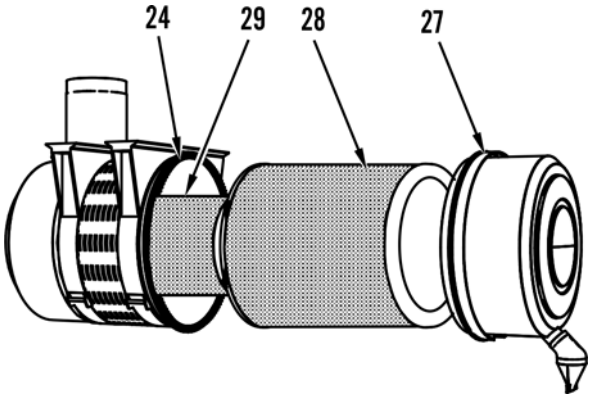

427-C0186

CLEANING AND INSPECTION



- **Solvent cleaning compound MIL-PRF-680 Type III is an environmentally compliant and low-toxic material. However, it may be irritating to the eyes and skin. Use protective gloves and goggles. Use in well-ventilated areas. Keep away from open flames and other sources of ignition. Failure to do so may result in injury or death to personnel.**
- **Particles blown by compressed air are hazardous. DO NOT exceed 15 psi (103 kPa) nozzle pressure when drying parts with compressed air. DO NOT direct compressed air against human skin. Make sure air stream is directed away from user and other personnel in the area. To prevent injury, user must wear protective goggles or face shield. Failure to follow this warning may result in injury to personnel.**

CAUTION

Observe the following guidelines to clean and inspect the primary filter element:

- **DO NOT tap or strike the filter element in order to remove dust.**
- **DO NOT wash the filter element.**
- **Use low pressure compressed, filtered, and dry air to remove dust from filter element. Air pressure must not exceed 30 psi (207 kPa). Direct the air flow along the length of the pleats, never directly at the filter element, from the inside of the filter element toward the outside. Take care not to damage the pleats. The primary filter element can be vacuum cleaned for those that require daily service in a dry, dusty environment. Neither method will remove carbon or oil deposits.**
- **Inspect primary filter element for any signs of deterioration or damage.**
- **The primary air filter element can be used up to six times if the element is properly cleaned and inspected. Compressed air can be used on primary elements that have not been cleaned more than two times. DO NOT use air filters with damaged pleats, gaskets, or seals. Dirt entering the engine will cause damage to engine components. Discard damaged primary filter elements. The primary filter element should be replaced at least once per year, regardless of the number of cleanings.**

1. Clean all parts (except filter elements) and surfaces with solvent cleaning compound.
2. Dry parts with compressed air.
3. Inspect all parts for damage, wear, pitting, cracks, or corrosion and replace if necessary.

INSTALLATION

CAUTION

Replace secondary filter element when primary filter element is serviced for a third time. Always replace secondary filter element. DO NOT attempt to reuse it by cleaning. Engine damage could result. If a clean primary filter element has been installed and a warning for the air filter still occurs, replace the secondary filter element. Also, if exhaust smoke remains black and a clean primary filter element has been installed, replace secondary filter element.

Air Filter Elements

1. Install secondary filter element (29) in air cleaner housing (24).
2. Install primary filter element (28) in air cleaner housing (24).
3. Install cover (27) on air cleaner housing (24).

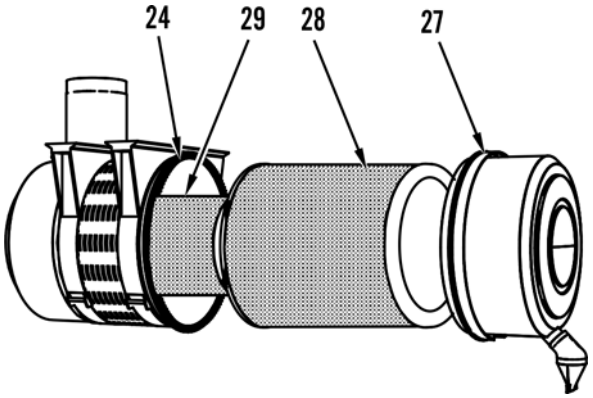

427-C0186

Air Cleaner and Precleaner

1. Install air cleaner housing (24) on air cleaner assembly (10).
2. Install four washers (26) and bolts (25) on air cleaner assembly (10).
3. Install precleaner assembly (20) on air cleaner housing (24).
4. Install three washers (22), bolts (21), and nuts (23) on air cleaner assembly (10).
5. Tighten clamp (19) on precleaner assembly (20).

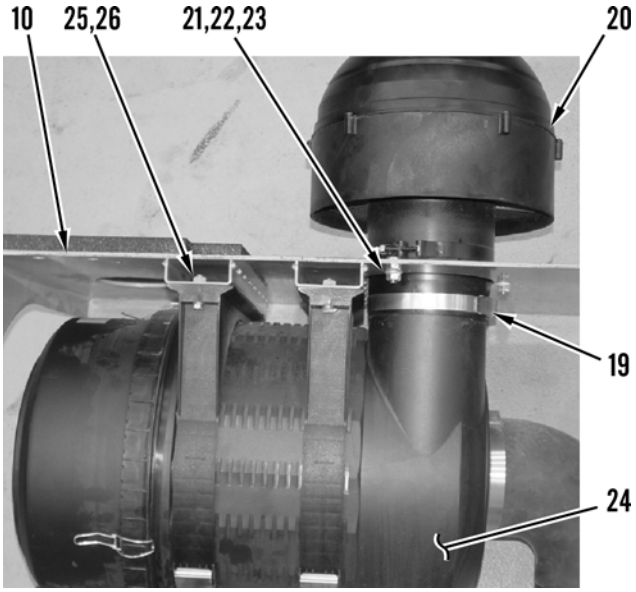

427-C0155

INSTALLATION - CONTINUED

Air Cleaner and Precleaner - Continued

WARNING

Use extreme caution when handling heavy parts. Provide adequate support and use assistance during procedure. Ensure that any lifting equipment used is in good condition and of suitable load capacity. Keep clear of heavy parts supported only by lifting equipment. Failure to follow this warning may result in injury or death to personnel.

NOTE

Air cleaner assembly weighs 120 lb (54 kg).

6. With assistance, attach lifting equipment and position air cleaner assembly (10) on machine.
7. Install two washers (16), bolts (15), three washers (18), and bolts (17) on air cleaner assembly (10).

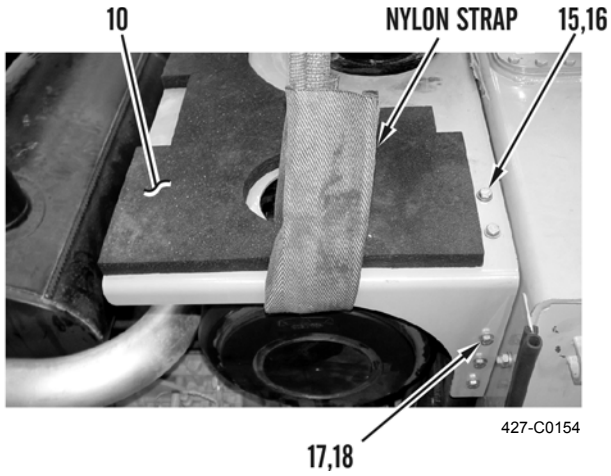

8. Install two washers (12), bolts (11), three washers (14), and bolts (13) on air cleaner assembly (10).

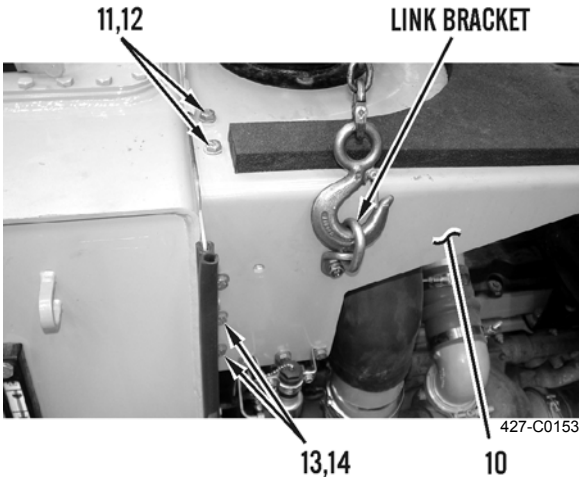

INSTALLATION - CONTINUED

Air Cleaner and Precleaner - Continued

9. Position clamp (9) on air cleaner assembly (10) and secure with two washers (8) and bolts (7).

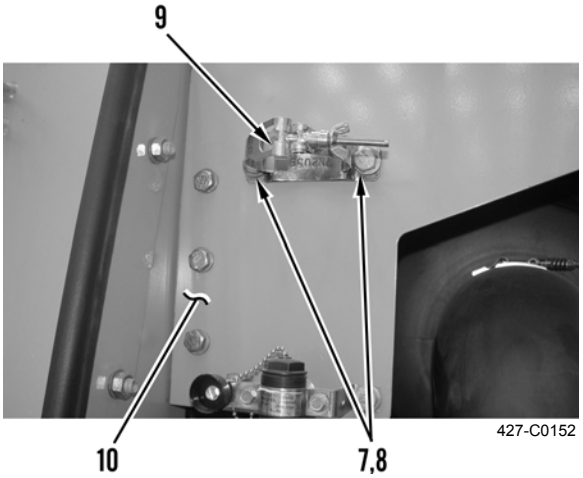

10. Connect hose (5) to tube (6) and tighten clamp (4) on hose.
11. Connect wiring harness (1) and tube assembly (2) to solenoid (3).

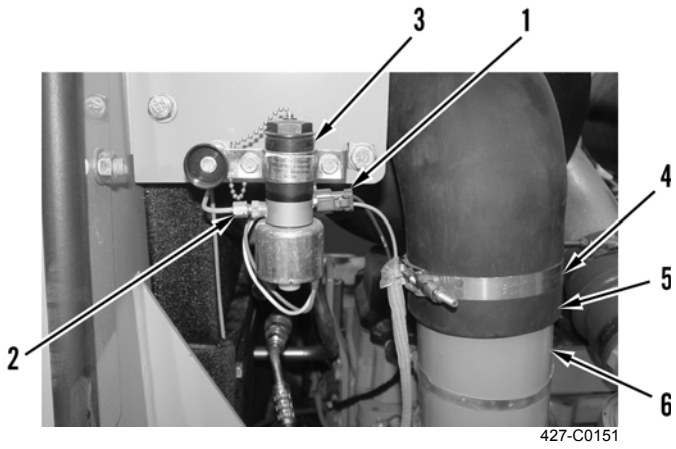

12. Install ether canister if removed (TM 5-3805-291-10).

WARNING

Before operating the machine, secure the steering frame lock in the stowed position. DO NOT operate machine with steering frame lock connected. Failure to lock steering frame lock into the stowed position before operating can result in loss of steering and injury or death to personnel.

13. Secure steering frame lock in stowed position (TM 5-3805-291-10).
14. Close hood (TM 5-3805-291-10).

END OF WORK PACKAGE

AIR INTAKE ASSEMBLY HOSES AND LINES REPLACEMENT 0031 00

THIS WORK PACKAGE COVERS

Removal, Cleaning and Inspection, Installation

INITIAL SETUP

Maintenance Level

Unit

Tools and Special Tools

Tool kit, general mechanic's, automotive (Item 90, WP 0232 00)

Shop equipment, automotive maintenance and repair: organizational maintenance, common no. 1 (Item 70, WP 0232 00)

Materials/Parts

Cap set, protective (Item 6, WP 0233 00)

Cleaning compound, solvent, type III (Item 7, WP 0233 00)

Oil, lubricating, OE/HDO-5/40 (Item 27, WP 0233 00)

Oil, lubricating, OE/HDO-15/40 (Item 28, WP 0233 00)

Oil, lubricating, OEA-30, Arctic (Item 29, WP 0233 00)

Materials/Parts - Continued

Rag, wiping (Item 35, WP 0233 00)

Tag, marker (Item 43, WP 0233 00)

O-ring (2)

Personnel Required

MOS 62B, Construction Equipment Repairer

Equipment Conditions

Hood opened (TM 5-3805-291-10)

Steering frame lock connected (TM 5-3805-291-10)

Boost pressure sensor disconnected (WP 0074 00)

Drawings Required

TM 5-380-291-23P, Figures 28 and 30

Estimated Time to Complete Task

3.0 hr

CAUTION

Wipe area clean around all connections to be opened during removal. Cap lines and hoses and plug openings after removing lines. Contamination of system could result in premature failure.

NOTE

Tag hoses and lines prior to removal to ensure correct installation.

AIR INTAKE ASSEMBLY HOSES AND LINES REPLACEMENT - CONTINUED 0031 00

REMOVAL

1. Remove two clamps (1) from lower hose (2).
2. Remove lower hose (2) from turbocharger (3) and tube (4).
3. Remove two clamps (5) from upper hose (6).
4. Disconnect tube (4) from upper hose (6).
5. Disconnect upper hose (6) from air cleaner assembly (7).
6. Remove clamp (8) from elbow (9) and remove elbow from turbocharger (3).

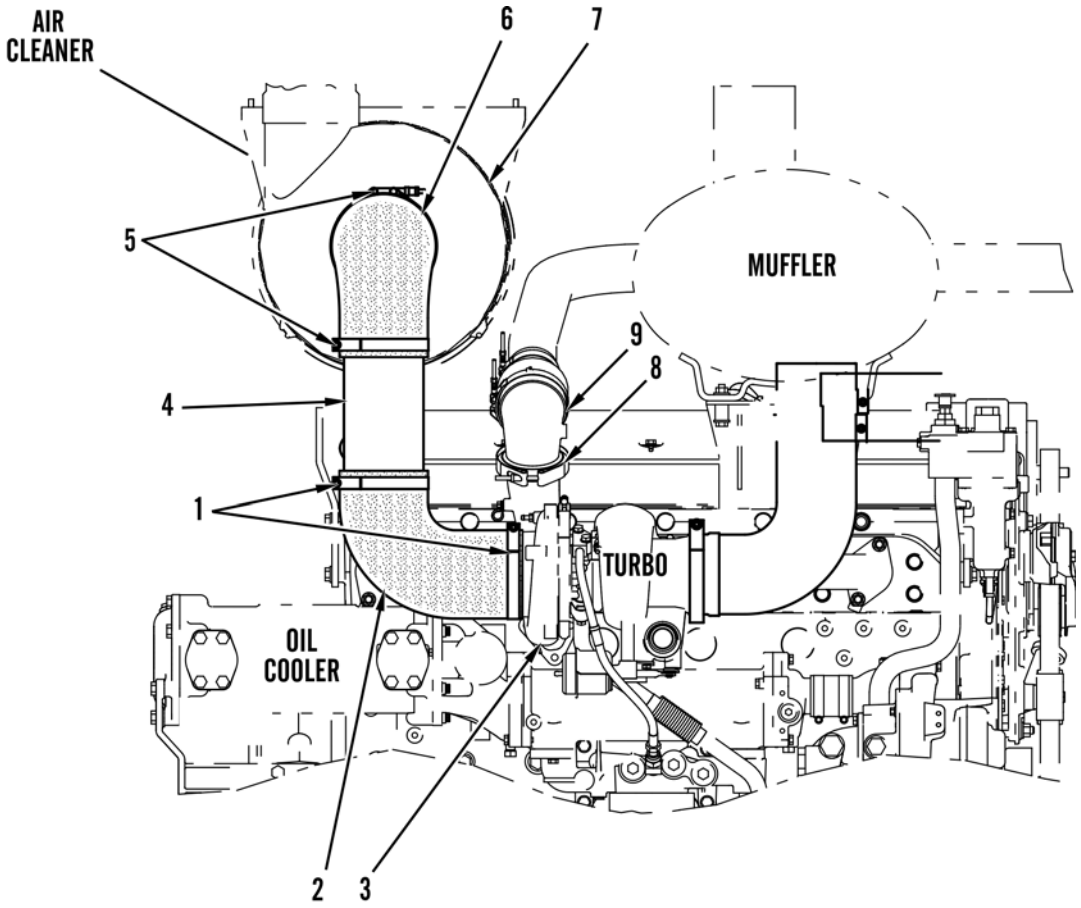

RIGHT SIDE VIEW 427-C0168

REMOVAL - CONTINUED

7. Remove O-ring (10) from turbocharger (3). Discard O-ring.

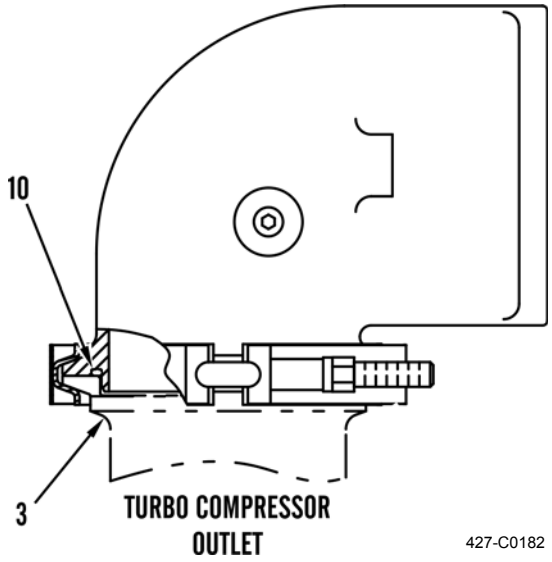

REMOVAL - CONTINUED

8. Remove two nuts (11) and washers (12) from U-bolt (13).
9. Remove U-bolt (13) from machine.
10. Remove two clamps (14) from front hose (15).
11. Disconnect elbow (9) from front hose (15).
12. Disconnect front hose (15) from tube (16).
13. Remove two clamps (17) from rear hose (18).
14. Disconnect tube (16) from rear hose (18).
15. Disconnect rear hose (18) from aftercooler (19).

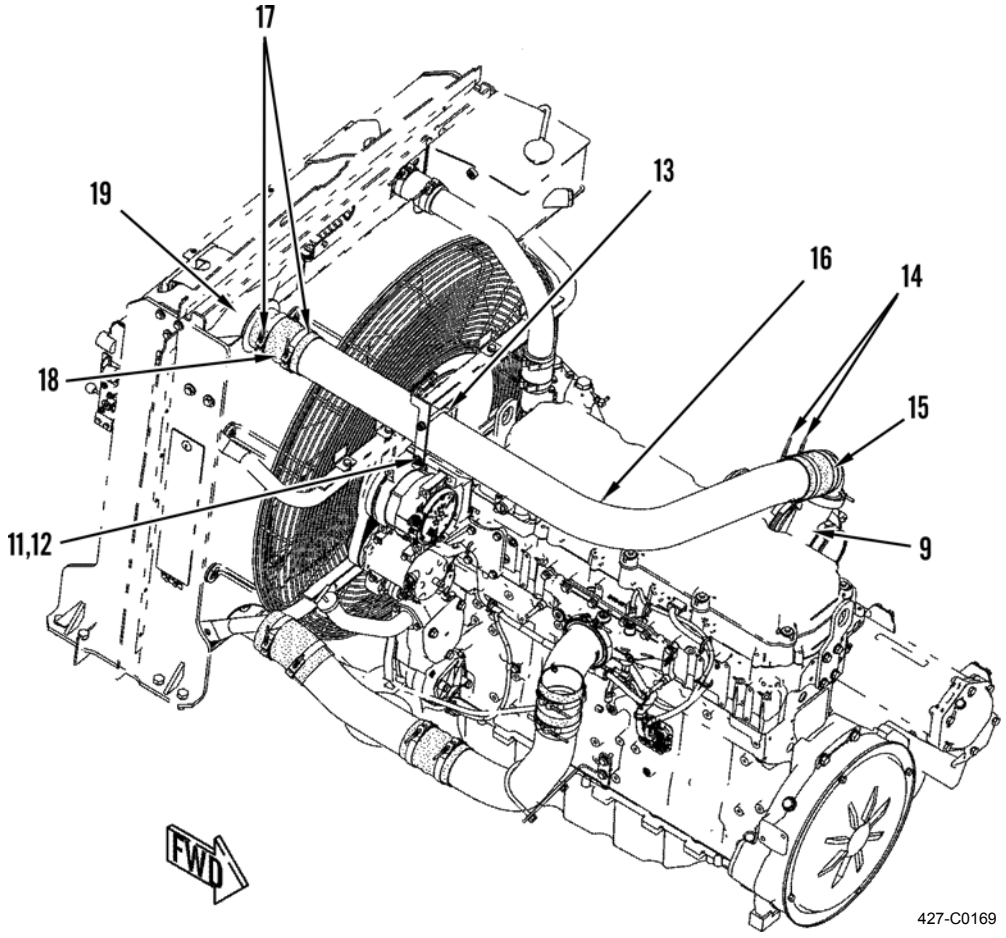

REMOVAL - CONTINUED

16. Remove two nuts (20) and washers (21) from U-bolt (22).
17. Remove U-bolt (22) from machine.
18. Remove clamp (23) from intake elbow (24). Disconnect intake elbow from intake manifold (25).

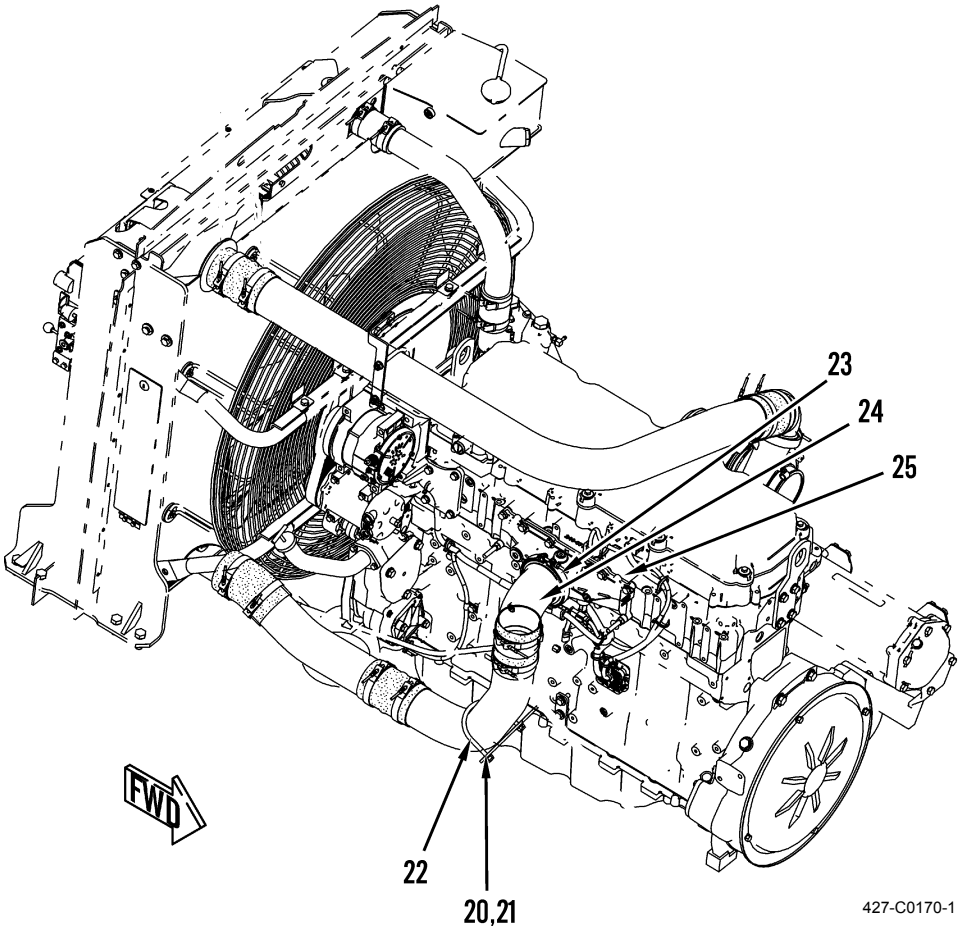

19. Remove O-ring (26) from intake manifold (25). Discard O-ring.

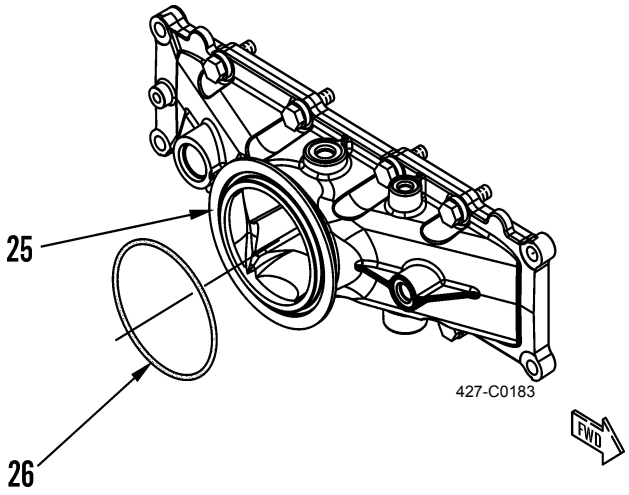

REMOVAL - CONTINUED

20. Remove two clamps (27) from front hose (28).
21. Disconnect intake elbow (24) from front hose (28).
22. Remove two clamps (29) from middle hose (30).
23. Disconnect front tube (31) from middle hose (30).
24. Disconnect middle hose (30) from rear tube (32).
25. Remove two clamps (33) from rear hose (34).
26. Disconnect rear tube (32) from rear hose (34).
27. Disconnect rear hose (34) from aftercooler (19).

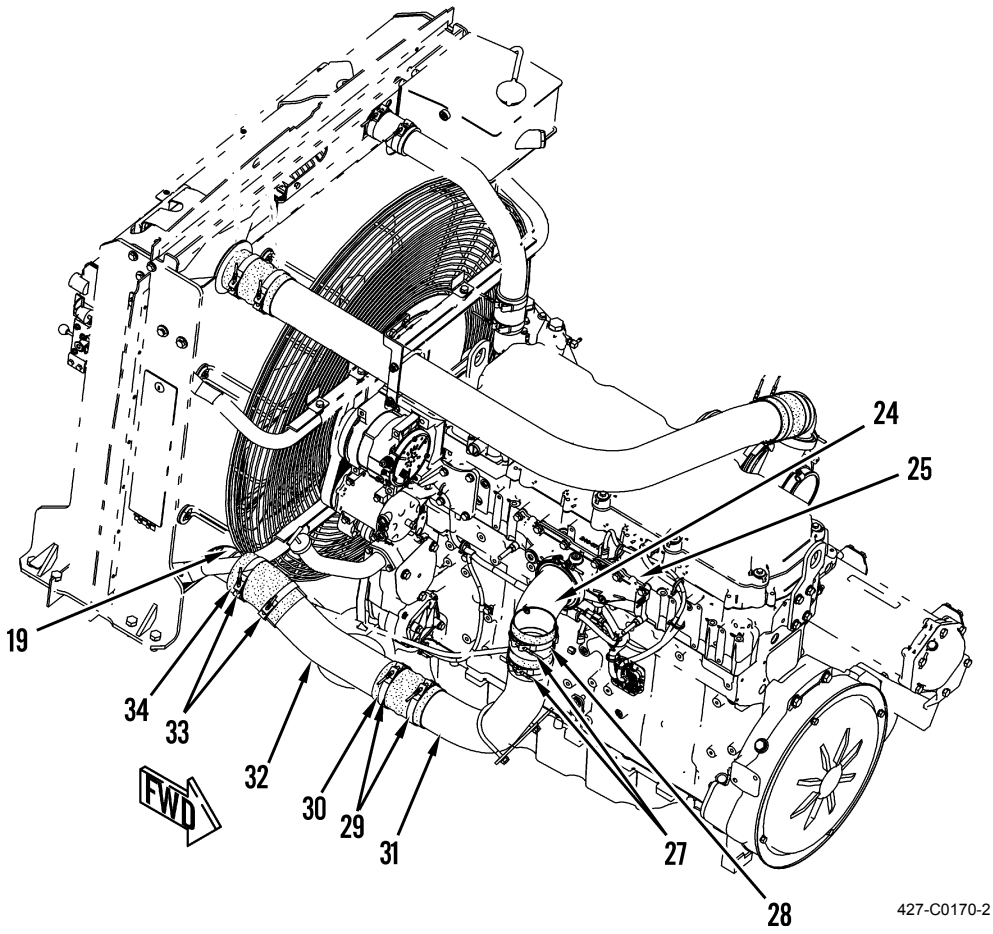

CLEANING AND INSPECTION



- **Solvent cleaning compound MIL-PRF-680 Type III is an environmentally compliant and low-toxic material. However, it may be irritating to the eyes and skin. Use protective gloves and goggles. Use in well-ventilated areas. Keep away from open flames and other sources of ignition. Failure to do so may result in injury or death to personnel.**
- **Particles blown by compressed air are hazardous. DO NOT exceed 15 psi (103 kPa) nozzle pressure when drying parts with compressed air. DO NOT direct compressed air against human skin. Make sure air stream is directed away from user and other personnel in the area. To prevent injury, user must wear protective goggles or face shield. Failure to follow this warning may result in injury to personnel.**

1. Clean all parts and surfaces with solvent cleaning compound.
2. Dry parts with compressed air.
3. Inspect all parts for damage, wear, pitting, cracks, or corrosion and replace if necessary.

INSTALLATION

1. Connect rear hose (34) to aftercooler (19).
2. Connect rear tube (32) to rear hose (34).
3. Install two clamps (33) on rear hose (34).
4. Connect middle hose (30) to rear tube (32).
5. Connect front tube (31) to middle hose (30).
6. Install two clamps (29) on middle hose (30).
7. Connect front hose (28) to front tube (31).
8. Connect intake elbow (24) to front hose (28).
9. Install two clamps (27) on front hose (28).
10. Install new O-ring (26) on intake manifold (25).

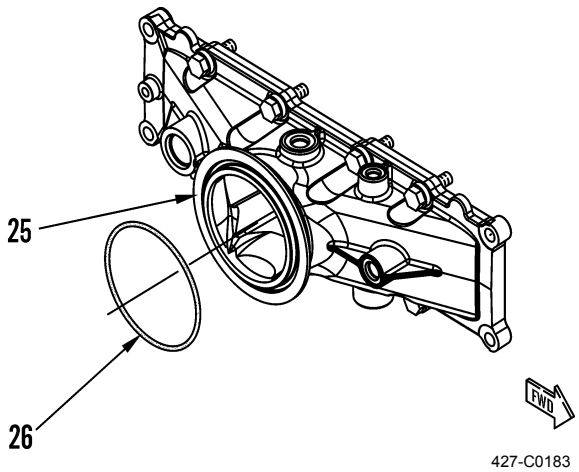

427-C0183

INSTALLATION - CONTINUED

11. Install intake elbow (24) on intake manifold (25).
12. Install clamp (23) on intake elbow (24) and tighten to 70.8 ± 35.4 lb-in. (8.0 ± 4.0 Nm).
13. Install U-bolt (22) on front tube (29).
14. Install two washers (21) and nuts (20) on U-bolt (22).

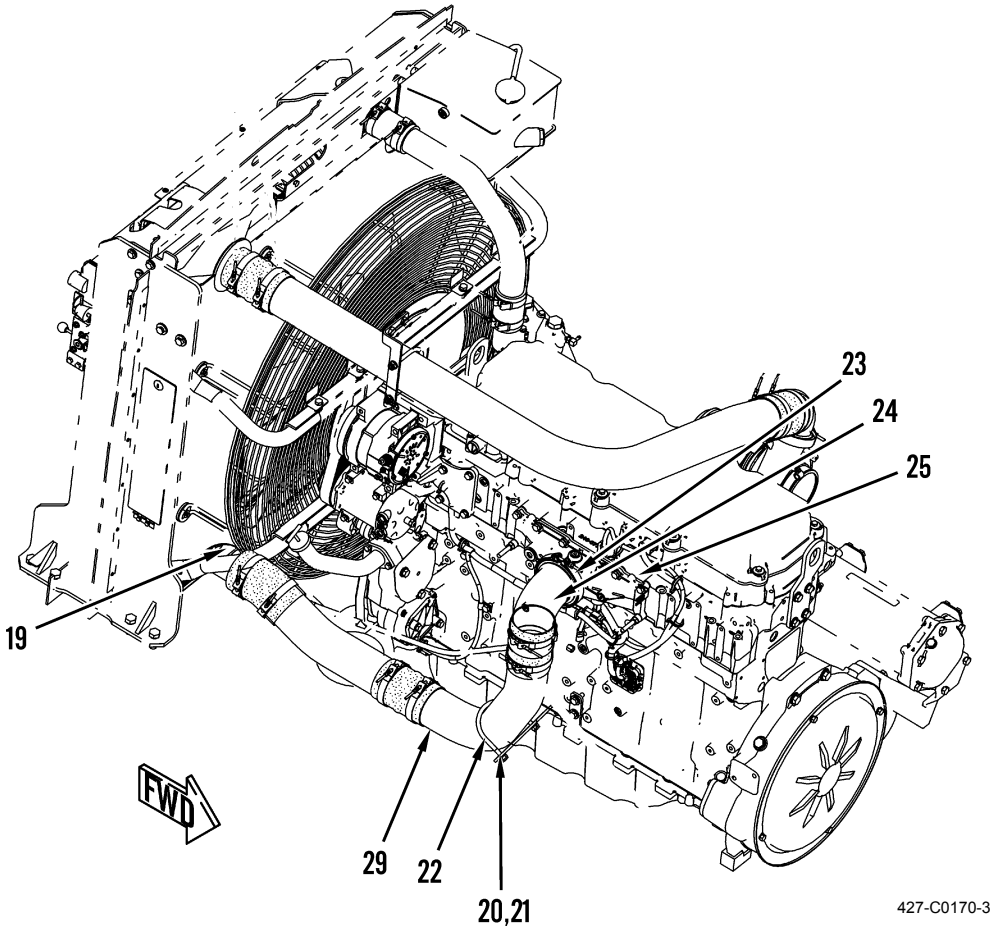

INSTALLATION - CONTINUED

15. Connect rear hose (18) to aftercooler (19).
16. Connect tube (16) to rear hose (18).
17. Install two clamps (17) on rear hose (18).
18. Connect front hose (15) to tube (16).
19. Connect elbow (9) to front hose (15).
20. Install two clamps (14) on front hose (15).
21. Install U-bolt (13) on tube (16).
22. Install two washers (12) and nuts (11) on U-bolt (13).

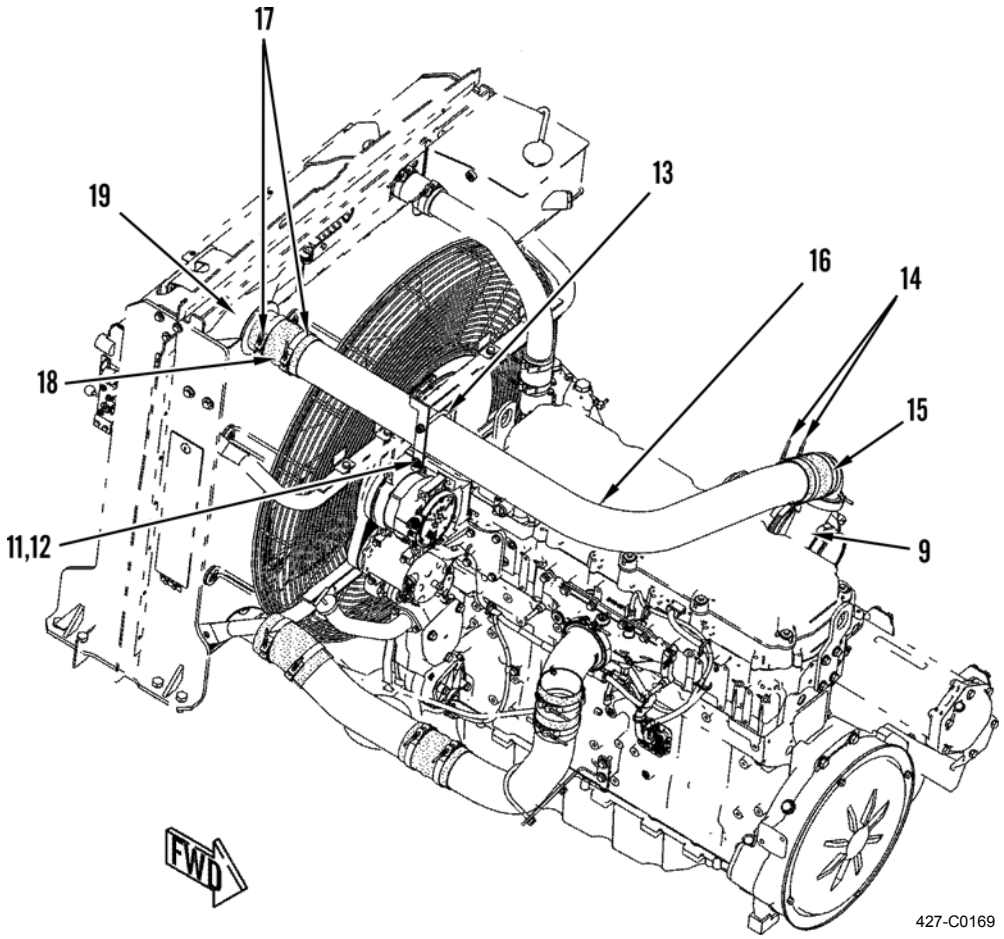

INSTALLATION - CONTINUED

23. Install new O-ring (10) on turbocharger (3).

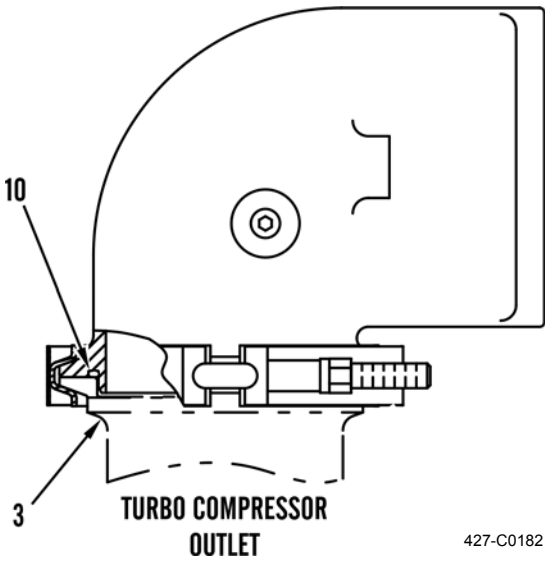

24. Connect elbow (9) to turbocharger (3). Install clamp (8) on elbow.
25. Connect upper hose (6) to air cleaner assembly (7).
26. Connect tube (4) to upper hose (6).
27. Install two clamps (5) on upper hose (6).
28. Connect lower hose (2) to turbocharger (3) and tube (4).
29. Install two clamps (1) on lower hose (2).

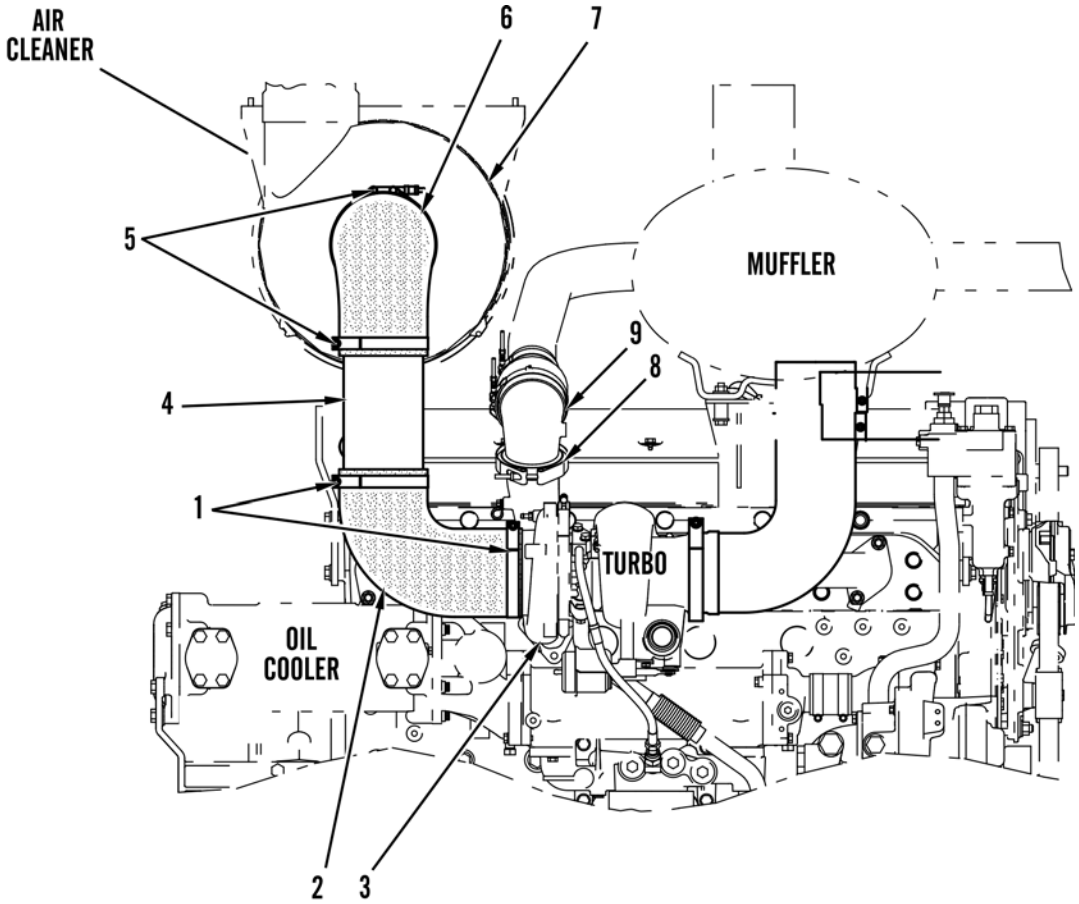

INSTALLATION - CONTINUED

30. Connect boost pressure sensor (WP 0074 00).

WARNING

Before operating the machine, secure the steering frame lock in the stowed position. DO NOT operate machine with steering frame lock connected. Failure to lock steering frame lock into the stowed position before operating can result in loss of steering and injury or death to personnel.

31. Secure steering frame lock in stowed position (TM 5-3805-291-10).
32. Start engine (TM 5-3805-291-10).
33. Run engine until normal operating temperature is reached (TM 5-3805-291-10).
34. Verify correct operation of machine (TM 5-3805-291-10).
35. Shut down engine (TM 5-3805-291-10).

END OF WORK PACKAGE

TURBOCHARGER ASSEMBLY, AIR LINES, AND OIL LINES REPLACEMENT 0032 00

THIS WORK PACKAGE COVERS

Removal, Cleaning and Inspection, Installation

INITIAL SETUP

Maintenance Level

Unit

Tools and Special Tools

Tool kit, general mechanic's, automotive (Item 90, WP 0232 00)

Shop equipment, automotive maintenance and repair: organizational maintenance, common no. 1 (Item 70, WP 0232 00)

Wrench, torque, click, ratcheting, 3/8" drive, 75 lb-ft (Item 98, WP 0232 00)

Lifting equipment, 100-lb capacity

Materials/Parts

Cap set, protective (Item 6, WP 0233 00)

Cleaning compound, solvent, type III (Item 7, WP 0233 00)

Detergent, general purpose, liquid (Item 9, WP 0233 00)

Oil, lubricating, OE/HDO-5/40 (Item 27, WP 0233 00)

Oil, lubricating, OE/HDO-15/40 (Item 28, WP 0233 00)

Oil, lubricating, OEA-30, Arctic (Item 29, WP 0233 00)

Oil, lubricating, refrigerant compressor: Synthetic Ester (Item 30, WP 0233 00)

Rag, wiping (Item 35, WP 0233 00)

Tag, marker (Item 43, WP 0233 00)

Gasket (3)

O-ring (3)

Personnel Required

MOS 62B, Construction Equipment Repairer (2)

References

WP 0008 00

WP 0011 00

WP 0025 00

WP 0026 00

WP 0030 00

WP 0031 00

WP 0040 00

WP 0189 00

Equipment Conditions

Machine parked on level ground (TM 5-3805-291-10)

Work tool lowered to ground (TM 5-3805-291-10)

Parking brake engaged (TM 5-3805-291-10)

Wheels chocked

Battery disconnect switch in OFF position (TM 5-3805-291-10)

Hood opened (TM 5-3805-291-10)

Steering frame lock connected (TM 5-3805-291-10)

Drawings Required

TM 5-3805-291-23P, Figures 17, 29, and 30

Estimated Time to Complete Task

4.0 hr complete

0.5 hr turbocharger only

CAUTION

Wipe area clean around all connections to be opened during removal. Cap lines and hoses and plug openings after removing lines. Contamination of system could result in premature failure.

NOTE

- **Tag hoses prior to removal to ensure correct installation.**
- **Use a container to catch any fluid that may drain from hoses or system. Dispose of fluid IAW local policy and ordinances. Ensure all spills are cleaned up.**

REMOVAL

1. Remove left and right side covers (1) from machine.
2. Loosen three clamps (2) and disconnect hose (3) and two tubes (4) from turbocharger (5).
3. Remove two bolts (6) and washers (7) and disconnect line (8) from turbocharger (5).
4. Remove gasket (9) from line (8). Discard gasket.

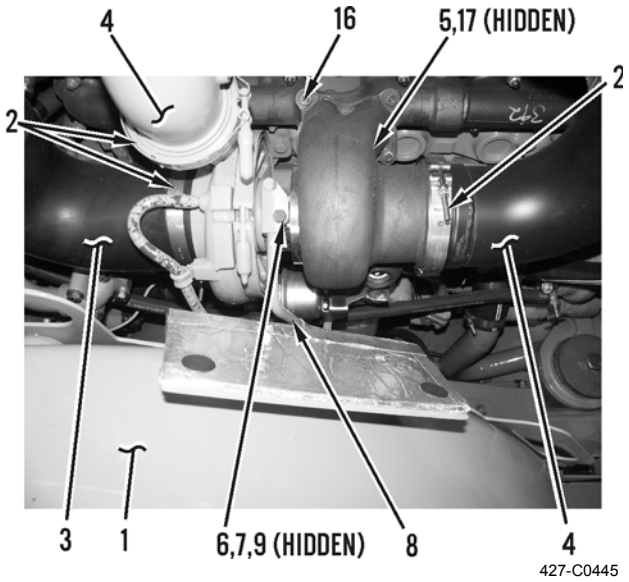

5. Remove two bolts (10), washers (11), and gasket (12) and disconnect tube (13) from turbocharger (5). Discard gasket.

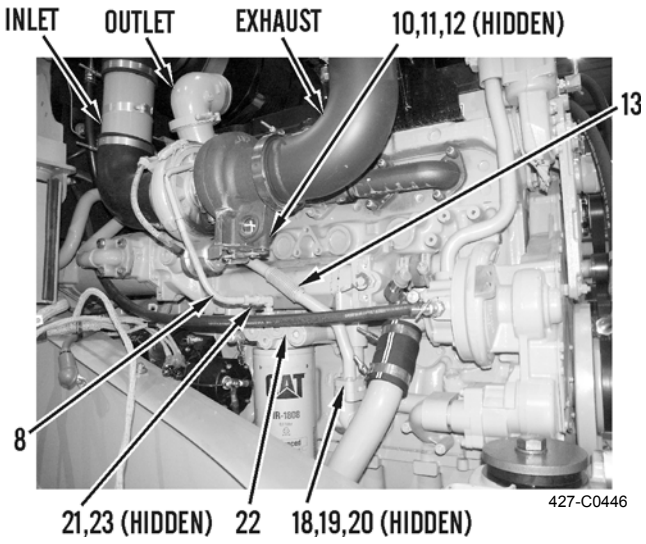

REMOVAL - CONTINUED

6. Loosen clamp (14) and disconnect tube (4) from muffler (15). Remove tube from machine.

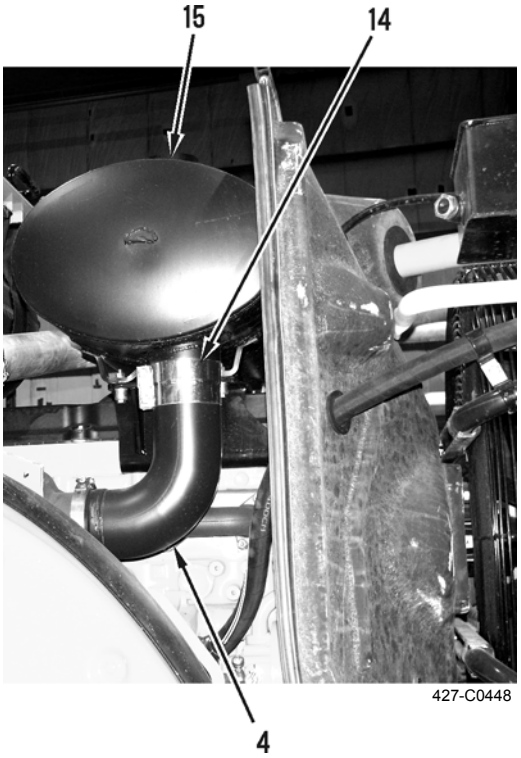

WARNING

Use extreme caution when handling heavy parts. Provide adequate support and use assistance during procedure. Ensure that any lifting equipment used is in good condition and of suitable load capacity. Keep clear of heavy parts supported only by lifting equipment. Failure to follow this warning may result in injury or death to personnel.

NOTE

Turbocharger weighs 75 lb (34 kg).

7. Attach lifting equipment to turbocharger (5).
8. Remove four nuts (16) from turbocharger (5) and, with assistance, remove turbocharger and gasket (17) from machine. Discard gasket.
9. Remove two bolts (18), washers (19), O-ring (20), and tube (13) from machine. Discard O-ring.
10. Disconnect line (8) from fitting (21) and remove line from machine.
11. Remove fitting (21) from filter base (22).
12. Remove two O-rings (23) from line (8) and fitting (21). Discard O-rings.

REMOVAL - CONTINUED

13. Loosen clamps (24, 25, and 26) and remove hose (27), tube (28), and hose (3) from machine.
14. Loosen two clamps (29) and remove hose (30) and tube (4) from machine.

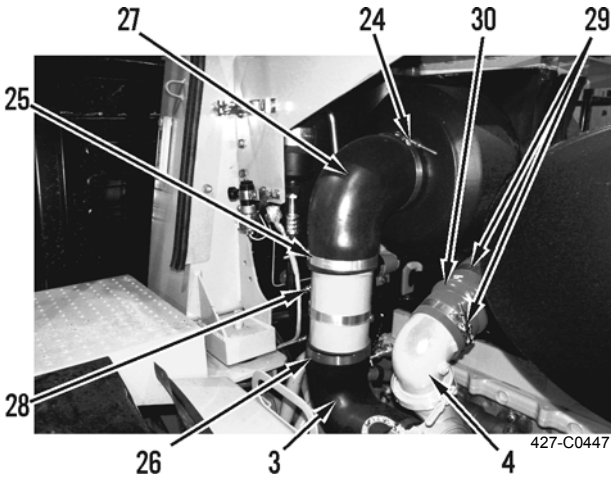

CLEANING AND INSPECTION



WARNING

- **Solvent cleaning compound MIL-PRF-680 Type III is an environmentally compliant and low-toxic material. However, it may be irritating to the eyes and skin. Use protective gloves and goggles. Use in well-ventilated areas. Keep away from open flames and other sources of ignition. Failure to do so may result in injury or death to personnel.**
- **Particles blown by compressed air are hazardous. DO NOT exceed 15 psi (103 kPa) nozzle pressure when drying parts with compressed air. DO NOT direct compressed air against human skin. Make sure air stream is directed away from user and other personnel in the area. To prevent injury, user must wear protective goggles or face shield. Failure to follow this warning may result in injury to personnel.**

NOTE

- **Before inspection of turbocharger, be sure that inlet air restriction is within specifications for your engine. Be sure that exhaust system restriction is within specifications for your engine. Refer to *Air Inlet and Exhaust System Inspection* (WP 0011 00).**
- **The condition of turbocharger will have definite effects on engine performance. Use following inspections and procedures to determine condition of turbocharger.**

CLEANING AND INSPECTION - CONTINUED

Compressor and Compressor Housing Inspection

1. Remove air piping from compressor inlet (WP 0031 00).
2. Inspect compressor wheel for damage from a foreign object. If there is damage, determine source of foreign object. As required, clean and repair intake system. Replace turbocharger. If there is no damage, go to step 4.
3. Clean compressor wheel and compressor wheel housing if you find build up of foreign material. If there is no build up of foreign material, go to step 4.
4. Turn rotating assembly by hand. While you turn assembly, push assembly sideways. Assembly should turn freely. Compressor wheel should not rub compressor wheel housing. Replace turbocharger if compressor wheel rubs compressor wheel housing. If there is no rubbing or scraping, go to step 5.
5. Inspect compressor and compressor wheel housing for oil leakage. An oil leak from compressor may deposit oil in aftercooler. Drain and clean aftercooler if you find oil in aftercooler (WP 0189 00).
   a. Check oil level in crankcase. If oil level is too high, adjust oil level (WP 0025 00).
   b. Inspect air cleaner element for restriction. If restriction is found, correct problem (WP 0030 00).
   c. Inspect engine crankcase breather. Clean engine crankcase breather or replace engine crankcase breather if plugged (WP 0026 00).
   d. Remove oil drain line for turbocharger. Inspect drain opening. Inspect oil drain line. Inspect area between bearings of rotating assembly shaft. Look for oil sludge. Inspect oil drain hole for oil sludge. Inspect oil drain line for oil sludge in drain line. If necessary, clean rotating assembly shaft. If necessary, clean oil drain hole. If necessary, clean oil drain line.
   e. If steps 5a thru 5d did not reveal source of oil leakage, turbocharger has internal damage. Replace turbocharger.

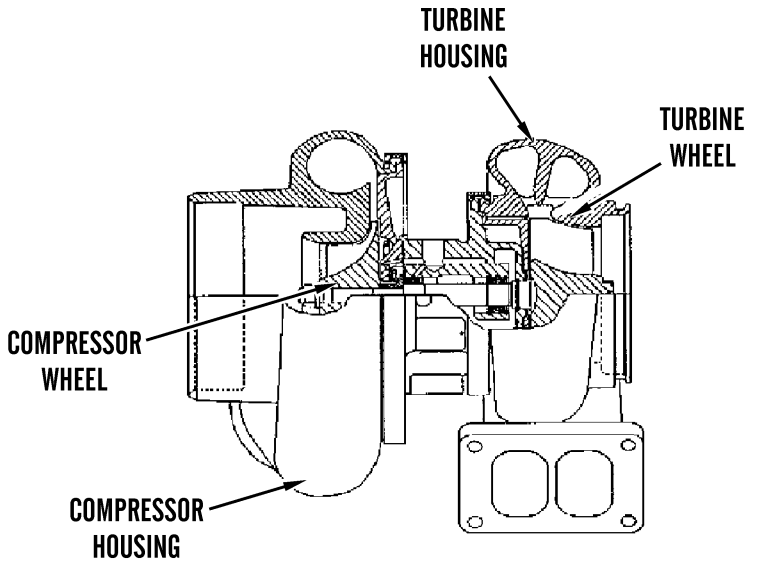

427-C1976

CLEANING AND INSPECTION - CONTINUED

Turbine Wheel and Turbine Housing Inspection

1. Remove air piping from turbine housing (WP 0040 00).
2. Inspect turbine for damage by a foreign object. If there is damage, determine source of foreign object. Replace turbocharger. If there is no damage, go to step 3.
3. Inspect turbine wheel for build up of carbon and other foreign material. Inspect turbine housing for buildup of carbon and foreign material. Clean turbine wheel and clean turbine housing if there is build up of carbon and foreign material. If there is no build up of carbon or foreign material, go to step 4.
4. Turn rotating assembly by hand. While you turn assembly, push assembly sideways. Assembly should turn freely. Turbine wheel should not rub against turbine housing. Replace turbocharger if turbine wheel rubs turbine housing. If there is no rubbing or scraping, go to step 5.
5. Inspect turbine and turbine housing for oil leakage. Inspect turbine and turbine housing for oil coking. Some oil coking may be cleaned. Heavy oil coking may require replacement of turbocharger. If oil is coming from turbocharger center housing, go to step 5a. Otherwise, go to *Wastegate Inspection* in this work package.
    a. Remove oil drain line for turbocharger. Inspect drain opening. Inspect area between bearings of rotating assembly shaft. Look for oil sludge. Inspect oil drain hole for oil sludge. Inspect oil drain line for oil sludge. If necessary, clean rotating assembly shaft. If necessary, clean drain opening. If necessary, clean drain line.
    b. If crankcase pressure is high, or if oil drain is restricted, pressure in center housing may be greater than pressure of turbine housing. Oil flow may be forced in wrong direction and oil may not drain. Check crankcase pressure and correct any problems.
    c. If oil drain line is damaged, replace oil drain line.
    d. Check routing of oil drain line. Eliminate any sharp restrictive bends. Makes sure oil drain line is not too close to engine exhaust manifold.
    e. If steps 5a thru 5d did not reveal source of oil leakage, turbocharger has internal damage. Replace turbocharger.

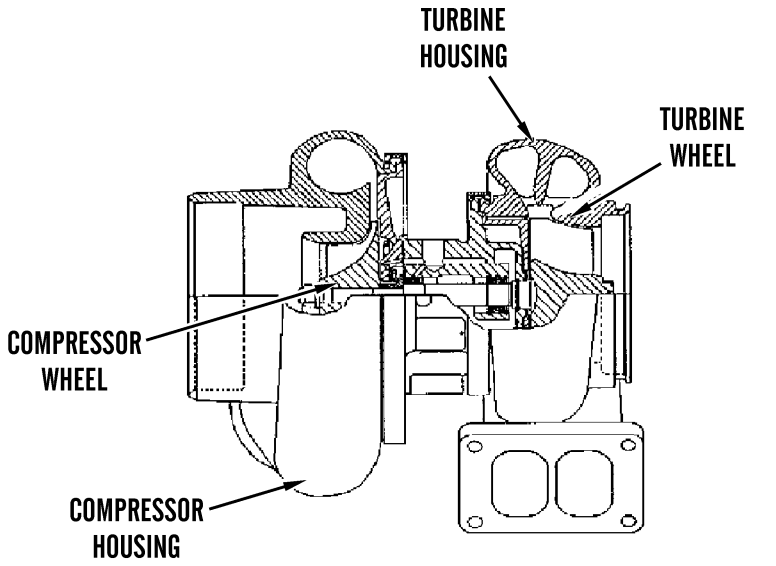

427-C1976

CLEANING AND INSPECTION - CONTINUED

Wastegate Inspection

CAUTION

Damage will result when increased heat and/or friction due to higher engine output goes beyond engine cooling and lubrication system's abilities. Boost pressure controls maximum rpm of turbocharger, because boost pressure controls position of wastegate.

NOTE

- **Wastegate controls amount of exhaust gas that is allowed to bypass turbine side of turbocharger. This valve then controls rpm of turbocharger. When engine operates in conditions of low boost (lug), a spring presses against a diaphragm in canister. Actuating rod will move and diaphragm in canister wastegate will close. Then, turbocharger can operate at maximum performance. When boost pressure increases against diaphragm in canister, wastegate will open. Rpm of turbocharger becomes limited. Rpm limitation occurs because a portion of exhaust gases bypass turbine wheel of turbocharger.**
- **Boost pressures that are too high at full load conditions and too low at all lug conditions indicate a possible problem with wastegate, wastegate solenoid, and air lines.**
- **Housing assembly for wastegate is preset at factory and no adjustments can be made.**

The following factors also affect maximum rpm of turbocharger:

- **Engine rating**
- **Horsepower demand on engine**
- **High idle rpm**
- **Height above sea level for engine operation**
- **Inlet air restriction**
- **Exhaust system restriction**

Inspect for broken or missing parts and free movement.

INSTALLATION

WARNING

Use extreme caution when handling heavy parts. Provide adequate support and use assistance during procedure. Ensure that any lifting equipment used is in good condition and of suitable load capacity. Keep clear of heavy parts supported only by lifting equipment. Failure to follow this warning may result in injury or death to personnel.

NOTE

Turbocharger weighs 75 lb (34 kg).

1. Attach lifting equipment to turbocharger (5).
2. With assistance, position new gasket (17) and turbocharger (5) on machine and install four nuts (16) on turbocharger. Tighten nuts to 52 ± 11 lb-ft (70 ± 15 Nm).
3. Lubricate and install new O-ring (20), two washers (19), bolts (18), and tube (13) on machine.
4. Install new gasket (12), two washers (11), and bolts (10) on tube (13) and connect tube to turbocharger (5).
5. Install new gasket (9), two washers (7), and bolts (6) on turbocharger (5) and connect line (8) to turbocharger.
6. Lubricate and install two new O-rings (23) in fitting (21) and line (8). Install fitting and line on machine.

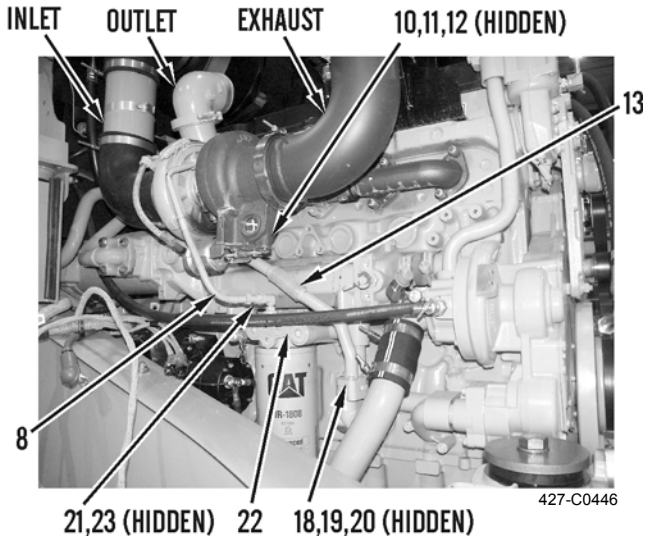

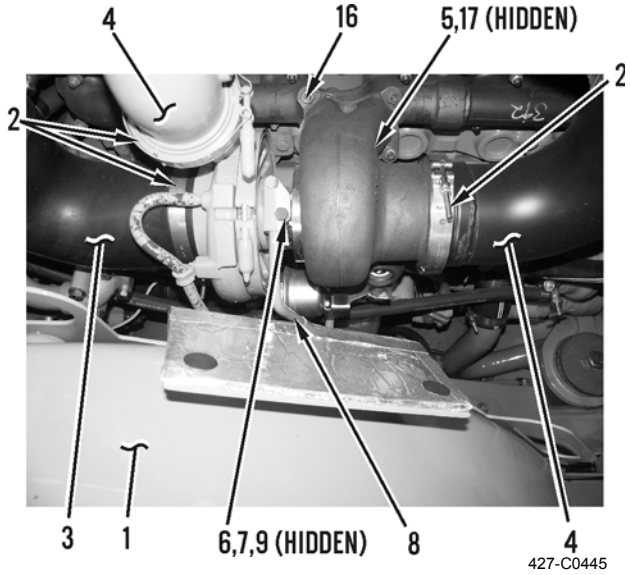

INSTALLATION - CONTINUED

7. Connect two tubes (4) and hose (30) to turbocharger (5) and muffler (15). Tighten clamp (14) and two clamps (29).
8. Connect hose (27) to air cleaner and tighten clamp (24).
9. Connect hose (27) to tube (28) and tighten clamp (25).
10. Connect tube (28) to hose (3) and tighten clamp (26).

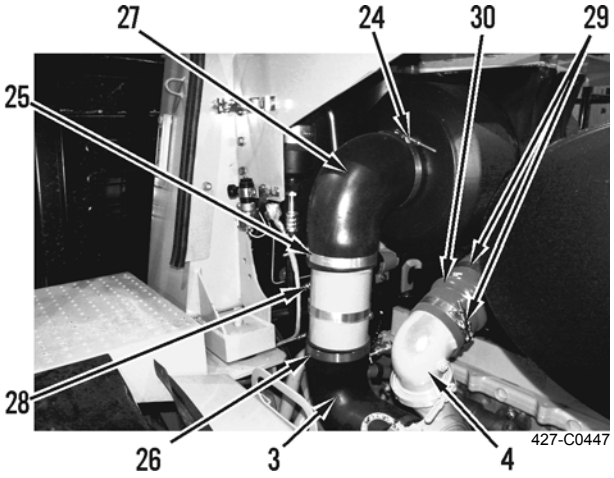

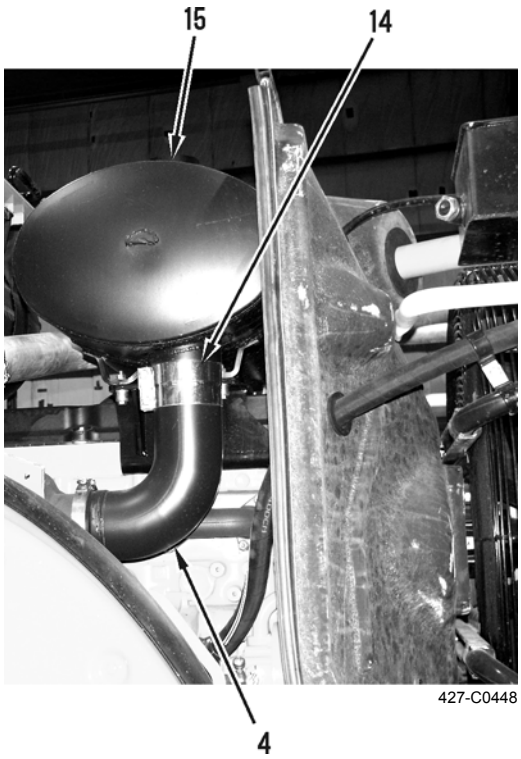

WARNING

Before operating the machine, secure the steering frame lock in the stowed position. DO NOT operate machine with steering frame lock connected. Failure to lock steering frame lock into the stowed position before operating can result in loss of steering and injury or death to personnel.

11. Secure steering frame lock in stowed position (TM 5-3805-291-10).
12. Close hood (TM 5-3805-291-10).
13. Start engine (TM 5-3805-291-10).
14. Run engine while checking for leaks.
15. Verify correct operation of machine (TM 5-3805-291-10).

END OF WORK PACKAGE

FUEL TANK REPLACEMENT 0033 00

THIS WORK PACKAGE COVERS

Draining, Removal, Cleaning and Inspection, Installation

INITIAL SETUP

Maintenance Level

Unit

Tools and Special Tools

Tool kit, general mechanic's, automotive (Item 90, WP 0232 00)

Shop equipment, automotive maintenance and repair: organizational maintenance, common no. 1 (Item 70, WP 0232 00)

Materials/Parts

Cap set, protective (Item 6, WP 0233 00)

Cleaning compound, solvent, type III (Item 7, WP 0233 00)

Detergent, general purpose, liquid (Item 9, WP 0233 00)

Diesel fuel, DF-1 (Item 10, WP 0233 00)

Fuel oil, diesel, DF-2 (Item 11, WP 0233 00)

Fuel, turbine, aviation (Item 12, WP 0233 00)

Rag, wiping (Item 35, WP 0233 00)

Tag, marker (Item 43, WP 0233 00)

O-ring (2)

Personnel Required

MOS 62B, Construction Equipment Repairer (2)

Equipment Conditions

Machine parked on level ground (TM 5-3805-291-10)

Work tool lowered to ground (TM 5-3805-291-10)

Parking brake engaged (TM 5-3805-291-10)

Wheels chocked

Battery disconnect switch in OFF position (TM 5-3805-291-10)

Steering frame lock connected (TM 5-3805-291-10)

Hood opened (TM 5-3805-291-10)

Drawings Required

TM 5-3805-291-23P, Figures 34 and 63

Estimated Time to Complete Task

4.0 hr

WARNING

DO NOT perform fuel system checks, inspections, or maintenance while smoking or near fire, flames, or sparks. Fuel may ignite, causing injury or death to personnel or damage to equipment.

NOTE

Fuel tank capacity is 106 gal. (404 L).

DRAINING

1. Remove plug (1) on fuel tank (2).
2. Allow fuel tank (2) to drain into suitable container.
3. Install plug (1) on fuel tank (2).

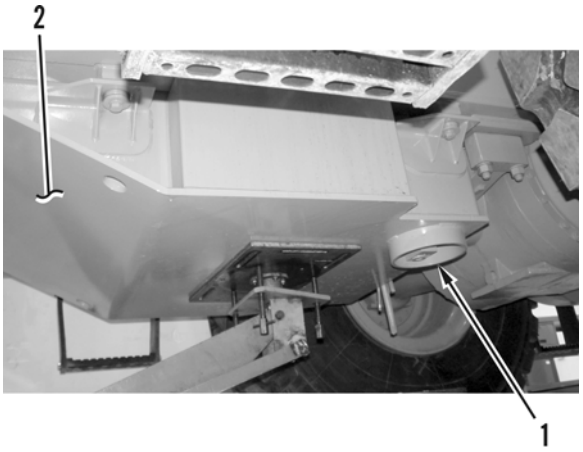

427-C1700

REMOVAL

CAUTION

Wipe area clean around all connections to be opened during removal. Cap lines and hoses and plug openings after removing lines. Contamination of system could result in premature failure.

NOTE

- **Tag hoses prior to removal to ensure correct installation.**
- **Use a container to catch any fluid that may drain from hoses or system. Dispose of fluid IAW local policy and ordinances. Ensure all spills are cleaned up.**

REMOVAL - CONTINUED

1. Disconnect hose assemblies (3 and 4) with O-rings (5) from fuel tank (2). Discard O-rings.

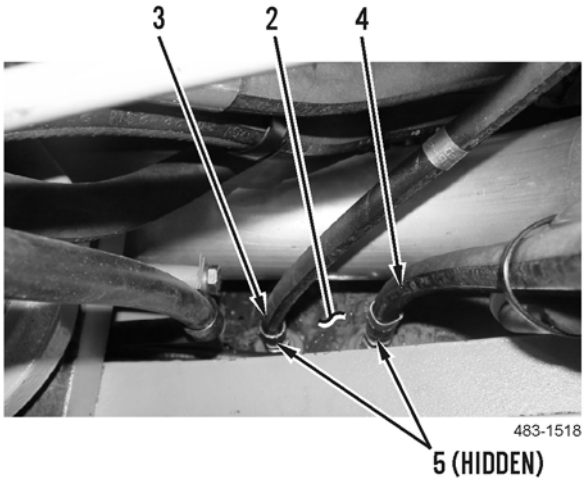

2. Remove and discard tiedown strap (11) from sending unit wire (8).
3. Remove nut (9), washer (10), and sending unit connector (7) from machine.
4. Disconnect sending unit connector (7) from wiring harness (6).

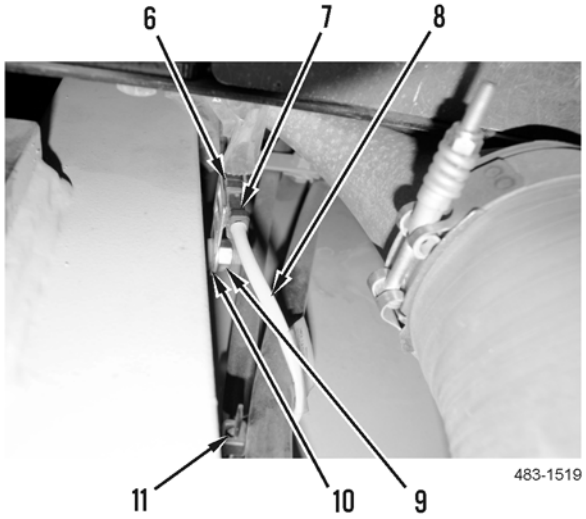

REMOVAL - CONTINUED

WARNING

Use extreme caution when handling heavy parts. Provide adequate support and use assistance during procedure. Ensure that any lifting equipment used is in good condition and of suitable load capacity. Keep clear of heavy parts supported only by lifting equipment. Failure to follow this warning may result in injury or death to personnel.

NOTE

Fuel tank weighs 550 lb (250 kg).

5. Support fuel tank with hydraulic jack.
6. Remove four bolts (12), washers (13), spacers (14), and eight mounts (15) from both sides of fuel tank (2).
7. With assistance, lower fuel tank (2) from machine.

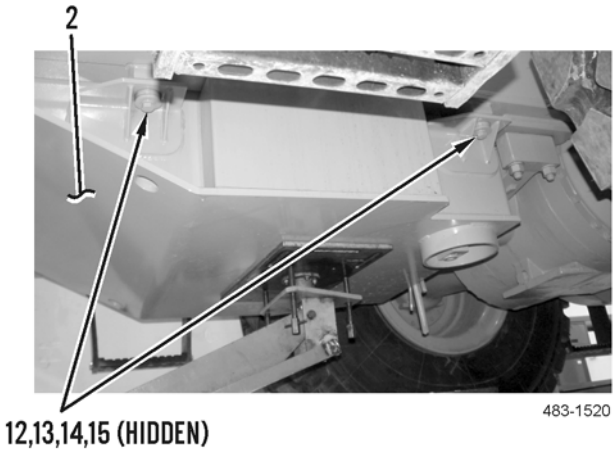

CLEANING AND INSPECTION

WARNING

- **Solvent cleaning compound MIL-PRF-680 Type III is an environmentally compliant and low-toxic material. However, it may be irritating to the eyes and skin. Use protective gloves and goggles. Use in well-ventilated areas. Keep away from open flames and other sources of ignition. Failure to do so may result in injury or death to personnel.**
- **Particles blown by compressed air are hazardous. DO NOT exceed 15 psi (103 kPa) nozzle pressure when drying parts with compressed air. DO NOT direct compressed air against human skin. Make sure air stream is directed away from user and other personnel in the area. To prevent injury, user must wear protective goggles or face shield. Failure to follow this warning may result in injury to personnel.**

1. Clean all parts and surfaces with solvent cleaning compound.
2. Dry parts with compressed air.
3. Inspect all parts for damage, wear, pitting, cracks, or corrosion and replace if necessary.

INSTALLATION

WARNING

Use extreme caution when handling heavy parts. Provide adequate support and use assistance during procedure. Ensure that any lifting equipment used is in good condition and of suitable load capacity. Keep clear of heavy parts supported only by lifting equipment. Failure to follow this warning may result in injury or death to personnel.

NOTE

Fuel tank weighs 550 lb (250 kg).

1. With assistance, use hydraulic jack to position fuel tank (2) on machine.
2. Install eight mounts (15), four spacers (14), washers (13), and bolts (12) on both sides of fuel tank (2).
3. Connect sending unit connector (7) to wiring harness (6).
4. Install nut (9), washer (10), and sending unit connector (7) on machine.
5. Install new tiedown strap (11) on sending unit wire (8).

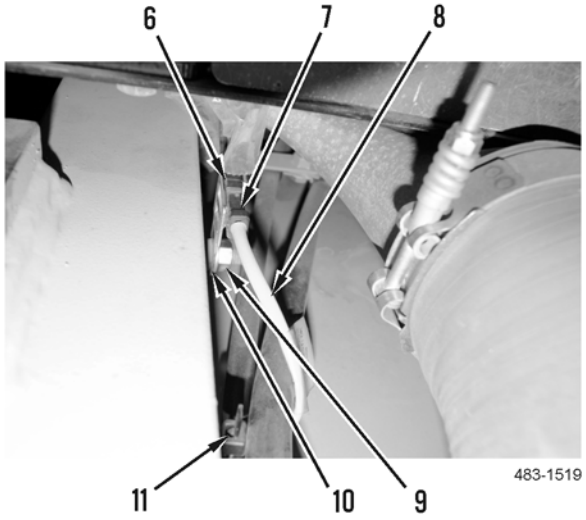

6. Connect hose assemblies (3 and 4) with new O-rings (5) to fuel tank (2).

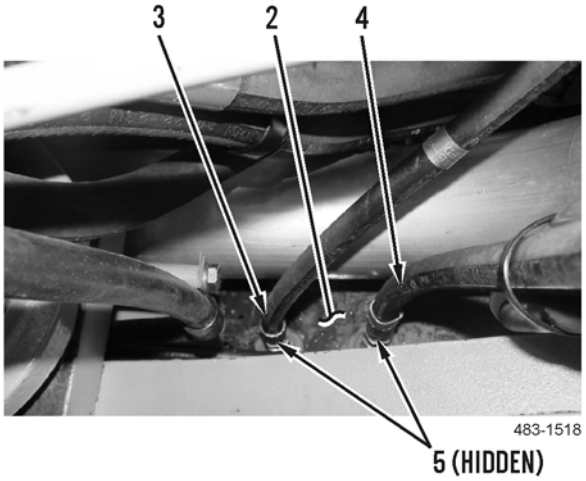

INSTALLATION - CONTINUED

7. Refill fuel tank to correct level (TM 5-3805-291-10).

WARNING

Before operating the machine, secure the steering frame lock in the stowed position. DO NOT operate machine with steering frame lock connected. Failure to lock steering frame lock into the stowed position before operating can result in loss of steering and injury or death to personnel.

8. Secure steering frame lock in stowed position (TM 5-3805-291-10).
9. Close hood (TM 5-3805-291-10).
10. Run engine until operating temperature is reached (TM 5-3805-291-10).
11. Check for leaks.

END OF WORK PACKAGE

FUEL FILTER LINES AND FITTINGS REPLACEMENT 0034 00

THIS WORK PACKAGE COVERS

Removal, Cleaning and Inspection, Installation

INITIAL SETUP

Maintenance Level

Unit

Tools and Special Tools

Tool kit, general mechanic's, automotive (Item 90, WP 0232 00)

Shop equipment, automotive maintenance and repair: organizational maintenance, common no. 1 (Item 70, WP 0232 00)

Materials/Parts

Cap set, protective (Item 6, WP 0233 00)

Cleaning compound, solvent, type III (Item 7, WP 0233 00)

Diesel fuel, DF-1 (Item 10, WP 0233 00)

Fuel oil, diesel, DF-2 (Item 11, WP 0233 00)

Fuel, turbine, aviation (Item 12, WP 0233 00)

Rag, wiping (Item 35, WP 0233 00)

Materials/Parts - Continued

Strap, tiedown, electrical components (Item 42, WP 0233 00)

Tag, marker (Item 43, WP 0233 00)

O-ring (24)

Personnel Required

MOS 62B, Construction Equipment Repairer

Equipment Conditions

Steering frame lock connected (TM 5-3805-291-10)

Hood opened (TM 5-3805-291-10)

Battery disconnect switch in OFF position (TM 5-3805-291-10)

Right side cover removed (WP 0135 00)

Drawings Required

TM 5-3805-291-23P, Figures 26, 32, and 33

Estimated Time to Complete Task

2.0 hr



WARNING

DO NOT perform fuel system checks, inspections, or maintenance while smoking or near fire, flames, or sparks. Fuel may ignite, causing injury or death to personnel or damage to equipment.

CAUTION

- **Wipe area clean around all connections to be opened during removal. Cap lines and hoses and plug openings after removing lines. Contamination of system could result in premature failure.**
- **Utilize two line wrenches to avoid damage to fittings.**

NOTE

- **Tag hoses and lines prior to removal to ensure correct installation.**
- **Use a container to catch any fluid that may drain from hoses or system. Dispose of fluid IAW local policy and ordinances. Ensure all spills are cleaned up.**

REMOVAL

1. Remove bolt (1) and washer (2) from two clamps (3).
2. Cut and remove tiedown strap (4) from hoses (5 and 6). Discard tiedown strap.
3. Disconnect hose (5) from fuel filter housing (7) and fuel tank (8).
4. Remove O-rings (9 and 10) from hose (5). Discard O-rings.
5. Disconnect hose (6) from secondary fuel filter housing (11) and fuel tank (8).
6. Remove O-rings (12 and 13) from hose (6). Discard O-rings.

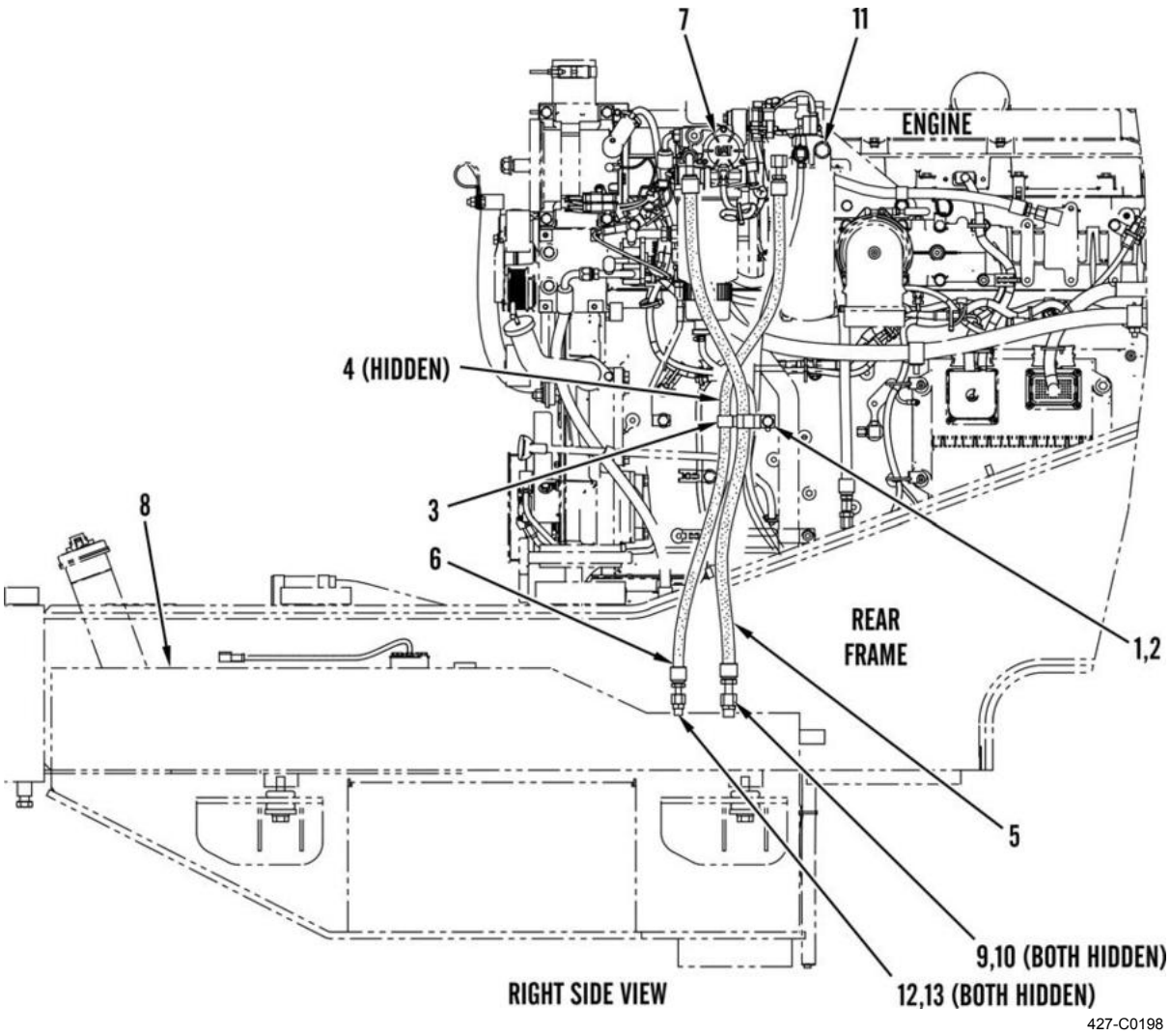

FUEL FILTER LINES AND FITTINGS REPLACEMENT - CONTINUED 0034 00

REMOVAL - CONTINUED

7. Disconnect hose (14) from elbow (15) and union (16).
8. Remove O-rings (17 and 18) from hose (14). Discard O-rings.
9. Remove elbow (15) and O-ring (19) from fuel filter housing (7). Discard O-ring.
10. Remove union (16) from line (20).
11. Remove bolt (21), washer (22), and spacer (23) from line (20).
12. Remove bolt (24) and washer (25) from clamp (26).
13. Remove clamp (26) from line (20).
14. Disconnect line (20) from elbow (27).
15. Remove elbow (27) and O-ring (28) from transfer pump. Discard O-ring.

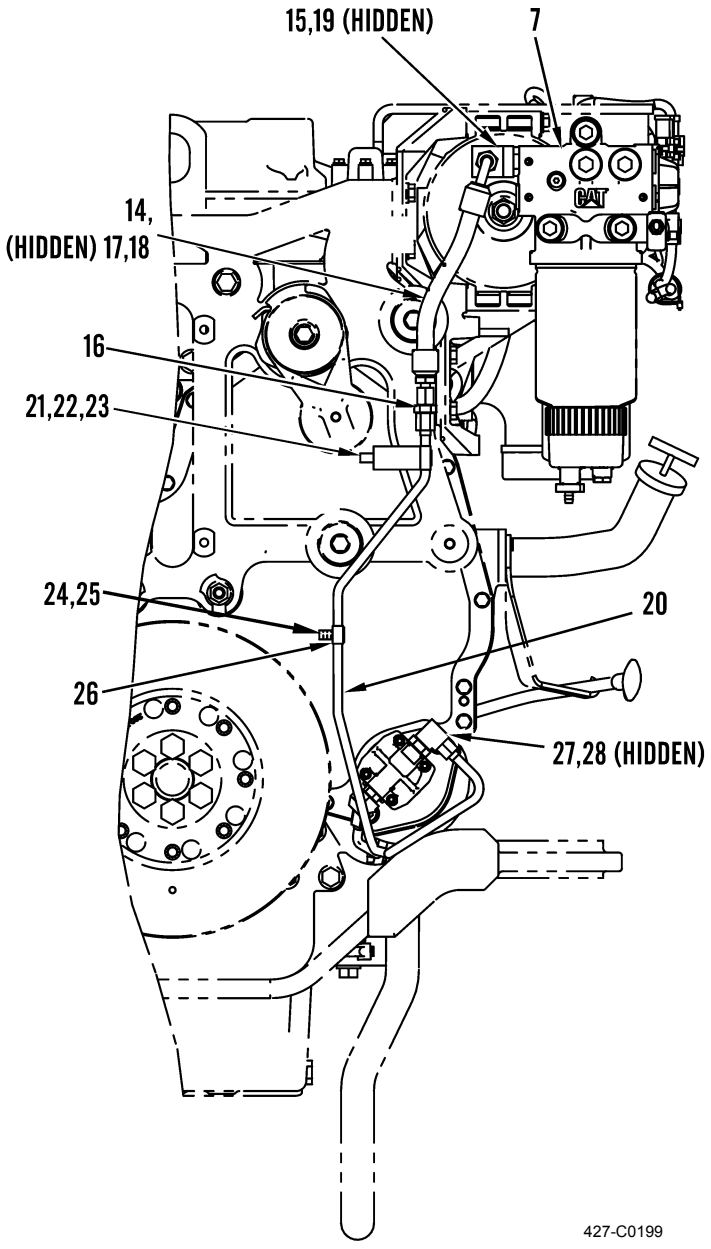

REMOVAL - CONTINUED

16. Cut and remove tiedown strap (29) from hoses (30 and 31). Discard tiedown strap.
17. Remove clamp (32) from hose (30).
18. Disconnect hose (30) from fuel filter housing (7).
19. Remove clamp (33) from hose (31).
20. Disconnect hose (31) from drain valve (34).
21. Remove drain valve (34) and O-ring (35) from fitting (36). Discard O-ring.
22. Remove fitting (36) from secondary fuel pump (11). Remove O-ring (37) from fitting. Discard O-ring.

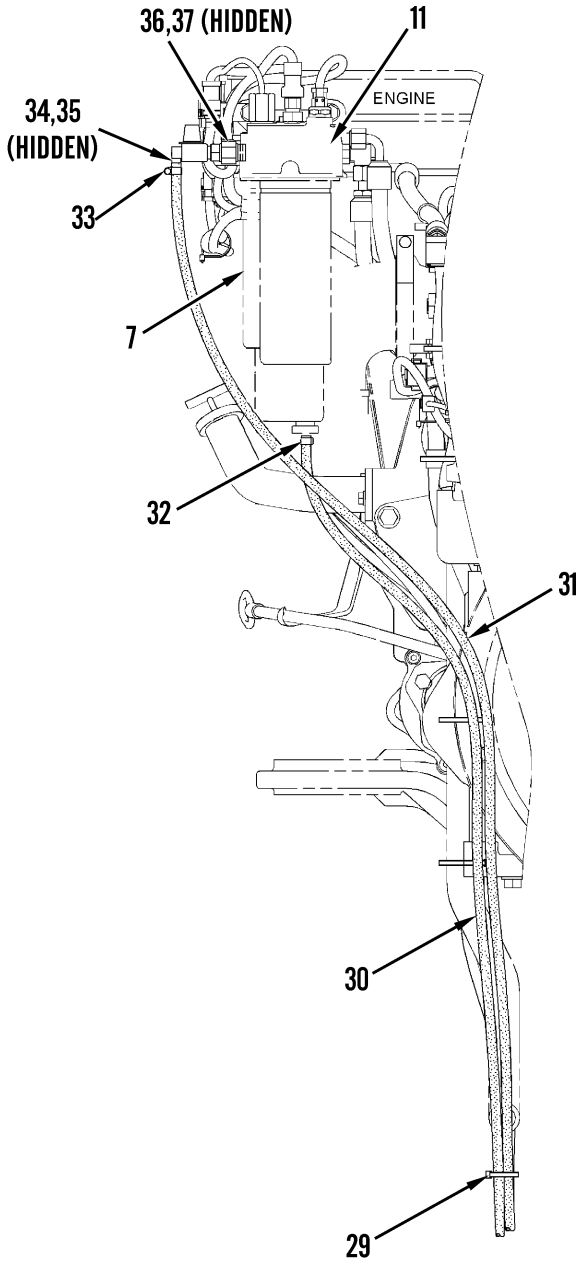

REMOVAL - CONTINUED

23. Remove elbow (38) and O-ring (39) from extension (40). Discard O-ring.
24. Remove extension (40) and O-ring (41) from secondary fuel pump (11). Discard O-ring.
25. Disconnect hose (42) and remove O-ring (43) from fitting (44). Discard O-ring.
26. Remove fitting (44) and O-ring (45) from secondary fuel pump (11). Discard O-ring.
27. Disconnect hose (46) and remove O-ring (47) from elbow (48). Discard O-ring.
28. Remove elbow (48) and O-ring (49) from fitting (50). Discard O-ring.
29. Remove fitting (50) and O-ring (51) from secondary fuel pump (11). Discard O-ring.
30. Disconnect hose (52) and remove O-ring (53) from fitting (54). Discard O-ring.
31. Remove fitting (54) and O-ring (55) from secondary fuel pump (11). Discard O-ring.

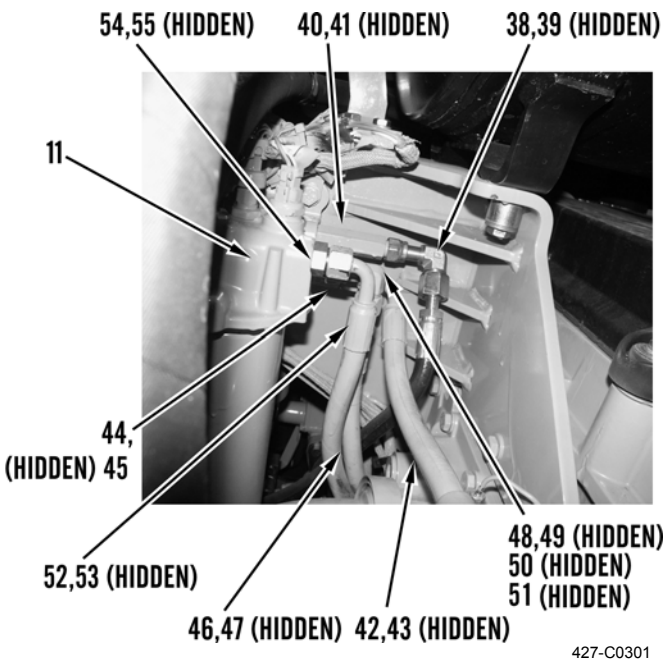

FUEL FILTER LINES AND FITTINGS REPLACEMENT - CONTINUED 0034 00

REMOVAL - CONTINUED

32. Remove bolt (56), washer (57), and spacer (58) from clamp (59).
33. Remove clamp (59) from hose (42).
34. Disconnect hose (42) and remove O-ring (60) from elbow (61). Discard O-ring.
35. Remove elbow (61) and O-ring (62) from machine. Discard O-ring.
36. Disconnect hose (46) and remove O-ring (63) from elbow (64). Discard O-ring.
37. Remove elbow (64) and O-ring (65) from machine. Discard O-ring.
38. Remove bolt (66), washer (67), and spacer (68) from clamp (69).
39. Remove clamp (69) from hose (52).
40. Disconnect hose (52) and remove O-ring (70) from union (71). Discard O-ring.
41. Remove union (71) from line (72).
42. Remove two bolts (73), washers (74), and link rods (75) from clamps (76).
43. Remove two clamps (76) from line (72).
44. Disconnect line (72) from elbow (77).
45. Remove elbow (77) and O-ring (78) from machine. Discard O-ring.

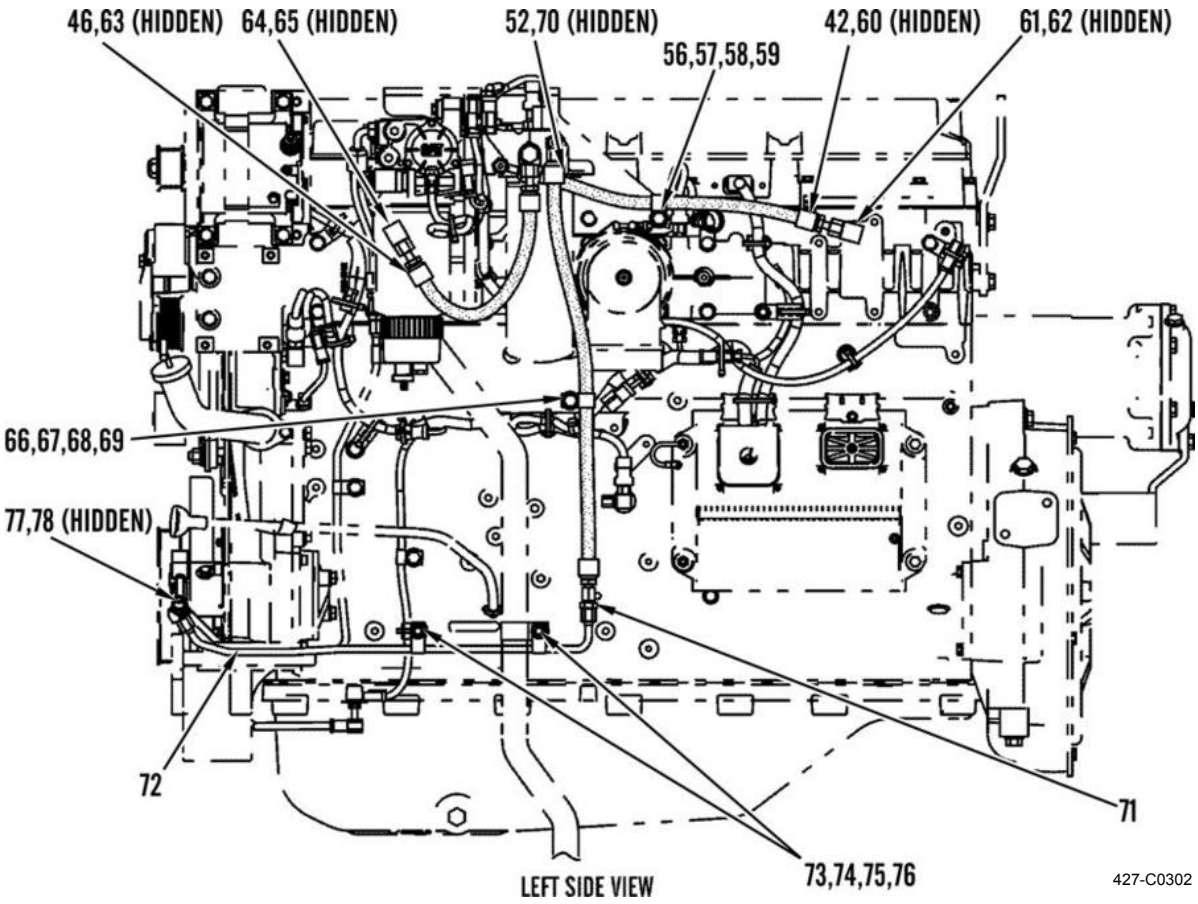

CLEANING AND INSPECTION



- **Solvent cleaning compound MIL-PRF-680 Type III is an environmentally compliant and low-toxic material. However, it may be irritating to the eyes and skin. Use protective gloves and goggles. Use in well-ventilated areas. Keep away from open flames and other sources of ignition. Failure to do so may result in injury or death to personnel.**
- **Particles blown by compressed air are hazardous. DO NOT exceed 15 psi (103 kPa) nozzle pressure when drying parts with compressed air. DO NOT direct compressed air against human skin. Make sure air stream is directed away from user and other personnel in the area. To prevent injury, user must wear protective goggles or face shield. Failure to follow this warning may result in injury to personnel.**

1. Clean all parts and surfaces with solvent cleaning compound.
2. Dry parts with compressed air.
3. Inspect all parts for damage, wear, pitting, cracks, or corrosion and replace if necessary.

INSTALLATION

NOTE

Apply a thin coat of clean fuel to all O-rings prior to installation.

1. Install new O-ring (78) on elbow (77). Install elbow on machine.
2. Connect line (72) to elbow (77).
3. Install two clamps (76) on line (72).
4. Install two link rods (75), washers (74), and bolts (73) on clamps (76).
5. Install union (71) on line (72).
6. Install new O-ring (70) and connect hose (52) to union (71).
7. Install clamp (69) on hose (52).
8. Install spacer (68), washer (67), and bolt (66) on clamp (69).
9. Install new O-ring (65) and elbow (64) on machine.
10. Install O-ring (63) and connect hose (46) to elbow (64).
11. Install new O-ring (62) and elbow (61) on machine.
12. Install new O-ring (60) and connect hose (42) to elbow (61).
13. Install clamp (59) on hose (42).
14. Install spacer (58), washer (57), and bolt (56) on clamp (59).

INSTALLATION - CONTINUED

15. Install new O-ring (55) and fitting (54) on secondary fuel pump (11).
16. Install new O-ring (53) and connect hose (52) to fitting (54).
17. Install new O-ring (51) and fitting (50) on secondary fuel pump (11).
18. Install new O-ring (49) and elbow (48) on fitting (50).
19. Install new O-ring (47) and connect hose (46) to elbow (48).
20. Install new O-ring (45) and fitting (44) to secondary fuel pump (11).
21. Install new O-ring (43) and connect hose (42) to fitting (44).
22. Install new O-ring (41) and extension (40) on secondary fuel pump (11).
23. Install new O-ring (39) and elbow (38) on extension (40).

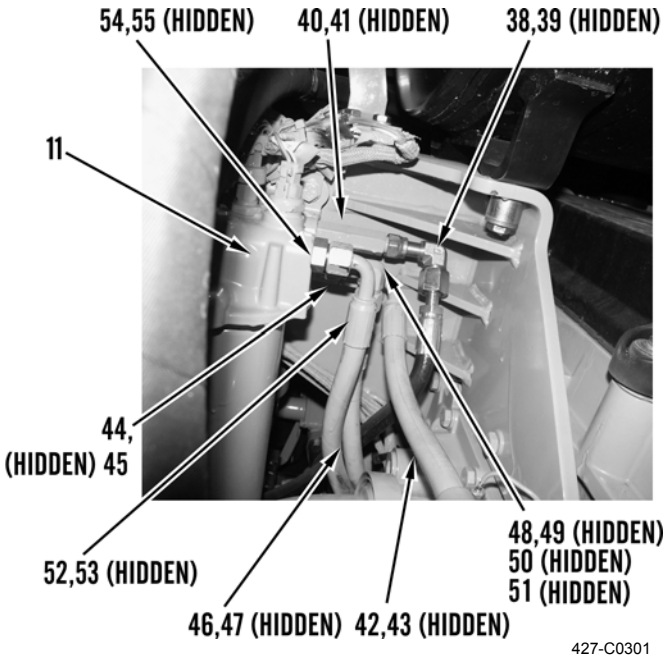

INSTALLATION - CONTINUED

24. Install new O-ring (37) and fitting (36) on secondary fuel pump (11).
25. Install new O-ring (35) and drain valve (34) on fitting (36).
26. Connect hose (31) to drain valve (34).
27. Install clamp (33) on hose (31).
28. Connect hose (30) to fuel filter housing (7).
29. Install clamp (32) on hose (30).
30. Install new tiedown strap (29) on hoses (31 and 30).

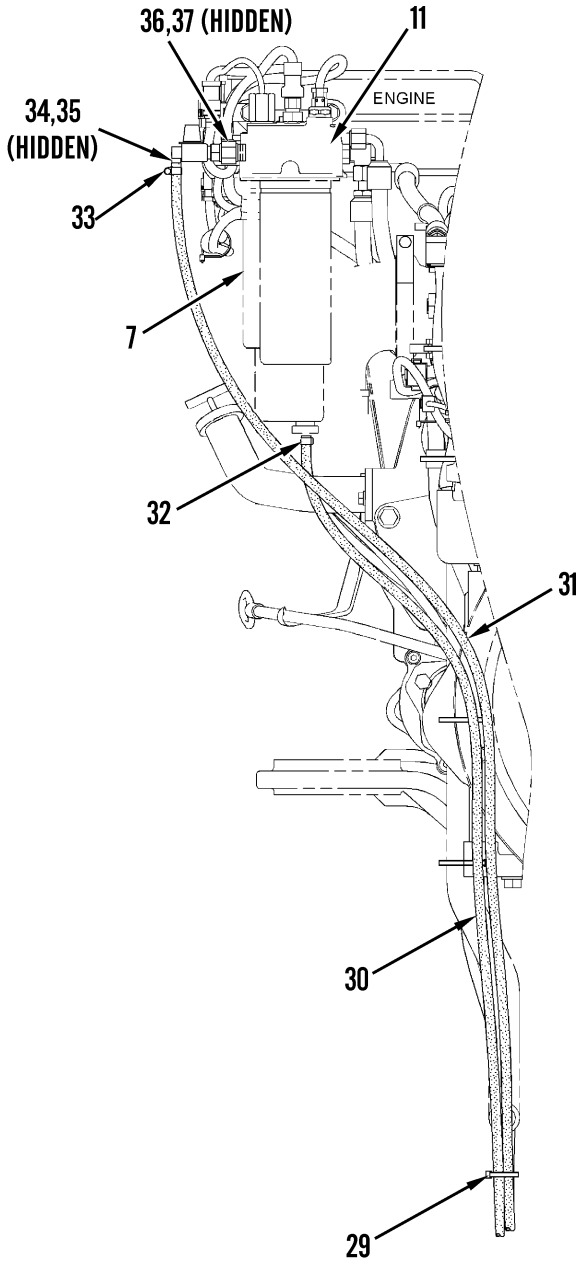

FUEL FILTER LINES AND FITTINGS REPLACEMENT - CONTINUED 0034 00

INSTALLATION - CONTINUED

31. Install new O-ring (28) and elbow (27) on transfer pump.
32. Connect line (20) to elbow (27).
33. Install clamp (26) on line (20).
34. Install washer (25) and bolt (24) on clamp (26).
35. Install spacer (23), washer (22), and bolt (21) on line (20).
36. Install union (16) on line (20).
37. Install new O-ring (19) and elbow (15) on primary fuel pump (7).
38. Install new O-rings (18 and 17) on hose (14).
39. Connect hose (14) to elbow (15) and union (16).

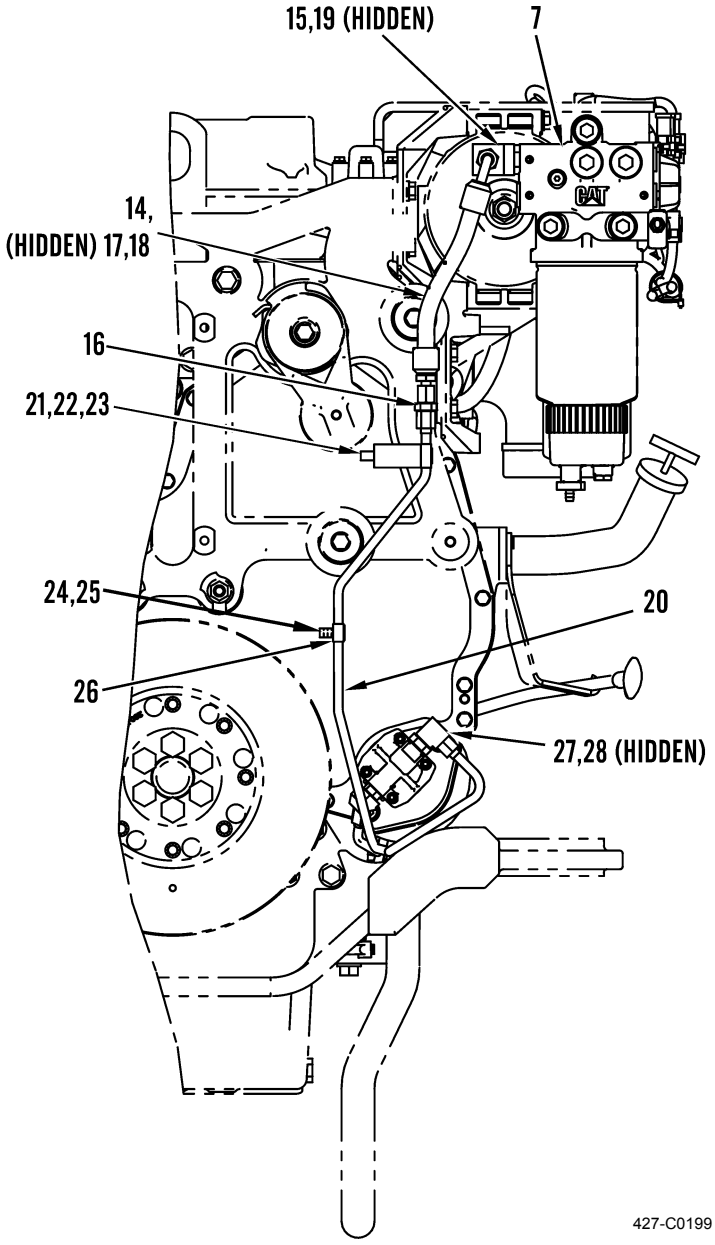

FUEL FILTER LINES AND FITTINGS REPLACEMENT - CONTINUED 0034 00

INSTALLATION - CONTINUED

40. Install new O-rings (13 and 12) on hose (6).
41. Connect hose (6) to secondary fuel filter housing (11) and fuel tank (8).
42. Install new O-rings (10 and 9) on hose (5).
43. Connect hose (5) to fuel filter housing (7) and fuel tank (8).
44. Install new tiedown strap (4) on hoses (6 and 5).
45. Install washer (2) and bolt (1) on two clamps (3).
46. Install right side panel (WP 0135 00).
47. Close hood (TM 5-3805-291-10).

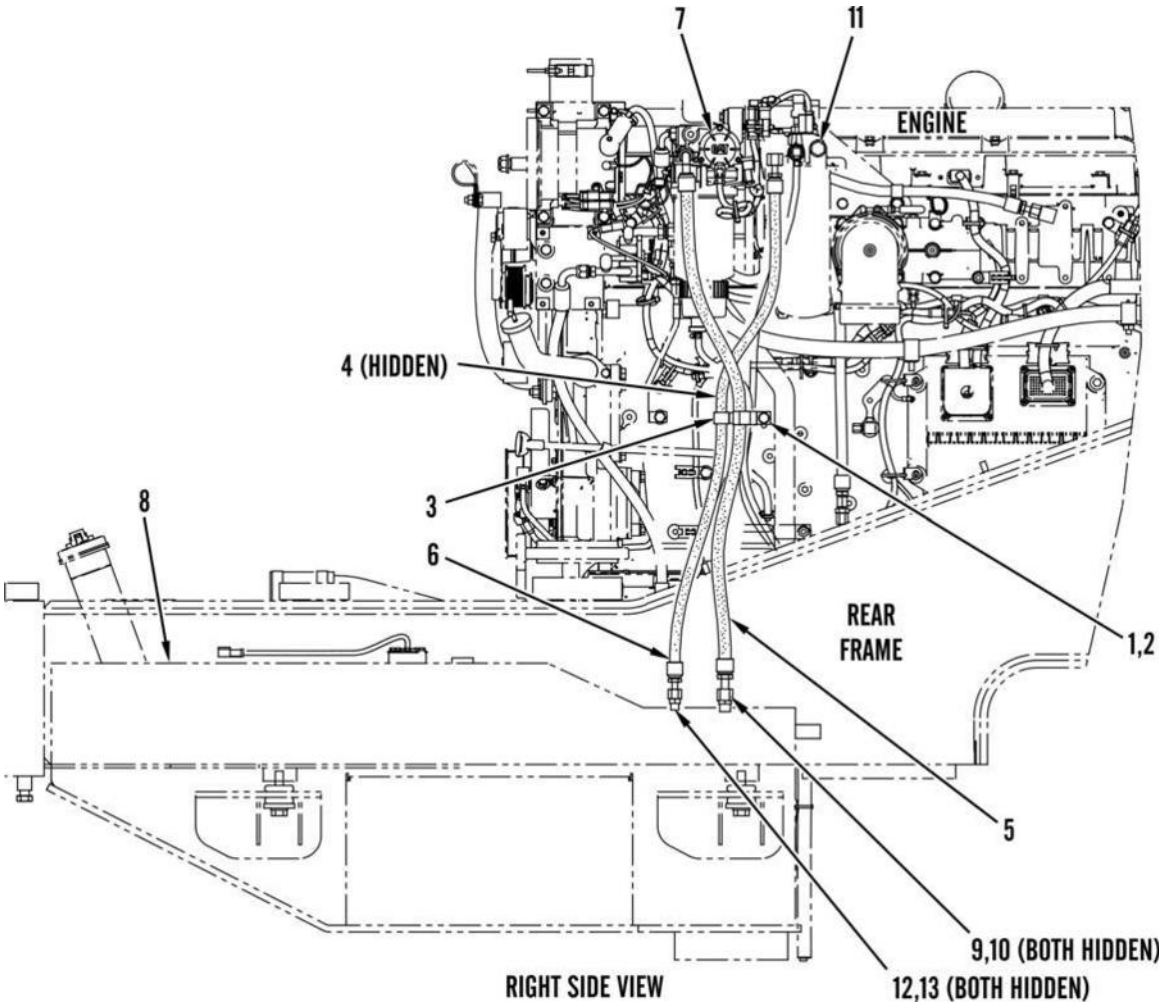

INSTALLATION - CONTINUED

WARNING

Before operating the machine, secure the steering frame lock in the stowed position. DO NOT operate machine with steering frame lock connected. Failure to lock steering frame lock into the stowed position before operating can result in loss of steering and injury or death to personnel.

48. Secure steering frame lock in stowed position (TM 5-3805-291-10).
49. Start engine (TM 5-3805-291-10).
50. Run engine until normal operating temperature is reached and check for leaks (TM 5-3805-291-10).
51. Verify correct operation of machine (TM 5-3805-291-10).
52. Shut down engine (TM 5-3805-291-10).

END OF WORK PACKAGE

PRIMARY FUEL FILTER AND WATER SEPARATOR REPLACEMENT 0035 00

THIS WORK PACKAGE COVERS

Removal, Cleaning and Inspection, Installation

INITIAL SETUP

Maintenance Level

Unit

Tools and Special Tools

Tool kit, general mechanic's, automotive (Item 90, WP 0232 00)

Shop equipment, automotive maintenance and repair: organizational maintenance, common no. 1 (Item 70, WP 0232 00)

Materials/Parts

Cleaning compound, solvent, type III (Item 7, WP 0233 00)

Diesel fuel, DF-1 (Item 10, WP 0233 00)

Fuel oil, diesel, DF-2 (Item 11, WP 0233 00)

Fuel, turbine, aviation (Item 12, WP 0233 00)

Oil, lubricating, OE/HDO-5/40 (Item 27, WP 0233 00)

Materials/Parts - Continued

Oil, lubricating, OE/HDO-15/40 (Item 28, WP 0233 00)

Rag, wiping (Item 35, WP 0233 00)

Fuel filter

O-ring

Personnel Required

MOS 62B, Construction Equipment Repairer

Equipment Conditions

Hood opened (TM 5-3805-291-10)

Side cover removed (WP 0135 00)

Drawings Required

TM 5-3805-291-23P, Figure 35

Estimated Time to Complete Task

0.5 hr



WARNING

DO NOT perform fuel system checks, inspections, or maintenance while smoking or near fire, flames, or sparks. Fuel may ignite, causing injury or death to personnel or damage to equipment.

CAUTION

Wipe area clean around all connections to be opened during removal. Cap lines and hoses and plug openings after removing lines. Contamination of system could result in premature failure.

NOTE

Use a container to catch any fluid that may drain from hoses or system. Dispose of fluid IAW local policy and ordinances. Ensure all spills are cleaned up.

REMOVAL

1. Open valve (1) and drain fuel bowl (2) into container for storage or disposal.

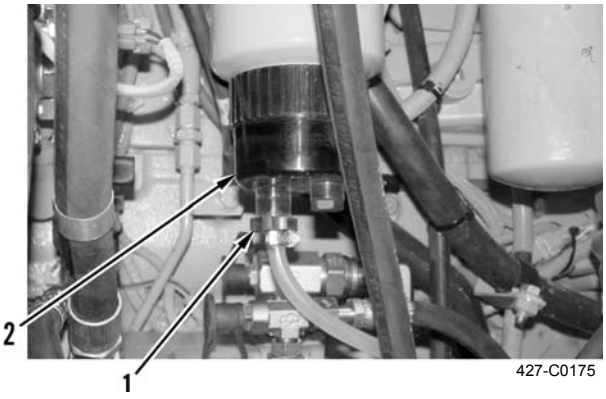

2. Remove primary fuel filter (3) from fuel priming pump (4). Discard primary fuel filter.

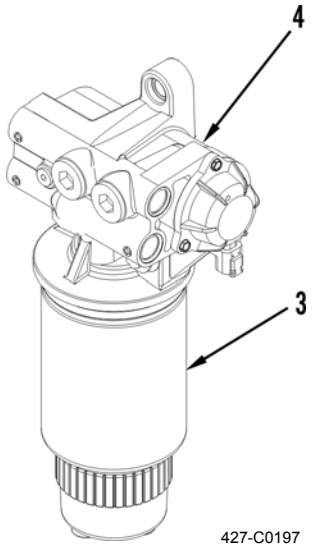

REMOVAL - CONTINUED

3. Remove bowl assembly (5) from primary fuel filter (3).
4. Remove O-ring (6) from bowl assembly (5). Discard O-ring.

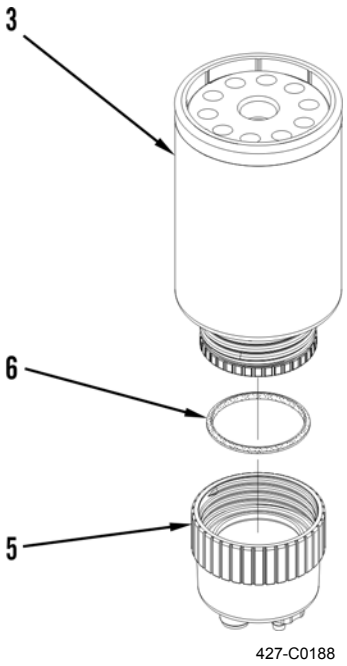

CLEANING AND INSPECTION

WARNING

- **Solvent cleaning compound MIL-PRF-680 Type III is an environmentally compliant and low-toxic material. However, it may be irritating to the eyes and skin. Use protective gloves and goggles. Use in well-ventilated areas. Keep away from open flames and other sources of ignition. Failure to do so may result in injury or death to personnel.**
- **Particles blown by compressed air are hazardous. DO NOT exceed 15 psi (103 kPa) nozzle pressure when drying parts with compressed air. DO NOT direct compressed air against human skin. Make sure air stream is directed away from user and other personnel in the area. To prevent injury, user must wear protective goggles or face shield. Failure to follow this warning may result in injury to personnel.**

1. Clean all parts and surfaces with solvent cleaning compound.
2. Dry parts with compressed air.
3. Inspect all parts for damage, wear, pitting, cracks, or corrosion and replace if necessary.

INSTALLATION

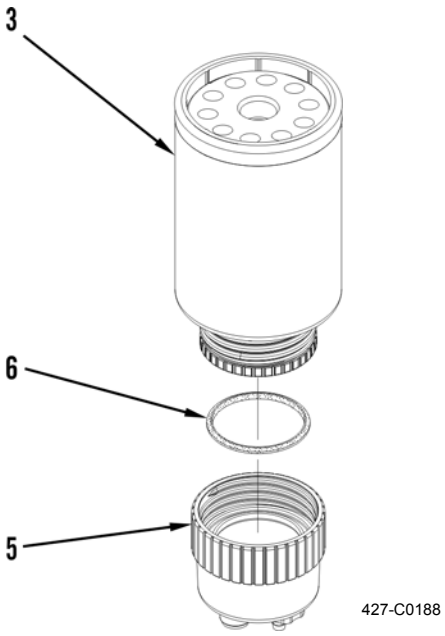

NOTE

New O-rings and bowl assemblies are included with replacement fuel filters.

1. Lubricate new O-ring (6) with thin coat of clean oil and install in bowl assembly (5).
2. Install bowl assembly (5) on new primary fuel filter (3).

CAUTION

Do not fill fuel filters with fuel before installing. The fuel will not be filtered and could be contaminated. Contaminated fuel will cause accelerated wear to fuel system parts. The fuel system should be primed prior to starting the engine.

NOTE

The fuel filter has rotation marks spaced at 90 degrees (1/4 turn). Follow instructions printed on filter (or supplied with non-OEM filter) for tightening procedure. Strap wrench (or equivalent) may be necessary to tighten filter to specification. Take care that tool does not damage new filter.

3. Lubricate seal on new primary fuel filter (3) with clean diesel fuel and install on fuel priming pump (4).

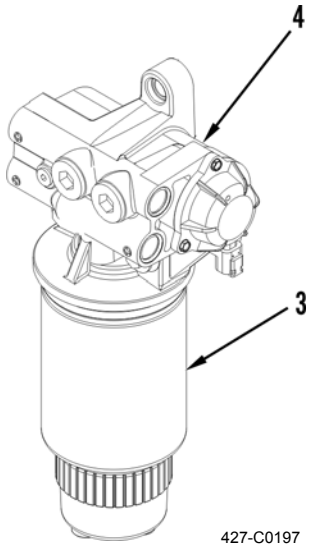

INSTALLATION - CONTINUED

NOTE

The water separator is under suction during normal engine operation. Tighten drain valve securely to prevent air leakage into fuel system.

4. Prime fuel system (TM-5-3805-291-10).
5. Check fuel level (TM 5-3805-291-10).
6. Run engine until normal operating temperature is reached (TM 5-3805-291-10).
7. Shut off engine and check for leaks.
8. Install side cover (WP 0135 00).
9. Close hood (TM 5-3805-291-10).

END OF WORK PACKAGE

SECONDARY FUEL FILTER AND BASE REPLACEMENT 0036 00

THIS WORK PACKAGE COVERS

Removal, Fuel Switch and Sensors Removal, Cleaning and Inspection, Fuel Switch and Sensors Installation, Installation

INITIAL SETUP

Maintenance Level

Unit

Tools and Special Tools

Tool kit, general mechanic's, automotive (Item 90, WP 0232 00)

Shop equipment, automotive maintenance and repair: organizational maintenance, common no. 1 (Item 70, WP 0232 00)

Materials/Parts

Cap set, protective (Item 6, WP 0233 00)

Cleaning compound, solvent, type III (Item 7, WP 0233 00)

Diesel fuel, DF-1 (Item 10, WP 0233 00)

Fuel oil, diesel, DF-2 (Item 11, WP 0233 00)

Fuel, turbine, aviation (Item 12, WP 0233 00)

Materials/Parts - Continued

Rag, wiping (Item 35, WP 0233 00)

Tag, marker (Item 43, WP 0233 00)

O-ring (18)

Personnel Required

MOS 62B, Construction Equipment Repairer

Equipment Conditions

Hood opened (TM 5-3805-291-10)

Right side cover removed (WP 0135 00)

Drawings Required

TM 5-3805-291-23P, Figures 26, 35, and 61

Estimated Time to Complete Task

2.0 hr



WARNING

DO NOT perform fuel system checks, inspections, or maintenance while smoking or near fire, flames, or sparks. Fuel may ignite, causing injury or death to personnel or damage to equipment.

CAUTION

Wipe area clean around all connections to be opened during removal. Cap lines and hoses and plug openings after removing lines. Contamination of system could result in premature failure.

NOTE

- **Tag hoses and wires prior to removal to ensure correct installation.**
- **Use a container to catch any fluid that may drain from hoses or system. Dispose of fluid IAW local policy and ordinances. Ensure all spills are cleaned up.**

REMOVAL

1. Turn knob (1) to OPEN position to drain fuel from secondary fuel filter (2) into container for storage or disposal.
2. Remove secondary fuel filter (2) from secondary fuel filter base (3).

NOTE

Wiring harness (5) has lock tab that has to be released in order to disconnect.

3. Disconnect wiring harnesses (4 and 5) from secondary fuel filter base (3).
4. Disconnect four hose assemblies (6) from secondary fuel filter base (3).
5. Remove and discard four O-rings (7) from hose assemblies (6).
6. Remove two bolts (8) and washers (9) from secondary fuel filter base (3).
7. Remove secondary fuel filter base (3) from machine.
8. Loosen clamp (10) and disconnect hose (11) from fitting (12). Remove and discard O-ring (13).
9. Remove fitting (12) and O-ring (14). Discard O-ring.
10. Remove plug (15), fitting (16), and two O-rings (17). Discard O-rings.
11. Remove four fittings (18) and O-rings (19). Discard O-rings.

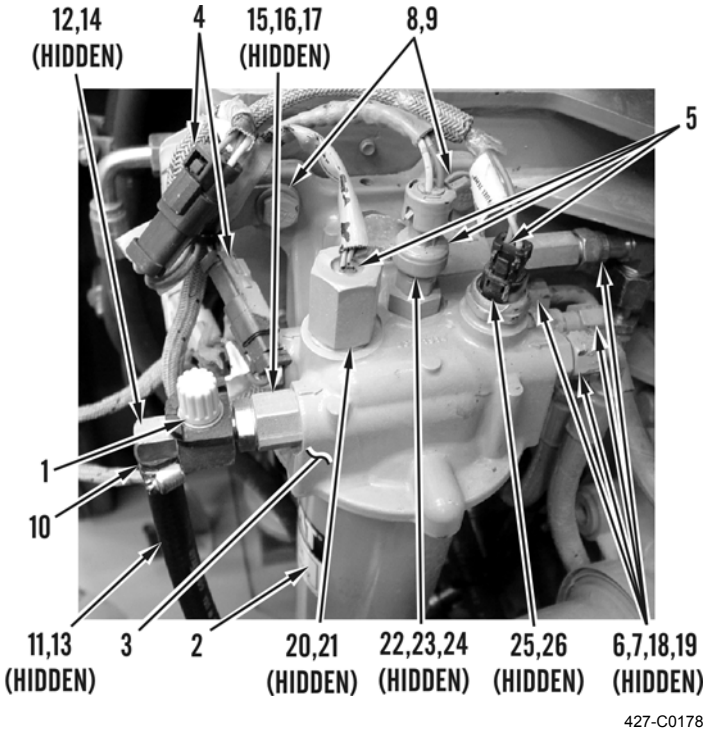

FUEL SWITCH AND SENSORS REMOVAL

1. Remove fuel filter pressure differential switch (20) and O-ring (21). Discard O-ring.
2. Remove fuel pressure sensor (22), adapter (23), and two O-rings (24). Discard O-rings.
3. Remove fuel temperature sensor (25) and O-ring (26). Discard O-ring.

CLEANING AND INSPECTION



- **Solvent cleaning compound MIL-PRF-680 Type III is an environmentally compliant and low-toxic material. However, it may be irritating to the eyes and skin. Use protective gloves and goggles. Use in well-ventilated areas. Keep away from open flames and other sources of ignition. Failure to do so may result in injury or death to personnel.**
- **Particles blown by compressed air are hazardous. DO NOT exceed 15 psi (103 kPa) nozzle pressure when drying parts with compressed air. DO NOT direct compressed air against human skin. Make sure air stream is directed away from user and other personnel in the area. To prevent injury, user must wear protective goggles or face shield. Failure to follow this warning may result in injury to personnel.**

1. Clean all parts and surfaces with solvent cleaning compound.
2. Dry parts with compressed air.
3. Inspect all parts for damage, wear, pitting, cracks, or corrosion and replace if necessary.

NOTE

Apply a thin coat of clean fuel to all O-rings prior to installation.

FUEL SWITCH AND SENSORS INSTALLATION

1. Install new O-ring (26) and fuel temperature sensor (25).
2. Install two new O-rings (24), adapter (23), and fuel pressure sensor (22).
3. Install new O-ring (21) and fuel filter pressure differential switch (20).

INSTALLATION

1. Install four new O-rings (19) and fittings (18).
2. Install two new O-rings (17), fitting (16), and plug (15).
3. Install new O-ring (14) and fitting (12).
4. Install new O-ring (13), connect hose (11) to fitting (12), and tighten clamp (10).
5. Position secondary fuel filter base (3) on machine and secure with two washers (9) and bolts (8).

CAUTION

Do not fill fuel filters with fuel before installing. The fuel will not be filtered and could be contaminated. Contaminated fuel will cause accelerated wear to fuel system parts. The fuel system should be primed prior to starting the engine.

NOTE

The fuel filter has rotation marks spaced at 90 degrees (1/4 turn). Follow instructions printed on filter (or supplied with non-OEM filter) for tightening procedure. Strap wrench (or equivalent) may be necessary to tighten filter to specification. Take care that tool does not damage new filter.

6. Lubricate seal of new secondary fuel filter (2) with clean diesel fuel and install on secondary fuel filter base (3).
7. Install four new O-rings (7) in hose assemblies (6).
8. Connect four hose assemblies (6) to secondary fuel filter base (3).
9. Connect wiring harnesses (5 and 4) to secondary fuel filter base (3).
10. Ensure knob (1) is in CLOSED position.

INSTALLATION - CONTINUED

11. Prime fuel system (TM 5-3805-291-10).
12. Run engine until normal operating temperature is reached (TM 5-3805-291-10).
13. Shut down engine (TM 5-3805-291-10).
14. Check for leaks.
15. Install right side cover on machine (WP 0135 00).
16. Close hood (TM 5-3805-291-10).

END OF WORK PACKAGE

ETHER STARTING AID REPLACEMENT 0037 00

THIS WORK PACKAGE COVERS

Removal, Cleaning and Inspection, Installation

INITIAL SETUP

Maintenance Level

Unit

Tools and Special Tools

Tool kit, general mechanic's, automotive (Item 90, WP 0232 00)

Materials/Parts

Cap set, protective (Item 6, WP 0233 00)

Cleaning compound, solvent, type III (Item 7, WP 0233 00)

Rag, wiping (Item 35, WP 0233 00)

Tag, marker (Item 43, WP 0233 00)

Gasket

O-ring (2)

Sleeve

Personnel Required

MOS 62B, Construction Equipment Repairer

Equipment Conditions

Machine parked on level ground (TM 5-3805-291-10)

Work tool lowered to ground (TM 5-3805-291-10)

Parking brake engaged (TM 5-3805-291-10)

Wheels chocked

Battery disconnect switch in OFF position (TM 5-3805-291-10)

Hood opened (TM 5-3805-291-10)

Ether canister removed (TM 5-3805-291-10)

Drawings Required

TM 5-3805-291-23P, Figure 36

Estimated Time to Complete Task

1.5 hr



WARNING

Ether is extremely flammable and toxic. DO NOT smoke and make sure you are in a well-ventilated area away from heat, open flames, or sparks. Wear eye protection. Avoid contact with skin and eyes and avoid breathing ether fumes. If fluid enters or fumes irritate the eyes, wash immediately with large quantities of clean water for 15 minutes. Seek medical attention immediately if ether is inhaled or causes eye irritation. Failure to follow this warning may result in injury or death to personnel.

CAUTION

- **Wipe area clean around all connections to be opened during removal. Cap lines and hoses and plug openings after removing lines. Contamination of system could result in premature failure.**
- **Utilize two line wrenches to avoid damage to fittings.**

NOTE

- **Tag hoses prior to removal to ensure correct installation.**
- **Use a container to catch any fluid that may drain from hoses or system. Dispose of fluid IAW local policy and ordinances. Ensure all spills are cleaned up.**
- **Ether starting aid cylinder is mounted on left side of machine next to air cleaner.**

REMOVAL

1. Remove three bolts (1) and washers (2) from clips (3).
2. Remove three clips (3) from lines (4 and 5).
3. Remove bolt (6) and washer (7) from clip (8).
4. Remove clip (8) from line (4).
5. Disconnect line (4) from connector (9).
6. Remove connector (9) and O-ring (10) from atomizer assembly (11). Discard O-ring.
7. Disconnect line (4) from union (12).
8. Remove line (4) from machine.
9. Remove union (12) from line (13).
10. Remove line (13) from union (14).
11. Remove union (14) from line (5).
12. Disconnect line (5) from nut (15).
13. Remove line (5) from machine.
14. Remove nut (15) and sleeve (16) from fitting (17). Discard sleeve.
15. Remove fitting (17) and O-ring (18) from machine. Discard O-ring.

ETHER STARTING AID REPLACEMENT - CONTINUED 0037 00

REMOVAL - CONTINUED

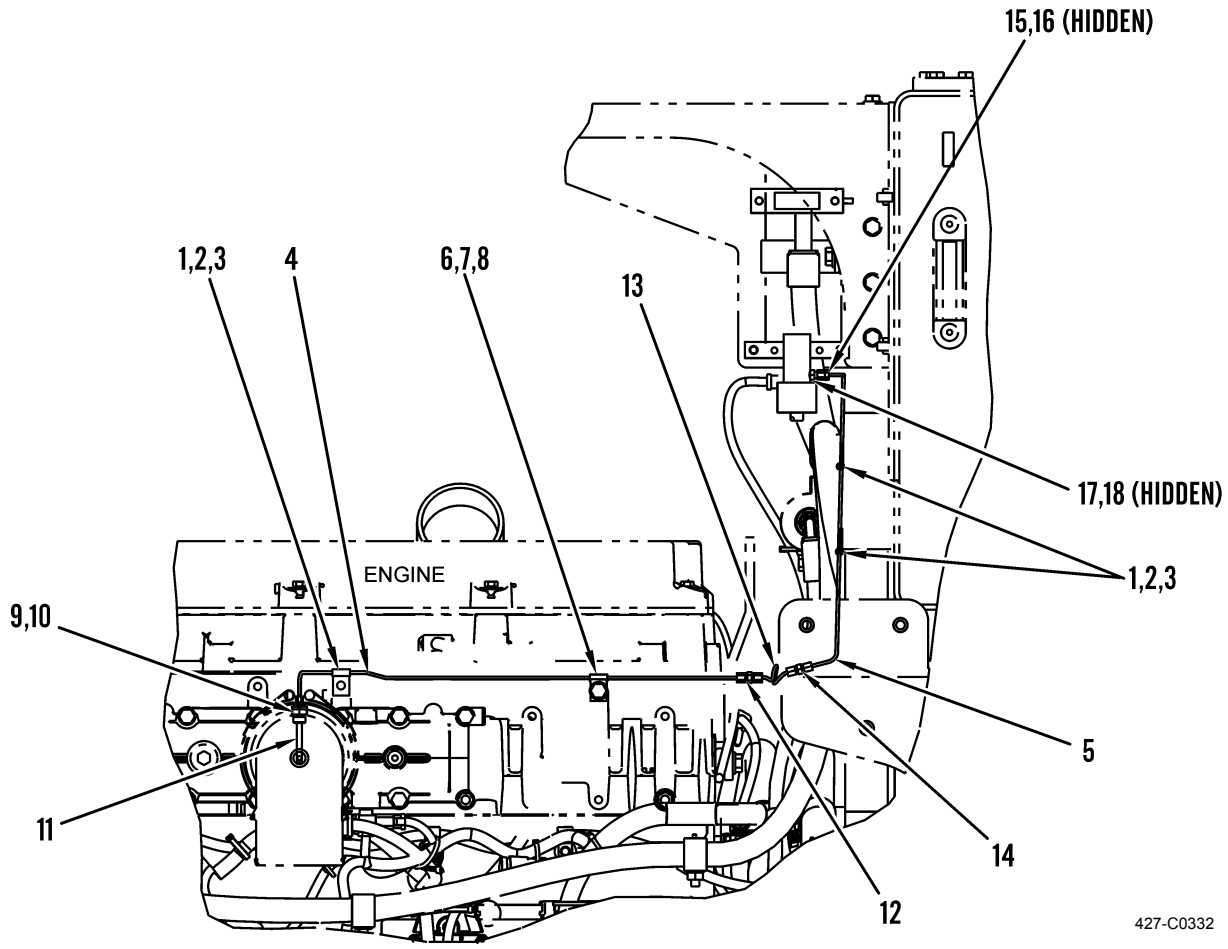

REMOVAL - CONTINUED

16. Disconnect chassis wiring harness (19) from atomizer assembly (11).
17. Remove two bolts (20), washers (21), and atomizer assembly (11) from machine.
18. Remove gasket (22) from atomizer assembly (11). Discard gasket.
19. Remove two bolts (23), washers (24), and retaining clamp (25) from machine.

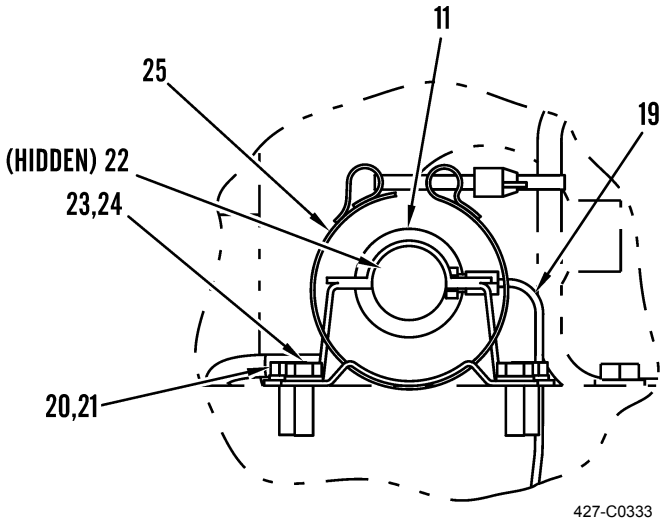

CLEANING AND INSPECTION



- **Solvent cleaning compound MIL-PRF-680 Type III is an environmentally compliant and low-toxic material. However, it may be irritating to the eyes and skin. Use protective gloves and goggles. Use in well-ventilated areas. Keep away from open flames and other sources of ignition. Failure to do so may result in injury or death to personnel.**
- **Particles blown by compressed air are hazardous. DO NOT exceed 15 psi (103 kPa) nozzle pressure when drying parts with compressed air. DO NOT direct compressed air against human skin. Make sure air stream is directed away from user and other personnel in the area. To prevent injury, user must wear protective goggles or face shield. Failure to follow this warning may result in injury to personnel.**

1. Clean all parts and surfaces with solvent cleaning compound.
2. Dry parts with compressed air.
3. Inspect all parts for damage, wear, pitting, cracks, or corrosion and replace if necessary.

INSTALLATION

1. Position retaining clamp (25) and install two washers (24) and bolts (23) on machine.
2. Install new gasket (22) on atomizer assembly (11).

INSTALLATION - CONTINUED

NOTE

Hole in atomizer must be aligned parallel with center line of air flow and must be oriented against the direction of the air flow. Use mark on hex head.

3. Position atomizer assembly (11) and install two washers (21) and bolts (20) on machine.
4. Connect chassis wiring harness (19) to atomizer assembly (11).
5. Install new O-ring (18) and fitting (17) on machine.
6. Install new sleeve (16) and nut (15) on fitting (17).
7. Position line (5) on machine.
8. Connect line (5) to nut (15).
9. Install union (14) on line (5).
10. Install line (13) on union (14).
11. Install union (12) on line (13).
12. Position line (4) on machine.
13. Connect line (4) to union (12).
14. Install new O-ring (10) and connector (9) on atomizer assembly (11).

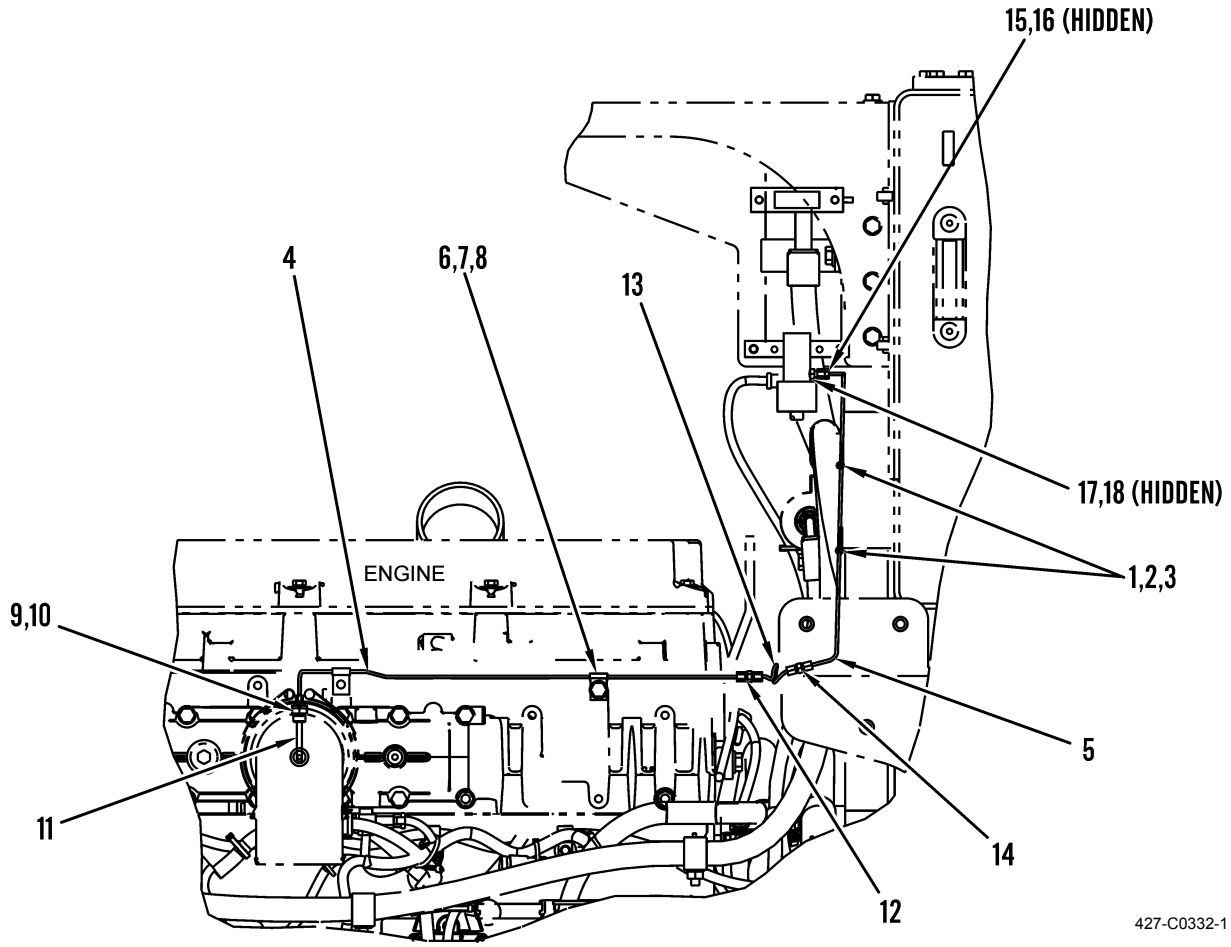

ETHER STARTING AID REPLACEMENT - CONTINUED 0037 00

INSTALLATION - CONTINUED

15. Connect line (4) to connector (9).
16. Install clip (8) on line (4).
17. Install washer (7) and bolt (6) on machine.
18. Install three clips (3) on lines (5 and 4).
19. Install three washers (2) and bolts (1) on machine.

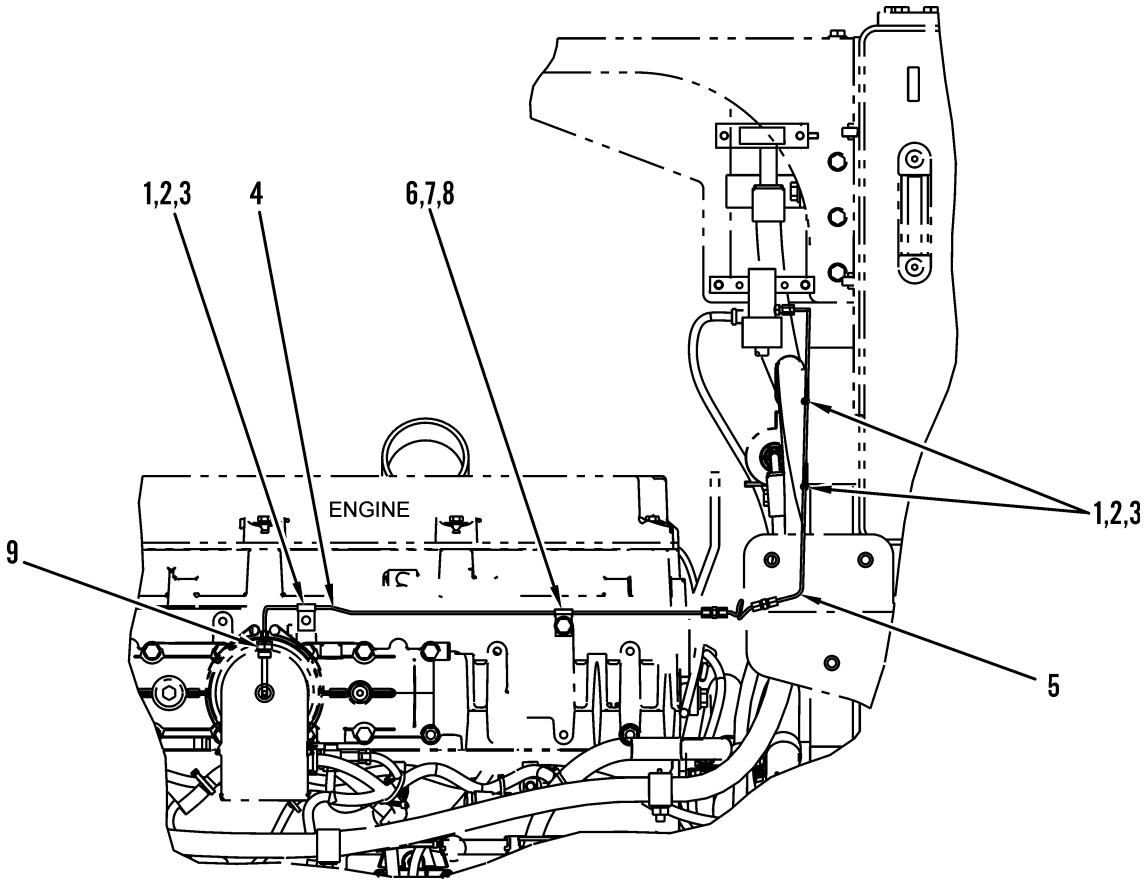

427-C0332-2

20. Switch on machine (TM 5-3805-291-10).
21. Install ether canister (TM 5-3805-291-10).
22. Verify correct operation of machine only when temperature is below 32°F (0°C) (TM 5-3805-291-10).

END OF WORK PACKAGE

FUEL PRIMING PUMP REPLACEMENT 0038 00

THIS WORK PACKAGE COVERS

Removal, Cleaning and Inspection, Installation

INITIAL SETUP

Maintenance Level

Unit

Tools and Special Tools

Tool kit, general mechanic's, automotive (Item 90, WP 0232 00)

Shop equipment, automotive maintenance and repair: organizational maintenance, common no. 1 (Item 70, WP 0232 00)

Materials/Parts

Cap set, protective (Item 6, WP 0233 00)

Cleaning compound, solvent, type III (Item 7, WP 0233 00)

Diesel fuel, DF-1 (Item 10, WP 0233 00)

Fuel oil, diesel, DF-2 (Item 11, WP 0233 00)

Fuel, turbine, aviation (Item 12, WP 0233 00)

Materials/Parts - Continued

Rag, wiping (Item 35, WP 0233 00)

Tag, marker (Item 43, WP 0233 00)

O-ring (3)

Preformed packing (3)

Personnel Required

MOS 62B, Construction Equipment Repairer

References

TM 5-3805-291-10

Equipment Conditions

Fuel primary filter and water separator removed (WP 0035 00)

Drawings Required

TM 5-3805-291-23P, Figure 26

Estimated Time to Complete Task

2.0 hr



WARNING

DO NOT perform fuel system checks, inspections, or maintenance while smoking or near fire, flames, or sparks. Fuel may ignite, causing injury or death to personnel or damage to equipment.

CAUTION

Wipe area clean around all connections to be opened during removal. Cap lines and hoses and plug openings after removing lines. Contamination of system could result in premature failure.

NOTE

- **Tag hoses and wires prior to removal to ensure correct installation.**
- **Use a container to catch any fluid that may drain from hoses or system. Dispose of fluid IAW local policy and ordinances. Ensure all spills are cleaned up.**

REMOVAL

1. Disconnect wiring harnesses (1 and 2) from fuel priming pump (3).
2. Disconnect two hose assemblies (4) from fuel priming pump (3).
3. Remove two O-rings (5) from hose assemblies (4). Discard O-rings.
4. Remove screw (6), washer (7), two mounts (8), and spacer (9).
5. Remove nut (10) and switch (11) from bracket (12).
6. Remove two screws (13), washers (14), spacers (15), six mounts (16), brackets (17 and 12), and fuel priming pump (3) from engine.
7. Remove two plugs (18) and preformed packings (19) from fuel priming pump (3). Discard preformed packings.
8. Remove bushing (20), O-ring (21), and preformed packing (22) from fuel priming pump (3). Discard O-ring and preformed packing.

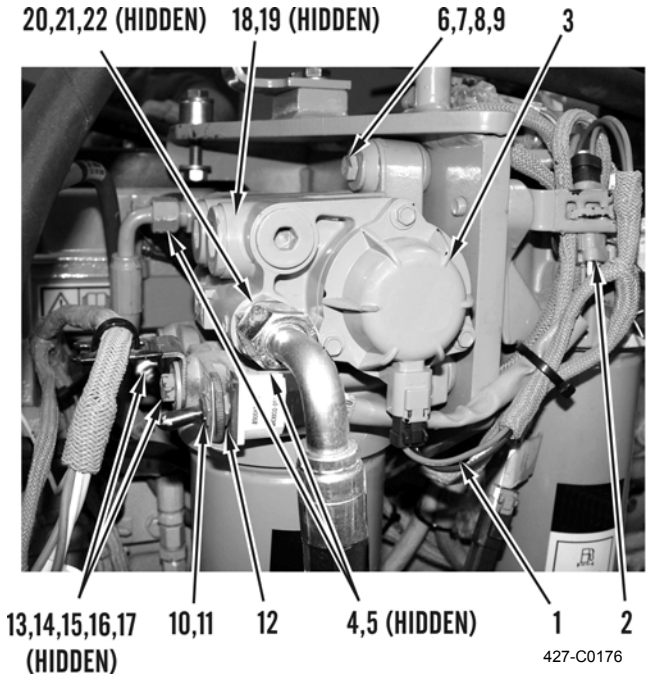

CLEANING AND INSPECTION



- **Solvent cleaning compound MIL-PRF-680 Type III is an environmentally compliant and low-toxic material. However, it may be irritating to the eyes and skin. Use protective gloves and goggles. Use in well-ventilated areas. Keep away from open flames and other sources of ignition. Failure to do so may result in injury or death to personnel.**
- **Particles blown by compressed air are hazardous. DO NOT exceed 15 psi (103 kPa) nozzle pressure when drying parts with compressed air. DO NOT direct compressed air against human skin. Make sure air stream is directed away from user and other personnel in the area. To prevent injury, user must wear protective goggles or face shield. Failure to follow this warning may result in injury to personnel.**

1. Clean all parts and surfaces with solvent cleaning compound.
2. Dry parts with compressed air.
3. Inspect all parts for damage, wear, pitting, cracks, or corrosion and replace if necessary.

INSTALLATION

NOTE

Lubricate new O-rings and preformed packings with clean fuel before installation.

1. Install new preformed packing (22), new O-ring (21), and bushing (20) on fuel priming pump (3).
2. Install two new preformed packings (19) and plugs (18) on fuel priming pump (3).
3. Install fuel priming pump (3), brackets (12 and 17), six mounts (16), two spacers (15), washers (14), and screws (13) on engine.
4. Install switch (11) and nut (10) on bracket (12).
5. Install spacer (9), two mounts (8), washer (7), and screw (6).
6. Install two new O-rings (5) in hose assemblies (4).
7. Connect two hose assemblies (4) to fuel priming pump (3).
8. Connect wiring harnesses (2 and 1) to fuel priming pump (3).
9. Install fuel primary filter and water separator (WP 0035 00).
10. Check fuel level (TM 5-3805-291-10).
11. Run engine until normal operating temperature is reached (TM 5-3805-291-10).
12. Shut down engine and check for leaks (TM 5-3805-291-10).

END OF WORK PACKAGE

THROTTLE PEDAL AND THROTTLE POSITION SENSOR MAINTENANCE 0039 00

THIS WORK PACKAGE COVERS

Removal, Disassembly, Cleaning and Inspection, Assembly, Installation

INITIAL SETUP

Maintenance Level

Unit

Tools and Special Tools

Tool kit, general mechanic's, automotive (Item 90, WP 0232 00)

Shop equipment, automotive maintenance and repair: organizational maintenance, common no. 1 (Item 70, WP 0232 00)

Wrench, torque, dial, 1/4" drive, 30 lb-in. (Item 96, WP 0232 00)

Materials/Parts

Rag, wiping (Item 35, WP 0233 00)

Sealing compound (Item 38, WP 0233 00)

Personnel Required

MOS 62B, Construction Equipment Repairer

Equipment Conditions

Machine parked on level ground (TM 5-3805-291-10)

Work tool lowered to ground (TM 5-3805-291-10)

Parking brake engaged (TM 5-3805-291-10)

Wheels chocked

Battery disconnect switch in OFF position (TM 5-3805-291-10)

Drawings Required

TM 5-3805-291-23P, Figures 37 and 65

Estimated Time to Complete Task

1.0 hr

REMOVAL

Throttle Pedal

1. Remove four bolts (1) and washers (2) from throttle pedal assembly (3).
2. Disconnect throttle position sensor (4) from wiring harness (5).
3. Remove throttle pedal assembly (3) from machine.

Throttle Position Sensor

Remove two screws (6) from throttle position sensor (4) and remove sensor from throttle pedal assembly (3).

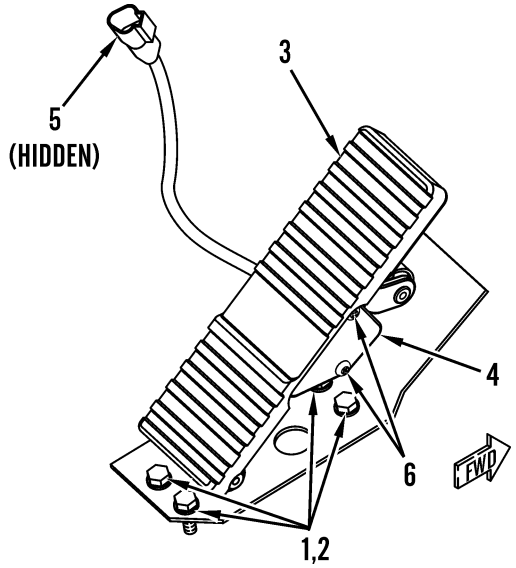

427-C0187

NOTE

The angle (Y) of the throttle pedal to the floor is 35 degrees. The maximum travel (Z) of the throttle pedal is 17 degrees.

DISASSEMBLY

1. Remove grommet (7) from throttle pedal assembly (3).
2. Remove two snap rings (8), pin (9), and roller (10) from throttle pedal assembly (3).
3. Remove parts kit (11) from throttle pedal assembly (3) in accordance with instruction provided with kit.
4. Remove pedal (12) from throttle pedal assembly (3).
5. Remove screw (13) and clip (14) from throttle pedal assembly (3).

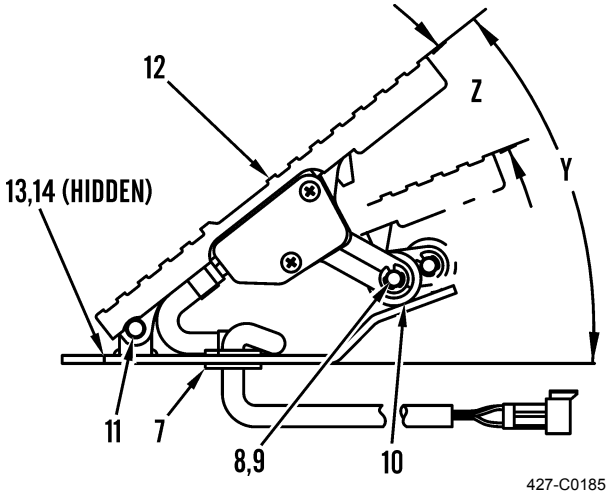

427-C0185

CLEANING AND INSPECTION



- **Solvent cleaning compound MIL-PRF-680 Type III is an environmentally compliant and low-toxic material. However, it may be irritating to the eyes and skin. Use protective gloves and goggles. Use in well-ventilated areas. Keep away from open flames and other sources of ignition. Failure to do so may result in injury or death to personnel.**
- **Particles blown by compressed air are hazardous. DO NOT exceed 15 psi (103 kPa) nozzle pressure when drying parts with compressed air. DO NOT direct compressed air against human skin. Make sure air stream is directed away from user and other personnel in the area. To prevent injury, user must wear protective goggles or face shield. Failure to follow this warning may result in injury to personnel.**

1. Clean all parts and surfaces with solvent cleaning compound.
2. Dry parts with compressed air.
3. Inspect all parts for damage, wear, pitting, cracks, or corrosion and replace if necessary.

ASSEMBLY

1. Install screw (13) and clip (14) on throttle pedal assembly (3).
2. Install pedal (12) on throttle pedal assembly (3).
3. Install parts kit (11) on throttle pedal assembly (3) in accordance with instruction provided with kit.
4. Install two snap rings (8), pin (9), and roller (10) on throttle pedal assembly (3).
5. Install grommet (7) on throttle pedal assembly (3).

INSTALLATION

Throttle Position Sensor

1. Position throttle position sensor (4) on throttle pedal assembly (3).

CAUTION

Excessive torque applied to mounting screws may affect operation of sensor.

2. Apply sealing compound to threads of two screws (6) and install on throttle position sensor (4). Tighten screws to 20 ± 2 lb-in. (2.25 ± 0.25 Nm).

Throttle Pedal

1. Install four washers (2) and bolts (1) on throttle pedal assembly (3).
2. Connect throttle position sensor (4) to wiring harness (5).
3. Verify correct throttle operation (TM 5-3805-291-10).

END OF WORK PACKAGE

MUFFLER AND EXHAUST PIPE REPLACEMENT 0040 00

THIS WORK PACKAGE COVERS

Removal, Cleaning and Inspection, Installation

INITIAL SETUP

Maintenance Level

Unit

Tools and Special Tools

Tool kit, general mechanic's, automotive (Item 90, WP 0232 00)

Shop equipment, automotive maintenance and repair: organizational maintenance, common no. 1 (Item 70, WP 0232 00)

Wrench, torque, click, ratcheting, 3/8" drive, 75 lb-ft (Item 98, WP 0232 00)

Lifting equipment, 200-lb capacity

Materials/Parts

Cleaning compound, solvent, type III (Item 7, WP 0233 00)

Rag, wiping (Item 35, WP 0233 00)

Personnel Required

MOS 62B, Construction Equipment Repairer (2)

Equipment Conditions

Machine parked on level ground (TM 5-3805-291-10)

Work tool lowered to ground (TM 5-3805-291-10)

Parking brake engaged (TM 5-3805-291-10)

Wheels chocked

Battery disconnect switch in OFF position (TM 5-3805-291-10)

Steering frame lock connected (TM 5-3805-291-10)

Hood opened (TM 5-3805-291-10)

Drawings Required

TM 5-3805-291-23, Figures 38 and 39

Estimated Time to Complete Task

0.5 hr



WARNING

Hot engine can cause burns. Allow additional time for engine to cool before performing this task.

REMOVAL



WARNING

Use extreme caution when handling heavy parts. Provide adequate support and use assistance during procedure. Ensure that any lifting equipment used is in good condition and of suitable load capacity. Keep clear of heavy parts supported only by lifting equipment. Failure to follow this warning may result in injury or death to personnel.

NOTE

Muffler weighs 126 lb (57 kg).

1. Attach lifting equipment to muffler (1).

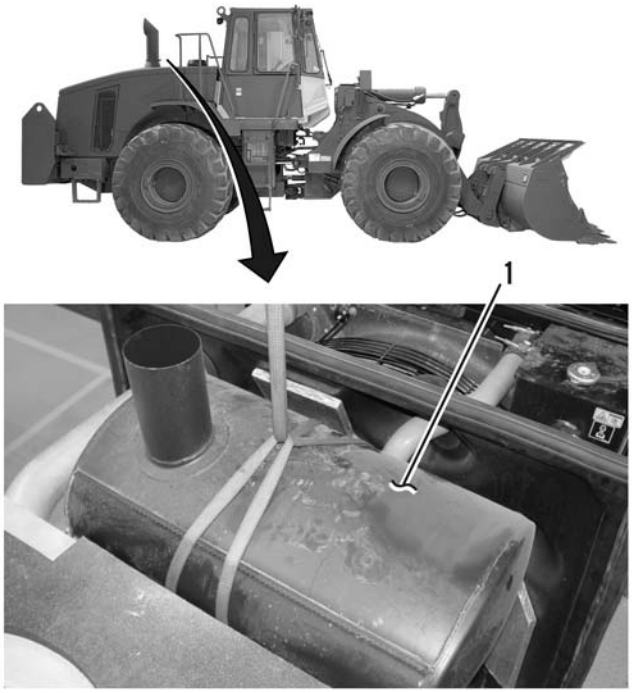

483-1205

REMOVAL - CONTINUED

2. Loosen clamp (2) and disconnect tube assembly (3) from muffler (1).
3. Remove two bolts (4), spacers (6), nuts (7), and four washers (5) from muffler (1).
4. Repeat step 3 for other side.
5. With assistance, remove muffler (1) from machine.

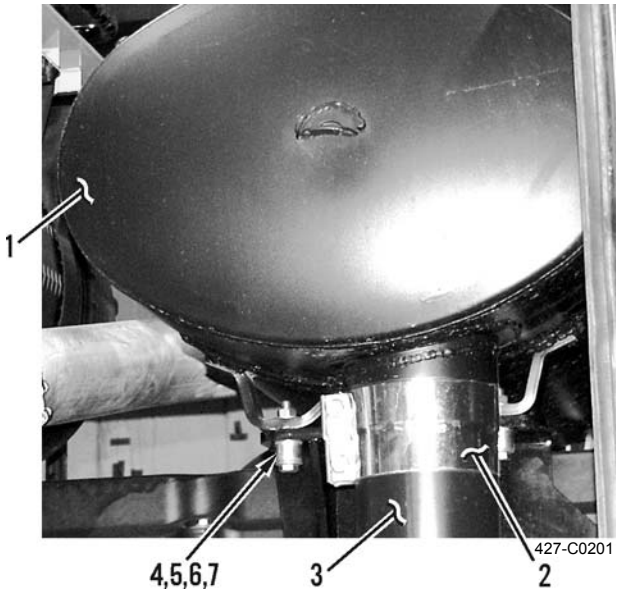

CLEANING AND INSPECTION



- **Solvent cleaning compound MIL-PRF-680 Type III is an environmentally compliant and low-toxic material. However, it may be irritating to the eyes and skin. Use protective gloves and goggles. Use in well-ventilated areas. Keep away from open flames and other sources of ignition. Failure to do so may result in injury or death to personnel.**
- **Particles blown by compressed air are hazardous. DO NOT exceed 15 psi (103 kPa) nozzle pressure when drying parts with compressed air. DO NOT direct compressed air against human skin. Make sure air stream is directed away from user and other personnel in the area. To prevent injury, user must wear protective goggles or face shield. Failure to follow this warning may result in injury to personnel.**

1. Clean all parts and surfaces with solvent cleaning compound.
2. Dry parts with compressed air.
3. Inspect all parts for damage, wear, pitting, cracks, or corrosion and replace if necessary.

INSTALLATION

WARNING

Use extreme caution when handling heavy parts. Provide adequate support and use assistance during procedure. Ensure that any lifting equipment used is in good condition and of suitable load capacity. Keep clear of heavy parts supported only by lifting equipment. Failure to follow this warning may result in injury or death to personnel.

NOTE

Muffler weighs 126 lb (57 kg).

1. With assistance, attach lifting equipment to muffler (1) and position muffler on machine.

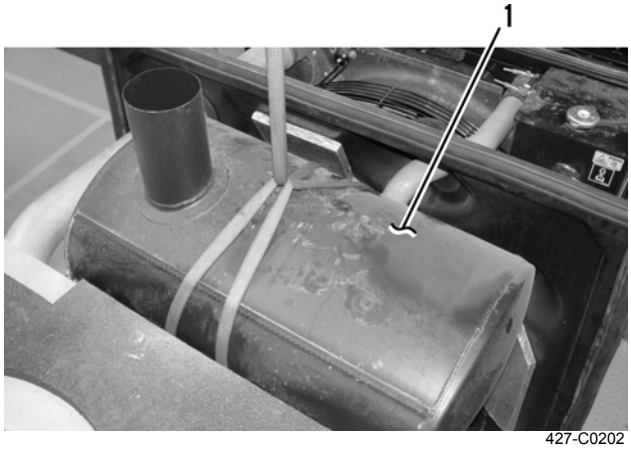

427-C0202

2. Install two nuts (7), spacers (6), bolts (4), and four washers (5) on muffler (1).
3. Repeat step 2 for other side.
4. Connect tube assembly (3) to muffler (1) and tighten clamp (2) to 35 lb-ft (47 Nm).

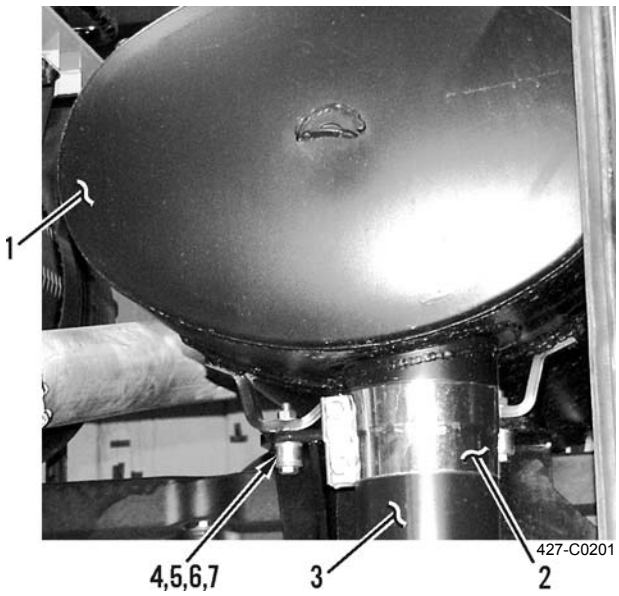

427-C0201

INSTALLATION - CONTINUED

WARNING

Before operating the machine, secure the steering frame lock in the stowed position. DO NOT operate machine with steering frame lock connected. Failure to lock steering frame lock into the stowed position before operating can result in loss of steering and injury or death to personnel.

5. Secure steering frame lock in the stowed position (TM 5-3805-291-10).
6. Operate machine and check for exhaust leaks (TM 5-3805-291-10).
7. Close hood (TM 5-3805-291-10).

END OF WORK PACKAGE

COOLING SYSTEM SERVICE 0041 00

THIS WORK PACKAGE COVERS

Service

INITIAL SETUP

Maintenance Level

Unit

Tools and Special Tools

Tool kit, general mechanic's, automotive (Item 90, WP 0232 00)

Shop equipment, automotive maintenance and repair: organizational maintenance, common no. 1 (Item 70, WP 0232 00)

Materials/Parts

Antifreeze (Item 1, WP 0233 00)

Rag, wiping (Item 35, WP 0233 00)

Personnel Required

MOS 62B, Construction Equipment Repairer

References

WP 0044 00

Equipment Conditions

Side covers removed (WP 0135 00)

Hood opened (TM 5-3805-291-10)

Drawings Required

TM 5-3805-291-23P, Figure 42

Estimated Time to Complete Task

1.0 hr



WARNING



- **DO NOT service cooling system unless engine has been allowed to cool down. This is a pressurized cooling system and escaping steam or hot coolant may result in serious burns.**
- **DO NOT remove cooling system radiator cap when engine is hot. Allow engine to cool down. Loosen cap to first stop and let any pressure out of cooling system, then remove cap. Failure to follow this warning may result in serious burns to personnel.**
- **Wear effective eye, hand, and skin protection when handling coolants. Failure to do so may result in injury to personnel.**
- **Engine coolant used in the performance of maintenance can be very slippery. Immediately wipe up any spills. Failure to follow this warning may result in injury to personnel.**

SERVICE

NOTE

Cooling system capacity is 11.2 gal. (42.3 L).

1. Carefully loosen pressure cap (1) to release any system pressure.
2. Open drain valve (2) at bottom of lower radiator hose (3) and allow coolant to drain into container.
3. Flush cooling system with clean water until drain water is clear. Allow water to drain completely.
4. Close drain valve (2).

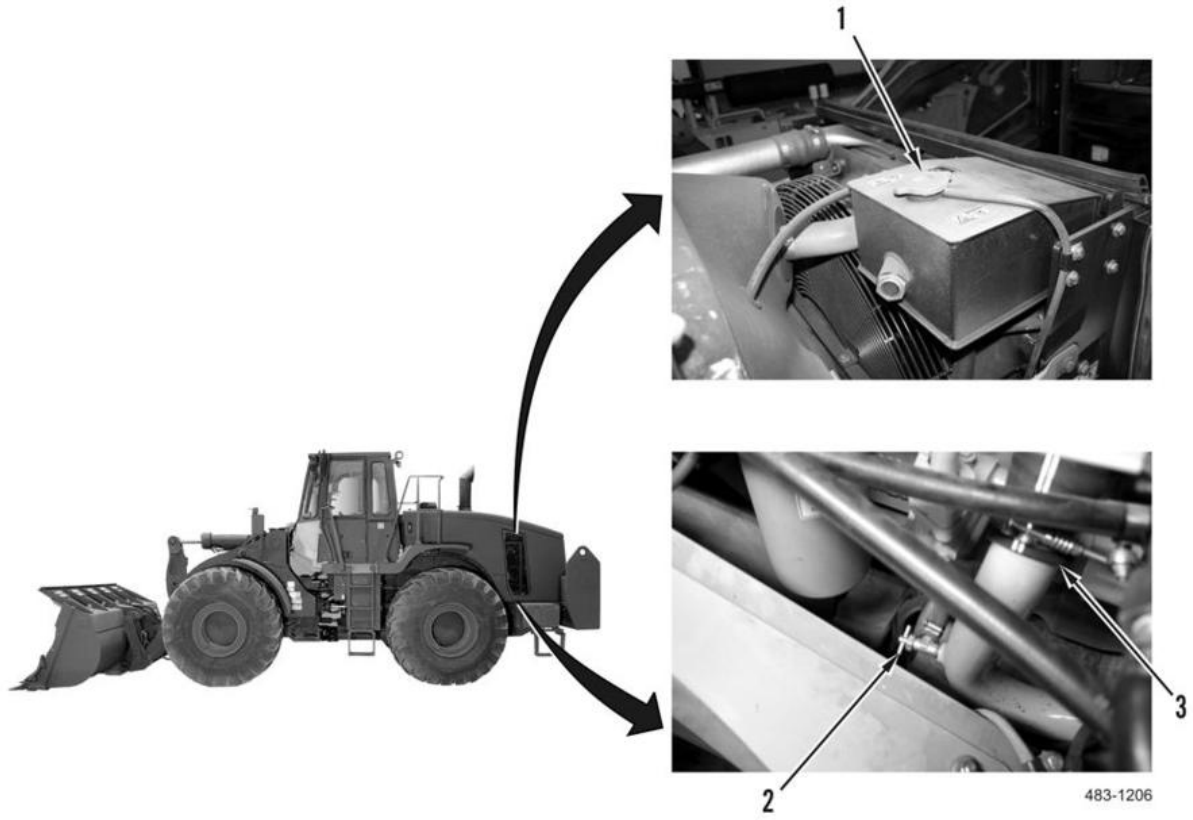

5. Replace thermostat (WP 0044 00).
6. Slowly add coolant until cooling system capacity is reached.
7. Run engine without pressure cap until thermostat opens and coolant level stabilizes.
8. Maintain coolant level in sight gage on upper radiator.
9. Install pressure cap.
10. Check cooling system for leaks.
11. Install side covers (WP 0135 00).
12. Close hood (TM 5-3805-291-10).

END OF WORK PACKAGE

RADIATOR TOP TANK REPLACEMENT 0042 00

THIS WORK PACKAGE COVERS

Removal, Cleaning and Inspection, Installation

INITIAL SETUP

Maintenance Level

Unit

Tools and Special Tools

Tool kit, general mechanic's, automotive (Item 90, WP 0232 00)

Shop equipment, automotive maintenance and repair: organizational maintenance, common no. 1 (Item 70, WP 0232 00)

Materials/Parts

Antifreeze (Item 1, WP 0233 00)

Cap set, protective (Item 6, WP 0233 00)

Cleaning compound, solvent, type III (Item 7, WP 0233 00)

Rag, wiping (Item 35, WP 0233 00)

Materials/Parts - Continued

Tag, marker (Item 43, WP 0233 00)

Personnel Required

MOS 62B, Construction Equipment Repairer

Equipment Conditions

Hood opened (TM 5-3805-291-10)

Engine coolant drained below sight glass (WP 0041 00)

Drawings Required

TM 5-3805-291-23P, Figure 42

Estimated Time to Complete Task

1.0 hr



WARNING



- **DO NOT service cooling system unless engine has been allowed to cool down. This is a pressurized cooling system and escaping steam or hot coolant may result in serious burns.**
- **DO NOT remove cooling system radiator cap when engine is hot. Allow engine to cool down. Loosen cap to first stop and let any pressure out of cooling system, then remove cap. Failure to follow this warning may result in serious burns to personnel.**
- **Wear effective eye, hand, and skin protection when handling coolants. Failure to do so may result in injury to personnel.**
- **Engine coolant used in the performance of maintenance can be very slippery. Immediately wipe up any spills. Failure to follow this warning may result in injury to personnel.**

CAUTION

Wipe area clean around all connections to be opened during removal. Cap lines and hoses and plug openings after removing lines. Contamination of system could result in premature failure.

NOTE

- **Tag hoses prior to removal to ensure correct installation.**
- **Use a container to catch any fluid that may drain from hoses or system. Dispose of fluid IAW local policy and ordinances. Ensure all spills are cleaned up.**

REMOVAL

1. Loosen clamp (1) and disconnect hose assembly (2) from radiator top tank (3).
2. Remove two bolts (4) and washers (5) from bracket (6).

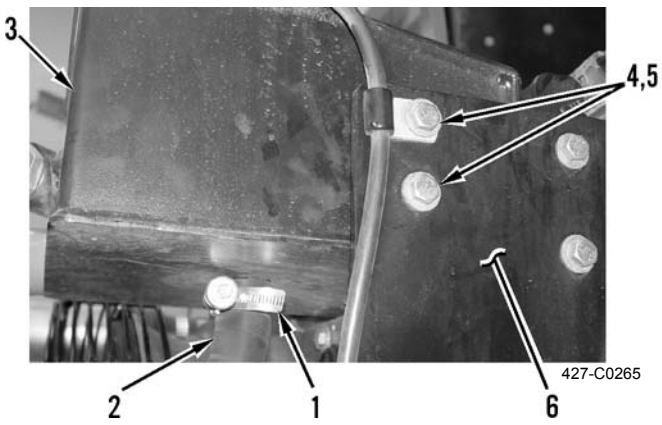

3. Loosen two clamps (7) and disconnect hoses (8) from radiator top tank (3).
4. Remove two bolts (9), washers (10), and radiator top tank (3) from bracket (11).

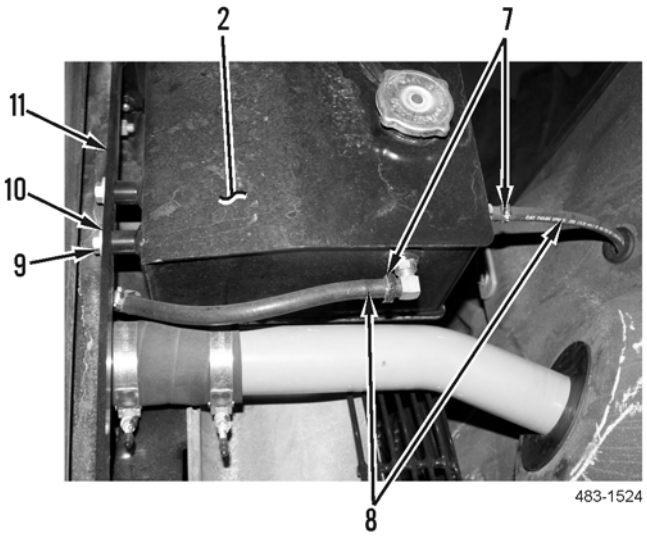

CLEANING AND INSPECTION



- **Solvent cleaning compound MIL-PRF-680 Type III is an environmentally compliant and low-toxic material. However, it may be irritating to the eyes and skin. Use protective gloves and goggles. Use in well-ventilated areas. Keep away from open flames and other sources of ignition. Failure to do so may result in injury or death to personnel.**
- **Particles blown by compressed air are hazardous. DO NOT exceed 15 psi (103 kPa) nozzle pressure when drying parts with compressed air. DO NOT direct compressed air against human skin. Make sure air stream is directed away from user and other personnel in the area. To prevent injury, user must wear protective goggles or face shield. Failure to follow this warning may result in injury to personnel.**

1. Clean all parts and mating surfaces with solvent cleaning compound.
2. Dry parts with compressed air.
3. Inspect all parts for wear, pitting, cracks, or corrosion and replace if necessary.

INSTALLATION

1. Position radiator top tank (3) and install two washers (10) and bolts (9) on bracket (11).
2. Connect hose (8) to radiator top tank (3) and tighten two clamps (7).
3. Connect hose assembly (2) to radiator top tank (3) and tighten clamp (1).
4. Install two washers (5) and bolts (4) on bracket (6).
5. Refill engine coolant to correct level (WP 0041 00).
6. Close hood (TM 5-3805-291-10).
7. Run engine until normal operating temperature is reached (TM 5-3805-291-10).
8. Shut down engine (TM 5-3805-291-10).
9. Check for leaks.

END OF WORK PACKAGE

COOLING SYSTEM LINES REPLACEMENT 0043 00

THIS WORK PACKAGE COVERS

Removal, Cleaning and Inspection, Installation

INITIAL SETUP

Maintenance Level

Unit

Tools and Special Tools

Tool kit, general mechanic's, automotive (Item 90, WP 0232 00)

Shop equipment, automotive maintenance and repair: organizational maintenance, common no. 1 (Item 70, WP 0232 00)

Materials/Parts

Antifreeze (Item 1, WP 0233 00)

Cap set, protective (Item 6, WP 0233 00)

Cleaning compound, solvent, type III (Item 7, WP 0233 00)

Rag, wiping (Item 35, WP 0233 00)

Materials/Parts - Continued

Strap, tiedown, electrical components (Item 42, WP 0233 00)

Tag, marker (Item 43, WP 0233 00)

O-ring (3)

Personnel Required

MOS 62B, Construction Equipment Repairer

References

TM 5-3805-291-10

Equipment Conditions

Coolant system drained (WP 0041 00)

Drawings Required

TM 5-3805-291-23P, Figures 42 and 43

Estimated Time to Complete Task

2.0 hr



WARNING



- **DO NOT service cooling system unless engine has been allowed to cool down. This is a pressurized cooling system and escaping steam or hot coolant may result in serious burns.**
- **DO NOT remove cooling system radiator cap when engine is hot. Allow engine to cool down. Loosen cap to first stop and let any pressure out of cooling system, then remove cap. Failure to follow this warning may result in serious burns to personnel.**
- **Wear effective eye, hand, and skin protection when handling coolants. Failure to do so may result in injury to personnel.**
- **Engine coolant used in the performance of maintenance can be very slippery. Immediately wipe up any spills. Failure to follow this warning may result in injury to personnel.**

CAUTION

Wipe area clean around all connections to be opened during removal. Cap lines and hoses and plug openings after removing lines. Contamination of system could result in premature failure.

NOTE

- **Tag hoses prior to removal to ensure correct installation.**
- **Use a container to catch any fluid that may drain from hoses or system. Dispose of fluid IAW local policy and ordinances. Ensure all spills are cleaned up.**

REMOVAL

1. Loosen clamp (1) and disconnect hose (2) from T (3).
2. Remove T (3) from machine.
3. Loosen clamp (4) and remove hose (2) and O-ring (5) from machine. Discard O-ring.
4. Loosen clamp (6) and disconnect hose (7) from T (8). Remove and discard O-ring (9).
5. Remove T (8) from radiator top tank (10).
6. Disconnect hose (11) from radiator filler cap (12) and pull hose through retaining clip (13).
7. Loosen clamp (14) and disconnect hose (15) from cooling package assembly.
8. Loosen clamp (16) and disconnect hose (17) from cooling package assembly.

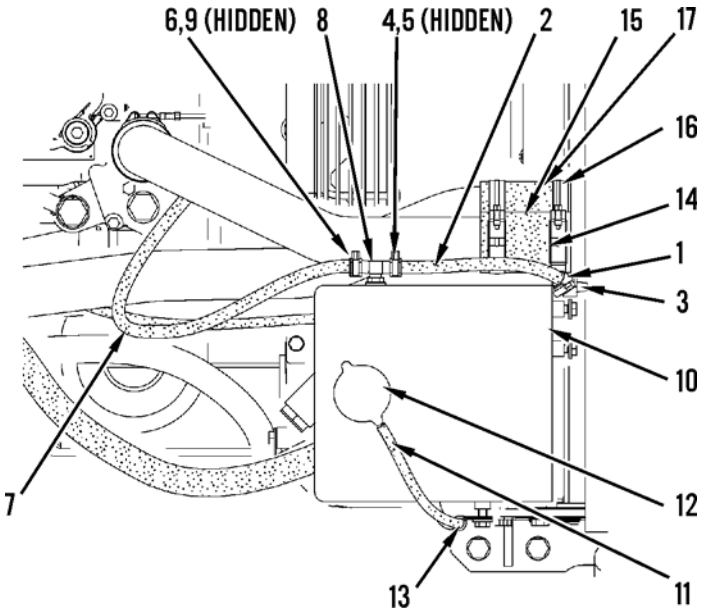

427-C0386

COOLING SYSTEM LINES REPLACEMENT - CONTINUED 0043 00

REMOVAL - CONTINUED

9. Loosen clamp (18) and remove hose (7) from machine.
10. Remove elbow (19) and O-ring (20) from engine port. Discard O-ring.
11. Loosen clamp (21) and disconnect hose (22) from radiator top tank (10).
12. Loosen clamp (23) and disconnect hose (22) from connector (24). Remove hose from machine.
13. Remove connector (24) from engine port.
14. Loosen clamp (25) and remove hose and tube assembly (26) from engine port.

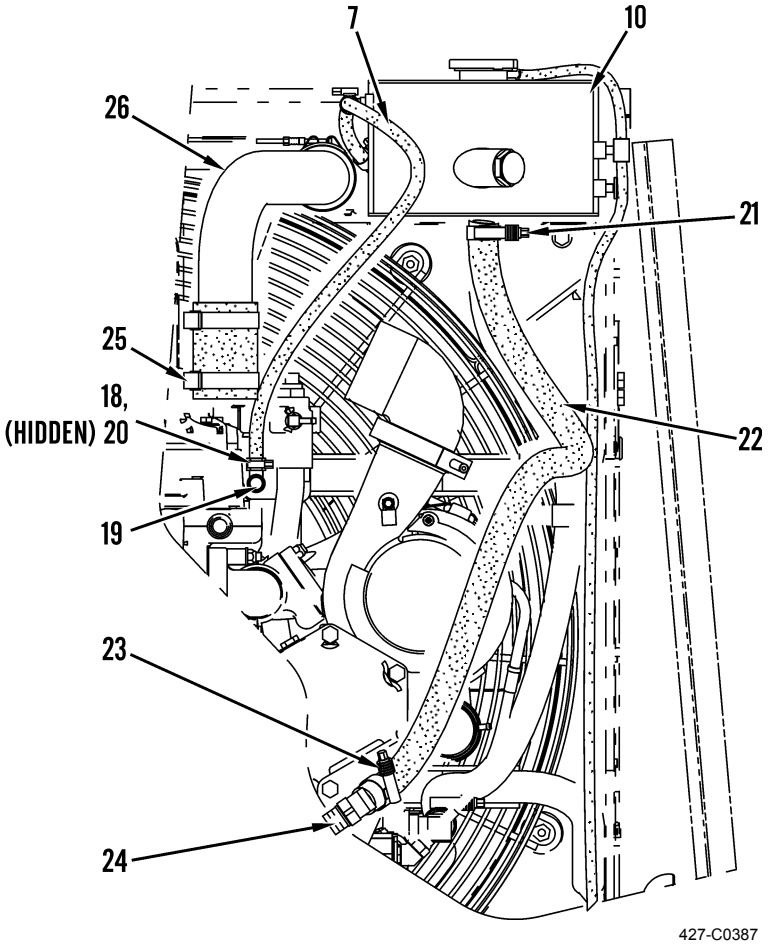

REMOVAL - CONTINUED

15. Cut and discard tiedown strap (27) securing hoses (11 and 29).
16. Remove hose (11) from machine.
17. Loosen clamp (28) and disconnect hose (29) from radiator drain valve (30).
18. Remove hose (29) from machine.
19. Loosen clamp (31) and remove hose and tube assembly (32) from machine.

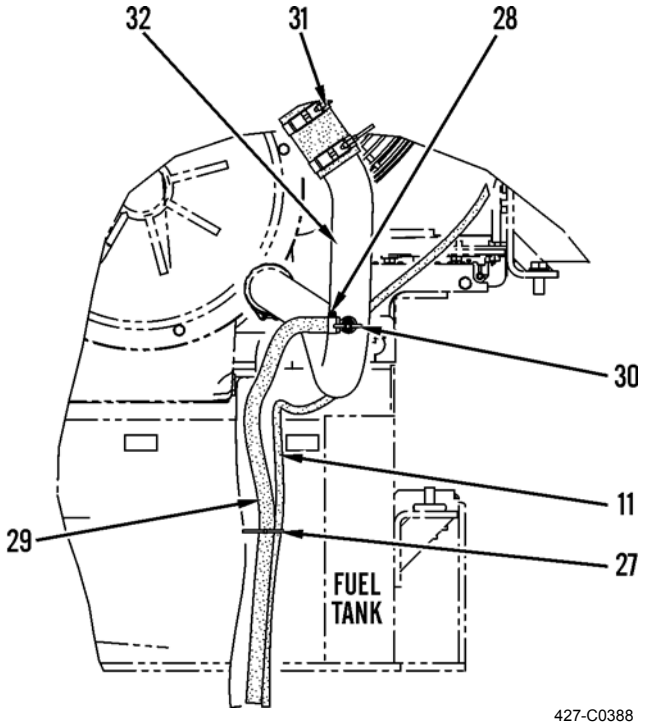

COOLING SYSTEM LINES REPLACEMENT - CONTINUED 0043 00

REMOVAL - CONTINUED

20. Loosen clamp (33) and disconnect hose (34) from water pump (35).
21. Loosen clamp (36) and disconnect hose (37) from engine block.
22. Remove four bolts (38) and washers (39) from clips (40).
23. Loosen clamp (41) and disconnect hose (34) from tube (42).
24. Loosen clamp (43) and disconnect hose (37) from tube (44).
25. Remove hoses (34 and 37) from engine compartment.

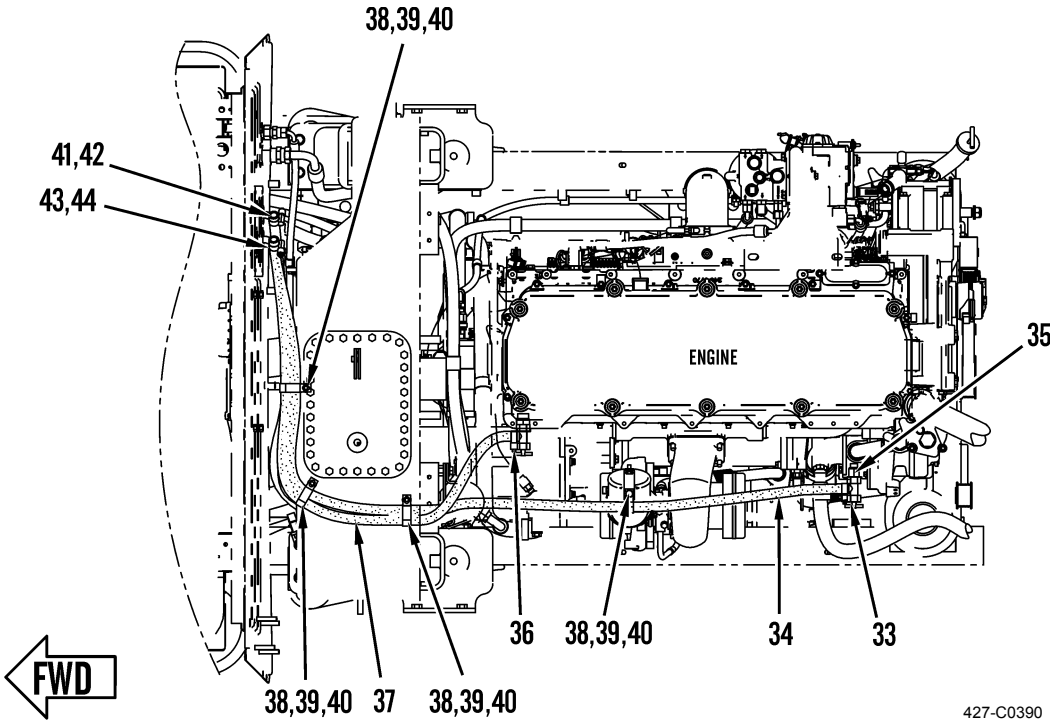

REMOVAL - CONTINUED

26. Inside cab, loosen two clamps (45) and disconnect hose (46) from tube (42).
27. Loosen two clamps (47) and disconnect hose (48) from tube (44).
28. Remove clip (49) from cab wall.
29. Remove nut (50) and washer (51) from clip (52).
30. Remove hoses (46 and 48) from heater core (53).

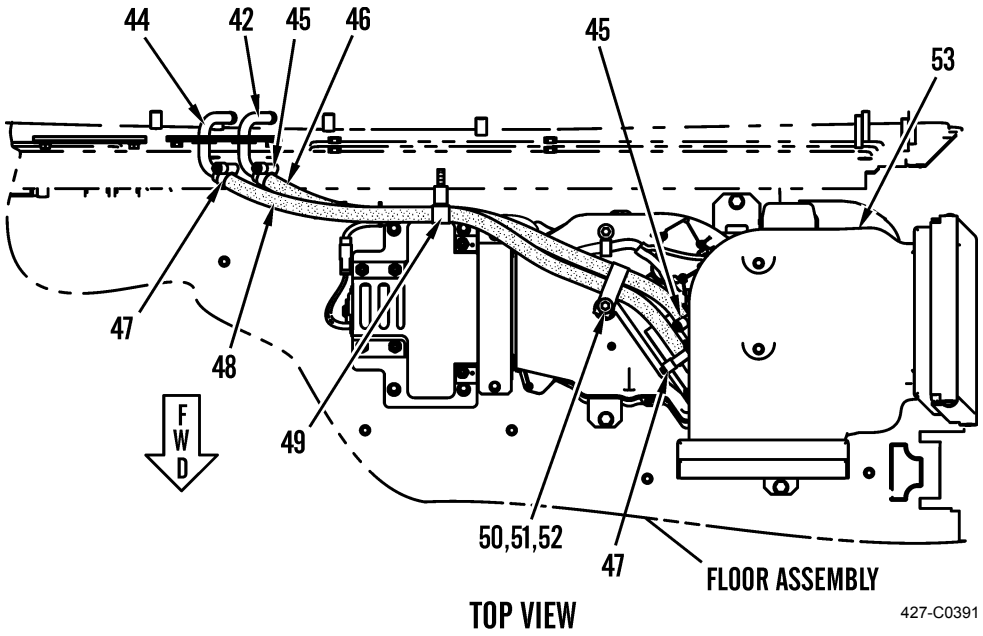

CLEANING AND INSPECTION



- **Solvent cleaning compound MIL-PRF-680 Type III is an environmentally compliant and low-toxic material. However, it may be irritating to the eyes and skin. Use protective gloves and goggles. Use in well-ventilated areas. Keep away from open flames and other sources of ignition. Failure to do so may result in injury or death to personnel.**
- **Particles blown by compressed air are hazardous. DO NOT exceed 15 psi (103 kPa) nozzle pressure when drying parts with compressed air. DO NOT direct compressed air against human skin. Make sure air stream is directed away from user and other personnel in the area. To prevent injury, user must wear protective goggles or face shield. Failure to follow this warning may result in injury to personnel.**

1. Clean all parts and mating surfaces with solvent cleaning compound.
2. Dry parts with compressed air.
3. Inspect all parts for wear, pitting, cracks, or corrosion and replace if necessary.

INSTALLATION

NOTE

Apply a thin coat of clean antifreeze to all O-rings prior to installation.

1. Connect hoses (48 and 46) to heater core (53).
2. Position clip (52) and install washer (51) and nut (50).
3. Install clip (49) on cab wall.
4. Connect hose (48) to tube (44) and tighten two clamps (47).
5. Connect hose (46) to tube (42) and tighten two clamps (45).
6. Connect hose (37) to tube (44) and tighten clamp (43).
7. Connect hose (34) to tube (42) and tighten clamp (41).
8. Install four washers (39) and bolts (38) on clips (40).
9. Connect hose (37) to engine block and tighten clamp (36).
10. Connect hose (34) to water pump (35) and tighten clamp (33).

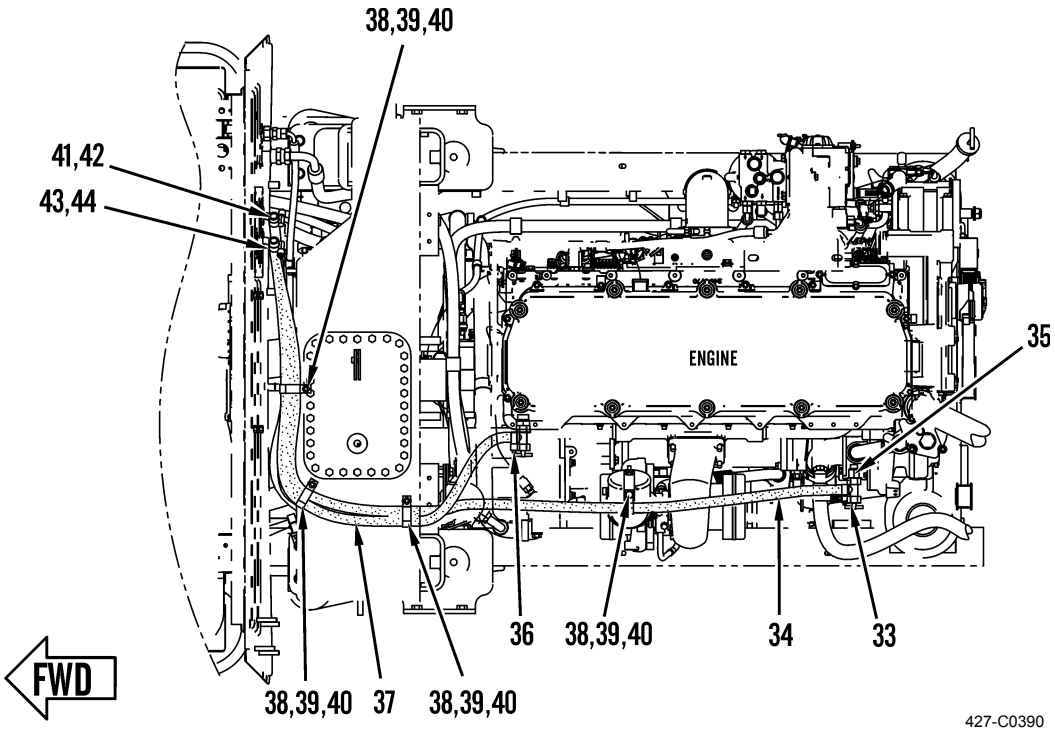

TOP VIEW

INSTALLATION - CONTINUED

11. Connect hose and tube assembly (32) to engine port and tighten clamp (31).
12. Connect hose (29) to radiator drain valve (30) and tighten clamp (28).

NOTE

Do not tighten tiedown strap until after performing step 22.

13. Install new tiedown strap (27) loosely around hoses (29 and 11).

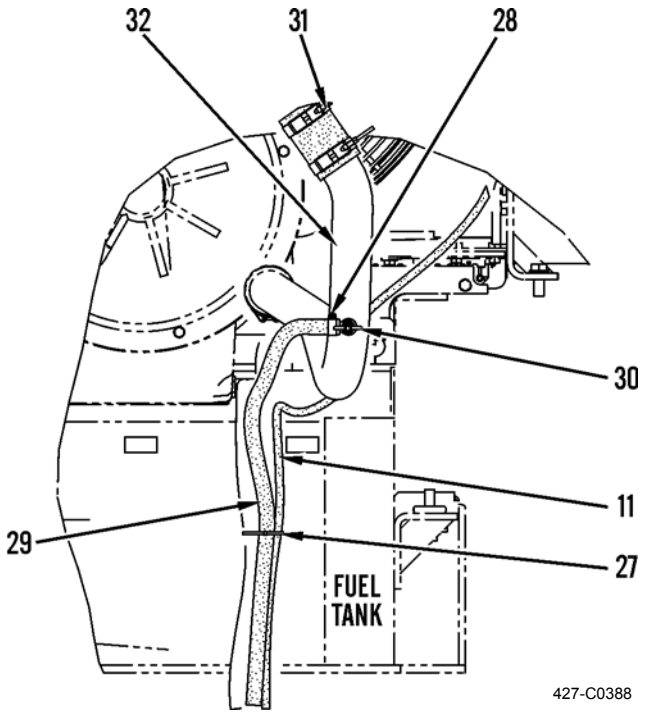

14. Connect hose and tube assembly (26) to engine port and tighten clamp (25).
15. Install connector (24) on engine port.
16. Connect hose (22) to connector (24) and tighten clamp (23).
17. Connect hose (22) to radiator top tank (10) and tighten clamp (21).

INSTALLATION - CONTINUED

18. Install new O-ring (20) and elbow (19) on engine port.
19. Connect hose (7) to elbow (19) and tighten clamp (18).

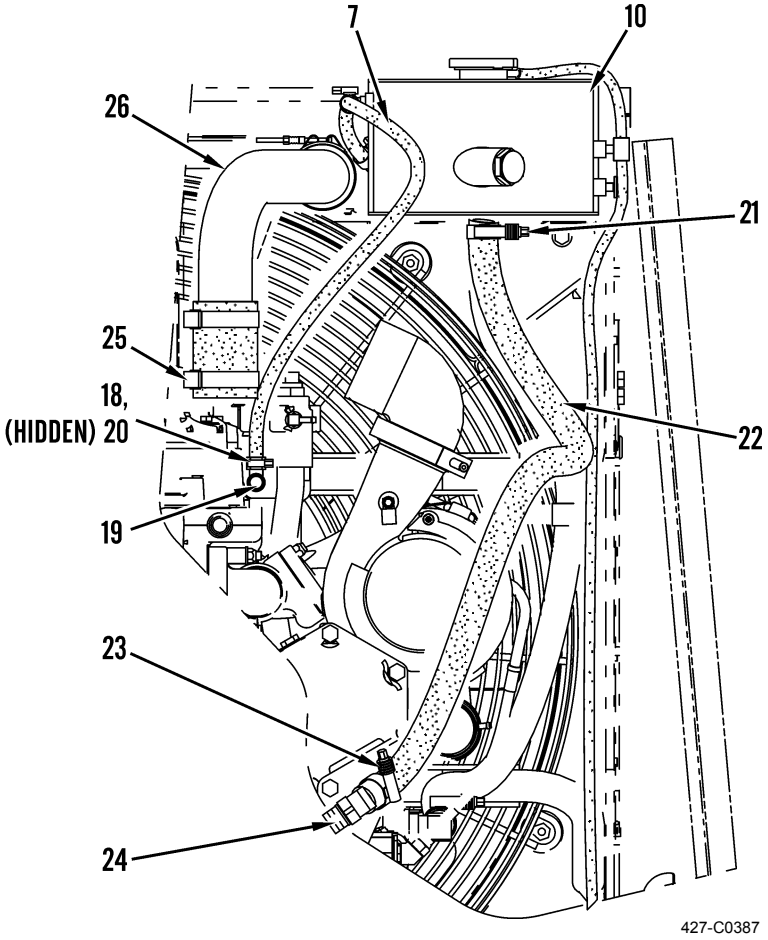

INSTALLATION - CONTINUED

20. Connect hose (17) to cooling package assembly and tighten clamp (16).
21. Connect hose (15) to cooling package assembly and tighten clamp (14).

NOTE

Tighten tiedown strap installed in step 13 after performing step 22.

22. Insert hose (11) through retaining clip (13) and connect to radiator filler cap (12).
23. Install T (8) on radiator top tank (10).
24. Install new O-ring (9) and connect hose (7) to T (8). Tighten clamp (6).
25. Install new O-ring (5) and connect hose (2) to T (8). Tighten clamp (4).
26. Install T (3) on cooling package.
27. Connect hose (2) to T (3) and tighten clamp (1).

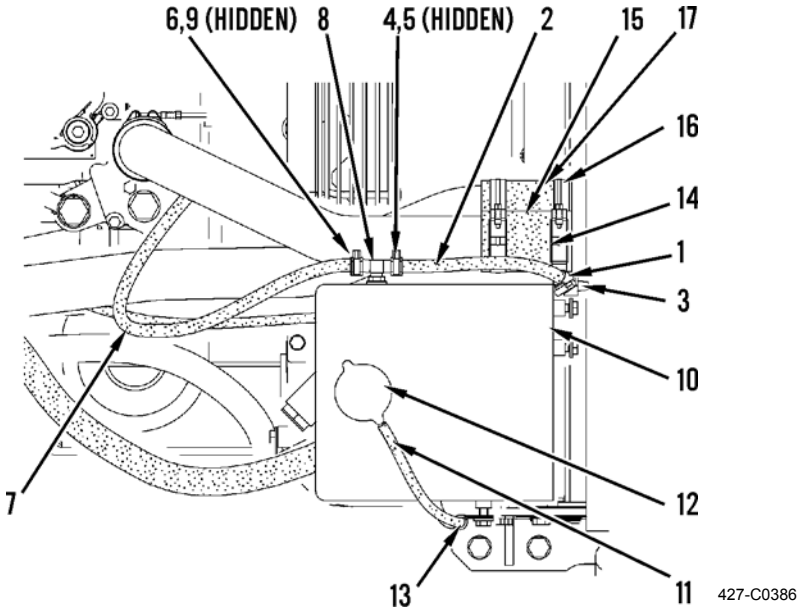

28. Fill cooling system (WP 0041 00).

END OF WORK PACKAGE

THERMOSTAT REPLACEMENT 0044 00

THIS WORK PACKAGE COVERS

Removal, Cleaning and Inspection, Installation

INITIAL SETUP

Maintenance Level

Unit

Test Equipment

Test stand, automotive (Item 87, WP 0232 00)

Tools and Special Tools

Tool kit, general mechanic's, automotive (Item 90, WP 0232 00)

Shop equipment, automotive maintenance and repair: organizational maintenance, common no. 1 (Item 70, WP 0232 00)

Materials/Parts

Antifreeze (Item 1, WP 0233 00)

Cap set, protective (Item 6, WP 0233 00)

Cleaning compound, solvent, type III (Item 7, WP 0233 00)

Rag, wiping (Item 35, WP 0233 00)

Tag, marker (Item 43, WP 0233 00)

O-ring (2)

Seal

Personnel Required

MOS 62B, Construction Equipment Repairer

Equipment Conditions

Machine parked on level ground (TM 5-3805-291-10)

Work tool lowered to ground (TM 5-3805-291-10)

Parking brake engaged (TM 5-3805-291-10)

Wheels chocked

Battery disconnect switch in OFF position (TM 5-3805-291-10)

Hood opened (TM 5-3805-291-10)

Steering frame lock connected (TM 5-3805-291-10)

Cooling system pressure cap removed (TM 5-3805-291-10)

Drawings Required

TM 5-3805-291-23P, Figure 43

Estimated Time to Complete Task

1.5 hr



WARNING

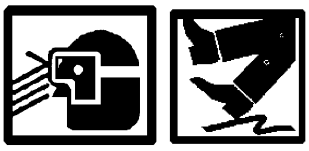

- **DO NOT service cooling system unless engine has been allowed to cool down. This is a pressurized cooling system and escaping steam or hot coolant may result in serious burns.**
- **DO NOT remove cooling system radiator cap when engine is hot. Allow engine to cool down. Loosen cap to first stop and let any pressure out of cooling system, then remove cap. Failure to follow this warning may result in serious burns to personnel.**
- **Wear effective eye, hand, and skin protection when handling coolants. Failure to do so may result in injury to personnel.**
- **Engine coolant used in the performance of maintenance can be very slippery. Immediately wipe up any spills. Failure to follow this warning may result in injury to personnel.**

CAUTION

Wipe area clean around all connections to be opened during removal. Cap lines and hoses and plug openings after removing lines. Contamination of system could result in premature failure.

NOTE

- **Tag hoses prior to removal to ensure correct installation.**
- **Use a container to catch any fluid that may drain from hoses or system. Dispose of fluid IAW local policy and ordinances. Ensure all spills are cleaned up.**

REMOVAL

1. Remove left side cover (1) from machine.

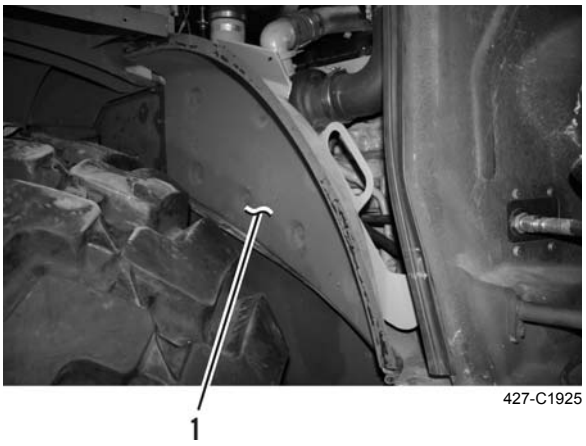

427-C1925

2. Place a container underneath hose (2) to catch draining coolant and open valve (3). Allow coolant to drain to a level below thermostat housing and close valve.

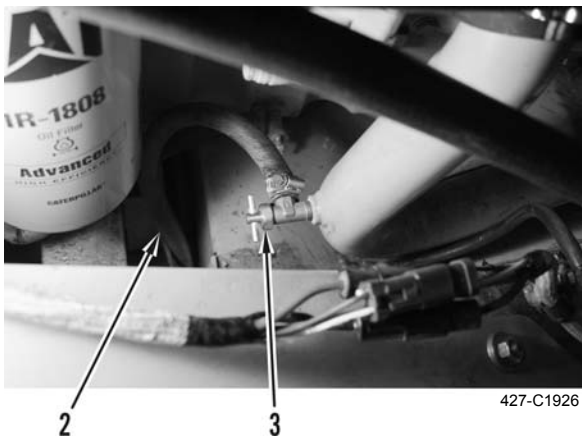

427-C1926

REMOVAL- CONTINUED

3. Loosen two clamps (4), disconnect hose (5), and position hose aside.
4. Remove four bolts (6) and housing (7).
5. Remove and discard seal (8) from housing (7).
6. Remove thermostat (9) from housing (7).
7. Remove and discard two O-rings (10) from tube (11) and thermostat (9).

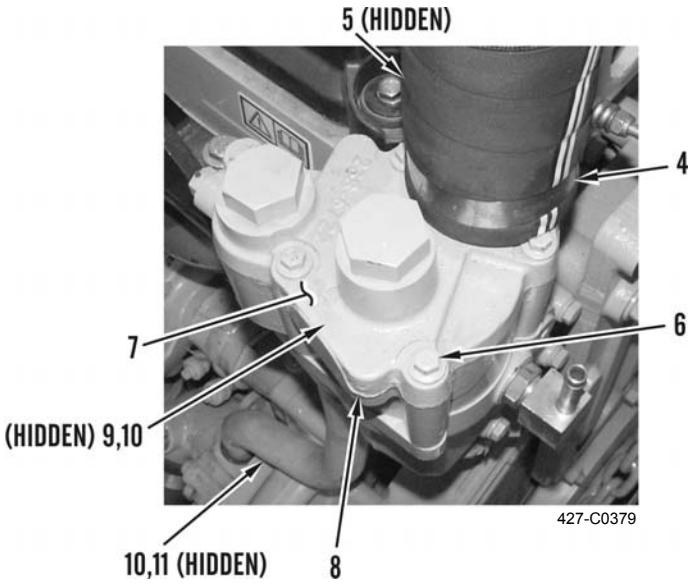

CLEANING AND INSPECTION



- **Solvent cleaning compound MIL-PRF-680 Type III is an environmentally compliant and low-toxic material. However, it may be irritating to the eyes and skin. Use protective gloves and goggles. Use in well-ventilated areas. Keep away from open flames and other sources of ignition. Failure to do so may result in injury or death to personnel.**
- **Particles blown by compressed air are hazardous. DO NOT exceed 15 psi (103 kPa) nozzle pressure when drying parts with compressed air. DO NOT direct compressed air against human skin. Make sure air stream is directed away from user and other personnel in the area. To prevent injury, user must wear protective goggles or face shield. Failure to follow this warning may result in injury to personnel.**

1. Clean all parts and mating surfaces with solvent cleaning compound.
2. Dry parts with compressed air.
3. Inspect all parts for wear, pitting, cracks, or corrosion and replace if necessary.

INSTALLATION

1. Lubricate new O-rings with antifreeze and install two new O-rings (10) on tube (11) and thermostat (9).
2. Install thermostat (9) in housing (7).
3. Install new seal (8) in housing (7).
4. Install housing (7) and four bolts (6).
5. Connect hose (5) and tighten two clamps (4).

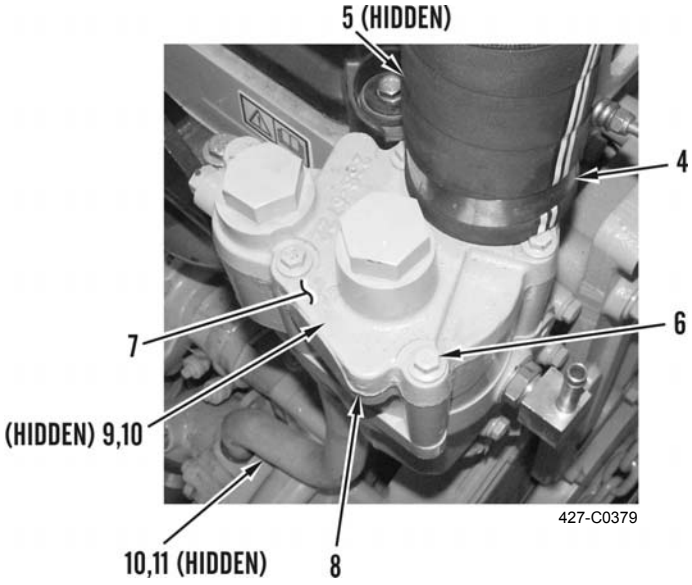

6. Top off cooling system (TM 5-3805-291-10).
7. Run engine until normal operating temperature is reached and coolant level stabilizes (TM 5-3805-291-10).
8. Shut down engine (TM 5-3805-291-10).
9. Check for leaks.
10. Install left side cover (1) on machine.

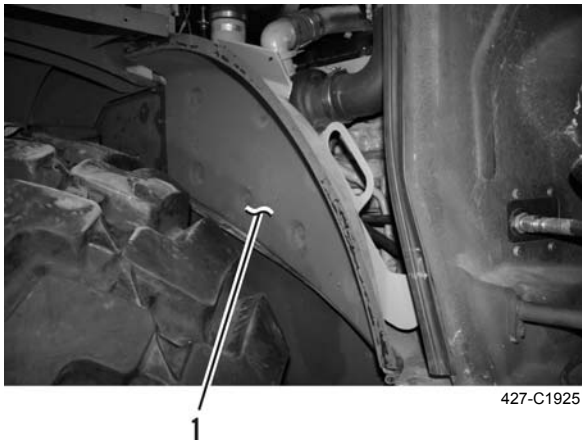

END OF WORK PACKAGE

WATER PUMP REPLACEMENT 0045 00

THIS WORK PACKAGE COVERS

Removal, Cleaning and Inspection, Installation, Testing

INITIAL SETUP

Maintenance Level

Unit

Tools and Special Tools

Tool kit, general mechanic's, automotive (Item 90, WP 0232 00)

Shop equipment, automotive maintenance and repair: organizational maintenance, common no. 1 (Item 70, WP 0232 00)

Test stand, automotive (Item 87, WP 0232 00)

Materials/Parts

Antifreeze (Item 1, WP 0233 00)

Cap set, protective (Item 6, WP 0233 00)

Cleaning compound, solvent, type III (Item 7, WP 0233 00)

Materials/Parts - Continued

Rag, wiping (Item 35, WP 0233 00)

Tag, marker (Item 43, WP 0233 00)

O-ring (5)

Personnel Required

MOS 62B, Construction Equipment Repairer

References

TM 5-3805-291-10

Equipment Conditions

Cooling system drained (WP 0041 00)

Thermostat removed (WP 0044 00)

Drawings Required

TM 5-3805-291-23P, Figure 44

Estimated Time to Complete Task

3.0 hr



WARNING



- **DO NOT service cooling system unless engine has been allowed to cool down. This is a pressurized cooling system and escaping steam or hot coolant may result in serious burns.**
- **DO NOT remove cooling system radiator cap when engine is hot. Allow engine to cool down. Loosen cap to first stop and let any pressure out of cooling system, then remove cap. Failure to follow this warning may result in serious burns to personnel.**
- **Wear effective eye, hand, and skin protection when handling coolants. Failure to do so may result in injury to personnel.**
- **Engine coolant used in the performance of maintenance can be very slippery. Immediately wipe up any spills. Failure to follow this warning may result in injury to personnel.**

CAUTION

Wipe area clean around all connections to be opened during removal. Cap lines and hoses and plug openings after removing lines. Contamination of system could result in premature failure.

NOTE

- **Tag hoses prior to removal to ensure correct installation.**
- **Use a container to catch any fluid that may drain from hoses or system. Dispose of fluid IAW local policy and ordinances. Ensure all spills are cleaned up.**

REMOVAL

1. Loosen clamps (1) and disconnect hose (2) from control valve (3).

NOTE

If equipped with arctic heater, perform steps 2 thru 6.

2. Loosen clamp (4) and remove hose (5) from valve assembly (6).
3. Remove control valve (3) from valve assembly (6).
4. Remove and discard O-ring (7) from control valve (3).
5. Remove valve assembly (6) from water pump (8).
6. Remove and discard O-ring (9) from valve assembly (6).
7. Loosen clamp (10) and disconnect hose (11) from fitting (12).
8. Loosen two clamps (13) and disconnect hose (14) from elbow (15).
9. Remove three bolts (16), washers (17), and elbow (15) from water pump (8).
10. Remove and discard O-ring (18) from elbow (15).
11. Loosen two clamps (19) and pull back hose (20) from connector (21).
12. Remove two bolts (22), washers (23), and connector (21) from water pump (8).
13. Remove and discard O-ring (24) from connector (21).
14. Remove two bolts (25), washers (26), and water pump (8) from machine.
15. Remove and discard O-ring (27) from water pump (8).

WATER PUMP REPLACEMENT - CONTINUED **0045 00**

REMOVAL - CONTINUED

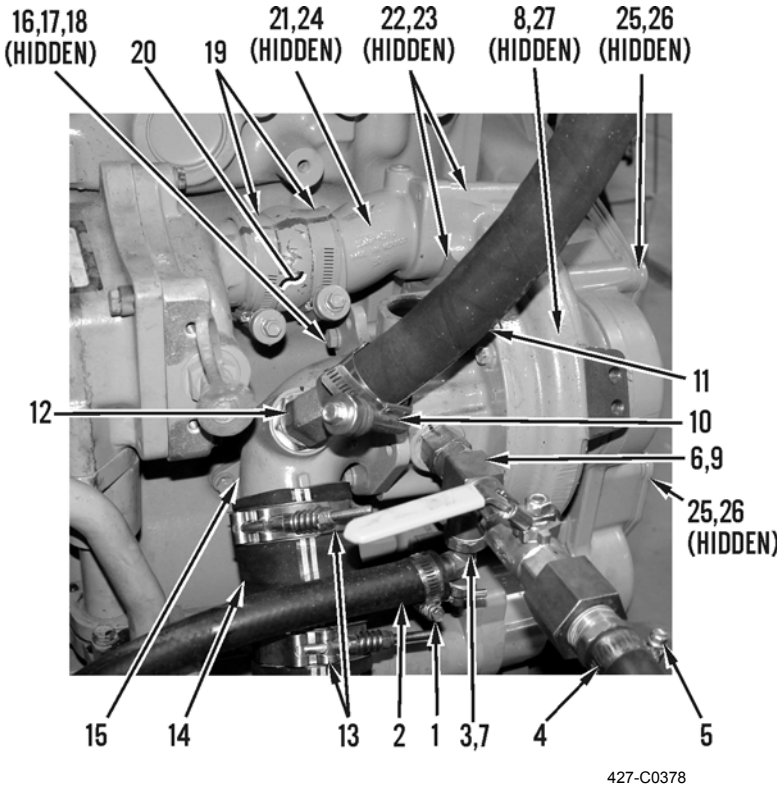

CLEANING AND INSPECTION



- **Solvent cleaning compound MIL-PRF-680 Type III is an environmentally compliant and low-toxic material. However, it may be irritating to the eyes and skin. Use protective gloves and goggles. Use in well-ventilated areas. Keep away from open flames and other sources of ignition. Failure to do so may result in injury or death to personnel.**
- **Particles blown by compressed air are hazardous. DO NOT exceed 15 psi (103 kPa) nozzle pressure when drying parts with compressed air. DO NOT direct compressed air against human skin. Make sure air stream is directed away from user and other personnel in the area. To prevent injury, user must wear protective goggles or face shield. Failure to follow this warning may result in injury to personnel.**

1. Clean all parts and mating surfaces with solvent cleaning compound.
2. Dry parts with compressed air.
3. Inspect all parts for wear, pitting, cracks, or corrosion and replace if necessary.

INSTALLATION

NOTE

Apply a thin coat of clean antifreeze to all O-rings before installation.

1. Install new O-ring (27) on water pump (8).
2. Position water pump (8) and install two washers (26) and bolts (25).
3. Install new O-ring (24) on connector (21).
4. Install connector (21), two washers (23), and bolts (22) on water pump (8).
5. Connect hose (20) to connector (21) and tighten two clamps (19).
6. Install new O-ring (18) on elbow (15).
7. Position elbow (15) and install three washers (17) and bolts (16) on water pump (8).
8. Connect hose (14) to elbow (15) and tighten two clamps (13).
9. Connect hose (11) to fittings (12) and tighten clamp (10).
10. Install new O-ring (9) on valve assembly (6).
11. Install valve assembly (6) on water pump (8).

INSTALLATION - CONTINUED

NOTE

Perform steps 12 thru 15 if equipped with arctic heater.

12. Install new O-ring (7) on control valve (3).
13. Install control valve (3) on valve assembly (6).
14. Connect hose (5) to valve assembly (6) and tighten clamp (4).
15. Connect hose (2) to control valve (3) and tighten clamp (1).

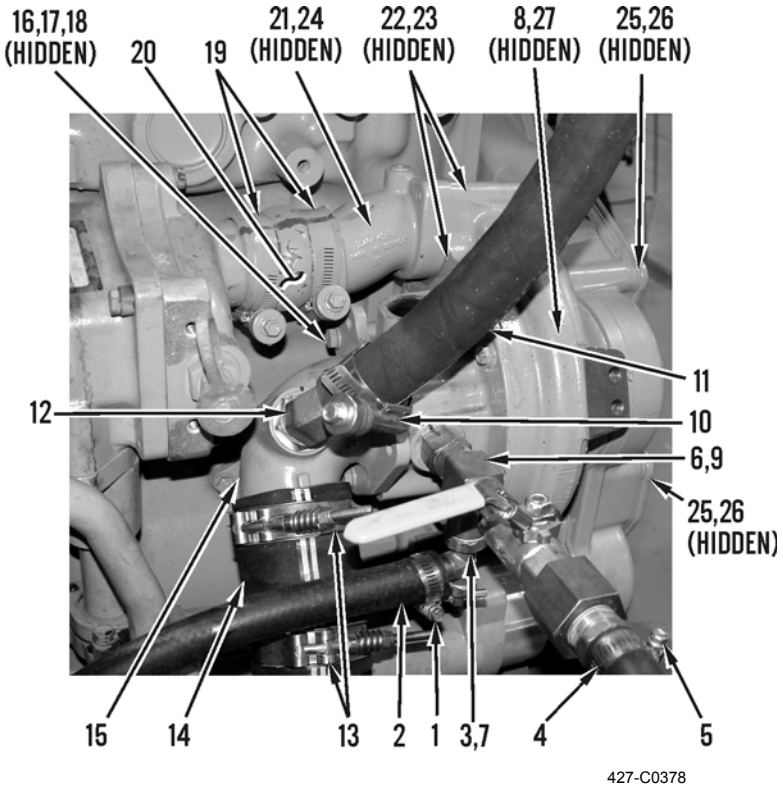

16. Install thermostat (WP 0044 00).
17. Fill engine with coolant (WP 0041 00).

TESTING

1. Remove plug from port (17).
2. Install test stand in port (17).

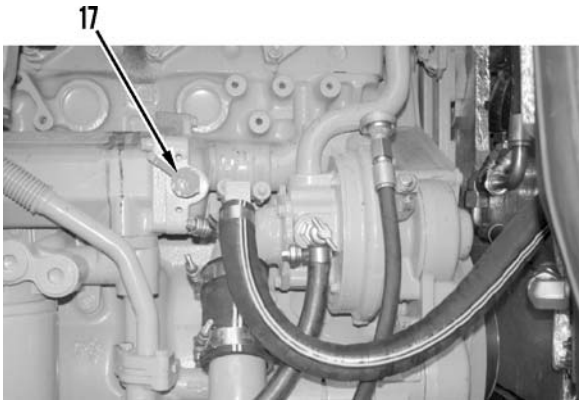

427-C0389

3. Start engine. Run engine until normal operating temperature is reached (TM 5-3805-291-10).
4. Note water pump pressure on differential gage. Water pump pressure should be 15 to 18 psi (103 to 124 kPa).
5. Remove test stand from port (17).
6. Install plug into port (17).
7. Fill cooling system (WP 0041 00).
8. Check for leaks around plug.

END OF WORK PACKAGE

ALTERNATOR REPLACEMENT 0046 00

THIS WORK PACKAGE COVERS

Removal, Installation

INITIAL SETUP

Maintenance Level

Unit

Tools and Special Tools

Tool kit, general mechanic's, automotive (Item 90, WP 0232 00)

Shop equipment, automotive maintenance and repair: organizational maintenance, common no. 1 (Item 70, WP 0232 00)

Wrench, torque, dial, 3/8" drive, 300 lb-in. (Item 97, WP 0232 00)

Wrench, torque, click, ratcheting, 3/8" drive, 75 lb-ft (Item 98, WP 0232 00)

Materials/Parts

Rag, wiping (Item 35, WP 0233 00)

Strap, tiedown, electrical components (Item 42, WP 0233 00)

Materials/Parts - Continued

Tag, marker (Item 43, WP 0233 00)

Lockwasher (2)

Personnel Required

MOS 62B, Construction Equipment Repairer

References

TM 5-3805-291-10

Equipment Conditions

Serpentine belt removed (WP 0048 00)

Battery cables disconnected from batteries (WP 0096 00)

Drawings Required

TM 5-3805-291-23P, Figure 47

Estimated Time to Complete Task

2.0 hr



WARNING

Ensure battery cables are disconnected before performing this task. Failure to follow this warning may result in injury to personnel or damage to equipment.

REMOVAL

NOTE

- **Tag wires prior to removal to ensure correct installation.**
- **Wipe area clean around component before removal.**

1. Cut and discard tiedown strap (1) on cable assembly (2).
2. Pull back cable cover (3).
3. Remove cable nut (4) and lockwasher (5) from cable assembly (2). Discard lockwasher.
4. Remove ground bolt (6), washer (7), lockwasher (8), and ground wire (9) from alternator (10). Discard lockwasher.
5. Disconnect regulator wiring harness connector (11) from alternator (10).
6. Remove four bolts (12), washers (13), and alternator (10) from machine.

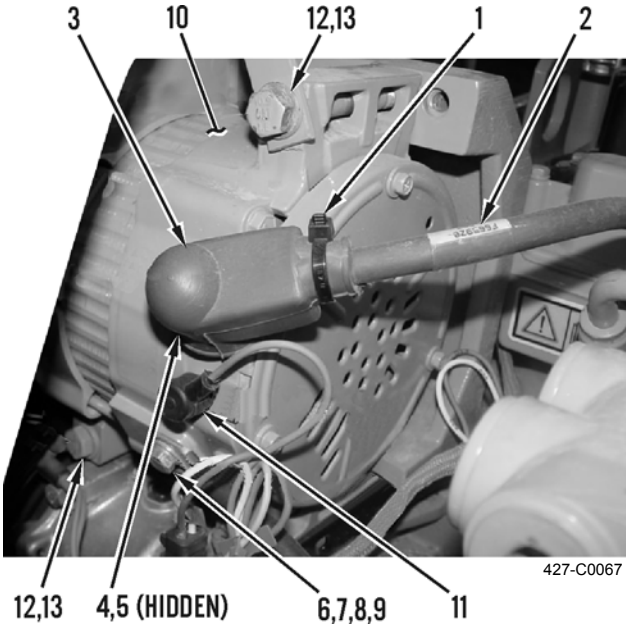

7. If replacing alternator (10), remove locknut (15), washer (16), and alternator pulley (14) from alternator (10).
8. Set alternator pulley (14) aside for reuse.

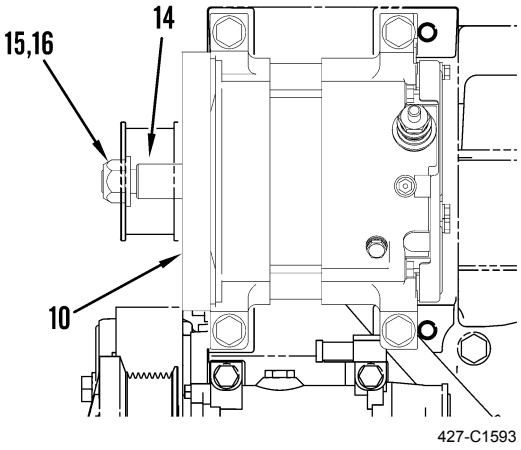

INSTALLATION

1. If removed, install alternator pulley (14), washer (16), and locknut (15) on alternator (10).
2. Position alternator (10) on engine and install four washers (13) and bolts (12).
3. Connect regulator wiring harness connector (11) to alternator (10).
4. Position ground wire (9) on alternator (10) and install new lockwasher (8), ground bolt (6), and washer (7). Tighten ground bolt to 39 ± 9 lb-in. (4.4 ± 1.0 Nm).
5. Position cable assembly (2) and install new lockwasher (5) and cable nut (4) on alternator (10). Tighten cable nut to 13 ± 2 lb-ft (18 ± 2 Nm).
6. Install cable cover (3) on cable assembly (2).
7. Install new tiedown strap (1) on cable assembly (2).
8. Connect battery cables to batteries (WP 0096 00).
9. Install serpentine belt (WP 0048 00).
10. Verify correct operation of alternator (TM 5-3805-291-10).

END OF WORK PACKAGE

BELT TENSIONER AND IDLER PULLEYS REPLACEMENT 0047 00

THIS WORK PACKAGE COVERS

Removal, Cleaning and Inspection, Installation

INITIAL SETUP

Maintenance Level

Unit

Tools and Special Tools

Tool kit, general mechanic's, automotive (Item 90, WP 0232 00)

Shop equipment, automotive maintenance and repair: organizational maintenance, common no. 1 (Item 70, WP 0232 00)

Wrench, torque, click, ratcheting, 3/8" drive, 75 lb-ft (Item 98, WP 0232 00)

Materials/Parts

Cleaning compound, solvent, type III (Item 7, WP 0233 00)

Rag, wiping (Item 35, WP 0233 00)

Lockwasher

Personnel Required

MOS 62B, Construction Equipment Repairer (2)

Equipment Conditions

Steering frame lock connected (TM 5-3805-291-10)

Serpentine belt removed (WP 0048 00)

Drawings Required

TM 5-3805-291-23P, Figure 47

Estimated Time to Complete Task

1.0 hr

REMOVAL

1. Remove bolt (1), lockwasher (2), and remove belt tensioner (3) from engine. Discard lockwasher.
2. Remove three bolts (4) and idler pulleys (5) from engine.

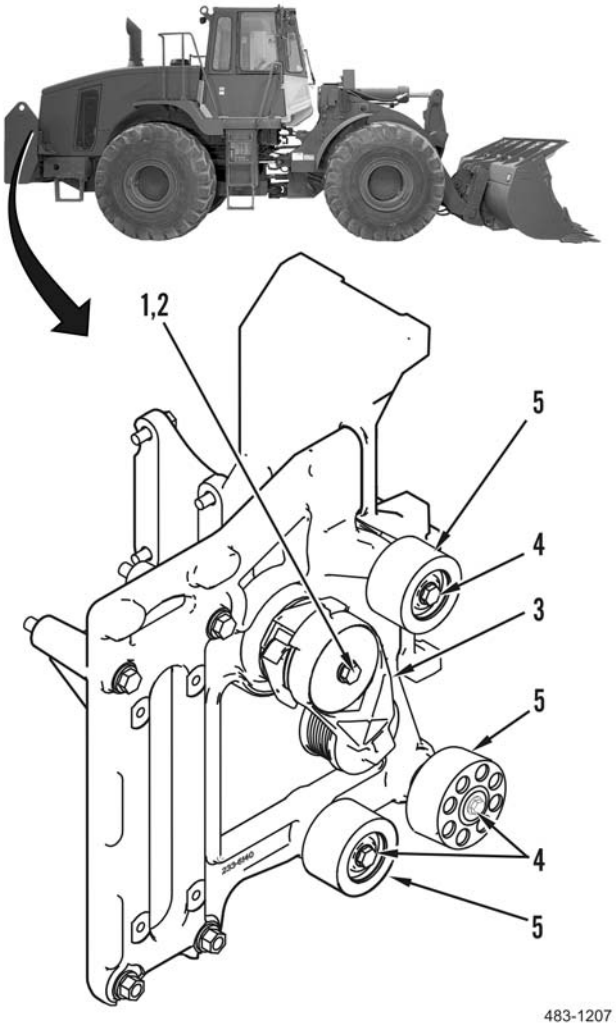

CLEANING AND INSPECTION

1. Clean all parts and mating surfaces with dry rag.
2. Inspect all parts for wear, pitting, cracks, or corrosion and replace if necessary.

INSTALLATION

1. Position three idler pulleys (5) on engine and install bolts (4) in idler pulleys. Tighten bolts to 37 ± 4 lb-ft (50 ± 5 Nm).
2. With assistance, position belt tensioner (3) on engine and install bolt (1) and new lockwasher (2) in belt tensioner.
3. Install serpentine belt (WP 0048 00).

WARNING

Before operating the machine, secure the steering frame lock in the stowed position. DO NOT operate machine with steering frame lock connected. Failure to lock steering frame lock into the stowed position before operating can result in loss of steering and injury or death to personnel.

4. Secure steering frame lock in stowed position (TM 5-3805-291-10).

END OF WORK PACKAGE

SERPENTINE BELT REPLACEMENT 0048 00

THIS WORK PACKAGE COVERS

Removal, Installation

INITIAL SETUP

Maintenance Level

Unit

Tools and Special Tools

Tool kit, general mechanic's, automotive (Item 90, WP 0232 00)

Materials/Parts

Rag, wiping (Item 35, WP 0233 00)

Personnel Required

MOS 62B, Construction Equipment Repairer

Equipment Conditions

Machine parked on level ground (TM 5-3805-291-10)

Equipment Conditions - Continued

Work tool lowered to ground (TM 5-3805-291-10)

Parking brake engaged (TM 5-3805-291-10)

Wheels chocked

Battery disconnect switch in OFF position (TM 5-3805-291-10)

Hood opened (TM 5-3802-291-10)

Drawings Required

TM 5-3805-291-23P, Figure 47

Estimated Time to Complete Task

0.5 hr

REMOVAL

1. Loosen two bolts (1) and remove two bolts (2), washers (3), and cover (4) from right side of engine shield (5) to gain access to tensioner (6).

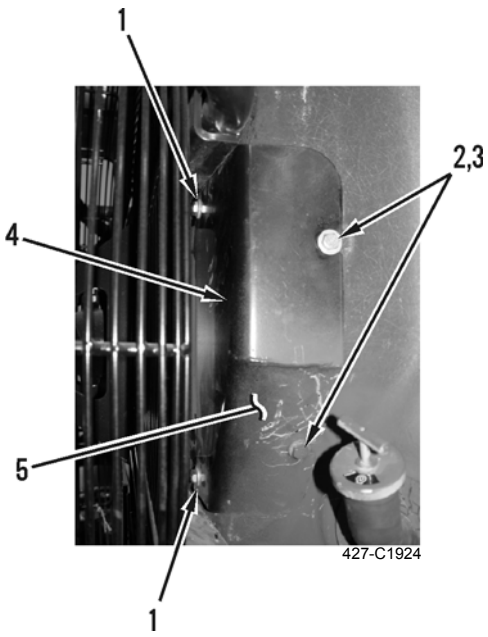

2. Rotate tensioner (6) counterclockwise to relieve tension on belt (7).

WARNING

Tensioner is spring loaded. Release wrench slowly to avoid injury to fingers.

3. Remove belt (7) from engine.

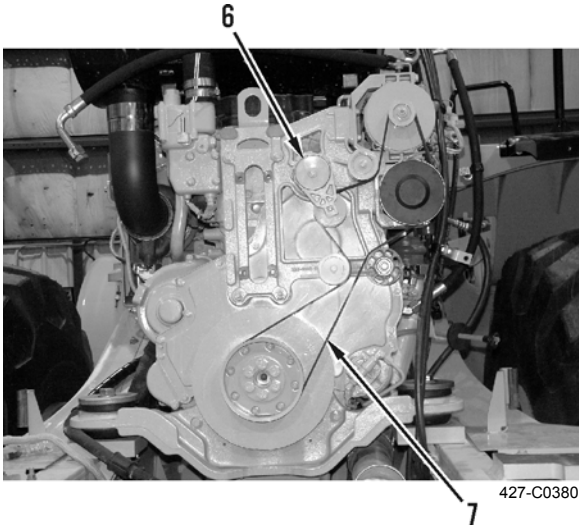

Cooling package removed from figure for clarity.

INSTALLATION

NOTE

- **Ensure new belt is routed correctly, as shown.**
- **The correct tension will automatically be applied.**

1. Install belt (7) and route belt around all pulleys except one.
2. Rotate tensioner (6) counterclockwise and slip belt over remaining pulley.
3. Release tensioner (6) slowly when belt (7) is fully installed.
4. Install cover (4), two washers (3), and bolts (2) and tighten two bolts (1) on engine shield (5).
5. Run engine to verify correct operation of accessories (TM 5-3805-291-10).
6. Close hood (TM 5-3805-291-10).

END OF WORK PACKAGE

BLOWER MOTOR RESISTOR REPLACEMENT 0049 00

THIS WORK PACKAGE COVERS

Removal, Cleaning and Inspection, Installation

INITIAL SETUP

Maintenance Level

Unit

Tools and Special Tools

Tool kit, general mechanic's, automotive (Item 90, WP 0232 00)

Materials/Parts

Cleaning compound, solvent, type III (Item 7, WP 0233 00)

Rag, wiping (Item 35, WP 0233 00)

Personnel Required

MOS 62B, Construction Equipment Repairer

Equipment Conditions

Machine parked on level ground (TM 5-3805-291-10)

Work tool lowered to ground (TM 5-3805-291-10)

Parking brake engaged (TM 5-3805-291-10)

Wheels chocked

Battery disconnect switch in OFF position (TM 5-3805-291-10)

Drawings Required

TM 5-3805-291-23P, Figure 172

Estimated Time to Complete Task

0.5 hr

BLOWER MOTOR RESISTOR REPLACEMENT - CONTINUED 0049 00

REMOVAL

1. Loosen two thumbwheel screws (2) on air filter cover (3) and remove from cover assembly (1).

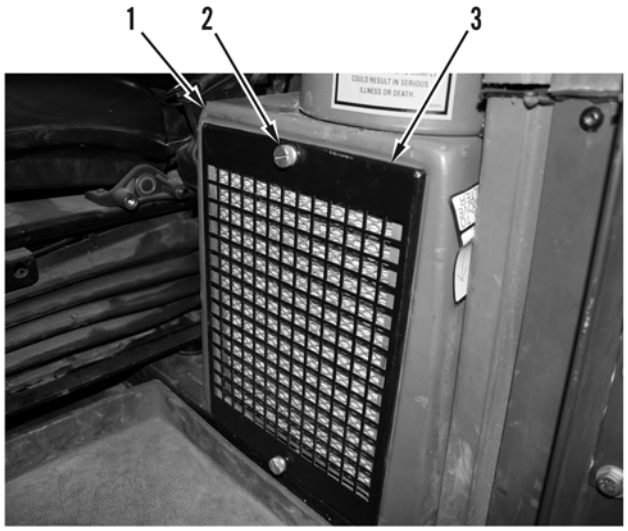

483-1010

2. Remove filter (4) from cover assembly (1).

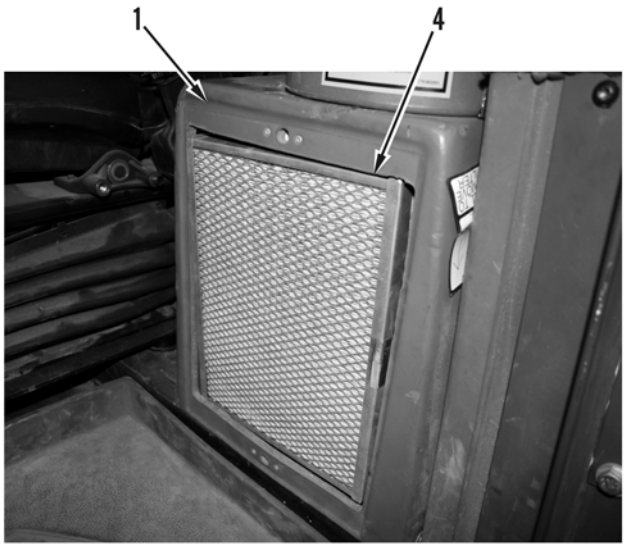

483-1011

REMOVAL - CONTINUED

3. Remove bolt (5), washer (6), two washers (7), washers (8) and resistor (10) from bracket (11).

NOTE

Note location of wires prior to disconnecting from resistor.

4. Disconnect three wires (9) from resistor (10) and remove resistor from machine.

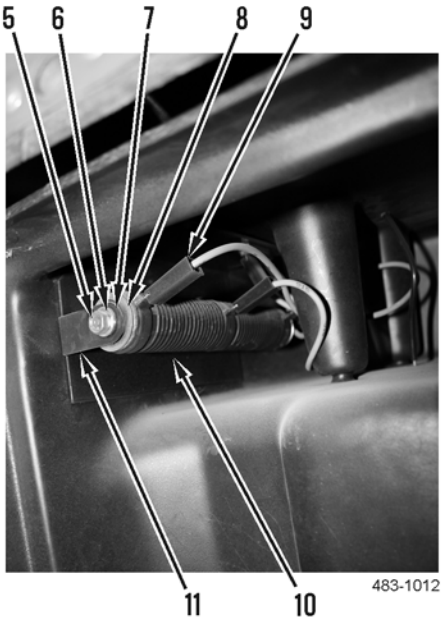

CLEANING AND INSPECTION

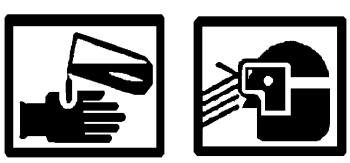


WARNING

- **Solvent cleaning compound MIL-PRF-680 Type III is an environmentally compliant and low-toxic material. However, it may be irritating to the eyes and skin. Use protective gloves and goggles. Use in well-ventilated areas. Keep away from open flames and other sources of ignition. Failure to do so may result in injury or death to personnel.**
- **Particles blown by compressed air are hazardous. DO NOT exceed 15 psi (103 kPa) nozzle pressure when drying parts with compressed air. DO NOT direct compressed air against human skin. Make sure air stream is directed away from user and other personnel in the area. To prevent injury, user must wear protective goggles or face shield. Failure to follow this warning may result in injury to personnel.**

1. Clean all parts and mating surfaces with solvent cleaning compound.
2. Dry parts with compressed air.
3. Inspect all parts for wear, pitting, cracks, or corrosion and replace if necessary.

INSTALLATION

1. Position resistor (10) on machine and connect three wires (9) on resistor.
2. Install two washers (8), washers (7), resistor (10), washer (6), and bolt (5) on bracket (11).

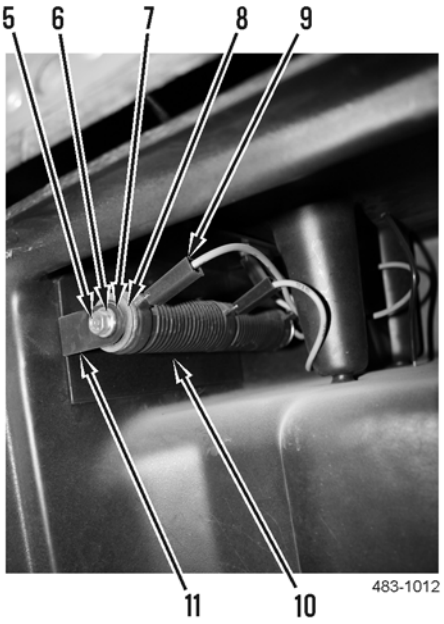

3. Install filter (4) on cover assembly (1).

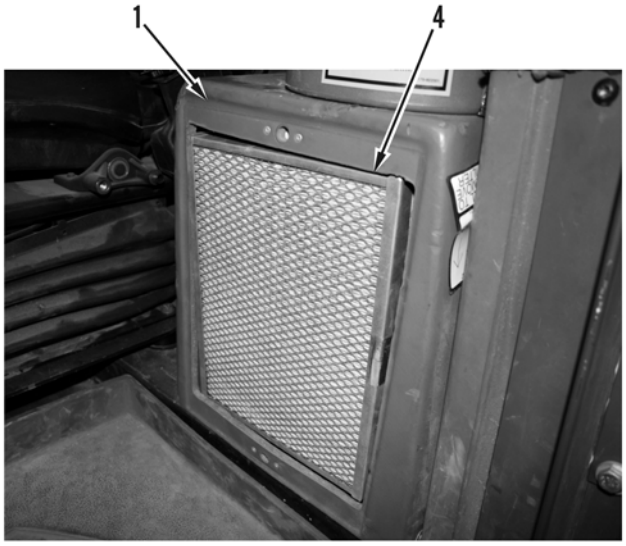

INSTALLATION - CONTINUED

4. Position air filter cover (3) on cover assembly (1).
5. Tighten two thumbwheel screws (2) on air filter cover (3).
6. Verify correct operation of machine (TM 5-3805-291-10).

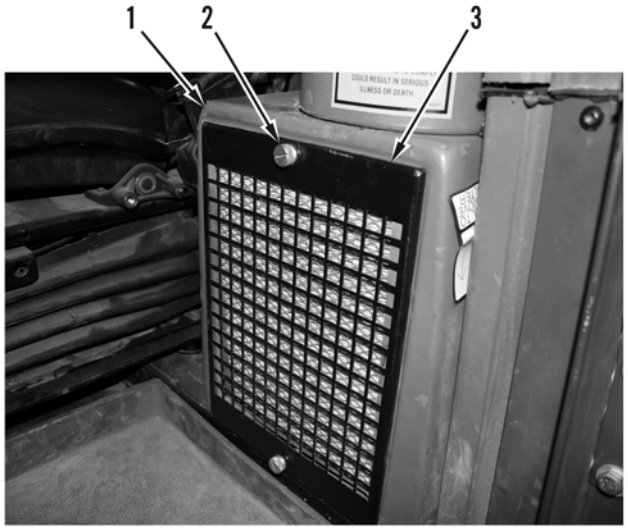

483-1010

END OF WORK PACKAGE

CHAPTER 5

SUPPORTING INFORMATION

REFERENCES 0230 00

SCOPE

This work package lists all publication indexes, forms, field manuals, technical bulletins, technical manuals, and other publications referenced in this manual and which apply to maintenance of the 966H Wheel Loader.

PUBLICATION INDEXES

The following indexes should be consulted frequently for latest changes or revisions and for new publications relating to material covered in this technical manual.

Consolidated Army Publications and Forms Index. . . . . DA PAM 25-30

Functional Users Manual for the Army Maintenance Management System (TAMMS) . . . . . PAM 738-750

FORMS

NOTE

Refer to PAM 738-750, *Functional Users Manual for the Army Maintenance Management System (TAMMS)*, for instructions on the use of maintenance forms.

Accident Identification Card . . . . . DD Form 518

Equipment Inspection and Maintenance Worksheet . . . . . DA Form 2404, DA Form 5988-E

Maintenance Request . . . . . DA Form 2407

Motor Vehicle Accident Report. . . . . SF Form 91

Product Quality Deficiency Report . . . . . SF Form 368

Recommended Changes to Publications and Blank Forms. . . . . DA Form 2028

Report of Discrepancy. . . . . SF Form 364

Uncorrected Fault Record . . . . . DA Form 2408-14

Vehicles and Spare Engines, Processing and Deprocessing Record for Shipment, Storage, and Issue of . . . . . DD Form 1397

FIELD MANUALS

Army Motor Transport Unit and Operations. . . . . FM 55-30

Basic Cold Weather Manual . . . . . FM 31-70

Chemical and Biological Contamination Avoidance . . . . . FM 3-3

Desert Operations . . . . . FM 90-3

First Aid. . . . . FM 4-25.11

NBC Field Handbook . . . . . FM 3-7

Northern Operations . . . . . FM 31-71

Nuclear Contamination Avoidance . . . . . FM 3-3-1

Operations and Maintenance of Ordnance Materiel in Cold Weather . . . . . FM 9-207

Recovery and Battlefield Damage Assessment and Repair . . . . . FM 9-43-2

Rigging Techniques, Procedures, and Applications . . . . . FM 5-125

TECHNICAL BULLETINS

CARC Spot Painting . . . . . TB 43-0242

Color, Marking, and Camouflage Painting of Military Vehicles, Construction Equipment and Materials Handling Equipment . . . . . TB 43-0209

Solder and Soldering . . . . . TB SIG 222

TECHNICAL BULLETINS - CONTINUED

Use of Antifreeze Solutions, Antifreeze Extender, Cleaning Compounds, and Test Kit in Engine Cooling Systems . . . . . TB 750-651

Warranty Bulletin for the 966H Wheel Loader . . . . . TB 5-3805-291-14

TECHNICAL MANUALS

Decontamination System, Sorbent: M100 . . . . . TM 3-4230-236-10

Inspection, Care, and Maintenance of Antifriction Bearings . . . . . TM 9-214

Materials Used for Cleaning, Preserving, Abrading and Cementing Ordnance Materiel, and Related Materiels Including Chemicals . . . . . TM 9-247

Operator's and Organizational Maintenance Manual Including RPSTL for STE/ICE-R . . . . . TM 9-4910-571-12&P

Operator's Manual for the 966H Wheel Loader . . . . . TM 5-3805-291-10

Operator's, Unit, Direct Support, and General Support Maintenance Manual for Lead-Acid Storage Batteries . . . . . TM 9-6140-200-14

Painting Instructions for Army Materiel . . . . . TM 43-0139

Procedures for Destruction of Equipment to Prevent Enemy Use (Mobility Equipment Command) . . . . . TM 750-244-3

Transportability Guidance for the 966H Wheel Loader . . . . . TM 5-3805-291-14

Unit, Direct Support, and General Support Including Depot Maintenance RPSTL for the 966H Wheel Loader . . . . . TM 5-3805-291-24P

OTHER PUBLICATIONS

Abbreviations and Acronyms . . . . . ASME Y14.38-1999

Army Medical Department Expendable/Durable Items . . . . . CTA 8-100

Expendable/Durable Items (Except Medical, Class V Repair Parts, and Heraldic Items) . . . . . CTA 50-970

Fuels and Lubricants Standardization Policy for Equipment . . . . . AR 70-12

Operator's Circular for Welding Theory and Application . . . . . TC 9-237

END OF WORK PACKAGE

MAINTENANCE ALLOCATION CHART (MAC) INTRODUCTION 0231 00

THE ARMY MAINTENANCE SYSTEM MAC

1. This introduction provides a general explanation of all maintenance and repair functions authorized at the two maintenance levels under the Two-Level Maintenance System concept.
2. The MAC immediately following this introduction designates overall authority and responsibility for the performance of maintenance functions on the identified end item or component. The application of the maintenance functions to the end item or component shall be consistent with the capacities of the designated maintenance levels, which are shown in the MAC (WP 0232 00) in column (4) as:

   Field - includes subcolumns:

   C - Operator/Crew
   O - Unit
   D - Direct Support

   Sustainment - includes subcolumns:

   H - General Support
   D - Depot
3. The tools and test equipment requirements (immediately following the MAC) list the tools and test equipment (both special tools and common tool sets) required for each maintenance function as referenced from the MAC.
4. The remarks (immediately following the tools and test equipment requirements) contain supplemental instructions and explanatory notes for a particular maintenance function.

MAINTENANCE FUNCTIONS

Maintenance functions are limited to and defined as follows:

1. **Inspect.** To determine the serviceability of an item by comparing its physical, mechanical, and/or electrical characteristics with established standards through examination (e.g., by sight, sound, or feel).
2. **Test.** To verify serviceability by measuring the mechanical, pneumatic, hydraulic, or electrical characteristics of an item and comparing those characteristics with prescribed standards on a scheduled basis, i.e., load testing of lift equipment and hydrostatic testing of pressure hoses.
3. **Service.** Operations required periodically to keep an item in proper operating condition; e.g., to clean (includes decontaminate, when required), to preserve, to drain, to paint, or to replenish fuel, lubricants, chemical fluids, or gases.
4. **Adjust.** To maintain or regulate, within prescribed limits, by bringing into proper position, or by setting the operating characteristics to specified parameters.
5. **Align.** To adjust specified variable elements of an item to bring about optimum or desired performance.
6. **Calibrate.** To determine and cause corrections to be made or to be adjusted on instruments of test, measuring, and diagnostic equipment used in precision measurement. Consists of comparisons of two instruments, one of which is a certified standard of known accuracy, to detect and adjust any discrepancy in the accuracy of the instrument being compared.
7. **Remove/Install.** To remove and install the same item when required to perform service or other maintenance functions. Install may be the act of emplacing, seating, or fixing into position a spare, repair part, or module (component or assembly) in a manner to allow the proper functioning of an equipment or system.
8. **Replace.** To remove an unserviceable item and install a serviceable counterpart in its place. “Replace” is authorized by the MAC and assigned maintenance level is shown as the third position code of the Source, Maintenance, and Recoverability (SMR) code.
9. **Repair.** The application of maintenance services, including fault location/troubleshooting, removal/installation, disassembly/assembly procedures, and maintenance actions to identify troubles and restore serviceability to an item by correcting specific damage, fault, malfunction, or failure in a part, subassembly, module (component or assembly), end item, or system.

MAINTENANCE FUNCTIONS - CONTINUED

NOTE

The following definitions are applicable to the "repair" maintenance function:

- **Services - Inspect, test, service, adjust, align, calibrate, and/or replace.**
- **Fault location/troubleshooting - The process of investigating and detecting the cause of equipment malfunctioning; the act of isolating a fault within a system or Unit Under Test (UUT).**
- **Disassembly/assembly - The step-by-step breakdown (taking apart) of a spare/functional group coded item and to the level of its least component, that is assigned a SMR code for the level of maintenance under consideration (i.e., identified as maintenance significant).**
- **Actions - Weld, grind, rivet, straighten, face, machine, and/or resurface.**

10. **Overhaul.** That maintenance effort (service/action) prescribed to restore an item to a completely serviceable/operational condition as required by maintenance standards in appropriate technical publications. Overhaul is normally the highest degree of maintenance performed by the Army. Overhaul does not normally return an item to like new condition.

11. **Rebuild.** Consists of those services/actions necessary for the restoration of unserviceable equipment to a like new condition in accordance with original manufacturing standards. Rebuild is the highest degree of materiel maintenance applied to Army equipment. The rebuild operation includes the act of returning to zero those age measurements (hours/miles, etc.) considered in classifying Army equipment/components.

EXPLANATION OF COLUMNS IN THE MAC, TABLE 1

1. **Column (1) - Group Number.** Column (1) lists Functional Group Code numbers, the purpose of which is to identify maintenance significant components, assemblies, subassemblies, and modules with the Next Higher Assembly (NHA).

2. **Column (2) - Component/Assembly.** Column (2) contains the item names of components, assemblies, subassemblies, and modules for which maintenance is authorized.

3. **Column (3) - Maintenance Function.** Column (3) lists the functions to be performed on the item listed in Column (2). (For a detailed explanation of these functions refer to *Maintenance Functions* outlined above).

4. **Column (4) - Maintenance Level.** Column (4) specifies each level of maintenance authorized to perform each function listed in column (3), by indicating work time required (expressed as manhours in whole hours or decimals) in the appropriate subcolumn. This work time figure represents the active time required to perform that maintenance function at the indicated level of maintenance. If the number or complexity of the tasks within the listed maintenance function varies at different maintenance levels, appropriate work time figures are to be shown for each level. The work time figure represents the average time required to restore an item (assembly, subassembly, component, module, end item, or system) to a serviceable condition under typical field operating conditions. This time includes preparation time (including any necessary disassembly/assembly time), troubleshooting/fault location time, and quality assurance time in addition to the time required to perform the specific tasks identified for the maintenance functions authorized in the MAC. The symbol designations for the various maintenance levels are as follows:

Field:

C - Operator/Crew Maintenance
O - Unit Maintenance
D - Direct Support Maintenance

Sustainment:

H - General Support Maintenance
D - Depot Maintenance

MAINTENANCE FUNCTIONS - CONTINUED

NOTE

The "L" maintenance level is not included in column (4) of the MAC. Functions to this level of maintenance are identified by a work time figure in the "H" column of column (4) and an associated reference code is used in the REMARKS CODE column (6). This code is keyed to the remarks and the SRA complete repair application is explained there.

5. **Column (5) - Tools and Equipment Reference Code.** Column (5) specifies, by code, those common tool sets (not individual tools), common Test, Measurement, and Diagnostic Equipment (TMDE), special tools, special TMDE, and special support equipment required to perform the designated function. Codes are keyed to the entries in the tools and test equipment table.
6. **Column (6) - Remarks Code.** When applicable, this column contains a letter code, in alphabetical order, which is keyed to the remarks table entries (Table 3).

EXPLANATION OF COLUMNS IN THE TOOLS AND TEST EQUIPMENT REQUIREMENTS, TABLE 2

1. **Column (1) - Tool or Test Equipment Reference Code.** The tool and test equipment reference code correlates with a code used in column (5) of the MAC.
2. **Column (2) - Maintenance Level.** The lowest level of maintenance authorized to use the tool or test equipment.
3. **Column (3) - Nomenclature.** Name or identification of the tool or test equipment.
4. **Column (4) - National Stock Number (NSN).** The NSN of the tool or test equipment.
5. **Column (5) - Tool Number.** The manufacturer's part number, model number, or type number.

EXPLANATION OF COLUMNS IN THE REMARKS, TABLE 3

1. **Column (1) - Remarks Code.** The code recorded in column (6) of the MAC.
2. **Column (2) - Remarks.** This column lists information pertinent to the maintenance function being performed as indicated in the MAC.

END OF WORK PACKAGE

Table 1. Maintenance Allocation Chart (MAC) for 966H Loader.

(1)	(2)	(3)	(4) MAINTENANCE LEVEL					(5)	(6)
			FIELD			SUSTAINMENT			
GROUP NUMBER	COMPONENT/ ASSEMBLY	MAINTENANCE FUNCTION	UNIT C	UNIT O	DS F	GS H	DEPOT D	TOOLS AND EQUIPMENT REF CODE	REMARKS CODE
01	**ENGINE**								
	Engine	Test			1.0			3,13,49,68,75, 84,86,87,89,90	E
0100	Engine Assembly	Inspect	0.3						B
		Service	0.1	0.7				70,90	B
		Replace			40.5			15,22, 41,68,90,99	A
		Rebuild				60			D
	Engine Mounts	Inspect		0.3					
		Replace			0.8			70,90	
0101	Crankcase, Block, and Cylinder Head								
	Cylinder Block	Inspect				0.7			D
		Replace				20.0			D
		Repair				8.0			D
	Cylinder Head Assembly	Inspect		0.5					
		Replace			22.5			68,90,98,99	A
		Rebuild				8.0			D
0102	Crankshaft								
	Crankshaft	Inspect				0.5			D
		Replace				14.5			D
		Repair				1.5			D
	Front Main Seal	Replace			10.5			68,90	
	Rear Main Seal	Replace			39.0			68,90	
	Vibration Damper and Pulley	Inspect			0.3			68,90	
		Replace			9.0			68,90	
0103	Flywheel								
	Flywheel	Inspect			38.0			25,26, 68,90	
		Replace			38.0			25,26, 68,90	
	Flywheel Housing	Inspect			42.0			25,26,68,90	
		Replace			42.0			25,26,68,90	
0104	Piston, Connecting Rods	Inspect				0.5			D
		Replace				8.0			D

Table 1. Maintenance Allocation Chart (MAC) for 966H Loader - Continued.

(1)	(2)	(3)	(4) MAINTENANCE LEVEL					(5)	(6)
			FIELD			SUSTAINMENT			
			UNIT		DS	GS	DEPOT	TOOLS AND EQUIPMENT	
GROUP NUMBER	COMPONENT/ ASSEMBLY	MAINTENANCE FUNCTION	C	O	F	H	D	REF CODE	REMARKS CODE
01	**ENGINE - Continued**								
0105	Valves, Camshaft, and Timing System								
	Camshaft	Inspect				0.5			D
		Replace				3.5			D
	Front Cover	Replace			27.0			68,90	
	Housing (Front)	Replace				48.0			D
	Intake/Exhaust Valves	Adjust			3.0			49,68,89,90,98	B
		Replace				4.0			D
	Rocker Arm Group	Replace			5.0			19,68,90,98	
	Valve Cover and Base	Replace		1.5				70,90	
0106	Engine Lubrication System								
	Crankcase Breather	Service		0.7				70,90	B
		Replace		0.7				70,90	
	Oil Cooler Core	Inspect	0.1						B
		Replace		2.0				70,90	A
	Oil Filler Tube and Dipstick Tube	Inspect	0.01						B
		Replace		0.7				70,90	
	Oil Filter	Replace		0.3				70,90	B
	Oil Filter Base	Replace		1.5				70,90	A
	Oil Pan and Gasket	Replace			16.0			68,90	
		Repair			16.0			68,90	A
	Oil Pump	Replace			19.0			68,90	
	Piston Cooling Jets	Replace			16.5			68,90,98	
	Turbocharger Oil Lines	Replace		0.5				70,90	
0108	Manifolds								
	Exhaust Manifold	Replace			4.0			68,90	
	Intake Manifold	Replace			3.0			68,90	
0109	Accessory Driving Mechanisms								
	Idler Gears	Replace			15.0			68,90	A

Table 1. Maintenance Allocation Chart (MAC) for 966H Loader - Continued.

(1)	(2)	(3)	(4) MAINTENANCE LEVEL					(5)	(6)
			FIELD			SUSTAINMENT			
			UNIT		DS	GS	DEPOT	TOOLS AND EQUIPMENT	
GROUP NUMBER	COMPONENT/ ASSEMBLY	MAINTENANCE FUNCTION	C	O	F	H	D	REF CODE	REMARKS CODE
03	**FUEL SYSTEM**								
	Fuel System	Inspect		1.0				21,70,84, 87,88,90	E
		Test		1.0				21,70,84, 87,88,90	E
0301	Fuel Injector	Test			3.0			3,68,75, 86,90,96,98	
		Adjust			3.0			3,68,75, 86,90,96,98	B
		Replace			3.0			3,68,75, 86,90,96,98	
0302	Fuel Pumps								
	Filter Lines and Fittings	Replace		2.0				70,90	
	Fuel Priming Pump	Replace		2.0				70,90	
	Fuel Transfer Pump	Replace			2.0			68,90	A
	Secondary Fuel Filter Base	Replace		2.0				70,90	
0304	Air Cleaner Assembly	Inspect	0.2						B
		Service	0.3						B
		Replace		2.0				17,70,90	
0305	Turbocharger								
	After Cooler	Inspect	0.1						B
		Replace			11.0			17,68,90	
	After Cooler (Air Intake) Air Lines	Replace		3.0				70,90	
	Turbocharger	Inspect		0.5				70,90,98	
		Replace		0.5				70,90,98	
	Turbocharger Air Lines	Inspect	0.03	0.5					B
		Replace		3.0				70,90	
0306	Tanks, Lines, Fittings, and Headers								
	Fuel Tank	Inspect	0.1						B
		Replace		4.0				70,90	
	Fuel Tank Lines, Fittings, and Hoses	Inspect	0.03						B
		Replace		0.5				70,90	

Table 1. Maintenance Allocation Chart (MAC) for 966H Loader - Continued.

(1)	(2)	(3)	(4) MAINTENANCE LEVEL					(5)	(6)
			FIELD			SUSTAINMENT			
			UNIT		DS	GS	DEPOT	TOOLS AND EQUIPMENT	
GROUP NUMBER	COMPONENT/ ASSEMBLY	MAINTENANCE FUNCTION	C	O	F	H	D	REF CODE	REMARKS CODE
03	**FUEL SYSTEM - Continued**								
0309	Fuel Filter Elements								
	Primary Fuel Filter	Service	0.1						B
		Replace		0.5				70,90	B
	Secondary Fuel Filter	Replace		0.5				70,90	B
0311	Engine Starting Aids								
	Cold (Ether) Starting Aid	Inspect	0.1						B
		Replace		1.5				90	
0312	Throttle Pedal	Replace		0.5				70,90,96	
		Repair		0.5				70,90	
04	**EXHAUST SYSTEM**								
0401	Muffler and Pipes								
	Exhaust Pipes and Clamps	Inspect	0.1						B
		Replace		0.5				70,90,98	
	Muffler	Inspect	0.1						B
		Replace		0.5				70,90,98	
05	**COOLING SYSTEM**								
	Cooling System	Inspect		0.5					E
		Test	0.2	1.0				70,85,88,90	B,E
		Service	0.2	1.0				70,90	B
0501	Radiator or Heat Exchanger								
	Fan Shroud	Replace			11.0			5,17,68,90	
	Radiator	Inspect	0.1	0.3					B
		Service		0.2				70,90	B
		Replace			2.0			16,68,90	
0503	Water Manifold, Headers, Thermostats, and Housings								
	Cooling System Lines	Inspect	0.01						B
		Replace		2.0				70,90	
	Thermostat	Replace		1.5				70,90	B
	Top Tank	Replace		1.0				70,90	
0504	Water Pump	Test		0.5				70,87,90	
		Replace		1.0				70,90	

Table 1. Maintenance Allocation Chart (MAC) for 966H Loader - Continued.

(1)	(2)	(3)	(4) MAINTENANCE LEVEL					(5)	(6)
			FIELD			SUSTAINMENT			
			UNIT		DS	GS	DEPOT	TOOLS AND EQUIPMENT	
GROUP NUMBER	COMPONENT/ ASSEMBLY	MAINTENANCE FUNCTION	C	O	F	H	D	REF CODE	REMARKS CODE
05	**COOLING SYSTEM - Continued**								
0505	Fan Assembly	Inspect	0.03						B
		Replace			11.5			5,17,68,90	
	Hydraulic Motor, Fan	Replace			11.0			5,17,68,90,98	A
0507	Hydraulic Oil Cooler	Inspect	0.1						B
		Replace			2.5			68,90	
06	**ELECTRICAL SYSTEM**								
	Electrical System	Test		0.3				1,2,3,4,14,18, 40,50,62,75, 83,86,90,91,97, 98	E
0601	Generator, Alternator								
	Accessory Support Brackets				14.5			68,90	
	Alternator	Replace		2.0				70,90,98,99	A
	Belt Tensioner and Idler Pulleys	Replace		1.0				70,90,98	
	Serpentine Belt	Inspect		0.2				90	B
		Replace		0.5				90	
0603	Starting Motor								
	Starter	Adjust		2.0				70,90	
		Replace		1.5				70,90,98	
0607	Instrument Panel								
	Fuse/Relay Block	Replace		1.0				90	
	Fuse, Relay, and Circuit Breakers	Replace		0.3				90	
	Instrument Cluster	Replace		0.2				70,90	
	Instrument Panels	Inspect	0.1						B
		Replace		1.0				90	
		Repair		1.0				90	
	Messenger ECM	Replace		2.0				3,75,86,90	
0608	Miscellaneous Items								

Table 1. Maintenance Allocation Chart (MAC) for 966H Loader - Continued.

(1)	(2)	(3)	(4) MAINTENANCE LEVEL					(5)	(6)
			FIELD			SUSTAINMENT			
			UNIT		DS	GS	DEPOT	TOOLS AND EQUIPMENT	
GROUP NUMBER	COMPONENT/ ASSEMBLY	MAINTENANCE FUNCTION	C	O	F	H	D	REF CODE	REMARKS CODE
06	**ELECTRICAL SYSTEM - Continued**								
	ARC Suppressor	Replace		0.5				90	
	Engine Electronic Control Module (ECM)	Replace		2.0				3,75,86,90	
	Hood Tilt Actuator	Service	0.2	0.2				70,90	B,C
		Replace		1.0				17,70,90	
	Hood Tilt Switch	Replace		0.5				90	
	Implement Electronic Control Module (ECM)	Calibrate		1.0				3,75,86,90	E
		Replace		2.0				3,75,86,90,97	
	Main Light Switch	Replace		0.2				90	
	Power Converter	Replace		1.0				70,90	
	Power Train Electronic Control Module (ECM)	Replace		2.0				3,75,86,90	
	Rear Camera	Replace		5.0				98	
	Stoplight Limit Switch	Adjust		0.5				70,90	
		Replace		0.5				70,90	
	Turnlamp Flasher	Replace		0.5				70,90	
	Turnlamp Switch	Replace		0.5				70,90	
	Wiper Switch	Replace		0.3				90	
0609	Lights								
	Blackout Drive	Inspect	0.02						B
		Replace		0.2				90	
	Dome Light	Replace		0.5				90	B
	Service Lights	Inspect	0.02						B
		Replace		0.5				70,90	
	Stoplight	Inspect	0.02						B
		Replace		0.5				90	
	Turnlamps	Inspect	0.02						B
		Replace		0.3				70,90	
	Worklights	Inspect	0.02						B
		Replace		0.2				90	
		Repair		0.1				90	
0610	Sending Units, Sensors, and Warning Switches								

Table 1. Maintenance Allocation Chart (MAC) for 966H Loader - Continued.

(1)	(2)	(3)	(4) MAINTENANCE LEVEL					(5)	(6)
			FIELD			SUSTAINMENT			
			UNIT		DS	GS	DEPOT	TOOLS AND EQUIPMENT	
GROUP NUMBER	COMPONENT/ ASSEMBLY	MAINTENANCE FUNCTION	C	O	F	H	D	REF CODE	REMARKS CODE
06	**ELECTRICAL SYSTEM - Continued**								
	Brake Pedal Position Sensor	Replace		0.5				90	
	Engine Speed/Timing Sensors	Replace		0.5				70,90,98	
	Fuel Level Sending Unit	Replace		1.0				70,90	
	Hydraulic Oil Temperature Sensor	Replace		3.5				90	
	Kickout and Position Sensors	Adjust	0.3						
		Replace		1.0				90	
	Pressure Sensor/ Switches	Replace		0.5				70,90,98	
	Temperature Sensors/ Switches	Replace		0.5				70,90,98	
	Throttle Position Sensor	Replace		0.5				70,90	
	Transmission Oil Filter Bypass Switch	Replace		0.5				90	
	Transmission Sensors	Adjust		0.5				70,90	
		Replace		0.5				70,90	
0611	Horns and Alarms								
	Backup Alarm	Inspect	0.02						B
		Replace		0.3				90	
	Electric Horn	Inspect	0.02						B
		Replace		0.3				90	
	Quick Coupler Alarm	Replace		0.5				98	
0612	Batteries and Storage								
	Batteries	Inspect	0.2	0.2					B
		Service		0.2				90	B
		Test		0.5				90	F
		Replace		1.2				90	
	Battery Box	Replace		0.5				70,90	
	Battery Cables	Inspect	0.2						B
		Replace		2.0				90	
	Battery Disconnect Switch	Replace		0.5				90	

Table 1. Maintenance Allocation Chart (MAC) for 966H Loader - Continued.

(1)	(2)	(3)	(4) MAINTENANCE LEVEL					(5)	(6)
			FIELD			SUSTAINMENT			
			UNIT		DS	GS	DEPOT	TOOLS AND EQUIPMENT	
GROUP NUMBER	COMPONENT/ ASSEMBLY	MAINTENANCE FUNCTION	C	O	F	H	D	REF CODE	REMARKS CODE
06	**ELECTRICAL SYSTEM - Continued**								
	NATO Slave Receptacle	Inspect	0.02						B
		Replace		0.5				90	
0613	Hull or Chassis Wiring Harness								
	Cab Harnesses	Replace			4.0			68,90	A
	Engine and Engine ECM Harnesses	Replace			4.0			90	A
	Front Chassis Harness	Replace			3.0			90	A
	Fuel Injector Wiring Harness	Replace			1.0			90	A
	Heater and Air Conditioning Harness	Replace			1.5			90	A
	Rear Chassis Harness	Replace			4.0			68,90	A
	Secondary Steering Harness	Replace			2.0			90	A
	Transmission Control Harness	Replace			4.0			90	A
07	**TRANSMISSION**								
	Transmission	Test		1.0				3,12,75,86,87, 90,95	E
		Adjust		1.0				3,12,75,86,87, 90,95	E
		Calibrate		1.0				3,12,75,86,87, 90,95	E
0705	Transmission Shifting Components								
	Modulating Valve	Replace			8.0			90,98	
	Relief Valve (Transmission Hydraulic Control)	Replace			4.0			68,90,98	
	Shift Lever	Replace		2.8				90	

Table 1. Maintenance Allocation Chart (MAC) for 966H Loader - Continued.

(1)	(2)	(3)	(4) MAINTENANCE LEVEL					(5)	(6)
			FIELD			SUSTAINMENT			
			UNIT		DS	GS	DEPOT	TOOLS AND EQUIPMENT	
GROUP NUMBER	COMPONENT/ ASSEMBLY	MAINTENANCE FUNCTION	C	O	F	H	D	REF CODE	REMARKS CODE
07	**TRANSMISSION - Continued**								
0710	Transmission Assembly with Torque Converter	Inspect	0.02						B
		Service		1.0				41,70,90	B
		Replace			24.0			17,37,68,90,99	A
		Rebuild				60.0			D
	Transmission Mounts	Inspect		0.3					B
		Replace			1.3			17,37,68,90	
0721	Coolers, Pumps, and Motors								
	Fill Tube	Inspect	0.01						B
		Replace		0.5				90	
	Magnetic Screen	Service		1.0					B
	Oil Filter Base	Replace		2.5				70,90,98	
	Test Oil Lines and Fittings	Replace		3.0				70,90	
	Transmission Filter Element	Replace		0.2				90	B
	Transmission Oil Cooler	Replace			7.5			68,90,98	
	Transmission Oil Cooler Lines	Replace		1.5				70,90	
	Transmission Oil Pump (Gear Pump)	Replace			8.0			68,90	A
		Repair				1.0			D
09	**PROPELLER AND PROPELLER SHAFTS**								
0900	Propeller Shafts								
	Carrier Bearing	Replace		1.3				70,90	
	Drive Shaft (Front)	Inspect	0.01						B
		Replace		3.0				70,90,99	A
	Drive Shaft (Rear)	Inspect	0.01						B
		Replace		3.0				70,90,99	A
	Slip Joint (Center)	Inspect	0.01						B
		Service	0.03						B,C
		Replace		2.2				70,90,99	

Table 1. Maintenance Allocation Chart (MAC) for 966H Loader - Continued.

(1)	(2)	(3)	(4) MAINTENANCE LEVEL					(5)	(6)
			FIELD			SUSTAINMENT			
			UNIT		DS	GS	DEPOT	TOOLS AND EQUIPMENT	
GROUP NUMBER	COMPONENT/ ASSEMBLY	MAINTENANCE FUNCTION	C	O	F	H	D	REF CODE	REMARKS CODE
10	**FRONT AXLE**								
1000	Front Axle	Inspect	0.01	0.1				70,90	B
		Service		0.5				70,90	B,C
		Replace			10.0			48,65,68,78,79, 90,93,99	A
		Rebuild				40.0			D
11	**REAR AXLE**								
1100	Rear Axle	Inspect	0.01	0.1				70,71,90	B
		Service		0.5				70,90	B,C
		Replace			10.0			69,90,99	A
		Rebuild				42.0			D
	Axle Trunnion Group	Replace			14.0			68,90	A
12	**BRAKES**								
	Brakes System	Test	0.1		1.0			30,34,69,75,86, 87,90	B,E
		Adjust			1.0			30,34,69,75,86, 87,90	
		Inspect			1.0			30,69,75,86,90	B,E
1201	Parking Brake	Test	0.1						B
		Inspect		4.0				66,70,90,99	
		Replace		4.0				57,70,90,99	
	Parking Brake Actuator	Replace		4.0				70,90	
1202	Service Brake Discs	Inspect			0.3			3,30,69,70,75, 86,90	B
1204	Hydraulic Brake System								
	Brake Accumulator	Test	0.1	0.5				3,33,23,70,75, 86,87,90	B
		Service		0.5				3,33,23,70,75, 86,87,90	
		Replace		3.0				3,33,23,70,75, 86,87,90	
	Parking Brake Control Valve	Replace		2.0				70,90	
	Service Brake Control Valve	Replace		2.0				70,90	A

Table 1. Maintenance Allocation Chart (MAC) for 966H Loader - Continued.

(1)	(2)	(3)	(4) MAINTENANCE LEVEL					(5)	(6)
			FIELD			SUSTAINMENT			
			UNIT		DS	GS	DEPOT	TOOLS AND EQUIPMENT	
GROUP NUMBER	COMPONENT/ ASSEMBLY	MAINTENANCE FUNCTION	C	O	F	H	D	REF CODE	REMARKS CODE
12	**BRAKES - Continued**								
	Service Brake Lines and Hoses	Replace		3.0				70,90	
1206	Service Brake Pedal	Inspect	0.01						B
		Replace		1.0				90	
13	**WHEEL AND TRACK**								
1311	Wheel and Tire Assembly	Inspect	0.1						B
		Service	0.2					48,53,55,56,63,	
		Replace		1.5				71,78,80,90,99	
1313	Tire	Inspect	0.1						B
		Replace		1.5				90	F
14	**STEERING**								
1401	Steering System	Inspect	0.1						B
		Test		1.0				31,48,65,72,79, 87,90,93,97,98	E
		Adjust		1.0				31,48,65,72,79, 87,90,93,97,98	E
	Steering Column	Replace		2.0				70,90	
	Steering Wheel	Inspect	0.01						B
		Replace		0.5				54,70,90,98	
1410	Hydraulic Pump or Fluid Motor								
	Secondary Steering	Replace		1.5				70,90,98	A
	Pump/Motor Assembly	Repair		1.5	9.5			70,90,98	A,D
	Steering Neutralizer Valve	Replace			2.0			68,90	
	Steering Pump	Repair			10.0			68,90	A
						4.0			D
1411	Steering Hoses, Lines, and Fittings	Replace		4.0				90	

Table 1. Maintenance Allocation Chart (MAC) for 966H Loader - Continued.

(1)	(2)	(3)	(4) MAINTENANCE LEVEL					(5)	(6)
			FIELD			SUSTAINMENT			
			UNIT		DS	GS	DEPOT	TOOLS AND EQUIPMENT	
GROUP NUMBER	COMPONENT/ ASSEMBLY	MAINTENANCE FUNCTION	C	O	F	H	D	REF CODE	REMARKS CODE
14	**STEERING - Continued**								
1412	Steering Cylinders	Inspect	0.1						B
		Service	0.1						B,C
		Replace		3.0				70,90	A
		Repair				4.0			D
1414	Steering System Valves								
	Steering Control Valve	Replace		1.5				70,90,98	A
		Repair		1.5				70,90,98	
	Steering Metering Pump	Replace		2.5				70,90	
	Secondary Steering Valve	Replace		3.0				78,90	
15	**FRAME, TOWING, AND ATTACHMENTS**								
1501	Frame Assembly								
	Hydraulic Service Box	Replace		0.5				70,90	
	Steering Frame Lock	Inspect	0.01						
1502	Counterweight	Replace		4.0				70,90	
1503	Articulation Pivot Pin	Inspect	0.02						B
		Service	0.2						B,C
		Replace			14.0			9,20,32, 42,44,51,55,57, 61,66,69,76,77, 80,81,90,97	
	Remote Lubrication Lines and Fittings	Inspect	0.01	0.2					B
		Service	0.4						
		Replace		0.5				70,90	
18	**BODY, CAB, HOOD**								
1801	Body, Cab, Hood, and Hull								
	Cab Assembly	Replace			8.0			44, 64, 72, 70,90,99	
	Chassis Guards	Replace		0.5				70,90	
	Door Assembly	Inspect	0.01						B
		Replace		1.0				70,90	
		Repair		3.0				70,90	

Table 1. Maintenance Allocation Chart (MAC) for 966H Loader - Continued.

(1)	(2)	(3)	(4) MAINTENANCE LEVEL					(5)	(6)
			FIELD			SUSTAINMENT			
			UNIT		DS	GS	DEPOT	TOOLS AND EQUIPMENT	
GROUP NUMBER	COMPONENT/ ASSEMBLY	MAINTENANCE FUNCTION	C	O	F	H	D	REF CODE	REMARKS CODE
18	**BODY, CAB, HOOD - Continued**								
	Engine Compartment Shield	Replace			9.5			68,90	
	Hood and Side Guards	Replace		3.0				17,70,90	
	Ladders, Steps, and Hand Rails	Inspect	0.02						B
		Replace		3.0				70,90	
	ROPS	Inspect	0.03	0.2					B
		Replace		1.0				90	C
1802	Fenders, Windshield and Glass								
	Front Fenders	Replace		0.5				15,90	
	Glass	Inspect	0.01						B
		Replace			1.5			68,90	
	Rear Fenders	Replace		1.2				15,70,90	
1806	Upholstery, Seats, and Carpets								
	Cabliners	Replace		3.0				70,90	
	Seat Assembly	Inspect	0.1						B
		Replace		1.5				70,90,98	
		Repair			4.5			68,90	
	Seat Belt	Inspect	0.2						B
		Replace		0.2				90	B
	Sunvisor and Mounting	Replace		0.5				70,90	
1808	Stowage Racks, Boxes, Straps, Carrying Cases, Cable Reels, Hose Reels, etc.								
	Rifle Rack	Replace		0.5				90	
	Tool Box	Replace		1.0				15,70,90	
22	**BODY ACCESSORY ITEMS**								
2202	Accessory Items								
	Cab Air Filter	Inspect	0.1						B
		Service	0.3						B
		Replace	0.3						B

Table 1. Maintenance Allocation Chart (MAC) for 966H Loader - Continued.

(1)	(2)	(3)	(4) MAINTENANCE LEVEL					(5)	(6)
			FIELD			SUSTAINMENT			
			UNIT		DS	GS	DEPOT	TOOLS AND EQUIPMENT	
GROUP NUMBER	COMPONENT/ ASSEMBLY	MAINTENANCE FUNCTION	C	O	F	H	D	REF CODE	REMARKS CODE
22	**BODY ACCESSORY ITEMS - Continued**								
	Mirrors and Mounting	Inspect	0.1					70,90	B
		Replace		0.5					
	Washer Bottle	Service	0.1						B
		Replace		2.0				90	
	Windshield Wipers	Inspect	0.5						B
		Replace		0.3				70,90,98	
	Wiper Motor	Replace		1.0				70,90,98	
2210	Data Plates	Inspect	0.2						B
		Replace		0.2				78,90	
24	**HYDRAULIC AND FLUID SYSTEMS**								
	Hydraulic Systems	Test			1.0			3,24,33,48, 65,68,72,75,79, 86,87,90,93,97	E
		Calibrate			1.0			3,24,33,48, 65,68,72,75,79, 86,87,90,93,97	E
		Adjust			1.0			3,24,33,48, 65,68,72,75,79, 86,87,90,93,97	E
2401	Hydraulic Pump								
	Hydraulic Brake and Fan Pump	Replace			4.0			68,90	A
		Repair				7.0			D
	Hydraulic Pump (Implement)	Replace			10.0			68,90	A
		Repair				7.0			D
2402	Hydraulic Control Valves								
	Brake and Fan Control Valve (Manifold)	Replace			2.0			68,90	A
	Main Hydraulic Control Valve	Replace			12.0			17,37,48,65,67, 68,78,90,92,98	A
		Repair				12.0			D
	Quick Coupler Diverter Valve	Replace		1.0				70,90	

Table 1. Maintenance Allocation Chart (MAC) for 966H Loader - Continued.

(1)	(2)	(3)	(4) MAINTENANCE LEVEL					(5)	(6)
			FIELD			SUSTAINMENT			
			UNIT		DS	GS	DEPOT	TOOLS AND EQUIPMENT	
GROUP NUMBER	COMPONENT/ ASSEMBLY	MAINTENANCE FUNCTION	C	O	F	H	D	REF CODE	REMARKS CODE
24	**HYDRAULIC AND FLUID SYSTEMS - Continued**								
2403	Accumulators	Test		1.0				15,33,23,48,65, 70,79,87,90, 93	
		Replace		3.0				15,33,23,48,65, 70,79,87,90, 93	
	Electro-Hydraulic Joy Stick	Inspect	0.2						B
		Replace			0.5			90	A
2404	Tilt Cylinder	Inspect	0.03						B
		Service	0.1						B,C
		Replace		4.0				11,36,47,53,56, 70,82,90,94	A
		Repair				6.0			D
2405	Lift Cylinders	Inspect	0.03						B
		Service	0.4						B,C
		Replace		3.0				36,43,48,51,52, 56,65,70,79,82, 90,92,93,94	A
		Repair				2.0			D
2406	Hydraulic Filters, Lines, and Fittings								
	Filters	Replace		0.2				90	B
	Hoses, Lines, and Fittings	Inspect	0.04						
		Replace		0.5				70,90	
	Hydraulic Filter Base	Replace		1.5				70,90	A
2407	Coupler Cylinder	Replace		1.5				70,90	A
		Repair				2.0			D
2408	Tanks and Reservoirs								
	Cap, Filler	Replace	0.1						
	Hydraulic Tank	Inspect	0.2						B
		Service		0.5				41,70,90	B
		Replace		4.0				70,90	A
	Sight Gage	Inspect	0.02						B
		Replace		0.5				70,90	

Table 1. Maintenance Allocation Chart (MAC) for 966H Loader - Continued.

(1)	(2)	(3)	(4) MAINTENANCE LEVEL					(5)	(6)
			FIELD			SUSTAINMENT			
			UNIT		DS	GS	DEPOT	TOOLS AND EQUIPMENT	
GROUP NUMBER	COMPONENT/ ASSEMBLY	MAINTENANCE FUNCTION	C	O	F	H	D	REF CODE	REMARKS CODE
33	**SPECIAL PURPOSE KITS**								
3303	Arctic Kit	Test	0.3						B
		Replace		2.3				70,90	
		Install		16.0				98	
	Battery Box (Arctic)	Replace		0.5				70,90	
3307	Sweeper Bristles	Inspect	0.2						B
		Replace		1.0				70,90	
	Broom Manifold and Hoses	Replace		1.0				70,90	
	Broom Motor	Replace		1.0				70,90	
	Broom Shields and Springs	Replace		1.0				22,70,90	
	Pallet Forks	Inspect	0.02						B
		Repair		4.0				15,70,90	
52	**REFRIGERATION AND AIR CONDITIONING COMPONENTS (HVAC)**								
5200	Air Conditioning	Test			2.0			38,39,60,68,90	E
		Service			2.0			60,68,90	
	Compressor	Replace			4.0			68,90	A
5217	Refrigerant Hoses, Valves, Flanges and Fittings	Replace			6.0			68,90	
5221	Refrigerant Accumulator								
	Accumulator	Replace			3.0			68,90	B
	Dryer	Replace			3.0			68,90	B
5230	Condenser	Replace			4.0			68,90	
	Heater Core	Replace			4.0			68,90	
5241	Evaporator Core	Replace			4.0			68,90	
5243	Blower Motor	Replace		2.0				70,90	
	Blower Motor Resistor	Replace		0.5				90	
	HVAC Blend Door Actuator	Replace		1.5				70,90	

Table 1. Maintenance Allocation Chart (MAC) for 966H Loader - Continued.

(1)	(2)	(3)	(4) MAINTENANCE LEVEL					(5)	(6)
			FIELD			SUSTAINMENT			
			UNIT		DS	GS	DEPOT	TOOLS AND EQUIPMENT	
GROUP NUMBER	COMPONENT/ ASSEMBLY	MAINTENANCE FUNCTION	C	O	F	H	D	REF CODE	REMARKS CODE
74	**CRANES, SHOVELS AND EARTH MOVING EQUIPMENT**								
7436	Bucket Lift Arms	Replace			8.0			5,6,10,19,20, 36,47,48,52,57, 65,68,72,79,82, 90,93,94	
	Bucket Linkage Tilt	Service	0.1						
	Lever	Replace			6.0			7,10,13,20, 36,43,45,46,47, 52,57,61,64,68, 73,74,82,90,94, 95	A
	Quick Coupler	Inspect	0.03						B
		Service	0.3						B,C
		Replace		1.5				36,47,52,56,70, 82,90	
7437	Loader Buckets	Inspect	0.02						B
		Service	0.2						B,C
		Replace	0.1						A
		Repair		0.5				71,90,99	

Table 2. Tools and Test Equipment Requirements for 966H Loader.

(1) ITEM NO.	(2) MAINTENANCE LEVEL	(3) ITEM NAME	(4) NATIONAL STOCK NUMBER	(5) PART NUMBER/ CAGEC
1	O	Adapter, cable, breakout	4910-01-473-8747	7X1695 (11083)
2	O	Adapter, cable, breakout	4910-01-473-8748	7X6370 (11083)
3	O	Adapter, test	4940-01-562-9617	2755120 (11083)
4	O	Adapter, connector	5935-01-523-5962	6V3093 (11083)
5	F	Adapter, mechanical puller	5120-01-286-8432	1P1837 (11083)
6	F	Adapter, mechanical puller	5120-01-286-8435	1P1835 (11083)
7	F	Adapter, mechanical puller	5120-01-288-2717	5P4184 (11083)
8	F	Adapter, mechanical puller	5120-01-484-9379	1P1841 (11083)
9	F	Adapter, mechanical puller	5120-01-484-9382	9U5336 (11083)
10	F	Adapter, puller	5120-01-480-6691	1P1839 (11083)
11	O	Adapter, shaft puller	5120-00-971-5572	6F8343 (11083)
12	F	Adapter, threaded	5120-01-480-6695	8T7781 (11083)
13	F	Adapter, timing pin	5340-01-533-0779	1397064 (11083)
14	O	Ammeter	6625-01-343-3370	2258266 (11083)
15	O	Bracket, link	4940-01-268-2201	1387573 (11083)
16	F	Bracket, link	5340-01-476-1734	1387574 (11083)
17	O	Bracket, link	5120-01-451-1401	1387575 (11083)
18	O	Cable assembly set (break out T)		2080059 (11083)
19	F	Bushing driver set	5120-01-030-1626	1P0510 (11083)
20	F	Bushing driver set	2150-01-039-4811	1P0520 (11083)
21	O	Testing ICPT, petrole	6630-01-546-1870	9U7840 (11083)
22	F	Chain come-along		1U9280 (11083)
23	F	Charging kit, pressure	4940-01-046-7109	12252157 (19200)
24	O	Coupling, hose	4730-01-375-5884	6V4143 (11083)
25	F	Diesel engine repair stand, 6,000-lb		1U5750 (11083)
26	F	Diesel engine repair stand, adapter plate		9U5161 (11083)
27	F	Driver plate	5120-01-484-9384	1P0502 (11083)
28	F	Extractor, screw	5120-01-480-6690	9U7763 (11083)
29	O	Filter, fluid	2910-01-343-8535	2P8278 (11083)
30	F	Gage, block		FT2616 (11083)
31	O	Gage, pressure, differential, dial indicating	6685-01-484-9403	1U5796 (11083)

Table 2. Tools and Test Equipment Requirements for 966H Loader - Continued.

(1) ITEM NO.	(2) MAINTENANCE LEVEL	(3) ITEM NAME	(4) NATIONAL STOCK NUMBER	(5) PART NUMBER/ CAGEC
32	F	Head	5120-01-119-1759	7F5283 (11083)
33	F	Hose	4720-01-485-7426	1777860 (11083)
34	F	Indicator, point, (Multi Tach)	4940-01-268-2200	9U7400 (11083)
35	F	Indicator, dial	4910-01-490-6453	00NS2:KTC S1019
36	O	Inserter end remover, pin	5210-01-288-2793	6V4035 (11083)
37	F	Lever puller hoist		1U9200 (11083)
38	F	Leak detection lamp		1922331 (11083
39	F	Leak detector, refrigerant gas	4940-01-387-0948	16600 (07295)
40	O	Multimeter	6625-01-131-8586	FLUKE 87 (89536)
41	O	Nipple, pipe	4730-01-357-9580	6V4142 (11083)
42	F	Nut	5310-01-053-3835	1A1935 (11083)
43	O	Nut, fastener	5310-01-483-6594	1P0544 (11083)
44	F	Nut, plain, hexagon	5310-00-579-0592	1B4330 (11083)
45	F	Nut, plain, hexagon	5310-01-352-7726	8T4133 (11083)
46	F	Nut, plain, round	5310-01-480-6692	1P0543 (11083)
47	O	Nut, plain, round	5310-01-480-6693	9U6832 (11083)
48	F	Pin, shoulder, headless	5315-01-270-2832	8S7615 (11083)
49	F	Pinion turning tool	3020-01-250-1610	9S9082 (11083)
50	O	Probe multimeter	6625-01-484-9402	7X1710 (11083)
51	F	Puller, hydraulic	5130-00-363-6680	6V3160 (11083)
52	F	Puller, hydraulic	5130-01-296-4277	6V3175 (11083)
53	O	Puller, hydraulic	5130-01-480-6682	5P5201 (11083)
54	O	Puller kit, steering wheel	5180-01-480-1268	1455242 (11083)
55	F	Pump, hydraulic	4320-01-484-9389	4C5809 (11083)
56	O	Pump, hydraulic ram, hand-driven	4320-00-374-1403	9U6600 (11083)
57	F	Pump, hydraulic ram, hand driven	4320-01-271-9831	1U5230 (11083)
58	O	Quick disconnect tool - 06		2791218
59	O	Quick disconnect tool - 08		2791219
60	F	Reclaimer, refrigerant R-134a	4250-01-396-8928	EEAC318A (55719)
61	F	Remover, bearing and bushing	5120-01-480-6687	IP1844 (11083)
62	O	Remover, electrical contact	5120-01-491-0560	1516320 (11083)
63	F	Repair tool, special	4910-01-264-4778	8S7621 (11083)

Table 2. Tools and Test Equipment Requirements for 966H Loader - Continued.

(1) ITEM NO.	(2) MAINTENANCE LEVEL	(3) ITEM NAME	(4) NATIONAL STOCK NUMBER	(5) PART NUMBER/ CAGEC
64	F	Rod, threaded end	5306-01-480-6748	9T2240 (11083)
65	O	Saddle assembly, lifting block	2510-01-264-8424	8S8048 (11083)
66	F	Screw, cap hexagon head	5305-01-128-6046	8F-6302
67	F	Shackle assembly		1890411 (11083)
68	F	Shop equipment, automotive maintenance and repair: field maintenance, basic, less power	4910-00-754-0705	491095A31 (19204) (LIN: T24660)
69	F	Shop equipment, machine shop, field maintenance, heavy, less power	3470-00-754-0738	347095A15 (19204) (LIN: T15640)
70	O	Shop equipment, automotive maintenance and repair: organizational maintenance, common no. 1	4910-00-754-0654	SC491095CLA74 (19204) (LIN: W32593)
71	O	Shop equipment, automotive maintenance and repair: organizational maintenance, common no. 2	4910-00-754-0650	SC491095CLA72 (19204) (LIN: W32730)
72	F	Sleeve		FT1028 (11083)
73	F	Sleeve, assembly	5365-01-480-6736	9S5431 (11083)
74	F	Sleeve assembly	5365-01-480-6694	9U6751 (11083)
75	O	Software kit	7030-01-488-3978	JEBD3003 (11083)
76	F	Spacer, sleeve	5365-01-484-9381	6V2097 (11083)
77	F	Spacer, sleeve	5365-01-484-9383	1M6756 (11083)
78	F	Stand assembly	4910-01-264-4777	8S7640 (11083)
79	O	Stand assembly	4910-01-264-4034	8S7630 (11083)
80	F	Stand, lift gp	4910-01-485-0944	9U7536 (11083)
81	F	Stud, plain	5307-01-484-9378	4C9633 (11083)
82	O	Stud, plain	5307-01-485-7432	4C9634 (11083)
83	O	Tachometer, stroboscopic	6680-01-355-7805	1U6602 (11083)
84	O	Tester, internal combustion engine	4910-01-136-1058	1U5470 (11083)
85	O	Test kit, radiator	4910-00-728-8227	10513874 (56161)
86	O	Test set, electronic systems (MSD)	6625-01-493-8984	7130003 (54418)
87	O	Test stand, automotive	4910-01-504-2154	6V7830 (11083)
88	O	Thermometer, infrared	6685-01-355-8499	1643310 (11083)
89	F	Timing pin	5120-01-537-9855	1364632 (11083)
90	O	Tool kit, general mechanic's, automotive	5180-01-483-0249	12B4700001 (59678) (LIN: T28688)

Table 2. Tools and Test Equipment Requirements for 966H Loader - Continued.

(1) ITEM NO.	(2) MAINTENANCE LEVEL	(3) ITEM NAME	(4) NATIONAL STOCK NUMBER	(5) PART NUMBER/ CAGEC
91	O	Transducer, pressure	6695-01-473-8766	6V2197 (11083)
92	O	Tube, metallic	4710-01-295-2507	8S7631 (11083)
93	O	Tubing assembly set, nonmetallic	4710-01-480-6677	8S7641 (11083)
94	O	Washer, flat	5310-01-162-6012	4K0684 (11083)
95	F	Washer, flat	5310-01-352-2753	8T4121 (11083)
96	O	Wrench, torque, dial, 1/4" drive, 30 lb-in.	4910-01-490-6453	00NS2:KTC S0986
97	O	Wrench, torque, dial, 3/8" drive, 300 lb-in.	4910-01-490-6453	00NS2:KTC S0987
98	O	Wrench, torque, click, ratcheting, 3/8" drive, 75 lb-ft	4910-01-490-6453	00NS2:KTC S0989
99	O	Wrench, torque, click, ratcheting, 1/2" drive, 250 lb-ft	4910-01-490-6453	00NS2:KTC S0991

Table 3. Remarks for the 966H Loader.

Remarks Code	Remarks
A	Limited repair authorized by replacement of components ONLY.
B	Preventive maintenance checks and services (PMCS).
C	Task requires use of BII.
D	Function performed by specialized repair activity (SRA) (Theater Logistics Support Center, Army) or authorized contractor facility.
E	System tests found in Volume I of this manual.
F	Refer to TM 9-2610-200-14 *Operator's, Unit Direct Support, and General Support Maintenance Manual* for care, maintenance, repair, and inspection of pneumatic tires and inner tubes for tire replacement and tool requirements.

END OF WORK PACKAGE

EXPENDABLE AND DURABLE ITEMS LIST 0233 00

SCOPE

This work package lists expendable and durable items you will need to maintain the 966H Wheel Loader. This listing is for informational purposes only and is not authority to requisition the listed items. These items are authorized to you by CTA 50-970, *Expendable/Durable Items (Except Medical, Class V Repair Parts, and Heraldic Items)*, or CTA 8-100, *Army Medical Department Expendable/Durable Items*.

EXPLANATION OF COLUMNS

1. **Column (1) - Item Number.** This number is assigned to the entry in the listing and is referenced in the narrative instructions to identify the item [e.g., Use Antifreeze (Item 1, WP 0233 00)].
2. **Column (2) - Level.** This column identifies the lowest level of maintenance that requires the listed item.

   C - Operator/Crew

   O - Unit Maintenance

   F - Direct Support Maintenance
3. **Column (3) - National Stock Number.** This is the National Stock Number assigned to the item which you can use to requisition it.
4. **Column (4) - Description, CAGEC, and Part Number.** This provides the other information you need to identify the item.
5. **Column (5) - Unit of Measure (U/M).** This column shows the physical measurement or count of an item, such as gallon, dozen, gross, etc.

Table 1. Expendable and Durable Items List for 966H Loader.

(1) ITEM NUMBER	(2) LEVEL	(3) NATIONAL STOCK NUMBER	(4) DESCRIPTION, CAGEC, AND PART NUMBER	(5) U/M
1	O		Antifreeze	
		6850-01-383-4068	(1QK63) 6724354 (1 Gallon Bottle)	GAL
		6850-01-441-3257	(58536) A-A52624 (5 Gallon Can)	CN
		6850-01-383-3918	(58536) A-A52621 (55 Gallon Drum)	DR
2	F		Antiseize compound (11083) 4C-5598	EA
3	O		Axle oil additive 1U-9891	
4	O	8135-00-132-9589	Barrier material, grease proofed, flexible (81349) MIL-B-121	RO
5	O	6840-00-300-6373	Biocide, fuel preservative (0U7J1) BIOBOR JF	QT
6	O	5340-00-450-5718	Cap set, protective Dust and Moisture Seal (19207) 10935405	EA
7	O		Cleaning compound, solvent, type III (81349) MIL-PRF-680	
		6850-01-474-2318	1 Gallon Can	GAL
		6850-01-474-2320	5 Gallon Can	GAL
		6850-01-474-2321	55 Gallon Drum	GAL
8	O		Cloth, abrasive (80204) ANSI B74.18	
		5350-00-584-4654	50 Sheet Package	EA
9	O		Detergent, general purpose, liquid	
		6850-01-159-4844	1 Gallon Can	GAL
10	C		Diesel fuel, DF-1 (81346) ASTM D 975	
		9140-00-286-5286	Bulk	GL
		9140-00-286-5287	5 Gallon Can	CN
		9140-00-286-5288	55 Gallon Drum	DR
11	C	9140-00-286-5294	Fuel oil, diesel, DF-2 ASTM D 975 (81346)	GAL
12	C	9130-01-031-5816	Fuel, turbine, aviation (81349) MIL-T-83133 GR JP-8	GL

Table 1. Expendable and Durable Items List for 966H Loader - Continued.

(1) ITEM NUMBER	(2) LEVEL	(3) NATIONAL STOCK NUMBER	(4) DESCRIPTION, CAGEC, AND PART NUMBER	(5) U/M
13	O		Flux, soldering (58536) A-A-51145TY FORM A	
14	F	8040-01-437-6864	Gasket cement 1U-8846 (11083)	
15	C		Grease, automotive and artillery, GAA	
		9150-01-197-7688	2-1/4 Ounce Tube (81349) M-10924-A	OZ
		9150-01-197-7690	1-3/4 Pound Can (81349) M-10924-C	LB
		9150-01-197-7692	35 Pound Can (81349) M-10924-E	LB
		9150-01-197-7693	14 Ounce Cartridge (81349) M-10924-B	OZ
16	O	9150-01-361-8919	Grease, electrically conductive (53711) 5190179	OZ
17	O		Grease, molybdenum 5P-0960	
18	O		Grease, multipurpose 1P-0808	
19	O		Insulating sleeving, electrical (11530) 08-196485-06	
		5970-00-815-1295	250 Foot Spool (11530) 08-196485-06	FT
20	O		Insulating varnish, electrical (75037) 1602	
		5970-00-476-6717	13 Ounce Aerosol Can	CN
21	O	9150-00-111-0208	Lubricating oil, engine (81349) MIL-PRF-21260	GAL
22	O	9150-01-293-7696	Lubricating oil, engine, preservative (81349) M21260-3-15W40	GAL
23	O	5935-01-507-0644	Maintenance kit, electrical connector (11083) 190-8900	EA
24	O		Nitrate test strips	
		6850-01-154-3653	100 Strip Package	PK
25	O	6803-00-782-2641	Nitrogen technical dry cylinder (58536) A-A-59503-1B1187	CYL

Table 1. Expendable and Durable Items List for 966H Loader - Continued.

(1) ITEM NUMBER	(2) LEVEL	(3) NATIONAL STOCK NUMBER	(4) DESCRIPTION, CAGEC, AND PART NUMBER	(5) U/M
26	C		Oil, lubricating, OE/HDO-40	
			(81349) MIL-PRF-2104	
		9150-00-188-9862	55 Gallon Drum	DR
27	C		Oil, lubricating, OE/HDO-5/40 (81349) MIL-PRF-2104	
		9150-01-524-9155	55 Gallon Drum	DR
28	C		Oil, lubricating, OE/HDO-15/40 (81349) MIL-PRF-2104	
	O	9150-01-152-4117	1 Quart Can	QT
		9150-01-152-4118	5 Gallon Can	GAL
		9150-01-152-4119	55 Gallon Drum	GAL
29	O		Oil, lubricating, OEA-30, Arctic	
		9150-00-402-4478	1 Quart Can (81349) MIL-L-46167	QT
		9150-00-402-2372	5 Gallon Can (81349) MIL-PRF-46167	GAL
		9150-00-491-7197	55 Gallon Drum (81349) MIL-PRF-46167	GAL
30	F	9150-01-524-4276	Oil, lubricating, refrigerant compressor: Synthetic Ester (59595) Capella HFC-68NA	
		9150-01-410-8972	1 Quart Can	QT
31	O		Oil, lubricating, TO-4	
		9150-00-402-2372	5 Gallon Can (11083) 8T-9576	GAL
		9150-00-491-7197	55 Gallon Drum (11083) 8T-9577	GAL
32	O		Paint, heat resisting	
33	O		Petrolatum, technical (81348) V-P-236	
		9150-00-250-0926	7.5 lb Can	CN
34	O	8010-01-359-9245	Primer coating (80244) GG00265	GA
35	O		Rag, wiping (64067) 7920-00-205-1711	

Table 1. Expendable and Durable Items List for 966H Loader - Continued.

(1) ITEM NUMBER	(2) LEVEL	(3) NATIONAL STOCK NUMBER	(4) DESCRIPTION, CAGEC, AND PART NUMBER	(5) U/M
36	F		Refrigerant dye	
37	O	2815-01-521-1638	Repair kit, diesel engine (11083) 175-3700	EA
38	O	8030-01-509-1597	Sealing compound (11083) 9S-3263	OZ
39	O	6810-00-297-0092	Sodium bicarbonate, technical (81346) ASTM D 928	BG
40	O		Solder, lead-tin alloy, rosin core (81346) SN60WRP2 0.032 1LB	
		3439-00-555-4629	1 Pound Spool	LB
41	O	4235-01-510-1292	Spill containment unit, hazardous material	
			20 in. x 20 in., box of 4 (1BW54) B-1400-rdp	
42	O		Strap, tiedown, electrical components	
			4 in. Length, Black, Pck of 100 (96906) MS3367-4-0 6 in. Length, Black, Pck of 100 (96906) MS3367-1-0 13.35 in. Minimum Length, black, Pck of 100 (96906) MS3367-2-1	
43	O		Tag, marker (64067) 9905-00-537-8954	
		9905-00-537-8954	Pack of 50	EA
44	O		Tape, duct - Roll	RL
45	O	7510-00-040-5895	Tape, pressure sensitive adhesive (81755) P5113-3	RL
46	F	6830-01-439-0614	Tetrafluoroethane, technical (Refrigerant R-134a)	43 LB CYL

END OF WORK PACKAGE

TORQUE LIMITS **0234 00**

SCOPE

This work package lists standard torque values and provides general information for applying torque. Special torque values and tightening sequences are indicated in maintenance procedures for applicable components.

GENERAL

1. Always use torque values listed in (Tables 1 thru 6) when maintenance procedure does not show a specific torque value.
   a. (Tables 1 thru 3) provides torque limits for SAE standard fasteners.
   b. (Tables 4 thru 6) provides torque limits for metric fasteners.
2. Unless otherwise indicated, standard torque tolerance shall be ± 10 percent.
3. Torque values listed are based on clean, dry threads. Reduce torque by 10 percent when engine oil is used as lubricant. If new plated capscrews are used, reduce torque by 20 percent.
4. If maintenance procedures do not specify a tightening order, use the following guides:
   a. Unless otherwise specified, lubricate threads of fasteners with oil (OE/HDO-10 or OEA-30).
   b. When tightening fasteners above 30 lb-ft (41 Nm), use torque pattern only to tighten to 70 percent of final value (multiply final value by 0.7). Repeat pattern until final value is reached.
   c. Tighten circular patterns using circular torque pattern and tighten straight patterns using straight torque pattern.

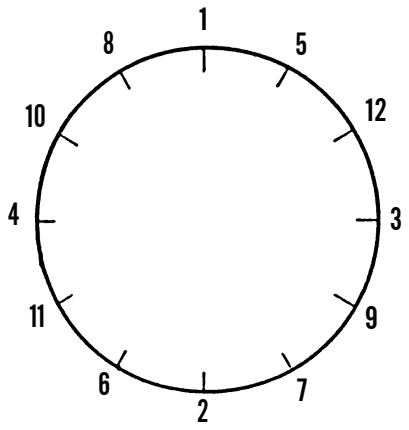

CIRCULAR TORQUE PATTERN

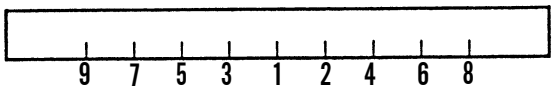

STRAIGHT TORQUE PATTERN

METRIC (ISO) FASTENERS

CAUTION

If replacement capscrews are of higher grade than originally supplied, use torque specifications for original. This will prevent equipment damage due to over-torquing.

NOTE

The following tables have recommended standard torque values for metric nuts and bolts for use on Caterpillar engines.

ENGLISH (SAE) FASTENERS

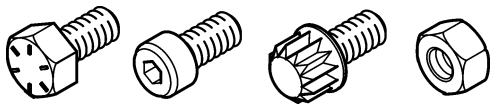

427-C2063

Table 1. English (SAE) Nuts and Bolts.

Thread Size (mm)	Torque
1/4	9 ± 2 lb-ft (12 ± 3 Nm)
5/16	18 ± 4 lb-ft (24 ± 8 Nm)
3/8	35 ± 7 lb-ft (47 ± 9 Nm)
7/16	50 ± 11 lb-ft (68 ± 15 Nm)
1/2	75 ± 15 lb-ft (101 ± 20 Nm)
9/16	120 ± 22 lb-ft (163 ± 30 Nm)
5/8	160 ± 30 lb-ft (217 ± 41 Nm)
3/4	275 ± 37 lb-ft (373 ± 50 Nm)
7/8	460 ± 60 lb-ft (624 ± 81 Nm)
1	660 ± 75 lb-ft (895 ± 102 Nm)
1 1/8	960 ± 110 lb-ft (1,302 ± 149 Nm)
1 1/4	1,320 ± 150 lb-ft (1,790 ± 203 Nm)
1 3/8	1,780 ± 220 lb-ft (2,413 ± 298 Nm)
1 1/2	2,280 ± 260 lb-ft (3,091 ± 353 Nm)

ENGLISH (SAE) FASTENERS - CONTINUED

Table 2. English (SAE) Taperlock Studs.

Thread Size (mm)	Torque
1/4	6 ± 2 lb-ft (8 ± 3 Nm)
5/16	13 ± 4 lb-ft (18 ± 5 Nm)
3/8	26 ± 4 lb-ft (35 ± 5 Nm)
7/16	33 ± 7 lb-ft (45 ± 9 Nm)
1/2	48 ± 7 lb-ft (65 ± 9 Nm)
5/8	80 ± 15 lb-ft (108 ± 20 Nm)
3/4	125 ± 22 lb-ft (169 ± 30 Nm)
7/8	190 ± 30 lb-ft (258 ± 41 Nm)
1	300 ± 44 lb-ft (407 ± 60 Nm)
1 1/8	390 ± 44 lb-ft (529 ± 60 Nm)
1 1/4	550 ± 60 lb-ft (746 ± 81 Nm)
1 3/8	700 ± 90 lb-ft (949 ± 122 Nm)
1 1/2	880 ± 110 lb-ft (1,193 ± 149 Nm)

ENGLISH (SAE) MACHINE SCREWS

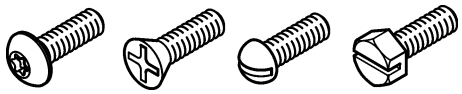

427-C2064

Table 3. English (SAE) Machine Screws.

Thread Size (mm)	Torque
0-80	0.9 ± 0.1 lb-in. (0.10 ± 0.01 Nm)
1-64	1.3 ± 0.1 lb-in. (0.15 ± 0.01 Nm)
2-56	2.2 ± 0.2 lb-in. (0.25 ± 0.02 Nm)
3-48	3.1 ± 0.4 lb-in. (0.35 ± 0.05 Nm)
4-40	4.4 ± 0.4 lb-in. (0.50 ± 0.05 Nm)
5-40	6.2 ± 0.4 lb-in. (0.70 ± 0.05 Nm)
6-32	8.0 ± 0.9 lb-in. (0.90 ± 0.10 Nm)
8-32	15.0 ± 2.2 lb-in. (1.69 ± 0.25 Nm)
10-24	19.9 ± 2.2 lb-in. (2.25 ± 0.25 Nm)
12-24	30.0 ± 5.3 lb-in. (3.40 ± 0.60 Nm)

METRIC (ISO) FASTENERS

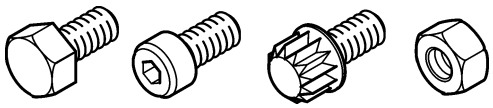

427-C2065

Table 4. Metric (ISO) Nuts and Bolts.

Thread Size (mm)	Torque
M6	9 ± 2 lb-ft (12 ± 3 Nm)
M8	21 ± 5 lb-ft (28 ± 7 Nm)
M10	41 ± 7 lb-ft (55 ± 9 Nm)
M12	75 ± 15 lb-ft (101 ± 20 Nm)
M14	120 ± 22 lb-ft (163 ± 30 Nm)
M16	175 ± 30 lb-ft (237 ± 41 Nm)
M20	340 ± 44 lb-ft (461 ± 60 Nm)
M24	590 ± 75 lb-ft (800 ± 102 Nm)
M30	1,180 ± 150 lb-ft (1,600 ± 203 Nm)
M36	2,000 ± 220 lb-ft (2,712 ± 298 Nm)

Table 5. Metric (ISO) Taperlock Studs.

Thread Size (mm)	Torque
M6	71 ± 27 lb-ft (96 ± 37 Nm)
M8	13 ± 4 lb-ft (18 ± 5 Nm)
M10	26 ± 4 lb-ft (35 ± 5 Nm)
M12	48 ± 7 lb-ft (65 ± 9 Nm)
M16	80 ± 15 lb-ft (108 ± 20 Nm)
M20	125 ± 22 lb-ft (169 ± 30 Nm)
M24	300 ± 44 lb-ft (408 ± 60 Nm)
M30	550 ± 60 lb-ft (746 ± 81 Nm)
M36	880 ± 110 lb-ft (1,193 ± 149 Nm)

METRIC (ISO) FASTENERS - CONTINUED

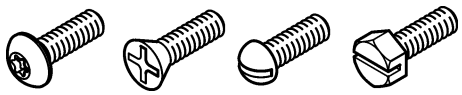

427-C2064

Table 6. Metric (ISO) Machine Screws.

Thread Size (mm)	Torque
M1.6	0.9 ± 0.1 lb-in. (0.10 ± 0.01 Nm)
M2	1.3 ± 0.1 lb-in. (0.15 ± 0.01 Nm)
M2.5	3.1 ± 0.4 lb-in. (0.35 ± 0.05 Nm)
M3	4.4 ± 0.4 lb-in. (0.50 ± 0.05 Nm)
M4	15.0 ± 2.2 lb-in. (1.69 ± 0.25 Nm)
M5	19.9 ± 2.2 lb-in. (2.25 ± 0.25 Nm)

GROUND ENGAGING TOOL (G.E.T.) FASTENERS

Ground Engaging Tools (G.E.T.) are secured by many types of bolts. Refer to (Table 7) for correct torque for following combinations of fasteners for G.E.T.:

- Plow bolts and nuts.
- Hex head bolt and nuts.

Table 7. Ground Engaging Tool (G.E.T.) Fasteners.

Thread Size In.	Torque [1]	
	lb-ft	Nm
5/8 in.	200 ± 30	271 ± 41
3/4 in.	350 ± 45	475 ± 61
7/8 in.	550 ± 65	746 ± 88
1 in.	850 ± 110	1,152 ± 149
1 1/4 in.	1,700 ± 220	2,305 ± 298
[1] These values are only for Caterpillar bolts for cutting edges.		

PLOW BOLTS

WARNING

Personal injury can result when installing plow bolts. Appropriate safety equipment must be worn when striking plow bolts. To avoid injury to your eyes and ears, wear protective glasses, and hearing protection during this procedure.

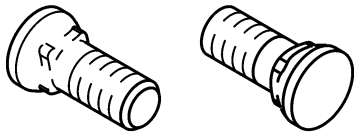

427-C2066

1. Clean all surfaces that had contact with bolt. Remove all occurrences of the following conditions: rust, paint, nicks, and burrs.
2. Tighten nut to correct torque. Refer to (Table 7).
3. Use hammer to bolt head. Bolt head must be struck with significant force.

NOTE

Bolt head may be recessed below mounting surface. Use suitable punch to transfer hammer blow to bolt head.

4. Tighten nut to correct torque. Refer to (Table 7).

INSTALLATION OF FITTINGS

NOTE

Tightening sequence of the fasteners that attach tube assembly or hose assembly to the machine is very critical to proper function of machine. Sealing surfaces of tube assembly or hose assembly should be secured squarely. Sealing surfaces of the tube assembly or hose assembly should be tightened to the serviced component (control valve, cylinder, hydraulic motor, etc.). Perform this procedure prior to final tightening of any clamps or slips that are used to fasten the tube assembly or hose assembly to machine.

Fittings have different connections. Fittings may have two completely different ends. Use proper torque for end of fitting. The following list contains some common types of fittings:

- Straight Thread O-Ring (STOR)
- Adjustable Straight Thread O-Ring (STOR)
- O-Ring Face Seal (ORFS)
- Tapered Pipe Thread (NPT and NPTF)
- 37 Degree Flare Fitting
- 45 Degree Flare Fitting
- 45 Degree Inverted Flare Fitting
- Split Flange Coupling

INSTALLATION OF SPLIT FLANGE COUPLINGS

1. For a metal tube to hose installation, install the tube and tighten all bolts finger tight at rigid end.
2. Install hose and tighten all bolts finger tight.
3. Put hose in a position where hose does not make contact with machine or other hoses.
4. Tighten bolts on both connections to proper torque. Follow the prescribed torque sequence for split-flange connections. Add measurement of gap (A) to measurement of gap (B). Total must not exceed 0.16 in. (4.0 mm).

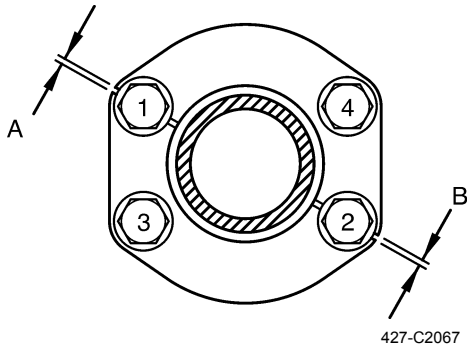

5. Start engine (TM 5-3805-291-10).
6. Move implement control levers to all positions.
7. Look at hose during movement of implement. Ensure hose is not making contact with machine or other hoses.

NOTE

For hoses that cross an articulation hitch, check for contact during articulation. For hoses that connect to the steering system, check for contact during steering.

8. Shut off engine (TM 5-3805-291-10).
9. If hose contacts other hoses or machine during test, loosen bolts and reposition hose. Repeat steps 3 thru 8 until there is no contact.

INSTALLATION OF ADJUSTABLE STOR FITTINGS

This type of fitting is used in many applications. One end of the fitting will be an adjustable STOR fitting. Other end will be different. Always use same installation procedure for STOR end. Adjustable STOR fittings should be positioned before tightening.

1. Put locknut (3), backup washer (4), and O-ring seal (5) as far back on fitting body (2) as possible. Hold these components in this position. Turn fitting into mating part. Turn the fitting until backup washer contacts the surface of mating part.
2. Put fitting assembly in correct position. Loosen fitting (1) until the correct assembly position is achieved. Do not loosen the fitting more than 360 degrees. Install tube or hose hand tight to verify the orientation of fitting. Tighten locknut (3) to torque that is shown on correct chart for fitting.

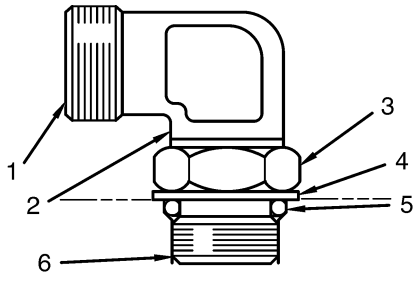

427-C2068

INSTALLATION OF ADJUSTABLE STOR FITTINGS - CONTINUED

NOTE

If fitting is not adjustable, hex bolt/nuts on body replaces locknut. To install this type of fitting, tighten hex bolt/nuts against face of the mating part.

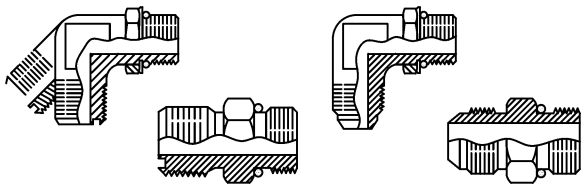

427-C2069

Table 8. Ferrous Straight Thread O-Ring Fitting Torques for Mating with Ferrous Materials.

Nominal Outer Diameter of the Tube	Thread Size (In.)	Standard Torque
.125 in. (3.18 mm)	5/16 - 24	70 ± 9 lb-in. (95 ± 12 Nm)
.188 in. (4.76 mm)	3/8 - 24	9 ± 1 lb-ft (12 ± 1 Nm)
.250 in. (6.35 mm)	7/16 - 20	16 ± 1 lb-ft (22 ± 1 Nm)
.312 in. (7.94 mm)	1/2 - 20	22 ± 2 lb-ft (30 ± 3 Nm)
.375 in. (9.52 mm)	9/16 - 18	35 ± 4 lb-ft (47 ± 5 Nm)
.500 in. (12.70 mm)	3/4 - 16	60 ± 6 lb-ft (81 ± 8 Nm)
.625 in. (15.88 mm)	7/8 - 14	105 ± 10 lb-ft (142 ± 14 Nm)
.750 in. (19.05 mm)	1 1/16 - 12	140 ± 11 lb-ft (190 ± 15 Nm)
.875 in. (22.22 mm)	1 3/16 - 12	185 ± 15 lb-ft (250 ± 20 Nm)
1.000 in. (25.40 mm)	1 5/16 - 12	220 ± 22 lb-ft (298 ± 30 Nm)
1.250 in. (31.75 mm)	1 5/8 - 12	260 ± 26 lb-ft (353 ± 35 Nm)
1.500 in. (38.10 mm)	1 7/16 - 12	305 ± 30 lb-ft (413 ± 40 Nm)
2.000 in. (50.80 mm)	2 1/2 - 12	320 ± 30 lb-ft (434 ± 41 Nm)
Note: Use 50 percent of the torque values from Table 8 when the fitting of the port material is nonferrous.		

INSTALLATION OF ADJUSTABLE STOR FITTINGS - CONTINUED

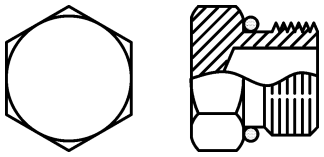

427-C2070

Table 9. Straight Thread O-Ring Plugs (Hex Bolt/Nut Drive).

Thread Size (In.)	Torque
5/16	80 ± 9 lb-in. (9.0 ± 1.0 Nm)
3/8	12.5 ± 1.1 lb-ft (17 ± 1.5 Nm)
7/16	17 ± 1 lb-ft (23 ± 1 Nm)
1/2	21 ± 2 lb-ft (28 ± 3 Nm)
9/16	25 ± 2 lb-ft (34 ± 3 Nm)
3/4	44 ± 4 lb-ft (60 ± 5 Nm)
7/8	85 ± 7 lb-ft (115 ± 9 Nm)
1 1/16	103 ± 10 lb-ft (140 ± 14 Nm)
1 3/16	140 ± 14 lb-ft (190 ± 19 Nm)
1 5/16	155 ± 15 lb-ft (210 ± 20 Nm)
1 5/8	215 ± 18 lb-ft (292 ± 24 Nm)
1 7/8	240 ± 22 lb-ft (325 ± 30 Nm)
2 1/2	310 ± 30 lb-ft (420 ± 41 Nm)

INSTALLATION OF ADJUSTABLE STOR FITTINGS - CONTINUED

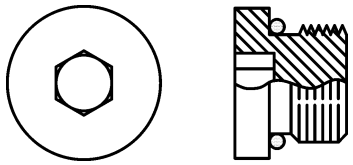

427-C2071

Table 10. Straight Thread O-Ring Plugs (Socket Drive).

Thread Size (In.)	Torque
5/16	44 ± 9 lb-in. (5.0 ± 1.0 Nm)
3/8	97 ± 9 lb-in. (132 ± 1.0 Nm)
7/16	12 ± 1 lb-ft (16 ± 1.4 Nm)
1/2	15 ± 1 lb-ft (20 ± 1 Nm)
9/16	26 ± 3 lb-ft (35 ± 4.0 Nm)
3/4	52 ± 5 lb-ft (70 ± 7 Nm)
7/8	73 ± 7 lb-ft (99 ± 9 Nm)
1 1/16	125 ± 11 lb-ft (169 ± 15 Nm)
1 3/16	160 ± 15 lb-ft (217 ± 20 Nm)
1 5/16	200 ± 18 lb-ft (271 ± 24 Nm)
1 5/8	250 ± 20 lb-ft 339 ± 27 Nm)
1 7/8	275 ± 25 lb-ft (373 ± 34 Nm)
2 1/2	305 ± 30 lb-ft (414 ± 41 Nm)

INSTALLATION OF ADJUSTABLE STOR FITTINGS - CONTINUED

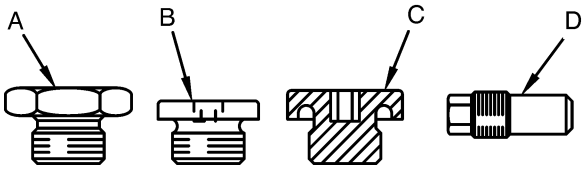

427-C2072

NOTE

Plug (A), plug (B), and plug (C) are used with gasket. Conical seal plug (D) does not use gasket.

Table 11. Drain Plugs with Straight Threads.

Plug Type	Thread Size (In.)	Torque
A	1/2 - 13	15 ± 4 lb-ft (20 ± 5 Nm)
	5/8 - 11	26 ± 4 lb-ft (35 ± 5 Nm)
	3/4 -12 3/4 -16	37 ± 4 lb-ft (50 ± 5 Nm)
	7/8 - 14 1 1/8 - 12	52 ± 11 lb-ft (70 ± 15 Nm)
B	1 5/16 - 12 1 1/2 - 12	66 ± 11 lb-ft (89 ± 15 Nm)
	2 - 12	92 ± 11 lb-ft (125 ± 15 Nm)
C	1 1/8 - 12	52 ± 11 lb-ft (70 ± 15 Nm)
	1 5/16 - 12	66 ± 11 lb-ft (89 ± 15 Nm)
D	1/2 - 20	97 ± 35 lb-ft (131 ± 47 Nm)
	7/8 - 14	41 ± 5 lb-ft (56 ± 7 Nm)
	1 3/8 - 13	66 ± 11 lb-ft (90 ± 15 Nm)
	1 1/12 - 12	92 ± 11 lb-ft (125 ± 15 Nm)

INSTALLATION OF ADJUSTABLE STOR FITTINGS - CONTINUED

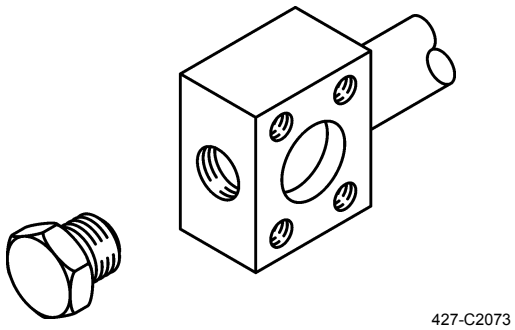

Table 12. Straight Thread O-Ring Plugs (Mechanical Joint Tube Assemblies).

Thread Size (In.)	Torque
7/8	92 ± 11 lb-ft (125 ± 15 Nm)
1 1/16	130 ± 11 lb-ft (176 ± 15 Nm)
1 3/16	185 ± 15 lb-ft (250 ± 20 Nm)
1 1/4	185 ± 15 lb-ft (250 ± 20 Nm)
1 5/16	275 ± 15 lb-ft (372 ± 20 Nm)
1 5/8	310 ± 20 lb-ft (420 ± 27 Nm)
1 7//8	390 ± 25 lb-ft (529 ± 34 Nm)
2 1/2	665 ± 40 lb-ft (902 ± 54 Nm)

O-RING FACE SEAL FITTINGS

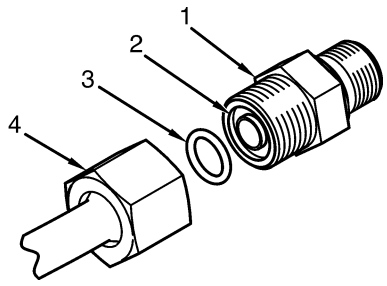

O-ring face seal fitting (OFRS fitting):

(1) O-ring face seal connector

(2) O-ring groove

(3) O-ring seal

(4) Nut for O-ring face seal

Table 13. Ferrous ORFS Fitting.

Thread Size (In.)	Standard Torque for Nut (3)
9/16 - 18	18 ± 2 lb-ft (24 ± 3 Nm)
11/16 - 16	30 ± 3 lb-ft (41 ± 4 Nm)
13/16 - 16	41 ± 4 lb-ft (56 ± 5 Nm)
1 - 14	65 ± 6 lb-ft (88 ± 8 Nm)
1 3/16 - 12	90 ± 11 lb-ft (122 ± 15 Nm)
1 7/16 - 12	120 ± 11 lb-ft (163 ± 15 Nm)
1 11/16 -12	150 ± 15 lb-ft (203 ± 20 Nm)
2 - 12	180 ± 15 lb-ft (244 ± 20 Nm)

BULKHEAD NUTS

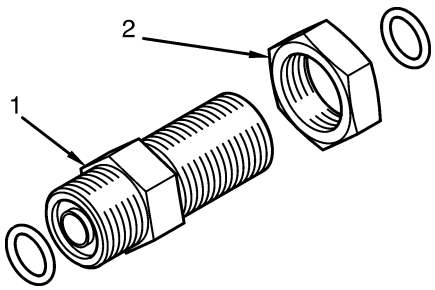

BULKHEAD CONNECTOR (ORFS) (1) AND BULKHEAD NUT (2)

427-C2075

NOTE

- **The bulkhead connector (1) may have different connections. Type of fluid connection does not affect torque for nut (2).**
- **When you assemble the fluid connection, do not use bulkhead nut as leverage for backup wrench. Use the hex bolt on body of connector for leverage.**

Table 14. Bulkhead Nuts.

Thread Size (In.)	Torque
5/16	53 ± 9 lb-in. (6 ± 1 Nm)
3/8	71 ± 9 lb-in. (8 ± 1 Nm)
7/16	10 ± 1 lb-ft (14 ± 1.3 Nm)
1/2	13 ± 1.4 lb-ft (18 ± 2 Nm)
9/16	16 ± 1.4 lb-ft (22 ± 2 Nm)
11/16	23 ± 2 lb-ft (31 ± 3 Nm)
3/4	27 ± 3 lb-ft (37 ± 4 Nm)
13/16	30 ± 3 lb-ft (41 ± 4 Nm)
7/8	32 ± 3 lb-ft (43 ± 4 Nm)
1	45 ± 4 lb-ft (61 ± 5 Nm)
1 1/16	52 ± 5 lb-ft (70 ± 7 Nm)
1 3/16	67 ± 7 lb-ft (91 ± 9 Nm)
1 5/16	83 ± 7 lb-ft (113 ± 9 Nm)
1 7/16	92 ± 9 lb-ft (125 ± 12 Nm)
1 5/8	110 ± 11 lb-ft (149 ± 15 Nm)
1 11/16	110 ± 11 lb-ft (149 ± 15 Nm)
1 7/8	115 ± 11 lb-ft (156 ± 15 Nm)
2	125 ± 13 lb-ft (169 ± 18 Nm)
2 1/2	160 ± 15 lb-ft (217 ± 20 Nm)

FLARE FITTINGS

37 Degree Flare Fittings

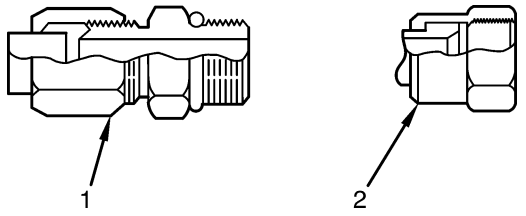

427-C2076

(1) 37 Degree Flare Fitting
(2) Swivel Nuts

Table 15. Nuts for 37 Degree Flare Fittings.

Nominal Outer Diameter of the Tube	Thread Size (In.)	Standard Torque
.125 in. (3.18 mm)	5/16	44 ± 13 lb-in. (5.0 ± 1.5 Nm)
.188 in. (4.76 mm)	3/8	100 ± 15 lb-in. (11 ± 2 Nm)
.250 in. (6.35 mm)	7/16	12 ± 3 lb-ft (16 ± 4 Nm)
.312 in. (7.94 mm)	1/2	15 ± 4 lb-ft (20 ± 5 Nm)
.375 in. (9.52 mm)	9/16	18 ± 4 lb-ft (24 ± 5 Nm)
.375 in. (9.52 mm)	5/8	26 ± 4 lb-ft (35 ± 5 Nm)
.500 in. (12.70 mm)	3/4	37 ± 5 lb-ft (50 ± 7 Nm)
.625 in. (15.88 mm)	7/8	48 ± 5 lb-ft (65 ± 7 Nm)
.750 in. (19.05 mm)	1 1/16	75 ± 7 lb-ft (102 ± 9 Nm)
.875 in. (22.22 mm)	1 3/16	90 ± 7 lb-ft (122 ± 9 Nm)
1.000 in. (25.40 mm)	1 5/16	100 ± 11 lb-ft (136 ± 15 Nm)
1.250 in. (31.75 mm)	1 5/8	135 ± 11 lb-ft (183 ± 15 Nm)
1.500 in. (38.10 mm)	1 7/8	165 ± 11 lb-ft (224 ± 15 Nm)
2.000 in. (50.80 mm)	2 1/2	240 ± 22 lb-ft (325 ± 30 Nm)
Note: Use 50 percent of torque values from Table 15 when the fitting or port material is nonferrous.		

FLARE FITTINGS - CONTINUED

45 Degree Flare and 45 Degree Inverted Flare Fittings

(1) 45 Degree Inverted Flare Fittings

(2) 45 Degree Flare Fittings

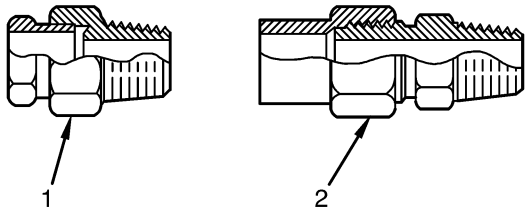

427-C2077

Table 16. 45 Degree Flare Fittings and 45 Degree Inverted Flare Fittings.

Nominal Outer Diameter of the Tube	Thread Size (In.)	Standard Torque
.125 in. (3.18 mm)	5/16	44 ± 13 lb-in. (5.0 ± 1.5 Nm)
.188 in. (4.76 mm)	3/8	70 ± 13 lb-in. (8.0 ± 1.5 Nm)
.250 in. (6.35 mm)	7/16	100 ± 15 lb-in. (11 ± 2 Nm)
.312 in. (7.94 mm)	1/2	13 ± 2 lb-ft (18 ± 3 Nm)
.375 in. (9.52 mm)	5/8	22 ± 2 lb-ft (30 ± 3 Nm)
.375 in. (9.52 mm)	5/8	26 ± 4 lb-ft (35 ± 5 Nm)
.438 in. (11.11 mm)	11/16	22 ± 2 lb-ft (30 ± 3 Nm)
.500 in. (12.70 mm)	3/4	28 ± 3 lb-ft (38 ± 4 Nm)
.625 in. (15.88 mm)	7/8	37 ± 4 lb-ft (50 ± 5 Nm)
.750 in. (19.05 mm)	1 1/16	65 ± 6 lb-ft (88 ± 8 Nm)
.875 in. (22.22 mm)	1 1/4	75 ± 7 lb-ft (102 ± 9 Nm)

AIR CONDITIONING FITTINGS

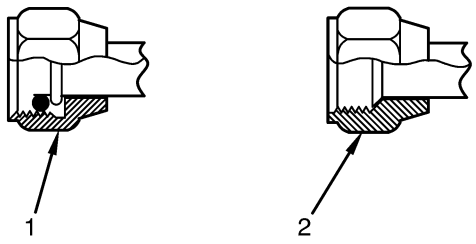

(1) O-RING SEAL (2) 45 DEGREE FLARE FITTING 427-C2078

Table 17. Air Conditioning Fittings.

Thread Size (In.)	O-Ring Fitting End	45 Degree Flare Fitting End	
	Torque	Torque for Steel Tubes	Torque for Aluminum Tubes
5/8 - 18	10 ± 3 lb-ft (14 ± 4 Nm)	22 ± 2 lb-ft (30 ± 3 Nm)	17 ± 2 lb-ft (23 ± 3 Nm)
3/4 - 16	20 ± 3 lb-ft (27 ± 4 Nm)	38 ± 4 lb-ft (52 ± 5 Nm)	24 ± 4 lb-ft (33 ± 5 Nm)
7/8 - 14 1 - 14	30 ± 3 lb-ft (41 ± 4 Nm)	44 ± 5 lb-ft (60 ± 7 Nm)	28 ± 3 lb-ft (38 ± 4 Nm)
1 1/16 - 14	33 ± 4 lb-ft (45 ± 5 Nm)	55 ± 6 lb-ft (75 ± 8 Nm)	37 ± 4 lb-ft (50 ± 5 Nm)

TAPERED PIPE THREAD FITTINGS

Torque is based on diameter of thread. Torque values are identical for coarse and fine threads.

NOTE

The following table has recommended standard torque value for tapered pipe thread fitting for use on Caterpillar engines.

Table 18. Tapered Pipe Thread Fittings.

Diameter of the Pipe Thread (In.)	Standard Torque	
	Threads with 5P-3413 Pipe Sealant	Threads without Pipe Sealant
1/16	90 lb-in. (10 Nm)	90 lb-in. (10 Nm)
1/8	12 lb-ft (16 Nm)	12 lb-ft (16 Nm)
1/4	15 lb-ft (20 Nm)	18 lb-ft (24 Nm)
3/8	26 lb-ft (35 Nm)	33 lb-ft (45 Nm)
1/2	33 lb-ft (45 Nm)	44 lb-ft (60 Nm)
3/4	44 lb-ft (60 Nm)	55 lb-ft (75 Nm)
1	55 lb-ft (75 Nm)	65 lb-ft (88 Nm)
1 1/4	65 lb-ft (88 Nm)	80 lb-ft (108 Nm)
1 1/2	80 lb-ft (108 Nm)	95 lb-ft (129 Nm)
2	95 lb-ft (129 Nm)	120 lb-ft (163 Nm)
Note: Use 50 percent of torque values from Table 18 when fitting, plug, or port material is nonferrous. Use 50 percent of torque values from Table 18 when tapered thread is mating with straight thread.		

MISCELLANEOUS FITTINGS

Hi-Duty Tube Fittings (Shear Sleeve)

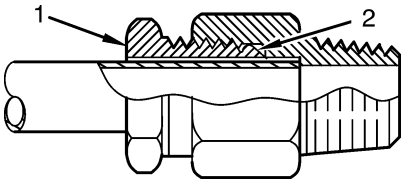

427-C2079

Put nut (1) over tube and push tube into counterbore of fitting body as far as possible. Turn nut with wrench until small decrease in torque is felt. Small decrease in torque indicates that sleeve (2) has been broken off of the nut. Hold tube to prevent tube from turning. Tighten nut for an additional 1 1/2 turns.

SAE FLARELESS FITTINGS

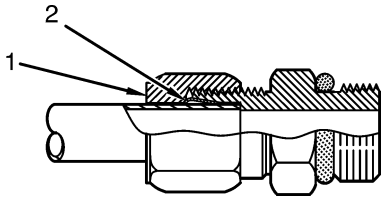

427-C2080

Put nut (1) and sleeve (2) over tube. Head end of sleeve should be next to nut. Head end has shoulder. Push tube into counterbore of fitting body as far as possible. Turn nut clockwise until sleeve grips tube. Sleeve must stop all movement of tube. Tighten nut until sudden increase in torque is felt. Next, tighten fitting for an additional 1/6 to 1/3 turn to seat sleeve.

Flex Fittings

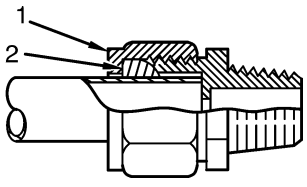

427-C2081

Put nut (1) and sleeve (2) over tube and push tube into counterbore of fitting body as far as possible. Tighten nut until nut is against hex part of fitting body.

HOSE CLAMPS

Worm Drive Band Type Clamps

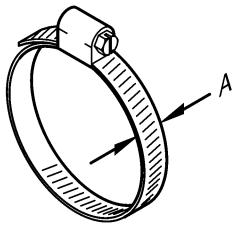

Table 19. Worm Drive Band Type Clamps.

Width (A) of Clamp	Torque for New Hose
0.31 in. (7.9 mm)	8 ± 2 lb-in. (0.9 ± 0.2 Nm)
0.53 in. (13.5 mm)	40 ± 4 lb-in. (4.5 ± 0.5 Nm)
0.63 in. (15.9 mm)	65 ± 4 lb-in. (7.3 ± 0.5 Nm)
Width (A) of Clamp	**Torque for Reused Hose(1)**
0.31 in. (7.9 mm)	6 ± 2 lb-in. (0.7 ± 0.2 Nm)
0.53 in. (13.5 mm)	27 ± 4 lb-in. (3.0 ± 0.5 Nm)
0.63 in. (15.9 mm)	40 ± 4 lb-in. (4.5 ± 0.5 Nm)
(1) Use this value when hose is re-used. However, clamp may be new or re-used.	

HOSE CLAMPS - CONTINUED

Constant Torque Hose Clamps

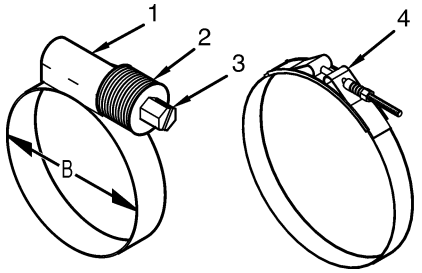

Use a constant torque hose clamp instead of any worm drive band type clamp. Ensure constant torque hose clap is the same size as worm drive band type clamp. Because of extreme temperature changes, hose will heat set. Heat setting can cause worm drive band type clamps to become loose. Loose hose clamps can result in leaks. There have been reports of component failures that have been caused by loosened worm drive band type clamps. Constant torque hose clamp will help prevent these failures.

Use a torque wrench for proper installation of all constant torque hose clamps. There are two types of constant torque hose clamps: Belleville washer (1) and T bolt and spring (4).

When constant torque hose clamp of Belleville washer (1) is assembled correctly, Belleville washers (2) are nearly collapsed flat. The proper torque for screw (3) is based on diameter (B) of clamp. Refer to the following table for the correct torque.

Diameter (B)	Standard Torque
2 in. (Up to 50.8 mm)	65 ± 5 lb-in. (7.3 ± 0.6 Nm)
2 in. (Greater than 50.8 mm)	95 ± 10 lb-in. (11 ± 1 Nm)

The correct torque for constant torque hose clamp (T bolt and spring) (4) is 60 ± 10 lb-in. (7 ± 1 Nm).

END OF WORK PACKAGE

PREPARATION FOR STORAGE OR SHIPMENT 0235 00

THIS WORK PACKAGE COVERS

Preparation for Short-Term Storage

Preparation for Return to Service from Short-Term Storage

Preparation for Long-Term Storage

Preparation for Return to Service from Long-Term Storage

Preparation for Shipment

INITIAL SETUP

Maintenance Level

Unit

Tools and Special Tools

Tool kit, general mechanic's, automotive (Item 90, WP 0232 00)

Shop equipment, automotive maintenance and repair: organizational maintenance, common no. 1 (Item 70, WP 0232 00)

Materials/Parts

Barrier material, grease proofed, flexible (Item 4, WP 0233 00)

Biocide, fuel preservative (Item 5, WP 0233 00)

Diesel fuel, DF-1 (Item 10, WP 0233 00)

Fuel oil, diesel, DF-2 (Item 11, WP 0233 00)

Fuel, turbine, aviation (Item 12, WP 0233 00)

Grease, automotive and artillery, GAA (Item 15, WP 0233 00)

Lubricating oil, engine (Item 21, WP 0233 00)

Lubricating oil, engine, preservative (Item 22, WP 0233 00)

Nitrate test strips (Item 24, WP 0233 00)

Oil, lubricating, OE/HDO-40 (Item 26, WP 0233 00)

Oil, lubricating, OE/HDO-5/40 (Item 27, WP 0233 00)

Oil, lubricating, OEA-30, Arctic (Item 29, WP 0233 00)

Paint, heat resisting (Item 32, WP 0233 00)

Primer coating (Item 34, WP 0233 00)

Rag, wiping (Item 35, WP 0233 00)

Sodium bicarbonate, technical (Item 39, WP 0233 00)

Materials/Parts - Continued

Strap, tiedown, electrical components (Item 42, WP 0233 00)

Tag, marker (Item 43, WP 0233 00)

Tape, pressure sensitive adhesive (Item 45, WP 0233 00)

Lubricating oil, engine, preservative (Item 22, WP 0233 00)

Personnel Required

MOS 62B, Construction Equipment Repairer (2)

References

TB 750-651

TM 9-6140-200-14

WP 0019 00

WP 0020 00

WP 0024 00

WP 0025 00

WP 0030 00

WP 0033 00

WP 0035 00

WP 0036 00

WP 0041 00

WP 0048 00

WP 0051 00

WP 0096 00

WP 0097 00

WP 0100 00

WP 0111 00

WP 0187 00

Equipment Conditions

Machine parked on level ground (TM 5-3805-291-10)

Work tool lowered to ground (TM 5-3805-291-10)

Parking brake engaged (TM 5-3805-291-10)

Wheels chocked

Battery disconnect switch in OFF position (TM 5-3805-291-10)

Estimated Time to Complete Task

8.0 hr

PREPARATION FOR SHORT-TERM STORAGE

NOTE

Short-term storage is storage for 90 days or less.

1. Thoroughly clean machine.
2. Perform all Operator PMCS (TM 5-3805-291-10).
3. Fill fuel tank completely to prevent condensation from forming (TM 5-3805-291-10).
4. Perform Unit PMCS (WP 0019 00 and WP 0020 00).
5. Schedule next PMCS on ULLS-G (Unit Level Logistics System – Ground).
6. Store machine in a dry, protected area with work tools lowered to ground (TM 5-3805-291-10).
7. If storage exceeds 30 days, disconnect battery cables (WP 0096 00) and secure away from contact with battery terminals using Strap, tiedown, electrical components (Item 42, WP 0233 00). Place a sign that says “BATTERIES ARE DISCONNECTED” in driver’s compartment. Maintain batteries IAW TM 9-6140-200-14.



- **To avoid injury, eye protection and acid-resistant gloves must be worn when working around batteries. Do not smoke, use open flame, make sparks, or create other ignition sources around batteries. If a battery is giving off gases, it can explode and cause injury. Remove all jewelry such as rings, ID tags, watches, and bracelets. If jewelry or a tool contacts a battery terminal, a direct short will cause instant heating, damage to equipment, and injury to personnel.**
- **Sulfuric acid contained in batteries can cause serious burns. If battery corrosion or electrolyte makes contact with skin, eyes or clothing, take immediate action to stop the corrosive burning effects. Failure to follow these procedures may result in injury or death to personnel.**
  - **a. Eyes. Flush with cold water for no less than 15 minutes and seek medical attention immediately.**
  - **b. Skin. Flush with large amounts of cold water until all acid is removed. Seek medical attention as required.**
  - **c. Internal. If corrosion or electrolyte is ingested, drink large amounts of water or milk. Follow with milk of magnesia, beaten egg, or vegetable oil. Seek medical attention immediately.**
  - **d. Clothing/Equipment. Wash area with large amounts of cold water. Neutralize acid with baking soda or household ammonia.**

PREPARATION FOR SHORT-TERM STORAGE - CONTINUED

8. Remove batteries (WP 0096 00) and clean batteries, clamps, supports, retainers, and battery box using acid swabbing brush and a solution of 1/2 lb (0.23 kg) of Sodium bicarbonate, technical (Item 39, WP 0233 00), to 1 gal. (3.8 L) of water. Flush with clean water and dry (TM 9-6140-200-14). Place batteries back in battery boxes.
9. Check engine coolant to ensure coolant has correct mixture for expected temperatures (WP 0020 00).
10. Seal all openings in engine, including air intake, exhaust outlet, and crankcase breather tube, with Tape, pressure sensitive adhesive (Item 45, WP 0233 00).
11. Ensure battery disconnect switch is in OFF position (TM 5-3805-291-10).
12. Fill in DD Form 1397, *Vehicles and Spare Engines, Processing and Deprocessing Record for Shipment, Storage and Issue of*, completely and attach to a conspicuous part of machine.
13. Inflate tires to 60 psi (414 kPa) for front and 40 psi (275 kPa) for rear with dry air (TM 5-3805-291-10). Annotate air pressure and/or if nitrogen was used on DA Form 2258, *Depreservation Guide for Vehicles and Equipment*.

PREPARATION FOR RETURN TO SERVICE FROM SHORT-TERM STORAGE

1. Inflate tires to 60 psi (414 kPa) for front and 40 psi (275 kPa) for rear with dry air (TM 5-3805-291-10).
2. Remove tape from all engine openings, including air intake, exhaust outlet, and crankcase breather tube.
3. If disconnected, connect battery cables (WP 0096 00).
4. Check coolant level in radiator (TM 5-3805-291-10).
5. Ensure fuel tank is full (TM 5-3805-291-10).
6. Start engine and perform machine warm-up (TM 5-3805-291-10). Verify proper operation of all gages, switches, and lights.
7. Operate machine without a load and check engine, transmission, brakes, steering, and electrical accessories for proper operation (TM 5-3805-291-10).

PREPARATION FOR LONG-TERM STORAGE

NOTE

Long-term storage is storage for more than 90 days.

1. Thoroughly clean machine.
2. Perform all Operator PMCS (TM 5-3805-291-10).
3. Perform Unit PMCS (WP 0019 00 and WP 0020 00).
4. Schedule next PMCS on ULLS-G.
5. Inspect machine for corrosion. Use touch-up paint where necessary to prevent rust (TB 43-0242, *CARC Spot Painting*).
6. Where practical, store hydraulic cylinders in fully retracted position, which is normal locked/stored position for equipment. Fill hydraulic systems to operating level (TM 5-3805-291-10). Coat exposed surfaces of hydraulic cylinder with Grease, automotive and artillery, GAA (Item 15, WP 0233 00). Wrap Barrier material, grease proofed, flexible (Item 4, WP 0233 00), around greased surfaces and secure wrap with Tape, pressure sensitive adhesive (Item 45, WP 0233 00). Place a tag on cylinder requiring grease to be cleaned off exposed surface prior to use. This is necessary to prevent cylinder seal from being damaged by contaminated grease.

PREPARATION FOR LONG-TERM STORAGE - CONTINUED

NOTE

If machine has accumulated a very low amount of hours (250 hours or less) since its last scheduled lubrication service, do not drain and refill transmission and differential; skip step 7 and proceed to step 8.

7. Drain and refill transmission (WP 0100 00) and differential (WP 0109 00).
8. Transmission and differential shall be filled to operating level with operational oil, as specified. Operate through all ranges for a minimum of 1 minute at a sufficient speed to assure lubricant coverage of all internal parts and surfaces. Transmissions shall be stored in neutral position. The soldier will annotate DA Form 2258 to indicate the grade and type of oil used.
9. Preserve engine as follows:

CAUTION

If an engine is not used for prolonged periods, oil can run off the cylinder walls, piston rings, main bearings, connecting rod bearings, crankshaft, gears, and other parts that normally get lubrication. This lack of lubricant allows corrosion to start on the metal, especially in areas of high humidity (water content in the air).

a. First, clean engine of all dirt, rust, grease, and oil. Inspect exterior of engine and paint areas that have paint damage with Paint, heat resisting (Item 32, WP 0233 00).

b. Remove any dirt from air cleaner. Check all seals and gaskets and filter element for damage (WP 0030 00).

c. Drain and refill crankcase with Lubricating oil, engine, preservative (Item 22, WP 0227 00) and change oil filter(s) (WP 0025 00). The soldier shall prepare a tag for each engine and attach it to or near to lube oil files; “THIS CRANKCASE IS FILLED TO OPERATING LEVEL WITH PRESERVATIVE LUBRICATING OIL GOOD FOR OPERATION UNTIL THE FIRST REQUIRED OIL CHANGE-DO NOT DRAIN-CHECK OIL LEVEL-IF LOW, FILL TO OPERATING LEVEL WITH OPERATION OIL.” To insure continuous preservation qualities of oil, oil shall be changed after 50 hours of operation.

NOTE

If the engine crankcase is full, drain enough engine oil to add the mixture.

d. Remove air filter element (WP 0030 00). Place emergency shutdown switch in OFF position (TM 5-3805-291-10) and turn engine at cranking speed. Add a coating of Lubricating oil, engine preservative (Item 22, WP 0227 00) into air intake or turbocharger inlet. Install air filter element and completely enclose element with dark plastic bags, sealing it with Tape, pressure sensitive adhesive (Item 45, WP 0233 00). Reinstall air filter covers. Put Tape, pressure sensitive adhesive (Item 45, WP 0233 00) over all openings to seal oil vapors in engine.

e. Apply a coating of Lubricating oil, engine preservative (Item 22, WP 0227 00) into exhaust openings. The minimum application volume is 1.4 oz (40 ml). Seal exhaust pipe, including drain holes in muffler, with Tape, pressure sensitive adhesive (Item 45, WP 0233 00).

f. Replace both primary and secondary fuel filters (WP 0035 00 and WP 0036 00). Apply a spray of Lubricating oil, engine preservative (Item 22, WP 0227 00) to prevent rust in fuel tank. Add 2 oz (50 ml) of Biocide, fuel preservative (Item 5, WP 0233 00) to fuel. Apply a small amount of oil to threads on fuel tank filler neck, and install cap (TM 5-3805-291-10). Seal all openings to tank with Tape, pressure sensitive adhesive (Item 45, WP 0233 00), to prevent evaporation of fuel and preservative.

g. Remove fuel injectors (WP 0187 00) and apply 1 oz (30 ml) of Lubricating oil, engine preservative (Item 22, WP 0227 00) into each cylinder. Rotate crankshaft by hand slowly; this will put oil on cylinder walls. Reinstall fuel injectors.

PREPARATION FOR LONG-TERM STORAGE - CONTINUED

h. Remove starter (WP 0049 00) and spray a thin amount of Lubricating oil, engine preservative (Item 22, WP 0227 00) on flywheel, ring gear teeth, and starter pinion. Install starter to keep in oil vapors.

NOTE

Install all covers and make sure that tape has been installed over all openings: air intake, exhaust, flywheel housing, crankcase breather, dipstick tubes, etc.

i. Attach a tag to engine with a notation of date machine was preserved, saying "THIS CRANKCASE IS FILLED TO OPERATING LEVEL WITH PRESERVATIVE LUBRICATING OIL GOOD FOR OPERATION UNTIL THE FIRST REQUIRED OIL CHANGE - DO NOT DRAIN - CHECK OIL LEVEL - IF LOW, FILL TO OPERATING LEVEL WITH OPERATIONAL OIL."

j. Inspect outside of engine every two or three months for corrosion. If engine shows signs of corrosion on outside at check period, repeat this procedure.

10. Check engine coolant to ensure coolant has correct mixture for expected temperatures (TB 750-651).

11. Remove serpentine belt (WP 0048 00) after completing engine preservation. Coat unpainted surfaces of pulley grooves with a Primer coating (Item 34, WP 0233 00). Tag machine indicating "BELT REMOVED, INSTALL PRIOR TO STARTING ENGINE" and attach annotated DA Form 2258.

12. Ensure battery disconnect switch is in OFF position (TM 5-3805-291-10).

13. Remove batteries (WP 0096 00) and tape all battery cable ends with Tape, pressure sensitive adhesive (Item 45, WP 0233 00). Clean batteries, clamps, supports, retainers, and battery box using acid swabbing brush and a solution of 1/2 lb (0.23 kg) of Sodium bicarbonate, technical (Item 39, WP 0233 00) to 1 gal. (3.8 L) of water. Flush with clean water and dry (TM 9-6140-200-14). Store batteries where they can be checked periodically and recharged. Discharged batteries will be damaged if they are stored in below freezing temperatures. Secure battery cables to battery box with Strap, tiedown, electrical components (Item 42, WP 0233 00).

14. Completely drain fuel tank (WP 0033 00) and fill or fog tank with Lubricating oil, engine (Item 21, WP 0233 00). Coat filler cap and drain plug with same oil and reinstall.

15. Place blocking under axles to remove weight from tires.

16. Fill in Form DD 1397, *Vehicles and Spare Engines, Processing and Deprocessing Record for Shipment, Storage and Issue of,* completely and attach to a conspicuous part of machine.

17. Inflate tires to 60 psi (414 kPa) for front and 40 psi (275 kPa) for rear with dry air (TM 5-3805-291-10). Dry nitrogen may be considered for long-term outside storage. Annotate air pressure and/or if nitrogen was used on DA Form 2258.

PREPARATION FOR RETURN TO SERVICE FROM LONG-TERM STORAGE

1. Inflate tires to 60 psi (414 kPa) for front and 40 psi (275 kPa) for rear with dry air (TM 5-3805-291-10).

2. Remove blocking from under axles.

3. Remove tape from battery cable ends and install batteries fully charged (WP 0096 00).

4. Fill hydraulic systems to operating level (TM 5-3805-291-10). Remove barrier material, tape, and tags from cylinders.

5. Fill fuel tank with Diesel fuel, DF-1 (Item 10, WP 0233 00); Fuel oil, diesel, DF-2 (Item 11, WP 0233 00); or Fuel, turbine, aviation (Item 12, WP 0233 00) (TM 5-3805-291-10).

6. Check oil and hydraulic fluid levels in engine crankcase, transmission, and hydraulic reservoir (TM 5-3805-291-10).

7. Check oil level in front and rear axles (WP 0111 00).

8. Check coolant level in radiator (TM 5-3805-291-10).

PREPARATION FOR RETURN TO SERVICE FROM LONG-TERM STORAGE - CONTINUED

9. Prepare engine for operation as follows:
   a. Remove all outside protective covers.
   b. Change engine oil and filter (WP 0025 00).
   c. Install serpentine belt (WP 0048 00). Replace as necessary.
   d. Replace fuel filter elements (WP 0035 00 and WP 0036 00).
   e. Remove plastic covers from air cleaner elements.

CAUTION

If an engine is not used for prolonged periods, oil can run off the cylinder walls, piston rings, main bearings, connecting rod bearings, crankshaft, gears, and other parts that normally get lubrication. This lack of lubricant allows corrosion to start on the metal, especially in areas of high humidity (water content in the air).

   f. Turn engine in normal direction of rotation (TM 5-3805-291-10) by hand to make sure there are no hydraulic locks or excessive resistance.
   g. Before starting engine, remove valve cover (WP 0024 00) and put a large amount of engine oil [Oil, lubricating, OEA-30, Arctic (Item 29, WP 0233 00); Oil, lubricating, OE/HDO-40 (Item 26, WP 0233 00); or Oil, lubricating, OE/HDO-5/40 (Item 27, WP 0233 00)] on camshaft, cam followers, and valve mechanism to prevent damage to mechanism.
   h. Before starting engine, test coolant mixture for proper nitrite and conditioner level with Nitrate test strips (Item 24, WP 0233 00). Drain and fill coolant, if necessary (WP 0041 00).
   i. Prime engine with clean diesel fuel before starting (TM 5-3805-291-10).

CAUTION

The engine must have adequate lubrication during the first few seconds of operation. A "dry start" (without adequate lubrication) can cause bearing damage. To prevent the possibility of a "dry start" and bearing damage during the first seconds of operation, pressure lubricate the engine.

   j. To get immediate lubrication, and to prevent damage to engine in the first few seconds after starting, pressure lubricate engine as follows:
      (1) Fill main oil passages with oil under pressure. Sources of clean oil under pressure, such as a service shop central oil supply, can be used for pressure lubrication.
      (2) Use a clean source of oil.
      (3) Put correct amount of engine oil in crankcase.
      (4) Connect oil source to engine's main oil passage.
      (5) Do not exceed an oil pressure of 35 ± 5 psi (242 ± 35 kPa).
      (6) Fill crankcase with correct oil: Oil, lubricating, OEA-30, Arctic (Item 29, WP 0233 00); Oil, lubricating, OE/HDO-40 (Item 26, WP 0233 00); or Oil, lubricating, OE/HDO-5/40 (Item 27, WP 0233 00). Amount of oil used in pressure lubrication procedure must be subtracted from refill capacity given in TM 5-3805-291-10. Maintain oil level between ADD and FULL marks on dipstick.
   k. Check condition of ALL rubber hoses. Replace damaged hoses as necessary.

PREPARATION FOR RETURN TO SERVICE FROM LONG-TERM STORAGE - CONTINUED

10. On the first day of returning to operation, check entire engine several times for leaks and correct operation. The quality of oil control components used in engines is such that, following engine storage, only an operational check at initial start is necessary before operation. This operational check ensures correct pressures and temperatures are kept in lubrication, cooling, and fuel systems, and leaks are detected. To be sure of a safe, uniform check at initial start, use this procedure:
    (1) Place emergency shutdown switch in OFF position (TM 5-3805-291-10) and crank engine until engine oil pressure is present.
    (2) Place emergency shutdown switch in ON position (TM 5-3805-291-10), start engine, and allow it to run for 10 minutes at low idle speed (TM 5-3805-291-10).
    (3) Operate engine for 15 minutes at half-load and three-quarter rated speed (TM 5-3805-291-10).
    (4) Operate engine for 30 minutes at rated load and speed (TM 5-3805-291-10).
    (5) Check frequently for leaks such as oil, coolant, and fuel during first few hours of operation. Repair any leaks as soon as they are detected.

PREPARATION FOR SHIPMENT

1. Perform all Operator PMCS (TM 5-3805-291-10).
2. Perform Unit PMCS (WP 0019 00 and WP 0020 00).
3. Schedule next PMCS on ULLS-G (Unit Level Logistics System – Ground).
4. Seal exhaust stack opening and engine air cleaner precleaner opening with Tape, pressure sensitive adhesive (Item 45, WP 0233 00).
5. Consult shipping and transportation data on data plate (TM 5-3805-291-10).
6. Refer to TM 5-3805-291-10 for Transport Procedures.

END OF WORK PACKAGE

Table 1. 966H Nomenclature Cross-Reference List.

Manual	Schematic
24	+24V
+V	+ BATTERY
ANTI-DRIFT DUMP SOLENOID	DUMP ANTIDRIFT SOLENOID
ANTI-DRIFT LOWER SOLENOID	LOWER ANTIDRIFT SOLENOID
ARC SUPPRESSOR START RLY	START RELAY ARC SUPPRESSOR
AUX LFT PROP SOLENOID	AUXILIARY THIRD FUNCTION REARWARD SOLENOID
AUX LWR PROP SOLENOID	AUXILIARY THIRD FUNCTION FORWARD SOLENOID
AUXILIARY HE SOLENOID	AUX 3RD FUNCTION FWD SOLENOID
AUXILIARY RE SOLENOID	THIRD REARWARD SOLENOID
BOOST PRESSURE SENSOR	INTAKE MANIFOLD PRESSURE SENSOR
BAT -	BATTERY - (4)
CAL	CALIBRATE
CAN A-	CAN DATA LINK -
CAN A+	CAN DATA LINK +
CLUTCH 1 (REVERSE)	CLUTCH SOLENOID 1 (REVERSE)
CLUTCH 1 REV	CLUTCH SOLENOID 1 (REVERSE)
CLUTCH 1 REVERSE	CLUTCH SOLENOID 1 (REVERSE)
CLUTCH 2 (FORWARD)	CLUTCH SOLENOID 2 (FORWARD)
CLUTCH 2 FORWARD	CLUTCH SOLENOID 2 (FORWARD)
CLUTCH 2-FWD	CLUTCH SOLENOID 2 (FORWARD)
CLUTCH 3 (FOURTH GEAR)	CLUTCH SOLENOID 3 (SPEED 4)
CLUTCH 3 (SPEED 4)	CLUTCH SOLENOID 3 (SPEED 4)
CLUTCH 3-4TH	CLUTCH SOLENOID 3 (4TH GEAR)
CLUTCH 4 (SPEED 3)	CLUTCH SOLENOID 4 (SPEED 3)
CLUTCH 4 (THIRD GEAR)	CLUTCH SOLENOID 4 (SPEED 3)
CLUTCH 5 (SECOND GEAR)	CLUTCH SOLENOID 5 (SPEED 2)
CLUTCH 5 (SPEED 2)	CLUTCH SOLENOID 5 (SPEED 2)
CLUTCH 5-2ND	CLUTCH SOLENOID 5 (2ND GEAR)
CLUTCH 6 (FIRST GEAR)	CLUTCH SOLENOID 6 (SPEED 1)
CLUTCH 6 (SPEED 1)	CLUTCH SOLENOID 6 (SPEED 1)

Table 1. 966H Nomenclature Cross-Reference List - Continued.

Manual	Schematic
CLUTCH 6-1ST	CLUTCH SOLENOID 6 (1ST GEAR)
CONVERTER OUTPUT SPD SNSR-	TC OUT SPEED SENSOR -
CONVERTER OUTPUT SPD SNSR+	TC OUT SPEED SENSOR +
COOLING FAN	DEMAND FAN
DIRECTION SW (FORWARD)	DIRECTION SWITCH FORWARD
DIRECTION SW (NEUTRAL)	DIRECTION SWITCH NEUTRAL
DIRECTION SW (REVERSE)	DIRECTION SWITCH REVERSE
DRIFT REDUCTION	ANTI-DRIFT
DRIFT REDUCTION SOLENOID	ANTI-DRIFT SOLENOID
DRIFT SOLENOID	LOWER ANTI-DRIFT SOLENOID
DUMP SOL	DUMP SOLENOID
DUMP SOLENOID	DUMP PROPORTIONAL SOLENOID
ENGINE COOLANT TEMPERATURE (SENSOR RETURN)	COOLANT TEMPERATURE SENSOR (GROUND)
ENGINE COOLANT TEMPERATURE SENSOR	COOLANT TEMPERATURE SENSOR
ENGINE OIL PRESSURE (ECM)	ENGINE OIL PRESSURE SENSOR SIGNAL
ENGINE SPD TACH WIRE (ENGINE)	ENGINE SPD SIGNAL TO TRANSMISSION
ENGINE START SWITCH	KEY START SWITCH
ETHER INJECTION SOLENOID (ECM)	ETHER ON RELAY
FWD	FORWARD
FWD SW IP	FORWARD SWITCH IP
GND	GROUND
HEADLAMP	SERVICE LIGHT
HMU 1 OR UPSHIFT SW (N/C)	HMU 1 OR UPSHIFT SWITCH (N/C)
HMU 2 OR UPSHIFT SW (N/O)	HMU 2 OR UPSHIFT SWITCH (N/O)
HMU 3 OR DOWNSHIFT (N/C)	HMU 3 OR UDOWNSHIFT SWITCH (N/C)
HMU 4 OR DOWNSHIFT (N/O)	HMU 4 OR UDOWNSHIFT SWITCH (N/O)
HORN	HORN HIGH
HORN	HORN LOW
ID CODE 2 (GROUND)	IDENTIFICATION CODE 2
ID CODE ENABLE	ECM LOC CODE ENABLE
IGNITION SWITCH	ENGINE START SWITCH

Table 1. 966H Nomenclature Cross-Reference List - Continued.

Manual	Schematic
IMAGE 427 C1616 XMSN OIL TEMP SENSOR (ECM)	TRANSMISSION OIL TEMPERATURE SENSOR
IMAGE NUMBER 427-C0700 “THROTTLE POSITION SENSOR” DIGITAL RETURN	THROTTLE POSITION SENSOR GROUND
IMAGE NUMBER 427-C0705 ENGINE SHUTDOWN SWITCH (RUN POSITION)	EMERGENCY SHUTDOWN SWITCH
IMPL LOCKOUT SW (NC)	IMPLEMENT LOCKOUT SWITCH (NC)
IMPL LOCKOUT SW (NO)	IMPLEMENT LOCKOUT SWITCH (NO)
IMPLEMENT CONTROL DOWNSHIFT SWITCH (N/O)	ELECTROHYDRAULIC CONTROL DOWNSHIFT (N/O)
INTAKE MANIFOLD AIR TEMPERATURE SENSOR	INTAKE AIR TEMPERATURE SENSOR
INTAKE MANIFOLD AIR TEMPERATURE (SENSOR RETURN)	INTAKE AIR TEMPERATURE SENSOR (GROUND)
JOYSTICK CONTROL POSITION SENSOR	JOYSTICK POSITION SENSOR
JUNCTION BLOCK	FUSE BOX
KICKOUT SET SW LIFT	KICKOUT SET SWITCH LIFT
KICKOUT SET SWITCH	BUCKET KICKOUT SET SWITCH LIFT
KICKOUT SET SW TILT	KICKOUT SET SWITCH TILT
LEFT PEDAL POSITION SENSOR	LEFT HAND BRAKE PEDAL SENSOR
LIFT LVR POS SENS	LIFT LEVER POSITION SENSOR
LOWER SOL	LOWER SOLENOID
NEUT SW IP	NEUTRAL SWITCH IP
PARA 5 (C) (1) LIFT LINKAGE ROTARY POSITION SENSOR	SCHEMATIC REFERS TO THIS SENSOR AS THE LIFT POSITION SENSOR
PARA 5 D. (1) TILT LINKAGE ROTARY POSITION SENSOR	SCHEMATIC REFERS TO THIS SENSOR AS THE TILT POSITION SENSOR
PARKING BRAKE SOLENOID	PARKING BRAKE ACTUATOR SOLENOID
PARK BRAKE SW-DISENGAGED	PARK BRAKE PRESSURE SWITCH DISENGAGE
PARK BRAKE SW-ENGAGED	PARK BRAKE PRESSURE SWITCH ENGAGE
PARKING BRAKE SWITCH (DISENGAGED)	PARK BRAKE PRESSURE SWITCH DISENGAGE
PARKING BRAKE SWITCH (ENGAGED)	PARK BRAKE PRESSURE SWITCH ENGAGE
PILOT PROPORTIONING	PILOT HYDRAULIC SUPPLY
PILOT SOL	PILOT HYD SUPPLY SOLENOID
PILOT SOLENOID	PILOT HYDRAULIC SUPPLY
PILOT SOLENOID RETURN	PILOT HYD SUPPLY SOLENOID RTN

Table 1. 966H Nomenclature Cross-Reference List - Continued.

Manual	Schematic
POSITION SENSOR LIFT LINKAGE	ROTARY LIFT POSITION SENSOR
POSITION SENSOR TILT LINKAGE	ROTARY TILT POSITION SENSOR
PRESSURE SENSOR +5 VDC (PIN 3)	ANALOG SENSOR POWER
PRIM STER PRESSURE SW (N/C)	PRIMARY STEER PRESSURE SWITCH (N/C)
PRIM STER PRESSURE SW (N/O)	PRIMARY STEER PRESSURE SWITCH (N/O)
PRIMARY SPEED/TIMING -	CRANKSHAFT (PRIMARY) SPEED TIMING SENSOR
PRIMARY SPEED/TIMING - (ECM)	CRANKSHAFT SPEED TIMING SENSOR
PRIMARY SPEED/TIMING +	CRANKSHAFT (PRIMARY) SPEED TIMING SENSOR
PRIMARY SPEED/TIMING + (ECM)	CRANKSHAFT SPEED TIMING SENSOR
PRIMARY STEERING PRESS SW	PRIMARY STEERING PRESSURE SWITCH
PRIMARY STEERING PRESSURE SWITCH (N/C)	PRIMARY STEER PRESSURE SWITCH (N/C)
PRIMARY STEERING PRESSURE SWITCH (N/O)	PRIMARY STEER PRESSURE SWITCH (N/O)
PROPORTIONAL RETURN	AUXILIARY SOLENOID RETURN
RACK SOL	RACKBACK SOLENOID
RACK SOLENOID	RACKBACK SOLENOID
RACK SOLENOID	RACKBACK PROPORTIONAL SOLENOID
RACKBACK SOLENOID	RACKBACK PROPORTIONAL SOLENOID
RAISE SOL	RAISE SOLENOID
RAISE SOLENOID	RAISE PROPORTIONAL SOLENOID
REMOTE INPUT 1(FNR)	REMOTE FNR INPUT 1
REMOTE INPUT 4 (FNR)	REMOTE FNR INPUT 4
REMOTE INPUT 6 (FNR)	REMOTE FNR INPUT 6
RETURN FOR SPD CLUTCH 4 & REV	RETURN FOR SPEED CLUTCHES 4 & REVERSE
RETURN FOR SPD CLUTCHES 1-3	RETURN FOR SPEED CLUTCHES 1-3
REV SW IP	REVERSE SWITCH IP
RIDE CNTL SOL 1	RIDE CONTROL SOLENOID #1
RIDE CNTL SOL 2	RIDE CONTROL SOLENOID #2
RIDE CNTL SOL 3	RIDE CONTROL SOLENOID #3
RIDE CNTL SOL ON/OFF #1	RIDE CONTROL SOLENOID ON/OFF#1
RIDE CNTL SOL ON/OFF #2	RIDE CONTROL SOLENOID ON/OFF#2
RIDE CNTL SOL ON/OFF #3	RIDE CONTROL SOLENOID ON/OFF#3
RIDE CNTL/AXLE COOLER RET	RIDE CONTROL/AXLE COOLER RETURN

Table 1. 966H Nomenclature Cross-Reference List - Continued.

Manual	Schematic
RIDE CONTROL SOLENOID 1 (ON/OFF)	RIDE CONTROL SOLENOID ON/OFF #1
RIDE CONTROL SOLENOID 2 (ON/OFF)	RIDE CONTROL SOLENOID ON/OFF #2
RIDE CONTROL SOLENOID 3 (ON/OFF)	RIDE CONTROL SOLENOID ON/OFF #3
RIDE CONTROL SW	RIDE CONTROL SWITCH
RIDE CONTROL SW (AUTO)	RIDE CONTROL SWITCH (AUTO)
RIDE CONTROL SW (ON)	RIDE CONTROL SWITCH (ON)
ROT LIFT POS SENS	ROTARY LIFT POSITION SENSOR
ROT TILT POS SENS	ROTARY TILT POSITION SENSOR
ROTARY LIFT LINKAGE POSITION SENSOR	LIFT POSITION SENSOR
ROTARY TILT LINKAGE POSITION SENSOR	TILT POSITION SENSOR
SEC GEAR	SECOND GEAR
SEC SPEED/TIMING -	CAMSHAFT (SECONDARY) SPEED TIMING SENSOR
SEC SPEED/TIMING +	CAMSHAFT (SECONDARY) SPEED TIMING SENSOR
SEC STEER INTIMED RELAY	SECONDARY STEER INTIMED RELAY
SEC STEERING PRES SW (N/C)	SECONDARY STEER PRESSURE SWITCH (N/C)
SEC STEERING PRES SW (N/O)	SECONDARY STEER PRESSURE SWITCH (N/O)
SEC STEERING PRESSURE SW (N/C)	SECONDARY STEER PRESSURE SWITCH (N/C)
SEC STEERING PRESSURE SW (N/O)	SECONDARY STEER PRESSURE SWITCH (N/O)
SECONDARY SPEED/TIMING - (ECM)	CAMSHAFT SPEED TIMING SENSOR
SECONDARY SPEED/TIMING + (ECM)	CAMSHAFT SPEED TIMING SENSOR
SECONDARY STEERING INTERMEDIATE RELAY	SECONDARY STEERING INTMED RELAY
SECONDARY STEERING PRESS SW	PRIMARY STEERING PRESSURE SWITCH
SECONDARY STEERING PRESSURE SWITCH (N/C)	SECONDARY STEER PRESSURE SWITCH (N/C)
SECONDARY STEERING PRESSURE SWITCH (N/O)	SECONDARY STEER PRESSURE SWITCH (N/O)
SENSOR OUTPUT SPEED (LEADING)	TRANSMISSION OUTPUT SPEED SENSOR
SENSOR OUTPUT SPEED (TRAILING)	TRANSMISSION OUTPUT SPEED SENSOR
SOL RETURN	PROPORTIONAL RETURN
START RELAY	STARTER RELAY
START RELAY/BACKUP ALM RET	START RELAY/RETURN

END OF WORK PACKAGE

SCHEMATICS INTRODUCTION 0237 00

INTRODUCTION

This work package contains schematic diagrams for the 966H Wheel Loader.

Electrical

FO-1. Electrical Schematics - Key to Components . . . . . FP-1/(FP-2 Blank)
FO-1. Electrical Schematics - Key to Harnesses . . . . . FP-3/(FP-4 Blank)
FO-1. Electrical Schematics - Lighting Circuit (Sheet 1 of 21) . . . . . FP-5/(FP-6 Blank)
FO-1. Electrical Schematics - Lighting Circuit (Sheet 2 of 21) . . . . . FP-7/(FP-8 Blank)
FO-1. Electrical Schematics - Accessories Circuit (Sheet 3 of 21) . . . . . FP-9/(FP-10 Blank)
FO-1. Electrical Schematics - Accessories Circuit (Sheet 4 of 21) . . . . . FP-11/(FP-12 Blank)
FO-1. Electrical Schematics - Accessories Circuit (Sheet 5 of 21) . . . . . FP-13/(FP-14 Blank)
FO-1. Electrical Schematics - Accessories Circuit (Sheet 6 of 21) . . . . . FP-15/(FP-16 Blank)
FO-1. Electrical Schematics - Implement Circuit (Sheet 7 of 21) . . . . . FP-17/(FP-18 Blank)
FO-1. Electrical Schematics - Implement Circuit (Sheet 8 of 21) . . . . . FP-19/(FP-20 Blank)
FO-1. Electrical Schematics - Implement Circuit (Sheet 9 of 21) . . . . . FP-21/(FP-22 Blank)
FO-1. Electrical Schematics - Implement Circuit (Sheet 10 of 21) . . . . . FP-23/(FP-24 Blank)
FO-1. Electrical Schematics - Implement Circuit (Sheet 11 of 21) . . . . . FP-25/(FP-26 Blank)
FO-1. Electrical Schematics - Engine Circuit (Sheet 12 of 21) . . . . . FP-27/(FP-28 Blank)
FO-1. Electrical Schematics - Engine Circuit (Sheet 13 of 21) . . . . . FP-29/(FP-30 Blank)
FO-1. Electrical Schematics - Transmission Circuit (Sheet 14 of 21) . . . . . FP-31/(FP-32 Blank)
FO-1. Electrical Schematics - Transmission Circuit (Sheet 15 of 21) . . . . . FP-33/(FP-34 Blank)
FO-1. Electrical Schematics - Transmission Circuit (Sheet 16 of 21) . . . . . FP-35/(FP-36 Blank)
FO-1. Electrical Schematics - Starting Circuit (Sheet 17 of 21). . . . . FP-37/(FP-38 Blank)
FO-1. Electrical Schematics - Starting Circuit (Sheet 18 of 21). . . . . FP-39/(FP-40 Blank)
FO-1. Electrical Schematics - Power Distribution Circuit (Sheet 19 of 21). . . . . FP-41/(FP-42 Blank)
FO-1. Electrical Schematics - Messenger Circuit (Sheet 20 of 21) . . . . . FP-43/(FP-44 Blank)
FO-1. Electrical Schematics - Legend (Sheet 21 of 21) . . . . . FP-45/(FP-46 Blank)

Hydraulic

FO-2. Hydraulic Component Locator . . . . . FP-47/(FP-48 Blank)
FO-2. Hydraulic Schematic (Sheet 1 of 2) . . . . . FP-49/(FP-50 Blank)
FO-2. Hydraulic Schematic Legend (Sheet 2 of 2). . . . . FP-51/(FP-52 Blank)

END OF WORK PACKAGE

INDEX

Subject — *Work Package/Page*

Numerics

12V Switch Removal 0055 00-12
5V Engine Pressure Sensor Supply Circuit Test 0013 00-6

A

Abbreviations/Acronyms, List 0001 00-2
Accessory Support Brackets Replacement 0194 00-1
Accumulator
- Brake Maintenance 0114 00-1
- Pilot Oil Maintenance 0150 00-1
- Refrigerant Replacement 0225 00-1
- Ride Control Maintenance 0151 00-1

Actuator
- Hood Tilt Replacement 0058 00-1
- Parking Brake Replacement 0112 00-1

Aft Shield
- Installation 0166 00-3
- Removal 0166 00-3

Aftercooler Replacement 0189 00-1
Air
- Cleaner and Precleaner Maintenance 0030 00-1
- Fuel Test, In 0011 00-2
- Inlet System Inspection 0011 00-9
- Intake Assembly Hoses and Lines Replacement 0031 00-1

Air Conditioning System
- Blower Motor Replacement 0168 00-1
- Charging 0222 00-6
- Compressor Replacement 0221 00-1
- Condenser Replacement 0226 00-1
- Evacuation 0222 00-3
- Recovery 0222 00-1
- Service 0222 00-1
- Tests, Inspections, and Adjustments 0018 00-1
- Theory of Operation 0003 00-181
- Wiring Harness Replacement 0198 00-1

Alternator Replacement 0046 00-1
Arc Suppressor Replacement 0053 00-1
Arctic Heater
- Replacement 0161 00-1
- Switch
  - Installation 0061 00-3
  - Removal 0061 00-3

INDEX - Continued

Subject — *Work Package/Page*

A - Continued

Arctic Heater Switch Replacement 0061 00-1
Articulated Hitch Adjustment 0016 00-14
Atmospheric Pressure Sensor Replacement 0073 00-1
Axle
- Front, Replacement 0207 00-1
- Rear, Replacement 0208 00-1

B

Backup Alarm Replacement 0094 00-1
Bases, Hydraulic System Oil Filter, Replacement 0155 00-1
Battery
- Batteries Replacement 0096 00-1
- Cables Replacement 0097 00-1
- Disconnect Switch Replacement 0098 00-1

Belt
- Seat Replacement 0141 00-1
- Serpentine Replacement 0048 00-1
- Tensioner Replacement 0047 00-1

Blackout Drive Light Replacement 0068 00-1
Blower Motor Resistor Replacement 0049 00-1
Boost Pressure Sensor Replacement 0074 00-1
Bore Runout (Radial Eccentricity) Inspection 0177 00-4
Brake
- Accumulator Maintenance 0114 00-1
- and Hydraulic Fan System, Theory of Operation 0003 00-67
- Charge Replacement 0217 00-1
- Control Manifold Test 0015 00-4
- Maintenance, Parking 0113 00-1
- Pedal Position Sensor Replacement 0075 00-1
- Pedals Replacement 0118 00-1
- Pump Replacement 0215 00-1
- Service
  - Hoses Replacement 0117 00-1
  - Lines Replacement 0117 00-1
- System Air Purge 0015 00-2
- System Tests, Inspections, and Adjustments 0015 00-1

Braking and Hydraulic Fan Pump Replacement 0215 00-1
Breakout T, Installation of 0022 00-23
Breather Replacement, Crankcase 0026 00-1

INDEX - Continued

Subject *Work Package/Page*

B - Continued

Bristles Replacement 0163 00-1
Broom
Hose, Manifold, and Link Replacement 0164 00-1
Motor Replacement 0165 00-1
Shields and Springs and Links Replacement 0166 00-1
Bucket
Lift Arms Replacement 0229 00-1
Tilt Lever and Link Replacement 0228 00-1
Tips and Cutting Edges Replacement 0170 00-1
Bypass Valve Pump 0028 00-5

C

Cab
Circuit Breaker 0053 00-7
Dome Light Replacement 0138 00-1
Doors Maintenance 0131 00-1
Installation 0132 00-1
Liner Replacement 0138 00-1
Removal 0132 00-1
Sun Visor and Mirrors Replacement 0139 00-1
Wiring Harness Replacement 0195 00-1
Calibration 0017 00-2
Camshaft Speed/Timing Sensor (Secondary) Replacement 0076 00-1
Carrier Bearing Replacement, Front Drive Shaft 0108 00-1
Case Drain Filter Base Removal 0155 00-3
CAT Data Link Circuit Test 0013 00-13
Center Drive Shaft (Slip Joint) Replacement 0107 00-1
Changing Engine Oil and Filter 0025 00-1
Charging System Test 0013 00-74
Chassis
Battery Box Replacement 0133 00-1
Circuit Breaker Box Replacement 0133 00-1
Guard Replacement 0133 00-1
Hydraulic Service Box Replacement 0133 00-1
Rear, Wiring Harness Replacement 0199 00-1
Side Panels Replacement 0133 00-1
Circuit Breaker
Cab 0053 00-7
Panel Box 0053 00-7
Replacement 0053 00-1

INDEX - Continued

Subject *Work Package/Page*

C - Continued

Cluster, Instrument Replacement 0054 00-1
Codes, Diagnostic 0006 00-3
Compressor, Air Conditioning System, Replacement 0221 00-1
Condenser, Air Conditioning System, Replacement 0226 00-1
Connector Repair 0022 00-3
Coolant Temperature Sensor Replacement 0077 00-1
Cooler
  Bypass, Oil Specifications 0028 00-4
  Core, Engine Oil, Replacement 0027 00-1
Cooling
  Jets, Piston, Replacement 0183 00-1
  System Tests, Inspections, and Adjustments 0012 00-1
Cooling System
  Inspection 0012 00-2
  Lines Replacement 0043 00-1
  Package (Radiator, Fan, Aftercooler, and Oil Cooler) Replacement 0190 00-1
  Service 0041 00-1
  Test 0012 00-3
Core
  Engine Oil Cooler, Replacement 0027 00-1
  Evaporator, Replacement 0227 00-1
  Heater, Replacement 0220 00-1
Corrosion Prevention and Control (CPC) 0001 00-1
Counterweight Replacement 0130 00-1
Coupler
  Quick, Replacement 0169 00-1
  System, Removal 0156 00-2
Cover, Front, Replacement 0178 00-1
Crankcase Breather Replacement 0026 00-1
Crankshaft
  Speed/Timing Sensor (Primary) Replacement 0078 00-1
  Vibration Damper and Pulley Replacement 0173 00-1
Cutting Edges Replacement 0170 00-1
Cylinder
  Head Replacement 0172 00-1
  Lift, Replacement 0153 00-1
  Quick Coupler, Replacement 0158 00-1
  Tilt Replacement 0152 00-1

INDEX - Continued

Subject *Work Package/Page*

D

Data Plates Replacement 0147 00-1
Destruction of Army Materiel to Prevent Enemy Use 0001 00-2
Diagnostic Codes 0006 00-3
Differential and Final Drive Oil Change 0111 00-1
Dipstick Tube Removal 0029 00-3
Disconnect Switch Replacement, Battery 0098 00-1
Dome Lamp Replacement 0069 00-1
Dome Light Replacement, Cab 0138 00-1
Door
- Cab, Maintenance 0131 00-1
- Glass Replacement 0213 00-1

Drive Light Replacement, Blackout 0068 00-1
Dryer, Inline Refrigerant, Replacement 0224 00-1

E

Electric Motor Maintenance 0123 00-1
Electrical
- Connector Inspection (Powertrain) 0022 00-18
- Connectors Inspection (Engine) 0022 00-10
- General Maintenance Instructions 0022 00-1
- Ground Points 0022 00-8
- Power Supply Circuit Test 0013 00-18
- System Tests, Inspections, and Adjustments 0013 00-1

Electro-Hydraulic
- Control (Joystick) Replacement 0219 00-1
- System, Theory of Operation 0003 00-136

Electronic Control Module (ECM)
- Engine, Replacement 0057 00-1
- Implement, Replacement 0060 00-1
- Powertrain, Replacement 0063 00-1

Engine
- Compartment Shield Replacement 0212 00-1
- Dipstick Tube Replacement 0029 00-1
- Electronic Control Module (ECM) Replacement 0057 00-1
- Fan Control Solenoid Circuit Test 0013 00-22
- Intake/Exhaust Valve Lash Adjustment 0179 00-1
- Oil Cooler Core Replacement 0027 00-1
- Oil Filler Tube Replacement 0029 00-1
- Oil Filter Base Replacement 0028 00-1
- Oil Pan Maintenance 0181 00-1

INDEX - Continued

Subject *Work Package/Page*

E - Continued

Engine - Continued
- Oil Pressure Sensor Replacement . . . 0079 00-1
- Oil Pressure Test . . . 0010 00-3
- Oil Pump Replacement . . . 0182 00-1
- Pressure Sensor Open or Short Circuit Test . . . 0013 00-26
- Replacement . . . 0171 00-1
- Speed/Timing Sensor Calibration . . . 0013 00-71
- Speed/Timing Sensor Circuit Test . . . 0013 00-34
- Start Switch Removal . . . 0055 00-13
- Temperature Sensor Open or Short Circuit Test . . . 0013 00-41
- Tests, Inspections, and Adjustments . . . 0010 00-1
- Theory of Operation . . . 0003 00-2
- Wiring Harness Replacement . . . 0196 00-1

Equipment
- Characteristics, Capabilities, and Features . . . 0002 00-1
- Data . . . 0002 00-9
- Description and Data . . . 0002 00-1
- Improvement Recommendations (EIRs), Reporting . . . 0001 00-1

Ether
- Injection System Test . . . 0013 00-46
- Starting Aid Replacement . . . 0037 00-1

Evaporator
- Coil, Theory of Operation . . . 0003 00-187
- Core Replacement . . . 0227 00-1

Excessive Engine Oil Consumption . . . 0010 00-6

Exhaust
- Manifold Replacement . . . 0184 00-1
- Muffler Replacement . . . 0040 00-1
- Pipe Replacement . . . 0040 00-1
- System Inspection . . . 0011 00-9
- Temperature Test . . . 0011 00-12
- Valve Lash Adjustment . . . 0179 00-1

Expendable and Durable Items List . . . 0233 00-1

F

Fan
- Group Replacement . . . 0192 00-1
- Hydraulic Motor Replacement . . . 0192 00-1
- Replacement . . . 0190 00-1

Fender Replacement, Front . . . 0136 00-1

INDEX - Continued

Subject *Work Package/Page*

F - Continued

Fill
- Time for Transmission Clutch (MSD) Calibration . . . 0014 00-32
- Tube Removal . . . 0029 00-2

Filter
- Base Replacement, Engine Oil . . . 0028 00-1
- Bases, Hydraulic System Oil, Replacement . . . 0155 00-1
- Bypass, Oil . . . 0028 00-4
- Changing Engine Oil . . . 0025 00-1
- Element Replacement, Transmission Oil Filter . . . 0105 00-1
- Hydraulic System Oil, Replacement . . . 0148 00-1

Finding Top-Center Position for No. 1 Piston . . . 0010 00-2

Flasher, Turnlamp Replacement . . . 0065 00-1

Flow Compensator Valve Adjusting . . . 0016 00-7

Flywheel
- Housing Replacement . . . 0176 00-1
- Replacement . . . 0177 00-1

Forks, Pallet, Repair . . . 0167 00-1

Forward
- High Speed Lockout Program . . . 0014 00-2
- Shield . . . 0166 00-1

Front
- Axle Replacement . . . 0207 00-1
- Chassis Wiring Harness Replacement . . . 0197 00-1
- Cover Replacement . . . 0178 00-1
- Drive Shaft Carrier Bearing Replacement . . . 0108 00-1
- Drive Shaft Replacement . . . 0109 00-1
- Fender Replacement . . . 0136 00-1
- Loader Frame, Separate . . . 0211 00-1
- Main Seal Replacement . . . 0174 00-1
- Turnlamp Replacement . . . 0071 00-1

Fuel
- Base Replacement, Secondary . . . 0036 00-1
- Filter
  - Differential Pressure Switch Circuit Test . . . 0013 00-51
  - Lines Replacement . . . 0034 00-1
  - Primary Replacement . . . 0035 00-1
  - Replacement, Secondary . . . 0036 00-1
- Fittings Replacement . . . 0034 00-1
- Injector and Wiring Harness Maintenance . . . 0187 00-1
- Level Sending Unit Replacement . . . 0080 00-1

INDEX - Continued

Subject *Work Package/Page*

F - Continued

Fuel - Continued
- Priming Pump Replacement . . . 0038 00-1
- Quality Test . . . 0011 00-4
- Switch and Sensors
  - Installation . . . 0036 00-3
  - Removal . . . 0036 00-2
- System
  - Inspection . . . 0011 00-5
  - Pressure Test . . . 0011 00-5
  - Tests, Inspections, and Adjustments . . . 0011 00-1
- Tank Replacement . . . 0033 00-1
- Temperature Sensor Replacement . . . 0082 00-1
- Transfer Pump Replacement . . . 0188 00-1
- Water Separator Replacement, Primary . . . 0035 00-1

Fuse
- Relay, Circuit Breaker, and Arc Suppressor Replacement . . . 0053 00-1
- Removal . . . 0053 00-1
- Replacement . . . 0053 00-1

G

Gear, Idler, Replacement . . . 0186 00-1

General Information . . . 0001 00-1

H

Handrails, Ladders, and Steps Replacement . . . 0134 00-1

Head, Cylinder, Replacement . . . 0172 00-1

Heater
- Arctic, Replacement . . . 0161 00-1
- Blower Motor Replacement . . . 0168 00-1
- Core Replacement . . . 0220 00-1
- Wiring Harness Replacement . . . 0198 00-1

High Pressure Relief Valve . . . 0028 00-5

Hood
- Replacement . . . 0135 00-1
- Tilt Actuator Replacement . . . 0058 00-1
- Tilt Relay Removal . . . 0053 00-5
- Tilt Switch Replacement . . . 0059 00-1
- Wiring Harness Replacement . . . 0059 00-1

Horn Replacement . . . 0095 00-1

INDEX - Continued

Subject *Work Package/Page*

H - Continued

Hose
- Lines and Intake Assembly Replacement . . . 0031 00-1
- Manifold, Link, and Broom Replacement . . . 0164 00-1
- Windshield Washer Bottle Replacement . . . 0144 00-1

Hoses, Lines, and Fittings
- Hydraulic System Oil Filter Bases and Cooler, Replacement . . . 0154 00-1
- Implement Hydraulic, Replacement . . . 0156 00-1
- Implement Pump Hydraulic, Replacement . . . 0157 00-1
- Main Control Valve Replacement . . . 0157 00-1
- Remote Lubrication, Replacement . . . 0129 00-1
- Valves, Flanges, and Refrigerant, Replacement . . . 0223 00-1

Housing, Flywheel, Replacement . . . 0176 00-1

How to Use MSD with ET . . . 0005 00-1

HVAC Blend Door Actuator Replacement . . . 0052 00-1

Hydraulic
- Fan
  - Control Manifold Replacement . . . 0217 00-1
  - Pump Replacement . . . 0215 00-1
  - Speed Test and Adjustment . . . 0015 00-22
- Filter Base Removal . . . 0155 00-2
- Main Control Valve Replacement . . . 0218 00-1
- Oil
  - Cooler Replacement . . . 0193 00-1
  - Temperature Sensor Replacement . . . 0083 00-1
- System Tests, Inspections, and Adjustments . . . 0017 00-1
- Tank Replacement . . . 0159 00-1

Hydraulic System
- Oil
  - Change and Filter Replacement . . . 0148 00-1
  - Filter Bases and Cooler Hoses, Lines, and Fittings Replacement . . . 0154 00-1
  - Filter Bases Replacement . . . 0155 00-1
- Pressure, Relieving . . . 0023 00-2

I

Idler
- Gear Replacement . . . 0186 00-1
- Pulleys Replacement . . . 0047 00-1

Implement
- Cycle Time Check . . . 0017 00-43
- Electronic Control Module (ECM) Replacement . . . 0060 00-1
- Hydraulic Hoses, Lines, and Fittings Replacement . . . 0156 00-1

INDEX - Continued

Subject *Work Package/Page*

I - Continued

Implement - Continued
- Hydraulic Service Mode . . . 0017 00-39
- Pump Hydraulic Hoses, Lines, and Fittings Replacement . . . 0157 00-1

Injector Solenoid Circuit Test . . . 0013 00-54

Inline Refrigerant Dryer Replacement . . . 0224 00-1

Instrument
- Cluster Replacement . . . 0054 00-1
- Panels Replacement . . . 0055 00-1
- Switch Replacement . . . 0055 00-1

Intake
- Manifold
  - Air Temperature Sensor Replacement . . . 0084 00-1
  - Replacement . . . 0185 00-1
- Valve Lash Adjustment . . . 0179 00-1

J

Joystick
- Control Position Sensor Calibration with MSD . . . 0017 00-6
- Electro-Hydraulic Control, Replacement . . . 0219 00-1

Junction Block Inspection . . . 0022 00-10

L

Ladders Replacement . . . 0134 00-1

Lever Replacement, Shift . . . 0101 00-1

Lift
- and Tilt
  - Cylinder Drift Check . . . 0017 00-45
  - Linkage Position Sensor (MSD) Calibration . . . 0017 00-13
- Arms Replacement, Bucket . . . 0229 00-1
- Cylinders Replacement . . . 0153 00-1
- System Removal . . . 0156 00-12

Light
- Blackout Drive, Replacement . . . 0068 00-1
- Work, Maintenance . . . 0072 00-1

Liner, Cab, Replacement . . . 0138 00-1

Lines, Transmission Oil
- Cooler Replacement . . . 0102 00-1
- Filter Base Replacement . . . 0104 00-1

List of Abbreviations/Acronyms . . . 0001 00-2

Location and Description of Major Components . . . 0002 00-3

Lubrication, General Procedures . . . 0020 00-18

INDEX - Continued

Subject *Work Package/Page*

M

Main Control Valve
(MSD) Calibration 0017 00-21
Hoses, Lines, and Fittings Replacement 0157 00-1
Hydraulic, Replacement 0218 00-1
Main Light Switch
Installation 0061 00-2
Removal 0061 00-2
Replacement 0061 00-1
Main Refrigerant Quick-Check Procedure for R-134A Expansion Valve and
Orifice Tube Systems 0018 00-5
Maintenance Allocation Chart (MAC)
Introduction 0231 00-1
Tables 0232 00-1
Maintenance Forms, Records, and Reports 0001 00-1
Major Components, Location and Description 0002 00-3
Manifold
Exhaust Replacement 0184 00-1
Intake Replacement 0185 00-1
Mechanical General Maintenance Instructions 0023 00-1
Messenger
Configuration Parameters, System 0056 00-2
Copy Configuration (Program ECM) 0056 00-6
Copy Configuration From ECM 0056 00-3
ECM Replacement 0056 00-1
ECM, Copy Configuration 0056 00-3
Flash Programming 0056 00-5
System Configuration Parameters 0056 00-2
Military Connector Repair 0022 00-6
Mirrors Replacement 0139 00-1
Motor
Broom Replacement 0165 00-1
Fan Hydraulic Replacement 0192 00-1
Front Windshield Replacement 0145 00-1
Rear Windshield Wiper, Replacement 0146 00-1
MSD, How to Use with ET 0005 00-1
Multimeter Usage 0022 00-8
Multiple-Pin Connector Identification Diagrams 0022 00-2

INDEX - Continued

Subject — *Work Package/Page*

N

NATO Slave Receptacle Replacement 0099 00-1
Nomenclature Cross-Reference List 0236 00-1

O

Oil
- Change, Differential and Final Drive 0111 00-1
- Cooler Bypass Specifications 0028 00-4
- Cooler Core, Engine, Replacement 0027 00-1
- Cooler Replacement 0190 00-1
- Cooler, Hydraulic, Replacement 0193 00-1
- Cooler, Transmission, Replacement 0205 00-1
- Coolers and Cooling System Operation, Theory of Operation 0003 00-61
- Engine, Filter, Changing. 0025 00-1
- Filler Tube Replacement 0029 00-1
- Filter Base Replacement, Engine 0028 00-1
- Filter Bypass 0028 00-4
- Hydraulic System Replacement 0148 00-1
- Pan Maintenance 0181 00-1
- Pressure Switch Replacement, Parking Brake 0086 00-1
- Pump
  - (Gear Pump), Transmission, Replacement 0206 00-1
  - Replacement 0182 00-1
- Sensors, Front and Rear Axle Temperature Replacement 0081 00-1
- Temperature Sensor Replacement 0081 00-1

On-Board Diagnostics 0006 00-1
Operational Checks (Braking and Hydraulic Fan System) 0015 00-3
Operator Preventive Maintenance Checks and Services (PMCS)
- Introduction 0019 00-1
- Procedures 0020 00-1

Orifice Tube, Air Conditioning System, Theory of Operation 0003 00-183

P

Pallet Forks Repair 0167 00-1
Panel Box Circuit Breaker 0053 00-7
Parking Brake
- Actuator Replacement 0112 00-1
- Control Valve Replacement 0115 00-1
- Maintenance 0113 00-1
- Manual Release 0015 00-8
- Oil Pressure Switch Replacement 0086 00-1

Performance Checks for Air Conditioning System 0018 00-8

INDEX - Continued

Subject *Work Package/Page*

P - Continued

Pilot
- Oil Accumulator Maintenance . . . 0150 00-1
- Pressure to Main Control Valve Check . . . 0017 00-47

Piston
- Cooling Jets Replacement . . . 0183 00-1
- Pump
  - High Pressure Stall Test and Adjustment (Steering) . . . 0016 00-2
  - Implement/Pilot Removal . . . 0216 00-4
  - Low Pressure Standby Test and Adjustment (Steering) . . . 0016 00-7
  - Margin Pressure Test and Adjustment (Steering) . . . 0016 00-4
  - Replacement (Steering and Implement/ Pilot) . . . 0216 00-1
  - Steering . . . 0216 00-2

Plates, Data, Replacement . . . 0147 00-1

Position Sensor (Left Brake Pedal) (MSD) Calibration . . . 0014 00-36

Power Converter Replacement . . . 0062 00-1

Powertrain
- Electronic Control Module (ECM) Replacement . . . 0063 00-1
- Tests, Inspections, and Adjustments . . . 0014 00-1
- Theory of Operation . . . 0003 00-20

Precleaner Maintenance, Air Cleaner . . . 0030 00-1

Preparation for
- Long-term Storage . . . 0235 00-3
- Return to Service from Long-term Storage . . . 0235 00-5
- Return to Service from Short-term Storage . . . 0235 00-3
- Shipment . . . 0235 00-7
- Short-term Storage . . . 0235 00-2
- Storage or Shipment . . . 0235 00-1

Pressure
- Compensator Valve Adjusting . . . 0016 00-3
- Reducing Valve Adjustment . . . 0017 00-52

Preventive Maintenance Checks and Services (PMCS), Operator
- Introduction . . . 0019 00-1
- Procedures . . . 0020 00-1

Priming Pump Replacement, Fuel . . . 0038 00-1

Pulley, Crankshaft, Replacement . . . 0173 00-1

Pump
- Bypass Valve . . . 0028 00-5
- Fuel Transfer Replacement. . . . 0188 00-1
- Fuel, Priming, Replacement . . . 0038 00-1
- Replacement, Water . . . 0045 00-1

INDEX - Continued

Subject — *Work Package/Page*

P - Continued

Push Rods Maintenance 0180 00-1

Q

Quick Coupler
- Cylinder Replacement 0158 00-1
- Diverter Valve Replacement 0149 00-1
- Replacement 0169 00-1

R

Rack, Rifle, Replacement 0142 00-1

Radiator
- Replacement 0191 00-1
- Top Tank Replacement 0042 00-1

Rear
- Axle
  - Replacement 0208 00-1
  - Trunnion Replacement 0209 00-1
- Drive Shaft Replacement 0110 00-1
- Fenders Replacement 0137 00-1
- Frame, Separate 0211 00-1
- Main Seal Replacement 0175 00-1

Rearview Camera, Cable, and Display Replacement 0050 00-1

Receptacle
- Connector Repair 0022 00-5
- Replacement, NATO Slave 0099 00-1

References 0230 00-1

Refrigerant
- Accumulator
  - AC System, Theory of Operation 0003 00-184
  - Replacement 0225 00-1
- Compressor
  - AC System, Theory of Operation 0003 00-185
  - Oil Check 0018 00-11
  - Test 0018 00-20
- Condenser, AC System, Theory of Operation 0003 00-186
- Hoses, Lines, Valves, Flanges, and Fittings Replacement 0223 00-1
- Leakage Test 0018 00-10
- System Charge 0018 00-14

INDEX - Continued

Subject *Work Package/Page*

R - Continued

Relay
- Hood Tilt Removal . . . 0053 00-5
- Inspection and Test . . . 0022 00-10
- Replacement . . . 0053 00-1

Relief Valve
- (Line) Test and Adjustment . . . 0017 00-61
- (Main, Load Sensing) Test and Adjustment . . . 0017 00-55
- (Pump Backup) Test and Adjustment . . . 0016 00-8
- (Steering Cylinder Crossover) Test and Adjustment . . . 0016 00-13
- High Pressure . . . 0028 00-5
- Transmission Hydraulic Control, Replacement . . . 0202 00-1

Relieving Hydraulic System Pressure . . . 0023 00-2

Remote Lubrication Lines, Hoses, and Fittings Replacement . . . 0129 00-1

Reporting Equipment Improvement Recommendations (EIRs) . . . 0001 00-1

Reverse High Speed Lockout Program . . . 0014 00-8

Ride Control
- Accumulator Maintenance . . . 0151 00-1
- Configuration Program . . . 0014 00-13
- Pressure Equalization Time Adjustment . . . 0017 00-68

Rifle Rack Replacement . . . 0142 00-1

Ring Terminal Repair . . . 0022 00-7

Rocker
- Arms and Push Rods Maintenance . . . 0180 00-1
- Switch Removal . . . 0055 00-11

Rotary Switch Removal . . . 0055 00-11

S

Seal, Main
- Front Replacement . . . 0174 00-1
- Rear Replacement . . . 0175 00-1

Sealed Connector Repair . . . 0022 00-4

Seat
- Assembly
  - Disassembly . . . 0214 00-1
  - Repair . . . 0214 00-1
  - Replacement . . . 0140 00-1
- Belt Replacement . . . 0141 00-1
- Suspension Assembly . . . 0214 00-7

INDEX - Continued

Subject *Work Package/Page*

S - Continued

Secondary
- Steering Program 0014 00-19
- Steering Pump Maintenance 0123 00-1
- Steering Valve Replacement 0126 00-1
- Steering Wiring Harness Replacement 0200 00-1

Sensor
- (Primary) Crankshaft Speed/Timing, Replacement 0078 00-1
- Atmospheric Pressure, Replacement 0073 00-1
- Boost Pressure, Replacement 0074 00-1
- Brake Pedal Position, Replacement 0075 00-1
- Camshaft Speed/Timing (Secondary), Replacement 0076 00-1
- Coolant Temperature, Replacement 0077 00-1
- Engine Oil Pressure, Replacement 0079 00-1
- Fuel Temperature, Replacement 0082 00-1
- Hydraulic Oil Temperature, Replacement 0083 00-1
- Intake Manifold Air Temperature, Replacement 0084 00-1
- Lift Kickout Position and Mounting Replacement 0085 00-1
- Tilt Kickout Position and Mounting Replacement 0089 00-1
- Torque Converter
  - Oil Temperature Sensor Replacement 0090 00-1
  - Output Speed Sensor Replacement 0091 00-1
- Transmission
  - Oil Temperature Sensor Replacement 0092 00-1
  - Output Speed Sensor Replacement 0093 00-1

Separate Front Loader Frame and Rear Frame 0211 00-1

Serpentine Belt Replacement 0048 00-1

Service
- Cooling System 0041 00-1
- Light
  - Removal 0071 00-2
  - Replacement 0071 00-1
- Transmission 0100 00-1

Service Brake
- Control Valve Replacement 0116 00-1
- Lines and Hoses Replacement 0117 00-1
- Oil Pressure Switch Replacement 0087 00-1
- System Pressure Test 0015 00-6
- Wear Indicator
  - (Existing Brake Disc) Check 0015 00-17
  - (New Brake Disc) Check 0015 00-9

INDEX - Continued

Subject *Work Package/Page*

S - Continued

Service Upon Receipt
- Inspection Instructions . . . 0021 00-1
- Servicing Instructions . . . 0021 00-1

Shaft Replacement
- Center Drive (Slip Joint) . . . 0107 00-1
- Front Drive . . . 0109 00-1
- Rear Drive . . . 0110 00-1

Shield
- Engine Compartment Replacement . . . 0212 00-1
- Forward, Removal . . . 0166 00-1

Shift Lever Replacement . . . 0101 00-1

Shipment, Preparation for . . . 0235 00-7

Side Covers Replacement . . . 0135 00-1

Sight Gage Replacement . . . 0160 00-1

Speed Sensor Adjustment . . . 0014 00-44

Splicing Wires . . . 0022 00-7

Springs, Replacement . . . 0166 00-1

Start Switch Removal, Engine . . . 0055 00-13

Starter Replacement . . . 0051 00-1

Starting Aid Replacement . . . 0037 00-1

Starting Motor Test . . . 0013 00-75

Status Groups, Using ET . . . 0005 00-4

Steering
- Column Replacement . . . 0121 00-1
- Control Valve
  - Adjustment . . . 0016 00-10
  - Replacement . . . 0127 00-1
- Cylinders Replacement . . . 0125 00-1
- Hoses, Lines, and Fittings Replacement . . . 0124 00-1
- Metering Pump Replacement . . . 0128 00-1
- Neutralizer Valve Check and Adjustment . . . 0016 00-12
- Neutralizer Valve Replacement . . . 0210 00-1
- Oil Pressure Switches Replacement . . . 0088 00-1
- Secondary Pump and Electric Motor Maintenance . . . 0123 00-1
- System Tests, Inspections, and Adjustments . . . 0016 00-1
- System, Theory of Operation . . . 0003 00-105
- Time Check . . . 0016 00-10
- Valve Replacement . . . 0126 00-1

Steps Replacement . . . 0134 00-1

INDEX - Continued

Subject *Work Package/Page*

S - Continued

Stoplight
- Assembly Replacement 0070 00-1
- Bracket Replacement 0070 00-1
- Limit Switch Maintenance 0064 00-1

Storage
- Long-term, Preparation 0235 00-3
- Short-term, Preparation for 0235 00-2

Sun Visor Replacement 0139 00-1

Support Brackets, Accessory, Replacement 0194 00-1

Suspension, Seat Assembly 0214 00-7

Switch
- 12V, Removal 0055 00-12
- Arctic Heater
  - Installation 0061 00-3
  - Removal 0061 00-3
- Battery Disconnect, Replacement 0098 00-1
- Engine Start, Removal 0055 00-13
- Instrument Panel Replacement 0055 00-1
- Main Light
  - Installation 0061 00-2
  - Removal 0061 00-2
- Parking Brake, Oil Pressure, Replacement 0086 00-1
- Replacement, Transmission Oil Filter Bypass 0104 00-1
- Rocker, Removal 0055 00-11
- Rotary, Removal 0055 00-11
- Service Brake Oil Pressure, Replacement 0087 00-1
- Steering Oil Pressure, Replacement 0088 00-1
- Stoplight, Limit, Maintenance 0064 00-1
- Turnlamp, Replacement 0066 00-1
- Windshield Wiper, Replacement 0067 00-1

T

Tank
- Hydraulic, Replacement 0159 00-1
- Replacement, Fuel 0033 00-1

Test Lines, and Fittings,Transmission Replacement 0106 00-1

Test Procedure for Testing ARC Suppressor
- Air Conditioning System Tests, Inspections, and Adjustments 0018 00-9
- Electrical System Tests, Inspections, and Adjustments 0013 00-5

INDEX - Continued

Subject *Work Package/Page*

T - Continued

Tests, Inspections, and Adjustments
- Electrical System 0013 00-1
- Powertrain 0014 00-1

Theory of Operation 0003 00-1

Thermostat Replacement 0044 00-1

Third Function System 0156 00-9

Throttle
- Pedal Replacement 0039 00-1
- Position Sensor
  - Circuit Test 0013 00-62
  - Replacement 0039 00-1

Tilt
- Cylinders Replacement 0152 00-1
- Lever Removal 0228 00-5
- Link Removal 0228 00-2
- System Removal 0156 00-10

Tire Assembly Replacement
- Front 0119 00-1
- Rear 0120 00-1

Toolbox Replacement 0143 00-1

Torque
- Converter
  - Oil Temperature Sensor Replacement 0090 00-1
  - Output Speed Sensor Replacement 0091 00-1
  - Removal 0204 00-9
  - Replacement 0204 00-1
  - Stall Test 0014 00-45
- Limits 0234 00-1

Transmission
- Assembly 0204 00-2
- Control Wiring Harness Replacement 0201 00-1
- Hydraulic Control Relief Valve Replacement 0202 00-1
- Modulating Valve Replacement 0203 00-1
- Neutralization Setpoint Adjustment 0014 00-39
- Oil Cooler Lines Replacement 0102 00-1
- Oil Cooler Replacement 0205 00-1
- Oil Filler Tube Replacement 0103 00-1
- Oil Filter Base, Lines, and Bypass Switch Replacement 0104 00-1
- Oil Filter Element Replacement 0105 00-1
- Oil Pump (Gear Pump) Replacement 0206 00-1
- Oil Temperature Sensor Replacement 0092 00-1

INDEX - Continued

Subject *Work Package/Page*

T - Continued

Transmission - Continued
- Output Speed Sensor Replacement 0093 00-1
- Pressures Test and Adjustment 0014 00-47
- Replacement 0204 00-1
- Service 0100 00-1
- Speed for
  - Forward Directional Shift Program 0014 00-23
  - Reverse Directional Shift Program 0014 00-27
- Test Lines, and Fittings Replacement 0106 00-1
- Troubleshooting Without a Diagnostic Code 0008 00-1

Troubleshooting
- Introduction 0004 00-1
- With a Diagnostic Code 0009 00-1
- Without a Diagnostic Code 0008 00-1

Trunnion, Rear Axle, Replacement 0209 00-1

Tube Replacement, Transmission Oil Filler 0103 00-1

Turbocharger
- Air Lines Replacement 0032 00-1
- Assembly Replacement 0032 00-1
- Oil Lines Replacement 0032 00-1

Turnlamp
- Flasher Replacement 0065 00-1
- Removal 0071 00-9
- Switch Replacement 0066 00-1

U

User Defined Shutdown Input Circuit Test 0013 00-68

V

Valve
- Base Replacement 0024 00-1
- Cover Replacement 0024 00-1
- Lash, Intake/Exhaust, Adjustment 0179 00-1
- Main Hydraulic Control, Replacement 0218 00-1
- Parking Brake Control, Replacement 0115 00-1
- Quick Coupler Diverter, Replacement 0149 00-1
- Service Brake Control, Replacement 0116 00-1
- Steering Neutralizer, Replacement 0210 00-1
- Transmission Modulating, Replacement 0203 00-1

Vibration Damper, Crankshaft, Replacement 0173 00-1

Visor, Sun, Replacement 0139 00-1

INDEX - Continued

Subject *Work Package/Page*

W

Warranty Information 0001 00-4
Water Pump Replacement 0045 00-1
Waterproof Connector Repair 0022 00-5
Wheel Replacement
- Front 0119 00-1
- Rear 0120 00-1

Windshield
- Front Wiper Motor Replacement 0145 00-1
- Front Wipers Replacement 0145 00-1
- Front/Rear and Doors Glass Replacement 0213 00-1
- Rear Wiper Motor Replacement 0146 00-1
- Rear Wiper Replacement 0146 00-1
- Washer Bottle Replacement 0144 00-1
- Washer Hoses, Replacement 0144 00-1
- Wiper Switches Replacement 0067 00-1

Wiring Harness
- Cab, Replacement 0195 00-1
- Engine, Replacement 0196 00-1
- Front Chassis Replacement 0197 00-1
- Fuel Injector, Maintenance 0187 00-1
- Heater and Air Conditioning, Replacement 0198 00-1
- Open Circuit Test 0013 00-3
- Rear Chassis, Replacement 0199 00-1
- Replacement 0059 00-1
- Secondary Steering, Replacement 0200 00-1
- Short Circuit Test 0013 00-4
- Transmission Control, Replacement 0201 00-1

Worklights
- Bulb Removal 0072 00-2
- Lamp Housing Removal 0072 00-4
- Maintenance 0072 00-1

RECOMMENDED CHANGES TO PUBLICATIONS AND BLANK FORMS For use of this form, see AR 25-30; the proponent agency is ODISC4.	Use Part II (reverse) for Repair Parts and Special Tool Lists (RPSTL) and Supply Catalogs/Supply Manuals (SC/SM).	DATE Date you filled out this form.
TO: *(Forward to proponent of publication or form) (Include ZIP Code)* U.S. Army TACOM Life Cycle Management Command ATTN: AMSTA-LCL-MPP/TECH PUBS 1 Rock Island Arsenal, Rock Island, IL 61299-7630	FROM: *(Activity and location) (Include ZIP Code)* Your mailing address	

PART I – ALL PUBLICATIONS (EXCEPT RPSTL AND SC/SM) AND BLANK FORMS

PUBLICATION/FORM NUMBER	DATE	Title Field Maintenance Manual (Includes Unit and DS maintenance) for 966H Loader, Heavy Type I and II
TM 5-3805-291-23-1	15 Jan 10	

ITEM NO.	PAGE NO.	PARA-GRAPH	LINE NO. *	FIGURE NO.	TABLE NO.	RECOMMENDED CHANGES AND REASON (Provide exact wording of recommended changes, if possible).
	0017 00	2				Part number supplied for item 2 is incorrect

SAMPLE

**Reference to line numbers within the paragraph or subparagraph.*

TYPED NAME, GRADE OR TITLE	TELEPHONE EXCHANGE/AUTOVON, PLUS EXTENSION	Signature
Your Name		*Your Signature*

TO: (Forward direct to addressee listed in publication)	FROM: (Activity and location) (Include ZIP Code)	DATE
U. S. Army TACOM Life Cycle Management Command ATTN: AMSTA-LCL-MPP/TECH PUBS 1 Rock Island Arsenal, Rock Island, IL 61299-7630	Your address	Date you filled out this form

PART II – REPAIR PARTS AND SPECIAL TOOL LISTS AND SUPPLY CATALOGS/SUPPLY MANUALS

PUBLICATION NUMBER	DATE	TITLE
TM 5-3805-291-23-1	15 Jan 10	Field Maint Manual w/Unit & DS Maint for 966H Loader Heavy Type I and II

PAGE NO.	COLM NO.	LINE NO.	NATIONAL STOCK NUMBER	REFERENCE NO.	FIGURE NO.	ITEM NO.	TOTAL NO. OF MAJOR ITEMS SUPPORTED	RECOMMENDED ACTION

SAMPLE

PART III – REMARKS **(Any general remarks or recommendations, or suggestions for improvement of publications and blank forms. Additional blank sheets may be used if more space is needed.)**

TYPED NAME, GRADE OR TITLE	TELEPHONE EXCHANGE/AUTOVON, PLUS EXTENSION	SIGNATURE
Your Name		Your Signature

USAPPC V3.00

RECOMMENDED CHANGES TO PUBLICATIONS AND BLANK FORMS For use of this form, see AR 25-30; the proponent agency is ODISC4.	Use Part II (reverse) for Repair Parts and Special Tool Lists (RPSTL) and Supply Catalogs/Supply Manuals (SC/SM).	DATE
TO: (Forward to proponent of publication or form)(Include ZIP Code) U.S. Army TACOM Life Cycle Management Command ATTN: AMSTA-LCL-MPP/TECH PUBS 1 Rock Island Arsenal, Rock Island, IL 61299-7630	FROM: (Activity and location) (Include ZIP Code)	

PART I – ALL PUBLICATIONS (EXCEPT RPSTL AND SC/SM) AND BLANK FORMS

PUBLICATION/FORM NUMBER	DATE	TITLE
TM 5-3805-291-23-1	15 Jan 10	Field Maintenance Manual (Includes Unit and DS Maintenance) for 966H Loader, Heavy Type I and II

ITEM NO.	PAGE NO.	PARA-GRAPH	LINE NO. *	FIGURE NO.	TABLE NO.	RECOMMENDED CHANGES AND REASON (Provide exact wording of recommended changes, if possible).

	**Reference to line numbers within the paragraph or subparagraph.*	
TYPED NAME, GRADE OR TITLE	TELEPHONE EXCHANGE/AUTOVON, PLUS EXTENSION	SIGNATURE

TO: (Forward direct to addressee listed in publication)	FROM: (Activity and location) (Include ZIP Code)	DATE
U. S. Army TACOM Life Cycle Management Command ATTN: AMSTA-LCL-MPP/TECH PUBS 1 Rock Island Arsenal, Rock Island, IL 61299-7630		

PART II – REPAIR PARTS AND SPECIAL TOOL LISTS AND SUPPLY CATALOGS/SUPPLY MANUALS

PUBLICATION NUMBER	DATE	TITLE
TM 5-3805-291-23-1	15 Jan 10	Field Maintenance Manual w/Unit and DS Maintenance for 966H Loader Heavy Type I/II

PAGE NO.	COLM NO.	LINE NO.	NATIONAL STOCK NUMBER	REFERENCE NO.	FIGURE NO.	ITEM NO.	TOTAL NO. OF MAJOR ITEMS SUPPORTED	RECOMMENDED ACTION

PART III – REMARKS (Any general remarks or recommendations, or suggestions for improvement of publications and blank forms. Additional blank sheets may be used if more space is needed.)

TYPED NAME, GRADE OR TITLE	TELEPHONE EXCHANGE/AUTOVON, PLUS EXTENSION	SIGNATURE

USAPPC V3.00

RECOMMENDED CHANGES TO PUBLICATIONS AND BLANK FORMS For use of this form, see AR 25-30; the proponent agency is ODISC4.	Use Part II (reverse) for Repair Parts and Special Tool Lists (RPSTL) and Supply Catalogs/Supply Manuals (SC/SM).	**DATE**
TO: (Forward to proponent of publication or form) (Include ZIP Code) U. S. Army TACOM Life Cycle Management Command ATTN: AMSTA-LCL-MPP/TECH PUBS 1 Rock Island Arsenal, Rock Island, IL 61299-7630	**FROM: (Activity and location) (Include ZIP Code)**	

PUBLICATION/FORM NUMBER TM 5-3805-291-23-1	DATE 15 Jan 10	TITLE Field Maintenance Manual (Includes Unit and DS Maintenance) for 966H Loader Heavy Type I and II

ITEM NO.	PAGE NO.	PARA-GRAPH	LINE NO. *	FIGURE NO.	TABLE NO.	RECOMMENDED CHANGES AND REASON (Provide exact wording of recommended changes, if possible).

**Reference to line numbers within the paragraph or subparagraph.*

TYPED NAME, GRADE OR TITLE	TELEPHONE EXCHANGE/AUTOVON, PLUS EXTENSION	SIGNATURE

DA FORM 2028, FEB 74 REPLACES DA FORM 2028, 1 DEC 68, WHICH WILL BE USED. USAPPC V3.00

TO: (Forward direct to addressee listed in publication) U. S. Army TACOM Life Cycle Management Command ATTN: AMSTA-LCL-MPP/TECH PUBS 1 Rock Island Arsenal, Rock Island, IL 61299-7630	FROM: (Activity and location) (Include ZIP Code)	DATE

PART II – REPAIR PARTS AND SPECIAL TOOL LISTS AND SUPPLY CATALOGS/SUPPLY MANUALS

PUBLICATION NUMBER	DATE	TITLE
TM 5-3805-291-23-1	15 Jan 10	Field Maintenance Manual w/Unit and DS Maintenance for 966H Loader, Heavy Type I and II

PAGE NO.	COLM NO.	LINE NO.	NATIONAL STOCK NUMBER	REFERENCE NO.	FIGURE NO.	ITEM NO.	TOTAL NO. OF MAJOR ITEMS SUPPORTED	RECOMMENDED ACTION

PART III – REMARKS (*Any general remarks or recommendations, or suggestions for improvement of publications and blank forms. Additional blank sheets may be used if more space is needed.)*

TYPED NAME, GRADE OR TITLE	TELEPHONE EXCHANGE/AUTOVON, PLUS EXTENSION	SIGNATURE

USAPPC V3.00

RECOMMENDED CHANGES TO PUBLICATIONS AND BLANK FORMS For use of this form, see AR 25-30; the proponent agency is ODISC4.	Use Part II (reverse) for Repair Parts and Special Tool Lists (RPSTL) and Supply Catalogs/Supply Manuals (SC/SM).	**DATE**
TO: (Forward to proponent of publication or form) (Include ZIP Code) U. S. Army TACOM Life Cycle Management Command ATTN: AMSTA-LCL-MPP/TECH PUBS 1 Rock Island Arsenal, Rock Island, IL 61299-7630	**FROM: (Activity and location) (Include ZIP Code)**	

PUBLICATION/FORM NUMBER TM 5-38-5-291-23-1	DATE 15 Jan 10	TITLE Field Maintenance Manual (Includes Unit and DS Maintenande) for 966H Loader, Heavy Type I and II

ITEM NO.	PAGE NO.	PARA-GRAPH	LINE NO. *	FIGURE NO.	TABLE NO.	RECOMMENDED CHANGES AND REASON (Provide exact wording of recommended changes, if possible).

**Reference to line numbers within the paragraph or subparagraph.*

TYPED NAME, GRADE OR TITLE	TELEPHONE EXCHANGE/AUTOVON, PLUS EXTENSION	SIGNATURE

DA FORM 2028, FEB 74 REPLACES DA FORM 2028, 1 DEC 68, WHICH WILL BE USED. USAPPC V3.00

TO: (Forward direct to addressee listed in publication) U. S. Army TACOM Life Cycle Management Command ATTN: AMSTA-LCL-MPP/TECH PUBS 1 Rock Island Arsenal, Rock Island, IL 61299-7630	FROM: (Activity and location) (Include ZIP Code)	DATE

PART II – REPAIR PARTS AND SPECIAL TOOL LISTS AND SUPPLY CATALOGS/SUPPLY MANUALS

PUBLICATION NUMBER	DATE	TITLE
TM 5-3805-291-23-1	15 Jan 10	Field Maintenance Manual w/Unit & DS Maintenance for 966H Loader, Heavy Type I and II

PAGE NO.	COLM NO.	LINE NO.	NATIONAL STOCK NUMBER	REFERENCE NO.	FIGURE NO.	ITEM NO.	TOTAL NO. OF MAJOR ITEMS SUPPORTED	RECOMMENDED ACTION

PART III – REMARKS (*Any general remarks or recommendations, or suggestions for improvement of publications and blank forms. Additional blank sheets may be used if more space is needed.)*

TYPED NAME, GRADE OR TITLE	TELEPHONE EXCHANGE/AUTOVON, PLUS EXTENSION	SIGNATURE

USAPPC V3.00

By Order of the Secretary of the Army:

GEORGE W. CASEY, JR.
General, United States Army
Chief of Staff

Official:

JOYCE E. MORROW
Administrative Assistant to the
Secretary of the Army
0924402

DISTRIBUTION: To be distributed in accordance with the initial distribution requirements for IDN: 251019, requirements for TM 5-3805-291-23-1.

COMPONENT	SCHEMATIC LOCATION
ALARM - BACKUP	SH5 LOC D-3
ALARM - QUICK COUPLER	SH4 LOC E-5
ALTERNATOR	SH17 LOC D-1
ARC SUPPRESSOR - AC	SH5 LOC D-4
ARC SUPPRESSOR - HEADLAMPS	SH1 LOC E-1
ARC SUPPRESSOR - HORN	SH10 LOC C-4
ARC SUPPRESSOR - QUICK COUPLER	SH9 LOC B-6
ARC SUPPRESSOR - REAR FRONT LIGHTS	SH1 LOC E-1
ARC SUPPRESSOR - SECONDARY STEERING	SH7 LOC C-5
ARC SUPPRESSOR - START RELAY	SH17 LOC A-1
ARCTIC HEATER	SH5 LOC C-5
BATTERIES	SH18 LOC D-3
BREAKER - MAIN	SH18 LOC B-2
BREAKER - START	SH18 LOC C-2
BREAKER - UNSWITCHED CAB BUSS	SH18 LOC B-2
CONTROL - HOOD RAISE/LOWER MOTOR	SH5 LOC A-7
CONVERTER - POWER	SH3 LOC B-4
DIAGNOSTIC CONNECTOR	SH20 LOC B-3
DIODE - BLOWER MOTOR	SH8 LOC C-5
DIODE - LEFT LAMP	SH1 LOC B-3
DIODE - RIGHT LAMP	SH1 LOC B-3
ECM - ENGINE	SH12 LOC C-1
ECM - IMPLEMENT	SH8 LOC C-3
ECM - POWER TRAIN	SH8 LOC C-3 SH12 LOC C-7 SH14 LOC B-1 SH17 LOC C-6
ELECTROHYDRAULIC CONTROL (JOYSTICK)	SH10 LOC B-4
FLASHER - 24V	SH1 LOC D-4
FUEL LEVEL SENDING UNIT	SH9 LOC B-3
FUSE - ALTERNATOR	SH17 LOC D-2
FUSE - BLOWER MOTOR	SH8 LOC C-4
FUSE BLOCK	SH19 LOC E-4
FUSE BLOCK - SWITCHED	SH1 LOC C-1
GROUND - CAB	SH9 LOC D-3 SH9 LOC E-3
GROUND - ENGINE	SH17 LOC D-2
GROUND - FRAME	SH18 LOC D-2
GROUND - LH	SH17 LOC D-2
GROUND - RH	SH13 LOC E-4
GROUND - SECONDARY STEERING	SH7 LOC D-4
HEADLAMP - LEFT FRONT	SH2 LOC B-5
HEADLAMP - RIGHT FRONT	SH2 LOC C-5
HORN (3RD PW WIPER)	SH10 LOC C-4
HORN HIGH	SH5 LOC E-4
HORN LOW	SH5 LOC E-4
INSTRUMENT CLUSTER	SH3 LOC B-4 SH17 LOC B-7
JUNCTION BLOCK ASSEMBLY	SH18 LOC D-4
LAMP - LH DOME	SH2 LOC E-5
LAMP - LH REAR	SH2 LOC A-5
LAMP - RH DOME	SH2 LOC E-5
LAMP - RH REAR	SH2 LOC B-5
LIGHT - BLACKOUT DRIVE	SH2 LOC C-5
MACHINE CONNECTOR	SH5 LOC D-3 SH12 LOC D-4 SH15 LOC C-3 SH17 LOC D-2
MESSENGER	SH20 LOC D-4
MOTOR - BLEND DOOR ACTUATOR	SH8 LOC B-5
MOTOR - BLOWER	SH8 LOC B-5
MOTOR - FRONT WIPER	SH3 LOC C-4
MOTOR - HOOD TILT ACTUATOR	SH5 LOC B-6
MOTOR - REAR WIPER	SH3 LOC C-4
MOTOR - SECONDARY STEERING	SH7 LOC D-5
MOTOR - STARTING	SH17 LOC C-2
NATO SLAVE RECEPTACLE	SH19 LOC D-2
OUTLETS - 12 VOLT ACCESSORY	SH9 LOC D-2
POTENTIOMETER - AIR CONDITIONING AND HEATER TEMPERATURE SELECT	SH4 LOC A-5
PUMP - FUEL PRIMING	SH12 LOC B-5
RELAY - BACKUP ALARM	SH5 LOC B-1
RELAY - HORN, FORWARD	SH19 LOC D-5
RELAY - MAIN	SH18 LOC C-2

COMPONENT	SCHEMATIC LOCATION
RELAY - BLACKOUT, FRONT WORKLIGHTS	SH1 LOC C-2
RELAY - BLACKOUT, HEADLAMP	SH1 LOC C-2
RELAY - BLACKOUT, HORN/DOME LAMPS	SH1 LOC C-2
RELAY - BLACKOUT,REAR WORKLIGHTS	SH1 LOC D-2
RELAY - BLACKOUT, TURN LAMPS/HAZARD	SH1 LOC D-2
RELAY - SECONDARY STEERING	SH7 LOC C-5
RELAY - START	SH17 LOC B-1
RESISTOR - BLEND DOOR (1)	SH8 LOC C-3
RESISTOR - BLEND DOOR (2)	SH8 LOC B-3
RESISTOR - BLOWER MOTOR	SH8 LOC C-5
RESISTOR - CAN	SH9 LOC A-4 SH12 LOC B-5
SEAT - AIR SUSPENSION	SH6 LOC D-3
SENSOR - ATMOSPHERIC PRESSURE	SH13 LOC A-3
SENSOR - CAMSHAFT (SECONDARY) SPEED TIMING	SH13 LOC C-3
SENSOR - COOLANT TEMPERATURE	SH13 LOC B-3
SENSOR - CRANKSHAFT (PRIMARY) SPEED TIMING	SH13 LOC B-3
SENSOR - ENGINE OIL PRESSURE	SH13 LOC B-3
SENSOR - FRONT AXLE OIL TEMPERATURE	SH16 LOC B-3
SENSOR - FUEL PRESSURE	SH13 LOC A-3
SENSOR - HYDRAULIC OIL TEMP	SH9 LOC B-3
SENSOR - INTAKE MANIFOLD PRESSURE	SH13 LOC A-3
SENSOR - INTAKE AIR TEMPERATURE	SH13 LOC B-3
SENSOR - LH BRAKE PEDAL	SH14 LOC E-4
SENSOR - LIFT POSITION	SH9 LOC A-3
SENSOR - OUTPUT SPEED (LEADING)	SH15 LOC B-4
SENSOR - OUTPUT SPEED (TRAILING)	SH15 LOC B-4
SENSOR - REAR AXLE OIL TEMPERATURE	SH16 LOC B-4
SENSOR - THROTTLE POSITION	SH12 LOC C-7
SENSOR - TILT POSITION	SH9 LOC A-5
SENSOR - TORQUE CONVERTER OUTPUT SPEED	SH15 LOC A-4
SENSOR - TORQUE CONVERTER TEMPERATURE	SH16 LOC C-4
SENSOR - TRANSMISSION OIL TEMPERATURE	SH15 LOC A-4
SENSOR - TURBO INLET PRESSURE	SH12 LOC C-5
SHIFT LEVER	SH14 LOC A-1
SOLENOID - A/C CLUTCH	SH5 LOC D-5
SOLENOID - AUXILIARY THIRD FUNCTION FORWARD	SH9 LOC C-7
SOLENOID - AUXILIARY THIRD FUNCTION REARWARD	SH9 LOC D-7
SOLENOID - CLUTCH 1 (REVERSE)	SH15 LOC B-4
SOLENOID - CLUTCH 2 (FORWARD)	SH15 LOC C-4
SOLENOID - CLUTCH 3 (4TH GEAR)	SH15 LOC C-4
SOLENOID - CLUTCH 4 (3RD GEAR)	SH15 LOC C-4
SOLENOID - CLUTCH 5 (2ND GEAR)	SH15 LOC C-4
SOLENOID - CLUTCH 6 (1ST GEAR)	SH15 LOC D-4
SOLENOID - DEMAND FAN	SH12 LOC C-5
SOLENOID - DUMP ANTI-DRIFT	SH9 LOC B-5
SOLENOID - DUMP PROPORTIONAL	SH9 LOC C-7
SOLENOID - ETHER INJECTION	SH12 LOC E-6
SOLENOID - FUEL INJECTOR 1	SH13 LOC B-6
SOLENOID - FUEL INJECTOR 2	SH13 LOC B-6
SOLENOID - FUEL INJECTOR 3	SH13 LOC C-6
SOLENOID - FUEL INJECTOR 4	SH13 LOC C-6
SOLENOID - FUEL INJECTOR 5	SH13 LOC C-6
SOLENOID - FUEL INJECTOR 6	SH13 LOC D-6
SOLENOID - LOWER	SH9 LOC D-7
SOLENOID - LOWER ANTI-DRIFT	SH9 LOC C-5
SOLENOID - PARKING BRAKE	SH5 LOC B-4
SOLENOID - PILOT HYDRAULIC SUPPLY	SH9 LOC E-7
SOLENOID - QUICK COUPLER	SH9 LOC B-6
SOLENOID - RACKBACK PROPORTIONAL	SH9 LOC C-7
SOLENOID - RAISE PROPORTIONAL	SH9 LOC D-7
SOLENOID - RIDE CONTROL #1	SH9 LOC C-5
SOLENOID - RIDE CONTROL #2	SH9 LOC C-5
SOLENOID - RIDE CONTROL #3	SH9 LOC D-5
SWITCH - A/C PRESSURE	SH5 LOC D-5
SWITCH - AIR CONDITIONING AND HEATER BLOWER FAN SPEED	SH4 LOC D-5
SWITCH - AIR CONDITIONING AND HEATER SELECT	SH4 LOC C-5
SWITCH - ARCTIC HEATER	SH5 LOC E-5
SWITCH - AUTOSHIFT CONTROL	SH15 LOC E-3
SWITCH - AUXILIARY FUNCTION CONTINUOUS FLOW	SH9 LOC B-3
SWITCH - BATTERY DISCONNECT	SH18 LOC D-2
SWITCH - ENGINE SHUT DOWN	SH12 LOC E-7
SWITCH - ENGINE START	SH18 LOC A-2

COMPONENT	SCHEMATIC LOCATION
SWITCH - FRONT WIPER	SH4 LOC B-5
SWITCH - FUEL PRIMING PUMP	SH12 LOC B-5
SWITCH - HAZARD LAMP	SH1 LOC C-5
SWITCH - HOOD TILT ACTUATOR	SH5 LOC B-7
SWITCH - HORN	SH3 LOC C-2
SWITCH - HYDRAULIC OIL FILTER BYPASS	SH9 LOC A-4
SWITCH - IMPLEMENT LOCKOUT	SH10 LOC D-4
SWITCH - KICKOUT SET	SH11 LOC A-4
SWITCH - LOW BRAKE OIL PRESSURE	SH16 LOC C-4
SWITCH - MAIN LIGHT	SH1 LOC B-1
SWITCH - PARKING BRAKE	SH3 LOC B-2
SWITCH - PARKING BRAKE PRESSURE	SH5 LOC B-4
SWITCH - PRIMARY STEERING PRESSURE	SH7 LOC A-5
SWITCH - QUICK COUPLER	SH11 LOC B-4
SWITCH - REAR WIPER	SH4 LOC B-5
SWITCH - RIDE CONTROL	SH11 LOC C-4
SWITCH - SECONDARY STEERING	SH7 LOC D-4
SWITCH - SECONDARY STEERING PRESSURE	SH7 LOC B-5
SWITCH - STOPLAMP	SH11 LOC A-5
SWITCH - TRANSMISSION OIL FILTER BYPASS	SH16 LOC C-5
SWITCH - TURN LAMP	SH1 LOC B-3
SWITCH - WORKLIGHT	SH1 LOC B-5
THERMOSTAT	SH6 LOC C-5
TURN LAMP - LH	SH2 LOC C-5
TURN LAMP - RH	SH2 LOC C-5
WASHER - FRONT	SH5 LOC C-4
WASHER - REAR	SH5 LOC C-4
WORKLIGHT - LH FRONT	SH2 LOC D-6
WORKLIGHT - LH REAR	SH2 LOC D-6
WORKLIGHT - RH FRONT	SH2 LOC D-6
WORKLIGHT - RH REAR	SH2 LOC D-6

— 100 wires are power circuits - white
— 200 wires are ground - black
— 200 wires from ground - black
— 300 wires are machine basic circuits
— 400 wires are monitoring circuits
— 500 wires are accessory circuits
— 600 wires are lighting circuits
— 700 to 999 wires are control circuits

483-1607

FO-1. Electrical Schematics - Key to Components

THIS SCHEMATIC IS FOR THE
966H
2929261CHG 00

COMPONENTS ARE SHOWN INSTALLED ON A FULLY OPERABLE MACHINE WITH THE KEY AND ENGINE OFF, TRANSMISSION SHIFTER IN NEUTRAL AND WITH THE PARK BRAKE SET.

SERVICE REPLACEMENT HARNESS MAY HAVE ADDITIONAL CONNECTORS THAT ARE NOT USED.

LOCATION	NOTE	DESCRIPTION
VARIOUS	NOTE A:	PARTIAL CONNECTOR SHOWN, FOR COMPLETE CONNECTOR DESCRIPTION REFER TO FULL SCALE SCHEMATIC DIAGRAM 292-9261

SYMBOL	DESCRIPTION
⚬	SPLICE
⏚	ELECTRICAL CONNECTION TO VEHICLE STRUCTURE
⏚	INTERNAL CONNECTION TO SURFACE OF COMPONENT
———	ATCH WIRE, CABLE AND COMPONENT
═══	HARNESS

ABBREV	COLOR
RD	RED
WH	WHITE
OR	ORANGE
YL	YELLOW
PK	PINK
BK	BLACK
GY	GRAY
PU	PURPLE
BR	BROWN
GN	GREEN
BU	BLUE

CABLE ASSEMBLY	
IDENT	DESCRIPTION
AA	JUNCTION BLOCK TO MAIN BREAKER
CC	JUNCTION BLOCK TO STARTER
EE	BATTERY TO BATTERY
GG	DISCONNECT TO BATTERY
HE	STARTER TO ALTERNATOR FUSE
HH	GROUND TO DISCONNECT
JJ	STARTER TO GROUND
KC	ALTERNATOR TO GROUND
KK	BATTERY TO BATTERY
LL	BATTERY TO BATTERY
MM	BATTERY TO DISCONNECT
NN	SECONDARY STEERING RELAY TO MOTOR
PP	SECONDARY STEERING MOTOR TO GROUND
RR	STARTER TO ENGINE GROUND
TT	BATTERY TO JUNCTION BLOCK ASSEMBLY
VV	JUNCTION BLOCK TO SECONDARY STEERING RELAY
WJ	ALTERNATOR FUSE TO ALTERNATOR
WW	BATTERY TO JUNCTION BLOCK
WIRE ASSEMBLY	
X	WIRE ASSEMBLY
HARNESS ASSEMBLY	
AG	FRONT
AJ	LH FRONT HEADLAMP AND TURNLAMP
AK	QUICK COUPLER
AM	TILT HARNESS
AT	TRANSMISSION
AY	TURNLAMP
A	DIAGNOSTIC CONNECTOR
CF	ARCTIC HEATER SWITCH
CG	HYDRAULIC SERVICE CENTER
CH	ENGINE MACHINE SIDE
CJ	MAIN CHASSIS
CK	ARCTIC HEATER
CV	SECONDARY STEERING
J	INJECTOR HARNESS
CY	REAR AXLE OIL TEMPERATURE SENSOR
C	MAIN CAB
EN	SEAT
FR	RH FRONT HEADLAMP AND TURNLAMP
F	AIR CONDITIONING AND HEATER
G	ELECTROHYDRAULIC CONTROL
HA	FRONT AXLE OIL TEMPERATURE SENSOR
K	ENGINE/ENGINE SIDE
UC	UPPER CAB
Y	CAB LIGHTS STANDARD

483-1608

FO-1. Electrical Schematics - Key to Harnesses.

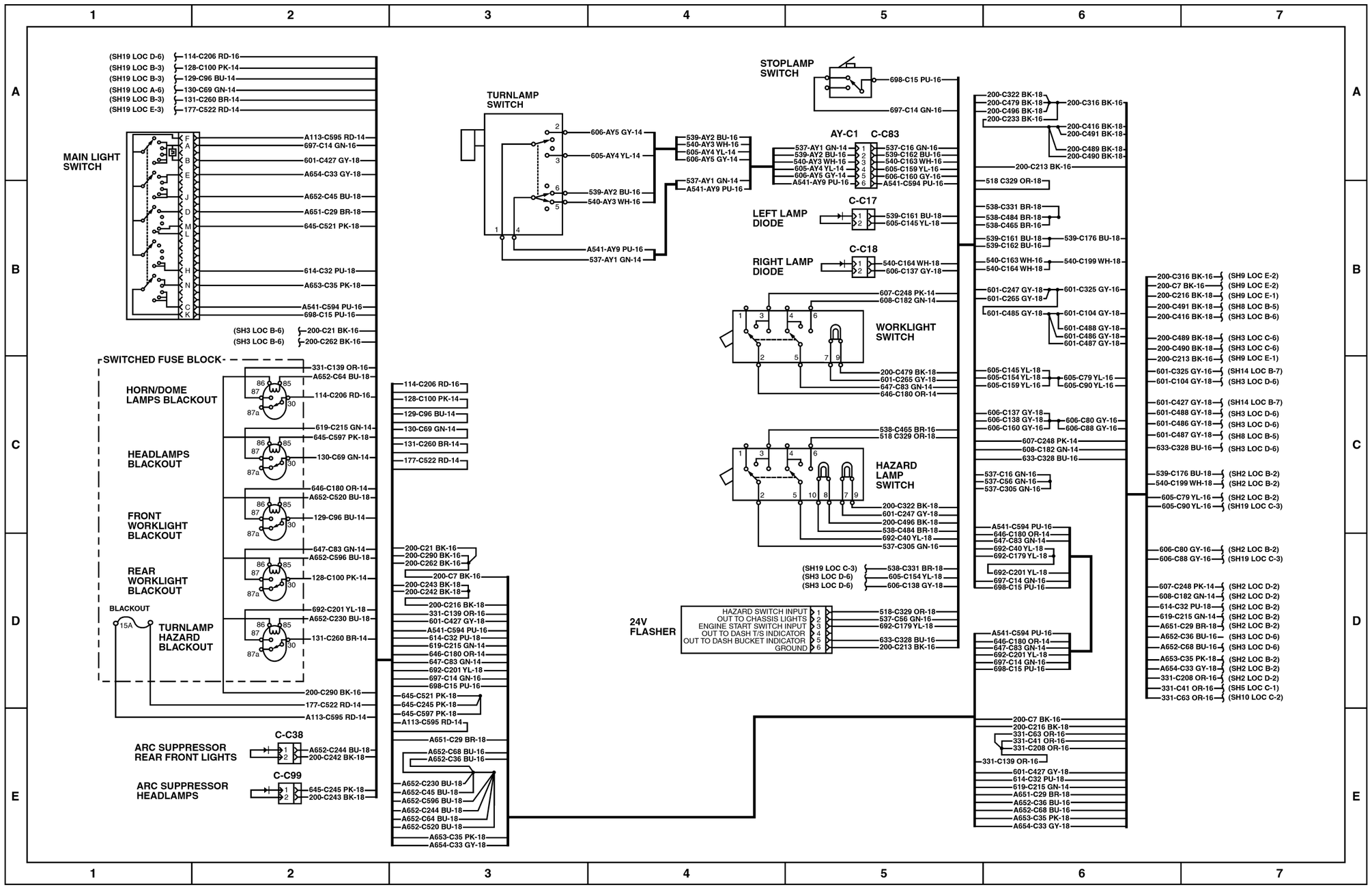

483-1586

FO-1. Electrical Schematics - Lighting Circuit (Sheet 1 of 21)

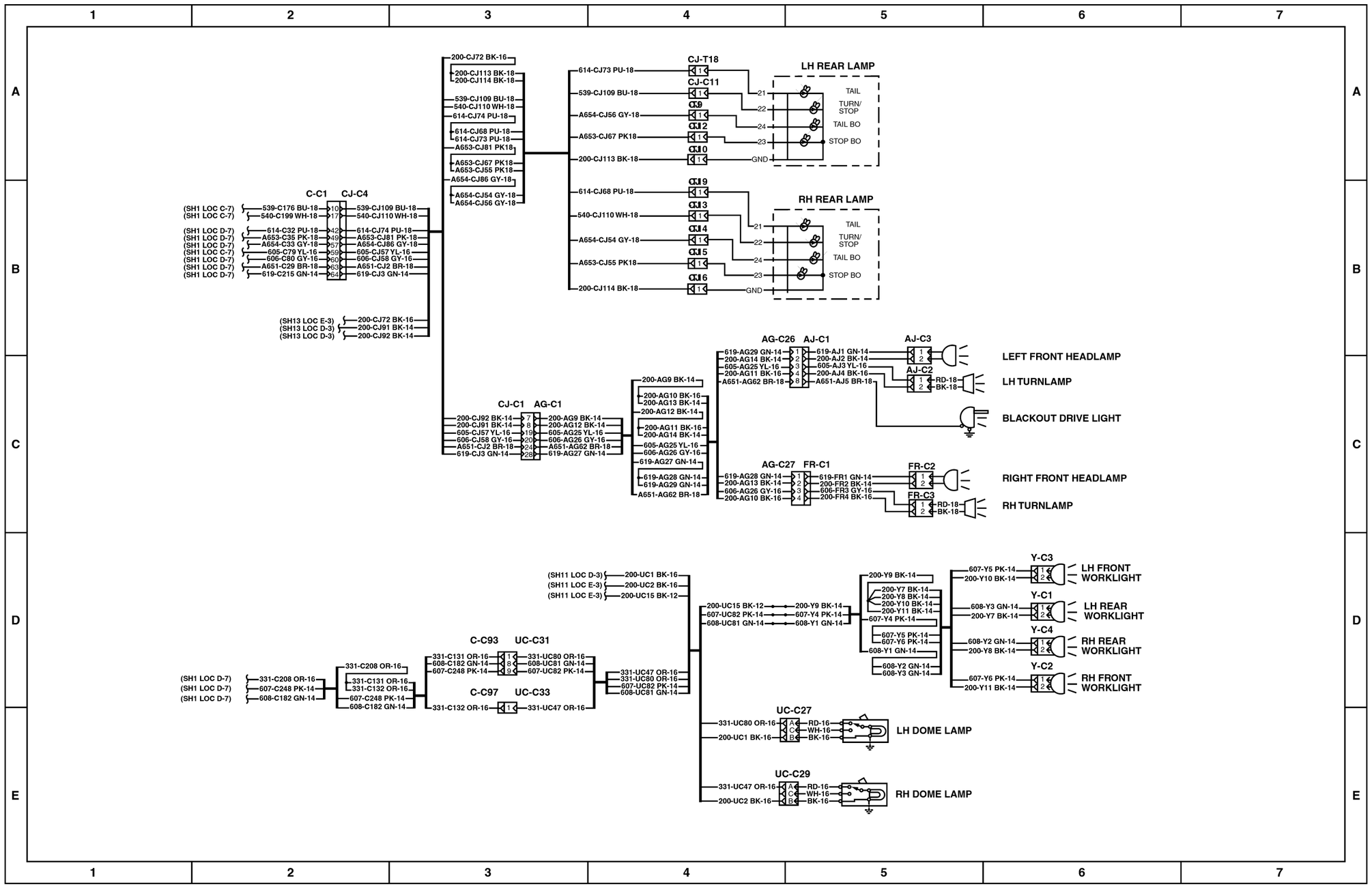

483-1587

FO-1. Electrical Schematics - Lighting Circuit (Sheet 2 of 21)

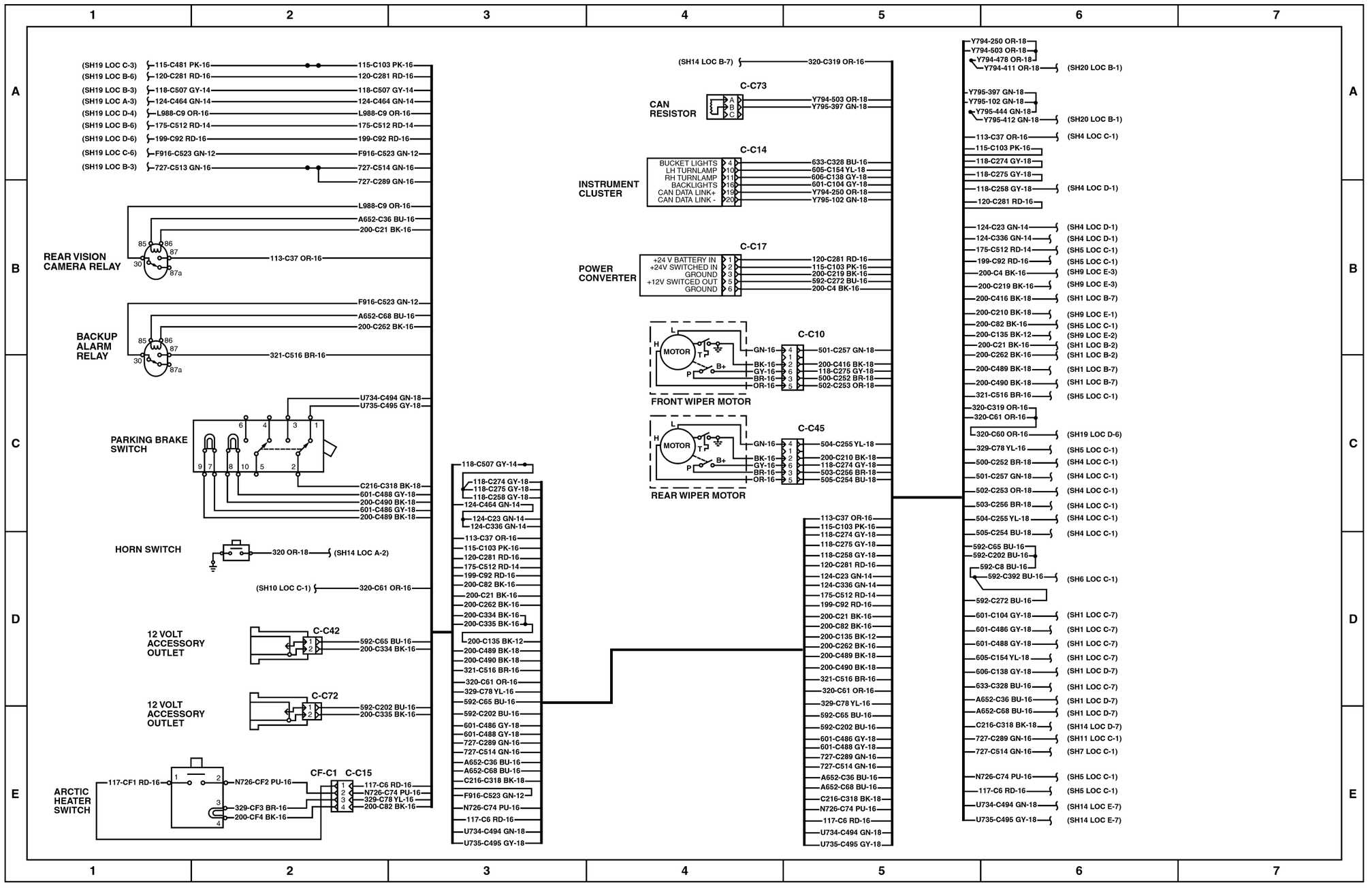

483-1588

FO-1. Electrical Schematics - Accessories Circuit (Sheet 3 of 21)

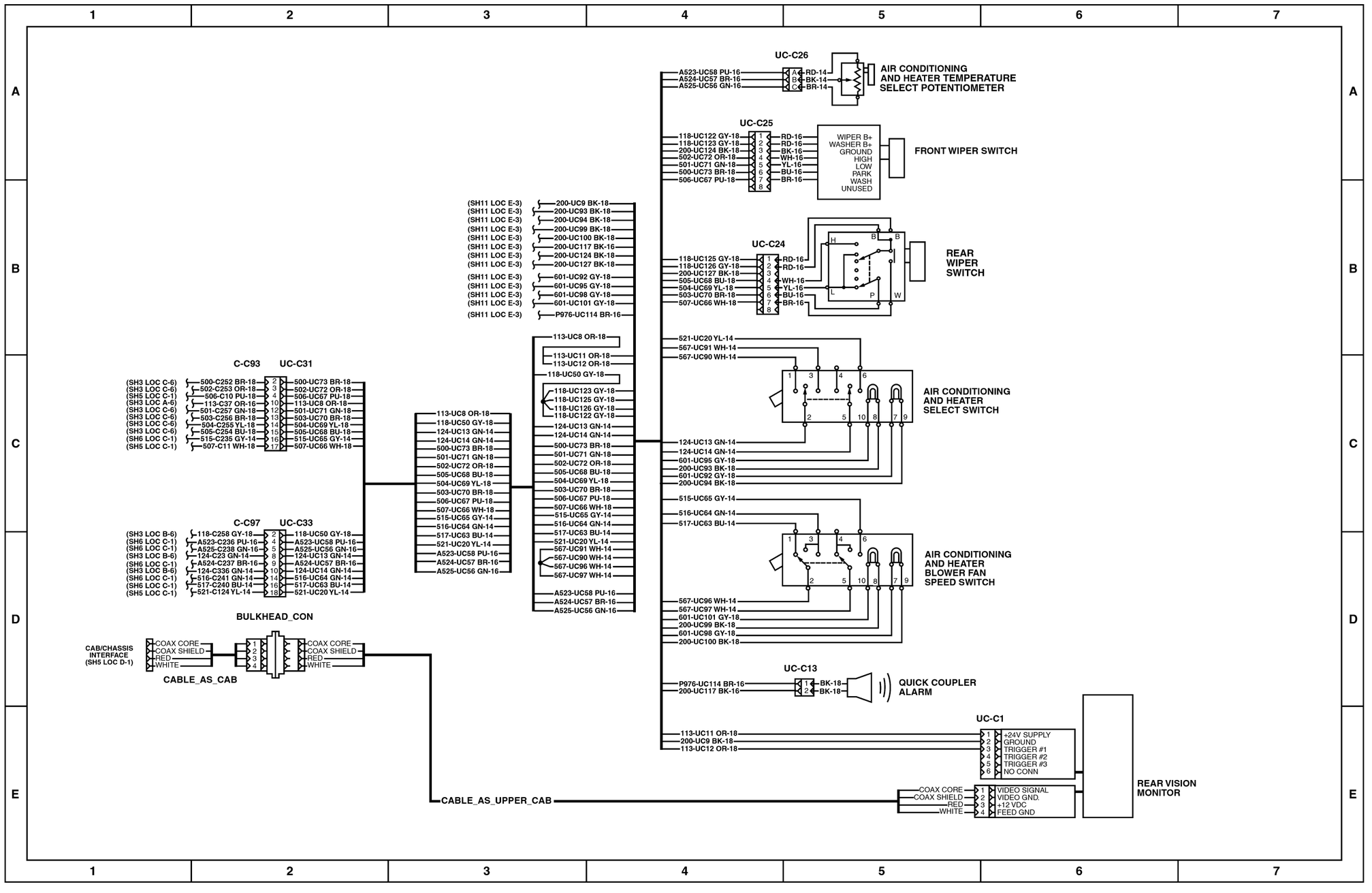

483-1589

FO-1. Electrical Schematics - Accessories Circuit (Sheet 4 of 21)

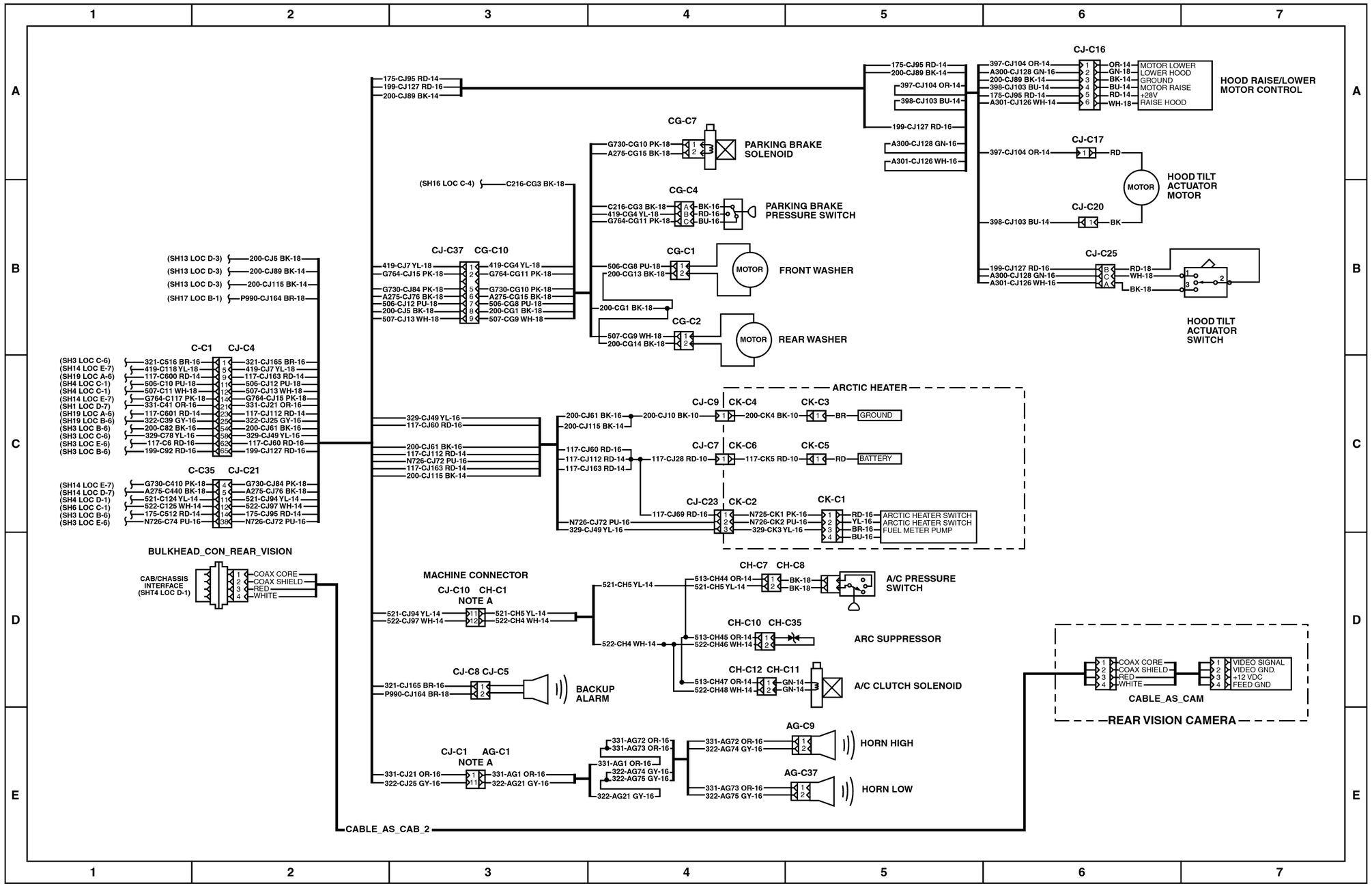

483-1590

FO-1. Electrical Schematics - Accessories Circuit (Sheet 5 of 21)

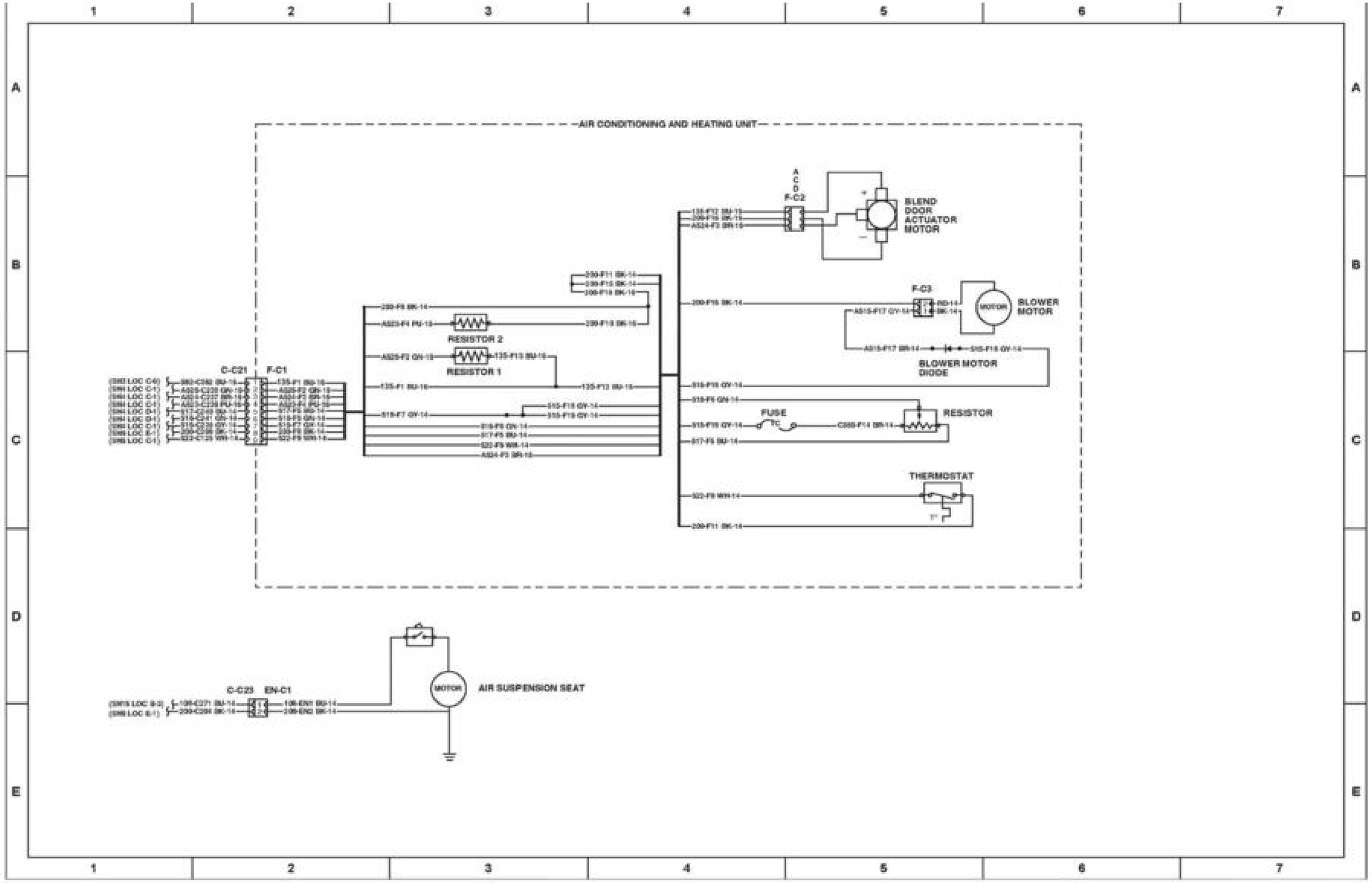

483-1591

FO-1. Electrical Schematics - Accessories Circuit (Sheet 6 of 21)

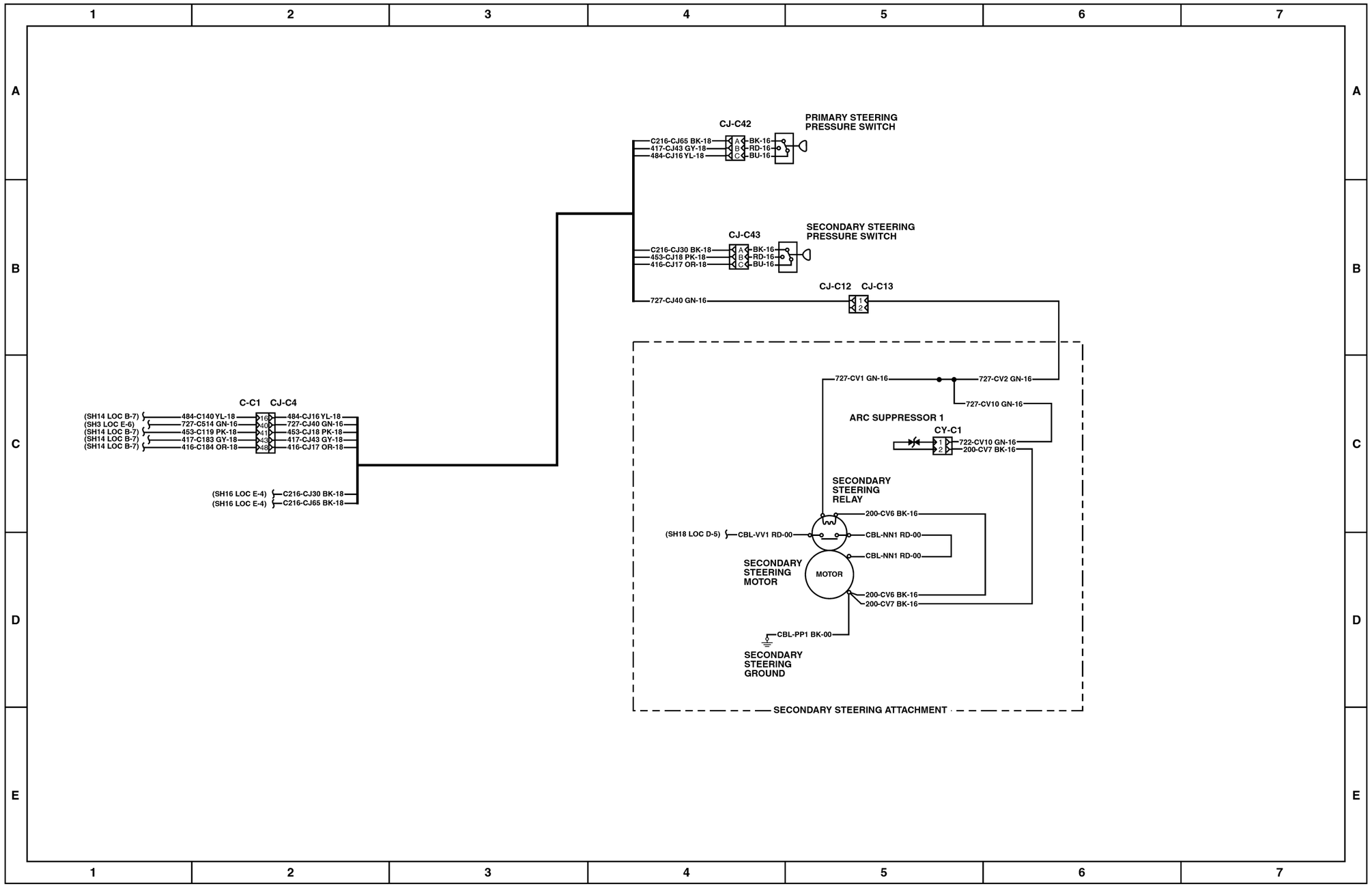

483-1592

FO-1. Electrical Schematics - Implement Circuit (Sheet 7 of 21)

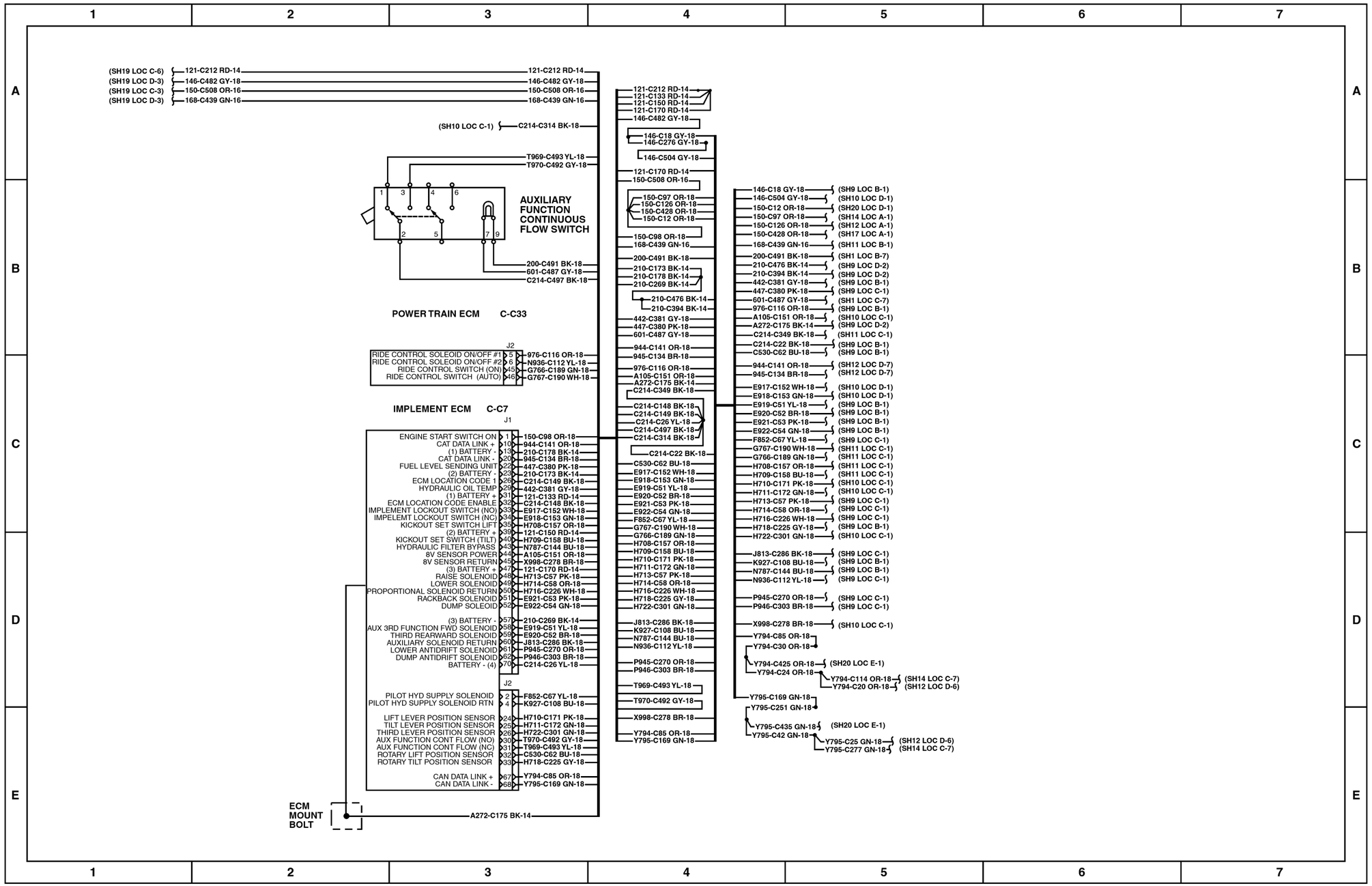

483-1593

FO-1. Electrical Schematics - Implement Circuit (Sheet 8 of 21)

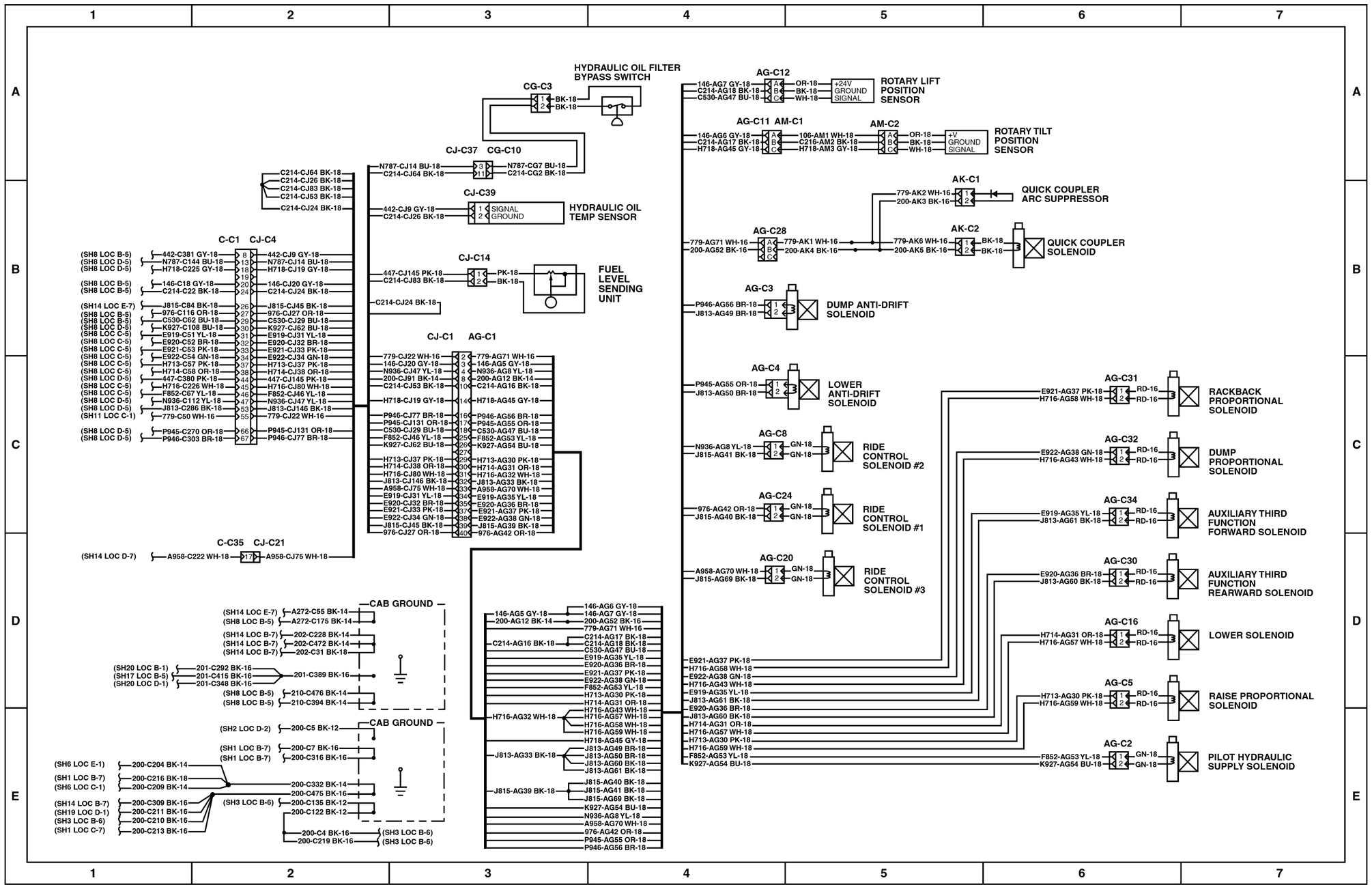

483-1594

FO-1. Electrical Schematics - Implement Circuit (Sheet 9 of 21)

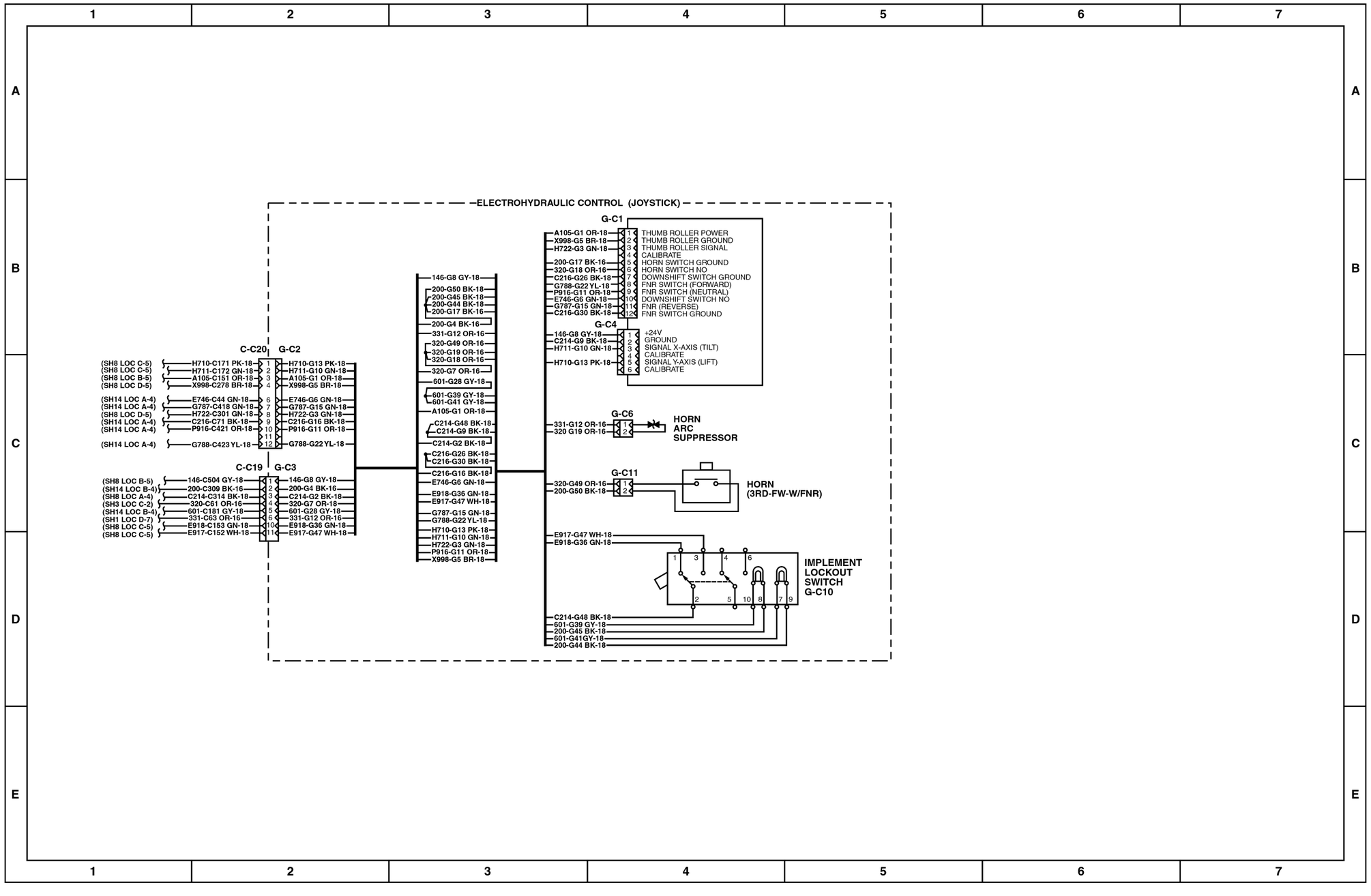

483-1595

FO-1. Electrical Schematics - Implement Circuit (Sheet 10 of 21)

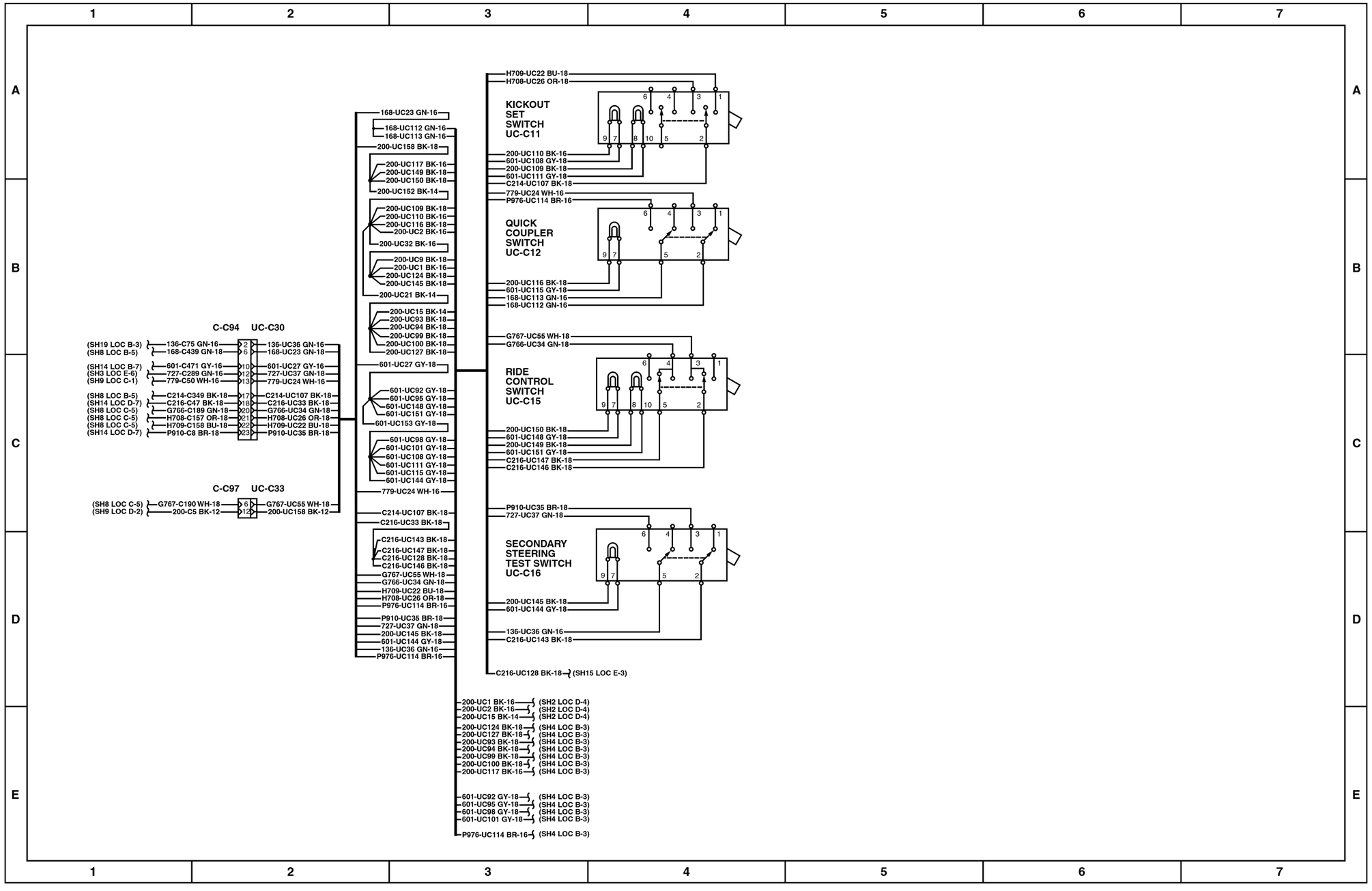

483-1596

FO-1. Electrical Schematics - Implement Circuit (Sheet 11 of 21)

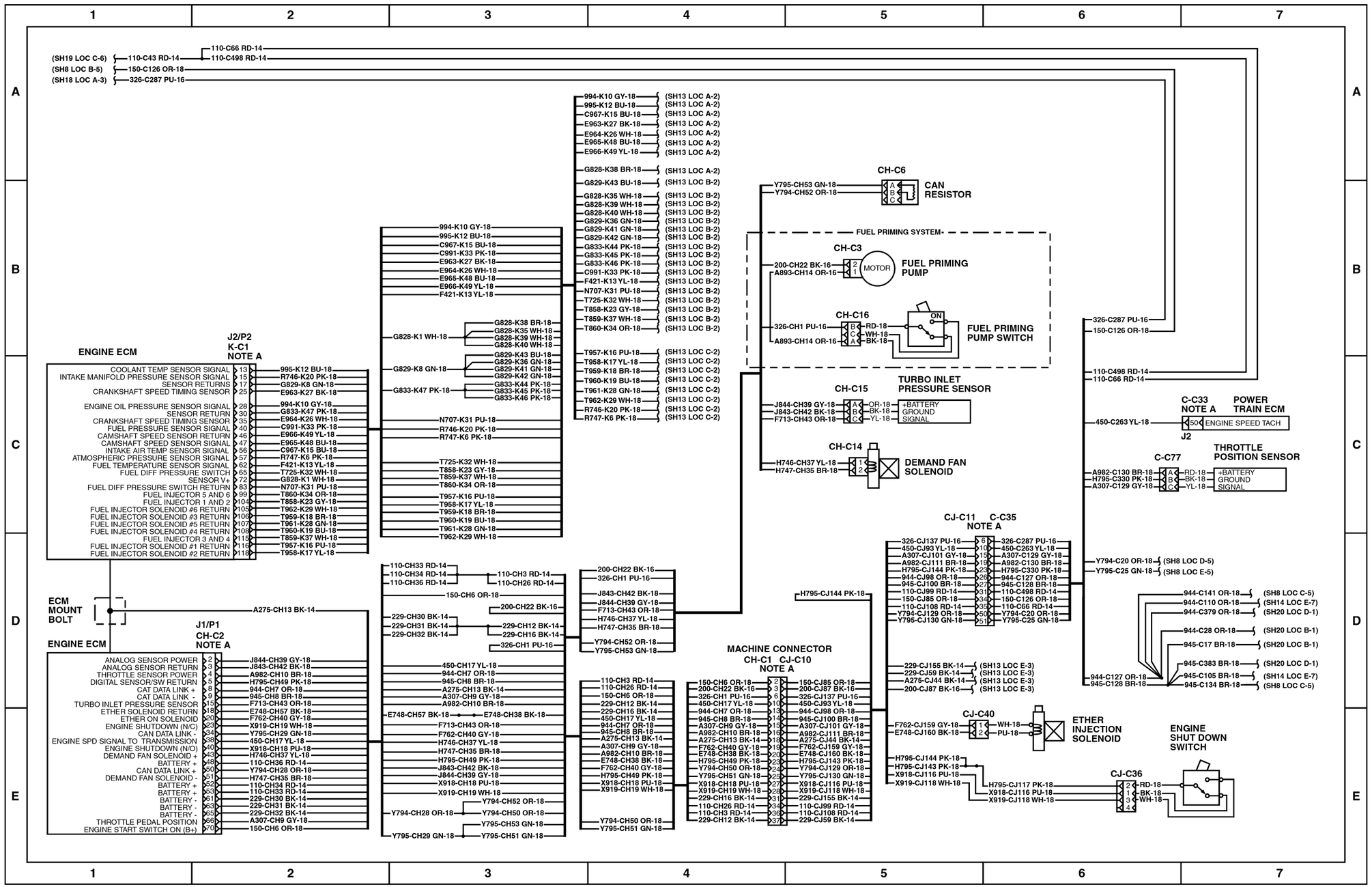

483-1597

FO-1. Electrical Schematics - Engine Circuit (Sheet 12 of 21)

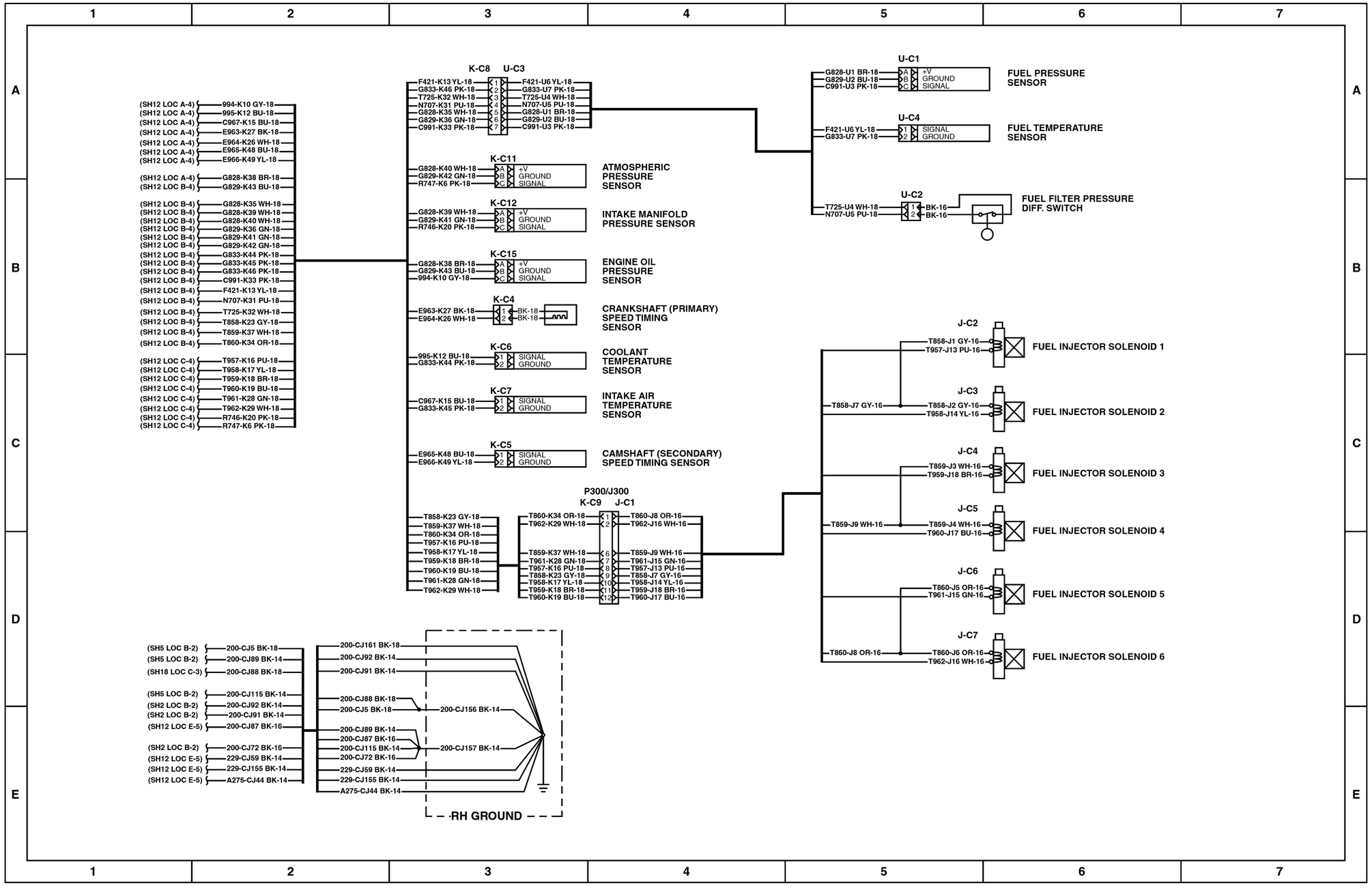

483-1598

FO-1. Electrical Schematics - Engine Circuit (Sheet 13 of 21)

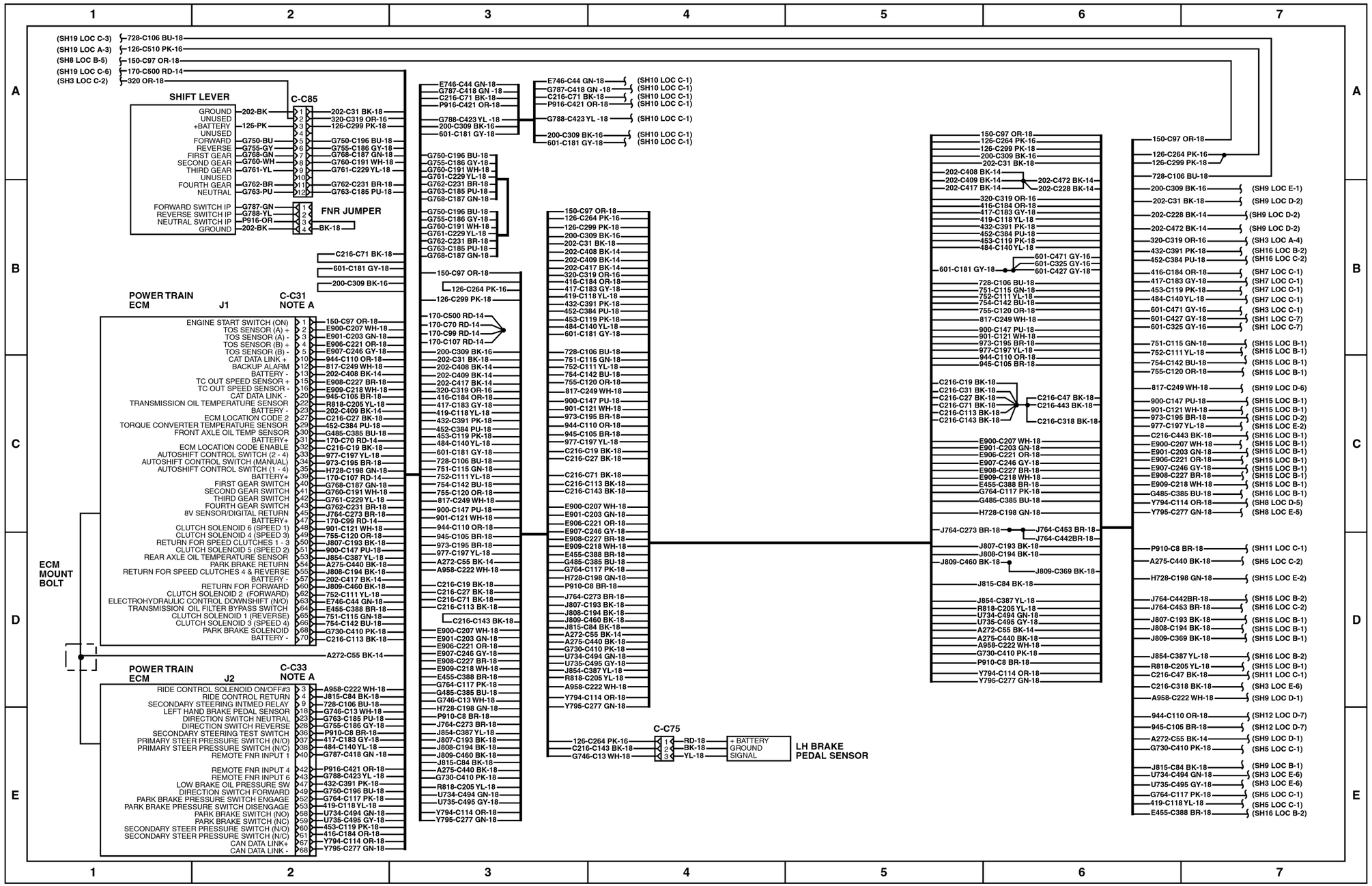

483-1599

FO-1. Electrical Schematics - Transmission Circuit (Sheet 14 of 21)

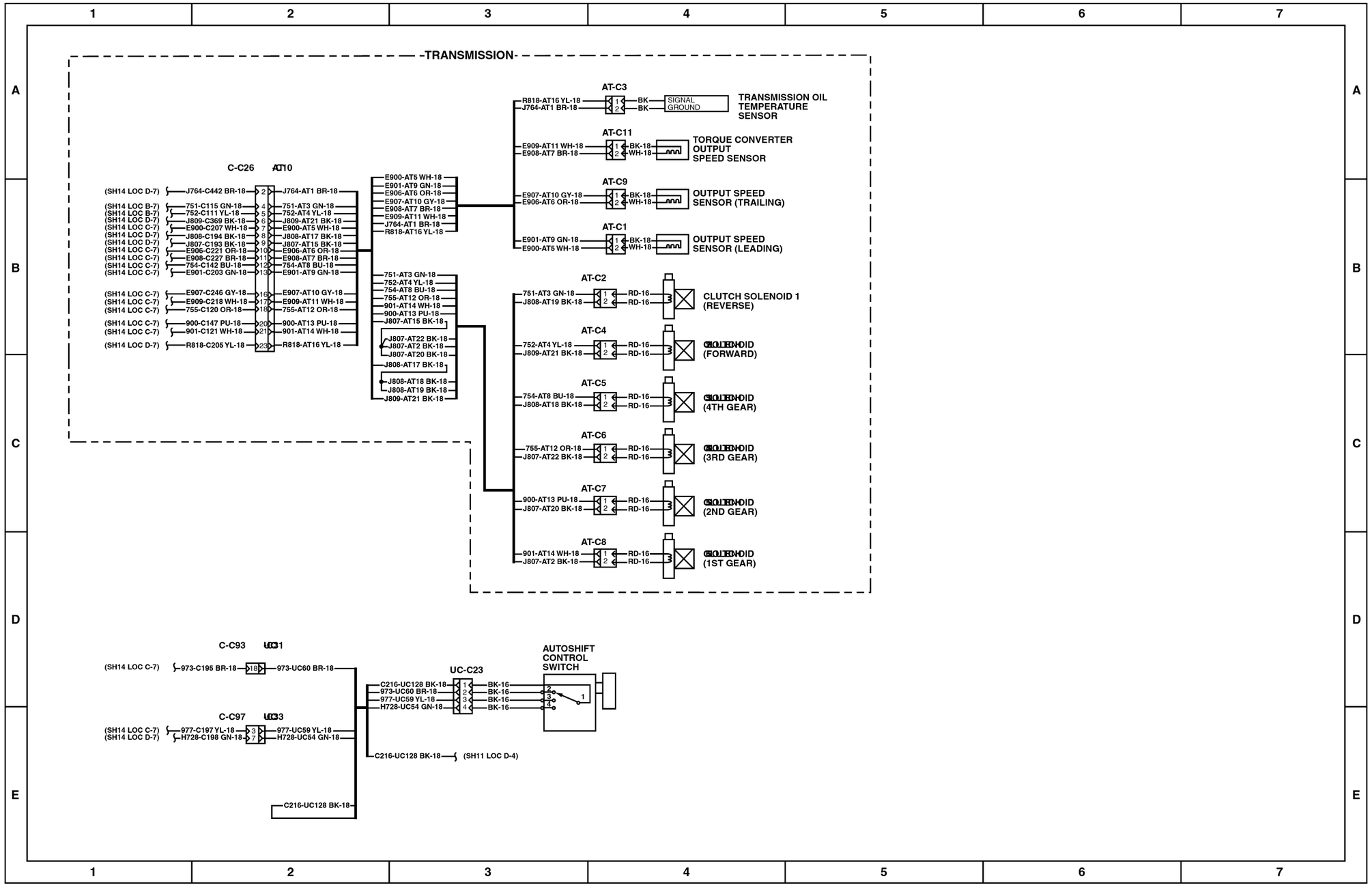

483-1600

FO-1. Electrical Schematics - Transmission Circuit (Sheet 15 of 21).

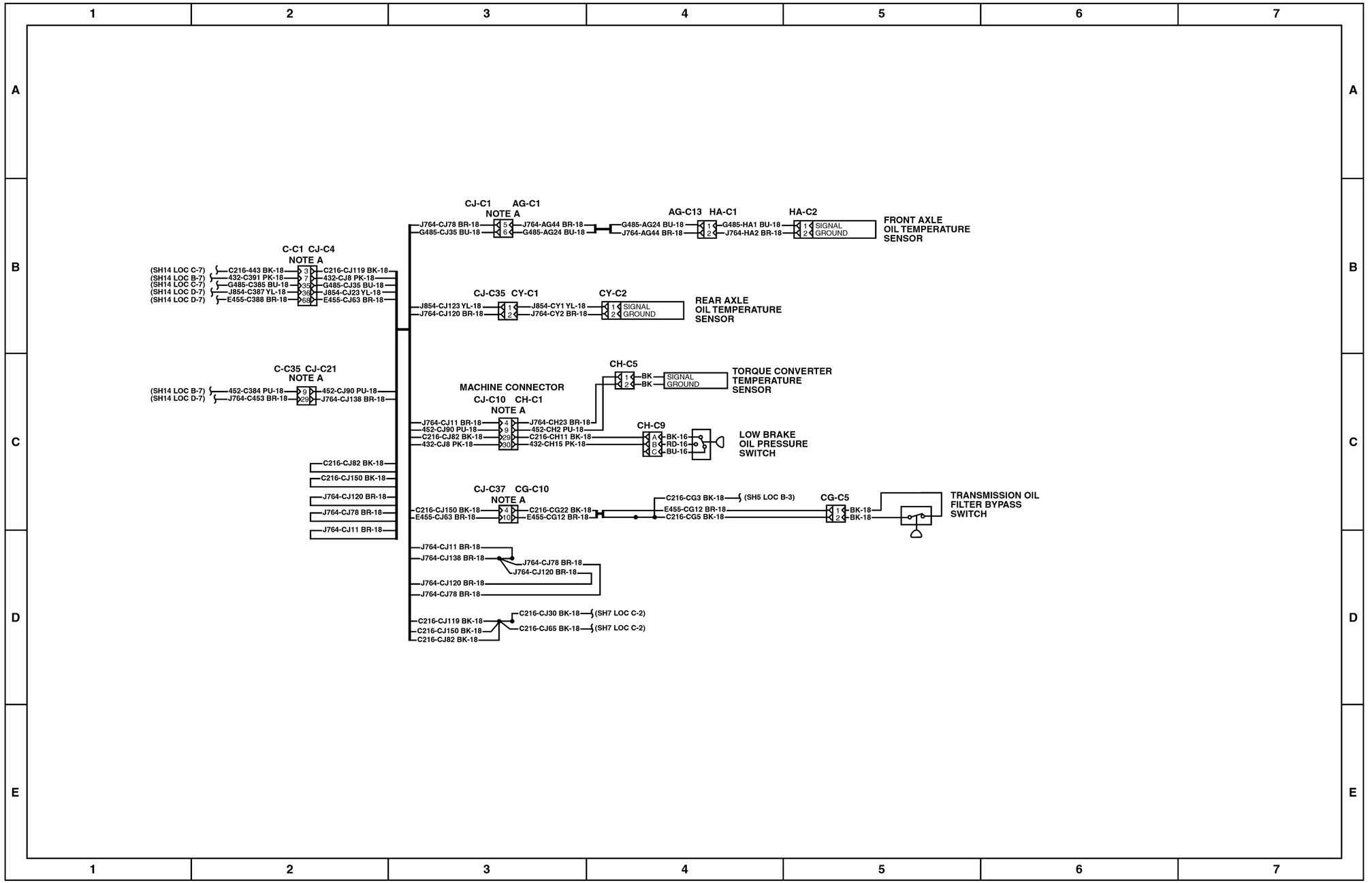

483-1601

FO-1. Electrical Schematics - Transmission Circuit (Sheet 16 of 21).

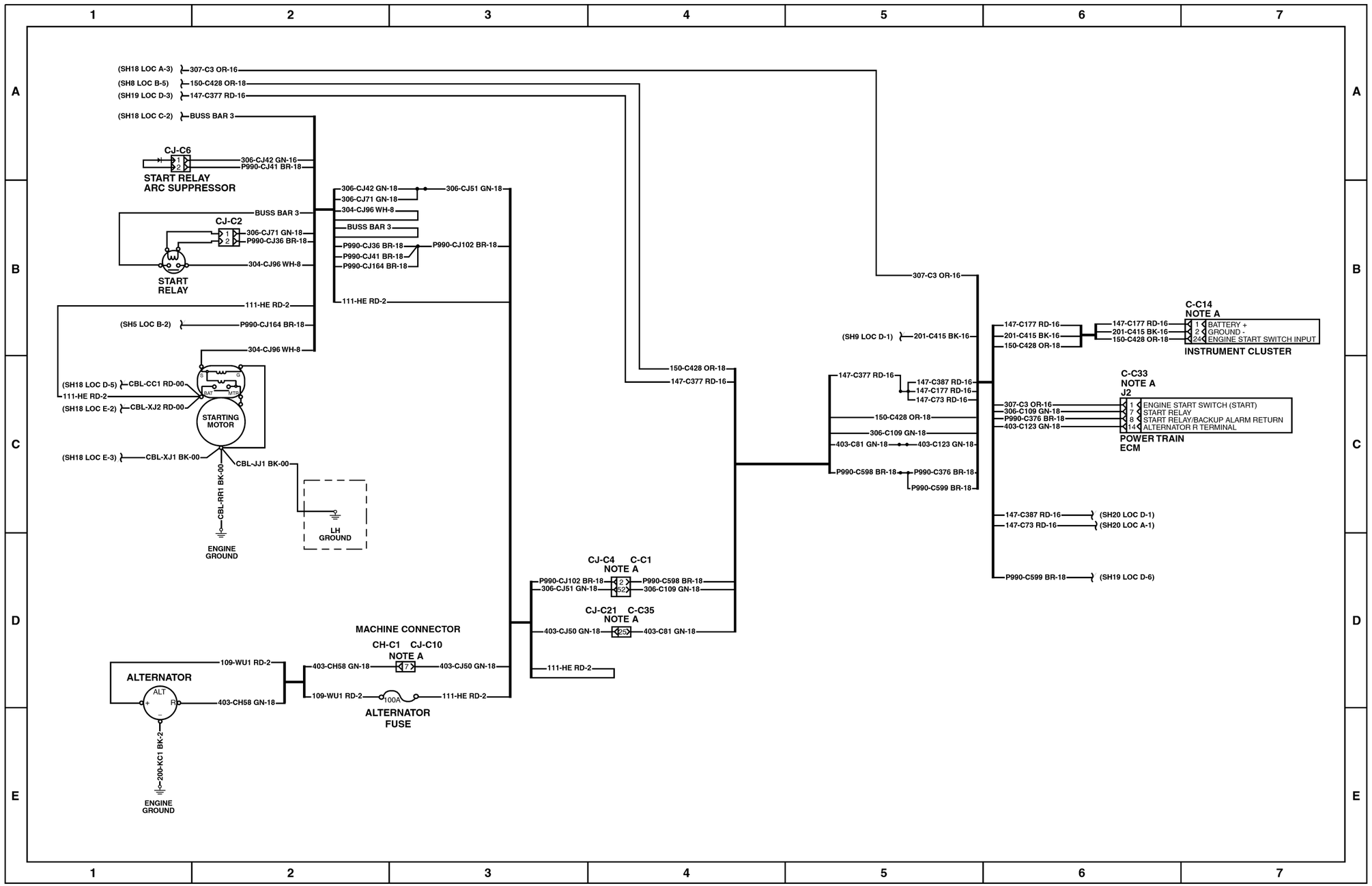

483-1602

FO-1. Electrical Schematics - Starting Circuit (Sheet 17 of 21).

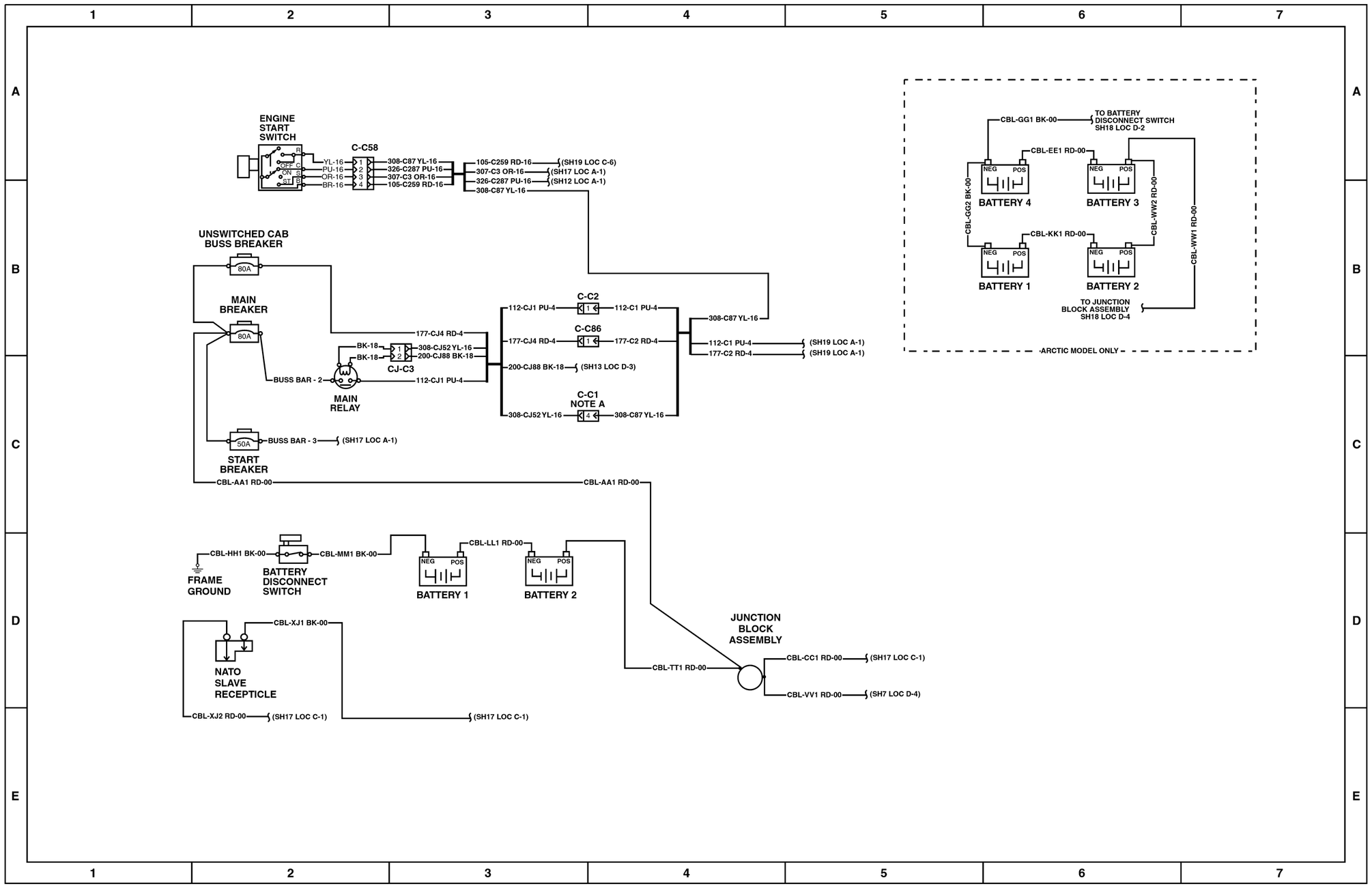

483-1603

FO-1. Electrical Schematics - Starting Circuit (Sheet 18 of 21).

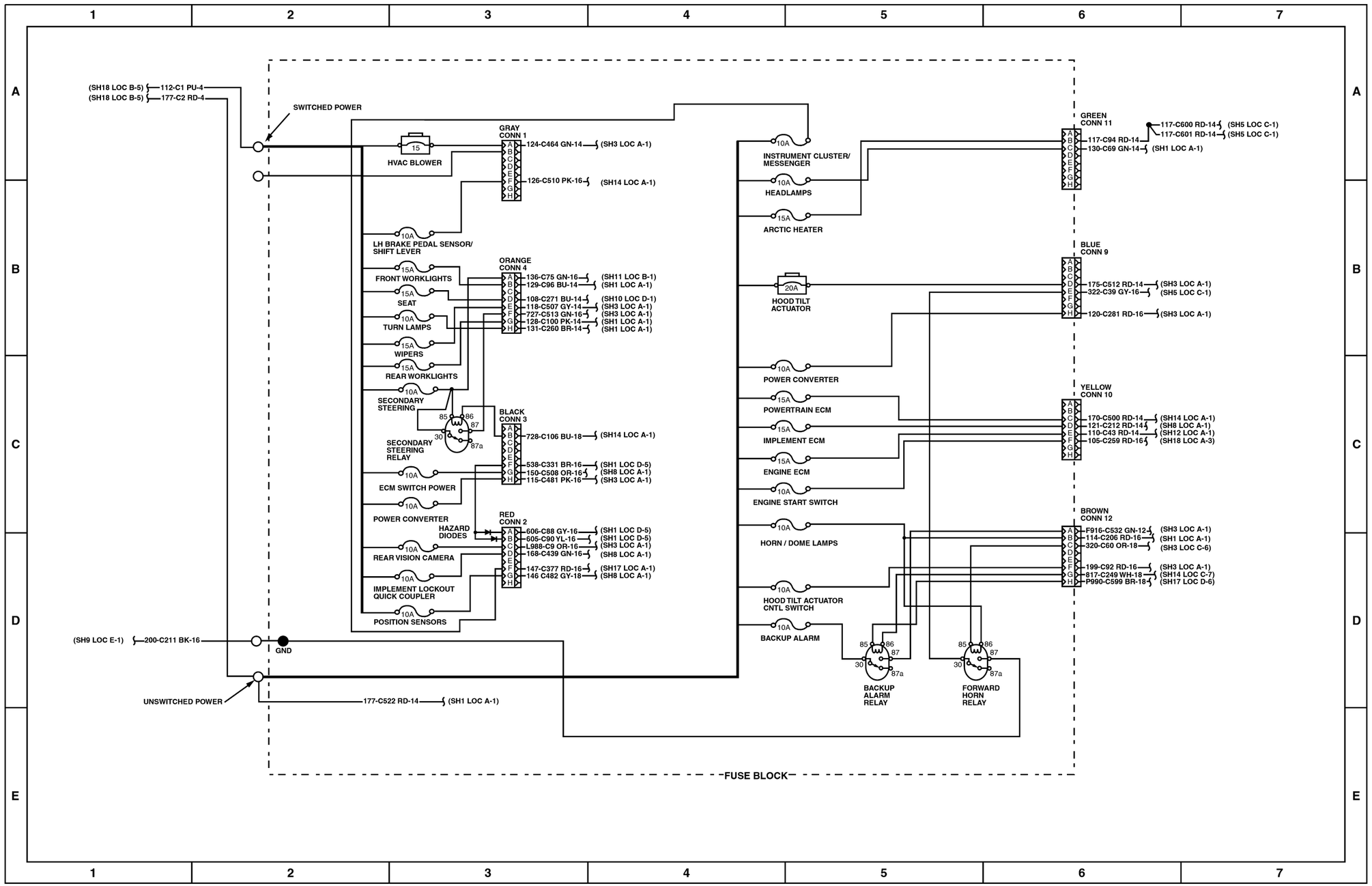

483-1604

FO-1. Electrical Schematics - Power Distribution Circuit (Sheet 19 of 21).

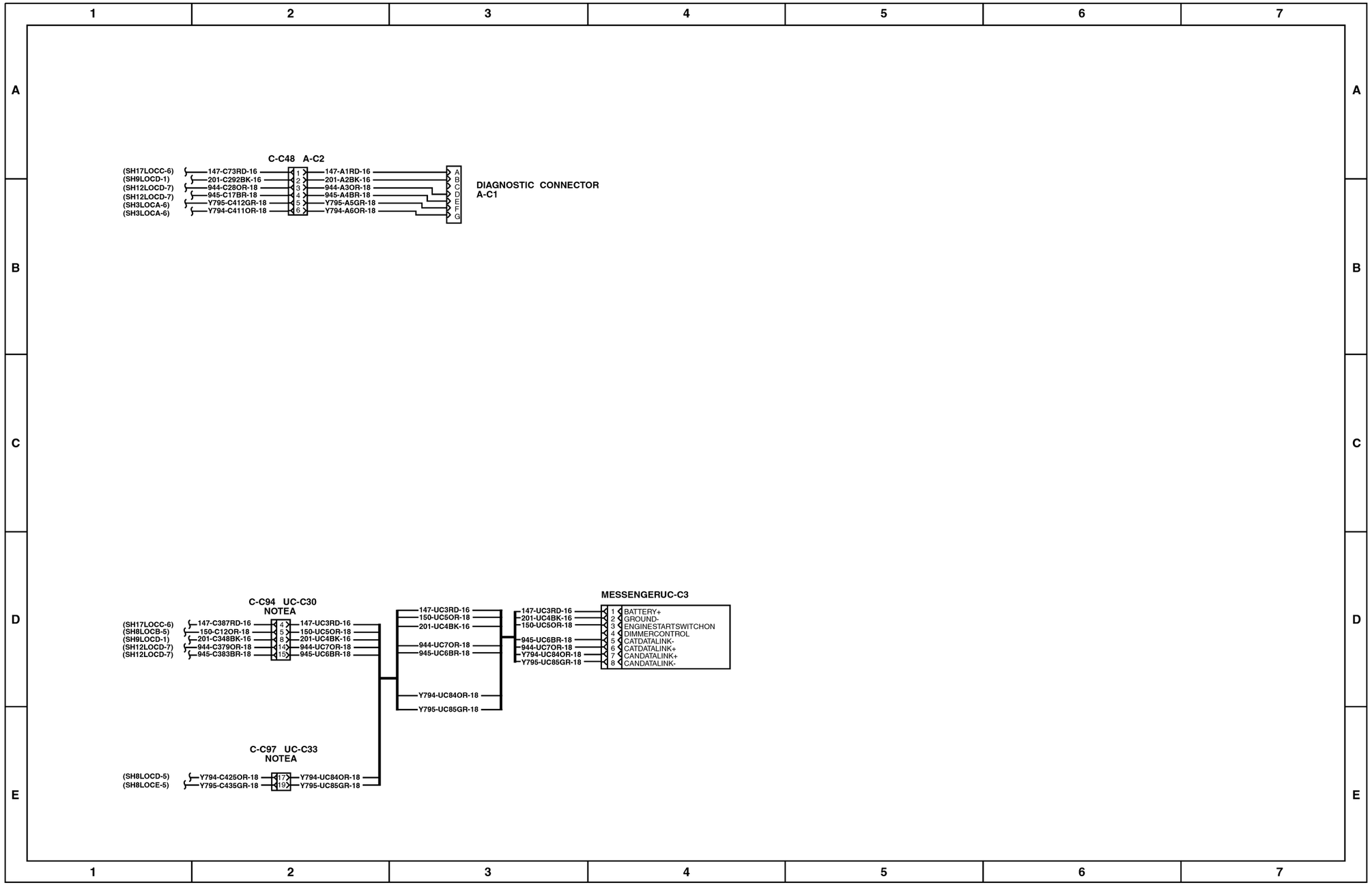

483-1605

FO-1. Electrical Schematics - Messenger Circuit (Sheet 20 of 21).

Harness And Wire Electrical Schematic Symbols

Symbols

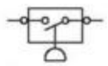
Pressure Symbol

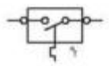
Temperature Symbol

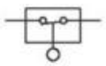
Level Symbol

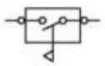
Flow Symbol

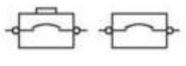
Circuit Breaker Symbol

Symbols And Definitions


Fuse- A component in an electrical circuit that will open the circuit if too much current flows through it.

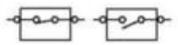
Switch (Normally Open): A switch that will close at a specified point (temp, press, etc.). The circle indicates that the component has screw terminals and a wire can be disconnected from it.

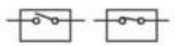
Switch (Normally Closed): A switch that will open at a specified point (temp, press, etc.). No circle indicates that the wire can be disconnected from the component

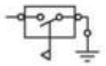
Ground (Wired): This indicates that the component is connected to a grounded wire. The grounded wire is fastened to the machine.

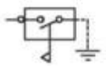
Ground (Case): This indicates that the component does not have a wire connected to ground. It is grounded by being fastened to the machine.


Reed Switch: A switch whose contacts are controlled by a magnet. A magnet closes the contacts of a normally open reed switch; it opens the contacts of a normally closed reed switch.

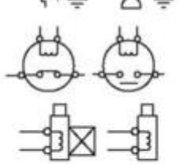
Sender: A component that is used with a temperature or pressure gauge. The sender measures the temperature or pressure. Its resistance changes to give an indication to the gauge of the temperature or pressure.

Relay (Magnetic Switch): A relay is an electrical component that is activated by electricity. It has a coil that makes an electromagnet when current flows through it. The electromagnet can open or close the switch part of the relay.

Solenoid: A solenoid is an electrical component that is activated by electricity. It has a coil that makes an electromagnet when current flows through it. The electromagnet can open or close a valve or move a piece of metal that can do work.

Harness And Wire Symbols



Deutsch connector: Typical representation of a Deutsch connector. The plug contains all sockets and the receptacle contains all pins.



Sure-Seal connector: Typical representation of a Sure-Seal connector. The plug and receptacle contain both pins and sockets.

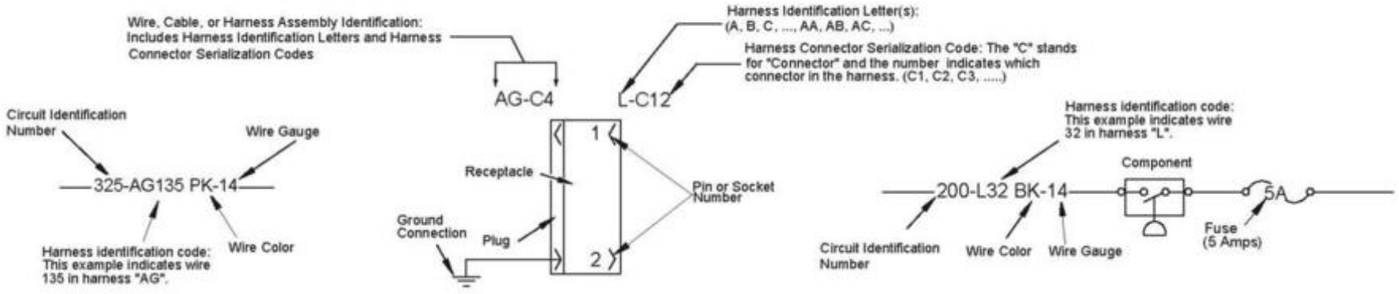

427-C2057-23

FO-1. Electrical Schematics - Legend (Sheet 21 of 21).

METRIC

NO.	PART NO.	NAME	REMARKS
		HMU STRG CKT	
1	241-8157	PUMP GP - STRG	98.3 CC/REV, POR = 20670 kPa, MARGIN PRESS.= 2400 kPa, FLOW @ 2200 RPM = 205 L/min
2	230-4176	HAND MTRG UNIT	125CC, 2700 kPa RATING, LS, NON-REACTION, 3.8-38 L/min
3	168-2144	CONN - ORIFICE	1.6mm ORIFICE
4	133-1747	CYL GP - STR	88.9mm BORE, 50.8 ROD, 624.6mm STROKE, 980.6 PIN-PIN
5	146-7571	VALVE GP - NEUT	
6	142-3996	VALVE GP - STR	
		IMPL CKT & RIDE CONT	
7	292-8768	PUMP GP - IMPL	145CC, LS, 2150 kPa MARGIN
8	242-4273	CYL - TILT	TILT 196.9mm BORE, 88.9mm ROD, 537mm STROKE
9	242-4275	CYL - LIFT (LH)	LIFT 158.8mm BORE, 88.9mm ROD, 833mm STROKE
10	242-4274	CYL - LIFT (RH)	LIFT 158.8mm BORE, 88.9mm ROD, 833mm STROKE
11	152-2646	VALVE	CHOKE CHK
12	112-1817	VALVE GP - MNL	DEAD STRT LOWER
13	275-7875	ACCUM	PILOT ACCUM: 470 mL, PRECHARGE = 690 kPa
		FAN/BK CKT	
14	254-5147	PUMP GP - FAN	LS MARGIN = 1800, POR = 18800 kPa, 32 CC/REV
15	161-8819	MOT GP - FAN	PISTON MOT 41 CC/REV
16	142-8977	VALVE GP - COOLER BYPASS	170 kPa @ 95 L/min
17	244-1031	FLTR GP	5 MICRONS ABSOLUTE
18	242-1307	FAN CONT-BK CHARGE VALVE	
		MISC	
19	249-2334	CASE DRAIN FLTR	5 MICRONS ABSOLUTE
20	220-0814	VALVE GP - BRKR RELIEF	70 kPa RELIEF, 0 kPa VACUUM
21	237-2742	TANK GP	178.2 L TOTAL, 171.3 L OIL
		ATCH	
22	141-2597	VALVE GP - DVTR	SECONDARY STRG ATCH
23	275-8543	PUMP GP - SUPPL STR	SECONDARY STRG ATCH
24	261-2338	VALVE GP - CONT	ATCH 3 FCTN VALVE W/RC (SKID PACK 236-9090), AUX = 20680 kPa, SYS PRESS. = 31000 ±700 kPa, PILOT PRESS. = 3500±350 kPa
25	245-2874	ACCUM-RIDE CONT	OIL = 3 L, 2964 kPa PRECHARGE PRESS.
26	139-8427	MOT GP	BROOM ARB 202-7700
27	284-7722	VALVE GP-RELIEF	
28	284-7723	VALVE GP-FLOW DIVIDER	
29	284-7718	CYL GP-BASIC	63.5mm BORE, 31.8mm ROD, 711.2mm S"

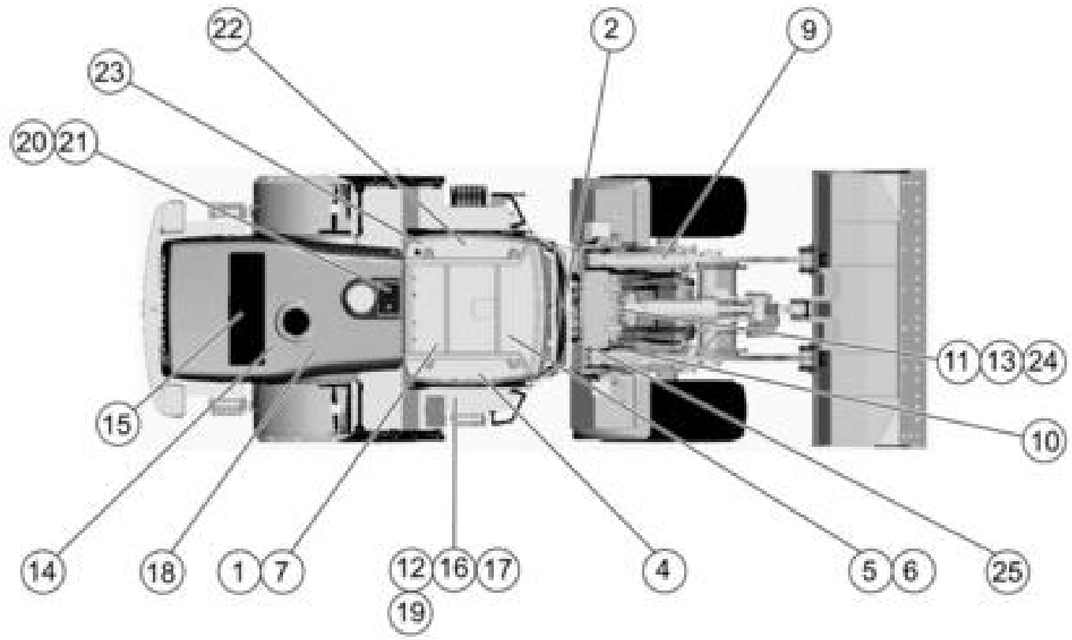

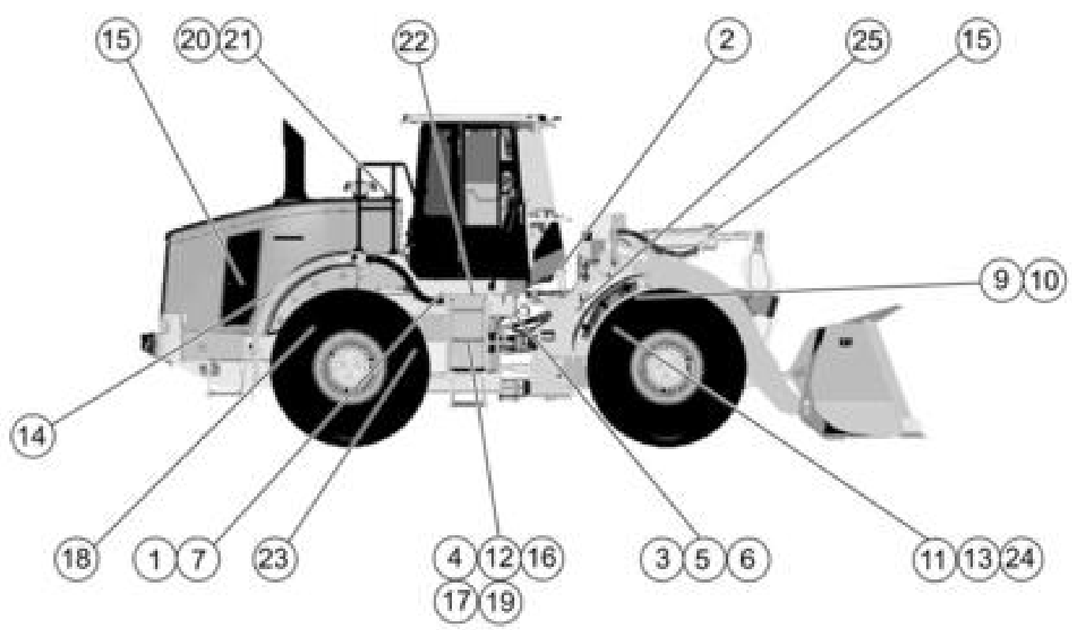

Machine Component Locations

427-C1981-2

FO-2. Hydraulic Component Locator.

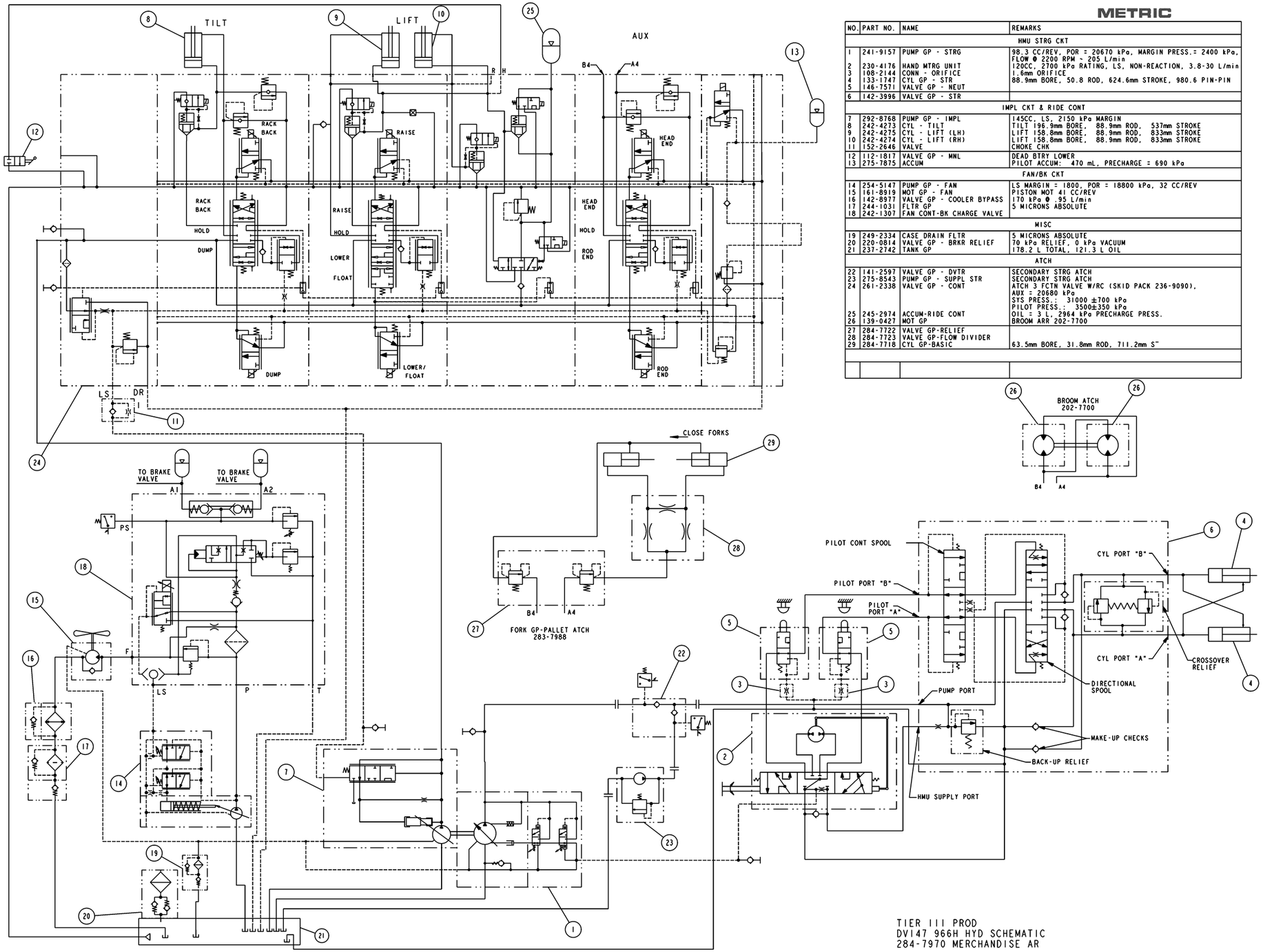

METRIC

NO.	PART NO.	NAME	REMARKS
		HMU STRG CKT	
1	241-9157	PUMP GP - STRG	98.3 CC/REV, POR = 20670 kPa, MARGIN PRESS.= 2400 kPa, FLOW @ 2200 RPM - 205 L/min
2	230-4176	HAND MTRG UNIT	120CC, 2700 kPa RATING, LS, NON-REACTION, 3.8-30 L/min
3	108-2144	CONN - ORIFICE	1.6mm ORIFICE
4	133-1747	CYL GP - STR	88.9mm BORE, 50.8 ROD, 624.6mm STROKE, 980.6 PIN-PIN
5	146-7571	VALVE GP - NEUT	
6	142-3996	VALVE GP - STR	
		IMPL CKT & RIDE CONT	
7	292-8768	PUMP GP - IMPL	145CC, LS, 2150 kPa MARGIN
8	242-4273	CYL - TILT	TILT 196.9mm BORE, 88.9mm ROD, 537mm STROKE
9	242-4275	CYL - LIFT (LH)	LIFT 158.8mm BORE, 88.9mm ROD, 833mm STROKE
10	242-4274	CYL - LIFT (RH)	LIFT 158.8mm BORE, 88.9mm ROD, 833mm STROKE
11	152-2646	VALVE	CHOKE CHK
12	112-1817	VALVE GP - MNL	DEAD BTRY LOWER
13	275-7875	ACCUM	PILOT ACCUM: 470 mL, PRECHARGE = 690 kPa
		FAN/BK CKT	
14	254-5147	PUMP GP - FAN	LS MARGIN = 1800, POR = 18800 kPa, 32 CC/REV
15	161-8919	MOT GP - FAN	PISTON MOT 41 CC/REV
16	142-8977	VALVE GP - COOLER BYPASS	170 kPa @ .95 L/min
17	244-1031	FLTR GP	5 MICRONS ABSOLUTE
18	242-1307	FAN CONT-BK CHARGE VALVE	
		MISC	
19	249-2334	CASE DRAIN FLTR	5 MICRONS ABSOLUTE
20	220-0814	VALVE GP - BRKR RELIEF	70 kPa RELIEF, 0 kPa VACUUM
21	237-2742	TANK GP	178.2 L TOTAL, 121.3 L OIL
		ATCH	
22	141-2597	VALVE GP - DVTR	SECONDARY STRG ATCH
23	275-8543	PUMP GP - SUPPL STR	SECONDARY STRG ATCH
24	261-2338	VALVE GP - CONT	ATCH 3 FCTN VALVE W/RC (SKID PACK 236-9090), AUX = 20680 kPa SYS PRESS.: 31000 ±700 kPa PILOT PRESS.: 3500±350 kPa
25	245-2974	ACCUM-RIDE CONT	OIL = 3 L, 2964 kPa PRECHARGE PRESS.
26	139-0427	MOT GP	BROOM ARR 202-7700
27	284-7722	VALVE GP-RELIEF	
28	284-7723	VALVE GP-FLOW DIVIDER	
29	284-7718	CYL GP-BASIC	63.5mm BORE, 31.8mm ROD, 711.2mm S"

TIER III PROD
DV147 966H HYD SCHEMATIC
284-7970 MERCHANDISE AR

427-C1981-1

FO-2. Hydraulic Schematic (Sheet 1 of 2).

FLUID POWER SYMBOLS

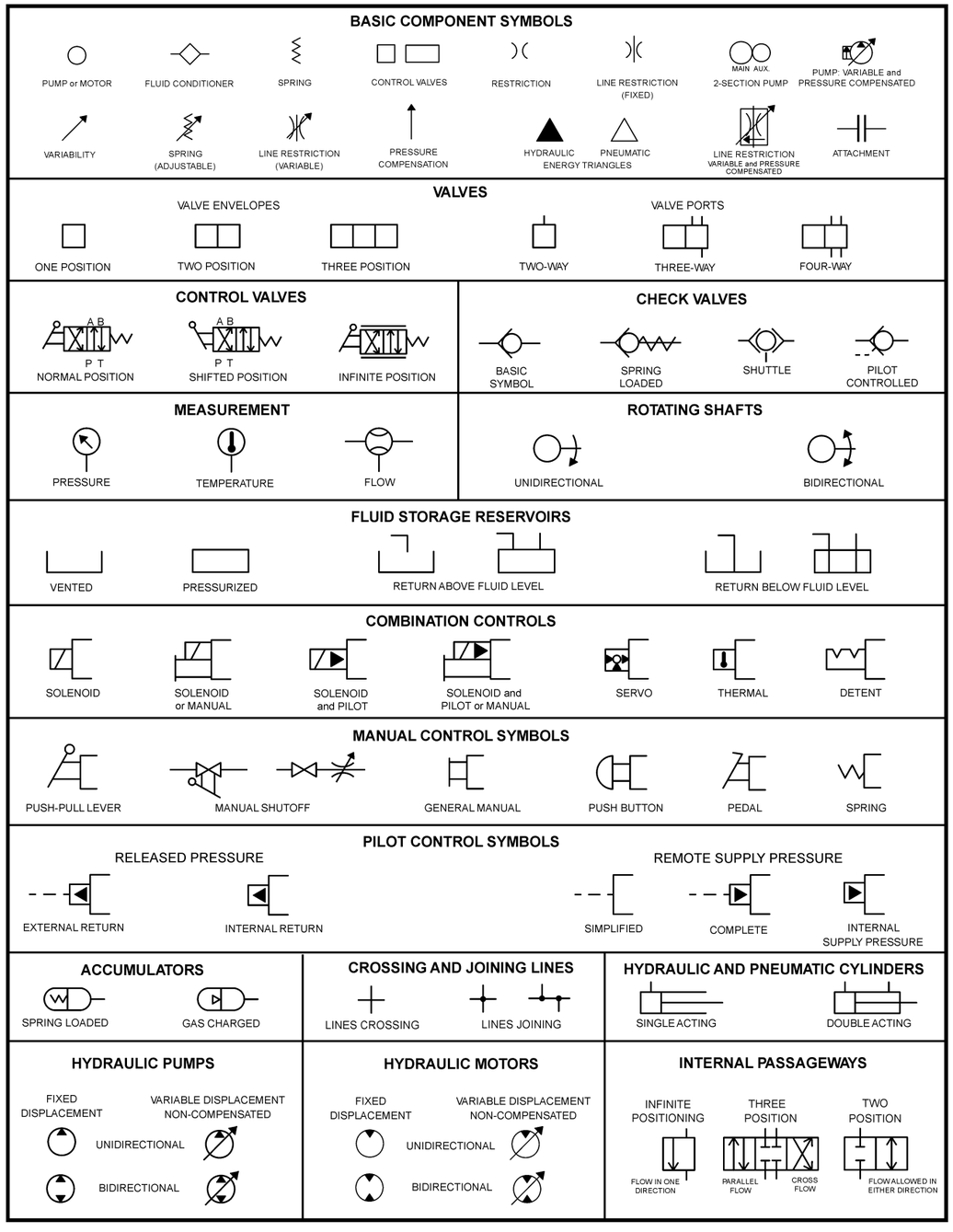

Electrical Symbols Table

Hydraulic Symbols (Electrical)

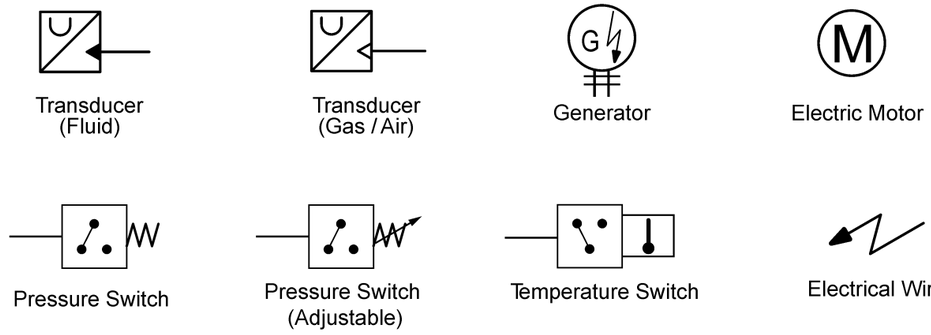

Electrical Symbols (Electrical)

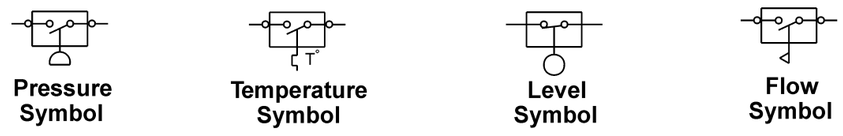

Wire Number Identification Codes

Electrical Schematic Example

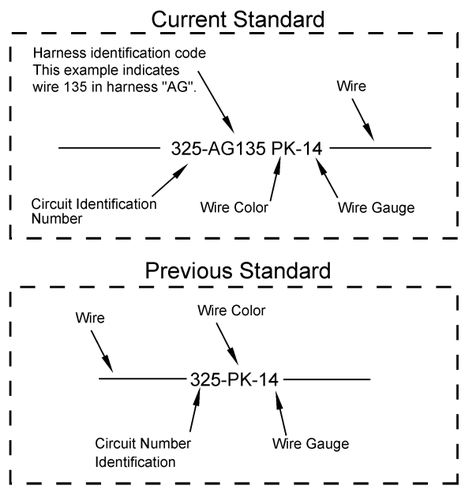

Hydraulic Schematic Example

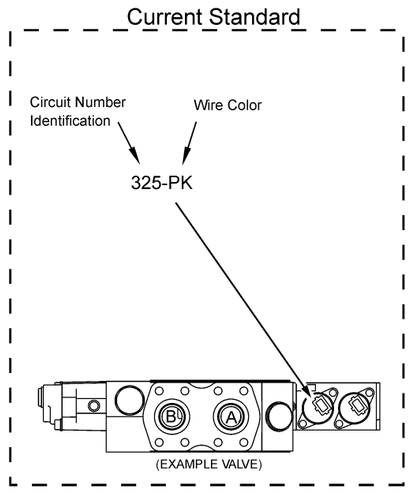

427-C1981-3

FO-2. Hydraulic Schematic Legend (Sheet 2 of 2).

THE METRIC SYSTEM AND EQUIVALENTS

Linear Measure

1 Centimeter = 10 Millimeters = 0.01 Meters = 0.3937 Inches
1 Meter = 100 Centimeters = 1000 Millimeters = 39.37 Inches
1 Kilometer = 1000 Meters = 0.621 Miles

Weights

1 Gram = 0.001 Kilograms = 1000 Milligrams = 0.035 Ounces
1 Kilogram = 1000 Grams = 2.2 Pounds
1 Metric Ton = 1000 Kilograms = 1 Megagram = 1.1 Short Tons

Liquid Measure

1 Milliliter = 0.001 Liters = 0.0338 Fluid Ounces
1 Liter = 1000 Milliliters = 33.82 Fluid Ounces

Square Measure

1 Sq Centimeter = 100 Sq Millimeters = 0.155 Sq Inches
1 Sq Meter = 10,000 Sq Centimeters = 10.76 Sq Feet
1 Sq Kilometer = 1,000,000 Sq Meters = 0.0386 Sq Miles

Cubic Measure

1 Cu Centimeter = 1,000 Cu Millimeters = 0.06 Cu Inches
1 Cu Meter = 1,000,000 Cu Centimeters = 35.31 Cu Feet

Temperature

5/9 (°F - 32) = °C
212° Fahrenheit is equivalent to 100° Celsius
90° Fahrenheit is equivalent to 32.2° Celsius
32° Fahrenheit is equivalent to 0° Celsius
9/5 C° +32 = F°

APPROXIMATE CONVERSION FACTORS

To Change	To	Multiply By
Inches	Centimeters	2.540
Feet	Meters	0.305
Yards	Meters	0.914
Miles	Kilometers	1.609
Sq Inches	Sq Centimeters	6.451
Sq Feet	Sq Meters	0.093
Sq Yards	Sq Meters	0.836
Sq Miles	Sq Kilometers	2.590
Acres	Sq Hectometers	0.405
Cubic Feet	Cubic Meters	0.028
Cubic Yards	Cubic Meters	0.765
Fluid Ounces	Milliliters	29.573
Pints	Liters	0.473
Quarts	Liters	0.946
Gallons	Liters	3.785
Ounces	Grams	28.349
Pounds	Kilograms	0.454
Short Tons	Metric Tons	0.907
Pound-Feet	Newton-Meters	1.356
Pounds per Sq Inch	Kilopascals	6.895
Miles per Gallon	Kilometers per Liter	0.425
Miles per Hour	Kilometers per Hour	1.609

To Change	To	Multiply By
Centimeters	Inches	0.394
Meters	Feet	3.280
Meters	Yards	1.094
Kilometers	Miles	0.621
Sq Centimeters	Sq Inches	0.155
Sq Meters	Sq Feet	10.764
Sq Meters	Sq Yards	1.196
Sq Kilometers	Sq Miles	0.386
Sq Hectometers	Acres	2.471
Cubic Meters	Cubic Feet	35.315
Cubic Meters	Cubic Yards	1.308
Milliliters	Fluid Ounces	0.034
Liters	Pints	2.113
Liters	Quarts	1.057
Liters	Gallons	0.264
Grams	Ounces	0.035
Kilograms	Pounds	2.205
Metric Tons	Short Tons	1.102
Newton-Meters	Pound-Feet	0.738
Kilopascals	Pounds per Sq Inch	0.145
Kilometers per Liter	Miles per Gallon	2.354
Kilometers per Hour	Miles per Hour	0.621

PIN: 084059-000