CATERPILLAR®

SEBP3848-01
September 2005

RUTHZIL TRATOR COMERCIAL DE PEÇAS LTDA 11 97083-6812 ROLANDO

Parts Manual

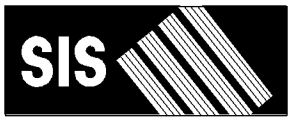

See "General Information" for New Parts Manual Features.

972H Wheel Loader

A7G1-Up (Machine)
MHX1-Up (Engine)
FAX1-Up (Transmission)
TKF1-Up (Torque Converter)

Powered By C13 Engine
This Parts Manual is also Available in .PDF Format on Compact Disc(CD-ROM)-Caterpillar Form No.SERP3848

Product and Dealer Information

Note: For product identification plate locations, see the section “Product Identification Information” in the Operation and Maintenance Manual.

Delivery Date: _____

Product Information

Model: _____

Product Identification Number: _____

Engine Serial Number: _____

Transmission Serial Number: _____

Generator Serial Number: _____

Attachment Serial Numbers: _____

Attachment Information: _____

Customer Equipment Number: _____

Dealer Equipment Number: _____

Dealer Information

Name: _____ Branch: _____

Address: _____

_____

_____

	Dealer Contact	Phone Number	Hours
Sales:	_____	_____	_____
Parts:	_____	_____	_____
Service:	_____	_____	_____

Informations produit et concessionnaire

Nota: Voir l'emplacement de la plaque signalétique du produit au chapitre "Informations produit" du guide d'utilisation et d'entretien.

Date de livraison: _____

Informations produit

Modèle: _____

Numéro d'identification produit: _____

Numéro de série du moteur: _____

Numéro de série de la boîte de vitesses: _____

Numéro de série de l'alternateur: _____

Numéros de série d'équipement: _____

Informations sur l'équipement: _____

Numéro matériel client: _____

Numéro matériel concessionnaire: _____

Informations concessionnaire

Nom: _____ Agence: _____

Adresse: _____

_____

_____

	Contact concessionnaire	Numéro de téléphone	Heures
Ventes:			
Pièces:			
Service:			

Información del Producto/Distribuidor

Nota: Para saber la ubicación de las placas de identificación del producto, ver la sección “Información sobre identificación del producto” en el Manual de Operación y Mantenimiento.

Fecha de entrega: _____

Información del producto

Modelo: _____

Número de identificación del producto: _____

Número de serie del motor: _____

Número de serie de la transmisión: _____

Número de serie del generador: _____

Números de serie de los accesorios: _____

Información sobre los accesorios: _____

Número del equipo del cliente: _____

Número del equipo del distribuidor: _____

Información del distribuidor

Nombre: _____ Sucursal: _____

Dirección: _____

_____

_____

Comunicación con el distribuidor	Número de teléfono	Horas
Ventas: _____	_____	_____
Piezas: _____	_____	_____
Servicio: _____	_____	_____

Informações Sobre Produto e Revendedor

Nota: Para localizações da placa de identificação do produto, consulte a seção, “Informações Sobre Identificação do Produto” no Manual de Operação e Manutenção.

Data de Entrega: _____

Informações Sobre o Produto

Modelo: _____

Número de Identificação do Produto: _____

Número de Série do Motor: _____

Número de Série da Transmissão: _____

Número de Série do Gerador: _____

Números de Série de Acessórios: _____

Informações Sobre Acessórios: _____

Número do Equipamento do Cliente: _____

Número do Equipamento do Revendedor: _____

Informações Sobre o Revendedor

Nome: _____ Filial: _____

Endereço: _____

_____

_____

	Contato do Revendedor	Telefone	Horas
Vendas:	_____	_____	_____
Peças:	_____	_____	_____
Serviço:	_____	_____	_____

Produkt- und Händlerinformation

Anmerkung: Für die Lage der Produkt-Identnummer und Seriennummern siehe Abschnitt “Produkt-Identinformation” im Betriebs- und Wartungshandbuch.

Lieferdatum: _____

Produkt-Identinformation

Modell: _____

Produkt-Identnummer: _____

Seriennummer des Motors: _____

Seriennummer des Getriebes: _____

Seriennummer des Generators: _____

Seriennummern der Arbeitsgeräte: _____

Arbeitsgeräteinformation: _____

Kundennummer: _____

Händlernummer: _____

Händlerinformation

Name: _____ Niederlassung: _____

Adresse: _____

_____

_____

	Kontaktperson beim Händler	Telefon	Dienststunden
Verkauf:	_____	_____	_____
Ersatzteile:	_____	_____	_____
Service:	_____	_____	_____

MEMORANDA

TABLE OF CONTENTS

Name	Page
GENERAL INFORMATION	A28
REPAIR ALTERNATIVES	A47
SUPPLEMENTAL COOLANT ADDITIVES	A52
MAINTENANCE PARTS	A57
INDEX	A78
MACHINE ARRANGEMENT	1
CHASSIS AR	1
CONVERSION AR-CERTIFICATION	2
GENERAL AR	2
ENGINE ARRANGEMENT	3
ENGINE AR-COMPLETE	3
ENGINE AR-CORE	4
INSTALLATION AR-ENGINE	5
BASIC ENGINE	6
BASE GP-VALVE COVER & INJ HARN	6
BELT TENSIONER GP	7
CAMSHAFT GP	8
COVER GP-FRONT HOUSING	9
COVER GP-VALVE MECHANISM	11
CRANKSHAFT GP	12
CYLINDER BLOCK AS	14
CYLINDER BLOCK GP	16
CYLINDER HEAD AS	18
CYLINDER HEAD GP	19
DAMPER GP	21
DRIVE GP-ACCESSORY	22
FASTENER GP-CYLINDER HEAD	23
FASTENER GP-DAMPER & PULLEY	24
FASTENER GP-FRONT HOUSING	25
FLYWHEEL GP	26
GEAR GP-FRONT	27
HOUSING GP-FLYWHEEL	28
HOUSING GP-FRONT	29
IDLER GP-BELT	31
KIT-CRANKSHAFT BEARING	32
LIFTER GP-VALVE	33
LIFTING GP-ENGINE	34
MOUNTING GP-ENGINE & TMSN	35
MOUNTING GP-VALVE MECHANISM	36
PAN GP-OIL	37
PISTON & ROD GP	38
PLUG GP-CYLINDER BLOCK	40
PLUG GP-ENGINE	43
PULLEY GP-ALTERNATOR	44
PULLEY GP-CRANKSHAFT	45
ROCKER ARM GP	46
SEAL GP-CRANKSHAFT	50
SUPPORT GP-ENGINE	51
VALVE MECHANISM GP	52
LUBRICATION SYSTEM	54
BASE GP-OIL FILTER	54
BREATHER GP	58
FILLER GP-ENGINE OIL	59
FILTER GP-ENGINE OIL	60
FUMES DISPOSAL GP	61
GAUGE GP-OIL LEVEL (DIPSTICK)	62
LINES GP-TURBOCHARGER OIL	63
PUMP GP-ENGINE OIL	64
COOLING SYSTEM	66
COOLER GP-ENGINE OIL	66
COOLING AR-HIGH AMBIENT TEMP	68
LINES GP-WATER	69
PUMP GP-WATER	75
RADIATOR & FAN GP	78
TANK GP-RADIATOR TOP	84
AIR INLET AND EXHAUST SYSTEM	85
AIR CLEANER GP	85
LINES GP-AFTERCOOLER AIR	87
LINES GP-AIR	88
MANIFOLD GP-EXHAUST	91
MANIFOLD GP-INLET	92
MUFFLER GP	93
PLUG GP-AIR INLET MANIFOLD	95
PRECLEANER GP	96
TURBOCHARGER GP	98
FUEL SYSTEM	100
FILTER & LINES GP-SEC FUEL	100
FILTER GP-FUEL	102
FILTER GP-WATER SEP & FUEL	103
INJECTOR GP-FUEL	104
LINES GP-FUEL	105
LINES GP-FUEL DRAIN	107
PUMP GP-FUEL INJECTION	109
PUMP GP-FUEL PRM & PRIM FILTER	110
PUMP GP-FUEL TRANSFER	112
TANK GP-FUEL	113
VALVE GP-CHECK	115
WATER SEP & FUEL PRM PUMP GP	117
ELECTRICAL AND STARTING SYSTEM	118
ALARM GP	118
ALTERNATOR GP-CHARGING	119
BATTERY & WIRING GP	121
CONNECTION GP-ELECTRICAL	125
CONTROL & MTG GP-COMMUNICATION	126
CONTROL & MTG GP-ENGINE ELEK	128
CONTROL AR-AUTODIG	129

TABLE OF CONTENTS

Name	Page
CONTROL GP-AUTODIG	130
CONTROL GP-UNPROGRAMMED	134
ELECTRICAL AR	135
ELECTRONICS GP-COMMUNICATION	136
ELECTRONICS GP-IMPLEMENT	137
ELECTRONICS GP-MONITOR	138
ELECTRONICS GP-POWER TRAIN	138
HEATER GP-JACKET WATER	139
INSTALLATION AR-COMMUNICATION	140
INSTALLATION AR-SECURITY	140
INSTALLATION GP-SECURITY	141
LAMP GP-DOME	143
LAMP GP-FLOOD	144
LAMP GP-HEAD & SIGNAL	148
LAMP GP-SIGNAL	152
LAMP GP-STOP & TAIL	154
LAMP GP-WARNING BEACON	155
LIGHTING AR-ROADING	156
LIGHTING AR-SIGNAL	156
LIGHTING GP-FLOOD	158
LIGHTING GP-FLOOD & SIGNAL	164
LIGHTING GP-ROADING	168
LIGHTING GP-WARNING BEACON	170
RECEPTACLE GP-AUXILIARY START	172
SENSOR & MTG GP-LIFT POSITION	173
SENSOR & MTG GP-PRESSURE	175
SENSOR & MTG GP-TILT POSITION	176
SENSOR GP-ENGINE	178
SENSOR GP-POSITION	180
SENSOR GP-PRESSURE	182
SENSOR GP-SPEED	189
SENSOR GP-TEMPERATURE	194
STARTING AID GP-ETHER	197
STARTING MOTOR GP-ELECTRIC	199
SWITCH GP-BYPASS	202
SWITCH GP-DIMMER	203
SWITCH GP-DISCONNECT	204
SWITCH GP-MAGNETIC	205
SWITCH GP-PRESSURE	207
SWITCH GP-REVERSING FAN	208
SWITCH GP-RIDE CONTROL	209
SWITCH GP-ROCKER	210
SWITCH GP-ROTARY	212
SWITCH GP-SECONDARY STEERING	213
SWITCH GP-SIGNAL	214
SWITCH GP-TOGGLE	218
SWITCH GP-TRANSMISSION	219
WARNING GP-BACKUP	220
WIRING GP-AIR CONDITIONER	221
WIRING GP-AUTOLUBE CONTROL	222
WIRING GP-AXLE MONITORING	224
WIRING GP-CAB	227
WIRING GP-CHASSIS	235
WIRING GP-ELECTRONIC CONTROL	241
WIRING GP-ENGINE	243
WIRING GP-FRONT	245
WIRING GP-LIGHTING	247
WIRING GP-SECONDARY STEERING	250
WIRING GP-SENSOR	252
WIRING GP-UNIT INJECTOR	256
POWER TRAIN	257
AXLE & AXLE OIL COOLER AR	257
AXLE AR-FIXED	258
AXLE AR-OSCILLATING	259
BASE GP-OIL FILTER	262
BRAKE & PLANETARY GP	263
CASE & PARTS GP-PLANETARY	265
CONTROL GP-TRANSMISSION	267
CONTROL GP-TRANSMISSION HYD	269
COOLER AR-AXLE OIL	271
COOLER GP-TRANSMISSION OIL	272
COVER GP-TMSN OIL FILLER CAP	274
DIFFERENTIAL GP	275
DIFFERENTIAL GP-LIMITED SLIP	277
DIFFERENTIAL GP-NOSPIN	278
FILLER GP-POWER TRAIN OIL	280
FILTER & LINES GP-TRANSMISSION	282
FILTER GP-OIL	284
GEAR GP-BEVEL & PINION	285
GEAR GP-OUTPUT TRANSFER	291
HEAT EXCHANGER GP-AXLE	296
HOUSING GP-FIXED AXLE	298
HOUSING GP-OSCILLATING AXLE	304
LINES GP-AXLE OIL COOLER	308
LINES GP-TORQUE CONV COOLER	312
MANIFOLD GP-CONTROL	315
MOUNTING GP-AXLE	316
MOUNTING GP-RIM	316
OIL CHANGE GP-HIGH SPEED	317
PLANETARY GP-TRANSMISSION	318
POWER TRAIN AR	322
PUMP GP-TRANSMISSION	323
RIM AR	325
RIM GP-DEMOUNTABLE	326
SHAFT GP-DRIVE	330
SLIP JOINT GP	331
TIRE & RIM AR	332
TORQUE CONVERTER & HOUSING GP	342
TORQUE CONVERTER GP	344
TRANSMISSION AR	346
UNIVERSAL JOINT GP	347
VALVE GP-MODULATING	349
VALVE GP-RELIEF	350
VALVE GP-TIRE	353

TABLE OF CONTENTS

Name	Page
FRAME AND BODY	354
ACTUATOR GP-HOOD TILT	354
BLOCK GP-AXLE OSC LIMITER	356
BOSS GP-REAR FRAME	357
BOX GP-BATTERY	360
COUNTERWEIGHT GP	361
FENDER AR-ROADING	362
FENDER GP	363
FENDER GP-ROADING	367
FRAME AS-LOADER	372
FRAME AS-REAR	375
GRILL GP-RADIATOR	378
GUARD GP-FRONT	380
GUARD GP-POWER TRAIN	381
HARDWARE GP-MOUNTING	383
HARDWARE GP-REAR FRAME	384
HINGE GP-ROADING FENDER	386
HITCH GP-ARTICULATING	388
HOOD & GUARD GP	390
LADDER GP	394
LINES GP-AUTOMATIC LUBRICATION	404
LINES GP-GREASE	415
LINES GP-LUBRICATION	419
LINK GP-STEERING FRAME LOCK	423
LUBRICATION AR-AUTOMATIC	424
PANEL GP-SIDE	427
PUMP & MTG GP-LUBRICATION	429
PUMP GP-LUBRICATION	430
SHIELD GP-ENGINE COMPARTMENT	431
SUPPORT GP-AIR INLET	433
SUPPORT GP-VALVE & FILTER	434
SUPPRESSION AR-SOUND	436
SUPPRESSION GP-SOUND	437
TILT GP-HOOD	441
VALVE & LINES GP-LUBRICATION	443
VALVE GP-LUBE DISTRIBUTION	446
BRAKING SYSTEM	448
ACCUMULATOR GP-BRAKE	448
BASE GP-FOOT BRAKE	450
BRAKE GP-PARKING	453
CONTROL GP-FOOT BRAKE	458
CONTROL GP-PARKING BRAKE	460
CONTROL GP-SERVICE BRAKE	461
VALVE GP-BRAKE CONTROL	467
STEERING SYSTEM	468
CONTROL GP-STEERING	468
CYLINDER & MTG GP-STEERING	472
CYLINDER GP-STEERING	473
LINES GP-SECONDARY STEERING	474
LINES GP-STEERING	476
PUMP & MOTOR GP-SEC STEERING	490
PUMP & MTG GP-SECONDARY STEER	491
PUMP GP-PISTON	492
ROTATING GP-PUMP	494
SCREEN GP-CASE DRAIN	495
STEERING AR-COMMAND CONTROL	496
STEERING AR-SECONDARY	496
STEERING COLUMN GP	497
STEERING WHEEL GP	498
SWASHPLATE GP	500
VALVE GP-CHECK	501
VALVE GP-PILOT	504
VALVE GP-PRESSURE REDUCING	506
VALVE GP-PUMP CONTROL	507
VALVE GP-RELIEF	508
VALVE GP-SECONDARY STEERING	510
VALVE GP-SHUTTLE	511
VALVE GP-STEERING	513
VALVE GP-STEERING NEUTRALIZER	517
HYDRAULIC SYSTEM	519
ACCUMULATOR & MTG GP-RIDE CONT	519
ACCUMULATOR GP-PILOT OIL	520
ACCUMULATOR GP-RIDE CONTROL	522
CONTROL & LINES GP-RIDE	524
CONTROL AR-RIDE	525
CONTROL GP-ELECTROHYDRAULIC	526
CONTROL GP-HANDLE	534
CONTROL GP-JOYSTICK	535
COOLER GP-HYDRAULIC & AXLE OIL	539
CYLINDER & SEAL GP-LIFT	540
CYLINDER & SEAL GP-TILT	542
CYLINDER GP-LIFT	543
CYLINDER GP-TILT	546
DRAIN GP-ECOLOGY	548
FILTER GP-OIL	549
HYDRAULIC AR-2 VALVE	551
HYDRAULIC AR-3 VALVE	551
LINES GP-COUPLER	552
LINES GP-FRONT	554
LINES GP-HYDRAULIC	558
LINES GP-HYDRAULIC OIL COOLER	563
LINES GP-LIFT CYLINDER	569
LINES GP-TILT CYLINDER	571
MANIFOLD GP-CONTROL	573
MANIFOLD GP-VALVE	575
MOTOR GP-PISTON	579
MOUNTING GP-HYDRAULIC TANK	581
PUMP & MTG GP-BRAKE & HYD FAN	582
PUMP & MTG GP-HYDRAULIC	584
PUMP GP-PISTON	586
ROTATING GP-PUMP	590
TANK GP-HYDRAULIC	591

TABLE OF CONTENTS

Name	Page
VALVE & MTG GP-MAIN CONTROL	593
VALVE GP-CHECK	605
VALVE GP-CONTROL	608
VALVE GP-DIVERTER	618
VALVE GP-DRAIN	619
VALVE GP-LOWERING CONTROL	620
VALVE GP-MAIN CONTROL	622
VALVE GP-MANUAL	627
VALVE GP-PRESSURE REDUCING	628
VALVE GP-PUMP CONTROL	629
VALVE GP-RELIEF	633
VALVE GP-RIDE CONTROL	634
VALVE GP-SHUTTLE	636
VALVE GP-SOLENOID	639
IMPLEMENTS	642
ARM & BEARING AS	642
ARM AS-LIFT	644
BOSS GP-LEVER	648
BOSS GP-LIFT ARM	649
CONTROL GP-BUCKET	653
LIFT AR	655
LINK GP-BUCKET	657
WORK TOOLS	658
ADAPTER GP-TIP	658
BUCKET AS-GENERAL PURPOSE	659
BUCKET AS-MATERIAL HANDLING	673
BUCKET AS-PENETRATION	687
BUCKET AS-ROCK	688
BUCKET AS-SLAG	698
BUCKET GP-GENERAL PURPOSE	699
BUCKET GP-MATERIAL HANDLING	714
BUCKET GP-PENETRATION	731
BUCKET GP-ROCK	732
BUCKET GP-SLAG	740
COUPLER AR-QUICK	741
COUPLER GP-QUICK	743
EDGE AS-CUTTING	745
EDGE GP-BIT & CUTTING	746
EDGE GP-CUTTING	747
EDGE GP-SEGMENT	751
FORK GP-PALLET	752
GUARD GP-BUCKET	756
LOCK GP-QUICK COUPLER	758
PIN GP	762
PLATE GP-WEAR	764
PROTECTOR GP-EDGE	766
TIP GP-EXTRA DUTY	767
TIP GP-GENERAL PURPOSE	768
TIP GP-LONG	769
OPERATOR STATION	770
ADJUSTER GP-SEAT	770
AIR COMPRESSOR GP-SEAT	772
AIR CONDITIONER AR	773
AIR CONDITIONER GP	774
ARM GP-WINDOW WIPER	779
ARMREST GP	781
CAB AR-ENCLOSED ROPS	782
COMPRESSOR GP-REFRIGERANT	784
CONDENSER & MTG GP-REFRIGERANT	786
CONTROL GP-MONITOR	788
CONTROL GP-UNPRGMED MONITOR	789
DOOR GP-CAB	790
DUCT & FILTER GP-AIR	797
FLOOR GP-SOUND SUPPRESSION	799
GUARD GP-WINDOW	803
HANDHOLD GP	807
HEATER GP-CAB	809
HORN GP-ELECTRIC	813
INSTALLATION GP-CONTROLS	814
INSTALLATION GP-RADIO	815
LATCH GP-CAB DOOR & WINDOW	817
LINER GP-CAB	819
LINES GP-AIR CONDITIONER	822
LINES GP-CAB HEATER	827
MIRROR GP-REAR VIEW	831
MODULE GP-DISPLAY	845
MODULE GP-QUAD GAUGE	846
MODULE GP-SPEEDOMETER & TACH	847
MOTOR GP-WINDOW WIPER	848
MOUNTING GP-CAB	850
OPERATOR AR-ENCLOSED ROPS	852
PAN GP-BACKREST	853
PANEL GP-INSTRUMENT	855
PEDAL GP-GOVERNOR	862
PLATFORM AR	864
RADIO GP	864
RADIO GP-COMMUNICATION	866
RECLINER GP-SEAT	867
ROPS GP-ENCLOSED	868
SEAT BELT GP	872
SEAT GP	873
SEAT GP-SUSPENSION	877
SUPPORT GP-HYDRAULIC CONTROL	880
SUPPRESSION GP-CAB SOUND	884
SUSPENSION GP-SEAT	890
VISOR GP-CAB	894
WASHER GP-WINDOW	895
WINDOW GP-DOOR	896
WIPER GP-WINDOW	900
SERVICE EQUIPMENT AND SUPPLIES	903
BOX GP-TOOL	903
FILM GP	906

TABLE OF CONTENTS

Name	Page	Name	Page
LINES GP-DIAGNOSTIC	908		
PLATE & FILM GP	914		
PLATE GP-AXLE IDENTIFICATION	919		
PROTECTION GP-VANDALISM	919		
PART NUMBER INDEX	B1		

TABLE DES MATIÈRES

Désignation	Page
GÉNÉRALITÉS	A31
OPTIONS DE RÉPARATION	A48
ADDITIFS POUR LIQUIDE DE REFROIDISSEMENT	A53
PIÈCES DE RECHANGE	A61
INDEX	A91
VERSION DE MACHINE	1
VERSION DE CHASSIS	1
VERSION DE TRANSFORMATION - HOMOLOGATION	2
VUE DU MODÈLE	2
MOTEUR (VERSION)	3
VERSION DE MOTEUR COMPLET	3
MOTEUR - PARTIE CENTRALE (VERSION)	4
MONTAGE DE MOTEUR (VERSION)	5
MOTEUR STANDARD	6
SUPPORT DE CACHE-SOUPAPE ET FAISC. DE CABL. D'IN.	6
TENDEUR DE COURROIE (ASS)	7
ARBRE A CAMES (ASS)	8
COUVERCLE DE CARTER AV (ASS)	9
CACHE-SOUPAPES (ASS)	11
VILEBREQUIN (ASS)	12
BLOC-CYLINDRES (ENS)	14
BLOC-CYLINDRES (ASS)	16
CULASSE (ENS)	18
CULASSE (ASS)	19
AMORTISSEUR DE VIBRATIONS (ASS)	21
ENTRAÎNEMENT AUXILIAIRE (ASS)	22
BOULONNERIE DE LA CULASSE (ASS)	23
BOULONNERIE D'AMORTISSEUR ET DE POULIE	24
BOULONNERIE DE CARTER AV (ASS)	25
VOLANT MOTEUR (ASS)	26
PIGNONNERIE AV (ASS)	27
CARTER DE VOLANT (ASS)	28
CARTER AV (ASS)	29
COURROIE INTERMÉDIAIRE (ASS)	31
KIT DE COUSSINET DE VILEBREQUIN	32
POUSSOIR DE SOUPAPE (ASS)	33
OEILLETONS DE LEVAGE MOTEUR (ASS)	34
MONTAGE DE MOTEUR ET BOÎTE (ASS)	35
MONTAGE DE CULBUTERIE (ASS)	36
HUILE MOTEUR - CARTER (ASS)	37
PISTON ET BIELLE (ASS)	38
BOUCHON DE BLOC-CYLINDRES (ASS)	40
BOUCHON DE MOTEUR (ASS)	43
POULIE-ALTERNATEUR (ASS)	44
VILEBREQUIN - POULIE (ASS)	45
AXE DE CULBUTEUR (ASS)	46
JOINT DE VILEBREQUIN (ASS)	50
SUPPORT DE MOTEUR (ASS)	51
CULBUTERIE (ASS)	52
CIRCUIT DE GRAISSAGE	54
SUPPORT DE FILTRE À HUILE (ASS)	54
RENIFLARD (ASS)	58
BOUCHON DE REMPLISSAGE D'HUILE MOTEUR (ASS)	59
FILTRE À HUILE MOTEUR (ASS)	60
DISPOSITIF D'EVACUATION DES VAPEURS DE CARTER	61
JAUGE D'HUILE MOTEUR (BAIONNETTE) (ASS)	62
CANALISATIONS D'HUILE DE TURBOCOMPRESSEUR (ASS)	63
POMPE A HUILE MOTEUR (ASS)	64
CIRCUIT DE REFROIDISSEMENT	66
REFROIDISSEUR D'HUILE MOTEUR (ASS)	66
REFROIDISSEMENT AUX TEMPÉRATURES ÉLEVÉES (VERSION)	68
CANALISATIONS D'EAU (ASS)	69
POMPE A EAU (ASS)	75
RADIATEUR ET VENTILATEUR (ASS)	78
RÉSERVOIR DU COUVERCLE DE RADIATEUR (ASS)	84
CIRCUIT D'ADMISSION D'AIR ET D'ÉCHAPPEMENT	85
FILTRE A AIR (ASS)	85
CANALISATIONS D'AIR DE REFROIDISSEUR D'ADMISSION (ASS)	87
CANALISATIONS D'AIR (ASS)	88
COLLECTEUR D'ÉCHAPPEMENT (ASS)	91
COLLECTEUR D'ADMISSION (ASS)	92
SILENCIEUX (ASS)	93

* TRADUCTION NON DISPONIBLE AU MOMENT DE LA PUBLICATION

TABLE DES MATIÈRES

Désignation	Page
BOUCHON DE COLLECTEUR D'ADMISSION (ASS)	95
PREFILTRE (ASS)	96
TURBOCOMPRESSEUR (ASS)	98
CIRCUIT DE CARBURANT	100
FILTRE ET CANALISATIONS DE CARBURANT AUXILIAIRES (ASS)	100
FILTRE A CARBURANT (ASS)	102
FILTRE DE SÉPARATEUR D'EAU ET DE CARBURANT (ASS)	103
INJECTEUR DE CARBURANT (ASS)	104
CANALISATIONS DE CARBURANT (ASS)	105
CARBURANT - CANALISATIONS DE VIDANGE (ASS)	107
POMPE D'INJECTION DE CARBURANT (ASS)	109
POMPE D'AMORÇAGE DE CARBURANT ET FILTRE PRINCIPAL	110
POMPE D'ALIMENTATION EN CARBURANT (ASS)	112
RÉSERVOIR DE CARBURANT (ASS)	113
CLAPET DE RETENUE (ENS)	115
POMPE DE SÉPARATEUR D'EAU ET D'AMORÇAGE DE CARBURANT (ASS)	117
CIRCUIT ELECTRIQUE ET DE DEMARRAGE	118
AVERTISSEUR (ASS)	118
ALTERNATEUR DE CHARGE (ASS)	119
BATTERIE ET CÂBLAGE	121
BRANCHEMENT ÉLECTRIQUE (ASS)	125
COMMANDE ET MONTAGE-COMMUNICATION (ASS)	126
COMMANDE ET MONTAGE - MOTEUR	128
VERSION DE COMMANDE-AUTODIG	129
COMMANDE DE CREUSAGE AUTOMATIQUE AUTODIG (ASS)	130
COMMANDE NON PROGRAMMEE (ASS)	134
VERSION ÉLECTRIQUE	135
ÉLECTRONIQUE - COMMUNICATION (ASS)	136
COMMANDE ÉLECTRONIQUE D'ÉQUIPEMENT (ASS)	137
ÉLECTRONIQUE-MONITEUR (ASS)	138
ÉLECTRONIQUE DE TRANSMISSION (ASS)	138
EAU DES CHEMISES - RECHAUFFEUR (ASS)	139
VERSION DE MONTAGE-COMMUNICATION	140
VERSION DE MONTAGE-SÉCURITÉ	140
MONTAGE-SÉCURITÉ (ASS)	141
PLAFONNIER (ASS)	143
LAMPE - PHARE (ASS)	144
LAMPE - PHARE ET CLIGNOTANT	148
LAMPE - CLIGNOTANT DE DIRECTION (ASS)	152
FEUX ARRIÈRE ET FEUX D'ARRÊT	154
LAMPE - GYROPHARE (ASS)	155
ÉCLAIRAGE - FEUX DE ROUTE (VERSION)	156
ÉCLAIRAGE - CLIGNOTANT (VERSION)	156
ÉCLAIRAGE - PROJECTEURS (ASS)	158
ÉCLAIRAGE - PROJECTEURS ET CLIGNOTANTS (ASS)	164
ÉCLAIRAGE - FEUX DE ROUTE (ASS)	168
ÉCLAIRAGE - GYROPHARE (ASS)	170
PRISE DE BATTERIE AUXILIAIRE (ASS)	172
CAPTEUR ET MONTAGE-POSITION DE LEVAGE (ASS)	173
CAPTEUR DE PRESSION ET MONTAGE	175
CAPTEUR ET MONTAGE-POSITION D'INCLINAISON (ASS)	176
CAPTEUR - MOTEUR (ASS)	178
SONDE - CIRCUIT DE CARBURANT	180
CAPTEUR DE PRESSION (ASS)	182
*SENSOR GP-PRESSURE	185
CAPTEUR DE PRESSION (ASS)	186
CAPTEUR DE VITESSE (ASS)	189
CAPTEUR DE TEMPERATURE (ASS)	194
AUXILIAIRE DE DÉMARRAGE À L'ÉTHER	197
DÉMARREUR ÉLECTRIQUE (ASS)	199
INTERRUPTEUR - DÉRIVATION (ASS)	202
INVERSEUR D'ÉCLAIRAGE (ASS)	203
ROBINET DE BATTERIE (ASS)	204
CONTACTEUR MAGNETIQUE (ASS)	205
MANOCONTACT	207
CONTACTEUR DE MARCHE ARRIÈRE DES PALES DE VENTILATEUR	208
CONTACTEUR DE COMMANDE DU SYSTÈME ANTITANGAGE (ASS)	209
INTERRUPTEUR À BASCULE (ASS)	210
CONTACTEUR ROTATIF (ASS)	212
INTERRUPTEUR DE DIRECTION AUXILIAIRE (ASS)	213
INTERRUPTEUR - SIGNAL (ASS)	214
INTERRUPTEUR À BASCULE (ASS)	218

* TRADUCTION NON DISPONIBLE AU MOMENT DE LA PUBLICATION

TABLE DES MATIÈRES

Désignation	Page
INTERRUPTEUR DE BOITE DE VITESSES (ASS)	219
AVERTISSEUR DE RECUL (ASS)	220
CABLAGE - CLIMATISEUR (ASS)	221
CÂBLAGE DE COMMANDE DE GRAISSAGE AUTOMATIQUE (ASS)	222
CÂBLE DE SURVEILLANCE D'ESSIEU (ASS)	224
CABLAGE DE CABINE (ASS)	227
CABLAGE DE CHASSIS (ASS)	235
COMMANDE ÉLECTRONIQUE - CABLAGE	241
CABLAGE DE MOTEUR (ASS)	243
CABLAGE AV (ASS)	245
CABLAGE D'ÉCLAIRAGE (ASS)	247
CABLAGE DE DIRECTION AUXILIAIRE (ASS)	250
CABLAGE - CAPTEUR (ASS)	252
CABLAGE D'INJECTEUR	256
TRANSMISSION	257
ESSIEU ET REFROIDISSEUR D'HUILE D'ESSIEU (VERSION)	257
ESSIEU FIXE (VERSION)	258
ESSIEU OSCILLANT (VERSION)	259
SUPPORT DE FILTRE À HUILE (ASS)	262
FREIN ET TRAINS PLANÉTAIRES (ASS)	263
TRAINS PLANÉTAIRES - CARTER ET PIÈCES	265
COMMANDE DE BOITE DE VITESSES (ASS)	267
COMMANDE HYDRAULIQUE DE BOÎTE (ASS)	269
REFROIDISSEUR D'HUILE D'ESSIEU (VERSION)	271
REFROIDISSEUR D'HUILE DE BOÎTE (ASS)	272
BOUCHON DE REMPLISSAGE D'HUILE DE BOÎTE (ASS)	274
DIFFERENTIEL (ASS)	275
DIFFÉRENTIEL - GLISSEMENT LIMITÉ (ASS)	277
DIFFÉRENTIEL NOSPIN (ASS)	278
GOULOTTE DE REMPLISSAGE D'HUILE DE TRANSMISSION	280
FILTRE ET CANALISATIONS - BOÎTE DE VITESSE (ASS)	282
FILTRE A HUILE (ASS)	284
COURONNE CONIQUE ET PIGNON	285
*GEAR GP-BEVEL & PINION	289
ENGRENAGE DE TRANSFERT DE RENDEMENT (ASS)	291
ÉCHANGEUR DE CHALEUR (ASS)-ESSIEU	296
CARTER D'ESSIEU FIXE	298
CARTER D'ESSIEU OSCILLANT	304
CANALISATIONS DE REFROIDISSEUR D'HUILE D'ESSIEU (ASS)	308
CANALIS. DE REFROIDISSEMENT DU CONV. DE COUPLE	312
COLLECTEUR - COMMANDE (ASS)	315
MONTAGE D'ESSIEU (ASS)	316
MONTAGE DE JANTE (ASS)	316
DISPOSITIF DE VIDANGE RAPIDE D'HUILE (ASS)	317
BOÎTE PLANÉTAIRE (ASS)	318
TRANSMISSION (VERSION)	322
POMPE DE BOÎTE DE VITESSES (ASS)	323
JANTE (VERSION)	325
JANTE DÉMONTABLE (ASS)	326
ARBRE D'ENTRAÎNEMENT (ASS)	330
CARDAN COULISSANT (ASS)	331
PNEU ET JANTE (VERSION)	332
CONVERTISSEUR DE COUPLE ET CARTER (ASS)	342
CONVERTISSEUR DE COUPLE (ASS)	344
BOÎTE DE VITESSES (VERSION)	346
JOINT UNIVERSEL (ASS)	347
SOUPAPE DE MODULATION (ASS)	349
CLAPET DE DECHARGE (ASS)	350
PNEU - GROUPE DE VALVE	353
CHÂSSIS ET BENNE	354
MÉCANISME DE COMMANDE D'INCLINAISON (ASS)	354
BLOC - LIMITEUR D'ESSIEU OSCILLANT (ASS)	356
BOSSAGE DE CHÂSSIS ARRIÈRE (ASS)	357
COMPARTIMENT DE BATTERIE (ASS)	360
CONTREPOIDS (ASS)	361
GARDE-BOUE (VERSION)	362
GARDE-BOUE (ASS)	363
BÂTI - CHARGEUSE (ENS)	372
BÂTI AR (ENS)	375
GRILLE DE RADIATEUR (ASS)	378
PROTECTION AV (ASS)	380
BLINDAGE DE TRANSMISSION (ASS)	381
FIXATION DE MONTAGE (ASS)	383
BOULONNERIE DE BÂTI ARRIÈRE (ASS)	384
CHARNIÈRE DE GARDE-BOUE (ASS)	386
ATTELAGE D'ARTICULATION (ASS)	388

* TRADUCTION NON DISPONIBLE AU MOMENT DE LA PUBLICATION

TABLE DES MATIÈRES

Désignation	Page
CAPOT ET PROTECTION (ASS)	390
ECHELLE (ASS)	394
CANALISATIONS DE GRAISSAGE AUTOMATIQUE (ASS)	404
CANALISATIONS DE GRAISSAGE (ASS)	415
LIAISON - VERROUILLAGE DE CHÂSSIS DE DIRECTION (ASS)	423
GRAISSAGE AUTOMATIQUE (VERSION)	424
PANNEAU LATERAL (ASS)	427
POMPE DE GRAISSAGE ET MONTAGE (ASS)	429
POMPE DE GRAISSAGE (ASS)	430
ÉCRAN THERMIQUE DE COMPARTIMENT MOTEUR	431
SUPPORTS D'ADMISSION D'AIR (ASS)	433
SUPPORT DE SOUPAPE ET FILTRE (ASS)	434
INSONORISATION (VERSION)	436
INSONORISATION (ASS)	437
INCLINAISON DU CAPOT (ASS)	441
SOUPAPE ET CONDUITES DE GRAISSAGE (ASS)	443
SOUPAPE DE DISTRIBUTION DE GRAISSAGE (ASS)	446
CIRCUIT DE FREINS	448
ACCUMULATEUR - FREIN	448
SUPPORT - PÉDALE DE FREIN (ASS)	450
FREIN DE STATIONNEMENT (ASS)	453
COMMANDE DE LA PÉDALE DE FREIN (ASS)	458
COMMANDE DE FREIN DE STATIONNEMENT (ASS)	460
FREIN DE MANOEUVRE - COMMANDE (ASS)	461
DISTRIBUTEUR DE FREIN (ASS)	467
CIRCUIT DE DIRECTION	468
COMMANDE DE DIRECTION (ASS)	468
VERIN DE DIRECTION ET MONTAGE (ASS)	472
VERIN DE DIRECTION (ASS)	473
CANALISATION DE DIRECTION AUXILIAIRE	474
CANALISATIONS DE DIRECTION (ASS)	476
POMPE DE DIRECTION AUXILIAIRE ET MONTAGE (ASS)	490
POMPE A PISTONS (ASS)	492
GROUPE DE ROTATION DE POMPE	494
*SCREEN GP-CASE DRAIN	495
*STEERING AR-COMMAND CONTROL	496
DIRECTION AUXILIAIRE (VERSION)	496
COLONNE DE DIRECTION (ASS)	497
VOLANT DE DIRECTION (ASS)	498
PLATEAU OSCILLANT (ASS)	500
CLAPET DE RETENUE (ENS)	501
SOUPAPE PILOTE (ASS)	504
SOUPAPE RÉDUCTRICE DE PRESSION (ASS)	506
DISTRIBUTEUR DE POMPE (ASS)	507
CLAPET DE DECHARGE (ASS)	508
SOUPAPE DE DIRECTION AUXILIAIRE (ASS)	510
VANNE PILOTE (ASS)	511
SOUPAPE DE DIRECTION (ASS)	513
SOUPAPE DE NEUTRALISATION DE DIRECTION (ASS)	517
CIRCUIT HYDRAULIQUE	519
ACCUMULATEUR ET MONTAGE - COMMANDE ANTI-TANGAGE	519
ACCUMULATEUR - HUILE PILOTE (ASS)	520
ACCUMULATEUR - COMMANDE DE TRANSLATION (ASS)	522
COMMANDE ET CANALIS. - TRANSLATION (ASS)	524
COMMANDE DE TRANSLATION (VERSION)	525
COMMANDE ÉLECTROHYDRAULIQUE (ASS)	526
COMMANDE DE POIGNÉE (ASS)	534
PALONNIER - GROUPE DE COMMANDE (ASS)	535
REFROIDISSEUR D'HUILE D'ESSIEU ET HYDRAULIQUE (ASS)	539
VÉRIN DE LEVAGE ET JOINT (ASS)	540
VÉRIN D'INCLINAISON ET JOINT (ASS)	542
VÉRIN DE LEVAGE (ASS)	543
VÉRIN D'INCLINAISON (ASS)	546
VIDANGE-ÉCOLOGIE (ASS)	548
FILTRE A HUILE (ASS)	549
DISTRIBUTEUR - 2 VOIES (VERSION)	551
DISTRIBUTEUR - 3 VOIES (VERSION)	551
CANALISATIONS DE COUPLEUR (ASS)	552
CANALISATIONS AV	554
CANALISATIONS HYDRAULIQUES (ASS)	558

* TRADUCTION NON DISPONIBLE AU MOMENT DE LA PUBLICATION

TABLE DES MATIÈRES

Désignation	Page
CANALISATIONS DE REFROIDISSEUR D'HUILE HYDR. (ASS)	563
CANALISATIONS DE VÉRIN DE LEVAGE (ASS)	569
CANALISATIONS DU VÉRIN D'INCLINAISON (ASS)	571
COLLECTEUR - COMMANDE (ASS)	573
COLLECTEUR - SOUPAPE (ASS)	575
GROUPE DE MOTEUR A PISTONS	579
RÉSERVOIR HYDRAULIQUE - MONTAGE (ASS)	581
POMPE DE VENTILATEUR HYDRAULIQUE ET DE FREIN ET MONTAGE (ASS)	582
POMPE ET MONTAGE - HYDRAULIQUE (ASS)	584
POMPE A PISTONS (ASS)	586
GROUPE DE ROTATION DE POMPE	590
RÉSERVOIR HYDRAULIQUE (ASS)	591
COMMANDE PRINCIPALE DE SOUPAPE ET MONTAGE (ASS)	593
CLAPET DE RETENUE (ENS)	605
DISTRIBUTEUR (ASS)	608
SOUPAPE DE DERIVATION (ASS)	618
SOUPAPE DE VIDANGE	619
SOUPAPE DE COMMANDE D'ABAISSEMENT (ASS)	620
SOUPAPE DE COMMANDE PRINCIPALE (ASS)	622
SOUPAPE A COMMANDE MANUELLE (ASS)	627
SOUPAPE RÉDUCTRICE DE PRESSION (ASS)	628
DISTRIBUTEUR DE POMPE (ASS)	629
CLAPET DE DECHARGE (ASS)	633
DISTRIBUTEUR DE COMMANDE ANTI-TANGAGE	634
VANNE PILOTE (ASS)	636
SOUPAPE - SOLÉNOÏDE (ASS)	639
ÉQUIPEMENTS	642
BRAS ET PALIER (ENS)	642
BRAS DE LEVAGE (ENS)	644
BOSSAGE DE LEVIER (ASS)	648
BOSSAGE DE BRAS DE LEVAGE (ASS)	649
COMMANDE DE GODET (ASS)	653
LEVAGE (VERSION)	655
LIAISON-GODET (ASS)	657
OUTILS DE TRAVAIL	658
PORTE-POINTE (ASS)	658
GODET NORMAL (ENS)	659
GODET DE MANUTENTION	673
GODET-PÉNÉTRATION (ENS)	687
GODET-ROCHE (ENS)	688
GODET POUR SCORIES (ENS)	698
GODET NORMAL (ASS)	699
GODET POUR MANUTENTION	714
GODET PÉNÉTRATION (ASS)	731
GODET-ROCHE (ASS)	732
GODET POUR SCORIES	740
COUPLEUR EXPRESS (VERSION)	741
COUPLEUR EXPRESS (ASS)	743
LAME DE COUPE (ENS)	745
EMBOUT ET LAME DE COUPE (ASS)	746
LAME DE COUPE (ASS)	747
SEGMENT DE LAME DE COUPE (ASS)	751
FOURCHE PALLETTE (ASS)	752
PROTECTION DE GODET (ASS)	756
VERROUILLAGE DE COUPLEUR EXPRESS (ASS)	758
AXE DE GODET (ASS)	762
PLAQUE D'USURE (ASS)	764
PROTECTEURS DE LAME (ASS)	766
POINTE EXTRA-ROBUSTE (ASS)	767
POINTE - UNIVERSELLE (ASS)	768
POINTE LONGUE (ASS)	769
POSTE DE CONDUITE	770
REGLAGE DE SIEGE (ASS)	770
SIÈGE - COMPRESSEUR D'AIR (ASS)	772
CLIMATISEUR (VERSION)	773
CLIMATISEUR (ASS)	774
BRAS D'ESSUIE-GLACE (ASS)	779
ACCOUDOIR (ASS)	781
CABINE ROPS FERMÉE (VERSION)	782
COMPRESSEUR DE REFRIGERANT (ASS)	784
CONDENSATEUR ET MONTAGE (RÉFRIGÉRANT)	786
GROUPE DE CONTROLE	788
COMMANDE DE MONITEUR NON PROGRAMMÉE (ASS)	789
PORTIÈRE DE CABINE (ASS)	790
CONDUIT ET FILTRE À AIR (ASS)	797
PLANCHER-ISOLATION (ASS)	799
PROTECTION DE GLACE (ASS)	803
POIGNÉE	807
CHAUFFAGE DE CABINE (ASS)	809
KLAXON ÉLECTRIQUE (ASS)	813
MONTAGE DES COMMANDES (ASS)	814
MONTAGE DE RADIO (ASS)	815
LOQUET - PORTE DE CABINE ET GLACE	817
CABINE - REVÊTEMENT (ASS)	819

* TRADUCTION NON DISPONIBLE AU MOMENT DE LA PUBLICATION

TABLE DES MATIÈRES

Désignation	Page
CANALISATIONS DE CLIMATISEUR (ASS)	822
CANALISATIONS DE CHAUFFAGE DE CABINE (ASS)	827
RÉTROVISEUR (ASS)	831
MODULE D'AFFICHAGE (ASS)	845
MODULE - QUATRE INSTRUMENTS (ASS)	846
MODULE D'INDICATEUR DE VITESSE ET COMPTE-TOURS (ASS)	847
MOTEUR D'ESSUIE-GLACE (ASS)	848
MONTAGE DE CABINE (ASS)	850
CABINE ROPS FERMÉE (VERSION)	852
COUVERCLE INFÉRIEUR-DOSSIER (ASS)	853
TABLEAU DE BORD (ASS)	855
RÉGULATEUR - PÉDALE (ASS)	862
PLATE-FORME (VERSION)	864
RADIO (ASS)	864
RADIO -COMMUNICATION (ASS)	866
SIÈGE INCLINABLE (ASS)	867
CABINE ROPS FERMÉE (ASS)	868
CEINTURE DE SECURITE (ASS)	872
SIÈGE (ASS)	873
SIÈGE AVEC SUSPENSION (ASS)	877
SUPPORT DE COMMANDE HYDRAULIQUE (ASS)	880
INSONORISATION DE CABINE (ASS)	884
SIÈGE AVEC SUSPENSION (ASS)	890
RETROVISEUR - CABINE (ASS)	894
LAVE-GLACE - VITRE (ASS)	895
GLACE DE PORTIÈRE (ASS)	896
ESSUIE-GLACE (ASS)	900
MATÉRIEL ET FOURNITURES D'ENTRETIEN	903
COFFRE A OUTILS (ASS)	903
PLAQUE SIGNALÉTIQUE (ASS)	906
CANALISATIONS DE DIAGNOSTIC (ASS)	908
PLAQUES SIGNALETIQUES ET AUTOCOLLANTS (ASS)	914
PLAQUE SIGNALÉTIQUE D'ESSIEU (ASS)	919
PROTECTION ANTIVANDALISME (ASS)	919
INDEX DE NUMÉROS DE PIÈCES	B1

* TRADUCTION NON DISPONIBLE AU MOMENT DE LA PUBLICATION

CONTENIDO

Nombre	Página
INFORMACIÓN GENERAL	A35
ALTERNATIVAS DE REPARACIÓN	A49
ADITIVOS DE REFRIGERANTE SUPLEMENTARIOS	A54
PIEZAS DE MANTENIMIENTO	A66
INDICE	A105
CONFIGURACIÓN DE MÁQUINAS	1
CHASIS (CONFIG)	1
CONFIGURACIÓN DE TRANSFORMACIÓN PARA CERTIFICACIÓN	2
CONFIGURACIÓN GENERAL	2
CONFIGURACION DE MOTOR	3
MOTOR COMPLETO (CONFIG)	3
MOTOR - NÚCLEO (CONFIG)	4
CONFIGURACIÓN DE INSTALACIÓN DEL MOTOR	5
MOTOR BÁSICO	6
BASE DE LA TAPA DE VÁLVULAS Y MAZO DE CABLES DE INYECTOR (GR)	6
TENSOR DE CORREA (GR)	7
ÁRBOL DE LEVAS (GR)	8
TAPA DE LA CAJA DELANTERA (GR)	9
TAPA DEL MECANISMO DE VÁLVULAS (GR)	11
CIGÜEÑAL (GR)	12
BLOQUE MOTOR (CONJ)	14
BLOQUE MOTOR (GR)	16
CULATA DE CILINDROS (CONJ)	18
CULATA DE CILINDROS (GR)	19
AMORTIGUADOR DE VIBRACIONES (GR)	21
ACCESORIOS - IMPULSOR DE (GR)	22
CULATA DE CILINDROS - TORNILLERÍA DE LA (GR)	23
GRUPO DE TORNILLERIA-AMORTIGUADOR Y POLEA	24
CAJA DELANTERA - TORNILLERÍA DE LA (GR)	25
VOLANTE (GR)	26
ENGRANAJE DELANTERO (GR)	27
VOLANTE - CAJA DE (GR)	28
CAJA DELANTERA (GR)	29
GRUPO DE GUIA, CORREA	31
JUEGO DE COJINETES DE BANCADA	32
VÁLVULA DE LEVANTAMIENTO (GR)	33
CÁNCAMOS DE LEVANTAMIENTO DEL MOTOR (GR)	34
MONTAJE DEL MOTOR Y LA TRANSMISIÓN (GR)	35
MECANISMO DE LA VÁLVULA - MONTAJE DEL (GR)	36
CÁRTER - COLECTOR DEL (GR)	37
PISTÓN Y BIELA (GR)	38
TAPÓN DEL BLOQUE MOTOR (GR)	40
TAPÓN DEL MOTOR (GR)	43
POLEA DEL ALTERNADOR (GR)	44
CIGÜEÑAL - POLEA DE (GR)	45
BALANCÍN (GR)	46
SELLO DE CIGÜEÑAL (GR)	50
MOTOR - SOPORTE DEL (GR)	51
MECANISMO DE VÁLVULAS (GR)	52
SISTEMA DE LUBRICACIÓN	54
FILTRO DE ACEITE - BASE DEL (GR)	54
RESPIRADERO (GR)	58
TUBO DE LLENADO DE ACEITE (GR)	59
FILTRO DE ACEITE DEL MOTOR (GR)	60
ESCAPE DE GASES (GR)	61
INDICADOR DEL NIVEL DE ACEITE (VARILLA) (GR)	62
TURBOCOMPRESOR - TUBERÍAS DE ACEITE DEL (GR)	63
BOMBA DE ACEITE DEL MOTOR (GR)	64
SISTEMA DE ENFRIAMIENTO	66
ENFRIADOR DE ACEITE DEL MOTOR (GR)	66
ENFRIADOR PARA ALTA TEMPERATURA DE AMBIENTE (CONFIG)	68
TUBERÍAS DEL AGUA (GR)	69
BOMBA DE AGUA (GR)	75
RADIADOR Y VENTILADOR (GR)	78
TAPA DEL TANQUE DE RADIADOR (GR)	84
SISTEMA DE AIRE DE ADMISIÓN Y ESCAPE	85
FILTRO DE AIRE (GR)	85
TUBERÍAS DE POSENFRIADOR DE AIRE (CONJ)	87
AIRE - TUBERÍAS DE (GR)	88
MÚLTIPLE DE ESCAPE (GR)	91
MÚLTIPLE DE ADMISIÓN (GR)	92
SILENCIADOR (GR)	93
GRUPO DE TAPÓN DEL MÚLTIPLE DE ADMISIÓN	95
ANTEFILTRO (GR)	96

* NO HAY TRADUCCION DISPONIBLE EN EL MOMENTO DE LA IMPRESION

CONTENIDO

Nombre	Página
TURBOCOMPRESOR (GR)	98
SISTEMA DE COMBUSTIBLE	100
FILTRO SECUNDARIO DE COMBUSTIBLE Y TUBERIAS (GR)	100
FILTRO DE COMBUSTIBLE (GR)	102
FILTRO DE COMBUSTIBLE Y SEPARADOR DE AGUA (GR)	103
INYECTOR DE COMBUSTIBLE (GR)	104
TUBERÍAS DE COMBUSTIBLE (GR)	105
COMBUSTIBLE - TUBERÍAS DE DRENAJE DE (GR)	107
BOMBA DE INYECCIÓN DE COMBUSTIBLE (GR)	109
BOMBA DE CEBADO Y FILTRO PRIMARIO DE COMBUSTIBLE (GR)	110
BOMBA DE TRANSFERENCIA DE COMBUSTIBLE (GR)	112
COMBUSTIBLE - TANQUE DE (GR)	113
VÁLVULA DE RETENCIÓN (GR)	115
SEPARADOR DE AGUA Y BOMBA DE CEBADO DE COMBUSTIBLE (GR)	117
SISTEMA ELECTRICO Y DE ARRANQUE	118
ALARMA (GR)	118
CARGA - ALTERNADOR DE (GR)	119
BATERÍA Y CABLES (GR)	121
CONEXIÓN ELÉCTRICA (GR)	125
CONTROL DE COMUNICACION Y MONTAJE (GR)	126
CONTROL ELECTRÓNICO DEL MOTOR Y MONTAJE	128
CONTROL DE AUTOCARGA (CONFIG)	129
CONTROL DE AUTOCARGA (GR)	130
CONTROL NO PROGRAMADO (GR)	134
CONFIGURACIÓN ELÉCTRICA	135
GRUPO ELECTRONICO-COMUNICACION	136
IMPLEMENTOS (GR ELECTRÓNICO)	137
ELECTRONICA DE MONITOR (GR)	138
TREN DE FUERZA-GRUPO ELECTRÓNICO	138
AGUA DE LAS CAMISAS - CALENTADOR DEL (GR)	139
INSTALACION DE COMUNICATION (CONFIG)	140
INSTALACION DE SEGURIDAD (CONFIG)	140
INSTALACION DE SEGURIDAD (GR)	141
LÁMPARA DEL TECHO (GR)	143
REFLECTOR (GR)	144
LÁMPARA DE LUZ DELANTERA Y DE SEÑAL (GR)	148
LUZ DE SEÑAL DE GIRO (GR)	152
LUCES DE PARADA Y COLA (GR)	154
LÁMPARA DE BALIZA DE ADVERTENCIA (GR)	155
LUCES DE DESPLAZAMIENTO (CONFIG)	156
SEÑAL DE LUCES (CONFIG)	156
LUCES DE REFLECTOR (GR)	158
LUCES DE REFLECTOR Y CAMBIO DE DIRECCION (GR)	164
LUCES DE DESPLAZAMIENTO (GR)	168
LUZ DE BALIZA (GR)	170
ENCHUFE DE ARRANQUE AUXILIAR (GR)	172
SENSOR DE LA POSICION DE LEVANTAMIENTO Y MONTAJE (GR)	173
SENSOR DE PRESIÓN Y MONTAJE (GR)	175
SENSOR DE LA POSICION DE INCLINACION Y MONTAJE (GR)	176
SENSOR DEL MOTOR (GR)	178
DETECTOR DE POSICIÓN (SISTEMA DE COMBUST.) (GR)	180
SENSOR DE PRESIÓN (GR)	182
*SENSOR GP-PRESSURE	185
SENSOR DE PRESIÓN (GR)	186
SENSOR DE VELOCIDAD (GR)	189
SENSOR DE TEMPERATURA (GR)	194
AUXILIAR DE ARRANQUE CON ÉTER (GR)	197
MOTOR DE ARRANQUE ELÉCTRICO (GR)	199
INTERRUPTOR DE DERIVACIÓN	202
REDUCTOR DE INTENSIDAD DE LUCES (GR)	203
DISYUNTOR (GR)	204
INTERRUPTOR MAGNÉTICO (GR)	205
INTERRUPTOR DE PRESIÓN (GR)	207
*SWITCH GP-REVERSING FAN	208
INTERRUPTOR DEL CONTROL DE AMORTIGUACIÓN (GR)	209
INTERRUPTOR DE VOLQUETE (GR)	210
GRUPO DE INTERRUPTOR ROTATORIO	212
INTERRUPTOR DE DIRECCIÓN SECUNDARIA (GR)	213
INTERRUPTOR DEL SEÑALERO (GR)	214
INTERRUPTOR DE VOLQUETE (GR)	218
INTERRUPTOR DE TRANSMISION (GR)	219
RETROCESO - ALARMA DE (GR)	220

* NO HAY TRADUCCION DISPONIBLE EN EL MOMENTO DE LA IMPRESION

CONTENIDO

Nombre	Página
CABLES DEL ACONDICIONADOR DE AIRE (GR)	221
GRUPO DE CABLES-CONTROL DE AUTOLUBRICACIÓN	222
GRUPO DE CABLES, MONITOREO DEL EJE	224
CABLES DE LA CABINA (GR)	227
CABLES DEL CHASIS (GR)	235
CABLES DEL CONTROL ELECTRÓNICO (GR)	241
CABLES DEL MOTOR (GR)	243
CABLES DELANTEROS (GR)	245
CABLES DE LAS LUCES (GR)	247
CABLES DE LA DIRECCIÓN SECUNDARIA	250
CABLES DE SENSOR (GR)	252
CABLES DE INYECTOR (GR)	256
TREN DE FUERZA	257
EJE Y ENFRIADOR DE ACEITE DE EJE (CONFIG)	257
EJE FIJO (CONFIG)	258
EJE OSCILANTE (CONFIG)	259
FILTRO DE ACEITE - BASE DEL (GR)	262
FRENO Y PLANETARIOS (GR)	263
CAJA Y PIEZAS DE LOS PLANETARIOS	265
CONTROL DE LA TRANSMISIÓN (GR)	267
CONTROL HIDRÁULICO DE LA TRANSMISIÓN (GR)	269
ENFRIADOR DEL ACEITE DEL EJE (CONFIG)	271
ENFRIADOR DE ACEITE DE LA TRANSMISIÓN (GR)	272
CUBIERTA (GR)-TAPA DE LLENADO DE ACEITE DE LA TRANSMISIÓN	274
DIFERENCIAL (GR)	275
DIFERENCIAL DE DESLIZAMIENTO LIMITADO (GR)	277
DIFERENCIAL NOSPIN (GR)	278
TUBO DE LLENADO DE ACEITE DE LA TRANSMISIÓN (GR)	280
TUBERÍAS DEL FILTRO Y LA TRANSMISIÓN (GR)	282
FILTRO DE ACEITE (GR)	284
ENGRANAJE DE CORONA Y PIÑÓN (GR)	285
*GEAR GP-BEVEL & PINION	289
ENGRANAJE DE TRANSFERENCIA DE SALIDA	291
INTERCAMBIADOR DE CALOR DEL EJE (GR)	296
CAJA DEL EJE OSCILANTE (GR)	298
CAJA DE EJE OSCILANTE (GR)	304
TUBERÍAS DEL ENFRIADOR DE ACEITE DEL EJE (GR)	308
TUBERIAS DEL ENFRIADOR DEL CONVERTIDOR DE PAR	312
CONTROL DEL MULTIPLE (GR)	315
EJE - GRUPO DE MONTAJE	316
MONTAJE DE ARO	316
CAMBIO RÁPIDO DE ACEITE (GR)	317
TRANSMISIÓN PLANETARIA (GR)	318
TREN DE FUERZA (CONFIG)	322
BOMBA DE LA TRANSMISIÓN (GR)	323
LLANTA (CONFIG)	325
ARO DESMONTABLE (GR)	326
EJE DE MANDO (GR)	330
JUNTA DESLIZANTE (GR)	331
ARO Y RUEDA	332
CONVERTIDOR DE PAR Y CAJA (GR)	342
CONVERTIDOR DE PAR (GR)	344
TRANSMISION (CONFIG)	346
JUNTA UNIVERSAL (GR)	347
VÁLVULA DE MODULACIÓN (GR)	349
VÁLVULA DE ALIVIO (GR)	350
VÁLVULA DEL NEUMÁTICO (GR)	353
BASTIDOR Y CAJA	354
ACCIONADOR DE INCLINACIÓN DEL CAPO (GR)	354
BLOQUE LIMITADOR DEL EJE OSCILANTE (GR)	356
*BOSS GP-REAR FRAME	357
CAJA DE BATERÍA	360
CONTRAPESO (GR)	361
GUARDABARROS (CONFIG)	362
GUARDABARROS (GR)	363
GUARDABARROS PARA DESPLAZAMIENTO EN CARRETERA (GR)	367
BASTIDOR DEL CARGADOR (CONJ)	372
BASTIDOR TRASERO (CONJ)	375
REJILLA DEL RADIADOR (GR)	378
PROTECTOR DELANTERO (GR)	380
PROTECTOR DEL TREN DE FUERZA (GR)	381
GRUPO DE TORNILLERIA- MONTAJE	383
TORNILLERIA GR-BASTIDOR TRASERO	384
BISAGRA DEL GUARDABARROS PARA DESPLAZ. POR CARRETERA	386
ENGANCHE ARTICULADO (GR)	388
CAPO Y PROTECTOR (GR)	390
ESCALERILLA (GR)	394
GRUPO DE TUBERIAS DE LUBRICACIÓN AUTOMÁTICA	404

* NO HAY TRADUCCION DISPONIBLE EN EL MOMENTO DE LA IMPRESION

CONTENIDO

Nombre	Página
TUBERÍAS DE ENGRASE (GR)	415
TUBERÍAS DE LUBRICACIÓN (GR)	419
TIRANTE DE TRABA DEL BASTIDOR DE DIRECCIÓN (GR)	423
LUBRICACION AUTOMATICA (CONFIG)	424
PANEL LATERAL (GR)	427
BOMBA DE LUBRICACIÓN Y MONTAJE (GR)	429
BOMBA DE LUBRICACIÓN (GR)	430
PROTECTOR TÉRMICO DEL COMPARTIMIENTO DEL MOTOR (GR)	431
SOPORTE DE LA ADMISIÓN DE AIRE (GR)	433
*SUPPORT GP-VALVE & FILTER	434
INSONORIZADOR (CONFIG)	436
INSONORIZADOR (GR)	437
INCLINACIÓN DEL CAPÓ (GR)	441
VÁLVULAS Y TUBERIAS, LUBRICACIÓN	443
VÁLVULA DE DISTRIBUCIÓN DE LUBRICACIÓN (GR)	446
SISTEMA DE FRENOS	448
ACUMULADOR DEL FRENO (GR)	448
BASE DEL FRENO DE PIE (GR)	450
FRENO DE ESTACIONAMIENTO (GR)	453
CONTROL DEL PEDAL DE FRENO (GR)	458
CONTROL DEL FRENO DE ESTACIONAMIENTO	460
FRENO DE SERVICIO - CONTROL (GR)	461
VÁLVULA DE CONTROL DEL FRENO (GR)	467
SISTEMA DE DIRECCIÓN	468
CONTROL DE DIRECCIÓN (GR)	468
CILINDRO DE DIRECCIÓN Y MONTAJE (GR)	472
CILINDRO DE DIRECCIÓN (GR)	473
TUBERÍAS DE LA DIRECCIÓN SECUNDARIA (GR)	474
TUBERÍAS DE DIRECCIÓN (GR)	476
BOMBA Y MOTOR DE DIRECCION SECUNDARIA (GR)	490
BOMBA Y MONTAJE DE LA DIRECCIÓN SECUNDARIA (GR)	491
BOMBA DE PISTONES (GR)	492
GRUPO GIRATORIO DE BOMBA	494
*SCREEN GP-CASE DRAIN	495
*STEERING AR-COMMAND CONTROL	496
DIRECCIÓN SECUNDARIA (CONFIG)	496
COLUMNA DE DIRECCIÓN (GR)	497
VOLANTE DE DIRECCIÓN (GR)	498
PLATO OSCILANTE (GR)	500
VÁLVULA DE RETENCIÓN (GR)	501
VÁLVULA PILOTO (GR)	504
VÁLVULA REDUCTORA DE PRESIÓN (GR)	506
VALVULA DE CONTROL DE LA BOMBA (GR)	507
VÁLVULA DE ALIVIO (GR)	508
VALVULA DE DIRECCION SECUNDARIA (GR)	510
VÁLVULA DE LANZADERA (GR)	511
VÁLVULAS DE LA DIRECCIÓN (GR)	513
VÁLVULA NEUTRALIZADORA DE DIRECCIÓN (GR)	517
SISTEMA HIDRÁULICO	519
ACUMULADOR Y MONTAJE DE CONTROL DE AMORT (GR)	519
ACUMULADOR DE ACEITE PILOTO (GR)	520
ACUMULADOR DE CONTROL DE AMORTIGUACION (GR)	522
CONTROL DE DESPLAZAMIENTO Y TUBERÍAS (GR)	524
CONTROL DE AMORTIGUACIÓN (CONFIG)	525
CONTROL ELECTROHIDRAULICO (GR)	526
CONTROL DE MANIJA (GR)	534
PALANCA UNIVERSAL DE CONTROL (GR)	535
GRUPO DE ENFRIADOR, HIDRÁULICO Y ACEITE DE EJE	539
CILINDRO DE LEVANTAMIENTO Y SELLO (GR)	540
CILINDRO DE INCLINACIÓN Y SELLO (GR)	542
CILINDRO DE LEVANTAMIENTO (GR)	543
INCLINACIÓN HORIZONTAL - CILINDRO DE (GR)	546
DRENAJE DE SEGURIDAD ECOLÓGICA (GR)	548
FILTRO DE ACEITE (GR)	549
CONFIGURACIÓN HIDRÁULICA DE 2 VÁLVULAS	551
VÁLVULA HIDRÁULICA DE 3 VÍAS (CONFIG)	551
ACOPLADOR - TUBERÍAS DE (GR)	552

* NO HAY TRADUCCION DISPONIBLE EN EL MOMENTO DE LA IMPRESION

CONTENIDO

Nombre	Página
TUBERÍAS DELANTERAS (GR)	554
TUBERÍAS HIDRÁULICAS (GR)	558
TUBERÍAS DEL ENFRIADOR DE ACEITE HIDRÁULICO (GR)	563
CILINDRO DE LEVANTAMIENTO - TUBERÍAS DEL (GR)	569
TUBERÍAS DEL CILINDRO DE INCLINACIÓN (GR)	571
CONTROL DEL MULTIPLE (GR)	573
MULTIPLE DE VALVULA (GR)	575
PISTONES DEL MOTOR (GR)	579
MONTAJE DEL TANQUE HIDRÁULICO (GR)	581
GRUPO DE BOMBA Y MONTAJE, FRENOS Y VENTILADOR HIDRÁULICO	582
BOMBA HIDRÁULICA Y MONTAJE (GR)	584
BOMBA DE PISTONES (GR)	586
GRUPO GIRATORIO DE BOMBA	590
TANQUE HIDRÁULICO (GR)	591
MONTAJE Y VALVULA DEL CONTROL PRINCIPAL (GR)	593
VÁLVULA DE RETENCIÓN (GR)	605
VÁLVULA DE CONTROL (GR)	608
VÁLVULA DE DERIVACIÓN (GR)	618
VÁLVULA DE DRENAJE (GR)	619
VÁLVULA DE CONTROL DE BAJADA (GR)	620
VÁLVULA DEL CONTROL PRINCIPAL (GR)	622
VÁLVULA DE CONTROL MANUAL (GR)	627
VÁLVULA REDUCTORA DE PRESIÓN (GR)	628
VALVULA DE CONTROL DE LA BOMBA (GR)	629
VÁLVULA DE ALIVIO (GR)	633
VÁLVULA DE CONTROL DE LA AMORTIGUACIÓN (GR)	634
VÁLVULA DE LANZADERA (GR)	636
VÁLVULA DE SOLENOIDE (GR)	639
IMPLEMENTOS	642
BRAZO Y COJINETE (CONJ)	642
BRAZO DE LEVANTAMIENTO (CONJ)	644
*BOSS GP-LEVER	648
*BOSS GP-LIFT ARM	649
CONTROL DEL CUCHARÓN (GR)	653
LEVANTAMIENTO (CONFIG)	655
ESLABON DEL CUCHARON (GR)	657
HERRAMIENTAS	658
GRUPO DE PUNTA Y ADAPTADOR	658
CUCHARÓN DE USO GENERAL (CONJ)	659
CUCHARÓN DE MANEJO DE MATERIAL (CONJ)	673
CUCHARON PARA PENETRACIÓN (CONJ)	687
CUCHARÓN PARA ROCA (CONJ)	688
CUCHARON DE ESCORIA (CONJ)	698
CUCHARÓN DE USO GENERAL (GR)	699
CUCHARÓN DE MANEJO DE MATERIAL (GR)	714
PENETRACIÓN DEL CUCHARÓN	731
CUCHARÓN PARA ROCA (GR)	732
CUCHARON PARA ESCORIA (GR)	740
ACOPLADOR RÁPIDO (CONFIG)	741
ACOPLADOR RÁPIDO (GR)	743
CUCHILLA (CONJ)	745
GRUPO DE CANTONERA Y CUCHILLA	746
CUCHILLA (GR)	747
SEGMENTO DE CUCHILLA (GR)	751
HORQUILLA PARA TARIMAS (GR)	752
GRUPO DE PROTECTOR DEL CUCHARON	756
TRABA-ACOPLADOR RAPIDO (GR)	758
PASADOR	762
PLANCHA DE DESGASTE (GR)	764
PROTECTOR DE LA CUCHILLA (GR)	766
GRUPO DE PUNTA-SERVICIO ADICIONAL	767
PUNTA PARA CUCHARON DE USO GENERAL (GR)	768
PUNTA LARGA (GR)	769
PUESTO DEL OPERADOR	770
AJUSTADOR DEL ASIENTO (GR)	770
COMPRESOR DE AIRE DEL ASIENTO (GR)	772
ACONDICIONADOR DE AIRE (CONFIG)	773
ACONDICIONADOR DE AIRE (GR)	774
BRAZO DE LIMPIAPARABRISAS (GR)	779
POSABRAZOS (GR)	781
SISTEMA ROPS DE CABINA CERRADA (CONFIG)	782
COMPRESOR DE REFRIGERANTE (GR)	784
CONDENSADOR DEL REFRIGERANTE Y MONTAJE (GR)	786
CONTROL DE MONITOR (GR)	788
GRUPO DE CONTROL-MONITOR NO PROGRAMADO	789
PUERTA DE CABINA	790

* NO HAY TRADUCCION DISPONIBLE EN EL MOMENTO DE LA IMPRESION

CONTENIDO

Nombre	Página
CONDUCTO Y FILTRO DE AIRE (GR)	797
*FLOOR GP-SOUND SUPPRESSION	799
PROTECTOR DE LA VENTANA	803
PASAMANOS (GR)	807
CALEFACCIÓN DE LA CABINA (GR)	809
BOCINA ELÉCTRICA (GR)	813
INSTALACIÓN DE CONTROLES (GR)	814
INSTALACIÓN DE RADIO (GR)	815
PESTILLO DE PUERTA Y VENTANA DE LA CABINA (GR)	817
REVESTIMIENTO DE LA CABINA (GR)	819
TUBERÍAS DE ACONDICIONADOR DE AIRE (GR)	822
TUBERÍAS DE CALEFACCIÓN DE LA CABINA	827
RETROVISOR (GR)	831
MODULO DE LA PANTALLA (GR)	845
MODULO ELECTRÓNICO DE CUATRO INDICADORES (GR)	846
MÓDULO DEL TACÓMETRO Y DEL VELOCÍMETRO (GR)	847
MOTOR-LIMPIAPARABRISAS (GR)	848
GRUPO DE MONTAJE DE LA CABINA	850
CABINA ROPS CERRADA (CONFIG)	852
SOPORTE DEL RESPALDO (GR)	853
TABLERO DE INSTRUMENTOS (GR)	855
REGULADOR - PEDAL DEL (GR)	862
PLATAFORMA (CONFIG)	864
RADIO (GR)	864
*RADIO GP-COMMUNICATION	866
RECLINACION DE ASIENTO (GR)	867
CABINA ROPS CERRADA (GR)	868
CINTURÓN DE SEGURIDAD (GR)	872
ASIENTO (GR)	873
SUSPENSIÓN - ASIENTO CON (GR)	877
SOPORTE DEL CONTROL HIDRÁULICO (GR)	880
INSONORIZACION DE CABINA (GR)	884
ASIENTO CON SUSPENSIÓN (GR)	890
VISERA (GR)	894
LAVAPARABRISAS DE LA VENTANA (GR)	895
VENTANA DE LA PUERTA (GR)	896
LIMPIAPARABRISAS DE LA VENTANA (GR)	900
EQUIPO DE SERVICIO Y SUMINISTROS	903
CAJA DE HERRAMIENTAS (GR)	903
ETIQUETA DE ADVERTENCIA (GR)	906
GRUPO DE TUBERIAS DE DIAGNÓSTICO	908
CALCOMANÍAS Y PLACAS DE IDENTIFICACIÓN (GR)	914
GRUPO DE PLACA DE IDENTIFICACIÓN DEL EJE	919
GRUPO DE PROTECCIÓN CONTRA EL VANDALISMO	919
INDICE DE NUMEROS DE PIEZA	B1

* NO HAY TRADUCCION DISPONIBLE EN EL MOMENTO DE LA IMPRESION

ÍNDICE

Designação	Página
INFORMAÇÃO GERAL	A39
ALTERNATIVAS DE REPARO	A50
ADITIVOS SUPLEMENTARES DO LÍQUIDO ARREFECEDOR	A55
PEÇAS DE MANUTENÇÃO	A70
ÍNDICE	A119
MÁQUINA - ARRANJO	1
CHASSI	1
GR. DE CONVERSÃO - CERTIFICADO	2
ARRANJO GERAL	2
MOTOR - ARRANJO	3
MOTOR COMPLETO	3
MOTOR - NÚCLEO	4
GRUPO DE INSTALAÇÃO - MOTOR	5
MOTOR BÁSICO	6
GR. BÁSICO - TAMPA DAS VÁLVULAS E CHICOTE DE INJEÇÃO	6
TENSOR DA CORREIA	7
EIXO-COMANDO DE VÁLVULA	8
TAMPA - CAIXA DIANTEIRA	9
TAMPA - MECANISMO DAS VÁLVULAS	11
VIRABREQUIM	12
BLOCO DO MOTOR	14
CABEÇOTE DO MOTOR	18
AMORTECEDOR	21
COMANDO DE ACESSÓRIOS	22
FIXADORES - CABEÇOTE DO MOTOR	23
FIXADOR - AMORTECEDOR E POLIA	24
FIXADORES - CAIXA DIANTEIRA	25
VOLANTE DO MOTOR	26
ENGRENAGENS DE DISTRIBUIÇÃO	27
CAIXA DO VOLANTE DO MOTOR	28
CAIXA DIANTEIRA	29
RODA-GUIA - CORREIA	31
JOGO DE MANCAL PRINCIPAL DO MOTOR	32
TUCHO DA VÁLVULA	33
LEVANTAMENTO DO MOTOR	34
MONTAGEM - MOTOR E TRANSMISSÃO	35
MONTAGEM - MECANISMO DAS VÁLVULAS	36
CÁRTER DO ÓLEO DO MOTOR	37
PISTÃO E BIELA	38
BUJÃO DO BLOCO DO CILINDRO	40
BUJÃO DO MOTOR	43
POLIA - ALTERNADOR	44
POLIA DO VIRABREQUIM	45
BALANCIM	46
RETENTOR DO VIRABREQUIM	50
SUPORTE DO MOTOR	51
MECANISMO DAS VÁLVULAS	52
SISTEMA DE LUBRIFICAÇÃO	54
BASE DO FILTRO DE ÓLEO	54
RESPIRO	58
BOCAL DE ENCHIMENTO DE ÓLEO DO MOTOR	59
FILTRO - ÓLEO DO MOTOR	60
ELIMINAÇÃO DE VAPORES DO CÁRTER	61
INDICADOR - NÍVEL DO ÓLEO (VARETA)	62
TUBOS - ÓLEO DO TURBOALIMENTADOR	63
BOMBA DE ÓLEO - MOTOR	64
SISTEMA DE ARREFECIMENTO	66
ARREFECEDOR - ÓLEO DO MOTOR	66
ARREFECIMENTO - TEMP. AMBIENTE ALTA	68
TUBOS - ÁGUA	69
BOMBA DE ÁGUA	75
RADIADOR E VENTILADOR	78
TANQUE SUPERIOR DO RADIADOR	84
SISTEMA DA ADMISSÃO DE AR E DE ESCAPE	85
PURIFICADOR DE AR	85
TUBULAÇÕES - AR DO PÓS-ARREFECEDOR	87
TUBOS - AR	88
COLETOR DE ESCAPE	91
COLETOR DE ADMISSÃO	92
SILENCIADOR	93
BUJÃO - COLETOR DE ADMISSÃO	95
PRÉ-PURIFICADOR	96
TURBOALIMENTADOR	98
SISTEMA DE COMBUSTÍVEL	100
FILTRO SECUNDÁRIO DO COMBUSTÍVEL E TUBULAÇÕES	100
FILTRO - COMBUSTÍVEL	102
FILTRO DE COMBUSTÍVEL E SEPARADOR DE ÁGUA	103
INJETOR DE COMBUSTÍVEL	104
TUBOS - COMBUSTÍVEL	105

* TRADUÇÃO NÃO DISPONÍVEL NO MOMENTO DA IMPRESSÃO

ÍNDICE

Designação	Página
TUBOS - DRENAGEM DO COMBUSTÍVEL	107
BOMBA DE INJEÇÃO DO COMBUSTÍVEL	109
BOMBA DE ESCORVA DO COMBUSTÍVEL E DO FILTRO PRIMÁRIO	110
BOMBA DE TRANSFERÊNCIA DO COMBUSTÍVEL	112
TANQUE DE COMBUSTÍVEL	113
VÁLVULA DE RETENÇÃO	115
SEPARADOR DE ÁGUA E BOMBA DE ESCORVA DE COMBUSTÍVEL	117
SISTEMA ELÉTRICO E DE PARTIDA	118
ALARME	118
ALTERNADOR DE CORRENTE	119
BATERIA E CABOS / FIOS ELÉTRICOS	121
CONEXÃO - ELÉTRICA	125
CONTROLE & MONTAGEM-COMUNICAÇÃO	126
CONTROLE ELETRÔNICO E MONTAGEM - MOTOR	128
CONTROLE-ESCAVAÇÃO AUTOMÁTICA	129
CONTROLE - NÃO PROGRAMADO	134
SISTEMA ELÉTRICO	135
SISTEMA ELETRÔNICO-COMUNICAÇÃO	136
SIST. ELETRÔNICO - ACESSÓRIO	137
SISTEMA ELETRÔNICO - MONITOR	138
SISTEMA ELETRÔNICO - TREM DE FORÇA	138
AQUECEDOR DA ÁGUA DO MOTOR	139
INSTALAÇÃO-COMUNICAÇÃO	140
INSTALAÇÃO-SEGURANÇA	140
LÂMPADA - TETO	143
LÂMPADA - FAROL	144
LÂMPADA DIANTEIRA E DE SINAL	148
LÂMPADA - SINALIZAÇÃO	152
LUZ TRASEIRA E DE FREIO	154
LUZ GIRATÓRIA DE ALARME	155
ILUMINAÇÃO RODOVIÁRIA	156
ILUMINAÇÃO - SINALIZAÇÃO	156
SISTEMA DE ILUMINAÇÃO - FARÓIS	158
SISTEMA DE ILUMINAÇÃO - FARÓIS E SINAL	164
ILUMINAÇÃO - RODOVIÁRIA	168
SIST. DE ILUMINAÇÃO - PISCA-PISCA GIRATÓRIO DE ADVERTÊNCIA	170
RECEPTÁCULO-PARTIDA AUXILIAR	172
SENSOR - POSIÇÃO DE LEVANTAMENTO E MONTAGEM	173
SENSOR DE PRESSÃO E MONTAGEM	175
SENSOR - POSIÇÃO DE INCLINAÇÃO E MONTAGEM	176
SENSOR DO MOTOR	178
EMISSOR - POSIÇÃO	180
SENSOR - PRESSÃO	182
*SENSOR GP-PRESSURE	185
SENSOR - PRESSÃO	186
SENSOR DE VELOCIDADE	189
SENSOR - TEMPERATURA	194
AUXILIAR DE PARTIDA A ÉTER	197
MOTOR ELÉTRICO DE PARTIDA	199
INTERRUPTOR DE DERIVAÇÃO	202
COMUTADOR-LUZ ALTA/BAIXA	203
CHAVE GERAL	204
INTERRUPTOR - MAGNÉTICO	205
INTERRUPTOR - PRESSÃO	207
INTERRUPTOR-VENTILADOR DE INVERSÃO	208
INTERRUPTOR - SISTEMA DE ABSORCAO DE IMPACTOS	209
INTERRUPTOR - BALANCIM	210
INTERRUPTOR GIRATÓRIO	212
INTERRUPTOR - DIREÇÃO SECUNDÁRIA	213
INTERRUPTOR DE SINALIZAÇÃO	214
INTERRUPTOR - BALANCIM	218
INTERRUPTOR - TRANSMISSÃO	219
ALARME DE MARCHA À RÉ	220
CABOS/FIOS ELÉTRICOS - AR CONDICIONADO	221
FIAÇÃO - CONTROLE DE LUBRIFICAÇÃO AUTOMÁTICA	222
FIAÇÃO - MONITORAÇÃO DO EIXO	224
CABOS/FIOS ELÉTRICOS - CABINE	227
CABOS/FIOS ELÉTRICOS - CHASSI	235
CABOS/FIOS ELÉTRICOS - CONTROLE ELETRÔNICO	241
CABOS/FIOS ELÉTRICOS - MOTOR	243
CABOS/FIOS ELÉTRICOS - DIANTEIROS	245
CABOS/FIOS ELÉTRICOS DE ILUMINAÇÃO	247
CABOS/FIOS ELÉTRICOS - DIREÇÃO SECUNDÁRIA	250
CABOS/FIOS ELÉTRICOS - SENSOR	252
CABOS/FIOS ELÉTRICOS - INJETOR	256
TREM DE FORÇA	257
EIXO E ARREFECEDOR DO ÓLEO DO EIXO	257
EIXO FIXO	258

* TRADUÇÃO NÃO DISPONÍVEL NO MOMENTO DA IMPRESSÃO

ÍNDICE

Designação	Página
EIXO OSCILANTE	259
BASE DO FILTRO DE ÓLEO	262
FREIOS E ENGRENAGENS PLANETARIAS	263
CARCAÇA DAS ENGRENAGENS PLANETÁRIAS E COMPONENTES	265
CONTROLE DA TRANSMISSÃO	267
CONTROLE HIDRÁULICO DA TRANSMISSÃO	269
ARREFECEDOR DO ÓLEO DO EIXO	271
ARREFECEDOR DE ÓLEO DA TRANSMISSÃO	272
TAMPA - BOCAL DE ENCHIMENTO DE ÓLEO DA TRANSMISSÃO	274
DIFERENCIAL	275
DIFERENCIAL - DESLIZAMENTO LIMITADO	277
DIFERENCIAL - NOSPIN	278
BOCAL DE ENCHIMENTO DE ÓLEO DO TREM DE FORÇA	280
FILTRO E TUBOS - TRANSMISSÃO	282
FILTRO - ÓLEO	284
ENGRENAGEM-COROA E PINHÃO	285
*GEAR GP-BEVEL & PINION	289
ENGRENAGENS DE SAÍDA DE TRANSFERÊNCIA	291
PERMUTADOR DE CALOR - EIXO	296
CAIXA - EIXO FIXO	298
CAIXA - EIXO OSCILANTE	304
TUBOS - ARREFECEDOR DE ÓLEO DO EIXO	308
TUBOS - ARREFECEDOR DO CONVERSOR DE TORQUE	312
COLETOR - CONTROLE	315
MONTAGEM DO EIXO	316
MONTAGEM - ARO	316
ÓLEO - ARRANJO PARA TROCA RÁPIDA	317
ENGRENAGENS PLANETÁRIAS - TRANSMISSÃO	318
TREM DE FORÇA	322
BOMBA DA TRANSMISSÃO	323
ARO	325
ARO DESMONTÁVEL	326
EIXO DE TRANSMISSÃO	330
JUNTA CORREDIÇA	331
PNEU E ARO	332
CONVERSOR DE TORQUE E CARCAÇA	342
CONVERSOR DE TORQUE	344
TRANSMISSÃO	346
JUNTA UNIVERSAL	347
VÁLVULA DE MODULAÇÃO	349
VÁLVULA DE ALÍVIO	350
VÁLVULA DE PNEU	353
CHASSI E CARROCERIA	354
ACIONADOR - INCLINAÇÃO DO CAPÔ	354
BLOCO LIMITADOR DE OSCILAÇÃO DO EIXO	356
RESSALTO-ARMAÇÃO TRASEIRA	357
CAIXA - BATERIA	360
CONTRAPESO	361
PÁRA-LAMA	362
CHASSI DIANTEIRO	372
CHASSI TRASEIRO	375
GRADE DO RADIADOR	378
PROTETOR - DIANTEIRO	380
PROTETOR - TREM DE FORÇA	381
FERRAGENS-MONTAGEM	383
FERRAGEM - CHASSI TRASEIRO	384
DOBRADIÇA DO PÁRA-LAMA	386
ENGATE - ARTICULAÇÃO	388
CAPÔ E PROTETOR	390
ESCADA	394
TUBULAÇÕES - LUBRIFICAÇÃO AUTOMÁTICA	404
TUBOS - GRAXA	415
TUBOS - LUBRIFICAÇÃO	419
ELO - TRAVA DA ARMAÇÃO DA DIREÇÃO	423
LUBRIFICAÇÃO - AUTOMÁTICA	424
PAINEL LATERAL	427
BOMBA E MONTAGEM - LUBRIFICAÇÃO	429
BOMBA DE LUBRIFICAÇÃO	430
BLINDAGEM DO COMPARTIMENTO DO MOTOR	431
SUPORTE - ADMISSÃO DE AR	433
SUPORTE - VALVULA E FILTRO	434
RUÍDO - ARRANJO PARA SUPRESSÃO	436
REDUÇÃO DE RUÍDO	437
INCLINAÇÃO - CAPÔ	441
VÁLVULA E TUBULAÇÕES - LUBRIFICAÇÃO	443
VÁLVULA DE LUBRIFICAÇÃO - DISTRIBUIÇÃO	446
SISTEMA DE FREIO	448
ACUMULADOR - FREIO	448
BASE DO FREIO - PEDAL	450
FREIO DE ESTACIONAMENTO	453
CONTROLE DO PEDAL DO FREIO	458

* TRADUÇÃO NÃO DISPONÍVEL NO MOMENTO DA IMPRESSÃO

ÍNDICE

Designação	Página
CONTROLE DO FREIO DE ESTACIONAMENTO	460
CONTROLE DO FREIO DE SERVIÇO	461
VÁLVULA DE CONTROLE DOS FREIOS	467
SISTEMA DE DIREÇÃO	468
CONTROLE DE DIREÇÃO	468
CILINDRO DE DIREÇÃO E MONTAGEM	472
CILINDRO DA DIREÇÃO	473
TUBOS - DIREÇÃO SECUNDÁRIA	474
TUBOS - DIREÇÃO	476
BOMBA DE DIREÇÃO SECUNDÁRIA E MOTOR	490
BOMBA DA DIREÇÃO SECUNDÁRIA E MONTAGEM	491
BOMBA DE PISTÃO	492
GRUPO ROTATIVO DA BOMBA	494
*SCREEN GP-CASE DRAIN	495
*STEERING AR-COMMAND CONTROL	496
DIREÇÃO SECUNDÁRIA	496
COLUNA DA DIREÇÃO	497
VOLANTE	498
PLACA BASCULANTE	500
VÁLVULA DE RETENÇÃO	501
VÁLVULA DE CONTROLE PILOTO	504
VÁLVULA DE REDUÇÃO DE PRESSÃO	506
VÁLVULA DE CONTROLE DA BOMBA	507
VÁLVULA DE ALÍVIO	508
VÁLVULA DE DIREÇÃO SECUNDÁRIA	510
VÁLVULA DE SEPARAÇÃO	511
VÁLVULA DA DIREÇÃO	513
VÁLVULA - NEUTRALIZADOR DA DIREÇÃO	517
SISTEMA HIDRÁULICO	519
ACUMULADOR DO SISTEMA DE ABSORÇÃO DE IMPACTOS E MONTAGEM	519
ACUMULADOR D ÓLEO - PILOTO	520
ACUMULADOR DO SISTEMA DE ABSORÇÃO DE IMPACTOS	522
SISTEMA DE ABSORÇÃO DE IMPACTOS E TUBOS	524
SISTEMA DE ABSORÇÃO DE IMPACTOS	525
CONTROLE-ELETROIDRÁULICO	526
CONTROLE-CABO	534
CONTROLE - ALAVANCA	535
ARREFECEDOR-ÕLEO HIDRÃULICO E DO EIXO	539
CILINDRO DE LEVANTAMENTO E RETENTOR	540
CILINDRO DE INCLINAÇÃO E RETENTOR	542
CILINDRO DE LEVANTAMENTO	543
CILINDRO DE INCLINAÇÃO	546
DRENO - ECOLOGIA	548
FILTRO - ÓLEO	549
ARRANJO HIDRÁULICO - 2 VÁLVULAS	551
ARRANJO HIDRÁULICO - 3 VÁLVULAS	551
TUBOS - ACOPLADOR	552
TUBOS - DIANTEIROS	554
TUBOS - ÓLEO HIDRÁULICO	558
TUBOS - ARREFECEDOR DE ÓLEO HIDRÁULICO	563
TUBOS - CILINDRO DE LEVANTAMENTO	569
TUBOS - CILINDRO DE INCLINAÇÃO	571
COLETOR - CONTROLE	573
COLETOR - VÁLVULA	575
MOTOR - PISTÃO	579
MONTAGEM - TANQUE HIDRÁULICO	581
BOMBA E MONTAGEM - FREIO E VENTILADOR HIDRÁULICO	582
BOMBA HIDRÁULICA E MONTAGEM	584
BOMBA DE PISTÃO	586
GRUPO ROTATIVO DA BOMBA	590
TANQUE HIDRÁULICO	591
VÁLVULA DO CONTROLE PRINCIPAL E MONTAGEM	593
VÁLVULA DE RETENÇÃO	605
VÁLVULA DE CONTROLE	608
VÁLVULA DESVIADORA	618
VÁLVULA DE DRENAGEM	619
VÁLVULA DE CONTROLE DE ABAIXAMENTO	620
VÁLVULA - CONTROLE PRINCIPAL	622
VÁLVULA MANUAL	627
VÁLVULA DE REDUÇÃO DE PRESSÃO	628
VÁLVULA DE CONTROLE DA BOMBA	629
VÁLVULA DE ALÍVIO	633
VÁLVULA DE CONTROLE DE ABSORÇÃO DE IMPACTOS	634
VÁLVULA DE SEPARAÇÃO	636
VÁLVULA SOLENÓIDE	639
ACESSÓRIOS	642
BRAÇO E MANCAL TIPO LUVA	642

* TRADUÇÃO NÃO DISPONÍVEL NO MOMENTO DA IMPRESSÃO

ÍNDICE

Designação	Página
BRAÇO DE LEVANTAMENTO	644
RESSALTO-ALAVANCA	648
RESSALTO - BRAÇO DE LEVANTAMENTO	649
CONTROLE DA CAÇAMBA	653
LEVANTAMENTO - ARRANJO	655
ARTICULAÇÃO - CAÇAMBA	657
FERRAMENTAS DE TRABALHO	658
ADAPTADOR DA PONTA	658
CAÇAMBA PARA APLICAÇÃO GERAL	659
CAÇAMBA - MANUSEIO DE MATERIAL	673
CAÇAMBA PARA PENETRAÇÃO	687
CAÇAMBA PARA ROCHAS	688
CAÇAMBA P/ ESCÓRIA	698
CAÇAMBA PARA APLICAÇÃO GERAL	699
CAÇAMBA - MANUSEIO DE MATERIAL	714
CAÇAMBA PARA PENETRAÇÃO	731
CAÇAMBA PARA ROCHAS	732
CAÇAMBA - P/ESCÓRIA	740
ACOPLADOR RÁPIDO	741
BORDA CORTANTE	745
BEIRA - PONTA CORTANTE	746
BORDA CORTANTE	747
BORDA SEGMENTADA DA CAÇAMBA	751
GARFO DE PALETAS	752
PROTETOR - CAÇAMBA	756
TRAVA - ACOPLADOR RÁPIDO	758
PINO	762
PLACA DE DESGASTE	764
PROTETOR DA BORDA CORTANTE	766
PONTA-SERVIÇO PESADO	767
PONTA PARA APLICAÇÕES GERAIS	768
PONTA LONGA	769
ESTAÇÃO DO OPERADOR	770
AJUSTADOR DO ASSENTO	770
COMPRESSOR DE AR - ASSENTO	772
CONDICIONADOR DE AR	773
BRACO DO LIMPADOR	779
BRAÇO DO ASSENTO	781
CABINE - ESTRUTURA ROPS COBERTA	782
COMPRESSOR DE REFRIGERANTE	784
CONDENSADOR DO REFRIGERANTE E MONTAGEM	786
CONTROLE DO PAINEL MONITOR	788
CONTROLE-MONITOR NÃO PROGRAMADO	789
PORTA DA CABINE	790
DUCTO E FILTRO	797
PISO-SUPRESSÃO DE RUÍDOS	799
PROTETOR - JANELA	803
PEGA-MÃO	807
AQUECEDOR DA CABINE	809
BUZINA ELÉTRICA	813
INSTALAÇÃO DOS CONTROLES	814
INSTALAÇÃO DO RÁDIO	815
TRINCO - PORTA DA CABINA E JANELA	817
REVESTIMENTO DA CABINE	819
TUBOS - AR CONDICIONADO	822
TUBOS - AQUECEDOR DA CABINE	827
ESPELHO RETROVISOR	831
MÓDULO DO VISOR	845
MÓDULO ELETRÔNICO DE QUATRO INDICADORES	846
MÓDULO - VELOCÍMETRO E TACÔMETRO	847
MOTOR - LIMPADOR DO VIDRO	848
MONTAGEM - CABINE	850
CABINE - ESTRUTURA ROPS COBERTA	852
FUNDO - ENCOSTO	853
PAINEL DE INSTRUMENTOS	855
PEDAL DO GOVERNADOR	862
PISO	864
RÁDIO	864
RÁDIO - COMUNICAÇÃO	866
RECLINAÇÃO - ASSENTO	867
ROPS FECHADA	868
CINTO DE SEGURANÇA	872
ASSENTO	873
ASSENTO COM SUSPENSÃO	877
SUPORTE - CONTROLE HIDRÁULICO	880
SUPRESSÃO DE RUÍDOS - CABINE	884
SUSPENSÃO - ASSENTO	890
PÁRA-SOL DA CABINE	894
LAVADOR DO VIDRO	895
VIDRO DA PORTA	896
LIMPADOR DO VIDRO	900
EQUIPAMENTOS DE SERVIÇO E SUPRIMENTOS	903
CAIXA DE FERRAMENTAS	903
DECALQUE	906
TUBULAÇÕES DE DIAGNÓSTICO	908
PLACA E DECALQUE	914
PLACA - IDENTIFICAÇÃO DO EIXO	919
PROTEÇÃO CONTRA VANDALISMO	919
ÍNDICE DE NÚMERO DE PEÇA	B1

* TRADUÇÃO NÃO DISPONÍVEL NO MOMENTO DA IMPRESSÃO

INHALTSVERZEICHNIS

Bezeichnung	Seite
ALLGEMEINE HINWEISE	A43
REPARATURALTERNATIVEN	A51
KÜHLMITTELZUSATZ	A56
WARTUNGSTEILE	A74
STICHWORTVERZEICHNIS	A132
MASCHINE	1
FAHRWERK	1
UMBAUSATZ - ZULASSUNG	2
GRUNDAUSFÜHRUNG	2
MOTOR	3
MOTOR, KOMPLETT	3
MOTORKÜHLERBLOCK	4
MOTOR-EINBAUSATZ	5
MOTOR (GRUNDAUSFÜHRUNG)	6
SOCKEL FÜR VENTILDECKEL U. EINSPRITZKABELBAUM	6
RIEMENSPANNER	7
NOCKENWELLE	8
STIRNRADGEHÄUSEDECKEL	9
VENTILDECKEL	11
KURBELWELLE	12
MOTORBLOCK	14
ZYLINDERKOPF	18
DÄMPFER	21
NEBENANTRIEB	22
ZYLINDERKOPF-HALTETEILE	23
BEFESTIGUNG - DÄMPFER U. RIEMENSCHEIBE	24
STIRNRADGEHÄUSE-HALTETEILE	25
SCHWUNGRAD	26
STIRNRAD	27
SCHWUNGRADGEHÄUSE	28
STIRNRADGEHÄUSE	29
LEITRAD - RIEMEN	31
KURBELLAGER-EINBAUSATZ	32
HUBVENTIL	33
MOTORHUBÖSE	34
MOTOR- UND GETRIEBEAUFLAGER	35
VENTILMECHANISMUSAUFHÄNGUNG	36
ÖLWANNE	37
PLEUELSTANGE UND KOLBEN	38
ZYLINDERBLOCKSCHRAUBE	40
MOTORSTOPFEN	43
DREHSTROMGENERATOR-RIEMENSCHEIBE	44
KURBELWELLEN-RIEMENSCHEIBE	45
VENTILKIPPHEBEL	46
KURBELWELLENDICHTUNG	50
MOTORAUFHÄNGUNG	51
VENTILSTEUERUNG	52
SCHMIERSYSTEM	54
ÖLFILTERSOCKEL	54
ENTLÜFTER	58
MOTORÖLEINFÜLLSTUTZEN	59
ÖLFILTER	60
ENTDUNSTER	61
ÖLMESSSTAB	62
TURBOLADERÖLLEITUNGEN	63
SCHMIERPUMPE	64
KÜHLSYSTEM	66
MOTORÖLKÜHLER	66
KÜHLSYSTEM - HOHE UMGEBUNGSTEMPERATUREN	68
KÜHLWASSERLEITUNGEN	69
KÜHLWASSERPUMPE	75
KÜHLER UND LÜFTER	78
KÜHLERWASSERKASTEN, OBEN	84
LUFTANSAUG- UND ABGASSYSTEM	85
LUFTREINIGER	85
LADELUFTKÜHLERLEITUNGEN	87
DRUCKLUFTLEITUNGEN	88
AUSPUFFKRÜMMER	91
ANSAUGKRÜMMER	92
SCHALLDÄMPFER	93
EINLASSKRÜMMERSTOPFEN	95
VORREINIGER	96
TURBOLADER	98
KRAFTSTOFFSYSTEM	100
SICHERHEITSKRAFTSTOFFILTER U. LEITUNGEN	100
KRAFTSTOFFILTER	102
WASSERABSCHEIDER- U. KRAFTSTOFFILTER	103
KRAFTSTOFFEINSPRITZDÜSE	104
KRAFTSTOFFLEITUNGEN	105
KRAFTSTOFFABLASSLEITUNGEN	107
KRAFTSTOFFEINSPRITZPUMPE	109
KRAFTSTOFFENTLÜFTUNGSPUMPE UND -HAUPTFILTER	110
KRAFTSTOFFÖRDERPUMPE	112
KRAFTSTOFFTANK	113
SPERRVENTIL	115
WASSERABSCHEIDER U. KRAFTSTOFFENTLÜFTUNGSPUMPE	117

* ÜBERSETZUNG ZUM ZEITPUNKT DER DRUCKLEGUNG NICHT VORHANDEN

INHALTSVERZEICHNIS

Bezeichnung	Seite
ELEKTRISCHE ANLAGE U. STARTSYSTEM	118
WARNVORRICHTUNG	118
DREHSTROMGENERATOR	119
BATTERIE UND VERDRAHTUNG	121
ANSCHLUSS, ELEKTR.	125
ÜBERTRAGUNGSSTEUERUNG U. BEFESTIGUNG	126
STEUERUNGSEINHEIT, ELEKTRON. FÜR MOTOR UND BEFEST.	128
AUTOMATISCHES LADESYSTEM (AUTODIG) - STEUERUNG	129
STEUERUNG - NICHT PROGRAMMIERT	134
ELEKTR. ANLAGE	135
ELEKTRONIK, KOMMUNIKATION	136
ARBEITSGERÄTEELEKTRONIK	137
ELEKTRONIK - MONITOR	138
KRAFTÜBERTRAGUNGSELEKTRONIK	138
UMLAUFKÜHLWASSERHEIZUNG	139
ÜBERTRAGUNGSEINBAUSATZ	140
SICHERHEITSEINBAUSATZ	140
FAHRERHAUSBELEUCHTUNG	143
ARBEITSLEUCHTEN	144
SCHEINWERFER U. RICHTUNGSLEUCHTE	148
BLINKLEUCHTE	152
BREMS- UND RÜCKLEUCHTE	154
RUNDUM-KENNLEUCHTE	155
BELEUCHTUNGSANLAGE (STRASSENAUSRÜSTUNG)	156
BLINKERLEUCHTEN	156
ARBEITSLEUCHTEN	158
ARBEITS- U. SIGNALLEUCHTE	164
BELEUCHTUNGSANLAGE (STRASSENAUSRÜSTUNG)	168
RUNDUM-KENNLEUCHTE	170
STARTHILFEANSCHLUSS	172
HUBSTELLUNGSSENSOR U. BEFESTIGUNGSTEILE	173
DRUCKSENSOR UND BEFESTIGUNGSTEILE	175
KIPPSTELLUNGS-SENSOR U. BEFESTIGUNGSTEILE	176
MOTORSENSOR	178
STELLUNGSSENSOR	180
DRUCKSENSOR	182
*SENSOR GP-PRESSURE	185
DRUCKSENSOR	186
DREHZAHLSENSOR	189
TEMPERATURSENSOR	194
ÄTHERSTARTHILFE	197
STARTERMOTOR	199
UMGEHUNGSSCHALTER	202
HELLIGKEITSREGLER	203
TRENNSCHALTER	204
MAGNETSCHALTER	205
DRUCKSCHALTER	207
SCHALTER - UMKEHRLÜFTER	208
SCHALTER FÜR HYDRAULISCHE SCHWINGUNGSDÄMPFUNG	209
KIPPSCHALTER	210
DREHSCHALTER	212
NOTLENKUNGSSCHALTER	213
RICHTUNGSSIGNALSCHALTER	214
KIPPSCHALTER	218
GETRIEBESCHALTER	219
RÜCKFAHRWARNHORN	220
KLIMAANLAGENVERDRAHTUNG	221
AUTOM. SCHMIERVORRICHTUNG - STEUERUNGSVERDRAHTUNG	222
ACHSENÜBERWACHUNG - VERDRAHTUNG	224
FAHRERHAUSVERDRAHTUNG	227
FAHRGESTELLVERDRAHTUNG	235
VERDRAHTUNG (ELEKTRON. STEUERUNG)	241
MOTORVERDRAHTUNG	243
VERDRAHTUNG, VORNE	245
BELEUCHTUNGSVERDRAHTUNG	247
NOTLENKUNGSVERDRAHTUNG	250
SENSORVERDRAHTUNG	252
VERDRAHTUNG (EINSPRITZEINHEIT)	256
KRAFTÜBERTRAGUNG	257
ACHSE U. ACHSÖLKÜHLER	257
STARRACHSE	258
PENDELACHSE	259
ÖLFILTERSOCKEL	262
BREMSE UND PLANETENGETRIEBE	263
PLANETENANTRIEBSGEHÄUSE U. TEILE	265
GETRIEBESTEUERUNG	267
GETRIEBEHYDRAULIK	269
ACHSÖLKÜHLER	271
GETRIEBEÖLKÜHLER	272
GETRIEBEÖLEINFÜLLKAPPE	274
DIFFERENTIAL	275
DIFFERENTIAL (BEGRENZTER SCHLUPF)	277
NOSPIN-DIFFERENTIAL	278
GETRIEBEÖLFÜLLSTUTZEN	280
GETRIEBEFILTER UND -LEITUNGEN	282
ÖLFILTER	284

* ÜBERSETZUNG ZUM ZEITPUNKT DER DRUCKLEGUNG NICHT VORHANDEN

INHALTSVERZEICHNIS

Bezeichnung	Seite
TELLER- UND KEGELRAD	285
*GEAR GP-BEVEL & PINION	289
VERTEILERGETRIEBEANTRIEB	291
ACHSWÄRMETAUSCHER	296
GEHÄUSE - STARRACHSE	298
GEHÄUSE - PENDELACHSE	304
ACHSENÖLKÜHLERLEITUNGEN	308
DREHMOMENTWANDLER-KÜHLERLEITUNGEN	312
STEUERKRÜMMER	315
ACHSENANBAUSATZ	316
FELGENAUFHÄNGUNG	316
ÖLSCHNELLWECHSELANSCHLUSS	317
PLANETENGETRIEBE	318
KRAFTÜBERTRAGUNG	322
GETRIEBEPUMPE	323
FELGE	325
FELGE (TEILBAR)	326
ANTRIEBSWELLE	330
ANTRIEBSWELLEN-KEILVERZAHNUNG	331
REIFEN UND FELGE	332
DREHZAHLWANDLER U. GEHÄUSE	342
DREHMOMENTWANDLER	344
GETRIEBE	346
KREUZGELENK	347
MODULATORVENTIL	349
ÜBERDRUCKVENTIL	350
REIFENVENTIL	353
RAHMEN UND FAHRGESTELL	354
MOTORHAUBENKIPPBETÄTIGUNG	354
PENDELACHSBEGRENZUNGSBLOCK	356
VORSPRUNG - HINTERER RAHMEN	357
BATTERIEKASTEN	360
GEGENGEWICHT	361
SCHUTZBLECHE (STRASSENAUSRÜSTUNG)	362
SCHUTZBLECHE	363
SCHUTZBLECHE (STRASSENAUSRÜSTUNG)	367
LADERRAHMEN	372
HINTERRAHMEN	375
KÜHLERGRILL	378
VERKLEIDUNGEN, VORN	380
ANTRIEBSSCHUTZ	381
BEFESTIGUNGSTEILE	383
HARDWARE, HINTERRAHMEN	384
GELENK FÜR SCHUTZBLECHE (STRASSENAUSRÜSTUNG)	386
KNICKGELENK-ANHÄNGUNG	388
MOTORHAUBE UND VERKLEIDUNG	390
STEIGLEITER	394
AUTOMATISCHE SCHMIERLEITUNGEN	404
SCHMIERLEITUNGEN	415
KNICKGELENKSPERRE	423
SCHMIERSYSTEM, AUTOM.	424
SEITENVERKLEIDUNG	427
SCHMIERPUMPE U. BEFESTIGUNGSTEILE	429
SCHMIERPUMPE	430
MOTORRAUM-SCHUTZVERKLEIDUNG	431
LUFTEINLASS-TRÄGER	433
BEFESTIGUNG - VENTIL U. FILTER	434
SCHALLDÄMPFUNG	436
MOTORHAUBEN-KIPPSTELLUNG	441
SCHMIERVENTIL U. -LEITUNGEN	443
SCHMIERÖLVERTEILERVENTIL	446
BREMSSYSTEM	448
BREMSDRUCKSPEICHER	448
FUSSBREMSSOCKEL	450
FESTSTELLBREMSE	453
FUSSBREMSGESTÄNGE	458
FESTSTELLBREMSGESTÄNGE	460
BREMSGESTÄNGE	461
BREMSSTEUERVENTIL	467
LENKSYSTEM	468
LENKBETÄTIGUNG	468
LENKZYLINDER UND AUFHÄNGUNG	472
LENKZYLINDER	473
NOTLENKUNGSLEITUNGEN	474
LENKÖLLEITUNGEN	476
NOTLENKUNGSPUMPE UND -MOTOR	490
NOTLENKUNGSPUMPE UND BEFESTIGUNGSTEILE	491
KOLBENPUMPE	492
KOLBENPUMPENUMLAUFSATZ	494
*SCREEN GP-CASE DRAIN	495
*STEERING AR-COMMAND CONTROL	496
NOTLENKUNG	496
LENKSÄULE	497
LENKRAD	498
SCHWENKSCHEIBE	500
SPERRVENTIL	501
VORSTEUERVENTIL	504
DRUCKREDUZIERVENTIL	506
PUMPENSTEUERVENTIL	507
ÜBERDRUCKVENTIL	508
NOTLENKUNGSVENTIL	510

* ÜBERSETZUNG ZUM ZEITPUNKT DER DRUCKLEGUNG NICHT VORHANDEN

INHALTSVERZEICHNIS

Bezeichnung	Seite
PENDELVENTIL	511
LENKVENTIL	513
LENKNEUTRALISIERVENTIL	517
HYDRAULIKSYSTEM	519
HYDRAULISCHE SCHWINGUNGS-DÄMPFUNG - DRUCKSPEICHER U. BEFESTIGUNGSTEILE	519
VORSTEUERÖLDRUCKSAMMLER	520
DRUCKSPEICHER, HYDRAULISCHE SCHWINGUNGSDÄMPFUNG	522
SCHWINGUNGSDÄMPFUNG U. LEITUNGEN	524
HYDRAULISCHE SCHWINGUNGSDÄMP-FUNG	525
ELEKTROHYDRAULISCHE STEUE-RUNG	526
STEUERHEBEL	534
JOYSTICK -STEUERUNG	535
HYDRAULIKÖL- U. ACHSENÖLKÜH-LER	539
HUBZYLINDER UND DICHTUNG	540
KIPPZYLINDER UND DICHTUNG	542
HUBZYLINDER	543
KIPPZYLINDER	546
ABLASS (UMWELTFREUNDLICH)	548
ÖLFILTER	549
HYDRAULIKANORDNUNG (2-VENTIL-HYDRAULIK)	551
HYDRAULIKANORDNUNG (3-VENTIL-HYDRAULIK)	551
ANSCHLUSSKUPPLUNGSLEITUN-GEN	552
LEITUNGEN, VORNE	554
HYDRAULIKLEITUNGEN	558
HYDRAULIKÖLKÜHLERLEITUNGEN	563
HUBZYLINDERLEITUNGEN	569
NEIGEZYLINDERLEITUNGEN	571
STEUERKRÜMMER	573
*MANIFOLD GP-VALVE	575
KOLBENMOTOR	579
HYDRAULIKTANK UND ANBAUSATZ	581
PUMPE U. BEFESTIGUNG - BREMSE U. HYDRAULIKLÜFTER	582
HYDRAULIKPUMPE UND BEFESTIGUNGS-TEILE	584
KOLBENPUMPE	586
KOLBENPUMPENUMLAUFSATZ	590
HYDRAULIKTANK	591
VENTIL UND BEFESTIGUNGSTEILE - HAUPTSTEUERUNG	593
SPERRVENTIL	605
STEUERVENTIL	608
UMLEITVENTIL	618
ABLASSVENTIL	619
ABSENKSTEUERVENTIL	620
HAUPTSTEUERVENTIL	622
VENTIL, MECH.	627
DRUCKREDUZIERVENTIL	628
PUMPENSTEUERVENTIL	629
ÜBERDRUCKVENTIL	633
VENTIL - HYDRAULISCHE SCHWINGUNGS-DÄMPFUNG	634
PENDELVENTIL	636
MAGNETVENTIL	639
ARBEITSGERÄTE	642
ARM U. LAGER	642
HUBARM	644
VORSPRUNG - HEBEL	648
VORSPRUNG - HUBARM	649
SCHAUFELSTEUERUNG	653
HUBVORRICHTUNG	655
SCHAUFELUMLENKMECHANISMUS	657
ARBEITSGERÄTE	658
ZAHNHALTER	658
UNIVERSALSCHAUFEL	659
MATERIALUMSCHLAGSCHAUFEL	673
ERDBAUSCHAUFEL	687
FELSSCHAUFEL	688
SCHLACKENSCHAUFEL	698
UNIVERSALSCHAUFEL	699
MATERIALUMSCHLAGSCHAUFEL	714
ERDBAUSCHAUFEL	731
FELSSCHAUFEL	732
SCHLACKENSCHAUFEL	740
SCHNELLWECHSELVORRICHTUNG	741
SCHNELLWECHSELEINRICHTUNG	743
SCHNEIDMESSER	745
SCHNEIDMESSER UND EINSATZ-STÜCK	746
SCHNEIDMESSER	747
SCHNEIDMESSERSEGMENT	751
PALETTENGABEL	752
SCHAUFELSCHUTZ	756
SCHNELLWECHSELEINRICHTUNGSSPER-RE	758
BOLZENSATZ	762
VERSCHLEISSPLATTEN	764
MESSERSCHUTZ	766
ZAHN, HD AUSFÜHRUNG	767
NORMALZAHNSPITZE	768
ZAHNSPITZE, LANG	769

* ÜBERSETZUNG ZUM ZEITPUNKT DER DRUCKLEGUNG NICHT VORHANDEN

INHALTSVERZEICHNIS

Bezeichnung	Seite
FAHRERHAUS	770
FAHRERSITZVERSTELLER	770
LUFTKOMPRESSORSITZ	772
KLIMAANLAGE	773
SCHEIBENWISCHERARM	779
ARMLEHNE	781
FAHRERHAUS MIT ÜBERROLL-SCHUTZ	782
KÄLTEMITTELKOMPRESSOR	784
KÄLTEMITTELKONDENSATOR U. BEFESTIGUNGSTEILE	786
MONITORSTEUERUNG	788
STEUERUNG, NICHT PROGRAMMIERTER MONITOR	789
FAHRERHAUSTÜR	790
LUFTKANAL U. FILTER	797
BODEN - GERÄUSCHSCHUTZ	799
SCHEIBENSCHUTZ	803
HALTEGRIFF	807
FAHRERHAUSHEIZUNG	809
WARNHORN, ELEKTR.	813
BEDIENUNGSEINBAUSATZ	814
RADIOEINBAUSATZ	815
FAHRERHAUSTÜR- U. FENSTERVERRIEGELUNG	817
FAHRERHAUSAUSKLEIDUNG	819
KLIMAANLAGENLEITUNGEN	822
FAHRERHAUSHEIZUNGSLEITUNGEN	827
RÜCKSPIEGEL	831
ANZEIGEMODUL	845
MODUL - VIER ELEKTRON. ANZEIGEN	846
GESCHWINDIGKEITS- U. DREHZAHLMESSERMODUL	847
SCHEIBENWISCHERMOTOR	848
FAHRERHAUSANBAUSATZ	850
FAHRERHAUSAUSFÜHRUNG MIT GESCHL. ÜBERROLLSCHUTZ	852
SCHALE - RÜCKENLEHNE	853
INSTRUMENTENTAFEL	855
GASPEDAL	862
PLATTFORM	864
RADIO	864
RADIO - KOMMUNIKATION	866
VERSTELLBARER SITZ	867
ÜBERROLL-SCHUTZKABINE	868
SICHERHEITSGURT	872
FAHRERSITZ	873
SCHWINGSITZ	877
HYDRAULIKSTEUERAUFHÄNGUNG	880
FAHRERHAUSLÄRMDÄMPFUNG	884
FAHRERSITZFEDERUNG	890
FAHRERHAUS, SONNENBLENDE	894
SCHEIBENWASCHANLAGE	895
TÜRFENSTER	896
SCHEIBENWISCHER	900
WARTUNGSAUSRÜSTUNG UND -ZUBEHÖR	903
WERKZEUGKASTEN	903
AUFKLEBER	906
DIAGNOSELEITUNGEN	908
SCHILD UND AUFKLEBER	914
ACHSE - IDENTIFIKATIONSSCHILD	919
SCHUTZABDECKUNG	919
ERSATZTEILNUMMERNINDEX	B1

* ÜBERSETZUNG ZUM ZEITPUNKT DER DRUCKLEGUNG NICHT VORHANDEN

GENERAL INFORMATION

1. MACHINE IDENTIFICATION

Caterpillar machines are identified by Product Identification Numbers (PIN). Some components included in a machine may be identified by Serial Numbers (S/N). Typical components that will be serialized include engines, transmissions, bulldozers, and rippers. The machine and engine are further identified by arrangement numbers and in some cases modification numbers. These numbers are shown on the product identification plate(s) and on the master plate in the operator's compartment.

Caterpillar dealers need all of these numbers to determine accurate parts identification.

SIS *New Feature*

Effective First Quarter 2001 the Caterpillar Product Identification Number (PIN) changed from 8 to 17 characters. In an effort to provide uniform equipment identification, Caterpillar and other construction equipment manufacturers are moving to comply with the latest version of the product identification numbering standard. Non-road machine PINs are defined by ISO 10261. The new PIN format will apply to all Caterpillar machines and generator sets. The PIN plates and frame marking will display the 17 character PIN. The new format will look like the following:

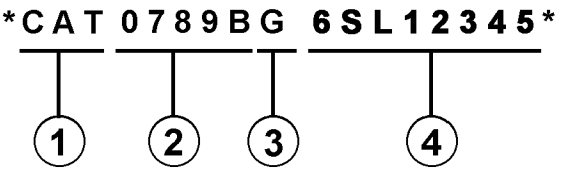

Where:

1. Caterpillar's World Manufacturing Code (characters 1-3)

2. Machine Descriptor (characters 4-8)

3. Check Character (character 9)

4. Machine Indicator Section (MIS) or Product Sequence Number (characters 10-17). These were previously referred to as the Serial Number.

Machines and generator sets produced before First Quarter 2001 will maintain their 8 character PIN format.

Components such as engines, transmissions, axles, etc. and work tools will continue to use an 8 character Serial Number (S/N).

2. ORDERING PARTS

⚠ WARNING

When replacement parts are required for this product Caterpillar recommends using Caterpillar replacement parts or parts with equivalent specifications including, but not limited to, physical dimensions, type, strength and material.

Failure to heed this warning can lead to premature failures, product damage, personal injury or death.

Quality Caterpillar replacement parts are available from Caterpillar dealers throughout the world. Their parts inventories are up to date and include all parts normally required to protect your investment in Caterpillar machines. Dealers may offer repair kits or remanufactured parts to allow selection of the most effective repair alternative for a particular situation. When ordering parts, your order should specify the quantity, part number, part name, and the serial number/product identification number of the machine for which the parts are needed.

3. PARTS MANUAL ORGANIZATION

Product information in this manual is presented as "information elements" that represent all of the components for the specific model. Engine Arrangement and Seat Group are examples of information elements. The information elements are organized alphabetically by part name and secondarily by part number within each major section of the manual.

4. TABLE OF CONTENTS

A table of contents (TOC) is found at the beginning of the manual. The TOC lists each section of the manual with a complete list of all information elements organized as they appear in the manual. Page numbers are provided for quick reference to detailed parts identification illustrations and serviceable consist lists.

5. MAINTENANCE PARTS INDEX

The Maintenance Parts Index, located near the beginning of the manual, references most frequently used maintenance part numbers, providing description, quantity, usage and page number. This information is organized alphabetically by part description.

6. INDEX

The index located near the front of the manual is an alphabetical listing of all information elements included in the manual. Page numbers are provided for quick reference to detailed parts identification illustrations and serviceable consist lists.

7. PART NUMBER INDEX

A numerical index listing all part numbers and the corresponding page number(s) appears at the back of the manual.

8. CAPTIONS

Captions located at the beginning of each information element identify the part number and part name along with additional descriptive information. PIN and S/N information found in each caption should be used to select correct information for a specific machine. Field replacement options, identification of optional attachment components, and where used ("part of") information is also provided.

The first line of a caption is shown in larger type font to indicate the beginning of an information element. Captions for additional pages that may be required to illustrate an information element will be shown in standard type font and will include the term *(contd.)* .

9. NON-SERVICED PARTS

In some instances it is necessary to display non-serviced parts that are a link to a lower level serviceable consist lists. These non-serviced part numbers are shown in *italic* type indicating that they are not available.

10. PARTS LIST REFERENCE NUMBERS

Numbers shown in the Ref No column correspond to numbers used in the associated graphic(s). An alphabetic suffix may be added to a reference number to identify lower level consist items. Numbers shown in the Graphic Ref column refer to the graphic number identifier displayed in the lower left corner of each illustration. The Graphic Ref number may be used in combination with the item Ref No to determine the correct part number. There may be intentional omission of a Ref No in a consist list as information is updated to reflect the latest serviceable part numbers.

11. INDENTED PART NAMES

When a part name is indented in a parts list, it is part of (included in) the group or assembly under which it is indented.

12. ILLUSTRATION REFERENCE LETTERS

When necessary, illustrations contain reference letters (A, B, C etc.) that are intended to track lines and harnesses from one point to another. They are also used to show where to reconnect illustrations that have been separated.

13. ABBREVIATIONS AND SYMBOLS

O.D. – Outside Diameter
I.D. – Inside Diameter
A – Not Part Of This Group
B – Use As Required
C – Change From Previous Type
D – Order By The Meter
E – Order By The Centimeter
F – Not Shown
G – Order By The Inch
I – Refer To Hydraulic Information System
M – Metric Part
R – Remfg Part May Be Available
Y – Separate Illustration
Z – Not Serviced Separately

SIS *New Feature*

14.<END>

This symbol indicates the end of an information element.

NOTE:

Continuing improvement and advancement of product design may cause changes to your machine which may not be included in this publication. Whenever a question arises regarding your caterpillar product or this publication, please consult your caterpillar dealer for the latest available information.

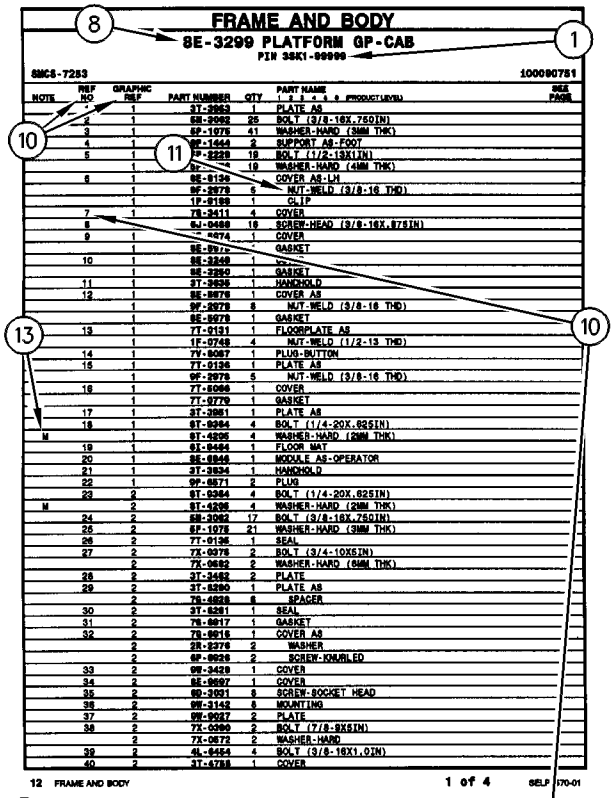
FRAME AND BODY
8E-3299 PLATFORM GP-CAB
PIN 3SK1-99999
SMCS-7283
100090751
NOTE REF NO GRAPHIC REF PART NUMBER QTY PART NAME SEE PAGE
1 1 3T-3963 1 PLATE AS
2 1 5H-3062 25 BOLT (3/8-16X.750IN)
3 1 5P-1075 41 WASHER-HARD (3MM THK)
4 1 9E-1443 2 SUPPORT AS-FOOT
5 1 9P-2229 19 BOLT (1/2-13X1IN)
1 19 WASHER-HARD (4MM THK)
6 1 9E-9136 1 COVER AS-LH
1 6 9F-2979 6 NUT-WELD (3/8-16 THD)
1 1P-6189 1 CLIP
7 1 7S-3411 4 COVER
8 1 6J-0468 18 SCREW-HEAD (3/8-16X.87SIN)
9 1 4 1 COVER
1 1 GASKET
10 1 1
1 1
11 1 3T-3836 1 HANDHOLD
12 1 8E-9878 1 COVER AS
1 8 NUT-WELD (3/8-16 THD)
1 8E-9879 1 GASKET
13 1 7T-9131 1 FLOORPLATE AS
1 4 NUT-WELD (1/2-13 THD)
14 1 7V-8067 1 PLUG-BUTTON
15 1 7T-9136 1 PLATE AS
1 5 NUT-WELD (3/8-16 THD)
16 1 7T-5066 1 COVER
1 1 GASKET
17 1 3T-3951 1 PLATE AS
18 1 9T-8264 4 BOLT (1/4-20X.88SIN)
M 1 9T-4296 4 WASHER-HARD (2MM THK)
1 1 FLOOR MAT
20 1 8E-6848 1 MODULE AS-OPERATOR
21 1 3T-3934 1 HANDHOLD
22 1 9P-8571 2 PLUG
23 2 9T-0364 4 BOLT (1/4-20X.62SIN)
M 2 9T-4296 4 WASHER-HARD (2MM THK)
24 2 5H-3062 17 BOLT (3/8-16X.750IN)
25 2 5P-1075 21 WASHER-HARD (3MM THK)
26 2 7T-9136 1 SEAL
27 2 7X-0375 2 BOLT (3/4-10X5IN)
2 2 7X-0682 2 WASHER-HARD (6MM THK)
28 2 3T-3482 2 PLATE
29 2 3T-5290 1 PLATE AS
2 7S-4828 6 SPACER
30 2 3T-5291 1 SEAL
31 2 7S-8617 1 GASKET
32 2 7S-8616 1 COVER AS
2 5R-2276 2 WASHER
2 9P-9626 2 SCREW-KNURLED
33 2 9W-3429 1 COVER
34 2 8E-9697 1 COVER
35 2 9D-3091 8 SCREW-SOCKET HEAD
36 2 9W-3143 8 MOUNTING
37 2 9W-9027 2 PLATE
38 2 7X-0360 2 BOLT (7/8-9X5IN)
2 7X-0672 2 WASHER-HARD
39 2 4L-6454 4 BOLT (3/8-16X1.0IN)
40 2 3T-4788 1 COVER
12 FRAME AND BODY
1 of 4
SELP4570-01

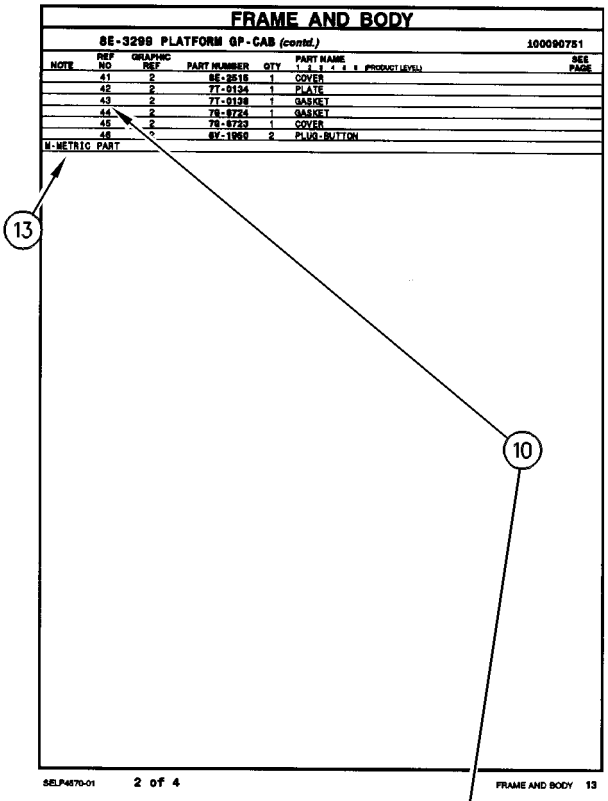
FRAME AND BODY
8E-3299 PLATFORM GP-CAB (contd.)
100090751
NOTE REF NO GRAPHIC REF PART NUMBER QTY PART NAME SEE PAGE
41 2 8E-2515 1 COVER
42 2 7T-9134 1 PLATE
43 2 7T-9138 1 GASKET
44 2 7S-8724 1 GASKET
45 2 7S-8723 1 COVER
46 * 8Y-1950 2 PLUG-BUTTON
M-METRIC PART
SELP4570-01
2 of 4
FRAME AND BODY 13

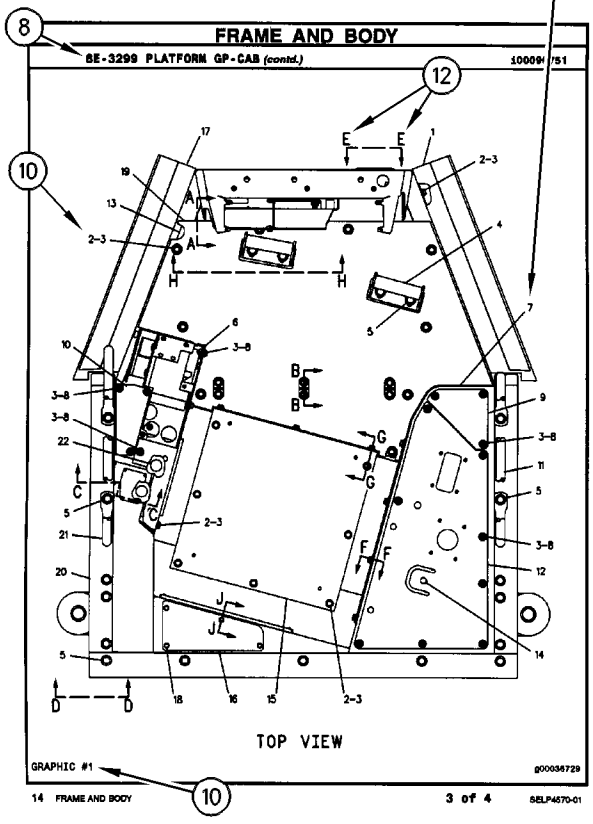
FRAME AND BODY
8E-3299 PLATFORM GP-CAB (contd.)
100090751
TOP VIEW
GRAPHIC #1
g00036729
14 FRAME AND BODY
3 of 4
SELP4570-01

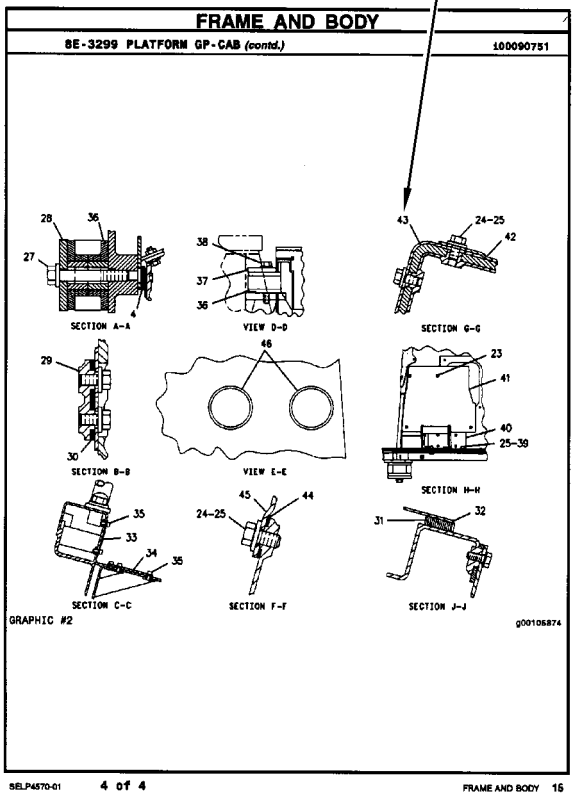
FRAME AND BODY
8E-3299 PLATFORM GP-CAB (contd.)
100090751
SECTION A-A
VIEW D-D
SECTION G-G
SECTION B-B
VIEW E-E
SECTION H-H
SECTION C-C
SECTION F-F
SECTION J-J
GRAPHIC #2
g00105874
SELP4570-01
4 of 4
FRAME AND BODY 15

GÉNÉRALITÉS

1. IDENTIFICATION DE LA MACHINE

Toutes les machines Caterpillar portent un numéro d'identification (PIN). Certains composants des machines peuvent porter des numéros de série (S/N). En général, parmi les composants qui portent des numéros de série il y a les moteurs, les transmissions, les bulldozers et les rippers. En plus, la machine et le moteur peuvent recevoir des numéros de version, et dans certains cas, de modification. Ces numéros figurent sur les plaques de numéro de série et sur la plaque signalétique principale qui se trouve dans le poste de conduite.

Les concessionnaires Caterpillar doivent connaître tous ces numéros pour identifier correctement les pièces.

SIS *Nouvelle Caractéristique*

À partir du premier trimestre 2001, le numéro d'identification produit (PIN) Caterpillar passe de 8 à 17 caractères. Afin de permettre une identification uniforme des matériels, Caterpillar et d'autres constructeurs de machines de travaux publics s'efforcent de se conformer à la norme la plus récente portant sur les numéros d'identification des produits. Les numéros d'identification (PIN) de machines de chantier sont définis par la norme ISO 10261. Le nouveau format du numéro d'identification est valable pour toutes les machines et tous les groupes électrogènes Caterpillar. Le numéro d'identification produit (PIN) figurant sur la plaque et sur le châssis se composera de 17 caractères. Le nouveau format ressemblera à ceci:

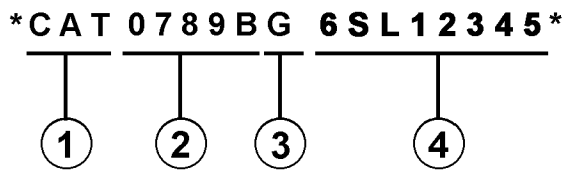

Il se décomposera de la façon suivante:

1. Code international de fabrication de Caterpillar (caractères 1 à 3)

2. Descriptif de la machine (caractères 4 à 8)

3. Contrôle (caractère 9)

4. Indicateur machine (MIS) ou numéro de séquence produit (caractères 10 à 17). Ceux-ci étaient auparavant désignés sous le terme de numéro de série.

Les machines et les groupes électrogènes construits avant le premier trimestre 2001 garderont le format à 8 caractères du numéro d'identification produit (PIN).

Les organes tels que les moteurs, les boîtes de vitesses, les essieux, etc., continueront d'être désignés par un numéro de série (S/N) à 8 caractères.

2. COMMANDE DE PIÈCES

⚠ DANGER

Lorsqu'il faut remplacer des pièces de rechange pour ce produit Caterpillar recommande d'utiliser les pièces de rechange Caterpillar ou les pièces qui ont des spécifications équivalentes dont les dimensions physiques, le type, la force et le matériau. Ces équivalences ne se limitent pas à l'énoncé précédent.

L'inobservation de cette mise en garde peut entraîner des défaillances prématurées, des dommages au produit, des blessures ou même la mort.

Les concessionnaires Caterpillar fournissent dans le monde entier des pièces de rechange de qualité Caterpillar. Leurs stocks de pièces sont constamment réapprovisionnés et comptent toutes les pièces nécessaires pour assurer la bonne marche de vos machines Caterpillar. Certains concessionnaires proposent également des kits de réparation ou des pièces rénovées, ce qui permet de choisir la solution la plus économique dans une situation donnée. Lors des commandes de pièces, mentionner la quantité, le numéro et la désignation des pièces ainsi que le numéro de série ou le numéro d'identification (PIN) de la machine pour laquelle ces pièces sont requises.

3. ORGANISATION DU CATALOGUE DE PIÈCES

Les renseignements sur les produits sont présentés sous forme de "Information element" (élément d'information) représentant tous les composants d'un modèle donné. "Engine Arrangement" (version de moteur) et "Seat Group" (assemblage de siège)" sont des exemples d'éléments d'information. Les éléments d'information sont classés par ordre alphabétique par la désignation standard des pièces et par numéros de pièces dans chaque partie importante du manuel.

4. TABLE DES MATIÈRES

Nouvelle Caractéristique

La table des matières se trouve au début du manuel. La table des matières fournit la liste de tous les chapitres du manuel avec une liste complète de tous les éléments d'information classés par ordre d'apparition dans le manuel. Les numéros de page sont fournis afin que l'utilisateur puisse trouver rapidement les illustrations détaillées concernant l'identification des pièces et les listes des pièces d'entretien.

5. INDEX DES PIÈCES D'ENTRETIEN

La rubrique "Index des pièces d'entretien" qui se trouve au début du manuel renvoie aux pièces d'entretien les plus fréquemment utilisées en précisant la désignation, la quantité, là où la pièce est utilisée et le numéro de page. Ces pièces sont classés par ordre alphabétique.

6. INDEX

L'index qui se trouve vers le début du manuel est une liste alphabétique de tous les éléments d'information du manuel. Les numéros de page sont fournis afin que l'utilisateur puisse trouver rapidement les illustrations détaillées concernant l'identification des pièces et les listes des pièces d'entretien.

7. INDEX DES NUMÉROS DE PIÈCES

Une liste numérique de tous les numéros de pièces et des pages correspondantes se trouve à la fin du manuel.

8. LÉGENDES

Les légendes qui se trouvent en haut de chaque page de chaque élément d'information fournissent le numéro de pièce, la désignation ainsi que des renseignements supplémentaires sur les pièces. Les renseignements concernant les numéros de série (S/N) qui se trouvent dans chaque légende doivent être utilisés pour sélectionner les informations correctes pour un moteur donné. Les informations concernant les options de remplacement sur le chantier, l'identification des composants des équipements offerts en option et les lieux d'application sont aussi fournies.

Nouvelle Caractéristique

Les lettres de la première ligne d'une légende sont présentées en police plus grande afin d'indiquer le début d'une unité d'information. Les légendes qui pourraient être requises pour des pages supplémentaires afin d'illustrer une unité d'information seront présentées en police standard et comprendront le terme (à suivre).

9. PIÈCES NON FOURNIES

Nouvelle Caractéristique

Dans certains cas, il est nécessaire d'indiquer les pièces non fournies qui sont en aval de la liste des pièces d'entretien. Les numéros des pièces non fournies dans la liste des pièces et les légendes seront en italique pour signaler qu'ils ne sont pas disponibles.

10. NUMÉROS DE RÉFÉRENCE DE LA LISTE DES PIÈCES

Nouvelle Caractéristique

Les numéros indiqués dans la colonne des numéros de références correspondent aux numéros utilisés dans les illustrations auxquelles ils sont associés. Un suffixe alphabétique peut être ajouté à un numéro de référence pour identifier la liste des articles en aval. Les numéros indiqués dans la colonne de référence de l'illustration renvoient à l'identification du numéro affiché dans le coin inférieur gauche de chaque illustration. Le numéro de référence de l'illustration pourrait être utilisé avec le numéro de référence de l'article pour déterminer le numéro de pièce correct. Il peut y avoir une omission intentionnelle d'un numéro de référence dans une liste de pièces suite à la mise à jour des informations en vue de refléter les numéros de pièces les plus récentes.

11. DÉSIGNATIONS DE PIÈCES EN RETRAIT

Lorsqu'une désignation de pièce est en retrait, cela veut dire que l'article en regard fait partie de l'ensemble sous lequel il figure.

12. LETTRES DE RÉFÉRENCE DES ILLUSTRATIONS

Quand cela est nécessaire, les illustrations comportent des lettres de référence (A, B, C, etc.) pour montrer le trajet des canalisations et faisceaux de câbles d'un point à l'autre. Elles sont utilisées également pour indiquer où relier les illustrations séparées auparavant.

13. ABRÉVIATIONS ET SYMBOLES

O.D. – Diamètre extérieur
I.D. – Diamètre intérieur
A – Ne fait pas partie de ce groupe
B – Utiliser selon besoin
C – Modification
D – Commander par mètre
E – Commander par centimètre
F – Non représenté
G – Commander par pouce
I – Voir "Hydraulic Information System"
M – Pièce métrique
R – Pièce rénovée éventuellement disponible
Y – Illustration séparée
Z – Non fourni séparément

NOTA:

En raison du progrès technique et des améliorations continuelles apportées au matériel, votre machine comporte peut-être des modifications qui n'apparaissent pas dans la présente publication. En cas de doute sur un détail de votre machine Caterpillar ou sur le texte de la présente publication, adressez-vous à votre concessionnaire Caterpillar.

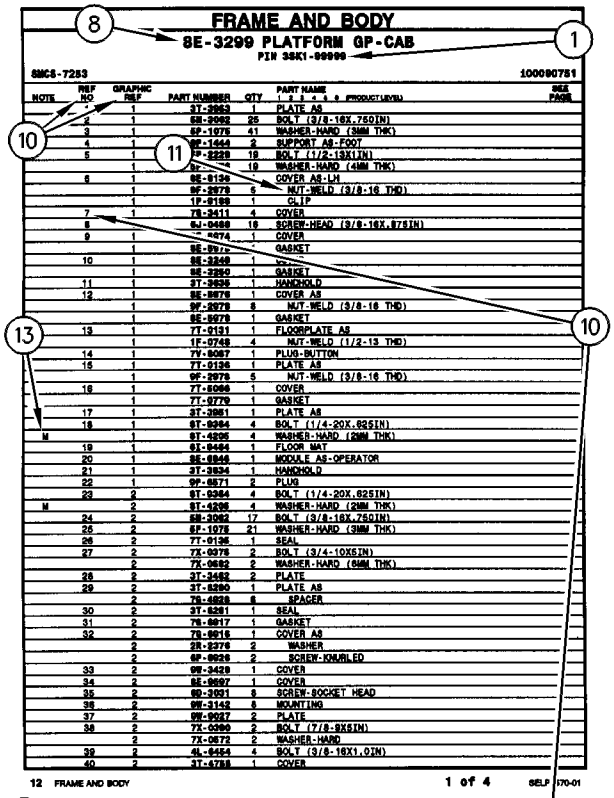

FRAME AND BODY

8E-3299 PLATFORM GP-CAB

PIN 3SK1-99999

SMCS-7283 100090751

NOTE	REF NO	GRAPHIC REF	PART NUMBER	QTY	PART NAME 1 2 3 4 5 6 (PRODUCT LEVEL)	SEE PAGE
	*	1	3T-3963	1	PLATE AS	
	2	1	5M-2062	25	BOLT (3/8-16X.750IN)	
	3	1	6P-1075	41	WASHER-HARD (3MM THK)	
	4	1	9E-1443	2	SUPPORT AS-FOOT	
	5	1	9P-2229	19	BOLT (1/2-13X1IN)	
		1	9P-[illegible]	19	WASHER-HARD (4MM THK)	
	6	1	9E-9136	*	COVER AS-LH	
		1	9F-2979	6	NUT-WELD (3/8-16 THD)	
		1	1P-0189	1	CLIP	
	7	1	7X-3411	4	COVER	
	8	1	9J-0468	18	SCREW-HEAD (3/8-16X.87SIN)	
	9	1	[illegible]-0274	1	COVER	
		1	9E-9[illegible]	*	GASKET	
	10	1	9E-3248	1	[illegible]	
		1	9E-3250	1	GASKET	
	11	1	3T-3636	1	HANDHOLD	
	12	1	9E-9076	1	COVER AS	
		1	9F-2979	8	NUT-WELD (3/8-16 THD)	
		1	9E-9078	1	GASKET	
	13	1	7T-9131	1	FLOORPLATE AS	
		1	1F-0748	4	NUT-WELD (1/2-13 THD)	
	14	1	7V-8067	1	PLUG-BUTTON	
	15	1	7T-9136	1	PLATE AS	
		1	9F-2979	5	NUT-WELD (3/8-16 THD)	
	16	1	7T-5066	1	COVER	
		1	7T-9779	1	GASKET	
	17	1	3T-3951	1	PLATE AS	
	18	1	9T-0264	4	BOLT (1/4-20X.62SIN)	
M		1	9T-4295	4	WASHER-HARD (2MM THK)	
	19	1	9I-9454	1	FLOOR MAT	
	20	1	9E-6946	1	MODULE AS-OPERATOR	
	21	1	3T-3934	1	HANDHOLD	
	22	1	9P-0671	2	PLUG	
	23	2	9T-0264	4	BOLT (1/4-20X.62SIN)	
M		2	9T-4295	4	WASHER-HARD (2MM THK)	
	24	2	5M-2062	17	BOLT (3/8-16X.750IN)	
	25	2	6P-1075	21	WASHER-HARD (3MM THK)	
	26	2	7T-9136	1	SEAL	
	27	2	7X-0075	2	BOLT (3/4-10X5IN)	
		2	7X-0682	2	WASHER-HARD (6MM THK)	
	28	2	3T-3482	2	PLATE	
	29	2	3T-5290	1	PLATE AS	
		2	7S-4828	6	SPACER	
	30	2	3T-5291	1	SEAL	
	31	2	7S-8817	1	GASKET	
	32	2	7S-8818	1	COVER AS	
		2	5R-2276	2	WASHER	
		2	9P-9026	2	SCREW-KNURLED	
	33	2	9W-3429	1	COVER	
	34	2	8E-9697	1	COVER	
	35	2	9D-3031	8	SCREW-SOCKET HEAD	
	36	2	9W-3143	8	MOUNTING	
	37	2	9W-9037	2	PLATE	
	38	2	7X-0360	2	BOLT (7/8-9X5IN)	
		2	7X-0672	2	WASHER-HARD	
	39	2	4L-9454	4	BOLT (3/8-16X1.0IN)	
	40	2	3T-4788	1	COVER	

12 FRAME AND BODY 1 of 4 SELP4570-01

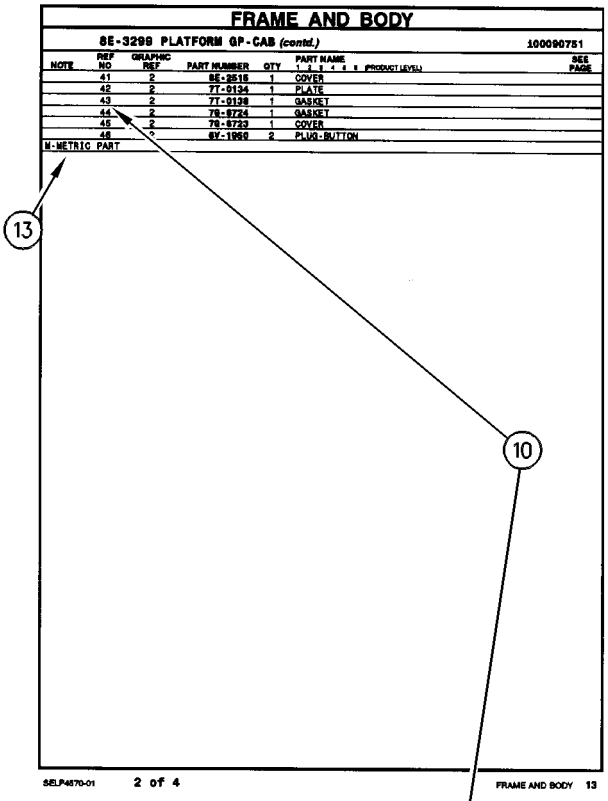

FRAME AND BODY

8E-3299 PLATFORM GP-CAB (contd.) 100090751

NOTE	REF NO	GRAPHIC REF	PART NUMBER	QTY	PART NAME 1 2 3 4 5 6 (PRODUCT LEVEL)	SEE PAGE
	41	2	8E-2515	1	COVER	
	42	2	7T-9134	1	PLATE	
	43	2	7T-9138	1	GASKET	
	44	2	7S-8724	1	GASKET	
	45	2	7S-8723	1	COVER	
	46	*	8Y-1950	2	PLUG-BUTTON	

M-METRIC PART

SELP4570-01 2 of 4 FRAME AND BODY 13

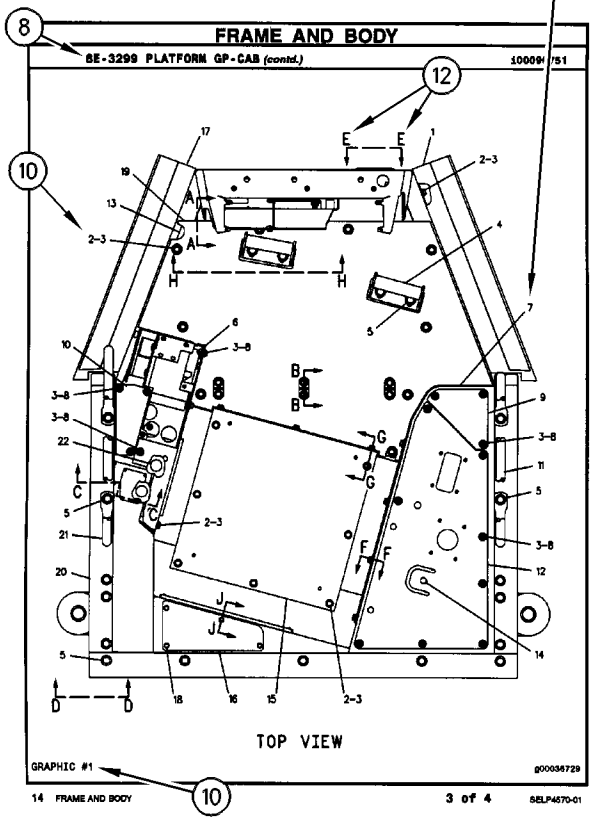

FRAME AND BODY

8E-3299 PLATFORM GP-CAB (contd.) 100090751

TOP VIEW

GRAPHIC #1 g00036729

14 FRAME AND BODY 3 of 4 SELP4570-01

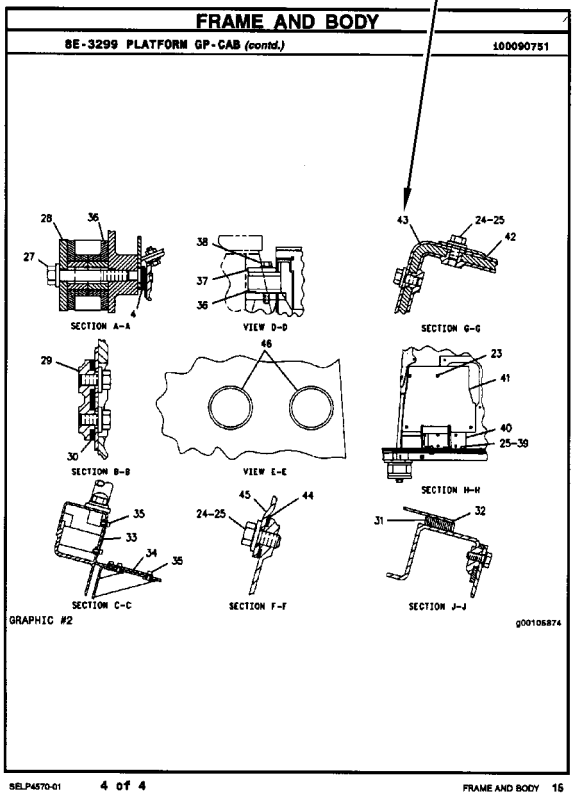

FRAME AND BODY

8E-3299 PLATFORM GP-CAB (contd.) 100090751

SECTION A-A VIEW D-D SECTION G-G

SECTION B-B VIEW E-E SECTION H-H

SECTION C-C SECTION F-F SECTION J-J

GRAPHIC #2 g00105874

SELP4570-01 4 of 4 FRAME AND BODY 15

INFORMACIÓN GENERAL

1. MÁQUINAS

Las máquinas Caterpillar se identifican con Números de Identificación del Producto (PIN). Algunos componentes incluídos en la máquina pueden estar identificados con Números de Serie (N/S). Los componentes que tienen típicamente esta identificación incluyen motores, transmisiones, hojas topadoras y desgarradores. La máquina y el motor se identifican además con Números de Configuración y en algunos casos, Números de Modificación. Estos números están en las placas de identificación del producto o en la placa principal en la cabina del operador.

Los distribuidores Caterpillar necesitan estos números para identificar con exactitud los números de piezas de repuesto.

SIS *Nueva Característica*

A partir del primer trimestre del 2001, el Número de Identificación de Producto (PIN) de Caterpillar cambió de 8 a 17 caracteres. Para hacer más uniforme el método de identificación de equipos, Caterpillar y otros fabricantes de equipo de construcción han tomado medidas para cumplir con la versión más reciente de la norma de numeración de identificación de productos. Los Números de Identificación de Producto para máquinas que no se operan en carreteras son definidos por la norma ISO 10261. El nuevo formato PIN corresponderá a todas las máquinas y grupos electrógenos Caterpillar. Las placas y los caracteres PIN estampados en el bastidor mostrarán el PIN de 17 caracteres. El nuevo formato tendrá la apariencia siguiente:

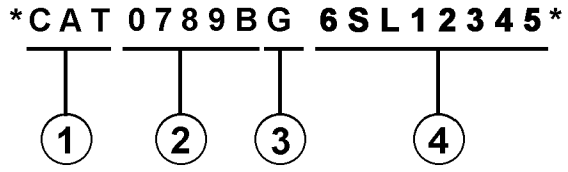

Significado de los caracteres:

1. Código de Fabricación Mundial de Caterpillar (caracteres 1-3)

2. Sección Descriptor de la Máquina (caracteres 4-8)

3. Carácter de Verificación (carácter 9)

4. Sección Indicador de la Máquina (MIS) o Número de Secuencia de Producto (caracteres 10-17). Anteriormente, estos caracteres constituían el Número de Serie.

Las máquinas y grupos electrógenos producidos antes del primer semestre del 2001 mantendrán su formato PIN de 8 caracteres.

Los componentes como motores, transmisiones, ejes, herramientas de trabajo, etc., continuarán usando un Número de Serie (S/N) de 8 caracteres.

2. COMO PEDIR REPUESTOS

⚠ ADVERTENCIA

Cuando se necesiten piezas de repuesto para este producto, Caterpillar recomienda usar piezas de repuesto Caterpillar o piezas que tengan especificaciones equivalentes incluyendo, pero sin estar limitadas a, dimensiones físicas, tipo, fortaleza y material.

El no hacer caso de esta advertencia puede llevar a fallas prematuras, daños al producto y lesiones graves o mortales.

Las piezas de repuesto Caterpillar de calidad están a la disposición de los distribuidores Caterpillar en todo el mundo. Sus existencias actualizadas incluyen todas las piezas normalmente requeridas para proteger su inversión en máquinas Caterpillar. Los distribuidores pueden tener juegos de reparación o piezas remanufacturadas para permitir la selección de la mejor alternativa de reparación en un caso en particular. Al pedir piezas de repuesto, especifique en su pedido la cantidad, el número de pieza, el nombre de la pieza y el número de serie/número de identificación del producto, de la máquina para la cual se necesitan estas piezas.

3. ORGANIZACION DEL MANUAL DE PIEZAS

La información sobre el producto, se presenta en este manual, como "elementos de información" que representan todos los componentes de un modelo específico. Las configuraciones de motores y los grupos de asientos son ejemplos de elementos de información. Los elementos de información están organizados primeramente por nombres de piezas en orden alfabético y en segundo lugar, por el número de pieza dentro de cada sección principal del manual.

4. CONTENIDO

La página de Contenido se encuentra al principio del manual. El Contenido indica cada sección del manual con una lista completa de todos los elementos de información organizados en el orden que aparecen en el manual. Los números de página proporcionan una referencia rápida a las ilustraciones detalladas de identificación de piezas y a las listas de componentes de repuesto de dichas piezas.

5. ÍNDICE DE PIEZAS DE MANTENIMIENTO

Al principio de este catálogo se encuentra un índice de los números de piezas utilizadas más frecuentemente para el mantenimiento, que incluye descripción, cantidad necesaria, lugar de utilización y número de página. Esta información está organizada alfabéticamente, por descripción de la pieza.

6. ÍNDICE

El Índice, ubicado cerca del principio del manual, es una lista en orden alfabético de todos los elementos de información incluídos en el manual. Los números de página proporcionan una referencia rápida a las ilustraciones detalladas de identificación de piezas y a las listas de componentes de repuesto de dichas piezas.

7. INDICE NUMÉRICO DE PIEZAS

Un índice numérico de piezas con el correspondiente número de página aparece al final de este catálogo.

8. TÍTULOS

Los títulos ubicados al principio de cada elemento de información identifican el número y el nombre de la pieza junto con información descriptiva. Se debe usar información sobre los Números de Identificación de Pieza (PIN) y los números de serie (S/N) para seleccionar la información que corresponda a una máquina en particular. También se suministra información sobre las opciones de reparación en el campo, la identificación de componentes de accesorios optativos y el lugar de ubicación de la pieza ("es parte de").

La primera línea del título se muestra con un tipo de letra más grande para indicar el comienzo de un elemento de información. Si se requieren páginas adicionales para ilustrar un elemento de información, los títulos se muestran con un tipo de letra normal y la continuación se indica entre paréntesis.

9. PIEZAS QUE NO SE SUMINISTRAN COMO REPUESTO

En algunos casos es necesario indicar piezas que no se suministran como repuesto pero que pueden estar conectadas a listas de componentes de otras piezas de repuesto. En tal caso, dichas piezas se muestran en cursiva para indicar que no son piezas disponibles.

10. NÚMEROS DE REFERENCIA

Los números en la columna de No. de Referencia corresponden a los números indicados en la ilustración que pertenece a ese número de pieza. Los números que tienen un sufijo alfabético identifican artículos de las listas de componentes de piezas. Los números en la columna de Referencia de la ilustración se identifican en la esquina inferior izquierda de cada ilustración. Para determinar el número de pieza correcto se puede utilizar tanto el No. de Referencia de la ilustración como el No. de Referencia del artículo. A medida que se actualiza la información para indicar los más recientes números de piezas de repuesto, puede omitirse intencionalmente un No. de Referencia en una lista de componentes de piezas.

11. NOMBRES DE PIEZA SANGRADOS

Cuando el nombre de una pieza está sangrado en una lista, significa que esta pieza forma parte del grupo o conjunto del renglón inmediatamente superior.

12. LETRAS DE REFERENCIA DE ILUSTRACIONES

Las ilustraciones contienen algunas veces letras de referencia (A, B, C etc.) cuyo propósito es seguir el trayecto de líneas y mazos de cables de un punto a otro. También se utilizan para mostrar dónde volver a unir ilustraciones que se habían separado.

13. ABREVIATURAS Y SIMBOLOS

O.D. – Diámetro exterior
I.D. – Diámetro interior
A – No es pieza de este grupo
B – Utilizado según la demanda
C – Indica cambio
D – Se pide por metro
E – Se pide por centímetro
F – No se muestra
G – Se pide por pulgada
I – Consulte el sistema de información hidráulica
M – Pieza métrica
R – Puede estar disponible como pieza remanufacturada
Y – Ilustración separada
Z – No se suministra por separado

SIS *Nueva Característica*

14.<END>

Este símbolo indica el final de un elemento de información.

NOTA:

Las contínuas mejoras y adelantos en diseño podrían originar cambios a su máquina que no se incluyen en esta publicación. Cuando tenga alguna pregunta acerca de su producto Caterpillar o de esta publicación, consulte al distribuidor Caterpillar para obtener la información más reciente.

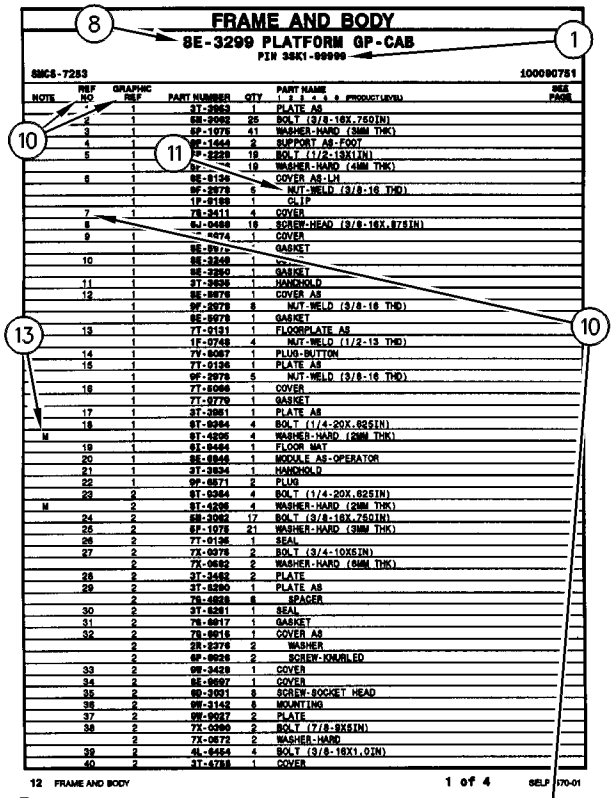

FRAME AND BODY

8E-3299 PLATFORM GP-CAB

PIN 3SK1-99999

SMCS-7283 100090751

NOTE	REF NO	GRAPHIC REF	PART NUMBER	QTY	PART NAME (1 2 3 4 5 6 PRODUCT LEVEL)	SEE PAGE
	*	1	3T-3963	1	PLATE AS	
	2	1	5M-3062	25	BOLT (3/8-16X.750IN)	
	3	1	6P-1075	41	WASHER-HARD (3MM THK)	
	4	1	9E-1444	2	SUPPORT AS-FOOT	
	5	1	9P-2228	18	BOLT (1/2-13X1IN)	
		1	9P-[illegible]	18	WASHER-HARD (4MM THK)	
	6	1	9E-9136	*	COVER AS-LH	
		1	9F-2978	6	NUT-WELD (3/8-16 THD)	
		1	1P-0189	1	CLIP	
	7	1	7X-3411	4	COVER	
	8	1	6J-0468	18	SCREW-HEAD (3/8-16X.87SIN)	
	9	1	[illegible]-0274	1	COVER	
		1	9E-9976	*	GASKET	
	10	1	9E-3248	1	[illegible]	
		1	9E-3250	1	GASKET	
	11	1	3T-3636	1	HANDHOLD	
	12	1	9E-9976	1	COVER AS	
		1	9F-2978	8	NUT-WELD (3/8-16 THD)	
		1	9E-9978	1	GASKET	
	13	1	7T-9131	1	FLOORPLATE AS	
		1	1F-0748	4	NUT-WELD (1/2-13 THD)	
	14	1	7V-8067	1	PLUG-BUTTON	
	15	1	7T-9136	1	PLATE AS	
		1	9F-2978	5	NUT-WELD (3/8-16 THD)	
	16	1	7T-5066	1	COVER	
		1	7T-9770	1	GASKET	
	17	1	3T-3951	1	PLATE AS	
	18	1	9T-0264	4	BOLT (1/4-20X.62SIN)	
M		1	9T-4296	4	WASHER-HARD (2MM THK)	
	19	1	9I-9464	1	FLOOR MAT	
	20	1	9E-6946	1	MODULE AS-OPERATOR	
	21	1	3T-3934	1	HANDHOLD	
	22	1	9P-0671	2	PLUG	
	23	2	9T-0264	4	BOLT (1/4-20X.62SIN)	
M		2	9T-4296	4	WASHER-HARD (2MM THK)	
	24	2	5M-3062	17	BOLT (3/8-16X.75QIN)	
	25	2	6P-1075	21	WASHER-HARD (3MM THK)	
	26	2	7T-9136	1	SEAL	
	27	2	7X-0078	2	BOLT (3/4-10X5IN)	
		2	7X-0682	2	WASHER-HARD (6MM THK)	
	28	2	3T-3482	2	PLATE	
	29	2	3T-5290	1	PLATE AS	
		2	7S-4828	6	SPACER	
	30	2	3T-5291	1	SEAL	
	31	2	7S-8817	1	GASKET	
	32	2	7S-8816	1	COVER AS	
		2	5R-2276	2	WASHER	
		2	9F-9626	2	SCREW-KNURLED	
	33	2	9W-3429	1	COVER	
	34	2	8E-9697	1	COVER	
	35	2	9D-3031	8	SCREW-SOCKET HEAD	
	36	2	9W-3143	8	MOUNTING	
	37	2	9W-9037	2	PLATE	
	38	2	7X-0360	2	BOLT (7/8-9X5IN)	
		2	7X-0672	2	WASHER-HARD	
	39	2	4L-6454	4	BOLT (3/8-16X1.0IN)	
	40	2	3T-4788	1	COVER	

12 FRAME AND BODY 1 of 4 SELP4570-01

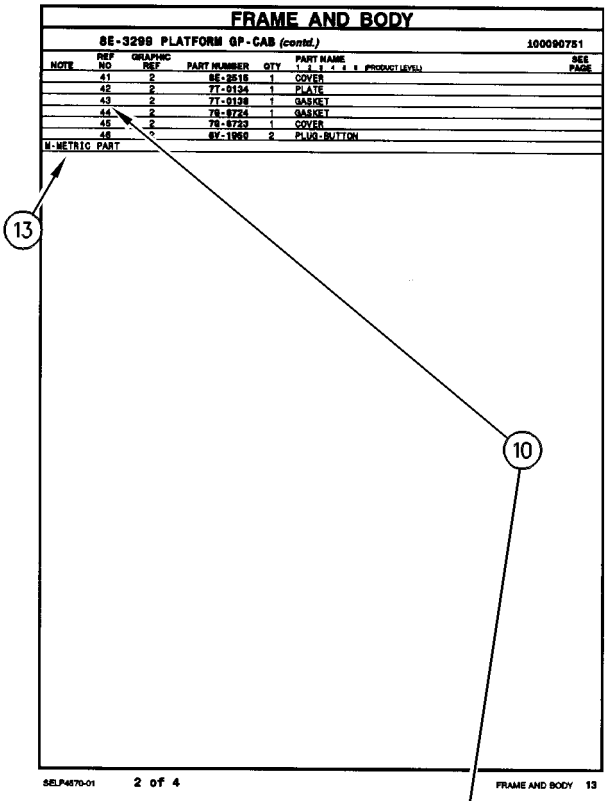

FRAME AND BODY

8E-3299 PLATFORM GP-CAB (contd.) 100090751

NOTE	REF NO	GRAPHIC REF	PART NUMBER	QTY	PART NAME (1 2 3 4 5 6 PRODUCT LEVEL)	SEE PAGE
	41	2	8E-2515	1	COVER	
	42	2	7T-9134	1	PLATE	
	43	2	7T-9138	1	GASKET	
	44	2	7S-8724	1	GASKET	
	45	2	7S-8723	1	COVER	
	46	*	8Y-1950	2	PLUG-BUTTON	

M-METRIC PART

SELP4570-01 2 of 4 FRAME AND BODY 13

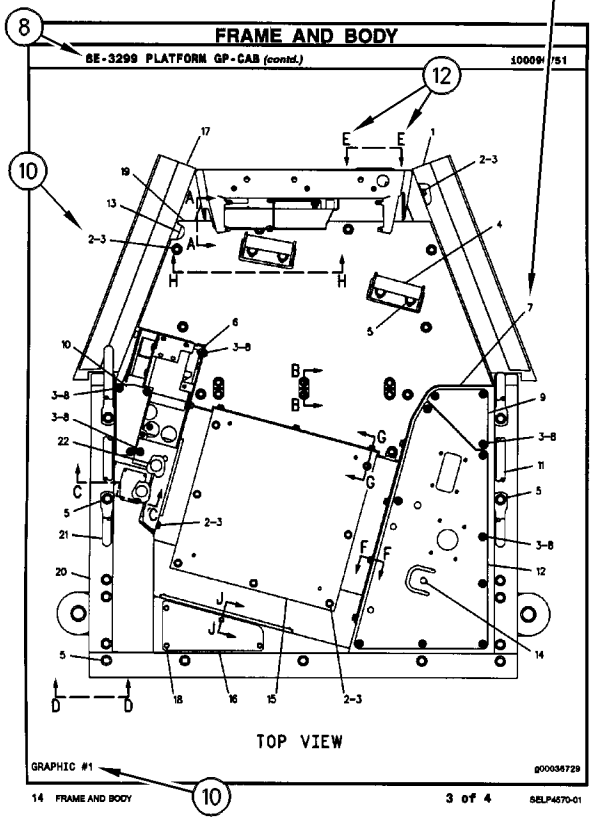

FRAME AND BODY

8E-3299 PLATFORM GP-CAB (contd.) 100090751

TOP VIEW

GRAPHIC #1 g00036729

14 FRAME AND BODY 3 of 4 SELP4570-01

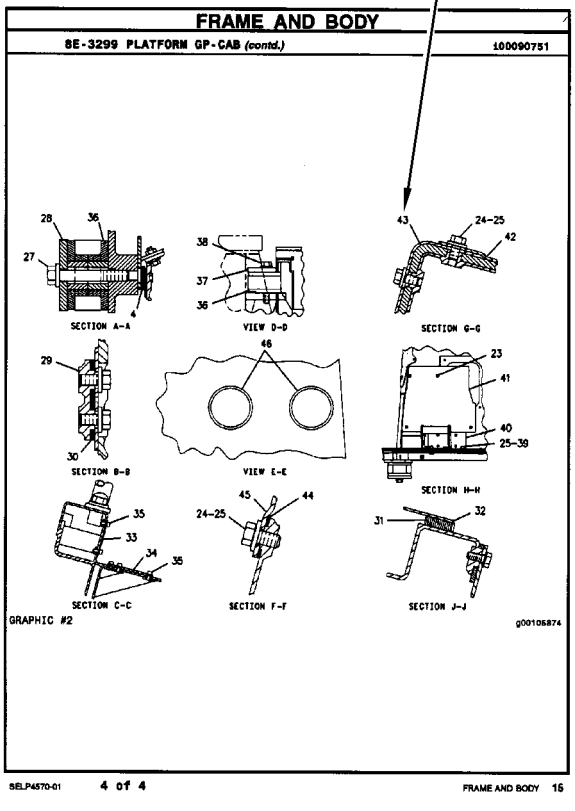

FRAME AND BODY

8E-3299 PLATFORM GP-CAB (contd.) 100090751

SECTION A-A

VIEW D-D

SECTION G-G

SECTION B-B

VIEW E-E

SECTION H-H

SECTION C-C

SECTION F-F

SECTION J-J

GRAPHIC #2 g00105874

SELP4570-01 4 of 4 FRAME AND BODY 15

INFORMAÇÃO GERAL

1. IDENTIFICAÇÃO DA MÁQUINA

As máquinas Caterpillar são identificadas pelos Números de Informação do Produto (PIN). Alguns componentes incluídos numa máquina podem ser identificados por Números de Série (S/N). Componentes típicos que serão enumerados com números de série incluem motores, transmissões, lâminas e ríperes. Além do número de série, a máquina e o motor são ainda identificados por números de arranjo e, em alguns casos, números de modificações. Tais números encontram-se na(s) placa(s) de identificação do produto e na placa mestre no compartimento do operador.

SIS *Novidades*

A partir do primeiro trimestre de 2001 o Número de Identificação de Produto da Caterpillar (PIN) precisa ser mudado de 8 para 17 caracteres. Esforçando-se para fornecer uma identificação uniforme de equipamentos, a Caterpillar e outros fabricantes de equipamento de construção estão mudando para atender a versão mais atualizada do padrão de identificação de produtos. Os números de PIN para produtos de aplicações não rodoviárias são definidos pela ISO 10261. O novo formato de número PIN será adotado em todas as máquinas e grupos geradores Caterpillar. As placas e as marcações do chassi mostrarão os 17 dígitos de PIN. O novo formato terá a seguinte disposição:

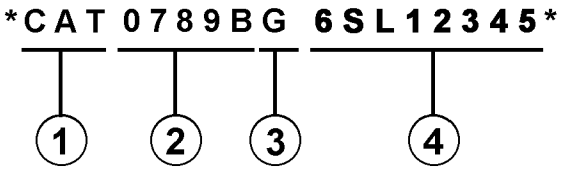

Onde:

1. Código de Fabricação Mundial da Caterpillar (dígitos 1-3)

2. Descrição da Máquina (dígitos 4-8)

3. Dígito de Verificação (dígito 9)

4. Seção de Indicador da Máquina (MIS) ou Número de Seqüência de Produto (dígitos 10-17). Estes eram anteriormente chamados de Número de Série.

Máquinas e grupos geradores produzidos antes do primeiro trimestre de 2001 manterão o formato de 8 caracteres de PIN.

Componentes como motores, transmissões, eixos, ferramentas de trabalho, etc. continuarão a usar Número de Série (S/N) com oito caracteres.

2. COMO OBTER PEÇAS

⚠ CUIDADO

Quando peças de substituição são exigidas para este produto, a Caterpillar recomenda a utilização de peças de substituição Caterpillar ou peças com as especificações equivalentes incluindo, mas não limitadas, à dimensões físicas, tipos, resistência e materiais.

A inobservância desta advertência poderá resultar em falhas prematuras, danos ao produto, ferimentos ou morte.

As Peças de Reposição de Qualidade Caterpillar encontram-se disponíveis nos revendedores Caterpillar no mundo inteiro. Seus estoques de peças são atualizados e incluem todas as peças normalmente necessárias para proteger seu investimento em máquinas Caterpillar. Alguns revendedores podem oferecer jogos de reparo ou peças de troca/remanufaturadas disponíveis como uma opção da alternativa de reparo mais eficaz para uma situação específica. Ao encomendar peças, seu pedido deve especificar a quantidade, o número e o nome da peça e o número de série/número de identificação do produto referentes à máquina para a qual as peças se destinam.

3. ORGANIZAÇÃO DO MANUAL DE PEÇAS

A informação do produto neste manual é apresentada em forma de "elementos de informação" que representam todos os componentes para o modelo específico. Arranjo de Motor e Grupo de Assento são exemplos de elementos de informação. Os elementos de informação são organizados em ordem alfabética por nome de peça ou secundariamente, por número de peça incluído em cada seção principal do manual.

4. LISTA DE CONTEÚDOS

A Lista de Conteúdos (TOC) se encontra no princípio do manual. A Lista de Conteúdos (TOC) relaciona em cada seção do manual uma lista completa com todos os elementos de informação organizados conforme aparecem no manual. Números de página são fornecidos para que se tenha referência rápida de ilustrações de peças detalhadas e listas de conteúdos que podem receber serviço de manutenção.

5. ÍNDICE DE PEÇAS DE MANUTENÇÃO

O Índice de Peças de Manutenção, localizado perto do princípio do manual, faz referência aos números de peça de manutenção usados com maior frequência, fornecendo uma descrição, a quantidade, o uso e o número de página. Esta informação é organizada com a descrição da peça em ordem alfabética.

6. ÍNDICE

O Índice localizado perto do princípio do manual, consiste de uma lista em ordem alfabética de todos os elementos de informação incluídos no manual. Números de página são fornecidos para que se tenha referência rápida de ilustrações de peças detalhadas e listas de conteúdos que podem receber serviço de manutenção.

7. ÍNDICE DE NÚMERO DE PEÇA

Um índice numérico relacionando todos os números de peça e a(s) página(s) correspondentes, aparece no final do manual.

8. LEGENDAS

As legendas localizadas no início de cada elemento de informação identificam o número e o nome de peça, juntamente com informação descritiva adicional. Informações sobre o Número de Informação do Produto (PIN) e o Número de Série (S/N) encontradas em cada legenda devem ser usadas para selecionar a informação correta sobre uma máquina específica. Opções de substituição no campo, identificação de componentes de acessórios opcionais e informações sobre onde são utilizados ("parte de") são também fornecidas.

A primeira linha de uma legenda é indicada em tipo maior para indicar o princípio de um elemento de informação. Legendas para páginas adicionais que podem ser necessárias para ilustrar um elemento de informação serão apresentadas em tipo padrão e incluirão o termo *(continua)* .

9. NÃO DISPONÍVEL SEPARADAMENTE

Em alguns casos, é necessário mostrar peças não disponíveis separadamente que têm uma ligação com listas de conteúdos de nível inferior que podem receber serviço de manutenção. Os números de peça destes componentes não disponíveis aparecerão em *itálico* , a fim de indicar que não estão disponíveis.

10. NÙMEROS DE REFERÊNCIA À LISTA DE PEÇAS

Os números indicados na coluna Ref No (No. de Referência) correspondem-se aos números usados no(s) gráfico(s) correspondente(s). Um sufixo com letras pode ser acrescentado a um número de referência para identificar itens de conteúdo de nível inferior. Os números indicados na coluna Graphic Ref (Referência de Gráfico) referem-se ao identificador de número de gráfico presente no canto esquerdo inferior de cada ilustração. O número de Referência de Gráfico pode ser usado em combinação com o item Ref No para determinar-se o número de peça correto. Poderá haver omissão intencional de um número de referência (Ref No) de uma lista de conteúdos uma vez que as informações são atualizadas para refletir os números de peça mais recentes que podem receber serviço de manutenção.

11. NOMES DE PEÇAS DESALINHADOS

Quando um nome de peça encontra-se desalinhado numa lista de peças, significa que tal item faz parte do (está incluído no) grupo ou conjunto sob o qual está relacionado.

12. LETRAS DE REFERÊNCIA NAS ILUSTRAÇÕES

Quando necessário, as ilustrações contêm letras de referência (A, B, C, etc.) que são utilizadas para seguir tubulações e cabos elétricos de um ponto a outro. Também foram utilizadas para indicar onde se pode reconectar as ilustrações que foram separadas.

13. ABREVIAÇÕES E SÍMBOLOS

O.D. – "Outside Diameter" (Diâmetro Externo)
I.D. – "Inside Diameter" (Diâmetro Interno)
A – Não faz parte deste grupo
B – Use conforme necessário
C – Indica modificação
D – Vendido por metro
E – Vendido por centímetro
F – Não ilustrado
G – Vendido por polegada
I – Consultar o Sistema de Informações Hidráulicas
M – Peça métrica
R – Peça remanufaturada pode estar disponível; consulte o seu revendedor Cat
Y – Ilustração separada
Z – Não disponível separadamente

SIS *Novidades*

14. <END>

Este símbolo indica o final de um elemento de informação.

INFORMAÇÃO GERAL

NOTA:

Os contínuos aperfeiçoamentos e avanços no projeto do produto podem ocasionar modificações em sua máquina que talvez ainda não estejam incluídas nesta publicação. Sempre que surgirem dúvidas quanto a um produto Caterpillar ou quanto à presente publicação, consulte o seu revendedor Caterpillar para obter as informações mais recentes disponíveis.

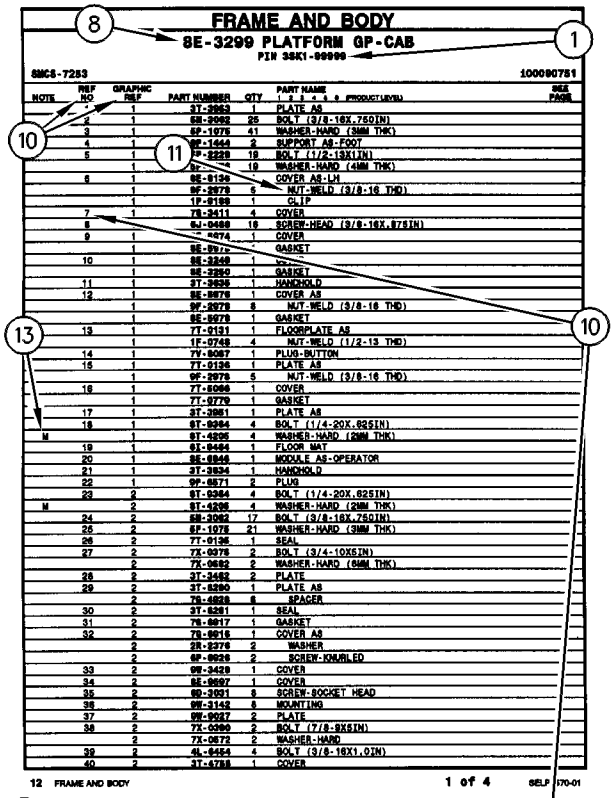

FRAME AND BODY

8E-3299 PLATFORM GP-CAB

PIN 3SK1-99999

SMCS-7283 100090751

NOTE	REF NO	GRAPHIC REF	PART NUMBER	QTY	PART NAME 1 2 3 4 5 6 (PRODUCT LEVEL)	SEE PAGE
	1	1	3T-3963	1	PLATE AS	
	2	1	5B-2062	25	BOLT (3/8-16X.750IN)	
	3	1	5P-1075	41	WASHER-HARD (3MM THK)	
	4	1	9E-1443	2	SUPPORT AS-FOOT	
	5	1	5P-2229	19	BOLT (1/2-13X1IN)	
		1	5P-[illegible]	19	WASHER-HARD (4MM THK)	
	6	1	9E-9136	1	COVER AS-LH	
		1	9F-2979	6	NUT-WELD (3/8-16 THD)	
		1	1P-0189	1	CLIP	
	7	1	7B-3411	4	COVER	
	8	1	6J-0468	18	SCREW-HEAD (3/8-16X.87SIN)	
	9	1	[illegible]-0274	1	COVER	
		1	9E-9[illegible]	1	GASKET	
	10	1	9E-3248	1	[illegible]	
		1	9E-3250	1	GASKET	
	11	1	3T-3636	1	HANDHOLD	
	12	1	9E-9076	1	COVER AS	
		1	9F-2979	8	NUT-WELD (3/8-16 THD)	
		1	9E-9078	1	GASKET	
	13	1	7T-9131	1	FLOORPLATE AS	
		1	1F-0748	4	NUT-WELD (1/2-13 THD)	
	14	1	7V-8067	1	PLUG-BUTTON	
	15	1	7T-9136	1	PLATE AS	
		1	9F-2979	5	NUT-WELD (3/8-16 THD)	
	16	1	7T-5066	1	COVER	
		1	7T-9779	1	GASKET	
	17	1	3T-3951	1	PLATE AS	
	18	1	9T-0264	4	BOLT (1/4-20X.62SIN)	
M		1	9T-4295	4	WASHER-HARD (2MM THK)	
	19	1	9I-9464	1	FLOOR MAT	
	20	1	9E-6946	1	MODULE AS-OPERATOR	
	21	1	3T-3934	1	HANDHOLD	
	22	1	9F-8571	2	PLUG	
	23	2	9T-0264	4	BOLT (1/4-20X.62SIN)	
M		2	9T-4295	4	WASHER-HARD (2MM THK)	
	24	2	5B-2062	17	BOLT (3/8-16X.750IN)	
	25	2	5P-1075	21	WASHER-HARD (3MM THK)	
	26	2	7T-9136	1	SEAL	
	27	2	7X-0078	2	BOLT (3/4-10X5IN)	
		2	7X-0682	2	WASHER-HARD (6MM THK)	
	28	2	3T-3482	2	PLATE	
	29	2	3T-5290	1	PLATE AS	
		2	7B-4828	6	SPACER	
	30	2	3T-5291	1	SEAL	
	31	2	7B-8817	1	GASKET	
	32	2	7B-8818	1	COVER AS	
		2	5R-2276	2	WASHER	
		2	9F-9026	2	SCREW-KNURLED	
	33	2	9W-3429	1	COVER	
	34	2	9E-9697	1	COVER	
	35	2	9D-3031	8	SCREW-SOCKET HEAD	
	36	2	9W-3143	8	MOUNTING	
	37	2	9W-9037	2	PLATE	
	38	2	7X-0360	2	BOLT (7/8-9X5IN)	
		2	7X-0672	2	WASHER-HARD	
	39	2	4L-6454	4	BOLT (3/8-16X1.0IN)	
	40	2	3T-4788	1	COVER	

12 FRAME AND BODY 1 of 4 SELP4570-01

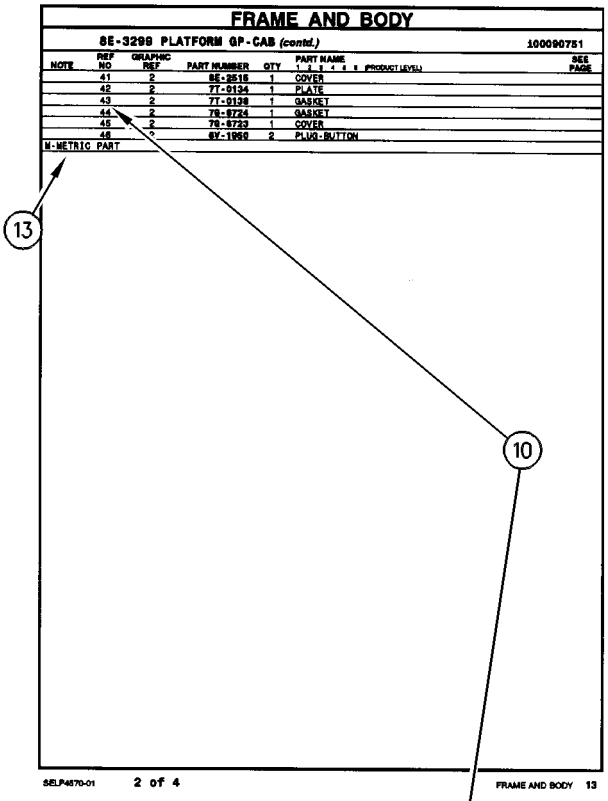

FRAME AND BODY

8E-3299 PLATFORM GP-CAB (contd.) 100090751

NOTE	REF NO	GRAPHIC REF	PART NUMBER	QTY	PART NAME 1 2 3 4 5 6 (PRODUCT LEVEL)	SEE PAGE
	41	2	9E-2515	1	COVER	
	42	2	7T-9134	1	PLATE	
	43	2	7T-9138	1	GASKET	
	44	2	7B-8724	1	GASKET	
	45	2	7B-8723	1	COVER	
	46	*	8Y-1950	2	PLUG-BUTTON	

M-METRIC PART

SELP4570-01 2 of 4 FRAME AND BODY 13

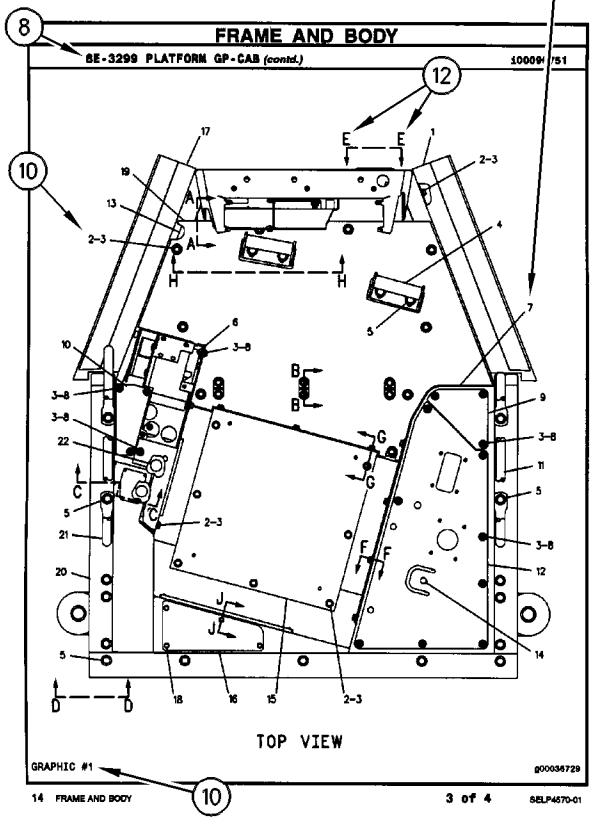

FRAME AND BODY

8E-3299 PLATFORM GP-CAB (contd.) 100090751

TOP VIEW

GRAPHIC #1 g00036729

14 FRAME AND BODY 3 of 4 SELP4570-01

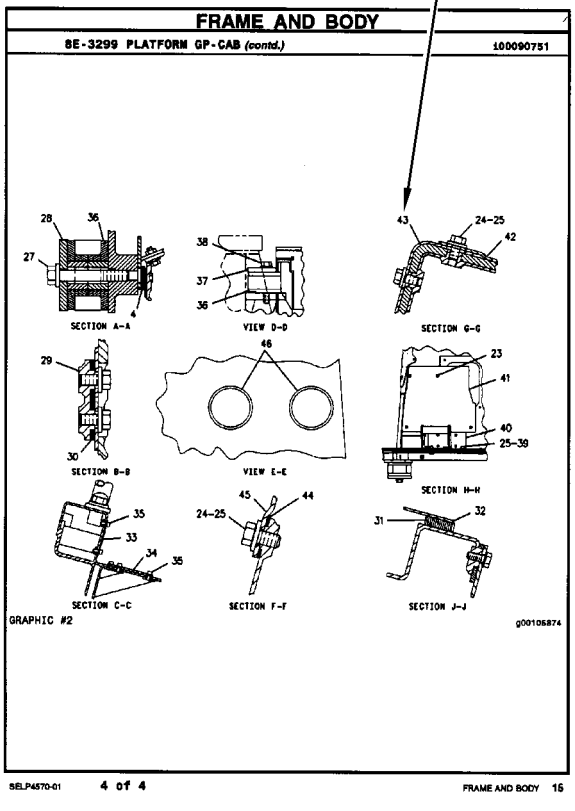

FRAME AND BODY

8E-3299 PLATFORM GP-CAB (contd.) 100090751

SECTION A-A

VIEW D-D

SECTION G-G

SECTION B-B

VIEW E-E

SECTION H-H

SECTION C-C

SECTION F-F

SECTION J-J

GRAPHIC #2 g00105874

SELP4570-01 4 of 4 FRAME AND BODY 15

ALLGEMEINE HINWEISE

1. MASCHINENKENNZEICHNUNG

Caterpillar-Maschinen sind mit PRODUCT IDENTIFICATION NUMBERS (PIN) (Produkt-Identnummern) gekennzeichnet. Einige Baugruppen, z.B. Motoren, Getriebe, Planierschilde und Aufreißer, sind mit SERIAL NUMBERS (S/N) (Seriennummern) gekennzeichnet. An der Maschine und am Motor befinden sich außerdem ARRANGEMENT NUMBERS (Ausrüstungsnummern) sowie in einigen Fällen MODIFICATION NUMBERS (Änderungsnummern). Sie befinden sich auf den PIN-Schildern und auf dem Typenschild im Fahrerhaus.

Bei Ersatzteilbestellungen müssen dem Händler alle diese Nummern zur Verfügung gestellt werden.

SIS *Neu im Parts Manual*

Vom ersten Quartal 2001 ab wurde die Caterpillar Produkt-Identnummer (PIN) von 8 auf 17 Zeichen geändert. Um zur Standardisierung der Produkt-Identnummer beizutragen, sind Caterpillar und andere Baumaschinenhersteller bestrebt, die aktuellste Norm zur Produkt-Identnummerierung einzuführen. Produkt-Identnummern für Baumaschinen sind durch ISO 10261 definiert. Das neue Format der Produkt-Identnummern gilt für alle Caterpillar-Maschinen und -Stromaggregate. Die Produkt-Identschilder und -Identrahmenmarkierung enthalten die aus 17 Zeichen bestehende Identnummer. Das neue Format hat folgende Abschnitte:

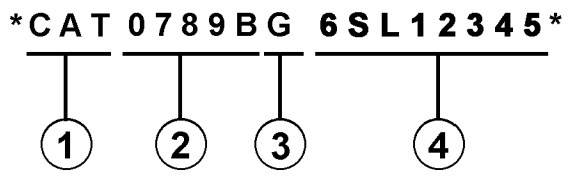

Abschnitte:

1. Caterpillars weltweiter Herstellungscode (Zeichen 1-3)

2. Modell (Zeichen 4-8)

3. Kontrollzeichen (Zeichen 9)

4. Maschinenspezifische Kennung (MIS) oder Produktsequenznummer (Zeichen 10-17). Diese wurde früher als Seriennummer bezeichnet.

Für vor dem ersten Quartal 2001 hergestellte Maschinen und Stromaggregate wird das aus 8 Zeichen bestehende PIN-Format beibehalten.

Bauteile wie z.B. Motoren, Getriebe, Achsen sowie Arbeitsgeräte werden weiterhin eine aus 8 Zeichen bestehende Seriennummer (S/N) aufweisen.

2. BESTELLEN VON ERSATZTEILEN

⚠ WARNUNG

Wenn für diese Maschine Ersatzteile benötigt werden, empfiehlt Caterpillar, ausschließlich Caterpillar-Ersatzteile oder solche zu verwenden, die die gleichen technischen Merkmale hinsichtlich Typ, Festigkeit, Werkzeugeigenschaften und die gleichen Maße aufweisen.

Bei Nichtbeachtung dieser Warnung besteht Verletzungs- oder sogar Lebensgefahr! Ferner kann Nichtbeachtung vorzeitige Ausfälle der Teile und Beschädigung der Maschine zur Folge haben.

Original Caterpillar-Ersatzteile können weltweit bei jedem Caterpillar-Händlern bestellt werden. Die umfangreichen Händlerlager enthalten normalerweise alle Teile, die Sie für Ihre Caterpillar-Maschine benötigen. Einige Händler bieten Reparatursätze, Austausch- oder werküberholte Teile an, so daß Sie eine Auswahl unter verschiedenen Reparaturmöglichkeiten treffen können. Ihre Bestellung muß folgende Angaben enthalten: Anzahl der benötigten Teile, Bestellnummer, Bezeichnung des Teils, Serien-Nr./Produkt-Ident-Nr., Ausrüstungs-Nr. und Änderungs-Nr. der Maschine, für die diese Teile benötigt werden.

3. AUFBAU DES PARTS MANUAL

Die Produktinformationen für alle Komponenten eines bestimmten Modells sind in INFORMATION ELEMENTS (Informationseinheiten) gegliedert. ENGINE ARRANGEMENT (Motorausführung) und SEAT GROUP (Fahrersitz) sind Beispiele für solche Informationseinheiten. Sie sind innerhalb jeder Gruppe alphabetisch, entsprechend der Ersatzteilbezeichnung, und zusätzlich numerisch, entsprechend der Ersatzteilnummer, geordnet.

4. INHALTSVERZEICHNIS

Das Inhaltsverzeichnis befindet sich am Anfang des Buches. Im Inhaltsverzeichnis werden die einzelnen Abschnitte des Buches aufgeführt. Die Abschnitte enthalten eine vollständige Aufstellung aller Informationseinheiten. Diese sind entsprechend ihrem Erscheinen im Buch geordnet. Das Inhaltsverzeichnis enthält Seitenangaben für Schnellverweise auf detaillierte Abbildungen und Teillisten.

ALLGEMEINE HINWEISE

5. INDEX FÜR WARTUNGSTEILE

Der Index für Wartungsteile vorn im Buch enthält die Bestellnummern, Seitenangaben, Mengenangaben und Informationen über den Einsatzbereich für die am häufigsten benötigten Ersatzteile. Die Angaben sind alphabetisch entsprechend der Teilebezeichnung geordnet.

6. INDEX

Der Index vorn im Buch enthält eine alphabetische Liste aller Informationseinheiten. Er enthält Seitenangaben für Schnellverweise auf detaillierte Abbildungen und Teillisten.

7. INDEX FÜR BESTELLNUMMERN

Hinten im Buch befindet sich ein numerischer Index, mit allen Bestellnummern und dem Hinweis auf die Seite, auf der sich die betreffende Abbildung befindet.

8. ÜBERSCHRIFTEN

Die Überschriften, die sich am Anfang jeder der Informationseinheiten befinden, enthalten Bestellnummern, Ersatzteilbezeichnungen und zusätzliche beschreibende Informationen. Produkt-Ident- und Seriennummern in den Überschriften sollten zur Auswahl der richtigen Informationen für die betreffende Maschine verwendet werden. Die Überschriften enthalten außerdem Informationen über möglichen Außendienstersatz, mögliche Baugerätekomponenten und die Baugruppe, zu der das Teil gehört.

Die erste Zeile einer Überschrift erscheint in einer größeren Schriftart, um den Anfang einer Informationseinheit zu kennzeichnen. Überschriften für zusätzliche Seiten, die zur Erläuterung einer Informationseinheit notwendig sind, erscheinen in normaler Schriftart und enthalten den Begriff "(contd.)".

9. NICHT EINZELN LIEFERBARE TEILE

In einigen Fällen ist es notwendig nicht lieferbare Teile, die selbst mit einer eigenen Teilliste im Buch vertreten sind, aufzuführen. Die Bestellnummern dieser nicht einzeln lieferbaren Teile erscheinen kursiv, wodurch angezeigt wird, daß sie nur in Verbindung mit anderen Teilen lieferbar sind.

10. REFERENZNUMMER FÜR ERSATZTEILE

Die Zahlen, die in der Spalte "Ref No" aufgeführt sind, stimmen mit den Zahlen in den beigefügten Abbildungen überein. Ein Buchstaben-Suffix kann zu einer Referenznummer hinzugefügt werden, um zu kennzeichnen, daß das Teil mit einer eigenen Teilliste im Buch aufgeführt ist. Die in der Spalte "Graphic Ref" angeführten Zahlen verweisen auf die Identifikationsnummer der Abbildung, die sich in der linken unteren Ecke der Abbildung befindet. Diese Nummer kann zusammen mit der Referenznummer des Teils angegeben werden, um die richtige Ersatzteilnummer zu ermitteln. Referenznummern können absichtlich weggelassen werden, da die Nummern der lieferbaren Ersatzteile ständig aktualisiert werden.

11. EINGERÜCKTE BEZEICHNUNGEN

Wenn eine Bezeichnung eingerückt ist, wird dadurch angezeigt, daß das Teil zu einer Baugruppe gehört, unter deren Bezeichnung es eingerückt ist.

12. REFERENZBUCHSTABEN

Falls erforderlich sind in den Abbildungen Referenzbuchstaben enthalten (z.B. A, B, C, usw.), die Leitungen und Kabelbäume von einem Punkt zum anderen verfolgen. Außerdem geben sie die Stelle an, an der getrennte Abbildungen fortgesetzt werden.

13. ABKÜRZUNGEN UND SYMBOLE

O.D. – Außendurchmesser
I.D. – Innendurchmesser
A – kein Teil dieser Gruppe
B – nach Bedarf verwenden
C – Hinweis auf eine Änderung
D – in Meter-Länge bestellen
E – in Zentimeter-Länge bestellen
F – nicht gezeigt
G – in Zoll-Länge bestellen
I – siehe Hydraulikinformationssystem
M – metrisches Teil
R – werküberholtes Teil unter Umständen lieferbar
Y – separate Abbildung
Z – nicht einzeln lieferbar

SIS *Neu im Parts Manual*

14. <END>

Dieses Symbol zeigt das Ende eines Informationselements an.

ANMERKUNG:

Ständig vorgenommene Verbesserungen und Weiterentwicklungen an Ihrer Maschine können Änderungen verursachen, die in der vorliegenden Ausgabe noch nicht berücksichtigt sind. Fragen zu Ihrer Caterpillar-Maschine oder diesem Ersatzteilbuch beantwortet Ihr Caterpillar-Händler.

ALLGEMEINE HINWEISE

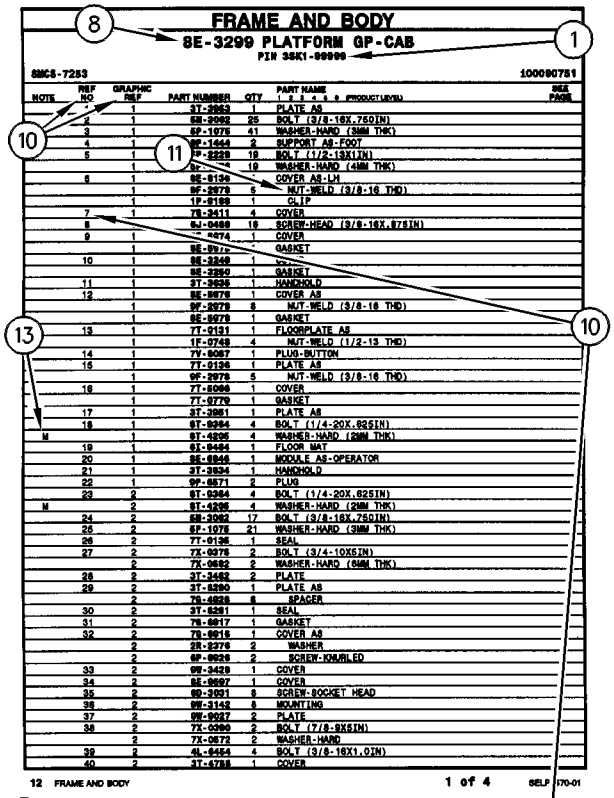

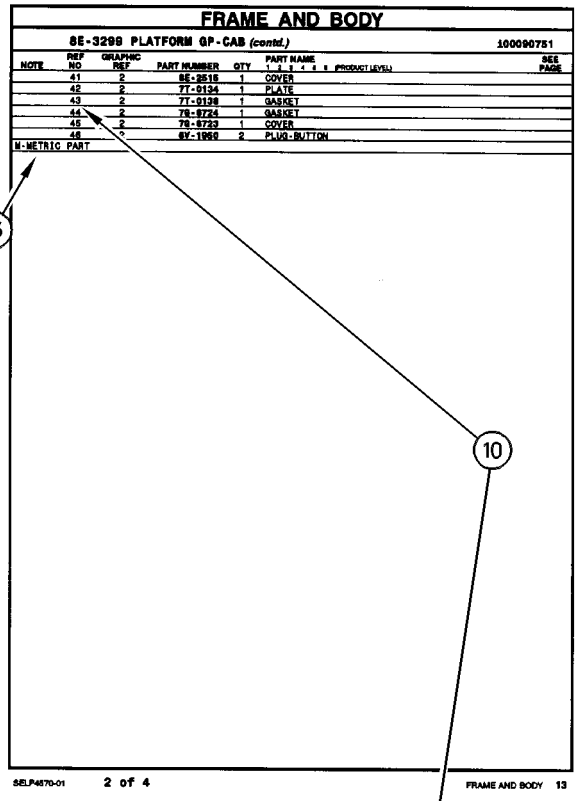

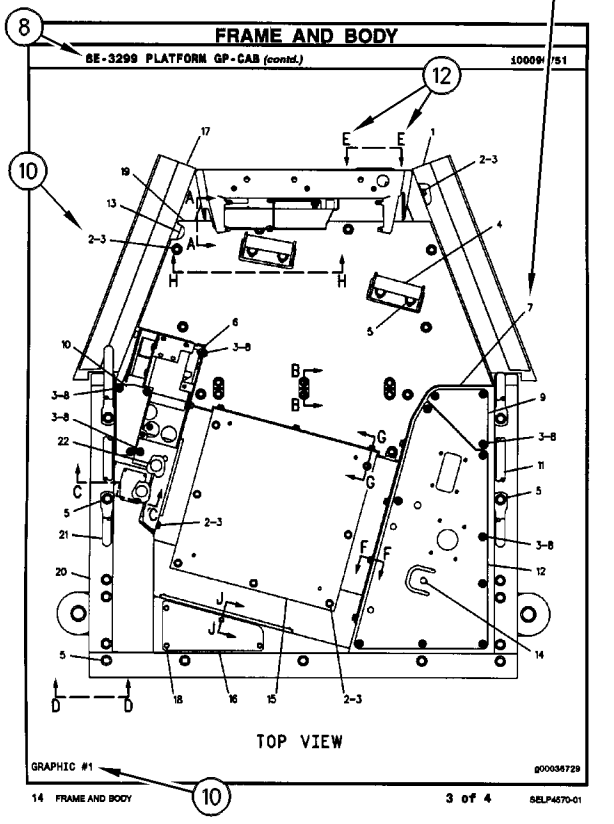

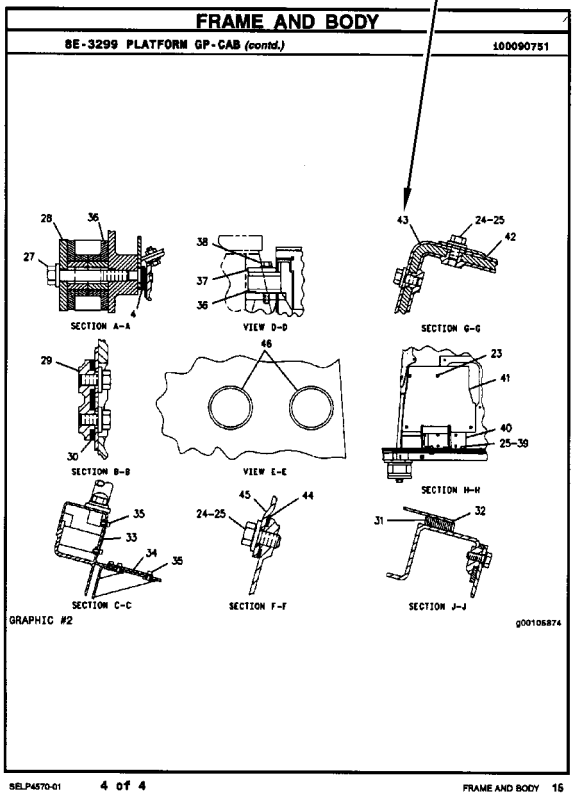

REMANUFACTURED COMPONENTS

As an option when making repairs consider Caterpillar Remanufactured Components. Components that are available through the Caterpillar Remanufactured Program are identified three ways in the parts book:

- with the letter R in the note field of the parts list
- with an R* at the beginning of the first line of the caption
- with an *R at the end of the first line of the caption

Typical components included in the Remanufacturing Program include:

ALTERNATORS
CONNECTING RODS
CRANKSHAFTS - UNDERSIZE
CRANKSHAFTS - UPGRADE TO NEW
CYLINDER HEADS
ELECTRONIC CONTROL MODULES (ECM)
ELECTRONIC SENSORS
FUEL INJECTORS
FUEL NOZZLES
FUEL PUMPS
GOVERNORS
OIL PUMPS
PISTONS
SHORT BLOCKS
STARTERS
TURBOCHARGERS - COMPLETE
TURBOCHARGER CARTRIDGES
WATER PUMPS

Caterpillar Remanufactured engines for many engine arrangements are also available.

OPTIONS DE RÉPARATION

COMPOSANTS RÉNOVÉS

Comme option de réparation, considérer les composants rénovés Caterpillar. Les composants disponibles dans le cadre du programme Caterpillar de composants rénovés sont identifiés de trois façons dans le catalogue de pièces:

- avec la lettre "R" dans l'espace note de la liste des pièces
- avec R* au début de la première ligne des légendes
- avec *R à la fin de la première ligne des légendes

Les composants suivants figurent parmi les composants typiques du programme de rénovation:

ALTERNATEURS
BIELLES
VILEBREQUINS - SOUS-DIMENSIONNÉS
VILEBREQUINS - REMIS À NEUF
CULASSES
MODULES DE COMMANDE ÉLECTRONIQUE (ECM)
CAPTEURS ÉLECTRONIQUES
INJECTEURS
TÊTES D'INJECTEURS
POMPES À CARBURANT
RÉGULATEURS
POMPES À HUILE
PISTONS
BLOCS EMBIELLÉS
DÉMARREURS
TURBOCOMPRESSEURS - COMPLETS
CARTOUCHES DE TURBOCOMPRESSEUR
POMPES À EAU

Des moteurs rénovés sont aussi disponibles pour plusieurs versions de moteur.

ALTERNATIVAS DE REPARACIÓN

COMPONENTES REMANUFACTURADOS

Al hacer reparaciones, tenga en cuenta la opción de Componentes Remanufacturados Caterpillar. Los componentes que están disponibles por medio del programa de Productos Remanufacturados Caterpillar se identifican de tres maneras en el manual de piezas:

- con la letra R en el espacio de Nota de la lista de piezas
- con una R* al comienzo de la primera línea de la leyenda
- con una *R al final de la primera línea de la leyenda

Los componentes que se incluyen típicamente en el Programa de Productos Remanufacturados son:

ALTERNADORES
BIELAS
CIGÜEÑALES - BAJOMEDIDA
CIGÜEÑALES - REMANUFACTURADOS A NUEVO
CULATAS
MÓDULOS DE CONTROL ELECTRÓNICO (ECM)
SENSORES ELECTRONICOS
INYECTORES
BOQUILLAS
BOMBAS DE COMBUSTIBLE
REGULADORES
BOMBAS DE ACEITE
PISTONES
MONOBLOQUES
MOTORES DE ARRANQUE
TURBOCOMPRESORES - COMPLETOS
NÚCLEOS DE TURBOCOMPRESOR
BOMBAS DE AGUA

También hay disponibles motores Remanufacturados Caterpillar para muchas de las configuraciones de motores.

ALTERNATIVAS DE REPARO

COMPONENTES REMANUFATURADOS

Considere o uso de Componentes Remanufaturados Caterpillar ao efetuar reparos. Os componentes disponíveis através do Programa de Remanufatura Caterpillar são identificados de três formas no manual de peças:

- com um R na área da nota da lista de peças
- com um R* no princípio da primeira linha da legenda
- com um *R no final da primeira linha da legenda

Os componentes típicos que constam no Programa de Remanufatura incluem:

ALTERNADORES
BIELAS
VIRABREQUINS - SUBMEDIDAS
VIRABREQUINS - ATUALIZAÇÃO
CABEÇOTES
MÓDULOS DE CONTROLE ELETRÔNICO (ECM)
SENSORES ELETRÔNICOS
INJETORES DE COMBUSTÍVEL
BICOS DE ABASTECIMENTO DE COMBUSTÍVEL
BOMBAS DE COMBUSTÍVEL
GOVERNADORES
BOMBAS DE ÓLEO
PISTÕES
BLOCOS BÁSICOS DO MOTOR
MOTORES DE PARTIDA
TURBOALIMENTADORES - COMPLETOS
CARTUCHOS DE TURBOALIMENTADORES
BOMBAS D'ÁGUA

Motores Remanufaturados Caterpillar também encontram-se disponíveis para diversos arranjos de motor.

REPARATURALTERNATIVEN

WERKÜBERHOLTE AT-PRODUKTE

Bei Reparaturen sollten werküberholte AT-Produkte von Caterpillar in Betracht gezogen werden. Die durch das AT-Programm von Caterpillar erhältlichen Teile sind im Parts Book auf drei verschiedene Arten gekennzeichnet:

- mit dem Buchstaben R in der Spalte NOTE der Ersatzteilliste
- mit einem R* am Anfang der ersten Zeile der Überschrift
- mit einem *R am Ende der ersten Zeile der Überschrift

Das AT-Programm umfaßt u.a. folgende Produkte:

DREHSTROMGENERATOREN
PLEUELSTANGEN
KURBELWELLEN - MIT UNTERMASS
KURBELWELLEN - MIT ORIGINALMASS
ZYLINDERKÖPFE
ELEKTRONISCHE STEUEREINHEITEN (EMC)
ELEKTRONISCHE SENSOREN
PUMPENDÜSEN
EINSPRITZDÜSEN
KRAFTSTOFFPUMPEN
DREHZAHLREGLER
ÖLPUMPEN
KOLBEN
TEILMOTOREN
ANLASSER
TURBOLADER - KOMPLETT
TURBOLADERLAUFZEUGE
KÜHLWASSERPUMPEN

Viele Motoren können durch werküberholte AT-Motoren von Caterpillar ersetzt werden.

SUPPLEMENTAL COOLANT ADDITIVES

CUSTOMER BENEFITS:

Protects against cavitation, foam, erosion, corrosion, and scale buildup in cooling systems.

- Provides measured coolant conditioner.

DESCRIPTION:

Additives deplete from the coolant with normal operation. For this reason, Supplemental Coolant Additives (SCA) must be added to all heavy duty coolants at regular intervals. In addition, when not using a fully formulated, pre-charged antifreeze, like Caterpillar's DEAC, an initial charge of SCA must be added to the cooling system. The amount of SCA added to the system is dependent on the capacity of the system.

The SCA for initial fill is provided as a liquid. SCA's for maintenance intervals are available in liquid form and as a spin-on element. (No Spin-on available for 3600 Family of Engines)

NOTE:

The amount of SCA added at initial fill is not the same as the amount added at maintenance intervals.

The coolant additive elements can be used with any ethylene or propylene glycol type antifreeze which meets ASTM D4985 or ASTM D5345 Specifications.

NOTE:

For use with standard heavy duty coolant only, not for use with Extended Life Coolant.

PARTS NEEDED:

Cooling System Capacity		Liquid SCA at Initial Fill	Liquid SCA at Maintenance*	Spin-on SCA Maintenance Element*
Liters	Gallons			
22-30	(6-8)	3P-2044 (1)	6V-3542 (1)	111-2370 (1)
30-38	(8-10)	3P-2044 (1) 6V-3542 (1)	111-2372 (1)	111-2369 (1)
38-49	(10-13)	3P-2044 (1) 8T-1589 (1)	111-2372 (1)	111-2369 (1)
49-64	(13-17)	3P-2044 (2)	8T-1589 (1)	9N-3368 (1)
64-83	(17-22)	3P-2044 (2) 8T-1589 (1)	111-2372 (1) 6V-3542 (1)	111-2371 (1)
83-114	(22-30)	3P-2044 (3) 8T-1589 (1)	3P-2044 (1)	9N-3718 (1)
114-163	(30-43)	3P-2044 (5)	3P-2044 (1) 6V-3542 (1)	111-2371 (2)
163-242	(43-64)	3P-2044 (8)	3P-2044 (2)	9N-3718 (2)

** Normal maintenance period is 250 hrs. See your Operation and Maintenance Manual for complete coolant maintenance instructions.*

( ) Indicates quantity required.

ADDITIFS POUR LIQUIDE DE REFROIDISSEMENT

AVANTAGES POUR LE CLIENT

L'additif protège contre la cavitation, la mousse, l'érosion, la corrosion et l'accumulation de dépôts dans le circuit de refroidissement.

- L'additif complémentaire fournit une quantité mesurée d'additif.

DESCRIPTION:

Les additifs s'épuisent pendant l'utilisation du moteur. C'est pourquoi l'on doit ajouter de l'additif au liquide de refroidissement/antigel pour moteurs diesel à intervalles réguliers. En plus, si l'on n'utilise pas de l'antigel entièrement formulé et pré-chargé comme le liquide de refroidissement/antigel Caterpillar pour moteurs diesel, une quantité initiale d'additif doit être ajoutée au circuit de refroidissement. La quantité d'additif à ajouter au circuit dépend de la contenance du circuit.

L'additif pour le remplissage initial est fourni sous forme liquide. L'additif pour l'entretien ultérieur est disponible sous forme liquide et sous forme d'élément à visser. (Il n'y a pas d'élément à visser pour les moteurs de la famille 3600).

NOTA:

La quantité d'additif à ajouter au remplissage initial diffère de la quantité à ajouter aux intervalles d'entretien.

Les éléments d'additif peuvent être utilisés avec tout antigel de type éthylène ou propylène-glycol conforme à la norme ASTM D4985 ou ASTM D5345.

NOTA:

A utiliser uniquement avec du liquide de refroidissement pour moteurs diesel et non avec le liquide de refroidissement longue durée.

PIÈCES NÉCESSAIRES:

Contenance du circuit de refroidissement		Additif liquide au remplissage initial	Additif liquide aux intervalles d'entretien*	Elément d'additif à visser aux intervalles d'entretien*
Litres	Gallons U.S.			
22-30	(6-8)	3P-2044 (1)	6V-3542 (1)	111-2370 (1)
30-38	(8-10)	3P-2044 (1) 6V-3542 (1)	111-2372 (1)	111-2369 (1)
38-49	(10-13)	3P-2044 (1) 8T-1589 (1)	111-2372 (1)	111-2369 (1)
49-64	(13-17)	3P-2044 (2)	8T-1589 (1)	9N-3368 (1)
64-83	(17-22)	3P-2044 (2) 8T-1589 (1)	111-2372 (1) 6V-3542 (1)	111-2371 (1)
83-114	(22-30)	3P-2044 (3) 8T-1589 (1)	3P-2044 (1)	9N-3718 (1)
114-163	(30-43)	3P-2044 (5)	3P-2044 (1) 6V-3542 (1)	111-2371 (2)
163-242	(43-64)	3P-2044 (8)	3P-2044 (2)	9N-3718 (2)

** L'intervalle d'entretien normal est de 250 heures-service. Voir le Guide d'utilisation et d'entretien pour de plus amples renseignements concernant l'entretien du circuit de refroidissement.*

( ) Indique la quantité exigée.

ADITIVOS DE REFRIGERANTE SUPLEMENTARIOS

VENTAJAS PARA EL USUARIO:

Protegen contra la cavitación, la formación de espuma, la corrosión y la acumulación de escamas en los sistemas de enfriamiento.

- Suministra un acondicionador dosificado de refrigerante.

DESCRIPCIÓN:

Los aditivos en el refrigerante se agotan con la operación normal. Por esta razón, se debe agregar Aditivo de refrigerante suplementario (SCA) a todos los refrigerantes para servicio pesado, a intervalos regulares. Además, cuando no se usa un anticongelante de precarga completo, tal como el DEAC de Caterpillar, es necesario agregar una cantidad de aditivo de refrigerante suplementario inicial al sistema de enfriamiento. La cantidad de aditivo que se debe agregar depende de la capacidad del sistema.

El SCA de llenado inicial es líquido. El que se usa para el mantenimiento está disponible tanto en líquido como en un elemento enroscable. (No hay elemento enroscable disponible para la Familia de Motores 3600).

NOTA:

La cantidad de aditivo de llenado inicial no es la misma que se agrega en los intervalos de mantenimiento.

Los elementos de aditivo de refrigerante se pueden usar con cualquier anticongelante de tipo glicol etilénico o propílico que esté de acuerdo con las especificaciones de las normas ASTM D4985 o ASTM D5345.

NOTA:

Se debe utilizar únicamente con refrigerante estándar para servicio pesado; no se debe usar con Refrigerante de Larga Duración.

PIEZAS NECESARIAS:

Capacidad del Sistema de Enfriamiento		SCA líquido de llenado inicial	SCA líquido de mantenimiento*	Elemento de mantenimiento enroscable*
litros	gal EE.UU.			
22-30	6-8	3P-2044 (1)	6V-3542 (1)	111-2370 (1)
30-38	8-10	3P-2044 (1) 6V-3542 (1)	111-2372 (1)	111-2369 (1)
38-49	10-13	3P-2044 (1) 8T-1589 (1)	111-2372 (1)	111-2369 (1)
49-64	13-17	3P-2044 (2)	8T-1589 (1)	9N-3368 (1)
64-83	17-22	3P-2044 (2) 8T-1589 (1)	111-2372 (1) 6V-3542 (1)	111-2371 (1)
83-114	22-30	3P-2044 (3) 8T-1589 (1)	3P-2044 (1)	9N-3718 (1)
114-163	30-43	3P-2044 (5)	3P-2044 (1) 6V-3542 (1)	111-2371 (2)
163-242	43-64	3P-2044 (8)	3P-2044 (2)	9N-3718 (2)

** El período normal de mantenimiento es de 250 horas. Para ver las instrucciones completas sobre el mantenimiento del refrigerante, consulte el Manual de Operación y Mantenimiento.*

( ) Indica la cantidad necesaria.

ADITIVOS SUPLEMENTARES DO LÍQUIDO ARREFECEDOR

BENEFÍCIOS PARA O CLIENTE:

Protege contra cavitação, espuma, erosão, corrosão e acúmulo de crostas nos sistemas de arrefecimento.

- Fornece uma quantidade pré-determinada de condicionador de arrefecimento.

DESCRIÇÃO:

Com a operação normal, os aditivos se esgotam do líquido arrefecedor. Por isso, Aditivos Suplementares do Líquido Arrefecedor (SCA) devem ser acrescentados a todos os líquidos arrefecedores para serviço pesado em intervalos regulares. Além disso, quando um anticongelante pré-carregado, totalmente formulado não for usado, como o DEAC Caterpillar, uma carga inicial de SCA deve ser acrescentada ao sistema de arrefecimento. A quantidade de SCA acrescentada ao sistema depende da capacidade do sistema.

O SCA para abastecimento inicial é fornecido em forma de líquido. Os aditivos suplementares (SCA) para intervalos de manutenção estão à disposição em forma líquida e como um elemento com roscas. (Exceto os Motores da Família 3600)

NOTA:

A quantidade de SCA adicionada no abastecimento inicial não é a mesma que a acrescentada nos intervalos de manutenção.

Os elementos do aditivo do líquido arrefecedor podem ser usados com qualquer tipo de anticongelante etileno ou propileno que satisfaz as Especificações ASTM D4985 ou ASTM D5345.

NOTA:

Para uso apenas com líquido arrefecedor para serviço pesado padrão, não deve ser usado com Líquido Arrefecedor de Vida Longa.

PEÇAS NECESSÁRIAS:

Capacidade do Sistema de Arrefecimento		Líquido SCA Durante Abastecimento Inicial	Líquido SCA Durante Manutenção*	Elemento de Manutenção de SCA com Roscas*
Litros	Galões			
22-30	6-8	3P-2044 (1)	6V-3542 (1)	111-2370 (1)
30-38	8-10	3P-2044 (1) 6V-3542 (1)	111-2372 (1)	111-2369 (1)
38-49	10-13	3P-2044 (1) 8T-1589 (1)	111-2372 (1)	111-2369 (1)
49-64	13-17	3P-2044 (2)	8T-1589 (1)	9N-3368 (1)
64-83	17-22	3P-2044 (2) 8T-1589 (1)	111-2372 (1) 6V-3542 (1)	111-2371 (1)
83-114	22-30	3P-2044 (3) 8T-1589 (1)	3P-2044 (1)	9N-3718 (1)
114-163	30-43	3P-2044 (5)	3P-2044 (1) 6V-3542 (1)	111-2371 (2)
163-242	43-64	3P-2044 (8)	3P-2044 (2)	9N-3718 (2)

** O período normal de manutenção é de 250 horas. Consulte o Manual de Operação e Manutenção para obter instruções completas quanto à manutenção do líquido arrefecedor.*

( ) Indica a quantidade exigida.

KÜHLMITTELZUSATZ

VORTEILE FÜR DEN KUNDEN:

Schutz gegen Kavitation, Schaumbildung, Erosion, Korrosion und Kesselsteinbildung in Kühlsystemen.

- Richtig dosierter Kühlmittelzusatz

BESCHREIBUNG:

Additive erschöpfen sich während des Motorbetriebs. Deshalb muß allen HD-Kühlmitteln regelmäßig Kühlmittelzusatz beigefügt werden. Wenn bei Erstfüllung kein vollwertiges Fertigkühlmittel, wie das Frostschutz- und Kühlmittel für Dieselmotoren von Caterpiller (DEAC), verwendet wird, muß bei Erstfüllung Kühlmittelzusatz beigefügt werden. Wieviel Kühlmittelzusatz beigefügt werden muß, hängt vom Inhalt des Kühlsystems ab.

Für Erstfüllung ist Kühlmittelzusatz nur in flüssiger Form erhältlich. Für Wartungsintervalle ist Kühlmittelzusatz in flüssiger Form und als Zusatzelement erhältlich. (Für die Motorbaureihe 3600 sind keine Zusatzelemente erhältlich.)

ANMERKUNG:

Die Kühlmittelmenge bei Erstfüllung ist nicht die gleiche Menge, die bei Wartungsintervallen beigefügt werden muß.

Die Kühlmittelzusatzelemente können mit allen Frostschutzmitteln auf Ethylen- oder Propylenglykolbasis verwendet werden, die den Standards nach ASTM D4985 oder ASTM D5345 entsprechen.

ANMERKUNG:

Den Kühlmittelzusatz nicht mit Langzeitkühlmittel (ELC) von Caterpillar verwenden. Der Kühlmittelzusatz ist nur für HD-Kühlmittel bestimmt.

TEILEBEZEICHNUNG:

Kühlsysteminhalt		Kühlmittelzusatz bei Erstfüllung	Flüssiger Kühlmittelzusatz bei Wartung*	Kühlmittelzusatzelement bei Wartung*
Liter	US-Gall.			
22-30	(6-8)	3P-2044 (1)	6V-3542 (1)	111-2370 (1)
30-38	(8-10)	3P-2044 (1) 6V-3542 (1)	111-2372 (1)	111-2369 (1)
38-49	(10-13)	3P-2044 (1) 8T-1589 (1)	111-2372 (1)	111-2369 (1)
49-64	(13-17)	3P-2044 (2)	8T-1589 (1)	9N-3368 (1)
64-83	(17-22)	3P-2044 (2) 8T-1589 (1)	111-2372 (1) 6V-3542 (1)	111-2371 (1)
83-114	(22-30)	3P-2044 (3) 8T-1589 (1)	3P-2044 (1)	9N-3718 (1)
114-163	(30-43)	3P-2044 (5)	3P-2044 (1) 6V-3542 (1)	111-2371 (2)
163-242	(43-64)	3P-2044 (8)	3P-2044 (2)	9N-3718 (2)

** Der normale Wartungsintervall beträgt 250 Betriebsstunden. Für vollständige Anweisungen zur Wartung des Kühlsystems, siehe Betriebs- und Wartungshandbuch.*

( ) Erforderliche Anzahl

MAINTENANCE PARTS

DESCRIPTION	PART NUMBER	QTY	WHERE USED	PAGE
AIR INLET AND EXHAUST SYSTEM				
FILTER ELEMENT AS-AIR (PRIMARY)	245-3818	1	AIR CLEANER GP	86
FILTER ELEMENT AS-AIR (SECONDARY)	245-3819	1	AIR CLEANER GP	86
HOSE-ELBOW	217-1601	1	LINES GP-AFTERCOOLER AIR	87
BASIC ENGINE				
BELT-SERPENTINE	260-1527	1	BELT TENSIONER GP	7
PLUG-DRAIN (ENGINE OIL PAN)	9X-6451	1	PAN GP-OIL	37
SEAL-VALVE COVER (VALVE COVER)	229-5711	1	COVER GP-VALVE MECHANISM	11
COOLING SYSTEM				
CAP-RADIATOR (7-PSI)	6L-8617	1	TANK GP-RADIATOR TOP	84
REGULATOR-WATER TEMPERATURE (92-DEG C) (COOLANT)	248-5513	1	LINES GP-WATER	72
SEAL-LIP TYPE (WATER TEMPERATURE REGULATOR)	3S-9643	1	LINES GP-WATER	72
SEAL (TEMPERATURE REGULATOR HOUSING)	227-5075	1	LINES GP-WATER	72

MAINTENANCE PARTS

DESCRIPTION	PART NUMBER	QTY	WHERE USED	PAGE
ELECTRICAL AND STARTING SYSTEM				
CIRCUIT BREAKER AS (105-AMPERE) (ALTERNATOR)	171-2212	1	WIRING GP-CHASSIS	235
CIRCUIT BREAKER AS (15-AMPERE) (RUNNING LIGHTS)	3T-2662	1	WIRING GP-CHASSIS	236
CIRCUIT BREAKER AS (30-AMPERE) (UNSWITCHED BAT POWER TO CAB)	6N-9349	1	WIRING GP-CHASSIS	237
CIRCUIT BREAKER AS (50-AMPERE) (ENGINE START)	171-2206	1	WIRING GP-CHASSIS	235
CIRCUIT BREAKER AS (80-AMPERE) (MAIN)	171-2210	1	WIRING GP-CHASSIS	235
CIRCUIT BREAKER GP (20-AMPERE) (HOOD TILT ACTUATOR)	6T-3644	1	WIRING GP-CHASSIS	237
ELEMENT AS-JACKET WATER HEATER (240-VOLT, 1500-WATT)	246-3513	1	HEATER GP-JACKET WATER	139
FLASHER AS (24-VOLT)	217-8166	1	SWITCH GP-SIGNAL	214
		1	SWITCH GP-SIGNAL	216
FUSE (10-AMPERE)	9W-1442	24	WIRING GP-CAB	227
FUSE (15-AMPERE)	9W-1441	7	WIRING GP-CAB	227
FUSE (20-AMPERE)	9W-1446	1	WIRING GP-CAB	227
KEY AS-ELECTRONIC (SECURITY)	206-5162	2	INSTALLATION GP-SECURITY	141
LAMP-HALOGEN (24-VOLT, 65-WATT)	9X-3463	1	LAMP GP-FLOOD	146
		1	LAMP GP-FLOOD	147
LAMP (12-VOLT, 24-VOLT, 35-WATT)	209-6638	1	LAMP GP-FLOOD	144
		1	LAMP GP-FLOOD	145
LAMP (24 VOLT)	9X-4493	1	LAMP GP-SIGNAL	152
LAMP (24-VOLT)	7N-5876	4	WIRING GP-CAB	227
	7N-9943	1	LAMP GP-DOME	143
	100-3245	2	LAMP GP-HEAD & SIGNAL	148
		2	LAMP GP-HEAD & SIGNAL	150
LAMP (24-VOLT, 21-WATT)	9X-4493	1	LAMP GP-HEAD & SIGNAL	148
		1	LAMP GP-HEAD & SIGNAL	150
		1	LAMP GP-STOP & TAIL	154
LAMP (24-VOLT, 5-WATT)	9X-4492	1	LAMP GP-STOP & TAIL	154
LAMP (24-VOLT, 70-WATT)	9X-7849	1	LAMP GP-WARNING BEACON	155
LAMP (24-VOLT, 75/70-WATT)	9X-3465	1	LAMP GP-HEAD & SIGNAL	148
		1	LAMP GP-HEAD & SIGNAL	150
LENS (AMBER)	100-3250	1	LAMP GP-HEAD & SIGNAL	148
		1	LAMP GP-HEAD & SIGNAL	150
LENS-AMBER	9X-3066	1	LAMP GP-SIGNAL	152
LENS AS (AMBER)	136-3848	1	LAMP GP-HEAD & SIGNAL	148
		1	LAMP GP-HEAD & SIGNAL	150
LENS AS (HEADLIGHT)	100-3248	1	LAMP GP-HEAD & SIGNAL	148
		1	LAMP GP-HEAD & SIGNAL	150
FRAME AND BODY				
BELT-STEP	255-7504	2	LADDER GP	399
		2	LADDER GP	402
BREATHER (HYDRAULIC TANK)	254-5258	1	LADDER GP	398
		1	LADDER GP	401
FILTER AS-GREASE	196-1062	1	PUMP GP-LUBRICATION	430
PLUG-DUST	153-6223	1	LADDER GP	399
		1	LADDER GP	402
SCREEN AS (RADIATOR)	244-3407	1	GRILL GP-RADIATOR	378

MAINTENANCE PARTS

DESCRIPTION	PART NUMBER	QTY	WHERE USED	PAGE
FUEL SYSTEM				
CAP AS-FILLER (FUEL TANK)	101-8909	1	TANK GP-FUEL	113
FILTER AS-FUEL	1R-0762	1	FILTER GP-FUEL	102
FILTER AS-WATER SEP & FUEL (PRIMARY)	1R-0770	1	FILTER GP-WATER SEP & FUEL	103
SEAL	220-8678	1	FILTER GP-WATER SEP & FUEL	103
STRAINER-FUEL	9P-7121	1	TANK GP-FUEL	113
VALVE-BREAKER RELIEF	188-8844	1	TANK GP-FUEL	113
HYDRAULIC SYSTEM				
CAP-FILLER	7H-1447	1	TANK GP-HYDRAULIC	591
FILTER AS-OIL	144-0832	1	FILTER GP-OIL	550
FILTER ELEMENT AS-OIL (HYDRAULIC)	225-4118	1	FILTER GP-OIL	549
PLUG	175-4966	1	DRAIN GP-ECOLOGY	548
PLUG-DRAIN	9J-7031	1	VALVE GP-DRAIN	619
SCREEN	6E-5066	1	MANIFOLD GP-VALVE	575
		1	MANIFOLD GP-VALVE	577
SCREEN AS (HYDRAULIC TANK)	9T-9227	2	TANK GP-HYDRAULIC	591
SCREEN (CONTROL VALVE MANIFOLD)	6E-5066	1	MANIFOLD GP-CONTROL	573
STRAINER AS (HYDRAULIC TANK FILL)	5D-7927	1	TANK GP-HYDRAULIC	591
LUBRICATION SYSTEM				
BREATHER AS (CRANKCASE)	9Y-4357	1	BREATHER GP	58
CAP AS-FILLER (ENGINE OIL)	5L-2952	1	FILLER GP-ENGINE OIL	59
FILTER AS-ENGINE OIL	1R-1808	1	FILTER GP-ENGINE OIL	60
GASKET (CRANKCASE BREATHER)	9Y-1758	1	BREATHER GP	58
HOSE (FUMES DISPOSAL)	237-9759	1	FUMES DISPOSAL GP	61
OPERATOR STATION				
ACCUMULATOR GP-REFRIGERANT	186-6189	1	LINES GP-AIR CONDITIONER	824
BELT-SERPENTINE (A/C COMPRESSOR)	260-1528	1	COMPRESSOR GP-REFRIGERANT	785
BLADE AS-WIPER	6V-7419	2	WIPER GP-WINDOW	900
FILTER-CAB AIR	7X-6041	2	DUCT & FILTER GP-AIR	797
FUSE (15-AMPERE)	133-9012	1	AIR CONDITIONER GP	775
		1	HEATER GP-CAB	811
KEY-HANDLE	3V-7476	1	DUCT & FILTER GP-AIR	797
SEAT BELT GP	236-7019	1	SEAT GP-SUSPENSION	877

MAINTENANCE PARTS

DESCRIPTION	PART NUMBER	QTY	WHERE USED	PAGE
POWER TRAIN				
BREATHER AS (TRANSMISSION)	9G-5127	1	CASE & PARTS GP-PLANETARY	265
CAP-FILLER	5K-1568	1	FILLER GP-POWER TRAIN OIL	280
FILTER ELEMENT AS-OIL (POWER TRAIN)	1R-1809	1	FILTER GP-OIL	284
PADLOCK GP	5P-8502	1	COVER GP-TMSN OIL FILLER CAP	274
PLUG	138-1510	1	GEAR GP-OUTPUT TRANSFER	291
PLUG-DRAIN (TRANSMISSION OIL COOLER)	8M-9307	1	COOLER GP-TRANSMISSION OIL	272
PLUG-MAGNETIC	5P-4484	1	HOUSING GP-FIXED AXLE	298
		1	HOUSING GP-FIXED AXLE	300
		1	HOUSING GP-FIXED AXLE	302
		1	HOUSING GP-OSCILLATING AXLE	304
		1	HOUSING GP-OSCILLATING AXLE	306
SCREEN GP-MAGNETIC	4S-8603	1	GEAR GP-OUTPUT TRANSFER	291
SCREEN-SUCTION	4S-8598	1	GEAR GP-OUTPUT TRANSFER	291
SERVICE EQUIPMENT AND SUPPLIES				
PADLOCK	5P-8501	2	PROTECTION GP-VANDALISM	919
PADLOCK GP	246-2641	1	PROTECTION GP-VANDALISM	919
STEERING SYSTEM				
SCREEN	6E-5066	2	SCREEN GP-CASE DRAIN	495

PIÈCES DE RECHANGE

DESCRIPTION	NUMÉRO DE PIECÈS	QTÉ	DOMAINE D'APPLICATION	PAGE
CHÂSSIS ET BENNE				
BOUCHON DE PROTECTION	153-6223	1	ECHELLE (ASS)	399
		1	ECHELLE (ASS)	402
COURROIE DE MARCHEPIED	255-7504	2	ECHELLE (ASS)	399
		2	ECHELLE (ASS)	402
ÉCRAN (ENS) (RADIATEUR)	244-3407	1	GRILLE DE RADIATEUR (ASS)	378
FILTRE À GRAISSE (ENS)	196-1062	1	POMPE DE GRAISSAGE (ASS)	430
RENIFLARD (RÉSERVOIR HYDRAULIQUE)	254-5258	1	ECHELLE (ASS)	401
		1	ECHELLE (ASS)	398
CIRCUIT D'ADMISSION D'AIR ET D'ÉCHAPPEMENT				
COUDE DE FLEXIBLE	217-1601	1	CANALISATIONS D'AIR DE REFROIDISSEUR D'ADMISSION (ASS)	87
ÉLÉMENT DE FILTRE À AIR (ENS) (PRINCIPAL)	245-3818	1	FILTRE A AIR (ASS)	86
ÉLÉMENT DE FILTRE À AIR (ENS) (SECONDAIRE)	245-3819	1	FILTRE A AIR (ASS)	86
CIRCUIT DE CARBURANT				
BOUCHON DE GOULOTTE DE REMPLISSAGE (ENS) (RESERVOIR DE CARBURANT)	101-8909	1	RÉSERVOIR DE CARBURANT (ASS)	113
BOURRELET D'ÉTANCHÉITÉ	220-8678	1	FILTRE DE SÉPARATEUR D'EAU ET DE CARBURANT (ASS)	103
CLAPET DE DÉCHARGE HYDRAULIQUE	188-8844	1	RÉSERVOIR DE CARBURANT (ASS)	113
FILTRE - SÉPARATEUR D'EAU ET DE CARBURANT (ENS) (PRINCIPAL)	1R-0770	1	FILTRE DE SÉPARATEUR D'EAU ET DE CARBURANT (ASS)	103
FILTRE À CARBURANT	9P-7121	1	RÉSERVOIR DE CARBURANT (ASS)	113
FILTRE A CARBURANT (ENS)	1R-0762	1	FILTRE A CARBURANT (ASS)	102
CIRCUIT DE DIRECTION				
ÉCRAN	6E-5066	2	*SCREEN GP-CASE DRAIN	495
CIRCUIT DE GRAISSAGE				
BOUCHON DE GOULOTTE DE REMPLISSAGE (ENS) (HUILE MOTEUR)	5L-2952	1	BOUCHON DE REMPLISSAGE D'HUILE MOTEUR (ASS)	59
FILTRE A HUILE MOTEUR (ENS)	1R-1808	1	FILTRE À HUILE MOTEUR (ASS)	60
FLEXIBLE (ÉVACUATION DES GAZ DE CARTER)	237-9759	1	DISPOSITIF D'EVACUATION DES VAPEURS DE CARTER	61
JOINT PLAT (RENIFLARD DE CARTER)	9Y-1758	1	RENIFLARD (ASS)	58
RENIFLARD (ENS) (CARTER)	9Y-4357	1	RENIFLARD (ASS)	58

PIÈCES DE RECHANGE

DESCRIPTION	NUMÉRO DE PIECÈS	QTÉ	DOMAINE D'APPLICATION	PAGE
CIRCUIT DE REFROIDISSEMENT				
BOURRELET D'ÉTANCHÉITÉ (BOÎTIER DE RÉGULATEUR DE TEMPÉRATURE)	227-5075	1	CANALISATIONS D'EAU (ASS)	72
CHAPEAU - RADIATEUR (7-PSI)	6L-8617	1	RÉSERVOIR DU COUVERCLE DE RADIATEUR (ASS)	84
THERMOSTAT-TEMPÉRATURE D'EAU (92-DEG C) (LIQUIDE DE REFROIDISSEMENT)	248-5513	1	CANALISATIONS D'EAU (ASS)	72
TYPE LÈVRE À JOINT (RÉGULATEUR DE TEMPÉRATURE D'EAU)	3S-9643	1	CANALISATIONS D'EAU (ASS)	72

PIÈCES DE RECHANGE

DESCRIPTION	NUMÉRO DE PIECÈS	QTÉ	DOMAINE D'APPLICATION	PAGE
CIRCUIT ELECTRIQUE ET DE DEMARRAGE				
AMPOULE (12V, 24V, 35W)	209-6638	1	LAMPE - PHARE (ASS)	144
		1	LAMPE - PHARE (ASS)	145
AMPOULE (24 VOLTS)	7N-9943	1	PLAFONNIER (ASS)	143
	7N-5876	4	CABLAGE DE CABINE (ASS)	227
	9X-4493	1	LAMPE - CLIGNOTANT DE DIRECTION (ASS)	152
	100-3245	2	LAMPE - PHARE ET CLIGNOTANT	148
		2	LAMPE - PHARE ET CLIGNOTANT	150
AMPOULE (24V, 21W)	9X-4493	1	FEUX ARRIÈRE ET FEUX D'ARRÊT	154
		1	LAMPE - PHARE ET CLIGNOTANT	148
		1	LAMPE - PHARE ET CLIGNOTANT	150
AMPOULE (24V, 5W)	9X-4492	1	FEUX ARRIÈRE ET FEUX D'ARRÊT	154
AMPOULE (24V, 70W)	9X-7849	1	LAMPE - GYROPHARE (ASS)	155
AMPOULE (24V, 75/70W)	9X-3465	1	LAMPE - PHARE ET CLIGNOTANT	148
		1	LAMPE - PHARE ET CLIGNOTANT	150
CLÉ ÉLECTRONIQUE (ENS) (SÉCURITÉ)	206-5162	2	MONTAGE-SÉCURITÉ (ASS)	141
CLIGNOTANT (ENS) (24 VOLTS)	217-8166	1	INTERRUPTEUR - SIGNAL (ASS)	214
		1	INTERRUPTEUR - SIGNAL (ASS)	216
DISJONCTEUR (ASS) (20A) (COMMANDE VÉRIN DE CAPOT)	6T-3644	1	CABLAGE DE CHASSIS (ASS)	237
DISJONCTEUR (ENS) (105A) (ALTERNATEUR)	171-2212	1	CABLAGE DE CHASSIS (ASS)	235
DISJONCTEUR (ENS) (15A) (FEUX DE ROUTE)	3T-2662	1	CABLAGE DE CHASSIS (ASS)	236
DISJONCTEUR (ENS) (30A) (ALIM BAT NON RELIÉE À LA CABINE)	6N-9349	1	CABLAGE DE CHASSIS (ASS)	237
DISJONCTEUR (ENS) (32-AMPÈRES) (DÉMARRAGE DU MOTEUR)	171-2206	1	CABLAGE DE CHASSIS (ASS)	235
DISJONCTEUR (ENS) (80A) (PRINCIPAL)	171-2210	1	CABLAGE DE CHASSIS (ASS)	235
ÉLÉMENT DU RÉCHAUFFEUR D'EAU DES CHEMISES (ENS) (240V, 1500W)	246-3513	1	EAU DES CHEMISES - RECHAUFFEUR (ASS)	139
FUSIBLE (10A)	9W-1442	24	CABLAGE DE CABINE (ASS)	227
FUSIBLE (15A)	9W-1441	7	CABLAGE DE CABINE (ASS)	227
FUSIBLE (20A)	9W-1446	1	CABLAGE DE CABINE (ASS)	227
LAMPE HALOGÈNE (24V, 65W)	9X-3463	1	LAMPE - PHARE (ASS)	146
		1	LAMPE - PHARE (ASS)	147
LENTILLE (ENS) (JAUNE)	136-3848	1	LAMPE - PHARE ET CLIGNOTANT	148
		1	LAMPE - PHARE ET CLIGNOTANT	150
LENTILLE (ENS) (PHARE AVANT)	100-3248	1	LAMPE - PHARE ET CLIGNOTANT	150
		1	LAMPE - PHARE ET CLIGNOTANT	148
LENTILLE (JAUNE)	100-3250	1	LAMPE - PHARE ET CLIGNOTANT	148
		1	LAMPE - PHARE ET CLIGNOTANT	150
LENTILLE ORANGE	9X-3066	1	LAMPE - CLIGNOTANT DE DIRECTION (ASS)	152

PIÈCES DE RECHANGE

DESCRIPTION	NUMÉRO DE PIECÈS	QTÉ	DOMAINE D'APPLICATION	PAGE
CIRCUIT HYDRAULIQUE				
BOUCHON DE GOULOTTE DE REMPLISSAGE	7H-1447	1	RÉSERVOIR HYDRAULIQUE (ASS)	591
BOUCHON DE VIDANGE	9J-7031	1	SOUPAPE DE VIDANGE	619
BOUCHON FILETÉ	175-4966	1	VIDANGE-ÉCOLOGIE (ASS)	548
CREPINE (ENS) (REMPLISSAGE DE RÉSERVOIR HYDRAULIQUE)	5D-7927	1	RÉSERVOIR HYDRAULIQUE (ASS)	591
ÉCRAN	6E-5066	1	COLLECTEUR - SOUPAPE (ASS)	575
		1	COLLECTEUR - SOUPAPE (ASS)	577
ÉCRAN (COLLECTEUR DE DISTRIBUTEUR)	6E-5066	1	COLLECTEUR - COMMANDE (ASS)	573
ÉCRAN (ENS) (RÉSERVOIR HYDRAULIQUE)	9T-9227	2	RÉSERVOIR HYDRAULIQUE (ASS)	591
ÉLÉMENT DE FILTRE À HUILE (ENS) (HYDRAULIQUE)	225-4118	1	FILTRE A HUILE (ASS)	549
FILTRE À HUILE (ENS)	144-0832	1	FILTRE A HUILE (ASS)	550
MATÉRIEL ET FOURNITURES D'ENTRETIEN				
CADENAS	5P-8501	2	PROTECTION ANTIVANDALISME (ASS)	919
CADENAS (ASS)	246-2641	1	PROTECTION ANTIVANDALISME (ASS)	919
MOTEUR STANDARD				
BOUCHON DE VIDANGE (CARTER D'HUILE MOTEUR)	9X-6451	1	HUILE MOTEUR - CARTER (ASS)	37
COURROIE MULTIPLE	260-1527	1	TENDEUR DE COURROIE (ASS)	7
JOINT DE CACHE-SOUPAPES (CACHE-SOUPAPES)	229-5711	1	CACHE-SOUPAPES (ASS)	11
POSTE DE CONDUITE				
ACCUMULATEUR - CLIMATISEUR (ASS)	186-6189	1	CANALISATIONS DE CLIMATISEUR (ASS)	824
BALAI D'ESSUIE-GLACE (ENS)	6V-7419	2	ESSUIE-GLACE (ASS)	900
CEINTURE DE SECURITE (ASS)	236-7019	1	SIÈGE AVEC SUSPENSION (ASS)	877
CLAVETTE - POIGNÉE	3V-7476	1	CONDUIT ET FILTRE À AIR (ASS)	797
COURROIE MULTIPLE (COMPRESSEUR DE CLIMATISEUR)	260-1528	1	COMPRESSEUR DE REFRIGERANT (ASS)	785
FILTRE À AIR DE CABINE	7X-6041	2	CONDUIT ET FILTRE À AIR (ASS)	797
FUSIBLE (15A)	133-9012	1	CHAUFFAGE DE CABINE (ASS)	811
		1	CLIMATISEUR (ASS)	775

PIÈCES DE RECHANGE

DESCRIPTION	NUMÉRO DE PIECÈS	QTÉ	DOMAINE D'APPLICATION	PAGE
TRANSMISSION				
BOUCHON AIMANTÉ	5P-4484	1	CARTER D'ESSIEU FIXE	298
		1	CARTER D'ESSIEU FIXE	300
		1	CARTER D'ESSIEU FIXE	302
		1	CARTER D'ESSIEU OSCILLANT	304
		1	CARTER D'ESSIEU OSCILLANT	306
BOUCHON DE GOULOTTE DE REMPLISSAGE	5K-1568	1	GOULOTTE DE REMPLISSAGE D'HUILE DE TRANSMISSION	280
BOUCHON DE VIDANGE (REFROIDISSEUR D'HUILE DE BOÎTE)	8M-9307	1	REFROIDISSEUR D'HUILE DE BOÎTE (ASS)	272
BOUCHON FILETÉ	138-1510	1	ENGRENAGE DE TRANSFERT DE RENDEMENT (ASS)	291
CADENAS (ASS)	5P-8502	1	BOUCHON DE REMPLISSAGE D'HUILE DE BOÎTE (ASS)	274
ÉCRAN MAGNÉTIQUE (ASS)	4S-8603	1	ENGRENAGE DE TRANSFERT DE RENDEMENT (ASS)	291
ÉLÉMENT DE FILTRE À HUILE (ENS) (TRANSMISSION)	1R-1809	1	FILTRE A HUILE (ASS)	284
RENIFLARD (ENS) (BOîTE DE VITESSES)	9G-5127	1	TRAINS PLANÉTAIRES - CARTER ET PIÈCES	265
TAMIS D'ASPIRATION	4S-8598	1	ENGRENAGE DE TRANSFERT DE RENDEMENT (ASS)	291

PIEZAS DE MANTENIMIENTO

DESCRIPCION	NUMERO DE PIEZA	CANT	SE UTILIZA EN	PAGINA
BASTIDOR Y CAJA				
*BELT-STEP	255-7504	2	ESCALERILLA (GR)	399
		2	ESCALERILLA (GR)	402
CONJUNTO DE FILTRO-ENGRASE	196-1062	1	BOMBA DE LUBRICACIÓN (GR)	430
PANTALLA (CONJ) (RADIADOR)	244-3407	1	REJILLA DEL RADIADOR (GR)	378
RESPIRADERO (TANQUE HIDRAULICO)	254-5258	1	ESCALERILLA (GR)	398
		1	ESCALERILLA (GR)	401
TAPON CONTRA EL POLVO	153-6223	1	ESCALERILLA (GR)	399
		1	ESCALERILLA (GR)	402
EQUIPO DE SERVICIO Y SUMINISTROS				
CANDADO (GR)	246-2641	1	GRUPO DE PROTECCIÓN CONTRA EL VANDALISMO	919
*PADLOCK	5P-8501	2	GRUPO DE PROTECCIÓN CONTRA EL VANDALISMO	919
MOTOR BÁSICO				
CORREA-SERPENTIN	260-1527	1	TENSOR DE CORREA (GR)	7
*SEAL-VALVE COVER (TAPA DE VÁLVULA)	229-5711	1	TAPA DEL MECANISMO DE VÁLVULAS (GR)	11
TAPÓN DE DRENAJE (COLECTOR DE ACEITE DEL MOTOR)	9X-6451	1	CÁRTER - COLECTOR DEL (GR)	37
PUESTO DEL OPERADOR				
ACUMULADOR DEL ACONDICIONADOR DE AIRE (GR)	186-6189	1	TUBERÍAS DE ACONDICIONADOR DE AIRE (GR)	824
CINTURÓN DE SEGURIDAD (GR)	236-7019	1	SUSPENSIÓN - ASIENTO CON (GR)	877
CORREA-SERPENTIN (COMPRESOR DEL ACONDICIONADOR DE AIRE)	260-1528	1	COMPRESOR DE REFRIGERANTE (GR)	785
FILTRO DE AIRE DE CABINA	7X-6041	2	CONDUCTO Y FILTRO DE AIRE (GR)	797
FUSIBLE (15 AMPERIOS)	133-9012	1	ACONDICIONADOR DE AIRE (GR)	775
		1	CALEFACCIÓN DE LA CABINA (GR)	811
HOJA DE LIMPIAPARABRISAS (CONJ)	6V-7419	2	LIMPIAPARABRISAS DE LA VENTANA (GR)	900
LLAVE - MANIJA	3V-7476	1	CONDUCTO Y FILTRO DE AIRE (GR)	797
SISTEMA DE AIRE DE ADMISIÓN Y ESCAPE				
ELEMENTO DEL FILTRO DE AIRE (CONJ) (PRIMARIO)	245-3818	1	FILTRO DE AIRE (GR)	86
ELEMENTO DEL FILTRO DE AIRE (CONJ) (SECUNDARIO)	245-3819	1	FILTRO DE AIRE (GR)	86
MANGUERA-CODO	217-1601	1	TUBERÍAS DE POSENFRIADOR DE AIRE (CONJ)	87

* NO HAY TRADUCCION DISPONIBLE EN EL MOMENTO DE LA IMPRESION

PIEZAS DE MANTENIMIENTO

DESCRIPCION	NUMERO DE PIEZA	CANT	SE UTILIZA EN	PAGINA
SISTEMA DE COMBUSTIBLE				
COLADOR DE COMBUSTIBLE	9P-7121	1	COMBUSTIBLE - TANQUE DE (GR)	113
FILTRO DE COMBUSTIBLE (CONJ)	1R-0762	1	FILTRO DE COMBUSTIBLE (GR)	102
FILTRO DE COMBUSTIBLE Y SEPARADOR DE AGUA (CONJ) (PRIMARIO)	1R-0770	1	FILTRO DE COMBUSTIBLE Y SEPARADOR DE AGUA (GR)	103
SELLO	220-8678	1	FILTRO DE COMBUSTIBLE Y SEPARADOR DE AGUA (GR)	103
TAPA DE LLENADO (CONJ) (TANQUE DE COMBUSTIBLE)	101-8909	1	COMBUSTIBLE - TANQUE DE (GR)	113
VÁLVULA DE ALIVIO DEL FRENO	188-8844	1	COMBUSTIBLE - TANQUE DE (GR)	113
SISTEMA DE DIRECCIÓN				
REJILLA	6E-5066	2	*SCREEN GP-CASE DRAIN	495
SISTEMA DE ENFRIAMIENTO				
REGULADOR DE TEMPERATURA DEL AGUA (92 GRADOS CENTÍGRADOS) (REFRIGERANTE)	248-5513	1	TUBERÍAS DEL AGUA (GR)	72
SELLO (CAJA DEL REGULADOR DE TEMPERATURA)	227-5075	1	TUBERÍAS DEL AGUA (GR)	72
SELLO DE LABIO (REGULADOR DE TEMPERATURA DEL AGUA)	3S-9643	1	TUBERÍAS DEL AGUA (GR)	72
TAPA DEL RADIADOR (7 LB/PULG2)	6L-8617	1	TAPA DEL TANQUE DE RADIADOR (GR)	84
SISTEMA DE LUBRICACIÓN				
EMPAQUETADURA (RESPIRADERO DEL CARTER)	9Y-1758	1	RESPIRADERO (GR)	58
FILTRO DE ACEITE DEL MOTOR (CONJ)	1R-1808	1	FILTRO DE ACEITE DEL MOTOR (GR)	60
MANGUERA (ELIMINACION DE GASES)	237-9759	1	ESCAPE DE GASES (GR)	61
RESPIRADERO (CONJ) (CÁRTER DEL MOTOR)	9Y-4357	1	RESPIRADERO (GR)	58
TAPA DE LLENADO (CONJ) (ACEITE DEL MOTOR)	5L-2952	1	TUBO DE LLENADO DE ACEITE (GR)	59
SISTEMA ELECTRICO Y DE ARRANQUE				
CONJUNTO DE DESTELLADOR (24 VOLTIOS)	217-8166	1	INTERRUPTOR DEL SEÑALERO (GR)	214
		1	INTERRUPTOR DEL SEÑALERO (GR)	216
CONJUNTO DE LLAVE, ELECTRONICA (SEGURIDAD)	206-5162	2	INSTALACION DE SEGURIDAD (GR)	141
CRISTAL (AMBAR)	100-3250	1	LÁMPARA DE LUZ DELANTERA Y DE SEÑAL (GR)	148
		1	LÁMPARA DE LUZ DELANTERA Y DE SEÑAL (GR)	150
DISYUNTOR (CONJ) (105 AMPERIOS) (ALTERNADOR)	171-2212	1	CABLES DEL CHASIS (GR)	235
DISYUNTOR (CONJ) (15 AMPERIOS) (LUCES DE TRABAJO)	3T-2662	1	CABLES DEL CHASIS (GR)	236
DISYUNTOR (CONJ) (30-AMPERIOS) (*UNSWITCHED BAT POWER TO CAB)	6N-9349	1	CABLES DEL CHASIS (GR)	237

* NO HAY TRADUCCION DISPONIBLE EN EL MOMENTO DE LA IMPRESION

PIEZAS DE MANTENIMIENTO

DESCRIPCION	NUMERO DE PIEZA	CANT	SE UTILIZA EN	PAGINA
DISYUNTOR (CONJ) (50 AMPERIOS) (ARRANQUE DEL MOTOR)	171-2206	1	CABLES DEL CHASIS (GR)	235
DISYUNTOR (CONJ) (80 AMPERIOS) (PRINCIPAL)	171-2210	1	CABLES DEL CHASIS (GR)	235
DISYUNTOR DE CIRCUITO (GR) (20-AMPERIOS) (ACCIONADOR DE INCLINACION DE CAPO)	6T-3644	1	CABLES DEL CHASIS (GR)	237
ELEMENTO DEL CALENTADOR DEL AGUA DE LAS CAMISAS (240 VOLTIOS, 1500 VATIOS)	246-3513	1	AGUA DE LAS CAMISAS - CALENTADOR DEL (GR)	139
FUSIBLE (10-AMPERIOS)	9W-1442	24	CABLES DE LA CABINA (GR)	227
FUSIBLE (15 AMPERIOS)	9W-1441	7	CABLES DE LA CABINA (GR)	227
FUSIBLE (20-AMPERIOS)	9W-1446	1	CABLES DE LA CABINA (GR)	227
LÁMPARA (12 VOLTIOS, 24 VOLTIOS, 35 VATIOS)	209-6638	1	REFLECTOR (GR)	144
		1	REFLECTOR (GR)	145
LÁMPARA (24 VOLTIOS)	7N-5876	4	CABLES DE LA CABINA (GR)	227
	7N-9943	1	LÁMPARA DEL TECHO (GR)	143
	9X-4493	1	LUZ DE SEÑAL DE GIRO (GR)	152
	100-3245	2	LÁMPARA DE LUZ DELANTERA Y DE SEÑAL (GR)	148
		2	LÁMPARA DE LUZ DELANTERA Y DE SEÑAL (GR)	150
LÁMPARA (24-VOLTIOS, 21 VATIOS)	9X-4493	1	LÁMPARA DE LUZ DELANTERA Y DE SEÑAL (GR)	148
		1	LÁMPARA DE LUZ DELANTERA Y DE SEÑAL (GR)	150
		1	LUCES DE PARADA Y COLA (GR)	154
LÁMPARA (24 VOLTIOS, 5 VATIOS)	9X-4492	1	LUCES DE PARADA Y COLA (GR)	154
LÁMPARA (24-VOLTIOS, 70-VATIOS)	9X-7849	1	LÁMPARA DE BALIZA DE ADVERTENCIA (GR)	155
LÁMPARA (24 VOLTIOS, 75/70 VATIOS)	9X-3465	1	LÁMPARA DE LUZ DELANTERA Y DE SEÑAL (GR)	148
		1	LÁMPARA DE LUZ DELANTERA Y DE SEÑAL (GR)	150
LENTE AMBAR	9X-3066	1	LUZ DE SEÑAL DE GIRO (GR)	152
LUCES DE ALÓGENO (24 VOLTIOS, 65 VATIOS)	9X-3463	1	REFLECTOR (GR)	146
		1	REFLECTOR (GR)	147
VIDRIO (CONJ) (AMBAR)	136-3848	1	LÁMPARA DE LUZ DELANTERA Y DE SEÑAL (GR)	148
		1	LÁMPARA DE LUZ DELANTERA Y DE SEÑAL (GR)	150
VIDRIO (CONJ) (FARO DELANTERO)	100-3248	1	LÁMPARA DE LUZ DELANTERA Y DE SEÑAL (GR)	148
		1	LÁMPARA DE LUZ DELANTERA Y DE SEÑAL (GR)	150

* NO HAY TRADUCCION DISPONIBLE EN EL MOMENTO DE LA IMPRESION

PIEZAS DE MANTENIMIENTO

DESCRIPCION	NUMERO DE PIEZA	CANT	SE UTILIZA EN	PAGINA
SISTEMA HIDRÁULICO				
COLADOR (CONJ) (LLENADO DEL TANQUE HIDRÁULICO)	5D-7927	1	TANQUE HIDRÁULICO (GR)	591
ELEMENTO DE FILTRO DE ACEITE (CONJ) (HIDRAULICO)	225-4118	1	FILTRO DE ACEITE (GR)	549
FILTRO DE ACEITE (CONJ)	144-0832	1	FILTRO DE ACEITE (GR)	550
PANTALLA (CONJ) (TANQUE HIDRAULICO)	9T-9227	2	TANQUE HIDRÁULICO (GR)	591
REJILLA	6E-5066	1	MULTIPLE DE VALVULA (GR)	575
		1	MULTIPLE DE VALVULA (GR)	577
REJILLA (VÁLVULA DE CONTROL DEL MULTIPLE)	6E-5066	1	CONTROL DEL MULTIPLE (GR)	573
TAPA DEL TUBO DE LLENADO	7H-1447	1	TANQUE HIDRÁULICO (GR)	591
TAPÓN	175-4966	1	DRENAJE DE SEGURIDAD ECOLÓGICA (GR)	548
TAPÓN DE DRENAJE	9J-7031	1	VÁLVULA DE DRENAJE (GR)	619
TREN DE FUERZA				
CANDADO (GR)	5P-8502	1	CUBIERTA (GR)-TAPA DE LLENADO DE ACEITE DE LA TRANSMISIÓN	274
ELEMENTO DE FILTRO DE ACEITE (CONJ) (TREN DE FUERZA)	1R-1809	1	FILTRO DE ACEITE (GR)	284
REJILLA DE SUCCIÓN	4S-8598	1	ENGRANAJE DE TRANSFERENCIA DE SALIDA	291
REJILLA MAGNÉTICA (GR)	4S-8603	1	ENGRANAJE DE TRANSFERENCIA DE SALIDA	291
RESPIRADERO (CONJ) (TRANSMISION)	9G-5127	1	CAJA Y PIEZAS DE LOS PLANETARIOS	265
TAPA DEL TUBO DE LLENADO	5K-1568	1	TUBO DE LLENADO DE ACEITE DE LA TRANSMISIÓN (GR)	280
TAPÓN	138-1510	1	ENGRANAJE DE TRANSFERENCIA DE SALIDA	291
TAPÓN DE DRENAJE (REFRIGERANTE DE ACEITE DE TRANSMISIÓN)	8M-9307	1	ENFRIADOR DE ACEITE DE LA TRANSMISIÓN (GR)	272
TAPÓN MAGNÉTICO	5P-4484	1	CAJA DE EJE OSCILANTE (GR)	304
		1	CAJA DE EJE OSCILANTE (GR)	306
		1	CAJA DEL EJE OSCILANTE (GR)	298
		1	CAJA DEL EJE OSCILANTE (GR)	300
		1	CAJA DEL EJE OSCILANTE (GR)	302

* NO HAY TRADUCCION DISPONIBLE EN EL MOMENTO DE LA IMPRESION

PEÇAS DE MANUTENÇÃO

DESCRIÇÃO	NÚMERO DE PEÇA	QUANT	UTILIZADA EM	PÁGINA
CHASSI E CARROCERIA				
*BELT-STEP	255-7504	2	ESCADA	399
		2	ESCADA	402
BUJÃO - POEIRA	153-6223	1	ESCADA	399
		1	ESCADA	402
FILTRO-GRAXA	196-1062	1	BOMBA DE LUBRIFICAÇÃO	430
RESPIRO (TANQUE HIDRÁULICO)	254-5258	1	ESCADA	398
		1	ESCADA	401
TELA FILTRANTE (RADIADOR)	244-3407	1	GRADE DO RADIADOR	378
EQUIPAMENTOS DE SERVIÇO E SUPRIMENTOS				
CADEADO	5P-8501	2	PROTEÇÃO CONTRA VANDALISMO	919
	246-2641	1	PROTEÇÃO CONTRA VANDALISMO	919
ESTAÇÃO DO OPERADOR				
ACUMULADOR - AR CONDICIONADO	186-6189	1	TUBOS - AR CONDICIONADO	824
CHAVE - ALAVANCA	3V-7476	1	DUCTO E FILTRO	797
CINTO DE SEGURANÇA	236-7019	1	ASSENTO COM SUSPENSÃO	877
CORREIA- SERPENTINA (COMPRESSOR DO CONDICIONADOR DE AR)	260-1528	1	COMPRESSOR DE REFRIGERANTE	785
FILTRO DE AR DE CABINA	7X-6041	2	DUCTO E FILTRO	797
FUSÍVEL (15 AMPERES)	133-9012	1	AQUECEDOR DA CABINE	811
		1	CONDICIONADOR DE AR	775
LÂMINA DO LIMPADOR DE PÁRA-BRISA	6V-7419	2	LIMPADOR DO VIDRO	900
MOTOR BÁSICO				
BUJÃO DO DRENO (CÁRTER DE ÓLEO DO MOTOR)	9X-6451	1	CÁRTER DO ÓLEO DO MOTOR	37
CORREIA- SERPENTINA	260-1527	1	TENSOR DA CORREIA	7
RETENTOR - TAMPA DA VÁLVULA (MECANISMO DAS VÁLVULAS - TAMPA)	229-5711	1	TAMPA - MECANISMO DAS VÁLVULAS	11
SISTEMA DA ADMISSÃO DE AR E DE ESCAPE				
ELEMENTO DO FILTRO DE AR (PRIMÁRIO)	245-3818	1	PURIFICADOR DE AR	86
ELEMENTO DO FILTRO DE AR (SECUNDÁRIO)	245-3819	1	PURIFICADOR DE AR	86
MANGUEIRA - COTOVELO	217-1601	1	TUBULAÇÕES - AR DO PÓS-ARREFECEDOR	87
SISTEMA DE ARREFECIMENTO				
REGULADOR DE TEMPERATURA DA ÁGUA (92 GRAUS C) (LÍQUIDO ARREFECEDOR)	248-5513	1	TUBOS - ÁGUA	72
RETENTOR (ALOJAMENTO DO REGULADOR DE TEMPERATURA)	227-5075	1	TUBOS - ÁGUA	72
TAMPA - RADIADOR (7 PSI)	6L-8617	1	TANQUE SUPERIOR DO RADIADOR	84
VEDADOR TIPO LABIO (REGULADOR DA TEMPERATURA DA ÁGUA)	3S-9643	1	TUBOS - ÁGUA	72

* TRADUÇÃO NÃO DISPONÍVEL NO MOMENTO DA IMPRESSÃO

PEÇAS DE MANUTENÇÃO

DESCRIÇÃO	NÚMERO DE PEÇA	QUANT	UTILIZADA EM	PÁGINA
SISTEMA DE COMBUSTÍVEL				
FILTRO - COMBUSTÍVEL	1R-0762	1	FILTRO - COMBUSTÍVEL	102
	9P-7121	1	TANQUE DE COMBUSTÍVEL	113
FILTRO - SEPARADOR DE ÁGUA E COMBUSTÍVEL (PRIMÁRIO)	1R-0770	1	FILTRO DE COMBUSTÍVEL E SEPARADOR DE ÁGUA	103
RETENTOR	220-8678	1	FILTRO DE COMBUSTÍVEL E SEPARADOR DE ÁGUA	103
TAMPA - BOCAL DE ENCHIMENTO (TANQUE DE COMBUSTÍVEL)	101-8909	1	TANQUE DE COMBUSTÍVEL	113
VÁLVULA DISJUNTORA	188-8844	1	TANQUE DE COMBUSTÍVEL	113
SISTEMA DE DIREÇÃO				
TELA FILTRANTE	6E-5066	2	*SCREEN GP-CASE DRAIN	495
SISTEMA DE LUBRIFICAÇÃO				
FILTRO - ÓLEO DO MOTOR	1R-1808	1	FILTRO - ÓLEO DO MOTOR	60
JUNTA (RESPIRO DO CÁRTER DO ÓLEO DO MOTOR)	9Y-1758	1	RESPIRO	58
MANGUEIRA (ELIMINAÇÃO DE VAPORES)	237-9759	1	ELIMINAÇÃO DE VAPORES DO CÁRTER	61
RESPIRO (CÁRTER DO MOTOR)	9Y-4357	1	RESPIRO	58
TAMPA - BOCAL DE ENCHIMENTO (ÓLEO DO MOTOR)	5L-2952	1	BOCAL DE ENCHIMENTO DE ÓLEO DO MOTOR	59
SISTEMA ELÉTRICO E DE PARTIDA				
CHAVE - ELETRÔNICO (SEGURANÇA)	206-5162	2	INSTALAÇÃO-SEGURANÇA	141
DISJUNTOR AUTOMÁTICO DE CIRCUITO (105 AMPERES) (ALTERNADOR)	171-2212	1	CABOS/FIOS ELÉTRICOS - CHASSI	235
DISJUNTOR AUTOMÁTICO DE CIRCUITO (15 AMPERES) (ILUMINAÇÃO DE OPERAÇÃO)	3T-2662	1	CABOS/FIOS ELÉTRICOS - CHASSI	236
DISJUNTOR AUTOMÁTICO DE CIRCUITO (30 AMPERES) (ENERGIA DA BATERIA PARA CABINE DESLIGADA)	6N-9349	1	CABOS/FIOS ELÉTRICOS - CHASSI	237
DISJUNTOR AUTOMÁTICO DE CIRCUITO (50 AMPÈRES) (PARTIDA DO MOTOR)	171-2206	1	CABOS/FIOS ELÉTRICOS - CHASSI	235
DISJUNTOR AUTOMÁTICO DE CIRCUITO (80 AMPERES) (PRINCIPAL)	171-2210	1	CABOS/FIOS ELÉTRICOS - CHASSI	235
ELEMENTO - AQUECEDOR DE ÁGUA DA CAMISA (240 VOLTS, 1500 WATTS)	246-3513	1	AQUECEDOR DA ÁGUA DO MOTOR	139
FUSÍVEL (10 AMPERES)	9W-1442	24	CABOS/FIOS ELÉTRICOS - CABINE	227
FUSÍVEL (15 AMPERES)	9W-1441	7	CABOS/FIOS ELÉTRICOS - CABINE	227
FUSÍVEL (20-AMPERES)	9W-1446	1	CABOS/FIOS ELÉTRICOS - CABINE	227
INTERRUPTOR - CIRCUITO (20-AMPERES) (ACIONADOR DE INCLINAÇÃO DO CAPÔ)	6T-3644	1	CABOS/FIOS ELÉTRICOS - CHASSI	237
LÂMPADA - HALOGÊNEO (24 VOLTS, 65 WATTS)	9X-3463	1	LÂMPADA - FAROL	146
		1	LÂMPADA - FAROL	147

* TRADUÇÃO NÃO DISPONÍVEL NO MOMENTO DA IMPRESSÃO

PEÇAS DE MANUTENÇÃO

DESCRIÇÃO	NÚMERO DE PEÇA	QUANT	UTILIZADA EM	PÁGINA
LÂMPADA (12 VOLTS, 24 VOLTS, 35 WATTS)	209-6638	1	LÂMPADA - FAROL	144
		1	LÂMPADA - FAROL	145
LÂMPADA (24 V)	9X-4493	1	LÂMPADA - SINALIZAÇÃO	152
LÂMPADA (24 VOLTS)	7N-5876	4	CABOS/FIOS ELÉTRICOS - CABINE	227
	100-3245	2	LÂMPADA DIANTEIRA E DE SINAL	148
		2	LÂMPADA DIANTEIRA E DE SINAL	150
	7N-9943	1	LÂMPADA - TETO	143
LÂMPADA (24 VOLTS, 21 WATTS)	9X-4493	1	LÂMPADA DIANTEIRA E DE SINAL	148
		1	LÂMPADA DIANTEIRA E DE SINAL	150
		1	LUZ TRASEIRA E DE FREIO	154
LÂMPADA (24 VOLTS, 5 WATTS)	9X-4492	1	LUZ TRASEIRA E DE FREIO	154
LÂMPADA (24 VOLTS, 70 WATTS)	9X-7849	1	LUZ GIRATÓRIA DE ALARME	155
LÂMPADA (24 VOLTS, 75-70 WATTS)	9X-3465	1	LÂMPADA DIANTEIRA E DE SINAL	148
		1	LÂMPADA DIANTEIRA E DE SINAL	150
LENTE ÂMBAR	9X-3066	1	LÂMPADA - SINALIZAÇÃO	152
LENTE (ÂMBER)	100-3250	1	LÂMPADA DIANTEIRA E DE SINAL	148
		1	LÂMPADA DIANTEIRA E DE SINAL	150
	136-3848	1	LÂMPADA DIANTEIRA E DE SINAL	148
		1	LÂMPADA DIANTEIRA E DE SINAL	150
LENTE (LUZES DIANTEIRAS)	100-3248	1	LÂMPADA DIANTEIRA E DE SINAL	148
		1	LÂMPADA DIANTEIRA E DE SINAL	150
LUZ INTERMITENTE (24 VOLTS)	217-8166	1	INTERRUPTOR DE SINALIZAÇÃO	214
		1	INTERRUPTOR DE SINALIZAÇÃO	216
SISTEMA HIDRÁULICO				
BUJÃO DO DRENO	9J-7031	1	VÁLVULA DE DRENAGEM	619
ELEMENTO FILTRANTE - ÓLEO (HIDRÁULICO)	225-4118	1	FILTRO - ÓLEO	549
FILTRO - ÓLEO	144-0832	1	FILTRO - ÓLEO	550
TAMPA - BOCAL DE ENCHIMENTO	7H-1447	1	TANQUE HIDRÁULICO	591
TAMPÃO	175-4966	1	DRENO - ECOLOGIA	548
TELA FILTRANTE	6E-5066	1	COLETOR - VÁLVULA	575
		1	COLETOR - VÁLVULA	577
TELA FILTRANTE (COLETOR DA VÁLVULA DE CONTROLE)	6E-5066	1	COLETOR - CONTROLE	573
TELA FILTRANTE (ENCHIMENTO DO TANUQE HIDRÁULICO)	5D-7927	1	TANQUE HIDRÁULICO	591
TELA FILTRANTE (TANQUE HIDRÁULICO)	9T-9227	2	TANQUE HIDRÁULICO	591

* TRADUÇÃO NÃO DISPONÍVEL NO MOMENTO DA IMPRESSÃO

PEÇAS DE MANUTENÇÃO

DESCRIÇÃO	NÚMERO DE PEÇA	QUANT	UTILIZADA EM	PÁGINA
TREM DE FORÇA				
BUJÃO DO DRENO (ARREFECEDOR DO ÓLEO DA TRANSMISSÃO)	8M-9307	1	ARREFECEDOR DE ÓLEO DA TRANSMISSÃO	272
BUJÃO MAGNÉTICO	5P-4484	1	CAIXA - EIXO FIXO	298
		1	CAIXA - EIXO FIXO	300
		1	CAIXA - EIXO FIXO	302
		1	CAIXA - EIXO OSCILANTE	304
		1	CAIXA - EIXO OSCILANTE	306
CADEADO	5P-8502	1	TAMPA - BOCAL DE ENCHIMENTO DE ÓLEO DA TRANSMISSÃO	274
ELEMENTO FILTRANTE - ÓLEO (TREM DE FORÇA)	1R-1809	1	FILTRO - ÓLEO	284
FILTRO - MAGNÉTICO	4S-8603	1	ENGRENAGENS DE SAÍDA DE TRANSFERÊNCIA	291
RESPIRO (TRANSMISSÃO)	9G-5127	1	CARCAÇA DAS ENGRENAGENS PLANETÁRIAS E COMPONENTES	265
TAMPA - BOCAL DE ENCHIMENTO	5K-1568	1	BOCAL DE ENCHIMENTO DE ÓLEO DO TREM DE FORÇA	280
TAMPÃO	138-1510	1	ENGRENAGENS DE SAÍDA DE TRANSFERÊNCIA	291
TELA DE SUCÇÃO	4S-8598	1	ENGRENAGENS DE SAÍDA DE TRANSFERÊNCIA	291

* TRADUÇÃO NÃO DISPONÍVEL NO MOMENTO DA IMPRESSÃO

WARTUNGSTEILE

BESCHREIBUNG	ERSATZTEIL-NUMMER	MENGE	VERWENDET IN	SEITE
ELEKTRISCHE ANLAGE U. STARTSYSTEM				
ABDECKGLAS (FRONTSCHEINWERFER)	100-3248	1	SCHEINWERFER U. RICHTUNGSLEUCHTE	148
		1	SCHEINWERFER U. RICHTUNGSLEUCHTE	150
ABDECKGLAS (GELB)	9X-3066	1	BLINKLEUCHTE	152
	100-3250	1	SCHEINWERFER U. RICHTUNGSLEUCHTE	148
		1	SCHEINWERFER U. RICHTUNGSLEUCHTE	150
	136-3848	1	SCHEINWERFER U. RICHTUNGSLEUCHTE	148
		1	SCHEINWERFER U. RICHTUNGSLEUCHTE	150
BLINKER (24 V)	217-8166	1	RICHTUNGSSIGNALSCHALTER	214
		1	RICHTUNGSSIGNALSCHALTER	216
ELEKTRONISCHER SCHLÜSSEL (SICHERHEIT)	206-5162	2	SICHERHEITSEINBAUSATZ	141
HALOGENSCHINWERFER (24V)(65W)	9X-3463	1	ARBEITSLEUCHTEN	146
		1	ARBEITSLEUCHTEN	147
LEUCHTE (12 V, 24 V, 35 W)	209-6638	1	ARBEITSLEUCHTEN	144
		1	ARBEITSLEUCHTEN	145
LEUCHTE (24 V)	7N-5876	4	FAHRERHAUSVERDRAHTUNG	227
	7N-9943	1	FAHRERHAUSBELEUCHTUNG	143
	9X-4493	1	BLINKLEUCHTE	152
	100-3245	2	SCHEINWERFER U. RICHTUNGSLEUCHTE	148
		2	SCHEINWERFER U. RICHTUNGSLEUCHTE	150
LEUCHTE (24 V, 5 W)	9X-4492	1	BREMS- UND RÜCKLEUCHTE	154
LEUCHTE (24 V, 70 W)	9X-7849	1	RUNDUM-KENNLEUCHTE	155
LEUCHTE (24 V, 75/70 W)	9X-3465	1	SCHEINWERFER U. RICHTUNGSLEUCHTE	148
		1	SCHEINWERFER U. RICHTUNGSLEUCHTE	150
LEUCHTE (24V, 21W)	9X-4493	1	SCHEINWERFER U. RICHTUNGSLEUCHTE	148
		1	SCHEINWERFER U. RICHTUNGSLEUCHTE	150
		1	BREMS- UND RÜCKLEUCHTE	154
SICHERUNG (10 A)	9W-1442	24	FAHRERHAUSVERDRAHTUNG	227
SICHERUNG (15 A)	9W-1441	7	FAHRERHAUSVERDRAHTUNG	227
SICHERUNG (20 A)	9W-1446	1	FAHRERHAUSVERDRAHTUNG	227
UMLAUFKÜHLWASSERHEIZUNGS-ELEMENT (240 V, 1500 W)	246-3513	1	UMLAUFKÜHLWASSERHEIZUNG	139
UNTERBRECHER (105 A) (DREHSTROMGENERATOR)	171-2212	1	FAHRGESTELLVERDRAHTUNG	235
UNTERBRECHER (15 A) (FAHRSCHEINWERFER)	3T-2662	1	FAHRGESTELLVERDRAHTUNG	236
UNTERBRECHER (20 A) (HAUBENNEIGESTELLGLIED)	6T-3644	1	FAHRGESTELLVERDRAHTUNG	237

* ÜBERSETZUNG ZUM ZEITPUNKT DER DRUCKLEGUNG NICHT VORHANDEN

WARTUNGSTEILE

BESCHREIBUNG	ERSATZTEIL-NUMMER	MENGE	VERWENDET IN	SEITE
UNTERBRECHER (30 A) (UNGESCHALTETER BATTREIESTROM ZUM FAHRERHAUS)	6N-9349	1	FAHRGESTELLVERDRAHTUNG	237
UNTERBRECHER (50 A) (MOTORSTART)	171-2206	1	FAHRGESTELLVERDRAHTUNG	235
UNTERBRECHER (80 A) (HAUPTUNTERBRECHER)	171-2210	1	FAHRGESTELLVERDRAHTUNG	235
FAHRERHAUS				
FAHRERHAUSLUFTFILTER	7X-6041	2	LUFTKANAL U. FILTER	797
KLIMAANLAGENDRUCKSPEICHER	186-6189	1	KLIMAANLAGENLEITUNGEN	824
SCHEIBENWISCHERBLATT	6V-7419	2	SCHEIBENWISCHER	900
SCHLÜSSELGRIFF	3V-7476	1	LUFTKANAL U. FILTER	797
SERPENTINENFÖRMIGER RIEMEN (KLIMAANLAGEN-KOMPRESSOR)	260-1528	1	KÄLTEMITTELKOMPRESSOR	785
SICHERHEITSGURT	236-7019	1	SCHWINGSITZ	877
SICHERUNG (15 A)	133-9012	1	FAHRERHAUSHEIZUNG	811
		1	KLIMAANLAGE	775
HYDRAULIKSYSTEM				
ABLASSSTOPFEN	9J-7031	1	ABLASSVENTIL	619
EINFÜLLSTUTZENKAPPE	7H-1447	1	HYDRAULIKTANK	591
FILTERSIEB (HYDRAULIKTANKEIN-FÜLLSIEB)	5D-7927	1	HYDRAULIKTANK	591
ÖLFILTER	144-0832	1	ÖLFILTER	550
ÖLFILTERELEMENT (HYDRAULISCH)	225-4118	1	ÖLFILTER	549
SCHRAUBE	175-4966	1	ABLASS (UMWELTFREUNDLICH)	548
SCREEN	6E-5066	1	*MANIFOLD GP-VALVE	575
		1	*MANIFOLD GP-VALVE	577
SCREEN (STEUERVENTIL-KRÜMMER)	6E-5066	1	STEUERKRÜMMER	573
SIEB (HYDRAULIKTANK)	9T-9227	2	HYDRAULIKTANK	591
KRAFTSTOFFSYSTEM				
DICHTUNG	220-8678	1	WASSERABSCHEIDER- U. KRAFTSTOFFILTER	103
EINFÜLLKAPPE (KRAFTSTOFFTANK)	101-8909	1	KRAFTSTOFFTANK	113
KRAFTSTOFFILTER	1R-0762	1	KRAFTSTOFFILTER	102
KRAFTSTOFFSIEB	9P-7121	1	KRAFTSTOFFTANK	113
RÜCKSCHLAGVENTIL (GEGEN VAKUUM)	188-8844	1	KRAFTSTOFFTANK	113
WASSERABSCHEIDER UND KRAFTSTOFFILTER (HAUPTELEMENT)	1R-0770	1	WASSERABSCHEIDER- U. KRAFTSTOFFILTER	103

* ÜBERSETZUNG ZUM ZEITPUNKT DER DRUCKLEGUNG NICHT VORHANDEN

WARTUNGSTEILE

BESCHREIBUNG	ERSATZTEIL-NUMMER	MENGE	VERWENDET IN	SEITE
KRAFTÜBERTRAGUNG				
ABLASSSTOPFEN (GETRIEBESÖLKÜHLER)	8M-9307	1	GETRIEBEÖLKÜHLER	272
ANSAUGSIEB	4S-8598	1	VERTEILERGETRIEBEANTRIEB	291
EINFÜLLSTUTZENKAPPE	5K-1568	1	GETRIEBEÖLFÜLLSTUTZEN	280
ENTLÜFTER (GETRIEBE)	9G-5127	1	PLANETENANTRIEBSGEHÄUSE U. TEILE	265
MAGNETSIEB	4S-8603	1	VERTEILERGETRIEBEANTRIEB	291
MAGNETSTOPFEN	5P-4484	1	GEHÄUSE - PENDELACHSE	304
		1	GEHÄUSE - PENDELACHSE	306
		1	GEHÄUSE - STARRACHSE	298
		1	GEHÄUSE - STARRACHSE	300
		1	GEHÄUSE - STARRACHSE	302
ÖLFILTERELEMENT (KRAFTÜBERTRAGUNG)	1R-1809	1	ÖLFILTER	284
SCHRAUBE	138-1510	1	VERTEILERGETRIEBEANTRIEB	291
VORHÄNGESCHLOSS	5P-8502	1	GETRIEBEÖLEINFÜLLKAPPE	274
KÜHLSYSTEM				
DICHTUNG (TEMPERATURREGELGEHÄUSE)	227-5075	1	KÜHLWASSERLEITUNGEN	72
KÜHLERKAPPE (7 PSI)	6L-8617	1	KÜHLERWASSERKASTEN, OBEN	84
LIPPENDICHTUNG (KÜHLWASSERTHERMOSTAT)	3S-9643	1	KÜHLWASSERLEITUNGEN	72
WASSERTEMPERATURREGLER (92 GRAD) (KÜHLMITTEL)	248-5513	1	KÜHLWASSERLEITUNGEN	72
LENKSYSTEM				
SCREEN	6E-5066	2	*SCREEN GP-CASE DRAIN	495
LUFTANSAUG- UND ABGASSYSTEM				
LUFTFILTER (HAUPTELEMENT)	245-3818	1	LUFTREINIGER	86
LUFTFILTER (HILFSELEMENT)	245-3819	1	LUFTREINIGER	86
SCHLAUCH - KNIESTÜCK	217-1601	1	LADELUFTKÜHLERLEITUNGEN	87
MOTOR (GRUNDAUSFÜHRUNG)				
ABLASSSTOPFEN (MOTORÖLWANNE)	9X-6451	1	ÖLWANNE	37
SERPENTINENFÖRMIGER RIEMEN	260-1527	1	RIEMENSPANNER	7
VENTILDECKELDICHTUNG (VENTILDECKEL)	229-5711	1	VENTILDECKEL	11
RAHMEN UND FAHRGESTELL				
*BELT-STEP	255-7504	2	STEIGLEITER	399
		2	STEIGLEITER	402
ENTLÜFTER (HYDRAULIKTANK)	254-5258	1	STEIGLEITER	398
		1	STEIGLEITER	401
SCHMIERFILTER	196-1062	1	SCHMIERPUMPE	430
SIEB (KÜHLER)	244-3407	1	KÜHLERGRILL	378
STAUBSCHUTZSTOPFEN	153-6223	1	STEIGLEITER	399
		1	STEIGLEITER	402

* ÜBERSETZUNG ZUM ZEITPUNKT DER DRUCKLEGUNG NICHT VORHANDEN

WARTUNGSTEILE

BESCHREIBUNG	ERSATZTEIL-NUMMER	MENGE	VERWENDET IN	SEITE
SCHMIERSYSTEM				
DICHTUNG (KURBELGEHÄUSEENTLÜFTER)	9Y-1758	1	ENTLÜFTER	58
EINFÜLLKAPPE (MOTORÖL)	5L-2952	1	MOTORÖLEINFÜLLSTUTZEN	59
ENTLÜFTER (KURBELGEHÄUSE)	9Y-4357	1	ENTLÜFTER	58
ÖLFILTER	1R-1808	1	ÖLFILTER	60
SCHLAUCHLEITUNG (ENTDUNSTER)	237-9759	1	ENTDUNSTER	61
WARTUNGSAUSRÜSTUNG UND -ZUBEHÖR				
VORHÄNGESCHLOSS	5P-8501	2	SCHUTZABDECKUNG	919
	246-2641	1	SCHUTZABDECKUNG	919

* ÜBERSETZUNG ZUM ZEITPUNKT DER DRUCKLEGUNG NICHT VORHANDEN

INDEX

Name	Page
A	
ACCUMULATOR & MTG GP-RIDE CONT	519
ACCUMULATOR GP-BRAKE–CHARGED	448
ACCUMULATOR GP-BRAKE–UNCHARGED	449
ACCUMULATOR GP-PILOT OIL–CHARGED–DEAD ENGINE, LIFT ARM LOWER	520
ACCUMULATOR GP-PILOT OIL–UNCHARGED–DEAD ENGINE, LIFT ARM LOWER	521
ACCUMULATOR GP-REFRIGERANT	824
ACCUMULATOR GP-RIDE CONTROL–CHARGED	522
ACCUMULATOR GP-RIDE CONTROL–UNCHARGED	523
ACTUATOR GP-HOOD TILT	354
ADAPTER GP-TIP	658
ADJUSTER GP-SEAT	770
AIR CLEANER GP	85 86
AIR COMPRESSOR GP-SEAT	772
AIR CONDITIONER AR	773
AIR CONDITIONER GP	774 775
ALARM GP–ACTION	118
ALTERNATOR GP-CHARGING–24-VOLT, 80-AMPERE	119
ALTERNATOR GP-CHARGING–24-VOLT, 80-AMPERE	120
ARM & BEARING AS	642 643
ARM AS-LIFT	644
ARM AS-LIFT–HIGH LIFT MACHINES	645
ARM GP-WINDOW WIPER–FRONT	780
ARM GP-WINDOW WIPER–REAR	779
ARMREST GP–LH	781
AXLE & AXLE OIL COOLER AR	257
AXLE & AXLE OIL COOLER AR–LIMITED SLIP DIFFERENTIAL	257
AXLE & AXLE OIL COOLER AR–REAR, LIMITED SLIP DIFFERENTIAL	257
AXLE AR-FIXED–FRONT, LIMITED SLIP DIFFERENTIAL	258
AXLE AR-FIXED–FRONT, LIMITED SLIP DIFFERENTIAL–WITH HEAT EXCHANGER	259
AXLE AR-FIXED–FRONT, STANDARD DIFFERENTIAL	258
AXLE AR-FIXED–FRONT, STANDARD DIFFERENTIAL–WITH HEAT EXCHANGER	258 259
AXLE AR-OSCILLATING–REAR, LIMITED SLIP DIFFERENTIAL	260 261
AXLE AR-OSCILLATING–REAR, LIMITED SLIP DIFFERENTIAL–WITH HEAT EXCHANGER	261
AXLE AR-OSCILLATING–REAR, NOSPIN DIFFERENTIAL	260
AXLE AR-OSCILLATING–REAR, STANDARD DIFFERENTIAL	259
AXLE AR-OSCILLATING–REAR, STANDARD DIFFERENTIAL–WITH HEAT EXCHANGER	260
B	
BASE GP-FOOT BRAKE–PEDAL, LH	451
BASE GP-FOOT BRAKE–PEDAL, RH	450
BASE GP-OIL FILTER–ENGINE	54 57
BASE GP-OIL FILTER–POWER TRAIN	262
BASE GP-VALVE COVER & INJ HARN	6
BATTERY & WIRING GP	121
BELT-SERPENTINE	7
BELT-SERPENTINE (A/C COMPRESSOR)	785
BELT-STEP	399 402
BELT TENSIONER GP	7
BLADE AS-WIPER	900
BLOCK GP-AXLE OSC LIMITER	356
BOSS GP-LEVER	648
BOSS GP-LIFT ARM	649 650 652
BOSS GP-REAR FRAME	357 359
BOX GP-BATTERY	360
BOX GP-TOOL	903 905
BRACKET AS-ADJUSTABLE SWITCH	451
BRAKE & PLANETARY GP	263
BRAKE GP-PARKING	453 455 456 457
BREATHER AS (CRANKCASE)	58
BREATHER AS (TRANSMISSION)	265
BREATHER GP–CRANKCASE	58
BREATHER (HYDRAULIC TANK)	398 401
BUCKET AS-GENERAL PURPOSE	659 660 661 662 663 665 667 669

INDEX

Name	Page
	671
	672
BUCKET AS-MATERIAL HANDLING	673
	674
	675
	677
	678
	679
	681
	682
	683
	685
BUCKET AS-PENETRATION	687
BUCKET AS-ROCK	688
	689
	690
	691
	693
	694
BUCKET AS-ROCK–HEAVY-DUTY	696
BUCKET AS-SLAG	698
BUCKET GP-GENERAL PURPOSE	699
	700
	701
	702
	703
	704
	705
	706
	707
	708
	709
	710
	711
	712
	713
BUCKET GP-MATERIAL HANDLING	714
	715
	716
	717
	719
	720
	721
	722
	723
	724
	726
	727
	728
	729
BUCKET GP-PENETRATION	731
BUCKET GP-ROCK	732
	733
	734
	735
	736
	737
	738
BUCKET GP-ROCK–HEAVY-DUTY	739
BUCKET GP-SLAG	740

C

CAB AR-ENCLOSED ROPS–COMMAND CONTROL STEERING	783
CAB AR-ENCLOSED ROPS–HMU STEERING	782
CAMSHAFT GP	8
CAP AS-FILLER (ENGINE OIL)	59
CAP AS-FILLER (FUEL TANK)	113
CAP-FILLER	280
	591
CAP-RADIATOR (7-PSI)	84
CARTRIDGE GP-TURBOCHARGER	98
CASE & PARTS GP-PLANETARY	265
CHASSIS AR	1
CIRCUIT BREAKER AS (105-AMPERE) (ALTERNATOR)	235
CIRCUIT BREAKER AS (15-AMPERE) (RUNNING LIGHTS)	236
CIRCUIT BREAKER AS (30-AMPERE) (UNSWITCHED BAT POWER TO CAB)	237
CIRCUIT BREAKER AS (50-AMPERE) (ENGINE START)	235
CIRCUIT BREAKER AS (80-AMPERE) (MAIN)	235
CIRCUIT BREAKER GP (20-AMPERE) (HOOD TILT ACTUATOR)	237
COMPRESSOR GP-REFRIGERANT	784
	785
CONDENSER & MTG GP-REFRIGERANT	786
CONNECTION GP-ELECTRICAL	125
CONTROL & LINES GP-RIDE	524
CONTROL & MTG GP-COMMUNICATION–PRODUCT LINK 321SR	126
CONTROL & MTG GP-ENGINE ELEK	128
CONTROL AR-AUTODIG–COMMAND CONTROL STEERING	129
CONTROL AR-AUTODIG–HMU STEERING	129
CONTROL AR-RIDE–2-VALVE	525
CONTROL AR-RIDE–3-VALVE	525
CONTROL GP-AUTODIG–COMMAND CONTROL STEERING	130
CONTROL GP-AUTODIG–HMU STEERING	132
CONTROL GP-BUCKET	653
	655
CONTROL GP-DISPLAY ELECTRONIC (INDICATOR PANEL, CENTER)	130
	132
CONTROL GP-DISPLAY ELECTRONIC (INDICATOR PANEL, RH, LH)	229

INDEX

Name	Page
CONTROL GP-ELECTROHYDRAULIC–JOYSTICK, 2-FUNCTION	530
CONTROL GP-ELECTROHYDRAULIC–JOYSTICK, 3-FUNCTION	532
CONTROL GP-ELECTROHYDRAULIC–2-FUNCTION	526
CONTROL GP-ELECTROHYDRAULIC–3-FUNCTION	528
CONTROL GP-FOOT BRAKE	458
	459
CONTROL GP-HANDLE	534
CONTROL GP-JOYSTICK–2-FUNCTION, WITH DOWNSHIFT	537
CONTROL GP-JOYSTICK–3-FUNCTION, WITH DOWNSHIFT	535
CONTROL GP-JOYSTICK (3-FUNCTION, WITH DOWNSHIFT)	532
CONTROL GP-MONITOR–DIMMER	788
CONTROL GP-PARKING BRAKE	460
CONTROL GP-SERVICE BRAKE	461
CONTROL GP-STEERING–COMMAND CONTROL STEERING	470
CONTROL GP-STEERING–HMU STEERING	468
CONTROL GP-TRANSMISSION	267
	268
CONTROL GP-TRANSMISSION HYD	269
CONTROL GP-UNPRGMED MONITOR–CATERPILLAR MONITORING SYSTEM	789
CONTROL GP-UNPRGMED MONITOR (CATERPILLAR MONITORING SYSTEM)	228
CONTROL GP-UNPROGRAMMED	134
CONTROL GP-UNPROGRAMMED (IMPLEMENT)	229
CONTROL GP-UNPROGRAMMED (POWER TRAIN)	229
CONVERSION AR-CERTIFICATION	2
COOLANT HEATER LINES	827
	830
COOLER AR-AXLE OIL	271
COOLER GP-ENGINE OIL	66
COOLER GP-HYDRAULIC & AXLE OIL	539
COOLER GP-TRANSMISSION OIL	272
COOLING AR-HIGH AMBIENT TEMP	68
CORE AS-CONDENSER (REFRIGERANT)	68
	786
CORE AS-OIL COOLER (AXLE, HYDRAULIC)	68
	257
	539
CORE AS-OIL COOLER (ENGINE)	66
CORE AS-OIL COOLER (TRANSMISSION)	272
CORE AS-RADIATOR	68
COUNTERWEIGHT GP	361
COUPLER AR-QUICK	741
	742
COUPLER GP-QUICK	743
	744
COVER GP-FRONT HOUSING	9
	10
COVER GP-TMSN OIL FILLER CAP	274
	919
COVER GP-VALVE MECHANISM	11
CRANKSHAFT GP	12
CYLINDER & MTG GP-STEERING	472
CYLINDER & SEAL GP-LIFT–LH	540
CYLINDER & SEAL GP-LIFT–RH	541
CYLINDER & SEAL GP-TILT	542
CYLINDER AS-ETHER	197
CYLINDER BLOCK AS	14
	15
CYLINDER BLOCK GP	16
CYLINDER GP-LIFT–LH	544
CYLINDER GP-LIFT–RH	543
CYLINDER GP-STEERING	473
CYLINDER GP-TILT	547
CYLINDER GP-TILT–LOGGING	546
CYLINDER HEAD AS	18
CYLINDER HEAD GP	19
	20

D

DAMPER AS-ALARM	130
	132
DAMPER GP	21
DIFFERENTIAL GP	275
	276
DIFFERENTIAL GP-LIMITED SLIP	277
DIFFERENTIAL GP-NOSPIN	278
	279
DISPLAY	845
DOOR GP-CAB	791
	796
DOOR GP-CAB–RH	795
DOOR GP-CAB–SLIDING WINDOW, RH	790
	794
DRAIN GP-ECOLOGY–POWER TRAIN	548
DRIVE GP-ACCESSORY	22
DUCT & FILTER GP-AIR	797

E

EDGE AS-CUTTING	745
EDGE GP-BIT & CUTTING	746
	747
EDGE GP-CUTTING	747
	748
	749
	750
EDGE GP-SEGMENT	751
ELECTRICAL AR	135

INDEX

Name	Page
ELECTRONICS GP-COMMUNICATION–PRODUCT LINK 300	136
ELECTRONICS GP-IMPLEMENT	137
ELECTRONICS GP-MONITOR–CATERPILLAR MONITORING SYSTEM	138
ELECTRONICS GP-POWER TRAIN	138
ELECTRONICS GP-POWER TRAIN–SPEED LIMITER	138
ELEMENT AS-JACKET WATER HEATER (240-VOLT, 1500-WATT)	139
ENGINE AR-COMPLETE	3
ENGINE AR-CORE	4
EXTENSION GP-BACKREST (CLOTH)	875

F

Name	Page
FASTENER GP-CYLINDER HEAD	23
FASTENER GP-DAMPER & PULLEY	24
FASTENER GP-FRONT HOUSING	25
FENDER AR-ROADING	362
FENDER GP	363 365
FENDER GP-ROADING	367
FILLER GP-ENGINE OIL	59
FILLER GP-POWER TRAIN OIL	280
FILM (AUTODIG)	130 132
FILM-CONTROL (AUTODIG)	130
FILM-CONTROL (DUMP, TILT BACK)	526 528
FILM-CONTROL (JOYSTICK, 2-FCTN, DOWNSHIFT SW)	530
FILM-CONTROL (JOYSTICK, 3-FCTN, D0WNSHIFT SW)	532
FILM-CONTROL (LIFT, FLOAT, LOWER)	526 528
FILM-CONTROL (UPPER PANEL)	228 857
FILM-CONTROLS	859
FILM-FUSE PANEL	819
FILM GP	906
FILM-IDENTIFICATION (AUXILIARY HYDRAULIC)	528
FILM-IDENTIFICATION (HORN)	526 528
FILM-IDENTIFICATION (IGNITION SWITCH)	141
FILM-IDENTIFICATION (ROAD HEIGHT)	2
FILM-IDENTIFICATION (12-VOLT)	859
FILM-IDENTIFICATION (20-KM/H)	138
FILM-INFORMATION (INPUT/OUTPUT)	859
FILM-INFORMATION (KEY)	141
FILM-INFORMATION (TIE-DOWN)	917
FILM-INSTRUCTION (ENGINE START)	859
FILM-INSTRUCTION (LIFT EYE, TIE-DOWN LOCATION)	917
FILM-INSTRUCTION (MAINTENANCE)	530 532
FILM-INSTRUCTION (MAINTENANCE)	526 528
FILM-INSTRUCTION (READ OMM)	141
FILM-INSTRUCTION (SEAT ADJUSTMENT)	892
FILM-INSTRUCTION (SEAT ADJUSTMENT)	890
FILM-MONITOR (CATERPILLAR MONITORING SYSTEM)	855 857
FILM-NOTICE (LIFT EYE LOCATION)	752 754
FILM-PANEL (CENTER)	859
FILM-PANEL (LH)	859
FILM-PANEL (RH)	859
FILM-TRANSMISSION (DOWNSHIFT SWITCH)	526 528
FILM-WARNING (CRUSH POINT)	915 916
FILM-WARNING (JUMP START, READ OMM)	172
FILM-WARNING (MANUAL)	915 916
FILM-WARNING (NO WELD, NO DRILL, READ OMM)	917
FILM-WARNING (PRODUCT LINK RADIO, NON NACD)	140
FILM-WARNING (READ OMM)	752 754
FILTER & LINES GP-SEC FUEL	100
FILTER & LINES GP-TRANSMISSION	282
FILTER AS-ENGINE OIL	60
FILTER AS-FUEL	102
FILTER AS-GREASE	430
FILTER AS-OIL	550
FILTER AS-WATER SEP & FUEL (PRIMARY)	103
FILTER-CAB AIR	797
FILTER ELEMENT AS-AIR (PRIMARY)	86
FILTER ELEMENT AS-AIR (SECONDARY)	86
FILTER ELEMENT AS-OIL (HYDRAULIC)	549
FILTER ELEMENT AS-OIL (POWER TRAIN)	284
FILTER GP-ENGINE OIL–HIGH EFFICIENCY	60
FILTER GP-FUEL	102
FILTER GP-OIL–HYDRAULIC	549
FILTER GP-OIL–HYDRAULIC CASE DRAIN	550
FILTER GP-OIL–POWER TRAIN	284
FILTER GP-WATER SEP & FUEL	103
FLASHER AS (24-VOLT)	214 216
FLOOR GP-SOUND SUPPRESSION	799 800 801
FLOOR MAT	819
FLYWHEEL GP	26
FORK GP-PALLET	752

INDEX

Name	Page
	754
FRAME AS-LOADER	372
FRAME AS-REAR	375
FUMES DISPOSAL GP	61
FUSE (10-AMPERE)	227
FUSE (15-AMPERE)	227
	775
	811
FUSE (20-AMPERE)	227

G

GASKET (CRANKCASE BREATHER)	58
GAUGE AS-OIL LEVEL	280
GAUGE AS-OIL LEVEL (DIPSTICK)	298
	300
	302
	304
	306
GAUGE GP-OIL LEVEL (DIPSTICK)–ENGINE	62
GAUGE GP-OIL LEVEL (DIPSTICK) (ENGINE)	62
GAUGE-LIQUID LEVEL (SIGHT GLASS)	591
GAUGE-SIGHT	69
GEAR GP-BEVEL & PINION	285
	287
	289
GEAR GP-FRONT	27
GEAR GP-OUTPUT TRANSFER	291
GENERAL AR	2
GRILL GP-RADIATOR	378
GUARD GP-BUCKET	756
	757
GUARD GP-FRONT	380
GUARD GP-POWER TRAIN	381
GUARD GP-WINDOW–FRONT	803
	805

H

HANDHOLD GP	808
HANDHOLD GP–CAB	807
HARDWARE GP-MOUNTING–FENDER	383
HARDWARE GP-REAR FRAME	384
	385
HARNESS AS-AXLE (FRONT)	224
HARNESS AS-AXLE (REAR)	224
HARNESS AS-BRAKE (STOP LIGHT)	451
HARNESS AS-CAB	229
HARNESS AS-CHASSIS (MAIN)	235
HARNESS AS-CHASSIS (PARK BRAKE, OIL FLTR SWITCHES)	236
HARNESS AS-CONTROL	126
HARNESS AS-CONTROL (AUTOMATIC LUBRICATION)	430
HARNESS AS-CONTROL (HEATED MIRRORS)	841
	843
HARNESS AS-ENGINE	243
HARNESS AS-ENGINE (ELECTRONIC CONTROL MODULE)	241
HARNESS AS-ENGINE (FUEL)	100
HARNESS AS-ENGINE (UNIT INJECTOR)	256
HARNESS AS-HEATER & AIR COND	775
	811
HARNESS AS-LIGHTING	159
	247
HARNESS AS-LIGHTING (CAB FLOODLIGHTS)	228
HARNESS AS-LIGHTING (LH)	249
HARNESS AS-LIGHTING (RH)	249
HARNESS AS-LIGHTING (TURN SIGNAL)	214
	216
HARNESS AS-LIGHTING (WARNING BEACON)	170
HARNESS AS-OPERATOR CONTROLS	228
HARNESS AS-OPERATOR CONTROLS (ELECTROHYDRAULIC, JOYSTICK)	532
HARNESS AS-OPERATOR CONTROLS (ELECTROHYDRAULIC, JOYSTICK)	530
HARNESS AS-PUMP	222
HARNESS AS-PUMP (AUTOMATIC LUBRICATION)	430
HARNESS AS-SENSOR (TILT)	252
HARNESS AS-STEERING (COLUMN, WHEEL)	498
HARNESS AS-STEERING (SECONDARY)	250
HARNESS AS-SWITCH	222
HARNESS AS-SWITCH (LEVEL)	430
HARNESS AS-TRANSMISSION	269
HARNESS AS-TRANSMISSION CONT (STEERING WHEEL)	498
HARNESS AS-VALVE	222
HARNESS AS-VALVE (SEAT AIR COMPRESSOR)	890
	892
HARNESS AS-WIRING	190
HARNESS AS-WIRING (CAM TIMING)	191
HARNESS AS-WIRING (SERVICE TOOL)	228
HEAT EXCHANGER GP-AXLE	296
HEATER GP-CAB	809
	811
HEATER GP-JACKET WATER	139
HINGE GP-ROADING FENDER	386
	387
HITCH GP-ARTICULATING	388
HOOD & GUARD GP	390
HORN AS (24-VOLT, LOW TONE)	813
HORN GP-ELECTRIC	813
HOSE-ELBOW	87

INDEX

Name	Page
HOSE (FUMES DISPOSAL)	61
HOUSING GP-FIXED AXLE	298
	300
	302
HOUSING GP-FLYWHEEL	28
HOUSING GP-FRONT	29
HOUSING GP-OSCILLATING AXLE	304
	306
HYDRAULIC AR-2 VALVE	551
HYDRAULIC AR-3 VALVE	551
I	
IDLER GP-BELT–ALTERNATOR, REFRIGERANT COMPRESSOR	31
INJECTOR GP-FUEL	104
INSTALLATION AR-COMMUNICATION–PRODUCT LINK 321SR	140
INSTALLATION AR-ENGINE	5
INSTALLATION AR-SECURITY	140
INSTALLATION GP-CONTROLS–PARKING BRAKE CABLE	814
INSTALLATION GP-RADIO	815
INSTALLATION GP-SECURITY	141
K	
KEY AS-ELECTRONIC (SECURITY)	141
KEY-HANDLE	797
KIT-AIR VALVE	890
	892
KIT-BEARING (ALTERNATOR)	119
KIT-BIAS PISTON (PUMP)	492
KIT-BOLT (ELECTRICAL CONNECTORS)	236
KIT-BRAKE LINING	456
KIT-BRUSH (STARTING MOTOR)	199
KIT-BUSHING (STARTING MOTOR)	199
KIT-CONTROL PISTON (PUMP)	492
KIT-CRANKSHAFT BEARING	12
	32
KIT-DISC	277
KIT-GAS ASSIST	468
KIT-GAS ASSIST (STEERING COLUMN)	497
KIT-HARDWARE (ALTERNATOR)	119
KIT-HORN	468
KIT-HOUSING (STEERING COLUMN)	497
KIT-INDICATOR	892
KIT-INSULATOR (STARTING MOTOR)	199
KIT-LEVER (STARTING MOTOR)	199
KIT-NUT	468
KIT-NUT (STEERING COLUMN)	497
KIT-RECEPTACLE (2 PIN)	152
KIT-RELIEF VALVE	490
KIT-ROLLER	862
KIT-SCREEN (PRECLEANER)	97
KIT-SEAL	315
	448
	449
	461
	509
	522
	523
	627
	640
KIT-SEAL (DIVERTER VALVE)	573
KIT-SEAL (DIVERTER VALVE) (HYDRAULIC FAN FLUID FLOW)	618
KIT-SEAL (METERING PUMP, STEERING)	478
KIT-SEAL (QUICK COUPLER)	758
KIT-SEAL (RELIEF VALVE)	573
KIT-SEAL (SHUTTLE VALVE)	573
KIT-SHAFT	468
KIT-SHIM (INCLUDES 17-SHIMS) (PISTON PUMP)	492
KIT-SHOCK ABSORBER	890
	892
KIT-SLIDER BLOCK	878
KIT-TERMINAL (ALTERNATOR)	119
KIT-TETHER	890
	892
KIT-TILT LEVER	468
KIT-TILT LEVER (STEERING COLUMN)	497
KIT-TREADLE PIN	862
KIT-VALVE (QUICK COUPLER)	758
L	
LADDER GP	394
	398
	401
LAMP GP-DOME–CAB	143
LAMP GP-FLOOD–HID, SUSPENDED MOUNT	144
LAMP GP-FLOOD–HID, VERTCAL MOUNT	145
LAMP GP-FLOOD–SUSPENDED MOUNT	147
LAMP GP-FLOOD–VERTICAL MOUNT	146
LAMP GP-HEAD & SIGNAL–LH	148
LAMP GP-HEAD & SIGNAL–RH	150
LAMP GP-SIGNAL–FRONT TURN	152
LAMP GP-SIGNAL–STOP, TAIL	153
LAMP GP-STOP & TAIL	154
LAMP GP-WARNING BEACON–AMBER	155
LAMP-HALOGEN (24-VOLT, 65-WATT)	146
	147
LAMP (12-VOLT, 24-VOLT, 35-WATT)	144
	145
LAMP (24 VOLT)	152
LAMP (24-VOLT)	143
	227
LAMP (24-VOLT)	148

INDEX

Name	Page
	150
LAMP (24-VOLT, 21-WATT)	154
LAMP (24-VOLT, 21-WATT)	148
	150
LAMP (24-VOLT, 5-WATT)	154
LAMP (24-VOLT, 70-WATT)	155
LAMP (24-VOLT, 75/70-WATT)	148
	150
LATCH GP-CAB DOOR & WINDOW	817
LENS (AMBER)	148
	150
LENS-AMBER	152
LENS AS (AMBER)	148
	150
LENS AS (HEADLIGHT)	148
	150
LIFT AR	656
LIFT AR–HIGH LIFT MACHINES, 2-VALVE	655
LIFT AR–HIGH LIFT MACHINES, 3-VALVE	655
LIFT AR–LOW	656
LIFTER GP-VALVE	33
LIFTING GP-ENGINE	34
LIGHTER GP-CIGAR (12-VOLT)	228
LIGHTING AR-ROADING–COMMAND CONTROL STEERING	156
LIGHTING AR-ROADING–HMU STEERING	156
LIGHTING AR-SIGNAL–COMMAND CONTROL STEERING	156
LIGHTING AR-SIGNAL–HMU STEERING	157
LIGHTING GP-FLOOD–4-LAMP, CAB	158
LIGHTING GP-FLOOD–4-LAMP, CAB–HID	159
LIGHTING GP-FLOOD–4-LAMP, CAB FRONT, REAR	161
LIGHTING GP-FLOOD & SIGNAL–4-LAMP, FRONT, REAR	164
LIGHTING GP-FLOOD & SIGNAL–6-LAMP, FRONT, REAR	166
LIGHTING GP-ROADING	168
LIGHTING GP-WARNING BEACON	170
LINER GP-CAB	819
LINES GP-AFTERCOOLER AIR	87
LINES GP-AIR	88
	89
	90
LINES GP-AIR CONDITIONER	822
	824
LINES GP-AUTOMATIC LUBRICATION	410
LINES GP-AUTOMATIC LUBRICATION–LOADER FRAME	406
	413
LINES GP-AUTOMATIC LUBRICATION–LOADER FRAME, REAR	404
LINES GP-AXLE OIL COOLER	308
LINES GP-CAB HEATER	827
	830
LINES GP-COUPLER	552
	553
LINES GP-DIAGNOSTIC–REMOTE PRESSURE TAPS	908
	911
LINES GP-FRONT	554
	556
LINES GP-FUEL	105
	106
LINES GP-FUEL DRAIN	107
LINES GP-GREASE	415
LINES GP-HYDRAULIC	558
LINES GP-HYDRAULIC OIL COOLER	563
LINES GP-LIFT CYLINDER	569
LINES GP-LUBRICATION–CENTRAL	419
	421
LINES GP-SECONDARY STEERING	474
LINES GP-STEERING–COMMAND CONTROL STEERING	482
LINES GP-STEERING–HMU STEERING	476
LINES GP-TILT CYLINDER	571
LINES GP-TORQUE CONV COOLER	312
LINES GP-TURBOCHARGER OIL	63
LINES GP-WATER	69
	72
	74
LINK GP-BUCKET	657
LINK GP-STEERING FRAME LOCK	423
LOCK GP-QUICK COUPLER	760
LOCK GP-QUICK COUPLER–HYDRAULIC	758
LUBRICATION AR-AUTOMATIC	424
	426

M

MANIFOLD GP-CONTROL–AXLE OIL FLOW DIVIDER	315
MANIFOLD GP-CONTROL–BRAKE CHARGE, HYD FAN CONTROL	573
MANIFOLD GP-EXHAUST	91
MANIFOLD GP-INLET	92
MANIFOLD GP-VALVE	575
	577
MIRROR GP-REAR VIEW	831
	832
	835
	838
	839
MIRROR GP-REAR VIEW–HEATED	841
	843
MIRROR GP-REAR VIEW–HEATED, LH	833
MIRROR GP-REAR VIEW–HEATED, RH	834
MIRROR GP-REAR VIEW–LH	836
MIRROR GP-REAR VIEW–RH	837

INDEX

Name	Page
MODULE GP-DISPLAY–AUTOMATIC LUBRICATION SYSTEM	845
MODULE GP-INTERFACE (KEY)	141
MODULE GP-QUAD GAUGE	846
MODULE GP-SPEEDOMETER & TACH	847
MOTOR GP-PISTON–HYDRAULIC FAN	579
MOTOR GP-WINDOW WIPER–FRONT	849
MOTOR GP-WINDOW WIPER–REAR	848
MOUNTING GP-ALTERNATOR	119
MOUNTING GP-AXLE	316
MOUNTING GP-CAB	850
MOUNTING GP-ENGINE & TMSN	35
MOUNTING GP-HYDRAULIC TANK	581
MOUNTING GP-RIM	316
MOUNTING GP-VALVE MECHANISM	36
MUFFLER GP	93
O	
OIL CHANGE GP-HIGH SPEED	317
OPERATOR AR-ENCLOSED ROPS–COMMAND CONTROL STEERING	852
OPERATOR AR-ENCLOSED ROPS–HMU STEERING	852
P	
PADLOCK	919
PADLOCK GP	274
	919
PAN GP-BACKREST	854
PAN GP-BACKREST–CLOTH	853
PAN GP-OIL–ENGINE	37
PANEL GP-INSTRUMENT–LOWER	859
PANEL GP-INSTRUMENT–UPPER	855
	857
PANEL GP-SIDE	427
PEDAL GP-GOVERNOR	862
	863
PIN GP	762
	763
PISTON & ROD GP	38
	39
PLANETARY GP-TRANSMISSION	318
PLATE & FILM GP	915
	916
	917
	918
PLATE & FILM GP–MACHINE CERTIFICATION	914
PLATE & FILM GP (MACHINE CERTIFICATION)	2
PLATE GP-AXLE IDENTIFICATION	919
PLATE GP-WEAR	764
	765
PLATE-IDENTIFICATION (CAT)	663
	665
	667
	669
	671
	672
	674
	675
	677
	678
	679
	681
	682
	683
	685
	690
	691
	693
	694
	696
	698
	704
	706
	717
	724
	729
PLATE-INFORMATION (MANUAL FUEL)	110
PLATE-INSTRUCTION (AIR CONDITIONER)	773
PLATE-INSTRUCTION (BATTERY)	121
PLATFORM AR	864
PLUG	291
	548
PLUG-DRAIN	619
PLUG-DRAIN (ENGINE OIL PAN)	37
PLUG-DRAIN (TRANSMISSION OIL COOLER)	272
PLUG-DUST	399
	402
PLUG GP-AIR INLET MANIFOLD	95
PLUG GP-CYLINDER BLOCK	40
	41
	42
PLUG GP-ENGINE–AIR COMPRESSOR	43
PLUG-MAGNETIC	298
	300
	302
	304
	306
POWER TRAIN AR	322
PRECLEANER GP	96
	97
PROTECTION GP-VANDALISM	919
PROTECTOR GP-EDGE	766
PULLEY GP-ALTERNATOR	44
PULLEY GP-CRANKSHAFT	45

INDEX

Name	Page
PUMP & MOTOR GP-SEC STEERING	490
PUMP & MTG GP-BRAKE & HYD FAN	582
PUMP & MTG GP-HYDRAULIC	584
PUMP & MTG GP-LUBRICATION	429
PUMP & MTG GP-SECONDARY STEER	491
PUMP GP-ENGINE OIL	64
	65
PUMP GP-FUEL INJECTION	109
PUMP GP-FUEL PRM & PRIM FILTER	110
PUMP GP-FUEL PRM & WATER SEP	117
PUMP GP-FUEL TRANSFER	112
PUMP GP-LUBRICATION	430
PUMP GP-METERING (HMU STEERING)	476
PUMP GP-PISTON– BRAKE, HYDRAULIC FAN	588
PUMP GP-PISTON–IMPLEMENT, PILOT	586
PUMP GP-PISTON–STEERING	492
PUMP GP-TRANSMISSION	323
PUMP GP-WATER	75
	76
	77

R

RADIATOR & FAN GP	78
RADIO GP–AM/FM	864
	865
RADIO GP-COMMUNICATION– PRODUCT LINK 121SR	866
RADIO GP-COMMUNICATION (PRODUCT LINK 121SR)	126
RECEPTACLE GP-AUXILIARY START	172
RECLINER GP-SEAT	867
REGULATOR AS-VOLTAGE (24-VOLT) (ALTERNATOR)	119
REGULATOR-WATER TEMPERATURE (92-DEG C) (COOLANT)	72
RELAY AS (24-VOLT) (FRONT CAB FLOODLIGHTS)	227
RELAY AS (24-VOLT) (HEATED MIRRORS)	841
	843
RELAY AS (24-VOLT) (HOOD TILT MOTOR)	235
RELAY AS (24-VOLT) (HORN)	227
RELAY AS (24-VOLT) (REAR FLOODLIGHT)	227
RELAY AS (24-VOLT) (SECONDARY STEER INTERMEDIATE)	250
RIM AR	325
RIM GP-DEMOUNTABLE	326
	327
	328
	329
ROCKER ARM GP	48
ROCKER ARM GP–EXHAUST	47
ROCKER ARM GP–INLET	46
ROCKER ARM GP–UNIT INJECTOR	49
ROPS GP-ENCLOSED	868
ROTATING GP-PUMP– BRAKE, HYDRAULIC FAN	590
ROTATING GP-PUMP–STEERING	494

S

SCREEN	495
	575
	577
SCREEN AS (HYDRAULIC TANK)	591
SCREEN AS (RADIATOR)	378
SCREEN (CONTROL VALVE MANIFOLD)	573
SCREEN GP-CASE DRAIN– STEERING PILOT	495
SCREEN GP-MAGNETIC	291
SCREEN-SUCTION	291
SEAL	103
SEAL GP-CRANKSHAFT	29
	50
SEAL GP (WATER PUMP)	75
SEAL-LIP TYPE (WATER TEMPERATURE REGULATOR)	72
SEAL-O-RING	573
SEAL (TEMPERATURE REGULATOR HOUSING)	72
SEAL-VALVE COVER (VALVE COVER)	11
SEAT BELT GP	872
	877
SEAT GP	875
SEAT GP–CLOTH	873
SEAT GP-SUSPENSION	877
	878
SEAT GP-SUSPENSION–HEATED	879
SENDER AS-FUEL LEVEL	113
SENSOR & MTG GP-LIFT POSITION	173
SENSOR & MTG GP-PRESSURE– LIFT CYLINDER OIL	175
SENSOR & MTG GP-TILT POSITION	176
SENSOR AS-POSITION (LIFT)	180
SENSOR GP-ENGINE	178
SENSOR GP-POSITION–LIFT, TILT	180
SENSOR GP-POSITION–THROTTLE	181
SENSOR GP-PRESSURE	183
	184
	186
	187
SENSOR GP-PRESSURE– AIR INLET MANIFOLD	188
SENSOR GP-PRESSURE–ATMOSPHERIC	185
SENSOR GP-PRESSURE– TURBOCHARGER INLET	182
SENSOR GP-PRESSURE (AIR INLET MANIFOLD)	178
SENSOR GP-PRESSURE (ATMOSPHERIC)	178

INDEX

Name	Page
SENSOR GP-PRESSURE (ENGINE OIL)	178
SENSOR GP-PRESSURE (LIFT CYLINDER OIL)	175
SENSOR GP-SPEED	190, 191
SENSOR GP-SPEED–CAMSHAFT SPEED, TIMING	193
SENSOR GP-SPEED–CRANKSHAFT SPEED, TIMING	192
SENSOR GP-SPEED–MAGNETIC, HIGH OUTPUT–TMSN, TORQUE CONVERTER OUTPUT	189
SENSOR GP-SPEED (CRANK TIMING)	178
SENSOR GP-SPEED (MAGNETIC, HIGH OUTPUT) (TORQUE CONVERTER OUTPUT)	342
SENSOR GP-SPEED (MAGNETIC, HIGH OUTPUT) (TRANSMISSION OUTPUT 1)	291
SENSOR GP-SPEED (MAGNETIC, HIGH OUTPUT) (TRANSMISSION OUTPUT 2)	291
SENSOR GP-SPEED (TIMING, CAMSHAFT)	178
SENSOR GP-TEMPERATURE–ENGINE COOLANT	196
SENSOR GP-TEMPERATURE–INTAKE AIR	195
SENSOR GP-TEMPERATURE–TRANSMISSION OIL	194
SENSOR GP-TEMPERATURE (COOLANT)	178
SENSOR GP-TEMPERATURE (INTAKE AIR)	178
SENSOR GP-TEMPERATURE (2-PIN) (TORQUE CONVERTER OIL)	243
SERVICE GP-COMMUNICATION (PRODUCT LINK 300)	136
SHAFT GP-DRIVE	330
SHIELD GP-ENGINE COMPARTMENT	431
SLIP JOINT GP	330, 331
SOFTWARE GP-COMMUNICATION (PRODUCT LINK 121SR)	866
SOFTWARE GP-COMMUNICATION (PRODUCT LINK 300)	136
SOLENOID AS (24-VOLT)	199
SPIDER & BEARING GP	331, 347, 348
STARTING AID GP-ETHER	197
STARTING MOTOR GP-ELECTRIC	199, 201
STEERING AR-COMMAND CONTROL	496
STEERING AR-SECONDARY	496
STEERING COLUMN GP	497
STEERING WHEEL GP	498
STRAINER AS (HYDRAULIC TANK FILL)	591
STRAINER-FUEL	113
SUPPORT GP-AIR INLET	433
SUPPORT GP-ENGINE	51
SUPPORT GP-HYDRAULIC CONTROL	880
SUPPORT GP-VALVE & FILTER	434
SUPPRESSION AR-SOUND	436
SUPPRESSION AR-SOUND–REAR FRAME	436
SUPPRESSION GP-CAB SOUND–A/C, HEATER	886
SUPPRESSION GP-CAB SOUND–CAB REAR, CAB ROOF	888
SUPPRESSION GP-CAB SOUND–FRONT	884
SUPPRESSION GP-CAB SOUND–REAR	887
SUPPRESSION GP-SOUND–REAR FRAME	437, 439
SUSPENSION GP-SEAT–AIR	890, 892
SWASHPLATE GP	500
SWITCH AS (AUTOMATIC LUBRICATION TEST)	430
SWITCH AS-DIMMER (ROADING)	203
SWITCH AS-LEVEL (GREASE)	430
SWITCH AS-LIMIT (STOP LIGHT)	451
SWITCH AS-PRESSURE (DIFFERENTIAL)	549
SWITCH AS-PRESSURE (PARKING BRAKE OIL)	235
SWITCH AS-PRESSURE (PRIMARY STEERING OIL)	250
SWITCH AS-PRESSURE (REFRIGERANT) (REFRIGERANT HIGH, LOW)	221
SWITCH AS-PRESSURE (SECONDARY STEERING OIL)	250
SWITCH AS-PRESSURE (SERVICE BRAKE OIL)	243
SWITCH AS-PUSH BUTTON (AUTODIG TRIGGER)	130, 132
SWITCH AS-PUSH BUTTON (HORN)	228
SWITCH AS-PUSH BUTTON (THROTTLE LOCK RESUME)	229
SWITCH AS-PUSH BUTTON (TRANSMISSION DOWNSHIFT)	498
SWITCH AS-PUSH BUTTON (TRANSMISSION UPSHIFT)	498
SWITCH AS-ROCKER (AIR CONDITIONER, HEATER)	229
SWITCH AS-ROCKER (AUTO LOADING KICKOUT SET)	132
SWITCH AS-ROCKER (AUTO LOADING KICKOUT SET)	130
SWITCH AS-ROCKER (AUTO LOADING MODE SELECT)	132
SWITCH AS-ROCKER (AUTO LOADING MODE SELECT)	130
SWITCH AS-ROCKER (AUTO REVERSING FAN)	208

INDEX

Name	Page
SWITCH AS-ROCKER (FAN BLOWER SPEED)	229
SWITCH AS-ROCKER (FINE MODULATION)	229
SWITCH AS-ROCKER (FORWARD, NEUTRAL, REVERSE)	219
SWITCH AS-ROCKER (FRONT, REAR FLOODLIGHTS)	159
SWITCH AS-ROCKER (HAZARD)	214, 216
SWITCH AS-ROCKER (HEATED MIRRORS)	841, 843
SWITCH AS-ROCKER (HYDRAULIC LOCKOUT)	230
SWITCH AS-ROCKER (LIFT, TILT KICKOUT)	229
SWITCH AS-ROCKER (MODE SELECT)	229
SWITCH AS-ROCKER (QUICK COUPLER)	210, 211
SWITCH AS-ROCKER (RIDE CONTROL)	209
SWITCH AS-ROCKER (SECONDARY STEERING)	213
SWITCH AS-ROCKER (TMSN NEUTRALIZER OVERRIDE)	229
SWITCH AS-ROCKER (TRANSMISSION DIRECTION)	498
SWITCH AS-ROCKER (WARNING BEACON)	170
SWITCH AS-ROCKER (3RD FUNCTION SELECT)	532
SWITCH AS-ROCKER (3RD FUNCTION SELECT)	528
SWITCH AS-ROTARY (24-VOLT) (AUTOSHIFT CONTROL)	228
SWITCH AS-ROTARY (24-VOLT) (REAR WIPER)	227
SWITCH AS-ROTARY (24-VOLT) (RUNNING LIGHTS)	227
SWITCH AS-ROTARY (24-VOLT) (VARIABLE SHIFT CONTROL)	228
SWITCH AS-TEMPERATURE (AIR CONDITIONER)	775
SWITCH AS-TURN SIGNAL	214, 216
SWITCH AS-WIPER (24-VOLT) (FRONT INTERMITTENT)	227
SWITCH GP-BYPASS–POWER TRAIN OIL FILTER	202
SWITCH GP-DIMMER	203
SWITCH GP-DISCONNECT–BATTERY	204
SWITCH GP-DISCONNECT (BATTERY)	121
SWITCH GP-MAGNETIC–MAIN RELAY	206
SWITCH GP-MAGNETIC–START RELAY	205
SWITCH GP-MAGNETIC (24-VOLT) (MAIN RELAY)	235
SWITCH GP-PRESSURE	207
SWITCH GP-REVERSING FAN	208
SWITCH GP-RIDE CONTROL	209
SWITCH GP-ROCKER–QUICK COUPLER, BUCKET/FORK SELECT, KICKOUT	210, 211
SWITCH GP-ROTARY–AUTODIG MATERIAL SELECT	212
SWITCH GP-ROTARY (AUTODIG MATERIAL SELECT)	132
SWITCH GP-ROTARY (AUTODIG MATERIAL SELECTOR)	130
SWITCH GP-SECONDARY STEERING	213
SWITCH GP-SIGNAL–TURN	214, 216
SWITCH GP-START (KEY)	227
SWITCH GP-TOGGLE	218
SWITCH GP-TOGGLE (GROUND LEVEL SHUTDOWN)	235
SWITCH GP-TOGGLE (HOOD TILT ACTUATOR)	235
SWITCH GP-TRANSMISSION–REMOTE FORWARD, NEUTRAL, REVERSE CONTROL	219
SWITCH-PRESSURE (AUTOLUBE ACTUATION) (LUBRICATION)	446

T

TANK GP-FUEL	113
TANK GP-HYDRAULIC	591
TANK GP-RADIATOR TOP	84
TILT GP-HOOD	441
TIP GP-EXTRA DUTY–K-90	767
TIP GP-GENERAL PURPOSE	768
TIP GP-LONG	769
TIRE & RIM AR	332, 333, 334, 335, 336, 337, 338, 339, 340, 341
TIRE & RIM AR–SPARE	340
TORQUE CONVERTER & HOUSING GP–FREEWHEEL STATOR	342
TORQUE CONVERTER GP–FREEWHEEL STATOR	344
TRANSMISSION AR–FREEWHEEL STATOR TORQUE CONVERTER	346
TURBOCHARGER GP	98, 99

INDEX

Name	Page
U	
UNIVERSAL JOINT GP–FRONT AXLE	348
UNIVERSAL JOINT GP–REAR AXLE	347
UNIVERSAL JOINT GP (FRONT AXLE)	330
UNIVERSAL JOINT GP (REAR AXLE)	330
V	
VALVE & LINES GP-LUBRICATION	443
VALVE & LINES GP-LUBRICATION–LOADER FRAME	444
VALVE & MTG GP-MAIN CONTROL–2-FUNCTION	593
VALVE & MTG GP-MAIN CONTROL–2-FUNCTION, WITH RIDE CONTROL	596
VALVE & MTG GP-MAIN CONTROL–3-FUNCTION, WITH RIDE CONTROL	599, 602
VALVE AS-FLUID SAMPLING (ENGINE OIL)	66
VALVE AS-VENT (WATER LINES)	72
VALVE-BREAKER RELIEF	113
VALVE GP	504
VALVE GP-BRAKE CONTROL–PARKING	467
VALVE GP-CHECK	607
VALVE GP-CHECK–BRAKE OIL, PILOT OIL	605
VALVE GP-CHECK–FUEL	115, 116
VALVE GP-CHECK–PILOT OIL	606
VALVE GP-CHECK–STEERING	502, 503
VALVE GP-CHECK–STEERING QUAD, CCS	501
VALVE GP-CHECK (AXLE OIL COOLER BYPASS)	315
VALVE GP-CHECK (STEERING QUAD)	482
VALVE GP-CONTROL–AUXILIARY	616
VALVE GP-CONTROL–HYDRAULIC BLOCK	608
VALVE GP-CONTROL–LIFT	614
VALVE GP-CONTROL–TILT	610, 612
VALVE GP-DIVERTER–HYDRAULIC FAN	618
VALVE GP-DRAIN–ECOLOGY, HYDRAULIC	619
VALVE GP-ETHER STARTING (24-VOLT)	197
VALVE GP-FLOW DIVIDER (AXLE OIL)	315
VALVE GP-LOWERING CONTROL	620
VALVE GP-LUBE DISTRIBUTION	446, 447
VALVE GP-MAIN CONTROL–2-FUNCTION	626
VALVE GP-MAIN CONTROL–2-FUNCTION, WITH RIDE CONTROL	624
VALVE GP-MAIN CONTROL–3-FUNCTION, WITH RIDE CONTROL	622, 625
VALVE GP-MANUAL–LOWERING CONTROL	627
VALVE GP-MODULATING	349
VALVE GP-PILOT–COMMAND CONTROL STEERING	504
VALVE GP-PRESSURE REDUCING–SIGNAL DUPLICATION	628
VALVE GP-PRESSURE REDUCING–STEERING	506
VALVE GP-PUMP CONTROL–IMPLEMENT, PILOT	631
VALVE GP-PUMP CONTROL–PRESSURE, FLOW COMPENSATOR	629
VALVE GP-PUMP CONTROL–PRESSURE, FLOW COMPENSATOR–STEERING	507
VALVE GP-RELIEF–PUMP BACKUP	509
VALVE GP-RELIEF–RIDE CONTROL	633
VALVE GP-RELIEF–STEERING CYLINDER CROSSOVER	508
VALVE GP-RELIEF–TORQUE CONVERTER OUTLET	350
VALVE GP-RELIEF–TRANSMISSION HYDRAULIC CONTROL	351
VALVE GP-RELIEF (AXLE OIL)	315
VALVE GP-RELIEF (REFRIGERANT COMPRESSOR)	784
VALVE GP-RIDE CONTROL	634
VALVE GP-SECONDARY STEERING	510
VALVE GP-SELECTOR (STEERING)	515
VALVE GP-SHUTOFF	558
VALVE GP-SHUTOFF (CAB HEATER)	827
VALVE GP-SHUTOFF (WATER PUMP)	827
VALVE GP-SHUTTLE	511, 512, 599, 636
VALVE GP-SHUTTLE–BALL RESOLVER	638
VALVE GP-SHUTTLE–BRAKE ACCUMULATOR	637
VALVE GP-SHUTTLE (BRAKE, HYDRAULIC FAN)	573
VALVE GP-SHUTTLE (STEERING OIL)	593, 596, 602
VALVE GP-SOLENOID–BRAKE, HYDRAULIC FAN	639
VALVE GP-SOLENOID–HYDRAULIC LOCKOUT	640
VALVE GP-SOLENOID–PILOT PROPORTIONING	641
VALVE GP-STEERING–COMMAND CONTROL STEERING	513
VALVE GP-STEERING–HMU STEERING	515
VALVE GP-STEERING NEUTRALIZER	517
VALVE GP-STEERING NEUTRALIZER–HMU STEERING	518

INDEX

Name	Page
VALVE GP-STEERING NEUTRALIZER (HMU STEERING)	476
VALVE GP-TIRE	325
	329
	353
VALVE MECHANISM GP	52
VISOR GP-CAB	894

W

Name	Page
WARNING GP-BACKUP	220
WASHER GP-WINDOW	895
WATER SEP & FUEL PRM PUMP GP	117
WINDOW GP-DOOR–LH	898
WINDOW GP-DOOR–RH	896
WIPER GP-WINDOW	900
WIRING GP-AIR CONDITIONER	221
WIRING GP-AUTOLUBE CONTROL	222
WIRING GP-AXLE MONITORING	224
WIRING GP-CAB	227
WIRING GP-CHASSIS	235
WIRING GP-ELECTRONIC CONTROL	241
WIRING GP-ENGINE	243
WIRING GP-FRONT	245
WIRING GP-LIGHTING	248
	249
WIRING GP-LIGHTING–LOADER FRAME	247
WIRING GP-SECONDARY STEERING	250
WIRING GP-SENSOR–TILT	252
	254
WIRING GP-UNIT INJECTOR	256

INDEX

Désignation	Page
A	
ACCOUDOIR (ASS)	781
ACCUMULATEUR - CLIMATISEUR (ASS)	824
ACCUMULATEUR - COMMANDE DE TRANSLATION (ASS)	522, 523
ACCUMULATEUR - FREIN	448, 449
ACCUMULATEUR - HUILE PILOTE (ASS)	520, 521
ACCUMULATEUR ET MONTAGE - COMMANDE ANTI-TANGAGE	519
ALLUME-CIGARETTES (ASS) (12 VOLTS)	228
ALTERNATEUR DE CHARGE (ASS)	119, 120
AMORTISSEUR DE VIBRATIONS (ASS)	21
AMPOULE (12V, 24V, 35W)	144, 145
AMPOULE (24 VOLTS)	143, 152, 227
AMPOULE (24 VOLTS)	148, 150
AMPOULE (24V, 21W)	154
AMPOULE (24V, 21W)	148, 150
AMPOULE (24V, 5W)	154
AMPOULE (24V, 70W)	155
AMPOULE (24V, 75/70W)	148, 150
ARBRE A CAMES (ASS)	8
ARBRE D'ENTRAÎNEMENT (ASS)	330
ATTELAGE D'ARTICULATION (ASS)	388
AUTOCOLLANT (AUTODIG)	130, 132
AUTOCOLLANT-COMMANDE (AUTODIG)	130
AUTOCOLLANT-COMMANDE (*JOYSTICK, 2-FCTN, DOWNSHIFT SW)	530
AUTOCOLLANT-COMMANDE (*JOYSTICK, 3-FCTN, D0WNSHIFT SW)	532
AUTOCOLLANT-COMMANDE (RELEVAGE, LIBRE, ABAISSEMENT)	526, 528
AUTOCOLLANT-COMMANDE (*UPPER PANEL)	228, 857
AUTOCOLLANT-COMMANDE (VIDAGE, REDRESSEMENT)	526, 528
AUTOCOLLANT DE MISE EN GARDE (DÉMARRAGE AVEC CÂBLES VOLANTS, LIRE LE GUIDE)	172
AUTOCOLLANT DE MISE EN GARDE (LIRE LE GUIDE D'UTILISATION ET D'ENTRETIEN)	752, 754
AUTOCOLLANT DE MISE EN GARDE (MANUEL)	915, 916
AUTOCOLLANT DE MISE EN GARDE (PAS DE SOUDAGE, PAS DE PERÇAGE, LIRE LE GUIDE D'UTILISATION ET D'ENTRETIEN)	917
AUTOCOLLANT DE MISE EN GARDE (POINT D'ÉCRASEMENT)	915, 916
AUTOCOLLANT DE MISE EN GARDE (RADIO PRODUCT LINK, AUTRE QUE NACD)	140
AUTOCOLLANT DE PANNEAU DE FUSIBLES	819
AUTOCOLLANT DES COMMANDES	859
AUTOCOLLANT D'IDENTIFICATION (CONTACTEUR D'ALLUMAGE)	141
AUTOCOLLANT D'IDENTIFICATION (CONTACTEUR D'ALLUMAGE)	141
AUTOCOLLANT D'IDENTIFICATION (DÉGAGEMENT SUR ROUTE)	2
AUTOCOLLANT D'IDENTIFICATION (HYDRAULIQUE AUXILIAIRE)	528
AUTOCOLLANT D'IDENTIFICATION (KLAXON)	526, 528
AUTOCOLLANT D'IDENTIFICATION (12 VOLTS)	859
AUTOCOLLANT D'IDENTIFICATION (20 KM/H)	138
AUTOCOLLANT DU PANNEAU (CENTRE)	859
AUTOCOLLANT DU PANNEAU (DROITE)	859
AUTOCOLLANT DU PANNEAU (GAUCHE)	859
AUTOCOLLANT-INFORMATION (CLAVETTE)	141
AUTOCOLLANT-INFORMATION (ENTRÉE/ SORTIE)	859
AUTOCOLLANT-INFORMATION (TIRANT)	917
AUTOCOLLANT-TRANSMISSION (*DOWNSHIFT SWITCH)	526, 528
AUXILIAIRE DE DÉMARRAGE À L'ÉTHER	197
AVERTISSEUR (ASS)	118
AVERTISSEUR DE RECUL (ASS)	220
AXE DE CULBUTEUR (ASS)	46, 47, 48, 49
AXE DE GODET (ASS)	762, 763

* TRADUCTION NON DISPONIBLE AU MOMENT DE LA PUBLICATION

INDEX

Désignation	Page

B

BALAI D'ESSUIE-GLACE (ENS) 900
BÂTI - CHARGEUSE (ENS) 372
BÂTI AR (ENS) 375
BATTERIE ET CÂBLAGE 121
BLINDAGE DE TRANSMISSION (ASS) 381
BLOC - LIMITEUR D'ESSIEU OSCILLANT (ASS) 356
BLOC-CYLINDRES (ASS) 16
BLOC-CYLINDRES (ENS) 14 15
BOÎTE DE VITESSES (VERSION) 346
BOÎTE PLANÉTAIRE (ASS) 318
BOSSAGE DE BRAS DE LEVAGE (ASS) 649 650 652
BOSSAGE DE CHÂSSIS ARRIÈRE (ASS) 357 359
BOSSAGE DE LEVIER (ASS) 648
BOUCHON AIMANTÉ 298 300 302 304 306
BOUCHON DE BLOC-CYLINDRES (ASS) 40 41 42
BOUCHON DE COLLECTEUR D'ADMISSION (ASS) 95
BOUCHON DE GOULOTTE DE REMPLISSAGE 280 591
BOUCHON DE GOULOTTE DE REMPLISSAGE (ENS) (HUILE MOTEUR) 59
BOUCHON DE GOULOTTE DE REMPLISSAGE (ENS) (RESERVOIR DE CARBURANT) 113
BOUCHON DE MOTEUR (ASS) 43
BOUCHON DE PROTECTION 399 402
BOUCHON DE REMPLISSAGE D'HUILE DE BOÎTE (ASS) 274 919
BOUCHON DE REMPLISSAGE D'HUILE MOTEUR (ASS) 59
BOUCHON DE VIDANGE 619
BOUCHON DE VIDANGE (CARTER D'HUILE MOTEUR) 37
BOUCHON DE VIDANGE (REFROIDISSEUR D'HUILE DE BOÎTE) 272
BOUCHON FILETÉ 291 548
BOULONNERIE D'AMORTISSEUR ET DE POULIE 24
BOULONNERIE DE BÂTI ARRIÈRE (ASS) 384 385
BOULONNERIE DE CARTER AV (ASS) 25
BOULONNERIE DE LA CULASSE (ASS) 23
BOURRELET D'ÉTANCHÉITÉ 103
BOURRELET D'ÉTANCHÉITÉ (BOÎTIER DE RÉGULATEUR DE TEMPÉRATURE) 72
BRANCHEMENT ÉLECTRIQUE (ASS) 125
BRAS DE LEVAGE (ENS) 644 645
BRAS D'ESSUIE-GLACE (ASS) 779 780
BRAS ET PALIER (ENS) 642 643

C

CABINE - REVÊTEMENT (ASS) 819
CABINE-FAISCEAU DE CÂBLES (ENS) 229
CABINE ROPS FERMÉE (ASS) 868
CABINE ROPS FERMÉE (VERSION) 782 783 852
CABLAGE - CAPTEUR (ASS) 252 254
CABLAGE - CLIMATISEUR (ASS) 221
CABLAGE AV (ASS) 245
CABLAGE DE CABINE (ASS) 227
CABLAGE DE CHASSIS (ASS) 235
CÂBLAGE DE COMMANDE DE GRAISSAGE AUTOMATIQUE (ASS) 222
CABLAGE DE DIRECTION AUXILIAIRE (ASS) 250
CABLAGE DE MOTEUR (ASS) 243
CABLAGE D'ÉCLAIRAGE (ASS) 247
CABLAGE D'ÉCLAIRAGE (ASS) 248 249
CABLAGE D'INJECTEUR 256
CABLAGE MOTEUR (ENS) 243
CABLAGE MOTEUR (ENS) (CARBURANT) 100
CABLAGE MOTEUR (ENS) (INJECTEUR D'UNITÉ) 256
CABLAGE MOTEUR (ENS) (MODULE DE COMMANDE ÉLECTRONIQUE) 241
CÂBLE DE SURVEILLANCE D'ESSIEU (ASS) . . . 224
CACHE-SOUPAPES (ASS) 11
CADENAS 919
CADENAS (ASS) 274 919
CANALIS. DE REFROIDISSEMENT DU CONV. DE COUPLE 312
CANALISATION DE DIRECTION AUXILIAIRE . . . 474
CANALISATIONS AV 554

* TRADUCTION NON DISPONIBLE AU MOMENT DE LA PUBLICATION

INDEX

Désignation	Page
	556
CANALISATIONS D'AIR (ASS)	88
	89
	90
CANALISATIONS D'AIR DE REFROIDISSEUR D'ADMISSION (ASS)	87
CANALISATIONS DE CARBURANT (ASS)	105
	106
CANALISATIONS DE CHAUFFAGE DE CABINE (ASS)	827
CANALISATIONS DE CHAUFFAGE DE CABINE (ASS)	830
CANALISATIONS DE CLIMATISEUR (ASS)	822
	824
CANALISATIONS DE COUPLEUR (ASS)	552
	553
CANALISATIONS DE DIAGNOSTIC (ASS)	908
	911
CANALISATIONS DE DIRECTION (ASS)	476
CANALISATIONS DE DIRECTION (ASS)	482
CANALISATIONS DE GRAISSAGE (ASS)	415
	419
	421
CANALISATIONS DE GRAISSAGE AUTOMATIQUE (ASS)	404
	406
	410
	413
CANALISATIONS DE RÉCHAUFFEUR DE LIQUIDE DE REFROIDISSEMENT	827
	830
CANALISATIONS DE REFROIDISSEUR D'HUILE D'ESSIEU (ASS)	308
CANALISATIONS DE REFROIDISSEUR D'HUILE HYDR. (ASS)	563
CANALISATIONS DE VÉRIN DE LEVAGE (ASS)	569
CANALISATIONS D'EAU (ASS)	74
CANALISATIONS D'EAU (ASS)	69
	72
CANALISATIONS D'HUILE DE TURBOCOMPRESSEUR (ASS)	63
CANALISATIONS DU VÉRIN D'INCLINAISON (ASS)	571
CANALISATIONS HYDRAULIQUES (ASS)	558
CAPOT ET PROTECTION (ASS)	390
CAPTEUR - MOTEUR (ASS)	178
CAPTEUR DE POSITION (ENS) (LEVAGE)	180
CAPTEUR DE PRESSION (ASS)	182
	183
	184
	186
	187
	188
CAPTEUR DE PRESSION (ASS) (ATMOSPHÉRIQUE)	178
CAPTEUR DE PRESSION (ASS) (COLLECTEUR D'ADMISSION D'AIR)	178
CAPTEUR DE PRESSION (ASS) (HUILE MOTEUR)	178
CAPTEUR DE PRESSION (ASS) (*LIFT CYLINDER OIL)	175
CAPTEUR DE PRESSION ET MONTAGE	175
CAPTEUR DE TEMPERATURE (ASS)	194
	195
	196
CAPTEUR DE TEMPERATURE (ASS) (ADMISSION D'AIR)	178
CAPTEUR DE TEMPERATURE (ASS) (LIQUIDE DE REFROIDISSEMENT)	178
CAPTEUR DE TEMPERATURE (ASS) (2 BROCHES) (HUILE DU CONV. DE COUPLE)	243
CAPTEUR DE VITESSE (ASS)	189
	190
	191
	192
	193
CAPTEUR DE VITESSE (ASS) (CALAGE DU VILEBREQUIN)	178
CAPTEUR DE VITESSE (ASS) (MAGNÉTIQUE, GRANDE PUISSANCE) (SORTIE DU CONVERTISSEUR DE COUPLE)	342
CAPTEUR DE VITESSE (ASS) (MAGNÉTIQUE, GRANDE PUISSANCE) (SORTIE 1 DE BOÎTE)	291
CAPTEUR DE VITESSE (ASS) (MAGNÉTIQUE, GRANDE PUISSANCE) (SORTIE 2 DE BOÎTE)	291
CAPTEUR DE VITESSE (ASS) (*TIMING, CAMSHAFT)	178
CAPTEUR ET MONTAGE-POSITION DE LEVAGE (ASS)	173
CAPTEUR ET MONTAGE-POSITION D'INCLINAISON (ASS)	176
CARBURANT - CANALISATIONS DE VIDANGE (ASS)	107
CARDAN COULISSANT (ASS)	330
CARDAN COULISSANT (ASS)	331
CARTER AV (ASS)	29
CARTER DE VOLANT (ASS)	28
CARTER D'ESSIEU FIXE	298
	300
	302
CARTER D'ESSIEU OSCILLANT	304
	306

* TRADUCTION NON DISPONIBLE AU MOMENT DE LA PUBLICATION

INDEX

Désignation	Page
CEINTURE DE SECURITE (ASS)	872
CEINTURE DE SECURITE (ASS)	877
CHAPEAU - RADIATEUR (7-PSI)	84
CHARNIÈRE DE GARDE-BOUE (ASS)	386
	387
CHAUFFAGE DE CABINE (ASS)	809
	811
CLAPET (ASS)	504
CLAPET DE DECHARGE (ASS)	350
	351
	508
	509
	633
CLAPET DE DECHARGE (ASS) (COMPRESSEUR DE RÉFRIGÉRANT)	784
CLAPET DE DECHARGE (ASS) (HUILE D'ESSIEU)	315
CLAPET DE DÉCHARGE HYDRAULIQUE	113
CLAPET DE RETENUE (ENS)	115
	116
	501
	502
	503
	605
	606
	607
CLAPET DE RETENUE (ENS) (DÉRIVATION DE REFROIDISSEUR D'HUILE D'ESSIEU)	315
CLAPET DE RETENUE (ENS) (DIRECTION QUADRUPLE)	482
CLAVETTE - POIGNÉE	797
CLÉ ÉLECTRONIQUE (ENS) (SÉCURITÉ)	141
CLIGNOTANT (ENS) (24 VOLTS)	214
	216
CLIMATISEUR (ASS)	774
	775
CLIMATISEUR (VERSION)	773
COFFRE A OUTILS (ASS)	903
	905
COLLECTEUR - COMMANDE (ASS)	315
	573
COLLECTEUR - SOUPAPE (ASS)	575
	577
COLLECTEUR D'ADMISSION (ASS)	92
COLLECTEUR D'ÉCHAPPEMENT (ASS)	91
COLONNE DE DIRECTION (ASS)	497
COMMANDE D'AFFICHAGE ÉLECTRONIQUE (PANNEAU DE TÉMOINS, DROIT, GAUCHE)	229
COMMANDE D'AFFICHAGE ÉLECTRONIQUE (TABLEAU DE TÉMOINS, CENTRE)	130
	132
COMMANDE DE BOITE DE VITESSES (ASS)	267
	268
COMMANDE DE CREUSAGE AUTOMATIQUE AUTODIG (ASS)	130
	132
COMMANDE DE DIRECTION (ASS)	468
	470
COMMANDE DE FAISCEAU (ENS)	126
COMMANDE DE FAISCEAU (ENS) (GRAISSAGE AUTOMATIQUE)	430
COMMANDE DE FAISCEAU (ENS) (*HEATED MIRRORS)	841
	843
COMMANDE DE FREIN DE STATIONNEMENT (ASS)	460
COMMANDE DE GODET (ASS)	653
	655
COMMANDE DE LA PÉDALE DE FREIN (ASS)	458
	459
COMMANDE DE MONITEUR NON PROGRAMMÉE (ASS)	789
COMMANDE DE MONITEUR NON PROGRAMMÉE (ASS) (SYSTÈME DE SURVEILLANCE CATERPILLAR)	228
COMMANDE DE POIGNÉE (ASS)	534
COMMANDE DE TRANSLATION (VERSION)	525
COMMANDE ÉLECTROHYDRAULIQUE (ASS)	526
	528
	530
	532
COMMANDE ÉLECTRONIQUE - CABLAGE	241
COMMANDE ÉLECTRONIQUE D'ÉQUIPEMENT (ASS)	137
COMMANDE ET CANALIS. - TRANSLATION (ASS)	524
COMMANDE ET MONTAGE - MOTEUR	128
COMMANDE ET MONTAGE-COMMUNICATION (ASS)	126
COMMANDE HYDRAULIQUE DE BOÎTE (ASS)	269
COMMANDE NON PROGRAMMEE (ASS)	134
COMMANDE NON PROGRAMMEE (ASS) (ÉQUIPEMENT)	229
COMMANDE NON PROGRAMMEE (ASS) (TRANSMISSION)	229
COMMANDE PRINCIPALE DE SOUPAPE ET MONTAGE (ASS)	593
	596
	599
	602
COMPARTIMENT DE BATTERIE (ASS)	360
COMPRESSEUR DE REFRIGERANT (ASS)	784

* TRADUCTION NON DISPONIBLE AU MOMENT DE LA PUBLICATION

INDEX

Désignation	Page
	785
CONDENSATEUR ET MONTAGE (RÉFRIGÉRANT)	786
CONDUIT ET FILTRE À AIR (ASS)	797
CONTACTEUR DE CLIGNOTANT (ENS)	214 216
CONTACTEUR DE COMMANDE DU SYSTÈME ANTITANGAGE (ASS)	209
CONTACTEUR DE MARCHE ARRIÈRE DES PALES DE VENTILATEUR	208
CONTACTEUR DE NIVEAU (ENS) (GRAISSER)	430
CONTACTEUR (ENS) (ESSAI DE GRAISSAGE AUTOMATIQUE)	430
CONTACTEUR MAGNETIQUE (ASS)	205 206
CONTACTEUR MAGNETIQUE (ASS) (24 VOLTS) (RELAIS PRINCIPAL)	235
CONTACTEUR RÉGLABLE DE SUPPORT (ENS)	451
CONTACTEUR ROTATIF (ASS)	212
CONTACTEUR ROTATIF (ASS) (SELECTEUR DE MATERIAU DE COMMANDE DE CREUSAGE AUTOMATIQUE)	130
CONTACTEUR ROTATIF (ASS) (SÉLECTION DU MATÉRIEL AUTODIG)	132
CONTREPOIDS (ASS)	361
CONVERTISSEUR DE COUPLE (ASS)	344
CONVERTISSEUR DE COUPLE ET CARTER (ASS)	342
COUDE DE FLEXIBLE	87
COUPLEUR EXPRESS (ASS)	743 744
COUPLEUR EXPRESS (VERSION)	741 742
COURONNE CONIQUE ET PIGNON	285 287
COURROIE DE MARCHEPIED	399 402
COURROIE INTERMÉDIAIRE (ASS)	31
COURROIE MULTIPLE	7
COURROIE MULTIPLE (COMPRESSEUR DE CLIMATISEUR)	785
COUVERCLE DE CARTER AV (ASS)	9 10
COUVERCLE INFÉRIEUR-DOSSIER (ASS)	853 854
CREPINE (ENS) (REMPLISSAGE DE RÉSERVOIR HYDRAULIQUE)	591
CROISILLON ET ROULEMENT	331 347 348
CULASSE (ASS)	19
	20
CULASSE (ENS)	18
CULBUTERIE (ASS)	52
CYLINDRE D'ETHER (ENS)	197

D

Désignation	Page
DÉMARREUR ÉLECTRIQUE (ASS)	199 201
DIFFÉRENTIEL - GLISSEMENT LIMITÉ (ASS)	277
DIFFERENTIEL (ASS)	275 276
DIFFÉRENTIEL NOSPIN (ASS)	278 279
DIRECTION AUXILIAIRE (VERSION)	496
DISJONCTEUR (ASS) (20A) (COMMANDE VÉRIN DE CAPOT)	237
DISJONCTEUR DE SECURITE (ENS) (FEUX D'ARRÊT)	451
DISJONCTEUR (ENS) (105A) (ALTERNATEUR)	235
DISJONCTEUR (ENS) (15A) (FEUX DE ROUTE)	236
DISJONCTEUR (ENS) (30A) (ALIM BAT NON RELIÉE À LA CABINE)	237
DISJONCTEUR (ENS) (32-AMPÈRES) (DÉMARRAGE DU MOTEUR)	235
DISJONCTEUR (ENS) (80A) (PRINCIPAL)	235
*DISPLAY	845
DISPOSITIF DE VIDANGE RAPIDE D'HUILE (ASS)	317
DISPOSITIF D'EVACUATION DES VAPEURS DE CARTER	61
DISTRIBUTEUR - 2 VOIES (VERSION)	551
DISTRIBUTEUR - 3 VOIES (VERSION)	551
DISTRIBUTEUR (ASS)	608 610 612 614 616
DISTRIBUTEUR DE COMMANDE ANTI-TANGAGE	634
DISTRIBUTEUR DE FREIN (ASS)	467
DISTRIBUTEUR DE POMPE (ASS)	507 629 631

E

Désignation	Page
EAU DES CHEMISES - RECHAUFFEUR (ASS)	139
ÉCHANGEUR DE CHALEUR (ASS)-ESSIEU	296

* TRADUCTION NON DISPONIBLE AU MOMENT DE LA PUBLICATION

INDEX

Désignation	Page
ECHELLE (ASS)	394, 398, 401
ÉCLAIRAGE - CLIGNOTANT (VERSION)	156, 157
ÉCLAIRAGE - FEUX DE ROUTE (ASS)	168
ÉCLAIRAGE - FEUX DE ROUTE (VERSION)	156
ÉCLAIRAGE - GYROPHARE (ASS)	170
ÉCLAIRAGE - PROJECTEURS (ASS)	158, 159, 161
ÉCLAIRAGE - PROJECTEURS ET CLIGNOTANTS (ASS)	164, 166
ÉCRAN	495, 575, 577
ÉCRAN (COLLECTEUR DE DISTRIBUTEUR)	573
ÉCRAN (ENS) (RADIATEUR)	378
ÉCRAN (ENS) (RÉSERVOIR HYDRAULIQUE)	591
ÉCRAN MAGNÉTIQUE (ASS)	291
ÉCRAN THERMIQUE DE COMPARTIMENT MOTEUR	431
ÉLECTRONIQUE - COMMUNICATION (ASS)	136
ÉLECTRONIQUE DE TRANSMISSION (ASS)	138
ÉLECTRONIQUE DE TRANSMISSION (ASS)	138
ÉLECTRONIQUE-MONITEUR (ASS)	138
ÉLÉMENT DE FILTRE À AIR (ENS) (PRINCIPAL)	86
ÉLÉMENT DE FILTRE À AIR (ENS) (SECONDAIRE)	86
ÉLÉMENT DE FILTRE À HUILE (ENS) (HYDRAULIQUE)	549
ÉLÉMENT DE FILTRE À HUILE (ENS) (TRANSMISSION)	284
ÉLÉMENT DU RÉCHAUFFEUR D'EAU DES CHEMISES (ENS) (240V, 1500W)	139
EMBOUT ET LAME DE COUPE (ASS)	746, 747
ENGRENAGE DE TRANSFERT DE RENDEMENT (ASS)	291
ENTRAÎNEMENT AUXILIAIRE (ASS)	22
ESSIEU ET REFROIDISSEUR D'HUILE D'ESSIEU (VERSION)	257
ESSIEU ET REFROIDISSEUR D'HUILE D'ESSIEU (VERSION)	257
ESSIEU FIXE (VERSION)	258, 259
ESSIEU OSCILLANT (VERSION)	259, 260, 261
ESSUIE-GLACE (ASS)	900

F

Désignation	Page
FAISCEAU-BOÎTE DE TRANSMISSION	269
FAISCEAU DE CABLES - CAPTEUR (ENS) (INCLINAISON)	252
FAISCEAU DE CÂBLES DE FREINS (ENS) (FEU DE STOP)	451
FAISCEAU DE CABLES (ENS)	190
FAISCEAU DE CABLES (ENS) (CALAGE DE CAME)	191
FAISCEAU DE CABLES (ENS) (OUTIL D'ENTRETIEN)	228
FAISCEAU DE CHÂSSIS (ENS) (FREIN DE STATIONNEMENT, CONTACTEURS DE FILTRE À HUILE)	236
FAISCEAU DE CHÂSSIS (ENS) (PRINCIPAL)	235
FAISCEAU DE CHAUFFAGE ET CLIMATISATION	775, 811
FAISCEAU DE COMMANDES (ENS)	228
FAISCEAU DE COMMANDES (ENS) (*ELECTROHYDRAULIC, JOYSTICK)	530
FAISCEAU DE COMMANDES (ENS) (*ELECTROHYDRAULIC, JOYSTICK)	532
FAISCEAU DE CONDENSEUR (ENS) (RÉFRIGÉRANT)	68
FAISCEAU DE CONDENSEUR (ENS) (RÉFRIGÉRANT)	786
FAISCEAU DE CONTACTEUR (ENS)	222
FAISCEAU DE CONTACTEUR (ENS) (NIVEAU)	430
FAISCEAU DE DIRECTION (ENS) (COLONNE, VOLANT)	498
FAISCEAU DE DIRECTION (ENS) (SECONDAIRE)	250
FAISCEAU DE SOUPAPE (ENS)	222
FAISCEAU DE SOUPAPE (ENS) (COMPRESSEUR PNEUMATIQUE DE SIÈGE)	890, 892
FAISCEAU D'ÉCLAIRAGE (ENS)	159, 247
FAISCEAU D'ÉCLAIRAGE (ENS) (CLIGNOTANT)	214, 216
FAISCEAU D'ÉCLAIRAGE (ENS) (DROITE)	249
FAISCEAU D'ÉCLAIRAGE (ENS) (GAUCHE)	249
FAISCEAU D'ÉCLAIRAGE (ENS) (GYROPHARE)	170
FAISCEAU D'ÉCLAIRAGE (ENS) (PROJECTEURS DE CABINE)	228
FAISCEAU D'ESSIEU (ENS) (ARRIÈRE)	224
FAISCEAU D'ESSIEU (ENS) (AVANT)	224

* TRADUCTION NON DISPONIBLE AU MOMENT DE LA PUBLICATION

INDEX

Désignation	Page
FAISCEAU DU REFROIDISSEUR D'HUILE (ENS) (BOÎTE DE VITESSES)	272
FAISCEAU DU REFROIDISSEUR D'HUILE (ENS) (ESSIEU HYDRAULIQUE)	539
FAISCEAU DU REFROIDISSEUR D'HUILE (ENS) (ESSIEU HYDRAULIQUE)	257
FAISCEAU DU REFROIDISSEUR D'HUILE (ENS) (ESSIEU HYDRAULIQUE)	68
FAISCEAU DU REFROIDISSEUR D'HUILE (ENS) (MOTEUR)	66
FEUX ARRIÈRE ET FEUX D'ARRÊT	154
FILTRE - SÉPARATEUR D'EAU ET DE CARBURANT (ENS) (PRINCIPAL)	103
FILTRE A AIR (ASS)	85
	86
FILTRE À AIR DE CABINE	797
FILTRE À CARBURANT	113
FILTRE A CARBURANT (ASS)	102
FILTRE A CARBURANT (ENS)	102
FILTRE À GRAISSE (ENS)	430
FILTRE A HUILE (ASS)	284
	549
	550
FILTRE À HUILE (ENS)	550
FILTRE À HUILE MOTEUR (ASS)	60
FILTRE A HUILE MOTEUR (ENS)	60
FILTRE DE SÉPARATEUR D'EAU ET DE CARBURANT (ASS)	103
FILTRE ET CANALISATIONS - BOÎTE DE VITESSE (ASS)	282
FILTRE ET CANALISATIONS DE CARBURANT AUXILIAIRES (ASS)	100
FIXATION DE MONTAGE (ASS)	383
FLEXIBLE (ÉVACUATION DES GAZ DE CARTER)	61
FOURCHE PALLETTE (ASS)	752
	754
FREIN DE MANOEUVRE - COMMANDE (ASS)	461
FREIN DE STATIONNEMENT (ASS)	453
	455
	456
	457
FREIN ET TRAINS PLANÉTAIRES (ASS)	263
FUSIBLE (10A)	227
FUSIBLE (15A)	227
	811
FUSIBLE (15A)	775
FUSIBLE (20A)	227

G

GARDE-BOUE (ASS)	363
	365
	367
GARDE-BOUE (VERSION)	362
*GEAR GP-BEVEL & PINION	289
GLACE DE PORTIÈRE (ASS)	896
	898
GODET DE MANUTENTION	673
	674
	675
	677
	678
	679
	681
	682
	683
	685
GODET NORMAL (ASS)	699
	700
	701
	702
	703
	704
	705
	706
	707
	708
	709
	710
	711
	712
	713
GODET NORMAL (ENS)	665
	667
	669
	671
	672
GODET NORMAL (ENS)	659
	660
	661
	662
	663
GODET PÉNÉTRATION (ASS)	731
GODET-PÉNÉTRATION (ENS)	687
GODET POUR MANUTENTION	714
	715
	716
	717
	719
	720
	721
	722
	723
	724

* TRADUCTION NON DISPONIBLE AU MOMENT DE LA PUBLICATION

INDEX

Désignation	Page
	726
	727
	728
	729
GODET POUR SCORIES	740
GODET POUR SCORIES (ENS)	698
GODET-ROCHE (ASS)	732
	733
	734
	735
	736
	737
	738
	739
GODET-ROCHE (ENS)	691
	693
	694
	696
GODET-ROCHE (ENS)	688
	689
	690
GOULOTTE DE REMPLISSAGE D'HUILE DE TRANSMISSION	280
GRAISSAGE AUTOMATIQUE (VERSION)	424
	426
GRILLE DE RADIATEUR (ASS)	378
GROUPE DE CONTROLE	788
GROUPE DE MOTEUR A PISTONS	579
GROUPE DE ROTATION DE POMPE	494
	590

H

*HARNESS AS-TRANSMISSION CONT (VOLANT DE DIRECTION)	498
HUILE MOTEUR - CARTER (ASS)	37

I

INCLINAISON DU CAPOT (ASS)	441
INJECTEUR DE CARBURANT (ASS)	104
INSONORISATION (ASS)	437
	439
INSONORISATION DE CABINE (ASS)	884
	886
	887
	888
INSONORISATION (VERSION)	436
INTERRUPTEUR - BOUTON-POUSSOIR (ENS) (DÉCLENCHEUR DE FONCTION AUTODIG)	130
	132
INTERRUPTEUR - BOUTON-POUSSOIR (ENS) (KLAXON)	228
INTERRUPTEUR - BOUTON-POUSSOIR (ENS) (MONTÉE EN VITESSE DE LA BOÎTE)	498
INTERRUPTEUR - BOUTON-POUSSOIR (ENS) (RÉENCLENCHEMENT DU VERROU DE LA MANETTE DE GAZ)	229
INTERRUPTEUR - BOUTON-POUSSOIR (ENS) (RETROGRADATION)	498
INTERRUPTEUR - DÉRIVATION (ASS)	202
INTERRUPTEUR - SIGNAL (ASS)	214
	216
INTERRUPTEUR À BASCULE (ASS)	210
	211
INTERRUPTEUR À BASCULE (ASS)	218
INTERRUPTEUR À BASCULE (ASS) (ARRÊT DEPUIS LE SOL)	235
INTERRUPTEUR À BASCULE (ASS) (COMMANDE VÉRIN DE CAPOT)	235
INTERRUPTEUR BALANCIER (ENS) (BLOCAGE HYDRAULIQUE)	230
INTERRUPTEUR BALANCIER (ENS) (CLIMATISATION, CHAUFFAGE)	229
INTERRUPTEUR BALANCIER (ENS) (COMMANDE DE SENS DE MARCHE)	498
INTERRUPTEUR BALANCIER (ENS) (COMMANDE DE TRANSLATION)	209
INTERRUPTEUR BALANCIER (ENS) (COUPLEUR EXPRESS)	210
	211
INTERRUPTEUR BALANCIER (ENS) (DIRECTION AUXILIAIRE)	213
INTERRUPTEUR BALANCIER (ENS) (FEUX DE DÉTRESSE)	214
	216
INTERRUPTEUR BALANCIER (ENS) (GYROPHARE)	170
INTERRUPTEUR BALANCIER (ENS) (LIMITEUR DE LEVAGE , D'INCLINAISON)	229
INTERRUPTEUR BALANCIER (ENS) (MARCHE ARRIÈRE AUTOMATIQUE DES PALES DE VENTILATEUR)	208
INTERRUPTEUR BALANCIER (ENS) (MARCHE AVANT, POINT MORT, MARCHE ARRIÈRE)	219
INTERRUPTEUR BALANCIER (ENS) (MODULATION PRÉCISE)	229
INTERRUPTEUR BALANCIER (ENS) (NEUTRALISATION DE LA BOÎTE DE VITESSES)	229
INTERRUPTEUR BALANCIER (ENS) (PROJECTEURS AVANT, ARRIÈRE)	159

* TRADUCTION NON DISPONIBLE AU MOMENT DE LA PUBLICATION

INDEX

Désignation	Page
INTERRUPTEUR BALANCIER (ENS) (RÉGLAGE DU LIMITEUR DE CHARGEMENT AUTOMATIQUE)	130, 132
INTERRUPTEUR BALANCIER (ENS) (RÉTROVISEURS À CHAUFFAGE INTÉGRÉ)	841
INTERRUPTEUR BALANCIER (ENS) (RÉTROVISEURS À CHAUFFAGE INTÉGRÉ)	843
INTERRUPTEUR BALANCIER (ENS) (SÉLECTEUR DE MODE DE CHARGEMENT AUTOMATIQUE)	130, 132
INTERRUPTEUR BALANCIER (ENS) (SÉLECTION DE MODE)	229
INTERRUPTEUR BALANCIER (ENS) (VITESSE DU VENTILATEUR SOUFFLANT)	229
INTERRUPTEUR BALANCIER (ENS) (*3RD FUNCTION SELECT)	528, 532
INTERRUPTEUR DE BOITE DE VITESSES (ASS)	219
INTERRUPTEUR DE DÉMARRAGE (ASS) (CLAVETTE)	227
INTERRUPTEUR DE DIRECTION AUXILIAIRE (ASS)	213
INTERRUPTEUR D'ESSUIE-GLACE (24 VOLTS) (AV, INTERMITTENT)	227
INTERRUPTEUR ROTATIF (ENS) (24 VOLTS) (COMMANDE DE CHANGEMENT DE VITESSES VARIABLE)	228
INTERRUPTEUR ROTATIF (ENS) (24 VOLTS) (COMMANDE DE PASSAGE AUTOMATIQUE DES VITESSES)	228
INTERRUPTEUR ROTATIF (ENS) (24 VOLTS) (ESSUIE-GLACE ARRIÈRE)	227
INTERRUPTEUR ROTATIF (ENS) (24 VOLTS) (FEUX DE ROUTE)	227
INVERSEUR D'ÉCLAIRAGE (ASS)	203
INVERSEUR D'ECLAIRAGE (ENS) (DÉPLACEMENT ROUTIER)	203

J

Désignation	Page
JANTE DÉMONTABLE (ASS)	326, 327, 328, 329
JANTE (VERSION)	325
JAUGE DE NIVEAU D'HUILE (ENS)	280
JAUGE DE NIVEAU D'HUILE (REGARD)	591
JAUGE D'HUILE MOTEUR (BAIONNETTE) (ASS)	62
JAUGE D'HUILE MOTEUR (BAIONNETTE) (ASS) (MOTEUR)	62
JAUGE D'HUILE MOTEUR (BAÏONNETTE) (ENS)	298, 300, 302, 304, 306
JOINT (ASS) (POMPE À EAU)	75
JOINT DE CACHE-SOUPAPES (CACHE-SOUPAPES)	11
JOINT DE VILEBREQUIN (ASS)	29, 50
JOINT PLAT (RENIFLARD DE CARTER)	58
JOINT TORIQUE	573
JOINT UNIVERSEL (ASS)	347, 348
JOINT UNIVERSEL (ASS) (ESSIEU ARRIÈRE)	330
JOINT UNIVERSEL (ASS) (ESSIEU AVANT)	330

K

Désignation	Page
KIT D'AMORTISSEUR	890, 892
KIT D'ARBRE DE CULBUTEURS	468
KIT D'ASSISTANCE À L'ACCÉLÉRATION	468
KIT D'ASSISTANCE À L'ACCÉLÉRATION (COLONNE DE DIRECTION)	497
KIT D'ATTACHE	890, 892
KIT D'AXE À PÉDALE	862
KIT DE BAGUE (DÉMARREUR)	199
KIT DE BALAIS (DÉMARREUR)	199
KIT DE BLOC COULISSANT	878
KIT DE BORNE (ALTERNATEUR)	119
KIT DE BOULONNERIE (ALTERNATEUR)	119
KIT DE CALES (COMPREND 17 CALES) (POMPE À PISTONS)	492
KIT DE CARTER (COLONNE DE DIRECTION)	497
KIT DE CLAPET DE DECHARGE	490
KIT DE COUSSINET (ALTERNATEUR)	119
KIT DE COUSSINET DE VILEBREQUIN	12, 32
KIT DE DISQUE	277
KIT DE GARNITURE DE FREIN	456
KIT DE JOINTS	315, 461, 509, 522, 523

* TRADUCTION NON DISPONIBLE AU MOMENT DE LA PUBLICATION

INDEX

Désignation	Page
	627
	640
KIT DE JOINTS (CLAPET DE DÉCHARGE)	573
KIT DE JOINTS (COUPLEUR EXPRESS)	758
KIT DE JOINTS (POMPE RÉGULATRICE, DIRECTION)	478
KIT DE JOINTS (SOUPAPE DE DÉRIVATION)	573
KIT DE JOINTS (SOUPAPE DE DÉRIVATION) (DÉBIT DE LIQUIDE DE VENTILATEUR HYDRAULIQUE)	618
KIT DE JOINTS (VANNE-PILOTE)	573
KIT DE KLAXON	468
KIT DE LEVIER (DÉMARREUR)	199
KIT DE LEVIER D'INCLINAISON	468
KIT DE LEVIER D'INCLINAISON (COLONNE DE DIRECTION)	497
KIT DE PISTON DE COMMANDE (POMPE)	492
KIT DE PISTON EXCENTRIQUE (POMPE)	492
KIT DE PRISE FEMELLE (2 BROCHES)	152
KIT DE ROULEAU	862
KIT DE SOUPAPE (COUPLEUR EXPRESS)	758
KIT DE SOUPAPE PNEUMATIQUE	890
	892
KIT DE TAMIS (PRÉFILTRE)	97
KIT DE VIS (CONNECTEURS ÉLECTRIQUES)	236
KIT D'ÉCROU	468
KIT D'ÉCROU (COLONNE DE DIRECTION)	497
KIT D'INDICATEUR	892
KIT D'ISOLANT (DÉMARREUR)	199
*KIT-SEAL	448
	449
KLAXON ÉLECTRIQUE (ASS)	813
KLAXON (ENS) (24V, FAIBLE)	813

L

Désignation	Page
LAME DE COUPE (ASS)	747
	748
	749
	750
LAME DE COUPE (ENS)	745
LAMPE - CLIGNOTANT DE DIRECTION (ASS)	152
	153
LAMPE - GYROPHARE (ASS)	155
LAMPE - PHARE (ASS)	144
	145
	146
LAMPE - PHARE (ASS)	147
LAMPE - PHARE ET CLIGNOTANT	148
	150
LAMPE HALOGÈNE (24V, 65W)	146
	147
LAVE-GLACE - VITRE (ASS)	895
LENTILLE (ENS) (JAUNE)	148
	150
LENTILLE (ENS) (PHARE AVANT)	148
	150
LENTILLE (JAUNE)	148
	150
LENTILLE ORANGE	152
LEVAGE (VERSION)	655
	656
LIAISON - VERROUILLAGE DE CHÂSSIS DE DIRECTION (ASS)	423
LIAISON-GODET (ASS)	657
LOGICIEL DE COMMUNICATION (ASS) (PRODUCT LINK 121SR)	866
LOGICIEL DE COMMUNICATION (ASS) (PRODUCT LINK 300)	136
LOQUET - PORTE DE CABINE ET GLACE	817

M

Désignation	Page
MANOCONTACT	207
MANOCONTACT (*AUTOLUBE ACTUATION) (GRAISSAGE)	446
MANOCONTACT (ENS) (DIFFÉRENTIEL)	549
MANOCONTACT (ENS) (HUILE DE DIRECTION AUXILIAIRE)	250
MANOCONTACT (ENS) (HUILE DE DIRECTION PRINCIPALE)	250
MANOCONTACT (ENS) (HUILE DE FREIN DE MANOEUVRE)	243
MANOCONTACT (ENS) (HUILE DE FREIN DE STATIONNEMENT)	235
MANOCONTACT (ENS) (RÉFRIGÉRANT) (RÉFRIGÉRANT ÉLEVÉ, BAS)	221
MÉCANISME DE COMMANDE D'INCLINAISON (ASS)	354
MODULE - QUATRE INSTRUMENTS (ASS)	846
MODULE D'AFFICHAGE (ASS)	845
MODULE D'INDICATEUR DE VITESSE ET COMPTE-TOURS (ASS)	847
MODULE-INTERFACE (ASS) (CLAVETTE)	141
MONTAGE D'ALTERNATEUR (ASS)	119
MONTAGE DE CABINE (ASS)	850
MONTAGE DE CULBUTERIE (ASS)	36
MONTAGE DE JANTE (ASS)	316
MONTAGE DE MOTEUR ET BOÎTE (ASS)	35
MONTAGE DE MOTEUR (VERSION)	5
MONTAGE DE RADIO (ASS)	815
MONTAGE DES COMMANDES (ASS)	814
MONTAGE D'ESSIEU (ASS)	316
MONTAGE-SÉCURITÉ (ASS)	141

* TRADUCTION NON DISPONIBLE AU MOMENT DE LA PUBLICATION

INDEX

Désignation	Page
MOTEUR - PARTIE CENTRALE (VERSION)	4
MOTEUR D'ESSUIE-GLACE (ASS)	848 849

O

Désignation	Page
OEILLETONS DE LEVAGE MOTEUR (ASS)	34

P

Désignation	Page
PALONNIER - GROUPE DE COMMANDE (ASS)	535 537
PALONNIER - GROUPE DE COMMANDE (ASS) (*3-FUNCTION, WITH DOWNSHIFT)	532
PANNEAU LATERAL (ASS)	427
PIGNONNERIE AV (ASS)	27
PISTON ET BIELLE (ASS)	38 39
PLAFONNIER (ASS)	143
PLANCHER-ISOLATION (ASS)	799 800 801
PLAQUE D'INSTRUCTIONS (BATTERIE)	121
PLAQUE D'INSTRUCTIONS (CLIMATISEUR)	773
PLAQUE D'USURE (ASS)	764 765
PLAQUE (IDENTIFICATION) (CAT)	663 665 667 669 671 672 674 675 677 678 679 681 682 683 685 690 691 693 694 696
PLAQUE (IDENTIFICATION) (CAT)	698 704 706 717 724 729
PLAQUE SIGNALÉTIQUE (ASS)	906
PLAQUE SIGNALÉTIQUE (CARBURANT MANUEL)	110
PLAQUE SIGNALÉTIQUE DE CONTROLEUR (SYSTÈME DE SURVEILLANCE CATERPILLAR)	855 857
PLAQUE SIGNALÉTIQUE D'ESSIEU (ASS)	919
PLAQUE SIGNALÉTIQUE (REMARQUE) (EMPLACEMENT D'OEILLETON DE LEVAGE)	754
PLAQUE SIGNALÉTIQUE (REMARQUE) (EMPLACEMENT D'OEILLETON DE LEVAGE)	752
PLAQUES SIGNALETIQUES ET AUTOCOLLANTS (ASS)	914 915 916 917 918
PLAQUES SIGNALETIQUES ET AUTOCOLLANTS (ASS) (*MACHINE CERTIFICATION)	2
PLATE-FORME (VERSION)	864
PLATEAU OSCILLANT (ASS)	500
PNEU - GROUPE DE VALVE	325 329 353
PNEU ET JANTE (VERSION)	332 333 334 335 336 337 338 339 340 341
POIGNÉE	807 808
POINTE - UNIVERSELLE (ASS)	768
POINTE EXTRA-ROBUSTE (ASS)	767
POINTE LONGUE (ASS)	769
POMPE A EAU (ASS)	75 76 77
POMPE A HUILE MOTEUR (ASS)	64 65
POMPE A PISTONS (ASS)	492 586 588
POMPE D'ALIMENTATION EN CARBURANT (ASS)	112

* TRADUCTION NON DISPONIBLE AU MOMENT DE LA PUBLICATION

INDEX

Désignation	Page
POMPE D'AMORÇAGE DE CARBURANT ET FILTRE PRINCIPAL	110
POMPE D'AMORÇAGE DE CARBURANT ET SÉPARATEUR D'EAU (ASS)	117
POMPE DE BOÎTE DE VITESSES (ASS)	323
POMPE DE DIRECTION AUXILIAIRE ET MONTAGE (ASS)	490
	491
POMPE DE FAISCEAU (ENS)	222
POMPE DE FAISCEAU (ENS) (GRAISSAGE AUTOMATIQUE)	430
POMPE DE GRAISSAGE (ASS)	430
POMPE DE GRAISSAGE ET MONTAGE (ASS)	429
POMPE DE REGULARISATION DE DEBIT (ASS) (*HMU STEERING)	476
POMPE DE SÉPARATEUR D'EAU ET D'AMORÇAGE DE CARBURANT (ASS)	117
POMPE DE VENTILATEUR HYDRAULIQUE ET DE FREIN ET MONTAGE (ASS)	582
POMPE D'INJECTION DE CARBURANT (ASS)	109
POMPE ET MONTAGE - HYDRAULIQUE (ASS)	584
PORTE-POINTE (ASS)	658
PORTIÈRE DE CABINE (ASS)	790
	791
	794
	795
	796
POULIE-ALTERNATEUR (ASS)	44
POUSSOIR DE SOUPAPE (ASS)	33
PREFILTRE (ASS)	96
	97
PRISE DE BATTERIE AUXILIAIRE (ASS)	172
PROTECTEURS DE LAME (ASS)	766
PROTECTION ANTIVANDALISME (ASS)	919
PROTECTION AV (ASS)	380
PROTECTION DE GLACE (ASS)	803
	805
PROTECTION DE GODET (ASS)	756
	757

R

Désignation	Page
RADIATEUR-CORPS (ENS)	68
RADIATEUR ET VENTILATEUR (ASS)	78
RADIO -COMMUNICATION (ASS)	866
RADIO -COMMUNICATION (ASS) (PRODUCT LINK 121SR)	126
RADIO (ASS)	864
	865
RALLONGE DU DOSSIER DE SIEGE (TOILE)	875
REFROIDISSEMENT AUX TEMPÉRATURES ÉLEVÉES (VERSION)	68
REFROIDISSEUR D'HUILE DE BOÎTE (ASS)	272
REFROIDISSEUR D'HUILE D'ESSIEU ET HYDRAULIQUE (ASS)	539
REFROIDISSEUR D'HUILE D'ESSIEU (VERSION)	271
REFROIDISSEUR D'HUILE MOTEUR (ASS)	66
REGARD DE NIVEAU	69
REGISTRE D'AVERTISSEUR	130
	132
REGLAGE DE SIEGE (ASS)	770
RÉGULATEUR - PÉDALE (ASS)	862
	863
REGULATEUR DE LA TENSION (ENS) (24 VOLTS) (ALTERNATEUR)	119
RELAIS (ENS) (24 VOLTS) (DIRECTION SECONDAIRE INTERMÉDIAIRE)	250
RELAIS (ENS) (24 VOLTS) (KLAXON)	227
RELAIS (ENS) (24 VOLTS) (MOTEUR D'INCLINAISON DE CAPOT)	235
RELAIS (ENS) (24 VOLTS) (PROJECTEUR ARRIÈRE)	227
RELAIS (ENS) (24 VOLTS) (PROJECTEURS DE CABINE AVANT)	227
RELAIS (ENS) (24 VOLTS) (RÉTROVISEURS À CHAUFFAGE INTÉGRÉ)	841
RELAIS (ENS) (24 VOLTS) (RÉTROVISEURS À CHAUFFAGE INTÉGRÉ)	843
RENIFLARD (ASS)	58
RENIFLARD (ENS) (BOÎTE DE VITESSES)	265
RENIFLARD (ENS) (CARTER)	58
RENIFLARD (RÉSERVOIR HYDRAULIQUE)	398
	401
RÉSERVOIR DE CARBURANT (ASS)	113
RÉSERVOIR DU COUVERCLE DE RADIATEUR (ASS)	84
RÉSERVOIR HYDRAULIQUE - MONTAGE (ASS)	581
RÉSERVOIR HYDRAULIQUE (ASS)	591
RETROVISEUR - CABINE (ASS)	894
RÉTROVISEUR (ASS)	831
	832
	833
	834
	835
	836
	837
	838
	839
	841
	843
ROBINET DE BATTERIE (ASS)	204

* TRADUCTION NON DISPONIBLE AU MOMENT DE LA PUBLICATION

INDEX

Désignation	Page
ROBINET DE BATTERIE (ASS) (BATTERIE)	121
ROBINET-ÉCHANTILLON DE LIQUIDE (ENS) (HUILE MOTEUR)	66
ROTATION DE LA ROUE DU VENTILATEUR SOUFFLANT (DÉMARRAGE DU MOTEUR)	859
ROTATION DE LA ROUE DU VENTILATEUR SOUFFLANT (EMPLACEMENT OEILLETON DE LEVAGE, TIRANT)	917
ROTATION DE LA ROUE DU VENTILATEUR SOUFFLANT (ENTRETIEN)	526 528 530 532
ROTATION DE LA ROUE DU VENTILATEUR SOUFFLANT (LIRE LE GUIDE D'UTILISATION ET D'ENTRETIEN)	141
ROTATION DE LA ROUE DU VENTILATEUR SOUFFLANT (RÉGLAGE DU SIÈGE)	890 892

S

Désignation	Page
*SCREEN GP-CASE DRAIN	495
SEGMENT DE LAME DE COUPE (ASS)	751
*SENSOR GP-PRESSURE	185
*SERVICE GP-COMMUNICATION (PRODUCT LINK 300)	136
SIÈGE - COMPRESSEUR D'AIR (ASS)	772
SIÈGE (ASS)	873 875
SIÈGE AVEC SUSPENSION (ASS)	877 878 879 890
SIÈGE AVEC SUSPENSION (ASS)	892
SIÈGE INCLINABLE (ASS)	867
SILENCIEUX (ASS)	93
SOLÉNOÏDE (ENS) (24 VOLTS)	199
SONDE - CIRCUIT DE CARBURANT	180 181
SONDE - NIVEAU DE CARBURANT (ENS)	113
SOUPAPE - RENIFLARD (CANALISATIONS D'EAU)	72
SOUPAPE - SOLÉNOÏDE (ASS)	639 640 641
SOUPAPE A COMMANDE MANUELLE (ASS)	627
SOUPAPE D'ARRÊT (ASS)	558
SOUPAPE D'ARRÊT (ASS) (POMPE À EAU)	827
SOUPAPE D'ARRÊT (ASS) (RÉCHAUFFEUR DE CABINE)	827
SOUPAPE DE COMMANDE D'ABAISSEMENT (ASS)	620
SOUPAPE DE COMMANDE PRINCIPALE (ASS)	622 624 625 626
SOUPAPE DE DÉMARRAGE À L'ÉTHER (ASS) (24 VOLTS)	197
SOUPAPE DE DERIVATION (ASS)	618
SOUPAPE DE DIRECTION (ASS)	513 515
SOUPAPE DE DIRECTION AUXILIAIRE (ASS)	510
SOUPAPE DE DISTRIBUTION DE GRAISSAGE (ASS)	446 447
SOUPAPE DE MODULATION (ASS)	349
SOUPAPE DE NEUTRALISATION DE DIRECTION (ASS)	517 518
SOUPAPE DE NEUTRALISATION DE DIRECTION (ASS) (*HMU STEERING)	476
SOUPAPE DE VIDANGE	619
SOUPAPE ET CONDUITES DE GRAISSAGE (ASS)	443 444
SOUPAPE PILOTE (ASS)	504
SOUPAPE RÉDUCTRICE DE PRESSION (ASS)	506 628
SOUPAPE RÉPARTITRICE DE DÉBIT (ASS) (HUILE D'ESSIEU)	315
SOUPAPE SÉLECTRICE (ASS) (DIRECTION)	515
*STEERING AR-COMMAND CONTROL	496
SUPPORT - PÉDALE DE FREIN (ASS)	450 451
SUPPORT DE CACHE-SOUPAPE ET FAISC. DE CABL. D'IN.	6
SUPPORT DE COMMANDE HYDRAULIQUE (ASS)	880
SUPPORT DE FILTRE À HUILE (ASS)	54 57
SUPPORT DE FILTRE À HUILE (ASS)	262
SUPPORT DE MOTEUR (ASS)	51
SUPPORT DE SOUPAPE ET FILTRE (ASS)	434
SUPPORTS D'ADMISSION D'AIR (ASS)	433

T

Désignation	Page
TABLEAU DE BORD (ASS)	855 857 859

* TRADUCTION NON DISPONIBLE AU MOMENT DE LA PUBLICATION

INDEX

Désignation	Page
TAMIS D'ASPIRATION	291
TAPIS DE PLANCHER	819
TENDEUR DE COURROIE (ASS)	7
THERMOCONTACT (ENS) (CLIMATISEUR)	775
THERMOSTAT-TEMPÉRATURE D'EAU (92-DEG C) (LIQUIDE DE REFROIDISSEMENT)	72
TRAINS PLANÉTAIRES - CARTER ET PIÈCES	265
TRANSMISSION (VERSION)	322
TURBOCOMPRESSEUR - CARTOUCHE (ASS)	98
TURBOCOMPRESSEUR (ASS)	98 99
TYPE LÈVRE À JOINT (RÉGULATEUR DE TEMPÉRATURE D'EAU)	72

V

Désignation	Page
VANNE PILOTE (ASS)	511 512 599 636 637 638
VANNE PILOTE (ASS) (FREIN, VENTILATEUR HYDRAULIQUE)	573
VANNE PILOTE (ASS) (HUILE DE DIRECTION)	593 596 602
VERIN DE DIRECTION (ASS)	473
VERIN DE DIRECTION ET MONTAGE (ASS)	472
VÉRIN DE LEVAGE (ASS)	543 544
VÉRIN DE LEVAGE ET JOINT (ASS)	540 541
VÉRIN D'INCLINAISON (ASS)	546 547
VÉRIN D'INCLINAISON ET JOINT (ASS)	542
VERROUILLAGE DE COUPLEUR EXPRESS (ASS)	758 760
VERSION DE CHASSIS	1
VERSION DE COMMANDE-AUTODIG	129
VERSION DE MONTAGE-COMMUNICATION	140
VERSION DE MONTAGE-SÉCURITÉ	140
VERSION DE MOTEUR COMPLET	3
VERSION DE TRANSFORMATION - HOMOLOGATION	2
VERSION ÉLECTRIQUE	135
VIDANGE-ÉCOLOGIE (ASS)	548
VILEBREQUIN - POULIE (ASS)	45
VILEBREQUIN (ASS)	12
VOLANT DE DIRECTION (ASS)	498
VOLANT MOTEUR (ASS)	26
VUE DU MODÈLE	2

* TRADUCTION NON DISPONIBLE AU MOMENT DE LA PUBLICATION

INDICE

Nombre	Página
A	
ACCESORIOS - IMPULSOR DE (GR)	22
ACCIONADOR DE INCLINACIÓN DEL CAPO (GR)	354
ACONDICIONADOR DE AIRE (CONFIG)	773
ACONDICIONADOR DE AIRE (GR)	774
	775
ACOPLADOR - TUBERÍAS DE (GR)	552
	553
ACOPLADOR RÁPIDO (CONFIG)	741
	742
ACOPLADOR RÁPIDO (GR)	743
	744
ACUMULADOR DE ACEITE PILOTO (GR)	520
	521
ACUMULADOR DE CONTROL DE AMORTIGUACION (GR)	522
	523
ACUMULADOR DEL ACONDICIONADOR DE AIRE (GR)	824
ACUMULADOR DEL FRENO (GR)	448
	449
ACUMULADOR Y MONTAJE DE CONTROL DE AMORT (GR)	519
AGUA DE LAS CAMISAS - CALENTADOR DEL (GR)	139
AIRE - TUBERÍAS DE (GR)	88
	89
	90
AJUSTADOR DEL ASIENTO (GR)	770
ALARMA (GR)	118
ALFOMBRILLA DEL PISO	819
AMORTIGUADOR DE VIBRACIONES (GR)	21
ANTEFILTRO (GR)	96
	97
ÁRBOL DE LEVAS (GR)	8
ARO DESMONTABLE (GR)	326
	327
	328
	329
ARO Y RUEDA	332
	333
	334
	335
	336
	337
	338
	339
	340
	341
ARRANQUE - INTERRUPTOR DE (GR) (LLAVE)	227
ASIENTO CON SUSPENSIÓN (GR)	890
	892
ASIENTO (GR)	873
	875
AUXILIAR DE ARRANQUE CON ÉTER (GR)	197
B	
BALANCÍN (GR)	46
	47
	48
	49
BASE DE LA TAPA DE VÁLVULAS Y MAZO DE CABLES DE INYECTOR (GR)	6
BASE DEL FRENO DE PIE (GR)	450
	451
BASTIDOR DEL CARGADOR (CONJ)	372
BASTIDOR TRASERO (CONJ)	375
BATERÍA Y CABLES (GR)	121
*BELT-STEP	399
	402
BISAGRA DEL GUARDABARROS PARA DESPLAZ. POR CARRETERA	386
	387
BLOQUE DESLIZANTE-JUEGO	878
BLOQUE LIMITADOR DEL EJE OSCILANTE (GR)	356
BLOQUE MOTOR (CONJ)	14
	15
BLOQUE MOTOR (GR)	16
BOCINA (CONJ) (24-VOLTIOS, TONO BAJO)	813
BOCINA ELÉCTRICA (GR)	813
BOMBA DE ACEITE DEL MOTOR (GR)	64
	65
BOMBA DE AGUA (GR)	75
BOMBA DE AGUA (GR)	76
	77
BOMBA DE CEBADO Y FILTRO PRIMARIO DE COMBUSTIBLE (GR)	110
BOMBA DE INYECCIÓN DE COMBUSTIBLE (GR)	109
BOMBA DE LA TRANSMISIÓN (GR)	323
BOMBA DE LUBRICACIÓN (GR)	430
BOMBA DE LUBRICACIÓN Y MONTAJE (GR)	429
BOMBA DE PISTONES (GR)	492
	586
	588
BOMBA DE SEPARADOR DE AGUA Y CEBADO DE COMBUSTIBLE (GR)	117
BOMBA DE TRANSFERENCIA DE COMBUSTIBLE (GR)	112
BOMBA HIDRÁULICA Y MONTAJE (GR)	584
BOMBA Y MONTAJE DE LA DIRECCIÓN SECUNDARIA (GR)	491

* NO HAY TRADUCCION DISPONIBLE EN EL MOMENTO DE LA IMPRESION

INDICE

Nombre	Página
BOMBA Y MOTOR DE DIRECCION SECUNDARIA (GR)	490
*BOSS GP-LEVER	648
*BOSS GP-LIFT ARM	649, 650, 652
*BOSS GP-REAR FRAME	357, 359
*BRACKET AS-ADJUSTABLE SWITCH	451
BRAZO DE LEVANTAMIENTO (CONJ)	644, 645
BRAZO DE LIMPIAPARABRISAS (GR)	779, 780
BRAZO Y COJINETE (CONJ)	642, 643

C

Nombre	Página
CABINA - MAZO DE CABLES DE LA	229
CABINA ROPS CERRADA (CONFIG)	852
CABINA ROPS CERRADA (GR)	868
CABLES DE INYECTOR (GR)	256
CABLES DE LA CABINA (GR)	227
CABLES DE LA DIRECCIÓN SECUNDARIA	250
CABLES DE LAS LUCES (GR)	247, 248, 249
CABLES DE SENSOR (GR)	252, 254
CABLES DEL ACONDICIONADOR DE AIRE (GR)	221
CABLES DEL CHASIS (GR)	235
CABLES DEL CONTROL ELECTRÓNICO (GR)	241
CABLES DEL MOTOR (GR)	243
CABLES DELANTEROS (GR)	245
CAJA DE BATERÍA	360
CAJA DE EJE OSCILANTE (GR)	304, 306
CAJA DE HERRAMIENTAS (GR)	903, 905
CAJA DEL EJE OSCILANTE (GR)	298, 300, 302
CAJA DELANTERA - TORNILLERÍA DE LA (GR)	25
CAJA DELANTERA (GR)	29
CAJA Y PIEZAS DE LOS PLANETARIOS	265
CALCOMANÍA (AUTOCARGA)	130, 132
CALCOMANÍA DE ADVERTENCIA (ARRANQUE DEL MOTOR)	859
CALCOMANÍA DE ADVERTENCIA (ASIENTO AJUSTABLE)	890, 892
CALCOMANÍA DE ADVERTENCIA (*JUMP START, READ OMM)	172
CALCOMANÍA DE ADVERTENCIA (LEA EL OMM)	141
CALCOMANÍA DE ADVERTENCIA (LEA EL OMM)	752, 754
CALCOMANÍA DE ADVERTENCIA (*LIFT EYE, TIE-DOWN LOCATION)	917
CALCOMANÍA DE ADVERTENCIA (MANTENIMIENTO)	526, 528, 530
CALCOMANÍA DE ADVERTENCIA (MANTENIMIENTO)	532
CALCOMANÍA DE ADVERTENCIA (MANUAL)	915, 916
CALCOMANÍA DE ADVERTENCIA (NO SUELDE, NO TALADRE, LEA EL OMM)	917
CALCOMANÍA DE ADVERTENCIA (PRODUCTO DE ENLACE DE RADIO, NO NACD)	140
CALCOMANÍA DE ADVERTENCIA (PUNTO DE APLASTAMIENTO)	915, 916
CALCOMANÍA DE ADVERTENCIA (UBICACIÓN DEL CONECTOR DE LEVANTAMIENTO)	752, 754
CALCOMANÍA DE IDENTIFICACIÓN (ALTURA DEL CAMINO)	2
CALCOMANÍA DE IDENTIFICACIÓN (BOCINA)	526, 528
CALCOMANÍA DE IDENTIFICACIÓN (HIDRAULICO AUXILIAR)	528
CALCOMANÍA DE IDENTIFICACIÓN (INTERRUPTOR DE ENCENDIDO)	141
CALCOMANÍA DE IDENTIFICACIÓN (12 VOLTIOS)	859
CALCOMANÍA DE IDENTIFICACIÓN (20 KM/H)	138
CALCOMANIA, TABLERO DE FUSIBLE	819
CALCOMANÍAS Y PLACAS DE IDENTIFICACIÓN (GR)	914, 915, 916, 917, 918
CALCOMANÍAS Y PLACAS DE IDENTIFICACIÓN (GR) (*MACHINE CERTIFICATION)	2
CALEFACCIÓN DE LA CABINA (GR)	809

* NO HAY TRADUCCION DISPONIBLE EN EL MOMENTO DE LA IMPRESION

INDICE

Nombre	Página
	811
CAMBIO RÁPIDO DE ACEITE (GR)	317
CÁNCAMOS DE LEVANTAMIENTO DEL MOTOR (GR)	34
CANDADO (GR)	274
	919
CAPO Y PROTECTOR (GR)	390
CARGA - ALTERNADOR DE (GR)	119
	120
CÁRTER - COLECTOR DEL (GR)	37
CHASIS (CONFIG)	1
CIGÜEÑAL - POLEA DE (GR)	45
CIGÜEÑAL (GR)	12
CILINDRO DE DIRECCIÓN (GR)	473
CILINDRO DE DIRECCIÓN Y MONTAJE (GR)	472
CILINDRO DE ÉTER (CONJ)	197
CILINDRO DE INCLINACIÓN Y SELLO (GR)	542
CILINDRO DE LEVANTAMIENTO - TUBERÍAS DEL (GR)	569
CILINDRO DE LEVANTAMIENTO (GR)	543
	544
CILINDRO DE LEVANTAMIENTO Y SELLO (GR)	540
	541
CINTURÓN DE SEGURIDAD (GR)	877
CINTURÓN DE SEGURIDAD (GR)	872
COLADOR (CONJ) (LLENADO DEL TANQUE HIDRÁULICO)	591
COLADOR DE COMBUSTIBLE	113
COLUMNA DE DIRECCIÓN (GR)	497
COMBUSTIBLE - TANQUE DE (GR)	113
COMBUSTIBLE - TUBERÍAS DE DRENAJE DE (GR)	107
COMPRESOR DE AIRE DEL ASIENTO (GR)	772
COMPRESOR DE REFRIGERANTE (GR)	785
COMPRESOR DE REFRIGERANTE (GR)	784
CONDENSADOR DEL REFRIGERANTE Y MONTAJE (GR)	786
CONDUCTO Y FILTRO DE AIRE (GR)	797
CONEXIÓN ELÉCTRICA (GR)	125
CONFIGURACIÓN DE CABLERIA, CALENTADOR Y ACONDICIONADOR DE AIRE	775
CONFIGURACIÓN DE CABLERIA, CALENTADOR Y ACONDICIONADOR DE AIRE	811
CONFIGURACIÓN DE INSTALACIÓN DEL MOTOR	5
CONFIGURACIÓN DE TRANSFORMACIÓN PARA CERTIFICACIÓN	2
CONFIGURACIÓN ELÉCTRICA	135
CONFIGURACIÓN GENERAL	2
CONFIGURACIÓN HIDRÁULICA DE 2 VÁLVULAS	551
CONJUNTO DE ALARMA Y DEFLECTOR	130
	132
CONJUNTO DE CABLES-BOMBA	222
CONJUNTO DE CABLES-BOMBA (LUBRICACION AUTOMATICA)	430
CONJUNTO DE CABLES, VÁLVULA	222
CONJUNTO DE CABLES, VÁLVULA (COMPRESOR DE AIRE DEL ASIENTO)	890
	892
CONJUNTO DE DESTELLADOR (24 VOLTIOS)	214
	216
CONJUNTO DE FILTRO-ENGRASE	430
CONJUNTO DE INTERRUPTOR DE SEÑAL DE GIRO	214
	216
CONJUNTO DE LLAVE, ELECTRONICA (SEGURIDAD)	141
CONJUNTO DE NÚCLEO-CONDENSADOR (REFRIGERANTE)	68
	786
CONJUNTO MAZO DE CABLES-CONTROLES DEL OPERADOR	228
CONJUNTO MAZO DE CABLES-CONTROLES DEL OPERADOR (*ELECTROHYDRAULIC, JOYSTICK)	530
CONJUNTO MAZO DE CABLES-CONTROLES DEL OPERADOR (*ELECTROHYDRAULIC, JOYSTICK)	532
CONTRAPESO (GR)	361
CONTROL DE AMORTIGUACIÓN (CONFIG)	525
CONTROL DE AUTOCARGA (CONFIG)	129
CONTROL DE AUTOCARGA (GR)	130
	132
CONTROL DE COMUNICACION Y MONTAJE (GR)	126
CONTROL DE DESPLAZAMIENTO Y TUBERÍAS (GR)	524
CONTROL DE DIRECCIÓN (GR)	468
	470
CONTROL DE LA TRANSMISIÓN (GR)	267
	268
CONTROL DE MANIJA (GR)	534
CONTROL DE MONITOR (GR)	788
CONTROL DEL CUCHARÓN (GR)	653
	655
CONTROL DEL FRENO DE ESTACIONAMIENTO	460
CONTROL DEL MULTIPLE (GR)	315
	573
CONTROL DEL PEDAL DE FRENO (GR)	458

* NO HAY TRADUCCION DISPONIBLE EN EL MOMENTO DE LA IMPRESION

INDICE

Nombre	Página
	459
CONTROL ELECTROHIDRAULICO (GR)	526
	528
	530
CONTROL ELECTROHIDRAULICO (GR)	532
CONTROL ELECTRÓNICO DEL MOTOR Y MONTAJE	128
CONTROL HIDRÁULICO DE LA TRANSMISIÓN (GR)	269
CONTROL NO PROGRAMADO (GR)	134
CONTROL NO PROGRAMADO (GR) (IMPLEMENTO)	229
CONTROL NO PROGRAMADO (GR) (TREN DE FUERZA)	229
CONVERTIDOR DE PAR (GR)	344
CONVERTIDOR DE PAR Y CAJA (GR)	342
CORREA-SERPENTIN	7
CORREA-SERPENTIN (COMPRESOR DEL ACONDICIONADOR DE AIRE)	785
CRISTAL (AMBAR)	148
	150
CRUCETA Y COJINETE (GR)	331
CRUCETA Y COJINETE (GR)	347
	348
CUBIERTA (GR)-TAPA DE LLENADO DE ACEITE DE LA TRANSMISIÓN	274
	919
CUCHARON DE ESCORIA (CONJ)	698
CUCHARÓN DE MANEJO DE MATERIAL (CONJ)	673
	674
	675
	677
	678
	679
	681
	682
	683
	685
CUCHARÓN DE MANEJO DE MATERIAL (GR)	714
	715
	716
	717
	719
	720
	721
	722
	723
	724
	726
	727
	728
	729
CUCHARÓN DE USO GENERAL (CONJ)	659
	660
	661
	662
	663
	665
	667
	669
	671
	672
CUCHARÓN DE USO GENERAL (GR)	699
	700
	701
	702
	703
	704
	705
	706
	707
	708
	709
	710
	711
	712
	713
CUCHARON PARA ESCORIA (GR)	740
CUCHARON PARA PENETRACIÓN (CONJ)	687
CUCHARÓN PARA ROCA (CONJ)	691
	693
	694
	696
CUCHARÓN PARA ROCA (CONJ)	688
	689
	690
CUCHARÓN PARA ROCA (GR)	732
	733
	734
	735
	736
	737
	738
	739
CUCHILLA (CONJ)	745
CUCHILLA (GR)	747
	748
	749
	750
CULATA DE CILINDROS - TORNILLERÍA DE LA (GR)	23
CULATA DE CILINDROS (CONJ)	18
CULATA DE CILINDROS (GR)	19
	20

* NO HAY TRADUCCION DISPONIBLE EN EL MOMENTO DE LA IMPRESION

INDICE

Nombre	Página

D

DETECTOR DE NIVEL DEL COMBUSTIBLE 113
DETECTOR DE POSICIÓN (SISTEMA DE COMBUST.) (GR) 181
DETECTOR DE POSICIÓN (SISTEMA DE COMBUST.) (GR) 180
DIFERENCIAL DE DESLIZAMIENTO LIMITADO (GR) 277
DIFERENCIAL (GR) 275
276
DIFERENCIAL NOSPIN (GR) 278
279
DIRECCIÓN SECUNDARIA (CONFIG) 496
*DISPLAY 845
DISYUNTOR (CONJ) (105 AMPERIOS) (ALTERNADOR) 235
DISYUNTOR (CONJ) (15 AMPERIOS) (LUCES DE TRABAJO) 236
DISYUNTOR (CONJ) (30-AMPERIOS) (*UNSWITCHED BAT POWER TO CAB) 237
DISYUNTOR (CONJ) (50 AMPERIOS) (ARRANQUE DEL MOTOR) 235
DISYUNTOR (CONJ) (80 AMPERIOS) (PRINCIPAL) 235
DISYUNTOR DE CIRCUITO (GR) (20-AMPERIOS) (ACCIONADOR DE INCLINACION DE CAPO) 237
DISYUNTOR (GR) 204
DISYUNTOR (GR) (BATERÍA) 121
DOSIFICACIÓN - BOMBA DE (GR) (*HMU STEERING) 476
DRENAJE DE SEGURIDAD ECOLÓGICA (GR) 548

E

EJE - GRUPO DE MONTAJE 316
EJE DE MANDO (GR) 330
EJE FIJO (CONFIG) 258
259
EJE OSCILANTE (CONFIG) 259
260
261
EJE Y ENFRIADOR DE ACEITE DE EJE (CONFIG) 257
EJE Y ENFRIADOR DE ACEITE DE EJE (CONFIG) 257
ELECTRONICA DE MONITOR (GR) 138
ELEMENTO DE FILTRO DE ACEITE (CONJ) (HIDRAULICO) 549
ELEMENTO DE FILTRO DE ACEITE (CONJ) (TREN DE FUERZA) 284
ELEMENTO DEL CALENTADOR DEL AGUA DE LAS CAMISAS (240 VOLTIOS, 1500 VATIOS) 139
ELEMENTO DEL FILTRO DE AIRE (CONJ) (PRIMARIO) 86
ELEMENTO DEL FILTRO DE AIRE (CONJ) (SECUNDARIO) 86
EMPAQUETADURA (RESPIRADERO DEL CARTER) 58
ENCENDEDOR DE CIGARRILLOS (GR) (12 VOLTIOS) 228
ENCHUFE DE ARRANQUE AUXILIAR (GR) 172
ENFRIADOR DE ACEITE DE LA TRANSMISIÓN (GR) 272
ENFRIADOR DE ACEITE DEL MOTOR (GR) . . . 66
ENFRIADOR DEL ACEITE DEL EJE (CONFIG) 271
ENFRIADOR PARA ALTA TEMPERATURA DE AMBIENTE (CONFIG) 68
ENGANCHE ARTICULADO (GR) 388
ENGRANAJE DE CORONA Y PIÑÓN (GR) 285
287
ENGRANAJE DE TRANSFERENCIA DE SALIDA 291
ENGRANAJE DELANTERO (GR) 27
ESCALERILLA (GR) 401
ESCALERILLA (GR) 394
398
ESCAPE DE GASES (GR) 61
ESLABON DEL CUCHARON (GR) 657
ETIQUETA DE ADVERTENCIA (GR) 906
EXTENSIÓN DEL RESPALDO (GR) (DE TELA) 875

F

*FILM-TRANSMISSION (*DOWNSHIFT SWITCH) 526
528
FILTRO DE ACEITE - BASE DEL (GR) 54
57
262
FILTRO DE ACEITE (CONJ) 550
FILTRO DE ACEITE DEL MOTOR (CONJ) 60
FILTRO DE ACEITE DEL MOTOR (GR) 60
FILTRO DE ACEITE (GR) 284
549
550
FILTRO DE AIRE DE CABINA 797
FILTRO DE AIRE (GR) 85
86
FILTRO DE COMBUSTIBLE (CONJ) 102
FILTRO DE COMBUSTIBLE (GR) 102

* NO HAY TRADUCCION DISPONIBLE EN EL MOMENTO DE LA IMPRESION

INDICE

Nombre	Página
FILTRO DE COMBUSTIBLE Y SEPARADOR DE AGUA (CONJ) (PRIMARIO)	103
FILTRO DE COMBUSTIBLE Y SEPARADOR DE AGUA (GR)	103
FILTRO SECUNDARIO DE COMBUSTIBLE Y TUBERIAS (GR)	100
*FLOOR GP-SOUND SUPPRESSION	799 800 801
FRENO DE ESTACIONAMIENTO (GR)	453 455 456 457
FRENO DE SERVICIO - CONTROL (GR)	461
FRENO Y PLANETARIOS (GR)	263
FUSIBLE (10-AMPERIOS)	227
FUSIBLE (15 AMPERIOS)	227 775 811
FUSIBLE (20-AMPERIOS)	227

G

*GEAR GP-BEVEL & PINION	289
GRUPO DE BOMBA Y MONTAJE, FRENOS Y VENTILADOR HIDRÁULICO	582
GRUPO DE CABLES-CONTROL DE AUTOLUBRICACIÓN	222
GRUPO DE CABLES, MONITOREO DEL EJE	224
GRUPO DE CANTONERA Y CUCHILLA	746 747
GRUPO DE CONTROL-MONITOR NO PROGRAMADO	789
GRUPO DE CONTROL-MONITOR NO PROGRAMADO (SISTEMA MONITOR CATERPILLAR)	228
GRUPO DE ENFRIADOR, HIDRÁULICO Y ACEITE DE EJE	539
GRUPO DE GUIA, CORREA	31
GRUPO DE INTERRUPTOR ROTATORIO	212
GRUPO DE INTERRUPTOR ROTATORIO (*AUTODIG MATERIAL SELECT)	132
GRUPO DE INTERRUPTOR ROTATORIO (SELECTOR DE MATERIAL DE EXCAV. AUTOMATICA)	130
GRUPO DE MONTAJE DE LA CABINA	850
GRUPO DE PLACA DE IDENTIFICACIÓN DEL EJE	919
GRUPO DE PROTECCIÓN CONTRA EL VANDALISMO	919
GRUPO DE PROTECTOR DEL CUCHARON	756 757
GRUPO DE PUNTA-SERVICIO ADICIONAL	767
GRUPO DE PUNTA Y ADAPTADOR	658
GRUPO DE SELLO (BOMBA DE AGUA)	75
GRUPO DE SOFTWARE, COMUNICACIÓN (*PRODUCT LINK 121SR)	866
GRUPO DE SOFTWARE, COMUNICACIÓN (*PRODUCT LINK 300)	136
GRUPO DE TAPÓN DEL MÚLTIPLE DE ADMISIÓN	95
GRUPO DE TORNILLERIA- MONTAJE	383
GRUPO DE TORNILLERIA-AMORTIGUADOR Y POLEA	24
GRUPO DE TUBERIAS DE DIAGNÓSTICO	908 911
GRUPO DE TUBERIAS DE LUBRICACIÓN AUTOMÁTICA	404 406 410 413
GRUPO DE VÁLVULA-ARRANQUE CON ÉTER (24 VOLTIOS)	197
GRUPO DE VÁLVULAS	504
GRUPO ELECTRONICO-COMUNICACION	136
GRUPO GIRATORIO DE BOMBA	494 590
GUARDABARROS (CONFIG)	362
GUARDABARROS (GR)	363 365
GUARDABARROS PARA DESPLAZAMIENTO EN CARRETERA (GR)	367

H

*HARNESS AS-TRANSMISSION CONT (VOLANTE DE DIRECCION)	498
HOJA DE LIMPIAPARABRISAS (CONJ)	900
HORQUILLA PARA TARIMAS (GR)	752 754

I

IMPLEMENTOS (GR ELECTRÓNICO)	137
INCLINACIÓN DEL CAPÓ (GR)	441
INCLINACIÓN HORIZONTAL - CILINDRO DE (GR)	546 547
INDICADOR DEL NIVEL DE ACEITE (VARILLA) (GR)	62
INDICADOR DEL NIVEL DE ACEITE (VARILLA) (GR) (MOTOR)	62
INDICADOR DEL NIVEL DEL ACEITE (VARILLA) (CONJ)	298 300 302

* NO HAY TRADUCCION DISPONIBLE EN EL MOMENTO DE LA IMPRESION

INDICE

Nombre	Página
	304
	306
INSONORIZACION DE CABINA (GR)	884
	886
	887
	888
INSONORIZADOR (CONFIG)	436
INSONORIZADOR (GR)	437
	439
INSTALACION DE COMUNICATION (CONFIG)	140
INSTALACIÓN DE CONTROLES (GR)	814
INSTALACIÓN DE RADIO (GR)	815
INSTALACION DE SEGURIDAD (CONFIG)	140
INSTALACION DE SEGURIDAD (GR)	141
INTERCAMBIADOR DE CALOR DEL EJE (GR)	296
INTERRUPTOR (CONJ) (PRUEBA DE LUBRICACION AUTOMATICA)	430
INTERRUPTOR DE DERIVACIÓN	202
INTERRUPTOR DE DIRECCIÓN SECUNDARIA (GR)	213
INTERRUPTOR DE LÍMITE (CONJ) (LUZ DE PARADA)	451
INTERRUPTOR DE NIVEL (CONJ) (ENGRASE)	430
INTERRUPTOR DE PRESIÓN (*AUTOLUBE ACTUATION) (LUBRICACIÓN)	446
INTERRUPTOR DE PRESIÓN (CONJ) (ACEITE DE FRENO DE ESTACIONAMIENTO)	235
INTERRUPTOR DE PRESIÓN (CONJ) (ACEITE DE LA DIRECCION PRIMARIA)	250
INTERRUPTOR DE PRESIÓN (CONJ) (ACEITE DE LA DIRECCION SECUNDARIA)	250
INTERRUPTOR DE PRESIÓN (CONJ) (ACEITE DEL FRENO DE SERVICIO)	243
INTERRUPTOR DE PRESIÓN (CONJ) (DIFERENCIAL)	549
INTERRUPTOR DE PRESIÓN (CONJ) (REFRIGERANTE) (REFRIGERANTE ALTO, BAJO)	221
INTERRUPTOR DE PRESIÓN (GR)	207
INTERRUPTOR DE TEMPERATURA (CONJ) (AIRE ACONDICIONADO)	775
INTERRUPTOR DE TRANSMISION (GR)	219
INTERRUPTOR DE VOLQUETE (CONJ) (ACOPLADOR RAPIDO)	210
	211
INTERRUPTOR DE VOLQUETE (CONJ) (AIRE ACONDICIONADO, CALENTADOR)	229
INTERRUPTOR DE VOLQUETE (CONJ) (ANULACIÓN DEL NEUTRALIZADOR DE LA TRANSMISIÓN)	229
INTERRUPTOR DE VOLQUETE (CONJ) (*AUTO REVERSING FAN)	208
INTERRUPTOR DE VOLQUETE (CONJ) (BALIZA DE ADVERTENCIA)	170
INTERRUPTOR DE VOLQUETE (CONJ) (CONTROL DE AMORT.)	209
INTERRUPTOR DE VOLQUETE (CONJ) (DESCONEXIÓN HIDRÁULICA)	230
INTERRUPTOR DE VOLQUETE (CONJ) (DIRECCIÓN SECUNDARIA)	213
INTERRUPTOR DE VOLQUETE (CONJ) (*FORWARD, NEUTRAL, REVERSE)	219
INTERRUPTOR DE VOLQUETE (CONJ) (*FRONT, REAR FLOODLIGHTS)	159
INTERRUPTOR DE VOLQUETE (CONJ) (*HAZARD)	214
	216
INTERRUPTOR DE VOLQUETE (CONJ) (*HEATED MIRRORS)	841
	843
INTERRUPTOR DE VOLQUETE (CONJ) (JUEGO DE DESCONEXIÓN DE CARGADOR AUTOMÁTICO)	130
	132
INTERRUPTOR DE VOLQUETE (CONJ) (*LIFT, TILT KICKOUT)	229
INTERRUPTOR DE VOLQUETE (CONJ) (MODULACIÓN PRECISA)	229
INTERRUPTOR DE VOLQUETE (CONJ) (SELECCIÓN DE MODALIDAD)	229
INTERRUPTOR DE VOLQUETE (CONJ) (SELECTOR DE MODALIDAD DE CARGADOR AUTOMÁTICO)	130
	132
INTERRUPTOR DE VOLQUETE (CONJ) (SENTIDO DE TRANSMISION)	498
INTERRUPTOR DE VOLQUETE (CONJ) (VELOCIDAD DEL VENTILADOR SOPLADOR)	229
INTERRUPTOR DE VOLQUETE (CONJ) (*3RD FUNCTION SELECT)	528
	532
INTERRUPTOR DE VOLQUETE (GR)	210
	211
	218
INTERRUPTOR DE VOLQUETE (GR) (ACCIONADOR DE INCLINACION DE CAPO)	235
INTERRUPTOR DE VOLQUETE (GR) (APAGADO A NIVEL DEL SUELO)	235
INTERRUPTOR DEL CONTROL DE AMORTIGUACIÓN (GR)	209

* NO HAY TRADUCCION DISPONIBLE EN EL MOMENTO DE LA IMPRESION

INDICE

Nombre	Página
INTERRUPTOR DEL LIMPIAPARABRISAS (CONJ) (24 VOLTIOS) (INTERMITENTE DELANTERO)	227
INTERRUPTOR DEL SEÑALERO (GR)	214, 216
INTERRUPTOR MAGNÉTICO (GR)	205, 206
INTERRUPTOR MAGNÉTICO (GR) (24 VOLTIOS) (RELE PRINCIPAL)	235
INTERRUPTOR PULSADOR (CONJ) (*AUTODIG TRIGGER)	130, 132
INTERRUPTOR PULSADOR (CONJ) (BOCINA)	228
INTERRUPTOR PULSADOR (CONJ) (CAMBIO ASCENDENTE DE TRANSMISION)	498
INTERRUPTOR PULSADOR (CONJ) (CAMBIO DESCENDENTE DE LA TRANSMISION)	498
INTERRUPTOR PULSADOR (CONJ) (RESUMICION DEL AJUSTE DE LA TRABA DE ACELERACION)	229
INTERRUPTOR ROTATIVO (CONJ) (24 VOLTIOS) (CONTROL DE CAMBIO AUTOMATICO)	228
INTERRUPTOR ROTATIVO (CONJ) (24 VOLTIOS) (CONTROL VARIABLE DE PALANCA)	228
INTERRUPTOR ROTATIVO (CONJ) (24 VOLTIOS) (LIMPIAPARABRISAS TRASERO)	227
INTERRUPTOR ROTATIVO (CONJ) (24 VOLTIOS) (LUCES DE TRABAJO)	227
INYECTOR DE COMBUSTIBLE (GR)	104

J

Nombre	Página
JUEGO (AISLADOR) (MOTOR DE ARRANQUE)	199
JUEGO DE AMORTIGUADOR	890, 892
JUEGO DE ATADURA	890, 892
JUEGO DE BOCINA	468
JUEGO DE BUJES (MOTOR DE ARRANQUE)	199
JUEGO DE CAJA (COLUMNA DE LA DIRECCION)	497
JUEGO DE CALCES (*INCLUDES 17-SHIMS) (BOMBA DE PISTON)	492
JUEGO DE COJINETES (ALTERNADOR)	119
JUEGO DE COJINETES DE BANCADA	12, 32
JUEGO DE CONTROL DE PISTÓN (BOMBA)	492
JUEGO DE DISCO	277
JUEGO DE DISPOSITIVO DE GAS AUXILIAR	468
JUEGO DE DISPOSITIVO DE GAS AUXILIAR (COLUMNA DE LA DIRECCION)	497
JUEGO DE EJE	468
JUEGO DE ESCOBILLAS (MOTOR DE ARRANQUE)	199
JUEGO DE INDICADOR	892
JUEGO DE PALANCA DE INCLINACIÓN	468
JUEGO DE PALANCA DE INCLINACIÓN (COLUMNA DE LA DIRECCION)	497
JUEGO DE PALANCA (MOTOR DE ARRANQUE)	199
JUEGO DE PANTALLA (ANTEFILTRO)	97
JUEGO DE PASADOR DE PEDAL	862
JUEGO DE PERNOS (CONECTORES ELECTRICOS)	236
JUEGO DE PISTÓN (BOMBA)	492
JUEGO DE RECEPTÁCULO (2 CLAVIJAS)	152
JUEGO DE REVESTIMIENTO DE FRENO	456
JUEGO DE RODILLO	862
JUEGO DE SELLOS	315, 461, 509, 522, 523, 627, 640
JUEGO DE SELLOS (ACOPLADOR RAPIDO)	758
JUEGO DE SELLOS (BOMBA DOSIFICADORA, DIRECCIÓN)	478
JUEGO DE SELLOS (VALVULA DE ALIVIO)	573
JUEGO DE SELLOS (VÁLVULA DE DERIVADOR)	573
JUEGO DE SELLOS (VÁLVULA DE DERIVADOR) (*HYDRAULIC FAN FLUID FLOW)	618
JUEGO DE SELLOS (VÁLVULA DE LANZADERA)	573
JUEGO DE TERMINAL (ALTERNADOR)	119
JUEGO DE TORNILLERÍA (ALTERNADOR)	119
JUEGO DE TUERCAS	468
JUEGO DE TUERCAS (COLUMNA DE LA DIRECCION)	497
JUEGO DE VALVULA DE AIRE	890, 892
JUEGO DE VÁLVULA DE ALIVIO	490
JUEGO DE VÁLVULAS (ACOPLADOR RAPIDO)	758
JUNTA DESLIZANTE (GR)	331
JUNTA DESLIZANTE (GR)	330
JUNTA UNIVERSAL (GR)	347, 348
JUNTA UNIVERSAL (GR) (*FRONT AXLE)	330
JUNTA UNIVERSAL (GR) (*REAR AXLE)	330

* NO HAY TRADUCCION DISPONIBLE EN EL MOMENTO DE LA IMPRESION

INDICE

Nombre	Página

K

*KIT-SEAL	448
	449

L

LÁMPARA DE BALIZA DE ADVERTENCIA (GR)	155
LÁMPARA DE LUZ DELANTERA Y DE SEÑAL (GR)	148
	150
LÁMPARA DEL TECHO (GR)	143
LÁMPARA (12 VOLTIOS, 24 VOLTIOS, 35 VATIOS)	144
	145
LÁMPARA (24 VOLTIOS)	143
	148
	150
	227
LÁMPARA (24 VOLTIOS)	152
LÁMPARA (24-VOLTIOS, 21 VATIOS)	148
	150
LÁMPARA (24-VOLTIOS, 21 VATIOS)	154
LÁMPARA (24 VOLTIOS, 5 VATIOS)	154
LÁMPARA (24-VOLTIOS, 70-VATIOS)	155
LÁMPARA (24 VOLTIOS, 75/70 VATIOS)	148
	150
LAVAPARABRISAS DE LA VENTANA (GR)	895
LENTE AMBAR	152
LEVANTAMIENTO (CONFIG)	655
	656
LIMPIAPARABRISAS DE LA VENTANA (GR)	900
LLANTA (CONFIG)	325
LLAVE - MANIJA	797
LUBRICACION AUTOMATICA (CONFIG)	424
	426
LUCES DE ALÓGENO (24 VOLTIOS, 65 VATIOS)	146
	147
LUCES DE DESPLAZAMIENTO (CONFIG)	156
LUCES DE DESPLAZAMIENTO (GR)	168
LUCES DE PARADA Y COLA (GR)	154
LUCES DE REFLECTOR (GR)	158
	159
	161
LUCES DE REFLECTOR Y CAMBIO DE DIRECCION (GR)	164
	166
LUZ DE BALIZA (GR)	170
LUZ DE SEÑAL DE GIRO (GR)	152
	153

M

MANGUERA-CODO	87
MANGUERA (ELIMINACION DE GASES)	61
MAZO DE CABLES (CONJ)	190
MAZO DE CABLES (CONJ) (HERRAMIENTA DE SERVICIO)	228
MAZO DE CABLES (CONJ) (SINCRONIZACIÓN DEL MÓDULO DE ALARMA DEL CLIENTE)	191
MAZO DE CABLES DE CONTROL (CONJ)	126
MAZO DE CABLES DE CONTROL (CONJ) (*HEATED MIRRORS)	841
	843
MAZO DE CABLES DE CONTROL (CONJ) (LUBRICACION AUTOMATICA)	430
MAZO DE CABLES DE DIRECCION (CONJ) (*COLUMN, WHEEL)	498
MAZO DE CABLES DE DIRECCION (CONJ) (SECUNDARIO)	250
MAZO DE CABLES DE LA TRANSMISION	269
MAZO DE CABLES DE LOS FRENOS (CONJ) (LUZ DE PARADA)	451
MAZO DE CABLES DE SENSOR (CONJ) (*TILT)	252
MAZO DE CABLES DEL CHASIS (CONJ) (*PARK BRAKE, OIL FLTR SWITCHES)	236
MAZO DE CABLES DEL CHASIS (CONJ) (PRINCIPAL)	235
MAZO DE CABLES DEL EJE (*FRONT)	224
MAZO DE CABLES DEL EJE (SELECTOR DE MARCHAS AUTOMÁTICO/MANUAL)	224
MAZO DE CABLES DEL INTERRUPTOR (CONFIG)	222
MAZO DE CABLES DEL INTERRUPTOR (CONFIG) (PALANCA)	430
MAZO DE CABLES DEL MOTOR (CONJ)	243
MAZO DE CABLES DEL MOTOR (CONJ) (BOMBA INYECTORA INDIVIDUAL)	256
MAZO DE CABLES DEL MOTOR (CONJ) (COMBUSTIBLE)	100
MAZO DE CABLES DEL MOTOR (CONJ) (MODULO DE CONTROL ELECTRONICO)	241
MAZO DE CABLES, LUCES	159
	247
MAZO DE CABLES, LUCES (BALIZA DE ADVERTENCIA)	170
MAZO DE CABLES, LUCES (*CAB FLOODLIGHTS)	228
MAZO DE CABLES, LUCES (IZQUIERDO)	249
MAZO DE CABLES, LUCES (LADO DERECHO)	249
MAZO DE CABLES, LUCES (SEÑAL DE GIRO)	214
	216

* NO HAY TRADUCCION DISPONIBLE EN EL MOMENTO DE LA IMPRESION

INDICE

Nombre	Página
MECANISMO DE LA VÁLVULA - MONTAJE DEL (GR)	36
MECANISMO DE VÁLVULAS (GR)	52
MEDIDOR DEL NIVEL DE LÍQUIDO (MIRILLA DE CRISTAL)	591
MIRILLA	69
MODULO DE INTERFAZ (GR) (LLAVE)	141
MODULO DE LA PANTALLA (GR)	845
MÓDULO DEL TACÓMETRO Y DEL VELOCÍMETRO (GR)	847
MODULO ELECTRÓNICO DE CUATRO INDICADORES (GR)	846
MONTAJE DE ARO	316
MONTAJE DEL ALTERNADOR (GR)	119
MONTAJE DEL MOTOR Y LA TRANSMISIÓN (GR)	35
MONTAJE DEL TANQUE HIDRÁULICO (GR)	581
MONTAJE Y VALVULA DEL CONTROL PRINCIPAL (GR)	593 596 599 602
MOTOR - NÚCLEO (CONFIG)	4
MOTOR - SOPORTE DEL (GR)	51
MOTOR COMPLETO (CONFIG)	3
MOTOR DE ARRANQUE ELÉCTRICO (GR)	199 201
MOTOR-LIMPIAPARABRISAS (GR)	848 849
MÚLTIPLE DE ADMISIÓN (GR)	92
MÚLTIPLE DE ESCAPE (GR)	91
MULTIPLE DE VALVULA (GR)	575 577

N

Nombre	Página
NUCLEO DE RADIADOR (CONJ)	68
NÚCLEO DE TURBOCOMPRESOR (GR)	98
NÚCLEO DEL ENFRIADOR DE ACEITE (CONJ) (*AXLE, HYDRAULIC)	68 539
NÚCLEO DEL ENFRIADOR DE ACEITE (CONJ) (*AXLE, HYDRAULIC)	257
NÚCLEO DEL ENFRIADOR DE ACEITE (CONJ) (MOTOR)	66
NÚCLEO DEL ENFRIADOR DE ACEITE (CONJ) (TRANSMISION)	272

P

Nombre	Página
*PADLOCK	919
PALANCA UNIVERSAL DE CONTROL (GR)	535 537
PALANCA UNIVERSAL DE CONTROL (GR) (*3-FUNCTION, WITH DOWNSHIFT)	532
PANEL LATERAL (GR)	427
PANTALLA (CONJ) (RADIADOR)	378
PANTALLA (CONJ) (TANQUE HIDRAULICO)	591
PASADOR	762 763
PASAMANOS (GR)	807 808
PENETRACIÓN DEL CUCHARÓN	731
PESTILLO DE PUERTA Y VENTANA DE LA CABINA (GR)	817
PISTÓN Y BIELA (GR)	38 39
PISTONES DEL MOTOR (GR)	579
PLACA DE CONTROL (AUTOCARGA)	130
PLACA DE CONTROL (*DUMP, TILT BACK)	526 528
PLACA DE CONTROL (*JOYSTICK, 2-FCTN, DOWNSHIFT SW)	530
PLACA DE CONTROL (*JOYSTICK, 3-FCTN, D0WNSHIFT SW)	532
PLACA DE CONTROL (*LIFT, FLOAT, LOWER)	526 528
PLACA DE CONTROL (SISTEMA MONITOR CATERPILLAR)	855 857
PLACA DE CONTROL (*UPPER PANEL)	228 857
PLACA DE IDENTIFICACION (CAT)	674 675 677 678 679 681 682 683 685 698 704 706 717 724 729
PLACA DE IDENTIFICACION (CAT)	663 665 667 669 671 672
PLACA DE IDENTIFICACION (CAT)	690 691

* NO HAY TRADUCCION DISPONIBLE EN EL MOMENTO DE LA IMPRESION

INDICE

Nombre	Página
	693
	694
	696
PLACA DE INFORMACION (AMARRE)	917
PLACA DE INFORMACION (COMBUSTIBLE MANUAL)	110
PLACA DE INFORMACION (ENTRADA/SALIDA)	859
PLACA DE INFORMACION (LLAVE)	141
PLACA DE INSTRUCCIONES (ACONDICIONADOR DE AIRE)	773
PLACA DE INSTRUCCIONES (BATERÍA)	121
PLACA DE PATRÓN DE LOS CONTROLES	859
PLACA DEL TABLERO (CENTRAL)	859
PLACA DEL TABLERO (IZQUIERDO)	859
PLACA DEL TABLERO (LADO DERECHO)	859
PLANCHA DE DESGASTE (GR)	764
	765
PLATAFORMA (CONFIG)	864
PLATO OSCILANTE (GR)	500
POLEA DEL ALTERNADOR (GR)	44
POSABRAZOS (GR)	781
POSICIÓN DEL SENSOR (CONJ) (LEVANTAMIENTO)	180
PROTECTOR DE LA CUCHILLA (GR)	766
PROTECTOR DE LA VENTANA	803
	805
PROTECTOR DEL TREN DE FUERZA (GR)	381
PROTECTOR DELANTERO (GR)	380
PROTECTOR TÉRMICO DEL COMPARTIMIENTO DEL MOTOR (GR)	431
PUERTA DE CABINA	790
	791
	794
	795
	796
PUNTA LARGA (GR)	769
PUNTA PARA CUCHARON DE USO GENERAL (GR)	768

R

Nombre	Página
RADIADOR Y VENTILADOR (GR)	78
*RADIO GP-COMMUNICATION	866
*RADIO GP-COMMUNICATION (*PRODUCT LINK 121SR)	126
RADIO (GR)	864
	865
RECLINACION DE ASIENTO (GR)	867
REDUCTOR DE INTENSIDAD DE LAS LUCES (CONJ) (DESPLAZAMIENTO POR CARRETERA)	203
REDUCTOR DE INTENSIDAD DE LUCES (GR)	203
REFLECTOR (GR)	144
	145
	146
	147
REGULADOR - PEDAL DEL (GR)	862
	863
REGULADOR DE TEMPERATURA DEL AGUA (92 GRADOS CENTÍGRADOS) (REFRIGERANTE)	72
REGULADOR DE VOLTAJE (24 VOLTIOS) (ALTERNADOR)	119
REJILLA	495
	575
	577
REJILLA DE SUCCIÓN	291
REJILLA DEL RADIADOR (GR)	378
REJILLA MAGNÉTICA (GR)	291
REJILLA (VÁLVULA DE CONTROL DEL MULTIPLE)	573
RELÉ (CONJ) (24 VOLTIOS) (BOCINA)	227
RELÉ (CONJ) (24 VOLTIOS) (*FRONT CAB FLOODLIGHTS)	227
RELÉ (CONJ) (24 VOLTIOS) (*HEATED MIRRORS)	843
RELÉ (CONJ) (24 VOLTIOS) (*HEATED MIRRORS)	841
RELÉ (CONJ) (24 VOLTIOS) (MOTOR, INCLINACION DEL CAPO)	235
RELÉ (CONJ) (24 VOLTIOS) (REFLECTOR TRASERO)	227
RELÉ (CONJ) (24 VOLTIOS) (*SECONDARY STEER INTERMEDIATE)	250
RESPIRADERO (CONJ) (CÁRTER DEL MOTOR)	58
RESPIRADERO (CONJ) (TRANSMISION)	265
RESPIRADERO (GR)	58
RESPIRADERO (TANQUE HIDRAULICO)	398
	401
RETROCESO - ALARMA DE (GR)	220
RETROVISOR (GR)	831
	832
	833
	834
	835
	836
	837
	838
	839
	841
	843
REVESTIMIENTO DE LA CABINA (GR)	819

* NO HAY TRADUCCION DISPONIBLE EN EL MOMENTO DE LA IMPRESION

INDICE

Nombre	Página

S

Nombre	Página
*SCREEN GP-CASE DRAIN	495
*SEAL-VALVE COVER (TAPA DE VÁLVULA)	11
SEGMENTO DE CUCHILLA (GR)	751
SELLO	103
SELLO ANULAR	573
SELLO (CAJA DEL REGULADOR DE TEMPERATURA)	72
SELLO DE CIGÜEÑAL (GR)	50
SELLO DE CIGÜEÑAL (GR)	29
SELLO DE LABIO (REGULADOR DE TEMPERATURA DEL AGUA)	72
SEÑAL DE LUCES (CONFIG)	156 157
SENSOR DE LA POSICION DE INCLINACION Y MONTAJE (GR)	176
SENSOR DE LA POSICION DE LEVANTAMIENTO Y MONTAJE (GR)	173
SENSOR DE PRESIÓN (GR)	182 183 184 186 187 188
SENSOR DE PRESIÓN (GR) (ACEITE DEL MOTOR)	178
SENSOR DE PRESIÓN (GR) (ATMOSFERICA)	178
SENSOR DE PRESIÓN (GR) (*LIFT CYLINDER OIL)	175
SENSOR DE PRESIÓN (GR) (MÚLTIPLE DE ADMISIÓN DE AIRE)	178
SENSOR DE PRESIÓN Y MONTAJE (GR)	175
SENSOR DE TEMPERATURA (GR)	194 195 196
SENSOR DE TEMPERATURA (GR) (AIRE DE ADMISION)	178
SENSOR DE TEMPERATURA (GR) (REFRIGERANTE)	178
SENSOR DE TEMPERATURA (GR) (2 CLAVIJAS) (ACEITE DE CONVERTIDOR DE PAR)	243
SENSOR DE VELOCIDAD (GR)	189 190
SENSOR DE VELOCIDAD (GR)	191 192 193
SENSOR DE VELOCIDAD (GR) (MAGNETICO, ALTA SALIDA) (SALIDA DE TRANSMISIÓN 1)	291
SENSOR DE VELOCIDAD (GR) (MAGNETICO, ALTA SALIDA) (SALIDA DE TRANSMISIÓN 2)	291
SENSOR DE VELOCIDAD (GR) (MAGNETICO, ALTA SALIDA) (SALIDA DEL CONVERTIDOR DE PAR)	342
SENSOR DE VELOCIDAD (GR) (SINCRONIZACIÓN DEL CIGÜEÑAL)	178
SENSOR DE VELOCIDAD (GR) (*TIMING, CAMSHAFT)	178
SENSOR DEL MOTOR (GR)	178
*SENSOR GP-PRESSURE	185
SEPARADOR DE AGUA Y BOMBA DE CEBADO DE COMBUSTIBLE (GR)	117
*SERVICE GP-COMMUNICATION (*PRODUCT LINK 300)	136
SILENCIADOR (GR)	93
SISTEMA ROPS DE CABINA CERRADA (CONFIG)	782 783
SOLENOIDE (CONJ) (24 VOLTIOS)	199
SOPORTE DE LA ADMISIÓN DE AIRE (GR)	433
SOPORTE DEL CONTROL HIDRÁULICO (GR)	880
SOPORTE DEL RESPALDO (GR)	853 854
*STEERING AR-COMMAND CONTROL	496
*SUPPORT GP-VALVE & FILTER	434
SUSPENSIÓN - ASIENTO CON (GR)	877
SUSPENSIÓN - ASIENTO CON (GR)	878 879
*SWITCH GP-REVERSING FAN	208

T

Nombre	Página
TABLERO DE INSTRUMENTOS (GR)	857 859
TABLERO DE INSTRUMENTOS (GR)	855
TABLERO ELECTRÓNICO DE CONTROL (GR) (*INDICATOR PANEL, CENTER)	130 132
TABLERO ELECTRÓNICO DE CONTROL (GR) (*INDICATOR PANEL, RH, LH)	229
TANQUE HIDRÁULICO (GR)	591
TAPA DE LA CAJA DELANTERA (GR)	9 10
TAPA DE LLENADO (CONJ) (ACEITE DEL MOTOR)	59
TAPA DE LLENADO (CONJ) (TANQUE DE COMBUSTIBLE)	113
TAPA DEL MECANISMO DE VÁLVULAS (GR)	11
TAPA DEL RADIADOR (7 LB/PULG2)	84
TAPA DEL TANQUE DE RADIADOR (GR)	84
TAPA DEL TUBO DE LLENADO	280 591
TAPÓN	291

* NO HAY TRADUCCION DISPONIBLE EN EL MOMENTO DE LA IMPRESION

INDICE

Nombre	Página
	548
TAPON CONTRA EL POLVO	399
	402
TAPÓN DE DRENAJE	619
TAPÓN DE DRENAJE (COLECTOR DE ACEITE DEL MOTOR)	37
TAPÓN DE DRENAJE (REFRIGERANTE DE ACEITE DE TRANSMISIÓN)	272
TAPÓN DEL BLOQUE MOTOR (GR)	40
	41
	42
TAPÓN DEL MOTOR (GR)	43
TAPÓN MAGNÉTICO	298
	300
	302
	304
	306
TENSOR DE CORREA (GR)	7
TIRANTE DE TRABA DEL BASTIDOR DE DIRECCIÓN (GR)	423
TORNILLERIA GR-BASTIDOR TRASERO	384
	385
TRABA-ACOPLADOR RAPIDO (GR)	758
	760
TRANSMISION (CONFIG)	346
TRANSMISIÓN PLANETARIA (GR)	318
TREN DE FUERZA (CONFIG)	322
TREN DE FUERZA-GRUPO ELECTRÓNICO	138
TUBERÍAS DE ACONDICIONADOR DE AIRE (GR)	822
	824
TUBERIAS DE CALEFACCION	827
	830
TUBERÍAS DE CALEFACCIÓN DE LA CABINA	827
	830
TUBERÍAS DE COMBUSTIBLE (GR)	105
	106
TUBERÍAS DE DIRECCIÓN (GR)	476
	482
TUBERÍAS DE ENGRASE (GR)	415
TUBERÍAS DE LA DIRECCIÓN SECUNDARIA (GR)	474
TUBERÍAS DE LUBRICACIÓN (GR)	419
	421
TUBERÍAS DE POSENFRIADOR DE AIRE (CONJ)	87
TUBERÍAS DEL AGUA (GR)	74
TUBERÍAS DEL AGUA (GR)	69
	72
TUBERÍAS DEL CILINDRO DE INCLINACIÓN (GR)	571
TUBERÍAS DEL ENFRIADOR DE ACEITE DEL EJE (GR)	308
TUBERÍAS DEL ENFRIADOR DE ACEITE HIDRÁULICO (GR)	563
TUBERIAS DEL ENFRIADOR DEL CONVERTIDOR DE PAR	312
TUBERÍAS DEL FILTRO Y LA TRANSMISIÓN (GR)	282
TUBERÍAS DELANTERAS (GR)	554
	556
TUBERÍAS HIDRÁULICAS (GR)	558
TUBO DE LLENADO DE ACEITE DE LA TRANSMISIÓN (GR)	280
TUBO DE LLENADO DE ACEITE (GR)	59
TURBOCOMPRESOR - TUBERÍAS DE ACEITE DEL (GR)	63
TURBOCOMPRESOR (GR)	98
	99

V

Nombre	Página
VÁLVULA DE ALIVIO DEL FRENO	113
VÁLVULA DE ALIVIO (GR)	508
	509
	633
VÁLVULA DE ALIVIO (GR)	350
	351
VÁLVULA DE ALIVIO (GR) (*AXLE OIL)	315
VÁLVULA DE ALIVIO (GR) (COMPRESOR DEL REFRIGERANTE)	784
VÁLVULA DE CONTROL DE BAJADA (GR)	620
VÁLVULA DE CONTROL DE LA AMORTIGUACIÓN (GR)	634
VALVULA DE CONTROL DE LA BOMBA (GR)	507
	629
	631
VÁLVULA DE CONTROL DEL FRENO (GR)	467
VÁLVULA DE CONTROL (GR)	608
	610
	612
	614
	616
VÁLVULA DE CONTROL MANUAL (GR)	627
VÁLVULA DE CORTE (GR)	558
VÁLVULA DE CORTE (GR) (BOMBA DE AGUA)	827
VÁLVULA DE CORTE (GR) (CALENTADOR DE CABINA)	827
VÁLVULA DE DERIVACIÓN (GR)	618
VALVULA DE DIRECCION SECUNDARIA (GR)	510
VÁLVULA DE DISTRIBUCIÓN DE LUBRICACIÓN (GR)	446

* NO HAY TRADUCCION DISPONIBLE EN EL MOMENTO DE LA IMPRESION

INDICE

Nombre	Página
	447
VÁLVULA DE DRENAJE (GR)	619
VÁLVULA DE LANZADERA (GR)	511
	512
	599
	636
	637
	638
VÁLVULA DE LANZADERA (GR) (ACEITE DE LA DIRECCIÓN)	593
	596
	602
VÁLVULA DE LANZADERA (GR) (*BRAKE, HYDRAULIC FAN)	573
VÁLVULA DE LEVANTAMIENTO (GR)	33
VÁLVULA DE MODULACIÓN (GR)	349
VALVULA DE MUESTRA DE FLUIDO (CONJ) (ACEITE DEL MOTOR)	66
VÁLVULA DE RETENCIÓN (GR)	115
	116
	501
	502
	503
	605
	606
	607
VÁLVULA DE RETENCIÓN (GR) (DERIVACION DE ENFRIADOR DE ACEITE DEL EJE)	315
VÁLVULA DE RETENCIÓN (GR) (GRUPO DE CUATRO VALVULAS HIDRAULICAS DE LA DIRECCION)	482
VÁLVULA DE SOLENOIDE (GR)	639
	640
	641
VÁLVULA DEL CONTROL PRINCIPAL (GR)	622
	624
	625
	626
VÁLVULA DEL NEUMÁTICO (GR)	325
	329
VÁLVULA DEL NEUMÁTICO (GR)	353
VÁLVULA DEL RESPIRADERO (CONJ) (TUBERIAS DE AGUA)	72
VÁLVULA HIDRÁULICA DE 3 VÍAS (CONFIG)	551
VÁLVULA NEUTRALIZADORA DE DIRECCIÓN (GR)	517
	518
VÁLVULA NEUTRALIZADORA DE DIRECCIÓN (GR) (*HMU STEERING)	476
VÁLVULA PILOTO (GR)	504
VÁLVULA REDUCTORA DE PRESIÓN (GR)	506
VÁLVULA REDUCTORA DE PRESIÓN (GR)	628
VÁLVULA SELECTORA (GR) (DIRECCIÓN)	515
VALVULAS DE DIVISOR DE FLUJO (GR) (*AXLE OIL)	315
VÁLVULAS DE LA DIRECCIÓN (GR)	513
	515
VÁLVULAS Y TUBERIAS, LUBRICACIÓN	443
	444
VARILLA DE NIVEL DE ACEITE (CONJ)	280
VENTANA DE LA PUERTA (GR)	896
	898
VIDRIO (CONJ) (AMBAR)	148
	150
VIDRIO (CONJ) (FARO DELANTERO)	148
	150
VISERA (GR)	894
VOLANTE - CAJA DE (GR)	28
VOLANTE DE DIRECCIÓN (GR)	498
VOLANTE (GR)	26

* NO HAY TRADUCCION DISPONIBLE EN EL MOMENTO DE LA IMPRESION

ÍNDICE

Designação	Página
A	
ACENDEDOR DE CIGARROS (12-VOLTS)	228
ACIONADOR - INCLINAÇÃO DO CAPÔ	354
ACOPLADOR RÁPIDO	741
	742
	743
	744
ACUMULADOR - AR CONDICIONADO	824
ACUMULADOR - FREIO	448
	449
ACUMULADOR D ÓLEO - PILOTO	520
	521
ACUMULADOR DO SISTEMA DE ABSORÇÃO DE IMPACTOS	522
	523
ACUMULADOR DO SISTEMA DE ABSORÇÃO DE IMPACTOS E MONTAGEM	519
ADAPTADOR DA PONTA	658
ADESIVO - PAINEL DE FUSÍVEIS	819
ADESIVO-TRANSMISSÃO (INTERRUPTOR DE REDUÇÃO DE MARCHA)	528
ADESIVO-TRANSMISSÃO (INTERRUPTOR DE REDUÇÃO DE MARCHA)	526
AJUSTADOR DO ASSENTO	770
ALARME	118
ALARME DE MARCHA À RÉ	220
ALTERNADOR DE CORRENTE	119
	120
AMORTECEDOR	21
AMORTECEDOR - ALARME	130
	132
AQUECEDOR DA ÁGUA DO MOTOR	139
AQUECEDOR DA CABINE	809
	811
ARO	325
ARO DESMONTÁVEL	326
	327
	328
	329
ARRANJO GERAL	2
ARRANJO HIDRÁULICO - 2 VÁLVULAS	551
ARRANJO HIDRÁULICO - 3 VÁLVULAS	551
ARREFECEDOR - ÓLEO DO MOTOR	66
ARREFECEDOR DE ÓLEO DA TRANSMISSÃO	272
ARREFECEDOR DO ÓLEO DO EIXO	271
ARREFECEDOR-ÕLEO HIDRÃULICO E DO EIXO	539
ARREFECIMENTO - TEMP. AMBIENTE ALTA	68
ARTICULAÇÃO - CAÇAMBA	657
ASSENTO	873
	875
ASSENTO COM SUSPENSÃO	877
	878
	879
AUXILIAR DE PARTIDA A ÉTER	197
B	
BALANCIM	46
	47
	48
	49
BASE DO FILTRO DE ÓLEO	54
	57
	262
BASE DO FREIO - PEDAL	450
	451
BATERIA E CABOS / FIOS ELÉTRICOS	121
BEIRA - PONTA CORTANTE	746
	747
*BELT-STEP	399
	402
BLINDAGEM DO COMPARTIMENTO DO MOTOR	431
BLOCO DO MOTOR	14
	15
	16
BLOCO LIMITADOR DE OSCILAÇÃO DO EIXO	356
BOCAL DE ENCHIMENTO DE ÓLEO DO MOTOR	59
BOCAL DE ENCHIMENTO DE ÓLEO DO TREM DE FORÇA	280
BOMBA - ESCORVA DE COMBUSTÍVEL E SEPARADOR DE ÁGUA	117
BOMBA DA DIREÇÃO SECUNDÁRIA E MONTAGEM	491
BOMBA DA TRANSMISSÃO	323
BOMBA DE ÁGUA	75
	76
	77
BOMBA DE DIREÇÃO SECUNDÁRIA E MOTOR	490
BOMBA DE ESCORVA DO COMBUSTÍVEL E DO FILTRO PRIMÁRIO	110
BOMBA DE INJEÇÃO DO COMBUSTÍVEL	109
BOMBA DE LUBRIFICAÇÃO	430
BOMBA DE ÓLEO - MOTOR	64
	65
BOMBA DE PISTÃO	492
	586
	588
BOMBA DE TRANSFERÊNCIA DO COMBUSTÍVEL	112

* TRADUÇÃO NÃO DISPONÍVEL NO MOMENTO DA IMPRESSÃO

ÍNDICE

Designação	Página
BOMBA E MONTAGEM - FREIO E VENTILADOR HIDRÁULICO	582
BOMBA E MONTAGEM - LUBRIFICAÇÃO	429
BOMBA HIDRÁULICA E MONTAGEM	584
BOMBA REGULADORA (*HMU STEERING)	476
BORDA CORTANTE	745
	747
	748
	749
	750
BORDA SEGMENTADA DA CAÇAMBA	751
BRAÇO DE LEVANTAMENTO	644
	645
BRAÇO DO ASSENTO	781
BRACO DO LIMPADOR	779
	780
BRAÇO E MANCAL TIPO LUVA	642
	643
BUJÃO - COLETOR DE ADMISSÃO	95
BUJÃO - POEIRA	399
	402
BUJÃO DO BLOCO DO CILINDRO	40
	41
	42
BUJÃO DO DRENO	619
BUJÃO DO DRENO (ARREFECEDOR DO ÓLEO DA TRANSMISSÃO)	272
BUJÃO DO DRENO (CÁRTER DE ÓLEO DO MOTOR)	37
BUJÃO DO MOTOR	43
BUJÃO MAGNÉTICO	298
	300
	302
	304
	306
BUZINA ELÉTRICA	813
BUZINA (24 VOLTS, TOM BAIXO)	813

C

CABEÇOTE DO MOTOR	18
	19
	20
CABINE - ESTRUTURA ROPS COBERTA	782
	783
	852
CABOS/FIOS ELÉTRICOS - AR CONDICIONADO	221
CABOS/FIOS ELÉTRICOS - CABINE	227
CABOS/FIOS ELÉTRICOS - CHASSI	235
CABOS/FIOS ELÉTRICOS - CONTROLE ELETRÔNICO	241
CABOS/FIOS ELÉTRICOS - DIANTEIROS	245
CABOS/FIOS ELÉTRICOS - DIREÇÃO SECUNDÁRIA	250
CABOS/FIOS ELÉTRICOS - INJETOR	256
CABOS/FIOS ELÉTRICOS - MOTOR	243
CABOS/FIOS ELÉTRICOS - SENSOR	252
	254
CABOS/FIOS ELÉTRICOS DE ILUMINAÇÃO	247
	248
	249
CAÇAMBA - MANUSEIO DE MATERIAL	673
	674
	675
	677
	678
	679
	681
	682
	683
	685
	714
	715
	716
	717
	719
	720
	721
	722
	723
	724
	726
	727
	728
	729
CAÇAMBA - P/ESCÓRIA	740
CAÇAMBA P/ ESCÓRIA	698
CAÇAMBA PARA APLICAÇÃO GERAL	659
	660
	661
	662
	663
	665
	667
	669
	671
	672
	699
	700
	701
	702
	703
	704
	705
	706

* TRADUÇÃO NÃO DISPONÍVEL NO MOMENTO DA IMPRESSÃO

ÍNDICE

Designação	Página
	707
	708
	709
	710
	711
	712
	713
CAÇAMBA PARA PENETRAÇÃO	687
	731
CAÇAMBA PARA ROCHAS	688
	689
	690
	691
	693
	694
	696
	732
	733
	734
	735
	736
	737
	738
	739
CADEADO	274
	919
CAIXA - BATERIA	360
CAIXA - EIXO FIXO	298
	300
	302
CAIXA - EIXO OSCILANTE	304
	306
CAIXA DE FERRAMENTAS	903
	905
CAIXA DIANTEIRA	29
CAIXA DO VOLANTE DO MOTOR	28
CAPÔ E PROTETOR	390
CARCAÇA DAS ENGRENAGENS PLANETÁRIAS E COMPONENTES	265
CÁRTER DO ÓLEO DO MOTOR	37
CARTUCHO DO TURBOALIMENTADOR	98
CHASSI	1
CHASSI DIANTEIRO	372
CHASSI TRASEIRO	375
CHAVE - ALAVANCA	797
CHAVE - ELETRÔNICO (SEGURANÇA)	141
CHAVE GERAL	204
CHAVE GERAL (BATERIA)	121
CHICOTE - CABINE	229
CHICOTE - CABOS ELÉTRICOS	190
CHICOTE - CABOS ELÉTRICOS (FERRAMENTA DE SERVIÇO)	228
CHICOTE - CABOS ELÉTRICOS (REGULAGEM - CAM)	191
CHICOTE - CHASSI (INTERRUPTORES DO FREIO DE ESTACIONAMENTO, FILTRO DO ÓLEO)	236
CHICOTE - CHASSI (PRINCIPAL)	235
CHICOTE - FREIOS (LUZ DO FREIO)	451
CHICOTE - ILUMINAÇÃO	159
	247
CHICOTE - ILUMINAÇÃO (FARÓIS DA CABINE)	228
CHICOTE - ILUMINAÇÃO (LADO DIREITO)	249
CHICOTE - ILUMINAÇÃO (LADO ESQUERDO)	249
CHICOTE - ILUMINAÇÃO (PISCA-ALERTA)	170
CHICOTE - ILUMINAÇÃO (SETA DE DIREÇÃO)	214
	216
CHICOTE - MOTOR	243
CHICOTE - MOTOR (COMBUSTÍVEL)	100
CHICOTE - MOTOR (MÓDULO DE CONTROLE ELETRÔNICO)	241
CHICOTE - MOTOR (UNIDADE INJETORA)	256
CHICOTE - SENSOR (INCLINAÇÃO)	252
CHICOTE - TRANSMISSÃO	269
CHICOTE - VÁLVULA	222
CHICOTE - VÁLVULA (COMPRESSOR DE AR DO ASSENTO)	890
	892
CHICOTE-DIREÇÃO (COLUNA, RODA)	498
CHICOTE-DIREÇÃO (SECUNDÁRIO)	250
CILINDRO DA DIREÇÃO	473
CILINDRO DE DIREÇÃO E MONTAGEM	472
CILINDRO DE ÉTER	197
CILINDRO DE INCLINAÇÃO	546
	547
CILINDRO DE INCLINAÇÃO E RETENTOR	542
CILINDRO DE LEVANTAMENTO	543
	544
CILINDRO DE LEVANTAMENTO E RETENTOR	540
	541
CINTO DE SEGURANÇA	872
	877
COLETOR - CONTROLE	315
	573
COLETOR - VÁLVULA	575
	577
COLETOR DE ADMISSÃO	92
COLETOR DE ESCAPE	91
COLMÉIA - ARREFECEDOR DE ÓLEO (EIXO, HIDRÁULICO)	539

* TRADUÇÃO NÃO DISPONÍVEL NO MOMENTO DA IMPRESSÃO

ÍNDICE

Designação	Página
COLMÉIA - ARREFECEDOR DE ÓLEO (EIXO, HIDRÁULICO)	257
COLMÉIA - ARREFECEDOR DE ÓLEO (EIXO, HIDRÁULICO)	68
COLMÉIA - ARREFECEDOR DE ÓLEO (MOTOR)	66
COLMÉIA - ARREFECEDOR DE ÓLEO (TRANSMISSÃO)	272
COLMEIA DO CONDENSADOR (REFRIGERANTE)	68 786
COLMEIA DO RADIADOR	68
COLUNA DA DIREÇÃO	497
COMANDO DE ACESSÓRIOS	22
COMPRESSOR DE AR - ASSENTO	772
COMPRESSOR DE REFRIGERANTE	784 785
COMUTADOR-LUZ ALTA/BAIXA	203
CONDENSADOR DO REFRIGERANTE E MONTAGEM	786
CONDICIONADOR DE AR	773 774 775
CONEXÃO - ELÉTRICA	125
CONTRAPESO	361
CONTROLE - ALAVANCA	535 537
CONTROLE - ALAVANCA (3 FUNÇÕES, COM REDUÇÃO DE MARCHA)	532
CONTROLE - NÃO PROGRAMADO	134
CONTROLE - NÃO PROGRAMADO (IMPLEMENTO)	229
CONTROLE - NÃO PROGRAMADO (TREM DE FORÇA)	229
CONTROLE & MONTAGEM-COMUNICAÇÃO	126
CONTROLE-CABO	534
CONTROLE DA CAÇAMBA	653 655
CONTROLE DA TRANSMISSÃO	267 268
CONTROLE DE DIREÇÃO	468 470
CONTROLE DO FREIO DE ESTACIONAMENTO	460
CONTROLE DO FREIO DE SERVIÇO	461
CONTROLE DO PAINEL MONITOR	788
CONTROLE DO PEDAL DO FREIO	458 459
CONTROLE-ELETROIDRÁULICO	526 528 530 532
CONTROLE ELETRÔNICO - VISOR (PAINEL DE INDICADORES, CENTRAL)	130 132
CONTROLE ELETRÔNICO - VISOR (PAINEL DE INDICADORES, DIREITO, ESQUERDO)	229
CONTROLE ELETRÔNICO E MONTAGEM - MOTOR	128
CONTROLE-ESCAVAÇÃO AUTOMÁTICA	129 130 132
CONTROLE HIDRÁULICO DA TRANSMISSÃO	269
CONTROLE-MONITOR NÃO PROGRAMADO	789
CONTROLE-MONITOR NÃO PROGRAMADO (SISTEMA DE MONITORIZAÇÃO CATERPILLAR)	228
CONVERSOR DE TORQUE	344
CONVERSOR DE TORQUE E CARCAÇA	342
CORREIA- SERPENTINA	7
CORREIA- SERPENTINA (COMPRESSOR DO CONDICIONADOR DE AR)	785
CRUZETA E MANCAL	331 347 348

D

Designação	Página
DECALQUE	906
DECALQUE - ADVERTÊNCIA (CONSULTAR OMM)	752 754
DECALQUE - ADVERTÊNCIA (MANUAL)	915 916
DECALQUE - ADVERTÊNCIA (NÃO SOLDAR, NÃO PERFURAR, CONSULTAR OMM)	917
DECALQUE - ADVERTÊNCIA (PARTIDA COM CABO AUXILIAR, CONSULTAR OMM)	172
DECALQUE - ADVERTÊNCIA (PONTO DE ESMAGAMENTO)	915 916
DECALQUE - ADVERTÊNCIA (RÁDIO DO PRODUCT LINK, NÃO NACD)	140
DECALQUE - AVISO (LOCAL DO OLHAL DE LEVANTAMENTO)	752 754
DECALQUE - CONTROLE (ALAVANCA DE CONTROLE, 2 FUNÇÕES, INTERRUPTOR DE REDUÇÃO DE MARCHA)	530
DECALQUE - CONTROLE (ALAVANCA DE CONTROLE, 3 FUNÇÕES, INTERRUPTOR DE REDUÇÃO DE MARCHA)	532
DECALQUE - CONTROLE (DESPEJAR, INCLINAR PARA TRÁS)	526

* TRADUÇÃO NÃO DISPONÍVEL NO MOMENTO DA IMPRESSÃO

ÍNDICE

Designação	Página
	528
DECALQUE - CONTROLE (ESCAVAÇÃO AUTOMÁTICA)	130
DECALQUE - CONTROLE (LEVANTAR, FLUTUAR, ABAIXAR)	526
	528
DECALQUE - CONTROLE (PAINEL SUPERIOR)	228
	857
DECALQUE - CONTROLES	859
DECALQUE - IDENTIFICAÇÃO (ALTURA DA ESTRADA)	2
DECALQUE - IDENTIFICAÇÃO (AUXILIAR HIDRÁULICO)	528
DECALQUE - IDENTIFICAÇÃO (BUZINA)	526
	528
DECALQUE - IDENTIFICAÇÃO (IGNIÇÃO)	141
DECALQUE - IDENTIFICAÇÃO (12-VOLTS)	859
DECALQUE - IDENTIFICAÇÃO (20-KM/H)	138
DECALQUE - INFORMAÇÕES (AMARRAÇÃO)	917
DECALQUE - INFORMAÇÕES (CHAVE)	141
DECALQUE - INFORMAÇÕES (ENTRADA-SAÍDA)	859
DECALQUE - INSTRUÇÃO (AJUSTE DO ASSENTO)	890
	892
DECALQUE - INSTRUÇÃO (CONSULTAR OMM)	141
DECALQUE - INSTRUÇÃO (MANUTENÇÃO)	526
	528
	530
	532
DECALQUE - INSTRUÇÃO (OLHAL DE LEVANTAMENTO, LOCAL DE AMARRAÇÃO)	917
DECALQUE - INSTRUÇÃO (PARTIDA DO MOTOR)	859
DECALQUE - PAINEL (CENTRAL)	859
DECALQUE - PAINEL (LADO DIREITO)	859
DECALQUE - PAINEL (LADO ESQUERDO)	859
DECALQUE (ESCAVAÇÃO AUTOMÁTICA)	130
	132
DECALQUE MONITOR (SISTEMA DE MONITORIZAÇÃO CATERPILLAR)	855
	857
DIFERENCIAL	275
	276
DIFERENCIAL - DESLIZAMENTO LIMITADO	277
DIFERENCIAL - NOSPIN	278
	279
DIREÇÃO SECUNDÁRIA	496
DISJUNTOR AUTOMÁTICO DE CIRCUITO (105 AMPERES) (ALTERNADOR)	235
DISJUNTOR AUTOMÁTICO DE CIRCUITO (15 AMPERES) (ILUMINAÇÃO DE OPERAÇÃO)	236
DISJUNTOR AUTOMÁTICO DE CIRCUITO (30 AMPERES) (ENERGIA DA BATERIA PARA CABINE DESLIGADA)	237
DISJUNTOR AUTOMÁTICO DE CIRCUITO (50 AMPÈRES) (PARTIDA DO MOTOR)	235
DISJUNTOR AUTOMÁTICO DE CIRCUITO (80 AMPERES) (PRINCIPAL)	235
DOBRADIÇA DO PÁRA-LAMA	386
	387
DRENO - ECOLOGIA	548
DUCTO E FILTRO	797

E

EIXO-COMANDO DE VÁLVULA	8
EIXO DE TRANSMISSÃO	330
EIXO E ARREFECEDOR DO ÓLEO DO EIXO	257
EIXO FIXO	258
	259
EIXO OSCILANTE	259
	260
	261
ELEMENTO - AQUECEDOR DE ÁGUA DA CAMISA (240 VOLTS, 1500 WATTS)	139
ELEMENTO DO FILTRO DE AR (PRIMÁRIO)	86
ELEMENTO DO FILTRO DE AR (SECUNDÁRIO)	86
ELEMENTO FILTRANTE - ÓLEO (HIDRÁULICO)	549
ELEMENTO FILTRANTE - ÓLEO (TREM DE FORÇA)	284
ELIMINAÇÃO DE VAPORES DO CÁRTER	61
ELO - TRAVA DA ARMAÇÃO DA DIREÇÃO	423
EMISSOR - NÍVEL DO COMBUSTÍVEL	113
EMISSOR - POSIÇÃO	180
	181
ENGATE - ARTICULAÇÃO	388
ENGRENAGEM-COROA E PINHÃO	285
	287
ENGRENAGENS DE DISTRIBUIÇÃO	27
ENGRENAGENS DE SAÍDA DE TRANSFERÊNCIA	291
ENGRENAGENS PLANETÁRIAS - TRANSMISSÃO	318
ESCADA	394
	398
	401
ESPELHO RETROVISOR	831

* TRADUÇÃO NÃO DISPONÍVEL NO MOMENTO DA IMPRESSÃO

ÍNDICE

Designação	Página
	832
	833
	834
	835
	836
	837
	838
	839
	841
	843
EXTENSÃO - ENCOSTO (TECIDO)	875

F

FERRAGEM - CHASSI TRASEIRO	384
	385
FERRAGENS-MONTAGEM	383
FIAÇÃO - AQUECEDOR E AR CONDICIONADO	775
	811
FIACAO - BOMBA	222
FIACAO - BOMBA (LUBRIFICAÇÃO AUTOMÁTICA)	430
FIAÇÃO - CONTROLE	126
FIAÇÃO - CONTROLE DE LUBRIFICAÇÃO AUTOMÁTICA	222
FIAÇÃO - CONTROLE (ESPELHOS AQUECIDOS)	841
	843
FIAÇÃO - CONTROLE (LUBRIFICAÇÃO AUTOMÁTICA)	430
FIAÇAO - CONTROLES DO OPERADOR	228
FIAÇAO - CONTROLES DO OPERADOR (ELETROIDRÁULICA, ALAVANCA DE CONTROLE)	530
	532
FIAÇÃO - EIXO (DIANTEIRA)	224
FIAÇÃO - EIXO (PARTE TRASEIRA)	224
FIAÇÃO - INTERRUPTOR	222
FIAÇÃO - INTERRUPTOR (NÍVEL)	430
FIAÇÃO - MONITORAÇÃO DO EIXO	224
FIAÇÃO-CONT TRANSMISSÃO (VOLANTE)	498
FILTRO - COMBUSTÍVEL	102
	113
FILTRO - MAGNÉTICO	291
FILTRO - ÓLEO	284
	549
	550
FILTRO - ÓLEO DO MOTOR	60
FILTRO - SEPARADOR DE ÁGUA E COMBUSTÍVEL (PRIMÁRIO)	103
FILTRO DE AR DE CABINA	797
FILTRO DE COMBUSTÍVEL E SEPARADOR DE ÁGUA	103
FILTRO E TUBOS - TRANSMISSÃO	282
FILTRO-GRAXA	430
FILTRO SECUNDÁRIO DO COMBUSTÍVEL E TUBULAÇÕES	100
FIXADOR - AMORTECEDOR E POLIA	24
FIXADORES - CABEÇOTE DO MOTOR	23
FIXADORES - CAIXA DIANTEIRA	25
FREIO DE ESTACIONAMENTO	453
	455
	456
	457
FREIOS E ENGRENAGENS PLANETARIAS	263
FUNDO - ENCOSTO	853
	854
FUSÍVEL (10 AMPERES)	227
FUSÍVEL (15 AMPERES)	227
	775
	811
FUSÍVEL (20-AMPERES)	227

G

GARFO DE PALETAS	752
	754
*GEAR GP-BEVEL & PINION	289
GR. BÁSICO - TAMPA DAS VÁLVULAS E CHICOTE DE INJEÇÃO	6
GR. DE CONVERSÃO - CERTIFICADO	2
GRADE DO RADIADOR	378
GRUPO DE INSTALAÇÃO - MOTOR	5
GRUPO ROTATIVO DA BOMBA	494
	590

I

ILUMINAÇÃO - RODOVIÁRIA	168
ILUMINAÇÃO - SINALIZAÇÃO	156
	157
ILUMINAÇÃO RODOVIÁRIA	156
INCLINAÇÃO - CAPÔ	441
INDICADOR - NÍVEL DE LÍQUIDO (VISOR DE VIDRO)	591
INDICADOR - NÍVEL DE ÓLEO	280
INDICADOR - NÍVEL DO ÓLEO (VARETA)	62
INDICADOR - NÍVEL DO ÓLEO (VARETA) (MOTOR)	62
INDICADOR - VARETA DO NÍVEL DE ÓLEO	298
	300
	302
	304
	306

* TRADUÇÃO NÃO DISPONÍVEL NO MOMENTO DA IMPRESSÃO

ÍNDICE

Designação	Página
INJETOR DE COMBUSTÍVEL	104
INSTALAÇÃO-COMUNICAÇÃO	140
INSTALAÇÃO DO RÁDIO	815
INSTALAÇÃO DOS CONTROLES	814
INSTALAÇÃO-SEGURANÇA	140, 141
INTERRUPTOR - BALANCIM	210, 211, 218
INTERRUPTOR - BALANCIM (ACIONADOR DE INCLINAÇÃO DO CAPÔ)	235
INTERRUPTOR - BALANCIM (ACOPLADOR RÁPIDO)	210, 211
INTERRUPTOR - BALANCIM (AJUSTE DE ATIVAÇÃO DE CARREGAMENTO AUTOMÁTICO)	130, 132
INTERRUPTOR - BALANCIM (ANULAR NEUTRALIZADOR DA TRANSMISSÃO)	229
INTERRUPTOR - BALANCIM (AQUECIMENTO DOS ESPELHOS)	841, 843
INTERRUPTOR - BALANCIM (CONDICIONADOR DE AR, AQUECEDOR)	229
INTERRUPTOR - BALANCIM (DESENGATE AUTOMÁTICO DE LEVANTAMENTO, INCLINAÇÃO)	229
INTERRUPTOR - BALANCIM (DIREÇÃO SECUNDÁRIA)	213
INTERRUPTOR - BALANCIM (FARÓIS DIANTEIRO, TRASEIRO)	159
INTERRUPTOR - BALANCIM (MARCHA AVANTE, NEUTRO, MARCHA À RÉ)	219
INTERRUPTOR - BALANCIM (MODULAÇÃO PRECISA)	229
INTERRUPTOR - BALANCIM (PARADA A NÍVEL DO SOLO)	235
INTERRUPTOR - BALANCIM (PERIGO)	214, 216
INTERRUPTOR - BALANCIM (PISCA-ALERTA)	170
INTERRUPTOR - BALANCIM (SELEÇÃO DE MODO)	229
INTERRUPTOR - BALANCIM (SELEÇÃO DE TERCEIRA FUNÇÃO)	528, 532
INTERRUPTOR - BALANCIM (SELETOR DE MODO DE CARREGAMENTO AUTOMÁTICO)	130, 132
INTERRUPTOR - BALANCIM (SENTIDO DA TRANSMISSÃO)	498
INTERRUPTOR - BALANCIM (SISTEMA DE ABSORÇÃO DE IMPACTOS)	209
INTERRUPTOR - BALANCIM (TRAVA HIDRÁULICA)	230
INTERRUPTOR - BALANCIM (VELOCIDADE DO VENTILADOR)	229
INTERRUPTOR - BALANCIM (VENTILADOR DE INVERSÃO AUTOMÁTICA)	208
INTERRUPTOR - BOTÃO (ACIONADOR DO AUTODIG)	130, 132
INTERRUPTOR - BOTÃO (BUZINA)	228
INTERRUPTOR - BOTÃO (REDUÇÃO DE MARCHA)	498
INTERRUPTOR - BOTÃO (RETOMAR A TRAVA DO ACELERADOR)	229
INTERRUPTOR - BOTÃO (TRANSMISSÃO - MUDANÇA DE MARCHAS ACIMA)	498
INTERRUPTOR - CIRCUITO (20-AMPERES) (ACIONADOR DE INCLINAÇÃO DO CAPÔ)	237
INTERRUPTOR - DIREÇÃO SECUNDÁRIA	213
INTERRUPTOR - LIMITADOR (LUZ DE FREIO)	451
INTERRUPTOR - LIMPADOR (24 VOLTS) (PISCA-PISCA DIANTEIRA)	227
INTERRUPTOR - MAGNÉTICO	205, 206
INTERRUPTOR - MAGNÉTICO (24 VOLTS) (RELÉ PRINCIPAL)	235
INTERRUPTOR - NÍVEL (GRAXA)	430
INTERRUPTOR - PARTIDA (CHAVE)	227
INTERRUPTOR - PISCA-PISCA	214, 216
INTERRUPTOR - PRESSÃO	207
INTERRUPTOR - PRESSÃO (ATIVAÇÃO DA LUBRIFICAÇÃO AUTOMÁTICA) (LUBRIFICAÇÃO)	446
INTERRUPTOR - PRESSÃO (DIFERENCIAL)	549
INTERRUPTOR - PRESSÃO (ÓLEO DA DIREÇÃO PRIMÁRIA)	250
INTERRUPTOR - PRESSÃO (ÓLEO DA DIREÇÃO SECUNDÁRIA)	250
INTERRUPTOR - PRESSÃO (ÓLEO DO FREIO DE ESTACIONAMENTO)	235
INTERRUPTOR - PRESSÃO (ÓLEO DO FREIO DE SERVIÇO)	243
INTERRUPTOR - PRESSÃO (REFRIGERANTE) (REFRIGERANTE ALTO, BAIXO)	221
INTERRUPTOR - REDUTOR DE LUMINOSIDADE (RODAGEM)	203
INTERRUPTOR - ROTATIVO (24 VOLTS) (CONTROLE DE MUDANÇA AUTOMÁTICA)	228

* TRADUÇÃO NÃO DISPONÍVEL NO MOMENTO DA IMPRESSÃO

ÍNDICE

Designação	Página
INTERRUPTOR - ROTATIVO (24 VOLTS) (CONTROLE VARÍAVEL DE MUDANÇA DAS MARCHAS)	228
INTERRUPTOR - ROTATIVO (24 VOLTS) (ILUMINAÇÃO DE OPERAÇÃO)	227
INTERRUPTOR - ROTATIVO (24 VOLTS) (LIMPADOR TRASEIRO)	227
INTERRUPTOR - SISTEMA DE ABSORCAO DE IMPACTOS	209
INTERRUPTOR - TEMPERATURA (AR CONDICIONADO)	775
INTERRUPTOR - TRANSMISSÃO	219
INTERRUPTOR DE DERIVAÇÃO	202
INTERRUPTOR DE SINALIZAÇÃO	214 216
INTERRUPTOR GIRATÓRIO	212
INTERRUPTOR GIRATÓRIO (SELEÇÃO DE,O MATERIAL DE AUTOESCAVAÇÃO)	132
INTERRUPTOR GIRATÓRIO (SELETOR DE MATERIAL DE ESCAVAÇÃO AUTOMÁTICA)	130
INTERRUPTOR (TESTE DE LUBRIFICAÇÃO AUTOMÁTICA)	430
INTERRUPTOR-VENTILADOR DE INVERSÃO	208

J

JOGO - BUZINA	468
JOGO DE ALAVANCA DE INCLINAÇÃO	468
JOGO DE ALAVANCA DE INCLINAÇÃO (COLUNA DA DIREÇÃO)	497
JOGO DE ALAVANCA (MOTOR DE PARTIDA)	199
JOGO DE AMORTECEDOR DE CHOQUES	890 892
JOGO DE BLOCO DESLIZADOR	878
JOGO DE BUCHA (MOTOR DE PARTIDA)	199
JOGO DE CAIXA (COLUNA DA DIREÇÃO)	497
JOGO DE CALÇOS (INCLUI 17 CALÇOS) (BOMBA DO PISTÃO)	492
JOGO DE CORDÃO	890 892
JOGO DE DISCO	277
JOGO DE DISPOSITIVO AUXILIAR DE GÁS	468
JOGO DE DISPOSITIVO AUXILIAR DE GÁS (COLUNA DA DIREÇÃO)	497
JOGO DE EIXO	468
JOGO DE ESCOVA (MOTOR DE PARTIDA)	199
JOGO DE FIXADORES (ALTERNADOR)	119
JOGO DE INDICADOR	892
JOGO DE ISOLADOR (MOTOR DE PARTIDA)	199
JOGO DE LONA DO FREIO	456
JOGO DE MANCAL (ALTERNADOR)	119
JOGO DE MANCAL PRINCIPAL DO MOTOR	12 32
JOGO DE PARAFUSO (CONECTORES ELÉTRICOS)	236
JOGO DE PINO DO PEDAL	862
JOGO DE PISTÃO (BOMBA)	492
JOGO DE PISTÃO DE CONTROLE (BOMBA)	492
JOGO DE PORCAS	468
JOGO DE PORCAS (COLUNA DA DIREÇÃO)	497
JOGO DE RECEPTÁCULO (2 PINOS)	152
JOGO DE RETENTOR	315 461 509 522 523 627 640
JOGO DE RETENTOR (ACOPLADOR RAPIDO)	758
JOGO DE RETENTOR (BOMBA DE MEDIÇÃO, DIREÇÃO)	478
JOGO DE RETENTOR (VALVULA DE ALIVIO)	573
JOGO DE RETENTOR (VÁLVULA DE DESVIO)	573
JOGO DE RETENTOR (VÁLVULA DE DESVIO) (FLUXO DO FLUIDO DO VENTILADOR HIDRÁULICO)	618
JOGO DE RETENTOR (VÁLVULA DE VAIVÉM)	573
JOGO DE ROLO	862
JOGO DE TELA (PRÉ-PURIFICADOR)	97
JOGO DE TERMINAL (ALTERNADOR)	119
JOGO DE VÁLVULA (ACOPLADOR RAPIDO)	758
JOGO DE VÁLVULA DE ALÍVIO	490
JOGO DE VÁLVULA DE AR	890 892
JUNTA CORREDIÇA	330 331
JUNTA (RESPIRO DO CÁRTER DO ÓLEO DO MOTOR)	58
JUNTA UNIVERSAL	347 348
JUNTA UNIVERSAL (EIXO DIANTEIRO)	330
JUNTA UNIVERSAL (EIXO TRASEIRO)	330

K

*KIT-SEAL	448 449

L

LÂMINA DO LIMPADOR DE PÁRA-BRISA	900

* TRADUÇÃO NÃO DISPONÍVEL NO MOMENTO DA IMPRESSÃO

ÍNDICE

Designação	Página
LÂMPADA - FAROL	144
	145
	146
	147
LÂMPADA - HALOGÊNEO (24 VOLTS, 65 WATTS)	146
	147
LÂMPADA - SINALIZAÇÃO	152
	153
LÂMPADA - TETO	143
LÂMPADA DIANTEIRA E DE SINAL	148
	150
LÂMPADA (12 VOLTS, 24 VOLTS, 35 WATTS)	144
	145
LÂMPADA (24 V)	152
LÂMPADA (24 VOLTS)	143
	148
	150
	227
LÂMPADA (24 VOLTS, 21 WATTS)	148
	150
	154
LÂMPADA (24 VOLTS, 5 WATTS)	154
LÂMPADA (24 VOLTS, 70 WATTS)	155
LÂMPADA (24 VOLTS, 75-70 WATTS)	148
	150
LAVADOR DO VIDRO	895
LENTE ÂMBAR	152
LENTE (ÂMBER)	148
	150
LENTE (LUZES DIANTEIRAS)	148
	150
LEVANTAMENTO - ARRANJO	655
	656
LEVANTAMENTO DO MOTOR	34
LIMPADOR DO VIDRO	900
LUBRIFICAÇÃO - AUTOMÁTICA	424
	426
LUZ GIRATÓRIA DE ALARME	155
LUZ INTERMITENTE (24 VOLTS)	214
	216
LUZ TRASEIRA E DE FREIO	154

M

MANGUEIRA - COTOVELO	87
MANGUEIRA (ELIMINAÇÃO DE VAPORES)	61
MECANISMO DAS VÁLVULAS	52
MÓDULO - INTERFACE (CHAVE)	141
MÓDULO - VELOCÍMETRO E TACÔMETRO	847
MÓDULO DO VISOR	845
MÓDULO ELETRÔNICO DE QUATRO INDICADORES	846
MONITOR	845
MONTAGEM - ALTERNADOR	119
MONTAGEM - ARO	316
MONTAGEM - CABINE	850
MONTAGEM - MECANISMO DAS VÁLVULAS	36
MONTAGEM - MOTOR E TRANSMISSÃO	35
MONTAGEM - TANQUE HIDRÁULICO	581
MONTAGEM DO EIXO	316
MOTOR - LIMPADOR DO VIDRO	848
	849
MOTOR - NÚCLEO	4
MOTOR - PISTÃO	579
MOTOR COMPLETO	3
MOTOR ELÉTRICO DE PARTIDA	199
	201

O

ÓLEO - ARRANJO PARA TROCA RÁPIDA	317

P

PAINEL DE INSTRUMENTOS	855
	857
	859
PAINEL LATERAL	427
PÁRA-LAMA	362
	363
	365
	367
PÁRA-SOL DA CABINE	894
PEDAL DO GOVERNADOR	862
	863
PEGA-MÃO	807
	808
PERMUTADOR DE CALOR - EIXO	296
PINO	762
	763
PISO	864
PISO-SUPRESSÃO DE RUÍDOS	799
	800
	801
PISTÃO E BIELA	38
	39
PLACA - IDENTIFICAÇÃO DO EIXO	919
PLACA BASCULANTE	500
PLACA DE DESGASTE	764
	765
PLACA DE IDENTIFICAÇÃO (CATERPILLAR)	663
	665
	667
	669
	671

* TRADUÇÃO NÃO DISPONÍVEL NO MOMENTO DA IMPRESSÃO

ÍNDICE

Designação	Página
	672
	674
	675
	677
	678
	679
	681
	682
	683
	685
	690
	691
	693
	694
	696
	698
	704
	706
	717
	724
	729
PLACA DE INFORMAÇÃO (COMBUSTIVEL MANUAL)	110
PLACA DE INSTRUÇÃO (BATERIA)	121
PLACA DE INSTRUÇÃO (CONDICIONADOR DE AR)	773
PLACA E DECALQUE	914
	915
	916
	917
	918
PLACA E DECALQUE (CERTIFICAÇÃO DA MÁQUINA)	2
PNEU E ARO	332
	333
	334
	335
	336
	337
	338
	339
	340
	341
POLIA - ALTERNADOR	44
POLIA DO VIRABREQUIM	45
PONTA LONGA	769
PONTA PARA APLICAÇÕES GERAIS	768
PONTA-SERVIÇO PESADO	767
PORTA DA CABINE	790
	791
	794
	795
	796
POSIÇÃO DO SENSOR (LEVANTAMENTO)	180
PRÉ-PURIFICADOR	96
	97
PROTEÇÃO CONTRA VANDALISMO	919
PROTETOR - CAÇAMBA	756
	757
PROTETOR - DIANTEIRO	380
PROTETOR - JANELA	803
	805
PROTETOR - TREM DE FORÇA	381
PROTETOR DA BORDA CORTANTE	766
PURIFICADOR DE AR	85
	86

R

RADIADOR E VENTILADOR	78
RÁDIO	864
	865
RÁDIO - COMUNICAÇÃO	866
RÁDIO - COMUNICAÇÃO (PRODUCT LINK 121SR)	126
RECEPTÁCULO-PARTIDA AUXILIAR	172
RECLINAÇÃO - ASSENTO	867
REDUÇÃO DE RUÍDO	437
	439
REGULADOR DE TEMPERATURA DA ÁGUA (92 GRAUS C) (LÍQUIDO ARREFECEDOR)	72
REGULADOR DE VOLTAGEM (24 VOLTS) (ALTERNADOR)	119
RELÉ (CONJ) (24 VOLTS) (AQUECIMENTO DOS ESPELHOS)	841
	843
RELÉ (CONJ) (24 VOLTS) (BUZINA)	227
RELÉ (CONJ) (24 VOLTS) (DIREÇÃO SECUNDÁRIA INTERMEDIÁRIA)	250
RELÉ (CONJ) (24 VOLTS) (FARÓIS DIANTEIROS DA CABINE)	227
RELÉ (CONJ) (24 VOLTS) (FAROL TRASEIRO)	227
RELÉ (CONJ) (24 VOLTS) (MOTOR DE INCLINAÇÃO DO CAPÔ)	235
RESPIRO	58
RESPIRO (CÁRTER DO MOTOR)	58
RESPIRO (TANQUE HIDRÁULICO)	398
	401
RESPIRO (TRANSMISSÃO)	265
RESSALTO - BRAÇO DE LEVANTAMENTO	649
	650
	652
RESSALTO-ALAVANCA	648
RESSALTO-ARMAÇÃO TRASEIRA	357
	359

* TRADUÇÃO NÃO DISPONÍVEL NO MOMENTO DA IMPRESSÃO

ÍNDICE

Designação	Página
RETENTOR	103
RETENTOR - TAMPA DA VÁLVULA (MECANISMO DAS VÁLVULAS - TAMPA)	11
RETENTOR (ALOJAMENTO DO REGULADOR DE TEMPERATURA)	72
RETENTOR DE ANEL-O	573
RETENTOR DO VIRABREQUIM	29, 50
REVESTIMENTO DA CABINE	819
RODA-GUIA - CORREIA	31
ROPS FECHADA	868
RUÍDO - ARRANJO PARA SUPRESSÃO	436

S

*SCREEN GP-CASE DRAIN	495
SENSOR - POSIÇÃO DE INCLINAÇÃO E MONTAGEM	176
SENSOR - POSIÇÃO DE LEVANTAMENTO E MONTAGEM	173
SENSOR - PRESSÃO	182, 183, 184, 186, 187, 188
SENSOR - PRESSÃO (ATMOSFÉRICA)	178
SENSOR - PRESSÃO (COLETOR DA ADMISSÃO DE AR)	178
SENSOR - PRESSÃO (ÓLEO DO CILINDRO DE LEVANTAMENTO)	175
SENSOR - PRESSÃO (ÓLEO DO MOTOR)	178
SENSOR - TEMPERATURA	194, 195, 196
SENSOR - TEMPERATURA (AR DE ADMISSÃO)	178
SENSOR - TEMPERATURA (LÍQUIDO ARREFECEDOR)	178
SENSOR - TEMPERATURA (2 PINOS) (ÓLEO DO CONVERSOR DE TORQUE)	243
SENSOR DE PRESSÃO E MONTAGEM	175
SENSOR DE VELOCIDADE	189, 190, 191, 192, 193
SENSOR DE VELOCIDADE (MAGNÉTICO, ALTO RENDIMENTO) (SAÍDA DA TRANSMISSÃO 1)	291
SENSOR DE VELOCIDADE (MAGNÉTICO, ALTO RENDIMENTO) (SAÍDA DA TRANSMISSÃO 2)	291
SENSOR DE VELOCIDADE (MAGNÉTICO, ALTO RENDIMENTO) (SAÍDA DO CONVERSOR DE TORQUE)	342
SENSOR DE VELOCIDADE (REGULAGEM DO ACIONAMENTO)	178
SENSOR DE VELOCIDADE (*TIMING, CAMSHAFT)	178
SENSOR DO MOTOR	178
*SENSOR GP-PRESSURE	185
SEPARADOR DE ÁGUA E BOMBA DE ESCORVA DE COMBUSTÍVEL	117
SERVIÇO-COMUNICAÇÃO (PRODUCT LINK 300)	136
SILENCIADOR	93
SIST. DE ILUMINAÇÃO - PISCA-PISCA GIRATÓRIO DE ADVERTÊNCIA	170
SIST. ELETRÔNICO - ACESSÓRIO	137
SISTEMA DE ABSORÇÃO DE IMPACTOS	525
SISTEMA DE ABSORÇÃO DE IMPACTOS E TUBOS	524
SISTEMA DE ILUMINAÇÃO - FARÓIS	158, 159, 161
SISTEMA DE ILUMINAÇÃO - FARÓIS E SINAL	164, 166
SISTEMA ELÉTRICO	135
SISTEMA ELETRÔNICO - MONITOR	138
SISTEMA ELETRÔNICO - TREM DE FORÇA	138
SISTEMA ELETRÔNICO-COMUNICAÇÃO	136
SOFTWARE - COMUNICAÇÃO (PRODUCT LINK 121SR)	866
SOFTWARE - COMUNICAÇÃO (PRODUCT LINK 300)	136
SOLENÓIDE (24 VOLTS)	199
*STEERING AR-COMMAND CONTROL	496
SUPORTE - ADMISSÃO DE AR	433
SUPORTE - CONTROLE HIDRÁULICO	880
SUPORTE - VALVULA E FILTRO	434
SUPORTE DO MOTOR	51
SUPORTE-INTERRUPTOR AJUSTÁVEL	451
SUPRESSÃO DE RUÍDOS - CABINE	884, 886, 887, 888
SUSPENSÃO - ASSENTO	890, 892

T

TAMPA - BOCAL DE ENCHIMENTO	280, 591

* TRADUÇÃO NÃO DISPONÍVEL NO MOMENTO DA IMPRESSÃO

ÍNDICE

Designação	Página
TAMPA - BOCAL DE ENCHIMENTO DE ÓLEO DA TRANSMISSÃO	274, 919
TAMPA - BOCAL DE ENCHIMENTO (ÓLEO DO MOTOR)	59
TAMPA - BOCAL DE ENCHIMENTO (TANQUE DE COMBUSTÍVEL)	113
TAMPA - CAIXA DIANTEIRA	9, 10
TAMPA - MECANISMO DAS VÁLVULAS	11
TAMPA - RADIADOR (7 PSI)	84
TAMPÃO	291, 548
TANQUE DE COMBUSTÍVEL	113
TANQUE HIDRÁULICO	591
TANQUE SUPERIOR DO RADIADOR	84
TAPETE	819
TELA DE SUCÇÃO	291
TELA FILTRANTE	495, 575, 577
TELA FILTRANTE (COLETOR DA VÁLVULA DE CONTROLE)	573
TELA FILTRANTE (ENCHIMENTO DO TANUQE HIDRÁULICO)	591
TELA FILTRANTE (RADIADOR)	378
TELA FILTRANTE (TANQUE HIDRÁULICO)	591
TENSOR DA CORREIA	7
TRANSMISSÃO	346
TRAVA - ACOPLADOR RÁPIDO	758, 760
TREM DE FORÇA	322
TRINCO - PORTA DA CABINA E JANELA	817
TUBOS - ACOPLADOR	552, 553
TUBOS - ÁGUA	69, 72, 74
TUBOS - AQUECEDOR DA CABINE	827, 830
TUBOS - AR	88, 89, 90
TUBOS - AR CONDICIONADO	822, 824
TUBOS - ARREFECEDOR DE ÓLEO DO EIXO	308
TUBOS - ARREFECEDOR DE ÓLEO HIDRÁULICO	563
TUBOS - ARREFECEDOR DO CONVERSOR DE TORQUE	312
TUBOS - CILINDRO DE INCLINAÇÃO	571
TUBOS - CILINDRO DE LEVANTAMENTO	569
TUBOS - COMBUSTÍVEL	105, 106
TUBOS - DIANTEIROS	554, 556
TUBOS - DIREÇÃO	476, 482
TUBOS - DIREÇÃO SECUNDÁRIA	474
TUBOS - DRENAGEM DO COMBUSTÍVEL	107
TUBOS - GRAXA	415
TUBOS - LUBRIFICAÇÃO	419, 421
TUBOS - ÓLEO DO TURBOALIMENTADOR	63
TUBOS - ÓLEO HIDRÁULICO	558
TUBOS DO AQUECEDOR	827, 830
TUBULAÇÕES - AR DO PÓS-ARREFECEDOR	87
TUBULAÇÕES - LUBRIFICAÇÃO AUTOMÁTICA	404, 406, 410, 413
TUBULAÇÕES DE DIAGNÓSTICO	908, 911
TUCHO DA VÁLVULA	33
TURBOALIMENTADOR	98, 99

V

VÁLVULA	504
VÁLVULA - AMOSTRA DE FLUIDOS (ÓLEO DO MOTOR)	66
VÁLVULA - CONTROLE PRINCIPAL	622, 624, 625, 626
VÁLVULA - NEUTRALIZADOR DA DIREÇÃO	517, 518
VÁLVULA - NEUTRALIZADOR DA DIREÇÃO (DIREÇÃO HMU)	476
VALVULA - PARTIDA A ETER (24 VOLTS)	197
VÁLVULA DA DIREÇÃO	513, 515
VÁLVULA DE ALÍVIO	350, 351, 508, 509, 633
VÁLVULA DE ALÍVIO (COMPRESSOR DO REFRIGERANTE)	784
VÁLVULA DE ALÍVIO (ÓLEO DO EIXO)	315
VÁLVULA DE CONTROLE	608

* TRADUÇÃO NÃO DISPONÍVEL NO MOMENTO DA IMPRESSÃO

ÍNDICE

Designação	Página
	610
	612
	614
	616
VÁLVULA DE CONTROLE DA BOMBA	507
	629
	631
VÁLVULA DE CONTROLE DE ABAIXAMENTO	620
VÁLVULA DE CONTROLE DE ABSORÇÃO DE IMPACTOS	634
VÁLVULA DE CONTROLE DOS FREIOS	467
VÁLVULA DE CONTROLE PILOTO	504
VÁLVULA DE DIREÇÃO SECUNDÁRIA	510
VÁLVULA DE DRENAGEM	619
VÁLVULA DE LUBRIFICAÇÃO - DISTRIBUIÇÃO	446
	447
VÁLVULA DE MODULAÇÃO	349
VÁLVULA DE PARADA	558
VÁLVULA DE PARADA (AQUECEDOR DA CABINE)	827
VÁLVULA DE PARADA (BOMBA D'ÁGUA)	827
VÁLVULA DE PNEU	325
	329
	353
VÁLVULA DE REDUÇÃO DE PRESSÃO	506
	628
VÁLVULA DE RETENÇÃO	115
	116
	501
	502
	503
	605
	606
	607
VÁLVULA DE RETENÇÃO (DERIVAÇÃO DO ARREFECEDOR DE ÓLEO DO EIXO)	315
VÁLVULA DE RETENÇÃO (DIREÇÃO)	482
VÁLVULA DE SEPARAÇÃO	511
	512
	599
	636
	637
	638
VÁLVULA DE SEPARAÇÃO (FREIO, VENTILADOR HIDRÁULICO)	573
VÁLVULA DE SEPARAÇÃO (ÓLEO DA DIREÇÃO)	593
	596
	602
VÁLVULA DE VENTILAÇÃO (TUBULAÇÃO DE ÁGUA)	72
VÁLVULA DESVIADORA	618
VÁLVULA DISJUNTORA	113
VÁLVULA DIVISORA DE FLUXO (ÓLEO DO EIXO)	315
VÁLVULA DO CONTROLE PRINCIPAL E MONTAGEM	593
	596
	599
	602
VÁLVULA E TUBULAÇÕES - LUBRIFICAÇÃO	443
	444
VÁLVULA MANUAL	627
VÁLVULA SELETORA (DIREÇÃO)	515
VÁLVULA SOLENÓIDE	639
	640
	641
VEDADOR (BOMBA D'ÁGUA)	75
VEDADOR TIPO LABIO (REGULADOR DA TEMPERATURA DA ÁGUA)	72
VIDRO DA PORTA	896
	898
VIGIA	69
VIRABREQUIM	12
VOLANTE	498
VOLANTE DO MOTOR	26

* TRADUÇÃO NÃO DISPONÍVEL NO MOMENTO DA IMPRESSÃO

STICHWORTVERZEICHNIS

Bezeichnung	Seite
A	
ABBLENDSCHALTER (STRASSENFAHRT)	203
ABDECKGLAS (FRONTSCHEINWERFER)	148, 150
ABDECKGLAS (GELB)	148, 150, 152
ABLASS (UMWELTFREUNDLICH)	548
ABLASSSTOPFEN	619
ABLASSSTOPFEN (GETRIEBESÖLKÜHLER)	272
ABLASSSTOPFEN (MOTORÖLWANNE)	37
ABLASSVENTIL	619
ABSENKSTEUERVENTIL	620
ABSPERRVENTIL	558
ABSPERRVENTIL (FAHRERHAUSHEIZUNG)	827
ABSPERRVENTIL (WASSERPUMPE)	827
ACHSE - IDENTIFIKATIONSSCHILD	919
ACHSE U. ACHSÖLKÜHLER	257
ACHSENANBAUSATZ	316
ACHSENÖLKÜHLERLEITUNGEN	308
ACHSENÜBERWACHUNG - VERDRAHTUNG	224
ACHSÖLKÜHLER	271
ACHSWÄRMETAUSCHER	296
ALARM - DÄMPFER	130, 132
ANSAUGKRÜMMER	92
ANSAUGSIEB	291
ANSCHLUSS, ELEKTR.	125
ANSCHLUSSKLEMMENSATZ (DREHSTROM-GENERATOR)	119
ANSCHLUSSKUPPLUNGSLEITUNGEN	552, 553
ANTRIEBSSCHUTZ	381
ANTRIEBSWELLE	330
ANTRIEBSWELLEN-KEILVERZAHNUNG	330, 331
ANZEIGEMODUL	845
ANZEIGEN-EINBAUSATZ	892
ANZUGSLEINE	890, 892
ARBEITS- U. SIGNALLEUCHTE	164, 166
ARBEITSGERÄTEELEKTRONIK	137
ARBEITSLEUCHTEN	144, 145, 146, 147, 158, 159, 161
ARM U. LAGER	642, 643
ARMLEHNE	781
ÄTHERSTARTHILFE	197
ÄTHERSTARTHILFEZYLINDER	197
ÄTHERSTARTVENTIL (24 V)	197
AUFKLEBER	906
AUFKLEBER - GETRIEBE (*DOWNSHIFT SWITCH)	526, 528
AUFKLEBER - INFORMATION (EINGANG/AUSGANG)	859
AUFKLEBER - INFORMATION (FESTZURREN)	917
AUFKLEBER - INFORMATION (TASTE)	141
AUFKLEBER - MONITOR (CATERPILLAR ÜBERWACHUNGSSYSTEM)	855, 857
AUFKLEBER - SICHERUNGSTAFEL	819
AUFKLEBER (AUTODIG)	130, 132
AUFKLEBER (HUBÖSE)	752, 754
AUFKLEBER (KONTROLLE) (ABKIPPEN, ZURÜCKNEIGEN)	526, 528
AUFKLEBER (KONTROLLE) (ANHEBEN, SCHWIMMEN, ABSENKEN)	526, 528
AUFKLEBER (KONTROLLE) (AUTODIG)	130
AUFKLEBER (KONTROLLE) (*JOYSTICK, 2-FCTN, DOWNSHIFT SW)	530
AUFKLEBER (KONTROLLE) (*JOYSTICK, 3-FCTN, D0WNSHIFT SW)	532
AUFKLEBER (KONTROLLE) (*UPPER PANEL)	857
AUFKLEBER (KONTROLLE) (*UPPER PANEL)	228
AUSPUFFKRÜMMER	91
AUTOM. SCHMIERVORRICHTUNG - STEUERUNGSVERDRAHTUNG	222
AUTOMATISCHE SCHMIERLEITUNGEN	404, 406, 410, 413
AUTOMATISCHES LADESYSTEM (AUTODIG) - STEUERUNG	129, 130, 132
B	
BATTERIE UND VERDRAHTUNG	121
BATTERIEKASTEN	360
BEDIENUNGSEINBAUSATZ	814

* ÜBERSETZUNG ZUM ZEITPUNKT DER DRUCKLEGUNG NICHT VORHANDEN

STICHWORTVERZEICHNIS

Bezeichnung	Seite
BEDIENUNGSELEMENTE - KABELSTRANG	228
BEDIENUNGSELEMENTE - KABELSTRANG (*ELECTROHYDRAULIC, JOYSTICK)	532
BEDIENUNGSELEMENTE - KABELSTRANG (*ELECTROHYDRAULIC, JOYSTICK)	530
BEDIENUNGSHEBEL-AUFKLEBER	859
BEFESTIGUNG - DÄMPFER U. RIEMENSCHEIBE	24
BEFESTIGUNG - VENTIL U. FILTER	434
BEFESTIGUNGSTEILE	383
BEFESTIGUNGSTEILE (DREHSTROMGENERATOR)	119
BELEUCHTUNGSANLAGE (STRASSENAUSRÜSTUNG)	156
	168
BELEUCHTUNGSKABELSTRANG	159
	247
BELEUCHTUNGSKABELSTRANG (FAHRERHAUS-ARBEITSSCHEINWERFER)	228
BELEUCHTUNGSKABELSTRANG (FAHRTRICHTUNGSBLINKER)	214
	216
BELEUCHTUNGSKABELSTRANG (LINKS)	249
BELEUCHTUNGSKABELSTRANG (RECHTS)	249
BELEUCHTUNGSKABELSTRANG (RUNDUM-KENNLEUCHTE)	170
BELEUCHTUNGSVERDRAHTUNG	247
	248
	249
*BELT-STEP	399
	402
BELÜFTUNGSVENTIL (WASSERLEITUNGEN)	72
BLINKER (24 V)	214
	216
BLINKERLEUCHTEN	156
	157
BLINKLEUCHTE	152
	153
BODEN - GERÄUSCHSCHUTZ	799
	800
	801
BOLZENSATZ	762
	763
BREMS- UND RÜCKLEUCHTE	154
BREMS-KABELBAUM (BREMSLEUCHTE)	451
BREMSBELAG-EINBAUSATZ	456
BREMSDRUCKSPEICHER	448
	449
BREMSE UND PLANETENGETRIEBE	263
BREMSGESTÄNGE	461
BREMSSTEUERVENTIL	467
BUCHSEN-EINBAUSATZ (STARTERMOTOR)	199
BÜRSTEN-EINBAUSATZ (STARTERMOTOR)	199

D

Bezeichnung	Seite
DÄMPFER	21
DIAGNOSELEITUNGEN	908
	911
DICHTUNG	103
DICHTUNG (KURBELGEHÄUSEENTLÜFTER)	58
DICHTUNG (TEMPERATURREGELGEHÄUSE)	72
DICHTUNG (WASSERPUMPE)	75
DICHTUNGSSATZ	315
	461
	509
	522
	523
	627
	640
DICHTUNGSSATZ (AUSGELEICHSVENTIL)	573
DICHTUNGSSATZ (*METERING PUMP, STEERING)	478
DICHTUNGSSATZ (SCHNELLWECHSELEINRICHTUNG)	758
DICHTUNGSSATZ (VERTEILERVENTIL)	573
DICHTUNGSSATZ (VERTEILERVENTIL) (HYDRAULIKLÜFTERFLUSS)	618
DICHTUNGSSATZ (WECHSELVENTIL)	573
DIFFERENTIAL	275
	276
DIFFERENTIAL (BEGRENZTER SCHLUPF)	277
*DISPLAY	845
DREHKNOPFSCHALTER (24 V) (AUTOSHIFT STEUERUNG)	228
DREHKNOPFSCHALTER (24 V) (FAHRSCHEINWERFER)	227
DREHKNOPFSCHALTER (24 V) (HINTERER SCHEIBENWISCHER)	227
DREHKNOPFSCHALTER (24 V) (VARIABLE SCHALTSTEUERUNG)	228
DREHMOMENTWANDLER	344
DREHMOMENTWANDLER-KÜHLERLEITUNGEN	312
DREHSCHALTER	212
DREHSCHALTER (AUTOGIG MATERIALWAHL)	132
DREHSCHALTER (AUTOMATISCHES LADESYSTEM (AUTODIG) - MATERIALWAHL)	130
DREHSTROMGENERATOR	119
	120
DREHSTROMGENERATOR - BEFESTIGUNG	119

* ÜBERSETZUNG ZUM ZEITPUNKT DER DRUCKLEGUNG NICHT VORHANDEN

STICHWORTVERZEICHNIS

Bezeichnung	Seite
DREHSTROMGENERATOR-RIEMENSCHEIBE	44
DREHZAHLSENSOR	189, 190, 191, 192, 193
DREHZAHLSENSOR (DURCHDREHZEITPUNKT)	178
DREHZAHLSENSOR (MAGNETISCH, HOCHLEISTUNG) (DREHMOMENTWANDLERAUSGANG)	342
DREHZAHLSENSOR (MAGNETISCH, HOCHLEISTUNG) (GETRIEBEAUSGANG 1)	291
DREHZAHLSENSOR (MAGNETISCH, HOCHLEISTUNG) (GETRIEBEAUSGANG 2)	291
DREHZAHLSENSOR (*TIMING, CAMSHAFT)	178
DREHZAHLWANDLER U. GEHÄUSE	342
DRUCKKNOPFSCHALTER (AUTODIG AUSLÖSER)	130, 132
DRUCKKNOPFSCHALTER (DREHZAHLSPERRE WIEDER AUFNEHMEN)	229
DRUCKKNOPFSCHALTER (GETRIEBEHERUNTERSCHALTUNG)	498
DRUCKKNOPFSCHALTER (GETRIEBE HOCHSCHALTEN)	498
DRUCKKNOPFSCHALTER (HUPE)	228
DRUCKLUFTLEITUNGEN	88, 89, 90
DRUCKLUFTVENTILSATZ	890, 892
DRUCKREDUZIERVENTIL	506, 628
DRUCKSCHALTER	207
DRUCKSCHALTER (*AUTOLUBE ACTUATION) (SCHMIERUNG)	446
DRUCKSCHALTER (BETRIEBSBREMSENÖL)	243
DRUCKSCHALTER (DIFFERENTIAL)	549
DRUCKSCHALTER (FESTSTELLBREMSÖL)	235
DRUCKSCHALTER (HAUPTLENKUNGSÖL)	250
DRUCKSCHALTER (KÜHLMITTEL) (KÄLTEMITTEL, HOCH, NIEDRIG)	221
DRUCKSCHALTER (NOTLENKUNGSÖL)	250
DRUCKSENSOR	182, 183, 184, 186, 187, 188
DRUCKSENSOR (ATMOSPHÄRISCH)	178
DRUCKSENSOR (*LIFT CYLINDER OIL)	175
DRUCKSENSOR (LUFTEINLASSKRÜMMER)	178
DRUCKSENSOR (MOTORÖL)	178
DRUCKSENSOR UND BEFESTIGUNGSTEILE	175
DRUCKSPEICHER, HYDRAULISCHE SCHWINGUNGSDÄMPFUNG	522, 523

E

Bezeichnung	Seite
EINFÜLLKAPPE (KRAFTSTOFFTANK)	113
EINFÜLLKAPPE (MOTORÖL)	59
EINFÜLLSTUTZENKAPPE	280, 591
EINLASSKRÜMMERSTOPFEN	95
ELEKTR. ANLAGE	135
ELEKTROHYDRAULISCHE STEUERUNG	526, 528, 530, 532
ELEKTRONIK - MONITOR	138
ELEKTRONIK, KOMMUNIKATION	136
ELEKTRONISCHER SCHLÜSSEL (SICHERHEIT)	141
ENDSCHALTER (BREMSLEUCHTE)	451
ENTDUNSTER	61
ENTLÜFTER	58
ENTLÜFTER (GETRIEBE)	265
ENTLÜFTER (HYDRAULIKTANK)	398, 401
ENTLÜFTER (KURBELGEHÄUSE)	58
ERDBAUSCHAUFEL	687, 731

F

Bezeichnung	Seite
FAHRERHAUS-KABELBAUM	229
FAHRERHAUS MIT ÜBERROLLSCHUTZ	782, 783
FAHRERHAUS, SONNENBLENDE	894
FAHRERHAUSANBAUSATZ	850
FAHRERHAUSAUSFÜHRUNG MIT GESCHL. ÜBERROLLSCHUTZ	852
FAHRERHAUSAUSKLEIDUNG	819
FAHRERHAUSBELEUCHTUNG	143
FAHRERHAUSHEIZUNG	809, 811
FAHRERHAUSHEIZUNGSLEITUNGEN	827, 830
FAHRERHAUSLÄRMDÄMPFUNG	884

* ÜBERSETZUNG ZUM ZEITPUNKT DER DRUCKLEGUNG NICHT VORHANDEN

STICHWORTVERZEICHNIS

Bezeichnung	Seite
	886
	887
	888
FAHRERHAUSLUFTFILTER	797
FAHRERHAUSTÜR	790
	791
	794
	795
	796
FAHRERHAUSTÜR- U. FENSTERVERRIEGELUNG	817
FAHRERHAUSVERDRAHTUNG	227
FAHRERSITZ	873
	875
FAHRERSITZFEDERUNG	890
	892
FAHRERSITZVERSTELLER	770
FAHRGESTELLVERDRAHTUNG	235
FAHRWERK	1
FAHRWERK-KABELBAUM (HAUPT)	235
FAHRWERK-KABELBAUM (*PARK BRAKE, OIL FLTR SWITCHES)	236
FELGE	325
FELGE (TEILBAR)	326
	327
	328
	329
FELGENAUFHÄNGUNG	316
FELSSCHAUFEL	688
	689
	690
	691
	693
	694
	696
	732
	733
	734
	735
	736
	737
	738
	739
FESTSTELLBREMSE	453
	455
	456
	457
FESTSTELLBREMSGESTÄNGE	460
FILTERSIEB (HYDRAULIKTANKEINFÜLLSIEB)	591
FUSSBREMSGESTÄNGE	458
	459
FUSSBREMSSOCKEL	450
	451
FUSSMATTE	819

G

GASFÜLLSATZ	468
GASFÜLLSATZ (LENKSÄULE)	497
GASPEDAL	862
	863
*GEAR GP-BEVEL & PINION	289
GEGENGEWICHT	361
GEHÄUSE - PENDELACHSE	304
	306
GEHÄUSE - STARRACHSE	298
	300
	302
GEHÄUSE-EINBAUSATZ (LENKSÄULE)	497
GELENK FÜR SCHUTZBLECHE (STRASSENAUSRÜSTUNG)	386
	387
GESCHWINDIGKEITS- U. DREHZAHLMESSER-MODUL	847
GETRIEBE	346
GETRIEBE-KABELBAUM	269
GETRIEBEFILTER UND -LEITUNGEN	282
GETRIEBEHYDRAULIK	269
GETRIEBEÖLEINFÜLLKAPPE	274
	919
GETRIEBEÖLFÜLLSTUTZEN	280
GETRIEBEÖLKÜHLER	272
GETRIEBEPUMPE	323
GETRIEBESCHALTER	219
GETRIEBESTEUERUNG	267
	268
GLEITSCHIENENBLOCK-EINBAUSATZ	878
GRUNDAUSFÜHRUNG	2

H

HALOGENSCHINWERFER (24V)(65W)	146
	147
HALTEGRIFF	807
	808
HALTERUNG, EINSTELLBARER SCHALTER	451
HARDWARE, HINTERRAHMEN	384
	385
*HARNESS AS-TRANSMISSION CONT (LENKRAD)	498
HAUPTSTEUERVENTIL	622
	624
	625
	626
HEBEL-EINBAUSATZ (STARTERMOTOR)	199

* ÜBERSETZUNG ZUM ZEITPUNKT DER DRUCKLEGUNG NICHT VORHANDEN

STICHWORTVERZEICHNIS

Bezeichnung	Seite
HEIZUNGSLEITUNGEN	827
	830
HELLIGKEITSREGLER	203
HINTERRAHMEN	375
HUBARM	644
	645
HUBSTELLUNGSSENSOR U. BEFESTIGUNGSTEILE	173
HUBVENTIL	33
HUBVORRICHTUNG	655
	656
HUBZYLINDER	543
	544
HUBZYLINDER UND DICHTUNG	540
	541
HUBZYLINDERLEITUNGEN	569
HYDRAULIKANORDNUNG (2-VENTIL-HYDRAULIK)	551
HYDRAULIKANORDNUNG (3-VENTIL-HYDRAULIK)	551
HYDRAULIKLEITUNGEN	558
HYDRAULIKÖL- U. ACHSENÖLKÜHLER	539
HYDRAULIKÖLKÜHLERLEITUNGEN	563
HYDRAULIKPUMPE UND BEFESTIGUNGSTEILE	584
HYDRAULIKSTEUERAUFHÄNGUNG	880
HYDRAULIKTANK	591
HYDRAULIKTANK UND ANBAUSATZ	581
HYDRAULISCHE SCHWINGUNGSDÄMPFUNG	525
HYDRAULISCHE SCHWINGUNGSDÄMPFUNG - DRUCKSPEICHER U. BEFESTIGUNGSTEILE	519

I

IDENTIFIKATIONSSCHILD (CAT)	663
	665
	667
	669
	671
	672
	674
	675
	677
	678
	679
	681
	682
	683
	685
	690
	691
	693
	694
	696
	698
	704
	706
	717
	724
	729
IDENTIFIZIERUNGS-AUFKLEBER (HÖHE FÜR STRASSENFAHRT)	2
IDENTIFIZIERUNGS-AUFKLEBER (STARTSCHLÜSSELSCHALTER)	141
IDENTIFIZIERUNGS-AUFKLEBER (WARNHORN)	526
	528
IDENTIFIZIERUNGS-AUFKLEBER (ZUSATZHYDRAULIK)	528
IDENTIFIZIERUNGS-AUFKLEBER (12 V)	859
IDENTIFIZIERUNGS-AUFKLEBER (20 KM/H)	138
INFORMATIONSSCHILD (MANUELL KRAFTSTOFF)	110
INSTRUKTIONS-AUFKLEBER (BETRIEBS- U. WARTUNGSHANDBUCH LESEN)	141
INSTRUKTIONS-AUFKLEBER (FÜR SITZVERSTELLUNG)	890
	892
INSTRUKTIONS-AUFKLEBER (HUBÖSE, FESTZURRSTELLE)	917
INSTRUKTIONS-AUFKLEBER (MOTOR-START)	859
INSTRUKTIONS-AUFKLEBER (WARTUNG)	530
	532
INSTRUKTIONS-AUFKLEBER (WARTUNG)	526
	528
INSTRUKTONSSCHILD (BATTERIE)	121
INSTRUKTONSSCHILD (KLIMAANLAGE)	773
INSTRUMENTENBRETT-AUFKLEBER (LINKS)	859
INSTRUMENTENBRETT-AUFKLEBER (MITTE)	859
INSTRUMENTENBRETT-AUFKLEBER (RECHTS)	859
INSTRUMENTENTAFEL	855
	857
	859
ISOLATOR-EINBAUSATZ (STARTERMOTOR)	199

J

JOYSTICK -STEUERUNG	535
	537

* ÜBERSETZUNG ZUM ZEITPUNKT DER DRUCKLEGUNG NICHT VORHANDEN

STICHWORTVERZEICHNIS

Bezeichnung	Seite
JOYSTICK -STEUERUNG (*3-FUNCTION, WITH DOWNSHIFT)	532

K

KABELSTRANG - ACHSE (HINTEN)	224
KABELSTRANG - ACHSE (VORN)	224
KABELSTRANG - HEIZUNG U. KLIMAANLAGE	775 811
KABELSTRANG - LENKUNG (*COLUMN, WHEEL)	498
KABELSTRANG - LENKUNG (HILFSELEMENT)	250
KÄLTEMITTELKOMPRESSOR	784 785
KÄLTEMITTELKONDENSATOR U. BEFESTIGUNGSTEILE	786
KIPPHEBELSATZ	468
KIPPHEBELSATZ (LENKSÄULE)	497
KIPPSCHALTER	210 211 218
KIPPSCHALTER (ABSTELLUNG AUF STANDEBENE)	235
KIPPSCHALTER (AUTO LOADING AUSSCHALTEINSTELLUNG)	132
KIPPSCHALTER (AUTO LOADING AUSSCHALTEINSTELLUNG)	130
KIPPSCHALTER (AUTO LOADING MODUSSCHALTER)	130 132
KIPPSCHALTER (AUTOM. UMKEHRLÜFTER)	208
KIPPSCHALTER (BEHEIZTE SPIEGEL)	841 843
KIPPSCHALTER (BETRIEBSART WÄHLEN)	229
KIPPSCHALTER (FEINMODULATION)	229
KIPPSCHALTER (GEBLÄSEGESCHWINDIGKEIT)	229
KIPPSCHALTER (GEFAHR)	214 216
KIPPSCHALTER (GETRIEBENEUTRALISIER-ÜBERSTEUERUNG)	229
KIPPSCHALTER (HAUBENNEIGESTELLGLIED)	235
KIPPSCHALTER (HUB, NEIGUNG AUSSCHALTUNG)	229
KIPPSCHALTER (HYDRAULIKSPERRE)	230
KIPPSCHALTER (KLIMAANLAGE, HEIZUNG)	229
KIPPSCHALTER (NOTLENKUNG)	213
KIPPSCHALTER (RUNDUM-KENNLEUCHTE)	170
KIPPSCHALTER (SCHNELLWECHSELEINRICHTUNG)	210 211
KIPPSCHALTER (SCHWINGUNGSDÄMPFUNG)	209
KIPPSCHALTER (*TRANSMISSION DIRECTION)	498
KIPPSCHALTER (VORN, HINTERE ARBEITSSCHEINWERFER)	159
KIPPSCHALTER (VORWÄRTS, NEUTRAL, RÜCKWÄRTS)	219
KIPPSCHALTER (*3RD FUNCTION SELECT)	528 532
KIPPSTELLUNGS-SENSOR U. BEFESTIGUNGSTEILE	176
KIPPZYLINDER	546 547
KIPPZYLINDER UND DICHTUNG	542
*KIT-SEAL	448 449
KLIMAANLAGE	773 774 775
KLIMAANLAGENDRUCKSPEICHER	824
KLIMAANLAGENLEITUNGEN	822 824
KLIMAANLAGENVERDRAHTUNG	221
KNICKGELENK-ANHÄNGUNG	388
KNICKGELENKSPERRE	423
KOLBENMOTOR	579
KOLBENPUMPE	492 586 588
KOLBENPUMPENUMLAUFSATZ	494 590
KONDENSATORBLOCK (KÜHLMITTEL)	68 786
KRAFTSTOFFABLASSLEITUNGEN	107
KRAFTSTOFFEINSPRITZDÜSE	104
KRAFTSTOFFEINSPRITZPUMPE	109
KRAFTSTOFFENTLÜFTUNGSPUMPE UND -HAUPTFILTER	110
KRAFTSTOFFILTER	102
KRAFTSTOFFLEITUNGEN	105 106
KRAFTSTOFFÖRDERPUMPE	112
KRAFTSTOFFSIEB	113
KRAFTSTOFFSTANDGEBER	113
KRAFTSTOFFTANK	113
KRAFTÜBERTRAGUNG	322
KRAFTÜBERTRAGUNGSELEKTRONIK	138
KREUZGELENK	347 348

* ÜBERSETZUNG ZUM ZEITPUNKT DER DRUCKLEGUNG NICHT VORHANDEN

STICHWORTVERZEICHNIS

Bezeichnung	Seite
KREUZGELENK (HINTERACHSE)	330
KREUZGELENK UND LAGER	331
	347
	348
KREUZGELENK (VORDERACHSE)	330
KÜHLER UND LÜFTER	78
KÜHLERBLOCK	68
KÜHLERGRILL	378
KÜHLERKAPPE (7 PSI)	84
KÜHLERWASSERKASTEN, OBEN	84
KÜHLSYSTEM - HOHE UMGEBUNGSTEMPERATUREN	68
KÜHLWASSERLEITUNGEN	69
	72
	74
KÜHLWASSERPUMPE	75
	76
	77
KURBELLAGER-EINBAUSATZ	12
	32
KURBELWELLE	12
KURBELWELLEN-RIEMENSCHEIBE	45
KURBELWELLENDICHTUNG	29
	50

L

LADELUFTKÜHLERLEITUNGEN	87
LADERRAHMEN	372
LAGERSATZ (DREHSTROMGENERATOR)	119
LEITRAD - RIEMEN	31
LEITUNGEN, VORNE	554
	556
LENKBETÄTIGUNG	468
	470
LENKNEUTRALISIERVENTIL	517
	518
LENKNEUTRALISIERVENTIL (*HMU STEERING)	476
LENKÖLLEITUNGEN	476
	482
LENKRAD	498
LENKSÄULE	497
LENKVENTIL	513
	515
LENKZYLINDER	473
LENKZYLINDER UND AUFHÄNGUNG	472
LEUCHTE (12 V, 24 V, 35 W)	144
	145
LEUCHTE (24 V)	143
	148
	150
	152
	227
LEUCHTE (24 V, 5 W)	154
LEUCHTE (24 V, 70 W)	155
LEUCHTE (24 V, 75/70 W)	148
	150
LEUCHTE (24V, 21W)	148
	150
LEUCHTE (24V, 21W)	154
LIPPENDICHTUNG (KÜHLWASSERTHERMOSTAT)	72
LUFTEINLASS-TRÄGER	433
LUFTFILTER (HAUPTELEMENT)	86
LUFTFILTER (HILFSELEMENT)	86
LUFTKANAL U. FILTER	797
LUFTKOMPRESSORSITZ	772
LUFTREINIGER	85
	86

M

MAGNETSCHALTER	205
	206
MAGNETSCHALTER (24 V) (HAUPTRELAIS)	235
MAGNETSIEB	291
MAGNETSPULE (24 V)	199
MAGNETSTOPFEN	298
	300
	302
	304
	306
MAGNETVENTIL	639
	640
	641
*MANIFOLD GP-VALVE	575
	577
MATERIALUMSCHLAGSCHAUFEL	673
	674
	675
	677
	678
	679
	681
	682
	683
	685
	714
	715
	716
	717
	719
	720
	721
	722

* ÜBERSETZUNG ZUM ZEITPUNKT DER DRUCKLEGUNG NICHT VORHANDEN

STICHWORTVERZEICHNIS

Bezeichnung	Seite
	723
	724
	726
	727
	728
	729
MESSERSCHUTZ	766
MODUL - VIER ELEKTRON. ANZEIGEN	846
MODULATORVENTIL	349
MONITORSTEUERUNG	788
MOTOR- UND GETRIEBEAUFLAGER	35
MOTOR-EINBAUSATZ	5
MOTOR, KOMPLETT	3
MOTORAUFHÄNGUNG	51
MOTORBLOCK	14
	15
	16
MOTORHAUBE UND VERKLEIDUNG	390
MOTORHAUBEN-KIPPSTELLUNG	441
MOTORHAUBENKIPPBETÄTIGUNG	354
MOTORHUBÖSE	34
MOTORKABELSTRANG	243
MOTORKABELSTRANG (ELEKTRON. STEUERMODUL)	241
MOTORKABELSTRANG (KRAFTSTOFF)	100
MOTORKABELSTRANG (PUMPENDÜSE)	256
MOTORKÜHLERBLOCK	4
MOTORÖLEINFÜLLSTUTZEN	59
MOTORÖLKÜHLER	66
MOTORRAUM-SCHUTZVERKLEIDUNG	431
MOTORSENSOR	178
MOTORSTOPFEN	43
MOTORVERDRAHTUNG	243
MUTTERNSATZ	468
MUTTERNSATZ (LENKSÄULE)	497

N

NEBENANTRIEB	22
NEIGEZYLINDERLEITUNGEN	571
NOCKENWELLE	8
NORMALZAHNSPITZE	768
NOSPIN-DIFFERENTIAL	278
	279
NOTLENKUNG	496
NOTLENKUNGSLEITUNGEN	474
NOTLENKUNGSPUMPE UND -MOTOR	490
NOTLENKUNGSPUMPE UND BEFESTIGUNGS-TEILE	491
NOTLENKUNGSSCHALTER	213
NOTLENKUNGSVENTIL	510
NOTLENKUNGSVERDRAHTUNG	250

O

O-RING-DICHTUNG	573
ÖLFILTER	60
	284
	549
	550
ÖLFILTERELEMENT (HYDRAULISCH)	549
ÖLFILTERELEMENT (KRAFTÜBERTRAGUNG)	284
ÖLFILTERSOCKEL	54
	57
	262
ÖLKÜHLERBLOCK (*AXLE, HYDRAULIC)	68
	257
	539
ÖLKÜHLERBLOCK (GETRIEBE)	272
ÖLKÜHLERBLOCK (MOTOR)	66
ÖLMESSSTAB	62
	280
	298
	300
	302
	304
	306
ÖLMESSSTAB (MOTOR)	62
ÖLSCHNELLWECHSELANSCHLUSS	317
ÖLWANNE	37

P

PALETTENGABEL	752
	754
PEDALBOLZEN	862
PENDELACHSBEGRENZUNGSBLOCK	356
PENDELACHSE	259
	260
	261
PENDELVENTIL	511
	512
	599
	636
	637
	638
PENDELVENTIL (*BRAKE, HYDRAULIC FAN)	573
PENDELVENTIL (LENKUNGSÖL)	593
	596
	602
PLANETENANTRIEBSGEHÄUSE U. TEILE	265
PLANETENGETRIEBE	318
PLATTFORM	864
PLEUELSTANGE UND KOLBEN	38
	39

* ÜBERSETZUNG ZUM ZEITPUNKT DER DRUCKLEGUNG NICHT VORHANDEN

STICHWORTVERZEICHNIS

Bezeichnung	Seite
PROBEENTNAHMEVENTIL F. WARTUNGSFL. (MOTORÖL)	66
PUMPE FÜR KRAFTSTOFFENTLÜFTUNG U. WASSERABSCHEIDER	117
PUMPE U. BEFESTIGUNG - BREMSE U. HYDRAULIKLÜFTER	582
PUMPENKABELSTRANG	222
PUMPENKABELSTRANG (AUTOM. SCHMIERUNG)	430
PUMPENSTEUERVENTIL	507
	629
	631

R

RADIO	864
	865
RADIO - KOMMUNIKATION	866
RADIO - KOMMUNIKATION (PRODUCT LINK 212SR)	126
RADIOEINBAUSATZ	815
REIFEN UND FELGE	332
	333
	334
	335
	336
	337
	338
	339
	340
	341
REIFENVENTIL	325
	329
	353
RELAIS (24 V) (BEHEIZTE SPIEGEL)	841
	843
RELAIS (24 V) (HAUBENNEIGEMOTOR)	235
RELAIS (24 V) (HINTERER ARBEITSSCHEIN-WERFER)	227
RELAIS (24 V) (HUPE)	227
RELAIS (24 V) (NOTLENKUNG)	250
RELAIS (24 V) (VORDERE FAHRERHAUS-ARBEITSSCHEINWERFER)	227
RICHTUNGSBLINKERSCHALTER	214
	216
RICHTUNGSSIGNALSCHALTER	214
	216
RIEMENSPANNER	7
ROLLENSATZ	862
RÜCKFAHRWARNHORN	220
RÜCKLEHNENVERLÄNGERUNG (STOFF)	875
RÜCKSCHLAGVENTIL (GEGEN VAKUUM)	113
RÜCKSPIEGEL	831
	832
	833
	834
	835
	836
	837
	838
	839
	841
	843
RUNDUM-KENNLEUCHTE	155
	170

S

SCHALE - RÜCKENLEHNE	853
	854
SCHALLDÄMPFER	93
SCHALLDÄMPFUNG	436
	437
	439
SCHALTER - STAND (SCHMIERFETT)	430
SCHALTER - UMKEHRLÜFTER	208
SCHALTER FÜR HYDRAULISCHE SCHWINGUNGSDÄMPFUNG	209
SCHALTER (PRÜFUNG, AUTOM. SCHMIERUNG)	430
SCHALTERKABELSTRANG	222
SCHALTERKABELSTRANG (STAND)	430
SCHALTVENTIL (LENKUNG)	515
SCHAUFELSCHUTZ	756
	757
SCHAUFELSTEUERUNG	653
	655
SCHAUFELUMLENKMECHANISMUS	657
SCHAUGLAS	69
SCHAUGLAS - FLÜSSIGKEITSSTAND (SCHAUGLAS)	591
SCHEIBENSATZ	277
SCHEIBENSCHUTZ	803
	805
SCHEIBENWASCHANLAGE	895
SCHEIBENWISCHER	900
SCHEIBENWISCHERARM	779
	780
SCHEIBENWISCHERBLATT	900
SCHEIBENWISCHERMOTOR	848
	849
SCHEIBENWISCHERSCHALTER (24 V) (VORN, INTERVALLSCHALTUNG)	227
SCHEINWERFER U. RICHTUNGSLEUCHTE	148
	150
SCHILD UND AUFKLEBER	914

* ÜBERSETZUNG ZUM ZEITPUNKT DER DRUCKLEGUNG NICHT VORHANDEN

STICHWORTVERZEICHNIS

Bezeichnung	Seite
	915
	916
	917
	918
SCHILD UND AUFKLEBER (*MACHINE CERTIFICATION)	2
SCHLACKENSCHAUFEL	698
	740
SCHLAUCH - KNIESTÜCK	87
SCHLAUCHLEITUNG (ENTDUNSTER)	61
SCHLÜSSELGRIFF	797
SCHMIERFILTER	430
SCHMIERLEITUNGEN	415
	419
	421
SCHMIERÖLVERTEILERVENTIL	446
	447
SCHMIERPUMPE	64
	65
	430
SCHMIERPUMPE U. BEFESTIGUNGSTEILE	429
SCHMIERSYSTEM, AUTOM.	424
	426
SCHMIERVENTIL U. -LEITUNGEN	443
	444
SCHNEIDMESSER	745
	747
	748
	749
	750
SCHNEIDMESSER UND EINSATZSTÜCK	746
	747
SCHNEIDMESSERSEGMENT	751
SCHNELLWECHSELEINRICHTUNG	743
	744
SCHNELLWECHSELEINRICHTUNGSSPERRE	758
	760
SCHNELLWECHSELVORRICHTUNG	741
	742
SCHNITTSTELLENMODUL (TASTE)	141
SCHRÄGKOLBEN-EINBAUSATZ (PUMPE)	492
SCHRAUBE	291
	548
SCHRAUBENSATZ (ELEKTRISCHE VERBINDER)	236
SCHUTZABDECKUNG	919
SCHUTZBLECHE	363
	365
SCHUTZBLECHE (STRASSENAUSRÜSTUNG)	362
	367
SCHWENKSCHEIBE	500
SCHWINGSITZ	877
	878
	879
SCHWINGUNGSDÄMPFUNG U. LEITUNGEN	524
SCHWUNGRAD	26
SCHWUNGRADGEHÄUSE	28
SCREEN	495
	575
	577
*SCREEN GP-CASE DRAIN	495
SCREEN (STEUERVENTIL-KRÜMMER)	573
SEITENVERKLEIDUNG	427
*SENSOR GP-PRESSURE	185
SENSOR, KABELSTRANG (KIPPEN)	252
SENSORVERDRAHTUNG	252
	254
SERPENTINENFÖRMIGER RIEMEN	7
SERPENTINENFÖRMIGER RIEMEN (KLIMAANLAGEN-KOMPRESSOR)	785
*SERVICE GP-COMMUNICATION (PRODUCT LINK 300)	136
SICHERHEITSEINBAUSATZ	140
	141
SICHERHEITSGURT	872
	877
SICHERHEITSKRAFTSTOFFILTER U. LEITUNGEN	100
SICHERUNG (10 A)	227
SICHERUNG (15 A)	227
	775
	811
SICHERUNG (20 A)	227
SIEB-EINBAUSATZ (VORREINIGER)	97
SIEB (HYDRAULIKTANK)	591
SIEB (KÜHLER)	378
SOCKEL FÜR VENTILDECKEL U. EINSPRITZKABELBAUM	6
SOFTWARE - KOMMUNIKATION (PRODUCT LINK 212SR)	866
SOFTWARE - KOMMUNIKATION (PRODUCT LINK 300)	136
SPANNUNGSREGLER (24 V) (DREHSTROMGENERATOR)	119
SPERRVENTIL	115
	116
	501
	502
	503
	605
	606
	607
SPERRVENTIL (ACHSÖLKÜHLERNEBENSTROM-VENTIL)	315

* ÜBERSETZUNG ZUM ZEITPUNKT DER DRUCKLEGUNG NICHT VORHANDEN

STICHWORTVERZEICHNIS

Bezeichnung	Seite
SPERRVENTIL (VIERWEGLENKVENTIL)	482
STARRACHSE	258, 259
STARTERMOTOR	199, 201
STARTHILFEANSCHLUSS	172
STARTSCHALTER (TASTE)	227
STAUBSCHUTZSTOPFEN	399, 402
STECKDOSEN - EINBAUSATZ (2POLIG)	152
*STEERING AR-COMMAND CONTROL	496
STEIGLEITER	394, 398, 401
STELLUNGSSENSOR	180, 181
STELLUNGSSENSOR (HUB)	180
STEUERHEBEL	534
STEUERKOLBENSATZ (PUMPE)	492
STEUERKRÜMMER	315, 573
STEUERUNG - NICHT PROGRAMMIERT	134
STEUERUNG - NICHT PROGRAMMIERT (ARBEITSGERÄT)	229
STEUERUNG - NICHT PROGRAMMIERT (KRAFTÜBERTRAGUNG)	229
STEUERUNG, ELEKTRON. ANZEIGE (ANZEIGENTAFEL, RECHTS, LINKS)	229
STEUERUNG, ELEKTRON. ANZEIGE (ANZEIGETAFEL, MITTE)	132
STEUERUNG, ELEKTRON. ANZEIGE (ANZEIGETAFEL, MITTE)	130
STEUERUNG, NICHT PROGRAMMIERTER MONITOR	789
STEUERUNG, NICHT PROGRAMMIERTER MONITOR (CATERPILLAR ÜBERWACHUNGSSYSTEM)	228
STEUERUNGS-KABELSTRANG	126
STEUERUNGS-KABELSTRANG (AUTOM. SCHMIERUNG)	430
STEUERUNGS-KABELSTRANG (*HEATED MIRRORS)	841, 843
STEUERUNGSEINHEIT, ELEKTRON. FÜR MOTOR UND BEFEST.	128
STEUERVENTIL	608, 610, 612, 614, 616
STIRNRAD	27
STIRNRADGEHÄUSE	29
STIRNRADGEHÄUSE-HALTETEILE	25
STIRNRADGEHÄUSEDECKEL	9, 10
STOSSDÄMPFER-REPARATURSATZ	890, 892

T

Bezeichnung	Seite
TELLER- UND KEGELRAD	285, 287
TEMPERATURSCHALTER (KLIMAANLAGE)	775
TEMPERATURSENSOR	194, 195, 196
TEMPERATURSENSOR (KÜHLMITTEL)	178
TEMPERATURSENSOR (LUFTEINLASS)	178
TEMPERATURSENSOR (2POLIG) (DREHMOMENTWANDLERÖL)	243
TRENNSCHALTER	204
TRENNSCHALTER (BATTERIE)	121
TURBOLADER	98, 99
TURBOLADEREINSATZ	98
TURBOLADERÖLLEITUNGEN	63
TÜRFENSTER	896, 898

U

Bezeichnung	Seite
ÜBERDRUCKVENTIL	350, 351, 508, 509, 633
ÜBERDRUCKVENTIL (*AXLE OIL)	315
ÜBERDRUCKVENTIL-EINBAUSATZ	490
ÜBERDRUCKVENTIL (KÄLTEMITTELKOMPRESSOR)	784
ÜBERROLL-SCHUTZKABINE	868
ÜBERTRAGUNGSEINBAUSATZ	140
ÜBERTRAGUNGSSTEUERUNG U. BEFESTIGUNG	126
UMBAUSATZ - ZULASSUNG	2
UMGEHUNGSSCHALTER	202
UMLAUFKÜHLWASSERHEIZUNG	139
UMLAUFKÜHLWASSERHEIZUNGS-ELEMENT (240 V, 1500 W)	139
UMLEITVENTIL	618
UNIVERSALSCHAUFEL	659, 660, 661, 662, 663, 665

* ÜBERSETZUNG ZUM ZEITPUNKT DER DRUCKLEGUNG NICHT VORHANDEN

STICHWORTVERZEICHNIS

Bezeichnung	Seite
	667
	669
	671
	672
	699
	700
	701
	702
	703
	704
	705
	706
	707
	708
	709
	710
	711
	712
	713
UNTERBRECHER (105 A) (DREHSTROMGENERATOR)	235
UNTERBRECHER (15 A) (FAHRSCHEINWERFER)	236
UNTERBRECHER (20 A) (HAUBENNEIGESTELLGLIED)	237
UNTERBRECHER (30 A) (UNGESCHALTETER BATTREIESTROM ZUM FAHRERHAUS)	237
UNTERBRECHER (50 A) (MOTORSTART)	235
UNTERBRECHER (80 A) (HAUPTUNTERBRECHER)	235
UNTERLEGSCHEIBE (EINSCHL. 17 BEILAGSCHEIBEN) (KOLBENPUMPE)	492

V

VENTIL	504
VENTIL - HYDRAULISCHE SCHWINGUNGSDÄMPFUNG	634
VENTIL, MECH.	627
VENTIL UND BEFESTIGUNGSTEILE - HAUPTSTEUERUNG	593
	596
	599
	602
VENTILDECKEL	11
VENTILDECKELDICHTUNG (VENTILDECKEL)	11
VENTILKABELSTRANG	222
VENTILKABELSTRANG (SITZ LUFTKOMPRESSOR)	890
	892
VENTILKIPPHEBEL	46
	47
	48
	49
VENTILMECHANISMUSAUFHÄNGUNG	36
VENTILSATZ (SCHNELLWECHSELEINRICHTUNG)	758
VENTILSTEUERUNG	52
VERDRAHTUNG (EINSPRITZEINHEIT)	256
VERDRAHTUNG (ELEKTRON. STEUERUNG)	241
VERDRAHTUNG, VORNE	245
VERDRAHTUNGSKABELBAUM	190
VERDRAHTUNGSKABELBAUM (WARTUNGSWERKZEUG)	228
VERDRAHTUNGSKABELBAUM (ZÜNDEINSTELLUNG)	191
VERKLEIDUNGEN, VORN	380
VERSCHLEISSPLATTEN	764
	765
VERSTELLBARER SITZ	867
VERTEILERGETRIEBEANTRIEB	291
VERTEILERVENTIL (*AXLE OIL)	315
VORHÄNGESCHLOSS	274
	919
VORREINIGER	96
	97
VORSPRUNG - HEBEL	648
VORSPRUNG - HINTERER RAHMEN	357
	359
VORSPRUNG - HUBARM	649
	650
	652
VORSTEUERÖLDRUCKSAMMLER	520
	521
VORSTEUERVENTIL	504

W

WARNAUFKLEBER (BETRIEBS- U. WARTUNGSHANDBUCH LESEN)	752
	754
WARNAUFKLEBER (DRUCKPUNKT)	915
	916
WARNAUFKLEBER (HANDBUCH)	915
	916
WARNAUFKLEBER (NICHT SCHWEISSEN, NICHT BOHREN, HANDBUCH LESEN)	917
WARNAUFKLEBER (PRODUCT LINK RADIO, NICHT NACD)	140
WARNAUFKLEBER (STARTHILFEKABEL, HANDBUCH LESEN)	172
WARNHORN	468
WARNHORN, ELEKTR.	813
WARNHORN (24 V, NIEDRIGER TON)	813

* ÜBERSETZUNG ZUM ZEITPUNKT DER DRUCKLEGUNG NICHT VORHANDEN

STICHWORTVERZEICHNIS

Bezeichnung	Seite
WARNVORRICHTUNG	118
WASSERABSCHEIDER- U. KRAFTSTOFFILTER	103
WASSERABSCHEIDER U. KRAFTSTOFFENTLÜFTUNGSPUMPE	117
WASSERABSCHEIDER UND KRAFTSTOFFILTER (HAUPTELEMENT)	103
WASSERTEMPERATURREGLER (92 GRAD) (KÜHLMITTEL)	72
WELLENEINBAUSATZ	468
WERKZEUGKASTEN	903
	905

Z

Bezeichnung	Seite
ZAHN, HD AUSFÜHRUNG	767
ZAHNHALTER	658
ZAHNSPITZE, LANG	769
ZIGARETTENANZÜNDER (12 V)	228
ZUMESSPUMPE (*HMU STEERING)	476
ZYLINDERBLOCKSCHRAUBE	40
	41
	42
ZYLINDERKOPF	18
	19
	20
ZYLINDERKOPF-HALTETEILE	23

* ÜBERSETZUNG ZUM ZEITPUNKT DER DRUCKLEGUNG NICHT VORHANDEN

MACHINE ARRANGEMENT

236-9051 CHASSIS AR

S/N: A7G1-UP

PART OF 236-9049 GENERAL AR

SMCS-7000 **i02416896**

NOTE	PART NUMBER	QTY	PART NAME 1 2 3 4 5 6 (PRODUCT LEVEL)	SEE PAGE
Y	*236-8973*	1	BOX GP-BATTERY	360
Y	*185-3650*	1	CONTROL GP-BUCKET	653
Y	*261-1712*	1	CONTROL GP-SERVICE BRAKE	461
Y	*243-3702*	1	COUNTERWEIGHT GP	361
Y	*119-4398*	1	CYLINDER & MTG GP-STEERING	472
Y	*236-8974*	1	FENDER GP	363
Y	*250-9969*	1	FENDER GP	365
Y	**257-4211**	1	FRAME AS-LOADER	372
Y	**236-9063**	1	FRAME AS-REAR	375
Y	*252-9543*	1	GUARD GP-FRONT	380
Y	*119-4401*	1	HITCH GP-ARTICULATING	388
Y	*250-5600*	1	HOOD & GUARD GP	390
Y	*236-8978*	1	LADDER GP	394
Y	*236-8979*	1	LINES GP-AFTERCOOLER AIR	87
Y	*236-8980*	1	LINES GP-CAB HEATER	827
Y	*236-8981*	1	LINES GP-FUEL	105
Y	*236-8982*	1	LINES GP-GREASE	415
Y	*236-8983*	1	LINES GP-HYDRAULIC OIL COOLER	563
Y	*236-8985*	1	LINES GP-STEERING (HMU STEERING)	476
Y	*242-8890*	1	LINES GP-TORQUE CONV COOLER	312
Y	*236-8988*	1	LINES GP-WATER (RADIATOR)	69
Y	*112-6973*	1	LINK GP-STEERING FRAME LOCK	423
Y	*252-6980*	1	PANEL GP-SIDE	427
Y	*236-9067*	1	PLATE & FILM GP	917
Y	*236-8990*	1	RADIATOR & FAN GP	78
Y	*236-8991*	1	SHIELD GP-ENGINE COMPARTMENT	431
Y	*236-8992*	1	SUPPORT GP-AIR INLET	433
Y	*245-9818*	1	SUPPORT GP-VALVE & FILTER	434
Y	*276-1054*	1	TANK GP-FUEL	113
Y	*236-9039*	1	WASHER GP-WINDOW	895
	6V-1970	1	LITERATURE GP	
	5P-7958	1	SLEEVE-CABLE SPLICE	
	5P-8500	2	KEY	
	7F-3400	1	BAG-POLYETHYLENE	

Y-SEPARATE ILLUSTRATION

<END>

MACHINE ARRANGEMENT

162-0053 CONVERSION AR-CERTIFICATION

S/N: A7G1-UP
UNITED KINGDOM MARKET
AN ATTACHMENT

SMCS-7000 **i02015020**

NOTE	PART NUMBER	QTY	PART NAME 1 2 3 4 5 6 (PRODUCT LEVEL)	SEE PAGE
	162-7039	1	BLOCK	
	7X-0334	2	BOLT (1/2-13X5-IN)	
	119-9080	2	BRACKET	
	164-4395	1	FILM-IDENTIFICATION (ROAD HEIGHT)	
	160-5738	1	RESTRAINER-BUCKET	
	6C-8664	2	SPACER	
	8T-4223	2	WASHER-HARD (13.5X25.5X3-MM THK)	

<END>

277-8157 CONVERSION AR-CERTIFICATION

S/N: A7G1-UP
AN ATTACHMENT

SMCS-7000 **i02421134**

NOTE	PART NUMBER	QTY	PART NAME 1 2 3 4 5 6 (PRODUCT LEVEL)	SEE PAGE
Y	*119-4376*	1	GUARD GP-POWER TRAIN	381
Y	*244-3599*	1	LIGHTING AR-SIGNAL (HMU STEERING)	157
Y	*132-3391*	1	PLATE & FILM GP (MACHINE CERTIFICATION)	914
Y	*246-4791*	1	PROTECTION GP-VANDALISM	919
Y	*236-9087*	1	STEERING AR-SECONDARY	496
Y	*277-8551*	1	SUPPRESSION AR-SOUND	436

Y-SEPARATE ILLUSTRATION

<END>

236-9049 GENERAL AR

S/N: A7G1-UP

SMCS-7000 **i02261852**

NOTE	PART NUMBER	QTY	PART NAME 1 2 3 4 5 6 (PRODUCT LEVEL)	SEE PAGE
Y	*236-9051*	1	CHASSIS AR	1
Y	*236-9053*	1	ELECTRICAL AR	135
Y	**234-7849**	1	ENGINE AR-COMPLETE	3
Y	*236-9055*	1	HYDRAULIC AR-2 VALVE	551
Y	*236-7231*	1	INSTALLATION AR-ENGINE	5
Y	*237-2570*	1	OPERATOR AR-ENCLOSED ROPS (HMU STEERING)	852
Y	*236-9057*	1	POWER TRAIN AR	322

Y-SEPARATE ILLUSTRATION

<END>

ENGINE ARRANGEMENT

234-7849 ENGINE AR-COMPLETE

S/N: MHX1-UP
232 BRAKE KW (311 BHP) AT 1800 RPM
PART OF 236-9049 GENERAL AR

SMCS-1000 **i02340850**

NOTE	PART NUMBER	QTY	PART NAME 1 2 3 4 5 6 (PRODUCT LEVEL)	SEE PAGE
Y	*237-9767*	1	ALTERNATOR GP-CHARGING	120
Y	*237-9755*	1	BASE GP-OIL FILTER	57
Y	*267-0007*	1	BREATHER GP	58
Y	*251-7610*	1	CONNECTION GP-ELECTRICAL	125
Y	*233-6191*	1	CONTROL & MTG GP-ENGINE ELEK	128
Y	*251-7600*	1	COOLER GP-ENGINE OIL	66
Y	*232-3120*	1	COOLER GP-TRANSMISSION OIL	272
Y	*113-8987*	1	COVER GP-FRONT HOUSING (HYD PUMP DRIVE)	9
Y	*227-2574*	1	COVER GP-FRONT HOUSING	10
Y	*229-2614*	1	COVER GP-VALVE MECHANISM	11
Y	*117-2766*	1	DAMPER GP	21
Y	*237-9769*	1	DRIVE GP-ACCESSORY	22
Y	*267-0009*	1	ENGINE AR-CORE	4
Y	*117-2771*	1	FASTENER GP-DAMPER & PULLEY	24
Y	*219-7440*	1	FASTENER GP-FRONT HOUSING	25
Y	*243-1670*	1	FILLER GP-ENGINE OIL	59
Y	*251-7605*	1	FILTER & LINES GP-SEC FUEL	100
Y	*231-3492*	1	FILTER GP-ENGINE OIL	60
Y	*185-5803*	1	FLYWHEEL GP	26
Y	*237-9758*	1	FUMES DISPOSAL GP	61
Y	*236-5035*	1	GAUGE GP-OIL LEVEL (DIPSTICK) (ENGINE)	62
Y	*243-1680*	1	HOUSING GP-FLYWHEEL	28
Y	*224-0880*	1	LIFTING GP-ENGINE	34
Y	*237-9754*	1	LINES GP-AIR	89
Y	*237-9756*	1	LINES GP-AIR (90-DEG)	90
Y	*251-7595*	1	LINES GP-FUEL	106
Y	*234-7843*	1	LINES GP-TURBOCHARGER OIL	63
Y	*255-2397*	1	LINES GP-WATER (PUMP)	74
Y	*243-1667*	1	LINES GP-WATER (SINGLE THERMOSTAT)	72
Y	*267-3476*	1	MANIFOLD GP-EXHAUST	91
Y	*222-3092*	1	MANIFOLD GP-INLET (MID)	92
Y	*234-7847*	1	PAN GP-OIL	37
Y	*227-5518*	1	PLUG GP-AIR INLET MANIFOLD	95
Y	*117-0165*	1	PLUG GP-CYLINDER BLOCK (OIL GALLERY, END)	40
Y	*227-9545*	1	PLUG GP-CYLINDER BLOCK (OIL GALLERY)	42
Y	*237-9753*	1	PLUG GP-ENGINE	43
Y	*123-0789*	1	PULLEY GP-ALTERNATOR	44
Y	*230-7168*	1	PULLEY GP-CRANKSHAFT	45
Y	*235-1080*	1	PUMP GP-FUEL PRM & PRIM FILTER	110
Y	*116-1091*	1	SEAL GP-CRANKSHAFT	50
Y	*243-1555*	1	SENSOR GP-ENGINE (TEMPERATURE, PRESSURE)	178
Y	*183-5518*	1	SUPPORT GP-ENGINE	51
Y	*261-1035*	1	TURBOCHARGER GP	99
Y	*237-9752*	1	WIRING GP-ELECTRONIC CONTROL	241
	235-7511	1	ELECTRONICS GP	
			PLEASE USE THE GASKET KIT LINK IN SIS OR CONTACT YOUR LOCAL DEALER FOR THE LATEST GASKET KIT INFORMATION	

Y-SEPARATE ILLUSTRATION

ENGINE ARRANGEMENT

267-0009 ENGINE AR-CORE

S/N: MHX1-UP

PART OF 234-7849 ENGINE AR-COMPLETE

SMCS-1000 **i02288756**

NOTE	PART NUMBER	QTY	PART NAME 1 2 3 4 5 6 (PRODUCT LEVEL)	SEE PAGE
Y	*267-0010*	1	BASE GP-VALVE COVER & INJ HARN	6
Y	*223-7463*	1	CAMSHAFT GP	8
Y	*224-3881*	1	CRANKSHAFT GP	12
Y	*240-7271*	1	CYLINDER BLOCK GP	16
Y	*240-7679*	1	CYLINDER HEAD GP	19
Y	*222-3088*	1	GEAR GP-FRONT	27
Y	*218-7272*	1	HOUSING GP-FRONT	29
Y	*229-8084*	1	MOUNTING GP-VALVE MECHANISM	36
Y	*238-2723*	6	PISTON & ROD GP	38
Y	*223-3875*	1	PLUG GP-CYLINDER BLOCK	41
Y	*233-5221*	1	PUMP GP-ENGINE OIL	65
Y	*253-1461*	6	PUMP GP-FUEL INJECTION	109
Y	*227-5723*	1	PUMP GP-FUEL TRANSFER	112
Y	*228-5812*	1	PUMP GP-WATER	77
Y	*240-7272*	1	VALVE MECHANISM GP	52
Y	*230-0961*	1	WIRING GP-UNIT INJECTOR	256

Y-SEPARATE ILLUSTRATION

ENGINE ARRANGEMENT

236-7231 INSTALLATION AR-ENGINE

S/N: A7G1-UP

PART OF 236-9049 GENERAL AR

SMCS-1000 **i02203655**

NOTE	PART NUMBER	QTY	PART NAME 1 2 3 4 5 6 (PRODUCT LEVEL)	SEE PAGE
Y	*235-1075*	1	AIR CLEANER GP	85
Y	*260-1939*	1	BELT TENSIONER GP	7
Y	*235-1078*	1	LINES GP-AIR (TURBOCHARGER)	88
Y	*235-1076*	1	LINES GP-FUEL DRAIN	107
Y	*185-5298*	1	MOUNTING GP-ENGINE & TMSN	35
Y	*237-9750*	1	MUFFLER GP	93
Y	*251-7593*	1	STARTING MOTOR GP-ELECTRIC	201

Y-SEPARATE ILLUSTRATION

BASIC ENGINE

267-0010 BASE GP-VALVE COVER & INJ HARN

S/N: MHX1-UP

PART OF 267-0009 ENGINE AR-CORE

SMCS-1120, 1408 **i02289202**

NOTE	REF NO	GRAPHIC REF	PART NUMBER	QTY	PART NAME 1 2 3 4 5 6 (PRODUCT LEVEL)	SEE PAGE
	1	1	**180-1538**	2	DOWEL	
	2	1	**248-6661**	1	BASE	
	3	1	**132-5789**	1	CLIP	
M	4	1	**6V-3918**	13	BOLT (M8X1.25X50-MM)	
	5	1	**9M-1974**	13	WASHER-HARD (8.8X16X2-MM THK)	
D	6	1	**5P-5678**		SEAL (3-M)	

D-ORDER BY THE METER
M-METRIC PART

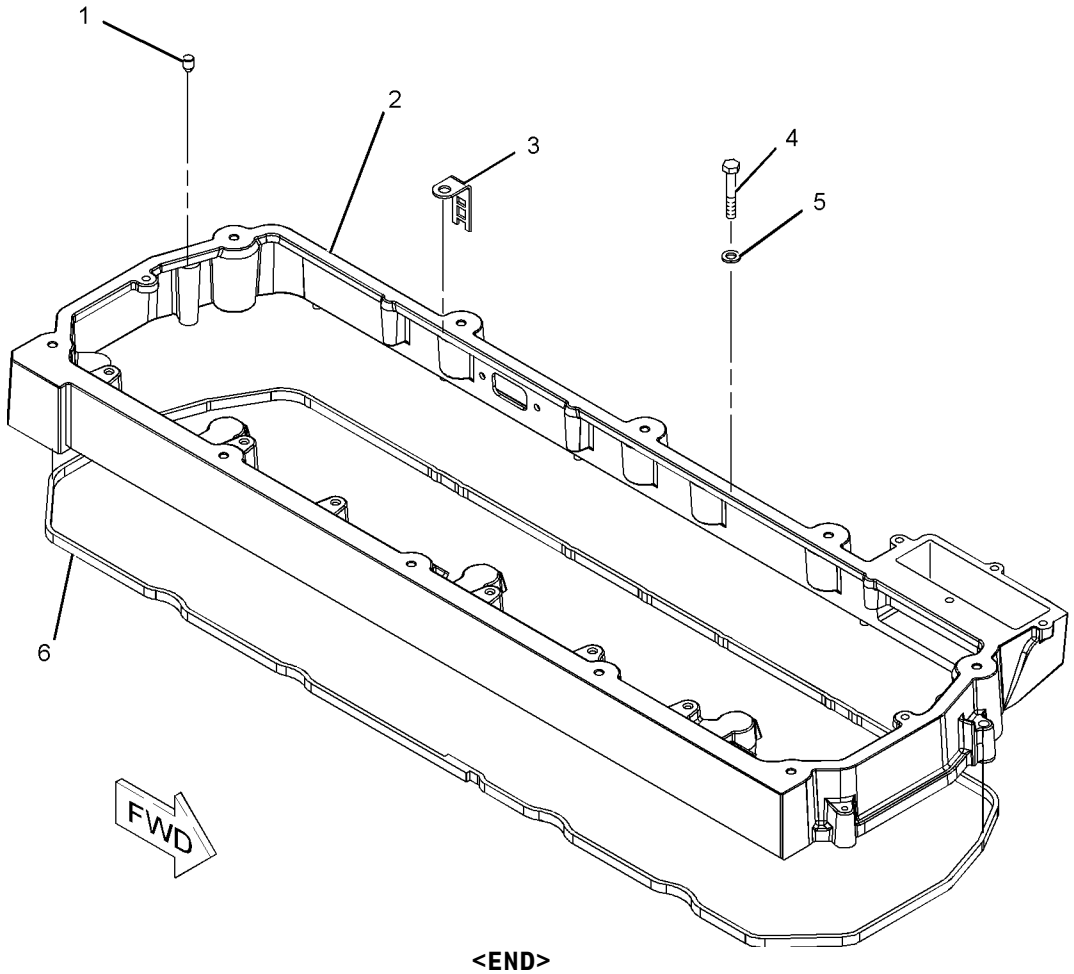

GRAPHIC #1 **<END>** g01143753

BASIC ENGINE

260-1939 BELT TENSIONER GP

S/N: A7G1-UP

PART OF 236-7231 INSTALLATION AR-ENGINE

SMCS-1357, 1358, 1397 **i02208384**

NOTE	REF NO	GRAPHIC REF	PART NUMBER	QTY	PART NAME 1 2 3 4 5 6 (PRODUCT LEVEL)	SEE PAGE
	1	1	**173-1498**	1	PULLEY AS-IDLER (8-GROOVE)	
		1	**151-2900**	1	BOLT (M10X1.5X54.25-MM)	
		1	**166-6358**	1	COVER-DUST	
	2	1	**260-1527**	1	BELT-SERPENTINE	

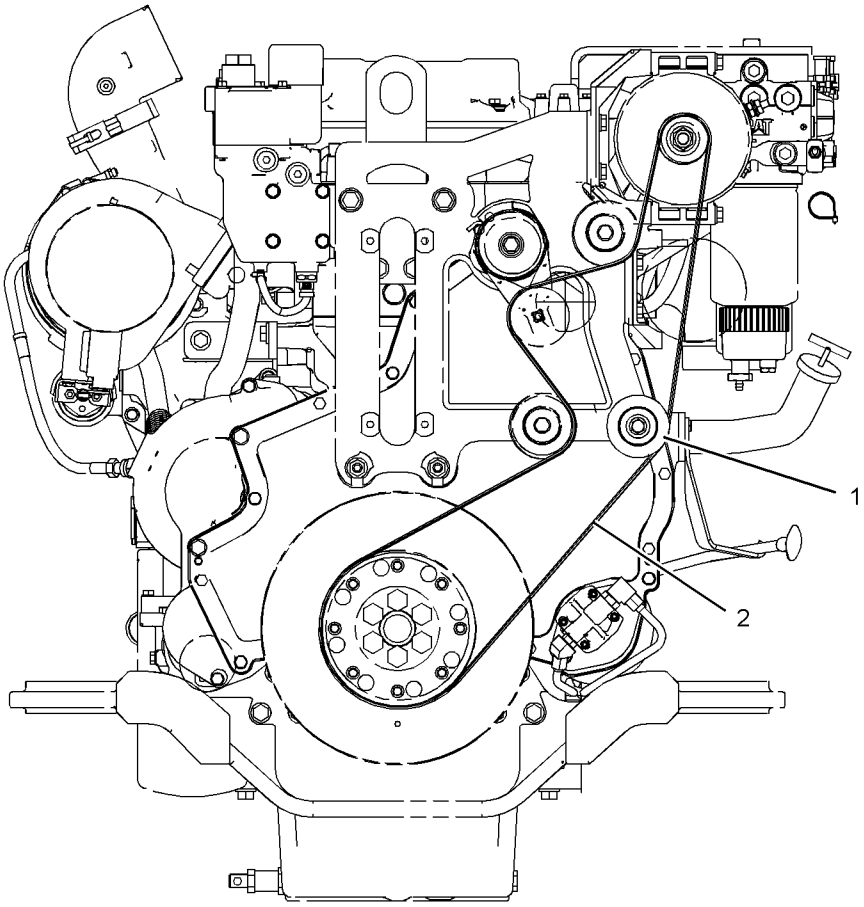

FRONT VIEW

GRAPHIC #1 **<END>** g01116958

BASIC ENGINE

223-7463 CAMSHAFT GP

S/N: MHX1-UP

PART OF 267-0009 ENGINE AR-CORE

SMCS-1210, 1211, 1212 **i02173306**

NOTE	REF NO	GRAPHIC REF	PART NUMBER	QTY	PART NAME 1 2 3 4 5 6 (PRODUCT LEVEL)	SEE PAGE
	1	1	**223-7468**	1	CAMSHAFT AS	
	1A	1	**1B-8705**	1	KEY-WOODRUFF	
	1B	1	**222-3907**	1	GEAR (96-TEETH)	
	1C	1	**223-7471**	1	PLATE-THRUST	
	2	1	**229-5684**	1	COVER	
	3	1	**131-3718**	1	SEAL-O-RING	
M	4	1	**6V-5217**	4	BOLT (M8X1.25X20-MM)	
	5	1	**9M-1974**	4	WASHER-HARD (8.8X16X2-MM THK)	
M	6	1	**8T-0338**	4	BOLT-SOCKET HEAD (M8X1.25X45-MM)	

M-METRIC PART

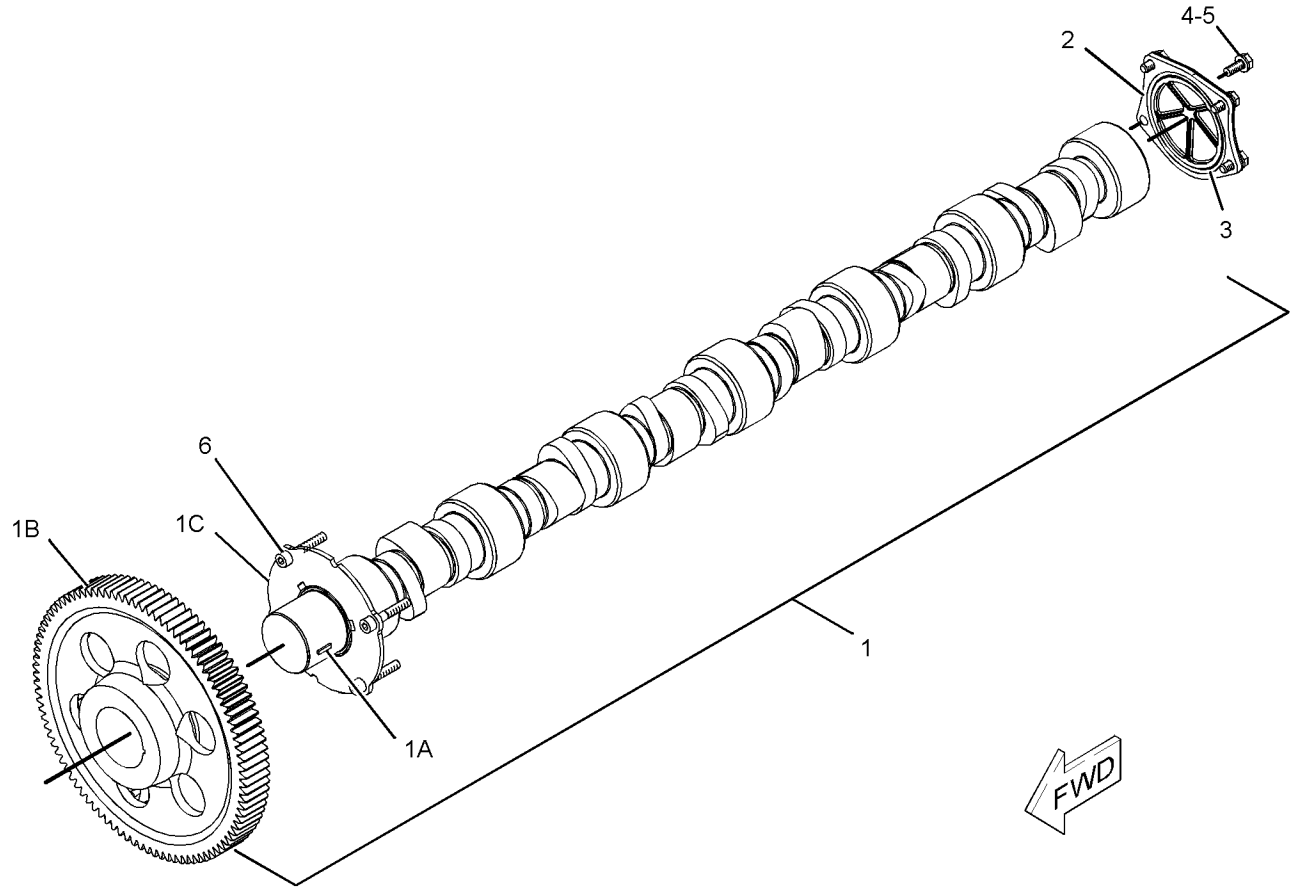

GRAPHIC #1 **<END>** g01043782

113-8987 COVER GP-FRONT HOUSING

S/N: MHX1-UP

PART OF 234-7849 ENGINE AR-COMPLETE

SMCS-1151, 1166 **i02173315**

NOTE	REF NO	GRAPHIC REF	PART NUMBER	QTY	PART NAME 1 2 3 4 5 6 (PRODUCT LEVEL)	SEE PAGE
M	1	1	**6V-5842**	2	BOLT (M10X1.5X40-MM)	
	2	1	**6V-5839**	2	WASHER (11X21X2.5-MM THK)	
	3	1	**129-2905**	1	COVER	
	4	1	**107-5769**	1	SEAL-O-RING	

M-METRIC PART

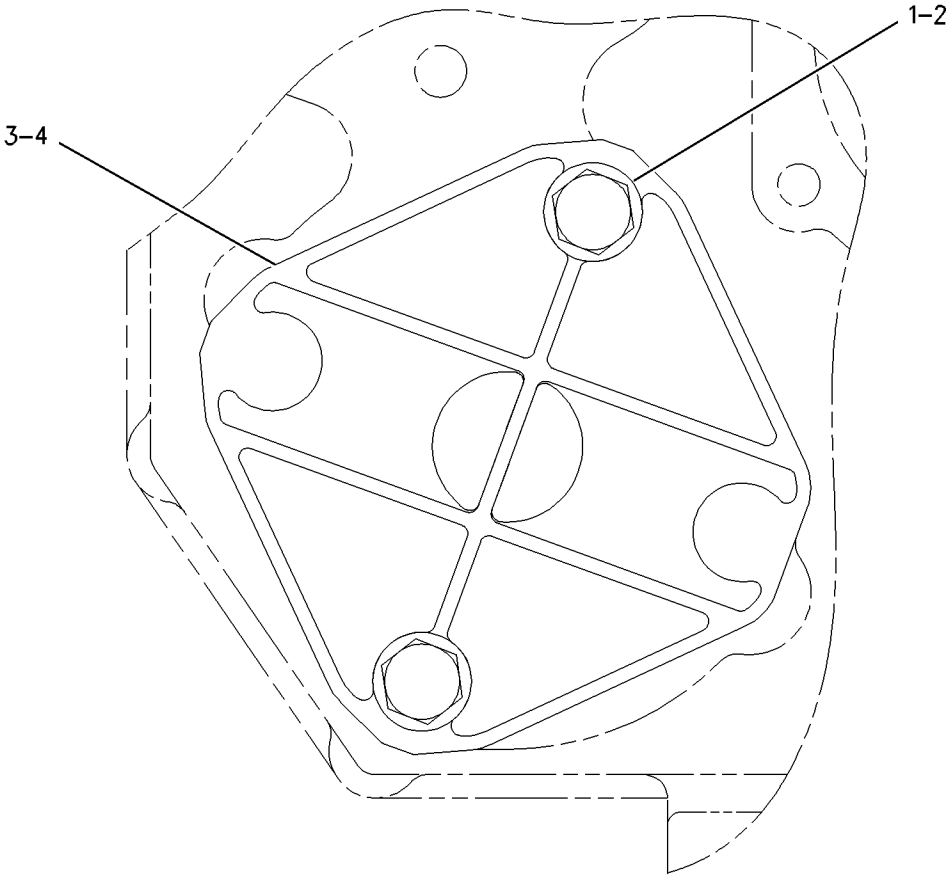

GRAPHIC #1 **<END>** g00856137

BASIC ENGINE

227-2574 COVER GP-FRONT HOUSING

S/N: MHX1-UP

PART OF 234-7849 ENGINE AR-COMPLETE

SMCS-1151, 1166 **i02174457**

NOTE	REF NO	GRAPHIC REF	PART NUMBER	QTY	PART NAME 1 2 3 4 5 6 (PRODUCT LEVEL)	SEE PAGE
	1	1	**227-2576**	1	COVER	
M	2	1	**6V-8197**	3	BOLT (M12X1.75X40-MM)	
	3	1	**7J-6285**	1	SEAL-O-RING	
	4	1	**8T-4223**	3	WASHER-HARD (13.5X25.5X3-MM THK)	

M-METRIC PART

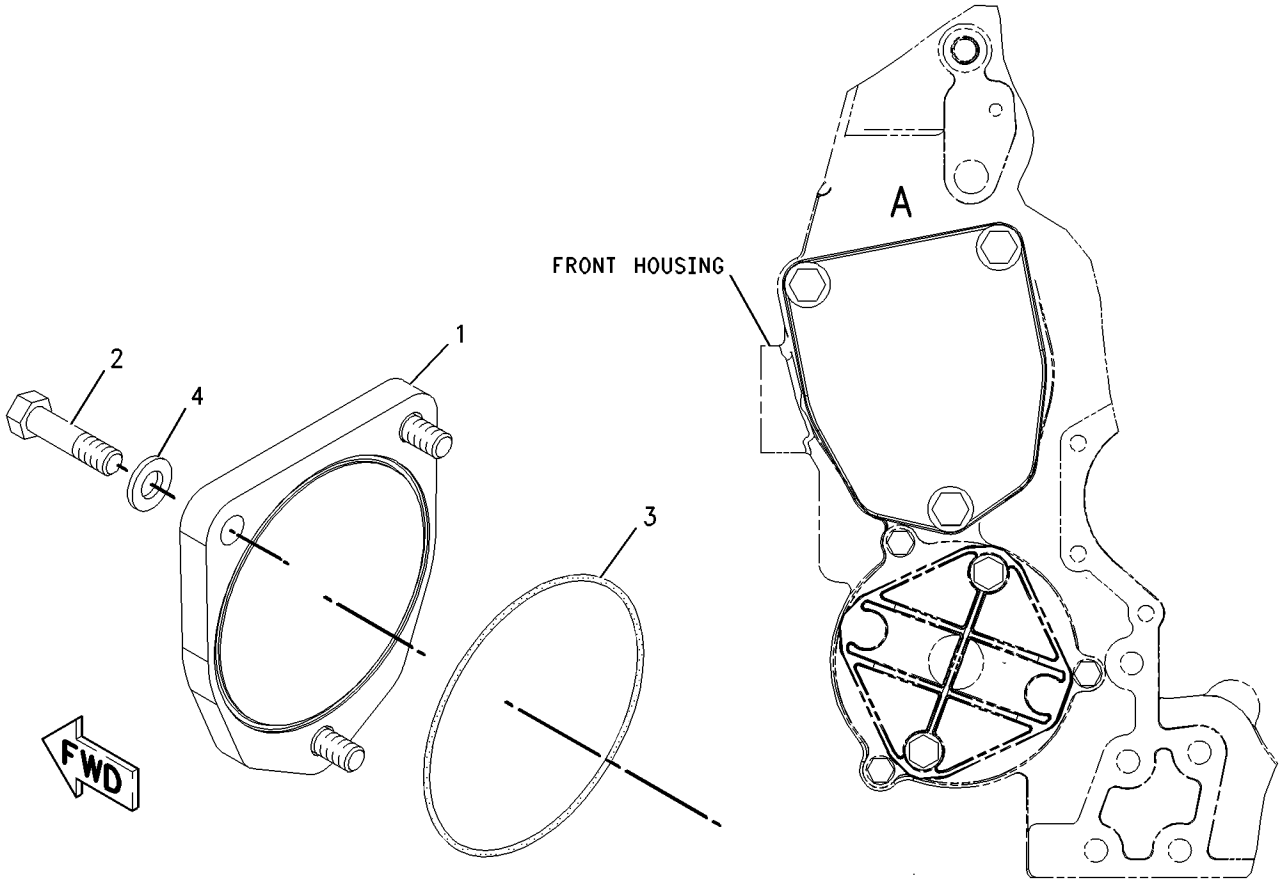

EXPLODED VIEW OF AREA A

FRONT VIEW

GRAPHIC #1 **<END>** g01003191

BASIC ENGINE

229-2614 COVER GP-VALVE MECHANISM

S/N: MHX1-UP

PART OF 234-7849 ENGINE AR-COMPLETE

SMCS-1107 **i02270507**

NOTE	REF NO	GRAPHIC REF	PART NUMBER	QTY	PART NAME 1 2 3 4 5 6 (PRODUCT LEVEL)	SEE PAGE
	1	1	**212-7728**	10	ISOLATOR AS	
	2	1	**229-2616**	1	COVER-VALVE	
	3	1	**229-5711**	1	SEAL-VALVE COVER (VALVE COVER)	
M	4	1	**6V-3918**	10	BOLT (M8X1.25X50-MM)	
	5	1	**9M-1974**	10	WASHER-HARD (8.8X16X2-MM THK)	

M-METRIC PART

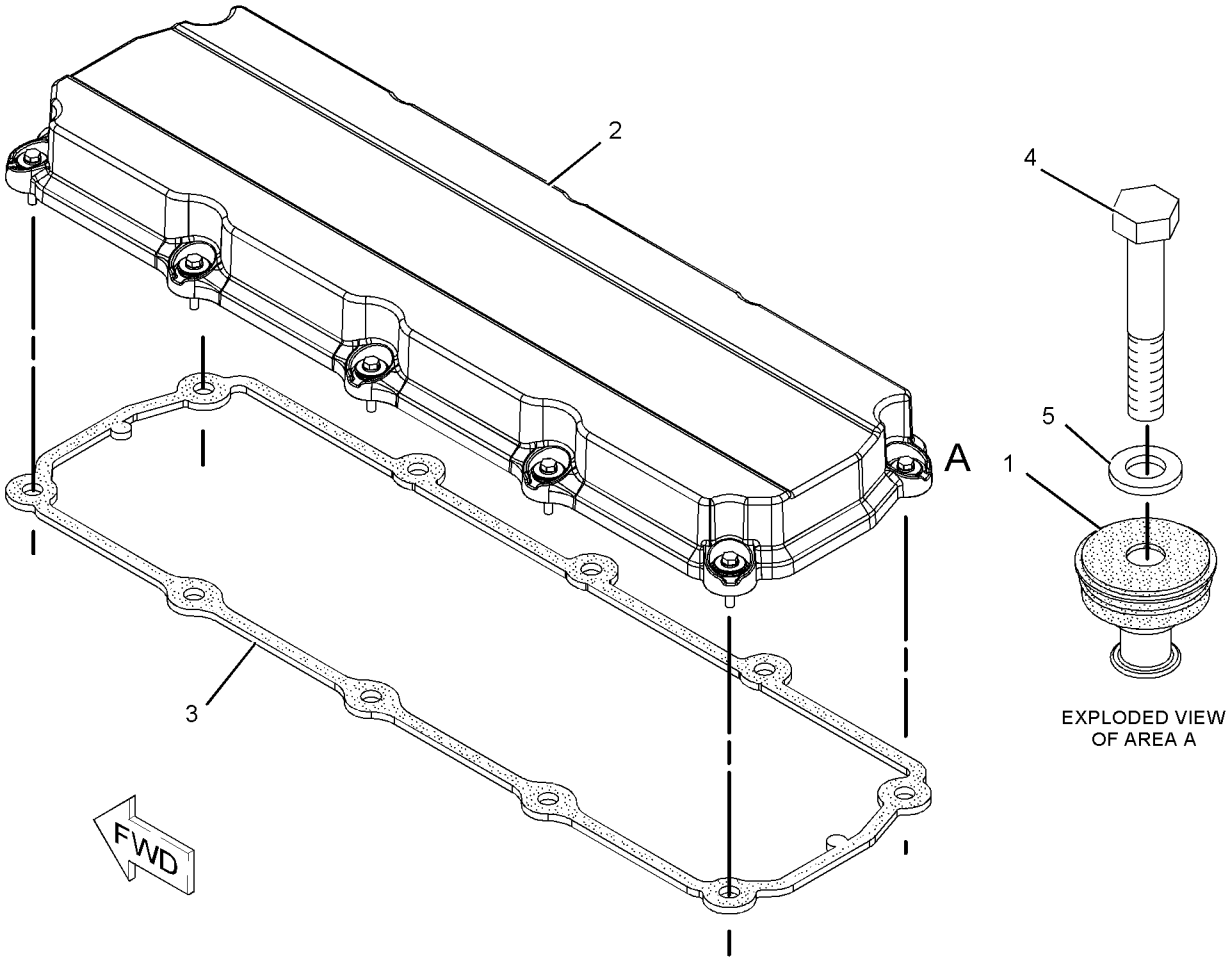

GRAPHIC #1 **<END>** g01121078

BASIC ENGINE

224-3881 CRANKSHAFT GP

S/N: MHX1-UP

PART OF 267-0009 ENGINE AR-CORE

SMCS-1202 **i02173326**

NOTE	REF NO	GRAPHIC REF	PART NUMBER	QTY	PART NAME 1 2 3 4 5 6 (PRODUCT LEVEL)	SEE PAGE
J	1	1	**211-0587**	4	BEARING-MAIN	
AB		1	**128-0400**	1	BEARING-MAIN (0.51-MM US)	
AB		1	**128-0401**	1	BEARING-MAIN (0.76-MM US)	
AB		1	**128-0402**	1	BEARING-MAIN (0.51-MM OS)	
AB		1	**128-0403**	1	BEARING-MAIN (0.51-MM US TO 0.51-MM OS)	
J	2	1	**211-0588**	3	BEARING-MAIN	
AB		1	**128-0382**	1	BEARING-MAIN (0.51-MM US)	
AB		1	**128-0383**	1	BEARING-MAIN (0.76-MM US)	
AB		1	**128-0384**	1	BEARING-MAIN (0.51-MM OS)	
AB		1	**128-0385**	1	BEARING-MAIN (0.51-MM US TO 0.51-MM OS)	
R	3	1	**221-9364**	1	CRANKSHAFT AS	
		1	**6V-3536**	1	DOWEL	
		1	**9Y-0810**	1	SLEEVE-WEAR	
		1	**9Y-0821**	1	SLEEVE	
		1	**187-8972**	1	GEAR-CRANKSHAFT (48-TEETH)	
J	4	1	**246-3144**	2	PLATE-THRUST	
					AVAILABLE REPAIR KIT(S):	
JY			**243-6717**	1	KIT-CRANKSHAFT BEARING	32

A-NOT PART OF THIS GROUP
B-USE AS REQUIRED
J-KIT MARKED J INCLUDES PARTS MARKED J
R-REMFG PART MAY BE AVAILABLE
Y-SEPARATE ILLUSTRATION

224-3881 **CRANKSHAFT GP** *(contd.)* **i02173326**

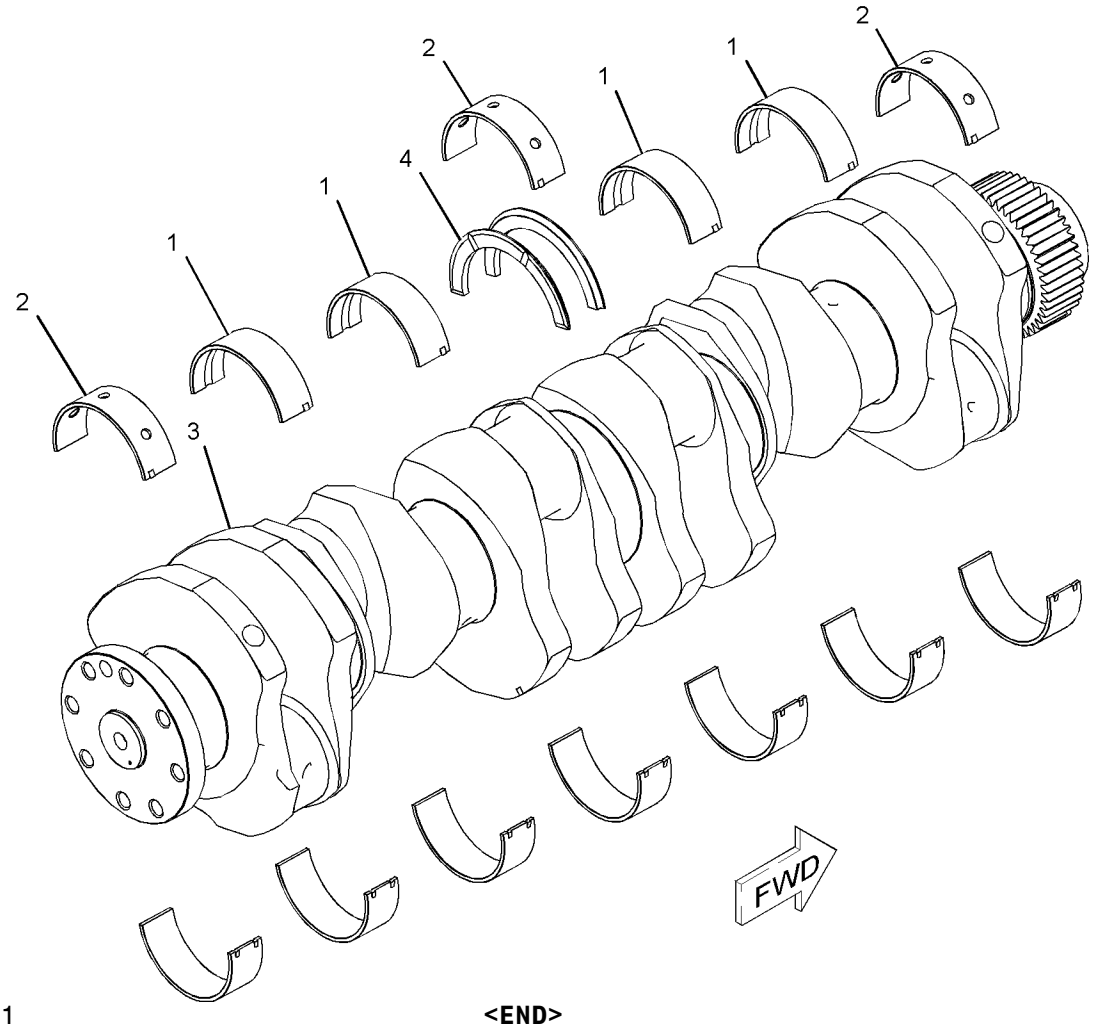

GRAPHIC #1 **<END>** g01101434

BASIC ENGINE

252-2180 CYLINDER BLOCK AS

S/N: MHX1-UP

PART OF 252-2181 CYLINDER BLOCK AS

SMCS-1201 **i02175634**

NOTE	REF NO	GRAPHIC REF	PART NUMBER	QTY	PART NAME 1 2 3 4 5 6 (PRODUCT LEVEL)	SEE PAGE
	1	1	**187-8969**	7	BEARING	
	2	1	**239-7359**	1	CYLINDER BLOCK AS	
	2A	1	**207-8572**	7	CAP-BEARING	
	2B	1	**223-6546**	14	BOLT (M18X2.5X170-MM)	
		1	**5P-8248**	14	WASHER-HARD (20X36.5X3.5-MM THK)	

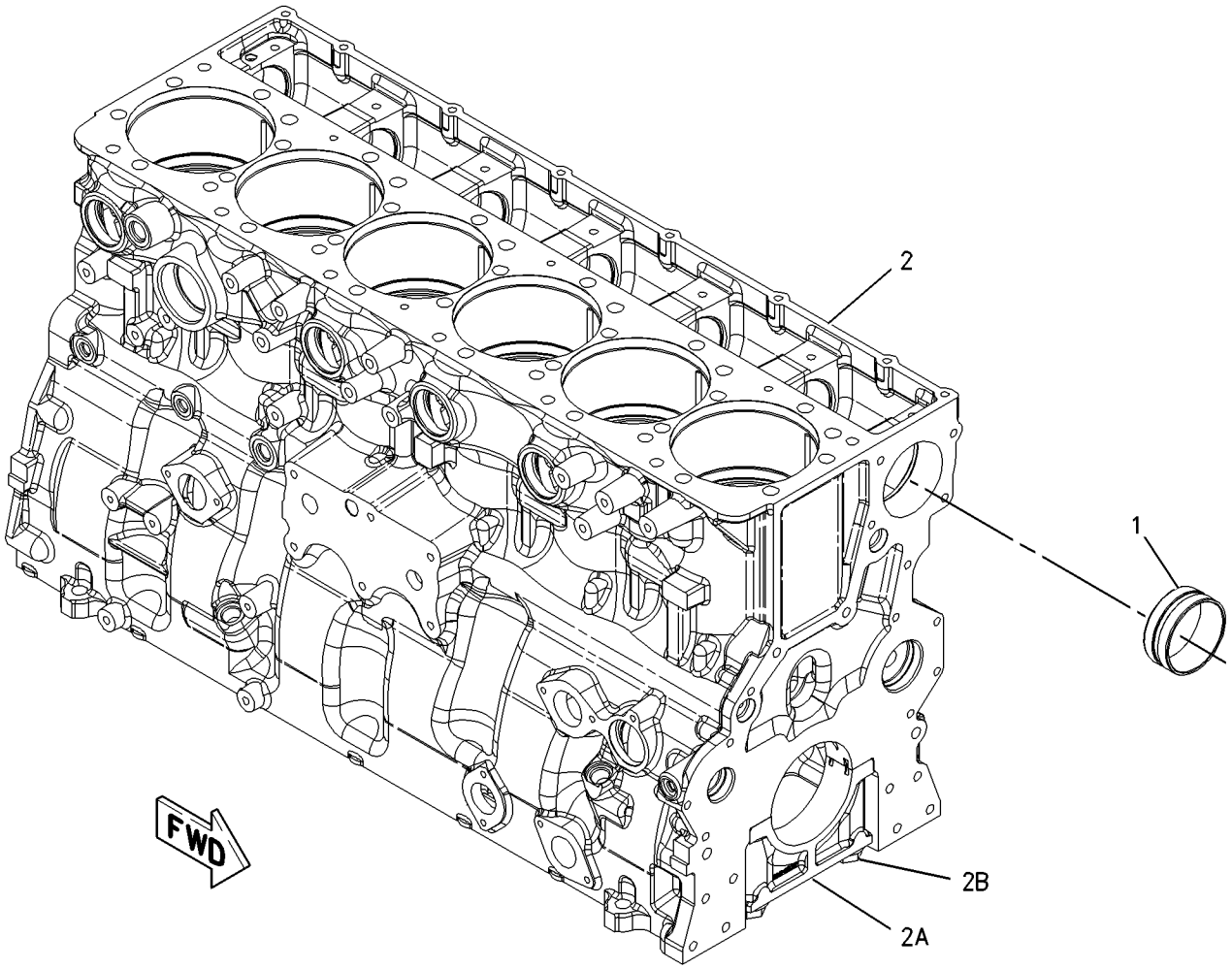

GRAPHIC #1 **<END>** g00950396

BASIC ENGINE

252-2181 CYLINDER BLOCK AS

S/N: MHX1-UP

PART OF 240-7271 CYLINDER BLOCK GP

SMCS-1201 **i02175046**

NOTE	REF NO	GRAPHIC REF	PART NUMBER	QTY	PART NAME 1 2 3 4 5 6 (PRODUCT LEVEL)	SEE PAGE
	1	1	**4F-5695**	5	PLUG-CUP	
	2	1	**104-3560**	6	SEAL-LINER	
	3	1	**197-9330**	6	LINER-CYLINDER	
Y	4	1	**252-2180**	1	CYLINDER BLOCK AS	14

Y-SEPARATE ILLUSTRATION

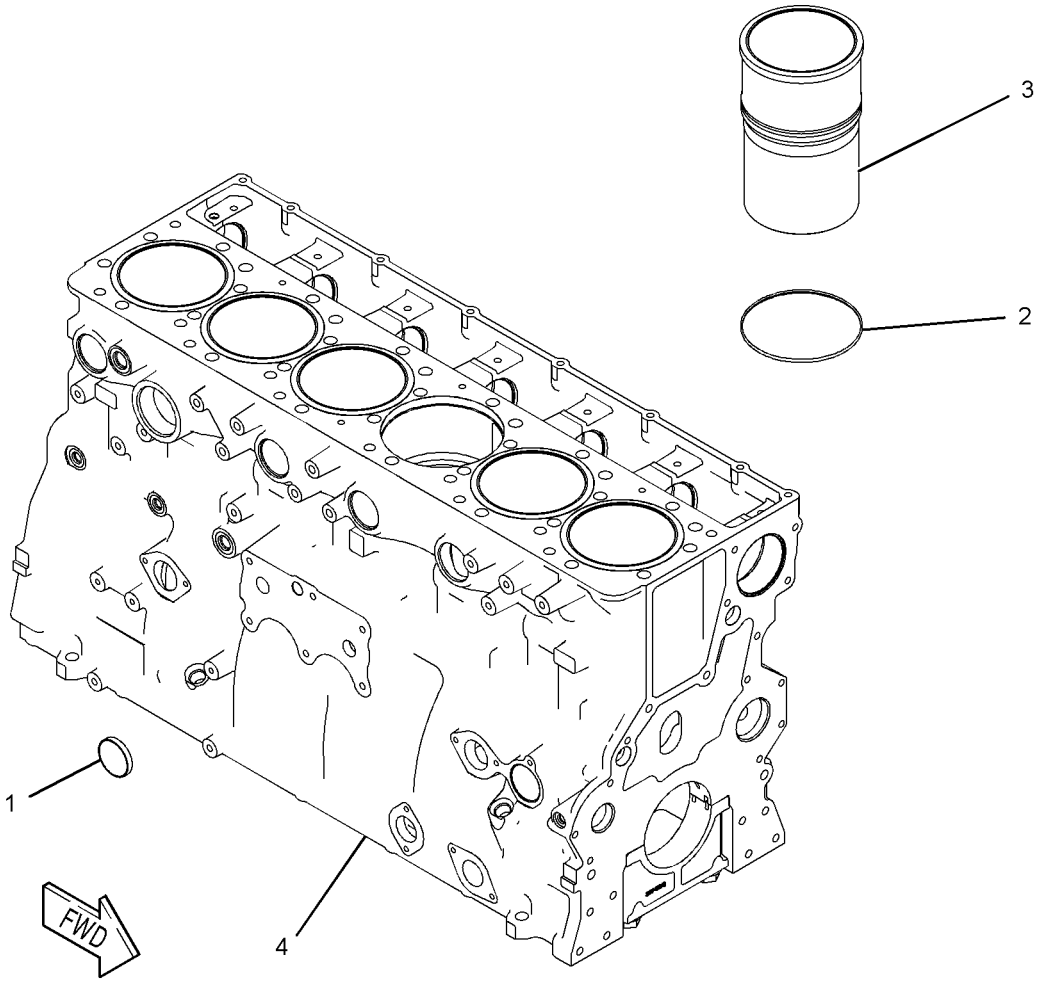

GRAPHIC #1 **<END>** g01009480

BASIC ENGINE

240-7271 CYLINDER BLOCK GP

S/N: MHX1-UP

PART OF 267-0009 ENGINE AR-CORE

SMCS-1201 **i02173333**

NOTE	REF NO	GRAPHIC REF	PART NUMBER	QTY	PART NAME 1 2 3 4 5 6 (PRODUCT LEVEL)	SEE PAGE
	1	1	**3B-0623**	3	PLUG-CUP	
CY	2	1	**252-2181**	1	CYLINDER BLOCK AS	15
	3	1	**9X-7378**	2	SEAL-O-RING	
	4	1	**9S-4182**	2	PLUG (7/16-2 THD)	
	5	1	**6V-5048**	1	SEAL-O-RING	
	6	1	**6V-3538**	2	DOWEL	
	7	1	**7N-5683**	6	DOWEL	
	8	1	**9S-8002**	1	PLUG (7/16-2 THD)	

C-CHANGE FROM PREVIOUS TYPE
Y-SEPARATE ILLUSTRATION

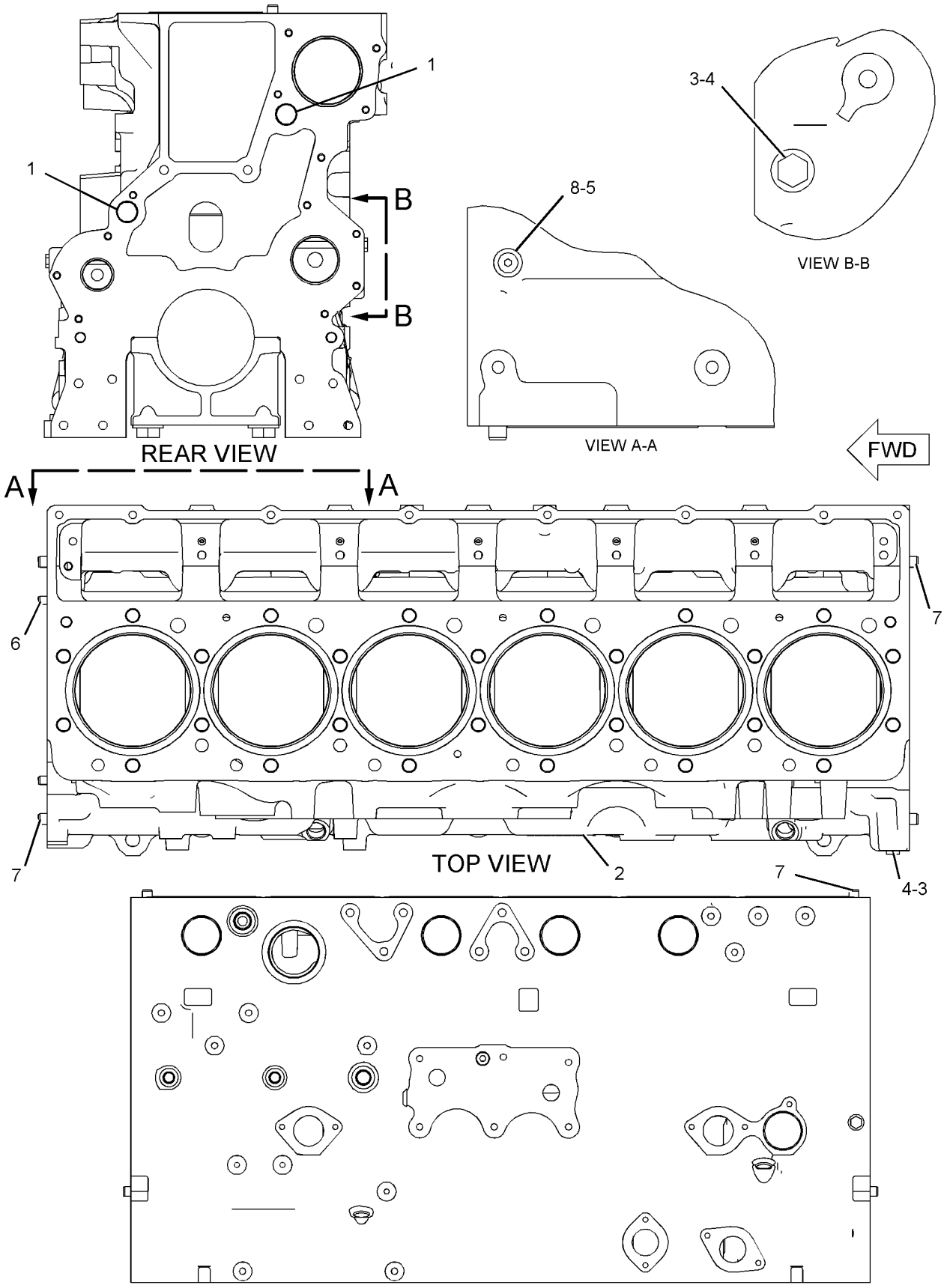

GRAPHIC #1

<END>

g01017611

BASIC ENGINE

257-2170 CYLINDER HEAD AS

S/N: MHX1-UP

PART OF 257-4095 CYLINDER HEAD GP

SMCS-1100, 1101 **i02305069**

NOTE	REF NO	GRAPHIC REF	PART NUMBER	QTY	PART NAME 1 2 3 4 5 6 (PRODUCT LEVEL)	SEE PAGE
	1	1	**224-1270**	12	INSERT-VALVE (EXHAUST)	
	2	1	**224-2410**	12	INSERT-VALVE (INLET)	
	3	1	**259-2186**	24	GUIDE-VALVE	
	4	1	**227-4239**	6	SLEEVE-INJECTOR	
	7	1	**166-2904**	12	SEAL-O-RING	
	8	1	**3B-0623**	36	PLUG-CUP	
	9	1	**6V-5049**	7	SEAL-O-RING	
	10	1	**9S-8004**	7	PLUG	
	11	1	**9X-7430**	6	SEAL-O-RING	

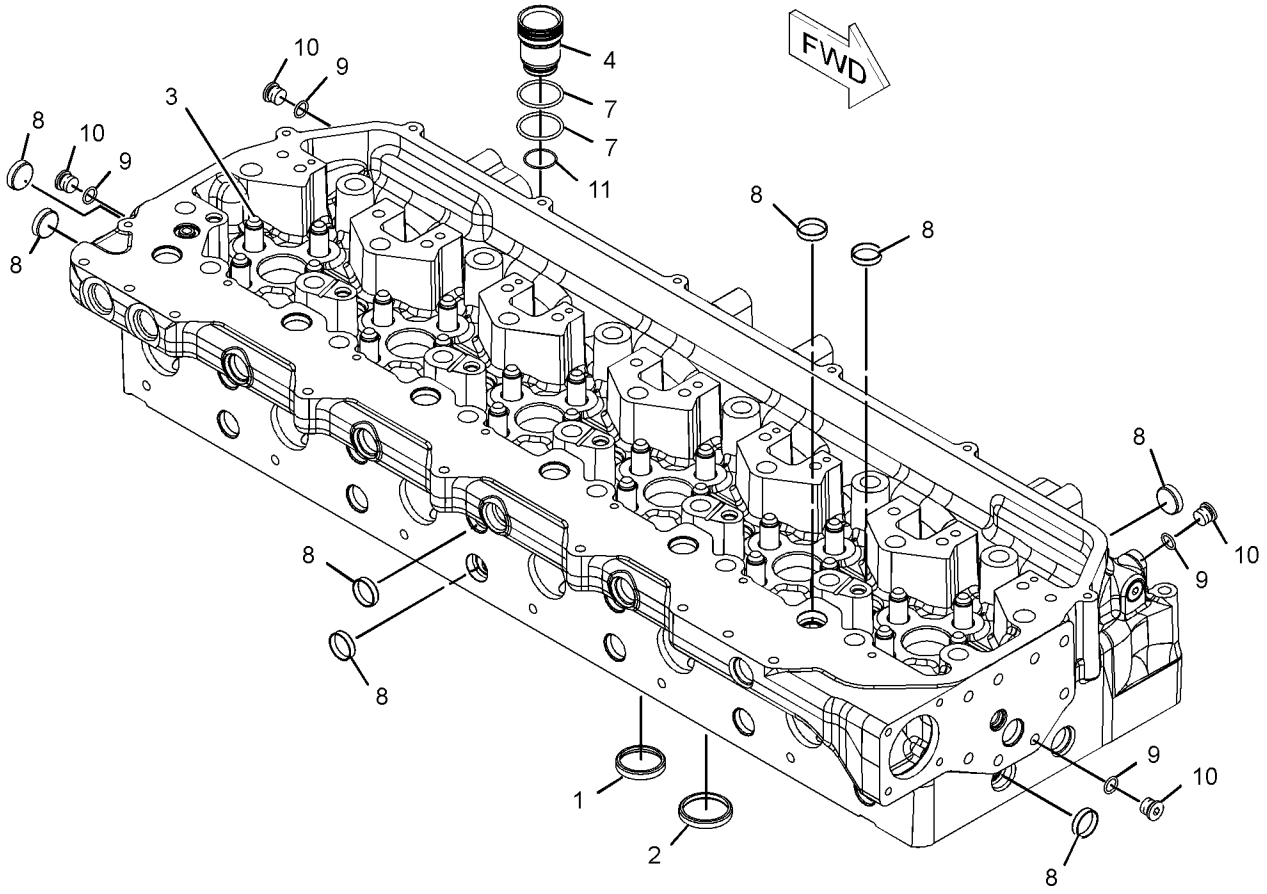

GRAPHIC #1 **<END>** g01151927

240-7679 CYLINDER HEAD GP

S/N: MHX1-UP

PART OF 267-0009 ENGINE AR-CORE

SMCS-1100 **i02173337**

NOTE	REF NO	GRAPHIC REF	PART NUMBER	QTY	PART NAME 1 2 3 4 5 6 (PRODUCT LEVEL)	SEE PAGE
Y	1	1	*198-4963*	1	FASTENER GP-CYLINDER HEAD	23
	2	1	**221-9392**	1	GASKET (CYLINDER HEAD)	
Y	3	1	**257-4095**	1	CYLINDER HEAD GP	20

Y-SEPARATE ILLUSTRATION

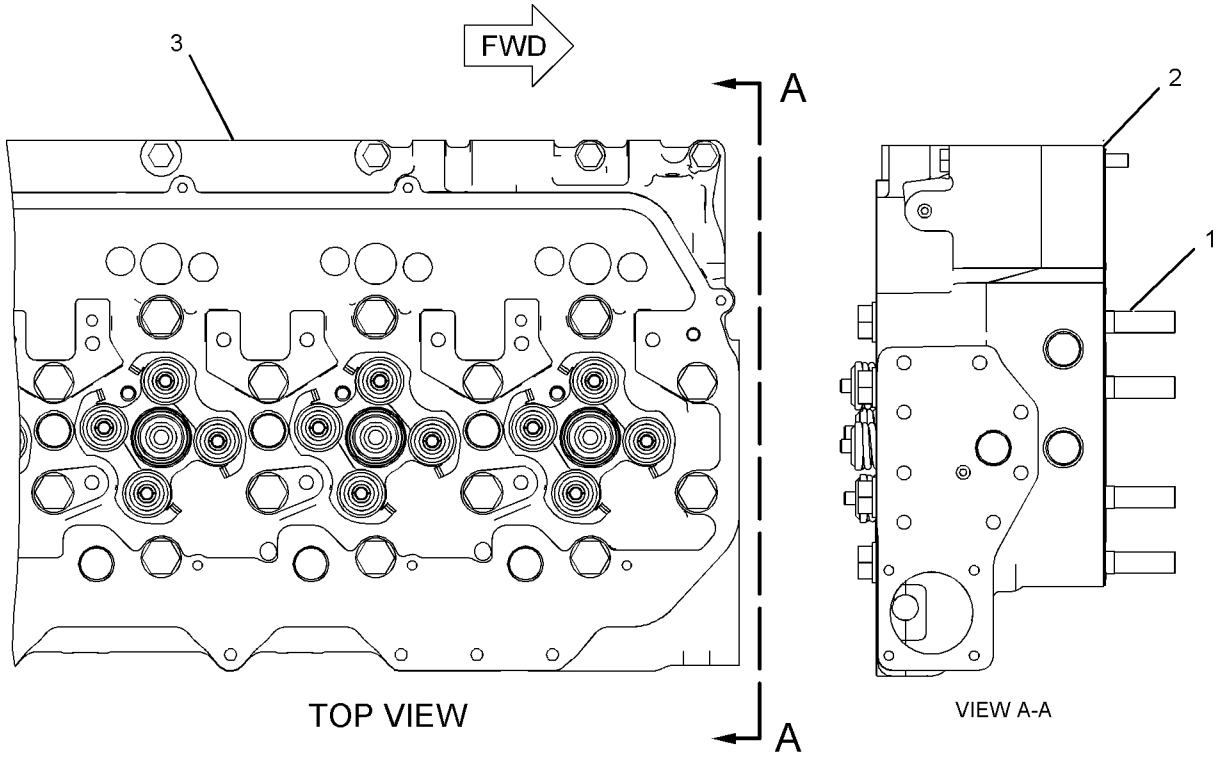

GRAPHIC #1 **<END>** g01018879

257-4095 CYLINDER HEAD GP*R

S/N: MHX1-UP

PART OF 240-7679 CYLINDER HEAD GP

SMCS-1100 **i02175047**

NOTE	REF NO	GRAPHIC REF	PART NUMBER	QTY	PART NAME 1 2 3 4 5 6 (PRODUCT LEVEL)	SEE PAGE
	1	1	**2A-4429**	48	LOCK-RETAINER	
	2	1	**214-0586**	24	SPRING (OUTER)	
	3	1	**6V-5063**	2	SEAL-O-RING	
	4	1	**224-3028**	12	VALVE-INLET	
	5	1	**9S-8008**	2	PLUG	
	6	1	**224-3030**	12	VALVE-EXHAUST	
	7	1	**7E-7977**	24	ROTOCOIL AS	
	8	1	**224-3125**	12	BASE	
	9	1	**224-4441**	24	SPRING (INNER)	
Y	10	1	**257-2170**	1	CYLINDER HEAD AS	18
	11	1	**5P-5598**	1	SEAL-O-RING	

Y-SEPARATE ILLUSTRATION

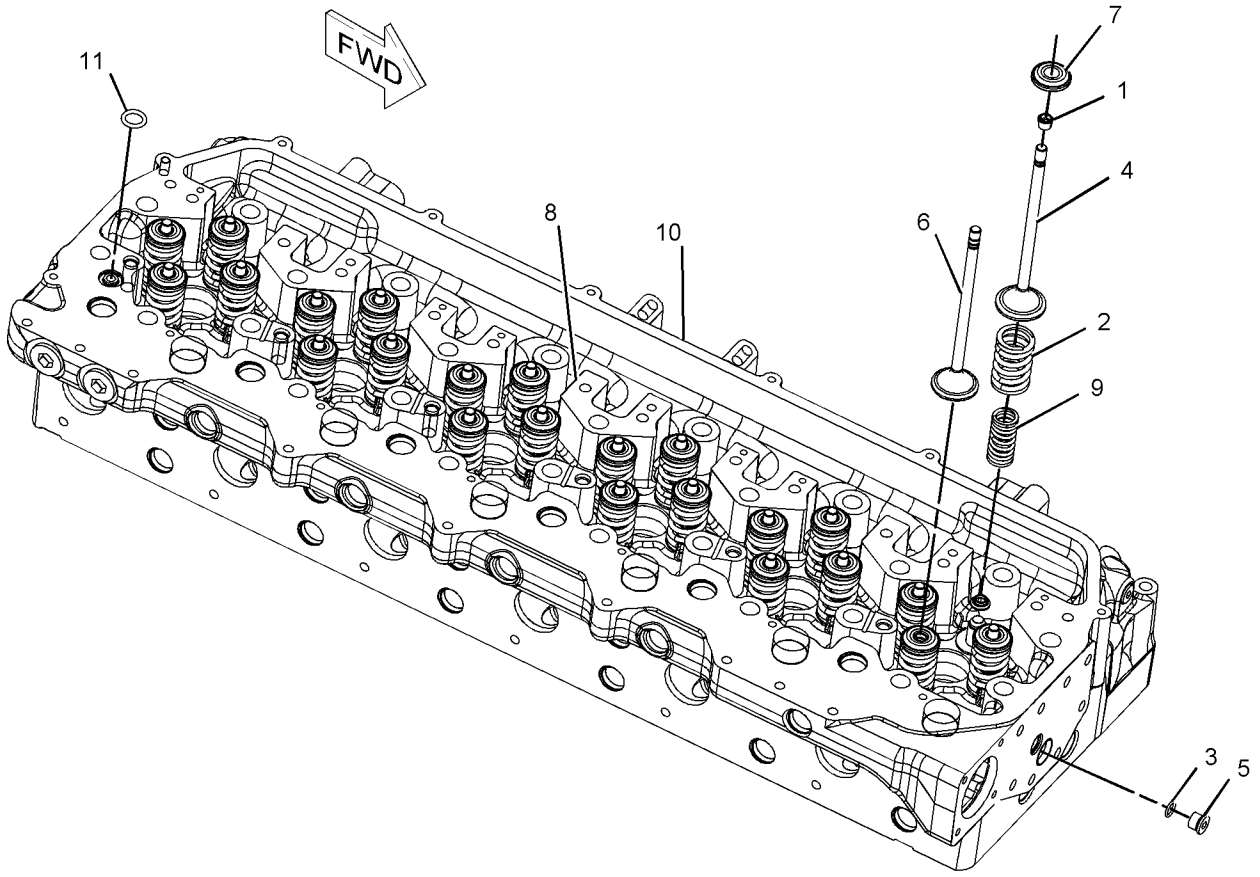

GRAPHIC #1 **<END>** g01094864

117-2766 DAMPER GP

S/N: MHX1-UP

PART OF 234-7849 ENGINE AR-COMPLETE

SMCS-1205 **i01324903**

NOTE	REF NO	GRAPHIC REF	PART NUMBER	QTY	PART NAME 1 2 3 4 5 6 (PRODUCT LEVEL)	SEE PAGE
	1	1	**132-3170**	1	ADAPTER	
	2	1	**133-7097**	1	DAMPER AS	
		1	**5M-9709**	2	PLUG-EXPANSION	
	3	1	**136-4183**	8	BOLT-12 POINT HEAD	
	4	1	**9X-2027**	8	WASHER (2MM THK)	

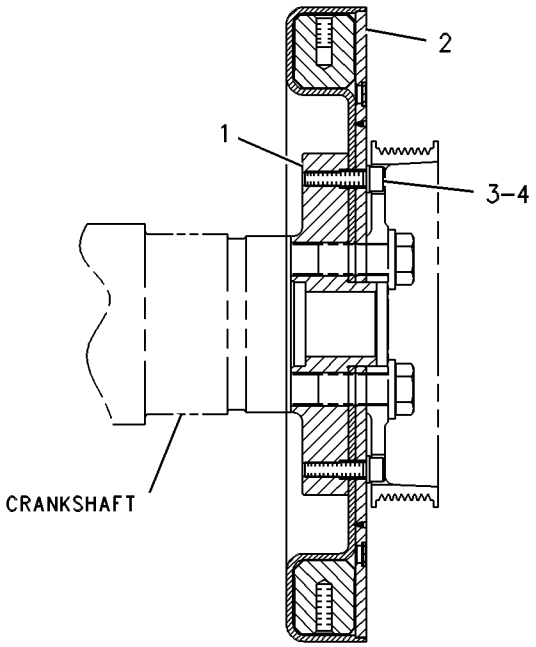

GRAPHIC #1 **<END>** g00258688

BASIC ENGINE

237-9769 DRIVE GP-ACCESSORY

S/N: MHX1-UP

PART OF 234-7849 ENGINE AR-COMPLETE

SMCS-1207 **i02270659**

NOTE	REF NO	GRAPHIC REF	PART NUMBER	QTY	PART NAME 1 2 3 4 5 6 (PRODUCT LEVEL)	SEE PAGE
	1	1	**207-8118**	2	PULLEY AS-IDLER	
	2	1	**219-7475**	1	SUPPORT AS	
	3	1	**219-7489**	1	BELT TENSIONER	
	4	1	**258-5031**	1	BRACKET-SUPPORT	
	5	1	**5P-8245**	4	WASHER-HARD (13.5X25.5X3-MM THK)	
M	6	1	**6V-3822**	6	BOLT (M10X1.5X35-MM)	
M	7	1	**6V-4249**	2	BOLT (M10X1.5X50-MM)	
	8	1	**6V-5839**	9	WASHER (11X21X2.5-MM THK)	
M	9	1	**6V-8004**	2	BOLT (M12X1.75X120-MM)	
M	10	1	**6V-8149**	2	NUT (M12X1.75-THD)	
M	11	1	**8T-0644**	1	BOLT (M10X1.5X90-MM)	

M-METRIC PART

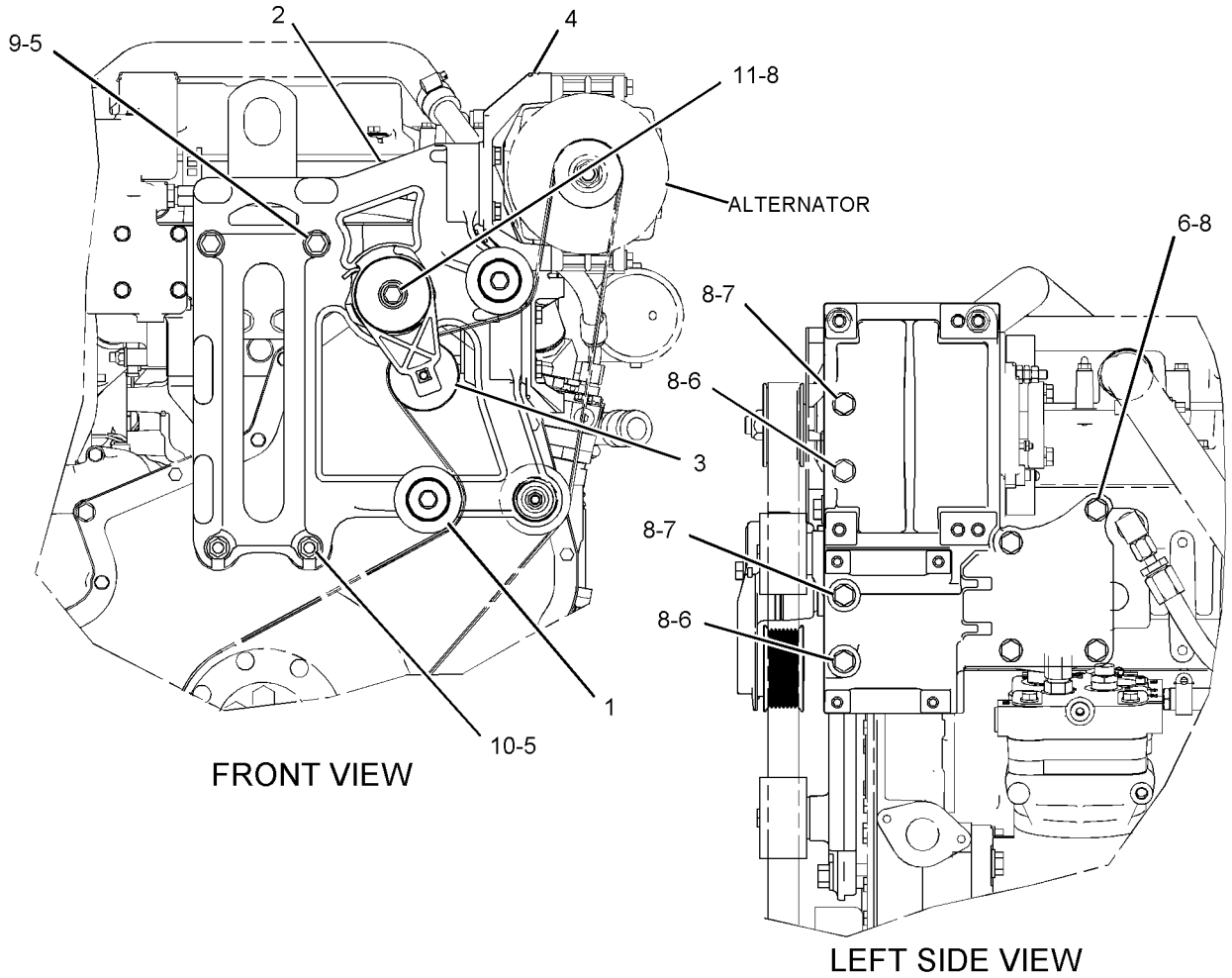

GRAPHIC #1 **<END>** g01121090

198-4963 FASTENER GP-CYLINDER HEAD

S/N: MHX1-UP

PART OF 240-7679 CYLINDER HEAD GP

SMCS-1100 **i02175052**

NOTE	REF NO	GRAPHIC REF	PART NUMBER	QTY	PART NAME 1 2 3 4 5 6 (PRODUCT LEVEL)	SEE PAGE
	1	1	**242-1811**	26	BOLT	
	2	1	**210-4460**	8	BOLT (M10X1.5X130-MM)	
	3	1	**2S-5658**	26	WASHER-HARD (17X29X3-MM THK)	

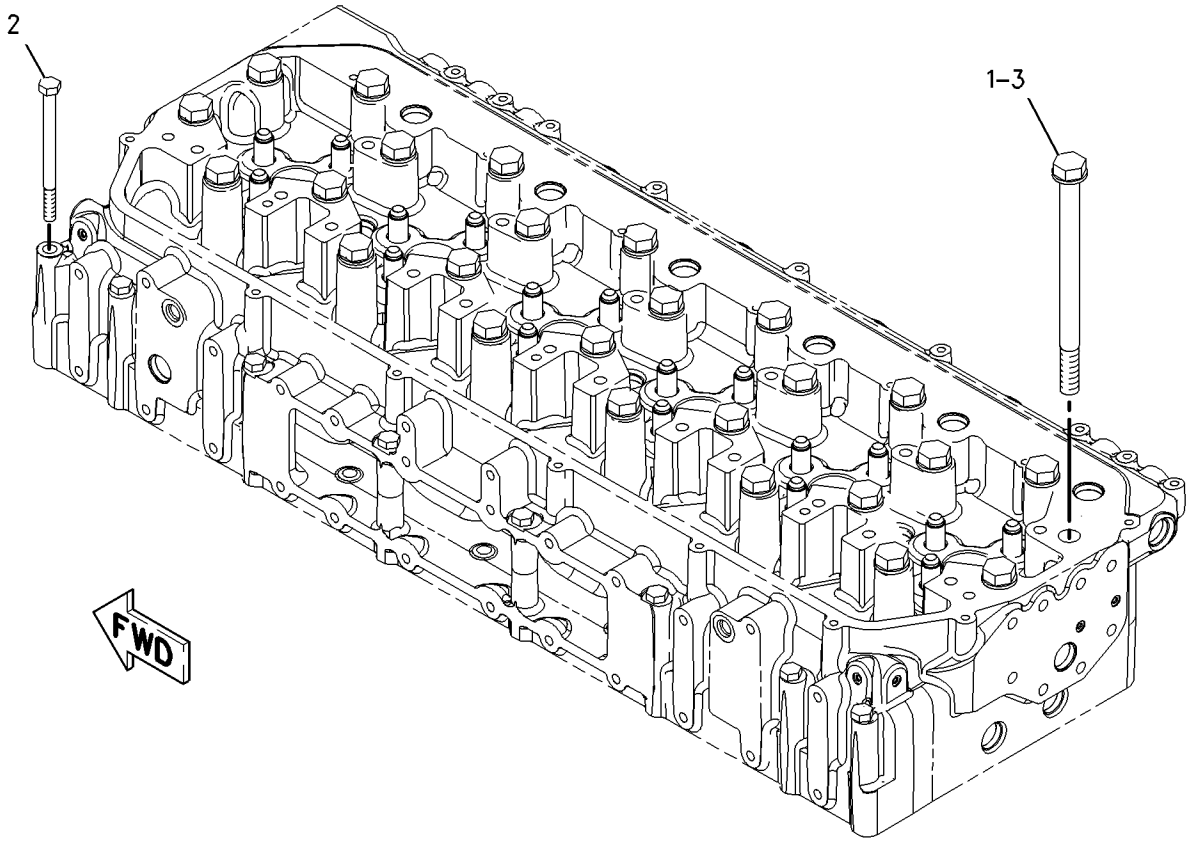

GRAPHIC #1 **<END>** g00949755

117-2771 FASTENER GP-DAMPER & PULLEY

S/N: MHX1-UP

PART OF 234-7849 ENGINE AR-COMPLETE

SMCS-1205, 7553 **i01756772**

NOTE	REF NO	GRAPHIC REF	PART NUMBER	QTY	PART NAME 1 2 3 4 5 6 (PRODUCT LEVEL)	SEE PAGE
M	1	1	**8T-0281**	6	BOLT (M16X2X80-MM)	
	2	1	**5P-8247**	6	WASHER-HARD (17X32X3.5-MM THK)	
					—OR—	
		1	**213-1585**	1	SPACER	

M-METRIC PART

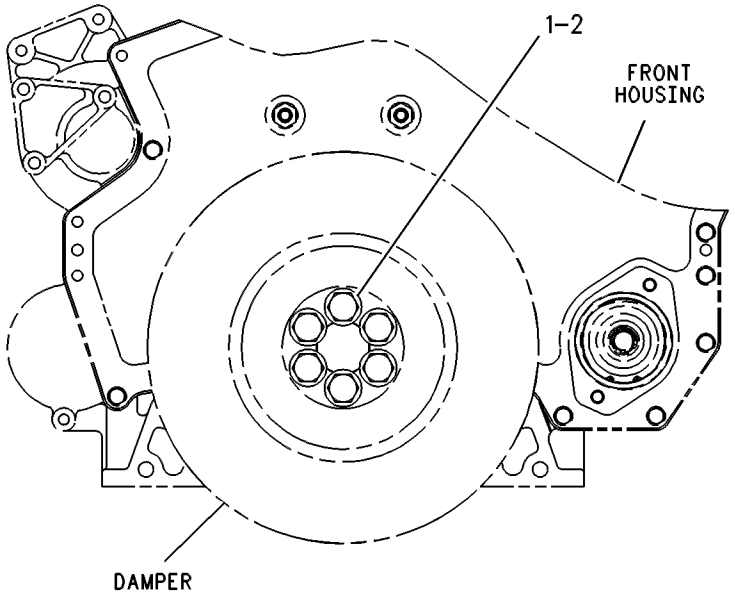

FRONT VIEW

GRAPHIC #1 **<END>** g00251640

219-7440 FASTENER GP-FRONT HOUSING

S/N: MHX1-UP

PART OF 234-7849 ENGINE AR-COMPLETE

SMCS-1151, 1162 **i02174479**

NOTE	REF NO	GRAPHIC REF	PART NUMBER	QTY	PART NAME 1 2 3 4 5 6 (PRODUCT LEVEL)	SEE PAGE
M	1	1	**123-0764**	2	STUD-TAPERLOCK (BOLT)	
	2	1	**5P-8245**	2	WASHER-HARD (13.5X25.5X3-MM THK)	

M-METRIC PART

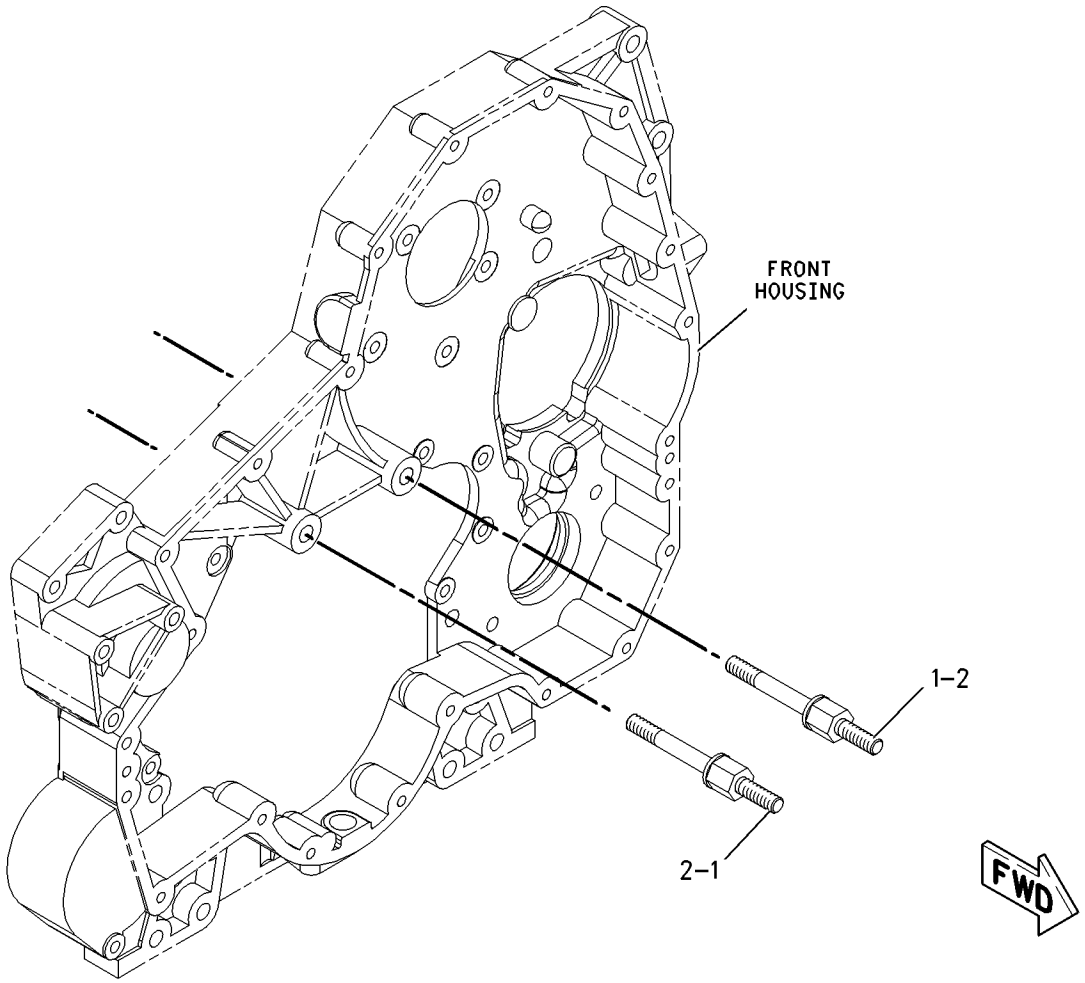

GRAPHIC #1 **<END>** g00948687

BASIC ENGINE

185-5803 FLYWHEEL GP

S/N: MHX1-UP

PART OF 234-7849 ENGINE AR-COMPLETE

SMCS-1156 **i01465740**

NOTE	REF NO	GRAPHIC REF	PART NUMBER	QTY	PART NAME 1 2 3 4 5 6 (PRODUCT LEVEL)	SEE PAGE
	1	1	**160-8210**	1	FLYWHEEL AS	
		1	**160-8185**	1	GEAR-FLYWHEEL (138 TEETH)	
	2	1	**5P-8247**	8	WASHER-HARD (17X32X3.5MM THK)	
M	3	1	**9X-2021**	8	BOLT-LOCKING (M16X2X45MM)	

M-METRIC PART

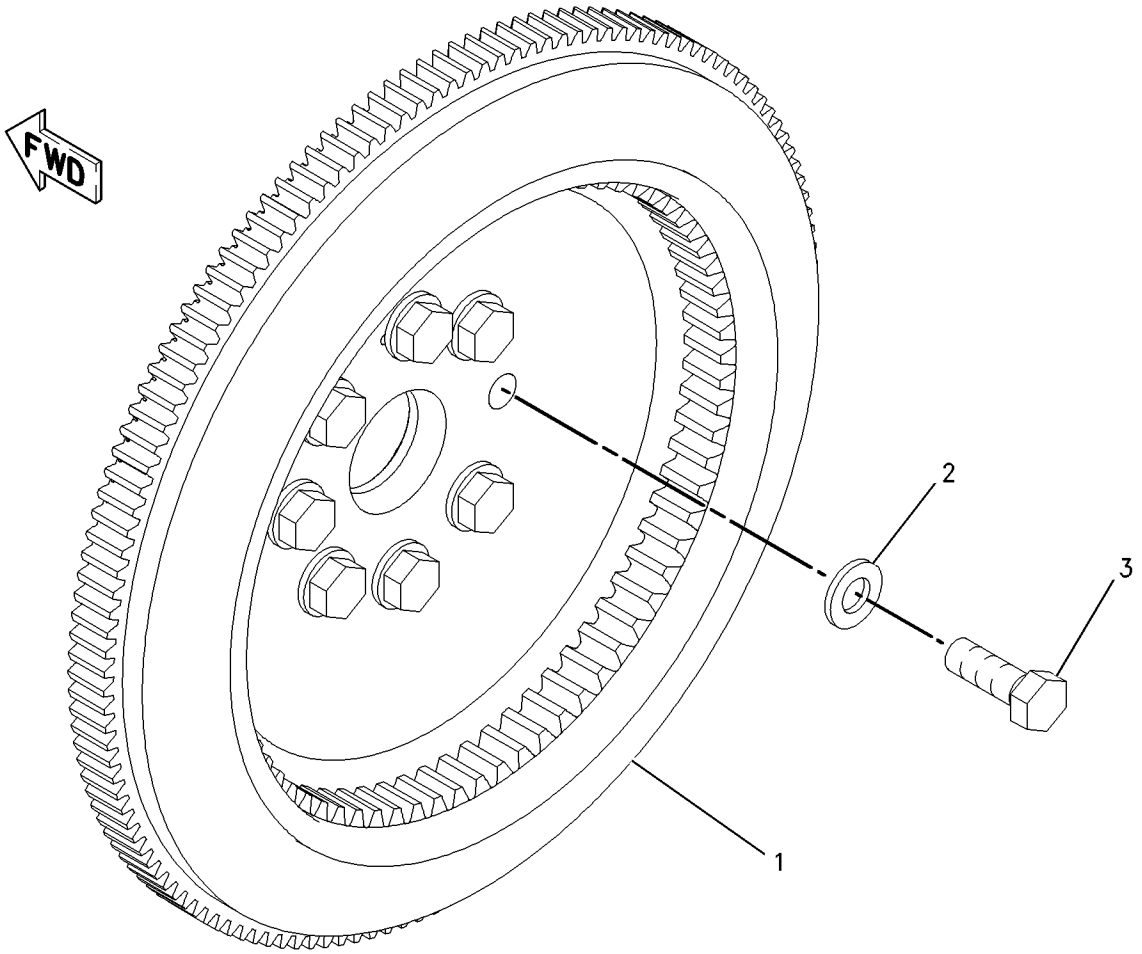

GRAPHIC #1 **<END>** g00766085

BASIC ENGINE

222-3088 GEAR GP-FRONT

S/N: MHX1-UP

PART OF 267-0009 ENGINE AR-CORE

SMCS-1206 **i02173343**

NOTE	REF NO	GRAPHIC REF	PART NUMBER	QTY	PART NAME 1 2 3 4 5 6 (PRODUCT LEVEL)	SEE PAGE
	1	1	**7C-7851**	1	SHAFT	
	2	1	**218-7270**	1	SHAFT	
	3	1	**222-3902**	1	GEAR AS (64-TEETH)	
		1	**7C-7852**	1	BEARING	
	4	1	**222-3905**	1	GEAR AS (CAM IDLER)(71 TEETH)	
M	5	1	**8T-0281**	1	BOLT (M16X2X80-MM)	
M	6	1	**8T-0360**	1	BOLT (M20X2.5X90-MM)	

M-METRIC PART

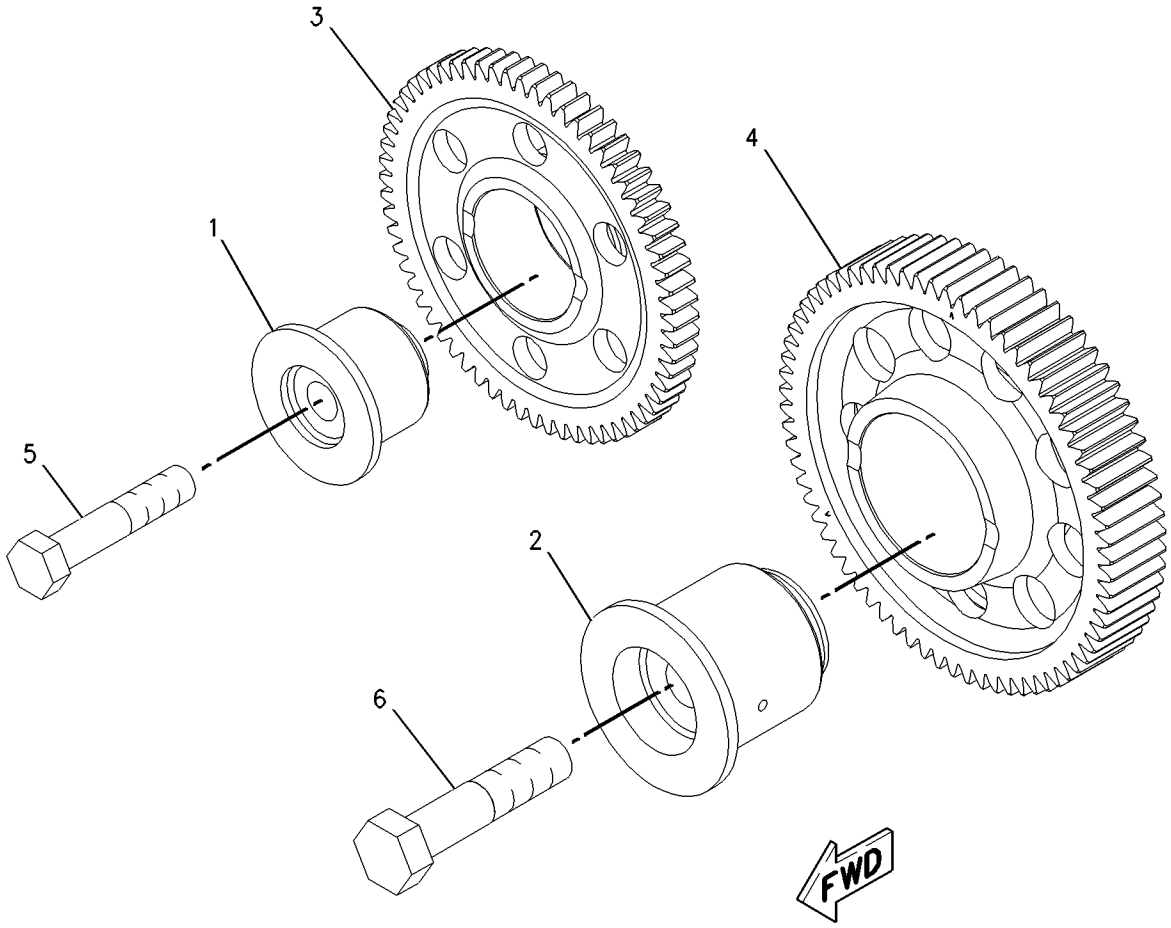

GRAPHIC #1 **<END>** g00939640

BASIC ENGINE

243-1680 HOUSING GP-FLYWHEEL

S/N: MHX1-UP

PART OF 234-7849 ENGINE AR-COMPLETE

SMCS-1157 **i02305587**

NOTE	REF NO	GRAPHIC REF	PART NUMBER	QTY	PART NAME 1 2 3 4 5 6 (PRODUCT LEVEL)	SEE PAGE
	1	1	**174-1586**	1	HOUSING-FLYWHEEL	
	2	1	**199-4051**	1	COVER	
M	3	1	**099-3649**	2	BOLT (M8X1.25X40-MM)	
	4	1	**1H-5728**	1	SEAL-O-RING	
	5	1	**1J-9671**	1	SEAL-O-RING	
	6	1	**214-6277**	10	BOLT	
	7	1	**3K-0360**	1	SEAL-O-RING	
	8	1	**3K-8460**	1	PLUG	
	9	1	**5D-9344**	1	SEAL-O-RING	
	10	1	**5P-8245**	2	WASHER-HARD (13.5X25.5X3-MM THK)	
M	11	1	**8T-0106**	2	BOLT (M12X1.75X100-MM)	
	12	1	**8T-4224**	2	WASHER-HARD (8.8X16X2-MM THK)	
	13	1	**9S-4185**	1	PLUG	
B	14	1	**1U-8846**	1	SEALANT-GASKET	
	15	1	**5P-8246**	10	WASHER-HARD (15.5X29X3-MM THK)	

B-USE AS REQUIRED
M-METRIC PART

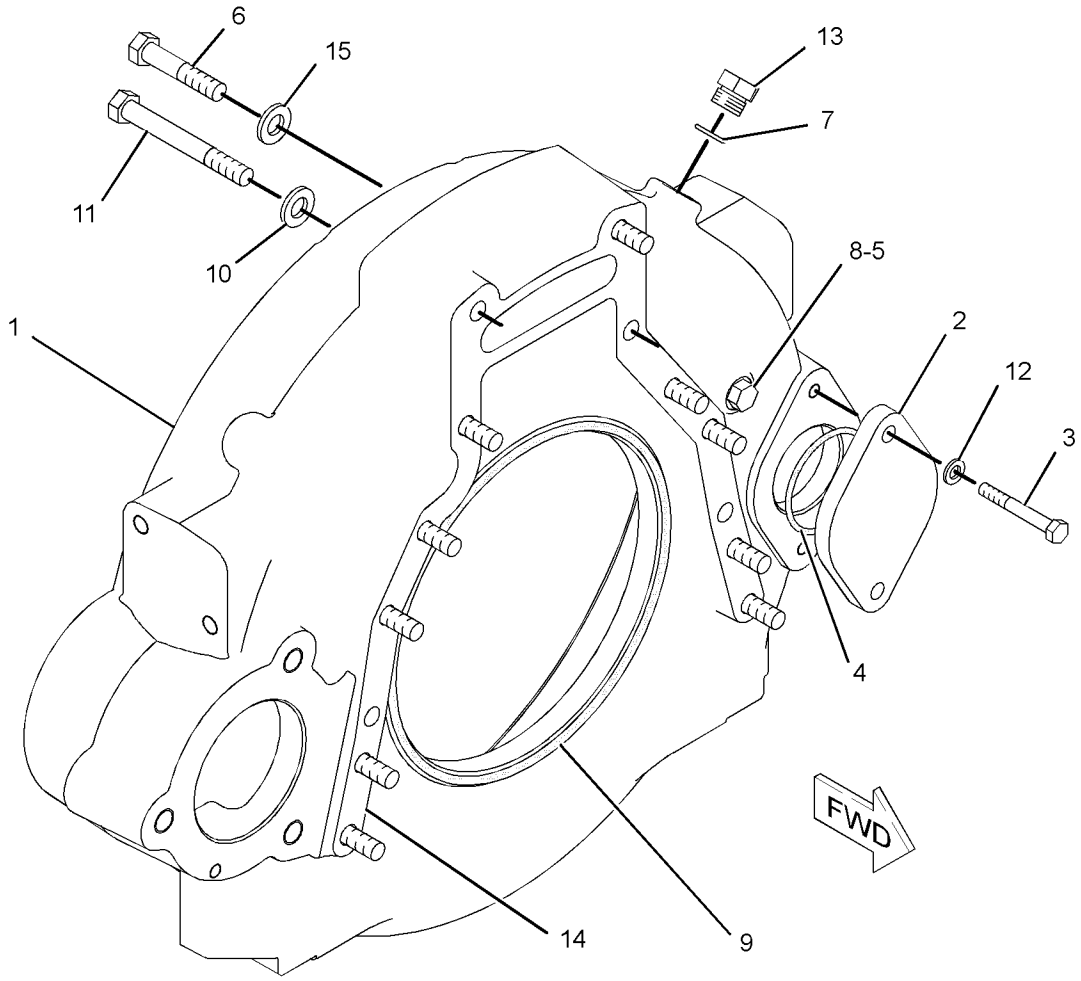

GRAPHIC #1 **<END>** g01154774

BASIC ENGINE

218-7272 HOUSING GP-FRONT

S/N: MHX1-UP

PART OF 267-0009 ENGINE AR-CORE

SMCS-1151, 1162 **i02173352**

NOTE	REF NO	GRAPHIC REF	PART NUMBER	QTY	PART NAME 1 2 3 4 5 6 (PRODUCT LEVEL)	SEE PAGE
	1	1	**5P-6727**	1	BALL BEARING	
	2	1	**8H-9789**	1	BALL BEARING	
	3	1	**251-4314**	1	ADAPTER	
	4	1	**240-1880**	1	COVER AS	
	5	1	**221-9357**	1	GEAR (40-TEETH)	
	6	1	**257-2015**	1	GASKET	
	7	1	**223-7852**	1	SEAL-INTEGRAL	
	8	1	**226-4755**	1	SEAL GP-CRANKSHAFT	
	9	1	**238-4756**	1	HOUSING AS	
	9A	1	**6V-3535**	2	DOWEL	
	10	1	**117-8801**	1	SEAL-O-RING	
M	11	1	**6V-2317**	17	BOLT (M8X1.25X30-MM)	
M	12	1	**6V-5192**	3	BOLT-SOCKET HEAD (M8X1.25X30-MM)	
M	13	1	**6V-5219**	9	BOLT (M8X1.25X40-MM)	
M	14	1	**6V-8225**	5	NUT (M6X1-THD)	
M	15	1	**8T-5093**	1	BOLT-LOCKING (M8X1.25X25-MM)	
	16	1	**9M-1974**	30	WASHER-HARD (8.8X16X2-MM THK)	
	17	1	**9X-8256**	5	WASHER (6.6X12X2-MM THK)	

M-METRIC PART

218-7272 **HOUSING GP-FRONT** *(contd.)* **i02173352**

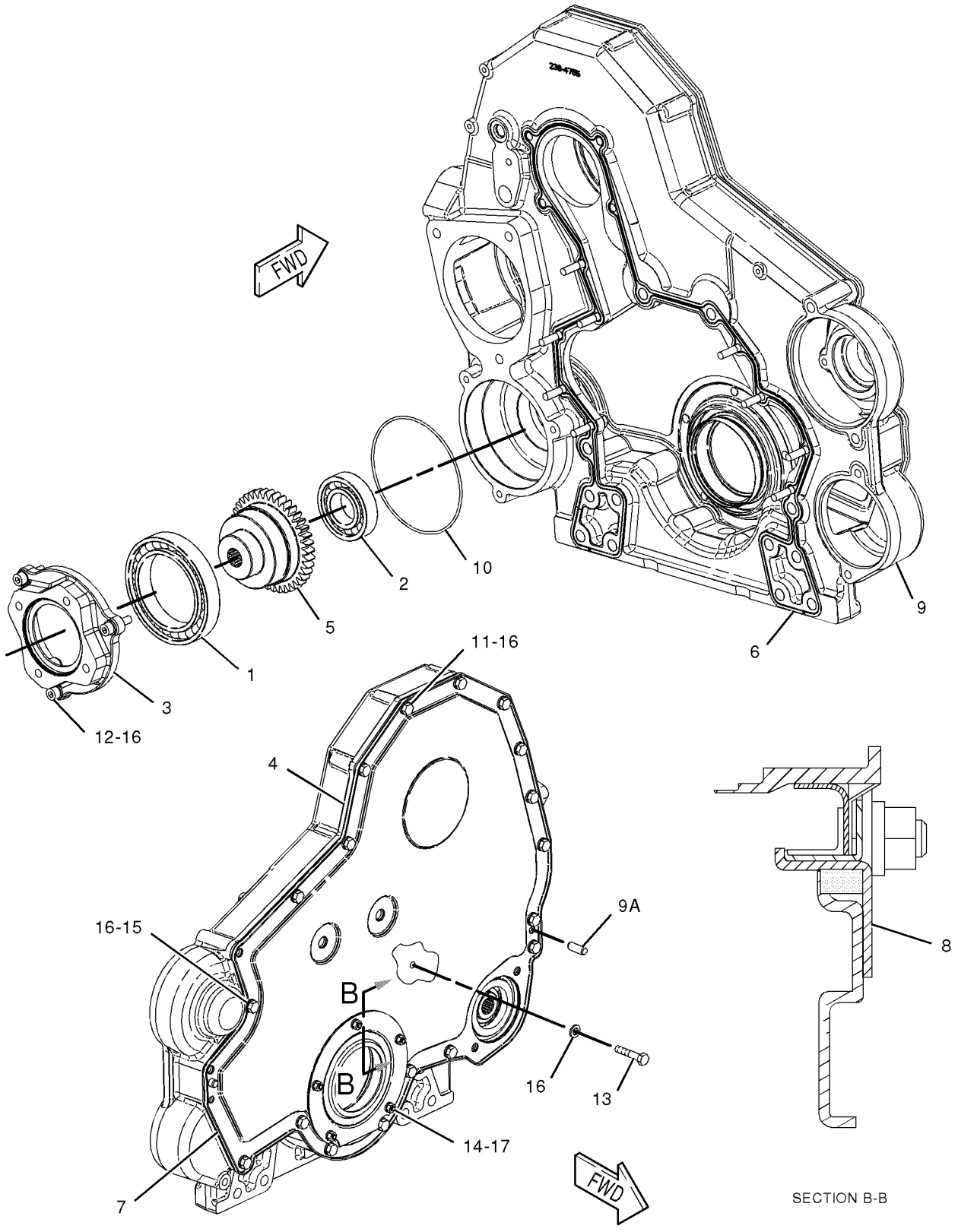

GRAPHIC #1 **<END>** g01101428

192-1563 IDLER GP-BELT–
ALTERNATOR, REFRIGERANT COMPRESSOR
S/N: A7G1-UP
PART OF 245-4387 COMPRESSOR GP-REFRIGERANT
AN ATTACHMENT

SMCS-1358, 1365, 1397, 1802 **i02046133**

NOTE	REF NO	GRAPHIC REF	PART NUMBER	QTY	PART NAME 1 2 3 4 5 6 (PRODUCT LEVEL)	SEE PAGE
	1	1	**151-2898**	1	SPACER (10.4X38.1X20-MM THK)	
	2	1	**144-5611**	1	PULLEY AS-IDLER	
	3	1	**145-2901**	1	COVER-DUST	
	4	1	**151-2900**	1	BOLT (M10X1.5X54.25-MM)	
	5	1	**6V-9027**	1	SEAL-O-RING	

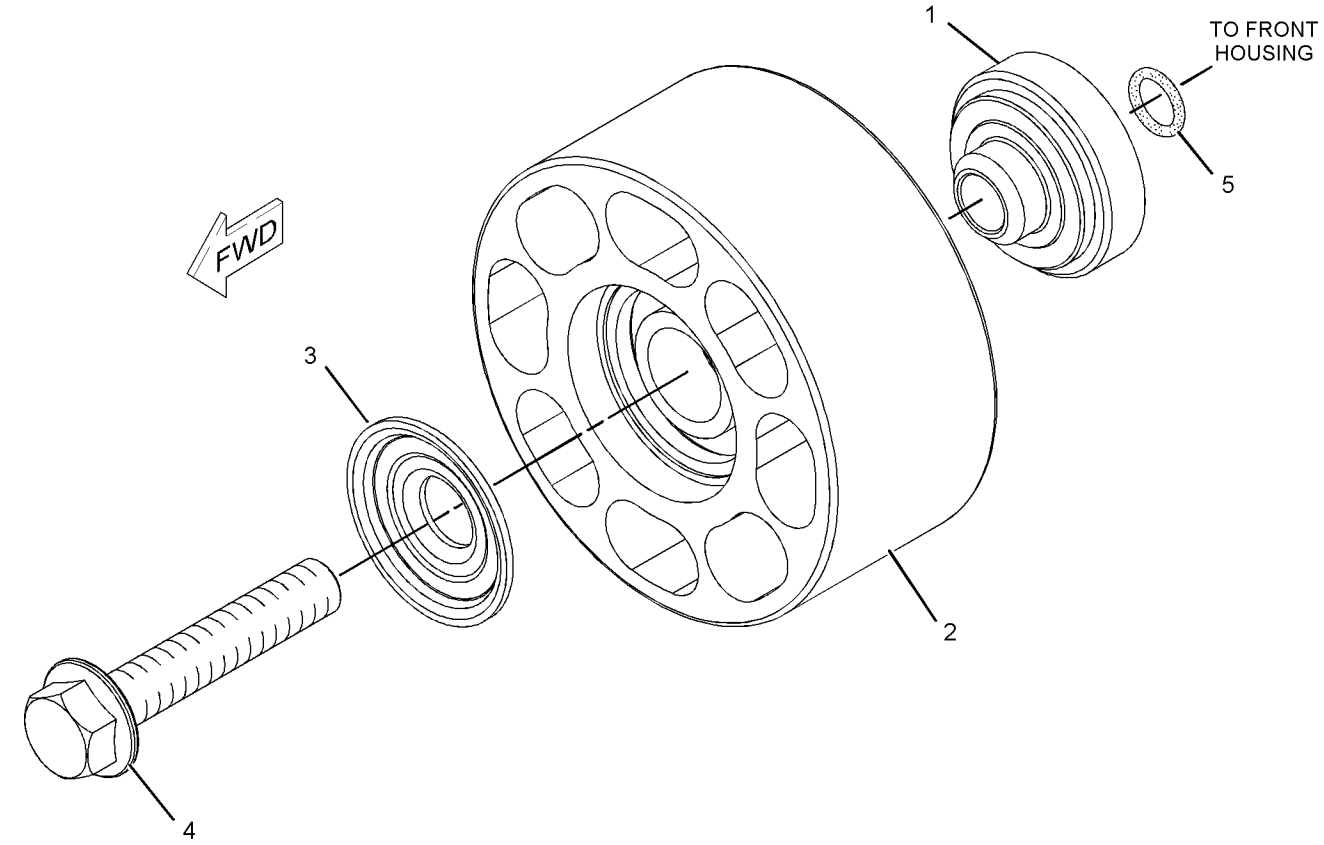

GRAPHIC #1 **<END>** g01051933

BASIC ENGINE

243-6717 KIT-CRANKSHAFT BEARING

S/N: MHX1-UP

PART OF 224-3881 CRANKSHAFT GP

SMCS-1202, 1203, 1230 **i02174949**

NOTE	PART NUMBER	QTY	PART NAME 1 2 3 4 5 6 (PRODUCT LEVEL)	SEE PAGE
	211-0587	4	BEARING-MAIN	
	211-0588	3	BEARING-MAIN	
	246-3144	2	PLATE-THRUST	

<END>

237-4376 LIFTER GP-VALVE

S/N: MHX1-UP

PART OF 240-7272 VALVE MECHANISM GP

SMCS-1209 **i02286715**

NOTE	REF NO	GRAPHIC REF	PART NUMBER	QTY	PART NAME 1 2 3 4 5 6 (PRODUCT LEVEL)	SEE PAGE
	1	1	**202-7475**	6	LIFTER AS (UNIT INJECTOR)	
	2	1	**251-1005**	12	LIFTER AS-VALVE	
	3	1	**269-2862**	5	BRACKET AS (INTERMEDIATE)	
	4	1	**269-2860**	1	BRACKET AS (FRONT)	
	5	1	**240-2636**	1	SHAFT AS	
	5A	1	**0L-1026**	2	PLUG-CUP	
	6	1	**269-2864**	1	BRACKET AS (REAR)	
	6A	1	**5L-4763**	1	PIN-SPRING	
M	7	1	**6V-5843**	7	BOLT (M10X1.5X45-MM)	
	8	1	**8E-8439**	1	DOWEL	

M-METRIC PART

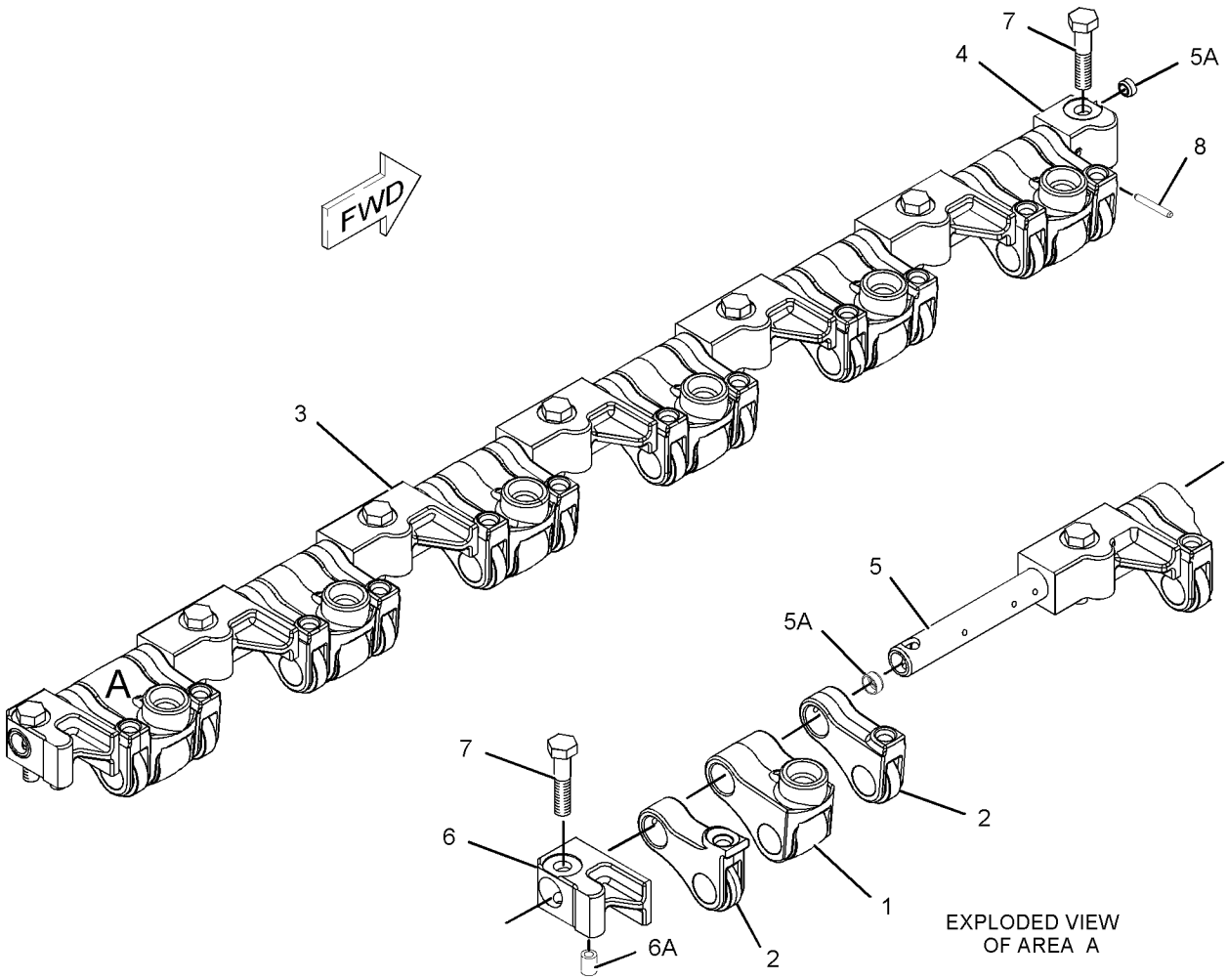

EXPLODED VIEW OF AREA A

GRAPHIC #1

<END>

g01119838

224-0880 LIFTING GP-ENGINE

S/N: MHX1-UP

PART OF 234-7849 ENGINE AR-COMPLETE

SMCS-1122 **i02174465**

NOTE	REF NO	GRAPHIC REF	PART NUMBER	QTY	PART NAME 1 2 3 4 5 6 (PRODUCT LEVEL)	SEE PAGE
	1	1	**224-4140**	2	EYE-LIFTING	
	2	1	**5P-8245**	8	WASHER-HARD (13.5X25.5X3-MM THK)	
M	3	1	**6V-3668**	8	BOLT (M12X1.75X30-MM)	

M-METRIC PART

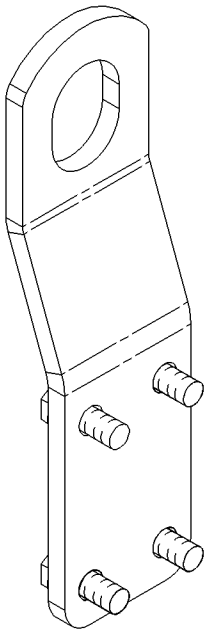

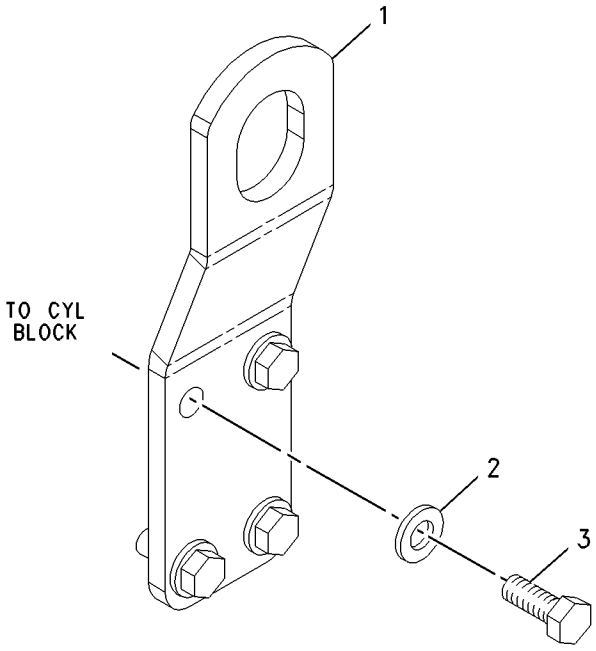

GRAPHIC #1 **<END>** g00950265

185-5298 MOUNTING GP-ENGINE & TMSN

S/N: A7G1-UP

PART OF 236-7231 INSTALLATION AR-ENGINE

SMCS-1152, 1154, 3082 **i01731433**

NOTE	REF NO	GRAPHIC REF	PART NUMBER	QTY	PART NAME 1 2 3 4 5 6 (PRODUCT LEVEL)	SEE PAGE
	1	1	**3E-4888**	4	WASHER (32X144X12-MM THK)	
	2	1	**6Y-9960**	4	MOUNT AS	
	3	1	**9W-7385**	4	SLEEVE	
	4	1	**138-4144**	2	BRACKET AS	
M	5	1	**7X-2563**	8	BOLT (M20X2.5X60-MM)	
	6	1	**165-3927**	11	BOLT	
	7	1	**8T-4123**	8	WASHER-PLATED (22X35X3.5-MM THK)	
	8	1	**8T-4167**	4	WASHER-HARD (26X44X4-MM THK)	
M	9	1	**8T-4649**	4	BOLT (M24X3X140-MM)	
	10	1	**8T-4896**	11	WASHER-HARD (10.2X18.5X2.5-MM THK)	

M-METRIC PART

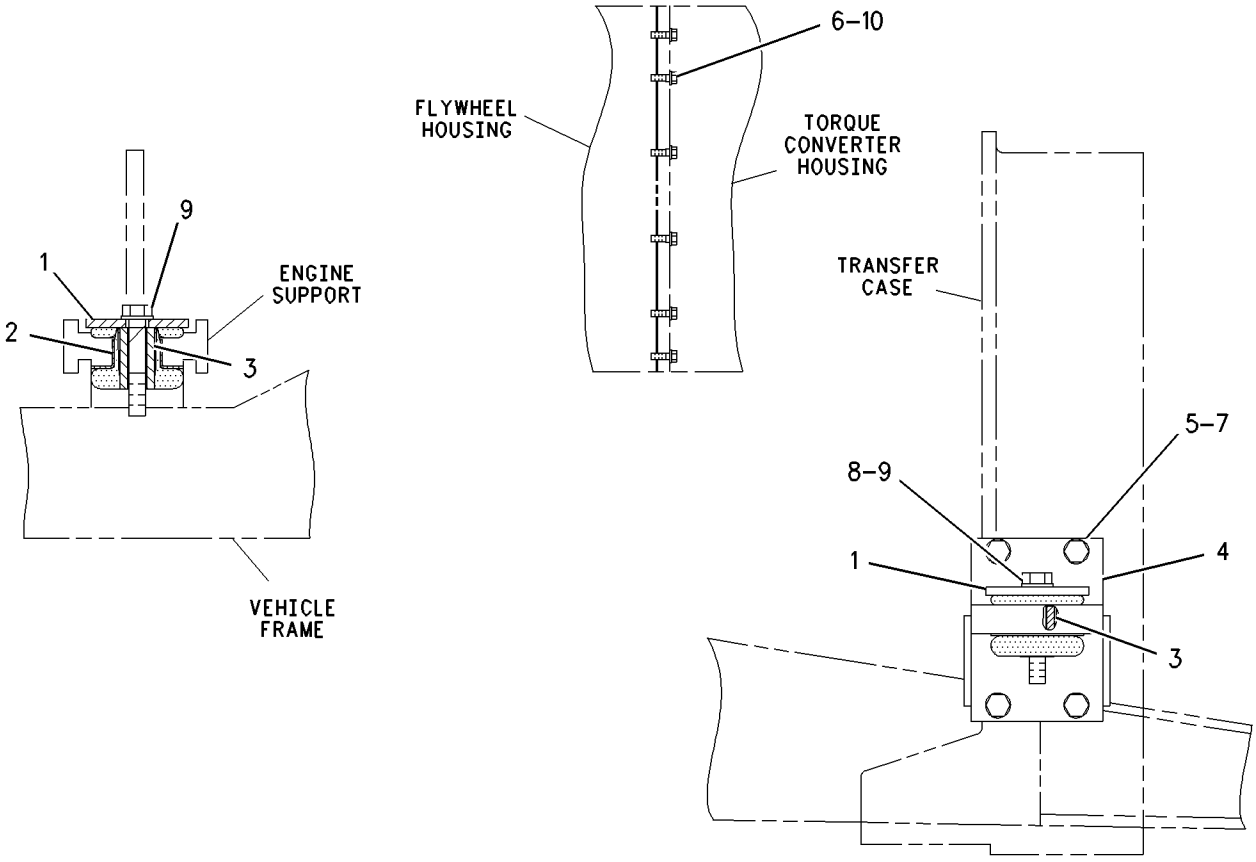

RIGHT SIDE VIEW

GRAPHIC #1 **<END>** g00766021

229-8084 MOUNTING GP-VALVE MECHANISM

S/N: MHX1-UP

PART OF 267-0009 ENGINE AR-CORE

SMCS-1102 **i02174394**

NOTE	REF NO	GRAPHIC REF	PART NUMBER	QTY	PART NAME 1 2 3 4 5 6 (PRODUCT LEVEL)	SEE PAGE
	1	1	**241-0847**	6	BOLT (M12-1.75X93-MM THD)	

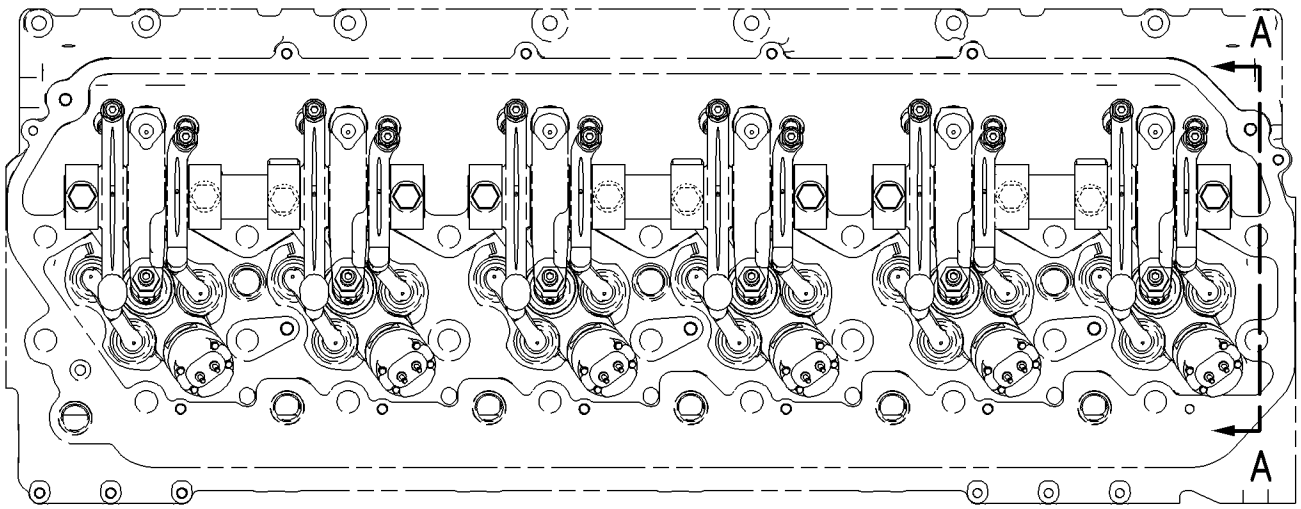

TOP VIEW

FWD

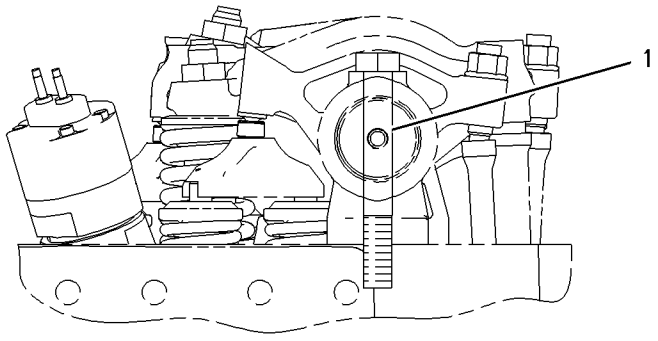

VIEW A-A

GRAPHIC #1 **<END>** g00950829

234-7847 PAN GP-OIL—ENGINE

S/N: MHX1-UP

PART OF 234-7849 ENGINE AR-COMPLETE

SMCS-1302 **i02270573**

NOTE	REF NO	GRAPHIC REF	PART NUMBER	QTY	PART NAME 1 2 3 4 5 6 (PRODUCT LEVEL)	SEE PAGE
	1	1	**6V-7238**	1	VALVE-SHUTOFF (ENGINE OIL PAN DRAIN)	
	2	1	**9X-6451**	1	PLUG-DRAIN (ENGINE OIL PAN)	
	3	1	**217-3673**	1	SEAL-ISOLATION	
	4	1	**217-3674**	14	FASTENER AS	
	5	1	**235-1073**	1	PAN-OIL	
	6	1	**235-1074**	1	BELL AS-SUCTION	
	7	1	**061-9458**	1	SEAL-O-RING	
M	8	1	**3E-8016**	2	BOLT-SELF-LOCKING (M8X1.25X25-MM)	
	9	1	**5P-8211**	1	SEAL-O-RING	
	10	1	**5P-8245**	2	WASHER-HARD (13.5X25.5X3-MM THK)	
M	11	1	**6A-5591**	2	BOLT (M12X1.75X25-MM)	
	12	1	**6N-8863**	14	WASHER (10.2X32X2.5-MM THK)	
M	13	1	**6V-4249**	14	BOLT (M10X1.5X50-MM)	
	14	1	**8L-2786**	1	SEAL-O-RING	
	15	1	**9M-1974**	2	WASHER-HARD (8.8X16X2-MM THK)	

M-METRIC PART

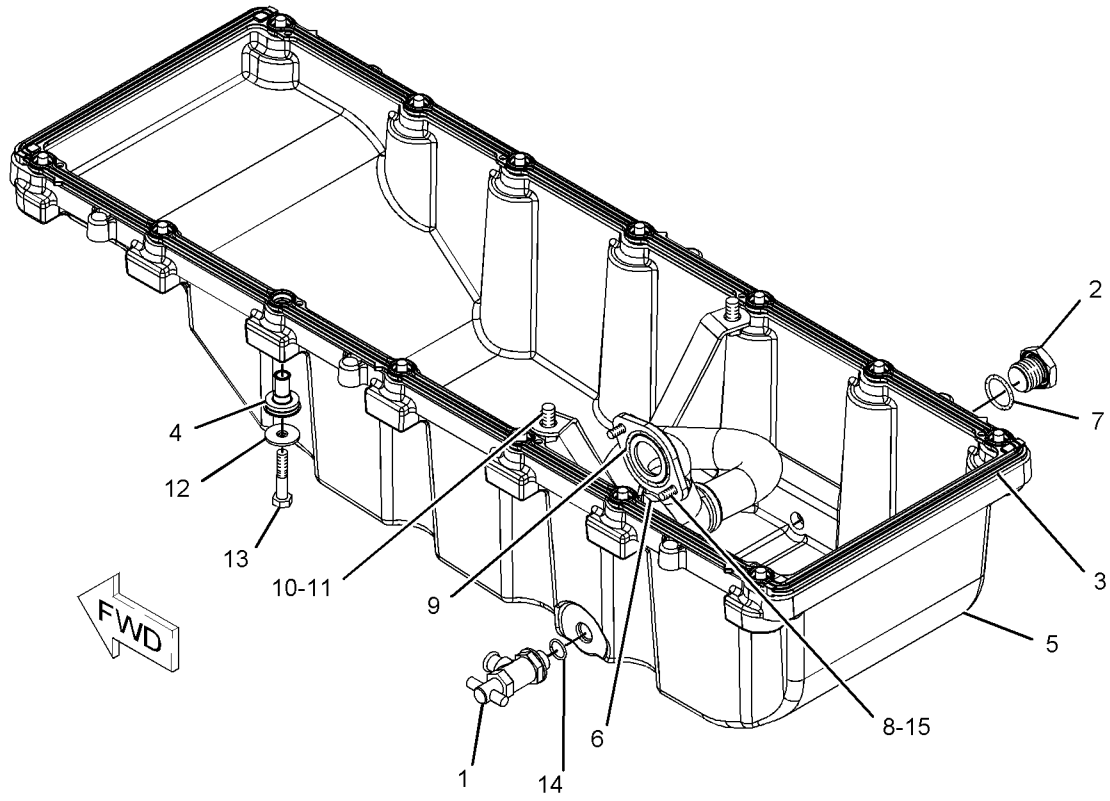

GRAPHIC #1 **<END>** g01120477

BASIC ENGINE

238-2723 PISTON & ROD GP

S/N: MHX1-852

PART OF 267-0009 ENGINE AR-CORE

SMCS-1225 **i02285799**

NOTE	REF NO	GRAPHIC REF	PART NUMBER	QTY	PART NAME 1 2 3 4 5 6 (PRODUCT LEVEL)	SEE PAGE
	1	1	**116-1089**	1	BEARING-CONNECTING ROD (STANDARD)	
AB		1	**128-0395**		BEARING-CONNECTING ROD (0.51-MM US)	
AB		1	**128-0396**		BEARING-CONNECTING ROD (0.76-MM US)	
R	2	1	**160-8229**	1	ROD AS-CONNECTING	
	2A	1	**115-2972**	1	BEARING-CONNECTING ROD	
M	2B	1	**115-2973**	2	BOLT-CONNECTING ROD	
	2C	1	**219-4458**	2	PIN-DOWEL	
	3	1	**197-9326**	2	RETAINER	
	4	1	**197-9327**	1	PIN-PISTON	
	5	1	**265-1313**	1	BODY AS-PISTON	
	6	1	**226-6478**	1	JET AS-PISTON COOLING	
	7	1	**265-1113**	1	RING-PISTON-OIL	
	8	1	**197-9257**	1	RING-INTERMEDIATE	
	9	1	**238-2717**	1	RING-PISTON-TOP	
	10	1	**3E-4352**	1	WASHER-HARD (8.8X20.5X2.5-MM THK)	
M	11	1	**8T-0100**	1	BOLT (M8X1.25X60-MM)	

A-NOT PART OF THIS GROUP
B-USE AS REQUIRED
M-METRIC PART
R-REMFG PART MAY BE AVAILABLE

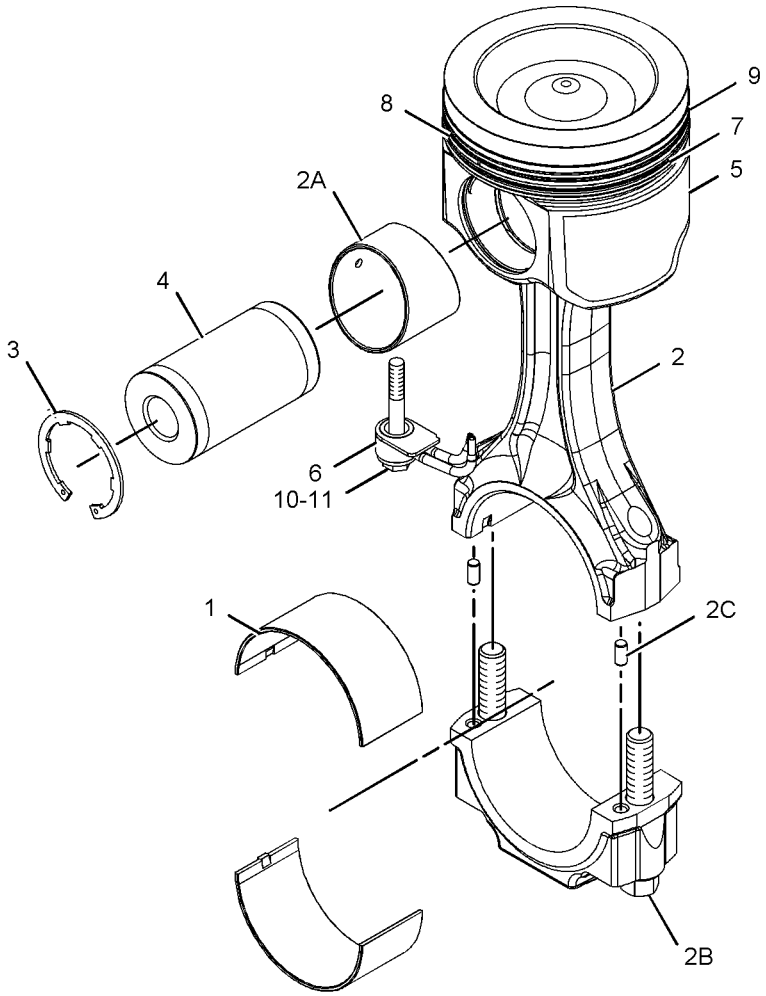

GRAPHIC #1

<END>

g01071574

BASIC ENGINE

238-2723 PISTON & ROD GP

S/N: MHX853-UP

PART OF 267-0009 ENGINE AR-CORE

SMCS-1225 **i02400969**

NOTE	REF NO	GRAPHIC REF	PART NUMBER	QTY	PART NAME 1 2 3 4 5 6 (PRODUCT LEVEL)	SEE PAGE
	1	1	**116-1089**	1	BEARING-CONNECTING ROD (STANDARD)	
AB		1	**128-0395**		BEARING-CONNECTING ROD (0.51-MM US)	
AB		1	**128-0396**		BEARING-CONNECTING ROD (0.76-MM US)	
C	2	1	**223-9150**	1	ROD AS-CONNECTING	
	2A	1	**115-2972**	1	BEARING-CONNECTING ROD	
M	2B	1	**115-2973**	2	BOLT-CONNECTING ROD	
	3	1	**197-9326**	2	RETAINER	
	4	1	**197-9327**	1	PIN-PISTON	
	5	1	**265-1313**	1	BODY AS-PISTON	
	6	1	**226-6478**	1	JET AS-PISTON COOLING	
	7	1	**265-1113**	1	RING-PISTON-OIL	
	8	1	**197-9257**	1	RING-INTERMEDIATE	
	9	1	**238-2717**	1	RING-PISTON-TOP	
	10	1	**3E-4352**	1	WASHER-HARD (8.8X20.5X2.5-MM THK)	
M	11	1	**8T-0100**	1	BOLT (M8X1.25X60-MM)	

A-NOT PART OF THIS GROUP
B-USE AS REQUIRED
C-CHANGE FROM PREVIOUS TYPE
M-METRIC PART

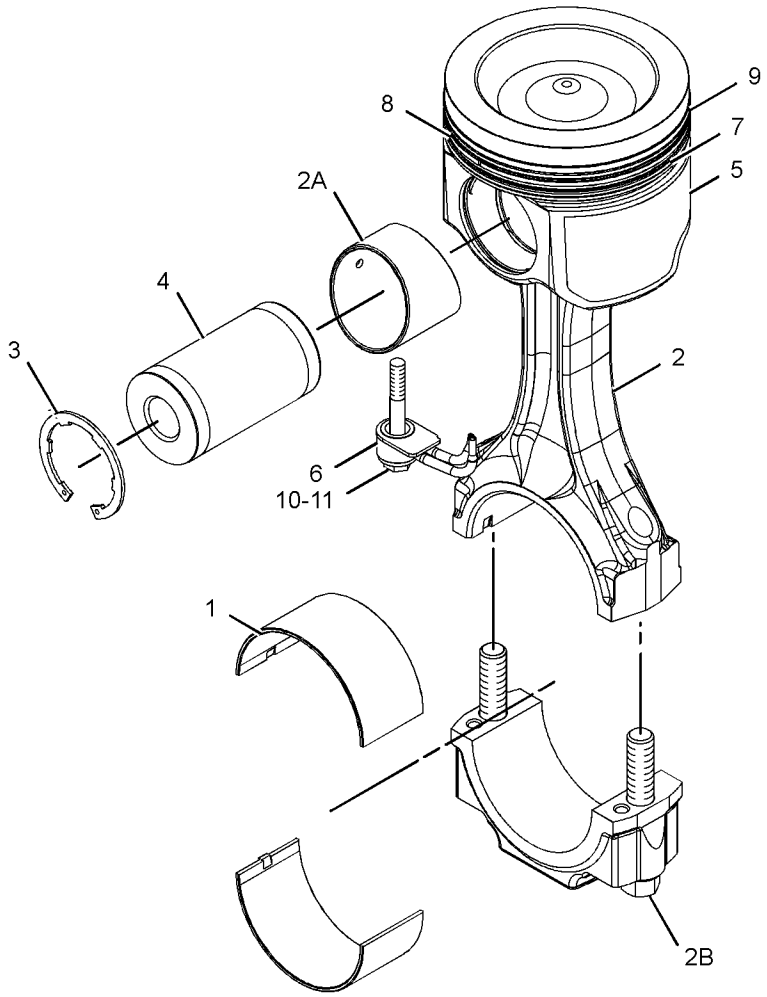

GRAPHIC #1

<END>

g01199611

117-0165 PLUG GP-CYLINDER BLOCK

S/N: MHX1-UP
REAR OIL GALLEY
PART OF 234-7849 ENGINE AR-COMPLETE
FOR USE WITH REAR GEAR GP

SMCS-1201 **i00831600**

NOTE	REF NO	GRAPHIC REF	PART NUMBER	QTY	PART NAME 1 2 3 4 5 6 (PRODUCT LEVEL)	SEE PAGE
	1	1	**3B-0623**	1	PLUG-CUP (25.73MM AVG OD)	

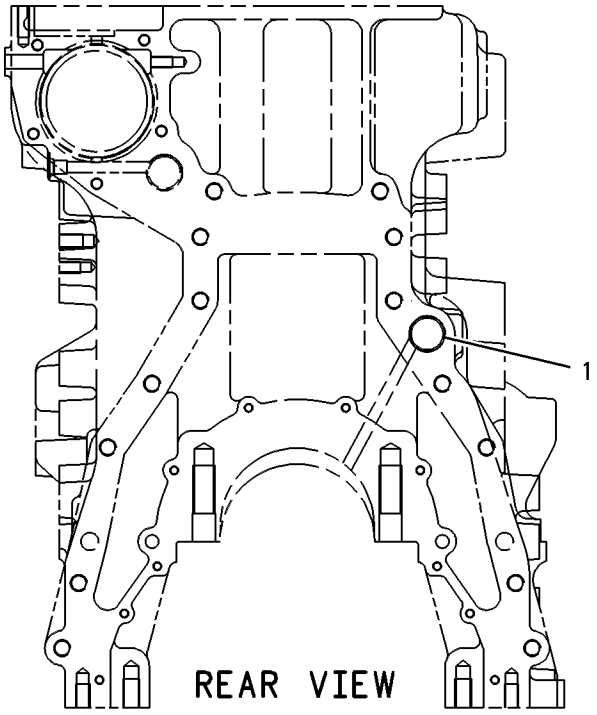

GRAPHIC #1 **<END>** g00251318

223-3875 PLUG GP-CYLINDER BLOCK

S/N: MHX1-UP

PART OF 267-0009 ENGINE AR-CORE

SMCS-1201 **i02173381**

NOTE	REF NO	GRAPHIC REF	PART NUMBER	QTY	PART NAME 1 2 3 4 5 6 (PRODUCT LEVEL)	SEE PAGE
	1	1	**6V-5048**	1	SEAL-O-RING	
	2	1	**9S-4182**	1	PLUG	

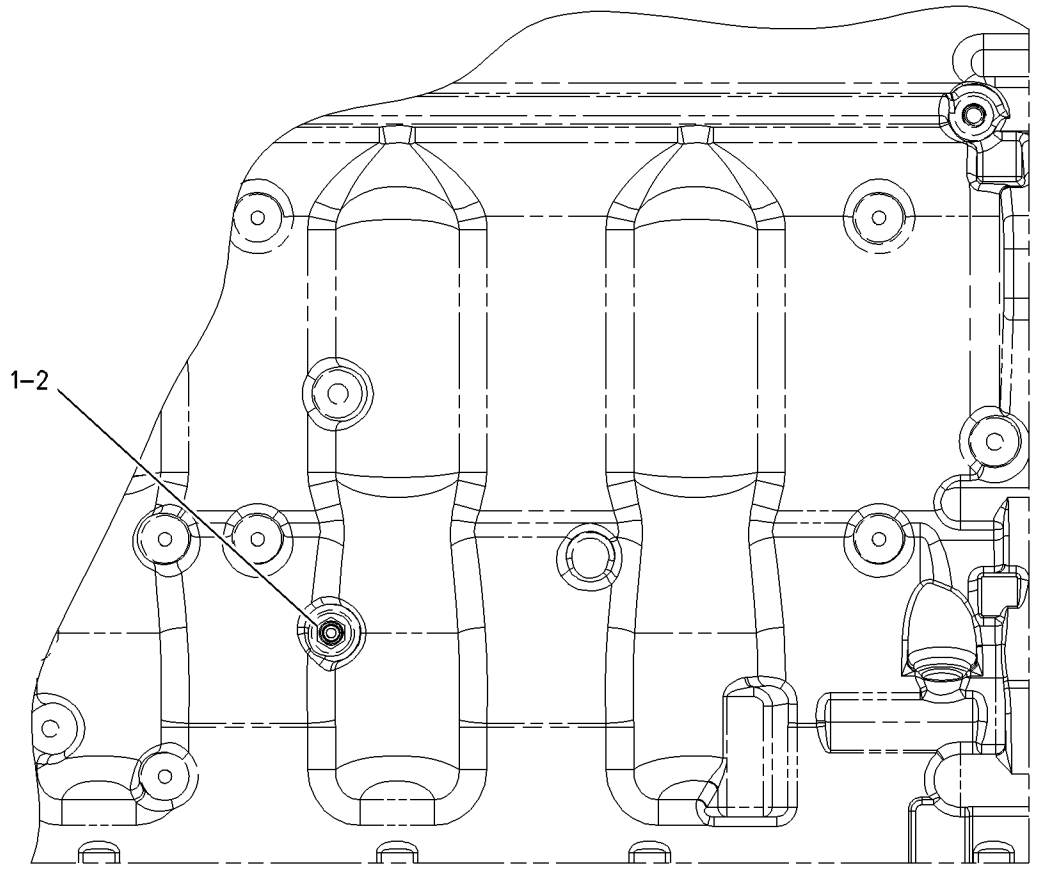

LEFT SIDE VIEW

GRAPHIC #1 **<END>** g00939495

BASIC ENGINE

227-9545 PLUG GP-CYLINDER BLOCK

S/N: MHX1-UP

PART OF 234-7849 ENGINE AR-COMPLETE

SMCS-1201 **i02174395**

NOTE	REF NO	GRAPHIC REF	PART NUMBER	QTY	PART NAME 1 2 3 4 5 6 (PRODUCT LEVEL)	SEE PAGE
	1	1	**6V-5049**	2	SEAL-O-RING	
	2	1	**8L-2786**	1	SEAL-O-RING	
	3	1	**9S-4185**	1	PLUG (3/4-16 THD)	
	4	1	**9S-4191**	2	PLUG (9/16-18 THD)	

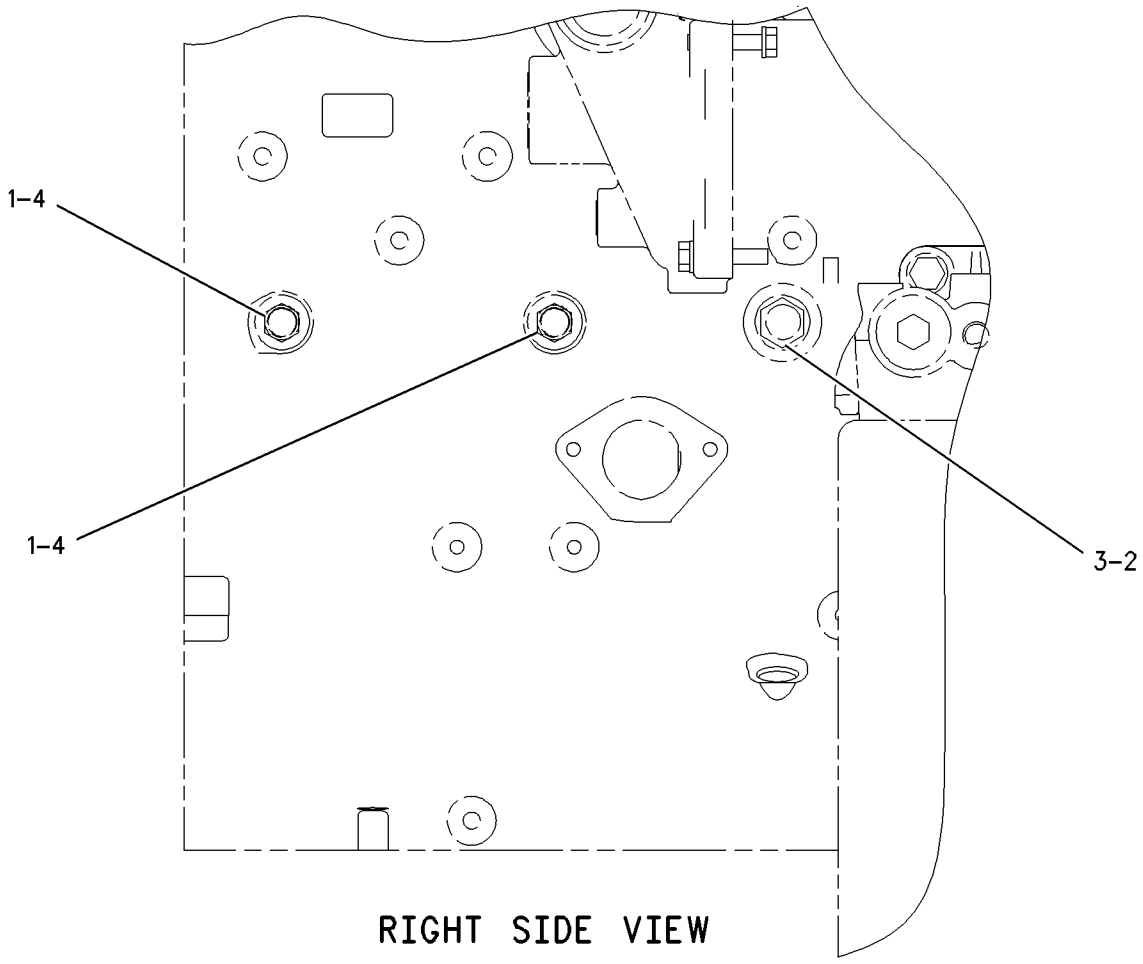

RIGHT SIDE VIEW

GRAPHIC #1 **<END>** g00950033

237-9753 PLUG GP-ENGINE–AIR COMPRESSOR

S/N: MHX1-UP

PART OF 234-7849 ENGINE AR-COMPLETE

SMCS-1000 **i02270602**

NOTE	REF NO	GRAPHIC REF	PART NUMBER	QTY	PART NAME 1 2 3 4 5 6 (PRODUCT LEVEL)	SEE PAGE
	1	1	**9L-8493**	1	CAP	
	2	1	**6V-3251**	1	SEAL-O-RING	
	3	1	**6V-6609**	1	SEAL-O-RING	
	4	1	**9S-8005**	1	PLUG	
	5	1	**9S-8006**	1	PLUG	

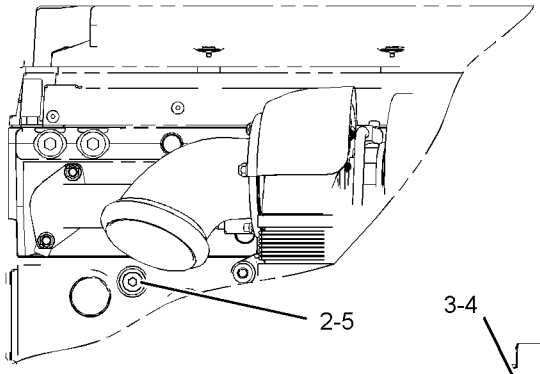

RIGHT SIDE VIEW

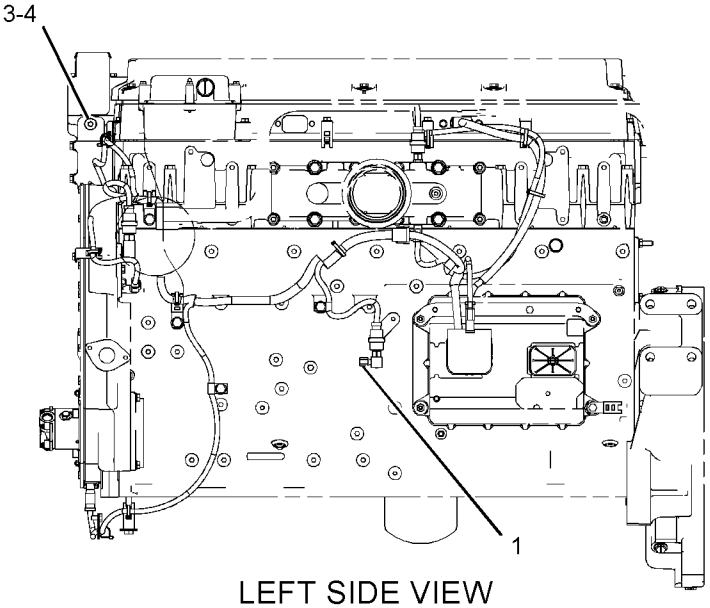

LEFT SIDE VIEW

GRAPHIC #1 **<END>** g01073921

BASIC ENGINE

123-0789 PULLEY GP-ALTERNATOR

S/N: MHX1-UP

PART OF 234-7849 ENGINE AR-COMPLETE

SMCS-1425 **i02270719**

NOTE	REF NO	GRAPHIC REF	PART NUMBER	QTY	PART NAME 1 2 3 4 5 6 (PRODUCT LEVEL)	SEE PAGE
	1	1	**123-0790**	1	PULLEY (ALTERNATOR)	

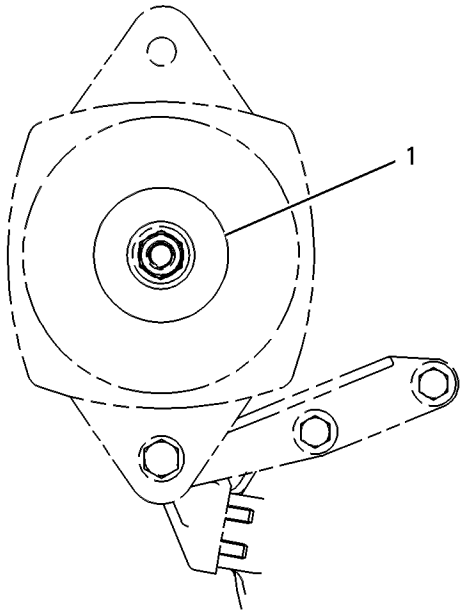

FRONT VIEW

GRAPHIC #1 **<END>** g00251352

230-7168 PULLEY GP-CRANKSHAFT

S/N: MHX1-UP

PART OF 234-7849 ENGINE AR-COMPLETE

SMCS-1205 **i02270523**

NOTE	REF NO	GRAPHIC REF	PART NUMBER	QTY	PART NAME 1 2 3 4 5 6 (PRODUCT LEVEL)	SEE PAGE
	1	1	**230-7167**	1	PULLEY	

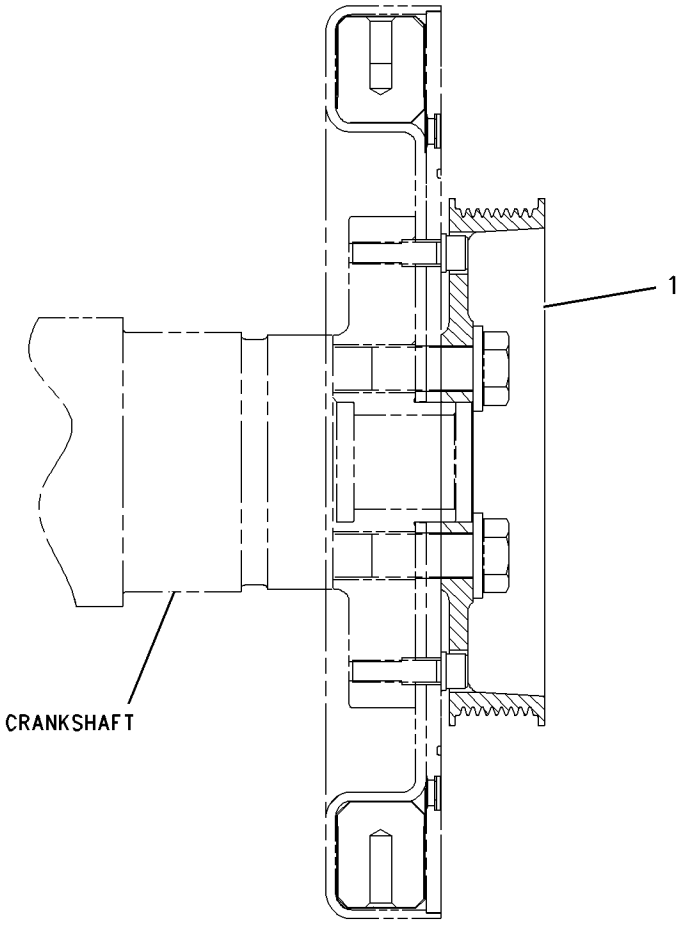

RIGHT SIDE VIEW

GRAPHIC #1 **<END>** g00783978

240-8461 ROCKER ARM GP–INLET

S/N: MHX1-UP

PART OF 241-0835 ROCKER ARM GP

SMCS-1123 **i02235152**

NOTE	REF NO	GRAPHIC REF	PART NUMBER	QTY	PART NAME 1 2 3 4 5 6 (PRODUCT LEVEL)	SEE PAGE
M	1	1	**183-4365**	1	SCREW-ADJUSTMENT (M10X1.5-THD)	
M	2	1	**2Y-5829**	1	NUT (M10X1.5-THD)	
	3	1	**240-8460**	1	ROCKER ARM AS	

M-METRIC PART

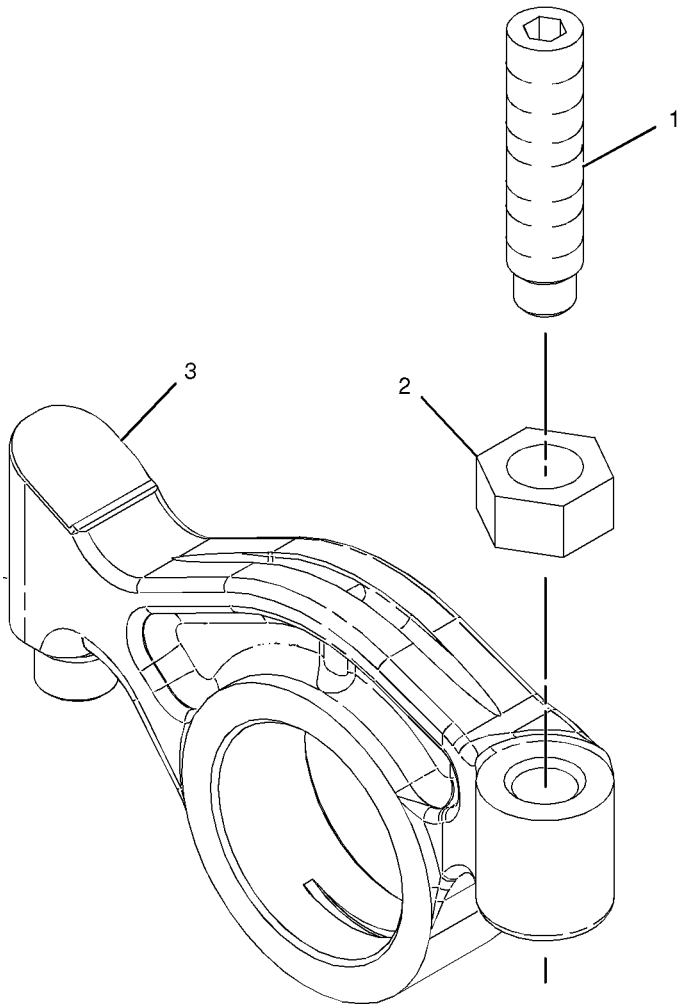

GRAPHIC #1 **<END>** g01030820

240-8463 ROCKER ARM GP–EXHAUST

S/N: MHX1-UP

PART OF 241-0835 ROCKER ARM GP

SMCS-1123 **i02178253**

NOTE	REF NO	GRAPHIC REF	PART NUMBER	QTY	PART NAME 1 2 3 4 5 6 (PRODUCT LEVEL)	SEE PAGE
M	1	1	**183-4365**	1	SCREW-ADJUSTMENT (M10X1.5-THD)	
	2	1	**240-8462**	1	ROCKER ARM AS	
M	3	1	**2Y-5829**	1	NUT (M10X1.5-THD)	

M-METRIC PART

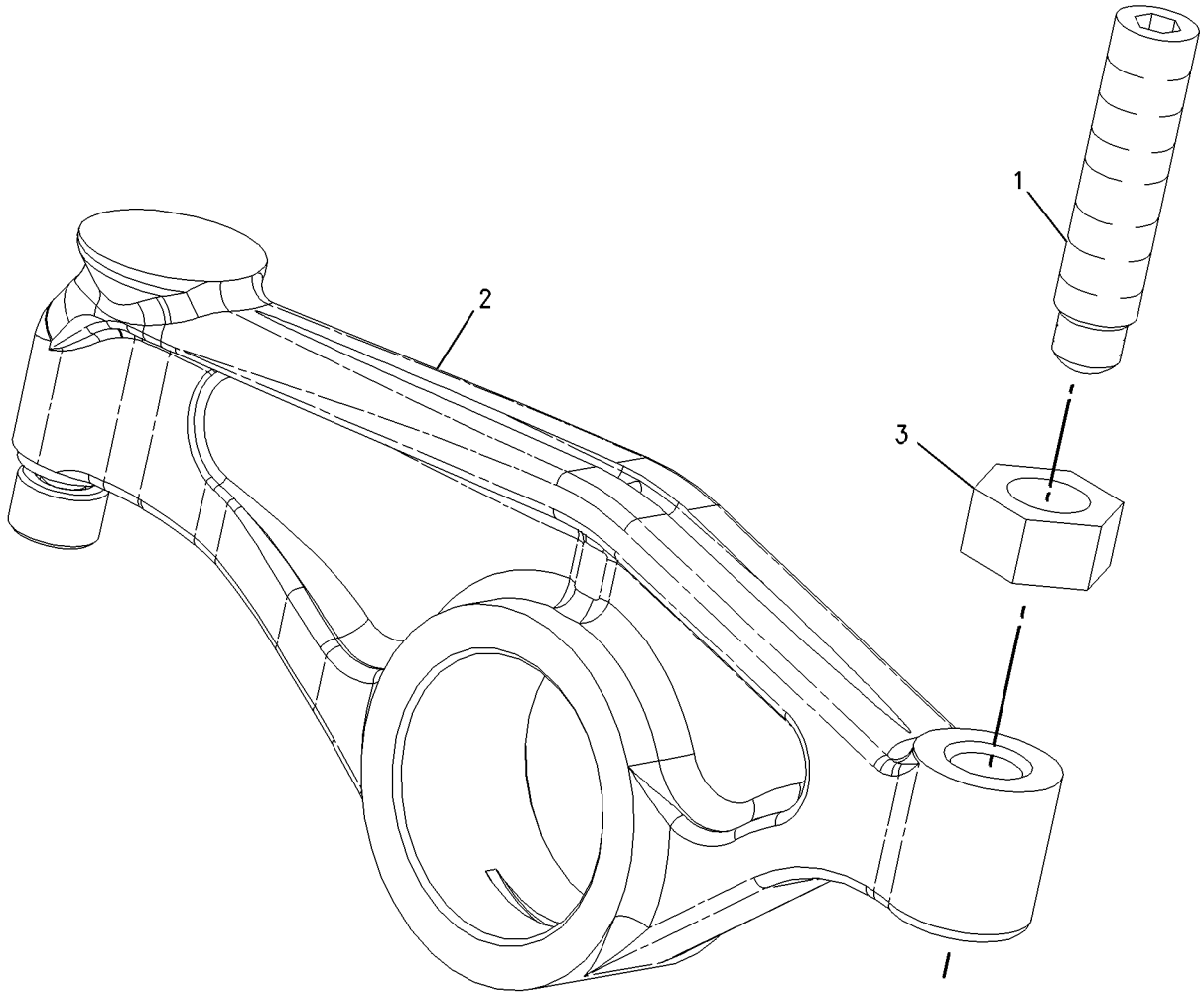

GRAPHIC #1 **<END>** g00956228

241-0835 ROCKER ARM GP

S/N: MHX1-UP

PART OF 240-7272 VALVE MECHANISM GP

SMCS-1123 **i02177103**

NOTE	REF NO	GRAPHIC REF	PART NUMBER	QTY	PART NAME 1 2 3 4 5 6 (PRODUCT LEVEL)	SEE PAGE
	1	1	**242-7418**	1	BASE	
	2	1	**242-1401**	2	BASE AS	
	3	1	**224-4418**	1	SHAFT AS	
			3S-6605	2	PLUG-CUP	
CY	4	1	*241-0845*	2	ROCKER ARM GP (UNIT INJECTOR)	49
Y	5	1	*240-8461*	2	ROCKER ARM GP (INLET)	46
Y	6	1	*240-8463*	2	ROCKER ARM GP (EXHAUST)	47
	7	1	**241-0847**	2	BOLT (M12-1.75X93-MM THD)	

C-CHANGE FROM PREVIOUS TYPE
Y-SEPARATE ILLUSTRATION

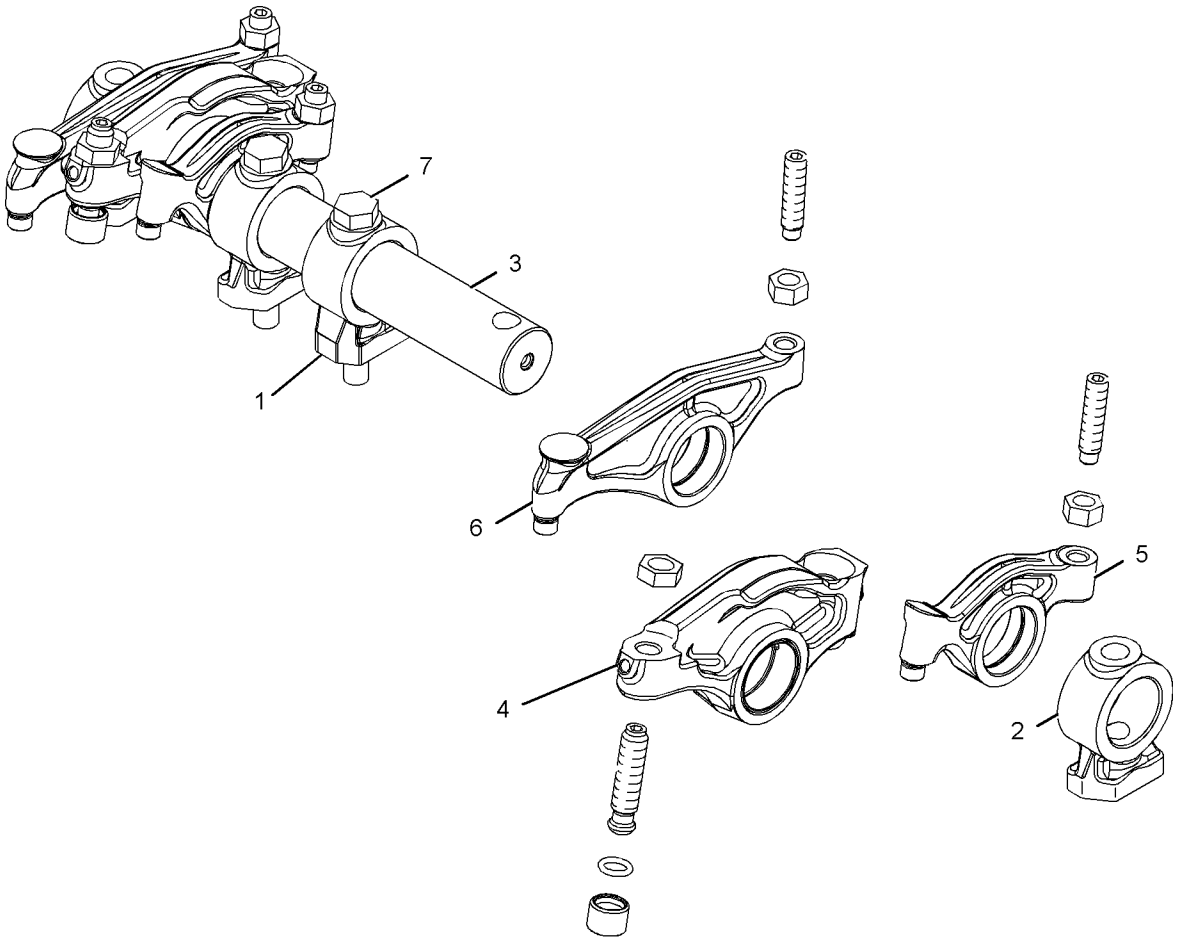

GRAPHIC #1 **<END>** g01083998

241-0845 ROCKER ARM GP—UNIT INJECTOR

S/N: MHX1-UP

PART OF 241-0835 ROCKER ARM GP

SMCS-1123 **i02364622**

NOTE	REF NO	GRAPHIC REF	PART NUMBER	QTY	PART NAME 1 2 3 4 5 6 (PRODUCT LEVEL)	SEE PAGE
	1	1	**258-8721**	1	BUTTON	
	2	1	**229-5279**	1	SCREW-ADJUSTMENT	
R	3	1	**241-0844**	1	ROCKER ARM AS	
		1	**2D-6642**	2	BALL	
	4	1	**8L-2777**	1	SEAL-O-RING	
	5	1	**245-6095**	1	NUT-HEX THIN (M12X1.5-THD)	

R-REMFG PART MAY BE AVAILABLE

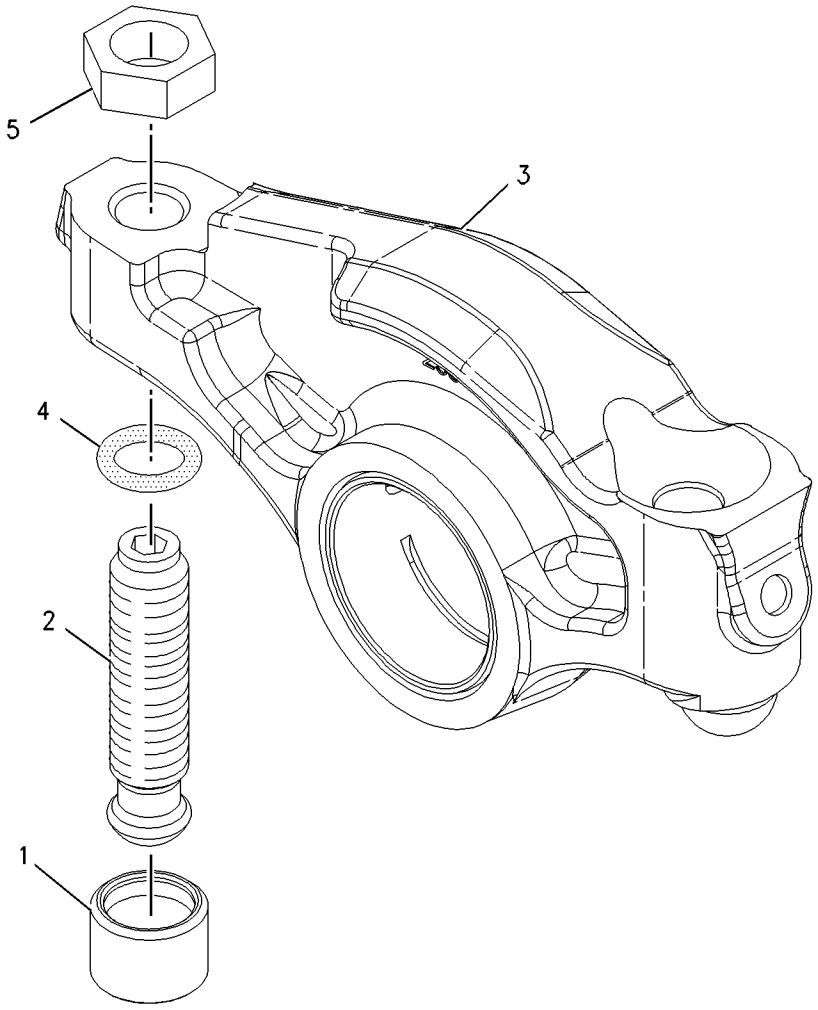

GRAPHIC #1 **<END>** g01007579

116-1091 SEAL GP-CRANKSHAFT

S/N: MHX1-UP

PART OF 234-7849 ENGINE AR-COMPLETE

SMCS-1160, 1161 **i01921430**

NOTE	REF NO	GRAPHIC REF	PART NUMBER	QTY	PART NAME 1 2 3 4 5 6 (PRODUCT LEVEL)	SEE PAGE
	1	1	**160-2323**	1	COVER	
M	2	1	**8T-0640**	6	BOLT (M6X1X30-MM)	
	3	1	**5P-0537**	13	WASHER-HARD (7.2X14.5X2-MM THK)	
M	4	1	**9X-2022**	7	BOLT-SELF-LOCKING (M6X1X20-MM)	
	5	1	**7C-1583**	1	GASKET	
	6	1	**107-6280**	1	SEAL-O-RING	
	7	1	**7C-1728**	1	SEAL GP-CRANKSHAFT	

M-METRIC PART

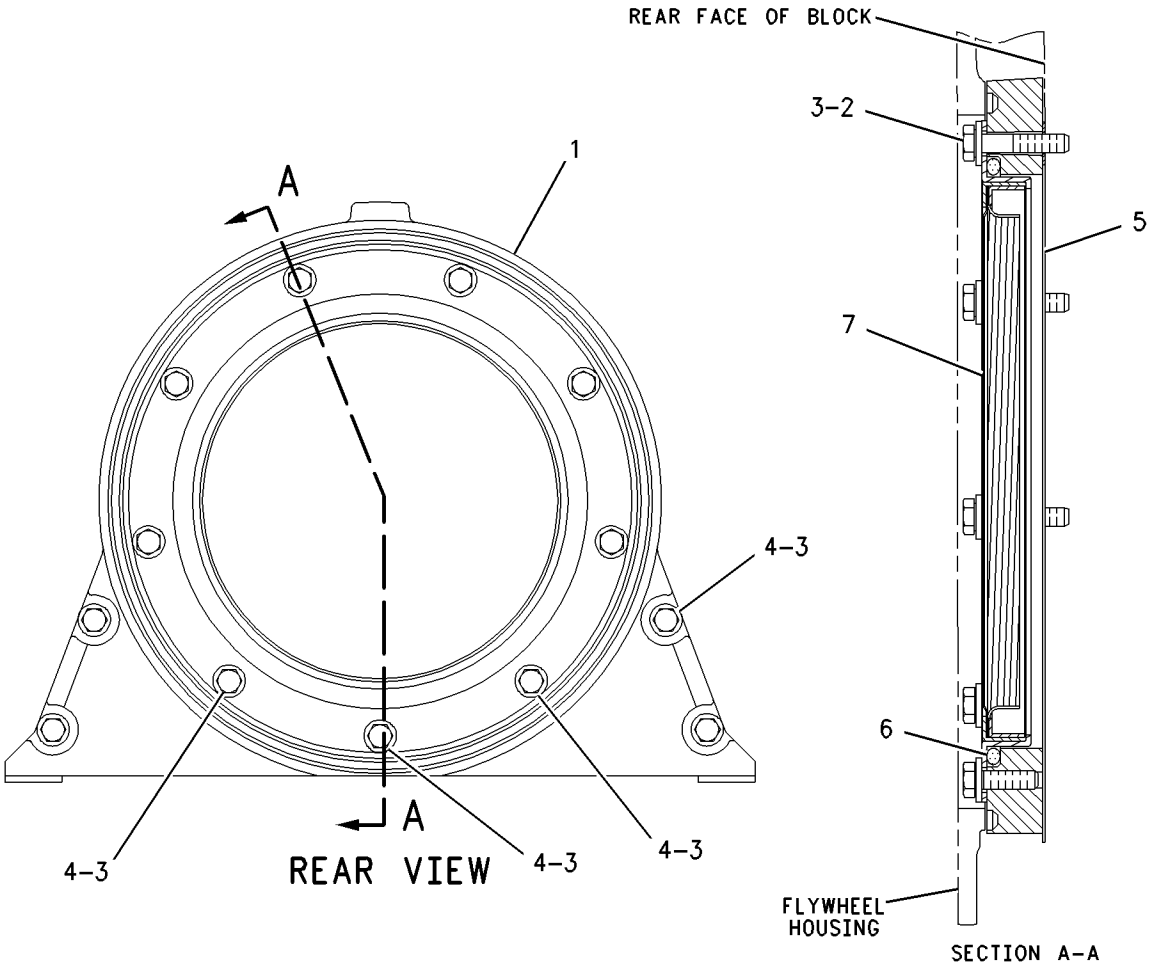

GRAPHIC #1 **<END>** g00785779

BASIC ENGINE

183-5518 SUPPORT GP-ENGINE

S/N: MHX1-UP

PART OF 234-7849 ENGINE AR-COMPLETE

SMCS-1152, 1153, 1154 **i01969954**

NOTE	REF NO	GRAPHIC REF	PART NUMBER	QTY	PART NAME 1 2 3 4 5 6 (PRODUCT LEVEL)	SEE PAGE
	1	1	**229-2887**	1	SUPPORT (FRONT)	
	2	1	**5P-8245**	8	WASHER-HARD (13.5X25.5X3-MM THK)	
M	3	1	**6V-5696**	8	BOLT (M12X1.75X80-MM)	

M-METRIC PART

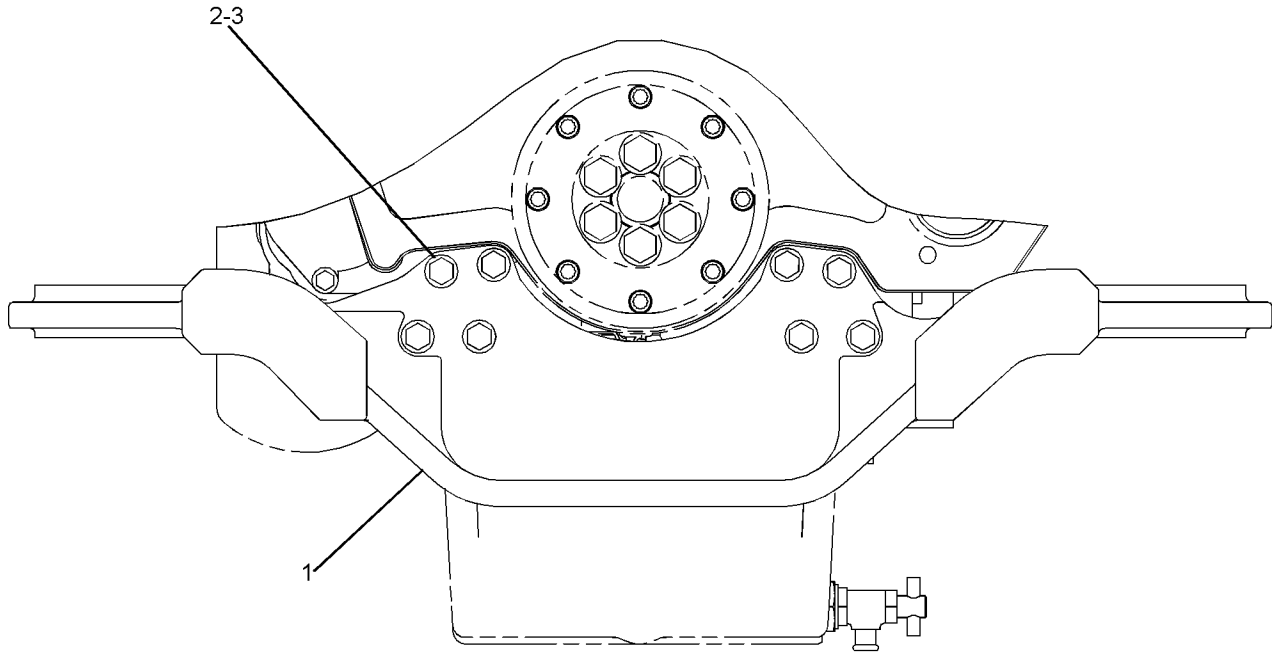

FRONT VIEW

GRAPHIC #1 **<END>** g01054311

BASIC ENGINE

240-7272 VALVE MECHANISM GP

S/N: MHX1-UP

PART OF 267-0009 ENGINE AR-CORE

SMCS-1102, 1121, 1123 **i02176587**

NOTE	REF NO	GRAPHIC REF	PART NUMBER	QTY	PART NAME 1 2 3 4 5 6 (PRODUCT LEVEL)	SEE PAGE
	1	1	**224-3117**	6	PUSHROD (INJECTOR)	
Y	2	1	*241-0835*	3	ROCKER ARM GP	48
Y	3	1	*237-4376*	1	LIFTER GP-VALVE	33
	4	1	**237-6469**	12	PUSHROD-VALVE	
	5	1	**237-7253**	12	BRIDGE-VALVE	

Y-SEPARATE ILLUSTRATION

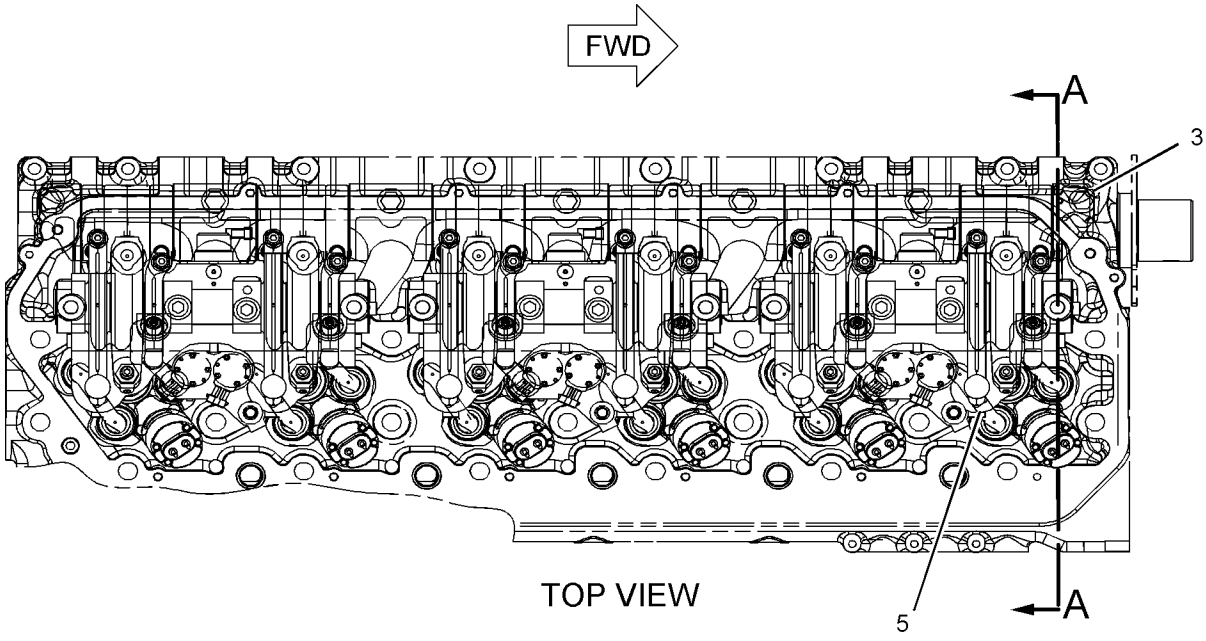

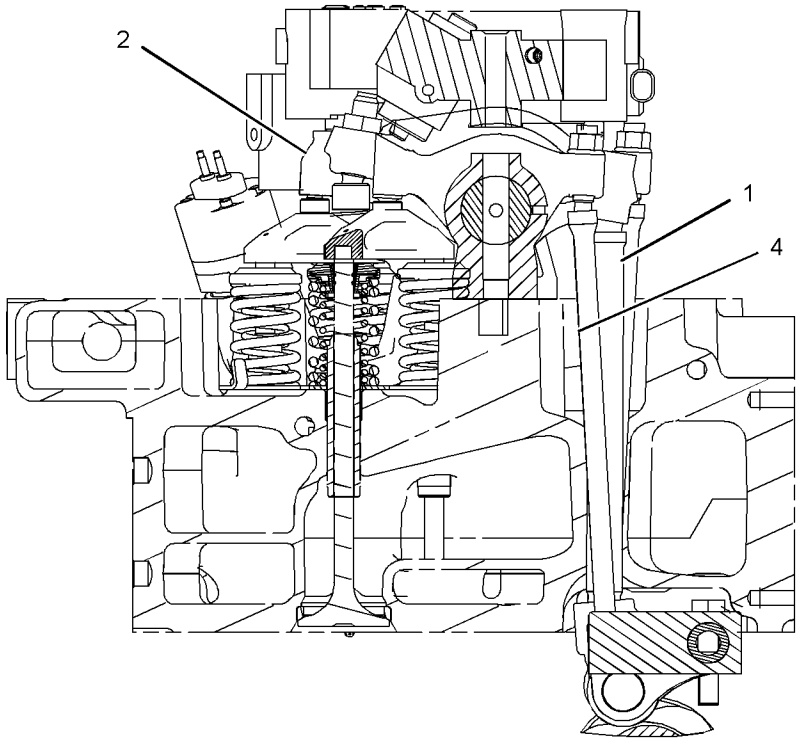

VIEW A-A

GRAPHIC #1 **<END>** g01017512

LUBRICATION SYSTEM

237-9748 BASE GP-OIL FILTER—ENGINE

S/N: MHX1-UP

PART OF 237-9755 BASE GP-OIL FILTER

SMCS-1306 **i02270587**

NOTE	REF NO	GRAPHIC REF	PART NUMBER	QTY	PART NAME 1 2 3 4 5 6 (PRODUCT LEVEL)	SEE PAGE
	1	1,2	**4N-8150**	2	SPRING	
	2	1	**7C-3081**	1	SPACER (6.88X9.53X50-MM THK)	
	3	1	**7C-3082**	1	RETAINER	
	4	1	**7C-3083**	1	SEAT-RELIEF VALVE SPRING	
	5	1	**7C-3954**	1	SPRING AS	
	6	1,2	**1P-1367**	2	PLUNGER (ENGINE OIL COOLER RELIEF VALVE)	
	7	1	**224-3405**	1	VALVE AS (OIL PUMP BYPASS) (ENGINE)	
	8	1	**237-9749**	1	BASE AS	
	8A	1	**2P-4304**	1	STUD-TAPERLOCK	
	9	1	**1A-2170**	1	SPRING-RETAINER	
	10	1	**5P-7701**	3	SEAL-O-RING	
	11	2	**6V-5049**	2	SEAL-O-RING	
M	12	1	**6V-8359**	1	BOLT (M6X1X70-MM)	
	13	2	**9S-8004**	2	PLUG	
	14	1	**9S-9334**	3	PLUG	
	15	1	**9S-8006**	1	PLUG	
	16	1	**2M-9780**	1	SEAL-O-RING	

M-METRIC PART

REFER TO ALL ILLUSTRATIONS OF THIS GROUP FOR AUXILIARY VIEWS

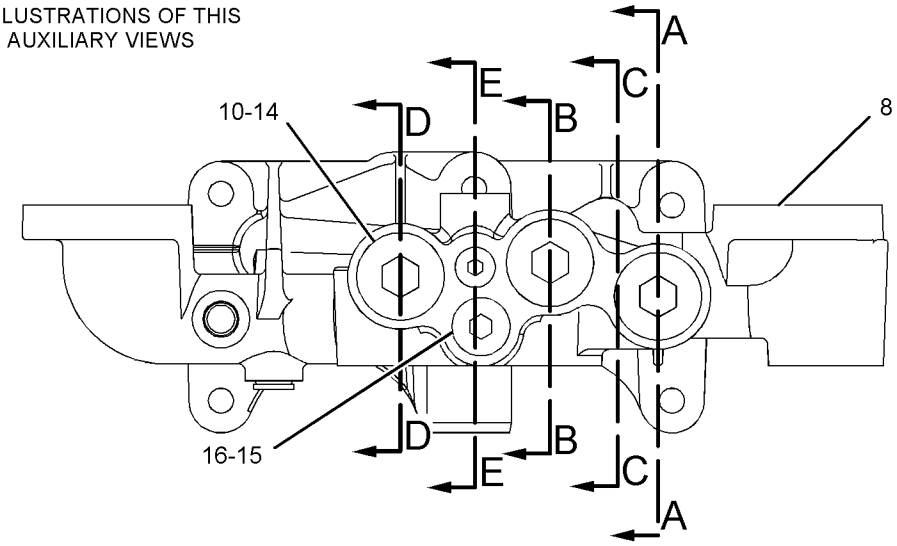

FRONT VIEW

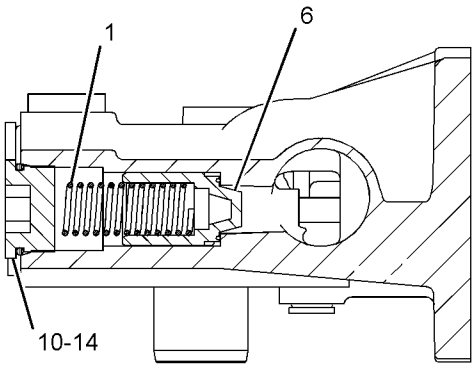

SECTION A-A

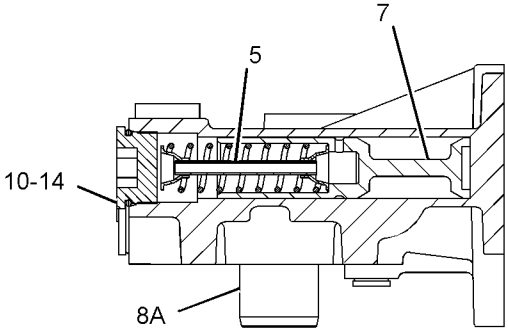

SECTION B-B

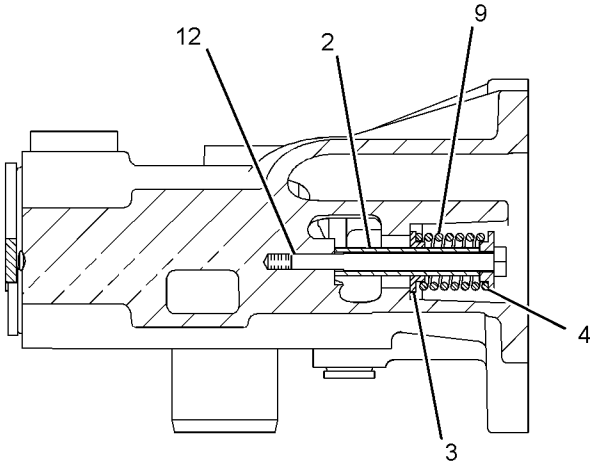

SECTION C-C

GRAPHIC #1

g01103881

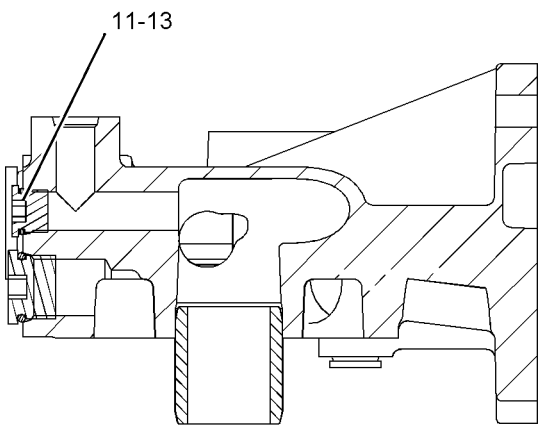

SECTION E-E

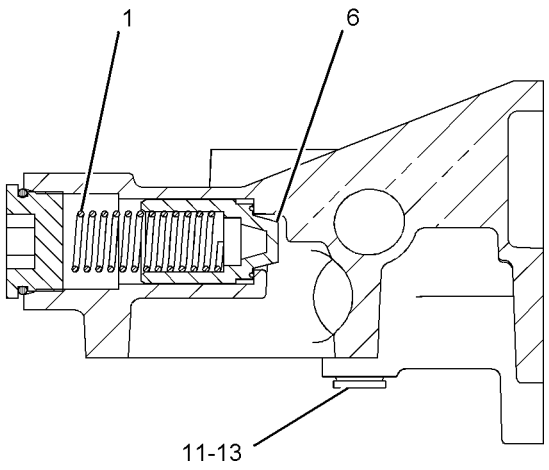

SECTION D-D

GRAPHIC #2 **<END>** g01103898

237-9755 BASE GP-OIL FILTER–ENGINE

S/N: MHX1-UP

PART OF 234-7849 ENGINE AR-COMPLETE

SMCS-1306 **i02270586**

NOTE	REF NO	GRAPHIC REF	PART NUMBER	QTY	PART NAME 1 2 3 4 5 6 (PRODUCT LEVEL)	SEE PAGE
	1	1	**8C-3445**	1	CAP-DUST	
	2	1	*217-9060*	1	VALVE AS-FLUID SAMPLING (ENGINE OIL)	
		1	**3J-7354**	1	SEAL-O-RING	
		1	**154-9023**	1	VALVE-SAMPLING (ENGINE OIL)	
Y	3	1	*237-9748*	1	BASE GP-OIL FILTER (ENGINE)	54
	4	1	**237-9751**	1	GASKET	
M	5	1	**134-5245**	6	BOLT (M10X1.5X30-MM)	
	6	1	**3P-0650**	2	SEAL-O-RING	
	7	1	**5P-9617**	1	ADAPTER	
	8	1	**6V-5049**	1	SEAL-O-RING	
	9	1	**6V-5839**	6	WASHER (11X21X2.5-MM THK)	

M-METRIC PART
Y-SEPARATE ILLUSTRATION

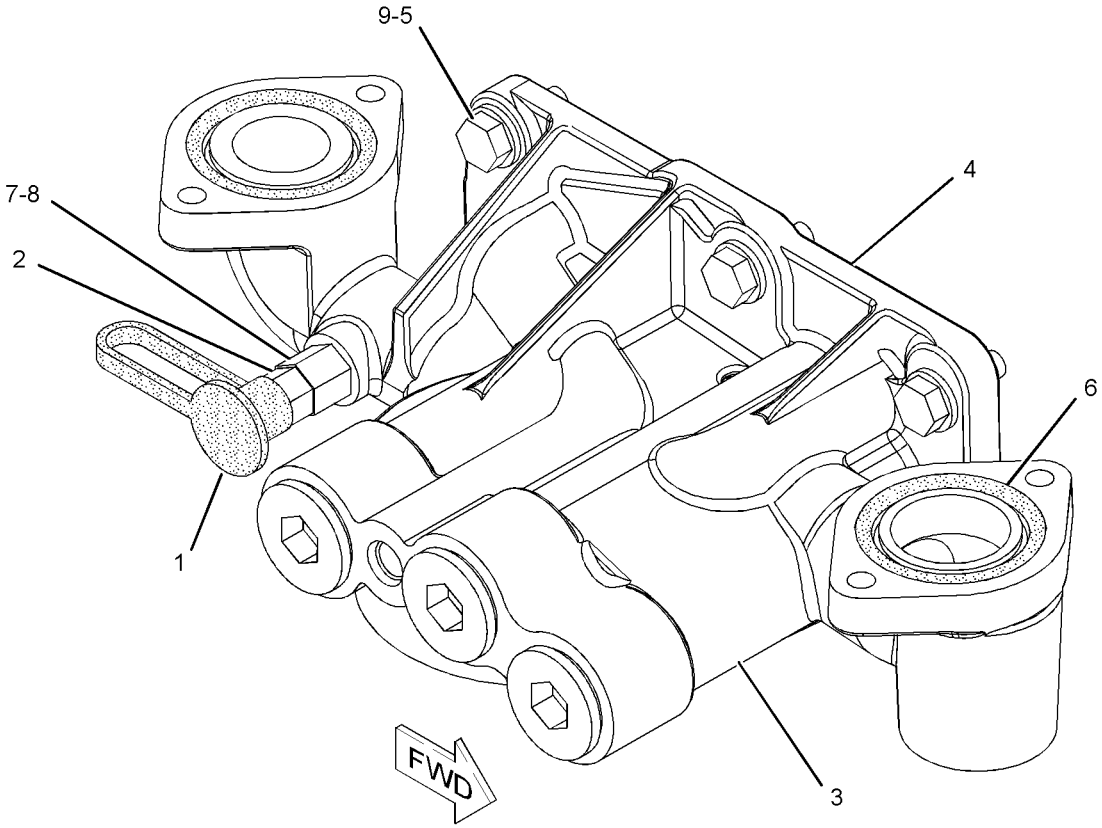

GRAPHIC #1 **<END>** g01082096

267-0007 BREATHER GP–CRANKCASE

S/N: MHX1-UP
SHORT
PART OF 234-7849 ENGINE AR-COMPLETE

SMCS-1317 **i02290287**

NOTE	REF NO	GRAPHIC REF	PART NUMBER	QTY	PART NAME 1 2 3 4 5 6 (PRODUCT LEVEL)	SEE PAGE
	1	1	**9Y-1758**	1	GASKET (CRANKCASE BREATHER)	
	2	1	**9Y-4357**	1	BREATHER AS (CRANKCASE)	
M	3	1	**8T-0275**	4	BOLT (M6X1X50-MM)	
	4	1	**9X-8267**	4	WASHER (6.6X12X2-MM THK)	

M-METRIC PART

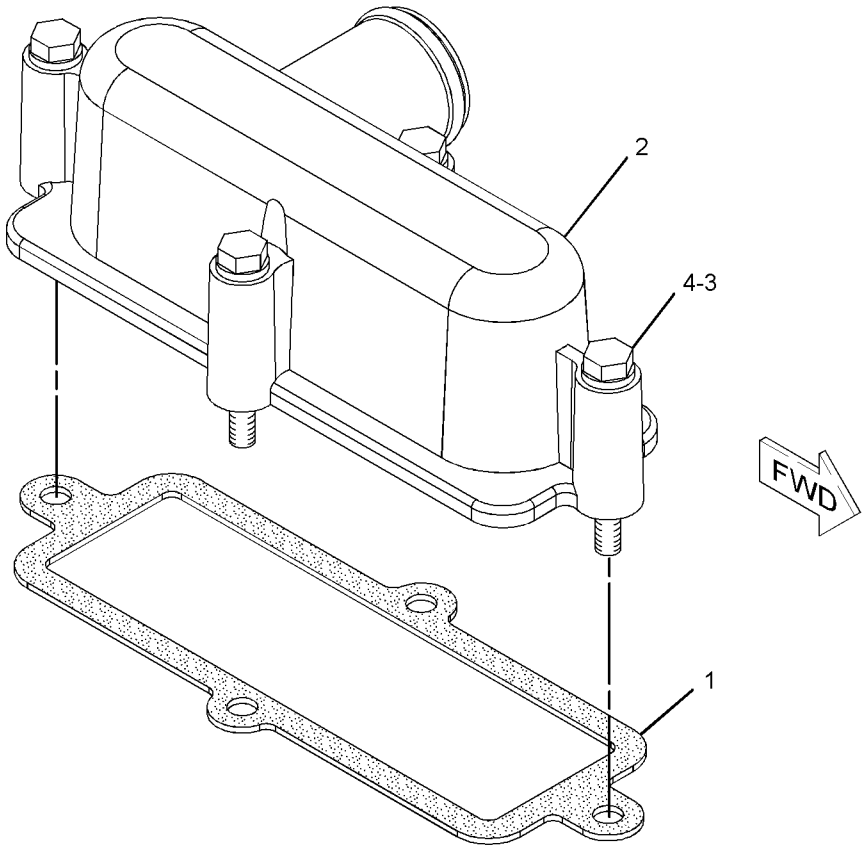

GRAPHIC #1 **<END>** g01145028

LUBRICATION SYSTEM

243-1670 FILLER GP-ENGINE OIL

S/N: MHX1-UP

PART OF 234-7849 ENGINE AR-COMPLETE

SMCS-1316 **i02270485**

NOTE	REF NO	GRAPHIC REF	PART NUMBER	QTY	PART NAME 1 2 3 4 5 6 (PRODUCT LEVEL)	SEE PAGE
	1	1	**5L-2952**	1	CAP AS-FILLER (ENGINE OIL)	
		1	**6L-2609**	1	SEAL-RUBBER	
	2	1	**7C-1445**	3	COVER	
	3	1	**221-3263**	1	TUBE AS	
	4	1	**061-9455**	4	SEAL-O-RING	
M	5	1	**6V-3940**	2	BOLT (M8X1.25X25-MM)	
M	6	1	**6V-5217**	6	BOLT (M8X1.25X20-MM)	
	7	1	**9M-1974**	8	WASHER-HARD (8.8X16X2-MM THK)	

M-METRIC PART

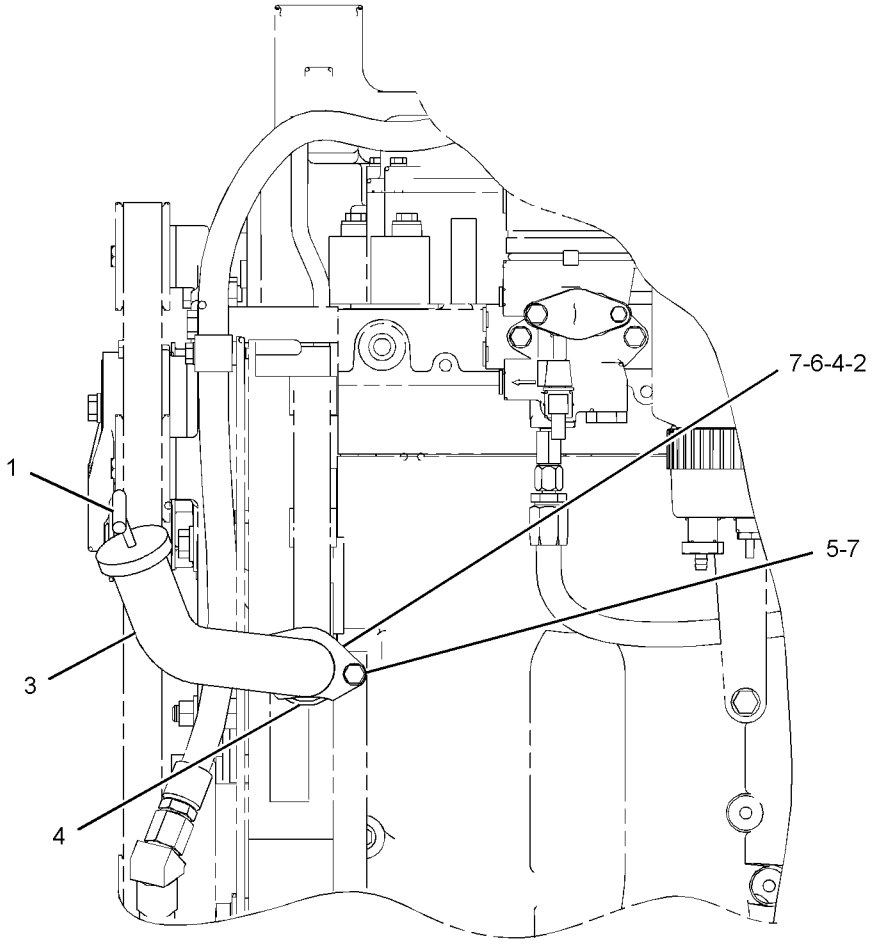

LEFT SIDE VIEW

GRAPHIC #1 **<END>** g01121041

LUBRICATION SYSTEM

231-3492 FILTER GP-ENGINE OIL—HIGH EFFICIENCY

S/N: MHX1-UP

PART OF 234-7849 ENGINE AR-COMPLETE

SMCS-1306, 1308 **i02270526**

NOTE	REF NO	GRAPHIC REF	PART NUMBER	QTY	PART NAME 1 2 3 4 5 6 (PRODUCT LEVEL)	SEE PAGE
	1	1	**1R-1808**	1	FILTER AS-ENGINE OIL	

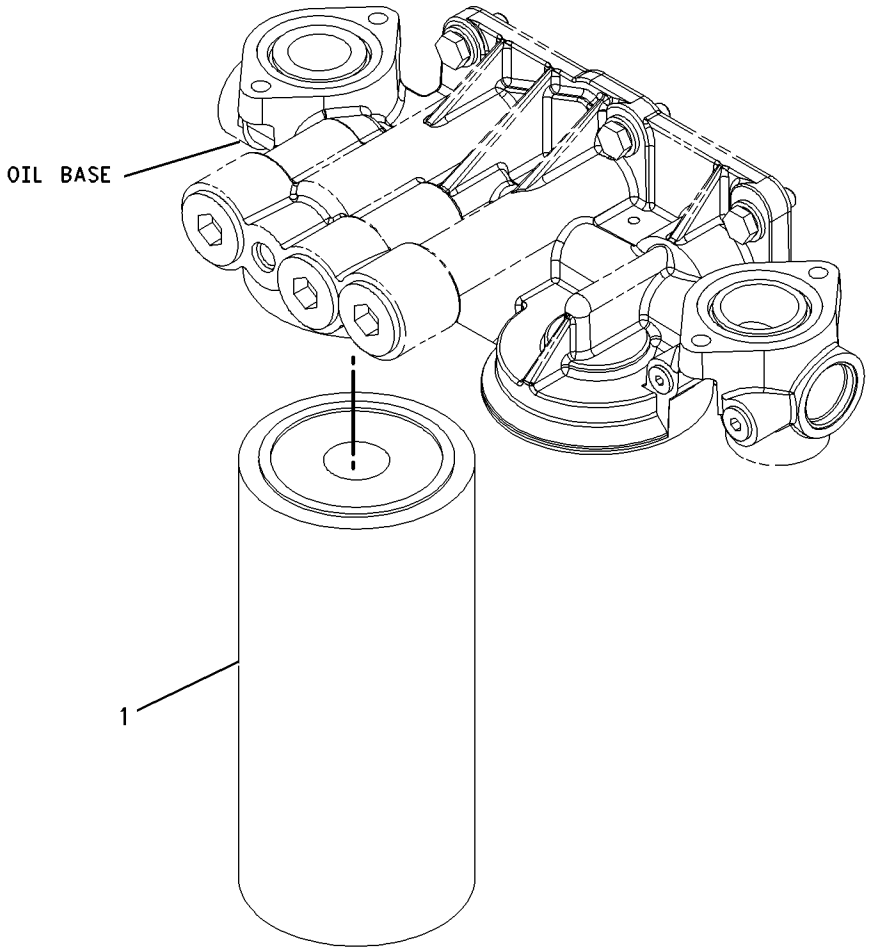

GRAPHIC #1 **<END>** g00951313

LUBRICATION SYSTEM

237-9758 FUMES DISPOSAL GP

S/N: MHX1-UP

PART OF 234-7849 ENGINE AR-COMPLETE

SMCS-1317 **i02270499**

NOTE	REF NO	GRAPHIC REF	PART NUMBER	QTY	PART NAME 1 2 3 4 5 6 (PRODUCT LEVEL)	SEE PAGE
	1	1	**237-9759**	1	HOSE (FUMES DISPOSAL)	
	2	1	**2S-2053**	1	CLIP	
M	3	1	**2Y-5829**	1	NUT (M10X1.5-THD)	
	4	1	**6V-5839**	1	WASHER (11X21X2.5-MM THK)	
	5	1	**9M-2904**	1	CLAMP-HOSE	
	6	1	**9C-5344**	1	SPACER (10.5X20X18-MM THK)	

M-METRIC PART

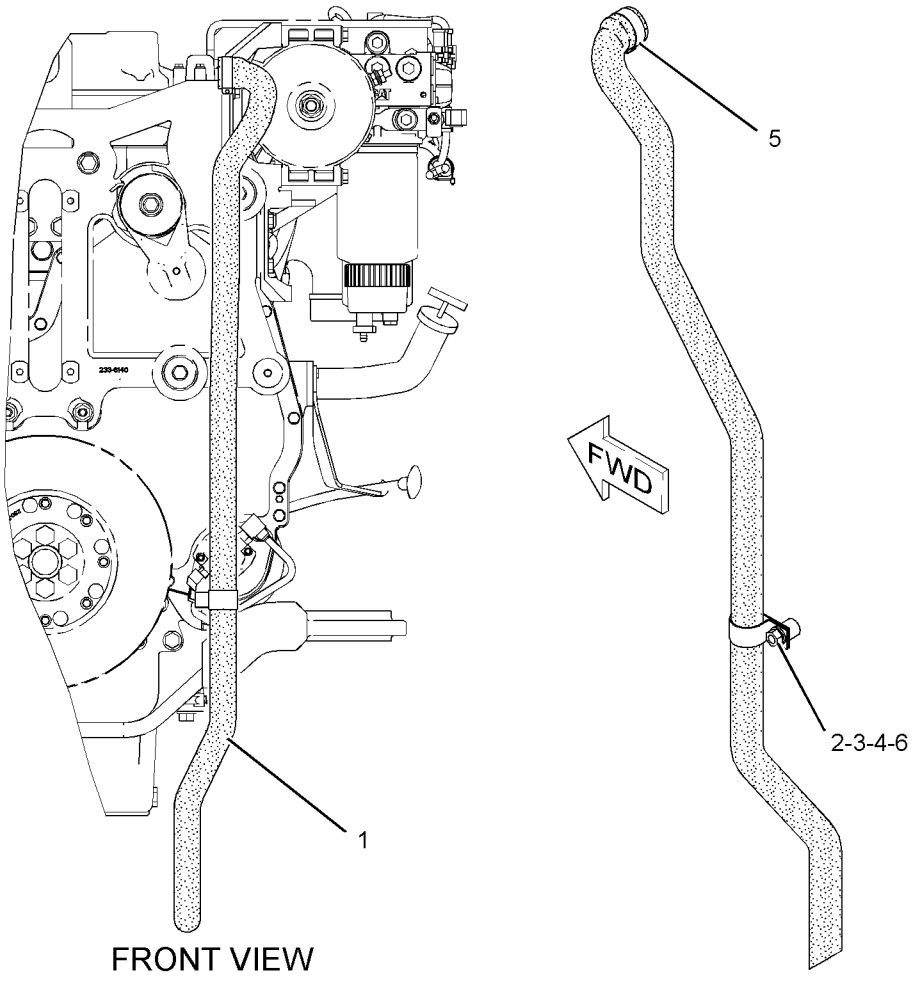

GRAPHIC #1 **<END>** g01121274

236-5035 GAUGE GP-OIL LEVEL (DIPSTICK)—ENGINE

S/N: MHX1-UP

PART OF 234-7849 ENGINE AR-COMPLETE

SMCS-1326 **i02305554**

NOTE	REF NO	GRAPHIC REF	PART NUMBER	QTY	PART NAME 1 2 3 4 5 6 (PRODUCT LEVEL)	SEE PAGE
J	1	1	**209-7309**	3	PLUG	
	2	1	**260-7760**	1	GAUGE GP-OIL LEVEL (DIPSTICK) (ENGINE)	
	3	1	**236-5034**	1	TUBE AS	
	4	1	**3P-0647**	1	SEAL-O-RING	

J-USE TO PLUG OPTIONAL DIPSTICK LOCATIONS

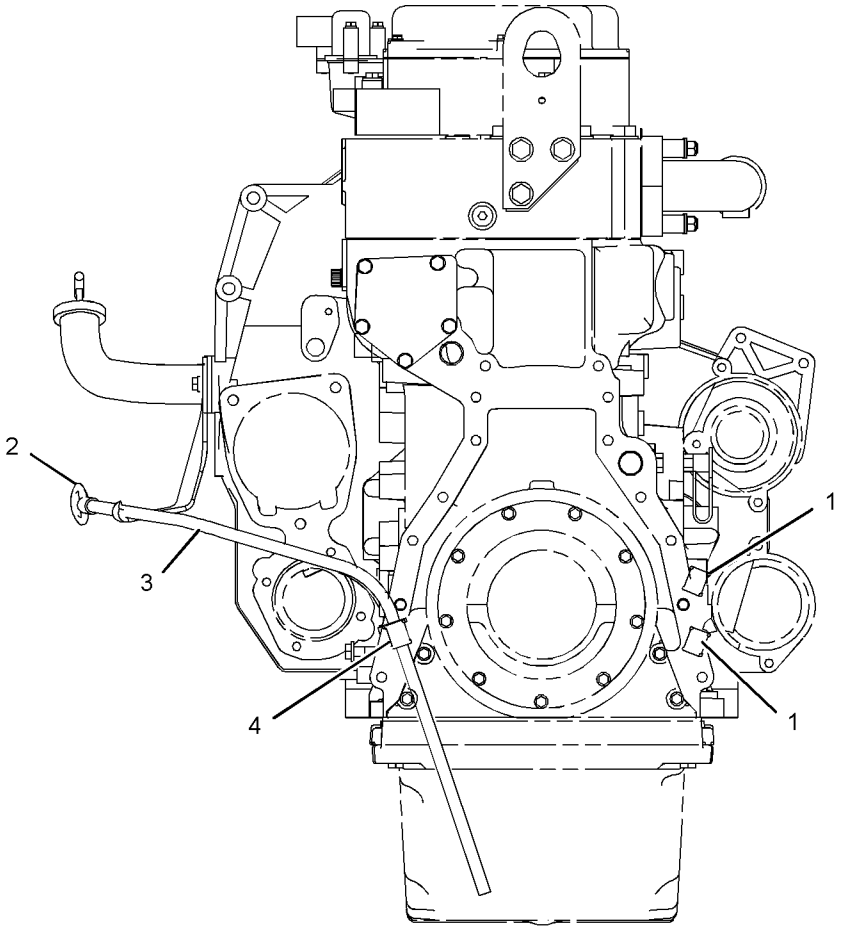

REAR VIEW

GRAPHIC #1

<END>

g01039918

234-7843 LINES GP-TURBOCHARGER OIL

S/N: MHX1-UP

PART OF 234-7849 ENGINE AR-COMPLETE

SMCS-1052, 1307 **i02270544**

NOTE	REF NO	GRAPHIC REF	PART NUMBER	QTY	PART NAME 1 2 3 4 5 6 (PRODUCT LEVEL)	SEE PAGE
	1	1	**197-8418**	1	GASKET (TURBOCHARGER OIL)	
	2	1	**197-8419**	1	GASKET (TURBOCHARGER OIL)	
	3	1	**235-1071**	1	HOSE AS	
	4	1	**227-9920**	1	TUBE AS-DRAIN	
	5	1	**8T-6876**	1	ELBOW	
	6	1	**225-6948**	1	SEAL-O-RING	
M	7	1	**6V-5218**	6	BOLT (M8X1.25X35-MM)	
	8	1	**9M-1974**	6	WASHER-HARD (8.8X16X2-MM THK)	
	9	1	**6V-8398**	1	SEAL-O-RING	
	10	1	**3J-1907**	1	SEAL-O-RING	

M-METRIC PART

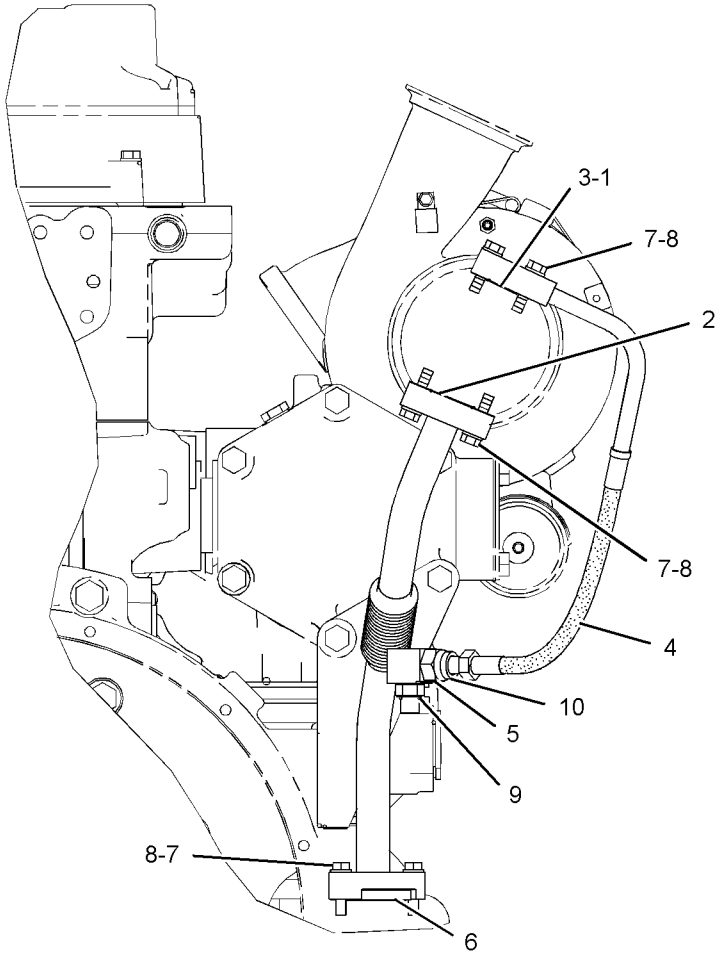

REAR VIEW

GRAPHIC #1 **<END>** g01111090

LUBRICATION SYSTEM

233-5220 PUMP GP-ENGINE OIL

S/N: MHX1-UP

PART OF 233-5221 PUMP GP-ENGINE OIL

SMCS-1304, 1315 **i02010613**

NOTE	REF NO	GRAPHIC REF	PART NUMBER	QTY	PART NAME 1 2 3 4 5 6 (PRODUCT LEVEL)	SEE PAGE
	1	1	**9Y-8076**	1	SHAFT AS-OIL PUMP (8 TEETH)	
	2	1	**6D-7146**	1	SEAL-O-RING	
M	3	1	**6V-2317**	4	BOLT (M8X1.25X30MM)	
	4	1	**9M-1974**	4	WASHER-HARD (8.8X16X2MM THK)	
	5	1	**9Y-8075**	1	SHAFT AS-OIL PUMP (8 TEETH)	

M-METRIC PART

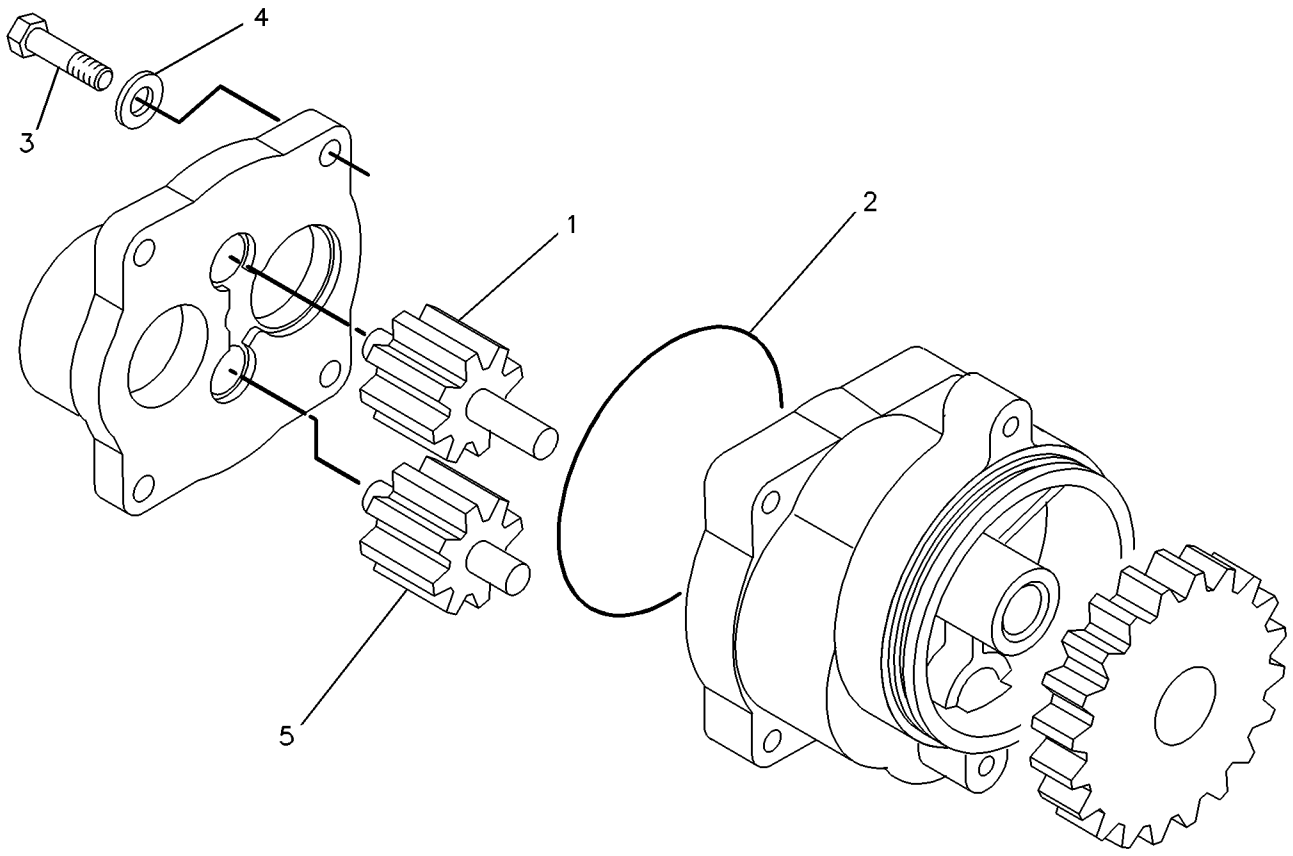

GRAPHIC #1 **<END>** g00228139

233-5221 PUMP GP-ENGINE OIL

S/N: MHX1-UP

PART OF 267-0009 ENGINE AR-CORE

SMCS-1304, 1315 **i02173382**

NOTE	REF NO	GRAPHIC REF	PART NUMBER	QTY	PART NAME 1 2 3 4 5 6 (PRODUCT LEVEL)	SEE PAGE
	1	1	**7C-1821**	1	COUPLING	
	2	1	**7C-1822**	1	COUPLING	
YR	3	1	**233-5220**	1	PUMP GP-ENGINE OIL	64
	4	1	**235-1448**	1	TUBE AS	
	5	1	**235-1451**	1	ELBOW-OIL PUMP	
	6	1	**061-8561**	1	SEAL-O-RING	
	7	1	**3E-4352**	2	WASHER-HARD (8.8X20.5X2.5-MM THK)	
	8	1	**3E-6788**	1	SEAL-O-RING	
	9	1	**5P-8068**	2	SEAL-O-RING	
	10	1	**6V-3834**	1	SEAL-O-RING	
	11	1	**6V-5134**	3	SEAL-O-RING	
M	12	1	**6V-5218**	2	BOLT (M8X1.25X35-MM)	
M	13	1	**6V-5221**	5	BOLT (M8X1.25X80-MM)	
M	14	1	**7X-0870**	1	BOLT (M8X1.25X140-MM)	
	15	1	**8J-4351**	1	SEAL-O-RING	
	16	1	**9M-1974**	6	WASHER-HARD (8.8X16X2-MM THK)	

M-METRIC PART
R-REMFG PART MAY BE AVAILABLE
Y-SEPARATE ILLUSTRATION

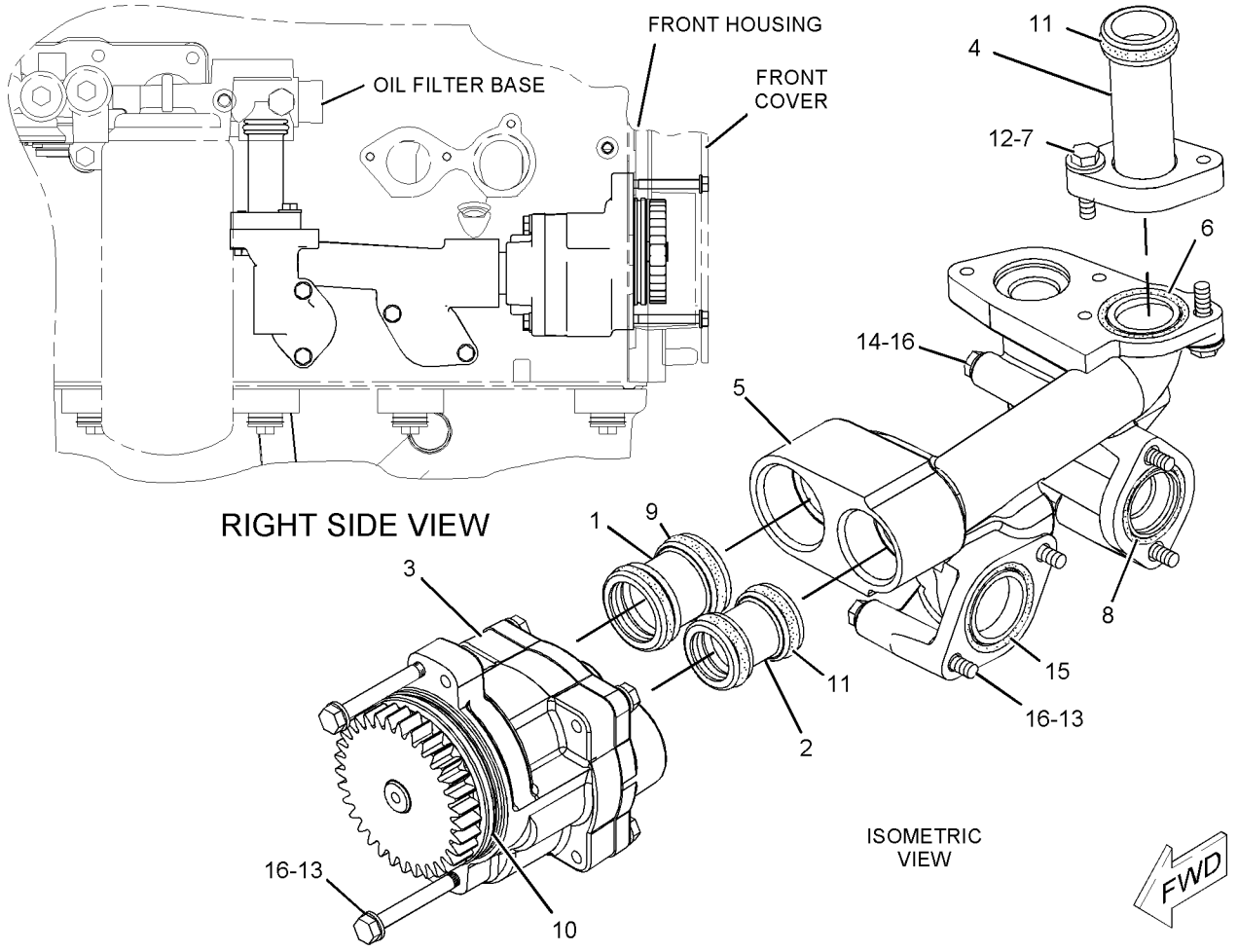

GRAPHIC #1

<END>

g01029145

251-7600 COOLER GP-ENGINE OIL

S/N: MHX1-UP

PART OF 234-7849 ENGINE AR-COMPLETE

SMCS-1378 **i02264131**

NOTE	REF NO	GRAPHIC REF	PART NUMBER	QTY	PART NAME 1 2 3 4 5 6 (PRODUCT LEVEL)	SEE PAGE
	1	1	**8E-9571**	1	WASHER-HARD (8.8X16X7-MM THK)	
	2	1	**224-2675**	1	SEAL	
	3	1	**224-5757**	1	HOSE	
	4	1	**224-6360**	2	SEAL	
	5	1	**8T-4984**	2	CLAMP-HOSE	
	6	1	**230-4518**	1	ELBOW	
	7	1	**230-4519**	1	BONNET (OIL COOLER)	
R	8	1	**236-8745**	1	CORE AS-OIL COOLER (ENGINE)	
	9	1	**3J-7354**	1	SEAL-O-RING	
M	10	1	**6V-2317**	5	BOLT (M8X1.25X30-MM)	
	11	1	*164-5590*	1	VALVE AS-FLUID SAMPLING (ENGINE OIL)	
		1	**3J-7354**	1	SEAL-O-RING	
		1	**8C-3446**	1	VALVE-FLUID SAMPLING	
	12	1	**6V-5049**	1	SEAL-O-RING	
M	13	1	**6V-5219**	5	BOLT (M8X1.25X40-MM)	
M	14	1	**6V-5221**	1	BOLT (M8X1.25X80-MM)	
	15	1	**9M-1974**	10	WASHER-HARD (8.8X16X2-MM THK)	
	16	1	**9S-8002**	1	PLUG	
	17	1	**9S-8004**	1	PLUG	
	18	1	**8K-4739**	1	ADAPTER	
	19	1	**6V-3251**	1	SEAL-O-RING	
	20	1	**157-0670**	1	CAP-DUST	

M-METRIC PART
R-REMFG PART MAY BE AVAILABLE

251-7600 **COOLER GP-ENGINE OIL** *(contd.)* **i02264131**

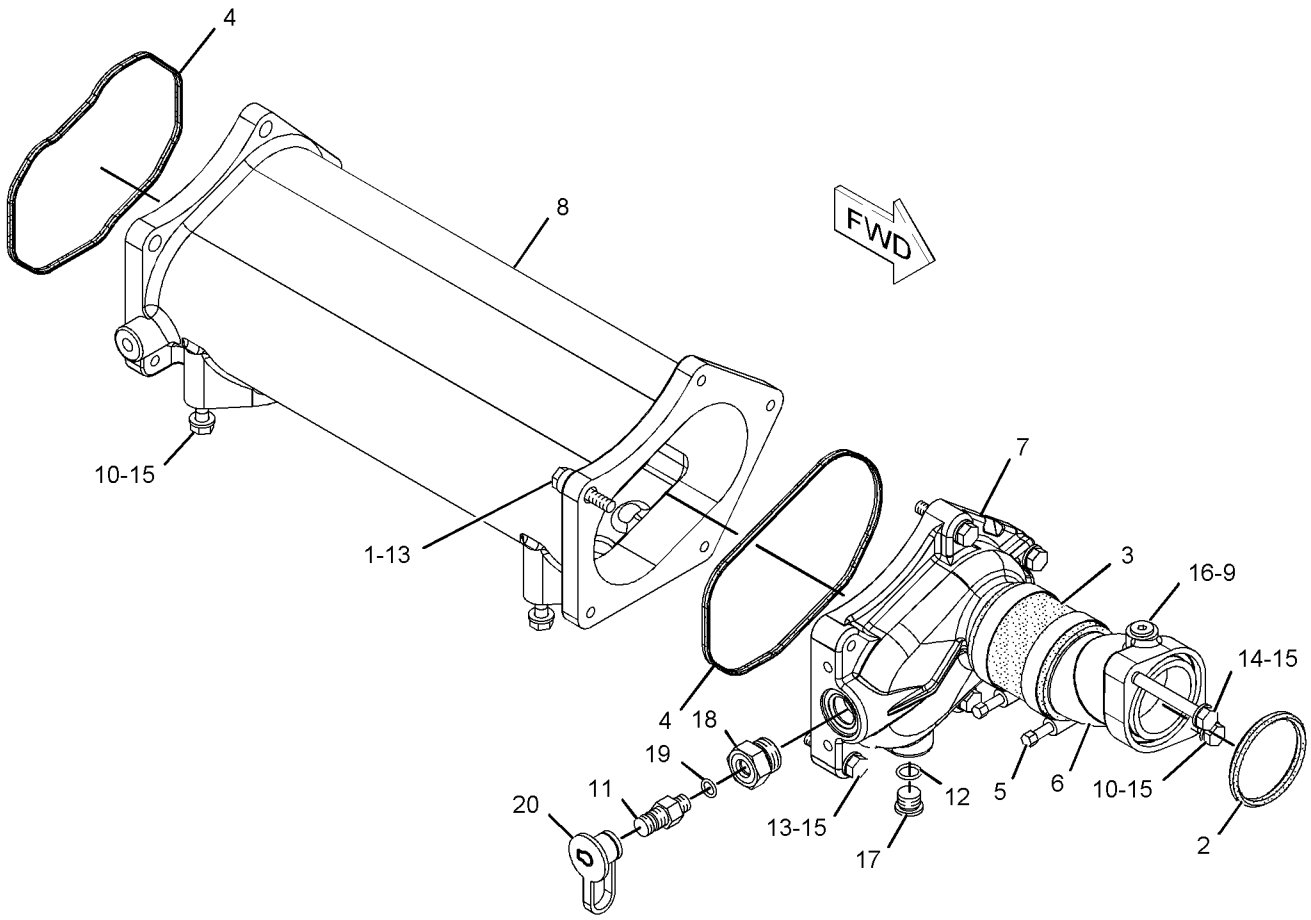

GRAPHIC #1 **<END>** g01121127

246-1921 COOLING AR-HIGH AMBIENT TEMP

S/N: A7G1-UP

AN ATTACHMENT

SMCS-1350, 1353, 1374, 1386, 1387, 5057 **i02243166**

NOTE	PART NUMBER	QTY	PART NAME 1 2 3 4 5 6 (PRODUCT LEVEL)	SEE PAGE
	244-8840	1	CORE AS-CONDENSER (REFRIGERANT)	
	251-1110	1	CORE AS-OIL COOLER (AXLE, HYDRAULIC)	
	256-6627	1	CORE AS-RADIATOR	

<END>

COOLING SYSTEM

236-8988 LINES GP-WATER

S/N: A7G1-UP

PART OF 236-9051 CHASSIS AR

SMCS-1380 **i02412062**

NOTE	REF NO	GRAPHIC REF	PART NUMBER	QTY	PART NAME 1 2 3 4 5 6 (PRODUCT LEVEL)	SEE PAGE
E	1	1,2	**5P-1262**	4	HOSE	
	2	2	**5D-1026**	1	CLAMP-HOSE	
	3	1	**5P-1230**	1	CONNECTOR	
	4	2	**7K-1181**	1	STRAP-CABLE	
	5	2	**8F-8151**	1	VALVE AS-SHUTOFF (RADIATOR DRAIN)	
	6	1	**8T-4983**	2	CLAMP-HOSE	
	7	1	**6V-1355**	1	ELBOW	
	8	1	**9Y-9236**	1	GAUGE-SIGHT	
	9	1,2	**209-4573**	8	CLAMP	
	10	2	**241-8506**	1	TUBE	
Y	11	1	*242-4340*	1	TANK GP-RADIATOR TOP	84
	12	1	**260-1818**	1	TUBE AS	
	13	2	**268-1497**	1	ELBOW	
	14	1	**274-7407**	1	TEE	
	15	1	**109-1145**	4	CLAMP-HOSE	
	16	1	**124-1479**	1	CLIP	
	17	1	**3J-1907**	1	SEAL-O-RING	
	18	1	**6V-6609**	1	SEAL-O-RING	
	19	1	**7M-8485**	1	SEAL-O-RING	
	20	1,2	**7X-7729**	4	WASHER (11X25X3-MM THK)	
M	21	1	**8T-4136**	2	BOLT (M10X1.5X25-MM)	
M	22	2	**8T-4137**	2	BOLT (M10X1.5X20-MM)	
E	23	1	**5P-0767**		HOSE (70-CM)	
E	24	2	**5P-1442**		HOSE (25.6-CM)	
E	24A	2	**5P-1442**		HOSE (76.7-CM)	
E	25	1	**5P-1251**		HOSE (109-CM)	
E	26	1	**7Y-1976**		HOSE (282-CM)	

E-ORDER BY THE CENTIMETER
M-METRIC PART
Y-SEPARATE ILLUSTRATION

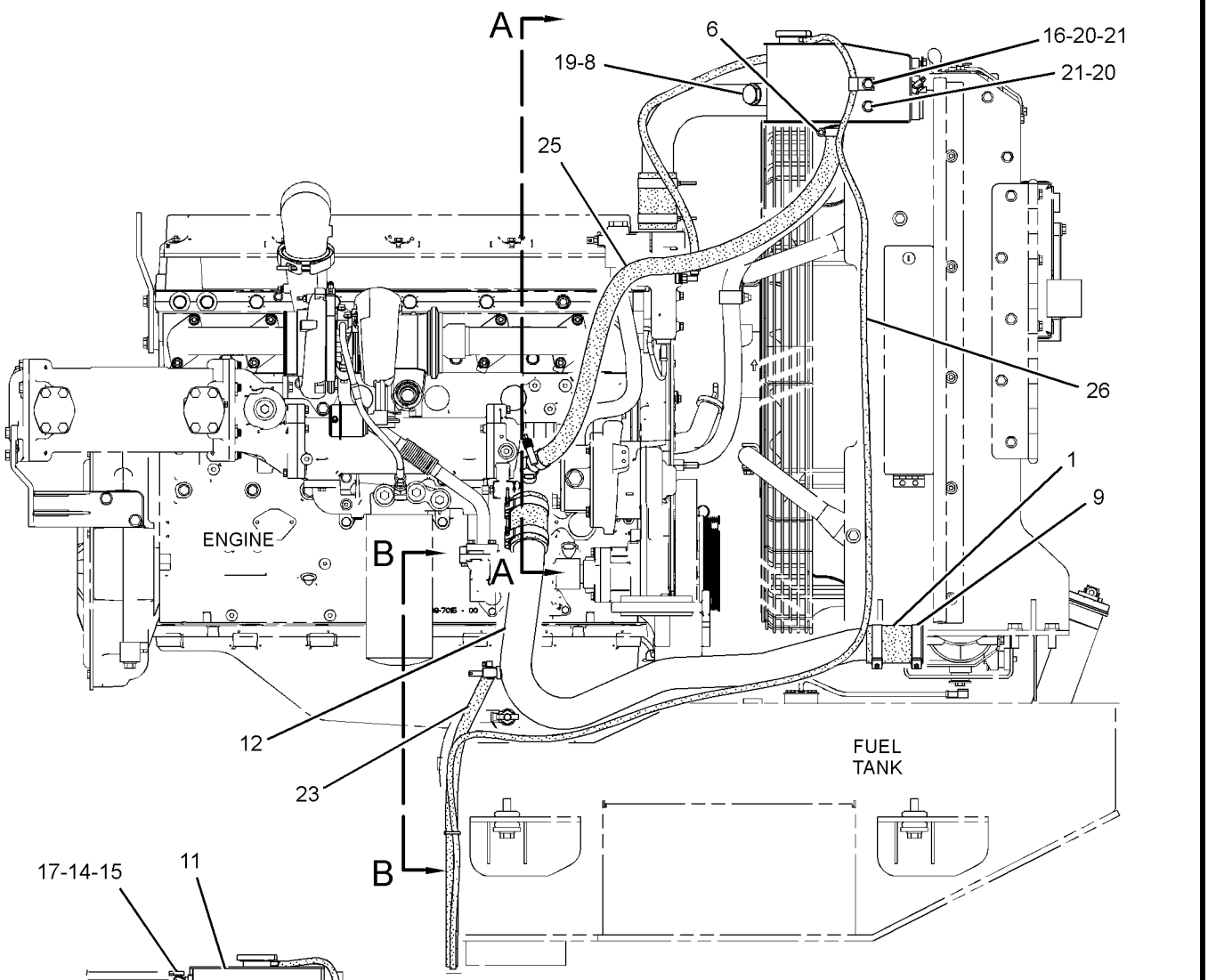

REAR VIEW

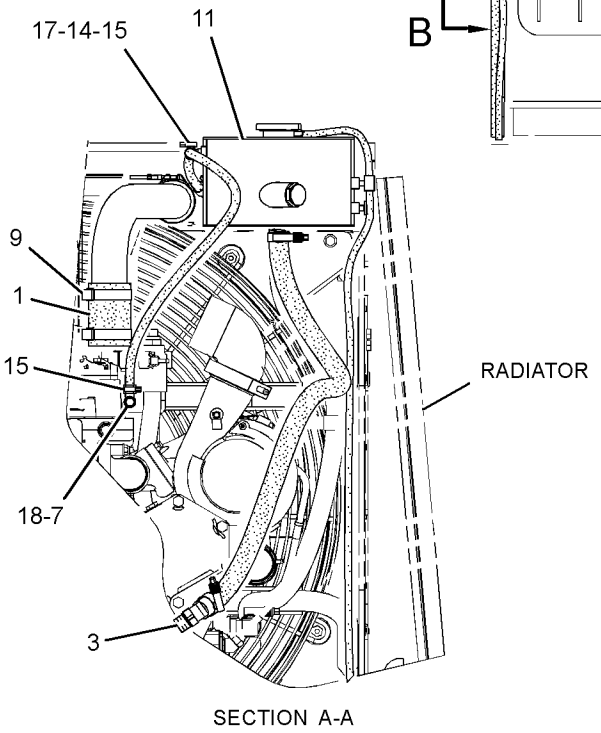

SECTION A-A

REFER TO ALL ILLUSTRATIONS OF
THIS GROUP FOR AUXILIARY VIEWS

GRAPHIC #1

g01196842

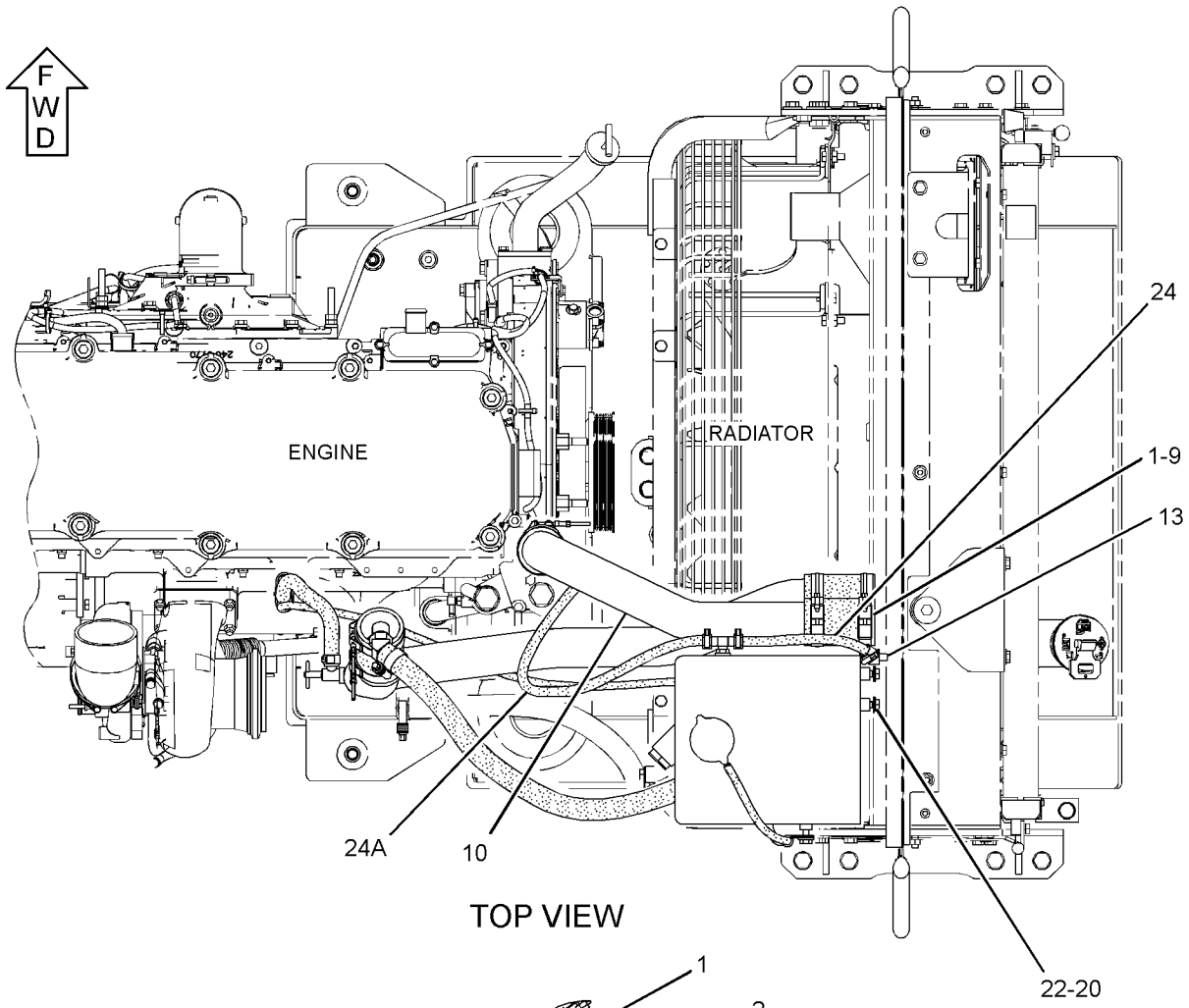

TOP VIEW

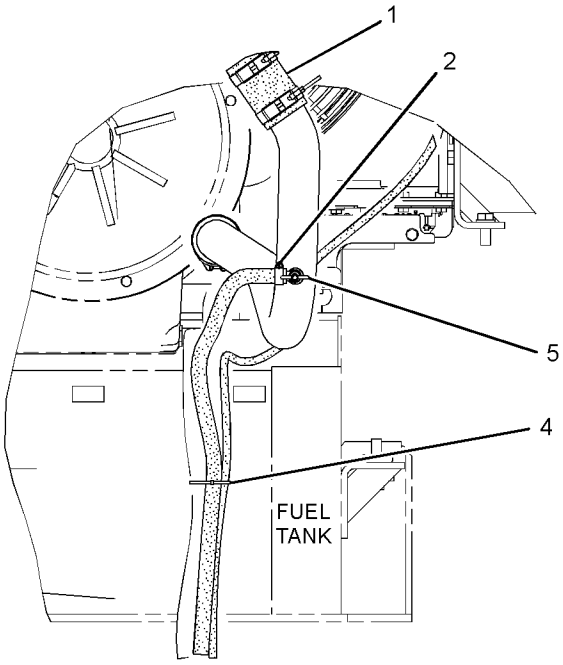

SECTION B-B

GRAPHIC #2 **<END>** g01196843

COOLING SYSTEM

243-1667 LINES GP-WATER

S/N: MHX1-UP

PART OF 234-7849 ENGINE AR-COMPLETE

SMCS-1380 **i02270683**

NOTE	REF NO	GRAPHIC REF	PART NUMBER	QTY	PART NAME 1 2 3 4 5 6 (PRODUCT LEVEL)	SEE PAGE
	1	1	**224-6361**	1	SEAL	
	2	1	**227-5075**	1	SEAL (TEMPERATURE REGULATOR HOUSING)	
	3	1	**238-6721**	1	BASE	
	4	1	**238-6728**	1	TUBE-BYPASS	
	5	1	**238-6730**	1	HOUSING AS-REGULATOR	
		1	**3S-9643**	1	SEAL-LIP TYPE (WATER TEMPERATURE REGULATOR)	
	6	1	**239-8135**	1	VALVE AS-VENT (WATER LINES)	
		1	**9X-7380**	1	SEAL-O-RING	
	7	1	**248-5513**	1	REGULATOR-WATER TEMPERATURE (92-DEG C) (COOLANT)	
	8	1	**230-2603**	4	BOLT (M8X1.25X90-MM)	
	10	1	**5P-9436**	2	PLUG-THREADED O-RING	
	11	1	**6V-5063**	2	SEAL-O-RING	
	12	1	**6V-6609**	3	SEAL-O-RING	
	13	1	**6V-9027**	2	SEAL-O-RING	
	14	1	**7L-6580**	2	SEAL-O-RING	
M	15	1	**8T-0292**	4	BOLT (M8X1.25X90-MM)	
	16	1	**9M-1974**	4	WASHER-HARD (8.8X16X2-MM THK)	
	17	1	**9S-4182**	2	PLUG (STRAIGHT THREAD-O RING)	
	18	1	**9S-8005**	3	PLUG	

M-METRIC PART

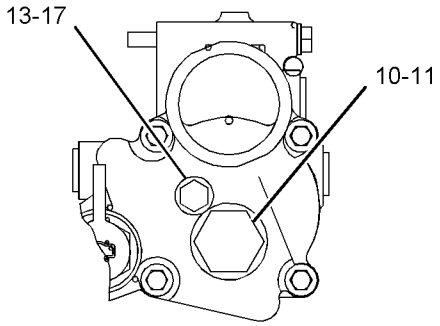

VIEW C-C

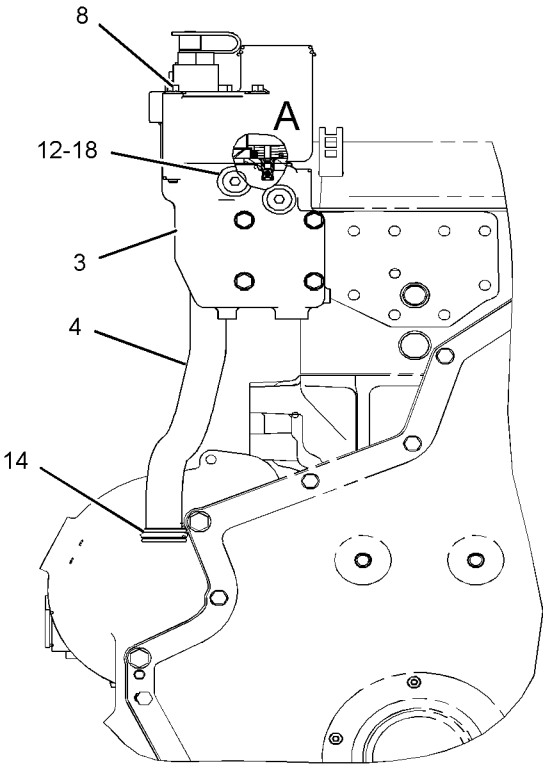

FRONT VIEW

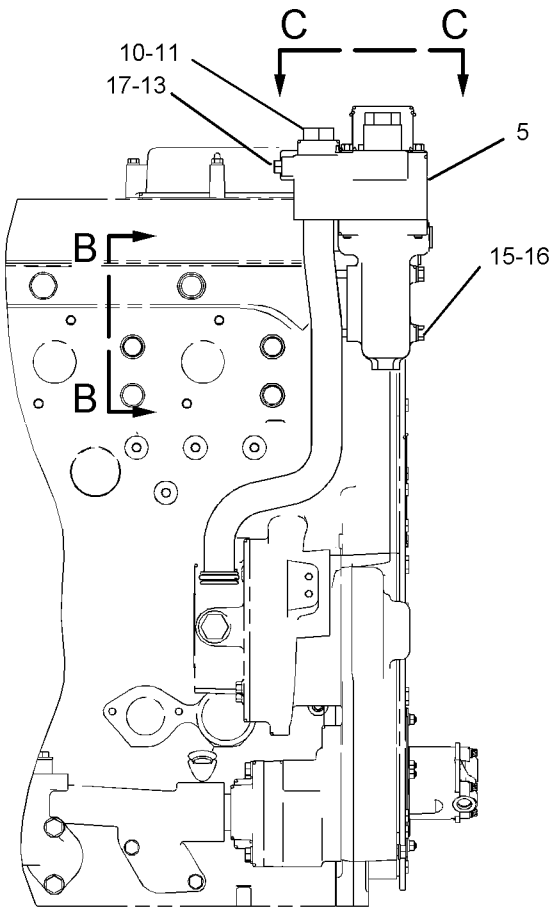

RIGHT SIDE VIEW

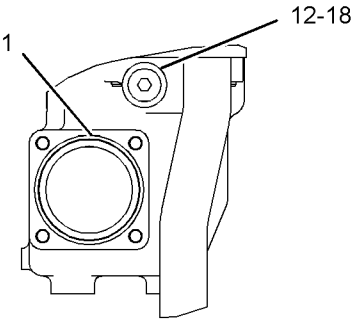

VIEW B-B

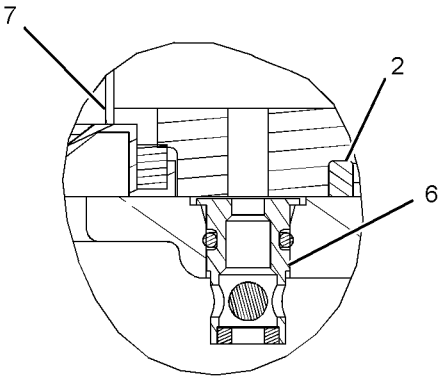

VIEW OF AREA A

GRAPHIC #1 **<END>** g01123849

255-2397 LINES GP-WATER

S/N: MHX1-UP

PART OF 234-7849 ENGINE AR-COMPLETE

SMCS-1380 **i02264280**

NOTE	REF NO	GRAPHIC REF	PART NUMBER	QTY	PART NAME 1 2 3 4 5 6 (PRODUCT LEVEL)	SEE PAGE
	1	1	**255-2395**	1	ELBOW-WATER PUMP	
M	2	1	**6V-3940**	3	BOLT (M8X1.25X25-MM)	
	3	1	**6V-5063**	2	SEAL-O-RING	
	4	1	**9M-1974**	3	WASHER-HARD (8.8X16X2-MM THK)	
	5	1	**9S-4183**	2	PLUG	

M-METRIC PART

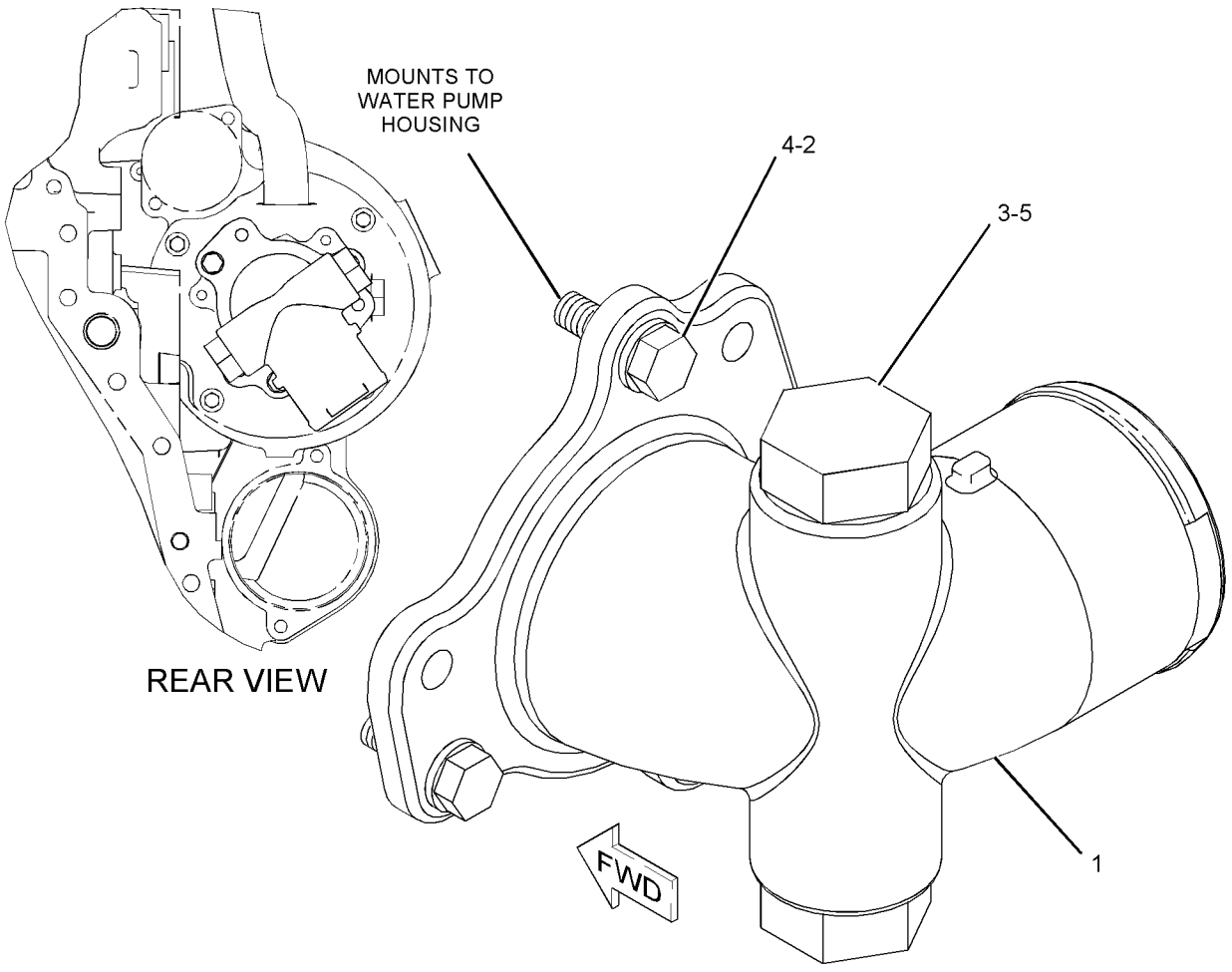

GRAPHIC #1 **<END>** g01121120

COOLING SYSTEM

223-9147 PUMP GP-WATER

S/N: MHX1-UP

PART OF 228-5811 PUMP GP-WATER

SMCS-1361 **i02176045**

NOTE	REF NO	GRAPHIC REF	PART NUMBER	QTY	PART NAME 1 2 3 4 5 6 (PRODUCT LEVEL)	SEE PAGE
	1	1	**128-0317**	1	SEAL GP (WATER PUMP)	
	2	1	**176-6994**	1	WASHER	
	4	1	**222-3904**	1	GEAR (35-TEETH)	
	5	1	**223-9143**	1	IMPELLER	
	6	1	**223-9144**	1	SHAFT-PUMP	
	7	1	**223-9145**	1	HOUSING-PUMP	
	8	1	**1B-3867**	2	BALL BEARING	
	9	1	**8C-3100**	1	SEAL-LIP TYPE	
M	10	1	**8T-9515**	1	BOLT-SOCKET HEAD (M10X1.5X40-MM)	
	11	1	**8T-9598**	1	RING-RETAINING	

M-METRIC PART

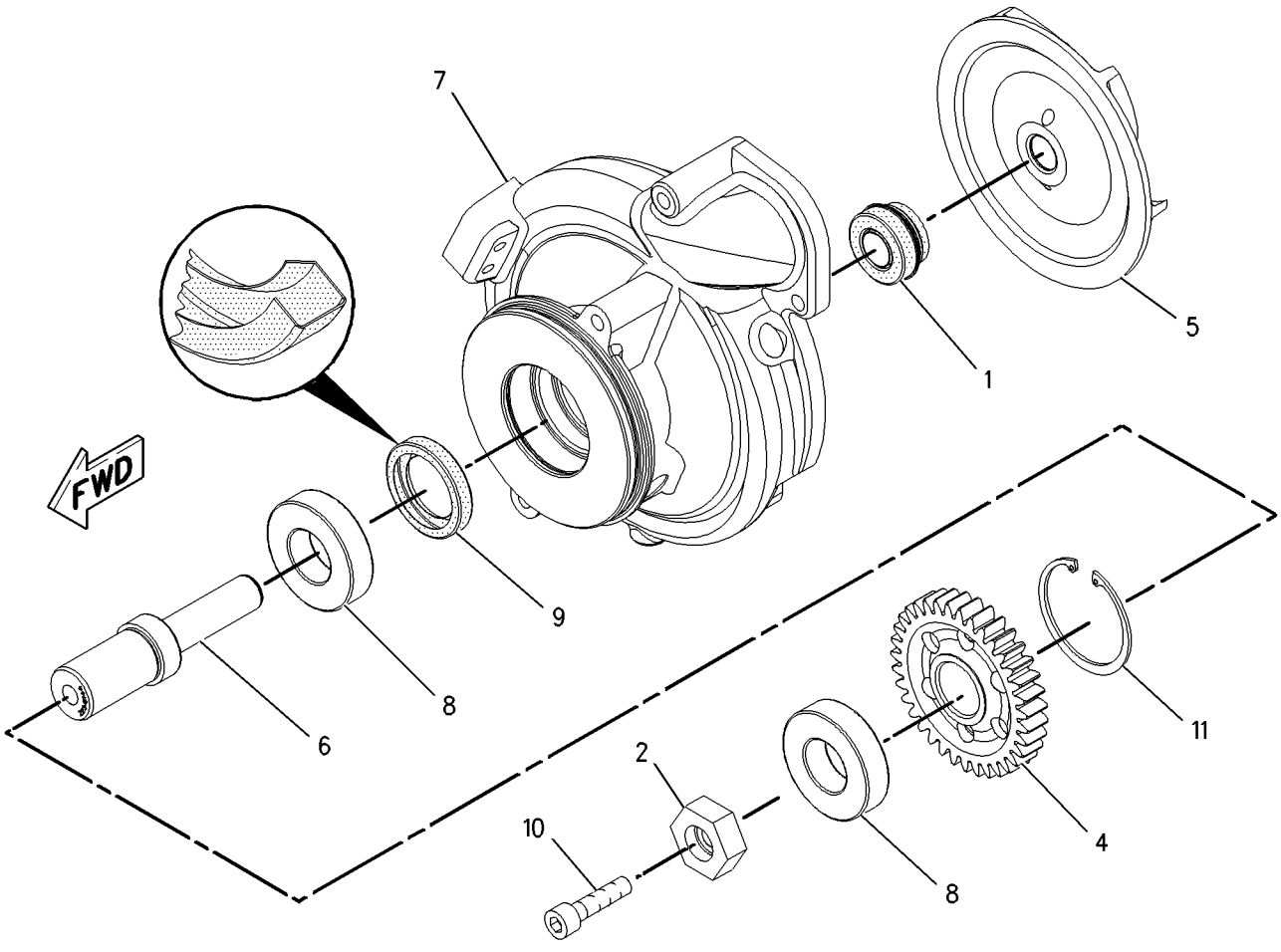

GRAPHIC #1 **<END>** g00950215

228-5811 PUMP GP-WATER*R

S/N: MHX1-UP

PART OF 228-5812 PUMP GP-WATER

SMCS-1361 **i02175050**

NOTE	REF NO	GRAPHIC REF	PART NUMBER	QTY	PART NAME 1 2 3 4 5 6 (PRODUCT LEVEL)	SEE PAGE
	1	1	**208-9281**	4	BOLT-FLANGE HEAD (M8X1.25X20-MM)	
Y	2	1	**223-9147**	1	PUMP GP-WATER	75
	3	1	**225-7003**	1	SEAL-O-RING	
	4	1	**228-5810**	1	COVER	
	5	1	**229-8810**	1	SEAL	
	6	1	**6V-3251**	1	SEAL-O-RING	
	7	1	**9S-4190**	1	PLUG	

Y-SEPARATE ILLUSTRATION

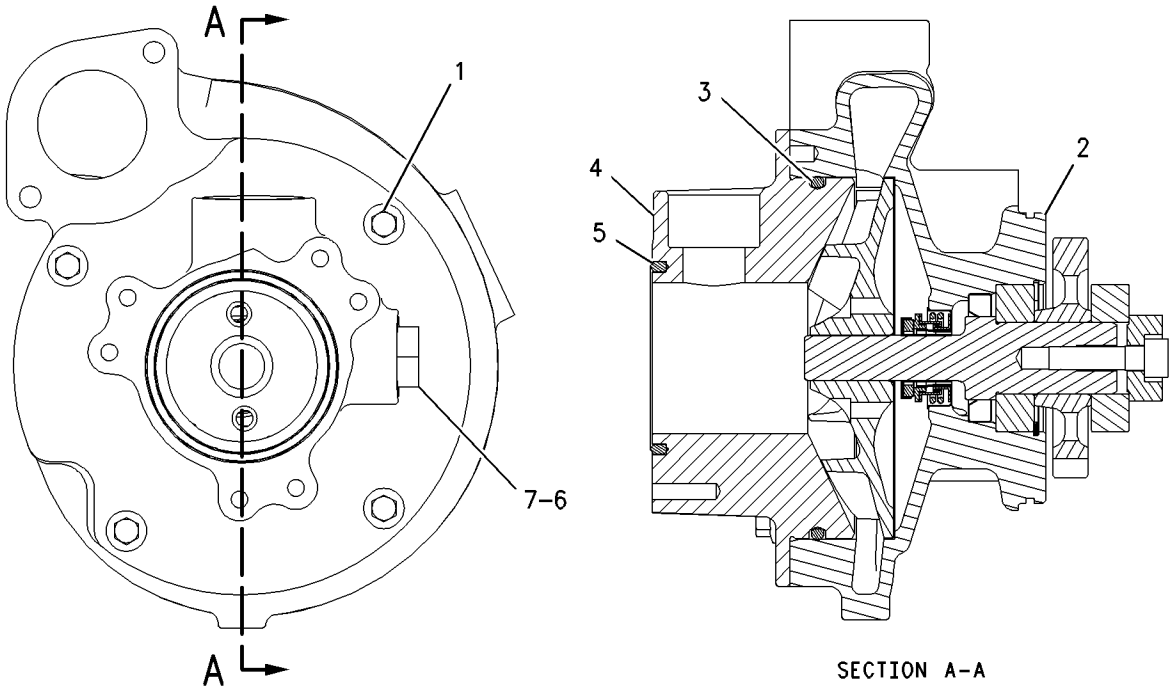

SECTION A-A

GRAPHIC #1 **<END>** g00950338

COOLING SYSTEM

228-5812 PUMP GP-WATER

S/N: MHX1-UP

PART OF 267-0009 ENGINE AR-CORE

SMCS-1361 **i02173370**

NOTE	REF NO	GRAPHIC REF	PART NUMBER	QTY	PART NAME 1 2 3 4 5 6 (PRODUCT LEVEL)	SEE PAGE
Y	1	1	**228-5811**	1	PUMP GP-WATER	76
	2	1	**6V-5839**	2	WASHER (11X21X2.5-MM THK)	
	3	1	**6V-7350**	1	SEAL-O-RING	
M	4	1	**8T-0643**	2	BOLT (M10X1.5X80-MM)	

M-METRIC PART
Y-SEPARATE ILLUSTRATION

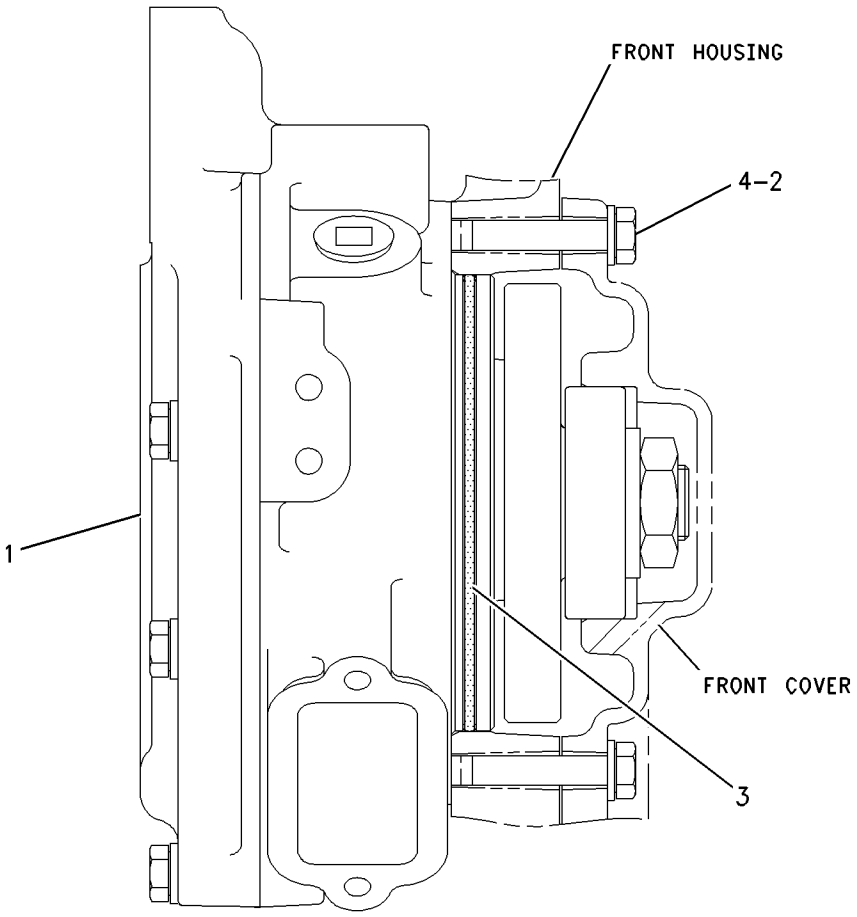

RIGHT SIDE VIEW

GRAPHIC #1 **<END>** g00942142

COOLING SYSTEM

236-8990 RADIATOR & FAN GP

S/N: A7G1-UP

PART OF 236-9051 CHASSIS AR

SMCS-1353, 1356 **i02412330**

NOTE	REF NO	GRAPHIC REF	PART NUMBER	QTY	PART NAME 1 2 3 4 5 6 (PRODUCT LEVEL)	SEE PAGE
	1	2	**4E-1384**	1	BUMPER-CONICAL	
	2	2	**5V-8780**	1	KNOB	
	3	2	**8T-2893**	2	LOCK AS-CYLINDER	
					(EACH INCLUDES)	
		2	**226-0291**	1	LOCK AS	
		2	**226-0321**	1	CAM	
	4	2	**112-5344**	1	LATCH AS-DOOR	
	5	1	**121-3307**	2	MOUNT AS-RESILIENT	
	6	4	**192-7356**	1	ADAPTER	
YR	7	1	**161-8919**	1	MOTOR GP-PISTON (HYDRAULIC FAN)	579
	8	4	**175-4249**	1	SPIDER AS-FAN (8-BLADE)	
	10	2	**189-5594**	2	COVER AS	
					(EACH INCLUDES)	
		2	**194-5278**	1	HINGE	
	11	2	**209-5528**	1	STRIKER	
	12	4	**250-3337**	1	GUARD AS	
M		4	**8T-3490**	8	NUT-WELD (M10X1.5-THD)	
		4	**204-6529**	8	WASHER (13.8X50X5-MM)	
	14	2	**239-3450**	1	SUPPORT AS (RH)	
	15	2	**239-3451**	1	SUPPORT AS (LH)	
	16	3	**239-3453**	1	SUPPORT AS	
	17	3	**239-3454**	1	SUPPORT AS	
	18	2	**239-3455**	1	HINGE AS	
	19	2	**239-3456**	1	SUPPORT AS-MOTOR	
	20	4	**240-0105**	1	SHROUD AS	
	21	4	**240-0107**	1	BAFFLE AS	
	22	4	**240-9973**	1	BRACKET AS	
	23	2	**240-9975**	1	BRACKET AS	
	24	4	**277-8986**	1	BRACKET	
	25	3	**242-9415**	1	BAFFLE AS-BOTTOM	
	26	2	**242-9417**	1	ANGLE	
	27	2	**242-9418**	1	ANGLE	
	28	1	**242-9419**	1	ANGLE	
	29	2,4	**243-2289**	2	MOUNT AS	
	30	1	**260-0354**	1	CORE AS-AFTERCOOLER	
	31	3	**244-4498**	1	CORE AS-HYDRAULIC OIL COOLER	
	32	2	**244-6856**	1	BRACKET AS	
	33	3	**245-1172**	1	BAFFLE	
	34	3	**245-1173**	1	BAFFLE	
	35	1	**245-3206**	1	ANGLE AS	
	36	1	**245-4018**	1	BRACKET AS	
	37	1	**245-6011**	1	BAFFLE AS	
	38	3	**256-5309**	1	CORE AS-RADIATOR	
	39	3	**3K-5178**	1	GROMMET	
M	40	2	**5C-2890**	4	NUT (M6X1-THD)	
M	41	2	**5C-7261**	1	NUT (M8X1.25-THD)	
	42	2	**5P-1076**	8	WASHER-HARD (13.5X30X4-MM THK)	
	43	4	**7X-0515**	1	WASHER-HARD (17X35X5-MM THK)	
M	44	1	**7X-2546**	4	BOLT (M10X1.5X180-MM)	
M	45	1,3	**7X-2553**	8	BOLT (M16X2X40-MM)	
	46	1,2,3, 4	**7X-7729**	75	WASHER (11X25X3-MM THK)	
	47	1,3	**8T-4121**	22	WASHER-HARD (11X21X2.5-MM THK)	
M	48	4	**8T-4132**	1	NUT (M16X2-THD)	
M	49	1,2	**8T-4133**	16	NUT (M10X1.15-THD)	
M	50	3,4	**8T-4136**	11	BOLT (M10X1.5X25-MM)	

236-8990 **RADIATOR & FAN GP** *(contd.)* **i02412330**

NOTE	REF NO	GRAPHIC REF	PART NUMBER	QTY	PART NAME 1 2 3 4 5 6 (PRODUCT LEVEL)	SEE PAGE
M	51	2,3	**8T-4137**	5	BOLT (M10X1.5X20-MM)	
M	52	2	**8T-4138**	4	BOLT (M6X1X20-MM)	
M	53	1,2,3, 4	**8T-4195**	59	BOLT (M10X1.5X30-MM)	
M	54	2,3	**8T-4196**	4	BOLT (M10X1.5X35-MM)	
	55	1	**8T-4223**	2	WASHER-HARD (13.5X25.5X3-MM THK)	
	56	1,2,4	**8T-4226**	5	WASHER-PLATED (10.5X45X3-MM THK)	
M	57	1,2	**8T-4956**	10	BOLT (M12X1.75X35-MM)	
M	58	1	**8T-6466**	2	BOLT (M10X1.5X60-MM)	
	59	2	**9X-8256**	8	WASHER (6.6X12X2-MM THK)	
	60	1,3	**9X-8257**	8	WASHER (17.5X30X3.5-MM THK)	
D	61	3	**5P-8309**	2	SEAL (0.1-M EACH)	
E	62	3	**112-9736**	2	SEAL (111-CM EACH)	
E	62A	3	**112-9736**		SEAL (121.5-CM)	
BD	63	1	**054-7915**		SEAL (1.05-M)	
BD	63A	1	**054-7915**		SEAL (0.98-M)	
M	64	4	**8T-4186**	1	BOLT (M10X1.5X40-MM)	
	65	4	**277-8628**	2	MOUNT	

B-USE AS REQUIRED
D-ORDER BY THE METER
E-ORDER BY THE CENTIMETER
M-METRIC PART
R-REMFG PART MAY BE AVAILABLE
Y-SEPARATE ILLUSTRATION

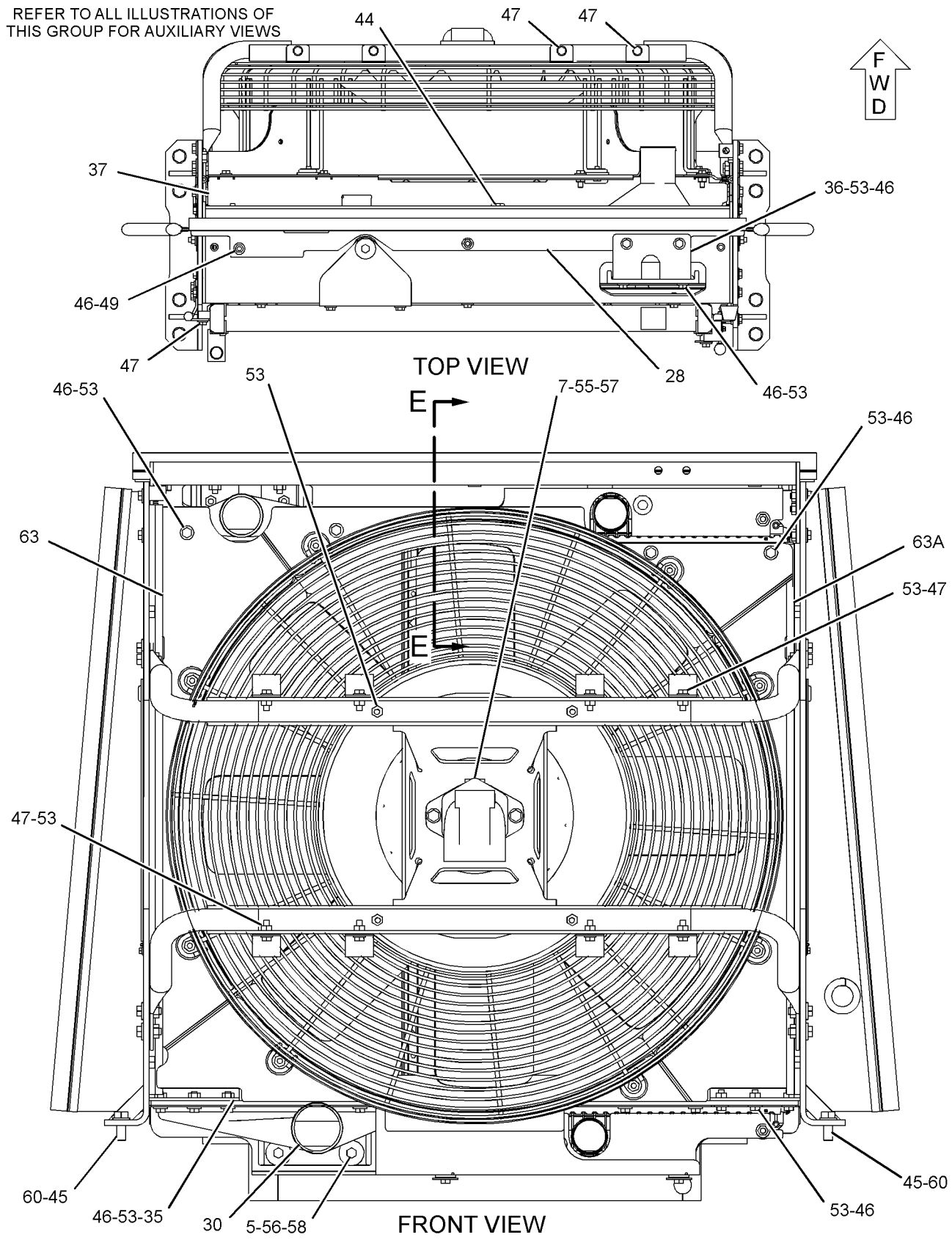

GRAPHIC #1

g01196914

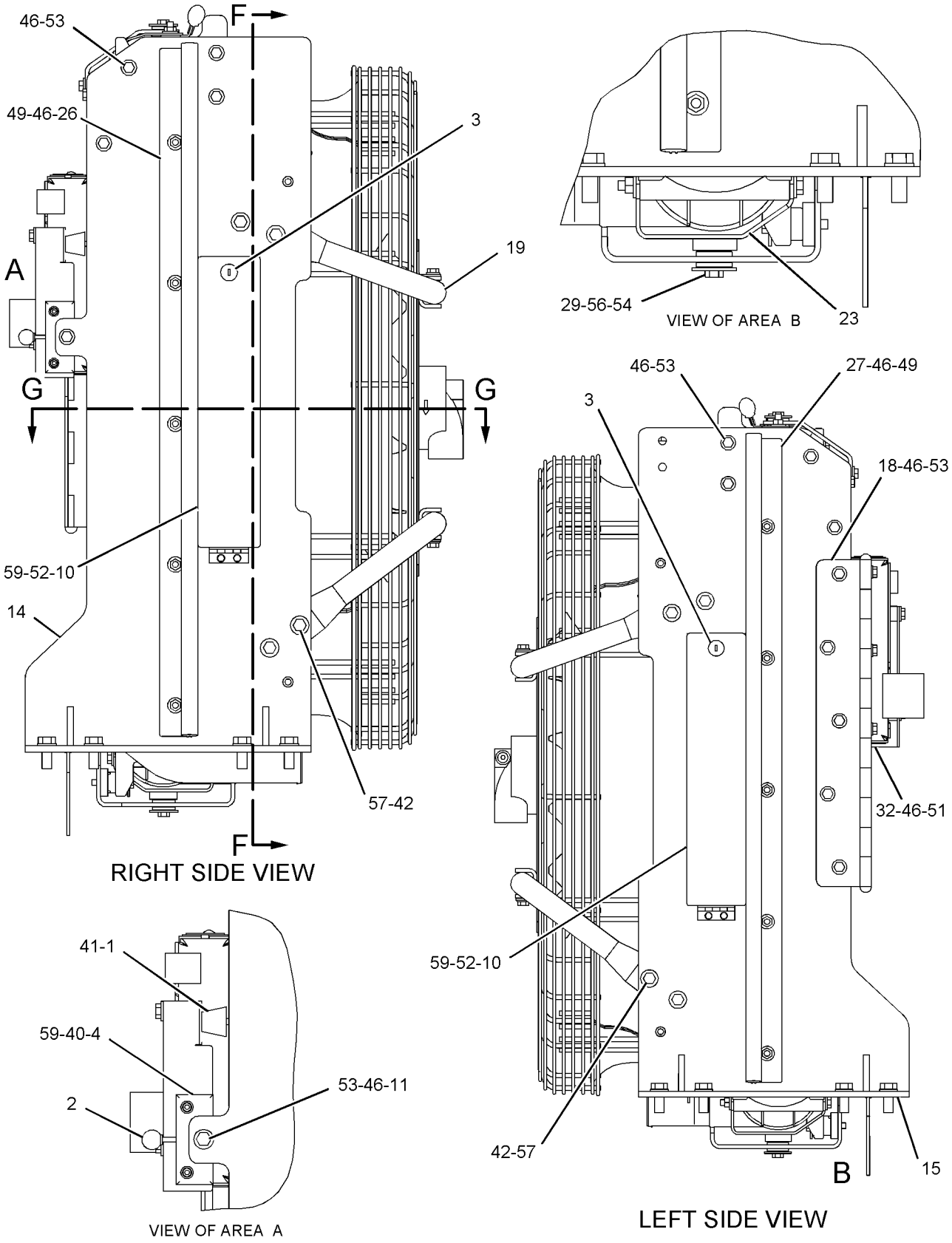

GRAPHIC #2

g01196915

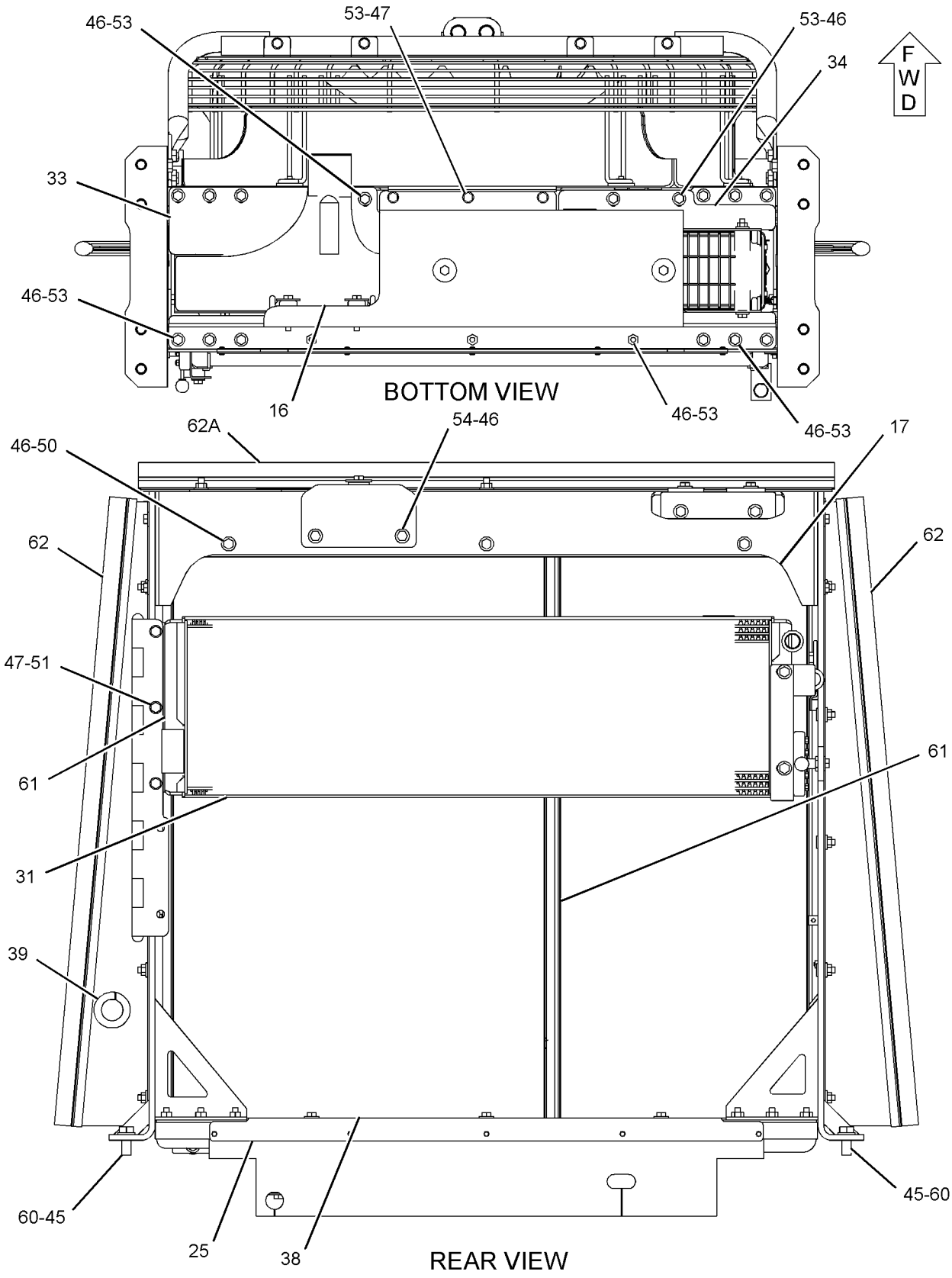

GRAPHIC #3

g01196916

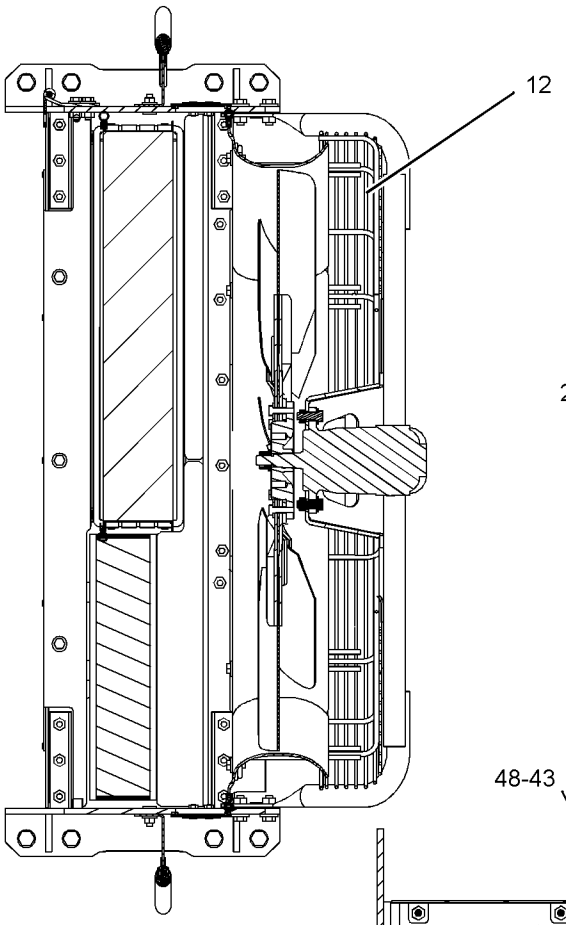

SECTION G-G

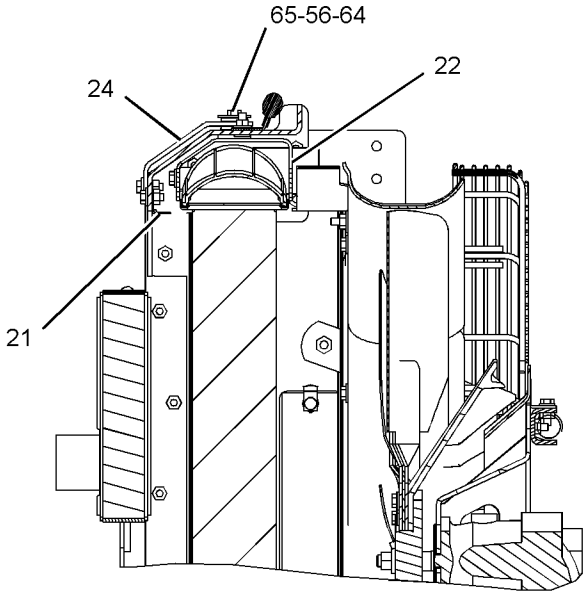

SECTION E-E

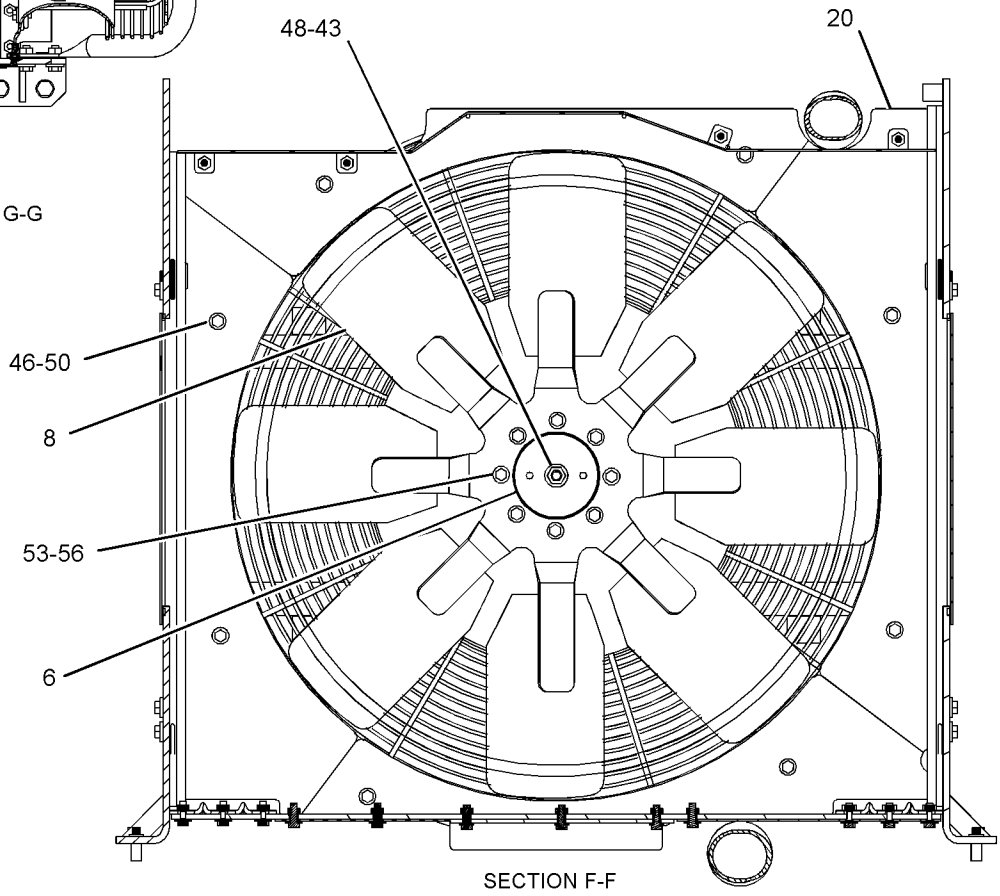

SECTION F-F

GRAPHIC #4 **<END>** g01196918

COOLING SYSTEM

242-4340 TANK GP-RADIATOR TOP

S/N: A7G1-UP

PART OF 236-8988 LINES GP-WATER

SMCS-1377 **i02412042**

NOTE	REF NO	GRAPHIC REF	PART NUMBER	QTY	PART NAME 1 2 3 4 5 6 (PRODUCT LEVEL)	SEE PAGE
	1	1	**6L-8617**	1	CAP-RADIATOR (7-PSI)	
	2	1	**242-4339**	1	TANK AS-COOLANT	

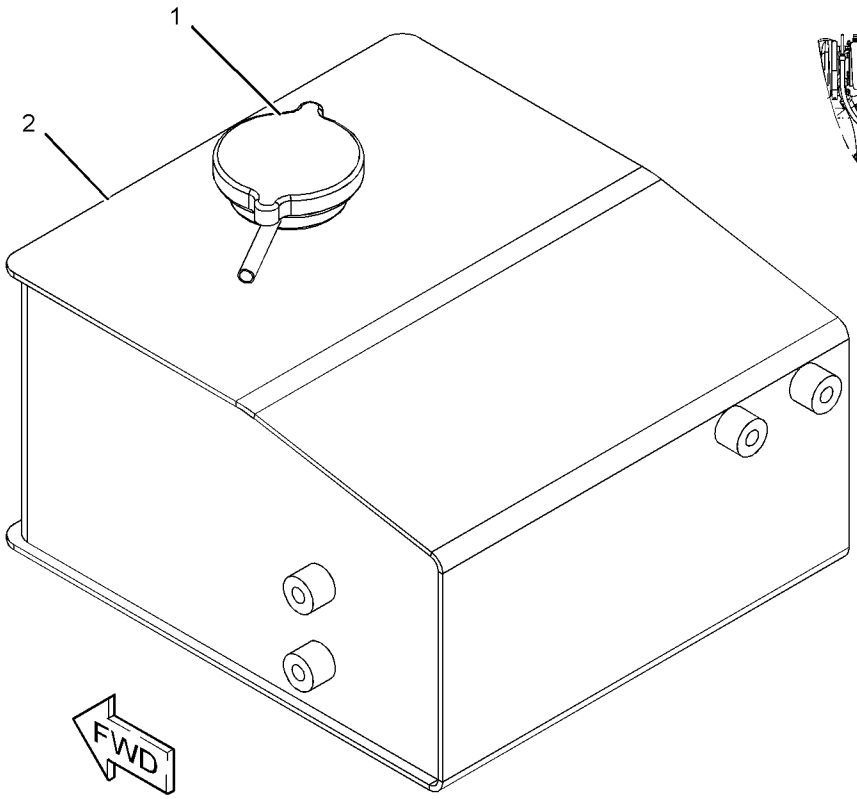

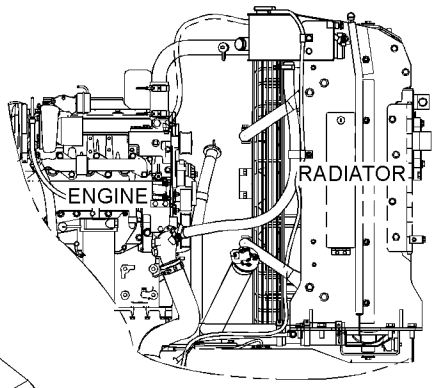

LEFT SIDE VIEW

GRAPHIC #1 **<END>** g01208737

AIR INLET AND EXHAUST SYSTEM

235-1075 AIR CLEANER GP

S/N: A7G1-UP

PART OF 236-7231 INSTALLATION AR-ENGINE

SMCS-1051, 1054 **i02411326**

NOTE	REF NO	GRAPHIC REF	PART NUMBER	QTY	PART NAME 1 2 3 4 5 6 (PRODUCT LEVEL)	SEE PAGE
	1	1	**243-1679**	1	EXTENSION	
Y	2	1	**245-3815**	1	AIR CLEANER GP	86
	3	1	**245-3816**	1	CAP AS-RAIN	
	4	1	**220-4126**	1	CLAMP	
M	5	1	**7X-2537**	4	BOLT (M8X1.25X35-MM)	
	6	1	**7X-0579**	4	WASHER-HARD (8.8X25.5X2-MM THK)	

M-METRIC PART
Y-SEPARATE ILLUSTRATION

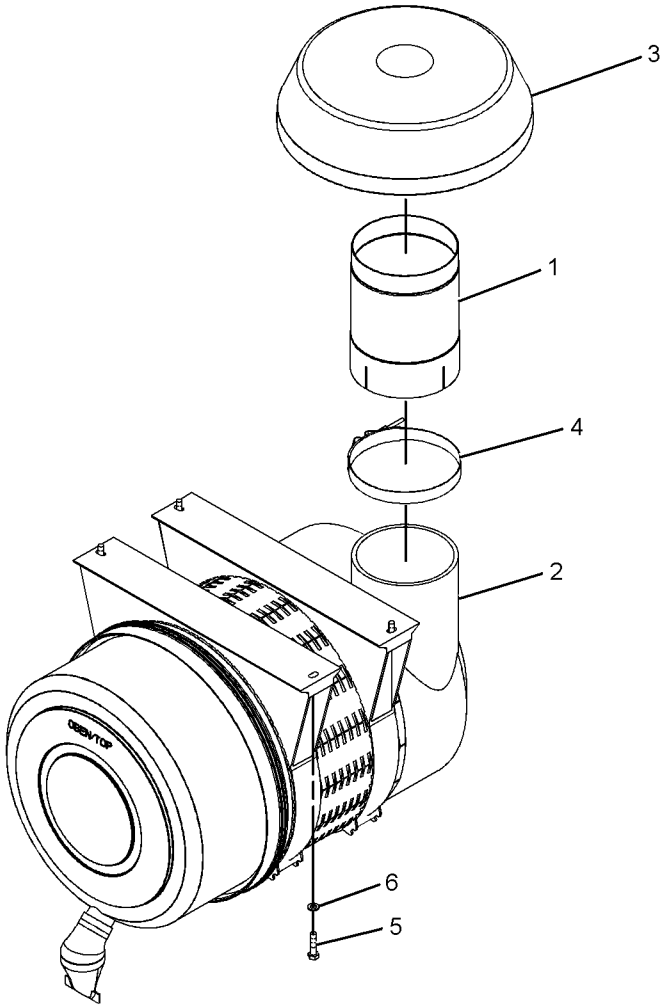

GRAPHIC #1 **<END>** g01113642

AIR INLET AND EXHAUST SYSTEM

245-3815 AIR CLEANER GP

S/N: A7G1-UP

PART OF 235-1075 AIR CLEANER GP

SMCS-1051, 1054 **i02203924**

NOTE	REF NO	GRAPHIC REF	PART NUMBER	QTY	PART NAME 1 2 3 4 5 6 (PRODUCT LEVEL)	SEE PAGE
	1	1	**245-3818**	1	FILTER ELEMENT AS-AIR (PRIMARY)	
	2	1	**245-3819**	1	FILTER ELEMENT AS-AIR (SECONDARY)	
	3	1	**246-4612**	1	VALVE-AIR CLEANER DUST	
	4	1	**246-4616**	1	COVER AS	
	5	1	**246-4617**	2	BRACKET AS	

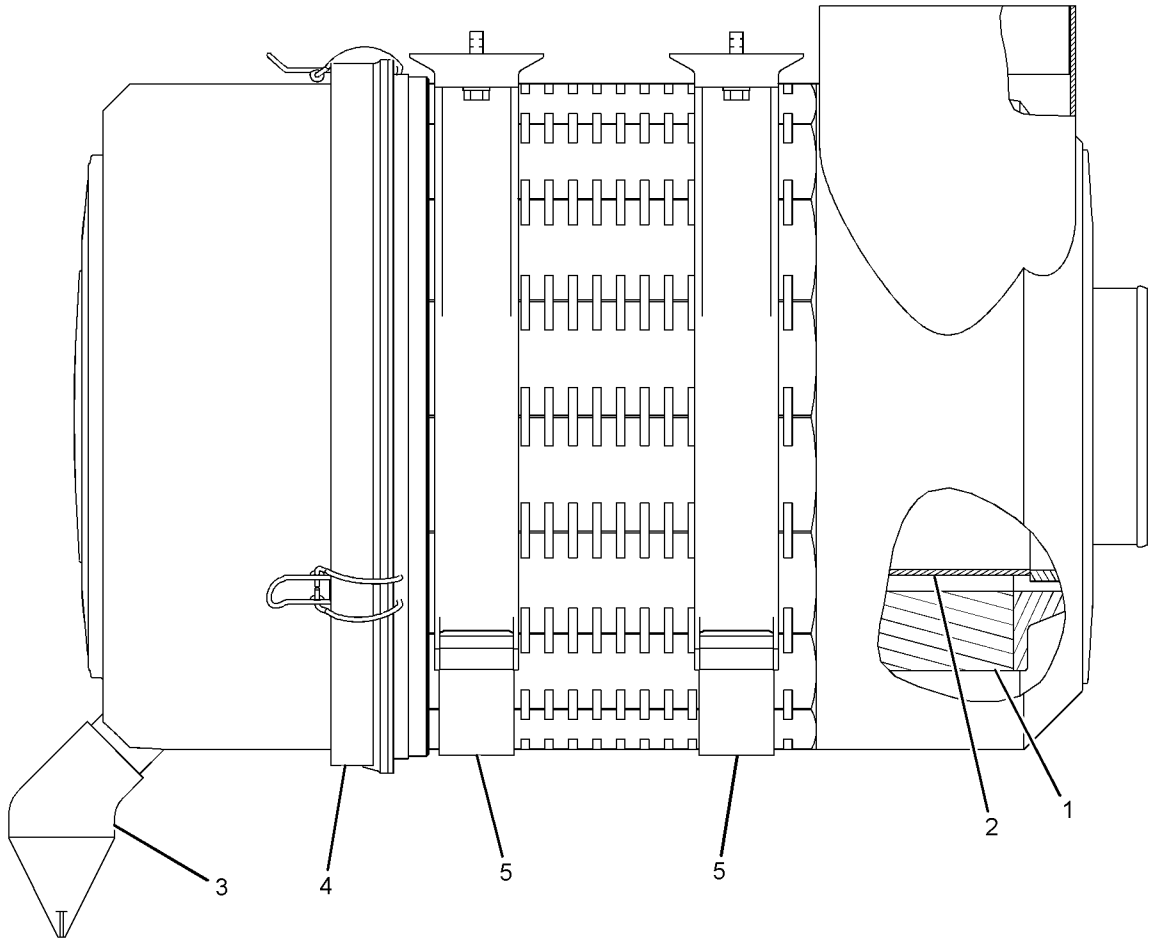

GRAPHIC #1 **<END>** g01113699

AIR INLET AND EXHAUST SYSTEM

236-8979 LINES GP-AFTERCOOLER AIR

S/N: A7G1-UP

PART OF 236-9051 CHASSIS AR

SMCS-1063, 1071 **i02412054**

NOTE	REF NO	GRAPHIC REF	PART NUMBER	QTY	PART NAME 1 2 3 4 5 6 (PRODUCT LEVEL)	SEE PAGE
	1	1	**7E-8630**	4	HOSE-AIR INLET	
	2	1	**177-0035**	1	U-BOLT (M10X1.15-THD)	
	3	1	**217-1601**	1	HOSE-ELBOW	
	4	1	**262-6848**	1	TUBE	
	5	1	**275-9368**	1	BRACKET	
	6	1	**275-9369**	1	TUBE	
	7	1	**275-9370**	1	TUBE	
	8	1	**276-1028**	1	BRACKET AS	
	9	1	**208-7448**	10	CLAMP	
	10	1	**7X-7729**	2	WASHER (11X25X3-MM THK)	
M	11	1	**8T-0389**	4	LOCKNUT (M10X1.15-THD)	
	12	1	**8T-4121**	4	WASHER-HARD (11X21X2.5-MM THK)	
M	13	1	**8T-4195**	4	BOLT (M10X1.5X30-MM)	
	14	1	**8T-4226**	2	WASHER-PLATED (10.5X45X3-MM THK)	

M-METRIC PART

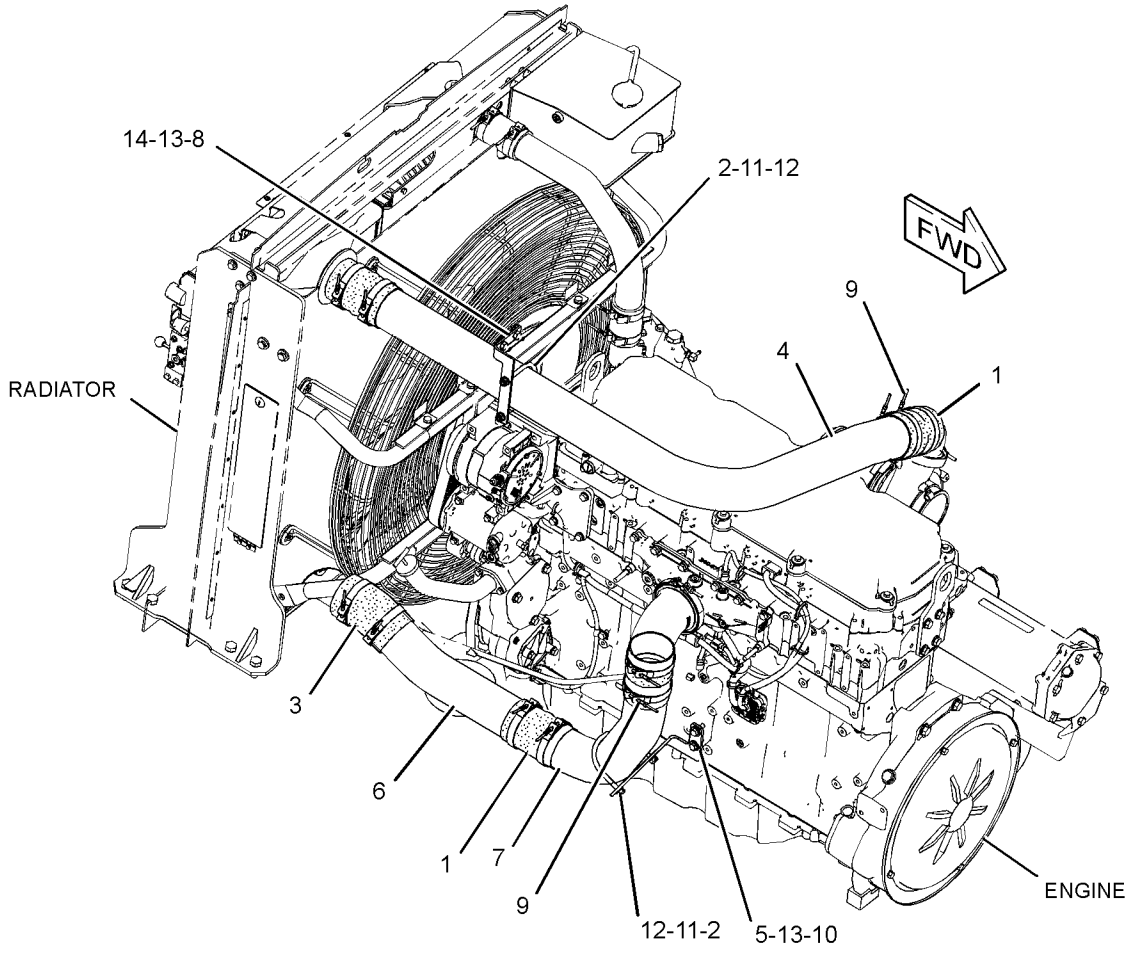

GRAPHIC #1 **<END>** g01206830

AIR INLET AND EXHAUST SYSTEM

235-1078 LINES GP-AIR

S/N: A7G1-UP

PART OF 236-7231 INSTALLATION AR-ENGINE

SMCS-1071 **i02411329**

NOTE	REF NO	GRAPHIC REF	PART NUMBER	QTY	PART NAME 1 2 3 4 5 6 (PRODUCT LEVEL)	SEE PAGE
	1	1	**9N-1941**	1	CLAMP-V-BAND	
	2	1	**135-6260**	1	CLAMP	
	3	1	**135-6261**	1	CLAMP	
	4	1	**243-1673**	1	ELBOW	
	5	1	**243-1676**	1	TUBE AS	
	6	1	**243-1677**	1	TUBE AS	
	7	1	**243-1678**	1	ELBOW	
	8	1	**241-9265**	1	CLAMP-MUFFLER	
	9	1	**147-1685**	2	CLAMP	

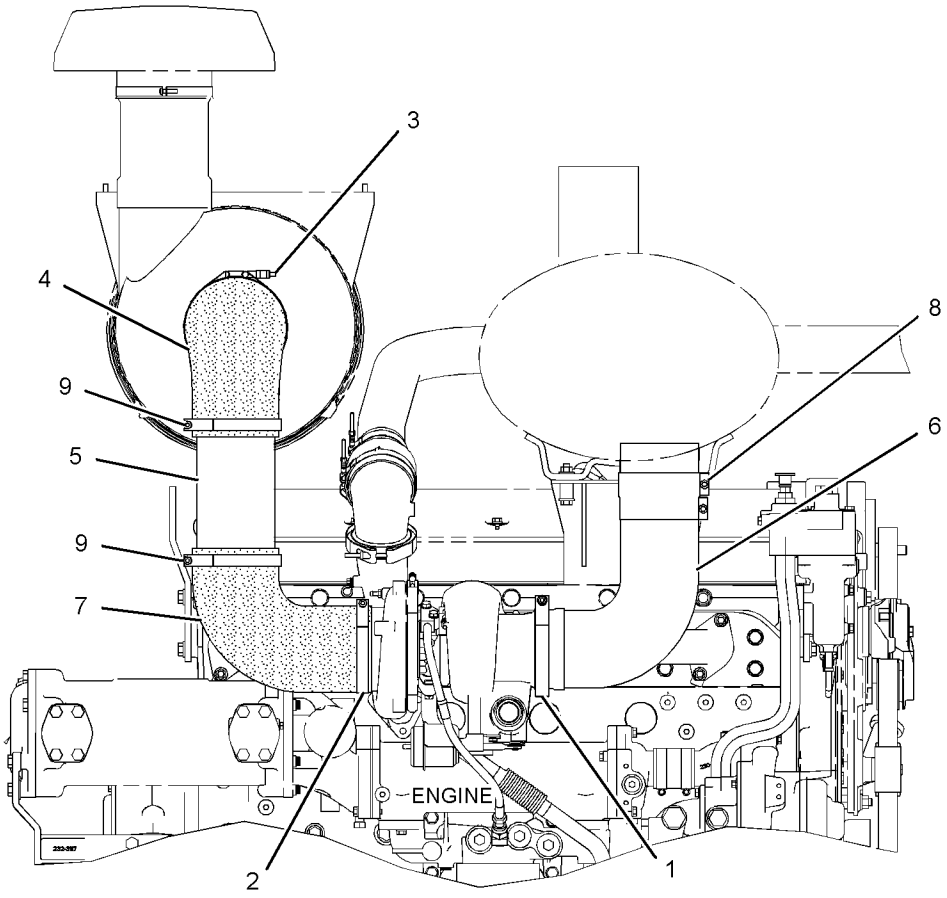

LEFT SIDE VIEW

GRAPHIC #1 **<END>** g01208865

AIR INLET AND EXHAUST SYSTEM

237-9754 LINES GP-AIR

S/N: MHX1-UP

PART OF 234-7849 ENGINE AR-COMPLETE

SMCS-1071 **i02270611**

NOTE	REF NO	GRAPHIC REF	PART NUMBER	QTY	PART NAME 1 2 3 4 5 6 (PRODUCT LEVEL)	SEE PAGE
	1	1	**127-0929**	1	CLAMP	
		1	**8T-0122**	1	NUT-FULL (1/4-28-THD)	
	2	1	**217-8946**	1	ELBOW	
	3	1	**6V-5048**	1	SEAL-O-RING	
	4	1	**8C-3089**	1	SEAL-O-RING	
	5	1	**9S-8002**	1	PLUG	

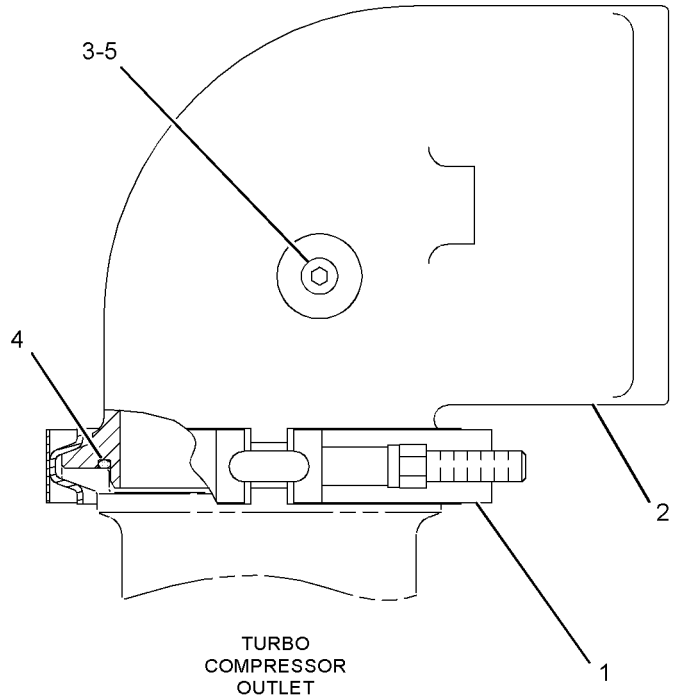

GRAPHIC #1 **<END>** g01086947

AIR INLET AND EXHAUST SYSTEM

237-9756 LINES GP-AIR

S/N: MHX1-UP

PART OF 234-7849 ENGINE AR-COMPLETE

SMCS-1071 **i02270618**

NOTE	REF NO	GRAPHIC REF	PART NUMBER	QTY	PART NAME 1 2 3 4 5 6 (PRODUCT LEVEL)	SEE PAGE
	1	1	**203-0351**	1	ELBOW-AIR	
	2	1	**248-4840**	1	CAP	
	3	1	**248-4841**	1	CLAMP-BAND	
	4	1	**6V-5048**	1	SEAL-O-RING	
	5	1	**9S-8002**	1	PLUG	

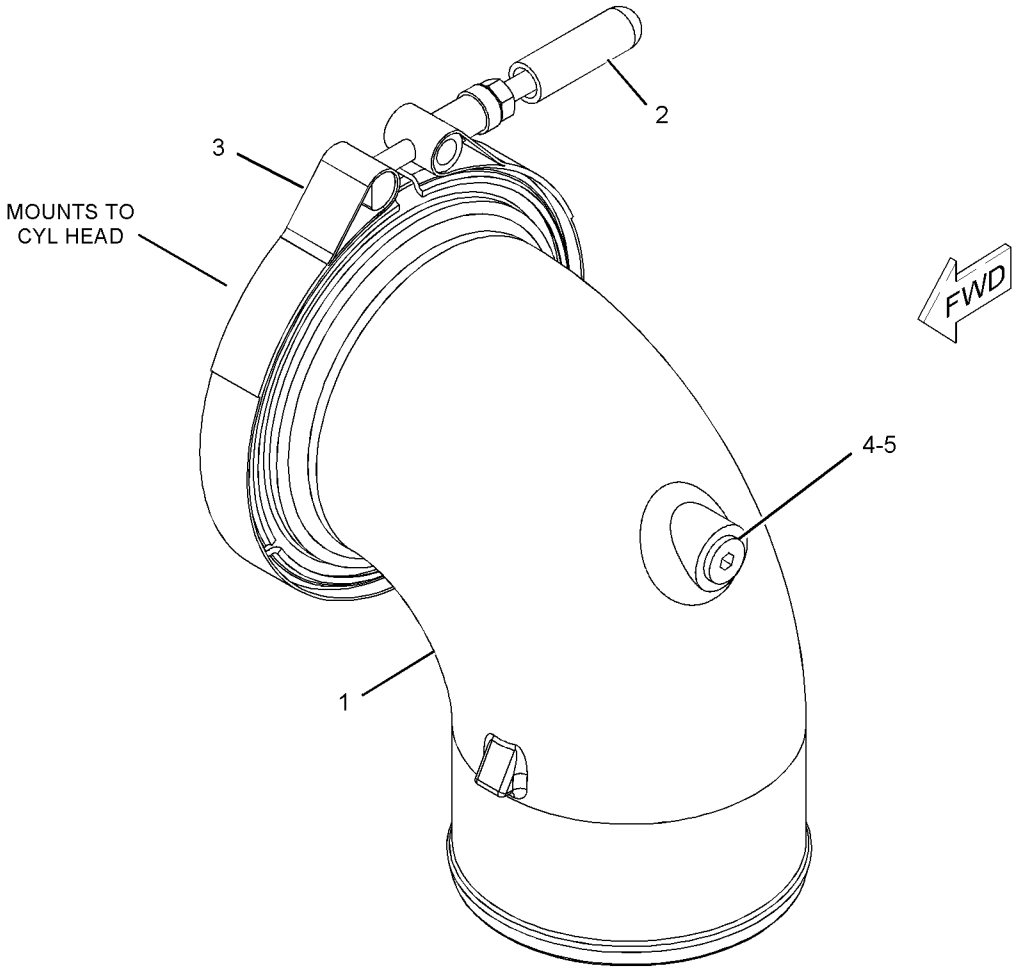

GRAPHIC #1 **<END>** g01121030

267-3476 MANIFOLD GP-EXHAUST

S/N: MHX1-UP

PART OF 234-7849 ENGINE AR-COMPLETE

SMCS-1059 **i02340855**

NOTE	REF NO	GRAPHIC REF	PART NUMBER	QTY	PART NAME 1 2 3 4 5 6 (PRODUCT LEVEL)	SEE PAGE
	1	1	**4P-4369**	12	SPACER (12X19X23.5-MM THK)	
	2	1	**224-5389**	6	GASKET	
	3	1	**231-9030**	2	MANIFOLD-EXHAUST	
	4	1	**247-2834**	1	MANIFOLD-EXHAUST	
M	5	1	**116-3715**	12	STUD-TAPERLOCK (M10X1.5X85-MM)	
M	6	1	**3E-8017**	12	LOCKNUT (M10X1.5-MM THD)	
	7	1	**6V-5839**	12	WASHER (11X21X2.5-MM THK)	
M	8	1	**9X-8281**	4	STUD-TAPERLOCK (M10X1.5X45-MM)	

M-METRIC PART

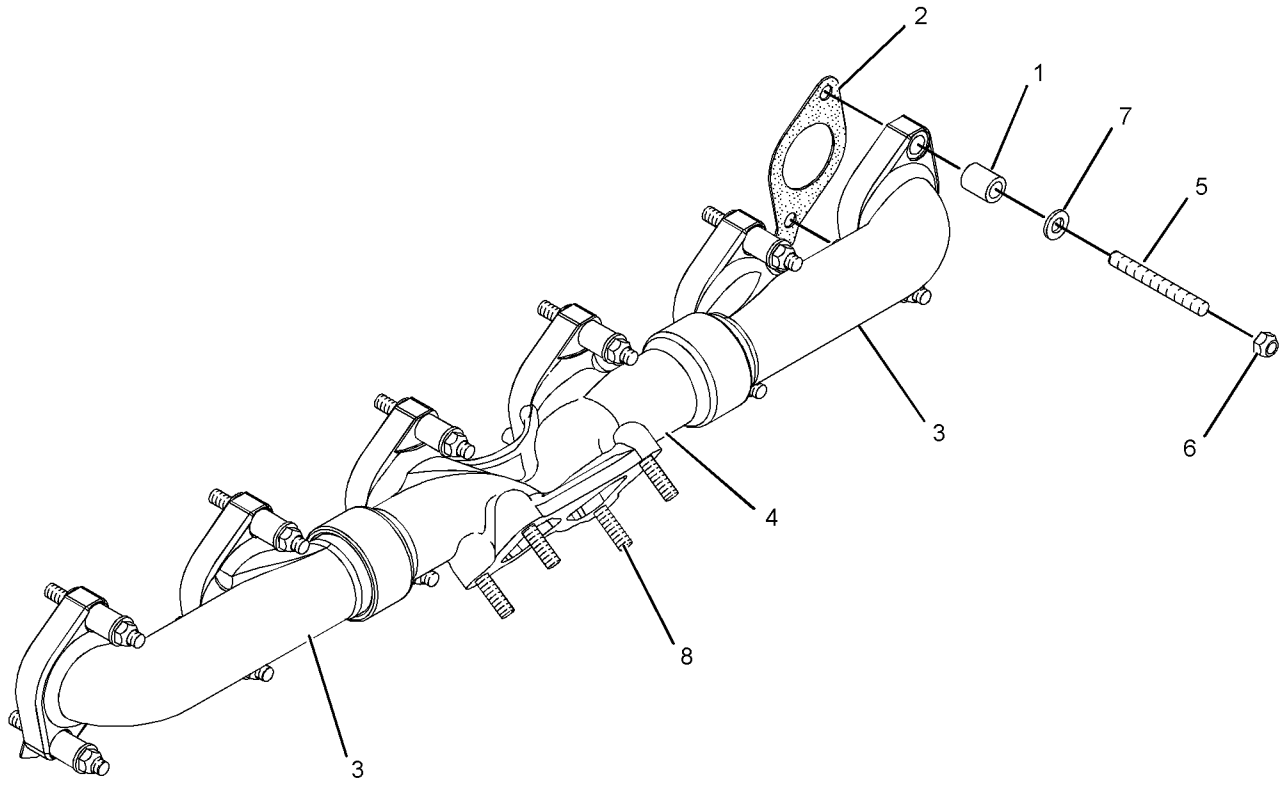

GRAPHIC #1 **<END>** g01142209

AIR INLET AND EXHAUST SYSTEM

222-3092 MANIFOLD GP-INLET

S/N: MHX1-UP

PART OF 234-7849 ENGINE AR-COMPLETE

SMCS-1058 **i02174441**

NOTE	REF NO	GRAPHIC REF	PART NUMBER	QTY	PART NAME 1 2 3 4 5 6 (PRODUCT LEVEL)	SEE PAGE
	1	1	**121-5908**	1	STUD	
	2	1	**222-3091**	1	MANIFOLD-INLET	
	3	1	**230-3518**	1	GASKET-MANIFOLD	
	4	1	**132-5789**	1	CLIP	
	5	1	**162-9527**	2	PLUG	
	6	1	**3J-1907**	2	SEAL-O-RING	
M	7	1	**6V-3822**	11	BOLT (M10X1.5X35-MM)	
	8	1	**6V-6353**	1	SEAL-O-RING	
	9	1	**7X-0623**	12	WASHER (10.5X21X2-MM THK)	

M-METRIC PART

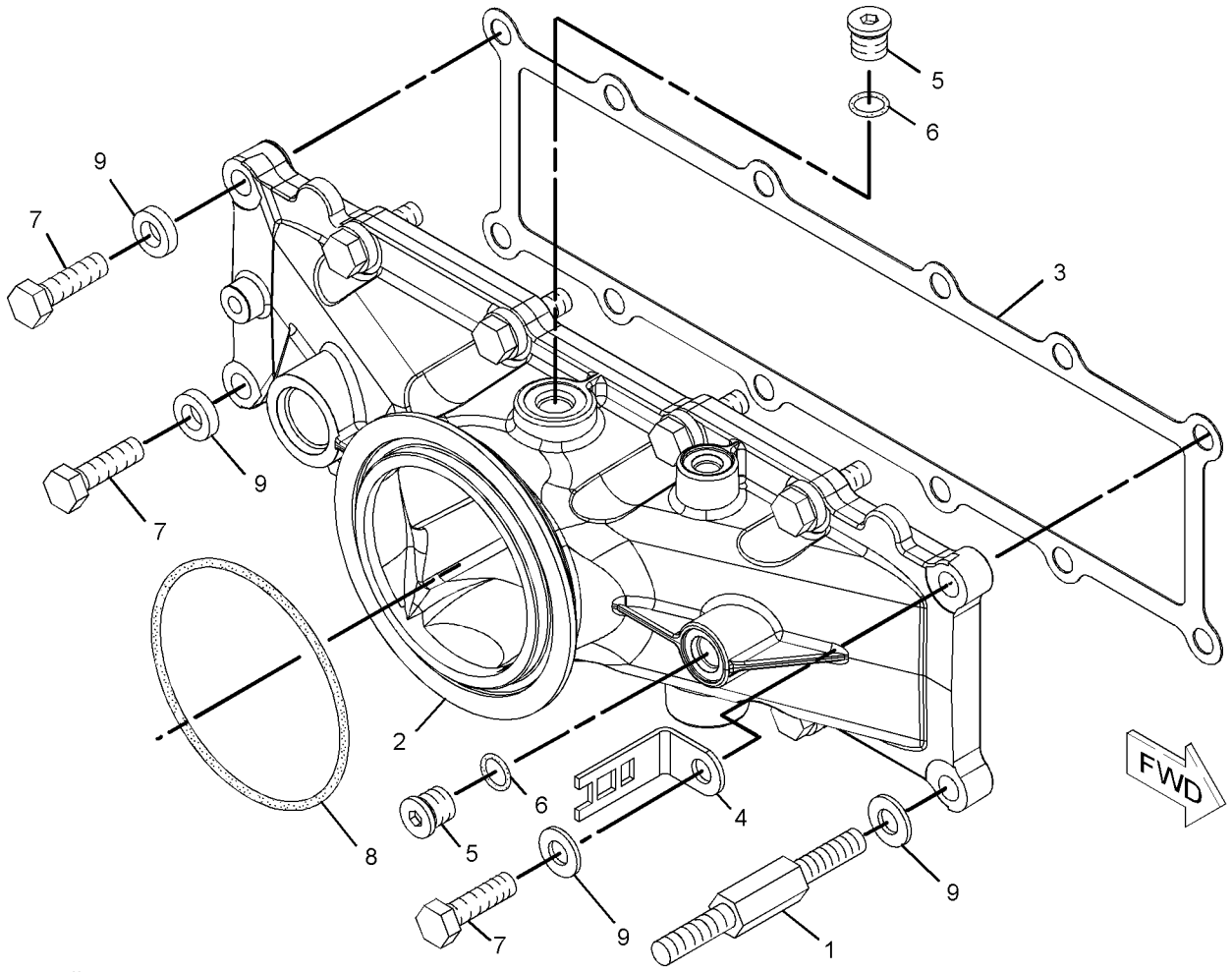

GRAPHIC #1 **<END>** g01081872

AIR INLET AND EXHAUST SYSTEM

237-9750 MUFFLER GP

S/N: A7G1-UP

PART OF 236-7231 INSTALLATION AR-ENGINE

SMCS-1062 **i02411330**

NOTE	REF NO	GRAPHIC REF	PART NUMBER	QTY	PART NAME 1 2 3 4 5 6 (PRODUCT LEVEL)	SEE PAGE
	1	1	**8L-5423**	7	SPACER (0.406X1X0.712-IN THK)	
	2	1	**243-1674**	1	SUPPORT AS	
	3	1	**243-1675**	1	MUFFLER AS	
	4	1	**7X-7729**	11	WASHER (11X25X3-MM THK)	
M	5	1	**8T-4133**	4	NUT (M10X1.15-THD)	
M	6	1	**8T-4182**	3	BOLT (M10X1.5X45-MM)	
M	7	1	**8T-6466**	4	BOLT (M10X1.5X60-MM)	

M-METRIC PART

237-9750 **MUFFLER GP** *(contd.)* **i02411330**

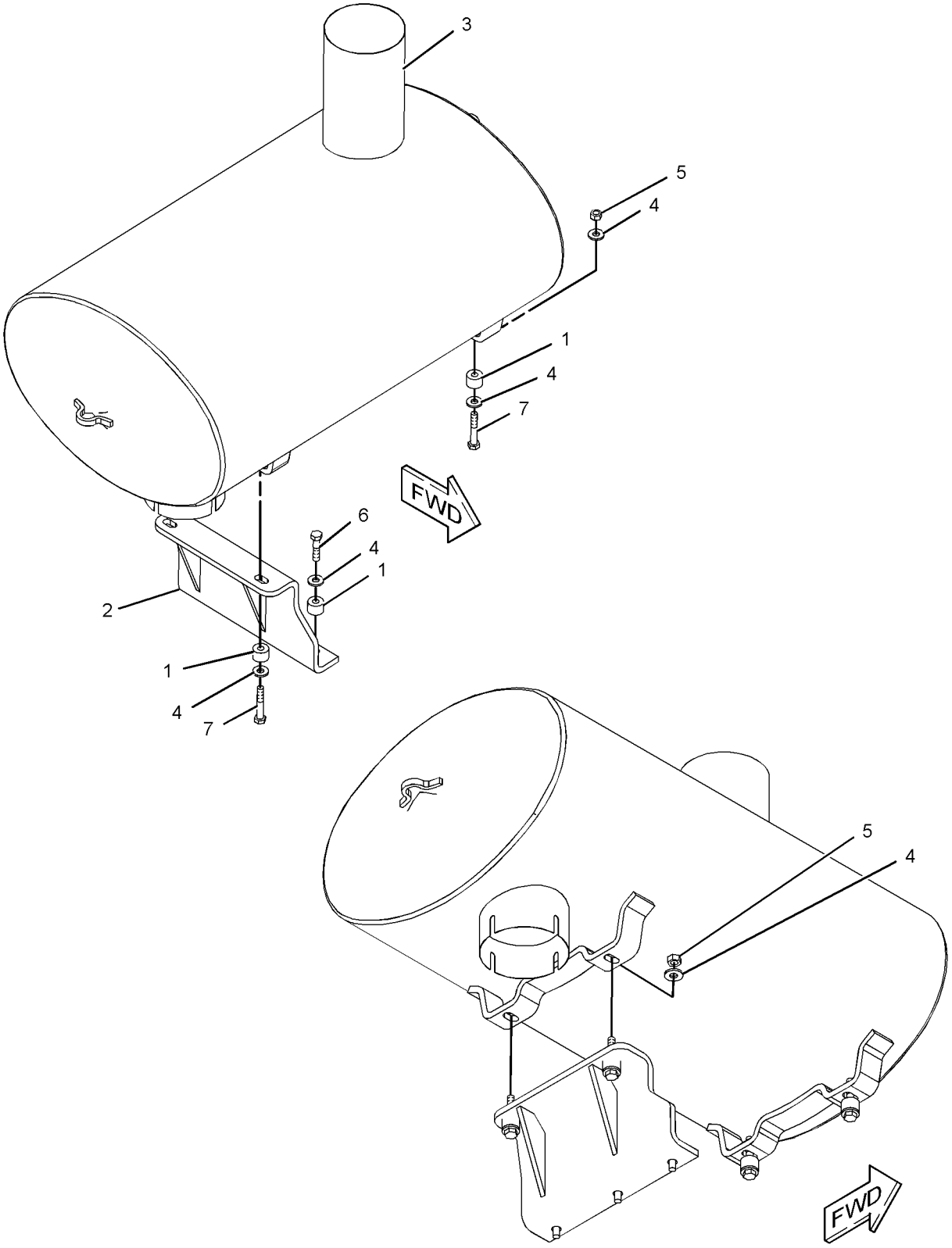

GRAPHIC #1 **<END>** g01206998

AIR INLET AND EXHAUST SYSTEM

227-5518 PLUG GP-AIR INLET MANIFOLD

S/N: MHX1-UP

PART OF 234-7849 ENGINE AR-COMPLETE

SMCS-1058 **i02270493**

NOTE	REF NO	GRAPHIC REF	PART NUMBER	QTY	PART NAME 1 2 3 4 5 6 (PRODUCT LEVEL)	SEE PAGE
	1	1	**189-9377**	1	SEAL-O-RING	
	2	1	**9S-8008**	1	PLUG	

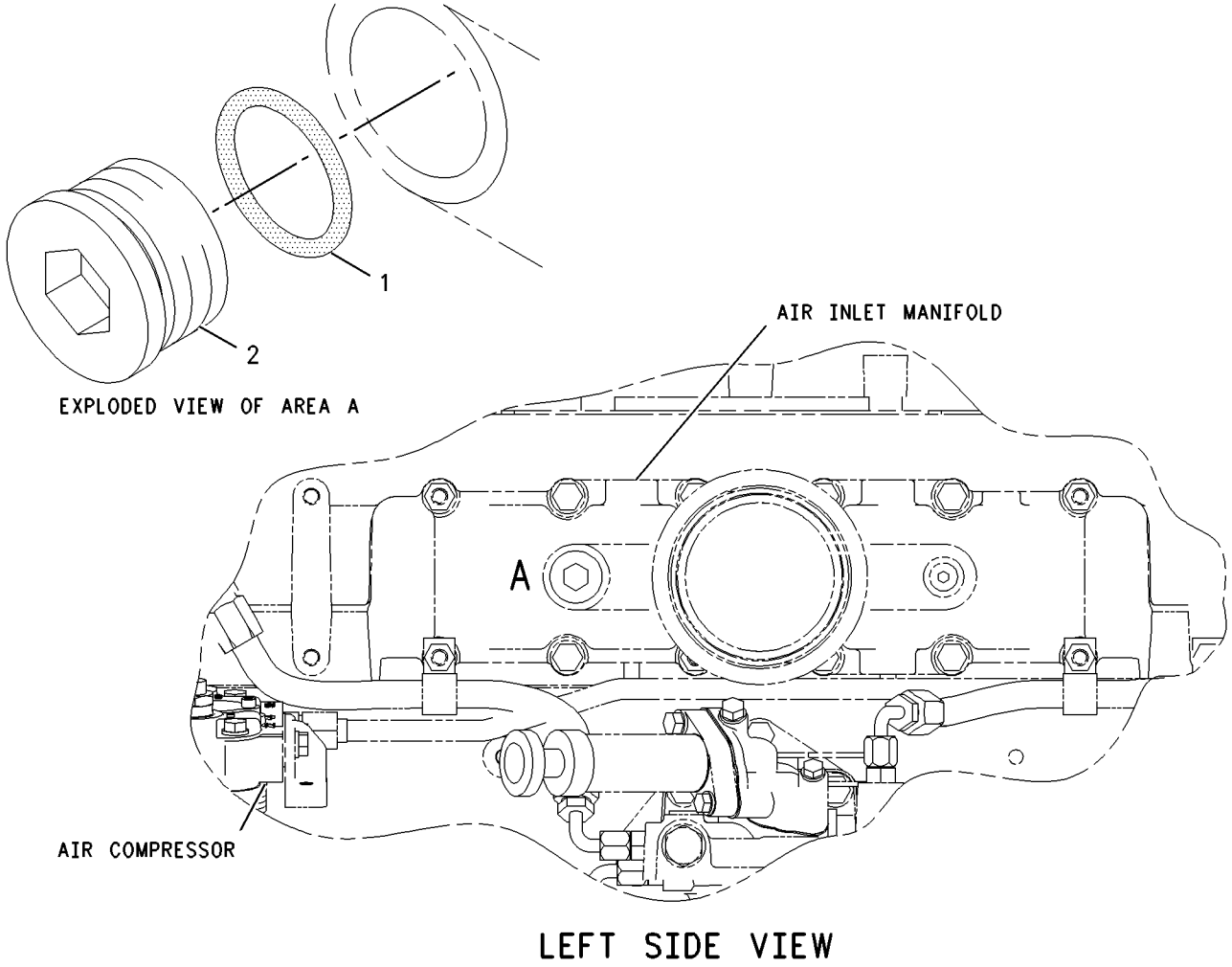

LEFT SIDE VIEW

GRAPHIC #1 **<END>** g00951570

AIR INLET AND EXHAUST SYSTEM

236-9135 PRECLEANER GP

S/N: A7G1-UP

AN ATTACHMENT

SMCS-1055 **i02418163**

NOTE	REF NO	GRAPHIC REF	PART NUMBER	QTY	PART NAME 1 2 3 4 5 6 (PRODUCT LEVEL)	SEE PAGE
	1	1	**8T-4121**	6	WASHER-HARD (11X21X2.5-MM THK)	
	2	1	**070-0107**	1	PRECLEANER GP	
	3	1	**209-6466**	1	PIPE	
	4	1	**250-0944**	1	PIPE AS-EXTENSION	
	5	1	**220-4126**	2	CLAMP	
M	6	1	**8T-4133**	3	NUT (M10X1.15-THD)	
M	7	1	**8T-4136**	3	BOLT (M10X1.5X25-MM)	

M-METRIC PART

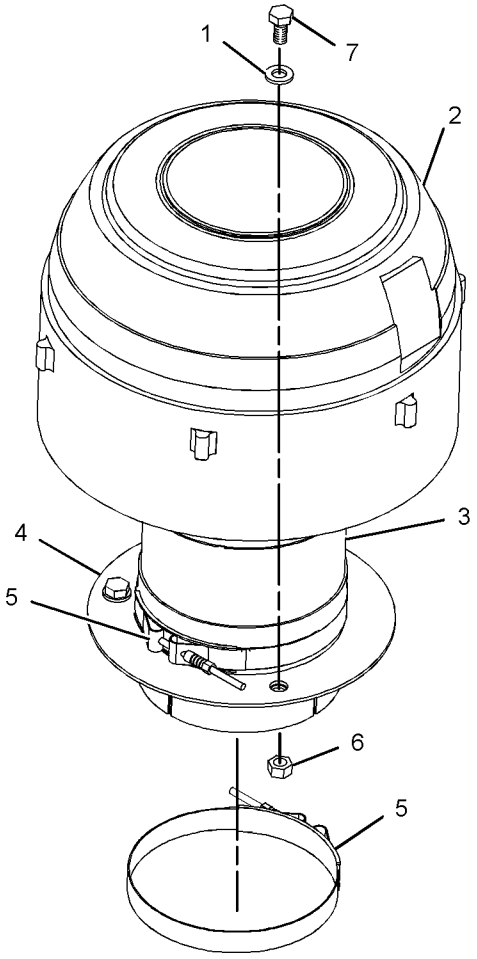

GRAPHIC #1 **<END>** g01116698

AIR INLET AND EXHAUST SYSTEM

236-9136 PRECLEANER GP

S/N: A7G1-UP

AN ATTACHMENT

SMCS-1055 **i02415401**

NOTE	REF NO	GRAPHIC REF	PART NUMBER	QTY	PART NAME 1 2 3 4 5 6 (PRODUCT LEVEL)	SEE PAGE
	1	1	**8T-4121**	6	WASHER-HARD (11X21X2.5-MM THK)	
	2	1	**070-0107**	1	PRECLEANER GP	
	3	1	**153-1277**	1	KIT-SCREEN (PRECLEANER)	
					(KIT INCLUDES DAMPER AND PRESCREEN)	
	4	1	**209-6466**	1	PIPE	
	5	1	**250-0944**	1	PIPE AS-EXTENSION	
	6	1	**220-4126**	2	CLAMP	
M	7	1	**8T-4133**	3	NUT (M10X1.15-THD)	
M	8	1	**8T-4136**	3	BOLT (M10X1.5X25-MM)	

M-METRIC PART

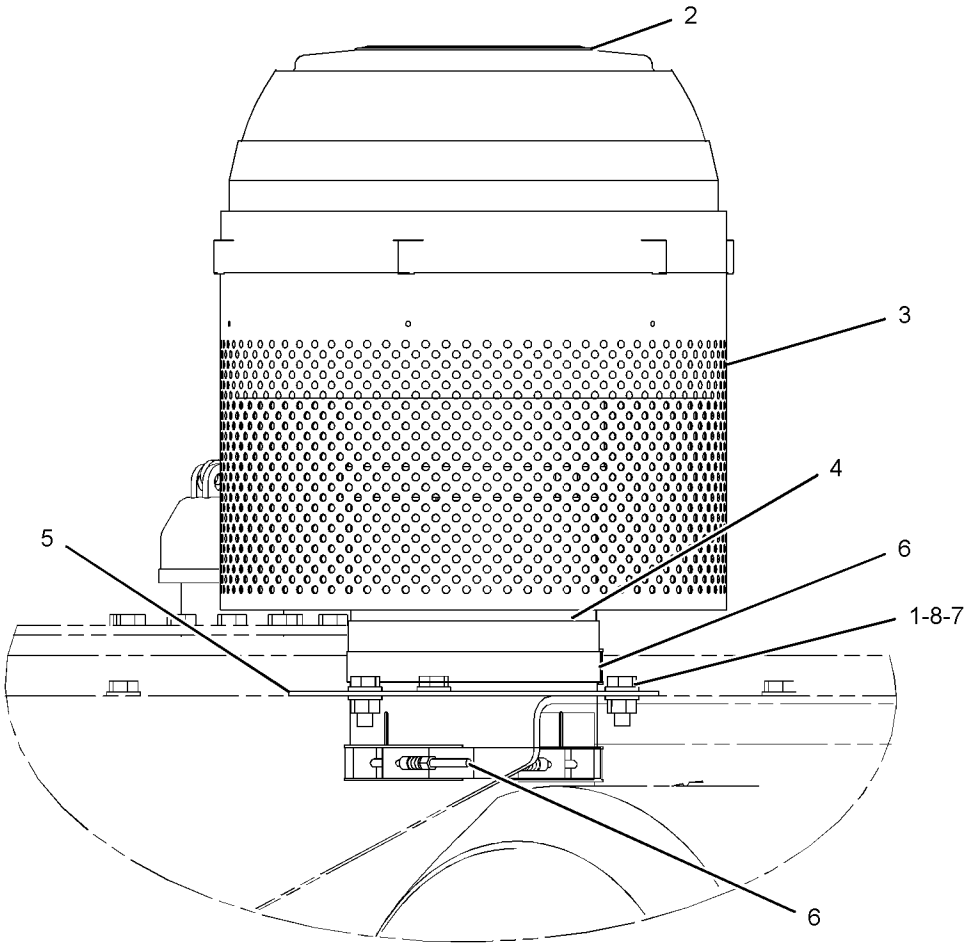

FRONT VIEW

GRAPHIC #1

<END>

g01190495

AIR INLET AND EXHAUST SYSTEM

247-2963 TURBOCHARGER GP

S/N: MHX1-UP

PART OF 261-1035 TURBOCHARGER GP

SMCS-1052, 1053 **i02342836**

NOTE	REF NO	GRAPHIC REF	PART NUMBER	QTY	PART NAME 1 2 3 4 5 6 (PRODUCT LEVEL)	SEE PAGE
	1	1	**115-7087**	1	BOLT (M6X0.04X10.4-MM)	
	2	1	**123-8253**	1	CLAMP AS (TURBINE)	
	2A	1	**7M-9918**	1	LOCKNUT (1/4-28-THD)	
	3	1	**161-6958**	1	CLIP-HOSE	
	4	1	**161-6963**	2	CLAMP	
	5	1	**239-5858**	1	CLAMP AS-COMPRESSOR	
	5A	1	**7M-9918**	1	LOCKNUT (1/4-28-THD)	
E	6	1	**242-3360**		HOSE (47-CM)	
	7	1	**257-4323**	1	CARTRIDGE GP-TURBOCHARGER	

E-ORDER BY THE CENTIMETER

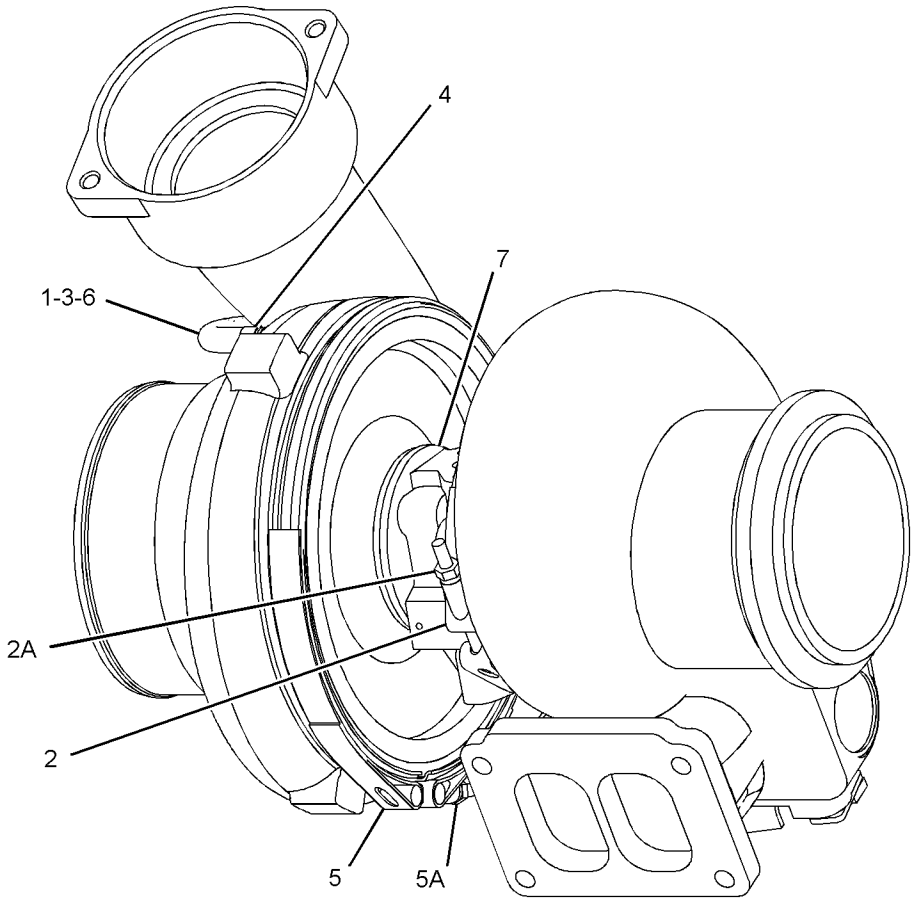

GRAPHIC #1 **<END>** g01210330

AIR INLET AND EXHAUST SYSTEM

261-1035 TURBOCHARGER GP

S/N: MHX1-UP

PART OF 234-7849 ENGINE AR-COMPLETE

SMCS-1052, 1053 **i02340854**

NOTE	REF NO	GRAPHIC REF	PART NUMBER	QTY	PART NAME 1 2 3 4 5 6 (PRODUCT LEVEL)	SEE PAGE
Y	1	1	**247-2963**	1	TURBOCHARGER GP	98
	2	1	**243-6462**	1	GASKET-TURBOCHARGER	
M	3	1	**3E-8017**	4	LOCKNUT (M10X1.5-MM-THD)	

M-METRIC PART
Y-SEPARATE ILLUSTRATION

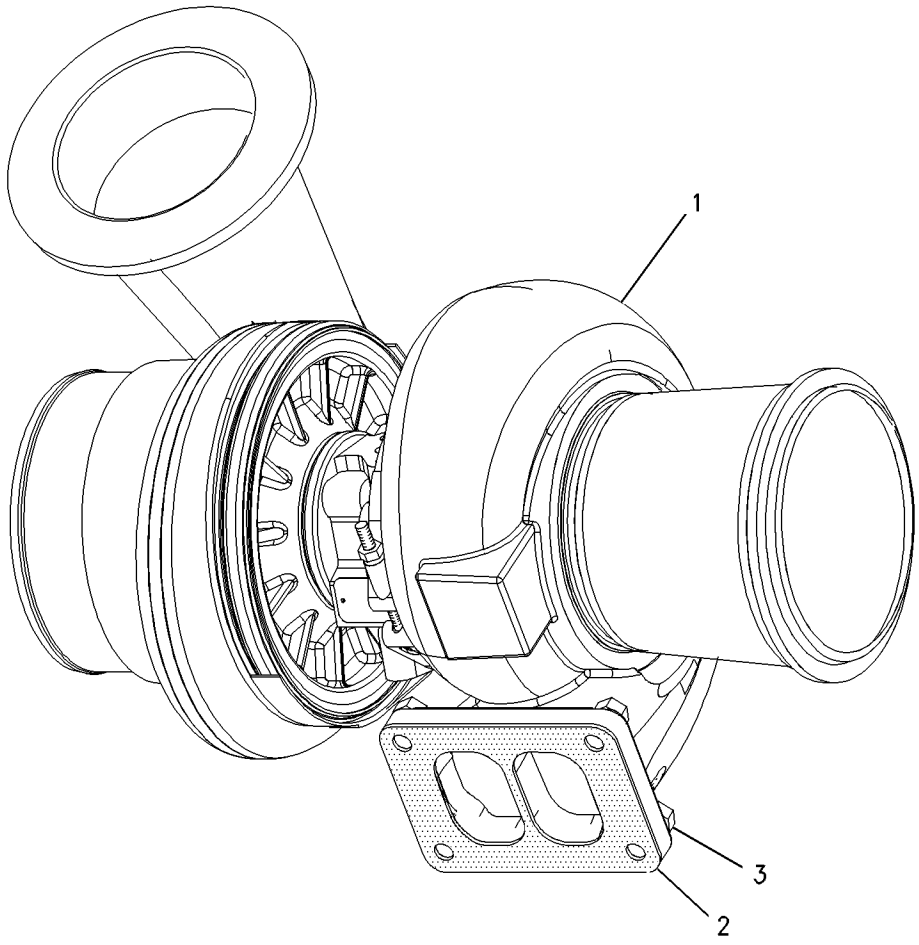

GRAPHIC #1 **<END>** g00696718

FUEL SYSTEM

251-7605 FILTER & LINES GP-SEC FUEL

S/N: MHX1-UP

PART OF 234-7849 ENGINE AR-COMPLETE

SMCS-1261, 1274 **i02338428**

NOTE	REF NO	GRAPHIC REF	PART NUMBER	QTY	PART NAME 1 2 3 4 5 6 (PRODUCT LEVEL)	SEE PAGE
	1	1	**3S-2093**	8	STRAP-CABLE	
Y	2	1	*116-5436*	1	FILTER GP-FUEL (SECONDARY)	102
	3	1	**130-9811**	1	SENSOR GP-TEMPERATURE (2-PIN) (FUEL)	
Y	4	1	*233-6742*	1	VALVE GP-CHECK (FUEL)	115
	5	1	**235-3595**	1	ADAPTER	
	6	1	**237-9310**	1	BASE AS	
		1	**9S-4167**	1	STUD-HOLLOW	
Y	7	1	*239-2396*	1	SENSOR GP-PRESSURE (FUEL)	186
	8	1	**241-0758**	1	HARNESS AS-ENGINE (FUEL)	
		1	**102-8802**	1	KIT-RECEPTACLE (2-PIN)	
					(INCLUDES RECEPTAACLE AS AND WEDGE)	
		1	**102-8803**	1	KIT-RECEPTACLE (3-PIN)	
					(INCLUDES RECEPTACLE AS AND WEDGE)	
		1	**102-8806**	1	KIT-RECEPTACLE (8-PIN)	
					(INCLUDES RECEPTACLE AS AND WEDGE)	
		1	**155-2260**	1	KIT-CONNECTING PLUG (3-PIN)	
					(INCLUDES PLUG AS AND WEDGE)	
		1	**155-2270**	4	KIT-CONNECTING PLUG (2-PIN)	
					(EACH INCLUDES PLUG AS AND WEDGE)	
Y	9	1	**258-0883**	1	SWITCH GP-PRESSURE (FUEL)	207
	10	1	**132-5789**	2	CLIP	
	11	1	*148-8318*	2	CONNECTOR AS	
					(EACH INCLUDES)	
		1	**3K-0360**	1	SEAL-O-RING	
		1	**6V-8397**	1	SEAL-O-RING	
		1	**6V-8634**	1	CONNECTOR	
	12	1	*148-8338*	1	CONNECTOR AS	
		1	**3J-1907**	1	SEAL-O-RING	
		1	**6V-8397**	1	SEAL-O-RING	
		1	**8T-0075**	1	CONNECTOR	
	13	1	*148-8367*	1	ELBOW AS	
		1	**6V-8397**	1	SEAL-O-RING	
		1	**6V-9850**	1	ELBOW	
	14	1	**234-7844**	1	BRACKET AS	
	15	1	**3J-1907**	1	SEAL-O-RING	
	16	1	**3K-0360**	2	SEAL-O-RING	
	17	1	**4P-7581**	2	CLIP	
M	18	1	**6V-4248**	3	BOLT (M10X1.5X25-MM)	
	19	1	**6V-5839**	7	WASHER (11X21X2.5-MM THK)	
M	20	1	**6V-5842**	2	BOLT (M10X1.5X40-MM)	
M	21	1	**6V-6317**	2	BOLT (M10X1.5X20-MM)	
	22	1	**8L-2786**	2	SEAL-O-RING	
	23	1	**9S-4185**	2	PLUG	
	24	1	**9S-4191**	1	PLUG	

M-METRIC PART
Y-SEPARATE ILLUSTRATION

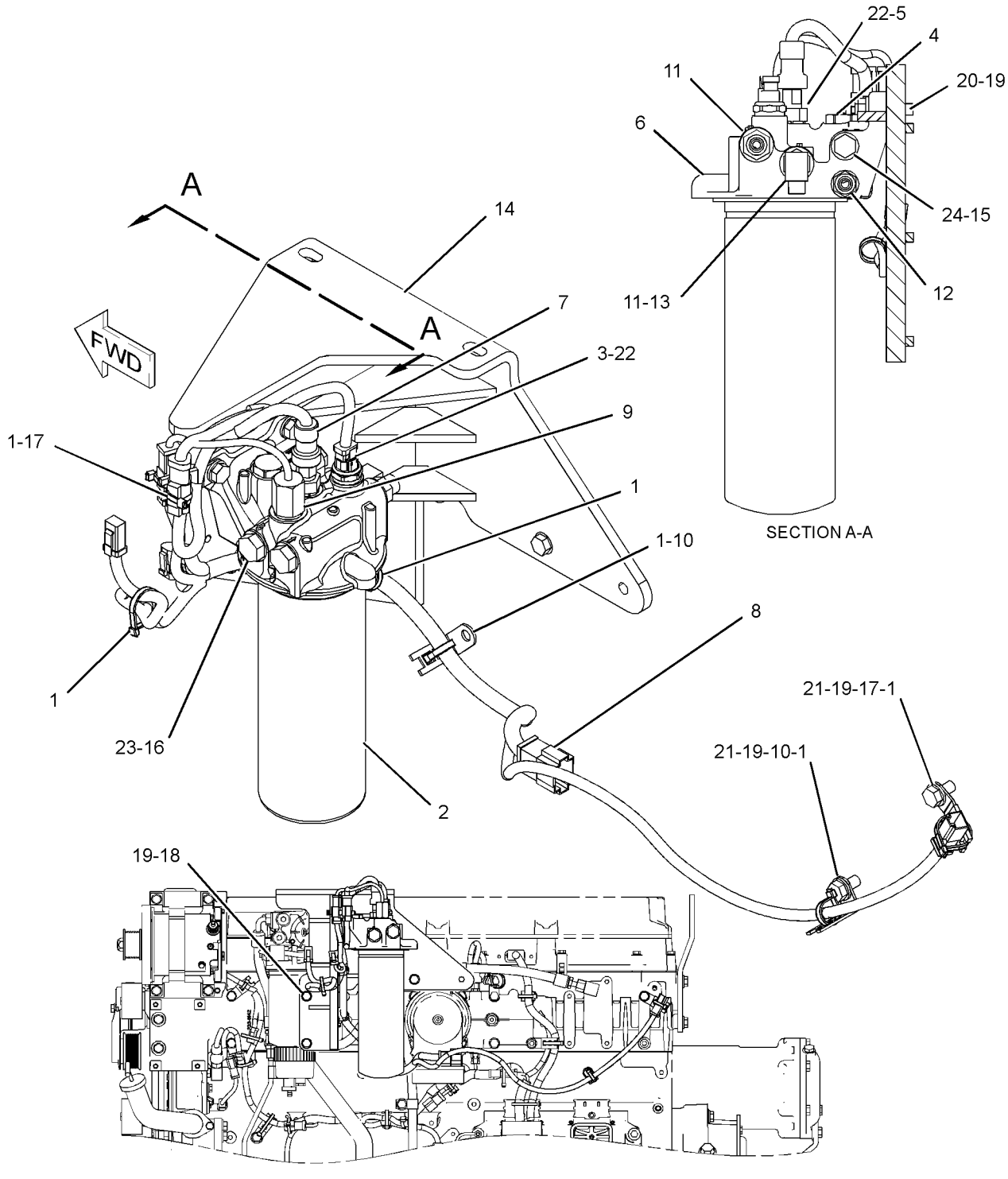

GRAPHIC #1 **<END>** g01184053

116-5436 FILTER GP-FUEL

S/N: MHX1-UP

PART OF 251-7605 FILTER & LINES GP-SEC FUEL

SMCS-1261 **i00830101**

NOTE	REF NO	GRAPHIC REF	PART NUMBER	QTY	PART NAME 1 2 3 4 5 6 (PRODUCT LEVEL)	SEE PAGE
	1	1	**1R-0762**	1	FILTER AS-FUEL	

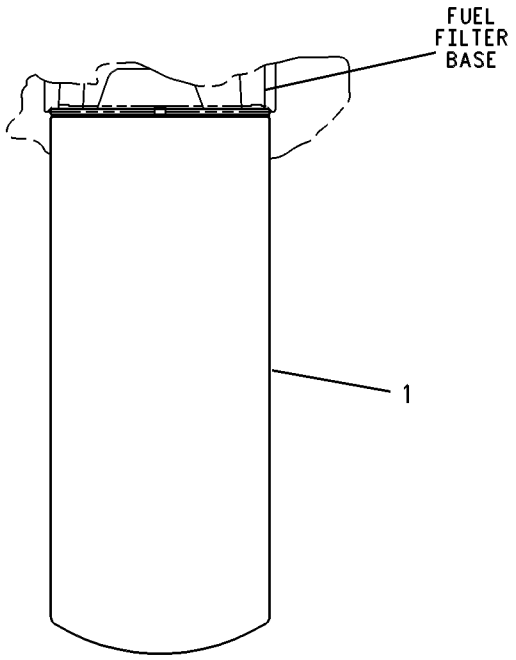

GRAPHIC #1 **<END>** g00269424

174-9570 FILTER GP-WATER SEP & FUEL

S/N: MHX1-UP

PART OF 190-8977 WATER SEP & FUEL PRM PUMP GP

SMCS-1261, 1263 **i02390248**

NOTE	REF NO	GRAPHIC REF	PART NUMBER	QTY	PART NAME 1 2 3 4 5 6 (PRODUCT LEVEL)	SEE PAGE
	1	1	**1R-0770**	1	FILTER AS-WATER SEP & FUEL (PRIMARY)	
	1A	1	**220-8678**	1	SEAL	
	2	1	**270-5320**	1	BOWL AS (FUEL, WATER SEPARATOR)	

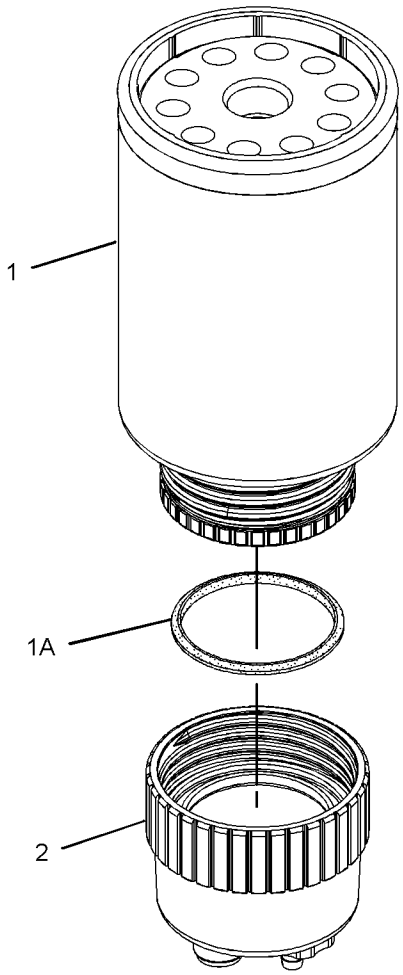

GRAPHIC #1 **<END>** g01179858

249-0713 INJECTOR GP-FUEL

S/N: MHX1-UP

PART OF 253-1461 PUMP GP-FUEL INJECTION

SMCS-1251, 1254, 1290, 1713 **i02175049**

NOTE	REF NO	GRAPHIC REF	PART NUMBER	QTY	PART NAME 1 2 3 4 5 6 (PRODUCT LEVEL)	SEE PAGE
	1	1	**9X-7317**	1	SEAL-O-RING	
	2	1	**230-3728**	1	SEAL-O-RING	
	3	1	**230-3775**	1	SEAL-O-RING	

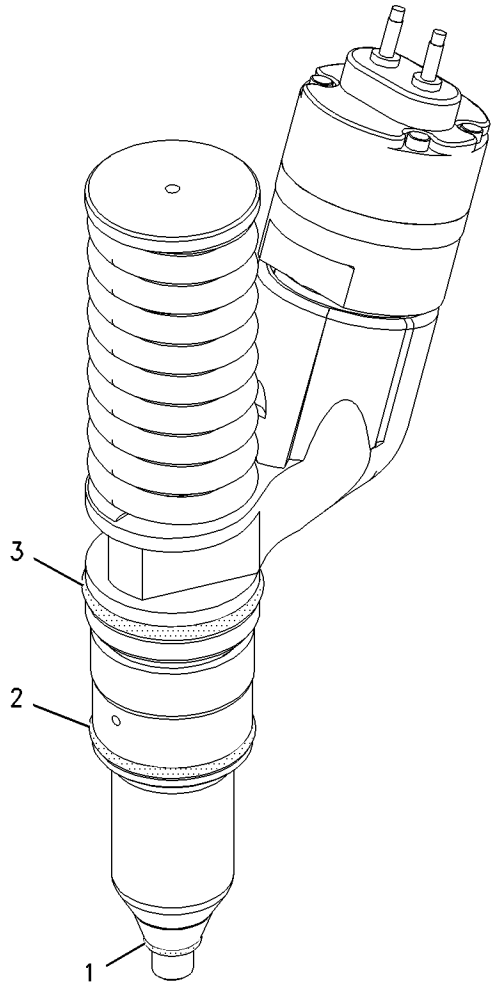

GRAPHIC #1 **<END>** g00914176

FUEL SYSTEM

236-8981 LINES GP-FUEL

S/N: A7G1-UP

PART OF 236-9051 CHASSIS AR

SMCS-1274 **i02412056**

NOTE	REF NO	GRAPHIC REF	PART NUMBER	QTY	PART NAME 1 2 3 4 5 6 (PRODUCT LEVEL)	SEE PAGE
I	1	1	**246-4793**	1	HOSE AS	
I	2	1	**246-4794**	1	HOSE AS	
	3	1	*148-8340*	1	CONNECTOR AS	
		1	**3K-0360**	1	SEAL-O-RING	
		1	**6V-8398**	1	SEAL-O-RING	
		1	**6V-8639**	1	CONNECTOR	
	4	1	*155-7327*	1	CONNECTOR AS	
		1	**3J-1907**	1	SEAL-O-RING	
		1	**5H-8853**	1	SEAL-O-RING	
		1	**6V-8636**	1	CONNECTOR	
	5	1	**5K-5338**	1	CLIP	
	6	1	**8D-9671**	1	CLIP	
	7	1	**8T-4121**	1	WASHER-HARD (11X21X2.5-MM THK)	
M	8	1	**8T-4195**	1	BOLT (M10X1.5X30-MM)	

I-REFER TO HYDRAULIC INFORMATION SYSTEM
M-METRIC PART

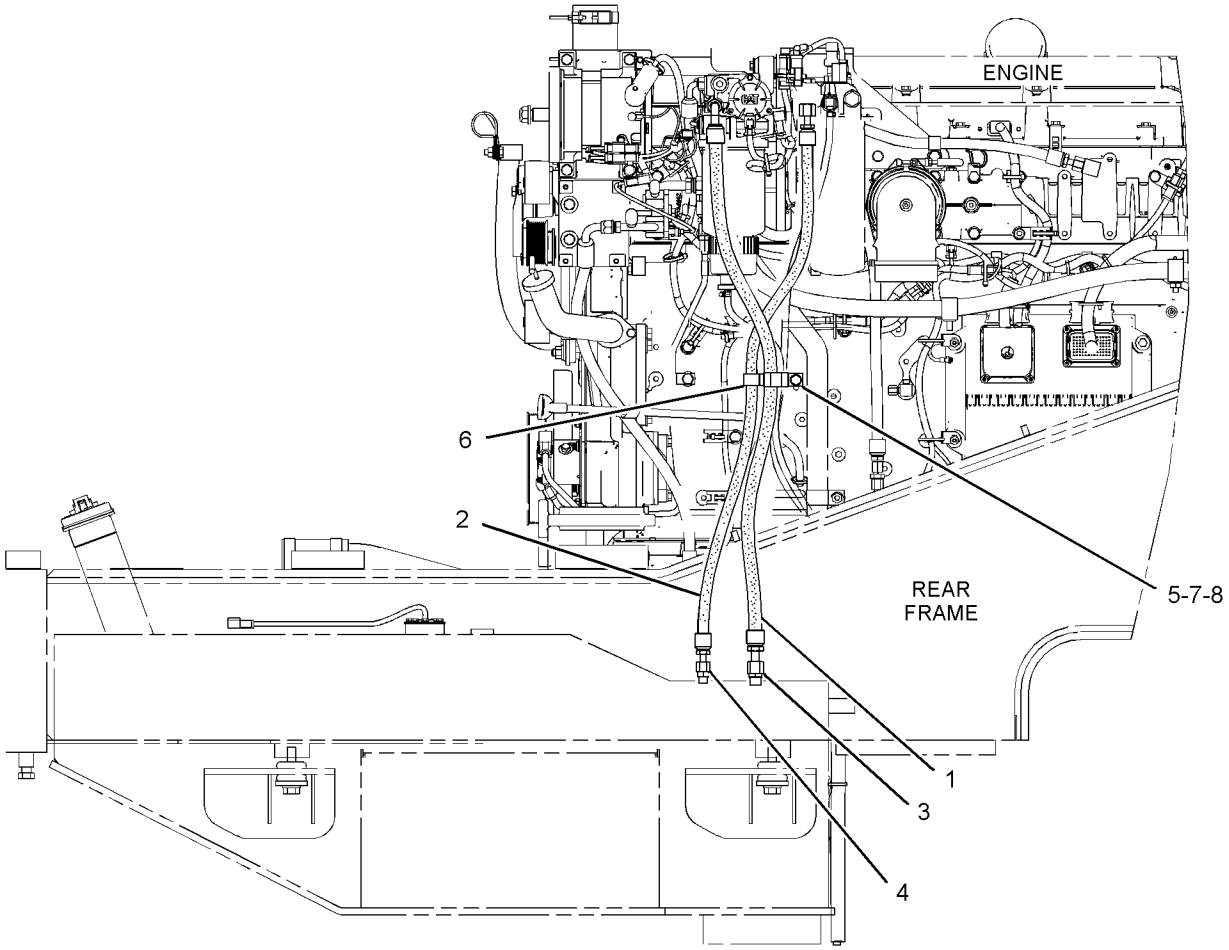

RIGHT SIDE VIEW

GRAPHIC #1 **<END>** g01190395

FUEL SYSTEM

251-7595 LINES GP-FUEL

S/N: MHX1-UP

PART OF 234-7849 ENGINE AR-COMPLETE

SMCS-1274 **i02264006**

NOTE	REF NO	GRAPHIC REF	PART NUMBER	QTY	PART NAME 1 2 3 4 5 6 (PRODUCT LEVEL)	SEE PAGE
	1	1	**7C-8246**	2	SPACER (10.5X20X24-MM THK)	
M	2	1	**175-9079**	2	ROD-LINK	
	3	1	**244-1420**	1	TUBE AS	
I	4	1	**258-4873**	1	HOSE AS	
I	5	1	**258-5457**	1	HOSE AS	
	6	1	**030-7942**	1	ELBOW	
	7	1	**138-7500**	2	SPACER (11X25X50-MM THK)	
I	8	1	**258-4872**	1	HOSE AS	
	9	1	**3J-1907**	3	SEAL-O-RING	
	10	1	**6V-5839**	4	WASHER (11X21X2.5-MM THK)	
M	11	1	**6V-7981**	1	BOLT (M10X1.5X70-MM)	
	12	1	**6V-8397**	2	SEAL-O-RING	
	13	1	**7H-7055**	2	CLIP	
	14	1	**7K-4129**	1	UNION-FLARED	
	15	1	**8M-2773**	2	CLIP	
M	16	1	**8T-0643**	1	BOLT (M10X1.5X80-MM)	
	17	1	**8T-1905**	2	ELBOW	

I-REFER TO HYDRAULIC INFORMATION SYSTEM
M-METRIC PART

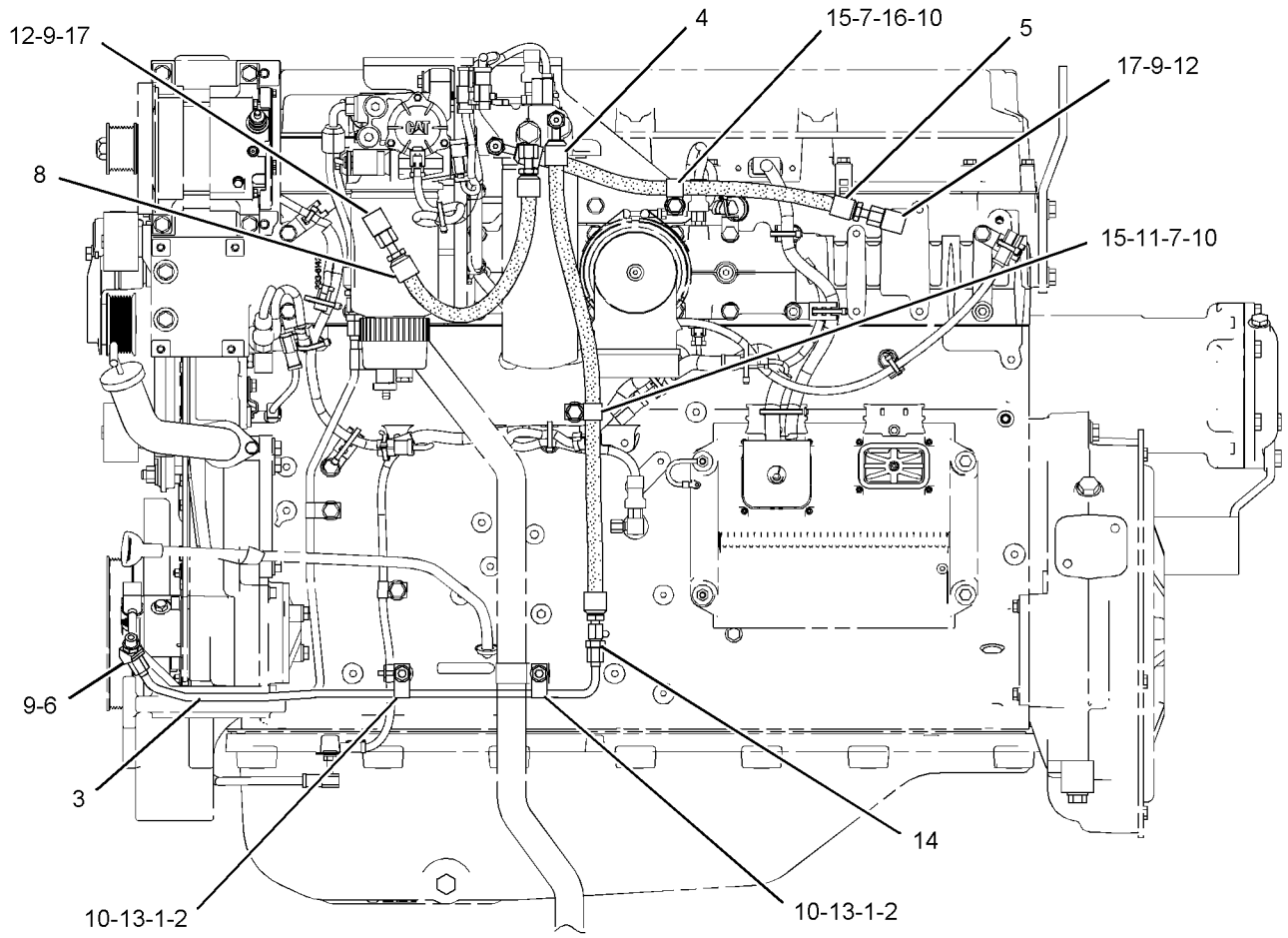

LEFT SIDE VIEW

GRAPHIC #1 **<END>** g01121072

235-1076 LINES GP-FUEL DRAIN

S/N: A7G1-UP

PART OF 236-7231 INSTALLATION AR-ENGINE

SMCS-1274 **i02203948**

NOTE	REF NO	GRAPHIC REF	PART NUMBER	QTY	PART NAME 1 2 3 4 5 6 (PRODUCT LEVEL)	SEE PAGE
	1	1	**3S-2093**	3	STRAP-CABLE	
	2	1	**5D-1026**	1	CLAMP-HOSE	
	3	1	**141-8275**	1	VALVE-DRAIN (FUEL FILTER)	
	4	1	*148-8313*	1	ADAPTER AS	
		1	**3K-0360**	1	SEAL-O-RING	
		1	**5P-6944**	1	ADAPTER	
	5	1	**1P-4278**	2	CLAMP-HOSE	
E	6	1	**5P-0767**		HOSE (56-CM)	
E	7	1	**8C-6959**		HOSE (113-CM)	
E	8	1	**103-2529**		HOSE (145-CM)	

E-ORDER BY THE CENTIMETER

235-1076 **LINES GP-FUEL DRAIN** *(contd.)* **i02203948**

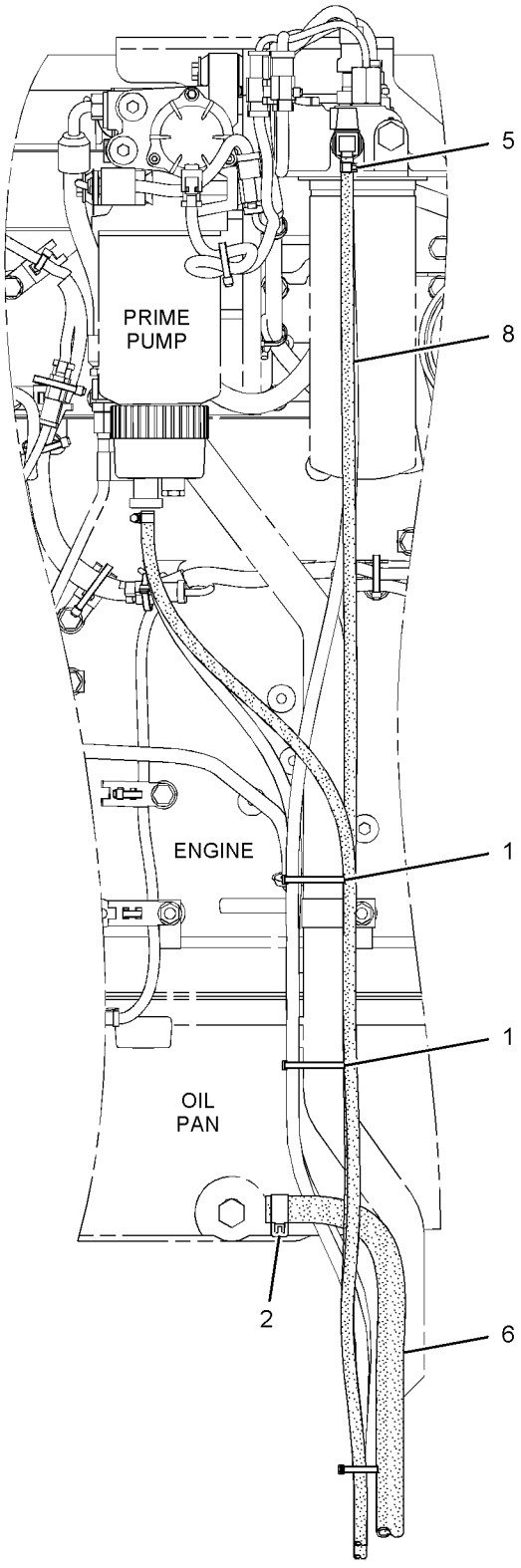

RIGHT SIDE VIEW

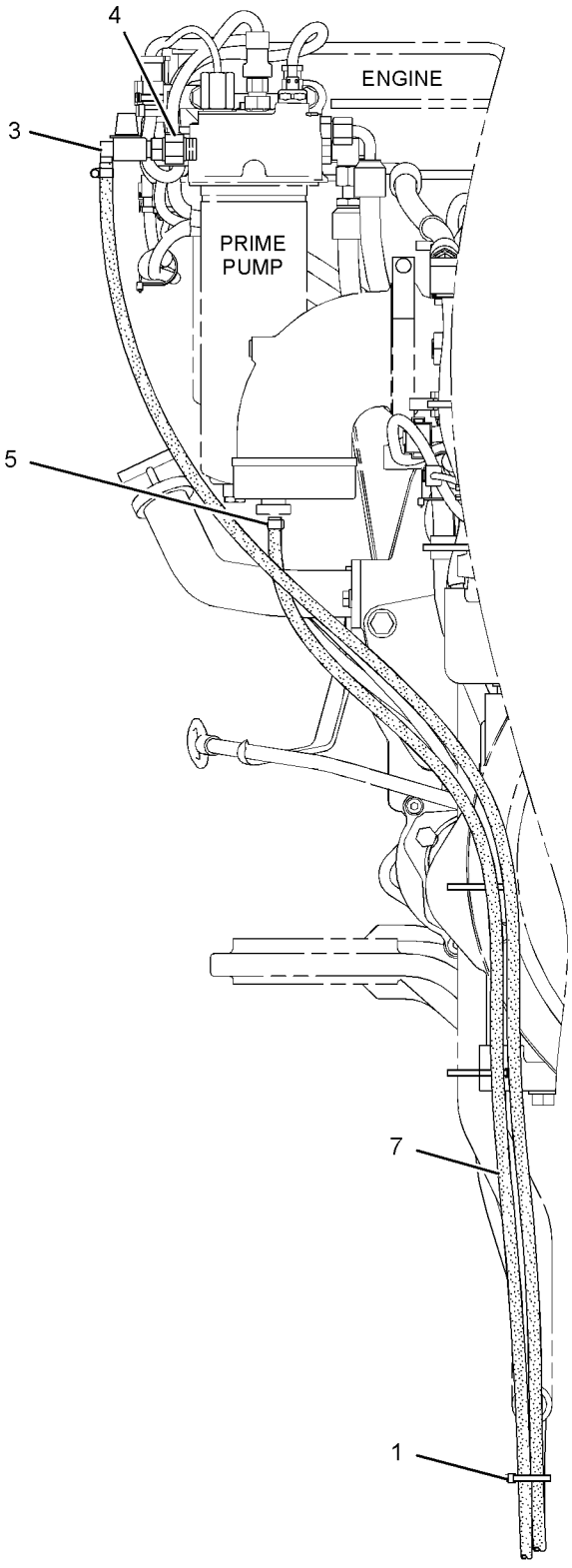

FRONT VIEW

GRAPHIC #1 **<END>** g01116805

253-1461 PUMP GP-FUEL INJECTION

S/N: MHX1-UP

PART OF 267-0009 ENGINE AR-CORE

SMCS-1251, 1290 **i02173383**

NOTE	REF NO	GRAPHIC REF	PART NUMBER	QTY	PART NAME 1 2 3 4 5 6 (PRODUCT LEVEL)	SEE PAGE
	1	1	**224-4991**	1	CLAMP-INJECTOR	
Y	2	1	**249-0713**	1	INJECTOR GP-FUEL	104
M	3	1	**8T-0644**	1	BOLT (M10X1.5X90-MM)	

M-METRIC PART
Y-SEPARATE ILLUSTRATION

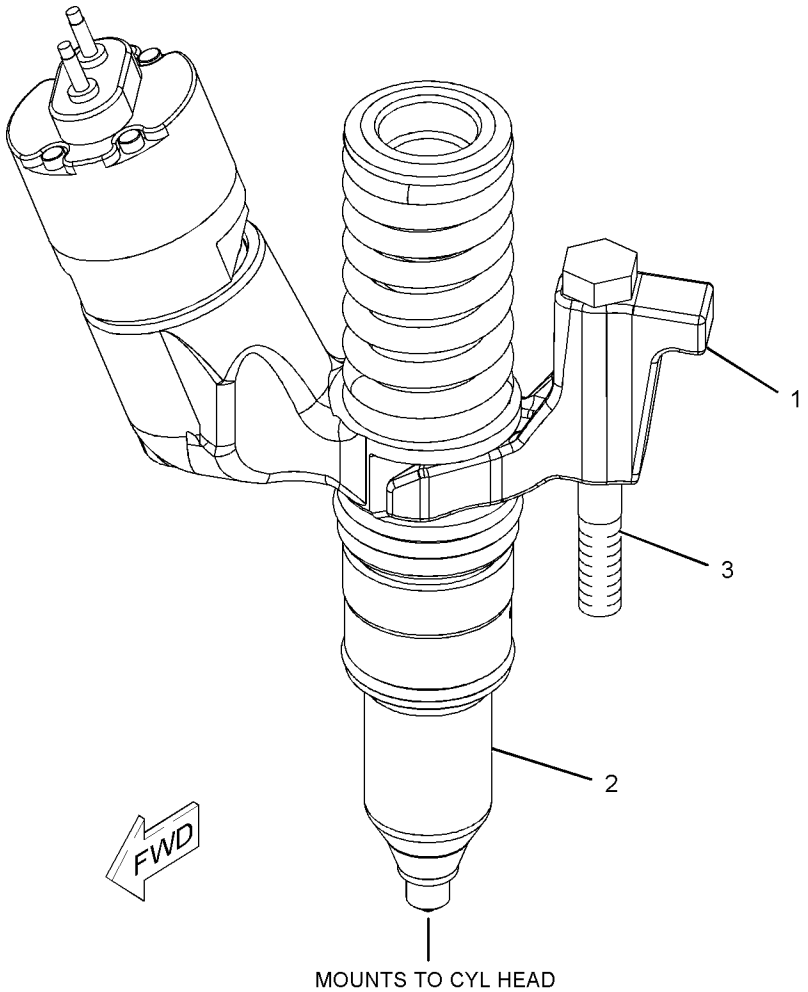

GRAPHIC #1

<END>

g01065170

235-1080 PUMP GP-FUEL PRM & PRIM FILTER

S/N: MHX1-UP

PART OF 234-7849 ENGINE AR-COMPLETE

SMCS-1258, 1260 **i02270580**

NOTE	REF NO	GRAPHIC REF	PART NUMBER	QTY	PART NAME 1 2 3 4 5 6 (PRODUCT LEVEL)	SEE PAGE
	1	1	**8T-9655**	8	MOUNT-ISOLATION	
Y	2	1	**165-5970**	1	SWITCH GP-TOGGLE (FUEL PRIMING)	218
Y	3	1	**190-8977**	1	WATER SEP & FUEL PRM PUMP GP	117
	4	1	**191-1782**	1	SPACER (8.5X12.7X38.2-MM THK)	
	5	1	**209-7659**	1	PLATE-INFORMATION (MANUAL FUEL)	
	6	1	**232-1374**	1	BRACKET	
	7	1	**232-1376**	2	SPACER (8.5X12.7X139.1-MM THK)	
	8	1	**258-4871**	1	TUBE AS	
I	9	1	**258-5458**	1	HOSE AS	
	10	1	**005-4362**	1	ELBOW	
	11	1	**138-7500**	1	SPACER (11X25X50-MM THK)	
	12	1	**164-5619**	2	PLUG AS	
					(EACH INCLUDES)	
		1	**2M-9780**	1	SEAL-O-RING	
		1	**9S-8006**	1	PLUG	
	13	1	*205-3692*	1	ELBOW AS	
		1	**2M-9780**	1	SEAL-O-RING	
		1	**6V-8397**	1	SEAL-O-RING	
		1	**9X-2134**	1	ELBOW	
		1	**2M-9780**	1	SEAL-O-RING	
M	14	1	**3E-8005**	2	BOLT (M8X1.25X160-MM)	
	15	1	**6V-5839**	2	WASHER (11X21X2.5-MM THK)	
M	16	1	**6V-6317**	1	BOLT (M10X1.5X20-MM)	
M	17	1	**6V-7981**	1	BOLT (M10X1.5X70-MM)	
	18	1	**7H-7055**	1	CLIP	
	19	1	**7K-4129**	1	UNION-FLARED	
	20	1	**7X-0579**	3	WASHER-HARD (8.8X25.5X2-MM THK)	
	21	1	**8H-1603**	1	CLIP	
	22	1	**8L-2786**	1	SEAL-O-RING	
M	23	1	**8T-0100**	1	BOLT (M8X1.25X60-MM)	

I-REFER TO HYDRAULIC INFORMATION SYSTEM
M-METRIC PART
Y-SEPARATE ILLUSTRATION

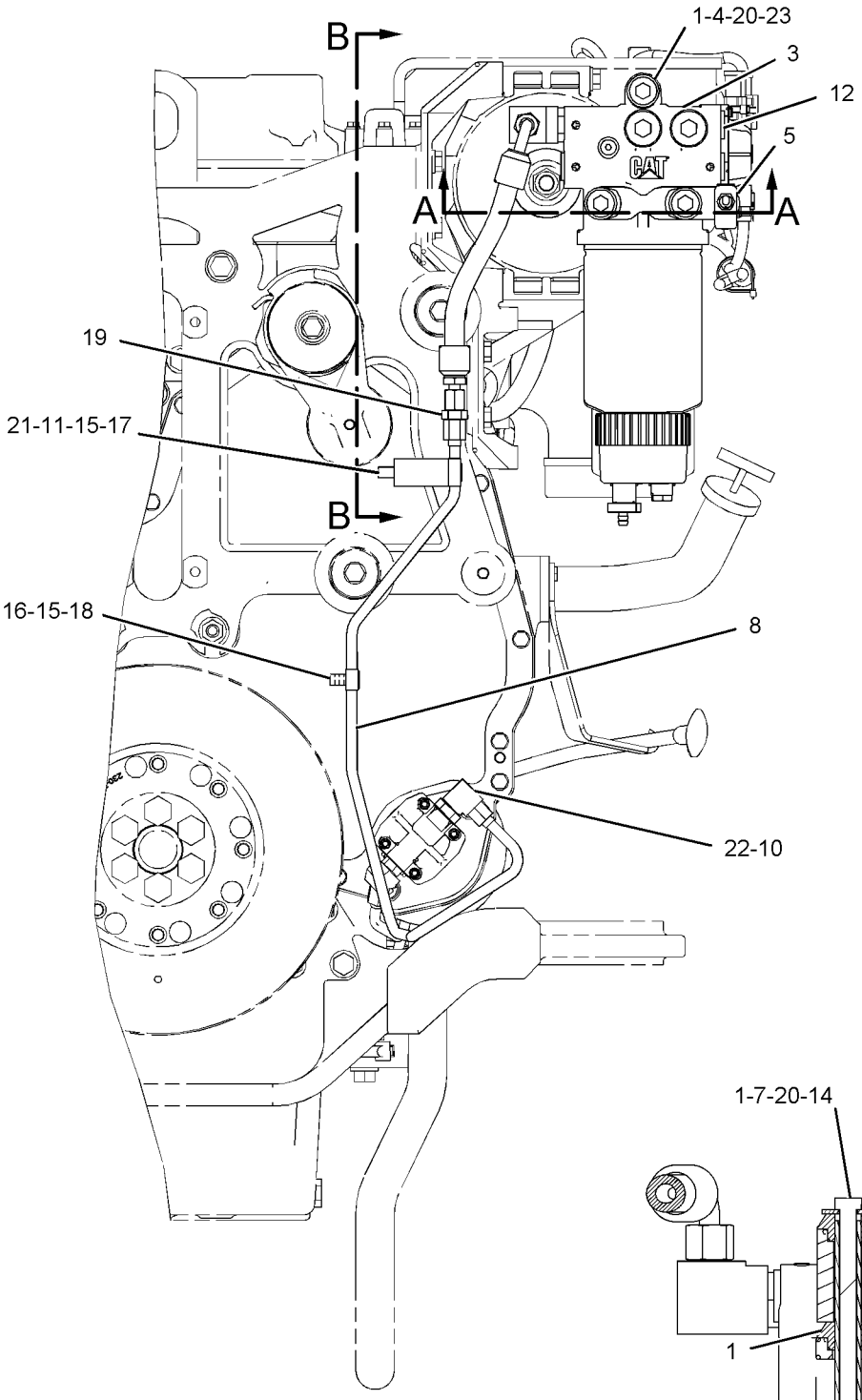

FRONT VIEW

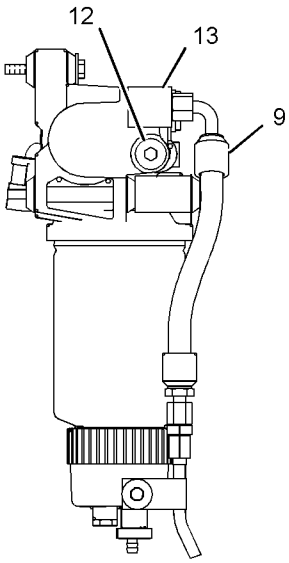

VIEW B-B

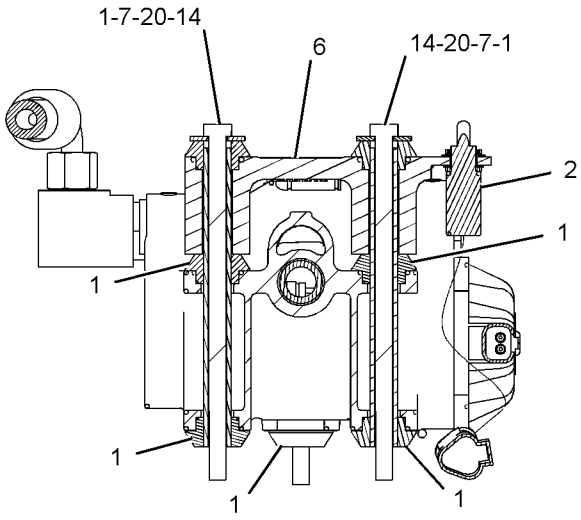

SECTION A-A

GRAPHIC #1 **<END>** g01121086

FUEL SYSTEM

227-5723 PUMP GP-FUEL TRANSFER

S/N: MHX1-UP

PART OF 267-0009 ENGINE AR-CORE

SMCS-1256 **i02173365**

NOTE	REF NO	GRAPHIC REF	PART NUMBER	QTY	PART NAME 1 2 3 4 5 6 (PRODUCT LEVEL)	SEE PAGE
	1	1	**190-3443**	1	PUMP GP-FUEL TRANSFER	
	2	1	**5P-4889**	1	SEAL-O-RING	
	3	1	**5M-2894**	2	WASHER-HARD (10.2X18.5X2.5-MM THK)	
M	4	1	**136-4183**	2	BOLT-12 POINT HEAD (M10X1.5X30-MM)	

M-METRIC PART

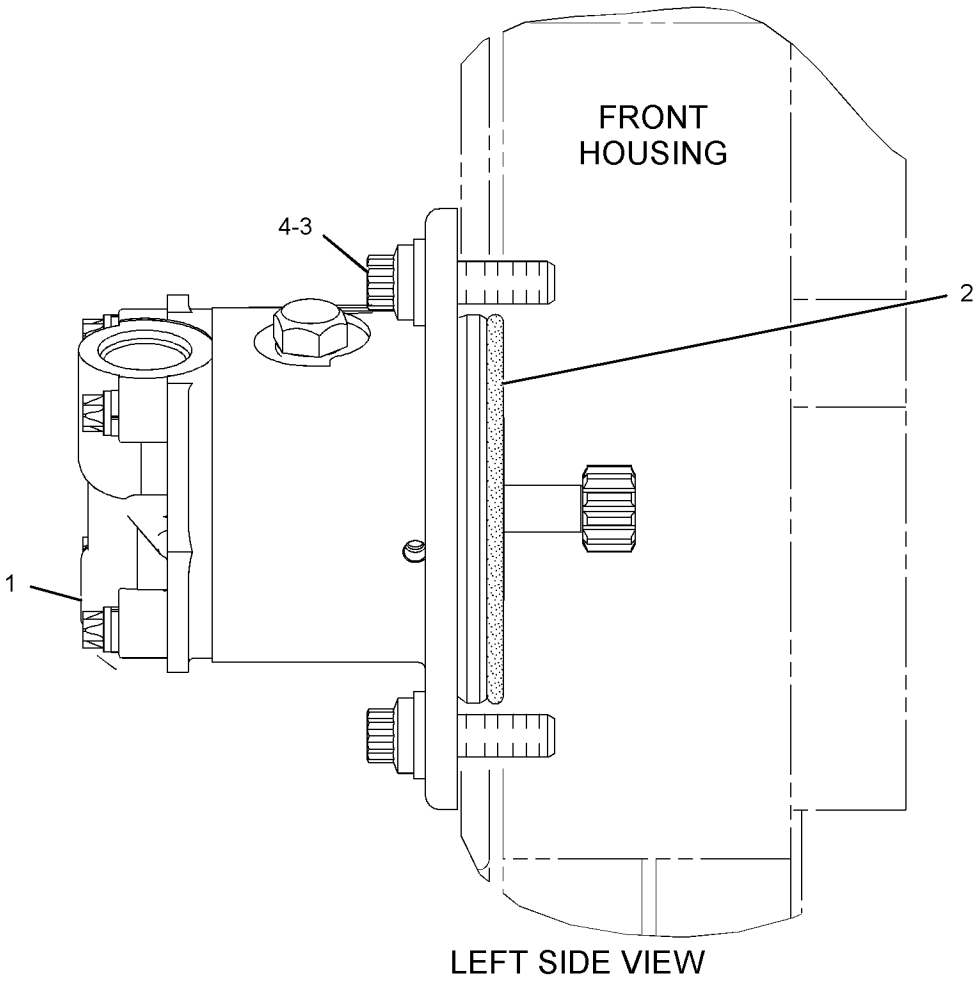

LEFT SIDE VIEW

GRAPHIC #1 **<END>** g01101661

276-1054 TANK GP-FUEL

S/N: A7G1-UP

PART OF 236-9051 CHASSIS AR

SMCS-1273 **i02424527**

NOTE	REF NO	GRAPHIC REF	PART NUMBER	QTY	PART NAME 1 2 3 4 5 6 (PRODUCT LEVEL)	SEE PAGE
	1	1	**1H-8306**	1	SCREW-PURGE (1/2-20X1.625-IN)	
	2	1	**9P-7121**	1	STRAINER-FUEL	
	3	1	**101-8909**	1	CAP AS-FILLER (FUEL TANK)	
	4	1	**187-7331**	8	MOUNT-RUBBER	
	5	1	**188-8844**	1	VALVE-BREAKER RELIEF	
	6	1	**220-8214**	1	SENDER AS-FUEL LEVEL	
		1	**102-8802**	1	KIT-RECEPTACLE (2-PIN)	
		1	**102-8802**	1	KIT-RECEPTACLE (2-PIN)	
					(EACH KIT INCLUDES RECEPTACLE AND WEDGE)	
		1	**186-3735**	2	PIN-CONNECTOR (16-GA TO 18-GA)	
	7	1	**275-1235**	1	TANK AS	
	8	1	**3D-2824**	1	SEAL-O-RING	
	9	1	**7M-8485**	1	SEAL-O-RING	
	10	1	**7X-0607**	4	WASHER-HARD (20X55X8-MM THK)	
M	11	1	**7X-2554**	4	BOLT (M16X2X70-MM)	
M	12	1	**8C-3210**	5	BOLT (M6X1X16-MM)	
	13	1	**9S-9334**	1	PLUG	
	14	1	**9X-8256**	5	WASHER (6.6X12X2-MM THK)	
	15	1	**9X-8257**	4	WASHER (17.5X30X3.5-MM THK)	
B	16	1	**1U-8846**		SEALANT-GASKET	

B-USE AS REQUIRED
M-METRIC PART

276-1054 **TANK GP-FUEL** *(contd.)* **i02424527**

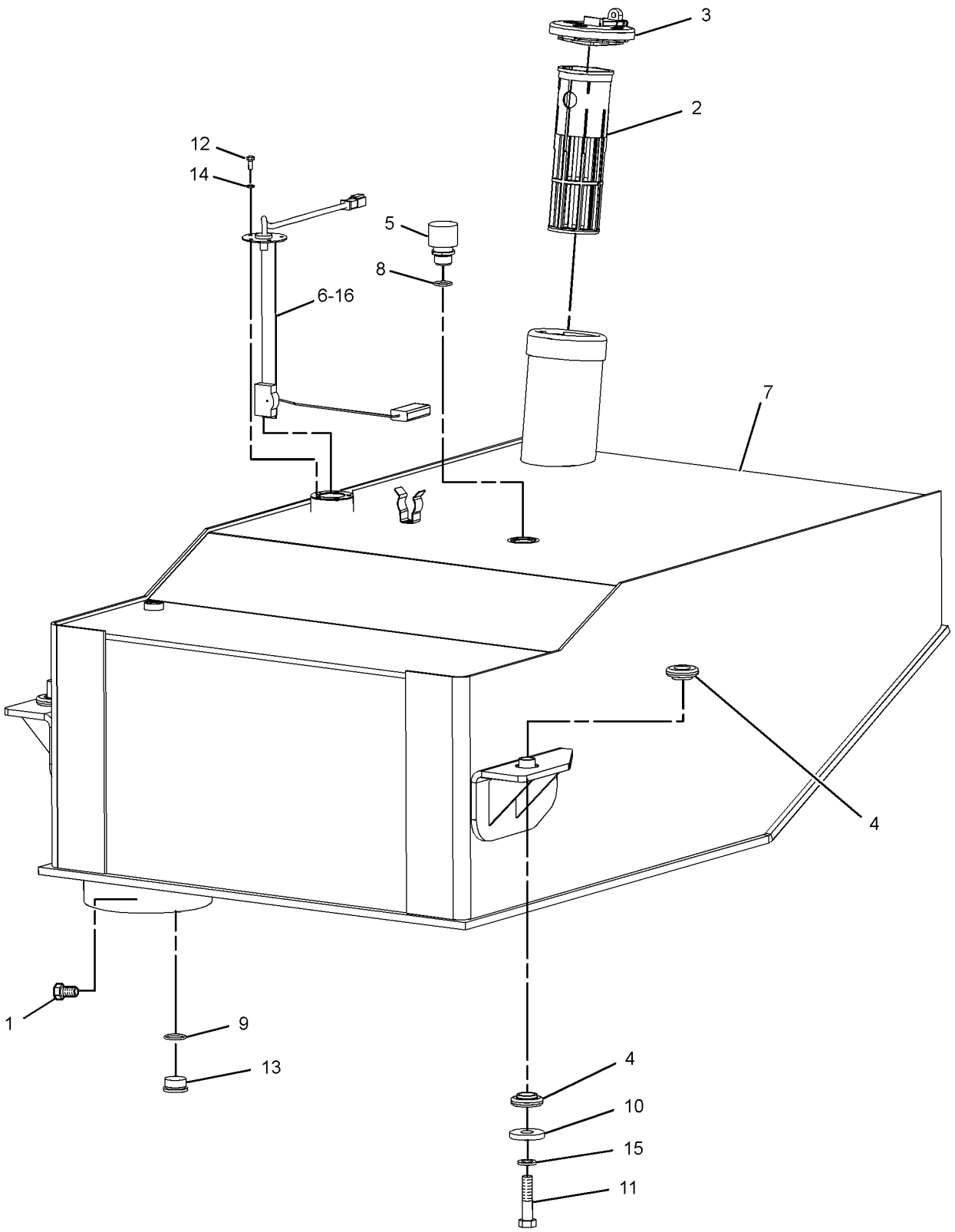

GRAPHIC #1 **<END>** g01189805

233-6742 VALVE GP-CHECK–FUEL

S/N: MHX1-UP

PART OF 251-7605 FILTER & LINES GP-SEC FUEL

SMCS-1251, 1274 **i01989486**

NOTE	REF NO	GRAPHIC REF	PART NUMBER	QTY	PART NAME 1 2 3 4 5 6 (PRODUCT LEVEL)	SEE PAGE
Y	1	1	**238-0296**	1	VALVE GP-CHECK (FUEL) (FUEL FILTER)	116
	2	1	**6V-4589**	1	SEAL-O-RING	

Y-SEPARATE ILLUSTRATION

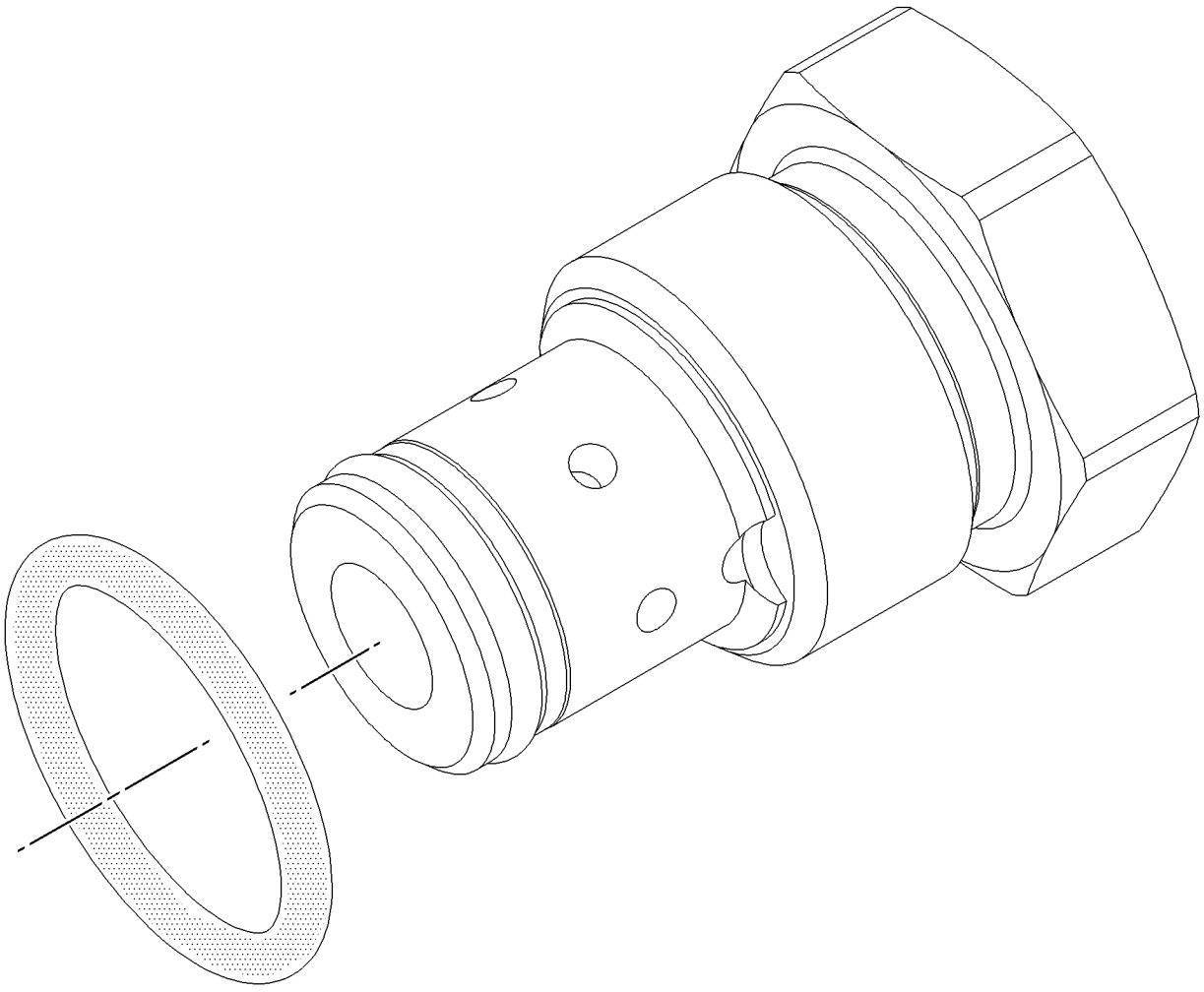

GRAPHIC #1 **<END>** g01007709

238-0296 VALVE GP-CHECK–FUEL

S/N: MHX1-UP

PART OF 233-6742 VALVE GP-CHECK

SMCS-1251, 1274 **i01989487**

NOTE	REF NO	GRAPHIC REF	PART NUMBER	QTY	PART NAME 1 2 3 4 5 6 (PRODUCT LEVEL)	SEE PAGE
	1	1	**6V-6923**	1	RING-BACKUP (13.16MM ID)	
	2	1	**033-6033**	1	SEAL-O-RING (12.42MM ID)	

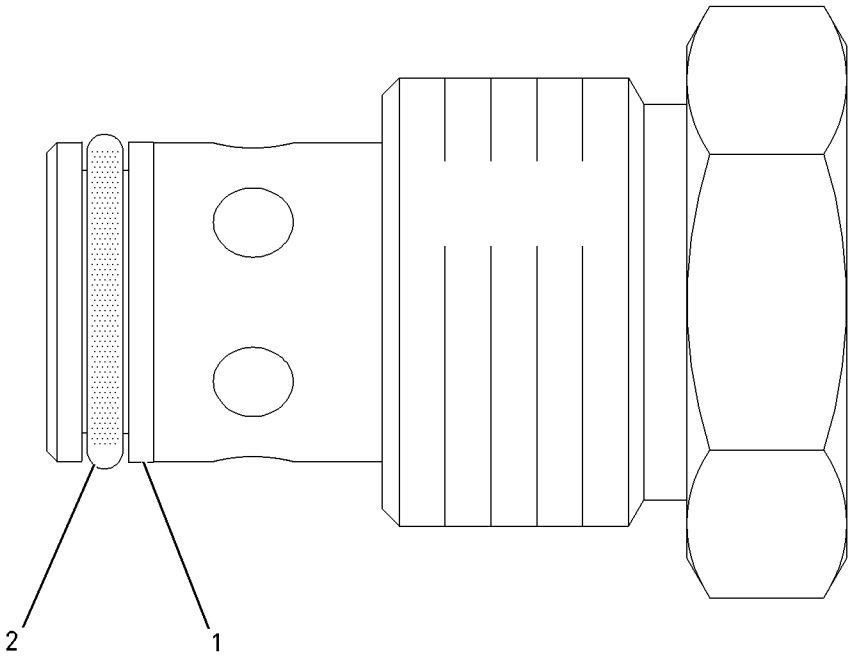

GRAPHIC #1 **<END>** g00864141

FUEL SYSTEM

190-8977 WATER SEP & FUEL PRM PUMP GP

S/N: MHX1-UP

PART OF 235-1080 PUMP GP-FUEL PRM & PRIM FILTER

SMCS-1258, 1263 **i01934930**

NOTE	REF NO	GRAPHIC REF	PART NUMBER	QTY	PART NAME 1 2 3 4 5 6 (PRODUCT LEVEL)	SEE PAGE
Y	1	1	*174-9570*	1	FILTER GP-WATER SEP & FUEL (PRIMARY)	103
	2	1	**190-8970**	1	BASE AS	

Y-SEPARATE ILLUSTRATION

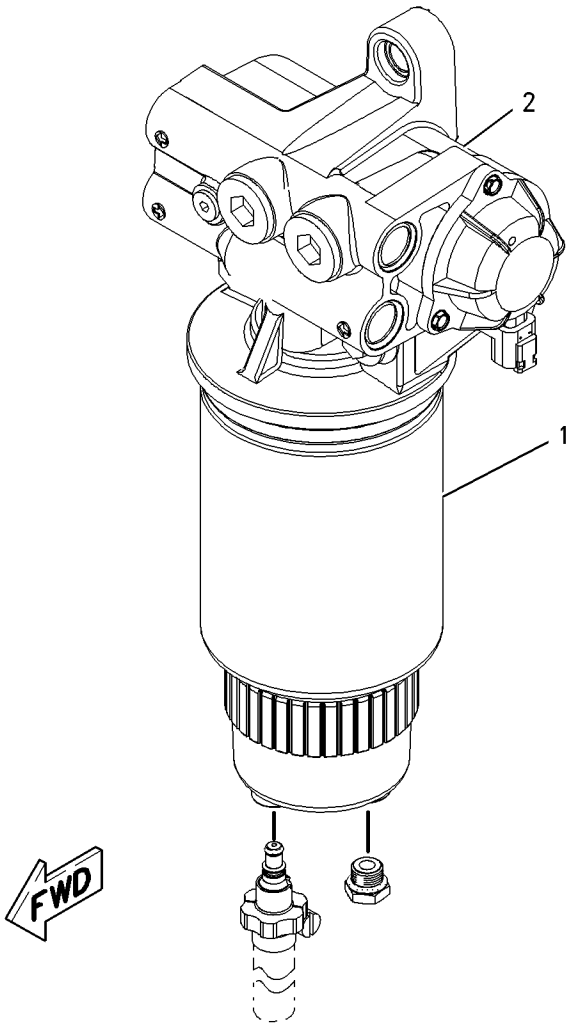

GRAPHIC #1 **<END>** g00904493

3E-6328 ALARM GP–ACTION

S/N: A7G1-UP
24 VOLT
PART OF 237-4910 WIRING GP-CAB
ALSO AN ATTACHMENT

SMCS-7400, 7402, 7407 **i01475415**

NOTE	REF NO	GRAPHIC REF	PART NUMBER	QTY	PART NAME 1 2 3 4 5 6 (PRODUCT LEVEL)	SEE PAGE
	1	1	**102-8802**	1	KIT-RECEPTACLE (2-PIN)	
					(INCLUDES RECEPTACLE AS AND WEDGE)	
	2	1	**3E-3365**	1	WEDGE-RECEPTACLE LOCK (2-PIN)	
	3	1	**186-3735**	2	PIN-CONNECTOR (16-GA TO 18-GA)	

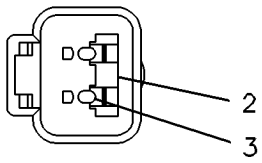

VIEW A–A

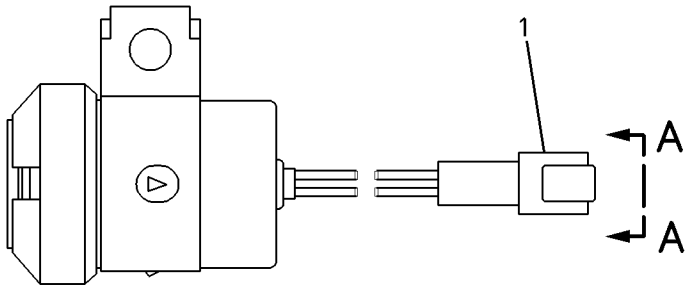

GRAPHIC #1 **<END>** g00083162

235-7133 ALTERNATOR GP-CHARGING–24-VOLT, 80-AMPERE

S/N: MHX1-UP

PART OF 237-9767 ALTERNATOR GP-CHARGING

SMCS-1405 **i02174215**

NOTE	REF NO	GRAPHIC REF	PART NUMBER	QTY	PART NAME 1 2 3 4 5 6 (PRODUCT LEVEL)	SEE PAGE
	1	1	**228-9656**	1	MOUNTING GP-ALTERNATOR	
	2	1	**5S-7349**	1	BOLT (1/4-20X0.5-IN)	
	3	1	**185-2639**	1	FAN AS	
	4	1	**1H-3244**	1	LOCKWASHER	
	5	1	**228-9655**	1	MOUNTING GP-ALTERNATOR	
	6	1	**2K-4821**	1	LOCKNUT (5/8-18-THD)	
	7	1	**5P-8247**	1	WASHER-HARD (17X32X3.5-MM THK)	
	8	1	**228-9657**	1	COVER AS	
	9	1	**8T-4205**	1	WASHER-HARD (7.2X14.5X2-MM THK)	
	10	1	**185-2647**	1	GROMMET	
	11	1	**9L-6770**	1	CAP	
	12	1	**185-2643**	1	STATOR AS (ALTERNATOR)	
	13	1	**185-2638**	2	COLLAR	
	14	1	**185-2654**	1	PLATE	
	15	1	**185-2650**	1	ROTOR AS	
	16	1	**185-2644**	1	COIL AS	
	17	1	**185-2648**	1	REGULATOR AS-VOLTAGE (24-VOLT) (ALTERNATOR)	
	18	1	**6V-8189**	1	NUT (5/16-18-THD)	
	19	1	**8T-4224**	1	WASHER-HARD (8.8X16X2-MM THK)	
	20	1	**3F-9556**	1	LOCKWASHER	
					AVAILABLE REPAIR KIT(S):	
			185-2655	1	KIT-BEARING (ALTERNATOR)	
			185-2658		KIT-HARDWARE (ALTERNATOR)	
			199-7891	1	KIT-TERMINAL (ALTERNATOR)	
			199-8436	1	KIT-TERMINAL (ALTERNATOR)	

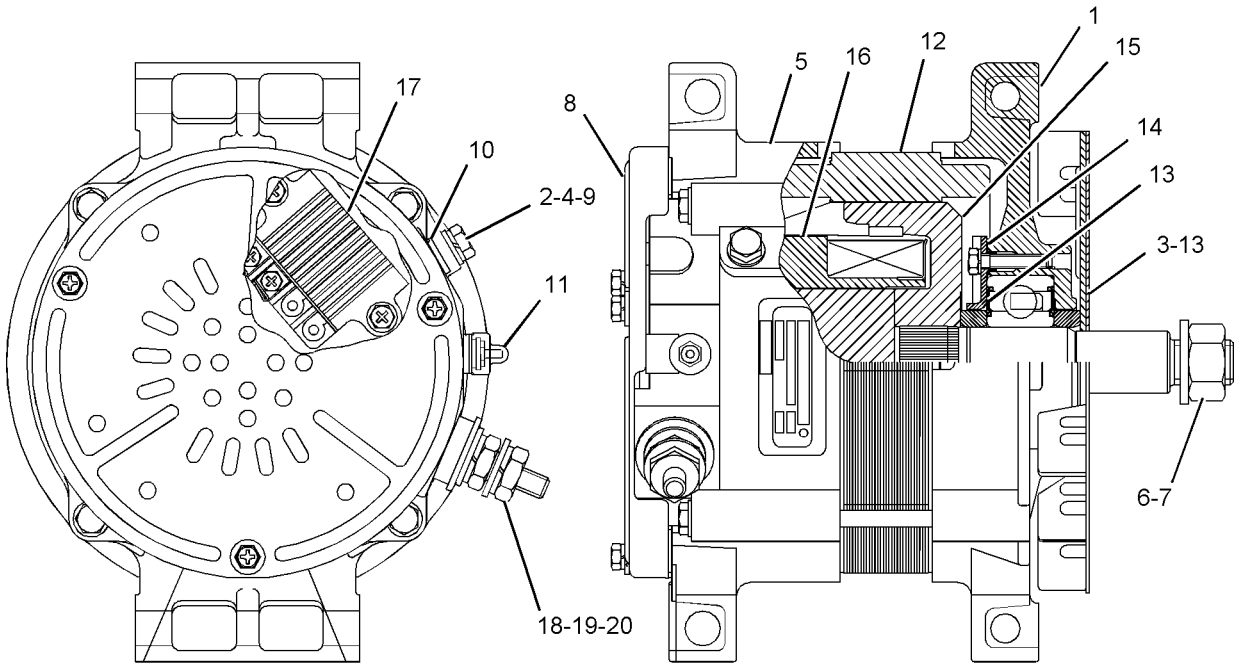

GRAPHIC #1 **<END>** g01088551

237-9767 ALTERNATOR GP-CHARGING–24-VOLT, 80-AMPERE

S/N: MHX1-UP

PART OF 234-7849 ENGINE AR-COMPLETE

SMCS-1405 **i02270636**

NOTE	REF NO	GRAPHIC REF	PART NUMBER	QTY	PART NAME 1 2 3 4 5 6 (PRODUCT LEVEL)	SEE PAGE
Y	1	1	**235-7133**	1	ALTERNATOR GP-CHARGING	119
M	2	1	**8T-4198**	4	BOLT (M10X1.5X100-MM)	
	3	1	**8T-4121**	4	WASHER-HARD (11X21X2.5-MM THK)	

M-METRIC PART
Y-SEPARATE ILLUSTRATION

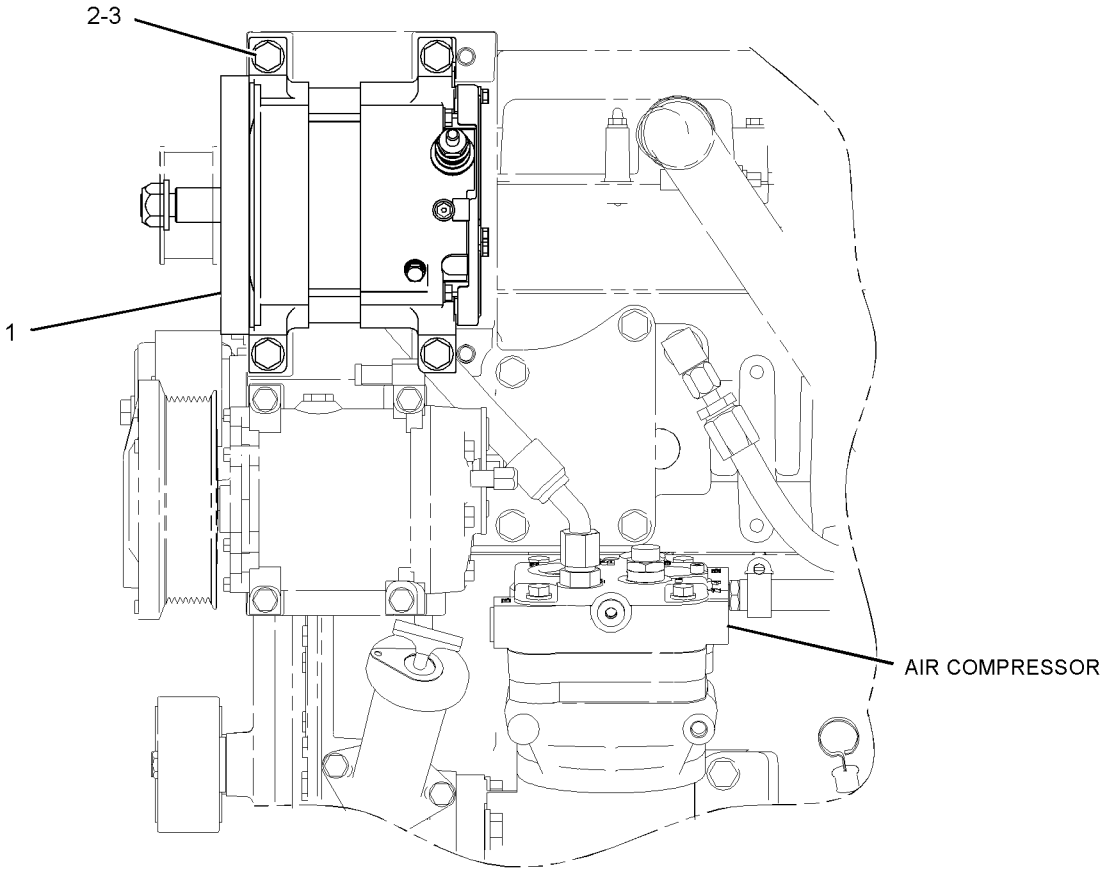

LEFT SIDE VIEW

GRAPHIC #1 **<END>** g01121140

ELECTRICAL AND STARTING SYSTEM

237-4902 BATTERY & WIRING GP

S/N: A7G1-UP

PART OF 236-9053 ELECTRICAL AR

SMCS-1401, 1402, 1408 **i02411355**

NOTE	REF NO	GRAPHIC REF	PART NUMBER	QTY	PART NAME 1 2 3 4 5 6 (PRODUCT LEVEL)	SEE PAGE
	1	2	**3E-8320**	1	PLATE-INSTRUCTION (BATTERY)	
	2	1,2	**3S-2093**	9	STRAP-CABLE	
	3	2	**6W-6005**	1	HOLD-DOWN-BATTERY	
Y	4	2	**7N-0718**	1	SWITCH GP-DISCONNECT (BATTERY)	204
	5	1	**9M-4136**	1	SPACER (0.438X0.75X0.5-IN THK)	
	6	2	**116-0080**	1	CABLE AS	
E		2	**5P-0761**		CABLE (00-GA, RED) (31-CM)	
		2	**7N-5274**	1	COVER-TERMINAL (BLACK)	
		2	**8L-8413**	1	STRAP-CABLE	
		2	**8N-1725**	1	COVER-TERMINAL (RED)	
		2	**8L-8413**	1	STRAP-CABLE	
		2	**3S-6050**	1	TERMINAL AS-BATTERY (NEGATIVE)	
		2	**3S-6049**	1	TERMINAL AS-BATTERY (POSITIVE)	
	7	2	**142-1657**	1	BRACKET AS	
M		2	**8T-3490**	1	NUT-WELD (M10X1.5-THD)	
	8	2	**148-3495**	1	BRACKET AS	
M		2	**8T-3490**	1	NUT-WELD (M10X1.5-THD)	
	9	1	**246-1553**	1	CABLE AS	
E		1	**8C-3056**		CABLE (02-GA, RED) (380-CM)	
		1	**8T-8827**	1	BOOT	
		1	**030-1712**	2	TERMINAL-RING (2-GA, 6.35-MM)	
		1	**231-4476**	1	TERMINAL AS	
	10	2	**246-1696**	1	CABLE AS	
		2	**1S-7251**	1	TERMINAL-RING (FOR 1/2-IN BOLT)	
E		2	**5P-0761**		CABLE (00-GA, RED) (71-CM)	
		2	**8N-0869**	1	COVER-TERMINAL (RED)	
		2	**8N-1725**	1	COVER-TERMINAL (RED)	
		2	**8L-8413**	1	STRAP-CABLE	
		2	**3S-6049**	1	TERMINAL AS-BATTERY (POSITIVE)	
		2	**1M-6119**	1	BOLT (5/16-18X1.375-IN)	
		2	**1M-6120**	1	NUT (5/16-18-THD)	
	11	2	**246-1697**	1	CABLE AS	
E		2	**5P-0747**		CABLE (00-GA, BLACK) (59-CM)	
		2	**7N-5274**	1	COVER-TERMINAL (BLACK)	
		2	**8L-8413**	1	STRAP-CABLE	
		2	**8S-3020**	1	TERMINAL-CABLE	
		2	**3S-6050**	1	TERMINAL AS-BATTERY (NEGATIVE)	
		2	**1M-6119**	1	BOLT (5/16-18X1.375-IN)	
		2	**1M-6120**	1	NUT (5/16-18-THD)	
		2	**9X-5699**	1	BOOT	
	12	1	**246-1698**	1	CABLE AS	
		1	**1S-7251**	2	TERMINAL-RING (FOR 1/2-IN BOLT)	
E		1	**5P-0761**		CABLE (00-GA, RED) (173-CM)	
		1	**8N-0869**	2	COVER-TERMINAL (RED)	
	13	2	**246-1699**	1	CABLE AS	
E		2	**5P-0747**		CABLE (00-GA, BLACK) (30-CM)	
		2	**8S-3020**	1	TERMINAL-CABLE	
		2	**216-7790**	1	TERMINAL-RING	
	14	1	**246-1715**	1	CABLE AS	
		1	**1S-7251**	2	TERMINAL-RING (FOR 1/2-IN BOLT)	
E		1	**5P-0747**		CABLE (00-GA, BLACK) (72-CM)	
	15	2	**246-6667**	1	ROD	
	16	1	**263-9574**	2	BATTERY (12-VOLT, MAINTENANCE FREE)	
M	17	2	**113-6990**	1	BOLT (M20X2.5X25-MM)	
	18	2	**133-9379**	2	GROMMET	
	19	1,2	**205-7299**	8	CLIP	

237-4902 **BATTERY & WIRING GP** *(contd.)* **i02411355**

NOTE	REF NO	GRAPHIC REF	PART NUMBER	QTY	PART NAME 1 2 3 4 5 6 (PRODUCT LEVEL)	SEE PAGE
	20	2	**6K-8178**	1	CLIP	
	21	2	**6V-8188**	6	NUT (1/2-13-THD)	
	22	2	**8C-6358**	1	BLOCK GP-JUNCTION	
		2	**1D-5117**	3	NUT-JAM (1/2-13-THD)	
		2	**8T-3519**	3	BOLT-BRONZE (1/2-13X2-IN)	
	23	1,2	**8M-2770**	14	CLIP	
M	24	2	**8T-0389**	1	LOCKNUT (M10X1.15-THD)	
	25	1,2	**8T-4121**	16	WASHER-HARD (11X21X2.5-MM THK)	
	26	2	**8T-4123**	1	WASHER-PLATED (22X35X3.5-MM THK)	
M	27	1,2	**8T-4133**	2	NUT (M10X1.15-THD)	
M	28	1,2	**8T-4136**	2	BOLT (M10X1.5X25-MM)	
M	29	1,2	**8T-4137**	12	BOLT (M10X1.5X20-MM)	
M	30	1	**8T-4185**	1	BOLT (M10X1.5X50-MM)	
M	31	2	**8T-4192**	2	BOLT (M12X1.75X25-MM)	
	32	1,2	**8T-4223**	9	WASHER-HARD (13.5X25.5X3-MM THK)	
	33	2	**8T-4226**	1	WASHER-PLATED (10.5X45X3-MM THK)	

E-ORDER BY THE CENTIMETER
M-METRIC PART
Y-SEPARATE ILLUSTRATION

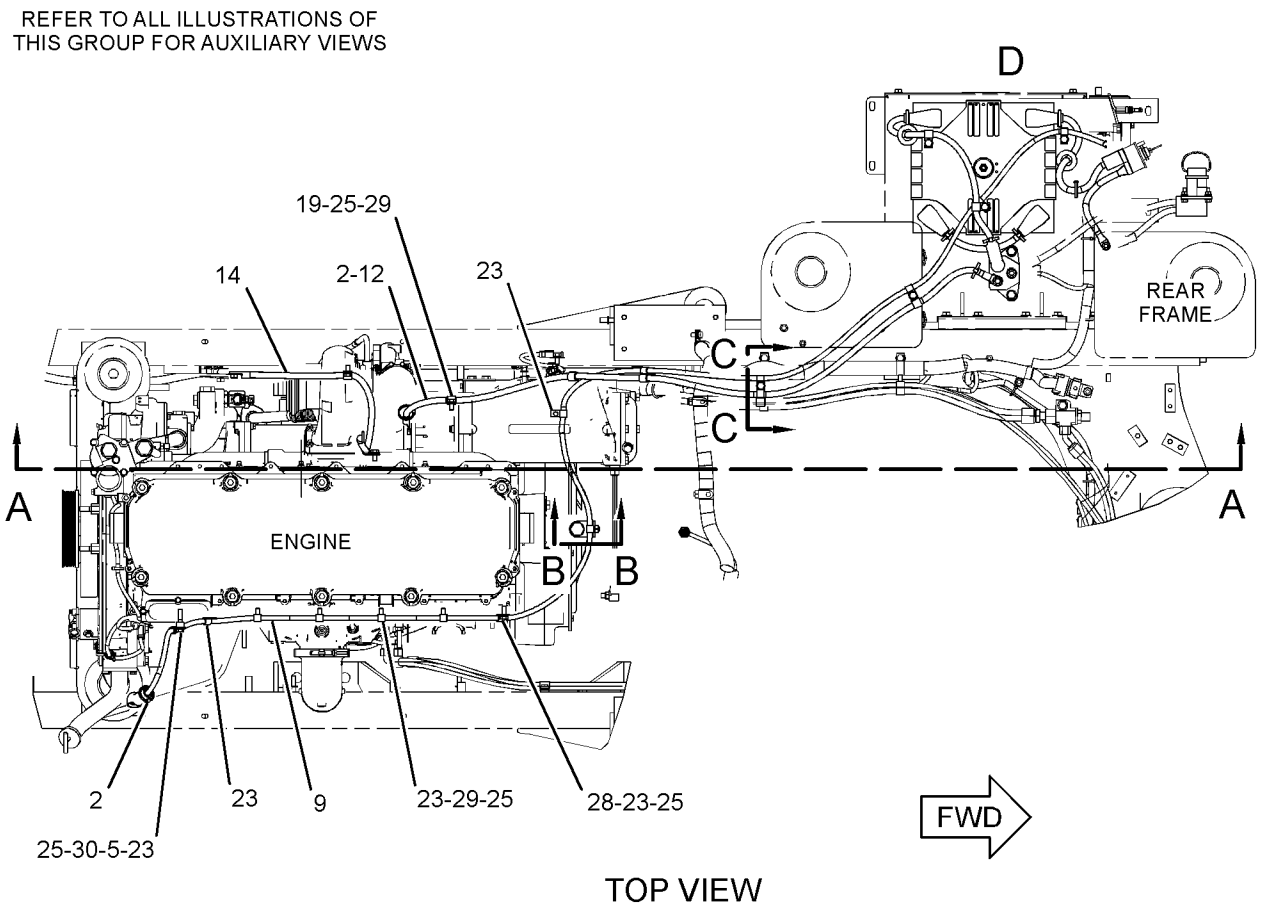

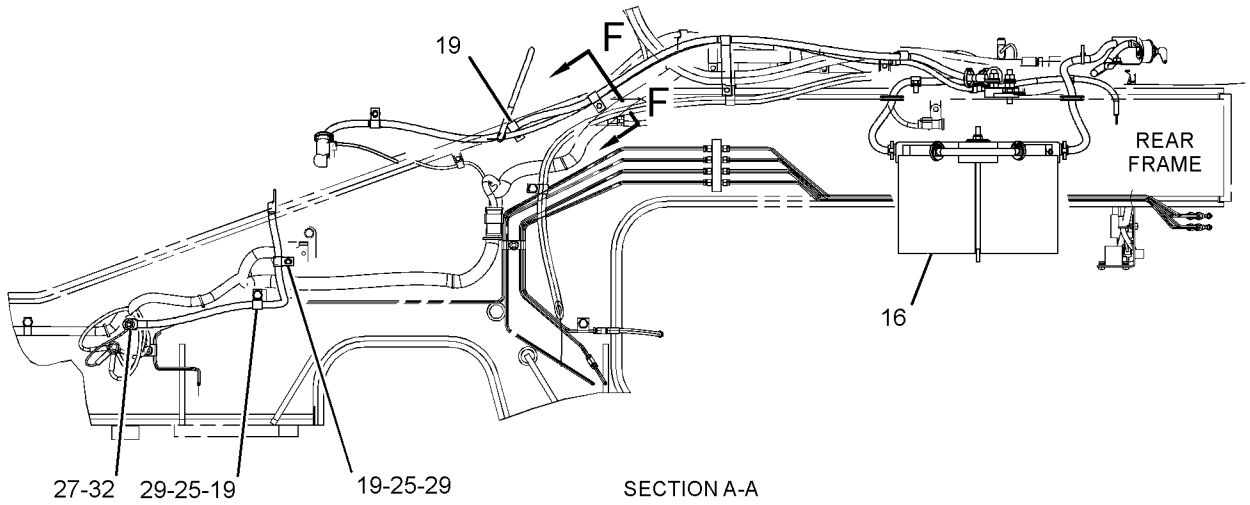

GRAPHIC #1

g01209920

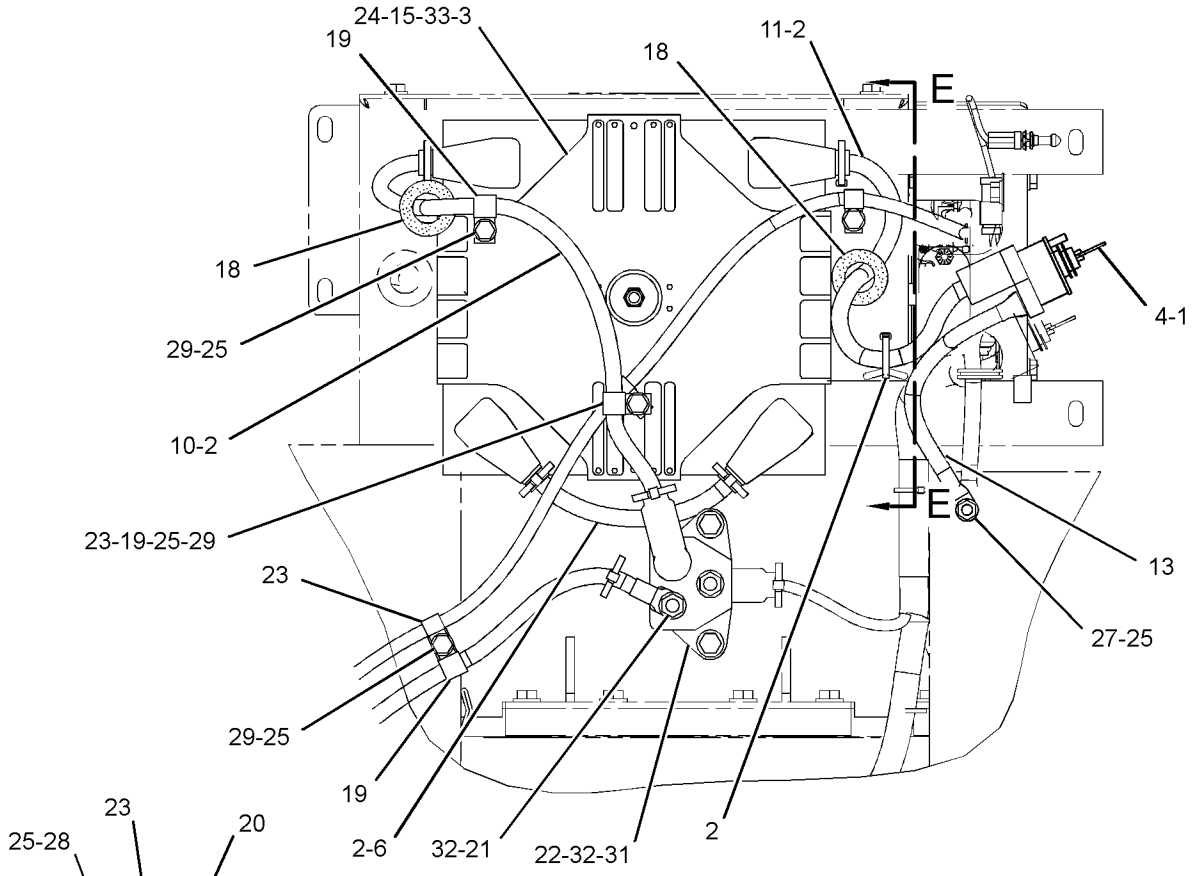

VIEW OF AREA D

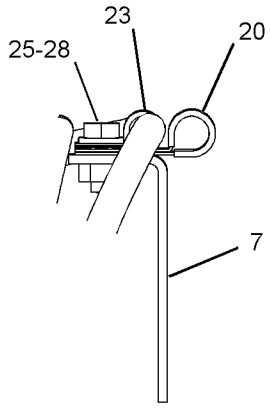

SECTION C-C

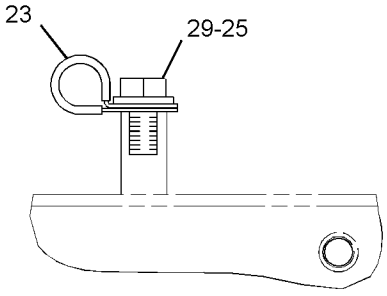

SECTION E-E

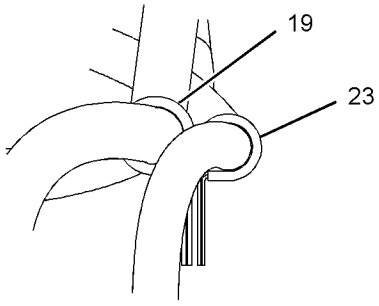

SECTION F-F

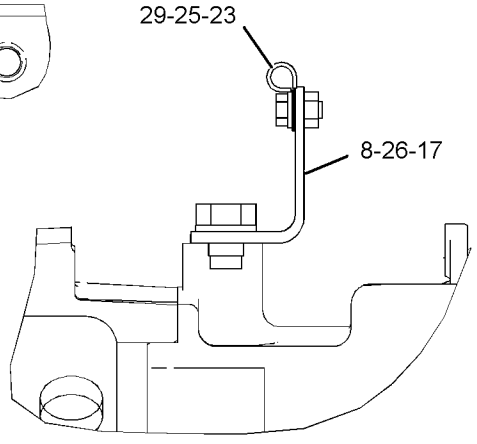

SECTION B-B

GRAPHIC #2 **<END>** g01209922

251-7610 CONNECTION GP-ELECTRICAL

S/N: MHX1-UP

PART OF 234-7849 ENGINE AR-COMPLETE

SMCS-1408 **i02264247**

NOTE	REF NO	GRAPHIC REF	PART NUMBER	QTY	PART NAME 1 2 3 4 5 6 (PRODUCT LEVEL)	SEE PAGE
	1	1	**212-0431**	1	STUD	
M	2	1	**2Y-5829**	1	NUT (M10X1.5-THD)	
	3	1	**3E-4353**	1	WASHER-HARD (11X25X3-MM THK)	
	4	1	**6V-5839**	2	WASHER (11X21X2.5-MM THK)	

M-METRIC PART

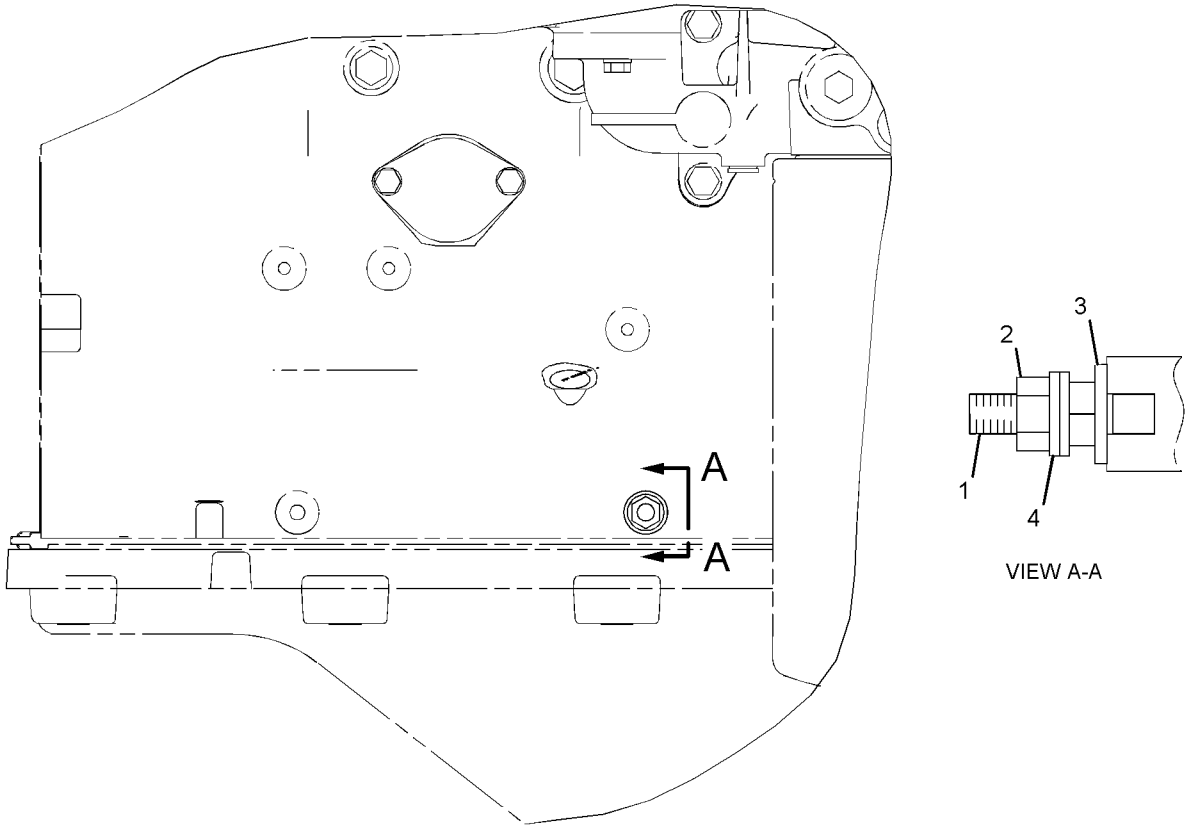

RIGHT SIDE VIEW

GRAPHIC #1 **<END>** g01121148

256-5068 CONTROL & MTG GP-COMMUNICATION–
PRODUCT LINK 321SR
S/N: A7G1-UP
PART OF 261-3037, 263-3322 INSTALLATION AR-COMMUNICATION
AN ATTACHMENT

SMCS-7606 **i02415698**

NOTE	REF NO	GRAPHIC REF	PART NUMBER	QTY	PART NAME 1 2 3 4 5 6 (PRODUCT LEVEL)	SEE PAGE
	1	1	**3S-2093**	3	STRAP-CABLE	
	2	1	**7K-1181**	9	STRAP-CABLE	
	3	1	**8C-5607**	8	MOUNT-ISOLATION	
	4	1	**8C-5608**	4	SPACER (6.5X9.5X25.4-MM THK)	
	5	1	**229-2704**	4	WASHER-RUBBER	
Y	6	1	**239-9954**	1	CONTROL GP-UNPROGRAMMED (PRODUCT LINK 300)	134
	7	1	**255-4369**	1	GROMMET	
	8	1	**263-8948**	1	ANTENNA AS	
		1	**223-4296**	1	ANTENNA (FLEX)	
Y	9	1	**263-9088**	1	RADIO GP-COMMUNICATION (PRODUCT LINK 121SR)	866
	10	1	**264-4872**	1	BRACKET AS	
	11	1	**264-7671**	1	BRACKET	
	12	1	**276-0031**	1	HARNESS AS-CONTROL	
		1	**102-8801**	2	KIT-RECEPTACLE (12-PIN)	
					(EACH INCLUDES RECEPTACLE AS AND WEDGE)	
		1	**9X-6772**	2	STRAP-CABLE	
		1	**155-2255**	2	KIT-CONNECTING PLUG (12-PIN)	
					(EACH INCLUDES PLUG AS AND WEDGE)	
		1	**160-7689**	1	PLUG AS-CONNECTOR (70-PIN)	
	13	1	**122-8705**	1	U-BOLT	
	14	1	**156-6175**	2	CLIP	
M	15	1	**5C-9553**	1	BOLT (M6X1X16-MM)	
M	16	1	**8C-8451**	3	BOLT (M6X1X40-MM)	
M	17	1	**8T-2947**	1	BOLT (M6X1X45-MM)	
	18	1	**8T-4121**	2	WASHER-HARD (11X21X2.5-MM THK)	
M	19	1	**8T-4133**	2	NUT (M10X1.15-THD)	
M	20	1	**8T-4138**	4	BOLT (M6X1X20-MM)	
M	21	1	**9X-2046**	2	SCREW-TRUSS HEAD (M6X1X35-MM)	
	22	1	**9X-6165**	8	WASHER (6.5X22X2.5-MM THK)	
	23	1	**9X-8256**	6	WASHER (6.6X12X2-MM THK)	

M-METRIC PART
Y-SEPARATE ILLUSTRATION

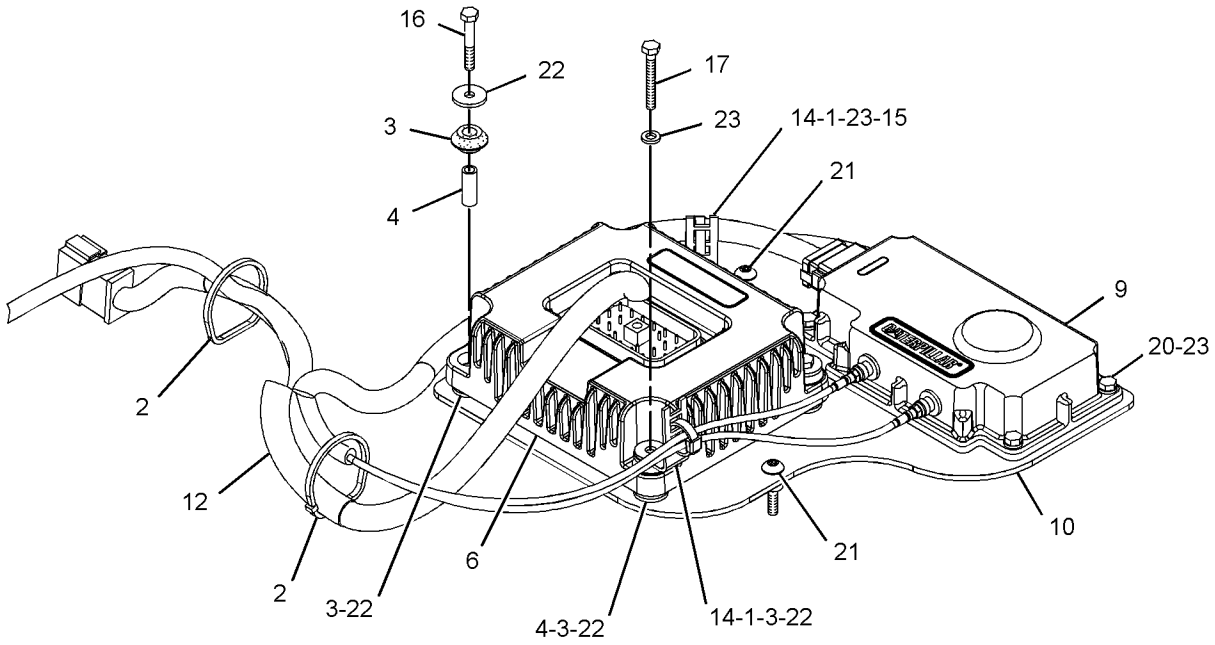

VIEW OF AREA A

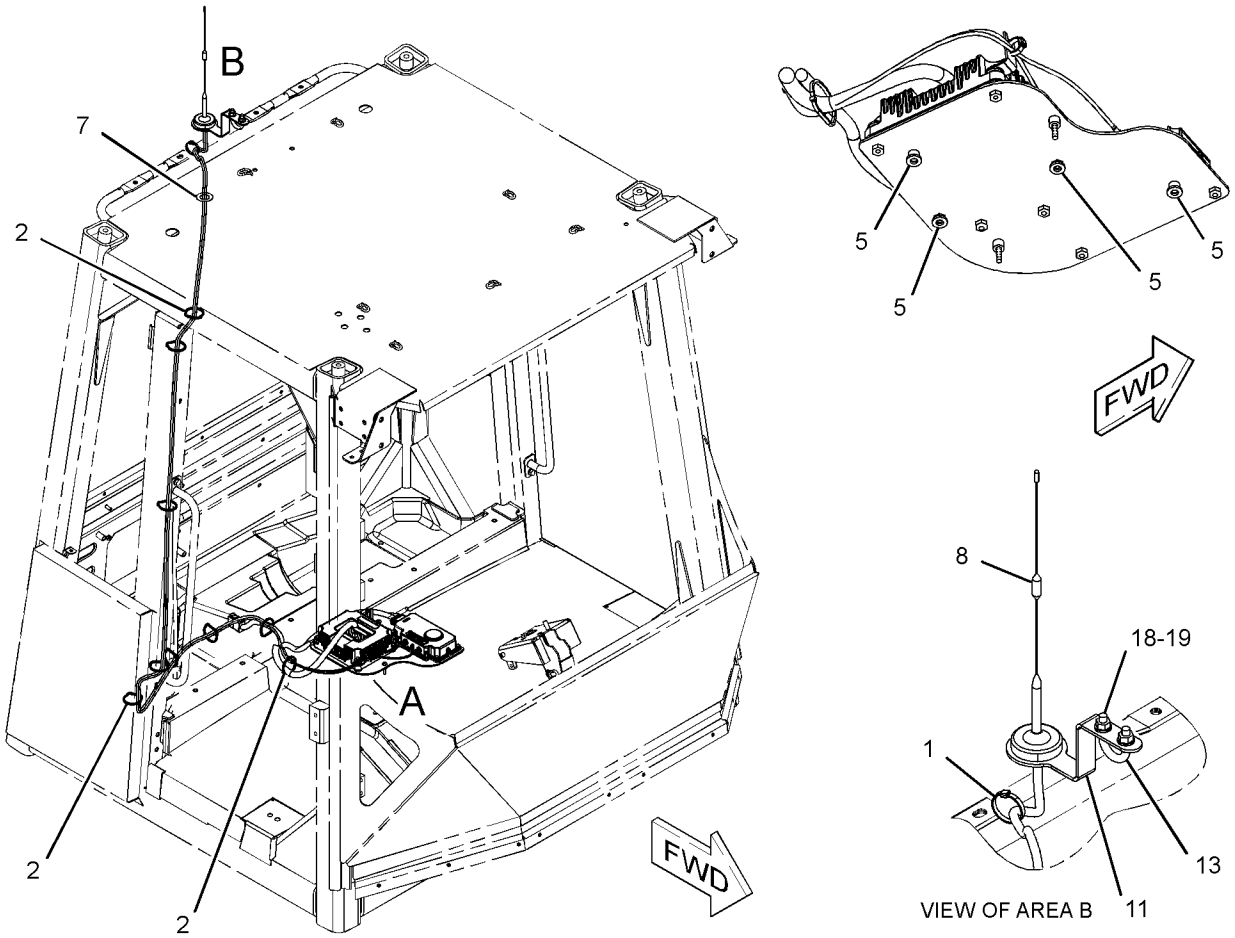

VIEW OF AREA B

GRAPHIC #1 **<END>** g01182804

233-6191 CONTROL & MTG GP-ENGINE ELEK

S/N: MHX1-UP

PART OF 234-7849 ENGINE AR-COMPLETE

SMCS-1901, 7620 **i02270542**

NOTE	REF NO	GRAPHIC REF	PART NUMBER	QTY	PART NAME 1 2 3 4 5 6 (PRODUCT LEVEL)	SEE PAGE
	1	1	**8T-9655**	8	MOUNT-ISOLATION	
M	2	1	**9X-2098**	2	STUD-TAPERLOCK (BOLT)	
	3	1	**226-7473**	1	CONTROL GP-ENGINE ELECTRONIC	
	5	1	**233-0891**	2	BRACKET AS	
	6	1	**6I-1418**	4	SPACER (8.2X12.7X28.7-MM THK)	
M	7	1	**8T-0276**	2	BOLT (M8X1.25X45-MM)	
	8	1	**9N-0869**	4	WASHER-HARD (8.8X25.5X2-MM THK)	

M-METRIC PART

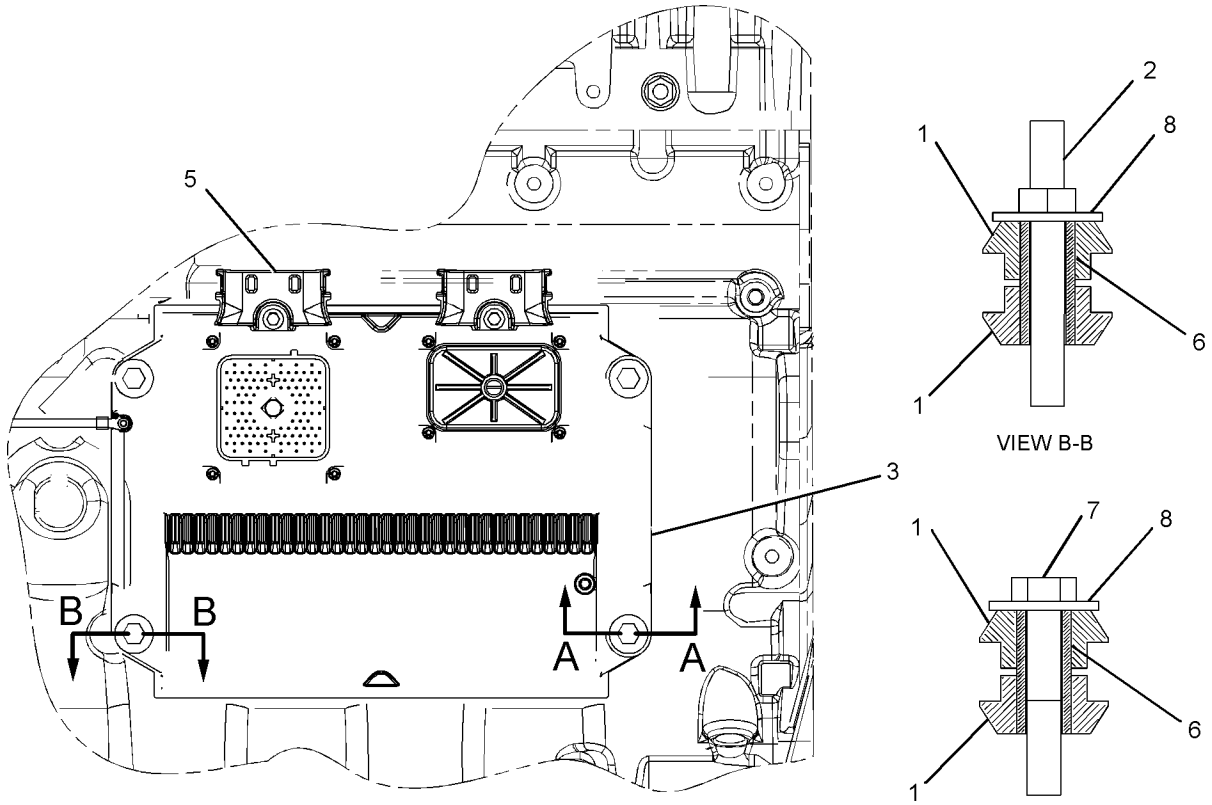

LEFT SIDE VIEW

GRAPHIC #1 **<END>** g01094987

236-9108 CONTROL AR-AUTODIG—HMU STEERING

S/N: A7G1-UP
AN ATTACHMENT

SMCS-5741 **i02415429**

NOTE	PART NUMBER	QTY	PART NAME 1 2 3 4 5 6 (PRODUCT LEVEL)	SEE PAGE
Y	*253-3471*	1	CONTROL GP-AUTODIG (HMU STEERING)	132
Y	*239-4850*	1	SENSOR & MTG GP-PRESSURE (LIFT CYLINDER OIL)	175
	214-0113	1	SOFTWARE GP-IMPLEMENT (AUTODIG)	

Y-SEPARATE ILLUSTRATION

<END>

246-1920 CONTROL AR-AUTODIG—COMMAND CONTROL STEERING

S/N: A7G1-UP
AN ATTACHMENT

SMCS-5741 **i02415756**

NOTE	PART NUMBER	QTY	PART NAME 1 2 3 4 5 6 (PRODUCT LEVEL)	SEE PAGE
Y	*243-1939*	1	CONTROL GP-AUTODIG (COMMAND CONTROL STEERING)	130
Y	*239-4850*	1	SENSOR & MTG GP-PRESSURE (LIFT CYLINDER OIL)	175
	214-0113	1	SOFTWARE GP-IMPLEMENT (AUTODIG)	

Y-SEPARATE ILLUSTRATION

<END>

279-4959 CONTROL AR-AUTODIG—COMMAND CONTROL STEERING

S/N: A7G1-UP
AN ATTACHMENT

SMCS-5741 **i02421211**

NOTE	PART NUMBER	QTY	PART NAME 1 2 3 4 5 6 (PRODUCT LEVEL)	SEE PAGE
Y	*243-1939*	1	CONTROL GP-AUTODIG (COMMAND CONTROL STEERING)	130
Y	*239-4850*	1	SENSOR & MTG GP-PRESSURE (LIFT CYLINDER OIL)	175
	214-0113	1	SOFTWARE GP-IMPLEMENT (AUTODIG)	

Y-SEPARATE ILLUSTRATION

<END>

243-1939 CONTROL GP-AUTODIG—COMMAND CONTROL STEERING

S/N: A7G1-UP

PART OF 246-1920, 279-4959 CONTROL AR-AUTODIG

AN ATTACHMENT

SMCS-5741 **i02388817**

NOTE	REF NO	GRAPHIC REF	PART NUMBER	QTY	PART NAME 1 2 3 4 5 6 (PRODUCT LEVEL)	SEE PAGE
	1	1	**4E-2229**	1	DAMPER AS-ALARM	
Y	2	1	**106-0107**	1	SWITCH GP-ROTARY (AUTODIG MATERIAL SELECTOR)	212
	3	1	**110-6109**	1	KNOB-CONTROL (AUTODIG SELECTOR SWITCH)	
	4	1	**123-9694**	1	HORN (AUDIBLE ALARM/AUTODIG CYCLE)	
	5	1	**265-8171**	1	SWITCH AS-PUSH BUTTON (AUTODIG TRIGGER)	
		1	**3E-3371**	1	WEDGE-RECEPTACLE LOCK (3-PIN)	
		1	**6F-0253**	1	LOCKWASHER	
		1	**186-3735**	3	PIN-CONNECTOR (16-GA TO 18-GA)	
		1	**102-8803**	1	KIT-RECEPTACLE (3-PIN)	
					(INCLUDES RECEPTACLE AS AND WEDGE)	
		1	**172-3511**	1	NUT (5/8-24-THD)	
	6	1	**236-4620**	1	SWITCH AS-ROCKER (AUTO LOADING MODE SELECT)	
	7	1	**236-4621**	1	SWITCH AS-ROCKER (AUTO LOADING KICKOUT SET)	
	8	1	**2H-3920**	1	LOCKWASHER	
B	9	1	**200-8064**	1	FILM-CONTROL (AUTODIG)	
	10	1	**201-1531**	1	FILM (AUTODIG)	
	11	1	**249-2775**	1	CONTROL GP-DISPLAY ELECTRONIC (INDICATOR PANEL, CENTER)	
	12	1	**107-1964**	4	SCREW-PAN HEAD (6-19X0.5-IN)	

B-USE AS REQUIRED
Y-SEPARATE ILLUSTRATION

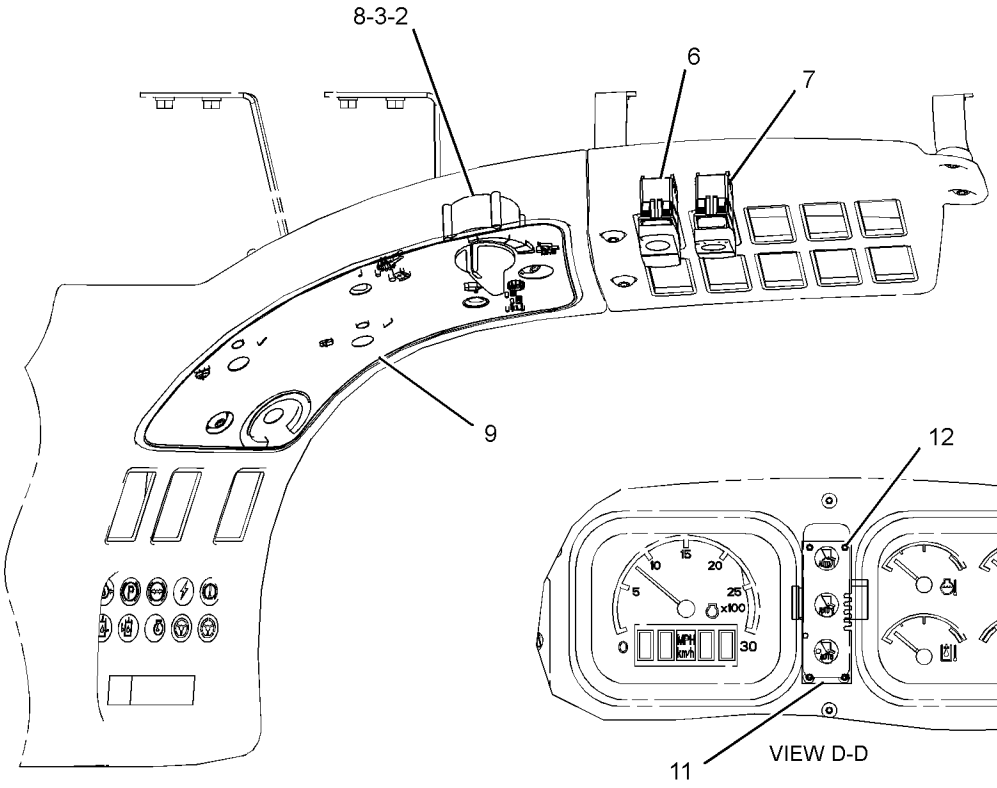

VIEW OF AREA A

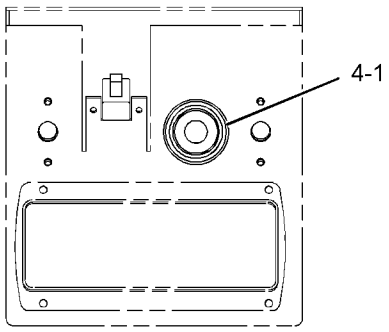

VIEW C-C

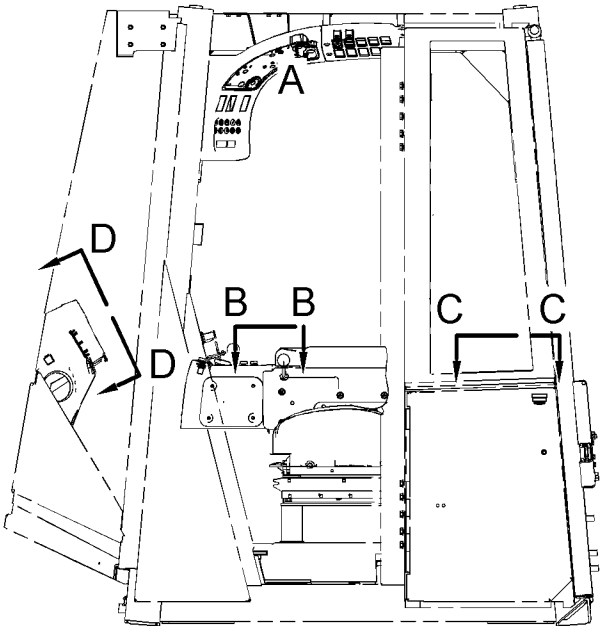

LEFT SIDE VIEW

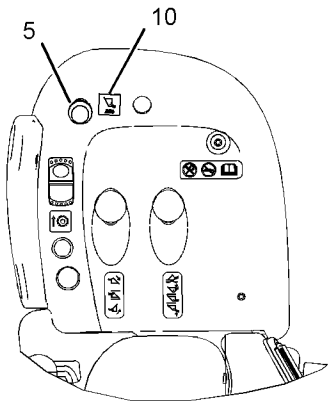

VIEW B-B

GRAPHIC #1 **<END>** g01195885

253-3471 CONTROL GP-AUTODIG—HMU STEERING

S/N: A7G1-UP
PART OF 236-9108 CONTROL AR-AUTODIG
AN ATTACHMENT

SMCS-5741 **i02389747**

NOTE	REF NO	GRAPHIC REF	PART NUMBER	QTY	PART NAME 1 2 3 4 5 6 (PRODUCT LEVEL)	SEE PAGE
	1	1	**4E-2229**	1	DAMPER AS-ALARM	
Y	2	1	**106-0107**	1	SWITCH GP-ROTARY (AUTODIG MATERIAL SELECT)	212
	3	1	**110-6109**	1	KNOB-CONTROL (AUTODIG SELECT SWITCH)	
	4	1	**123-9694**	1	HORN (AUDIBLE ALARM/ AUTODIG CYCLE)	
	5	1	**265-8171**	1	SWITCH AS-PUSH BUTTON (AUTODIG TRIGGER)	
		1	**102-8803**	1	KIT-RECEPTACLE (3-PIN)	
					(INCLUDES RECEPTACLE AS AND WEDGE)	
		1	**172-3511**	1	NUT (5/8-24-THD)	
		1	**6F-0253**	1	LOCKWASHER	
		1	**186-3735**	3	PIN-CONNECTOR (16-GA TO 18-GA)	
	6	1	**201-1531**	1	FILM (AUTODIG)	
	7	1	**236-4620**	1	SWITCH AS-ROCKER (AUTO LOADING MODE SELECT)	
	8	1	**236-4621**	1	SWITCH AS-ROCKER (AUTO LOADING KICKOUT SET)	
B	9	1	**251-1082**	1	FILM-CONTROL (AUTODIG)	
	10	1	**2H-3920**	1	LOCKWASHER	
	11	1	**249-2775**	1	CONTROL GP-DISPLAY ELECTRONIC (INDICATOR PANEL, CENTER)	
	12	1	**107-1964**	4	SCREW-PAN HEAD (6-19X0.5-IN)	

B-USE AS REQUIRED
Y-SEPARATE ILLUSTRATION

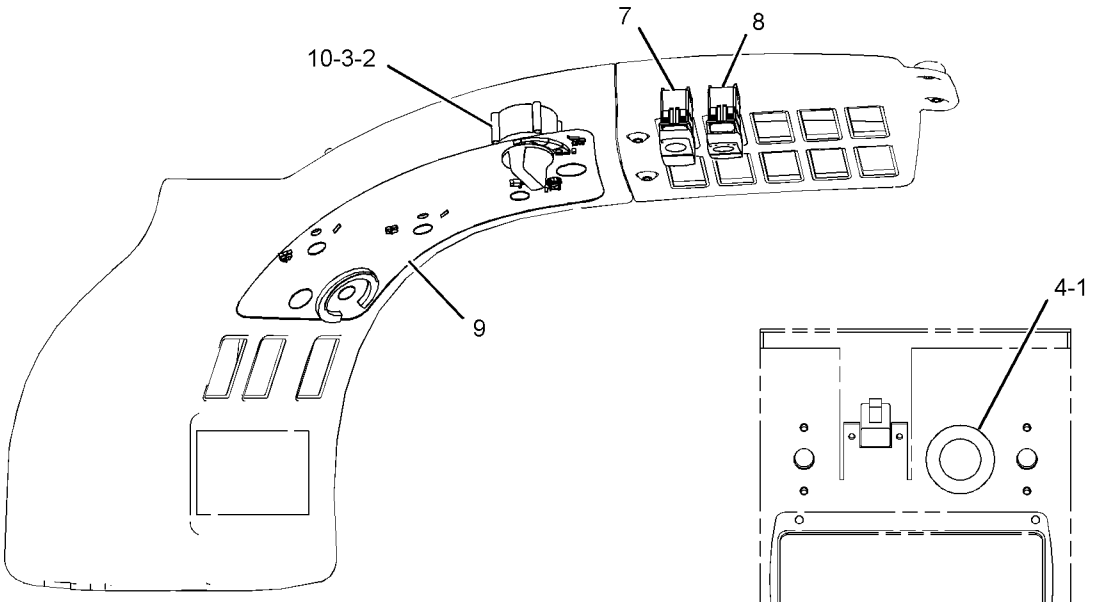

VIEW OF AREA B

VIEW A-A

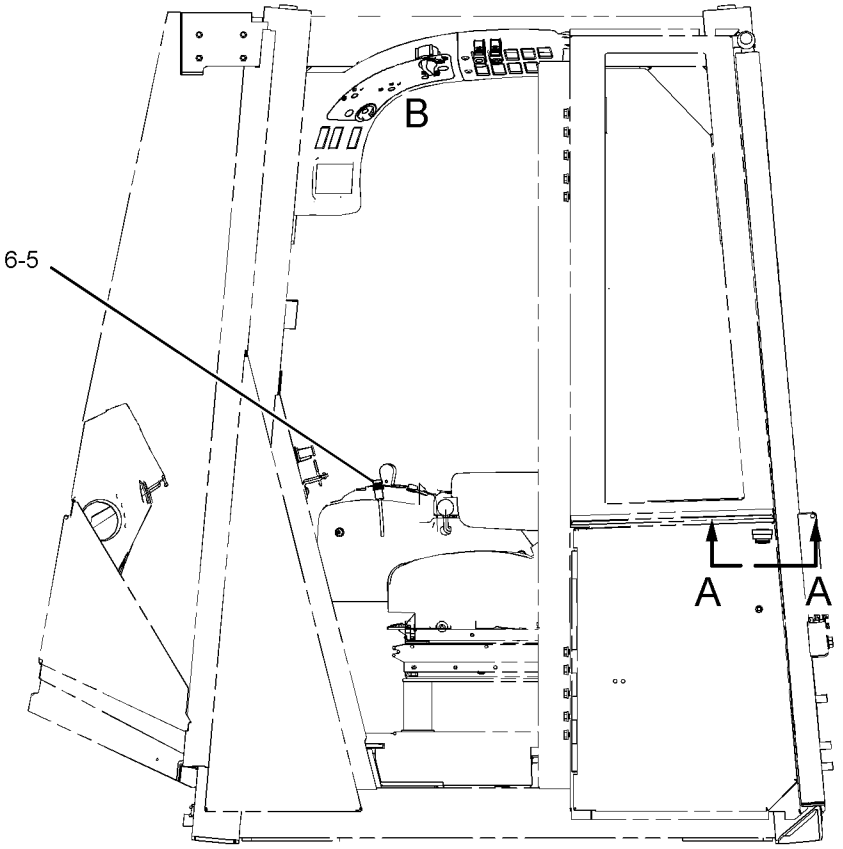

LEFT SIDE VIEW

GRAPHIC #1

<END>

g01115587

239-9954 CONTROL GP-UNPROGRAMMED

S/N: A7G1-UP

PART OF 256-5068 CONTROL & MTG GP-COMMUNICATION

AN ATTACHMENT

SMCS-7610 **i02310286**

NOTE	REF NO	GRAPHIC REF	PART NUMBER	QTY	PART NAME 1 2 3 4 5 6 (PRODUCT LEVEL)	SEE PAGE
	1	1	**7X-6315**	1	STRAP AS-GROUND	
	2	1	**126-7574**	1	SCREW-PAN HEAD (8-32X9.52-MM)	
	3	1	**134-4126**	1	WASHER (4.52X8.28X0.76-MM THK)	

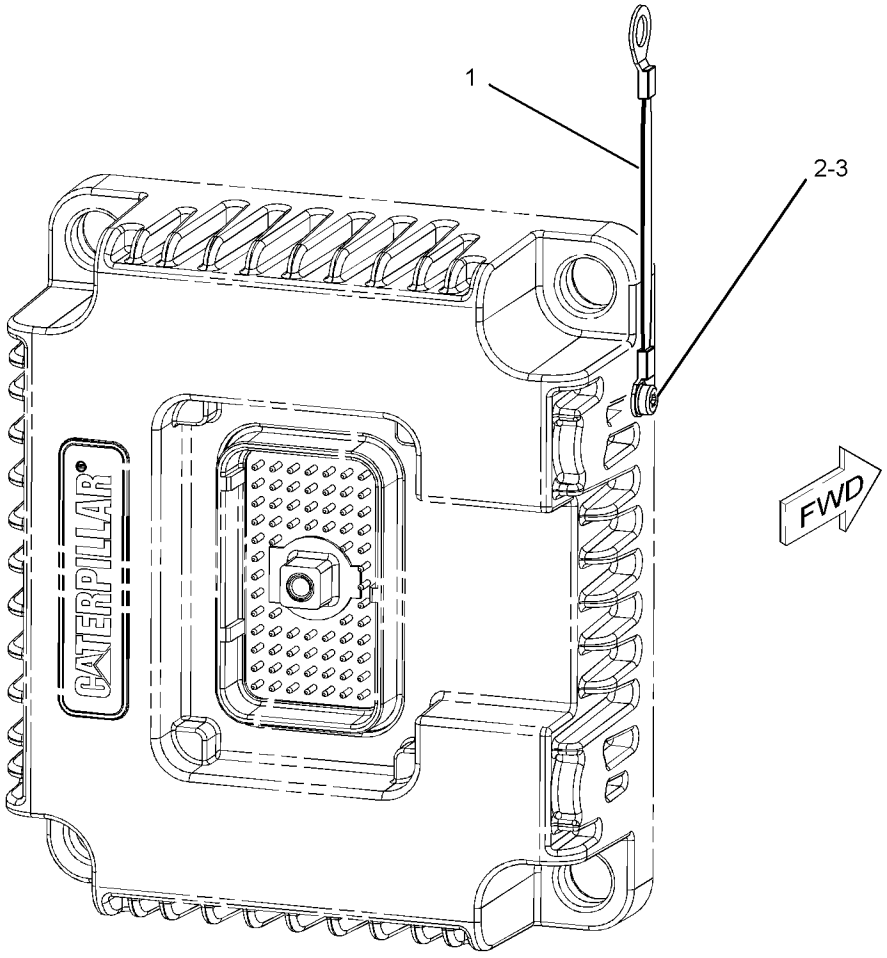

GRAPHIC #1 **<END>** g01145801

236-9053 ELECTRICAL AR

S/N: A7G1-UP

PART OF 236-9049 GENERAL AR

SMCS-1408, 1429, 7402, 7406 **i02416851**

NOTE	PART NUMBER	QTY	PART NAME 1 2 3 4 5 6 (PRODUCT LEVEL)	SEE PAGE
Y	*237-4902*	1	BATTERY & WIRING GP	121
Y	*236-9069*	1	ELECTRONICS GP-IMPLEMENT	137
Y	*236-9068*	1	ELECTRONICS GP-MONITOR (CATERPILLAR MONITORING SYSTEM)	138
Y	*236-8995*	1	ELECTRONICS GP-POWER TRAIN	138
Y	*246-3292*	1	HORN GP-ELECTRIC	813
Y	*235-5275*	1	LIGHTING GP-FLOOD & SIGNAL (4-LAMP, FRONT, REAR)	164
Y	*179-9375*	1	SENSOR & MTG GP-LIFT POSITION	173
Y	*246-7917*	1	SENSOR & MTG GP-TILT POSITION	176
Y	*236-9003*	1	TILT GP-HOOD	441
Y	*246-2347*	1	WIRING GP-AXLE MONITORING (OIL TEMPERATURE)	224
Y	*237-4905*	1	WIRING GP-CHASSIS	235
Y	*237-4903*	1	WIRING GP-ENGINE	243
Y	*237-4904*	1	WIRING GP-FRONT	245
Y	*271-4016*	1	WIRING GP-LIGHTING (LOADER FRAME)	247
Y	*272-9821*	1	WIRING GP-SENSOR (TILT)	252

Y-SEPARATE ILLUSTRATION

<END>

262-2043 ELECTRONICS GP-COMMUNICATION–

PRODUCT LINK 300

S/N: A7G1-UP

PART OF 263-3322 INSTALLATION AR-COMMUNICATION

AN ATTACHMENT

SMCS-7606, 7610, 7620 **i02388833**

NOTE	REF NO	GRAPHIC REF	PART NUMBER	QTY	PART NAME 1 2 3 4 5 6 (PRODUCT LEVEL)	SEE PAGE
	1	1	**265-9642**	1	SOFTWARE GP-COMMUNICATION (PRODUCT LINK 300)	
					-OR-	
					(OPTIONAL SERVICE REPLACEMENT)	
	2	1	**265-9643**	1	SERVICE GP-COMMUNICATION (PRODUCT LINK 300)	
					(INCLUDES CONTROL GP & SOFTWARE)	
	3	1	**7X-6315**	1	STRAP AS-GROUND	
	4	1	**126-7574**	1	SCREW-PAN HEAD (8-32X9.52-MM)	
	5	1	**134-4126**	1	WASHER (4.52X8.28X0.76-MM THK)	

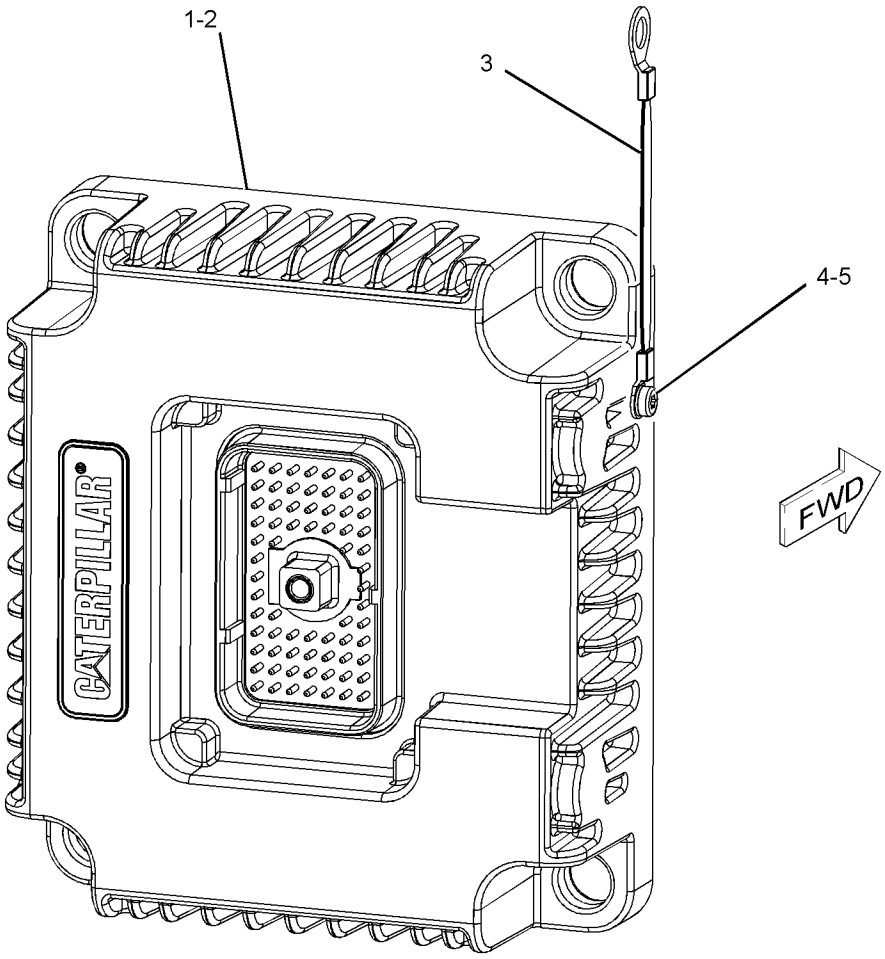

GRAPHIC #1 **<END>** g01157176

236-9069 ELECTRONICS GP-IMPLEMENT

S/N: A7G1-UP

PART OF 236-9053 ELECTRICAL AR

SMCS-5701, 7610, 7620 **i02262604**

NOTE	REF NO	GRAPHIC REF	PART NUMBER	QTY	PART NAME 1 2 3 4 5 6 (PRODUCT LEVEL)	SEE PAGE
	1	1	*248-0400*	1	SOFTWARE GP-IMPLEMENT	
					—OR—	
	2	1	**248-0401**	1	SERVICE GP-IMPLEMENT	

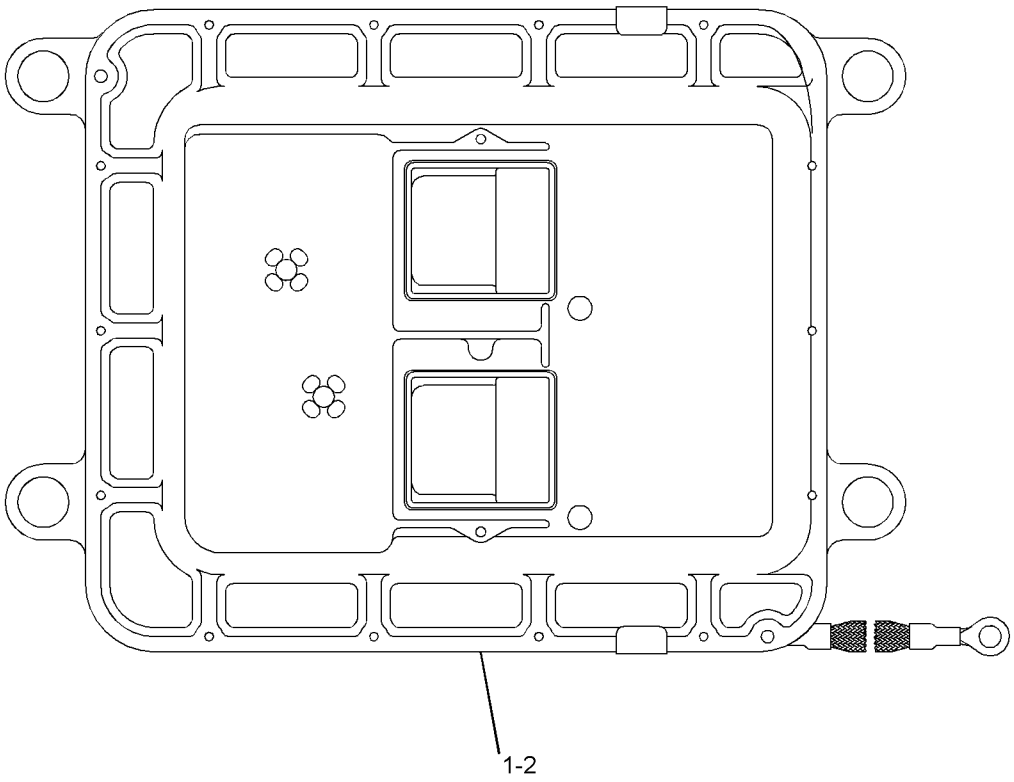

GRAPHIC #1 **<END>** g01136309

236-9068 ELECTRONICS GP-MONITOR–CATERPILLAR MONITORING SYSTEM

S/N: A7G1-UP

PART OF 236-9053 ELECTRICAL AR

SMCS-7490, 7494, 7601, 7603, 7610, 7620 **i02206678**

NOTE	PART NUMBER	QTY	PART NAME 1 2 3 4 5 6 (PRODUCT LEVEL)	SEE PAGE
	248-0009	1	SOFTWARE GP-MONITOR (CATERPILLAR MONITORING SYSTEM)	
			–OR–	
	248-0010	1	SERVICE GP-MONITOR (CATERPILLAR MONITORING SYSTEM)	

<END>

213-7276 ELECTRONICS GP-POWER TRAIN–SPEED LIMITER

S/N: A7G1-UP

AN ATTACHMENT

SMCS-4800, 4808, 7610, 7620 **i02015056**

NOTE	PART NUMBER	QTY	PART NAME 1 2 3 4 5 6 (PRODUCT LEVEL)	SEE PAGE
	106-0827	3	FILM-IDENTIFICATION (20-KM/H)	

<END>

236-8995 ELECTRONICS GP-POWER TRAIN

S/N: A7G1-UP

PART OF 236-9053 ELECTRICAL AR

SMCS-4800, 4808, 7610, 7620 **i02286040**

NOTE	PART NUMBER	QTY	PART NAME 1 2 3 4 5 6 (PRODUCT LEVEL)	SEE PAGE
	247-9760	1	SOFTWARE GP-POWER TRAIN	
			–OR–	
	247-9761	1	SERVICE GP-POWER TRAIN	
			(INCLUDES SOFTWARE)(OPTIONAL SERVICE REPLACEMENT)	

<END>

246-3514 HEATER GP-JACKET WATER

S/N: A7G1-UP
240-VOLT, 1500-WATT
AN ATTACHMENT

SMCS-1383 **i02416052**

NOTE	REF NO	GRAPHIC REF	PART NUMBER	QTY	PART NAME 1 2 3 4 5 6 (PRODUCT LEVEL)	SEE PAGE
	1	1	**246-3513**	1	ELEMENT AS-JACKET WATER HEATER (240-VOLT, 1500-WATT)	
		1	**7M-8485**	1	SEAL-O-RING	
		1	**133-6517**	1	CAP AS-DUST	
	2	1	**217-6284**	1	CORD AS-HEATER	

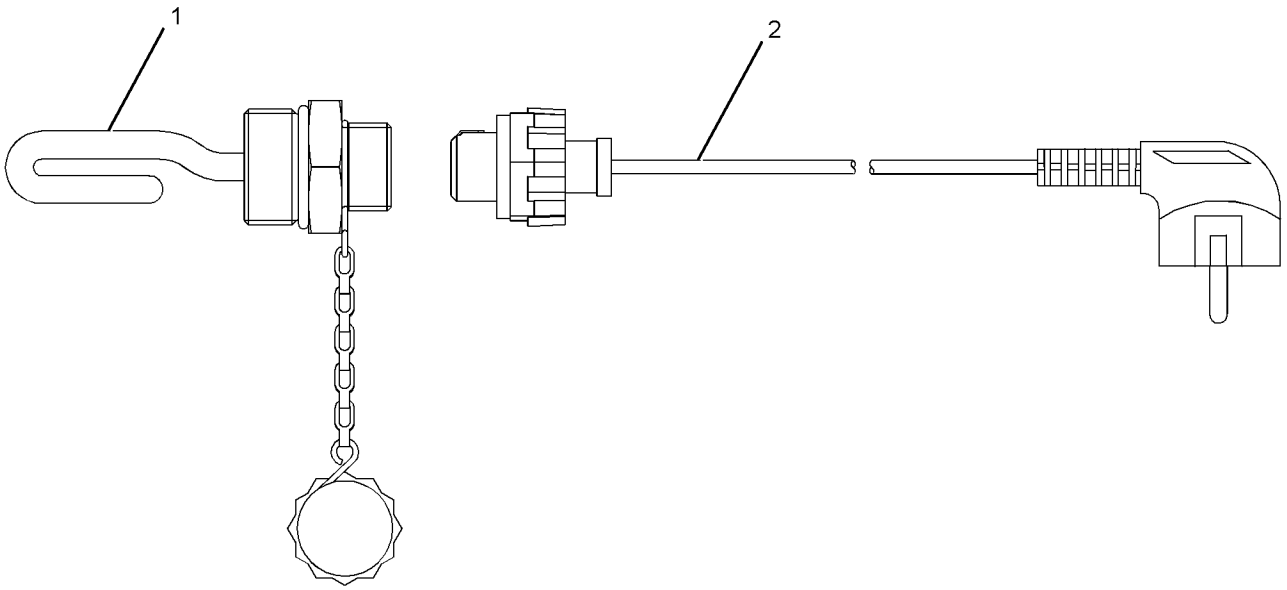

GRAPHIC #1 **<END>** g01210282

261-3037 INSTALLATION AR-COMMUNICATION–

PRODUCT LINK 321SR

S/N: A7G1-UP

AN ATTACHMENT

SMCS-7606 **i02420607**

NOTE	PART NUMBER	QTY	PART NAME 1 2 3 4 5 6 (PRODUCT LEVEL)	SEE PAGE
Y	*256-5068*	1	CONTROL & MTG GP-COMMUNICATION (PRODUCT LINK 321SR)	126
	230-1341	1	FILM-WARNING (PRODUCT LINK RADIO, NON NACD)	
Y-SEPARATE ILLUSTRATION				

<END>

263-3322 INSTALLATION AR-COMMUNICATION–

PRODUCT LINK 321SR

S/N: A7G1-UP

AN ATTACHMENT

SMCS-7606 **i02241993**

NOTE	PART NUMBER	QTY	PART NAME 1 2 3 4 5 6 (PRODUCT LEVEL)	SEE PAGE
Y	*256-5068*	1	CONTROL & MTG GP-COMMUNICATION (PRODUCT LINK 321SR)	126
Y	*262-2043*	1	ELECTRONICS GP-COMMUNICATION (PRODUCT LINK 300)	136
	230-1341	1	FILM-WARNING (PRODUCT LINK RADIO, NON NACD)	
			INSIDE CAB ON LEFT FRONT METAL POST 1200-MM ABOVE CAB FLOOR	
Y-SEPARATE ILLUSTRATION				

<END>

243-1945 INSTALLATION AR-SECURITY

S/N: A7G1-UP

AN ATTACHMENT

SMCS-7631 **i02418698**

NOTE	PART NUMBER	QTY	PART NAME 1 2 3 4 5 6 (PRODUCT LEVEL)	SEE PAGE
Y	*246-6291*	1	INSTALLATION GP-SECURITY	141
	264-0551	1	SOFTWARE GP-MACHINE (SECURITY)	
Y-SEPARATE ILLUSTRATION				

<END>

246-6291 INSTALLATION GP-SECURITY

S/N: A7G1-UP

PART OF 243-1945 INSTALLATION AR-SECURITY

AN ATTACHMENT

SMCS-7631 **i02384912**

NOTE	REF NO	GRAPHIC REF	PART NUMBER	QTY	PART NAME 1 2 3 4 5 6 (PRODUCT LEVEL)	SEE PAGE
	1	1	**3S-2093**	4	STRAP-CABLE	
	2	1	**8C-5607**	4	MOUNT-ISOLATION	
	3	1	**8C-5608**	2	SPACER (6.5X9.5X25.4-MM THK)	
	4	1	**198-5389**	1	FILM-IDENTIFICATION (IGNITION SWITCH)	
	5	1	**205-0826**	1	FILM-INSTRUCTION (READ OMM)	
	6	1	**206-5162**	2	KEY AS-ELECTRONIC (SECURITY)	
	7	1	*206-5203*	1	COIL AS (EXCITER)	
		1	**102-8802**	1	KIT-RECEPTACLE (2-PIN)	
					(INCLUDES RECEPTACLE AS AND WEDGE)	
		1	**3E-3365**	1	WEDGE-RECEPTACLE LOCK (2-PIN)	
		1	**198-5389**	2	FILM-IDENTIFICATION (IGNITION SWITCH)	
		1	**205-8257**	2	COIL AS (EXCITER)	
D		1	**5P-5677**		WIRE (18-GA, BLACK) (0.4-M)	
		1	**186-3735**	2	PIN-CONNECTOR (16-GA TO 18-GA)	
	8	1	**218-0404**	1	MODULE GP-INTERFACE (KEY)	
		1	**6V-6715**	1	SCREW-PAN HEAD (4-20X0.25-IN)	
		1	**8C-3095**	1	SEAL-O-RING	
	9	1	**219-6314**	2	KEY RING (IDENTIFICATION)	
	10	1	**219-6607**	2	FILM-INFORMATION (KEY)	
M	12	1	**7X-2533**	2	BOLT (M6X1X35-MM)	
	13	1	**9X-6165**	2	WASHER (6.5X22X2.5-MM THK)	

D-ORDER BY THE METER
M-METRIC PART

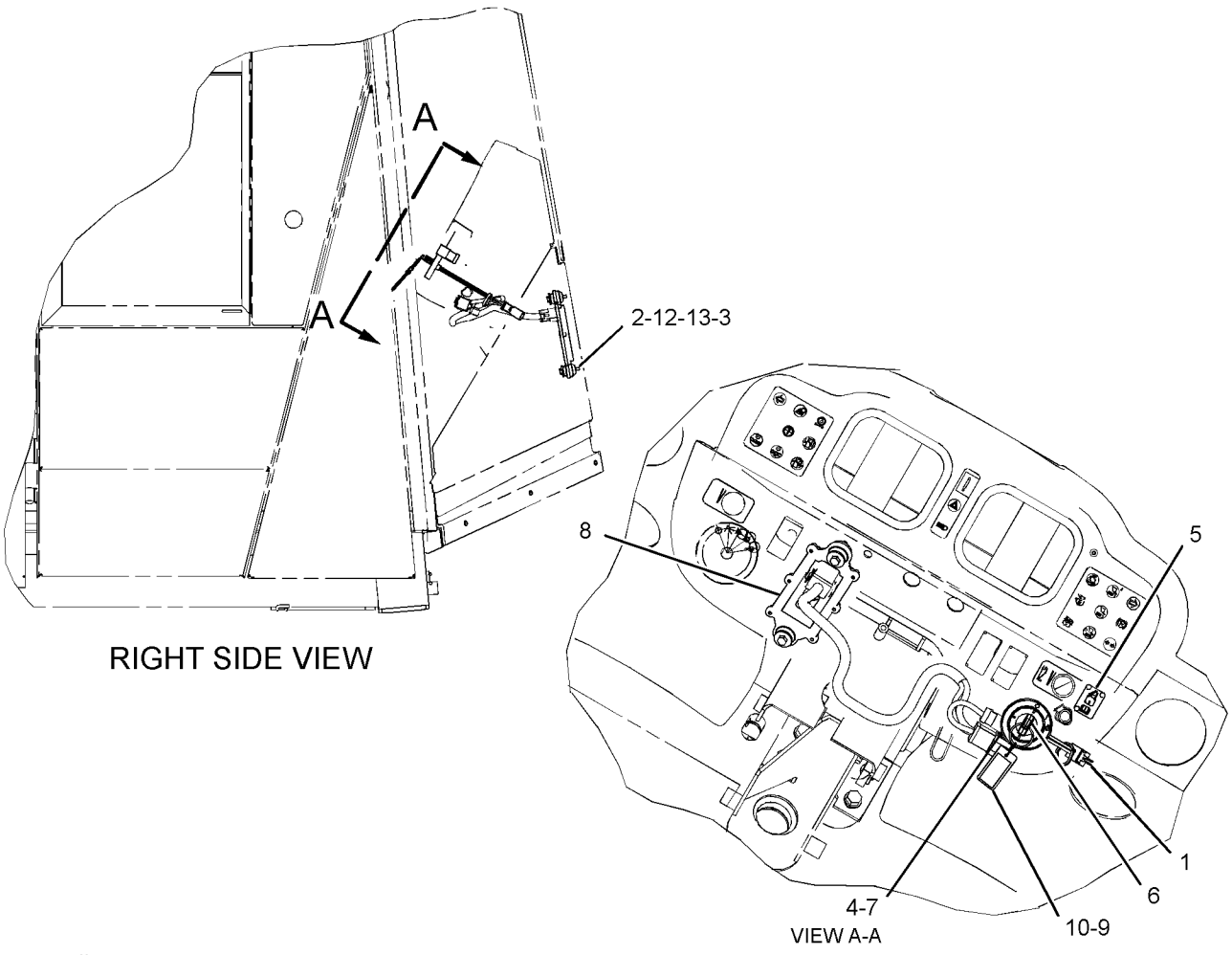

GRAPHIC #1 **<END>** g01192054

3E-6389 LAMP GP-DOME–CAB

S/N: A7G1-UP
24-VOLT, WITH SWITCH
PART OF 237-4910 WIRING GP-CAB
ALSO AN ATTACHMENT

SMCS-1433 **i02286061**

NOTE	REF NO	GRAPHIC REF	PART NUMBER	QTY	PART NAME 1 2 3 4 5 6 (PRODUCT LEVEL)	SEE PAGE
	1	1	**7N-9943**	1	LAMP (24-VOLT)	
	2	1	**102-8803**	1	KIT-RECEPTACLE (3-PIN)	
					(INCLUDES RECEPTACLE AS AND WEDGE)	
		1	**3E-3371**	1	WEDGE-RECEPTACLE LOCK (3-PIN)	
		1	**8T-8729**	3	PIN-CONNECTOR	
	3	1	**7T-0020**	1	LENS-DOME LAMP	

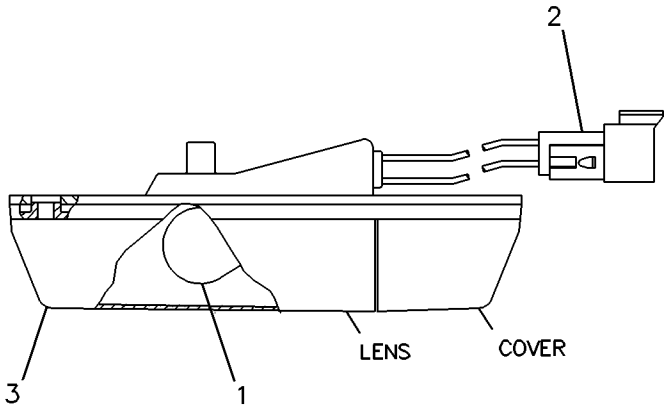

GRAPHIC #1 **<END>** g00083220

210-8422 LAMP GP-FLOOD–HID, SUSPENDED MOUNT

S/N: A7G1-UP
24-VOLT,35-WATT
PART OF 235-8560 LIGHTING GP-FLOOD
AN ATTACHMENT

SMCS-1434 **i02266547**

NOTE	REF NO	GRAPHIC REF	PART NUMBER	QTY	PART NAME 1 2 3 4 5 6 (PRODUCT LEVEL)	SEE PAGE
	1	1	**229-9969**	1	LENS AS (FLOODLIGHT)	
	2	1	**209-6638**	1	LAMP (12-VOLT, 24-VOLT, 35-WATT)	
M	3	1	**151-8754**	1	BOLT (M10X1.5X40-MM)	
	4	1	**8T-4121**	1	WASHER-HARD (11X21X2.5-MM THK)	
M	5	1	**120-9027**	4	SCREW-PAN HEAD (M3X0.5X16-MM)	
M	6	1	**8T-4189**	2	BOLT (M8X1.25X20-MM)	
M	7	1	**6V-9189**	2	LOCKNUT (M8X1.25-THD)	
	8	1	**229-9972**	1	BRACKET AS	
	9	1	**229-9974**	1	BEZEL	

M-METRIC PART

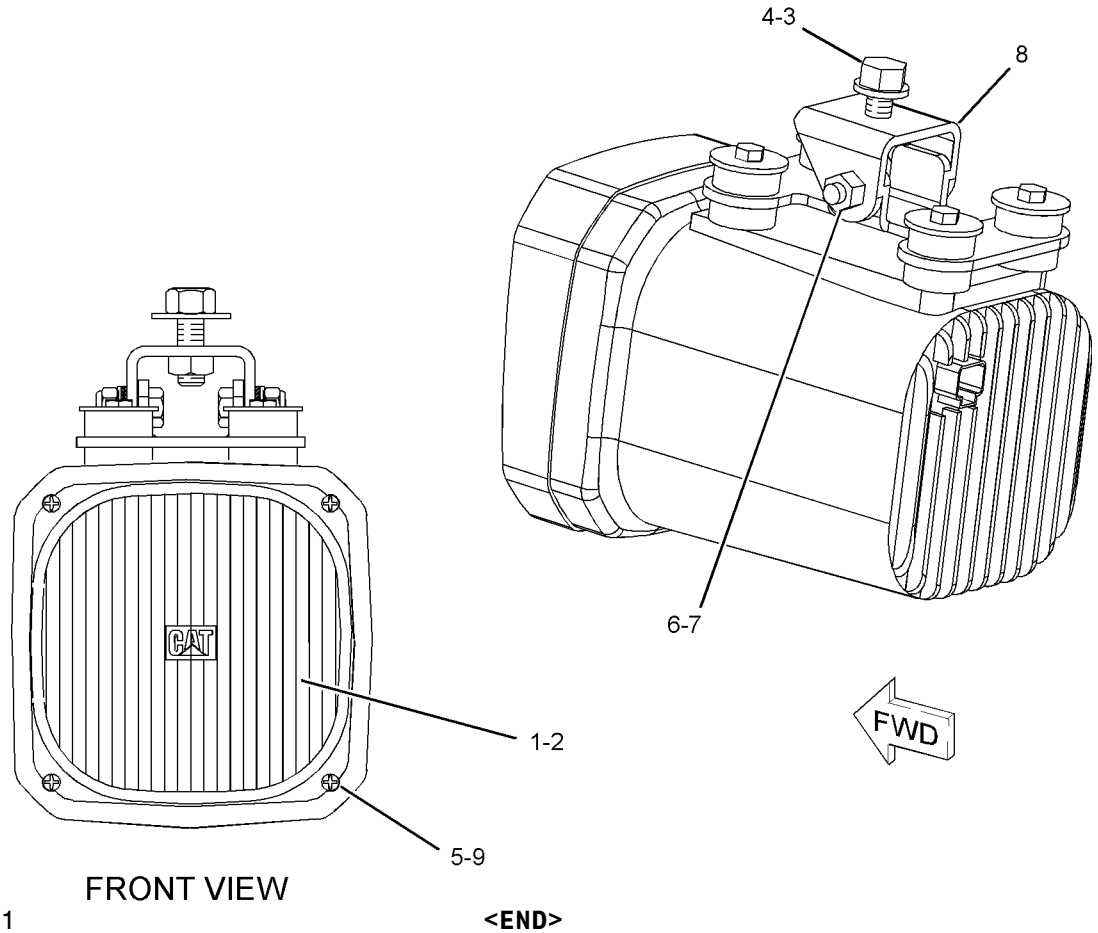

GRAPHIC #1 **<END>** g01069665

210-8423 LAMP GP-FLOOD–HID, VERTCAL MOUNT

S/N: A7G1-UP
24-VOLT, 35-WATT
PART OF 235-8560 LIGHTING GP-FLOOD
AN ATTACHMENT

SMCS-1434 **i02266552**

NOTE	REF NO	GRAPHIC REF	PART NUMBER	QTY	PART NAME 1 2 3 4 5 6 (PRODUCT LEVEL)	SEE PAGE
	1	1	**229-9969**	1	LENS AS (FLOODLIGHT)	
	2	1	**209-6638**	1	LAMP (12-VOLT, 24-VOLT, 35-WATT)	
M	3	1	**151-8754**	1	BOLT (M10X1.5X40-MM)	
	4	1	**8T-4121**	1	WASHER-HARD (11X21X2.5-MM THK)	
M	5	1	**120-9027**	4	SCREW-PAN HEAD (M3X0.5X16-MM)	
M	6	1	**8T-4189**	2	BOLT (M8X1.25X20-MM)	
M	7	1	**6V-9189**	2	LOCKNUT (M8X1.25-THD)	
	8	1	**229-9972**	1	BRACKET AS	
	9	1	**229-9974**	1	BEZEL	

M-METRIC PART

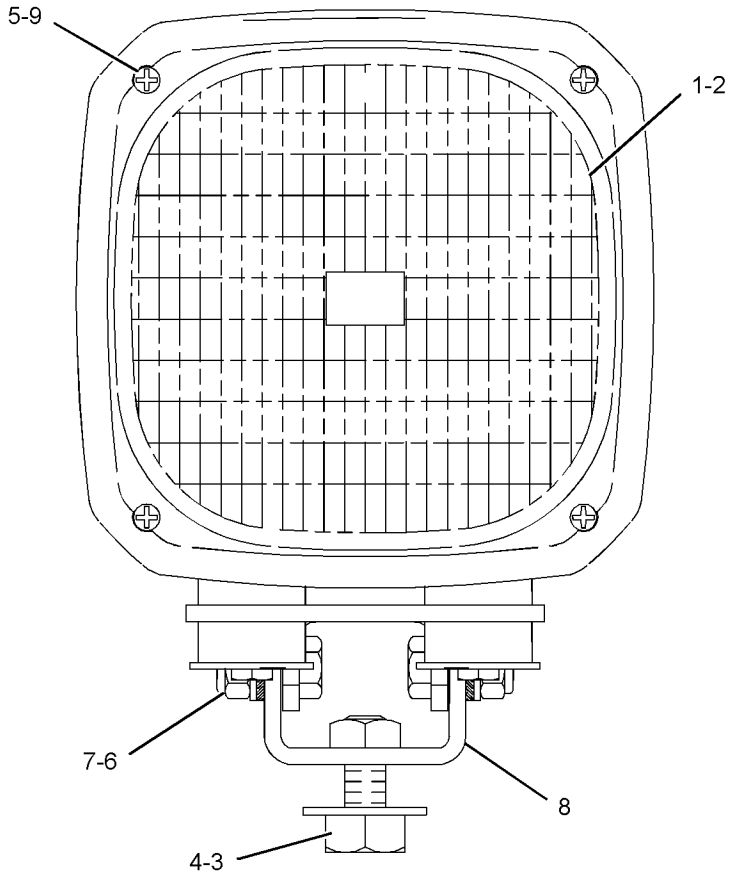

GRAPHIC #1 **<END>** g01022778

219-6485 LAMP GP-FLOOD–VERTICAL MOUNT

S/N: A7G1-UP
24-VOLT
PART OF 235-5275, 235-5276 LIGHTING GP-FLOOD & SIGNAL
ALSO AN ATTACHMENT

SMCS-1434 **i02286088**

NOTE	REF NO	GRAPHIC REF	PART NUMBER	QTY	PART NAME 1 2 3 4 5 6 (PRODUCT LEVEL)	SEE PAGE
	1	1	**9X-3463**	1	LAMP-HALOGEN (24-VOLT, 65-WATT)	
	2	1	**9X-4244**	2	SCREW	
	4	1	**202-6614**	1	LENS AS (FLOODLIGHT)	
	5	1	**175-4292**	1	BODY AS	
	6	1	**164-7556**	1	CLIP	
	7	1	**247-4285**	1	BOLT (M8X1.25X50-MM)	
M	8	1	**5C-7261**	1	NUT (M8X1.25-THD)	
	9	1	**8T-4224**	2	WASHER-HARD (8.8X16X2-MM THK)	
	10	1	**175-4291**	1	BRACKET AS	

M-METRIC PART

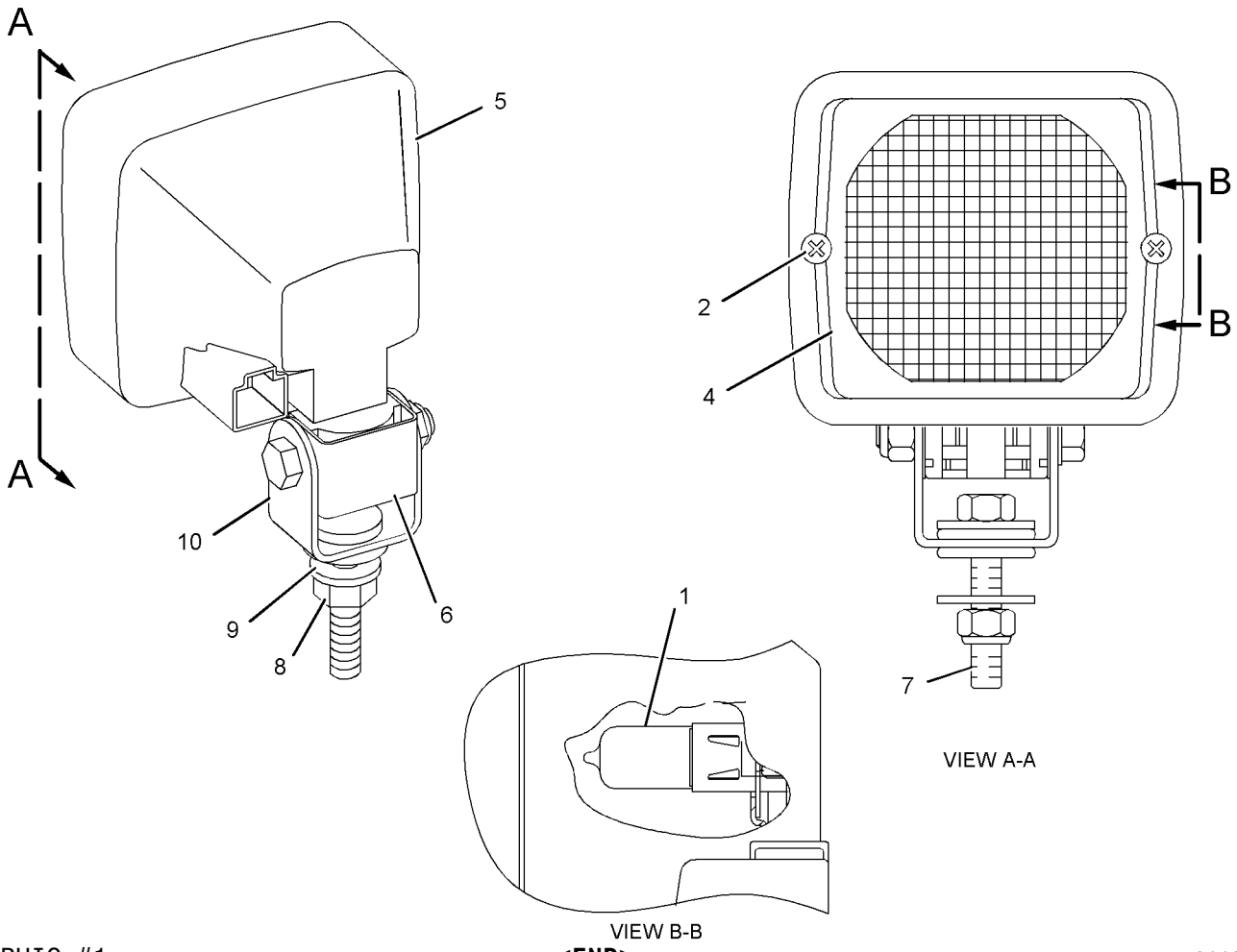

GRAPHIC #1 **<END>** g01136857

219-6487 LAMP GP-FLOOD–SUSPENDED MOUNT

S/N: A7G1-UP
24-VOLT
PART OF 235-8559, 280-1456 LIGHTING GP-FLOOD
ALSO AN ATTACHMENT

SMCS-1434 **i02309958**

NOTE	REF NO	GRAPHIC REF	PART NUMBER	QTY	PART NAME 1 2 3 4 5 6 (PRODUCT LEVEL)	SEE PAGE
	1	1	**9X-3463**	1	LAMP-HALOGEN (24-VOLT, 65-WATT)	
M	2	1	**8T-6912**	1	BOLT (M8X1.25X50-MM)	
M	3	1	**5C-7261**	1	NUT (M8X1.25-THD)	
	4	1	**8T-4224**	2	WASHER-HARD (8.8X16X2-MM THK)	
	5	1	**9X-4244**	2	SCREW	
	6	1	**202-6612**	1	SEAL	
	7	1	**202-6614**	1	LENS AS (FLOODLIGHT)	
	8	1	**175-4292**	1	BODY AS	
	9	1	**164-7556**	1	CLIP	
	10	1	**175-4291**	1	BRACKET AS	

M-METRIC PART

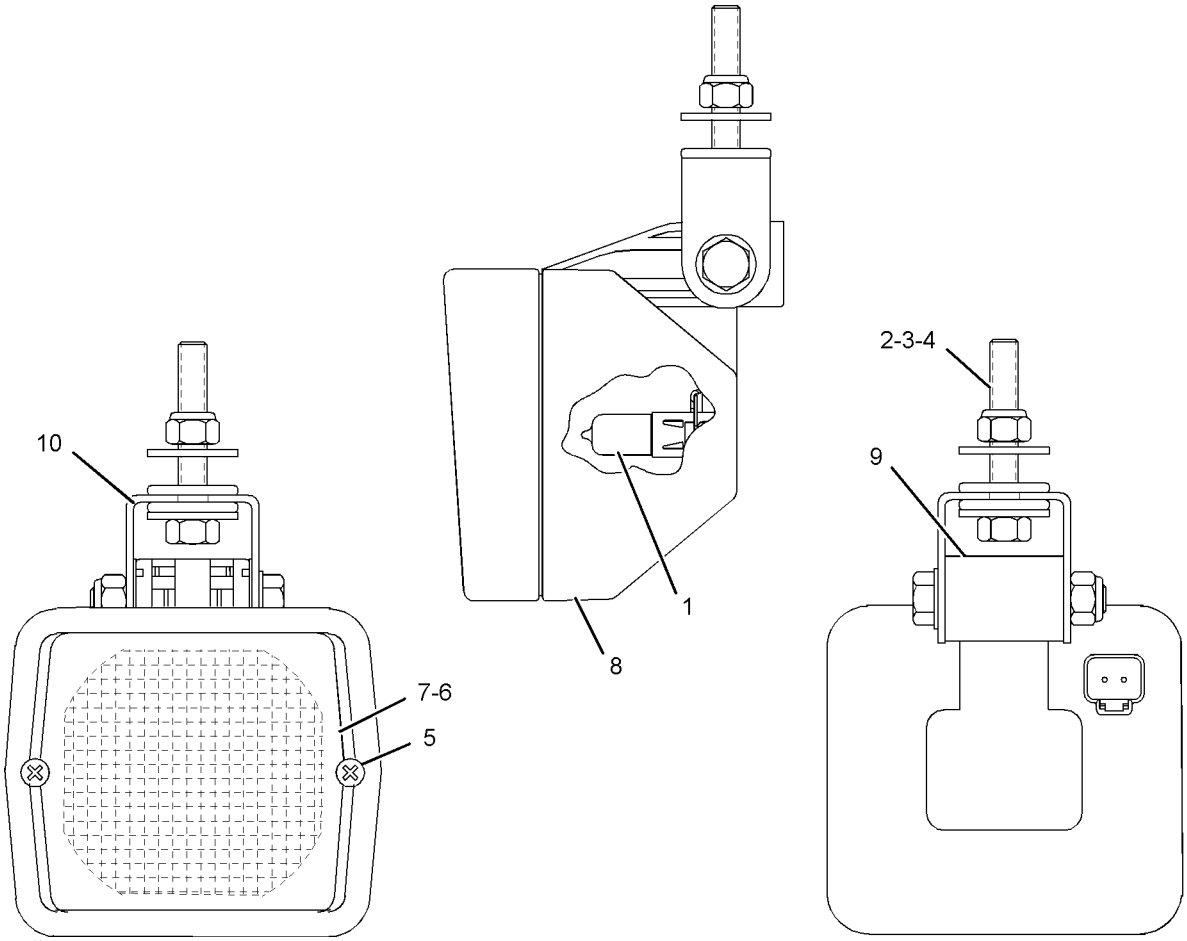

GRAPHIC #1 **<END>** g01021977

105-4849 LAMP GP-HEAD & SIGNAL–LH

S/N: A7G1-UP
24-VOLT
PART OF 248-0414 LIGHTING GP-ROADING
AN ATTACHMENT

SMCS-1429, 1430 **i01321473**

NOTE	REF NO	GRAPHIC REF	PART NUMBER	QTY	PART NAME 1 2 3 4 5 6 (PRODUCT LEVEL)	SEE PAGE
	1	1	**9X-4244**	4	SCREW	
	2	1	**100-3251**	2	SCREW-LENS	
	3	1	**9X-9865**	1	SEAL	
	4	1	**100-3248**	1	LENS AS (HEADLIGHT)	
	5	1	**9X-3465**	1	LAMP (24-VOLT, 75/70-WATT)	
	6	1	**136-3848**	1	LENS AS (AMBER)	
M	7	1	**8T-5005**	1	BOLT (M10X1.5X70-MM)	
M	8	1	**8T-0389**	1	LOCKNUT (M10X1.5-THD)	
	9	1	**100-3253**	1	SPACER	
	10	1	**100-3254**	1	SPACER	
	11	1	**100-3255**	1	WASHER	
	13	1	**8T-8729**	5	PIN-CONNECTOR	
	14	1	**3E-3383**	1	WEDGE-RECEPTACLE LOCK (6-PIN)	
	15	1	**8T-8737**	1	PLUG-SEAL	
	16	1	**100-3245**	2	LAMP (24-VOLT)	
	17	1	**9X-4493**	1	LAMP (24-VOLT, 21-WATT)	
	18	1	**100-3250**	1	LENS (AMBER)	
	19	1	**136-3845**	1	BODY AS-LAMP	
	20	1	**102-8805**	1	KIT-RECEPTACLE (6-PIN)	
					(INCLUDES RECEPTACLE AS AND WEDGE)	

M-METRIC PART

105-4849 LAMP GP-HEAD & SIGNAL *(contd.)* **i01321473**

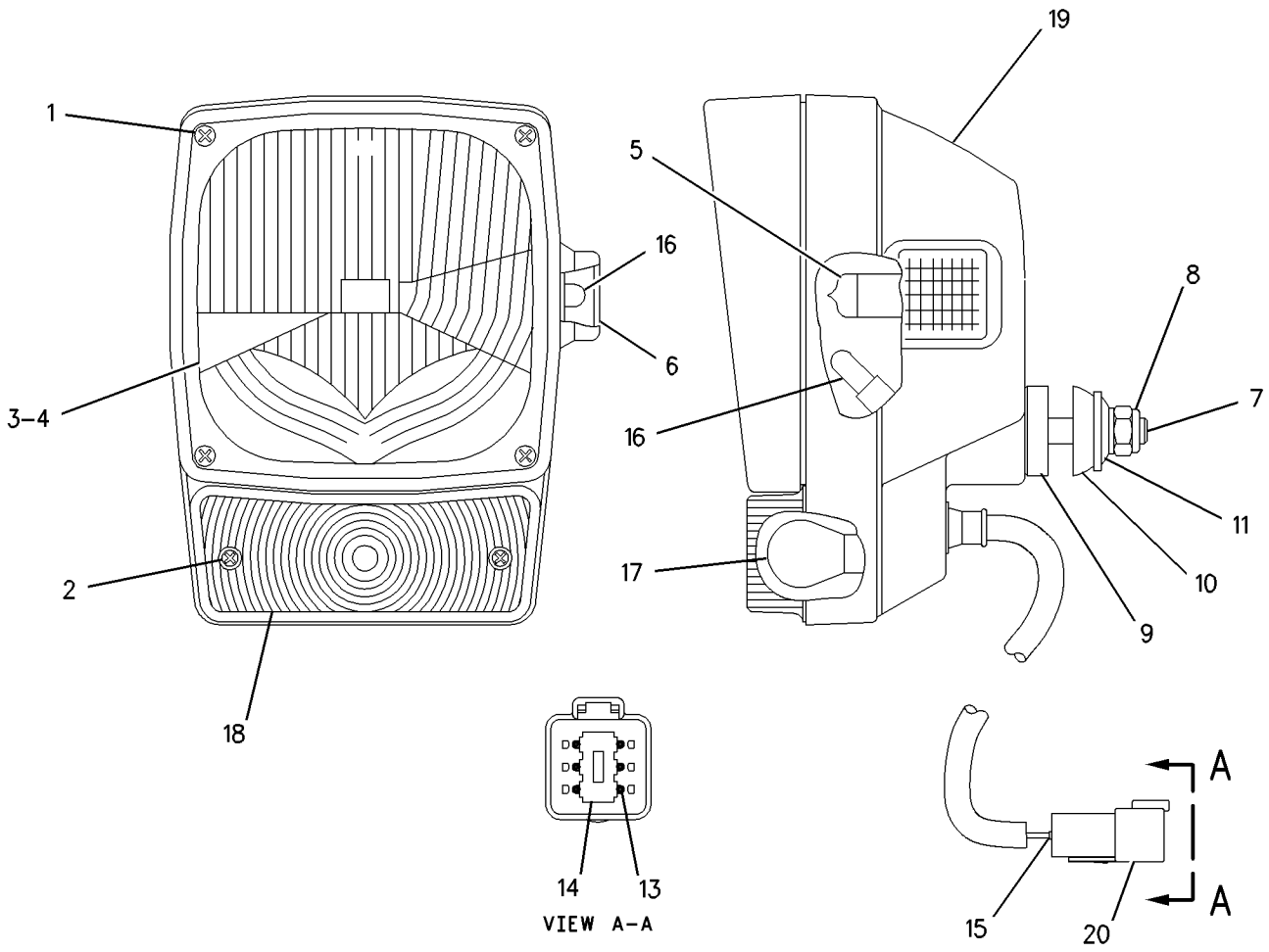

GRAPHIC #1 **<END>** g00661265

ELECTRICAL AND STARTING SYSTEM

105-4850 LAMP GP-HEAD & SIGNAL–RH

S/N: A7G1-UP
24-VOLT
PART OF 248-0414 LIGHTING GP-ROADING
AN ATTACHMENT

SMCS-1429, 1430 **i01321483**

NOTE	REF NO	GRAPHIC REF	PART NUMBER	QTY	PART NAME 1 2 3 4 5 6 (PRODUCT LEVEL)	SEE PAGE
	1	1	**9X-4244**	4	SCREW	
	2	1	**100-3251**	2	SCREW-LENS	
	3	1	**9X-9865**	1	SEAL	
	4	1	**100-3248**	1	LENS AS (HEADLIGHT)	
	5	1	**9X-3465**	1	LAMP (24-VOLT, 75/70-WATT)	
	6	1	**136-3848**	1	LENS AS (AMBER)	
M	7	1	**8T-5005**	1	BOLT (M10X1.5X70-MM)	
M	8	1	**8T-0389**	1	LOCKNUT (M10X1.5-THD)	
	9	1	**100-3253**	1	SPACER	
	10	1	**100-3254**	1	SPACER	
	11	1	**100-3255**	1	WASHER	
	12	1	**102-8805**	1	KIT-RECEPTACLE (6-PIN)	
					(INCLUDES RECEPTACLE AS AND WEDGE)	
	13	1	**8T-8729**	5	PIN-CONNECTOR	
	14	1	**3E-3383**	1	WEDGE-RECEPTACLE LOCK (6-PIN)	
	15	1	**8T-8737**	1	PLUG-SEAL	
	16	1	**100-3245**	2	LAMP (24-VOLT)	
	17	1	**9X-4493**	1	LAMP (24-VOLT, 21-WATT)	
	18	1	**100-3250**	1	LENS (AMBER)	
	19	1	**136-3846**	1	BODY AS-LAMP	

M-METRIC PART

105-4850 LAMP GP-HEAD & SIGNAL *(contd.)* **i01321483**

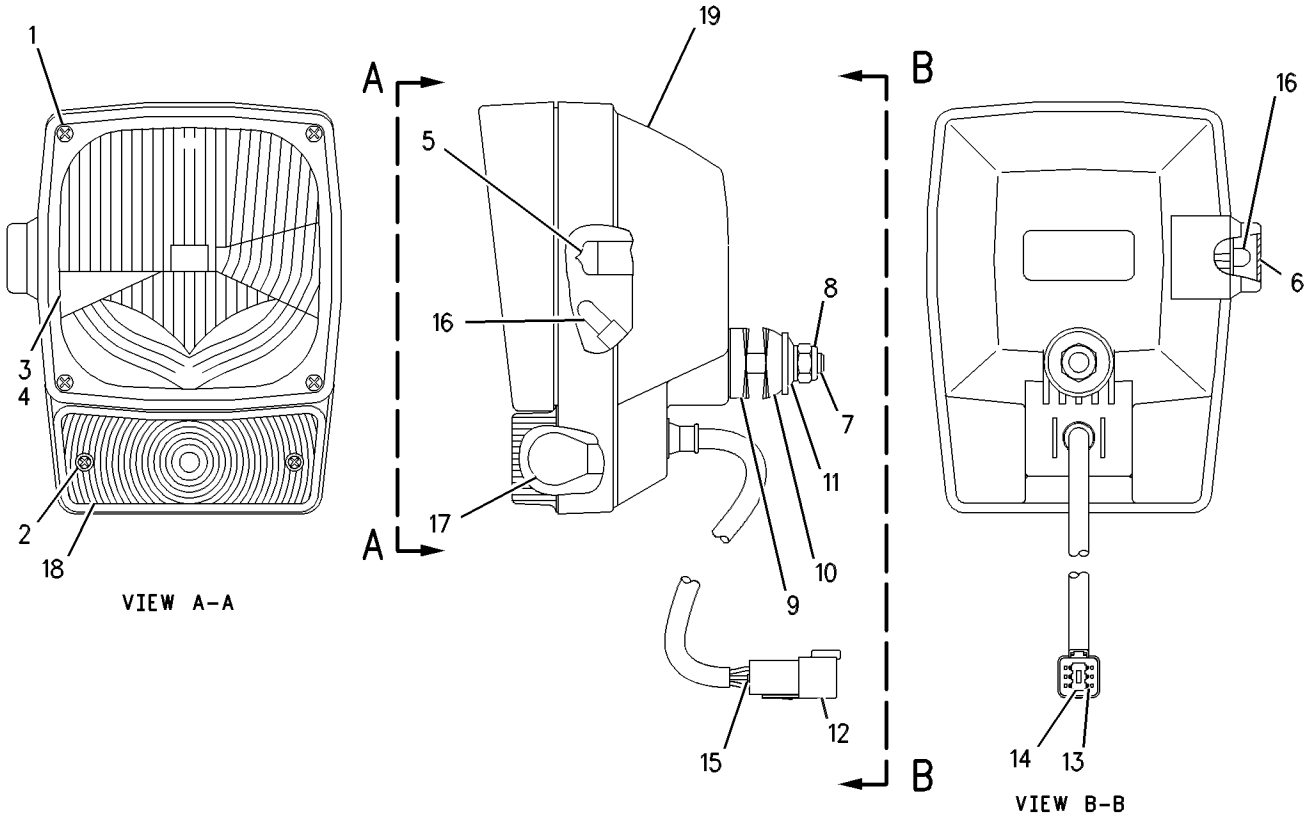

GRAPHIC #1 **<END>** g00610742

3E-6466 LAMP GP-SIGNAL–FRONT TURN

S/N: A7G1-UP
24-VOLT
PART OF 235-5276 LIGHTING GP-FLOOD & SIGNAL
AN ATTACHMENT

SMCS-1430 **i01321493**

NOTE	REF NO	GRAPHIC REF	PART NUMBER	QTY	PART NAME 1 2 3 4 5 6 (PRODUCT LEVEL)	SEE PAGE
	1	1	**9X-3066**	1	LENS-AMBER	
	2	1	**9X-4493**	1	LAMP (24 VOLT)	
	3	1	**102-8802**	1	KIT-RECEPTACLE (2 PIN)	
					(INCLUDES RECEPTACLE AS AND WEDGE)	
	4	1	**3E-3365**	1	WEDGE-RECEPTACLE LOCK (2 PIN)	
	5	1	**8T-8729**	2	PIN-CONNECTOR	

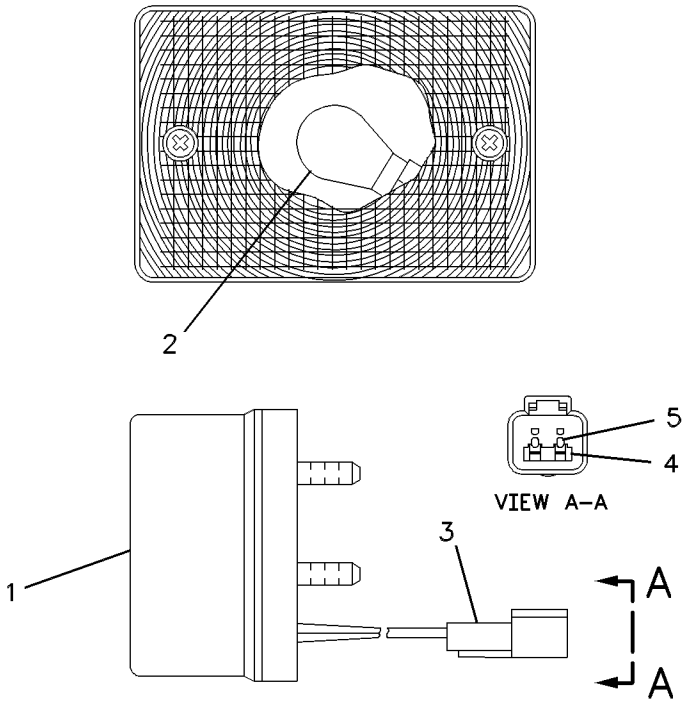

GRAPHIC #1 **<END>** g00589531

135-0426 LAMP GP-SIGNAL–STOP, TAIL

S/N: A7G1-UP
24-VOLT
PART OF 235-5275 LIGHTING GP-FLOOD & SIGNAL

SMCS-1430 **i01539396**

NOTE	REF NO	GRAPHIC REF	PART NUMBER	QTY	PART NAME 1 2 3 4 5 6 (PRODUCT LEVEL)	SEE PAGE
	1	1	**102-8803**	1	KIT-RECEPTACLE (3-PIN)	
					(INCLUDES RECEPTACLE AS & WEDGE)	
	2	1	**3E-3371**	1	WEDGE-RECEPTACLE LOCK (3-PIN)	
	3	1	**186-3735**	3	PIN-CONNECTOR (16-GA TO 18-GA)	

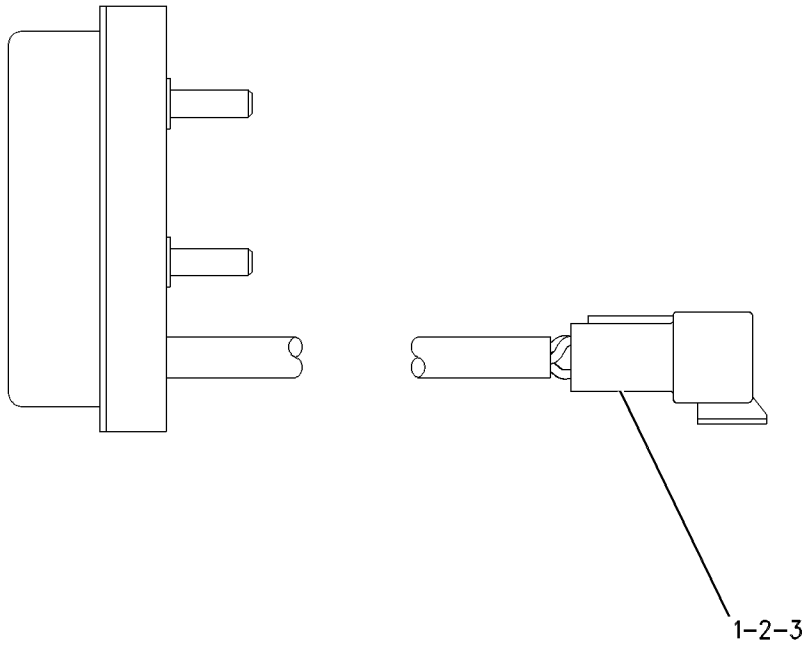

GRAPHIC #1 **<END>** g00305543

145-6929 LAMP GP-STOP & TAIL

S/N: A7G1-UP
24-VOLT
PART OF 235-5276 LIGHTING GP-FLOOD & SIGNAL, 248-0414 LIGHTING GP-ROADING AN ATTACHMENT

SMCS-1432 **i02414172**

NOTE	REF NO	GRAPHIC REF	PART NUMBER	QTY	PART NAME 1 2 3 4 5 6 (PRODUCT LEVEL)	SEE PAGE
	1	1	**102-8803**	1	KIT-RECEPTACLE (3-PIN)	
					(INCLUDES RECEPTACLE AS AND WEDGE)	
	2	1	**267-2809**	1	LENS (STOP, TAIL, TURN)	
	3	1	**186-3735**	5	PIN-CONNECTOR (16-GA TO 18-GA)	
	4	1	**9X-4492**	1	LAMP (24-VOLT, 5-WATT)	
	5	1	**9X-4493**	1	LAMP (24-VOLT, 21-WATT)	
	6	1	**102-8802**	1	KIT-RECEPTACLE (2-PIN)	
					(INCLUDES RECEPTACLE AS AND WEDGE)	

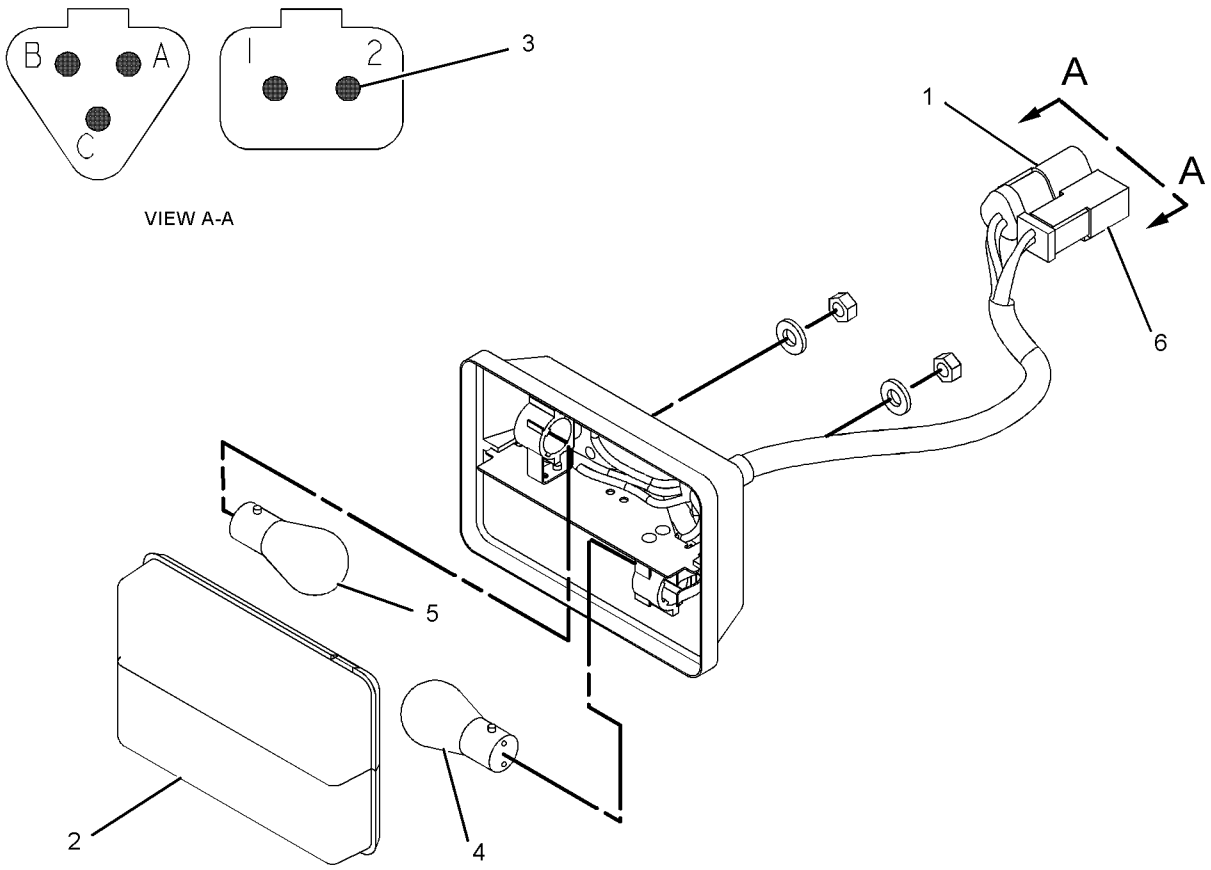

GRAPHIC #1 **<END>** g01146590

235-3937 LAMP GP-WARNING BEACON–AMBER

S/N: A7G1-UP
24-VOLT
PART OF 237-1012 LIGHTING GP-WARNING BEACON
AN ATTACHMENT

SMCS-1431 **i02281578**

NOTE	REF NO	GRAPHIC REF	PART NUMBER	QTY	PART NAME 1 2 3 4 5 6 (PRODUCT LEVEL)	SEE PAGE
	1	1	**215-6672**	1	LENS-AMBER (WARNING BEACON)	
	2	1	**9X-7849**	1	LAMP (24-VOLT, 70-WATT)	
	3	1	**215-6673**	1	BELT-WARNING BEACON (WARNING BEACON)	
	4	1	**215-6674**	1	CLIP	
M	5	1	**6V-8225**	3	NUT (M6X1-THD)	
	6	1	**5P-0537**	3	WASHER-HARD (7.2X14.5X2-MM THK)	
	7	1	**102-8802**	1	KIT-RECEPTACLE (2-PIN)	
					(KIT INCLUDES RECEPTACLE AS & WEDGE)	
	8	1	**3E-3365**	1	WEDGE-RECEPTACLE LOCK (2-PIN)	
	9	1	**186-3735**	2	PIN-CONNECTOR (16-GA TO 18-GA)	

M-METRIC PART

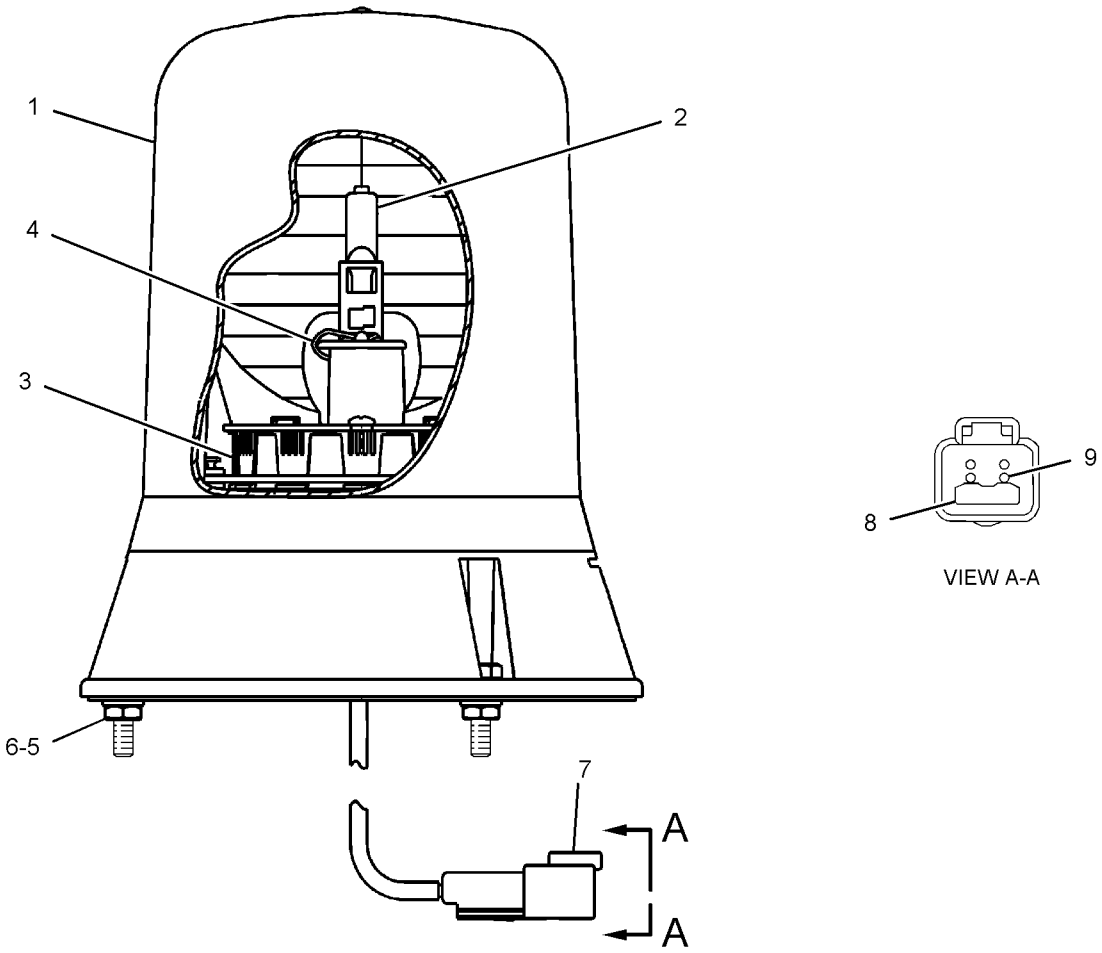

GRAPHIC #1 **<END>** g01047107

254-5525 LIGHTING AR-ROADING—HMU STEERING

S/N: A7G1-UP
AN ATTACHMENT

SMCS-1429 **i02415812**

NOTE	PART NUMBER	QTY	PART NAME 1 2 3 4 5 6 (PRODUCT LEVEL)	SEE PAGE
Y	*248-0414*	1	LIGHTING GP-ROADING	168
Y	*197-6475*	1	SWITCH GP-DIMMER (ROADING)	203
Y	*253-3951*	1	SWITCH GP-SIGNAL (TURN)	216
Y	*271-4037*	1	WIRING GP-LIGHTING (LOADER FRAME)	249

Y-SEPARATE ILLUSTRATION

<END>

260-7765 LIGHTING AR-ROADING—COMMAND CONTROL STEERING

S/N: A7G1-UP
AN ATTACHMENT

SMCS-1429 **i02415884**

NOTE	PART NUMBER	QTY	PART NAME 1 2 3 4 5 6 (PRODUCT LEVEL)	SEE PAGE
Y	*248-0414*	1	LIGHTING GP-ROADING	168
Y	*197-6475*	1	SWITCH GP-DIMMER (ROADING)	203
Y	*252-5920*	1	SWITCH GP-SIGNAL (TURN)	214
Y	*271-4037*	1	WIRING GP-LIGHTING (LOADER FRAME)	249

Y-SEPARATE ILLUSTRATION

<END>

235-5279 LIGHTING AR-SIGNAL—COMMAND CONTROL STEERING

S/N: A7G1-UP
AN ATTACHMENT

SMCS-1430 **i02414174**

NOTE	PART NUMBER	QTY	PART NAME 1 2 3 4 5 6 (PRODUCT LEVEL)	SEE PAGE
Y	*235-5276*	1	LIGHTING GP-FLOOD & SIGNAL (6-LAMP, FRONT, REAR)	166
Y	*252-5920*	1	SWITCH GP-SIGNAL (TURN)	214
Y	*271-4028*	1	WIRING GP-LIGHTING (LOADER FRAME)	248

Y-SEPARATE ILLUSTRATION

<END>

244-3599 LIGHTING AR-SIGNAL—HMU STEERING

S/N: A7G1-UP

PART OF 277-8157 CONVERSION AR-CERTIFICATION

AN ATTACHMENT

SMCS-1430 **i02415464**

NOTE	PART NUMBER	QTY	PART NAME 1 2 3 4 5 6 (PRODUCT LEVEL)	SEE PAGE
Y	*235-5276*	1	LIGHTING GP-FLOOD & SIGNAL (6-LAMP, FRONT, REAR)	166
Y	*253-3951*	1	SWITCH GP-SIGNAL (TURN)	216
Y	*271-4028*	1	WIRING GP-LIGHTING (LOADER FRAME)	248

Y-SEPARATE ILLUSTRATION

<END>

235-8559 LIGHTING GP-FLOOD—4-LAMP, CAB

S/N: A7G1-UP

PART OF 237-2572, 237-2573 CAB AR-ENCLOSED ROPS

ALSO AN ATTACHMENT

SMCS-1434 **i02265177**

NOTE	REF NO	GRAPHIC REF	PART NUMBER	QTY	PART NAME 1 2 3 4 5 6 (PRODUCT LEVEL)	SEE PAGE
Y	1	1	**219-6487**	4	LAMP GP-FLOOD (24-VOLT, SUSPENDED MOUNT) (WIDE SPAN)	147
	2	1	**236-9773**	1	BRACKET (LH)	
	3	1	**236-9774**	1	BRACKET (RH)	
	4	1	**122-8705**	2	U-BOLT	
	5	1	**8T-4121**	8	WASHER-HARD (11X21X2.5-MM THK)	
M	6	1	**8T-4133**	6	NUT (M10X1.5 THD)	
M	7	1	**8T-4195**	2	BOLT (M10X1.5X30-MM)	

M-METRIC PART
Y-SEPARATE ILLUSTRATION

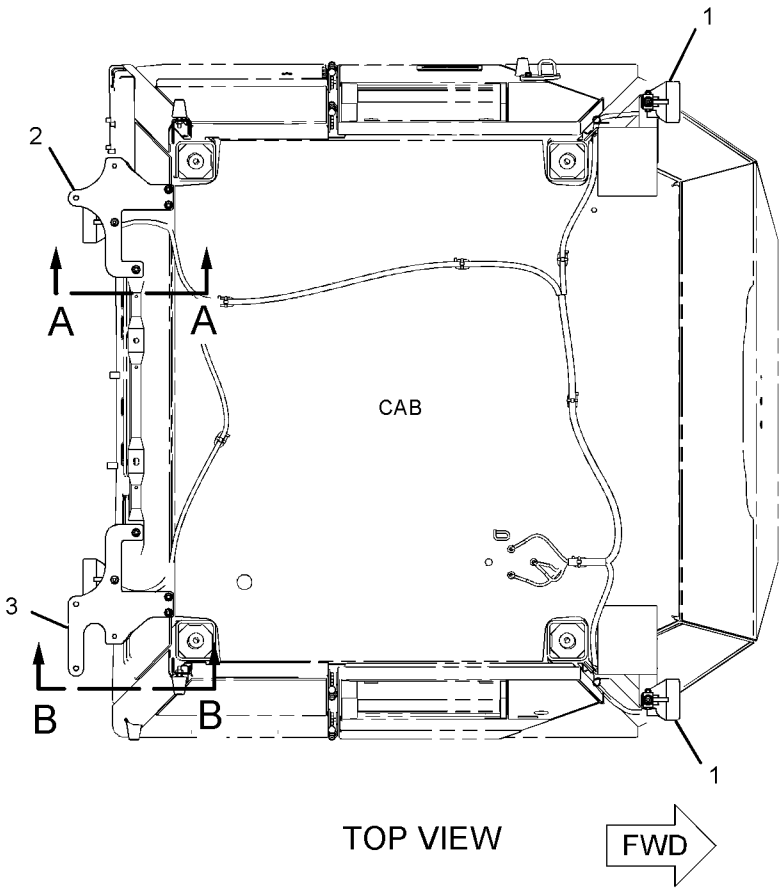

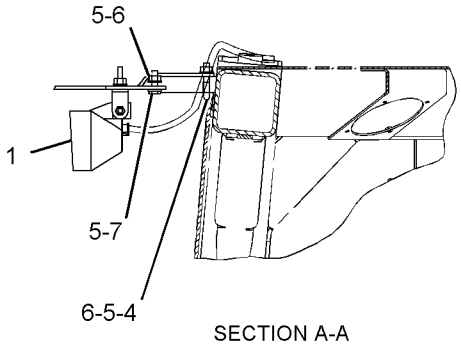

SECTION A-A

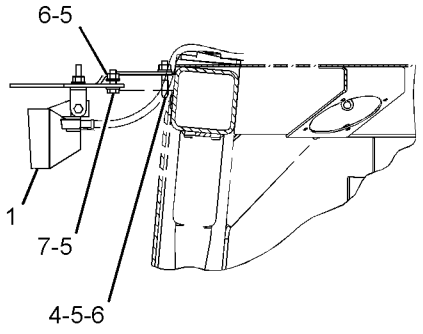

SECTION B-B

GRAPHIC #1 **<END>** g01116742

235-8560 LIGHTING GP-FLOOD—4-LAMP, CAB—HID

S/N: A7G1-UP

AN ATTACHMENT

SMCS-1434 **i02336920**

NOTE	REF NO	GRAPHIC REF	PART NUMBER	QTY	PART NAME 1 2 3 4 5 6 (PRODUCT LEVEL)	SEE PAGE
	1	1	**3S-2093**	8	STRAP-CABLE	
	2	1	**236-7773**	1	HARNESS AS-LIGHTING	
		1	**155-2270**	8	KIT-CONNECTING PLUG (2-PIN)	
					(EACH INCLUDES PLUG AS AND WEDGE)	
	5	1	**236-9775**	1	BRACKET AS (LH)	
	6	1	**236-9776**	1	BRACKET AS (RH)	
	8	1	**132-5789**	2	CLIP	
Y	9	1	**210-8422**	2	LAMP GP-FLOOD (24-VOLT, 35-WATT, HID, SUSP MT) (HIGH INTENSITY DISCHARGE, REAR)	144
Y	10	1	**210-8423**	2	LAMP GP-FLOOD (24-VOLT, 35-WATT, HID, VERT MT) (HIGH INTENSITY DISCHARGE, FR)	145
	11	1	**251-4339**	1	SWITCH AS-ROCKER (FRONT, REAR FLOODLIGHTS)	
	12	1	**8T-4121**	4	WASHER-HARD (11X21X2.5-MM THK)	
M	13	1	**8T-4133**	2	NUT (M10X1.15-THD)	
M	14	1	**8T-4195**	2	BOLT (M10X1.5X30-MM)	
	15	1	**9M-8406**	4	CLIP	

M-METRIC PART
Y-SEPARATE ILLUSTRATION

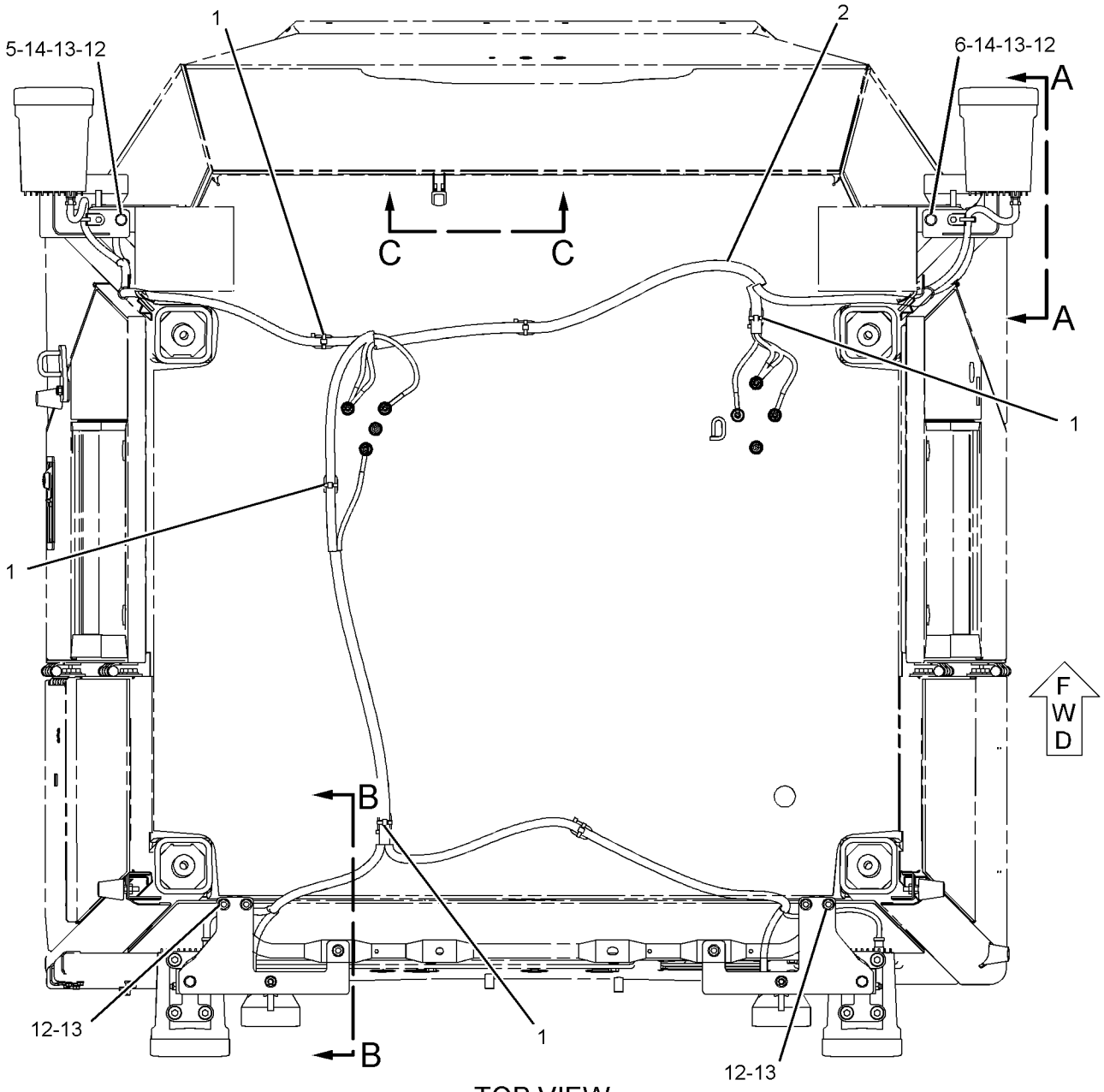

TOP VIEW

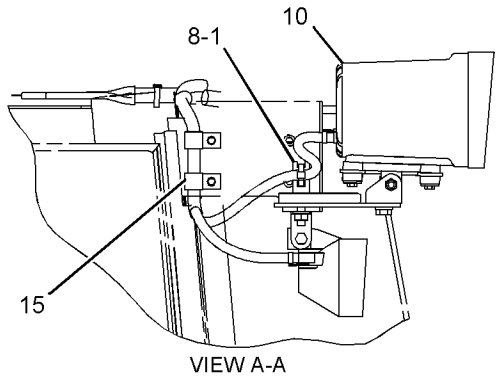

VIEW A-A

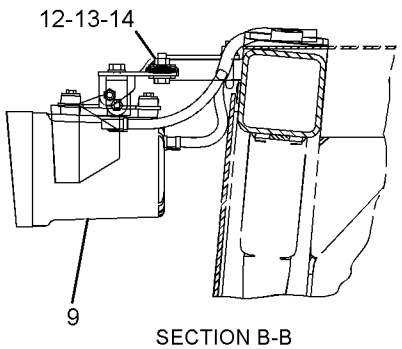

SECTION B-B

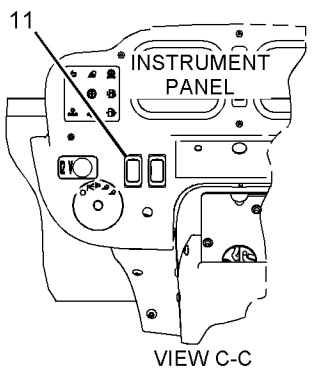

VIEW C-C

GRAPHIC #1

<END>

g01144307

280-1456 LIGHTING GP-FLOOD—4-LAMP, CAB FRONT, REAR

S/N: A7G1-UP

CANNOT BE USED WITH 235-8560—PAGE 159

AN ATTACHMENT

SMCS-1434 **i02415957**

NOTE	REF NO	GRAPHIC REF	PART NUMBER	QTY	PART NAME 1 2 3 4 5 6 (PRODUCT LEVEL)	SEE PAGE
	1	2	**3S-2093**	2	STRAP-CABLE	
	2	1	**188-1616**	2	PLATE	
Y	3	2	**219-6487**	4	LAMP GP-FLOOD (24-VOLT, SUSPENDED MOUNT)	147
	4	2	**280-1436**	2	HARNESS AS-FRONT LIGHTING	
					(EACH INCLUDES)	
		2	**102-8802**	1	KIT-RECEPTACLE (2-PIN)	
					(INCLUDES RECEPTACLE AS AND WEDGE)	
		2	**155-2270**	2	KIT-CONNECTING PLUG (2-PIN)	
					(EACH INCLUDES PLUG AS AND WEDGE)	
	5	2	**280-1437**	2	HARNESS AS-REAR LIGHTING	
					(EACH INCLUDES)	
		2	**102-8802**	1	KIT-RECEPTACLE (2-PIN)	
					(INCLUDE RECEPTACLE AS AND WEDGE)	
		2	**155-2270**	2	KIT-CONNECTING PLUG (2-PIN)	
					(EACH INCUDES PLUG AS AND WEDGE)	
	6	2	**132-5789**	2	CLIP	
	7	2	**8T-4121**	4	WASHER-HARD (11X21X2.5-MM THK)	
M	8	2	**8T-4133**	2	NUT (M10X1.15-THD)	
M	9	2	**8T-4195**	2	BOLT (M10X1.5X30-MM)	

M-METRIC PART
Y-SEPARATE ILLUSTRATION

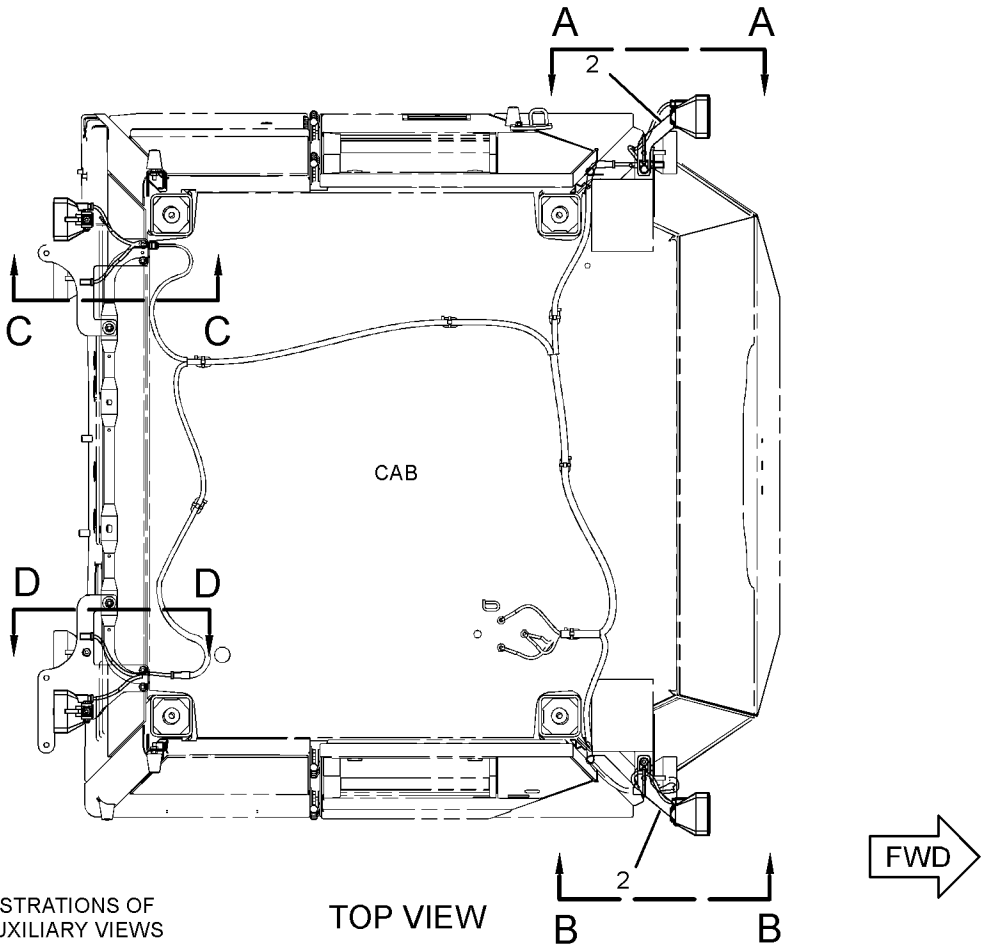

REFER TO ALL ILLUSTRATIONS OF THIS GROUP FOR AUXILIARY VIEWS

TOP VIEW

GRAPHIC #1

g01210771

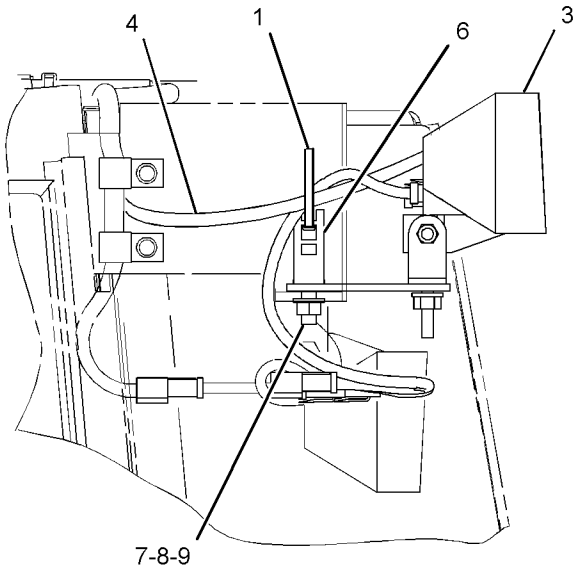

VIEW B-B

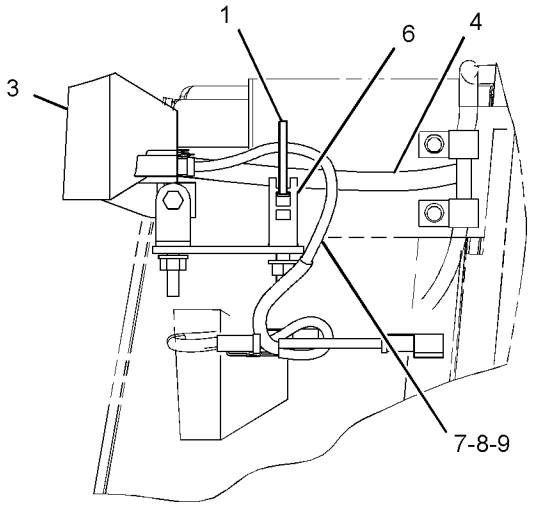

VIEW A-A

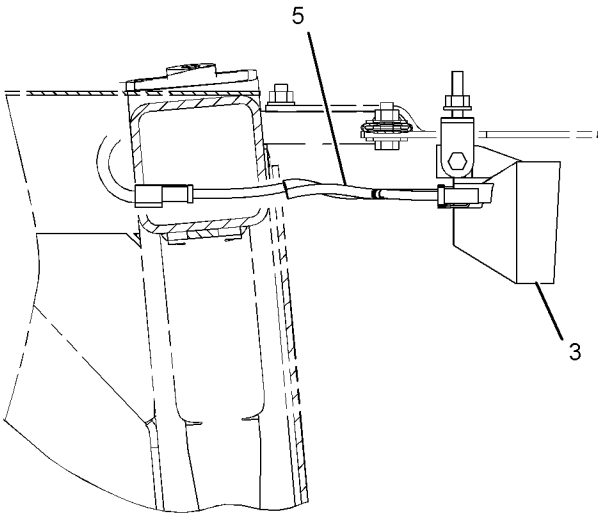

SECTION D-D

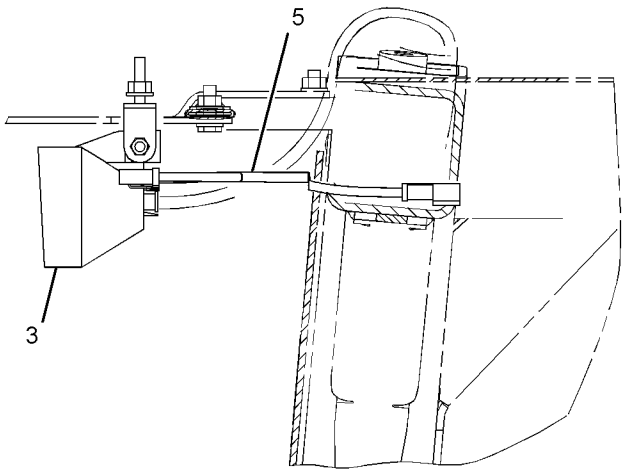

SECTION C-C

GRAPHIC #2 **<END>** g01210772

235-5275 LIGHTING GP-FLOOD & SIGNAL–
4-LAMP, FRONT, REAR
S/N: A7G1-UP
PART OF 236-9053 ELECTRICAL AR

SMCS-1430, 1434 **i02411357**

NOTE	REF NO	GRAPHIC REF	PART NUMBER	QTY	PART NAME 1 2 3 4 5 6 (PRODUCT LEVEL)	SEE PAGE
Y	1	2	**135-0426**	2	LAMP GP-SIGNAL (24-VOLT, STOP, TAIL)	153
	2	1	**111-4013**	2	GROMMET	
Y	3	2	**219-6485**	2	LAMP GP-FLOOD (24-VOLT, VERTICAL MOUNT)	146
	4	2	**246-3290**	2	PLATE AS	
					(EACH INCLUDES)	
M		2	**8T-4935**	1	BOSS-WELD (M10X1.5X45-MM)	
	5	2	**261-2332**	1	BRACKET AS (RH)	
	6	2	**261-2333**	1	BRACKET AS (LH)	
	7	2	**130-5300**	4	CLIP	
M	8	2	**5C-2890**	6	NUT (M6X1-THD)	
	9	1,2	**8T-4121**	10	WASHER-HARD (11X21X2.5-MM THK)	
M	10	1,2	**8T-4136**	10	BOLT (M10X1.5X25-MM)	
M	11	2	**9X-2044**	8	SCREW-TRUSS HEAD (M6X1X16-MM)	
	12	2	**9X-8256**	6	WASHER (6.6X12X2-MM THK)	

M-METRIC PART
Y-SEPARATE ILLUSTRATION

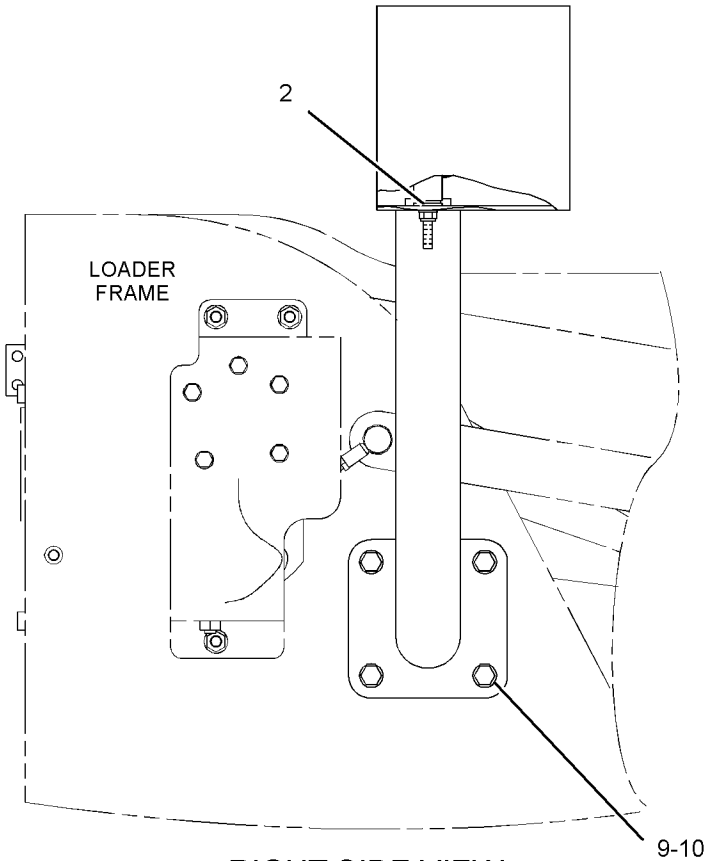

RIGHT SIDE VIEW
(FRONT)

GRAPHIC #1 g01208982

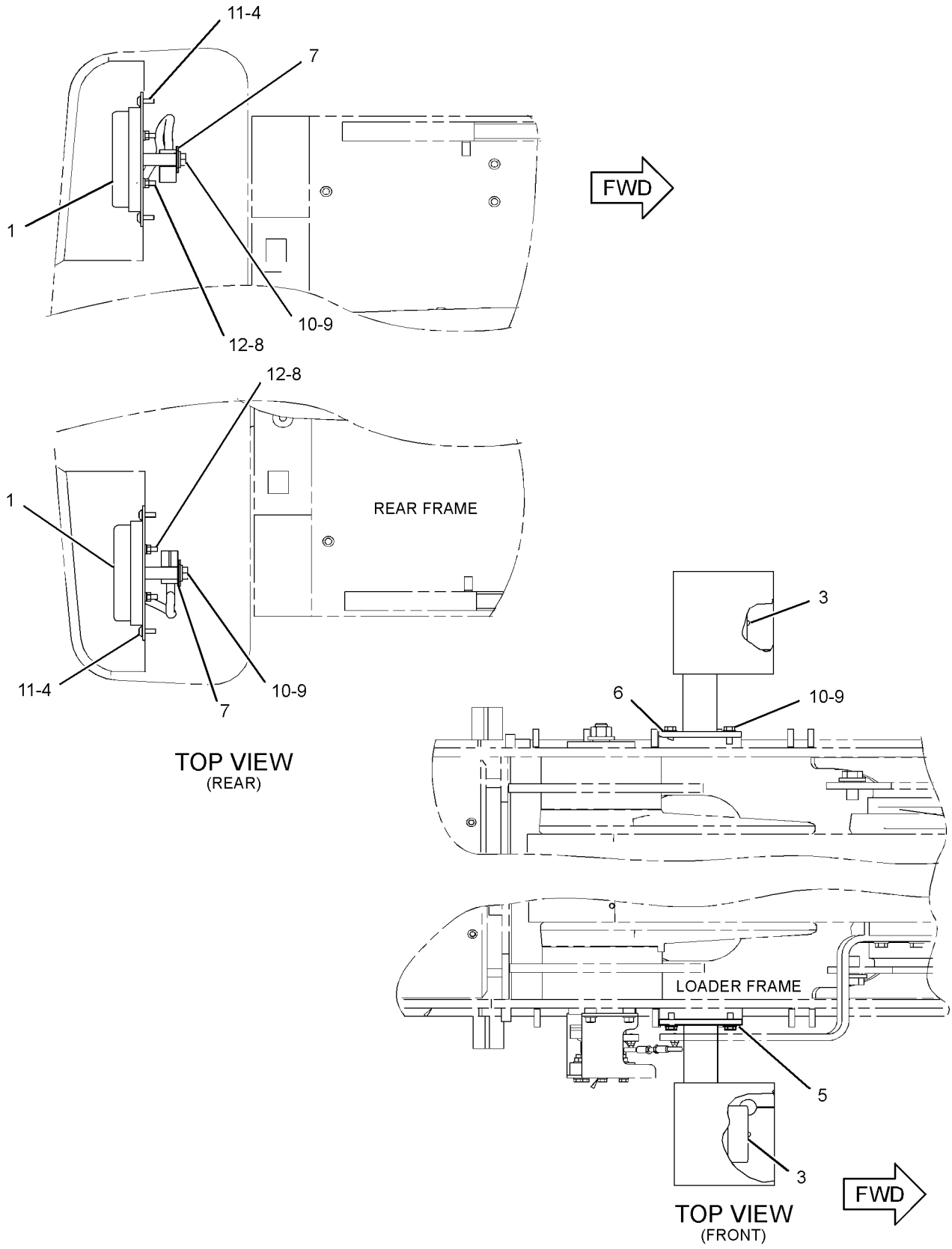

GRAPHIC #2 **<END>** g01208985

235-5276 LIGHTING GP-FLOOD & SIGNAL–

6-LAMP, FRONT, REAR

S/N: A7G1-UP

PART OF 235-5279, 244-3599 LIGHTING AR-SIGNAL

AN ATTACHMENT

SMCS-1430, 1434 **i02210927**

NOTE	REF NO	GRAPHIC REF	PART NUMBER	QTY	PART NAME 1 2 3 4 5 6 (PRODUCT LEVEL)	SEE PAGE
Y	1	1	**3E-6466**	2	LAMP GP-SIGNAL (24-VOLT) (FRONT TURN)	152
	2	1	**111-4013**	2	GROMMET	
Y	3	1	**145-6929**	2	LAMP GP-STOP & TAIL (24-VOLT)	154
Y	4	1	**219-6485**	2	LAMP GP-FLOOD (24-VOLT, VERTICAL MOUNT)	146
	5	1	**246-3295**	2	PLATE AS	
					(EACH INCLUDES)	
M		1	**8T-4935**	1	BOSS-WELD (M10X1.5X45-MM)	
		1	**246-3296**	1	PLATE	
	6	1	**261-4405**	1	BRACKET AS (RH)	
	7	1	**261-4406**	1	BRACKET AS (LH)	
	8	1	**261-4884**	2	COVER	
	9	1	**130-5300**	6	CLIP	
M	10	1	**5C-2890**	6	NUT (M6X1-THD)	
	11	1	**8T-4121**	12	WASHER-HARD (11X21X2.5-MM THK)	
M	12	1	**8T-4136**	10	BOLT (M10X1.5X25-MM)	
M	13	1	**8T-4137**	2	BOLT (M10X1.5X20-MM)	
M	14	1	**8T-4138**	8	BOLT (M6X1X20-MM)	
	15	1	**8T-4205**	8	WASHER-HARD (7.2X14.5X2-MM THK)	
M	16	1	**9X-2044**	8	SCREW-TRUSS HEAD (M6X1X16-MM)	
	17	1	**9X-8256**	6	WASHER (6.6X12X2-MM THK)	

M-METRIC PART
Y-SEPARATE ILLUSTRATION

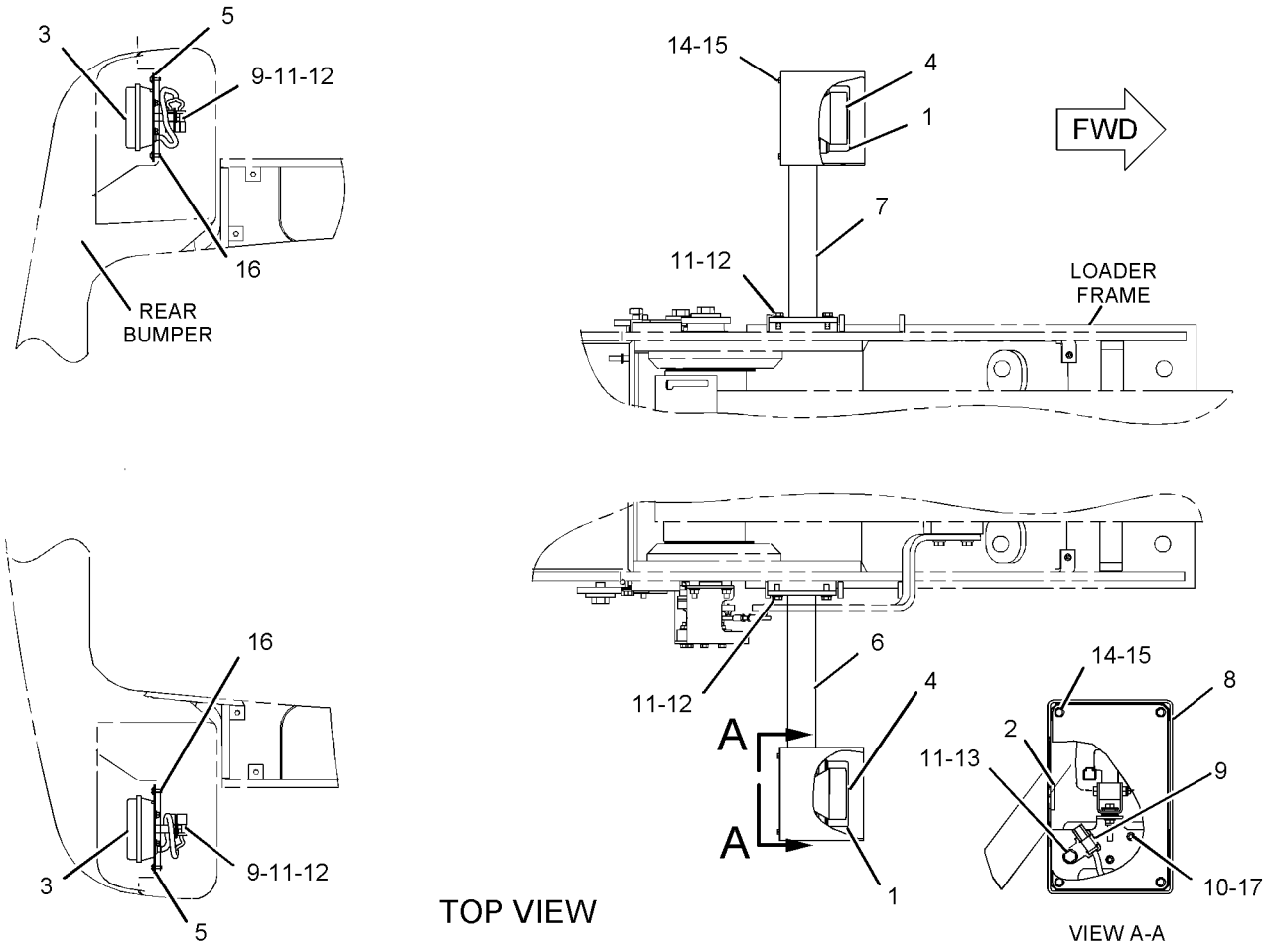

GRAPHIC #1 **<END>** g01132886

248-0414 LIGHTING GP-ROADING

S/N: A7G1-UP
PART OF 254-5525, 260-7765 LIGHTING AR-ROADING
AN ATTACHMENT

SMCS-1429 **i02241690**

NOTE	REF NO	GRAPHIC REF	PART NUMBER	QTY	PART NAME 1 2 3 4 5 6 (PRODUCT LEVEL)	SEE PAGE
Y	1	1	**105-4849**	1	LAMP GP-HEAD & SIGNAL (LH)	148
Y	2	1	**105-4850**	1	LAMP GP-HEAD & SIGNAL (RH)	150
	3	1	**111-4013**	2	GROMMET	
Y	4	1	**145-6929**	2	LAMP GP-STOP & TAIL (24-VOLT)	154
	5	1	**246-3295**	2	PLATE AS	
					(EACH INCLUDES)	
M		1	**8T-4935**	1	BOSS-WELD (M10X1.5X45-MM)	
	6	1	**260-9984**	1	BRACKET AS (RH)	
	7	1	**260-9985**	1	BRACKET AS (LH)	
	8	1	**130-5300**	4	CLIP	
	9	1	**8T-4121**	10	WASHER-HARD (11X21X2.5-MM THK)	
M	10	1	**8T-4136**	10	BOLT (M10X1.5X25-MM)	
M	11	1	**9X-2044**	8	SCREW-TRUSS HEAD (M6X1X16-MM)	

M-METRIC PART
Y-SEPARATE ILLUSTRATION

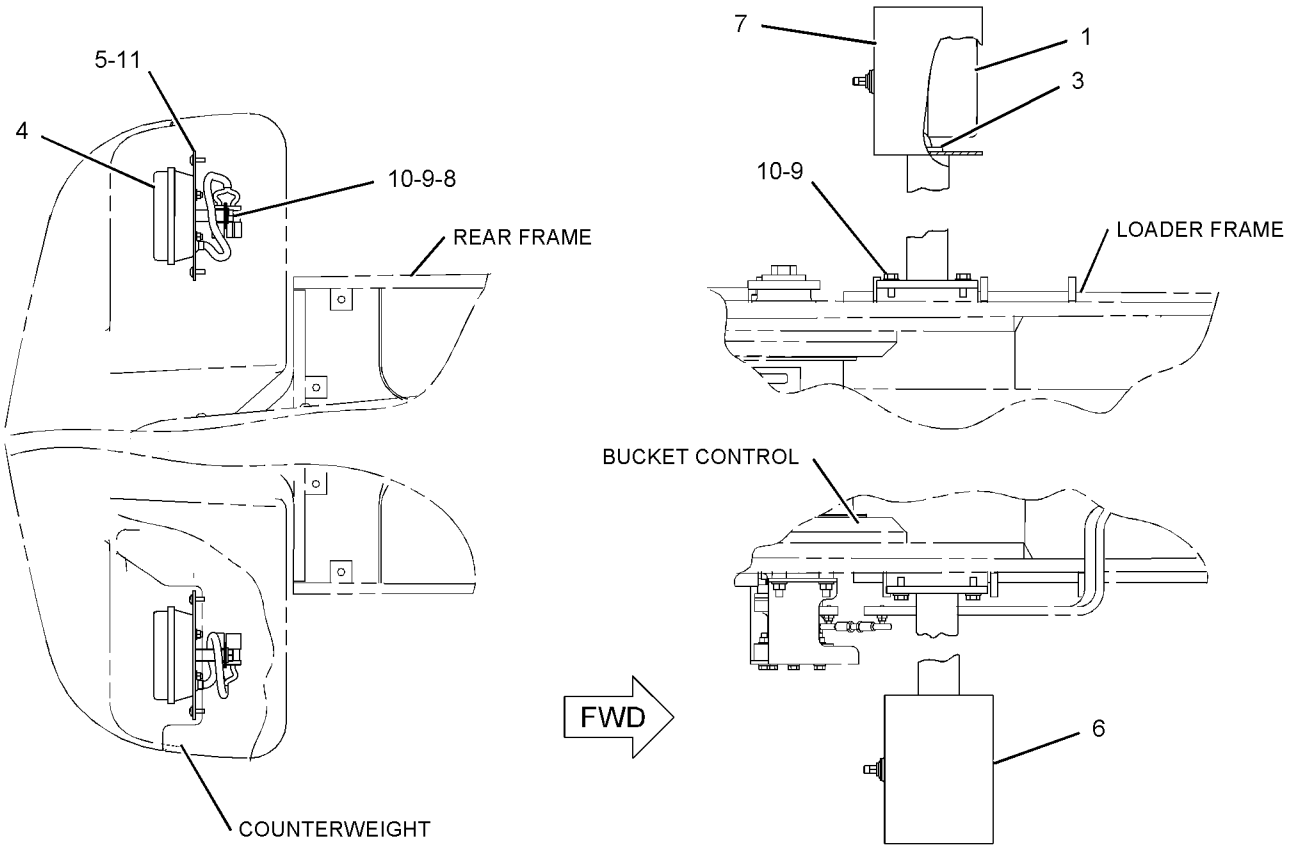

TOP VIEW

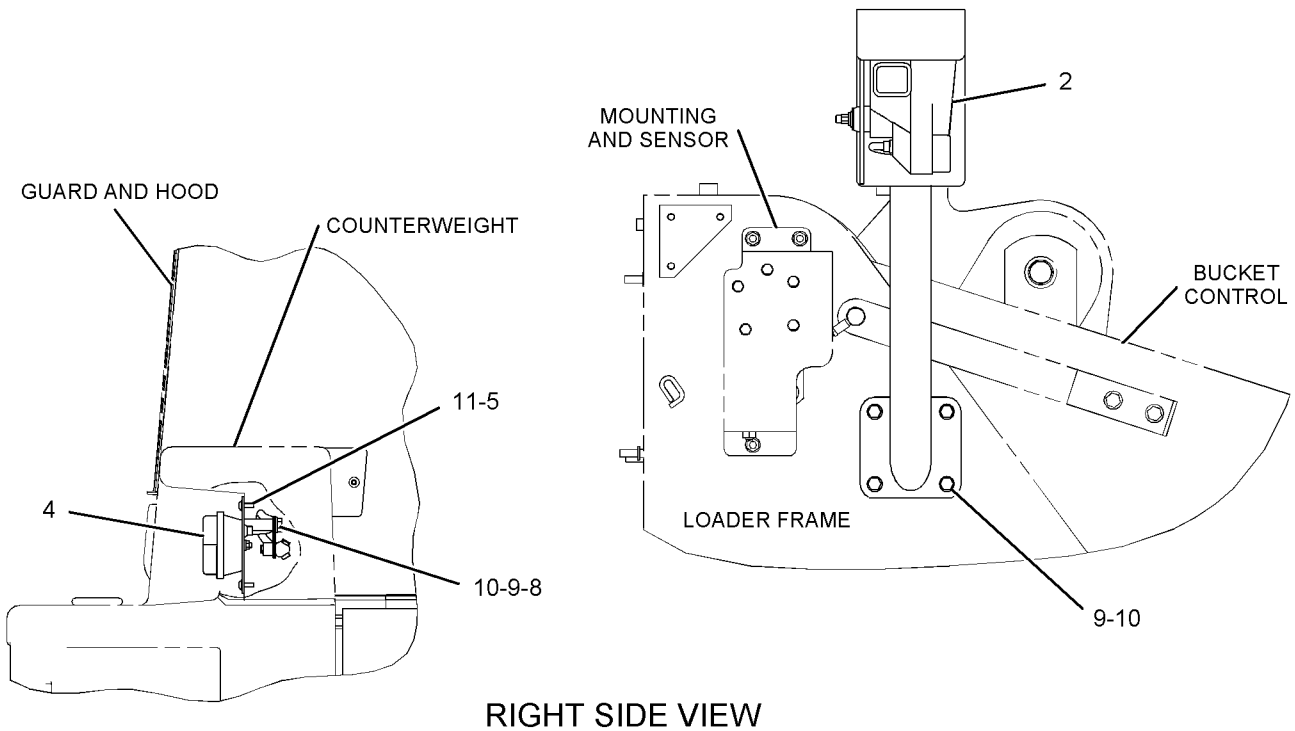

RIGHT SIDE VIEW

GRAPHIC #1

<END>

g01130691

237-1012 LIGHTING GP-WARNING BEACON

S/N: A7G1-UP

AN ATTACHMENT

SMCS-1431 **i02310364**

NOTE	REF NO	GRAPHIC REF	PART NUMBER	QTY	PART NAME 1 2 3 4 5 6 (PRODUCT LEVEL)	SEE PAGE
	1	1	**3S-2093**	5	STRAP-CABLE	
	2	1	**9T-8556**	1	SPRING	
Y	3	1	**235-3937**	1	LAMP GP-WARNING BEACON (24-VOLT, AMBER)	155
	4	1	**236-7775**	1	HARNESS AS-LIGHTING (WARNING BEACON)	
		1	**155-2270**	1	KIT-CONNECTING PLUG (2-PIN)	
					(INCLUDES PLUG AS AND WEDGE)	
	5	1	**237-7262**	1	PLATE AS	
	6	1	**237-9736**	1	SWITCH AS-ROCKER (WARNING BEACON)	
	7	1	**255-4370**	1	BRACKET	
	8	1	**255-4371**	1	BRACKET	
	9	1	**122-8705**	2	U-BOLT	
M	10	1	**129-3180**	1	LOCKNUT (M12X1.75-THD)	
	11	1	**130-5300**	1	CLIP	
	12	1	**8T-0255**	1	PIN-SPRING	
	13	1	**8T-4121**	11	WASHER-HARD (11X21X2.5-MM THK)	
M	14	1	**8T-4122**	1	WASHER-HARD (17X32X3.5-MM THK)	
M	15	1	**8T-4133**	4	NUT (M10X1.15-THD)	
M	16	1	**8T-4137**	7	BOLT (M10X1.5X20-MM)	
	17	1	**8T-4223**	1	WASHER-HARD (13.5X25.5X3-MM THK)	

M-METRIC PART
Y-SEPARATE ILLUSTRATION

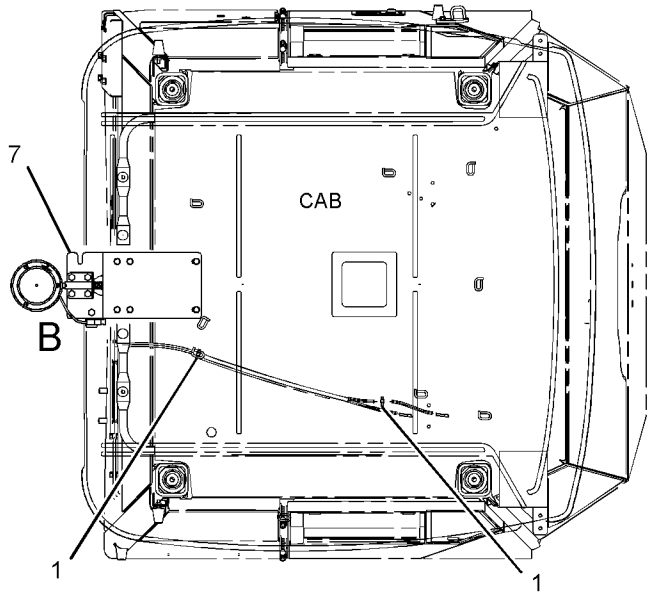

TOP VIEW

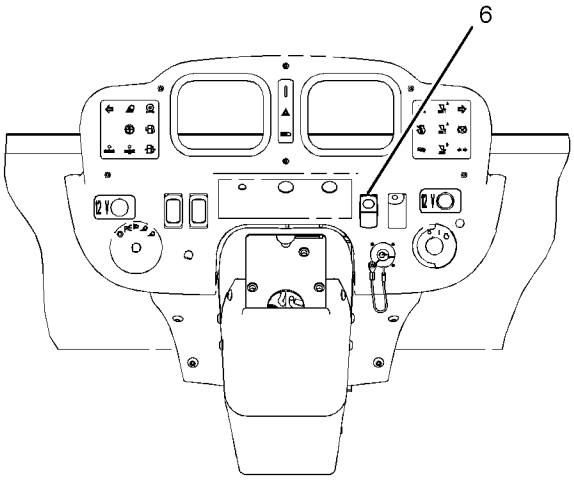

SECTION A-A

FWD

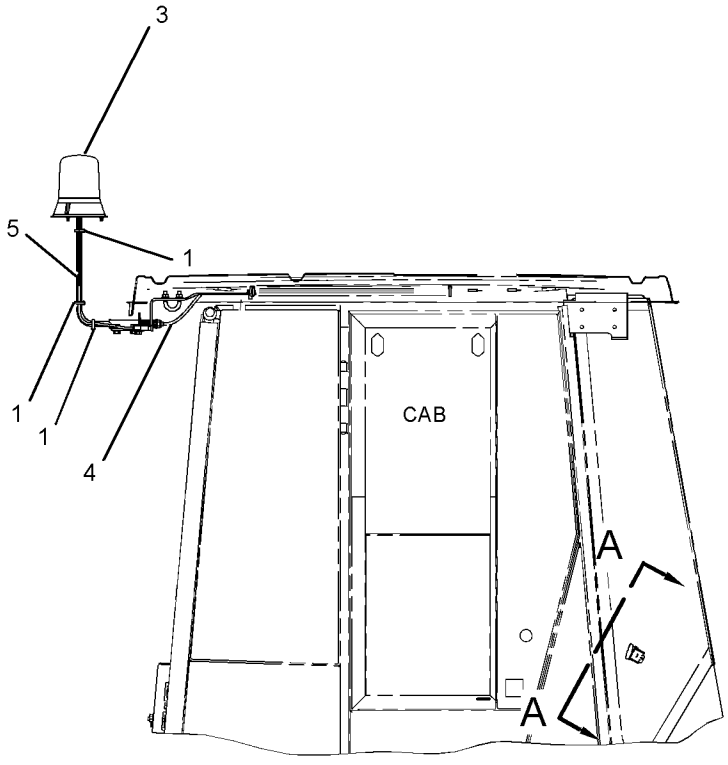

RIGHT SIDE VIEW

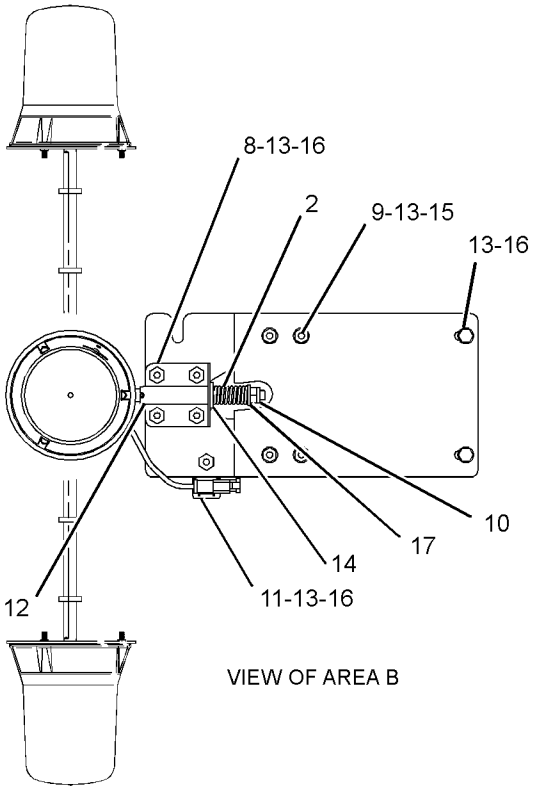

VIEW OF AREA B

GRAPHIC #1 **<END>** g01155151

237-4908 RECEPTACLE GP-AUXILIARY START

S/N: A7G1-UP

AN ATTACHMENT

SMCS-1463 **i02415402**

NOTE	REF NO	GRAPHIC REF	PART NUMBER	QTY	PART NAME 1 2 3 4 5 6 (PRODUCT LEVEL)	SEE PAGE
	1	1	**246-6196**	1	RECEPTACLE AS	
		1	**1S-7251**	1	TERMINAL-RING (FOR 1/2-IN BOLT)	
		1	**125-7876**	10	TUBE-HEAT SHRINK	
E		1	**159-8049**		CABLE (00-GA, RED) (53-CM)	
E		1	**159-8050**		CABLE (00-GA, BLACK) (26-CM)	
	2	1	**205-7299**	1	CLIP	
M	3	1	**5C-7261**	4	NUT (M8X1.25-THD)	
	4	1	**8S-2634**	1	COVER AS	
		1	**2P-2975**	2	SEAL-O-RING	
	5	1	**8T-4121**	1	WASHER-HARD (11X21X2.5-MM THK)	
M	6	1	**8T-4191**	1	BOLT (M10X1.5X16-MM)	
	7	1	**8T-4224**	8	WASHER-HARD (8.8X16X2-MM THK)	
M	8	1	**8T-7547**	4	BOLT (M8X1.25X30-MM)	
	9	1	**146-6747**	1	FILM-INFORMATION (24-VOLT)	
	10	1	**225-0313**	1	FILM-WARNING (JUMP START, READ OMM)	

E-ORDER BY THE CENTIMETER
M-METRIC PART

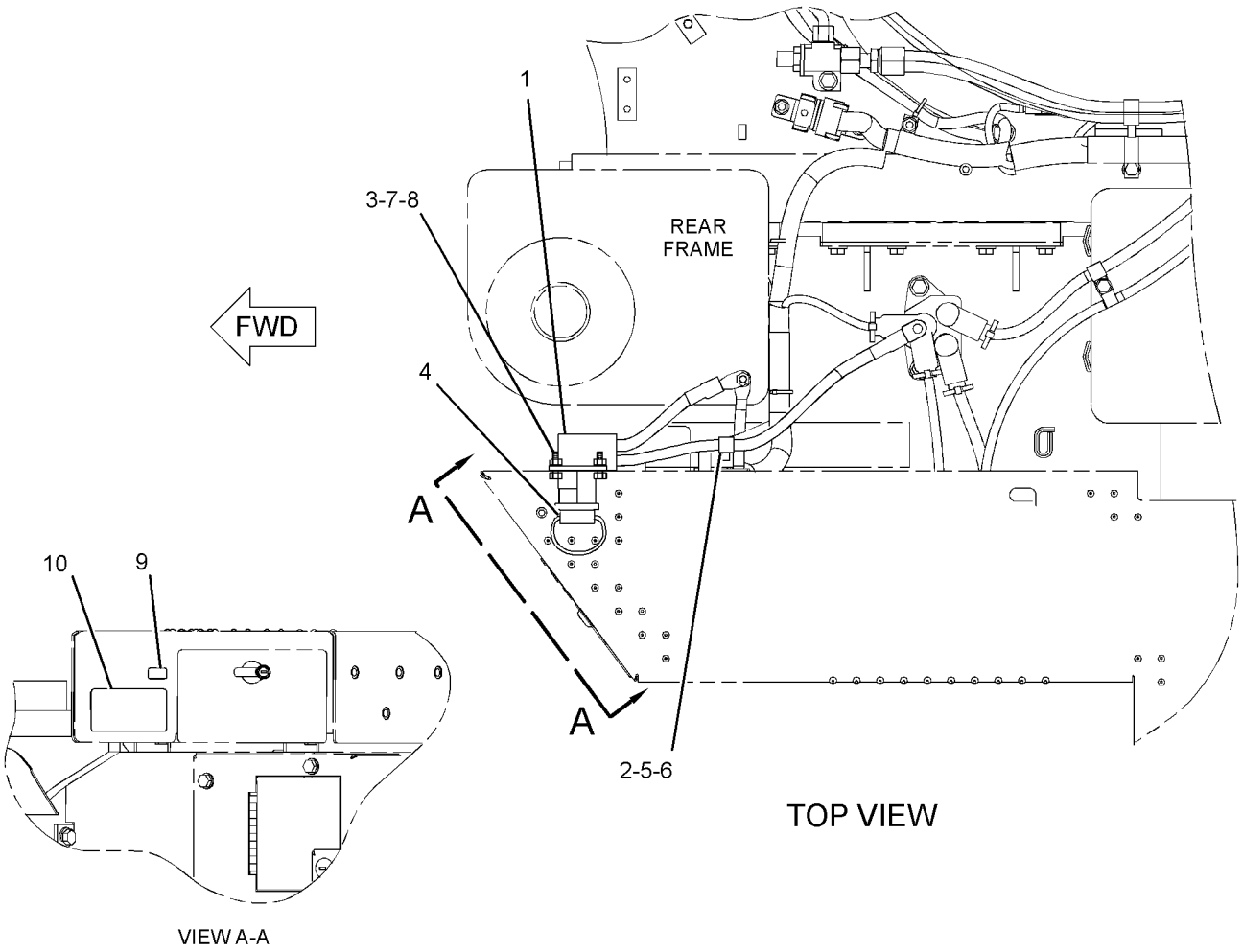

GRAPHIC #1 **<END>** g01191390

179-9375 SENSOR & MTG GP-LIFT POSITION

S/N: A7G1-UP

PART OF 236-9053 ELECTRICAL AR

SMCS-5736 **i02150728**

NOTE	REF NO	GRAPHIC REF	PART NUMBER	QTY	PART NAME 1 2 3 4 5 6 (PRODUCT LEVEL)	SEE PAGE
C	1	1	**4H-1225**	1	WASHER (11X22X6-MM THK)	
	2	1	**6C-3997**	3	SPACER (15X20X10-MM THK)	
	3	1	**7X-7662**	2	ROD END	
	4	1	**130-5300**	1	CLIP	
	5	1	**166-0599**	1	ROD	
Y	6	1	**169-0417**	1	SENSOR GP-POSITION (LIFT)	180
	7	1	**179-7000**	1	ARM	
	8	1	**199-4064**	1	BRACKET AS	
	9	1	**214-3616**	1	PLATE	
	10	1	**214-3617**	1	PLATE	
M	11	1	**160-8500**	4	NUT (M8X1.25-THD)	
M	12	1	**5C-7261**	5	NUT (M8X1.25-THD)	
C	13	1	**5P-9297**	2	CLIP	
M	14	1	**7X-0818**	5	BOLT (M8X1.25X45-MM)	
C	15	1	**8T-4121**	6	WASHER-HARD (11X21X2.5-MM THK)	
CM	16	1	**8T-4133**	5	NUT (M10X1.15-THD)	
M	17	1	**8T-4137**	1	BOLT (M10X1.5X20-MM)	
	18	1	**8T-4223**	2	WASHER-HARD (13.5X25.5X3-MM THK)	
	19	1	**8T-4224**	10	WASHER-HARD (8.8X16X2-MM THK)	
M	20	1	**8T-4956**	2	BOLT (M12X1.75X35-MM)	
M	21	1	**8T-4971**	2	BOLT (M6X1X30-MM)	
	22	1	**9X-8256**	2	WASHER (6.6X12X2-MM THK)	

C-CHANGE FROM PREVIOUS TYPE
M-METRIC PART
Y-SEPARATE ILLUSTRATION

179-9375 **SENSOR & MTG GP-LIFT POSITION** *(contd.)* **i02150728**

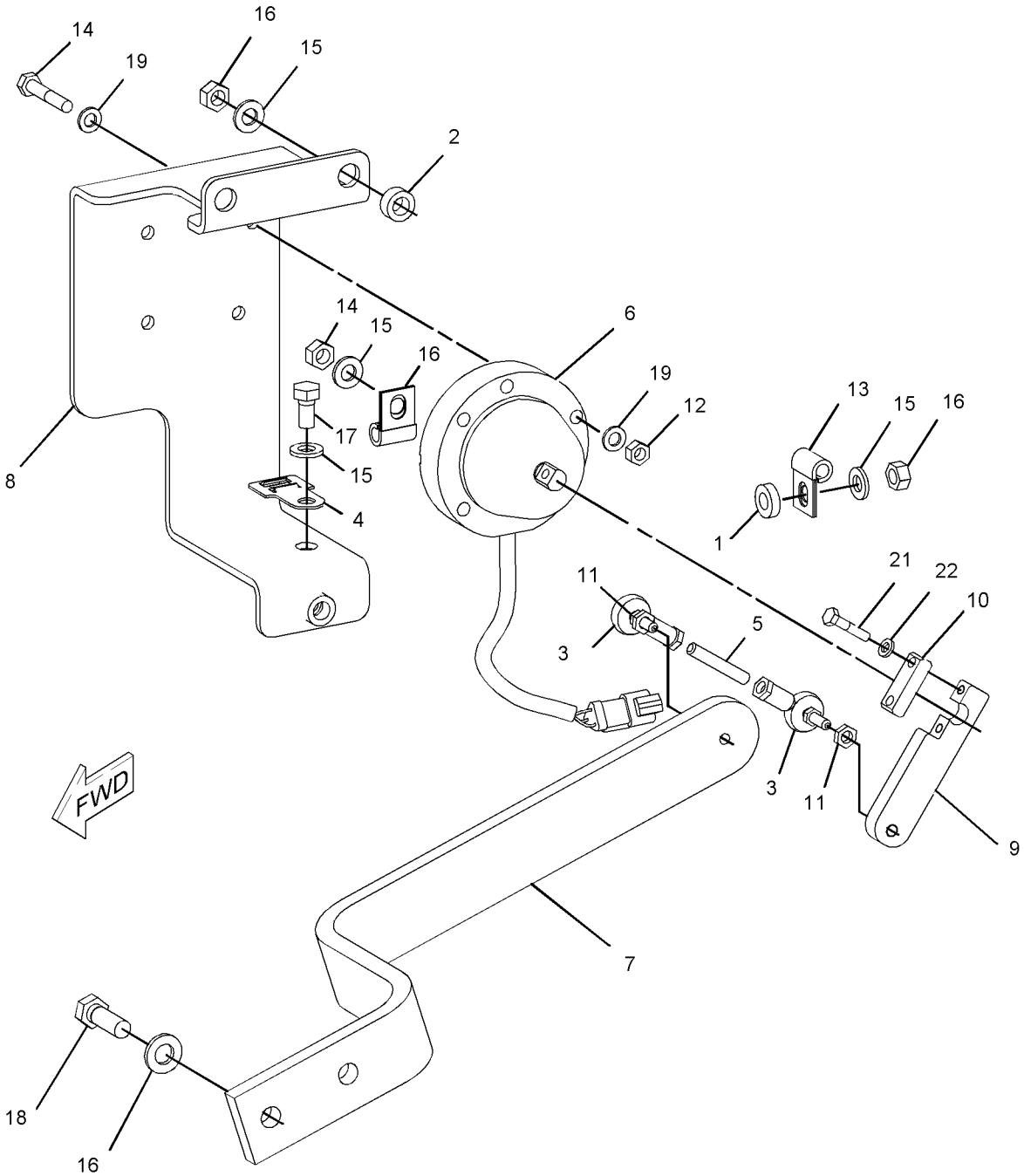

GRAPHIC #1 **<END>** g01077689

239-4850 SENSOR & MTG GP-PRESSURE–LIFT CYLINDER OIL

S/N: A7G1-UP

PART OF 236-9108, 246-1920, 279-4959 CONTROL AR-AUTODIG

AN ATTACHMENT

SMCS-1923 **i02414893**

NOTE	REF NO	GRAPHIC REF	PART NUMBER	QTY	PART NAME 1 2 3 4 5 6 (PRODUCT LEVEL)	SEE PAGE
	1	1	**5I-4376**	1	FITTING	
	2	1	**6V-0852**	1	CAP-DUST	
	3	1	**164-6871**	1	ADAPTER AS	
		1	**6V-8397**	1	SEAL-O-RING	
Y	4	1	**221-3416**	1	SENSOR GP-PRESSURE (LIFT CYLINDER OIL)	184
	5	1	*164-5567*	1	FITTING GP-COUPLING	
		1	**3J-1907**	1	SEAL-O-RING	
		1	**6V-3965**	1	FITTING AS (QUICK DISCONNECT)	
	6	1	**3J-1907**	1	SEAL-O-RING	

Y-SEPARATE ILLUSTRATION

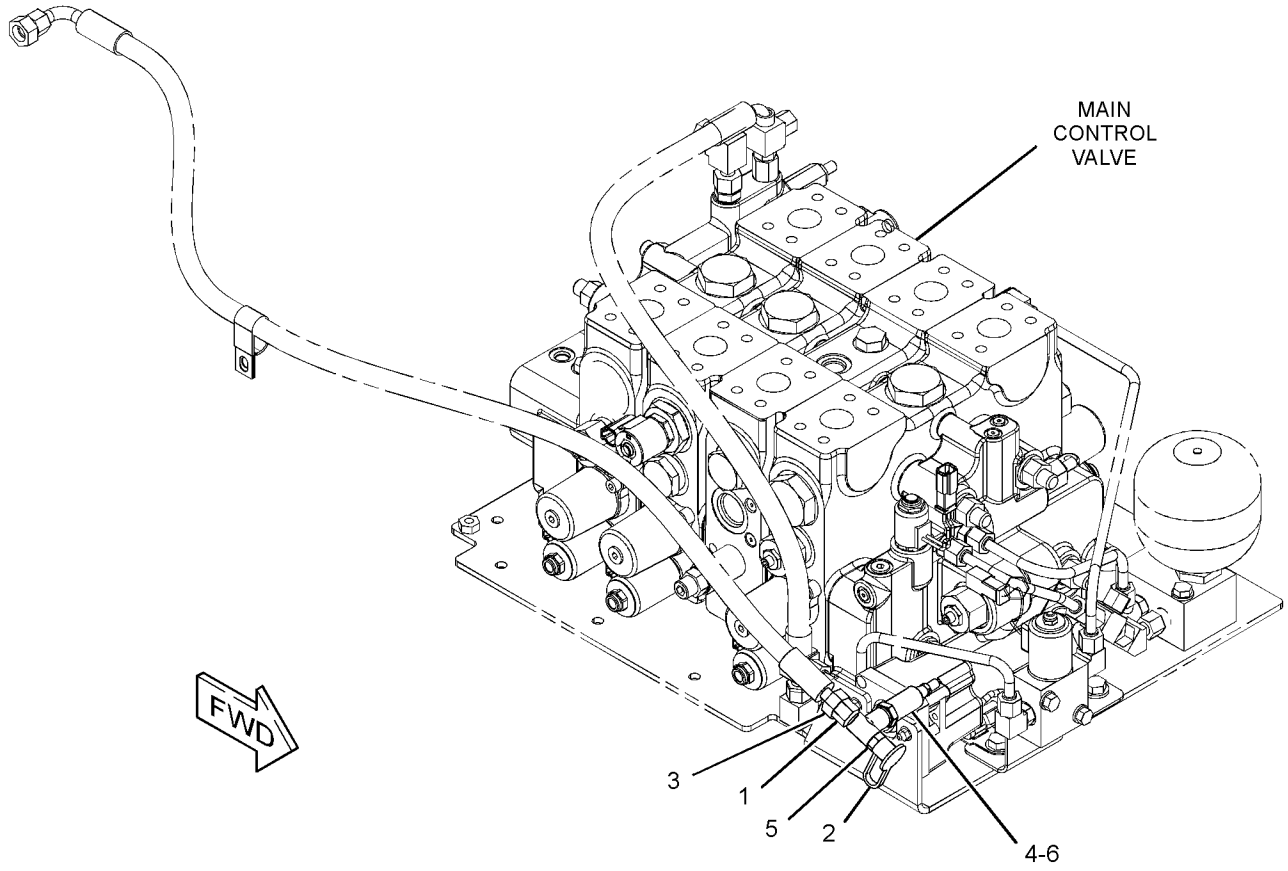

GRAPHIC #1 **<END>** g01198997

246-7917 SENSOR & MTG GP-TILT POSITION

S/N: A7G1-UP

PART OF 236-9053 ELECTRICAL AR

SMCS-5736 **i02411865**

NOTE	REF NO	GRAPHIC REF	PART NUMBER	QTY	PART NAME 1 2 3 4 5 6 (PRODUCT LEVEL)	SEE PAGE
	1	1	**7X-7662**	2	ROD END	
	2	1	**130-5300**	1	CLIP	
	3	1	**166-0599**	1	ROD	
Y	4	1	**169-0417**	1	SENSOR GP-POSITION (TILT)	180
	5	1	**208-3906**	1	ARM AS-TILT (BAIL)	
	6	1	**208-3908**	1	COVER	
	7	1	**208-3909**	1	COVER AS	
	8	1	**212-8810**	1	BRACKET AS	
	9	1	**214-3616**	1	PLATE	
	10	1	**214-3617**	1	PLATE	
M	11	1	**160-8500**	5	NUT (M8X1.25-THD)	
	12	1	**4D-7794**	1	CLIP	
M	13	1	**5C-7261**	5	NUT (M8X1.25-THD)	
M	14	1	**7X-0818**	5	BOLT (M8X1.25X45-MM)	
	15	1	**7X-7729**	4	WASHER (11X25X3-MM THK)	
	16	1	**8T-4121**	6	WASHER-HARD (11X21X2.5-MM THK)	
M	17	1	**8T-4136**	4	BOLT (M10X1.5X25-MM)	
M	18	1	**8T-4137**	2	BOLT (M10X1.5X20-MM)	
M	19	1	**8T-4195**	4	BOLT (M10X1.5X30-MM)	
	20	1	**8T-4224**	12	WASHER-HARD (8.8X16X2-MM THK)	
M	21	1	**8T-4971**	2	BOLT (M6X1X30-MM)	
	22	1	**9X-8256**	2	WASHER (6.6X12X2-MM THK)	

M-METRIC PART
Y-SEPARATE ILLUSTRATION

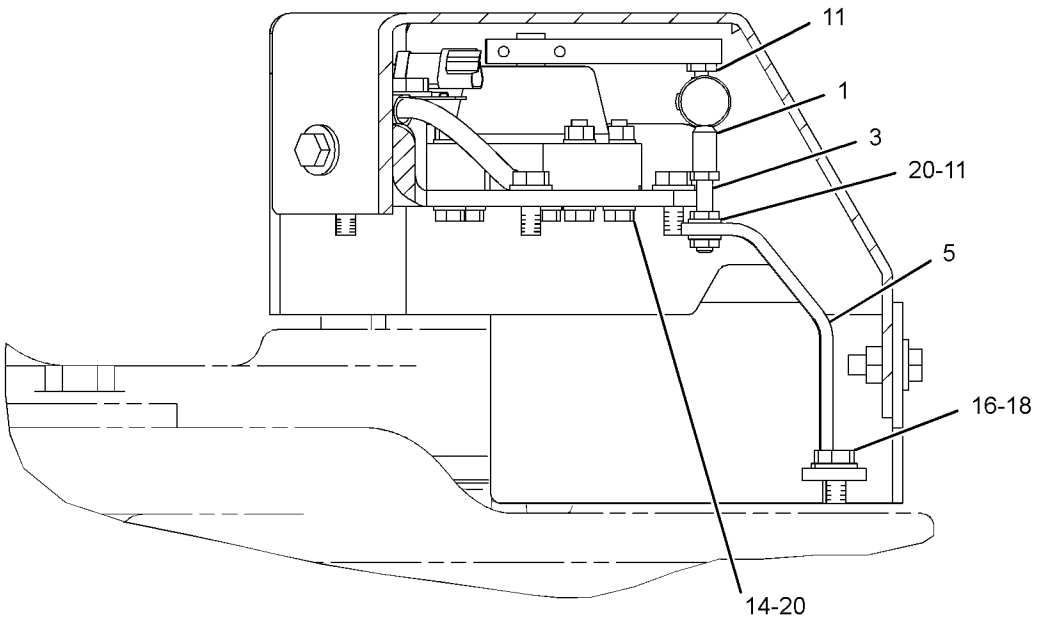

SECTION B-B

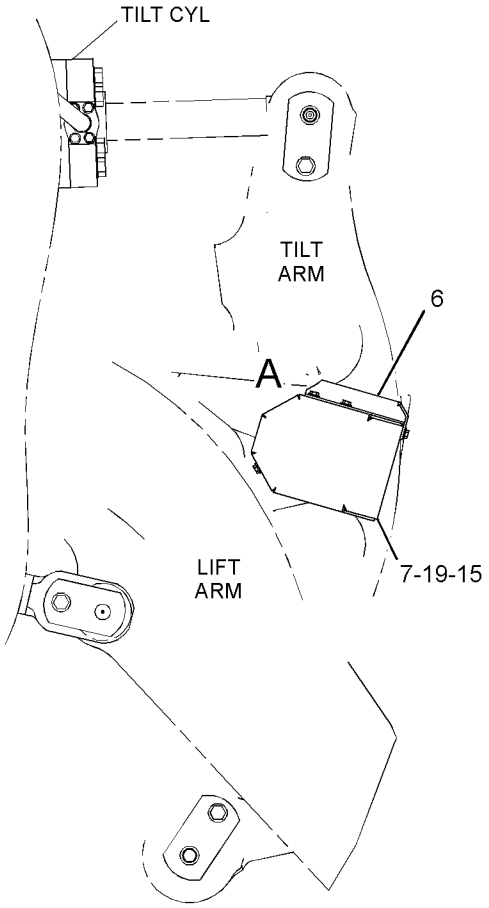

RIGHT SIDE VIEW

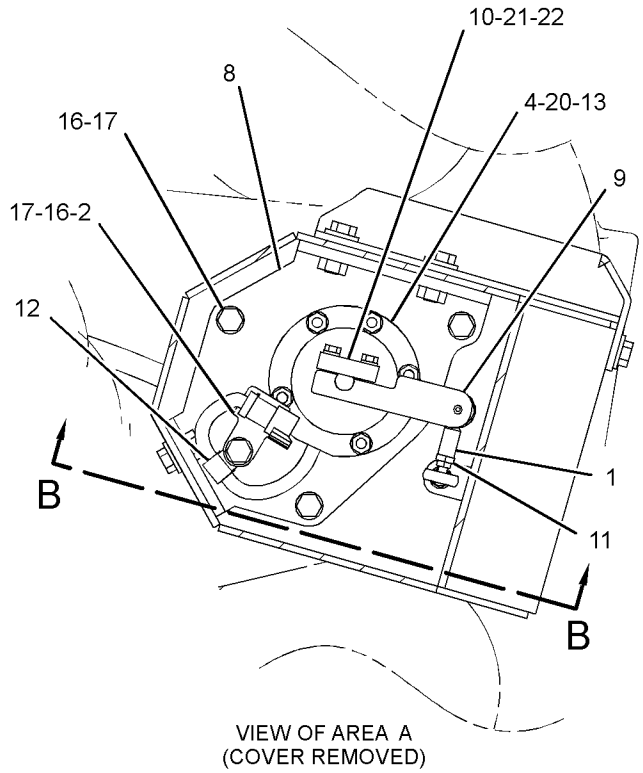

VIEW OF AREA A
(COVER REMOVED)

GRAPHIC #1 **<END>** g01200464

243-1555 SENSOR GP-ENGINE

S/N: MHX1-UP

PART OF 234-7849 ENGINE AR-COMPLETE

SMCS-1718, 1906, 1907, 1912, 1917, 1923, 1924, 1928, 1929, 7400

i02420117

NOTE	REF NO	GRAPHIC REF	PART NUMBER	QTY	PART NAME 1 2 3 4 5 6 (PRODUCT LEVEL)	SEE PAGE
	1	1	**3S-2093**	1	STRAP-CABLE	
	2	1	**9X-0262**	1	ADAPTER	
	3	1	**117-0067**	1	ELBOW	
Y	4	1	**230-7149**	1	SENSOR GP-SPEED (CRANK TIMING)	192
	5	1	**234-4355**	1	ADAPTER-O-RING	
Y	6	1	*239-2395*	1	SENSOR GP-PRESSURE (ATMOSPHERIC)	185
Y	7	1	*239-2396*	1	SENSOR GP-PRESSURE (ENGINE OIL)	186
Y	8	1	*239-2397*	1	SENSOR GP-SPEED (TIMING, CAMSHAFT)	193
Y	9	1	*274-7395*	1	SENSOR GP-TEMPERATURE (INTAKE AIR)	195
Y	10	1	*274-7396*	1	SENSOR GP-TEMPERATURE (COOLANT)	196
Y	11	1	*239-5674*	1	SENSOR GP-PRESSURE (AIR INLET MANIFOLD)	188
	12	1	**6V-5048**	2	SEAL-O-RING	
	13	1	**6V-5049**	1	SEAL-O-RING	
M	14	1	**8T-0642**	2	BOLT (M8X1.25X14-MM)	
	15	1	**9M-1974**	2	WASHER-HARD (8.8X16X2-MM THK)	

M-METRIC PART
Y-SEPARATE ILLUSTRATION

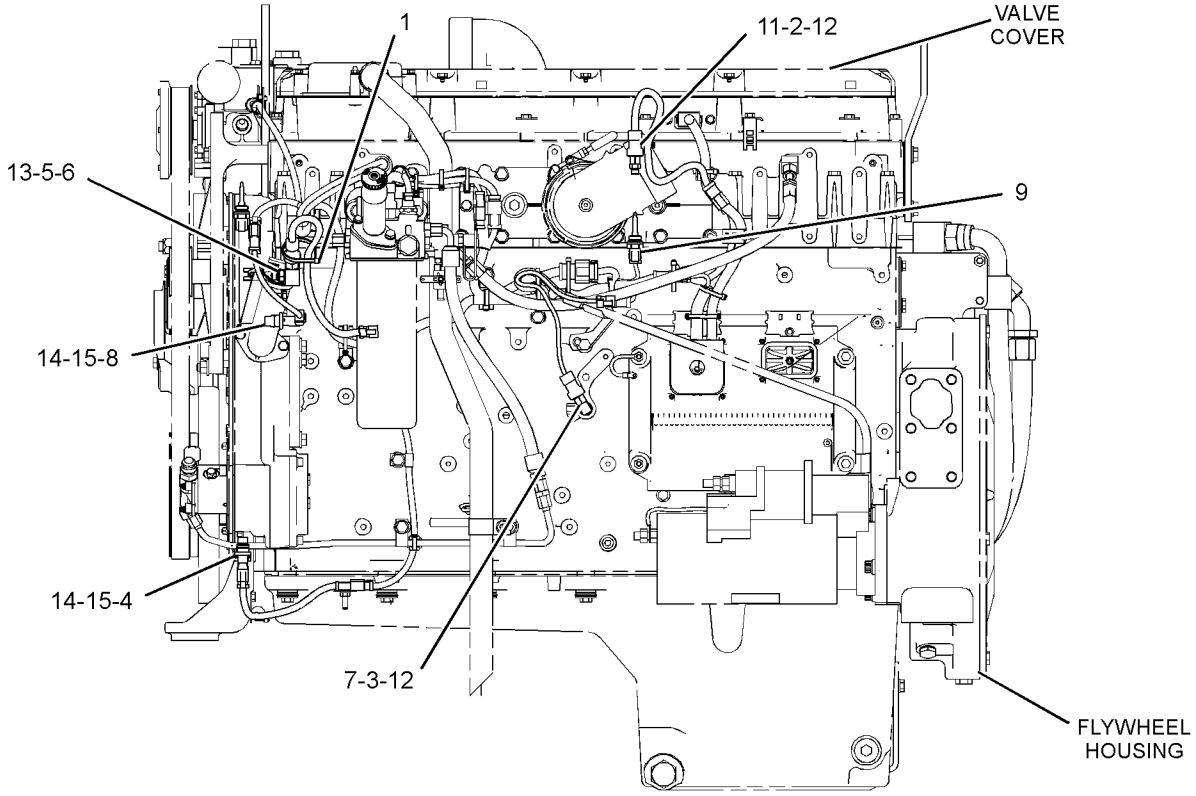

LEFT SIDE VIEW

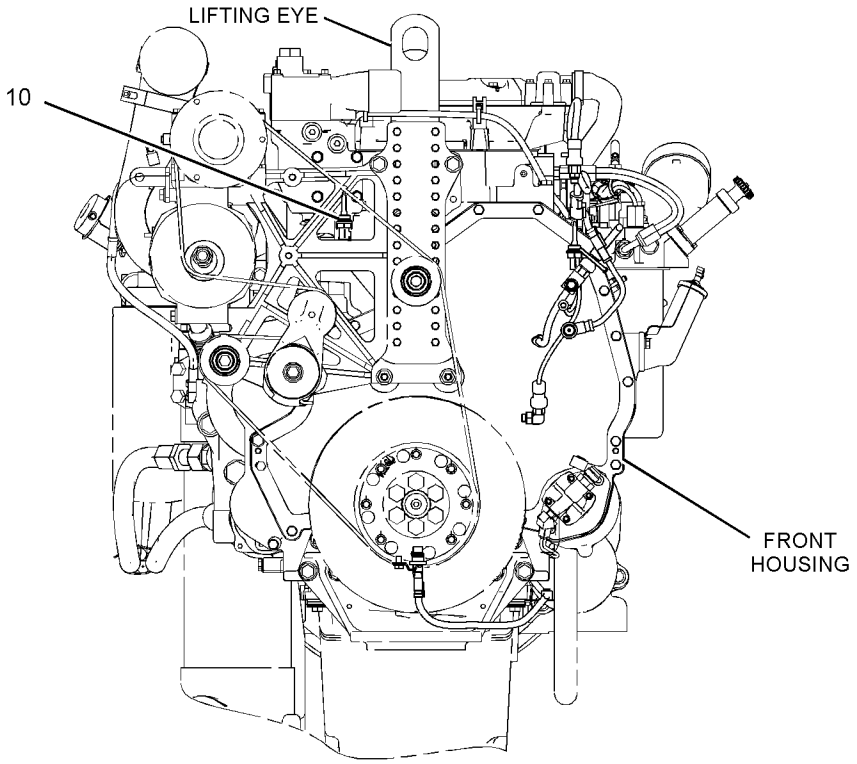

FRONT VIEW

GRAPHIC #1

<END>

g01209749

169-0417 SENSOR GP-POSITION–LIFT, TILT

S/N: A7G1-UP

PART OF 179-9375 SENSOR & MTG GP-LIFT POSITION, 246-7917 SENSOR & MTG GP-TILT POSITION

SMCS-4269, 5702, 5736, 5737, 7494 **i02015060**

NOTE	REF NO	GRAPHIC REF	PART NUMBER	QTY	PART NAME 1 2 3 4 5 6 (PRODUCT LEVEL)	SEE PAGE
	1	1	*169-0418*	1	SENSOR AS-POSITION (LIFT)	
M		1	**6V-9671**	4	SCREW-MACHINE (M3X0.5X12-MM)	
		1	**172-1483**	4	SPACER	
		1	**191-9253**	4	WASHER	
	2	1	**102-8803**	1	KIT-RECEPTACLE (3-PIN)	
					(INCLUDES RECEPTACLE AS & WEDGE)	
	3	1	**9X-3401**	3	PIN-CONNECTOR (16-18 GA)	
	4	1	**3E-3371**	1	WEDGE-RECEPTACLE LOCK (3-PIN)	
E	5	1	**119-3662**		TUBE-HEAT SHRINK (5CM)	
E	6	1	**9X-1813**		SLEEVE (17CM)	
	7	1	**172-1482**	1	CLAMP	
M	8	1	**3E-8048**	2	SCREW-MACHINE (M3X0.5X6-MM)	

E-ORDER BY THE CENTIMETER
M-METRIC PART

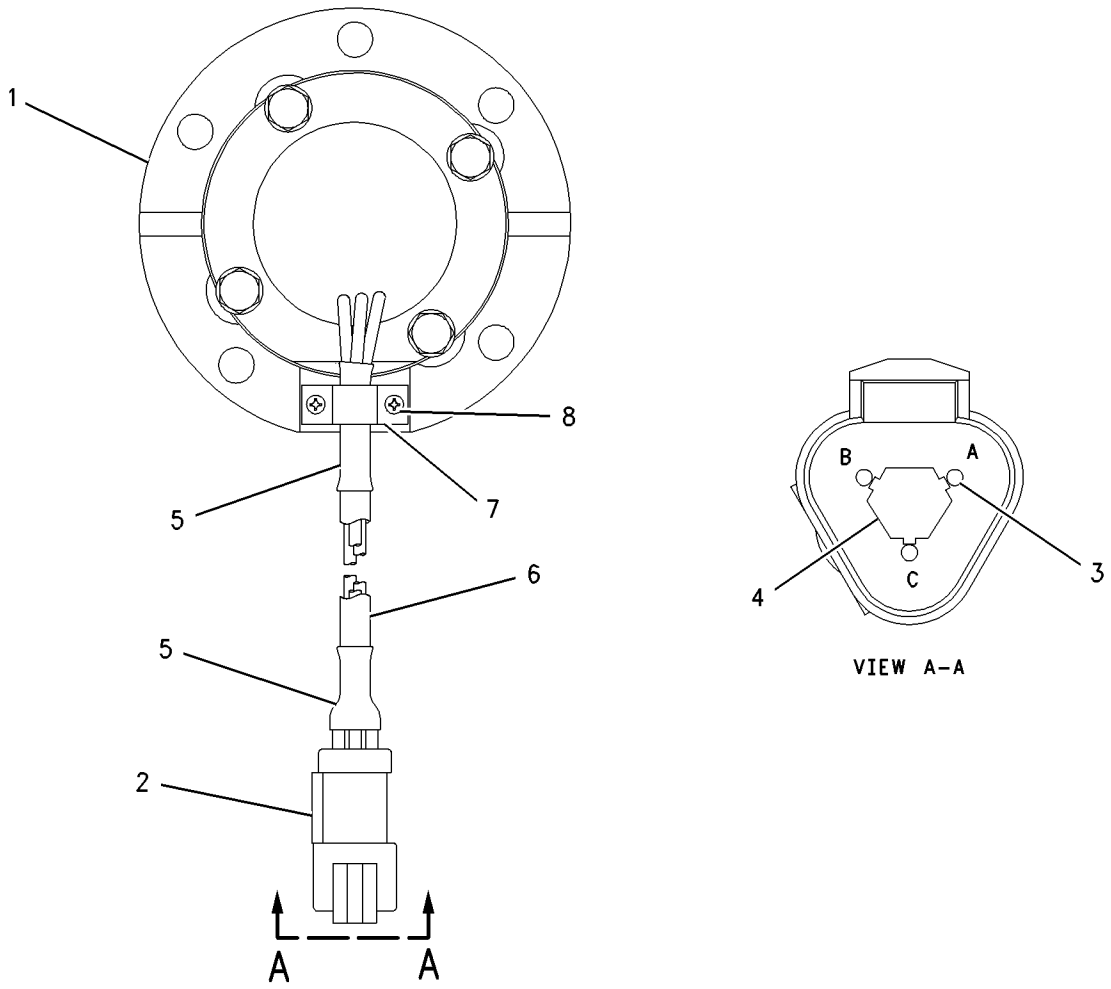

GRAPHIC #1 **<END>** g00744970

204-7949 SENSOR GP-POSITION–THROTTLE

S/N: A7G1-UP
PART OF 201-8616 PEDAL GP-GOVERNOR
ALSO AN ATTACHMENT

SMCS-4269, 5702, 5736, 5737, 7494 **i01855778**

NOTE	REF NO	GRAPHIC REF	PART NUMBER	QTY	PART NAME 1 2 3 4 5 6 (PRODUCT LEVEL)	SEE PAGE
	1	1	**102-8803**	1	KIT-RECEPTACLE (3-PIN)	
					(INCLUDES RECEPTACLE AS & WEDGE)	
	2	1	**3E-3371**	1	WEDGE-RECEPTACLE LOCK (3-PIN)	
	3	1	**186-3735**	3	PIN-CONNECTOR (16-GA TO 18-GA)	

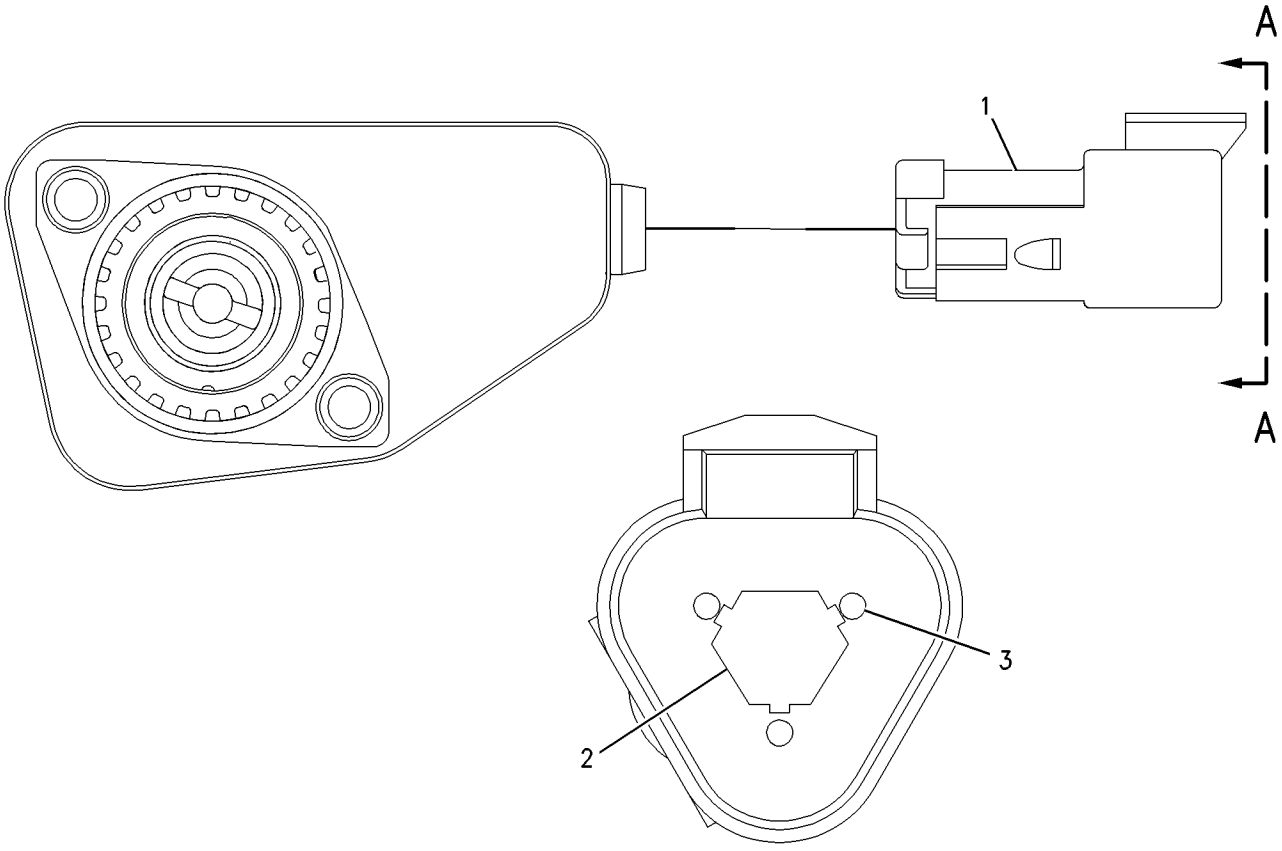

VIEW A–A

GRAPHIC #1 **<END>** g00925280

194-6722 SENSOR GP-PRESSURE–TURBOCHARGER INLET

S/N: A7G1-UP; MHX1-UP

PART OF 239-2395 SENSOR GP-PRESSURE, 237-4903 WIRING GP-ENGINE

SMCS-1408, 1925, 7494 **i01821057**

NOTE	REF NO	GRAPHIC REF	PART NUMBER	QTY	PART NAME 1 2 3 4 5 6 (PRODUCT LEVEL)	SEE PAGE
E	1	1	**9X-1813**		SLEEVE (34CM)	
	2	1	**155-2260**	1	KIT-CONNECTING PLUG (3-PIN)	
					(INCLUDES PLUG AS AND WEDGE)	
	3	1	*180-9340*	3	SOCKET-CONNECTOR	
	4	1	**3E-3368**	1	WEDGE-PLUG LOCK (3-PIN)	

E-ORDER BY THE CENTIMETER

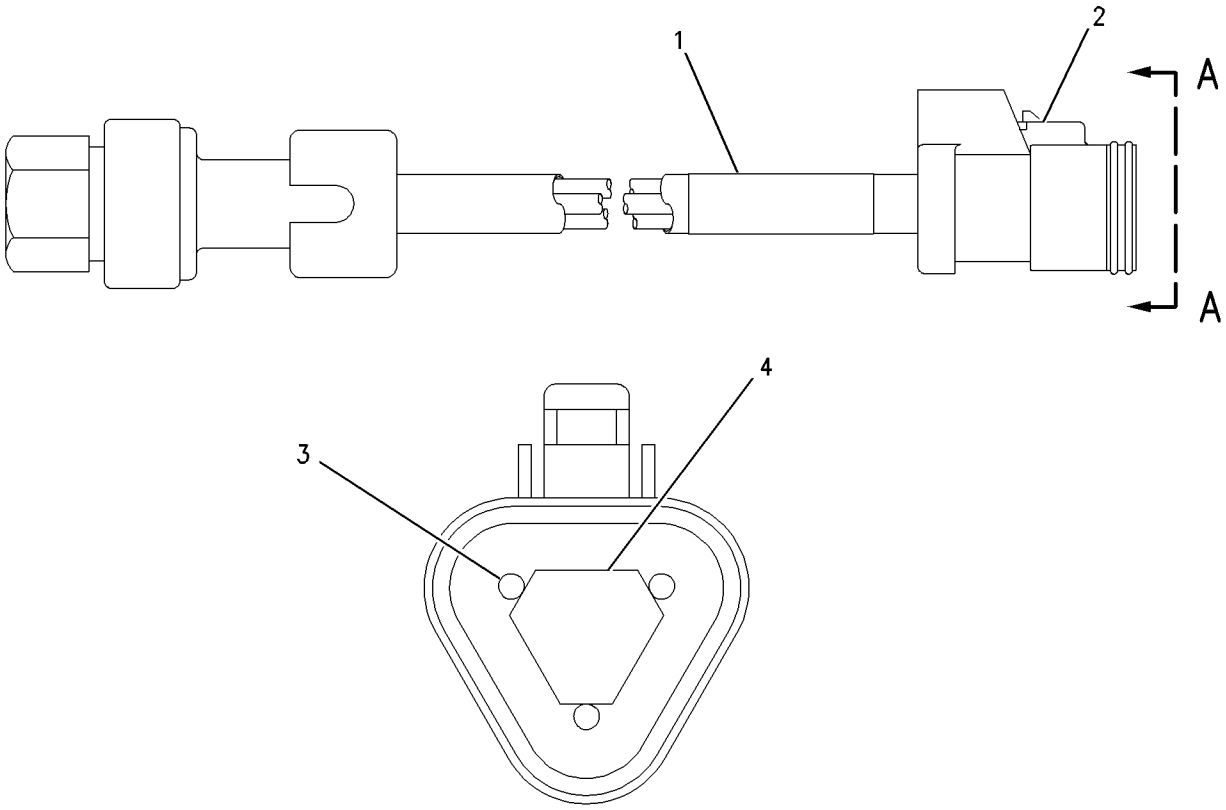

VIEW A-A

GRAPHIC #1 **<END>** g00851220

194-6725 SENSOR GP-PRESSURE

S/N: MHX1-UP

PART OF 239-2396 SENSOR GP-PRESSURE

SMCS-1408, 1925, 7494 **i02301143**

NOTE	REF NO	GRAPHIC REF	PART NUMBER	QTY	PART NAME 1 2 3 4 5 6 (PRODUCT LEVEL)	SEE PAGE
E	1	1	**9X-1813**		SLEEVE (34-CM)	
	2	1	**155-2260**	1	KIT-CONNECTING PLUG (3-PIN)	
					(INCLUDES PLUG AS AND WEDGE)	
	3	1	**180-9340**	3	SOCKET-CONNECTOR	
	4	1	**3E-3368**	1	WEDGE-PLUG LOCK (3-PIN)	
E-ORDER BY THE CENTIMETER						

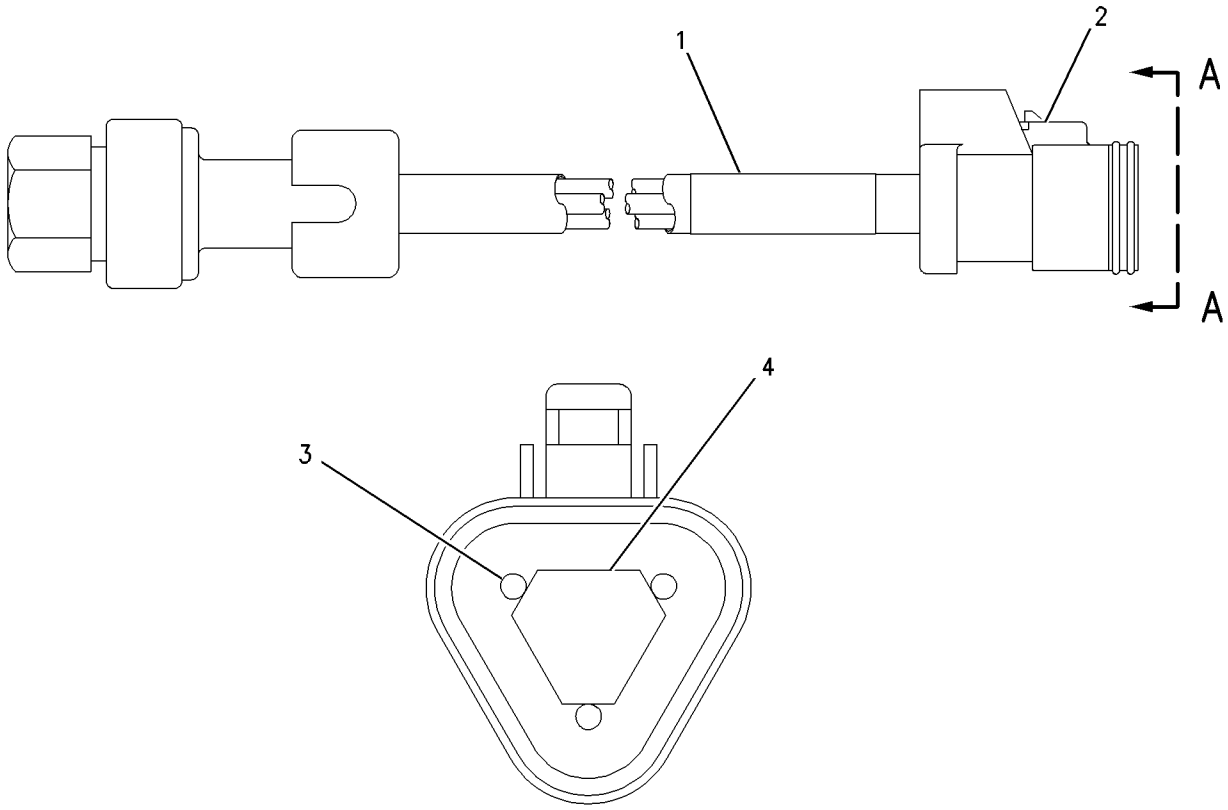

VIEW A-A

GRAPHIC #1 **<END>** g00851220

221-3416 SENSOR GP-PRESSURE

S/N: A7G1-UP
PART OF 239-4850 SENSOR & MTG GP-PRESSURE
AN ATTACHMENT

SMCS-1408, 1925, 7494 **i02415323**

NOTE	REF NO	GRAPHIC REF	PART NUMBER	QTY	PART NAME 1 2 3 4 5 6 (PRODUCT LEVEL)	SEE PAGE
	1	1	**155-2260**	1	KIT-CONNECTING PLUG (3-PIN)	
					(INCLUDES PLUG AS AND WEDGE)	
	2	1	**180-9340**	3	SOCKET-CONNECTOR	
	3	1	**155-2276**	1	WEDGE-PLUG LOCK (3-PIN)	

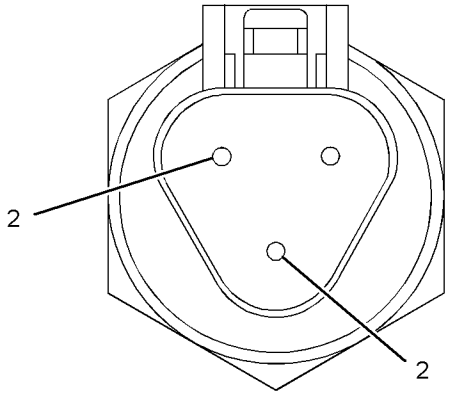

VIEW A-A

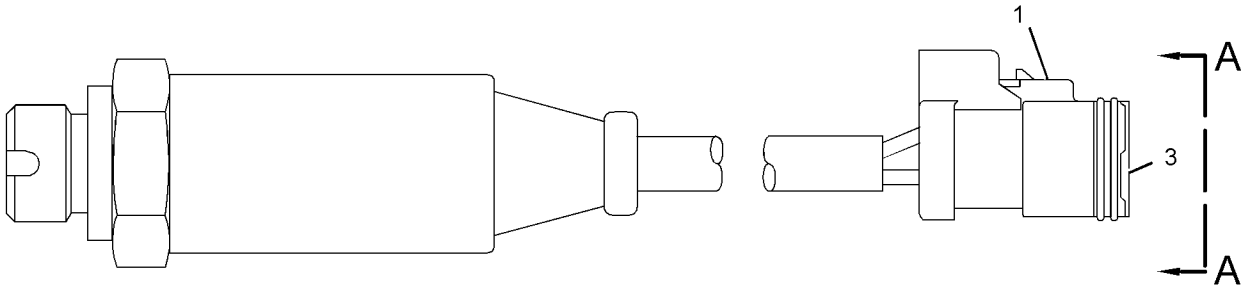

GRAPHIC #1 **<END>** g01175734

239-2395 SENSOR GP-PRESSURE–ATMOSPHERIC

S/N: MHX1-UP

PART OF 243-1555 SENSOR GP-ENGINE

SMCS-1408, 1925, 7494 **i02096868**

NOTE	REF NO	GRAPHIC REF	PART NUMBER	QTY	PART NAME 1 2 3 4 5 6 (PRODUCT LEVEL)	SEE PAGE
Y	1	1	**194-6722**	1	SENSOR GP-PRESSURE (ATMOSPHERIC)	182
	2	1	**6V-5049**	1	SEAL-O-RING	

Y-SEPARATE ILLUSTRATION

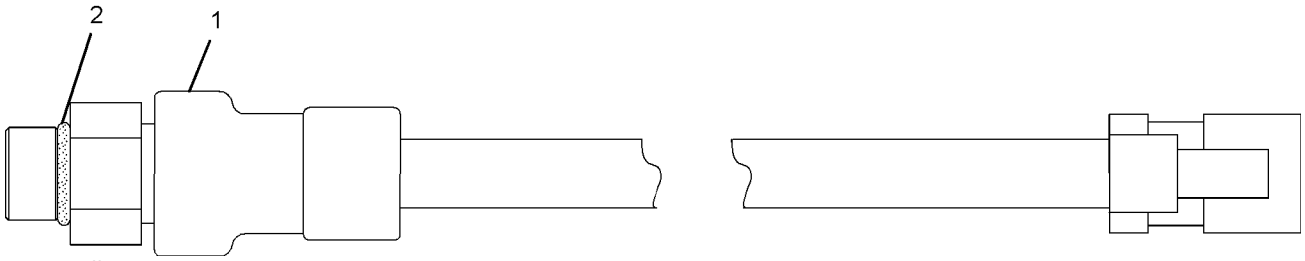

GRAPHIC #1 **<END>** g01019702

239-2396 SENSOR GP-PRESSURE

S/N: MHX1-UP

PART OF 251-7605 FILTER & LINES GP-SEC FUEL, 243-1555 SENSOR GP-ENGINE

SMCS-1408, 1925, 7494 **i02300958**

NOTE	REF NO	GRAPHIC REF	PART NUMBER	QTY	PART NAME 1 2 3 4 5 6 (PRODUCT LEVEL)	SEE PAGE
Y	1	1	**194-6725**	1	SENSOR GP-PRESSURE (FUEL)	183
	2	1	**6V-5048**	1	SEAL-O-RING	

Y-SEPARATE ILLUSTRATION

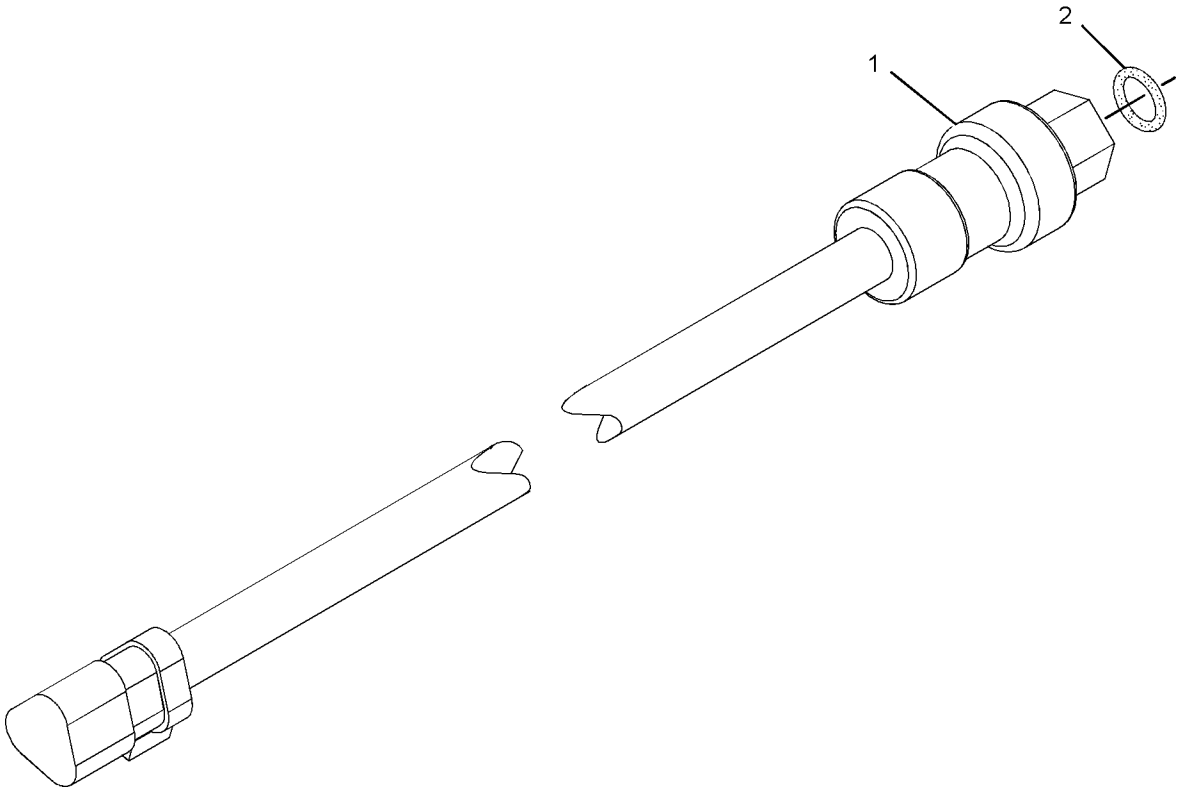

GRAPHIC #1 **<END>** g01057563

239-3478 SENSOR GP-PRESSURE

S/N: MHX1-UP

PART OF 239-5674 SENSOR GP-PRESSURE

SMCS-1408, 1925, 7494 **i02103128**

NOTE	REF NO	GRAPHIC REF	PART NUMBER	QTY	PART NAME 1 2 3 4 5 6 (PRODUCT LEVEL)	SEE PAGE
E	1	1	**9X-1813**		SLEEVE (34CM)	
	2	1	**102-8803**	1	KIT-RECEPTACLE (3-PIN)	
					(INCLUDES RECEPTACLE AS AND WEDGE)	
	3	1	**9X-3401**	3	PIN-CONNECTOR (16-18 GA)	
	4	1	**3E-3371**	1	WEDGE-RECEPTACLE LOCK (3-PIN)	
E-ORDER BY THE CENTIMETER						

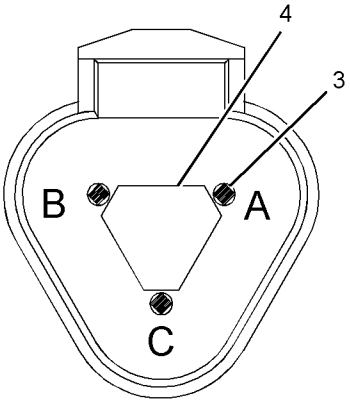

VIEW A-A

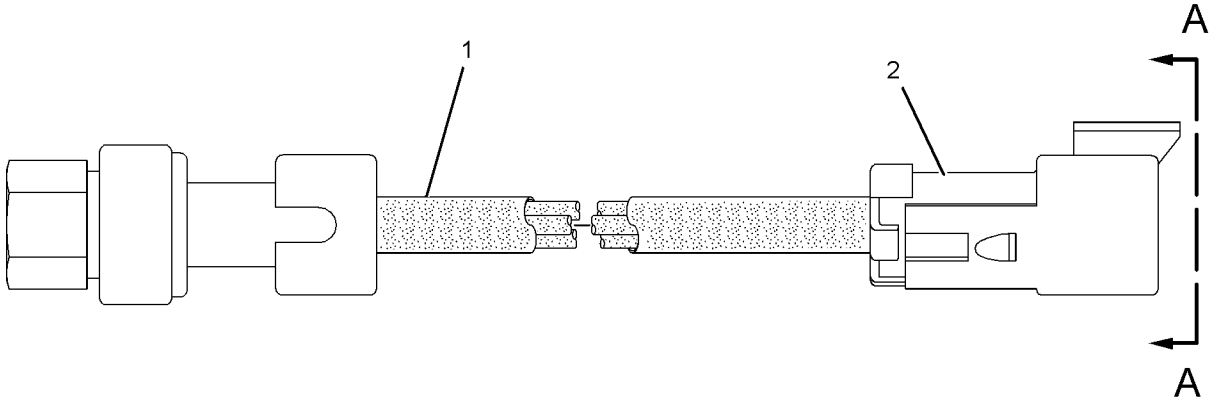

GRAPHIC #1 **<END>** g01019421

239-5674 SENSOR GP-PRESSURE—AIR INLET MANIFOLD

S/N: MHX1-UP

PART OF 243-1555 SENSOR GP-ENGINE

SMCS-1408, 1925, 7494 **i02103127**

NOTE	REF NO	GRAPHIC REF	PART NUMBER	QTY	PART NAME 1 2 3 4 5 6 (PRODUCT LEVEL)	SEE PAGE
Y	1	1	**239-3478**	1	SENSOR GP-PRESSURE (INTAKE AIR MANIFOLD)	187
	2	1	**6V-5048**	1	SEAL-O-RING	

Y-SEPARATE ILLUSTRATION

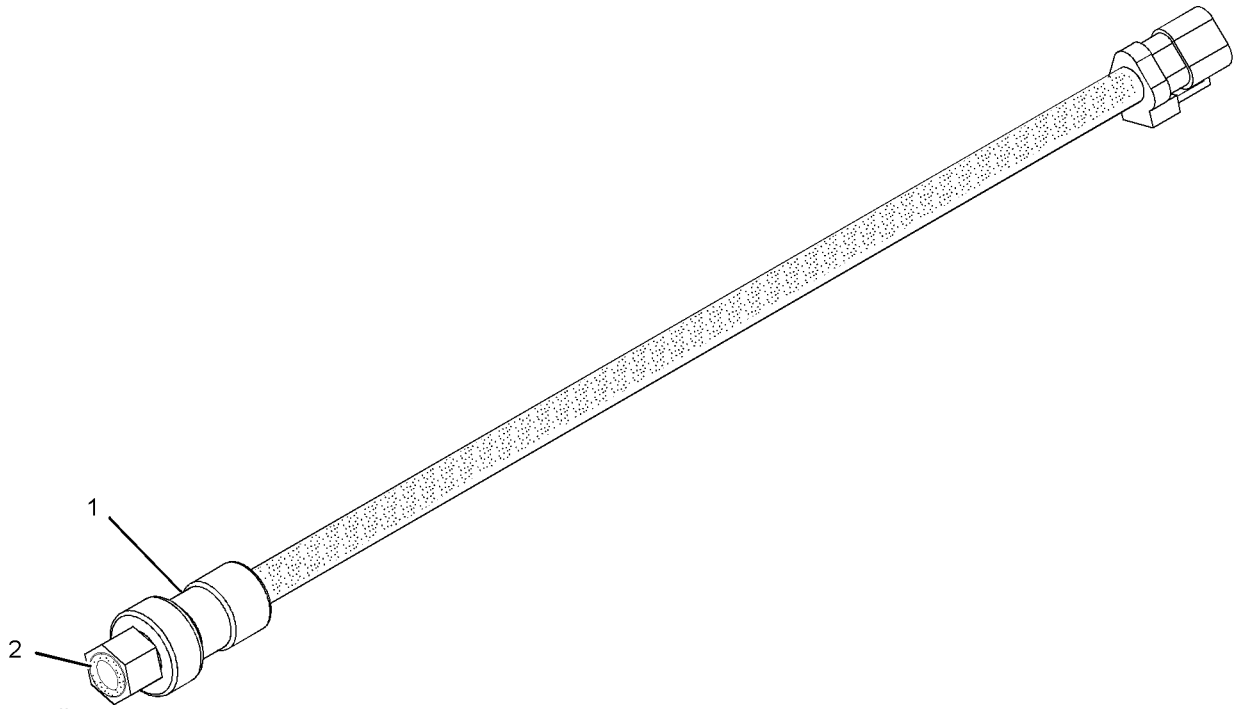

GRAPHIC #1 **<END>** g01019323

193-2550 SENSOR GP-SPEED—MAGNETIC, HIGH OUTPUT—TMSN, TORQUE CONVERTER OUTPUT

S/N: FAX1-UP

PART OF 248-0357 GEAR GP-OUTPUT TRANSFER, 243-1605 TORQUE CONVERTER & HOUSING GP

SMCS-1907, 1912, 3175, 4803, 7493 **i01483093**

NOTE	REF NO	GRAPHIC REF	PART NUMBER	QTY	PART NAME 1 2 3 4 5 6 (PRODUCT LEVEL)	SEE PAGE
	1	1	**171-5349**	1	MARKER	
	2	1	**102-8802**	1	KIT-RECEPTACLE (2-PIN)	
					(INCLUDES RECEPTACLE AS AND WEDGE)	
	3	1	**8T-8729**	2	PIN-CONNECTOR	
	4	1	**3E-3365**	1	WEDGE-RECEPTACLE LOCK (2-PIN)	
E	5	1	**9X-1813**		SLEEVE (14CM)	

E-ORDER BY THE CENTIMETER

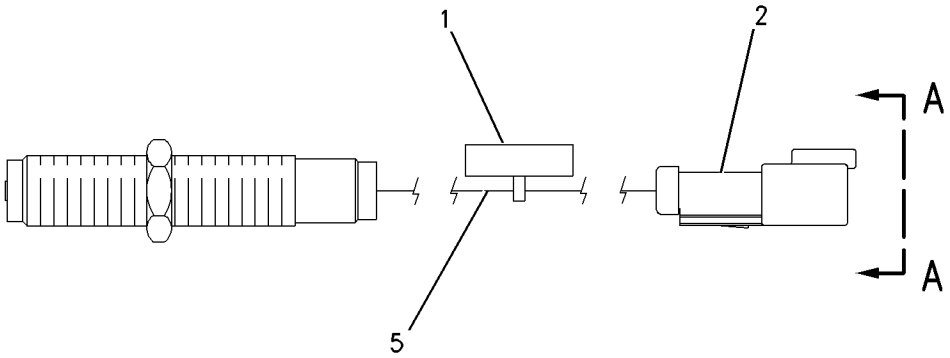

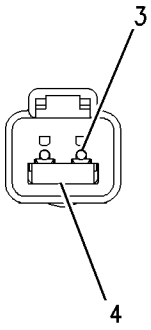

VIEW A-A

GRAPHIC #1 **<END>** g00690327

201-6615 SENSOR GP-SPEED

S/N: MHX1-UP

PART OF 230-7149 SENSOR GP-SPEED

SMCS-1907, 1912, 3175, 4803, 7493 **i02235035**

NOTE	REF NO	GRAPHIC REF	PART NUMBER	QTY	PART NAME 1 2 3 4 5 6 (PRODUCT LEVEL)	SEE PAGE
	1	1	**133-0260**	1	BRACKET	
	2	1	**188-9429**	1	HARNESS AS-WIRING	
		1	**102-8802**	1	KIT-RECEPTACLE (2-PIN)	
					(INCLUDES RECEPTACLE AS AND WEDGE)	
		1	**155-2270**	1	KIT-CONNECTING PLUG (2-PIN)	
					(INCLUDES PLUG AS AND WEDGE)	

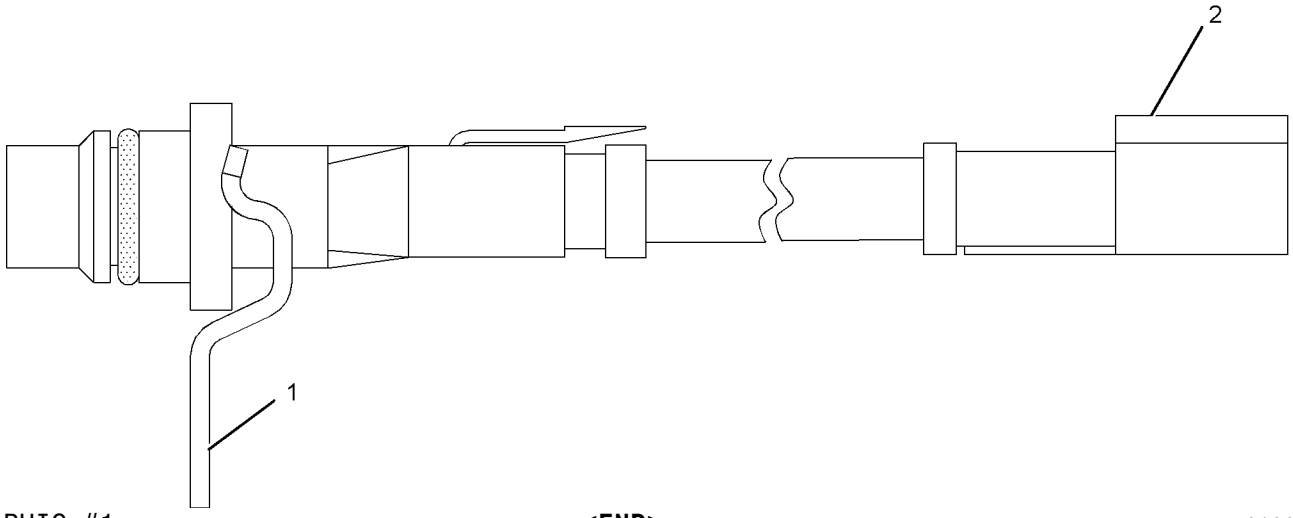

GRAPHIC #1 **<END>** g01009894

201-6616 SENSOR GP-SPEED

S/N: MHX1-UP

PART OF 239-2397 SENSOR GP-SPEED

SMCS-1907, 1912, 3175, 4803, 7493 **i02338749**

NOTE	REF NO	GRAPHIC REF	PART NUMBER	QTY	PART NAME 1 2 3 4 5 6 (PRODUCT LEVEL)	SEE PAGE
	1	1	**264-7786**	1	BRACKET	
	2	1	**189-0852**	1	HARNESS AS-WIRING (CAM TIMING)	
		1	**102-8802**	1	KIT-RECEPTACLE (2-PIN)	
					(INCLUDES RECEPTACLE AS AND WEDGE)	
		1	**155-2270**	1	KIT-CONNECTING PLUG (2-PIN)	
					(INCLUDES PLUG AS AND WEDGE)	

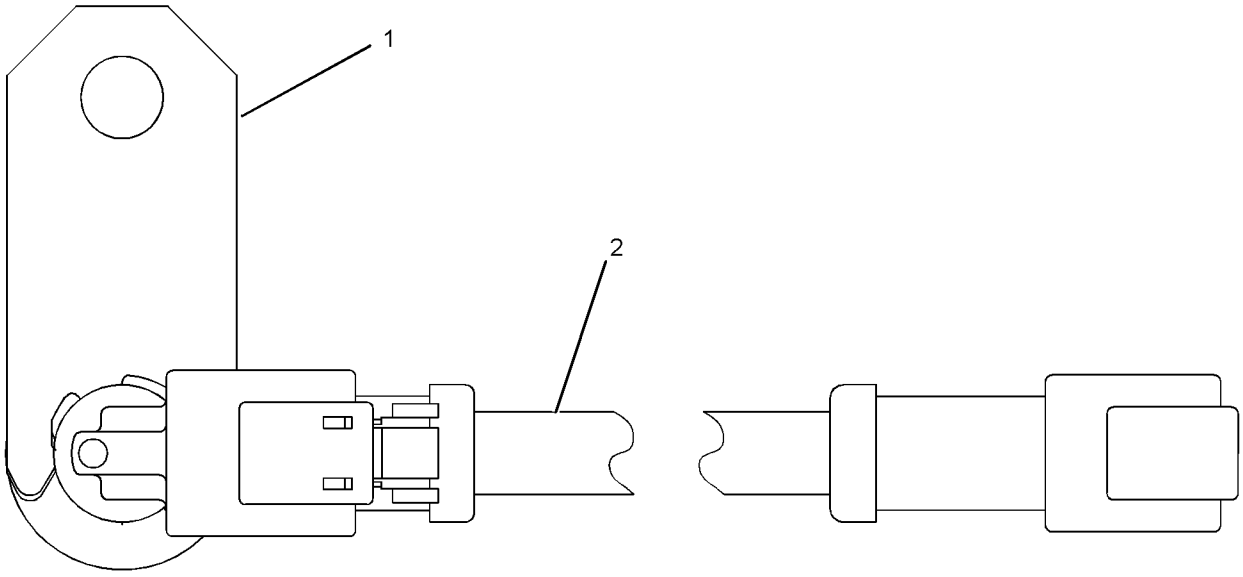

GRAPHIC #1 **<END>** g01184106

230-7149 SENSOR GP-SPEED–CRANKSHAFT SPEED, TIMING

S/N: MHX1-UP

PART OF 243-1555 SENSOR GP-ENGINE

SMCS-1907, 1912, 3175, 4803, 7493 **i02174595**

NOTE	REF NO	GRAPHIC REF	PART NUMBER	QTY	PART NAME 1 2 3 4 5 6 (PRODUCT LEVEL)	SEE PAGE
Y	1	1	*201-6615*	1	SENSOR GP-SPEED	190
	2	1	**228-4947**	1	SEAL-O-RING	

Y-SEPARATE ILLUSTRATION

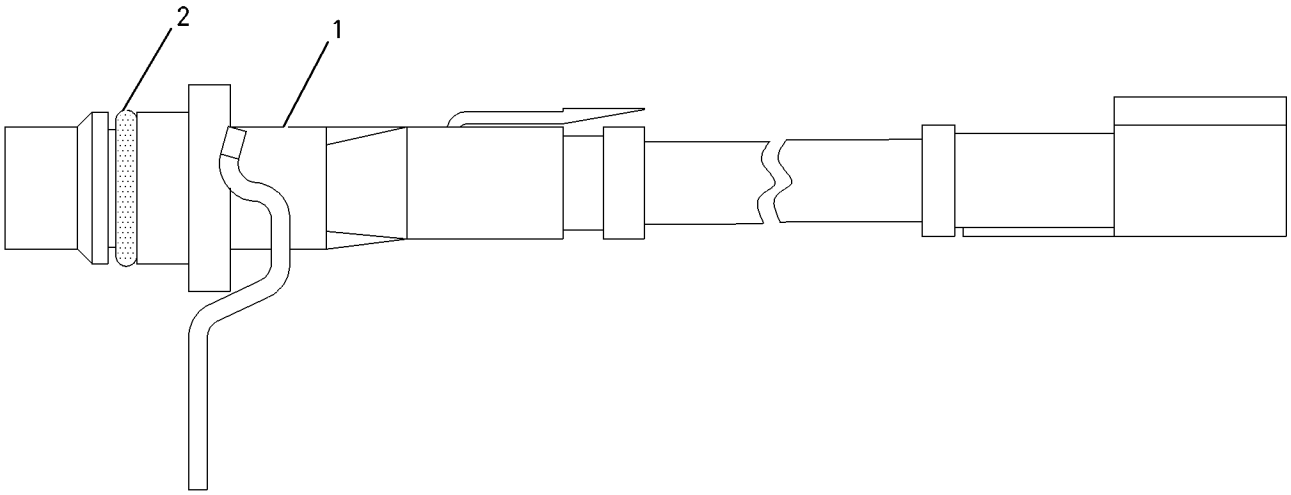

GRAPHIC #1 **<END>** g01007584

239-2397 SENSOR GP-SPEED—CAMSHAFT SPEED, TIMING

S/N: MHX1-UP

PART OF 243-1555 SENSOR GP-ENGINE

SMCS-1907, 1912, 3175, 4803, 7493 **i02235092**

NOTE	REF NO	GRAPHIC REF	PART NUMBER	QTY	PART NAME 1 2 3 4 5 6 (PRODUCT LEVEL)	SEE PAGE
	1	1	**228-4947**	1	SEAL-O-RING	
Y	2	1	**201-6616**	1	SENSOR GP-SPEED	191

Y-SEPARATE ILLUSTRATION

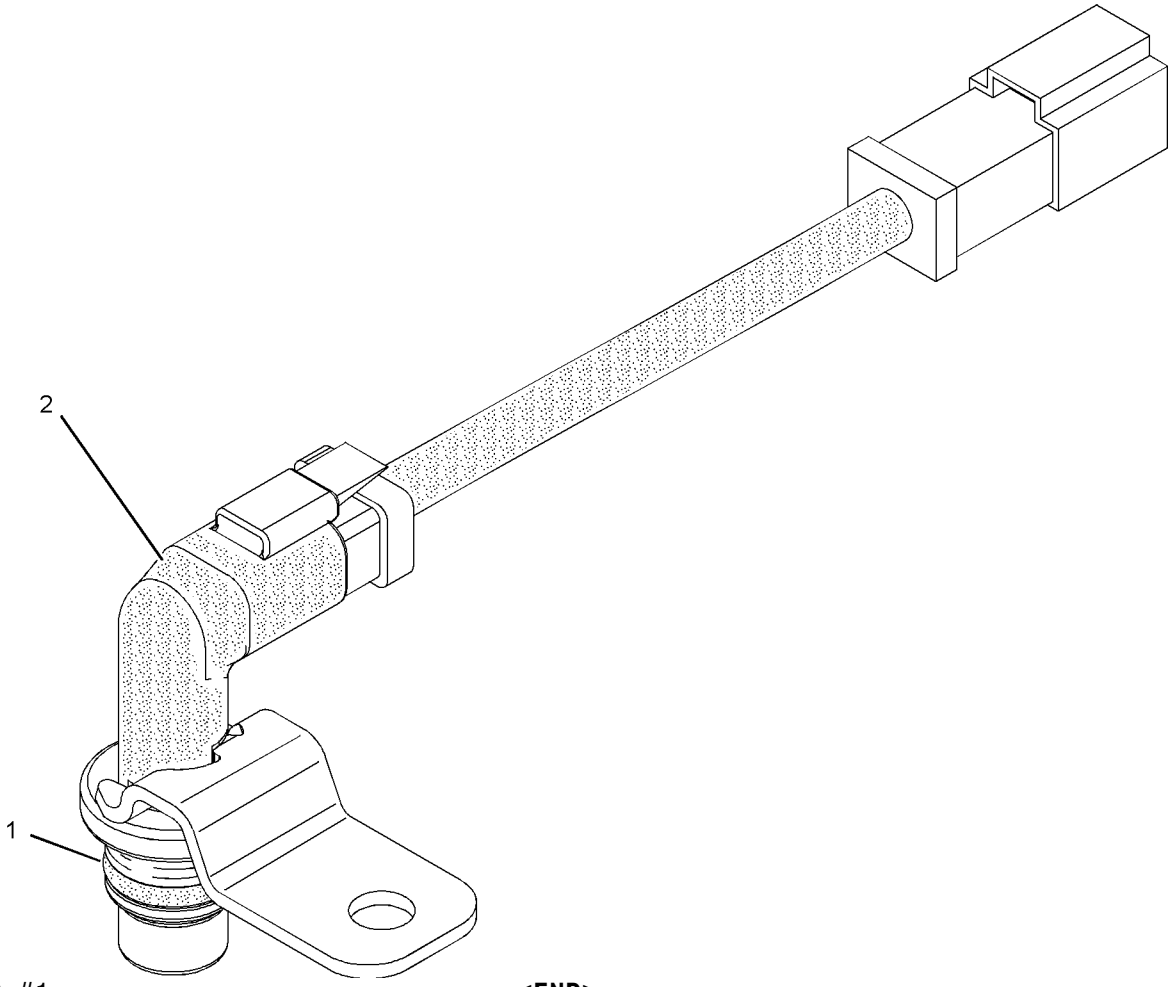

GRAPHIC #1 **<END>** g01019337

145-7028 SENSOR GP-TEMPERATURE–TRANSMISSION OIL

S/N: FAX1-UP

PART OF 247-7831 CONTROL GP-TRANSMISSION HYD

SMCS-1408, 1906, 1921, 1922, 301T, 429T, 509T **i02222923**

NOTE	REF NO	GRAPHIC REF	PART NUMBER	QTY	PART NAME 1 2 3 4 5 6 (PRODUCT LEVEL)	SEE PAGE
	1	1	**102-8802**	1	KIT-RECEPTACLE (2-PIN)	
					(INCLUDES RECEPTACLE AS AND WEDGE)	
E	2	1	**153-5043**		SLEEVE (3-CM)	
	3	1	**8T-8729**	2	PIN-CONNECTOR	
	4	1	**3E-3365**	1	WEDGE-RECEPTACLE LOCK (2-PIN)	

E-ORDER BY THE CENTIMETER

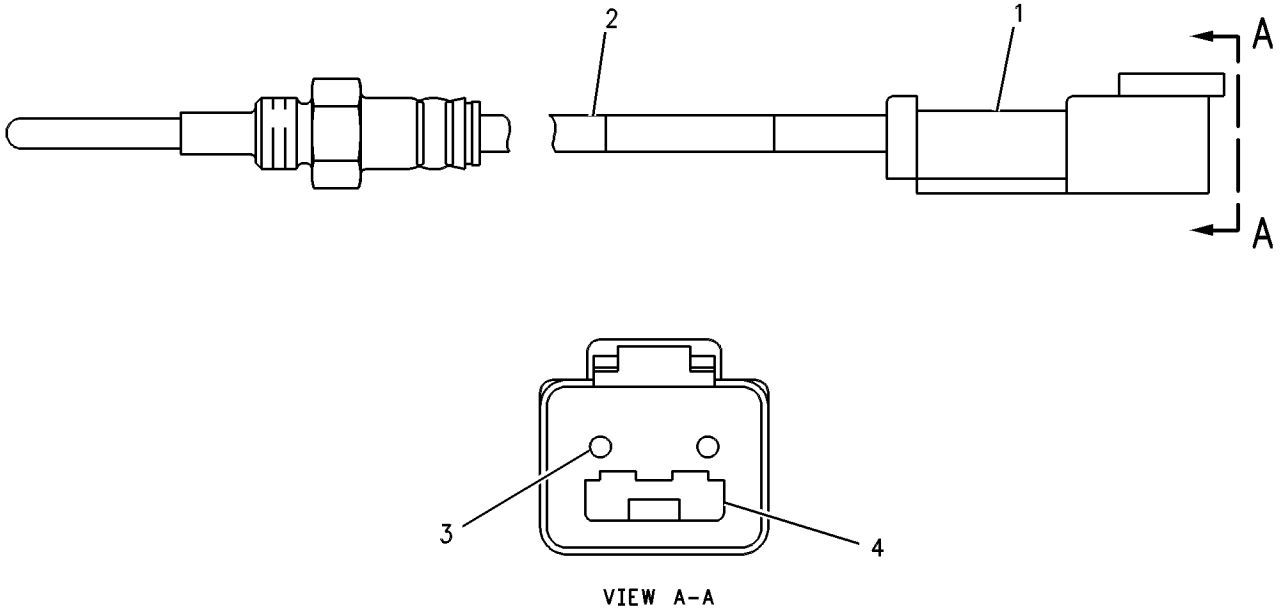

VIEW A-A

GRAPHIC #1 **<END>** g00334570

274-7395 SENSOR GP-TEMPERATURE–INTAKE AIR

S/N: MHX1-UP

PART OF 243-1555 SENSOR GP-ENGINE

SMCS-1408, 1906, 1921, 1922, 301T, 429T, 509T **i02379188**

NOTE	REF NO	GRAPHIC REF	PART NUMBER	QTY	PART NAME 1 2 3 4 5 6 (PRODUCT LEVEL)	SEE PAGE
	1	1	**130-9811**	1	SENSOR GP-TEMPERATURE (2-PIN)	
	2	1	**8L-2786**	1	SEAL-O-RING	

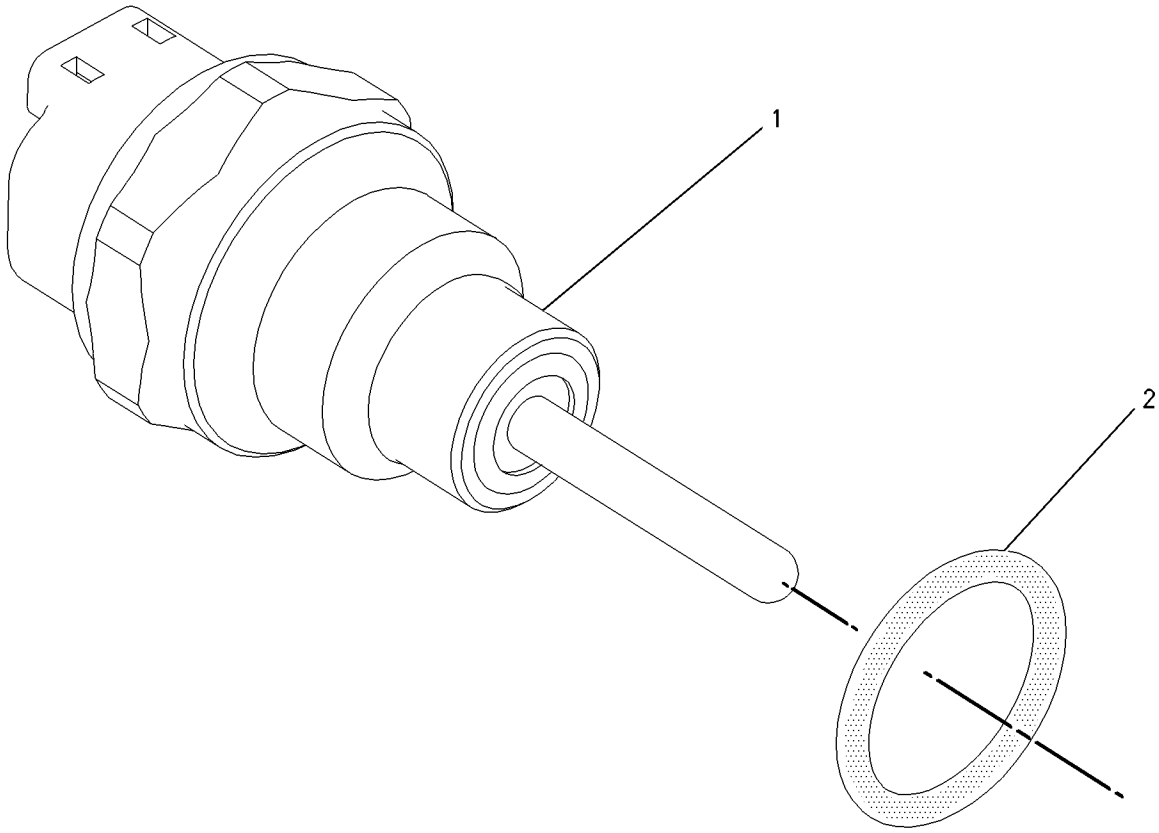

GRAPHIC #1 **<END>** g00856011

274-7396 SENSOR GP-TEMPERATURE–ENGINE COOLANT

S/N: MHX1-UP

PART OF 243-1555 SENSOR GP-ENGINE

SMCS-1408, 1906, 1921, 1922, 301T, 429T, 509T **i02379131**

NOTE	REF NO	GRAPHIC REF	PART NUMBER	QTY	PART NAME 1 2 3 4 5 6 (PRODUCT LEVEL)	SEE PAGE
	1	1	**130-9811**	1	SENSOR GP-TEMPERATURE (2-PIN)	
	2	1	**6V-6609**	1	SEAL-O-RING	

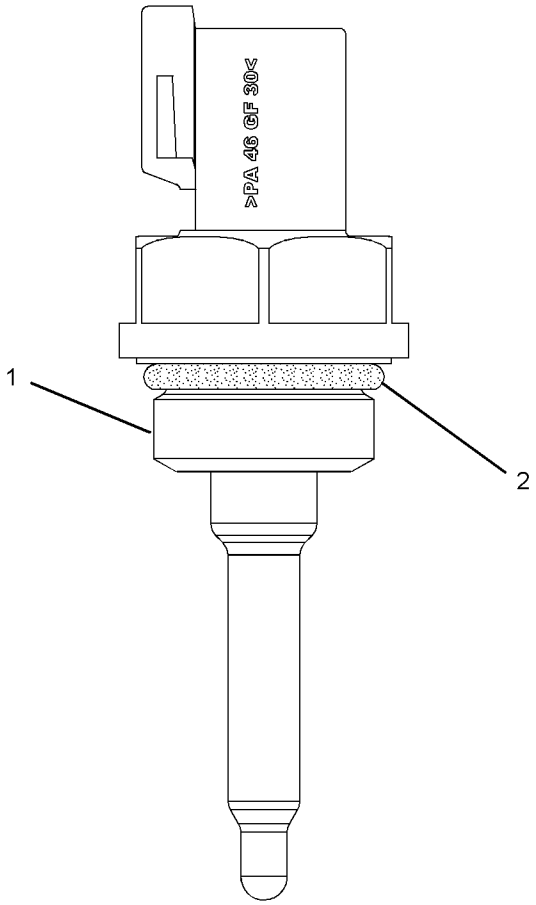

GRAPHIC #1 **<END>** g01193032

236-8956 STARTING AID GP-ETHER

S/N: A7G1-UP

AN ATTACHMENT

SMCS-1456 **i02414176**

NOTE	REF NO	GRAPHIC REF	PART NUMBER	QTY	PART NAME 1 2 3 4 5 6 (PRODUCT LEVEL)	SEE PAGE
	1	1	**3E-6332**	1	VALVE GP-ETHER STARTING (24-VOLT)	
		1	**7N-9801**	1	GASKET	
		1	**186-3735**	1	PIN-CONNECTOR (16-GA TO 18-GA)	
		1	**102-8802**	1	KIT-RECEPTACLE (2-PIN)	
					(INCLUDES RECEPTACLE AS AND WEDGE)	
	2	1	**3Y-2888**	1	CONNECTOR	
	3	1	**5P-6313**	1	NUT-FLARELESS (5/16-24-THD)	
	4	1	**5P-6314**	1	SLEEVE	
	5	1	**7N-0140**	1	TUBE AS-COIL	
	6	1	**7N-2059**	1	CLAMP AS	
	7	1	**230-0917**	1	FITTING	
	8	1	**241-1851**	1	TUBE	
	9	1	**241-1852**	1	TUBE	
	10	1	**256-6881**	1	ATOMIZER AS-ETHER	
	11	1	**6V-2686**	4	CLIP	
	12	1	**8T-4121**	1	WASHER-HARD (11X21X2.5-MM THK)	
M	13	1	**8T-4137**	1	BOLT (M10X1.5X20-MM)	
	14	1	**8T-4224**	4	WASHER-HARD (8.8X16X2-MM THK)	
M	15	1	**8T-4908**	4	BOLT (M8X1.25X25-MM)	
A		1	**7N-0296**	1	CYLINDER AS-ETHER	
					(MAY BE PROCURED LOCALLY AT YOUR CATERPILLAR DEALER)	

A-NOT PART OF THIS GROUP
M-METRIC PART

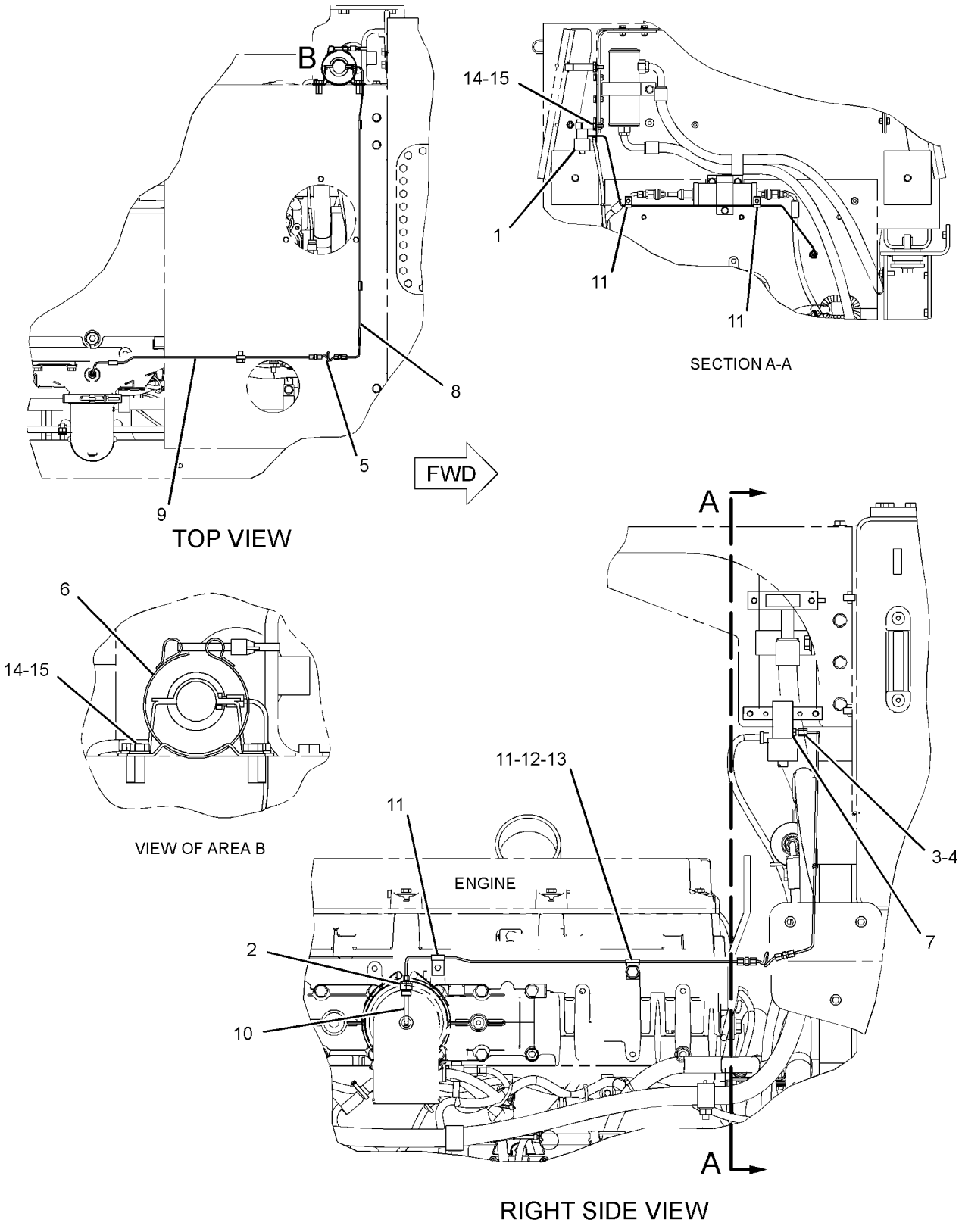

GRAPHIC #1 **<END>** g01196145

ELECTRICAL AND STARTING SYSTEM

165-4619 STARTING MOTOR GP-ELECTRIC*R

S/N: A7G1-UP
24 VOLT
PART OF 251-7593 STARTING MOTOR GP-ELECTRIC

SMCS-1453 **i01605355**

NOTE	REF NO	GRAPHIC REF	PART NUMBER	QTY	PART NAME 1 2 3 4 5 6 (PRODUCT LEVEL)	SEE PAGE
	1	1	**3T-3434**	6	PLUG	
	2	1	**7T-3279**	1	HOUSING AS	
	3	1	**212-0443**	1	TERMINAL AS	
	4	1	**6V-8188**	4	NUT (1/2-13 THD)	
	5	1	**7X-0562**	4	WASHER-HARD (13.5X19X0.8-MM THK)	
	6	1	**3T-3422**	1	WIRE AS	
	7	1	**7T-3278**	1	HOLDER AS-BRUSH	
	8	1	**7T-3277**	1	COIL AS-FIELD	
	9	1	**7T-3454**	1	INSULATOR	
	10	1	**7T-3271**	1	CONNECTOR	
	11	1	**7T-3451**	1	INSULATOR-TERMINAL	
	12	1	**8T-8569**	1	INSULATOR-TERMINAL	
	13	1	**5S-7349**	4	BOLT (1/4-20X0.5-IN)	
	14	1	**8T-4205**	4	WASHER-HARD (7.2X14.5X2-MM THK)	
	15	1	**8H-1141**	4	SHOE-POLE	
	16	1	**1H-2629**	2	STRIP-INSULATION	
	17	1	**3F-0379**	8	SCREW-POLE SHOE (3/8-24-THD)	
	18	1	**7T-3276**	1	ARMATURE AS (24-VOLT)	
	19	1	**7T-3973**	1	HOUSING AS-LEVER	
	20	1	**4M-1831**	1	PLUG-LEVER HOUSING	
	21	1	**7L-2894**	1	GASKET	
	22	1	**036-9823**	5	BOLT (1/4-28X1-IN)	
	23	1	**184-6964**	1	DRIVE AS-MOTOR	
	24	1	**7T-3974**	1	HOUSING AS-DRIVE	
	25	1	**7X-3373**	6	BOLT (5/16-18X0.88-IN)	
	26	1	**193-8570**	1	SOLENOID AS (24-VOLT)	
	27	1	**6V-8378**	2	NUT (10-32-THD)	
	28	1	**8F-1434**	2	LOCKWASHER	
	29	1	**8T-0328**	2	WASHER-HARD (5.5X10X1-MM THK)	
	30	1	**9X-4824**	1	COVER-STARTING MOTOR	
					AVAILABLE REPAIR KIT(S):	
			8T-9884	1	KIT-INSULATOR (STARTING MOTOR)	
					(INCLUDES INSULATORS AND BUSHING)	
			8C-3655	1	KIT-BRUSH (STARTING MOTOR)	
					(INCLUDES BRUSH, SPRING, SCREW, SEAL AND SCREW ASSEMBLY)	
			7T-3267	1	KIT-BUSHING (STARTING MOTOR)	
					(INCLUDES BUSHINGS, WICKS, CUPS, SEALS, GASKET, SCREW ASSEMBLIES, WASHERS, SPACER AND NUT)	
			7T-3268	1	KIT-LEVER (STARTING MOTOR)	
					(INCLUDES LEVER ASSEMBLIES, SEALS, NUT, GASKET AND RETAINER)	

165-4619 **STARTING MOTOR GP-ELECTRIC** *(contd.)* **i01605355**

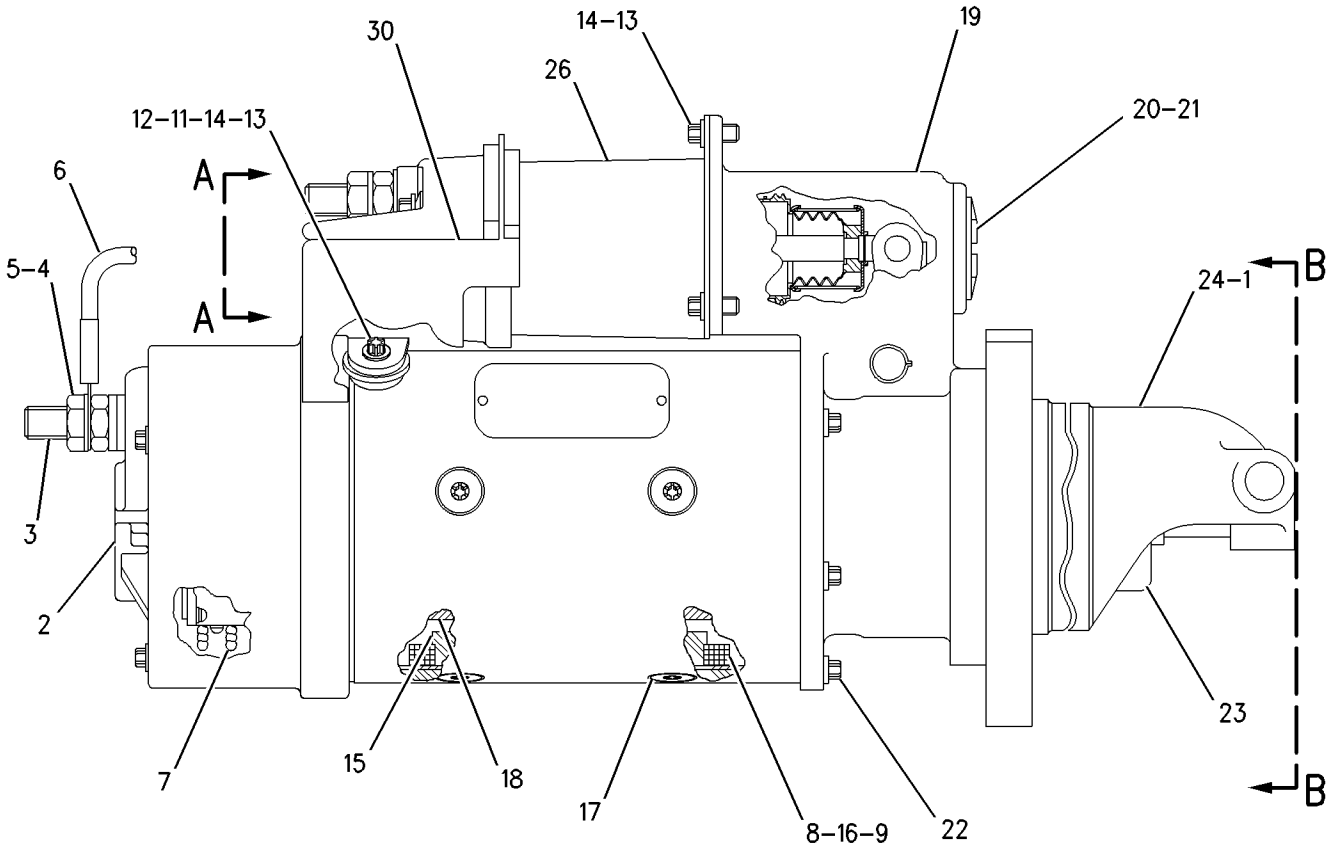

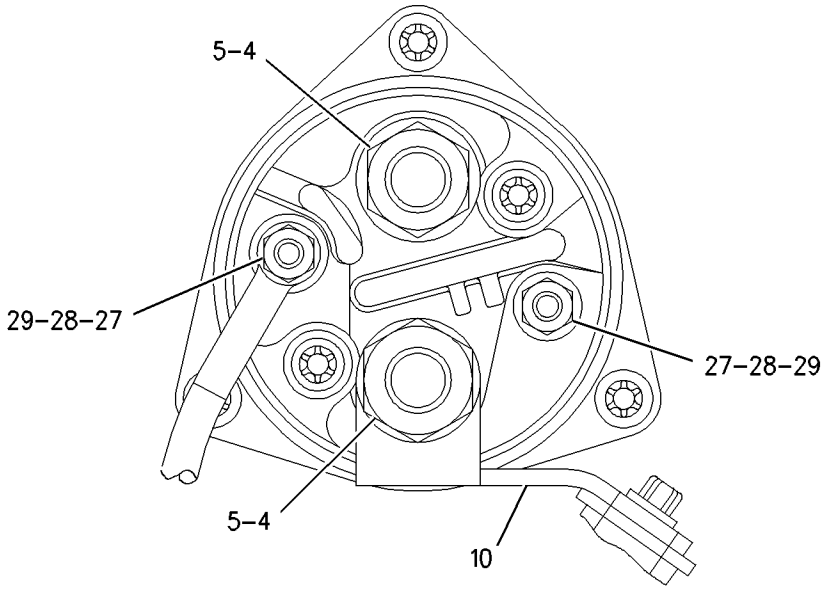

VIEW A-A

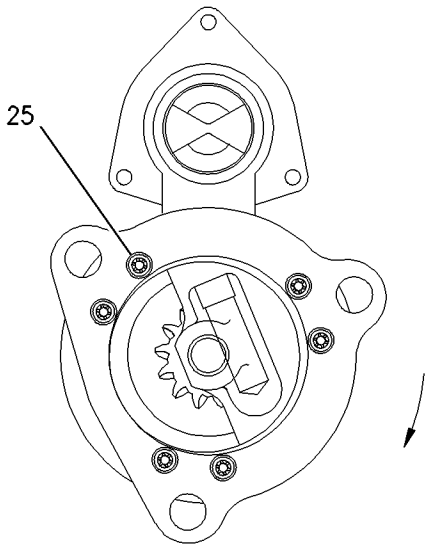

VIEW B-B

GRAPHIC #1 **<END>** g00767005

251-7593 STARTING MOTOR GP-ELECTRIC

S/N: A7G1-UP
24-VOLT
PART OF 236-7231 INSTALLATION AR-ENGINE

SMCS-1453 **i02204019**

NOTE	REF NO	GRAPHIC REF	PART NUMBER	QTY	PART NAME 1 2 3 4 5 6 (PRODUCT LEVEL)	SEE PAGE
	1	1	**4E-2604**	1	CABLE AS	
		1	**1S-7251**	1	TERMINAL-RING	
		1	**1S-7252**	1	TERMINAL-RING	
E		1	**5P-0747**		CABLE (OO-GA, BLACK) (18-CM)	
	2	1	**4N-1059**	1	GASKET	
YR	3	1	**165-4619**	1	STARTING MOTOR GP-ELECTRIC	199
	4	1	**6V-0371**	3	BOLT (5/8-11X1.375)	

E-ORDER BY THE CENTIMETER
R-REMFG PART MAY BE AVAILABLE
Y-SEPARATE ILLUSTRATION

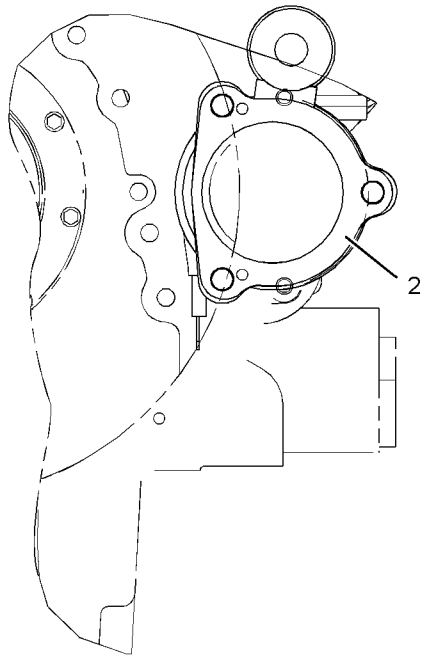

REAR VIEW

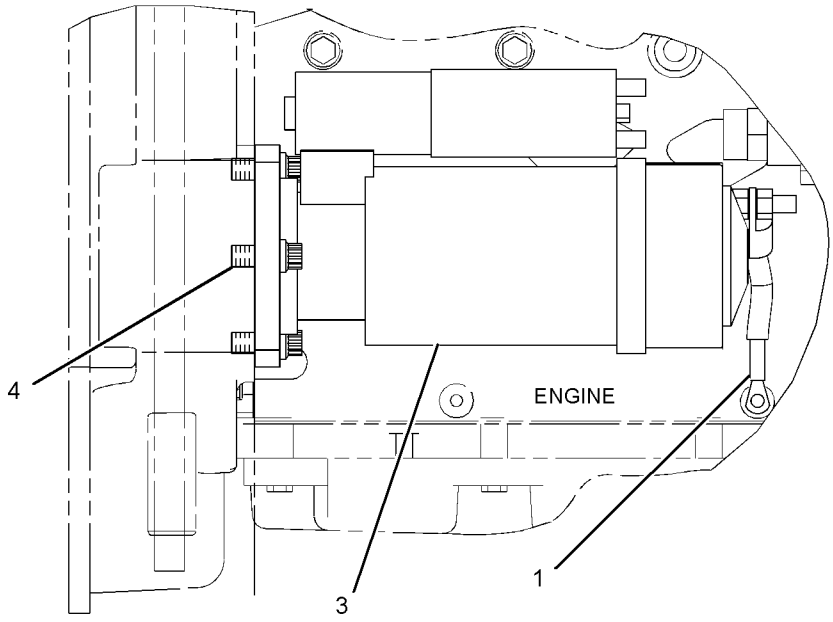

RIGHT SIDE VIEW

GRAPHIC #1 **<END>** g01116732

164-7577 SWITCH GP-BYPASS–POWER TRAIN OIL FILTER

S/N: A7G1-UP

PART OF 266-2271 BASE GP-OIL FILTER, 237-4905 WIRING GP-CHASSIS

SMCS-1408, 1435 **i01431491**

NOTE	REF NO	GRAPHIC REF	PART NUMBER	QTY	PART NAME 1 2 3 4 5 6 (PRODUCT LEVEL)	SEE PAGE
BE	1	1	**9X-1813**		SLEEVE	
	2	1	**102-8802**	1	KIT-RECEPTACLE (2-PIN)	
					(INCLUDES RECEPTACLE AS & WEDGE)	
	3	1	**186-3735**	2	PIN-CONNECTOR (16-GA TO 18-GA)	
	4	1	**3E-3365**	1	WEDGE-RECEPTACLE LOCK (2-PIN)	
	5	1	**3D-2824**	1	SEAL-O-RING	
Z	6	1		1	SWITCH AS	

B-USE AS REQUIRED
E-ORDER BY THE CENTIMETER
Z-NOT SERVICED SEPARATELY

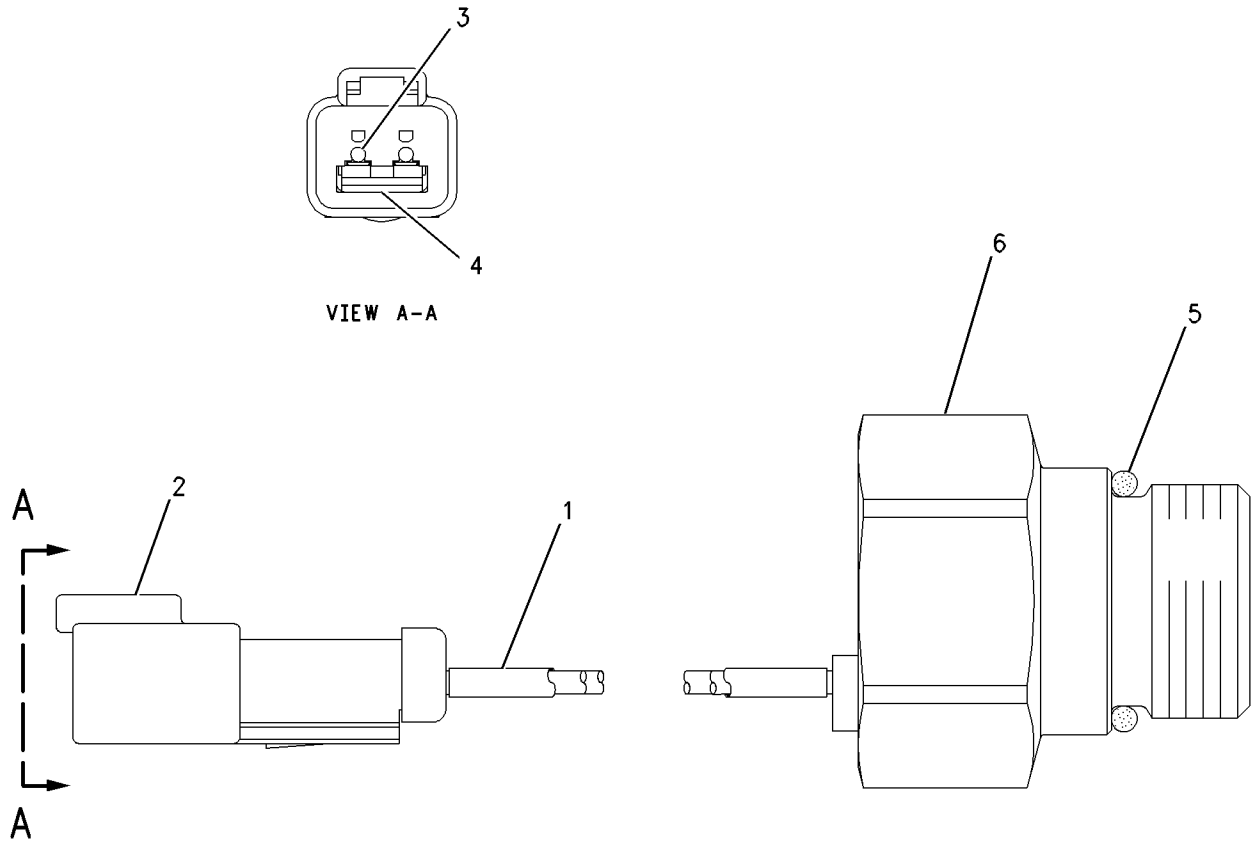

GRAPHIC #1 **<END>** g00750019

197-6475 SWITCH GP-DIMMER

S/N: A7G1-UP
ROADING
PART OF 254-5525, 260-7765 LIGHTING AR-ROADING
AN ATTACHMENT

SMCS-7332 **i01538195**

NOTE	REF NO	GRAPHIC REF	PART NUMBER	QTY	PART NAME 1 2 3 4 5 6 (PRODUCT LEVEL)	SEE PAGE
	1	1	**2H-1855**	1	SWITCH AS-DIMMER (ROADING)	
		1	**6V-8362**	3	SCREW-MACHINE (8-32X0.31-IN)	
		1	**9B-7233**	3	LOCKWASHER	
	2	1	**121-8039**	1	WIRE AS	
		1	**102-8803**	1	KIT-RECEPTACLE (3-PIN)	
					(INCLUDES RECEPTACLE AS & WEDGE)	
D		1	**5P-5624**	1	WIRE (14-GA, BLACK) (.6M)	
	3	1	**5S-7349**	3	BOLT (1/4-20X0.5-IN)	
	4	1	**8T-4205**	3	WASHER-HARD (7.2X14.5X2-MM THK)	

D-ORDER BY THE METER

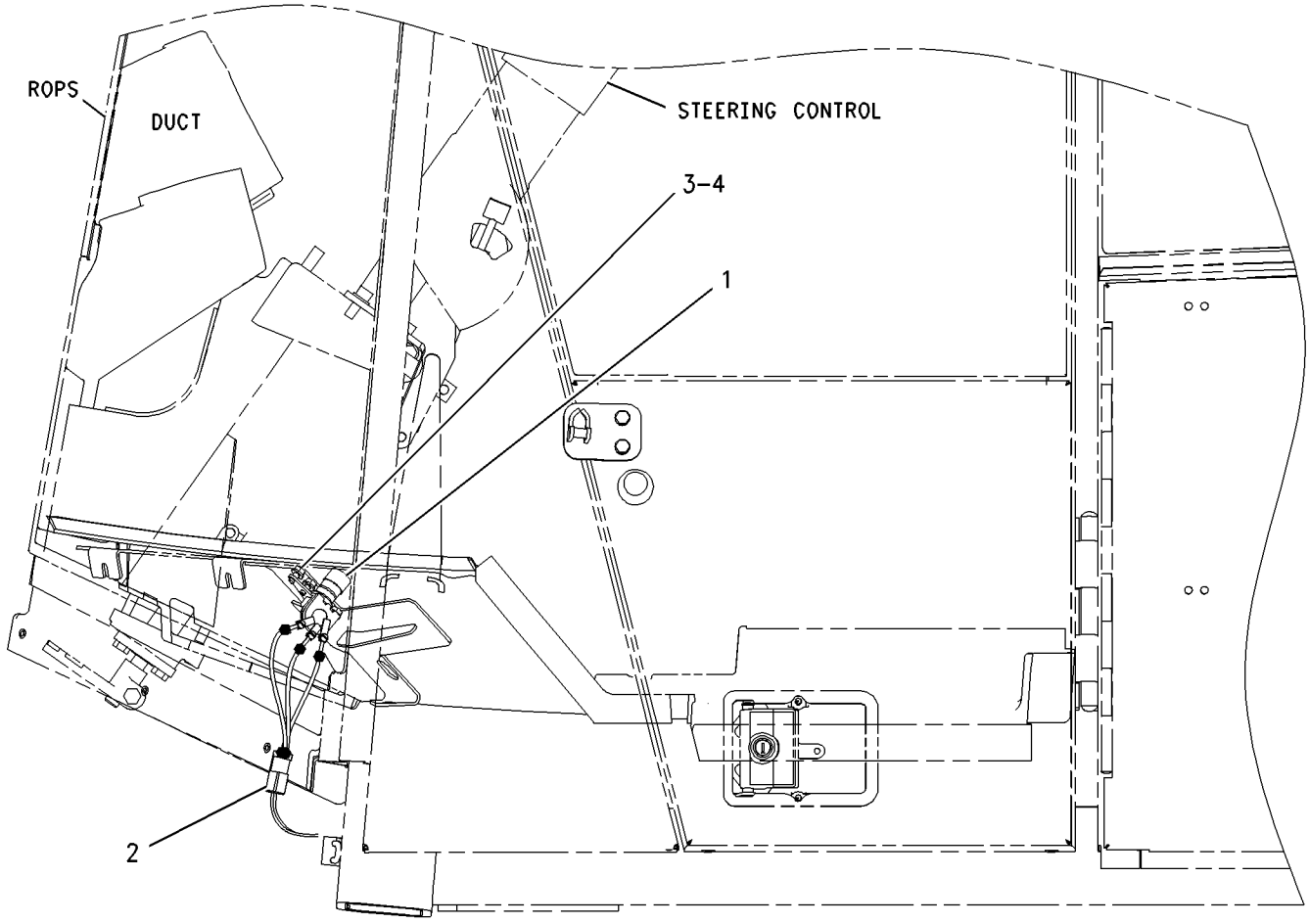

LEFT SIDE VIEW OF CAB

GRAPHIC #1 **<END>** g00799540

7N-0718 SWITCH GP-DISCONNECT–BATTERY

S/N: A7G1-UP

PART OF 237-4902 BATTERY & WIRING GP

SMCS-1411 **i01853569**

NOTE	REF NO	GRAPHIC REF	PART NUMBER	QTY	PART NAME 1 2 3 4 5 6 (PRODUCT LEVEL)	SEE PAGE
	1	1	**8H-5306**	1	KEY (DISCONNECT SWITCH)	
	2	1	**8H-5303**	1	NUT (3/4-16-THD)	
	3	1	**2H-3922**	2	LOCKWASHER	
	4	1	**9F-5644**	2	LOCKWASHER	
	5	1	**6F-7045**	2	NUT-FULL (3/8X24-THD)	

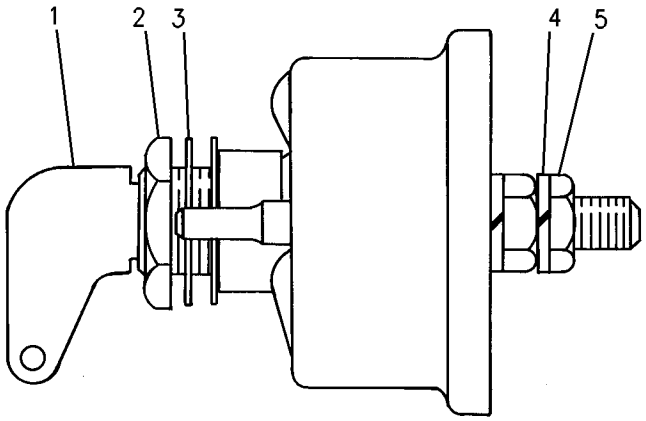

GRAPHIC #1 **<END>** g00699216

125-1302 SWITCH GP-MAGNETIC–START RELAY

S/N: A7G1-UP
24 VOLT
PART OF 237-4905 WIRING GP-CHASSIS

SMCS-7499 **i01896615**

NOTE	REF NO	GRAPHIC REF	PART NUMBER	QTY	PART NAME 1 2 3 4 5 6 (PRODUCT LEVEL)	SEE PAGE
	1	1	**102-8802**	1	KIT-RECEPTACLE (2-PIN)	
					(INCLUDES RECEPTACLE AS & WEDGE)	
	2	1	**186-3735**	2	PIN-CONNECTOR (16-GA TO 18-GA)	
	3	1	**1H-3338**	2	LOCKWASHER	
	4	1	**012-0380**	2	LOCKWASHER	
M	5	1	**5C-2890**	2	NUT (M6X1-THD)	
E	6	1	**9X-1813**		SLEEVE (16CM)	

E-ORDER BY THE CENTIMETER
M-METRIC PART

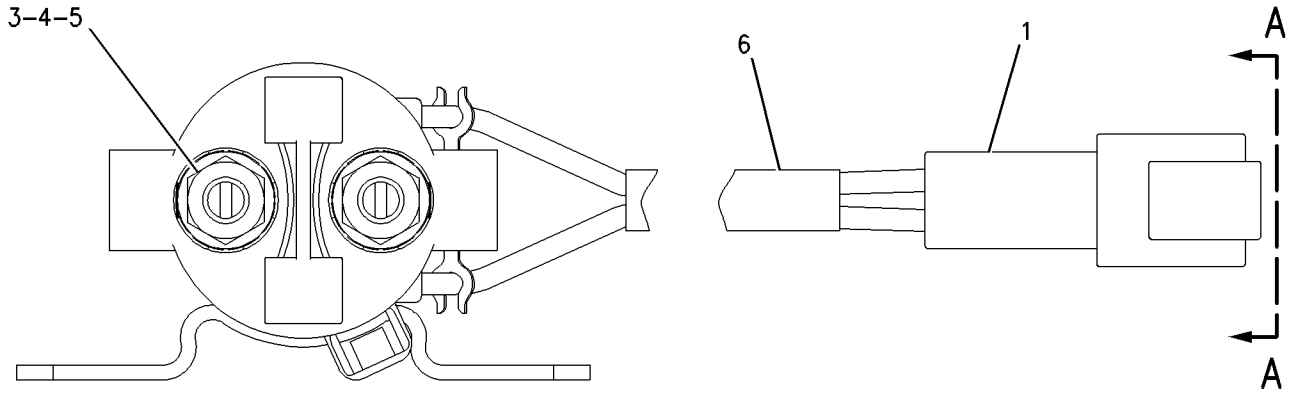

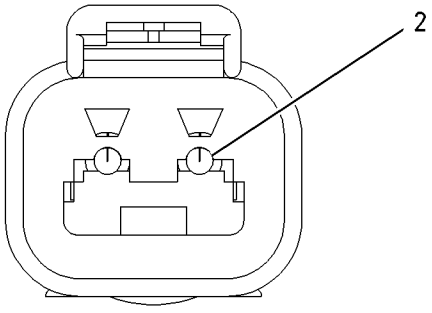

VIEW A–A

GRAPHIC #1 **<END>** g00988004

241-8368 SWITCH GP-MAGNETIC–MAIN RELAY

S/N: A7G1-UP

PART OF 237-4905 WIRING GP-CHASSIS

SMCS-7499 **i02288281**

NOTE	REF NO	GRAPHIC REF	PART NUMBER	QTY	PART NAME 1 2 3 4 5 6 (PRODUCT LEVEL)	SEE PAGE
	1	1	**155-2270**	1	KIT-CONNECTING PLUG (2-PIN)	
					(KIT INCLUDES PLUG AS AND WEDGE)	
	2	1	**4F-2294**	2	NUT-JAM (5/16-24-THD)	
	3	1	**186-3736**	2	SOCKET-CONNECTOR (16-AWG TO 18-AWG)	

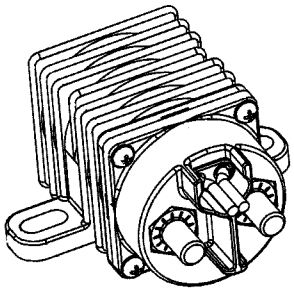

ISOMETRIC VIEW

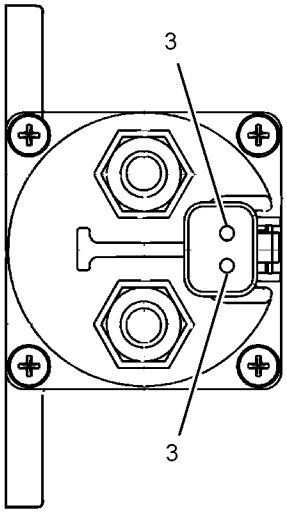

VIEW A-A

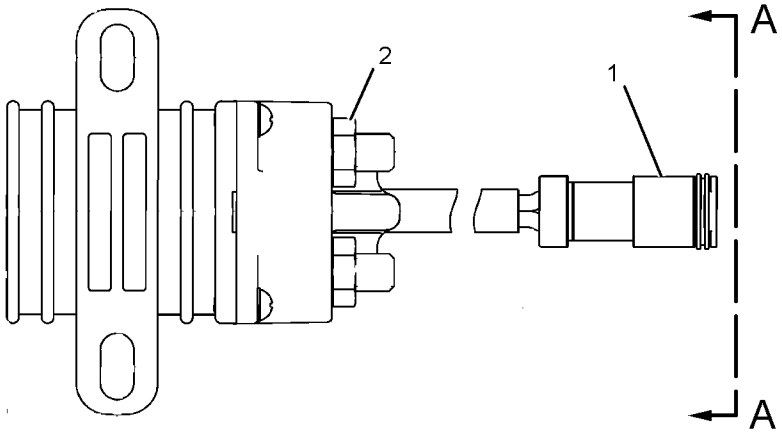

GRAPHIC #1 **<END>** g01077362

258-0883 SWITCH GP-PRESSURE

S/N: MHX1-UP

PART OF 251-7605 FILTER & LINES GP-SEC FUEL

SMCS-1435 **i02246432**

NOTE	REF NO	GRAPHIC REF	PART NUMBER	QTY	PART NAME 1 2 3 4 5 6 (PRODUCT LEVEL)	SEE PAGE
	1	1	**102-8802**	1	KIT-RECEPTACLE (2-PIN)	
					(INCLUDES RECEPTACLE AS AND WEDGE)	
	2	1	**3E-3365**	1	WEDGE-RECEPTACLE LOCK (2-PIN)	
	3	1	**186-3735**	2	PIN-CONNECTOR (16-GA TO 18-GA)	
BE	4	1	**9X-1813**		SLEEVE	
	5	1	**6V-4589**	1	SEAL-O-RING	
	6	1	**7L-9061**	1	SEAL-O-RING	

B-USE AS REQUIRED
E-ORDER BY THE CENTIMETER

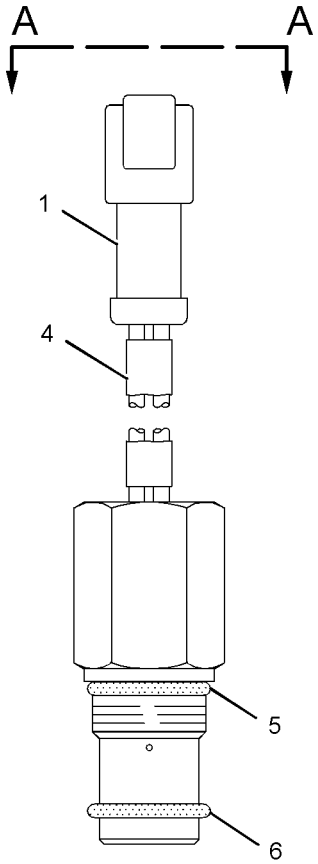

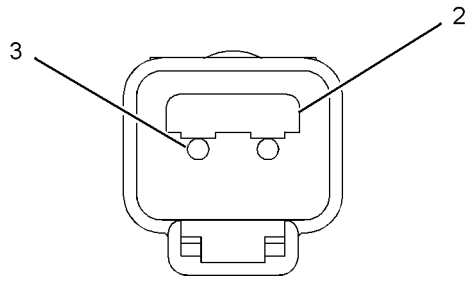

VIEW A-A

GRAPHIC #1 **<END>** g01072091

262-9949 SWITCH GP-REVERSING FAN

S/N: A7G1-UP

AN ATTACHMENT

SMCS-7332 **i02241834**

NOTE	REF NO	GRAPHIC REF	PART NUMBER	QTY	PART NAME 1 2 3 4 5 6 (PRODUCT LEVEL)	SEE PAGE
	1	1	**236-4623**	1	SWITCH AS-ROCKER (AUTO REVERSING FAN)	

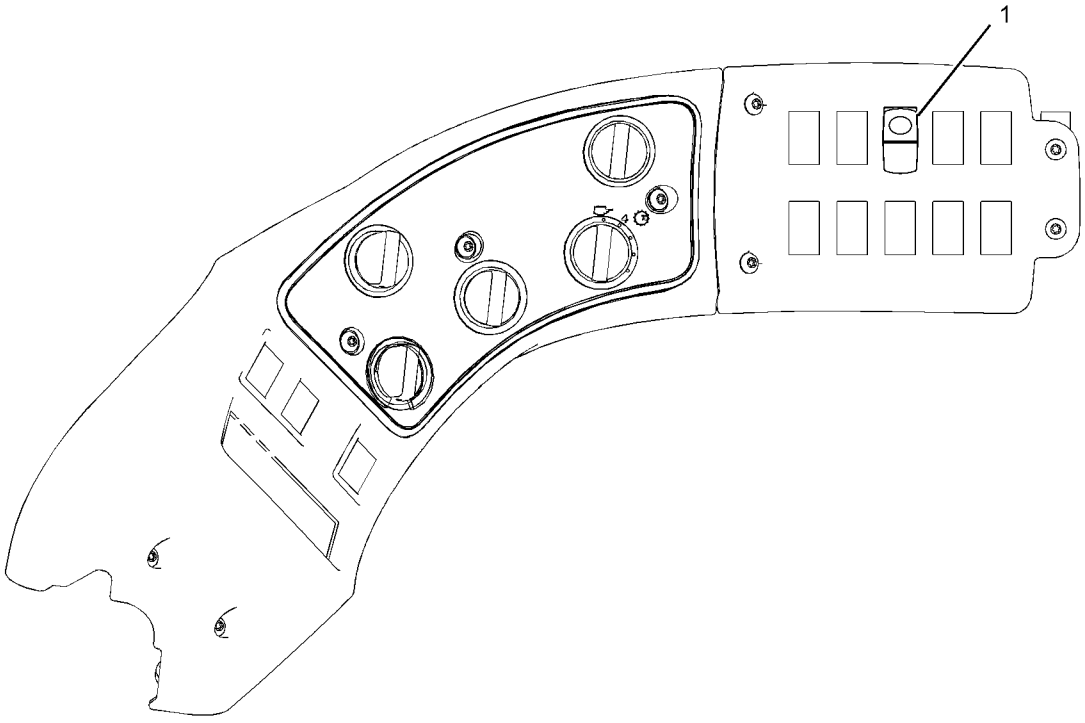

LEFT SIDE VIEW

GRAPHIC #1 **<END>** g01116598

252-5917 SWITCH GP-RIDE CONTROL

S/N: A7G1-UP
PART OF 236-9094, 236-9097 CONTROL AR-RIDE
AN ATTACHMENT

SMCS-7332 **i02116995**

NOTE	REF NO	GRAPHIC REF	PART NUMBER	QTY	PART NAME 1 2 3 4 5 6 (PRODUCT LEVEL)	SEE PAGE
	1	1	**236-4612**	1	SWITCH AS-ROCKER (RIDE CONTROL)	

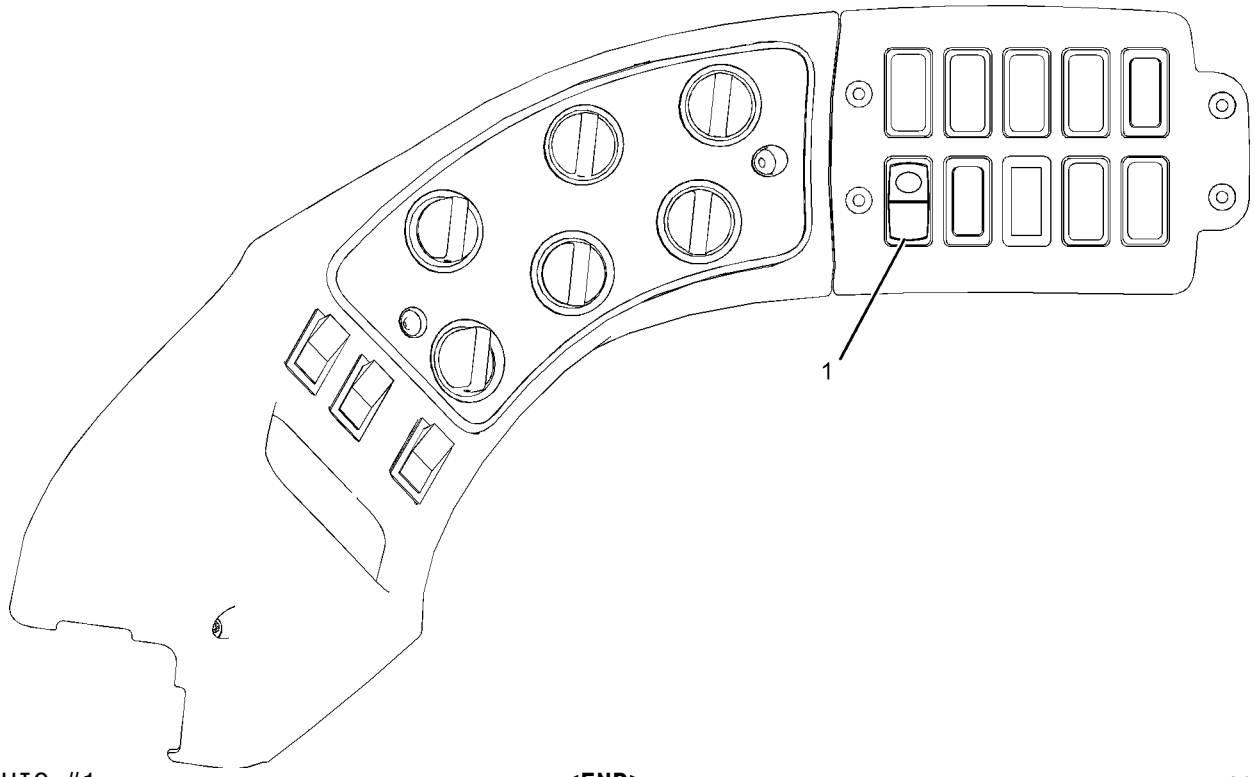

GRAPHIC #1 **<END>** g01080120

263-4133 SWITCH GP-ROCKER–
QUICK COUPLER, BUCKET/FORK SELECT, KICKOUT
S/N: A7G1-UP
AN ATTACHMENT

SMCS-7332 **i02242011**

NOTE	REF NO	GRAPHIC REF	PART NUMBER	QTY	PART NAME 1 2 3 4 5 6 (PRODUCT LEVEL)	SEE PAGE
	1	1	**248-5081**	1	SWITCH AS-ROCKER (QUICK COUPLER)	
	2	1	**219-9526**	1	SWITCH AS-ROCKER (BUCKET, FORK SELECT)	
	3	1	**219-9535**	1	SWITCH AS-ROCKER (LIFT, TILT KICKOUT ON, OFF)	
	4	1	**249-5602**	1	GUARD-SWITCH	

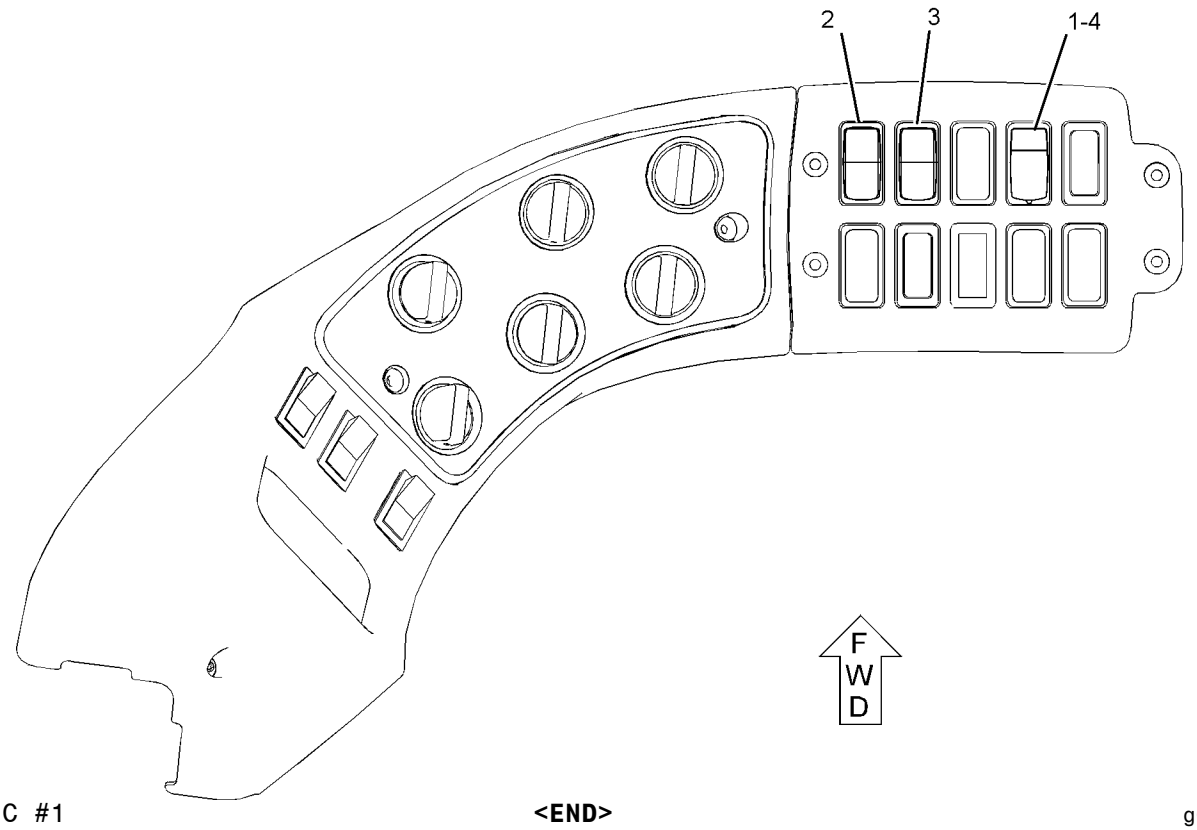

GRAPHIC #1 **<END>** g01130930

263-4134 SWITCH GP-ROCKER–
QUICK COUPLER, BUCKET/FORK SELECT, KICKOUT
S/N: A7G1-UP
AN ATTACHMENT

SMCS-7332 **i02242020**

NOTE	REF NO	GRAPHIC REF	PART NUMBER	QTY	PART NAME 1 2 3 4 5 6 (PRODUCT LEVEL)	SEE PAGE
	1	1	**248-5081**	1	SWITCH AS-ROCKER (QUICK COUPLER)	
	2	1	**219-9526**	1	SWITCH AS-ROCKER (BUCKET, FORK SELECT)	
	3	1	**219-9535**	1	SWITCH AS-ROCKER (KICKOUT ON, OFF)	
	4	1	**249-5602**	1	GUARD-SWITCH	

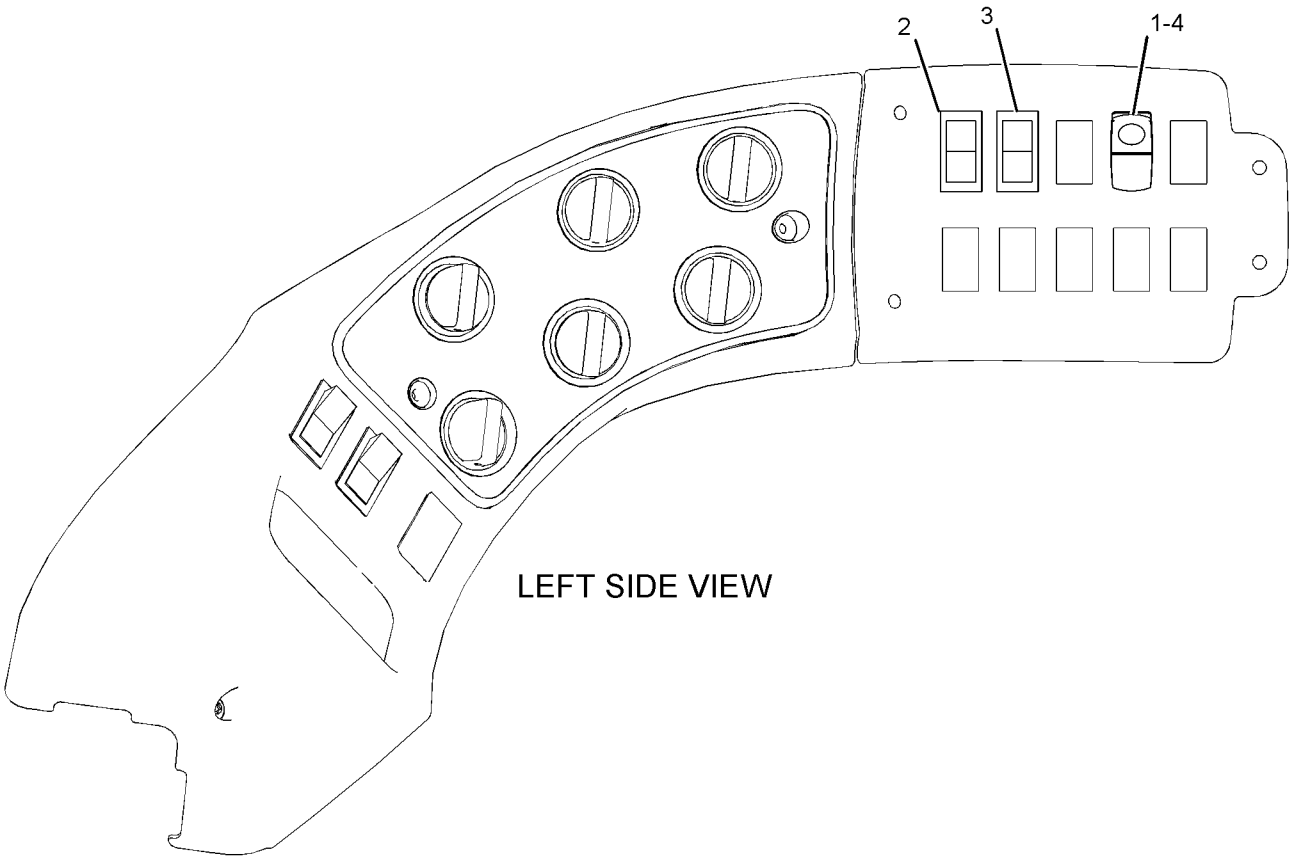

GRAPHIC #1 **<END>** g01116635

106-0107 SWITCH GP-ROTARY–AUTODIG MATERIAL SELECT

S/N: A7G1-UP

PART OF 243-1939, 253-3471 CONTROL GP-AUTODIG

AN ATTACHMENT

SMCS-7332 **i02247455**

NOTE	REF NO	GRAPHIC REF	PART NUMBER	QTY	PART NAME 1 2 3 4 5 6 (PRODUCT LEVEL)	SEE PAGE
	1	1	**102-8805**	1	KIT-RECEPTACLE (6-PIN)	
					(INCLUDES RECEPTACLE AS AND WEDGE)	
	2	1	**3E-3383**	1	WEDGE-RECEPTACLE LOCK (6-PIN)	
	3	1	**8T-8737**	1	PLUG-SEAL	
	4	1	**144-1636**	5	PIN-CONNECTOR	
M	5	1	**7Y-5458**	1	NUT (M12X1-THD)	
	6	1	**7Y-5464**	1	WASHER (M12.2X15.4X0.5-MM THK)	
	7	1	**106-0210**	1	SEAL	

M-METRIC PART

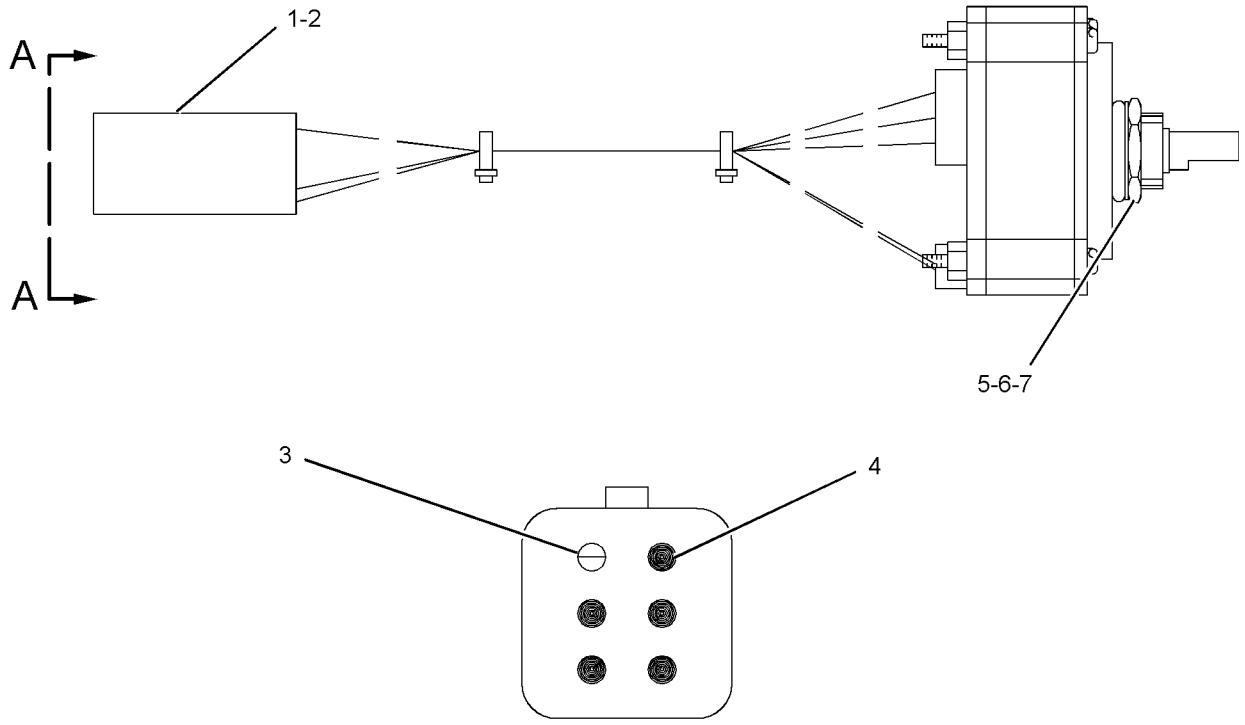

VIEW A-A

GRAPHIC #1 **<END>** g01098706

252-5924 SWITCH GP-SECONDARY STEERING

S/N: A7G1-UP
PART OF 236-9087 STEERING AR-SECONDARY
AN ATTACHMENT

SMCS-7332 **i02118421**

NOTE	REF NO	GRAPHIC REF	PART NUMBER	QTY	PART NAME 1 2 3 4 5 6 (PRODUCT LEVEL)	SEE PAGE
	1	1	**236-4615**	1	SWITCH AS-ROCKER (SECONDARY STEERING)	

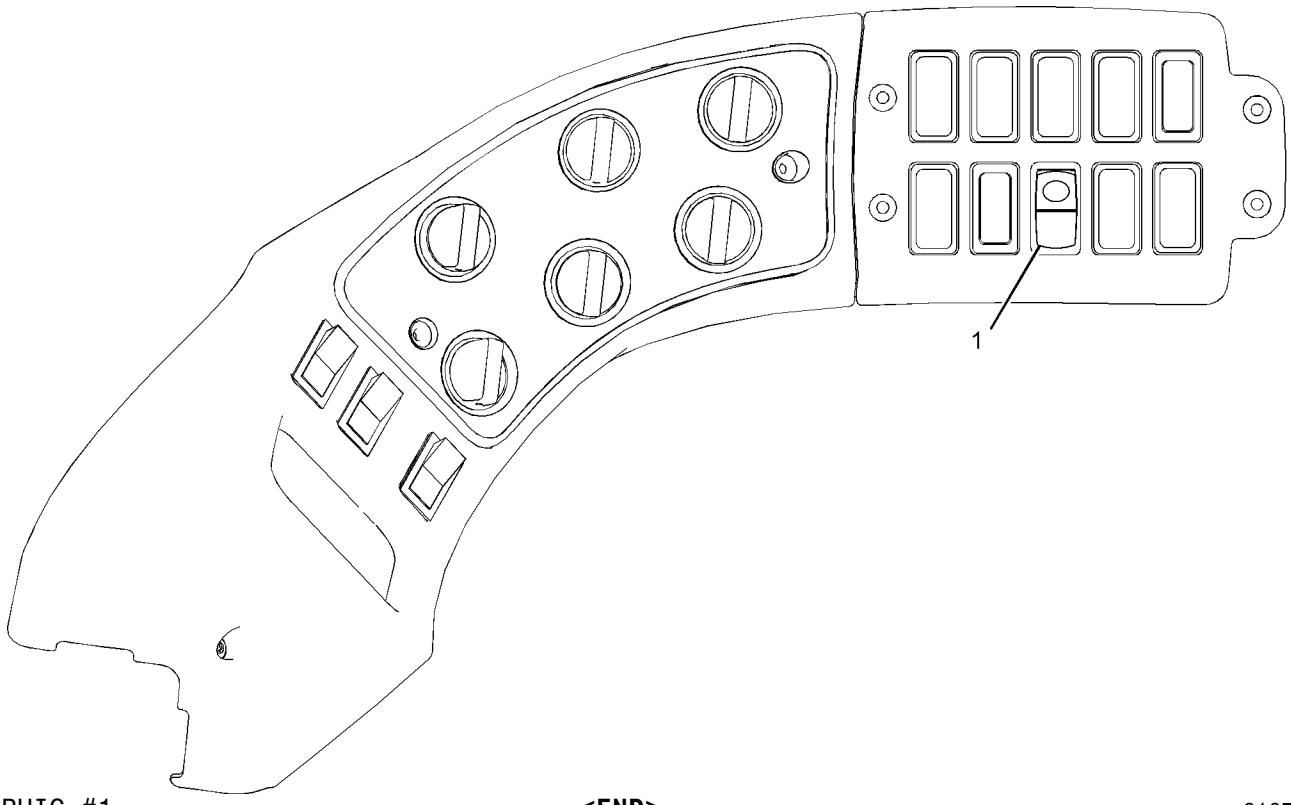

GRAPHIC #1 **<END>** g01079142

ELECTRICAL AND STARTING SYSTEM

252-5920 SWITCH GP-SIGNAL—TURN

S/N: A7G1-UP

PART OF 260-7765 LIGHTING AR-ROADING, 235-5279 LIGHTING AR-SIGNAL AN ATTACHMENT

SMCS-7332 **i02225338**

NOTE	REF NO	GRAPHIC REF	PART NUMBER	QTY	PART NAME 1 2 3 4 5 6 (PRODUCT LEVEL)	SEE PAGE
	1	1	**8N-2622**	1	LEVER	
	2	1	**134-9569**	1	SWITCH AS-TURN SIGNAL	
		1	**5L-7200**	1	SCREW (8-32X0.375-IN)	
		1	**9B-7233**	1	LOCKWASHER	
	3	1	**153-3945**	1	COVER AS	
	4	1	**154-4563**	1	HARNESS AS-LIGHTING (TURN SIGNAL)	
		1	**102-8805**	3	KIT-RECEPTACLE (6-PIN)	
					(EACH KIT INCLUDES RECEPTACLE AS AND WEDGE)	
	5	1	**172-9200**	1	SUPPRESSOR-ARC	
	6	1	**201-5555**	1	PLATE-INSTRUCTION (TURN SIGNAL)	
	7	1	**214-9453**	1	BOOT	
	8	1	**214-9454**	1	BRACKET AS	
	9	1	**217-8166**	1	FLASHER AS (24-VOLT)	
	10	1	**236-4616**	1	SWITCH AS-ROCKER (HAZARD)	
	11	1	**096-6166**	3	WASHER-HARD (4.5X9X1-MM THK)	
M	12	1	**123-0707**	3	SCREW-HEX SOCKET (M4X0.7X20-MM)	
	13	1	**189-3158**	1	SUPPRESSOR-ARC	
M	14	1	**5C-8312**	3	NUT (M4X0.7-THD)	
M	15	1	**6V-3938**	2	BOLT (M10X1.5X20-MM)	
M	16	1	**8T-0288**	2	BOLT (M5X0.8X12-MM)	
	17	1	**8T-0328**	2	WASHER-HARD (5.5X10X1-MM THK)	
	18	1	**8T-4121**	6	WASHER-HARD (11X21X2.5-MM THK)	
	19	1	**9M-8406**	1	CLIP	

M-METRIC PART

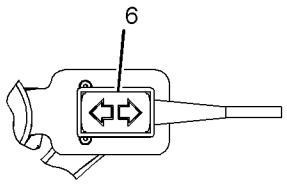

VIEW G-G

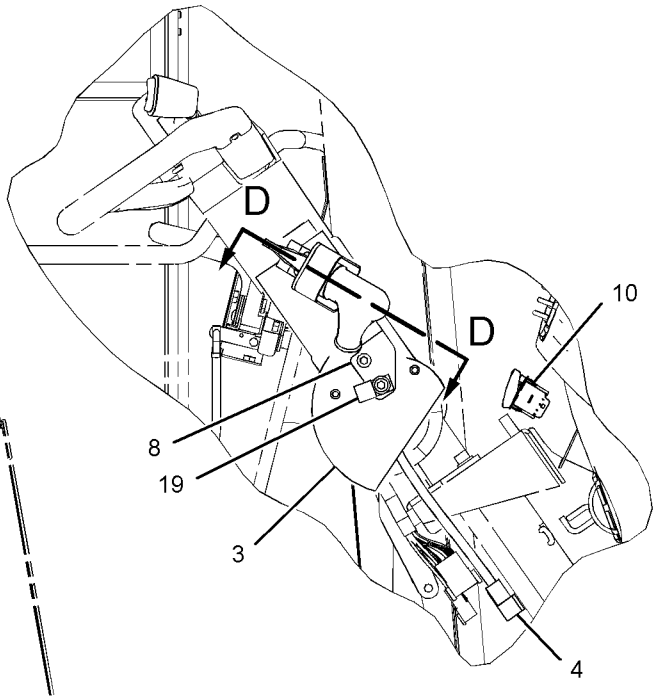

VIEW OF AREA A

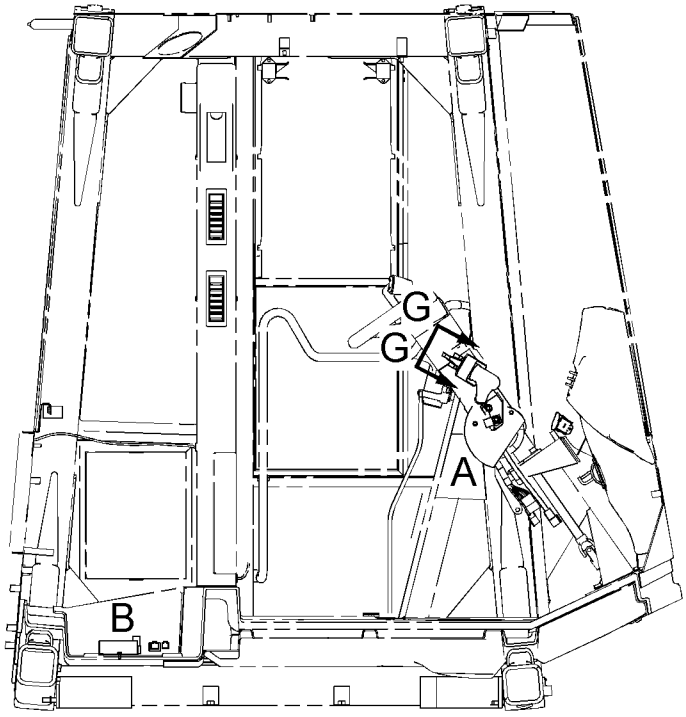

RIGHT SIDE VIEW

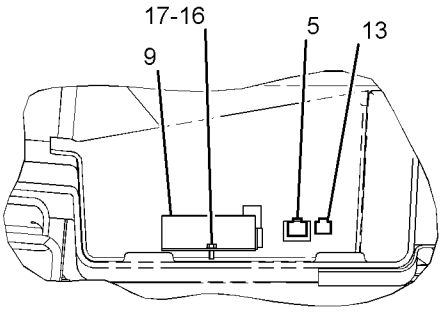

VIEW OF AREA B

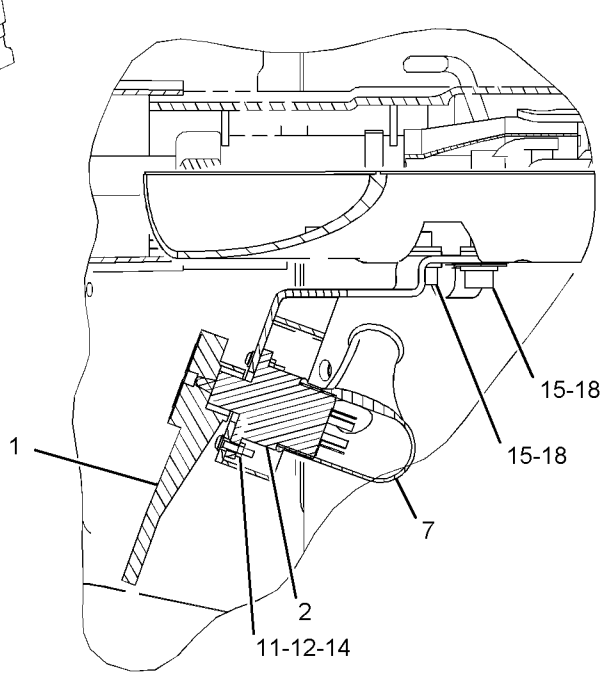

SECTION D-D

GRAPHIC #1 **<END>** g01116771

253-3951 SWITCH GP-SIGNAL–TURN

S/N: A7G1-UP

PART OF 254-5525 LIGHTING AR-ROADING, 244-3599 LIGHTING AR-SIGNAL AN ATTACHMENT

SMCS-7332 **i02286199**

NOTE	REF NO	GRAPHIC REF	PART NUMBER	QTY	PART NAME 1 2 3 4 5 6 (PRODUCT LEVEL)	SEE PAGE
	1	1	**8N-2622**	1	LEVER	
	2	1	**134-9569**	1	SWITCH AS-TURN SIGNAL	
		1	**5L-7200**	1	SCREW (8-32X0.375-IN)	
		1	**9B-7233**	1	LOCKWASHER	
	3	1	**149-0668**	1	COVER	
	4	1	**154-4563**	1	HARNESS AS-LIGHTING (TURN SIGNAL)	
		1	**102-8805**	1	KIT-RECEPTACLE (6-PIN)	
					(INCLUDES RECEPTACLE AS AND WEDGE)	
	5	1	**154-8262**	1	BRACKET AS	
	6	1	**172-9200**	1	SUPPRESSOR-ARC	
	7	1	**201-5555**	1	PLATE-INSTRUCTION (TURN SIGNAL)	
	8	1	**217-8166**	1	FLASHER AS (24-VOLT)	
	9	1	**236-4616**	1	SWITCH AS-ROCKER (HAZARD)	
	10	1	**189-3158**	1	SUPPRESSOR-ARC	
M	11	1	**7Y-3173**	3	SCREW-BUTTON HEAD (M4X0.7X12-MM)	
M	12	1	**8T-0288**	2	BOLT (M5X0.8X12-MM)	
	13	1	**8T-0328**	2	WASHER-HARD (5.5X10X1-MM THK)	
M	14	1	**8T-4200**	2	BOLT (M8X1.25X16-MM)	
	15	1	**8T-4205**	1	WASHER-HARD (7.2X14.5X2-MM THK)	
	16	1	**9M-8406**	1	CLIP	
	17	1	**9X-2038**	4	WASHER (7X19X2-MM THK)	
M	18	1	**9X-2042**	4	SCREW-TRUSS HEAD (M6X1X12-MM)	

M-METRIC PART

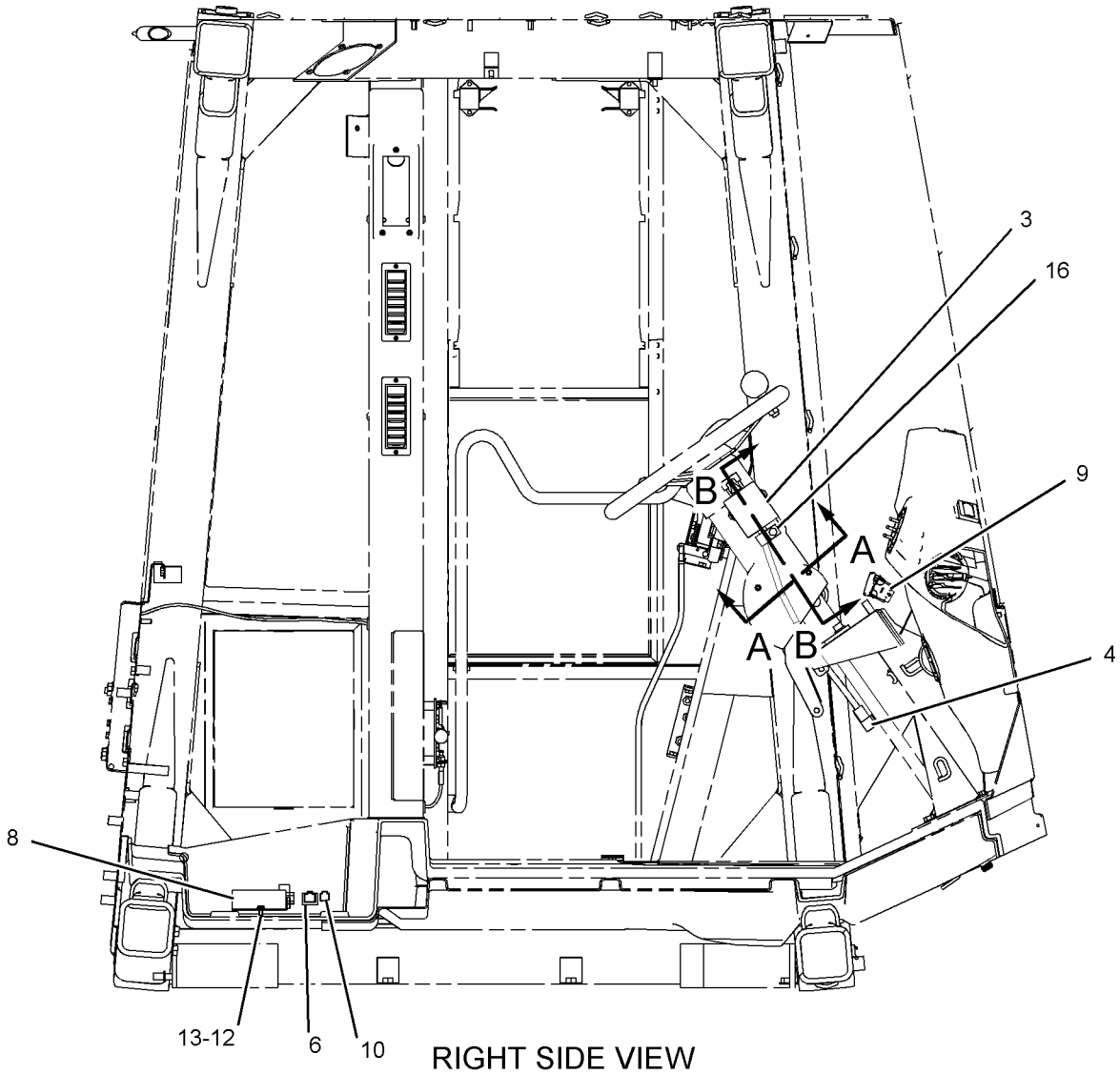

RIGHT SIDE VIEW

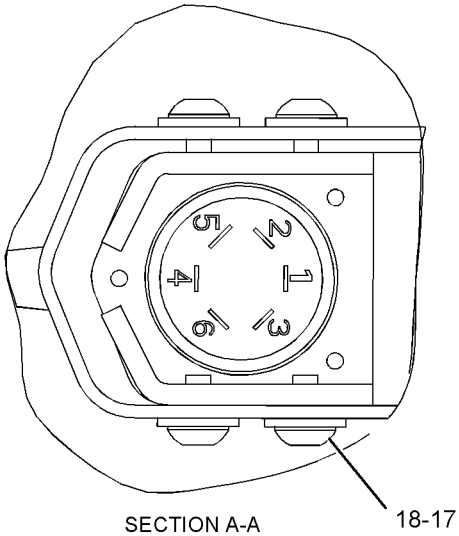

SECTION A-A

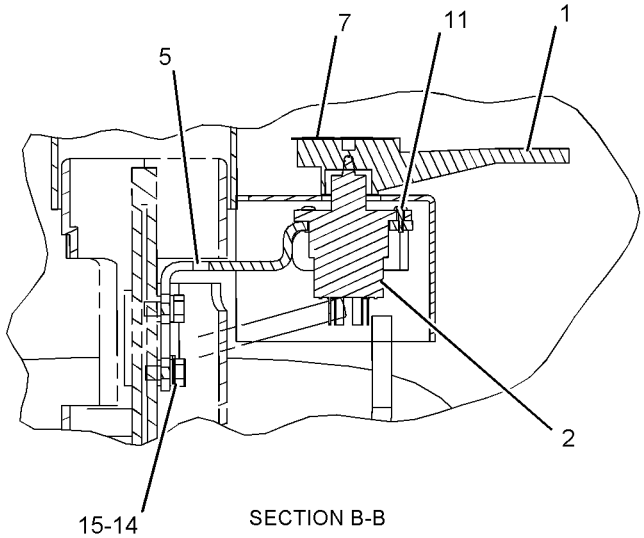

SECTION B-B

GRAPHIC #1

<END>

g01074399

165-5970 SWITCH GP-TOGGLE

S/N: MHX1-UP

PART OF 235-1080 PUMP GP-FUEL PRM & PRIM FILTER

SMCS-7332 **i02409114**

NOTE	REF NO	GRAPHIC REF	PART NUMBER	QTY	PART NAME 1 2 3 4 5 6 (PRODUCT LEVEL)	SEE PAGE
	1	1	**6T-3631**	2	NUT-HEX (15/32-32-THD)	
	2	1	**6T-3632**	1	LOCKWASHER	
	3	1	**6T-3633**	1	RING-LOCKING	
	4	1	**102-8803**	1	KIT-RECEPTACLE (3-PIN)	
					(INCLUDES RECEPTACLE AS & WEDGE)	
	5	1	**186-3735**	3	PIN-CONNECTOR (16-GA TO 18-GA)	

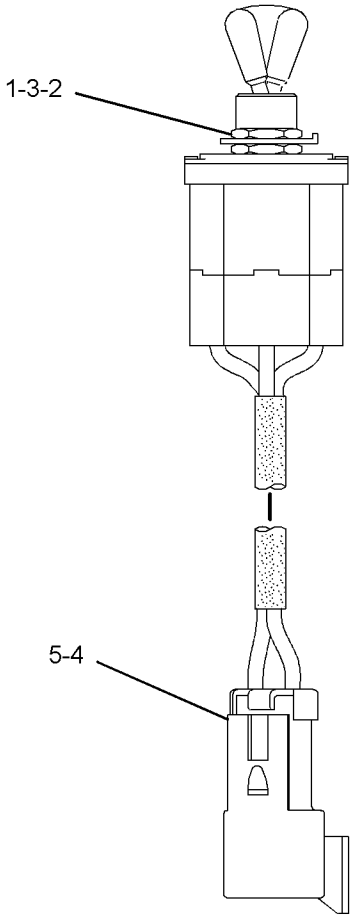

GRAPHIC #1 **<END>** g01203825

243-1938 SWITCH GP-TRANSMISSION–
REMOTE FORWARD, NEUTRAL, REVERSE CONTROL
S/N: A7G1-UP
AN ATTACHMENT

SMCS-1611, 3065, 4309, 7332 **i02415406**

NOTE	REF NO	GRAPHIC REF	PART NUMBER	QTY	PART NAME 1 2 3 4 5 6 (PRODUCT LEVEL)	SEE PAGE
	1	1	**246-2642**	1	SWITCH AS-ROCKER (FORWARD, NEUTRAL, REVERSE)	

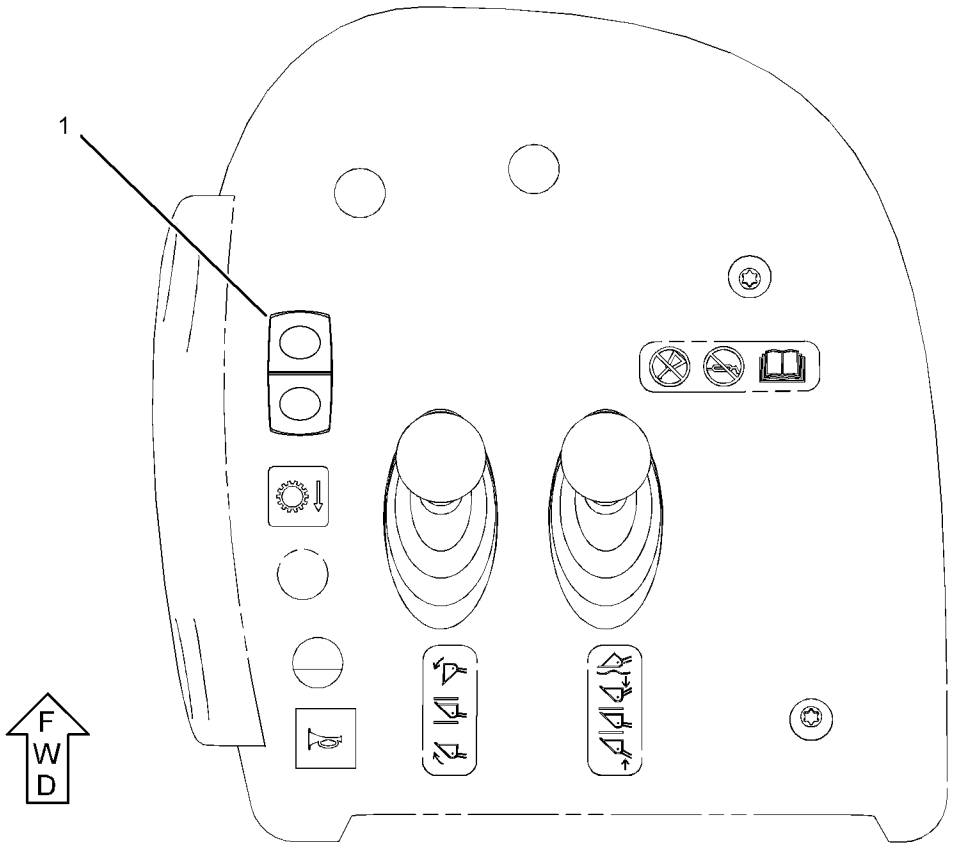

TOP VIEW

GRAPHIC #1 **<END>** g01202175

236-8959 WARNING GP-BACKUP

S/N: A7G1-UP

AN ATTACHMENT

SMCS-7406 **i02242126**

NOTE	REF NO	GRAPHIC REF	PART NUMBER	QTY	PART NAME 1 2 3 4 5 6 (PRODUCT LEVEL)	SEE PAGE
	1	1	**213-9100**	1	ALARM AS-BACKUP (BACKUP)	
		1	**102-8802**	1	KIT-RECEPTACLE (2-PIN)	
					(INCLUDES RECEPTACLE AS AND WEDGE)	
		1	**3E-3365**	1	WEDGE-RECEPTACLE LOCK (2-PIN)	
D		1	**5P-5623**		WIRE-ELECTRICAL (16-GA, BLACK) (0.8-M)	
		1	**186-3735**	2	PIN-CONNECTOR (16-GA TO 18-GA)	
E		1	**9X-1813**		SLEEVE (31-CM)	
	2	1	**7X-0772**	4	WASHER-HARD (10.2X25.5X2.5-MM THK)	
M	3	1	**8T-4137**	4	BOLT (M10X1.5X20-MM)	

D-ORDER BY THE METER
E-ORDER BY THE CENTIMETER
M-METRIC PART

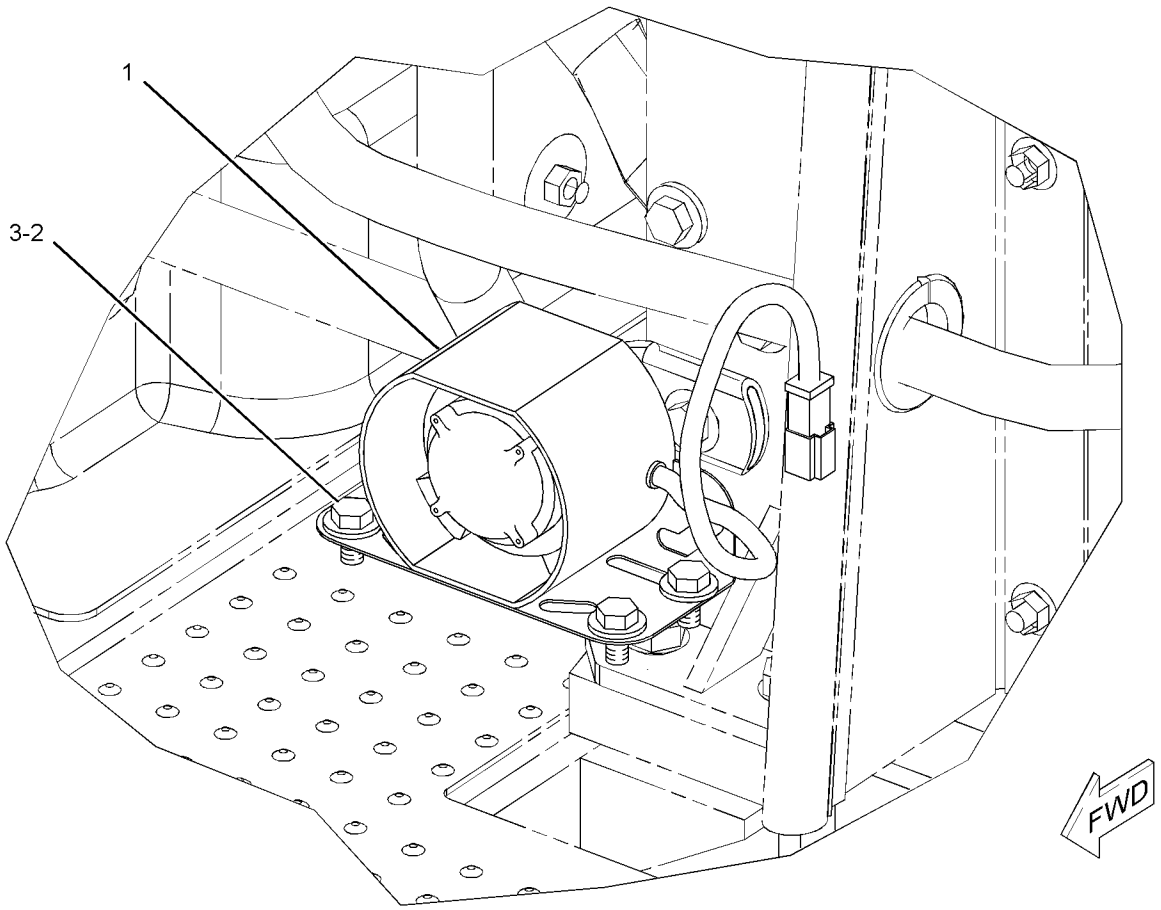

GRAPHIC #1 **<END>** g01115695

237-4907 WIRING GP-AIR CONDITIONER

S/N: A7G1-UP
PART OF 236-8960 AIR CONDITIONER AR
AN ATTACHMENT

SMCS-1408, 7320 **i02246460**

NOTE	REF NO	GRAPHIC REF	PART NUMBER	QTY	PART NAME 1 2 3 4 5 6 (PRODUCT LEVEL)	SEE PAGE
	1	1	**7K-1181**	2	STRAP-CABLE	
	2	1	**114-5333**	1	SWITCH AS-PRESSURE (REFRIGERANT) (REFRIGERANT HIGH, LOW)	
		1	**102-8802**	1	KIT-RECEPTACLE (2-PIN)	
					(INCLUDES RECEPTACLE AS AND WEDGE)	
		1	**186-3735**	2	PIN-CONNECTOR (16-GA TO 18-GA)	
E		1	**9X-1386**		SLEEVE (25-CM)	
	3	1	**218-4935**	1	SUPPRESSOR-ARC	
	4	1	**9X-7378**	1	SEAL-O-RING	

E-ORDER BY THE CENTIMETER

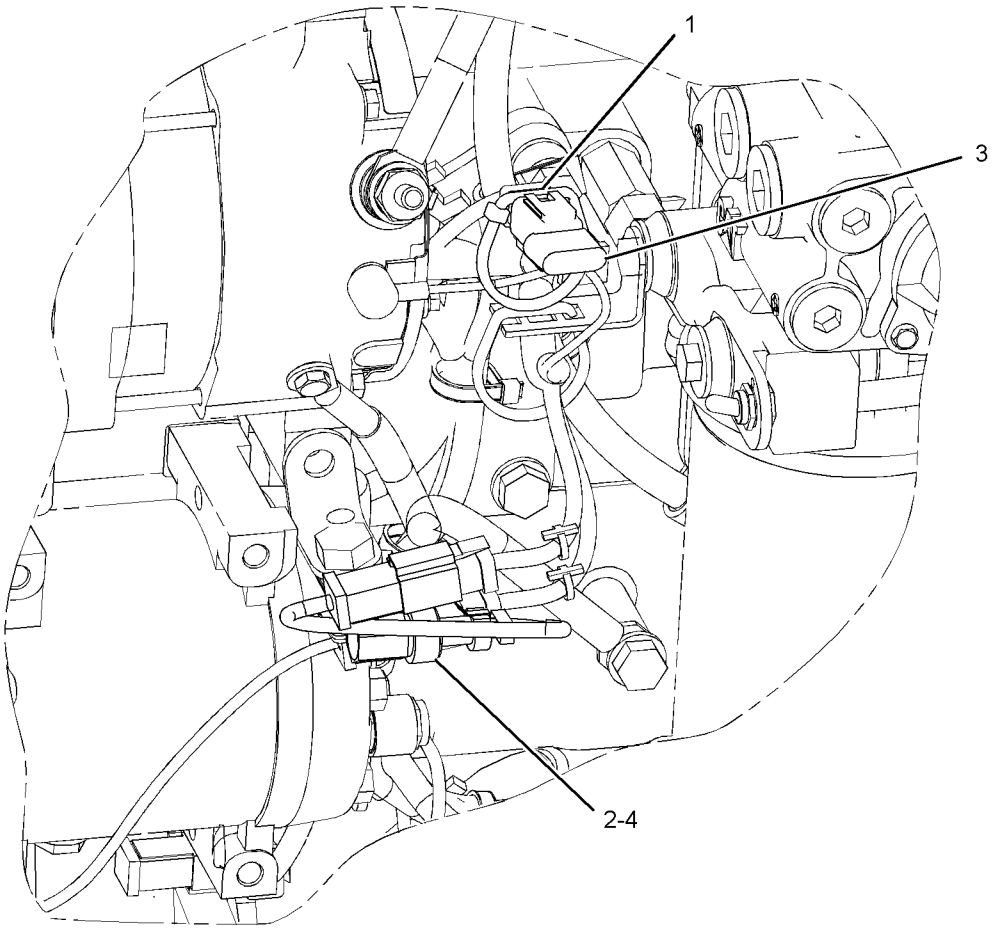

GRAPHIC #1 **<END>** g01116262

276-7398 WIRING GP-AUTOLUBE CONTROL

S/N: A7G1-UP

PART OF 261-1446, 263-6296, 277-0038 LUBRICATION AR-AUTOMATIC

AN ATTACHMENT

SMCS-1408, 7540 **i02389653**

NOTE	REF NO	GRAPHIC REF	PART NUMBER	QTY	PART NAME 1 2 3 4 5 6 (PRODUCT LEVEL)	SEE PAGE
	1	1	**276-7400**	1	HARNESS AS-VALVE	
		1	**102-8804**	1	KIT-RECEPTACLE (4-PIN)	
					(INCLUDES RECEPTACLE AS AND WEDGE)	
		1	**155-2265**	1	KIT-CONNECTING PLUG (8-PIN)	
		1	**155-2270**	1	KIT-CONNECTING PLUG (2-PIN)	
					(EACH KIT PLUG INCLUDES PLUG AS AND WEDGE)	
	2	1	**277-8271**	1	HARNESS AS-PUMP	
		1	**102-8806**	1	KIT-RECEPTACLE (8-PIN)	
					(INCLUDES RECEPTACLE AS AND WEDGE)	
		1	**146-4055**	1	RECEPTACLE AS	
	3	1	**277-8272**	1	HARNESS AS-SWITCH	
		1	**102-8802**	1	KIT-RECEPTACLE (2-PIN)	
					(INCLUDES RECEPTACLE AS AND WEDGE)	
		1	**146-4073**	1	RECEPTACLE AS	
	4	1	**130-5300**	2	CLIP	
	5	1	**2V-3216**	2	CLIP	
	6	1	**4K-8864**	3	CLIP	
	7	1	**6D-3479**	1	CLIP	
B	8	1	**7K-1181**	23	STRAP-CABLE	

B-USE AS REQUIRED

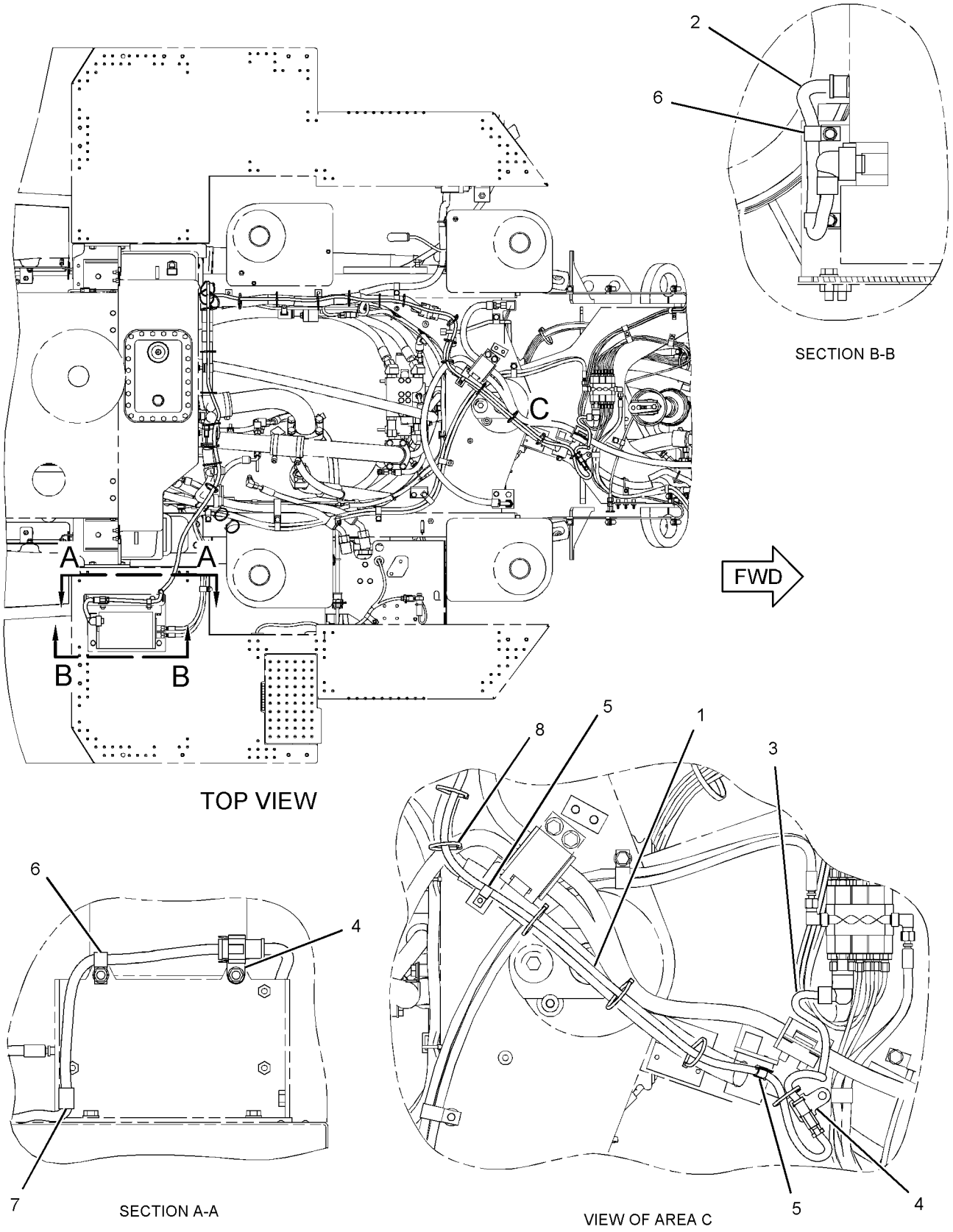

GRAPHIC #1 **<END>** g01201985

246-2347 WIRING GP-AXLE MONITORING

S/N: A7G1-UP

PART OF 236-9053 ELECTRICAL AR

SMCS-1408, 7490 **i02411864**

NOTE	REF NO	GRAPHIC REF	PART NUMBER	QTY	PART NAME 1 2 3 4 5 6 (PRODUCT LEVEL)	SEE PAGE
	1	2	**4V-1939**	2	CLAMP	
	2	2	**107-4749**	1	PLATE	
	3	1	**7K-1181**	4	STRAP-CABLE	
	4	2	**125-8534**	1	PLATE AS	
	5	2	**130-9811**	1	SENSOR GP-TEMPERATURE (2-PIN) (FRONT AXLE OIL)	
	5A	2	**130-9811**	1	SENSOR GP-TEMPERATURE (2-PIN) (REAR AXLE OIL)	
	6	1,2	**168-6467**	2	GUARD	
	7	2	**169-7389**	4	SPACER (17.4X30X8.3-MM THK)	
	8	1	**246-2348**	1	HARNESS AS-AXLE (REAR)	
		1	**102-8802**	1	KIT-RECEPTACLE (2-PIN)	
					(INCLUDES RECEPTACLE AND WEDGE)	
		1	**155-2270**	1	KIT-CONNECTING PLUG (2-PIN)	
					(INCLUDES PLUG AS AND WEDGE)	
	9	1	**246-2349**	1	HARNESS AS-AXLE (FRONT)	
		1	**155-2270**	2	KIT-CONNECTING PLUG (2-PIN)	
					(EACH KIT INCLUDES PLUG AS AND WEDGE)	
	10	1	**130-5300**	1	CLIP	
	11	2	**3K-0360**	2	SEAL-O-RING	
	12	2	**6K-8178**	1	CLIP	
M	13	2	**7X-2534**	2	BOLT (M6X1X50-MM)	
M	14	2	**7X-2554**	4	BOLT (M16X2X70-MM)	
	15	1	**8M-2770**	1	CLIP	
	16	1,2	**8T-4121**	4	WASHER-HARD (11X21X2.5-MM THK)	
M	17	1	**8T-4133**	1	NUT (M10X1.15-THD)	
M	18	2	**8T-4136**	1	BOLT (M10X1.5X25-MM)	
M	19	1,2	**8T-4137**	3	BOLT (M10X1.5X20-MM)	
	20	2	**9M-8406**	1	CLIP	
	21	2	**9X-8256**	2	WASHER (6.6X12X2-MM THK)	
	22	2	**9X-8257**	4	WASHER (17.5X30X3.5-MM THK)	
	23	1	**4D-8123**	1	CLIP	

M-METRIC PART

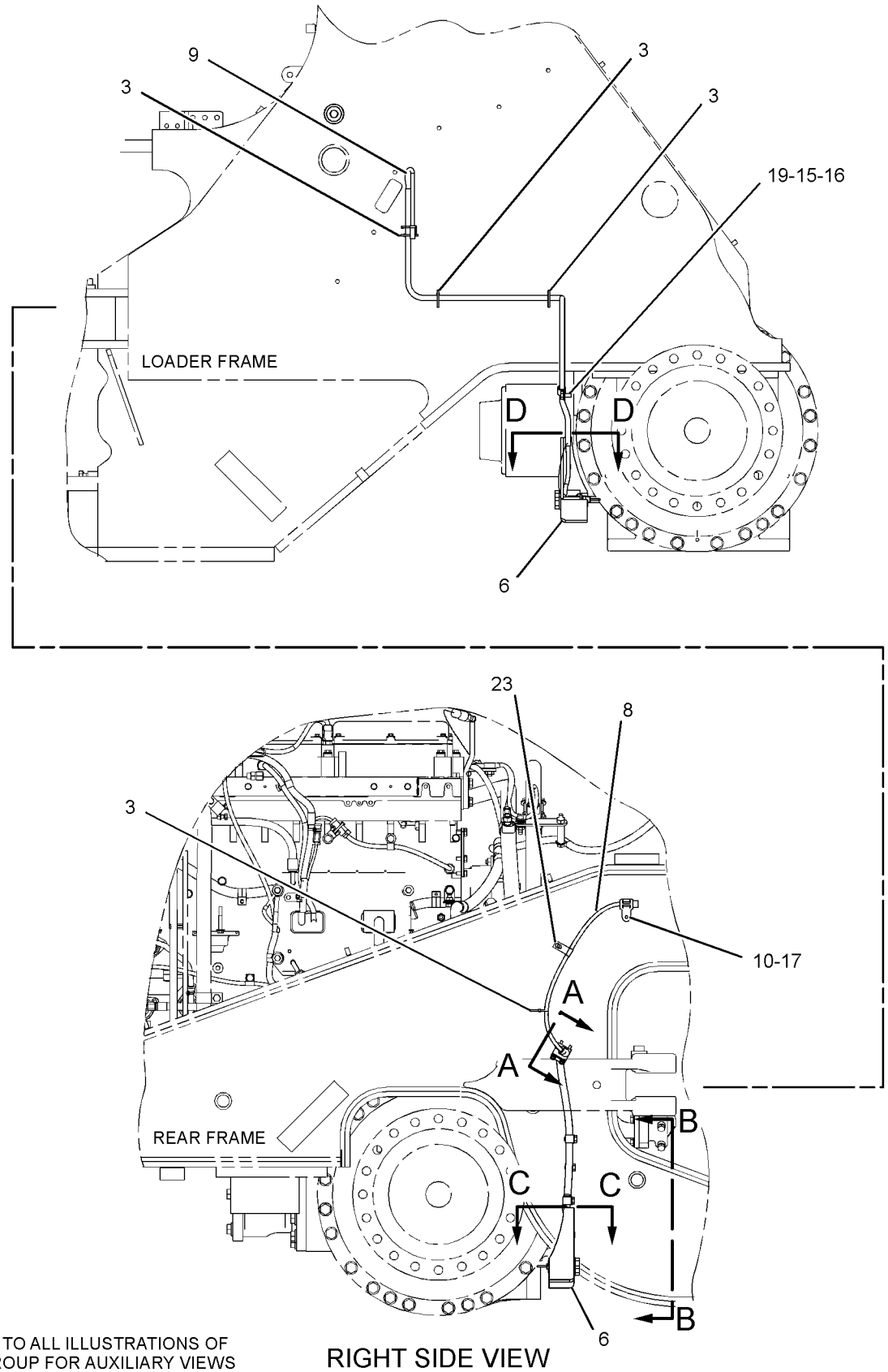

REFER TO ALL ILLUSTRATIONS OF THIS GROUP FOR AUXILIARY VIEWS

RIGHT SIDE VIEW

GRAPHIC #1

g01189722

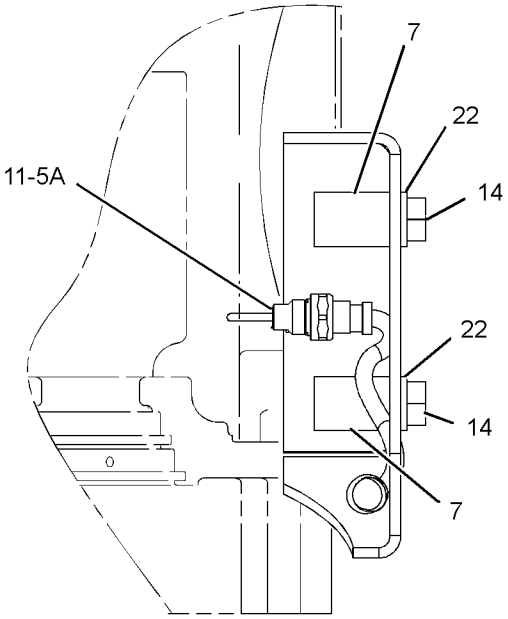

SECTION C-C

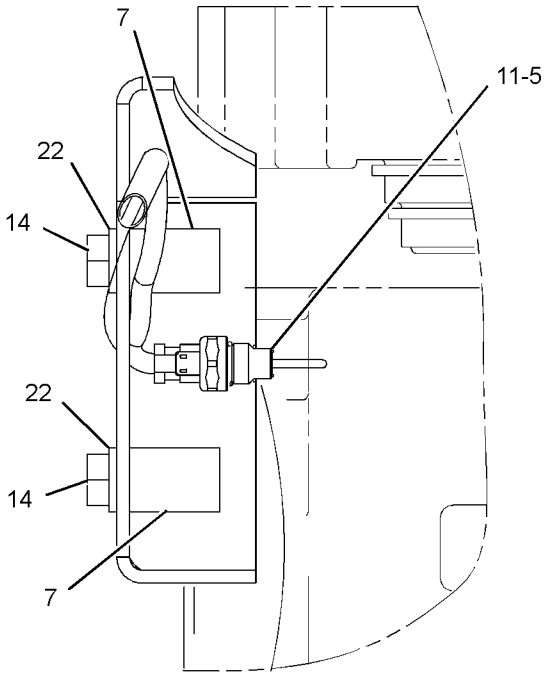

SECTION D-D

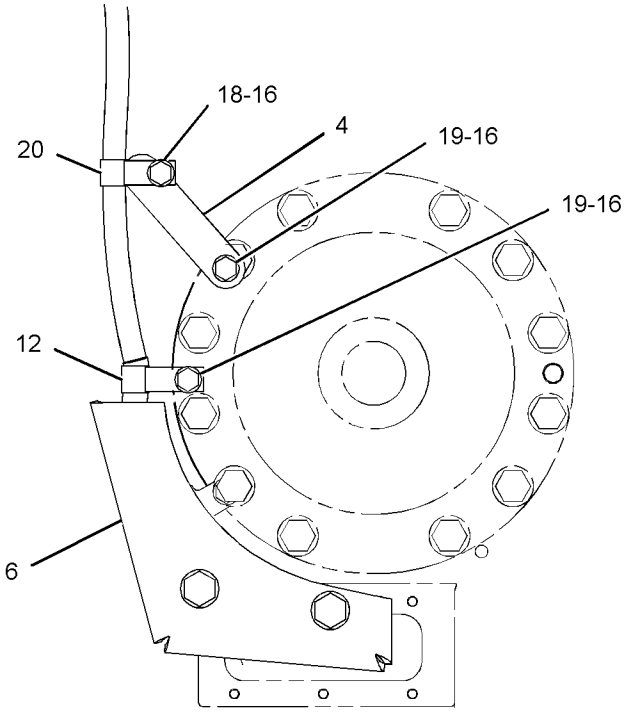

VIEW B-B

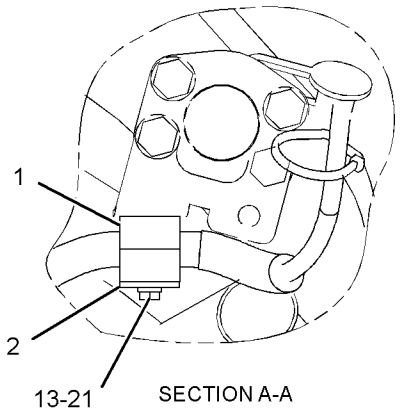

SECTION A-A

GRAPHIC #2 **<END>** g01189721

237-4910 WIRING GP-CAB

S/N: A7G1-UP

PART OF 237-2572, 237-2573 CAB AR-ENCLOSED ROPS

ALSO AN ATTACHMENT

SMCS-1408, 7301 **i02325187**

NOTE	REF NO	GRAPHIC REF	PART NUMBER	QTY	PART NAME 1 2 3 4 5 6 (PRODUCT LEVEL)	SEE PAGE
	1	4	**102-8802**	1	KIT-RECEPTACLE (2-PIN)	
	2	3	**102-8805**	1	KIT-RECEPTACLE (6-PIN)	
					(EACH KIT RECEPTACLE INCLUDES RECEPTACLE AS AND WEDGE)	
	3	2	**3E-5239**	1	RELAY AS (24-VOLT) (FRONT CAB FLOODLIGHTS)	
	3A	2	**3E-5239**	1	RELAY AS (24-VOLT) (REAR FLOODLIGHT)	
	3B	2	**3E-5239**	1	RELAY AS (24-VOLT) (HORN)	
Y	4	2	**3E-6328**	1	ALARM GP (24-VOLT) (ACTION)	118
Y	5	1	**3E-6389**	2	LAMP GP-DOME (24-VOLT, WITH SWITCH) (CAB)	143
	6	1,3,4	**3S-2093**	23	STRAP-CABLE	
	7	2	**4P-8525**	11	SPACER (9X16X30-MM THK)	
	8	1	**4V-4164**	16	BUSHING-TERMINAL	
	9	2	**6I-1418**	8	SPACER (8.2X12.7X28.7-MM THK)	
	10	1	**6V-8369**	2	NUT (7/16-28-THD)	
	11	1,2,3, 4	**7K-1181**	32	STRAP-CABLE	
	12	3	**7N-5876**	4	LAMP (24-VOLT)	
	13	3	**8C-6354**	1	CAP-RECEPTACLE (DUST)	
	14	3	**8T-8737**	6	PLUG-SEAL	
	15	2	**8T-9655**	16	MOUNT-ISOLATION	
	16	1	**8X-5804**	1	STRAP AS-GROUND	
	17	1	**9F-8125**	16	LOCKWASHER	
	18	2	**9W-1441**	7	FUSE (15-AMPERE)	
	19	2	**9W-1442**	24	FUSE (10-AMPERE)	
	20	2	**9W-1446**	1	FUSE (20-AMPERE)	
	21	1	**098-8968**	16	WASHER (5X16X1.2-MM THK)	
Y	22	4	**103-5526**	1	CONTROL GP-MONITOR (DIMMER)	788
	23	3	**108-3320**	1	SWITCH AS-ROTARY (24-VOLT) (RUNNING LIGHTS)	
		3	**3E-3389**	1	WEDGE-RECEPTACLE LOCK	
		3	**9W-0852**	8	PIN-CONNECTOR (14-GA)	
		3	**102-8806**	1	KIT-RECEPTACLE (8-PIN)	
					(INCLUDES RECEPTACLE AS AND WEDGE)	
	24	1,3	**110-6109**	6	KNOB-CONTROL (CONTROL PANEL SWITCHES)	
	25	1	**110-7886**	1	SWITCH AS-WIPER (24-VOLT) (FRONT INTERMITTENT)	
		1	**2H-3920**	1	LOCKWASHER	
		1	**6V-8369**	1	NUT (7/16-28-THD)	
		1	**8T-8737**	1	PLUG-SEAL	
		1	**9W-0852**	4	PIN-CONNECTOR (14-GA)	
		1	**102-8806**	2	KIT-RECEPTACLE (8-PIN)	
					(EACH INCLUDES RECEPTACLE AS AND WEDGE)	
		1	**186-3735**	3	PIN-CONNECTOR (16-GA TO 18-GA)	
	26	3	**110-7887**	1	SWITCH GP-START (KEY)	
		3	**7T-6799**	1	NUT-MOUNTING (1-32-THD)	
		3	**102-8804**	1	KIT-RECEPTACLE (4-PIN)	
					(INCLUDES RECEPTACLE AS AND WEDGE)	
		3	**186-3735**	4	PIN-CONNECTOR (16-GA TO 18-GA)	
	27	1	**112-6174**	1	SWITCH AS-ROTARY (24-VOLT) (REAR WIPER)	
		1	**2H-3920**	1	LOCKWASHER	
		1	**6V-8369**	1	NUT (7/16-28-THD)	
		1	**186-3735**	6	PIN-CONNECTOR (16-GA TO 18-GA)	
		1	**8T-8737**	2	PLUG-SEAL	
		1	**102-8806**	2	KIT-RECEPTACLE (8-PIN)	
					(EACH INCLUDES RECEPTACLE AS AND WEDGE)	
	28	3	**117-2311**	1	RECEPTACLE AS-POWER (12-VOLT) (AUXILIARY)	

237-4910 **WIRING GP-CAB** *(contd.)* **i02325187**

NOTE	REF NO	GRAPHIC REF	PART NUMBER	QTY	PART NAME 1 2 3 4 5 6 (PRODUCT LEVEL)	SEE PAGE
	29	1	**121-8038**	1	RECEPTACLE AS (AUXILIARY)	
		1	**102-8803**	1	KIT-RECEPTACLE (3-PIN)	
					(INCLUDES RECEPTACLE AS AND WEDGE)	
		1	**3E-3371**	1	WEDGE-RECEPTACLE LOCK (3-PIN)	
D		1	**5P-5624**	1	WIRE (14-GA, BLACK) (0.3-M)	
		1	**8T-8737**	1	PLUG-SEAL	
		1	**9W-0852**	2	PIN-CONNECTOR (14-GA)	
	30	1	**123-2896**	1	GASKET	
	31	1	**127-4540**	1	POTENTIOMETER AS (TEMPERATURE SELECT)	
		1	**102-8803**	1	KIT-RECEPTACLE (3-PIN)	
					(INCLUDES RECEPTACLE AS AND WEDGE)	
		1	**186-3735**	3	PIN-CONNECTOR (16-GA TO 18-GA)	
		1	**236-8722**	1	WASHER	
Y	32	1	**154-7443**	1	CONTROL GP-UNPRGMED MONITOR (CATERPILLAR MONITORING SYSTEM)	789
Y	33	3	**166-6928**	1	MODULE GP-QUAD GAUGE	846
	34	4	**170-1821**	1	SWITCH AS-PUSH BUTTON (HORN)	
		4	**6F-0253**	1	LOCKWASHER	
		4	**186-3735**	2	PIN-CONNECTOR (16-GA TO 18-GA)	
		4	**172-3511**	1	NUT (5/8-24-THD)	
	35	2	**173-2234**	1	PLATE AS	
	36	1	**185-6335**	1	SWITCH AS-ROTARY (24-VOLT) (AUTOSHIFT CONTROL)	
	36A	1	**185-6335**	1	SWITCH AS-ROTARY (24-VOLT) (VARIABLE SHIFT CONTROL)	
					(EACH INCLUDES)	
		1	**8T-8737**	2	PLUG-SEAL	
		1	**9W-0852**	4	PIN-CONNECTOR (14-GA)	
		1	**102-8805**	2	KIT-RECEPTACLE (6-PIN)	
					(EACH INCLUDES RECEPTACLE AS AND WEDGE)	
	37	1	**192-1954**	1	FILM-CONTROL (UPPER PANEL)	
	38	3	**198-6570**	1	LIGHTER GP-CIGAR (12-VOLT)	
	39	4	**209-0381**	1	CONVERTER-POWER (24-VOLT TO 12-VOLT)	
	40	1	**234-5925**	1	GASKET	
	41	1	**235-5506**	1	HARNESS AS-LIGHTING (CAB FLOODLIGHTS)	
		1	**155-2270**	4	KIT-CONNECTING PLUG (2-PIN)	
					(EACH INCLUDES PLUG AS AND WEDGE)	
	42	1,3,4	**236-4631**	20	BEZEL	
	43	4	**236-9993**	1	PLATE AS	
M		4	**6V-9632**	4	NUT-WELD (M6X1-THD)	
		4	**7T-1099**	5	LINK	
M		4	**8T-3490**	2	NUT-WELD (M10X1.5-THD)	
M		4	**8T-3612**	4	NUT-WELD (M8X1.25-THD)	
M		4	**8T-8874**	9	NUT-WELD (M5X0.8-THD)	
	44	1	**242-6099**	1	CLIP	
	45	2	**242-8421**	1	PLATE AS	
	46	4	**246-0578**	1	HARNESS AS-OPERATOR CONTROLS	
		4	**155-2255**	1	KIT-CONNECTING PLUG (12-PIN)	
		4	**155-2265**	1	KIT-CONNECTING PLUG (8-PIN)	
		4	**155-2260**	1	KIT-CONNECTING PLUG (3-PIN)	
		4	**155-2270**	1	KIT-CONNECTING PLUG (2-PIN)	
		4	**155-2271**	3	KIT-CONNECTING PLUG (4-PIN)	
					(EACH KIT PLUG INCLUDES PLUG AS AND WEDGE)	
		4	**102-8803**	2	KIT-RECEPTACLE (3-PIN)	
		4	**102-8804**	1	KIT-RECEPTACLE (4-PIN)	
					(EACH KIT RECEPTACLE INCLUDES RECEPTACLE AS AND WEDGE)	
	47	1	**246-5459**	1	PLATE	
	48	4	**249-5602**	1	GUARD-SWITCH	
	49	3	**260-9602**	1	HARNESS AS-WIRING (SERVICE TOOL)	

237-4910 **WIRING GP-CAB** ***(contd.)*** **i02325187**

NOTE	REF NO	GRAPHIC REF	PART NUMBER	QTY	PART NAME 1 2 3 4 5 6 (PRODUCT LEVEL)	SEE PAGE
		3	**102-8805**	1	KIT-RECEPTACLE (6-PIN)	
					(INCLUDES RECEPTACLE AS AND WEDGE)	
	50	2	**262-1408**	1	CONTROL GP-UNPROGRAMMED (IMPLEMENT)	
	50A	2	**262-1408**	1	CONTROL GP-UNPROGRAMMED (POWER TRAIN)	
	51	4	**263-1493**	1	SWITCH AS-PUSH BUTTON (THROTTLE LOCK RESUME)	
		4	**172-3511**	1	NUT (5/8-24-THD)	
		4	**6F-0253**	1	LOCKWASHER	
		4	**155-2260**	1	KIT-CONNECTING PLUG (3-PIN)	
					(EACH INCLUDES PLUG AS AND WEDGE)	
		4	**126-1766**	3	SOCKET-CONNECTOR	
	52	1	**273-0274**	1	HARNESS AS-CAB	
		1	**102-8802**	4	KIT-RECEPTACLE (2-PIN)	
		1	**102-8803**	1	KIT-RECEPTACLE (3-PIN)	
		1	**102-8804**	3	KIT-RECEPTACLE (4-PIN)	
		1	**102-8805**	4	KIT-RECEPTACLE (6-PIN)	
		1	**102-8806**	3	KIT-RECEPTACLE (8-PIN)	
		1	**102-8801**	3	KIT-RECEPTACLE (12-PIN)	
		1	**197-7565**	1	KIT-RECEPTACLE (4-PIN)	
					(EACH KIT RECEPTACLE INCLUDES RECEPTACLE AS AND WEDGE)	
		1	**3S-2093**	8	STRAP-CABLE	
		1	**8N-1532**	1	RECEPTACLE AS-CONNECTOR (6-PIN)	
		1	**8N-1536**	1	NUT (1-5/8-18-THD)	
		1	**8N-1535**	1	BELL AS-END	
		1	**9X-0145**	1	RECEPTACLE AS-CONNECTOR (24-PIN)	
		1	**9X-1054**	3	PLUG AS-CONNECTOR (4-PIN)	
		1	**9X-6772**	1	STRAP-CABLE	
		1	**147-1445**	2	PLUG AS-CONNECTOR (70-PIN)	
					(EACH INCLUDES)	
		1	**159-9322**	1	SEAL-O-RING	
		1	**147-1446**	2	PLUG AS-CONNECTOR (70-PIN)	
					(EACH INCLUDES)	
		1	**159-9322**	1	SEAL-O-RING	
		1	**155-2255**	6	KIT-CONNECTING PLUG (12-PIN)	
		1	**155-2265**	5	KIT-CONNECTING PLUG (8-PIN)	
		1	**155-2260**	7	KIT-CONNECTING PLUG (3-PIN)	
		1	**155-2270**	5	KIT-CONNECTING PLUG (2-PIN)	
		1	**155-2271**	5	KIT-CONNECTING PLUG (4-PIN)	
		1	**155-2274**	13	KIT-CONNECTING PLUG (6-PIN)	
					(EACH KIT PLUG INCLUDES PLUG AS AND WEDGE)	
		1	**214-4208**	1	RECEPTACLE AS (70-PIN)	
	53	4	**132-5789**	4	CLIP	
	54	2	**134-2540**	1	RECEPTACLE AS-CONNECTOR (3-PIN)	
	55	3,4	**156-6175**	3	CLIP	
	56	4	**198-4775**	2	WASHER-HARD (6.6X15X6-MM THK)	
	57	1,3,4	**228-6089**	14	PLUG	
	58	1	**236-4608**	1	SWITCH AS-ROCKER (MODE SELECT)	
	59	1	**236-4609**	1	SWITCH AS-ROCKER (TMSN NEUTRALIZER OVERRIDE)	
	60	1	**236-4610**	1	SWITCH AS-ROCKER (AIR CONDITIONER, HEATER)	
	61	1	**236-4611**	1	SWITCH AS-ROCKER (FAN BLOWER SPEED)	
	62	1	**236-4619**	1	SWITCH AS-ROCKER (LIFT, TILT KICKOUT)	
	63	4	**236-4622**	1	SWITCH AS-ROCKER (FINE MODULATION)	
	64	3	**249-2763**	2	CONTROL GP-DISPLAY ELECTRONIC (INDICATOR PANEL, RH, LH)	
					(EACH INCLUDES)	
		3	**1S-9593**	1	STRAP-CABLE	
		3	**102-8801**	1	KIT-RECEPTACLE (12-PIN)	
					(INCLUDES RECEPTACLE AS AND WEDGE)	
		3	**3E-5180**	1	WEDGE-RECEPTACLE LOCK (12-PIN)	
		3	**186-3735**	11	PIN-CONNECTOR (16-GA TO 18-GA)	

237-4910 **WIRING GP-CAB** ***(contd.)*** **i02325187**

NOTE	REF NO	GRAPHIC REF	PART NUMBER	QTY	PART NAME 1 2 3 4 5 6 (PRODUCT LEVEL)	SEE PAGE
	65	4	**251-1197**	1	SWITCH AS-ROCKER (HYDRAULIC LOCKOUT)	
	66	4	**2A-2677**	1	SPACER (0.75-IN THK)	
	67	1	**2H-3920**	6	LOCKWASHER	
	68	4	**102-8802**	1	KIT-RECEPTACLE (2-PIN)	
					(INCLUDES RECEPTACLE AS AND WEDGE)	
	69	1	**4B-2049**	16	NUT (10-32-THD)	
	70	4	**4D-7388**	1	CLIP	
	71	3	**4P-7581**	1	CLIP	
M	72	2	**5C-7261**	2	NUT (M8X1.25-THD)	
M	73	2	**5C-8312**	4	NUT (M4X0.7-THD)	
	74	3	**5P-4116**	1	WASHER-HARD (8.8X20.5X2-MM THK)	
	75	1	**6D-1641**	1	CLIP	
	76	1	**6D-6146**	8	SCREW-MACHINE (10-32X1.25-IN)	
	77	3	**6V-1889**	1	CLIP	
	78	1	**6V-2687**	8	SCREW-PAN HEAD (10-24X1-IN)	
	79	1	**6V-3265**	4	CLIP	
	80	2	**6V-5645**	4	SCREW-MACHINE (10-32X0.87-IN)	
M	81	4	**6V-9673**	3	SCREW-MACHINE (M5X0.8X12-MM)	
M	82	2	**7X-0818**	3	BOLT (M8X1.25X45-MM)	
M	83	2	**8T-0337**	4	SCREW-MACHINE (M4X0.7X12-MM)	
	84	1,2,4	**8T-4121**	13	WASHER-HARD (11X21X2.5-MM THK)	
M	85	4	**8T-4133**	1	NUT (M10X1.15-THD)	
M	86	2	**8T-4136**	1	BOLT (M10X1.5X25-MM)	
M	87	1,4	**8T-4137**	10	BOLT (M10X1.5X20-MM)	
M	88	1,4	**8T-4138**	10	BOLT (M6X1X20-MM)	
M	89	1,4	**8T-4171**	2	BOLT (M6X1X12-MM)	
M	90	4	**8T-4186**	1	BOLT (M10X1.5X40-MM)	
M	91	3	**8T-4199**	1	BOLT (M8X1.25X12-MM)	
	92	1,2,4	**8T-4205**	9	WASHER-HARD (7.2X14.5X2-MM THK)	
	93	1,2	**8T-4223**	4	WASHER-HARD (13.5X25.5X3-MM THK)	
	94	2	**8T-4224**	2	WASHER-HARD (8.8X16X2-MM THK)	
M	95	1,2	**8T-4244**	4	NUT (M12X1.75-THD)	
M	96	2,3	**8T-4970**	5	BOLT (M6X1X14-MM)	
M	97	2	**8T-6870**	8	BOLT (M8X1.25X70-MM)	
	98	2	**9M-4972**	1	CLIP	
	99	1	**9M-5870**	8	GROMMET	
	100	2	**9N-0869**	11	WASHER-HARD (8.8X25.5X2-MM THK)	
M	101	1	**9X-1046**	6	SCREW (M4X0.7X18-MM)	
M	102	4	**9X-2480**	2	BOLT (M6X1X45-MM)	
	103	3	**9X-6165**	1	WASHER (6.5X22X2.5-MM THK)	
	104	1,3,4	**9X-8256**	7	WASHER (6.6X12X2-MM THK)	

D-ORDER BY THE METER
M-METRIC PART
Y-SEPARATE ILLUSTRATION

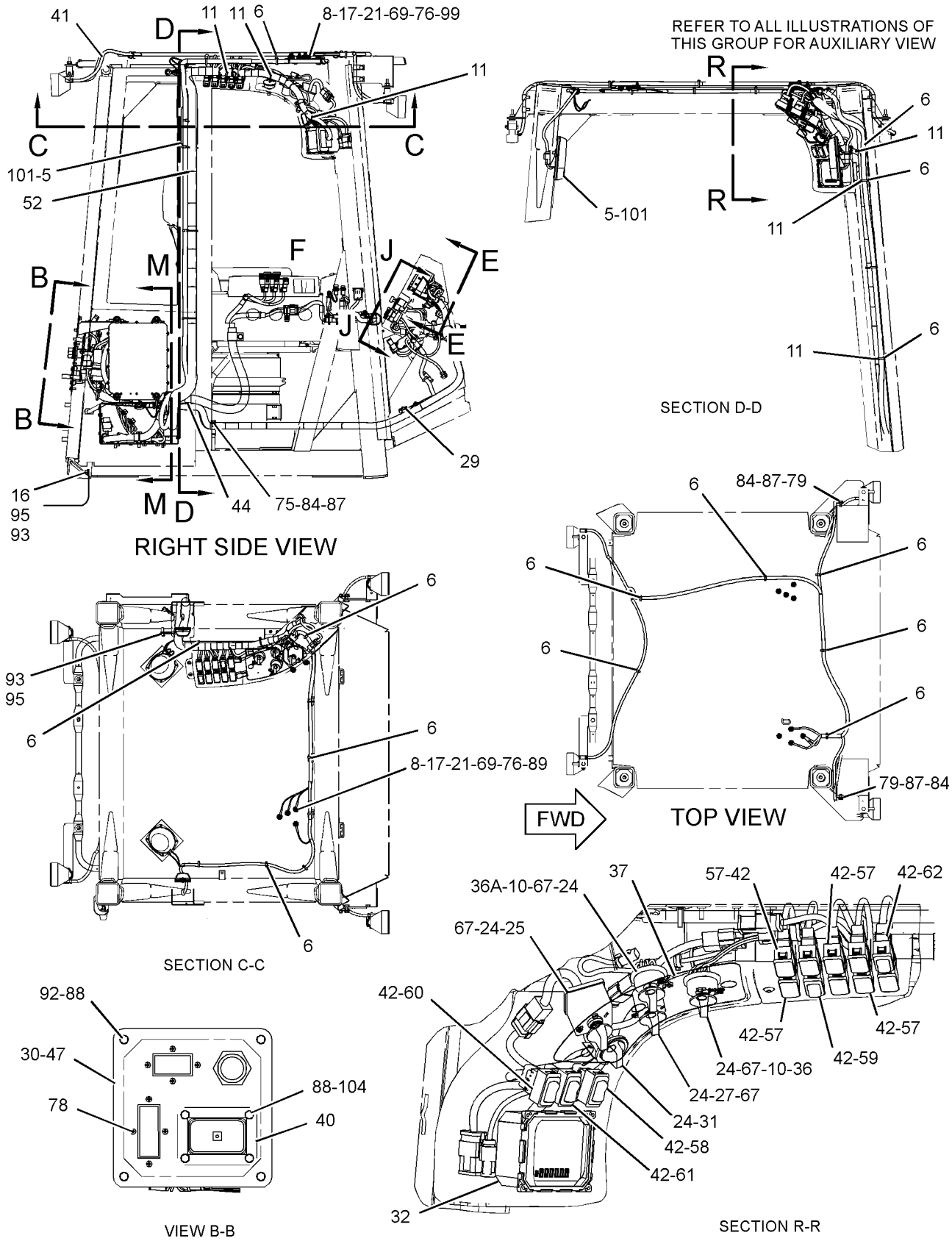

GRAPHIC #1 g01166384

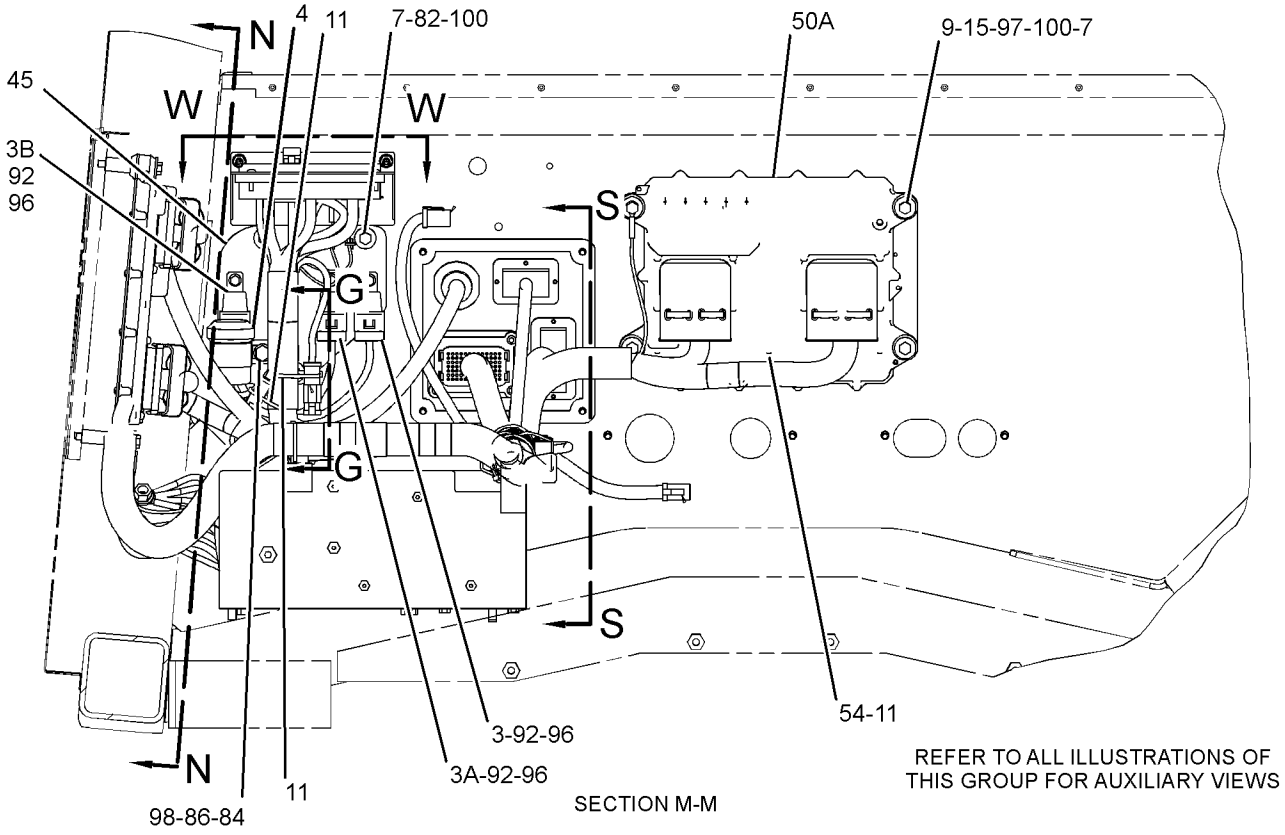

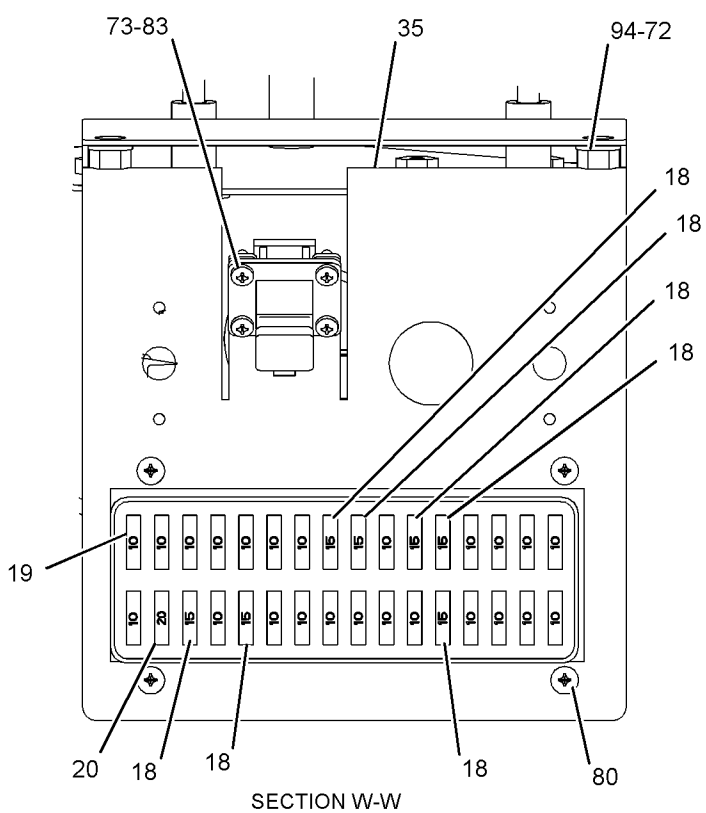

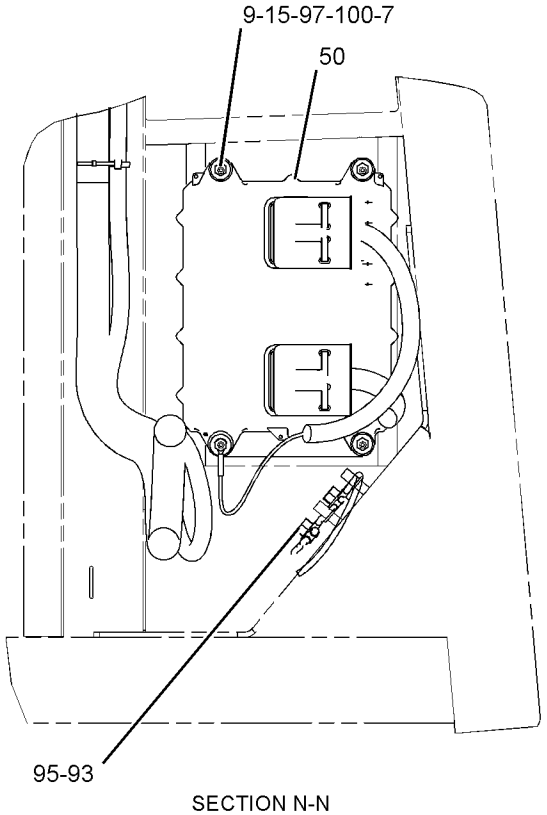

GRAPHIC #2 g01166395

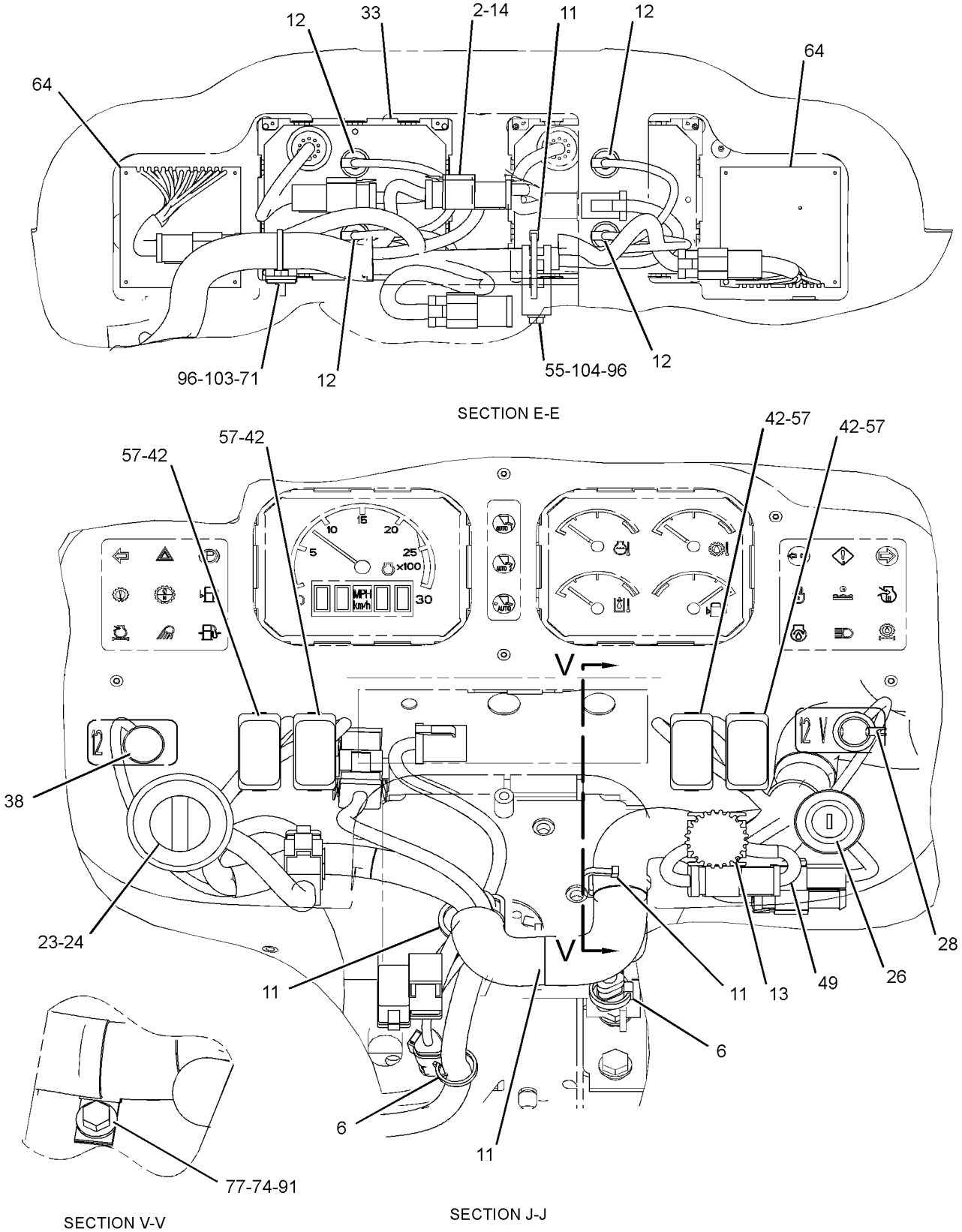

GRAPHIC #3 g01191288

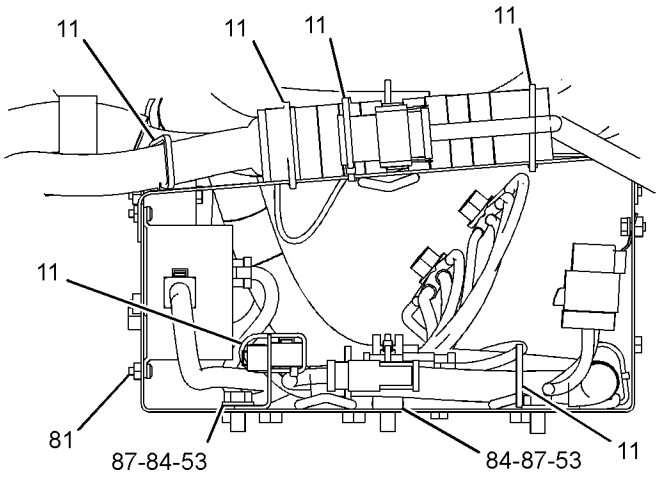

SECTION S-S

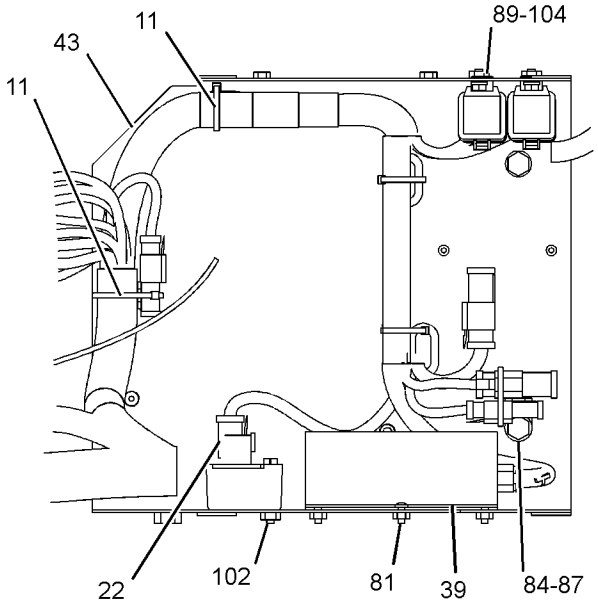

SECTION L-L

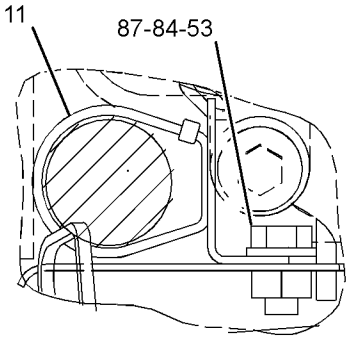

SECTION G-G

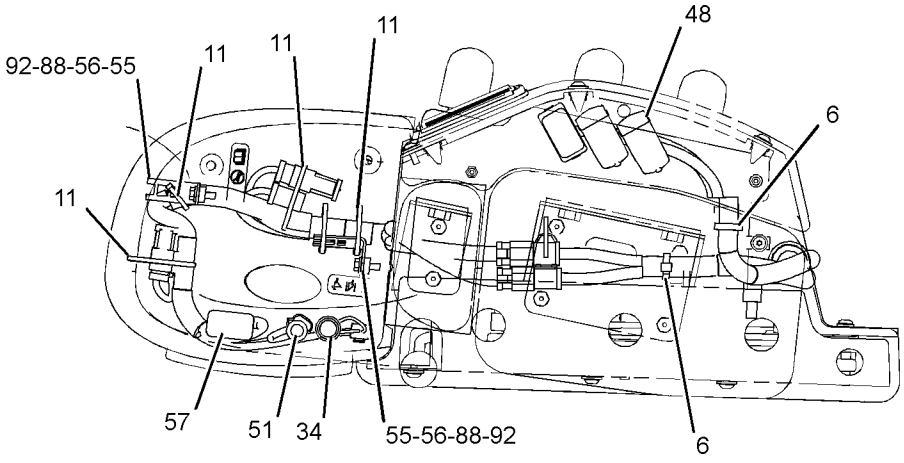

VIEW A-A

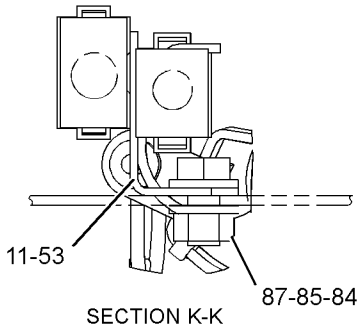

SECTION K-K

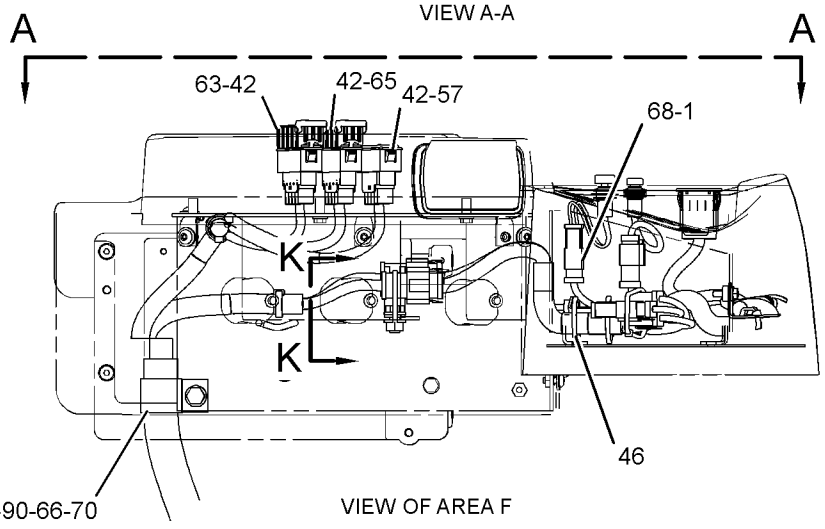

VIEW OF AREA F

GRAPHIC #4

<END>

g01191289

237-4905 WIRING GP-CHASSIS

S/N: A7G1-UP

PART OF 236-9053 ELECTRICAL AR

SMCS-1408 **i02411863**

NOTE	REF NO	GRAPHIC REF	PART NUMBER	QTY	PART NAME 1 2 3 4 5 6 (PRODUCT LEVEL)	SEE PAGE
	1	3	**3E-5169**	1	GUARD-SWITCH	
	2	1,2,3	**7K-1181**	50	STRAP-CABLE	
	3	2	*8T-2893*	1	LOCK AS-CYLINDER	
		2	**226-0291**	1	LOCK AS	
		2	**226-0321**	1	CAM	
	4	1	**103-0010**	1	BRACKET AS	
	5	2	**118-6365**	1	PLATE AS	
Y	6	3	**125-1302**	1	SWITCH GP-MAGNETIC (24-VOLT) (START RELAY)	205
	7	1	**130-9811**	1	SENSOR GP-TEMPERATURE (2-PIN) (HYDRAULIC OIL)	
	8	3	**131-0359**	1	PLATE-CONTROL (ENGINE STOP, RUN)	
	9	1	**146-0240**	1	SWITCH GP-TOGGLE (HOOD TILT ACTUATOR)	
		1	**6T-3631**	2	NUT-HEX (15/32-32-THD)	
		1	**6T-3632**	1	LOCKWASHER	
		1	**6T-3633**	1	RING-LOCKING	
		1	**186-3735**	3	PIN-CONNECTOR (16-GA TO 18-GA)	
		1	**102-8803**	1	KIT-RECEPTACLE (3-PIN)	
					(INCLUDES RECEPTACLE AS AND WEDGE)	
	10	3	**149-2612**	1	RELAY AS (24-VOLT) (HOOD TILT MOTOR)	
		3	**186-3735**	2	PIN-CONNECTOR (16-GA TO 18-GA)	
		3	**9W-0852**	4	PIN-CONNECTOR (14-GA)	
		3	**102-8805**	1	KIT-RECEPTACLE (6-PIN)	
					(INCLUDES RECEPTACLE AS AND WEDGE)	
	11	3	**158-6634**	1	SWITCH GP-TOGGLE (GROUND LEVEL SHUTDOWN)	
		3	**6T-3631**	2	NUT-HEX (15/32-32-THD)	
		3	**6T-3632**	1	LOCKWASHER	
		3	**6T-3633**	1	RING-LOCKING	
		3	**186-3735**	1	PIN-CONNECTOR (16-GA TO 18-GA)	
		3	**9G-3695**	1	PLUG (GROMMET SEALING)	
		3	**102-8804**	1	KIT-RECEPTACLE (4-PIN)	
					(INCLUDES RECEPTACLE AS AND WEDGE)	
Y	12	1	**164-7577**	1	SWITCH GP-BYPASS (POWER TRAIN OIL FILTER)	202
	13	3	**171-2206**	1	CIRCUIT BREAKER AS (50-AMPERE) (ENGINE START)	
		3	**6V-8187**	2	NUT (1/4-28-THD)	
		3	**8T-4205**	2	WASHER-HARD (7.2X14.5X2-MM THK)	
		3	**253-2111**	2	LOCKWASHER	
	14	3	**171-2210**	1	CIRCUIT BREAKER AS (80-AMPERE) (MAIN)	
		3	**6V-8187**	2	NUT (1/4-28-THD)	
		3	**8T-4205**	2	WASHER-HARD (7.2X14.5X2-MM THK)	
		3	**253-2111**	2	LOCKWASHER	
	15	3	**171-2212**	1	CIRCUIT BREAKER AS (105-AMPERE) (ALTERNATOR)	
		3	**6V-8187**	2	NUT (1/4-28-THD)	
		3	**8T-4205**	2	WASHER-HARD (7.2X14.5X2-MM THK)	
		3	**253-2111**	2	LOCKWASHER	
	16	1	**172-4871**	1	CLAMP	
		1	**6V-6716**	2	RIVET-TRUSS HEAD	
		1	**109-1645**	1	CLIP	
	17	1	**174-4312**	1	SWITCH AS-PRESSURE (PARKING BRAKE OIL)	
		1	**186-3735**	1	PIN-CONNECTOR (16-GA TO 18-GA)	
		1	**102-8803**	1	KIT-RECEPTACLE (3-PIN)	
					(INCLUDES RECEPTACLE AS AND WEDGE)	
	18	1	**188-6185**	4	GROMMET	
	19	2	**188-6252**	1	PLATE-HOOD	
	20	3	**218-4935**	1	SUPPRESSOR-ARC	
Y	21	3	**241-8368**	1	SWITCH GP-MAGNETIC (24-VOLT) (MAIN RELAY)	206
	22	1	**245-3257**	1	HARNESS AS-CHASSIS (MAIN)	
		1	**102-8802**	6	KIT-RECEPTACLE (2-PIN)	

237-4905 **WIRING GP-CHASSIS** ***(contd.)*** **i02411863**

NOTE	REF NO	GRAPHIC REF	PART NUMBER	QTY	PART NAME 1 2 3 4 5 6 (PRODUCT LEVEL)	SEE PAGE
		1	**102-8803**	2	KIT-RECEPTACLE (3-PIN)	
		1	**102-8804**	1	KIT-RECEPTACLE (4-PIN)	
		1	**102-8805**	1	KIT-RECEPTACLE (6-PIN)	
		1	**102-8801**	1	KIT-RECEPTACLE (12-PIN)	
					(EACH KIT RECEPTACLE INCLUDES RECEPTACLE AS AND WEDGE)	
		1	**110-6845**	1	PLUG AS-CONNECTOR (40-PIN)	
		1	**8N-1533**	1	PLUG AS-CONNECTOR (7-PIN)	
		1	**3S-2093**	2	STRAP-CABLE	
		1	**7K-1181**	1	STRAP-CABLE	
		1	**9X-6772**	1	STRAP-CABLE	
		1	**8N-1535**	1	BELL AS-END	
		1	**113-0580**	1	RECEPTACLE AS-CONNECTOR (40-PIN)	
		1	**106-4155**	1	KIT-BOLT (ELECTRICAL CONNECTORS)	
		1	**129-7163**	1	PLUG AS-CONNECTOR (1-PIN)	
		1	**129-7164**	1	RECEPTACLE AS-CONNECTOR (1-PIN)	
		1	**155-2260**	5	KIT-CONNECTING PLUG (3-PIN)	
		1	**155-2270**	10	KIT-CONNECTING PLUG (2-PIN)	
		1	**155-2271**	2	KIT-CONNECTING PLUG (4-PIN)	
		1	**155-2274**	2	KIT-CONNECTING PLUG (6-PIN)	
					(EACH KIT PLUG INCLUDES PLUG AS AND WEDGE)	
		1	**160-7689**	1	PLUG AS-CONNECTOR (70-PIN)	
		1	**159-9322**	1	SEAL-O-RING	
	23	3	**246-4488**	1	BAR-BUS	
	24	3	**246-4489**	1	WIRE AS	
	25	1	**247-3773**	1	HARNESS AS-CHASSIS (PARK BRAKE, OIL FLTR SWITCHES)	
		1	**155-2255**	1	KIT-CONNECTING PLUG (12-PIN)	
		1	**155-2260**	1	KIT-CONNECTING PLUG (3-PIN)	
		1	**155-2270**	2	KIT-CONNECTING PLUG (2-PIN)	
					(EACH KIT PLUG INCLUDES PLUG AS AND WEDGE)	
	26	2	**248-1545**	1	PLATE-FUSE	
	27	1	**255-4369**	1	GROMMET	
	28	3	**271-3952**	1	BUSS BAR	
	29	3	**275-4024**	1	PANEL AS	
		3	**3R-9322**	1	HINGE	
M		3	**6V-9632**	7	NUT-WELD (M6X1-THD)	
		3	**7T-1099**	5	LINK	
M		3	**8T-6462**	1	BOSS-WELD (M10X1.5X25-MM OAL)	
	30	3	**275-9916**	1	BUSS BAR	
	31	1,2	**130-5300**	8	CLIP	
	32	3	**132-5789**	2	CLIP	
	33	1	**147-0385**	1	CLIP	
	34	1	**149-7738**	3	CLIP	
	35	2	**205-7299**	2	CLIP	
	36	1	**1S-0994**	1	CLIP	
	37	3	**2Y-5564**	1	PLUG-BUTTON	
	38	1	**3E-6769**	1	SEAL-O-RING	
	39	1	**3J-1907**	1	SEAL-O-RING	
	40	1	**3P-3839**	1	GROMMET	
	41	3	**3T-2662**	1	CIRCUIT BREAKER AS (15-AMPERE) (RUNNING LIGHTS)	
		3	**6V-8376**	2	SCREW-MACHINE (8-32X0.25-IN)	
		3	**9B-7233**	2	LOCKWASHER	
	42	2	**4P-7581**	1	CLIP	
	43	2	**5L-4507**	6	SCREW-MACHINE (10-32X0.875-IN)	
	44	2	**5M-6668**	6	SCREW-MACHINE (8-32X0.75-IN)	
	45	2	**5P-9085**	2	CLIP	
	46	2	**5P-9297**	3	CLIP	

237-4905 **WIRING GP-CHASSIS** ***(contd.)*** **i02411863**

NOTE	REF NO	GRAPHIC REF	PART NUMBER	QTY	PART NAME 1 2 3 4 5 6 (PRODUCT LEVEL)	SEE PAGE
	47	3	**6N-9349**	1	CIRCUIT BREAKER AS (30-AMPERE) (UNSWITCHED BAT POWER TO CAB)	
		3	**6V-8376**	2	SCREW-MACHINE (8-32X0.25-IN)	
		3	**9B-7233**	2	LOCKWASHER	
	48	3	**6T-3644**	1	CIRCUIT BREAKER GP (20-AMPERE) (HOOD TILT ACTUATOR)	
		3	**6V-8376**	2	SCREW-MACHINE (8-32X0.25-IN)	
		3	**9B-7233**	2	LOCKWASHER	
	49	1,2	**7C-4354**	3	CLIP	
	50	2	**7D-1728**	1	CLIP	
	51	1	**7I-3722**	3	CLIP	
	52	2	**8M-2772**	1	CLIP	
	53	1,2,3	**8T-4121**	25	WASHER-HARD (11X21X2.5-MM THK)	
M	54	1,2	**8T-4133**	11	NUT (M10X1.15-THD)	
M	55	1	**8T-4136**	1	BOLT (M10X1.5X25-MM)	
M	56	1,2	**8T-4137**	8	BOLT (M10X1.5X20-MM)	
M	57	3	**8T-4138**	2	BOLT (M6X1X20-MM)	
M	58	3	**8T-4171**	1	BOLT (M6X1X12-MM)	
M	59	3	**8T-4191**	1	BOLT (M10X1.5X16-MM)	
	60	2	**8T-4223**	1	WASHER-HARD (13.5X25.5X3-MM THK)	
M	61	2	**8T-4244**	1	NUT (M12X1.75-THD)	
M	62	3	**8T-4970**	4	BOLT (M6X1X14-MM)	
M	63	2	**8T-5436**	4	BOLT (M10X1.5X130-MM)	
	64	3	**9X-8256**	7	WASHER (6.6X12X2-MM THK)	
D	65	3	**5P-6120**		TRIM-EDGE (0.4-M)	

D-ORDER BY THE METER
M-METRIC PART
Y-SEPARATE ILLUSTRATION

237-4905 **WIRING GP-CHASSIS** *(contd.)* **i02411863**

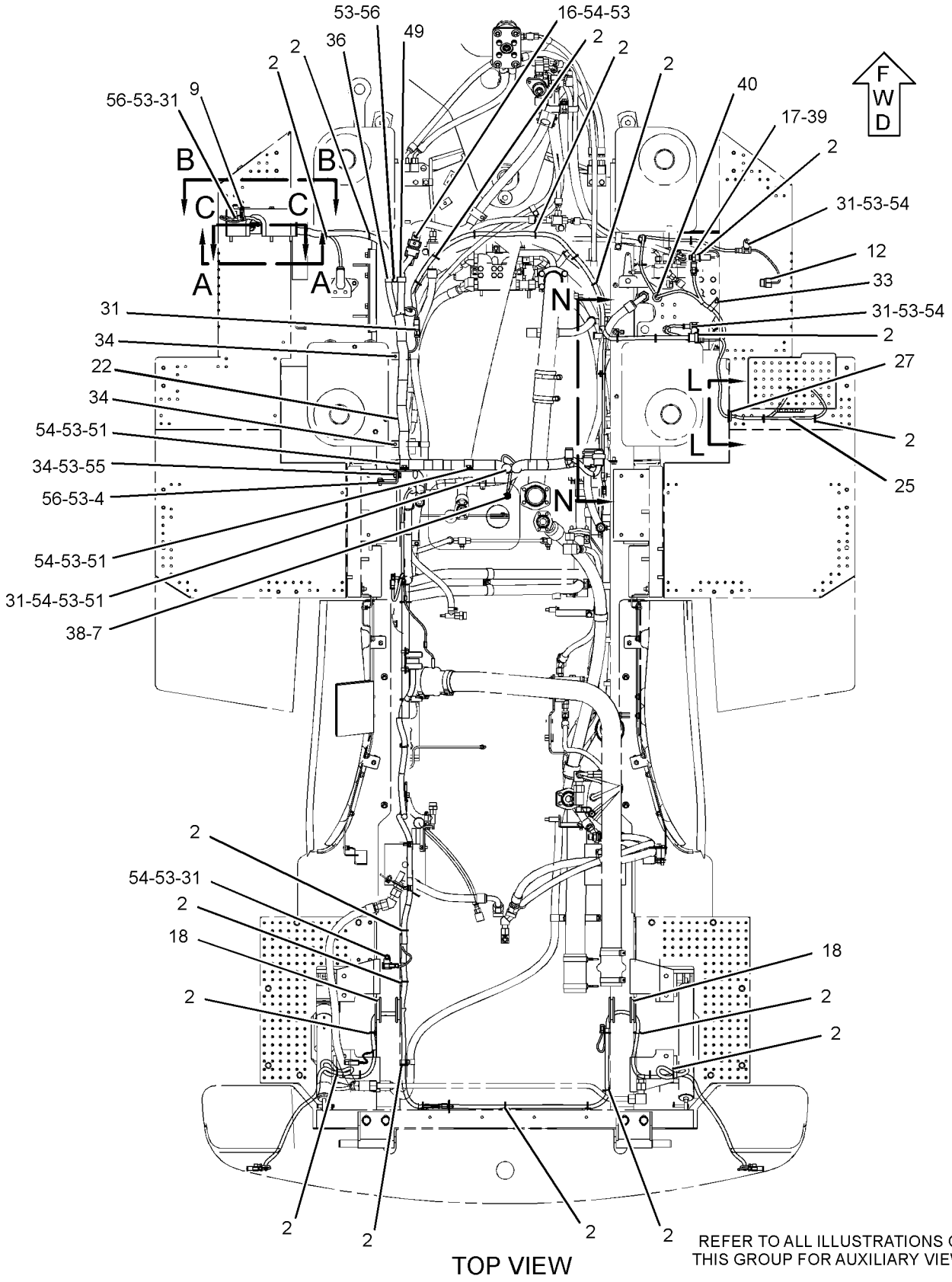

REFER TO ALL ILLUSTRATIONS OF THIS GROUP FOR AUXILIARY VIEWS

GRAPHIC #1

g01190939

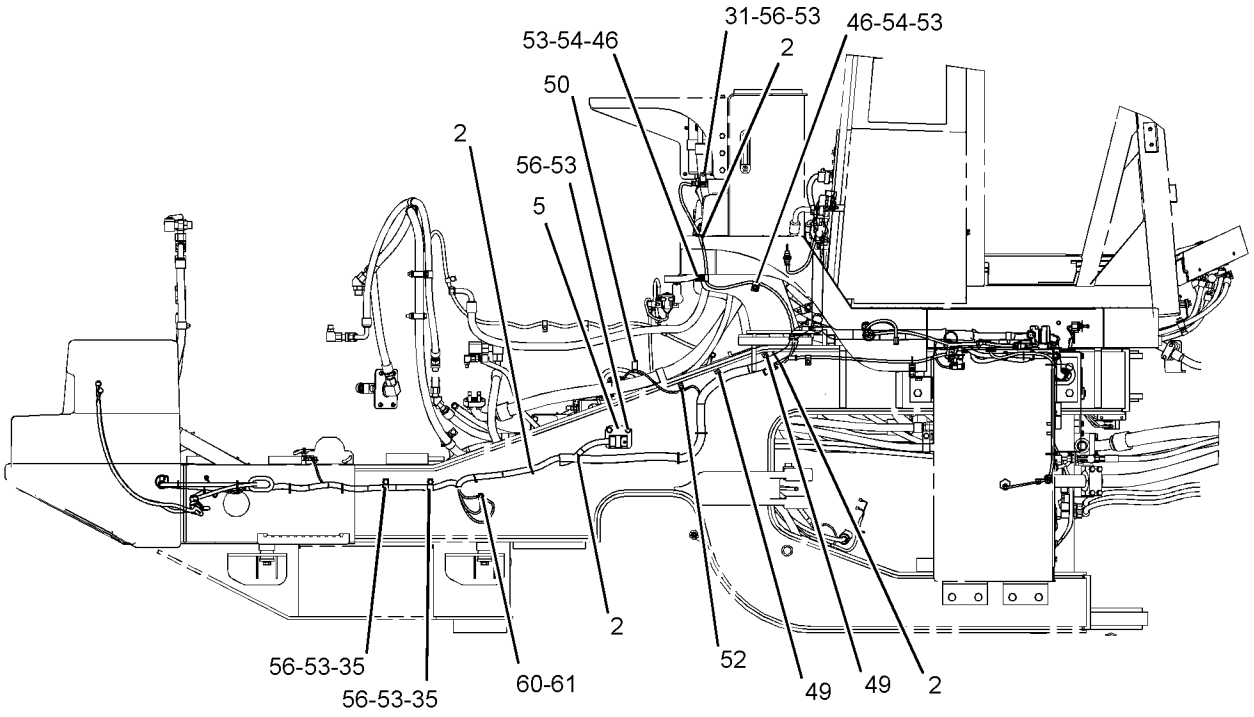

RIGHT SIDE VIEW

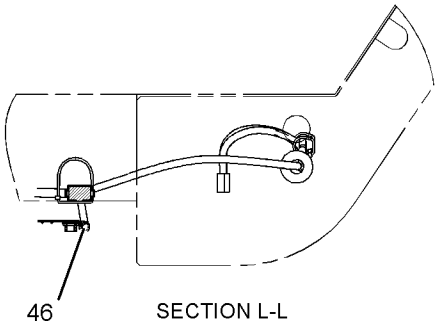

SECTION L-L

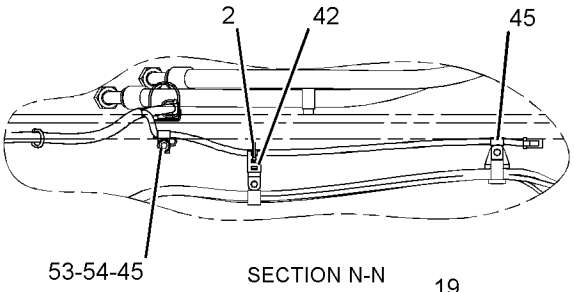

SECTION N-N

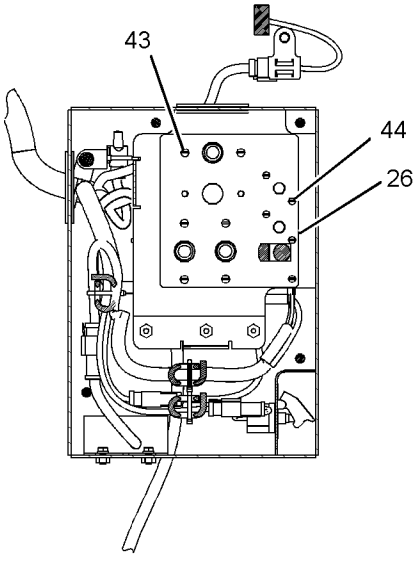

SECTION C-C

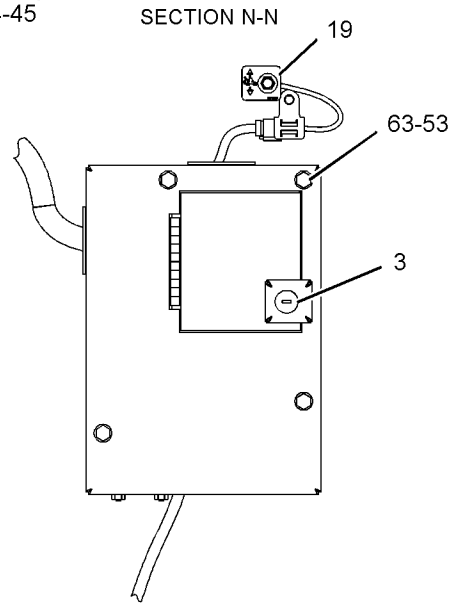

SECTION B-B

GRAPHIC #2

g01202767

237-4905 **WIRING GP-CHASSIS** *(contd.)* **i02411863**

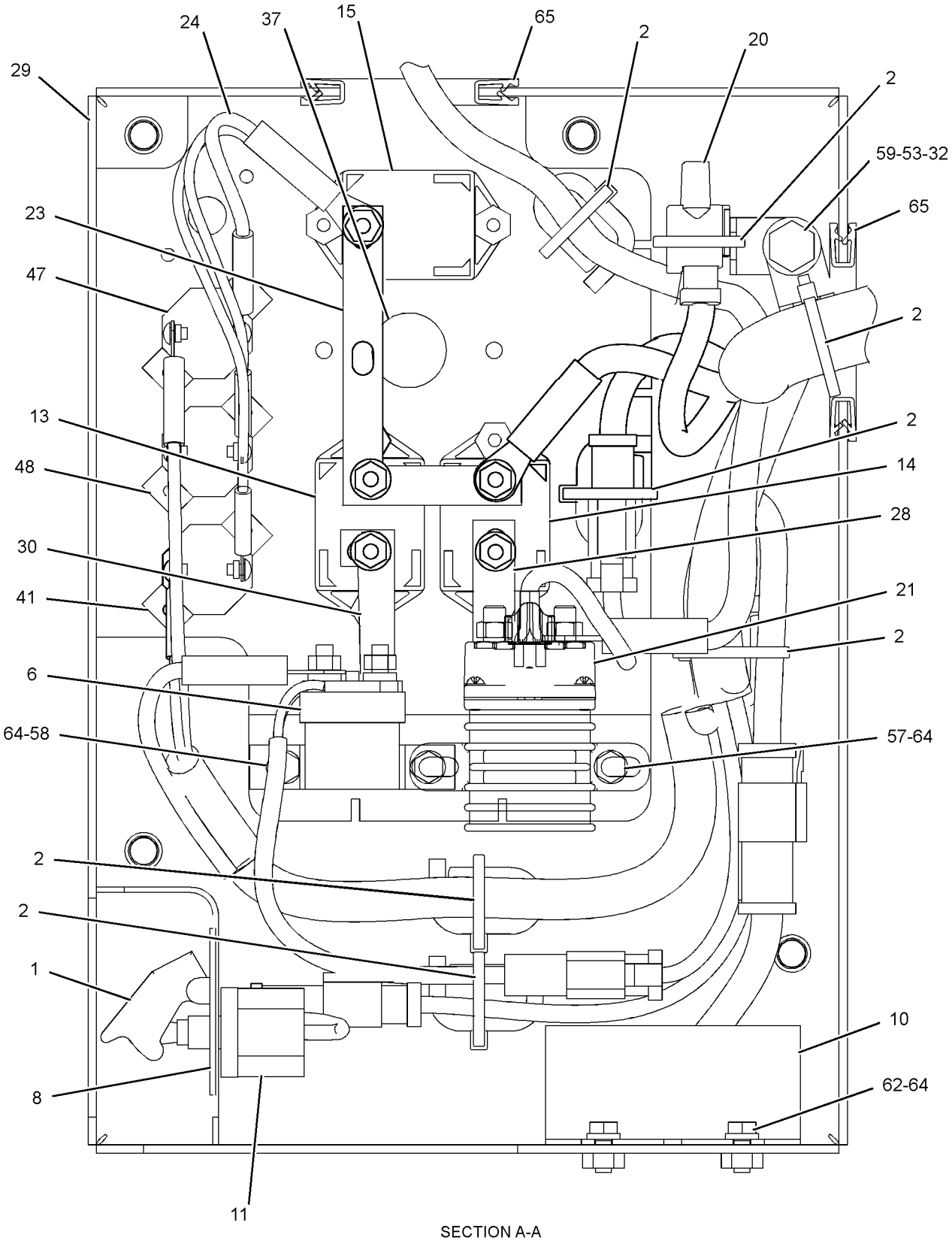

SECTION A-A

GRAPHIC #3 **<END>** g01202769

237-9752 WIRING GP-ELECTRONIC CONTROL

S/N: MHX1-UP

PART OF 234-7849 ENGINE AR-COMPLETE

SMCS-1408 **i02270582**

NOTE	REF NO	GRAPHIC REF	PART NUMBER	QTY	PART NAME 1 2 3 4 5 6 (PRODUCT LEVEL)	SEE PAGE
	1	1	**3S-2093**	15	STRAP-CABLE	
	2	1	**4W-9149**	1	SPACER (10.5X19X16.75-MM THK)	
	3	1	**9C-5344**	1	SPACER (10.5X20X18-MM THK)	
M	4	1	**9X-2097**	1	STUD (M8X1.25-THD)	
	5	1	**219-7461**	1	HARNESS AS-ENGINE (ELECTRONIC CONTROL MODULE)	
		1	**102-8802**	1	KIT-RECEPTACLE (2-PIN)	
					(INCLUDES RECEPTACLE AS AND WEDGE)	
		1	**102-8803**	2	KIT-RECEPTACLE (3-PIN)	
					(EACH INCLUDES RECEPTACLE AS AND WEDGE)	
		1	**3S-2093**	1	STRAP-CABLE	
		1	**105-1797**	1	MOUNT	
		1	**155-2255**	1	KIT-CONNECTING PLUG (12-PIN)	
					(INCLUDES PLUG AS AND WEDGE)	
		1	**155-2265**	1	KIT-CONNECTING PLUG (8-PIN)	
					(INCLUDES PLUG AS AND WEDGE)	
		1	**155-2260**	1	KIT-CONNECTING PLUG (3-PIN)	
					(INCLUDES PLUG AS AND WEDGE)	
		1	**155-2270**	5	KIT-CONNECTING PLUG (2-PIN)	
					(EACH INCLUDES PLUG AS AND WEDGE)	
		1	**227-4002**	1	PLUG AS-CONNECTOR (108-PIN)	
	6	1	**130-5300**	1	CLIP	
	7	1	**132-5789**	2	CLIP	
	8	1	**149-9129**	2	CLIP	
M	9	1	**2Y-5829**	2	NUT (M10X1.15-THD)	
	10	1	**4P-7581**	7	CLIP	
M	11	1	**6V-3918**	1	BOLT (M8X1.25X50-MM)	
	12	1	**6V-5839**	6	WASHER (11X21X2.5-MM THK)	
M	13	1	**6V-8212**	4	BOLT (M10X1.5X16-MM)	
M	14	1	**6V-8836**	1	BOLT (M6X1X14-MM)	
	15	1	**9M-1974**	2	WASHER-HARD (8.8X16X2-MM THK)	
	16		**9X-8267**	1	WASHER (6.6X12X2-MM THK)	

M-METRIC PART

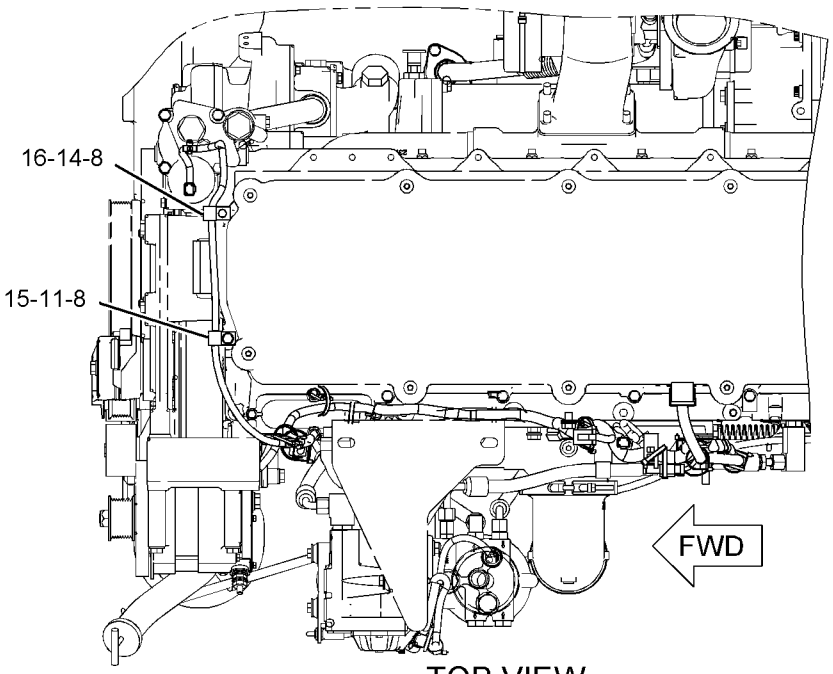

TOP VIEW

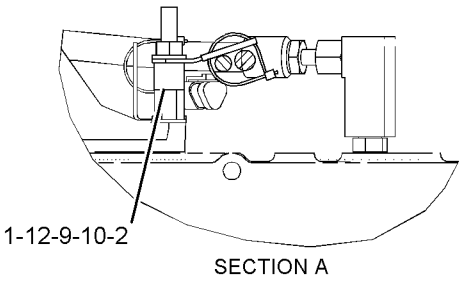

SECTION A

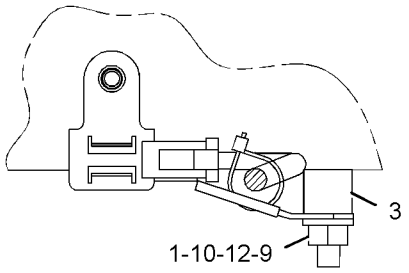

SECTION C-C

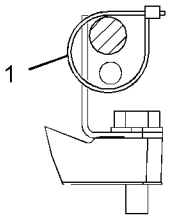

SECTION B-B

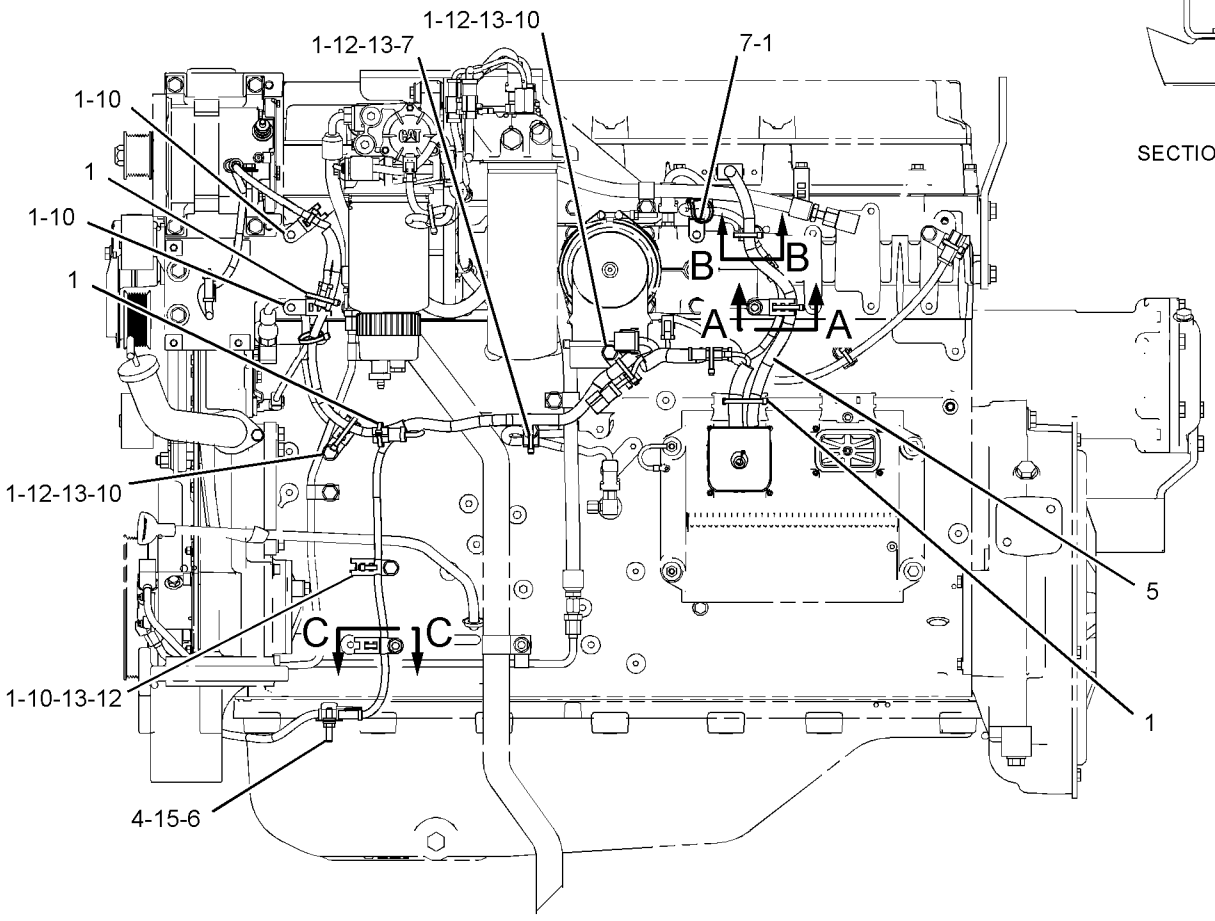

LEFT SIDE VIEW

GRAPHIC #1 **<END>** g01137547

237-4903 WIRING GP-ENGINE

S/N: A7G1-UP

PART OF 236-9053 ELECTRICAL AR

SMCS-1403, 1408 **i02411540**

NOTE	REF NO	GRAPHIC REF	PART NUMBER	QTY	PART NAME 1 2 3 4 5 6 (PRODUCT LEVEL)	SEE PAGE
	1	1	**3S-2093**	1	STRAP-CABLE	
	2	1	**7K-1181**	13	STRAP-CABLE	
	3	1	**121-1340**	1	ANGLE AS	
M		1	**8T-3490**	1	NUT-WELD (M10X1.5-THD)	
	4	1	**130-9811**	1	SENSOR GP-TEMPERATURE (2-PIN) (TORQUE CONVERTER OIL)	
	5	1	**144-4613**	1	ANGLE AS	
M		1	**8T-3490**	1	NUT-WELD (M10X1.5-THD)	
	6	1	**175-3244**	1	SWITCH AS-PRESSURE (SERVICE BRAKE OIL)	
		1	**102-8803**	1	KIT-RECEPTACLE (3-PIN)	
					(INCLUDES RECEPTACLE AS AND WEDGE)	
	7	1	**245-3514**	1	HARNESS AS-ENGINE	
		1	**102-8802**	2	KIT-RECEPTACLE (2-PIN)	
		1	**102-8803**	2	KIT-RECEPTACLE (3-PIN)	
					(EACH KIT INCLUDES RECEPTACLE AS AND WEDGE)	
		1	**110-6845**	1	PLUG AS-CONNECTOR (40-PIN)	
		1	**8T-8737**	49	PLUG-SEAL	
		1	**126-1774**	1	COVER	
		1	**155-2270**	16	KIT-CONNECTING PLUG (2-PIN)	
		1	**155-2260**	4	KIT-CONNECTING PLUG (3-PIN)	
					(EACH KIT INCLUDES PLUG AS AND WEDGE)	
		1	**160-7689**	1	PLUG AS-CONNECTOR (70-PIN)	
	8	1	**246-1774**	1	CABLE AS	
E		1	**8C-0596**		CABLE (02-GA) (34-CM)	
		1	**030-1712**	2	TERMINAL-RING (2-GA, 6.35-MM)	
		1	**231-4476**	1	TERMINAL AS	
	9	1	**130-5300**	3	CLIP	
	10	1	**130-5301**	1	CLIP	
	11	1	**132-5789**	5	CLIP	
Y	12	1	**194-6722**	1	SENSOR GP-PRESSURE (TURBOCHARGER INLET)	182
	13	1	**3J-1907**	2	SEAL-O-RING	
	14	1	**3K-0360**	1	SEAL-O-RING	
	15	1	**4P-7582**	2	CLIP	
	16	1	**6D-4246**	2	CLIP	
	17	1	**6V-5839**	1	WASHER (11X21X2.5-MM THK)	
	18	1	**7D-1649**	1	WASHER-HARD (13.5X32X5-MM THK)	
M	19	1	**7X-0409**	1	BOLT-HIGH TEMPERATURE (M10X1.5X20-MM)	
	20	1	**8T-4121**	3	WASHER-HARD (11X21X2.5-MM THK)	
M	21	1	**8T-4136**	3	BOLT (M10X1.5X25-MM)	
	22	1	**8T-4223**	1	WASHER-HARD (13.5X25.5X3-MM THK)	
	23	1	**8T-8919**	1	BOLT (1/2-13X1.75-IN)	

E-ORDER BY THE CENTIMETER
M-METRIC PART
Y-SEPARATE ILLUSTRATION

237-4903 **WIRING GP-ENGINE** *(contd.)* **i02411540**

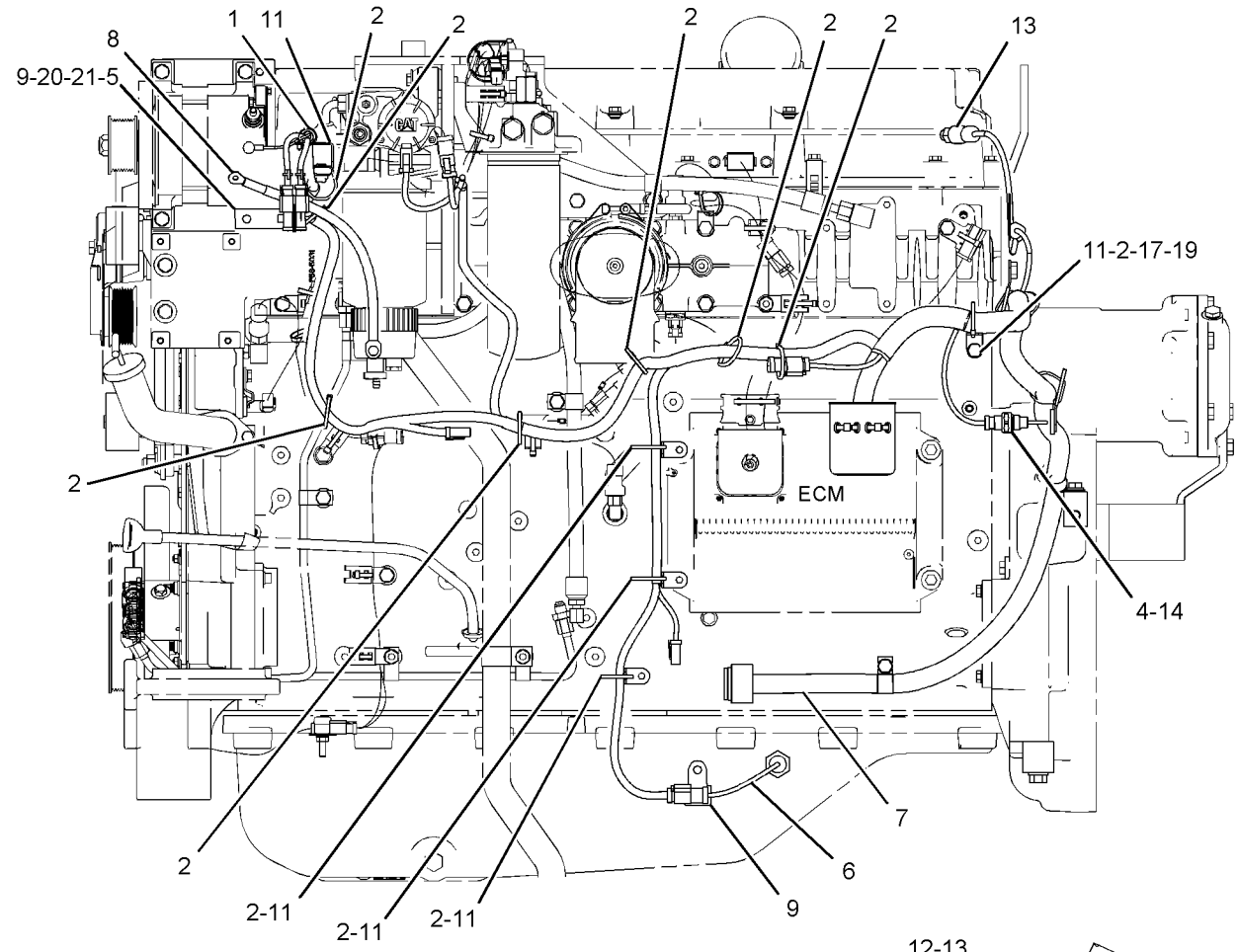

RIGHT SIDE VIEW

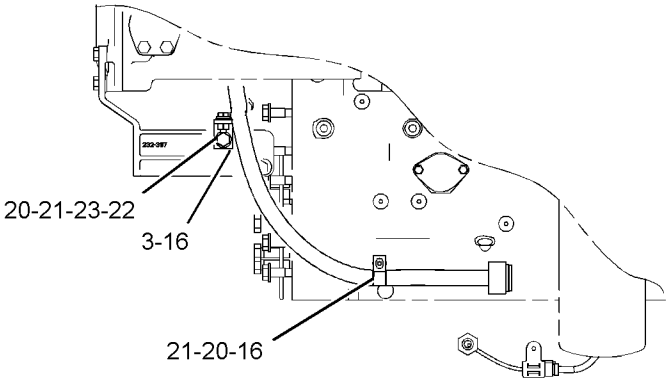

LEFT SIDE VIEW

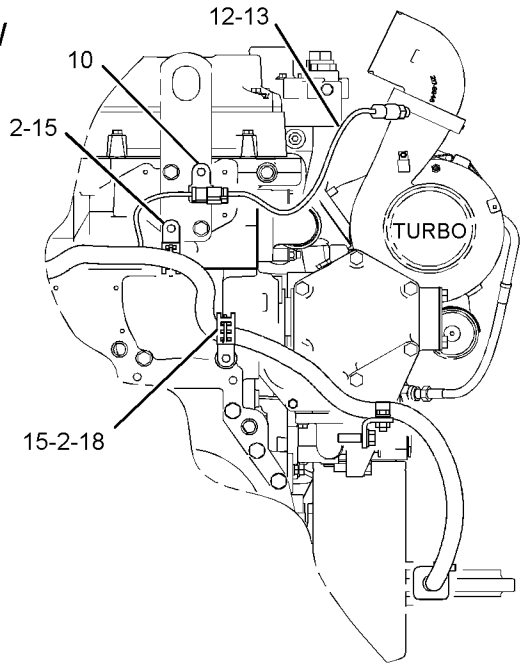

FRONT VIEW

GRAPHIC #1 **<END>** g01195727

237-4904 WIRING GP-FRONT

S/N: A7G1-UP

PART OF 236-9053 ELECTRICAL AR

SMCS-5734 **i02411669**

NOTE	REF NO	GRAPHIC REF	PART NUMBER	QTY	PART NAME 1 2 3 4 5 6 (PRODUCT LEVEL)	SEE PAGE
	1	1	**4H-1225**	3	WASHER (11X22X6-MM THK)	
	2	1	**5V-6152**	4	CLAMP	
	3	1	**5V-6153**	2	PLATE-COVER	
	4	1	**7K-1181**	17	STRAP-CABLE	
	5	1	**273-0275**	1	HARNESS AS-FRONT CHASSIS	
		1	**102-8802**	7	KIT-RECEPTACLE (2-PIN)	
		1	**102-8803**	2	KIT-RECEPTACLE (3-PIN)	
		1	**102-8801**	2	KIT-RECEPTACLE (12-PIN)	
					(EACH KIT RECEPTACLE INCLUDES RECEPTACLE AS AND WEDGE)	
		1	**7K-1181**	2	STRAP-CABLE	
		1	**113-0580**	1	RECEPTACLE AS-CONNECTOR (40-PIN)	
		1	**155-2260**	4	KIT-CONNECTING PLUG (3-PIN)	
		1	**155-2270**	15	KIT-CONNECTING PLUG (2-PIN)	
					(EACH KIT PLUG INCLUDES PLUG AS AND WEDGE)	
	6	1	**124-1479**	6	CLIP	
	7	1	**130-5300**	5	CLIP	
	8	1	**147-0385**	2	CLIP	
	9	1	**4K-8864**	3	CLIP	
	10	1	**4P-7428**	3	CLIP	
	11	1	**5P-9297**	2	CLIP	
	12	1	**6D-4246**	2	CLIP	
M	13	1	**8T-3844**	2	BOLT (M6X1X70-MM)	
	14	1	**8T-4121**	9	WASHER-HARD (11X21X2.5-MM THK)	
M	15	1	**8T-4133**	6	NUT (M10X1.15-THD)	
M	16	1	**8T-4137**	3	BOLT (M10X1.5X20-MM)	
M	17	1	**8T-6974**	2	BOLT (M6X1X80-MM)	
	18	1	**9X-8250**	1	CLIP	
	19	1	**9X-8256**	4	WASHER (6.6X12X2-MM THK)	

M-METRIC PART

237-4904 **WIRING GP-FRONT** *(contd.)* **i02411669**

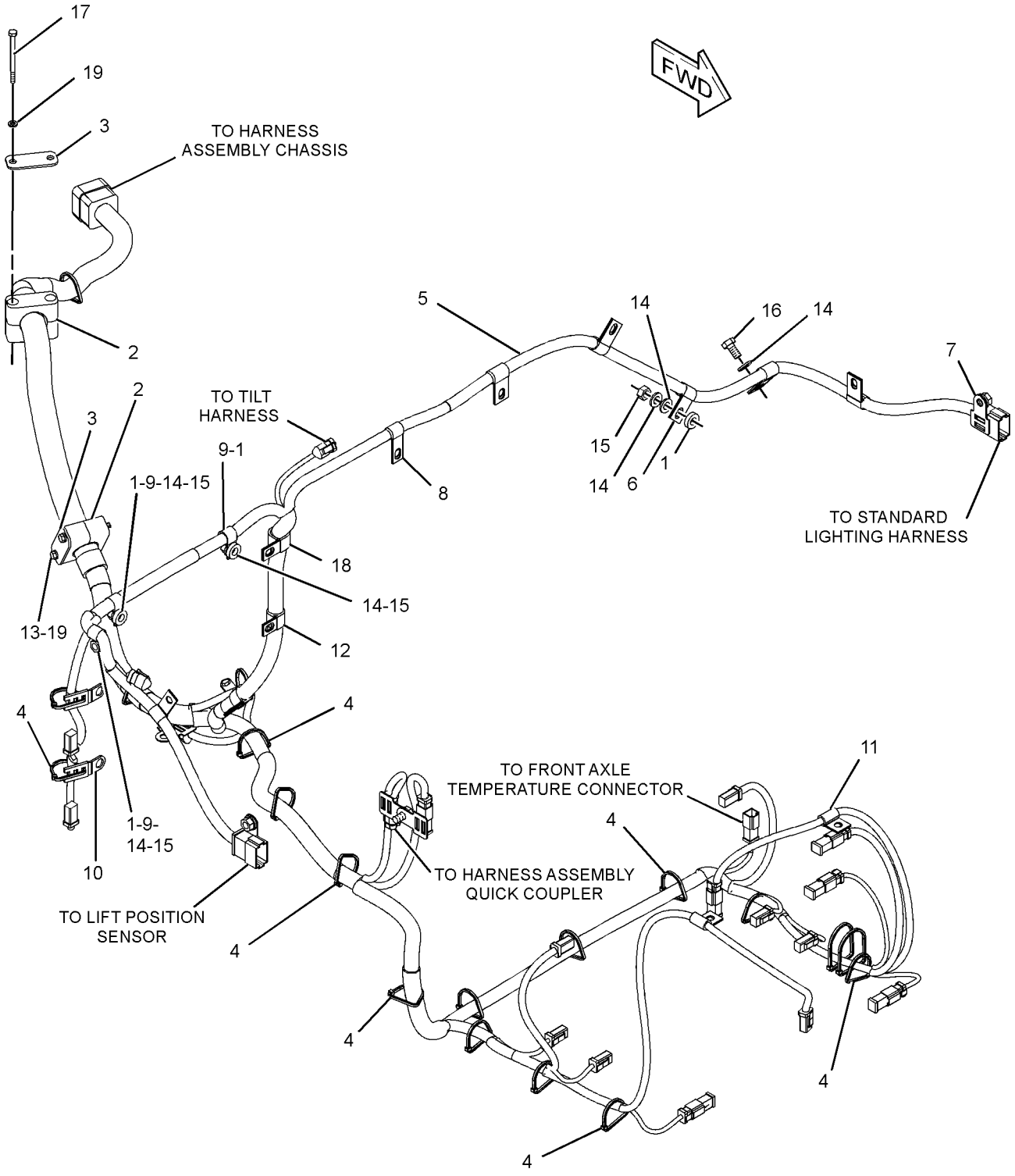

GRAPHIC #1 **<END>** g01200831

271-4016 WIRING GP-LIGHTING—LOADER FRAME

S/N: A7G1-UP

PART OF 236-9053 ELECTRICAL AR

SMCS-1408, 1429 **i02416845**

NOTE	REF NO	GRAPHIC REF	PART NUMBER	QTY	PART NAME 1 2 3 4 5 6 (PRODUCT LEVEL)	SEE PAGE
	1	1	**271-4017**	2	HARNESS AS-LIGHTING	
					(EACH INCLUDES)	
		1	**155-2255**	1	KIT-CONNECTING PLUG (12-PIN)	
		1	**155-2270**	1	KIT-CONNECTING PLUG (2-PIN)	
					(EACH INCLUDES PLUG AS AND WEDGE)	

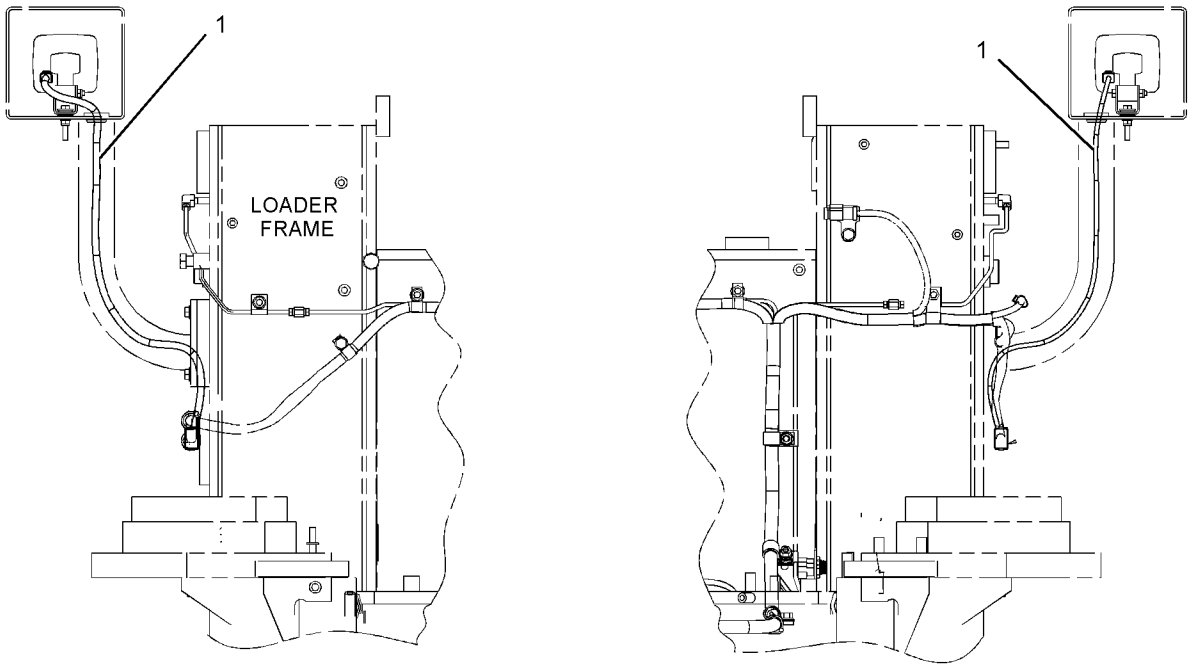

REAR VIEW

GRAPHIC #1 **<END>** g01201152

271-4028 WIRING GP-LIGHTING

S/N: A7G1-UP

PART OF 235-5279, 244-3599 LIGHTING AR-SIGNAL AN ATTACHMENT

SMCS-1408, 1429 **i02414177**

NOTE	REF NO	GRAPHIC REF	PART NUMBER	QTY	PART NAME 1 2 3 4 5 6 (PRODUCT LEVEL)	SEE PAGE
	1	1	**271-4029**	1	HARNESS AS-LIGHTING (LH)	
		1	**155-2255**	1	KIT-CONNECTING PLUG (12-PIN)	
		1	**155-2270**	1	KIT-CONNECTING PLUG (2-PIN)	
					(EACH KIT INCLUDES PLUG AS AND WEDGE)	
	2	1	**271-4030**	1	HARNESS AS-LIGHTING (RH)	
		1	**155-2255**	1	KIT-CONNECTING PLUG (12-PIN)	
		1	**155-2270**	1	KIT-CONNECTING PLUG (2-PIN)	
					(EACH KIT INCLUDES PLUG AS AND WEDGE)	

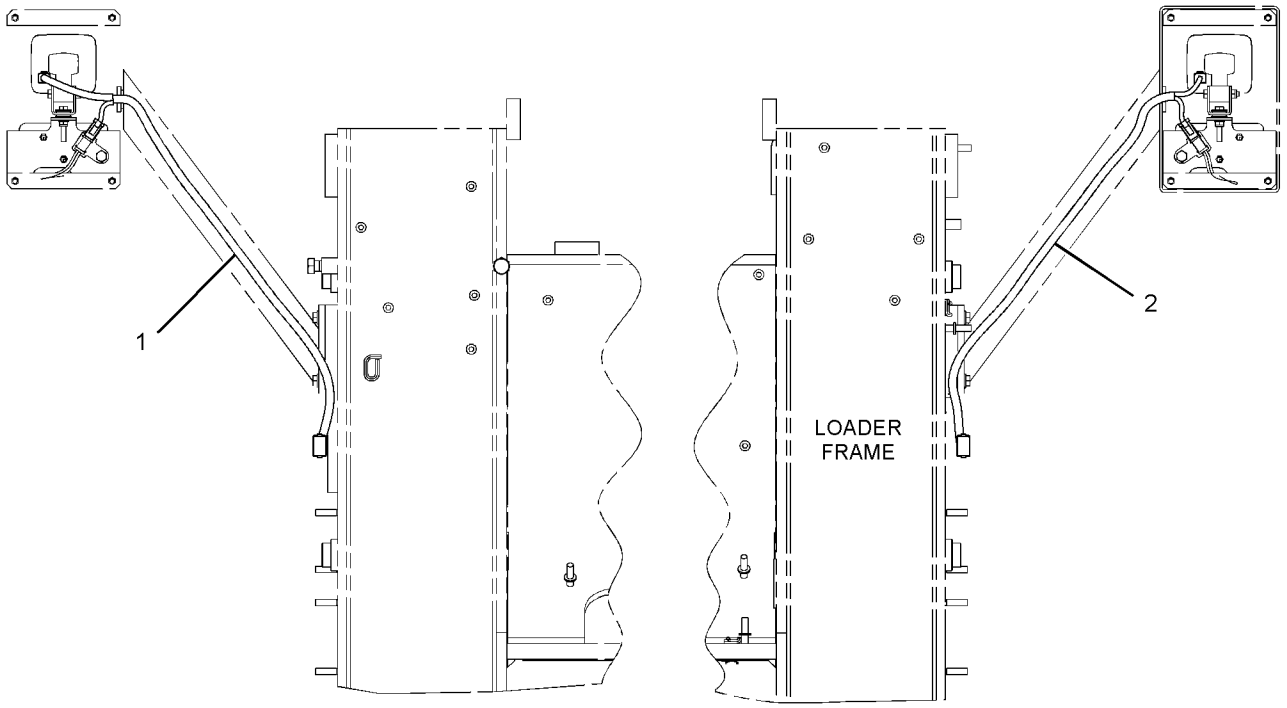

REAR VIEW

GRAPHIC #1 **<END>** g01195661

271-4037 WIRING GP-LIGHTING

S/N: A7G1-UP
PART OF 254-5525, 260-7765 LIGHTING AR-ROADING
AN ATTACHMENT

SMCS-1408, 1429 **i02415809**

NOTE	REF NO	GRAPHIC REF	PART NUMBER	QTY	PART NAME 1 2 3 4 5 6 (PRODUCT LEVEL)	SEE PAGE
	1	1	**271-4038**	1	HARNESS AS-LIGHTING (LH)	
		1	**155-2255**	1	KIT-CONNECTING PLUG (12-PIN)	
		1	**155-2274**	1	KIT-CONNECTING PLUG (6-PIN)	
					(EACH KIT INCLUDES PLUG AS AND WEDGE)	
	2	1	**271-4039**	1	HARNESS AS-LIGHTING (RH)	
		1	**155-2255**	1	KIT-CONNECTING PLUG (12-PIN)	
		1	**155-2274**	1	KIT-CONNECTING PLUG (6-PIN)	
					(EACH KIT INCLUDES PLUG AS AND WEDGE)	

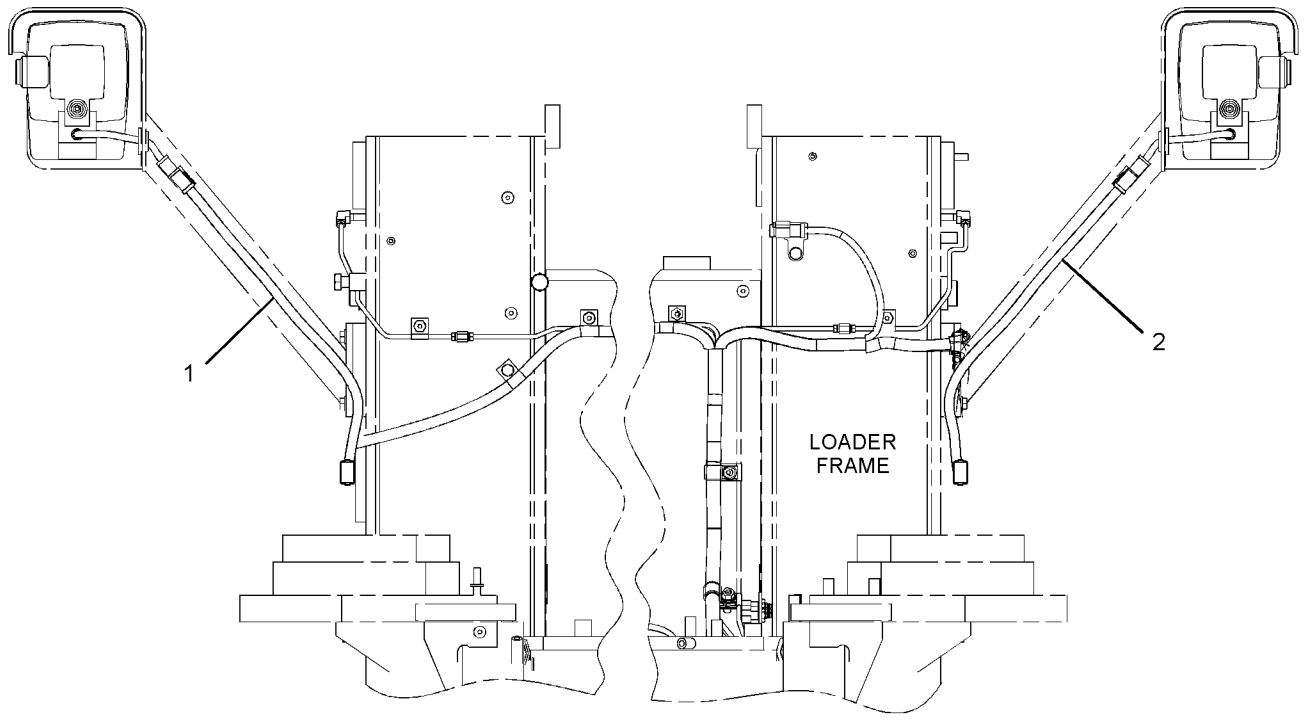

REAR VIEW

GRAPHIC #1 **<END>** g01195665

237-4909 WIRING GP-SECONDARY STEERING

S/N: A7G1-UP
PART OF 236-9087 STEERING AR-SECONDARY
AN ATTACHMENT

SMCS-1408, 4334 **i02414863**

NOTE	REF NO	GRAPHIC REF	PART NUMBER	QTY	PART NAME 1 2 3 4 5 6 (PRODUCT LEVEL)	SEE PAGE
	1	1	**3E-5239**	1	RELAY AS (24-VOLT) (SECONDARY STEER INTERMEDIATE)	
	2	1	**3S-2093**	3	STRAP-CABLE	
	3	1	**189-5604**	1	PLATE AS	
	4	1	**198-6755**	1	CABLE AS	
		1	**1S-7251**	1	TERMINAL-RING (FOR 1/2-IN BOLT)	
		1	**1S-7252**	1	TERMINAL-RING (FOR 3/8-IN BOLT)	
E		1	**5P-0747**		CABLE (00-GA, BLACK) (5-CM)	
	5	1	**218-4935**	1	SUPPRESSOR-ARC	
	6	1	**230-5771**	1	SWITCH AS-PRESSURE (PRIMARY STEERING OIL)	
	6A	1	**230-5771**	1	SWITCH AS-PRESSURE (SECONDARY STEERING OIL)	
					(EACH SWITCH AS INCLUDES)	
		1	**102-8803**	1	KIT-RECEPTACLE (3-PIN)	
					(INCLUDES RECEPTACLE AS AND WEDGE)	
		1	**186-3735**	1	PIN-CONNECTOR (16-GA TO 18-GA)	
E		1	**9X-1813**		SLEEVE (30-CM)	
	7	1	**280-7314**	1	CABLE AS	
E		1	**5P-0761**		CABLE (00-GA, RED) (213-CM)	
		1	**1S-7251**	2	TERMINAL-RING (FOR 1/2-IN BOLT)	
		1	**8T-8827**	1	BOOT	
E		1	**114-8843**		SLEEVE-PLASTIC (5-CM)	
	8	1	**258-7107**	1	HARNESS AS-STEERING (SECONDARY)	
		1	**102-8805**	1	KIT-RECEPTACLE (6-PIN)	
					(INCLUDES RECEPTACLE AS AND WEDGE)	
		1	**9X-1054**	1	PLUG AS-CONNECTOR (4-PIN)	
		1	**155-2270**	1	KIT-CONNECTING PLUG (2-PIN)	
					(INCLUDES PLUG AS AND WEDGE)	
	9	1	**033-8248**	2	CLIP	
	10	1	**130-5300**	1	CLIP	
	11	1	**205-7299**	3	CLIP	
	12	1	**2A-2677**	1	SPACER (0.75-IN THK)	
	13	1	**3K-0360**	2	SEAL-O-RING	
	14	1	**4D-9517**	1	CLIP	
	15	1	**5P-9297**	1	CLIP	
	16	1	**8M-2770**	1	CLIP	
	17	1	**8T-4121**	5	WASHER-HARD (11X21X2.5-MM THK)	
M	18	1	**8T-4137**	4	BOLT (M10X1.5X20-MM)	
M	19	1	**8T-4171**	1	BOLT (M6X1X12-MM)	
M	20	1	**8T-4186**	1	BOLT (M10X1.5X40-MM)	
	21	1	**8T-4223**	1	WASHER-HARD (13.5X25.5X3-MM THK)	
M	22	1	**8T-4244**	1	NUT (M12X1.75-THD)	
	23	1	**9X-8267**	1	WASHER (6.6X12X2-MM THK)	

E-ORDER BY THE CENTIMETER
M-METRIC PART

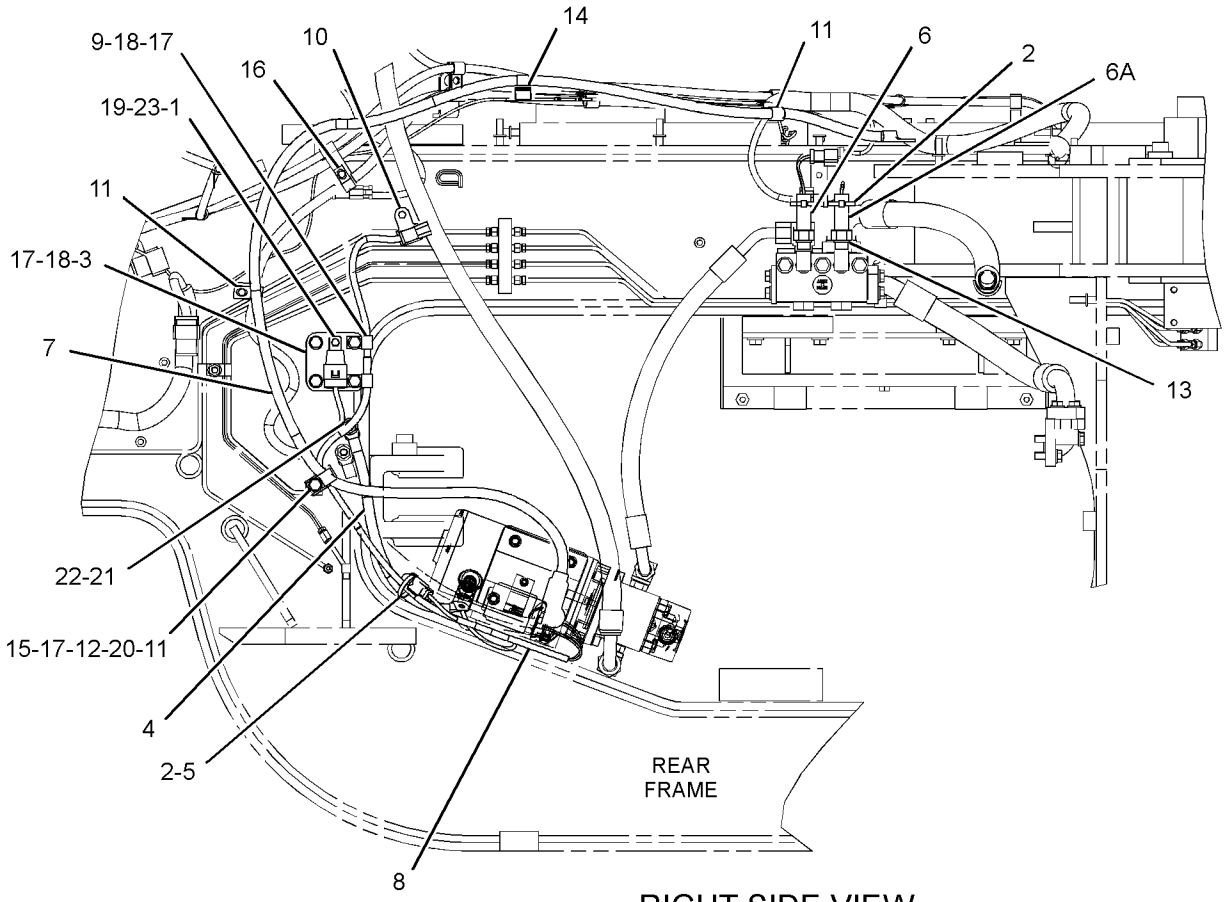

RIGHT SIDE VIEW

GRAPHIC #1 **<END>** g01210047

272-9821 WIRING GP-SENSOR–TILT

S/N: A7G1-UP

PART OF 236-9053 ELECTRICAL AR

SMCS-1408 **i02388505**

NOTE	REF NO	GRAPHIC REF	PART NUMBER	QTY	PART NAME 1 2 3 4 5 6 (PRODUCT LEVEL)	SEE PAGE
	1	1	**3S-2093**	1	STRAP-CABLE	
	2	1	**4V-1939**	4	CLAMP	
	3	1	**107-4749**	2	PLATE	
	4	1	**272-9822**	1	HARNESS AS-SENSOR (TILT)	
		1	**102-8803**	1	KIT-RECEPTACLE (3-PIN)	
					(INCLUDES RECEPTACLE AS AND WEDGE)	
		1	**155-2260**	1	KIT-CONNECTING PLUG (3-PIN)	
					(INCLUDES PLUG AS AND WEDGE)	
	5	1	**130-5300**	1	CLIP	
M	6	1	**8C-8451**	4	BOLT (M6X1X40-MM)	
	7	1	**8T-4121**	3	WASHER-HARD (11X21X2.5-MM THK)	
M	8	1	**8T-4133**	2	NUT (M10X1.15-THD)	
M	9	1	**8T-4137**	1	BOLT (M10X1.5X20-MM)	
	10	1	**9M-8406**	3	CLIP	
	11	1	**9X-8256**	4	WASHER (6.6X12X2-MM THK)	

M-METRIC PART

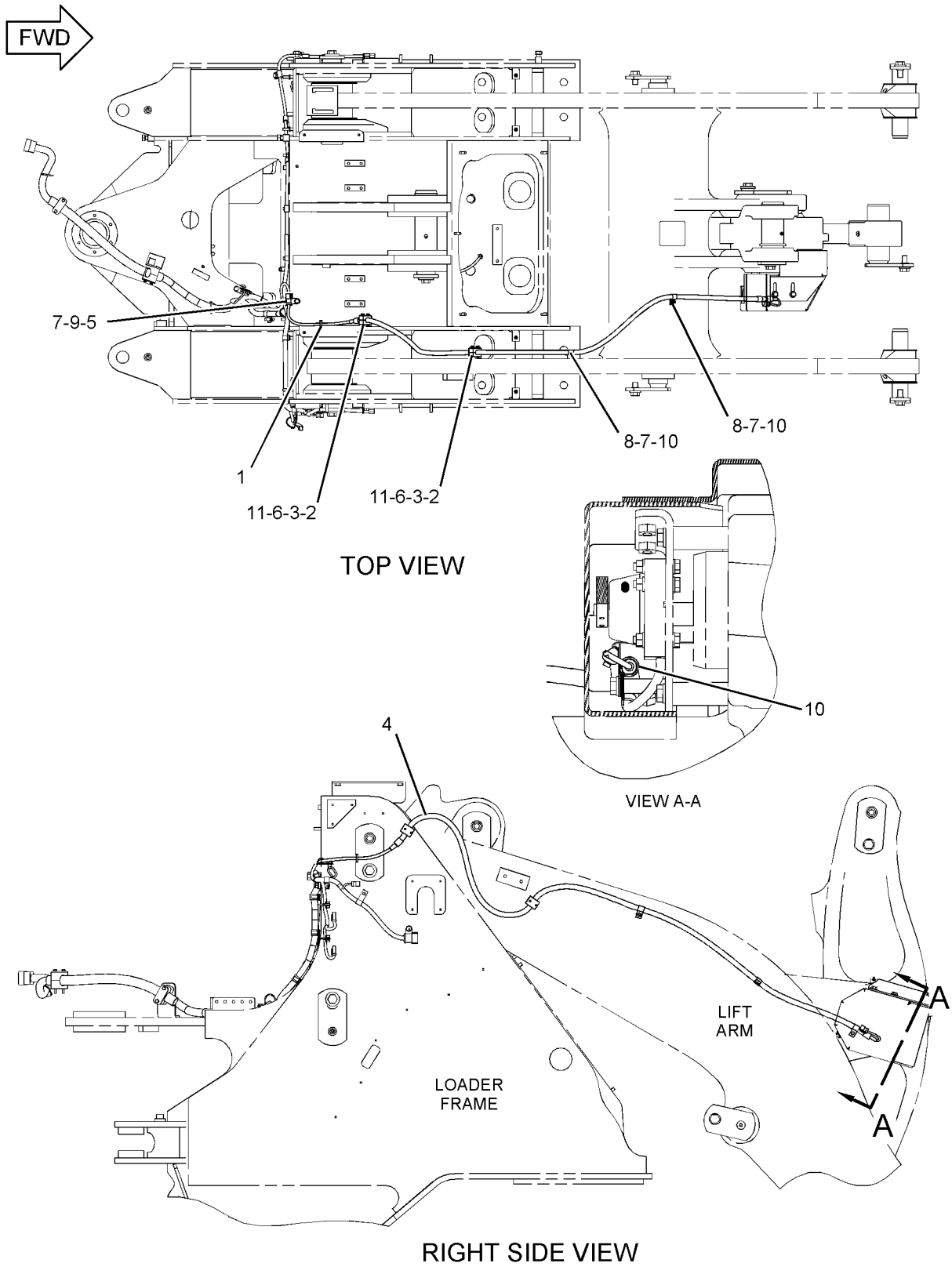

GRAPHIC #1 **<END>** g01196679

275-0024 WIRING GP-SENSOR–TILT

S/N: A7G1-UP
PART OF 236-9101, 236-9102 LIFT AR
AN ATTACHMENT

SMCS-1408 **i02414899**

NOTE	REF NO	GRAPHIC REF	PART NUMBER	QTY	PART NAME 1 2 3 4 5 6 (PRODUCT LEVEL)	SEE PAGE
	1	1	**3S-2093**	1	STRAP-CABLE	
	2	1	**4V-1939**	4	CLAMP	
	3	1	**107-4749**	2	PLATE	
	4	1	**275-0026**	1	HARNESS AS-SENSOR (TILT)	
		1	**102-8803**	2	KIT-RECEPTACLE (3-PIN)	
					(INCLUDES RECEPTACLE AS AND WEDGE)	
		1	**155-2260**	3	KIT-CONNECTING PLUG (3-PIN)	
					(INCLUDES PLUG AS AND WEDGE)	
	5	1	**130-5300**	1	CLIP	
M	6	1	**8C-8451**	4	BOLT (M6X1X40-MM)	
	7	1	**8T-4121**	3	WASHER-HARD (11X21X2.5-MM THK)	
M	8	1	**8T-4133**	2	NUT (M10X1.15-THD)	
M	9	1	**8T-4137**	1	BOLT (M10X1.5X20-MM)	
	10	1	**9M-8406**	3	CLIP	
	11	1	**9X-8256**	4	WASHER (6.6X12X2-MM THK)	

M-METRIC PART

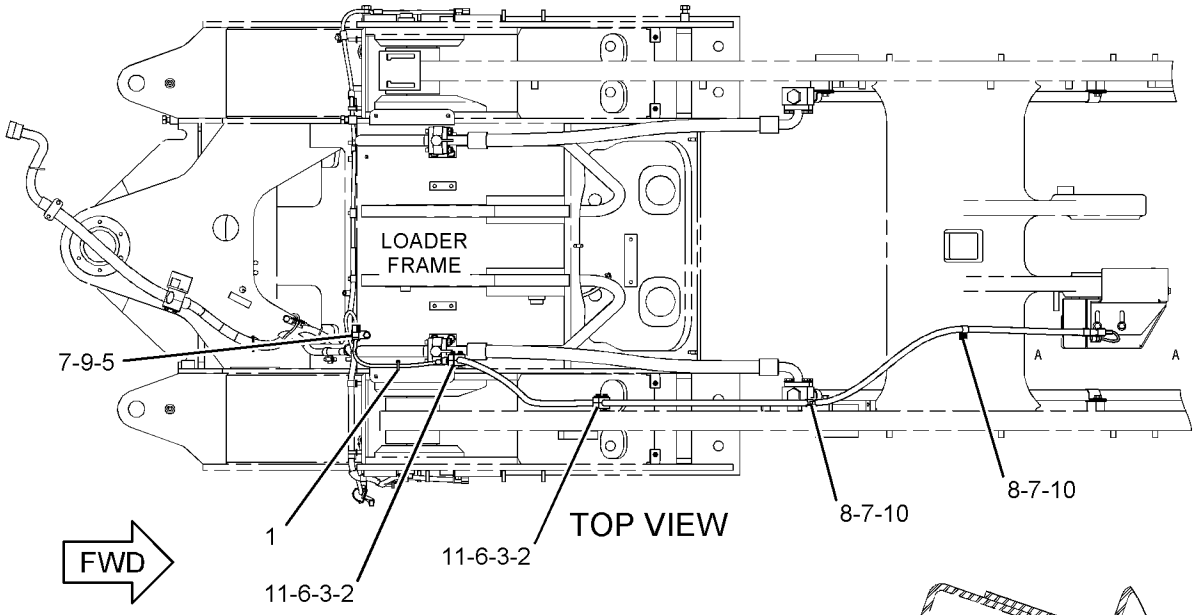

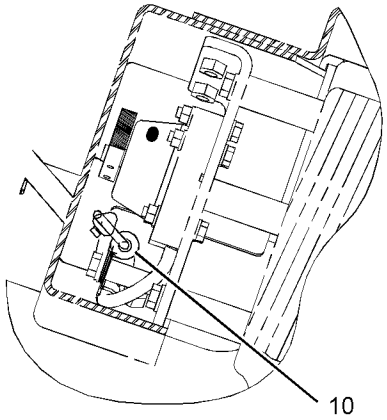

VIEW B-B

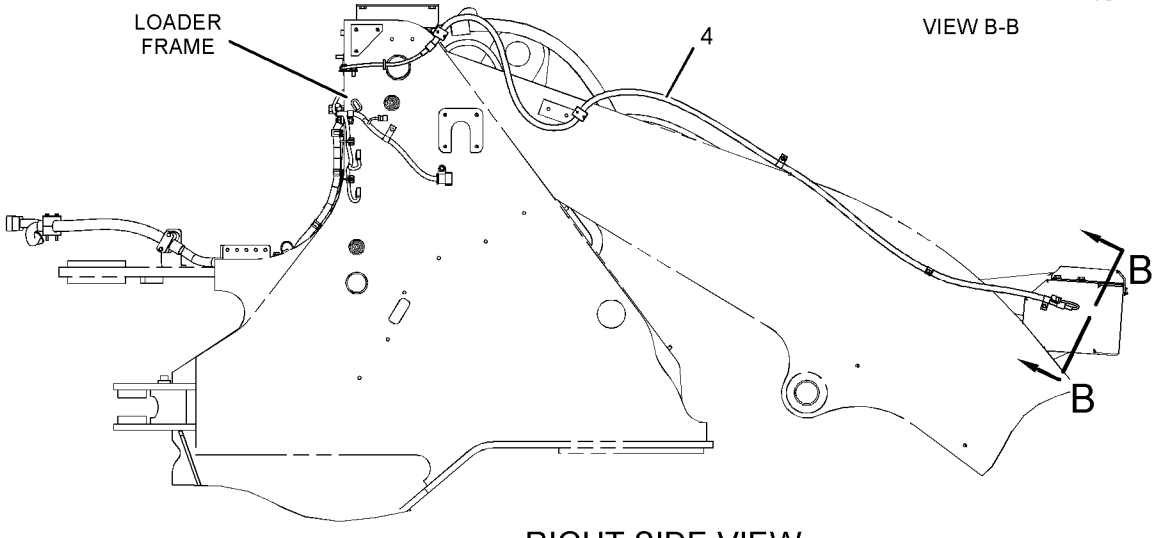

RIGHT SIDE VIEW

GRAPHIC #1 **<END>** g01196217

230-0961 WIRING GP-UNIT INJECTOR

S/N: MHX1-UP

PART OF 267-0009 ENGINE AR-CORE

SMCS-1290, 1408 **i02173377**

NOTE	REF NO	GRAPHIC REF	PART NUMBER	QTY	PART NAME 1 2 3 4 5 6 (PRODUCT LEVEL)	SEE PAGE
	1	1	**3S-2093**	1	STRAP-CABLE	
	2	1	**7E-6508**	6	CAP AS	
	3	1	**230-0960**	1	HARNESS AS-ENGINE (UNIT INJECTOR)	
		1	**3E-7990**	1	RECEPTACLE AS-CONNECTOR (12-PIN)	
		1	**103-8133**	1	KIT-RECEPTACLE (12-PIN)	
					(INCLUDES RECEPTACLE AND WEDGE)	
		1	**3S-2093**	2	STRAP-CABLE	
		1	**8T-8737**	3	PLUG-SEAL	
	4	1	**237-9960**	1	CLIP	
	5	1	**117-1802**	4	DOWEL-HOLLOW	
	6	1	**2V-3216**	4	CLIP	
	7	1	**5P-0537**	7	WASHER-HARD (7.2X14.5X2-MM THK)	
M	8	1	**6V-7728**	4	BOLT (M6X1X45-MM)	
M	9	1	**6V-8214**	2	BOLT (M6X1X20-MM)	
M	10	1	**6V-8836**	1	BOLT (M6X1X14-MM)	

M-METRIC PART

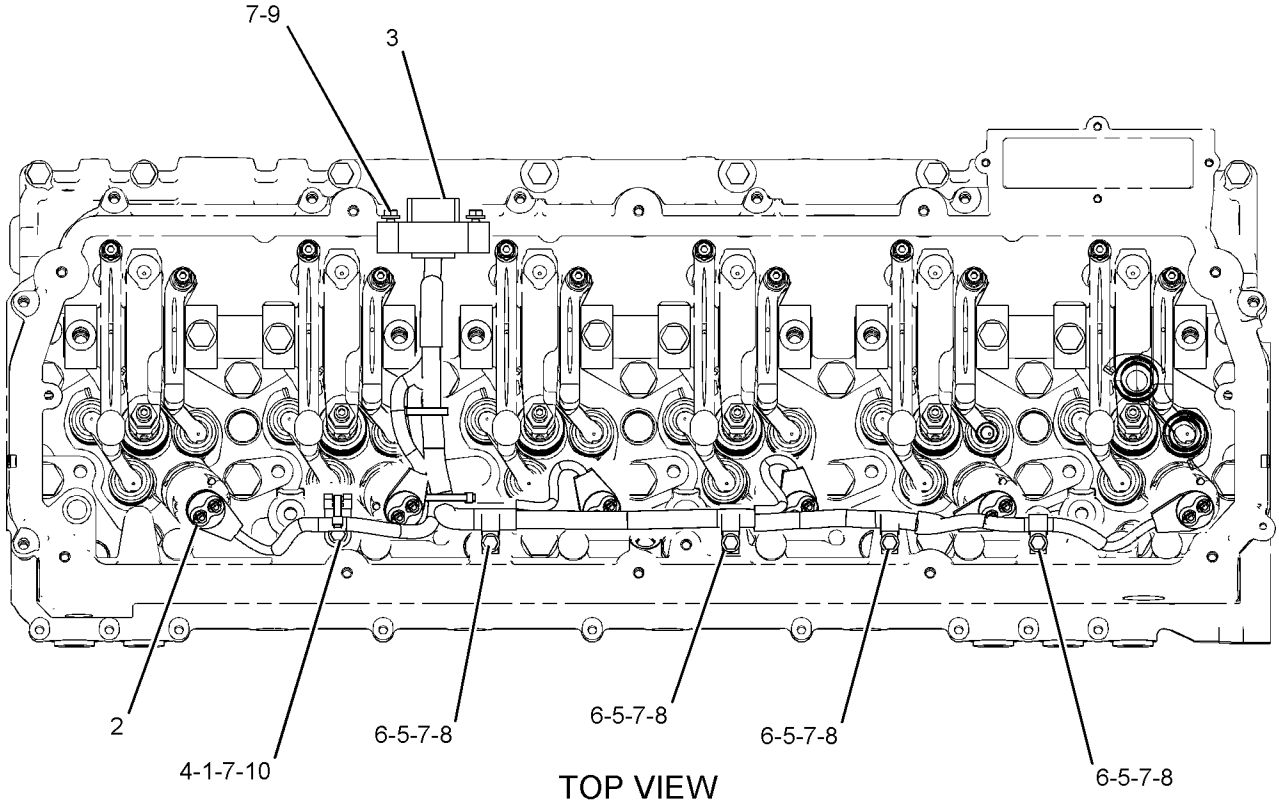

TOP VIEW

GRAPHIC #1

<END>

g01064811

236-9099 AXLE & AXLE OIL COOLER AR

S/N: A7G1-UP

AN ATTACHMENT

SMCS-1365, 3013, 3278 **i02265294**

NOTE	PART NUMBER	QTY	PART NAME 1 2 3 4 5 6 (PRODUCT LEVEL)	SEE PAGE
Y	*139-9102*	1	AXLE AR-FIXED (FRONT, STANDARD DIFFERENTIAL) (WITH HEAT EXCHANGER)	258
Y	*139-9101*	1	AXLE AR-OSCILLATING (REAR, STANDARD DIFFERENTIAL) (WITH HEAT EXCHANGER)	260
Y	*246-2070*	1	COOLER GP-HYDRAULIC & AXLE OIL	539
Y	*236-9100*	1	LINES GP-AXLE OIL COOLER	308
Y-SEPARATE ILLUSTRATION				

<END>

236-9112 AXLE & AXLE OIL COOLER AR–

LIMITED SLIP DIFFERENTIAL

S/N: A7G1-UP

AN ATTACHMENT

SMCS-1365, 3013, 3278 **i02265295**

NOTE	PART NUMBER	QTY	PART NAME 1 2 3 4 5 6 (PRODUCT LEVEL)	SEE PAGE
Y	*251-7571*	1	AXLE AR-FIXED (FRONT, LIMITED SLIP DIFF) (WITH HEAT EXCHANGER)	259
Y	*139-9103*	1	AXLE AR-OSCILLATING (REAR, LIMITED SLIP DIFF) (WITH HEAT EXCHANGER)	261
Y	*236-9100*	1	LINES GP-AXLE OIL COOLER	308
	246-2070	1	COOLER GP-HYDRAULIC & AXLE OIL	
	251-1110	1	CORE AS-OIL COOLER (AXLE, HYDRAULIC)	
Y-SEPARATE ILLUSTRATION				

<END>

236-9113 AXLE & AXLE OIL COOLER AR–

REAR, LIMITED SLIP DIFFERENTIAL

S/N: A7G1-UP

AN ATTACHMENT

SMCS-1365, 3013, 3278 **i02265297**

NOTE	PART NUMBER	QTY	PART NAME 1 2 3 4 5 6 (PRODUCT LEVEL)	SEE PAGE
Y	*251-7570*	1	AXLE AR-FIXED (FRONT, STANDARD DIFFERENTIAL) (WITH HEAT EXCHANGER)	259
Y	*139-9103*	1	AXLE AR-OSCILLATING (REAR, LIMITED SLIP DIFF) (WITH HEAT EXCHANGER)	261
Y	*236-9100*	1	LINES GP-AXLE OIL COOLER	308
	246-2070	1	COOLER GP-HYDRAULIC & AXLE OIL	
	251-1110	1	CORE AS-OIL COOLER (AXLE, HYDRAULIC)	
Y-SEPARATE ILLUSTRATION				

<END>

139-9102 AXLE AR-FIXED—FRONT, STANDARD DIFFERENTIAL—WITH HEAT EXCHANGER

S/N: A7G1-UP

PART OF 236-9099 AXLE & AXLE OIL COOLER AR

AN ATTACHMENT

SMCS-3013, 3278 **i01889835**

NOTE	PART NUMBER	QTY	PART NAME 1 2 3 4 5 6 (PRODUCT LEVEL)	SEE PAGE
Y	*129-4289*	2	BRAKE & PLANETARY GP	263
Y	*129-4298*	1	DIFFERENTIAL GP	275
Y	*129-4290*	1	GEAR GP-BEVEL & PINION	285
Y	*160-0719*	1	HEAT EXCHANGER GP-AXLE	296
Y	*139-9107*	1	HOUSING GP-FIXED AXLE	298
Y-SEPARATE ILLUSTRATION				

<END>

251-4522 AXLE AR-FIXED—FRONT, STANDARD DIFFERENTIAL

S/N: A7G1-UP

PART OF 237-8965 CONTROL GP-BUCKET, 237-8964 LIFT AR, 236-9057 POWER TRAIN AR

ALSO AN ATTACHMENT

SMCS-3013, 3278 **i02120286**

NOTE	PART NUMBER	QTY	PART NAME 1 2 3 4 5 6 (PRODUCT LEVEL)	SEE PAGE
Y	*129-4289*	2	BRAKE & PLANETARY GP	263
Y	*251-4249*	1	DIFFERENTIAL GP	276
Y	*251-4879*	1	GEAR GP-BEVEL & PINION	289
Y	*251-4524*	1	HOUSING GP-FIXED AXLE	300
Y	**220-7925**	1	PLATE GP-AXLE IDENTIFICATION	919
Y-SEPARATE ILLUSTRATION				

<END>

251-4523 AXLE AR-FIXED—FRONT, LIMITED SLIP DIFFERENTIAL

S/N: A7G1-UP

AN ATTACHMENT

SMCS-3013, 3278 **i02199965**

NOTE	PART NUMBER	QTY	PART NAME 1 2 3 4 5 6 (PRODUCT LEVEL)	SEE PAGE
Y	*129-4289*	2	BRAKE & PLANETARY GP	263
Y	**129-4304**	1	DIFFERENTIAL GP-LIMITED SLIP	277
Y	*251-4879*	1	GEAR GP-BEVEL & PINION	289
Y	*251-4524*	1	HOUSING GP-FIXED AXLE	300
Y	**220-7925**	1	PLATE GP-AXLE IDENTIFICATION	919
Y-SEPARATE ILLUSTRATION				

<END>

251-7570 AXLE AR-FIXED–FRONT, STANDARD DIFFERENTIAL–WITH HEAT EXCHANGER

S/N: A7G1-UP

PART OF 236-9113 AXLE & AXLE OIL COOLER AR, 276-7255, 282-6416 COOLER AR-AXLE OIL

AN ATTACHMENT

SMCS-3013, 3278 **i02194436**

NOTE	PART NUMBER	QTY	PART NAME 1 2 3 4 5 6 (PRODUCT LEVEL)	SEE PAGE
Y	*129-4289*	2	BRAKE & PLANETARY GP	263
Y	*251-4249*	1	DIFFERENTIAL GP	276
Y	*251-4879*	1	GEAR GP-BEVEL & PINION	289
Y	*160-0719*	1	HEAT EXCHANGER GP-AXLE	296
Y	*251-7575*	1	HOUSING GP-FIXED AXLE	302
Y-SEPARATE ILLUSTRATION				

<END>

251-7571 AXLE AR-FIXED–FRONT, LIMITED SLIP DIFFERENTIAL–WITH HEAT EXCHANGER

S/N: A7G1-UP

PART OF 236-9112 AXLE & AXLE OIL COOLER AR

AN ATTACHMENT

SMCS-3013, 3278 **i02199858**

NOTE	PART NUMBER	QTY	PART NAME 1 2 3 4 5 6 (PRODUCT LEVEL)	SEE PAGE
Y	*129-4289*	2	BRAKE & PLANETARY GP	263
Y	**129-4304**	1	DIFFERENTIAL GP-LIMITED SLIP	277
Y	*251-4879*	1	GEAR GP-BEVEL & PINION	289
Y	*160-0719*	1	HEAT EXCHANGER GP-AXLE	296
Y	*251-7575*	1	HOUSING GP-FIXED AXLE	302
Y-SEPARATE ILLUSTRATION				

<END>

129-4281 AXLE AR-OSCILLATING–REAR, STANDARD DIFFERENTIAL

S/N: A7G1-UP

PART OF 236-9057 POWER TRAIN AR

SMCS-3013, 3278 **i01880145**

NOTE	PART NUMBER	QTY	PART NAME 1 2 3 4 5 6 (PRODUCT LEVEL)	SEE PAGE
Y	*129-4289*	2	BRAKE & PLANETARY GP	263
Y	*129-4298*	1	DIFFERENTIAL GP	275
Y	*129-4292*	1	GEAR GP-BEVEL & PINION	287
Y	*129-4293*	1	HOUSING GP-OSCILLATING AXLE	304
Y-SEPARATE ILLUSTRATION				

<END>

129-4283 AXLE AR-OSCILLATING–REAR, LIMITED SLIP DIFFERENTIAL

S/N: A7G1-UP

AN ATTACHMENT

SMCS-3013, 3278 **i01890780**

NOTE	PART NUMBER	QTY	PART NAME 1 2 3 4 5 6 (PRODUCT LEVEL)	SEE PAGE
Y	*129-4289*	2	BRAKE & PLANETARY GP	263
Y	**129-4304**	1	DIFFERENTIAL GP-LIMITED SLIP	277
Y	*129-4292*	1	GEAR GP-BEVEL & PINION	287
Y	*129-4293*	1	HOUSING GP-OSCILLATING AXLE	304

Y-SEPARATE ILLUSTRATION

<END>

129-4286 AXLE AR-OSCILLATING–REAR, NOSPIN DIFFERENTIAL

S/N: A7G1-UP

AN ATTACHMENT

SMCS-3013, 3278 **i01890793**

NOTE	PART NUMBER	QTY	PART NAME 1 2 3 4 5 6 (PRODUCT LEVEL)	SEE PAGE
Y	*129-4289*	2	BRAKE & PLANETARY GP	263
Y	**129-4308**	1	DIFFERENTIAL GP-NOSPIN	278
Y	*129-4292*	1	GEAR GP-BEVEL & PINION	287
Y	*129-4293*	1	HOUSING GP-OSCILLATING AXLE	304

Y-SEPARATE ILLUSTRATION

<END>

139-9101 AXLE AR-OSCILLATING–REAR, STANDARD DIFFERENTIAL–WITH HEAT EXCHANGER

S/N: A7G1-UP

PART OF 236-9099 AXLE & AXLE OIL COOLER AR, 276-7255 COOLER AR-AXLE OIL

AN ATTACHMENT

SMCS-3013, 3278 **i01889803**

NOTE	PART NUMBER	QTY	PART NAME 1 2 3 4 5 6 (PRODUCT LEVEL)	SEE PAGE
Y	*129-4289*	2	BRAKE & PLANETARY GP	263
Y	*129-4298*	1	DIFFERENTIAL GP	275
Y	*129-4292*	1	GEAR GP-BEVEL & PINION	287
Y	*160-0719*	1	HEAT EXCHANGER GP-AXLE	296
Y	*139-9106*	1	HOUSING GP-OSCILLATING AXLE	306

Y-SEPARATE ILLUSTRATION

<END>

139-9103 AXLE AR-OSCILLATING–
REAR, LIMITED SLIP DIFFERENTIAL–WITH HEAT EXCHANGER
S/N: A7G1-UP
PART OF 236-9112, 236-9113 AXLE & AXLE OIL COOLER AR
AN ATTACHMENT

SMCS-3013, 3278 **i01889844**

NOTE	PART NUMBER	QTY	PART NAME 1 2 3 4 5 6 (PRODUCT LEVEL)	SEE PAGE
Y	*129-4289*	2	BRAKE & PLANETARY GP	263
Y	**129-4304**	1	DIFFERENTIAL GP-LIMITED SLIP	277
Y	*129-4292*	1	GEAR GP-BEVEL & PINION	287
Y	*160-0719*	1	HEAT EXCHANGER GP-AXLE	296
Y	*139-9106*	1	HOUSING GP-OSCILLATING AXLE	306

Y-SEPARATE ILLUSTRATION

<END>

203-2369 AXLE AR-OSCILLATING–
REAR, LIMITED SLIP DIFFERENTIAL
S/N: A7G1-UP
PART OF 282-6416 COOLER AR-AXLE OIL
AN ATTACHMENT

SMCS-3013, 3278 **i01504831**

NOTE	PART NUMBER	QTY	PART NAME 1 2 3 4 5 6 (PRODUCT LEVEL)	SEE PAGE
Y	*129-4289*	2	BRAKE & PLANETARY GP	263
Y	**129-4304**	1	DIFFERENTIAL GP-LIMITED SLIP	277
Y	*129-4292*	1	GEAR GP-BEVEL & PINION	287
Y	*160-0719*	1	HEAT EXCHANGER GP-AXLE	296
Y	*139-9106*	1	HOUSING GP-OSCILLATING AXLE	306

Y-SEPARATE ILLUSTRATION

<END>

266-2271 BASE GP-OIL FILTER—POWER TRAIN

S/N: A7G1-UP

PART OF 266-2272 FILTER GP-OIL

SMCS-3004, 3067 **i02310290**

NOTE	REF NO	GRAPHIC REF	PART NUMBER	QTY	PART NAME 1 2 3 4 5 6 (PRODUCT LEVEL)	SEE PAGE
	1	1	**3T-9549**	1	ADAPTER	
	2	1	**7G-4998**	1	SPOOL-BYPASS	
	3	1	**7M-1297**	1	SPRING (OUTER)	
	4	1	**133-2198**	1	SPRING (INNER)	
Y	5	1	**164-7577**	1	SWITCH GP-BYPASS (POWER TRAIN OIL FILTER)	202
Z	6	1		1	BASE-FILTER	
	7	1	**2S-4078**	1	SEAL-O-RING	
	8	1	**3D-2824**	1	SEAL-O-RING	
	9	1	**9S-8008**	1	PLUG	

Y-SEPARATE ILLUSTRATION
Z-NOT SERVICED SEPARATELY

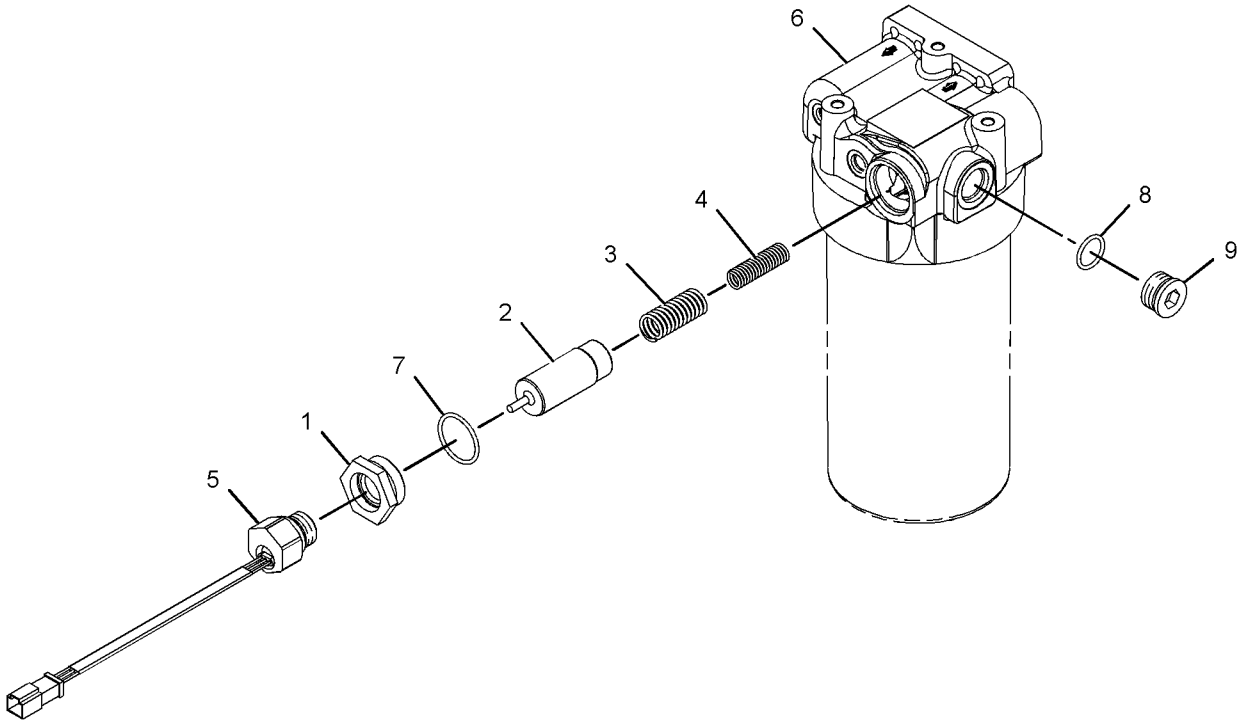

GRAPHIC #1 **<END>** g01141585

129-4289 BRAKE & PLANETARY GP

S/N: A7G1-UP

PART OF 139-9102, 251-4522, 251-4523, 251-7570, 251-7571 AXLE AR-FIXED, 129-4281, 129-4283, 129-4286, 139-9101, 139-9103, 203-2369 AXLE AR-OSCILLATING

ALSO AN ATTACHMENT

SMCS-4011, 4255 **i01664644**

NOTE	REF NO	GRAPHIC REF	PART NUMBER	QTY	PART NAME 1 2 3 4 5 6 (PRODUCT LEVEL)	SEE PAGE
	1	1	**8T-2925**	3	PIN-SPRING	
	2	1	**112-0759**	1	PLUG	
	3	1	**117-1803**	1	CUP	
	4	1	**129-4300**	1	CARRIER-PLANETARY	
	5	1	**130-5866**	1	PLATE-REACTION	
	6	1	**172-6011**	1	SEAL-BRAKE	
	7	1	**172-6007**	1	SEAL-BRAKE	
	8	1	**163-8781**	3	SPRING	
	9	1	**163-3008**	6	WASHER-THRUST	
	10	1	**138-1645**	3	PIN-SPRING	
	11	1	**149-9113**	1	DOWEL	
	12	1	**149-9114**	1	PIN (BRAKE DISC WEAR INDICATOR)	
	13	1	**150-4651**	1	SEAL-O-RING	
	14	1	**096-6166**	1	WASHER-HARD (4.5X9X1MM THK)	
	15	1	**117-1801**	1	DOWEL	
	16	1	**127-8909**	1	GEAR-SUN (18 TEETH)	
	17	1	**129-4296**	3	BEARING-SLEEVE	
	18	1	**129-4299**	3	GEAR-PLANET (27 TEETH)	
	19	1	**129-4323**	3	SHAFT-PLANETARY	
	20	1	**129-5403**	1	GEAR-RING (75 TEETH)	
	21	1	**130-5859**	1	PLATE-REACTION	
	22	1	**130-5860**	2	DISC-FRICTION	
	23	1	**130-5867**	1	PISTON-REACTION	
	24	1	**133-4952**	4	DOWEL	
	25	1	**2N-2658**	1	BOLT-SOCKET HEAD	
	26	1	**3P-7832**	4	DOWEL	

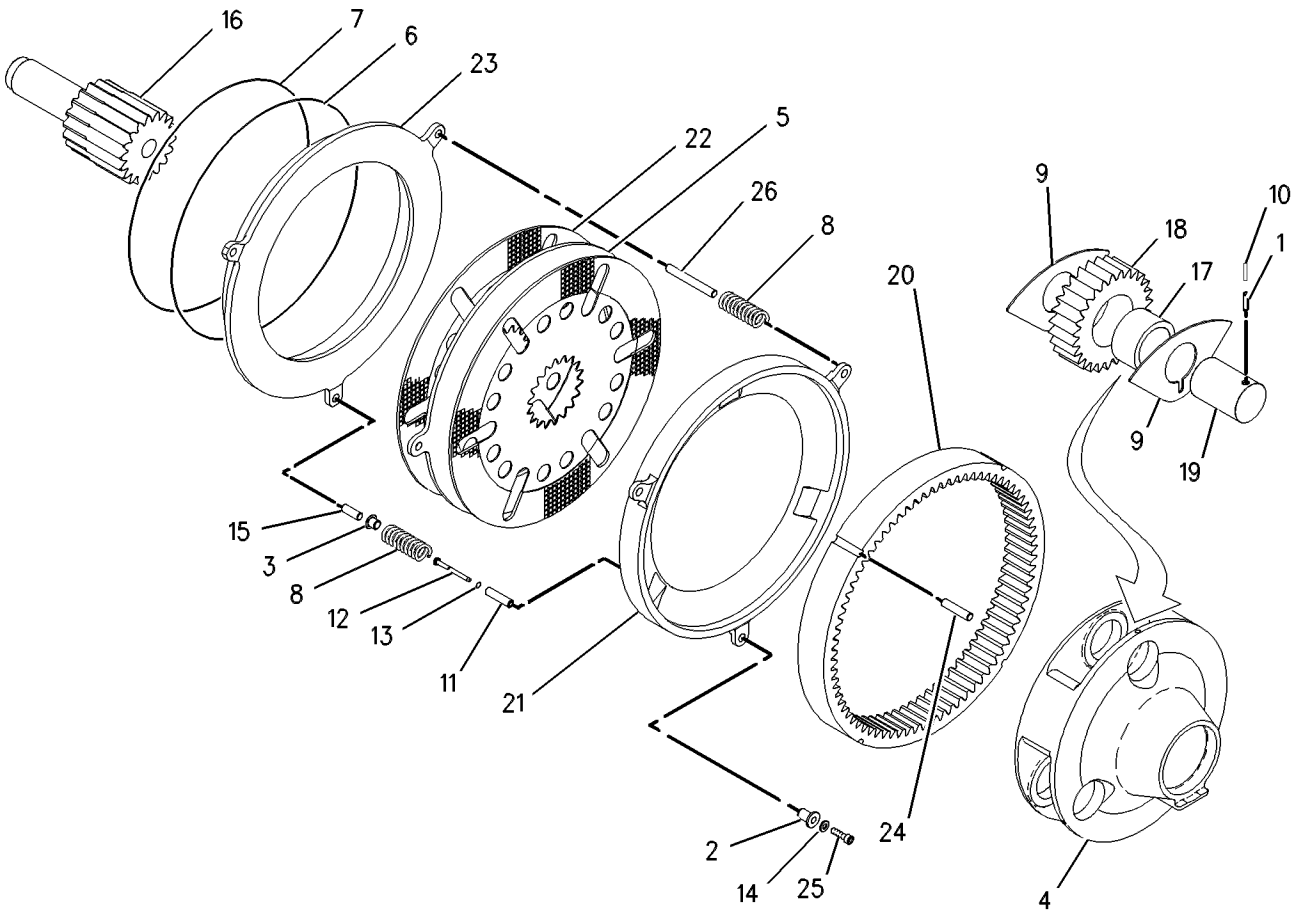

GRAPHIC #1 **<END>** g00448845

POWER TRAIN

253-8351 CASE & PARTS GP-PLANETARY

S/N: FAX1-UP

PART OF 237-2331 TRANSMISSION AR

SMCS-3064 **i02204757**

NOTE	REF NO	GRAPHIC REF	PART NUMBER	QTY	PART NAME 1 2 3 4 5 6 (PRODUCT LEVEL)	SEE PAGE
	1	1	**9G-5127**	1	BREATHER AS (TRANSMISSION)	
	2	1	**115-8494**	1	TUBE AS	
	3	1	**5F-8000**	1	SEAL-O-RING	
M	4	1	**6V-3668**	2	BOLT (M12X1.75X30-MM)	
	5	1	**9M-5024**	1	SEAL-O-RING	
	6	1	**127-9323**	1	BRACKET AS	
M		1	**8T-3490**	1	NUT-WELD (M10X1.5-THD)	
	7	1	**5P-8245**	14	WASHER-HARD (13.5X25.5X3-MM THK)	
M	8	1	**6V-5684**	14	BOLT (M12X1.75X45-MM)	
	9	1	**5P-9806**	1	SEAL-O-RING	
	10	1	**6V-5839**	16	WASHER (11X21X2.5-MM THK)	
M	11	1	**6V-5230**	10	BOLT (M10X1.5X60-MM)	
M	12	1	**6V-3822**	4	BOLT (M10X1.5X35-MM)	
	13	1	**194-2453**	1	TUBE	
M	14	1	**8T-0372**	1	BOLT (M12X1.75X90-MM)	
M	15	1	**6V-3823**	1	BOLT (M12X1.75X60-MM)	
	16	1	**1P-3707**	1	SEAL-RECTANGULAR	
	17	1	**4F-7389**	1	SEAL-O-RING	
M	18	1	**7X-2544**	1	BOLT (M10X1.5X104-MM)	
M	19	1	**6V-1819**	4	BOLT (M10X1.5X100-MM)	
	20	1	**6L-1649**	1	SEAL-O-RING	
	21	1	**3H-2652**	1	SEAL-O-RING	
M	22	1	**6V-5842**	2	BOLT (M10X1.5X40-MM)	
M	23	1	**141-6348**	1	BOLT (M10X65-MM)	
	24	1	**8T-4121**	1	WASHER-HARD (11X21X2.5-MM THK)	
M	25	1	**8T-6466**	6	BOLT (M10X1.5X60-MM)	

M-METRIC PART

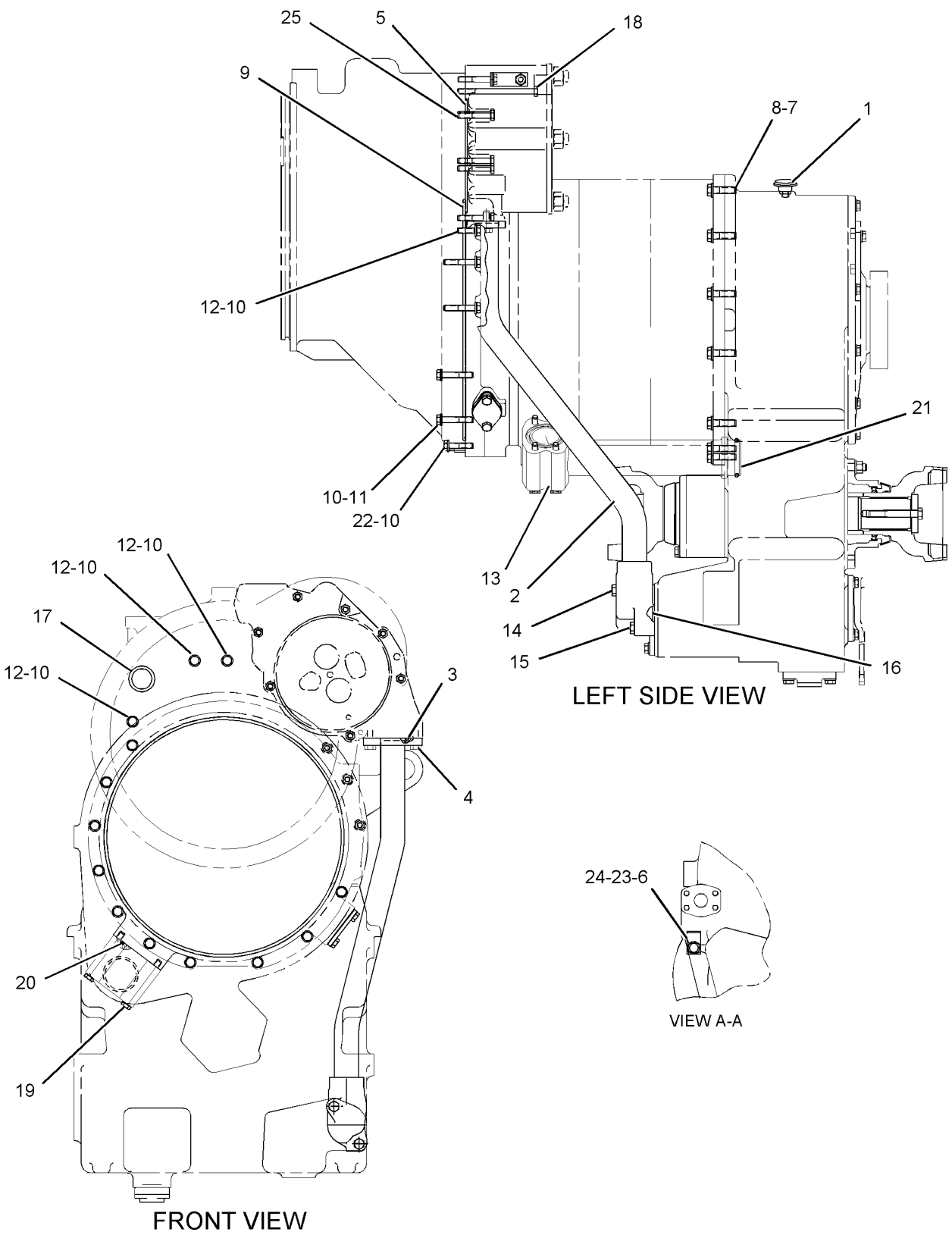

GRAPHIC #1 **<END>** g01117085

121-9300 CONTROL GP-TRANSMISSION

S/N: A7G1-UP

PART OF 237-2572 CAB AR-ENCLOSED ROPS

SMCS-3065 **i01864723**

NOTE	REF NO	GRAPHIC REF	PART NUMBER	QTY	PART NAME 1 2 3 4 5 6 (PRODUCT LEVEL)	SEE PAGE
M	1	1	**134-1374**	4	BOLT-SOCKET HEAD (M5X0.8X20-MM)	
CY	2	1	**201-0212**	1	CONTROL GP-TRANSMISSION	268
	3	1	**3S-2093**	1	STRAP-CABLE	
	4	1	**4P-7581**	1	CLIP	
	5	1	**7K-1181**	1	STRAP-CABLE	
	6	1	**8T-4121**	1	WASHER-HARD (11X21X2.5-MM THK)	
M	7	1	**8T-4137**	1	BOLT (M10X1.5X20-MM)	

C-CHANGE FROM PREVIOUS TYPE
M-METRIC PART
Y-SEPARATE ILLUSTRATION

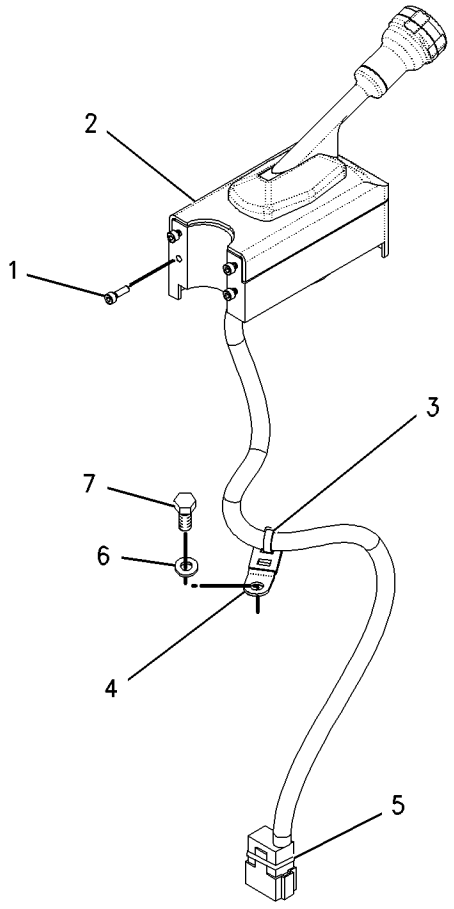

GRAPHIC #1 **<END>** g00851858

201-0212 CONTROL GP-TRANSMISSION

S/N: A7G1-UP

PART OF 121-9300 CONTROL GP-TRANSMISSION

SMCS-3065 **i01582352**

NOTE	REF NO	GRAPHIC REF	PART NUMBER	QTY	PART NAME 1 2 3 4 5 6 (PRODUCT LEVEL)	SEE PAGE
	1	1	**102-8801**	1	KIT-RECEPTACLE (12-PIN)	
					(INCLUDES RECEPTACLE AS & WEDGE)	
	2	1	**3E-5180**	1	WEDGE-RECEPTACLE LOCK (12-PIN)	
	3	1	**186-3736**	4	SOCKET-CONNECTOR (16-AWG TO 18-AWG)	
	4	1	**186-3735**	9	PIN-CONNECTOR (16-GA TO 18-GA)	
	5	1	**101-9161**	1	WIRE AS	
	6	1	**155-2271**	1	KIT-CONNECTING PLUG (4-PIN)	
					(INCLUDES PLUG AS & WEDGE)	
	7	1	**155-2262**	1	WEDGE-PLUG LOCK (4-PIN)	
	8	1	**9G-3695**	3	PLUG (GROMMET SEALING)	

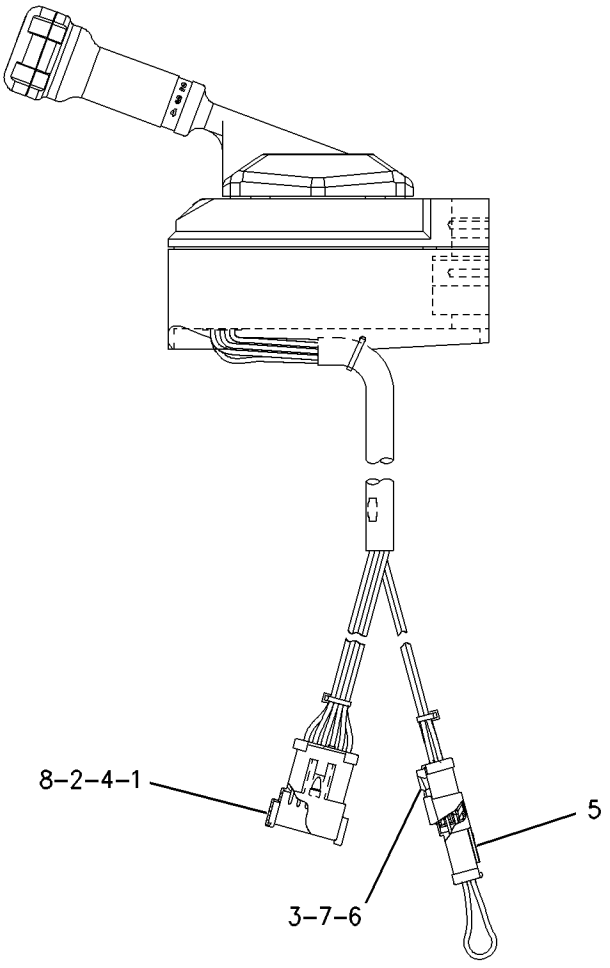

GRAPHIC #1 **<END>** g00802298

247-7831 CONTROL GP-TRANSMISSION HYD

S/N: FAX1-UP

PART OF 237-2331 TRANSMISSION AR

SMCS-3073, 3167 **i02264912**

NOTE	REF NO	GRAPHIC REF	PART NUMBER	QTY	PART NAME 1 2 3 4 5 6 (PRODUCT LEVEL)	SEE PAGE
Y	1	1	**223-4434**	1	VALVE GP-RELIEF (TRANSMISSION HYDRAULIC CONTROL)	351
	2	1	**4F-4097**	1	SEAL-O-RING	
	3	1	**4P-8134**	2	CLIP	
M	4	1	**6V-6317**	3	BOLT (M10X1.5X20-MM)	
	5	1	**130-5300**	2	CLIP	
	6	1	**186-2458**	1	CLIP AS	
Y	7	1	**145-7028**	1	SENSOR GP-TEMPERATURE (TRANSMISSION OIL)	194
	8	1	**3J-1907**	2	SEAL-O-RING	
Y	9	1	*216-5338*	6	VALVE GP-MODULATING (24-VOLT) (TRANSMISSION CLUTCH)	349
	10	1	**8S-0768**	6	SEAL-O-RING	
	11	1	**174-9603**	3	PLATE	
	12	1	**3S-2093**	11	STRAP-CABLE	
	13	1	**247-4861**	1	HARNESS AS-TRANSMISSION	
		1	**7X-6222**	1	PLUG AS-CONNECTOR (24-PIN)	
		1	**155-2270**	1	KIT-CONNECTING PLUG (2-PIN)	
		1	**155-2270**	1	KIT-CONNECTING PLUG (2-PIN)	
					(EACK KIT-CONNECTING PLUG INCLUDES PLUG AS AND WEDGE)	
	14	1	**148-1928**	1	VALVE-RELIEF (TORQUE CONVERTER INLET)	
	15	1	**9X-4609**	1	SEAL-O-RING	
M	16	1	**8T-0100**	16	BOLT (M8X1.25X60-MM)	
	17	1	**9M-1974**	13	WASHER-HARD (8.8X16X2-MM THK)	
Y	18	1	**130-5485**	1	VALVE GP-RELIEF (TORQUE CONVERTER OUTLET)	350
	19	1	**6V-0852**	6	CAP-DUST	
	20	1	**6V-5839**	5	WASHER (11X21X2.5-MM THK)	
M	21	1	**8T-0643**	3	BOLT (M10X1.5X80-MM)	
	22	1	**061-7540**	1	SEAL-O-RING	
	23	1	**6V-4365**	1	SEAL-O-RING	
	24	1	**6V-0484**	1	ADAPTER-O-RING	
	25	1	**8T-7934**	1	WASHER-HARD (11X21X5-MM THK)	
	26	1	**5P-4295**	1	CLIP	
M	27	1	**6V-8212**	1	BOLT (M10X1.5X16-MM)	
	28	1	**164-3651**	1	ADAPTER	
	29	1	**7J-0204**	1	SEAL-O-RING	

M-METRIC PART
Y-SEPARATE ILLUSTRATION

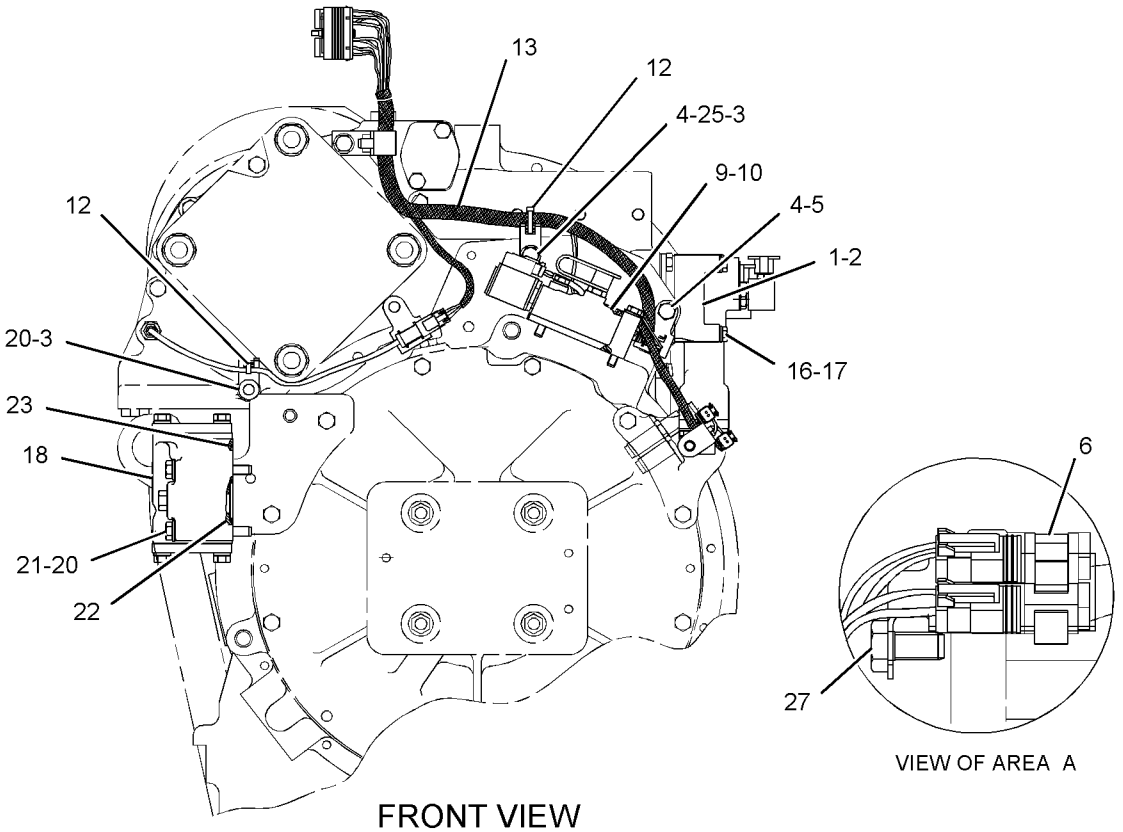

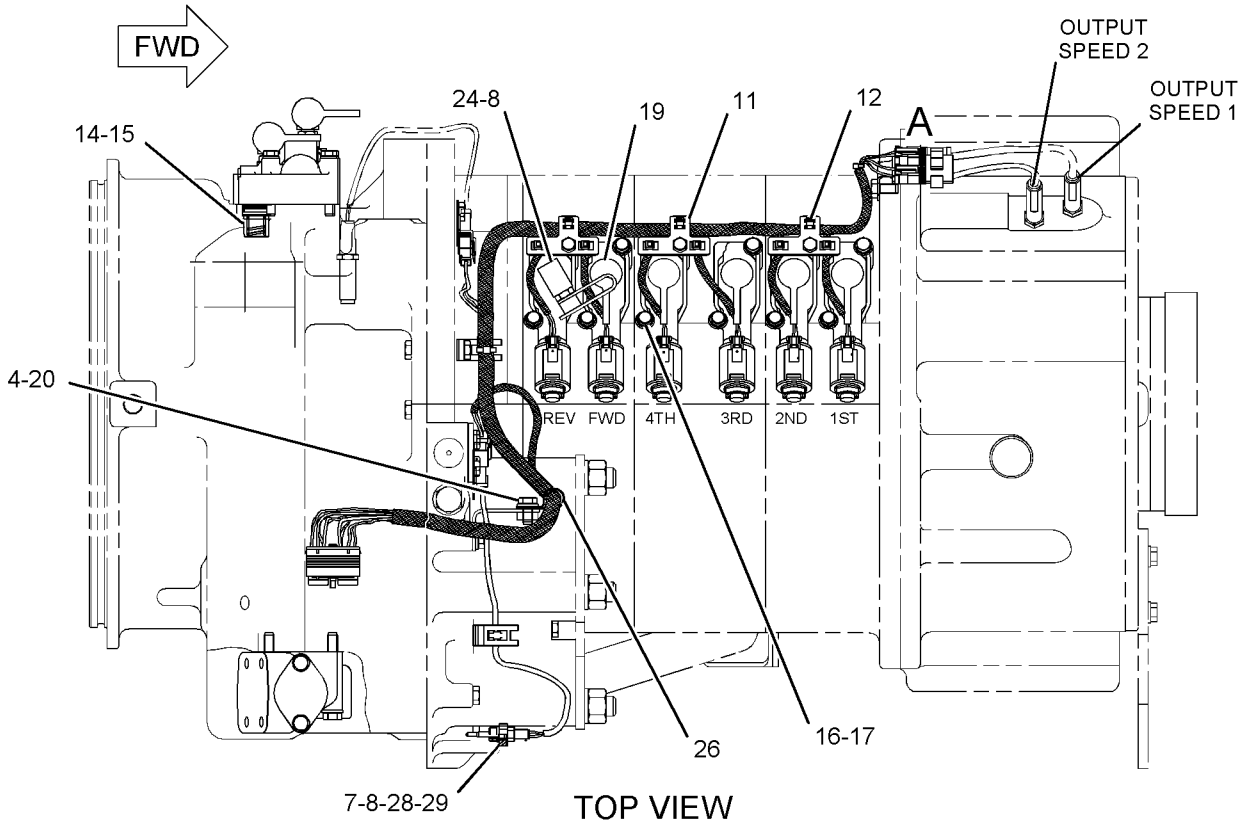

GRAPHIC #1

<END>

g01136533

276-7255 COOLER AR-AXLE OIL

S/N: A7G1-UP

AN ATTACHMENT

SMCS-1365 **i02421117**

NOTE	PART NUMBER	QTY	PART NAME 1 2 3 4 5 6 (PRODUCT LEVEL)	SEE PAGE
Y	*251-7570*	1	AXLE AR-FIXED (FRONT, STANDARD DIFFERENTIAL) (WITH HEAT EXCHANGER)	259
Y	*139-9101*	1	AXLE AR-OSCILLATING (REAR, STANDARD DIFFERENTIAL) (WITH HEAT EXCHANGER)	260
Y	*246-2070*	1	COOLER GP-HYDRAULIC & AXLE OIL	539
Y	*236-9100*	1	LINES GP-AXLE OIL COOLER	308

Y-SEPARATE ILLUSTRATION

<END>

282-6416 COOLER AR-AXLE OIL

S/N: A7G1-UP

CANNOT BE USED WITH 129-4283–PAGE 260, 129-4286–PAGE 260, 236-9112–PAGE 257, 236-9113–PAGE 257, 276-7255–PAGE 271

AN ATTACHMENT

SMCS-1365 **i02421146**

NOTE	PART NUMBER	QTY	PART NAME 1 2 3 4 5 6 (PRODUCT LEVEL)	SEE PAGE
Y	*251-7570*	1	AXLE AR-FIXED (FRONT, STANDARD DIFFERENTIAL) (WITH HEAT EXCHANGER)	259
Y	*203-2369*	1	AXLE AR-OSCILLATING (REAR, LIMITED SLIP DIFF) (WITH HEAT EXCHANGER)	261
Y	*246-2070*	1	COOLER GP-HYDRAULIC & AXLE OIL	539
Y	*236-9100*	1	LINES GP-AXLE OIL COOLER	308

Y-SEPARATE ILLUSTRATION

<END>

232-3120 COOLER GP-TRANSMISSION OIL

S/N: MHX1-UP

PART OF 234-7849 ENGINE AR-COMPLETE

SMCS-1375 **i02270533**

NOTE	REF NO	GRAPHIC REF	PART NUMBER	QTY	PART NAME 1 2 3 4 5 6 (PRODUCT LEVEL)	SEE PAGE
	1	1	**2S-0795**	2	GASKET	
	2	1	**8M-9307**	1	PLUG-DRAIN (TRANSMISSION OIL COOLER)	
	3	1	**8S-4304**	1	BONNET-TMSN OIL COOLER	
	4	1	**124-5043**	1	COUPLING	
	5	1	**187-3523**	1	CORE AS-OIL COOLER (TRANSMISSION)	
		1	**8T-6764**	1	PLUG-PIPE	
	6	1	**231-3178**	1	BRACKET	
	7	1	**232-3116**	1	BONNET	
	8	1	**232-3117**	1	BRACKET	
	9	1	**0S-1587**	2	BOLT (1/2-13X1.75-IN)	
	10	1	**171-2438**	6	BOLT-12 POINT HEAD (M12X1.75X30-MM)	
	11	1	*183-3408*	1	PLUG AS	
		1	**6V-5049**	1	SEAL-O-RING	
		1	**9S-8004**	1	PLUG	
	12	1	**2N-0475**	2	SEAL-O-RING	
M	13	1	**8T-0293**	8	BOLT (M12X1.75X20-MM)	
	14	1	**3E-4353**	2	WASHER-HARD (11X25X3-MM THK)	
	15	1	**3H-5523**	2	COVER	
	16	1	**3J-5553**	2	GASKET	
	17	1	**5P-8245**	4	WASHER-HARD (13.5X25.5X3-MM THK)	
	18	1	**6F-7062**	1	WASHER (12.7X19.05X1.83-MM THK)	
M	19	1	**6V-1820**	2	BOLT (M10X1.5X30-MM)	
M	20	1	**6V-2317**	2	BOLT (M8X1.25X30-MM)	
M	21	1	**6V-3668**	6	BOLT (M12X1.75X30-MM)	
M	22	1	**6V-3823**	2	BOLT (M12X1.75X60-MM)	
	23	1	**6V-5064**	1	SEAL-O-RING	
M	24	1	**6V-5219**	3	BOLT (M8X1.25X40-MM)	
	25	1	**9M-1974**	5	WASHER-HARD (8.8X16X2-MM THK)	
	26	1	**9S-9334**	1	PLUG	

M-METRIC PART

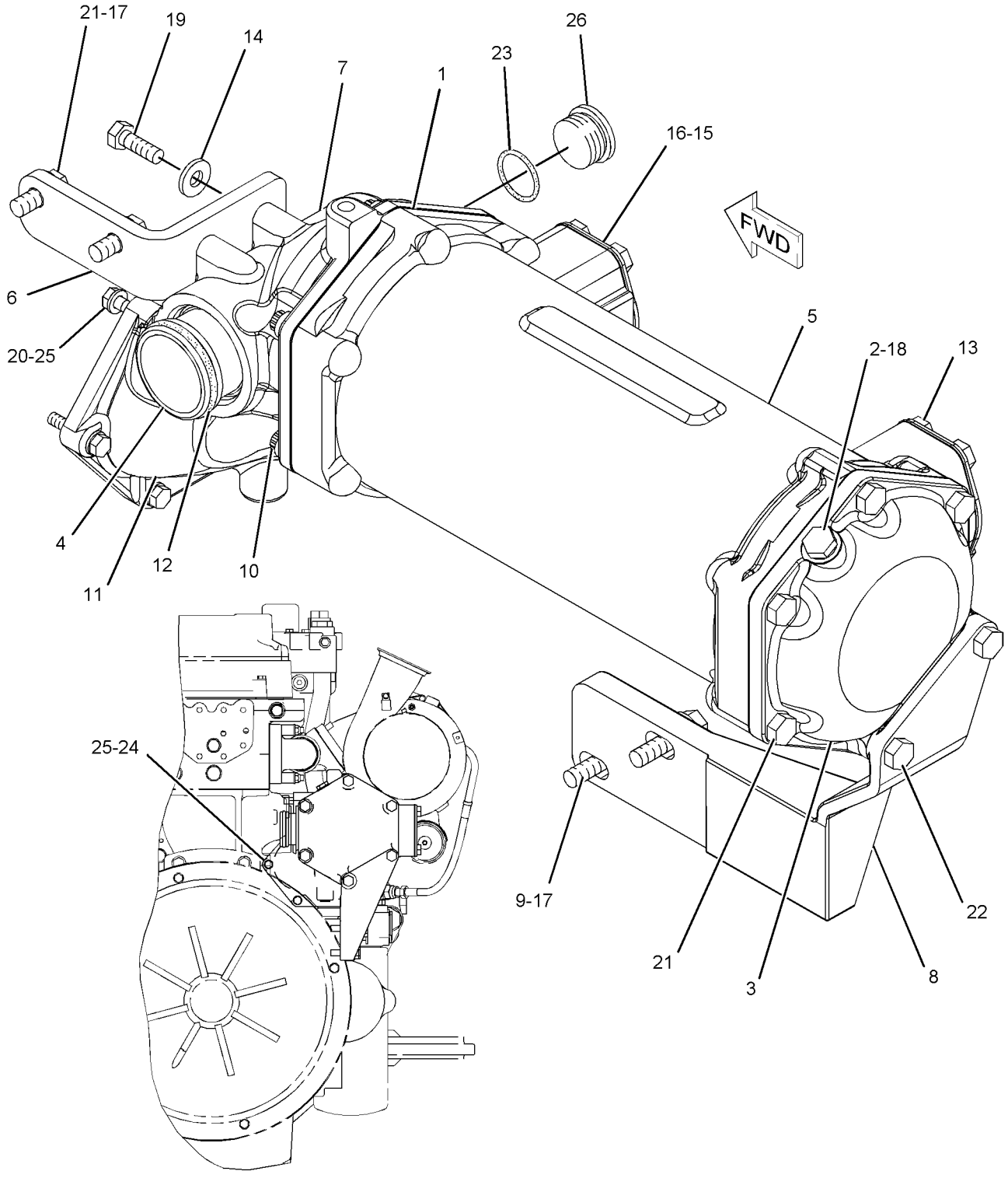

REAR VIEW

GRAPHIC #1 **<END>** g01121029

7K-5636 COVER GP-TMSN OIL FILLER CAP

S/N: A7G1-UP
PART OF 246-4791 PROTECTION GP-VANDALISM
AN ATTACHMENT

SMCS-3005, 3030, 7315 **i02023246**

NOTE	REF NO	GRAPHIC REF	PART NUMBER	QTY	PART NAME 1 2 3 4 5 6 (PRODUCT LEVEL)	SEE PAGE
	1	1	**1L-5072**	1	DOWEL	
	2	1	**9M-7394**	1	LEVER (COVER)	
	3	1	**7K-5634**	1	COVER	
	4	1	**2J-7761**	1	RING-RETAINING	
	5	1	**5P-8502**	1	PADLOCK GP	
A		1	**5P-8500**	1	KEY	
A		1	**8Y-6364**	1	SLEEVE	

A-NOT PART OF THIS GROUP

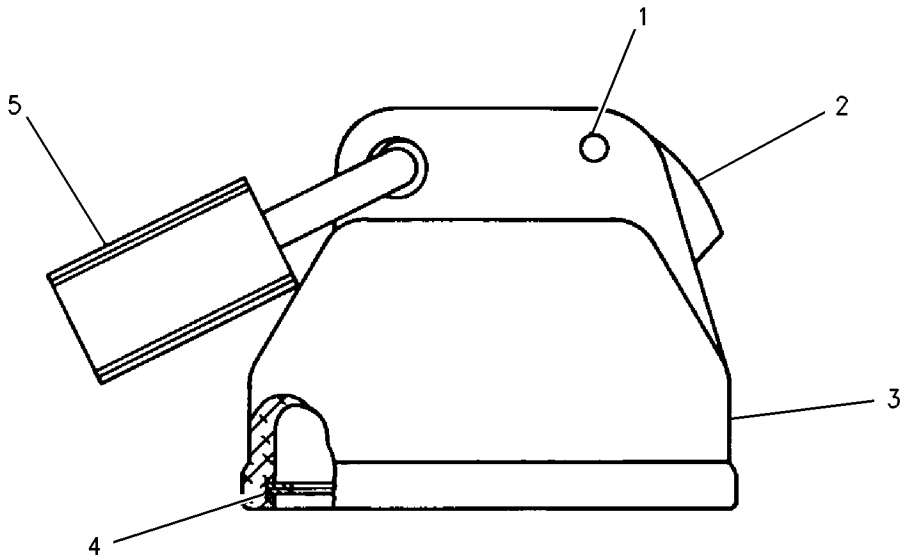

GRAPHIC #1 **<END>** g00661303

129-4298 DIFFERENTIAL GP

S/N: A7G1-UP

PART OF 139-9102 AXLE AR-FIXED, 129-4281, 139-9101 AXLE AR-OSCILLATING

ALSO AN ATTACHMENT

SMCS-3258 **i02300903**

NOTE	REF NO	GRAPHIC REF	PART NUMBER	QTY	PART NAME 1 2 3 4 5 6 (PRODUCT LEVEL)	SEE PAGE
	1	1	**151-4464**	4	BEARING-SLEEVE	
M	2	1	**127-1960**	8	SCREW-FLAT HEAD (M6X1X16-MM)	
	3	1	**217-3682**	4	WASHER-THRUST	
	4	1	**129-2339**	1	SPIDER	
	5	1	**129-2342**	2	WASHER-THRUST	
	6	1	**9C-6023**	4	PINION-DIFFERENTIAL BEVEL (10-TEETH)	
	7	1	**129-2341**	2	GEAR-DIFFERENTIAL BEVEL (18-TEETH)	
	8	1	**130-1848**	1	CASE AS-DIFFERENTIAL	
J	8A	1		4	WASHER-HARD (17X32X3.5-MM THK)	
J	8B	1		4	BOLT (M16X2X160-MM)	

J-PARTS MARKED J ARE FOR SHIPPING & STORAGE ONLY, REMOVE BEFORE INSTALLATION INTO AXLE
M-METRIC PART

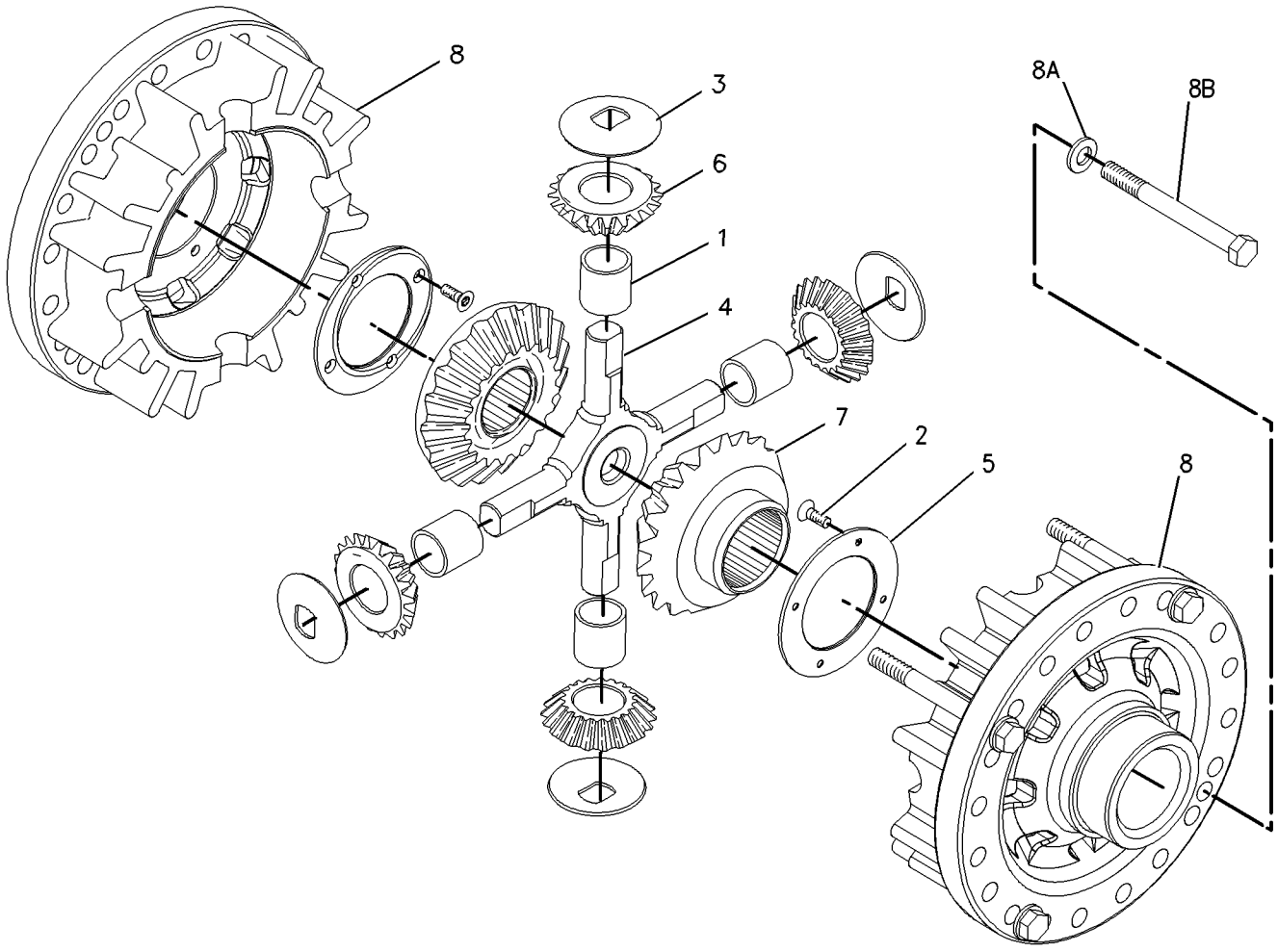

GRAPHIC #1 **<END>** g00858133

251-4249 DIFFERENTIAL GP

S/N: A7G1-UP

PART OF 251-4522, 251-7570 AXLE AR-FIXED

ALSO AN ATTACHMENT

SMCS-3258 **i02198397**

NOTE	REF NO	GRAPHIC REF	PART NUMBER	QTY	PART NAME 1 2 3 4 5 6 (PRODUCT LEVEL)	SEE PAGE
	1	1	**151-4464**	4	BEARING-SLEEVE	
M	2	1	**127-1960**	8	SCREW-FLAT HEAD (M6X1X16-MM)	
	3	1	**217-3682**	4	WASHER-THRUST	
	4	1	**251-4251**	1	SHAFT	
	5	1	**129-2342**	2	WASHER-THRUST	
	6	1	**251-4250**	4	PINION-BEVEL	
	7	1	**129-2341**	2	GEAR-DIFFERENTIAL BEVEL (18-TEETH)	
	8	1	**130-1848**	1	CASE AS-DIFFERENTIAL	
J	8A	1		4	WASHER-HARD (17X32X3.5-MM THK)	
J	8B	1		4	BOLT (M16X2X160-MM)	

J-PARTS MARKED J ARE FOR SHIPPING & STORAGE ONLY, REMOVE BEFORE INSTALLATION INTO AXLE
M-METRIC PART

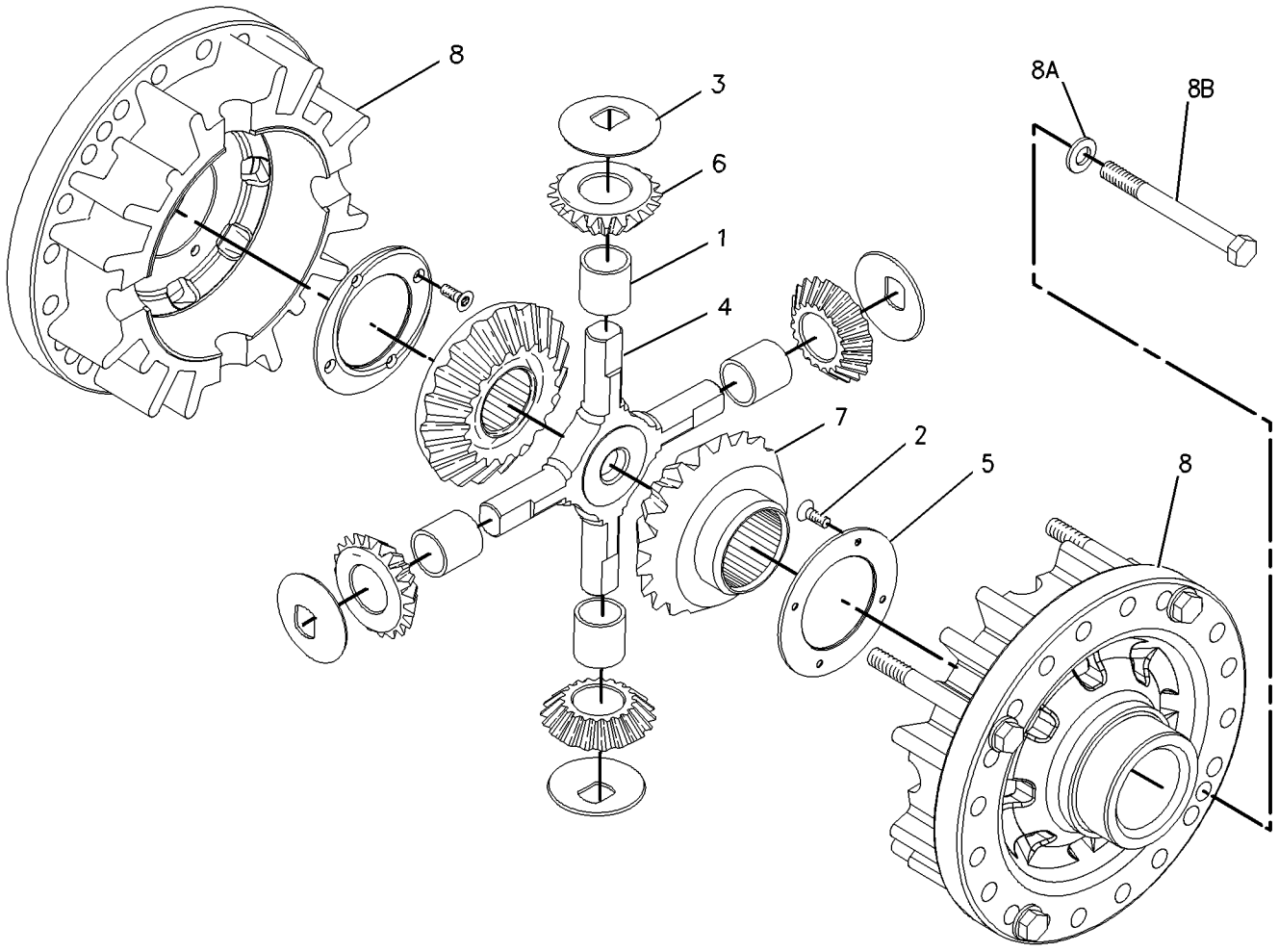

GRAPHIC #1 **<END>** g00858126

129-4304 DIFFERENTIAL GP-LIMITED SLIP

S/N: A7G1-UP

PART OF 251-4523, 251-7571 AXLE AR-FIXED, 129-4283, 139-9103, 203-2369 AXLE AR-OSCILLATING

AN ATTACHMENT

SMCS-3263 **i01662583**

NOTE	REF NO	GRAPHIC REF	PART NUMBER	QTY	PART NAME 1 2 3 4 5 6 (PRODUCT LEVEL)	SEE PAGE
	1	1	**135-7493**	2	WASHER	
	2	1	**102-7509**	2	HOUSING-ACTUATOR	
	3	1	**102-7510**	4	PINION-DIFFERENTIAL BEVEL	
	4	1	**102-7511**	2	SHAFT-PINION	
	5	1	**135-7492**	2	GEAR (16 TEETH)	
	6	1	**135-7495**	2	KIT-DISC	
	7	1	**135-7496**	1	CASE AS	
JM	7A	1	**8T-9515**	2	BOLT-SOCKET HEAD (M10X1.5X40MM)	
	8	1	**135-7494**	2	KIT-DISC	

J-PART MARKED J IS FOR SHIPPING & STORAGE ONLY, REMOVE BEFORE INSTALLATION INTO AXLE.
M-METRIC PART

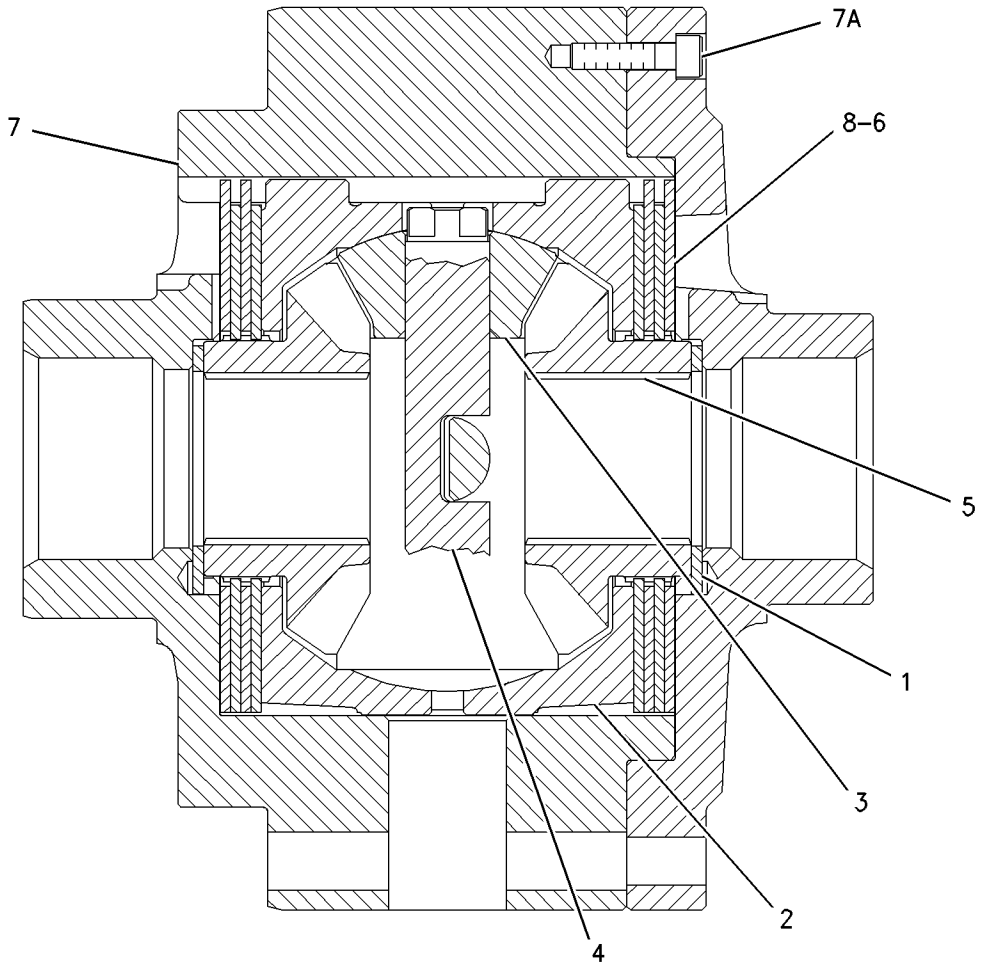

GRAPHIC #1 **<END>** g00858142

129-4308 DIFFERENTIAL GP-NOSPIN

S/N: A7G1-UP
PART OF 129-4286 AXLE AR-OSCILLATING
AN ATTACHMENT

SMCS-3265 **i01662596**

NOTE	REF NO	GRAPHIC REF	PART NUMBER	QTY	PART NAME 1 2 3 4 5 6 (PRODUCT LEVEL)	SEE PAGE
	1	1	**130-1848**	1	CASE AS-DIFFERENTIAL	
J	1A	1		4	WASHER-HARD (17X32X3.5MM THK)	
J	1B	1		4	BOLT (M16X2.0X160MM)	
CY	2	1	**178-1704**	1	DIFFERENTIAL GP-NOSPIN	279

C-CHANGE FROM PREVIOUS TYPE
J-PARTS MARKED J ARE FOR SHIPPING & STORAGE ONLY, REMOVE BEFORE INSTALLATION INTO AXLE
M-METRIC PART
Y-SEPARATE ILLUSTRATION

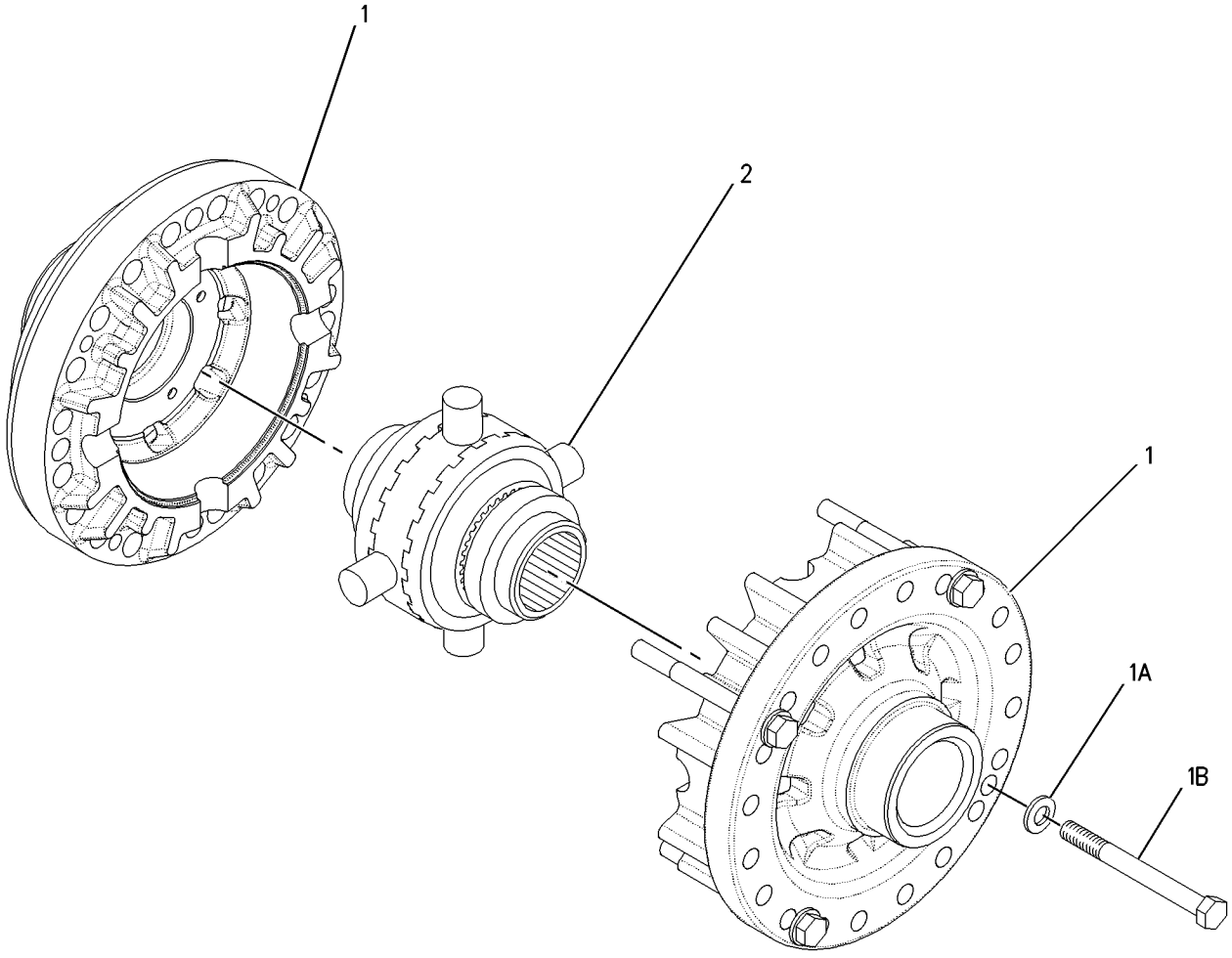

GRAPHIC #1 **<END>** g00858148

178-1704 DIFFERENTIAL GP-NOSPIN

S/N: A7G1-UP
PART OF 129-4308 DIFFERENTIAL GP-NOSPIN
AN ATTACHMENT

SMCS-3265 **i01347527**

NOTE	REF NO	GRAPHIC REF	PART NUMBER	QTY	PART NAME 1 2 3 4 5 6 (PRODUCT LEVEL)	SEE PAGE
	1	1	**143-4715**	2	GEAR (39 TEETH)	
	2	1	**2G-4987**	2	SPRING	
	3	1	**2G-4429**	2	CLUTCH AS	
	4	1	**151-1404**	1	SPIDER AS	
	5	1	**8W-5256**	2	RETAINER	
	6	1	**178-0399**	1	SPACER	

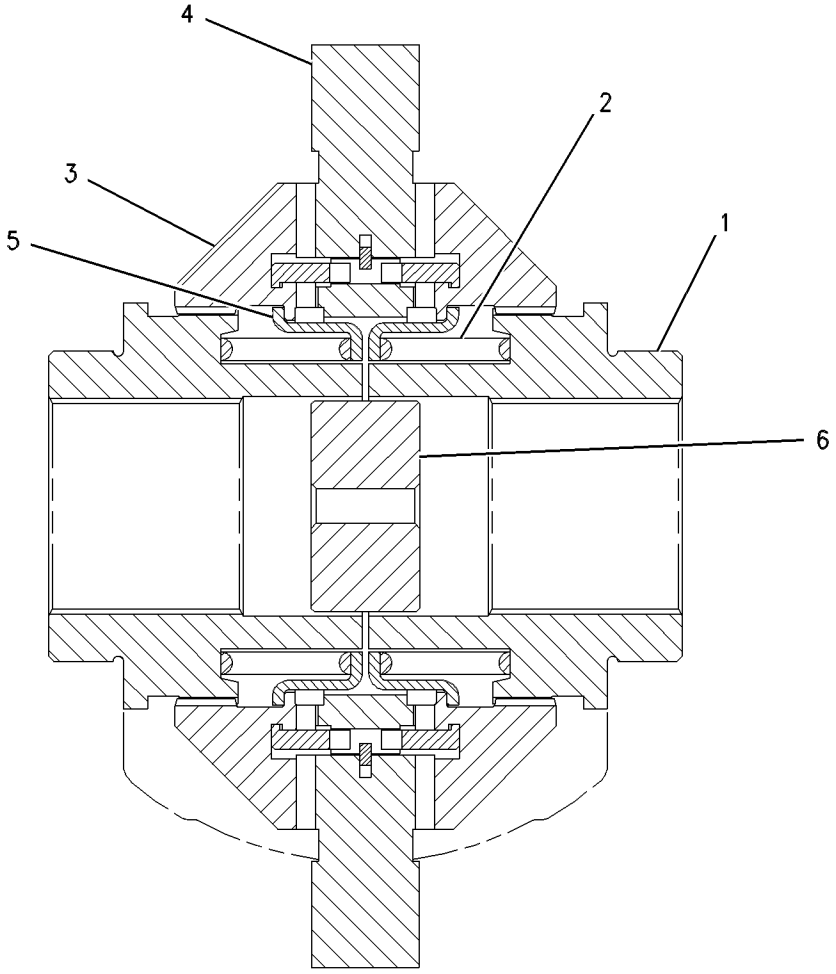

GRAPHIC #1 **<END>** g00613650

246-4792 FILLER GP-POWER TRAIN OIL

S/N: A7G1-UP

PART OF 236-9057 POWER TRAIN AR

SMCS-3005, 3081 **i02204878**

NOTE	REF NO	GRAPHIC REF	PART NUMBER	QTY	PART NAME 1 2 3 4 5 6 (PRODUCT LEVEL)	SEE PAGE
	1	1	**2S-4750**	1	GASKET	
	2	1	**4B-9782**	1	BALL	
	3	1	**5K-1568**	1	CAP-FILLER	
	4	1	**6F-5188**	1	SEAL-RING	
	5	1	**6H-5139**	1	PLATE-PRESSURE	
	6	1	**134-6635**	1	GAUGE AS-OIL LEVEL	
		1	**5J-2974**	4	SEAL-O-RING	
		1	**122-8353**	2	BOLT (M12X46.5-MM)	
	7	1	**246-5827**	1	TUBE AS	
	8	1	**254-3446**	1	BRACKET	
	9	1	**5P-1076**	1	WASHER-HARD (13.5X30X4-MM THK)	
	10	1	**5P-7468**	1	CLIP (SLOT)	
	11	1	**5P-7469**	1	CLIP (TAB)	
	12	1	**5P-8444**	1	GROMMET	
	13	1	**8T-4121**	4	WASHER-HARD (11X21X2.5-MM THK)	
M	14	1	**8T-4139**	1	BOLT (M12X1.75X30-MM)	
M	15	1	**8T-4183**	1	BOLT (M12X1.75X40-MM)	
M	16	1	**8T-4195**	4	BOLT (M10X1.5X30-MM)	
	17	1	**8T-4223**	1	WASHER-HARD (13.5X25.5X3-MM THK)	
M	18	1	**8T-4244**	1	NUT (M12X1.75-THD)	

M-METRIC PART

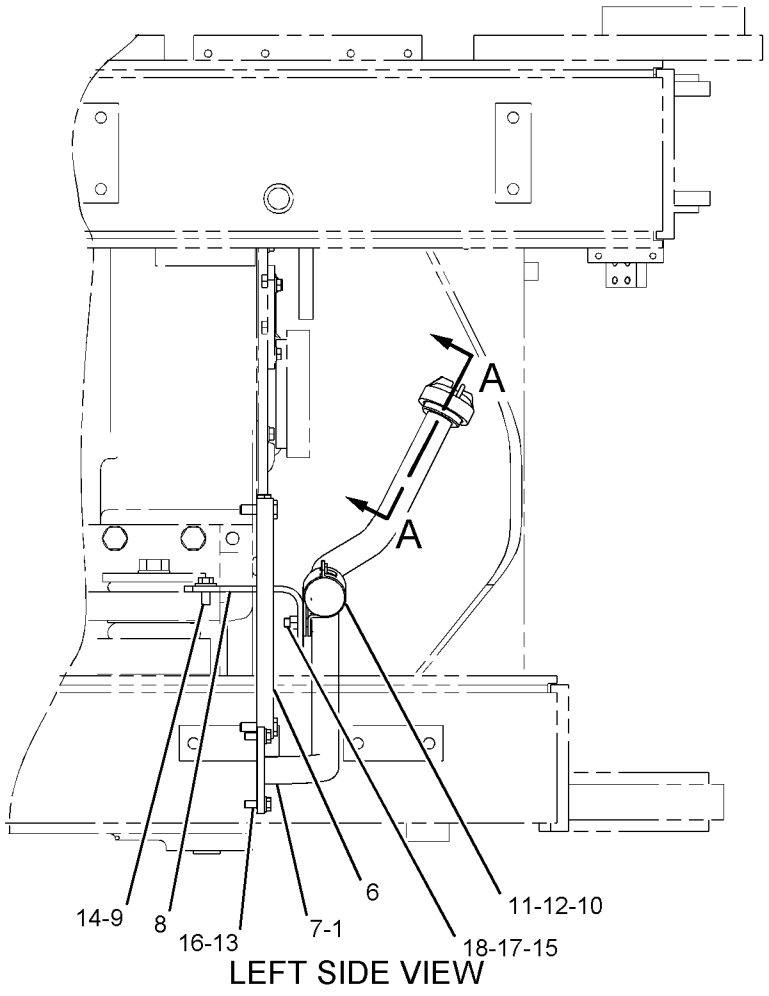

LEFT SIDE VIEW

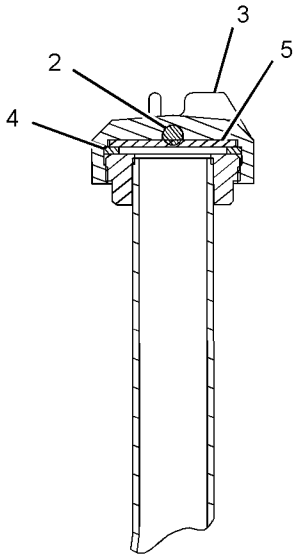

SECTION A-A

GRAPHIC #1 **<END>** g01116802

POWER TRAIN

236-8999 FILTER & LINES GP-TRANSMISSION

S/N: A7G1-UP

PART OF 236-9057 POWER TRAIN AR

SMCS-3067, 3154 **i02412080**

NOTE	REF NO	GRAPHIC REF	PART NUMBER	QTY	PART NAME 1 2 3 4 5 6 (PRODUCT LEVEL)	SEE PAGE
	1	1	**4J-0520**	4	SEAL-O-RING	
I	2	1	**276-9775**	2	HOSE AS	
	3	1	**276-9776**	1	TUBE AS	
	4	1	**276-9777**	1	TUBE AS	
	5	1	**276-9778**	1	BRACKET	
	6	1	**277-2112**	1	BRACKET AS	
	7	1	**132-7551**	8	SPACER (11X19X6-MM THK)	
	8	1	*164-5577*	2	ELBOW GP	
					(EACH INCLUDES)	
		1	**5K-9090**	2	SEAL-O-RING	
		1	**6V-8984**	1	ELBOW	
	9	1	**1S-0724**	2	CLIP	
Y	10	1	*266-2272*	1	FILTER GP-OIL (POWER TRAIN)	284
	11	1	**2P-6470**	1	CLIP (SLOT)	
	12	1	**2P-6471**	1	CLIP (TAB)	
	13	1	**6V-9172**	2	NUT (1-7/16-12-THD)	
	14	1	**7X-7729**	3	WASHER (11X25X3-MM THK)	
	15	1	**8C-3206**	8	FLANGE-HALF	
	16	1	**8T-4121**	18	WASHER-HARD (11X21X2.5-MM THK)	
M	17	1	**8T-4136**	1	BOLT (M10X1.5X25-MM)	
M	18	1	**8T-4137**	1	BOLT (M10X1.5X20-MM)	
M	19	1	**8T-4182**	8	BOLT (M10X1.5X45-MM)	
M	20	1	**8T-4196**	3	BOLT (M10X1.5X35-MM)	
E	21	1	**206-2726**		GUARD-HOSE (30-CM)	
M	22	1	**8T-4186**	8	BOLT (M10X1.5X40-MM)	
M	23	1	**6V-3822**	2	BOLT (M10X1.5X35-MM)	
	24	1	**6V-5839**	2	WASHER (11X21X2.5-MM THK)	

E-ORDER BY THE CENTIMETER
I-REFER TO HYDRAULIC INFORMATION SYSTEM
M-METRIC PART
Y-SEPARATE ILLUSTRATION

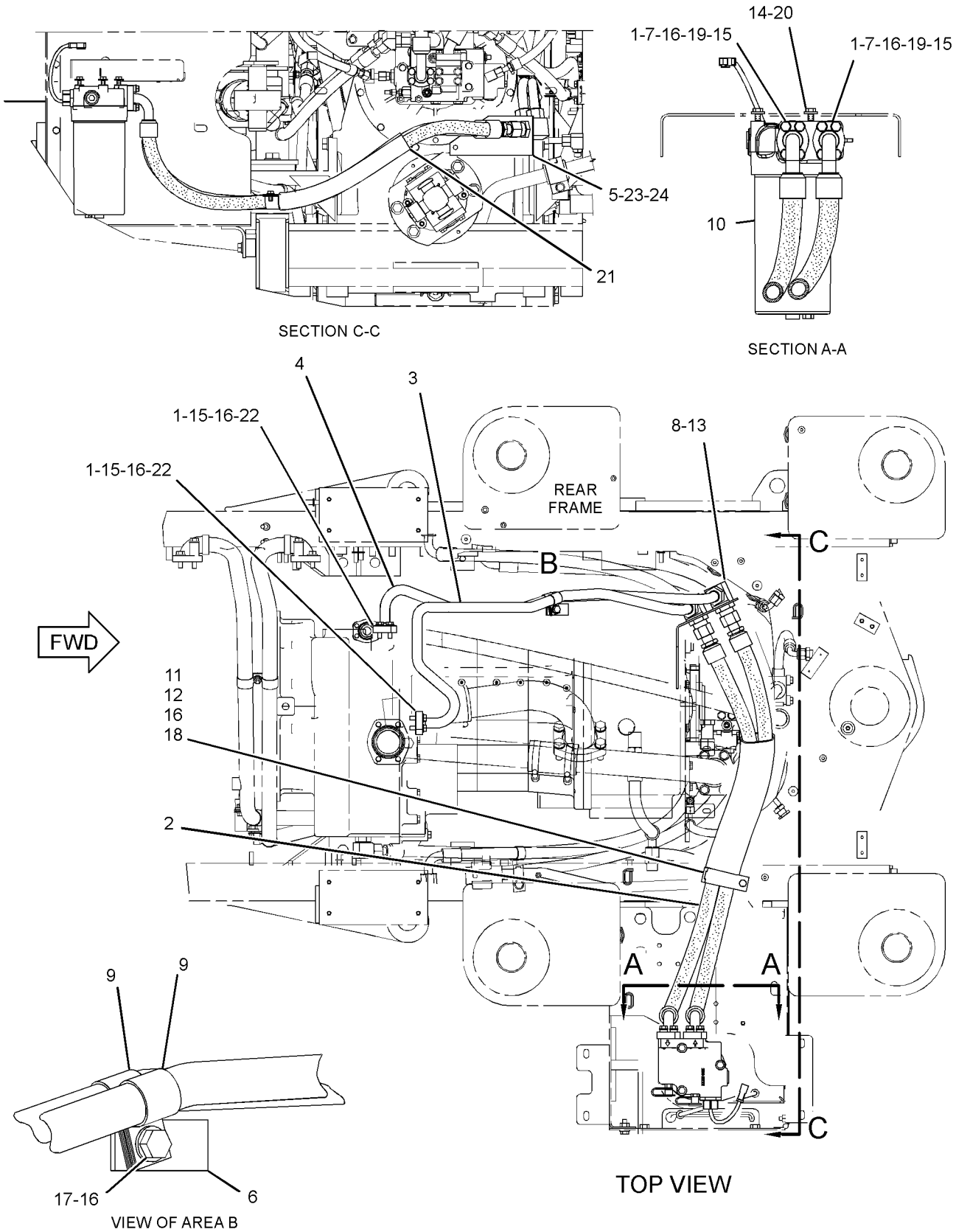

GRAPHIC #1 **<END>** g01200581

266-2272 FILTER GP-OIL—POWER TRAIN

S/N: A7G1-UP

PART OF 236-8999 FILTER & LINES GP-TRANSMISSION

SMCS-3004, 3067 **i02424570**

NOTE	REF NO	GRAPHIC REF	PART NUMBER	QTY	PART NAME 1 2 3 4 5 6 (PRODUCT LEVEL)	SEE PAGE
	1	1	**1R-1809**	1	FILTER ELEMENT AS-OIL (POWER TRAIN)	
		1	**130-0229**	1	SEAL-O-RING	
	2	1	**6V-0852**	1	CAP-DUST	
	3	1	**8C-3447**	1	CAP-DUST	
Y	4	1	**266-2271**	1	BASE GP-OIL FILTER (POWER TRAIN)	262
	5	1	**241-3352**	1	HOUSING AS	
		1	**3J-1907**	1	SEAL-O-RING	
		1	**9S-8004**	1	PLUG	
	6	1	**3J-1907**	1	SEAL-O-RING	
	7	1	**3J-7354**	1	SEAL-O-RING	
	8	1	**6V-3965**	1	FITTING AS (QUICK DISCONNECT)	
	9	1	**8C-3446**	1	VALVE-FLUID SAMPLING (POWER TRAIN OIL)	

Y-SEPARATE ILLUSTRATION

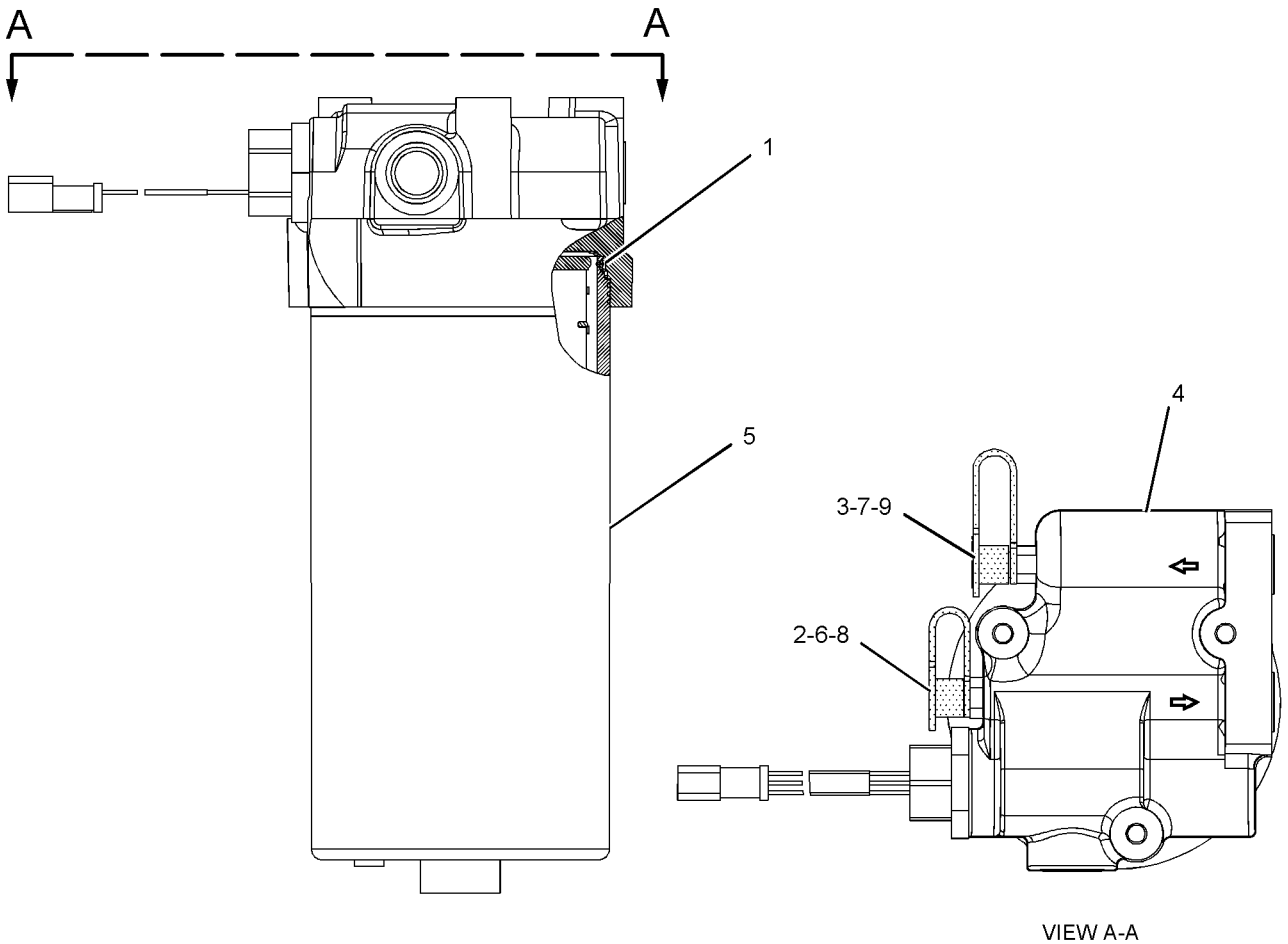

VIEW A-A

GRAPHIC #1 **<END>** g01141240

129-4290 GEAR GP-BEVEL & PINION

S/N: A7G1-UP
PART OF 139-9102 AXLE AR-FIXED
AN ATTACHMENT

SMCS-3254, 3256 **i01347446**

NOTE	REF NO	GRAPHIC REF	PART NUMBER	QTY	PART NAME 1 2 3 4 5 6 (PRODUCT LEVEL)	SEE PAGE
	1	1	**4S-5838**	1	RETAINER	
M	2	1	**8T-6868**	1	BOLT (M12X1.75X80-MM)	
	3	1	**1L-7518**	1	CONE-BEARING	
	4	1	**173-7501**	1	NUT-ADJUSTING	
	5	1	**4E-3897**	2	LOCK	
M	6	1	**4E-3896**	2	BOLT (M6X1X14-MM)	
	7	1	**4E-4031**	2	PIN	
	8	1	**132-6597**	1	CONE-BEARING	
	9	1	**132-6598**	1	CUP-BEARING	
	10	1	**6K-5529**	1	CONE-BEARING	
	11	1	**6K-5528**	1	CUP-BEARING	
	12	1	**6W-4749**	1	WASHER (75.5X106X5-MM THK)	
	13	1	**6W-4750**	1	NUT-SPECIAL	
	14	1	**133-3574**	1	SHAFT-BEVEL PINION	
	15	1	**129-5401**	1	GEAR-BEVEL (52-TEETH)	
	16	1	**9X-2617**	4	PIN-SPRING	
	17	1	**9X-2618**	4	PIN-SPRING	
	18	1	**8S-9075**	1	CONE-BEARING	
M	19	1	**9X-6494**	20	BOLT (MJ20X2.5X200-MM)	
	20	1	**173-7502**	1	NUT-ADJUSTING (M240X2 SPL THD)	
	22	1	**7S-4001**	1	SEAL-O-RING	
	23	1	**134-3032**	1	YOKE AS	
	25	1	**133-3605**	1	SLEEVE AS	
	26	1	**6B-4370**	1	CUP-BEARING	
	27	1	**133-3606**	1	SLEEVE AS	
	28	1	**8S-9076**	1	CUP-BEARING	

M-METRIC PART

129-4290 **GEAR GP-BEVEL & PINION** *(contd.)* **i01347446**

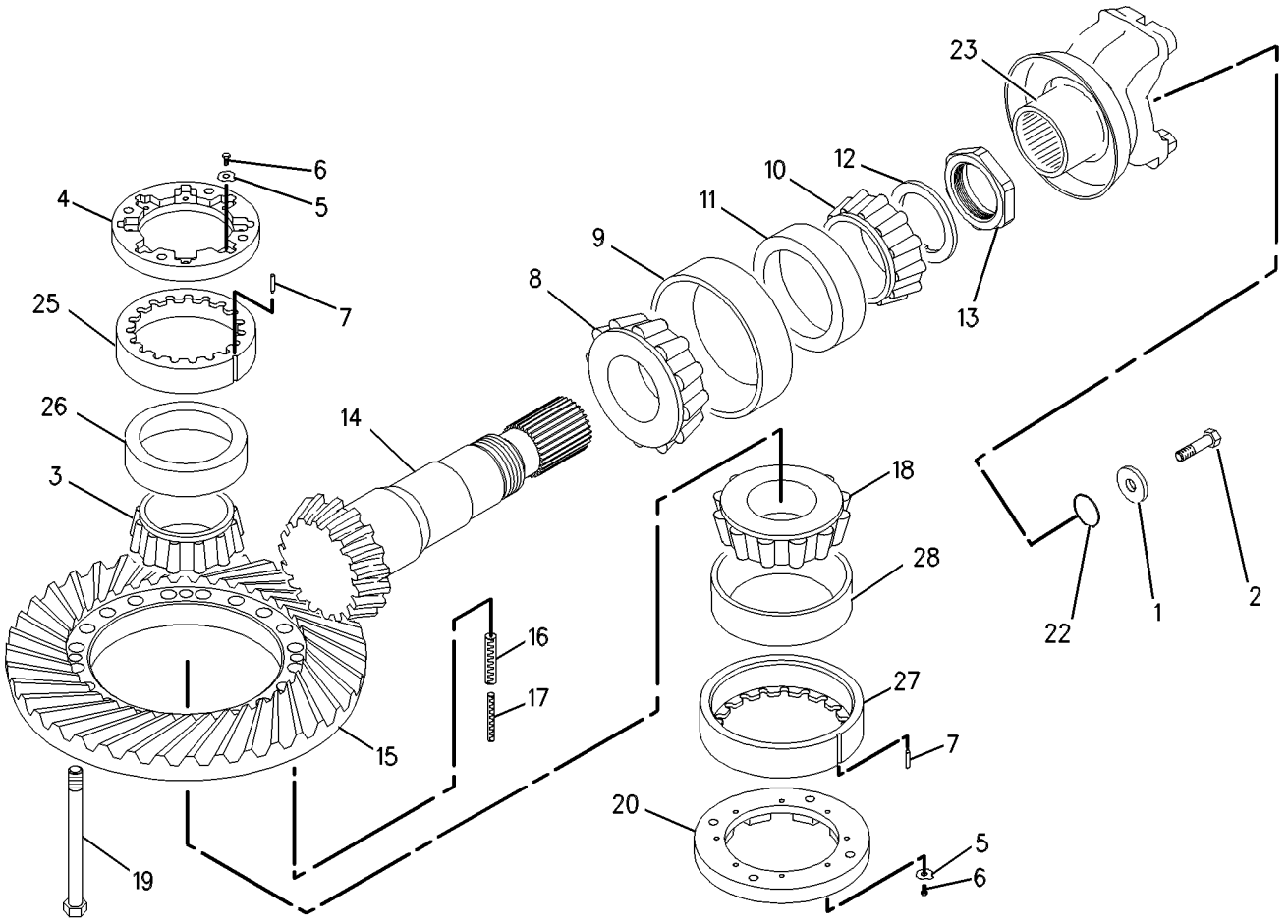

GRAPHIC #1 **<END>** g00588154

129-4292 GEAR GP-BEVEL & PINION

S/N: A7G1-UP

PART OF 129-4281, 129-4283, 129-4286, 139-9101, 139-9103, 203-2369 AXLE

AR-OSCILLATING

ALSO AN ATTACHMENT

SMCS-3254, 3256 **i01990422**

NOTE	REF NO	GRAPHIC REF	PART NUMBER	QTY	PART NAME 1 2 3 4 5 6 (PRODUCT LEVEL)	SEE PAGE
	1	1	**8S-9075**	1	CONE-BEARING	
M	2	1	**4E-3896**	2	BOLT (M6X1X14-MM)	
	3	1	**4E-3897**	2	LOCK	
	4	1	**6K-5528**	1	CUP-BEARING	
	5	1	**6K-5529**	1	CONE-BEARING	
	6	1	**6W-4749**	1	WASHER (75.5X106X5-MM THK)	
	7	1	**6W-4750**	1	NUT-SPECIAL	
	8	1	**1L-7518**	1	CONE-BEARING	
	9	1	**9X-2617**	4	PIN-SPRING	
	10	1	**9X-2618**	4	PIN-SPRING	
M	11	1	**9X-6494**	20	BOLT (MJ20X2.5X200-MM)	
	12	1	**173-7501**	1	NUT-ADJUSTING	
	13	1	**132-6597**	1	CONE-BEARING	
	14	1	**132-6598**	1	CUP-BEARING	
	15	1	**129-5401**	1	GEAR-BEVEL (52-TEETH)	
	16	1	**129-5400**	1	SHAFT-BEVEL PINION	
	17	1	**133-3605**	1	SLEEVE AS	
	18	1	**6B-4370**	1	CUP-BEARING	
	19	1	**133-3606**	1	SLEEVE AS	
	20	1	**8S-9076**	1	CUP-BEARING	
	21	1	**4E-4031**	2	PIN	
	22	1	**173-7502**	1	NUT-ADJUSTING (M240X2 SPL THD)	
	23	1	**156-1150**	1	YOKE AS	
	24	1	**134-3030**	1	GUARD	

M-METRIC PART

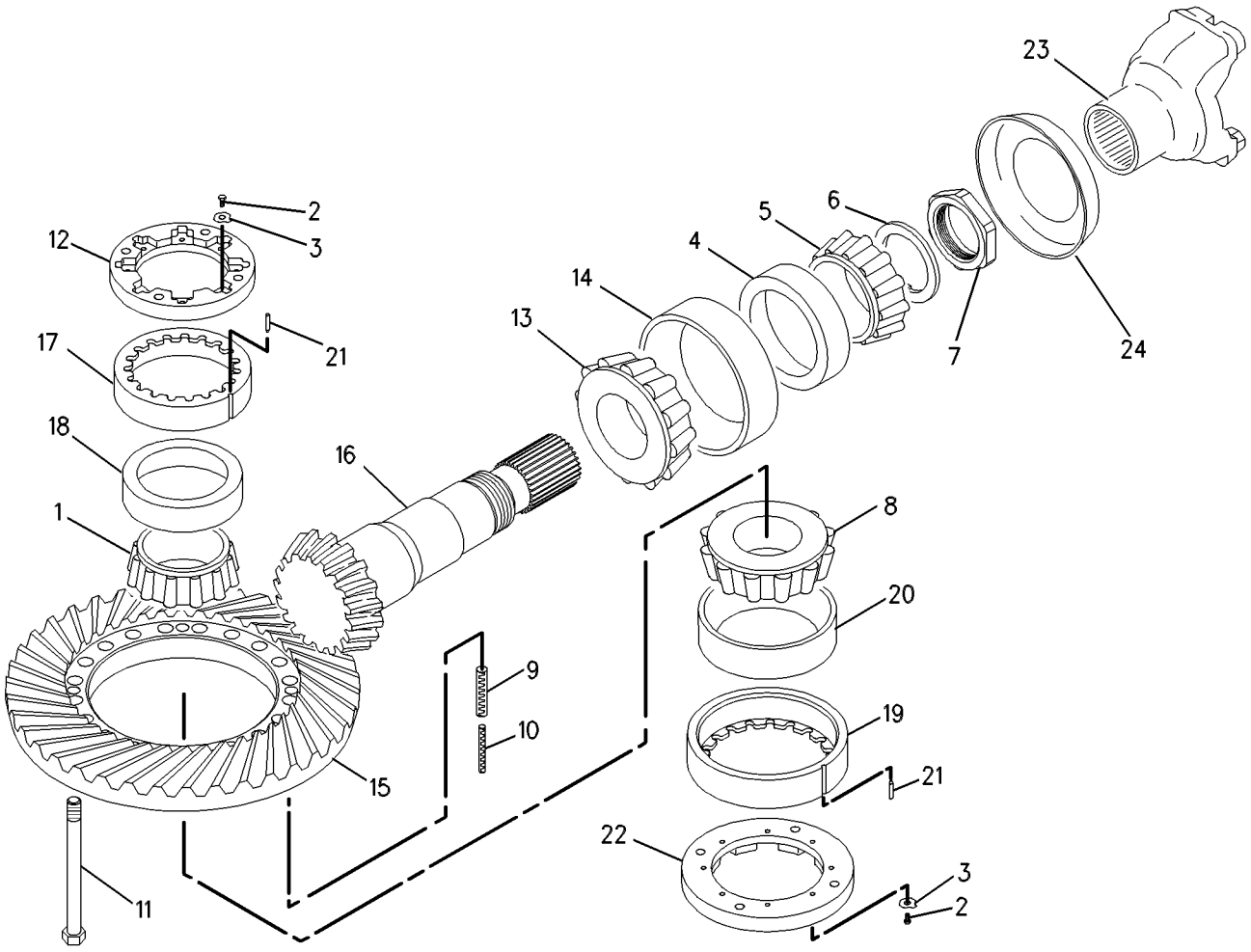

GRAPHIC #1 **<END>** g00385456

251-4879 GEAR GP-BEVEL & PINION

S/N: A7G1-UP

PART OF 251-4522, 251-4523, 251-7570, 251-7571 AXLE AR-FIXED

ALSO AN ATTACHMENT

SMCS-3254, 3256 **i02120292**

NOTE	REF NO	GRAPHIC REF	PART NUMBER	QTY	PART NAME 1 2 3 4 5 6 (PRODUCT LEVEL)	SEE PAGE
	1	1	**4S-5838**	1	RETAINER	
M	2	1	**8T-6868**	1	BOLT (M12X1.75X80-MM)	
	3	1	**1L-7518**	1	CONE-BEARING	
	4	1	**173-7501**	1	NUT-ADJUSTING	
	5	1	**4E-3897**	2	LOCK	
M	6	1	**4E-3896**	2	BOLT (M6X1X14-MM)	
	7	1	**4E-4031**	2	PIN	
	8	1	**8E-7926**	1	CONE-BEARING	
	9	1	**8E-7927**	1	CUP-BEARING	
	10	1	**6K-5529**	1	CONE-BEARING	
	11	1	**6K-5528**	1	CUP-BEARING	
	12	1	**6W-4749**	1	WASHER (75.5X106X5-MM THK)	
	13	1	**6W-4750**	1	NUT-SPECIAL	
	14	1	**252-0567**	1	SET-BEVEL GEAR	
	16	1	**9X-2617**	4	PIN-SPRING	
	17	1	**9X-2618**	4	PIN-SPRING	
	18	1	**8S-9075**	1	CONE-BEARING	
M	19	1	**9X-6494**	20	BOLT (MJ20X2.5X200-MM)	
	20	1	**173-7502**	1	NUT-ADJUSTING (M240X2 SPL THD)	
	22	1	**7S-4001**	1	SEAL-O-RING	
	23	1	**134-3032**	1	YOKE AS	
	25	1	**133-3605**	1	SLEEVE AS	
		1	**6B-4370**	1	CUP-BEARING	
	26	1	**133-3606**	1	SLEEVE AS	
		1	**8S-9076**	1	CUP-BEARING	

M-METRIC PART

251-4879 **GEAR GP-BEVEL & PINION** *(contd.)* **i02120292**

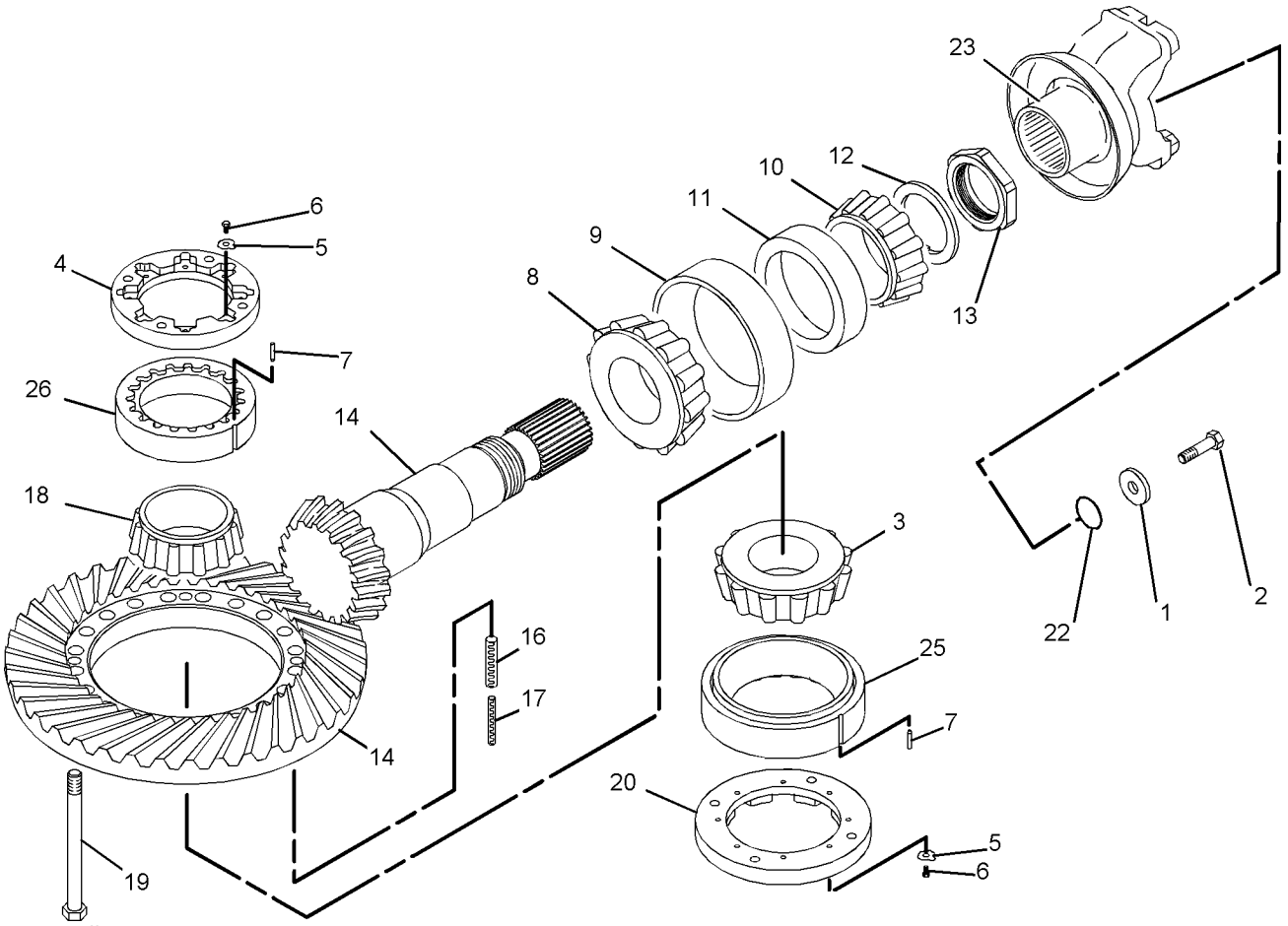

GRAPHIC #1 **<END>** g01080115

248-0357 GEAR GP-OUTPUT TRANSFER

S/N: FAX1-UP

PART OF 237-2331 TRANSMISSION AR

SMCS-3075, 3159 **i02265138**

NOTE	REF NO	GRAPHIC REF	PART NUMBER	QTY	PART NAME 1 2 3 4 5 6 (PRODUCT LEVEL)	SEE PAGE
	1	1	**248-0356**	1	CASE AS	
M		1	**8T-5414**	8	STUD (M12X1.75X50-MM)	
	2	2	**8E-9740**	1	GEAR-OUTPUT TRANSFER (64-TEETH)	
	3	2	**5P-2526**	2	CUP-BEARING	
	4	2	**2K-5065**	2	CONE-BEARING	
	5	2	**252-0995**	1	CAGE AS	
M		2	**8T-5414**	4	STUD (M12X1.75X50-MM)	
	6	2	**4D-1577**	1	SEAL-O-RING	
B	7	2	**9P-7766**	2	SHIM PACK (INCLUDES 12-SHIMS)	
	8	1	**3T-6965**	1	PLATE-EYE	
M	9	1	**6V-5842**	4	BOLT (M10X1.5X40-MM)	
	10	1,3	**6V-5839**	22	WASHER (11X21X2.5-MM THK)	
M	11	1	**6V-1820**	10	BOLT (M10X1.5X30-MM)	
	12	2	**246-5422**	1	COVER	
M	13	2	**6V-8149**	12	NUT (M12X1.75 THD)	
	14	2	**8E-9741**	1	GEAR-OUTPUT TRANSFER (58-TEETH)	
	15	2	**222-9875**	1	CAGE-BEARING	
	16	2	**138-1509**	1	DRAIN AS	
		2	**7M-8485**	1	SEAL-O-RING	
		2	**8F-0212**	1	SEAL-O-RING	
		2	**138-1510**	1	PLUG	
	17	2	**5P-8245**	12	WASHER-HARD (13.5X25.5X3-MM THK)	
	18	2	**155-1634**	2	RETAINER	
M	19	2	**8T-0358**	2	BOLT (M16X2X90-MM)	
	20	2	**2H-3088**	2	SEAL-O-RING	
	21	2	**155-1632**	1	SHAFT-OUTPUT	
	22	2	**117-4465**	2	YOKE AS	
					(EACH INCLUDES)	
		2	**3K-0196**	1	GUARD	
	23	2	**116-8231**	1	CAGE-BEARING	
	24	3	**8M-3107**	1	COVER	
	25	3	**2S-4750**	1	GASKET	
M	26	3	**6V-4248**	8	BOLT (M10X1.5X25-MM)	
	27	2	**5H-6734**	2	SEAL-O-RING	
	28	2	**222-9874**	1	RETAINER-BEARING	
M	29	2	**6V-1819**	6	BOLT (M10X1.5X100-MM)	
	30	2	**2P-8987**	2	CONE-BEARING	
	31	2	**2P-8986**	2	CUP-BEARING	
	32	2	**2H-9247**	1	SEAL-O-RING	
	33	2	**8P-2155**	1	SPACER (61X76X43-MM THK)	
	34	2	**7B-3642**	1	BEARING-INNER	
	35	2	**5P-5411**	1	RACE-BEARING OUTER	
	36	3	**9X-7743**	2	SEAL-LIP TYPE	
Y	37	1,3	**193-2550**	1	SENSOR GP-SPEED (MAGNETIC, HIGH OUTPUT) (TRANSMISSION OUTPUT 1)	189
Y	37A	3	**193-2550**	1	SENSOR GP-SPEED (MAGNETIC, HIGH OUTPUT) (TRANSMISSION OUTPUT 2)	189
	38	3	**8P-3251**	1	COVER AS	
		3	**7B-3028**	2	SCREW-DRIVE (NO 4X3/16-IN)	
		3	**7S-2962**	1	WASHER-SPRING (52.3X82.5X9.1-MM THK)	
		3	**8P-1722**	1	COVER	
	39	3	**8H-7521**	1	SEAL-O-RING	
	40	3	**4S-8598**	1	SCREEN-SUCTION	
	41	3	**4S-8603**	1	SCREEN GP-MAGNETIC	
		3	**4S-8599**	1	TUBE	
		3	**8M-7160**	3	MAGNET	

248-0357 **GEAR GP-OUTPUT TRANSFER** *(contd.)* **i02265138**

NOTE	REF NO	GRAPHIC REF	PART NUMBER	QTY	PART NAME 1 2 3 4 5 6 (PRODUCT LEVEL)	SEE PAGE
	42	2	**3F-5792**	1	SEAL-O-RING	
	43	1	**135-0134**	1	ANGLE	
	44	1	**247-8495**	1	BRACKET AS	
M		1	**8T-3490**	2	NUT-WELD (M10X1.5 THD)	
		1	**247-8496**	1	BRACKET	
	45	1	**1V-6341**	2	SEAL	
	46	1	**9X-8268**	2	WASHER (17.5X30X3.5-MM THK)	
	47	2	**5M-2894**	6	WASHER-HARD (10.2X18.5X2.5-MM THK)	
	48	1	**5M-3154**	1	COVER	
	49	1	**1S-6595**	1	GASKET-OIL SUPPLY	
M	50	1	**6V-6317**	2	BOLT (M10X1.5X20-MM)	

B-USE AS REQUIRED
M-METRIC PART
Y-SEPARATE ILLUSTRATION

248-0357 **GEAR GP-OUTPUT TRANSFER** *(contd.)* **i02265138**

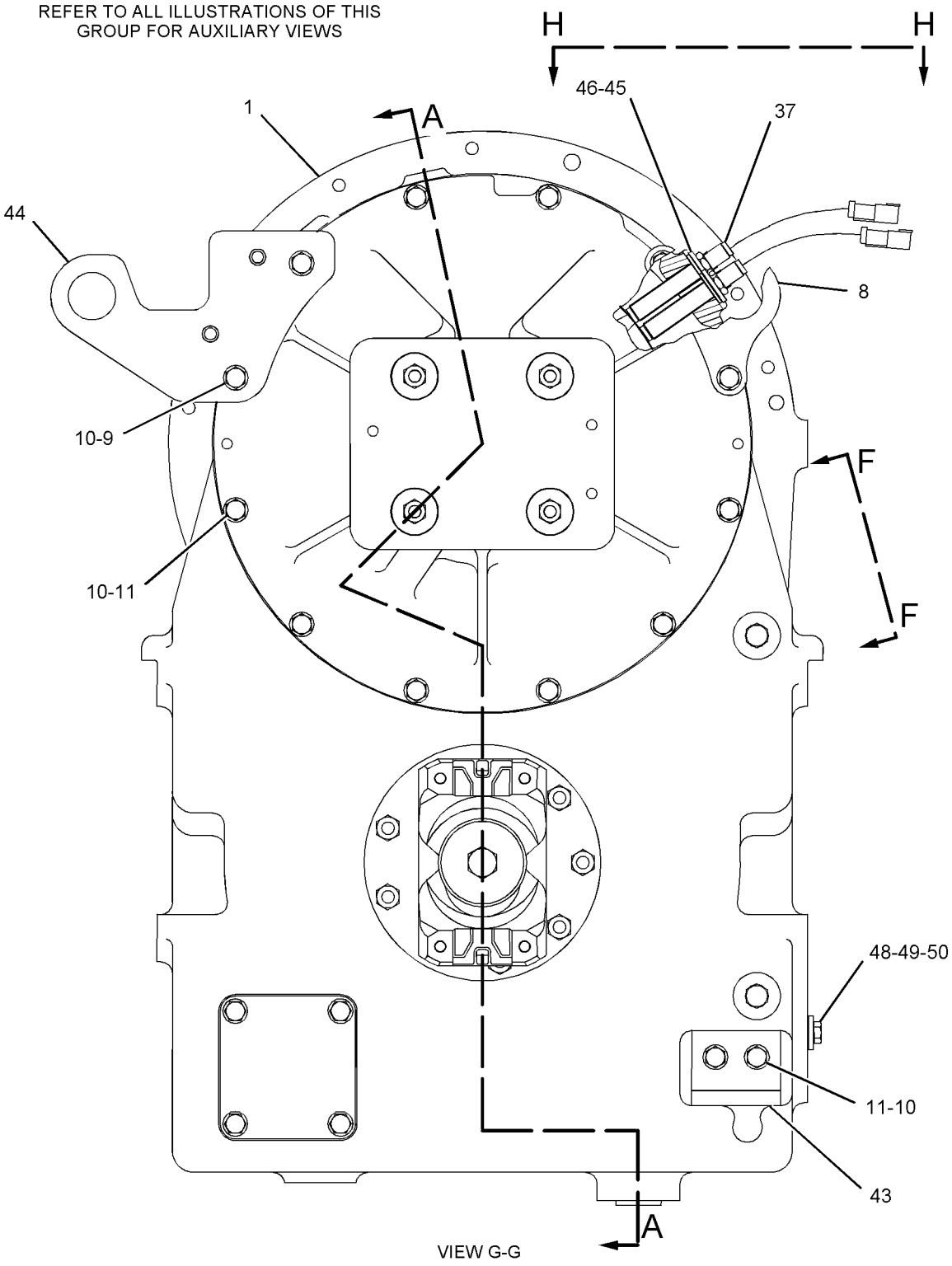

GRAPHIC #1 g01120223

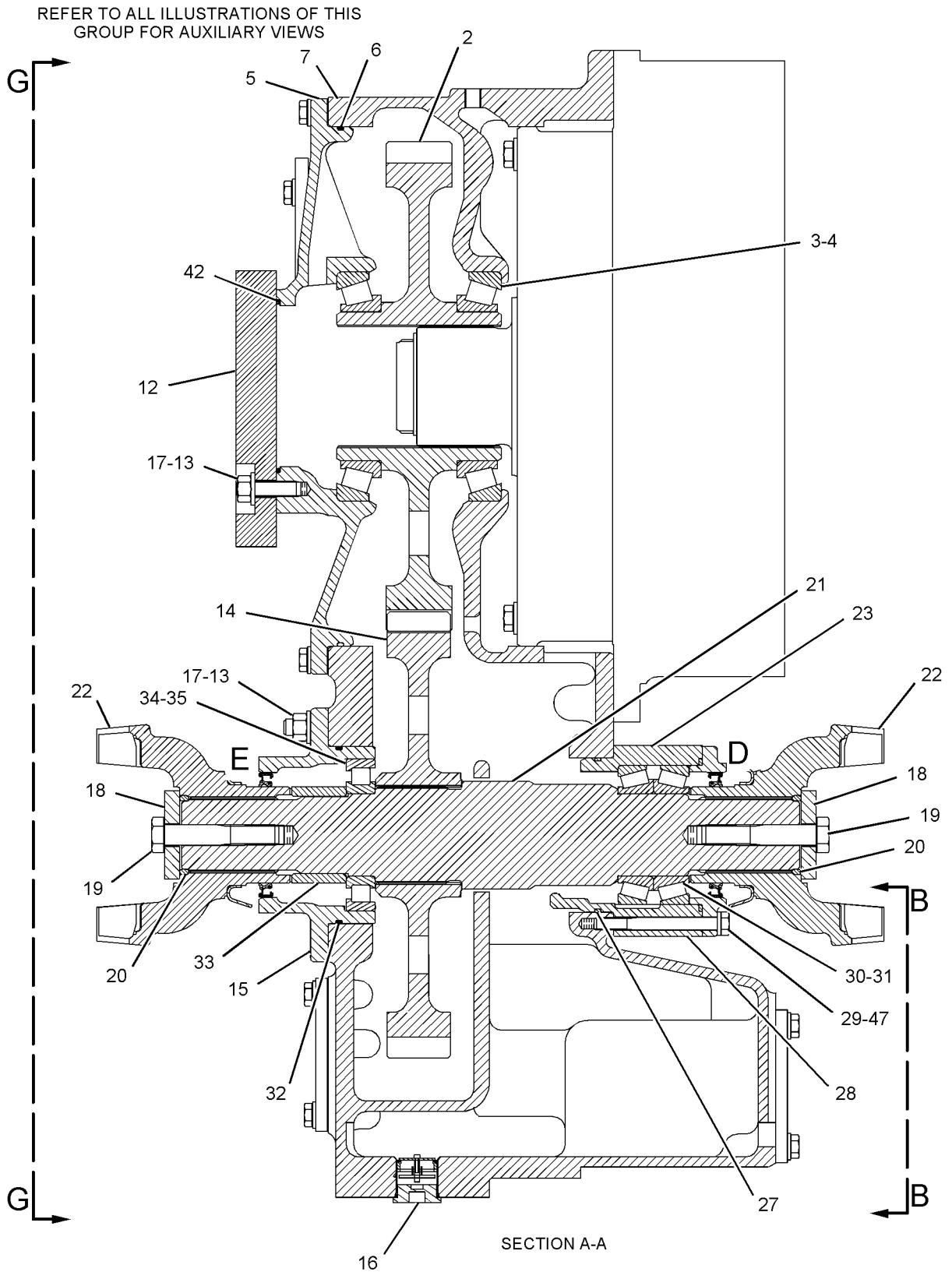

GRAPHIC #2

g01120225

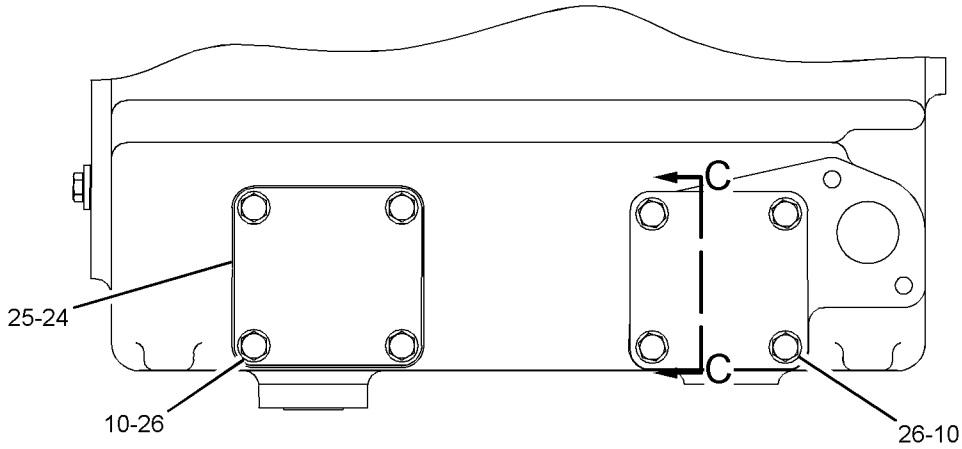

VIEW B-B

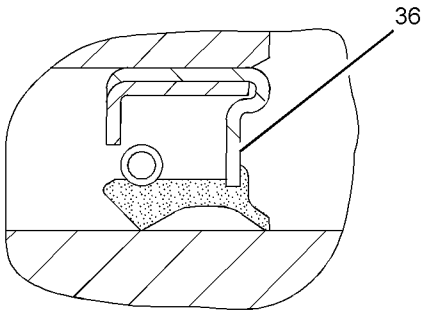

VIEW OF AREA D

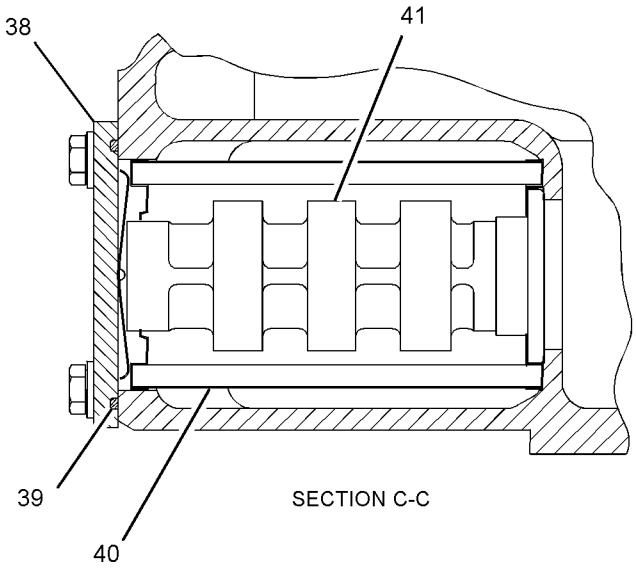

SECTION C-C

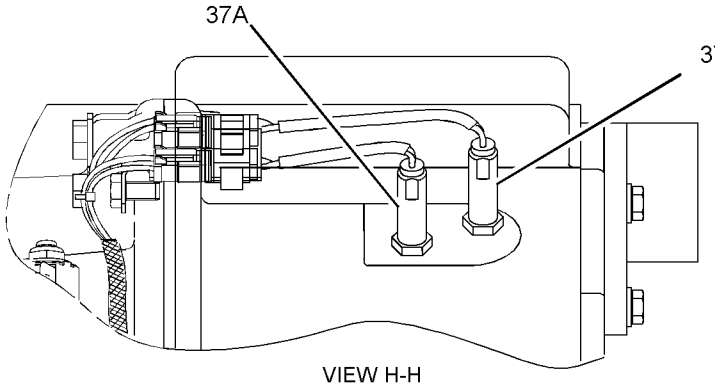

VIEW H-H

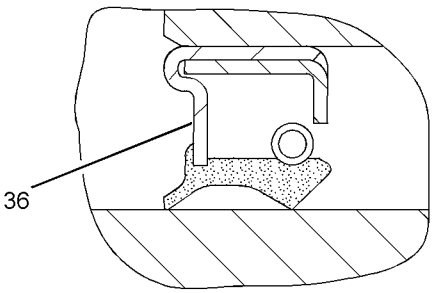

VIEW OF AREA E

GRAPHIC #3 **<END>** g01120222

160-0719 HEAT EXCHANGER GP-AXLE

S/N: A7G1-UP

PART OF 139-9102, 251-7570, 251-7571 AXLE AR-FIXED, 139-9101, 139-9103, 203-2369 AXLE AR-OSCILLATING

AN ATTACHMENT

SMCS-1379 **i01150142**

NOTE	REF NO	GRAPHIC REF	PART NUMBER	QTY	PART NAME 1 2 3 4 5 6 (PRODUCT LEVEL)	SEE PAGE
	1	1	**8E-9571**	3	WASHER-HARD (8.8X16X7-MM THK)	
	2	1	**131-8215**	1	HEADER	
	3	1	**160-0718**	1	HEAT EXCHANGER AS-AXLE	
M		1	**6V-5218**	12	BOLT (M8X1.25X35-MM)	
B		1	**1U-8846**		SEALANT-GASKET	
		1	**131-1285**	1	COVER-RETURN	
		1	**131-4020**	1	MANIFOLD	
		1	**132-7534**	12	LOCK	
		1	**160-0720**	1	TUBE AS	
	4	1	**106-9586**	2	SEAL-O-RING	
M	5	1	**3E-8016**	3	BOLT-SELF-LOCKING (M8X1.25X25-MM)	
B	6	1	**1U-8846**		SEALANT-GASKET	
	7	1	**148-8328**	2	CONNECTOR AS	
M	8	1	**8T-2394**	6	BOLT-SOCKET HEAD (M8X1.25X90-MM)	
M	9	1	**8T-4189**	6	BOLT (M8X1.25X20-MM)	
	10	1	**9M-1974**	12	WASHER-HARD (8.8X16X2-MM THK)	

B-USE AS REQUIRED
M-METRIC PART

160-0719 **HEAT EXCHANGER GP-AXLE** *(contd.)* **i01150142**

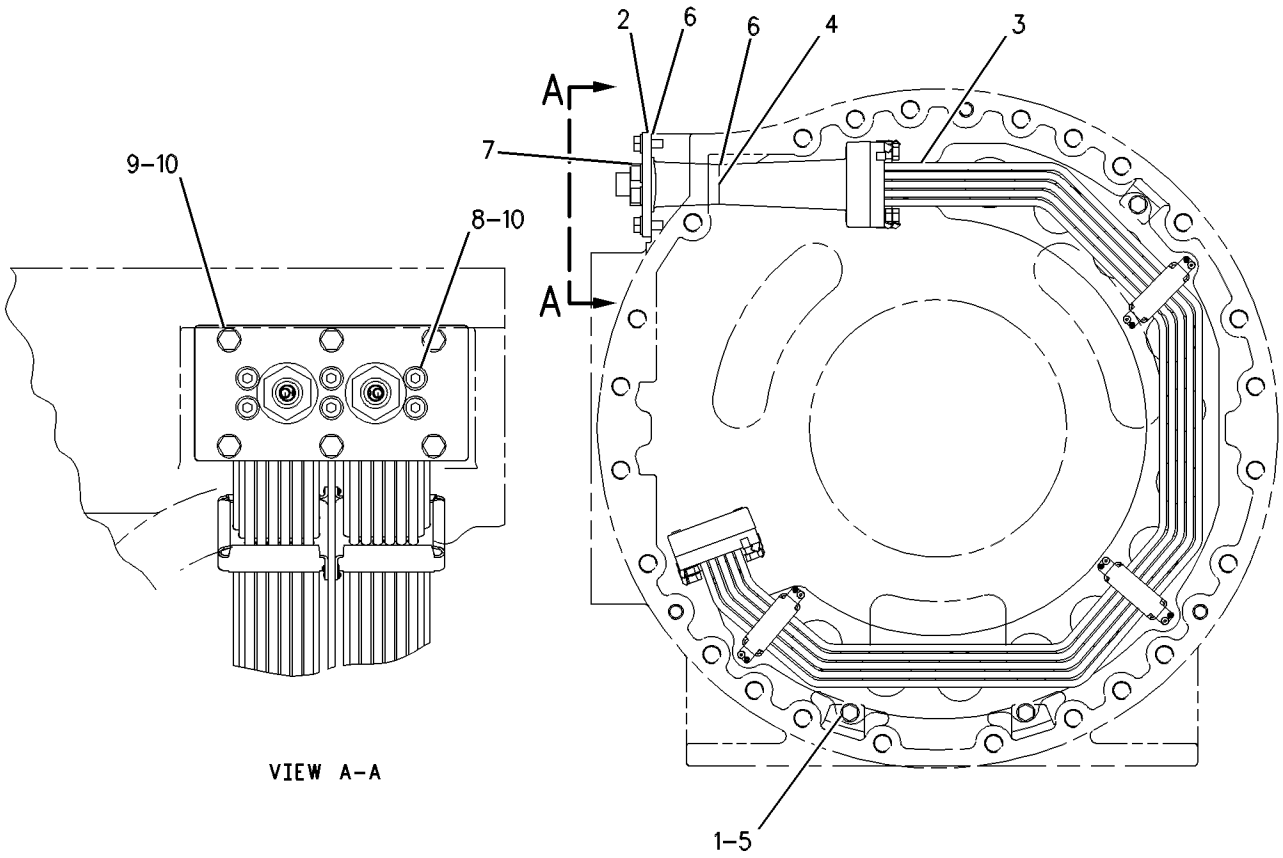

GRAPHIC #1 **<END>** g00610169

139-9107 HOUSING GP-FIXED AXLE

S/N: A7G1-UP
PART OF 139-9102 AXLE AR-FIXED
AN ATTACHMENT

SMCS-3260 **i02169208**

NOTE	REF NO	GRAPHIC REF	PART NUMBER	QTY	PART NAME 1 2 3 4 5 6 (PRODUCT LEVEL)	SEE PAGE
	1	1	**5H-3701**	2	SCREW-PURGE	
	2	1	**5M-6592**	2	CUP-BEARING	
	3	1	**5P-4484**	1	PLUG-MAGNETIC	
	4	1	**6B-4852**	2	CONE-BEARING	
	5	1	**8R-0512**	1	GAUGE AS-OIL LEVEL (DIPSTICK)	
	6	1	**8T-0336**	1	FITTING-PRESSURE RELIEF	
	7	1	**9G-5317**	2	SEAL GP-DUO-CONE	
	8	1	**251-4525**	2	HOUSING-AXLE SHAFT	
C	9	1	**9S-9334**	1	PLUG	
	10	1	**156-4773**	1	RETAINER	
B	11	1	**130-8707**	1	SHIM PACK (INCLUDES 15-SHIMS)	
	12	1	**133-4292**	1	SEAL-LIP TYPE	
	13	1	**130-5869**	1	HOUSING-PINION	
	14	1	**127-8910**	2	SHAFT-AXLE	
	15	1	**3B-0551**	1	PLUG-PIPE	
	16	1	**4E-2240**	2	NUT-BEARING	
	17	1	**4K-6804**	1	SEAL-O-RING	
	18	1	**5H-5012**	2	RING-RETAINING	
	19	1	**5P-8247**	58	WASHER-HARD (17X32X3.5-MM THK)	
M	20	1	**6V-5686**	10	BOLT (M16X2X50-MM)	
M	21	1	**6V-7732**	6	BOLT (M10X1.5X25-MM)	
	22	1	**6Y-2546**	2	CONE-BEARING	
	23	1	**6Y-2547**	2	CUP-BEARING	
C	24	1	**7M-8485**	2	SEAL-O-RING	
M	25	1	**6C-5304**	24	BOLT (M16X2X110-MM)	
	26	1	**9C-6041**	2	DOWEL	
	27	1	**9X-2027**	6	WASHER (11X18X2-MM THK)	
M	28	1	**6C-5303**	24	BOLT (M16X2X200-MM)	
B	29	1	**1U-8846**		SEALANT-GASKET	
C	30	1	**187-8894**	1	HOUSING AS	

B-USE AS REQUIRED
C-CHANGE FROM PREVIOUS TYPE
M-METRIC PART

139-9107 **HOUSING GP-FIXED AXLE** *(contd.)* **i02169208**

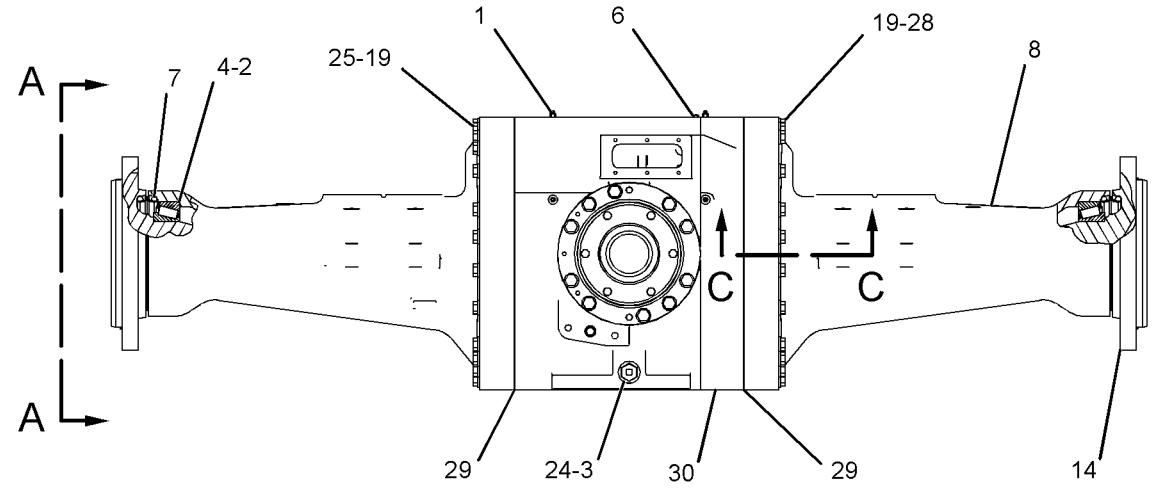

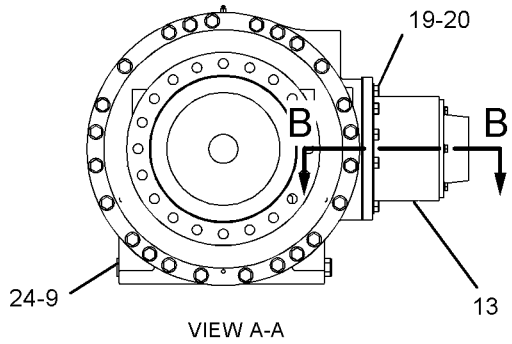

VIEW A-A

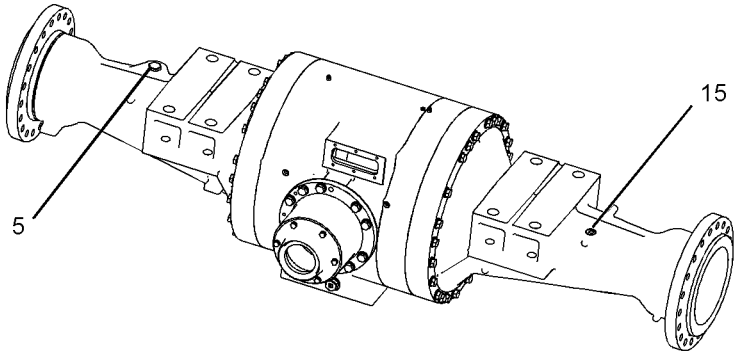

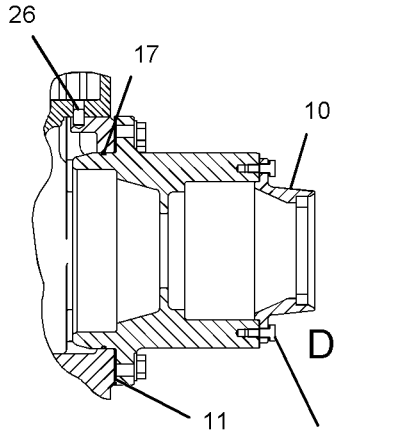

SECTION B-B

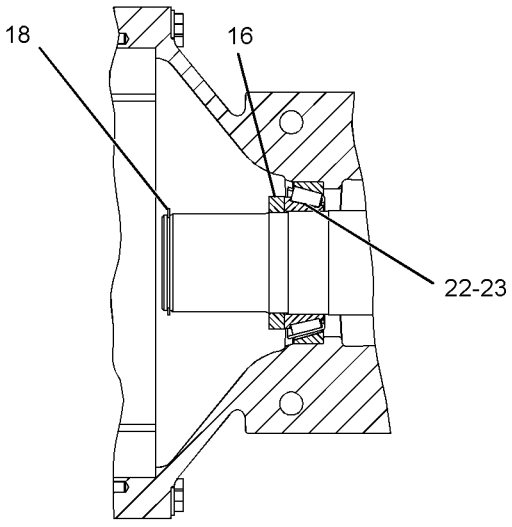

SECTION C-C

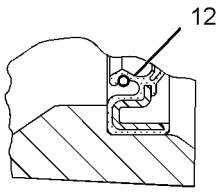

VIEW OF AREA D

GRAPHIC #1 **<END>** g01099313

POWER TRAIN

251-4524 HOUSING GP-FIXED AXLE

S/N: A7G1-UP
PART OF 251-4522, 251-4523 AXLE AR-FIXED
ALSO AN ATTACHMENT

SMCS-3260 **i02120291**

NOTE	REF NO	GRAPHIC REF	PART NUMBER	QTY	PART NAME 1 2 3 4 5 6 (PRODUCT LEVEL)	SEE PAGE
	1	1	**5H-3701**	2	SCREW-PURGE	
	2	1	**251-6481**	2	BEARING AS-TAPERED ROLLER	
	3	1	**5P-4484**	1	PLUG-MAGNETIC	
	5	1	**8R-0512**	1	GAUGE AS-OIL LEVEL (DIPSTICK)	
	6	1	**8T-0336**	1	FITTING-PRESSURE RELIEF	
	7	1	**9W-6684**	2	SEAL GP-DUO-CONE	
	8	1	**251-4525**	2	HOUSING-AXLE SHAFT	
	9	1	**9S-9334**	1	PLUG	
	10	1	**156-4773**	1	RETAINER	
B	11	1	**130-8707**	1	SHIM PACK (INCLUDES 15-SHIMS)	
	12	1	**133-4292**	1	SEAL-LIP TYPE	
	14	1	**127-8910**	2	SHAFT-AXLE	
	15	1	**3B-0551**	1	PLUG-PIPE	
	16	1	**4E-2240**	2	NUT-BEARING	
	17	1	**4K-6804**	1	SEAL-O-RING	
	18	1	**5H-5012**	2	RING-RETAINING	
	19	1	**5P-8247**	58	WASHER-HARD (17X32X3.5-MM THK)	
M	20	1	**6V-5686**	10	BOLT (M16X2X50-MM)	
M	21	1	**6V-7732**	6	BOLT (M10X1.5X25-MM)	
	22	1	**251-6480**	2	BEARING AS-TAPERED ROLLER	
	24	1	**7M-8485**	2	SEAL-O-RING	
M	25	1	**6C-5304**	24	BOLT (M16X2X110-MM)	
	26	1	**9C-6041**	2	DOWEL	
	27	1	**9X-2027**	6	WASHER (11X18X2-MM THK)	
M	28	1	**6C-5303**	24	BOLT (M16X2X200-MM)	
	29	1	**1U-8846**		SEALANT-GASKET (62 ML)	
	30	1	**187-8883**	1	HOUSING AS	

B-USE AS REQUIRED
M-METRIC PART

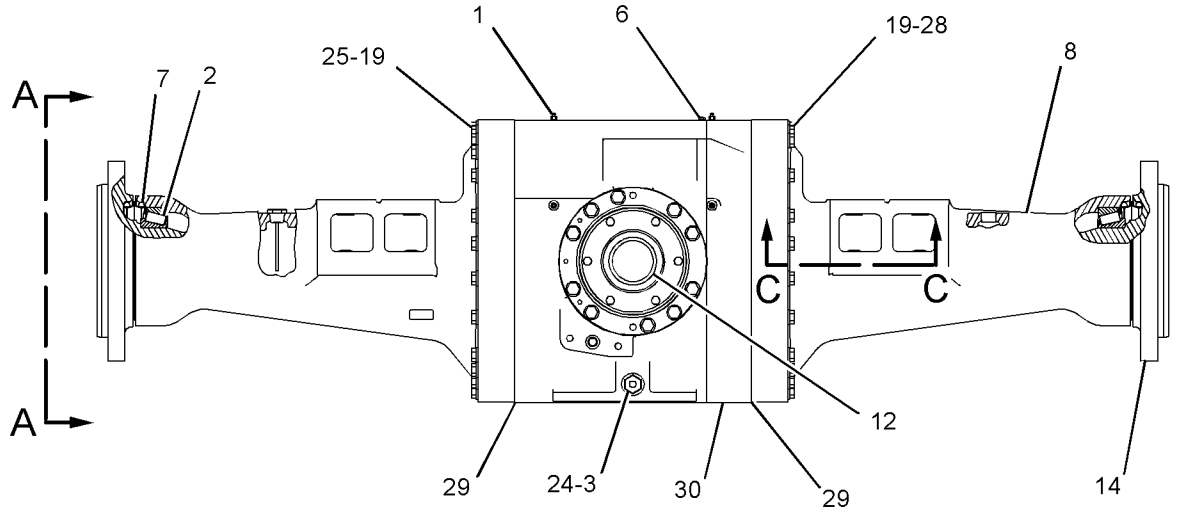

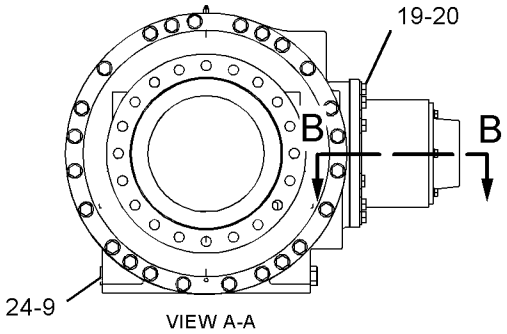

VIEW A-A

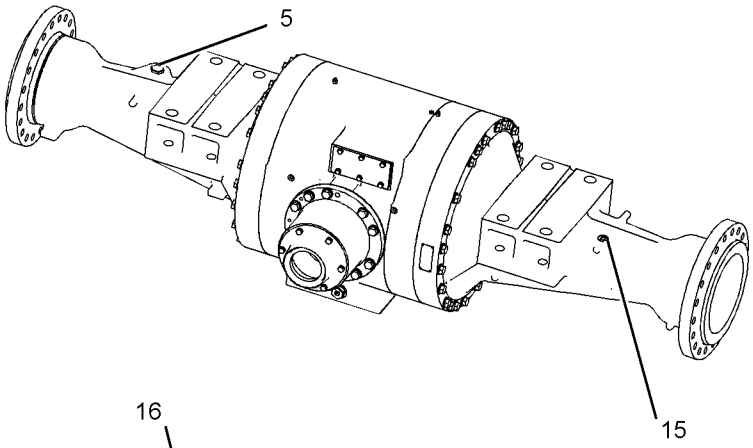

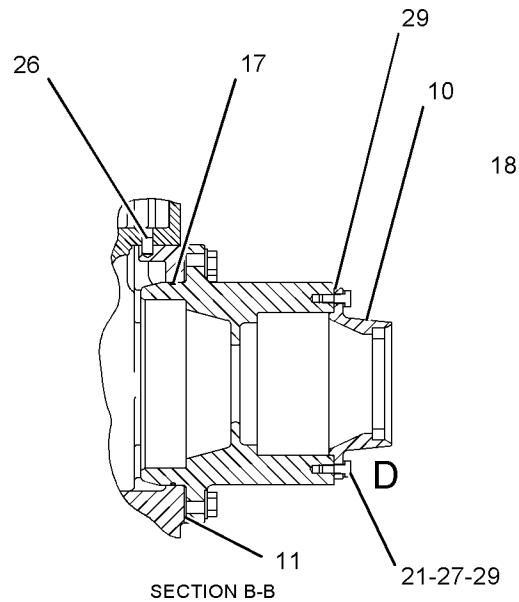

SECTION B-B

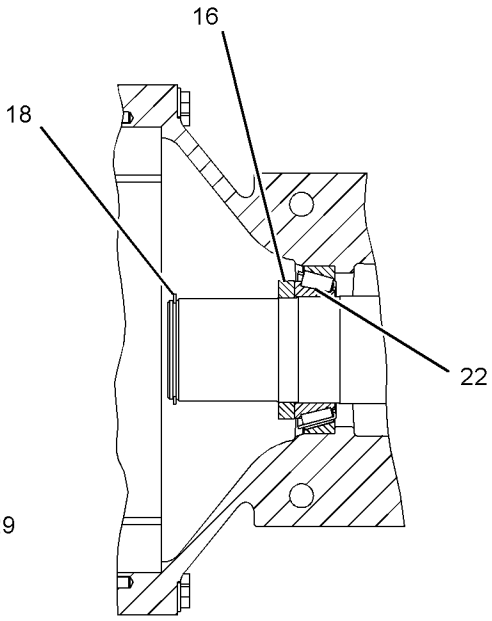

SECTION C-C

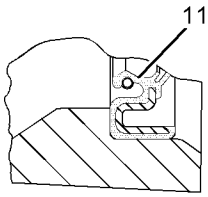

VIEW OF AREA D

GRAPHIC #1 **<END>** g01080206

251-7575 HOUSING GP-FIXED AXLE

S/N: A7G1-UP
PART OF 251-7570, 251-7571 AXLE AR-FIXED
AN ATTACHMENT

SMCS-3260 **i02198284**

NOTE	REF NO	GRAPHIC REF	PART NUMBER	QTY	PART NAME 1 2 3 4 5 6 (PRODUCT LEVEL)	SEE PAGE
	1	1	**4E-2240**	2	NUT-BEARING	
	2	1	**5H-3701**	2	SCREW-PURGE	
	3	1	**5P-4484**	1	PLUG-MAGNETIC	
	4	1	**8R-0512**	1	GAUGE AS-OIL LEVEL (DIPSTICK)	
	5	1	**8T-0336**	1	FITTING-PRESSURE RELIEF	
	6	1	**9G-5317**	2	SEAL GP-DUO-CONE	
	7	1	**127-8910**	2	SHAFT-AXLE	
	8	1	**130-5869**	1	HOUSING-PINION	
B	9	1	**130-8707**	1	SHIM PACK (INCLUDES 15-SHIMS)	
	10	1	**133-4292**	1	SEAL-LIP TYPE	
	11	1	**156-4773**	1	RETAINER	
	12	1	**187-8894**	1	HOUSING AS	
M		1	**095-0673**	3	BOLT-SOCKET HEAD (M12X1.75X60-MM)	
	13	1	**251-4525**	2	HOUSING-AXLE SHAFT	
	14	1	**251-6480**	2	BEARING AS-TAPERED ROLLER	
	15	1	**251-6481**	2	BEARING AS-TAPERED ROLLER	
	16	1	**3B-0551**	1	PLUG-PIPE	
	17	1	**4K-6804**	1	SEAL-O-RING	
	18	1	**5H-5012**	2	RING-RETAINING	
	19	1	**5P-8247**	58	WASHER-HARD (17X32X3.5-MM THK)	
M	20	1	**6V-5686**	10	BOLT (M16X2X50-MM)	
M	21	1	**6V-7732**	6	BOLT (M10X1.5X25-MM)	
	22	1	**7M-8485**	2	SEAL-O-RING	
M	23	1	**8T-0207**	24	BOLT (M16X2X100-MM)	
	24	1	**9C-6041**	2	DOWEL	
	25	1	**9S-9334**	1	PLUG	
	26	1	**9X-2027**	6	WASHER (11X18X2-MM THK)	
M	27	1	**9X-2075**	24	BOLT (M16X2X200-MM)	
B	28	1	**1U-8846**		SEALANT-GASKET	

B-USE AS REQUIRED
M-METRIC PART

251-7575 **HOUSING GP-FIXED AXLE** *(contd.)* **i02198284**

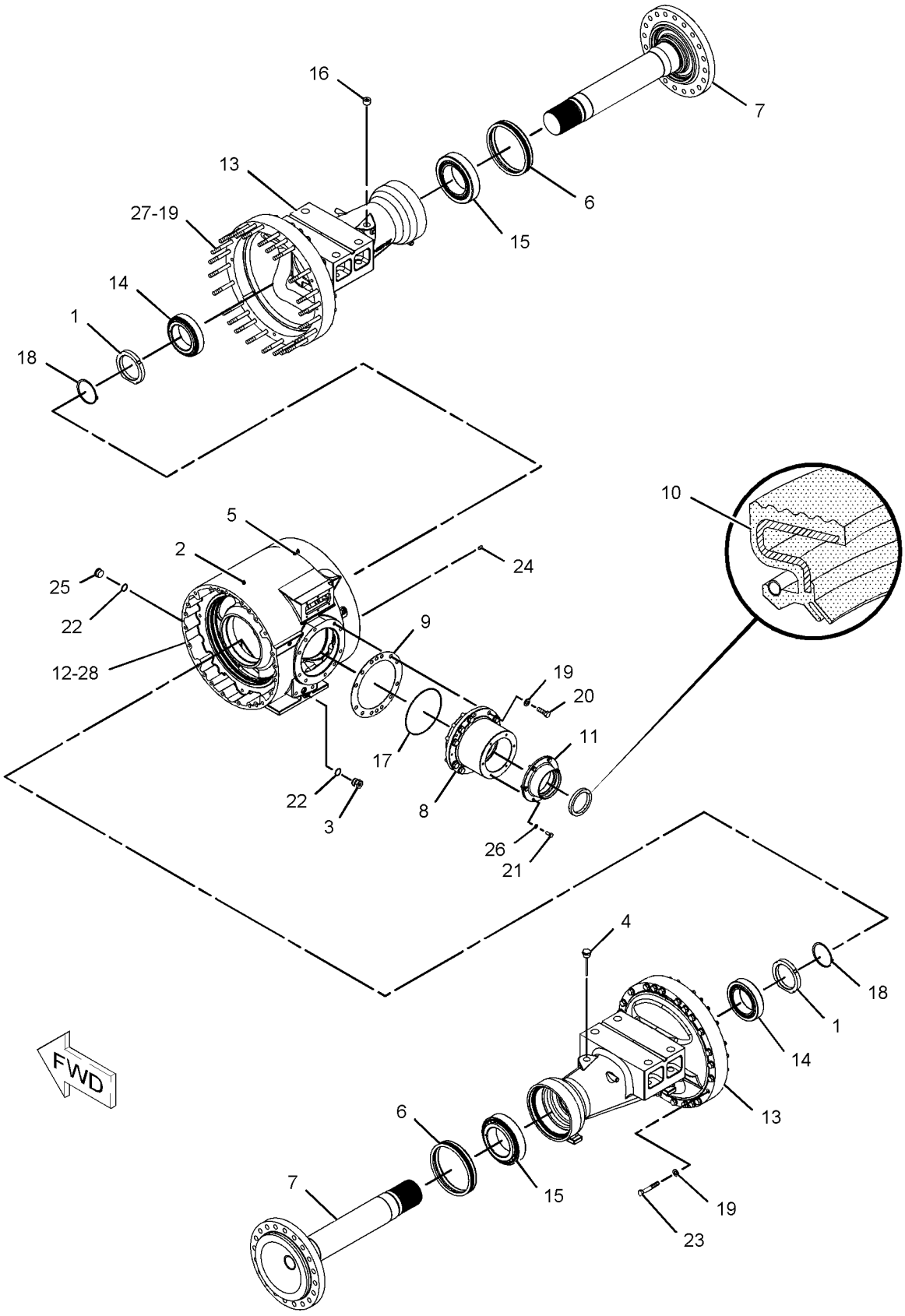

GRAPHIC #1 **<END>** g01117969

POWER TRAIN

129-4293 HOUSING GP-OSCILLATING AXLE

S/N: A7G1-UP

PART OF 129-4281, 129-4283, 129-4286 AXLE AR-OSCILLATING

ALSO AN ATTACHMENT

SMCS-3260, 3268 **i01828986**

NOTE	REF NO	GRAPHIC REF	PART NUMBER	QTY	PART NAME 1 2 3 4 5 6 (PRODUCT LEVEL)	SEE PAGE
	1	1	**129-5398**	1	SUPPORT-FRONT TRUNNION	
	2	1	**2K-0715**	2	WASHER-THRUST (6.35-MM THK)	
	3	1	**3D-8417**	2	SEAL-LIP TYPE	
	4	1	**4V-5099**	1	COVER	
	5	1	**5H-3701**	2	SCREW-PURGE	
	6	1	**5M-6592**	2	CUP-BEARING	
	7	1	**5P-4484**	1	PLUG-MAGNETIC	
	8	1	**6B-4852**	2	CONE-BEARING	
	9	1	**6K-2430**	1	SEAL-LIP TYPE	
	10	1	**8R-0512**	1	GAUGE AS-OIL LEVEL (DIPSTICK)	
	11	1	**8T-0336**	1	FITTING-PRESSURE RELIEF	
	12	1	**9C-9191**	1	TRUNNION	
	13	1	**9W-6684**	2	SEAL GP-DUO-CONE	
	14	1	**109-4731**	1	PLATE	
	15	1	**129-5395**	2	HOUSING-AXLE SHAFT	
B	16	1	**1U-8846**		SEALANT-GASKET	
	17	1	**156-4773**	1	RETAINER	
	18	1	**130-8706**	1	HOUSING-PINION	
B	19	1	**130-8707**	1	SHIM PACK (INCLUDES 15-SHIMS)	
	20	1	**213-1366**	1	BEARING-SLEEVE	
	21	1	**133-4292**	1	SEAL-LIP TYPE	
	22	1	**213-1370**	1	BEARING-SLEEVE	
C	23	1	**187-8889**	1	HOUSING AS-OSCILLATING	
	24	1	**127-8910**	2	SHAFT-AXLE	
	25	1	**3B-0551**	1	PLUG-PIPE	
	26	1	**4E-2240**	2	NUT-BEARING	
	27	1	**4K-6804**	1	SEAL-O-RING	
	28	1	**5H-5012**	2	RING-RETAINING	
	29	1	**5P-8247**	78	WASHER-HARD (17X32X3.5-MM THK)	
M	30	1	**6V-3531**	4	BOLT (M20X2.5X50-MM)	
M	31	1	**6V-5686**	26	BOLT (M16X2X50-MM)	
M	32	1	**6V-7732**	6	BOLT (M10X1.5X25-MM)	
M	33	1	**6C-5303**	24	BOLT (M16X2X200-MM)	
	34	1	**6Y-2546**	2	CONE-BEARING	
	35	1	**6Y-2547**	2	CUP-BEARING	
C	36	1	**7M-8485**	2	SEAL-O-RING	
M	37	1	**6C-5304**	24	BOLT (M16X2X110-MM)	
	38	1	**8T-3282**	4	WASHER-HARD (22X35X3.5-MM THK)	
	39	1	**9C-6041**	2	DOWEL	
	40	1	**9X-2027**	6	WASHER (11X18X2-MM THK)	
	41	1	**155-6456**	1	SUPPORT-TRUNNION	
M	42	1	**6C-8648**	4	BOLT (M16X2-THD)	
C	43	1	**9S-9334**	1	PLUG	
	44	1	**6V-7979**	1	RING-RETAINING	

B-USE AS REQUIRED
C-CHANGE FROM PREVIOUS TYPE
M-METRIC PART

129-4293 **HOUSING GP-OSCILLATING AXLE** *(contd.)* **i01828986**

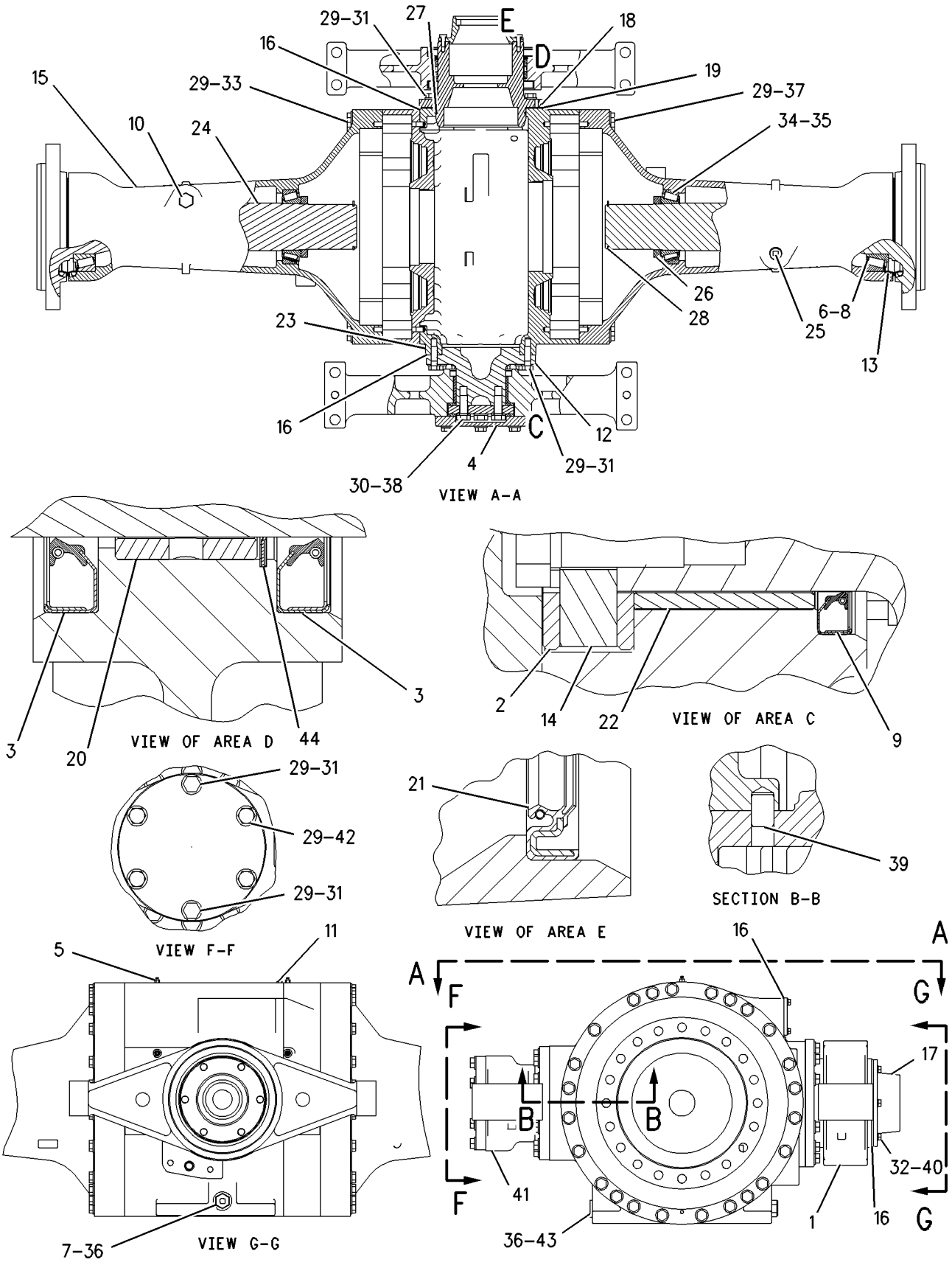

GRAPHIC #1 **<END>** g00900752

139-9106 HOUSING GP-OSCILLATING AXLE

S/N: A7G1-UP

PART OF 139-9101, 139-9103, 203-2369 AXLE AR-OSCILLATING

AN ATTACHMENT

SMCS-3260, 3268 **i01831358**

NOTE	REF NO	GRAPHIC REF	PART NUMBER	QTY	PART NAME 1 2 3 4 5 6 (PRODUCT LEVEL)	SEE PAGE
	1	1	**129-5398**	1	SUPPORT-FRONT TRUNNION	
	2	1	**2K-0715**	2	WASHER-THRUST (6.35-MM THK)	
	3	1	**3D-8417**	2	SEAL-LIP TYPE	
	4	1	**4V-5099**	1	COVER	
	5	1	**5H-3701**	2	SCREW-PURGE	
	6	1	**5M-6592**	2	CUP-BEARING	
	7	1	**5P-4484**	1	PLUG-MAGNETIC	
	8	1	**6B-4852**	2	CONE-BEARING	
	9	1	**6K-2430**	1	SEAL-LIP TYPE	
	10	1	**8R-0512**	1	GAUGE AS-OIL LEVEL (DIPSTICK)	
	11	1	**8T-0336**	1	FITTING-PRESSURE RELIEF	
	12	1	**9C-9191**	1	TRUNNION	
	13	1	**9W-6684**	2	SEAL GP-DUO-CONE	
	14	1	**109-4731**	1	PLATE	
	15	1	**129-5395**	2	HOUSING-AXLE SHAFT	
B	16	1	**1U-8846**		SEALANT-GASKET (70ML)	
	17	1	**156-4773**	1	RETAINER	
	18	1	**130-8706**	1	HOUSING-PINION	
B	19	1	**130-8707**	1	SHIM PACK (INCLUDES 15-SHIMS)	
	20	1	**213-1366**	1	BEARING-SLEEVE	
	21	1	**133-4292**	1	SEAL-LIP TYPE	
	22	1	**213-1370**	1	BEARING-SLEEVE	
C	23	1	**187-8899**	1	HOUSING AS	
	24	1	**127-8910**	2	SHAFT-AXLE	
	25	1	**3B-0551**	1	PLUG-PIPE	
	26	1	**4E-2240**	2	NUT-BEARING	
	27	1	**4K-6804**	1	SEAL-O-RING	
	28	1	**5H-5012**	2	RING-RETAINING	
	29	1	**5P-8247**	78	WASHER-HARD (17X32X3.5-MM THK)	
M	30	1	**6V-3531**	4	BOLT (M20X2.5X50-MM)	
M	31	1	**6V-5686**	26	BOLT (M16X2X50-MM)	
M	32	1	**6V-7732**	6	BOLT (M10X1.5X25-MM)	
M	33	1	**9X-2075**	24	BOLT (M16X2X200-MM)	
	34	1	**6Y-2546**	2	CONE-BEARING	
	35	1	**6Y-2547**	2	CUP-BEARING	
C	36	1	**7M-8485**	2	SEAL-O-RING	
M	37	1	**8T-0207**	24	BOLT (M16X2X100-MM)	
	38	1	**8T-3282**	4	WASHER-HARD (22X35X3.5-MM THK)	
	39	1	**9C-6041**	2	DOWEL	
	40	1	**9X-2027**	6	WASHER (11X18X2-MM THK)	
	41	1	**155-6456**	1	SUPPORT-TRUNNION	
M	42	1	**6C-8648**	4	BOLT (M16X2-THD)	
C	43	1	**9S-9334**	1	PLUG	
	44	1	**6V-7979**	1	RING-RETAINING	

B-USE AS REQUIRED
C-CHANGE FROM PREVIOUS TYPE
M-METRIC PART

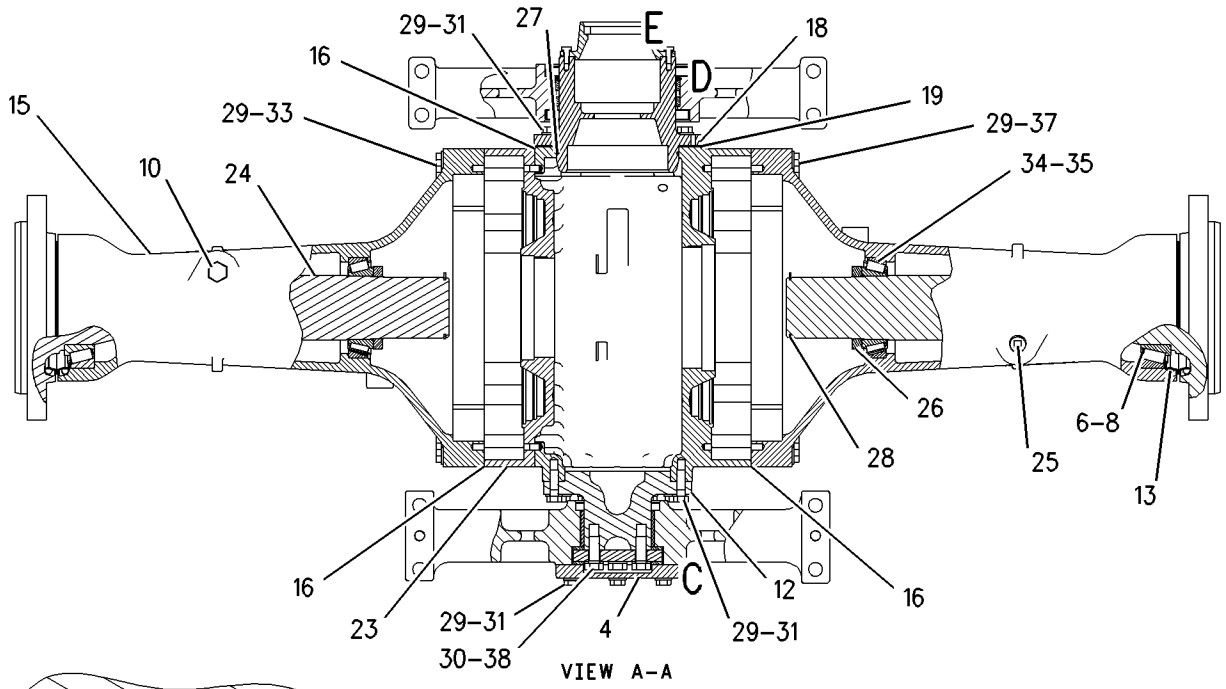

VIEW A–A

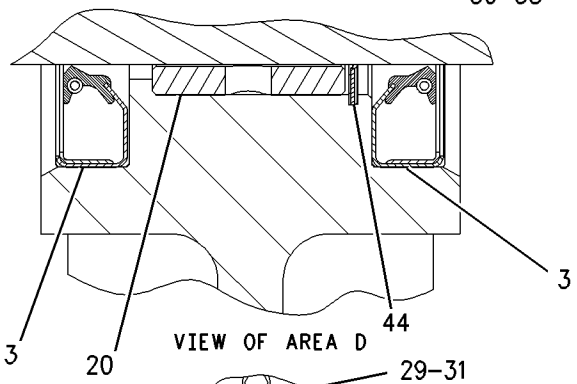

VIEW OF AREA D

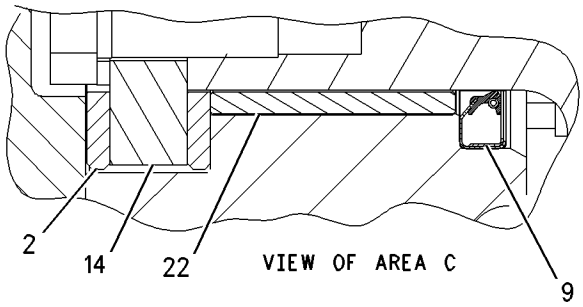

VIEW OF AREA C

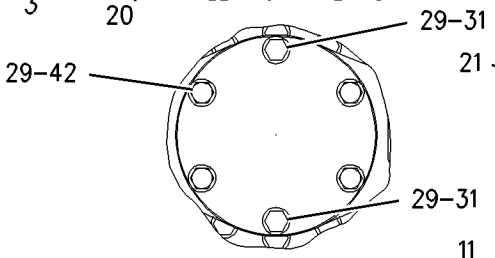

VIEW F-F

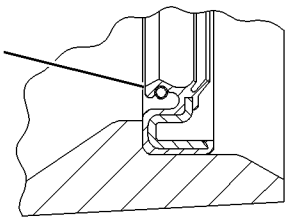

VIEW OF AREA E

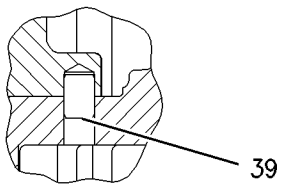

SECTION B-B

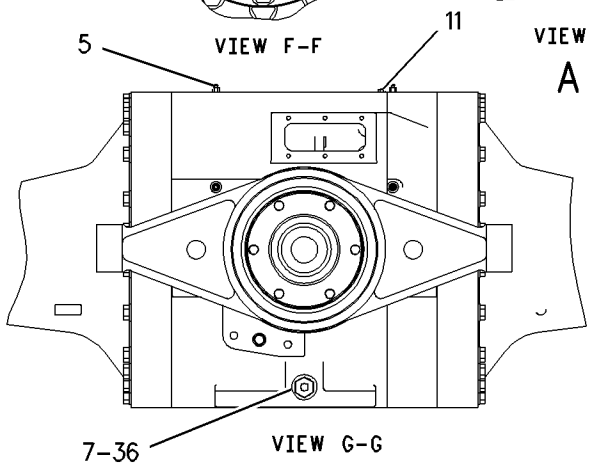

VIEW G-G

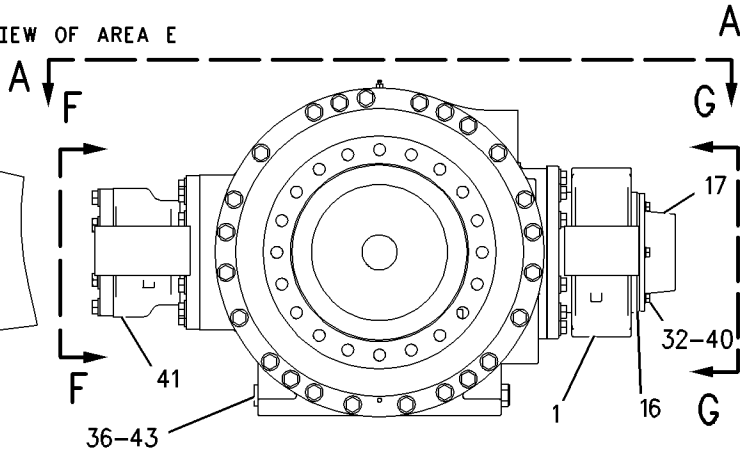

GRAPHIC #1 **<END>** g00894431

236-9100 LINES GP-AXLE OIL COOLER

S/N: A7G1-UP

PART OF 236-9099, 236-9112, 236-9113 AXLE & AXLE OIL COOLER AR, 276-7255, 282-6416 COOLER AR-AXLE OIL

AN ATTACHMENT

SMCS-1365, 3016 **i02415396**

NOTE	REF NO	GRAPHIC REF	PART NUMBER	QTY	PART NAME 1 2 3 4 5 6 (PRODUCT LEVEL)	SEE PAGE
I	1	1	**152-1870**	1	HOSE AS	
I	2	1	**152-1872**	1	HOSE AS	
	3	2	*205-3096*	1	CONNECTOR AS	
		2	**3D-2824**	1	SEAL-O-RING	
		2	**6V-9746**	1	SEAL-O-RING	
		2	**8C-8498**	1	CONNECTOR	
Y	4	2	**237-8180**	1	MANIFOLD GP-CONTROL (AXLE OIL FLOW DIVIDER)	315
I	5	1	**243-0561**	1	HOSE AS	
I	6	1	**243-0562**	1	HOSE AS	
I	7	1	**243-0563**	1	HOSE AS	
	8	2	**244-3280**	1	BRACKET AS	
I	9	1	**244-3281**	1	HOSE AS	
I	10	1	**244-3282**	1	HOSE AS	
I	11	1	**244-3283**	1	HOSE AS	
	12	1	**271-7619**	1	BRACKET AS	
	13	1	**272-0292**	1	TUBE AS	
	14	1	**272-0293**	1	TUBE AS	
	15	2	**273-2638**	1	BRACKET AS	
	16	2	*148-8347*	1	ELBOW AS	
		2	**3D-2824**	1	SEAL-O-RING	
		2	**6V-9007**	1	ELBOW	
		2	**6V-9746**	1	SEAL-O-RING	
	17	2	*148-8364*	4	ELBOW AS	
					(EACH INCLUDES)	
		2	**3K-0360**	1	SEAL-O-RING	
		2	**6V-8398**	1	SEAL-O-RING	
		2	**6V-8625**	1	ELBOW	
	18	2	*148-8370*	1	ELBOW AS	
		2	**6V-8398**	1	SEAL-O-RING	
		2	**6V-9851**	1	ELBOW	
	19	1	*148-8375*	2	ELBOW GP	
					(EACH INCLUDES)	
		1	**6V-8398**	2	SEAL-O-RING	
		1	**6V-8981**	1	ELBOW	
	20	2	*153-6241*	1	ELBOW AS	
		2	**6V-8398**	1	SEAL-O-RING	
		2	**8C-8989**	1	ELBOW	
	21	1	*164-5572*	2	UNION AS	
					(EACH INCLUDES)	
		1	**6V-8398**	2	SEAL-O-RING	
		1	**6V-8731**	1	UNION	
	22	1	**1B-3057**	2	CLIP	
	23	1	**5K-5338**	1	CLIP	
	24	2	**6D-4246**	6	CLIP	
	25	2	**6V-9169**	2	NUT-BULKHEAD (13/16-16-THD)	
	26	2	**7D-7233**	1	CLIP	
M	27	2	**7X-2545**	2	BOLT (M10X1.5X150-MM)	
M	28	1	**7X-2553**	1	BOLT (M16X2X40-MM)	
	29	1,2	**8T-4121**	12	WASHER-HARD (11X21X2.5-MM THK)	
M	30	1,2	**8T-4133**	3	NUT (M10X1.15-THD)	
M	31	2	**8T-4136**	4	BOLT (M10X1.5X25-MM)	
M	32	1,2	**8T-4137**	2	BOLT (M10X1.5X20-MM)	
M	33	2	**8T-4195**	1	BOLT (M10X1.5X30-MM)	
	34	1	**9X-8257**	1	WASHER (17.5X30X3.5-MM THK)	

236-9100 **LINES GP-AXLE OIL COOLER** *(contd.)* **i02415396**

I-REFER TO HYDRAULIC INFORMATION SYSTEM
M-METRIC PART
Y-SEPARATE ILLUSTRATION

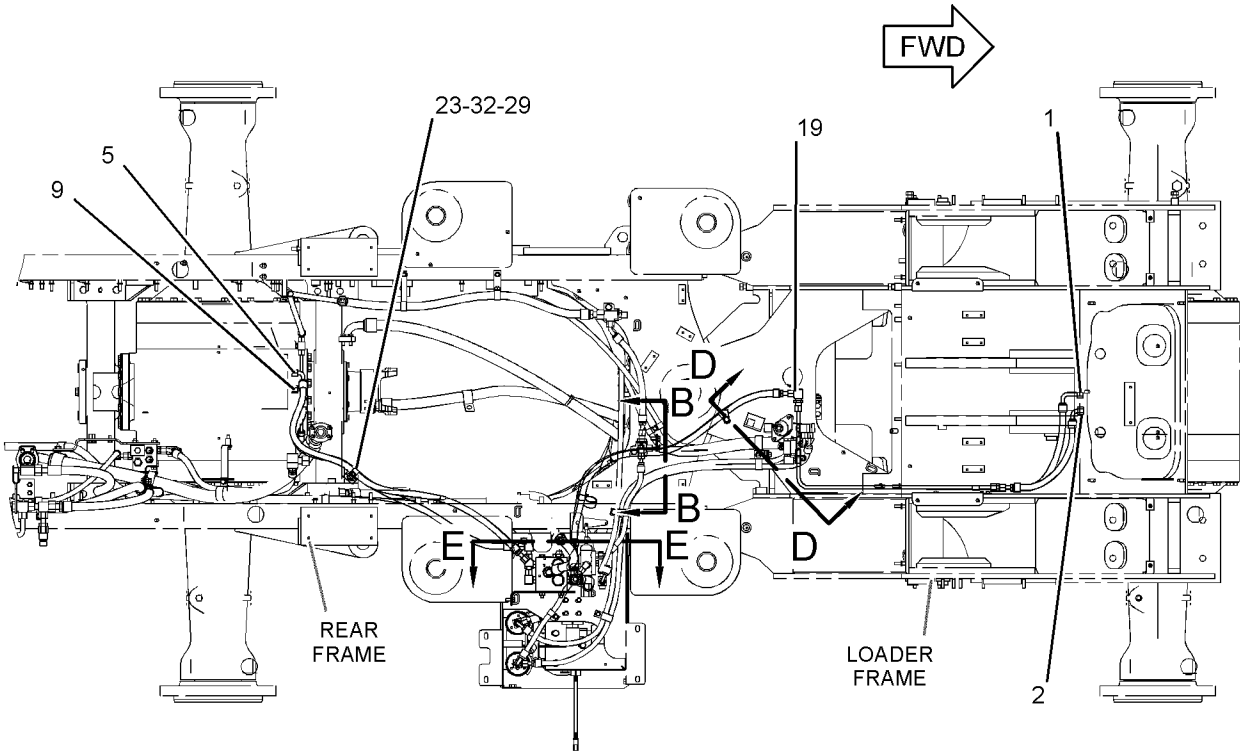

TOP VIEW

REFER TO ALL ILLUSTRATIONS OF
THIS GROUP FOR AUXILIARY VIEWS

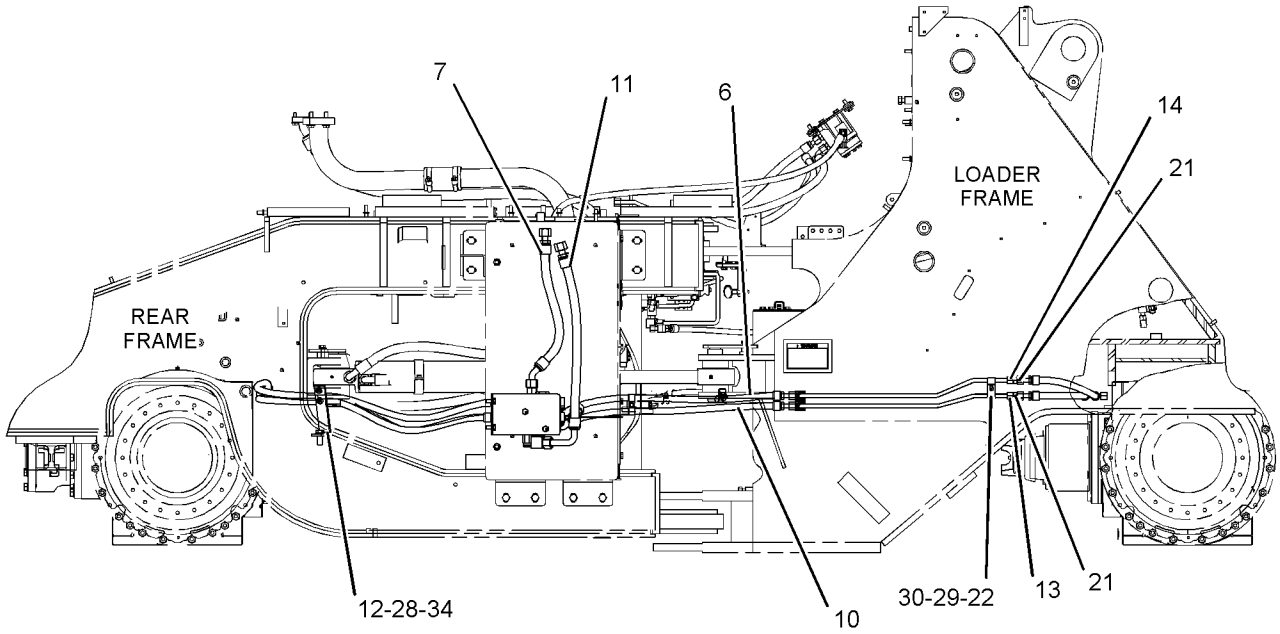

RIGHT SIDE VIEW

GRAPHIC #1

g01196895

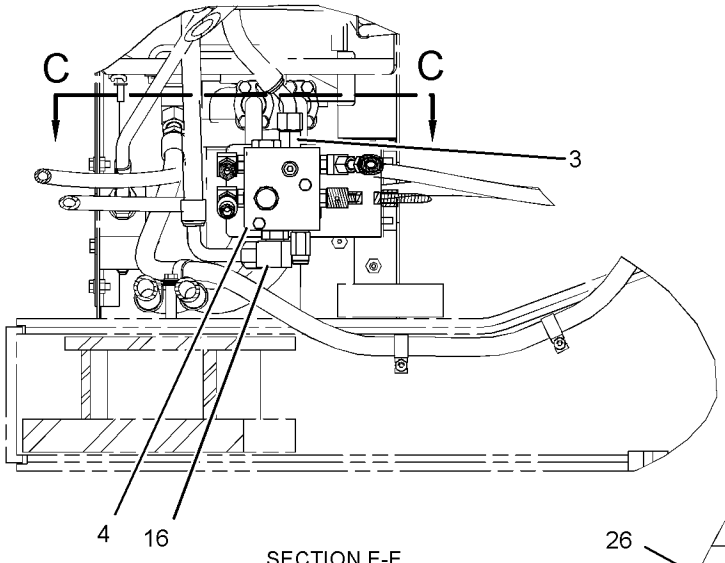

SECTION E-E

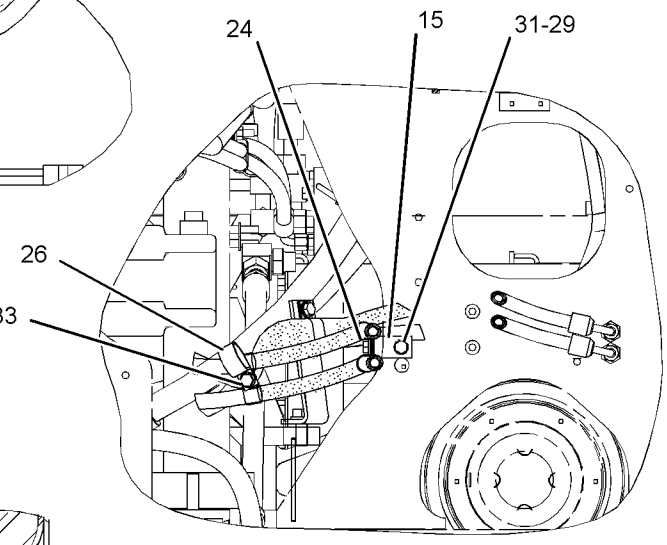

SECTION B-B

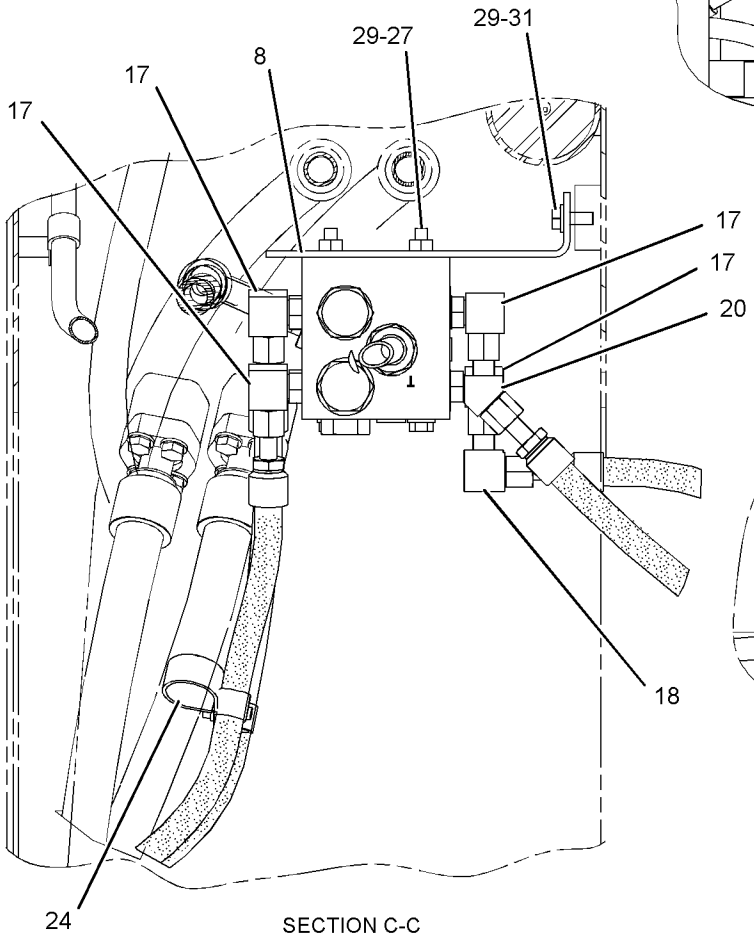

SECTION C-C

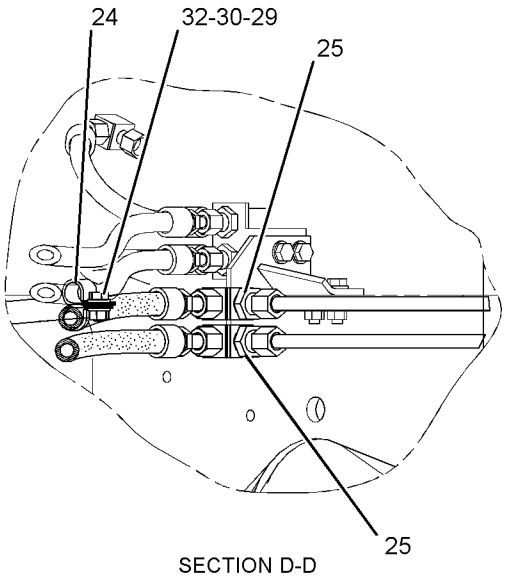

SECTION D-D

GRAPHIC #2 **<END>** g01196896

POWER TRAIN

242-8890 LINES GP-TORQUE CONV COOLER

S/N: A7G1-UP

PART OF 236-9051 CHASSIS AR

SMCS-1375, 3016 **i02388860**

NOTE	REF NO	GRAPHIC REF	PART NUMBER	QTY	PART NAME 1 2 3 4 5 6 (PRODUCT LEVEL)	SEE PAGE
	1	1	**002-3448**	2	CLIP	
	2	2	**158-0494**	1	FLANGE	
	3	1	**158-0495**	1	FLANGE-ONE PIECE	
	4	2	**158-0496**	1	FLANGE	
	5	2	**161-8067**	1	ELBOW	
	6	2	**184-7773**	2	SPACER (11.125X19.05X9.14-MM THK)	
	7	1	**236-9006**	1	TUBE AS	
	8	1	**242-8892**	1	TUBE AS	
	9	1	**250-8383**	1	BRACKET AS	
M		1	**8T-3490**	2	NUT-WELD (M10X1.5-THD)	
	10	1	**1P-3705**	1	SEAL-RECTANGULAR	
	11	1	**2L-2685**	1	CLIP	
	12	2	**4F-7389**	2	SEAL-O-RING	
	13	2	**4J-0521**	1	SEAL-O-RING	
	14	2	**4J-0525**	2	SEAL-O-RING	
	15	1	**5L-4504**	1	CLIP	
	16	1	**5P-1076**	1	WASHER-HARD (13.5X30X4-MM THK)	
	17	2	**7X-3392**	4	WASHER-HARD (13.5X22.5X3-MM THK)	
	18	1,2	**8T-4121**	6	WASHER-HARD (11X21X2.5-MM THK)	
M	19	1	**8T-4133**	1	NUT (M10X1.15-THD)	
M	20	1	**8T-4136**	2	BOLT (M10X1.5X25-MM)	
M	21	2	**8T-4172**	2	BOLT (M10X1.5X80-MM)	
M	22	2	**8T-4184**	4	BOLT (M12X1.75X45-MM)	
M	23	1,2	**8T-4195**	3	BOLT (M10X1.5X30-MM)	
	24	2	**8T-4223**	8	WASHER-HARD (13.5X25.5X3-MM THK)	
M	25	2	**8T-4648**	4	BOLT (M12X1.75X70-MM)	
M	26	2	**8T-4956**	4	BOLT (M12X1.75X35-MM)	
	27	1	**8T-9384**	1	BOLT (1/2-13X0.875-IN)	

M-METRIC PART

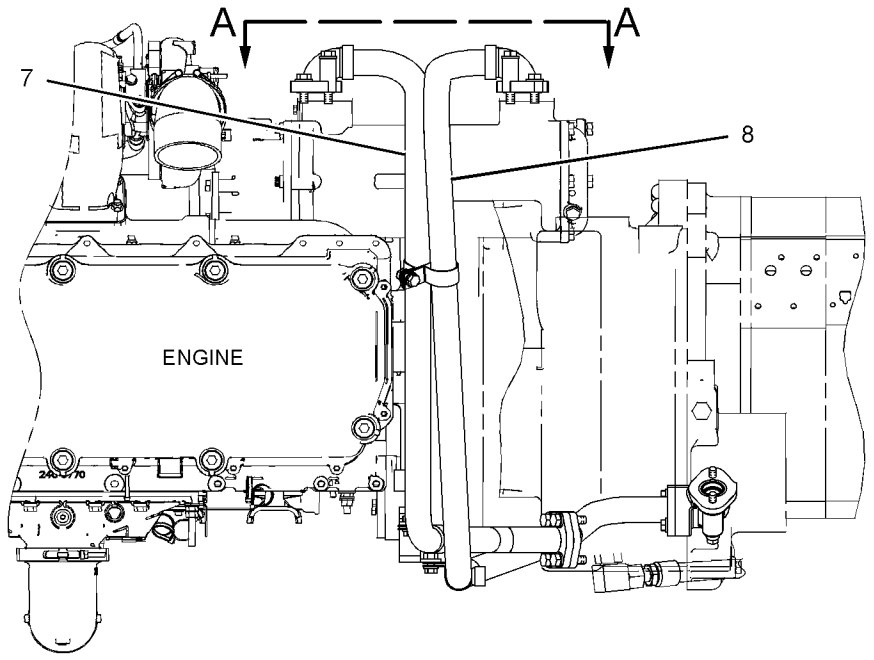

REFER TO ALL ILLUSTRATIONS OF THIS GROUP FOR AUXILIARY VIEWS

FWD

TOP VIEW

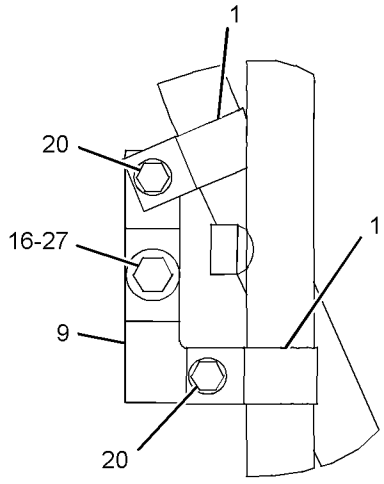

VIEW OF AREA B

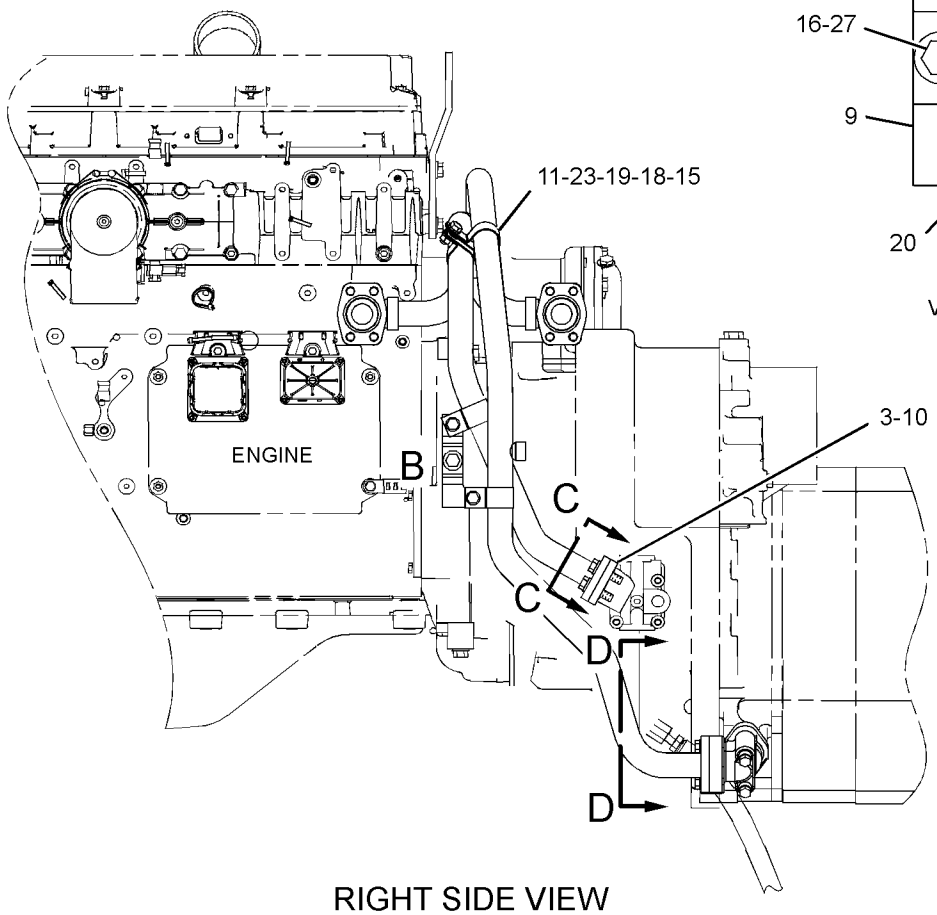

RIGHT SIDE VIEW

GRAPHIC #1

g01199721

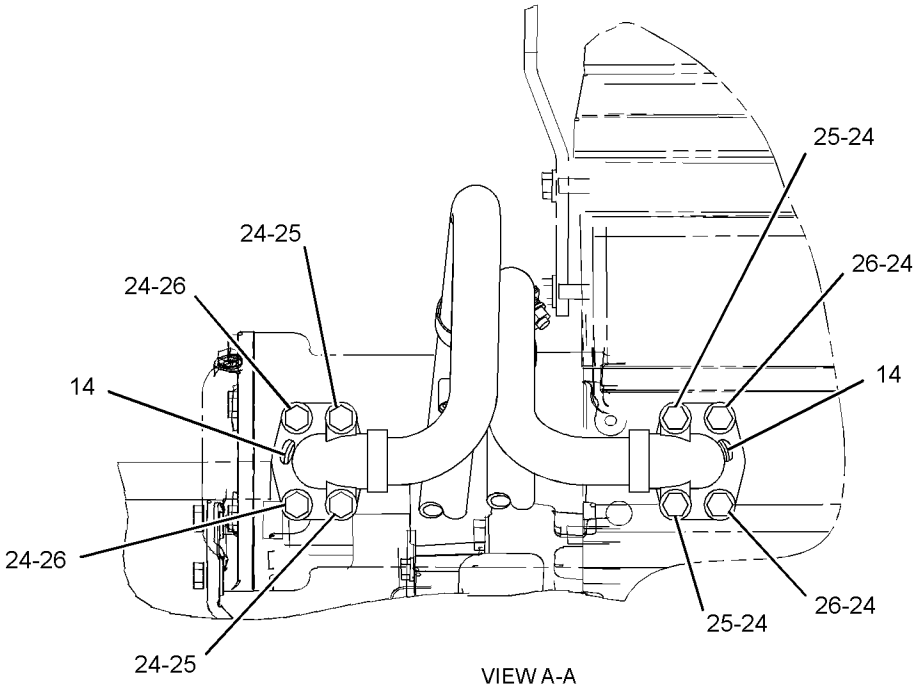

VIEW A-A

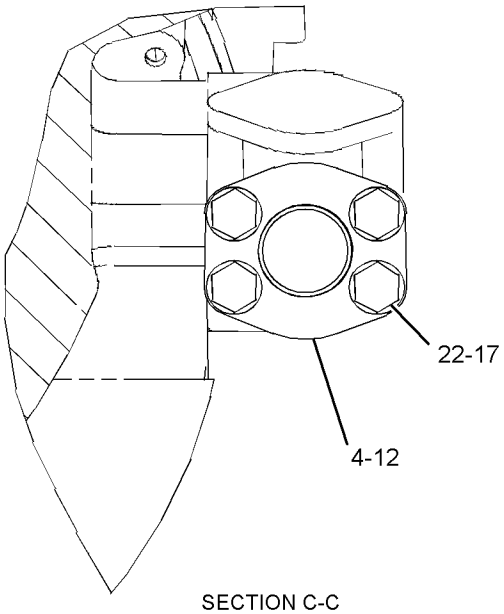

SECTION C-C

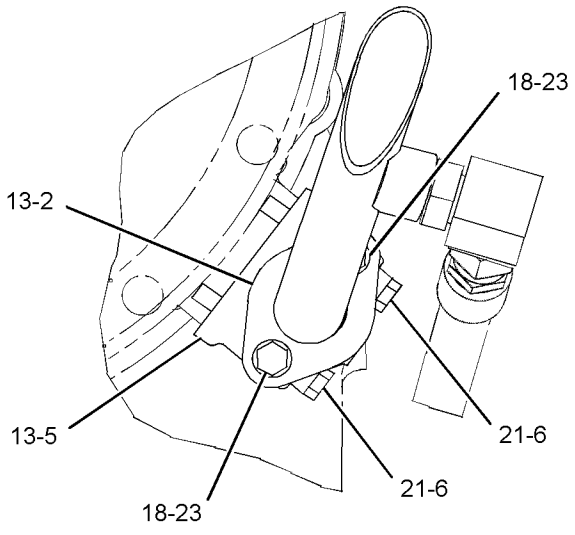

SECTION D-D

GRAPHIC #2 **<END>** g01199722

237-8180 MANIFOLD GP-CONTROL–AXLE OIL FLOW DIVIDER

S/N: A7G1-UP
PART OF 236-9100 LINES GP-AXLE OIL COOLER
AN ATTACHMENT

SMCS-3206, 5137 **i02242733**

NOTE	REF NO	GRAPHIC REF	PART NUMBER	QTY	PART NAME 1 2 3 4 5 6 (PRODUCT LEVEL)	SEE PAGE
	1	1	**142-8977**	2	VALVE GP-CHECK (AXLE OIL COOLER BYPASS)	
					(EACH INCLUDES)	
J		1	**141-1232**	1	KIT-SEAL	
	2	1	**237-8181**	1	VALVE GP-FLOW DIVIDER (AXLE OIL)	
J		1	**237-8260**	1	KIT-SEAL	
	3	1	**237-8183**	1	VALVE GP-RELIEF (AXLE OIL)	
		1	**227-5509**		KIT-SEAL	
	4	1	**9S-8004**	4	PLUG	
	5	1	**3J-1907**	4	SEAL-O-RING	
	6	1	**9S-8005**	1	PLUG	
	7	1	**3K-0360**	1	SEAL-O-RING	

J-INCLUDES O-RINGS AND BACK-UP RINGS

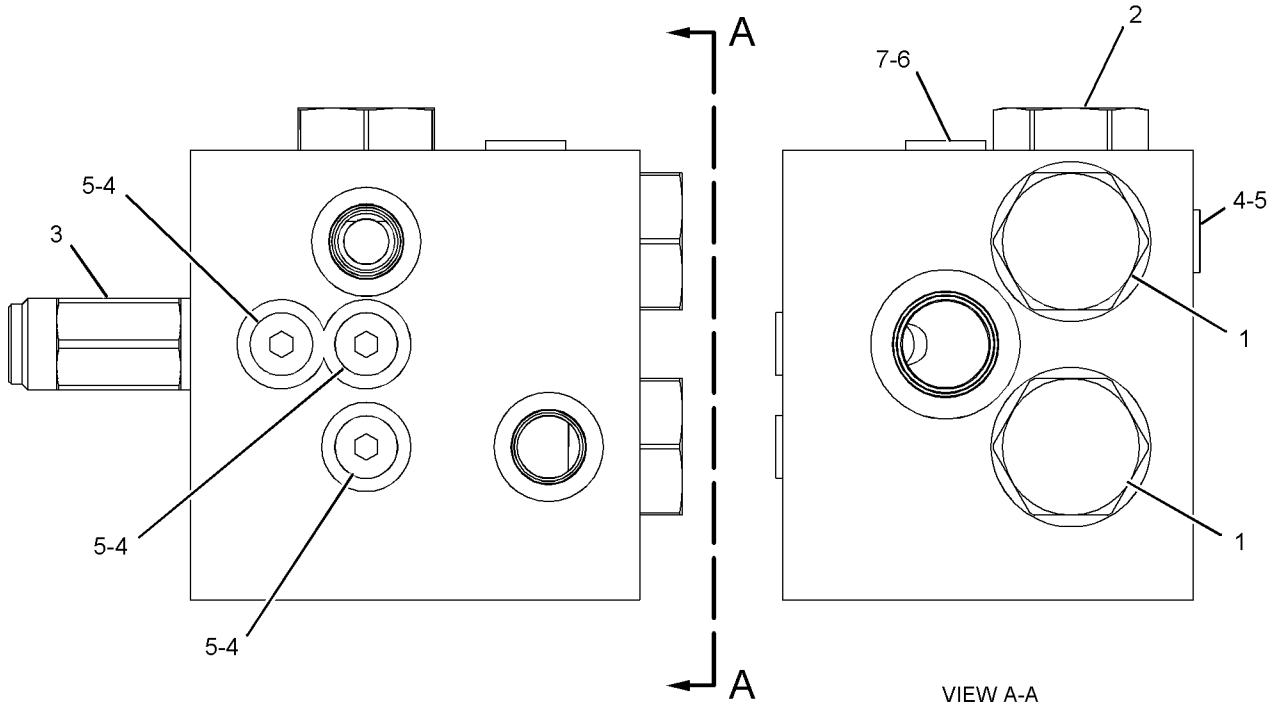

GRAPHIC #1 **<END>** g01080215

129-4278 MOUNTING GP-AXLE

S/N: A7G1-UP

PART OF 236-9057 POWER TRAIN AR

SMCS-3268, 3278 **i02412046**

NOTE	PART NUMBER	QTY	PART NAME 1 2 3 4 5 6 (PRODUCT LEVEL)	SEE PAGE
CM	**8T-4136**	4	BOLT (M10X1.5X25-MM)	
	190-8494	8	BOLT	
M	**169-5792**	8	BOLT	
	6C-2356	2	DOWEL	
	268-8262	8	NUT	
C	**165-0197**	2	PLATE	
	169-9955	2	PLATE	
	169-9956	4	PLATE	
C	**7X-7729**	4	WASHER (11X25X3-MM THK)	
	9X-8258	8	WASHER (33X56X6-MM THK)	
	267-3506	16	WASHER-HARD (26X44X4-MM THK)	

C-CHANGE FROM PREVIOUS TYPE
M-METRIC PART

<END>

127-4736 MOUNTING GP-RIM

S/N: A7G1-UP

PART OF 236-9057 POWER TRAIN AR

SMCS-4202, 4209 **i02412045**

NOTE	PART NUMBER	QTY	PART NAME 1 2 3 4 5 6 (PRODUCT LEVEL)	SEE PAGE
M	**9X-2615**	80	BOLT (M24X3X60-MM)	
	267-3506	80	WASHER-HARD (26X44X4-MM THK)	

M-METRIC PART

<END>

236-9106 OIL CHANGE GP-HIGH SPEED

S/N: A7G1-UP
AN ATTACHMENT

SMCS-3193 **i02415399**

NOTE	REF NO	GRAPHIC REF	PART NUMBER	QTY	PART NAME 1 2 3 4 5 6 (PRODUCT LEVEL)	SEE PAGE
	1	1	**3E-7427**	1	ADAPTER	
	2	1	**9S-9272**	1	CAP AS	
	3	1	**9X-6274**	2	WASHER (32.5X50X1.6-MM THK)	
	4	1	*171-6726*	1	COUPLER AS	
		1	**6V-9746**	1	SEAL-O-RING	
		1	**8T-5373**	1	COUPLER-MALE	
I	5	1	**246-6367**	1	HOSE AS	
	6	1	**061-9458**	1	SEAL-O-RING	
	7	1	*148-8359*	1	ELBOW AS	
		1	**3K-0360**	1	SEAL-O-RING	
		1	**6V-9746**	1	SEAL-O-RING	
		1	**6V-9877**	1	ELBOW	
	8	1	**2P-1293**	1	LOCKNUT (1-3/16-12-THD)	

I-REFER TO HYDRAULIC INFORMATION SYSTEM

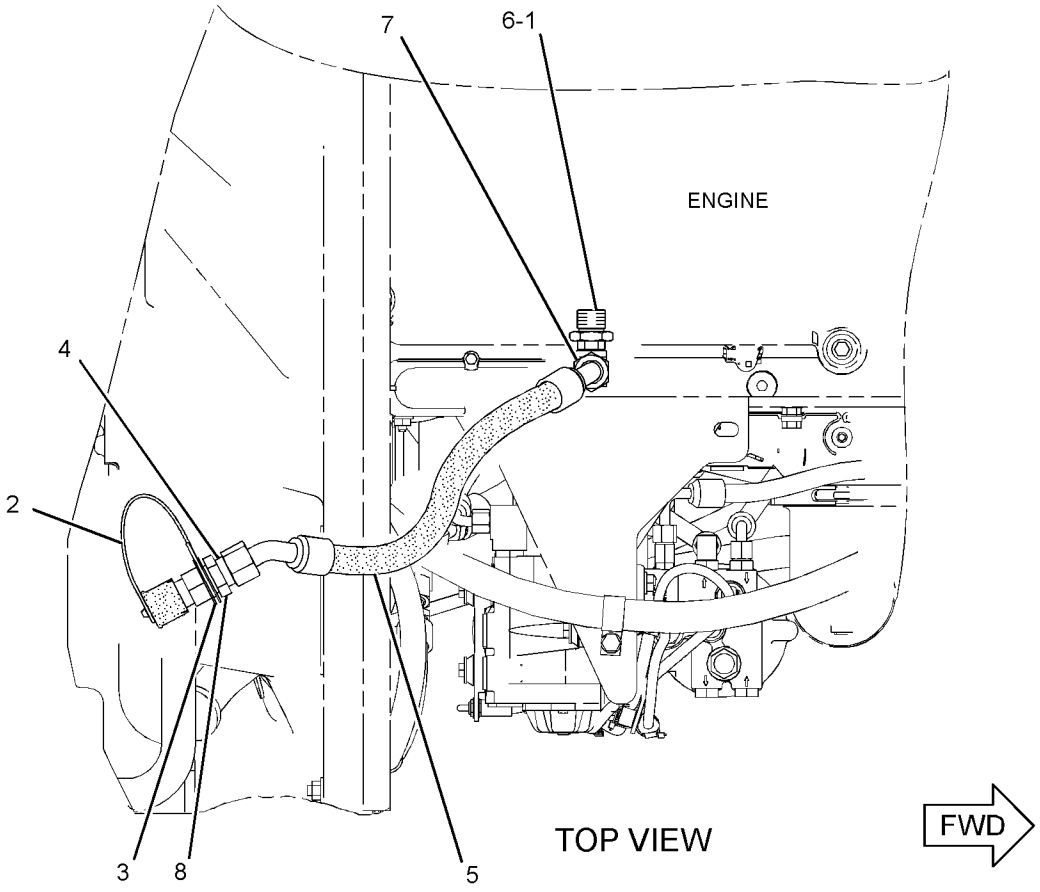

GRAPHIC #1 **<END>** g01195731

POWER TRAIN

196-1799 PLANETARY GP-TRANSMISSION

S/N: FAX1-UP

PART OF 237-2331 TRANSMISSION AR

SMCS-3160 **i01447466**

NOTE	REF NO	GRAPHIC REF	PART NUMBER	QTY	PART NAME 1 2 3 4 5 6 (PRODUCT LEVEL)	SEE PAGE
M	1	1,2	**8T-0106**	3	BOLT (M12X1.75X100-MM)	
	2	1	**1S-5596**	1	RETAINER	
	3	1	**8E-7448**	1	GEAR-TRANSFER (61-TEETH)	
	4	1	**6V-4351**	1	PLATE-INNER RACE	
	5	1	**067-3161**	1	RING-RETAINING	
	6	1	**5K-8591**	1	BEARING-OUTER	
	7	1	**6V-4350**	1	RACE-ROLLER BEARING	
	8	1	**195-7878**	1	HOUSING AS	
	9	1	**3P-7009**	1	PLUG-CUP	
	10	1	**3T-4377**	2	SEAL-RING	
	11	1,2	**3S-2708**	10	PIN-SPRING	
	12	1	**112-4511**	3	PIN-SPRING	
	13	1,2	**8P-2019**	5	RING-SEAL	
	14	1,2	**8P-2022**	5	RING-SEAL	
	15	1,2	**115-5568**	5	PISTON	
	16	1	**9P-7390**	8	DISC AS-FRICTION	
	17	1	**115-5571**	8	PLATE-CLUTCH	
	18	1	**6Y-1602**	1	COUPLING	
	19	1,2	**4S-5924**	4	SEAL-O-RING	
	20	1	**112-3818**	1	SHAFT-INPUT	
	21	1	**8M-5010**	1	SEAL-O-RING	
	22	1	**068-8093**	1	RING-RETAINING	
	23	1	**8H-5352**	1	BALL BEARING	
	24	1	**131-4091**	1	SEAL-RING	
	25	1	**6Y-4819**	1	CARRIER-PLANETARY	
	26	1	**8E-8305**	6	DISC-THRUST	
	27	1	**8P-1919**	3	GEAR-PLANETARY (20-TEETH)	
	28	1	**5D-2989**	3	BEARING	
	29	1	**9P-8623**	3	SHAFT-PLANETARY	
	30	1	**8P-1948**	1	GEAR-RING (88-TEETH)	
	31	1	**113-1830**	1	PLATE AS	
	32	1	**5H-6202**	2	PIN	
	33	1,2	**5M-3038**	2	SEAL-O-RING	
	34	1,2	**6V-0473**	3	RING-RETAINING	
	35	1,2	**7T-8816**	3	BALL BEARING	
	36	1	**8E-8304**	12	DISC-THRUST	
	37	1	**7G-2516**	6	GEAR-PLANETARY (24-TEETH)	
	38	1	**5M-6126**	6	BEARING AS-ROLLER	
	39	1	**112-5585**	3	SHAFT-PLANETARY	
	40	1,2	**144-4284**	3	RING-LOCK	
	41	1	**112-8041**	1	CARRIER-PLANETARY	
	42	1	**8P-2053**	1	SEAL-RING	
	43	1	**7G-6355**	1	GEAR-RING (90-TEETH)	
	44	1	**5L-1941**	5	SPRING	
	45	1	**9W-8437**	1	GEAR-SUN (32-TEETH)	
	46	1,2	**3H-0107**	4	SEAL-O-RING	
	47	1	**113-1832**	1	HOUSING-CLUTCH	
	48	1,2	**115-5572**	8	PLATE-CLUTCH	
	49	1	**115-5570**	1	GEAR-RING (90-TEETH)	
	50	1,2	**6Y-5911**	8	DISC-FRICTION	
	51	1,2	**2S-1382**	15	SPRING	
	52	2	**9P-7757**	1	GEAR-SUN (42-TEETH)	
	53	2	**061-6711**	1	RING-RETAINING	
	54	2	**5P-5296**	2	RING-RETAINING	
	55	2	**9P-8626**	1	GEAR-SUN (42-TEETH)	
	59	2	**116-8234**	4	BOLT	

196-1799 PLANETARY GP-TRANSMISSION *(contd.)* i01447466

NOTE	REF NO	GRAPHIC REF	PART NUMBER	QTY	PART NAME 1 2 3 4 5 6 (PRODUCT LEVEL)	SEE PAGE
	60	2	**116-6653**	1	HOUSING AS	
	61	2	**1A-2223**	4	DOWEL	
	65	2	**9W-8433**	1	SHAFT AS-OUTPUT	
	66	2	**9G-6744**	1	BEARING-SLEEVE	
	67	2	**9G-6743**	1	BEARING-SLEEVE	
	69	2	**8E-8299**	14	DISC-THRUST	
	70	2	**8P-1916**	3	GEAR-PLANETARY (20-TEETH)	
	71	2	**5P-3930**	3	BEARING AS-ROLLER	
	73	2	**9G-0289**	3	SHAFT-PLANETARY	
	75	2	**7G-7218**	1	CARRIER-PLANETARY	
	76	2	**7T-9370**	1	GEAR-SUN (51-TEETH)	
	79	2	**186-2461**	1	GEAR-RING (90-TEETH)	
	80	2	**9U-9550**	1	PLATE-CLUTCH	
	81	2	**9G-0290**	1	HUB-CLUTCH	
	82	2	**6Y-5912**	3	DISC-FRICTION	
	83	2	**8P-1964**	2	PLATE-CLUTCH	
	84	2	**6V-2478**	1	RING-RETAINING	
	85	2	**9G-8020**	1	PLATE-RETAINER	
	86	2	**7G-2343**	3	SPRING-DISC	
	87	2	**7G-7724**	1	PISTON-CLUTCH	
	88	2	**8P-2023**	1	RING-SEAL	
	89	2	**8D-9739**	1	SEAL-RING	
	90	2	**6I-8510**	1	HOUSING AS-CLUTCH	
	91	2	**6P-7704**	1	CARRIER-RING	
	92	2	**6B-6863**	1	PIN-SPRING	
	93	2	**8M-5255**	1	SEAL-O-RING	
	94	2	**7G-3975**	1	RING-RETAINING	
	95	2	**5P-8194**	1	RING-RETAINING	
	96	2	**7G-2830**	2	RING-SEAL	
	97	2	**195-7877**	1	MANIFOLD AS	
	98	2	**3P-7009**	1	PLUG-CUP	
	99	2	**1A-2223**	1	DOWEL	
	100	2	**3S-9896**	1	SEAL-O-RING	
	101	2	**5P-5045**	1	BALL BEARING	
	102	2	**1L-7388**	1	RING-RETAINING	
	103	2	**5P-5297**	1	RING-RETAINING	
	104	2	**9P-9031**	1	GEAR-SUN (47-TEETH)	
	105	2	**9P-8116**	1	CARRIER-PLANETARY	
	106	2	**8P-1918**	4	GEAR-PLANETARY (20-TEETH)	
	107	2	**2S-0669**	8	BEARING	
	108	2	**8P-2042**	4	SHAFT-PLANETARY	
	109	2	**7J-6580**	1	RING-RETAINING	
	110	2	**9P-8516**	1	GEAR-RING (85-TEETH)	
	111	2	**5P-8245**	7	WASHER-HARD (13.5X25.5X3-MM THK)	
	112	2	**116-8230**	5	ROD	
	113	2	**195-7876**	1	HOUSING AS	
	114	2	**1A-2223**	2	DOWEL	
	115	2	**1J-5353**	5	PIN-SPRING	
M	116	2	**195-7879**	5	BOLT-SPECIAL	
	117	2	**7G-5670**	1	SEAL-RING	
M	119	2	**120-9486**	4	BOLT-SPECIAL (M16X2X420-MM)	
	120	2	**9X-8268**	4	WASHER (17.5X30X3.5-MM THK)	

M-METRIC PART

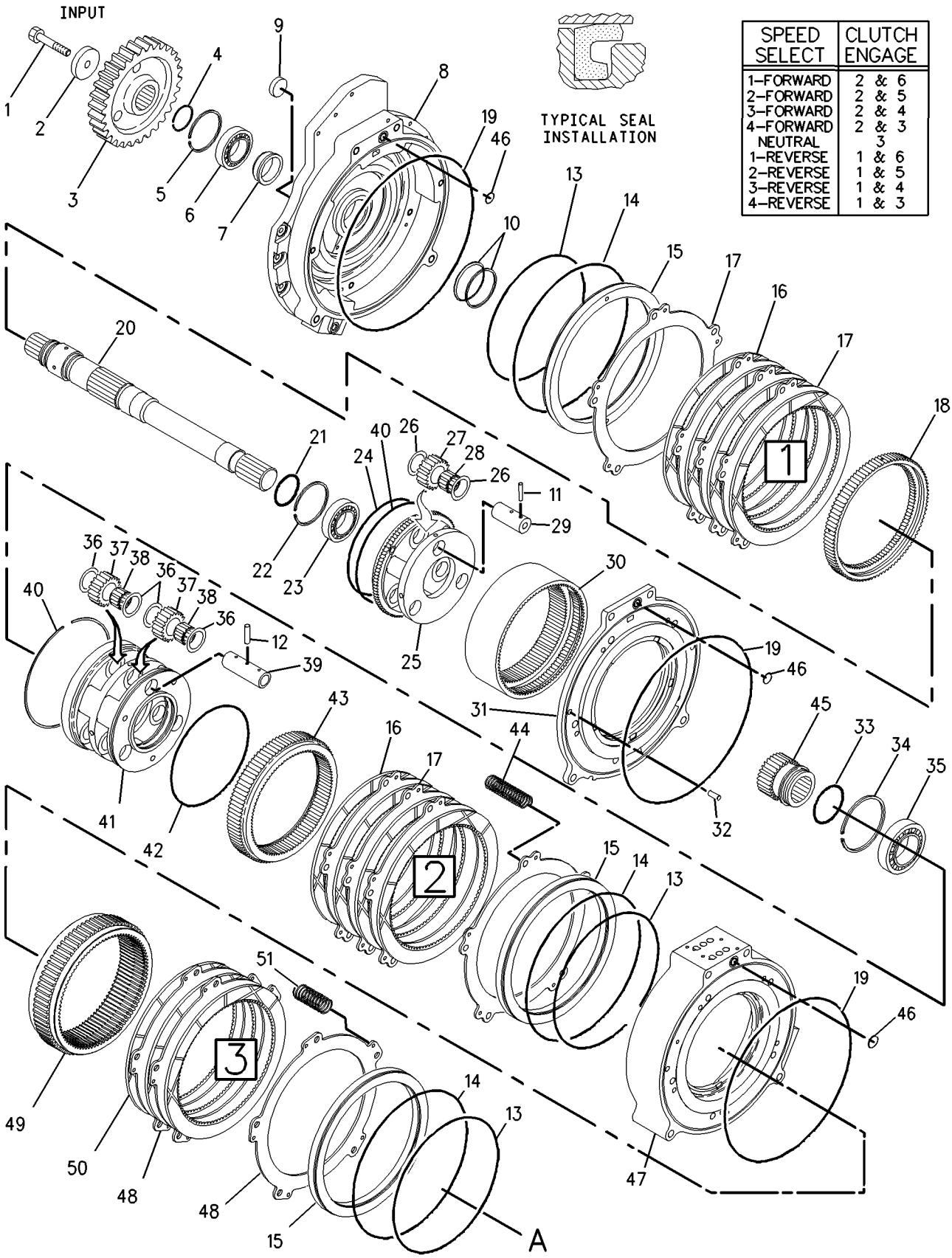

GRAPHIC #1 g00747260

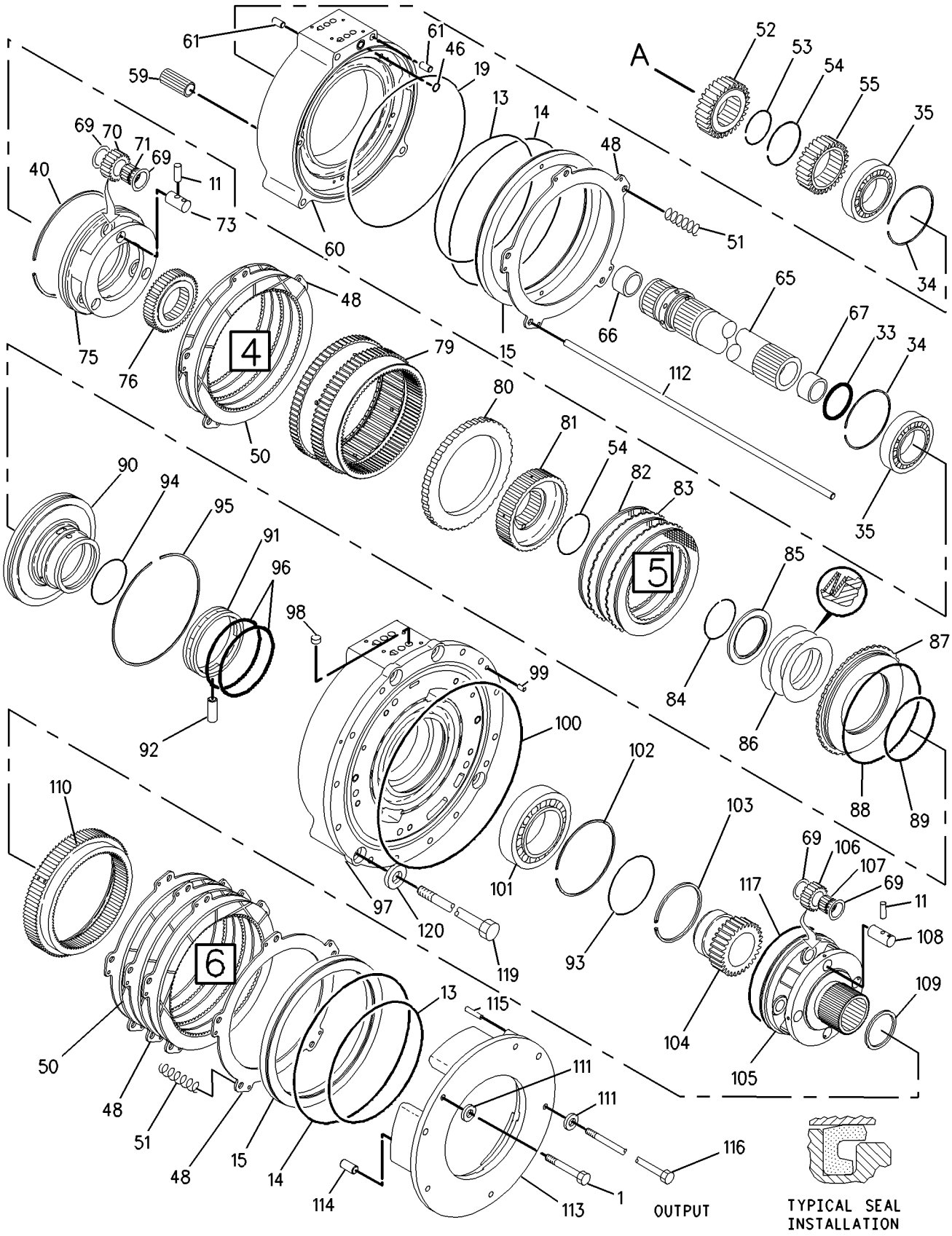

GRAPHIC #2 **<END>** g00744951

POWER TRAIN

236-9057 POWER TRAIN AR

S/N: A7G1-UP

PART OF 236-9049 GENERAL AR

SMCS-3000, 4000 **i02417171**

NOTE	PART NUMBER	QTY	PART NAME 1 2 3 4 5 6 (PRODUCT LEVEL)	SEE PAGE
Y	*251-4522*	1	AXLE AR-FIXED (FRONT, STANDARD DIFFERENTIAL)	258
Y	*129-4281*	1	AXLE AR-OSCILLATING (REAR, STANDARD DIFFERENTIAL)	259
Y	*122-7197*	1	BRAKE GP-PARKING	453
Y	*246-4792*	1	FILLER GP-POWER TRAIN OIL	280
Y	*236-8999*	1	FILTER & LINES GP-TRANSMISSION	282
Y	*129-4278*	1	MOUNTING GP-AXLE	316
Y	*127-4736*	1	MOUNTING GP-RIM	316
Y	**125-9358**	1	SHAFT GP-DRIVE	330
Y	*237-2331*	1	TRANSMISSION AR (FREEWHEEL STATOR TORQUE CONV)	346

Y-SEPARATE ILLUSTRATION

<END>

241-8686 PUMP GP-TRANSMISSION

S/N: FAX1-UP

PART OF 237-2331 TRANSMISSION AR

SMCS-3066 **i02204604**

NOTE	REF NO	GRAPHIC REF	PART NUMBER	QTY	PART NAME 1 2 3 4 5 6 (PRODUCT LEVEL)	SEE PAGE
	1	1	**127-9094**	1	COVER AS-OIL PUMP	
		1	**129-4536**	2	BEARING-SLEEVE	
	2	1	**241-8687**	1	MANIFOLD AS	
		1	**1H-0974**	2	DOWEL	
		1	**129-4536**	1	BEARING-SLEEVE	
		1	**241-8688**	1	BODY-OIL PUMP	
	3	1	**243-0505**	1	GEAR AS-OIL PUMP (17-TEETH)	
		1	**2B-9373**	1	KEY-WOODRUFF	
		1	**132-2119**	1	SHAFT	
		1	**243-0509**	1	GEAR	
	4	1	**243-0507**	1	GEAR AS (17-TEETH)	
		1	**2B-9373**	1	KEY-WOODRUFF	
		1	**156-5104**	1	SHAFT	
		1	**243-0509**	1	GEAR	
	5	1	**243-0572**	1	BODY AS-OIL PUMP	
		1	**8M-8489**	4	DOWEL	
		1	**243-0573**	1	BODY-OIL PUMP	
	6	1	**148-8410**	1	PLUG AS	
		1	**2M-9780**	1	SEAL-O-RING	
		1	**9S-4190**	1	PLUG	
	7	1	**6V-5839**	6	WASHER (11X21X2.5-MM THK)	
M	8	1	**8T-0643**	6	BOLT (M10X1.5X80-MM)	

M-METRIC PART

241-8686 PUMP GP-TRANSMISSION *(contd.)* **i02204604**

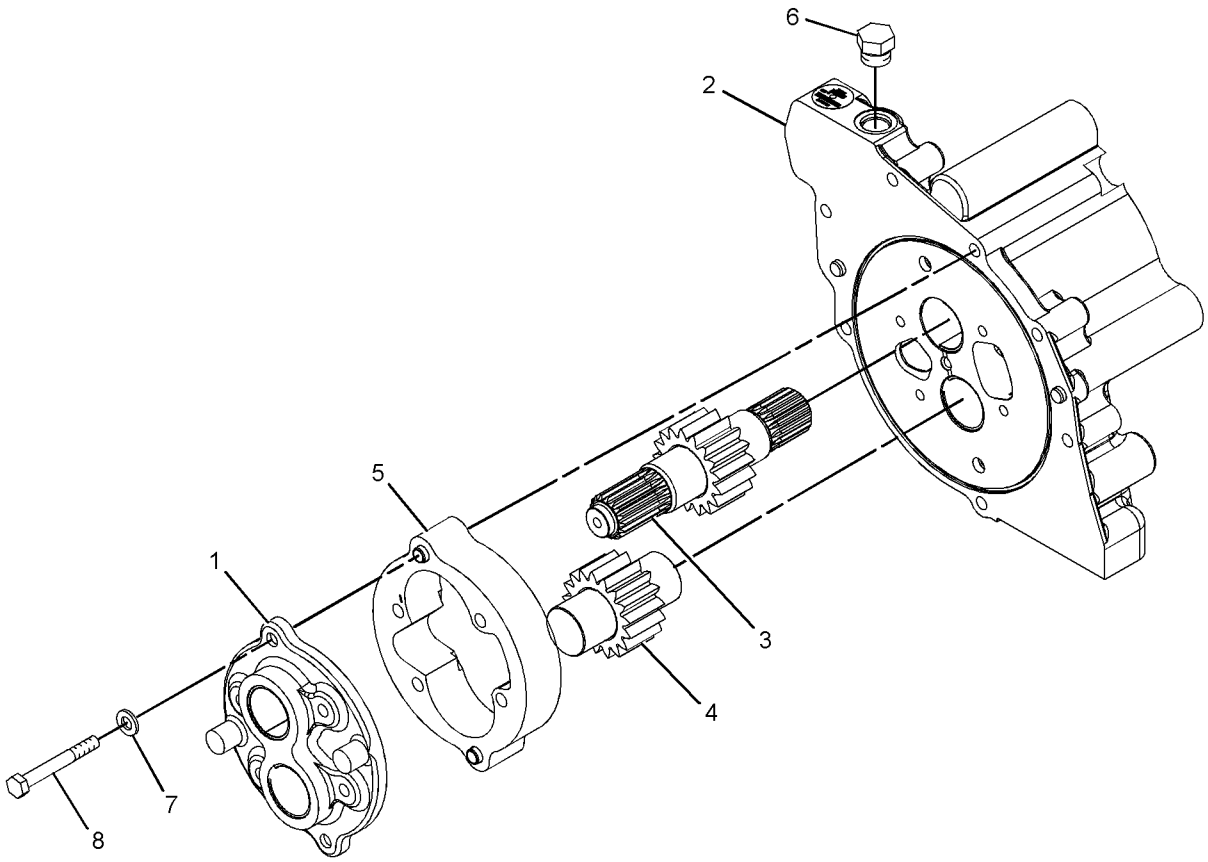

GRAPHIC #1 **<END>** g01114318

127-4782 RIM AR

S/N: A7G1-UP
26.5 X 25 TUBELESS TIRE
PART OF 127-4772, 127-4773, 127-4774, 127-4775, 151-5778, 154-5581, 159-1095, 165-6178, 172-0002, 173-1785, 174-6258, 175-2493, 176-7921, 178-6928, 197-2417, 202-1114, 209-1717, 222-4297, 231-4158, 254-3918, 254-8272, 259-2547, 259-2548, 262-7397, 263-7122, 263-7677 TIRE & RIM AR
AN ATTACHMENT

SMCS-4209 **i02265280**

NOTE	PART NUMBER	QTY	PART NAME 1 2 3 4 5 6 (PRODUCT LEVEL)	SEE PAGE
	5T-5682	4	DRIVER	
Y	*127-4783*	4	RIM GP-DEMOUNTABLE	326
			—OR—	
Y	**206-9280**	4	RIM GP-DEMOUNTABLE	329
	2D-2443	4	SEAL-O-RING	
Y	**2D-2511**	4	VALVE GP-TIRE	353

Y-SEPARATE ILLUSTRATION

<END>

128-0914 RIM AR

S/N: A7G1-UP
23.5 X 25 TUBELESS TIRE
PART OF 151-7227, 159-1085, 171-7037, 171-7038 TIRE & RIM AR
AN ATTACHMENT

SMCS-4209 **i00946319**

NOTE	PART NUMBER	QTY	PART NAME 1 2 3 4 5 6 (PRODUCT LEVEL)	SEE PAGE
	5T-5682	4	DRIVER	
Y	*128-0915*	4	RIM GP-DEMOUNTABLE	327
	2D-2443	4	SEAL-O-RING	
Y	**2D-2511**	4	VALVE GP-TIRE	353

Y-SEPARATE ILLUSTRATION

<END>

247-8414 RIM AR

S/N: A7G1-UP
PART OF 247-8413 TIRE & RIM AR
AN ATTACHMENT

SMCS-4209 **i02116849**

NOTE	PART NUMBER	QTY	PART NAME 1 2 3 4 5 6 (PRODUCT LEVEL)	SEE PAGE
Y	*127-4783*	4	RIM GP-DEMOUNTABLE	326
Y	**2D-2511**	4	VALVE GP-TIRE	353
	5T-5682	4	DRIVER	
	2D-2443	4	SEAL-O-RING	

Y-SEPARATE ILLUSTRATION

<END>

127-4783 RIM GP-DEMOUNTABLE

S/N: A7G1-UP
26.5 X 25 TUBELESS TIRE
PART OF 247-8414 RIM AR, 256-8686 TIRE & RIM AR
AN ATTACHMENT

SMCS-4209 **i01328353**

NOTE	REF NO	GRAPHIC REF	PART NUMBER	QTY	PART NAME 1 2 3 4 5 6 (PRODUCT LEVEL)	SEE PAGE
	1	1	**4F-8925**	2	FLANGE	
	2	1	**8R-1465**	1	RIM AS	
	3	1	**8W-9602**	1	BAND AS	
	4	1	**7D-7469**	1	LOCKRING	

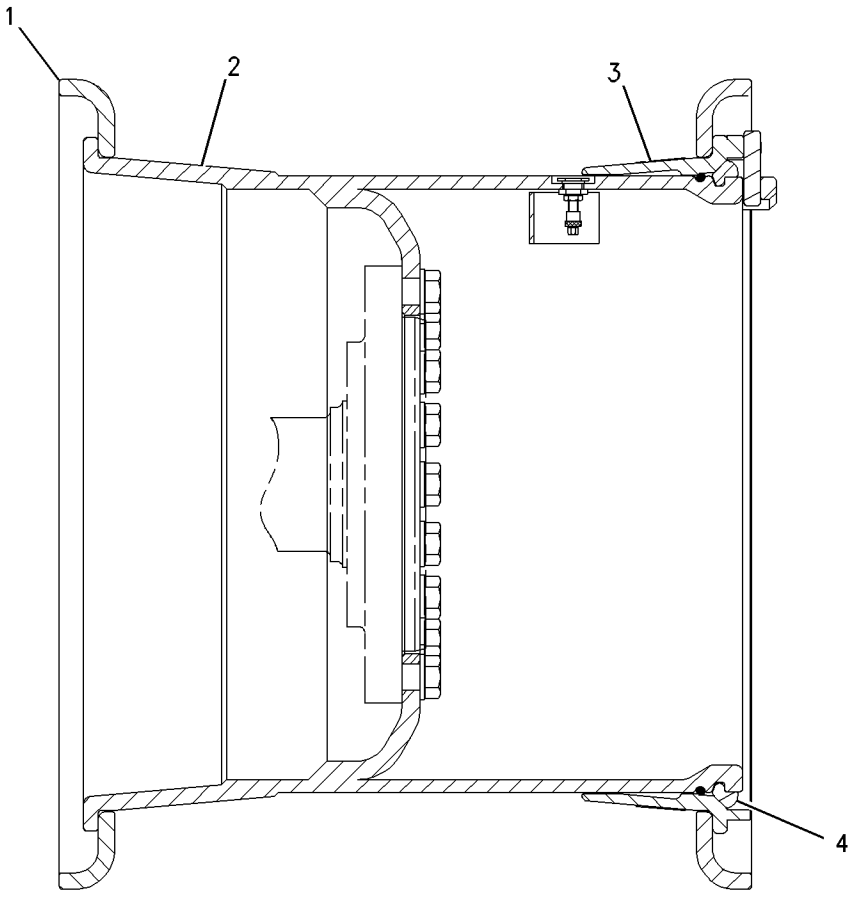

GRAPHIC #1 **<END>** g00702885

128-0915 RIM GP-DEMOUNTABLE

S/N: A7G1-UP
23.5 X 25 TUBELESS TIRE
PART OF 128-0914 RIM AR, 190-8130 TIRE & RIM AR
AN ATTACHMENT

SMCS-4209 **i00925277**

NOTE	REF NO	GRAPHIC REF	PART NUMBER	QTY	PART NAME 1 2 3 4 5 6 (PRODUCT LEVEL)	SEE PAGE
	1	1	**8R-2379**	1	RIM AS	
	2	1	**1J-8387**	2	FLANGE	
	3	1	**8W-9602**	1	BAND AS	
	4	1	**7D-7469**	1	LOCKRING	

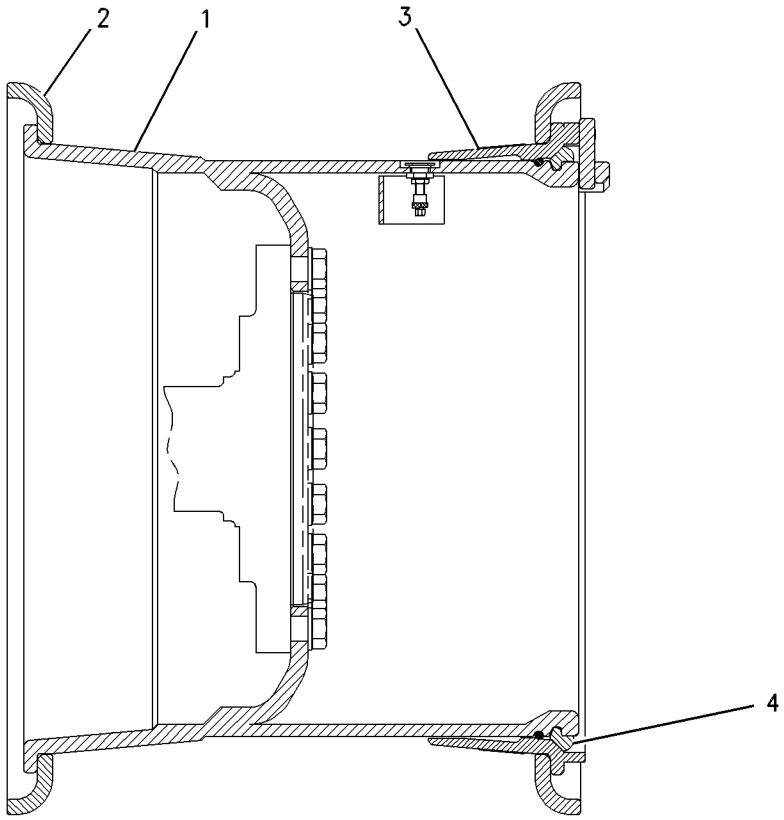

GRAPHIC #1 **<END>** g00490432

206-9279 RIM GP-DEMOUNTABLE

S/N: A7G1-UP
22X25
PART OF 206-9280 RIM GP-DEMOUNTABLE
AN ATTACHMENT

SMCS-4209 **i01662275**

NOTE	REF NO	GRAPHIC REF	PART NUMBER	QTY	PART NAME 1 2 3 4 5 6 (PRODUCT LEVEL)	SEE PAGE
	1	1	**7D-7469**	1	LOCK RING	
	2	1	**206-9272**	1	RIM AS	
	3	1	**208-7473**	1	FLANGE AS	

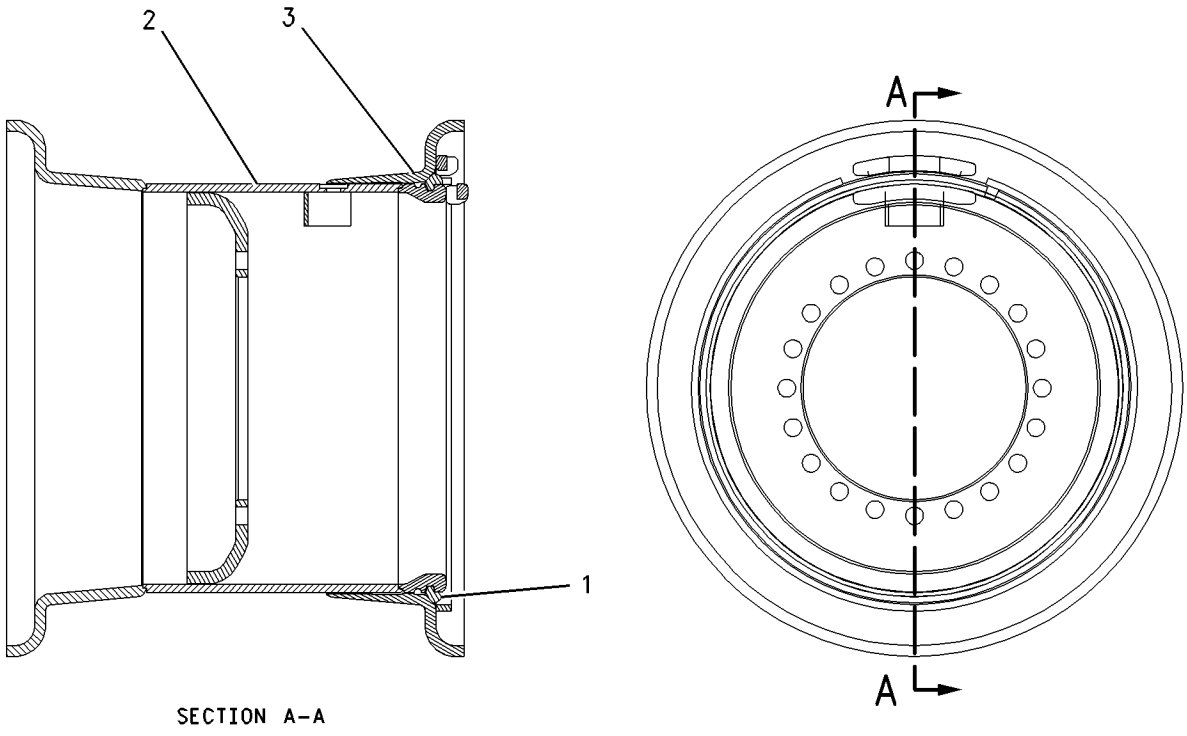

SECTION A-A

GRAPHIC #1 **<END>** g00830931

206-9280 RIM GP-DEMOUNTABLE

S/N: A7G1-UP
22X25. 3-PIECE
PART OF 127-4782 RIM AR, 173-1301, 177-1581, 178-2186, 196-7438, 204-5131, 211-5715 TIRE & RIM AR
AN ATTACHMENT

SMCS-4209 **i02265283**

NOTE	PART NUMBER	QTY	PART NAME 1 2 3 4 5 6 (PRODUCT LEVEL)	SEE PAGE
Y	*206-9279*	1	RIM GP-DEMOUNTABLE	328
Y	**2D-2511**	1	VALVE GP-TIRE	353
	5T-5682	1	DRIVER	
	2D-2443	1	SEAL-O-RING	

Y-SEPARATE ILLUSTRATION

<END>

POWER TRAIN

125-9358 SHAFT GP-DRIVE

S/N: A7G1-UP

PART OF 236-9057 POWER TRAIN AR

SMCS-3253 **i02020945**

NOTE	REF NO	GRAPHIC REF	PART NUMBER	QTY	PART NAME 1 2 3 4 5 6 (PRODUCT LEVEL)	SEE PAGE
	1	1	**4V-7081**	10	STRAP	
	2	1	**9V-2429**	1	RETAINER	
	3	1	**110-6923**	4	SPACER	
	4	1	**179-3185**	1	YOKE-BRAKE	
Y	5	1	**125-8807**	1	SLIP JOINT GP	331
Y	6	1	**125-8808**	1	UNIVERSAL JOINT GP (REAR AXLE)	347
Y	7	1	**125-8817**	1	UNIVERSAL JOINT GP (FRONT AXLE)	348
C	8	1	**233-8552**	1	BEARING AS	
		1	**197-6667**	1	SETSCREW	
	9	1	**138-3816**	20	BOLT-12 POINT HEAD (M12X1.25X30-MM)	
M	10	1	**7X-2554**	4	BOLT (M16X2X70-MM)	
M	11	1	**8T-4176**	1	BOLT (M12X1.75X90-MM)	

C-CHANGE FROM PREVIOUS TYPE
M-METRIC PART
Y-SEPARATE ILLUSTRATION

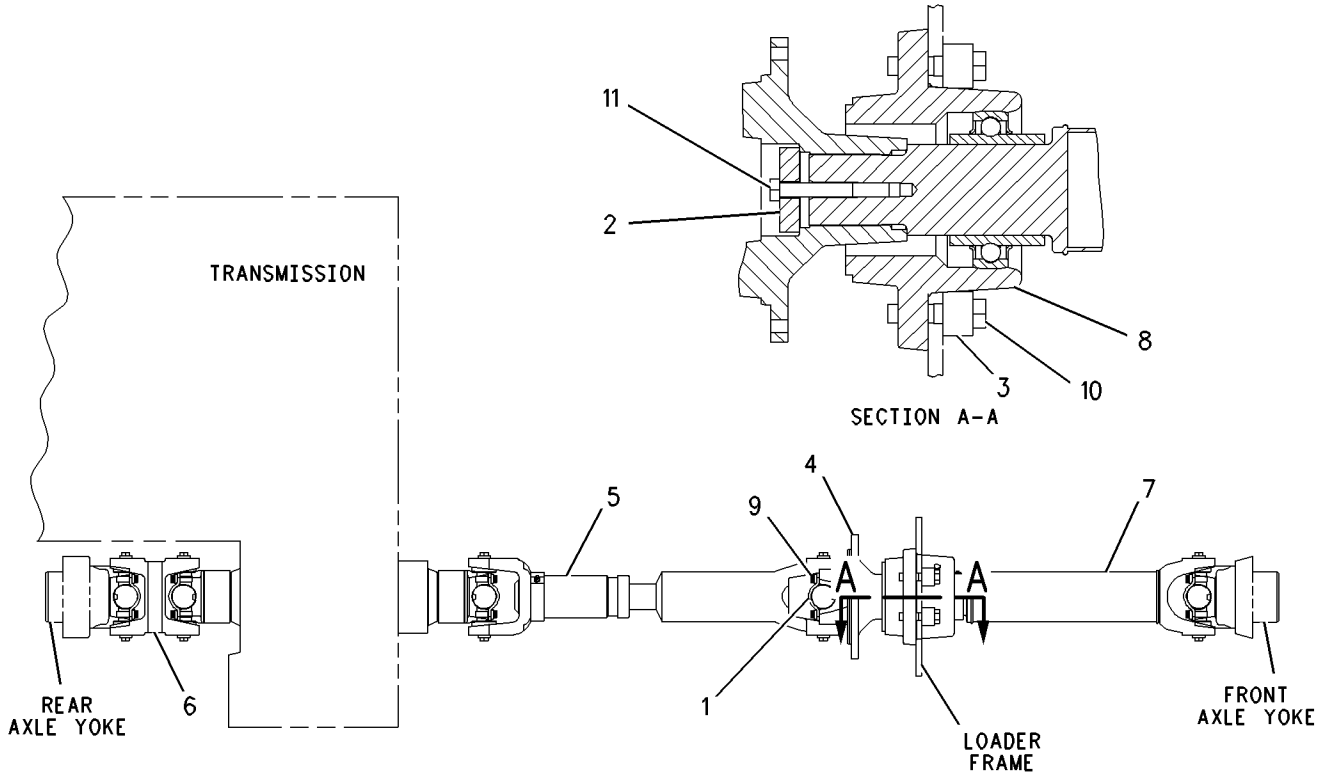

GRAPHIC #1 **<END>** g00719646

125-8807 SLIP JOINT GP

S/N: A7G1-UP

PART OF 125-9358 SHAFT GP-DRIVE

SMCS-3251 **i01934542**

NOTE	REF NO	GRAPHIC REF	PART NUMBER	QTY	PART NAME 1 2 3 4 5 6 (PRODUCT LEVEL)	SEE PAGE
	1	1	**3B-8489**	1	FITTING-GREASE	
	2	1	**196-8490**	1	CAP-DUST	
	3	1	**8V-1412**	1	RETAINER	
	4	1	**125-8810**	2	SPIDER & BEARING GP	
					(EACH INCLUDES)	
M		1	**153-1185**	4	BOLT (HEX HEAD, M10X1.25X16-MM)	
		1	**9C-9159**	2	PLATE	
		1	**027-1287**	2	FITTING-GREASE	

M-METRIC PART

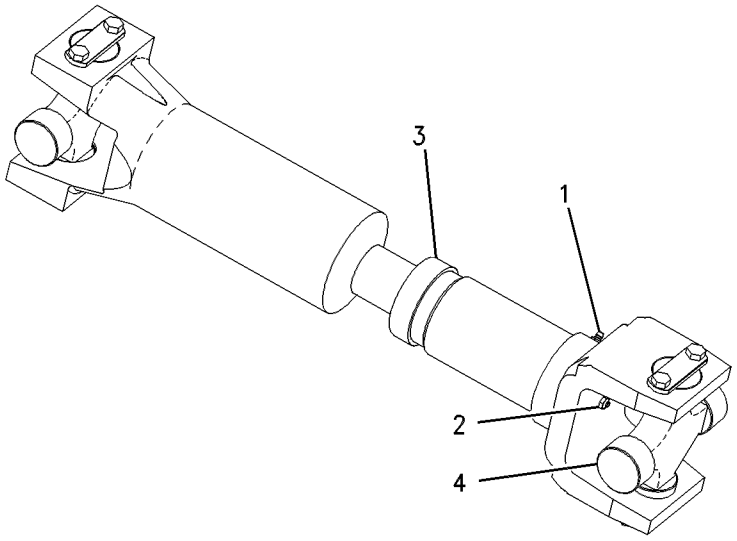

GRAPHIC #1 **<END>** g00283045

POWER TRAIN

127-4772 TIRE & RIM AR

S/N: A7G1-UP
AN ATTACHMENT

SMCS-4202 **i02351754**

NOTE	PART NUMBER	QTY	PART NAME 1 2 3 4 5 6 (PRODUCT LEVEL)	SEE PAGE
Y	*127-4782*	1	RIM AR	325
	127-4780	4	TIRE (26.5-25)	

Y-SEPARATE ILLUSTRATION

<END>

127-4773 TIRE & RIM AR

S/N: A7G1-UP
26.5-25 20 PR L-3
AN ATTACHMENT

SMCS-4202 **i00826136**

NOTE	PART NUMBER	QTY	PART NAME 1 2 3 4 5 6 (PRODUCT LEVEL)	SEE PAGE
Y	*127-4782*	1	RIM AR	325

Y-SEPARATE ILLUSTRATION

<END>

127-4774 TIRE & RIM AR

S/N: A7G1-UP
AN ATTACHMENT

SMCS-4202 **i00826130**

NOTE	PART NUMBER	QTY	PART NAME 1 2 3 4 5 6 (PRODUCT LEVEL)	SEE PAGE
Y	*127-4782*	1	RIM AR	325

Y-SEPARATE ILLUSTRATION

<END>

127-4775 TIRE & RIM AR

S/N: A7G1-UP
AN ATTACHMENT

SMCS-4202 **i00826137**

NOTE	PART NUMBER	QTY	PART NAME 1 2 3 4 5 6 (PRODUCT LEVEL)	SEE PAGE
Y	*127-4782*	1	RIM AR	325

Y-SEPARATE ILLUSTRATION

<END>

151-5778 TIRE & RIM AR

S/N: A7G1-UP
AN ATTACHMENT

SMCS-4202 **i01155160**

NOTE	PART NUMBER	QTY	PART NAME 1 2 3 4 5 6 (PRODUCT LEVEL)	SEE PAGE
Y	*176-2444*	1	BLOCK GP-AXLE OSC LIMITER	356
Y	*127-4782*	1	RIM AR	325

Y-SEPARATE ILLUSTRATION

<END>

151-7227 TIRE & RIM AR

S/N: A7G1-UP
AN ATTACHMENT

SMCS-4202 **i00941953**

NOTE	PART NUMBER	QTY	PART NAME 1 2 3 4 5 6 (PRODUCT LEVEL)	SEE PAGE
Y	*128-0914*	1	RIM AR	325

Y-SEPARATE ILLUSTRATION

<END>

154-5581 TIRE & RIM AR

S/N: A7G1-UP
AN ATTACHMENT

SMCS-4202 **i00925457**

NOTE	PART NUMBER	QTY	PART NAME 1 2 3 4 5 6 (PRODUCT LEVEL)	SEE PAGE
Y	*127-4782*	1	RIM AR	325

Y-SEPARATE ILLUSTRATION

<END>

159-1085 TIRE & RIM AR

S/N: A7G1-UP
AN ATTACHMENT

SMCS-4202 **i00820144**

NOTE	PART NUMBER	QTY	PART NAME 1 2 3 4 5 6 (PRODUCT LEVEL)	SEE PAGE
Y	*128-0914*	1	RIM AR	325

Y-SEPARATE ILLUSTRATION

<END>

POWER TRAIN

159-1095 TIRE & RIM AR

S/N: A7G1-UP

AN ATTACHMENT

SMCS-4202 **i01155166**

NOTE	PART NUMBER	QTY	PART NAME 1 2 3 4 5 6 (PRODUCT LEVEL)	SEE PAGE
Y	*176-2444*	1	BLOCK GP-AXLE OSC LIMITER	356
Y	*127-4782*	1	RIM AR	325

Y-SEPARATE ILLUSTRATION

<END>

165-6178 TIRE & RIM AR

S/N: A7G1-UP

AN ATTACHMENT

SMCS-4202 **i01306047**

NOTE	PART NUMBER	QTY	PART NAME 1 2 3 4 5 6 (PRODUCT LEVEL)	SEE PAGE
Y	*127-4782*	1	RIM AR	325

Y-SEPARATE ILLUSTRATION

<END>

171-7037 TIRE & RIM AR

S/N: A7G1-UP

AN ATTACHMENT

SMCS-4202 **i01052399**

NOTE	PART NUMBER	QTY	PART NAME 1 2 3 4 5 6 (PRODUCT LEVEL)	SEE PAGE
Y	*128-0914*	1	RIM AR	325

Y-SEPARATE ILLUSTRATION

<END>

171-7038 TIRE & RIM AR

S/N: A7G1-UP

AN ATTACHMENT

SMCS-4202 **i01052400**

NOTE	PART NUMBER	QTY	PART NAME 1 2 3 4 5 6 (PRODUCT LEVEL)	SEE PAGE
Y	*128-0914*	1	RIM AR	325

Y-SEPARATE ILLUSTRATION

<END>

172-0002 TIRE & RIM AR

S/N: A7G1-UP
AN ATTACHMENT

SMCS-4202 **i01155171**

NOTE	PART NUMBER	QTY	PART NAME 1 2 3 4 5 6 (PRODUCT LEVEL)	SEE PAGE
CY	*176-2444*	1	BLOCK GP-AXLE OSC LIMITER	356
Y	*127-4782*	1	RIM AR	325

C-CHANGE FROM PREVIOUS TYPE
Y-SEPARATE ILLUSTRATION

<END>

173-1301 TIRE & RIM AR

S/N: A7G1-UP
AN ATTACHMENT

SMCS-4202 **i02271703**

NOTE	PART NUMBER	QTY	PART NAME 1 2 3 4 5 6 (PRODUCT LEVEL)	SEE PAGE
Y	*206-9280*	1	RIM GP-DEMOUNTABLE	329
	4E-8168	1	TIRE (26.5-R25)	

Y-SEPARATE ILLUSTRATION

<END>

173-1785 TIRE & RIM AR

S/N: A7G1-UP
AN ATTACHMENT

SMCS-4202 **i01313781**

NOTE	PART NUMBER	QTY	PART NAME 1 2 3 4 5 6 (PRODUCT LEVEL)	SEE PAGE
Y	*176-2444*	1	BLOCK GP-AXLE OSC LIMITER	356
Y	*127-4782*	1	RIM AR	325

Y-SEPARATE ILLUSTRATION

<END>

174-6258 TIRE & RIM AR

S/N: A7G1-UP
AN ATTACHMENT

SMCS-4202 **i01448833**

NOTE	PART NUMBER	QTY	PART NAME 1 2 3 4 5 6 (PRODUCT LEVEL)	SEE PAGE
Y	*127-4782*	1	RIM AR	325

Y-SEPARATE ILLUSTRATION

<END>

175-2493 TIRE & RIM AR

S/N: A7G1-UP
AN ATTACHMENT

SMCS-4202 **i01155178**

NOTE	PART NUMBER	QTY	PART NAME 1 2 3 4 5 6 (PRODUCT LEVEL)	SEE PAGE
CY	*176-2444*	1	BLOCK GP-AXLE OSC LIMITER	356
Y	*127-4782*	1	RIM AR	325

C-CHANGE FROM PREVIOUS TYPE
Y-SEPARATE ILLUSTRATION

<END>

176-7921 TIRE & RIM AR

S/N: A7G1-UP
AN ATTACHMENT

SMCS-4202 **i01448851**

NOTE	PART NUMBER	QTY	PART NAME 1 2 3 4 5 6 (PRODUCT LEVEL)	SEE PAGE
Y	*127-4782*	1	RIM AR	325

Y-SEPARATE ILLUSTRATION

<END>

177-1581 TIRE & RIM AR

S/N: A7G1-UP
AN ATTACHMENT

SMCS-4202 **i02271696**

NOTE	PART NUMBER	QTY	PART NAME 1 2 3 4 5 6 (PRODUCT LEVEL)	SEE PAGE
Y	*206-9280*	1	RIM GP-DEMOUNTABLE	329
	6C-3588	1	TIRE (26.5-25)	

Y-SEPARATE ILLUSTRATION

<END>

178-2186 TIRE & RIM AR

S/N: A7G1-UP
AN ATTACHMENT

SMCS-4202 **i02271692**

NOTE	PART NUMBER	QTY	PART NAME 1 2 3 4 5 6 (PRODUCT LEVEL)	SEE PAGE
Y	*206-9280*	1	RIM GP-DEMOUNTABLE	329
	6C-4018	1	TIRE (26.5-25)	

Y-SEPARATE ILLUSTRATION

<END>

178-6928 TIRE & RIM AR

S/N: A7G1-UP
AN ATTACHMENT

SMCS-4202 **i02351755**

NOTE	PART NUMBER	QTY	PART NAME 1 2 3 4 5 6 (PRODUCT LEVEL)	SEE PAGE
Y	*176-2444*	1	BLOCK GP-AXLE OSC LIMITER	356
Y	*127-4782*	1	RIM AR	325
	178-6927	4	TIRE (26.5-R25)	

Y-SEPARATE ILLUSTRATION

<END>

190-8130 TIRE & RIM AR

S/N: A7G1-UP
AN ATTACHMENT

SMCS-4202 **i01297589**

NOTE	PART NUMBER	QTY	PART NAME 1 2 3 4 5 6 (PRODUCT LEVEL)	SEE PAGE
Y	*128-0915*	1	RIM GP-DEMOUNTABLE	327

Y-SEPARATE ILLUSTRATION

<END>

196-7438 TIRE & RIM AR

S/N: A7G1-UP
AN ATTACHMENT

SMCS-4202 **i02306138**

NOTE	PART NUMBER	QTY	PART NAME 1 2 3 4 5 6 (PRODUCT LEVEL)	SEE PAGE
CY	*206-9280*	1	RIM GP-DEMOUNTABLE	329
	136-7211	1	TIRE (26.5-25)	

C-CHANGE FROM PREVIOUS TYPE
Y-SEPARATE ILLUSTRATION

<END>

197-2417 TIRE & RIM AR

S/N: A7G1-UP
AN ATTACHMENT

SMCS-4202 **i01409422**

NOTE	PART NUMBER	QTY	PART NAME 1 2 3 4 5 6 (PRODUCT LEVEL)	SEE PAGE
Y	*176-2444*	1	BLOCK GP-AXLE OSC LIMITER	356
Y	*127-4782*	1	RIM AR	325

Y-SEPARATE ILLUSTRATION

<END>

202-1114 TIRE & RIM AR

S/N: A7G1-UP
AN ATTACHMENT

SMCS-4202 **i01513098**

NOTE	PART NUMBER	QTY	PART NAME 1 2 3 4 5 6 (PRODUCT LEVEL)	SEE PAGE
Y	*176-2444*	1	BLOCK GP-AXLE OSC LIMITER	356
Y	*127-4782*	1	RIM AR	325
Y-SEPARATE ILLUSTRATION				

<END>

204-5131 TIRE & RIM AR

S/N: A7G1-UP
AN ATTACHMENT

SMCS-4202 **i02271718**

NOTE	PART NUMBER	QTY	PART NAME 1 2 3 4 5 6 (PRODUCT LEVEL)	SEE PAGE
Y	*206-9280*	1	RIM GP-DEMOUNTABLE	329
	9C-3879	1	TIRE (26.5-25)	
Y-SEPARATE ILLUSTRATION				

<END>

209-1717 TIRE & RIM AR

S/N: A7G1-UP
AN ATTACHMENT

SMCS-4202 **i01549009**

NOTE	PART NUMBER	QTY	PART NAME 1 2 3 4 5 6 (PRODUCT LEVEL)	SEE PAGE
Y	*176-2444*	1	BLOCK GP-AXLE OSC LIMITER	356
Y	*127-4782*	1	RIM AR	325
Y-SEPARATE ILLUSTRATION				

<END>

211-5715 TIRE & RIM AR

S/N: A7G1-UP
SPARE
AN ATTACHMENT

SMCS-4202 **i02203659**

NOTE	PART NUMBER	QTY	PART NAME 1 2 3 4 5 6 (PRODUCT LEVEL)	SEE PAGE
Y	*127-4783*	1	RIM GP-DEMOUNTABLE	326
			—OR—	
Y	*206-9280*	1	RIM GP-DEMOUNTABLE	329
	6C-7369	1	TIRE (26.5-25)	
Y-SEPARATE ILLUSTRATION				

<END>

222-4297 TIRE & RIM AR

S/N: A7G1-UP
AN ATTACHMENT

SMCS-4202 **i01967339**

NOTE	PART NUMBER	QTY	PART NAME 1 2 3 4 5 6 (PRODUCT LEVEL)	SEE PAGE
Y	*176-2444*	1	BLOCK GP-AXLE OSC LIMITER	356
Y	*127-4782*	1	RIM AR	325

Y-SEPARATE ILLUSTRATION

<END>

231-4158 TIRE & RIM AR

S/N: A7G1-UP
AN ATTACHMENT

SMCS-4202 **i01930746**

NOTE	PART NUMBER	QTY	PART NAME 1 2 3 4 5 6 (PRODUCT LEVEL)	SEE PAGE
Y	*127-4782*	1	RIM AR	325

Y-SEPARATE ILLUSTRATION

<END>

247-8413 TIRE & RIM AR

S/N: A7G1-UP
AN ATTACHMENT

SMCS-4202 **i02116855**

NOTE	PART NUMBER	QTY	PART NAME 1 2 3 4 5 6 (PRODUCT LEVEL)	SEE PAGE
Y	*247-8414*	1	RIM AR	325
	4E-8168	4	TIRE (26.5-R25)	

Y-SEPARATE ILLUSTRATION

<END>

254-3918 TIRE & RIM AR

S/N: A7G1-UP
AN ATTACHMENT

SMCS-4202 **i02285614**

NOTE	PART NUMBER	QTY	PART NAME 1 2 3 4 5 6 (PRODUCT LEVEL)	SEE PAGE
Y	*127-4782*	1	RIM AR	325
	153-0067	4	TIRE (26.5-R25)	

Y-SEPARATE ILLUSTRATION

<END>

POWER TRAIN

254-8272 TIRE & RIM AR

S/N: A7G1-UP

AN ATTACHMENT

SMCS-4202 **i02118404**

NOTE	PART NUMBER	QTY	PART NAME 1 2 3 4 5 6 (PRODUCT LEVEL)	SEE PAGE
Y	*176-2444*	1	BLOCK GP-AXLE OSC LIMITER	356
Y	*127-4782*	1	RIM AR	325
	254-8273	4	TIRE (26.5-R25)	

Y-SEPARATE ILLUSTRATION

<END>

256-8686 TIRE & RIM AR—SPARE

S/N: A7G1-UP

AN ATTACHMENT

SMCS-4202 **i02196826**

NOTE	PART NUMBER	QTY	PART NAME 1 2 3 4 5 6 (PRODUCT LEVEL)	SEE PAGE
Y	*127-4783*	1	RIM GP-DEMOUNTABLE	326
	4E-8168	1	TIRE (26.5-R25)	

Y-SEPARATE ILLUSTRATION

<END>

259-2547 TIRE & RIM AR

S/N: A7G1-UP

AN ATTACHMENT

SMCS-4202 **i02351932**

NOTE	PART NUMBER	QTY	PART NAME 1 2 3 4 5 6 (PRODUCT LEVEL)	SEE PAGE
Y	*127-4782*	1	RIM AR	325
	259-2544	4	TIRE (26.5-R25)	

Y-SEPARATE ILLUSTRATION

<END>

259-2548 TIRE & RIM AR

S/N: A7G1-UP

AN ATTACHMENT

SMCS-4202 **i02351946**

NOTE	PART NUMBER	QTY	PART NAME 1 2 3 4 5 6 (PRODUCT LEVEL)	SEE PAGE
Y	*127-4782*	1	RIM AR	325
	259-2545	4	TIRE (26.5-R25)	

Y-SEPARATE ILLUSTRATION

<END>

262-7397 TIRE & RIM AR

S/N: A7G1-UP
AN ATTACHMENT

SMCS-4202 **i02196410**

NOTE	PART NUMBER	QTY	PART NAME 1 2 3 4 5 6 (PRODUCT LEVEL)	SEE PAGE
Y	*176-2444*	1	BLOCK GP-AXLE OSC LIMITER	356
Y	*127-4782*	1	RIM AR	325
	262-7398	4	TIRE (26.5-R25)	

Y-SEPARATE ILLUSTRATION

<END>

263-7122 TIRE & RIM AR

S/N: A7G1-UP
AN ATTACHMENT

SMCS-4202 **i02283739**

NOTE	PART NUMBER	QTY	PART NAME 1 2 3 4 5 6 (PRODUCT LEVEL)	SEE PAGE
Y	*127-4782*	1	RIM AR	325
	263-7911	4	TIRE (23.5-25)	

Y-SEPARATE ILLUSTRATION

<END>

263-7677 TIRE & RIM AR

S/N: A7G1-UP
AN ATTACHMENT

SMCS-4202 **i02202762**

NOTE	PART NUMBER	QTY	PART NAME 1 2 3 4 5 6 (PRODUCT LEVEL)	SEE PAGE
Y	*127-4782*	1	RIM AR	325
	263-8763	4	TIRE (26.5-25)	

Y-SEPARATE ILLUSTRATION

<END>

243-1605 TORQUE CONVERTER & HOUSING GP–
FREEWHEEL STATOR
S/N: FAX1-UP
PART OF 237-2331 TRANSMISSION AR

SMCS-3101, 3105 **i02204618**

NOTE	REF NO	GRAPHIC REF	PART NUMBER	QTY	PART NAME 1 2 3 4 5 6 (PRODUCT LEVEL)	SEE PAGE
	1	1	**8E-7447**	1	GEAR (56-TEETH)	
	2	1	**1S-5596**	1	RETAINER	
	3	1	**0S-1579**	1	BOLT (1/2-20X2-IN)	
	4	1	**0S-1590**	8	BOLT (3/8-16X2-IN)	
	5	1	**5M-2894**	8	WASHER-HARD (10.2X18.5X2.5-MM THK)	
	6	1	**243-3725**	1	HOUSING-TORQUE CONVERTER	
	7	1	**122-6579**	1	FLANGE-PUMP DRIVE	
M	8	1	**8T-0281**	1	BOLT (M16X2X80-MM)	
	9	1	**9X-8268**	2	WASHER (17.5X30X3.5-MM THK)	
M	10	1	**6V-4248**	8	BOLT (M10X1.5X25-MM)	
	11	1	**243-1606**	1	GEAR-PUMP DRIVE (67-TEETH)	
	12	1	**1F-2771**	1	BALL BEARING	
	13	1	**123-3205**	1	SHAFT	
Y	14	1	*243-1604*	1	TORQUE CONVERTER GP (FREEWHEEL STATOR)	344
	15	1	**1T-1639**	1	RING	
	16	1	**144-8299**	1	SEAL-O-RING	
	17	1	**9S-8009**	2	PLUG	
	18	1	**4K-1388**	2	SEAL-O-RING	
	19	1	**6V-0852**	1	CAP-DUST	
	20	1	**6V-3965**	1	FITTING AS (QUICK DISCONNECT)	
	21	1	**3J-1907**	1	SEAL-O-RING	
Y	22	1	*193-2550*	1	SENSOR GP-SPEED (MAGNETIC, HIGH OUTPUT) (TORQUE CONVERTER OUTPUT)	189
	23	1	**1V-6341**	1	SEAL	
	24	1	**3P-0647**	1	SEAL-O-RING	

M-METRIC PART
Y-SEPARATE ILLUSTRATION

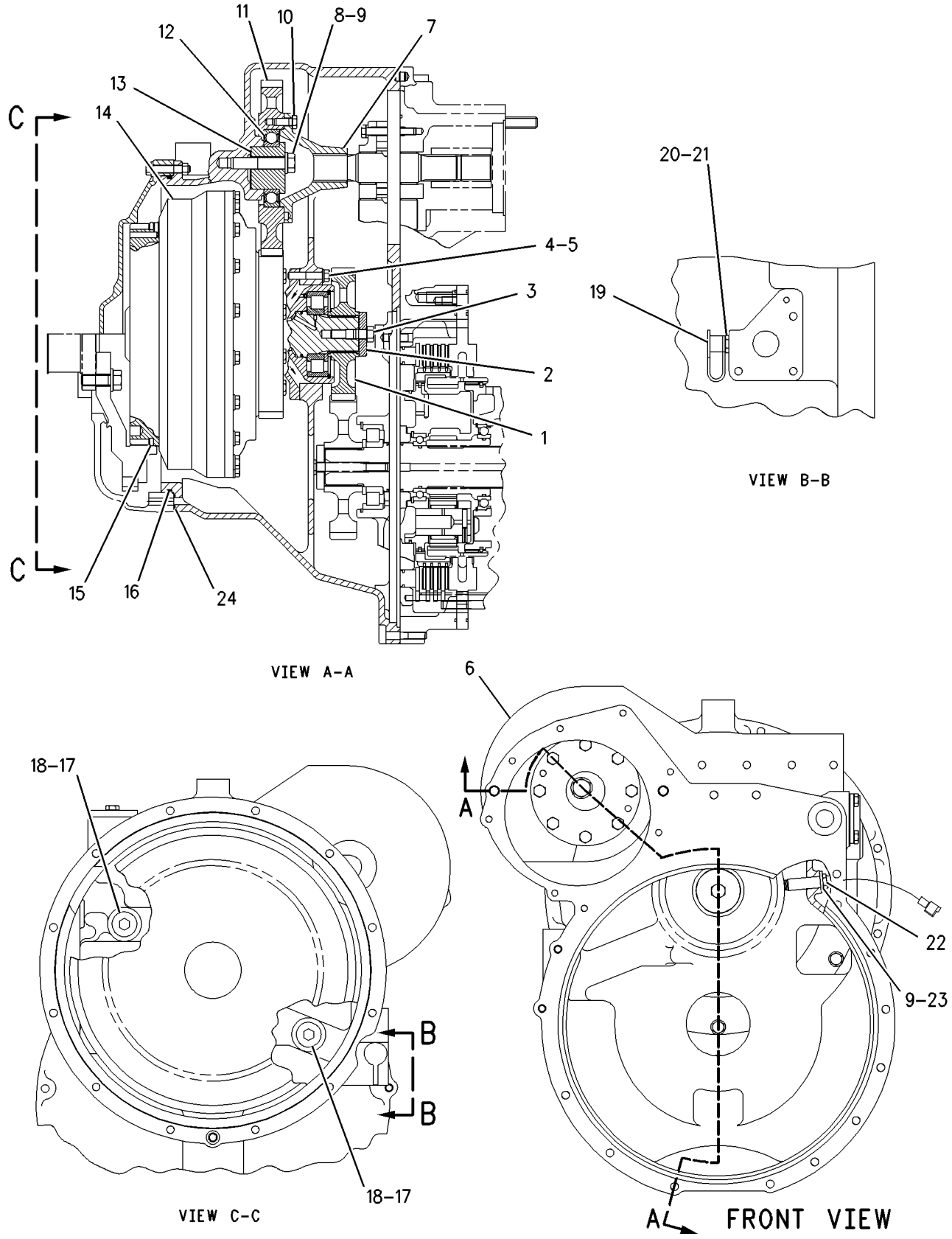

GRAPHIC #1 **<END>** g00826108

243-1604 TORQUE CONVERTER GP—FREEWHEEL STATOR

S/N: TKF1-UP

PART OF 243-1605 TORQUE CONVERTER & HOUSING GP

SMCS-3101 **i02204636**

NOTE	REF NO	GRAPHIC REF	PART NUMBER	QTY	PART NAME 1 2 3 4 5 6 (PRODUCT LEVEL)	SEE PAGE
	1	1	**6Y-3148**	1	SHAFT-OUTPUT	
	2	1	**5P-6414**	3	RING-RETAINING	
	3	1	**5K-8591**	1	BEARING-OUTER	
	4	1	**171-6348**	1	CARRIER AS	
		1	**1P-0604**	1	PLUG-CUP	
		1	**4S-8541**	1	DOWEL	
M	5	1	**6V-3823**	8	BOLT (M12X1.75X60-MM)	
	6	1	**243-1607**	1	GEAR-PUMP DRIVE (70-TEETH)	
	7	1	**8E-9972**	1	IMPELLER-CONVERTER	
M	8	1	**6V-1820**	34	BOLT (M10X1.5X30-MM)	
	9	1	**6V-5839**	34	WASHER (11X21X2.5-MM THK)	
	10	1	**6Y-4859**	1	HOUSING	
	11	1	**8E-5247**	1	BALL BEARING	
	12	1	**3E-6799**	1	SEAL-O-RING	
	13	1	**6Y-1087**	1	COVER-END	
	14	1	**8E-6539**	1	HUB AS	
		1	**4S-8541**	1	DOWEL	
	15	1	**064-3843**	1	RING-SNAP	
	16	1	**8E-6648**	1	SPACER (60.2X80X3-MM THK)	
	17	1	**5K-9065**	1	RING-RETAINING	
	18	1	**6V-8128**	1	RING-RETAINING	
	19	1	**191-8720**	1	PLATE-SPLINED	
	20	1	**6Y-1089**	1	TURBINE-CONVERTER	
	21	1	**6Y-1090**	1	STATOR-CONVERTER	
	22	1	**141-0752**	1	SPACER	
	23	1	**119-5727**	1	BALL BEARING	
	24	1	**1T-1621**	1	RING-SEAL	
	25	1	**3N-8506**	1	RING-PISTON	
	26	1	**6V-4350**	1	RACE-ROLLER BEARING	
	27	1	**6V-4351**	1	PLATE-INNER RACE	
	28	1	**194-4411**	2	WASHER-THRUST	
	29	1	**141-1236**	1	RACE-FREEWHEEL	
	30	1	**8P-7857**	9	ROLLER-FREEWHEEL	
	31	1	**8P-7858**	9	SPRING-FREEWHEEL	
	32	1	**7G-8430**	1	CAM-FREEWHEEL	

M-METRIC PART

243-1604 **TORQUE CONVERTER GP** *(contd.)* **i02204636**

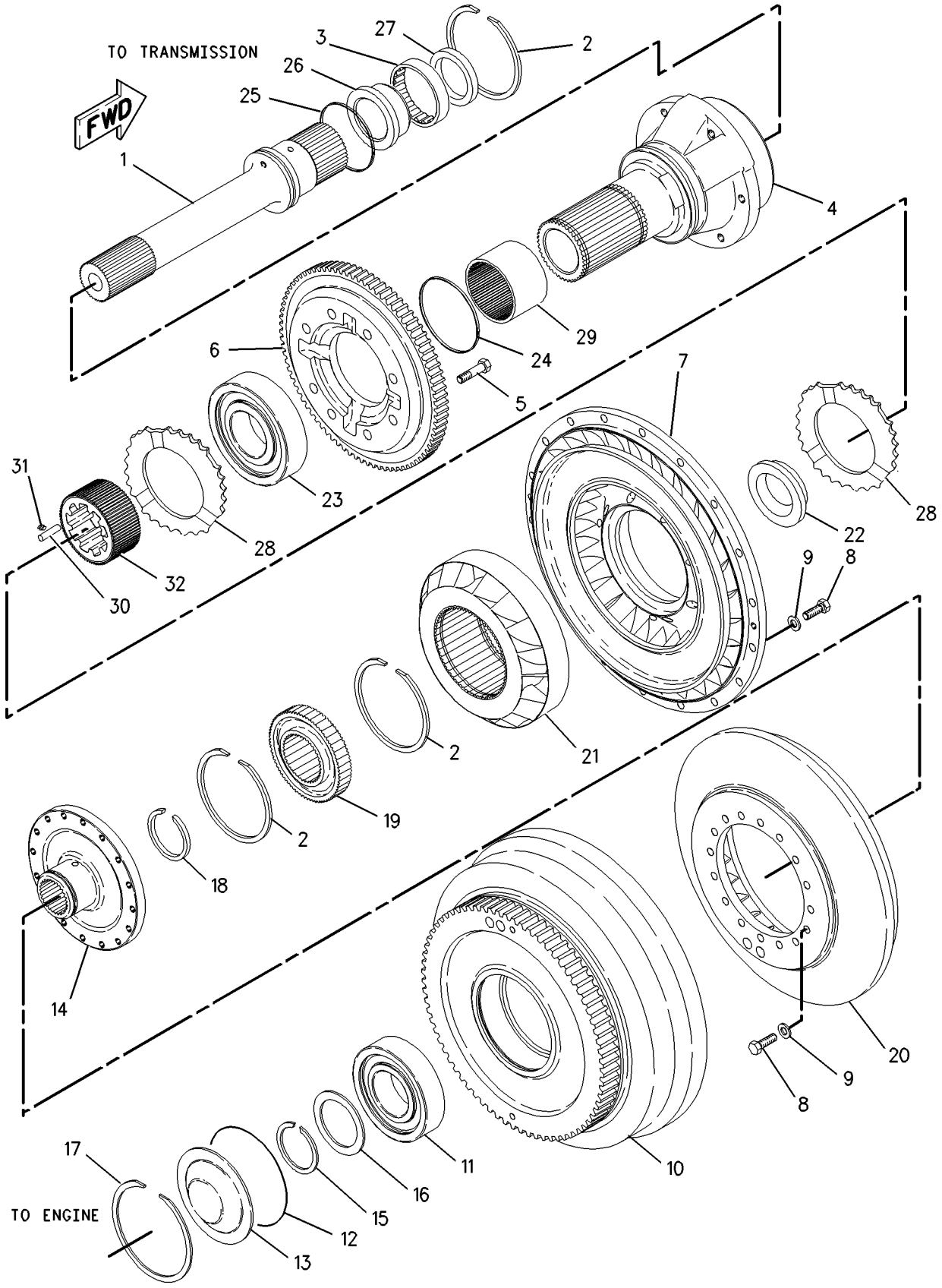

GRAPHIC #1 **<END>** g00819807

237-2331 TRANSMISSION AR–
FREEWHEEL STATOR TORQUE CONVERTER
S/N: FAX1-UP
PART OF 236-9057 POWER TRAIN AR

SMCS-3030 **i02204593**

NOTE	PART NUMBER	QTY	PART NAME 1 2 3 4 5 6 (PRODUCT LEVEL)	SEE PAGE
Y	*253-8351*	1	CASE & PARTS GP-PLANETARY	265
Y	*247-7831*	1	CONTROL GP-TRANSMISSION HYD	269
Y	*248-0357*	1	GEAR GP-OUTPUT TRANSFER	291
Y	*196-1799*	1	PLANETARY GP-TRANSMISSION	318
Y	**241-8686**	1	PUMP GP-TRANSMISSION	323
Y	*243-1605*	1	TORQUE CONVERTER & HOUSING GP (FREEWHEEL STATOR)	342

Y-SEPARATE ILLUSTRATION

<END>

125-8808 UNIVERSAL JOINT GP–REAR AXLE

S/N: A7G1-UP

PART OF 125-9358 SHAFT GP-DRIVE

SMCS-3251, 3253 **i01141458**

NOTE	REF NO	GRAPHIC REF	PART NUMBER	QTY	PART NAME 1 2 3 4 5 6 (PRODUCT LEVEL)	SEE PAGE
	1	1	**125-8810**	2	SPIDER & BEARING GP	
					(EACH INCLUDES)	
M		1	**6V-8455**	4	BOLT (M10X1.5X16-MM)	
		1	**9C-9159**	2	PLATE	
		1	**027-1287**	1	FITTING-GREASE	

M-METRIC PART

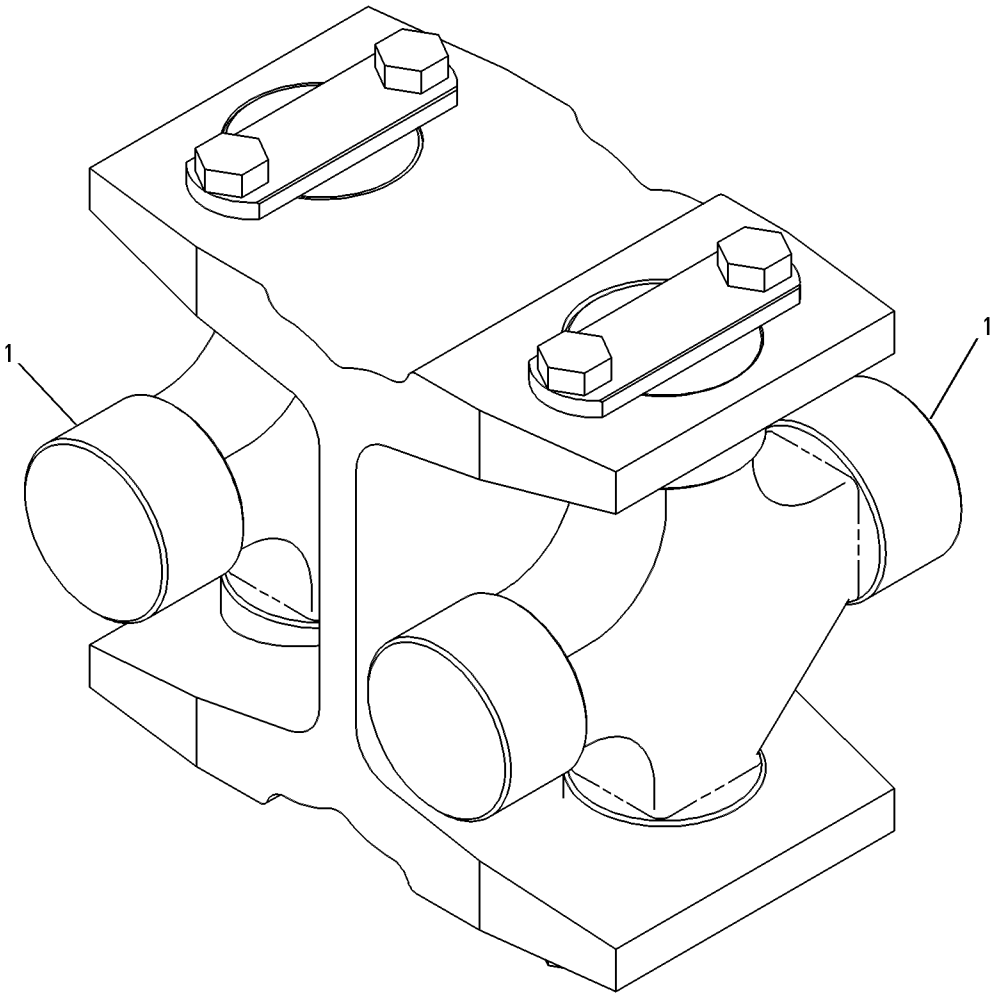

GRAPHIC #1 **<END>** g00374806

125-8817 UNIVERSAL JOINT GP–FRONT AXLE

S/N: A7G1-UP

PART OF 125-9358 SHAFT GP-DRIVE

SMCS-3251, 3253 **i00820926**

NOTE	REF NO	GRAPHIC REF	PART NUMBER	QTY	PART NAME 1 2 3 4 5 6 (PRODUCT LEVEL)	SEE PAGE
	1	1	**125-8810**	1	SPIDER & BEARING GP	
M		1	**6V-8455**	4	BOLT (M10X1.5X16-MM)	
		1	**027-1287**	1	FITTING-GREASE	
		1	**9C-9159**	2	PLATE	

M-METRIC PART

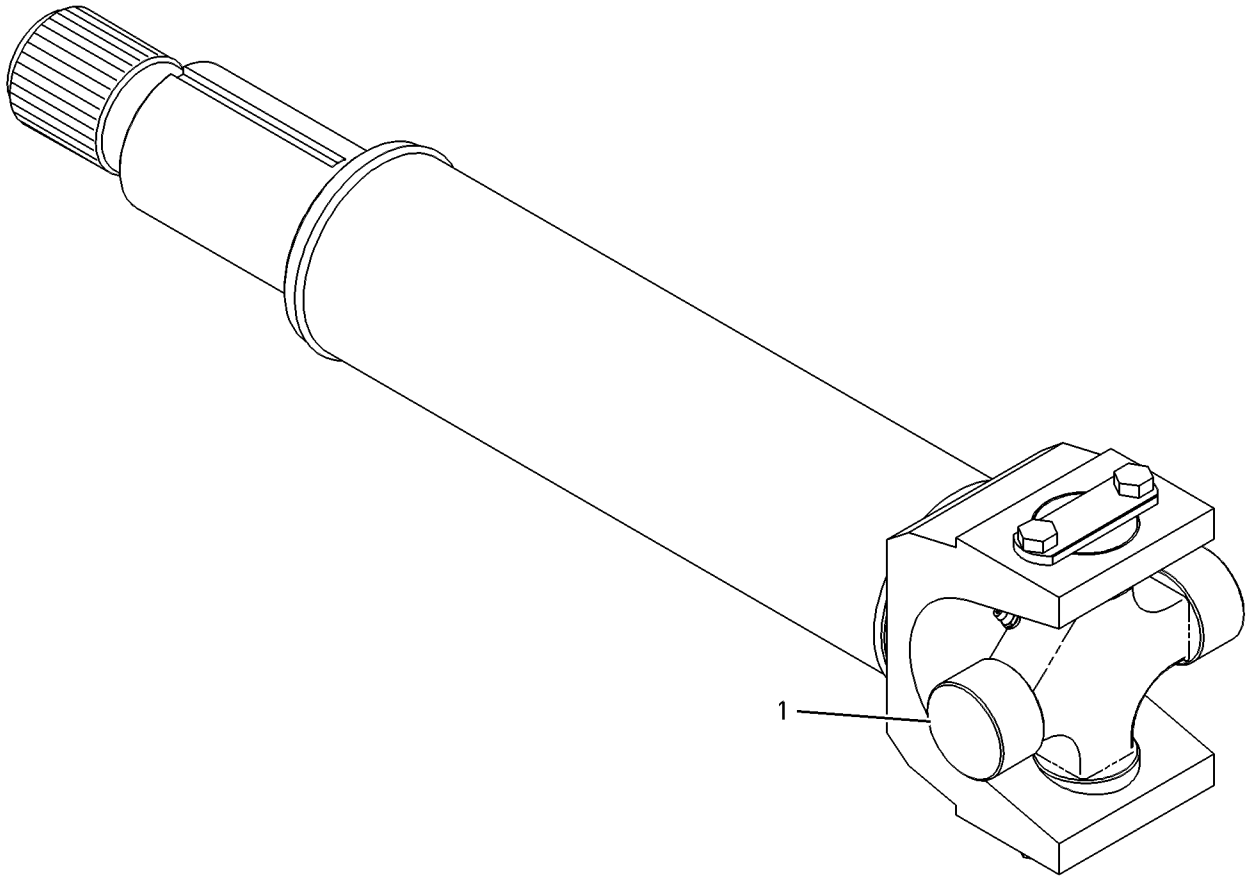

GRAPHIC #1 **<END>** g00374804

216-5338 VALVE GP-MODULATING

S/N: FAX1-UP

PART OF 247-7831 CONTROL GP-TRANSMISSION HYD

SMCS-3139 **i01851508**

NOTE	REF NO	GRAPHIC REF	PART NUMBER	QTY	PART NAME 1 2 3 4 5 6 (PRODUCT LEVEL)	SEE PAGE
	1	1	**6V-3965**	1	FITTING AS	
	2	1	**145-1144**	1	COIL AS	
	3	1	**3J-1907**	1	SEAL-O-RING	
	4	1	**164-2108**	1	WASHER (13.03X25.4X2.38-MM THK)	
	5	1	**167-9524**	1	NUT-SELF-LOCKING (1/2-28-THD)	

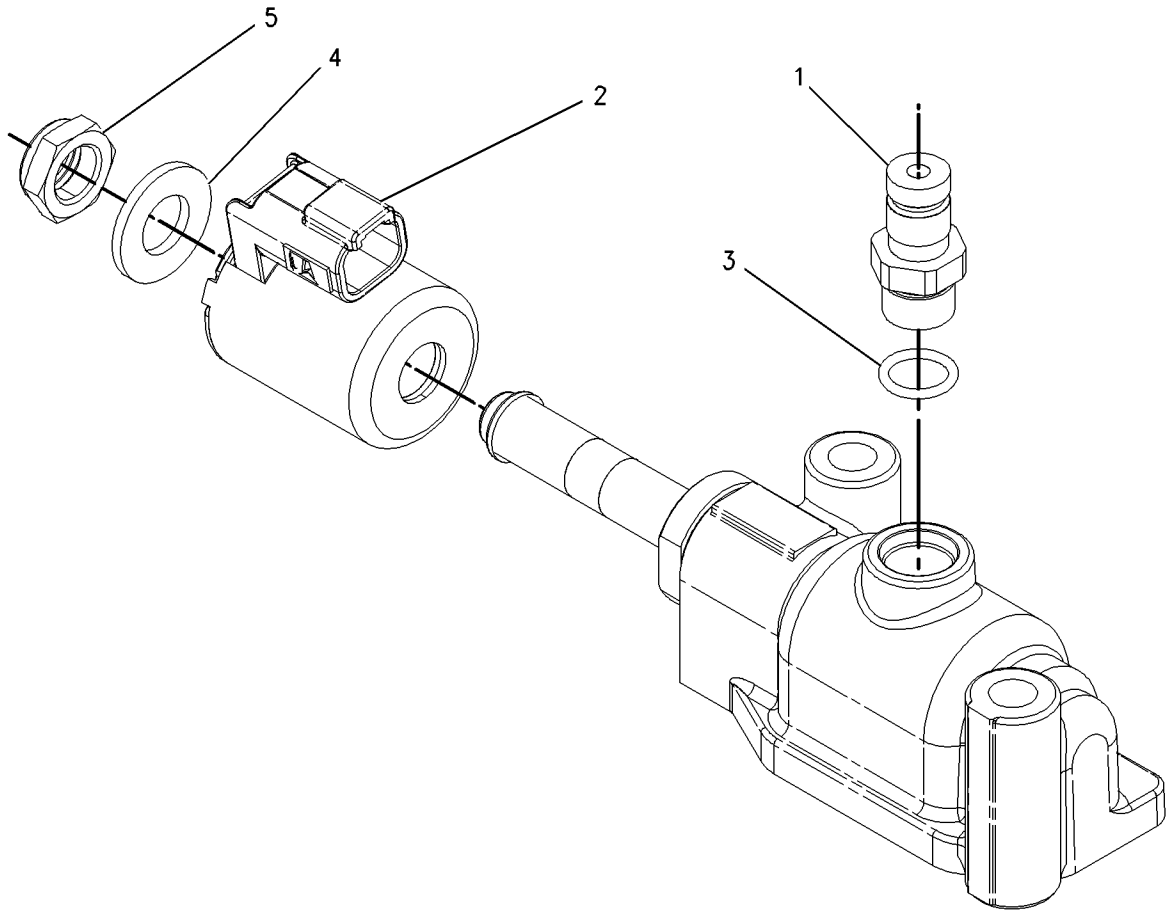

GRAPHIC #1 **<END>** g00919065

130-5485 VALVE GP-RELIEF–TORQUE CONVERTER OUTLET

S/N: FAX1-UP

PART OF 247-7831 CONTROL GP-TRANSMISSION HYD

SMCS-3133, 3182, 3210, 3213 **i00778979**

NOTE	REF NO	GRAPHIC REF	PART NUMBER	QTY	PART NAME 1 2 3 4 5 6 (PRODUCT LEVEL)	SEE PAGE
M	1	1	**8T-4136**	4	BOLT (M10X1.5X25-MM)	
	2	1	**8T-4121**	4	WASHER-HARD (11X21X2.5-MM THK)	
	3	1	**3J-1907**	1	SEAL-O-RING	
	4	1	**9S-4191**	1	PLUG	
B	5	1	**4M-1751**	3	SPACER (15.09X0.4-MM THK)	
B	6	1	**5S-7001**	5	SPACER (7.54X14.15X0.9-MM THK)	
	7	1	**8M-4986**	2	SEAL-O-RING	
	8	1	**2S-1382**	1	SPRING	
	9	1	**2S-1384**	1	SPOOL AS-RELIEF	
		1	**5M-9548**	1	SPRING	
		1	**7M-8592**	1	RING-RETAINING	
		1	**8M-2538**	1	POPPET	
		1	**8M-4409**	1	RETAINER	
	10	1	**4M-8239**	2	COVER	

B-USE AS REQUIRED
M-METRIC PART

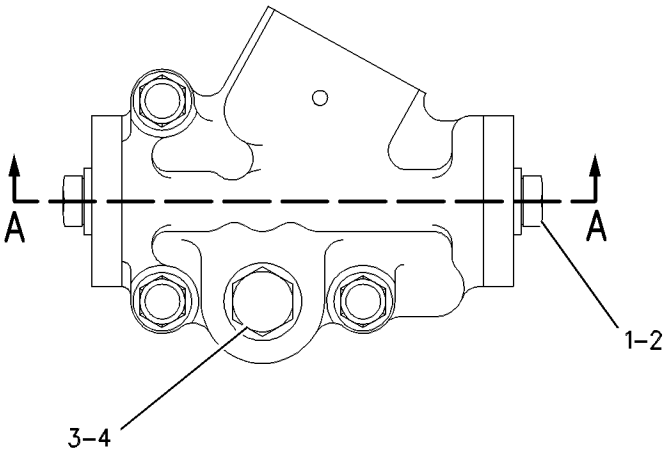

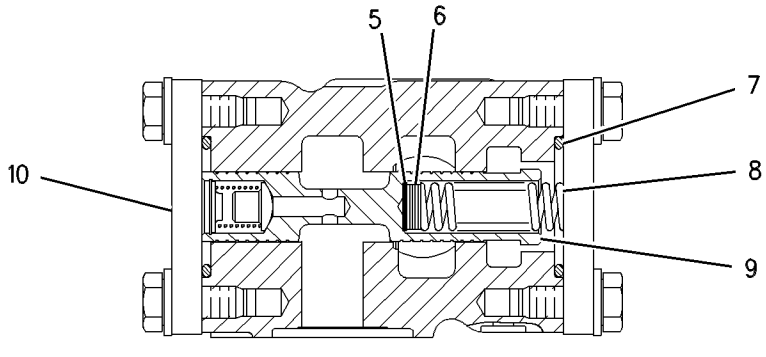

SECTION A–A

GRAPHIC #1 **<END>** g00467161

223-4434 VALVE GP-RELIEF—TRANSMISSION HYDRAULIC CONTROL

S/N: FAX1-UP

PART OF 247-7831 CONTROL GP-TRANSMISSION HYD

SMCS-3133, 3182, 3210, 3213 **i02204688**

NOTE	REF NO	GRAPHIC REF	PART NUMBER	QTY	PART NAME 1 2 3 4 5 6 (PRODUCT LEVEL)	SEE PAGE
	1	1	**2S-4663**	1	SEAL-O-RING	
	2	1	**6V-3965**	2	FITTING AS (QUICK DISCONNECT)	
	3	1	**3J-1907**	4	SEAL-O-RING	
	4	1	**6V-0852**	2	CAP-DUST	
	5	1	**241-6206**	1	PLUG	
	6	1	**2M-9780**	1	SEAL-O-RING	
	7	1	**202-2005**	1	COVER	
	8	1	**9M-2110**	1	COVER-ADJUSTMENT	
	9	1	**9S-8001**	3	PLUG	
	10	1	**4J-7533**	3	SEAL-O-RING	
M	11	1	**6V-5218**	2	BOLT (M8X1.25X35-MM)	
	12	1	**9M-1974**	2	WASHER-HARD (8.8X16X2-MM THK)	
M	13	1	**6V-3940**	2	BOLT (M8X1.25X25-MM)	
	14	1	**8E-1143**	1	SLUG	
	15	1	**9U-8668**	1	SPOOL AS	
		1	**3D-8317**	1	RING-RETAINING	
		1	**4B-9880**	1	BALL	
		1	**4M-2381**	1	SPRING	
		1	**8E-9893**	1	SPOOL-RELIEF	
		1	**9U-8669**	1	RETAINER	
	16	1	**1M-9351**	1	SPRING	
	17	1	**2S-5835**	1	PISTON-LOAD	
	18	1	**202-2006**	1	SCREW-ADJUSTMENT	
	19	1	**8M-5253**	1	SEAL-O-RING	
	20	1	**085-7356**	2	FITTING	
	21	1	**111-3200**	1	BODY	

M-METRIC PART

223-4434 VALVE GP-RELIEF *(contd.)* **i02204688**

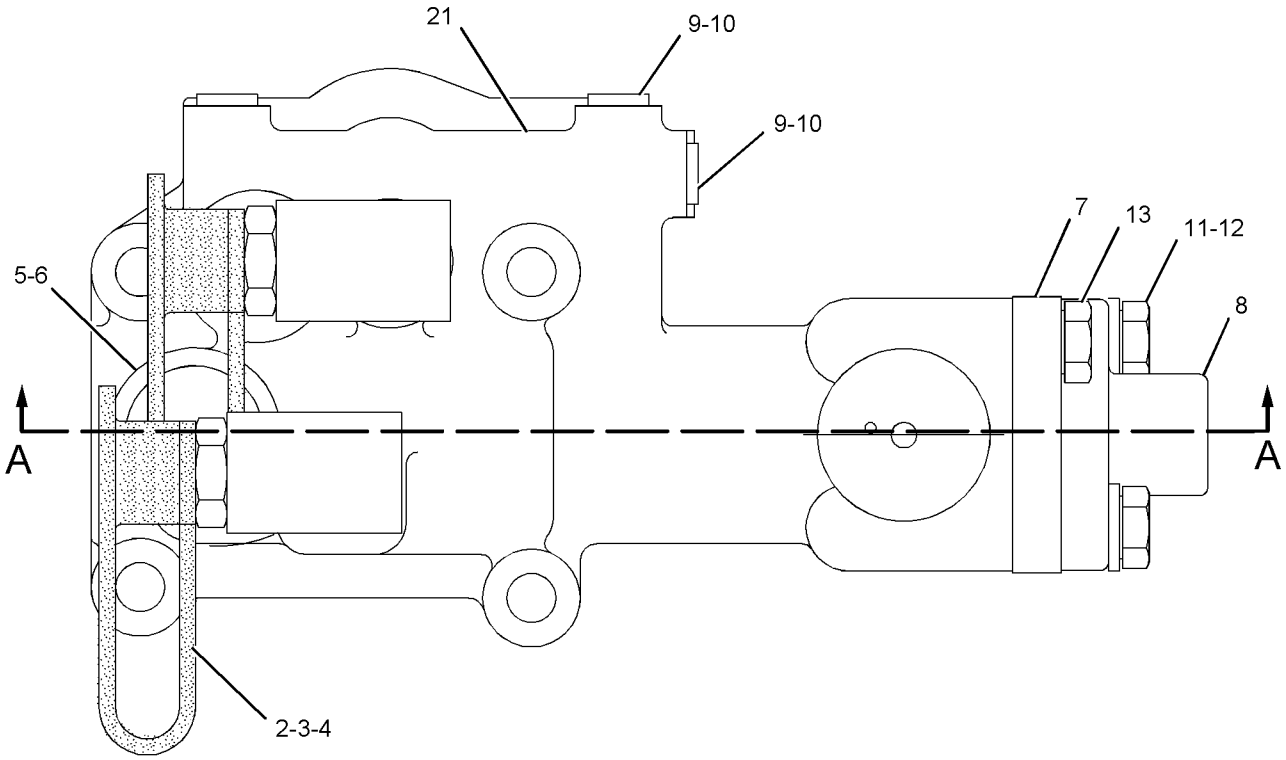

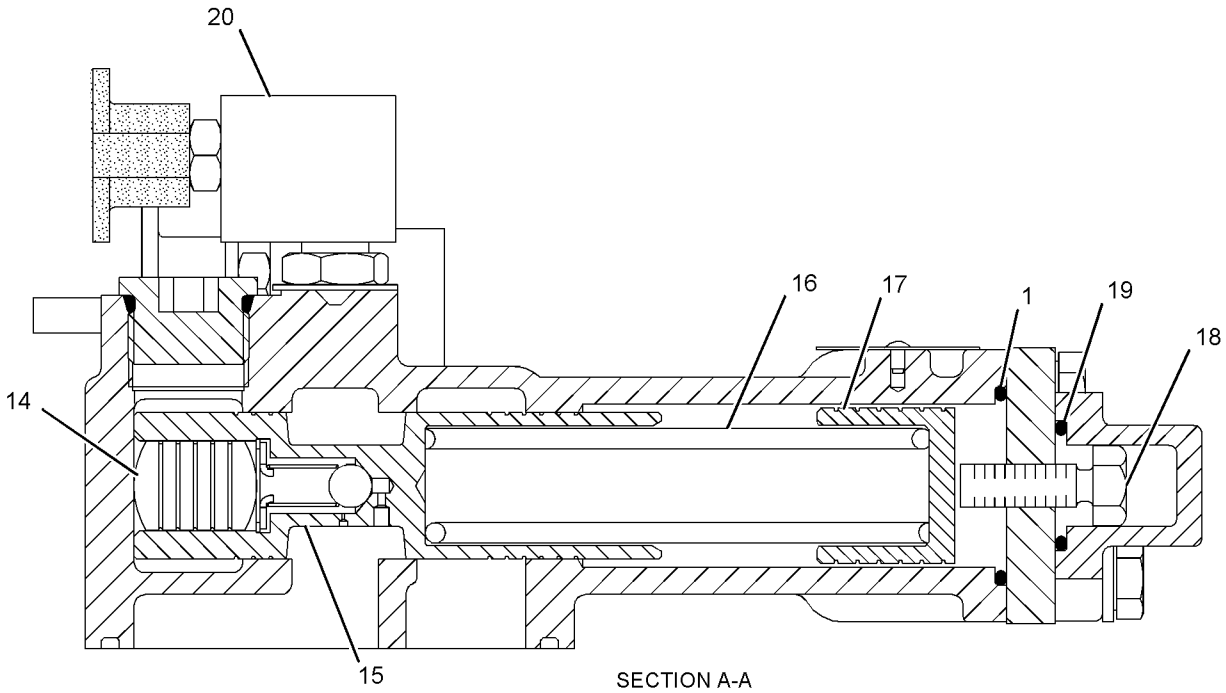

SECTION A-A

GRAPHIC #1 **<END>** g01119677

2D-2511 VALVE GP-TIRE

S/N: A7G1-UP
PART OF 128-0914, 247-8414 RIM AR, 206-9280 RIM GP-DEMOUNTABLE
AN ATTACHMENT

SMCS-4203 **i00876166**

NOTE	REF NO	GRAPHIC REF	PART NUMBER	QTY	PART NAME 1 2 3 4 5 6 (PRODUCT LEVEL)	SEE PAGE
	1	1	**3D-2239**	1	VALVE GP-TIRE	
	2	1	**6F-3930**	1	CORE-VALVE	
	3	1	**9K-7951**	1	CAP-VALVE	
	4	1	**7D-5252**	1	SPUD AS	
	5	1	**2D-2509**	1	LOCKNUT	
	6	1	**2D-2508**	1	GROMMET	

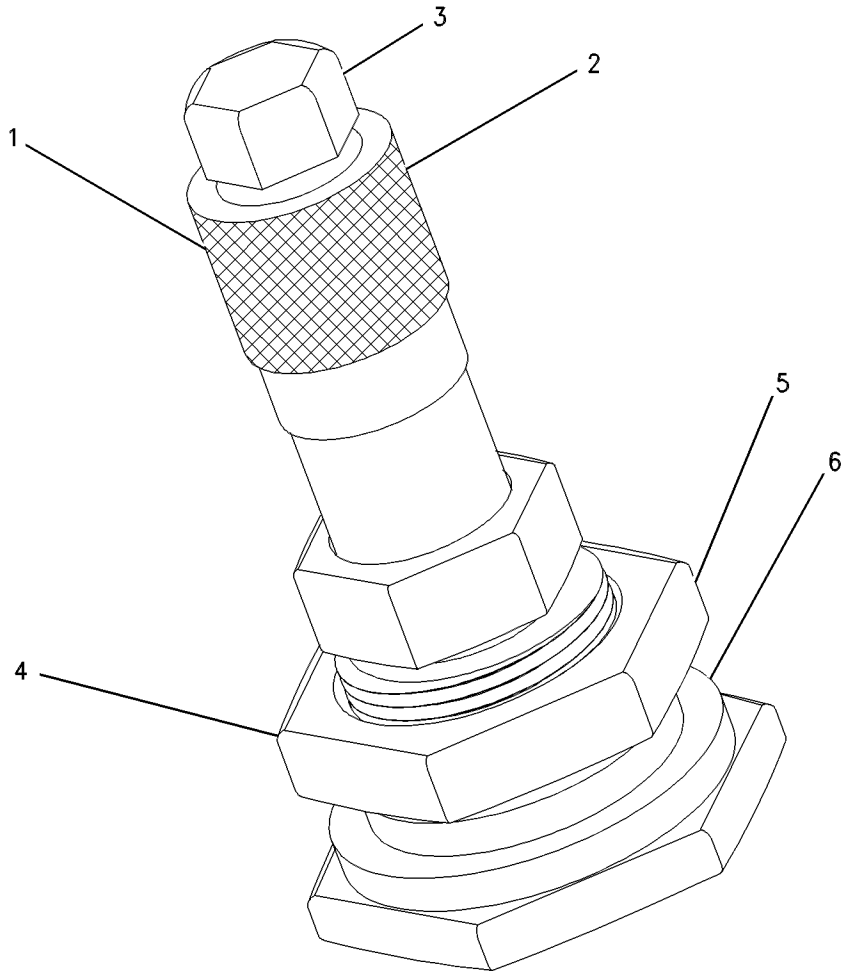

GRAPHIC #1 **<END>** g00457535

262-4914 ACTUATOR GP-HOOD TILT

S/N: A7G1-UP

PART OF 236-9003 TILT GP-HOOD

SMCS-1427, 7275 **i02294014**

NOTE	REF NO	GRAPHIC REF	PART NUMBER	QTY	PART NAME 1 2 3 4 5 6 (PRODUCT LEVEL)	SEE PAGE
	1	1	**117-1559**	1	MOUNT AS	
	2	1	**122-4233**	1	WIPER	
	3	1	**262-4917**	1	POST AS	
		1	**203-6473**	1	GASKET	
	4	1	**262-4918**	1	POWERHEAD AS	
JM	5	1	**179-4324**	2	LOCKNUT (M5X0.8-THD)	
J	6	1	**168-2166**	1	GASKET-MOTOR	
J	7	1	**203-6473**	1	GASKET	
	8	1	**205-6029**	1	MOTOR AS-ELECTRIC (HOOD TILT)	
		1	**8N-1540**	1	PIN-CONNECTOR	
		1	**8N-1541**	1	SOCKET-CONNECTOR (12-GA TO 14-GA)	
		1	**129-7163**	1	PLUG AS-CONNECTOR (1-PIN)	
		1	**129-7164**	1	RECEPTACLE AS-CONNECTOR (1-PIN)	
	9	1	**212-6854**	1	ROD END	
	10	1	**8T-4121**	4	WASHER-HARD (11X21X2.5-MM THK)	
M	11	1	**8T-4133**	4	NUT (M10X1.15-THD)	
M	12	1	**8T-4137**	2	BOLT (M10X1.5X20-MM)	
J	13	1	**171-3716**	1	GASKET-COVER	
					AVAILABLE REPAIR KIT(S):	
J			**203-6470**		KIT-GASKET	

J-KIT(S) MARKED J SERVICES PART(S) MARKED J
M-METRIC PART

262-4914 **ACTUATOR GP-HOOD TILT** *(contd.)* **i02294014**

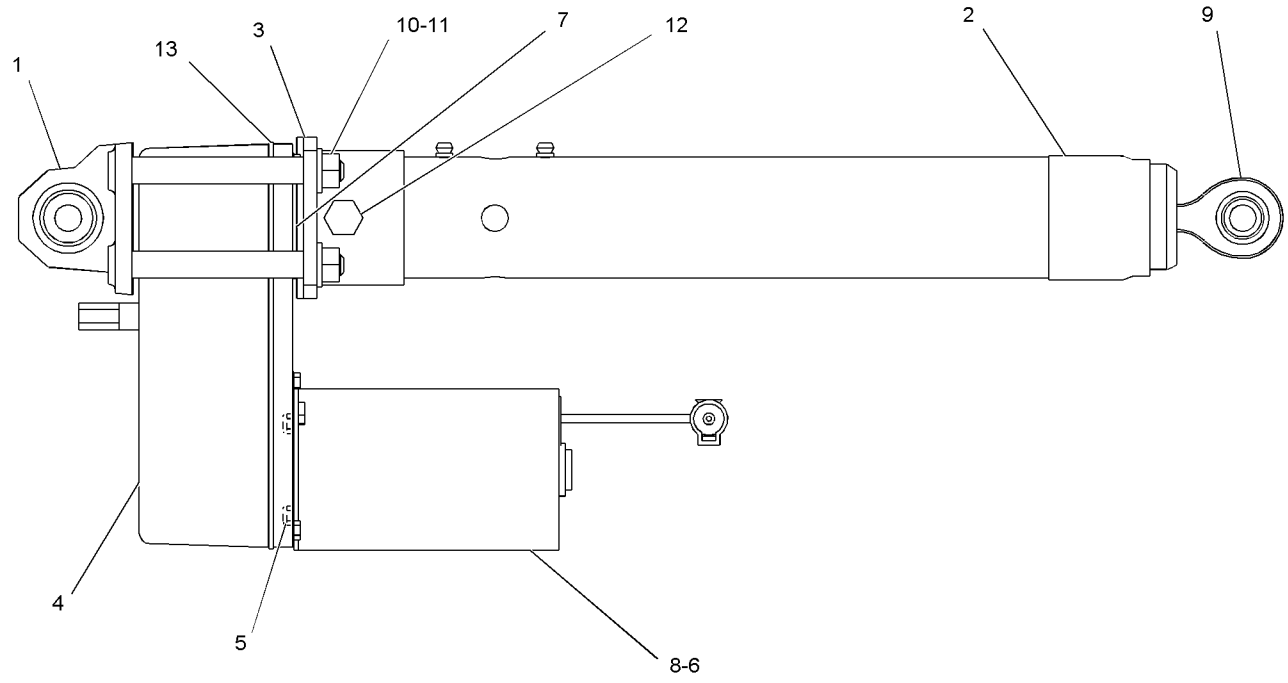

GRAPHIC #1 **<END>** g01128348

176-2444 BLOCK GP-AXLE OSC LIMITER

S/N: A7G1-UP

PART OF 151-5778, 159-1095, 172-0002, 173-1785, 175-2493, 178-6928, 197-2417, 202-1114, 209-1717, 222-4297, 254-8272, 262-7397 TIRE & RIM AR AN ATTACHMENT

SMCS-3278, 7051 **i01590599**

NOTE	REF NO	GRAPHIC REF	PART NUMBER	QTY	PART NAME 1 2 3 4 5 6 (PRODUCT LEVEL)	SEE PAGE
	1	1	*4E-0684*	2	BAR	

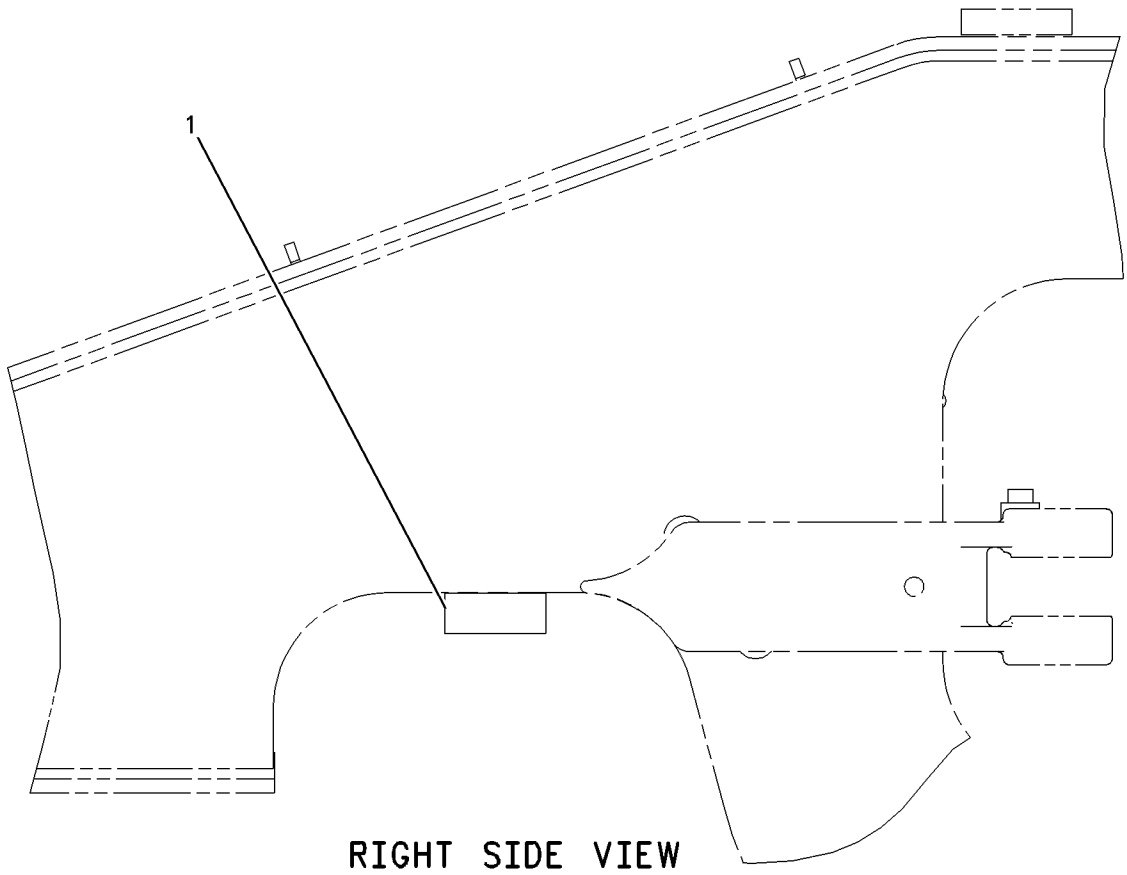

RIGHT SIDE VIEW

GRAPHIC #1 **<END>** g00606869

265-5389 BOSS GP-REAR FRAME

S/N: A7G1-UP

PART OF 261-1446, 263-6296, 277-0038 LUBRICATION AR-AUTOMATIC

AN ATTACHMENT

SMCS-7051 **i02388773**

NOTE	REF NO	GRAPHIC REF	PART NUMBER	QTY	PART NAME 1 2 3 4 5 6 (PRODUCT LEVEL)	SEE PAGE
	1	1	**134-8754**	1	STRIP	
M	2	1	**7X-0752**	2	BOSS-WELD (M10X1.5X65-MM OAL)	
M	3	1	**8T-3851**	15	BOSS-WELD (M10X1.5X17.5-MM)	
M	4	1	**8T-4935**	1	BOSS-WELD (M10X1.5X45-MM)	
M	5	1	**9X-8487**	4	BOSS-WELD (M10X1.5X35-MM)	

M-METRIC PART

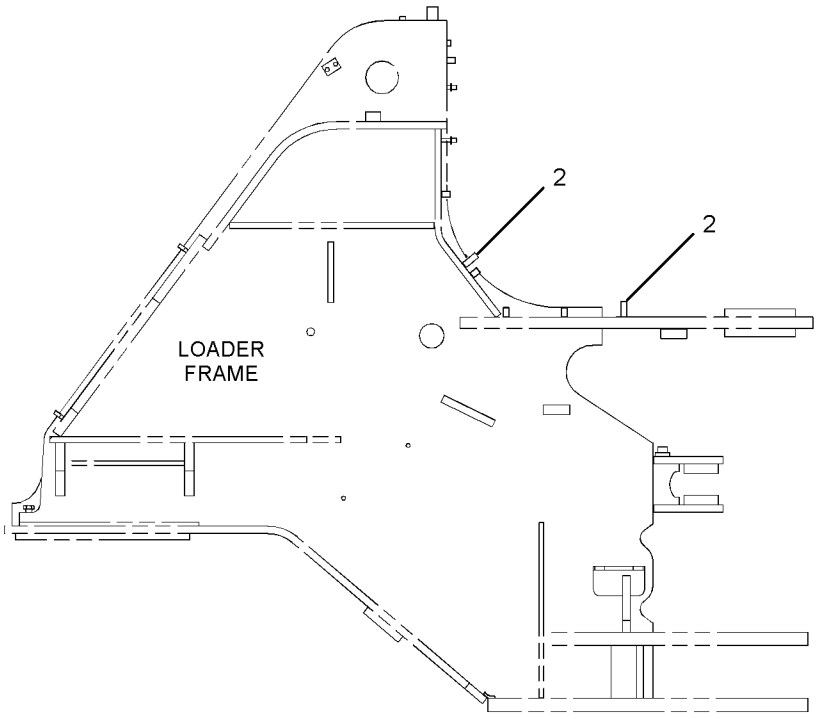

LEFT SIDE VIEW

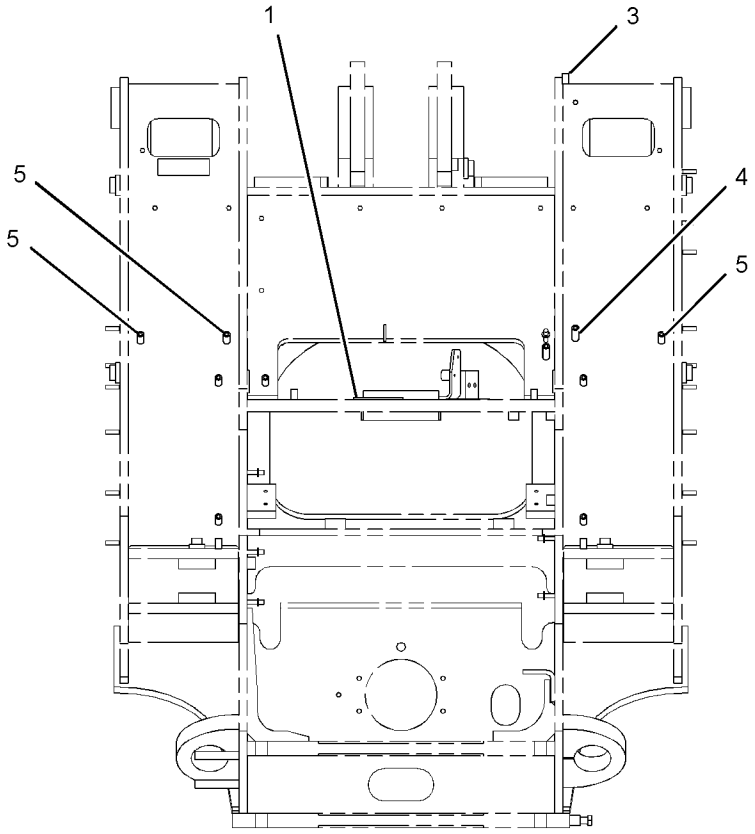

REAR VIEW

GRAPHIC #1

<END>

g01198924

276-8227 BOSS GP-REAR FRAME

S/N: A7G1-UP

PART OF 261-1446, 263-6296, 277-0038 LUBRICATION AR-AUTOMATIC AN ATTACHMENT

SMCS-7051 **i02389742**

NOTE	REF NO	GRAPHIC REF	PART NUMBER	QTY	PART NAME 1 2 3 4 5 6 (PRODUCT LEVEL)	SEE PAGE
M	1	1	**110-2023**	1	STUD-WELD (M10X1.5X25-MM)	
M	2	1	**7X-0752**	2	BOSS-WELD (M10X1.5X65-MM OAL)	
M	3	1	**8T-3851**	1	BOSS-WELD (M10X1.5X17.5-MM)	
	4	1	**9R-2060**	1	BOSS (M10X1.5X21-MM)	

M-METRIC PART

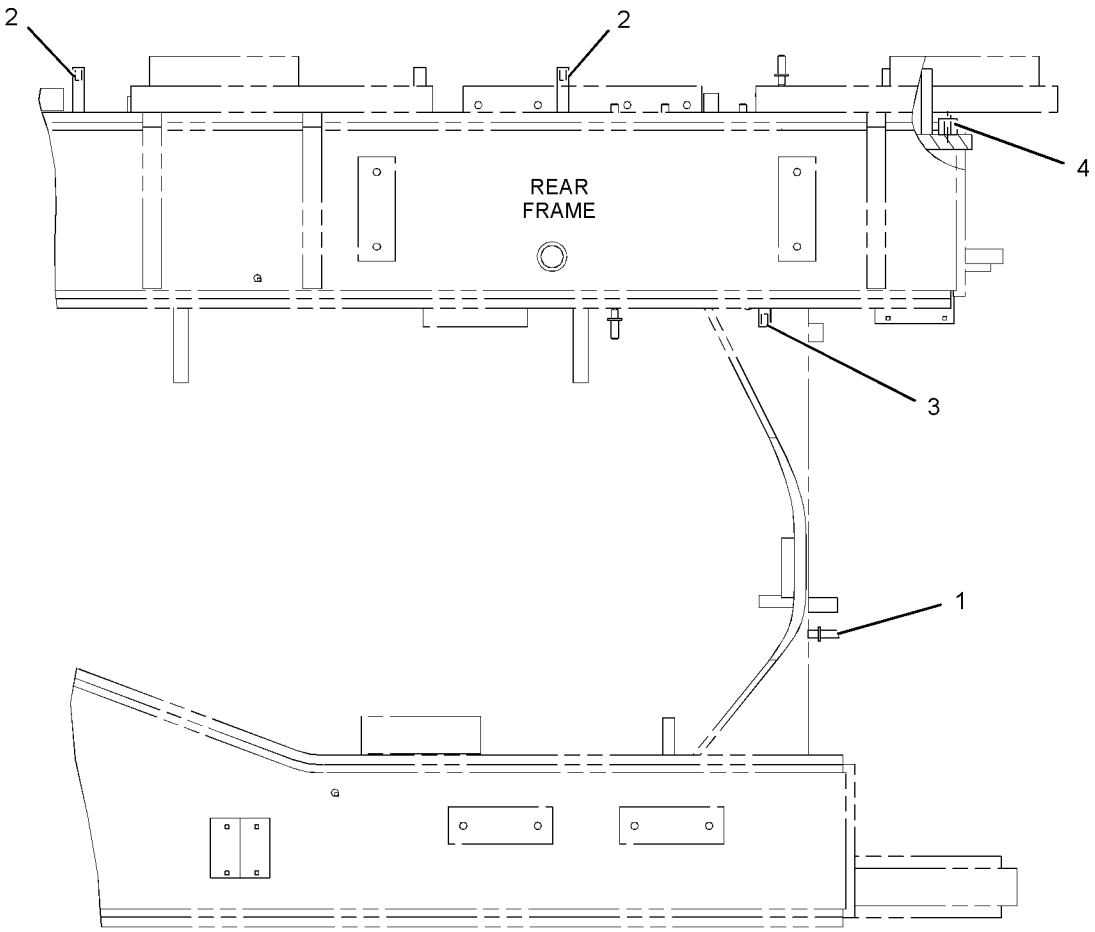

RIGHT SIDE VIEW

GRAPHIC #1

<END>

g01196248

FRAME AND BODY

236-8973 BOX GP-BATTERY

S/N: A7G1-UP

PART OF 236-9051 CHASSIS AR

SMCS-7257 **i02412049**

NOTE	REF NO	GRAPHIC REF	PART NUMBER	QTY	PART NAME 1 2 3 4 5 6 (PRODUCT LEVEL)	SEE PAGE
	1	1	**244-6308**	1	BOX GP-BATTERY	
	2	1	**275-5635**	1	COVER	
	3	1	**5P-1076**	8	WASHER-HARD (13.5X30X4-MM THK)	
	4	1	**8T-4121**	4	WASHER-HARD (11X21X2.5-MM THK)	
M	5	1	**8T-4137**	4	BOLT (M10X1.5X20-MM)	
M	6	1	**8T-4139**	8	BOLT (M12X1.75X30-MM)	

M-METRIC PART

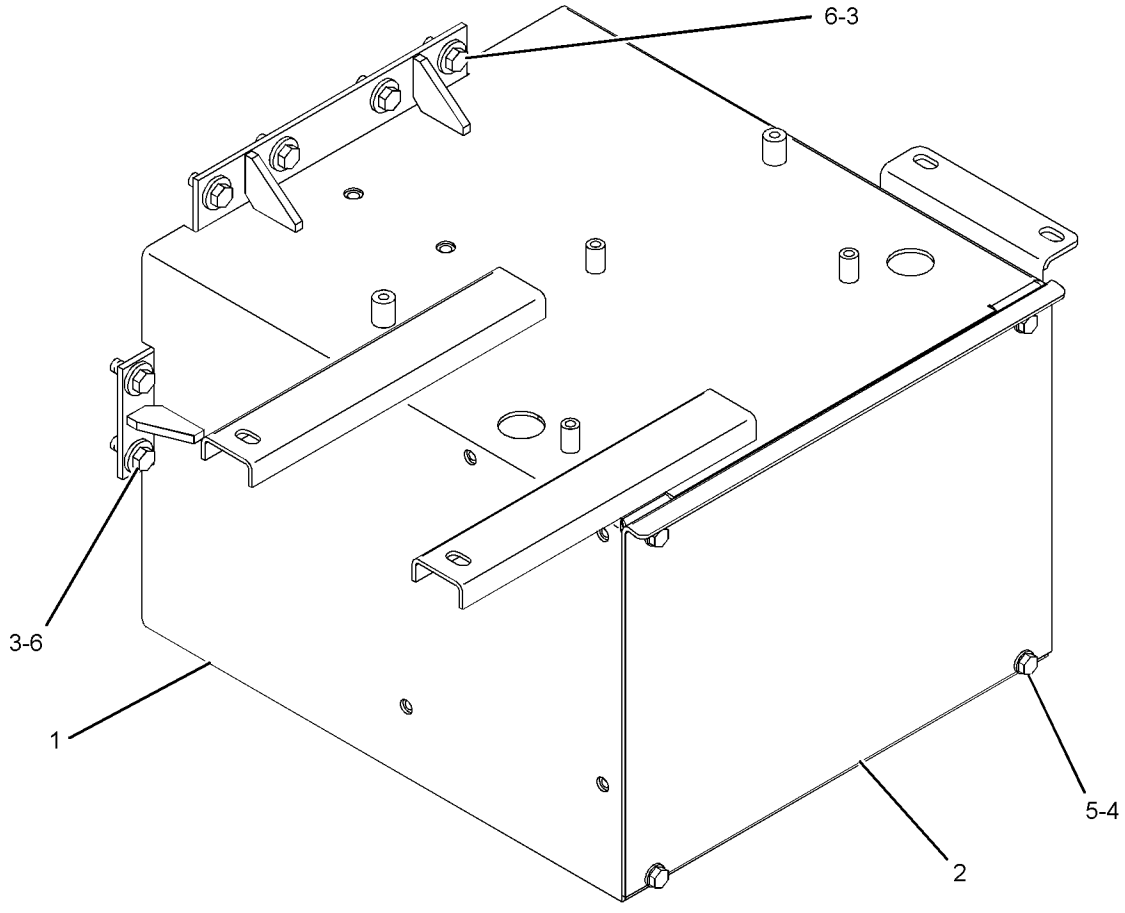

GRAPHIC #1 **<END>** g01195235

FRAME AND BODY

243-3702 COUNTERWEIGHT GP

S/N: A7G1-UP

PART OF 236-9051 CHASSIS AR

SMCS-7056 **i02379266**

NOTE	REF NO	GRAPHIC REF	PART NUMBER	QTY	PART NAME 1 2 3 4 5 6 (PRODUCT LEVEL)	SEE PAGE
	1	1	**103-5796**	1	PIN-KEEPER	
	2	1	**219-0017**	1	PIN-HITCH	
	3	1	**243-3703**	1	COUNTERWEIGHT	
	4	1	**9X-8258**	8	WASHER (33X56X6-MM THK)	
M	5	1	**7X-2584**	4	BOLT (M30X3.5X140-MM)	
M	6	1	**7X-2586**	4	BOLT (M30X35X180-MM)	

M-METRIC PART

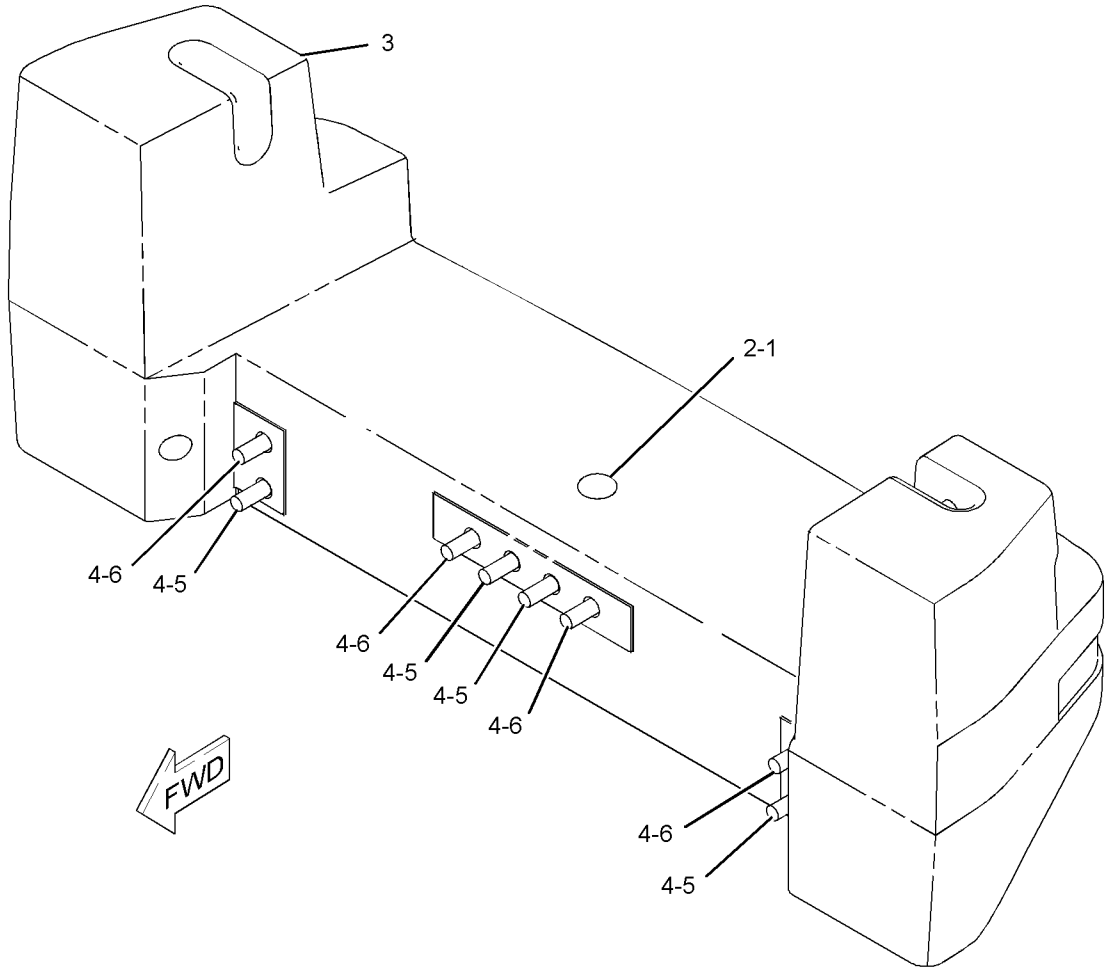

GRAPHIC #1 **<END>** g01116934

255-5552 FENDER AR-ROADING

S/N: A7G1-UP

AN ATTACHMENT

SMCS-7252 **i02416314**

NOTE	PART NUMBER	QTY	PART NAME 1 2 3 4 5 6 (PRODUCT LEVEL)	SEE PAGE
Y	*274-7040*	1	FENDER GP-ROADING	367
Y	*274-7051*	1	HARDWARE GP-MOUNTING	383

Y-SEPARATE ILLUSTRATION

<END>

FRAME AND BODY

236-8974 FENDER GP

S/N: A7G1-UP

PART OF 236-9051 CHASSIS AR

SMCS-7252 **i02412052**

NOTE	REF NO	GRAPHIC REF	PART NUMBER	QTY	PART NAME 1 2 3 4 5 6 (PRODUCT LEVEL)	SEE PAGE
	1	1	**1K-8850**	1	SPRING	
	2	1	**275-0571**	1	CAM-LATCH	
	3	1	**172-6251**	1	FENDER AS-FRONT (LH)	
	4	1	**172-6252**	1	FENDER AS-FRONT (RH)	
	5	1	**243-5849**	1	FENDER AS (LH)	
	6	1	**243-5850**	1	FENDER AS (RH)	
	7	1	**244-2571**	1	DEFLECTOR AS	
	8	1	**245-7428**	1	DEFLECTOR AS-LH	
	9	1	**245-7727**	2	COVER	
M	10	1	**5C-9553**	2	BOLT (M6X1X16-MM)	
	11	1	**7X-0589**	12	WASHER-HARD (12X28.5X5-MM THK)	
M	12	1	**8T-0389**	12	LOCKNUT (M10X1.15-THD)	
M	13	1	**8T-4139**	12	BOLT (M12X1.75X30-MM)	
	14	1	**5P-1076**	12	WASHER-HARD (13.5X30X4-MM THK)	
	15	1	**9X-8256**	2	WASHER (6.6X12X2-MM THK)	
	16	1	**275-0572**	1	LATCH AS	
M	17	1	**8T-4195**	6	BOLT (M10X1.5X30-MM)	
	18	1	**7X-7729**	6	WASHER (11X25X3-MM THK)	

M-METRIC PART

236-8974 **FENDER GP** *(contd.)* **i02412052**

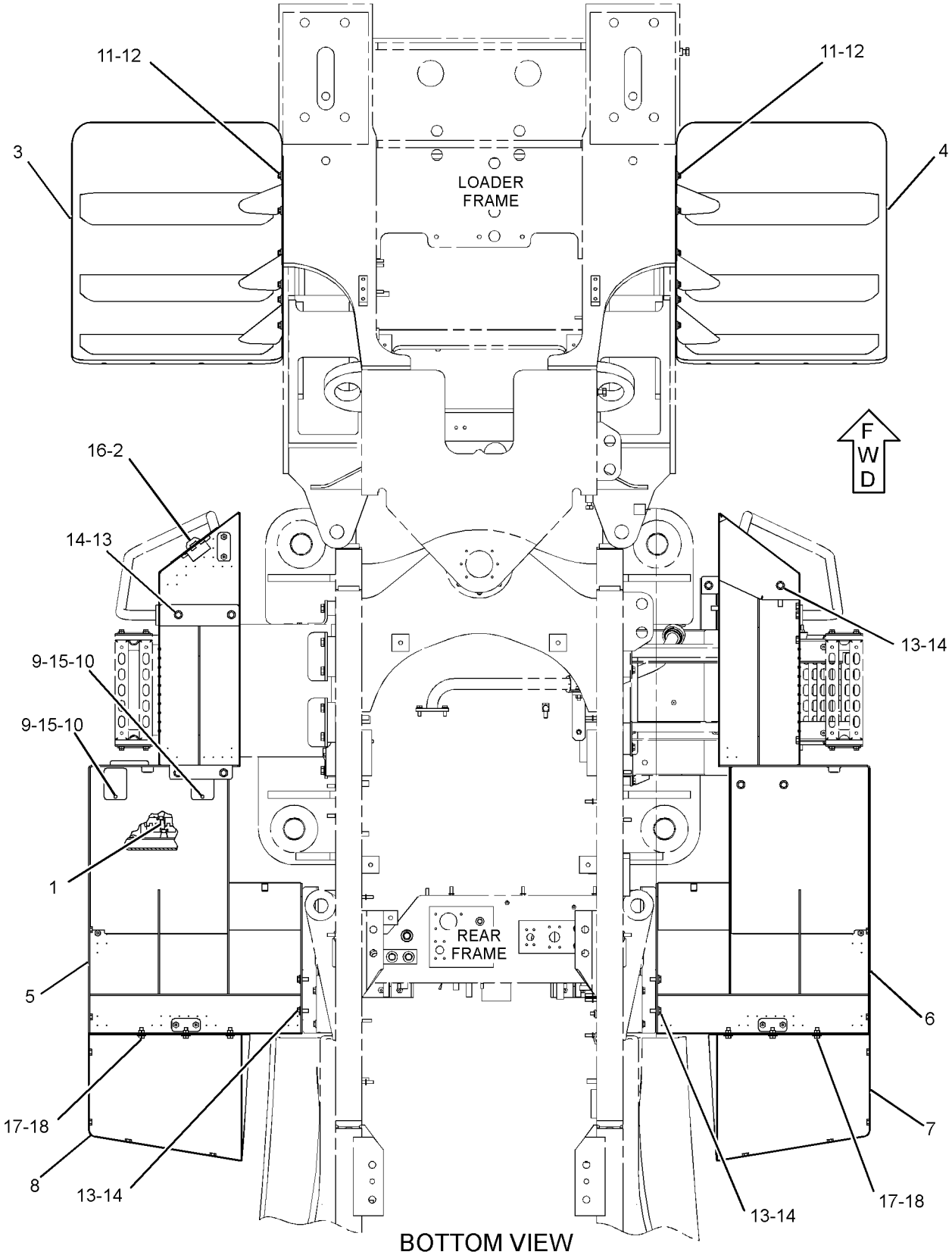

GRAPHIC #1

<END>

g01204254

FRAME AND BODY

250-9969 FENDER GP

S/N: A7G1-UP

PART OF 236-9051 CHASSIS AR

SMCS-7252 **i02413317**

NOTE	REF NO	GRAPHIC REF	PART NUMBER	QTY	PART NAME 1 2 3 4 5 6 (PRODUCT LEVEL)	SEE PAGE
	1	1	**138-6814**	2	STRIP AS	
	2	1	**138-6819**	2	FLAP	
	3	1	**271-4956**	2	FLAP	
	4	1	**271-4958**	2	STRIP	
	5	1	**272-5550**	1	SUPPORT AS	
	6	1	**273-2554**	1	DEFLECTOR AS (RH)	
	7	1	**275-7808**	1	DEFLECTOR (LH)	
	8	1	**275-7809**	1	DEFLECTOR (RH)	
	9	1	**275-7810**	1	DEFLECTOR (LH)	
	10	1	**275-7811**	1	DEFLECTOR (RH)	
M	11	1	**6V-7357**	10	BOLT (M6X1X25-MM)	
	12	1	**7X-7729**	28	WASHER (11X25X3-MM THK)	
M	13	1	**8T-0389**	8	LOCKNUT (M10X1.15-THD)	
M	14	1	**8T-4136**	20	BOLT (M10X1.5X25-MM)	
	15	1	**9X-6165**	10	WASHER (6.5X22X2.5-MM THK)	

M-METRIC PART

250-9969 **FENDER GP** *(contd.)* **i02413317**

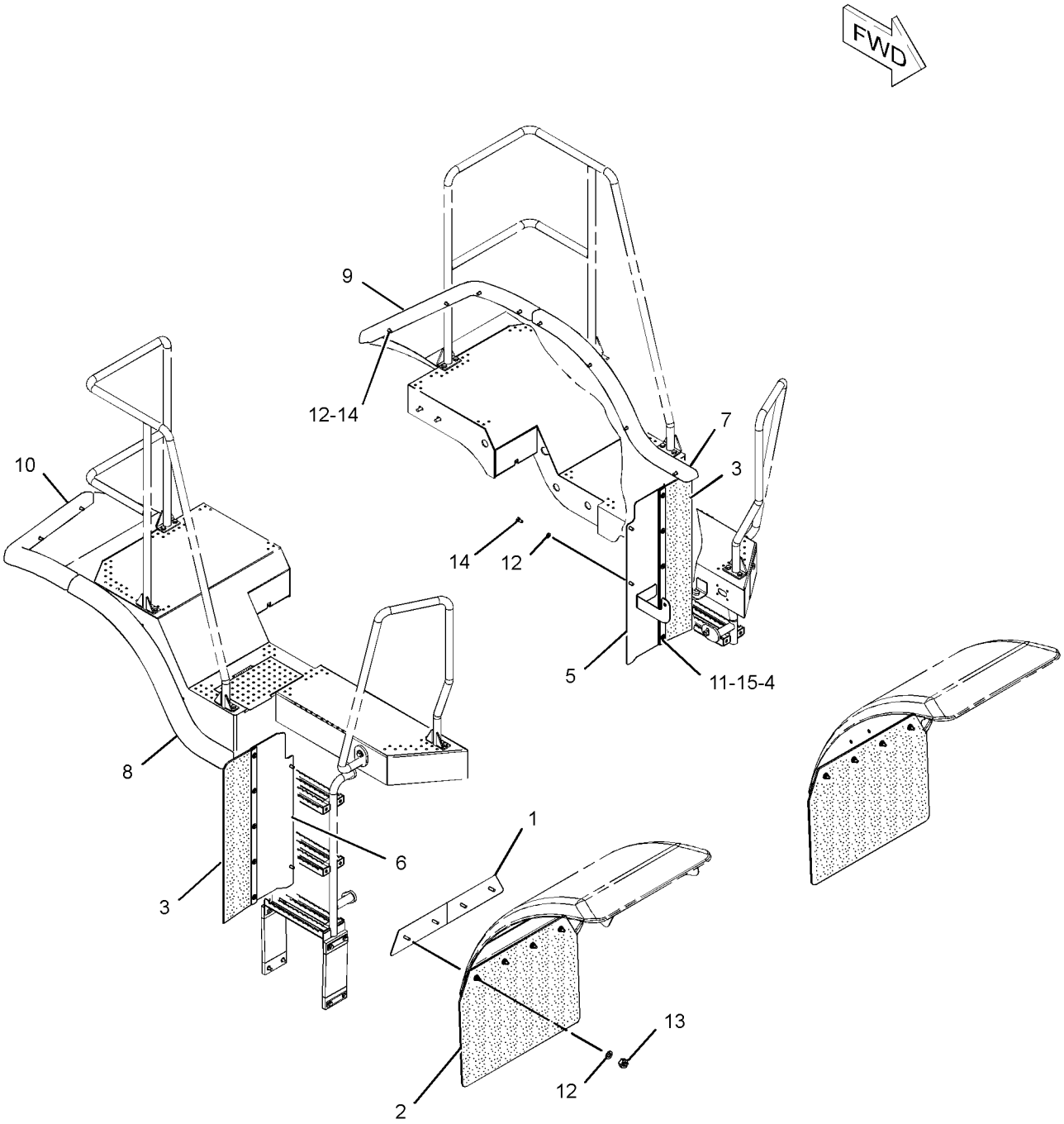

GRAPHIC #1 **<END>** g01196181

FRAME AND BODY

274-7040 FENDER GP-ROADING

S/N: A7G1-UP
PART OF 255-5552 FENDER AR-ROADING
AN ATTACHMENT

SMCS-7252 **i02410860**

NOTE	REF NO	GRAPHIC REF	PART NUMBER	QTY	PART NAME 1 2 3 4 5 6 (PRODUCT LEVEL)	SEE PAGE
	1	2,3	**4E-1384**	2	BUMPER-CONICAL	
	2	2,3	**6W-5817**	2	SPRING	
	3	1	**8T-3985**	2	KNOB	
	4	2	**132-1924**	1	SUPPORT AS-FENDER LATCH (RH)	
	5	3	**132-1929**	1	SUPPORT AS-FENDER LATCH (LH)	
	6	2	**138-6814**	2	STRIP AS	
	7	2	**138-6819**	2	FLAP	
	8	3	**141-3874**	2	GUIDE AS	
	9	1	**141-3889**	2	EXTENSION	
	10	1	**141-3890**	2	PLATE AS	
	11	1	**184-6259**	1	FENDER AS-FRONT (RH)	
	12	1	**184-6260**	1	FENDER AS-FRONT (LH)	
	13	2,3	**220-2612**	2	LATCH	
	14	3	**271-4956**	2	FLAP	
	15	3	**271-4958**	2	STRIP	
	16	3	**272-5550**	1	SUPPORT AS	
	17	3	**273-2554**	1	DEFLECTOR AS (RH)	
	18	1	**274-7032**	4	BRACKET AS	
	19	2	**274-7034**	2	DEFLECTOR	
	20	2	**274-7035**	2	BAR	
	21	2,3	**274-7036**	2	ROD AS	
	22	1	**274-7041**	1	FENDER AS	
		1	**274-7038**	1	BRACKET AS	
M		1	**8T-3490**	2	NUT-WELD (M10X1.5-THD)	
	23	1	**274-7042**	1	FENDER AS	
		1	**274-7038**	1	BRACKET AS	
M		1	**8T-3490**	2	NUT-WELD (M10X1.5-THD)	
	24	1	**274-7053**	2	CHANNEL	
	25	3	**274-7054**	1	SUPPORT AS (RH)	
	26	2	**274-7055**	1	SUPPORT AS (LH)	
Y	27	2	*274-7060*	1	HINGE GP-ROADING FENDER (RH)	386
Y	28	1	*274-7061*	1	HINGE GP-ROADING FENDER (LH)	387
	29	2,3	**274-7068**	2	COVER	
	30	1	**274-7069**	1	DEFLECTOR (RH)	
	31	1	**274-7070**	1	DEFLECTOR (LH)	
	32	1	**275-7808**	1	DEFLECTOR (LH)	
	33	1	**275-7809**	1	DEFLECTOR (RH)	
	34	2,3	**092-9741**	2	GROMMET	
	35	2,3	**1B-0676**	2	PIN	
	36	2,3	**3B-2062**	2	PIN	
	37	2,3	**3B-4615**	4	PIN-COTTER	
M	38	2	**5C-2890**	8	NUT (M6X1-THD)	
M	39	2,3	**5C-7261**	2	NUT (M8X1.25-THD)	
M	40	3	**6V-7357**	10	BOLT (M6X1X25-MM)	
	41	1	**7X-0578**	20	WASHER-HARD (10.2X32X2.5-MM THK)	
M	42	2	**7X-2552**	12	BOLT (M16X2X30-MM)	
	43	1,2,3	**7X-7729**	54	WASHER (11X25X3-MM THK)	
	44	2,3	**8P-8540**	2	GROMMET	
M	45	1	**8T-0389**	16	LOCKNUT (M10X1.15-THD)	
M	46	2	**8T-4122**	18	WASHER-HARD (17X32X3.5-MM THK)	
M	47	2,3	**8T-4133**	2	NUT (M10X1.15-THD)	
M	48	1,2,3	**8T-4136**	14	BOLT (M10X1.5X25-MM)	
M	49	1,2,3	**8T-4137**	32	BOLT (M10X1.5X20-MM)	
M	50	3	**8T-4191**	2	BOLT (M10X1.5X16-MM)	
	51	2,3	**8T-4968**	2	END-YOKE ROD	

274-7040 **FENDER GP-ROADING** *(contd.)* **i02410860**

NOTE	REF NO	GRAPHIC REF	PART NUMBER	QTY	PART NAME 1 2 3 4 5 6 (PRODUCT LEVEL)	SEE PAGE
M	52	2	**8T-4971**	8	BOLT (M6X1X30-MM)	
M	53	2	**8T-6594**	6	BOLT-SOCKET HEAD (M16X2X35-MM)	
M	54	3	**9X-2041**	6	SCREW-TRUSS HEAD (M10X1.5X20-MM)	
	55	2,3	**9X-6165**	26	WASHER (6.5X22X2.5-MM THK)	
E	56	1	**246-0435**		SEAL (127.3-CM EACH)	

E-ORDER BY THE CENTIMETER
M-METRIC PART
Y-SEPARATE ILLUSTRATION

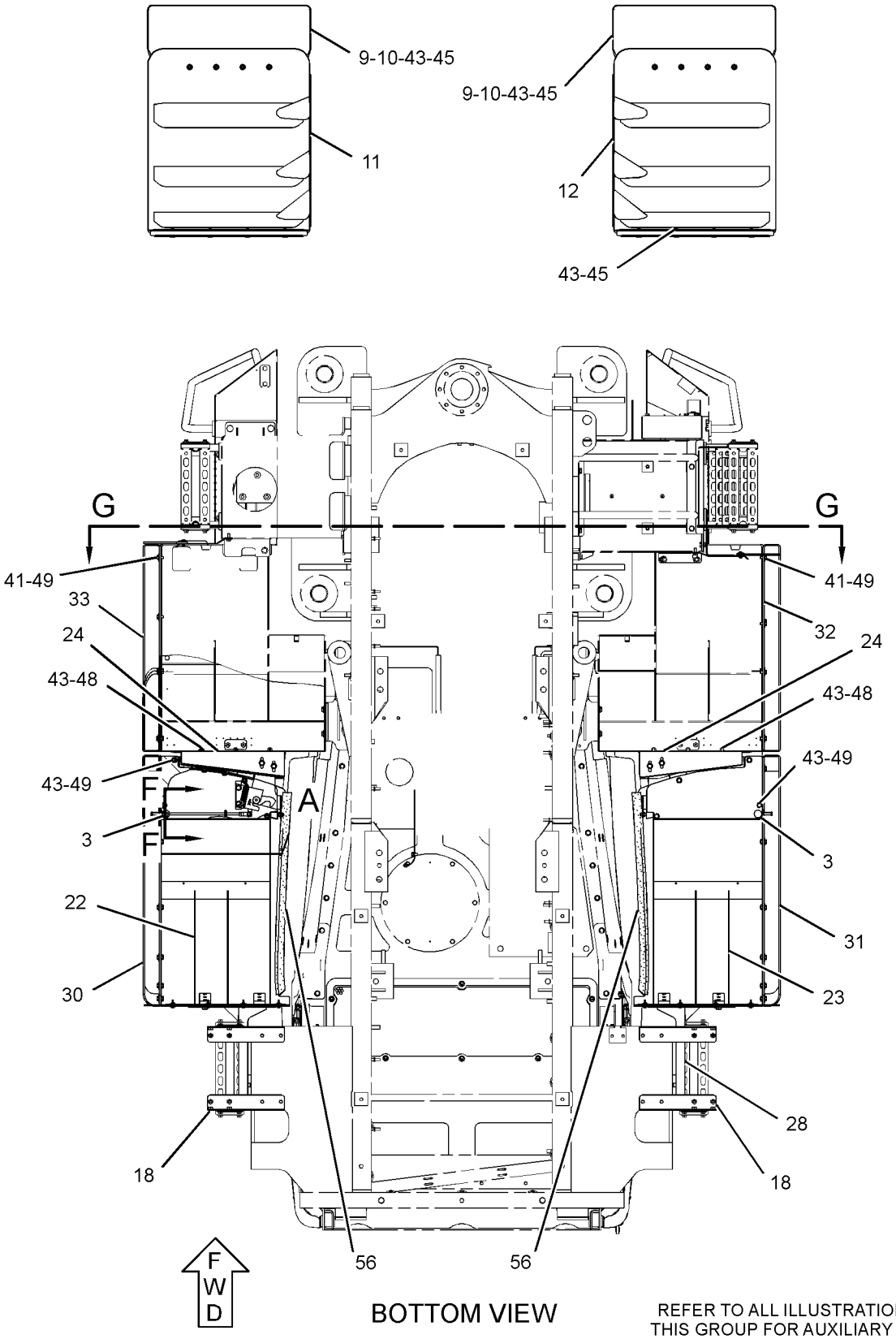

GRAPHIC #1

g01208579

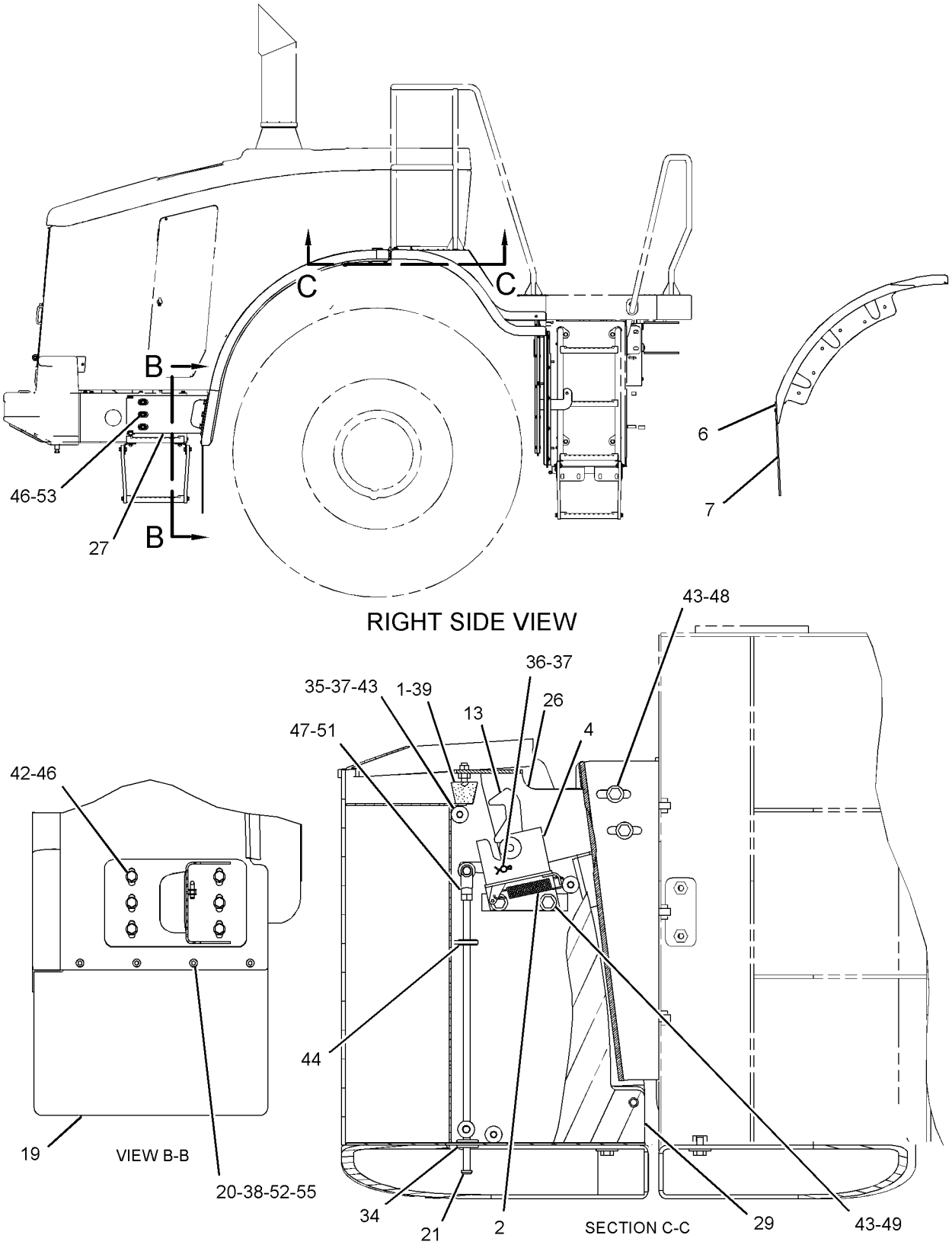

GRAPHIC #2

g01208580

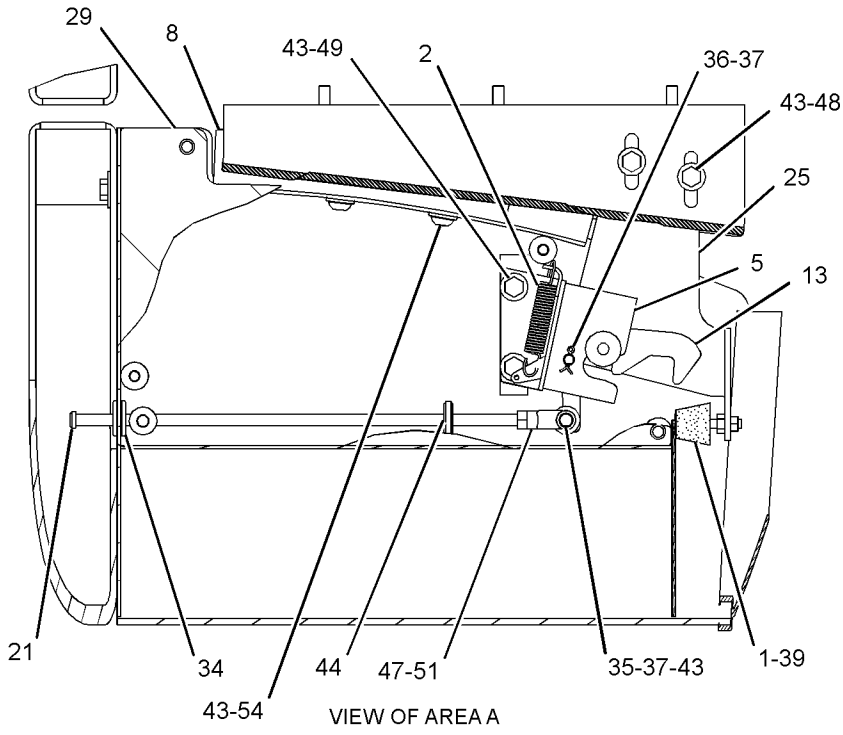

VIEW OF AREA A

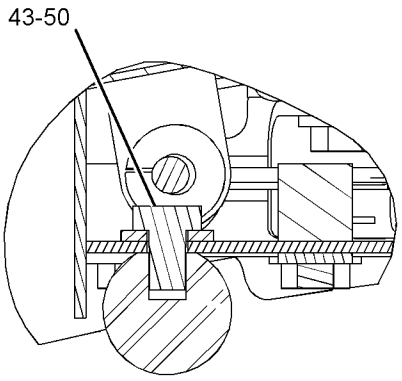

SECTION F-F

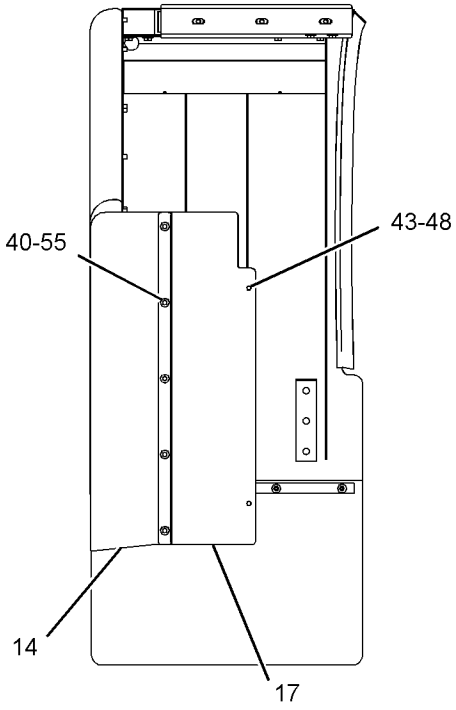

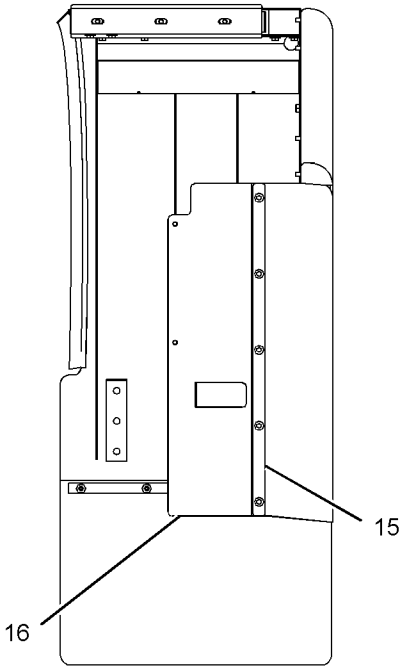

SECTION G-G

GRAPHIC #3 **<END>** g01208581

FRAME AND BODY

257-4211 FRAME AS-LOADER

S/N: A7G1-UP

PART OF 236-9051 CHASSIS AR

SMCS-7054 **i02389620**

NOTE	REF NO	GRAPHIC REF	PART NUMBER	QTY	PART NAME 1 2 3 4 5 6 (PRODUCT LEVEL)	SEE PAGE
	1	2	**3W-9117**	1	BAR	
	2	2	**7K-1972**	2	EYE	
	3	2	**8X-5147**	1	BLOCK	
	4	1	**9C-6809**	3	BLOCK	
	5	1	**9X-6562**	4	TACK-FASTENER	
	6	1	**118-7997**	1	BRACKET AS	
	7	2	*118-7999*	1	PLATE AS (RH)	
		2	**118-7997**	1	BRACKET AS	
		2	**118-8003**	1	PLATE AS	
		2	**118-8004**	1	PLATE AS	
	8	2	**118-8000**	1	PLATE AS	
		2	**118-8001**	1	PLATE AS	
		2	**118-8002**	1	PLATE AS	
		2	**144-7739**	1	BRACKET AS	
	9	1	**144-7739**	1	BRACKET AS	
	10	2	*170-0664*	4	ANGLE AS	
					(EACH INCLUDES)	
M		2	**8T-3490**	1	NUT-WELD (M10X1.5-THD)	
	11	2	*248-0354*	1	SUPPORT AS	
		2	**4I-3398**	1	PLATE	
	12	2	*254-0004*	1	BRACKET AS	
M		2	**8T-3490**	2	NUT-WELD (M10X1.5-THD)	
	13	2	*276-0730*	1	BRACKET AS	
M		2	**8T-3490**	2	NUT-WELD (M10X1.5-THD)	
M	14	1,2	**110-2023**	16	STUD-WELD (M10X1.5X25-MM)	
	15	2	**119-2013**	1	BLOCK	
	16	2	**132-6964**	1	PLATE	
	17	1,2	**7T-1099**	9	LINK	
M	18	1	**7X-0750**	1	BOSS-WELD (M10X1.5X55-MM)	
	19	1	**7Y-2522**	4	PLATE	
M	20	1,2	**8T-3851**	4	BOSS-WELD (M10X1.5X17.5-MM)	
M	21	2	**8T-4219**	5	STUD-WELD (M10X1.5X17.5-MM)	
M	22	1	**8T-4935**	2	BOSS-WELD (M10X1.5X45-MM)	
M	23	2	**8T-7501**	15	STUD-WELD (M10X1.5X38-MM)	
	24	2	**9R-2060**	1	BOSS (M10X1.5X21-MM)	
	25	1	**9R-2613**	1	BOSS-WELD (M10X1.5X25-MM OAL)	

M-METRIC PART

257-4211 FRAME AS-LOADER *(contd.)* **i02389620**

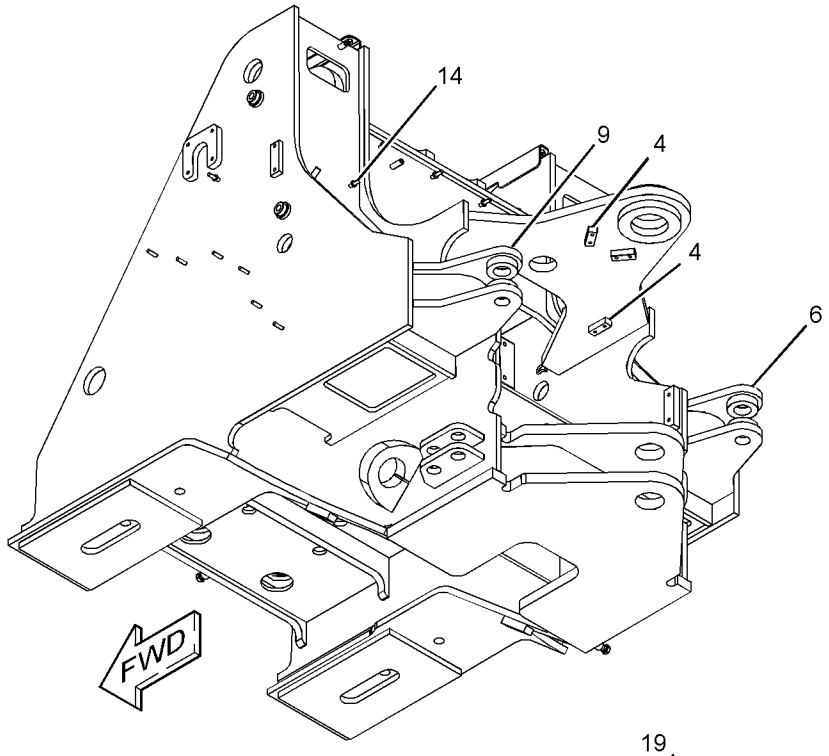

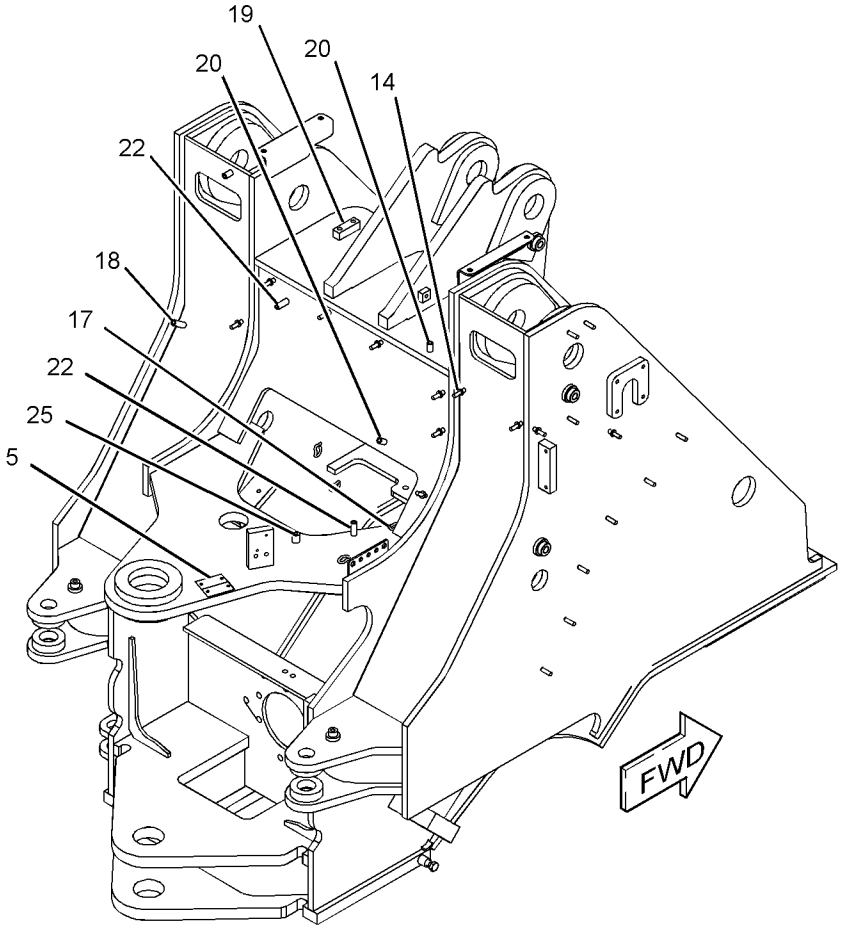

GRAPHIC #1 g01211293

257-4211 FRAME AS-LOADER *(contd.)* **i02389620**

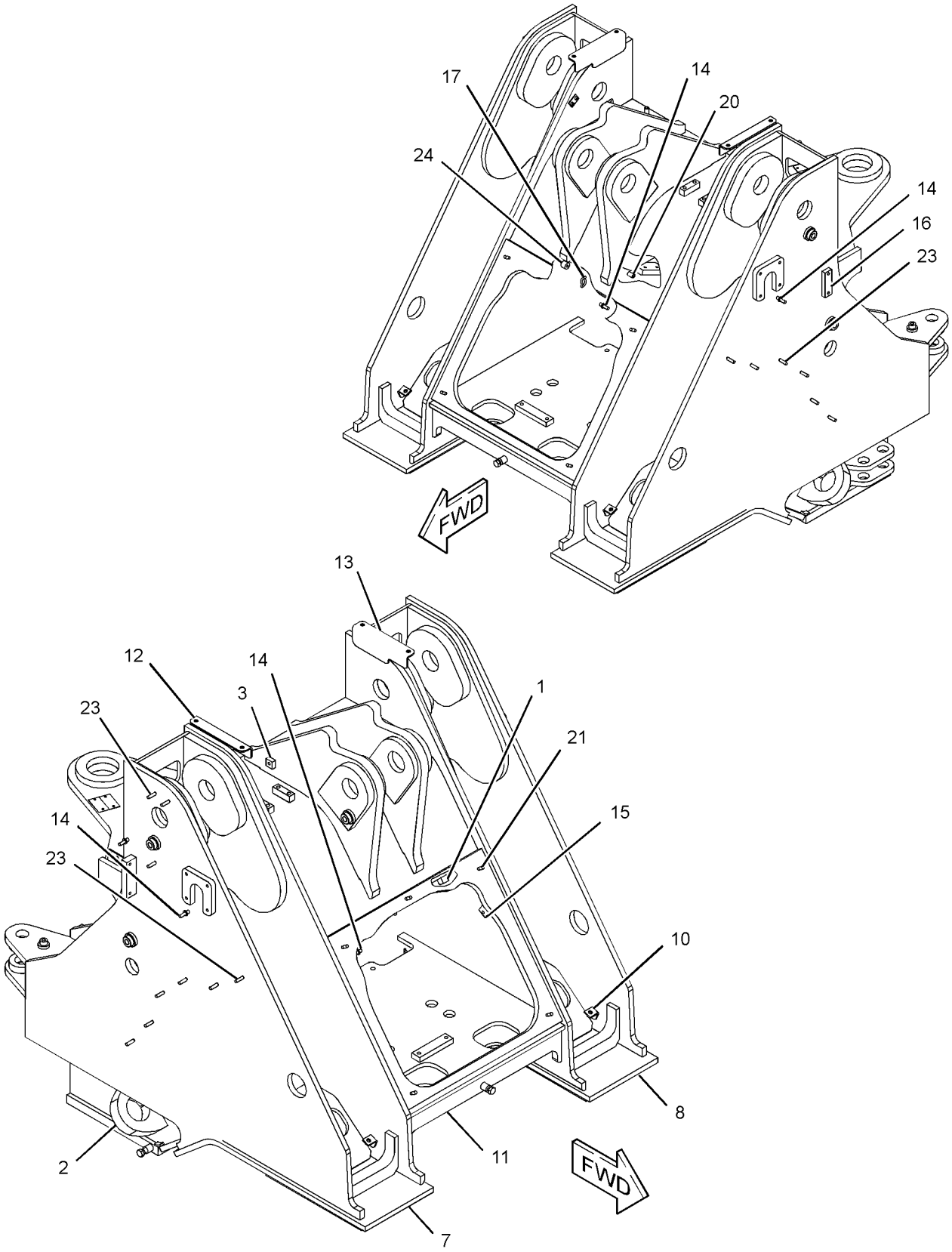

GRAPHIC #2 **<END>** g01211294

FRAME AND BODY

236-9063 FRAME AS-REAR

S/N: A7G1-UP

PART OF 236-9051 CHASSIS AR

SMCS-7051 **i02388709**

NOTE	REF NO	GRAPHIC REF	PART NUMBER	QTY	PART NAME 1 2 3 4 5 6 (PRODUCT LEVEL)	SEE PAGE
	1	1	**5P-2248**	4	GUSSET	
	2	1	**9C-4935**	1	PLATE	
	3	1,2	**9C-6809**	5	BLOCK	
	4	2	**123-9313**	1	HITCH AS	
	5	1	**141-9645**	2	PLATE AS	
	6	1	**143-7022**	2	PLATE AS	
	7	2	**166-1881**	1	HITCH AS	
	8	1	**202-4797**	8	STUD-WELD (M10X1.5X23-MM)	
	9	2	**202-4798**	2	STUD-WELD (M10X1.5X17.5-MM)	
	10	1	**202-4799**	2	STUD-WELD (M10X1.5X38-MM)	
	11	2	**202-4800**	8	STUD-WELD (M10X1.75X21.1-MM)	
	12	1	**244-3525**	1	ENCLOSURE AS-LH	
		1	**7T-1099**	2	LINK	
		1	**8X-5147**	4	BLOCK	
		1	*245-0577*	1	PLATE AS	
M		1	**6V-9632**	2	NUT-WELD (M6X1-THD)	
M		1	**8T-3597**	4	NUT-WELD (M12X1.75-THD)	
		1	*245-1255*	1	PLATE AS	
M		1	**6V-9632**	2	NUT-WELD (M6X1-THD)	
M		1	**8T-3490**	2	NUT-WELD (M10X1.5-THD)	
	13	1	**244-3526**	1	ENCLOSURE AS-RH	
		1	**7T-1099**	2	LINK	
		1	**8X-5147**	4	BLOCK	
		1	*245-0578*	1	PLATE AS	
M		1	**8T-3597**	4	NUT-WELD (M12X1.75-THD)	
		1	*245-1256*	1	PLATE AS	
M		1	**8T-3490**	2	NUT-WELD (M10X1.5-THD)	
M	14	1	**9R-2640**	2	BOSS (M12X1.75X25-MM)	
	15	2	**4I-5228**	4	PLATE	
	16	2	**5I-3333**	1	PLATE	
	17	1,2	**7T-1099**	26	LINK	
M	18	2	**7X-0750**	2	BOSS-WELD (M10X1.5X55-MM)	
	19	1	**7Y-8763**	2	BOSS (M10X1.5X25-MM)	
	20	1	**8X-5147**	1	BLOCK	
	21	2	**9C-7863**	2	BLOCK	
	22	2	**9C-7929**	1	BLOCK	
	23	1	**9R-1733**	1	BOSS (M10X1.5X66.5-MM)	
	24	1	**9R-2060**	3	BOSS (M10X1.5X21-MM)	
	25	1,2	**9R-2613**	8	BOSS-WELD (M10X1.5X25-MM OAL)	

M-METRIC PART

236-9063 FRAME AS-REAR *(contd.)* **i02388709**

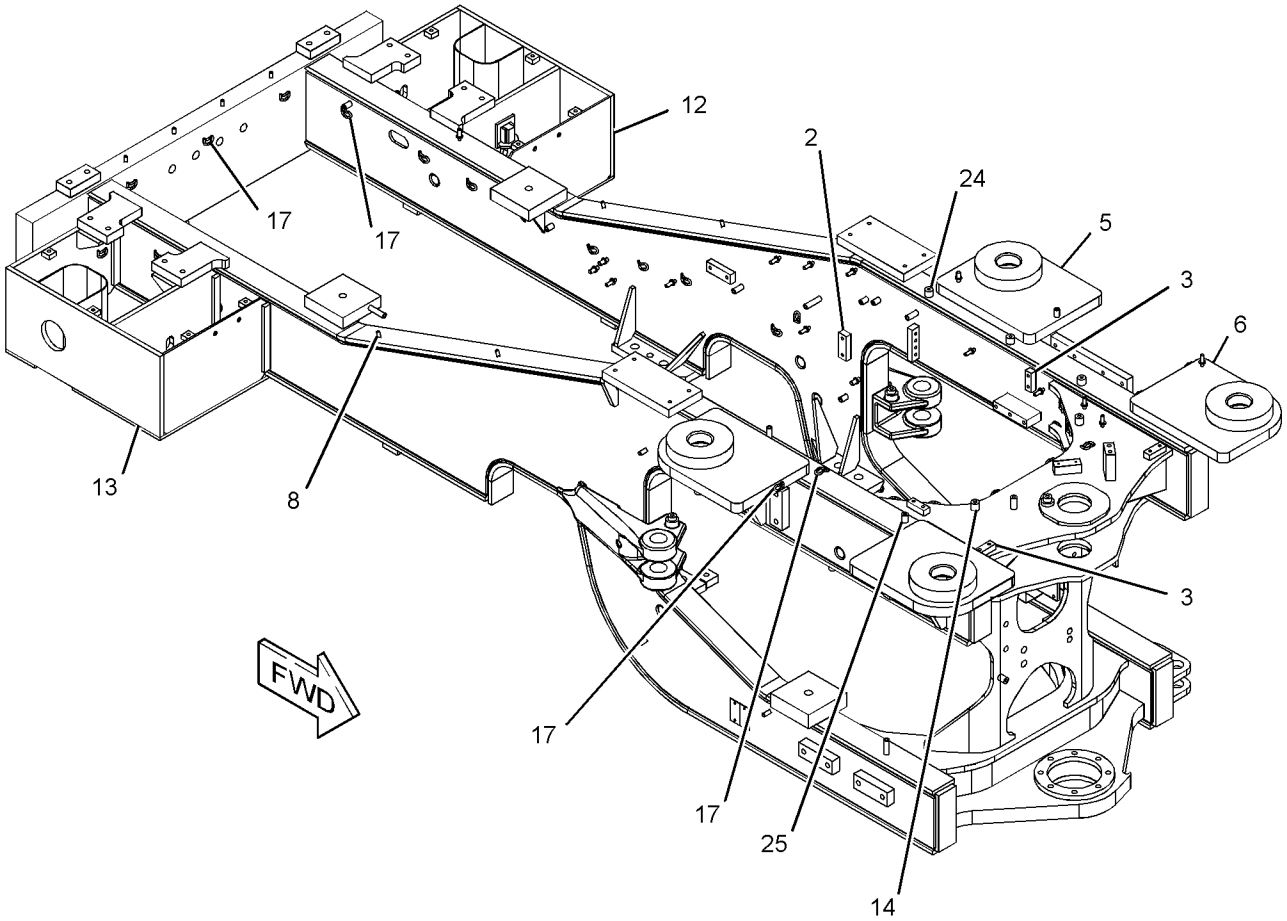

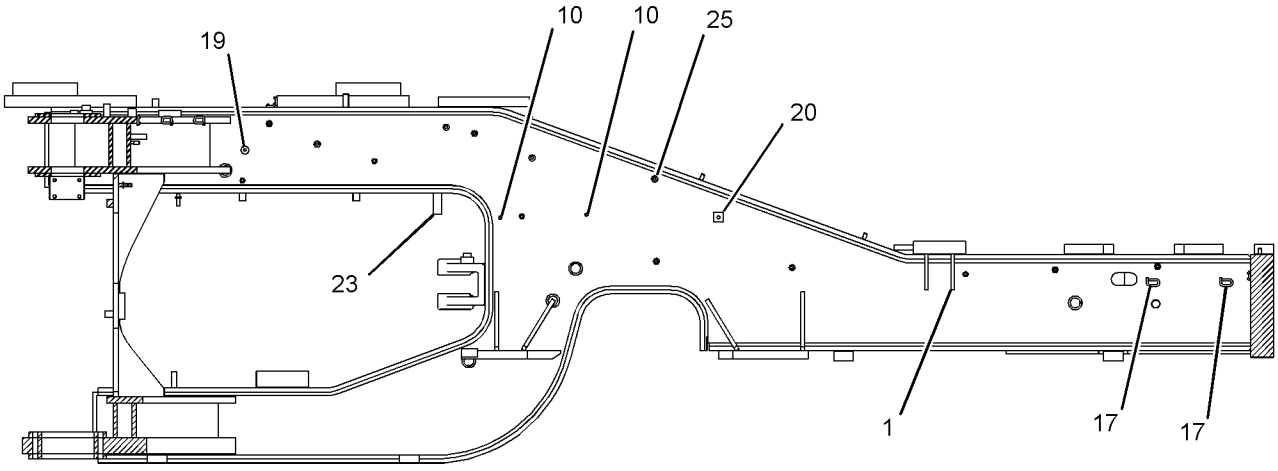

SECTION C-C

GRAPHIC #1

g01202938

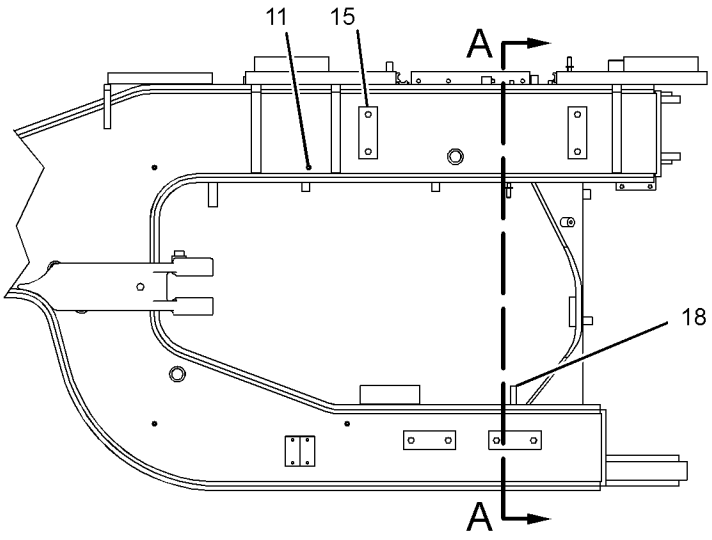

RIGHT SIDE VIEW

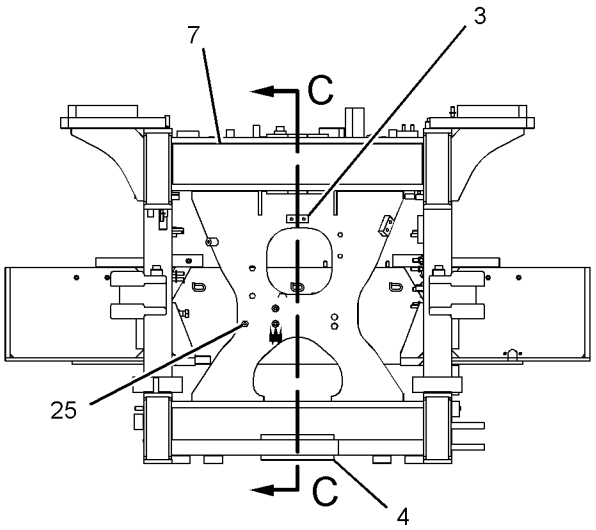

FRONT VIEW

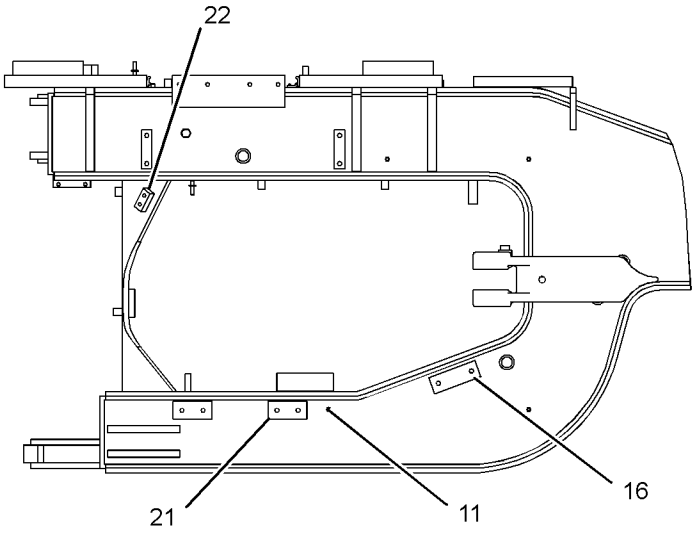

LEFT SIDE VIEW

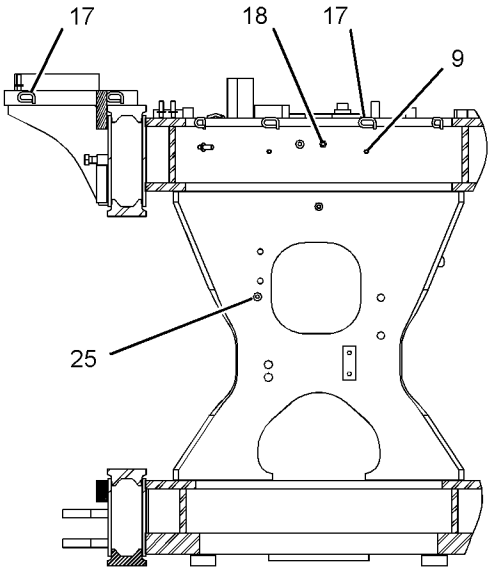

SECTION A-A

REFER TO ALL ILLUSTRATIONS OF
THIS GROUP FOR AUXILIARY VIEWS

GRAPHIC #2

<END>

g01202939

FRAME AND BODY

242-0772 GRILL GP-RADIATOR

S/N: A7G1-UP

PART OF 250-5600 HOOD & GUARD GP

SMCS-7170 **i02412624**

NOTE	REF NO	GRAPHIC REF	PART NUMBER	QTY	PART NAME 1 2 3 4 5 6 (PRODUCT LEVEL)	SEE PAGE
	1	1	**3B-2062**	1	PIN	
	2	1	**5P-0372**	1	LOCK PIN	
	3	1	**6W-5817**	1	SPRING	
	4	1	**6W-5818**	1	LATCH	
	5	1	**174-3086**	1	PIN AS	
	6	1	**174-8663**	1	PIN	
	7	1	**229-7534**	1	LATCH AS	
	8	1	**236-9939**	1	PLATE AS	
	9	1	**242-0773**	1	GRILL AS-REAR	
		1	**8G-0871**	1	HANDLE	
		1	**9V-0334**	1	ANGLE	
		1	**9V-0453**	1	BUSHING-TERMINAL	
		1	**174-3085**	3	HINGE AS	
	10	1	**244-3407**	1	SCREEN AS (RADIATOR)	
	11	1	**264-4437**	2	BAFFLE	
	12	1	**096-3781**	1	PIN-CLEVIS	
	13	1	**131-5879**	4	WASHER (11X32X3-MM THK)	
	14	1	**3B-4615**	1	PIN-COTTER	
	15	1	**7X-7729**	10	WASHER (11X25X3-MM THK)	
	16	1	**8T-4121**	2	WASHER-HARD (11X21X2.5-MM THK)	
M	17	1	**8T-4133**	6	NUT (M10X1.15-THD)	
M	18	1	**8T-4136**	8	BOLT (M10X1.5X25-MM)	
M	19	1	**9X-2040**	4	SCREW-TRUSS HEAD (M10X1.5X25-MM)	
J	20	1	**5P-7483**	1	SEAL (10-DM)	

J-ORDER BY THE DECIMETERS
M-METRIC PART

242-0772 **GRILL GP-RADIATOR** *(contd.)* **i02412624**

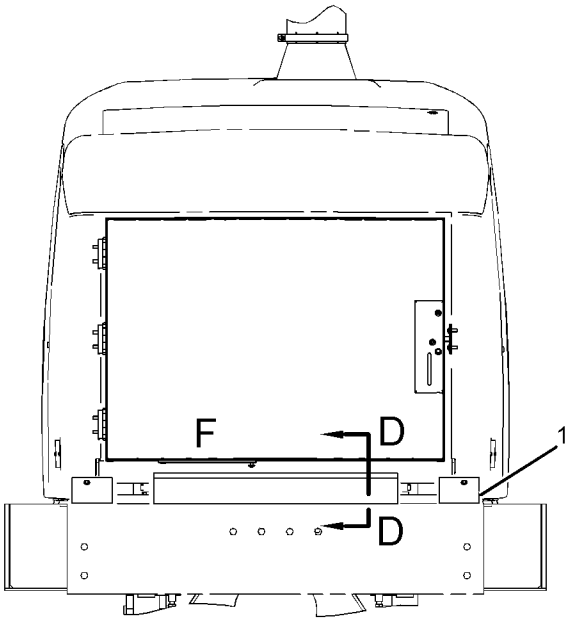

REAR VIEW

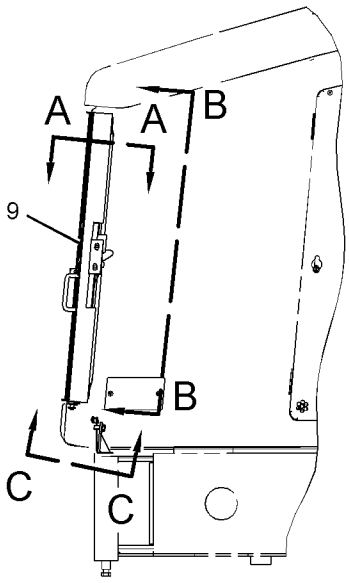

RIGHT SIDE VIEW

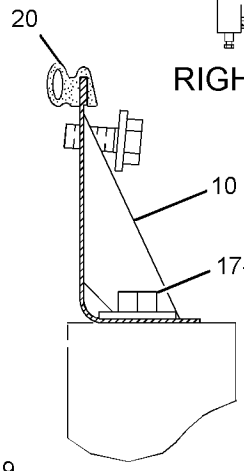

SECTION D-D

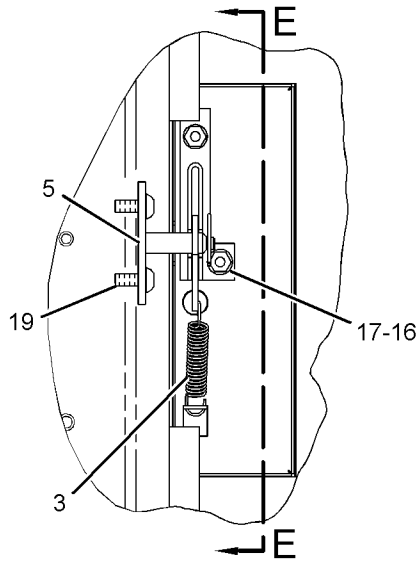

SECTION B-B

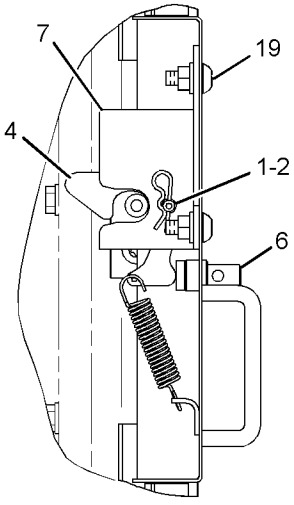

SECTION E-E

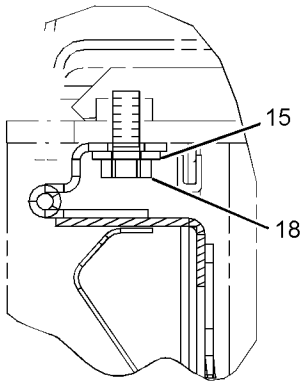

SECTION A-A

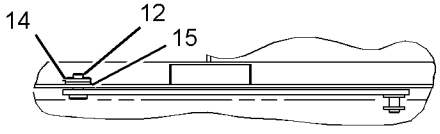

VIEW OF AREA F

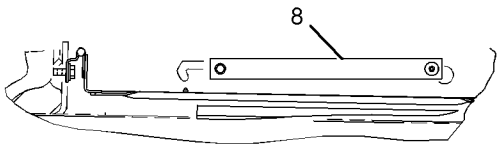

SECTION C-C

GRAPHIC #1 **<END>** g01196233

252-9543 GUARD GP-FRONT

S/N: A7G1-UP

PART OF 236-9051 CHASSIS AR

SMCS-7167 **i02412699**

NOTE	REF NO	GRAPHIC REF	PART NUMBER	QTY	PART NAME 1 2 3 4 5 6 (PRODUCT LEVEL)	SEE PAGE
	1	1	**271-9032**	2	COVER	
	2	1	**271-9033**	1	ANGLE	
	3	1	**271-9034**	2	PLATE	
	4	1	**271-9035**	1	PLATE AS	
	5	1	**8T-2561**	5	WASHER-HARD (10.5X28.5X5-MM THK)	
	6	1	**8T-4121**	8	WASHER-HARD (11X21X2.5-MM THK)	
M	7	1	**8T-4133**	5	NUT (M10X1.15-THD)	
M	8	1	**8T-4136**	8	BOLT (M10X1.5X25-MM)	

M-METRIC PART

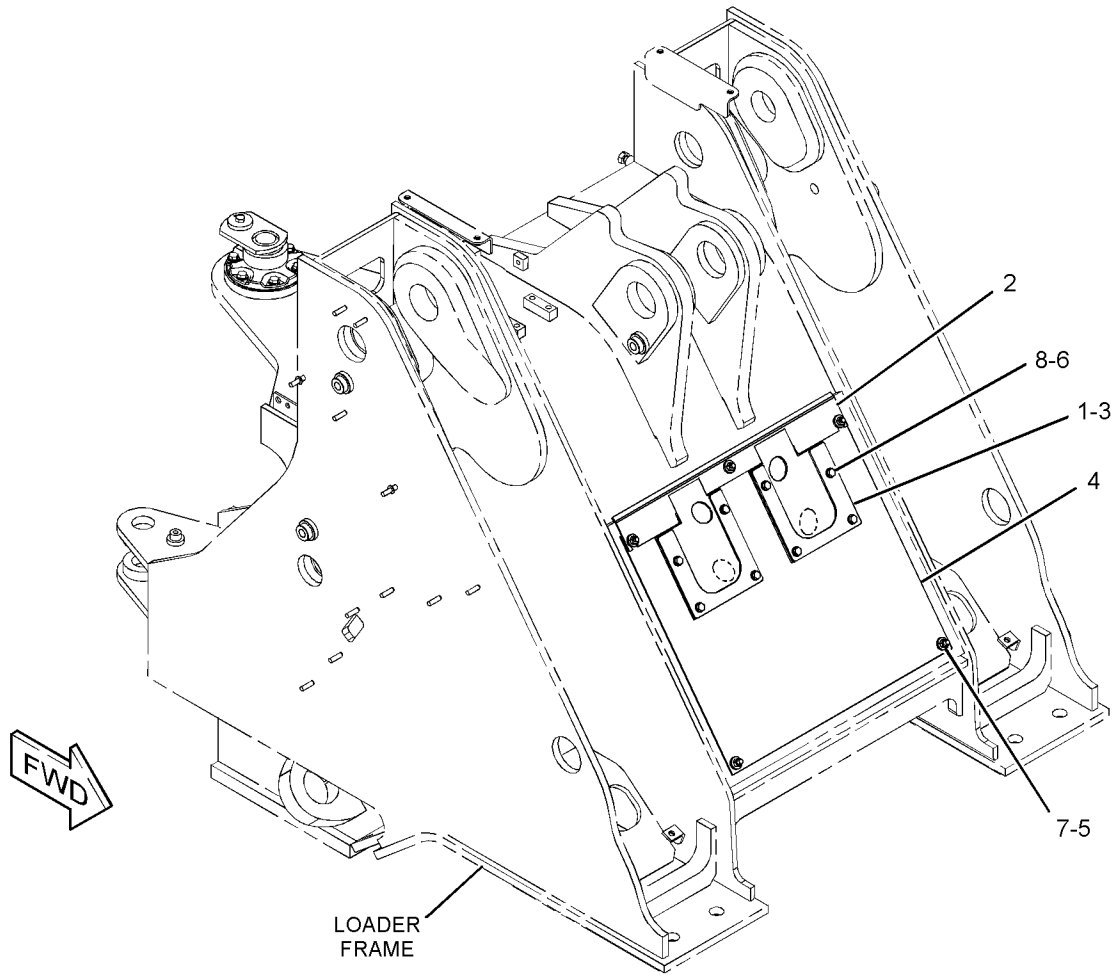

GRAPHIC #1 **<END>** g01189501

119-4376 GUARD GP-POWER TRAIN

S/N: A7G1-UP

PART OF 277-8157 CONVERSION AR-CERTIFICATION, 236-9043 SUPPRESSION AR-SOUND AN ATTACHMENT

SMCS-7153 **i01186238**

NOTE	REF NO	GRAPHIC REF	PART NUMBER	QTY	PART NAME 1 2 3 4 5 6 (PRODUCT LEVEL)	SEE PAGE
	1	1	**135-4404**	1	COVER AS	
M		1	**8T-3490**	4	NUT-WELD (M10X1.5 THD)	
	2	1	**135-4555**	1	PLATE	
	3	1	**7X-0583**	4	WASHER-HARD (17X45X6-MM THK)	
M	4	1	**8T-4779**	4	BOLT (M16X2X35-MM)	
	5	1	**8T-4121**	4	WASHER-HARD (11X21X2.5-MM THK)	
M	6	1	**8T-4196**	4	BOLT (M10X1.5X35-MM)	

M-METRIC PART

119-4376 **GUARD GP-POWER TRAIN** *(contd.)* **i01186238**

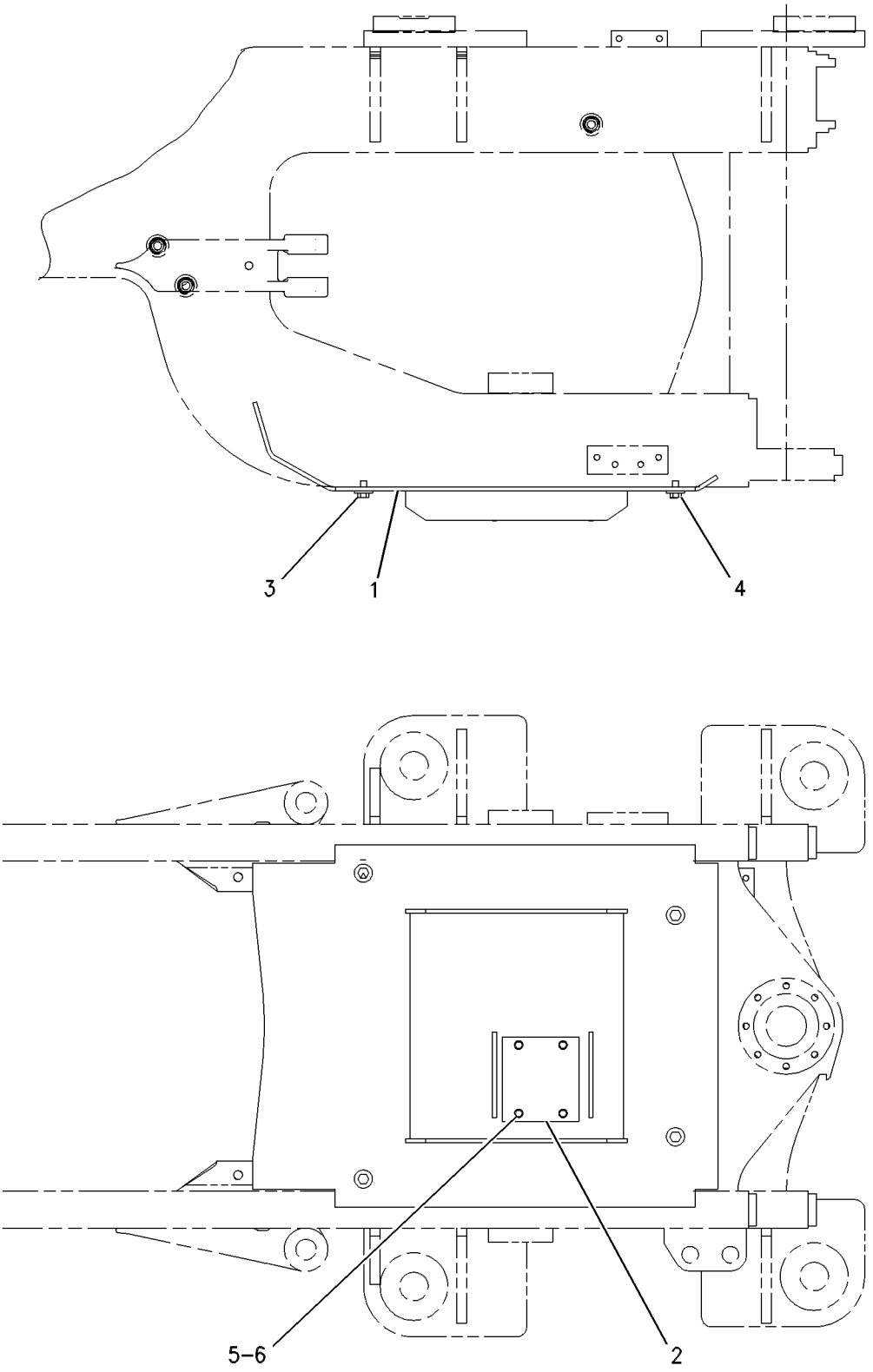

GRAPHIC #1 **<END>** g00461341

274-7051 HARDWARE GP-MOUNTING–FENDER

S/N: A7G1-UP
PART OF 255-5552 FENDER AR-ROADING
AN ATTACHMENT

SMCS-7050, 7553 **i02416317**

NOTE	REF NO	GRAPHIC REF	PART NUMBER	QTY	PART NAME 1 2 3 4 5 6 (PRODUCT LEVEL)	SEE PAGE
	1	1	**243-4013**	2	BLOCK	

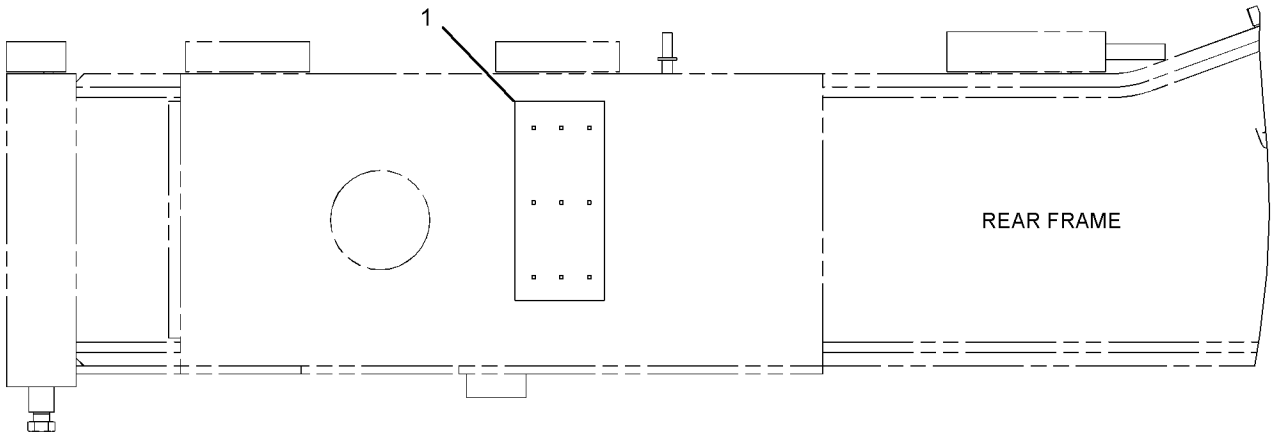

RIGHT SIDE VIEW

GRAPHIC #1 **<END>** g01195918

259-2566 HARDWARE GP-REAR FRAME

S/N: A7G1-UP
PART OF 236-9043, 269-2727 SUPPRESSION AR-SOUND
AN ATTACHMENT

SMCS-7051, 7553 **i02414654**

NOTE	REF NO	GRAPHIC REF	PART NUMBER	QTY	PART NAME 1 2 3 4 5 6 (PRODUCT LEVEL)	SEE PAGE
	1	1	*070-0345*	3	BAR	
	2	1	**9R-3845**	2	BOSS (M12X1.75X38-MM)	

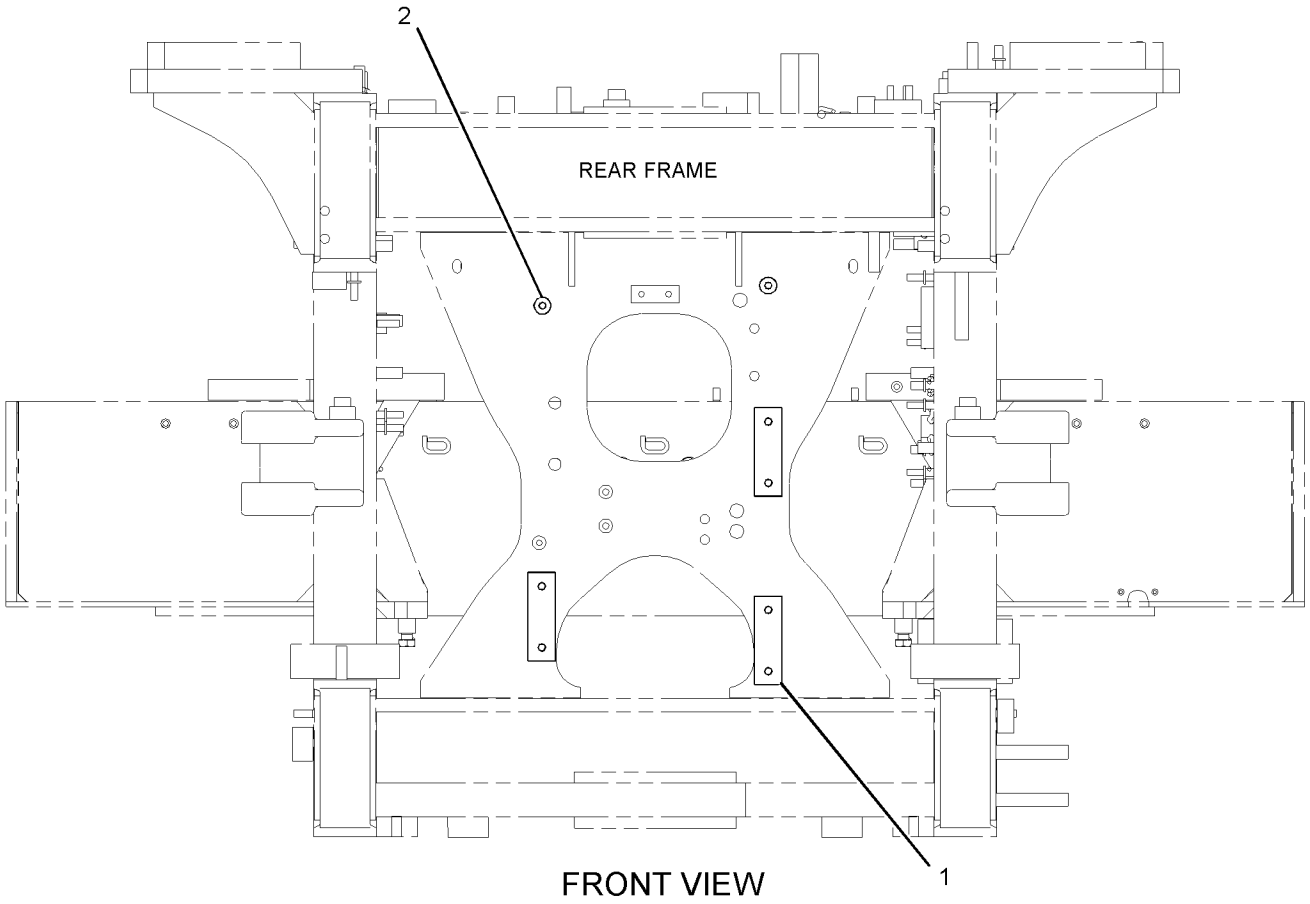

FRONT VIEW

GRAPHIC #1 **<END>** g01115590

FRAME AND BODY

261-2031 HARDWARE GP-REAR FRAME

S/N: A7G1-UP

PART OF 236-9043, 277-8551 SUPPRESSION AR-SOUND

AN ATTACHMENT

SMCS-7051, 7553 **i02414649**

NOTE	REF NO	GRAPHIC REF	PART NUMBER	QTY	PART NAME 1 2 3 4 5 6 (PRODUCT LEVEL)	SEE PAGE
	1	1	*141-0008*	3	PLATE	

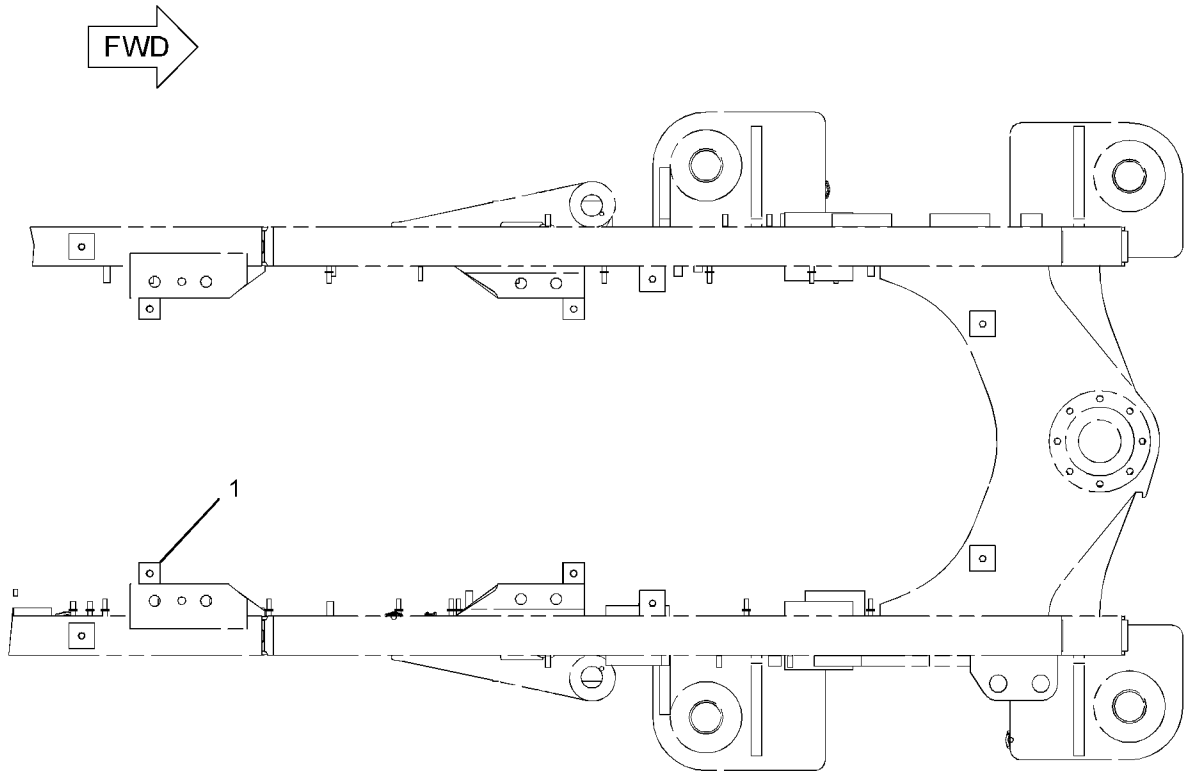

TOP VIEW

GRAPHIC #1 **<END>** g01207066

274-7060 HINGE GP-ROADING FENDER

S/N: A7G1-UP
PART OF 274-7040 FENDER GP-ROADING
AN ATTACHMENT

SMCS-7252 **i02410868**

NOTE	REF NO	GRAPHIC REF	PART NUMBER	QTY	PART NAME 1 2 3 4 5 6 (PRODUCT LEVEL)	SEE PAGE
	1	1	**3B-4605**	1	PIN-COTTER	
	2	1	**3B-4629**	1	PIN-COTTER	
	3	1	**3B-8489**	1	FITTING-GREASE	
	4	1	**132-1928**	1	PIN AS	
	5	1	**274-7062**	1	CHANNEL AS	
	6	1	**274-7066**	1	ROD AS	
	7	1	**276-2124**	1	HINGE AS	
	8	1	**8T-4121**	1	WASHER-HARD (11X21X2.5-MM THK)	

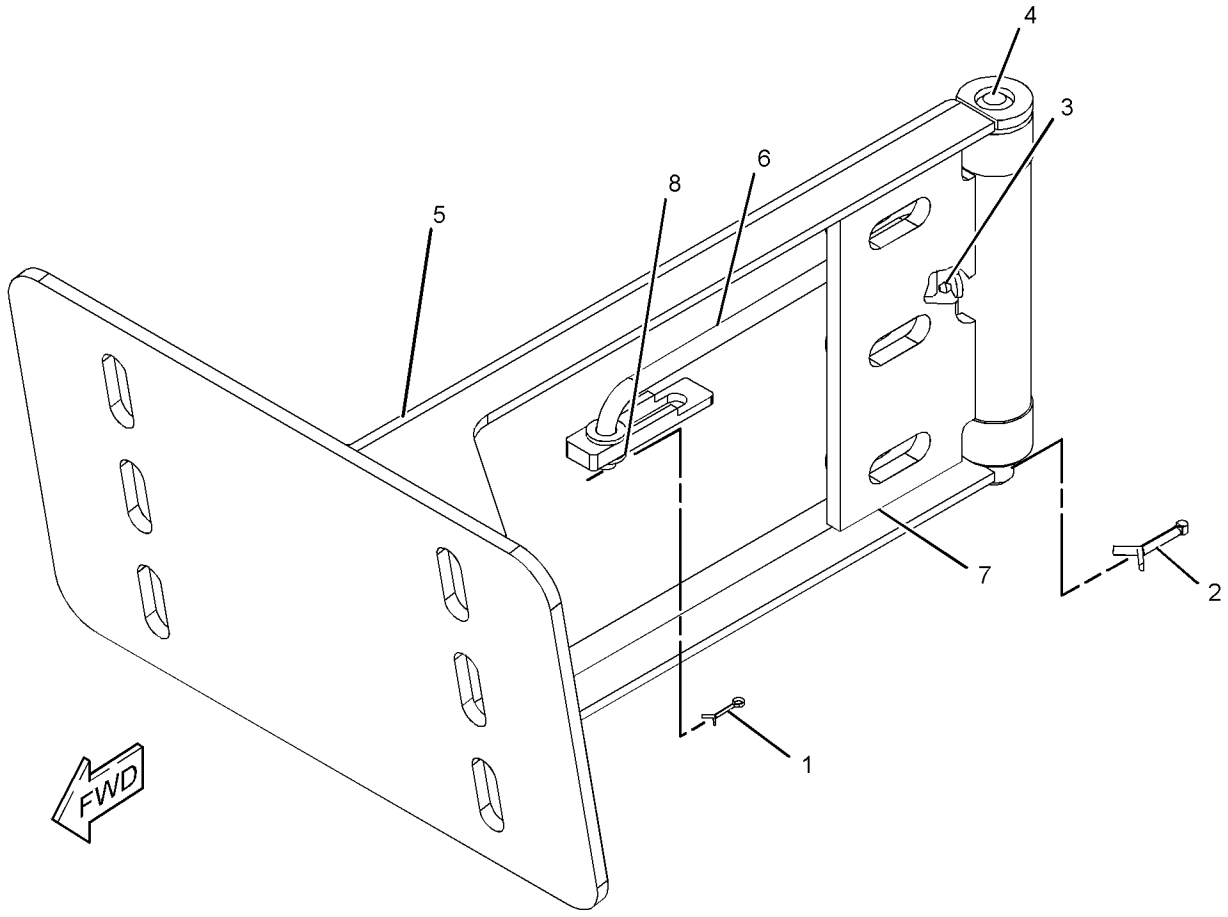

GRAPHIC #1 **<END>** g01208757

274-7061 HINGE GP-ROADING FENDER

S/N: A7G1-UP
PART OF 274-7040 FENDER GP-ROADING
AN ATTACHMENT

SMCS-7252 **i02410869**

NOTE	REF NO	GRAPHIC REF	PART NUMBER	QTY	PART NAME 1 2 3 4 5 6 (PRODUCT LEVEL)	SEE PAGE
	1	1	**3B-4605**	1	PIN-COTTER	
	2	1	**3B-4629**	1	PIN-COTTER	
	3	1	**3B-8489**	1	FITTING-GREASE	
	4	1	**132-1928**	1	PIN AS	
	5	1	**274-7063**	1	CHANNEL AS	
	6	1	**274-7066**	1	ROD AS	
	7	1	**276-2125**	1	HINGE AS	
	8	1	**8T-4121**	1	WASHER-HARD (11X21X2.5-MM THK)	

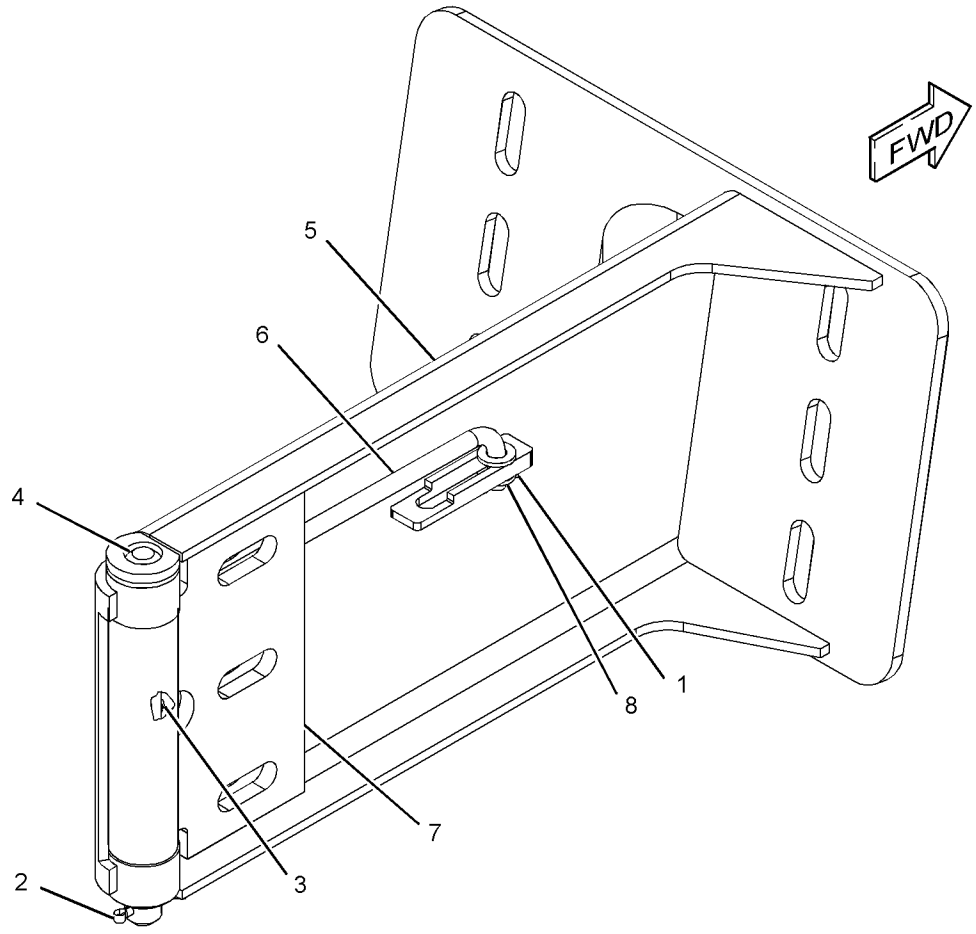

GRAPHIC #1 **<END>** g01208763

FRAME AND BODY

119-4401 HITCH GP-ARTICULATING

S/N: A7G1-UP

PART OF 236-9051 CHASSIS AR

SMCS-7057, 7100 **i01969599**

NOTE	REF NO	GRAPHIC REF	PART NUMBER	QTY	PART NAME 1 2 3 4 5 6 (PRODUCT LEVEL)	SEE PAGE
	1	1	**1B-3934**	2	CUP-BEARING	
B	2	1	**1V-8848**	1	SHIM PACK (INCLUDES 20 SHIMS)	
	3	1	**1V-8852**	1	CAP	
	4	1	**3B-8489**	2	FITTING-GREASE	
	5	1	**3F-7183**	2	CONE-BEARING	
	6	1	**4K-6780**	1	SPACER	
	7	1	**4K-6781**	1	SPACER	
	8	1	**4K-7461**	1	SEAL-LIP TYPE	
	9	1	**4K-7462**	1	SEAL-LIP TYPE	
	10	1	**6H-3999**	2	SEAL-LIP TYPE	
	11	1	**7D-8636**	2	CONE-BEARING	
	12	1	**7D-8637**	2	CUP-BEARING	
	13	1	**236-5925**	1	RETAINER	
	14	1	**115-2955**	1	PIN AS	
	15	1	**115-3183**	1	CAP	
B	16	1	**118-8276**	1	SHIM PACK (INCLUDES 20-SHIMS)	
	17	1	**134-3079**	1	PLATE	
	18	1	**134-3080**	1	PIN	
	19	1	**134-3081**	1	CAP	
B	20	1	**137-7668**	1	SHIM PACK (INCLUDES 19 SHIMS)	
	21	1	**137-7669**	1	CAP	
	22	1	**4V-1901**	2	BEARING-SLEEVE	
M	23	1	**7X-2549**	6	BOLT (M12X1.75X100-MM)	
	24	1	**8T-4123**	2	WASHER-PLATED (22X35X3.5-MM THK)	
M	25	1	**8T-4139**	1	BOLT (M12X1.75X30-MM)	
M	26	1	**8T-4183**	6	BOLT (M12X1.75X40-MM)	
	27	1	**8T-4223**	20	WASHER-HARD (13.5X25.5X3-MM THK)	
M	28	1	**8T-5041**	8	BOLT (M12X1.75X120-MM)	
M	29	1	**8T-6430**	2	BOLT (M20X2.5X50-MM)	

B-USE AS REQUIRED
M-METRIC PART

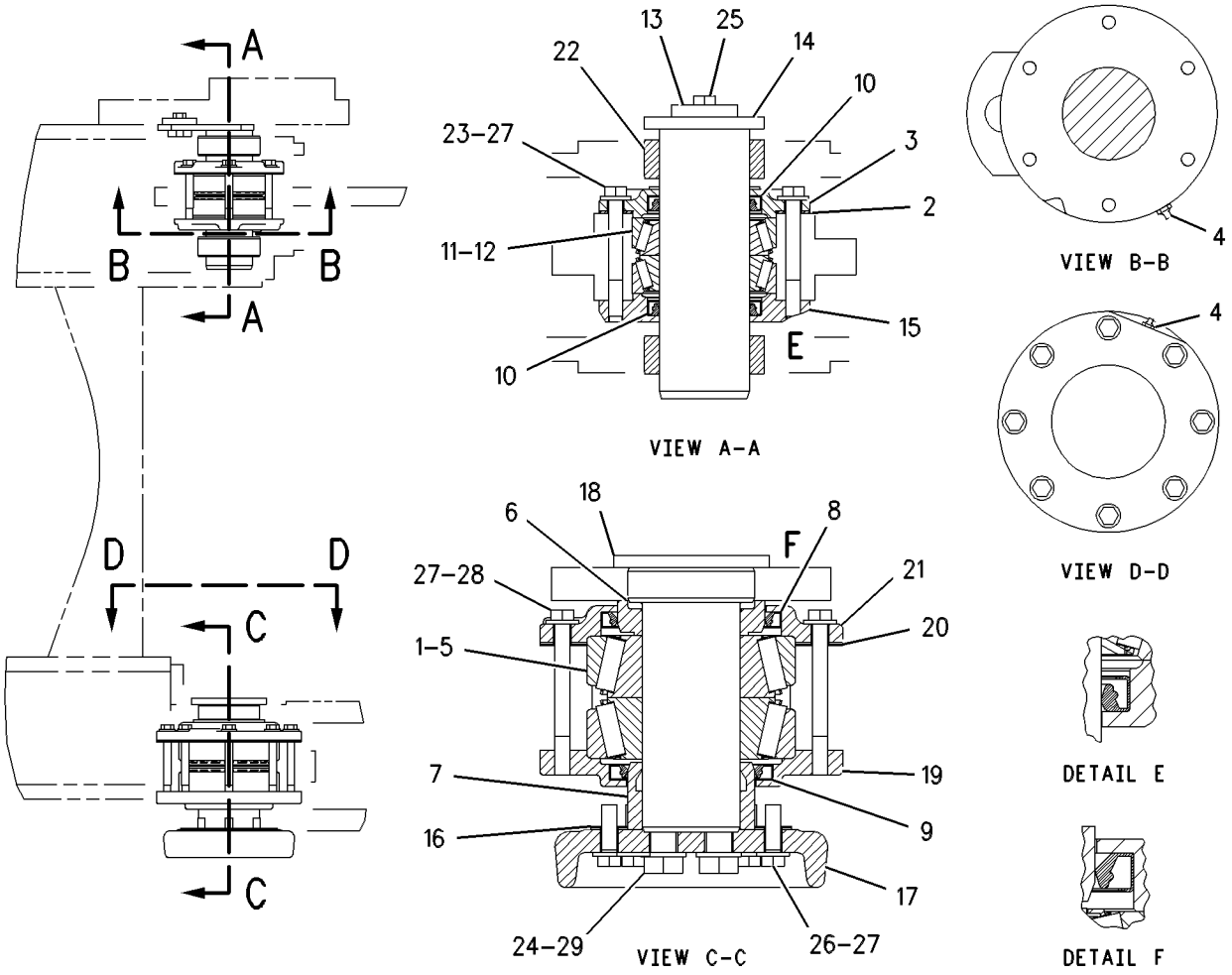

GRAPHIC #1 **<END>** g00284542

FRAME AND BODY

250-5600 HOOD & GUARD GP

S/N: A7G1-UP

PART OF 236-9051 CHASSIS AR

SMCS-7251 **i02413330**

NOTE	REF NO	GRAPHIC REF	PART NUMBER	QTY	PART NAME 1 2 3 4 5 6 (PRODUCT LEVEL)	SEE PAGE
	2	3	**125-7037**	1	INSERT	
	3	1	**131-1586**	2	ROD AS	
	4	1	**239-8410**	1	PLATE	
Y	5	2	*242-0772*	1	GRILL GP-RADIATOR	378
	6	2	**244-1035**	1	GRILL AS-TOP	
	7	1	**244-1037**	1	DOOR AS-ACCESS (RH)	
	8	2	**244-1039**	1	DOOR AS-ACCESS (LH)	
					(EACH DOOR AS INCLUDES)	
	8A	1	**6V-4604**	1	RIVET-POP	
	8B	1	**9V-1820**	1	SPACER	
	8C	1	**119-0281**	2	HINGE AS	
	8D	1	**274-3734**	1	CAM-LATCH	
	8E	1	**233-4466**	1	LATCH AS	
		2	**9V-1777**	1	CABLE	
	9	3	**244-1046**	2	BRACKET	
	10	1	**244-1047**	1	PIPE AS-EXHAUST	
		1	**237-4987**	1	CLAMP AS	
	11	1	**244-1067**	1	TUBE	
	12	2	**250-5593**	1	PANEL GP (LH)	
		2	**7X-0603**	7	WASHER-HARD (9.9X35X2.5-MM THK)	
		2	**148-8240**	7	CLIP	
		2	**240-9134**	1	INSULATION-HOOD (LH)	
		2	**250-5595**	1	PANEL AS-SIDE (LH)	
	13	2	**250-5594**	1	PANEL GP (RH)	
		2	**7X-0603**	7	WASHER-HARD (9.9X35X2.5-MM THK)	
		2	**148-8240**	7	CLIP	
		2	**240-9133**	1	INSULATION-HOOD (RH)	
		2	**250-5596**	1	PANEL AS-SIDE (RH)	
	14	1	**250-5599**	1	PANEL GP-TOP	
		1	**250-5590**	1	PANEL AS-HOOD (TOP)	
		1	**240-9136**	1	INSULATION-HOOD (TOP)	
		1	**224-9392**	4	FASTENER-SINGLE HEAD	
	15	3	**252-5175**	1	BRACKET AS	
	16	2	**252-5180**	1	SUPPORT AS	
	17	3	**252-5182**	1	BRACKET AS	
	18	1	**3B-4611**	2	PIN-COTTER	
	19	1	**4M-7470**	6	GROMMET	
M	20	3	**5C-2890**	4	NUT (M6X1-THD)	
	22	3	**7X-7729**	40	WASHER (11X25X3-MM THK)	
	23	1,2,3	**8T-4121**	38	WASHER-HARD (11X21X2.5-MM THK)	
M	24	3	**8T-4133**	20	NUT (M10X1.15-THD)	
M	25	1,2,3	**8T-4196**	56	BOLT (M10X1.5X35-MM)	
	26	3	**9M-5884**	6	BUMPER	
M	27	1	**9X-2044**	2	SCREW-TRUSS HEAD (M6X1X16-MM)	
	28	3	**9X-8256**	4	WASHER (6.6X12X2-MM THK)	
D	29	2	**6V-6604**		SEAL (0.9-M)	
E	30	1	**126-8472**		SEAL (30-CM)	
D	31	2	**5P-7483**		SEAL (1.18-M)	
D	31A	2	**5P-7483**		SEAL (0.79-M)	
D	31B	2	**5P-7483**		SEAL (1.16-M)	
E	32	2	**112-9736**		SEAL (148-CM)	
E	33	2	**120-5281**		SEAL (103.5-CM EACH)	

D-ORDER BY THE METER
E-ORDER BY THE CENTIMETER
M-METRIC PART
Y-SEPARATE ILLUSTRATION

REFER TO ALL ILLUSTRATIONS OF
THIS GROUP FOR AUXILIARY VIEWS

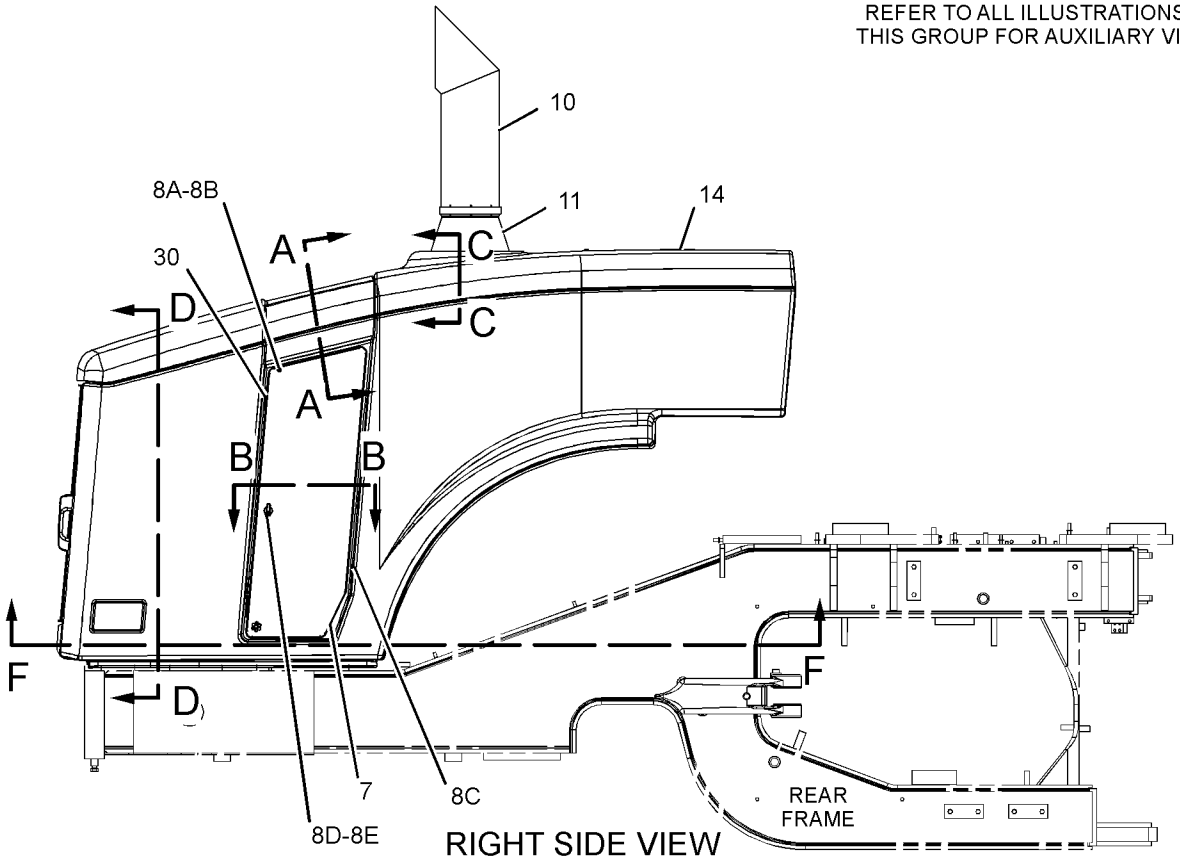

RIGHT SIDE VIEW

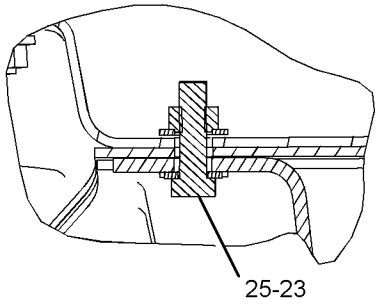

SECTION A-A

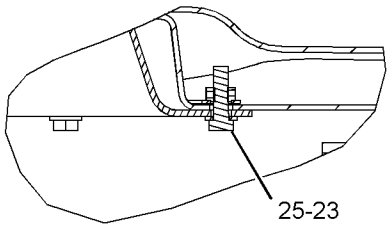

SECTION C-C

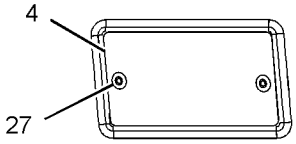

SECTION H-H

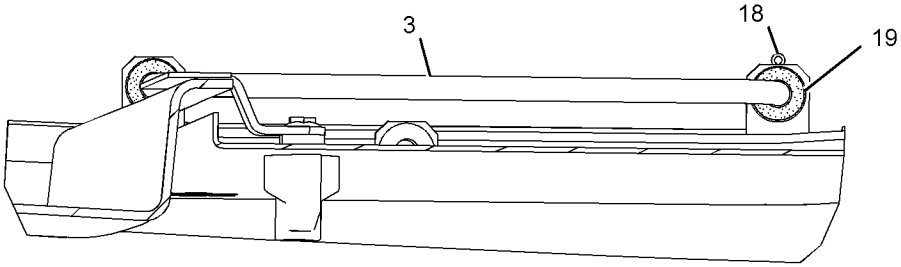

SECTION B-B

GRAPHIC #1 g01200517

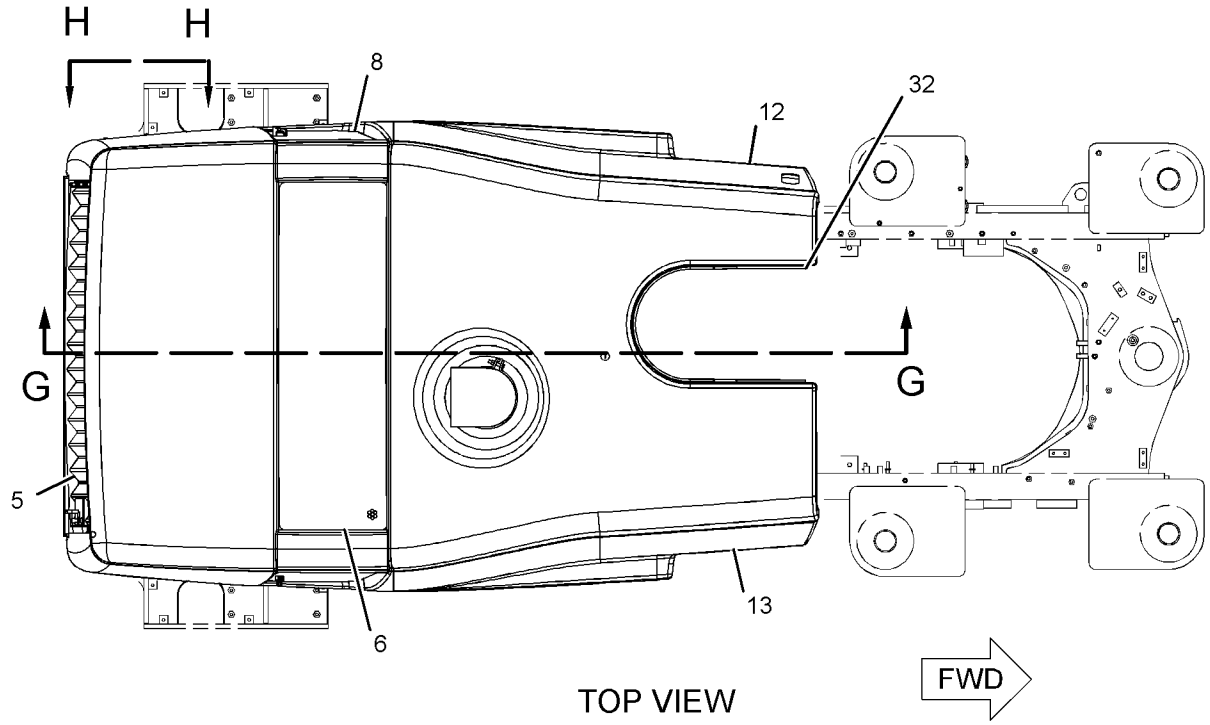

TOP VIEW

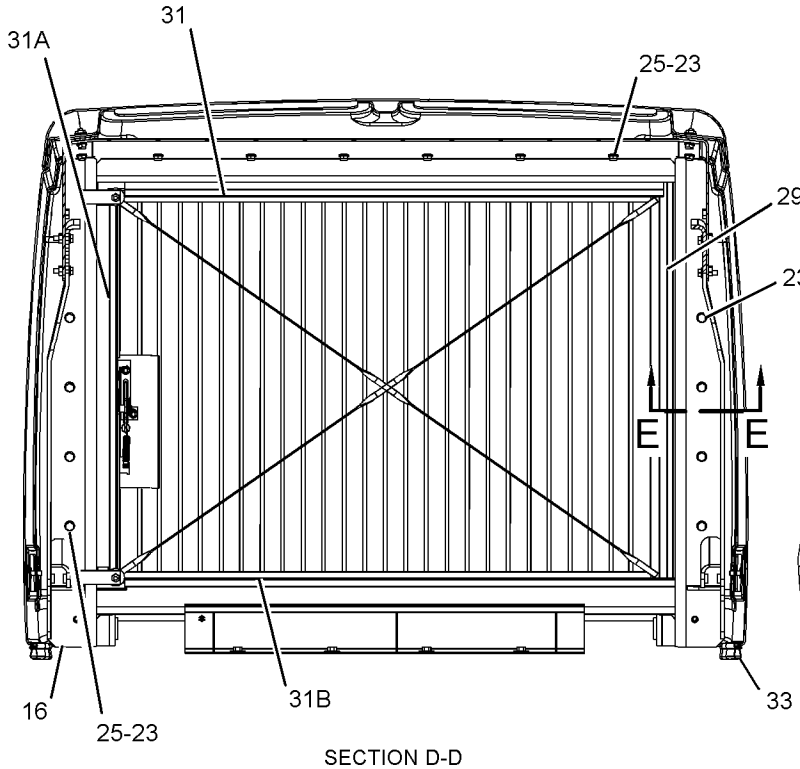

SECTION D-D

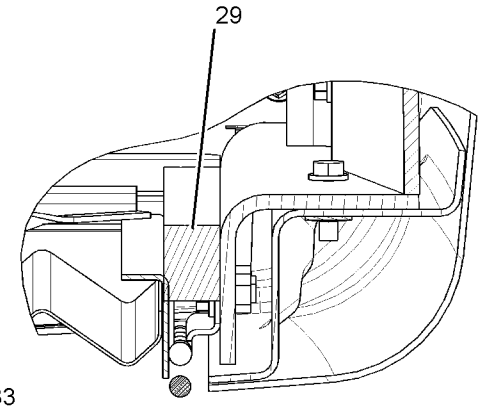

SECTION E-E

GRAPHIC #2

g01190177

250-5600 **HOOD & GUARD GP** *(contd.)* **i02413330**

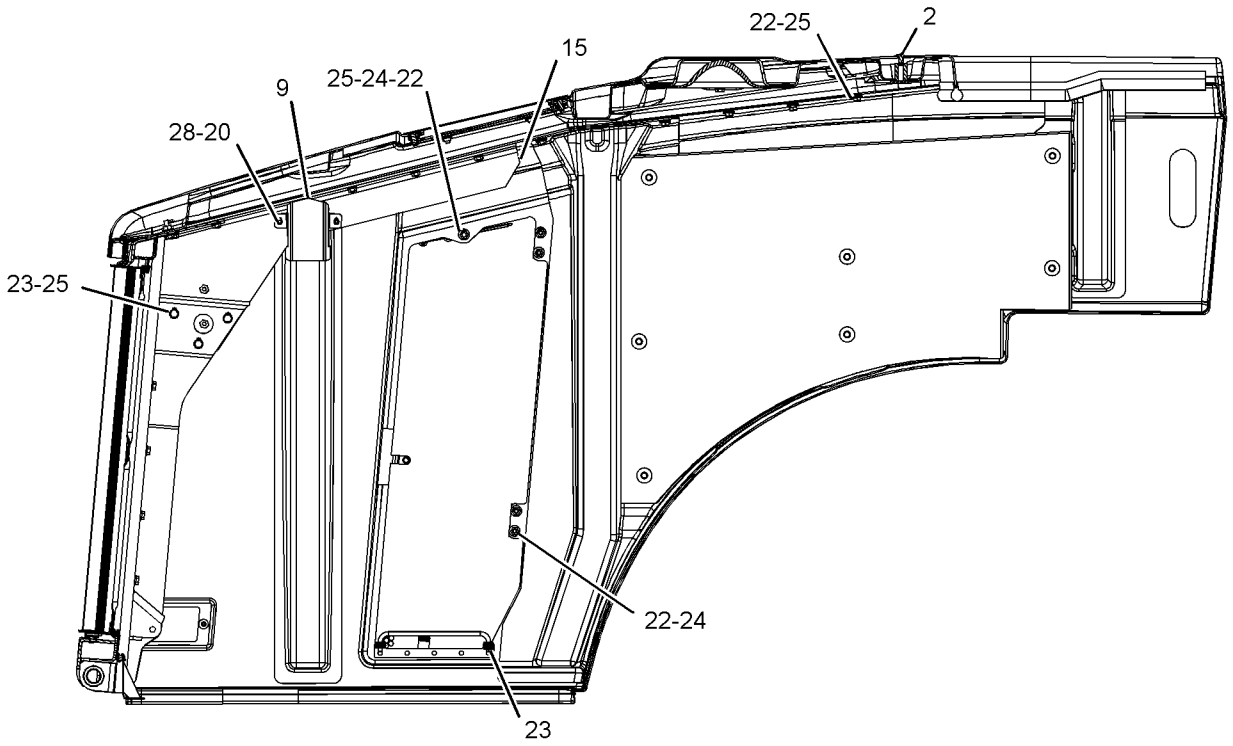

SECTION G-G

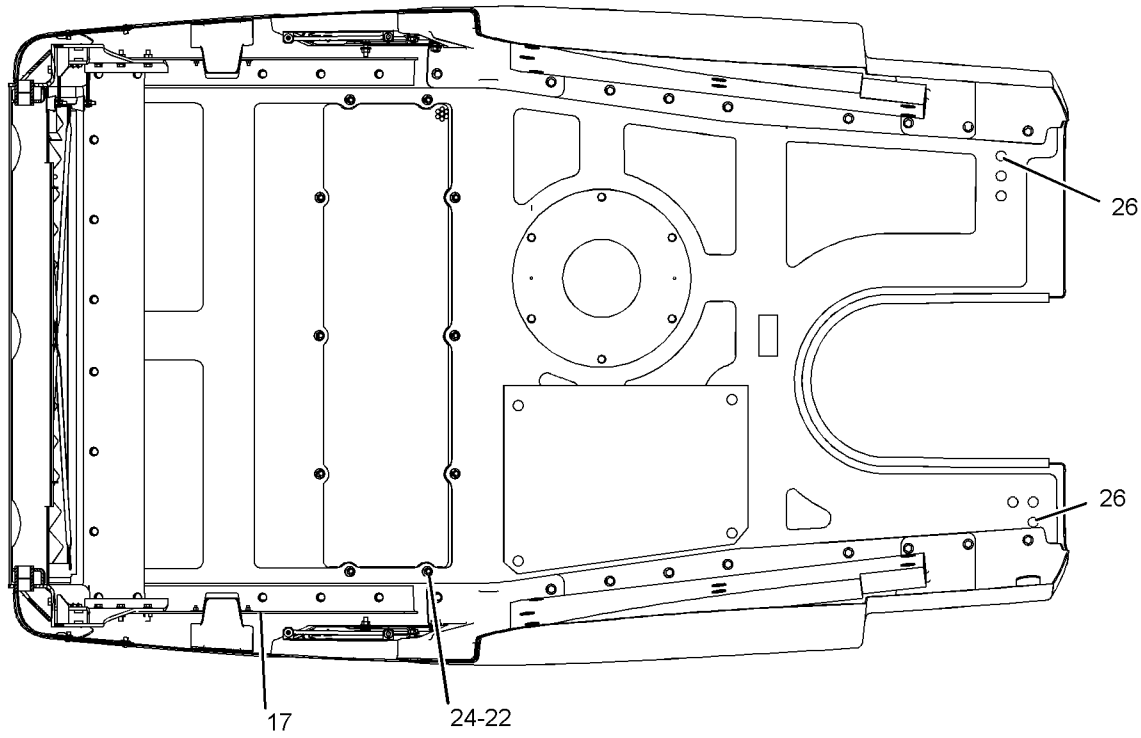

SECTION F-F

GRAPHIC #3 **<END>** g01116842

FRAME AND BODY

236-8978 LADDER GP

S/N: A7G1-UP

PART OF 236-9051 CHASSIS AR

SMCS-7254 **i02412053**

NOTE	REF NO	GRAPHIC REF	PART NUMBER	QTY	PART NAME 1 2 3 4 5 6 (PRODUCT LEVEL)	SEE PAGE
	1	2,3	**7W-8106**	32	SPACER (15-MM THK)	
	2	2,3	**234-1530**	4	STEP AS	
					(EACH INCLUDES)	
M		2,3	**8T-3490**	4	NUT-WELD (M10X1.5-THD)	
	3	2,3	**234-1531**	3	STEP	
	4	2,3	**234-3545**	16	PLATE	
	5	2,3	**234-5101**	4	BRACKET AS	
					(EACH INCLUDES)	
M		2,3	**8T-3490**	4	NUT-WELD (M10X1.5-THD)	
	6	2,3	**234-5107**	8	BELT-STEP	
	7	3	**243-6390**	1	HANDHOLD AS (LH)	
	8	2	**243-6391**	1	HANDHOLD GP (RH)	
	9	3	**243-6409**	1	HANDHOLD AS (LH)	
	10	2	**243-6410**	1	HANDHOLD GP (RH)	
	11	3	**244-3541**	1	LADDER AS (LH)	
	12	3	**245-4915**	1	SUPPORT AS	
	13	2	**245-9087**	1	LADDER AS (RH)	
	14	2,3	**5P-1076**	10	WASHER-HARD (13.5X30X4-MM THK)	
	15	1,3	**7X-7729**	12	WASHER (11X25X3-MM THK)	
	16	1,2,3	**8T-4121**	48	WASHER-HARD (11X21X2.5-MM THK)	
M	17	2,3	**8T-4139**	22	BOLT (M12X1.75X30-MM)	
M	18	2,3	**8T-4186**	32	BOLT (M10X1.5X40-MM)	
M	19	1,3	**8T-4195**	28	BOLT (M10X1.5X30-MM)	
	20	2,3	**8T-4223**	12	WASHER-HARD (13.5X25.5X3-MM THK)	

M-METRIC PART

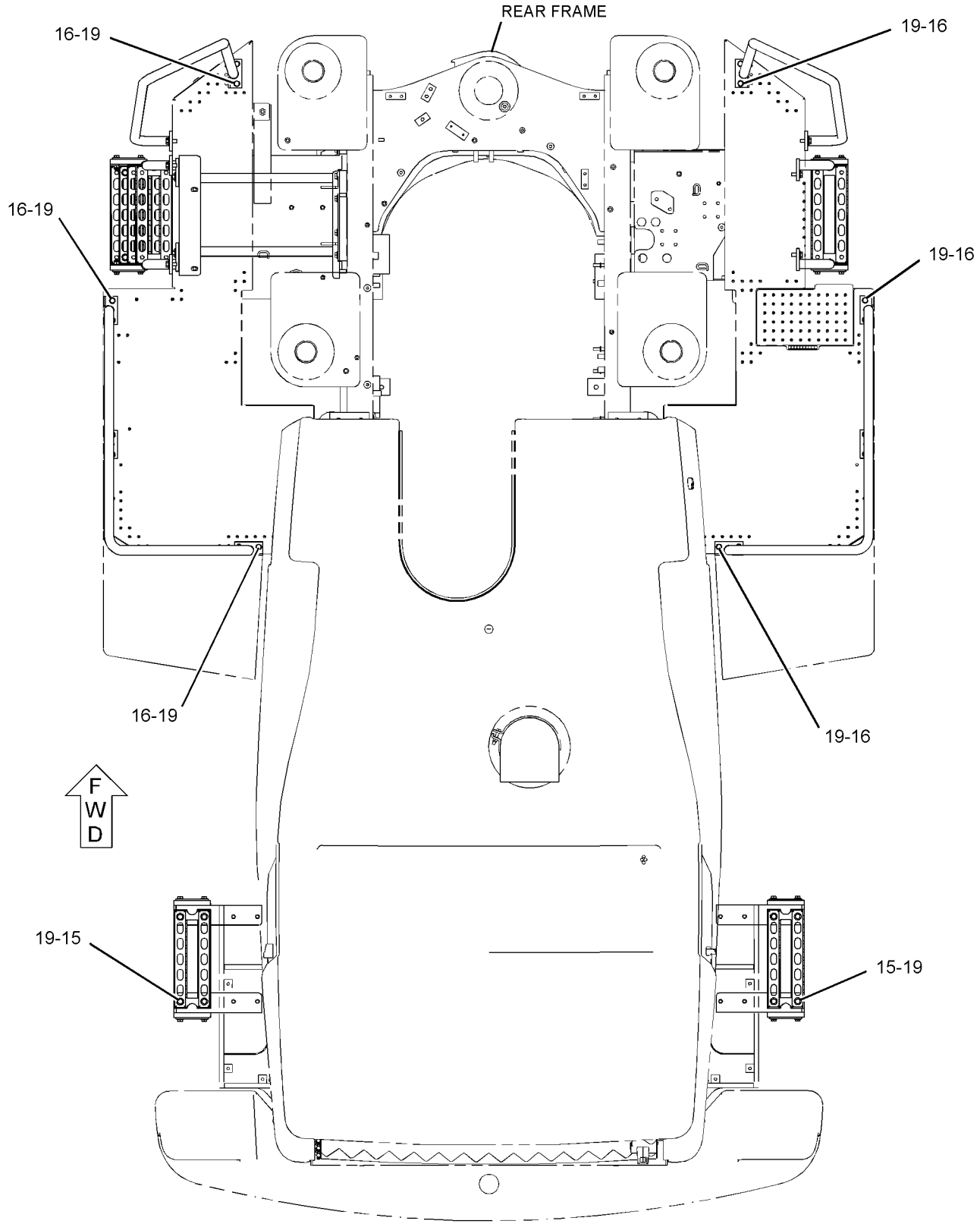

TOP VIEW

GRAPHIC #1 g01116078

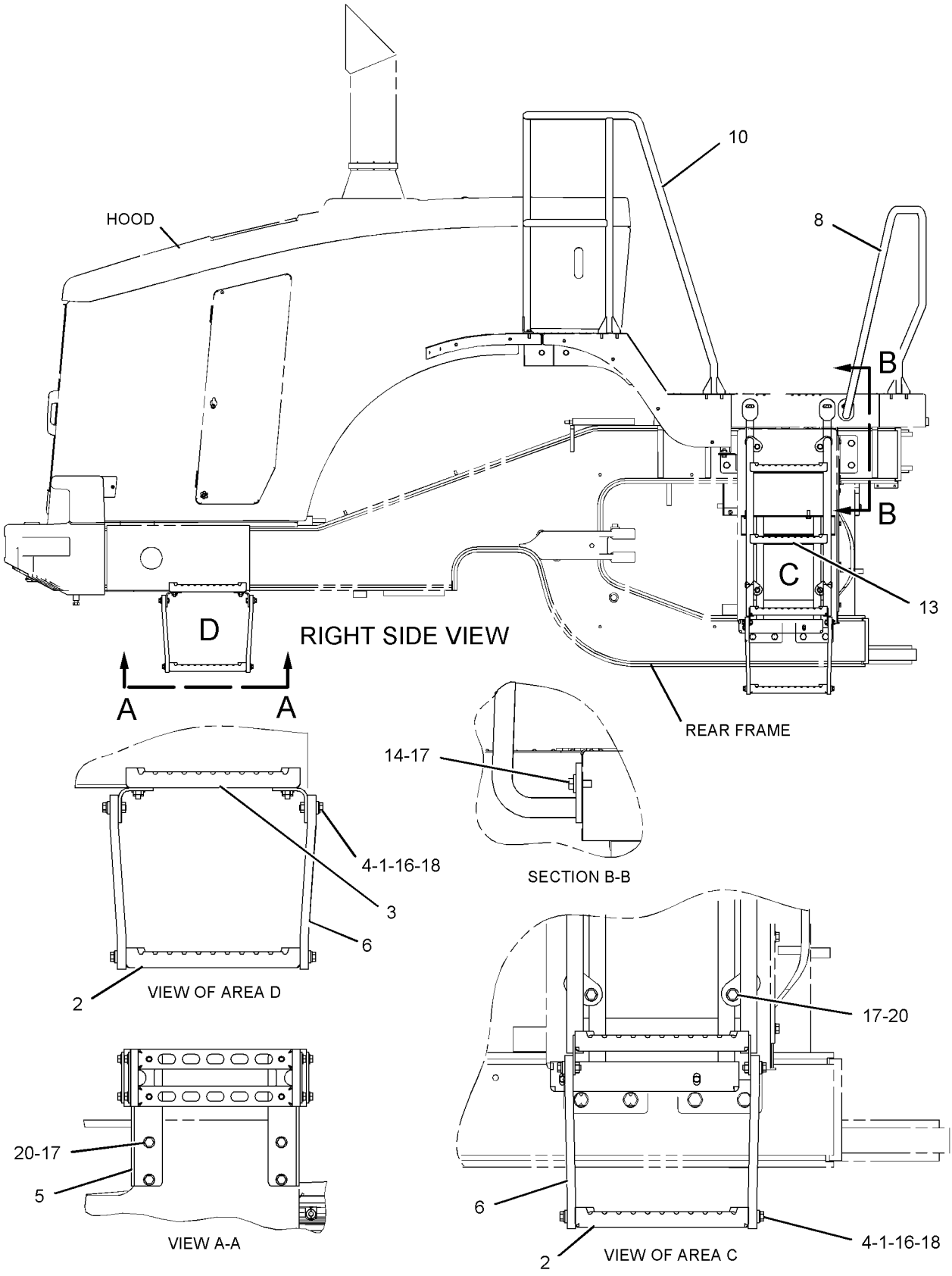

GRAPHIC #2

g01116079

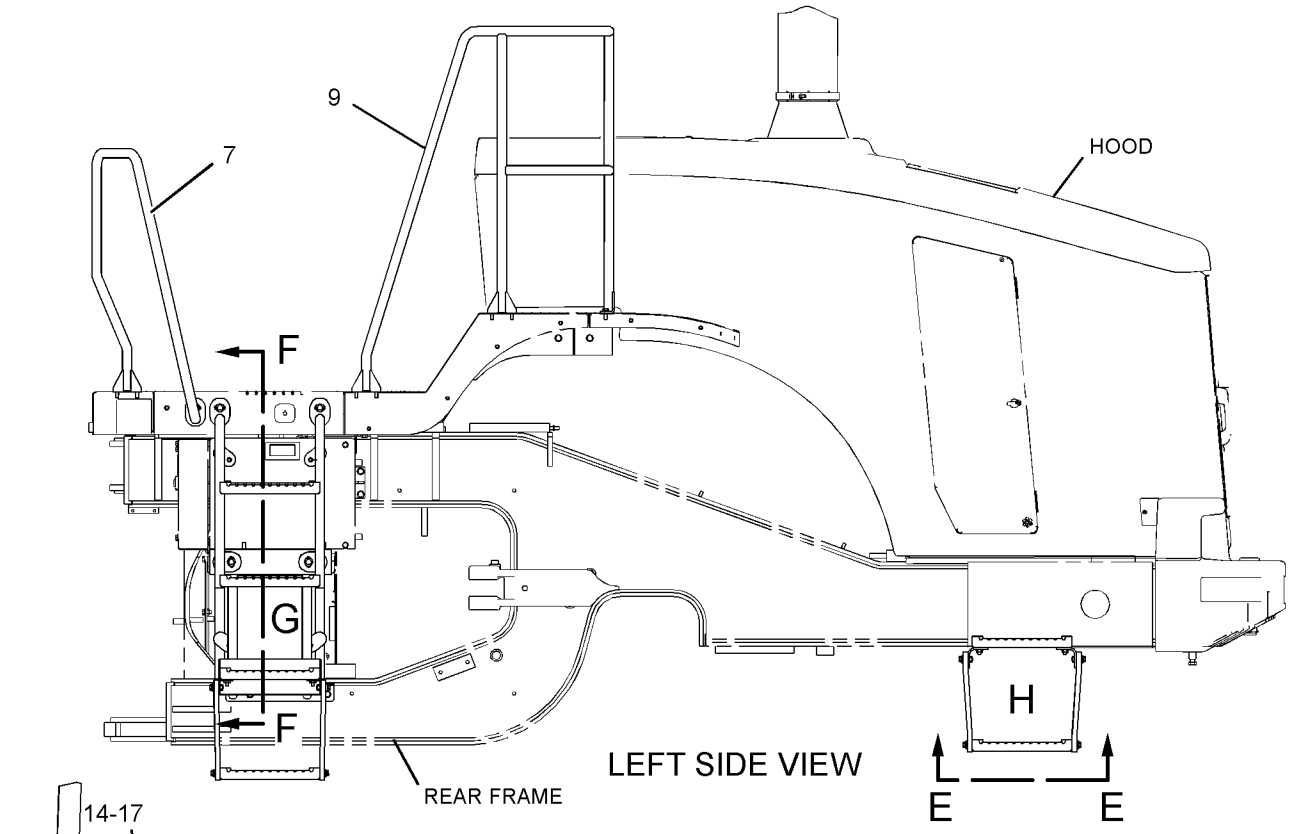

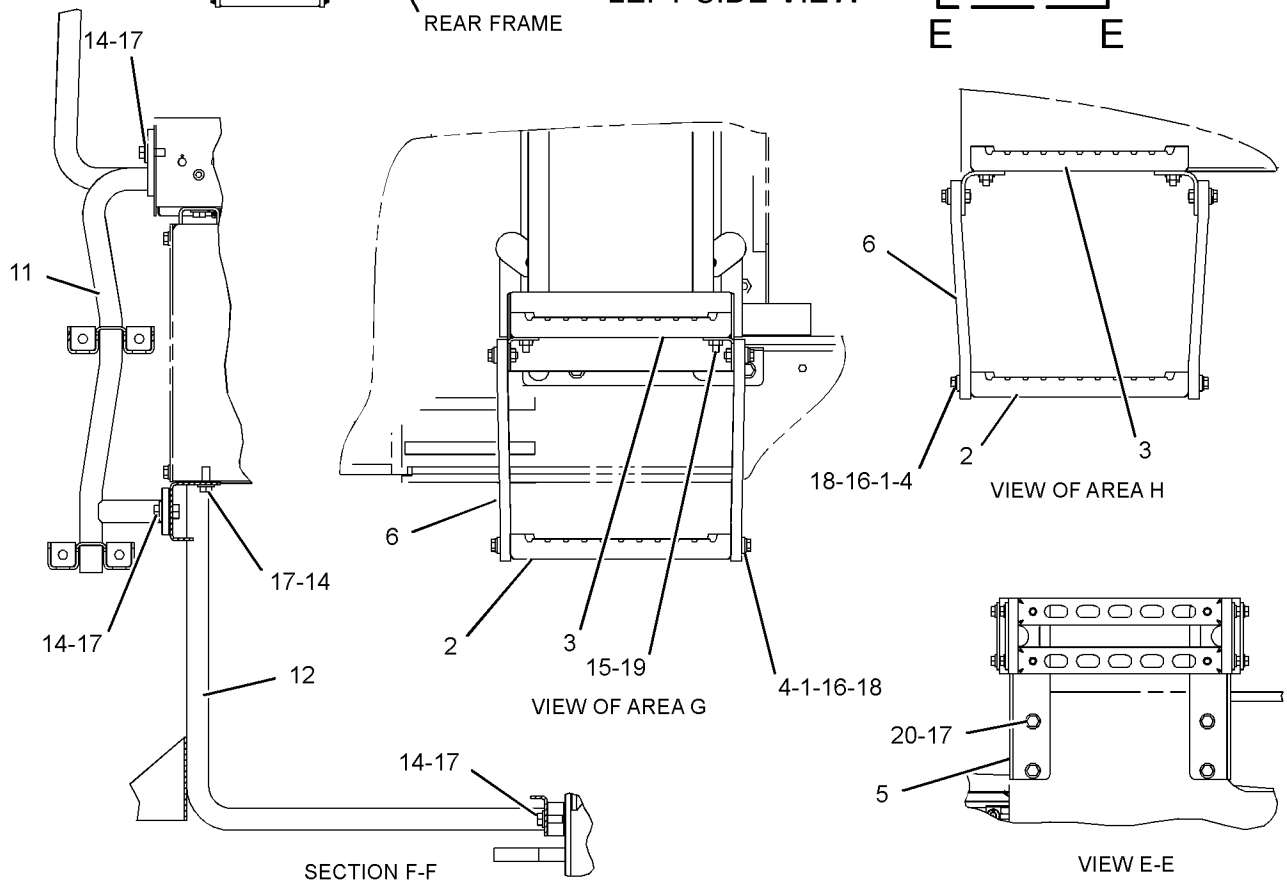

GRAPHIC #3 **<END>** g01170145

FRAME AND BODY

272-2775 LADDER GP

S/N: A7G1-UP

AN ATTACHMENT

SMCS-7254 **i02416303**

NOTE	REF NO	GRAPHIC REF	PART NUMBER	QTY	PART NAME 1 2 3 4 5 6 (PRODUCT LEVEL)	SEE PAGE
	1	2	**5G-7817**	1	BOSS	
	2	2	**7K-1181**	1	STRAP-CABLE	
	3	1,2	**7W-8106**	8	SPACER (15-MM THK)	
	4	2	**144-4613**	2	ANGLE AS	
					(EACH INCLUDES)	
M		2	**8T-3490**	1	NUT-WELD (M10X1.5-THD)	
	5	1	**149-2847**	1	FITTING	
	6	1	**234-1530**	1	STEP AS	
M		1	**8T-3490**	4	NUT-WELD (M10X1.5-THD)	
	7	1	**234-3545**	4	PLATE	
	8	2	**254-4151**	2	ROLLER	
	9	2	**254-4152**	1	CYLINDER	
	10	2	**254-4153**	1	SPRING-GAS	
	11	2	**254-4154**	2	PLATE	
	12	2	**254-4171**	1	PIN	
	13	2	**254-4187**	2	PIN	
	14	2	**254-4189**	3	BLOCK	
	15	2	**254-4190**	3	PLATE	
	16	2	**254-5254**	2	HOUSING	
	17	2	**254-5255**	2	BEARING	
	18	2	**254-5257**	1	ELBOW	
	19	2	**254-5258**	1	BREATHER (HYDRAULIC TANK)	
	20	2	**254-8471**	1	PLATE	
	21	2	**257-2259**	1	COVER AS	
M		2	**6V-9632**	4	NUT-WELD (M6X1-THD)	
	22	2	**259-3011**	1	PLATE	
	23	2	**260-3597**	1	ARM AS	
	24	1	**267-1778**	1	BRACKET AS	
		1	**267-1777**	1	PLATE	
	25	1	**267-1781**	1	PLATE	
	26	1	**267-1782**	1	LADDER AS	
	27	1	**267-1783**	1	FENDER AS (LH)	
M		1	**8T-3597**	1	NUT-WELD (M12X1.75-THD)	
		1	**243-5849**	1	FENDER AS (LH)	
	28	1	**272-2787**	1	HANDHOLD AS (FRONT, LH)	
Y	29	1	**272-2792**	1	BOX GP-TOOL	905
I	30	1	**278-9481**	1	HOSE AS	
	31	2	**095-0917**	1	RING-RETAINING	
	32	1	*148-8434*	1	TEE AS	
		1	**6V-8397**	2	SEAL-O-RING	
		1	**6V-9843**	1	TEE-SWIVEL	
	33	1	*150-4050*	1	ELBOW AS	
		1	**3J-1907**	1	SEAL-O-RING	
		1	**8T-0788**	1	ELBOW	
	34	1	**156-3722**	1	COUPLING AS	
	35	1	**3J-1907**	1	SEAL-O-RING	
	36	2	**3V-4791**	2	GROMMET	
	37	1	**4J-5477**	1	SEAL-O-RING	
M	38	2	**5C-7261**	1	NUT (M8X1.25-THD)	
M	39	2	**5C-9553**	6	BOLT (M6X1X16-MM)	
	40	2	**5G-9603**	1	SPACER (11.03X26.6X50-MM THK)	
	41	2	**5L-4035**	4	RING-RETAINING (EXTERNAL)	
	42	2	**5P-1076**	2	WASHER-HARD (13.5X30X4-MM THK)	
	43	2	**6D-3479**	2	CLIP	
	44	1,2	**6V-8397**	3	SEAL-O-RING	
	45	1	**6V-8641**	1	CONNECTOR	

272-2775 **LADDER GP** *(contd.)* **i02416303**

NOTE	REF NO	GRAPHIC REF	PART NUMBER	QTY	PART NAME 1 2 3 4 5 6 (PRODUCT LEVEL)	SEE PAGE
M	46	2	**6V-9189**	1	LOCKNUT (M8X1.25-THD)	
	47	1	**6V-9850**	1	ELBOW	
M	48	2	**7X-2537**	1	BOLT (M8X1.25X35-MM)	
	49	1,2	**8T-4121**	29	WASHER-HARD (11X21X2.5-MM THK)	
M	50	1	**8T-4133**	6	NUT (M10X1.15-THD)	
M	51	2	**8T-4136**	2	BOLT (M10X1.5X25-MM)	
M	52	2	**8T-4137**	3	BOLT (M10X1.5X20-MM)	
M	53	2	**8T-4139**	2	BOLT (M12X1.75X30-MM)	
M	54	2	**8T-4172**	1	BOLT (M10X1.5X80-MM)	
M	55	1	**8T-4186**	6	BOLT (M10X1.5X40-MM)	
M	56	2	**8T-4191**	2	BOLT (M10X1.5X16-MM)	
M	57	2	**8T-4195**	4	BOLT (M10X1.5X30-MM)	
M	58	2	**8T-4196**	4	BOLT (M10X1.5X35-MM)	
	59	2	**8T-4224**	2	WASHER-HARD (8.8X16X2-MM THK)	
M	60	2	**8T-6466**	1	BOLT (M10X1.5X60-MM)	
	61	2	**9X-6165**	4	WASHER (6.5X22X2.5-MM THK)	
	62	2	**9X-8256**	2	WASHER (6.6X12X2-MM THK)	
	63	2	**255-7504**	2	BELT-STEP	
	64	1	**153-6223**	1	PLUG-DUST	

I-REFER TO HYDRAULIC INFORMATION SYSTEM
M-METRIC PART
Y-SEPARATE ILLUSTRATION

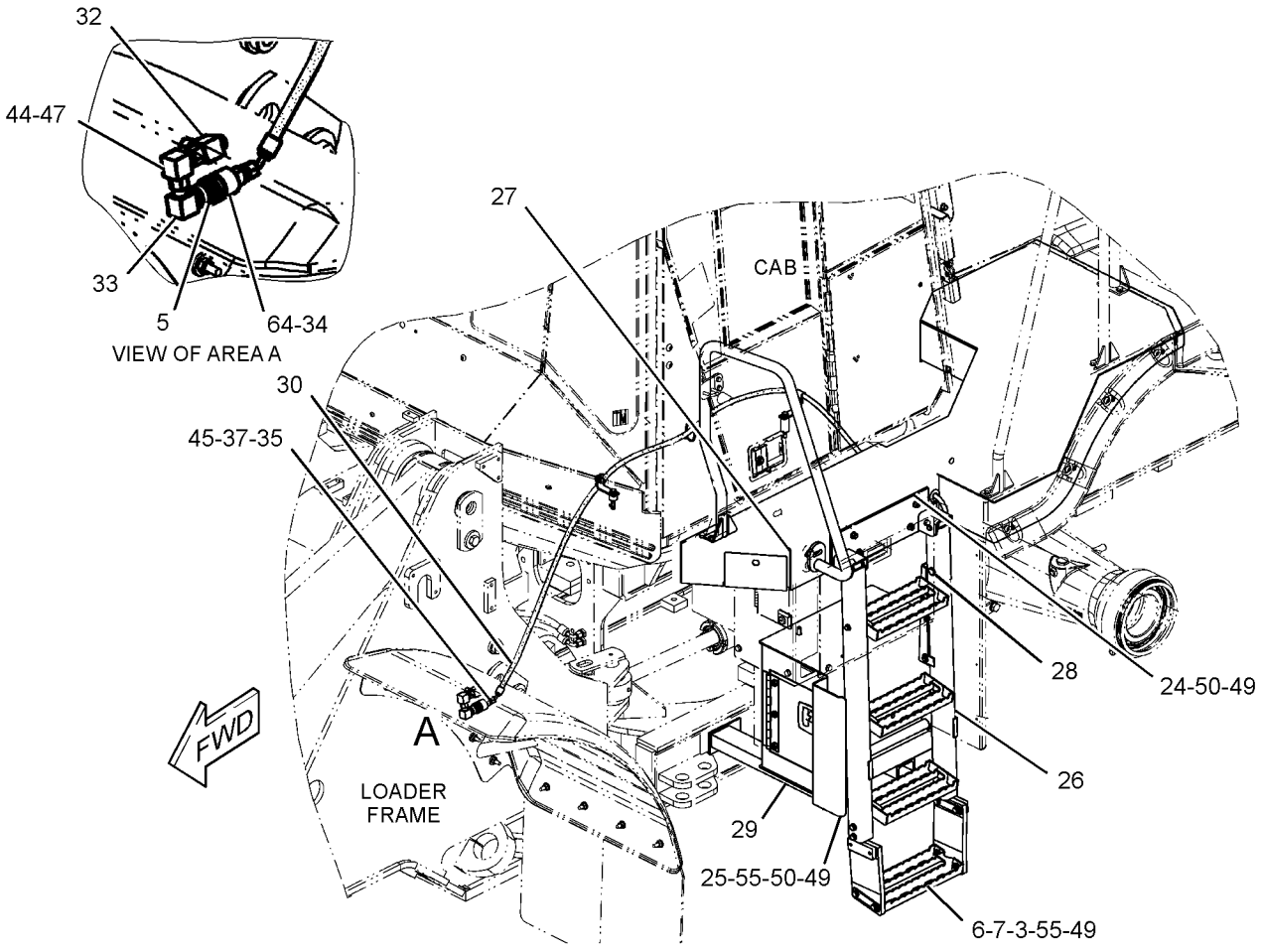

GRAPHIC #1 g01211124

272-2775 **LADDER GP** *(contd.)* **i02416303**

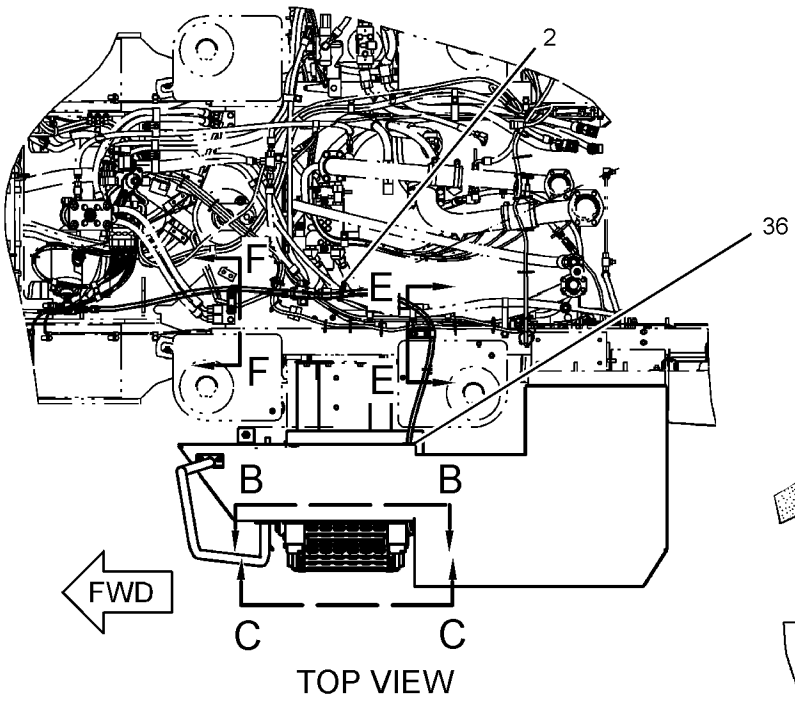

TOP VIEW

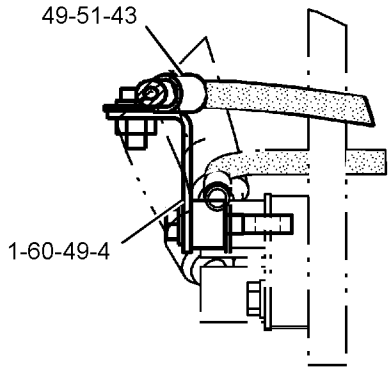

SECTION F-F

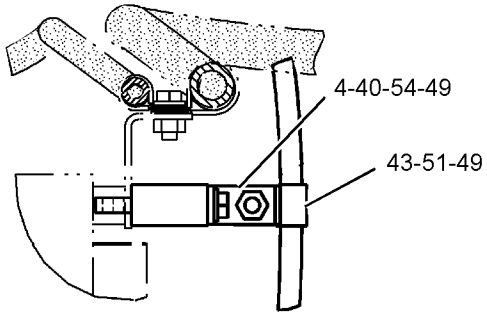

SECTION E-E

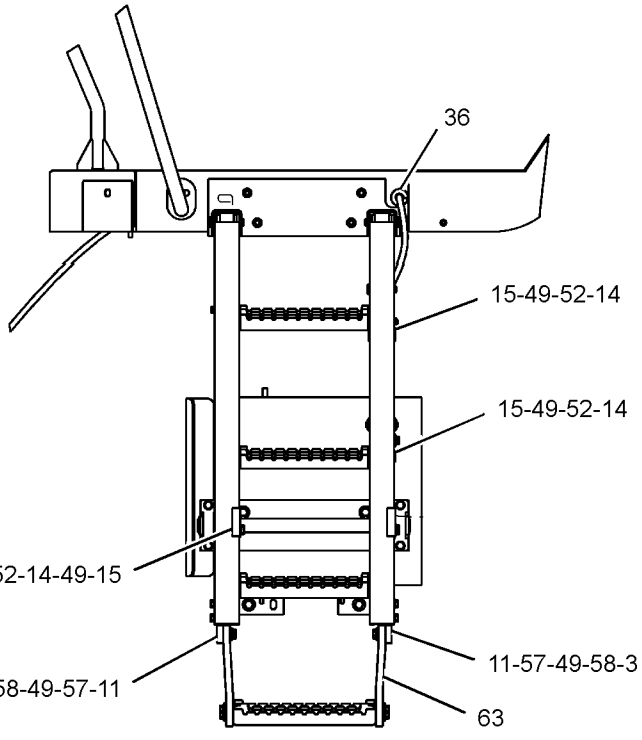

VIEW C-C

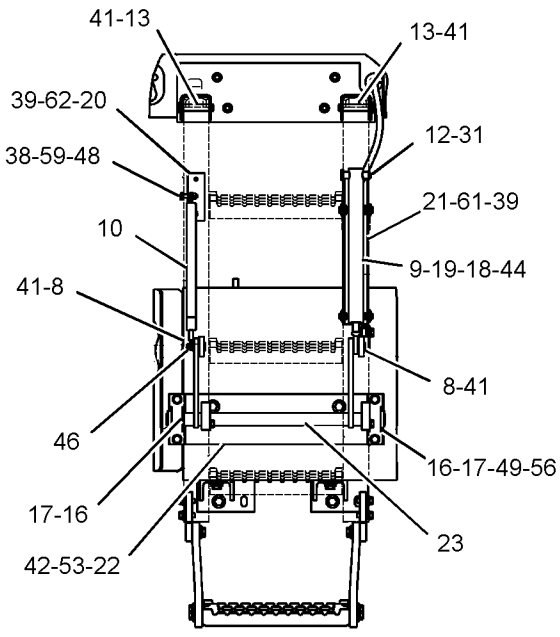

VIEW B-B

GRAPHIC #2 **<END>** g01211125

FRAME AND BODY

272-2801 LADDER GP

S/N: A7G1-UP

AN ATTACHMENT

SMCS-7254 **i02416305**

NOTE	REF NO	GRAPHIC REF	PART NUMBER	QTY	PART NAME 1 2 3 4 5 6 (PRODUCT LEVEL)	SEE PAGE
	1	2	**7K-1181**	1	STRAP-CABLE	
	2	1	**7W-8106**	8	SPACER (15-MM THK)	
	3	2	**132-3421**	1	BUMPER	
	4	2	**144-4613**	2	ANGLE AS	
					(EACH INCLUDES)	
M		2	**8T-3490**	1	NUT-WELD (M10X1.5-THD)	
	5	1	**149-2847**	1	FITTING	
	6	1	**234-1530**	1	STEP AS	
M		1	**8T-3490**	4	NUT-WELD (M10X1.5-THD)	
	7	1	**234-3545**	4	PLATE	
	8	2	**254-4151**	2	ROLLER	
	9	2	**254-4152**	1	CYLINDER	
	10	2	**254-4153**	1	SPRING-GAS	
	11	2	**254-4154**	2	PLATE	
	12	2	**254-4171**	1	PIN	
	13	2	**254-4187**	2	PIN	
	14	2	**254-4189**	2	BLOCK	
	15	2	**254-4190**	2	PLATE	
	16	2	**254-5254**	2	HOUSING	
	17	2	**254-5255**	2	BEARING	
	18	2	**254-5257**	1	ELBOW	
	19	2	**254-5258**	1	BREATHER (HYDRAULIC TANK)	
	20	2	**254-8471**	1	PLATE	
	21	2	**255-7499**	1	ARM AS	
	22	2	**257-2259**	1	COVER AS	
M		2	**6V-9632**	4	NUT-WELD (M6X1-THD)	
	23	1	**267-1778**	1	BRACKET AS	
	24	2	**267-1780**	1	PLATE	
	25	1	**267-1781**	1	PLATE	
	26	1	**267-1782**	1	LADDER AS	
	27	1	**267-1783**	1	FENDER AS (LH)	
M		1	**8T-3597**	1	NUT-WELD (M12X1.75-THD)	
		1	**243-5849**	1	FENDER AS (LH)	
	28	1	**272-2787**	1	HANDHOLD AS (FRONT, LH)	
	29	1	**272-2790**	1	SUPPORT AS	
M		1	**8T-3597**	4	NUT-WELD (M12X1.75-THD)	
I	30	1	**272-6388**	1	HOSE AS	
	31	2	**095-0917**	1	RING-RETAINING	
	32	1	*148-8434*	1	TEE AS	
		1	**6V-8397**	2	SEAL-O-RING	
		1	**6V-9843**	1	TEE-SWIVEL	
	33	1	*150-4050*	1	ELBOW AS	
		1	**3J-1907**	1	SEAL-O-RING	
		1	**8T-0788**	1	ELBOW	
	34	1	**156-3722**	1	COUPLING AS	
	35	1	**3J-1907**	1	SEAL-O-RING	
	36	2	**3V-4791**	2	GROMMET	
	37	1	**4J-5477**	1	SEAL-O-RING	
M	38	2	**5C-7261**	1	NUT (M8X1.25-THD)	
M	39	2	**5C-9553**	6	BOLT (M6X1X16-MM)	
	40	2	**5G-9603**	1	SPACER (11.03X26.6X50-MM THK)	
	41	2	**5L-4035**	4	RING-RETAINING (EXTERNAL)	
	42	1,2	**5P-1076**	8	WASHER-HARD (13.5X30X4-MM THK)	
	43	2	**6D-3479**	2	CLIP	
	44	1	**6V-8397**	1	SEAL-O-RING	
	45	1	**6V-8641**	1	CONNECTOR	

272-2801 **LADDER GP** *(contd.)* **i02416305**

NOTE	REF NO	GRAPHIC REF	PART NUMBER	QTY	PART NAME 1 2 3 4 5 6 (PRODUCT LEVEL)	SEE PAGE
M	46	2	**6V-9189**	1	LOCKNUT (M8X1.25-THD)	
	47	1	**6V-9850**	1	ELBOW	
M	48	2	**7X-2537**	1	BOLT (M8X1.25X35-MM)	
	49	2	**8C-7528**	1	CLIP	
	50	1,2	**8T-4121**	23	WASHER-HARD (11X21X2.5-MM THK)	
M	51	1	**8T-4133**	2	NUT (M10X1.15-THD)	
M	52	2	**8T-4136**	2	BOLT (M10X1.5X25-MM)	
M	53	2	**8T-4137**	2	BOLT (M10X1.5X20-MM)	
M	54	1,2	**8T-4139**	8	BOLT (M12X1.75X30-MM)	
M	55	2	**8T-4172**	1	BOLT (M10X1.5X80-MM)	
M	56	1	**8T-4186**	6	BOLT (M10X1.5X40-MM)	
M	57	2	**8T-4191**	2	BOLT (M10X1.5X16-MM)	
M	58	2	**8T-4195**	4	BOLT (M10X1.5X30-MM)	
M	59	2	**8T-4196**	4	BOLT (M10X1.5X35-MM)	
	60	2	**8T-4224**	2	WASHER-HARD (8.8X16X2-MM THK)	
	61	2	**9X-6165**	4	WASHER (6.5X22X2.5-MM THK)	
	62	2	**9X-8256**	2	WASHER (6.6X12X2-MM THK)	
	63	2	**255-7504**	2	BELT-STEP	
	64	1	**153-6223**	1	PLUG-DUST	

I-REFER TO HYDRAULIC INFORMATION SYSTEM
M-METRIC PART

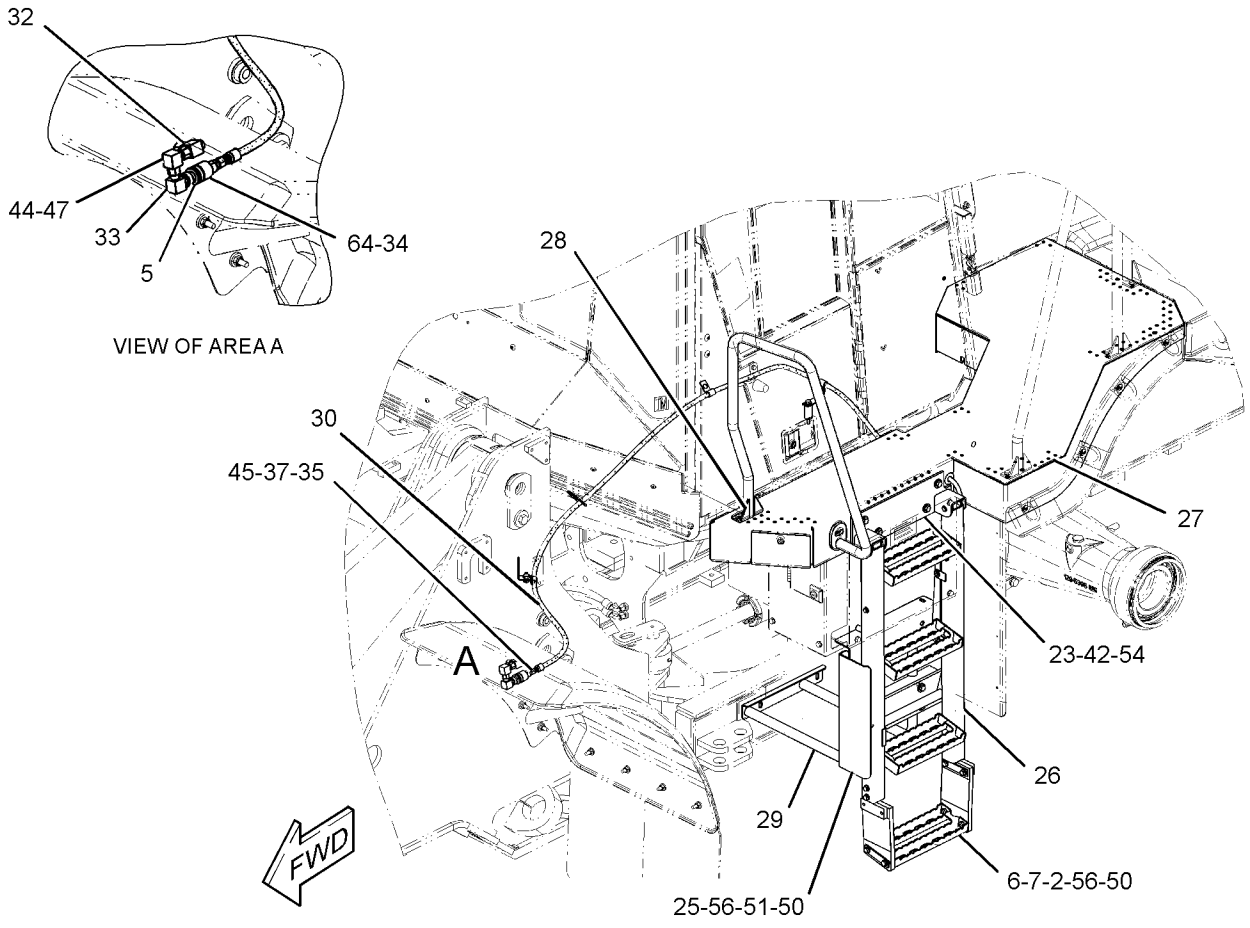

GRAPHIC #1 g01211441

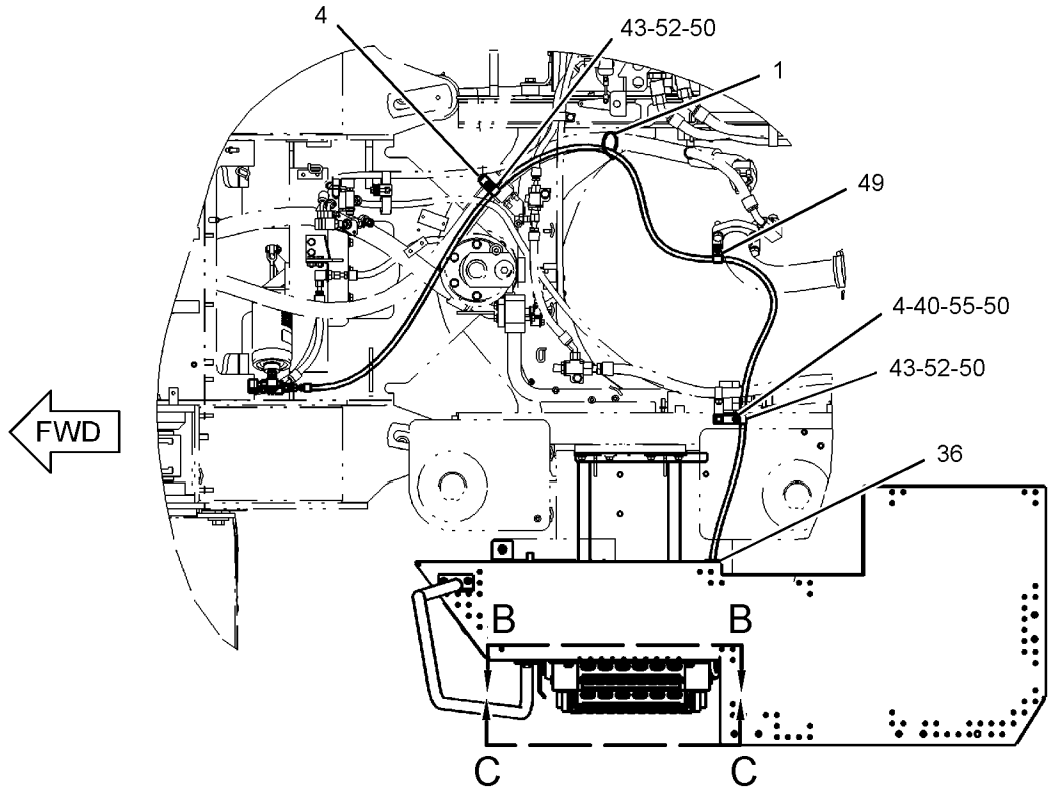

TOP VIEW

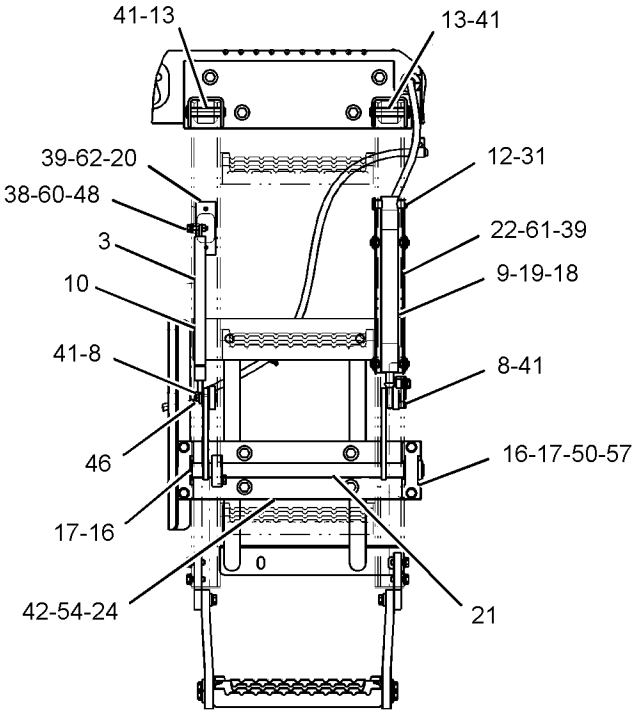

SECTION B-B

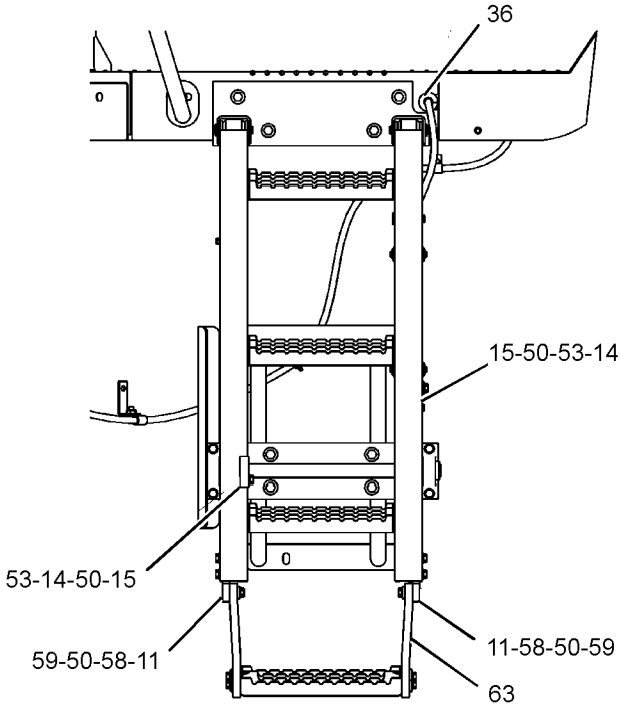

VIEW C-C

GRAPHIC #2 **<END>** g01211174

276-8075 LINES GP-AUTOMATIC LUBRICATION–

LOADER FRAME, REAR

S/N: A7G1-UP

PART OF 261-1446, 263-6296, 277-0038 LUBRICATION AR-AUTOMATIC

AN ATTACHMENT

SMCS-7510, 7540 **i02389803**

NOTE	REF NO	GRAPHIC REF	PART NUMBER	QTY	PART NAME 1 2 3 4 5 6 (PRODUCT LEVEL)	SEE PAGE
	1	1	**3B-8489**	6	FITTING-GREASE	
	2	1	**3S-2093**	1	STRAP-CABLE	
	3	1	**6K-0806**	3	STRAP-CABLE	
	4	1	**177-3463**	8	COUPLING	
	5	1	**177-3464**	5	ELBOW	
	6	1	**177-3465**	1	COUPLING	
	7	1	**177-3466**	2	ADAPTER	
	8	1	**177-3468**	2	ADAPTER	
	9	1	**177-3475**	2	ADAPTER	
	10	1	**250-0241**	6	CONNECTOR	
	11	1	**276-8069**	1	PLATE	
	12	1	**276-8173**	4	ELBOW	
Y	13	1	*277-3413*	1	VALVE & LINES GP-LUBRICATION (REAR)	443
	14	1	**277-3437**	1	TUBE	
	15	1	**2B-2404**	1	CLIP	
	16	1	**4D-8123**	1	CLIP	
	17	1	**4D-8948**	1	CLIP	
	18	1	**5K-2298**	4	CLIP	
	19	1	**5P-9299**	2	CLIP	
	20	1	**7X-7729**	1	WASHER (11X25X3-MM THK)	
	21	1	**8M-2770**	2	CLIP	
	22	1	**8M-2772**	13	CLIP	
	23	1	**8M-2773**	4	CLIP	
	24	1	**8T-4121**	20	WASHER-HARD (11X21X2.5-MM THK)	
M	25	1	**8T-4133**	1	NUT (M10X1.15-THD)	
M	26	1	**8T-4137**	19	BOLT (M10X1.5X20-MM)	
M	27	1	**8T-4191**	1	BOLT (M10X1.5X16-MM)	

M-METRIC PART
Y-SEPARATE ILLUSTRATION

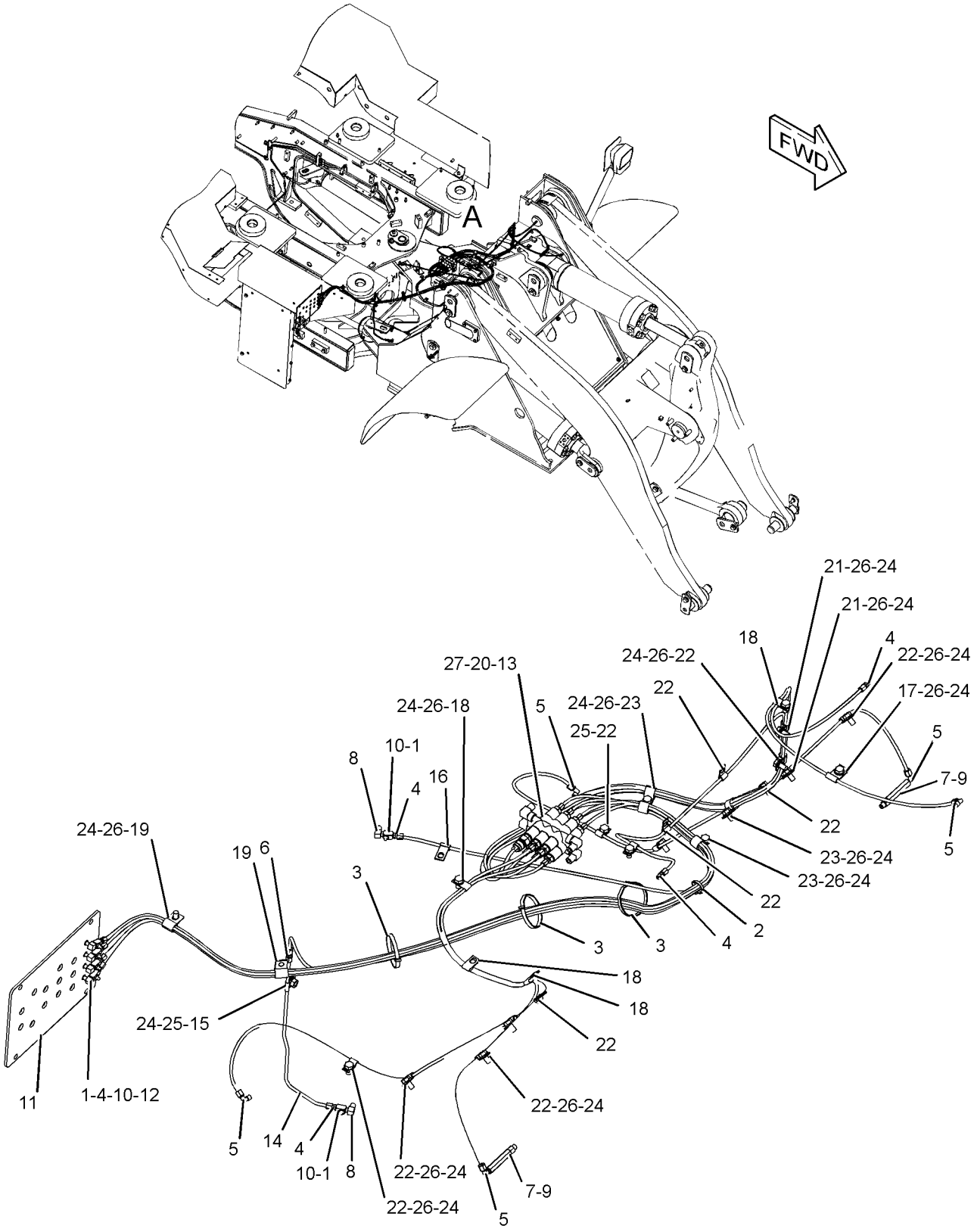

VIEW OF AREA A

GRAPHIC #1 **<END>** g01196440

277-0307 LINES GP-AUTOMATIC LUBRICATION–

LOADER FRAME

S/N: A7G1-UP

PART OF 263-6296 LUBRICATION AR-AUTOMATIC

AN ATTACHMENT

SMCS-7510, 7540 **i02396686**

NOTE	REF NO	GRAPHIC REF	PART NUMBER	QTY	PART NAME 1 2 3 4 5 6 (PRODUCT LEVEL)	SEE PAGE
	1	2,3	**3S-2093**	3	STRAP-CABLE	
	2	1	**7F-5345**	1	PLATE	
	3	2,3	**177-3475**	5	ADAPTER	
	4	3	**177-3477**	1	ADAPTER	
	5	3	**177-3484**	2	BOLT	
	6	3	**177-3489**	1	COUPLING	
	7	2	**177-3490**	2	ELBOW	
	8	2	**178-2723**	2	ELBOW	
	9	3	**192-5918**	2	BRACKET AS	
	10	2	**251-2138**	2	ELBOW AS	
	11	2	**251-2139**	8	BRACKET	
	12	2	**251-3532**	1	TUBE	
	13	2	**251-3533**	1	TUBE	
	14	1	**251-6079**	2	CLAMP AS	
					(EACH INCLUDES)	
		1	**251-3104**	1	BLOCK	
	15	3	**251-7294**	2	BUSHING	
	16	3	**253-3269**	1	TUBE	
	17	3	**253-3270**	1	TUBE	
	18	2	**256-4884**	1	BRACKET	
Y	19	3	*278-2071*	1	VALVE & LINES GP-LUBRICATION (LOADER FRAME)	444
	20	3	**278-2078**	1	ELBOW	
	21	3	**278-4131**	1	BRACKET AS	
M		3	**8T-3490**	1	NUT-WELD (M10X1.5-THD)	
	22	3	**4M-8973**	1	ELBOW	
M	23	2	**5C-9553**	2	BOLT (M6X1X16-MM)	
	24	1	**5M-5687**	2	CLIP	
	25	3	**5P-9299**	17	CLIP	
M	26	1	**6V-7744**	2	LOCKNUT (M10X1.15-THD)	
	27	2,3	**7X-7729**	4	WASHER (11X25X3-MM THK)	
	28	1	**8J-8332**	1	CLIP	
	29	1,3	**8T-4121**	11	WASHER-HARD (11X21X2.5-MM THK)	
M	30	2,3	**8T-4136**	13	BOLT (M10X1.5X25-MM)	
M	31	1	**8T-4189**	1	BOLT (M8X1.25X20-MM)	
M	32	1	**8T-4196**	2	BOLT (M10X1.5X35-MM)	
M	33	2	**8T-4200**	8	BOLT (M8X1.25X16-MM)	
	34	1,2	**8T-4224**	10	WASHER-HARD (8.8X16X2-MM THK)	
M	35	1	**8T-4908**	1	BOLT (M8X1.25X25-MM)	
	36	2	**9X-8256**	2	WASHER (6.6X12X2-MM THK)	

M-METRIC PART
Y-SEPARATE ILLUSTRATION

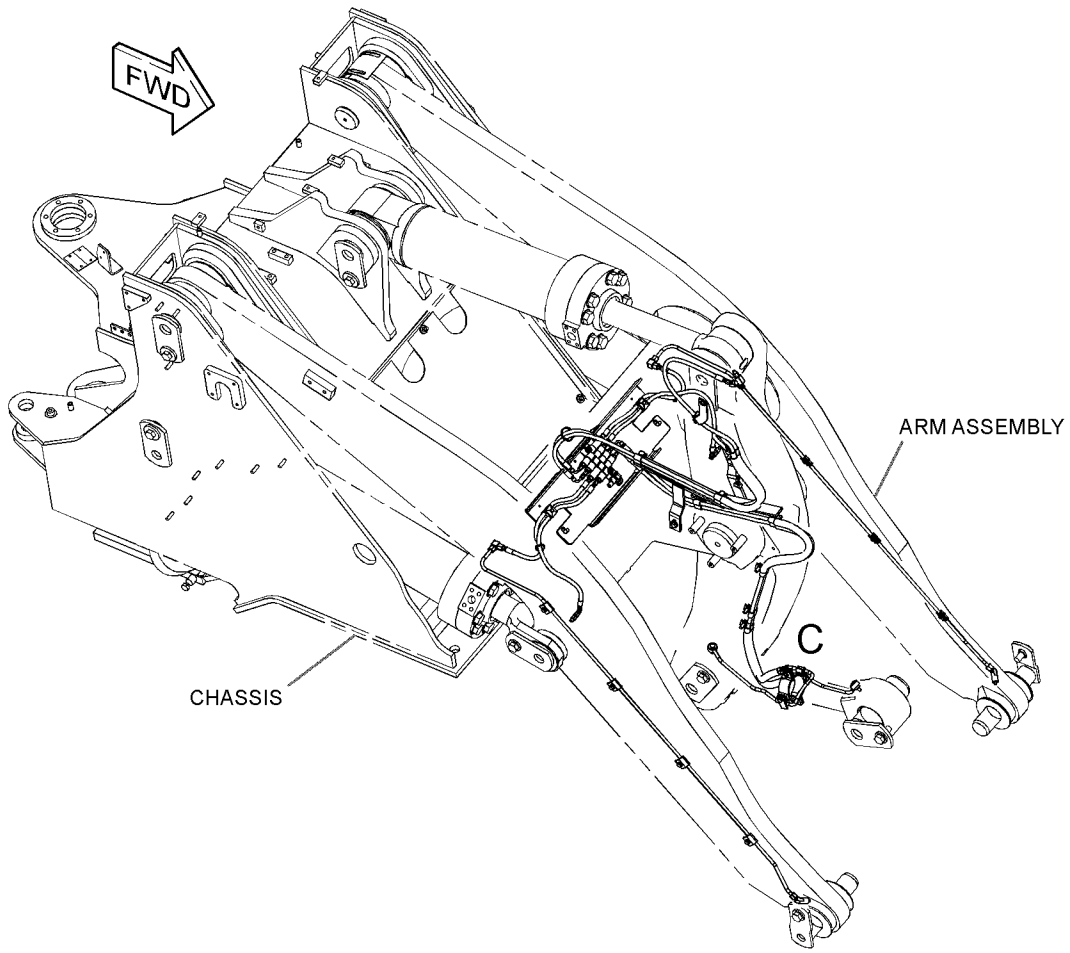

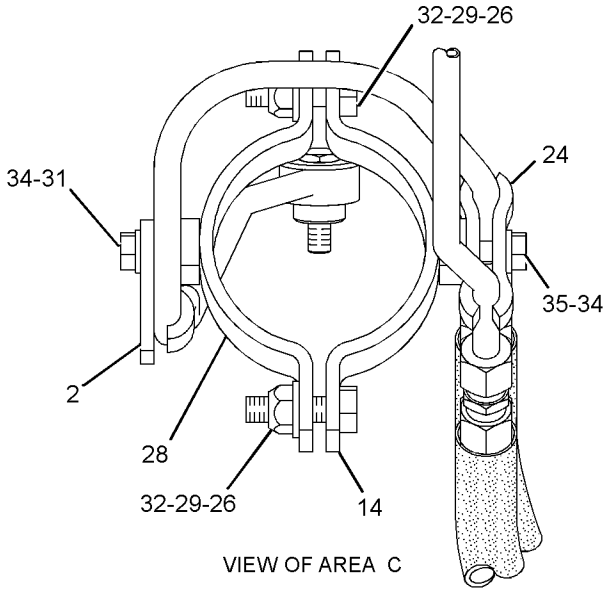

GRAPHIC #1

g01198852

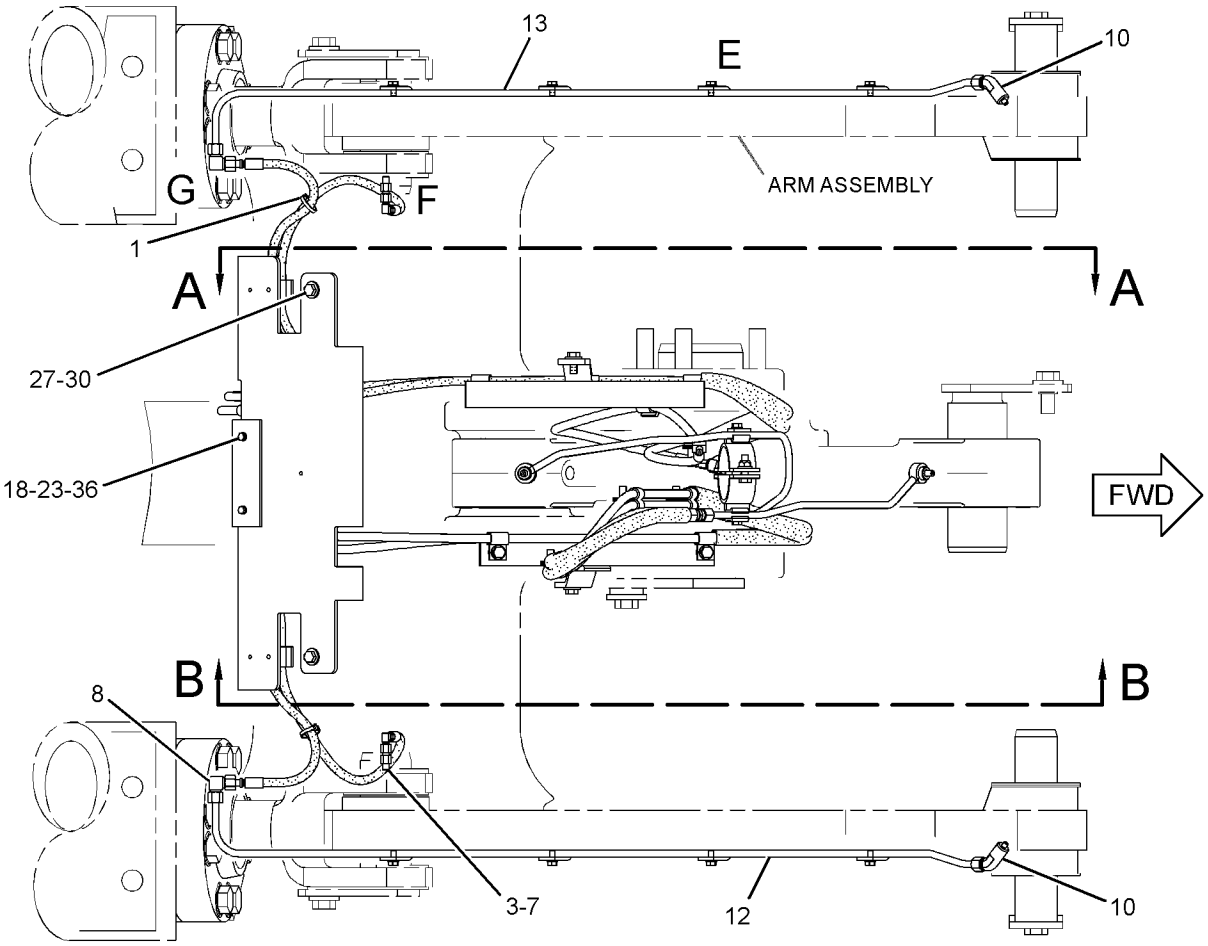

BOTTOM VIEW

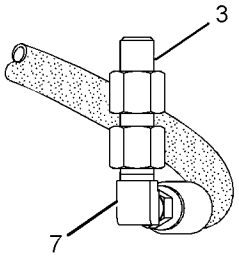

VIEW OF AREA F

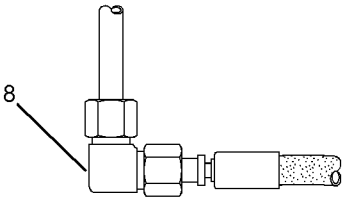

VIEW OF AREA G

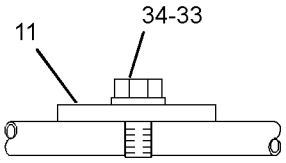

VIEW OF AREA E

GRAPHIC #2

g01198854

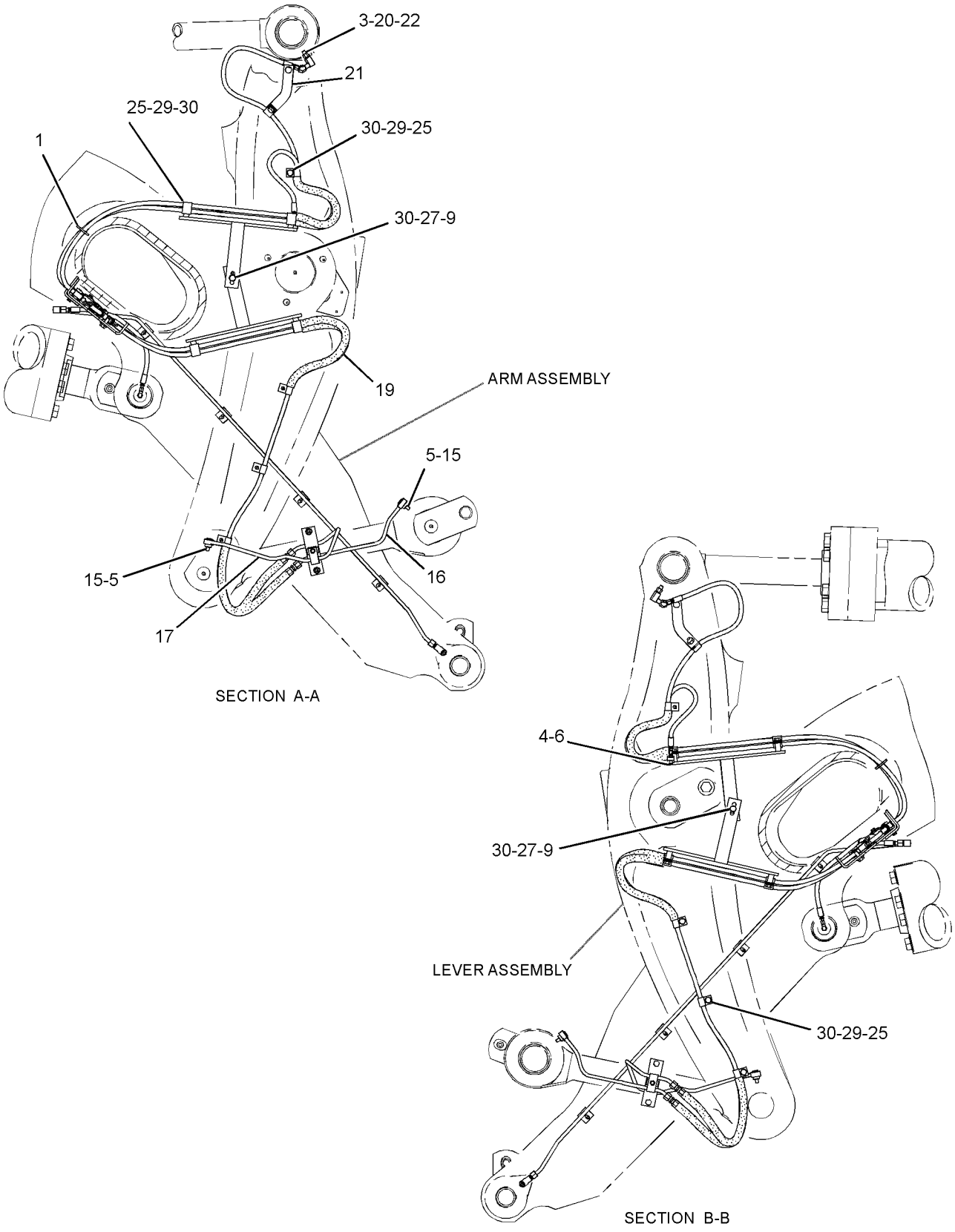

GRAPHIC #3 **<END>** g01198853

277-0308 LINES GP-AUTOMATIC LUBRICATION

S/N: A7G1-UP

PART OF 261-1446 LUBRICATION AR-AUTOMATIC

AN ATTACHMENT

SMCS-7510, 7540 **i02392062**

NOTE	REF NO	GRAPHIC REF	PART NUMBER	QTY	PART NAME 1 2 3 4 5 6 (PRODUCT LEVEL)	SEE PAGE
	1	1,2	**3S-2093**	3	STRAP-CABLE	
	2	2	**7F-5345**	1	PLATE	
	3	1,2	**177-3475**	5	ADAPTER	
	4	2	**177-3477**	1	ADAPTER	
	5	2	**177-3484**	2	BOLT	
	6	2	**177-3489**	1	COUPLING	
	7	1	**177-3490**	2	ELBOW	
	8	1	**178-2723**	2	ELBOW	
	9	2	**192-5918**	2	BRACKET AS	
	10	1	**251-2138**	2	ELBOW AS	
	11	1	**251-2139**	8	BRACKET	
	12	2	**251-7294**	2	BUSHING	
	13	2	**253-5179**	2	CLAMP AS	
		2	**251-3104**	1	BLOCK	
	14	2	**253-6088**	1	TUBE	
	15	2	**253-8659**	1	TUBE	
	16	1	**253-8660**	1	TUBE	
	17	1	**253-8661**	1	TUBE	
	18	1	**256-4884**	1	BRACKET	
Y	19	2	*278-2071*	1	VALVE & LINES GP-LUBRICATION (LOADER FRAME)	444
	20	2	**278-2078**	1	ELBOW	
	21	2	**278-4131**	1	BRACKET AS	
M		2	**8T-3490**	1	NUT-WELD (M10X1.5-THD)	
	22	2	**4M-8973**	1	ELBOW	
M	23	1	**5C-9553**	2	BOLT (M6X1X16-MM)	
	24	2	**5M-5687**	2	CLIP	
	25	2	**5P-9299**	17	CLIP	
M	26	2	**6V-7744**	2	LOCKNUT (M10X1.15-THD)	
	27	1,2	**7X-7729**	4	WASHER (11X25X3-MM THK)	
	28	2	**8J-8332**	1	CLIP	
	29	2	**8T-4121**	11	WASHER-HARD (11X21X2.5-MM THK)	
M	30	1,2	**8T-4136**	13	BOLT (M10X1.5X25-MM)	
M	31	2	**8T-4189**	1	BOLT (M8X1.25X20-MM)	
M	32	2	**8T-4196**	2	BOLT (M10X1.5X35-MM)	
M	33	1	**8T-4200**	8	BOLT (M8X1.25X16-MM)	
	34	1,2	**8T-4224**	10	WASHER-HARD (8.8X16X2-MM THK)	
M	35	2	**8T-4908**	1	BOLT (M8X1.25X25-MM)	
	36	1	**9X-8256**	2	WASHER (6.6X12X2-MM THK)	

M-METRIC PART
Y-SEPARATE ILLUSTRATION

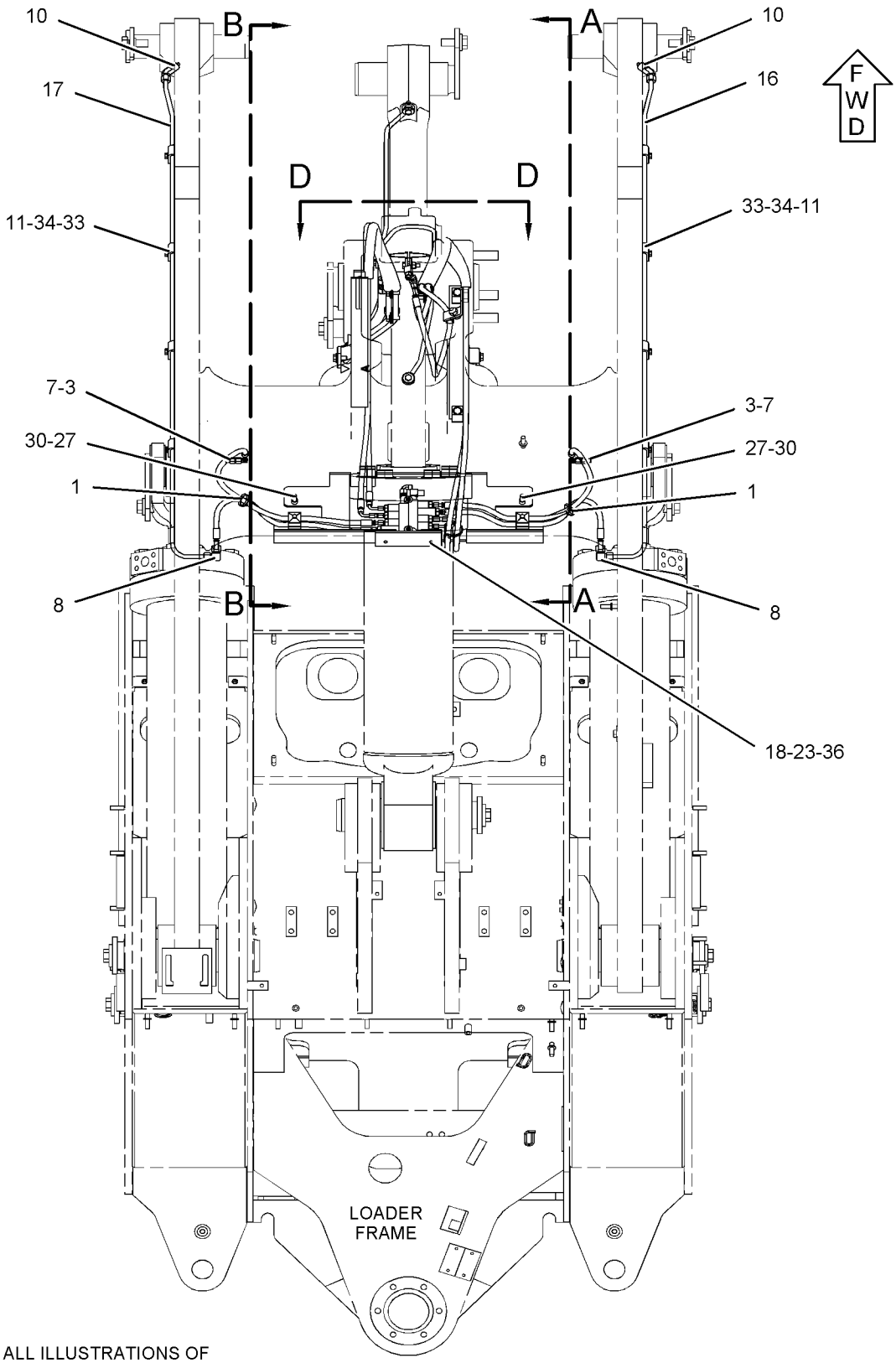

REFER TO ALL ILLUSTRATIONS OF
THIS GROUP FOR AUXILIARY VIEWS

TOP VIEW

GRAPHIC #1

g01211253

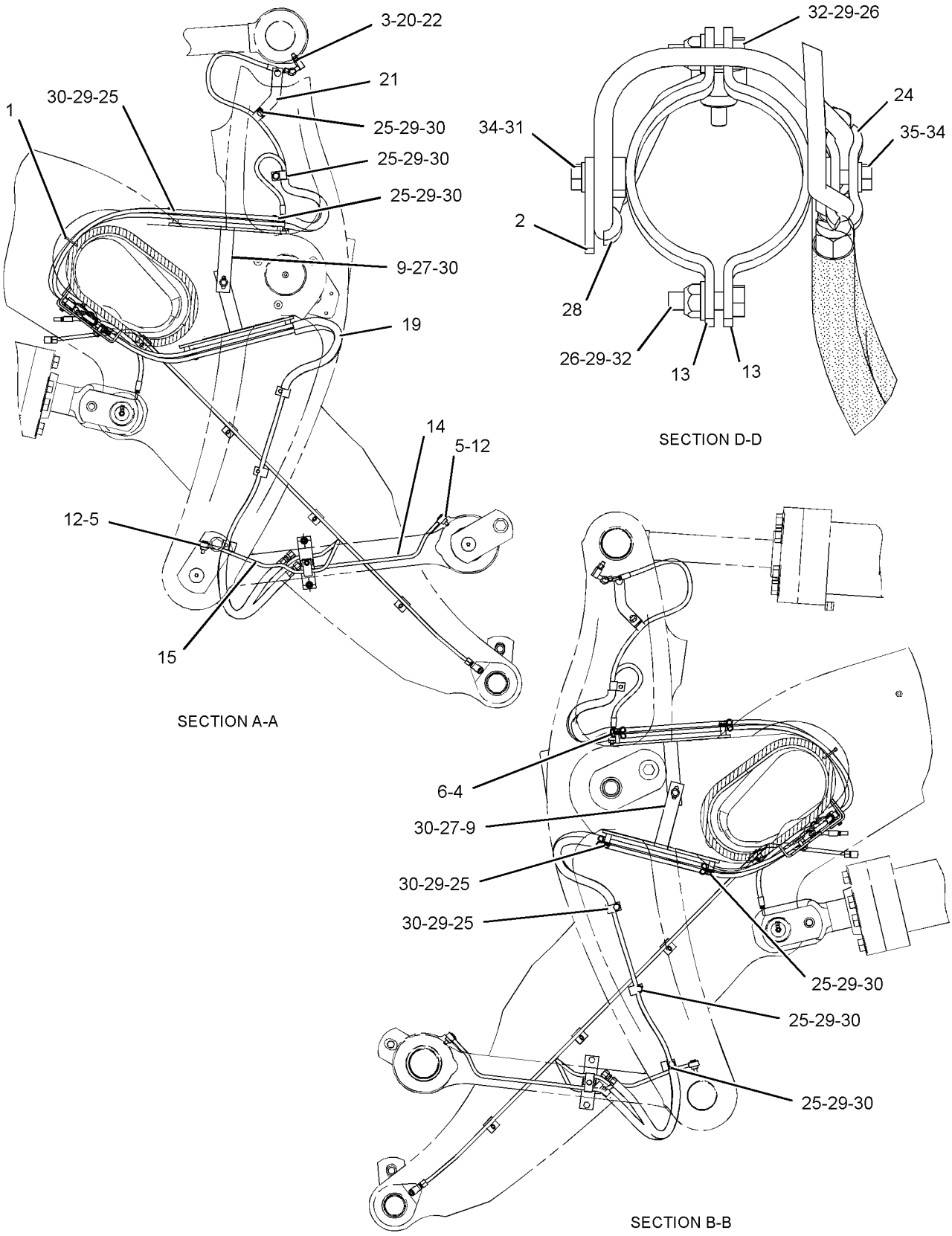

GRAPHIC #2 **<END>** g01211255

277-5336 LINES GP-AUTOMATIC LUBRICATION–

LOADER FRAME

S/N: A7G1-UP

PART OF 277-0038 LUBRICATION AR-AUTOMATIC

AN ATTACHMENT

SMCS-7510, 7540 **i02389755**

NOTE	REF NO	GRAPHIC REF	PART NUMBER	QTY	PART NAME 1 2 3 4 5 6 (PRODUCT LEVEL)	SEE PAGE
	1	1	**3S-2093**	3	STRAP-CABLE	
	2	1	**4M-8973**	1	ELBOW	
	3	1	**7F-5345**	1	PLATE	
	4	1	**177-3475**	5	ADAPTER	
	5	1	**177-3477**	1	ADAPTER	
	6	1	**177-3484**	2	BOLT	
	7	1	**177-3489**	1	COUPLING	
	8	1	**177-3490**	2	ELBOW	
	9	1	**178-2723**	2	ELBOW	
	10	1	**192-5918**	2	BRACKET AS	
	11	1	**251-2138**	2	ELBOW AS	
	12	1	**251-2139**	8	BRACKET	
	13	1	**251-6079**	2	CLAMP AS	
	14	1	**251-7294**	2	BUSHING	
	15	1	**253-3269**	1	TUBE	
	16	1	**253-3270**	1	TUBE	
	17	1	**256-4884**	1	BRACKET	
	18	1	**277-5341**	1	TUBE	
	19	1	**277-5343**	1	TUBE	
Y	20	1	*278-2071*	1	VALVE & LINES GP-LUBRICATION (LOADER FRAME)	444
	21	1	**278-2078**	1	ELBOW	
	22	1	**278-4131**	1	BRACKET AS	
M		1	**8T-3490**	1	NUT-WELD (M10X1.5-THD)	
M	23	1	**5C-9553**	2	BOLT (M6X1X16-MM)	
	24	1	**5M-5687**	2	CLIP	
	25	1	**5P-9299**	17	CLIP	
M	26	1	**6V-7744**	2	LOCKNUT (M10X1.15-THD)	
	27	1	**7X-7729**	4	WASHER (11X25X3-MM THK)	
	28	1	**8J-8332**	1	CLIP	
	29	1	**8T-4121**	11	WASHER-HARD (11X21X2.5-MM THK)	
M	30	1	**8T-4136**	13	BOLT (M10X1.5X25-MM)	
M	31	1	**8T-4189**	1	BOLT (M8X1.25X20-MM)	
M	32	1	**8T-4196**	2	BOLT (M10X1.5X35-MM)	
M	33	1	**8T-4200**	8	BOLT (M8X1.25X16-MM)	
	34	1	**8T-4224**	10	WASHER-HARD (8.8X16X2-MM THK)	
M	35	1	**8T-4908**	1	BOLT (M8X1.25X25-MM)	
	36	1	**9X-8256**	2	WASHER (6.6X12X2-MM THK)	

M-METRIC PART
Y-SEPARATE ILLUSTRATION

277-5336 **LINES GP-AUTOMATIC LUBRICATION** *(contd.)* **i02389755**

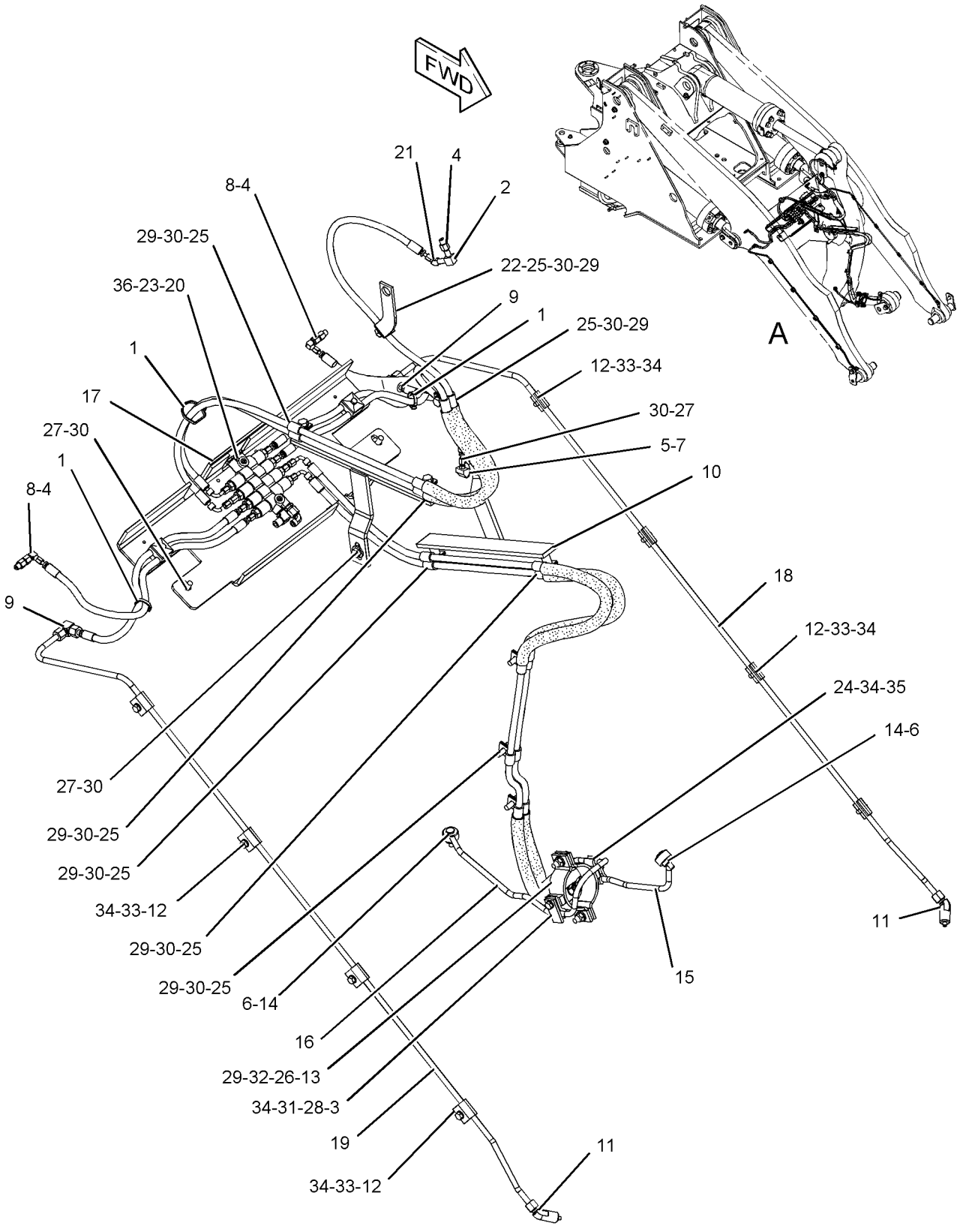

VIEW OF AREA A

GRAPHIC #1 **<END>** g01196182

FRAME AND BODY

236-8982 LINES GP-GREASE

S/N: A7G1-UP

PART OF 236-9051 CHASSIS AR

SMCS-7510 **i02412057**

NOTE	REF NO	GRAPHIC REF	PART NUMBER	QTY	PART NAME 1 2 3 4 5 6 (PRODUCT LEVEL)	SEE PAGE
	1	2	**4H-1225**	3	WASHER (11X22X6-MM THK)	
	2	3	**5B-0935**	7	FITTING-GREASE	
	3	2	**5K-9242**	1	UNION-FLARED	
	4	1,2,3	**5K-9243**	7	ELBOW-FLARED	
	5	2	**5K-9979**	1	CONNECTOR	
	6	3	**5P-5461**	7	NUT (1/8-27-THD)	
	7	3	**5P-5463**	7	ADAPTER-LUBRICATION	
	8	2	**6L-3616**	4	CONNECTOR	
	9	1,2,3	**111-4839**	6	STRAP	
	10	2	**197-3855**	1	TUBE AS	
	11	2	**197-3856**	1	TUBE AS	
	12	1	**197-6629**	1	TUBE AS	
	13	2	**245-6800**	1	TUBE AS	
	14	2	**245-6801**	1	TUBE AS	
	15	2	**245-6802**	1	TUBE AS	
	16	2	**245-6804**	1	TUBE AS	
	17	3	**256-7880**	1	HOSE AS	
	18	3	**256-7881**	1	HOSE AS	
	19	3	**256-7882**	1	HOSE AS	
	20	3	**256-7883**	1	HOSE AS	
	21	1,2,3	**111-4838**	6	CLIP	
I	22	2	**275-3514**	1	HOSE AS	
	23	2	**2B-2404**	8	CLIP	
	24	3	**3B-6552**	4	ELBOW	
	25	2	**5K-2298**	6	CLIP	
	26	1	**6V-3265**	1	CLIP	
	27	1	**7D-7233**	1	CLIP	
	28	1	**8T-4223**	2	WASHER-HARD (13.5X25.5X3-MM THK)	
	29	1,2,3	**8T-4121**	20	WASHER-HARD (11X21X2.5-MM THK)	
M	30	1,2,3	**8T-4133**	16	NUT (M10X1.15-THD)	
M	31	1	**8T-4136**	1	BOLT (M10X1.5X25-MM)	
M	32	1,2	**8T-4137**	3	BOLT (M10X1.5X20-MM)	
	33	1	**8M-2773**	2	CLIP	

I-REFER TO HYDRAULIC INFORMATION SYSTEM
M-METRIC PART

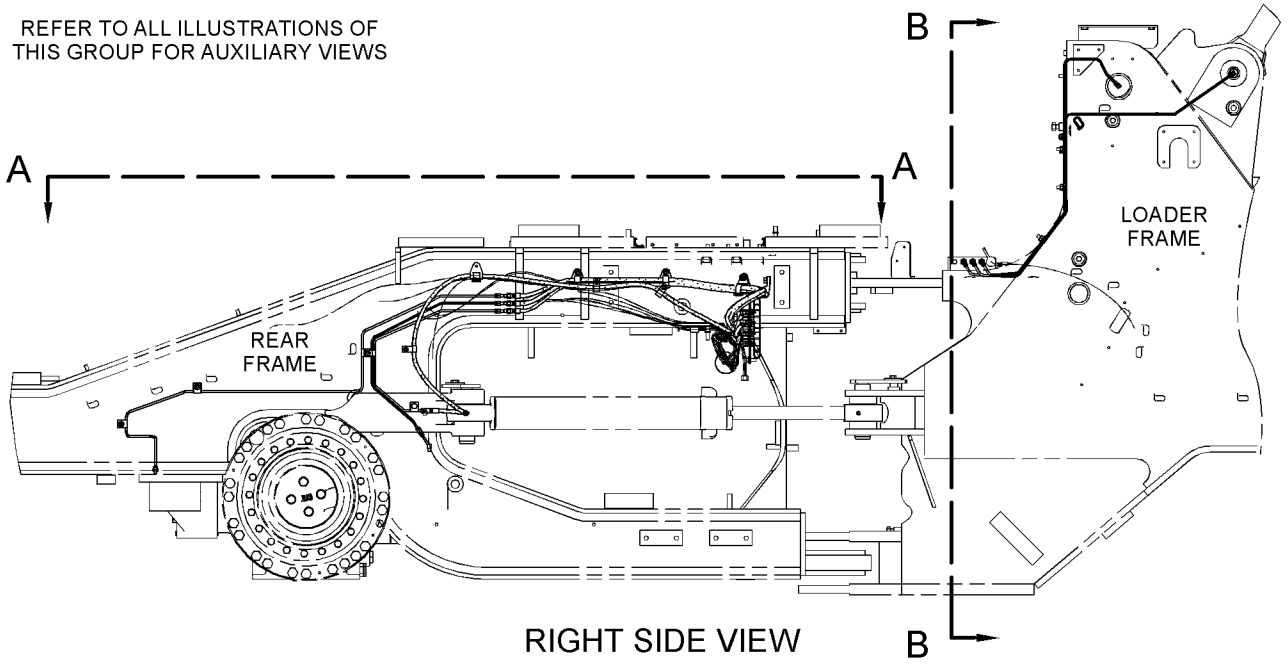

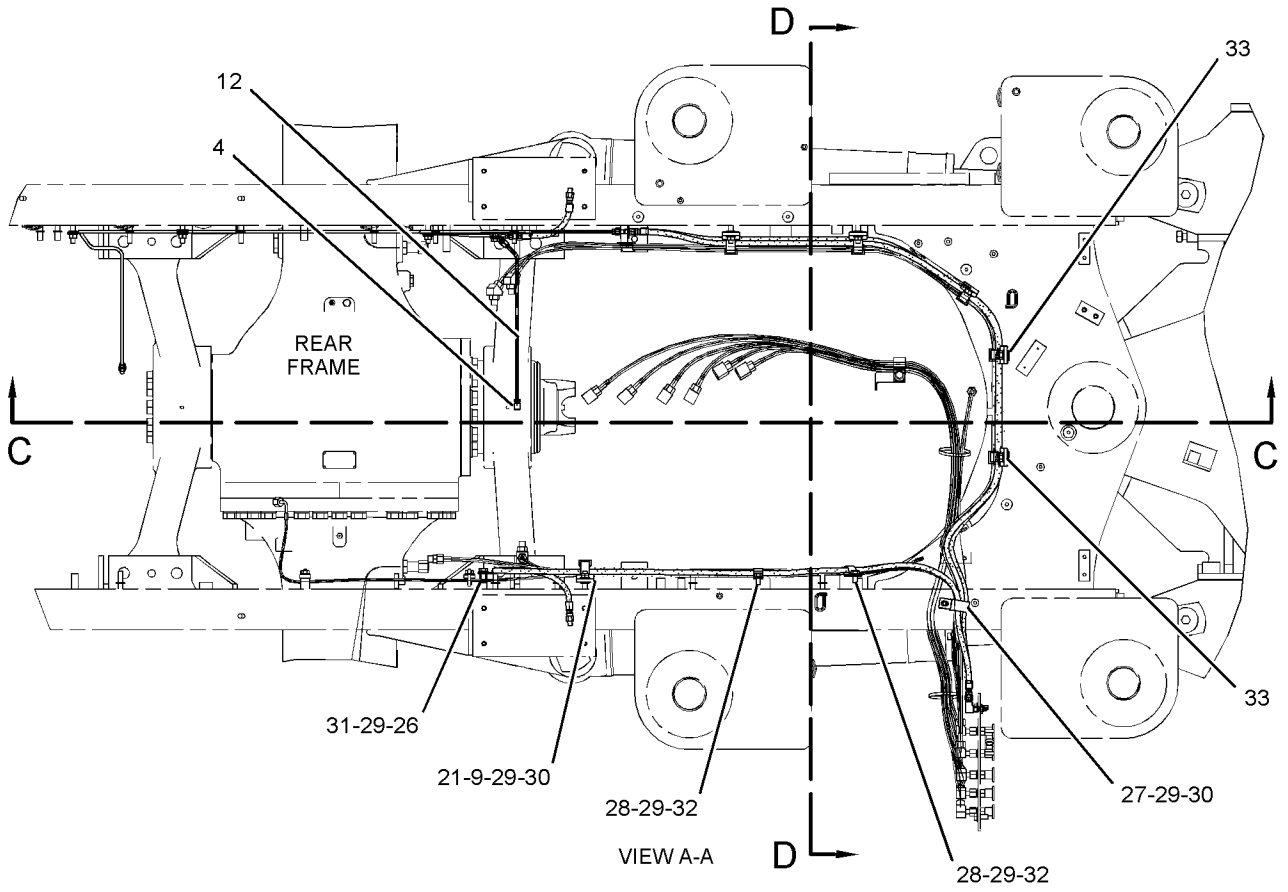

GRAPHIC #1

g01190297

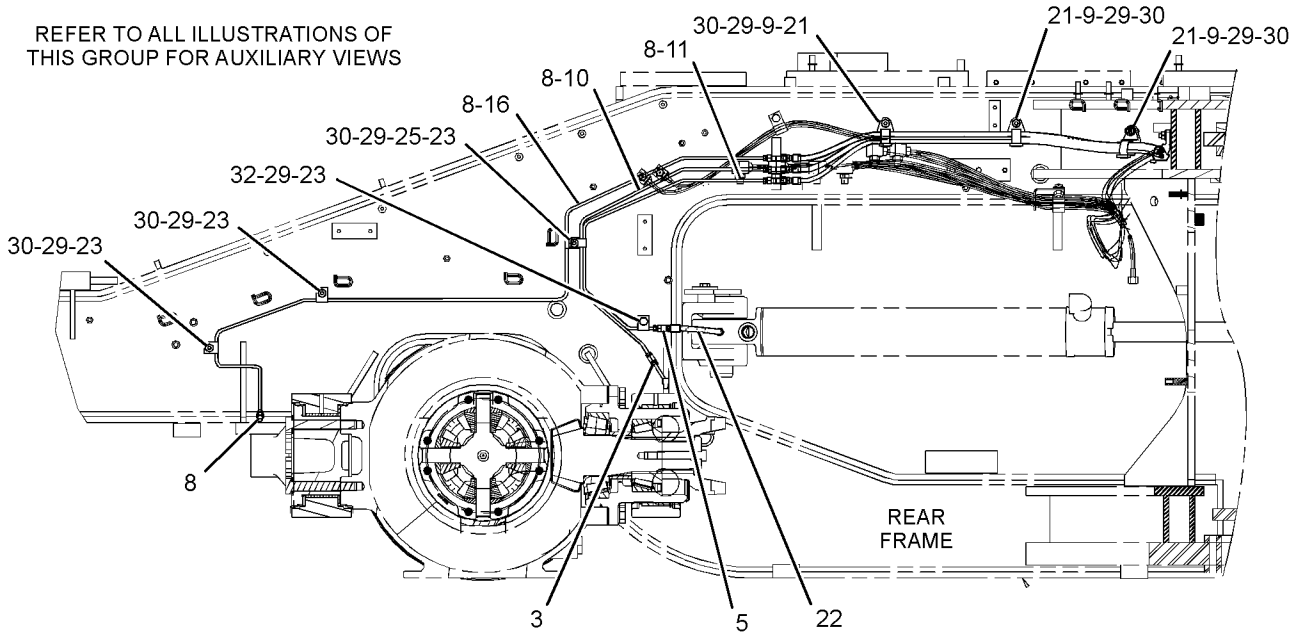

SECTION C-C

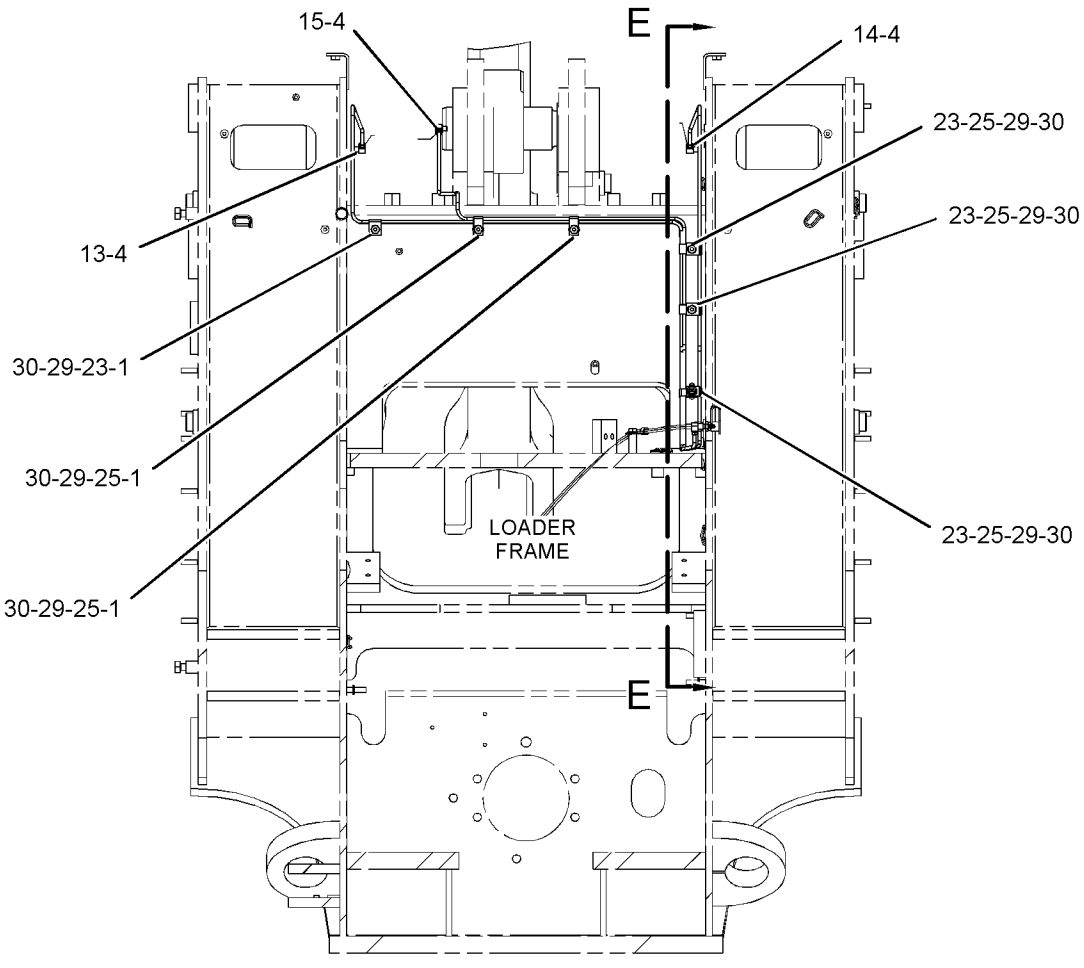

SECTION B-B

GRAPHIC #2

g01190299

236-8982 **LINES GP-GREASE** *(contd.)* **i02412057**

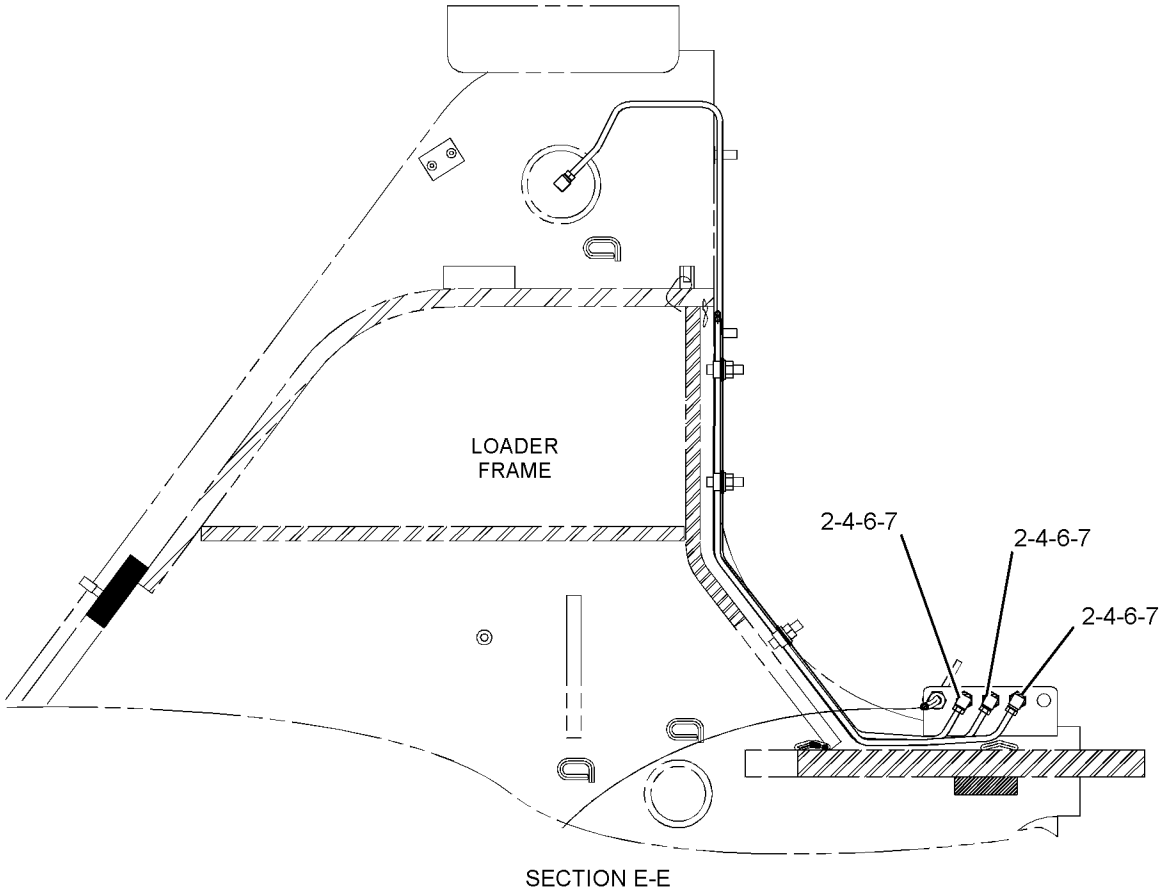

SECTION E-E

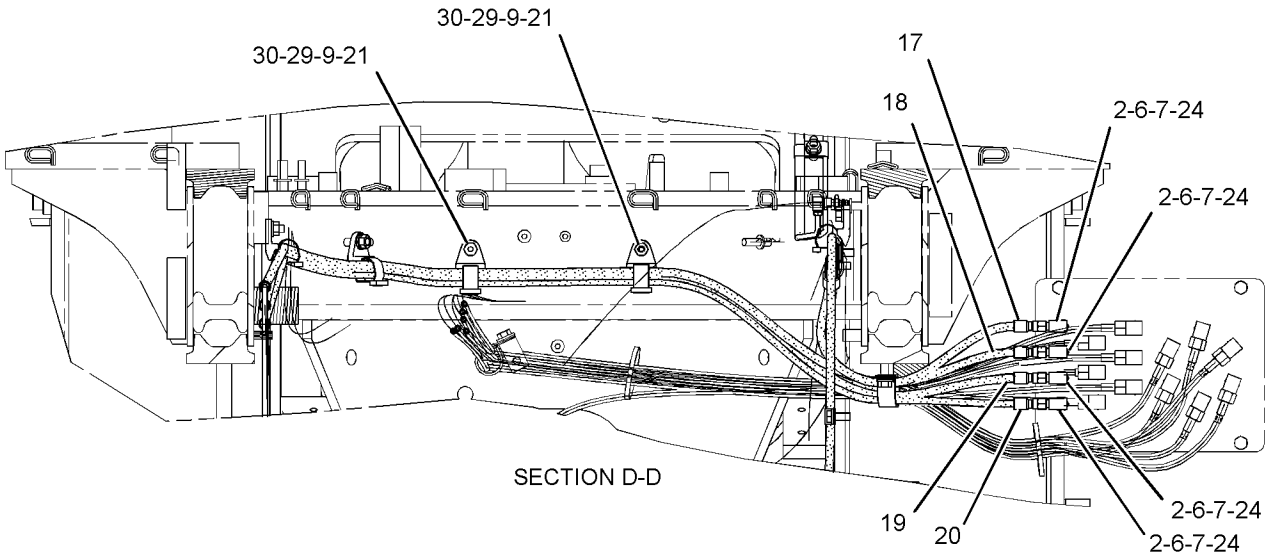

SECTION D-D

GRAPHIC #3 **<END>** g01190300

276-9599 LINES GP-LUBRICATION–CENTRAL

S/N: A7G1-UP

PART OF 261-1446, 263-6296 LUBRICATION AR-AUTOMATIC

AN ATTACHMENT

SMCS-7510, 7540 **i02392069**

NOTE	REF NO	GRAPHIC REF	PART NUMBER	QTY	PART NAME 1 2 3 4 5 6 (PRODUCT LEVEL)	SEE PAGE
	1	1	**091-7124**	1	SPACER (11X19X58-MM THK)	
	2	1	**114-9325**	1	CLAMP-DOUBLE	
	3	1	**198-3897**	1	SPACER (11X20X25-MM THK)	
I	4	1	**278-5297**	2	HOSE AS	
I	5	1	**278-5299**	2	HOSE AS	
M	6	1	**8C-8451**	1	BOLT (M6X1X40-MM)	
M	7	1	**8T-0644**	1	BOLT (M10X1.5X90-MM)	
	8	1	**8T-4121**	15	WASHER-HARD (11X21X2.5-MM THK)	
M	9	1	**8T-4136**	13	BOLT (M10X1.5X25-MM)	
M	10	1	**8T-4185**	1	BOLT (M10X1.5X50-MM)	
	11	1	**9M-4995**	18	CLIP	
E	12	1	**206-2722**		GUARD (57-CM)	

E-ORDER BY THE CENTIMETER
I-REFER TO HYDRAULIC INFORMATION SYSTEM
M-METRIC PART

276-9599 **LINES GP-LUBRICATION** *(contd.)* **i02392069**

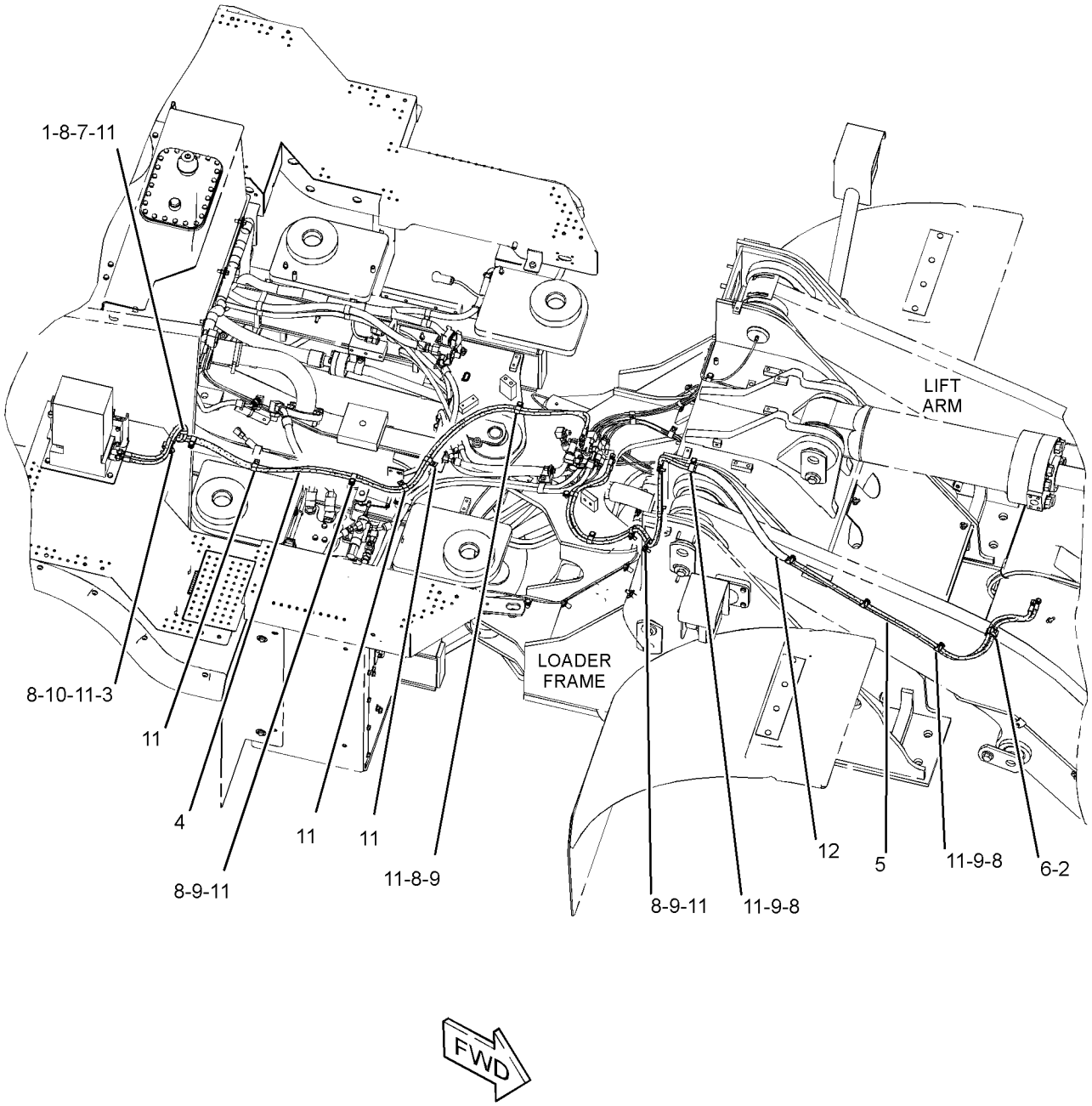

GRAPHIC #1 **<END>** g01211106

280-0508 LINES GP-LUBRICATION–CENTRAL

S/N: A7G1-UP

PART OF 277-0038 LUBRICATION AR-AUTOMATIC

AN ATTACHMENT

SMCS-7510, 7540 **i02389761**

NOTE	REF NO	GRAPHIC REF	PART NUMBER	QTY	PART NAME 1 2 3 4 5 6 (PRODUCT LEVEL)	SEE PAGE
	1	1	**091-7124**	1	SPACER (11X19X58-MM THK)	
	2	1	**114-9325**	1	CLAMP-DOUBLE	
	3	1	**198-3897**	1	SPACER (11X20X25-MM THK)	
I	4	1	**278-5297**	2	HOSE AS	
	5	1	**280-1884**	2	HOSE AS	
M	6	1	**8C-8451**	1	BOLT (M6X1X40-MM)	
M	7	1	**8T-0644**	1	BOLT (M10X1.5X90-MM)	
	8	1	**8T-4121**	16	WASHER-HARD (11X21X2.5-MM THK)	
M	9	1	**8T-4136**	14	BOLT (M10X1.5X25-MM)	
M	10	1	**8T-4185**	1	BOLT (M10X1.5X50-MM)	
	11	1	**9M-4995**	19	CLIP	
E	12	1	**206-2722**		GUARD (57-CM)	

E-ORDER BY THE CENTIMETER
I-REFER TO HYDRAULIC INFORMATION SYSTEM
M-METRIC PART

280-0508 **LINES GP-LUBRICATION** *(contd.)* **i02389761**

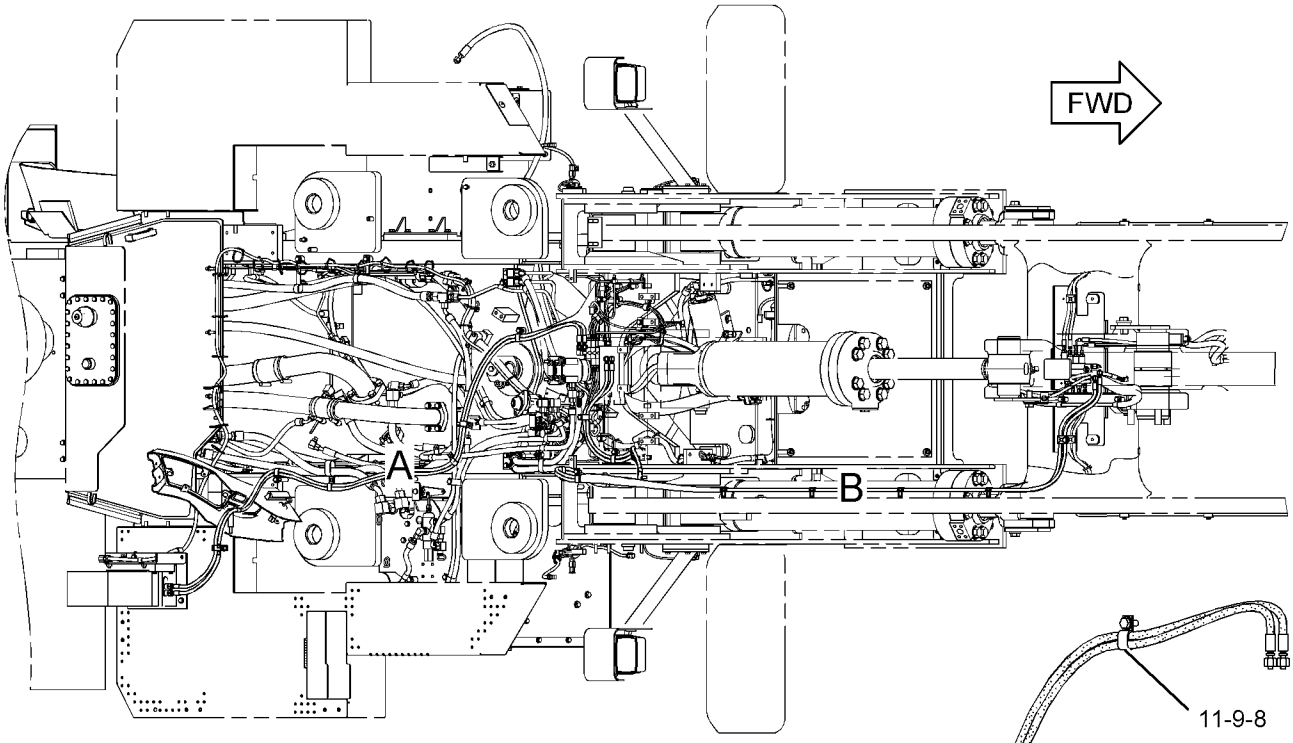

TOP VIEW

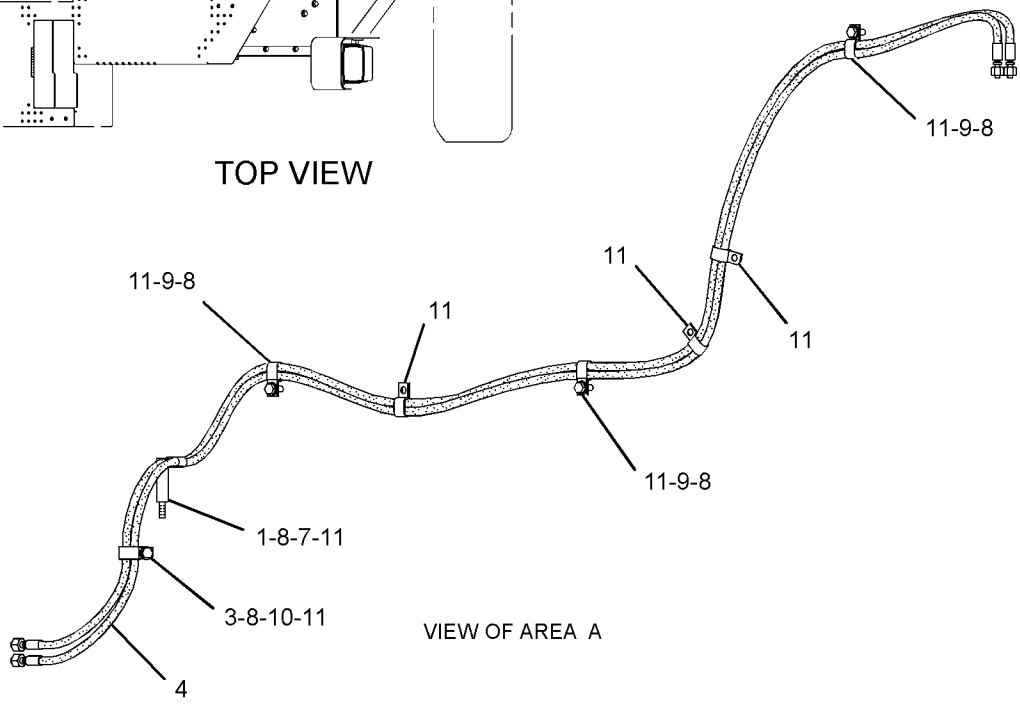

VIEW OF AREA A

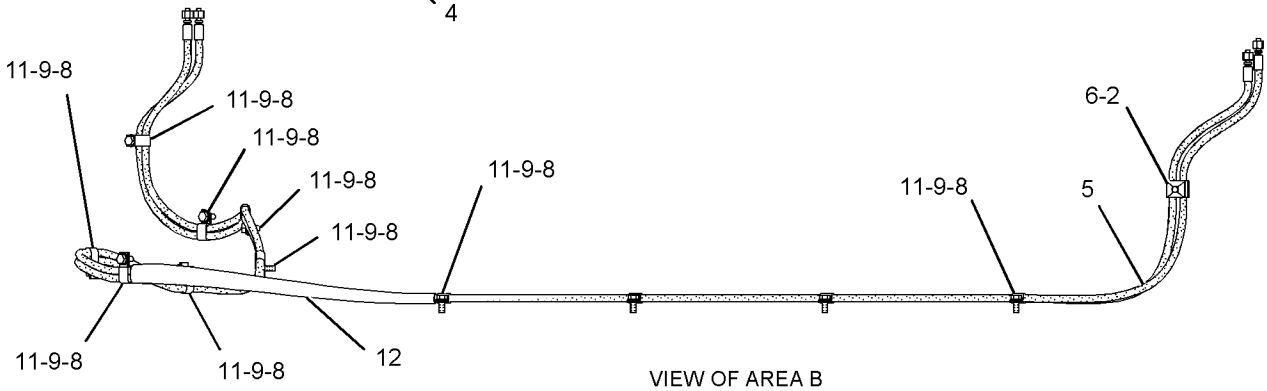

VIEW OF AREA B

GRAPHIC #1 **<END>** g01202376

112-6973 LINK GP-STEERING FRAME LOCK

S/N: A7G1-UP

PART OF 236-9051 CHASSIS AR

SMCS-7506 **i00754417**

NOTE	REF NO	GRAPHIC REF	PART NUMBER	QTY	PART NAME 1 2 3 4 5 6 (PRODUCT LEVEL)	SEE PAGE
	1	1	**5V-6380**	2	PIN	
	2	1	**8D-3791**	2	PIN	
	3	1	**127-1579**	1	LINK	

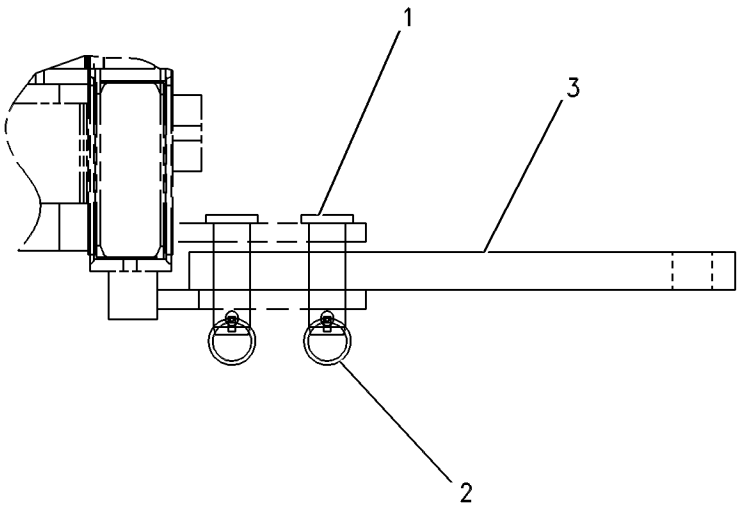

GRAPHIC #1 **<END>** g00262252

261-1446 LUBRICATION AR-AUTOMATIC

S/N: A7G1-UP

AN ATTACHMENT

SMCS-7540 **i02424478**

NOTE	REF NO	GRAPHIC REF	PART NUMBER	QTY	PART NAME 1 2 3 4 5 6 (PRODUCT LEVEL)	SEE PAGE
Y	1	1	*192-6118*	1	BOSS GP-LEVER	648
Y	2	1	*265-5389*	1	BOSS GP-REAR FRAME	357
Y	3	1	*276-5073*	1	PUMP & MTG GP-LUBRICATION	429
Y	4	1	*276-7398*	1	WIRING GP-AUTOLUBE CONTROL	222
Y	5	1	*276-8075*	1	LINES GP-AUTOMATIC LUBRICATION (LOADER FRAME, REAR)	404
Y	6	1	*276-8227*	1	BOSS GP-REAR FRAME	359
Y	7	1	*276-9599*	1	LINES GP-LUBRICATION (CENTRAL)	419
Y	8	1	*277-0308*	1	LINES GP-AUTOMATIC LUBRICATION	410
Y	9	1	*277-5330*	1	LINK GP-BUCKET	657
Y	10	1	*277-5334*	1	MODULE GP-DISPLAY (AUTOMATIC LUBRICATION SYSTEM)	845
Y	11	1	*278-5855*	1	BOSS GP-LIFT ARM	650

Y-SEPARATE ILLUSTRATION

261-1446 **LUBRICATION AR-AUTOMATIC** *(contd.)* **i02424478**

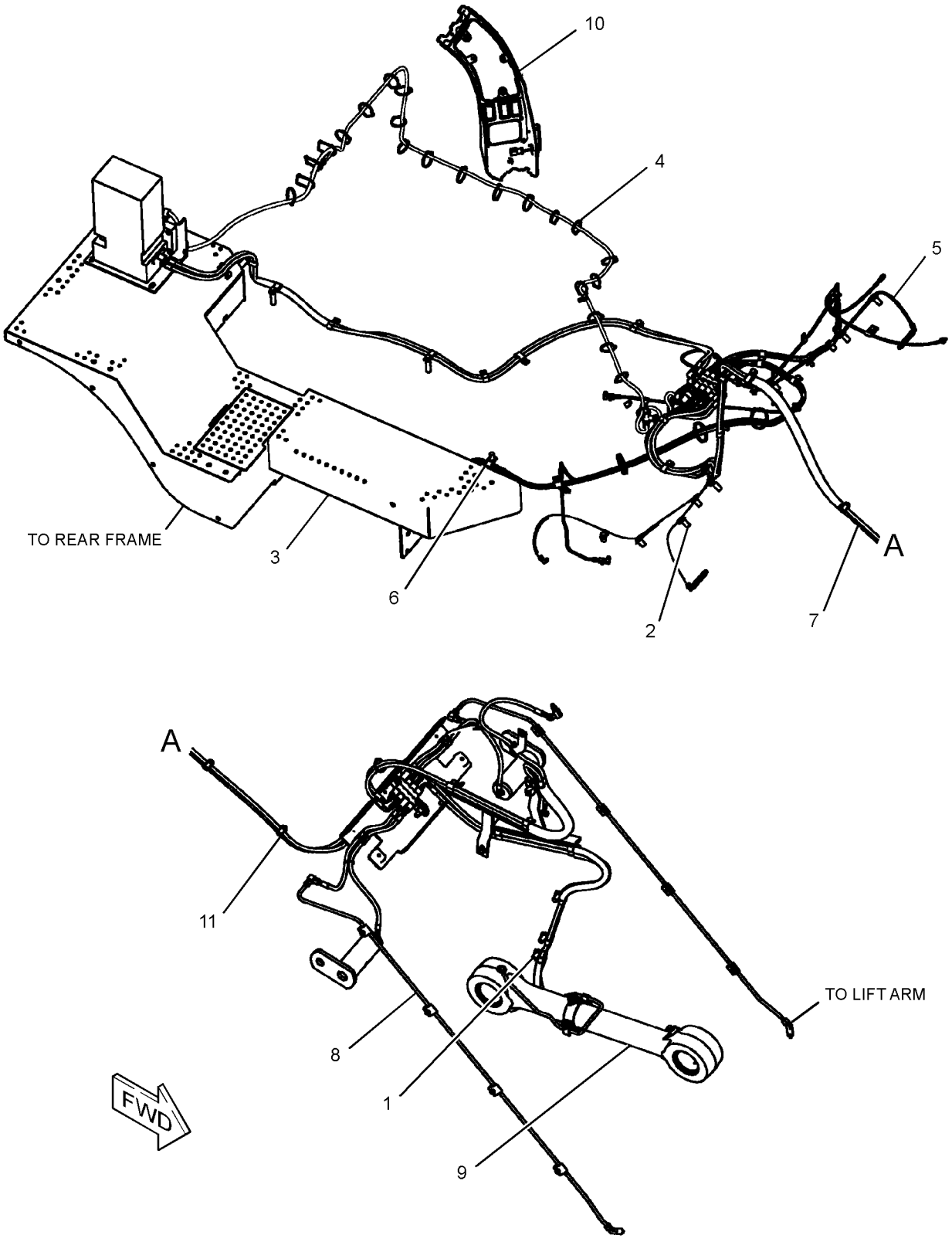

GRAPHIC #1 **<END>** g01211196

263-6296 LUBRICATION AR-AUTOMATIC

S/N: A7G1-UP

AN ATTACHMENT

SMCS-7540 **i02423561**

NOTE	PART NUMBER	QTY	PART NAME 1 2 3 4 5 6 (PRODUCT LEVEL)	SEE PAGE
Y	**192-6118**	1	BOSS GP-LEVER	648
Y	*278-8695*	1	BOSS GP-LIFT ARM	652
Y	*265-5389*	1	BOSS GP-REAR FRAME	357
Y	*276-8227*	1	BOSS GP-REAR FRAME	359
Y	*276-8075*	1	LINES GP-AUTOMATIC LUBRICATION (LOADER FRAME, REAR)	404
Y	*277-0307*	1	LINES GP-AUTOMATIC LUBRICATION (LOADER FRAME)	406
Y	*276-9599*	1	LINES GP-LUBRICATION (CENTRAL)	419
Y	*277-5334*	1	MODULE GP-DISPLAY (AUTOMATIC LUBRICATION SYSTEM)	845
Y	*277-5331*	1	PIN GP	762
Y	*276-5073*	1	PUMP & MTG GP-LUBRICATION	429
Y	*276-7398*	1	WIRING GP-AUTOLUBE CONTROL	222

Y-SEPARATE ILLUSTRATION

<END>

277-0038 LUBRICATION AR-AUTOMATIC

S/N: A7G1-UP

FOR USE WITH 236-9101—PAGE 655, 236-9102—PAGE 655

AN ATTACHMENT

SMCS-7540 **i02416491**

NOTE	PART NUMBER	QTY	PART NAME 1 2 3 4 5 6 (PRODUCT LEVEL)	SEE PAGE
Y	**192-6118**	1	BOSS GP-LEVER	648
Y	*277-5617*	1	BOSS GP-LIFT ARM	649
Y	*265-5389*	1	BOSS GP-REAR FRAME	357
Y	*276-8227*	1	BOSS GP-REAR FRAME	359
Y	*276-8075*	1	LINES GP-AUTOMATIC LUBRICATION (LOADER FRAME, REAR)	404
Y	*277-5336*	1	LINES GP-AUTOMATIC LUBRICATION (LOADER FRAME)	413
Y	*280-0508*	1	LINES GP-LUBRICATION (CENTRAL)	421
Y	*277-5334*	1	MODULE GP-DISPLAY (AUTOMATIC LUBRICATION SYSTEM)	845
Y	*280-2421*	1	PIN GP	763
Y	*276-5073*	1	PUMP & MTG GP-LUBRICATION	429
Y	*276-7398*	1	WIRING GP-AUTOLUBE CONTROL	222

Y-SEPARATE ILLUSTRATION

<END>

FRAME AND BODY

252-6980 PANEL GP-SIDE

S/N: A7G1-UP

PART OF 236-9051 CHASSIS AR

SMCS-7267 **i02412701**

NOTE	REF NO	GRAPHIC REF	PART NUMBER	QTY	PART NAME 1 2 3 4 5 6 (PRODUCT LEVEL)	SEE PAGE
	1	1	**4E-1384**	4	BUMPER-CONICAL	
	2	1	**242-7218**	1	INSULATION	
	3	1	**252-6971**	1	PANEL-OUTER (RH)	
	4	1	**252-6972**	1	PANEL-OUTER (LH)	
	5	1	**252-6973**	1	SUPPORT AS	
	6	1	**252-6974**	1	SUPPORT AS	
	7	1	**252-6977**	1	PLATE AS (RH)	
	8	1	**252-6978**	1	PLATE AS (LH)	
	9	1	**252-6979**	1	PLATE	
	10	1	**252-6982**	1	PLATE	
	11	1	**252-6985**	1	PLATE AS	
	12	1	**252-6986**	1	PLATE AS	
M	13	1	**5C-7261**	4	NUT (M8X1.25-THD)	
	14	1	**7X-7729**	36	WASHER (11X25X3-MM THK)	
M	15	1	**8T-0389**	14	LOCKNUT (M10X1.15-THD)	
M	16	1	**8T-4133**	4	NUT (M10X1.15-THD)	
M	17	1	**8T-4183**	6	BOLT (M12X1.75X40-MM)	
M	18	1	**8T-4195**	22	BOLT (M10X1.5X30-MM)	
	19	1	**8T-4223**	6	WASHER-HARD (13.5X25.5X3-MM THK)	
D	20	1	**5P-7483**	2	SEAL (1.1-M EACH)	
E	21	1	**246-0435**	2	SEAL (140-CM EACH)	
E	22	1	**167-0608**	2	SEAL (32-CM EACH)	
E	22A	1	**167-0608**	2	SEAL (10-CM EACH)	
	23	1	**9U-2574**	2	FASTENER	
	24	1	**7X-0589**	4	WASHER-HARD (12X28.5X5-MM THK)	

D-ORDER BY THE METER
E-ORDER BY THE CENTIMETER
M-METRIC PART

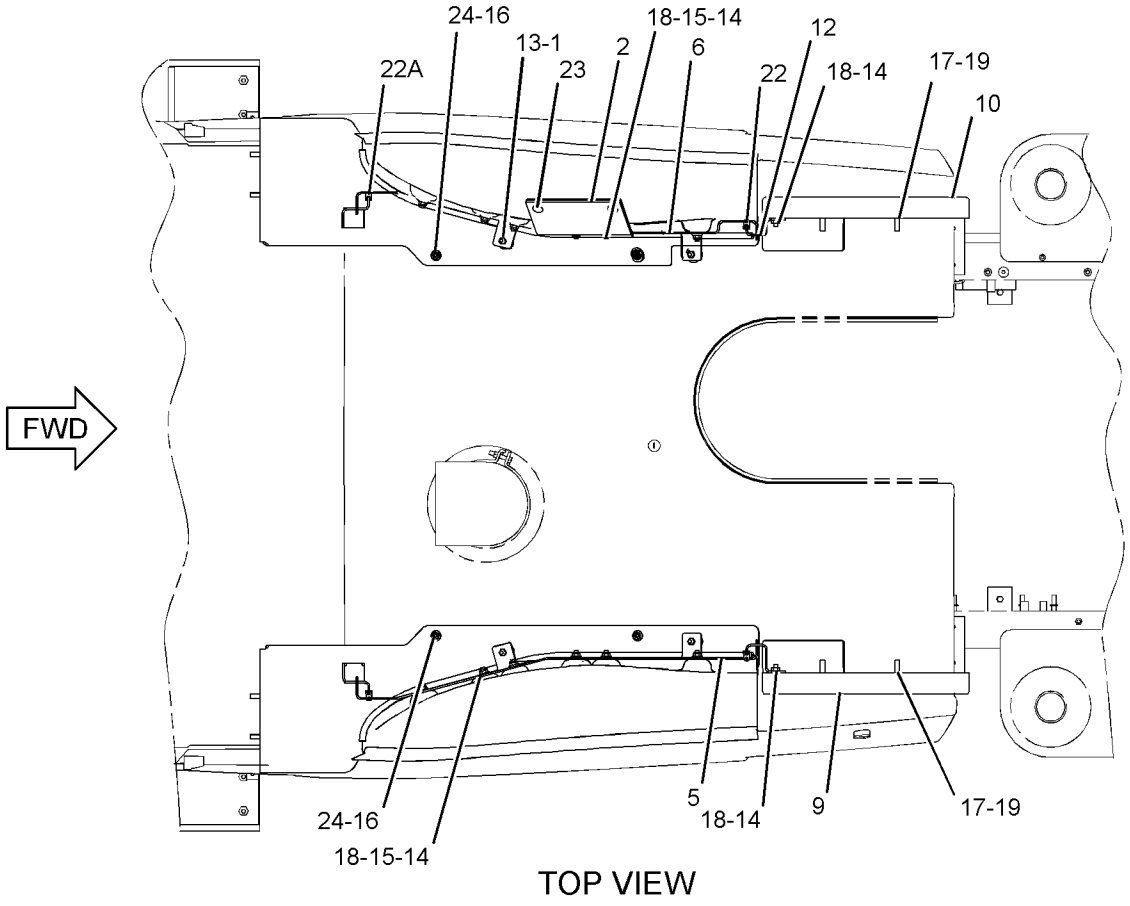

TOP VIEW

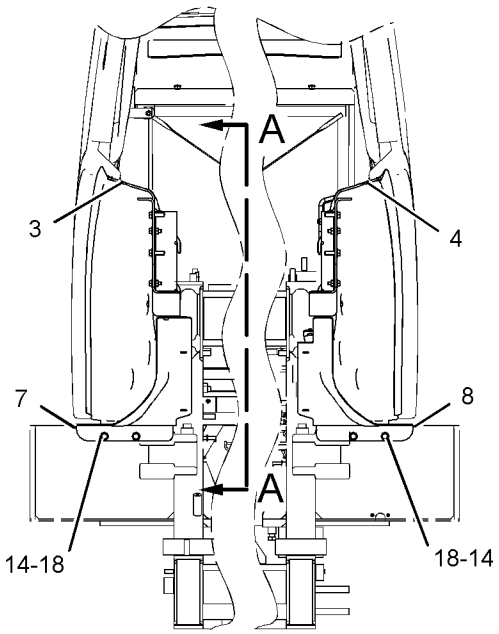

FRONT VIEW

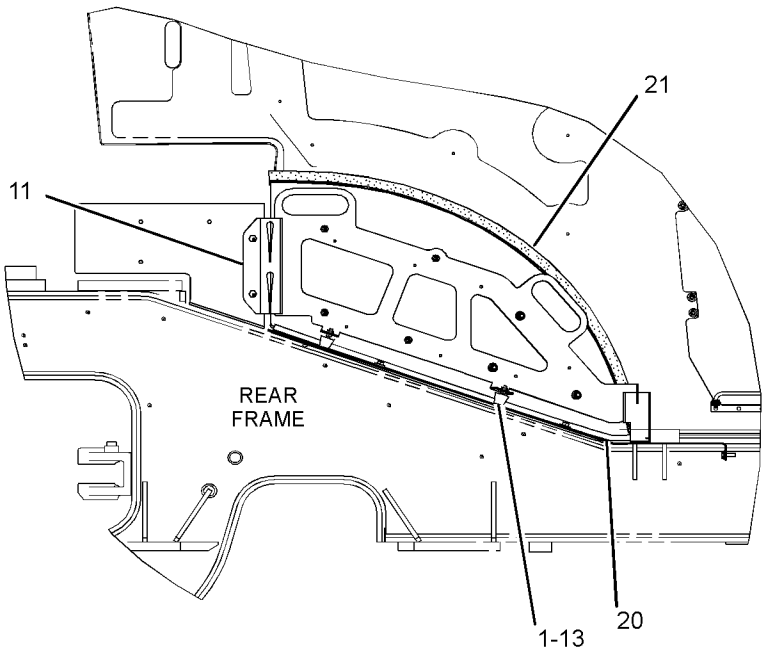

SECTION A-A

GRAPHIC #1 **<END>** g01190068

276-5073 PUMP & MTG GP-LUBRICATION

S/N: A7G1-UP

PART OF 261-1446, 263-6296, 277-0038 LUBRICATION AR-AUTOMATIC AN ATTACHMENT

SMCS-7540 **i02389649**

NOTE	REF NO	GRAPHIC REF	PART NUMBER	QTY	PART NAME 1 2 3 4 5 6 (PRODUCT LEVEL)	SEE PAGE
Y	1	1	**184-0704**	1	PUMP GP-LUBRICATION (DOUBLE)	430
	2	1	**276-3899**	1	SUPPORT AS-PUMP	
	3	1	**276-5308**	1	FENDER AS-REAR (RH)	
	4	1	**8T-4121**	4	WASHER-HARD (11X21X2.5-MM THK)	
M	5	1	**8T-4195**	4	BOLT (M10X1.5X30-MM)	
	6	1	**8T-4224**	4	WASHER-HARD (8.8X16X2-MM THK)	
M	7	1	**8T-6912**	4	BOLT (M8X1.25X50-MM)	

M-METRIC PART
Y-SEPARATE ILLUSTRATION

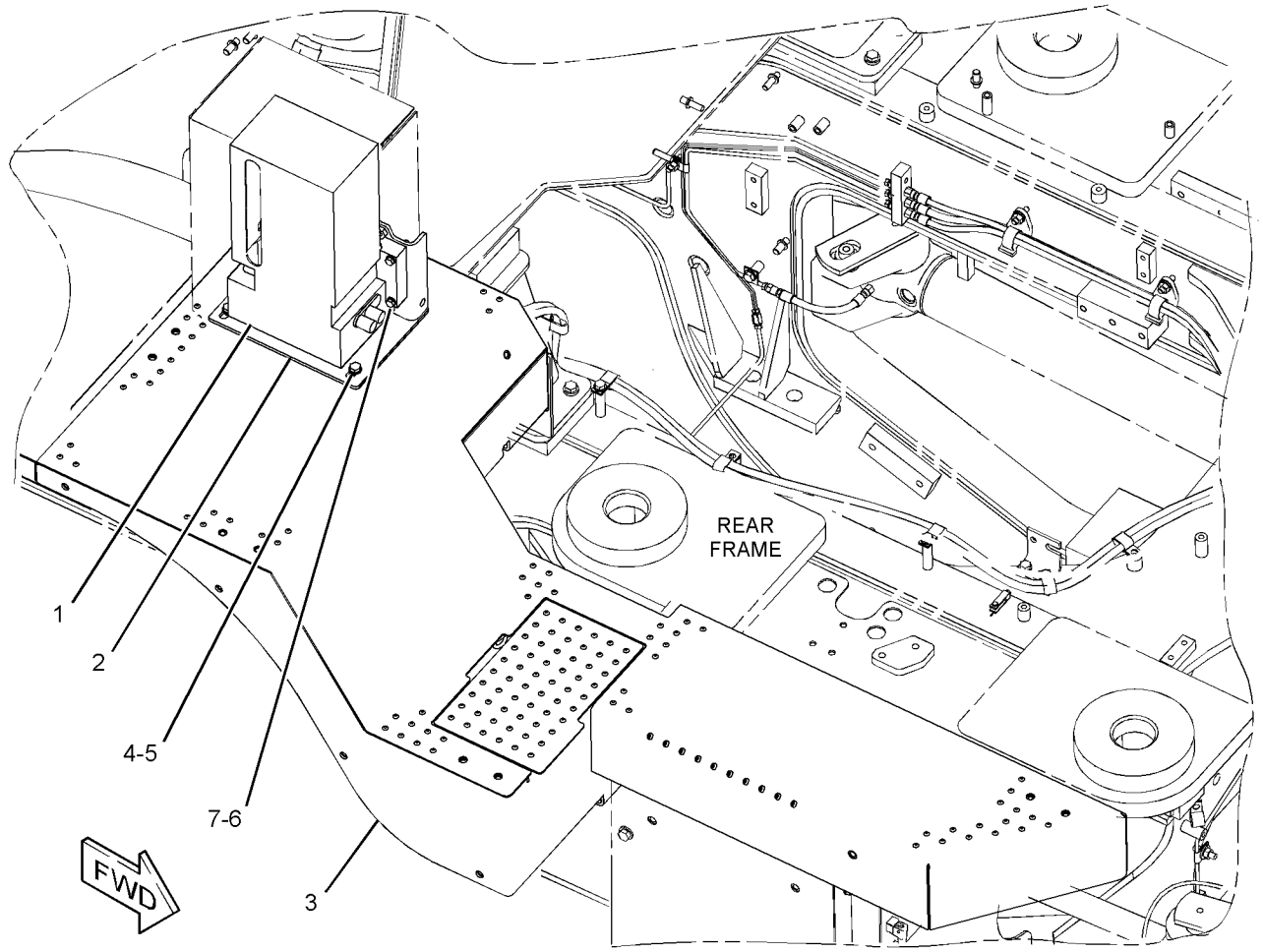

GRAPHIC #1 **<END>** g01202919

184-0704 PUMP GP-LUBRICATION

S/N: A7G1-UP
PART OF 276-5073 PUMP & MTG GP-LUBRICATION
AN ATTACHMENT

SMCS-7516 **i02127329**

NOTE	PART NUMBER	QTY	PART NAME 1 2 3 4 5 6 (PRODUCT LEVEL)	SEE PAGE
	196-1055	1	BRACKET	
	196-1060	1	CAP	
	196-1074	1	CIRCUIT BOARD AS	
	196-1075	4	CLIP	
	196-1077	1	COIL AS	
	196-1070	2	CONNECTOR	
	196-1063	1	COUPLING	
	251-3564	1	COUPLING	
	196-1061	1	COUPLING	
	196-1064	1	COVER	
	196-1047	1	COVER GP	
	196-1053	1	COVER GP	
	196-1062	1	FILTER AS-GREASE	
	254-8502	1	FITTING-GREASE	
	254-8503	1	FITTING-GREASE	
	196-1052	1	GASKET GP	
	196-1049	1	GUIDE ROD	
	196-1066	1	HARNESS AS-CONTROL (AUTOMATIC LUBRICATION)	
	196-1079	1	HARNESS AS-PUMP (AUTOMATIC LUBRICATION)	
	196-1069	1	HARNESS AS-SWITCH (LEVEL)	
	196-1046	1	LOCK GP	
	254-8501	1	MOTOR GP-ELECTRIC (24-VOLT, AUTOMATIC LUBRICATION)	
	196-1051	1	PLATE AS	
	196-1068	1	PLUG GP	
	196-1078	1	RING	
	196-1054	1	SEAL	
	196-1048	1	SEAL-O-RING	
	196-1056	1	SEAL-O-RING	
	196-1071	2	SEAL-O-RING	
	196-1072	2	SEAL-O-RING	
	196-1073	2	SEAL-O-RING	
	196-1065	1	SWITCH AS (AUTOMATIC LUBRICATION TEST)	
	196-1067	1	SWITCH AS-LEVEL (GREASE)	
	196-1050	1	TANK AS-LUBRICATION	
	196-1076	1	VALVE AS	

<END>

236-8991 SHIELD GP-ENGINE COMPARTMENT

S/N: A7G1-UP

PART OF 236-9051 CHASSIS AR

SMCS-7154, 7263 **i02412608**

NOTE	REF NO	GRAPHIC REF	PART NUMBER	QTY	PART NAME 1 2 3 4 5 6 (PRODUCT LEVEL)	SEE PAGE
	1	1	**6V-0292**	1	PLUG	
	2	1	**134-5330**	1	GROMMET	
	3	1	**142-2623**	1	GROMMET	
	4	1	**142-2624**	1	GROMMET	
	5	1	**178-3129**	1	GROMMET	
	6	1	**197-5470**	1	GROMMET	
	7	1	**236-9086**	1	SHIELD	
	8	1	**243-5401**	1	HANDHOLD GP (LH)	
	9	1	**243-5405**	1	HANDHOLD GP (RH)	
	10	1	**243-5412**	1	COVER (BELT TENSIONER)	
	11	1	**254-5762**	1	PANEL AS-SOUND SUPPRESSION	
	12	1	**255-1312**	1	STRIP	
	13	1	**5P-1076**	4	WASHER-HARD (13.5X30X4-MM THK)	
	14	1	**5P-4116**	4	WASHER-HARD (8.8X20.5X2-MM THK)	
	15	1	**7X-7729**	4	WASHER (11X25X3-MM THK)	
M	16	1	**8T-4133**	7	NUT (M10X1.15-THD)	
M	17	1	**8T-4183**	4	BOLT (M12X1.75X40-MM)	
M	18	1	**8T-4186**	4	BOLT (M10X1.5X40-MM)	
M	19	1	**8T-4195**	3	BOLT (M10X1.5X30-MM)	
	20	1	**8T-4226**	7	WASHER-PLATED (10.5X45X3-MM THK)	
M	21	1	**8T-4908**	4	BOLT (M8X1.25X25-MM)	
	22	1	**1M-4543**	1	GROMMET	
E	23	1	**112-9736**	2	SEAL (92.5-CM EACH)	
E	23A	1	**112-9736**		SEAL (124-CM)	

E-ORDER BY THE CENTIMETER
M-METRIC PART

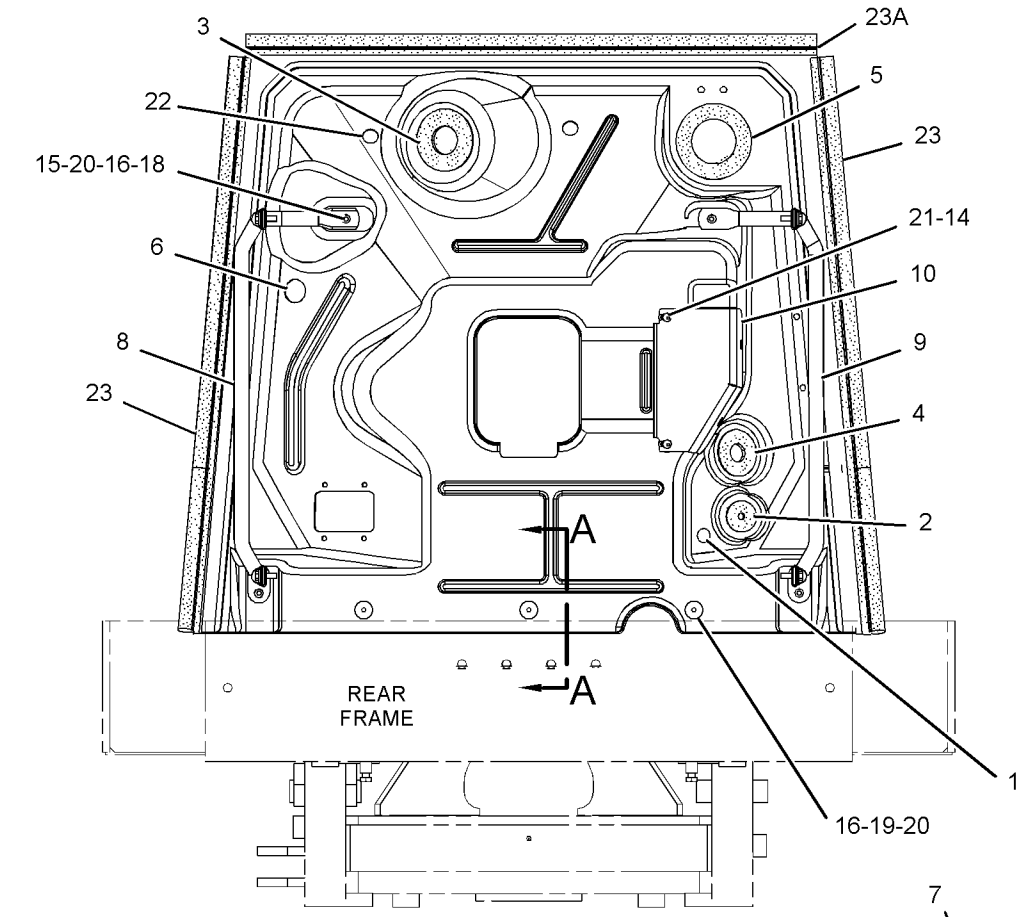

REAR VIEW



SECTION A-A

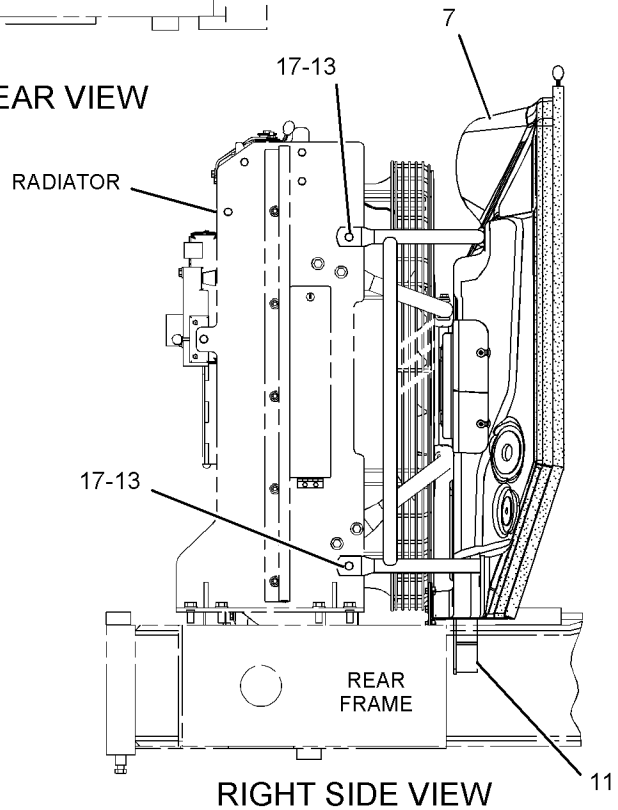

RIGHT SIDE VIEW

GRAPHIC #1 **<END>** g01196533

236-8992 SUPPORT GP-AIR INLET

S/N: A7G1-UP

PART OF 236-9051 CHASSIS AR

SMCS-1087 **i02232889**

NOTE	REF NO	GRAPHIC REF	PART NUMBER	QTY	PART NAME 1 2 3 4 5 6 (PRODUCT LEVEL)	SEE PAGE
	1	1	**243-6529**	1	PLATE AS	
M		1	**8T-3490**	5	NUT-WELD (M10X1.5-THD)	
M		1	**8T-3612**	2	NUT-WELD (M8X1.25-THD)	
	2	1	**257-4159**	2	PLATE	
	3	1	**8T-4121**	14	WASHER-HARD (11X21X2.5-MM THK)	
M	4	1	**8T-4133**	4	NUT (M10X1.5 THD)	
M	5	1	**8T-4136**	10	BOLT (M10X1.5X25-MM)	
D	6	1	**5P-7211**		SEAL (0.9-M)	

D-ORDER BY THE METER
M-METRIC PART

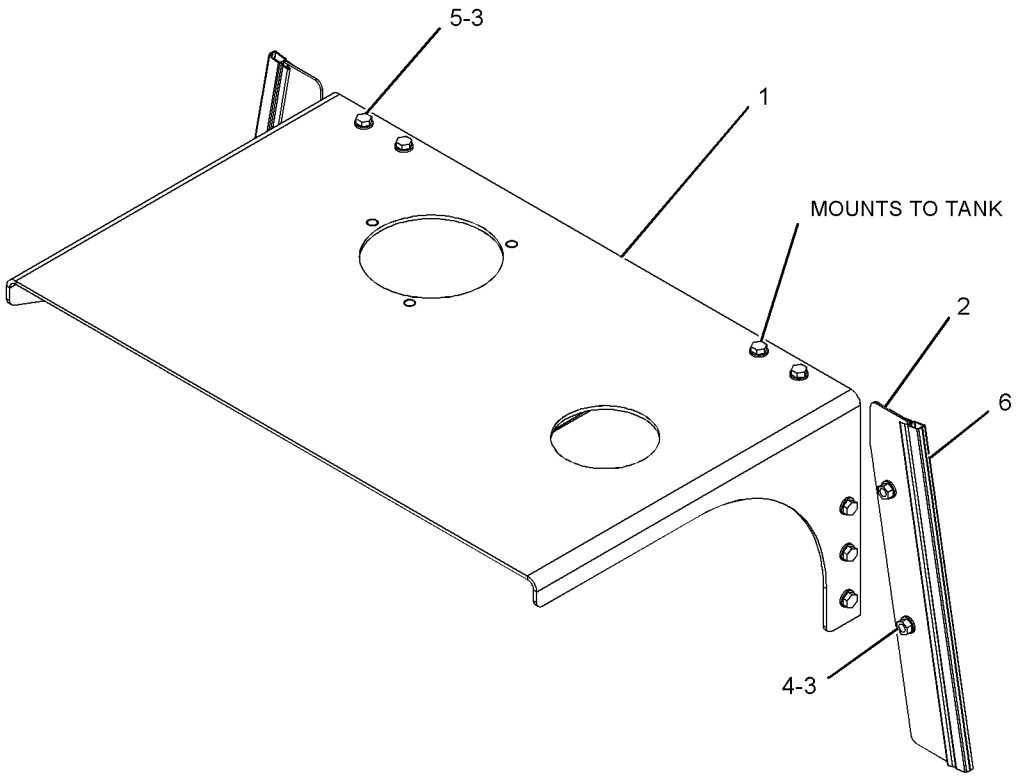

GRAPHIC #1 **<END>** g01116557

245-9818 SUPPORT GP-VALVE & FILTER

S/N: A7G1-UP

PART OF 236-9051 CHASSIS AR

SMCS-4263, 5068 **i02389808**

NOTE	REF NO	GRAPHIC REF	PART NUMBER	QTY	PART NAME 1 2 3 4 5 6 (PRODUCT LEVEL)	SEE PAGE
	1	1	**2G-1388**	1	LATCH	
	2	1	**3B-4611**	1	PIN-COTTER	
	3	1	**245-6135**	1	ENCLOSURE AS-SERVICE CENTER	
	4	1	**245-6173**	1	DOOR AS-ACCESS (HYD FILTER, BRAKE ACCUMULATOR)	
M		1	**8T-3597**	4	NUT-WELD (M12X1.75 THD)	
		1	**113-9359**	1	HINGE	
	5	1	**245-6175**	1	ROD AS	
	6	1	**246-4374**	1	DOOR GP-ACCESS (REMOTE PRESSURE TAPS)	
M	7	1	**7X-2553**	8	BOLT (M16X2X40-MM)	
	8	1	**8T-4121**	10	WASHER-HARD (11X21X2.5-MM THK)	
M	9	1	**8T-4133**	2	NUT (M10X1.5 THD)	
M	10	1	**8T-4136**	9	BOLT (M10X1.5X25-MM)	
M	11	1	**8T-4139**	2	BOLT (M12X1.75X30-MM)	
	12	1	**8T-4223**	2	WASHER-HARD (13.5X25.5X3-MM THK)	
	13	1	**9X-8257**	8	WASHER (17.5X30X3.5-MM THK)	

M-METRIC PART

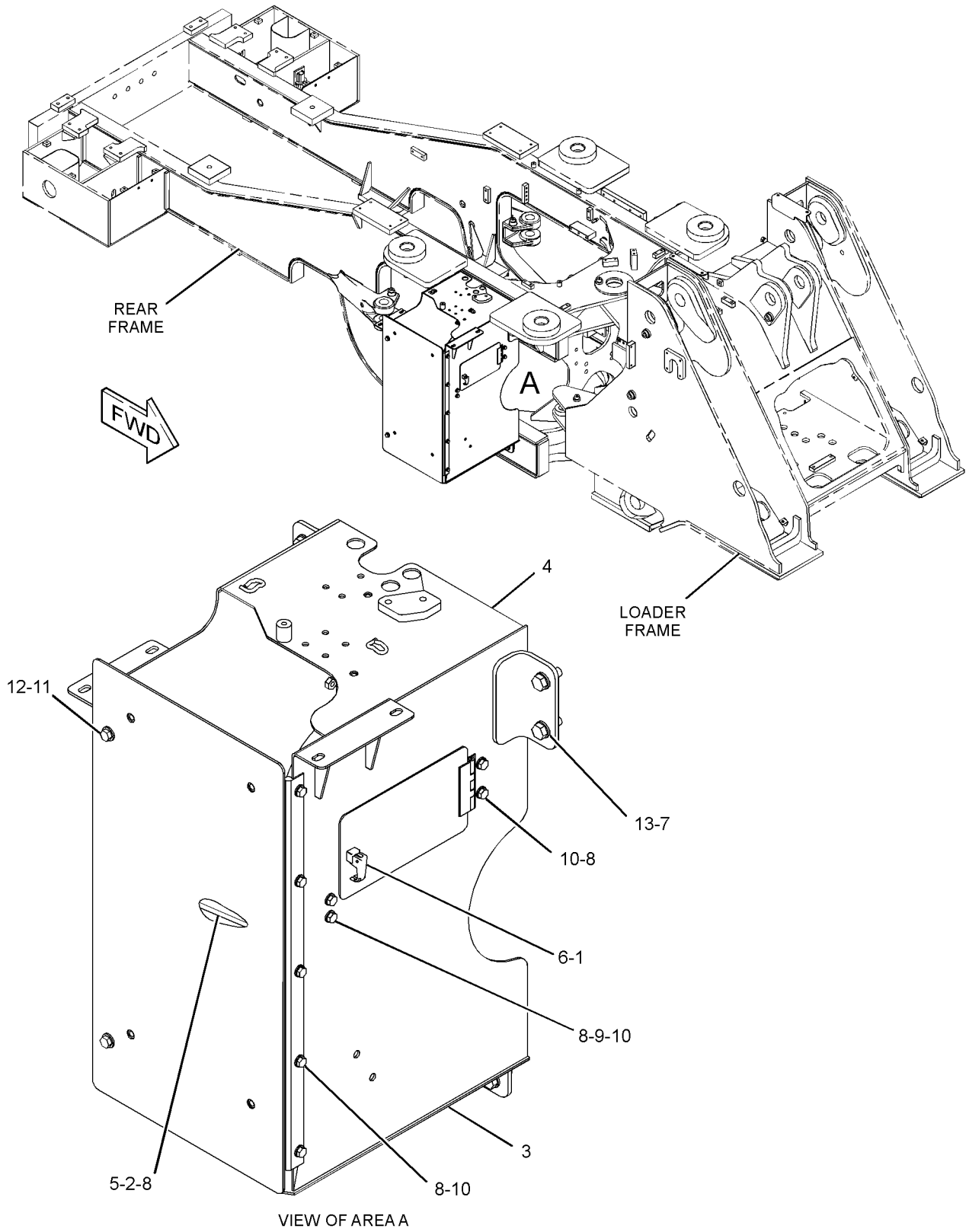

VIEW OF AREA A

GRAPHIC #1 **<END>** g01191976

236-9043 SUPPRESSION AR-SOUND

S/N: A7G1-UP
AN ATTACHMENT

SMCS-7261 **i02414662**

NOTE	PART NUMBER	QTY	PART NAME 1 2 3 4 5 6 (PRODUCT LEVEL)	SEE PAGE
Y	*119-4376*	1	GUARD GP-POWER TRAIN	381
Y	*259-2566*	1	HARDWARE GP-REAR FRAME	384
Y	**261-2031**	1	HARDWARE GP-REAR FRAME	385
Y	*246-5231*	1	SUPPRESSION GP-CAB SOUND (CAB REAR, CAB ROOF)	888
Y	*246-5288*	1	SUPPRESSION GP-SOUND (REAR FRAME)	437
Y	*246-5289*	1	SUPPRESSION GP-SOUND (REAR FRAME)	439

Y-SEPARATE ILLUSTRATION

<END>

269-2727 SUPPRESSION AR-SOUND–REAR FRAME

S/N: A7G1-UP
AN ATTACHMENT

SMCS-7261 **i02416297**

NOTE	PART NUMBER	QTY	PART NAME 1 2 3 4 5 6 (PRODUCT LEVEL)	SEE PAGE
Y	*259-2566*	1	HARDWARE GP-REAR FRAME	384
Y	*246-5288*	1	SUPPRESSION GP-SOUND (REAR FRAME)	437

Y-SEPARATE ILLUSTRATION

<END>

277-8551 SUPPRESSION AR-SOUND

S/N: A7G1-UP
PART OF 277-8157 CONVERSION AR-CERTIFICATION
AN ATTACHMENT

SMCS-7261 **i02421124**

NOTE	PART NUMBER	QTY	PART NAME 1 2 3 4 5 6 (PRODUCT LEVEL)	SEE PAGE
Y	*266-6594*	1	FLOOR GP-SOUND SUPPRESSION	801
Y	**261-2031**	1	HARDWARE GP-REAR FRAME	385
Y	*246-5231*	1	SUPPRESSION GP-CAB SOUND (CAB REAR, CAB ROOF)	888
Y	*246-5289*	1	SUPPRESSION GP-SOUND (REAR FRAME)	439

Y-SEPARATE ILLUSTRATION

<END>

246-5288 SUPPRESSION GP-SOUND–REAR FRAME

S/N: A7G1-UP

PART OF 236-9043, 269-2727 SUPPRESSION AR-SOUND

AN ATTACHMENT

SMCS-7076, 7261 **i02242182**

NOTE	REF NO	GRAPHIC REF	PART NUMBER	QTY	PART NAME 1 2 3 4 5 6 (PRODUCT LEVEL)	SEE PAGE
	1	1	**245-8097**	1	INSULATION	
	2	1	**245-8098**	1	INSULATION	
	3	1	**245-8099**	1	INSULATION	
	4	1	**247-1111**	1	ENCLOSURE AS-SERVICE CENTER	
	5	1	**259-2558**	1	PLATE	
	6	1	**259-2561**	1	PLATE	
	7	1	**259-2562**	1	PLATE	
	8	1	**259-2563**	1	INSULATION	
	9	1	**259-2565**	1	INSULATION	
	10	1	**259-2567**	1	COVER AS	
D		1	**5P-7211**	1	SEAL (0.4-M)	
M		1	**8T-3597**	3	NUT-WELD (M12X1.75-THD)	
	11	1	**259-3187**	1	INSULATION	
	12	1	**259-3188**	1	INSULATION	
M	13	1	**8T-4139**	8	BOLT (M12X1.75X30-MM)	
	14	1	**8T-4223**	12	WASHER-HARD (13.5X25.5X3-MM THK)	
M	15	1	**8T-4244**	4	NUT (M12X1.75-THD)	

D-ORDER BY THE METER
M-METRIC PART

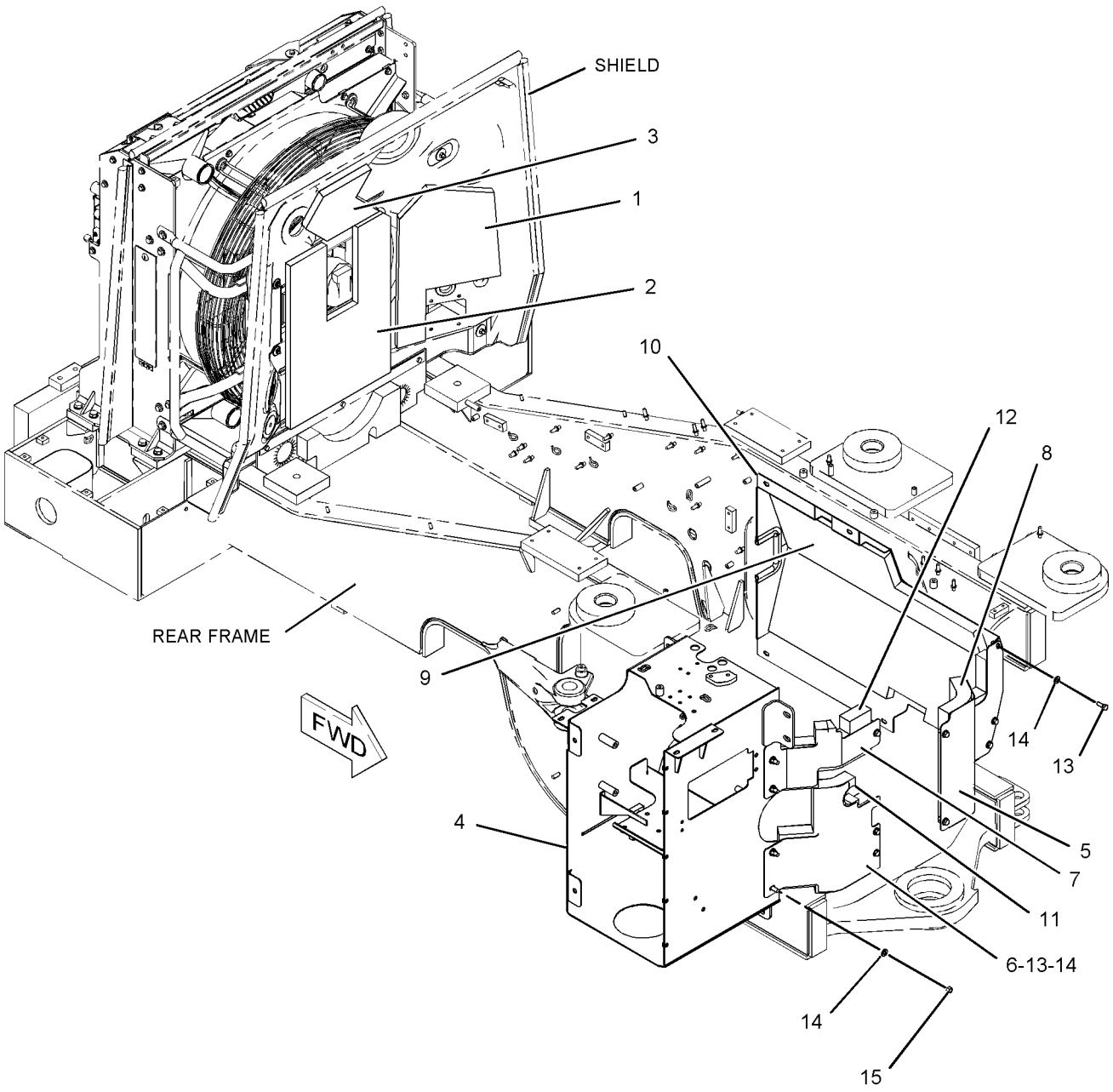

GRAPHIC #1 **<END>** g01116982

246-5289 SUPPRESSION GP-SOUND—REAR FRAME

S/N: A7G1-UP

PART OF 236-9043, 277-8551 SUPPRESSION AR-SOUND

AN ATTACHMENT

SMCS-7076, 7261 **i02242224**

NOTE	REF NO	GRAPHIC REF	PART NUMBER	QTY	PART NAME 1 2 3 4 5 6 (PRODUCT LEVEL)	SEE PAGE
	1	1	**133-1644**	14	FASTENER	
	2	1	**161-7136**	1	INSULATION	
	3	1	**161-7137**	1	INSULATION	
	4	1	**189-0131**	2	BRACKET AS	
					(EACH INCLUDES)	
		1	**9R-2821**	6	BOSS (M10X15-MM)	
	5	1	**240-9131**	1	INSULATION	
	6	1	**240-9132**	1	INSULATION	
	7	1	**245-3936**	1	INSULATION	
	8	1	**245-3937**	1	INSULATION	
	9	1	**245-3940**	1	INSULATION AS	
	10	1	**245-6780**	1	INSULATION	
	11	1	**245-6781**	1	INSULATION	
	12	1	**245-9819**	1	COVER (LH)	
	13	1	**245-9820**	1	COVER (RH)	
	14	1	**246-0569**	1	INSULATION	
	15	1	**246-0570**	1	INSULATION	
	16	1	**255-3598**	1	SHEET	
	17	1	**115-6433**	12	WASHER (11X50X6-MM THK)	
	18	1	**4Y-3046**	8	WASHER (13.5X38X3-MM THK)	
	19	1	**7X-0603**	14	WASHER-HARD (9.9X35X2.5-MM THK)	
M	20	1	**7X-2552**	4	BOLT (M16X2X30-MM)	
M	21	1	**7X-2621**	3	BOLT (M10X1.5X12-MM)	
M	22	1	**8T-4136**	12	BOLT (M10X1.5X25-MM)	
	23	1	**8T-4226**	3	WASHER-PLATED (10.5X45X3-MM THK)	
M	24	1	**8T-4244**	8	NUT (M12X1.75-THD)	
	25	1	**9X-8257**	4	WASHER (17.5X30X3.5-MM THK)	
D	26	1	**5P-7211**	1	SEAL (170-M)	

D-ORDER BY THE METER
M-METRIC PART

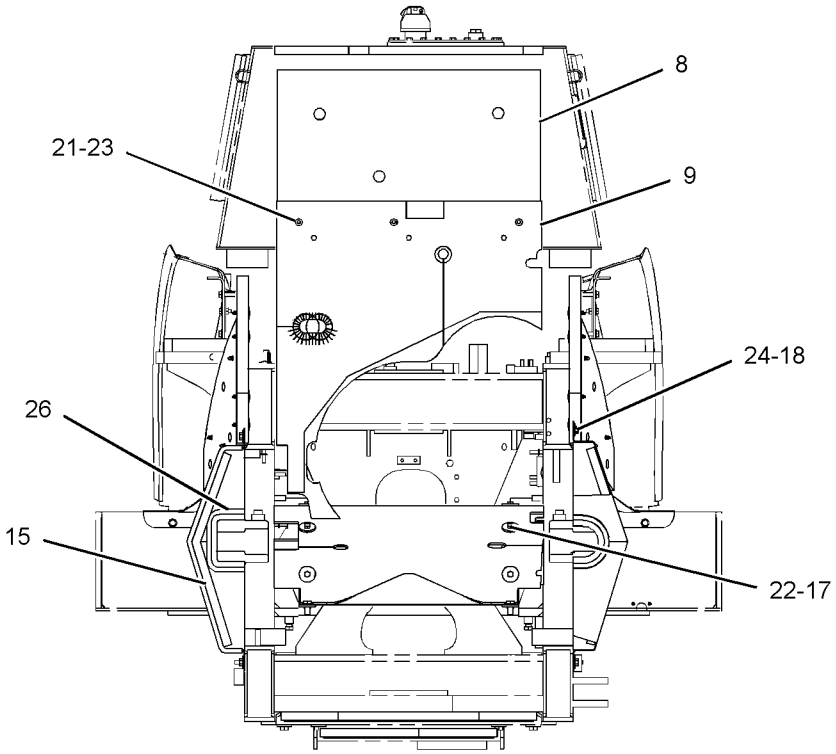

FRONT VIEW

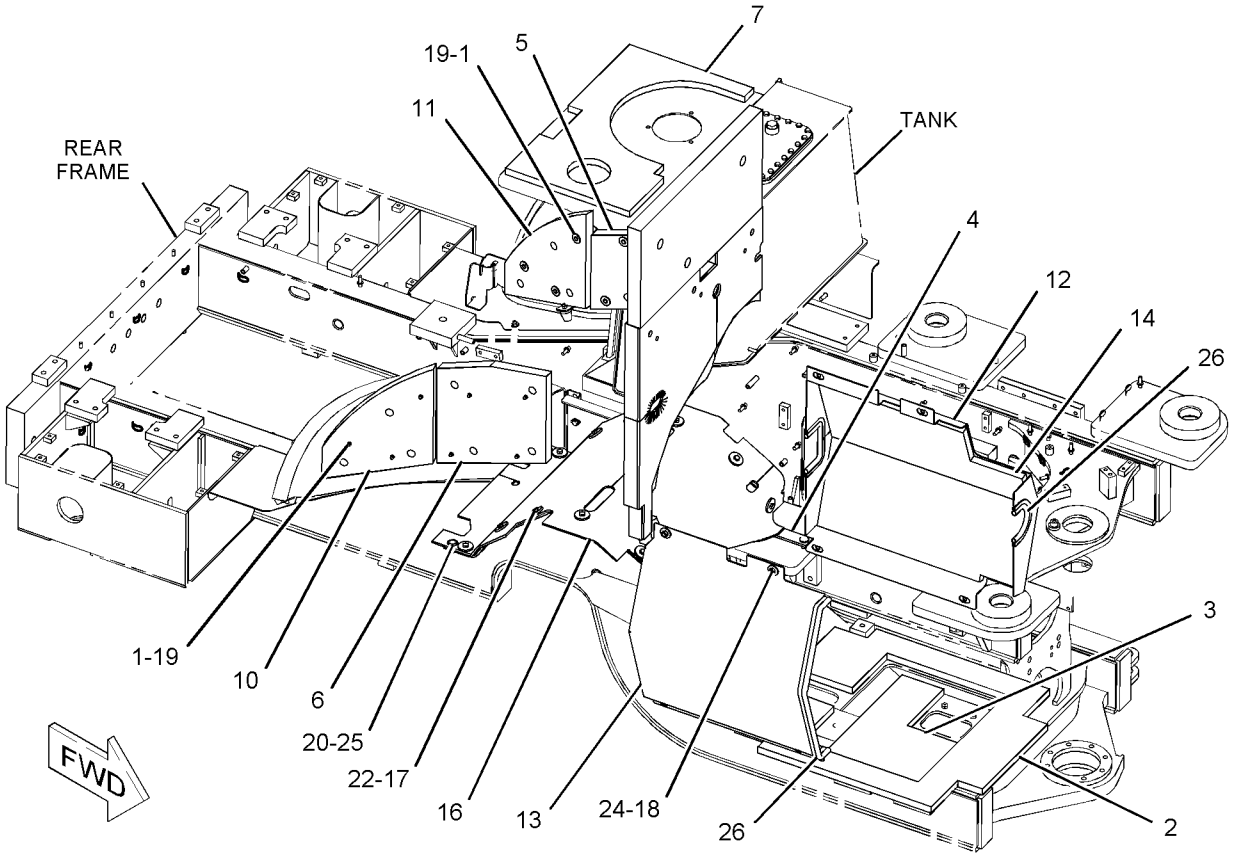

GRAPHIC #1 **<END>** g01131529

FRAME AND BODY

236-9003 TILT GP-HOOD

S/N: A7G1-UP

PART OF 236-9053 ELECTRICAL AR

SMCS-1427, 7251 **i02411356**

NOTE	REF NO	GRAPHIC REF	PART NUMBER	QTY	PART NAME 1 2 3 4 5 6 (PRODUCT LEVEL)	SEE PAGE
	1	1	**6S-6646**	2	PIN-COTTER	
	2	1	**138-9487**	4	SPACER (17.5X35X27-MM THK)	
Y	3	1	**262-4914**	1	ACTUATOR GP-HOOD TILT	354
	5	1	**245-4053**	1	PIN AS	
	6	1	**245-4063**	1	PIN AS	
	7	1	**245-7963**	1	COVER	
	8	1	**246-1472**	1	COVER AS	
M		1	**8T-3490**	3	NUT-WELD (M10X1.5-THD)	
	9	1	**251-6162**	1	COVER	
	10	1	**7V-9791**	1	PIN	
	11	1	**7X-7729**	8	WASHER (11X25X3-MM THK)	
M	12	1	**8T-4136**	8	BOLT (M10X1.5X25-MM)	
M	13	1	**8T-4138**	4	BOLT (M6X1X20-MM)	
M	14	1	**8T-4140**	4	BOLT (M16X2X60-MM)	
	16	1	**9X-8256**	4	WASHER (6.6X12X2-MM THK)	
	17	1	**9X-8257**	4	WASHER (17.5X30X3.5-MM THK)	
	18	1	**6W-5752**	1	PIN	

M-METRIC PART
Y-SEPARATE ILLUSTRATION

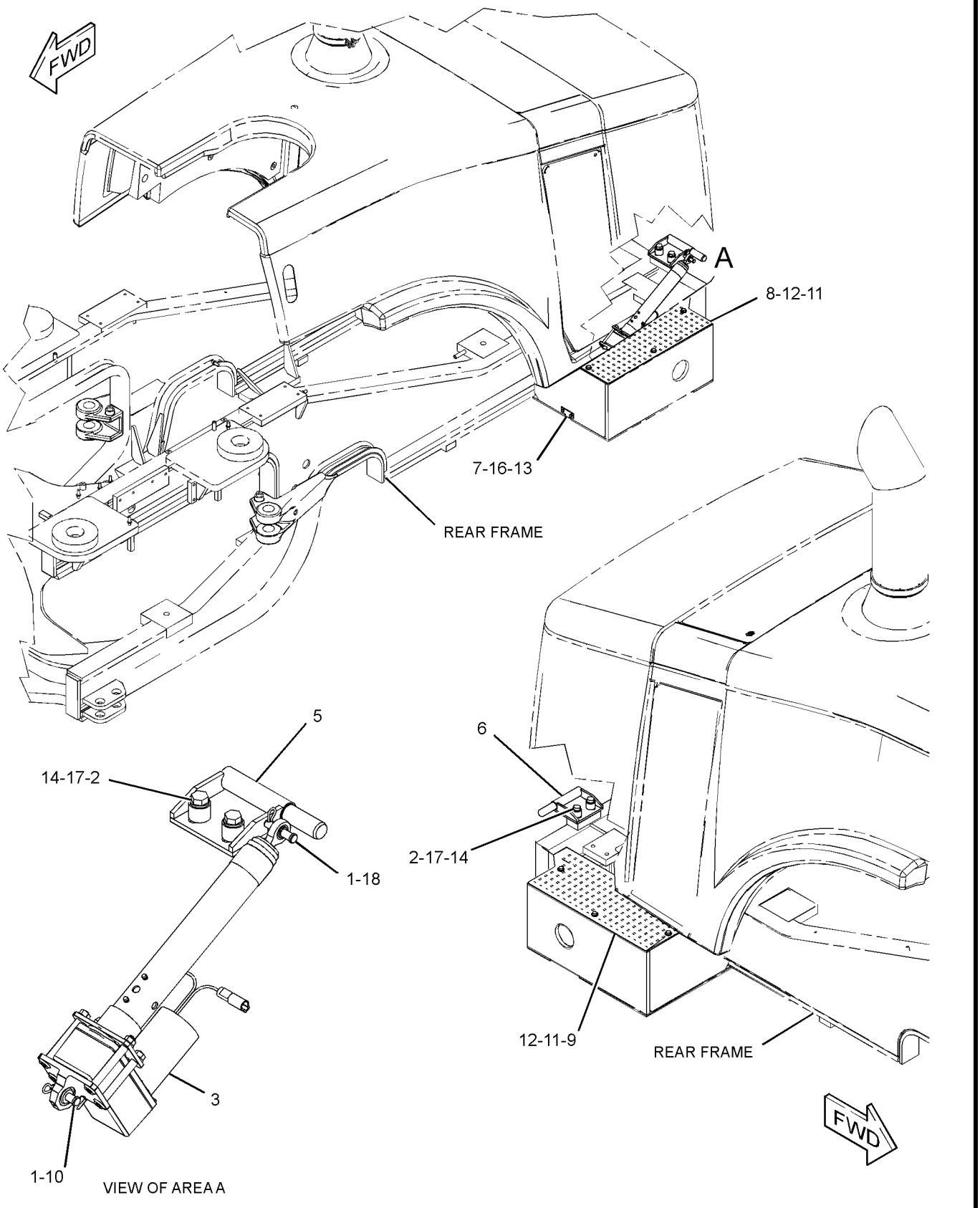

GRAPHIC #1 **<END>** g01210769

277-3413 VALVE & LINES GP-LUBRICATION

S/N: A7G1-UP

PART OF 276-8075 LINES GP-AUTOMATIC LUBRICATION

AN ATTACHMENT

SMCS-7540 **i02389805**

NOTE	REF NO	GRAPHIC REF	PART NUMBER	QTY	PART NAME 1 2 3 4 5 6 (PRODUCT LEVEL)	SEE PAGE
Y	1	1	**249-0554**	1	VALVE GP-LUBE DISTRIBUTION (13-INJECTOR)	446
E	2	1	**161-9030**		TUBE (117-CM)	
	2A	1	**161-9030**		TUBE (173-CM)	
	2B	1	**161-9030**		TUBE (198-CM)	
	2C	1	**161-9030**		TUBE (143-CM)	
	2D	1	**161-9030**		TUBE (134-CM)	
	2E	1	**161-9030**		TUBE (199-CM)	
	2F	1	**161-9030**		TUBE (208-CM)	
	2G	1	**161-9030**		TUBE (129-CM)	
	2H	1	**161-9030**		TUBE (181-CM)	
E	3	1	**161-9031**		TUBE (214-CM)	
	3A	1	**161-9031**		TUBE (215-CM)	

E-ORDER BY THE CENTIMETER
Y-SEPARATE ILLUSTRATION

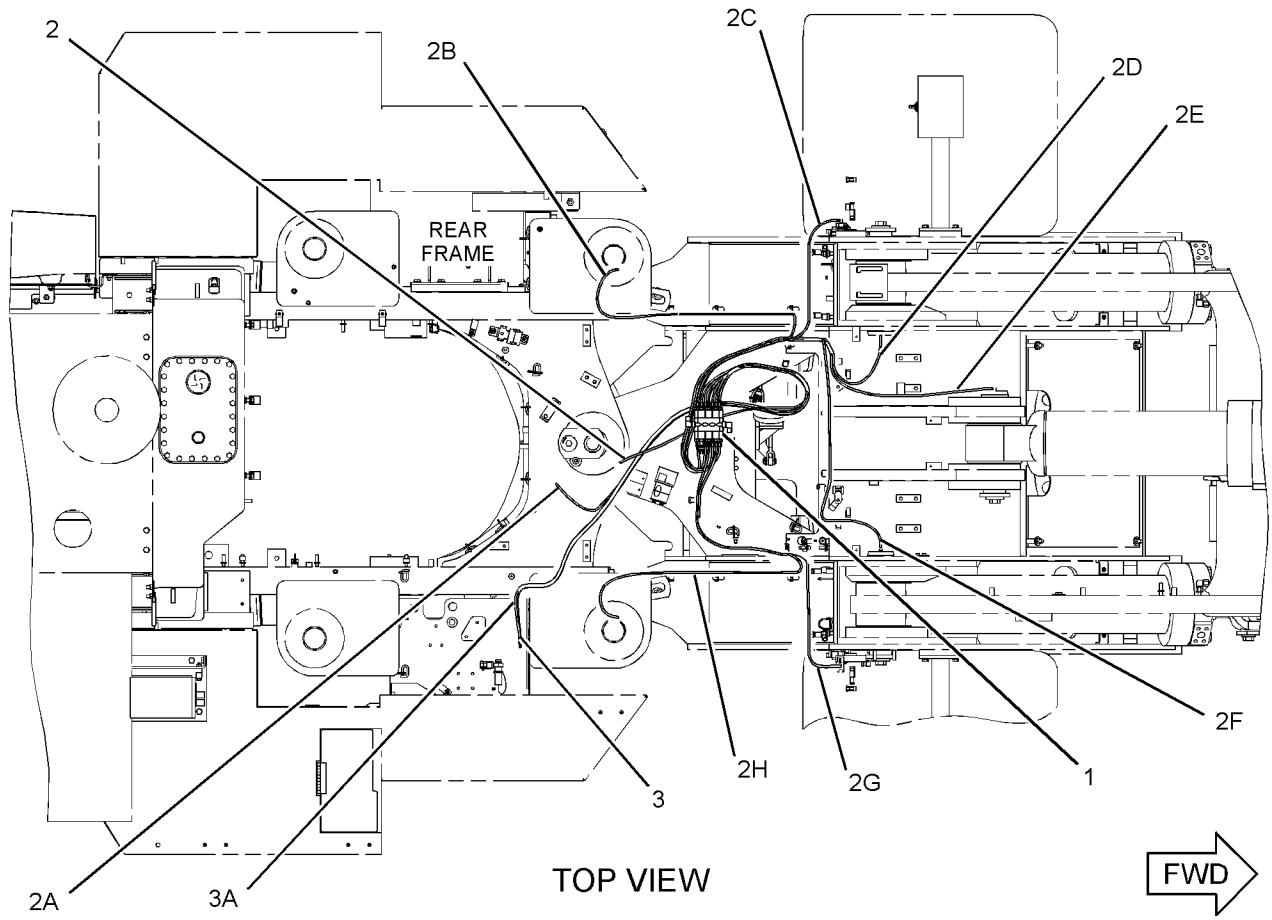

GRAPHIC #1 **<END>** g01200740

278-2071 VALVE & LINES GP-LUBRICATION–LOADER FRAME

S/N: A7G1-UP

PART OF 277-0307, 277-0308, 277-5336 LINES GP-AUTOMATIC LUBRICATION

AN ATTACHMENT

SMCS-7540 **i02389757**

NOTE	REF NO	GRAPHIC REF	PART NUMBER	QTY	PART NAME 1 2 3 4 5 6 (PRODUCT LEVEL)	SEE PAGE
	1	1	**114-9325**	2	CLAMP-DOUBLE	
	2	1	**178-2722**	2	COUPLING	
	3	1	**178-2766**	2	HOSE	
	4	1	**192-5939**	1	HOSE AS	
	5	1	**192-5942**	1	HOSE AS	
Y	6	1	**250-3801**	1	VALVE GP-LUBE DISTRIBUTION (8-INJECTOR)	447
	7	1	**252-0257**	2	HOSE AS	
	8	1	**278-2073**	1	BRACKET MOUNTING	
	9	1	**095-0827**	2	LOCKWASHER	
M	10	1	**8C-8451**	2	BOLT (M6X1X40-MM)	
M	11	1	**8T-8442**	2	BOLT-SOCKET HEAD (M6X1X30-MM)	
	12	1	**178-2774**	2	HOSE	
E	13	1	**252-8211**		SLEEVE (44-CM EACH)	
E	13A	1	**252-8211**		SLEEVE (40-CM EACH)	
E	13B	1	**252-8211**		SLEEVE (30-CM EACH)	

E-ORDER BY THE CENTIMETER
M-METRIC PART
Y-SEPARATE ILLUSTRATION

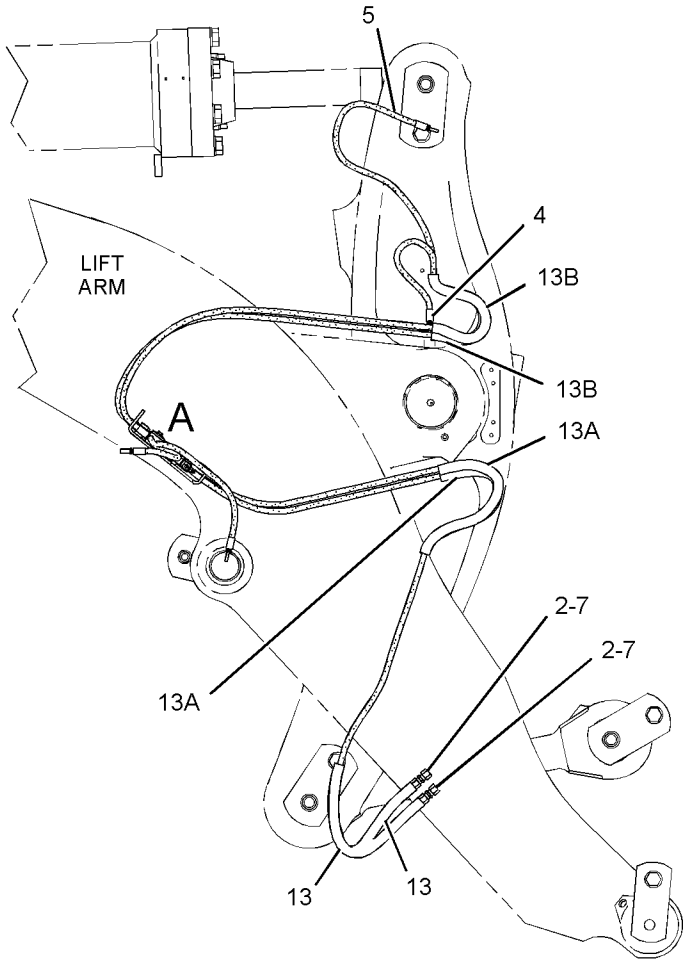

RIGHT SIDE VIEW

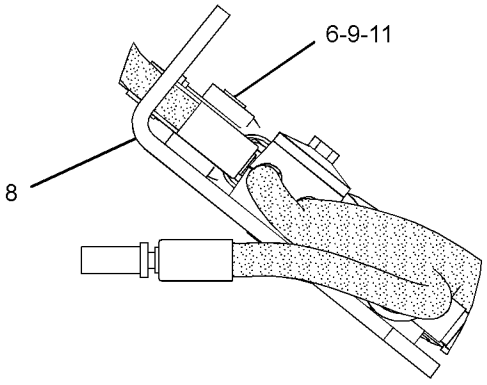

VIEW OF AREA A

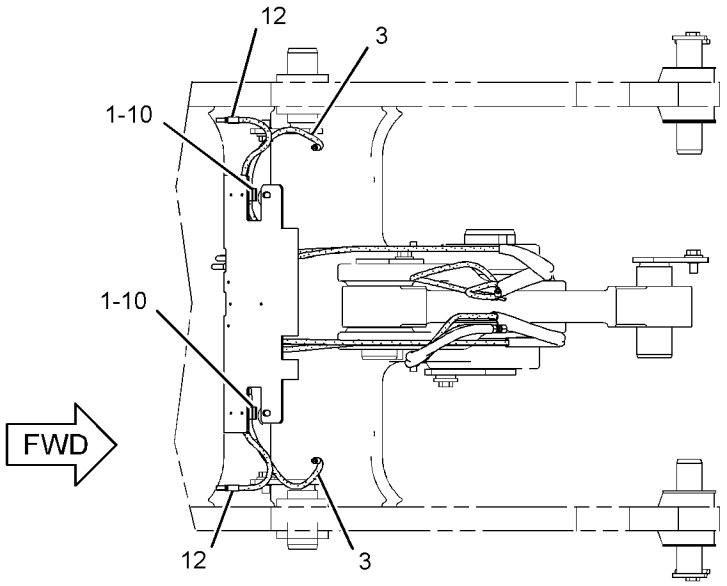

BOTTOM VIEW

GRAPHIC #1 **<END>** g01196471

249-0554 VALVE GP-LUBE DISTRIBUTION

S/N: A7G1-UP
PART OF 277-3413 VALVE & LINES GP-LUBRICATION
AN ATTACHMENT

SMCS-7540 **i02296517**

NOTE	REF NO	GRAPHIC REF	PART NUMBER	QTY	PART NAME 1 2 3 4 5 6 (PRODUCT LEVEL)	SEE PAGE
	1	1	**177-3516**	4	INJECTOR-GREASE	
	2	1	**177-3517**	4	INJECTOR-GREASE	
	3	1	**177-3518**	3	INJECTOR-GREASE	
	4	1	**177-3519**	1	SWITCH-PRESSURE (AUTOLUBE ACTUATION) (LUBRICATION)	
	5	1	**177-3520**	1	VALVE	
	6	1	**260-5764**	1	BLOCK	
	7	1	**178-2737**	4	COUPLING	
	8	1	**178-2740**	2	INJECTOR	

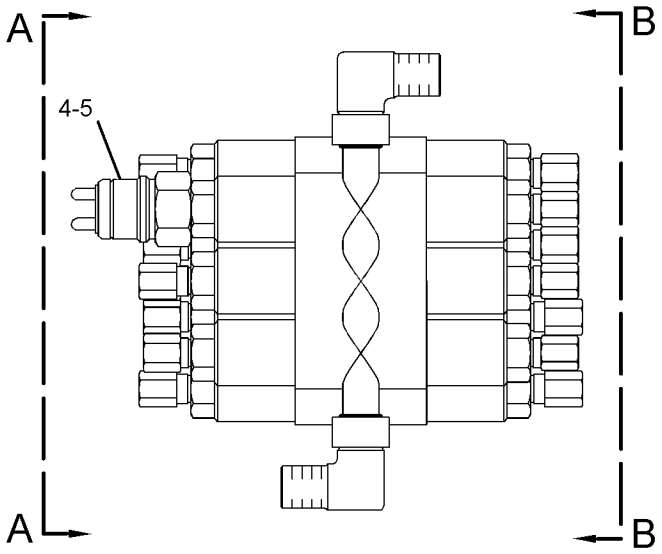

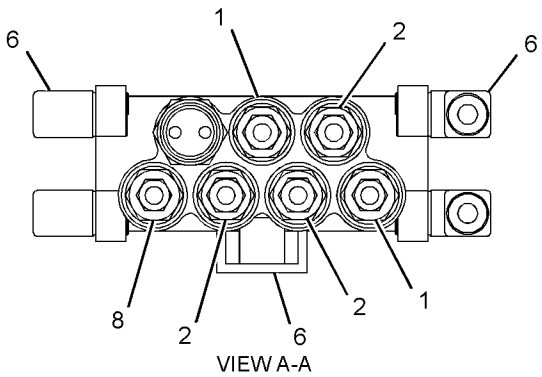

VIEW A-A

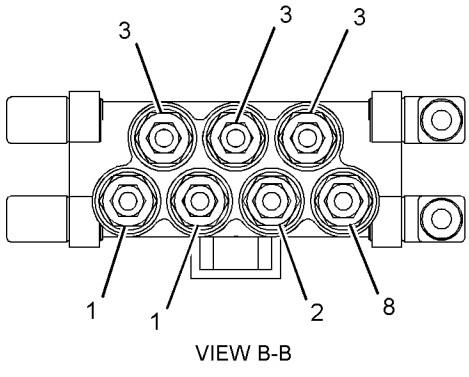

VIEW B-B

GRAPHIC #1 **<END>** g01210794

FRAME AND BODY

250-3801 VALVE GP-LUBE DISTRIBUTION

S/N: A7G1-UP

PART OF 278-2071 VALVE & LINES GP-LUBRICATION

AN ATTACHMENT

SMCS-7540 **i02390858**

NOTE	REF NO	GRAPHIC REF	PART NUMBER	QTY	PART NAME 1 2 3 4 5 6 (PRODUCT LEVEL)	SEE PAGE
	1	1	**177-3517**	1	INJECTOR-GREASE	
	2	1	**177-3518**	2	INJECTOR-GREASE	
	3	1	**178-2737**	1	COUPLING	
	4	1	**178-2740**	2	INJECTOR	
	5	1	**178-2746**	1	INJECTOR	
	6	1	**179-1660**	2	PLUG	
	7	1	**179-1661**	1	COUPLING	
	8	1	**192-5987**	2	GASKET	
	9	1	**192-6036**	2	CONNECTOR	
	10	1	**192-6212**	2	INJECTOR	
	11	1	**248-7538**	1	BLOCK-HYDRAULIC	
	12	1	**253-9795**	1	ELBOW	

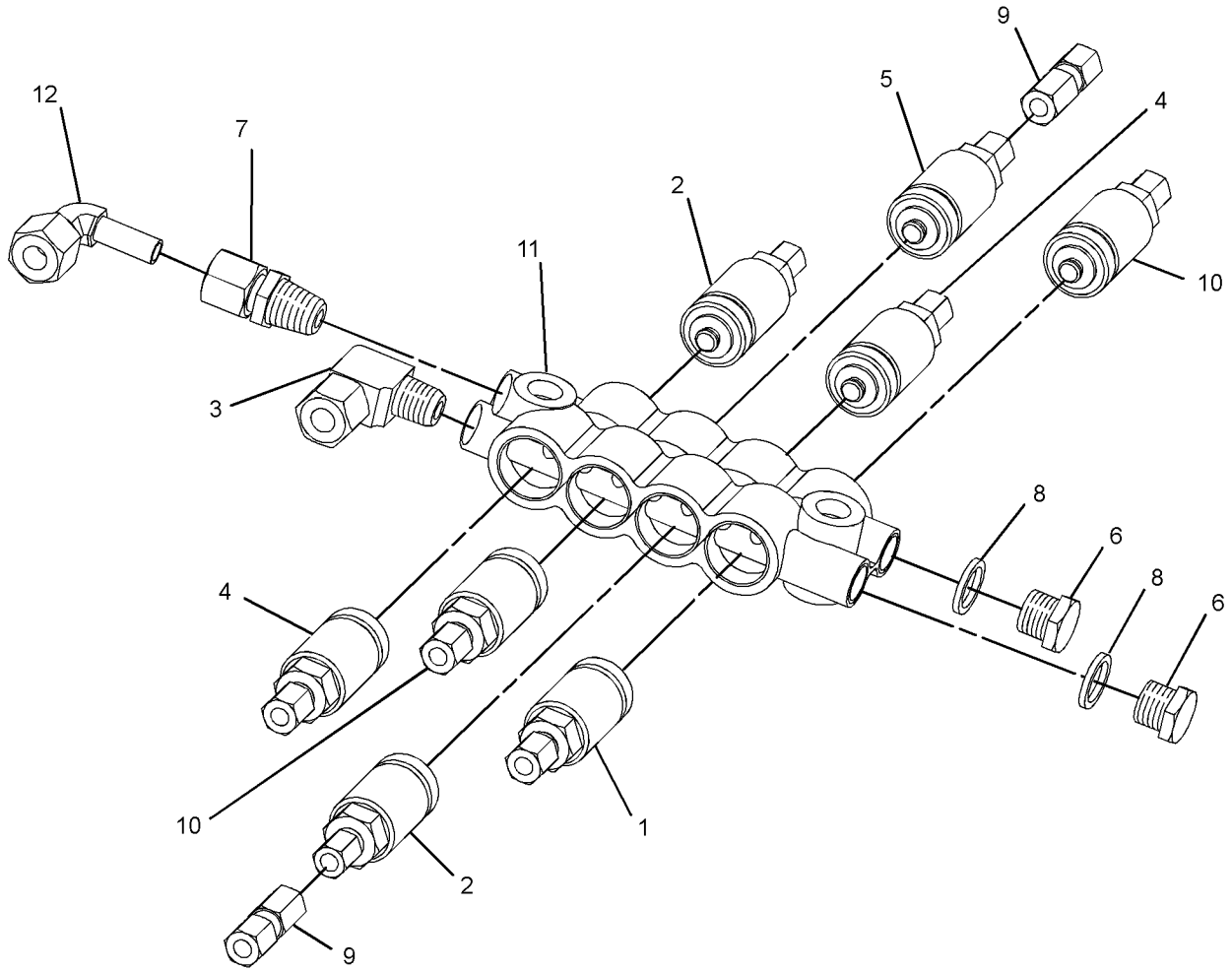

GRAPHIC #1 **<END>** g01196222

220-2726 ACCUMULATOR GP-BRAKE–CHARGED

S/N: A7G1-UP

PART OF 261-1712 CONTROL GP-SERVICE BRAKE

FIELD REPLACEMENT ORDER 220-2727–PAGE 449

SMCS-4263 **i01872367**

NOTE	REF NO	GRAPHIC REF	PART NUMBER	QTY	PART NAME 1 2 3 4 5 6 (PRODUCT LEVEL)	SEE PAGE
	1	1	**069-2535**	1	VALVE-GAS	
	2	1	**111-9110**	1	PROTECTOR-GAS VALVE	
	3	1	**1J-9671**	1	SEAL-O-RING	
	4	1	**5M-3062**	2	BOLT (3/8-16X0.75-IN)	
	5	1	**203-1558**	1	KIT-SEAL	

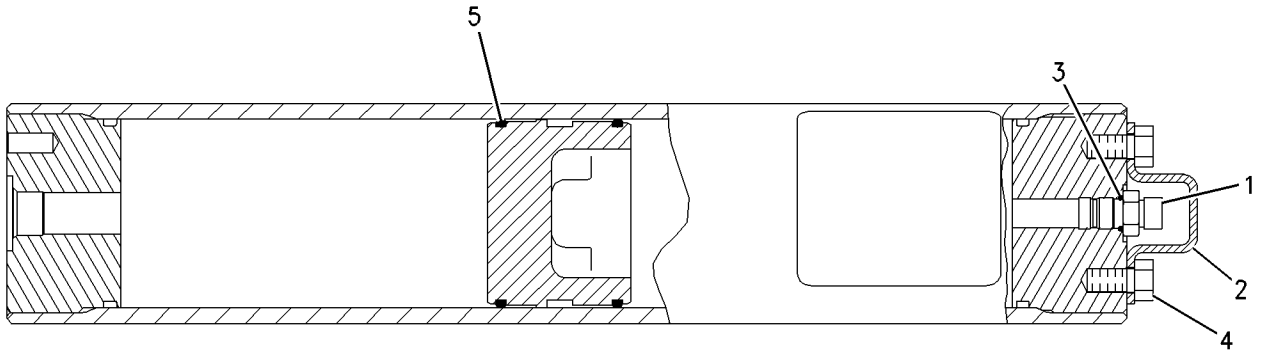

GRAPHIC #1 **<END>** g00895105

220-2727 ACCUMULATOR GP-BRAKE—UNCHARGED

S/N: A7G1-UP

FIELD REPLACEMENT FOR 220-2726—PAGE 448

SMCS-4263 **i01909969**

NOTE	REF NO	GRAPHIC REF	PART NUMBER	QTY	PART NAME 1 2 3 4 5 6 (PRODUCT LEVEL)	SEE PAGE
	1	1	**069-2535**	1	VALVE-GAS	
	2	1	**111-9110**	1	PROTECTOR-GAS VALVE	
	3	1	**1J-9671**	1	SEAL-O-RING	
	4	1	**5M-3062**	2	BOLT (3/8-16X0.75-IN)	
	5	1	**203-1558**	1	KIT-SEAL	

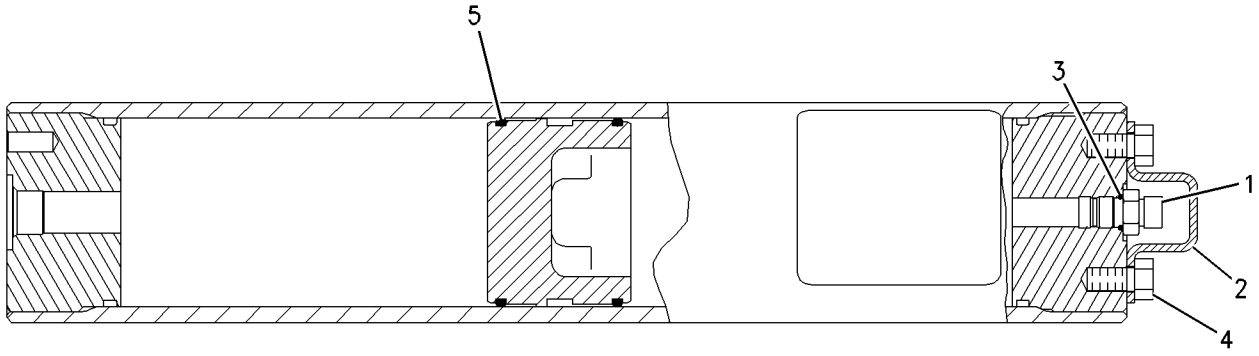

GRAPHIC #1 **<END>** g00895105

188-7497 BASE GP-FOOT BRAKE–PEDAL, RH

S/N: A7G1-UP
PART OF 271-0263 CONTROL GP-FOOT BRAKE
ALSO AN ATTACHMENT

SMCS-4269 **i01682088**

NOTE	REF NO	GRAPHIC REF	PART NUMBER	QTY	PART NAME 1 2 3 4 5 6 (PRODUCT LEVEL)	SEE PAGE
	1	1	**4E-8958**	1	PIN	
	2	1	**4E-9664**	1	PIN	
	3	1	**8S-2225**	1	SEAL-LIP TYPE	
	4	1	**009-3101**	4	RING-RETAINING	
	5	1	**113-7752**	1	PEDAL-BRAKE	
	6	1	**115-2247**	1	SPRING	
	7	1	**205-3582**	1	ROLLER	

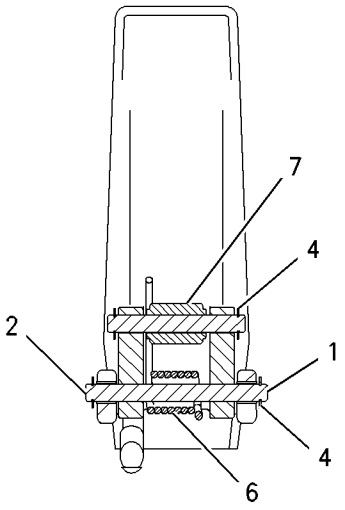

SECTION A-A

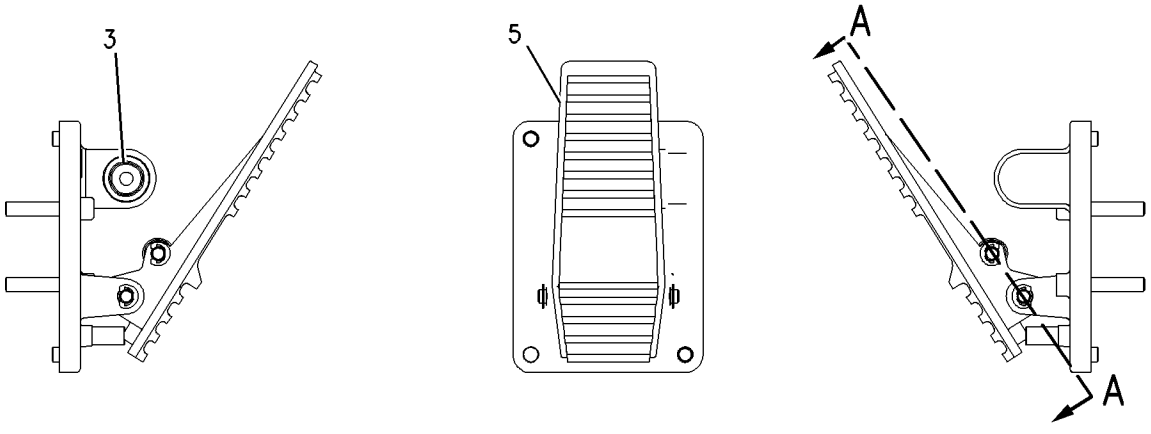

GRAPHIC #1 **<END>** g00826585

271-0264 BASE GP-FOOT BRAKE–PEDAL, LH

S/N: A7G1-UP

PART OF 271-0263 CONTROL GP-FOOT BRAKE

ALSO AN ATTACHMENT

SMCS-4269 **i02413393**

NOTE	REF NO	GRAPHIC REF	PART NUMBER	QTY	PART NAME 1 2 3 4 5 6 (PRODUCT LEVEL)	SEE PAGE
	1	1	**4E-9664**	1	PIN	
	2	1	**009-3101**	3	RING-RETAINING	
	3	1	**105-6117**	1	SWITCH AS-LIMIT (STOP LIGHT)	
	4	1	**113-7752**	1	PEDAL-BRAKE	
	5	1	**115-2247**	1	SPRING	
	6	1	**146-1892**	1	HARNESS AS-BRAKE (STOP LIGHT)	
		1	**155-2270**	1	KIT-CONNECTING PLUG (2-PIN)	
					(INCLUDES PLUG AS AND WEDGE)	
M	7	1	**153-6273**	1	SETSCREW	
	8	1	**200-2217**	1	COVER	
	9	1	**200-2218**	1	BRACKET AS-ADJUSTABLE SWITCH	
	10	1	**200-2219**	6	BOLT	
	11	1	**200-2220**	1	SEAL	
	12	1	**200-2221**	1	PIN	
	13	1	**230-7640**	1	ROLLER	
M	14	1	**125-3295**	2	SCREW-PAN HEAD (M2.5X0.45X12-MM)	
	15	1	**267-5222**	1	SENSOR GP-POSITION (ROTARY) (BRAKE PEDAL)	
M	16	1	**8T-2899**	2	SCREW-MACHINE (M2.5X0.45X6)	

M-METRIC PART

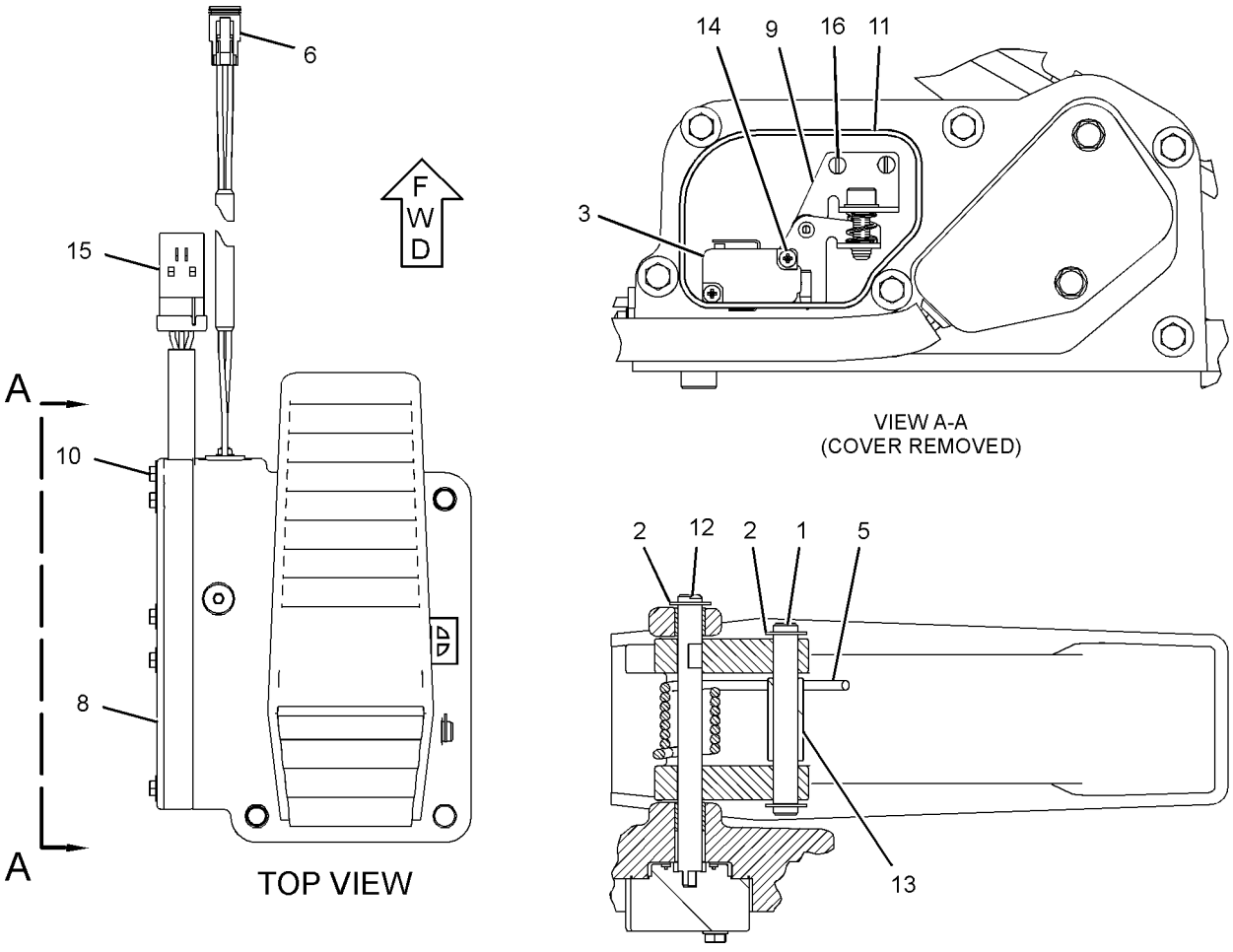

GRAPHIC #1

<END>

g01199507

122-7197 BRAKE GP-PARKING

S/N: A7G1-UP

PART OF 236-9057 POWER TRAIN AR

SMCS-4267 **i01699955**

NOTE	REF NO	GRAPHIC REF	PART NUMBER	QTY	PART NAME 1 2 3 4 5 6 (PRODUCT LEVEL)	SEE PAGE
	1	1	**3B-4617**	1	PIN-COTTER	
	2	1	**4K-1540**	1	PIN-CLEVIS	
	3	1	**6H-3618**	2	PLUG-PROTECTION	
	4	1	**172-7940**	1	LEVER	
	5	1	**154-8042**	1	ACTUATOR AS-PARKING BRAKE	
CY	6	1	**196-5374**	1	BRAKE GP-PARKING	457
	7	1	**209-0499**	1	END-YOKE ROD	
	8	1	**150-7693**	1	BRACKET AS	
	9	1	**9X-8257**	4	WASHER (17.5X30X3.5-MM THK)	
M	10	1	**8T-4133**	1	NUT (M10X1.15-THD)	
M	11	1	**8T-4139**	3	BOLT (M12X1.75X30-MM)	
M	12	1	**8T-4194**	8	BOLT (M12X1.75X50-MM)	
	13	1	**8T-4223**	14	WASHER-HARD (13.5X25.5X3-MM THK)	
M	14	1	**8T-4244**	2	NUT (M12X1.75-THD)	
M	15	1	**8T-7338**	4	BOLT (M16X2X45-MM)	
	16	1	**9B-7237**	1	BOLT (3/8-16X1.25-IN)	
	17	1	**156-6418**	1	DRUM AS	

C-CHANGE FROM PREVIOUS TYPE
M-METRIC PART
Y-SEPARATE ILLUSTRATION

122-7197 **BRAKE GP-PARKING** *(contd.)* **i01699955**

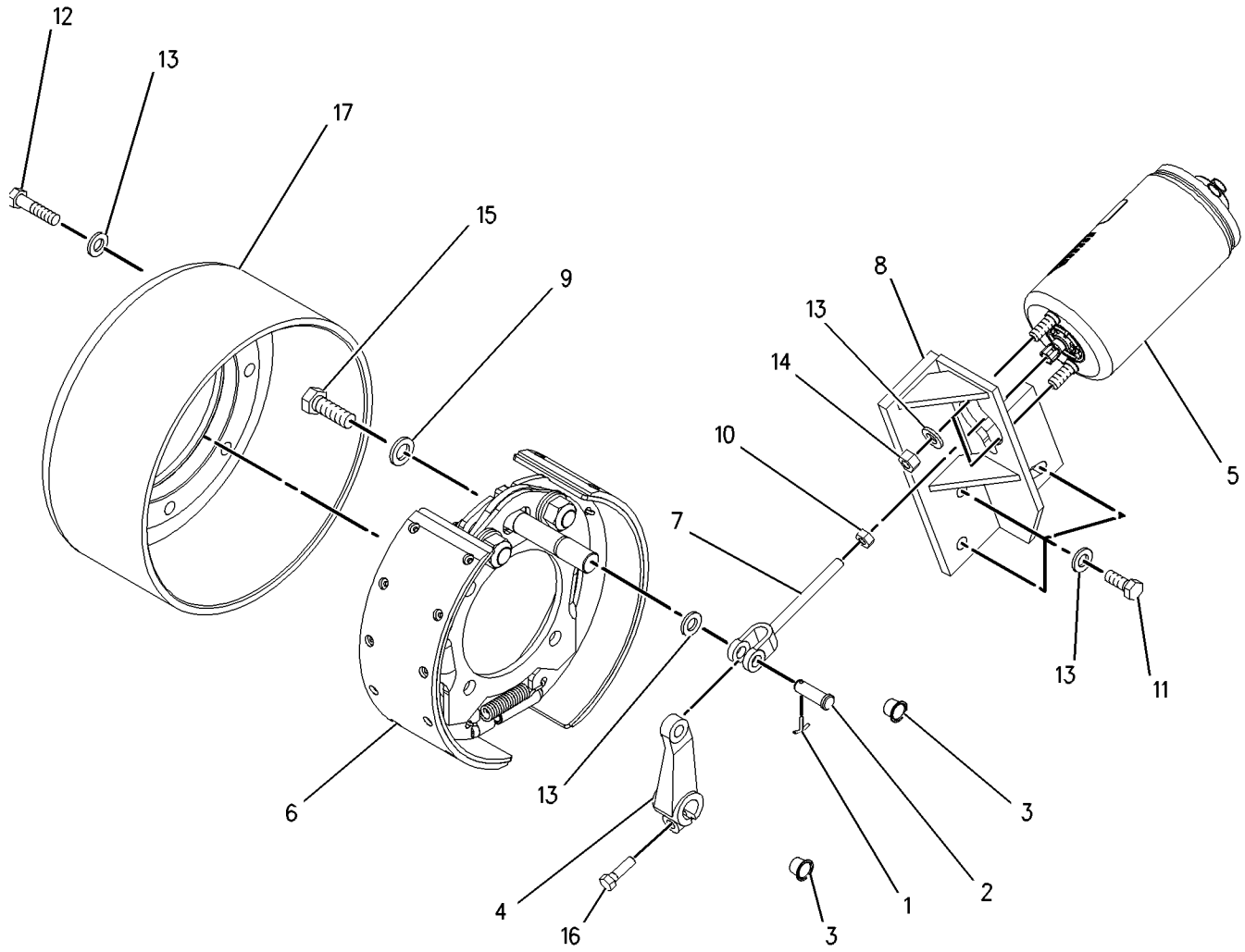

GRAPHIC #1 **<END>** g00629589

BRAKING SYSTEM

149-0643 BRAKE GP-PARKING

S/N: A7G1-UP
SOURCED FOR JAPAN
PART OF 196-5374 BRAKE GP-PARKING

SMCS-4267 **i01228661**

NOTE	PART NUMBER	QTY	PART NAME 1 2 3 4 5 6 (PRODUCT LEVEL)	SEE PAGE
			(NO SERVICED PARTS)	

<END>

196-2313 BRAKE GP-PARKING

S/N: A7G1-UP

PART OF 196-5374 BRAKE GP-PARKING

SMCS-4267 **i02022978**

NOTE	REF NO	GRAPHIC REF	PART NUMBER	QTY	PART NAME 1 2 3 4 5 6 (PRODUCT LEVEL)	SEE PAGE
	1	1	**9M-5139**	2	SPRING	
	2	1	**9M-5137**	1	BRACE-ANCHOR PIN	
	3	1	**155-4979**	1	PLATE AS-BRAKE	
	4	1	**7F-9578**	1	SPRING	
	5	1	**7F-9572**	1	NUT	
	6	1	**7F-9571**	1	SCREW-ADJUSTMENT	
	7	1	**7F-9579**	1	SOCKET	
	8	1	**6W-7301**	2	RING-RETAINING	
	9	1	**6W-7297**	2	PIN	
	10	1	**196-2314**	1	CAMSHAFT	
	11	1	**6B-6682**	2	NUT-FULL (3/4-16-THD)	
	12	1	**5P-8248**	4	WASHER-HARD (20X36.5X3.5-MM THK)	
	13	1	**196-2315**	1	SHOE AS-BRAKE (LH)	
	14	1	**196-2316**	1	SHOE AS-BRAKE (RH)	
					AVAILABLE REPAIR KIT(S):	
			9C-9837	1	KIT-BRAKE LINING	

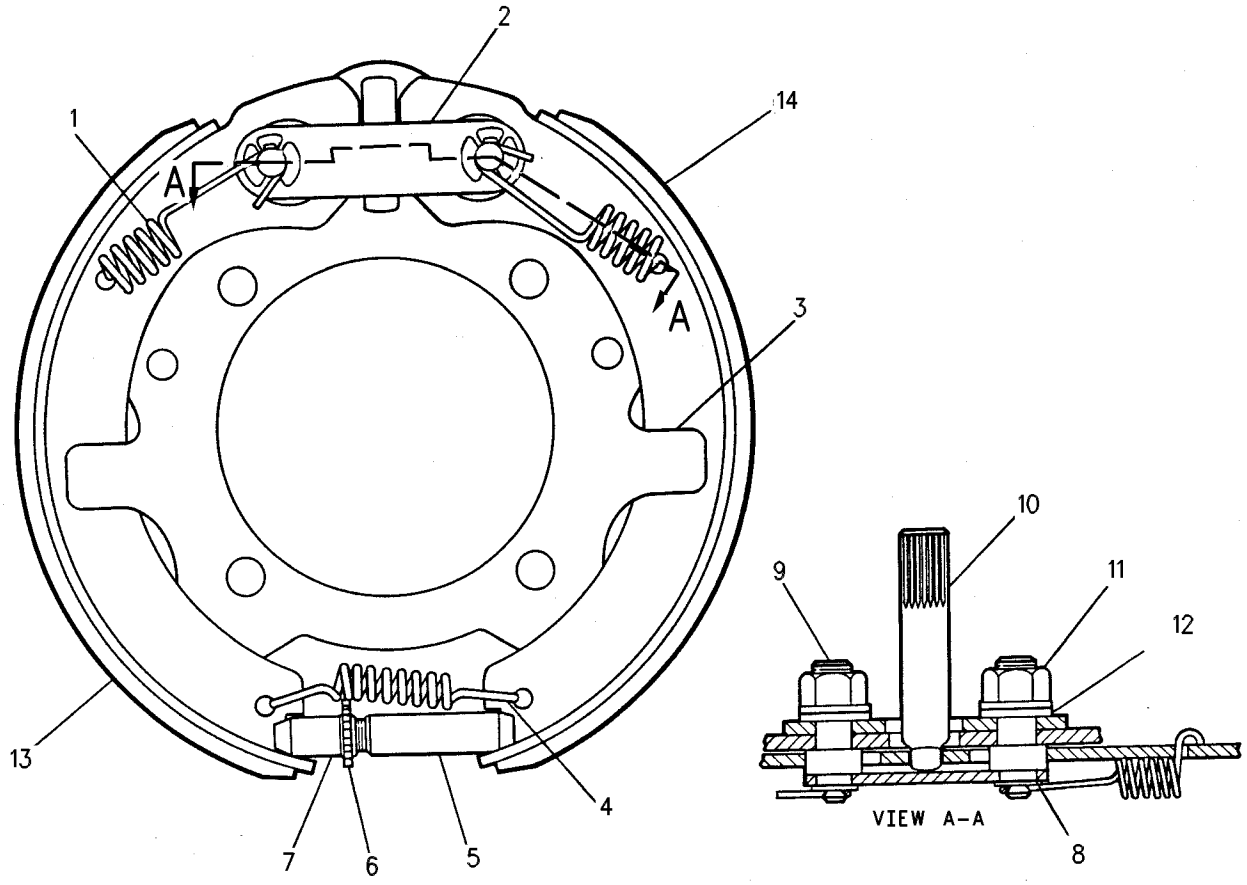

GRAPHIC #1 **<END>** g00596223

196-5374 BRAKE GP-PARKING

S/N: A7G1-UP

PART OF 122-7197 BRAKE GP-PARKING

SMCS-4267 **i01474733**

NOTE	PART NUMBER	QTY	PART NAME 1 2 3 4 5 6 (PRODUCT LEVEL)	SEE PAGE
Y	*149-0643*	1	BRAKE GP-PARKING (SOURCED FROM JAPAN)	455
Y	*196-2313*	1	BRAKE GP-PARKING (SOURCED FROM USA)	456

Y-SEPARATE ILLUSTRATION

<END>

BRAKING SYSTEM

265-6695 CONTROL GP-FOOT BRAKE

S/N: A7G1-UP
PART OF 237-2572, 237-2573 CAB AR-ENCLOSED ROPS
ALSO AN ATTACHMENT

SMCS-4269 **i02413369**

NOTE	REF NO	GRAPHIC REF	PART NUMBER	QTY	PART NAME 1 2 3 4 5 6 (PRODUCT LEVEL)	SEE PAGE
Y	1	1	**271-0263**	1	CONTROL GP-FOOT BRAKE	459
M	2	1	**099-3649**	6	BOLT (M8X1.25X40-MM)	
	3	1	**8T-4224**	6	WASHER-HARD (8.8X16X2-MM THK)	

M-METRIC PART
Y-SEPARATE ILLUSTRATION

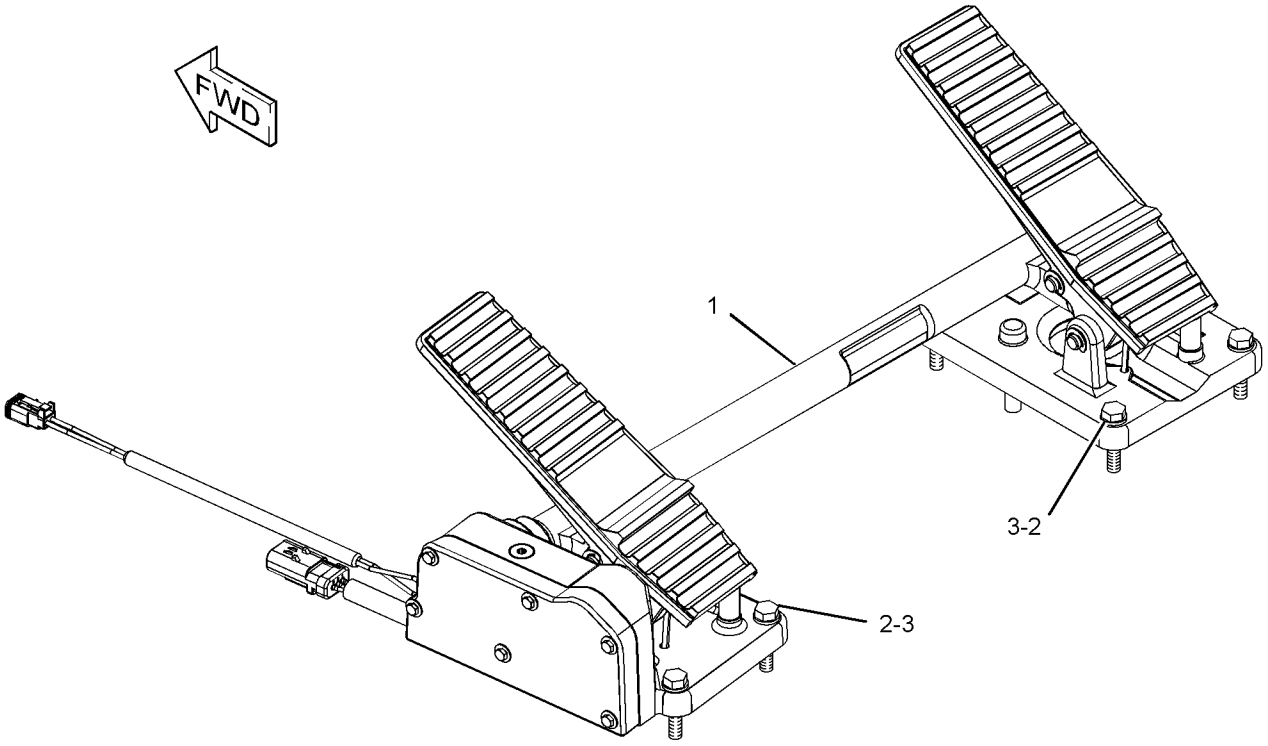

GRAPHIC #1 **<END>** g01202978

BRAKING SYSTEM

271-0263 CONTROL GP-FOOT BRAKE

S/N: A7G1-UP

PART OF 265-6695 CONTROL GP-FOOT BRAKE

ALSO AN ATTACHMENT

SMCS-4269 **i02413374**

NOTE	REF NO	GRAPHIC REF	PART NUMBER	QTY	PART NAME 1 2 3 4 5 6 (PRODUCT LEVEL)	SEE PAGE
	1	1	**180-3994**	1	SHAFT AS	
		1	**4E-9667**	1	ROLLER	
		1	**4E-9668**	1	PIN	
		1	**009-3101**	2	RING-RETAINING	
		1	**114-9491**	2	WASHER	
Y	2	1	**188-7497**	1	BASE GP-FOOT BRAKE (PEDAL, RH)	450
Y	3	1	**271-0264**	1	BASE GP-FOOT BRAKE (PEDAL, LH)	451

Y-SEPARATE ILLUSTRATION

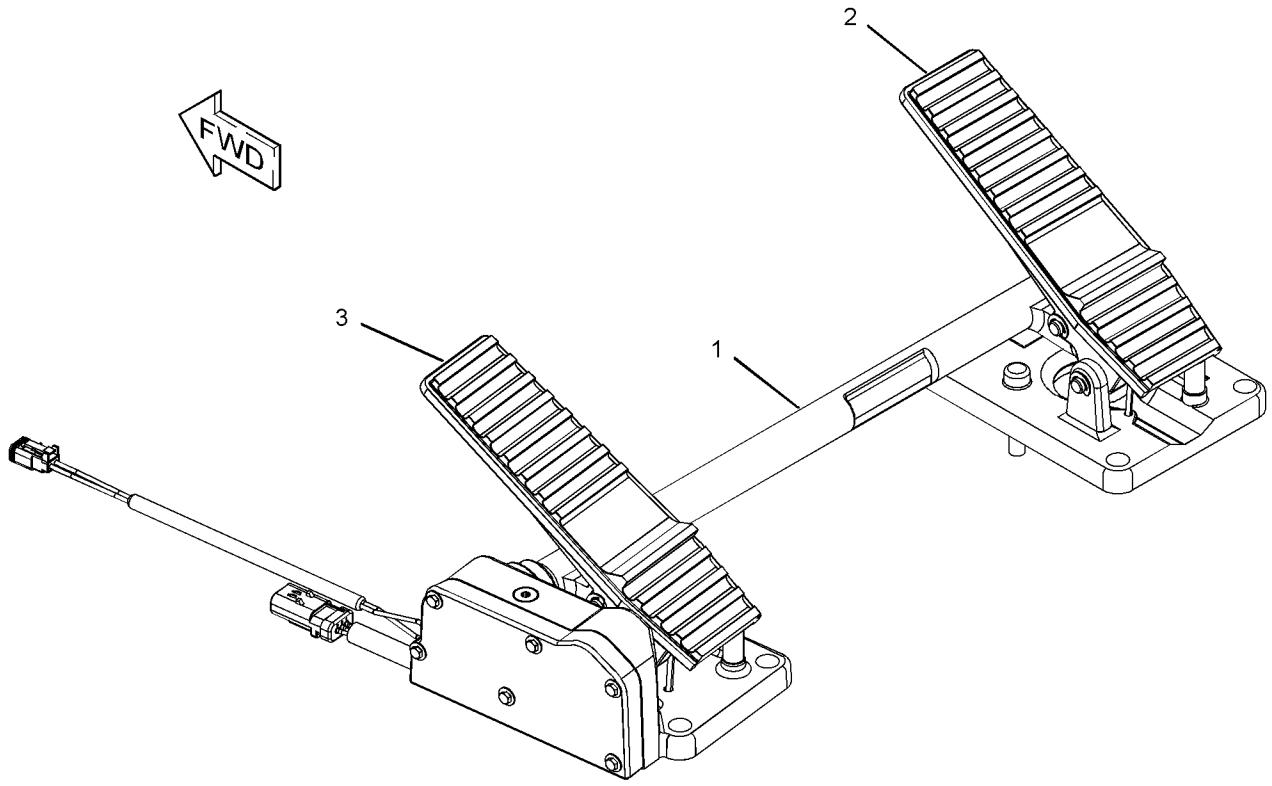

GRAPHIC #1 **<END>** g01202981

BRAKING SYSTEM

244-2747 CONTROL GP-PARKING BRAKE

S/N: A7G1-UP
PART OF 237-2572, 237-2573 CAB AR-ENCLOSED ROPS
ALSO AN ATTACHMENT

SMCS-4282, 4284 **i02413619**

NOTE	REF NO	GRAPHIC REF	PART NUMBER	QTY	PART NAME 1 2 3 4 5 6 (PRODUCT LEVEL)	SEE PAGE
	1	1	**3S-2093**	1	STRAP-CABLE	
	2	1	**9C-9458**	1	BRACKET AS	
	3	1	**122-1671**	1	KNOB	
	4	1	**134-0165**	1	WASHER (13.8X45X3-MM THK)	
	5	1	**195-2187**	1	CABLE AS-PARKING BRAKE CONTROL	
		1	**8T-4223**	3	WASHER-HARD (13.5X25.5X3-MM THK)	
M		1	**8T-4244**	4	NUT (M12X1.75-THD)	
		1	**9B-0453**	2	LOCKWASHER	
M	7	1	**5C-2890**	1	NUT (M6X1-THD)	
	8	1	**6V-3265**	1	CLIP	
	9	1	**8T-4121**	2	WASHER-HARD (11X21X2.5-MM THK)	
M	10	1	**8T-4137**	1	BOLT (M10X1.5X20-MM)	

M-METRIC PART

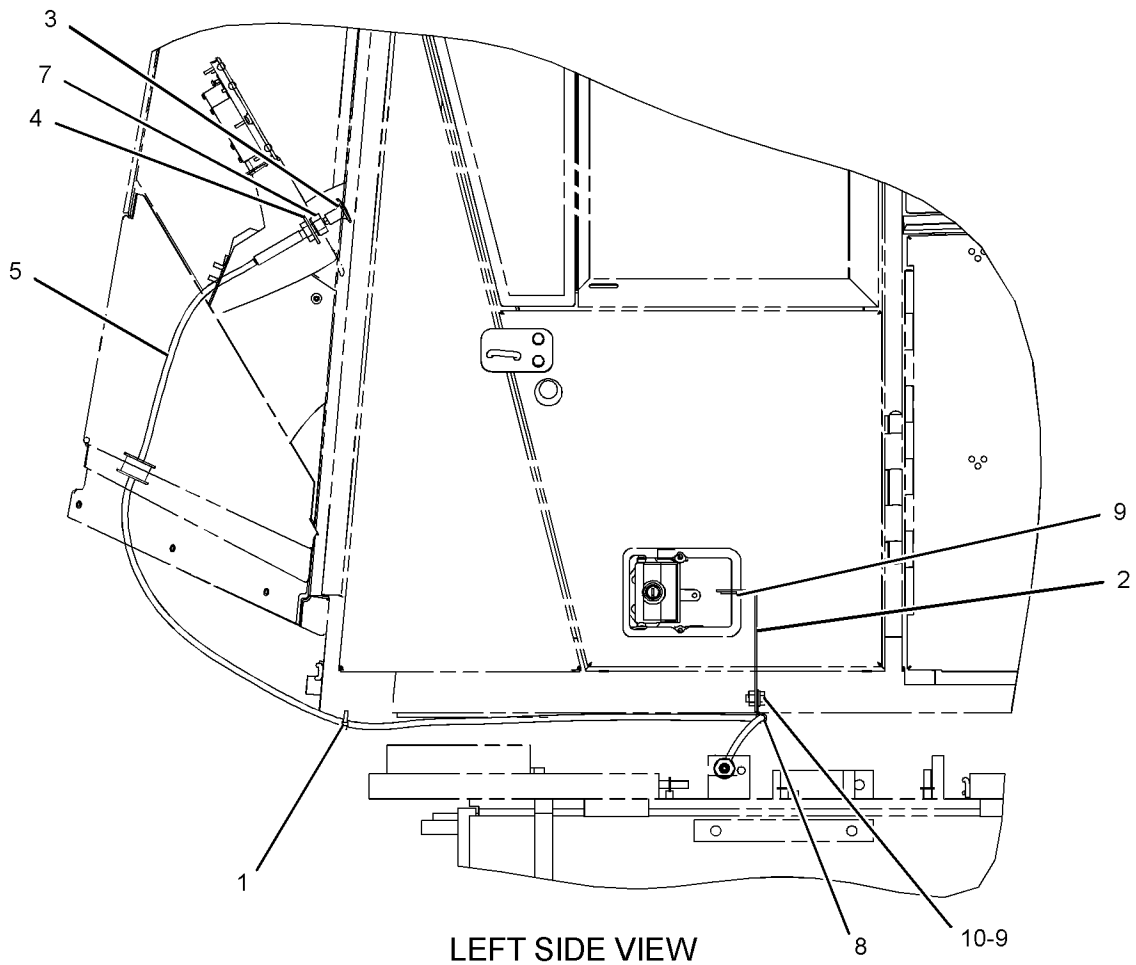

LEFT SIDE VIEW

GRAPHIC #1

<END>

g01190983

BRAKING SYSTEM

261-1712 CONTROL GP-SERVICE BRAKE

S/N: A7G1-UP

PART OF 236-9051 CHASSIS AR

SMCS-4257, 4258, 4263, 4265, 4269, 4280 **i02412697**

NOTE	REF NO	GRAPHIC REF	PART NUMBER	QTY	PART NAME 1 2 3 4 5 6 (PRODUCT LEVEL)	SEE PAGE
	1	3	**5P-6724**	1	BEARING-ROLLER	
	2	2	**6N-8744**	1	MOUNT	
	3	2	**6V-8076**	1	ELBOW	
	4	3	**7I-4078**	1	LEVER AS	
I	5	2	**9U-4143**	2	HOSE AS	
	6	2	**9X-2492**	2	TEE-O-RING	
	7	3	**081-5645**	1	TEE-FEMALE	
	8	3	**091-1745**	6	WASHER (16.6X24X1.2-MM THK)	
	9	3	**101-3846**	1	ROD-CONTROL	
Y	10	3	**106-1774**	1	VALVE GP-BRAKE CONTROL (PARKING)	467
	11	2	**124-3019**	1	BRACKET AS	
M		2	**8T-3490**	1	NUT-WELD (M10X1.5-THD)	
	12	1	**132-2453**	1	UNION	
	13	1	**135-3823**	2	TUBE AS	
	14	1	**142-1657**	1	BRACKET AS	
M		1	**8T-3490**	1	NUT-WELD (M10X1.5-THD)	
	15	1	**144-4613**	1	ANGLE AS	
I	16	1	**146-9047**	1	HOSE AS	
	17	2	**150-8013**	1	PLATE AS	
	18	3	**184-7415**	2	ELBOW	
	19	1	**195-0882**	1	BRACKET AS	
	20	1	**197-7382**	2	CLAMP	
	21	2	**210-5587**	1	VALVE GP-BRAKE CONTROL (SERVICE)	
		2	**117-7798**	1	BOOT	
		2	**117-7799**	1	KIT-SEAL	
					(INCLUDES BOOT, CUP, QUAD RING, AND O-RINGS)	
Y	22	2	*220-2726*	2	ACCUMULATOR GP-BRAKE (CHARGED)	448
I	23	1	**243-0564**	1	HOSE AS	
I	24	1	**243-0565**	1	HOSE AS	
	25	3	**243-0570**	1	BRACKET AS	
I	26	1	**244-3265**	1	HOSE AS	
I	27	1	**244-3268**	1	HOSE AS	
I	28	1	**244-3269**	1	HOSE AS	
	29	2	**244-3274**	1	BRACKET AS	
I	30	2	**244-3279**	1	HOSE AS	
I	31	2	**244-3285**	1	HOSE AS	
	32	2	**244-3287**	1	BRACKET AS	
M		2	**8T-3490**	2	NUT-WELD (M10X1.5-THD)	
	33	1	**246-4777**	2	BRACKET	
I	34	1	**246-4778**	1	HOSE AS	
I	35	2	**246-4779**	1	HOSE AS	
I	36	1	**246-4780**	1	HOSE AS	
I	37	2	**246-4781**	1	HOSE AS	
I	38	2	**246-4782**	1	HOSE AS	
I	39	3	**246-4783**	1	HOSE AS	
	40	1	*148-8336*	2	CONNECTOR AS	
					(EACH INCLUDES)	
		1	**3J-1907**	1	SEAL-O-RING	
		1	**6V-8397**	1	SEAL-O-RING	
		1	**6V-8636**	1	CONNECTOR	
	41	1	*148-8361*	4	ELBOW AS	
					(EACH INCLUDES)	
		1	**3J-7354**	1	SEAL-O-RING	
		1	**6V-8397**	1	SEAL-O-RING	
		1	**6V-9200**	1	ELBOW	

261-1712 CONTROL GP-SERVICE BRAKE *(contd.)* i02412697

NOTE	REF NO	GRAPHIC REF	PART NUMBER	QTY	PART NAME 1 2 3 4 5 6 (PRODUCT LEVEL)	SEE PAGE
	42	2	*148-8364*	2	ELBOW AS	
					(EACH INCLUDES)	
		2	**3K-0360**	1	SEAL-O-RING	
		2	**6V-8398**	1	SEAL-O-RING	
		2	**6V-8625**	1	ELBOW	
	43	3	*148-8365*	1	ELBOW AS	
		3	**3J-1907**	1	SEAL-O-RING	
		3	**6V-8398**	1	SEAL-O-RING	
		3	**8T-6876**	1	ELBOW	
	44	1	*148-8370*	2	ELBOW AS	
					(EACH INCLUDES)	
		1	**6V-8398**	1	SEAL-O-RING	
		1	**6V-9851**	1	ELBOW	
	45	2	*148-8374*	1	ELBOW AS	
		2	**3K-0360**	1	SEAL-O-RING	
		2	**6V-8397**	1	SEAL-O-RING	
		2	**6V-8723**	1	ELBOW	
	46	1	*148-8377*	2	ELBOW AS	
					(EACH INCLUDES)	
		1	**6V-8397**	2	SEAL-O-RING	
		1	**6V-8980**	1	ELBOW	
	47	1	*148-8378*	1	ELBOW AS	
		1	**3J-1907**	1	SEAL-O-RING	
		1	**6V-8397**	1	SEAL-O-RING	
		1	**6V-8724**	1	ELBOW	
	48	2	*148-8411*	1	PLUG AS	
		2	**3K-0360**	1	SEAL-O-RING	
		2	**9S-4185**	1	PLUG	
	49	1	*148-8427*	1	TEE AS	
		1	**6V-8398**	3	SEAL-O-RING	
		1	**8T-6895**	1	TEE-UNION	
	50	1	*148-8428*	2	TEE AS	
					(EACH INCLUDES)	
		1	**3K-0360**	1	SEAL-O-RING	
		1	**6V-8398**	2	SEAL-O-RING	
		1	**6V-8782**	1	TEE	
	51	1	*148-8433*	1	TEE AS	
		1	**6V-8397**	2	SEAL-O-RING	
		1	**6V-9836**	1	TEE-SWIVEL	
	52	1,2	*148-8434*	2	TEE AS	
					(EACH INCLUDES)	
		1,2	**6V-8397**	2	SEAL-O-RING	
		1,2	**6V-9843**	1	TEE-SWIVEL	
	53	1	*148-8444*	1	TEE AS-SWIVEL	
		1	**6V-8398**	2	SEAL-O-RING	
		1	**6V-9837**	1	TEE-SWIVEL	
	54	3	*155-7327*	1	CONNECTOR AS	
		3	**3J-1907**	1	SEAL-O-RING	
		3	**5H-8853**	1	SEAL-O-RING	
		3	**6V-8636**	1	CONNECTOR	
	55	1,2	*164-5567*	3	FITTING GP-COUPLING	
					(EACH INCLUDES)	
		1,2	**3J-1907**	1	SEAL-O-RING	
		1,2	**6V-3965**	1	FITTING AS (QUICK DISCONNECT)	
	56	2	*164-5574*	1	TEE GP	
		2	**3D-2824**	1	SEAL-O-RING	
		2	**6V-8784**	1	TEE-FACE SEAL	
		2	**6V-9746**	2	SEAL-O-RING	
	57	1	*164-5580*	1	TEE AS	

261-1712 **CONTROL GP-SERVICE BRAKE** *(contd.)* **i02412697**

NOTE	REF NO	GRAPHIC REF	PART NUMBER	QTY	PART NAME 1 2 3 4 5 6 (PRODUCT LEVEL)	SEE PAGE
		1	**6V-8398**	2	SEAL-O-RING	
		1	**6V-9489**	1	TEE-BULKHEAD	
		1	**6V-9746**	1	SEAL-O-RING	
	58	3	**3B-4607**	2	PIN-COTTER	
	59	3	**3B-4640**	1	PIN-COTTER	
	60	2	**3J-1907**	1	SEAL-O-RING	
	61	2	**3K-0360**	2	SEAL-O-RING	
	62	1,2,3	**5K-5338**	10	CLIP	
	63	2	**6D-1641**	1	CLIP	
	64	1,2	**6V-0852**	3	CAP-DUST	
	65	1	**6V-1889**	2	CLIP	
	66	3	**6V-8397**	4	SEAL-O-RING	
	67	2,3	**6V-8398**	3	SEAL-O-RING	
	68	1,3	**6V-9168**	4	NUT (11/16-16-THD)	
	69	1	**6V-9169**	2	NUT-BULKHEAD (13/16-16-THD)	
	70	2	**6V-9832**	1	CAP AS	
M	71	3	**7X-0818**	2	BOLT (M8X1.25X45-MM)	
	72	3	**7X-2618**	2	PIN	
	73	1	**7X-7729**	1	WASHER (11X25X3-MM THK)	
	74	1,2	**8M-2773**	7	CLIP	
	75	3	**8T-0741**	2	SEAL-LIP TYPE	
	76	1,2,3	**8T-4121**	27	WASHER-HARD (11X21X2.5-MM THK)	
M	77	2	**8T-4133**	7	NUT (M10X1.15-THD)	
M	78	1,2,3	**8T-4136**	15	BOLT (M10X1.5X25-MM)	
M	79	2	**8T-4137**	2	BOLT (M10X1.5X20-MM)	
M	80	1	**8T-4139**	4	BOLT (M12X1.75X30-MM)	
M	81	1	**8T-4195**	1	BOLT (M10X1.5X30-MM)	
M	82	2	**8T-4196**	3	BOLT (M10X1.5X35-MM)	
	83	2	**8T-4222**	2	WASHER-PLATED (11X32X2.5-MM THK)	
	84	1	**8T-4223**	4	WASHER-HARD (13.5X25.5X3-MM THK)	
	85	3	**8T-4224**	2	WASHER-HARD (8.8X16X2-MM THK)	
	86	1,3	**9X-8257**	5	WASHER (17.5X30X3.5-MM THK)	

I-REFER TO HYDRAULIC INFORMATION SYSTEM
M-METRIC PART
Y-SEPARATE ILLUSTRATION

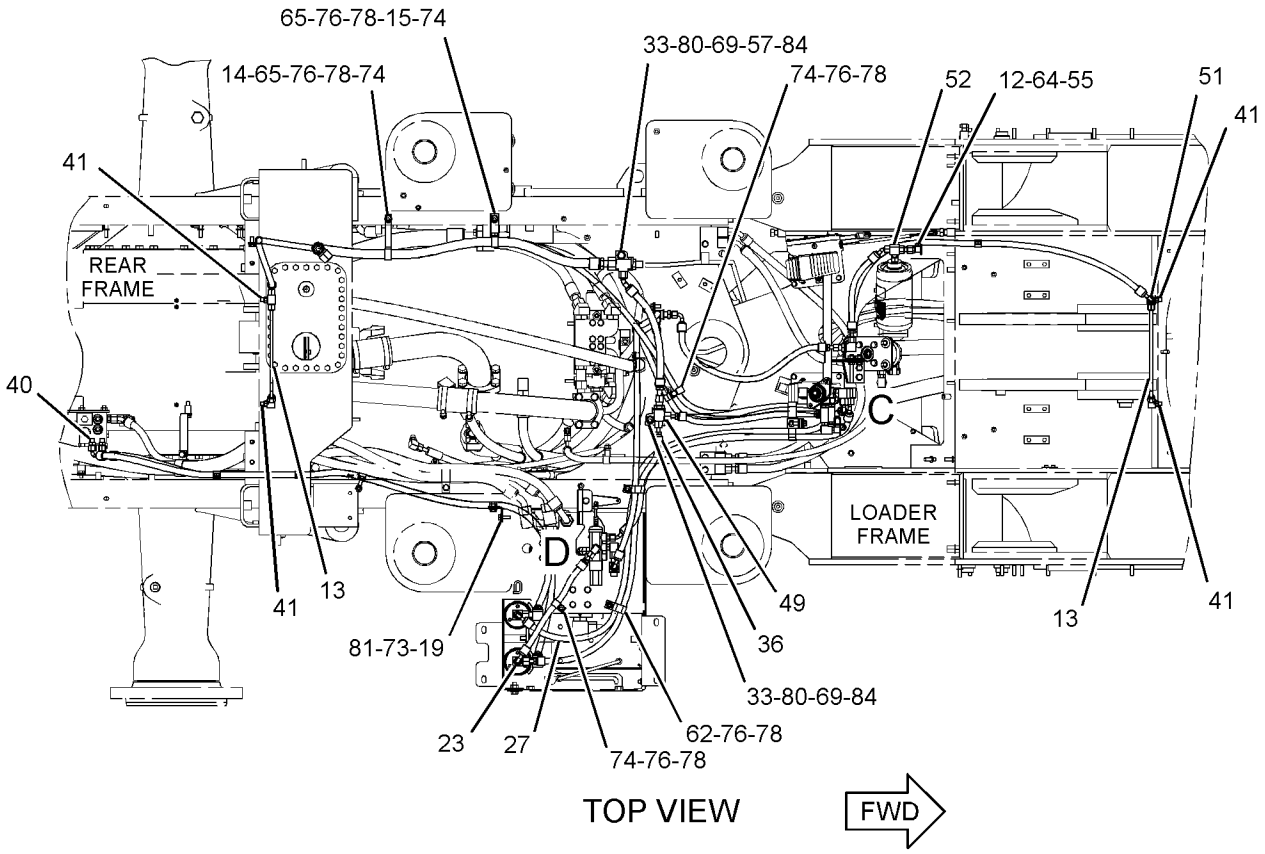

REFER TO ALL ILLUSTRATIONS OF THIS GROUP FOR AUXILIARY VIEWS

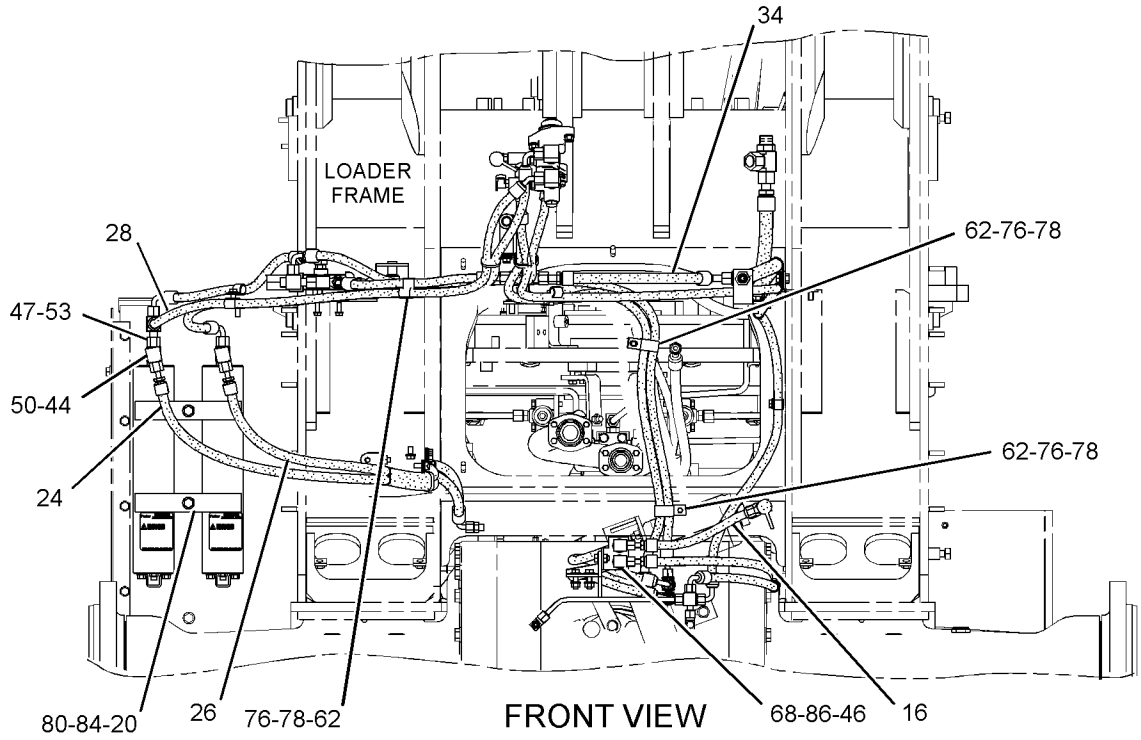

GRAPHIC #1

g01210811

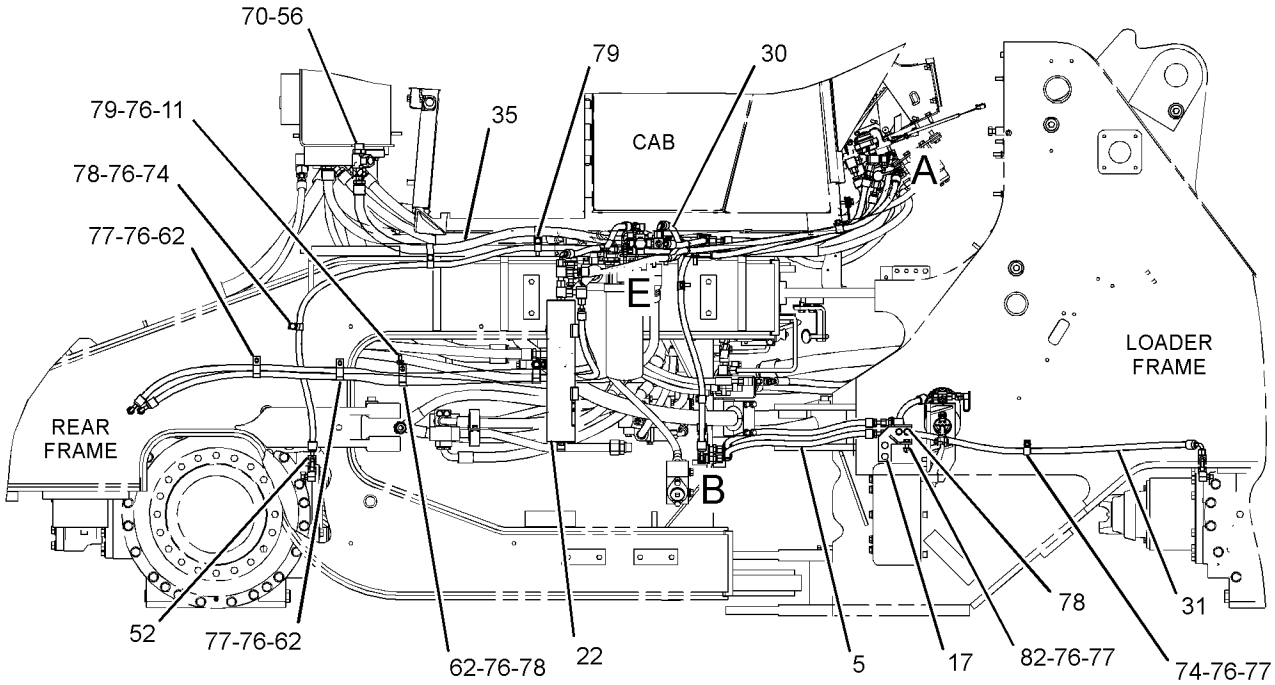

RIGHT SIDE VIEW

REFER TO ALL ILLUSTRATIONS OF
THIS GROUP FOR AUXILIARY VIEWS

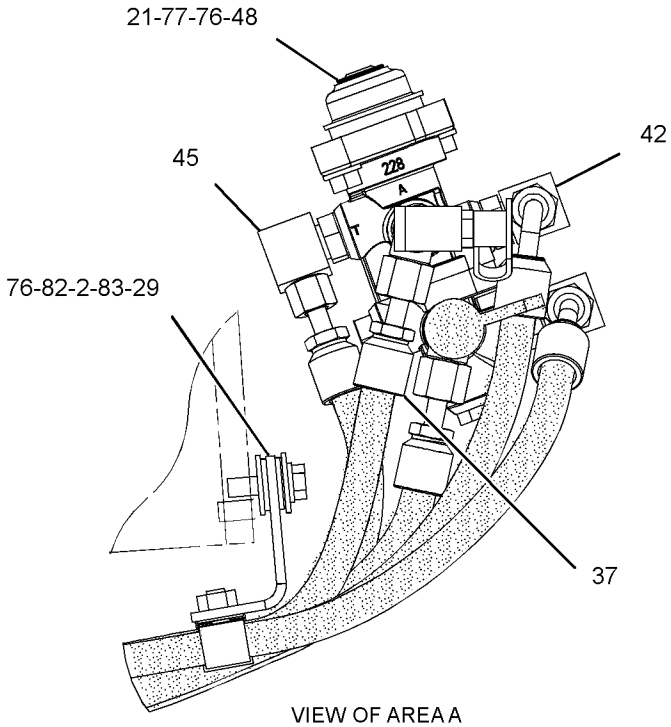

VIEW OF AREA A

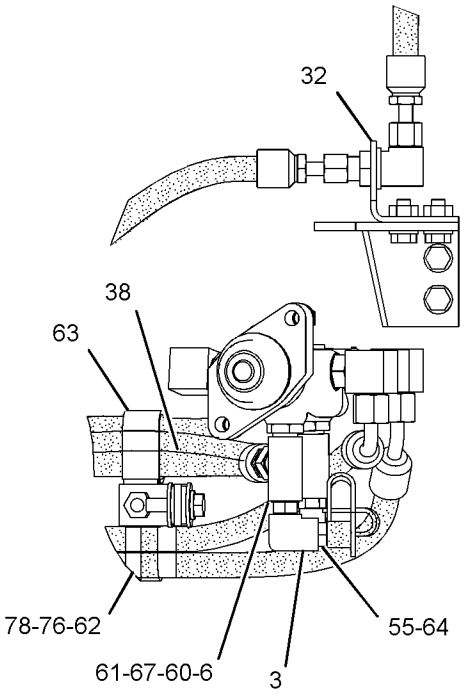

VIEW OF AREA C

GRAPHIC #2 g01210812

261-1712 **CONTROL GP-SERVICE BRAKE** *(contd.)* **i02412697**

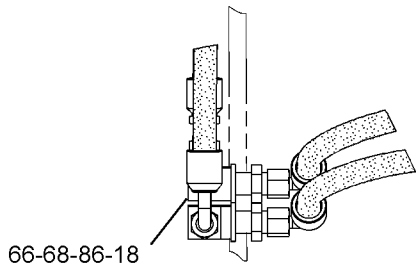

VIEW OF AREA B

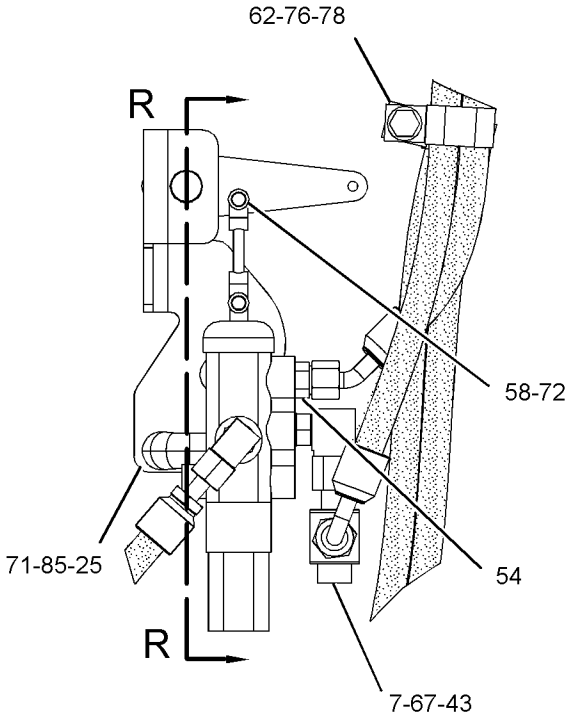

VIEW OF AREA D

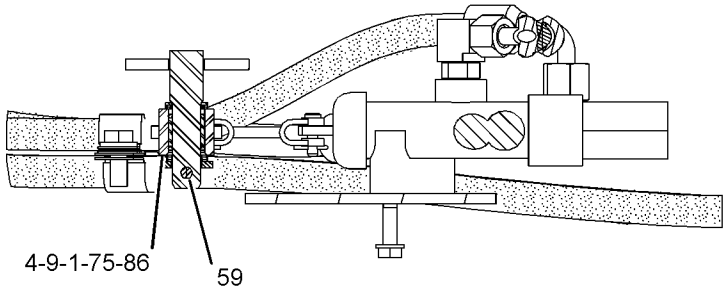

SECTION R-R

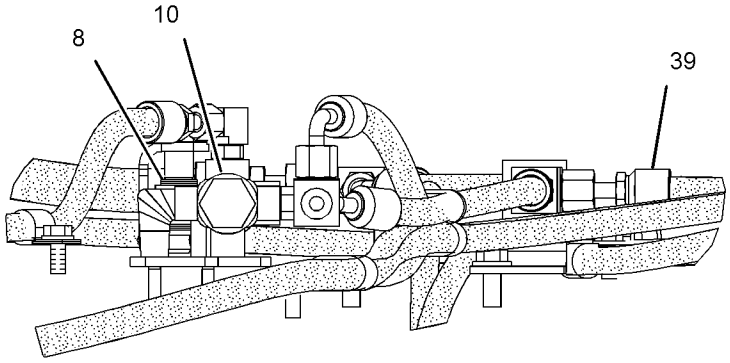

VIEW OF AREA E

GRAPHIC #3 **<END>** g01210815

106-1774 VALVE GP-BRAKE CONTROL–PARKING

S/N: A7G1-UP

PART OF 261-1712 CONTROL GP-SERVICE BRAKE

SMCS-4265, 4282 **i00814819**

NOTE	REF NO	GRAPHIC REF	PART NUMBER	QTY	PART NAME 1 2 3 4 5 6 (PRODUCT LEVEL)	SEE PAGE
	1	1	**9S-8001**	2	PLUG	
	2	1	**4J-7533**	2	SEAL-O-RING	

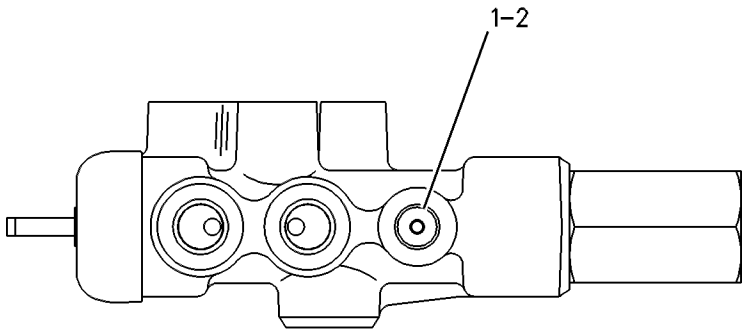

GRAPHIC #1 **<END>** g00261899

STEERING SYSTEM

141-8802 CONTROL GP-STEERING—HMU STEERING

S/N: A7G1-UP

PART OF 237-2572 CAB AR-ENCLOSED ROPS

SMCS-4304, 4309, 4310, 4338 **i02225221**

NOTE	REF NO	GRAPHIC REF	PART NUMBER	QTY	PART NAME 1 2 3 4 5 6 (PRODUCT LEVEL)	SEE PAGE
	1	1	**2T-3360**	1	BUTTON AS-HORN	
	2	1	**8R-2918**	1	KNOB AS	
M	3	1	**105-3477**	1	BOLT-SOCKET HEAD (M10X1.5X45-MM)	
	4	1	**123-6713**	1	WEDGE	
J	5	1	**141-8803**	1	COLUMN AS	
	6	1	**141-8808**	1	COVER AS (RH)	
	7	1	**141-8811**	1	COVER AS (LH)	
	8	1	**144-0896**	1	BRACKET AS	
M		1	**8T-3490**	4	NUT-WELD (M10X1.5 THD)	
	9	1	**146-3793**	1	STEERING WHEEL	
M	10	1	**6V-5683**	4	BOLT (M6X1X16-MM)	
M	11	1	**8T-1159**	4	BOLT-SOCKET HEAD (M10X1.5X25-MM)	
	12	1	**8T-4121**	10	WASHER-HARD (11X21X2.5-MM THK)	
M	13	1	**8T-4136**	4	BOLT (M10X1.5X25-MM)	
M	14	1	**8T-4185**	2	BOLT (M10X1.5X50-MM)	
	15	1	**124-0065**	1	BLOCK	
	16	1	**255-8545**	1	WASHER-RUBBER	
					AVAILABLE REPAIR KIT(S):	
J			**149-2906**	1	KIT-NUT	
J			**228-5847**	1	KIT-SHAFT	
J			**220-3933**	1	KIT-HORN	
J			**145-8867**	1	KIT-GAS ASSIST	
J			**149-2907**	1	KIT-TILT LEVER	

J-KIT(S) MARKED J AVAILABLE FOR PART(S) MARKED J
M-METRIC PART

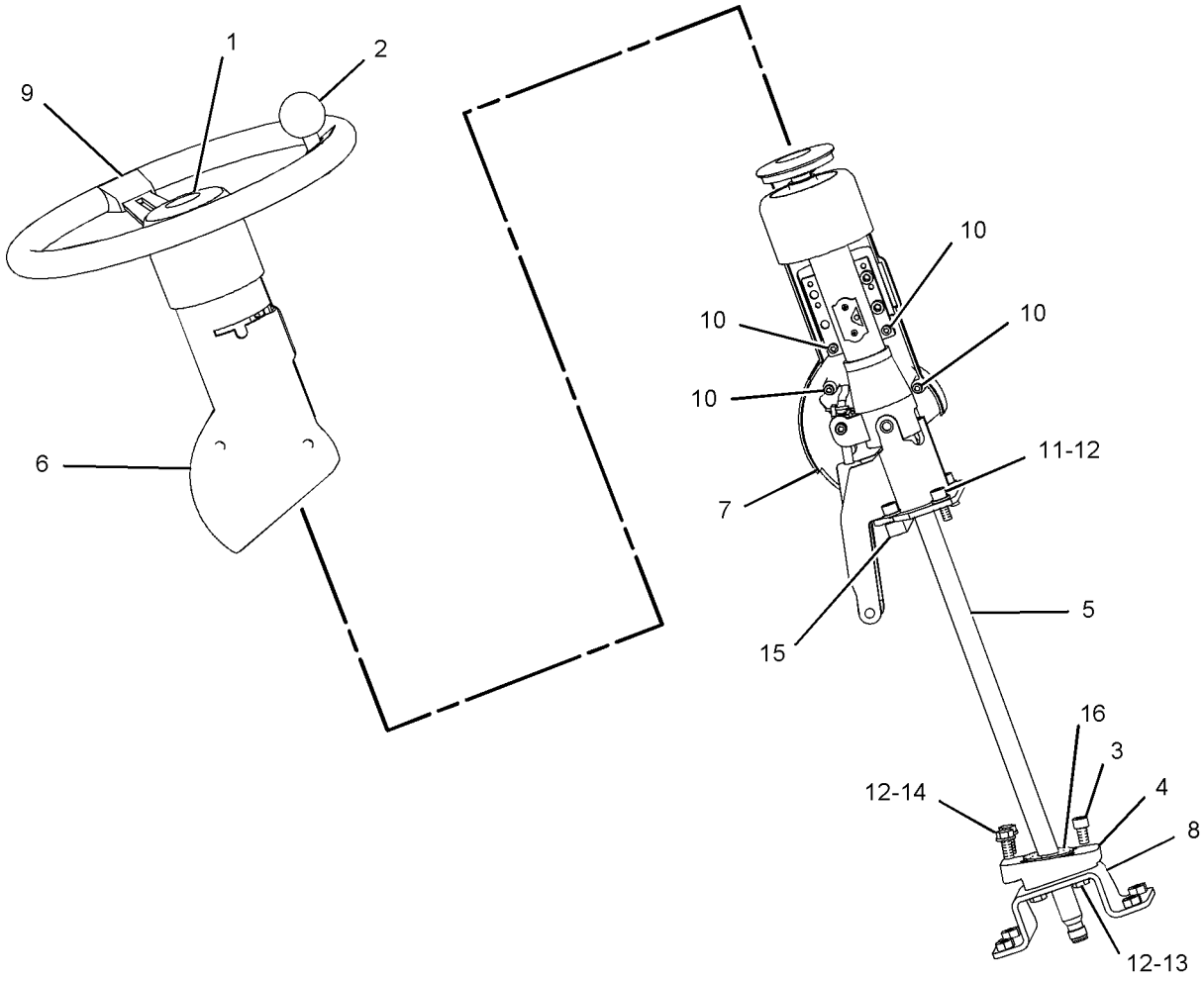

GRAPHIC #1 **<END>** g01100899

STEERING SYSTEM

219-7619 CONTROL GP-STEERING—COMMAND CONTROL STEERING

S/N: A7G1-UP

PART OF 237-2573 CAB AR-ENCLOSED ROPS

AN ATTACHMENT

SMCS-4304, 4309, 4310, 4338 **i01913902**

NOTE	REF NO	GRAPHIC REF	PART NUMBER	QTY	PART NAME 1 2 3 4 5 6 (PRODUCT LEVEL)	SEE PAGE
	1	1	**1A-2812**	1	WASHER-VALVE PUSH (0.06-MM THK)	
	2	1	**2S-2160**	1	RING-RETAINING	
	3	1	**2V-7859**	1	BEARING	
	4	1	**3S-2093**	1	STRAP-CABLE	
	5	1	**6P-0593**	2	BEARING-ROLLER	
M	6	1	**105-3477**	1	BOLT-SOCKET HEAD (M10X1.5X45-MM)	
	7	1	**112-2014**	1	CLAMP	
	8	1	**112-9716**	1	LEVER	
	9	1	**114-5309**	1	COVER AS (RH)	
	10	1	**114-5312**	1	COVER AS (LH)	
	11	1	**115-2014**	1	SHAFT	
	12	1	**117-6056**	1	HOUSING AS	
	13	1	**118-8078**	2	CLIP	
	14	1	**123-6713**	1	WEDGE	
	15	1	**124-0065**	1	BLOCK	
	16	1	**155-6526**	1	SLEEVE	
Y	17	1	**156-0549**	1	STEERING COLUMN GP	497
	18	1	**1B-8705**	1	KEY-WOODRUFF	
Y	19	1	*218-0654*	1	STEERING WHEEL GP	498
	20	1	**4D-9517**	1	CLIP	
M	21	1	**6V-5683**	4	BOLT (M6X1X16-MM)	
M	22	1	**7X-2619**	3	BOLT (M6X1X20-MM)	
M	23	1	**8T-1159**	4	BOLT-SOCKET HEAD (M10X1.5X25-MM)	
	24	1	**8T-4121**	5	WASHER-HARD (11X21X2.5-MM THK)	
M	25	1	**8T-4185**	2	BOLT (M10X1.5X50-MM)	
M	26	1	**8T-4191**	1	BOLT (M10X1.5X16-MM)	
M	27	1	**8T-4195**	5	BOLT (M10X1.5X30-MM)	
	28	1	**8T-4205**	3	WASHER-HARD (7.2X14.5X2-MM THK)	

M-METRIC PART
Y-SEPARATE ILLUSTRATION

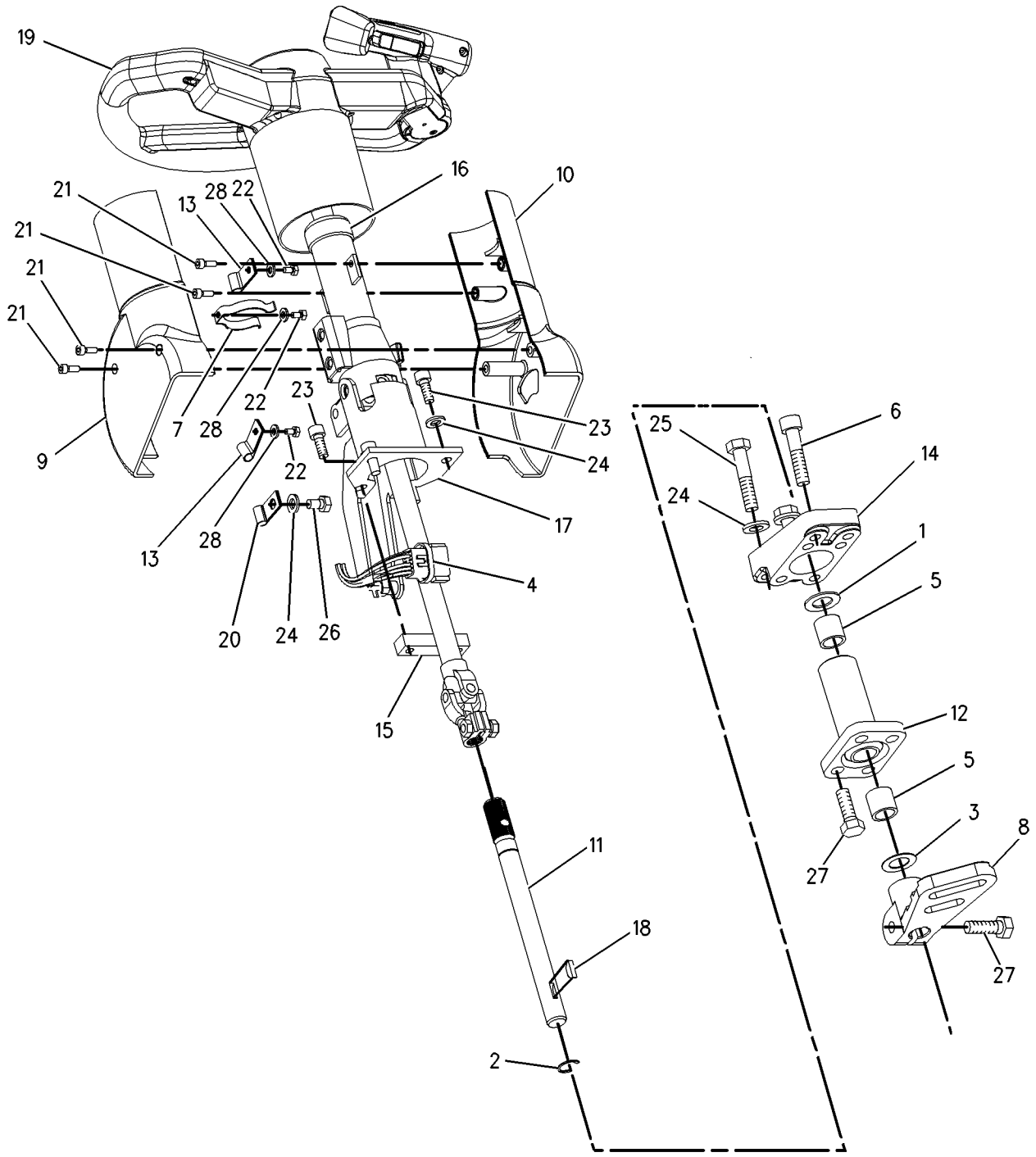

GRAPHIC #1 **<END>** g01004677

STEERING SYSTEM

119-4398 CYLINDER & MTG GP-STEERING

S/N: A7G1-UP

PART OF 236-9051 CHASSIS AR

SMCS-4303 **i01223014**

NOTE	REF NO	GRAPHIC REF	PART NUMBER	QTY	PART NAME 1 2 3 4 5 6 (PRODUCT LEVEL)	SEE PAGE
	1	1	**3B-8489**	2	FITTING-GREASE	
	2	1	**7G-8839**	4	SPACER (13.5X57X6-MM THK)	
Y	3	1	**133-1747**	2	CYLINDER GP-STEERING	473
	4	1	**136-1711**	4	PIN AS	
M	5	1	**8T-4139**	4	BOLT (M12X1.75X30-MM)	

M-METRIC PART
Y-SEPARATE ILLUSTRATION

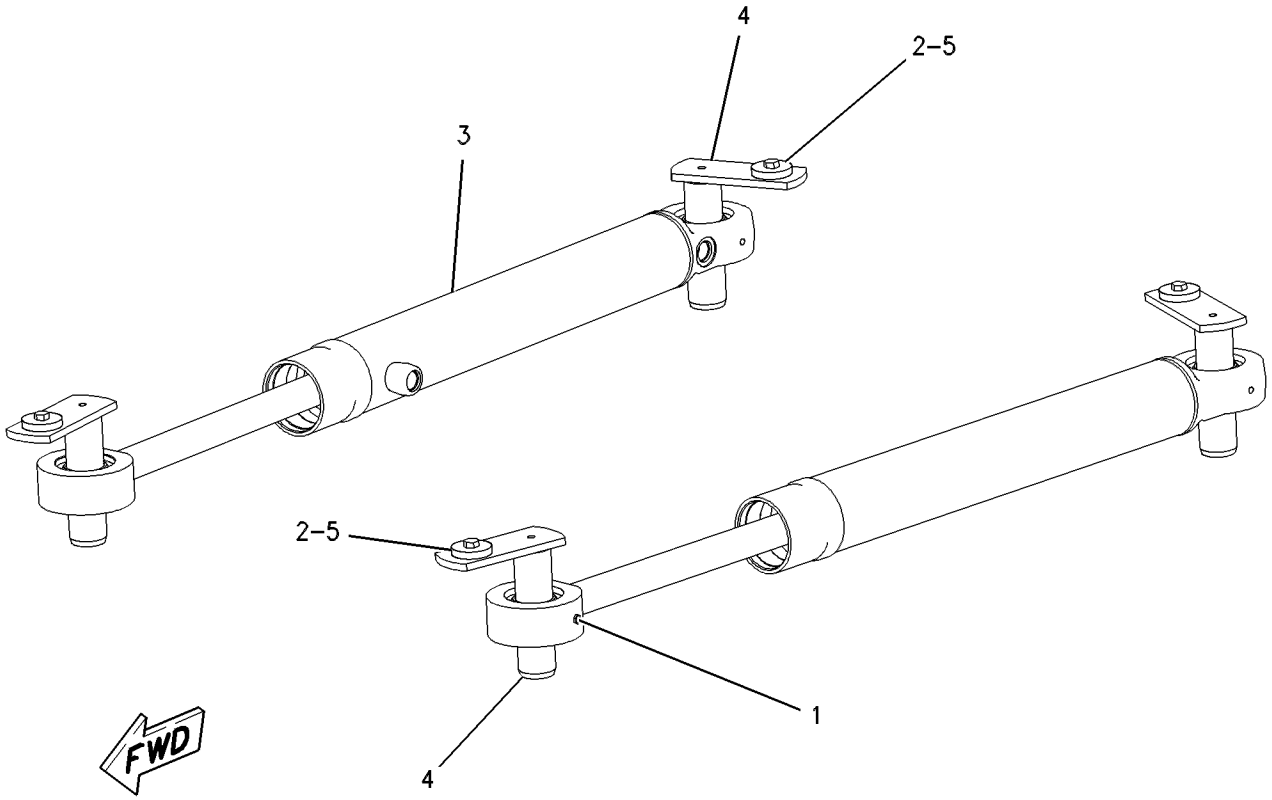

GRAPHIC #1 **<END>** g00282386

133-1747 CYLINDER GP-STEERING

S/N: A7G1-UP
88.9 MM BORE X 649.6 MM STROKE
PART OF 119-4398 CYLINDER & MTG GP-STEERING

SMCS-4303 **i02138242**

NOTE	REF NO	GRAPHIC REF	PART NUMBER	QTY	PART NAME 1 2 3 4 5 6 (PRODUCT LEVEL)	SEE PAGE
	1	1	**135-4688**	1	CYLINDER AS	
		1	**6E-1497**	1	BOSS	
		1	**1K-6985**	2	RING-RETAINING	
		1	**6V-5002**	1	BEARING-ALIGNING	
CM	2	1	**173-9683**	1	BOLT (M30X3.5X90-MM)	
	3	1	**9X-8399**	1	WASHER (33X56X6-MM THK)	
	4	1	**145-9105**	1	PISTON	
C	5	1	**175-7898**	1	SEAL-O-RING	
	6	1	**4J-9224**	1	RING-BACKUP	
	7	1	**6E-4974**	1	HEAD	
	8	1	**135-4690**	1	ROD AS	
		1	**1K-6985**	2	RING-RETAINING	
		1	**6V-5002**	1	BEARING-ALIGNING	
	9	1	**7J-9885**	1	RING-WEAR	
	10	1	**4T-8054**	1	SEAL AS	
C	11	1	**229-9382**	1	SEAL-WIPER	
C	12	1	**167-2304**	1	SEAL-U-CUP	
	13	1	**4T-5613**	1	RING-WEAR	
C	14	1	**167-2195**	1	SEAL AS-BUFFER	

C-CHANGE FROM PREVIOUS TYPE
M-METRIC PART

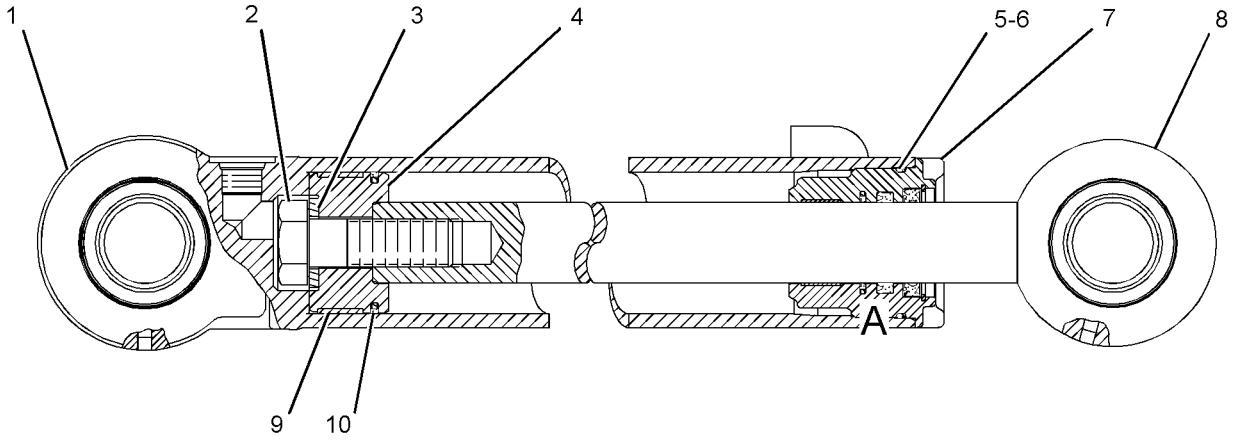

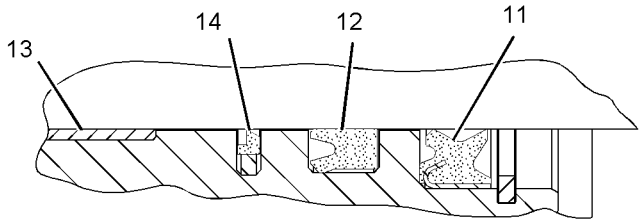

VIEW OF AREA A

GRAPHIC #1 **<END>** g01098899

STEERING SYSTEM

236-9007 LINES GP-SECONDARY STEERING

S/N: A7G1-UP

PART OF 236-9087 STEERING AR-SECONDARY

AN ATTACHMENT

SMCS-4304 **i02414641**

NOTE	REF NO	GRAPHIC REF	PART NUMBER	QTY	PART NAME 1 2 3 4 5 6 (PRODUCT LEVEL)	SEE PAGE
	1	1	**6V-0484**	2	ADAPTER-O-RING	
	2	1	**8X-5027**	2	ELBOW	
Y	3	1	**141-2597**	1	VALVE GP-SECONDARY STEERING	510
	4	1	**177-0762**	1	BRACKET AS	
M		1	**8T-3490**	1	NUT-WELD (M10X1.5-THD)	
	5	1	**178-3620**	1	STRAP	
I	6	1	**245-7688**	1	HOSE AS	
I	7	1	**245-7690**	1	HOSE AS	
I	8	1	**245-7691**	1	HOSE AS	
I	9	1	**278-1808**	1	HOSE AS	
I	10	1	**278-3310**	1	HOSE AS	
	11	1	*148-8327*	1	CONNECTOR AS	
		1	**3D-2824**	1	SEAL-O-RING	
		1	**6V-8637**	1	CONNECTOR	
		1	**6V-9746**	1	SEAL-O-RING	
	12	1	*148-8359*	1	ELBOW AS	
		1	**3K-0360**	1	SEAL-O-RING	
		1	**6V-9746**	1	SEAL-O-RING	
		1	**6V-9877**	1	ELBOW	
	13	1	*148-8364*	1	ELBOW AS	
		1	**3K-0360**	1	SEAL-O-RING	
		1	**6V-8398**	1	SEAL-O-RING	
		1	**6V-8625**	1	ELBOW	
	14	1	*148-8390*	1	ELBOW AS	
		1	**2M-9780**	1	SEAL-O-RING	
		1	**6V-8626**	1	ELBOW	
		1	**7J-9108**	1	SEAL-O-RING	
	15	1	*148-8392*	1	ELBOW AS	
		1	**6V-9746**	1	SEAL-O-RING	
		1	**6V-9853**	1	ELBOW	
	16	1	*150-4048*	1	ELBOW AS	
		1	**3K-0360**	1	SEAL-O-RING	
		1	**6V-8722**	1	ELBOW	
		1	**7J-9108**	1	SEAL-O-RING	
	17	1	*153-6256*	1	ELBOW AS	
		1	**7J-9108**	1	SEAL-O-RING	
		1	**8C-7563**	1	ELBOW	
	18	1	**1P-4577**	8	FLANGE-HALF	
	19	1	**3J-1907**	4	SEAL-O-RING	
	20	1	**4J-0520**	5	SEAL-O-RING	
	21	1	**5P-8874**	2	ADAPTER	
	22	1	**6V-1889**	1	CLIP	
M	23	1	**7X-2549**	3	BOLT (M12X1.75X100-MM)	
	24	1	**8T-4121**	24	WASHER-HARD (11X21X2.5-MM THK)	
M	25	1	**8T-4137**	1	BOLT (M10X1.5X20-MM)	
M	26	1	**8T-4172**	2	BOLT (M10X1.5X80-MM)	
M	27	1	**8T-4192**	1	BOLT (M12X1.75X25-MM)	
M	28	1	**8T-4196**	18	BOLT (M10X1.5X35-MM)	
M	29	1	**8T-4198**	2	BOLT (M10X1.5X100-MM)	
	30	1	**8T-4223**	4	WASHER-HARD (13.5X25.5X3-MM THK)	
M	31	1	**8T-6466**	2	BOLT (M10X1.5X60-MM)	

I-REFER TO HYDRAULIC INFORMATION SYSTEM
M-METRIC PART
Y-SEPARATE ILLUSTRATION

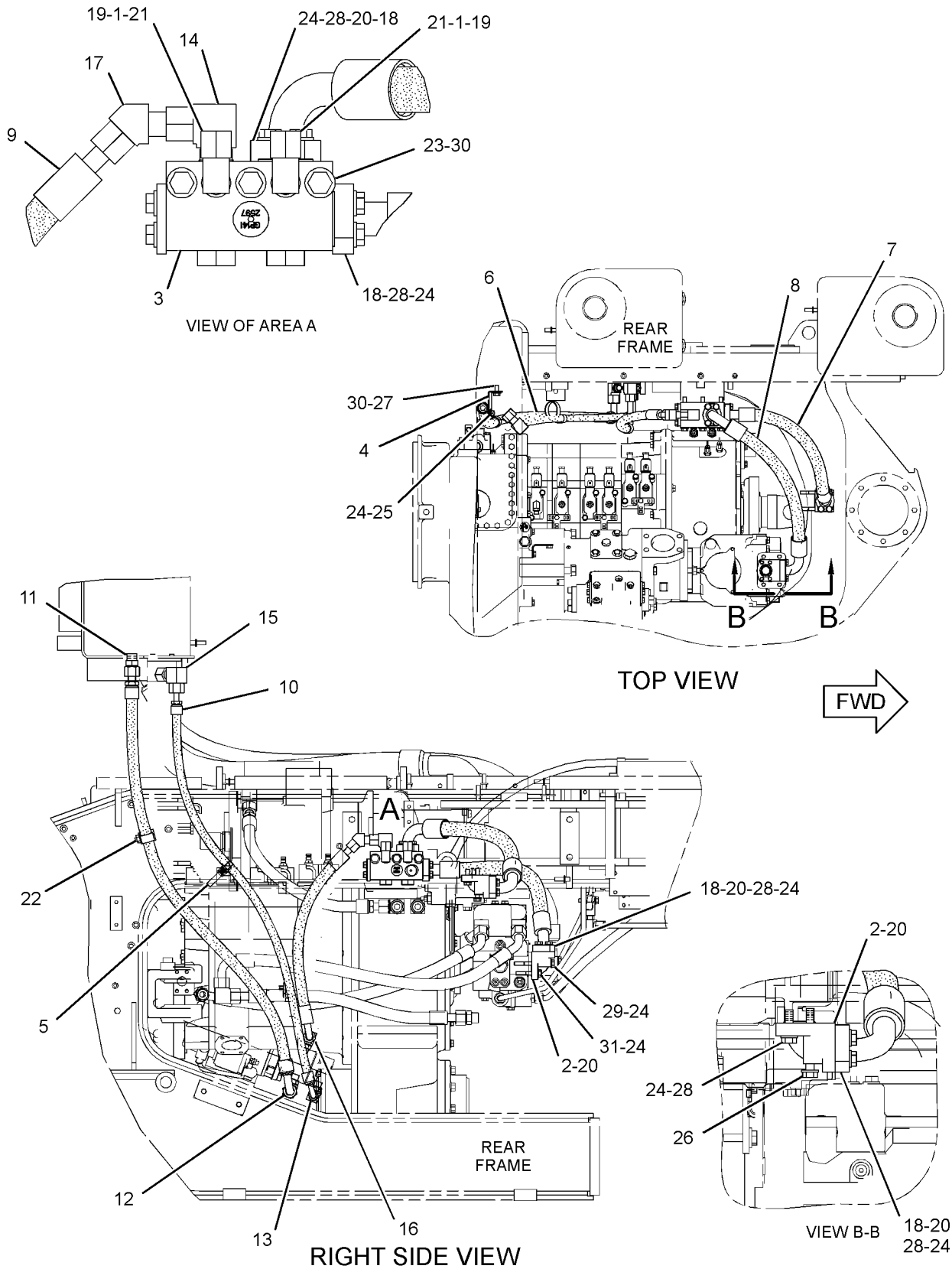

GRAPHIC #1

<END>

g01209611

STEERING SYSTEM

236-8985 LINES GP-STEERING—HMU STEERING

S/N: A7G1-UP

PART OF 236-9051 CHASSIS AR

SMCS-4304 **i02412059**

NOTE	REF NO	GRAPHIC REF	PART NUMBER	QTY	PART NAME 1 2 3 4 5 6 (PRODUCT LEVEL)	SEE PAGE
	1	1	**5G-7817**	1	BOSS	
E	2	1	**5P-1295**		HOSE (13-CM)	
	3	2	**6N-6984**	4	MOUNT-RUBBER	
	4	2	**6N-8744**	1	MOUNT	
	5	3	**6V-0852**	1	CAP-DUST	
	6	1	**8C-8498**	1	CONNECTOR	
	7	1	**9J-3866**	1	ADAPTER	
	8	2	**108-2144**	2	ELBOW	
	9	1	**135-5038**	1	MANIFOLD	
	10	2	**141-8807**	1	PLATE	
Y	11	1	**142-3996**	1	VALVE GP-STEERING (HMU STEERING)	515
	12	1	**144-0367**	2	CLAMP-HOSE	
M	13	2	**146-6581**	2	BOLT-FLAT HEAD (M12-1.75X72-MM)	
Y	14	1	**146-7571**	2	VALVE GP-STEERING NEUTRALIZER (HMU STEERING)	518
	15	2	**147-8583**	2	BRACKET	
	16	2	**149-0257**	2	TUBE AS	
	17	1,3	**149-0271**	2	PLATE	
	18	2	**149-0272**	1	MANIFOLD	
J	19	3	**230-4176**	1	PUMP GP-METERING (HMU STEERING)	
	20	2	**244-3274**	1	BRACKET AS	
I	21	1	**244-6563**	1	HOSE AS	
I	22	1	**244-6577**	1	HOSE AS	
	23	2	**244-6578**	1	TUBE AS	
I	24	1	**245-3017**	1	HOSE AS	
	25	1	**245-4370**	1	TUBE AS	
	26	1	**245-4371**	1	TUBE AS	
	27	1	**246-6292**	1	TUBE AS	
	28	1	**246-6293**	1	TUBE AS	
I	29	1	**247-0507**	1	HOSE AS	
I	30	1	**247-3018**	1	HOSE AS	
I	31	2	**247-3019**	1	HOSE AS	
I	32	1	**247-3020**	1	HOSE AS	
	33	1	**255-4499**	1	TUBE AS	
	34	1	**255-4500**	1	TUBE AS	
I	35	1	**258-5426**	1	HOSE AS	
I	36	1	**258-5427**	1	HOSE AS	
	37	3	**258-5428**	1	TUBE AS	
	38	3	**258-5429**	1	TUBE AS	
I	39	1	**271-2609**	1	HOSE AS	
I	40	1	**271-2610**	1	HOSE AS	
I	41	2	**271-2611**	1	HOSE AS	
	42	3	**271-3987**	1	TUBE AS	
	43	1	*148-8317*	2	CONNECTOR AS	
					(EACH INCLUDES)	
		1	**3D-2824**	1	SEAL-O-RING	
		1	**5K-9090**	1	SEAL-O-RING	
		1	**6V-8714**	1	CONNECTOR	
	44	1	*148-8325*	1	CONNECTOR AS	
		1	**3J-1907**	2	SEAL-O-RING	
		1	**4J-5477**	2	SEAL-O-RING	
		1	**6V-8641**	2	CONNECTOR	
	45	1,2,3	*148-8340*	5	CONNECTOR AS	
					(EACH INCLUDES)	
		1,2,3	**3K-0360**	1	SEAL-O-RING	
		1,2,3	**6V-8398**	1	SEAL-O-RING	
		1,2,3	**6V-8639**	1	CONNECTOR	

236-8985 **LINES GP-STEERING** *(contd.)* **i02412059**

NOTE	REF NO	GRAPHIC REF	PART NUMBER	QTY	PART NAME 1 2 3 4 5 6 (PRODUCT LEVEL)	SEE PAGE
	46	1	*148-8344*	1	CONNECTOR GP	
		1	**3D-2824**	1	SEAL-O-RING	
		1	**6V-9162**	1	CONNECTOR	
		1	**6V-9746**	1	SEAL-O-RING	
	47	2,3	*148-8364*	2	ELBOW AS	
					(EACH INCLUDES)	
		2,3	**3K-0360**	1	SEAL-O-RING	
		2,3	**6V-8398**	1	SEAL-O-RING	
		2,3	**6V-8625**	1	ELBOW	
	48	3	*148-8375*	2	ELBOW GP	
					(EACH INCLUDES)	
		3	**6V-8398**	2	SEAL-O-RING	
		3	**6V-8981**	1	ELBOW	
	49	2	*148-8378*	3	ELBOW AS	
					(EACH INCLUDES)	
		2	**3J-1907**	1	SEAL-O-RING	
		2	**6V-8397**	1	SEAL-O-RING	
		2	**6V-8724**	1	ELBOW	
	50	3	*148-8380*	2	ELBOW AS	
					(EACH INCLUDES)	
		3	**6V-8398**	2	SEAL-O-RING	
		3	**6V-8988**	1	ELBOW	
	51	2	*150-4027*	1	TEE AS	
		2	**3E-2310**	1	TEE	
		2	**3J-1907**	1	SEAL-O-RING	
		2	**6V-8397**	1	SEAL-O-RING	
	52	1	*150-4043*	4	CONNECTOR AS	
					(EACH INCLUDES)	
		1	**3J-1907**	1	SEAL-O-RING	
		1	**6V-8398**	1	SEAL-O-RING	
		1	**6V-9873**	1	CONNECTOR	
	53	3	*150-4047*	1	ADAPTER AS	
		3	**3J-7354**	1	SEAL-O-RING	
		3	**8T-2353**	1	ADAPTER	
	54	1	*153-6237*	2	ELBOW AS	
					(EACH INCLUDES)	
		1	**3D-2824**	1	SEAL-O-RING	
		1	**6V-9004**	1	ELBOW	
		1	**6V-9746**	1	SEAL-O-RING	
	55	1	*153-6241*	1	ELBOW AS	
		1	**6V-8398**	1	SEAL-O-RING	
		1	**8C-8989**	1	ELBOW	
	56	3	*153-6257*	3	UNION AS	
					(EACH INCLUDES)	
		3	**6V-8398**	2	SEAL-O-RING	
		3	**6V-9808**	1	UNION	
	57	2	*164-5567*	1	FITTING GP-COUPLING	
		2	**3J-1907**	1	SEAL-O-RING	
		2	**6V-3965**	1	FITTING AS (QUICK DISCONNECT)	
	58	1	*164-5606*	2	CONNECTOR AS	
					(EACH INCLUDES)	
		1	**3D-2824**	1	SEAL-O-RING	
		1	**6V-9746**	1	SEAL-O-RING	
		1	**8T-0078**	1	CONNECTOR	
	59	1	*171-6723*	2	ELBOW AS	
					(EACH INCLUDES)	
		1	**6V-9746**	1	SEAL-O-RING	
		1	**8T-8899**	1	ELBOW	
	60	1	**198-4777**	4	WASHER-HARD (11X25X10-MM THK)	

236-8985 **LINES GP-STEERING** *(contd.)* **i02412059**

NOTE	REF NO	GRAPHIC REF	PART NUMBER	QTY	PART NAME 1 2 3 4 5 6 (PRODUCT LEVEL)	SEE PAGE
	61	1,2	**1P-3703**	2	SEAL-RECTANGULAR	
	62	1	**1P-3704**	2	SEAL-RECTANGULAR	
	63	3	**1P-4576**	4	FLANGE-HALF	
	64	1,2	**1P-4584**	4	FLANGE-HALF	
	65	2	**2A-2677**	1	SPACER (0.75-IN THK)	
	66	1	**3D-2824**	1	SEAL-O-RING	
	67	2	**3J-1907**	2	SEAL-O-RING	
	68	1	**4B-0418**	1	CLIP	
	69	2	**4D-7388**	1	CLIP	
	70	1	**4J-0520**	3	SEAL-O-RING	
	71	3	**4J-5267**	2	SEAL-O-RING	
	72	3	**5G-7020**	2	CLIP (SLOT)	
	73	3	**5G-7021**	2	CLIP (TAB)	
	74	1	**5P-4295**	1	CLIP	
	75	1	**6D-1641**	1	CLIP	
	76	3	**6D-4244**	2	CLIP	
	77	2	**6D-4246**	1	CLIP	
	78	1	**6J-2680**	2	SEAL-O-RING	
	79	2	**6V-8397**	2	SEAL-O-RING	
	80	3	**6V-9169**	7	NUT-BULKHEAD (13/16-16-THD)	
	81	1	**6V-9746**	1	SEAL-O-RING	
	82	1	**8C-3206**	4	FLANGE-HALF	
	83	3	**8T-1889**	2	CLIP (SLOT)	
	84	3	**8T-1890**	2	CLIP (TAB)	
	85	1,2,3	**8T-4121**	53	WASHER-HARD (11X21X2.5-MM THK)	
M	86	2	**8T-4133**	1	NUT (M10X1.15-THD)	
M	87	1,2,3	**8T-4136**	7	BOLT (M10X1.5X25-MM)	
M	88	1,2,3	**8T-4137**	9	BOLT (M10X1.5X20-MM)	
M	89	2	**8T-4182**	3	BOLT (M10X1.5X45-MM)	
M	90	2	**8T-4183**	4	BOLT (M12X1.75X40-MM)	
M	91	1,3	**8T-4184**	6	BOLT (M12X1.75X45-MM)	
M	92	1	**8T-4186**	1	BOLT (M10X1.5X40-MM)	
M	93	1,2,3	**8T-4196**	21	BOLT (M10X1.5X35-MM)	
M	94	1	**8T-4198**	12	BOLT (M10X1.5X100-MM)	
	95	2	**8T-4222**	2	WASHER-PLATED (11X32X2.5-MM THK)	
	96	1,2,3	**8T-4223**	12	WASHER-HARD (13.5X25.5X3-MM THK)	
	97	3	**8T-4226**	4	WASHER-PLATED (10.5X45X3-MM THK)	
M	98	2,3	**8T-4244**	4	NUT (M12X1.75-THD)	
M	99	2	**8T-5005**	4	BOLT (M10X1.5X70-MM)	
M	100	1	**8T-5436**	3	BOLT (M10X1.5X130-MM)	
M	101	2	**8T-6466**	4	BOLT (M10X1.5X60-MM)	
	102	2	**9X-2027**	4	WASHER (11X18X2-MM THK)	
					AVAILABLE REPAIR KIT(S):	
J			**257-8471**	1	KIT-SEAL (METERING PUMP, STEERING)	
					(INCLUDES SEAL-U-CUP AND SEAL-O-RING)	

E-ORDER BY THE CENTIMETER
I-REFER TO HYDRAULIC INFORMATION SYSTEM
J-KIT MARKED J SERVICES PART MARKED J
M-METRIC PART
Y-SEPARATE ILLUSTRATION

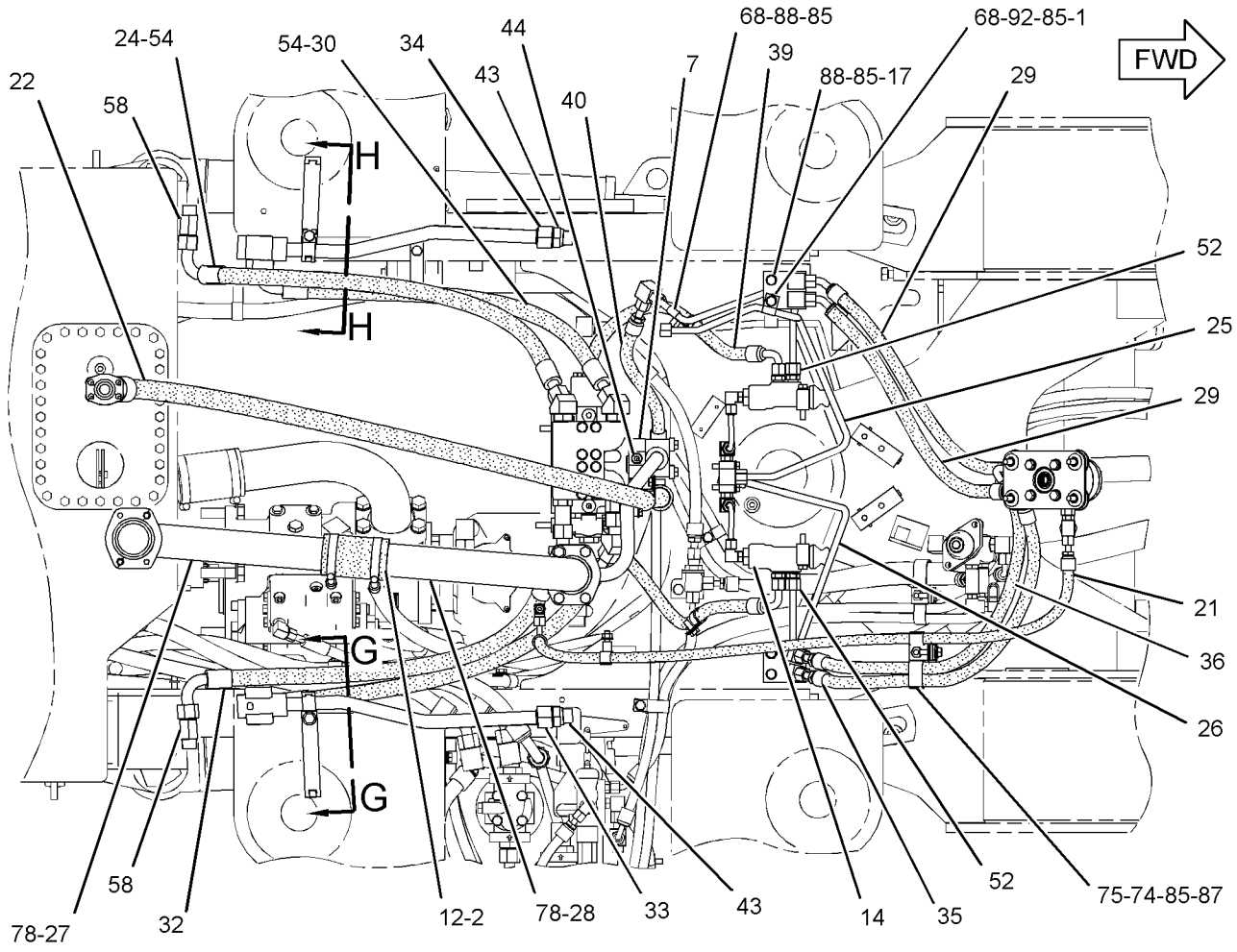

TOP VIEW

REFER TO ALL ILLUSTRATIONS OF THIS GROUP FOR AUXILIARY VIEWS

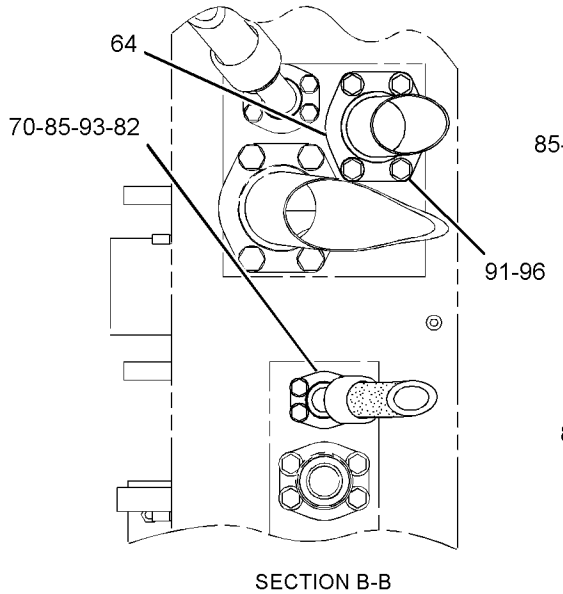

SECTION B-B

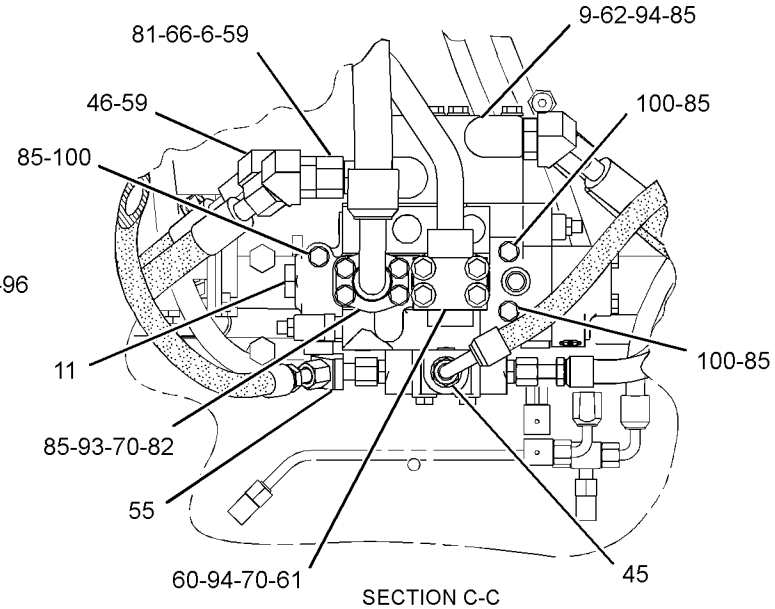

SECTION C-C

GRAPHIC #1

g01191074

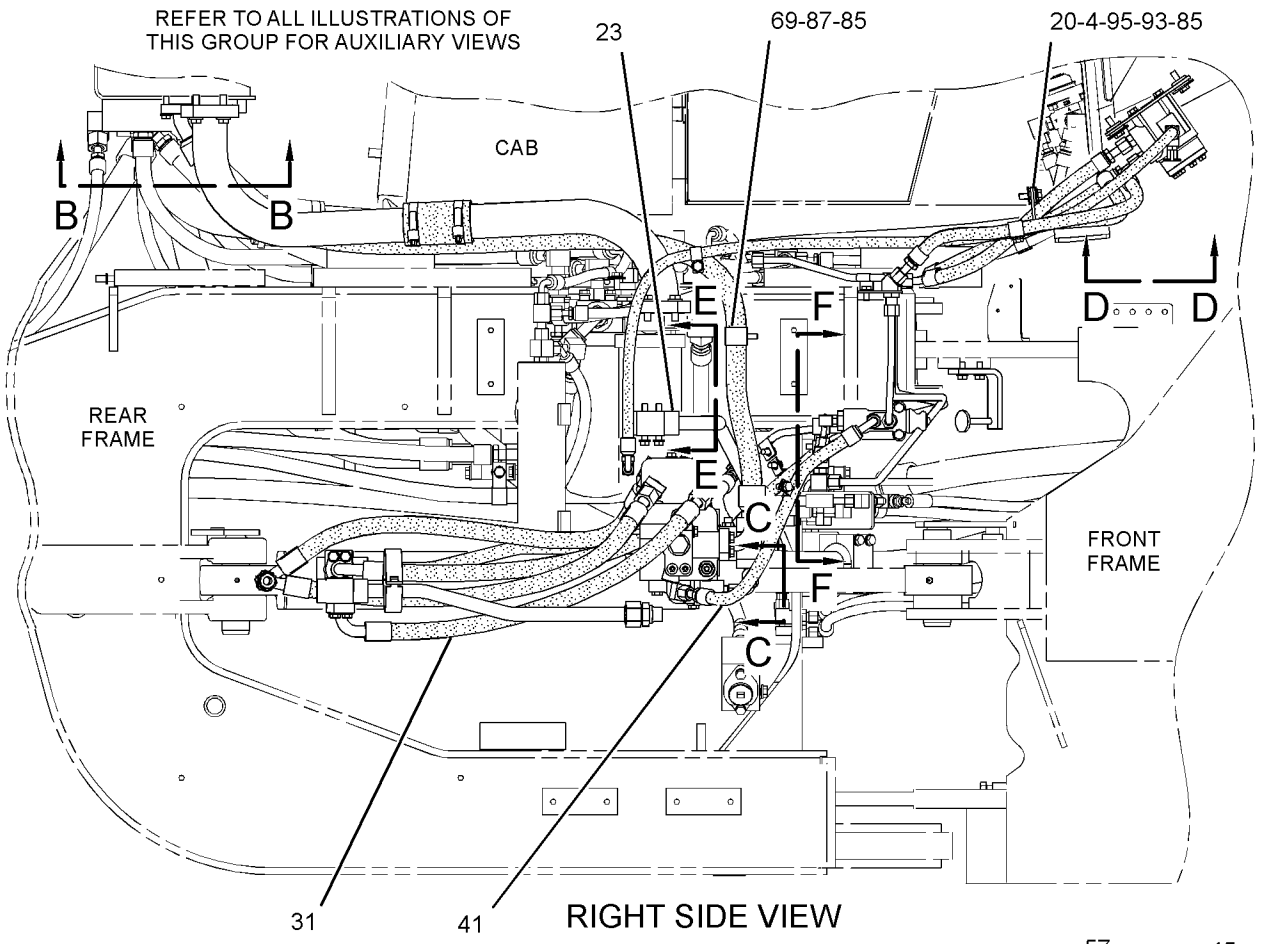

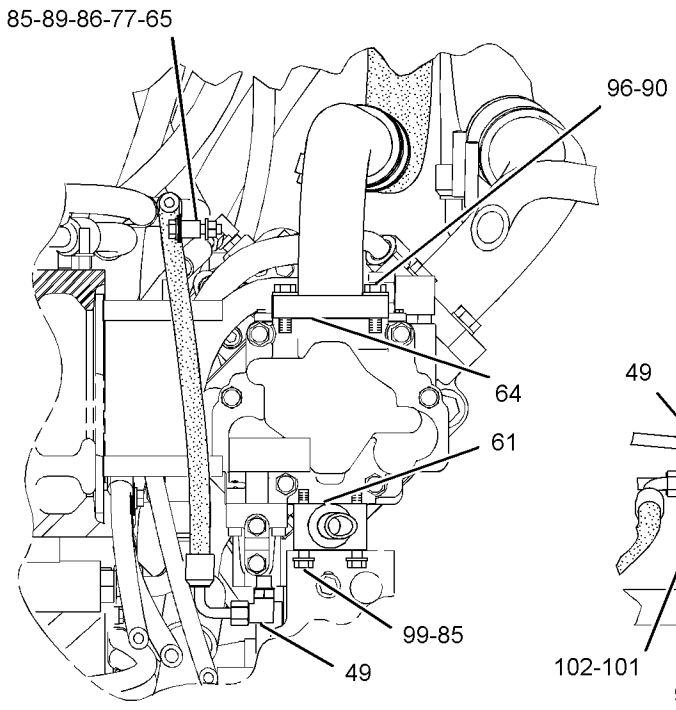

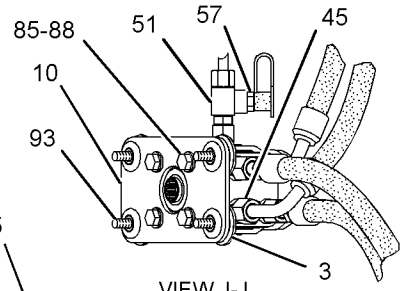

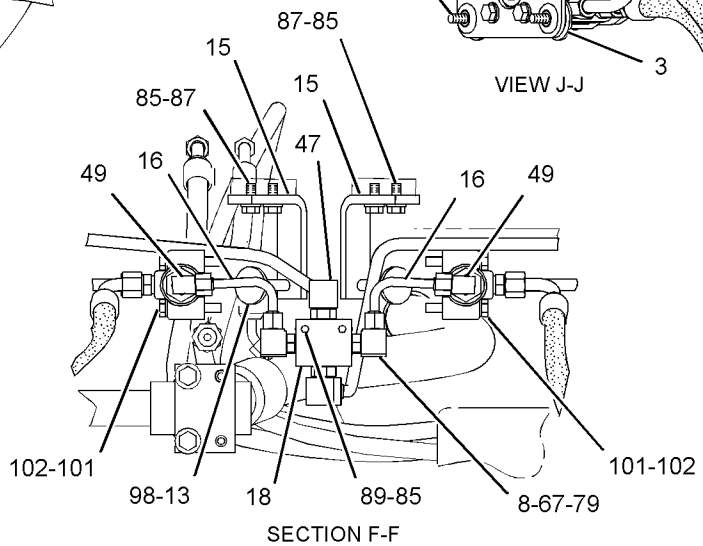

GRAPHIC #2

g01191073

REFER TO ALL ILLUSTRATIONS OF
THIS GROUP FOR AUXILIARY VIEWS

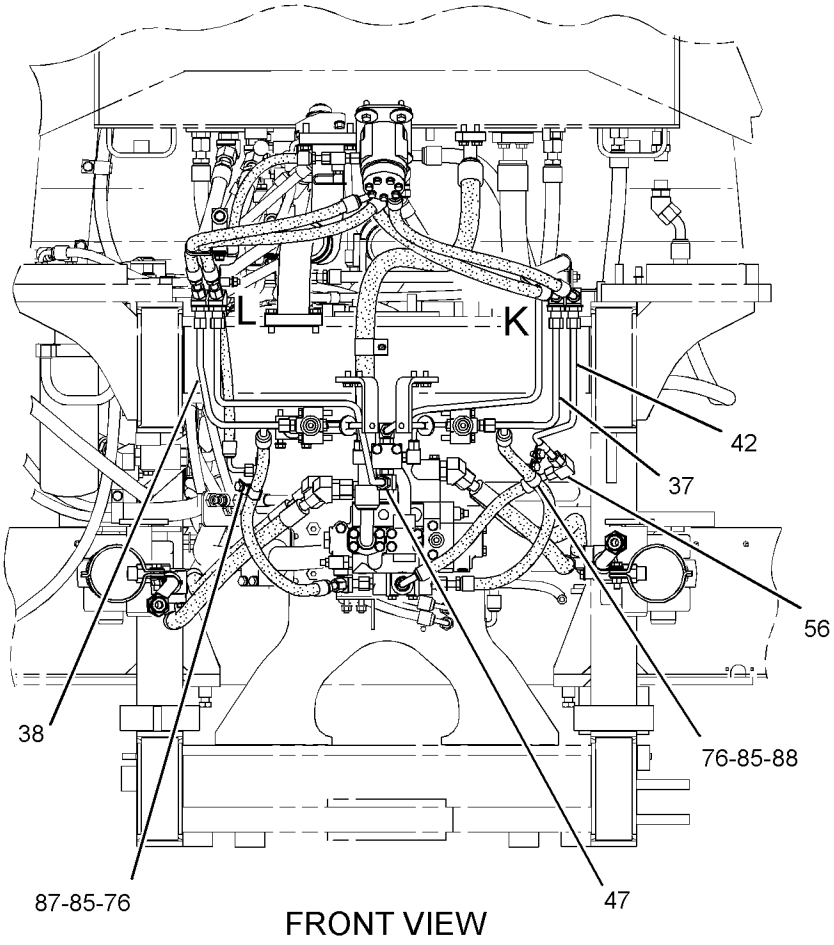

FRONT VIEW

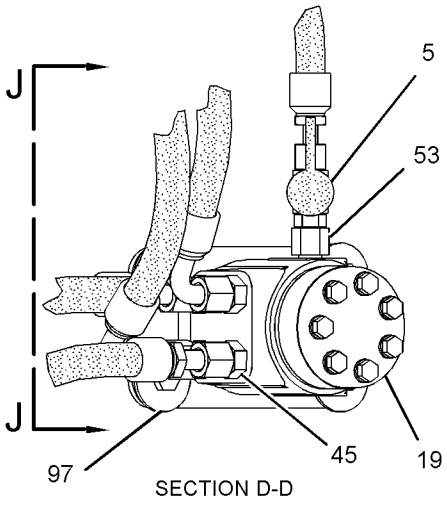

SECTION D-D

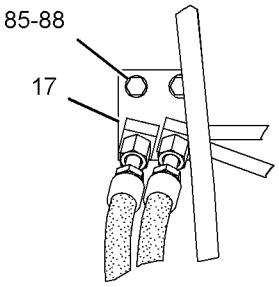

VIEW M-M

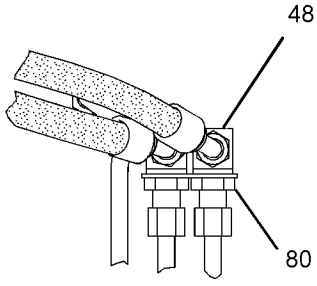

VIEW OF AREA K

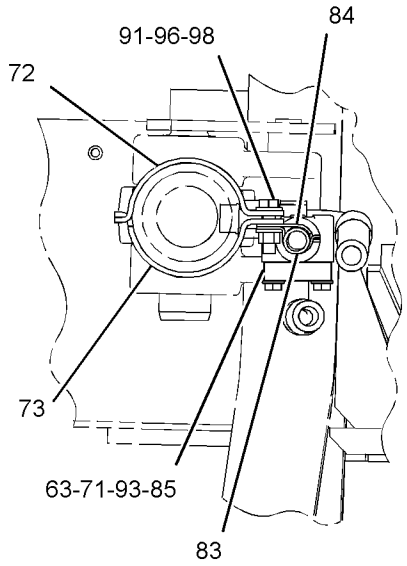

SECTION G-G

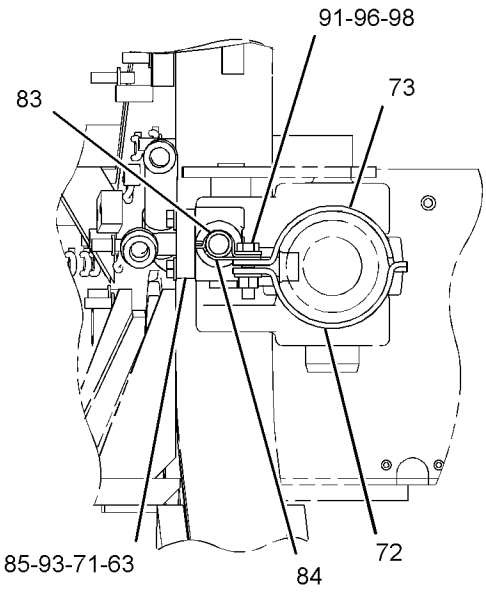

SECTION H-H

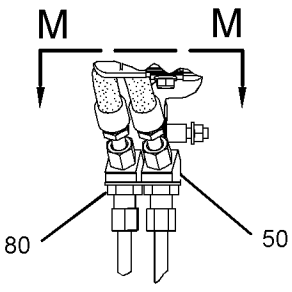

VIEW OF AREA L

GRAPHIC #3 **<END>** g01191075

STEERING SYSTEM

236-8986 LINES GP-STEERING—COMMAND CONTROL STEERING

S/N: A7G1-UP

PART OF 244-3597 STEERING AR-COMMAND CONTROL

AN ATTACHMENT

SMCS-4304 **i02388756**

NOTE	REF NO	GRAPHIC REF	PART NUMBER	QTY	PART NAME 1 2 3 4 5 6 (PRODUCT LEVEL)	SEE PAGE
	1	3	**5G-7817**	1	BOSS	
E	2	2	**5P-1295**		HOSE (13-CM)	
	3	1,3,4	**6V-0852**	4	CAP-DUST	
	4	3	**8C-8498**	1	CONNECTOR	
Y	5	2	**8J-1553**	2	VALVE GP-STEERING NEUTRALIZER	517
Y	6	2	**8J-6875**	1	VALVE GP-SHUTTLE	512
	7	2	**9J-3866**	1	ADAPTER	
Y	8	2	**111-7775**	1	VALVE GP-CHECK (STEERING QUAD)	501
I	9	2	**116-9333**	1	HOSE AS	
	10	4	**125-9774**	1	PLATE AS	
M		4	**6V-9632**	2	NUT-WELD (M6X1-THD)	
Y	11	4	**133-1728**	1	VALVE GP-STEERING (COMMAND CONTROL STEERING)	513
	12	3	**135-4557**	1	BRACKET AS	
	13	2	**135-5038**	1	MANIFOLD	
	14	2	**144-0367**	2	CLAMP-HOSE	
	15	3	**146-5776**	1	SHAFT AS-STEERING	
M	16	1	**146-6581**	2	BOLT-FLAT HEAD (M12-1.75X72-MM)	
	17	1	**147-8583**	2	BRACKET	
	18	4	**149-0271**	1	PLATE	
	19	4	**149-0272**	1	MANIFOLD	
Y	20	4	*154-2883*	1	SCREEN GP-CASE DRAIN (STEERING PILOT)	495
	21	2	**159-4610**	2	TUBE AS	
Y	22	3	**164-4116**	1	VALVE GP-PILOT (COMMAND CONTROL STEERING)	504
	23	2	**170-0269**	1	TUBE AS	
	24	1	**185-6250**	1	FITTING AS	
I	25	1	**243-4623**	1	HOSE AS	
I	26	1	**243-4624**	1	HOSE AS	
I	27	1	**244-6577**	1	HOSE AS	
	28	4	**244-6578**	1	TUBE AS	
I	29	1	**245-3017**	1	HOSE AS	
	30	3	**246-6292**	1	TUBE AS	
	31	2	**246-6293**	1	TUBE AS	
I	32	1	**247-3018**	1	HOSE AS	
I	33	2	**247-3019**	1	HOSE AS	
I	34	1	**247-3020**	1	HOSE AS	
I	35	3	**247-7017**	1	HOSE AS	
I	36	3	**247-7018**	1	HOSE AS	
I	37	3	**247-7019**	1	HOSE AS	
I	38	2	**247-7026**	1	HOSE AS	
I	39	2	**247-7037**	1	HOSE AS	
	40	1	**247-7610**	1	TUBE AS	
	41	4	**247-7611**	1	TUBE AS	
	42	2	**247-7612**	1	TUBE AS	
	43	1	**247-7613**	1	TUBE AS	
I	44	3	**247-7614**	1	HOSE AS	
I	45	2	**247-8310**	1	HOSE AS	
I	46	1	**247-8311**	1	HOSE AS	
	47	1	**247-8312**	1	TUBE AS	
	48	3	**247-8313**	1	TUBE AS	
	49	3	**248-0282**	1	BRACKET AS	
		3	**7Y-2522**	1	PLATE	
M		3	**8T-3490**	2	NUT-WELD (M10X1.5-THD)	
	50	3	**248-0286**	1	ANGLE AS	
M		3	**8T-3490**	4	NUT-WELD (M10X1.5-THD)	
		3	**9R-1733**	1	BOSS (M10X1.5X66.5-MM)	

236-8986 **LINES GP-STEERING** *(contd.)* **i02388756**

NOTE	REF NO	GRAPHIC REF	PART NUMBER	QTY	PART NAME 1 2 3 4 5 6 (PRODUCT LEVEL)	SEE PAGE
M		3	**9R-2640**	2	BOSS (M12X1.75X25-MM)	
	51	3	**248-0287**	1	PLATE	
	52	1	**255-4499**	1	TUBE AS	
	53	3	**255-4500**	1	TUBE AS	
	54	3	**257-7315**	1	TUBE AS	
	55	1	**266-8708**	1	GUARD-HOSE	
I	56	1	**271-6408**	1	HOSE AS	
I	57	1	**271-6409**	1	HOSE AS	
	58	1	**273-3555**	1	HOSE AS	
I	59	1	**273-4066**	1	HOSE AS	
I	60	1	**273-4067**	1	HOSE AS	
	61	1	**132-7551**	4	SPACER (11X19X6-MM THK)	
	62	1	*148-8317*	3	CONNECTOR AS	
					(EACH INCLUDES)	
		1	**3D-2824**	1	SEAL-O-RING	
		1	**6V-8714**	1	CONNECTOR	
		1	**5K-9090**	1	SEAL-O-RING	
	63	2,3	*148-8325*	2	CONNECTOR AS	
					(EACH INCLUDES)	
		2,3	**3J-1907**	2	SEAL-O-RING	
		2,3	**4J-5477**	2	SEAL-O-RING	
		2,3	**6V-8641**	2	CONNECTOR	
	64	2	*148-8326*	1	CONNECTOR AS	
		2	**3J-7354**	1	SEAL-O-RING	
		2	**6V-8397**	1	SEAL-O-RING	
		2	**6V-9872**	1	CONNECTOR	
	65	2	*148-8336*	2	CONNECTOR AS	
					(EACH INCLUDES)	
		2	**3J-1907**	1	SEAL-O-RING	
		2	**6V-8397**	1	SEAL-O-RING	
		2	**6V-8636**	1	CONNECTOR	
	66	2,4	*148-8340*	5	CONNECTOR AS	
					(EACH INCLUDES)	
		2,4	**3K-0360**	1	SEAL-O-RING	
		2,4	**6V-8398**	1	SEAL-O-RING	
		2,4	**6V-8639**	1	CONNECTOR	
	67	2	*148-8344*	1	CONNECTOR GP	
		2	**3D-2824**	1	SEAL-O-RING	
		2	**6V-9162**	1	CONNECTOR	
		2	**6V-9746**	1	SEAL-O-RING	
	68	4	*148-8364*	1	ELBOW AS	
		4	**3K-0360**	1	SEAL-O-RING	
		4	**6V-8398**	1	SEAL-O-RING	
		4	**6V-8625**	1	ELBOW	
	69	2,3	*148-8365*	3	ELBOW AS	
					(EACH INCLUDES)	
		2,3	**3J-1907**	1	SEAL-O-RING	
		2,3	**6V-8398**	1	SEAL-O-RING	
		2,3	**8T-6876**	1	ELBOW	
	70	2,3	*148-8367*	2	ELBOW AS	
		2,3	**6V-8397**	1	SEAL-O-RING	
		2,3	**6V-9850**	1	ELBOW	
	71	1,3	*148-8370*	3	ELBOW AS	
					(EACH INCLUDES)	
		1,3	**6V-8398**	1	SEAL-O-RING	
		1,3	**6V-9851**	1	ELBOW	
	72	2,3,4	*148-8378*	5	ELBOW AS	
					(EACH INCLUDES)	
		2,3,4	**3J-1907**	1	SEAL-O-RING	

236-8986 **LINES GP-STEERING** *(contd.)* **i02388756**

NOTE	REF NO	GRAPHIC REF	PART NUMBER	QTY	PART NAME 1 2 3 4 5 6 (PRODUCT LEVEL)	SEE PAGE
		2,3,4	**6V-8397**	1	SEAL-O-RING	
		2,3,4	**6V-8724**	1	ELBOW	
	73	2	*148-8379*	2	ELBOW AS	
					(EACH INCLUDES)	
		2	**1J-9671**	1	SEAL-O-RING	
		2	**6V-8397**	1	SEAL-O-RING	
		2	**7X-0901**	1	ELBOW	
	74	1,2	*148-8444*	2	TEE AS-SWIVEL	
					(EACH INCLUDES)	
		1,2	**6V-8398**	2	SEAL-O-RING	
		1,2	**6V-9837**	1	TEE-SWIVEL	
	75	1,2	*148-8457*	2	UNION AS	
					(EACH INCLUDES)	
		1,2	**6V-8398**	2	SEAL-O-RING	
		1,2	**6V-8995**	1	UNION	
	76	3,4	*150-4027*	3	TEE AS	
					(EACH INCLUDES)	
		3,4	**3E-2310**	1	TEE	
		3,4	**3J-1907**	1	SEAL-O-RING	
		3,4	**6V-8397**	1	SEAL-O-RING	
	77	2,4	*150-4043*	3	CONNECTOR AS	
					(EACH INCLUDES)	
		2,4	**3J-1907**	1	SEAL-O-RING	
		2,4	**6V-8398**	1	SEAL-O-RING	
		2,4	**6V-9873**	1	CONNECTOR	
	78	2	*150-4044*	1	CONNECTOR AS	
		2	**3J-1907**	1	SEAL-O-RING	
		2	**6V-8397**	1	SEAL-O-RING	
		2	**8T-1779**	1	CONNECTOR	
	79	2	*153-6237*	2	ELBOW AS	
					(EACH INCLUDES)	
		2	**3D-2824**	1	SEAL-O-RING	
		2	**6V-9004**	1	ELBOW	
		2	**6V-9746**	1	SEAL-O-RING	
	80	4	*153-6241*	1	ELBOW AS	
		4	**6V-8398**	1	SEAL-O-RING	
		4	**8C-8989**	1	ELBOW	
	81	1	**160-8708**	1	BRACKET AS	
	82	3,4	*164-5567*	3	FITTING GP-COUPLING	
					(EACH INCLUDES)	
		3,4	**3J-1907**	1	SEAL-O-RING	
		3,4	**6V-3965**	1	FITTING AS (QUICK DISCONNECT)	
	83	1	*164-5606*	2	CONNECTOR AS	
					(EACH INCLUDES)	
		1	**3D-2824**	1	SEAL-O-RING	
		1	**6V-9746**	1	SEAL-O-RING	
		1	**8T-0078**	1	CONNECTOR	
	84	2	*164-5624*	2	ELBOW GP	
					(EACH INCLUDES)	
		2	**3J-1907**	1	SEAL-O-RING	
		2	**6V-8398**	1	SEAL-O-RING	
		2	**9X-2085**	1	ELBOW	
	85	2	*164-8908*	1	CONNECTOR GP	
		2	**3K-0360**	1	SEAL-O-RING	
		2	**6V-8398**	1	SEAL-O-RING	
		2	**8T-0077**	1	CONNECTOR	
	86	1	**170-4735**	1	RING-RETAINING	
	87	1,2	*171-6723*	2	ELBOW AS	
					(EACH INCLUDES)	

236-8986 **LINES GP-STEERING** *(contd.)* **i02388756**

NOTE	REF NO	GRAPHIC REF	PART NUMBER	QTY	PART NAME 1 2 3 4 5 6 (PRODUCT LEVEL)	SEE PAGE
		1,2	**6V-9746**	1	SEAL-O-RING	
		1,2	**8T-8899**	1	ELBOW	
	88	3	**1B-8705**	1	KEY-WOODRUFF	
	89	2,4	**1P-3703**	2	SEAL-RECTANGULAR	
	90	1,2	**1P-3704**	4	SEAL-RECTANGULAR	
	91	1,3	**1P-3705**	2	SEAL-RECTANGULAR	
	92	3	**1P-4576**	4	FLANGE-HALF	
	93	2,4	**1P-4579**	4	FLANGE-HALF	
	94	1,2	**1P-4584**	4	FLANGE-HALF	
	95	1	**1P-5767**	4	FLANGE-HALF	
	96	2	**1S-0994**	2	CLIP	
	97	1,2	**3G-8054**	2	CLIP (TAB)	
	98	1,2	**3G-8057**	2	CLIP (SLOT)	
	99	3	**4B-0418**	1	CLIP	
	100	2	**4D-7388**	1	CLIP	
	101	1,4	**4J-0520**	3	SEAL-O-RING	
	102	2,4	**4J-0524**	2	SEAL-O-RING	
	103	2	**4S-1936**	1	CLIP	
	104	3	**5G-7020**	2	CLIP (SLOT)	
	105	3	**5G-7021**	2	CLIP (TAB)	
	106	1	**6D-4246**	2	CLIP	
	107	1,2	**6J-2680**	2	SEAL-O-RING	
	108	1,2	**6V-0974**	2	GROMMET	
	109	1	**6V-3265**	2	CLIP	
	110	1,3	**6V-9169**	2	NUT-BULKHEAD (13/16-16-THD)	
	111	1,4	**8C-3206**	4	FLANGE-HALF	
	112	1	**8K-2665**	2	CLAMP-HALF	
	113	3	**8T-1889**	2	CLIP (SLOT)	
	114	3	**8T-1890**	2	CLIP (TAB)	
	115	1,2,3,4	**8T-4121**	66	WASHER-HARD (11X21X2.5-MM THK)	
M	116	2	**8T-4133**	3	NUT (M10X1.15-THD)	
M	117	1,2	**8T-4136**	7	BOLT (M10X1.5X25-MM)	
M	118	1,3,4	**8T-4137**	4	BOLT (M10X1.5X20-MM)	
M	119	1	**8T-4139**	2	BOLT (M12X1.75X30-MM)	
M	120	4	**8T-4182**	2	BOLT (M10X1.5X45-MM)	
M	121	2,4	**8T-4183**	8	BOLT (M12X1.75X40-MM)	
M	122	1,2,3	**8T-4184**	10	BOLT (M12X1.75X45-MM)	
M	123	3	**8T-4185**	4	BOLT (M10X1.5X50-MM)	
M	124	2,3,4	**8T-4192**	10	BOLT (M12X1.75X25-MM)	
M	125	1	**8T-4194**	8	BOLT (M12X1.75X50-MM)	
M	126	3	**8T-4195**	4	BOLT (M10X1.5X30-MM)	
M	127	1,2,3,4	**8T-4196**	20	BOLT (M10X1.5X35-MM)	
M	128	1,2	**8T-4198**	12	BOLT (M10X1.5X100-MM)	
	129	1,2,3,4	**8T-4223**	47	WASHER-HARD (13.5X25.5X3-MM THK)	
M	130	1,3	**8T-4244**	3	NUT (M12X1.75-THD)	
M	131	1	**8T-4648**	4	BOLT (M12X1.75X70-MM)	
M	132	1	**8T-4910**	4	BOLT (M12X1.75X60-MM)	
M	133	2,3,4	**8T-5005**	8	BOLT (M10X1.5X70-MM)	
M	134	2,4	**8T-5436**	3	BOLT (M10X1.5X130-MM)	
M	135	4	**8T-6466**	6	BOLT (M10X1.5X60-MM)	
	136	4	**9X-2027**	6	WASHER (11X18X2-MM THK)	
M	137	4	**9X-2480**	2	BOLT (M6X1X45-MM)	
	138	4	**9X-8256**	2	WASHER (6.6X12X2-MM THK)	

E-ORDER BY THE CENTIMETER
I-REFER TO HYDRAULIC INFORMATION SYSTEM
M-METRIC PART
Y-SEPARATE ILLUSTRATION

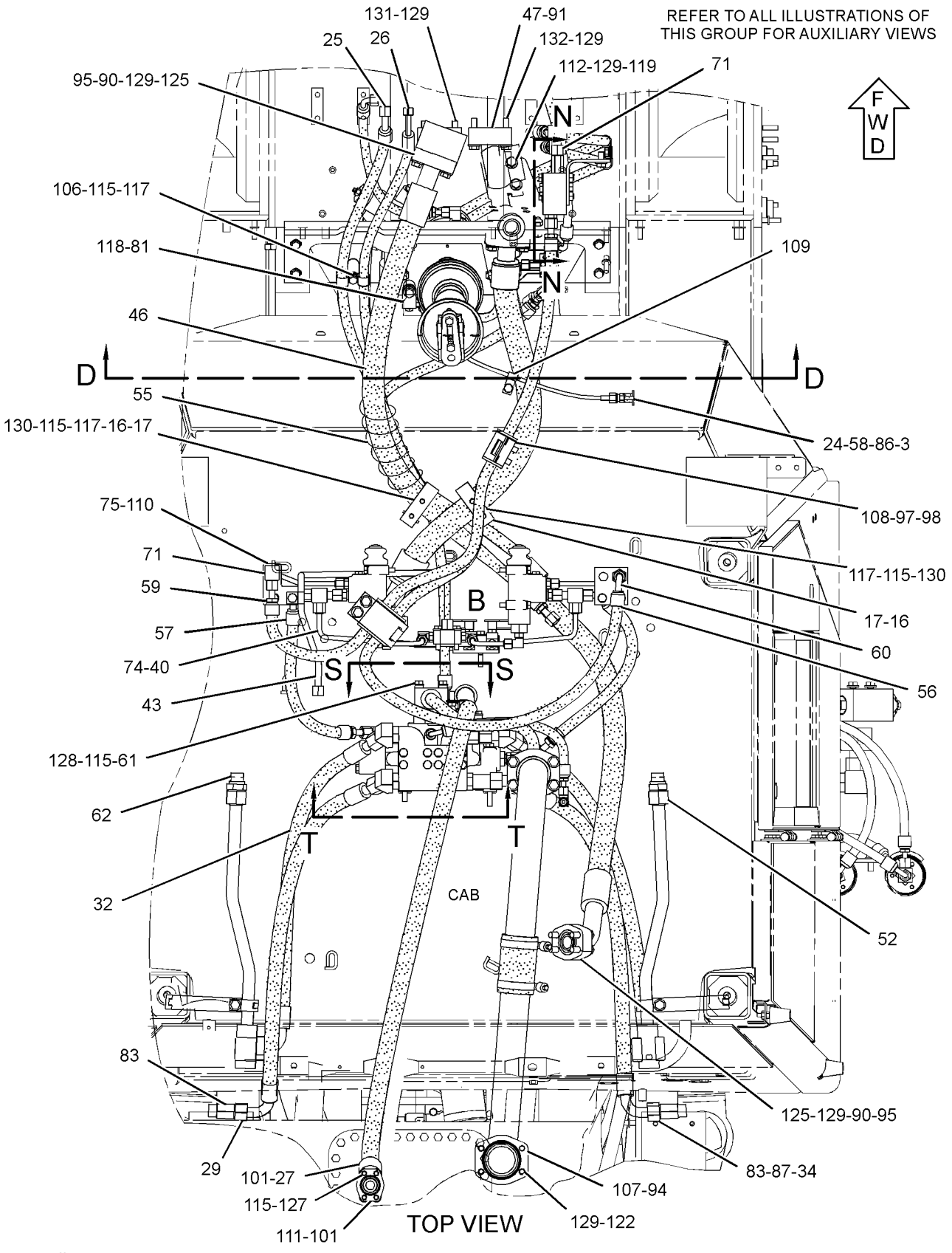

GRAPHIC #1

g01197132

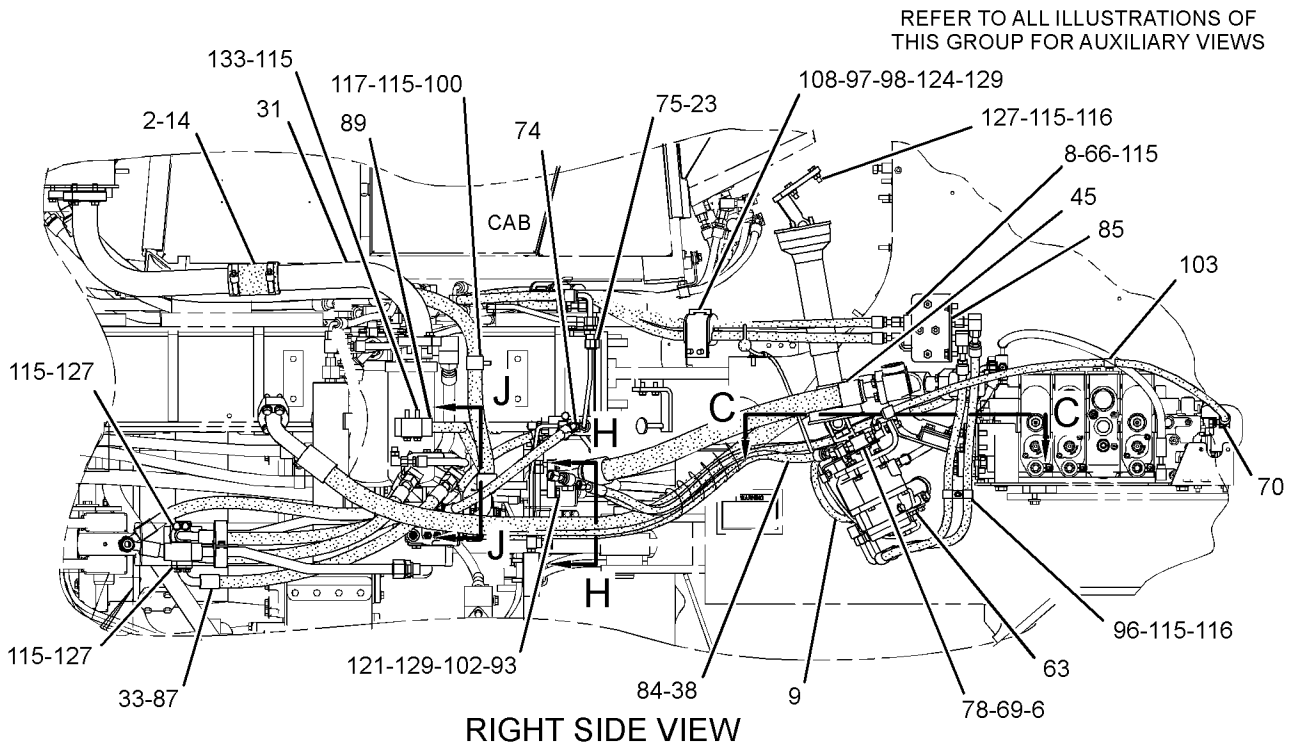

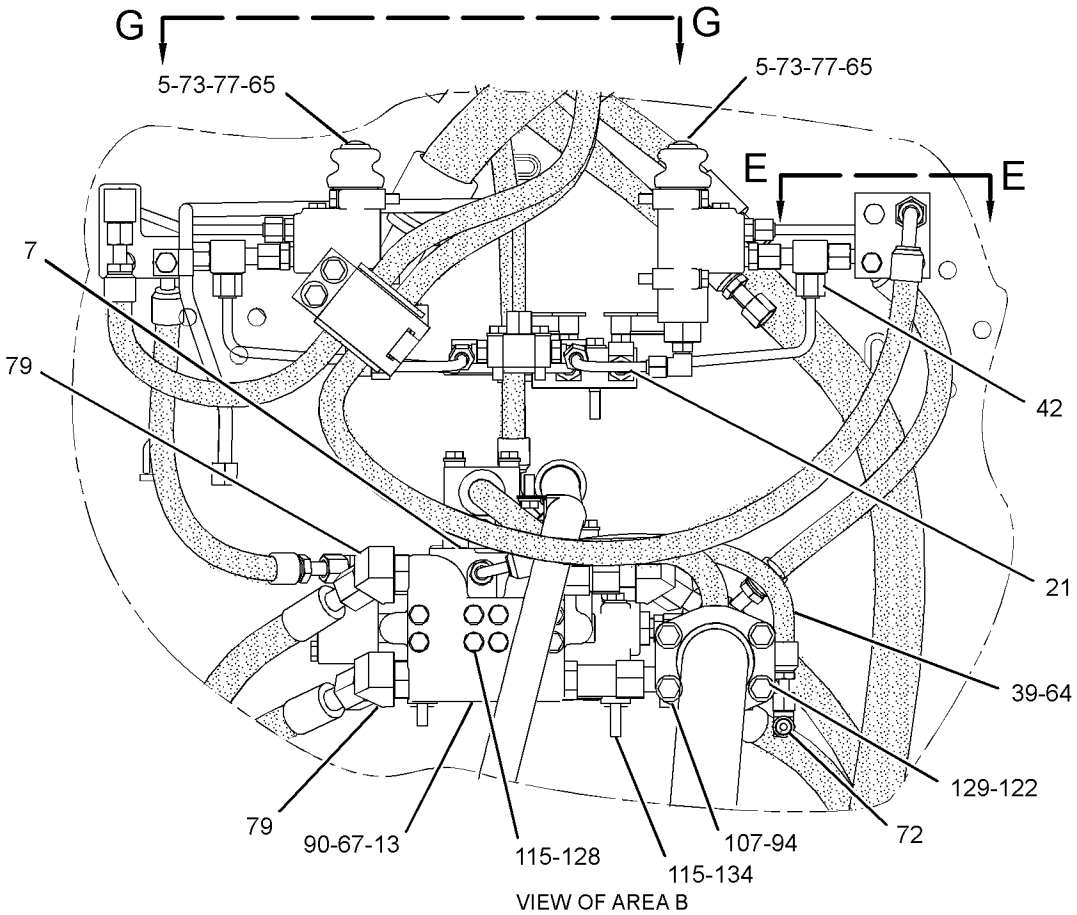

GRAPHIC #2

g01197133

236-8986 **LINES GP-STEERING** *(contd.)* **i02388756**

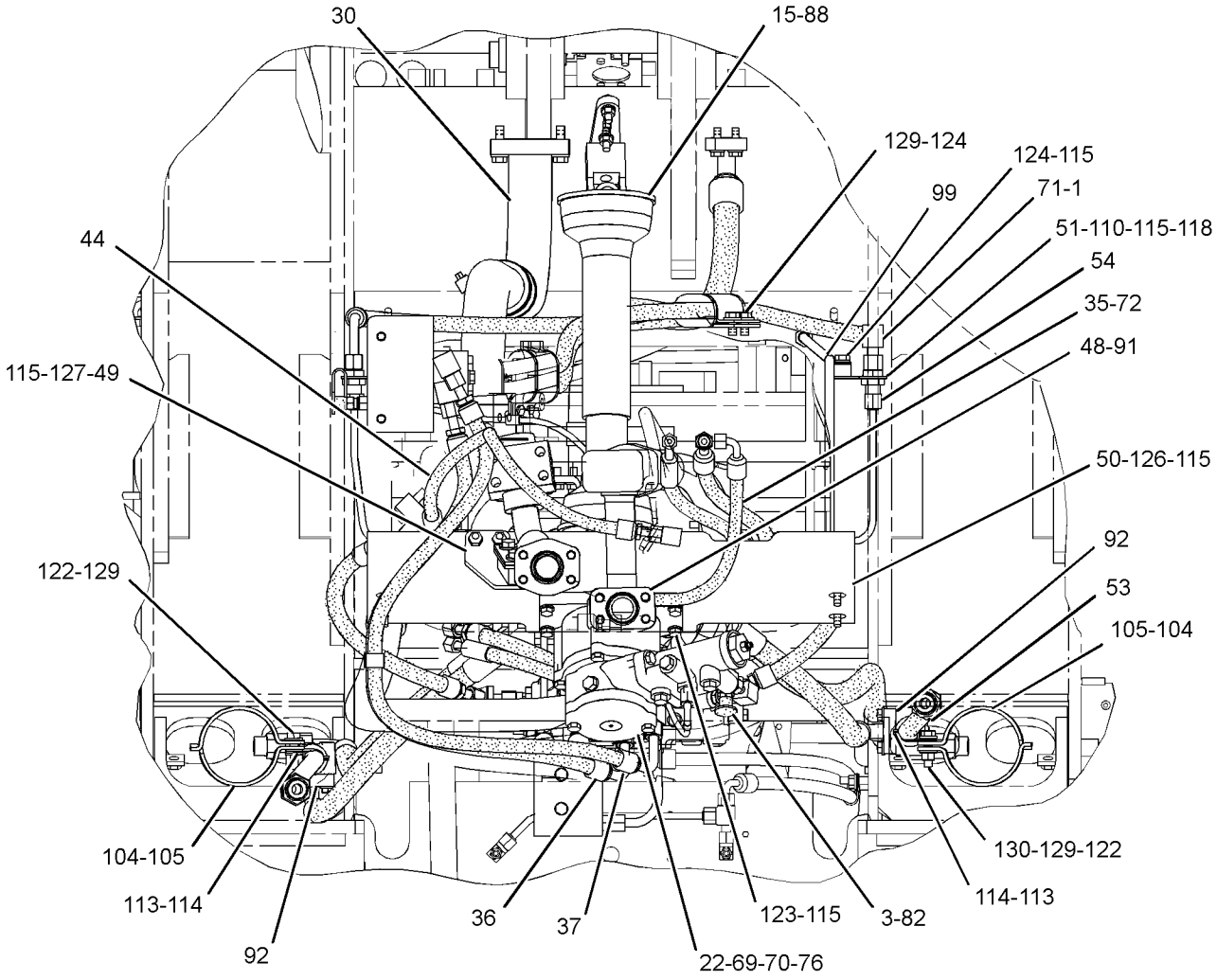

FRONT VIEW

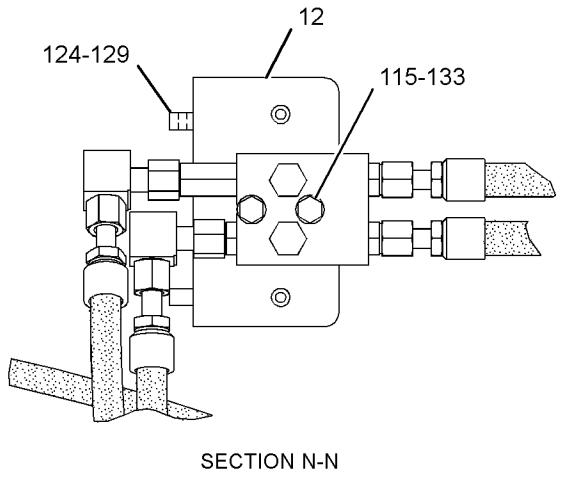

SECTION N-N

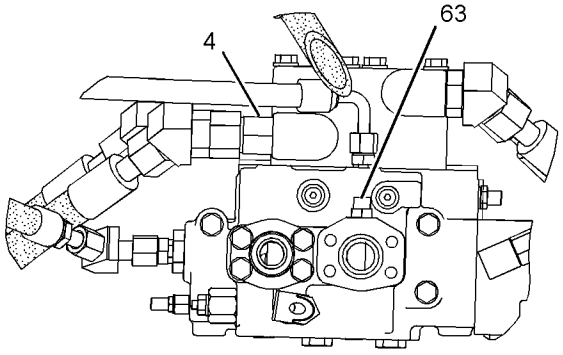

SECTION J-J

GRAPHIC #3 g01197134

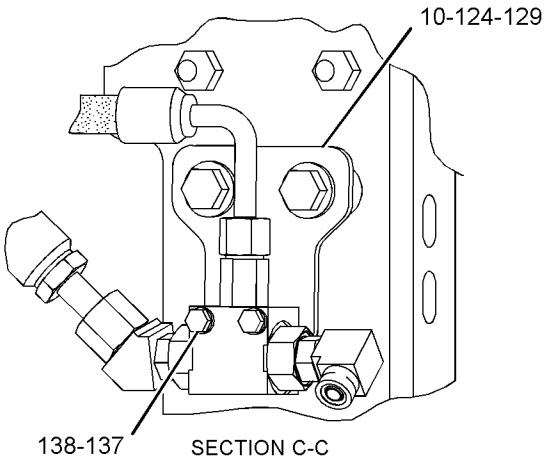

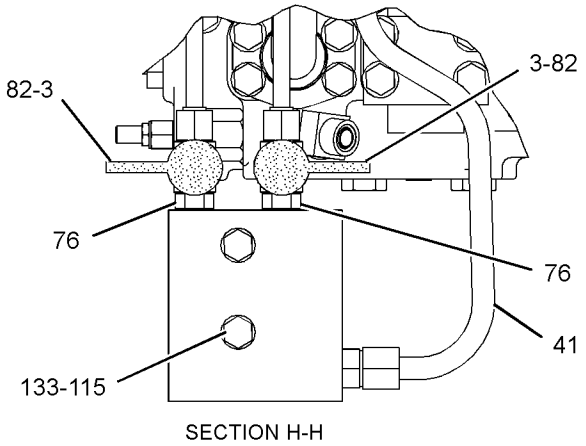

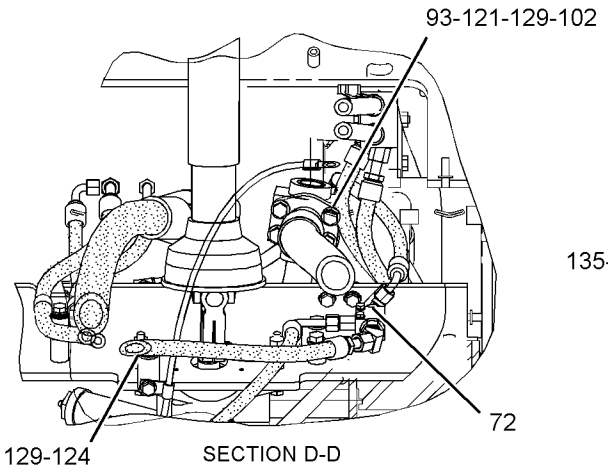

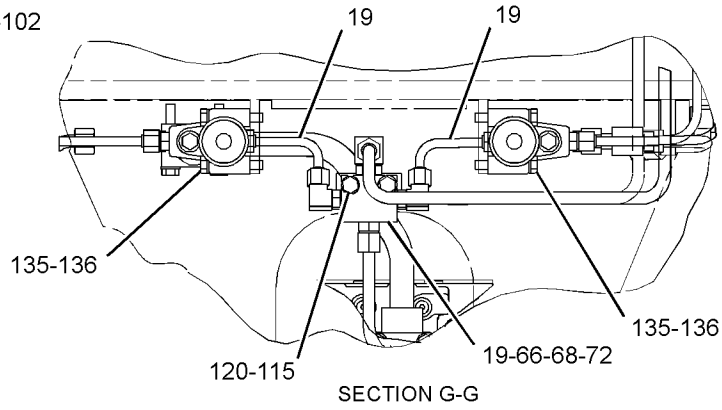

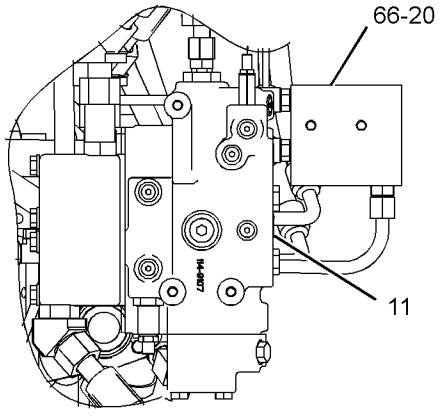

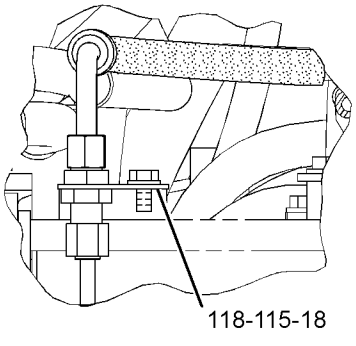

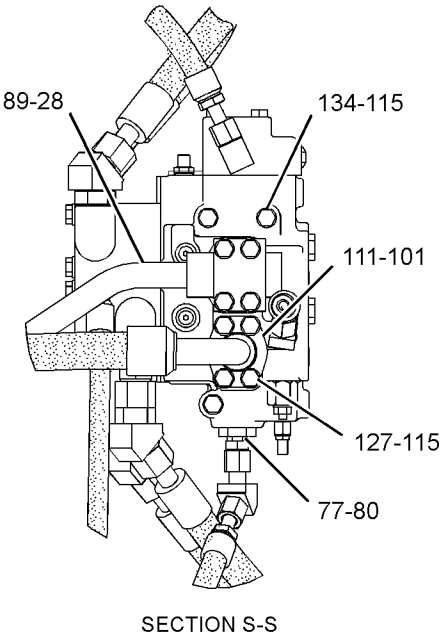

GRAPHIC #4 **<END>** g01197135

STEERING SYSTEM

275-8544 PUMP & MOTOR GP-SEC STEERING

S/N: A7G1-UP

PART OF 236-9088 PUMP & MTG GP-SECONDARY STEER

AN ATTACHMENT

SMCS-4324, 4325 **i02414665**

NOTE	REF NO	GRAPHIC REF	PART NUMBER	QTY	PART NAME 1 2 3 4 5 6 (PRODUCT LEVEL)	SEE PAGE
	1	1	**117-5268**	1	GASKET	
	2	1	**183-6967**	1	MOTOR GP-ELECTRIC	
	3	1	**183-6970**	1	RELAY	
	4	1	**183-6971**	1	CABLE AS	
	5	1	**277-0731**	1	PUMP GP-GEAR	
	6	1	**237-9878**	1	KIT-RELIEF VALVE	

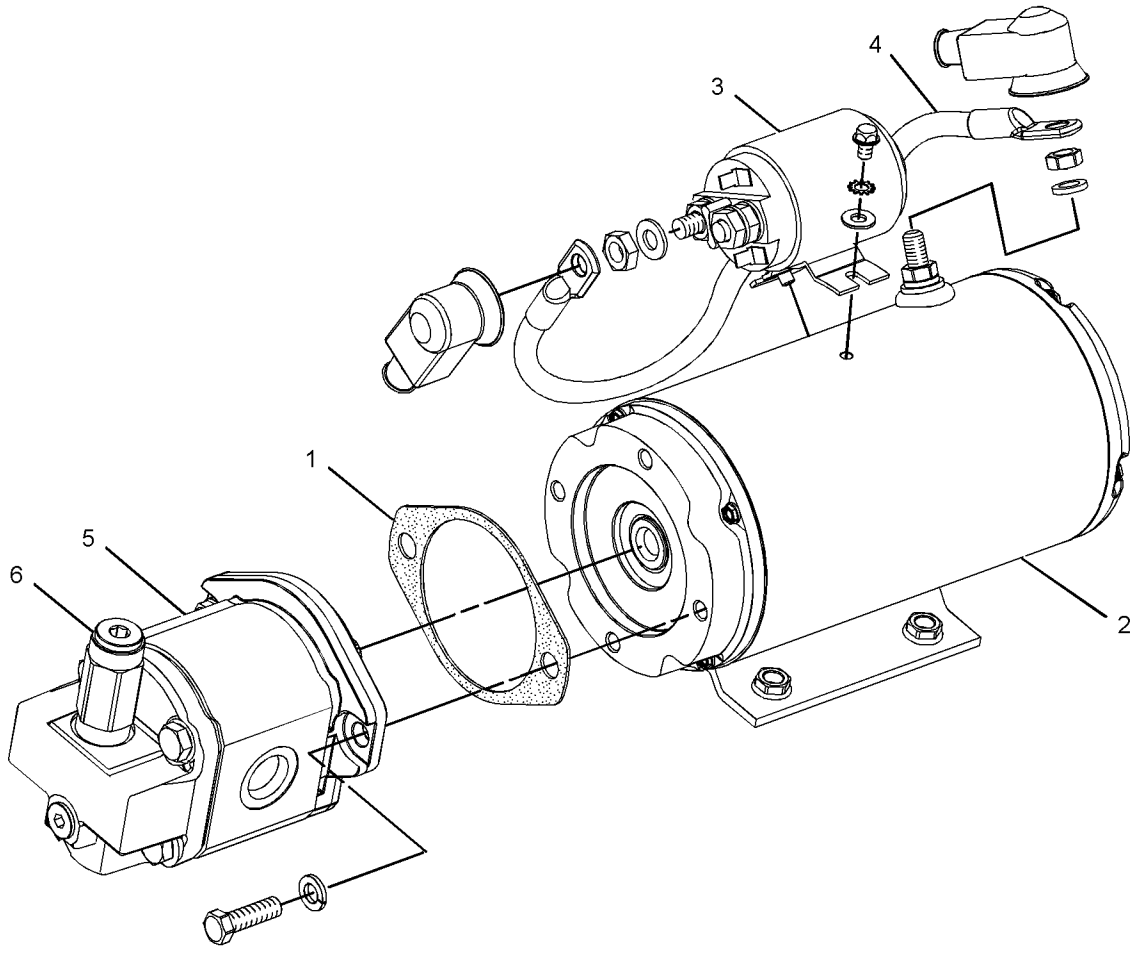

GRAPHIC #1 **<END>** g01210759

236-9088 PUMP & MTG GP-SECONDARY STEER

S/N: A7G1-UP
PART OF 236-9087 STEERING AR-SECONDARY
AN ATTACHMENT

SMCS-4324 **i02414666**

NOTE	REF NO	GRAPHIC REF	PART NUMBER	QTY	PART NAME 1 2 3 4 5 6 (PRODUCT LEVEL)	SEE PAGE
Y	1	1	**275-8544**	1	PUMP & MOTOR GP-SEC STEERING	490
	2	1	**245-7686**	1	BRACKET	
	3	1	**8T-4121**	4	WASHER-HARD (11X21X2.5-MM THK)	
M	4	1	**8T-4136**	4	BOLT (M10X1.5X25-MM)	
M	5	1	**8T-4139**	2	BOLT (M12X1.75X30-MM)	
	6	1	**8T-4223**	2	WASHER-HARD (13.5X25.5X3-MM THK)	

M-METRIC PART
Y-SEPARATE ILLUSTRATION

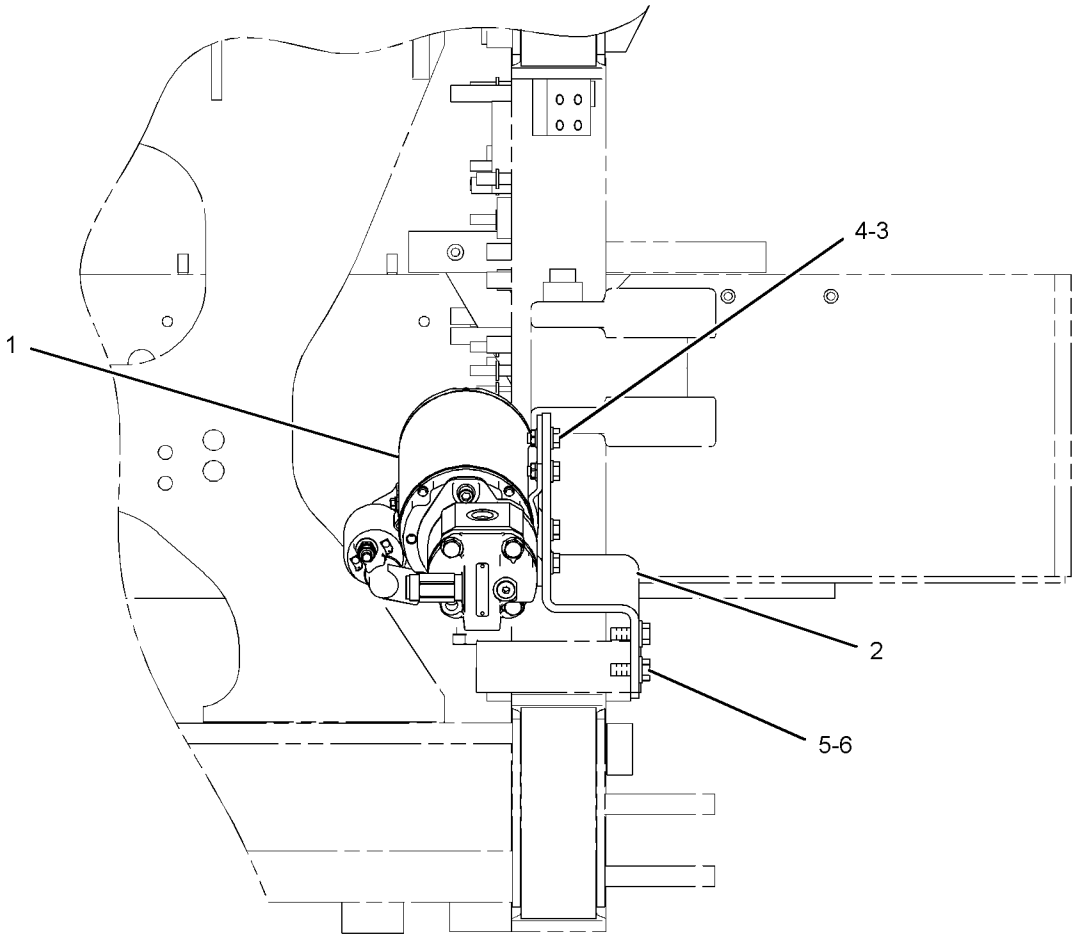

FRONT VIEW

GRAPHIC #1 **<END>** g01115823

STEERING SYSTEM

241-9157 PUMP GP-PISTON—STEERING

S/N: A7G1-UP

PART OF 246-2055 PUMP & MTG GP-HYDRAULIC

SMCS-4268, 4306, 5070 **i02424536**

NOTE	REF NO	GRAPHIC REF	PART NUMBER	QTY	PART NAME 1 2 3 4 5 6 (PRODUCT LEVEL)	SEE PAGE
	1	1	**6E-4224**	1	PLUG-SWASHPLATE	
	2	1	**033-6036**	1	SEAL-O-RING	
	3	1	**100-3402**	1	BEARING-SWASH	
	4	1	**100-3405**	1	BEARING-SWASH	
M	5	1	**6V-8837**	3	BOLT (M6X1X16-MM)	
	6	1	**4F-4097**	1	SEAL-O-RING	
M	7	1	**3E-4302**	2	SCREW-FLAT HEAD (M4X0.7X10-MM)	
	8	1	**100-3404**	1	COVER-TRUNNION	
	9	1	**9T-1636**	1	SEAT	
	10	1	**9T-1710**	1	POPPET	
	11	1	**9T-1699**	1	SPRING	
	12	1	**117-0823**	1	HEAD-PUMP	
B	13	1	**6E-1436**	1	KIT-SHIM (INCLUDES 17-SHIMS) (PISTON PUMP)	
	14	1	**6Y-4280**	1	CONE-BEARING	
	15	1	**7T-9755**	1	CUP-BEARING	
	16	1	**9T-7775**	1	PLATE-VALVE	
	17	1	**3E-7417**	2	PLUG	
	18	1	**8T-7876**	2	SEAL-O-RING	
	19	1	**7L-9061**	2	SEAL-O-RING	
	20	1	**100-3413**	1	GASKET	
Y	21	1	**100-3412**	1	ROTATING GP-PUMP	494
	22	1	**100-3409**	1	SPRING-BIAS	
	23	1	**100-3408**	1	KIT-BIAS PISTON (PUMP)	
					(INCLUDES SPRING, ROD, PISTON, AND SEAL)	
	24	1	**002-1212**	1	CUP-BEARING	
	25	1	**2F-8509**	1	CONE-BEARING	
	26	1	**102-2066**	1	SHAFT-PUMP	
	27	1	**102-2067**	1	HOUSING-PUMP	
	28	1	**006-8663**	1	RING	
	29	1	**8T-4750**	1	SEAL-LIP TYPE	
Y	30	1	**169-3290**	1	SWASHPLATE GP	500
		1	**1H-3937**	2	PIN	
		1	**167-1801**	2	STOP-SWASHPLATE	
	31	1	**100-3415**	1	KIT-CONTROL PISTON (PUMP)	
					(INCLUDES ROD, PISTON, AND SEAL)	
	32	1	**9T-1652**	1	PIN	
M	33	1	**6V-8336**	1	BOLT (M12X1.75X70-MM)	
M	34	1	**6V-7673**	4	BOLT (M12X1.75X50-MM)	
M	35	1	**8T-0372**	1	BOLT (M12X1.75X90-MM)	
M	36	1	**6V-8337**	4	BOLT-SOCKET HEAD (M8X1.25X35-MM)	
Y	37	1	**141-1053**	1	VALVE GP-PUMP CONTROL (PRESSURE, FLOW COMPENSATOR)	507
	38	1	**3D-2824**	1	SEAL-O-RING	
	39	1	**9S-4183**	1	PLUG	
	40	1	**095-0888**	2	PIN-SPRING	
	41	1	**109-3204**	3	SEAL-O-RING	

B-USE AS REQUIRED
M-METRIC PART
Y-SEPARATE ILLUSTRATION

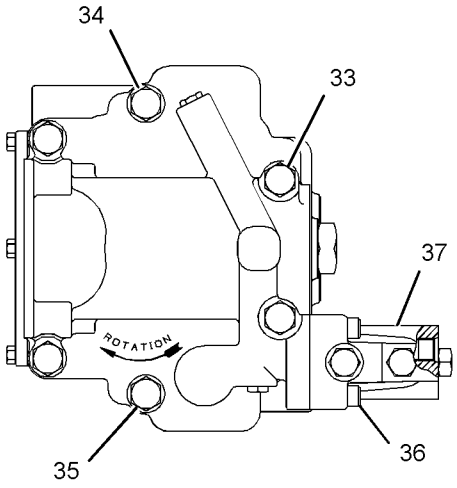

VIEW E-E

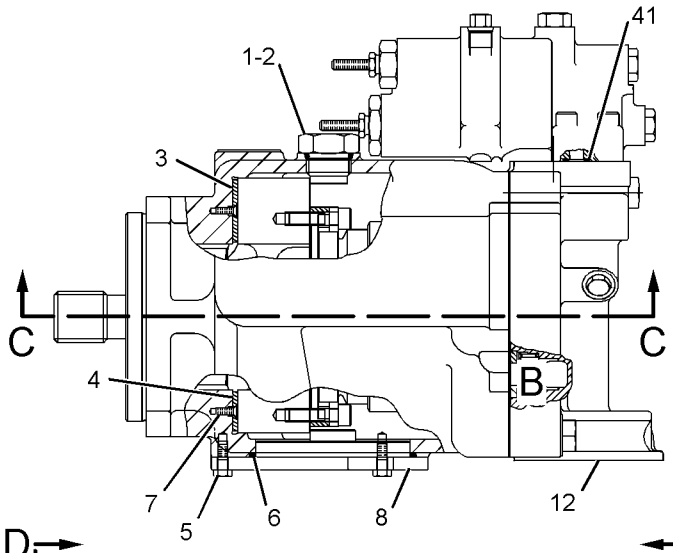

TOP VIEW

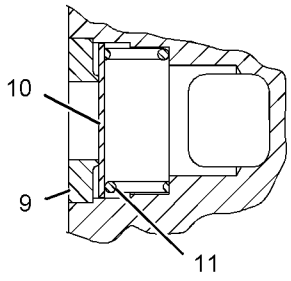

VIEW OF AREA B

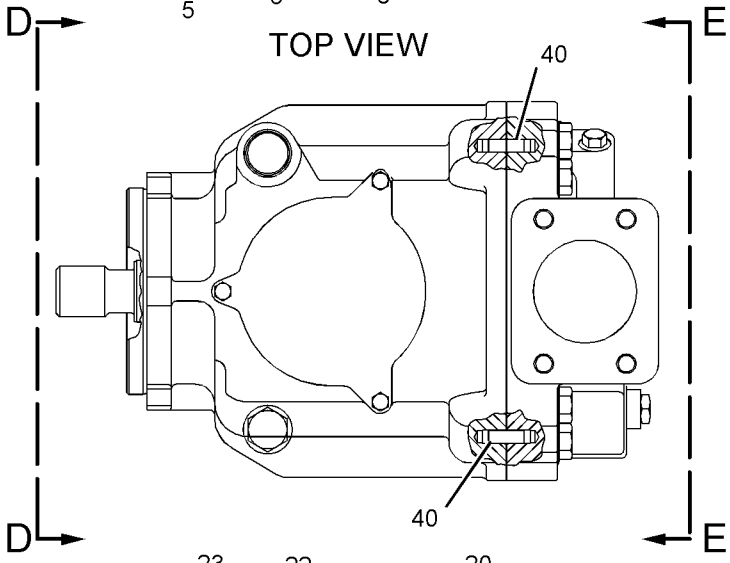

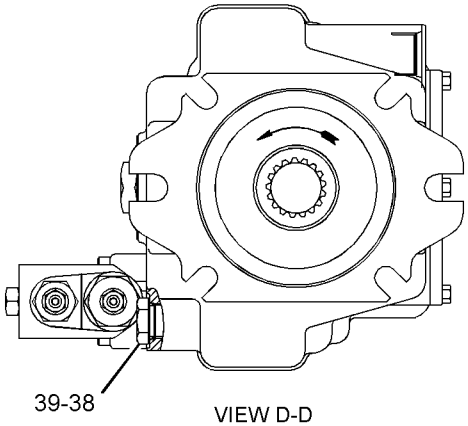

VIEW D-D

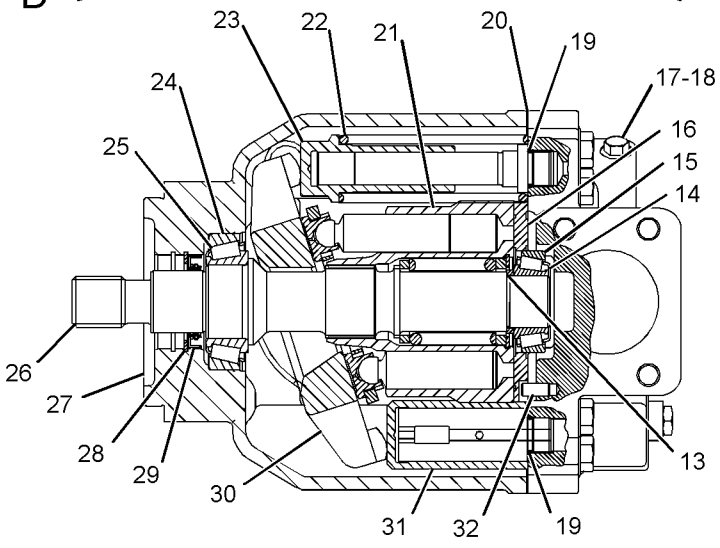

SECTION C-C

GRAPHIC #1 **<END>** g01116694

100-3412 ROTATING GP-PUMP—STEERING

S/N: A7G1-UP

PART OF 241-9157 PUMP GP-PISTON

SMCS-5070 **i00341707**

NOTE	REF NO	GRAPHIC REF	PART NUMBER	QTY	PART NAME 1 2 3 4 5 6 (PRODUCT LEVEL)	SEE PAGE
	1	1	**9T-7774**	1	BARREL	
	2	1	**3J-8500**	1	RING-RETAINING	
	3	1	**9T-7769**	1	GUIDE-OUTER	
M	4	1	**6V-5192**	4	BOLT-SOCKET HEAD (M8X1.25X30-MM)	
	5	1	**100-3410**	2	PLATE	
	6	1	**100-3411**	2	PLATE-SPACER	
	7	1	**9T-7765**	9	PISTON	
	8	1	**9T-7767**	1	PLATE-RETRACTION	
	9	1	**9T-7773**	1	GUIDE-INNER	
	10	1	**9T-7771**	1	SPRING	

M-METRIC PART

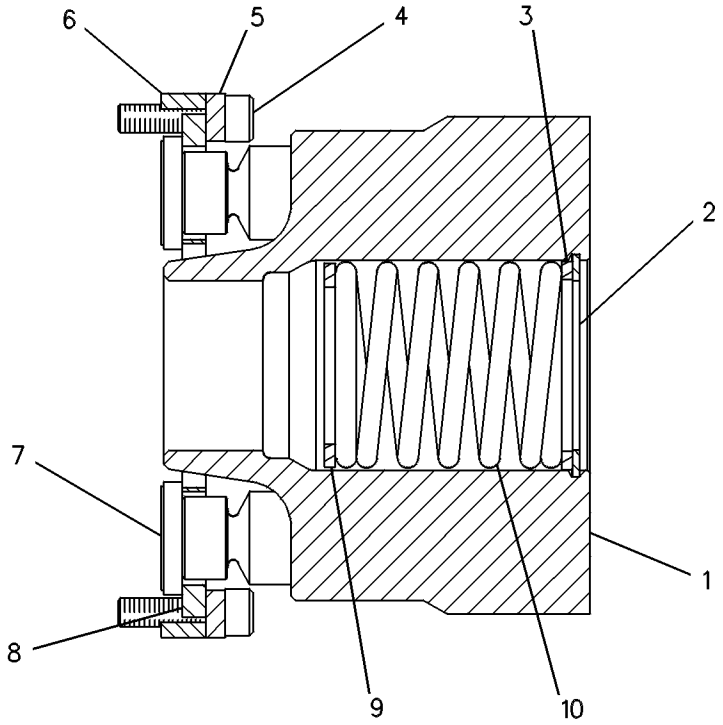

GRAPHIC #1 **<END>** g00084780

154-2883 SCREEN GP-CASE DRAIN–STEERING PILOT

S/N: A7G1-UP
PART OF 236-8986 LINES GP-STEERING
AN ATTACHMENT

SMCS-4304, 5057 **i00846049**

NOTE	REF NO	GRAPHIC REF	PART NUMBER	QTY	PART NAME 1 2 3 4 5 6 (PRODUCT LEVEL)	SEE PAGE
	1	1	**1T-0936**	2	PLUG-PIPE	
	2	1	**6E-5066**	2	SCREEN	
	3	1	**157-3491**	1	BLOCK	

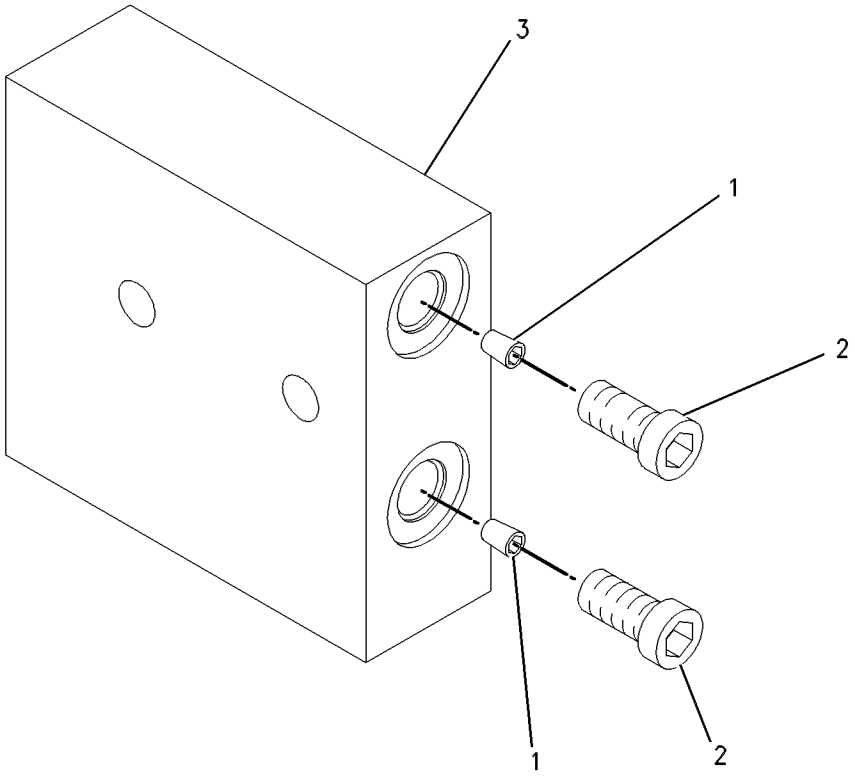

GRAPHIC #1 **<END>** g00434518

STEERING SYSTEM

244-3597 STEERING AR-COMMAND CONTROL

S/N: A7G1-UP
AN ATTACHMENT

SMCS-4300 **i02211450**

NOTE	PART NUMBER	QTY	PART NAME 1 2 3 4 5 6 (PRODUCT LEVEL)	SEE PAGE
Y	*236-8986*	1	LINES GP-STEERING (COMMAND CONTROL STEERING)	482
Y	*237-2571*	1	OPERATOR AR-ENCLOSED ROPS (COMMAND CONTROL STEERING)	852

Y-SEPARATE ILLUSTRATION

<END>

236-9087 STEERING AR-SECONDARY

S/N: A7G1-UP
PART OF 277-8157 CONVERSION AR-CERTIFICATION
AN ATTACHMENT

SMCS-4300 **i02242246**

NOTE	PART NUMBER	QTY	PART NAME 1 2 3 4 5 6 (PRODUCT LEVEL)	SEE PAGE
Y	*236-9007*	1	LINES GP-SECONDARY STEERING	474
Y	*236-9088*	1	PUMP & MTG GP-SECONDARY STEER	491
Y	*252-5924*	1	SWITCH GP-SECONDARY STEERING	213
Y	*237-4909*	1	WIRING GP-SECONDARY STEERING	250

Y-SEPARATE ILLUSTRATION

<END>

156-0549 STEERING COLUMN GP

S/N: A7G1-UP
PART OF 219-7619 CONTROL GP-STEERING
AN ATTACHMENT

SMCS-4310 **i02235169**

NOTE	REF NO	GRAPHIC REF	PART NUMBER	QTY	PART NAME 1 2 3 4 5 6 (PRODUCT LEVEL)	SEE PAGE
	1	1	**145-8867**	1	KIT-GAS ASSIST (STEERING COLUMN)	
	2	1	**149-2906**	1	KIT-NUT (STEERING COLUMN)	
	3	1	**149-2907**	1	KIT-TILT LEVER (STEERING COLUMN)	
	4	1	**156-4315**	1	KIT-SHAFT (STEERING COLUMN)	
	5	1	**149-0774**	1	KIT-HOUSING (STEERING COLUMN)	
	6	1	**254-1519**	1	COVER	

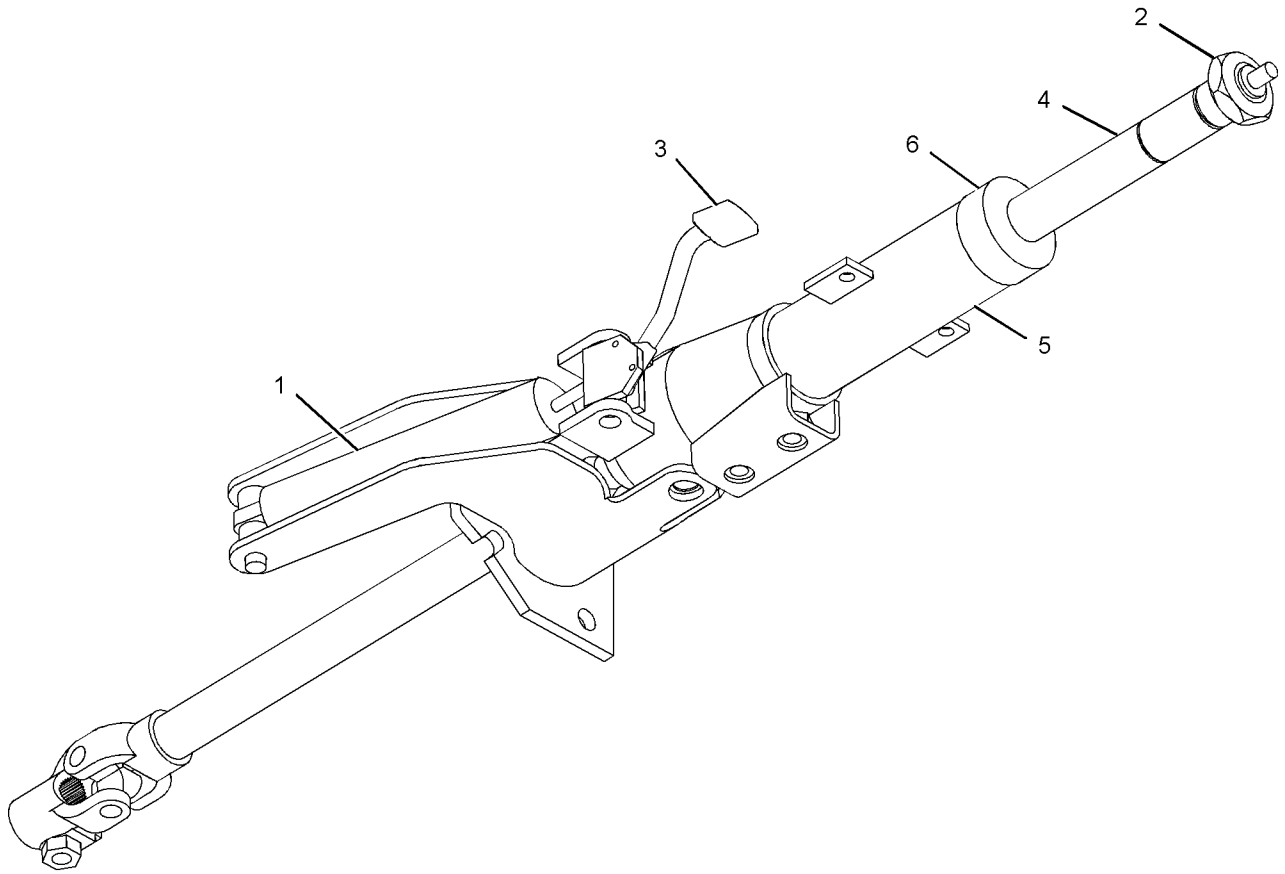

GRAPHIC #1 **<END>** g01090390

STEERING SYSTEM

218-0654 STEERING WHEEL GP

S/N: A7G1-UP
PART OF 219-7619 CONTROL GP-STEERING
AN ATTACHMENT

SMCS-3171, 4309 **i02321960**

NOTE	REF NO	GRAPHIC REF	PART NUMBER	QTY	PART NAME 1 2 3 4 5 6 (PRODUCT LEVEL)	SEE PAGE
	1	1	**2T-3360**	1	BUTTON AS-HORN	
	2	1	**112-9714**	1	INSERT-SPLINED	
	3	1	**112-9715**	1	LEVER	
	4	1	**124-0786**	1	COVER	
	5	1	**151-6980**	1	WHEEL	
	6	1	**151-6981**	1	SHROUD	
	7	1	**151-6982**	1	COVER	
	8	1	**151-6984**	1	COVER	
	9	1	**151-6985**	1	BEARING AS	
	10	1	**151-6986**	1	AXLE AS	
	11	1	**152-2788**	1	PIVOT	
	12	1	**152-2791**	1	ROCKER	
	13	1	**152-2794**	1	AXLE	
	14	1	**218-0652**	1	SWITCH AS-PUSH BUTTON (TRANSMISSION UPSHIFT)	
	15	1	**218-0653**	1	SWITCH AS-PUSH BUTTON (TRANSMISSION DOWNSHIFT)	
	16	1	**152-6432**	1	HARNESS AS-TRANSMISSION CONT (STEERING WHEEL)	
		1	**102-8806**	1	KIT-RECEPTACLE (8-PIN)	
					(INCLUDES RECEPTACLE AS AND WEDGE)	
		1	**171-1653**	1	PLUG AS (8-PIN)	
	17	1	**177-7582**	1	SWITCH AS-ROCKER (TRANSMISSION DIRECTION)	
		1	**5S-4246**	2	LOCKWASHER	
		1	**6V-9497**	2	WASHER-HARD (3.2X6X0.5-MM THK)	
		1	**8T-8729**	3	PIN-CONNECTOR	
		1	**9X-8917**	2	SCREW-MACHINE (4-40X9.52-MM)	
	18	1	**118-2943**	1	HARNESS AS-STEERING (COLUMN, WHEEL)	
		1	**155-2265**	1	KIT-CONNECTING PLUG (8-PIN)	
					(INCLUDES PLUG AS AND WEDGE)	
		1	**102-8801**	1	KIT-RECEPTACLE (12-PIN)	
					(INCLUDES RECEPTACLE AS AND WEDGE)	
M	19	1	**107-3786**	1	BOLT (M4X0.7X12-MM)	
M	20	1	**153-3568**	4	BOLT-SOCKET HEAD (M5X0.8X10-MM)	
M	21	1	**153-8002**	2	BOLT-SOCKET HEAD (M4X0.7X25-MM)	
M	22	1	**153-8003**	2	BOLT-SOCKET HEAD (M4X0.7X30-MM)	
M	23	1	**153-8004**	1	BOLT-SOCKET HEAD (M4X0.7X35-MM)	
M	24	1	**153-9300**	2	BOLT-SOCKET HEAD (M3X0.5X12-MM)	
M	25	1	**153-9301**	2	BOLT-SOCKET HEAD (M4X0.7X10-MM)	
M	26	1	**5C-7261**	1	NUT (M8X1.25-THD)	
	27	1	**9X-8256**	1	WASHER (6.6X12X2-MM THK)	
	28	1	**189-8846**	1	RECEPTACLE AS	
	29	1	**189-9304**	1	WEDGE	
	30	1	**193-0042**	2	NUT	
	31	1	**195-5950**	1	SPRING	
	32	1	**195-5951**	1	BUSHING	

M-METRIC PART

218-0654 **STEERING WHEEL GP** *(contd.)* **i02321960**

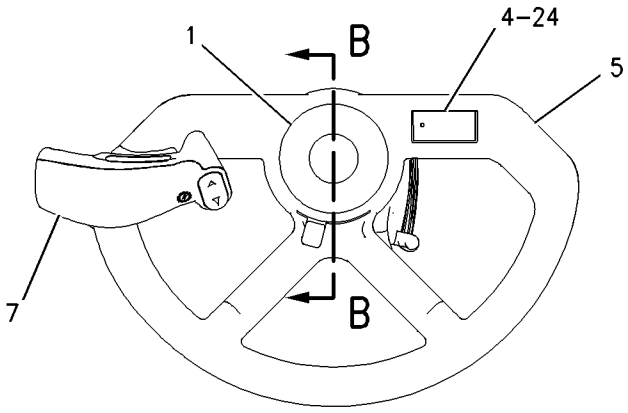

TOP VIEW

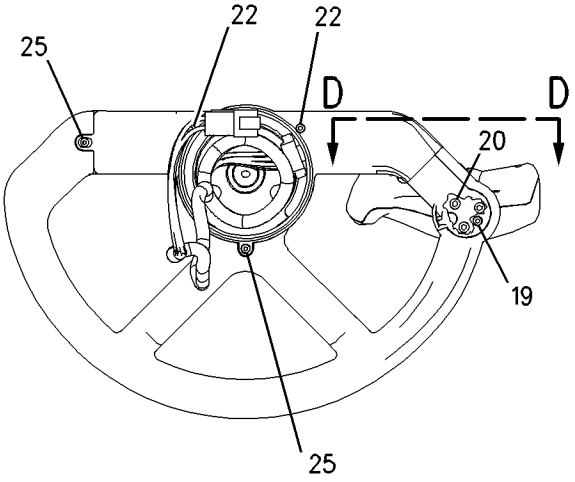

BOTTOM VIEW

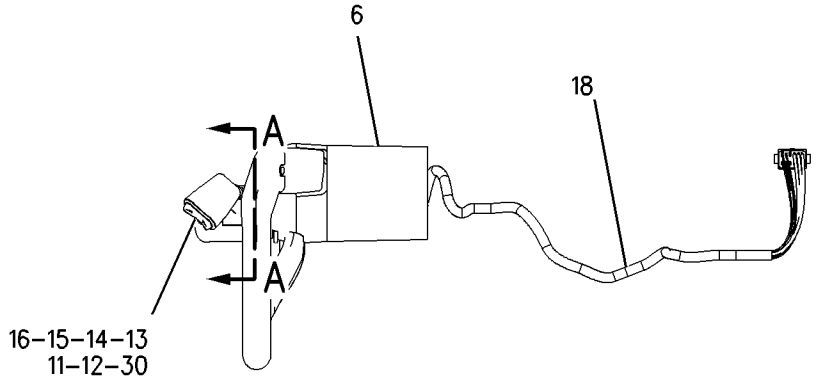

RIGHT SIDE VIEW

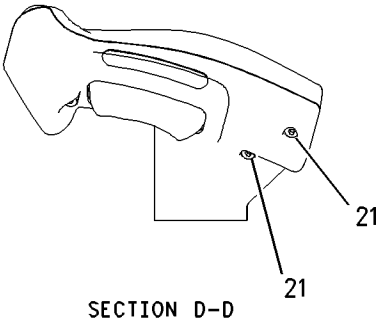

SECTION D-D

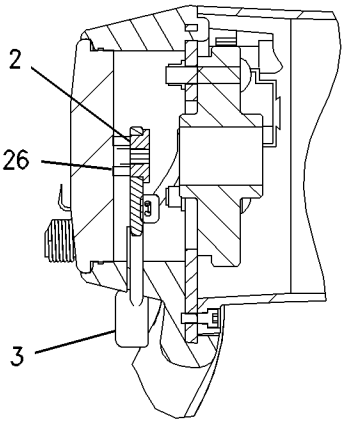

SECTION B-B

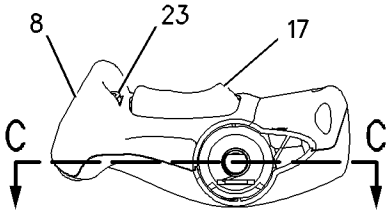

SECTION A-A

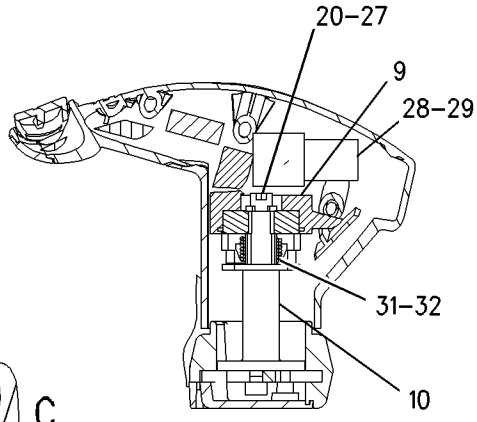

SECTION C-C

GRAPHIC #1 **<END>** g00910219

STEERING SYSTEM

169-3290 SWASHPLATE GP

S/N: A7G1-UP

PART OF 241-9157 PUMP GP-PISTON

SMCS-5070 **i02234641**

NOTE	REF NO	GRAPHIC REF	PART NUMBER	QTY	PART NAME 1 2 3 4 5 6 (PRODUCT LEVEL)	SEE PAGE
	1	1	**1H-3937**	2	PIN	
	2	1	**167-1801**	2	STOP-SWASHPLATE	

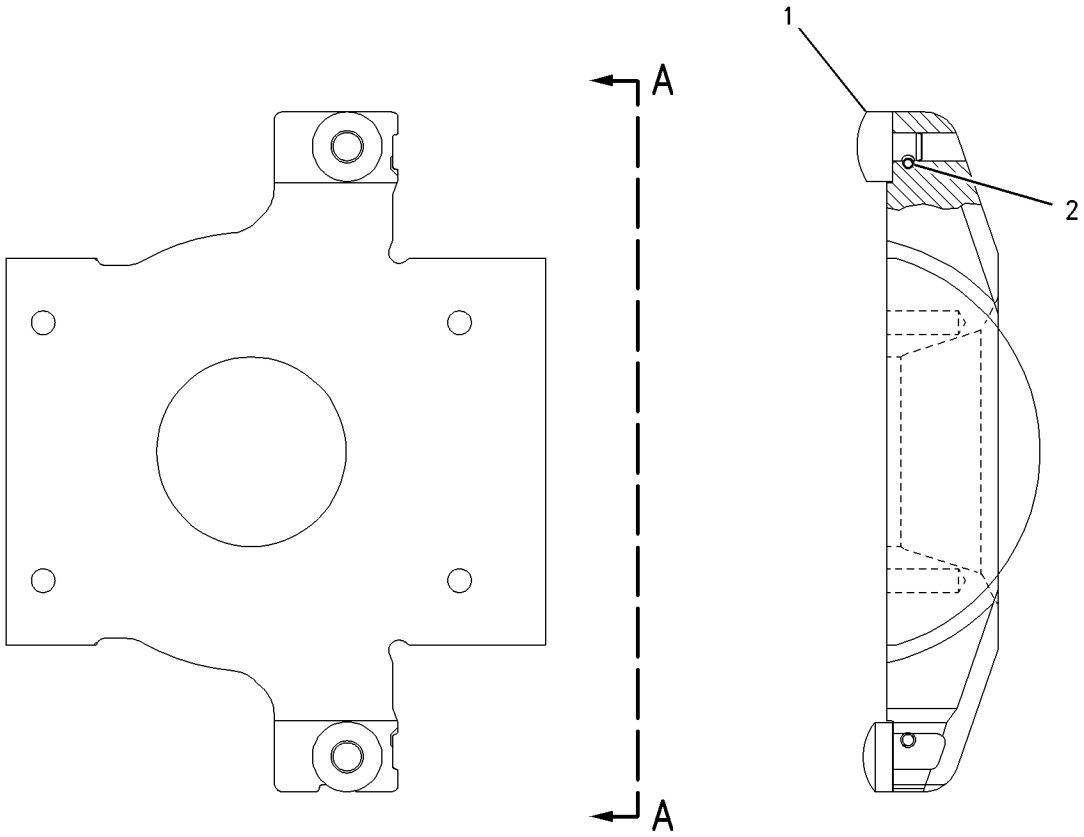

VIEW A-A

GRAPHIC #1 **<END>** g00938671

111-7775 VALVE GP-CHECK–STEERING QUAD, CCS

S/N: A7G1-UP

PART OF 236-8986 LINES GP-STEERING

AN ATTACHMENT

SMCS-4275, 5067 **i01446850**

NOTE	REF NO	GRAPHIC REF	PART NUMBER	QTY	PART NAME 1 2 3 4 5 6 (PRODUCT LEVEL)	SEE PAGE
Y	1	1	**176-9369**	2	VALVE GP-CHECK (STEERING)	502
Y	2	1	**176-9371**	2	VALVE GP-CHECK (STEERING)	503

Y-SEPARATE ILLUSTRATION

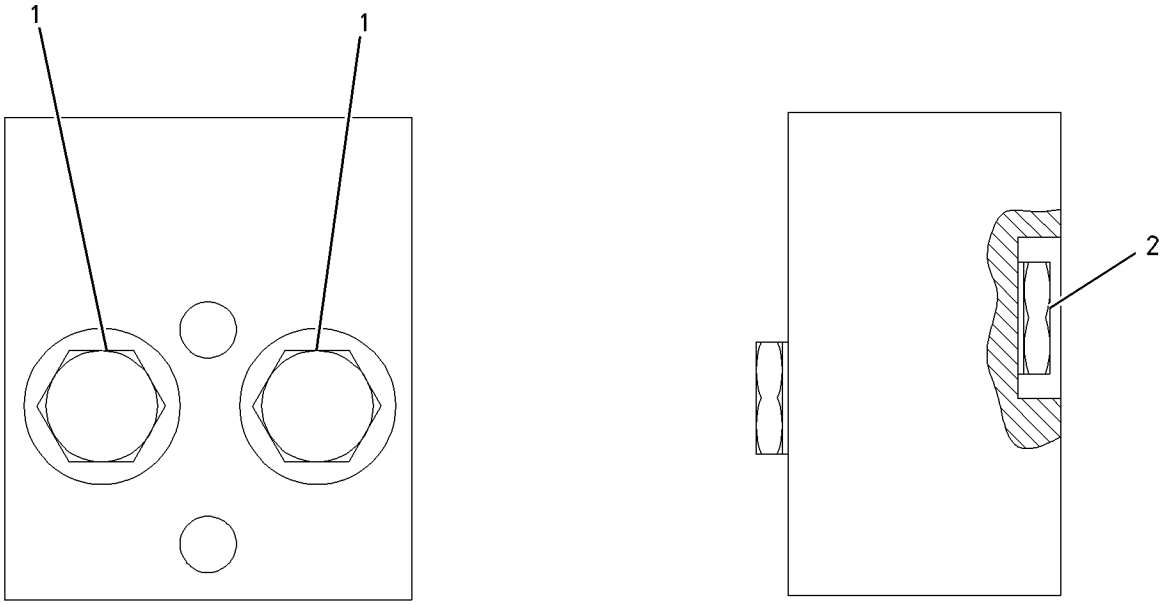

GRAPHIC #1 **<END>** g00707411

STEERING SYSTEM

176-9369 VALVE GP-CHECK–STEERING

S/N: A7G1-UP
PART OF 111-7775 VALVE GP-CHECK
AN ATTACHMENT

SMCS-4275, 5067 **i01446872**

NOTE	REF NO	GRAPHIC REF	PART NUMBER	QTY	PART NAME 1 2 3 4 5 6 (PRODUCT LEVEL)	SEE PAGE
	1	1	**3K-0360**	1	SEAL-O-RING	
	2	1	**161-6154**	1	SEAL-O-RING	
	3	1	**6E-0381**	1	RING-BACKUP	

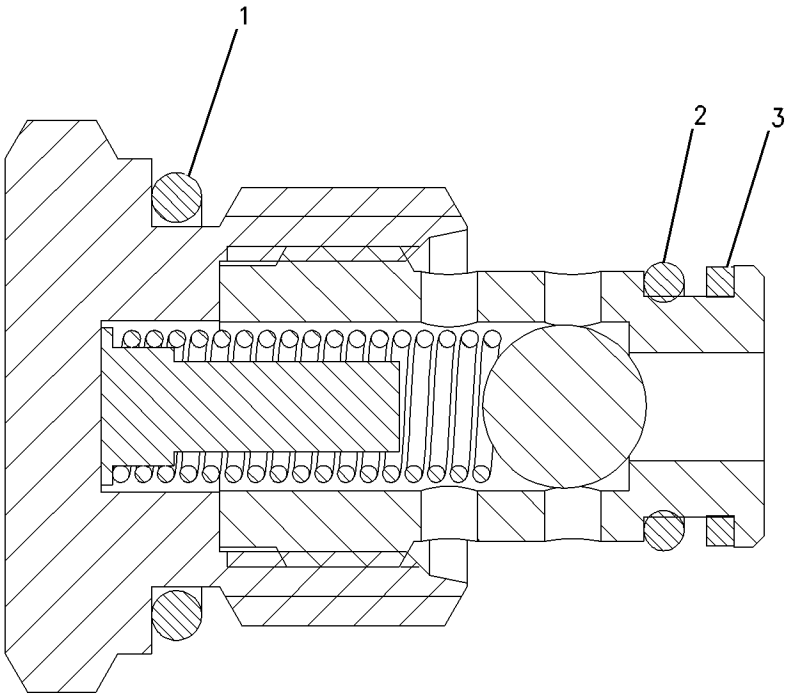

GRAPHIC #1 **<END>** g00707403

176-9371 VALVE GP-CHECK–STEERING

S/N: A7G1-UP
PART OF 111-7775 VALVE GP-CHECK
AN ATTACHMENT

SMCS-4275, 5067 **i01446882**

NOTE	REF NO	GRAPHIC REF	PART NUMBER	QTY	PART NAME 1 2 3 4 5 6 (PRODUCT LEVEL)	SEE PAGE
	1	1	**3K-0360**	1	SEAL-O-RING	
	2	1	**161-6154**	1	SEAL-O-RING	
	3	1	**6E-0381**	1	RING-BACKUP	

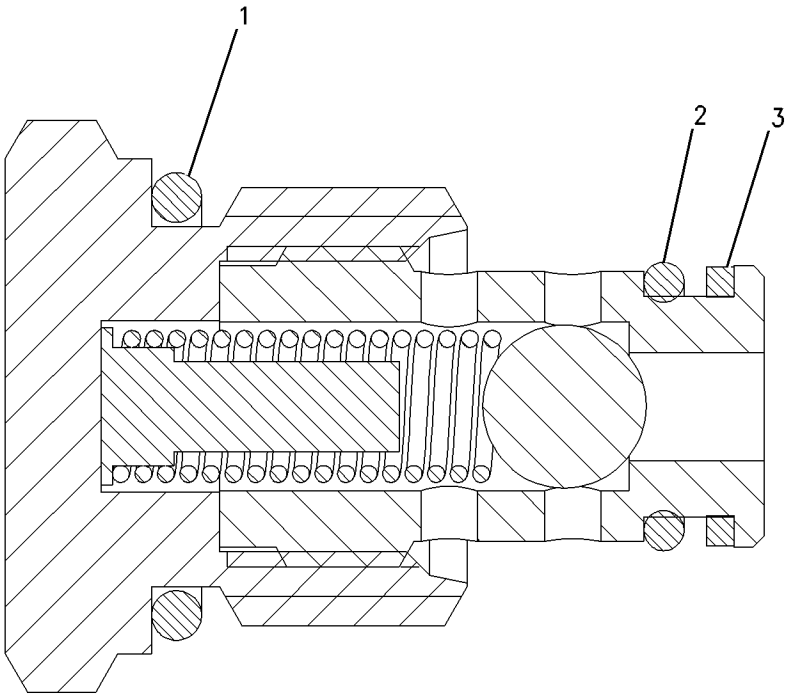

GRAPHIC #1 **<END>** g00707403

STEERING SYSTEM

164-4116 VALVE GP-PILOT–COMMAND CONTROL STEERING

S/N: A7G1-UP

PART OF 236-8986 LINES GP-STEERING

AN ATTACHMENT

SMCS-4342 **i02297684**

NOTE	REF NO	GRAPHIC REF	PART NUMBER	QTY	PART NAME 1 2 3 4 5 6 (PRODUCT LEVEL)	SEE PAGE
	1	1	**135-7474**	1	RING	
	2	1	**135-7483**	1	PLUNGER	
	3	1	**1B-8702**	1	KEY-WOODRUFF	
	5	1	**135-7470**	1	SPRING	
	6	1	**135-7471**	1	PIN	
	7	1	**135-7475**	1	COVER	
	8	1	**135-7477**	1	BODY	
	9	1	**135-7478**	1	SLEEVE	
	10	1	**135-7479**	1	VALVE GP	
	11	1	**135-7482**	1	PLUG	
	12	1	**137-7581**	1	RETAINER	
	13	1	**143-8302**	1	SPRING	
	14	1	**176-7078**	1	SHAFT AS	
	15	1	**146-0719**	1	CAM	
	16	1	**147-1788**	1	BODY	
	17	1	**160-0089**	1	SEAL-LIP TYPE	
	18	1	**162-6560**	1	BODY	
	20	1	**095-0919**	1	RING-RETAINING	
	21	1	**121-0628**	1	SLUG	
	22	1	**146-0720**	1	SPOOL	
	23	1	**150-6255**	1	PLUNGER	
	24	1	**3G-3726**	1	NUT (3/8-40-THD)	
	27	1	**4J-5309**	2	SEAL-O-RING	
	28	1	**5F-3106**	1	SEAL-O-RING	
	29	1	**5L-4141**	2	BALL BEARING	
	30	1	**5P-2569**	2	SEAL-O-RING	
	31	1	**5P-8215**	1	SEAL-O-RING	
	32	1	**6E-0198**	2	PIN	
	33	1	**6J-3134**	1	SEAL-O-RING	
M	34	1	**6V-5843**	2	BOLT (M10X1.5X45-MM)	
	35	1	**6V-8116**	1	RING-RETAINING	
	36	1	**254-3250**	1	SPRING	
	37	1	**7M-8485**	1	SEAL-O-RING	
M	38	1	**8T-4185**	2	BOLT (M10X1.5X50-MM)	
M	39	1	**8T-4195**	1	BOLT (M10X1.5X30-MM)	
M	40	1	**8T-4196**	2	BOLT (M10X1.5X35-MM)	
	41	1	*148-8411*	1	PLUG AS	
		1	**3K-0360**	1	SEAL-O-RING	
		1	**9S-4185**	1	PLUG	
	42	1	*148-8407*	6	PLUG AS	
					(EACH INCLUDES)	
		1	**3J-1907**	1	SEAL-O-RING	
		1	**9S-4191**	1	PLUG	

M-METRIC PART

164-4116 VALVE GP-PILOT *(contd.)* **i02297684**

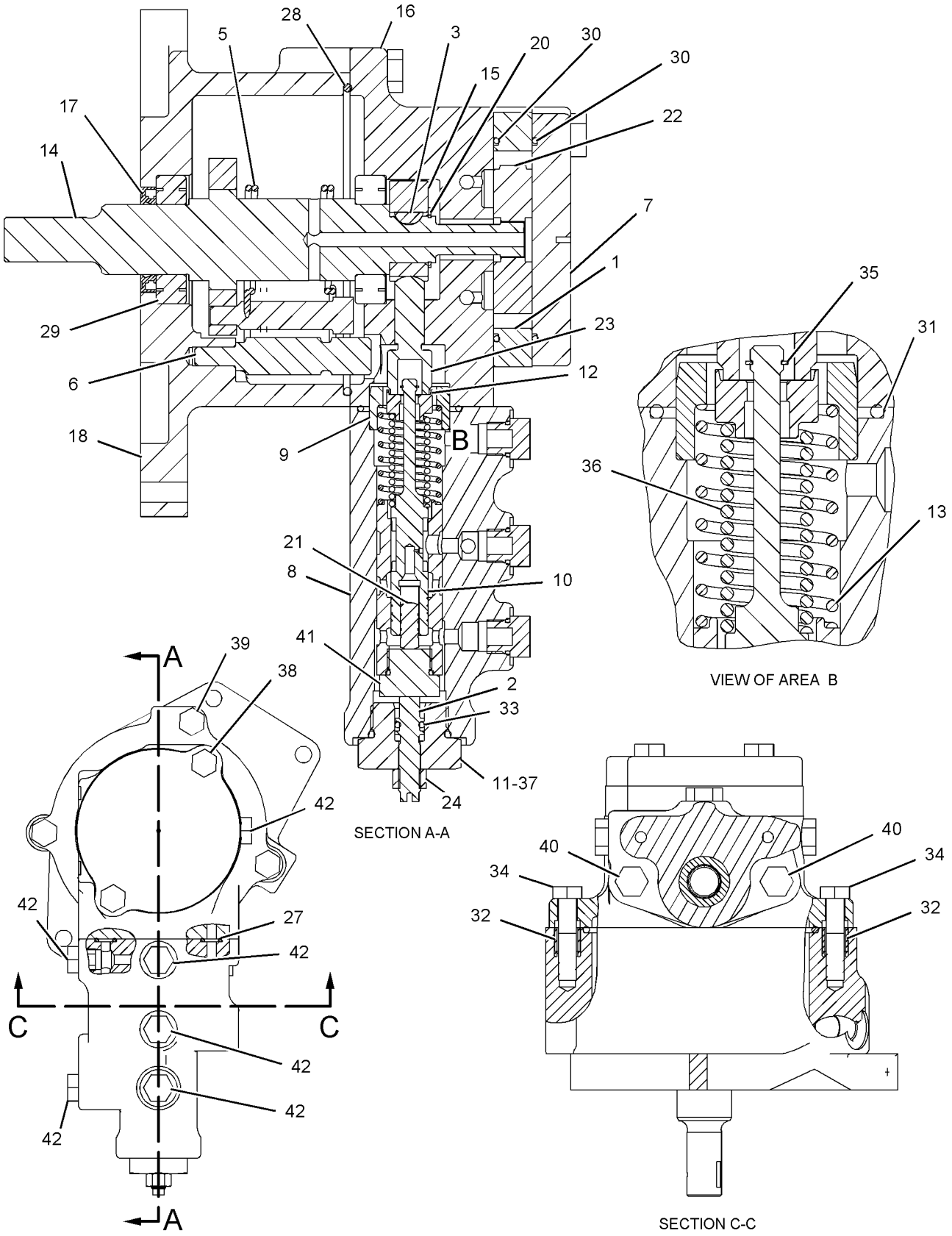

GRAPHIC #1 **<END>** g01088833

114-1267 VALVE GP-PRESSURE REDUCING–STEERING

S/N: A7G1-UP

PART OF 133-1728 VALVE GP-STEERING

AN ATTACHMENT

SMCS-4337, 4807 **i01111337**

NOTE	REF NO	GRAPHIC REF	PART NUMBER	QTY	PART NAME 1 2 3 4 5 6 (PRODUCT LEVEL)	SEE PAGE
	1	1	**2M-9780**	1	SEAL-O-RING (19.18MM ID)	
	2	1	**6V-3505**	1	RING-BACKUP	
	3	1	**8C-3132**	1	SEAL-O-RING (14MM ID)	
	4	1	**6E-0410**	1	SEAL-O-RING (16.10MM ID)	
	5	1	**5P-2199**	1	RING-BACKUP	

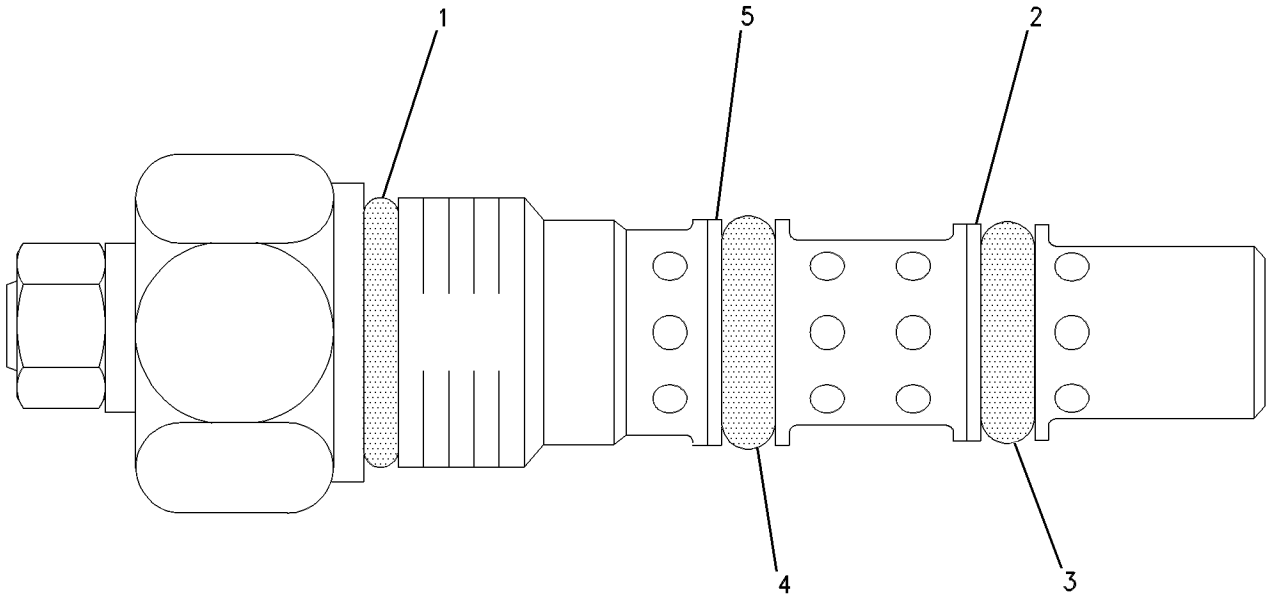

GRAPHIC #1 **<END>** g00589945

141-1053 VALVE GP-PUMP CONTROL–
PRESSURE, FLOW COMPENSATOR–STEERING

S/N: A7G1-UP

PART OF 241-9157 PUMP GP-PISTON

SMCS-5455 **i00878903**

NOTE	REF NO	GRAPHIC REF	PART NUMBER	QTY	PART NAME 1 2 3 4 5 6 (PRODUCT LEVEL)	SEE PAGE
	1	1	**6E-4229**	1	BODY-COMPENSATOR	
	2	1	**9S-4191**	1	PLUG	
	3	1	**3J-1907**	3	SEAL-O-RING	
	4	1	**6E-4241**	1	SPOOL-MARGIN	
	5	1	**9T-2186**	2	PLUG	
	6	1	**6E-4239**	1	SPOOL-CUTOFF	
	7	1	**6E-4230**	2	GUIDE-SPRING	
	8	1	**6E-4228**	1	SPRING	
	9	1	**6E-6140**	1	PLUG-COMPENSATOR	
	10	1	**033-6036**	1	SEAL-O-RING	
	11	1	**6E-6141**	2	LOCKNUT-SEALING	
M	12	1	**129-7632**	2	SCREW-ADJUSTMENT	
	13	1	**6E-6142**	1	PLUG-MARGIN	
	14	1	**033-6027**	1	SEAL-O-RING	
	15	1	**6E-4246**	1	SPRING-MARGIN	
	16	1	**6E-4318**	1	PIN-SPRING STOP	
	17	1	**6E-4242**	2	GUIDE-SPRING	

M-METRIC PART

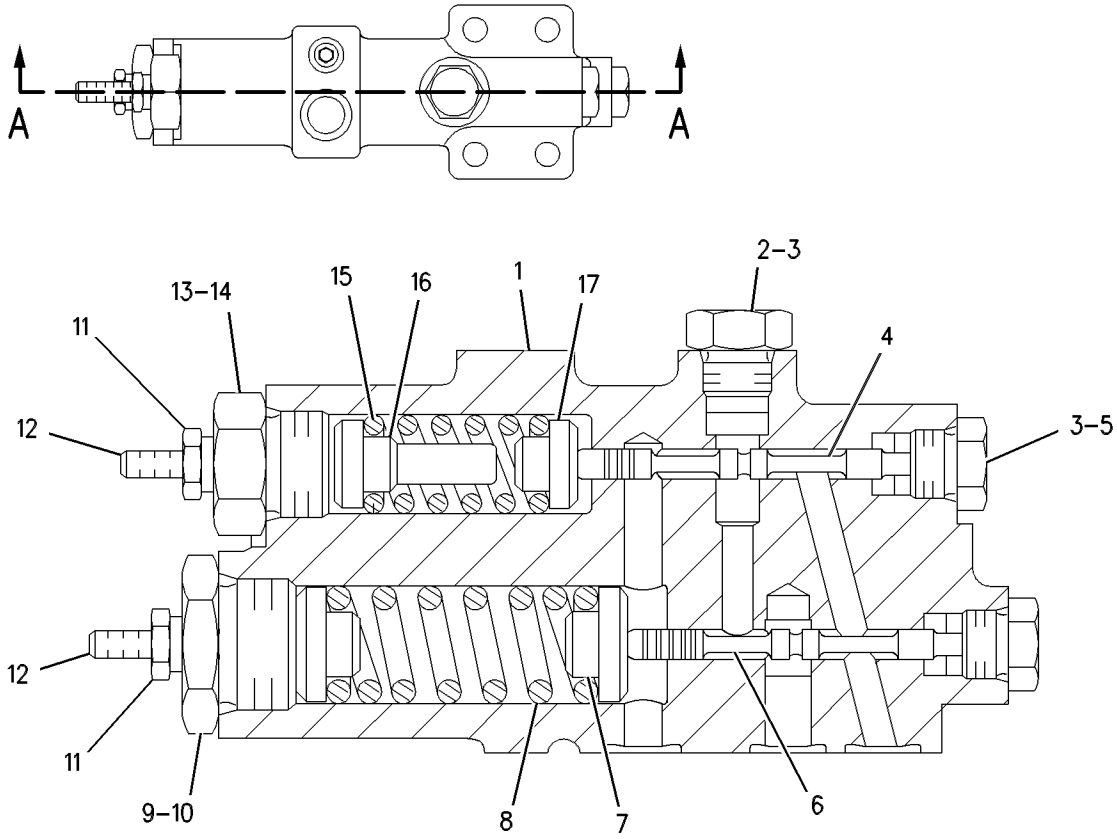

SECTION A-A

GRAPHIC #1 **<END>** g00346403

129-8222 VALVE GP-RELIEF–STEERING CYLINDER CROSSOVER

S/N: A7G1-UP

PART OF 133-1728, 142-3996 VALVE GP-STEERING

ALSO AN ATTACHMENT

SMCS-4322, 5069, 7428 **i00775450**

NOTE	REF NO	GRAPHIC REF	PART NUMBER	QTY	PART NAME 1 2 3 4 5 6 (PRODUCT LEVEL)	SEE PAGE
	1	1	**2M-9780**	1	SEAL-O-RING	
	2	1	**6E-0410**	1	SEAL-O-RING	
	3	1	**5P-2199**	2	RING-BACKUP	

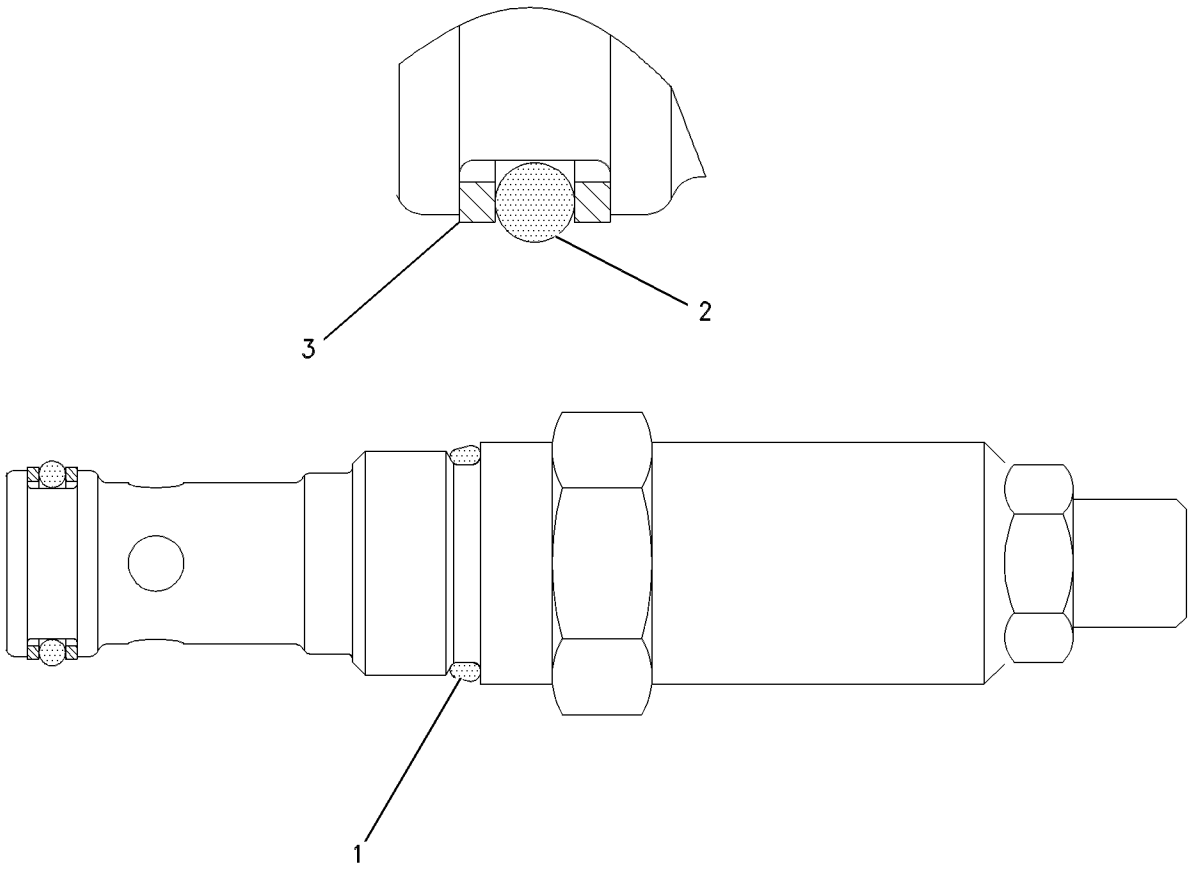

GRAPHIC #1 **<END>** g00357635

132-5258 VALVE GP-RELIEF–PUMP BACKUP

S/N: A7G1-UP

PART OF 133-1728, 142-3996 VALVE GP-STEERING

ALSO AN ATTACHMENT

SMCS-4322, 5069, 7428 **i00764941**

NOTE	REF NO	GRAPHIC REF	PART NUMBER	QTY	PART NAME 1 2 3 4 5 6 (PRODUCT LEVEL)	SEE PAGE
	1	1	**7X-4776**	2	RING-BACKUP	
	2	1	**8C-3097**	1	SEAL-O-RING	
	3	1	**3K-0360**	1	SEAL-O-RING	
					AVAILABLE REPAIR KIT(S):	
			6E-4753	1	KIT-SEAL	

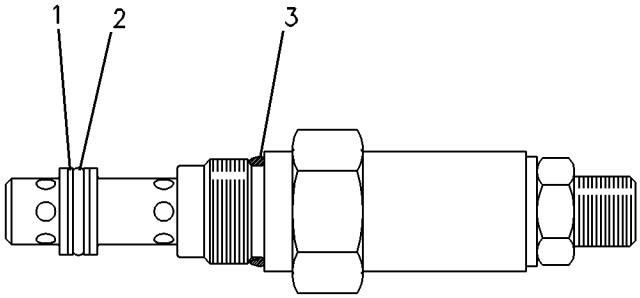

GRAPHIC #1 **<END>** g00119845

STEERING SYSTEM

141-2597 VALVE GP-SECONDARY STEERING

S/N: A7G1-UP
PART OF 236-9007 LINES GP-SECONDARY STEERING
AN ATTACHMENT

SMCS-4339 **i00969857**

NOTE	REF NO	GRAPHIC REF	PART NUMBER	QTY	PART NAME 1 2 3 4 5 6 (PRODUCT LEVEL)	SEE PAGE
	1	1	**2S-2596**	2	SPRING	
	2	1	**100-8010**	2	VALVE-CHECK	
	3	1	**100-8011**	2	PLUG	
M	4	1	**8T-4136**	4	BOLT (M10X1.5X25-MM)	
	5	1	**3J-7479**	1	COVER	
	6	1	**4J-0519**	1	SEAL-O-RING	
	7	1	**7M-8485**	2	SEAL-O-RING	
	8	1	**8T-4121**	4	WASHER-HARD (11X21X2.5-MM THK)	

M-METRIC PART

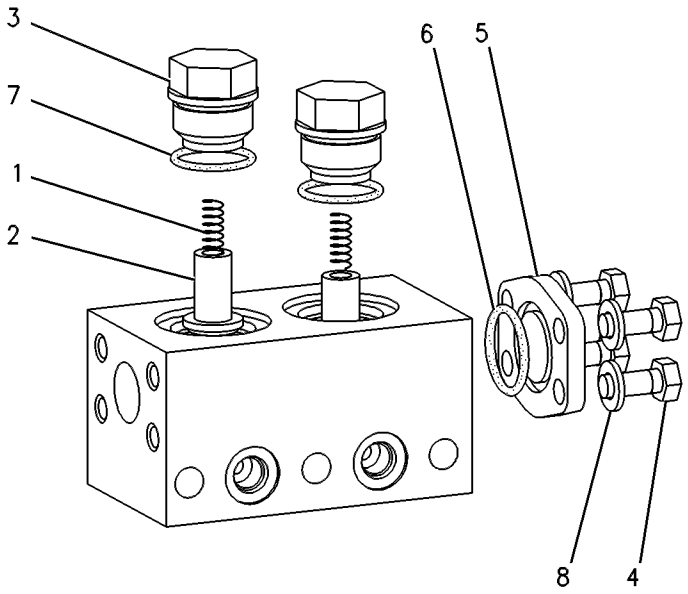

GRAPHIC #1 **<END>** g00130458

STEERING SYSTEM

4T-1860 VALVE GP-SHUTTLE

S/N: A7G1-UP
BALL RESOLVER
PART OF 133-1728 VALVE GP-STEERING
AN ATTACHMENT

SMCS-4289 **i02319592**

NOTE	REF NO	GRAPHIC REF	PART NUMBER	QTY	PART NAME 1 2 3 4 5 6 (PRODUCT LEVEL)	SEE PAGE
	1	1	**6V-5586**	1	SEAL-O-RING	
	2	1	**4T-5070**	2	RING-BACKUP	
	3	1	**4T-5071**	2	RING-BACKUP	
	4	1	**8C-3085**	1	SEAL-O-RING	
	5	1	**3J-1907**	1	SEAL-O-RING	
	6	1	**1M-6718**	1	BALL	
	7	1	**4T-0925**	1	SEAT	
	8	1	**4T-0928**	1	VALVE	

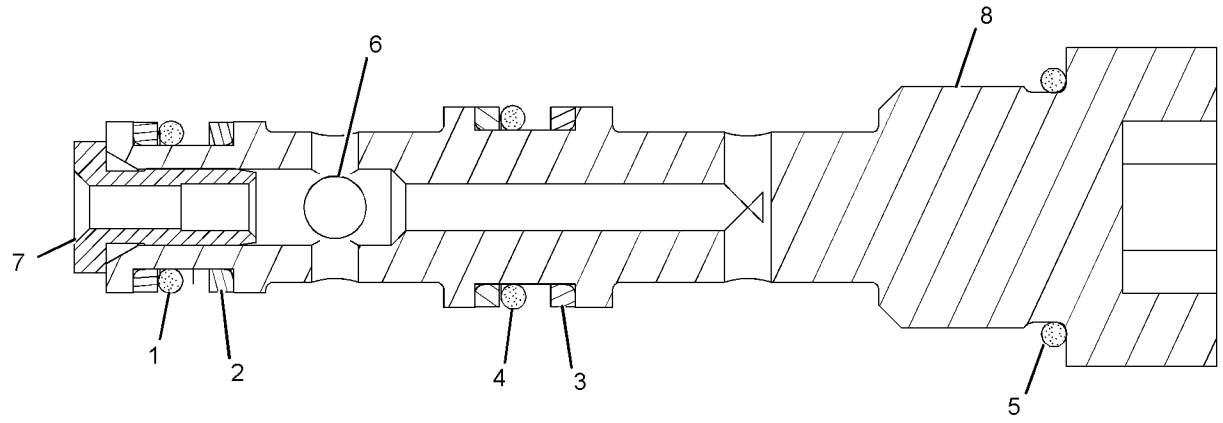

GRAPHIC #1 **<END>** g01159672

8J-6875 VALVE GP-SHUTTLE

S/N: A7G1-UP
PART OF 236-8986 LINES GP-STEERING
AN ATTACHMENT

SMCS-4289 **i02249690**

NOTE	REF NO	GRAPHIC REF	PART NUMBER	QTY	PART NAME 1 2 3 4 5 6 (PRODUCT LEVEL)	SEE PAGE
	1	1	**4T-9905**	2	ADAPTER	
	2	1	**2M-9780**	2	SEAL-O-RING	
	3	1	**4B-9784**	1	BALL	

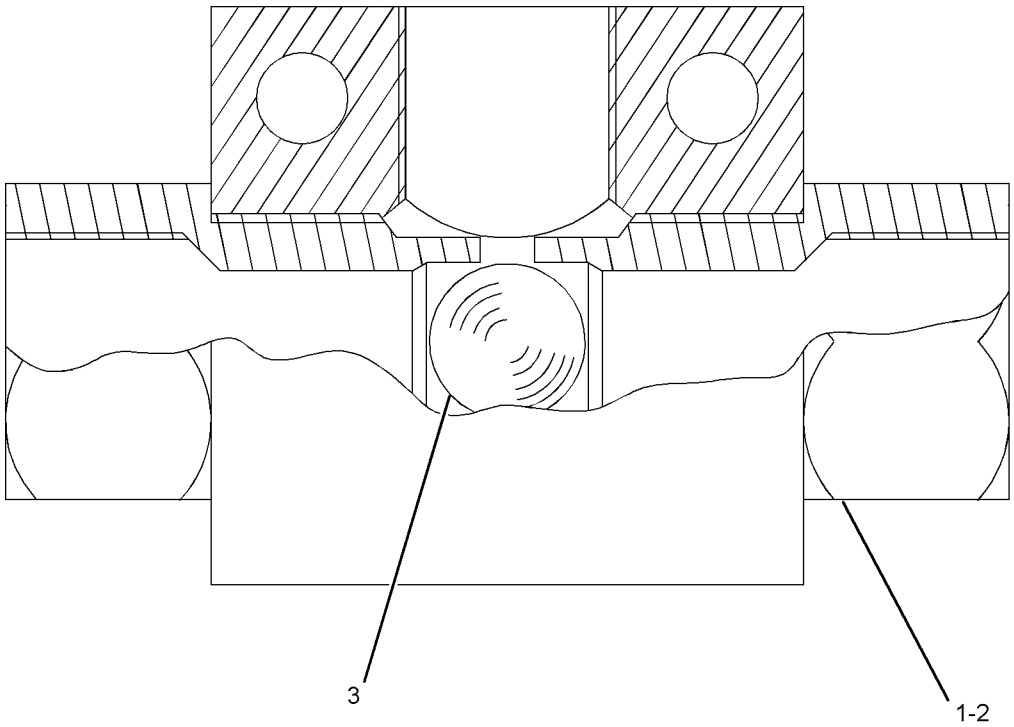

GRAPHIC #1 **<END>** g01047576

133-1728 VALVE GP-STEERING—COMMAND CONTROL STEERING

S/N: A7G1-UP

PART OF 236-8986 LINES GP-STEERING

AN ATTACHMENT

SMCS-4307 **i01158318**

NOTE	REF NO	GRAPHIC REF	PART NUMBER	QTY	PART NAME 1 2 3 4 5 6 (PRODUCT LEVEL)	SEE PAGE
	1	1	**2S-2596**	2	SPRING	
	4	1	**107-0071**	1	RETAINER	
Y	5	1	**114-1267**	1	VALVE GP-PRESSURE REDUCING	506
	7	1	**115-6901**	1	COVER	
	8	1	**115-9976**	1	RETAINER	
	9	1	**115-9978**	2	PLUG AS	
					(EACH INCLUDES)	
		1	**7M-5130**	1	PIN-SPRING	
	10	1	**126-5484**	1	SPRING	
Y	11	1	**129-8222**	1	VALVE GP-RELIEF (STEERING CYLINDER CROSSOVER)	508
Y	12	1	**132-5258**	1	VALVE GP-RELIEF (PUMP BACKUP)	509
	14	1	**2M-9780**	1	SEAL-O-RING	
	15	1	**2P-8421**	1	ADAPTER-O-RING	
	16	1	**3D-2824**	1	SEAL-O-RING	
	17	1	**3D-4603**	2	PLUG-PIPE	
	18	1	**3J-1907**	4	SEAL-O-RING	
	19	1	**3J-7354**	17	SEAL-O-RING	
	20	1	**3K-0360**	2	SEAL-O-RING	
	21	1	**4B-4280**	1	WASHER (13.5X27X2.5-MM THK)	
	22	1	**4B-9782**	2	BALL	
	23	1	**4F-7952**	1	SEAL-O-RING	
Y	24	1	**4T-1860**	1	VALVE GP-SHUTTLE	511
B	25	1	**6J-6516**	8	SHIM (0.01-IN THK)	
M	26	1	**6V-5195**	1	BOLT-SOCKET HEAD (M8X1.25X50-MM)	
	27	1	**8C-3206**	8	FLANGE-HALF	
	28	1	**8F-9206**	1	SEAL-O-RING	
	29	1	**8T-4121**	16	WASHER-HARD (11X21X2.5-MM THK)	
M	30	1	**8T-4196**	16	BOLT (M10X1.5X35-MM)	
	31	1	**8T-4224**	1	WASHER-HARD (8.8X16X2-MM THK)	
M	32	1	**8T-5005**	4	BOLT (M10X1.5X70-MM)	
	34	1	**9S-4182**	1	PLUG	
	35	1	**9S-4191**	4	PLUG	
	36	1	**9S-8002**	16	PLUG	
	37	1	**9S-8006**	1	PLUG	

B-USE AS REQUIRED
M-METRIC PART
Y-SEPARATE ILLUSTRATION

133-1728 VALVE GP-STEERING *(contd.)* i01158318

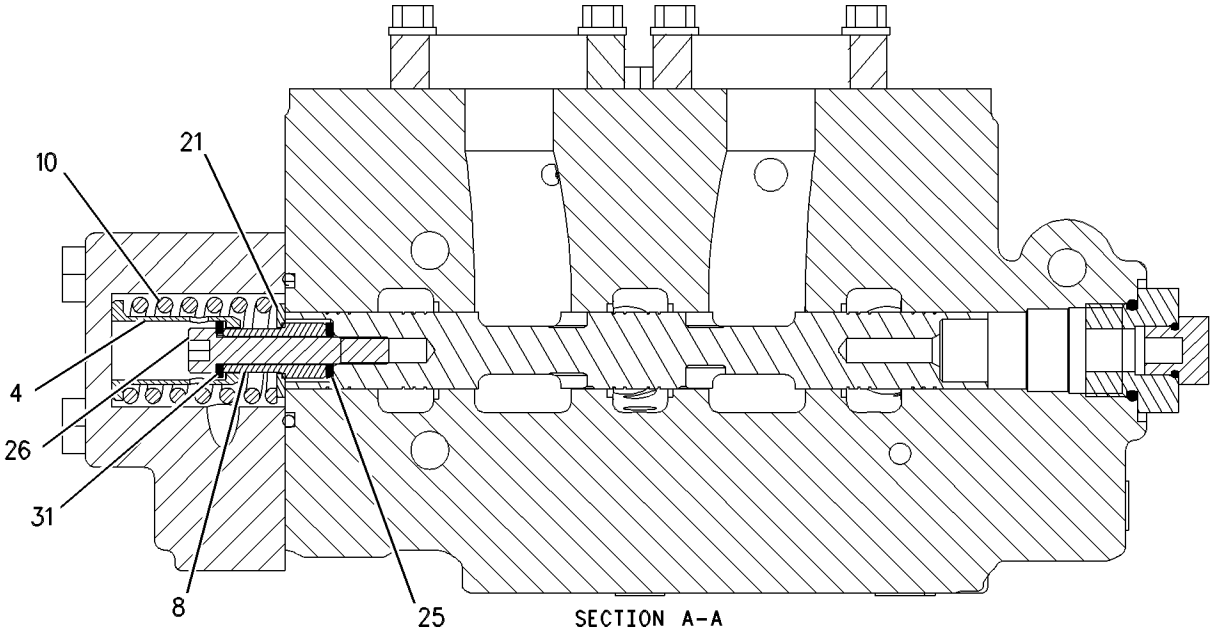

SECTION A-A

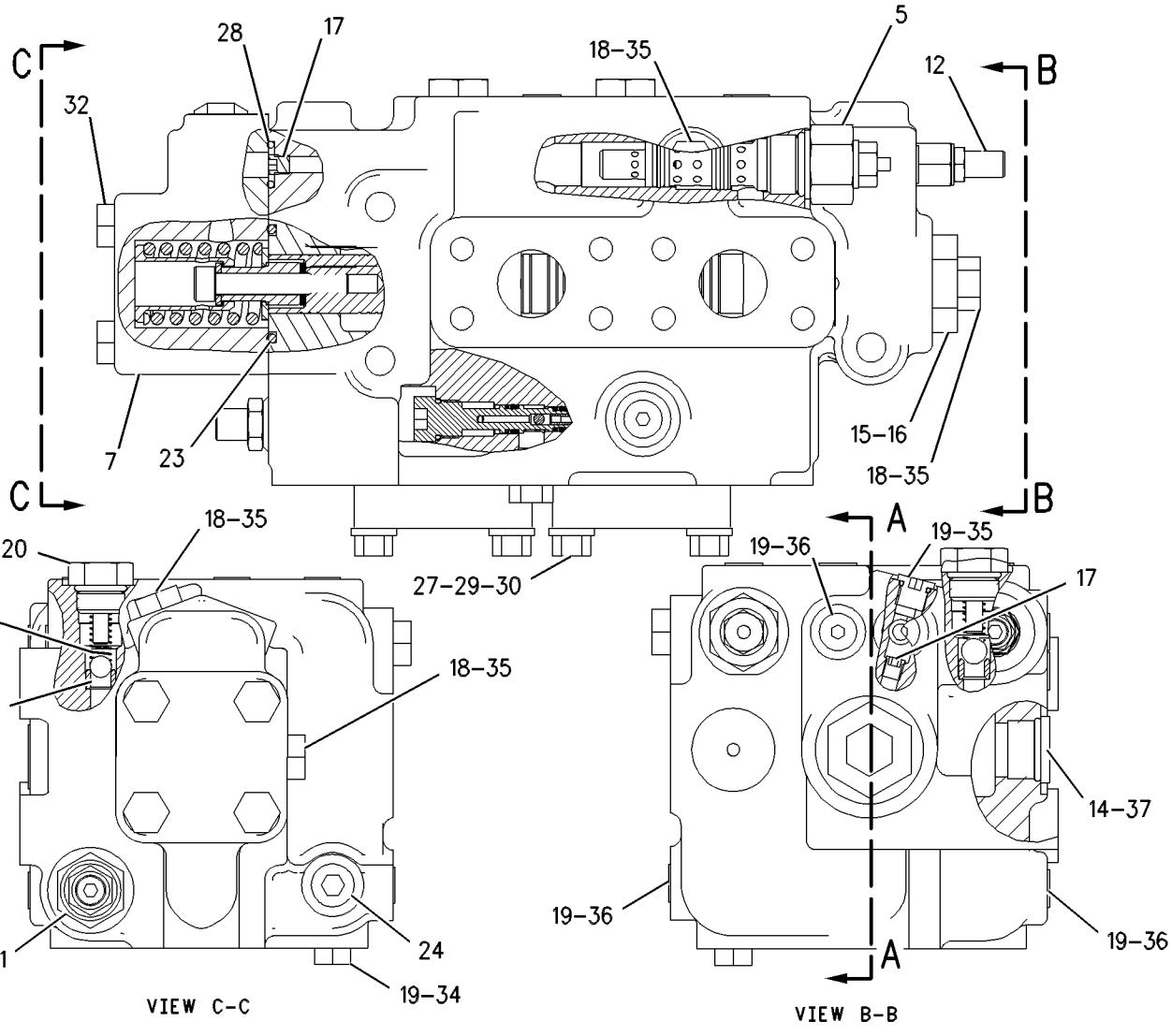

VIEW C-C

VIEW B-B

GRAPHIC #1 **<END>** g00491324

STEERING SYSTEM

142-3996 VALVE GP-STEERING—HMU STEERING

S/N: A7G1-UP

PART OF 236-8985 LINES GP-STEERING

SMCS-4307 **i02412047**

NOTE	REF NO	GRAPHIC REF	PART NUMBER	QTY	PART NAME 1 2 3 4 5 6 (PRODUCT LEVEL)	SEE PAGE
Y	1	1	**132-5258**	1	VALVE GP-RELIEF (PUMP BACKUP)	509
M	2	1	**8T-6466**	2	BOLT (M10X1.5X60-MM)	
	3	1	**8F-9206**	7	SEAL-O-RING	
M	4	1	**8T-4196**	18	BOLT (M10X1.5X35-MM)	
	5	1	**5J-2974**	2	SEAL-O-RING	
	6	1	**2S-2596**	4	SPRING	
	7	1	**4B-9782**	4	BALL	
	8	1	*183-7263*	11	PLUG AS	
					(EACH INCLUDES)	
		1	**3J-7354**	1	SEAL-O-RING	
		1	**9S-8002**	1	PLUG	
	10	1	**142-3995**	1	STEM	
	11	1	*148-8408*	1	PLUG AS	
		1	**3D-2824**	1	SEAL-O-RING	
		1	**9S-4183**	1	PLUG	
	12	1	**3J-1907**	2	SEAL-O-RING	
Y	13	1	**129-8222**	1	VALVE GP-RELIEF (STEERING CYLINDER CROSSOVER)	508
	15	1	**8C-3206**	8	FLANGE-HALF	
	16	1	**9S-6154**	2	PLUG AS	
					(EACH INCLUDES)	
		1	**3J-1907**	1	SEAL-O-RING	
		1	**5H-3193**	1	PIN-SPRING	
	17	1	**9T-7220**	1	COVER	
	18	1	**4J-0520**	1	SEAL-O-RING	
	19	1	**8T-4121**	16	WASHER-HARD (11X21X2.5-MM THK)	
M	20	1	**8T-5005**	4	BOLT (M10X1.5X70-MM)	
	21	1	**6T-6052**	1	PLUG-ORIFICE	
	22	1	**6E-5397**	1	VALVE GP-SELECTOR (STEERING)	
		1	**6E-5289**	2	CONNECTOR	
		1	**3K-0360**	2	SEAL-O-RING	
		1	**5H-3193**	2	PIN-SPRING	
	23	1	*148-8411*	1	PLUG AS	
		1	**3K-0360**	1	SEAL-O-RING	
		1	**9S-4185**	1	PLUG	
B	25	1	**6J-6516**	8	SHIM (0.01-IN THK)	
B	26	1	**6J-6517**	1	SHIM (0.12-MM THK)	
	27	1	**7J-4321**	1	RETAINER-SPRING	
	28	1	**126-8473**	1	SPRING	
M	29	1	**3E-8025**	1	BOLT-SOCKET HEAD (M8X1.25X50-MM)	
	30	1	**9M-1974**	1	WASHER-HARD (8.8X16X2-MM THK)	
	31	1	**6J-6506**	1	SPACER	
	32	1	**9T-8672**	1	RETAINER	
	33	1	**164-5619**	1	PLUG AS	
		1	**2M-9780**	1	SEAL-O-RING	
	35	1	**8J-6815**	2	PLUG-ORIFICE	
	36	1	**9J-9821**	4	SEAT	

B-USE AS REQUIRED
M-METRIC PART
Y-SEPARATE ILLUSTRATION

142-3996 VALVE GP-STEERING *(contd.)* i02412047

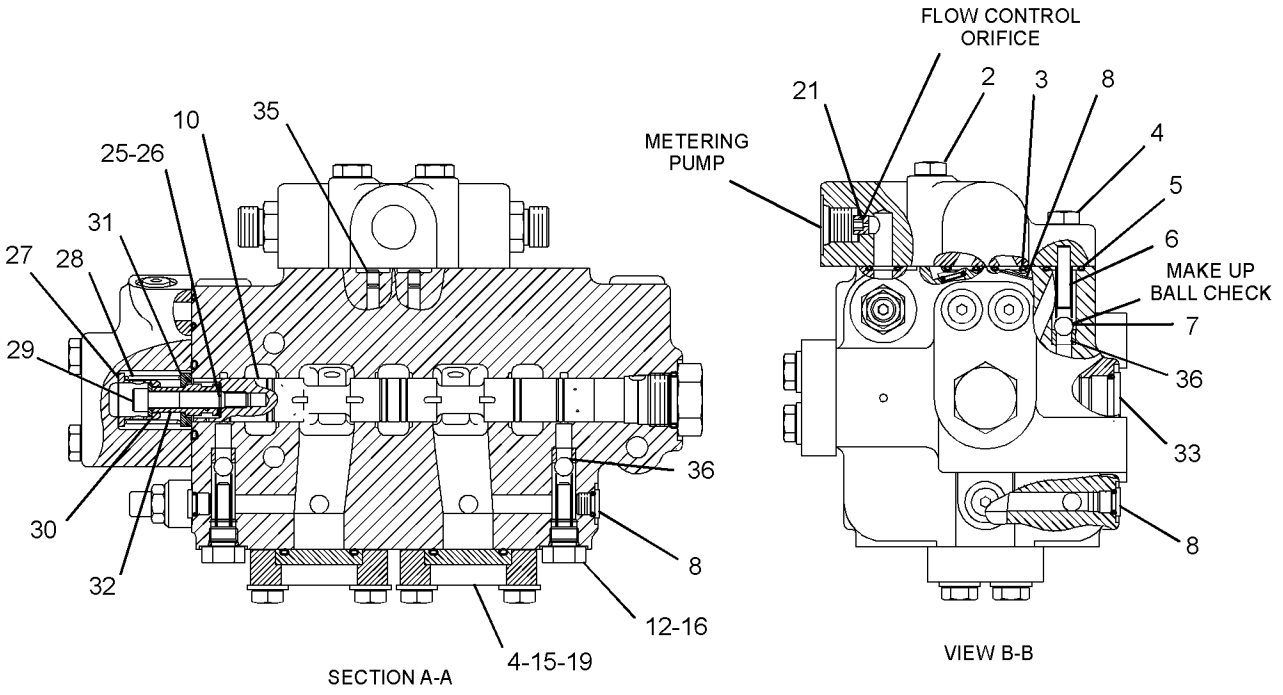

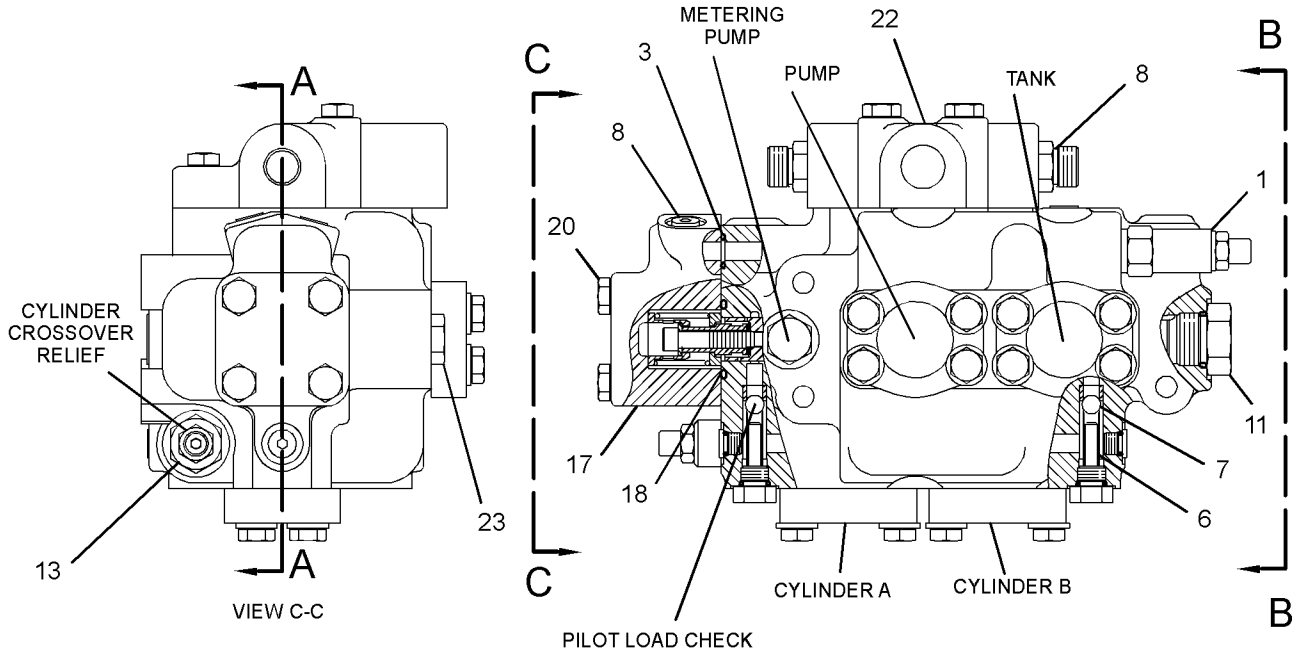

GRAPHIC #1 **<END>** g01206149

8J-1553 VALVE GP-STEERING NEUTRALIZER

S/N: A7G1-UP
PART OF 236-8986 LINES GP-STEERING
AN ATTACHMENT

SMCS-4330 **i01147334**

NOTE	REF NO	GRAPHIC REF	PART NUMBER	QTY	PART NAME 1 2 3 4 5 6 (PRODUCT LEVEL)	SEE PAGE
	1	1	**1U-3142**	1	BOOT	
	2	1	**9S-6155**	1	PLUG AS	
		1	**1J-9671**	1	SEAL-O-RING	
	3	1	**1A-8096**	1	SPRING-VALVE	
	4	1	**4B-9782**	1	BALL	
	5	1	**7B-8194**	1	SPRING	
	6	1	**9J-0477**	1	PLUG	
		1	**4K-1388**	1	SEAL-O-RING	
	7	1	**8J-1552**	1	VALVE GP-STEERING NEUTRALIZER	
	8	1	**3J-4407**	1	SEAL-LIP TYPE	
	9	1	**6J-4608**	1	BOLT-SOCKET HEAD	
		1	**3B-4505**	1	LOCKWASHER	
		1	**6B-6122**	1	WASHER	

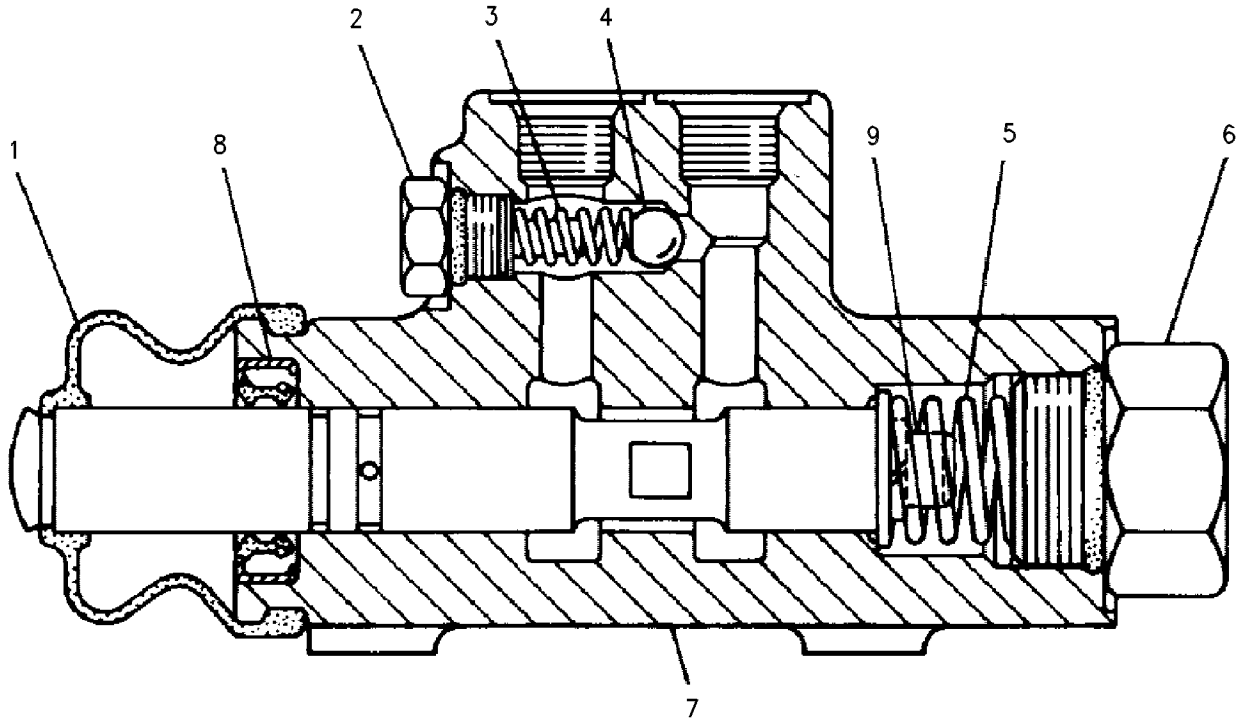

GRAPHIC #1 **<END>** g00430859

146-7571 VALVE GP-STEERING NEUTRALIZER–HMU STEERING

S/N: A7G1-UP

PART OF 236-8985 LINES GP-STEERING

SMCS-4330 **i01138063**

NOTE	REF NO	GRAPHIC REF	PART NUMBER	QTY	PART NAME 1 2 3 4 5 6 (PRODUCT LEVEL)	SEE PAGE
	1	1	**3D-2824**	1	SEAL-O-RING	
	2	1	**6J-4568**	1	BOOT	
	3	1	**5F-9035**	1	SPRING	
	4	1	**6V-1949**	1	SEAL-LIP TYPE	

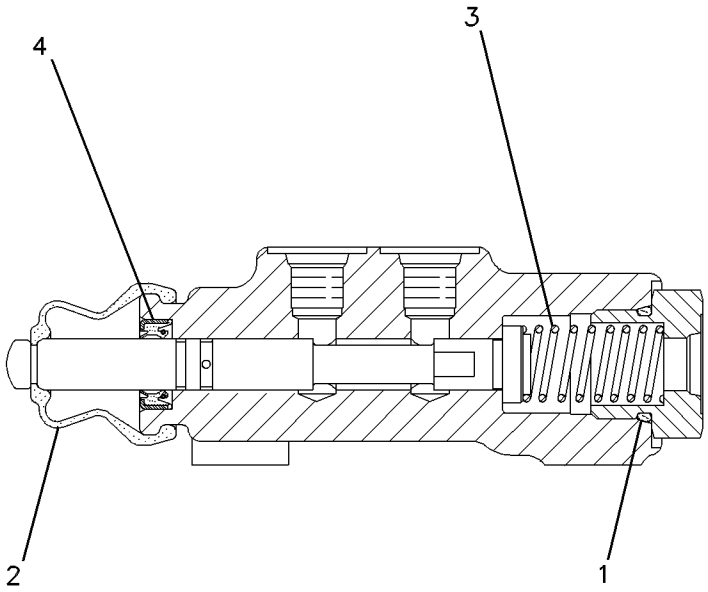

GRAPHIC #1 **<END>** g00494093

246-2053 ACCUMULATOR & MTG GP-RIDE CONT

S/N: A7G1-UP
PART OF 236-9096 CONTROL & LINES GP-RIDE
AN ATTACHMENT

SMCS-5077 **i02389820**

NOTE	REF NO	GRAPHIC REF	PART NUMBER	QTY	PART NAME 1 2 3 4 5 6 (PRODUCT LEVEL)	SEE PAGE
	1	1	**270-2636**	2	BRACKET	
Y	2	1	*245-2974*	1	ACCUMULATOR GP-RIDE CONTROL (CHARGED)	522
	3	1	*148-8355*	1	ELBOW AS	
		1	**5K-9090**	1	SEAL-O-RING	
		1	**6V-9005**	1	ELBOW	
		1	**7M-8485**	1	SEAL-O-RING	
	4	1	**7X-7729**	6	WASHER (11X25X3-MM THK)	
M	5	1	**8T-4136**	6	BOLT (M10X1.5X25-MM)	
	6	1	**222-2367**	1	VALVE-GAS	

M-METRIC PART
Y-SEPARATE ILLUSTRATION

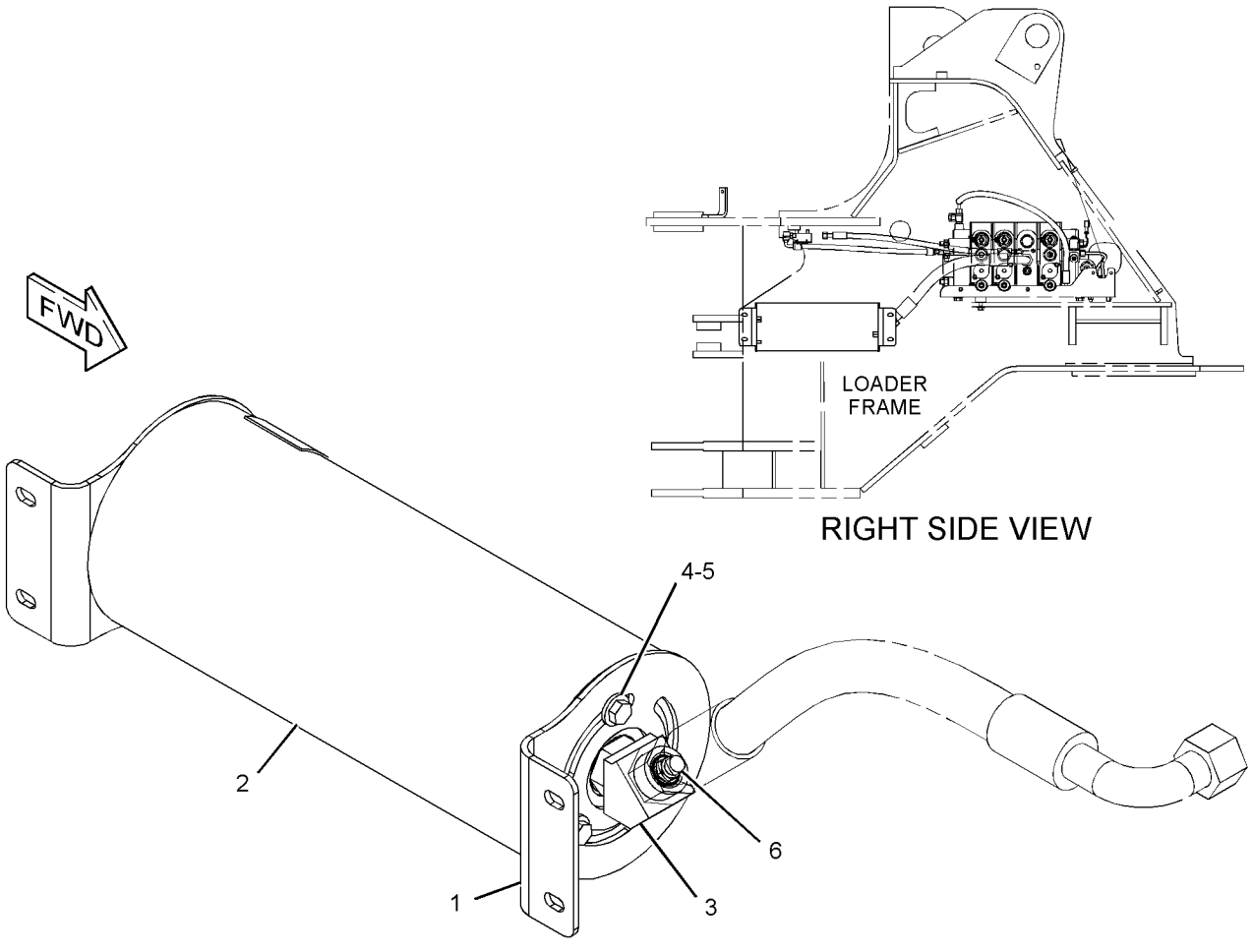

GRAPHIC #1 **<END>** g01192514

HYDRAULIC SYSTEM

245-2975 ACCUMULATOR GP-PILOT OIL–CHARGED–

DEAD ENGINE, LIFT ARM LOWER

S/N: A7G1-UP

PART OF 236-9035, 236-9095, 236-9098, 256-3565 VALVE & MTG GP-MAIN CONTROL

FIELD REPLACEMENT ORDER 245-6566–PAGE 521

ALSO AN ATTACHMENT

SMCS-5077 **i02215835**

NOTE	REF NO	GRAPHIC REF	PART NUMBER	QTY	PART NAME 1 2 3 4 5 6 (PRODUCT LEVEL)	SEE PAGE
					(NO SERVICED PARTS)	

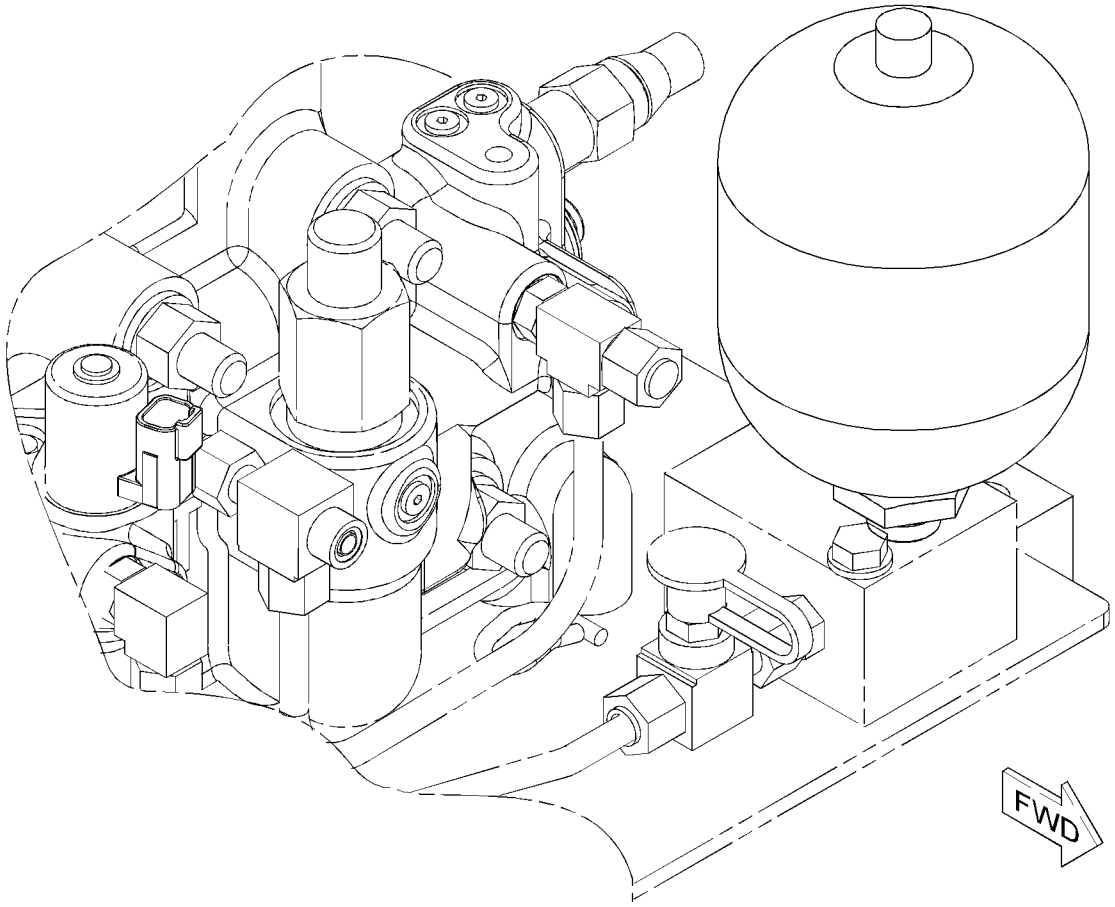

GRAPHIC #1 **<END>** g01114723

245-6566 ACCUMULATOR GP-PILOT OIL–UNCHARGED–

DEAD ENGINE, LIFT ARM LOWER

S/N: A7G1-UP

FIELD REPLACEMENT FOR 245-2975–PAGE 520

SMCS-5077 **i02215836**

NOTE	REF NO	GRAPHIC REF	PART NUMBER	QTY	PART NAME 1 2 3 4 5 6 (PRODUCT LEVEL)	SEE PAGE
					(NO SERVICED PARTS)	

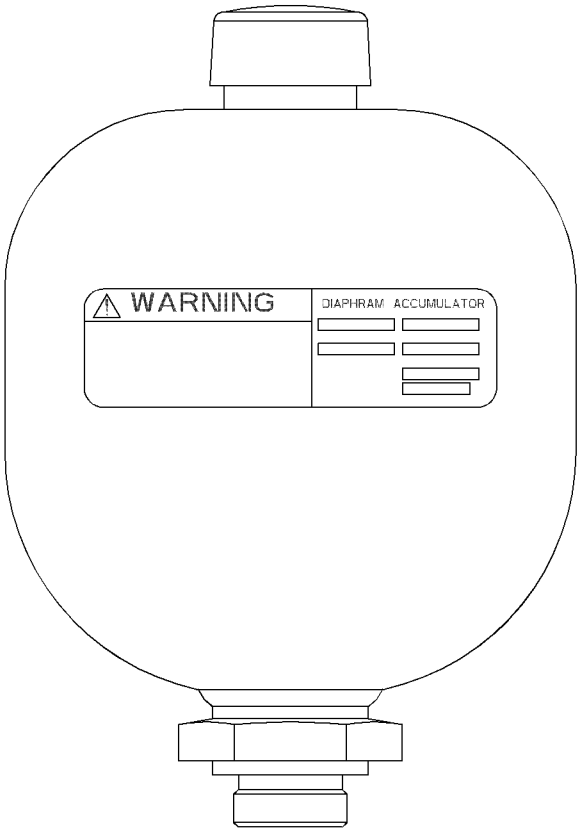

GRAPHIC #1 **<END>** g01116272

245-2974 ACCUMULATOR GP-RIDE CONTROL–CHARGED

S/N: A7G1-UP
PART OF 246-2053 ACCUMULATOR & MTG GP-RIDE CONT
FIELD REPLACEMENT ORDER 245-6564–PAGE 523
AN ATTACHMENT

SMCS-5077 **i02249684**

NOTE	REF NO	GRAPHIC REF	PART NUMBER	QTY	PART NAME 1 2 3 4 5 6 (PRODUCT LEVEL)	SEE PAGE
					AVAILABLE REPAIR KIT(S):	
			170-0494	1	KIT-SEAL	

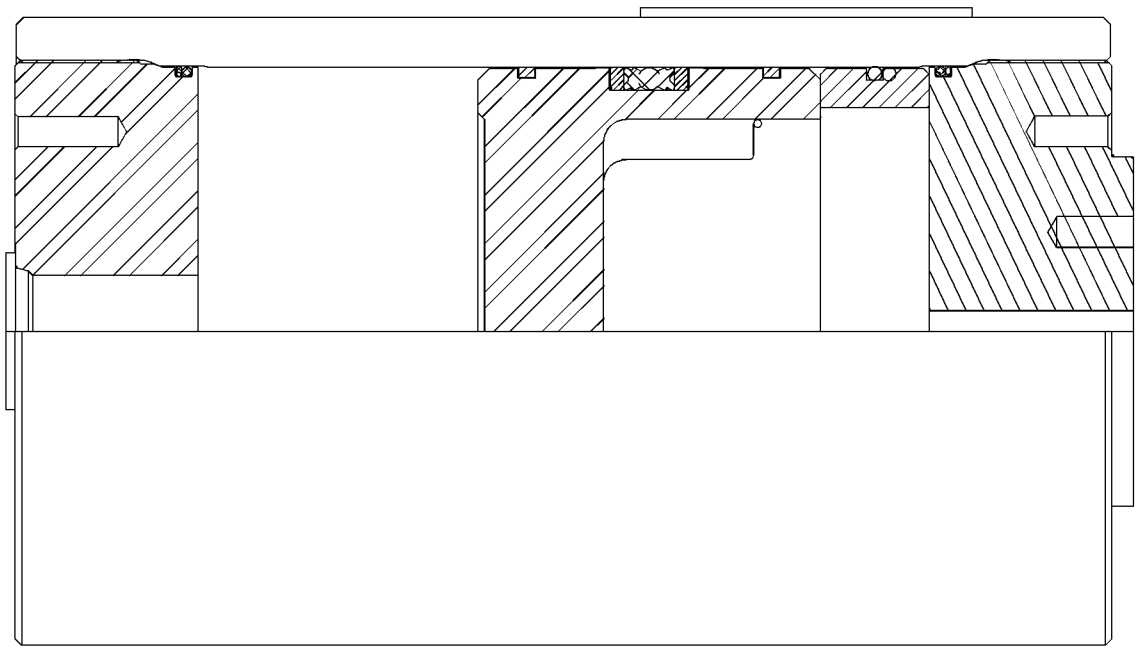

GRAPHIC #1 **<END>** g01116649

245-6564 ACCUMULATOR GP-RIDE CONTROL—UNCHARGED

S/N: A7G1-UP

PART OF 246-2053 ACCUMULATOR & MTG GP-RIDE CONT

FIELD REPLACEMENT FOR 245-2974—PAGE 522

SMCS-5077 **i02251750**

NOTE	REF NO	GRAPHIC REF	PART NUMBER	QTY	PART NAME 1 2 3 4 5 6 (PRODUCT LEVEL)	SEE PAGE
	1	1	**222-2367**	1	VALVE-GAS	
	2	1	**5P-3779**	1	TAG-NOTICE (CYLINDER PRESSURE)	
					AVAILABLE REPAIR KIT(S):	
			170-0494	1	KIT-SEAL	

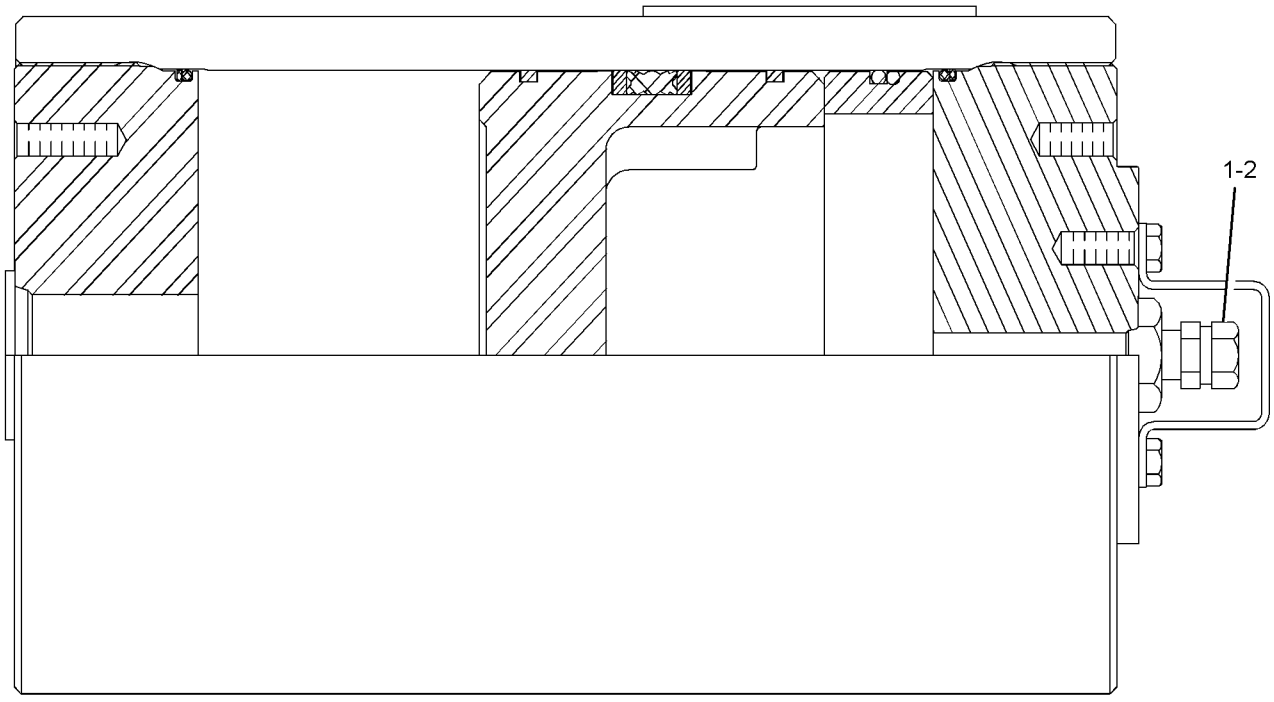

GRAPHIC #1 **<END>** g01133884

HYDRAULIC SYSTEM

236-9096 CONTROL & LINES GP-RIDE

S/N: A7G1-UP
PART OF 236-9094, 236-9097 CONTROL AR-RIDE
AN ATTACHMENT

SMCS-5004 **i02388795**

NOTE	REF NO	GRAPHIC REF	PART NUMBER	QTY	PART NAME 1 2 3 4 5 6 (PRODUCT LEVEL)	SEE PAGE
	1	1	**7J-5311**	1	PLATE-WARNING (HIGH PRESSURE CYLINDER)	
I	2	1	**239-4857**	1	HOSE AS	
Y	3	1	*246-2053*	1	ACCUMULATOR & MTG GP-RIDE CONT	519
	4	1	**7X-7729**	4	WASHER (11X25X3-MM THK)	
M	5	1	**8T-4195**	4	BOLT (M10X1.5X30-MM)	

I-REFER TO HYDRAULIC INFORMATION SYSTEM
M-METRIC PART
Y-SEPARATE ILLUSTRATION

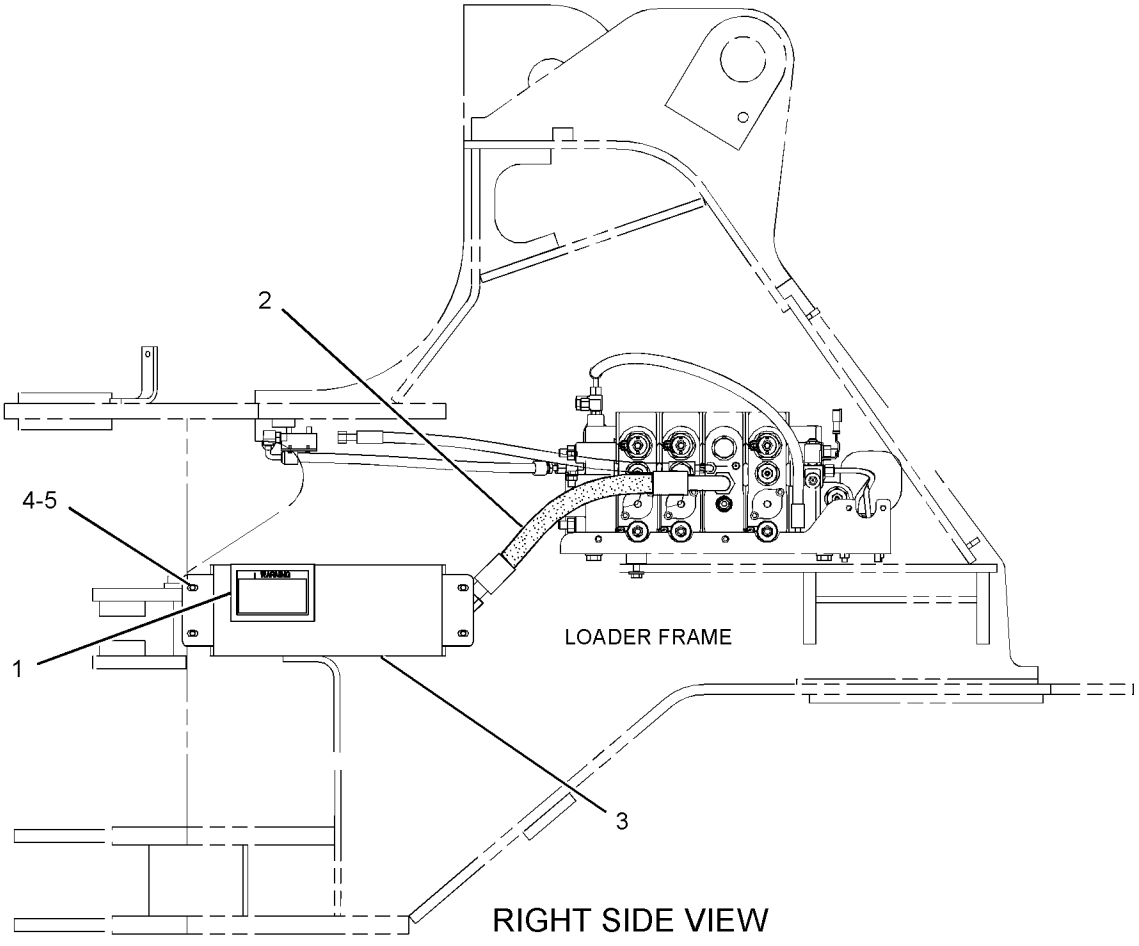

GRAPHIC #1 **<END>** g01202452

236-9094 CONTROL AR-RIDE–2-VALVE

S/N: A7G1-UP
AN ATTACHMENT

SMCS-5004 **i02242390**

NOTE	PART NUMBER	QTY	PART NAME 1 2 3 4 5 6 (PRODUCT LEVEL)	SEE PAGE
Y	*236-9096*	1	CONTROL & LINES GP-RIDE	524
Y	*252-5917*	1	SWITCH GP-RIDE CONTROL	209
Y	*236-9095*	1	VALVE & MTG GP-MAIN CONTROL (2-FUNCTION, WITH RIDE CONTROL)	596

Y-SEPARATE ILLUSTRATION

<END>

236-9097 CONTROL AR-RIDE–3-VALVE

S/N: A7G1-UP
AN ATTACHMENT

SMCS-5004 **i02242685**

NOTE	PART NUMBER	QTY	PART NAME 1 2 3 4 5 6 (PRODUCT LEVEL)	SEE PAGE
Y	*236-9096*	1	CONTROL & LINES GP-RIDE	524
Y	*252-5917*	1	SWITCH GP-RIDE CONTROL	209
Y	**236-9098**	1	VALVE & MTG GP-MAIN CONTROL (3-FUNCTION, WITH RIDE CONTROL)	599

Y-SEPARATE ILLUSTRATION

<END>

HYDRAULIC SYSTEM

243-1089 CONTROL GP-ELECTROHYDRAULIC–2-FUNCTION

S/N: A7G1-UP

PART OF 237-2572, 237-2573 CAB AR-ENCLOSED ROPS

ALSO AN ATTACHMENT

SMCS-5702 **i02413617**

NOTE	REF NO	GRAPHIC REF	PART NUMBER	QTY	PART NAME 1 2 3 4 5 6 (PRODUCT LEVEL)	SEE PAGE
	1	1	**4E-8722**	4	NUT	
	2	1	**140-5945**	1	FILM-IDENTIFICATION (HORN)	
	3	1	**189-2077**	1	FILM-CONTROL (LIFT, FLOAT, LOWER)	
	4	1	**189-2078**	1	FILM-CONTROL (DUMP, TILT BACK)	
	5	1	**189-2079**	1	FILM-INSTRUCTION (MAINTENANCE)	
Y	6	1	**243-3166**	1	CONTROL GP-HANDLE (TILT)	534
Y	6A	1	**243-3166**	1	CONTROL GP-HANDLE (LIFT)	534
	7	1	**245-6447**	1	CUSHION AS	
	8	1	**247-4184**	1	FILM-TRANSMISSION (DOWNSHIFT SWITCH)	
	9	1	**247-4969**	1	PLATE	
	10	1	**262-5236**	1	COVER	
	11	1	**262-5239**	1	HOUSING AS	
	12	1	**262-5240**	1	PLATE AS	
M	13	1	**6R-7653**	2	SCREW (M6X1X15-MM)	
	14	1	**8R-3695**	2	GROMMET	
	15	1	**8T-4205**	2	WASHER-HARD (7.2X14.5X2-MM THK)	
M	16	1	**8T-4970**	2	BOLT (M6X1X14-MM)	
	17	1	**9X-2038**	4	WASHER (7X19X2-MM THK)	
M	18	1	**9X-2044**	17	SCREW-TRUSS HEAD (M6X1X16-MM)	
M	19	1	**9X-2045**	4	SCREW-TRUSS HEAD (M6X1X20-MM)	
D	20	1	**6V-3987**		SEAL (0.062-M EA)	

D-ORDER BY THE METER
M-METRIC PART
Y-SEPARATE ILLUSTRATION

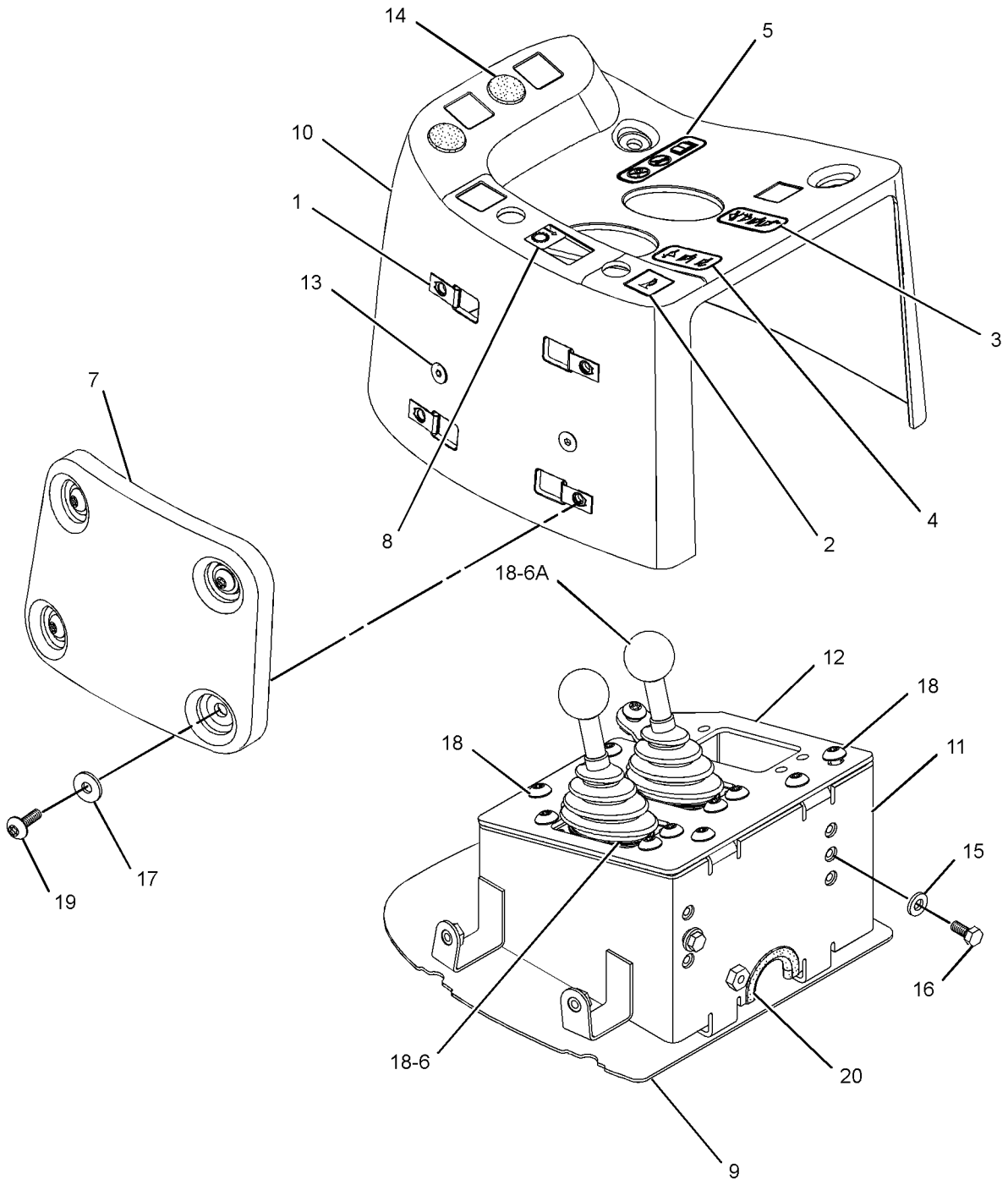

GRAPHIC #1 **<END>** g01202207

HYDRAULIC SYSTEM

243-1940 CONTROL GP-ELECTROHYDRAULIC—3-FUNCTION

S/N: A7G1-UP

PART OF 246-5304 HYDRAULIC AR-3 VALVE

AN ATTACHMENT

SMCS-5702 **i02414847**

NOTE	REF NO	GRAPHIC REF	PART NUMBER	QTY	PART NAME 1 2 3 4 5 6 (PRODUCT LEVEL)	SEE PAGE
	1	1	**4E-8722**	4	NUT	
	2	1	**140-5945**	1	FILM-IDENTIFICATION (HORN)	
	3	1	**189-2077**	1	FILM-CONTROL (LIFT, FLOAT, LOWER)	
	4	1	**189-2078**	1	FILM-CONTROL (DUMP, TILT BACK)	
	5	1	**189-2079**	1	FILM-INSTRUCTION (MAINTENANCE)	
	6	1	**201-5563**	1	FILM-IDENTIFICATION (AUXILIARY HYDRAULIC)	
Y	7	1	**243-3166**	1	CONTROL GP-HANDLE (TILT)	534
Y	7A	1	**243-3166**	1	CONTROL GP-HANDLE (LIFT)	534
Y	7B	1	**243-3166**	1	CONTROL GP-HANDLE (AUXILIARY)	534
	8	1	**245-6447**	1	CUSHION AS	
	9	1	**247-4184**	1	FILM-TRANSMISSION (DOWNSHIFT SWITCH)	
	10	1	**247-4969**	1	PLATE	
	11	1	**262-5237**	1	COVER	
	12	1	**262-5239**	1	HOUSING AS	
	13	1	**262-5240**	1	PLATE AS	
M	14	1	**6R-7653**	2	SCREW (M6X1X15-MM)	
	15	1	**8T-4205**	2	WASHER-HARD (7.2X14.5X2-MM THK)	
M	16	1	**8T-4970**	2	BOLT (M6X1X14-MM)	
	17	1	**9X-2038**	4	WASHER (7X19X2-MM THK)	
M	18	1	**9X-2044**	21	SCREW-TRUSS HEAD (M6X1X16-MM)	
D	19	1	**6V-3987**		SEAL (0.062-M EACH)	
M	20	1	**9X-2045**	4	SCREW-TRUSS HEAD (M6X1X20-MM)	
	21	1	**256-7822**	1	SWITCH AS-ROCKER (3RD FUNCTION SELECT)	
	22	1	**8R-3695**	2	GROMMET	

D-ORDER BY THE METER
M-METRIC PART
Y-SEPARATE ILLUSTRATION

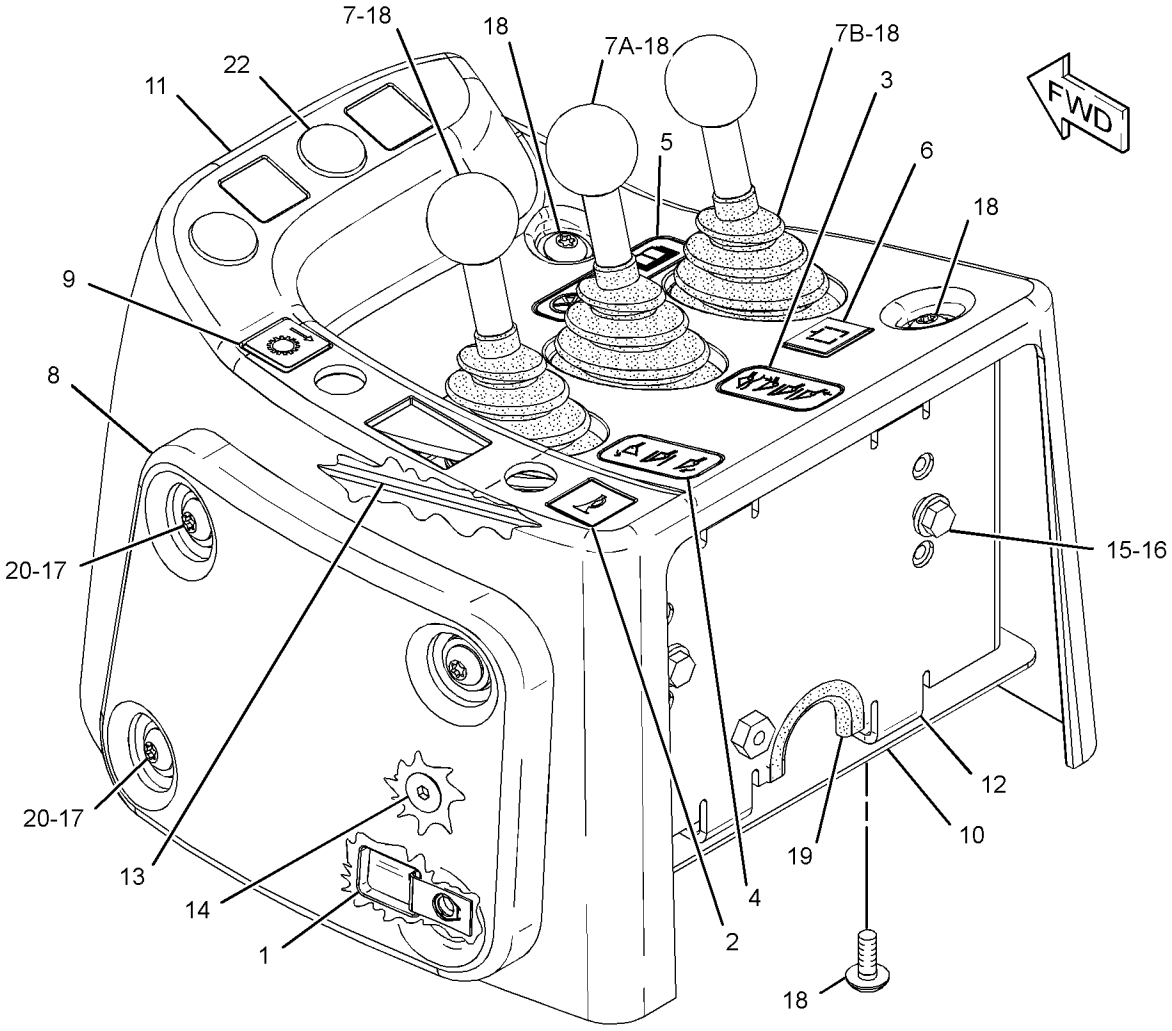

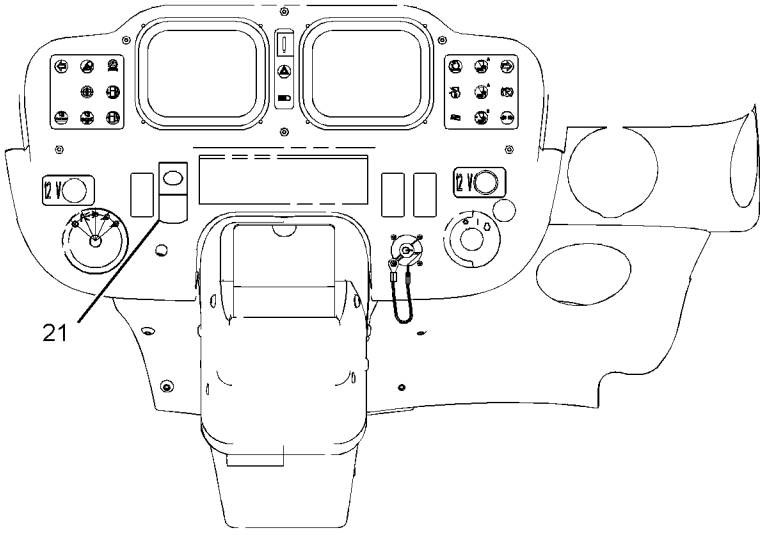

FRONT VIEW
(OPERATORS POSITION)

GRAPHIC #1 **<END>** g01202194

HYDRAULIC SYSTEM

243-1941 CONTROL GP-ELECTROHYDRAULIC–
JOYSTICK, 2-FUNCTION
S/N: A7G1-UP
AN ATTACHMENT

SMCS-5702 **i02415410**

NOTE	REF NO	GRAPHIC REF	PART NUMBER	QTY	PART NAME 1 2 3 4 5 6 (PRODUCT LEVEL)	SEE PAGE
	1	1	**4E-8722**	1	NUT	
	2	1	**7K-1181**	4	STRAP-CABLE	
	3	1	**189-2079**	1	FILM-INSTRUCTION (MAINTENANCE)	
	4	1	**245-6447**	1	CUSHION AS	
Y	5	1	**245-7650**	1	CONTROL GP-JOYSTICK (2-FUNCTION, WITH DOWNSHIFT)	537
	6	1	**245-8335**	1	HARNESS AS-OPERATOR CONTROLS (ELECTROHYDRAULIC, JOYSTICK)	
		1	**155-2255**	2	KIT-CONNECTING PLUG (12-PIN)	
		1	**155-2265**	1	KIT-CONNECTING PLUG (8-PIN)	
		1	**155-2270**	1	KIT-CONNECTING PLUG (2-PIN)	
		1	**155-2274**	1	KIT-CONNECTING PLUG (6-PIN)	
		1	**155-2260**	1	KIT-CONNECTING PLUG (3-PIN)	
					(EACH KIT PLUG INCLUDES PLUG AS AND WEDGE)	
	7	1	**247-4969**	1	PLATE	
	8	1	**254-9149**	1	FILM-CONTROL (JOYSTICK, 2-FCTN, DOWNSHIFT SW)	
	9	1	**262-5238**	1	COVER	
	10	1	**262-5239**	1	HOUSING AS	
	11	1	**263-1995**	1	PLATE AS	
M	12	1	**112-6646**	4	LOCKNUT (M6X1-THD)	
	13	1	**156-6175**	1	CLIP	
	14	1	**198-4775**	1	WASHER-HARD (6.6X15X6-MM THK)	
M	15	1	**6R-7653**	2	SCREW (M6X1X15-MM)	
	16	1	**8R-3695**	3	GROMMET	
M	17	1	**8T-4138**	1	BOLT (M6X1X20-MM)	
	18	1	**8T-4205**	3	WASHER-HARD (7.2X14.5X2-MM THK)	
M	19	1	**8T-4970**	2	BOLT (M6X1X14-MM)	
	20	1	**9X-2038**	4	WASHER (7X19X2-MM THK)	
M	21	1	**9X-2044**	9	SCREW-TRUSS HEAD (M6X1X16-MM)	
M	22	1	**9X-2045**	4	SCREW-TRUSS HEAD (M6X1X20-MM)	
D	23	1	**6V-3987**		SEAL (0.062-M EACH)	

D-ORDER BY THE METER
M-METRIC PART
Y-SEPARATE ILLUSTRATION

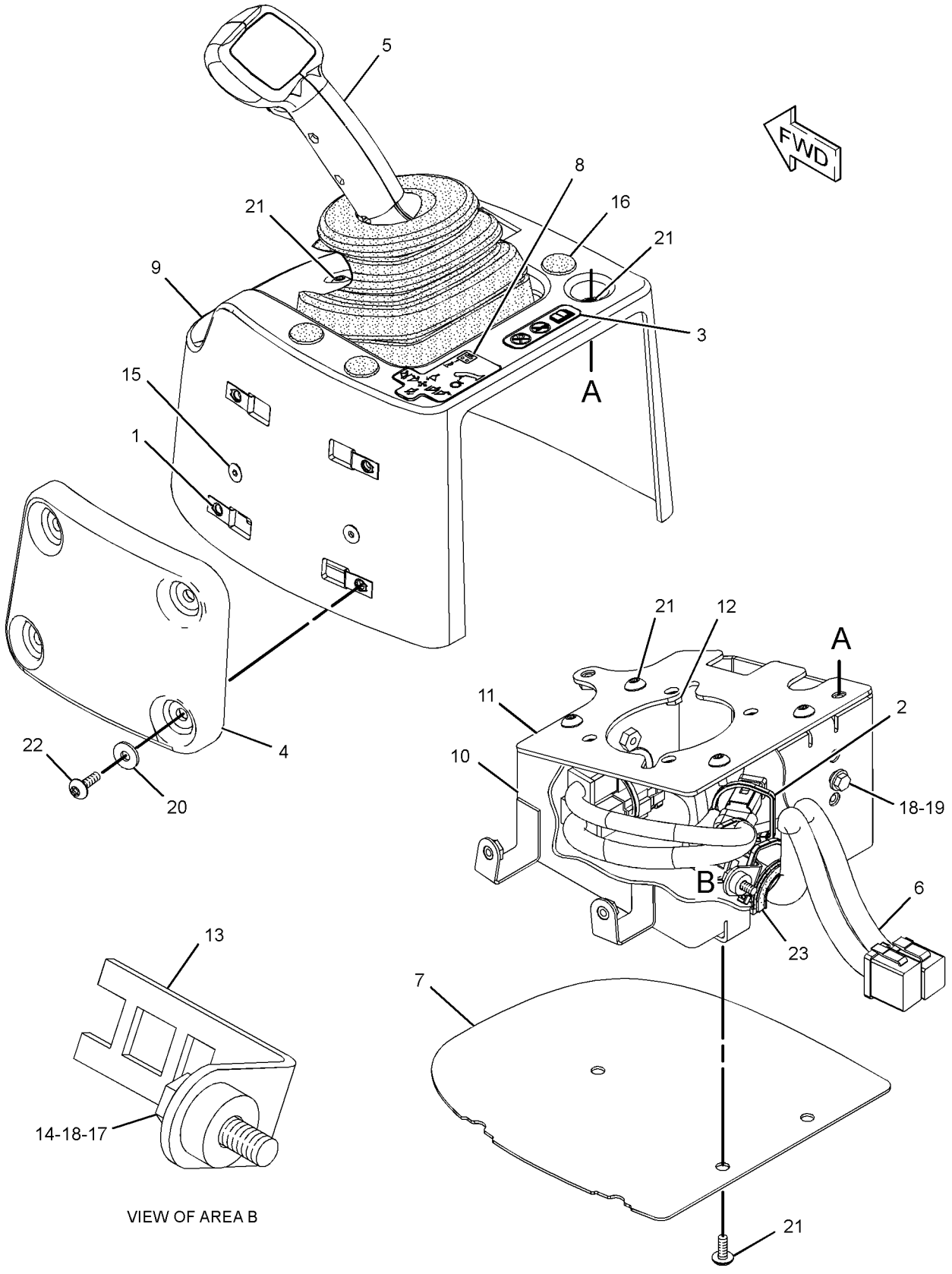

GRAPHIC #1 **<END>** g01210563

243-1946 CONTROL GP-ELECTROHYDRAULIC–
JOYSTICK, 3-FUNCTION
S/N: A7G1-UP
AN ATTACHMENT

SMCS-5702 **i02415416**

NOTE	REF NO	GRAPHIC REF	PART NUMBER	QTY	PART NAME 1 2 3 4 5 6 (PRODUCT LEVEL)	SEE PAGE
	1	1	**4E-8722**	4	NUT	
	2	1	**189-2079**	1	FILM-INSTRUCTION (MAINTENANCE)	
	3	1	**245-6447**	1	CUSHION AS	
Y	4	1	**245-7649**	1	CONTROL GP-JOYSTICK (3-FUNCTION, WITH DOWNSHIFT)	535
	5	1	**245-8335**	1	HARNESS AS-OPERATOR CONTROLS (ELECTROHYDRAULIC, JOYSTICK)	
		1	**155-2255**	1	KIT-CONNECTING PLUG (12-PIN)	
		1	**155-2265**	1	KIT-CONNECTING PLUG (8-PIN)	
		1	**155-2260**	1	KIT-CONNECTING PLUG (3-PIN)	
		1	**155-2270**	1	KIT-CONNECTING PLUG (2-PIN)	
		1	**155-2274**	1	KIT-CONNECTING PLUG (6-PIN)	
					(EACH KIT INCLUDES PLUG AS AND WEDGE)	
	6	1	**247-4969**	1	PLATE	
	7	1	**254-9150**	1	FILM-CONTROL (JOYSTICK, 3-FCTN, DOWNSHIFT SW)	
	8	1	**262-5238**	1	COVER	
	9	1	**262-5239**	1	HOUSING AS	
	10	1	**263-1995**	1	PLATE AS	
	11	1	**256-7822**	1	SWITCH AS-ROCKER (3RD FUNCTION SELECT)	
M	12	1	**112-6646**	4	LOCKNUT (M6X1-THD)	
M	13	1	**6R-7653**	2	SCREW (M6X1X15-MM)	
	14	1	**8R-3695**	3	GROMMET	
	15	1	**8T-4205**	2	WASHER-HARD (7.2X14.5X2-MM THK)	
M	16	1	**8T-4970**	2	BOLT (M6X1X14-MM)	
	17	1	**9X-2038**	4	WASHER (7X19X2-MM THK)	
M	18	1	**9X-2044**	9	SCREW-TRUSS HEAD (M6X1X16-MM)	
M	19	1	**9X-2045**	4	SCREW-TRUSS HEAD (M6X1X20-MM)	
D	20	1	**6V-3987**		SEAL (0.062-DM EACH)	

D-ORDER BY THE METER
M-METRIC PART
Y-SEPARATE ILLUSTRATION

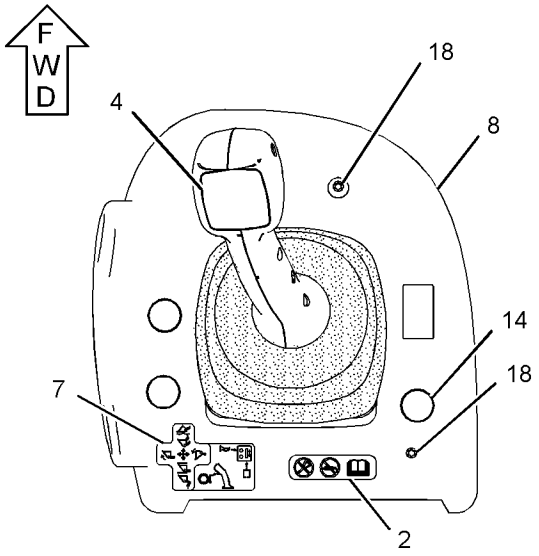

TOP VIEW

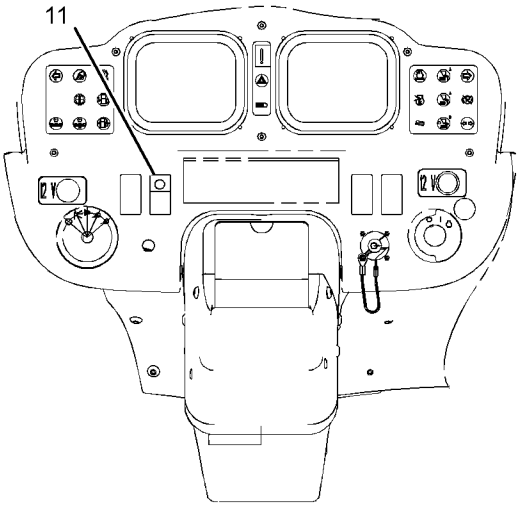

FRONT VIEW

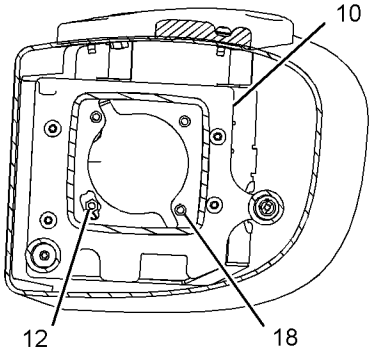

SECTION A-A

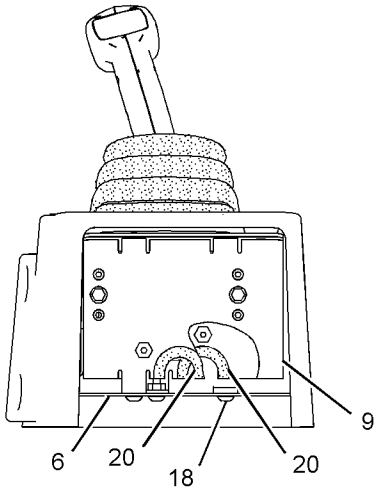

REAR VIEW

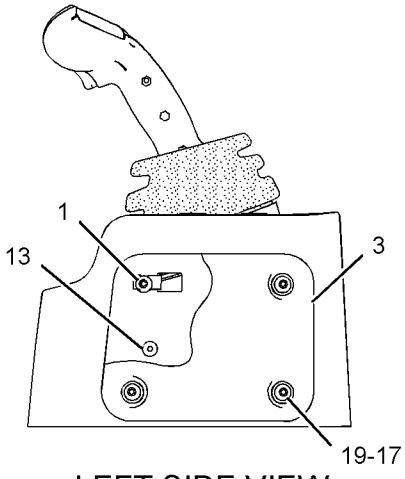

LEFT SIDE VIEW

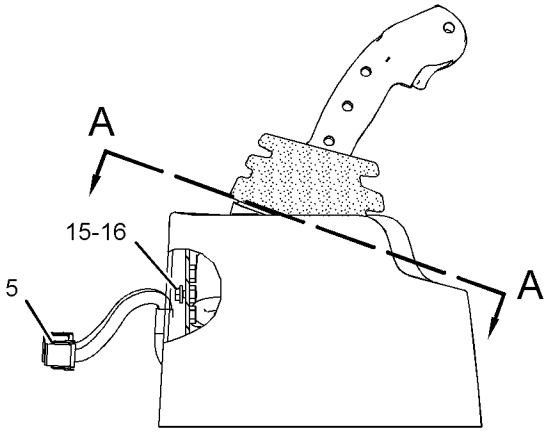

RIGHT SIDE VIEW

GRAPHIC #1 **<END>** g01201304

HYDRAULIC SYSTEM

243-3166 CONTROL GP-HANDLE

S/N: A7G1-UP

PART OF 243-1089, 243-1940 CONTROL GP-ELECTROHYDRAULIC

ALSO AN ATTACHMENT

SMCS-5063, 5705 **i02415387**

NOTE	REF NO	GRAPHIC REF	PART NUMBER	QTY	PART NAME 1 2 3 4 5 6 (PRODUCT LEVEL)	SEE PAGE
	1	1	**102-8804**	1	KIT-RECEPTACLE (4-PIN)	
					(INCLUDES RECEPTACLE AS AND WEDGE)	
	2	1	**278-8974**	1	KNOB	
	3	1	**278-8965**	1	BOOT	
	4	1	**278-8967**	1	RETAINER-BOOT	
	5	1	**278-8970**	4	SCREW	

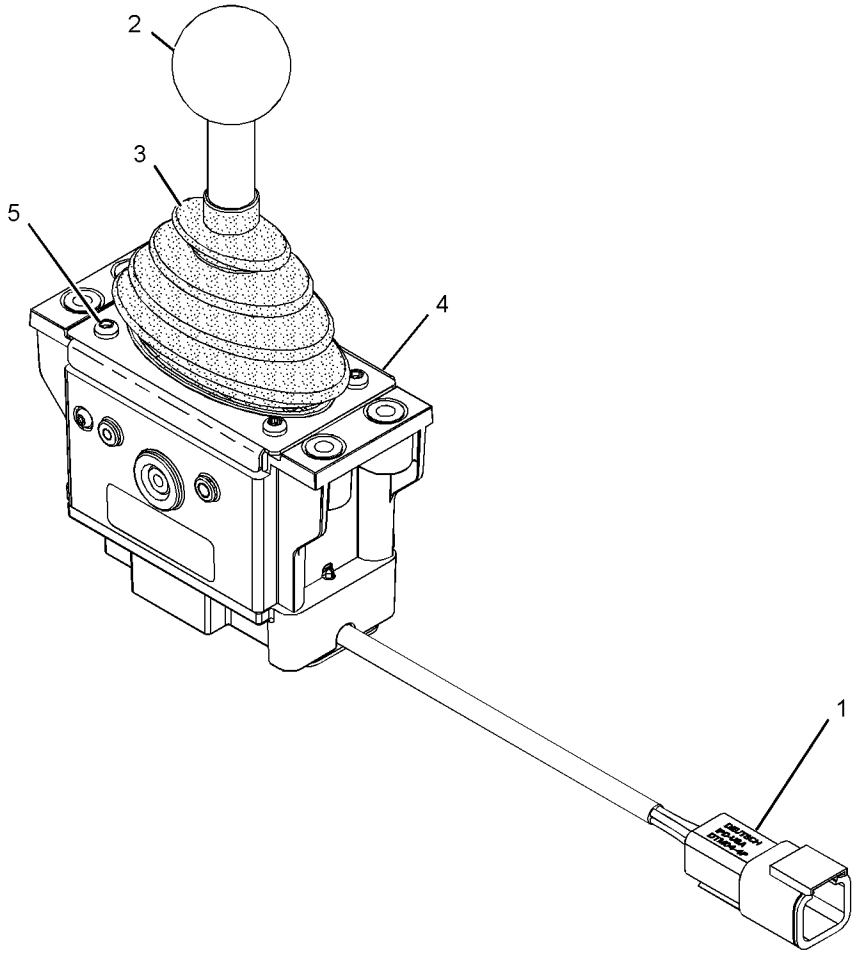

GRAPHIC #1 **<END>** g01195083

245-7649 CONTROL GP-JOYSTICK–
3-FUNCTION, WITH DOWNSHIFT
S/N: A7G1-UP
PART OF 243-1946 CONTROL GP-ELECTROHYDRAULIC
AN ATTACHMENT

SMCS-5063, 5705 **i02416030**

NOTE	REF NO	GRAPHIC REF	PART NUMBER	QTY	PART NAME 1 2 3 4 5 6 (PRODUCT LEVEL)	SEE PAGE
	1	1	**254-9137**	1	BASE AS	
		1	**102-8805**	1	KIT-RECEPTACLE (6-PIN)	
					(KIT INCLUDES RECEPTACLE AS AND WEDGE)	
		1	**186-3735**	6	PIN-CONNECTOR (16-GA TO 18-GA)	
	2	1	**254-9140**	1	CONTROL GP-HANDLE (LIFT, TILT, AUX, DOWNSHIFT SW)	
		1	**8T-8737**	2	PLUG-SEAL	
		1	**144-0331**	1	CAP-PUSH BUTTON	
		1	**174-3091**	1	KIT-RECEPTACLE (12-PIN)	
					(KIT INCLUDES RECEPTACLE AS AND WEDGE)	
		1	**186-3735**	10	PIN-CONNECTOR (16-GA TO 18-GA)	
	3	1	**274-2363**	1	BOOT	
	4	1	**213-7489**	3	SCREW (M4X25-MM)	
M	5	1	**178-9983**	3	LOCKNUT (M4X0.7-THD)	
	6	1	**174-3091**	1	KIT-RECEPTACLE (12-PIN)	
	7	1	**102-8805**	1	KIT-RECEPTACLE (6-PIN)	
					(EACH KIT INCLUDES RECEPTACLE AS AND WEDGE)	
	8	1	**186-3735**	6	PIN-CONNECTOR (16-GA TO 18-GA)	
	9	1	**8T-8737**	6	PLUG-SEAL	

M-METRIC PART

245-7649 CONTROL GP-JOYSTICK *(contd.)* **i02416030**

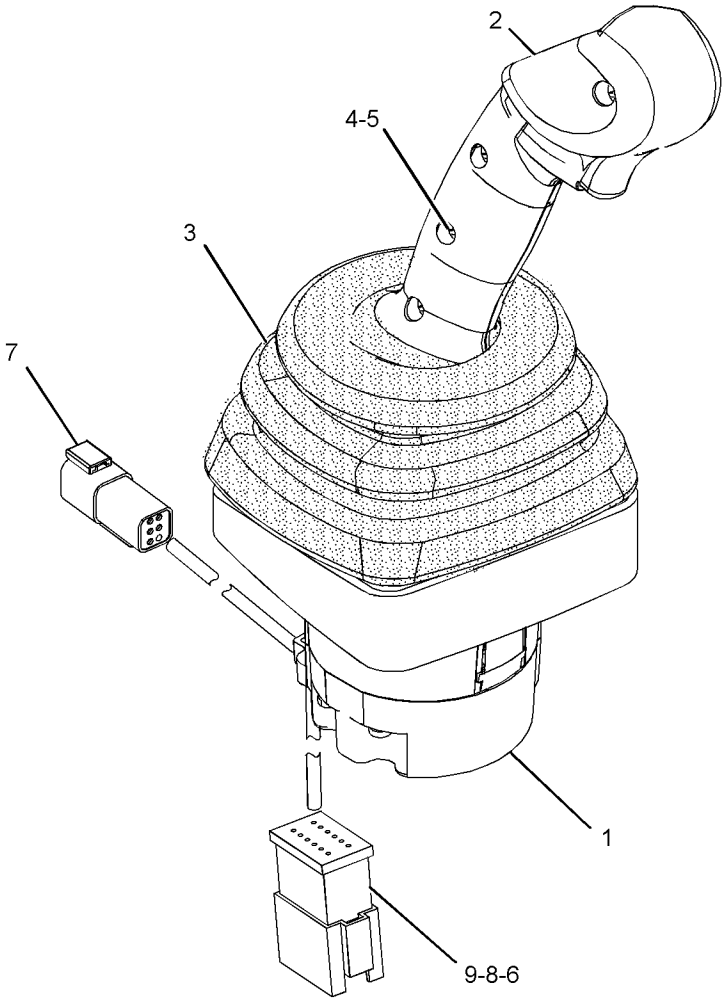

GRAPHIC #1 **<END>** g01197937

245-7650 CONTROL GP-JOYSTICK–
2-FUNCTION, WITH DOWNSHIFT
S/N: A7G1-UP
PART OF 243-1941 CONTROL GP-ELECTROHYDRAULIC
AN ATTACHMENT

SMCS-5063, 5705 **i02416037**

NOTE	REF NO	GRAPHIC REF	PART NUMBER	QTY	PART NAME 1 2 3 4 5 6 (PRODUCT LEVEL)	SEE PAGE
	1	1	**254-9137**	1	BASE AS	
		1	**102-8805**	1	KIT-RECEPTACLE (6-PIN)	
					(INCLUDES RECEPTACLE AS AND WEDGE)	
		1	**186-3735**	6	PIN-CONNECTOR (16-GA TO 18-GA)	
	2	1	**254-9139**	1	CONTROL GP-HANDLE (LIFT, TILT, DOWNSHIFT SWITCH)	
		1	**8T-8737**	6	PLUG-SEAL	
		1	**144-0331**	1	CAP-PUSH BUTTON	
		1	**174-3091**	1	KIT-RECEPTACLE (12-PIN)	
					(KIT INCLUDES RECEPTACLE AS AND WEDGE)	
		1	**186-3735**	6	PIN-CONNECTOR (16-GA TO 18-GA)	
	3	1	**274-2363**	1	BOOT	
	4	1	**213-7489**	3	SCREW (M4X25-MM)	
M	5	1	**178-9983**	3	LOCKNUT (M4X0.7-THD)	
	6	1	**174-3091**	1	KIT-RECEPTACLE (12-PIN)	
	7	1	**102-8805**	1	KIT-RECEPTACLE (6-PIN)	
					(EACH KIT INCLUDES RECEPTACLE AS AND WEDGE)	
	8	1	**186-3735**	6	PIN-CONNECTOR (16-GA TO 18-GA)	
	9	1	**8T-8737**	6	PLUG-SEAL	

M-METRIC PART

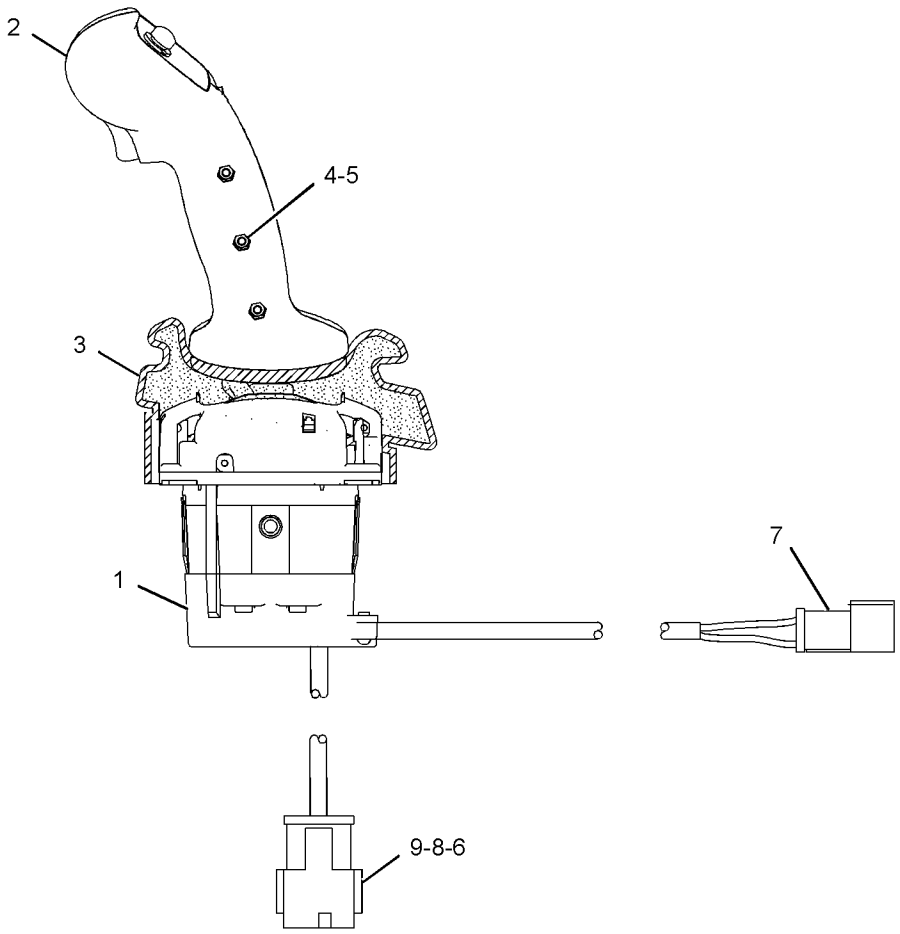

GRAPHIC #1 **<END>** g01195972

246-2070 COOLER GP-HYDRAULIC & AXLE OIL

S/N: A7G1-UP

PART OF 236-9099 AXLE & AXLE OIL COOLER AR, 276-7255, 282-6416 COOLER AR-AXLE OIL

AN ATTACHMENT

SMCS-1365, 1374 **i02249338**

NOTE	PART NUMBER	QTY	PART NAME 1 2 3 4 5 6 (PRODUCT LEVEL)	SEE PAGE
	251-1110	1	CORE AS-OIL COOLER (AXLE, HYDRAULIC)	

<END>

HYDRAULIC SYSTEM

236-9031 CYLINDER & SEAL GP-LIFT–LH

S/N: A7G1-UP

PART OF 236-9055 HYDRAULIC AR-2 VALVE

SMCS-5102 **i02214660**

NOTE	REF NO	GRAPHIC REF	PART NUMBER	QTY	PART NAME 1 2 3 4 5 6 (PRODUCT LEVEL)	SEE PAGE
Y	1	1	*242-4275*	1	CYLINDER GP-LIFT (LH)	544
	2	1	**7K-9209**	2	SEAL-LIP TYPE	

Y-SEPARATE ILLUSTRATION

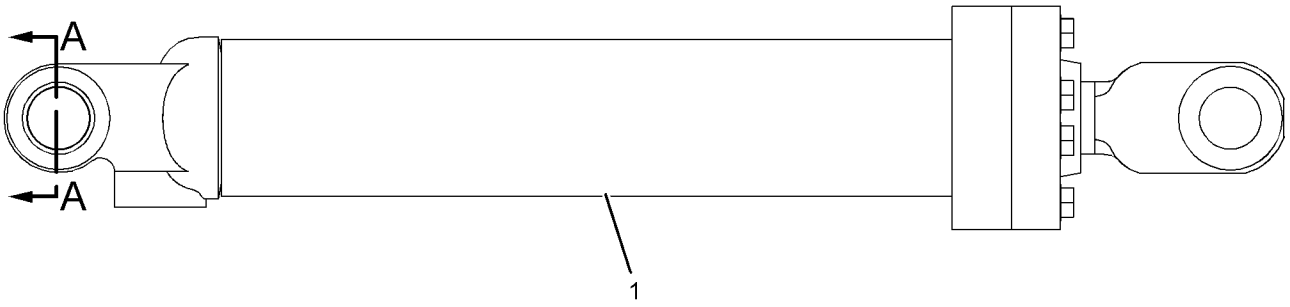

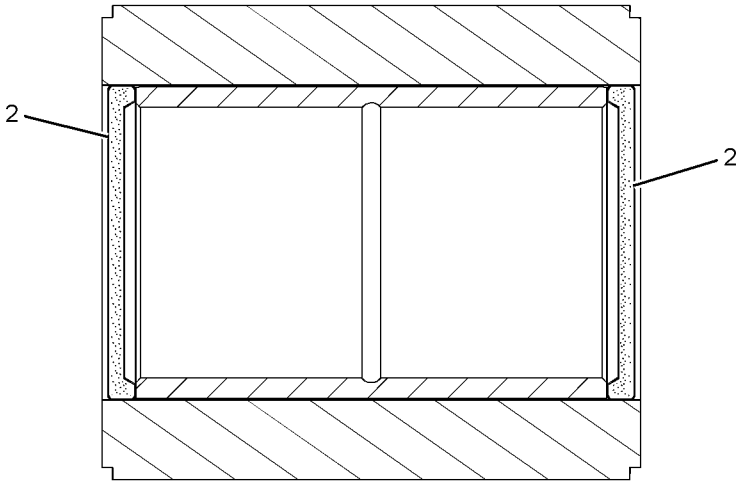

SECTION A-A

GRAPHIC #1 **<END>** g01116018

HYDRAULIC SYSTEM

236-9032 CYLINDER & SEAL GP-LIFT–RH

S/N: A7G1-UP

PART OF 236-9055 HYDRAULIC AR-2 VALVE

SMCS-5102 **i02233296**

NOTE	REF NO	GRAPHIC REF	PART NUMBER	QTY	PART NAME 1 2 3 4 5 6 (PRODUCT LEVEL)	SEE PAGE
	1	1	**7K-9209**	2	SEAL-LIP TYPE	
Y	2	1	**242-4274**	1	CYLINDER GP-LIFT (RH)	543

Y-SEPARATE ILLUSTRATION

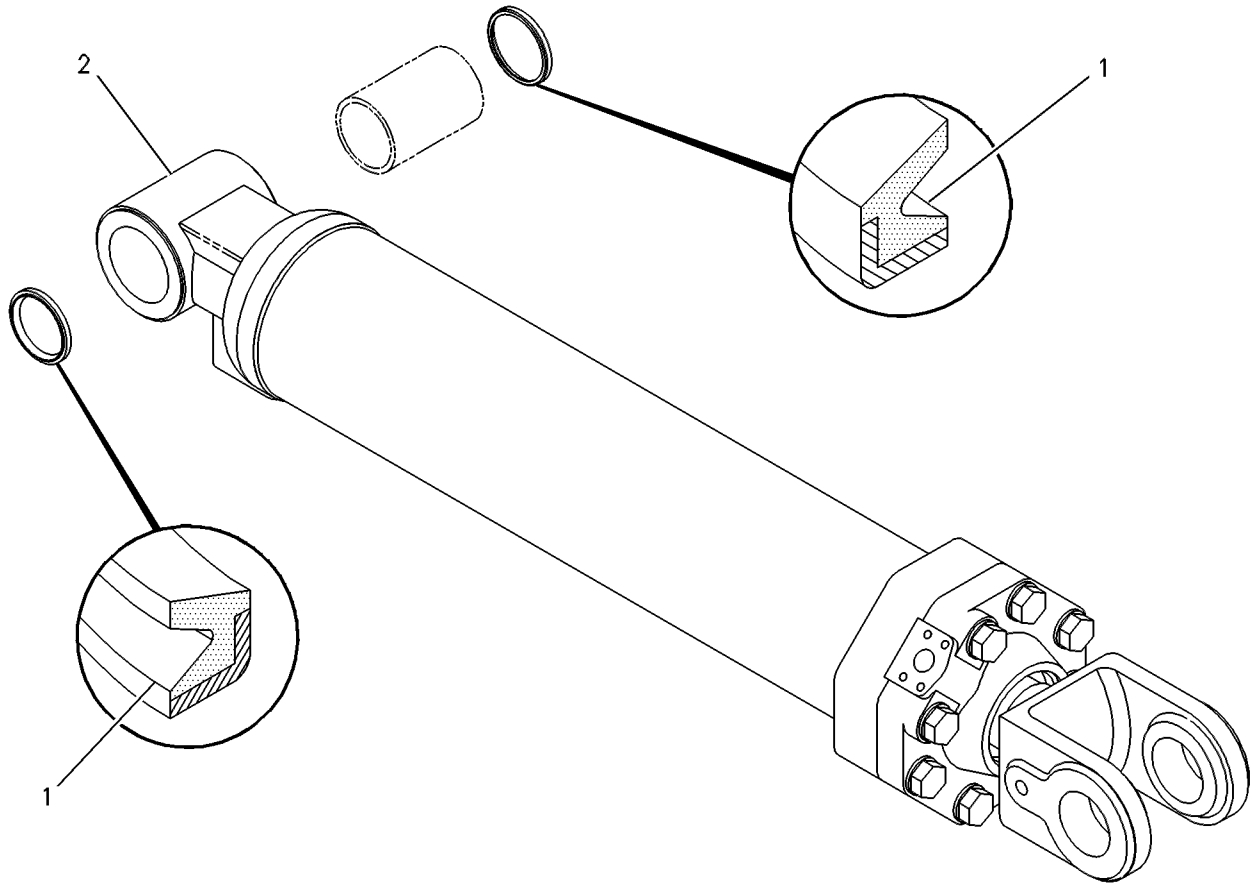

GRAPHIC #1 **<END>** g00281288

HYDRAULIC SYSTEM

236-9104 CYLINDER & SEAL GP-TILT

S/N: A7G1-UP

PART OF 236-9055 HYDRAULIC AR-2 VALVE

SMCS-5104 **i02206265**

NOTE	REF NO	GRAPHIC REF	PART NUMBER	QTY	PART NAME 1 2 3 4 5 6 (PRODUCT LEVEL)	SEE PAGE
Y	1	1	**244-8777**	1	CYLINDER GP-TILT (LOGGING)	546
	2	1	**7K-9211**	4	SEAL-LIP TYPE	

Y-SEPARATE ILLUSTRATION

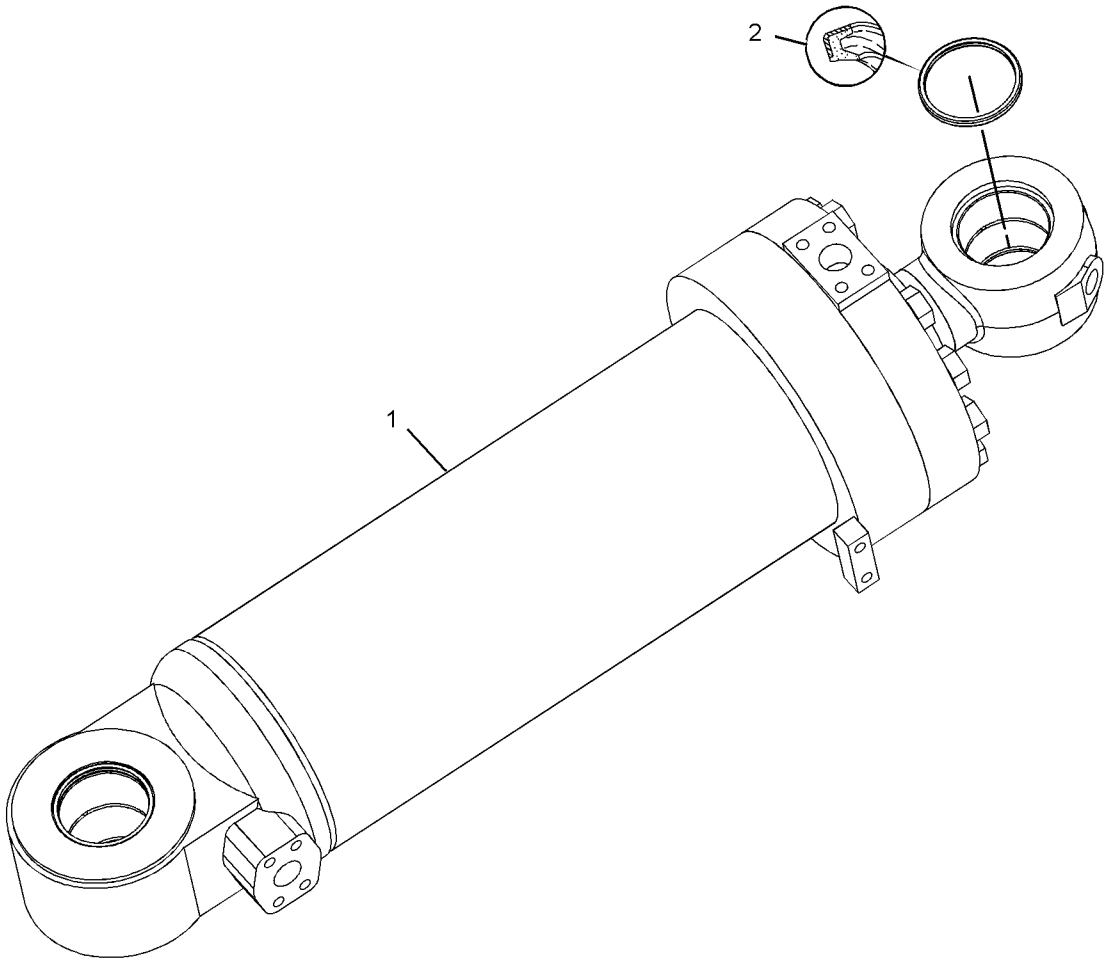

GRAPHIC #1 **<END>** g01116474

242-4274 CYLINDER GP-LIFT–RH

S/N: A7G1-UP
158.8-MM BORE X 833-MM STROKE
PART OF 236-9032 CYLINDER & SEAL GP-LIFT

SMCS-5102 **i02233300**

NOTE	REF NO	GRAPHIC REF	PART NUMBER	QTY	PART NAME 1 2 3 4 5 6 (PRODUCT LEVEL)	SEE PAGE
	1	1	**162-7209**	1	RING-BACKUP	
	2	1	**244-6628**	1	HEAD	
	3	1	**244-7025**	1	ROD AS	
	4	1	**244-7030**	1	CYLINDER AS	
		1	**9T-8676**	1	BEARING-SLEEVE	
	5	1	**248-3317**	1	PISTON	
	6	1	**132-4907**	1	RING-WEAR (ROD)	
	7	1	**167-2211**	1	SEAL AS-BUFFER	
	8	1	**167-2324**	1	SEAL-U-CUP	
	9	1	**225-3286**	1	SEAL-WIPER	
	10	1	**2J-7686**	1	LOCKNUT	
	11	1	**6V-5657**	1	SEAL-O-RING	
	12	1	**6V-8237**	8	WASHER (26X44X4-MM THK)	
M	13	1	**8T-0667**	8	BOLT (M24X3X100-MM)	
	14	1	**8T-1788**	1	SEAL AS	
	15	1	**9J-5550**	1	RING-WEAR	

M-METRIC PART

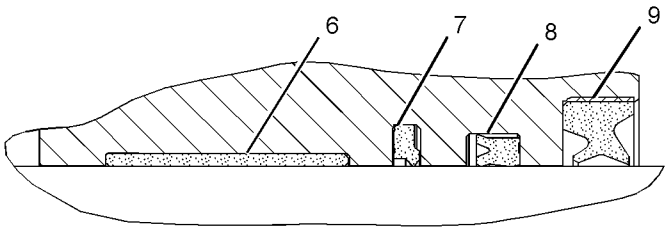

VIEW OF AREA B

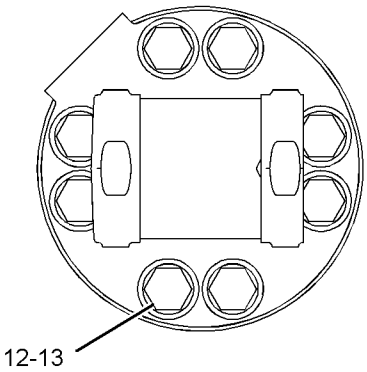

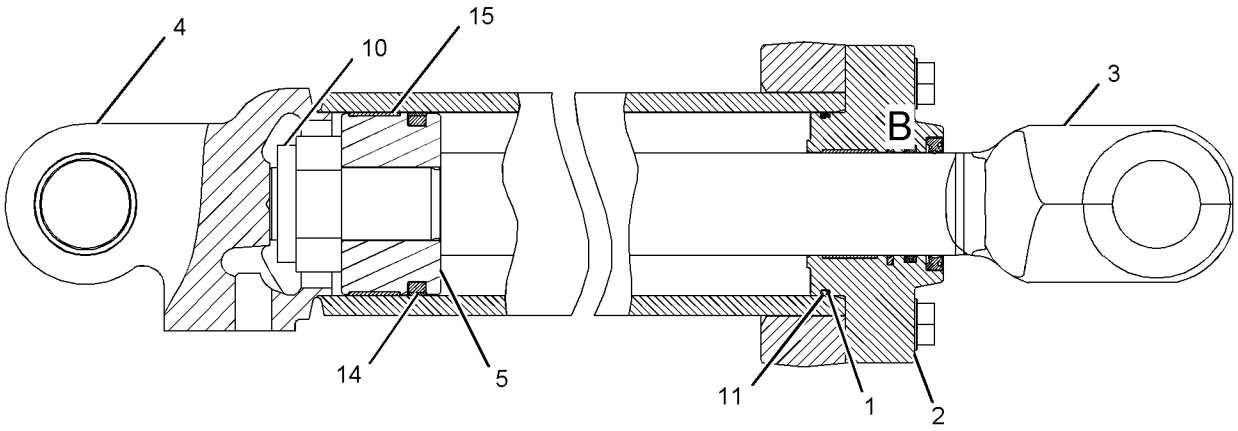

GRAPHIC #1 **<END>** g01114545

HYDRAULIC SYSTEM

242-4275 CYLINDER GP-LIFT–LH

S/N: A7G1-UP

158.8-MM BORE X 833-MM STROKE

PART OF 236-9031 CYLINDER & SEAL GP-LIFT

SMCS-5102 **i02234143**

NOTE	REF NO	GRAPHIC REF	PART NUMBER	QTY	PART NAME 1 2 3 4 5 6 (PRODUCT LEVEL)	SEE PAGE
	1	1	**162-7209**	1	RING-BACKUP	
	2	1	**244-6628**	1	HEAD	
	3	1	**244-7025**	1	ROD AS	
	4	1	**244-7030**	1	CYLINDER AS	
		1	**9T-8676**	1	BEARING-SLEEVE	
	5	1	**248-3317**	1	PISTON	
	6	1	**132-4907**	1	RING-WEAR (ROD)	
	7	1	**167-2211**	1	SEAL AS-BUFFER	
	8	1	**167-2324**	1	SEAL-U-CUP	
	9	1	**225-3286**	1	SEAL-WIPER	
	10	1	**2J-7686**	1	LOCKNUT	
	11	1	**6V-5657**	1	SEAL-O-RING	
	12	1	**6V-8237**	8	WASHER (26X44X4-MM THK)	
M	13	1	**8T-0667**	8	BOLT (M24X3X100-MM)	
	14	1	**8T-1788**	1	SEAL AS	
	15	1	**9J-5550**	1	RING-WEAR	

M-METRIC PART

242-4275 **CYLINDER GP-LIFT** *(contd.)* **i02234143**

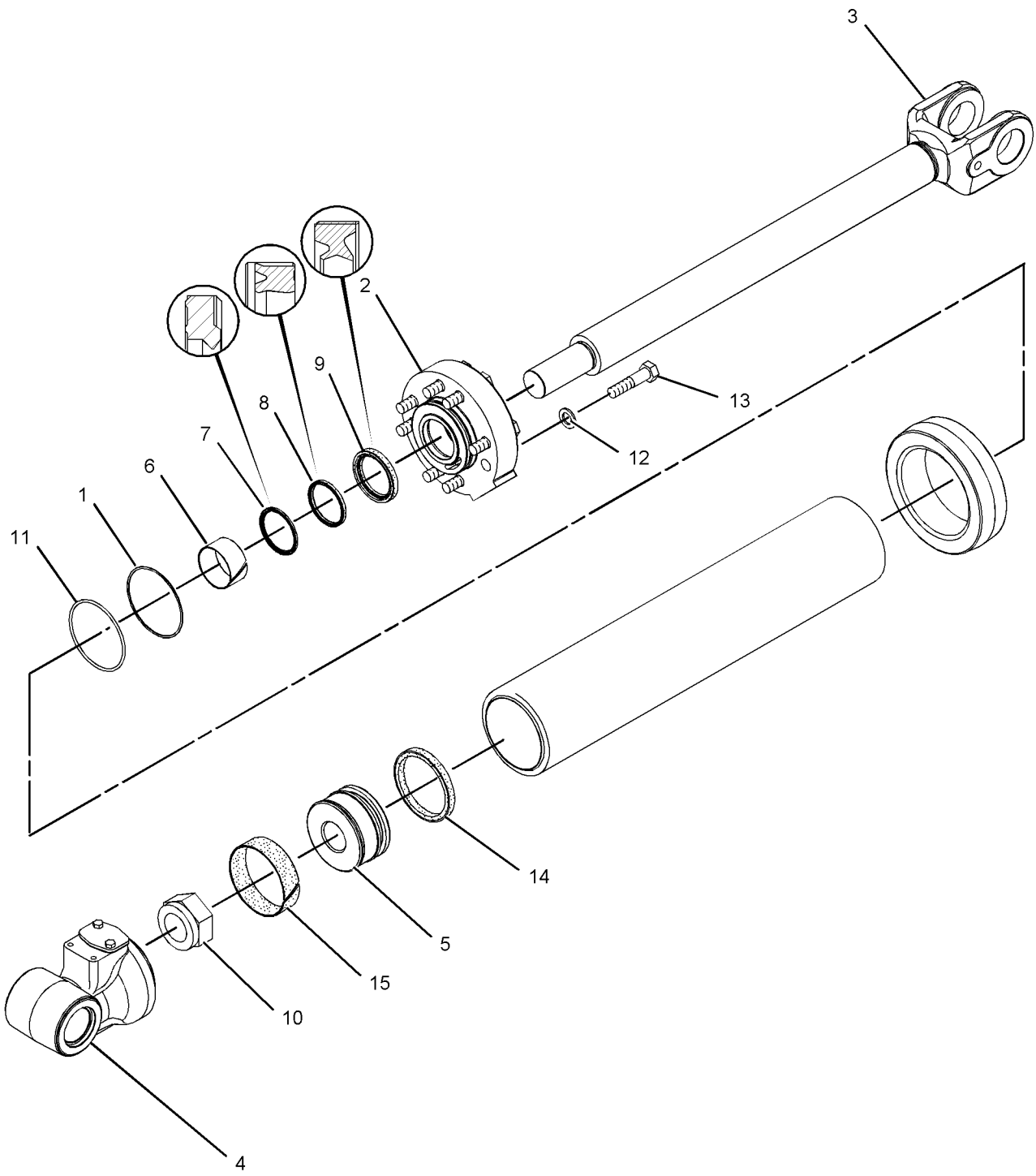

GRAPHIC #1 **<END>** g01116954

HYDRAULIC SYSTEM

244-8777 CYLINDER GP-TILT–LOGGING

S/N: A7G1-UP

PART OF 236-9104 CYLINDER & SEAL GP-TILT

SMCS-5104 **i02206274**

NOTE	REF NO	GRAPHIC REF	PART NUMBER	QTY	PART NAME 1 2 3 4 5 6 (PRODUCT LEVEL)	SEE PAGE
	1	1	**244-7778**	1	HEAD	
	2	1	**244-8772**	1	PISTON	
	3	1	**244-8776**	1	CYLINDER AS	
		1	**9J-7100**	1	BEARING-SLEEVE	
	4	1	**247-4834**	1	ROD AS	
		1	**9J-7099**	1	BEARING-SLEEVE	
	5	1	**167-2214**	1	SEAL AS-BUFFER	
	6	1	**167-2328**	1	SEAL-U-CUP	
	7	1	**227-1149**	1	SEAL-WIPER	
	8	1	**4J-6888**	1	LOCKNUT (2 3/4-12-THD)	
	9	1	**5K-1787**	1	SEAL-O-RING	
	10	1	**5P-8250**	11	WASHER (28X49X5-MM THK)	
	11	1	**8J-0548**	1	RING-BACKUP	
	12	1	**8T-1792**	1	SEAL AS	
	13	1	**8T-3330**	1	RING-WEAR	
	14	1	**9J-5037**	1	RING-WEAR	
	15	1	**9X-8896**	11	BOLT (1-8X4-IN)	

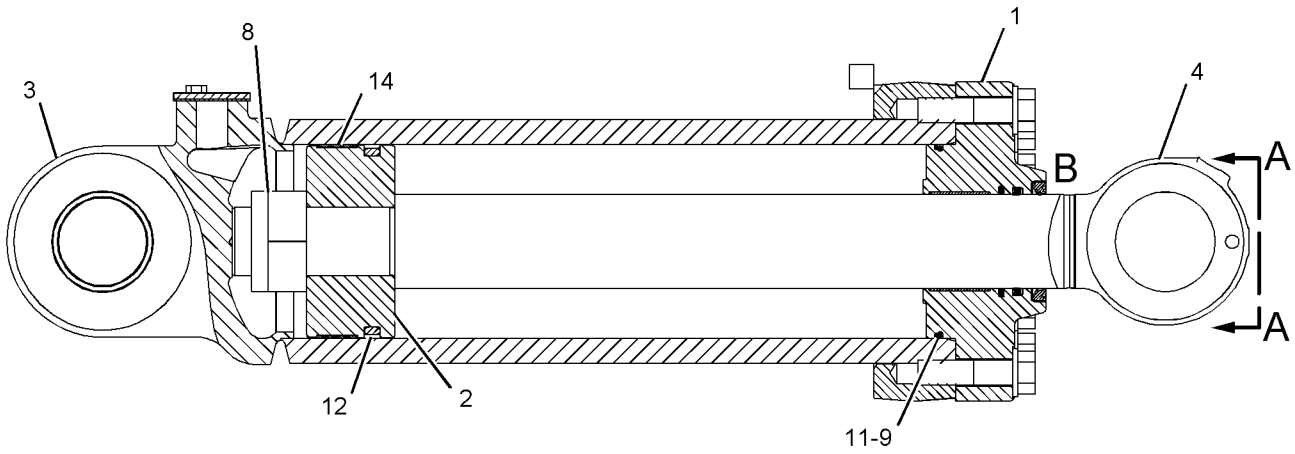

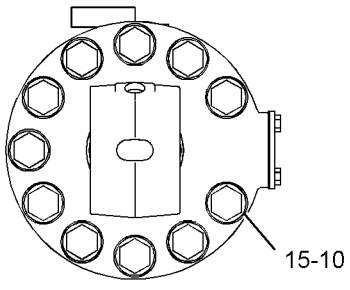

VIEW A-A

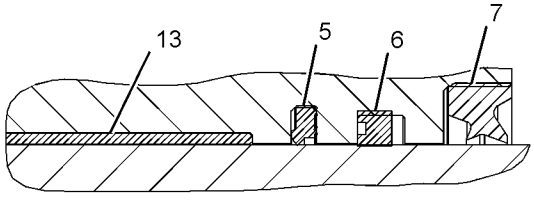

VIEW OF AREA B

GRAPHIC #1 **<END>** g01116544

HYDRAULIC SYSTEM

245-7486 CYLINDER GP-TILT

S/N: A7G1-UP
PART OF 236-9101, 236-9102 LIFT AR
AN ATTACHMENT

SMCS-5104 **i02249700**

NOTE	REF NO	GRAPHIC REF	PART NUMBER	QTY	PART NAME 1 2 3 4 5 6 (PRODUCT LEVEL)	SEE PAGE
	1	1	**244-7778**	1	HEAD	
	2	1	**244-8772**	1	PISTON	
	3	1	**245-7685**	1	CYLINDER AS	
		1	**9J-7100**	1	BEARING-SLEEVE	
	4	1	**247-4915**	1	ROD AS	
		1	**9J-7099**	1	BEARING-SLEEVE	
	5	1	**167-2214**	1	SEAL AS-BUFFER	
	6	1	**167-2328**	1	SEAL-U-CUP	
	7	1	**227-1149**	1	SEAL-WIPER	
	8	1	**4J-6888**	1	LOCKNUT (2 3/4-12-THD)	
	9	1	**5K-1787**	1	SEAL-O-RING	
	10	1	**5P-8250**	11	WASHER (28X49X5-MM THK)	
	11	1	**8J-0548**	1	RING-BACKUP	
	12	1	**8T-1792**	1	SEAL AS	
	13	1	**8T-3330**	1	RING-WEAR	
	14	1	**9J-5037**	1	RING-WEAR	
	15	1	**9X-8896**	11	BOLT (1-8X4-IN)	

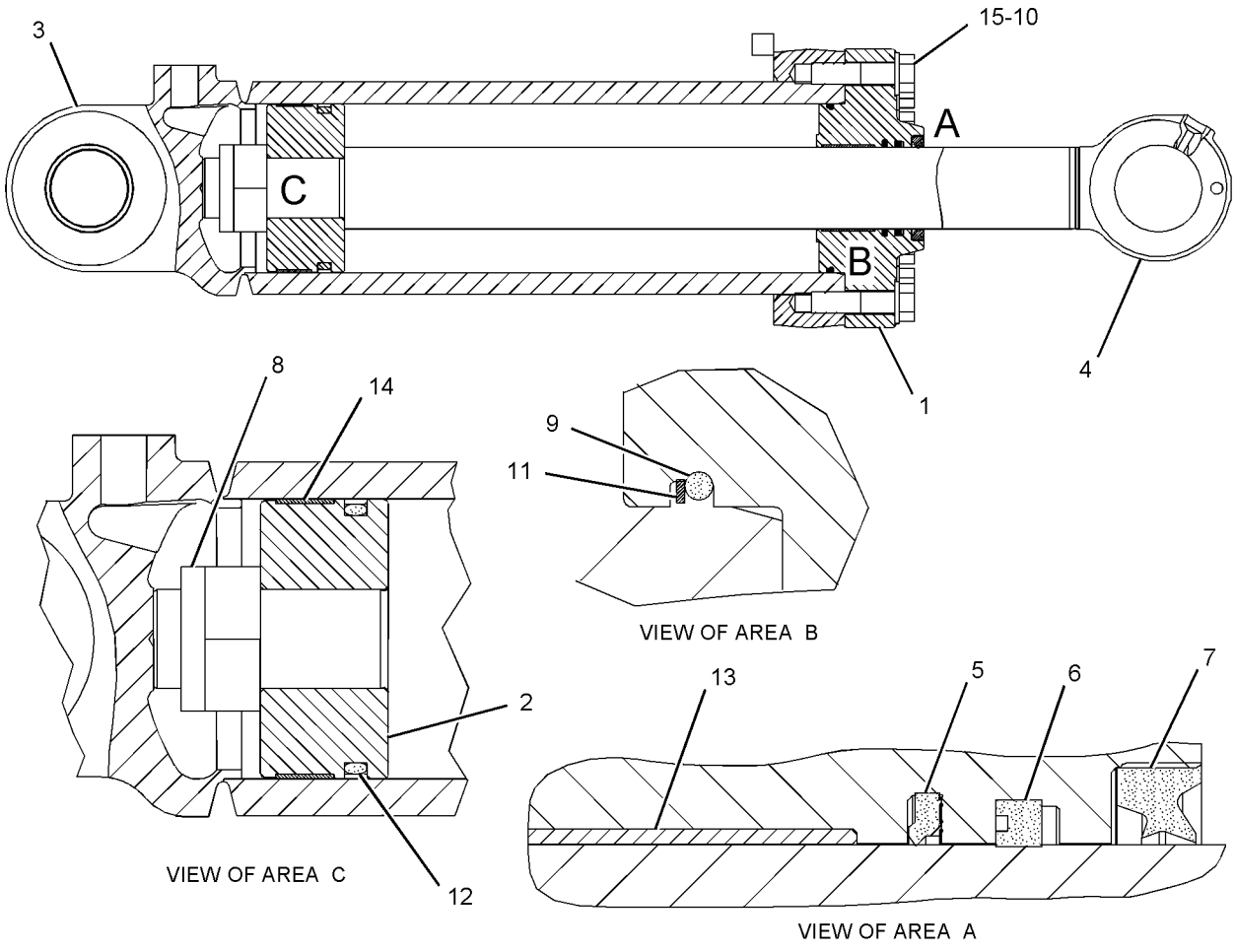

GRAPHIC #1 **<END>** g01118788

HYDRAULIC SYSTEM

198-7248 DRAIN GP-ECOLOGY—POWER TRAIN

S/N: A7G1-UP
AN ATTACHMENT

SMCS-1273, 5056 **i01706410**

NOTE	REF NO	GRAPHIC REF	PART NUMBER	QTY	PART NAME 1 2 3 4 5 6 (PRODUCT LEVEL)	SEE PAGE
	1	1	**173-0566**	2	DRAIN GP-ECOLOGY	
					(EACH INCLUDES)	
	1A	1	**2K-8199**	1	SEAL-O-RING	
	1B	1	**077-3241**	1	SEAL-O-RING	
	1C	1	**175-4966**	1	PLUG	
	2	1	**7M-8485**	2	SEAL-O-RING	

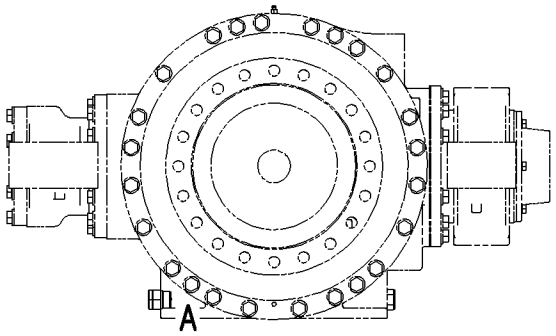

REAR AXLE

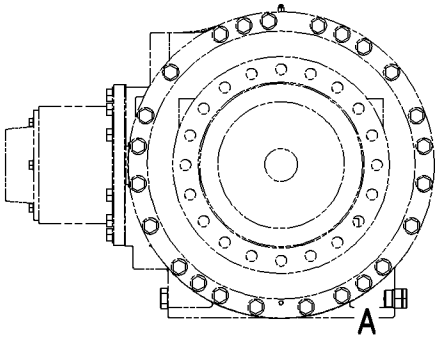

FRONT AXLE

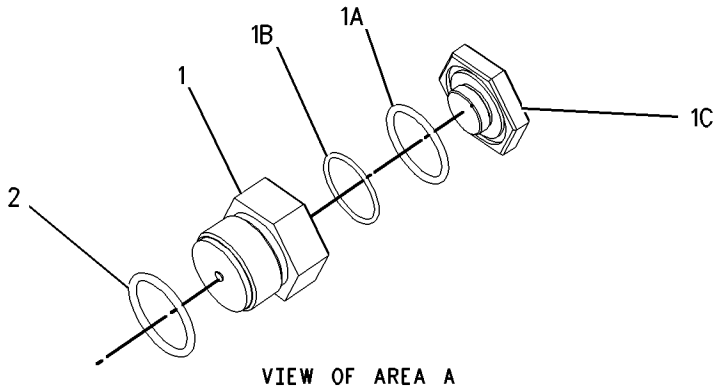

VIEW OF AREA A
COMMON BOTH AXLES

GRAPHIC #1 **<END>** g00886903

244-1031 FILTER GP-OIL–HYDRAULIC

S/N: A7G1-UP

PART OF 236-8983 LINES GP-HYDRAULIC OIL COOLER

SMCS-5068, 5091, 5092 **i02415417**

NOTE	REF NO	GRAPHIC REF	PART NUMBER	QTY	PART NAME 1 2 3 4 5 6 (PRODUCT LEVEL)	SEE PAGE
	1	1	**8C-3451**	1	CAP-DUST	
	2	1	**8C-6712**	1	ELBOW	
	3	1	**253-2673**	1	SWITCH AS-PRESSURE (DIFFERENTIAL)	
		1	**102-8802**	1	KIT-RECEPTACLE (2-PIN)	
					(INCLUDES RECEPTACLE AS AND WEDGE)	
		1	**186-3735**	1	PIN-CONNECTOR (16-GA TO 18-GA)	
E		1	**9X-1813**		SLEEVE (14-CM)	
	4	1	**225-4118**	1	FILTER ELEMENT AS-OIL (HYDRAULIC)	
	5	1	**3J-1907**	2	SEAL-O-RING	
	6	1	**3J-7354**	1	SEAL-O-RING	
	7	1	**5F-9144**	1	SEAL-O-RING	
	8	1	**8C-3446**	1	VALVE-FLUID SAMPLING	

E-ORDER BY THE CENTIMETER

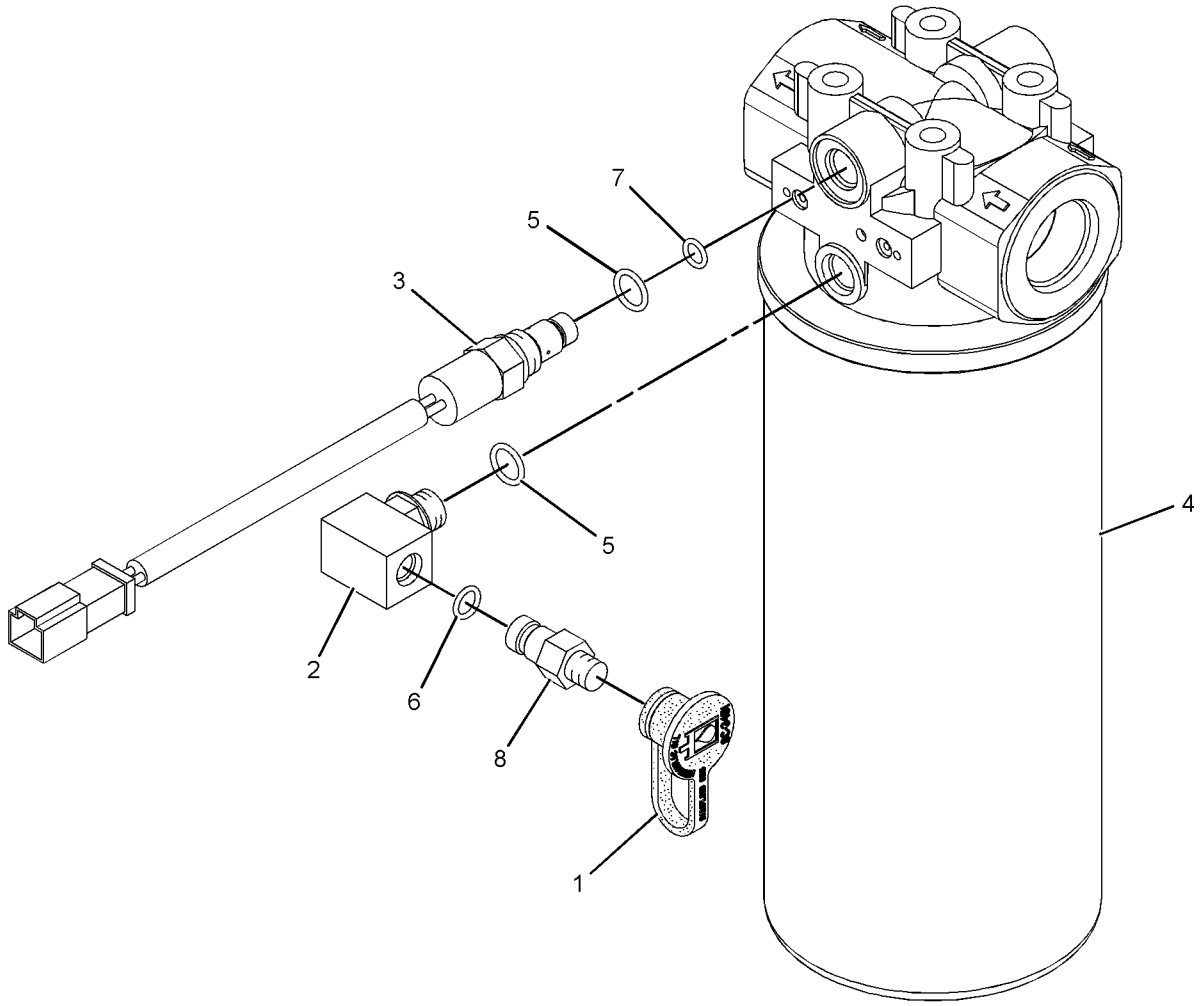

GRAPHIC #1 **<END>** g01114256

249-2334 FILTER GP-OIL–HYDRAULIC CASE DRAIN

S/N: A7G1-UP

PART OF 236-8997 LINES GP-HYDRAULIC

SMCS-5068, 5091, 5092 **i02411880**

NOTE	REF NO	GRAPHIC REF	PART NUMBER	QTY	PART NAME 1 2 3 4 5 6 (PRODUCT LEVEL)	SEE PAGE
	1	1	**144-0832**	1	FILTER AS-OIL	

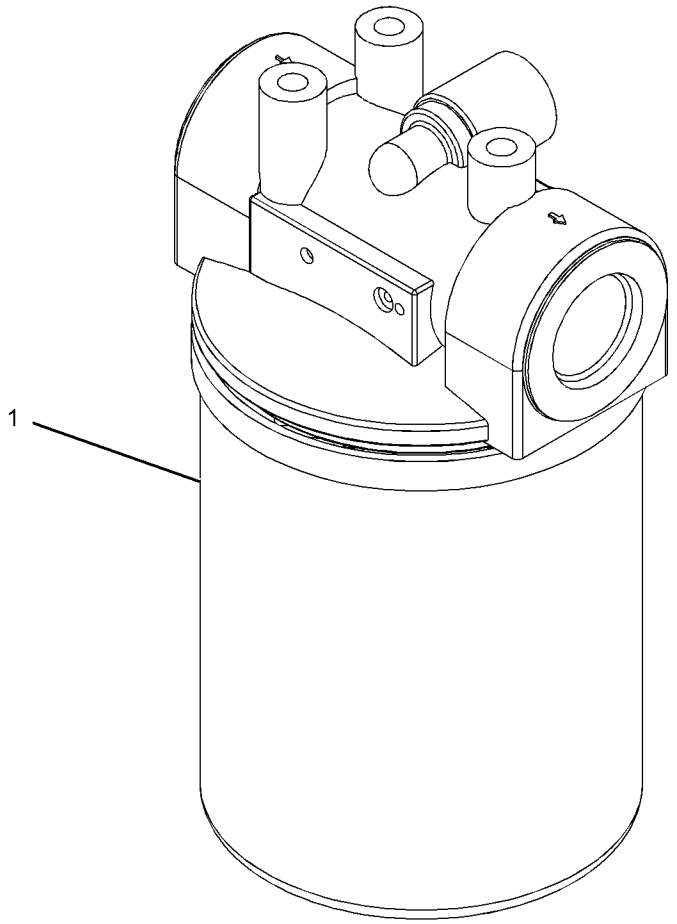

GRAPHIC #1 **<END>** g01205947

HYDRAULIC SYSTEM

236-9055 HYDRAULIC AR-2 VALVE

S/N: A7G1-UP

PART OF 236-9049 GENERAL AR

SMCS-5051 **i02203703**

NOTE	PART NUMBER	QTY	PART NAME 1 2 3 4 5 6 (PRODUCT LEVEL)	SEE PAGE
Y	*236-9031*	1	CYLINDER & SEAL GP-LIFT (LH)	540
Y	*236-9032*	1	CYLINDER & SEAL GP-LIFT (RH)	541
Y	*236-9104*	1	CYLINDER & SEAL GP-TILT	542
Y	*236-9046*	1	LINES GP-DIAGNOSTIC (REMOTE PRESSURE TAPS, HYD)	908
Y	*236-8997*	1	LINES GP-HYDRAULIC	558
Y	*236-9033*	1	LINES GP-LIFT CYLINDER	569
Y	*236-9034*	1	LINES GP-TILT CYLINDER	571
Y	*236-8998*	1	MOUNTING GP-HYDRAULIC TANK	581
Y	*246-2055*	1	PUMP & MTG GP-HYDRAULIC	584
Y	*236-9105*	1	PUMP & MTG GP-BRAKE & HYD FAN	582
Y	*237-2742*	1	TANK GP-HYDRAULIC	591
Y	*236-9035*	1	VALVE & MTG GP-MAIN CONTROL (2-FUNCTION)	593
Y	*236-9037*	1	VALVE GP-LOWERING CONTROL	620

Y-SEPARATE ILLUSTRATION

<END>

246-5304 HYDRAULIC AR-3 VALVE

S/N: A7G1-UP

AN ATTACHMENT

SMCS-5051 **i02418566**

NOTE	PART NUMBER	QTY	PART NAME 1 2 3 4 5 6 (PRODUCT LEVEL)	SEE PAGE
Y	**193-3131**	1	ARM AS-LIFT	644
Y	*243-1940*	1	CONTROL GP-ELECTROHYDRAULIC (3-FUNCTION)	528
Y	*236-9091*	1	LINES GP-FRONT	554
Y	*256-3565*	1	VALVE & MTG GP-MAIN CONTROL (3-FUNCTION, WITH RIDE CONTROL)	602

Y-SEPARATE ILLUSTRATION

<END>

HYDRAULIC SYSTEM

195-3265 LINES GP-COUPLER

S/N: A7G1-UP
FOR USE WITH 193-0852—PAGE 741
AN ATTACHMENT

SMCS-5057, 5133 **i01915767**

NOTE	REF NO	GRAPHIC REF	PART NUMBER	QTY	PART NAME 1 2 3 4 5 6 (PRODUCT LEVEL)	SEE PAGE
I	1	1	**232-6401**	2	HOSE AS	
	2	1	**086-9286**	2	CLAMP	
	3	1	**1A-9579**	1	BOLT (5/16-18X1.5 IN)	
	4	1	**3V-0046**	1	PLATE	

I-SEE HOSE FABRICATION GUIDE

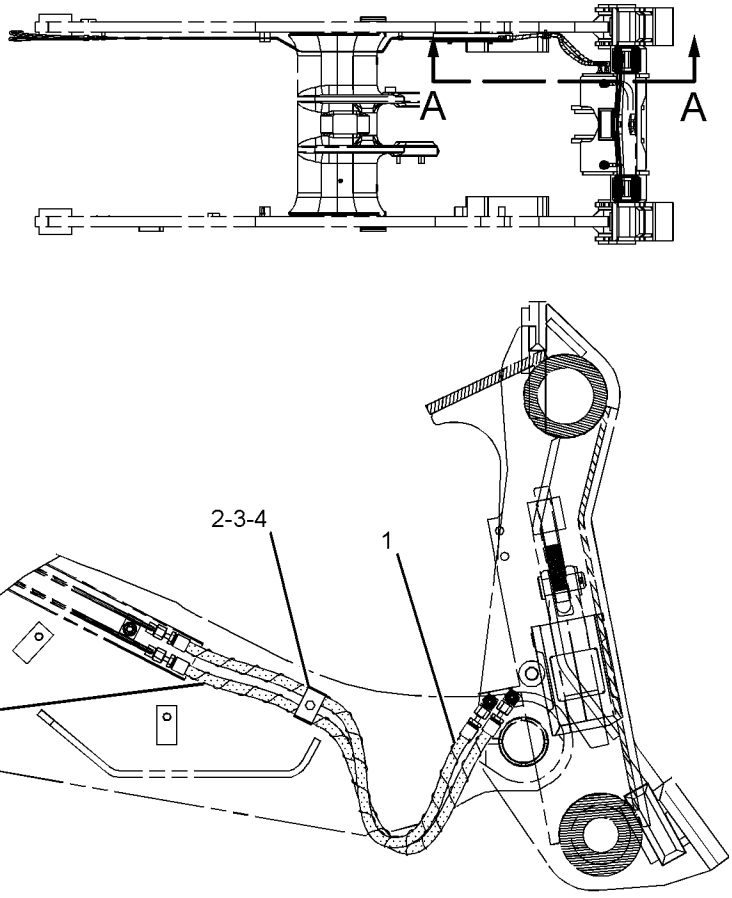

SECTION A-A

GRAPHIC #1 **<END>** g01018770

HYDRAULIC SYSTEM

201-8255 LINES GP-COUPLER

S/N: A7G1-UP

FOR USE WITH 193-8526—PAGE 742

AN ATTACHMENT

SMCS-5057, 5133 **i01480894**

NOTE	PART NUMBER	QTY	PART NAME 1 2 3 4 5 6 (PRODUCT LEVEL)	SEE PAGE
	201-8256	2	HOSE AS	

<END>

HYDRAULIC SYSTEM

236-9091 LINES GP-FRONT

S/N: A7G1-UP

PART OF 246-5304 HYDRAULIC AR-3 VALVE

AN ATTACHMENT

SMCS-5057 **i02414864**

NOTE	REF NO	GRAPHIC REF	PART NUMBER	QTY	PART NAME 1 2 3 4 5 6 (PRODUCT LEVEL)	SEE PAGE
	1	1	**6V-0852**	2	CAP-DUST	
	3	1	**185-9390**	1	TUBE AS	
	4	1	**185-9391**	1	TUBE AS	
	5	1	**197-3295**	12	FLANGE-HALF	
	6	1	**246-1151**	1	TUBE AS	
	7	1	**246-1153**	1	TUBE AS	
I	8	1	**240-8246**	2	HOSE AS	
	9	1	**246-2951**	2	ADAPTER	
	10	1	*164-5567*	2	FITTING GP-COUPLING	
					(EACH INCLUDES)	
		1	**3J-1907**	1	SEAL-O-RING	
		1	**6V-3965**	1	FITTING AS (QUICK DISCONNECT)	
	11	1	**1P-3704**	2	SEAL-RECTANGULAR	
	13	1	**4J-0522**	8	SEAL-O-RING	
	14	1	**5H-4020**	2	COVER	
	15	1	**7X-3392**	24	WASHER-HARD (13.5X22.5X3-MM THK)	
	16	1	**7Y-4538**	4	CLAMP-HALF	
M	17	1	**8T-4139**	4	BOLT (M12X1.75X30-MM)	
	18	1	**8T-4223**	16	WASHER-HARD (13.5X25.5X3-MM THK)	
M	19	1	**8T-4648**	16	BOLT (M12X1.75X70-MM)	
M	20	1	**8T-4956**	20	BOLT (M12X1.75X35-MM)	

I-REFER TO HYDRAULIC INFORMATION SYSTEM
M-METRIC PART

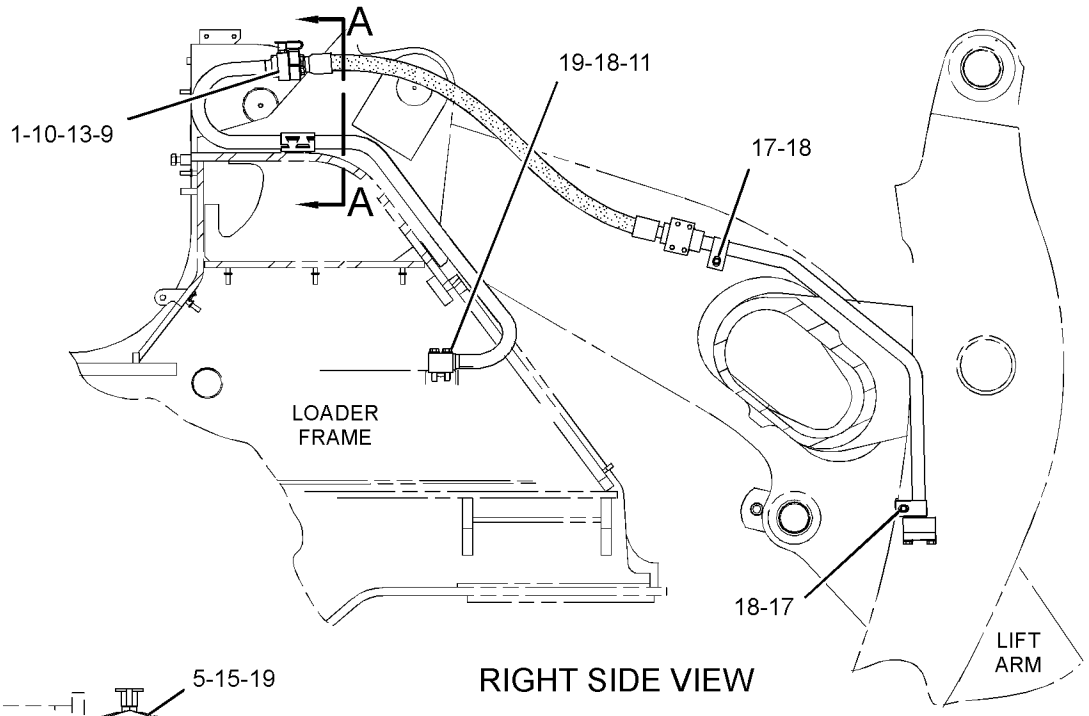

RIGHT SIDE VIEW

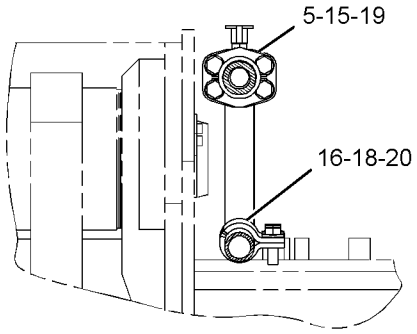

SECTION A-A

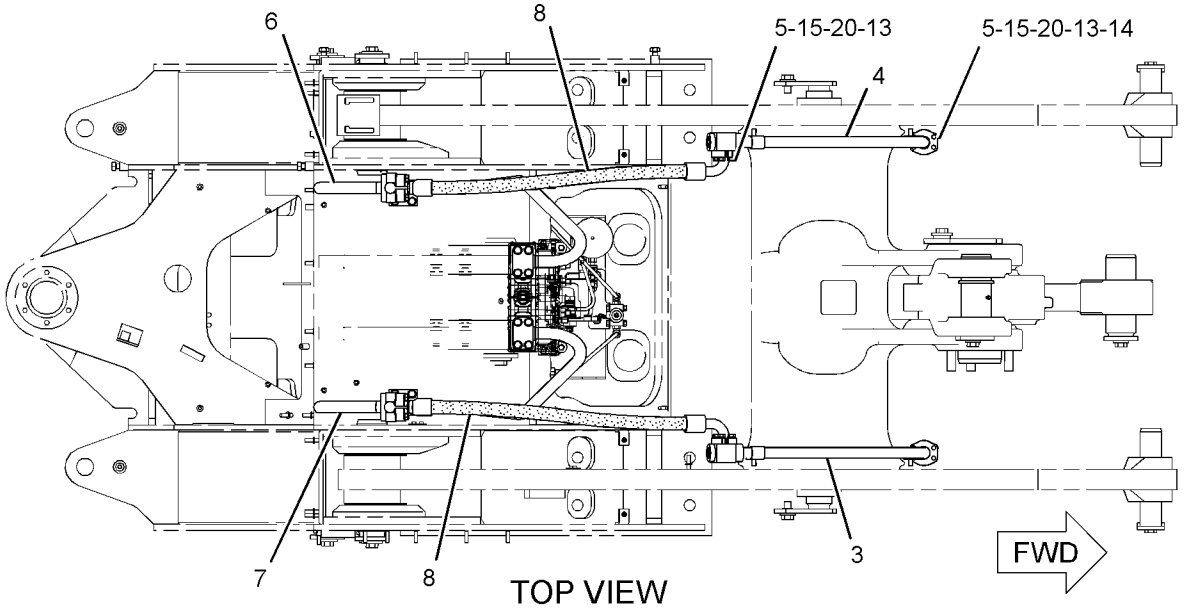

TOP VIEW

GRAPHIC #1

<END>

g01196290

HYDRAULIC SYSTEM

246-5290 LINES GP-FRONT

S/N: A7G1-UP
PART OF 236-9102 LIFT AR
AN ATTACHMENT

SMCS-5057 **i02415418**

NOTE	REF NO	GRAPHIC REF	PART NUMBER	QTY	PART NAME 1 2 3 4 5 6 (PRODUCT LEVEL)	SEE PAGE
	1	1	**197-3295**	12	FLANGE-HALF	
	2	1	**246-1151**	1	TUBE AS	
	3	1	**246-1153**	1	TUBE AS	
	4	1	**246-2951**	2	ADAPTER	
I	5	1	**246-6014**	2	HOSE AS	
	6	1	*164-5567*	2	FITTING GP-COUPLING	
					(EACH INCLUDES)	
		1	**3J-1907**	1	SEAL-O-RING	
		1	**6V-3965**	1	FITTING AS (QUICK DISCONNECT)	
	7	1	**173-2972**	1	TUBE AS	
	8	1	**173-3807**	1	TUBE AS	
	9	1	**1P-3704**	2	SEAL-RECTANGULAR	
	10	1	**4J-0522**	8	SEAL-O-RING	
	11	1	**5H-4020**	2	COVER	
	12	1	**6V-0852**	2	CAP-DUST	
	13	1	**7X-3392**	24	WASHER-HARD (13.5X22.5X3-MM THK)	
	14	1	**7Y-4538**	4	CLAMP-HALF	
M	15	1	**8T-4139**	6	BOLT (M12X1.75X30-MM)	
	16	1	**8T-4223**	18	WASHER-HARD (13.5X25.5X3-MM THK)	
M	17	1	**8T-4648**	16	BOLT (M12X1.75X70-MM)	
M	18	1	**8T-4956**	20	BOLT (M12X1.75X35-MM)	

I-REFER TO HYDRAULIC INFORMATION SYSTEM
M-METRIC PART

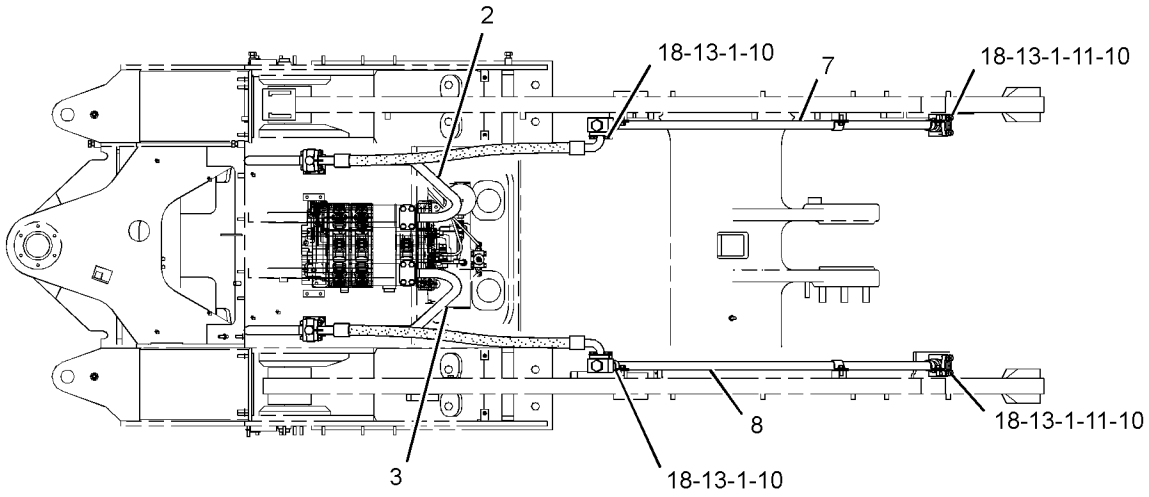

TOP VIEW

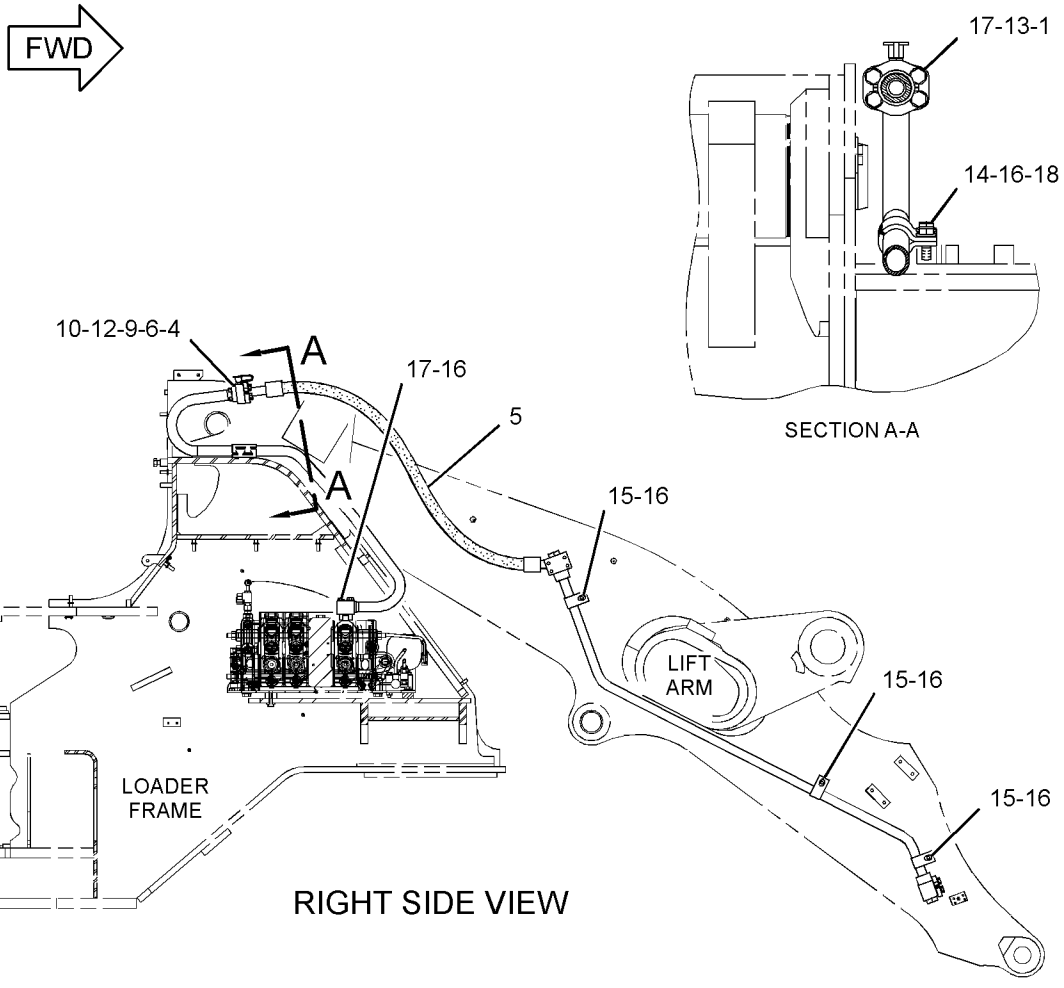

SECTION A-A

RIGHT SIDE VIEW

GRAPHIC #1 **<END>** g01195883

HYDRAULIC SYSTEM

236-8997 LINES GP-HYDRAULIC

S/N: A7G1-UP

PART OF 236-9055 HYDRAULIC AR-2 VALVE

SMCS-5057 **i02367694**

NOTE	REF NO	GRAPHIC REF	PART NUMBER	QTY	PART NAME 1 2 3 4 5 6 (PRODUCT LEVEL)	SEE PAGE
E	1	1	**7X-7893**		HOSE (13-CM)	
	2	1	**8T-6907**	1	VALVE GP-SHUTOFF	
	3	2	*148-8424*	1	TEE AS	
		2	**6V-8397**	1	SEAL-O-RING	
		2	**8T-8902**	1	TEE	
	4	2	*148-8440*	1	TEE GP-ORFS	
		2	**3D-2824**	1	SEAL-O-RING	
		2	**6V-9746**	1	SEAL-O-RING	
		2	**8C-0569**	1	TEE-O-RING	
	5	2	**162-9728**	1	BRACKET AS	
	6	2	*164-5567*	1	FITTING GP-COUPLING	
		2	**3J-1907**	1	SEAL-O-RING	
		2	**6V-3965**	1	FITTING AS (QUICK DISCONNECT)	
	7	1	*188-2008*	2	ELBOW AS	
					(EACH INCLUDES)	
		1	**3D-2824**	1	SEAL-O-RING	
		1	**5K-9090**	1	SEAL-O-RING	
		1	**8T-7970**	1	ELBOW	
	8	2	**220-0814**	1	VALVE-BREAKER RELIEF	
	9	1	*241-6209*	1	CROSS AS	
		1	**5K-9090**	3	SEAL-O-RING	
		1	**117-5208**	1	CROSS	
	10	2	**243-3720**	2	CLAMP	
I	11	1	**243-4186**	1	HOSE AS	
I	12	1	**243-4187**	1	HOSE AS	
	13	1	**243-4566**	1	TUBE AS	
I	14	2	**243-4623**	1	HOSE AS	
I	15	2	**243-4624**	1	HOSE AS	
I	16	2	**243-4625**	1	HOSE AS	
I	17	2	**243-4626**	1	HOSE AS	
I	18	1	**243-4692**	1	HOSE AS	
	19	1	**243-4786**	1	TUBE AS	
	20	2	**243-6897**	1	BRACKET AS	
Y	21	2	**245-5943**	1	VALVE GP-DRAIN (ECOLOGY, HYDRAULIC)	619
I	22	2	**246-1133**	1	HOSE AS	
	23	1	**246-3371**	1	TUBE AS	
Y	24	2	**249-2334**	1	FILTER GP-OIL (HYDRAULIC CASE DRAIN)	550
I	25	1	**255-3613**	1	HOSE AS	
I	26	2	**262-5320**	1	HOSE AS	
	27	1	**266-8708**	1	GUARD-HOSE	
	28	2	**270-7147**	1	BRACKET AS	
I	29	1	**273-3958**	1	HOSE AS	
	30	2	**273-3959**	1	TUBE AS	
I	31	2	**274-5871**	1	HOSE AS	
	32	1,2	**275-8880**	2	FLANGE	
I	33	1	**276-4167**	1	HOSE AS	
	34	2	**124-8333**	1	ELBOW	
	35	2	*148-8327*	1	CONNECTOR AS	
		2	**3D-2824**	1	SEAL-O-RING	
		2	**6V-8637**	1	CONNECTOR	
		2	**6V-9746**	1	SEAL-O-RING	
	36	2	*148-8336*	2	CONNECTOR AS	
					(EACH INCLUDES)	
		2	**3J-1907**	1	SEAL-O-RING	
		2	**6V-8397**	1	SEAL-O-RING	
		2	**6V-8636**	1	CONNECTOR	

236-8997 **LINES GP-HYDRAULIC** *(contd.)* **i02367694**

NOTE	REF NO	GRAPHIC REF	PART NUMBER	QTY	PART NAME 1 2 3 4 5 6 (PRODUCT LEVEL)	SEE PAGE
	37	2	*148-8352*	1	ELBOW GP	
		2	**5K-9090**	1	SEAL-O-RING	
		2	**6V-9854**	1	ELBOW (SWIVEL)	
	38	2	*148-8357*	1	ELBOW AS	
		2	**5K-9090**	1	SEAL-O-RING	
		2	**6V-9008**	1	ELBOW	
		2	**7M-8485**	1	SEAL-O-RING	
	39	2	*148-8366*	1	ELBOW GP	
		2	**6V-8397**	2	SEAL-O-RING	
		2	**6V-8987**	1	ELBOW	
	40	1	*148-8378*	1	ELBOW AS	
		1	**3J-1907**	1	SEAL-O-RING	
		1	**6V-8397**	1	SEAL-O-RING	
		1	**6V-8724**	1	ELBOW	
	41	2	*148-8380*	1	ELBOW AS	
		2	**6V-8398**	2	SEAL-O-RING	
		2	**6V-8988**	1	ELBOW	
	42	2	*148-8392*	1	ELBOW AS	
		2	**6V-9746**	1	SEAL-O-RING	
		2	**6V-9853**	1	ELBOW	
	43	2	*148-8455*	1	UNION AS	
		2	**6V-8997**	1	UNION	
		2	**6V-9746**	2	SEAL-O-RING	
	44	2	*150-3068*	1	UNION AS	
		2	**5K-9090**	2	SEAL-O-RING	
		2	**6V-9649**	1	UNION	
	45	2	*153-6230*	1	CONNECTOR GP	
		2	**2M-9780**	1	SEAL-O-RING	
		2	**5K-9090**	1	SEAL-O-RING	
		2	**8T-9386**	1	CONNECTOR	
	46	1	*153-6248*	1	ADAPTER AS	
		1	**6V-8397**	1	SEAL-O-RING	
		1	**8T-6663**	1	ADAPTER-PORT	
	47	1	*164-5574*	1	TEE GP	
		1	**3D-2824**	1	SEAL-O-RING	
		1	**6V-8784**	1	TEE-FACE SEAL	
		1	**6V-9746**	2	SEAL-O-RING	
	48	2	*171-6723*	1	ELBOW AS	
		2	**6V-9746**	1	SEAL-O-RING	
		2	**8T-8899**	1	ELBOW	
	49	1,2	**1P-3704**	2	SEAL-RECTANGULAR	
	50	1,2	**1P-4579**	8	FLANGE-HALF	
	51	1,2	**1P-5767**	4	FLANGE-HALF	
	52	2	**1S-0994**	2	CLIP	
	53	2	*225-7657*	1	ELBOW AS	
		2	**3K-0360**	1	SEAL-O-RING	
		2	**9X-2091**	1	ELBOW (SWIVEL)	
	54	1,2	**2H-6338**	2	SEAL-O-RING	
	55	2	**2P-1293**	1	LOCKNUT (1-3/16-12-THD)	
	56	2	**3D-2824**	1	SEAL-O-RING	
	57	2	**3P-2404**	1	CLIP	
	58	2	**4D-7388**	1	CLIP	
	59	1,2	**4J-0524**	4	SEAL-O-RING	
	60	2	**5D-0718**	1	CLIP	
	61	1	**5P-1076**	2	WASHER-HARD (13.5X30X4-MM THK)	
	62	2	**6D-4246**	2	CLIP	
	63	2	**6V-0852**	1	CAP-DUST	
	64	2	**6V-1875**	1	GROMMET	
	65	2	**6V-1889**	2	CLIP	

236-8997 **LINES GP-HYDRAULIC** *(contd.)* **i02367694**

NOTE	REF NO	GRAPHIC REF	PART NUMBER	QTY	PART NAME 1 2 3 4 5 6 (PRODUCT LEVEL)	SEE PAGE
	66	2	**6V-9168**	1	NUT (11/16-16-THD)	
	67	2	**6V-9169**	1	NUT-BULKHEAD (13/16-16-THD)	
	68	2	**6V-9829**	1	CAP AS	
	69	2	**7K-1401**	1	CLIP	
	70	2	**7K-1402**	1	BRACKET	
	71	2	**7M-8485**	1	SEAL-O-RING	
	72	1,2	**7X-0591**	8	WASHER-HARD (17X29X3-MM THK)	
M	73	2	**7X-2543**	4	BOLT (M10X1.5X120-MM)	
	74	2	**8T-4121**	13	WASHER-HARD (11X21X2.5-MM THK)	
M	75	2	**8T-4136**	3	BOLT (M10X1.5X25-MM)	
M	76	2	**8T-4137**	6	BOLT (M10X1.5X20-MM)	
M	77	1	**8T-4183**	8	BOLT (M12X1.75X40-MM)	
M	78	1	**8T-4184**	4	BOLT (M12X1.75X45-MM)	
M	79	2	**8T-4192**	3	BOLT (M12X1.75X25-MM)	
M	80	1,2	**8T-4193**	10	BOLT (M16X2X50-MM)	
M	81	1,2	**8T-4194**	8	BOLT (M12X1.75X50-MM)	
	82	1,2	**8T-4223**	27	WASHER-HARD (13.5X25.5X3-MM THK)	
M	83	1,2	**8T-4956**	6	BOLT (M12X1.75X35-MM)	
	84	1	**8T-4985**	2	CLAMP-HOSE	
	85	2	**9X-8257**	2	WASHER (17.5X30X3.5-MM THK)	

E-ORDER BY THE CENTIMETER
I-REFER TO HYDRAULIC INFORMATION SYSTEM
M-METRIC PART
Y-SEPARATE ILLUSTRATION

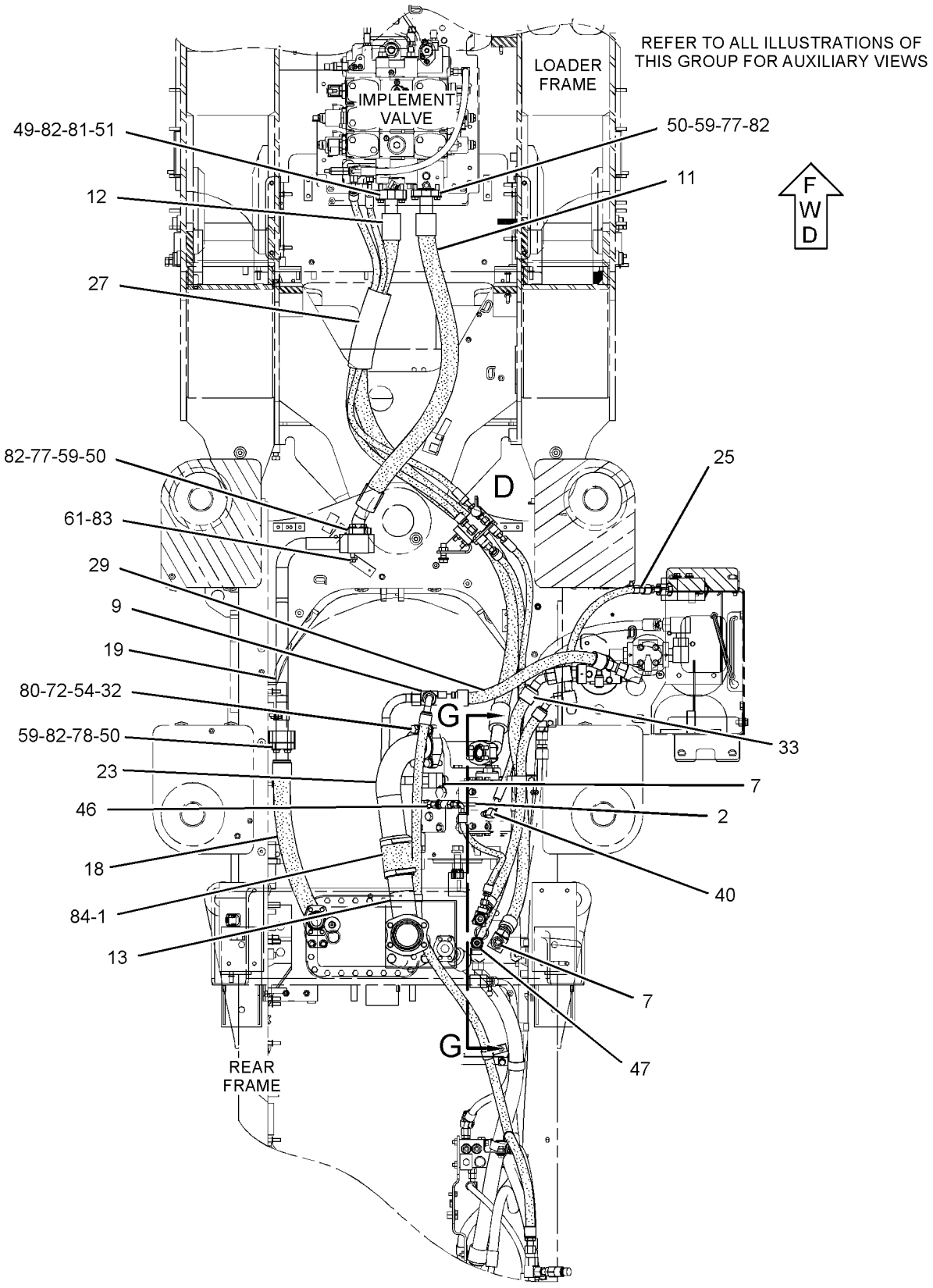

TOP VIEW

GRAPHIC #1

g01196872

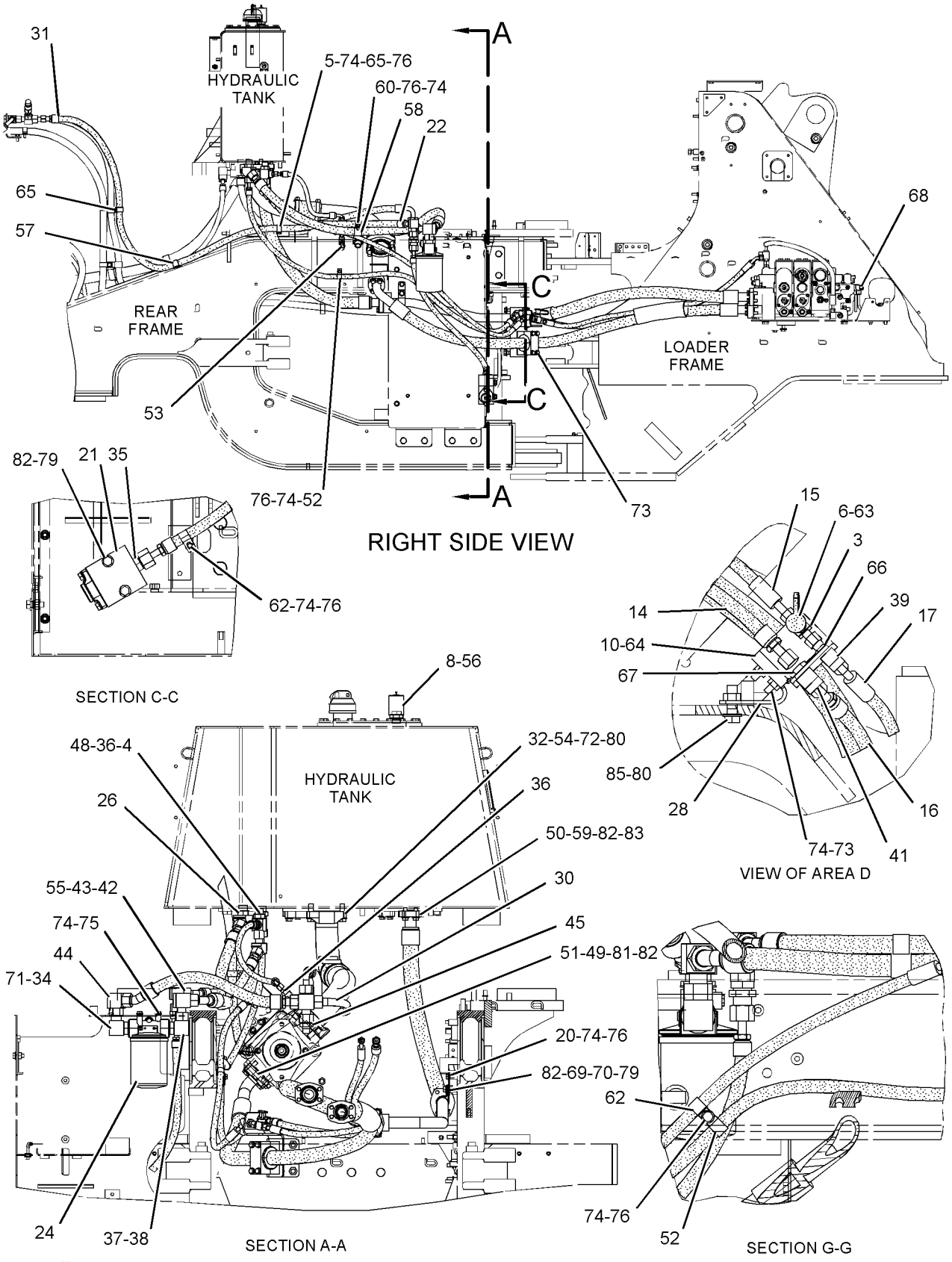

GRAPHIC #2 **<END>** g01196879

HYDRAULIC SYSTEM

236-8983 LINES GP-HYDRAULIC OIL COOLER

S/N: A7G1-UP

PART OF 236-9051 CHASSIS AR

SMCS-1374, 5057 **i02412601**

NOTE	REF NO	GRAPHIC REF	PART NUMBER	QTY	PART NAME 1 2 3 4 5 6 (PRODUCT LEVEL)	SEE PAGE
	1	3	**8X-4186**	2	WASHER (32X60X3-MM THK)	
	2	1	**127-9323**	1	BRACKET AS	
	3	1	**144-4613**	1	ANGLE AS	
	4	3	*148-8424*	1	TEE AS	
		3	**6V-8397**	1	SEAL-O-RING	
		3	**8T-8902**	1	TEE	
	5	2	*148-8443*	1	TEE GP	
		2	**3J-1907**	1	SEAL-O-RING	
		2	**6V-8397**	1	SEAL-O-RING	
		2	**7X-2459**	1	TEE-O-RING	
	6	1	*148-8447*	1	TEE AS-SWIVEL	
		1	**7J-9108**	1	SEAL-O-RING	
		1	**7X-0872**	1	TEE-SWIVEL	
	7	2	*164-5611*	1	TEE AS	
		2	**6V-9746**	1	SEAL-O-RING	
		2	**7M-8485**	1	SEAL-O-RING	
		2	**8T-3312**	1	TEE	
	8	2	*164-6874*	1	FITTING AS	
		2	**3J-1907**	1	SEAL-O-RING	
		2	**085-7356**	1	FITTING	
	9	3	**173-1583**	1	BRACKET AS	
	10	3	**204-9734**	1	SPACER (11X18X25-MM THK)	
Y	11	3	**242-1307**	1	MANIFOLD GP-CONTROL (BRAKE CHARGE, HYD FAN CONTROL)	573
Y	12	3	**244-1031**	1	FILTER GP-OIL (HYDRAULIC)	549
Y	13	2	**244-1426**	1	VALVE GP-CHECK (HYDRAULIC OIL COOLER BYPASS)	607
	14	2	**244-8832**	1	TUBE AS	
I	15	3	**244-8836**	1	HOSE AS	
I	16	1	**244-8837**	1	HOSE AS	
	17	3	**246-0573**	1	TUBE AS	
I	18	1	**246-1573**	1	HOSE AS	
I	19	1	**246-1708**	1	HOSE AS	
	20	3	**253-1540**	1	BRACKET AS	
	21	3	**254-6581**	1	PLATE AS	
	22	2	**255-0185**	1	SPACER (11X18X37-MM THK)	
I	23	3	**268-3755**	1	HOSE AS	
	24	1	**270-1738**	1	BRACKET	
I	25	1	**270-1739**	1	HOSE AS	
I	26	1	**270-1740**	1	HOSE AS	
I	27	1	**279-6580**	1	HOSE AS	
	28	3	**089-7338**	2	SLEEVE	
	29	1	*148-8315*	1	CONNECTOR AS	
		1	**2M-9780**	1	SEAL-O-RING	
		1	**6V-8642**	1	CONNECTOR	
		1	**7J-9108**	1	SEAL-O-RING	
	30	1	*148-8327*	2	CONNECTOR AS	
					(EACH INCLUDES)	
		1	**3D-2824**	1	SEAL-O-RING	
		1	**6V-8637**	1	CONNECTOR	
		1	**6V-9746**	1	SEAL-O-RING	
	31	3	*148-8352*	1	ELBOW GP	
		3	**5K-9090**	1	SEAL-O-RING	
		3	**6V-9854**	1	ELBOW (SWIVEL)	
	32	3	*148-8353*	1	ELBOW AS	
		3	**3J-1907**	1	SEAL-O-RING	
		3	**6V-8397**	1	SEAL-O-RING	

236-8983 LINES GP-HYDRAULIC OIL COOLER *(contd.)* i02412601

NOTE	REF NO	GRAPHIC REF	PART NUMBER	QTY	PART NAME 1 2 3 4 5 6 (PRODUCT LEVEL)	SEE PAGE
		3	**6V-9001**	1	ELBOW	
	33	3	*148-8357*	1	ELBOW AS	
		3	**5K-9090**	1	SEAL-O-RING	
		3	**6V-9008**	1	ELBOW	
		3	**7M-8485**	1	SEAL-O-RING	
	34	3	*148-8360*	1	ELBOW AS	
		3	**6V-9182**	1	ELBOW	
		3	**6V-9746**	1	SEAL-O-RING	
		3	**7M-8485**	1	SEAL-O-RING	
	35	3	*148-8367*	1	ELBOW AS	
		3	**6V-8397**	1	SEAL-O-RING	
		3	**6V-9850**	1	ELBOW	
	36	3	*148-8376*	1	ELBOW AS	
		3	**6V-8983**	1	ELBOW	
		3	**6V-9746**	2	SEAL-O-RING	
	37	3	*148-8388*	1	ELBOW AS	
		3	**2M-9780**	1	SEAL-O-RING	
		3	**6V-8629**	1	ELBOW	
		3	**6V-9746**	1	SEAL-O-RING	
	38	1,2,3	*148-8392*	5	ELBOW AS	
					(EACH INCLUDES)	
		1,2,3	**6V-9746**	1	SEAL-O-RING	
		1,2,3	**6V-9853**	1	ELBOW	
	39	3	*148-8413*	1	REDUCER AS	
		3	**4J-5477**	1	SEAL-O-RING	
		3	**6V-8934**	1	REDUCER	
	40	2	*148-8449*	1	TEE AS-SWIVEL	
		2	**6V-9746**	2	SEAL-O-RING	
		2	**6V-9839**	1	TEE-SWIVEL	
	41	3	*148-8455*	1	UNION AS	
		3	**6V-8997**	1	UNION	
		3	**6V-9746**	2	SEAL-O-RING	
	42	1	*150-3035*	1	ELBOW AS	
		1	**6V-9746**	1	SEAL-O-RING	
		1	**8T-1718**	1	ELBOW	
	43	3	*150-4043*	1	CONNECTOR AS	
		3	**3J-1907**	1	SEAL-O-RING	
		3	**6V-8398**	1	SEAL-O-RING	
		3	**6V-9873**	1	CONNECTOR	
	44	2	*150-4047*	1	ADAPTER AS	
		2	**3J-7354**	1	SEAL-O-RING	
		2	**8T-2353**	1	ADAPTER	
	45	2	*153-6237*	3	ELBOW AS	
					(EACH INCLUDES)	
		2	**3D-2824**	1	SEAL-O-RING	
		2	**6V-9004**	1	ELBOW	
		2	**6V-9746**	1	SEAL-O-RING	
	46	1	*153-6256*	1	ELBOW AS	
					(EACH INCLUDES)	
		1	**7J-9108**	1	SEAL-O-RING	
		1	**8C-7563**	1	ELBOW	
	47	1	*155-3504*	1	ELBOW GP	
		1	**2M-9780**	1	SEAL-O-RING	
		1	**6V-9003**	1	ELBOW	
		1	**7J-9108**	1	SEAL-O-RING	
	48	1,2	*164-5567*	3	FITTING GP-COUPLING	
					(EACH INCLUDES)	
		1,2	**3J-1907**	1	SEAL-O-RING	
		1,2	**6V-3965**	1	FITTING AS (QUICK DISCONNECT)	

236-8983 LINES GP-HYDRAULIC OIL COOLER *(contd.)* i02412601

NOTE	REF NO	GRAPHIC REF	PART NUMBER	QTY	PART NAME 1 2 3 4 5 6 (PRODUCT LEVEL)	SEE PAGE
	49	2	*164-5573*	1	UNION AS	
		2	**6V-8398**	1	SEAL-O-RING	
		2	**6V-8738**	1	UNION	
		2	**7J-9108**	1	SEAL-O-RING	
	50	1	*164-6860*	1	TEE AS	
		1	**6V-9350**	1	TEE-BULKHEAD	
		1	**7J-9108**	3	SEAL-O-RING	
I	51	1	**165-4769**	1	HOSE AS	
I	52	1	**166-7959**	1	HOSE AS	
	53	2	*171-6723*	1	ELBOW AS	
		2	**6V-9746**	1	SEAL-O-RING	
		2	**8T-8899**	1	ELBOW	
	54	2	*171-6728*	1	ELBOW GP	
		2	**3K-0360**	1	SEAL-O-RING	
		2	**8T-0249**	1	ELBOW (SWIVEL)	
	55	3	*172-9287*	1	CONNECTOR AS	
		3	**3J-1907**	1	SEAL-O-RING	
		3	**6V-8397**	1	SEAL-O-RING	
		3	**7E-9898**	1	CONNECTOR	
	56	3	**1P-4578**	2	FLANGE-HALF	
	57	2	**1P-4579**	2	FLANGE-HALF	
I	58	2	**250-1656**	1	HOSE AS	
	59	3	**2P-1293**	2	LOCKNUT (1-3/16-12-THD)	
	60	1,3	**3P-2404**	4	CLIP	
	61	3	**4J-0522**	1	SEAL-O-RING	
	62	2	**4J-0524**	1	SEAL-O-RING	
	63	3	**5P-4116**	4	WASHER-HARD (8.8X20.5X2-MM THK)	
	64	3	**6D-4244**	1	CLIP	
	65	1,2	**6V-0852**	3	CAP-DUST	
	66	1,2	**6V-1889**	9	CLIP	
	67	1	**6V-9170**	1	NUT-BULKHEAD (1-14-THD)	
	68	1,3	**7D-1553**	3	CLIP	
	69	1,2,3	**7X-7729**	3	WASHER (11X25X3-MM THK)	
	70	1	**8T-2920**	1	GROMMET	
	71	1,2,3	**8T-4121**	25	WASHER-HARD (11X21X2.5-MM THK)	
M	72	1,2	**8T-4133**	5	NUT (M10X1.15-THD)	
M	73	1,3	**8T-4136**	8	BOLT (M10X1.5X25-MM)	
M	74	1,2,3	**8T-4137**	7	BOLT (M10X1.5X20-MM)	
M	75	3	**8T-4182**	1	BOLT (M10X1.5X45-MM)	
M	76	2,3	**8T-4184**	8	BOLT (M12X1.75X45-MM)	
M	77	3	**8T-4189**	5	BOLT (M8X1.25X20-MM)	
M	78	1,2,3	**8T-4195**	4	BOLT (M10X1.5X30-MM)	
	79	2,3	**8T-4223**	8	WASHER-HARD (13.5X25.5X3-MM THK)	
	80	3	**8T-4224**	1	WASHER-HARD (8.8X16X2-MM THK)	
M	81	2	**8T-5005**	1	BOLT (M10X1.5X70-MM)	
M	82	3	**8T-5436**	2	BOLT (M10X1.5X130-MM)	
	83	2	**9X-8250**	2	CLIP	
E	84	1	**7Y-5074**		GUARD (43-CM)	
E	84A	1	**7Y-5074**		GUARD (70-CM)	

E-ORDER BY THE CENTIMETER
I-REFER TO HYDRAULIC INFORMATION SYSTEM
M-METRIC PART
Y-SEPARATE ILLUSTRATION

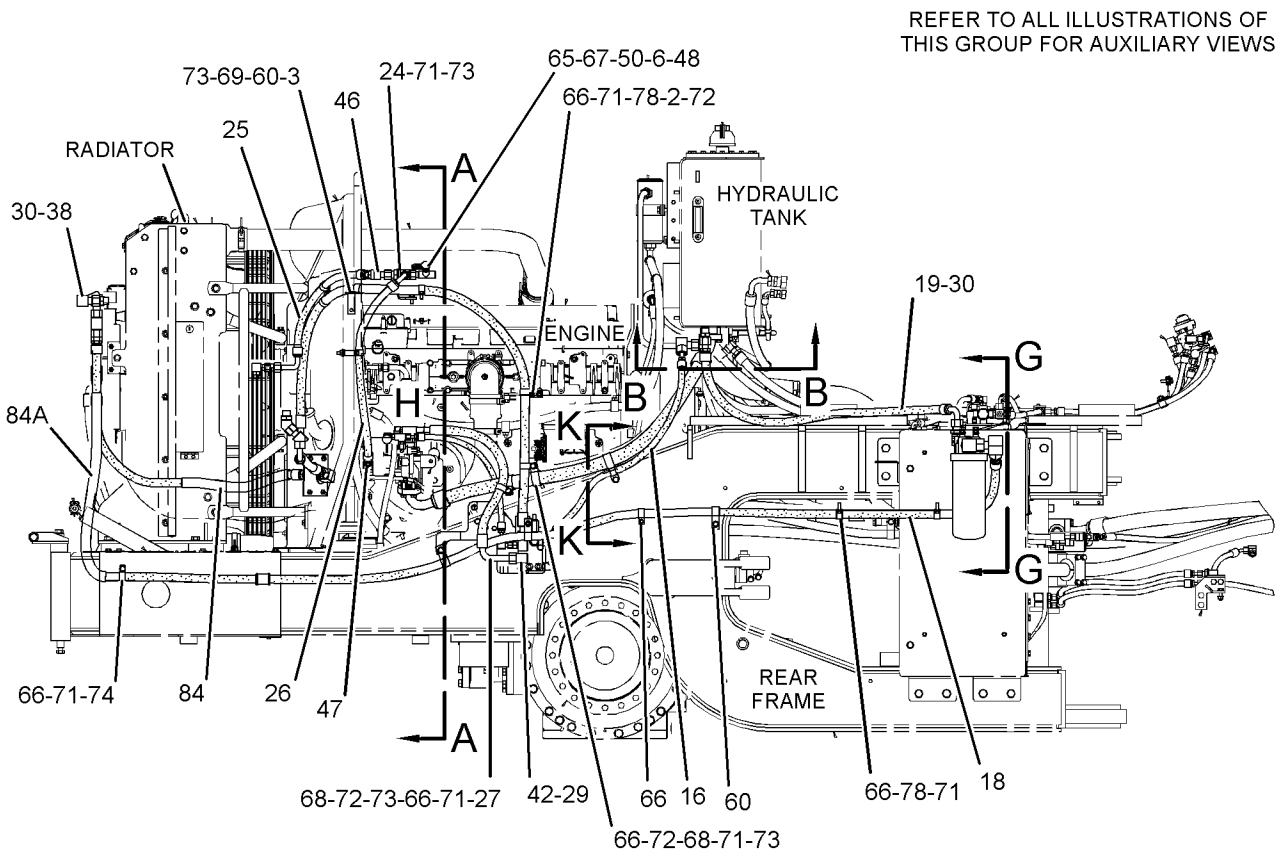

RIGHT SIDE VIEW

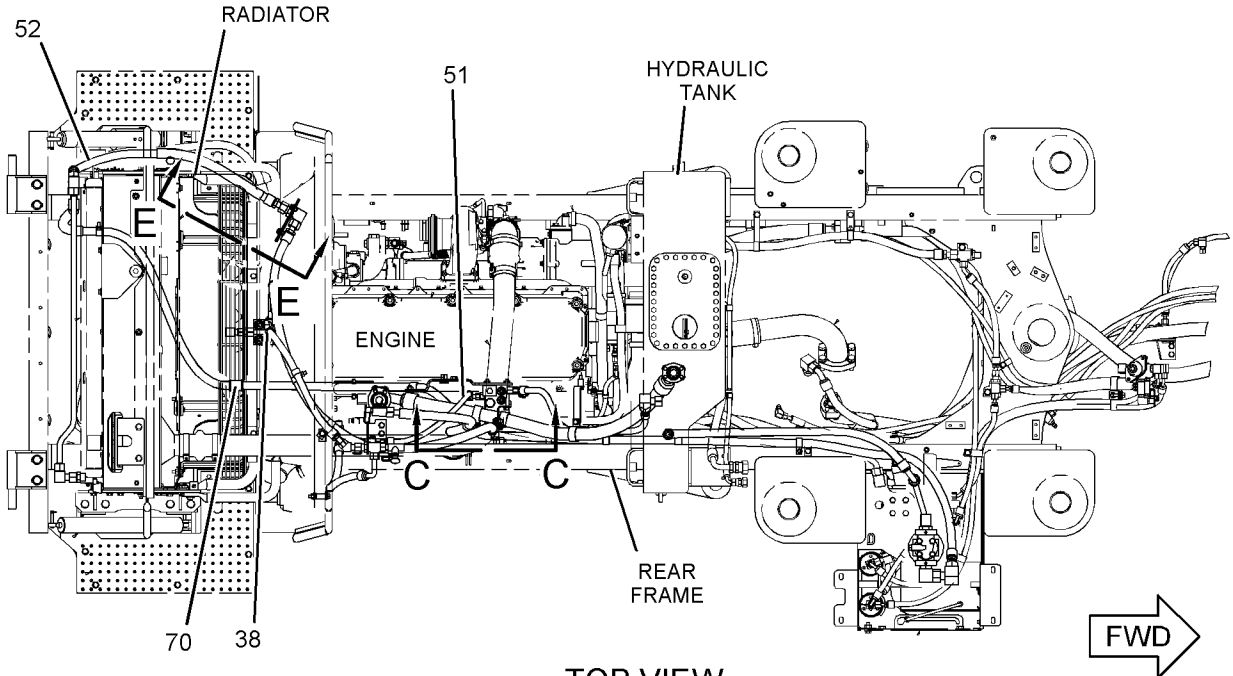

TOP VIEW

GRAPHIC #1

g01208079

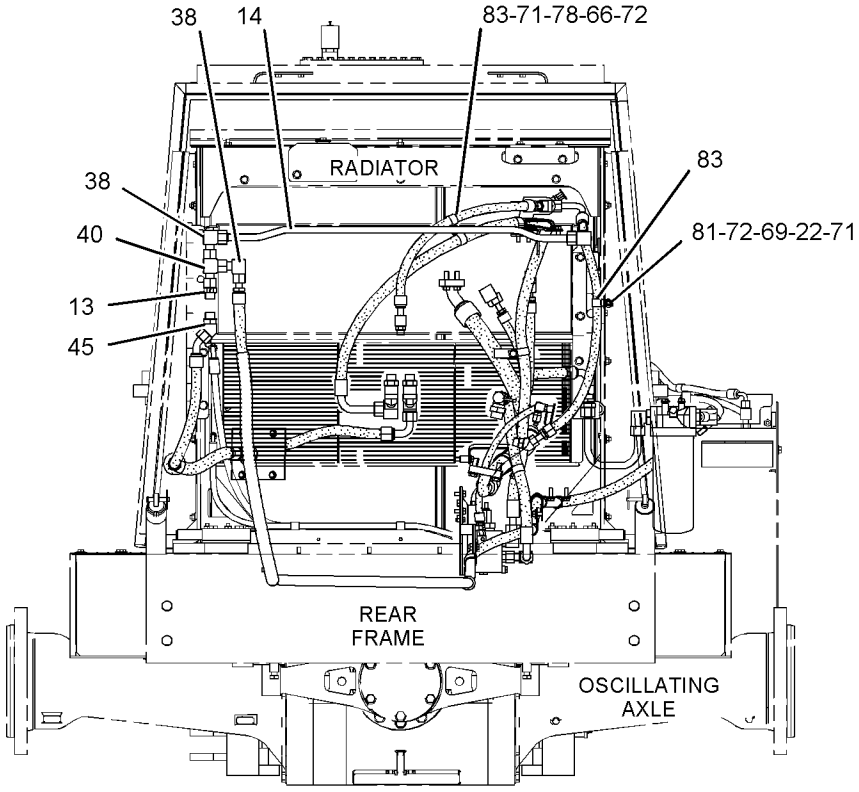

REAR VIEW

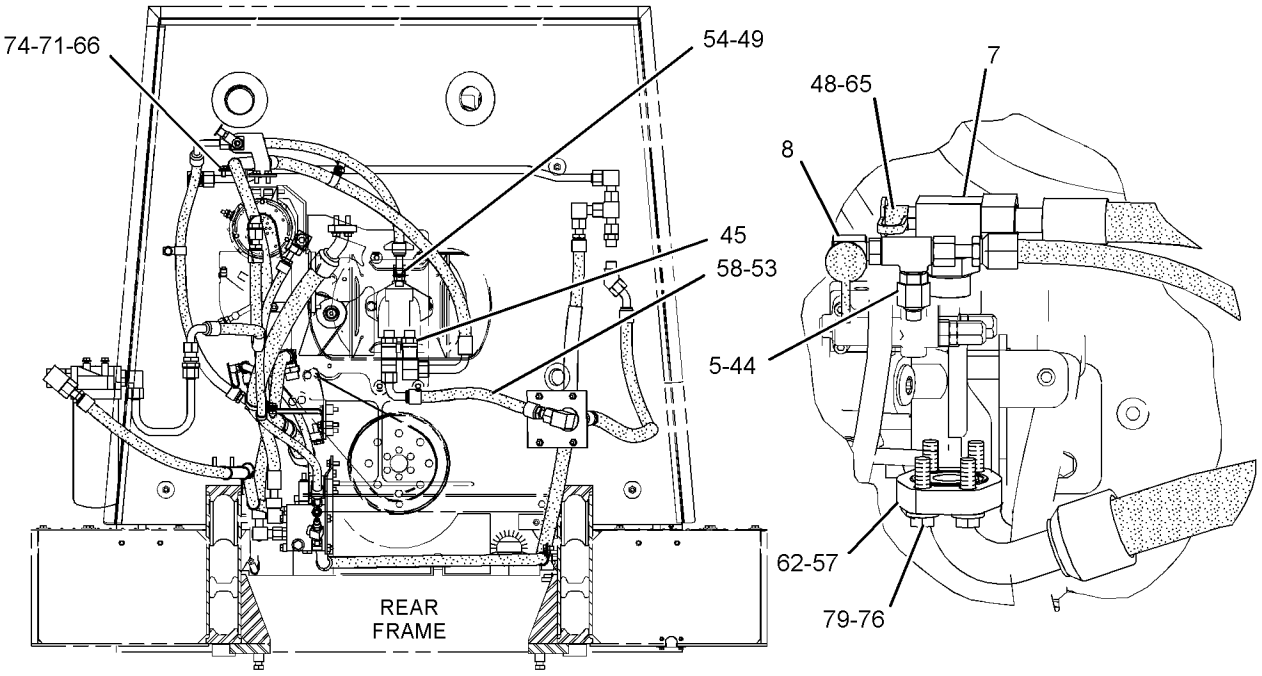

SECTION A-A

VIEW OF AREA H

GRAPHIC #2

g01208080

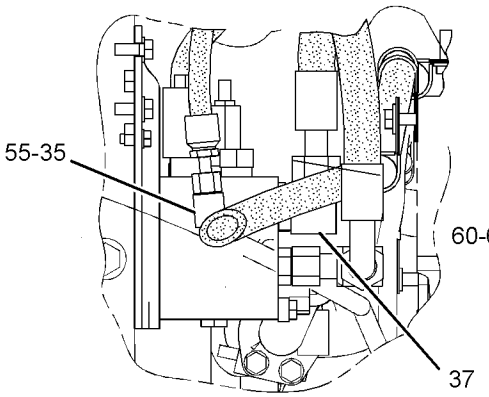

SECTION D-D

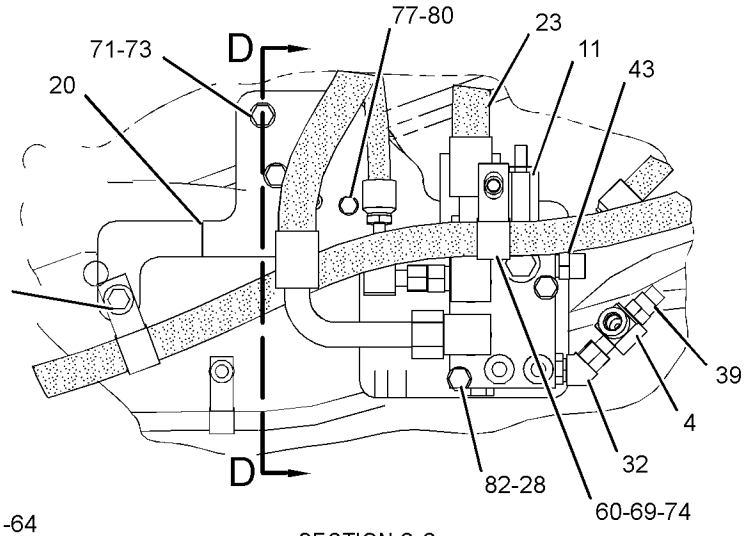

SECTION C-C

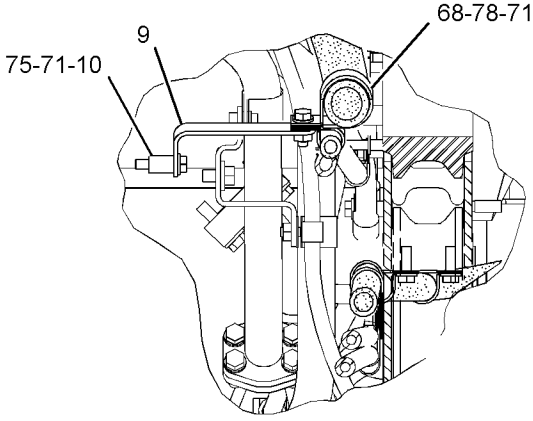

SECTION K-K

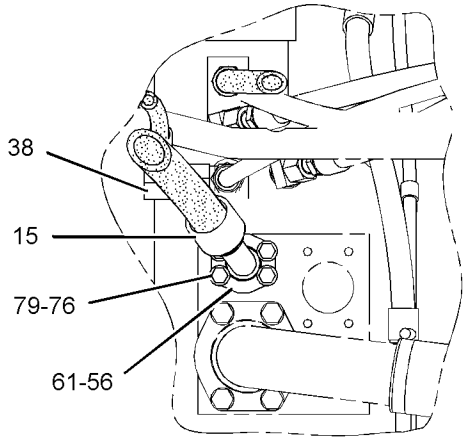

SECTION B-B

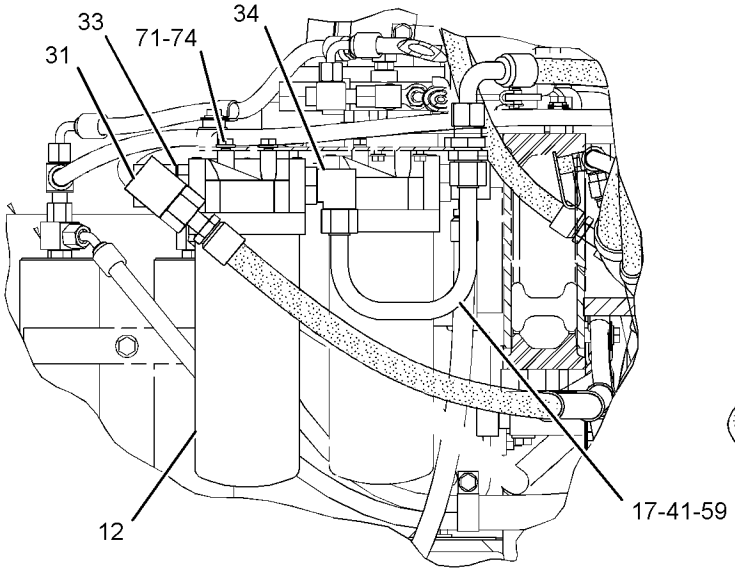

SECTION G-G

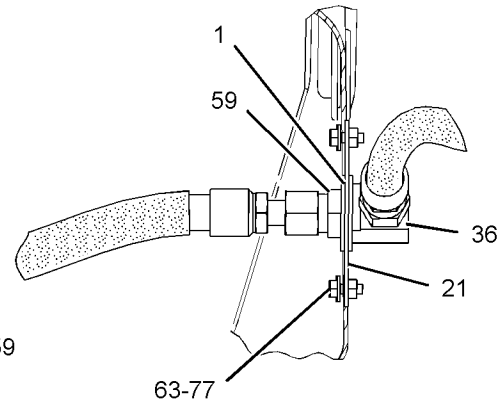

SECTION E-E

GRAPHIC #3 **<END>** g01208081

HYDRAULIC SYSTEM

236-9033 LINES GP-LIFT CYLINDER

S/N: A7G1-UP

PART OF 236-9055 HYDRAULIC AR-2 VALVE

SMCS-5057, 5102 **i02411877**

NOTE	REF NO	GRAPHIC REF	PART NUMBER	QTY	PART NAME 1 2 3 4 5 6 (PRODUCT LEVEL)	SEE PAGE
	1	1	**244-3322**	1	TUBE AS	
	2	1	**244-3323**	1	TUBE AS	
	3	1	**244-3324**	1	TUBE AS	
	4	1	**244-3325**	1	TUBE AS	
	5	1	**244-3329**	1	TUBE AS	
	6	1	**244-3330**	1	TUBE AS	
I	7	1	**244-3336**	2	HOSE AS	
I	8	1	**250-4262**	2	HOSE AS	
	9	1	**267-8937**	1	BRACKET AS	
	10	1	**267-9445**	1	BRACKET AS	
	11	1	**255-8482**	1	BRACKET AS	
	12	1	**255-8484**	1	BRACKET AS	
	13	1	**1P-3703**	2	SEAL-RECTANGULAR	
	14	1	**1P-3704**	12	SEAL-RECTANGULAR	
	15	1	**1P-5767**	12	FLANGE-HALF	
	16	1	**6V-0400**	4	FLANGE-HALF	
	17	1	**7Y-4538**	12	CLAMP-HALF	
M	18	1	**8T-4183**	16	BOLT (M12X1.75X40-MM)	
M	19	1	**8T-4184**	24	BOLT (M12X1.75X45-MM)	
M	20	1	**8T-4192**	8	BOLT (M12X1.75X25-MM)	
M	21	1	**8T-4194**	8	BOLT (M12X1.75X50-MM)	
	22	1	**8T-4223**	76	WASHER-HARD (13.5X25.5X3-MM THK)	
M	23	1	**8T-4648**	8	BOLT (M12X1.75X70-MM)	
M	24	1	**8T-4956**	12	BOLT (M12X1.75X35-MM)	

I-REFER TO HYDRAULIC INFORMATION SYSTEM
M-METRIC PART

236-9033 **LINES GP-LIFT CYLINDER** *(contd.)* **i02411877**

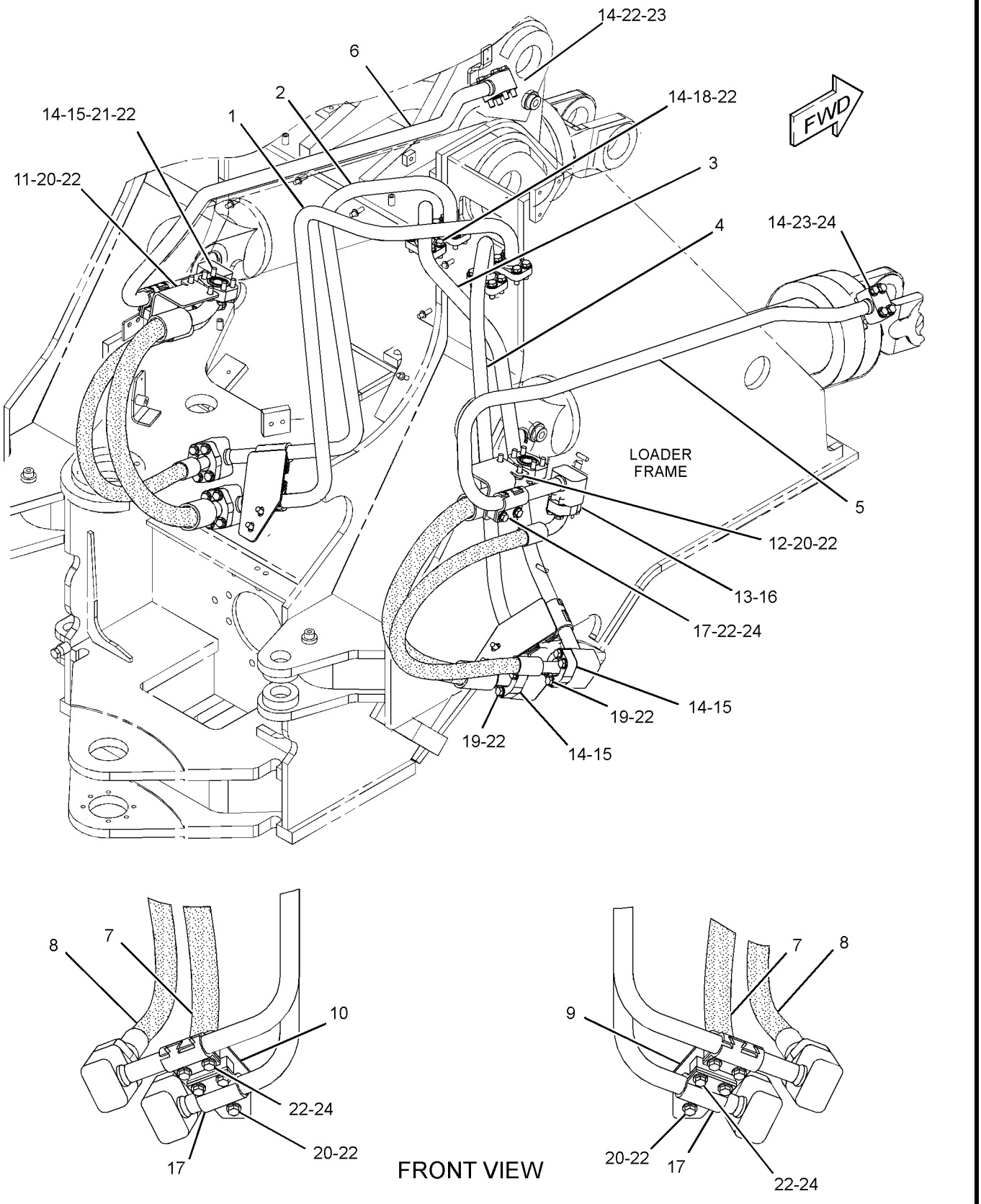

GRAPHIC #1 **<END>** g01210650

HYDRAULIC SYSTEM

236-9034 LINES GP-TILT CYLINDER

S/N: A7G1-UP

PART OF 236-9055 HYDRAULIC AR-2 VALVE

SMCS-5057, 5104 **i02234335**

NOTE	REF NO	GRAPHIC REF	PART NUMBER	QTY	PART NAME 1 2 3 4 5 6 (PRODUCT LEVEL)	SEE PAGE
	1	1	**6V-0852**	2	CAP-DUST	
	2	1	**245-7302**	1	TUBE AS	
	3	1	**245-7304**	1	TUBE AS	
	4	1	**245-7306**	1	TUBE AS	
I	5	1	**245-7307**	1	HOSE AS	
I	6	1	**245-7308**	1	HOSE AS	
	7	1	**245-7576**	2	ADAPTER	
	8	1	**254-3569**	1	BRACKET AS	
M		1	**8T-3597**	2	NUT-WELD (M12X1.75-THD)	
	9	1	*164-5567*	2	FITTING GP-COUPLING	
					(EACH INCLUDES)	
		1	**3J-1907**	1	SEAL-O-RING	
		1	**6V-3965**	1	FITTING AS (QUICK DISCONNECT)	
	10	1	**1P-3704**	7	SEAL-RECTANGULAR	
	11	1	**1P-3705**	2	SEAL-RECTANGULAR	
	12	1	**1P-5767**	8	FLANGE-HALF	
	13	1	**7Y-4538**	6	CLAMP-HALF	
M	14	1	**8T-4139**	4	BOLT (M12X1.75X30-MM)	
M	15	1	**8T-4183**	8	BOLT (M12X1.75X40-MM)	
M	16	1	**8T-4194**	8	BOLT (M12X1.75X50-MM)	
	17	1	**8T-4223**	36	WASHER-HARD (13.5X25.5X3-MM THK)	
M	18	1	**8T-4648**	4	BOLT (M12X1.75X70-MM)	
M	19	1	**8T-4956**	4	BOLT (M12X1.75X35-MM)	
M	20	1	**8T-6868**	8	BOLT (M12X1.75X80-MM)	

I-REFER TO HYDRAULIC INFORMATION SYSTEM
M-METRIC PART

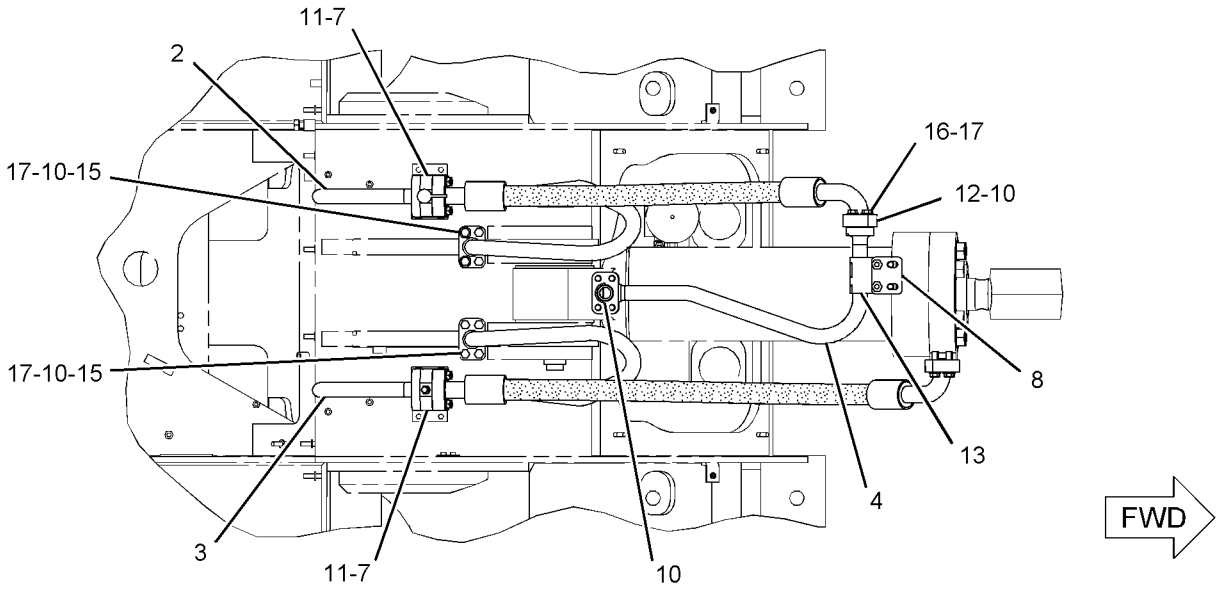

TOP VIEW

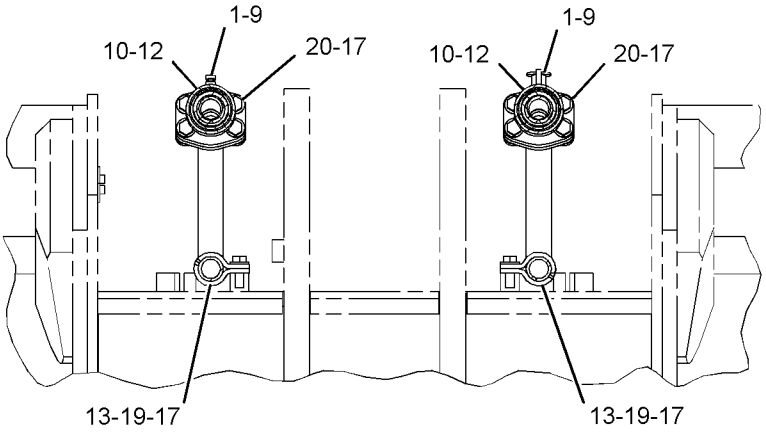

SECTION A-A

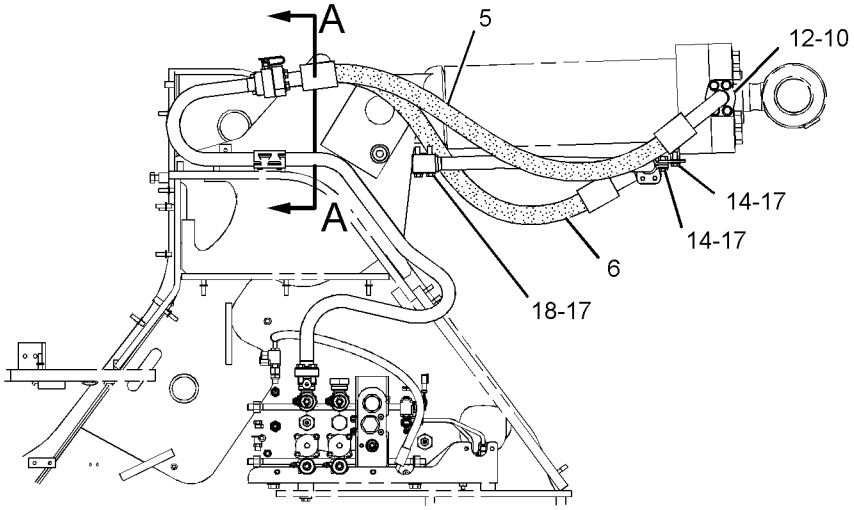

RIGHT SIDE VIEW

GRAPHIC #1 **<END>** g01128369

242-1307 MANIFOLD GP-CONTROL–
BRAKE CHARGE, HYD FAN CONTROL
S/N: A7G1-UP

PART OF 236-8983 LINES GP-HYDRAULIC OIL COOLER

SMCS-4264, 5072, 5264, 5467, 5479 **i02343634**

NOTE	REF NO	GRAPHIC REF	PART NUMBER	QTY	PART NAME 1 2 3 4 5 6 (PRODUCT LEVEL)	SEE PAGE
Y	1	1	**252-9256**	1	VALVE GP-DIVERTER (HYDRAULIC FAN)	618
Y	2	1	**158-9956**	1	VALVE GP-CHECK (BRAKE OIL)	605
J	3	1	**239-0621**	1	VALVE GP-DIVERTER (HYDRAULIC TANK)	
	4	1	**256-9997**	1	VALVE GP-RELIEF (HYDRAULIC TANK)	
		1	**3K-0360**	1	SEAL-O-RING	
		1	**161-6154**	1	SEAL-O-RING	
		1	**6E-0381**	1	RING-BACKUP	
H	5	1	**245-8355**	1	VALVE GP-RELIEF (BRAKE)	
H		1	**2M-9780**	1	SEAL-O-RING	
H		1	**161-6149**	1	SEAL-O-RING	
H		1	**161-6161**	2	RING-BACKUP	
Y	6	1	**249-5227**	1	VALVE GP-SHUTTLE (BRAKE ACCUMULATOR)	637
L	7	1	**239-0618**	1	VALVE GP-SHUTTLE (BRAKE, HYDRAULIC FAN)	
L		1	**3H-0442**	1	SEAL-O-RING	
Y	8	1	**183-7595**	1	VALVE GP-SOLENOID (24-VOLT) (BRAKE, HYDRAULIC FAN)	639
	9	1	**6E-5066**	1	SCREEN (CONTROL VALVE MANIFOLD)	
	10	1	**246-0535**	1	PLUG-ORIFICE	
	11	1	**9S-8001**	2	PLUG	
	12	1	**9S-8004**	1	PLUG	
	13	1	**4J-7533**	2	SEAL-O-RING	
	14	1	**3J-1907**	2	SEAL-O-RING	
					AVAILABLE REPAIR KIT(S):	
J			**200-6282**	1	KIT-SEAL (DIVERTER VALVE)	
					(INCLUDES SEALS & RINGS)	
H			**133-5545**	1	KIT-SEAL (RELIEF VALVE)	
					(INCLUDES SEALS & RINGS)	
L			**239-5195**	1	KIT-SEAL (SHUTTLE VALVE)	
					(INCLUDES SEALS & RINGS)	

H-KIT MARKED H SERVICES PARTS MARKED H
J-KIT MARKED J SERVICES PARTS MARKED J
L-KIT MARKED L SERVICES PARTS MARKED L
Y-SEPARATE ILLUSTRATION

242-1307 MANIFOLD GP-CONTROL *(contd.)* i02343634

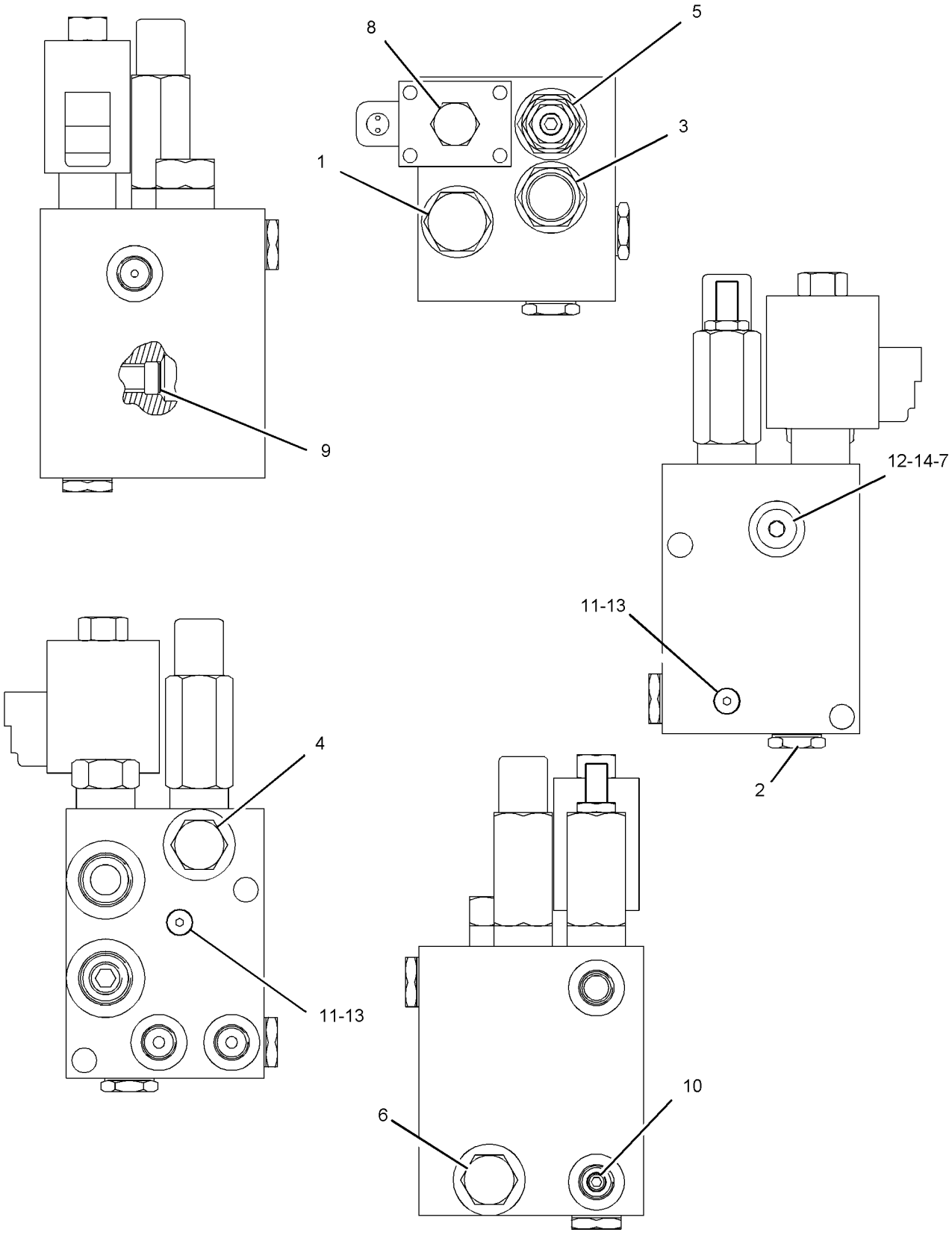

GRAPHIC #1 **<END>** g01133789

269-9397 MANIFOLD GP-VALVE

S/N: A7G1-UP

PART OF 256-3644, 261-2337, 261-2338, 261-3945 VALVE GP-MAIN CONTROL

ALSO AN ATTACHMENT

SMCS-5264 **i02405882**

NOTE	REF NO	GRAPHIC REF	PART NUMBER	QTY	PART NAME 1 2 3 4 5 6 (PRODUCT LEVEL)	SEE PAGE
	1	1	**1T-0936**	1	PLUG-PIPE	
	2	1	*148-8395*	1	PLUG AS	
		1	**3K-0360**	1	SEAL-O-RING	
		1	**9S-8005**	1	PLUG	
	3	1	**6E-5066**	1	SCREEN	
Y	4	1	**193-1665**	1	VALVE GP-PRESSURE REDUCING	628
	5	1	**235-6160**	1	VALVE GP-RELIEF (MAIN, LOAD SENSING)	
	6	1	*162-0177*	1	PLUG AS	
		1	**3J-1907**	1	SEAL-O-RING	
		1	**9S-8004**	1	PLUG	
	7	1	*173-3993*	6	PLUG AS	
					(EACH INCLUDES)	
		1	**4J-7533**	1	SEAL-O-RING	
		1	**9S-8001**	1	PLUG	

Y-SEPARATE ILLUSTRATION

269-9397 MANIFOLD GP-VALVE *(contd.)* i02405882

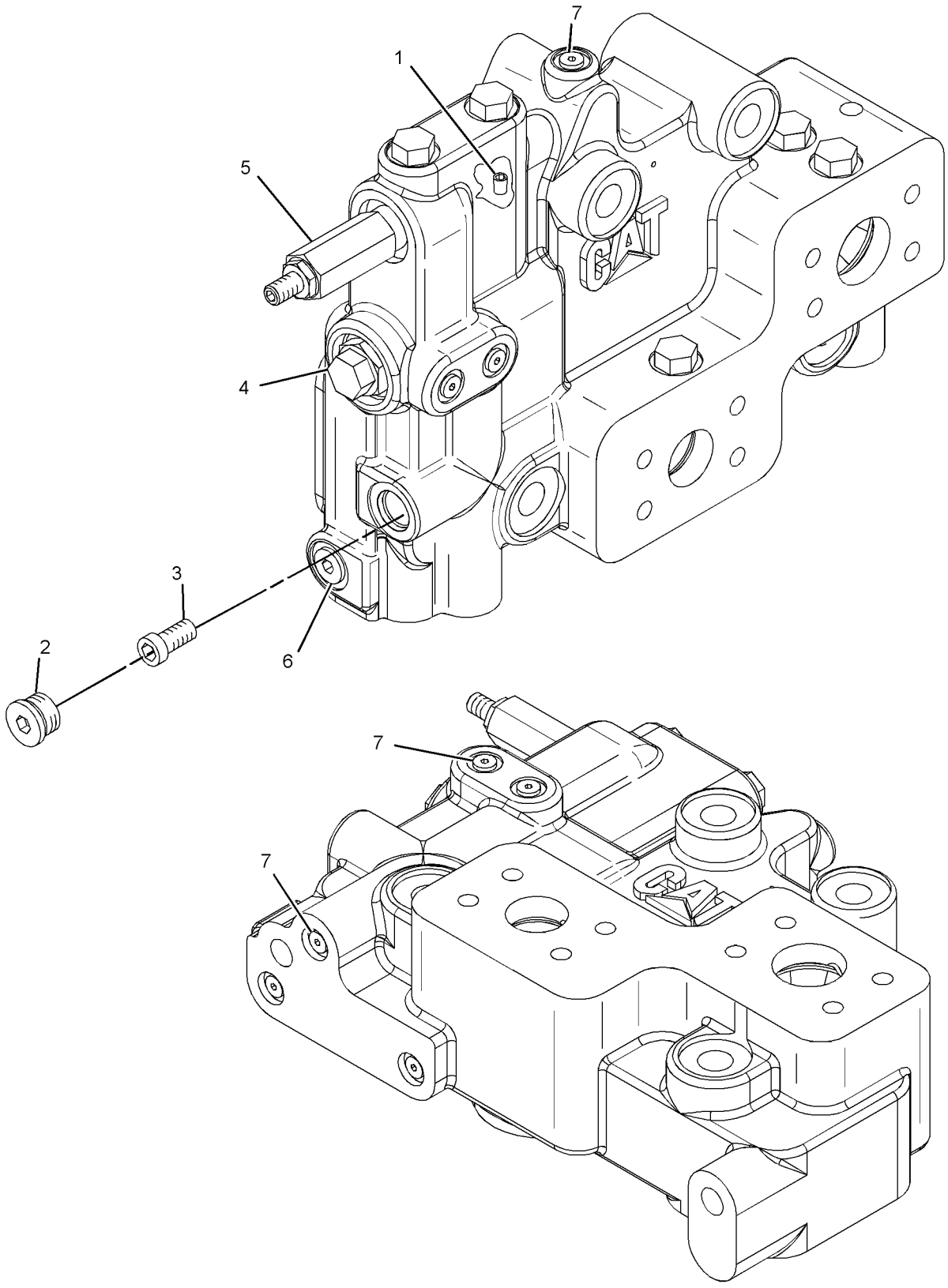

GRAPHIC #1 **<END>** g01189575

269-9398 MANIFOLD GP-VALVE

S/N: A7G1-UP

PART OF 256-3644, 261-2337, 261-2338, 261-3945 VALVE GP-MAIN CONTROL

ALSO AN ATTACHMENT

SMCS-5264 **i02405689**

NOTE	REF NO	GRAPHIC REF	PART NUMBER	QTY	PART NAME 1 2 3 4 5 6 (PRODUCT LEVEL)	SEE PAGE
	1	1	**4J-9535**	2	SEAL-O-RING	
	2	1	**6E-5066**	1	SCREEN	
Y	3	1	**225-0300**	1	VALVE GP-SOLENOID (HYDRAULIC LOCKOUT)	640
	4	1	**235-6163**	1	VALVE GP-PRESSURE REDUCING	
	5	1	**6J-3134**	4	SEAL-O-RING	
	6	1	**254-5789**	1	VALVE GP-RELIEF	
M	7	1	**8T-1158**	1	BOLT-SOCKET HEAD (M8X1.25X20-MM)	
	8	1	*148-8395*	1	PLUG AS	
		1	**3K-0360**	1	SEAL-O-RING	
		1	**9S-8005**	1	PLUG	
Y	9	1	**158-9956**	1	VALVE GP-CHECK (PILOT OIL)	605
	10	1	*162-0177*	5	PLUG AS	
					(EACH INCLUDES)	
		1	**3J-1907**	1	SEAL-O-RING	
		1	**9S-8004**	1	PLUG	
	11	1	*173-3993*	16	PLUG AS	
					(EACH INCLUDES)	
		1	**4J-7533**	1	SEAL-O-RING	
		1	**9S-8001**	1	PLUG	
	12	1	*183-7263*	2	PLUG AS	
					(EACH INCLUDES)	
		1	**3J-7354**	1	SEAL-O-RING	
		1	**9S-8002**	1	PLUG	
	13	1	**1P-3705**	1	SEAL-RECTANGULAR	
	14	1	**4J-0524**	2	SEAL-O-RING	

M-METRIC PART
Y-SEPARATE ILLUSTRATION

269-9398 MANIFOLD GP-VALVE *(contd.)* i02405689

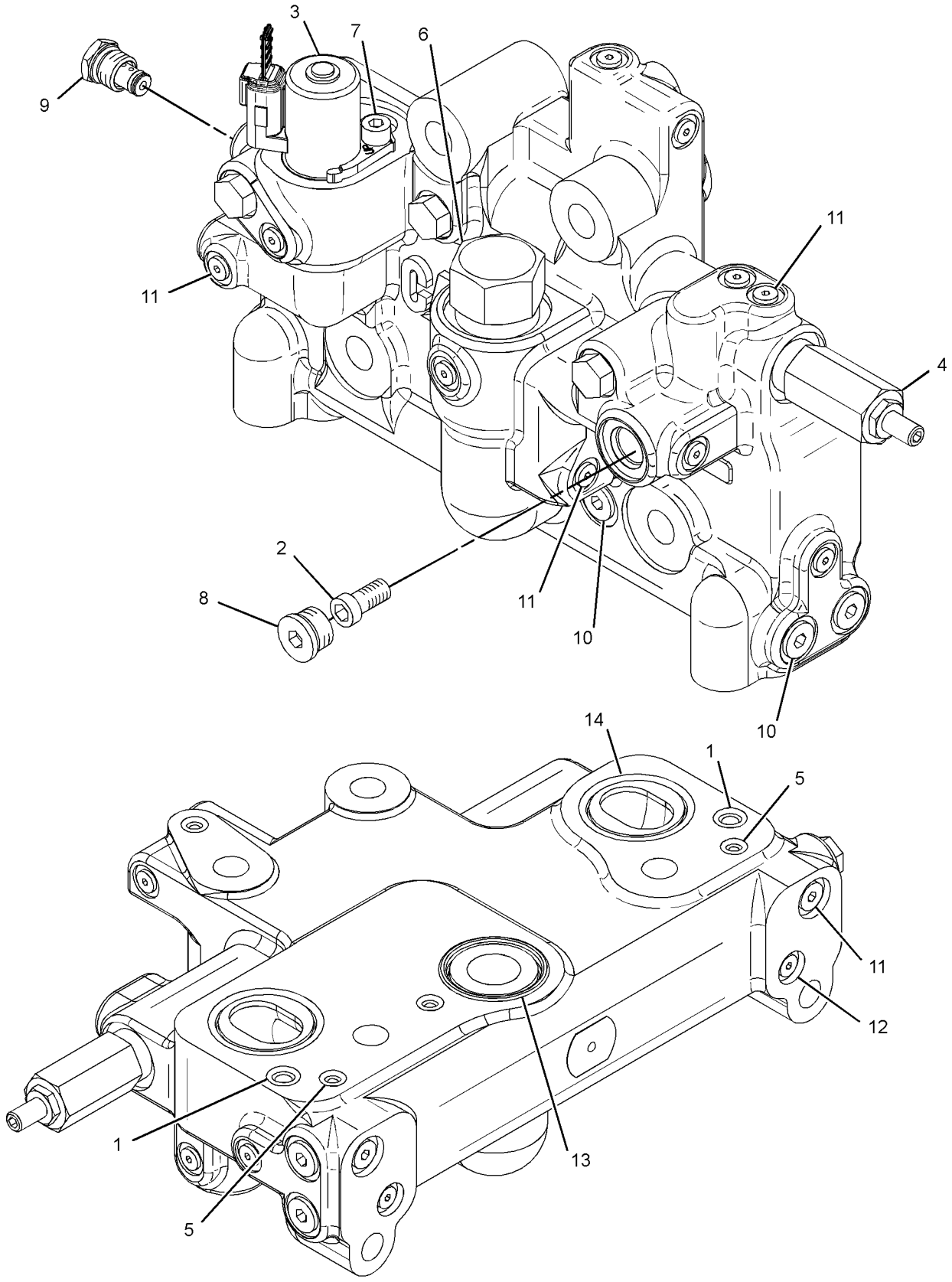

GRAPHIC #1 **<END>** g01189087

161-8919 MOTOR GP-PISTON–HYDRAULIC FAN*R

S/N: A7G1-UP

PART OF 236-8990 RADIATOR & FAN GP

SMCS-1386, 5058 **i00991039**

NOTE	REF NO	GRAPHIC REF	PART NUMBER	QTY	PART NAME 1 2 3 4 5 6 (PRODUCT LEVEL)	SEE PAGE
	1	1	**1D-4539**	3	BOLT (5/16-18X2.5-IN)	
	2	1	**1B-9575**	3	BOLT (5/16-18X1.75-IN)	
	3	1	**9S-8004**	1	PLUG	
	4	1	**3J-1907**	2	SEAL-O-RING	
	5	1	**117-9734**	1	PLUG (9/16-18 THD)	
	6	1	**9J-5706**	1	PLUNGER	
	7	1	**9J-5696**	1	SPRING	
	8	1	**033-5381**	1	BEARING AS-NEEDLE	
	9	1	**5P-1827**	2	RACE-THRUST BEARING	
	10	1	**5P-1828**	1	BEARING-THRUST	
	11	1	**135-2037**	1	RING-RETAINING	
	12	1	**117-9736**	1	SEAL AS-SHAFT	
	13	1	**117-9735**	1	SEAL-SHAFT	
	14	1	**8C-3078**	1	SEAL-O-RING	
	15	1	**131-4859**	1	SHAFT-MOTOR	
	16	1	**5L-4019**	2	RING-RETAINING	
	17	1	**5P-1941**	1	BEARING AS-NEEDLE	
	18	1	**3G-3484**	1	PLATE-CAM	
	19	1	**3G-3483**	1	ROTATOR	
	20	1	**117-9737**	1	PLATE-VALVE	
	21	1	**3K-0715**	1	SEAL-O-RING	
F		1	**5H-8985**	1	PIN-SPRING (4.76MM)	
F		1	**8L-6565**	1	PIN-SPRING (3.18MM)	

F-NOT SHOWN

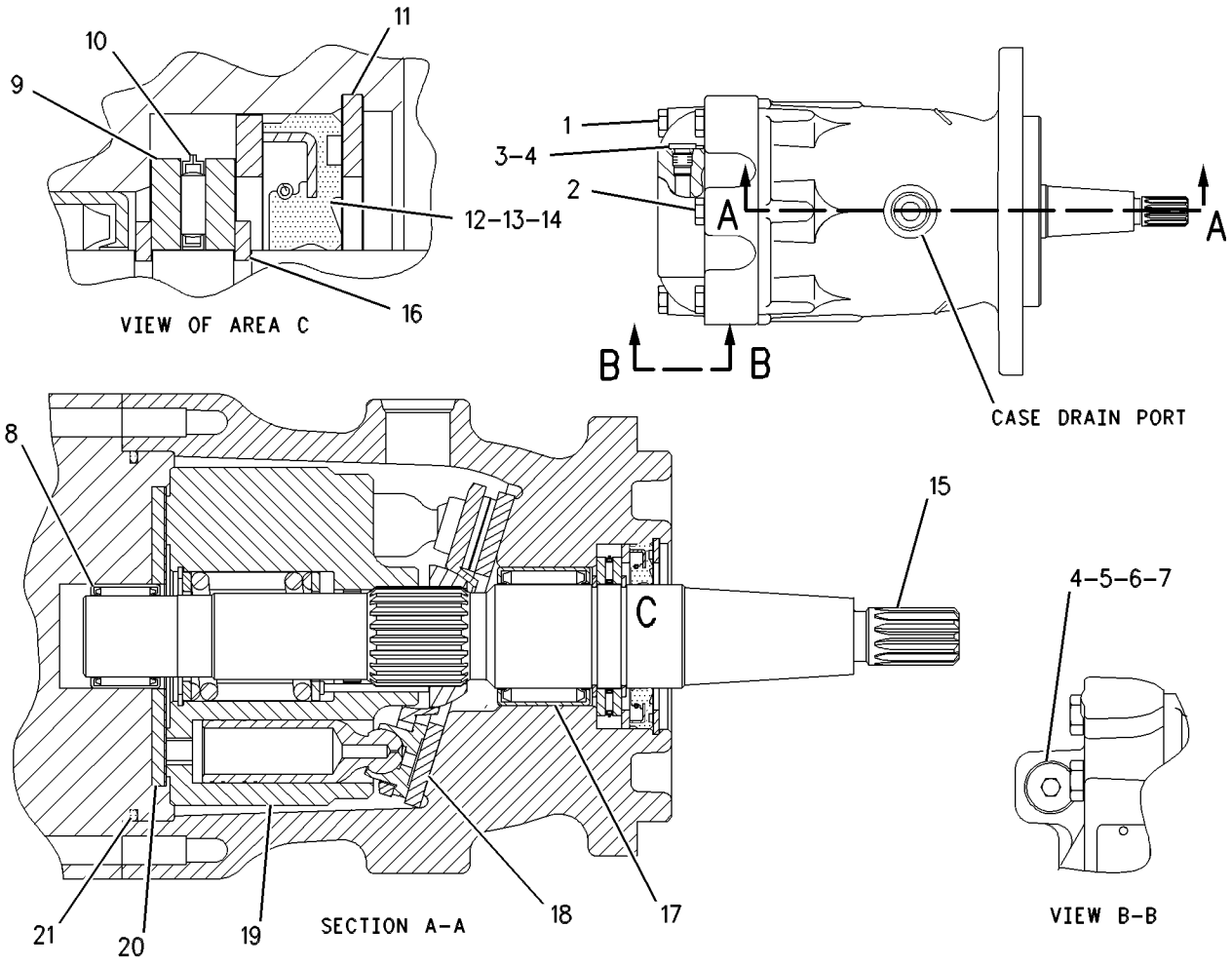

GRAPHIC #1 **<END>** g00503452

236-8998 MOUNTING GP-HYDRAULIC TANK

S/N: A7G1-UP

PART OF 236-9055 HYDRAULIC AR-2 VALVE

SMCS-5056 **i02205118**

NOTE	REF NO	GRAPHIC REF	PART NUMBER	QTY	PART NAME 1 2 3 4 5 6 (PRODUCT LEVEL)	SEE PAGE
	1	1	**6T-6080**	8	MOUNT-RUBBER	
	2	1	**254-9941**	1	MOUNT AS (RH)	
M		1	**8T-3597**	5	NUT-WELD (M12X1.75-THD)	
	3	1	**254-9942**	1	MOUNT AS (LH)	
M		1	**8T-3597**	5	NUT-WELD (M12X1.75-THD)	
M		1	**9X-8487**	1	BOSS-WELD (M10X1.5X35-MM)	
	4	1	**8T-4123**	4	WASHER-PLATED (22X35X3.5-MM THK)	
M	5	1	**8T-4183**	8	BOLT (M12X1.75X40-MM)	
M	6	1	**8T-6381**	4	BOLT (M20X2.5X120-MM)	
	7	1	**8T-7971**	8	WASHER-HARD (13.5X25.5X5-MM THK)	
	8	1	**8X-0674**	4	WASHER (22X100X10-MM THK)	

M-METRIC PART

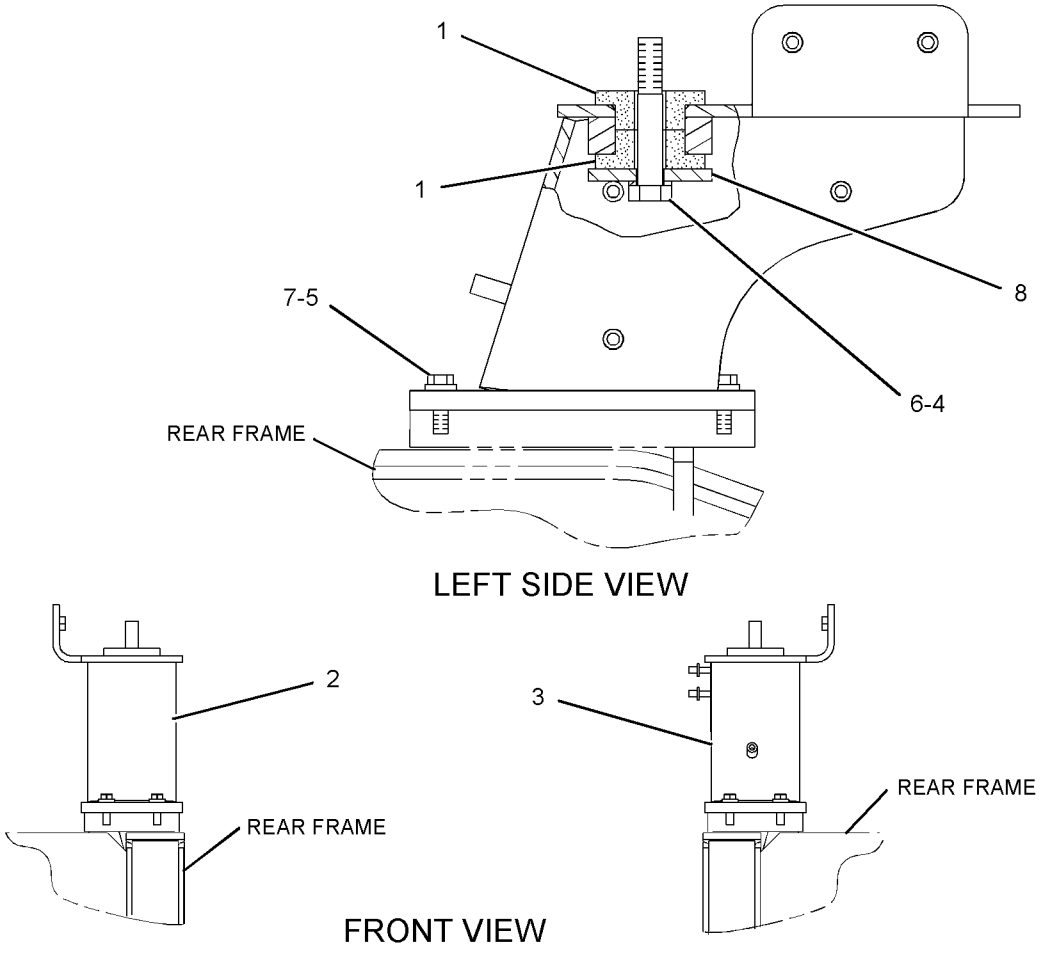

GRAPHIC #1 **<END>** g01116124

HYDRAULIC SYSTEM

236-9105 PUMP & MTG GP-BRAKE & HYD FAN

S/N: A7G1-UP

PART OF 236-9055 HYDRAULIC AR-2 VALVE

SMCS-1387, 4268 **i02270570**

NOTE	REF NO	GRAPHIC REF	PART NUMBER	QTY	PART NAME 1 2 3 4 5 6 (PRODUCT LEVEL)	SEE PAGE
	1	1	**6H-7062**	2	SPACER (13.5X25X19-MM THK)	
	2	1	**147-7131**	1	GEAR (42-TEETH)	
	3	1	**198-2820**	1	SEAL	
	4	1	**204-9734**	2	SPACER (11X18X25-MM THK)	
	5	1	**242-9005**	1	BRACKET AS	
M		1	**8T-3490**	1	NUT-WELD (M10X1.5 THD)	
	6	1	**253-1525**	1	FLANGE	
Y	7	1	*254-5147*	1	PUMP GP-PISTON (BRAKE, HYDRAULIC FAN)	588
	8	1	**2K-0337**	1	LOCKNUT (3/4-16-THD)	
	9	1	**3D-0053**	1	BALL BEARING	
	10	1	**5P-1076**	2	WASHER-HARD (13.5X30X4-MM THK)	
	11	1	**6V-6353**	1	SEAL-O-RING	
	12	1	**8T-4121**	4	WASHER-HARD (11X21X2.5-MM THK)	
M	13	1	**8T-4139**	1	BOLT (M12X1.75X30-MM)	
M	14	1	**8T-4182**	2	BOLT (M10X1.5X45-MM)	
M	15	1	**8T-4183**	2	BOLT (M12X1.75X40-MM)	
M	16	1	**8T-4186**	2	BOLT (M10X1.5X40-MM)	
	17	1	**8T-4223**	3	WASHER-HARD (13.5X25.5X3-MM THK)	
M	18	1	**8T-4910**	1	BOLT (M12X1.75X60-MM)	
	19	1	**8T-4994**	1	WASHER-HARD (20X36.5X3.5-MM THK)	

M-METRIC PART
Y-SEPARATE ILLUSTRATION

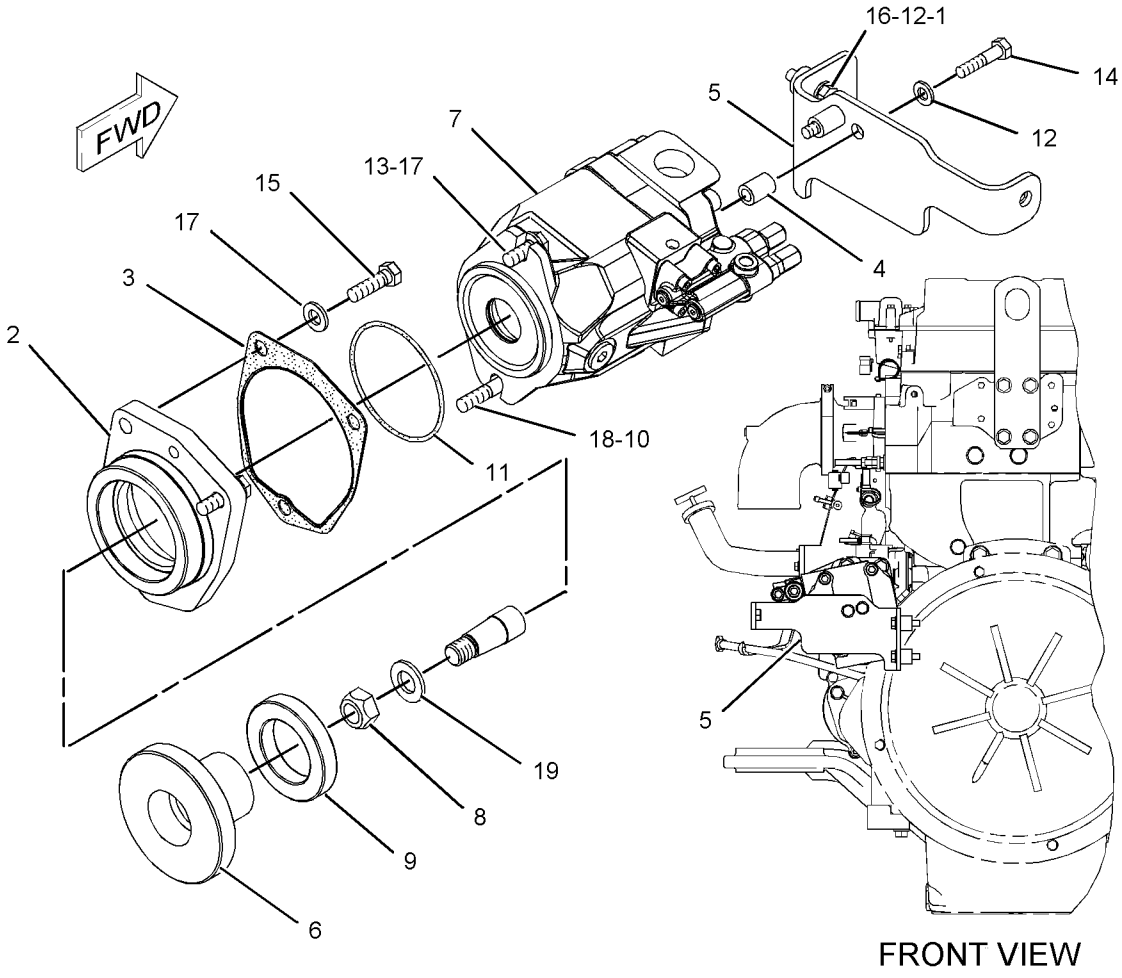

GRAPHIC #1 **<END>** g01116472

HYDRAULIC SYSTEM

246-2055 PUMP & MTG GP-HYDRAULIC

S/N: A7G1-UP

PART OF 236-9055 HYDRAULIC AR-2 VALVE

SMCS-5055, 5070, 5073, 5084 **i02412066**

NOTE	REF NO	GRAPHIC REF	PART NUMBER	QTY	PART NAME 1 2 3 4 5 6 (PRODUCT LEVEL)	SEE PAGE
	1	1	**132-9713**	1	COUPLING AS	
		1	**1L-3768**	1	RING-RETAINING	
Y	2	1	**241-9157**	1	PUMP GP-PISTON (STEERING)	492
	3	1	**246-2065**	1	BRACKET	
Y	4	1	**254-4109**	1	PUMP GP-PISTON (IMPLEMENT, PILOT)	586
	5	1	**117-8801**	1	SEAL-O-RING	
M	6	1	**6V-5844**	2	BOLT (M16X2X35-MM)	
	7	1	**7D-9014**	1	SEAL-O-RING	
	8	1	**7X-7729**	6	WASHER (11X25X3-MM THK)	
	9	1	**226-4192**	4	WASHER-HARD (21.5X35X8-MM THK)	
M	10	1	**7X-2563**	4	BOLT (M20X2.5X60-MM)	
M	11	1	**8T-4196**	2	BOLT (M10X1.5X35-MM)	
M	12	1	**8T-5005**	4	BOLT (M10X1.5X70-MM)	
	13	1	**9X-8268**	2	WASHER (17.5X30X3.5-MM THK)	
	14	1	**246-2889**	1	COUPLING AS	
		1	**8C-3312**	2	RING-RETAINING	

M-METRIC PART
Y-SEPARATE ILLUSTRATION

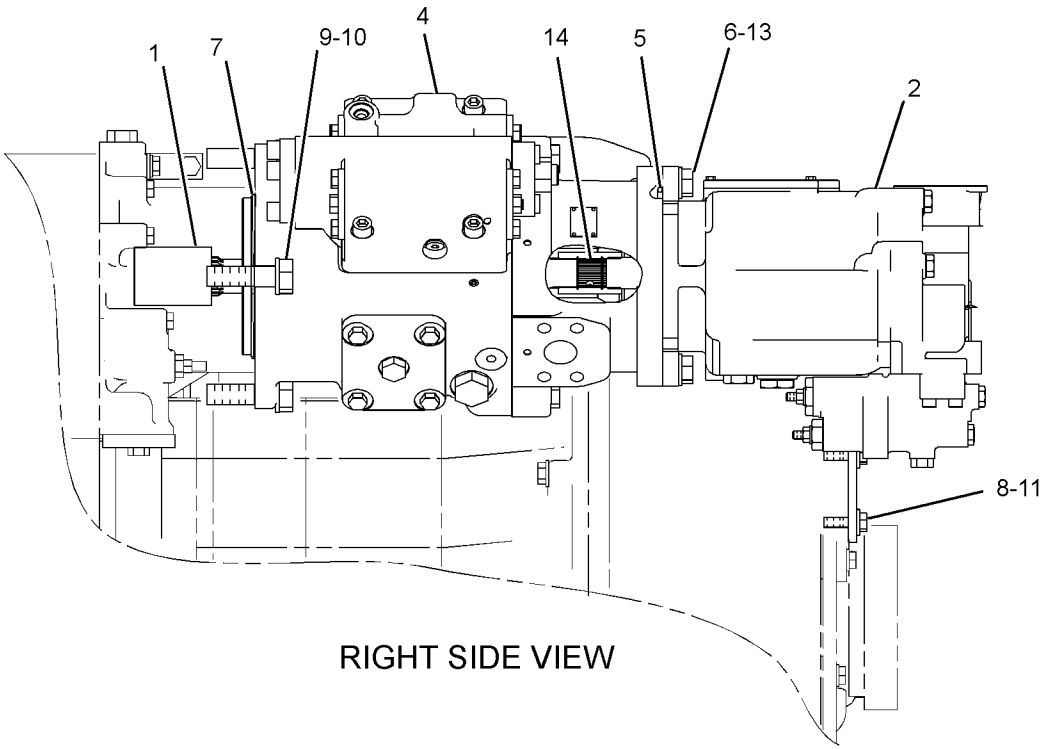

RIGHT SIDE VIEW

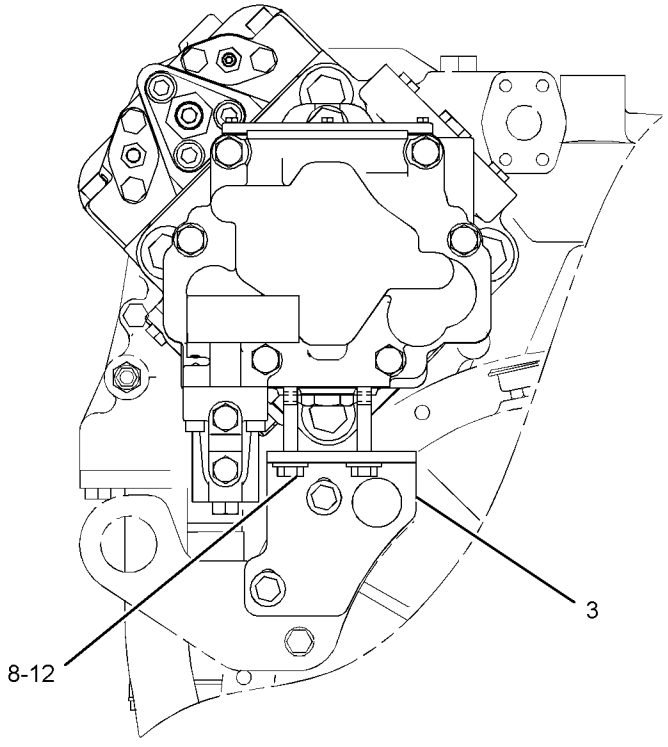

FRONT VIEW

GRAPHIC #1 **<END>** g01189337

HYDRAULIC SYSTEM

254-4109 PUMP GP-PISTON–IMPLEMENT, PILOT

S/N: A7G1-UP

PART OF 246-2055 PUMP & MTG GP-HYDRAULIC

SMCS-5070 **i02392291**

NOTE	REF NO	GRAPHIC REF	PART NUMBER	QTY	PART NAME 1 2 3 4 5 6 (PRODUCT LEVEL)	SEE PAGE
	1	1	**7Y-4215**	1	SPACER	
	2	1	**7Y-4944**	1	RING-RETAINING	
	3	1	**096-4389**	9	SPRING	
	4	1	**129-7853**	1	PLATE-CREEP	
	5	1	**129-7921**	1	RING-RETAINING	
	6	1	**129-7925**	2	SEAL-LIP TYPE	
	7	1	**129-7927**	1	BEARING	
	8	1	**150-5782**	2	COVER	
	9	1	**173-3427**	1	GUIDE-BALL	
	10	1	**192-0573**	2	PIN-DOWEL	
	11	1	**245-3862**	1	CASE-SEAL	
	12	1	**245-8095**	1	PLATE-ADAPTER	
	13	1	**254-6549**	1	BODY AS	
		1	**124-1555**	2	PLUG	
	14	1	**254-6555**	1	BLOCK	
		1	**124-1555**	3	PLUG	
Y	15	1	**254-6561**	1	VALVE GP-PUMP CONTROL (PRESSURE, FLOW COMPENSATOR) (IMPLEMENT, PILOT)	631
	16	1	**254-6589**	1	NAMEPLATE	
	17	1	**256-0083**	1	BARREL AS-PUMP	
	18	1	**263-7474**	1	SET-BEARING	
	19	1	**273-3591**	1	SHAFT-PUMP	
	20	1	**274-1262**	1	SEAL-O-RING	
	21	1	**094-1875**	3	DOWEL	
	22	1	**094-1883**	1	PLUG	
M	23	1	**095-0673**	4	BOLT-SOCKET HEAD (M12X1.75X60-MM)	
	24	1	**095-0946**	1	RING-RETAINING	
	25	1	**095-7419**	4	SCREW-DRIVE	
	26	1	**117-8801**	1	SEAL-O-RING	
	27	1	**129-7979**	2	DOWEL	
	28	1	**189-9763**	1	SEAL-O-RING	
	29	1	**193-1736**	2	SEAL-O-RING	
	30	1	**236-6919**	1	SEAL-O-RING	
	31	1	**242-6801**	1	SWASHPLATE AS	
		1	**094-1875**	1	DOWEL	
		1	**173-3428**	1	BEARING-SLEEVE	
		1	**242-6803**	2	PIN-DOWEL	
	32	1	**242-6804**	2	BEARING	
	33	1	**256-7485**	1	PISTON AS	
	34	1	**3D-2824**	2	SEAL-O-RING	
	35	1	**3J-1907**	1	SEAL-O-RING	
	36	1	**3K-0360**	3	SEAL-O-RING	
	37	1	**4I-1022**	1	ORIFICE	
	38	1	**6V-3907**	1	SEAL-O-RING	
M	39	1	**6V-8200**	2	BOLT-SOCKET HEAD (M12X1.75X35-MM)	
M	40	1	**8T-4136**	8	BOLT (M10X1.5X25-MM)	
M	41	1	**8T-4140**	4	BOLT (M16X2X60-MM)	
	42	1	**9S-4183**	2	PLUG	
	43	1	**9S-4185**	2	PLUG	
	44	1	**9S-8004**	1	PLUG	
	45	1	**9S-8005**	1	PLUG	

M-METRIC PART
Y-SEPARATE ILLUSTRATION

254-4109 PUMP GP-PISTON *(contd.)* i02392291

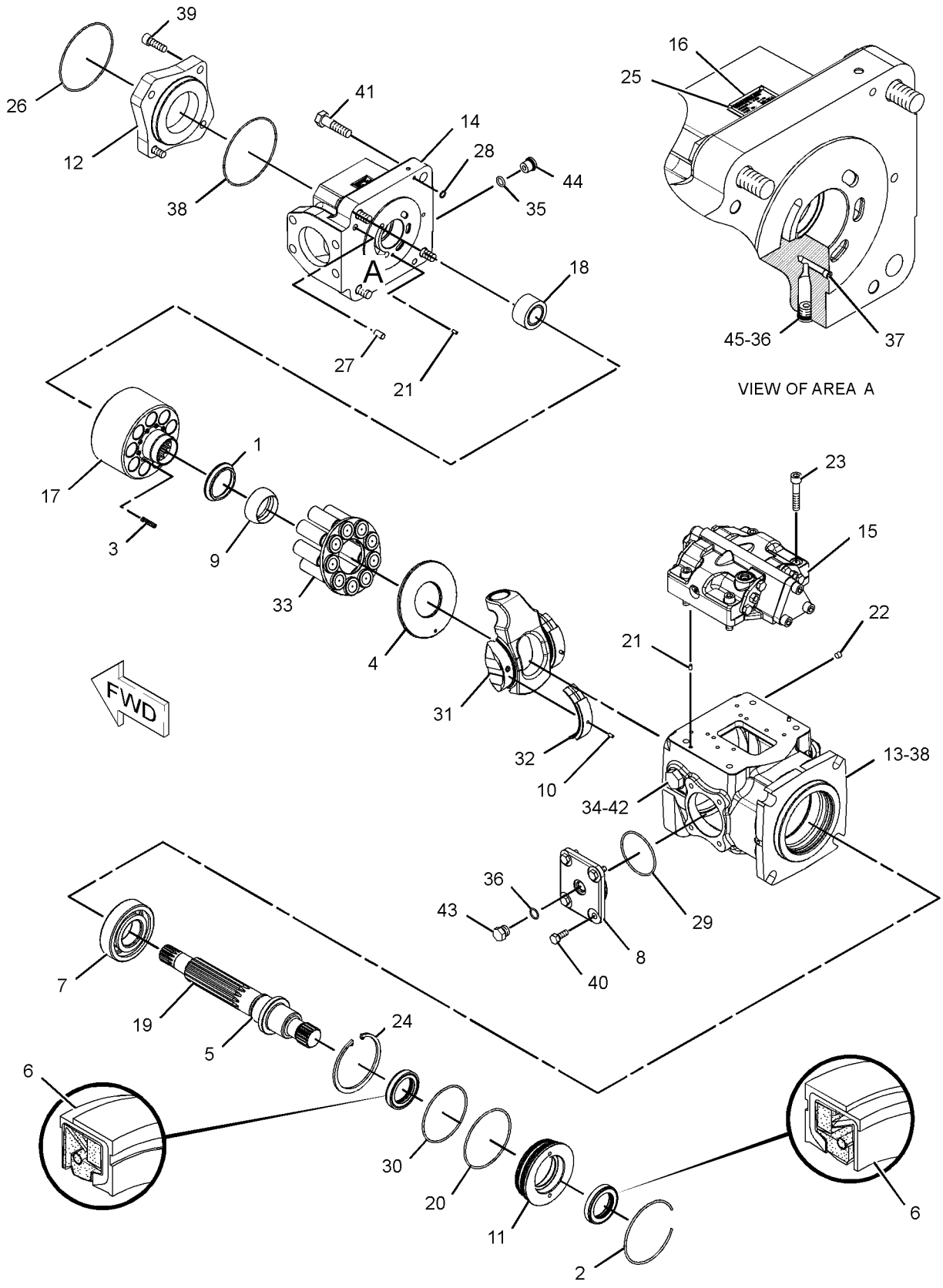

GRAPHIC #1 **<END>** g01210961

254-5147 PUMP GP-PISTON–BRAKE, HYDRAULIC FAN

S/N: A7G1-UP

PART OF 236-9105 PUMP & MTG GP-BRAKE & HYD FAN

SMCS-5070 **i02412093**

NOTE	REF NO	GRAPHIC REF	PART NUMBER	QTY	PART NAME 1 2 3 4 5 6 (PRODUCT LEVEL)	SEE PAGE
Y	1	1	**258-5193**	1	ROTATING GP-PUMP	590
	2	1	**168-7861**	1	PISTON-ACTUATOR	
	3	1	**168-2198**	1	LINK-CONTROL	
	4	1	**197-1762**	1	SWASHPLATE	
	5	1	**198-2617**	1	SHAFT	
	6	1	**196-1251**	1	PLUG	
	7	1	**127-9490**	1	SPRING (BIAS)	
	8	1	**9S-8002**	1	PLUG	
	9	1	**198-2618**	1	KEY	
	10	1	**185-0263**	1	BEARING	
	11	1	**189-4717**	1	BEARING	
	12	1	**237-4227**	2	BEARING-CRADLE	
	13	1	**166-0344**	1	SEAL-SHAFT	
	14	1	**127-9485**	1	SEAL-O-RING	
	15	1	**8T-7525**	1	SEAL-O-RING	
	16	1	**168-3504**	1	SEAL	
	17	1	**8C-3110**	1	RING-RETAINING	
M	18	1	**095-0670**	4	BOLT (M12X1.75X45-MM)	
	19	1	**9S-8006**	1	PLUG	
	20	1	**120-4394**	1	PLUG-BREAK OFF	
	21	1	**9X-8979**	1	DOWEL	
	22	1	**2M-9780**	1	SEAL-O-RING	
Y	23	1	**207-0697**	1	VALVE GP-PUMP CONTROL (PRESSURE, FLOW COMPENSATOR)	629
	24	1	**3J-7354**	1	SEAL-O-RING	
	25	1	**9X-7680**	3	SEAL-O-RING	
M	26	1	**8T-8442**	4	BOLT-SOCKET HEAD (M6X1X30-MM)	
B	27	1	**127-9483**	1	SHIM (PRELOAD)	

B-USE AS REQUIRED
M-METRIC PART
Y-SEPARATE ILLUSTRATION

254-5147 PUMP GP-PISTON *(contd.)* **i02412093**

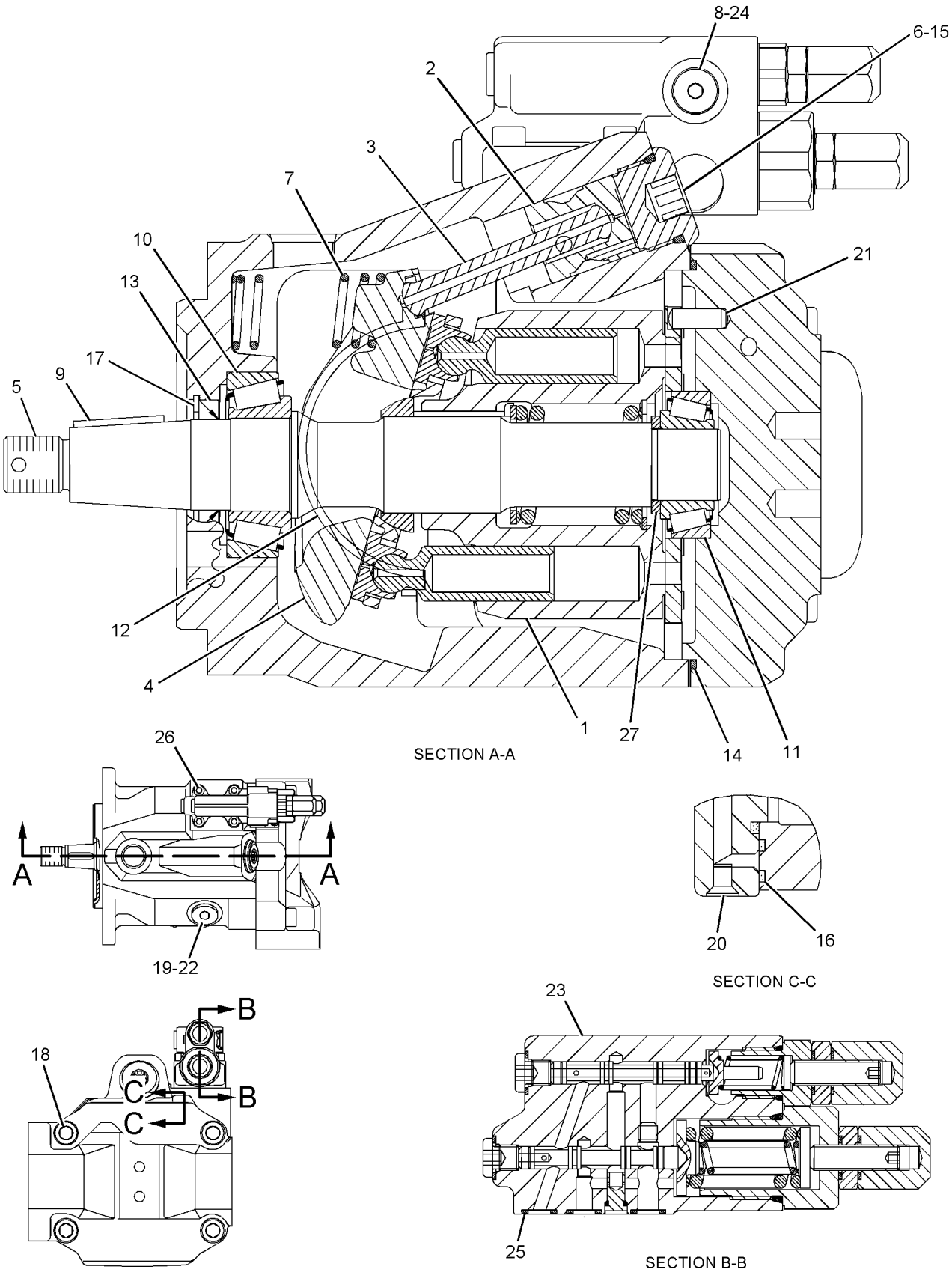

GRAPHIC #1 **<END>** g01116397

HYDRAULIC SYSTEM

258-5193 ROTATING GP-PUMP–BRAKE, HYDRAULIC FAN

S/N: A7G1-UP

PART OF 254-5147 PUMP GP-PISTON

SMCS-1387, 5070, 5084 **i02373058**

NOTE	REF NO	GRAPHIC REF	PART NUMBER	QTY	PART NAME 1 2 3 4 5 6 (PRODUCT LEVEL)	SEE PAGE
	1	1	**138-8175**	1	BEARING-SPHERICAL	
	2	1	**168-7940**	3	PIN	
	3	1	**096-0015**	1	RING-RETAINING	
	4	1	**233-0455**	1	BARREL	
	5	1	**168-7941**	1	SPRING	
	6	1	**168-7942**	1	WASHER	
	7	1	**168-7943**	9	PISTON AS	
	8	1	**258-5194**	1	PLATE	
	9	1	**175-6796**	1	PLATE-VALVE	

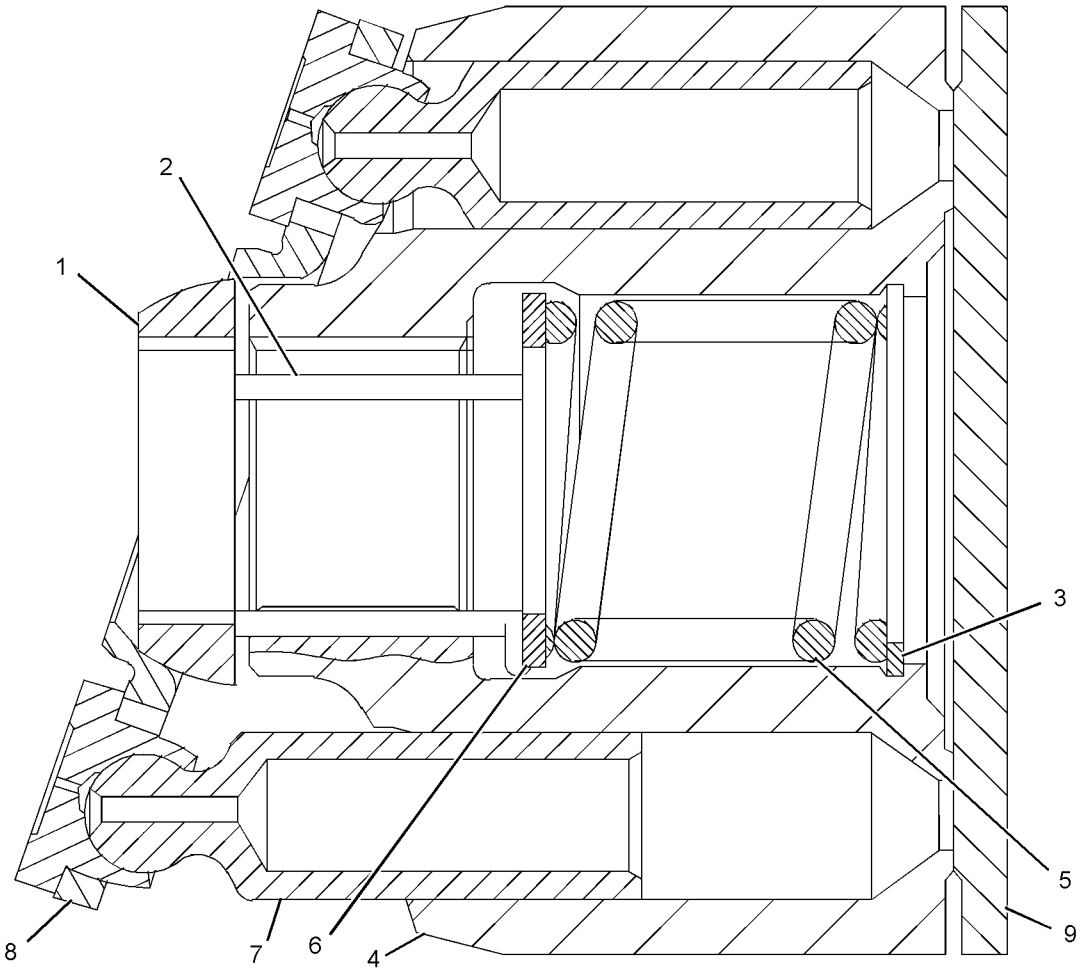

GRAPHIC #1 **<END>** g01117012

HYDRAULIC SYSTEM

237-2742 TANK GP-HYDRAULIC

S/N: A7G1-UP

PART OF 236-9055 HYDRAULIC AR-2 VALVE

SMCS-5056 **i02361873**

NOTE	REF NO	GRAPHIC REF	PART NUMBER	QTY	PART NAME 1 2 3 4 5 6 (PRODUCT LEVEL)	SEE PAGE
	1	1	**1P-4578**	2	FLANGE-HALF	
	2	1	**1P-4579**	2	FLANGE-HALF	
	3	1	**1P-4584**	2	FLANGE-HALF	
	4	1	**1P-4585**	2	FLANGE-HALF	
	5	1	**7X-0591**	4	WASHER-HARD (17X29X3-MM THK)	
	6	1	**8C-3206**	2	FLANGE-HALF	
	7	1	**8T-4121**	8	WASHER-HARD (11X21X2.5-MM THK)	
M	8	1	**8T-4184**	4	BOLT (M12X1.75X45-MM)	
M	9	1	**8T-4193**	4	BOLT (M16X2X50-MM)	
M	10	1	**8T-4196**	8	BOLT (M10X1.5X35-MM)	
	11	1	**8T-4223**	8	WASHER-HARD (13.5X25.5X3-MM THK)	
M	12	1	**8T-4956**	4	BOLT (M12X1.75X35-MM)	
	13	1	**5D-1911**	1	COVER-HYDRAULIC CAP	
	14	1	**5D-7927**	1	STRAINER AS (HYDRAULIC TANK FILL)	
	15	1	**7H-1447**	1	CAP-FILLER	
	16	1	**9M-7394**	1	LEVER (COVER)	
	17	1	**9T-9226**	2	PLATE	
	18	1	**9T-9227**	2	SCREEN AS (HYDRAULIC TANK)	
	19	1	**237-2743**	1	TANK AS-HYDRAULIC	
	20	1	**244-0405**	1	COVER AS	
	21	1	**244-0420**	1	GASKET	
	22	1	**260-8636**	1	GAUGE-LIQUID LEVEL (SIGHT GLASS)	
	23	1	**1L-5072**	1	DOWEL	
	24	1	**2D-4202**	1	PLATE	
	25	1	**2J-7761**	1	RING-RETAINING	
	26	1	**6H-9361**	1	RING-RETAINING	
M	27	1	**6V-7744**	2	LOCKNUT (M10X1.15-THD)	
	28	1	**8T-2275**	1	BALL	
M	29	1	**8T-4201**	24	BOLT-LOCKING (M10X1.5X20-MM)	
	30	1	**9H-6454**	1	GASKET	

M-METRIC PART

237-2742 TANK GP-HYDRAULIC *(contd.)* i02361873

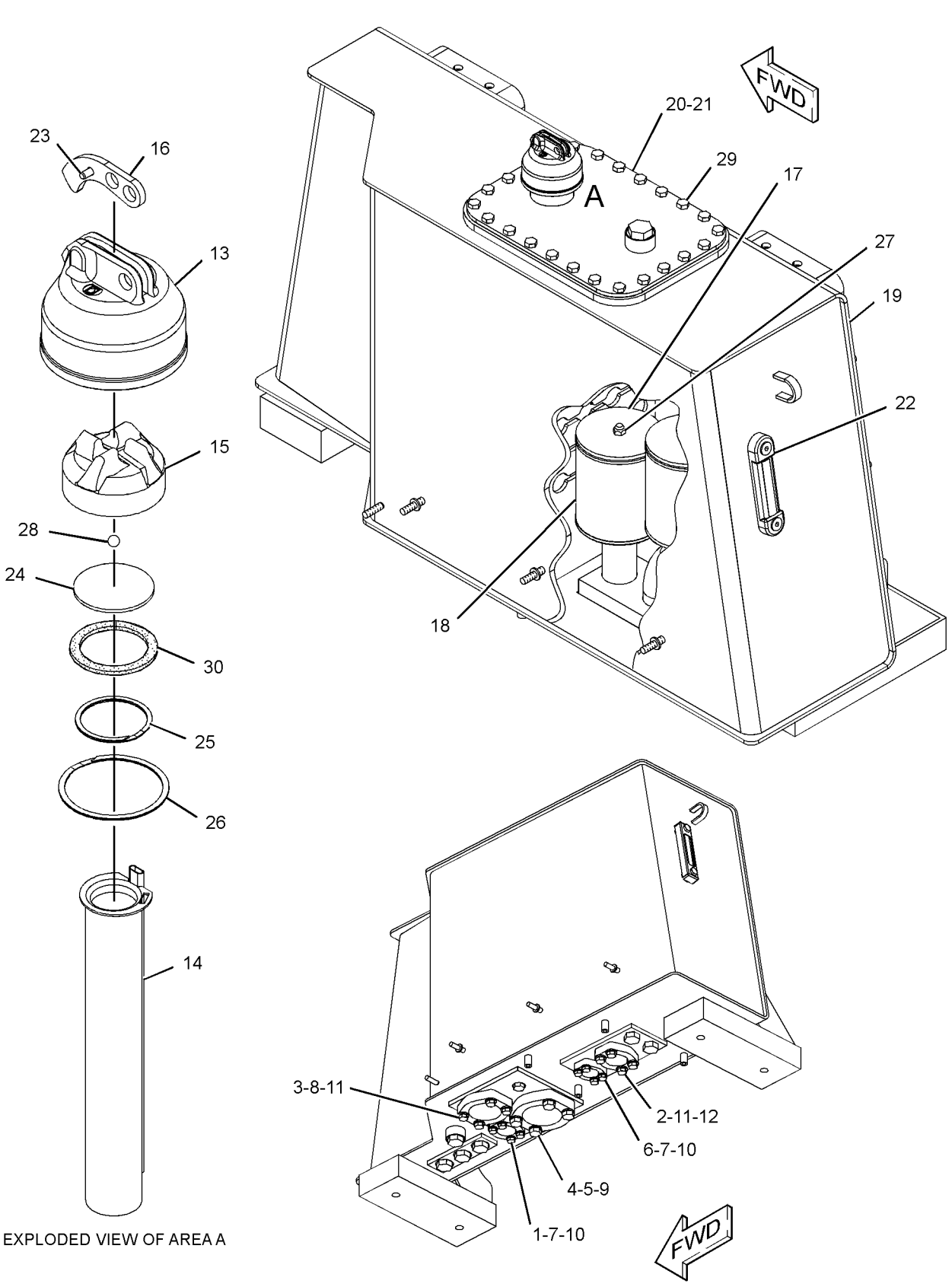

GRAPHIC #1 **<END>** g01190109

HYDRAULIC SYSTEM

236-9035 VALVE & MTG GP-MAIN CONTROL—2-FUNCTION

S/N: A7G1-UP

PART OF 236-9055 HYDRAULIC AR-2 VALVE

SMCS-5051 **i02411878**

NOTE	REF NO	GRAPHIC REF	PART NUMBER	QTY	PART NAME 1 2 3 4 5 6 (PRODUCT LEVEL)	SEE PAGE
	1	1	*148-8424*	1	TEE AS	
		1	**6V-8397**	1	SEAL-O-RING	
		1	**8T-8902**	1	TEE	
	2	1	*165-6365*	1	FITTING AS	
		1	**3J-1907**	1	SEAL-O-RING	
		1	**7W-7381**	1	FITTING-OUTLET	
	3	1	**241-2628**	1	BRACKET AS	
	4	1	**244-6625**	1	ADAPTER-SPECIAL	
Y	5	1	**245-2975**	1	ACCUMULATOR GP-PILOT OIL (CHARGED) (DEAD ENGINE LOWER)	520
I	6	1	**249-0787**	1	HOSE AS	
	7	1	**259-1502**	1	BLOCK	
	8	1	**259-1971**	1	TUBE AS	
	9	1	**259-2092**	1	TUBE AS	
	10	1	*148-8336*	2	CONNECTOR AS	
					(EACH INCLUDES)	
		1	**3J-1907**	1	SEAL-O-RING	
		1	**6V-8397**	1	SEAL-O-RING	
		1	**6V-8636**	1	CONNECTOR	
	11	1	*148-8367*	1	ELBOW AS	
		1	**6V-8397**	1	SEAL-O-RING	
		1	**6V-9850**	1	ELBOW	
	12	1	*148-8378*	1	ELBOW AS	
		1	**3J-1907**	1	SEAL-O-RING	
		1	**6V-8397**	1	SEAL-O-RING	
		1	**6V-8724**	1	ELBOW	
	13	1	*148-8433*	1	TEE AS	
		1	**6V-8397**	2	SEAL-O-RING	
		1	**6V-9836**	1	TEE-SWIVEL	
	14	1	*148-8435*	2	TEE AS	
					(EACH INCLUDES)	
		1	**3J-1907**	1	SEAL-O-RING	
		1	**6V-8397**	2	SEAL-O-RING	
		1	**6V-8781**	1	TEE-FACE SEAL	
	15	1	*150-3033*	1	ELBOW AS	
		1	**3J-1907**	1	SEAL-O-RING	
		1	**4J-5477**	1	SEAL-O-RING	
		1	**8T-0164**	1	ELBOW	
	16	1	*150-4044*	2	CONNECTOR AS	
					(EACH INCLUDES)	
		1	**3J-1907**	1	SEAL-O-RING	
		1	**6V-8397**	1	SEAL-O-RING	
		1	**8T-1779**	1	CONNECTOR	
Y	17	1	**152-2646**	1	VALVE GP-SHUTTLE (STEERING OIL)	636
	18	1	**152-3411**	1	ELBOW	
	19	1	*164-5567*	1	FITTING GP-COUPLING	
		1	**3J-1907**	1	SEAL-O-RING	
		1	**6V-3965**	1	FITTING AS (QUICK DISCONNECT)	
Y	20	1	**261-3945**	1	VALVE GP-MAIN CONTROL (2-FUNCTION)	626
	21	1	**3D-2824**	1	SEAL-O-RING	
	22	1	**3J-1907**	1	SEAL-O-RING	
	23	1	**5P-1076**	3	WASHER-HARD (13.5X30X4-MM THK)	
	24	1	**6V-0852**	1	CAP-DUST	
	25	1	**6V-8397**	3	SEAL-O-RING	
	26	1	**6V-8398**	1	SEAL-O-RING	
	27	1	**6V-9829**	4	CAP AS	

236-9035 VALVE & MTG GP-MAIN CONTROL *(contd.)* i02411878

NOTE	REF NO	GRAPHIC REF	PART NUMBER	QTY	PART NAME 1 2 3 4 5 6 (PRODUCT LEVEL)	SEE PAGE
	28	1	**6V-9830**	1	CAP AS	
M	29	1	**7X-2552**	4	BOLT (M16X2X30-MM)	
	30	1	**8T-4121**	2	WASHER-HARD (11X21X2.5-MM THK)	
M	31	1	**8T-4122**	4	WASHER-HARD (17X32X3.5-MM THK)	
M	32	1	**8T-4172**	2	BOLT (M10X1.5X80-MM)	
M	33	1	**8T-4183**	3	BOLT (M12X1.75X40-MM)	
M	34	1	**8T-4192**	2	BOLT (M12X1.75X25-MM)	
	35	1	**8T-4223**	2	WASHER-HARD (13.5X25.5X3-MM THK)	

I-REFER TO HYDRAULIC INFORMATION SYSTEM
M-METRIC PART
Y-SEPARATE ILLUSTRATION

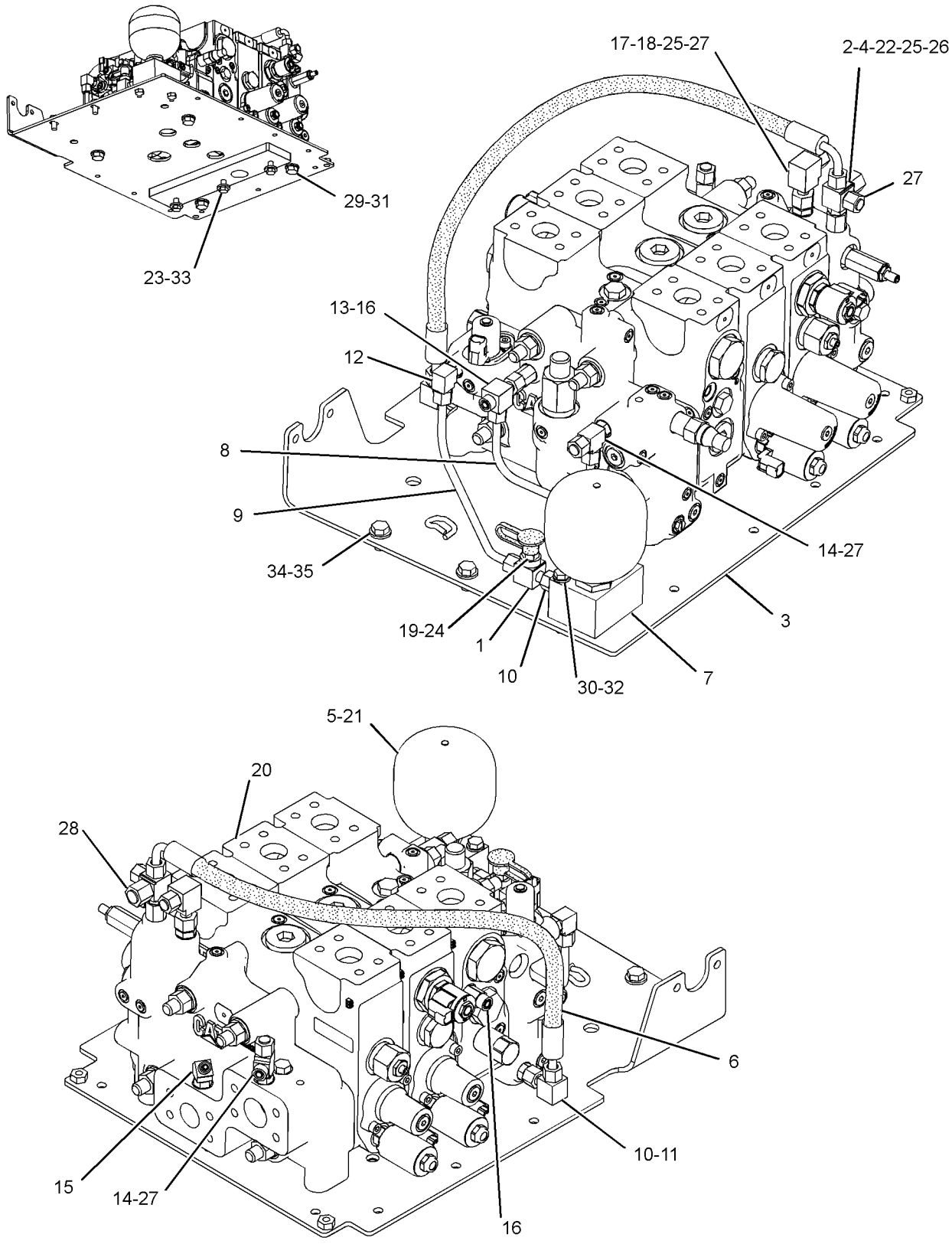

GRAPHIC #1 **<END>** g01189218

HYDRAULIC SYSTEM

236-9095 VALVE & MTG GP-MAIN CONTROL–
2-FUNCTION, WITH RIDE CONTROL
S/N: A7G1-UP
PART OF 236-9094 CONTROL AR-RIDE
AN ATTACHMENT

SMCS-5051 **i02415394**

NOTE	REF NO	GRAPHIC REF	PART NUMBER	QTY	PART NAME 1 2 3 4 5 6 (PRODUCT LEVEL)	SEE PAGE
	1	1	*148-8424*	1	TEE AS	
		1	**6V-8397**	1	SEAL-O-RING	
		1	**8T-8902**	1	TEE	
	2	1	*165-6365*	1	FITTING AS	
		1	**3J-1907**	1	SEAL-O-RING	
		1	**7W-7381**	1	FITTING-OUTLET	
	3	1	**241-2628**	1	BRACKET AS	
	4	1	**244-6625**	1	ADAPTER-SPECIAL	
Y	5	1	*245-2975*	1	ACCUMULATOR GP-PILOT OIL (CHARGED) (DEAD ENGINE LOWER)	520
I	6	1	**249-0787**	1	HOSE AS	
	7	1	**259-1502**	1	BLOCK	
	8	1	**259-1971**	1	TUBE AS	
	9	1	**259-2092**	1	TUBE AS	
	10	1	*148-8336*	2	CONNECTOR AS	
					(EACH INCLUDES)	
		1	**3J-1907**	1	SEAL-O-RING	
		1	**6V-8397**	1	SEAL-O-RING	
		1	**6V-8636**	1	CONNECTOR	
	11	1	*148-8367*	1	ELBOW AS	
		1	**6V-8397**	1	SEAL-O-RING	
		1	**6V-9850**	1	ELBOW	
	12	1	*148-8378*	1	ELBOW AS	
		1	**3J-1907**	1	SEAL-O-RING	
		1	**6V-8397**	1	SEAL-O-RING	
		1	**6V-8724**	1	ELBOW	
	13	1	*148-8433*	1	TEE AS	
		1	**6V-8397**	2	SEAL-O-RING	
		1	**6V-9836**	1	TEE-SWIVEL	
	14	1	*148-8435*	2	TEE AS	
					(EACH INCLUDES)	
		1	**3J-1907**	1	SEAL-O-RING	
		1	**6V-8397**	2	SEAL-O-RING	
		1	**6V-8781**	1	TEE-FACE SEAL	
	15	1	*150-3033*	1	ELBOW AS	
		1	**3J-1907**	1	SEAL-O-RING	
		1	**4J-5477**	1	SEAL-O-RING	
		1	**8T-0164**	1	ELBOW	
	16	1	*150-4044*	2	CONNECTOR AS	
					(EACH INCLUDES)	
		1	**3J-1907**	1	SEAL-O-RING	
		1	**6V-8397**	1	SEAL-O-RING	
		1	**8T-1779**	1	CONNECTOR	
Y	17	1	**152-2646**	1	VALVE GP-SHUTTLE (STEERING OIL)	636
	18	1	**152-3411**	1	ELBOW	
	19	1	*164-5567*	1	FITTING GP-COUPLING	
		1	**3J-1907**	1	SEAL-O-RING	
		1	**6V-3965**	1	FITTING AS (QUICK DISCONNECT)	
Y	20	1	**261-2337**	1	VALVE GP-MAIN CONTROL (2-FUNCTION, WITH RIDE CONTROL)	624
	21	1	**3D-2824**	1	SEAL-O-RING	
	22	1	**3J-1907**	1	SEAL-O-RING	
	23	1	**5P-1076**	3	WASHER-HARD (13.5X30X4-MM THK)	
	24	1	**6V-0852**	1	CAP-DUST	

236-9095 **VALVE & MTG GP-MAIN CONTROL** *(contd.)* **i02415394**

NOTE	REF NO	GRAPHIC REF	PART NUMBER	QTY	PART NAME 1 2 3 4 5 6 (PRODUCT LEVEL)	SEE PAGE
	25	1	**6V-8397**	3	SEAL-O-RING	
	26	1	**6V-8398**	1	SEAL-O-RING	
	27	1	**6V-9829**	4	CAP AS	
	28	1	**6V-9830**	1	CAP AS	
M	29	1	**7X-2552**	4	BOLT (M16X2X30-MM)	
	30	1	**8T-4121**	2	WASHER-HARD (11X21X2.5-MM THK)	
M	31	1	**8T-4122**	4	WASHER-HARD (17X32X3.5-MM THK)	
M	32	1	**8T-4172**	2	BOLT (M10X1.5X80-MM)	
M	33	1	**8T-4183**	3	BOLT (M12X1.75X40-MM)	
M	34	1	**8T-4192**	2	BOLT (M12X1.75X25-MM)	
	35	1	**8T-4223**	2	WASHER-HARD (13.5X25.5X3-MM THK)	

I-REFER TO HYDRAULIC INFORMATION SYSTEM
M-METRIC PART
Y-SEPARATE ILLUSTRATION

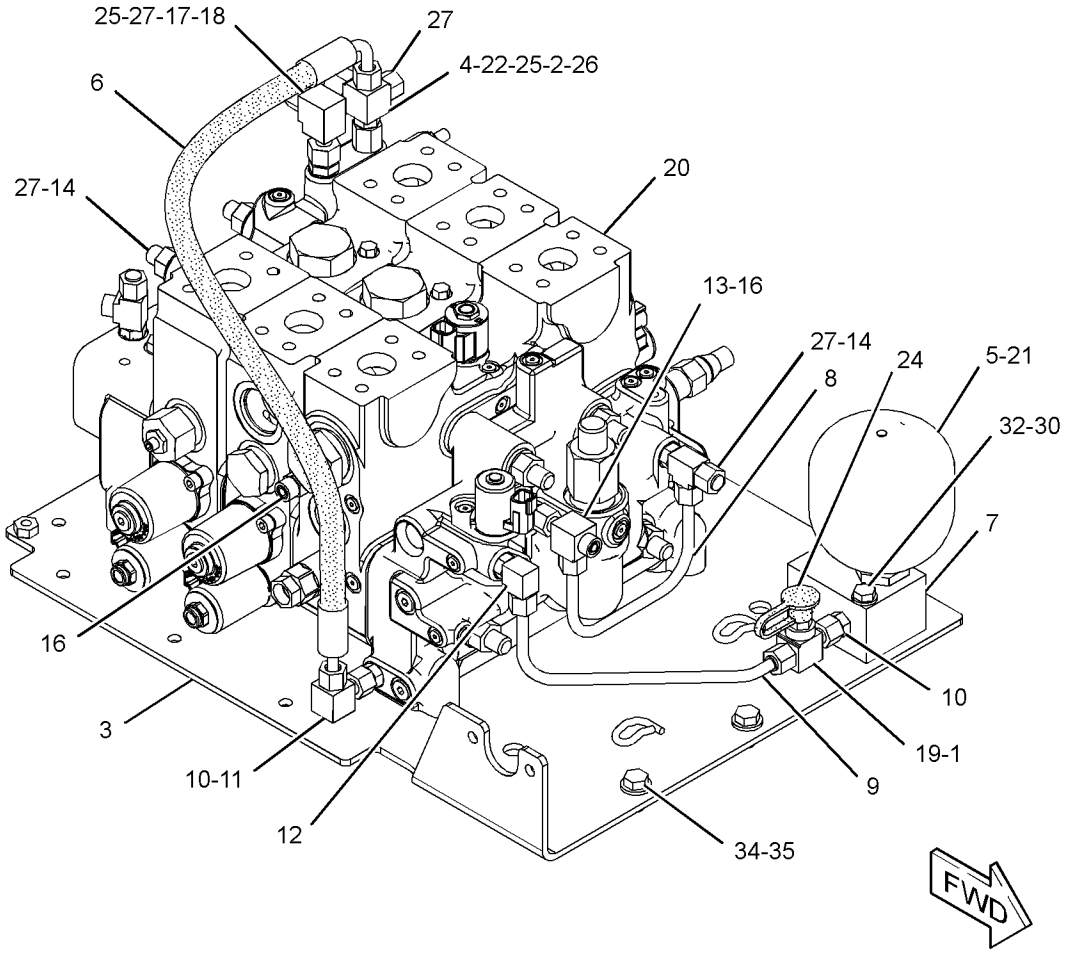

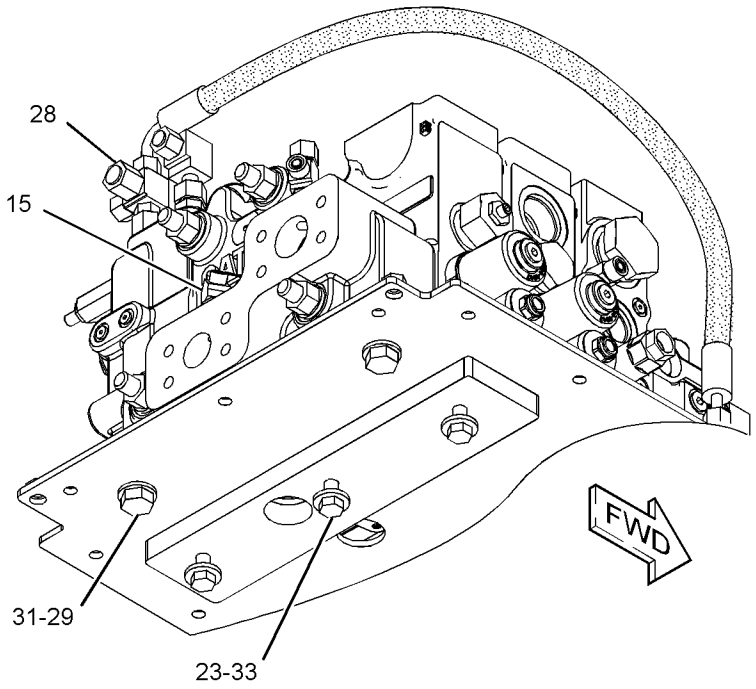

GRAPHIC #1 **<END>** g01196550

HYDRAULIC SYSTEM

236-9098 VALVE & MTG GP-MAIN CONTROL–
3-FUNCTION, WITH RIDE CONTROL
S/N: A7G1-UP
PART OF 236-9097 CONTROL AR-RIDE
AN ATTACHMENT

SMCS-5051 **i02415395**

NOTE	REF NO	GRAPHIC REF	PART NUMBER	QTY	PART NAME 1 2 3 4 5 6 (PRODUCT LEVEL)	SEE PAGE
	1	1	*148-8424*	1	TEE AS	
		1	**6V-8397**	1	SEAL-O-RING	
		1	**8T-8902**	1	TEE	
Y	2	1	**152-2646**	1	VALVE GP-SHUTTLE	636
	3	1	**241-2628**	1	BRACKET AS	
	4	1	**244-6625**	1	ADAPTER-SPECIAL	
Y	5	1	*245-2975*	1	ACCUMULATOR GP-PILOT OIL (CHARGED) (DEAD ENGINE LOWER)	520
I	6	1	**249-0368**	1	HOSE AS	
	7	1	**259-1502**	1	BLOCK	
	8	1	**259-1970**	1	TUBE AS	
	9	1	**259-1971**	1	TUBE AS	
Y	10	1	**261-2338**	1	VALVE GP-MAIN CONTROL (3-FUNCTION, WITH RIDE CONTROL)	625
	11	1	*150-3033*	1	ELBOW AS	
		1	**3J-1907**	1	SEAL-O-RING	
		1	**4J-5477**	1	SEAL-O-RING	
		1	**8T-0164**	1	ELBOW	
	12	1	*148-8336*	2	CONNECTOR AS	
					(EACH INCLUDES)	
		1	**3J-1907**	1	SEAL-O-RING	
		1	**6V-8397**	1	SEAL-O-RING	
		1	**6V-8636**	1	CONNECTOR	
	13	1	*148-8367*	1	ELBOW AS	
		1	**6V-8397**	1	SEAL-O-RING	
		1	**6V-9850**	1	ELBOW	
	14	1	*148-8378*	1	ELBOW AS	
		1	**3J-1907**	1	SEAL-O-RING	
		1	**6V-8397**	1	SEAL-O-RING	
		1	**6V-8724**	1	ELBOW	
	15	1	*148-8433*	1	TEE AS	
		1	**6V-8397**	2	SEAL-O-RING	
		1	**6V-9836**	1	TEE-SWIVEL	
	16	1	*148-8435*	2	TEE AS	
					(EACH INCLUDES)	
		1	**3J-1907**	1	SEAL-O-RING	
		1	**6V-8397**	2	SEAL-O-RING	
		1	**6V-8781**	1	TEE-FACE SEAL	
	17	1	*150-4044*	2	CONNECTOR AS	
					(EACH INCLUDES)	
		1	**3J-1907**	1	SEAL-O-RING	
		1	**6V-8397**	1	SEAL-O-RING	
		1	**8T-1779**	1	CONNECTOR	
	18	1	**152-3411**	1	ELBOW	
	19	1	*164-5567*	1	FITTING GP-COUPLING	
		1	**3J-1907**	1	SEAL-O-RING	
		1	**6V-3965**	1	FITTING AS (QUICK DISCONNECT)	
	20	1	**3D-2824**	1	SEAL-O-RING	
	21	1	**3J-1907**	1	SEAL-O-RING	
	22	1	**5P-1076**	3	WASHER-HARD (13.5X30X4-MM THK)	
	23	1	**6V-0852**	1	CAP-DUST	
	24	1	**6V-8397**	3	SEAL-O-RING	
	25	1	**6V-8398**	1	SEAL-O-RING	
	26	1	**6V-9829**	4	CAP AS	

236-9098 VALVE & MTG GP-MAIN CONTROL *(contd.)* i02415395

NOTE	REF NO	GRAPHIC REF	PART NUMBER	QTY	PART NAME 1 2 3 4 5 6 (PRODUCT LEVEL)	SEE PAGE
	27	1	**6V-9830**	1	CAP AS	
	28	1	*165-6365*	1	FITTING AS	
		1	**3J-1907**	1	SEAL-O-RING	
		1	**7W-7381**	1	FITTING-OUTLET	
M	29	1	**7X-2552**	4	BOLT (M16X2X30-MM)	
	30	1	**8T-4121**	2	WASHER-HARD (11X21X2.5-MM THK)	
M	31	1	**8T-4122**	4	WASHER-HARD (17X32X3.5-MM THK)	
M	32	1	**8T-4172**	2	BOLT (M10X1.5X80-MM)	
M	33	1	**8T-4183**	3	BOLT (M12X1.75X40-MM)	
M	34	1	**8T-4192**	2	BOLT (M12X1.75X25-MM)	
	35	1	**8T-4223**	2	WASHER-HARD (13.5X25.5X3-MM THK)	

I-REFER TO HYDRAULIC INFORMATION SYSTEM
M-METRIC PART
Y-SEPARATE ILLUSTRATION

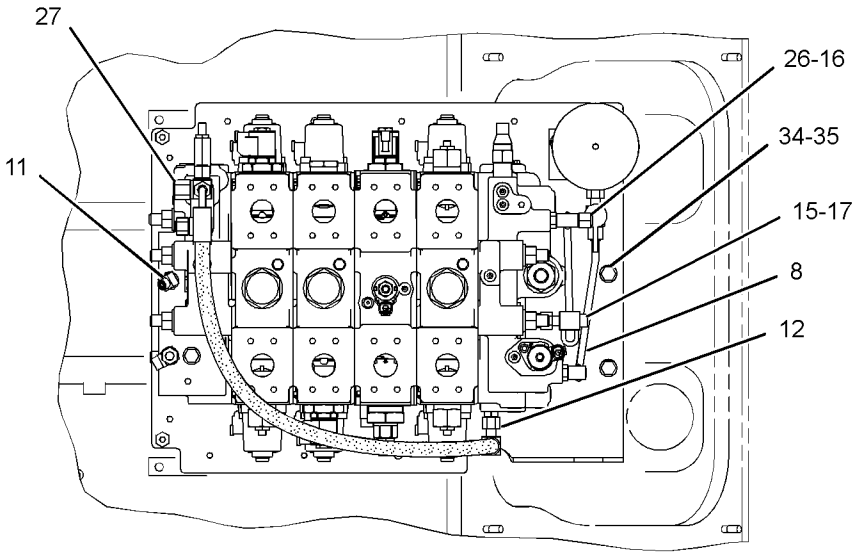

TOP VIEW

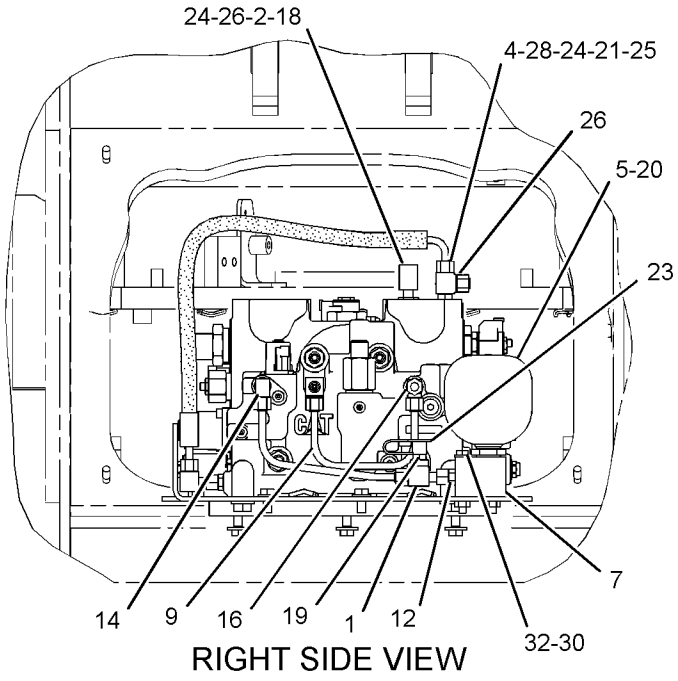

RIGHT SIDE VIEW

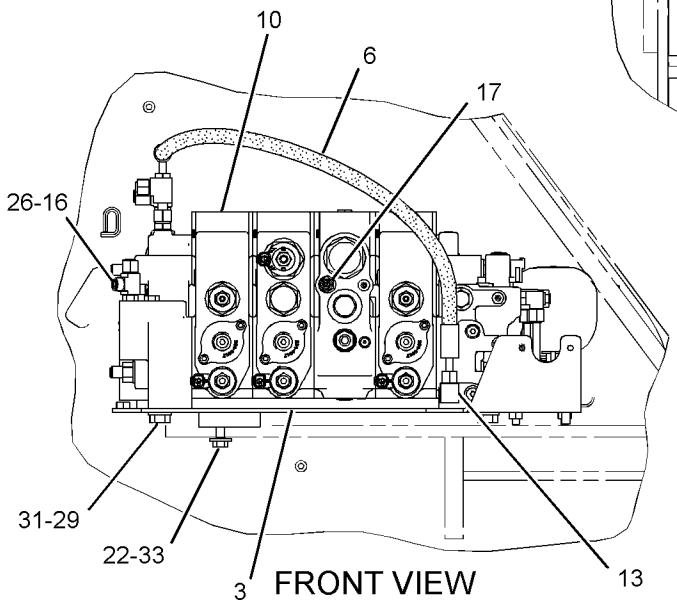

FRONT VIEW

GRAPHIC #1 **<END>** g01202005

HYDRAULIC SYSTEM

256-3565 VALVE & MTG GP-MAIN CONTROL–
3-FUNCTION, WITH RIDE CONTROL
S/N: A7G1-UP
PART OF 246-5304 HYDRAULIC AR-3 VALVE
AN ATTACHMENT

SMCS-5051 **i02414906**

NOTE	REF NO	GRAPHIC REF	PART NUMBER	QTY	PART NAME 1 2 3 4 5 6 (PRODUCT LEVEL)	SEE PAGE
	1	1	*148-8424*	1	TEE AS	
		1	**6V-8397**	1	SEAL-O-RING	
		1	**8T-8902**	1	TEE	
	2	1	*165-6365*	1	FITTING AS	
		1	**3J-1907**	1	SEAL-O-RING	
		1	**7W-7381**	1	FITTING-OUTLET	
	3	1	**241-2628**	1	BRACKET AS	
	4	1	**244-6625**	1	ADAPTER-SPECIAL	
Y	5	1	*245-2975*	1	ACCUMULATOR GP-PILOT OIL (CHARGED) (DEAD ENGINE, LIFT ARM LOWER)	520
I	6	1	**249-0368**	1	HOSE AS	
	7	1	**259-1502**	1	BLOCK	
	8	1	**259-1970**	1	TUBE AS	
	9	1	**259-1971**	1	TUBE AS	
	10	1	*148-8336*	2	CONNECTOR AS	
					(EACH INCLUDES)	
		1	**3J-1907**	1	SEAL-O-RING	
		1	**6V-8397**	1	SEAL-O-RING	
		1	**6V-8636**	1	CONNECTOR	
	11	1	*148-8367*	1	ELBOW AS	
		1	**6V-8397**	1	SEAL-O-RING	
		1	**6V-9850**	1	ELBOW	
	12	1	*148-8378*	1	ELBOW AS	
		1	**3J-1907**	1	SEAL-O-RING	
		1	**6V-8397**	1	SEAL-O-RING	
		1	**6V-8724**	1	ELBOW	
	13	1	*148-8433*	1	TEE AS	
		1	**6V-8397**	2	SEAL-O-RING	
		1	**6V-9836**	1	TEE-SWIVEL	
	14	1	*148-8435*	2	TEE AS	
					(EACH INCLUDES)	
		1	**3J-1907**	1	SEAL-O-RING	
		1	**6V-8397**	2	SEAL-O-RING	
		1	**6V-8781**	1	TEE-FACE SEAL	
	15	1	*150-3033*	1	ELBOW AS	
		1	**3J-1907**	1	SEAL-O-RING	
		1	**4J-5477**	1	SEAL-O-RING	
		1	**8T-0164**	1	ELBOW	
	16	1	*150-4044*	2	CONNECTOR AS	
					(EACH INCLUDES)	
		1	**3J-1907**	1	SEAL-O-RING	
		1	**6V-8397**	1	SEAL-O-RING	
		1	**8T-1779**	1	CONNECTOR	
Y	17	1	**152-2646**	1	VALVE GP-SHUTTLE (STEERING OIL)	636
	18	1	**152-3411**	1	ELBOW	
	19	1	*164-5567*	1	FITTING GP-COUPLING	
		1	**3J-1907**	1	SEAL-O-RING	
		1	**6V-3965**	1	FITTING AS (QUICK DISCONNECT)	
Y	20	1	*256-3644*	1	VALVE GP-MAIN CONTROL (3-FUNCTION, WITH RIDE CONTROL)	622
	21	1	**3D-2824**	1	SEAL-O-RING	
	22	1	**3J-1907**	1	SEAL-O-RING	
	23	1	**5P-1076**	3	WASHER-HARD (13.5X30X4-MM THK)	
	24	1	**6V-0852**	1	CAP-DUST	

256-3565 VALVE & MTG GP-MAIN CONTROL *(contd.)* i02414906

NOTE	REF NO	GRAPHIC REF	PART NUMBER	QTY	PART NAME 1 2 3 4 5 6 (PRODUCT LEVEL)	SEE PAGE
	25	1	**6V-8397**	3	SEAL-O-RING	
	26	1	**6V-8398**	1	SEAL-O-RING	
	27	1	**6V-9829**	4	CAP AS	
	28	1	**6V-9830**	1	CAP AS	
M	29	1	**7X-2552**	4	BOLT (M16X2X30-MM)	
	30	1	**8T-4121**	2	WASHER-HARD (11X21X2.5-MM THK)	
M	31	1	**8T-4122**	4	WASHER-HARD (17X32X3.5-MM THK)	
M	32	1	**8T-4172**	2	BOLT (M10X1.5X80-MM)	
M	33	1	**8T-4183**	3	BOLT (M12X1.75X40-MM)	
M	34	1	**8T-4192**	2	BOLT (M12X1.75X25-MM)	
	35	1	**8T-4223**	2	WASHER-HARD (13.5X25.5X3-MM THK)	

I-REFER TO HYDRAULIC INFORMATION SYSTEM
M-METRIC PART
Y-SEPARATE ILLUSTRATION

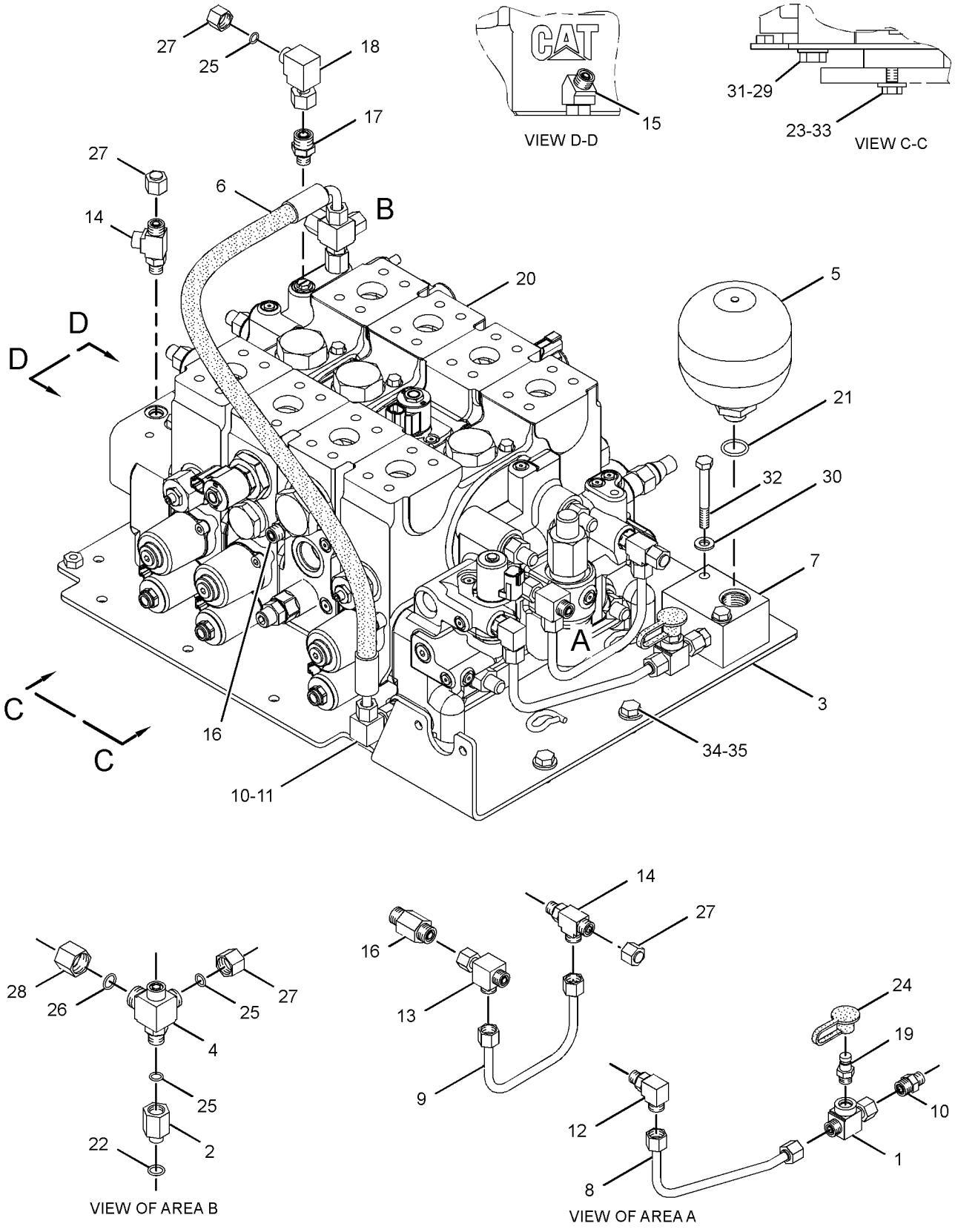

GRAPHIC #1 **<END>** g01196597

158-9956 VALVE GP-CHECK–BRAKE OIL, PILOT OIL

S/N: A7G1-UP

PART OF 242-1307 MANIFOLD GP-CONTROL, 269-9398 MANIFOLD GP-VALVE

ALSO AN ATTACHMENT

SMCS-5067 **i02230295**

NOTE	REF NO	GRAPHIC REF	PART NUMBER	QTY	PART NAME 1 2 3 4 5 6 (PRODUCT LEVEL)	SEE PAGE
	1	1	**3K-0360**	1	SEAL-O-RING	
	2	1	**161-6154**	1	SEAL-O-RING	
	3	1	**6E-0381**	1	RING-BACKUP	

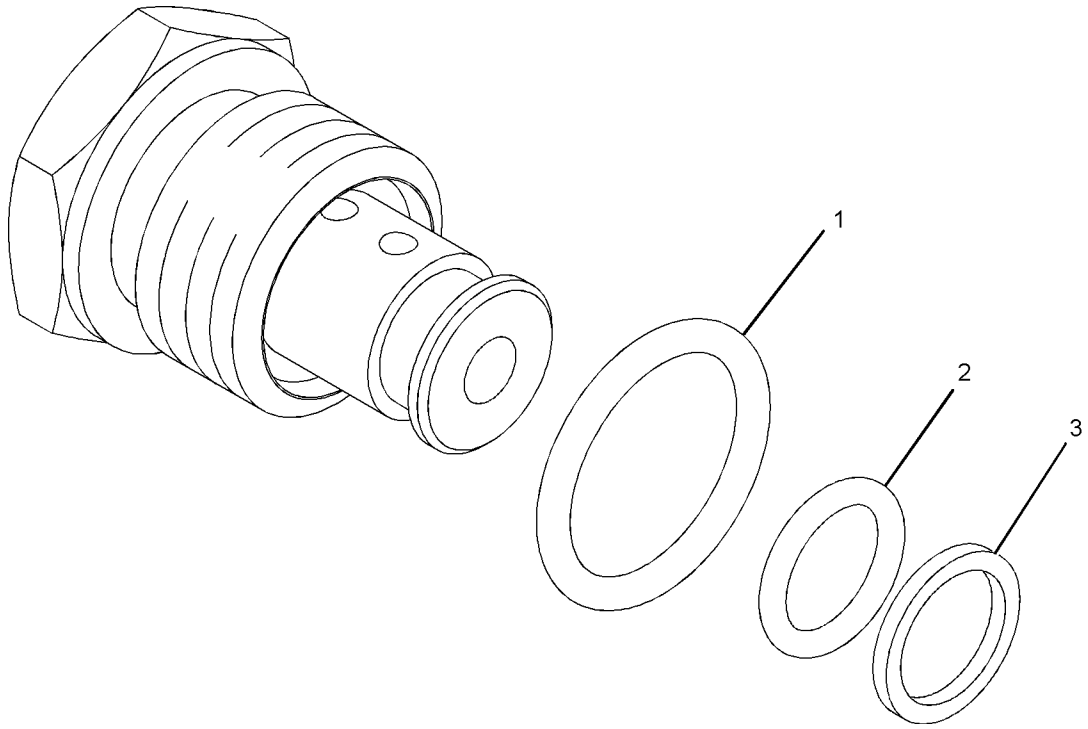

GRAPHIC #1 **<END>** g01016882

194-1723 VALVE GP-CHECK—PILOT OIL

S/N: A7G1-UP

PART OF 247-7601 VALVE GP-CONTROL, 253-4026 VALVE GP-RIDE CONTROL

ALSO AN ATTACHMENT

SMCS-5067 **i02210498**

NOTE	REF NO	GRAPHIC REF	PART NUMBER	QTY	PART NAME 1 2 3 4 5 6 (PRODUCT LEVEL)	SEE PAGE
	1	1	**2M-9780**	1	SEAL-O-RING	
	2	1	**161-6149**	1	SEAL-O-RING	
	3	1	**7X-4776**	1	RING-BACKUP	

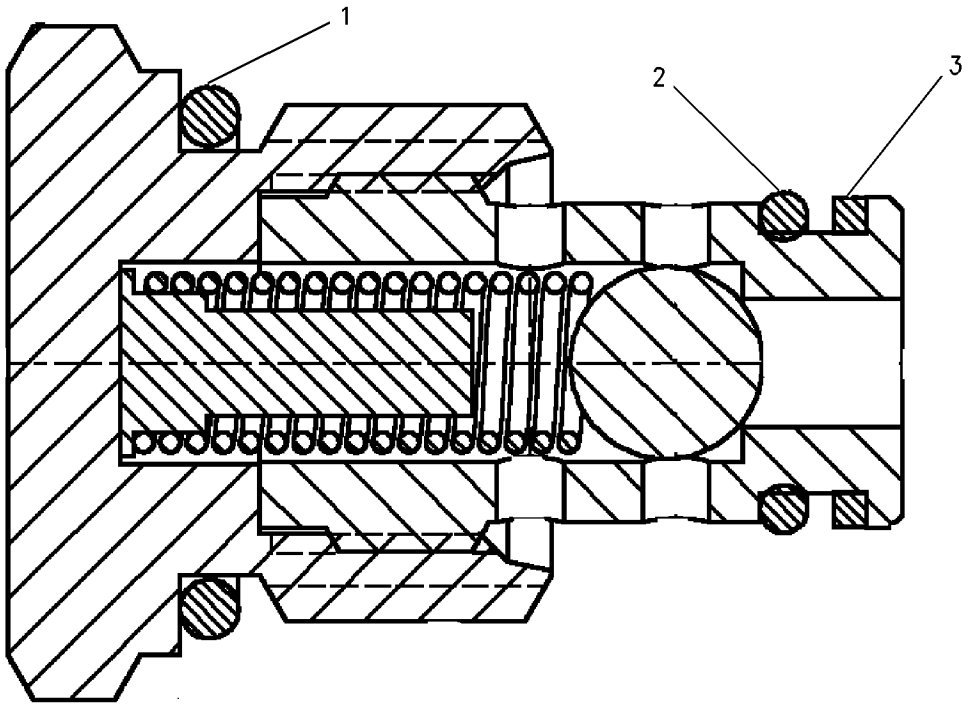

GRAPHIC #1 **<END>** g00748809

244-1426 VALVE GP-CHECK

S/N: A7G1-UP

PART OF 236-8983 LINES GP-HYDRAULIC OIL COOLER

SMCS-5067 **i02232864**

NOTE	REF NO	GRAPHIC REF	PART NUMBER	QTY	PART NAME 1 2 3 4 5 6 (PRODUCT LEVEL)	SEE PAGE
	1	1	**3D-2824**	1	SEAL-O-RING	
	2	1	**6V-9746**	1	SEAL-O-RING	

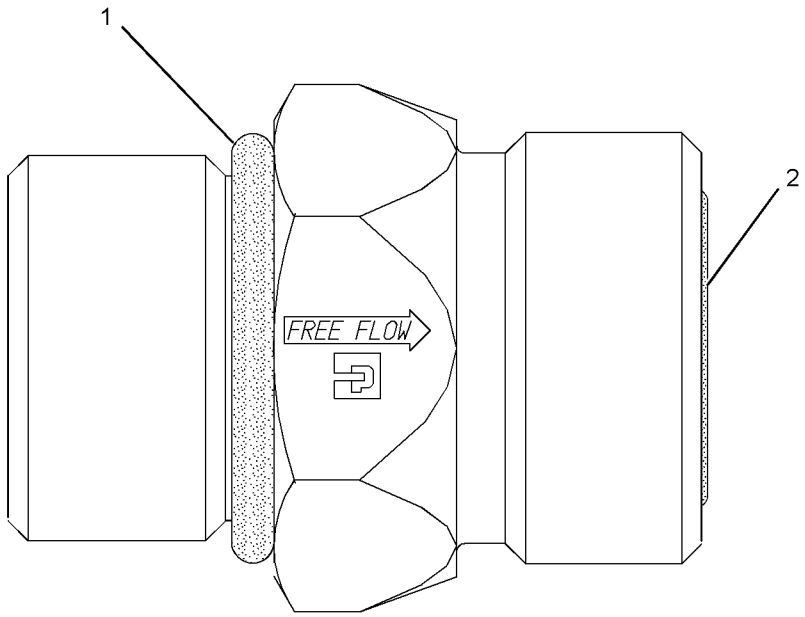

GRAPHIC #1 **<END>** g01128106

HYDRAULIC SYSTEM

247-7601 VALVE GP-CONTROL—HYDRAULIC BLOCK

S/N: A7G1-UP

PART OF 261-3945 VALVE GP-MAIN CONTROL

ALSO AN ATTACHMENT

SMCS-5051 **i02412090**

NOTE	REF NO	GRAPHIC REF	PART NUMBER	QTY	PART NAME 1 2 3 4 5 6 (PRODUCT LEVEL)	SEE PAGE
	2	1	**9T-7692**	2	RING	
	3	1	**148-9359**	5	PLUG	
Y	4	1	**194-1723**	1	VALVE GP-CHECK (PILOT OIL)	606
	5	1	**223-1341**	1	PLUG AS	
		1	**3K-0360**	1	SEAL-O-RING	
		1	**7J-9933**	1	SEAL-O-RING	
	6	1	**240-4695**	2	RING-BACKUP	
	7	1	**247-4481**	1	PLUG	
	9	1	**253-4025**	1	BODY-VALVE	
	10	1	**256-4362**	2	RING-BACKUP	
	11	1	**256-4363**	2	RING-BACKUP	
	12	1	**256-4552**	2	PLUG	
	13	1	**256-7280**	2	RING-BACKUP	
Y	14	1	**260-8590**	1	VALVE GP-SHUTTLE	638
	15	1	**095-1750**	1	SEAL-O-RING	
	16	1	**095-1751**	1	SEAL-O-RING	
	17	1	*148-8395*	1	PLUG AS	
		1	**3K-0360**	1	SEAL-O-RING	
		1	**9S-8005**	1	PLUG	
	18	1	*148-8406*	1	PLUG AS	
		1	**7M-8485**	1	SEAL-O-RING	
		1	**9S-9334**	1	PLUG	
	19	1	*148-8411*	2	PLUG AS	
					(EACH INCLUDES)	
		1	**3K-0360**	1	SEAL-O-RING	
		1	**9S-4185**	1	PLUG	
	20	1	*162-0177*	1	PLUG AS	
		1	**3J-1907**	1	SEAL-O-RING	
		1	**9S-8004**	1	PLUG	
	21	1	*162-6448*	1	PLUG AS	
		1	**1N-5999**	1	PLUG	
		1	**7J-0204**	1	SEAL-O-RING	
	22	1	*164-4180*	1	PLUG AS	
		1	**9S-4191**	1	PLUG	
		1	**7M-8485**	1	SEAL-O-RING	
	23	1	*173-3993*	14	PLUG AS	
					(EACH INCLUDES)	
		1	**4J-7533**	1	SEAL-O-RING	
		1	**9S-8001**	1	PLUG	
	24	1	**1P-3704**	2	SEAL-RECTANGULAR	
	25	1	**1P-3705**	1	SEAL-RECTANGULAR	
	26	1	**2M-9780**	1	SEAL-O-RING	
	27	1	**2S-4078**	2	SEAL-O-RING	
	28	1	**4J-0524**	2	SEAL-O-RING	
	29	1	**4J-9535**	2	SEAL-O-RING	
	30	1	**6J-3134**	5	SEAL-O-RING	
	31	1	**6V-0357**	2	SEAL-O-RING	
	32	1	**7J-9108**	1	SEAL-O-RING	
	33	1	**7X-1550**	2	SEAL-O-RING	
	34	1	**9W-7783**	2	PLUG	

Y-SEPARATE ILLUSTRATION

247-7601 **VALVE GP-CONTROL** *(contd.)* **i02412090**

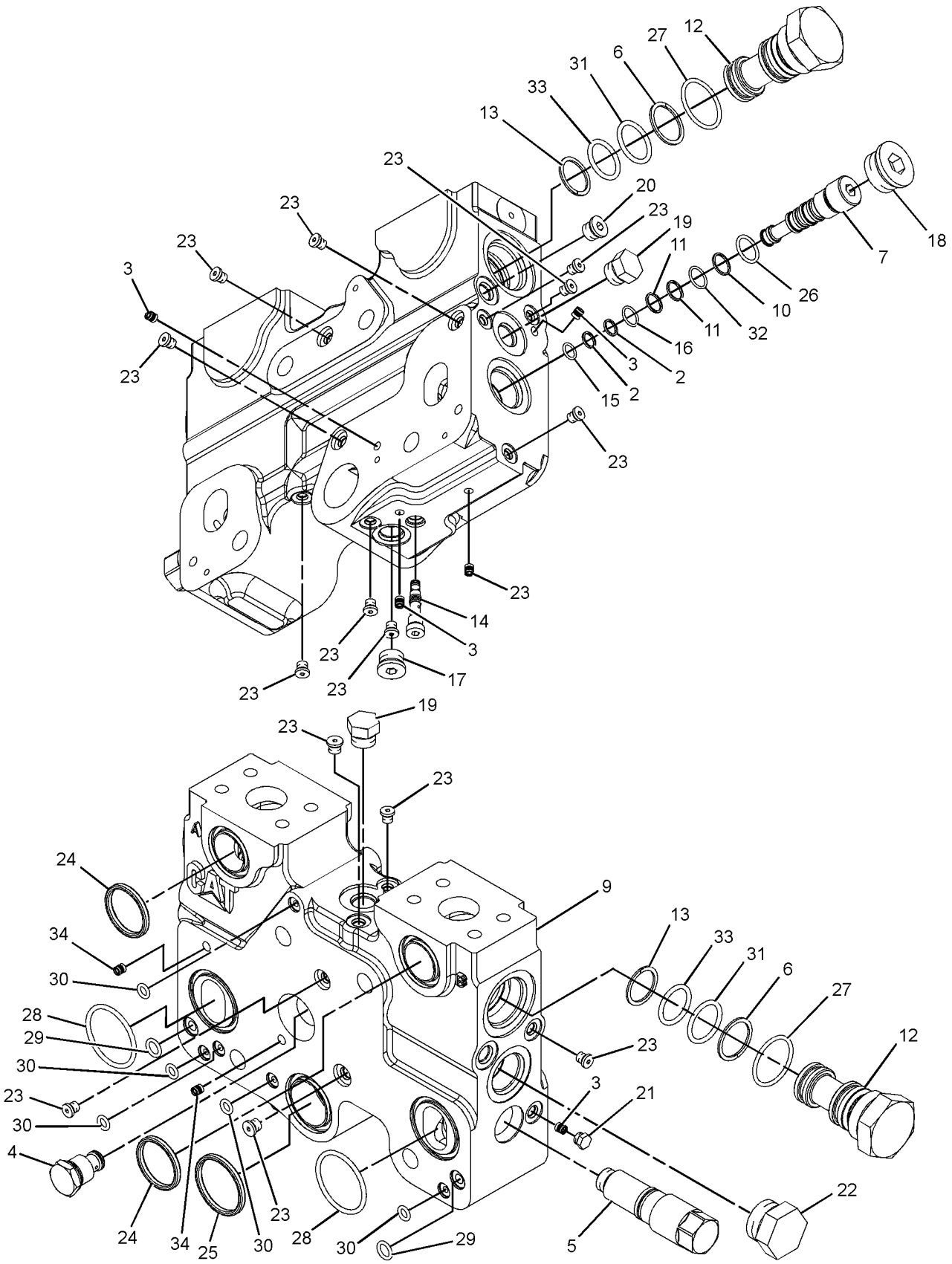

GRAPHIC #1 **<END>** g01211331

HYDRAULIC SYSTEM

256-3364 VALVE GP-CONTROL–TILT

S/N: A7G1-UP
PART OF 256-3644 VALVE GP-MAIN CONTROL
AN ATTACHMENT

SMCS-5051 **i02409657**

NOTE	REF NO	GRAPHIC REF	PART NUMBER	QTY	PART NAME 1 2 3 4 5 6 (PRODUCT LEVEL)	SEE PAGE
	1	1	**1T-0936**	1	PLUG-PIPE	
	3	1	**9W-7783**	2	PLUG	
	4	1	**148-9359**	4	PLUG	
	5	1	*162-0177*	2	PLUG AS	
					(EACH INCLUDES)	
		1	**9S-8004**	1	PLUG	
		1	**3J-1907**	1	SEAL-O-RING	
Z	6	1		1	BODY-VALVE	
	7	1	**234-4845**	1	SPOOL	
	8	1	**234-4846**	1	SPOOL	
	9	1	**234-4851**	1	SPRING	
	10	1	**234-5001**	1	SPRING	
	11	1	**235-1498**	1	SPRING	
	12	1	**236-9832**	1	SPRING	
	13	1	**250-7531**	1	PLUG-RETAINER	
	14	1	**256-2866**	1	VALVE GP-RELIEF (LINE, TILT)	
Y	16	1	**257-0267**	2	VALVE GP-SOLENOID (PILOT PROPORTIONING)	641
	17	1	**260-3053**	1	HOUSING-SPRING	
	18	1	**260-3055**	1	HOUSING-SPRING	
	19	1	**260-3056**	1	RETAINER	
	20	1	**260-3057**	1	RETAINER	
	21	1	**260-3058**	1	BOLT	
Z	22	1		1	STEM-VALVE (TILT)	
Y	23	1	**260-8590**	1	VALVE GP-SHUTTLE (BALL RESOLVER)	638
	24	1	**262-5265**	1	VALVE GP-SOLENOID (DRIFT REDUCTION)	
		1	**2S-4078**	1	SEAL-O-RING	
		1	**096-3044**	1	SEAL-O-RING	
		1	**099-8232**	1	SEAL-O-RING	
	25	1	**276-7521**	1	VALVE GP-RELIEF (LINE, TILT)	
	26	1	**164-5619**	1	PLUG AS	
		1	**2M-9780**	1	SEAL-O-RING	
	27	1	*183-7263*	1	PLUG AS	
		1	**3J-7354**	1	SEAL-O-RING	
		1	**9S-8002**	1	PLUG	
	28	1	**1P-3705**	1	SEAL-RECTANGULAR	
	29	1	**2S-4078**	1	SEAL-O-RING	
	30	1	**3E-6771**	2	SEAL-O-RING	
	31	1	**3J-1907**	1	SEAL-O-RING	
	32	1	**4J-0524**	2	SEAL-O-RING	
	33	1	**4J-9535**	2	SEAL-O-RING	
M	34	1	**5A-3604**	4	BOLT-SOCKET HEAD (M8X1.25X25-MM)	
	35	1	**6J-3134**	4	SEAL-O-RING	

M-METRIC PART
Y-SEPARATE ILLUSTRATION
Z-NOT SERVICED SEPARATELY

256-3364 VALVE GP-CONTROL *(contd.)* **i02409657**

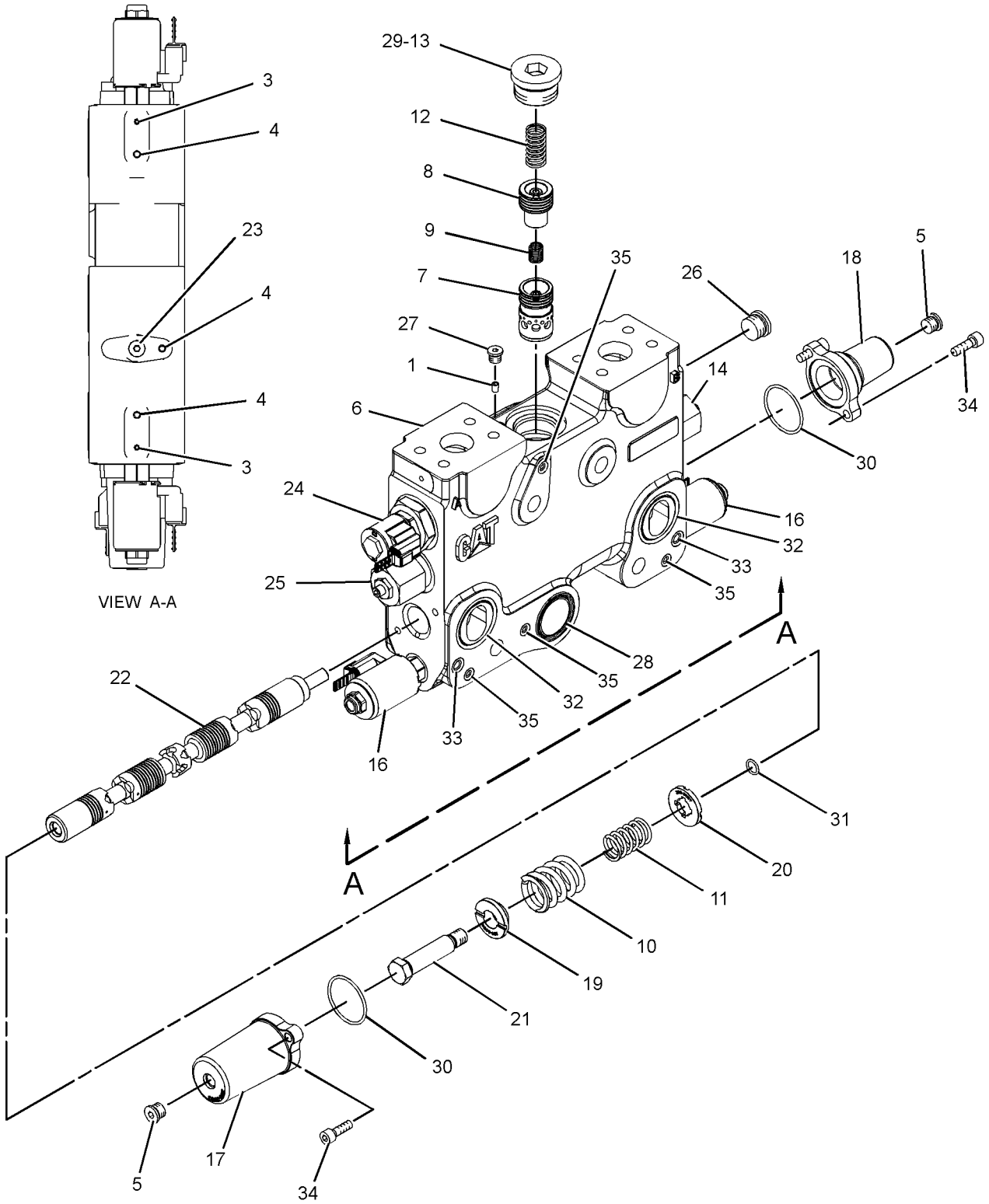

GRAPHIC #1 **<END>** g01197632

HYDRAULIC SYSTEM

261-0015 VALVE GP-CONTROL—TILT

S/N: A7G1-UP

PART OF 261-2337, 261-2338, 261-3945 VALVE GP-MAIN CONTROL

ALSO AN ATTACHMENT

SMCS-5051 **i02413741**

NOTE	REF NO	GRAPHIC REF	PART NUMBER	QTY	PART NAME 1 2 3 4 5 6 (PRODUCT LEVEL)	SEE PAGE
	1	1	**1T-0936**	1	PLUG-PIPE	
	2	1	**6J-3134**	4	SEAL-O-RING	
	3	1	**9W-7783**	2	PLUG	
	4	1	**148-9359**	4	PLUG	
	5	1	*162-0177*	2	PLUG AS	
					(EACH INCLUDES)	
		1	**3J-1907**	1	SEAL-O-RING	
		1	**9S-8004**	1	PLUG	
	6	1	*234-0349*	1	BODY-VALVE	
Z	7	1		1	SPOOL	
Z	8	1		1	SPOOL	
	9	1	**234-4851**	1	SPRING	
J	10	1	**256-2866**	1	VALVE GP-RELIEF (LINE, TILT CYL ROD END PORT)	
J	10A	1	**256-2866**	1	VALVE GP-RELIEF (LINE, TILT CYL HEAD END PORT)	
	11	1	**234-5001**	1	SPRING	
	12	1	**235-1498**	1	SPRING	
	13	1	**236-9832**	1	SPRING	
	14	1	**262-5265**	1	VALVE GP-SOLENOID (DRIFT REDUCTION)	
		1	**2S-4078**	1	SEAL-O-RING	
		1	**096-3044**	1	SEAL-O-RING	
		1	**099-8232**	1	SEAL-O-RING	
	15	1	**250-7531**	1	PLUG-RETAINER	
Y	16	1	**257-0267**	2	VALVE GP-SOLENOID (PILOT PROPORTIONING)	641
	17	1	**260-3053**	1	HOUSING-SPRING	
	18	1	**260-3055**	1	HOUSING-SPRING	
	19	1	**260-3056**	1	RETAINER	
	20	1	**260-3057**	1	RETAINER	
	21	1	**260-3058**	1	BOLT	
	22	1	**260-6734**	1	STEM-VALVE (TILT)	
Y	23	1	**260-8590**	1	VALVE GP-SHUTTLE (BALL RESOLVER)	638
M	24	1	**5A-3604**	4	BOLT-SOCKET HEAD (M8X1.25X25-MM)	
	25	1	**1P-3705**	1	SEAL-RECTANGULAR	
	26	1	*183-7263*	1	PLUG AS	
		1	**3J-7354**	1	SEAL-O-RING	
		1	**9S-8002**	1	PLUG	
	27	1	**2S-4078**	1	SEAL-O-RING	
	28	1	**3E-6771**	2	SEAL-O-RING	
	29	1	**3J-1907**	1	SEAL-O-RING	
	30	1	**4J-0524**	2	SEAL-O-RING	
	31	1	**4J-9535**	2	SEAL-O-RING	
	32	1	**164-5619**	1	PLUG AS	
		1	**2M-9780**	1	SEAL-O-RING	
					AVAILABLE REPAIR KIT(S):	
J			**238-9842**	1	KIT-SEAL	

J-KIT MARKED J SERVICES PARTS MARKED J
M-METRIC PART
Y-SEPARATE ILLUSTRATION
Z-NOT SERVICED SEPARATELY

261-0015 VALVE GP-CONTROL *(contd.)* **i02413741**

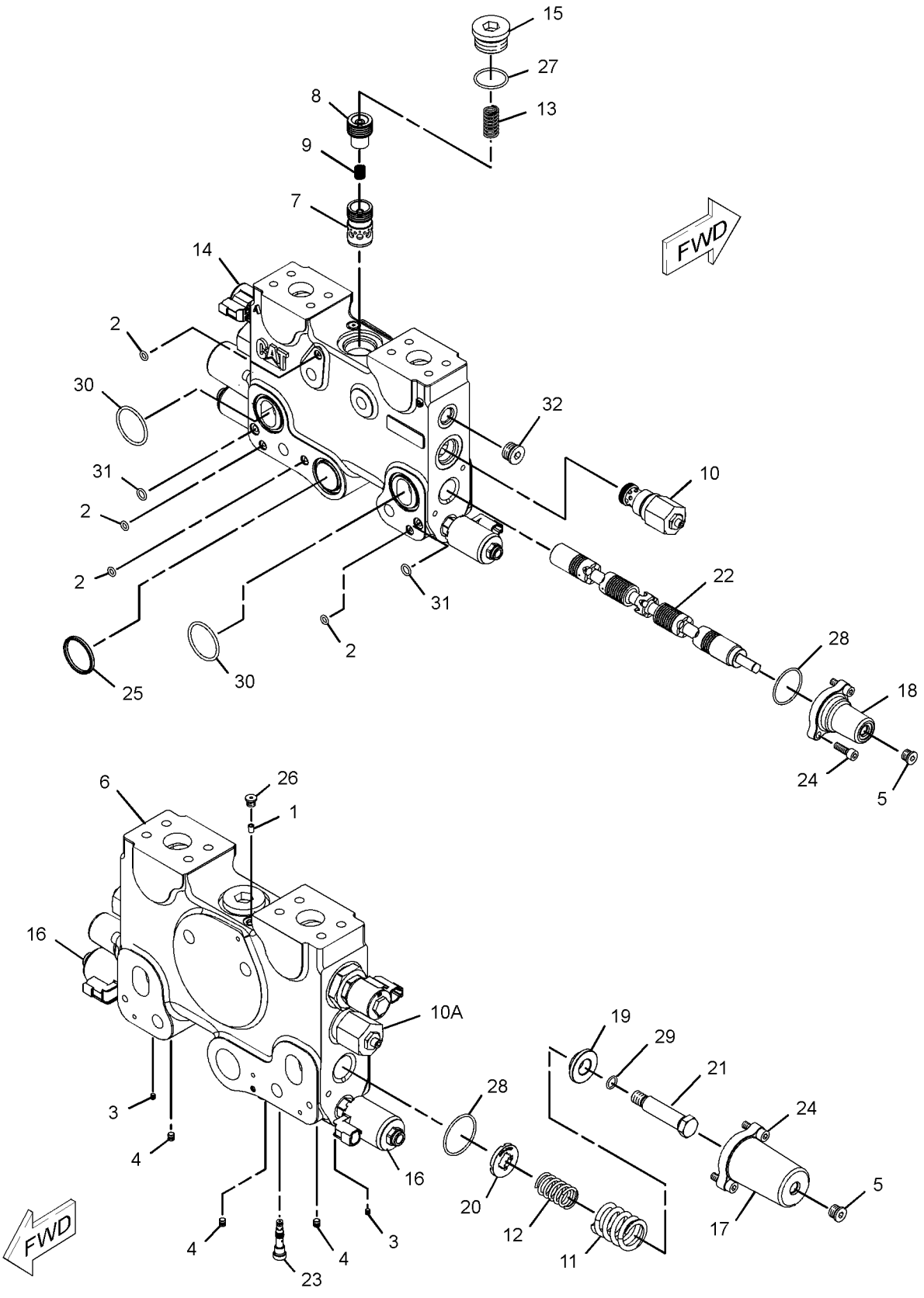

GRAPHIC #1 **<END>** g01210767

HYDRAULIC SYSTEM

261-0016 VALVE GP-CONTROL–LIFT

S/N: A7G1-UP

PART OF 256-3644, 261-2337, 261-2338, 261-3945 VALVE GP-MAIN CONTROL

ALSO AN ATTACHMENT

SMCS-5051 **i02412288**

NOTE	REF NO	GRAPHIC REF	PART NUMBER	QTY	PART NAME 1 2 3 4 5 6 (PRODUCT LEVEL)	SEE PAGE
	1	1	**1T-0936**	1	PLUG-PIPE	
	2	1	**6J-3134**	4	SEAL-O-RING	
	3	1	**9W-7783**	2	PLUG	
	4	1	**148-9359**	4	PLUG	
	5	1	*162-0177*	2	PLUG AS	
					(EACH INCLUDES)	
		1	**3J-1907**	1	SEAL-O-RING	
		1	**9S-8004**	1	PLUG	
	6	1	**234-4845**	1	SPOOL	
	7	1	**234-4846**	1	SPOOL	
	8	1	**234-4851**	1	SPRING	
	9	1	*234-4860*	1	BODY-VALVE	
	10	1	**234-4869**	1	VALVE GP-MAKEUP	
	11	1	**234-4870**	1	PLUG	
	12	1	**234-5001**	1	SPRING	
	13	1	**235-1498**	1	SPRING	
	14	1	**236-9832**	1	SPRING	
	15	1	**262-5265**	1	VALVE GP-SOLENOID (DRIFT REDUCTION)	
		1	**2S-4078**	1	SEAL-O-RING	
		1	**096-3044**	1	SEAL-O-RING	
		1	**099-8232**	1	SEAL-O-RING	
	16	1	**240-4696**	1	RING-BACKUP	
	17	1	**250-7531**	1	PLUG-RETAINER	
Y	18	1	**257-0267**	2	VALVE GP-SOLENOID (PILOT PROPORTIONING)	641
	19	1	**260-3053**	1	HOUSING-SPRING	
	20	1	**260-3055**	1	HOUSING-SPRING	
	21	1	**260-3056**	1	RETAINER	
	22	1	**260-3057**	1	RETAINER	
	23	1	**260-3058**	1	BOLT	
	24	1	**260-6735**	1	STEM-VALVE (LIFT)	
Y	25	1	**260-8590**	1	VALVE GP-SHUTTLE (BALL RESOLVER)	638
	26	1	**7M-8485**	1	SEAL-O-RING	
	27	1	**1P-3705**	1	SEAL-RECTANGULAR	
	28	1	*183-7263*	1	PLUG AS	
		1	**3J-7354**	1	SEAL-O-RING	
		1	**9S-8002**	1	PLUG	
	29	1	**2S-4078**	1	SEAL-O-RING	
	30	1	**3E-6771**	2	SEAL-O-RING	
	31	1	**3J-1907**	1	SEAL-O-RING	
	32	1	**4J-0524**	2	SEAL-O-RING	
	33	1	**4J-8996**	1	SEAL-O-RING	
	34	1	**4J-9535**	2	SEAL-O-RING	
M	35	1	**5A-3604**	4	BOLT-SOCKET HEAD (M8X1.25X25-MM)	
	36	1	**164-5619**	1	PLUG AS	
		1	**2M-9780**	1	SEAL-O-RING	
					AVAILABLE REPAIR KIT(S):	
J			**238-9842**	1	KIT-SEAL	

J-KIT MARKED J SERVICES PART MARKED J
M-METRIC PART
Y-SEPARATE ILLUSTRATION

261-0016 VALVE GP-CONTROL *(contd.)* **i02412288**

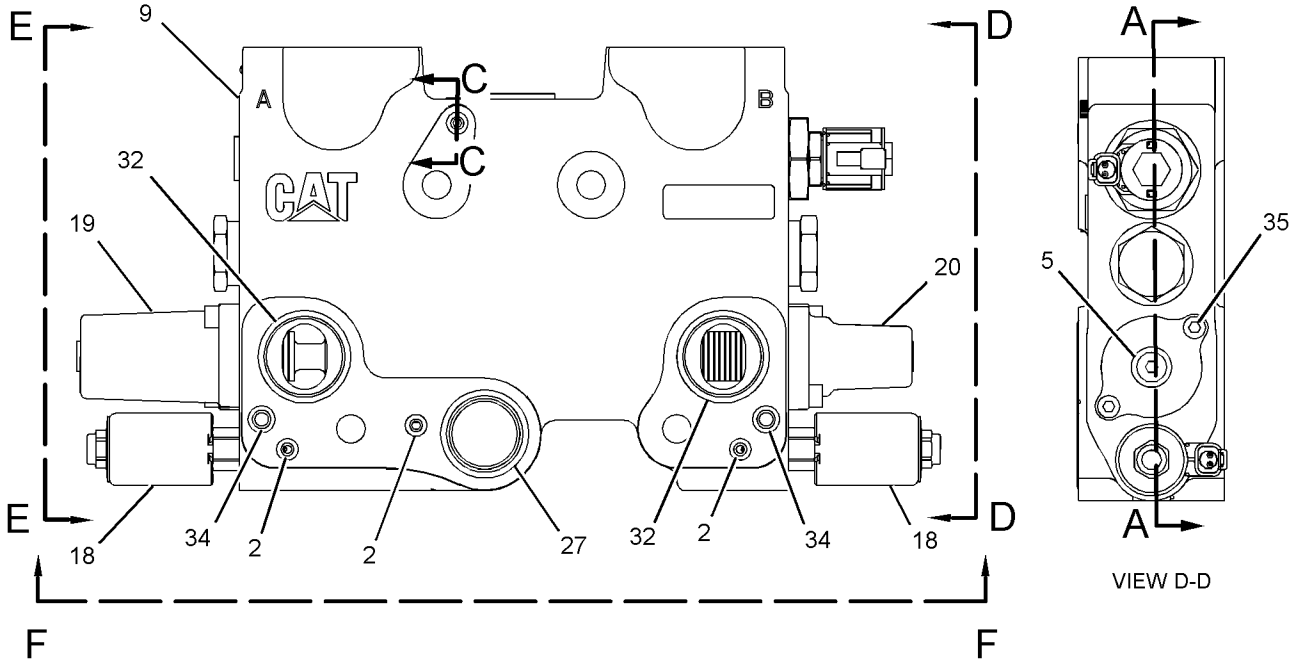

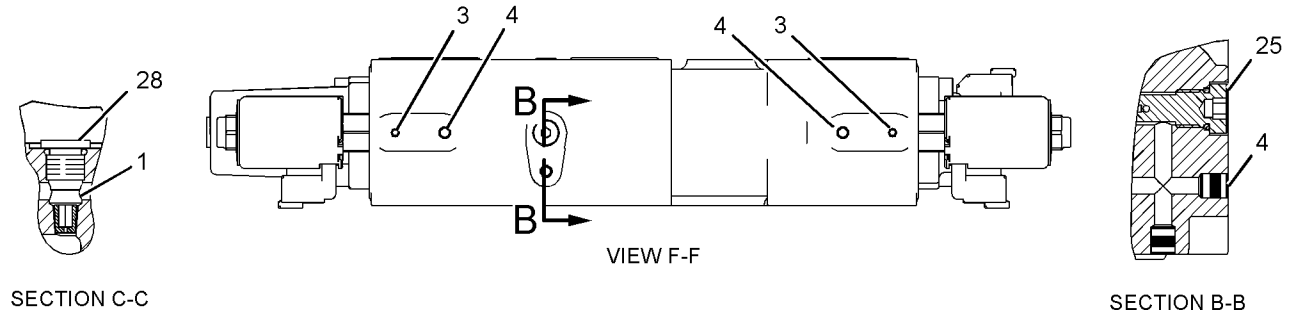

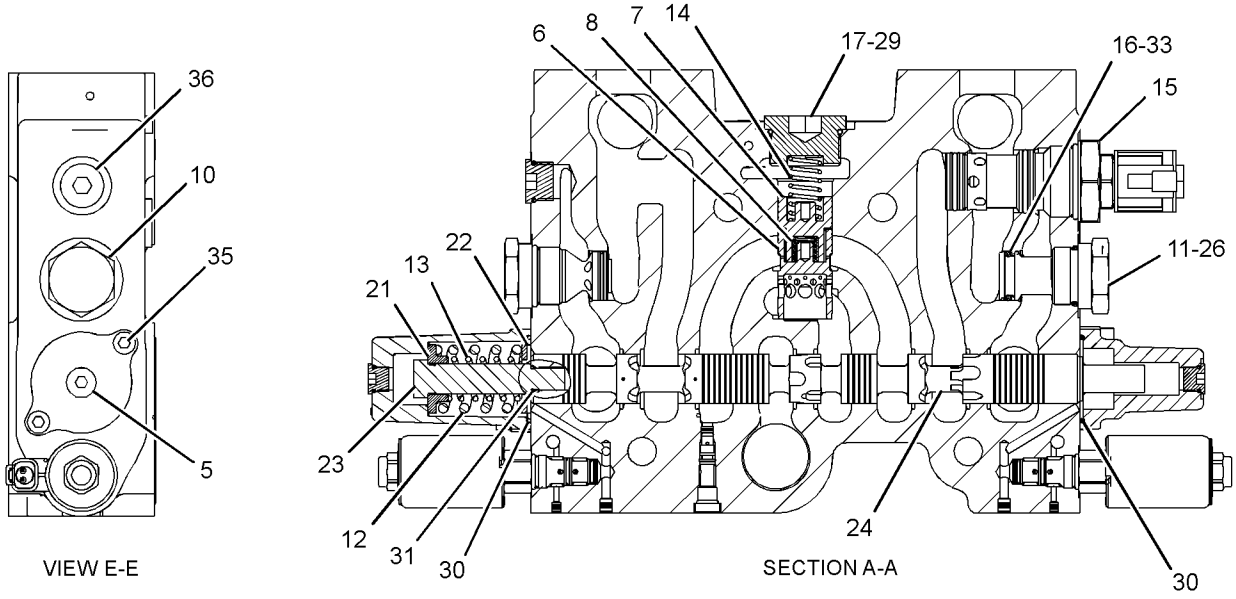

GRAPHIC #1 **<END>** g01210777

HYDRAULIC SYSTEM

261-0017 VALVE GP-CONTROL–AUXILIARY

S/N: A7G1-UP
PART OF 256-3644, 261-2338 VALVE GP-MAIN CONTROL
AN ATTACHMENT

SMCS-5051 **i02384909**

NOTE	REF NO	GRAPHIC REF	PART NUMBER	QTY	PART NAME 1 2 3 4 5 6 (PRODUCT LEVEL)	SEE PAGE
	1	1	**1T-0936**	1	PLUG-PIPE	
	2	1	**164-5619**	2	PLUG AS	
					(EACH INCLUDES)	
		1	**2M-9780**	1	SEAL-O-RING	
	3	1	**9W-7783**	2	PLUG	
	4	1	**148-9359**	4	PLUG	
	5	1	**234-4845**	1	SPOOL	
	6	1	**234-4846**	1	SPOOL	
	7	1	**234-4851**	1	SPRING (INNER)	
	8	1	**234-5001**	1	SPRING (OUTER)	
	9	1	**235-1498**	1	SPRING (INNER)	
	10	1	**236-9832**	1	SPRING (OUTER)	
J	11	1	**247-8669**	2	VALVE GP-RELIEF (LINE, AUXILIARY)	
	12	1	**250-7531**	1	PLUG-RETAINER	
	14	1	**253-0272**	1	BODY-VALVE	
Y	15	1	**257-0267**	2	VALVE GP-SOLENOID (PILOT PROPORTIONING)	641
	16	1	**260-3053**	1	HOUSING-SPRING	
	17	1	**260-3055**	1	HOUSING-SPRING	
	18	1	**260-3056**	1	RETAINER	
	19	1	**260-3057**	1	RETAINER	
	20	1	**260-3058**	1	BOLT	
	21	1	**260-6736**	1	STEM-VALVE (AUXILIARY)	
Y	22	1	**260-8590**	1	VALVE GP-SHUTTLE (BALL RESOLVER)	638
	24	1	**162-0177**	2	PLUG AS	
					(EACH INCLUDES)	
		1	**3J-1907**	1	SEAL-O-RING	
		1	**9S-8004**	1	PLUG	
	25	1	**1P-3705**	1	SEAL-RECTANGULAR	
	26	1	*183-7263*	1	PLUG AS	
		1	**3J-7354**	1	SEAL-O-RING	
		1	**9S-8002**	1	PLUG	
	27	1	**2S-4078**	1	SEAL-O-RING	
	28	1	**3E-6771**	2	SEAL-O-RING	
	29	1	**3J-1907**	1	SEAL-O-RING	
	30	1	**4J-0524**	2	SEAL-O-RING	
	31	1	**4J-9535**	2	SEAL-O-RING	
M	32	1	**5A-3604**	4	BOLT-SOCKET HEAD (M8X1.25X25-MM)	
	33	1	**6J-3134**	4	SEAL-O-RING	
					AVAILABLE REPAIR KIT(S):	
J			**238-9842**	1	KIT-SEAL	

J-KIT MARKED J SERVICES PARTS MARKED J
M-METRIC PART
Y-SEPARATE ILLUSTRATION

261-0017 **VALVE GP-CONTROL** *(contd.)* **i02384909**

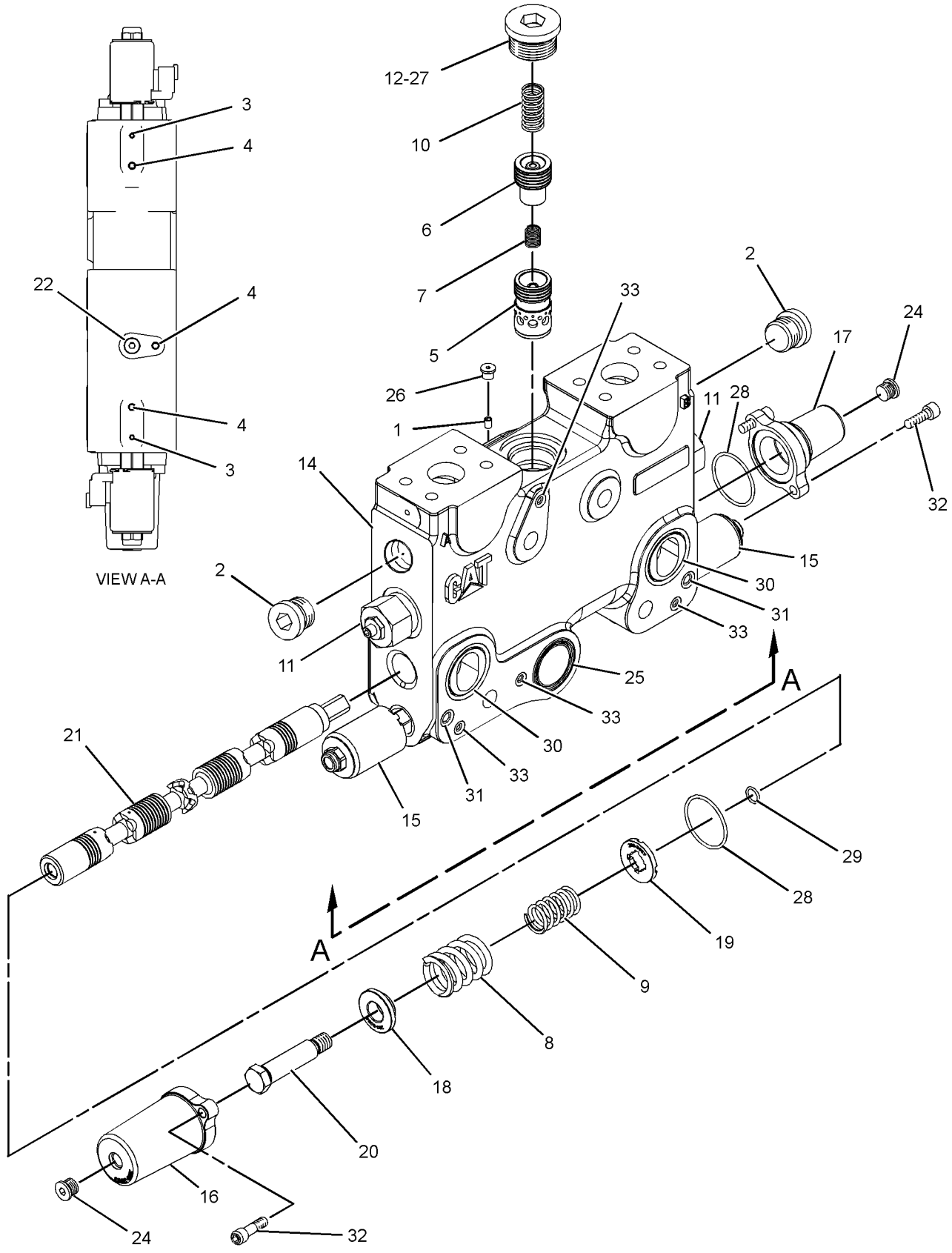

GRAPHIC #1 **<END>** g01197592

252-9256 VALVE GP-DIVERTER–HYDRAULIC FAN

S/N: A7G1-UP

PART OF 242-1307 MANIFOLD GP-CONTROL

SMCS-5066 **i02230291**

NOTE	REF NO	GRAPHIC REF	PART NUMBER	QTY	PART NAME 1 2 3 4 5 6 (PRODUCT LEVEL)	SEE PAGE
J	1	1	**2M-9780**	1	SEAL-O-RING	
J	2	1	**6V-5142**	1	SEAL-O-RING	
J	3	1	**169-1617**	2	RING-BACKUP	
J	4	1	**095-1751**	1	SEAL-O-RING	
J	5	1	**169-1616**	2	RING-BACKUP	
					AVAILABLE REPAIR KIT(S):	
J			**200-6282**	1	KIT-SEAL (DIVERTER VALVE) (HYDRAULIC FAN FLUID FLOW)	
					(INCLUDES SEAL-O-RINGS AND RING BACK-UPS)	

J-KIT MARKED J INCLUDES PARTS MARKED J

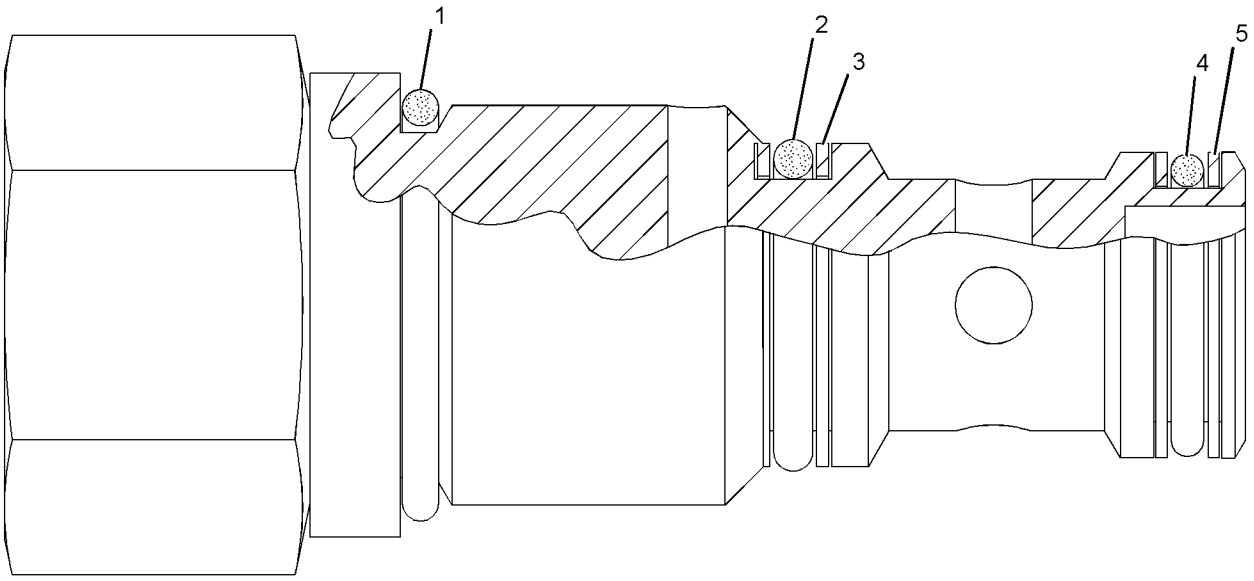

GRAPHIC #1 **<END>** g01128707

245-5943 VALVE GP-DRAIN–ECOLOGY, HYDRAULIC

S/N: A7G1-UP

PART OF 236-8997 LINES GP-HYDRAULIC

SMCS-5076 **i02205061**

NOTE	REF NO	GRAPHIC REF	PART NUMBER	QTY	PART NAME 1 2 3 4 5 6 (PRODUCT LEVEL)	SEE PAGE
	1	1	**1U-2827**	1	GUIDE-VALVE	
	2	1	**8J-8782**	1	BODY-DRAIN VALVE	
	3	1	**8J-8783**	1	VALVE	
	4	1	**9J-7031**	1	PLUG-DRAIN	
	5	1	**245-5942**	1	BLOCK	
	6	1	**5M-2057**	1	SEAL-O-RING	
	7	1	**7B-3039**	1	SPRING	
M	8	1	**8T-0722**	2	BOLT-LOCKING (M10X1.5X30-MM)	
	9	1	**8T-3298**	1	SEAL-RECTANGULAR	
	10	1	**8T-4896**	2	WASHER-HARD (10.2X18.5X2.5-MM THK)	

M-METRIC PART

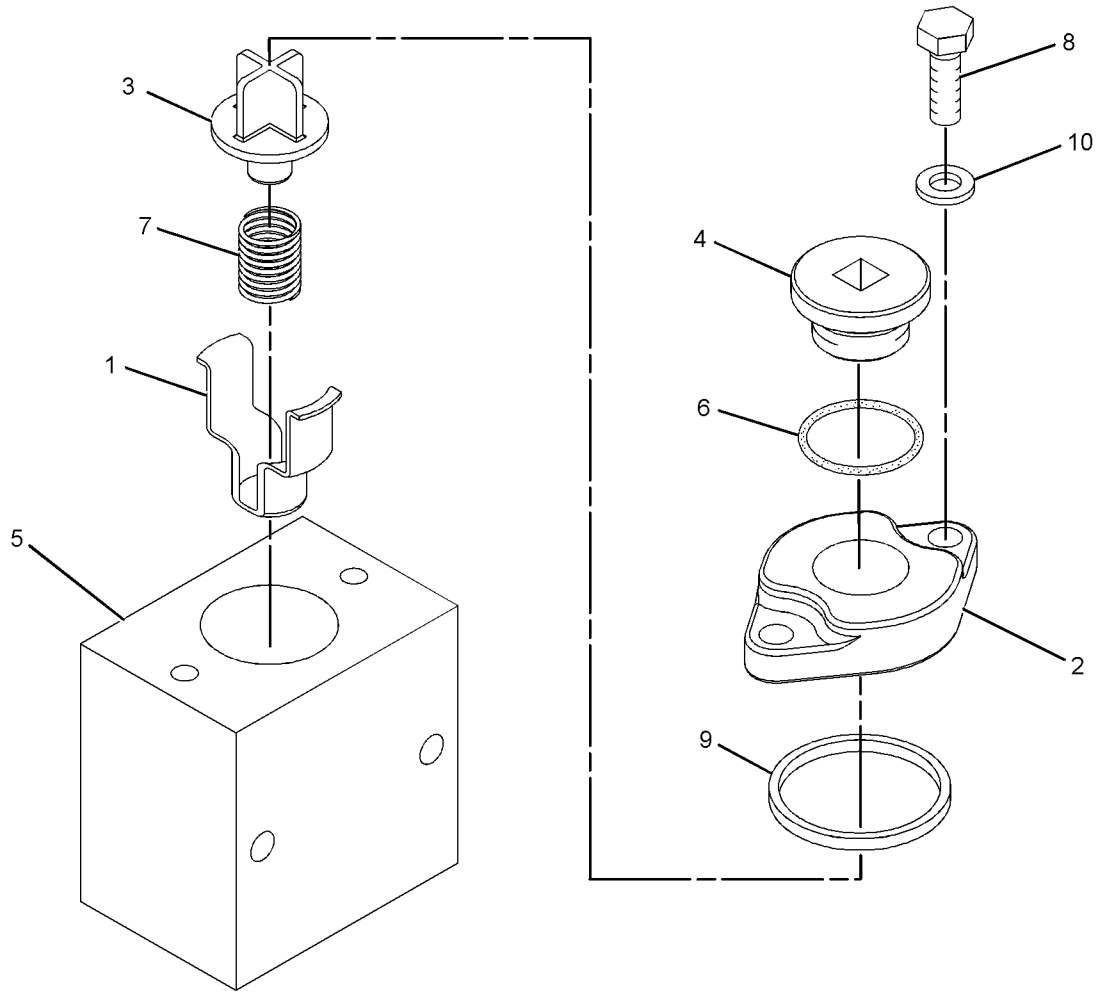

GRAPHIC #1 **<END>** g01116077

HYDRAULIC SYSTEM

236-9037 VALVE GP-LOWERING CONTROL

S/N: A7G1-UP

PART OF 236-9055 HYDRAULIC AR-2 VALVE

SMCS-5147 **i02412064**

NOTE	REF NO	GRAPHIC REF	PART NUMBER	QTY	PART NAME 1 2 3 4 5 6 (PRODUCT LEVEL)	SEE PAGE
I	1	1	**245-3217**	1	HOSE AS	
I	2	1	**245-3219**	1	HOSE AS	
	3	1	**259-8317**	1	PLATE	
	4	1	**096-6166**	4	WASHER-HARD (4.5X9X1-MM THK)	
Y	5	1	**112-1817**	1	VALVE GP-MANUAL	627
	6	1	*148-8378*	1	ELBOW AS	
		1	**3J-1907**	1	SEAL-O-RING	
		1	**6V-8397**	1	SEAL-O-RING	
		1	**6V-8724**	1	ELBOW	
	7	1	*148-8435*	1	TEE AS	
		1	**3J-1907**	1	SEAL-O-RING	
		1	**6V-8397**	2	SEAL-O-RING	
		1	**6V-8781**	1	TEE-FACE SEAL	
	9	1	**6V-9829**	1	CAP AS	
M	10	1	**8T-0285**	4	SCREW-MACHINE (M4X0.7X12-MM)	
	11	1	**8T-4121**	2	WASHER-HARD (11X21X2.5-MM THK)	
M	12	1	**8T-4137**	2	BOLT (M10X1.5X20-MM)	

I-REFER TO HYDRAULIC INFORMATION SYSTEM
M-METRIC PART
Y-SEPARATE ILLUSTRATION

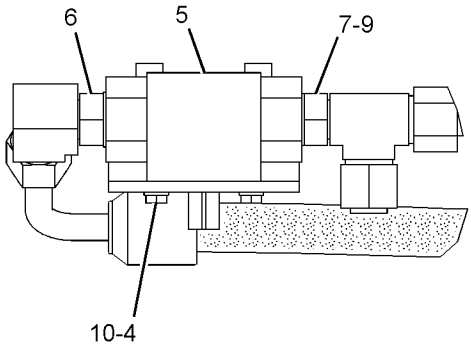

VIEW A-A

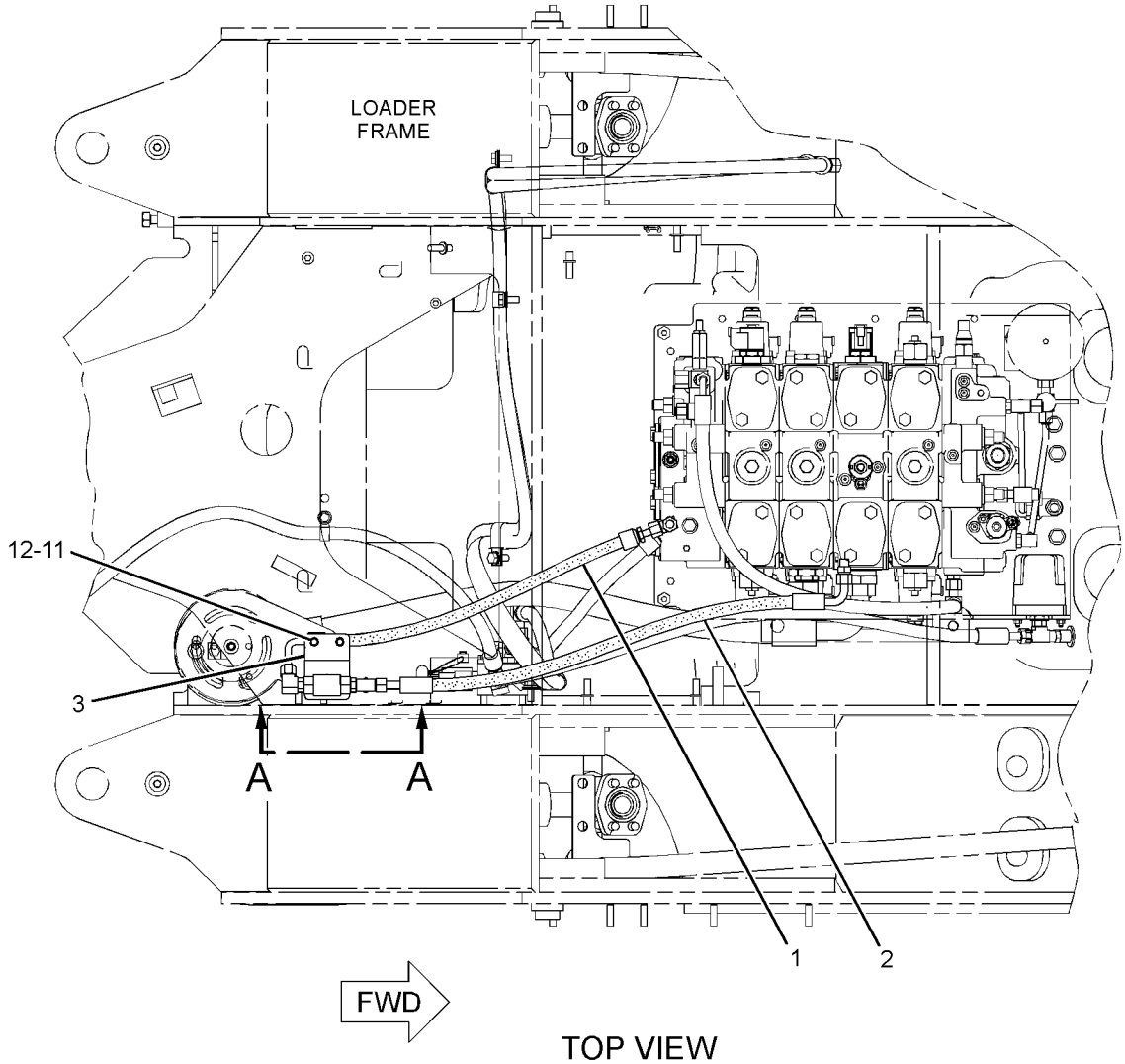

TOP VIEW

GRAPHIC #1 **<END>** g01205910

256-3644 VALVE GP-MAIN CONTROL–
3-FUNCTION, WITH RIDE CONTROL
S/N: A7G1-UP
PART OF 256-3565 VALVE & MTG GP-MAIN CONTROL
AN ATTACHMENT

SMCS-5051 **i02409470**

NOTE	REF NO	GRAPHIC REF	PART NUMBER	QTY	PART NAME 1 2 3 4 5 6 (PRODUCT LEVEL)	SEE PAGE
M	2	1	**8T-4132**	8	NUT (M16X2-THD)	
	3	1	**238-1796**	4	ROD	
Y	4	1	**253-4026**	1	VALVE GP-RIDE CONTROL	634
Y	5	1	**256-3364**	1	VALVE GP-CONTROL (TILT)	610
Y	7	1	**261-0016**	1	VALVE GP-CONTROL (LIFT)	614
Y	8	1	*261-0017*	1	VALVE GP-CONTROL (AUXILIARY)	616
Y	9	1	**269-9397**	1	MANIFOLD GP-VALVE (INLET)	575
Y	10	1	**269-9398**	1	MANIFOLD GP-VALVE (END COVER)	577
	11	1	*183-7263*	1	PLUG AS	
					(EACH INCLUDES)	
		1	**3J-7354**	1	SEAL-O-RING	
		1	**9S-8002**	1	PLUG	
	12	1	**9X-8257**	8	WASHER (17.5X30X3.5-MM THK)	

M-METRIC PART
Y-SEPARATE ILLUSTRATION

256-3644 VALVE GP-MAIN CONTROL *(contd.)* **i02409470**

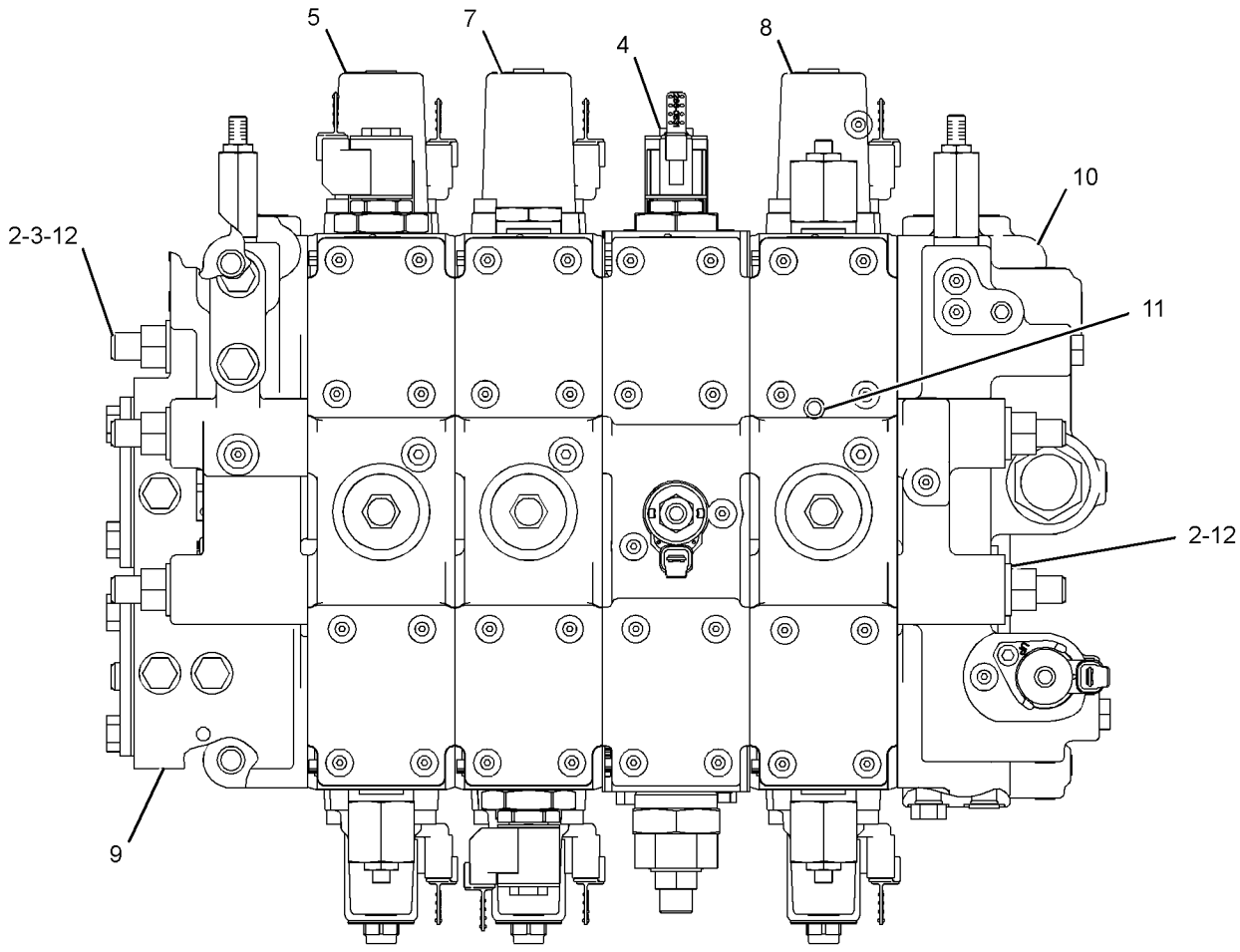

GRAPHIC #1 **<END>** g01200153

261-2337 VALVE GP-MAIN CONTROL–
2-FUNCTION, WITH RIDE CONTROL
S/N: A7G1-UP
PART OF 236-9095 VALVE & MTG GP-MAIN CONTROL
AN ATTACHMENT

SMCS-5051 **i02405926**

NOTE	REF NO	GRAPHIC REF	PART NUMBER	QTY	PART NAME 1 2 3 4 5 6 (PRODUCT LEVEL)	SEE PAGE
M	2	1	**8T-4132**	8	NUT (M16X2-THD)	
	3	1	**238-1795**	4	ROD	
Y	4	1	**253-4026**	1	VALVE GP-RIDE CONTROL	634
Y	5	1	**261-0015**	1	VALVE GP-CONTROL (TILT)	612
Y	6	1	**261-0016**	1	VALVE GP-CONTROL (LIFT)	614
Y	8	1	**269-9397**	1	MANIFOLD GP-VALVE (INLET)	575
Y	9	1	**269-9398**	1	MANIFOLD GP-VALVE (END COVER)	577
	10	1	*183-7263*	1	PLUG AS	
		1	**3J-7354**	1	SEAL-O-RING	
		1	**9S-8002**	1	PLUG	
	11	1	**9X-8257**	8	WASHER (17.5X30X3.5-MM THK)	

M-METRIC PART
Y-SEPARATE ILLUSTRATION

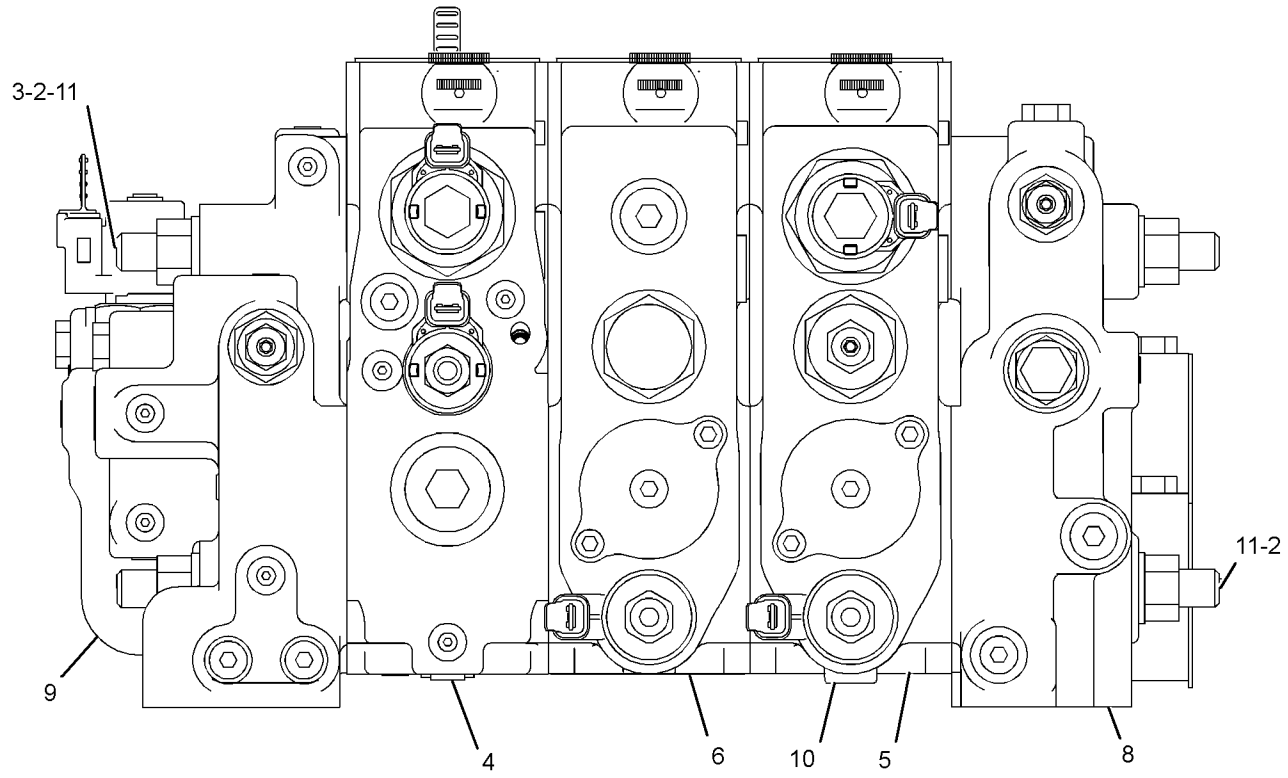

GRAPHIC #1 **<END>** g01196271

261-2338 VALVE GP-MAIN CONTROL–
3-FUNCTION, WITH RIDE CONTROL
S/N: A7G1-UP
PART OF 236-9098 VALVE & MTG GP-MAIN CONTROL
AN ATTACHMENT

SMCS-5051 **i02405655**

NOTE	REF NO	GRAPHIC REF	PART NUMBER	QTY	PART NAME 1 2 3 4 5 6 (PRODUCT LEVEL)	SEE PAGE
M	2	1	**8T-4132**	8	NUT (M16X2-THD)	
	3	1	**238-1796**	4	ROD	
Y	4	1	**253-4026**	1	VALVE GP-RIDE CONTROL	634
Y	5	1	**261-0015**	1	VALVE GP-CONTROL (TILT)	612
Y	6	1	**261-0016**	1	VALVE GP-CONTROL (LIFT)	614
Y	7	1	*261-0017*	1	VALVE GP-CONTROL (AUXILIARY)	616
Y	9	1	**269-9397**	1	MANIFOLD GP-VALVE (INLET)	575
Y	10	1	**269-9398**	1	MANIFOLD GP-VALVE (END COVER)	577
	11	1	*183-7263*	1	PLUG AS	
		1	**3J-7354**	1	SEAL-O-RING	
		1	**9S-8002**	1	PLUG	
	12	1	**9X-8257**	8	WASHER (17.5X30X3.5-MM THK)	

M-METRIC PART
Y-SEPARATE ILLUSTRATION

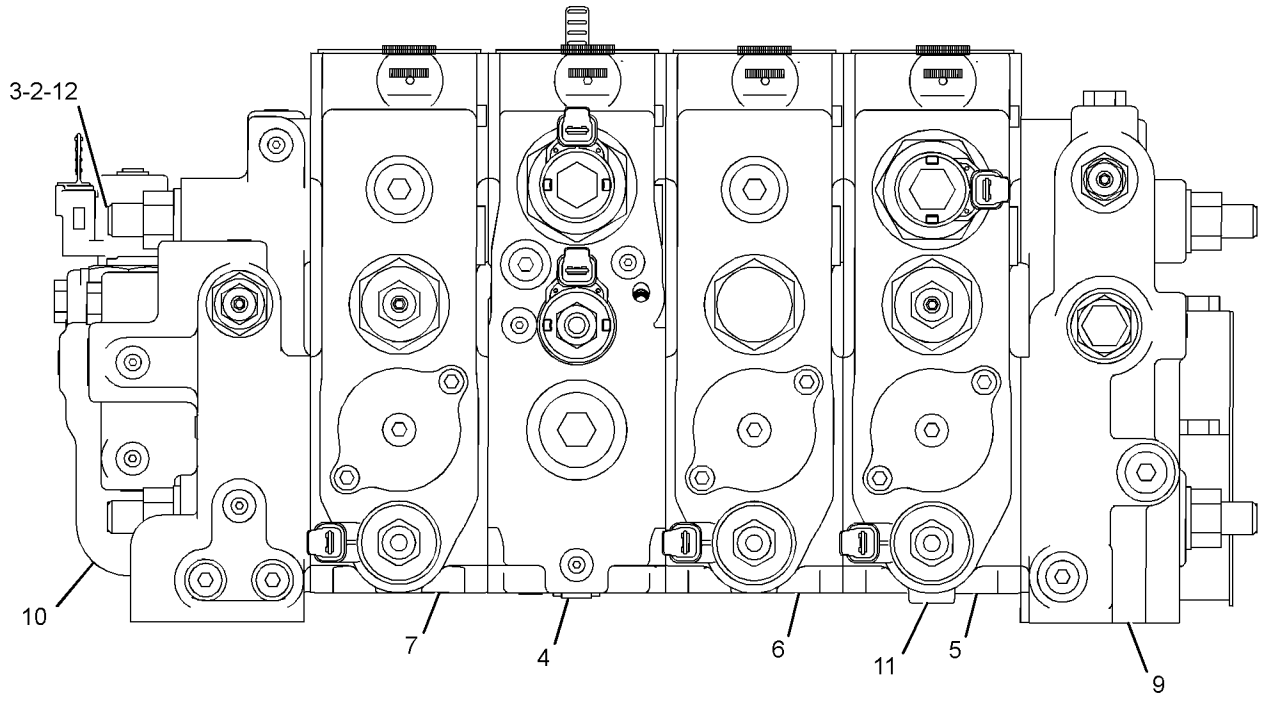

GRAPHIC #1 **<END>** g01196352

261-3945 VALVE GP-MAIN CONTROL–2-FUNCTION

S/N: A7G1-UP

PART OF 236-9035 VALVE & MTG GP-MAIN CONTROL

SMCS-5051 **i02405658**

NOTE	REF NO	GRAPHIC REF	PART NUMBER	QTY	PART NAME 1 2 3 4 5 6 (PRODUCT LEVEL)	SEE PAGE
M	1	1	**8T-4132**	8	NUT (M16X2-THD)	
	2	1	**238-1795**	4	ROD	
Y	3	1	**247-7601**	1	VALVE GP-CONTROL (HYDRAULIC BLOCK)	608
Y	4	1	**261-0015**	1	VALVE GP-CONTROL (TILT)	612
Y	5	1	**261-0016**	1	VALVE GP-CONTROL (LIFT)	614
	6	1	**9X-8257**	8	WASHER (17.5X30X3.5-MM THK)	
Y	7	1	**269-9397**	1	MANIFOLD GP-VALVE (INLET)	575
Y	8	1	**269-9398**	1	MANIFOLD GP-VALVE (END COVER)	577
	9	1	*183-7263*	1	PLUG AS	
		1	**3J-7354**	1	SEAL-O-RING	
		1	**9S-8002**	1	PLUG	

M-METRIC PART
Y-SEPARATE ILLUSTRATION

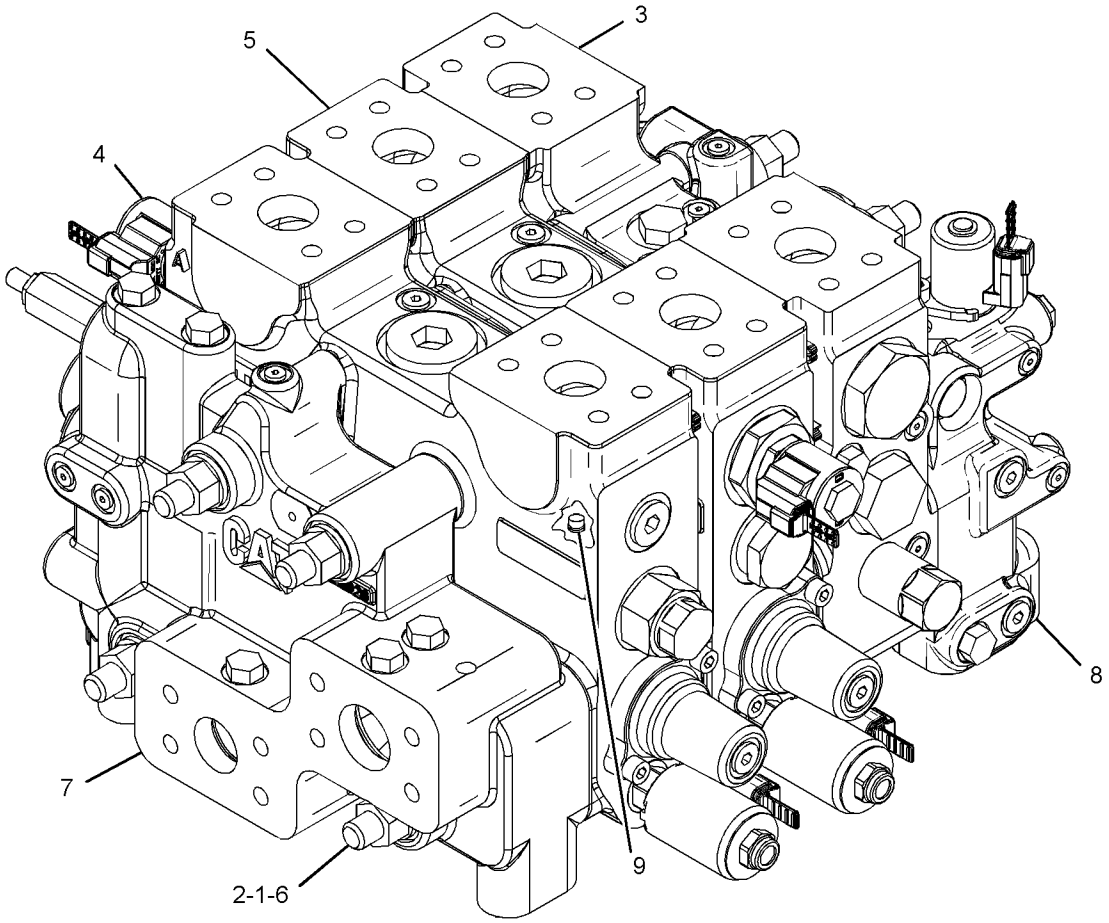

GRAPHIC #1 **<END>** g01189732

112-1817 VALVE GP-MANUAL–LOWERING CONTROL

S/N: A7G1-UP

PART OF 236-9037 VALVE GP-LOWERING CONTROL

SMCS-5001, 5130, 5147 **i02266981**

NOTE	PART NUMBER	QTY	PART NAME 1 2 3 4 5 6 (PRODUCT LEVEL)	SEE PAGE
J	*202-0671*	1	VALVE GP-MANUAL (MANUAL LOWERING CONTROL)	
			–OR–	
J	*202-0673*	1	VALVE GP-MANUAL (MANUAL LOWERING CONTROL)	
			–OR–	
J	*202-0674*	1	VALVE GP-MANUAL (MANUAL LOWERING CONTROL)	
			AVAILABLE REPAIR KIT(S):	
J	**112-9861**	1	KIT-SEAL	
			(INCLUDES SEALS, CONNECTORS & THRUST RING)	

J-KIT MARKED J SERVICES PARTS MARKED J

<END>

193-1665 VALVE GP-PRESSURE REDUCING–
SIGNAL DUPLICATION
S/N: A7G1-UP
PART OF 269-9397 MANIFOLD GP-VALVE
ALSO AN ATTACHMENT

SMCS-5117 **i01735361**

NOTE	REF NO	GRAPHIC REF	PART NUMBER	QTY	PART NAME 1 2 3 4 5 6 (PRODUCT LEVEL)	SEE PAGE
	1	1	**193-1664**	1	VALVE GP-CONTROL	
	2	1	**3J-1907**	2	SEAL-O-RING	
	3	1	**4J-5268**	1	SEAL-O-RING	
	4	1	**4J-5351**	1	SEAL-O-RING	
	5	1	**4T-5072**	1	RING-BACKUP	
	6	1	**5J-2974**	1	SEAL-O-RING	
	7	1	**5P-6719**	1	PLUG	
	8	1	**9T-8761**	1	RING-BACKUP	
	9	1	**9T-9963**	1	RING-BACKUP	

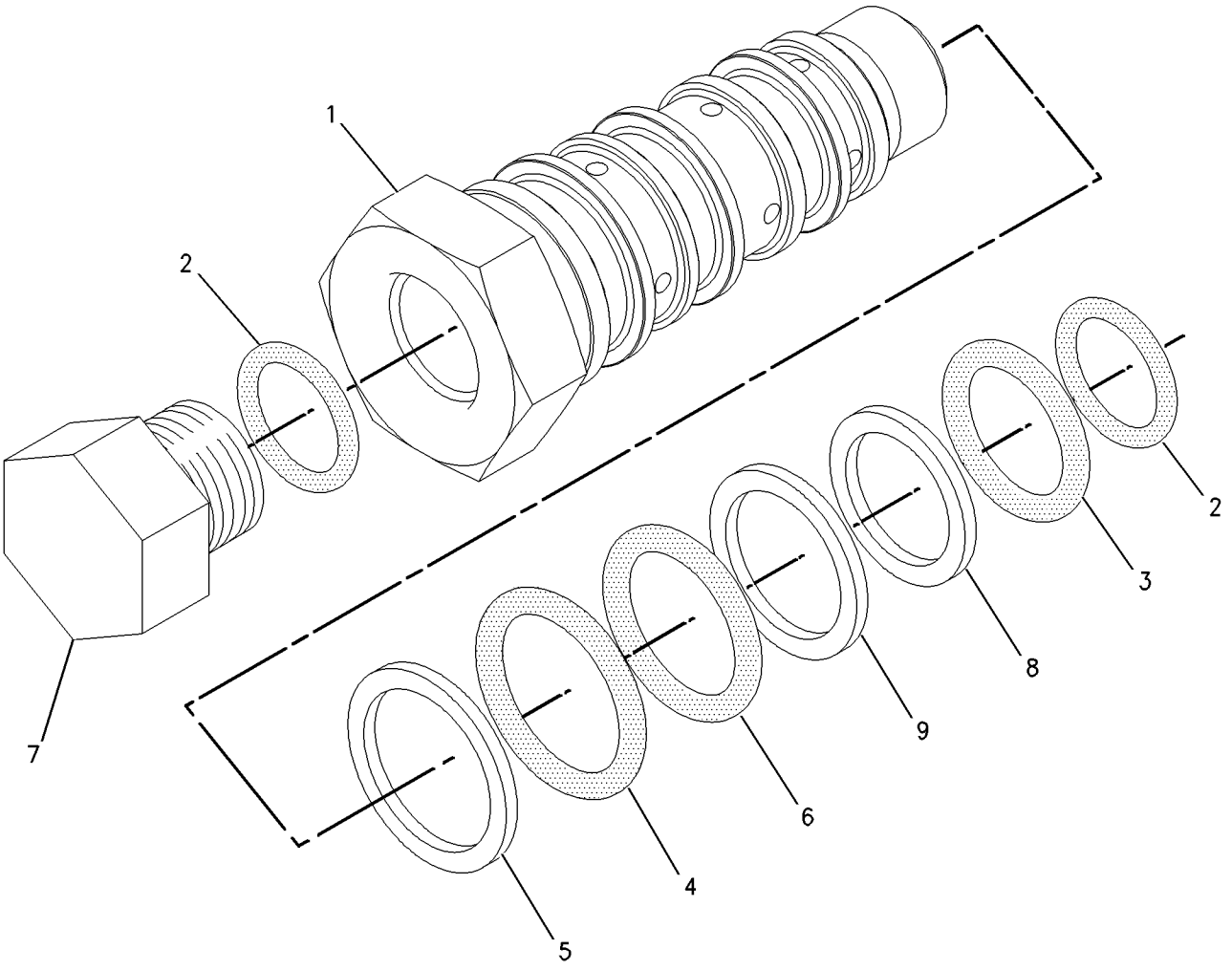

GRAPHIC #1 **<END>** g00763618

207-0697 VALVE GP-PUMP CONTROL–
PRESSURE, FLOW COMPENSATOR
S/N: A7G1-UP
PART OF 254-5147 PUMP GP-PISTON

SMCS-5455 **i01627059**

NOTE	REF NO	GRAPHIC REF	PART NUMBER	QTY	PART NAME 1 2 3 4 5 6 (PRODUCT LEVEL)	SEE PAGE
	1	1	**6E-6527**	2	PLUG	
	2	1	**6E-6528**	6	SEAL	
	3	1	**9S-8002**	1	PLUG	
	4	1	**9X-7680**	3	SEAL-O-RING	
	5	1	**5P-9262**	1	SEAL-O-RING	
	6	1	**105-2145**	1	VALVE-ORIFICE	
	7	1	**6E-3268**	1	RETAINER-SPRING	
	8	1	**6E-3269**	1	RETAINER-SPRING	
M	9	1	**8T-8442**	4	BOLT-SOCKET HEAD (M6X1X30-MM)	
	10	1	**6E-3273**	1	SEAT	
	11	1	**033-6034**	1	SEAL-O-RING	
	12	1	**6E-6536**	1	PLUG	
M	13	1	**6E-6537**	2	SCREW-ADJUSTMENT (M8X1X28-MM)	
M	14	1	**6E-6538**	2	NUT-ADJUSTMENT (M8X1-THD)	
M	15	1	**6E-6539**	2	NUT-CAP (M8X1-THD)	
	16	1	**6E-6540**	1	PLUG	
	17	1	**6V-8352**	1	SEAL-O-RING	
	18	1	**6E-3272**	1	SEAT	
	19	1	**6E-3274**	1	SPRING	
	20	1	**6E-3275**	1	SPRING	
	21	1	**3J-7354**	1	SEAL-O-RING	
	22	1	**193-1036**	1	SPRING	
	23	1	**6E-3276**	1	SPRING	
	24	1	**119-0959**	1	PLUG-ORIFICE	

M-METRIC PART

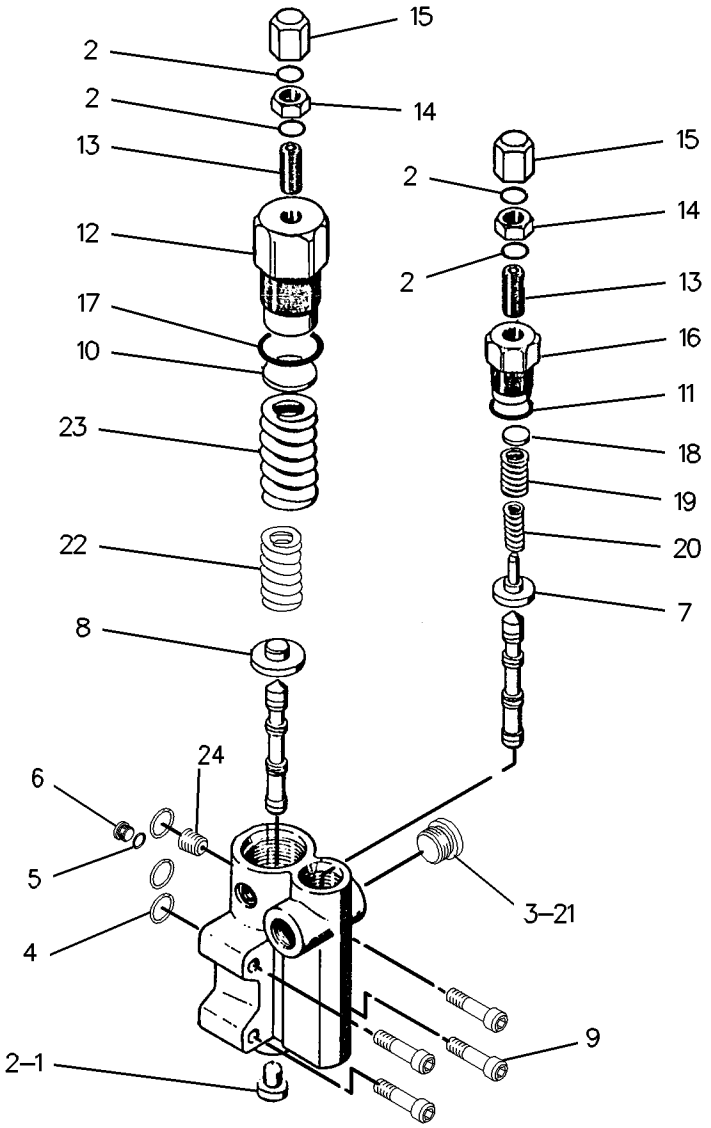

GRAPHIC #1 **<END>** g00837761

254-6561 VALVE GP-PUMP CONTROL—IMPLEMENT, PILOT

S/N: A7G1-UP

PART OF 254-4109 PUMP GP-PISTON

SMCS-5455 **i02234476**

NOTE	REF NO	GRAPHIC REF	PART NUMBER	QTY	PART NAME 1 2 3 4 5 6 (PRODUCT LEVEL)	SEE PAGE
	1	1	**171-3258**	1	ORIFICE	
C	3	1	**225-4607**	1	SETSCREW (M20X2.5X45-MM)	
	4	1	**234-4452**	1	COVER	
	5	1	**245-7438**	1	PIN	
	6	1	**248-9953**	1	RETAINER	
	7	1	**248-9954**	1	RETAINER	
	8	1	**248-9955**	1	GUIDE	
	9	1	**248-9956**	2	PISTON	
	10	1	*254-6562*	1	BODY AS	
		1	**124-1555**	1	PLUG	
		1	**245-8472**	1	PLUG-EXPANSION	
	11	1	**259-7889**	1	SPOOL AS	
C	12	1	**263-1203**	1	COVER	
C	13	1	**7Y-4217**	2	RING-BACKUP	
	14	1	**095-1787**	2	RING	
	15	1	**095-1788**	1	RING-BACKUP	
M	16	1	**096-2966**	1	SETSCREW-SOCKET	
CM	17	1	**8T-4131**	1	NUT (M20X2.5-THD)	
	18	1	**114-3361**	1	SEAL-O-RING	
	19	1	**153-8623**	1	RING-BACKUP	
C	20	1	**263-1204**	1	PISTON	
	21	1	**189-9763**	3	SEAL-O-RING	
	22	1	**190-7673**	1	SEAL-O-RING	
	23	1	**190-7674**	1	SEAL-O-RING	
C	24	1	**095-1586**	2	SEAL-O-RING	
C	25	1	**095-1590**	2	SEAL-O-RING	
	26	1	**215-9962**	1	STOPPER	
	27	1	**225-4456**	2	COVER	
	28	1	**225-4460**	1	SETSCREW	
	29	1	**248-9963**	1	SPRING	
	30	1	**2K-4472**	1	SEAL-O-RING	
	31	1	**3J-1907**	1	SEAL-O-RING	
	32	1	**3K-6113**	4	WASHER-HARD (12X18.5X3-MM THK)	
M	33	1	**6V-8200**	6	BOLT-SOCKET HEAD (M12X1.75X35-MM)	
	34	1	**7J-0204**	1	SEAL-O-RING	
M	35	1	**8T-4133**	2	NUT (M10X1.5 THD)	
M	36	1	**8T-4136**	4	BOLT (M10X1.5X25-MM)	
	37	1	**8T-4223**	6	WASHER-HARD (13.5X25.5X3-MM THK)	
	38	1	**9S-8004**	1	PLUG	
	39	1	**9S-8007**	1	PLUG	
C	40	1	**263-1202**	1	SPRING	

C-CHANGE FROM PREVIOUS TYPE
M-METRIC PART

254-6561 VALVE GP-PUMP CONTROL *(contd.)* i02234476

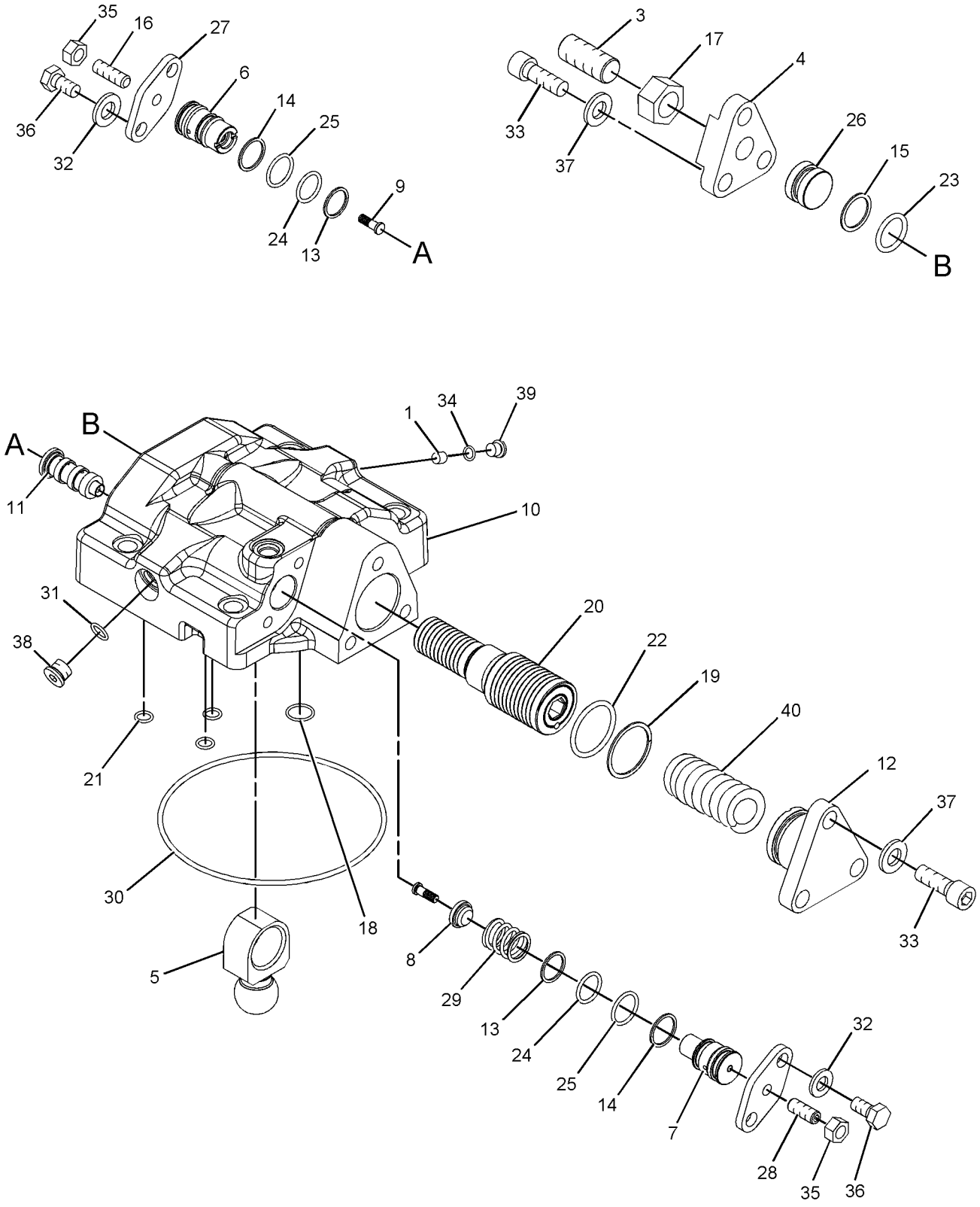

GRAPHIC #1 **<END>** g01126794

4T-7581 VALVE GP-RELIEF–RIDE CONTROL

S/N: A7G1-UP
PART OF 253-4026 VALVE GP-RIDE CONTROL
AN ATTACHMENT

SMCS-5069, 5117 **i02252843**

NOTE	REF NO	GRAPHIC REF	PART NUMBER	QTY	PART NAME 1 2 3 4 5 6 (PRODUCT LEVEL)	SEE PAGE
	1	1	**6E-1835**	1	RETAINER AS	
	2	1	**9X-6395**	1	NUT (3/4-16-THD)	
	3	1	**3K-0360**	2	SEAL-O-RING	
	5	1	**4T-4942**	1	SPRING	
	6	1	**7J-9933**	1	SEAL-O-RING	
	7	1	**4T-7571**	1	PLATE	
	8	1	**6J-6439**	1	VALVE-POPPET	
	9	1	**9M-1974**	1	WASHER-HARD (8.8X16X2-MM THK)	
	10	1	**6F-7062**	1	WASHER (12.7X19.05X1.83-MM THK)	

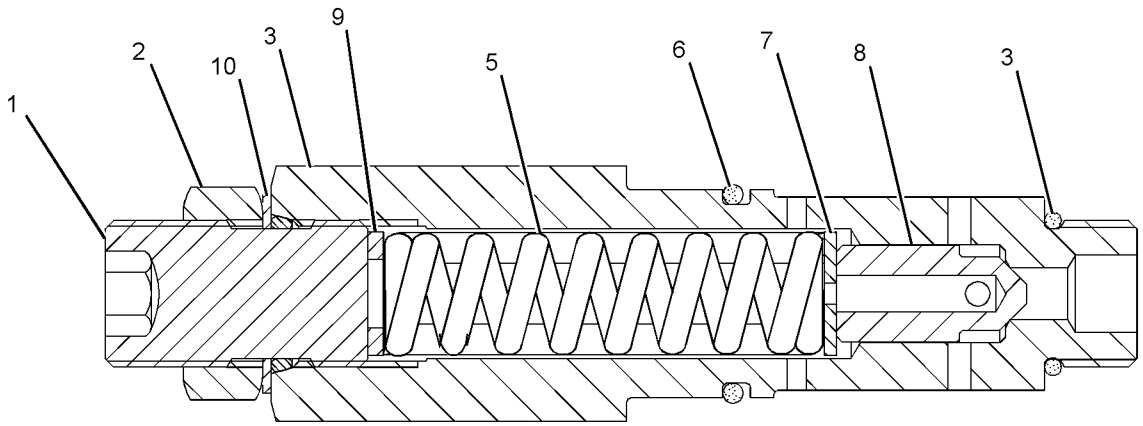

GRAPHIC #1 **<END>** g01135025

HYDRAULIC SYSTEM

253-4026 VALVE GP-RIDE CONTROL

S/N: A7G1-UP

PART OF 256-3644, 261-2337, 261-2338 VALVE GP-MAIN CONTROL

AN ATTACHMENT

SMCS-5054, 5066 **i02414918**

NOTE	REF NO	GRAPHIC REF	PART NUMBER	QTY	PART NAME 1 2 3 4 5 6 (PRODUCT LEVEL)	SEE PAGE
Y	1	1	**4T-7581**	1	VALVE GP-RELIEF (RIDE CONTROL)	633
	2	1	**148-9359**	5	PLUG	
Y	3	1	**194-1723**	1	VALVE GP-CHECK (PILOT OIL)	606
J	4	1	**235-6157**	1	VALVE GP-SHUTTLE	
	5	1	**252-0737**	1	VALVE GP-SOLENOID (RIDE CONTROL, LIFT CYLINDER)	
	5A	1	**252-0737**	1	VALVE GP-SOLENOID (RIDE CONTROL ON, OFF)	
Y	8	1	**260-8590**	1	VALVE GP-SHUTTLE	638
	9	1	**262-5265**	1	VALVE GP-SOLENOID (RIDE CONTROL, ACCUMULATOR)	
		1	**2S-4078**	1	SEAL-O-RING	
		1	**096-3044**	1	SEAL-O-RING	
		1	**099-8232**	1	SEAL-O-RING	
L	10	1	**270-1768**	1	VALVE GP-CHECK (RIDE CONTROL)	
	11	1	*148-8335*	1	CONNECTOR AS	
		1	**5K-9090**	1	SEAL-O-RING	
		1	**6V-8635**	1	CONNECTOR	
		1	**7M-8485**	1	SEAL-O-RING	
	12	1	*148-8395*	1	PLUG AS	
		1	**3K-0360**	1	SEAL-O-RING	
		1	**9S-8005**	1	PLUG	
	13	1	*148-8406*	1	PLUG AS	
		1	**7M-8485**	1	SEAL-O-RING	
		1	**9S-9334**	1	PLUG	
	14	1	*162-0177*	1	PLUG AS	
		1	**3J-1907**	1	SEAL-O-RING	
		1	**9S-8004**	1	PLUG	
	15	1	*173-3993*	14	PLUG AS	
					(EACH INCLUDES)	
		1	**4J-7533**	1	SEAL-O-RING	
		1	**9S-8001**	1	PLUG	
	16	1	*162-6448*	1	PLUG AS	
		1	**1N-5999**	1	PLUG	
		1	**7J-0204**	1	SEAL-O-RING	
	17	1	**1P-3704**	2	SEAL-RECTANGULAR	
	18	1	**1P-3705**	1	SEAL-RECTANGULAR	
	20	1	**4J-0524**	2	SEAL-O-RING	
	21	1	**4J-9535**	2	SEAL-O-RING	
	22	1	**6J-3134**	5	SEAL-O-RING	
	23	1	**9W-7783**	2	PLUG	
					AVAILABLE REPAIR KIT(S):	
J			**238-9844**	1	KIT-SEAL (SHUTTLE VALVE)	
L			**238-9843**	1	KIT-SEAL (CHECK VALVE)	
					(EACH KIT INCLUDES SEAL-O-RINGS AND RING-BACKUPS)	

J-KIT MARKED J SERVICES PARTS MARKED J
L-KIT MARKED L SERVICES PARTS MARKED L
Y-SEPARATE ILLUSTRATION

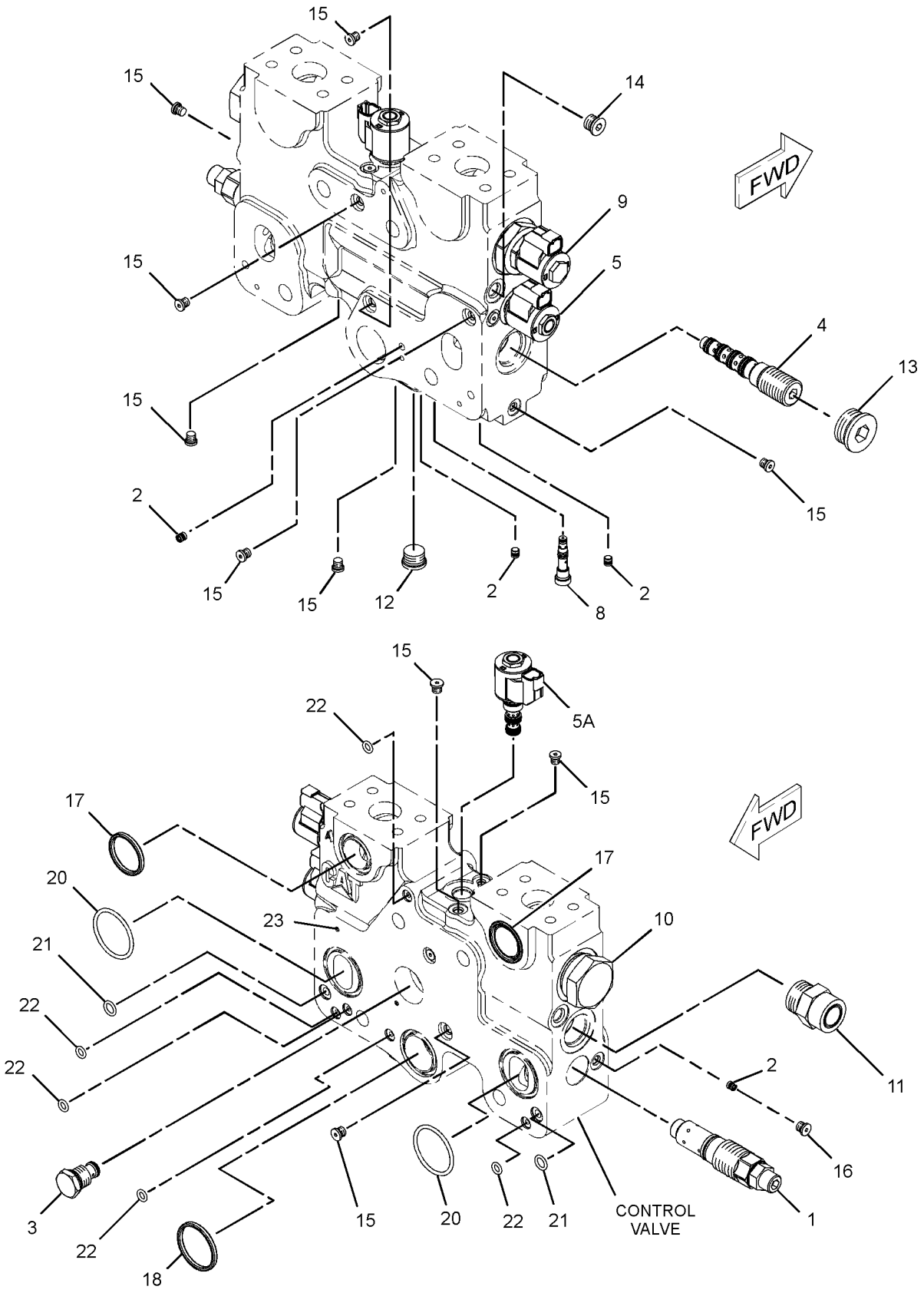

GRAPHIC #1 **<END>** g01196167

HYDRAULIC SYSTEM

152-2646 VALVE GP-SHUTTLE

S/N: A7G1-UP

PART OF 236-9035, 236-9095, 236-9098, 256-3565 VALVE & MTG GP-MAIN CONTROL

ALSO AN ATTACHMENT

SMCS-5079 **i02234514**

NOTE	REF NO	GRAPHIC REF	PART NUMBER	QTY	PART NAME 1 2 3 4 5 6 (PRODUCT LEVEL)	SEE PAGE
	1	1	**6V-8398**	1	SEAL-O-RING	
	2	1	**123-5799**	1	SEAT	
	3	1	**131-0752**	1	VALVE	
	4	1	**123-5798**	1	SEAT	
	5	1	**131-0749**	1	CONNECTOR	
	6	1	**3J-1907**	1	SEAL-O-RING	

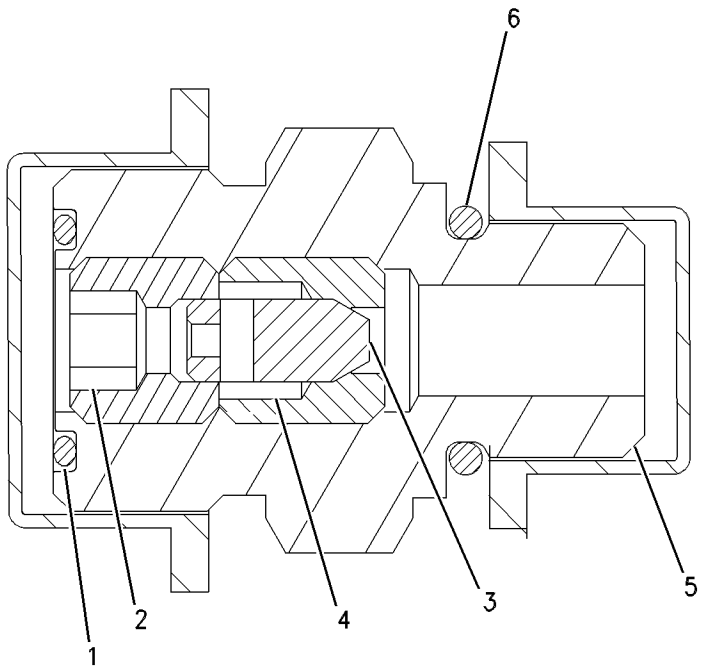

GRAPHIC #1 **<END>** g00502136

249-5227 VALVE GP-SHUTTLE–BRAKE ACCUMULATOR

S/N: A7G1-UP

PART OF 242-1307 MANIFOLD GP-CONTROL

SMCS-5079 **i02230287**

NOTE	REF NO	GRAPHIC REF	PART NUMBER	QTY	PART NAME 1 2 3 4 5 6 (PRODUCT LEVEL)	SEE PAGE
	1	1	**3K-0360**	1	SEAL-O-RING	
	2	1	**161-6149**	1	SEAL-O-RING	
	3	1	**095-1750**	1	SEAL-O-RING	
	4	1	**161-6161**	1	RING-BACKUP	
	5	1	**187-0541**	1	RING-BACKUP	

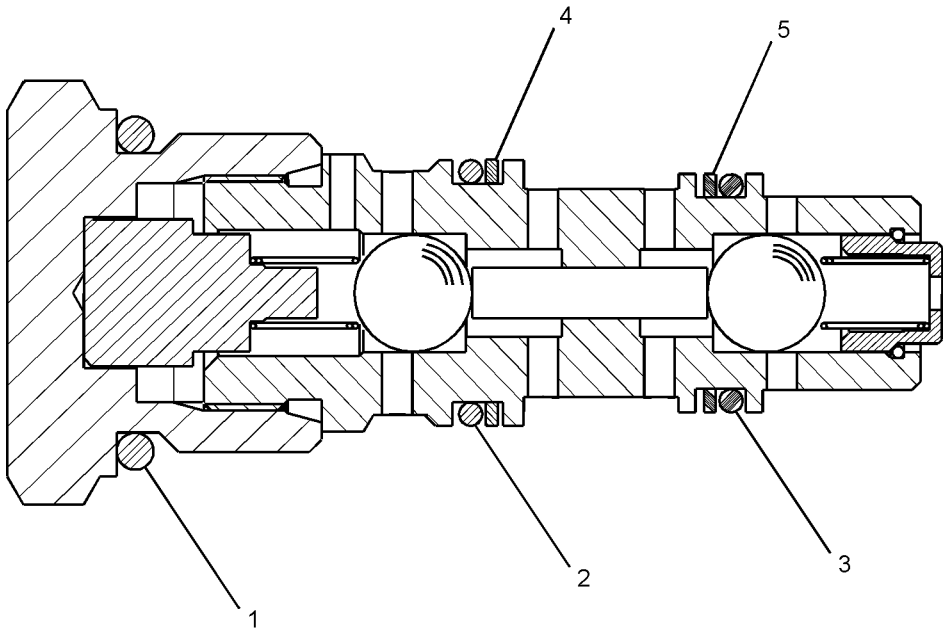

GRAPHIC #1 **<END>** g01064226

260-8590 VALVE GP-SHUTTLE–BALL RESOLVER

S/N: A7G1-UP

PART OF 247-7601, 256-3364, 261-0015, 261-0016, 261-0017 VALVE GP-CONTROL, 253-4026 VALVE GP-RIDE CONTROL

ALSO AN ATTACHMENT

SMCS-5079 **i02236197**

NOTE	REF NO	GRAPHIC REF	PART NUMBER	QTY	PART NAME 1 2 3 4 5 6 (PRODUCT LEVEL)	SEE PAGE
	1	1	**3J-7354**	1	SEAL-O-RING	
	2	1	**9N-1756**	1	SEAL-O-RING	
	3	1	**3H-0442**	1	SEAL-O-RING	
					AVAILABLE REPAIR KIT(S):	
			240-7356	1	KIT-SEAL (SHUTTLE VALVE) (WINCH CONTROL)	

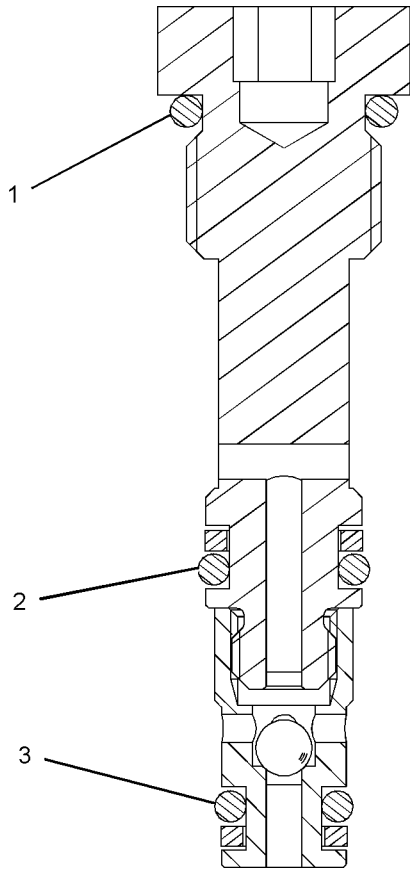

GRAPHIC #1 **<END>** g01018080

183-7595 VALVE GP-SOLENOID–BRAKE, HYDRAULIC FAN

S/N: A7G1-UP

PART OF 242-1307 MANIFOLD GP-CONTROL

SMCS-5132, 5479 **i02230290**

NOTE	REF NO	GRAPHIC REF	PART NUMBER	QTY	PART NAME 1 2 3 4 5 6 (PRODUCT LEVEL)	SEE PAGE
	1	1	**146-3728**	1	WASHER-SPRING	
	2	1	**187-8191**	1	COIL AS	
	3	1	**154-4133**	1	CARTRIDGE AS	
		1	**6V-5049**	1	SEAL-O-RING	
	4	1	*184-3409*	1	ADAPTER AS	
		1	**7X-4776**	1	RING-BACKUP	
		1	**8L-2786**	1	SEAL-O-RING	
		1	**9J-0705**	1	RING-BACKUP	
		1	**033-5879**	1	SEAL-O-RING	
		1	**033-6033**	1	SEAL-O-RING	

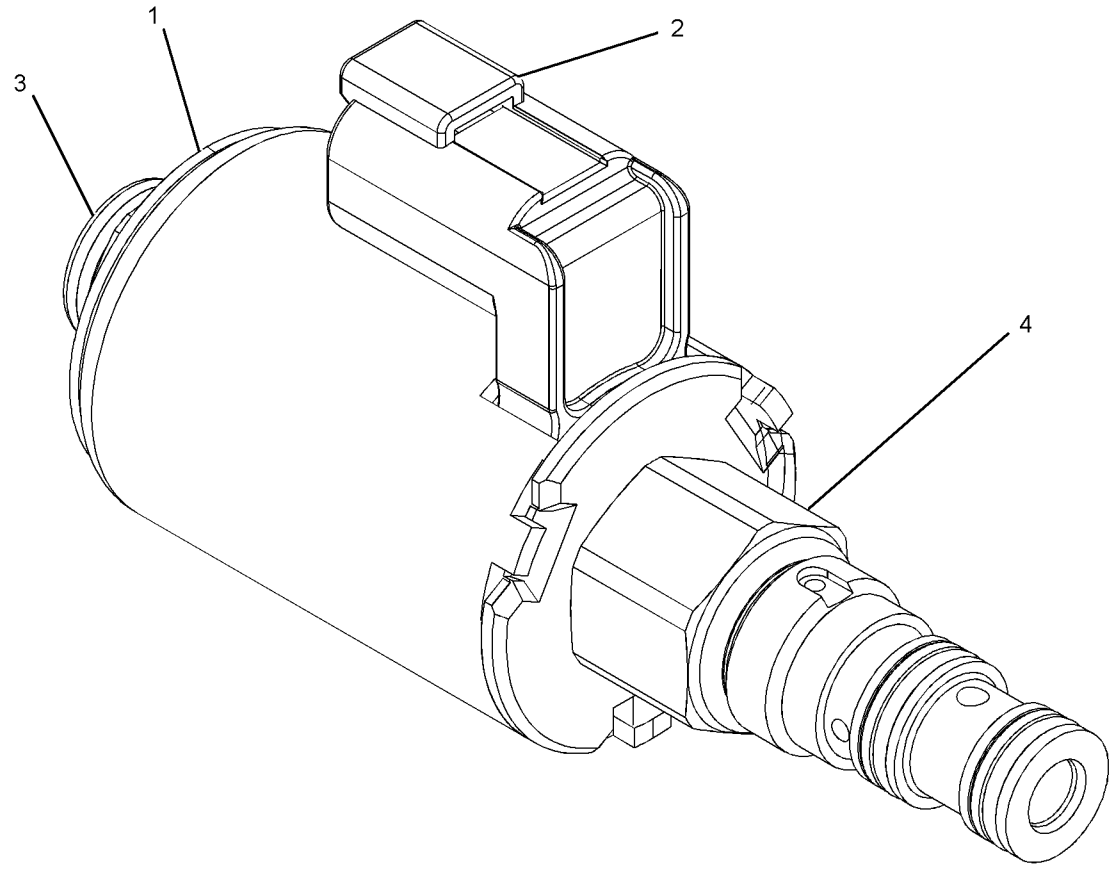

GRAPHIC #1 **<END>** g01128560

HYDRAULIC SYSTEM

225-0300 VALVE GP-SOLENOID—HYDRAULIC LOCKOUT

S/N: A7G1-UP
PART OF 269-9398 MANIFOLD GP-VALVE
ALSO AN ATTACHMENT

SMCS-5132, 5479 **i02236156**

NOTE	REF NO	GRAPHIC REF	PART NUMBER	QTY	PART NAME 1 2 3 4 5 6 (PRODUCT LEVEL)	SEE PAGE
	1	1	**212-0061**	1	FLANGE	
					AVAILABLE REPAIR KIT(S):	
			200-2371	1	KIT-SEAL	
					(INCLUDES SEAL O-RINGS)	

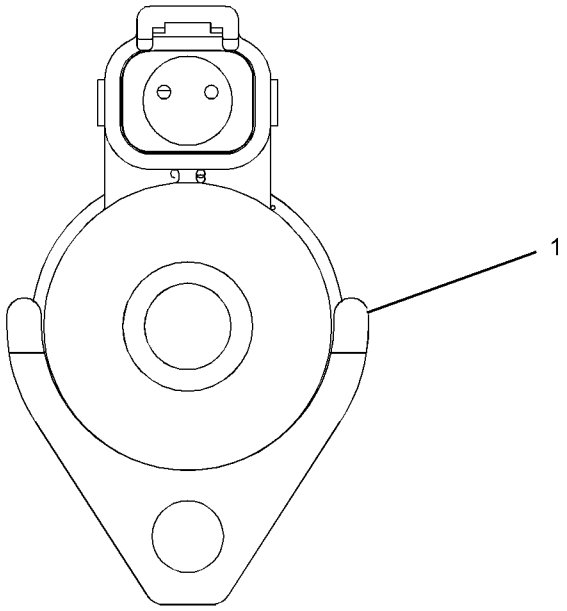

GRAPHIC #1 **<END>** g01113783

257-0267 VALVE GP-SOLENOID—PILOT PROPORTIONING

S/N: A7G1-UP

PART OF 256-3364, 261-0015, 261-0016, 261-0017 VALVE GP-CONTROL

ALSO AN ATTACHMENT

SMCS-5132, 5479 **i02236171**

NOTE	REF NO	GRAPHIC REF	PART NUMBER	QTY	PART NAME 1 2 3 4 5 6 (PRODUCT LEVEL)	SEE PAGE
Z	1	1		1	CARTRIDGE AS	
Z	2	1		1	COIL AS	
Z	3	1		1	CARTRIDGE AS-VALVE	
Z	4	1		1	WASHER-SPRING	
	5	1	**6M-5062**	1	SEAL-O-RING	
	6	1	**3K-0360**	1	SEAL-O-RING	
	7	1	**4K-2039**	1	SEAL-O-RING	

Z-NOT SERVICED SEPARATELY

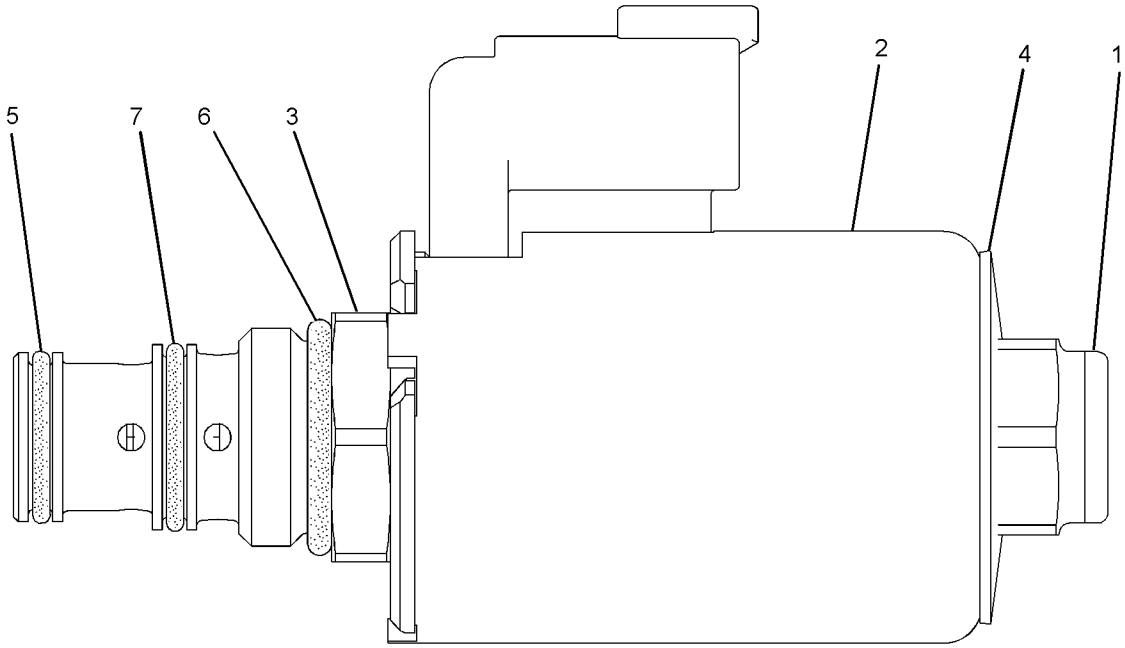

GRAPHIC #1 **<END>** g01022105

237-5049 ARM & BEARING AS

S/N: A7G1-UP
PART OF 237-8965 CONTROL GP-BUCKET, 237-8964, 256-5718 LIFT AR AN ATTACHMENT

SMCS-6118, 6119, 7069 **i02120233**

NOTE	REF NO	GRAPHIC REF	PART NUMBER	QTY	PART NAME 1 2 3 4 5 6 (PRODUCT LEVEL)	SEE PAGE
	1	1	**237-4782**	1	ARM & BEARING AS	
	1A	1	**4V-8673**	2	BEARING-SLEEVE	
	1B	1	**4V-8674**	2	BEARING-SLEEVE	
	1C	1	**4V-8675**	2	BEARING-SLEEVE	

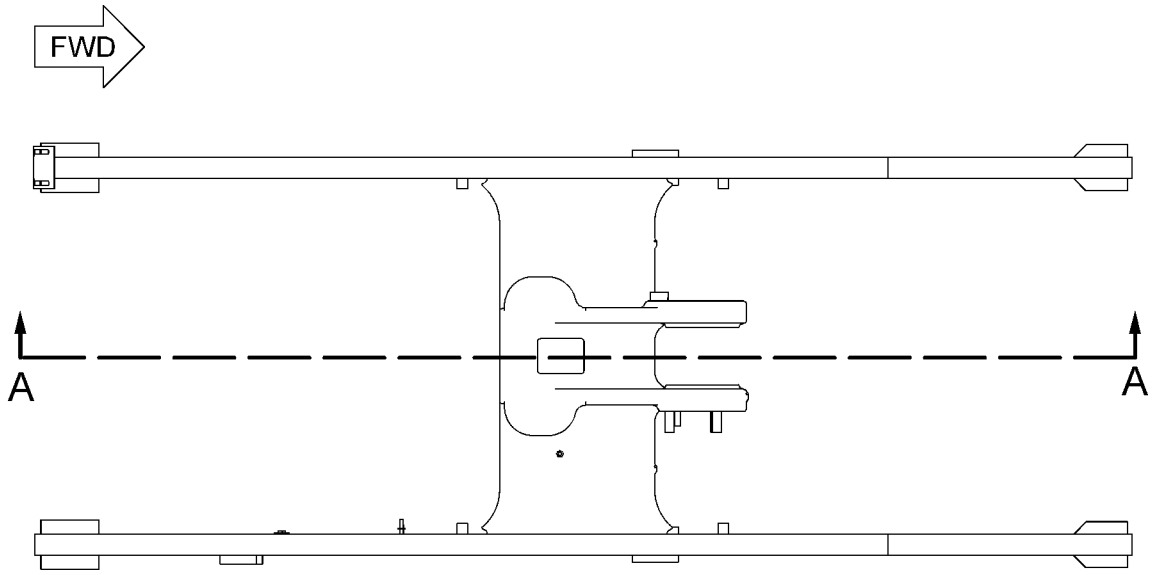

TOP VIEW

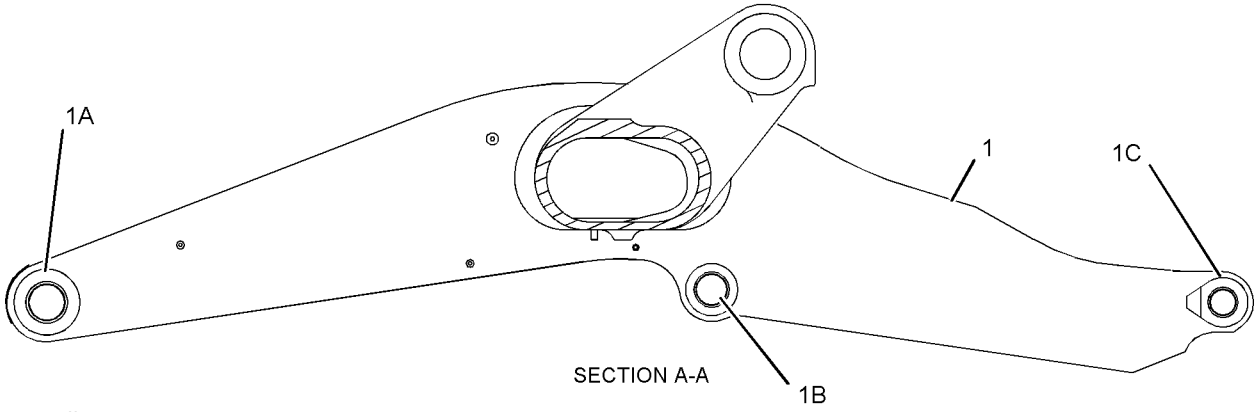

GRAPHIC #1 **<END>** g01080188

242-0445 ARM & BEARING AS

S/N: A7G1-UP
HIGH
PART OF 242-0446 ARM AS-LIFT, 236-9101 LIFT AR
AN ATTACHMENT

SMCS-6118, 6119, 7069 **i02010059**

NOTE	REF NO	GRAPHIC REF	PART NUMBER	QTY	PART NAME 1 2 3 4 5 6 (PRODUCT LEVEL)	SEE PAGE
	1	1	**5V-2798**	1	PLATE	
	3	1	**4V-8673**	2	BEARING-SLEEVE	
	4	1	**4V-8674**	2	BEARING-SLEEVE	
	5	1	**4V-8675**	2	BEARING-SLEEVE	

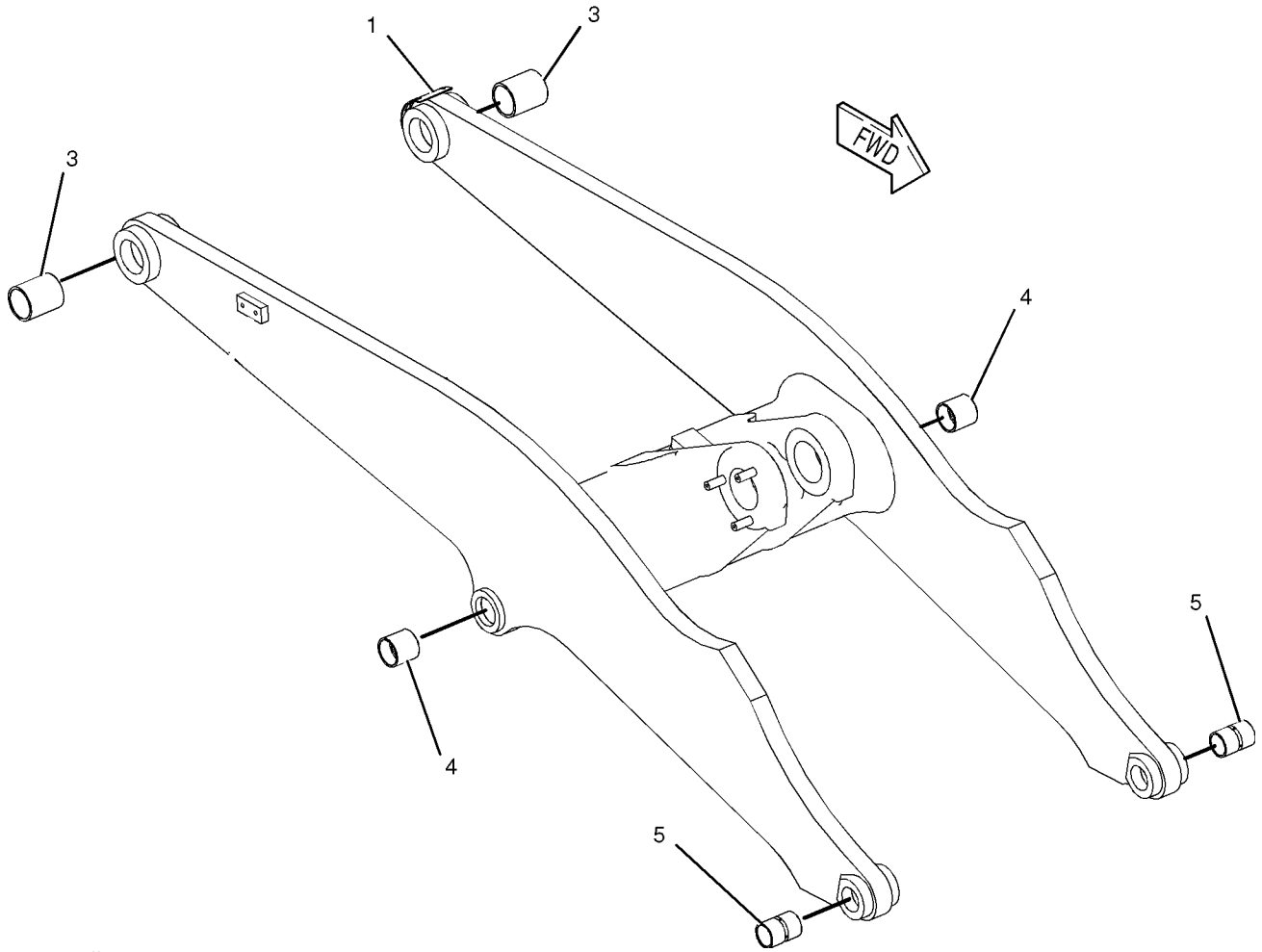

GRAPHIC #1 **<END>** g01040197

193-3131 ARM AS-LIFT

S/N: A7G1-UP
PART OF 246-5304 HYDRAULIC AR-3 VALVE
AN ATTACHMENT

SMCS-6119 **i02116223**

NOTE	REF NO	GRAPHIC REF	PART NUMBER	QTY	PART NAME 1 2 3 4 5 6 (PRODUCT LEVEL)	SEE PAGE
	1	1	**185-3651**	1	ARM & BEARING AS	
	1A	1	**4V-8673**	2	BEARING-SLEEVE	
	1B	1	**4V-8674**	2	BEARING-SLEEVE	
	1C	1	**4V-8675**	2	BEARING-SLEEVE	
	1D	1	**5V-2798**	1	PLATE	

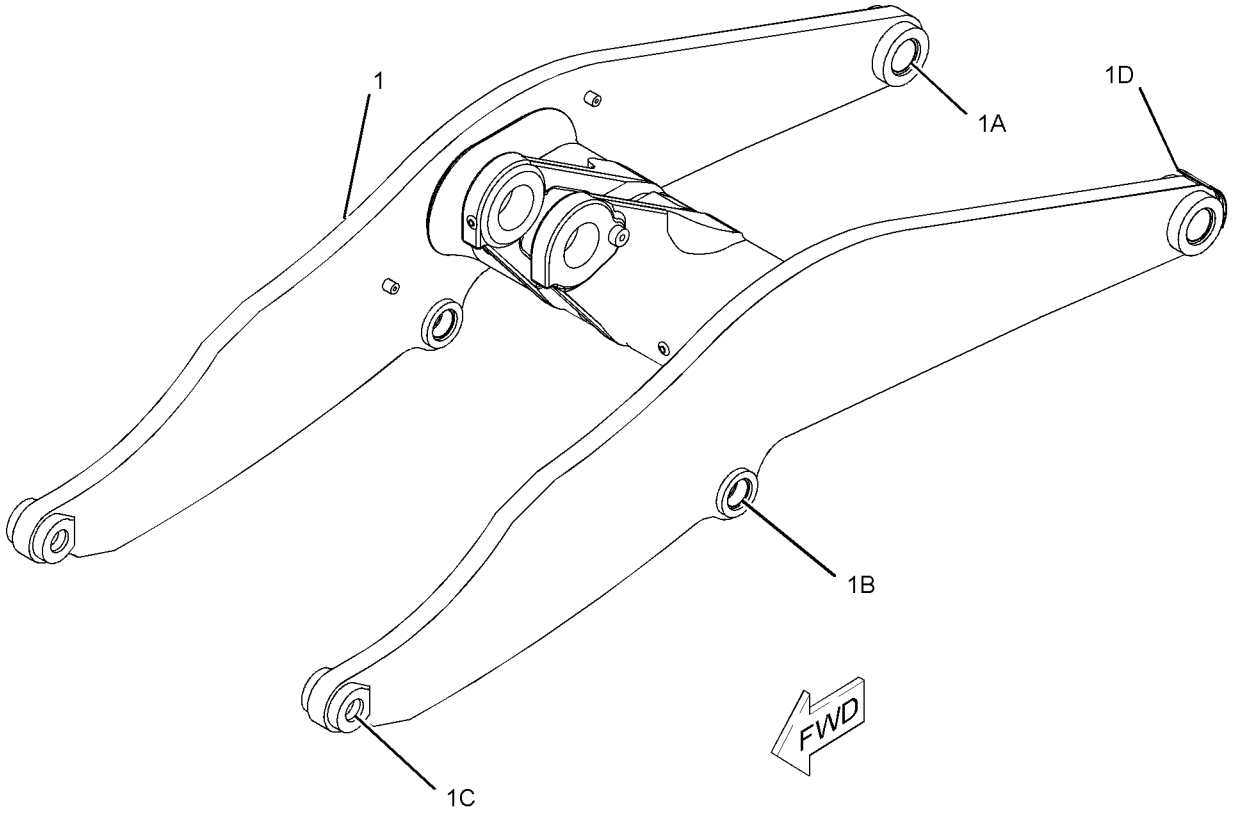

GRAPHIC #1 **<END>** g01078360

242-0446 ARM AS-LIFT—HIGH LIFT MACHINES

S/N: A7G1-UP
PART OF 236-9102 LIFT AR
AN ATTACHMENT

SMCS-6119 **i02112658**

NOTE	REF NO	GRAPHIC REF	PART NUMBER	QTY	PART NAME 1 2 3 4 5 6 (PRODUCT LEVEL)	SEE PAGE
	1	1,2	**2R-1920**	3	BLOCK	
	2	2	**7V-2882**	1	PLATE AS	
	3	1	**104-5671**	6	BLOCK	
Y	4	1	**242-0445**	1	ARM & BEARING AS	643
M	5	1	**7X-0752**	1	BOSS-WELD (M10X1.5X65-MM OAL)	
M	6	2	**8T-4967**	4	STUD-WELD (M10X1.5X23-MM OAL)	
M	7	1,2	**8T-6462**	12	BOSS-WELD (M10X1.5X25-MM OAL)	
	8	2	**9C-4935**	2	PLATE	
	9	2	**9R-2613**	5	BOSS-WELD (M10X1.5X25-MM OAL)	

M-METRIC PART
Y-SEPARATE ILLUSTRATION

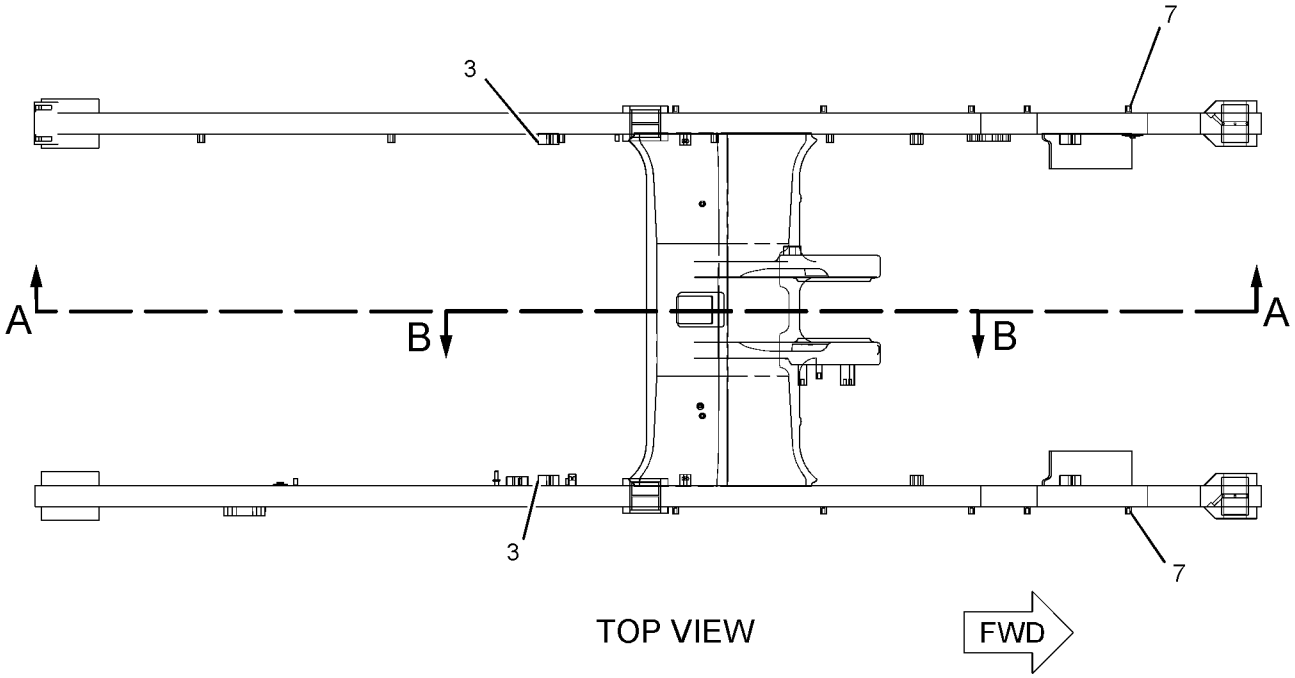

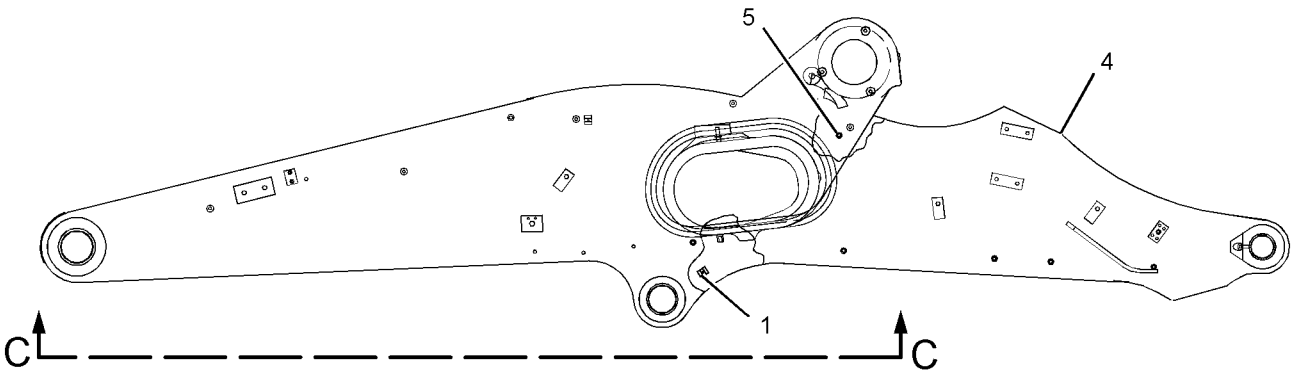

RIGHT SIDE VIEW

GRAPHIC #1 g01080047

242-0446 **ARM AS-LIFT** *(contd.)* **i02112658**

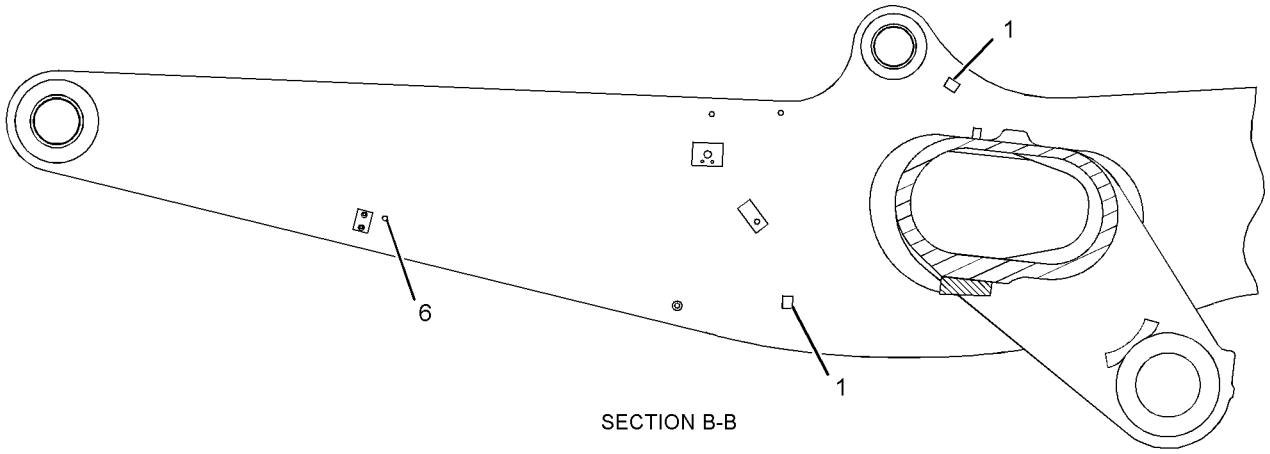

SECTION B-B

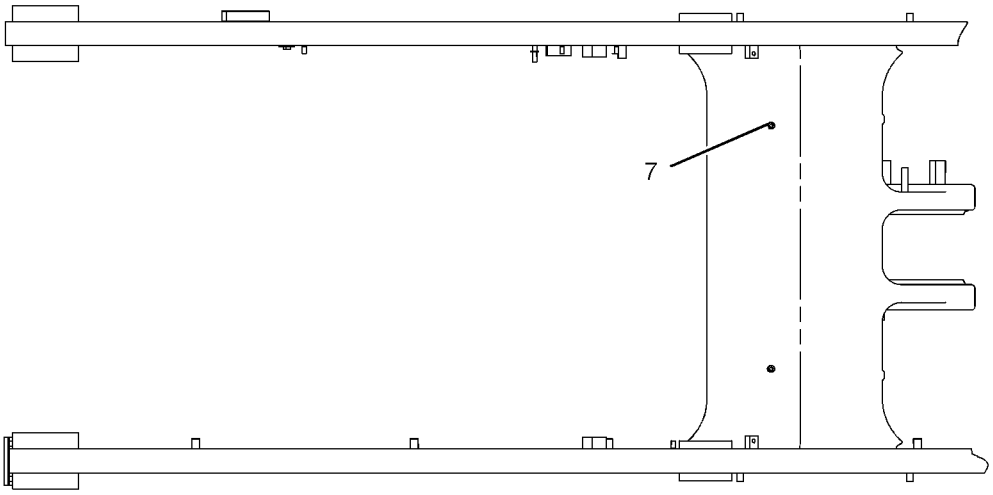

SECTION C-C

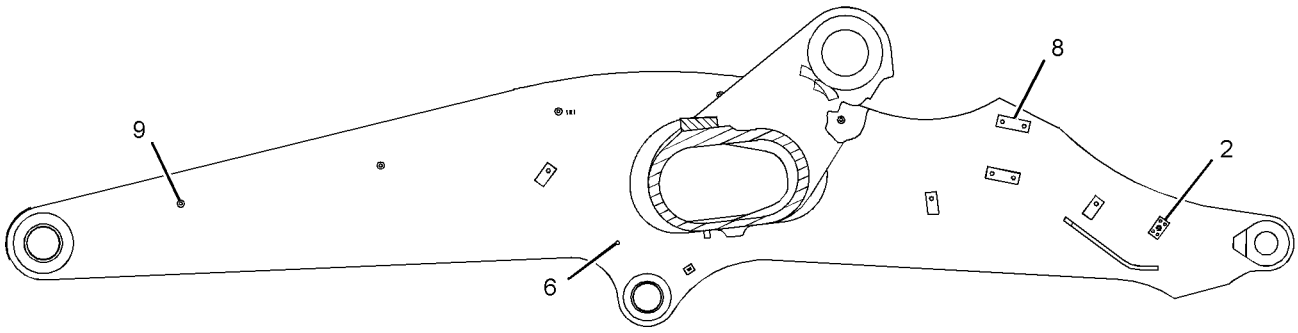

SECTION A-A

GRAPHIC #2 **<END>** g01080049

192-6118 BOSS GP-LEVER

S/N: A7G1-UP

PART OF 261-1446, 263-6296, 277-0038 LUBRICATION AR-AUTOMATIC AN ATTACHMENT

SMCS-6116 **i02115656**

NOTE	REF NO	GRAPHIC REF	PART NUMBER	QTY	PART NAME 1 2 3 4 5 6 (PRODUCT LEVEL)	SEE PAGE
M	1	1	**8T-3851**	4	BOSS-WELD (M10X1.5X17.5-MM)	

M-METRIC PART

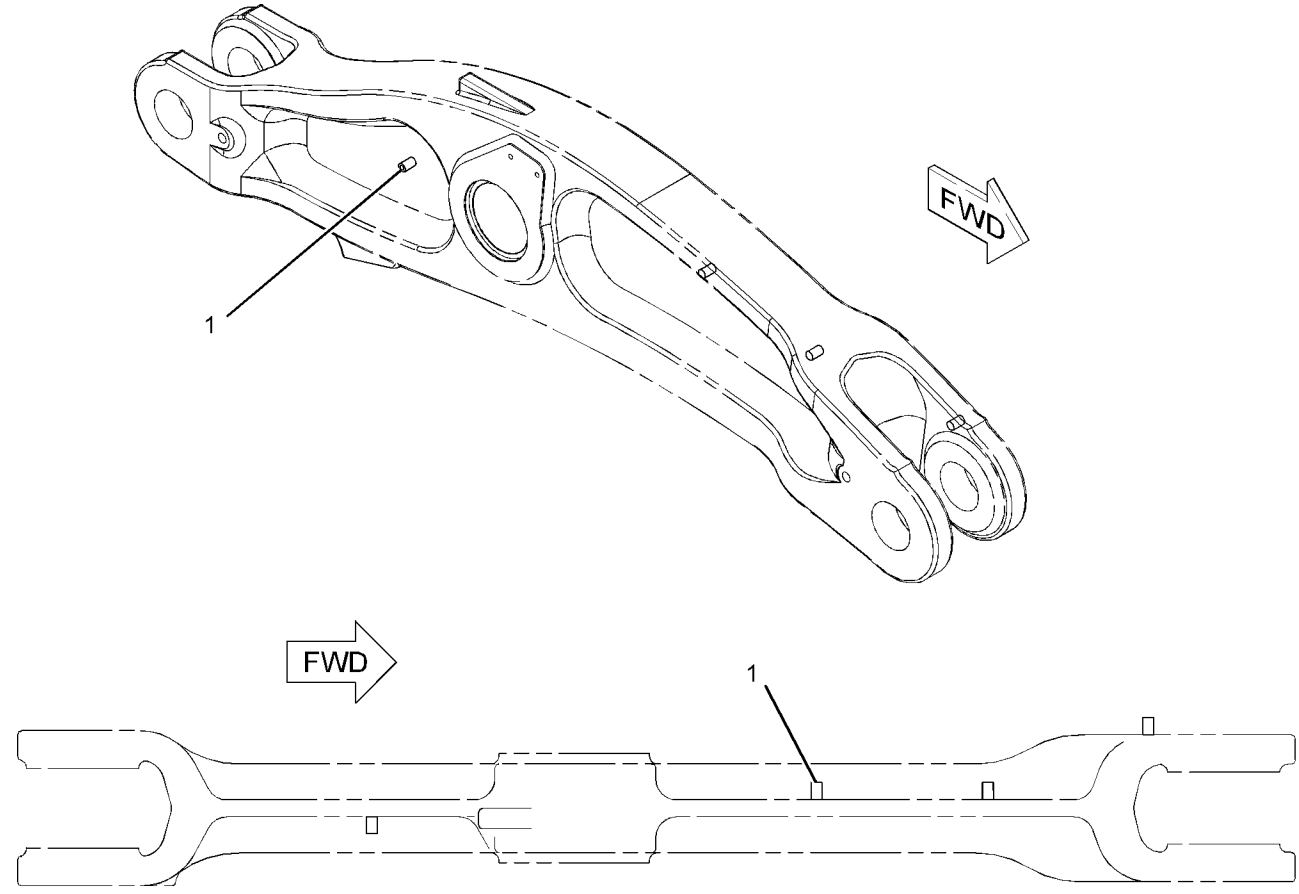

TOP VIEW

GRAPHIC #1 **<END>** g01078403

277-5617 BOSS GP-LIFT ARM

S/N: A7G1-UP

PART OF 277-0038 LUBRICATION AR-AUTOMATIC

AN ATTACHMENT

SMCS-6118, 6119 **i02389759**

NOTE	REF NO	GRAPHIC REF	PART NUMBER	QTY	PART NAME 1 2 3 4 5 6 (PRODUCT LEVEL)	SEE PAGE
	1	1	**5G-6973**	2	LUG	
	2	1	**251-3104**	8	BLOCK	
	3	1	**278-2076**	2	BLOCK-THREADED	
M	4	1	**8T-3851**	4	BOSS-WELD (M10X1.5X17.5-MM)	

M-METRIC PART

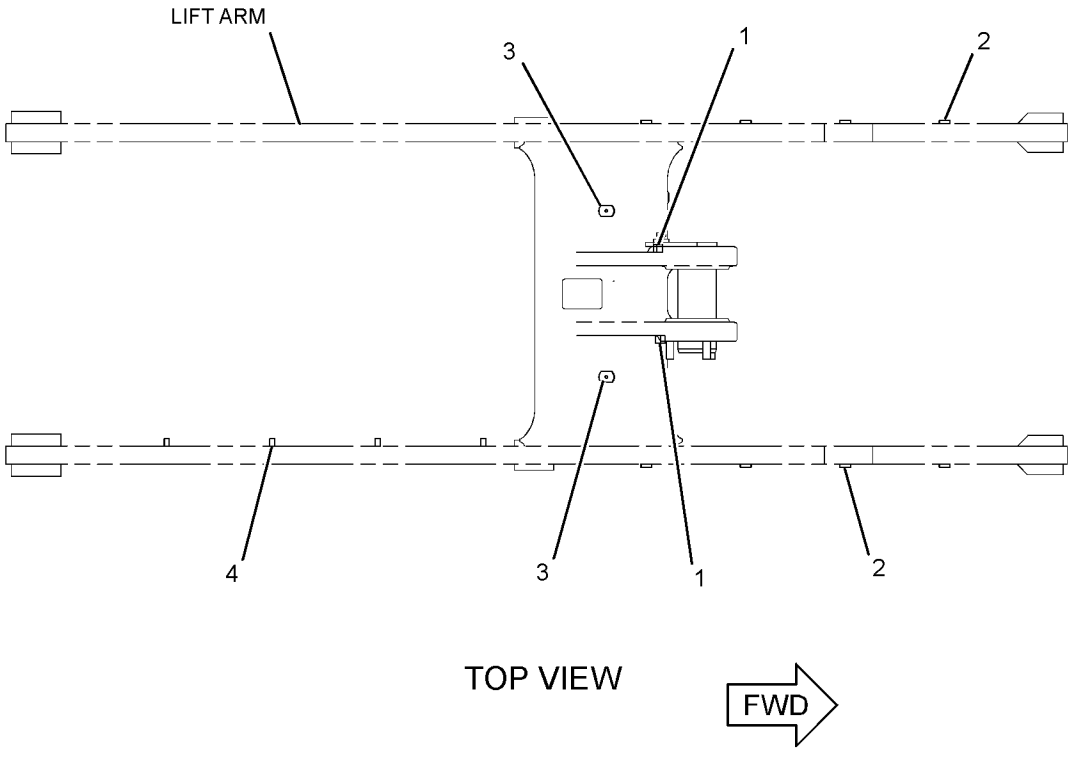

GRAPHIC #1 **<END>** g01202413

IMPLEMENTS

278-5855 BOSS GP-LIFT ARM

S/N: A7G1-UP

PART OF 261-1446 LUBRICATION AR-AUTOMATIC

AN ATTACHMENT

SMCS-6118, 6119 **i02392065**

NOTE	REF NO	GRAPHIC REF	PART NUMBER	QTY	PART NAME 1 2 3 4 5 6 (PRODUCT LEVEL)	SEE PAGE
	1	1	**5G-6973**	2	LUG	
	2	1	**251-3104**	8	BLOCK	
	3	1	**278-2076**	2	BLOCK-THREADED	
M	4	1	**8T-3851**	3	BOSS-WELD (M10X1.5X17.5-MM)	

M-METRIC PART

278-5855 **BOSS GP-LIFT ARM** *(contd.)* **i02392065**

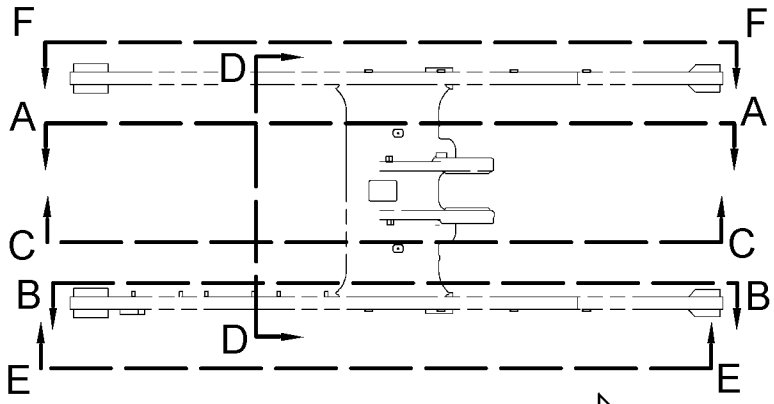

TOP VIEW FWD

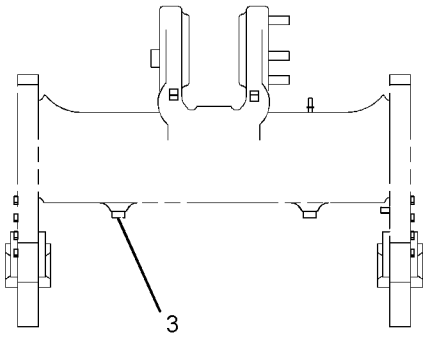

SECTION D-D

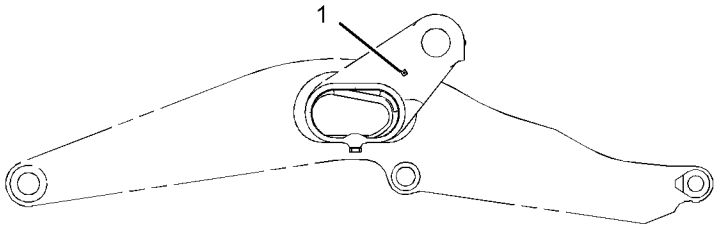

SECTION C-C

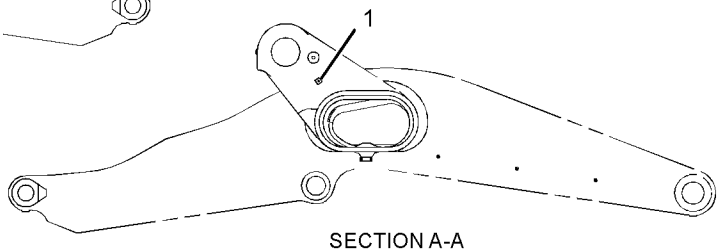

SECTION A-A

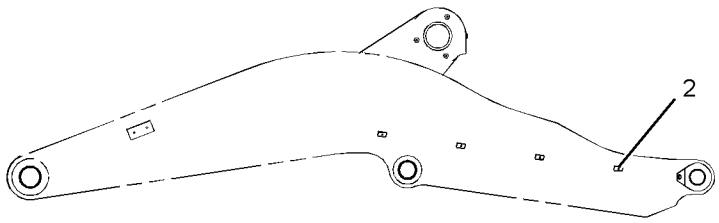

VIEW E-E

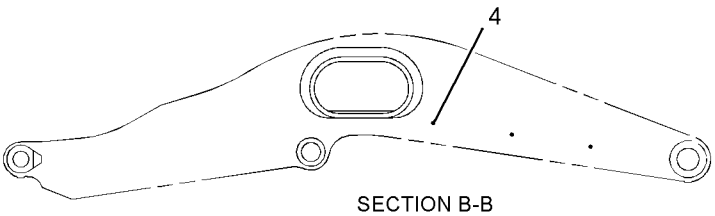

SECTION B-B

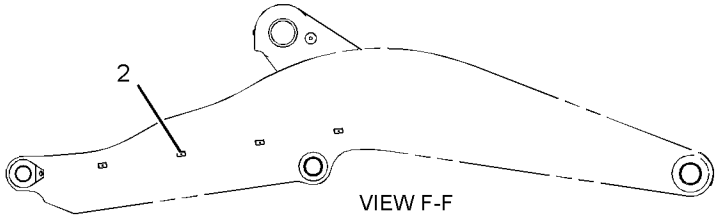

VIEW F-F

GRAPHIC #1 **<END>** g01211136

278-8695 BOSS GP-LIFT ARM

S/N: A7G1-UP

PART OF 263-6296 LUBRICATION AR-AUTOMATIC

AN ATTACHMENT

SMCS-6118, 6119 **i02418546**

NOTE	REF NO	GRAPHIC REF	PART NUMBER	QTY	PART NAME 1 2 3 4 5 6 (PRODUCT LEVEL)	SEE PAGE
	1	1	**5G-6973**	2	LUG	
	2	1	**251-3104**	8	BLOCK	
	3	1	**278-2076**	2	BLOCK-THREADED	
M	4	1	**8T-3851**	3	BOSS-WELD (M10X1.5X17.5-MM)	

M-METRIC PART

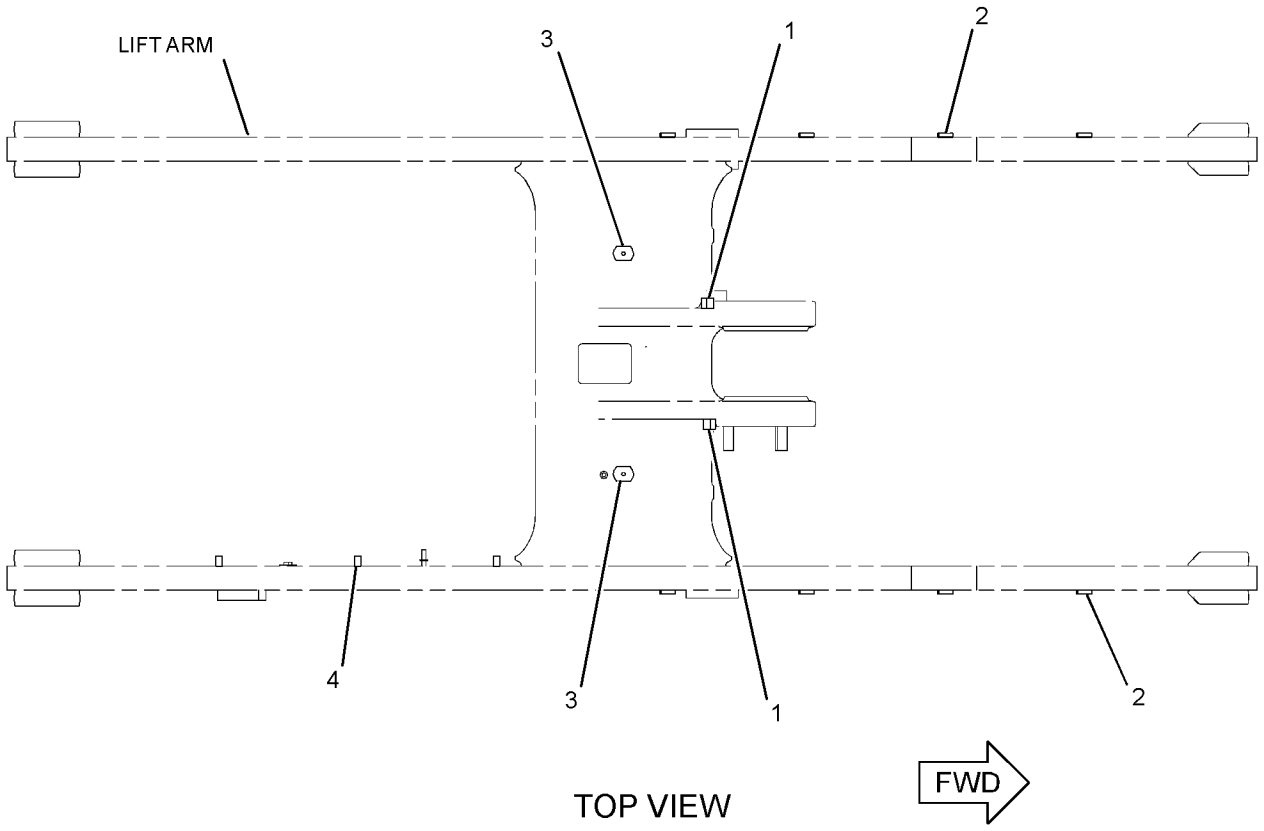

TOP VIEW

GRAPHIC #1 **<END>** g01209305

185-3650 CONTROL GP-BUCKET

S/N: A7G1-UP

PART OF 236-9051 CHASSIS AR

SMCS-6107 **i02416898**

NOTE	REF NO	GRAPHIC REF	PART NUMBER	QTY	PART NAME 1 2 3 4 5 6 (PRODUCT LEVEL)	SEE PAGE
	1	1	**2D-4867**	2	FITTING-GREASE	
	2	1	**3B-8489**	4	FITTING-GREASE	
	3	1	**3B-8491**	2	FITTING-GREASE	
	4	1	**4E-3196**	2	PIN AS	
	5	1	**4V-7099**	3	PIN AS	
	6	1	**4V-7101**	1	PIN AS	
	7	1	**5V-0353**	4	WASHER (1.6-MM THK)	
	8	1	**5V-0354**	4	WASHER (66X133X3-MM THK)	
	9	1	**7K-9205**	4	SEAL-LIP TYPE	
	10	1	**7K-9209**	4	SEAL-LIP TYPE	
	11	1	**7K-9212**	8	SEAL-LIP TYPE	
	12	1	**7K-9220**	2	SEAL-LIP TYPE	
	13	1	**7V-6715**	2	PIN AS	
	14	1	**9K-9731**	7	SPACER (20.4X28.5X14.2-MM THK)	
	15	1	**096-6467**	6	WASHER (22X60X8-MM THK)	
	16	1	**237-9941**	1	LINK & BEARING AS	
	17	1	**138-6674**	2	PIN AS	
	18	1	**138-6679**	1	PIN AS	
	19	1	**138-6685**	2	PIN AS	
B	20	1	**159-0268**	4	SHIM (0.35-MM THK)	
B	21	1	**159-0269**	8	SHIM (0.35-MM THK)	
	22	1	**280-9604**	1	LEVER AS	
		1	**4V-8519**	1	BEARING-SLEEVE	
	23	1	*185-3651*	1	ARM & BEARING AS	
		1	**4V-8673**	2	BEARING-SLEEVE	
		1	**4V-8674**	2	BEARING-SLEEVE	
		1	**4V-8675**	2	BEARING-SLEEVE	
		1	**5V-2798**	1	PLATE	
		1	**185-3652**	1	ARM AS-LIFT	
M		1	**7X-0752**	3	BOSS-WELD (M10X1.5X65-MM OAL)	
		1	**9C-7863**	1	BLOCK	
M		1	**110-2023**	2	STUD-WELD (M10X1.5X25-MM)	
M	25	1	**8T-4780**	6	BOLT (M20X2.5X30-MM)	
	26	1	**8T-5439**	7	WASHER (21.5X45X6-MM THK)	
M	27	1	**8T-5460**	2	BOLT (M20X2.5X40-MM)	
M	28	1	**8T-6430**	5	BOLT (M20X2.5X50-MM)	

B-USE AS REQUIRED
M-METRIC PART

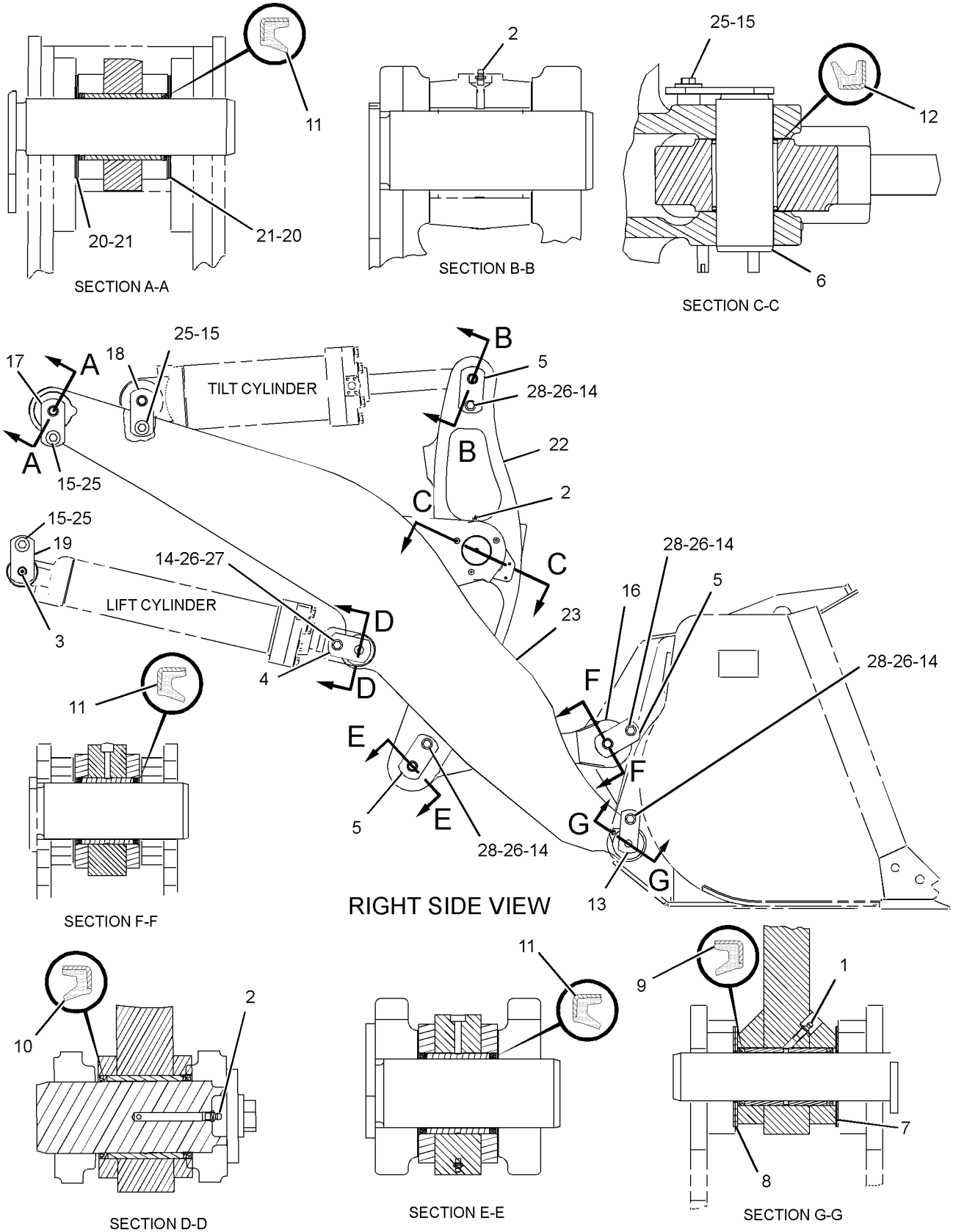

GRAPHIC #1

<END>

g01208380

IMPLEMENTS

237-8965 CONTROL GP-BUCKET

S/N: A7G1-UP
AN ATTACHMENT

SMCS-6107 **i02220833**

NOTE	PART NUMBER	QTY	PART NAME 1 2 3 4 5 6 (PRODUCT LEVEL)	SEE PAGE
Y	**237-5049**	1	ARM & BEARING AS	642
JY	**251-4522**	1	AXLE AR-FIXED (FRONT, STANDARD DIFFERENTIAL)	258
	137-4117	1	LINK AS-BEARING	
	4V-8520	2	BEARING-SLEEVE	

J-NOT YET RELEASED
Y-SEPARATE ILLUSTRATION

<END>

236-9101 LIFT AR—HIGH LIFT MACHINES, 2-VALVE

S/N: A7G1-UP
AN ATTACHMENT

SMCS-6000 **i02417193**

NOTE	PART NUMBER	QTY	PART NAME 1 2 3 4 5 6 (PRODUCT LEVEL)	SEE PAGE
Y	**242-0445**	1	ARM & BEARING AS	643
Y	**245-7486**	1	CYLINDER GP-TILT (HIGH LIFT MACHINES)	547
Y	*275-0024*	1	WIRING GP-SENSOR (TILT)	254
	254-3571	1	BRACKET AS	
M	**8T-3597**	2	NUT-WELD (M12X1.75-THD)	
	137-4117	1	LINK & BEARING AS	
	4V-8520	2	BEARING-SLEEVE	

M-METRIC PART
Y-SEPARATE ILLUSTRATION

<END>

236-9102 LIFT AR—HIGH LIFT MACHINES, 3-VALVE

S/N: A7G1-UP
AN ATTACHMENT

SMCS-6000 **i02417194**

NOTE	PART NUMBER	QTY	PART NAME 1 2 3 4 5 6 (PRODUCT LEVEL)	SEE PAGE
Y	**242-0446**	1	ARM AS-LIFT	645
Y	**245-7486**	1	CYLINDER GP-TILT (HIGH LIFT MACHINES)	547
Y	*246-5290*	1	LINES GP-FRONT	556
Y	*275-0024*	1	WIRING GP-SENSOR (TILT)	254
	254-3571	1	BRACKET AS	
M	**8T-3597**	2	NUT-WELD (M12X1.75-THD)	
	137-4117	1	LINK & BEARING AS	
	4V-8520	2	BEARING-SLEEVE	

M-METRIC PART
Y-SEPARATE ILLUSTRATION

<END>

IMPLEMENTS

237-8964 LIFT AR–LOW

S/N: A7G1-UP
CANNOT BE USED WITH 3 VALVE, HIGH LIFT CONFIGURATION, LUBRICATION GP, AND HYDRAULIC AR
AN ATTACHMENT

SMCS-6000 **i02328186**

NOTE	PART NUMBER	QTY	PART NAME 1 2 3 4 5 6 (PRODUCT LEVEL)	SEE PAGE
Y	**237-5049**	1	ARM & BEARING AS	642
Y	**251-4522**	1	AXLE AR-FIXED (FRONT, STANDARD DIFFERENTIAL)	258
	137-4117	1	LINK AS-BEARING	
	4V-8520	2	BEARING-SLEEVE	

Y-SEPARATE ILLUSTRATION

<END>

256-5718 LIFT AR

S/N: A7G1-UP
AN ATTACHMENT

SMCS-6000 **i02325554**

NOTE	PART NUMBER	QTY	PART NAME 1 2 3 4 5 6 (PRODUCT LEVEL)	SEE PAGE
Y	**237-5049**	1	ARM & BEARING AS	642
	137-4117	1	LINK AS-BEARING	
	4V-8520	2	BEARING-SLEEVE	

Y-SEPARATE ILLUSTRATION

<END>

277-5330 LINK GP-BUCKET

S/N: A7G1-UP
PART OF 261-1446 LUBRICATION AR-AUTOMATIC
AN ATTACHMENT

SMCS-6513 **i02392064**

NOTE	REF NO	GRAPHIC REF	PART NUMBER	QTY	PART NAME 1 2 3 4 5 6 (PRODUCT LEVEL)	SEE PAGE
	1	1	**246-4907**	1	LINK & BEARING AS	
		1	**4V-8520**	2	BEARING-SLEEVE	
	2	1	**275-8815**	2	PIN AS	

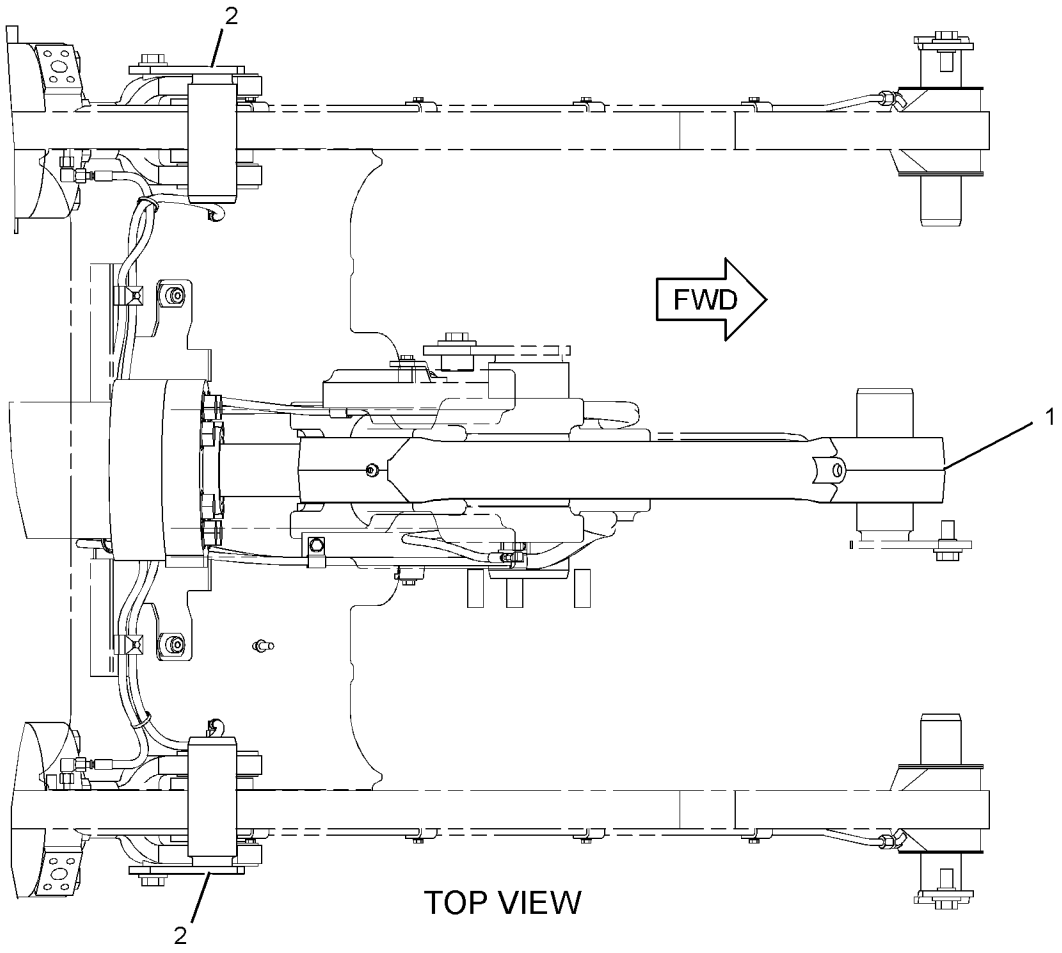

GRAPHIC #1 **<END>** g01196998

WORK TOOLS

229-6942 ADAPTER GP-TIP

S/N: A7G1-UP

AN ATTACHMENT

SMCS-6803 **i02238862**

NOTE	PART NUMBER	QTY	PART NAME 1 2 3 4 5 6 (PRODUCT LEVEL)	SEE PAGE
	222-1097	6	ADAPTER-TIP (K-90, 2-STRAP, CENTER)	
	222-1099	1	ADAPTER-TIP (K-90, LONG, LH)	
	222-1098	1	ADAPTER-TIP (K-90, LONG, RH)	
	5P-8361	2	BOLT-PLOW (1-1/4-7X4.92-IN)	
	6V-6535	2	BOLT-PLOW (1-1/4-7X3.74-IN)	
	198-1092	12	BOLT-PLOW (1-1/4-7X4.5-IN)	
	5P-8362	12	NUT (1-1/4-7-THD)	
	3K-9770	4	NUT-FULL (1-1/4-7-THD)	

<END>

133-1676 BUCKET AS-GENERAL PURPOSE

S/N: A7G1-UP
3.8 CU M (5.0 CU YD)
PART OF 133-1667 BUCKET GP-GENERAL PURPOSE
AN ATTACHMENT

SMCS-6101 **i01144242**

NOTE	REF NO	GRAPHIC REF	PART NUMBER	QTY	PART NAME 1 2 3 4 5 6 (PRODUCT LEVEL)	SEE PAGE
	2	1	**128-9623**	4	PLATE-WEAR	
	3	1	**134-7934**	1	HINGE AS (LIFT-RH-OUTER)	
	4	1	**134-7935**	1	HINGE AS (LIFT-LH-OUTER)	
	5	1	**134-7936**	1	HINGE AS (LIFT-RH-INNER)	
	6	1	**134-7937**	1	HINGE AS (LIFT-LH-INNER)	
	7	1	**134-7940**	1	HINGE AS (TILT-RH)	
	8	1	**134-7941**	1	HINGE AS (TILT-LH)	
	9	1	**8E-5310**	1	CORNER-RH	
	10	1	**134-4500**	2	BAR	
	11	1	**143-2643**	2	PLATE	
	12	1	**8E-5311**	1	CORNER-LH	
	13	1	**9V-6575**	1	EDGE-CUTTING	

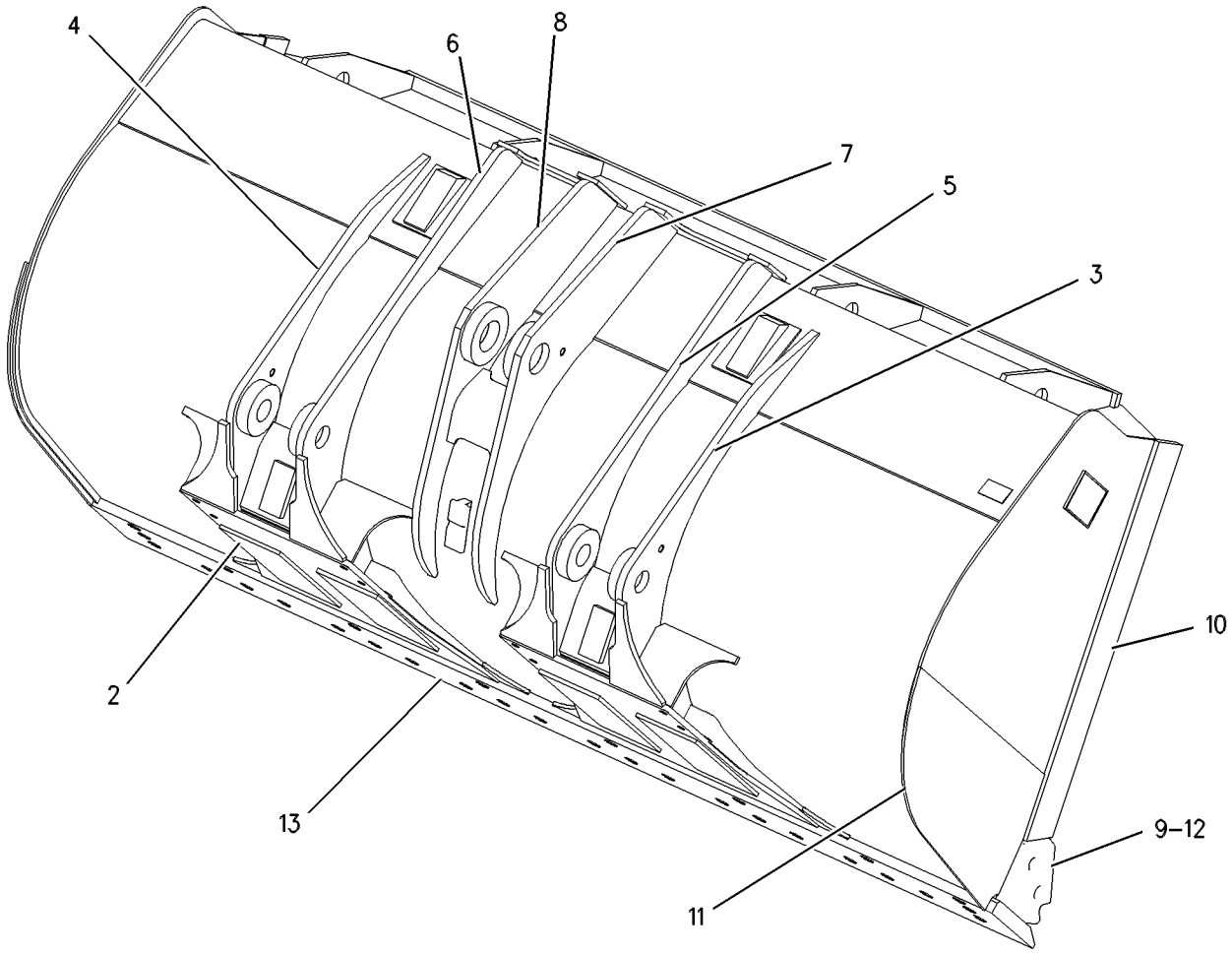

GRAPHIC #1 **<END>** g00448583

133-1681 BUCKET AS-GENERAL PURPOSE

S/N: A7G1-UP
4.0 CU M (5.25 CU YD)
PART OF 133-1671 BUCKET GP-GENERAL PURPOSE
AN ATTACHMENT

SMCS-6101 **i01129996**

NOTE	REF NO	GRAPHIC REF	PART NUMBER	QTY	PART NAME 1 2 3 4 5 6 (PRODUCT LEVEL)	SEE PAGE
	1	1	**9V-6575**	1	EDGE-CUTTING	
	2	1	**128-9623**	4	PLATE-WEAR	
	3	1	**134-7934**	1	HINGE AS (LIFT-RH-OUTER)	
	4	1	**134-7935**	1	HINGE AS (LIFT-LH-OUTER)	
	5	1	**134-7936**	1	HINGE AS (LIFT-RH-INNER)	
	6	1	**134-7937**	1	HINGE AS (LIFT-LH-INNER)	
	7	1	**134-7940**	1	HINGE AS (TILT-RH)	
	8	1	**134-7941**	1	HINGE AS (TILT-LH)	
	9	1	**143-3330**	2	PLATE	
	10	1	**8E-5310**	1	CORNER-RH	
	11	1	**137-3863**	2	BAR	
	12	1	**8E-5311**	1	CORNER-LH	

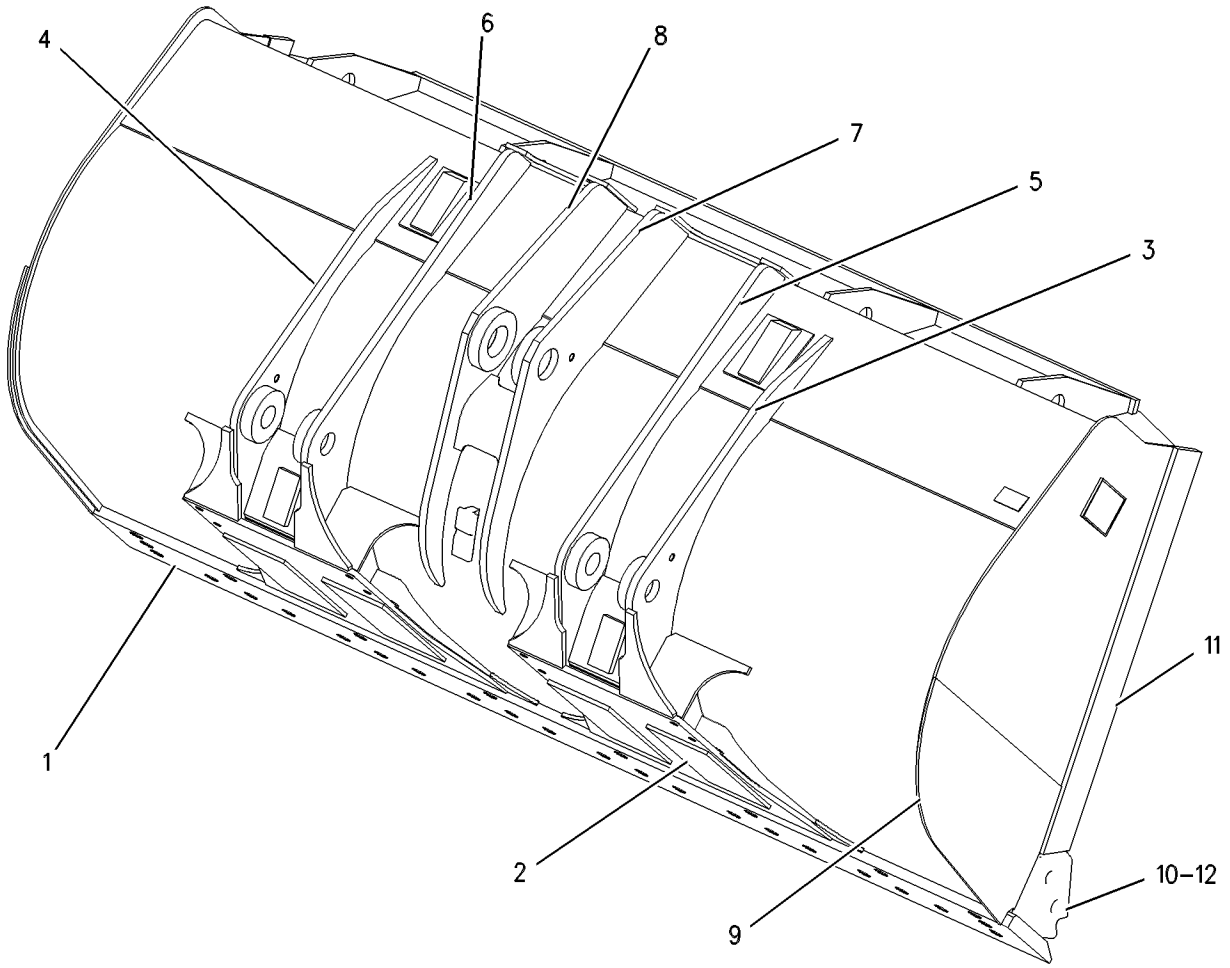

GRAPHIC #1 **<END>** g00368836

133-1700 BUCKET AS-GENERAL PURPOSE

S/N: A7G1-UP
4.3 CU M (5.5 CU YD)
PART OF 133-1693 BUCKET GP-GENERAL PURPOSE
AN ATTACHMENT

SMCS-6101 **i01144347**

NOTE	REF NO	GRAPHIC REF	PART NUMBER	QTY	PART NAME 1 2 3 4 5 6 (PRODUCT LEVEL)	SEE PAGE
	1	1	**7I-3015**	1	EDGE-CUTTING	
	2	1	**128-9623**	4	PLATE-WEAR	
	3	1	**134-7934**	1	HINGE AS (LIFT-RH-OUTER)	
	4	1	**134-7935**	1	HINGE AS (LIFT-LH-OUTER)	
	5	1	**134-7936**	1	HINGE AS (LIFT-RH-INNER)	
	6	1	**134-7937**	1	HINGE AS (LIFT-LH-INNER)	
	7	1	**134-7940**	1	HINGE AS (TILT-RH)	
	8	1	**134-7941**	1	HINGE AS (TILT-LH)	
	9	1	**8E-5310**	1	CORNER-RH	
	10	1	**137-3863**	2	BAR	
	11	1	**143-3330**	2	PLATE	
	12	1	**8E-5311**	1	CORNER-LH	

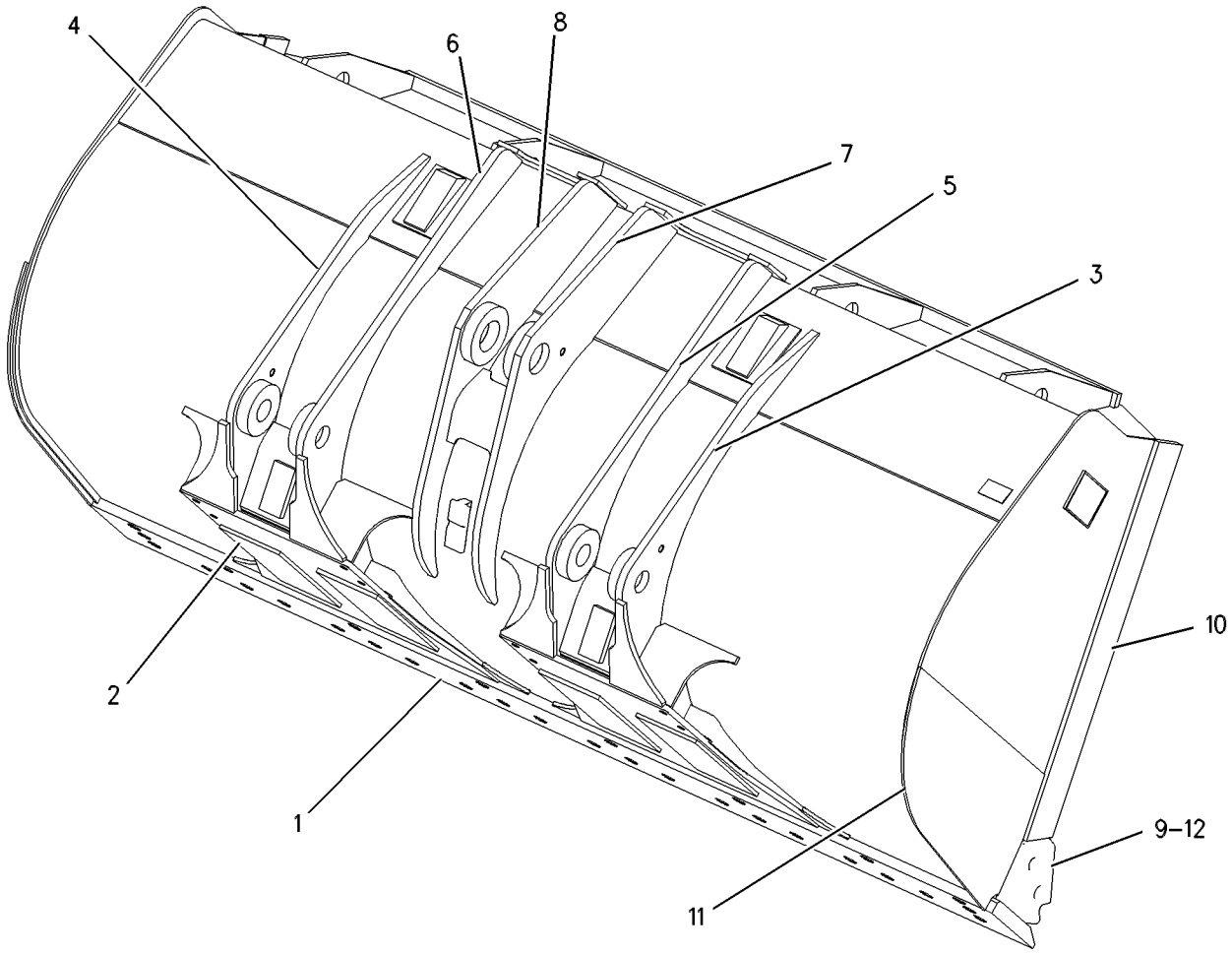

GRAPHIC #1 **<END>** g00448984

213-1177 BUCKET AS-GENERAL PURPOSE

S/N: A7G1-UP
4.5 CU M (5.75 CU YD)
PART OF 213-1176 BUCKET GP-GENERAL PURPOSE
AN ATTACHMENT

SMCS-6101 **i01743780**

NOTE	REF NO	GRAPHIC REF	PART NUMBER	QTY	PART NAME 1 2 3 4 5 6 (PRODUCT LEVEL)	SEE PAGE
	1	1	**134-7935**	1	HINGE AS (LIFT-LH-OUTER)	
	2	1	**134-7937**	1	HINGE AS (LIFT-LH-INNER)	
	3	1	**134-7941**	1	HINGE AS (TILT-LH)	
	4	1	**134-7940**	1	HINGE AS (TILT-RH)	
	5	1	**134-7936**	1	HINGE AS (LIFT-RH-INNER)	
	6	1	**134-7934**	1	HINGE AS (LIFT-RH-OUTER)	
	7	1	**213-1184**	2	PLATE	
	8	1	**213-1188**	4	PLATE	
	9	1	**7I-3015**	1	EDGE-CUTTING	
	11	1	**8E-5310**	1	CORNER-RH	
	12	1	**137-3863**	2	BAR	
	13	1	**213-1183**	2	PLATE	
	14	1	**8E-5311**	1	CORNER-LH	

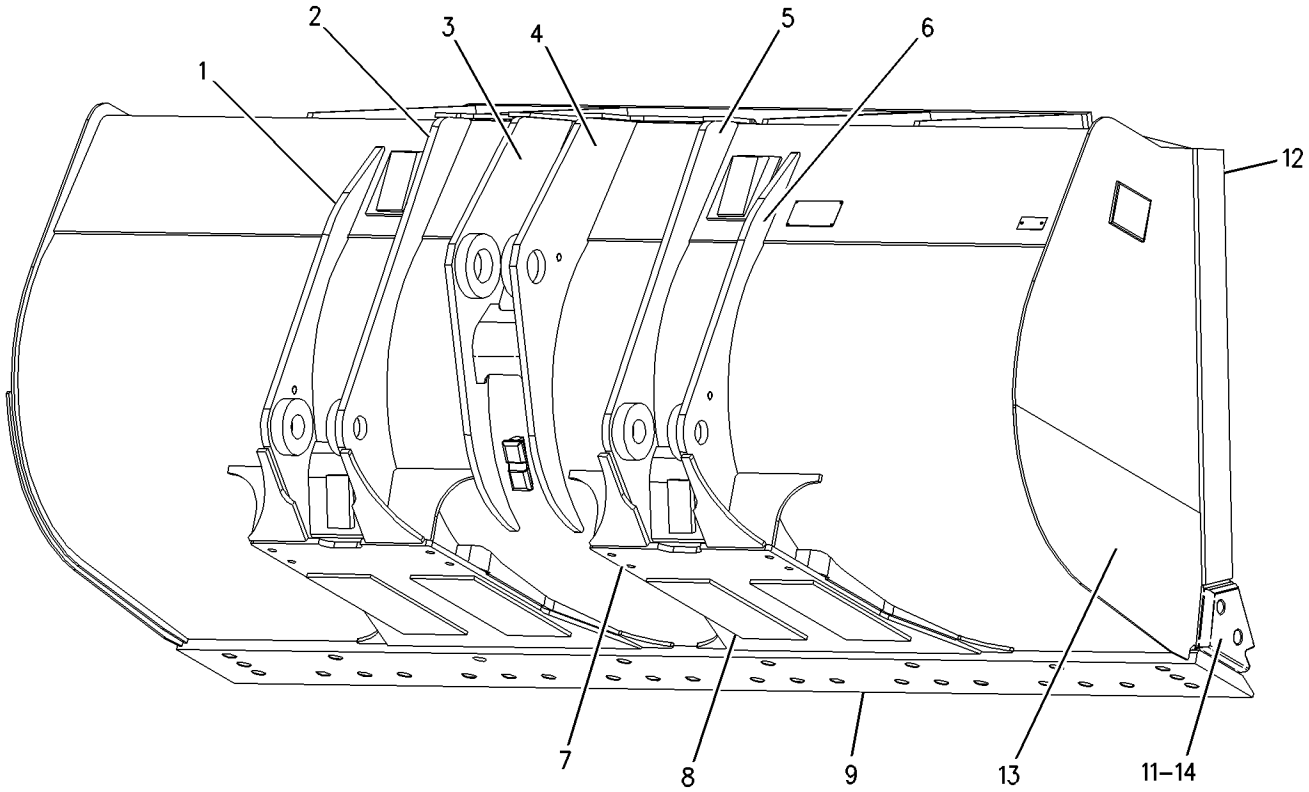

GRAPHIC #1 **<END>** g00885487

251-3038 BUCKET AS-GENERAL PURPOSE

S/N: A7G1-UP
3201-MM (126.02-IN) WIDE X 5.0-CU M (6.539-CU YD)
PART OF 251-3037 BUCKET GP-GENERAL PURPOSE
AN ATTACHMENT

SMCS-6101 **i02418906**

NOTE	REF NO	GRAPHIC REF	PART NUMBER	QTY	PART NAME 1 2 3 4 5 6 (PRODUCT LEVEL)	SEE PAGE
	1	1	**248-1666**	2	PLATE	
	2	1	**248-7329**	2	PLATE-WEAR	
	3	1	**2C-9259**	2	PLATE-IDENTIFICATION (CAT)	
	4	1	**8E-5310**	1	CORNER-RH	
	5	1	**248-7341**	2	PLATE-WEAR	
	6	1	**249-0656**	2	PLATE-WEAR (SIDE)	
	7	1	**8E-5311**	1	CORNER-LH	
	8	1	**7I-3015**	1	EDGE-CUTTING	

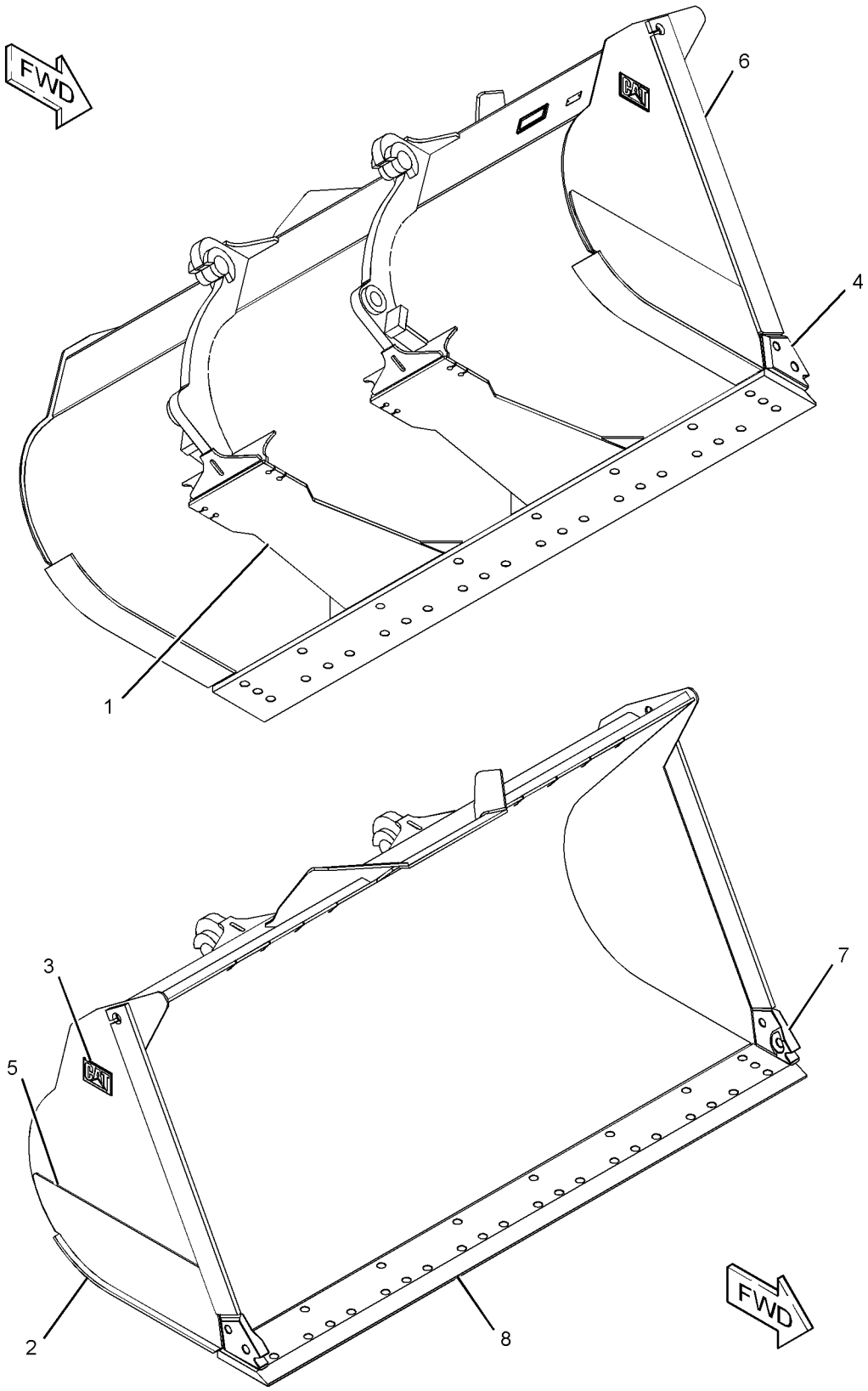

GRAPHIC #1 **<END>** g01210418

WORK TOOLS

251-3044 BUCKET AS-GENERAL PURPOSE

S/N: A7G1-UP
3231-MM (127.20-IN) WIDE X 5.4-CU M (7.06-CU YD)
PART OF 251-3043 BUCKET GP-GENERAL PURPOSE
AN ATTACHMENT

SMCS-6101 **i02418949**

NOTE	REF NO	GRAPHIC REF	PART NUMBER	QTY	PART NAME 1 2 3 4 5 6 (PRODUCT LEVEL)	SEE PAGE
	1	1	**248-5737**	1	HINGE AS (TILT, CENTER)	
	2	1	**248-5747**	1	HINGE AS (LIFT, LH)	
	3	1	**248-5756**	1	HINGE AS (LIFT, RH)	
	4	1	**7I-3015**	1	EDGE-CUTTING	
	5	1	**8E-5310**	1	CORNER-RH	
	6	1	**2C-9259**	2	PLATE-IDENTIFICATION (CAT)	
	7	1	**8E-5311**	1	CORNER-LH	
	8	1	**251-9252**	2	PLATE-WEAR (SIDE)	
	9	1	**251-9255**	2	PLATE-EDGE (SIDE)	
	10	1	**252-9423**	2	PLATE-WEAR	
	11	1	**252-9424**	5	PLATE-WEAR	

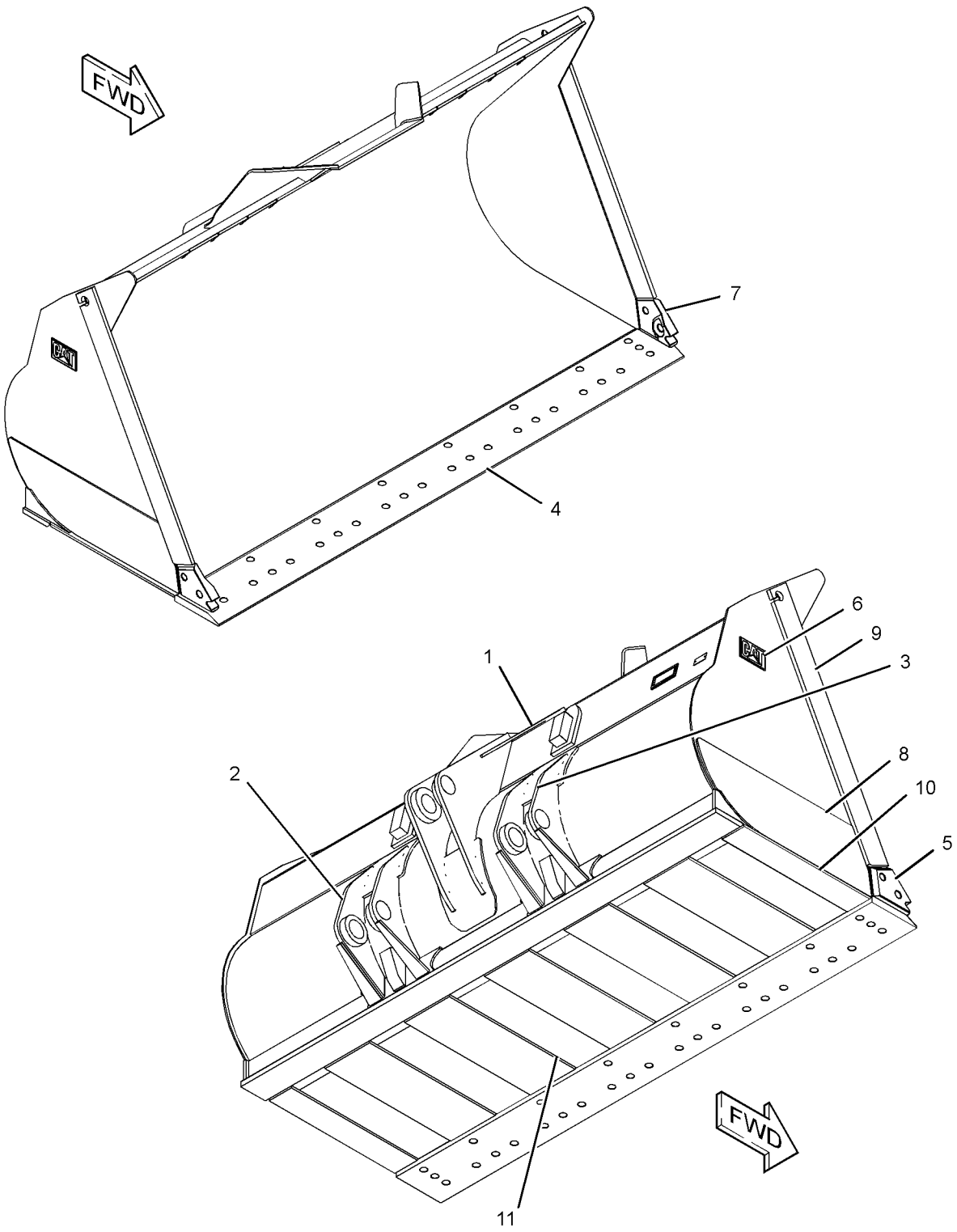

GRAPHIC #1 **<END>** g01210105

251-3052 BUCKET AS-GENERAL PURPOSE

S/N: A7G1-UP
3202-MM (126.02-IN) WIDE X 4.8-CU M (6.3-CU YD)
PART OF 251-3051 BUCKET GP-GENERAL PURPOSE
AN ATTACHMENT

SMCS-6101 **i02419508**

NOTE	REF NO	GRAPHIC REF	PART NUMBER	QTY	PART NAME 1 2 3 4 5 6 (PRODUCT LEVEL)	SEE PAGE
	1	1	**248-5737**	1	HINGE AS (TILT, CENTER)	
	2	1	**248-5747**	1	HINGE AS (LIFT, LH)	
	3	1	**248-5756**	1	HINGE AS (LIFT, RH)	
	4	1	**7I-3015**	1	EDGE-CUTTING	
	5	1	**2C-9259**	2	PLATE-IDENTIFICATION (CAT)	
	6	1	**8E-5310**	1	CORNER-RH	
	7	1	**251-9262**	2	PLATE-WEAR (SIDE)	
	8	1	**251-9265**	2	PLATE-EDGE (SIDE)	
	9	1	**8E-5311**	1	CORNER-LH	
	10	1	**252-9430**	1	PLATE-WEAR (BOTTOM)	
	11	1	**252-9431**	1	PLATE-WEAR (BOTTOM)	

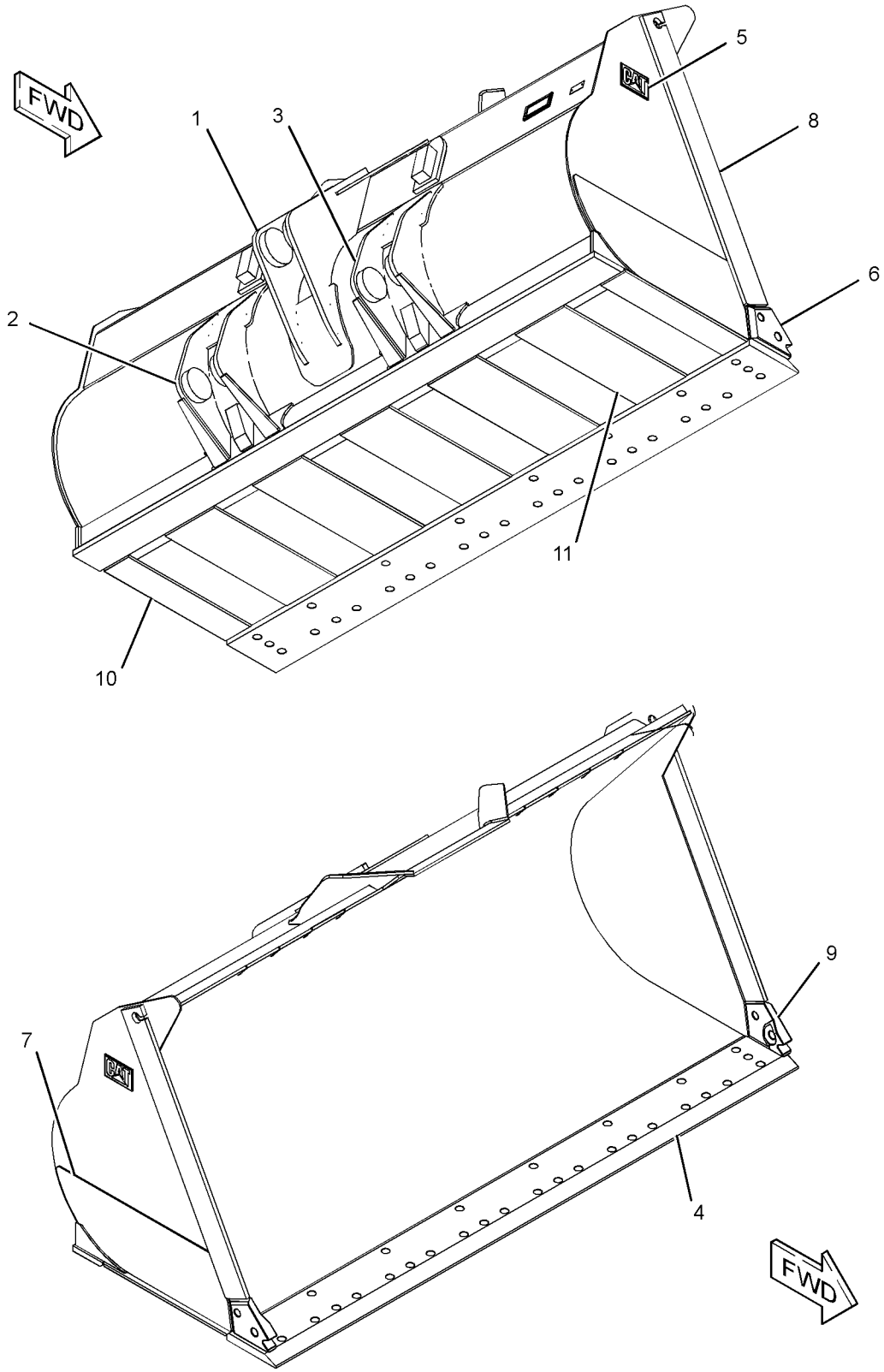

GRAPHIC #1 **<END>** g01210302

WORK TOOLS

251-3056 BUCKET AS-GENERAL PURPOSE

S/N: A7G1-UP
3201-MM (126.02-IN) WIDE X 4.8-CU M (6.3-CU YD). QUICK COUPLER
PART OF 251-3055 BUCKET GP-GENERAL PURPOSE
AN ATTACHMENT

SMCS-6101 **i02419696**

NOTE	REF NO	GRAPHIC REF	PART NUMBER	QTY	PART NAME 1 2 3 4 5 6 (PRODUCT LEVEL)	SEE PAGE
	1	1	**7I-3015**	1	EDGE-CUTTING	
	2	1	**201-0115**	2	HOOK AS	
	3	1	**2C-9259**	2	PLATE-IDENTIFICATION (CAT)	
	4	1	**8E-5310**	1	CORNER-RH	
	5	1	**251-9262**	2	PLATE-WEAR (SIDE)	
	6	1	**251-9265**	2	PLATE-EDGE (SIDE)	
	7	1	**8E-5311**	1	CORNER-LH	
	8	1	**252-9427**	2	PLATE-BOTTOM (PADDLE)	
	9	1	**252-9428**	2	PLATE-WEAR (BOTTOM, SIDE)	

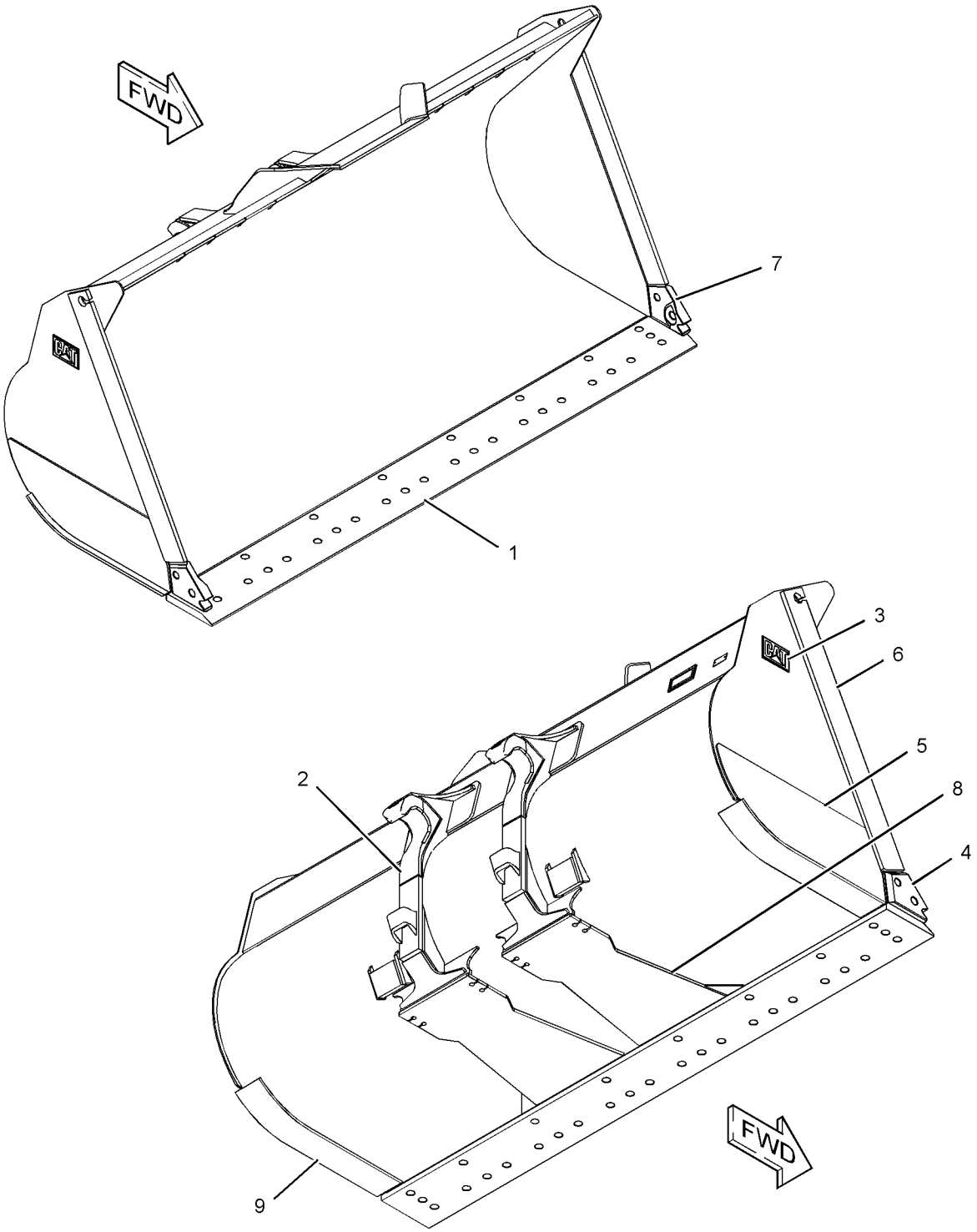

GRAPHIC #1 **<END>** g01210032

251-3058 BUCKET AS-GENERAL PURPOSE

S/N: A7G1-UP
4.53-CU M (5.93 CU YD). QUICK COUPLER
PART OF 251-3057 BUCKET GP-GENERAL PURPOSE
AN ATTACHMENT

SMCS-6101 **i02419728**

NOTE	REF NO	GRAPHIC REF	PART NUMBER	QTY	PART NAME 1 2 3 4 5 6 (PRODUCT LEVEL)	SEE PAGE
	1	1	**7I-3015**	1	EDGE-CUTTING	
	2	1	**201-0115**	2	HOOK AS	
	3	1	**2C-9259**	2	PLATE-IDENTIFICATION (CAT)	
	4	1	**8E-5310**	1	CORNER-RH	
	5	1	**251-9262**	2	PLATE-WEAR (SIDE)	
	6	1	**251-9265**	2	PLATE-EDGE (SIDE)	
	7	1	**8E-5311**	1	CORNER-LH	
	8	1	**252-9430**	2	PLATE-WEAR (BOTTOM)	
	9	1	**252-9431**	5	PLATE-WEAR (BOTTOM)	

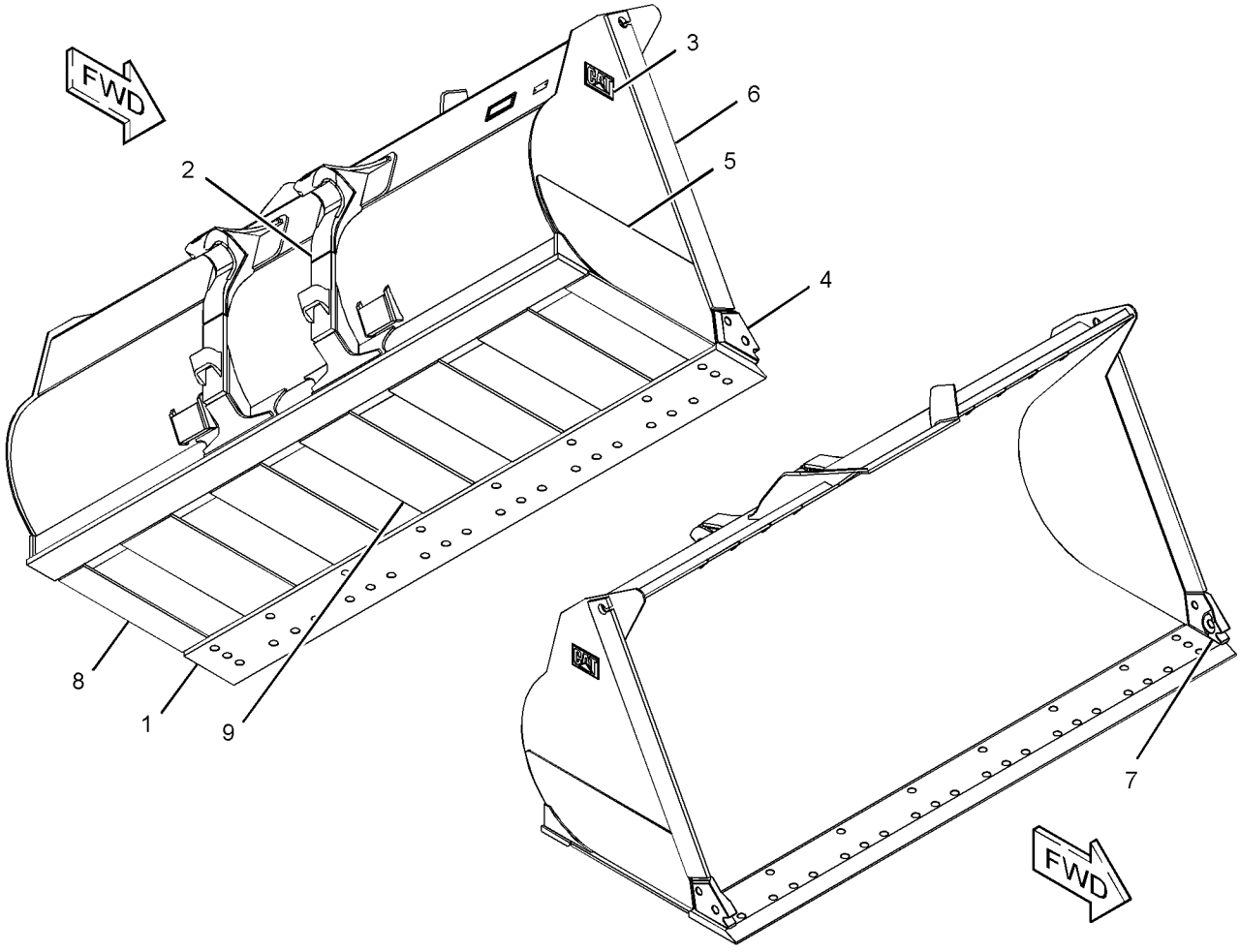

GRAPHIC #1 **<END>** g01209688

WORK TOOLS

251-3060 BUCKET AS-GENERAL PURPOSE

S/N: A7G1-UP
3294-MM (129.69-IN) WIDE X 4.5-CU M (7.06-CU YD). QUICK COUPLER
PART OF 251-3059 BUCKET GP-GENERAL PURPOSE
AN ATTACHMENT

SMCS-6101 **i02419747**

NOTE	REF NO	GRAPHIC REF	PART NUMBER	QTY	PART NAME 1 2 3 4 5 6 (PRODUCT LEVEL)	SEE PAGE
	1	1	**149-2865**	1	EDGE-CUTTING	
	2	1	**229-7094**	8	ADAPTER-TIP (K-90, FLUSH MOUNT)	
	3	1	**201-0115**	2	HOOK AS	
	4	1	**2C-9259**	2	PLATE-IDENTIFICATION (CAT)	
	5	1	**249-0657**	2	PLATE-CORNER	
	6	1	**251-9262**	2	PLATE-WEAR (SIDE)	
	7	1	**251-9265**	2	PLATE-EDGE (SIDE)	
	8	1	**252-9430**	2	PLATE-WEAR (BOTTOM)	
	9	1	**252-9431**	5	PLATE-WEAR (BOTTOM)	

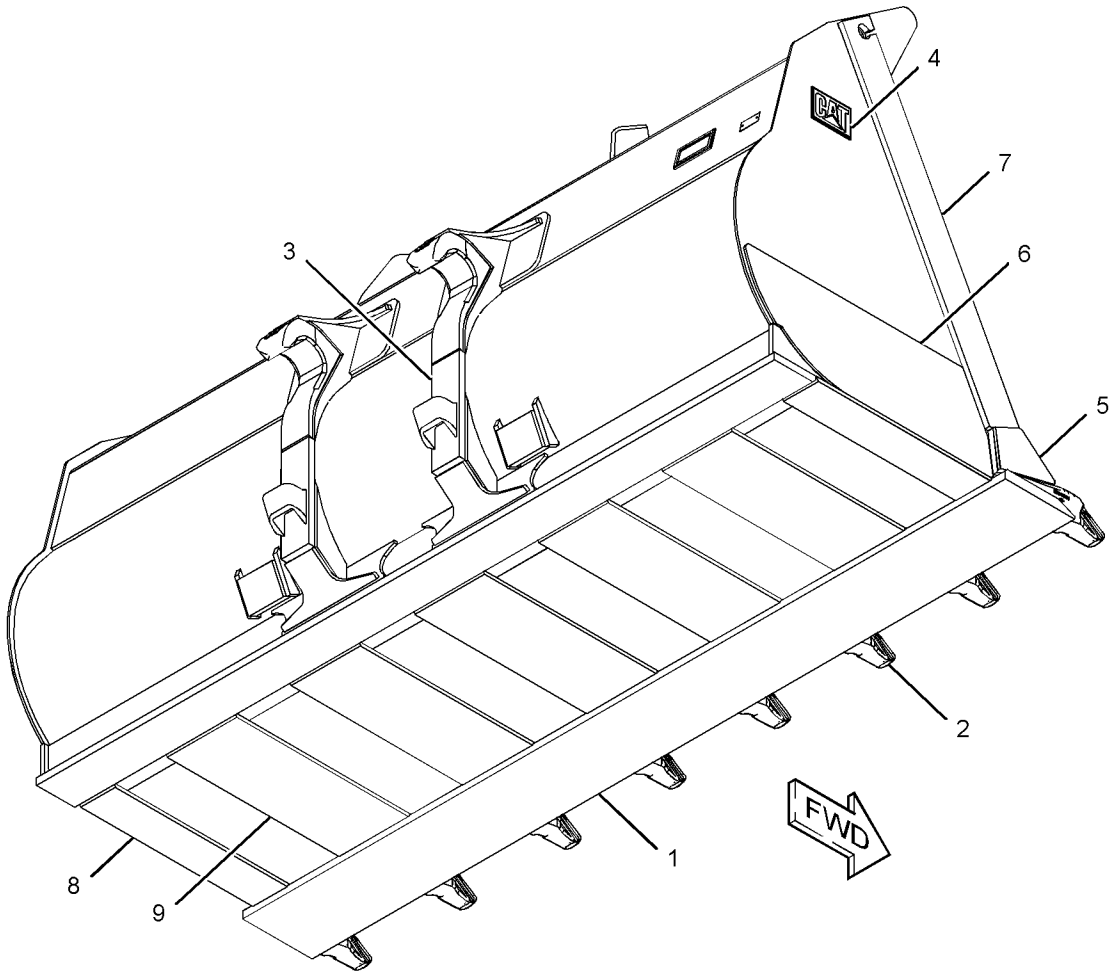

GRAPHIC #1 **<END>** g01209949

147-0133 BUCKET AS-MATERIAL HANDLING

S/N: A7G1-UP
5.5 CU M (7.15 CU YD)
PART OF 147-0131 BUCKET GP-MATERIAL HANDLING
FOR USE WITH 100-6669—PAGE 748, 100-6667—PAGE 747. CANNOT BE USED WITH 3G-8956—PAGE 746, 9W-0817—PAGE 747
AN ATTACHMENT

SMCS-6101 **i01139121**

NOTE	REF NO	GRAPHIC REF	PART NUMBER	QTY	PART NAME 1 2 3 4 5 6 (PRODUCT LEVEL)	SEE PAGE
	1	1	**151-0315**	1	HINGE AS (LIFT-LH-OUTER)	
	2	1	**151-0312**	1	HINGE AS (LIFT-LH-INNER)	
	3	1	**151-0309**	1	HINGE AS (TILT-LH)	
	4	1	**151-0308**	1	HINGE AS (TILT-RH)	
	5	1	**151-0311**	1	HINGE AS (LIFT-RH-INNER)	
	6	1	**151-0314**	1	HINGE AS (LIFT-RH-OUTER)	
	7	1	**7I-3015**	1	EDGE-CUTTING	
	8	1	**158-7487**	2	PLATE	
	9	1	**158-7488**	4	PLATE	
	10	1	**158-7492**	2	BAR	
	11	1	**158-7494**	2	PLATE	
	12	1	**8E-5310**	1	CORNER-RH	
	13	1	**8E-5311**	1	CORNER-LH	

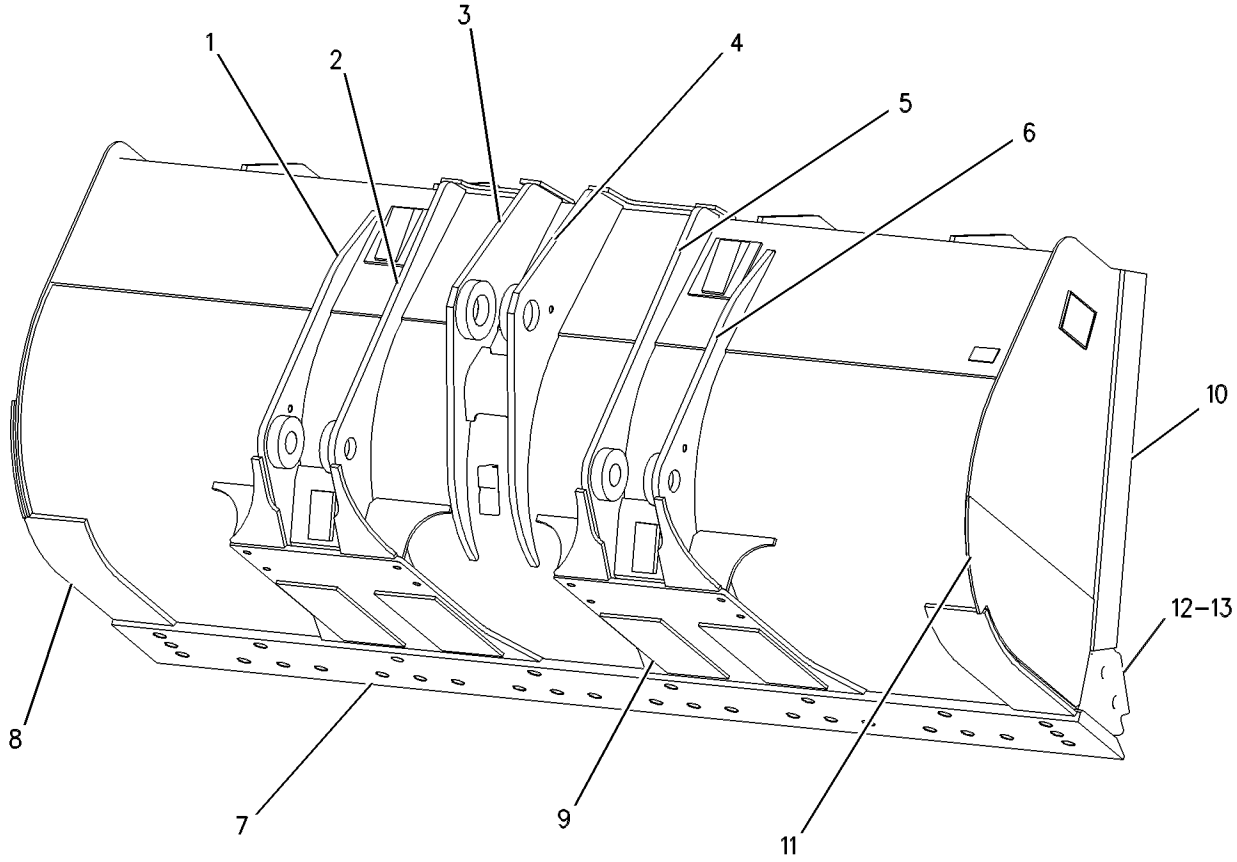

GRAPHIC #1 **<END>** g00499720

WORK TOOLS

248-0562 BUCKET AS-MATERIAL HANDLING

S/N: A7G1-UP
PART OF 248-0561 BUCKET GP-ROCK
AN ATTACHMENT

SMCS-6101 **i02422310**

NOTE	REF NO	GRAPHIC REF	PART NUMBER	QTY	PART NAME 1 2 3 4 5 6 (PRODUCT LEVEL)	SEE PAGE
	1	1	**248-5737**	1	HINGE AS (TILT, CENTER)	
	2	1	**248-5747**	1	HINGE AS (LIFT, LH)	
	3	1	**248-5756**	1	HINGE AS (LIFT, RH)	
	4	1	**248-1666**	2	PLATE	
	5	1	**248-7329**	2	PLATE-WEAR	
	6	1	**2C-9259**	2	PLATE-IDENTIFICATION (CAT)	
	7	1	**248-7338**	2	PLATE-CORNER	
	8	1	**248-7339**	2	PLATE-WEAR (SIDE)	
	9	1	**248-7341**	2	PLATE-WEAR	
	10	1	**248-0571**	1	EDGE-CUTTING	

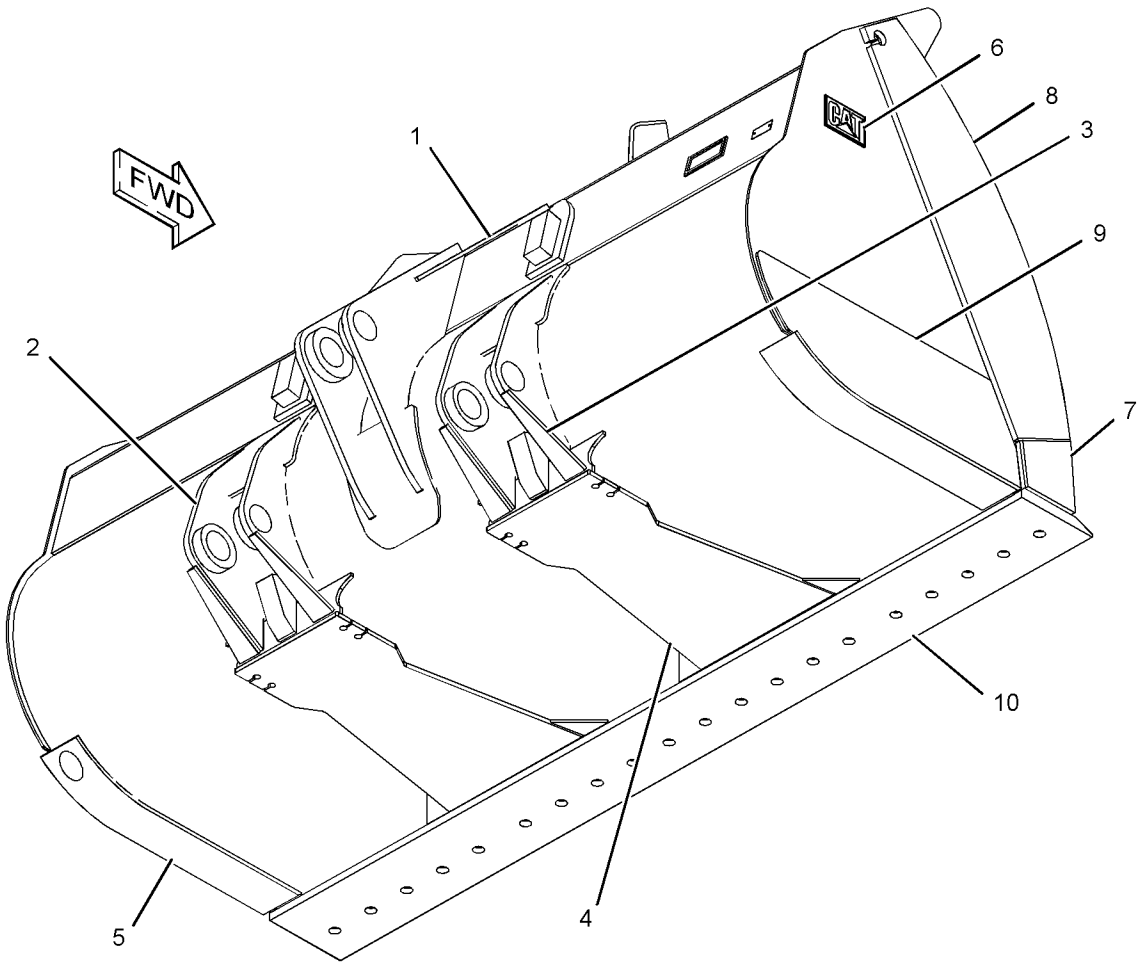

GRAPHIC #1 **<END>** g01209709

WORK TOOLS

248-0568 BUCKET AS-MATERIAL HANDLING

S/N: A7G1-UP
4.8-CU M (6.3-CU YD)
PART OF 248-0567 BUCKET GP-MATERIAL HANDLING
AN ATTACHMENT

SMCS-6101 **i02410620**

NOTE	REF NO	GRAPHIC REF	PART NUMBER	QTY	PART NAME 1 2 3 4 5 6 (PRODUCT LEVEL)	SEE PAGE
	1	1	**248-5737**	1	HINGE AS (TILT, CENTER)	
	2	1	**248-5747**	1	HINGE AS (LIFT, LH)	
	3	1	**248-5756**	1	HINGE AS (LIFT, RH)	
	4	1	**2C-9259**	2	PLATE-IDENTIFICATION (CAT)	
	5	1	**8E-5310**	1	CORNER-RH	
	6	1	**248-7341**	2	PLATE-WEAR	
	7	1	**249-0656**	2	PLATE-WEAR (SIDE)	
	8	1	**8E-5311**	1	CORNER-LH	
	9	1	**7I-3015**	1	EDGE-CUTTING	
	10	1	**249-5420**	2	PLATE-WEAR	
	11	1	**249-5421**	5	PLATE-WEAR	

248-0568 **BUCKET AS-MATERIAL HANDLING** *(contd.)* **i02410620**

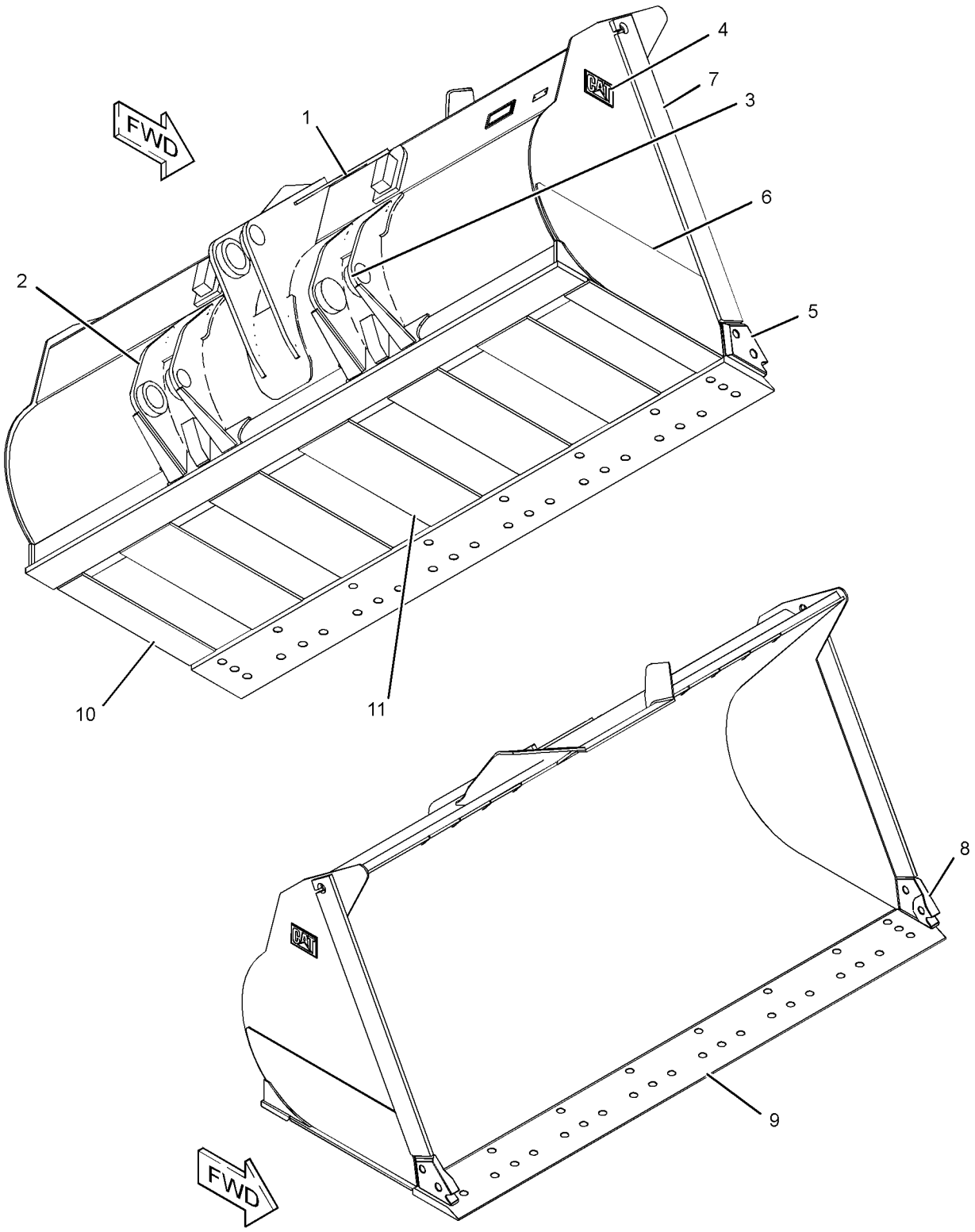

GRAPHIC #1 **<END>** g01209635

WORK TOOLS

251-3042 BUCKET AS-MATERIAL HANDLING

S/N: A7G1-UP
3231-MM (127.20-IN) WIDE X 5.4-CU M (7.06-CU YD)
PART OF 251-3041 BUCKET GP-MATERIAL HANDLING
AN ATTACHMENT

SMCS-6101 **i02418937**

NOTE	REF NO	GRAPHIC REF	PART NUMBER	QTY	PART NAME 1 2 3 4 5 6 (PRODUCT LEVEL)	SEE PAGE
	1	1	**248-5737**	1	HINGE AS (TILT, CENTER)	
	2	1	**248-5747**	1	HINGE AS (LIFT, LH)	
	3	1	**248-5756**	1	HINGE AS (LIFT, RH)	
	4	1	**248-0571**	1	EDGE-CUTTING	
	5	1	**2C-9259**	2	PLATE-IDENTIFICATION (CAT)	
	6	1	**248-7338**	2	PLATE-CORNER	
	7	1	**251-9251**	2	PLATE-EDGE (SIDE)	
	8	1	**251-9252**	2	PLATE-WEAR (SIDE)	
	9	1	**252-8384**	2	PLATE-BOTTOM (PADDLE)	
	10	1	**252-8385**	2	PLATE-WEAR (BOTTOM, SIDE)	

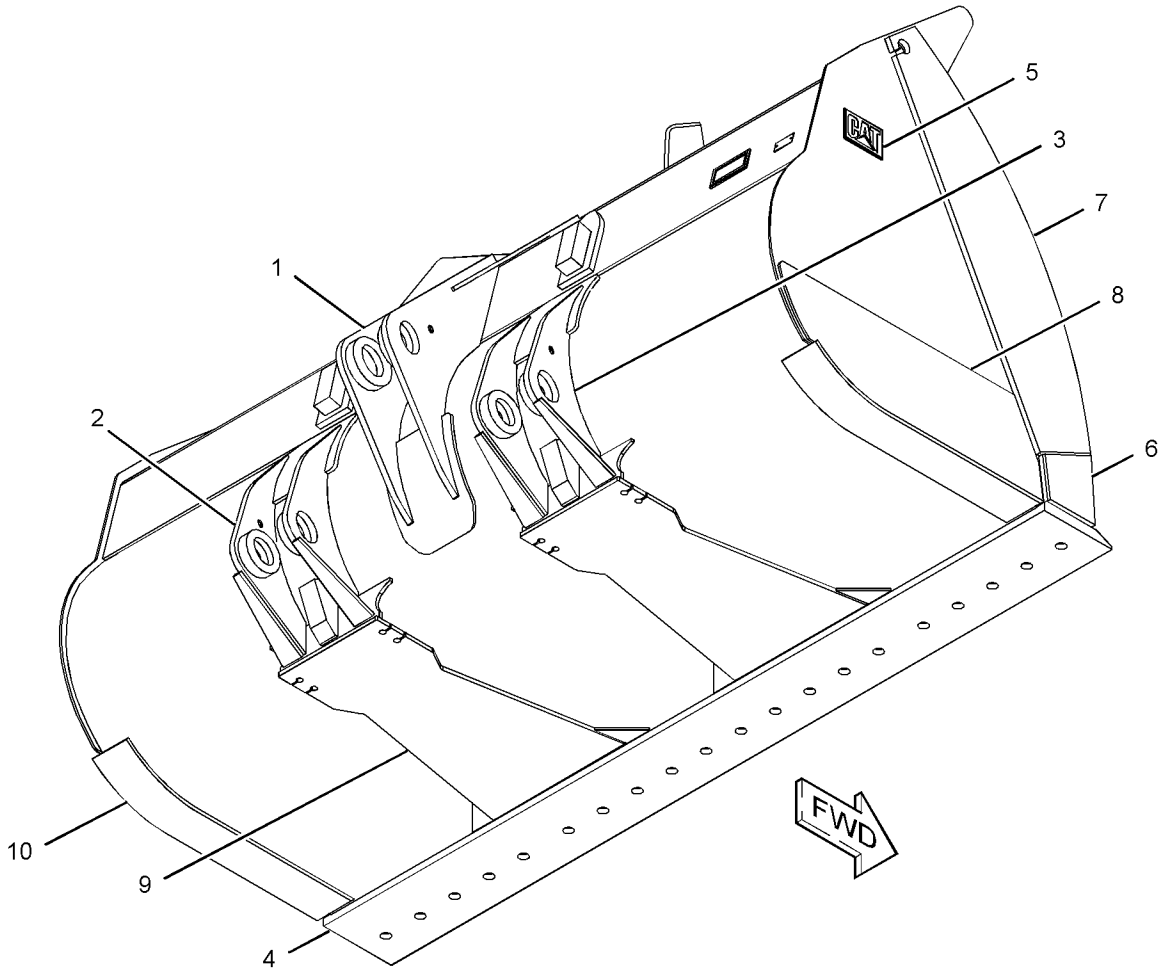

GRAPHIC #1 **<END>** g01209729

WORK TOOLS

251-3046 BUCKET AS-MATERIAL HANDLING

S/N: A7G1-UP
3294-MM (129.69-IN) WIDE X 5.0-CU M (6.59-CU YD)
PART OF 251-3045 BUCKET GP-MATERIAL HANDLING
AN ATTACHMENT

SMCS-6101 **i02418958**

NOTE	REF NO	GRAPHIC REF	PART NUMBER	QTY	PART NAME 1 2 3 4 5 6 (PRODUCT LEVEL)	SEE PAGE
	1	1	**248-5737**	1	HINGE AS (TILT, CENTER)	
	2	1	**248-5747**	1	HINGE AS (LIFT, LH)	
	3	1	**248-5756**	1	HINGE AS (LIFT, RH)	
	4	1	**149-2865**	1	EDGE-CUTTING	
	5	1	**229-7094**	8	ADAPTER-TIP (K-90, FLUSH MOUNT)	
	6	1	**2C-9259**	2	PLATE-IDENTIFICATION (CAT)	
	7	1	**251-9252**	2	PLATE-WEAR (SIDE)	
	8	1	**249-0657**	2	PLATE-CORNER	
	9	1	**251-9255**	2	PLATE-EDGE (SIDE)	
	10	1	**252-9423**	2	PLATE-WEAR	
	11	1	**252-9424**	5	PLATE-WEAR	

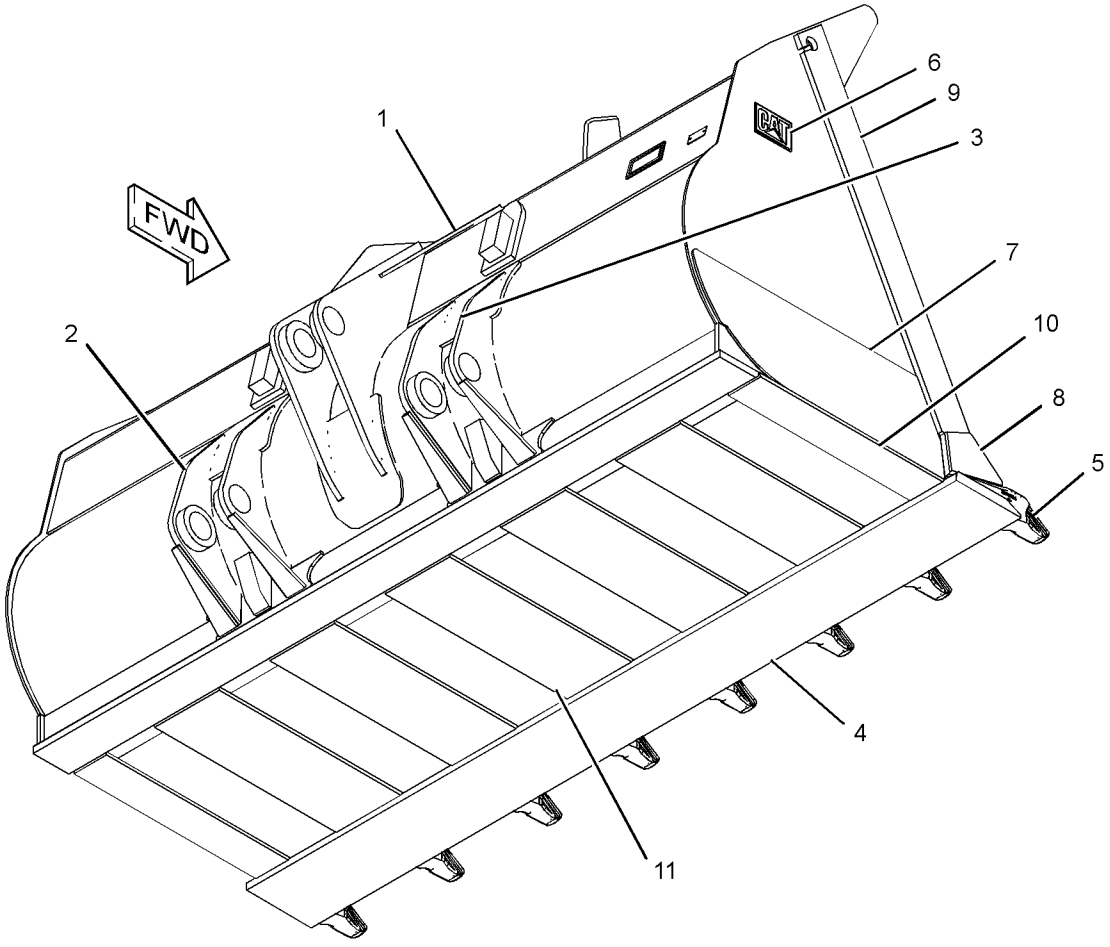

GRAPHIC #1 **<END>** g01210052

251-3048 BUCKET AS-MATERIAL HANDLING

S/N: A7G1-UP
3201-MM (126.02-IN) WIDE X 4.8-CU M (6.3-CU YD)
PART OF 251-3047 BUCKET GP-MATERIAL HANDLING
AN ATTACHMENT

SMCS-6101 **i02419012**

NOTE	REF NO	GRAPHIC REF	PART NUMBER	QTY	PART NAME 1 2 3 4 5 6 (PRODUCT LEVEL)	SEE PAGE
	1	1	**248-5737**	1	HINGE AS (TILT, CENTER)	
	2	1	**248-5747**	1	HINGE AS (LIFT, LH)	
	3	1	**248-5756**	1	HINGE AS (LIFT, RH)	
	4	1	**7I-3015**	1	EDGE-CUTTING	
	5	1	**2C-9259**	2	PLATE-IDENTIFICATION (CAT)	
	6	1	**8E-5310**	1	CORNER-RH	
	7	1	**251-9262**	2	PLATE-WEAR (SIDE)	
	8	1	**251-9265**	2	PLATE-EDGE (SIDE)	
	9	1	**8E-5311**	1	CORNER-LH	
	10	1	**252-9427**	2	PLATE-BOTTOM (PADDLE)	
	11	1	**252-9428**	2	PLATE-WEAR (BOTTOM, SIDE)	

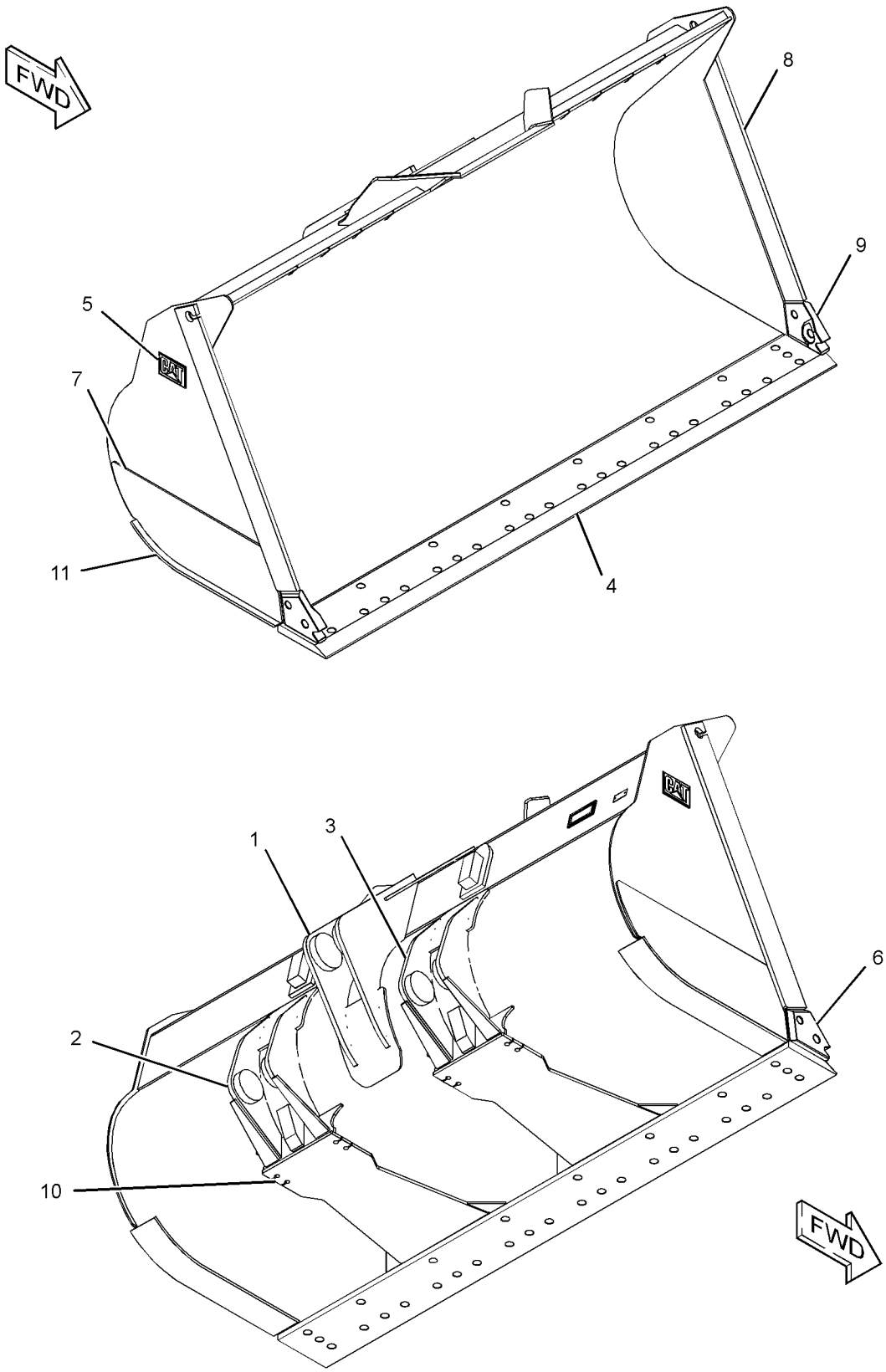

GRAPHIC #1 **<END>** g01210274

251-3050 BUCKET AS-MATERIAL HANDLING

S/N: A7G1-UP
3230-MM (127.16-IN) WIDE X 4.8-CU M (6.3-CU YD)
PART OF 251-3049 BUCKET GP-MATERIAL HANDLING
AN ATTACHMENT

SMCS-6101 **i02419033**

NOTE	REF NO	GRAPHIC REF	PART NUMBER	QTY	PART NAME 1 2 3 4 5 6 (PRODUCT LEVEL)	SEE PAGE
	1	1	**248-5737**	1	HINGE AS (TILT, CENTER)	
	2	1	**248-5747**	1	HINGE AS (LIFT, LH)	
	3	1	**248-5756**	1	HINGE AS (LIFT, RH)	
	4	1	**248-0571**	1	EDGE-CUTTING	
	5	1	**2C-9259**	2	PLATE-IDENTIFICATION (CAT)	
	6	1	**248-7338**	2	PLATE-CORNER	
	7	1	**251-9261**	2	PLATE-EDGE (SIDE)	
	8	1	**251-9262**	2	PLATE-WEAR (SIDE)	
	9	1	**252-9427**	2	PLATE-BOTTOM (PADDLE)	
	10	1	**252-9428**	2	PLATE-WEAR (BOTTOM, SIDE)	

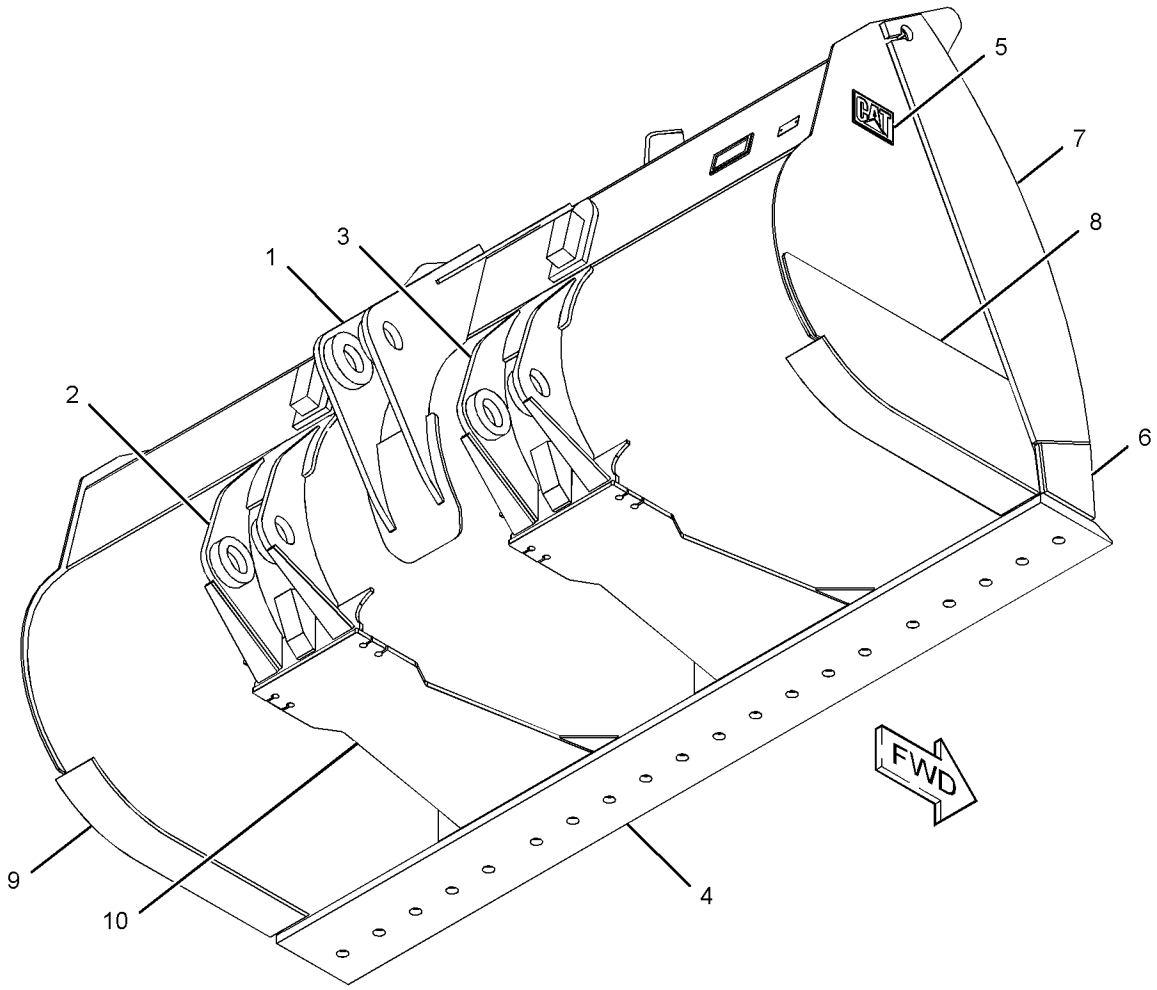

GRAPHIC #1 **<END>** g01209939

WORK TOOLS

251-3054 BUCKET AS-MATERIAL HANDLING

S/N: A7G1-UP
3294-MM (129.69-IN) WIDE X 4.5-CU M (5.89-CU YD)
PART OF 251-3053 BUCKET GP-GENERAL PURPOSE
AN ATTACHMENT

SMCS-6101 **i02419606**

NOTE	REF NO	GRAPHIC REF	PART NUMBER	QTY	PART NAME 1 2 3 4 5 6 (PRODUCT LEVEL)	SEE PAGE
	1	1	**248-5737**	1	HINGE AS (TILT, CENTER)	
	2	1	**248-5747**	1	HINGE AS (LIFT, LH)	
	3	1	**248-5756**	1	HINGE AS (LIFT, RH)	
	4	1	**149-2865**	1	EDGE-CUTTING	
	5	1	**229-7094**	8	ADAPTER-TIP (K-90, FLUSH MOUNT)	
	6	1	**2C-9259**	2	PLATE-IDENTIFICATION (CAT)	
	7	1	**249-0657**	2	PLATE-CORNER	
	8	1	**251-9262**	2	PLATE-WEAR (SIDE)	
	9	1	**251-9265**	2	PLATE-EDGE (SIDE)	
	10	1	**252-9430**	2	PLATE-WEAR (BOTTOM)	
	11	1	**252-9431**	5	PLATE-WEAR (BOTTOM)	

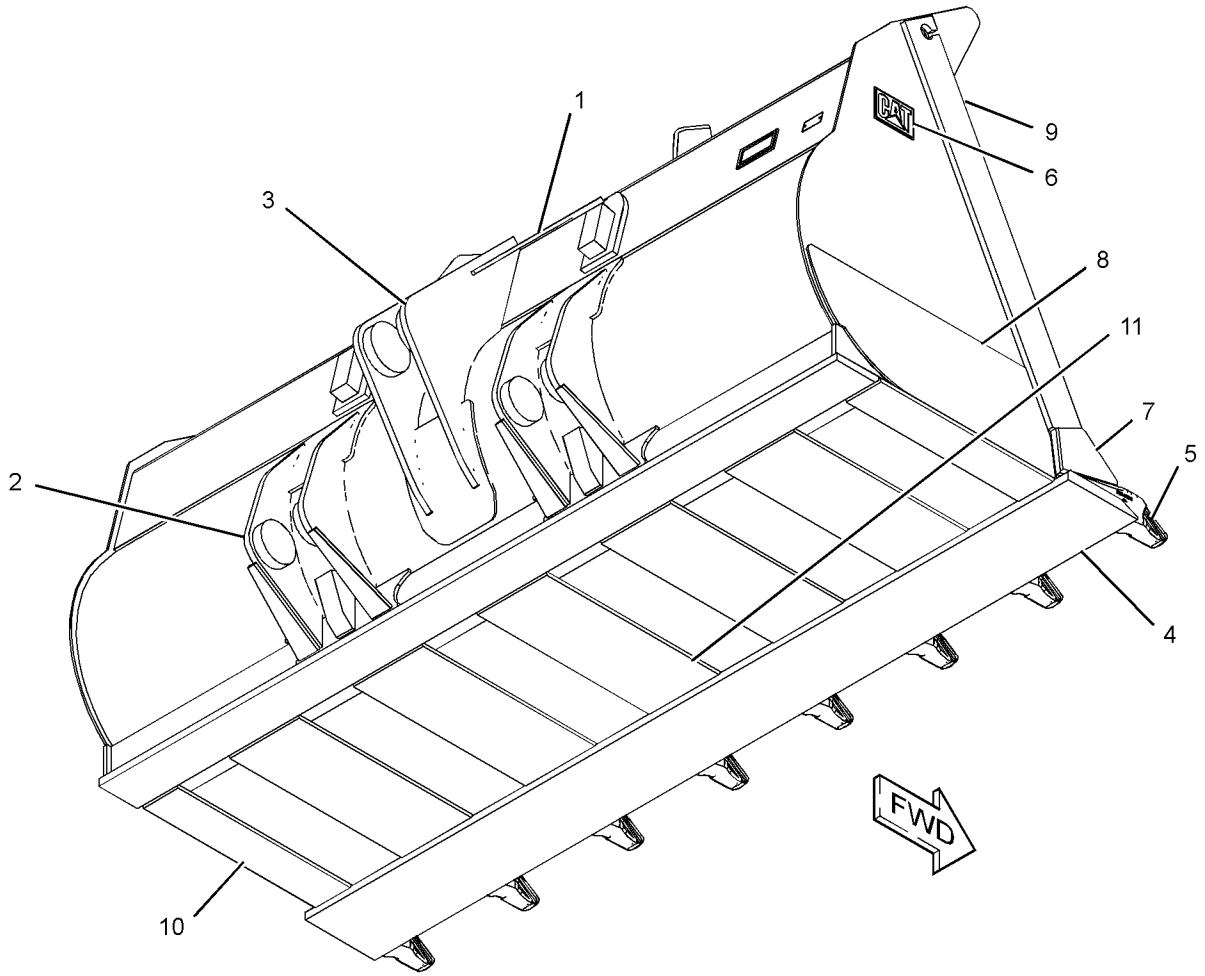

GRAPHIC #1 **<END>** g01209449

WORK TOOLS

251-3064 BUCKET AS-MATERIAL HANDLING

S/N: A7G1-UP
3201-MM (126.02-IN) WIDE X 4.5-CU M (5.89-CU YD)
PART OF 251-3063 BUCKET GP-MATERIAL HANDLING
AN ATTACHMENT

SMCS-6101 **i02419769**

NOTE	REF NO	GRAPHIC REF	PART NUMBER	QTY	PART NAME 1 2 3 4 5 6 (PRODUCT LEVEL)	SEE PAGE
	1	1	**248-5737**	1	HINGE AS (TILT, CENTER)	
	2	1	**248-5747**	1	HINGE AS (LIFT, LH)	
	3	1	**248-5756**	1	HINGE AS (LIFT, RH)	
	4	1	**7I-3015**	1	EDGE-CUTTING	
	5	1	**2C-9259**	2	PLATE-IDENTIFICATION (CAT)	
	6	1	**8E-5310**	1	CORNER-RH	
	7	1	**252-7721**	2	PLATE-WEAR (SIDE)	
	8	1	**252-7723**	2	PLATE-WEAR	
	9	1	**8E-5311**	1	CORNER-LH	
	10	1	**252-9437**	2	PLATE-WEAR	
	11	1	**252-9438**	5	PLATE-WEAR	

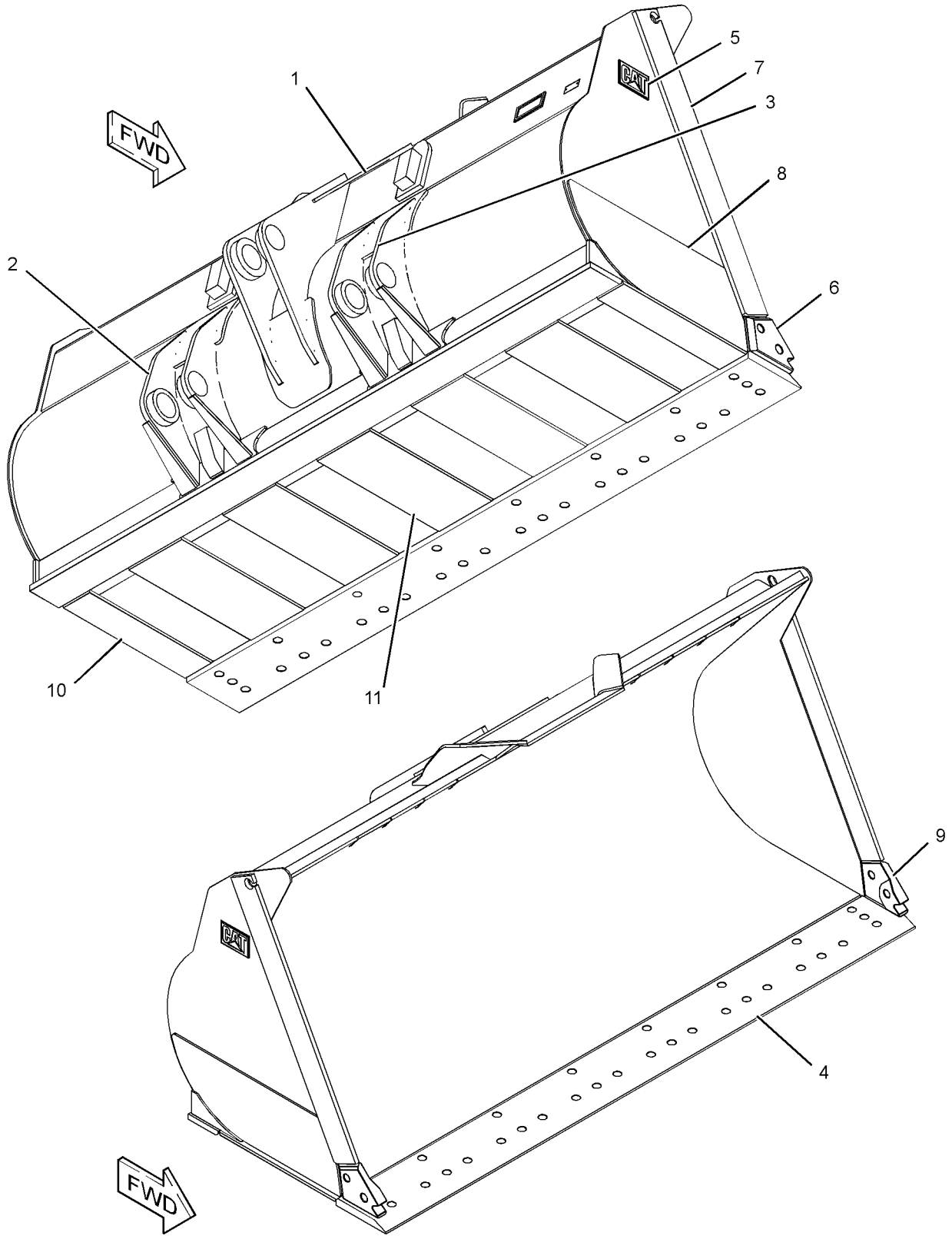

GRAPHIC #1 **<END>** g01209811

WORK TOOLS

256-3697 BUCKET AS-MATERIAL HANDLING

S/N: A7G1-UP
3230-MM (127.20-IN) WIDE X 5.0-CU M (6.59-CU YD)
PART OF 256-3695 BUCKET GP-MATERIAL HANDLING
AN ATTACHMENT

SMCS-6101 **i02422307**

NOTE	REF NO	GRAPHIC REF	PART NUMBER	QTY	PART NAME 1 2 3 4 5 6 (PRODUCT LEVEL)	SEE PAGE
	1	1	**248-5737**	1	HINGE AS (TILT, CENTER)	
	2	1	**248-5747**	1	HINGE AS (LIFT, LH)	
	3	1	**248-5756**	1	HINGE AS (LIFT, RH)	
	4	1	**248-1666**	2	PLATE	
	5	1	**248-7329**	2	PLATE-WEAR	
	6	1	**2C-9259**	2	PLATE-IDENTIFICATION (CAT)	
	7	1	**8E-5310**	1	CORNER-RH	
	8	1	**248-7341**	2	PLATE-WEAR	
	9	1	**249-0656**	2	PLATE-WEAR (SIDE)	
	10	1	**8E-5311**	1	CORNER-LH	
	11	1	**147-1469**	1	EDGE-CUTTING	

256-3697 **BUCKET AS-MATERIAL HANDLING** *(contd.)* **i02422307**

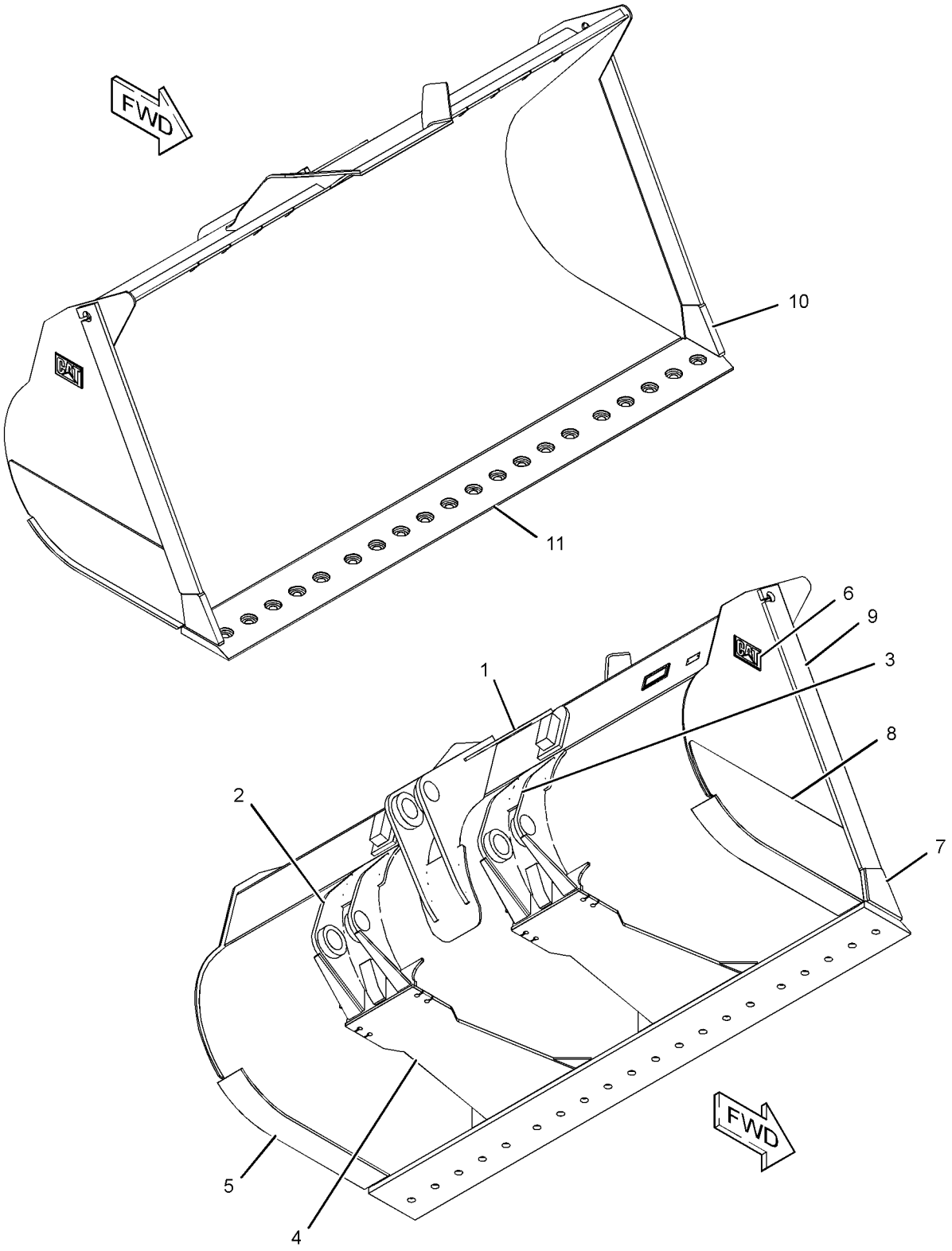

GRAPHIC #1 **<END>** g01209950

146-8080 BUCKET AS-PENETRATION

S/N: A7G1-UP
4.8 CU M (6.25 CU YD)
PART OF 146-8070 BUCKET GP-PENETRATION
AN ATTACHMENT

SMCS-6131 **i01130019**

NOTE	REF NO	GRAPHIC REF	PART NUMBER	QTY	PART NAME 1 2 3 4 5 6 (PRODUCT LEVEL)	SEE PAGE
	1	1	**146-8187**	1	HINGE AS (LIFT-LH-OUTER)	
	2	1	**146-8184**	1	HINGE AS (LIFT-LH-INNER)	
	3	1	**146-8180**	1	HINGE AS (TILT-LH)	
	4	1	**146-8179**	1	HINGE AS (TILT-RH)	
	5	1	**146-8183**	1	HINGE AS (LIFT-RH-INNER)	
	6	1	**146-8186**	1	HINGE AS (LIFT-RH-OUTER)	
	7	1	**149-2865**	1	EDGE-CUTTING	
	9	1	**1U-1354**	8	ADAPTER	
	10	1	**146-8161**	2	PLATE-WEAR	
	11	1	**146-8166**	5	PLATE-WEAR	
	12	1	**146-8107**	2	BAR	
	13	1	**146-8112**	2	PLATE-WEAR	
	14	1	**147-1470**	2	CORNER	

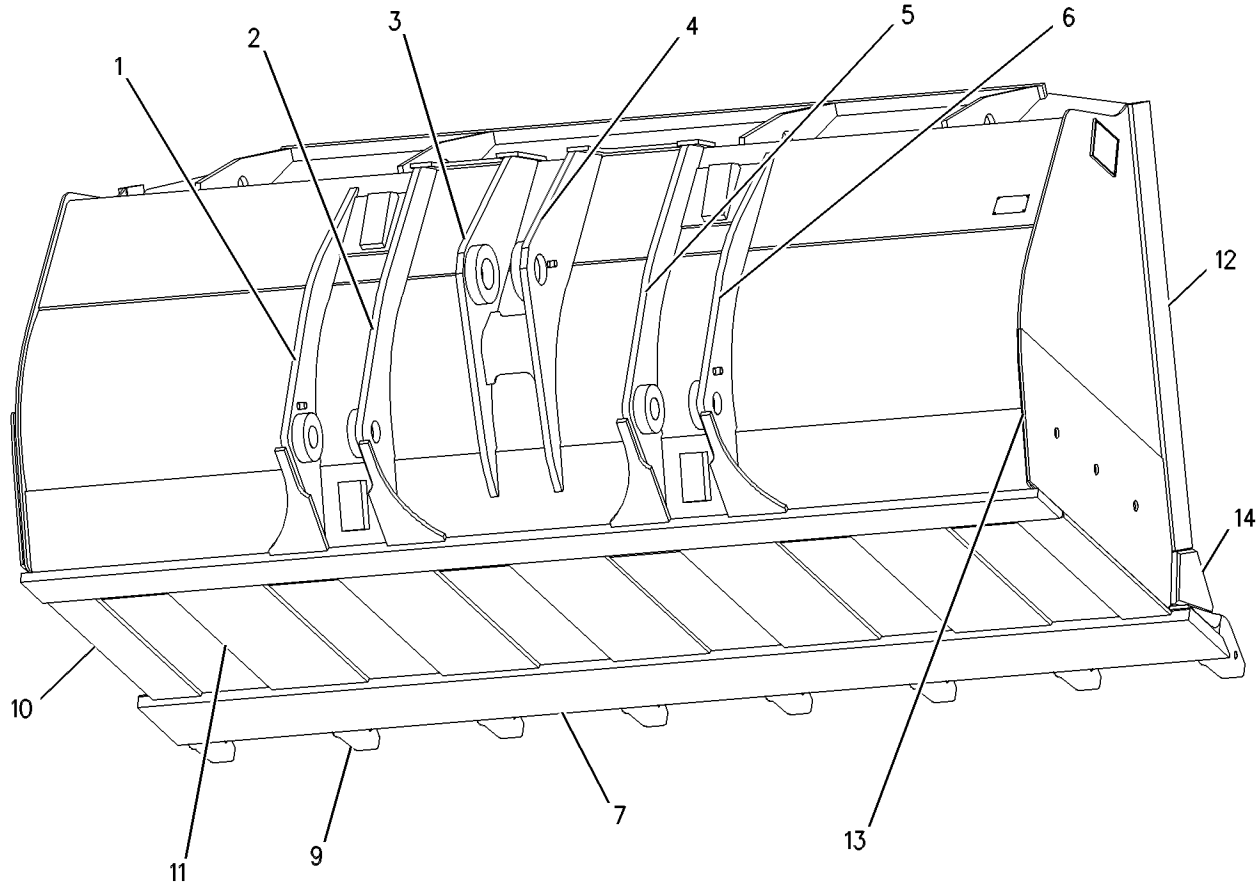

GRAPHIC #1 **<END>** g00499772

WORK TOOLS

148-6906 BUCKET AS-ROCK

S/N: A7G1-UP
3.5 CU M (4.5 CU YD)
PART OF 148-6898 BUCKET GP-ROCK
AN ATTACHMENT

SMCS-6102 **i01429323**

NOTE	REF NO	GRAPHIC REF	PART NUMBER	QTY	PART NAME 1 2 3 4 5 6 (PRODUCT LEVEL)	SEE PAGE
	1	1	**148-6953**	1	HINGE AS (LIFT, OUTER, LH) (LIFT-LH-OUTER)	
	2	1	**148-6950**	1	HINGE AS (LIFT, INNER, LH) (LIFT-LH-INNER)	
	3	1	**148-6947**	1	HINGE AS (TILT, LH) (TILT-LH)	
	4	1	**148-6946**	1	HINGE AS (TILT, RH) (TILT-RH)	
	5	1	**148-6949**	1	HINGE AS (LIFT, INNER, RH) (LIFT-RH-INNER)	
	6	1	**148-6952**	1	HINGE AS (LIFT, OUTER, RH) (LIFT-RH-OUTER)	
	7	1	**148-6928**	2	BAR	
	8	1	**148-6936**	2	PLATE	
	9	1	**154-1604**	1	EDGE-CUTTING	

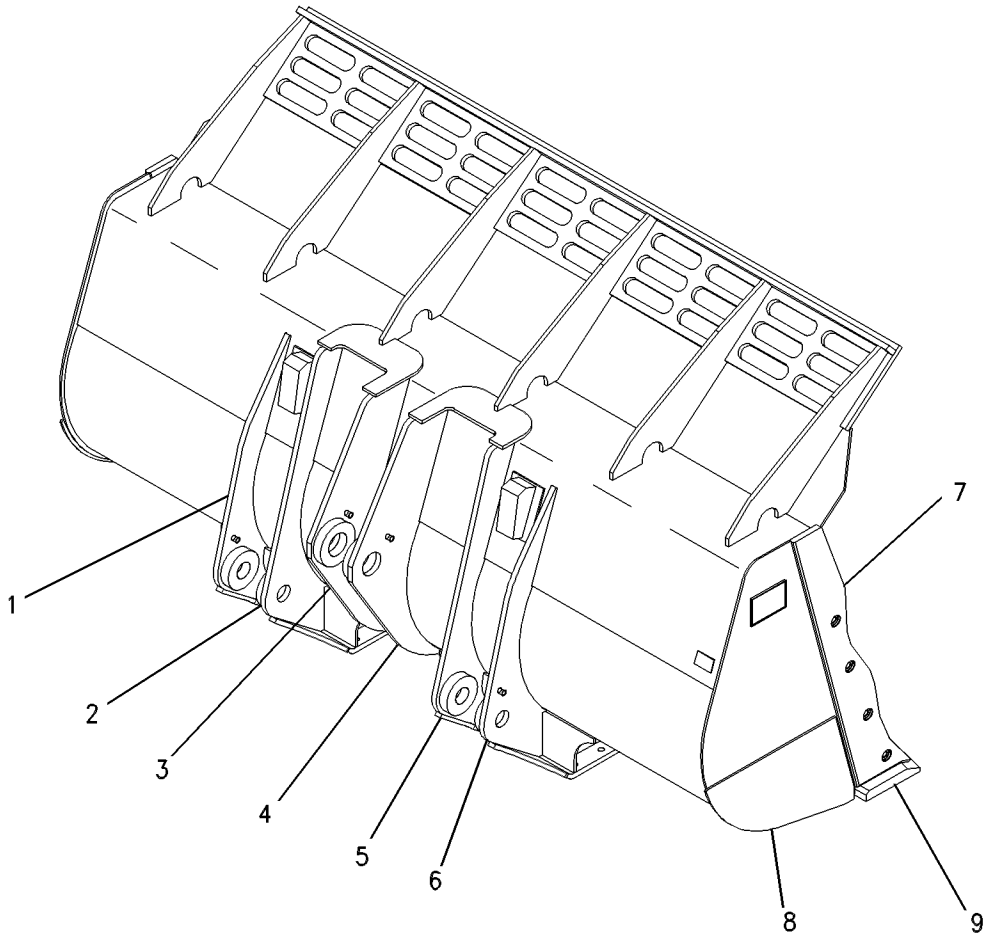

GRAPHIC #1 **<END>** g00470927

WORK TOOLS

148-6910 BUCKET AS-ROCK

S/N: A7G1-UP
4.0 CU M (5.2 CU YD)
PART OF 148-6902 BUCKET GP-ROCK
AN ATTACHMENT

SMCS-6102 **i01990563**

NOTE	REF NO	GRAPHIC REF	PART NUMBER	QTY	PART NAME 1 2 3 4 5 6 (PRODUCT LEVEL)	SEE PAGE
	1	1	**148-6946**	1	HINGE AS (TILT, RH)	
	2	1	**148-6947**	1	HINGE AS (TILT, LH)	
	3	1	**148-6949**	1	HINGE AS (LIFT, INNER, RH)	
	4	1	**148-6950**	1	HINGE AS (LIFT, INNER, LH)	
	5	1	**148-6952**	1	HINGE AS (LIFT, OUTER, RH)	
	6	1	**148-6953**	1	HINGE AS (LIFT, OUTER, LH)	
	7	1	**154-1604**	1	EDGE-CUTTING	
	8	1	**148-6934**	2	BAR	
	9	1	**148-6937**	2	PLATE	

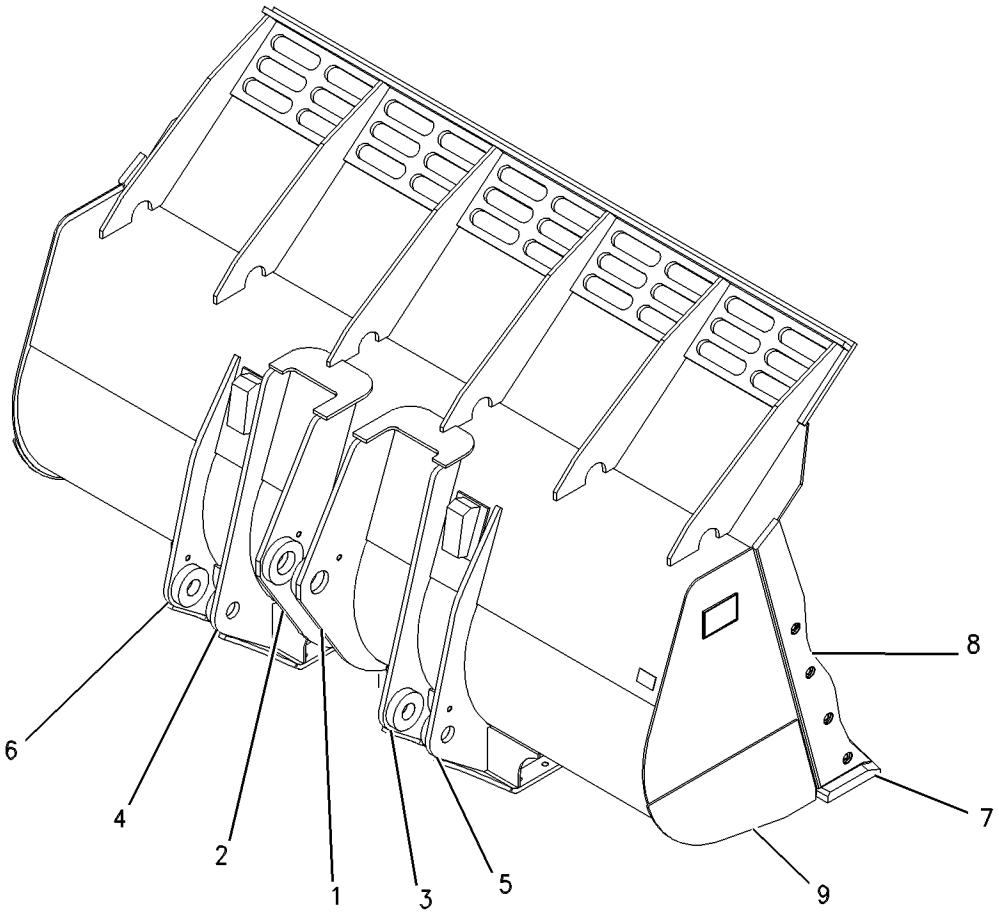

GRAPHIC #1 **<END>** g00370018

WORK TOOLS

248-0564 BUCKET AS-ROCK

S/N: A7G1-UP
4.8-CU M (6.3-CU YD)
PART OF 248-0563 BUCKET GP-ROCK
AN ATTACHMENT

SMCS-6102 **i02420400**

NOTE	REF NO	GRAPHIC REF	PART NUMBER	QTY	PART NAME 1 2 3 4 5 6 (PRODUCT LEVEL)	SEE PAGE
	1	1	**248-5737**	1	HINGE AS (TILT, CENTER)	
	2	1	**248-5747**	1	HINGE AS (LIFT, LH)	
	3	1	**248-5756**	1	HINGE AS (LIFT, RH)	
	4	1	**248-1666**	2	PLATE	
	5	1	**248-7329**	2	PLATE-WEAR	
	6	1	**2C-9259**	2	PLATE-IDENTIFICATION (CAT)	
	7	1	**248-7341**	2	PLATE-WEAR	
	8	1	**249-0656**	2	PLATE-WEAR (SIDE)	
	9	1	**249-0657**	2	PLATE-CORNER	
	10	1	**149-2865**	1	EDGE-CUTTING	
	11	1	**229-7094**	8	ADAPTER-TIP (K-90, FLUSH MOUNT)	

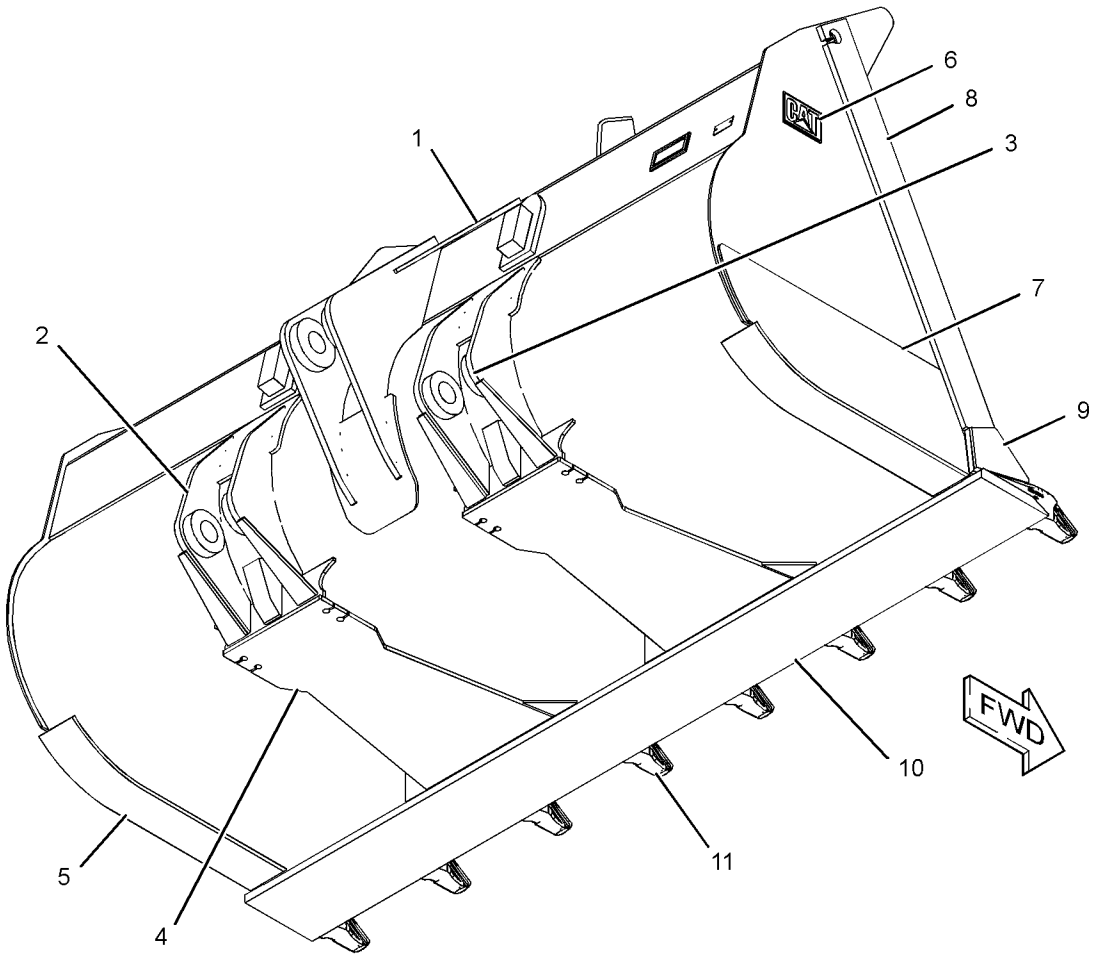

GRAPHIC #1 **<END>** g01209555

248-0566 BUCKET AS-ROCK

S/N: A7G1-UP
5.0-CU M (6.5-CU YD)
PART OF 248-0565 BUCKET GP-ROCK
AN ATTACHMENT

SMCS-6102 **i02249425**

NOTE	REF NO	GRAPHIC REF	PART NUMBER	QTY	PART NAME 1 2 3 4 5 6 (PRODUCT LEVEL)	SEE PAGE
	1	1	**248-5737**	1	HINGE AS (TILT, CENTER)	
	2	1	**248-5747**	1	HINGE AS (LIFT, LH)	
	3	1	**248-5756**	1	HINGE AS (LIFT, RH)	
	4	1	**248-1666**	2	PLATE	
	5	1	**248-7329**	2	PLATE-WEAR	
	6	1	**2C-9259**	2	PLATE-IDENTIFICATION (CAT)	
	7	1	**8E-5310**	1	CORNER-RH	
	8	1	**248-7341**	2	PLATE-WEAR	
	9	1	**249-0656**	2	PLATE-WEAR (SIDE)	
	10	1	**8E-5311**	1	CORNER-LH	
	11	1	**7I-3015**	1	EDGE-CUTTING	

248-0566 **BUCKET AS-ROCK** *(contd.)* **i02249425**

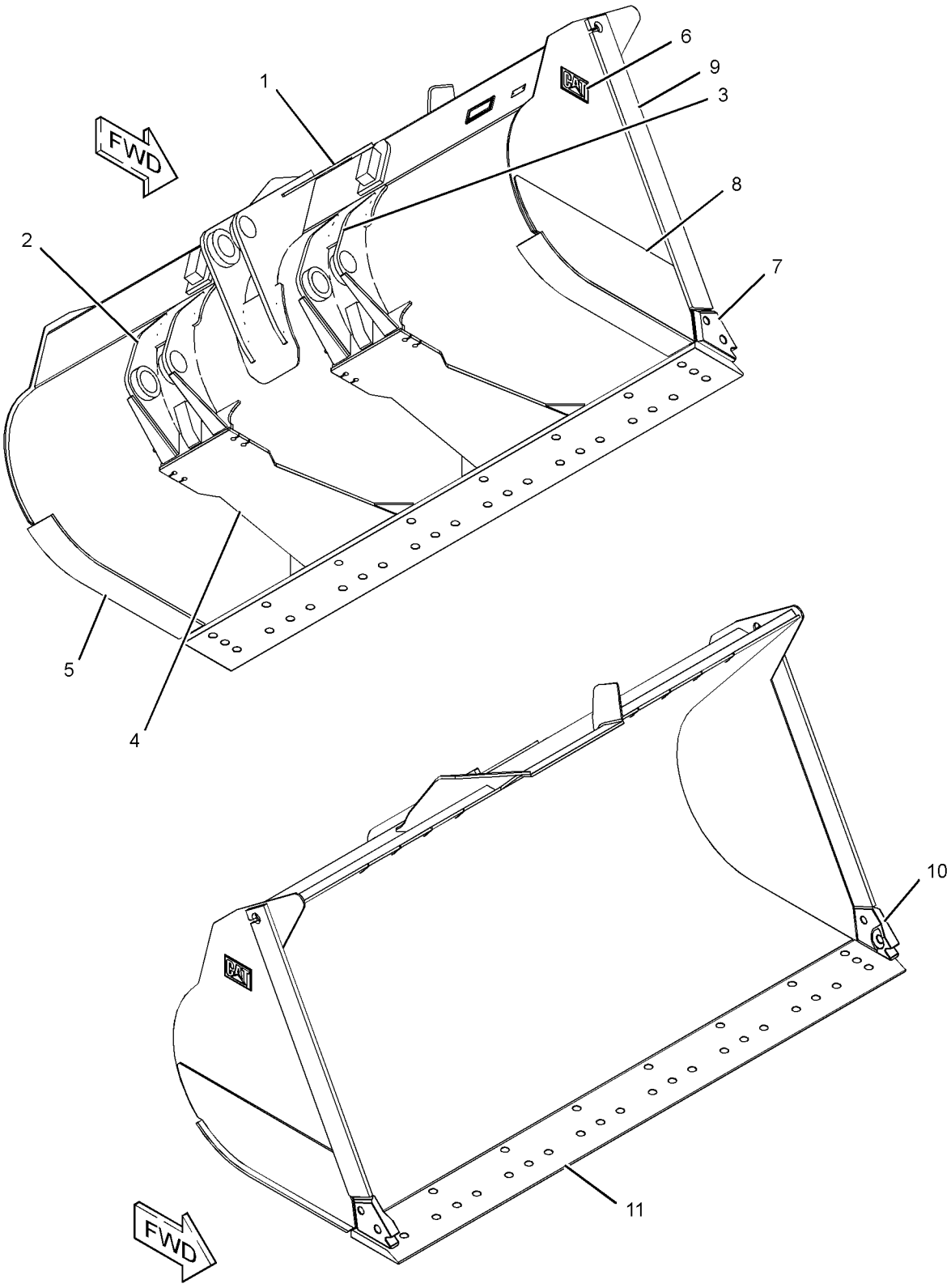

GRAPHIC #1 **<END>** g01209843

WORK TOOLS

254-4500 BUCKET AS-ROCK

S/N: A7G1-UP
3.5-CU M (4.5-CU YD)
PART OF 254-4496 BUCKET GP-ROCK
AN ATTACHMENT

SMCS-6102 **i02408457**

NOTE	REF NO	GRAPHIC REF	PART NUMBER	QTY	PART NAME 1 2 3 4 5 6 (PRODUCT LEVEL)	SEE PAGE
	1	1	**148-6946**	2	HINGE AS (TILT, RH)	
	2	1	**148-6947**	1	HINGE AS (TILT, LH)	
	3	1	**148-6949**	1	HINGE AS (LIFT, INNER, RH)	
	4	1	**148-6950**	1	HINGE AS (LIFT, INNER, LH)	
	5	1	**148-6952**	1	HINGE AS (LIFT, OUTER, RH)	
	6	1	**148-6953**	1	HINGE AS (LIFT, OUTER, LH)	
	7	1	**254-4505**	1	EDGE AS-CUTTING	
		1	**222-1094**	2	ADAPTER-TIP (K-90, 2-STRAP, CENTER)	
		1	**222-1095**	3	ADAPTER-TIP (K-90, 2-STRAP, RH)	
		1	**222-1096**	3	ADAPTER-TIP (K-90, 2-STRAP, LH)	
	8	1	*256-2303*	1	PLATE AS (RH)	
	9	1	*256-2304*	1	PLATE AS (LH)	
					(EACH PLATE AS INCLUDES)	
		1	**2C-9259**	1	PLATE-IDENTIFICATION (CAT)	
		1	**148-6936**	1	PLATE	
		1	**256-2299**	1	BAR	

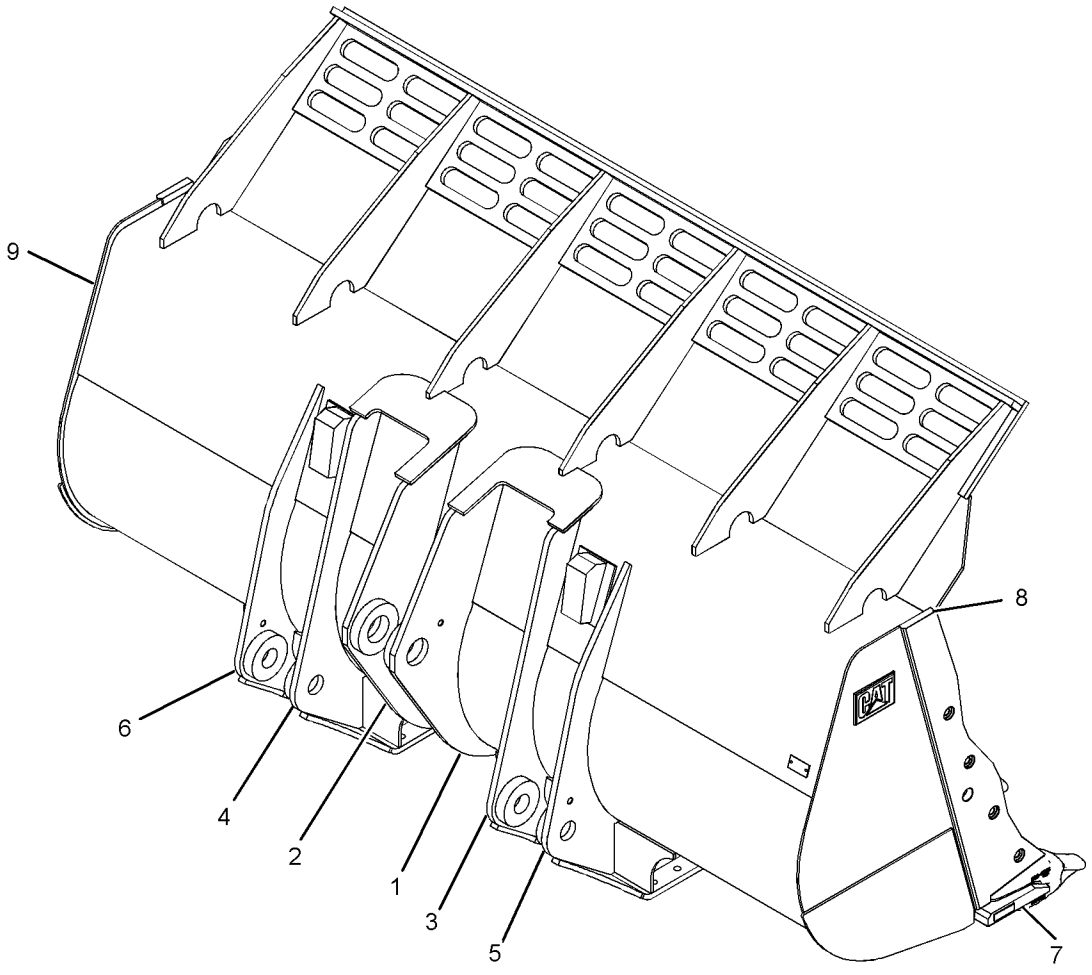

GRAPHIC #1 **<END>** g01208643

WORK TOOLS

254-4502 BUCKET AS-ROCK

S/N: A7G1-UP
4.0-CU M (5.2-CU YD)
PART OF 254-4498 BUCKET GP-ROCK
AN ATTACHMENT

SMCS-6102 **i02408472**

NOTE	REF NO	GRAPHIC REF	PART NUMBER	QTY	PART NAME 1 2 3 4 5 6 (PRODUCT LEVEL)	SEE PAGE
	1	1	**148-6946**	1	HINGE AS (TILT, RH)	
	2	1	**148-6947**	1	HINGE AS (TILT, LH)	
	3	1	**148-6949**	1	HINGE AS (LIFT, INNER, RH)	
	4	1	**148-6950**	1	HINGE AS (LIFT, INNER, LH)	
	5	1	**148-6952**	1	HINGE AS (LIFT, OUTER, RH)	
	6	1	**148-6953**	1	HINGE AS (LIFT, OUTER, LH)	
	7	1	**254-4505**	1	EDGE AS-CUTTING	
	7A	1	**222-1094**	2	ADAPTER-TIP (K-90, 2-STRAP, CENTER)	
	7B	1	**222-1095**	3	ADAPTER-TIP (K-90, 2-STRAP, RH)	
	7C	1	**222-1096**	3	ADAPTER-TIP (K-90, 2-STRAP, LH)	
	8	1	*256-2305*	1	PLATE AS	
	9	1	*256-2306*	1	PLATE AS	
					(EACH PLATE AS INCLUDES)	
		1	**2C-9259**	1	PLATE-IDENTIFICATION (CAT)	
		1	**148-6937**	1	PLATE	
		1	**256-2300**	1	BAR	

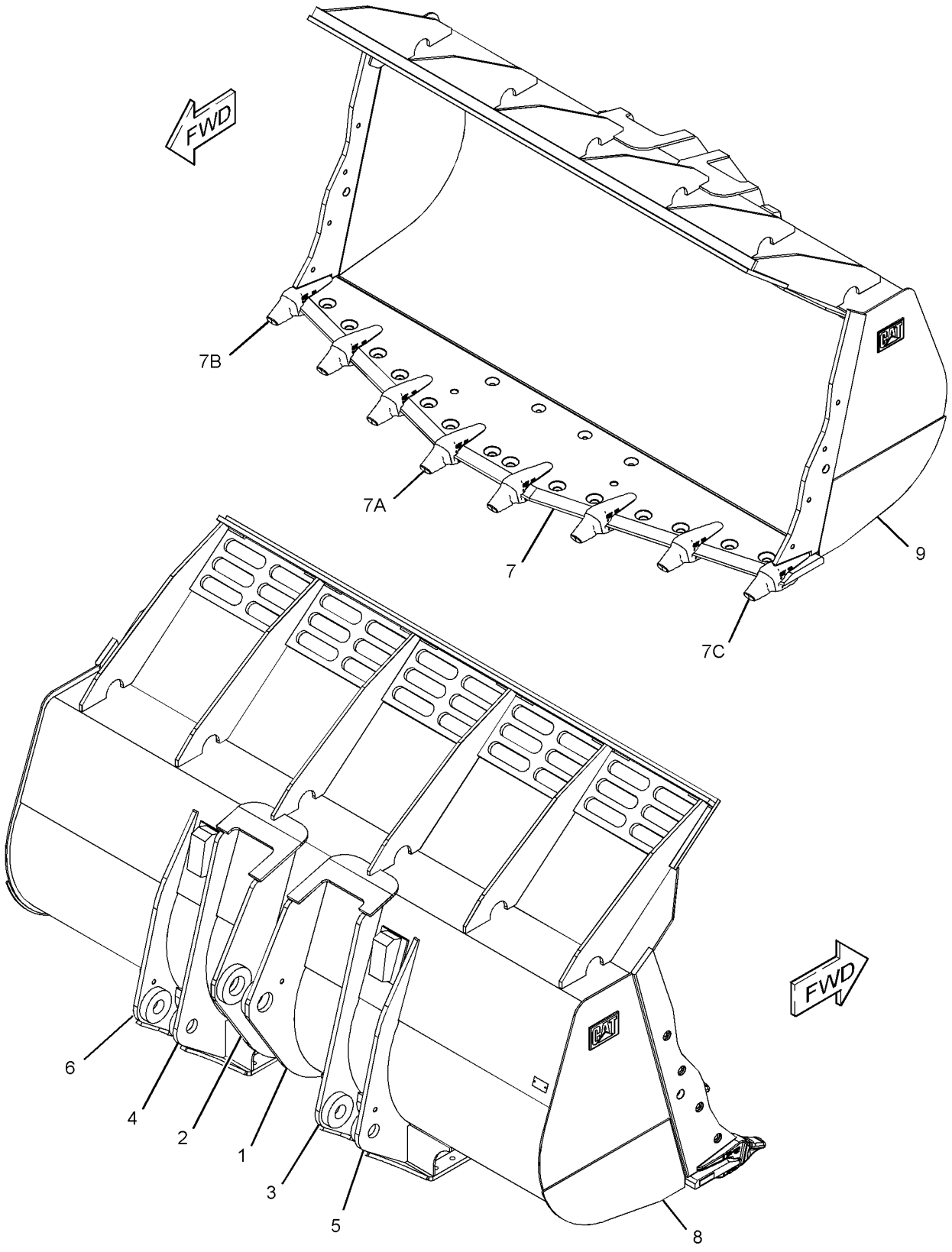

GRAPHIC #1 **<END>** g01208607

WORK TOOLS

269-0134 BUCKET AS-ROCK—HEAVY-DUTY

S/N: A7G1-UP
3350-MM (131.89-IN) WIDE X 4.1-CU M (5.36-CU YD)
PART OF 269-0133 BUCKET GP-ROCK
AN ATTACHMENT

SMCS-6102 **i02416249**

NOTE	REF NO	GRAPHIC REF	PART NUMBER	QTY	PART NAME 1 2 3 4 5 6 (PRODUCT LEVEL)	SEE PAGE
	2	1	**148-6946**	1	HINGE AS (TILT, RH)	
	3	1	**148-6947**	1	HINGE AS (TILT, LH)	
	4	1	**148-6949**	1	HINGE AS (LIFT, INNER, RH)	
	5	1	**148-6950**	1	HINGE AS (LIFT, INNER, LH)	
	6	1	**148-6952**	1	HINGE AS (LIFT, OUTER, RH)	
	7	1	**148-6953**	1	HINGE AS (LIFT, OUTER, LH)	
	8	1	**2C-9259**	2	PLATE-IDENTIFICATION (CAT)	
	9	1	**153-2655**	2	BAR	
	10	1	**153-2656**	2	PLATE	
	11	1	**153-2659**	2	PLATE	
	12	1	**153-2661**	2	PLATE-WEAR	
Y	13	1	**270-4122**	1	EDGE AS-CUTTING	745
	14	1	**270-8867**	1	PLATE	
	15	1	**271-3633**	3	PLATE-WEAR	

Y-SEPARATE ILLUSTRATION

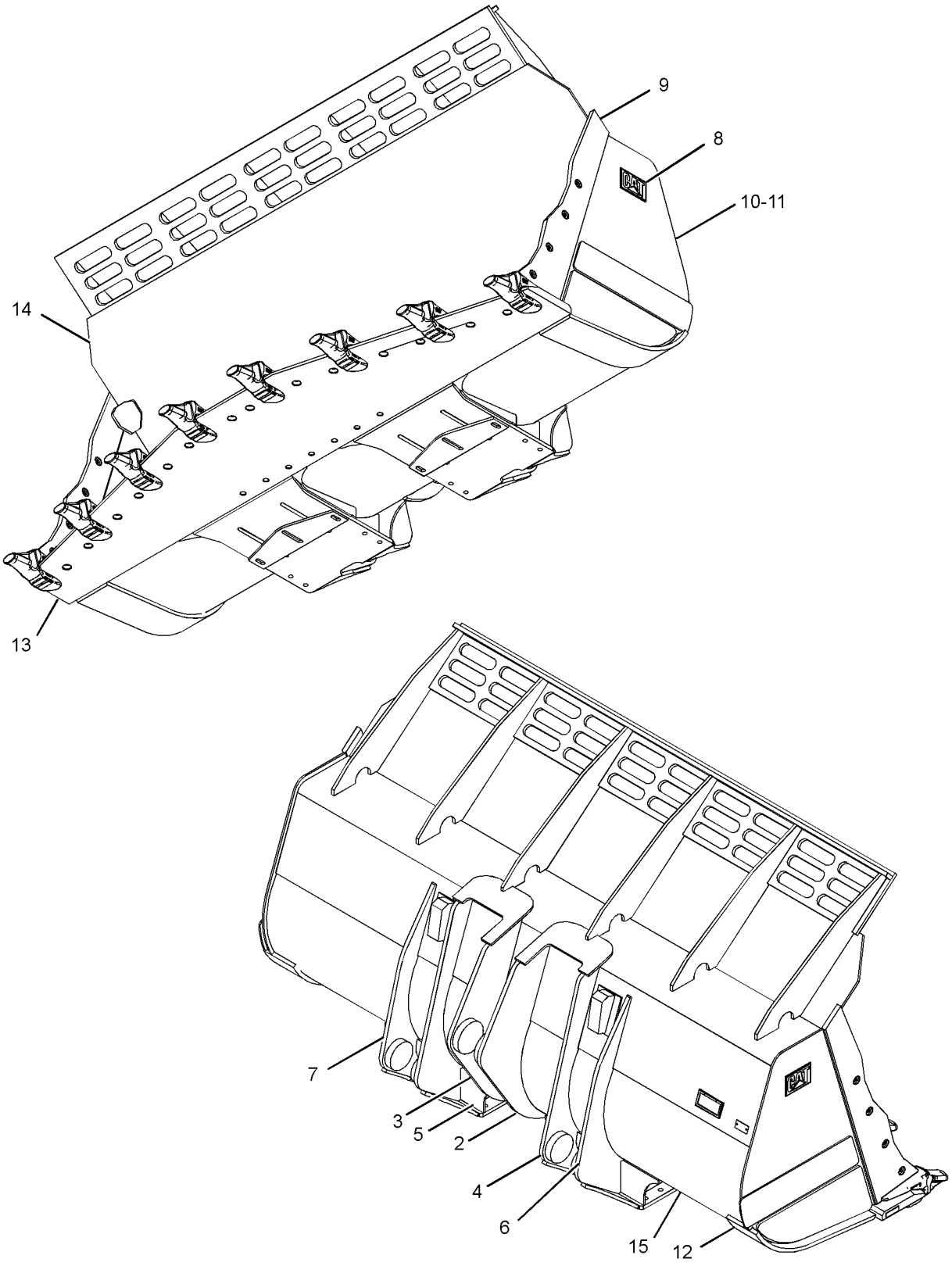

GRAPHIC #1 **<END>** g01210398

WORK TOOLS

247-4000 BUCKET AS-SLAG

S/N: A7G1-UP
PART OF 247-3999 BUCKET GP-SLAG
AN ATTACHMENT

SMCS-6110 **i02418701**

NOTE	REF NO	GRAPHIC REF	PART NUMBER	QTY	PART NAME 1 2 3 4 5 6 (PRODUCT LEVEL)	SEE PAGE
	1	1	**243-6342**	1	EDGE AS-CUTTING	
	1A	1	**114-0464**	7	ADAPTER	
	2	1	**243-6359**	2	PLATE-WEAR	
	3	1	**247-5855**	2	PLATE-WEAR	
	4	1	**247-5858**	2	PLATE-WEAR	
	5	1	**248-5805**	1	HINGE AS (TILT, RH)	
	6	1	**248-5806**	1	HINGE AS (TILT, LH)	
	7	1	**2C-9259**	2	PLATE-IDENTIFICATION (CAT)	
	8	1	**243-6386**	2	PLATE	
	9	1	**247-5868**	2	PLATE	
	10	1	**247-6728**	1	HINGE AS (LIFT, OUTER, RH)	
	11	1	**247-6729**	1	HINGE AS (LIFT, INNER, RH)	
	12	1	**247-6730**	1	HINGE AS (LIFT, INNER, LH)	
	13	1	**247-6731**	1	HINGE AS (LIFT, OUTER, LH)	
	14	1	**248-5801**	2	PLATE-WEAR	

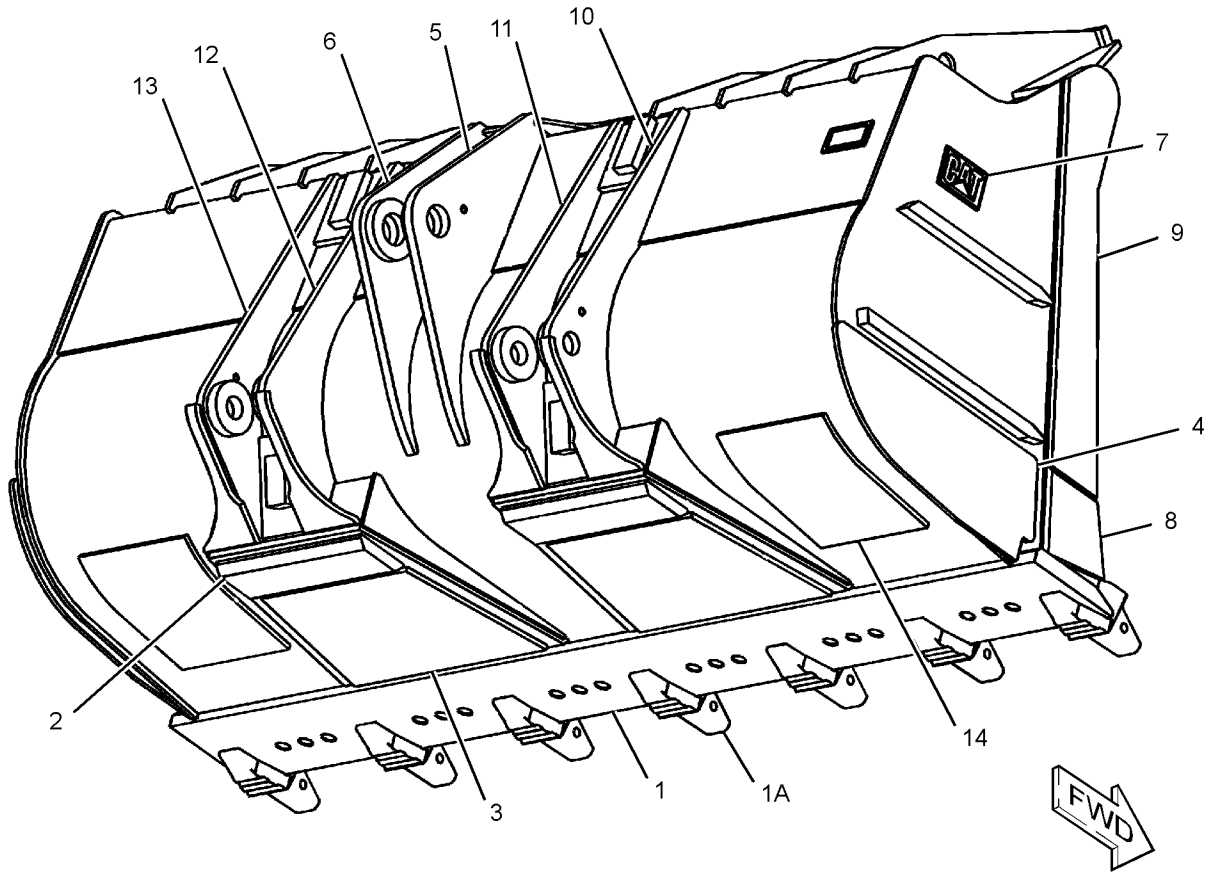

GRAPHIC #1 **<END>** g01210789

133-1667 BUCKET GP-GENERAL PURPOSE

S/N: A7G1-UP
3.8 CU M (5.0 CU YD)
FOR USE WITH 3G-8956—PAGE 746, 9W-0817—PAGE 747, 229-6942—PAGE 658, 254-5072—PAGE 768, 254-5073—PAGE 767. CANNOT BE USED WITH 140-6824—PAGE 749, 100-6669—PAGE 748, 134-2959—PAGE 748, 100-6667—PAGE 747, 100-6665—PAGE 747
AN ATTACHMENT

SMCS-6101 **i01343366**

NOTE	REF NO	GRAPHIC REF	PART NUMBER	QTY	PART NAME 1 2 3 4 5 6 (PRODUCT LEVEL)	SEE PAGE
Y	1	1	**133-1676**	1	BUCKET AS-GENERAL PURPOSE	659
Y	2	1	*161-9131*	1	PLATE GP-WEAR	764

Y-SEPARATE ILLUSTRATION

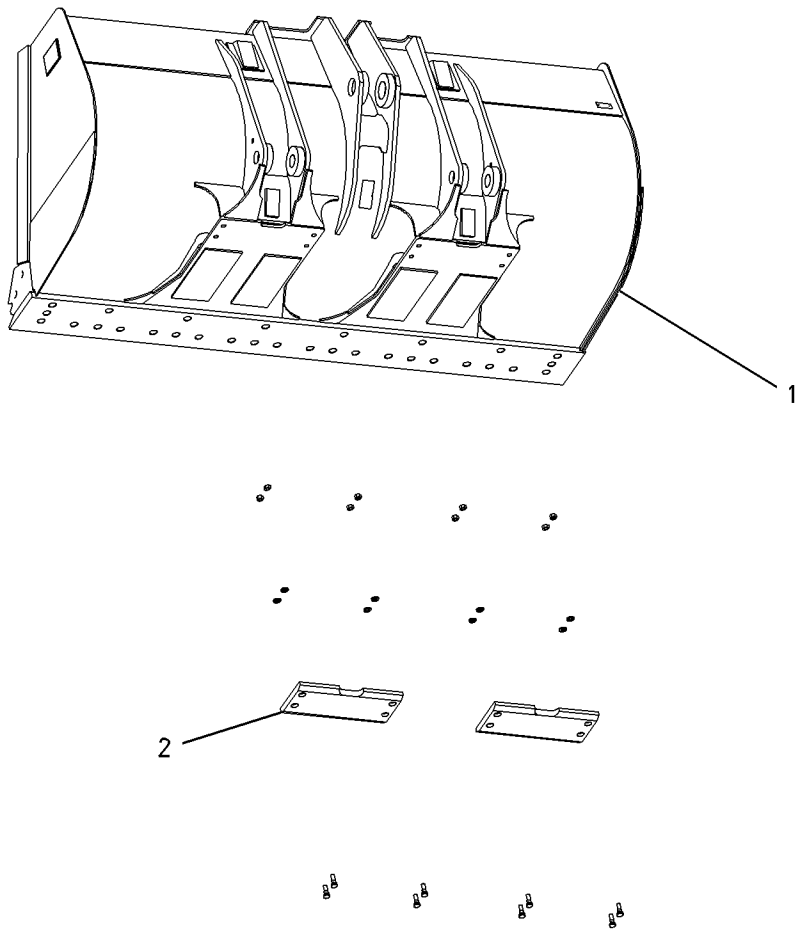

GRAPHIC #1 **<END>** g00689496

WORK TOOLS

133-1671 BUCKET GP-GENERAL PURPOSE

S/N: A7G1-UP
4.0 CU M (5.25 CU YD)
FOR USE WITH 3G-8956—PAGE 746, 9W-0817—PAGE 747
AN ATTACHMENT

SMCS-6101 **i01343534**

NOTE	REF NO	GRAPHIC REF	PART NUMBER	QTY	PART NAME 1 2 3 4 5 6 (PRODUCT LEVEL)	SEE PAGE
Y	1	1	**133-1681**	1	BUCKET AS-GENERAL PURPOSE	660
Y	2	1	*161-9131*	1	PLATE GP-WEAR	764

Y-SEPARATE ILLUSTRATION

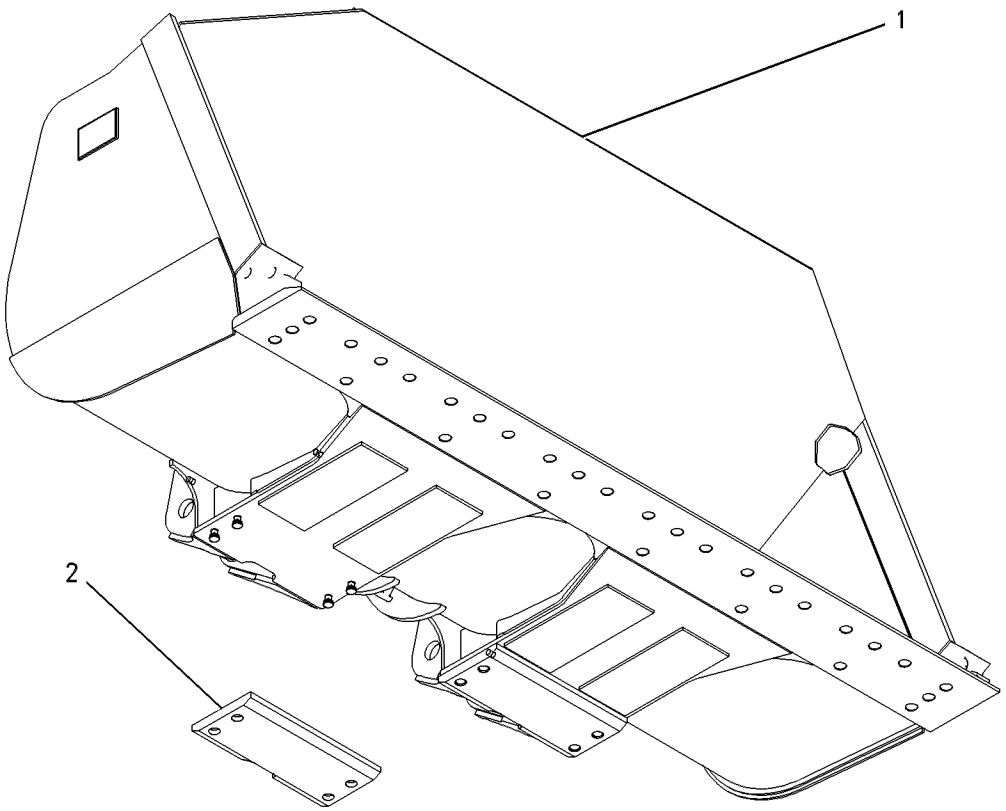

GRAPHIC #1 **<END>** g00584629

133-1693 BUCKET GP-GENERAL PURPOSE

S/N: A7G1-UP
4.3-CU M (5.5-CU YD)
FOR USE WITH 100-6669—PAGE 748, 100-6667—PAGE 747. CANNOT BE USED WITH 3G-8956—PAGE 746, 9W-0817—PAGE 747
AN ATTACHMENT

SMCS-6101 **i02393872**

NOTE	REF NO	GRAPHIC REF	PART NUMBER	QTY	PART NAME 1 2 3 4 5 6 (PRODUCT LEVEL)	SEE PAGE
Y	1	1	**133-1700**	1	BUCKET AS-GENERAL PURPOSE	661
Y	2	1	*161-9131*	1	PLATE GP-WEAR	764

Y-SEPARATE ILLUSTRATION

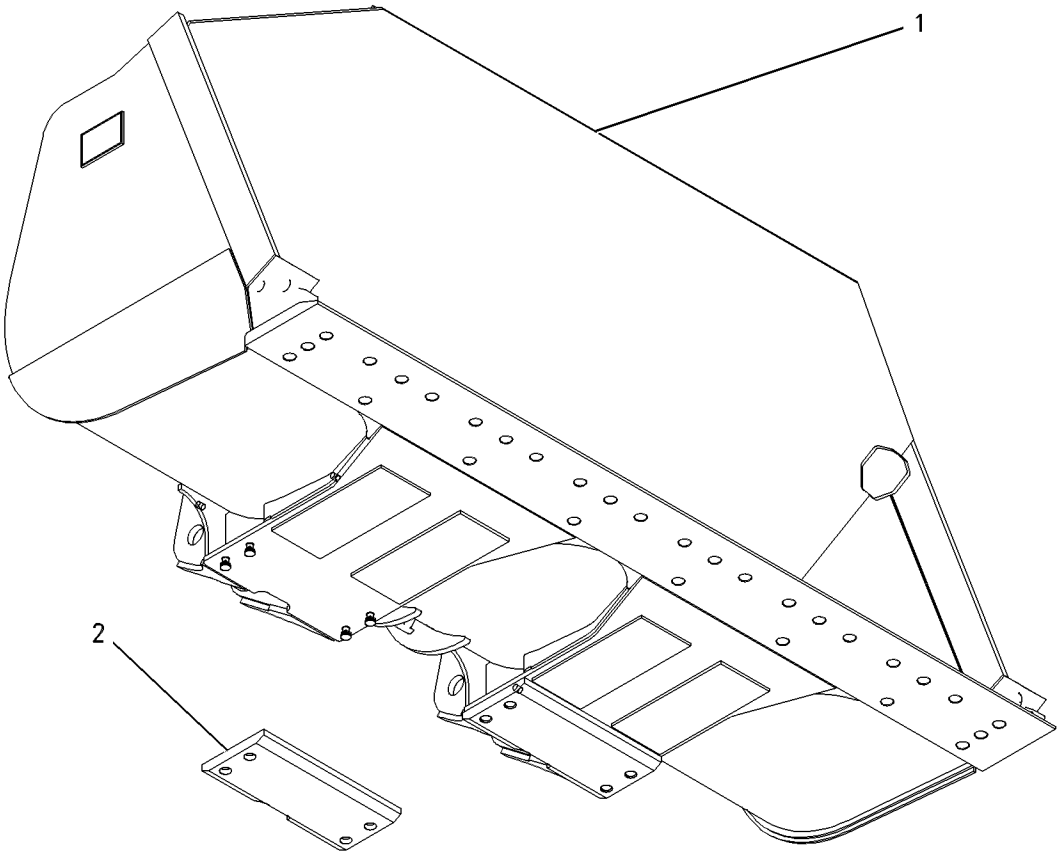

GRAPHIC #1 **<END>** g00584631

WORK TOOLS

213-1176 BUCKET GP-GENERAL PURPOSE

S/N: A7G1-UP
4.5 CU M (5.75 CU YD)
FOR USE WITH 100-6669—PAGE 748, 100-6667—PAGE 747, 229-6942—PAGE 658, 254-5072—PAGE 768, 254-5073—PAGE 767. CANNOT BE USED WITH 3G-8956—PAGE 746, 140-6824—PAGE 749, 134-2959—PAGE 748, 100-6665—PAGE 747
AN ATTACHMENT

SMCS-6101 **i01743775**

NOTE	REF NO	GRAPHIC REF	PART NUMBER	QTY	PART NAME 1 2 3 4 5 6 (PRODUCT LEVEL)	SEE PAGE
Y	1	1	*213-1177*	1	BUCKET AS-GENERAL PURPOSE	662
Y	2	1	*161-9131*	1	PLATE GP-WEAR	764

Y-SEPARATE ILLUSTRATION

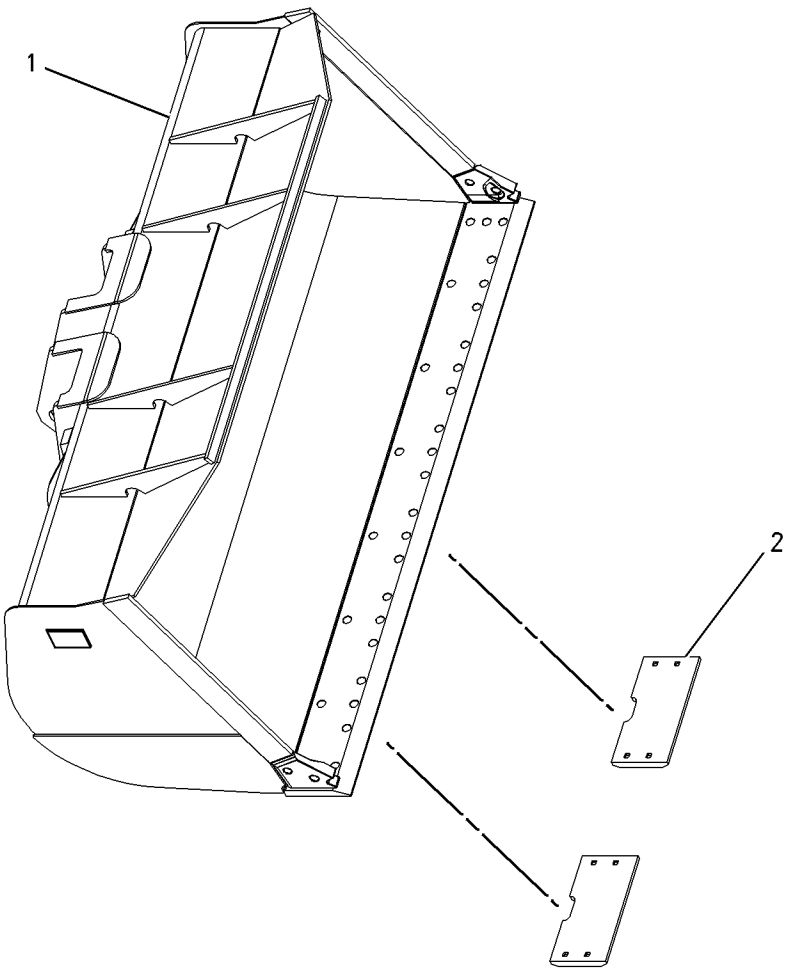

GRAPHIC #1 **<END>** g00912049

WORK TOOLS

251-3033 BUCKET GP-GENERAL PURPOSE

S/N: A7G1-UP

3294-MM WIDE (129.69-IN) WIDE X 4.8-CU M (6.3-CU YD)

FOR USE WITH 248-7325—PAGE 757. CANNOT BE USED WITH 100-6669—PAGE 748, 100-6667—PAGE 747, 229-6942—PAGE 658, 240-3118—PAGE 756, 237-8964—PAGE 656, 237-8965—PAGE 655, LIFT ARM AR-SHORT, HIGH CAPACITY

AN ATTACHMENT

SMCS-6101 **i02418769**

NOTE	REF NO	GRAPHIC REF	PART NUMBER	QTY	PART NAME 1 2 3 4 5 6 (PRODUCT LEVEL)	SEE PAGE
Y	1	1	*251-3034*	1	BUCKET GP-GENERAL PURPOSE	704
Y	2	1	*254-5072*	1	TIP GP-GENERAL PURPOSE (K-90)	768

Y-SEPARATE ILLUSTRATION

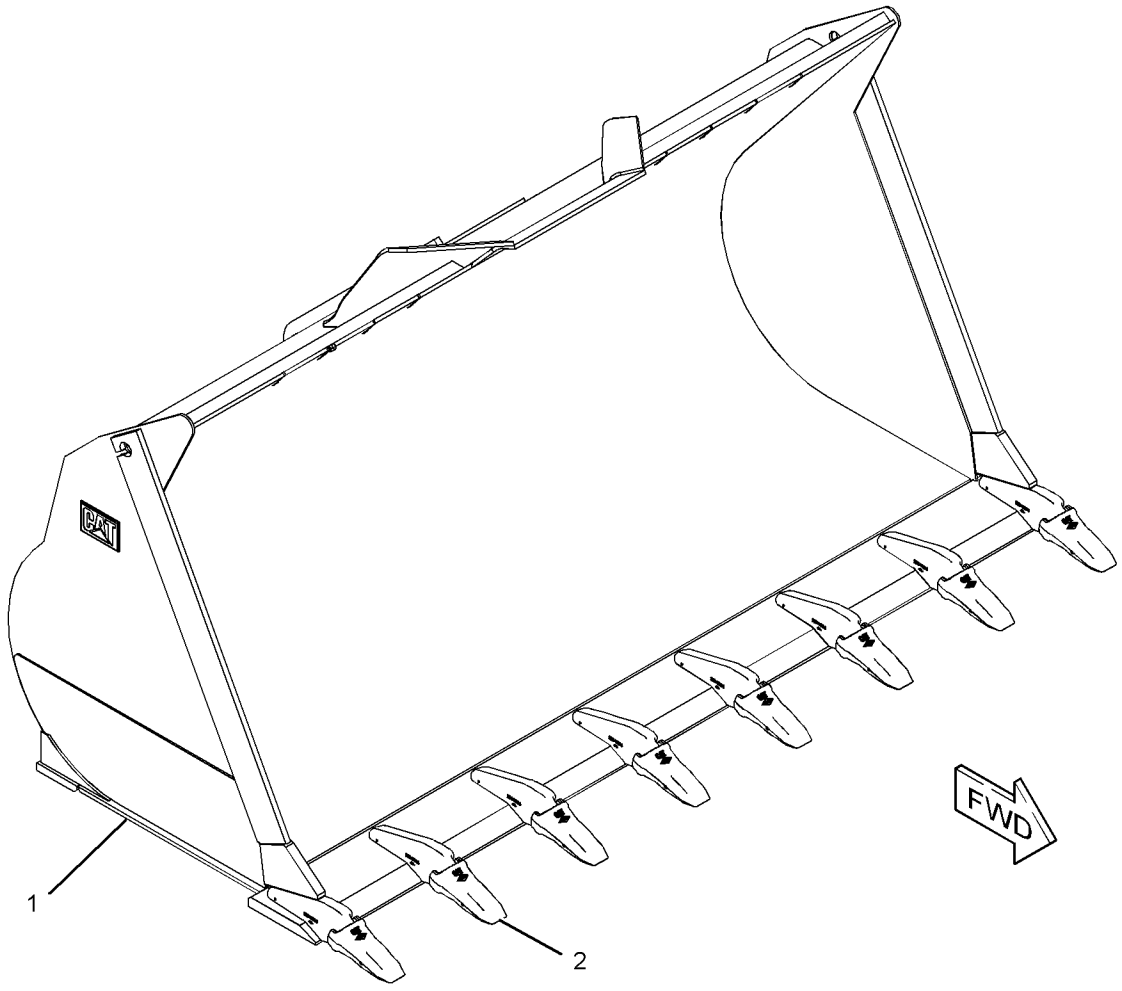

GRAPHIC #1 **<END>** g01209470

WORK TOOLS

251-3034 BUCKET GP-GENERAL PURPOSE

S/N: A7G1-UP
3294-MM (129.59-IN) X 4.8-CU M (6.3-CU YD)
PART OF 251-3033 BUCKET GP-GENERAL PURPOSE
AN ATTACHMENT

SMCS-6101 **i02418810**

NOTE	REF NO	GRAPHIC REF	PART NUMBER	QTY	PART NAME 1 2 3 4 5 6 (PRODUCT LEVEL)	SEE PAGE
	1	1	**248-5737**	1	HINGE AS (TILT, CENTER)	
	2	1	**248-5747**	1	HINGE AS (LIFT, LH)	
	3	1	**248-5756**	1	HINGE AS (LIFT, RH)	
	4	1	**2C-9259**	2	PLATE-IDENTIFICATION (CAT)	
	5	1	**248-7341**	2	PLATE-WEAR	
	6	1	**249-0656**	2	PLATE-WEAR (SIDE)	
	7	1	**149-2865**	1	EDGE-CUTTING	
	8	1	**229-7094**	8	ADAPTER-TIP (K-90, FLUSH MOUNT)	
	9	1	**249-5420**	2	PLATE-WEAR	
	10	1	**249-5421**	5	PLATE-WEAR	

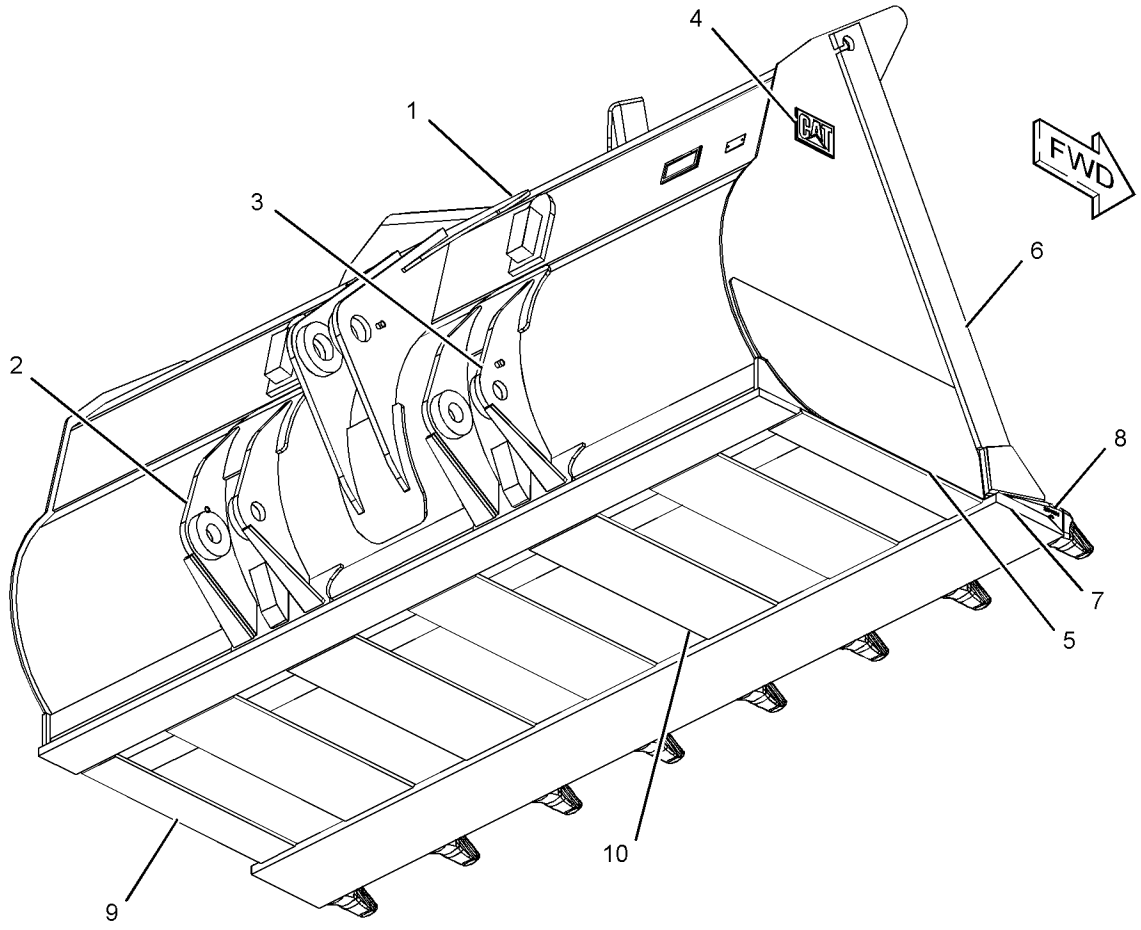

GRAPHIC #1 **<END>** g01209442

251-3035 BUCKET GP-GENERAL PURPOSE

S/N: A7G1-UP

3201-MM (126.02-IN) X 5.0-CU M (1.38-CU YD)

FOR USE WITH 248-7325—PAGE 757, 100-6669—PAGE 748, 100-6667—PAGE 747, 254-5072—PAGE 768, 254-5073—PAGE 767, 229-6942—PAGE 658, 193-0852—PAGE 741.

CANNOT BE USED WITH 240-3118—PAGE 756

AN ATTACHMENT

SMCS-6101 **i02418820**

NOTE	REF NO	GRAPHIC REF	PART NUMBER	QTY	PART NAME 1 2 3 4 5 6 (PRODUCT LEVEL)	SEE PAGE
Y	1	1	*248-0672*	1	PLATE GP-WEAR	765
Y	2	1	*251-3036*	1	BUCKET GP-GENERAL PURPOSE	706

Y-SEPARATE ILLUSTRATION

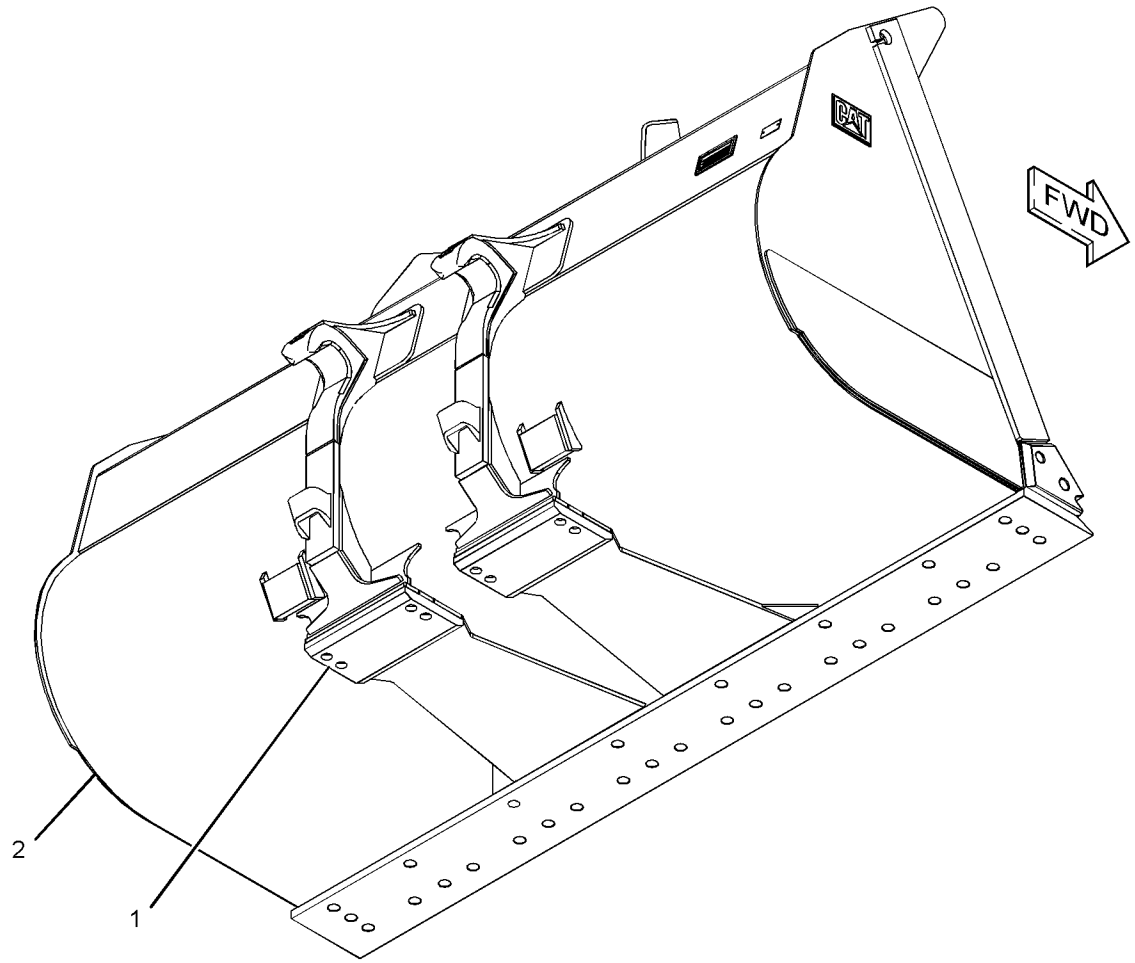

GRAPHIC #1 **<END>** g01209496

WORK TOOLS

251-3036 BUCKET GP-GENERAL PURPOSE

S/N: A7G1-UP
3201-MM (126.02-IN) WIDE X 5.0-CU M (6.539-CU YD)
PART OF 251-3035 BUCKET GP-GENERAL PURPOSE
AN ATTACHMENT

SMCS-6101 **i02418847**

NOTE	REF NO	GRAPHIC REF	PART NUMBER	QTY	PART NAME 1 2 3 4 5 6 (PRODUCT LEVEL)	SEE PAGE
	1	1	**2C-9259**	2	PLATE-IDENTIFICATION (CAT)	
	2	1	**8E-5310**	1	CORNER-RH	
	3	1	**248-7341**	2	PLATE-WEAR	
	4	1	**249-0656**	2	PLATE-WEAR (SIDE)	
	5	1	**8E-5311**	1	CORNER-LH	
	6	1	**7I-3015**	1	EDGE-CUTTING	
	7	1	**201-0115**	2	HOOK AS	
	8	1	**248-1666**	4	PLATE	
	9	1	**248-7329**	2	PLATE-WEAR	

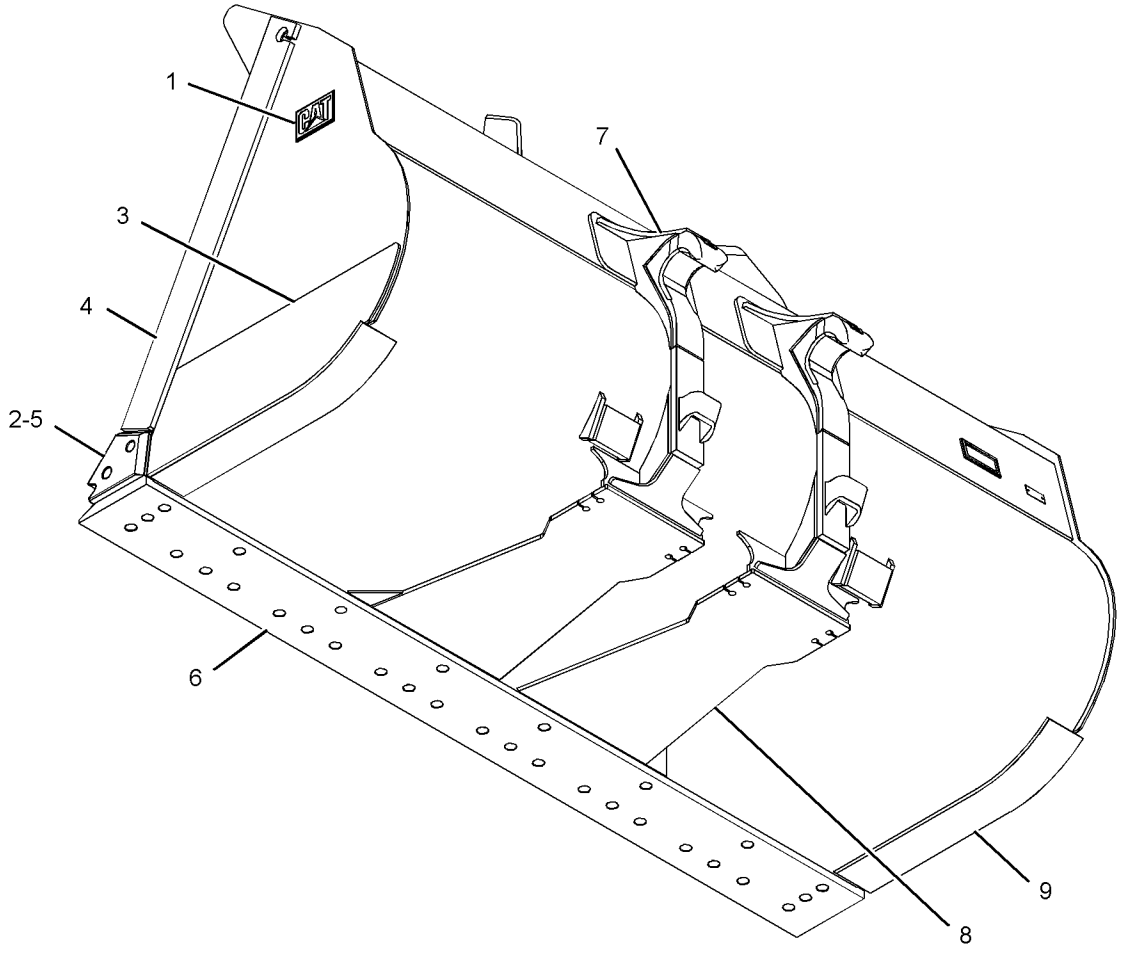

GRAPHIC #1 **<END>** g01210564

251-3037 BUCKET GP-GENERAL PURPOSE

S/N: A7G1-UP
3201-MM (126.02-IN) WIDE X 5.0 CU M (6.54-CU YD)
FOR USE WITH 248-7325—PAGE 757, 100-6669—PAGE 748, 100-6667—PAGE 747, 254-5072—PAGE 768, 254-5073—PAGE 767, 229-6942—PAGE 658, 193-8526—PAGE 742.
CANNOT BE USED WITH 240-3118—PAGE 756
AN ATTACHMENT

SMCS-6101 **i02418883**

NOTE	REF NO	GRAPHIC REF	PART NUMBER	QTY	PART NAME 1 2 3 4 5 6 (PRODUCT LEVEL)	SEE PAGE
Y	1	1	*248-0672*	1	PLATE GP-WEAR	765
Y	2	1	*251-3038*	1	BUCKET AS-GENERAL PURPOSE	663

Y-SEPARATE ILLUSTRATION

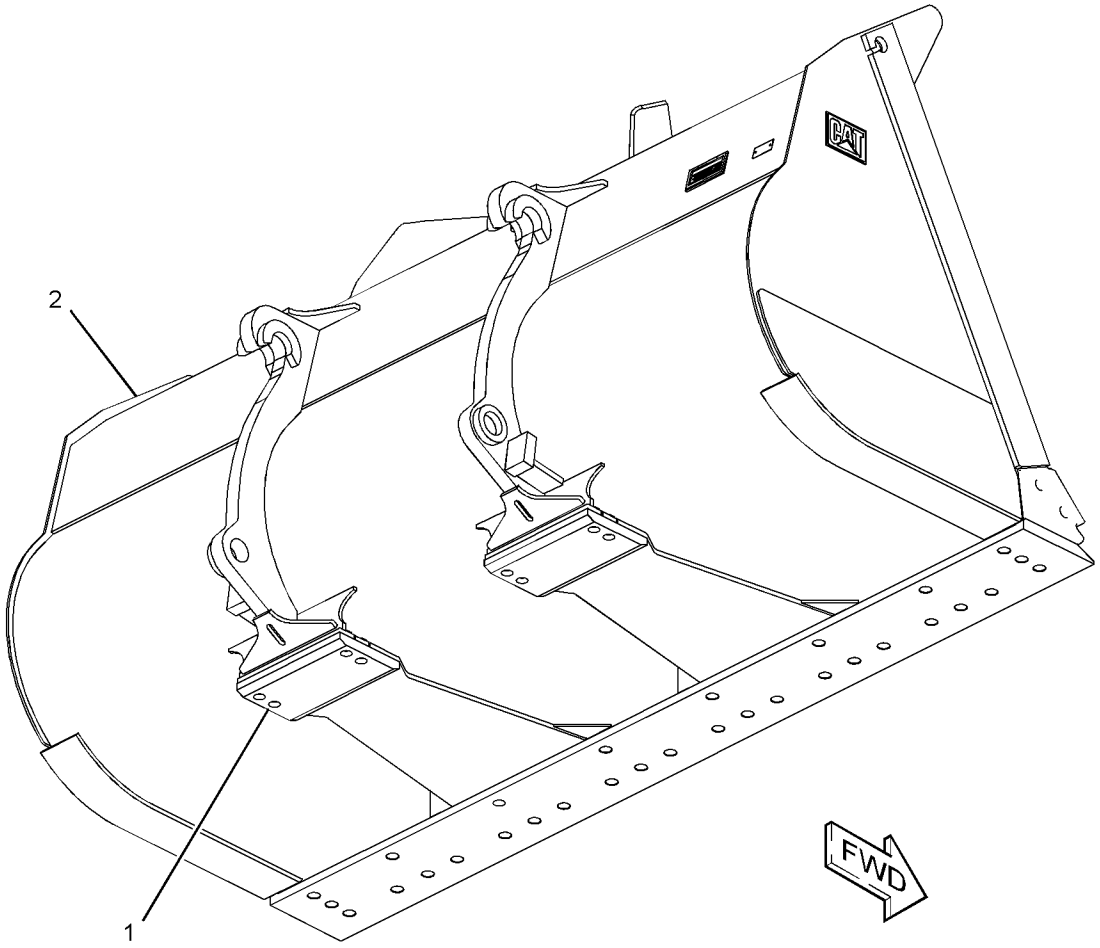

GRAPHIC #1 **<END>** g01210096

251-3043 BUCKET GP-GENERAL PURPOSE

S/N: A7G1-UP

3231-MM (127.20-IN) WIDE X 5.4-CU M (7.06-CU YD)

FOR USE WITH 248-7325—PAGE 757. CANNOT BE USED WITH 100-6669—PAGE 748, 100-6667—PAGE 747, 254-5072—PAGE 768, 254-5073—PAGE 767, 229-6942—PAGE 658, 240-3118—PAGE 756, 237-8964—PAGE 656, 237-8965—PAGE 655

AN ATTACHMENT

SMCS-6101 **i02418939**

NOTE	REF NO	GRAPHIC REF	PART NUMBER	QTY	PART NAME 1 2 3 4 5 6 (PRODUCT LEVEL)	SEE PAGE
Y	1	1	*100-6669*	1	EDGE GP-CUTTING	748
Y	2	1	*251-3044*	1	BUCKET AS-GENERAL PURPOSE	665

Y-SEPARATE ILLUSTRATION

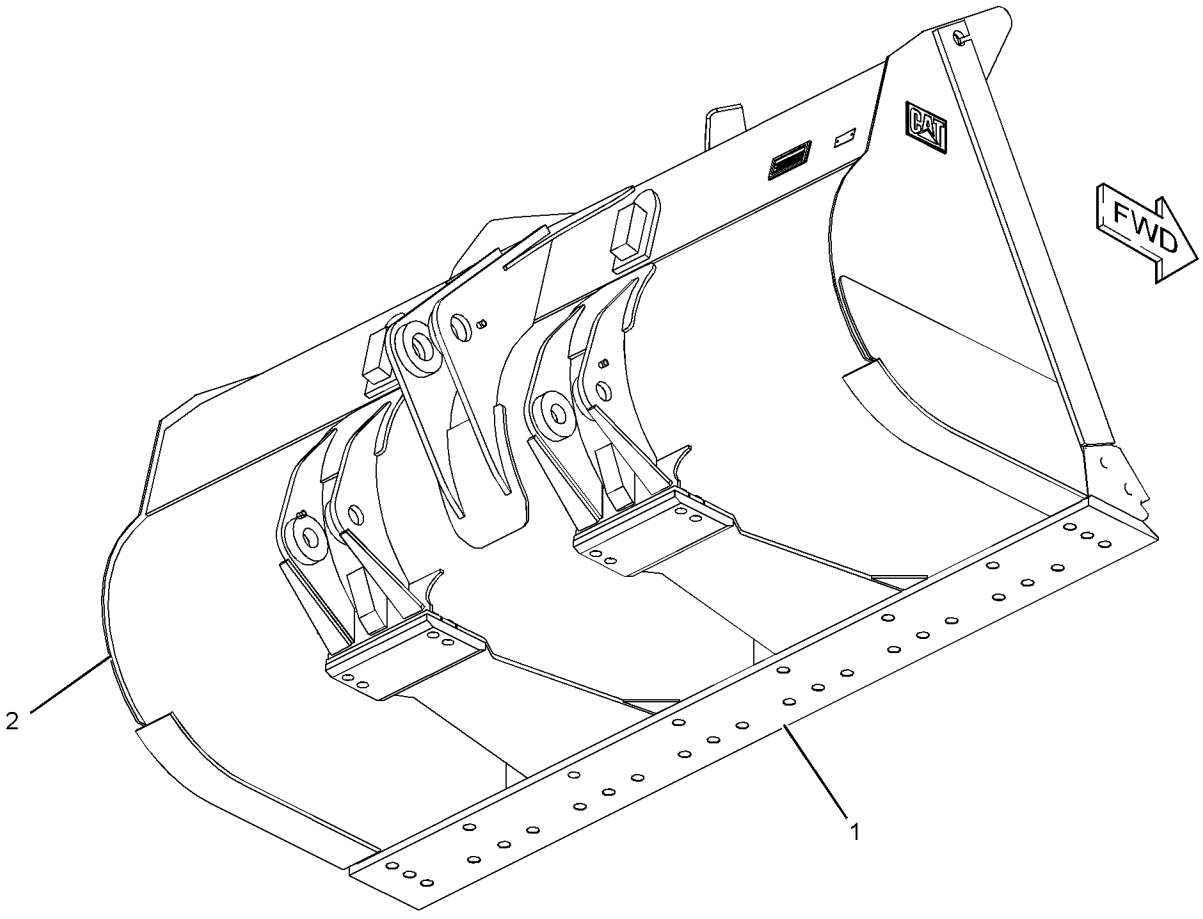

GRAPHIC #1 **<END>** g01209894

251-3051 BUCKET GP-GENERAL PURPOSE

S/N: A7G1-UP

3201-MM (126.02-IN) WIDE X 4.8-CU M (6.3-CU YD)

FOR USE WITH 248-7325—PAGE 757. CANNOT BE USED WITH 100-6669—PAGE 748, 100-6667—PAGE 747, 254-5072—PAGE 768, 254-5073—PAGE 767, 229-6942—PAGE 658, 240-3118—PAGE 756, 237-8964—PAGE 656, 237-8965—PAGE 655

AN ATTACHMENT

SMCS-6101 **i02419034**

NOTE	REF NO	GRAPHIC REF	PART NUMBER	QTY	PART NAME 1 2 3 4 5 6 (PRODUCT LEVEL)	SEE PAGE
Y	1	1	*100-6669*	1	EDGE GP-CUTTING	748
Y	2	1	*251-3052*	1	BUCKET AS-GENERAL PURPOSE	667

Y-SEPARATE ILLUSTRATION

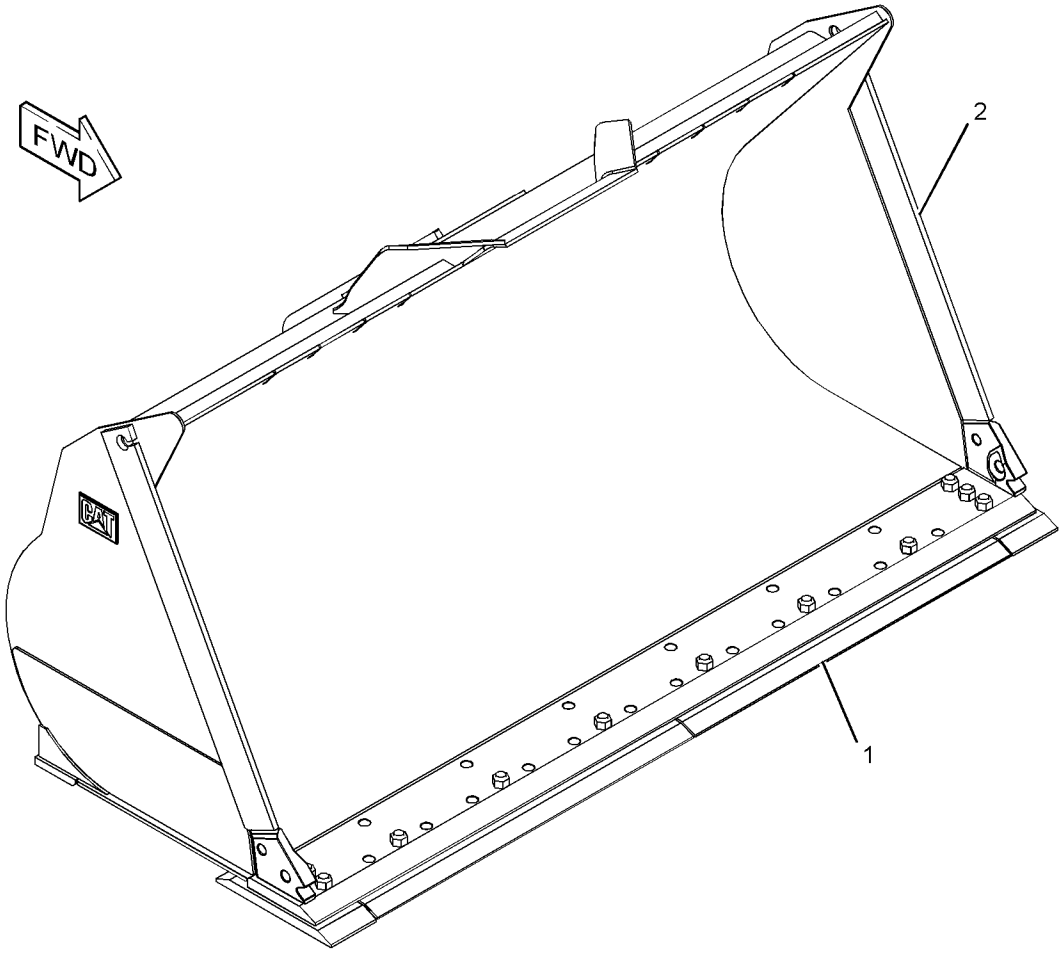

GRAPHIC #1 **<END>** g01210303

WORK TOOLS

251-3053 BUCKET GP-GENERAL PURPOSE

S/N: A7G1-UP
3294-MM (129.69-IN) WIDE X 4.5-CU M (5.89-CU YD)
FOR USE WITH 248-7325—PAGE 757, 193-0852—PAGE 741. CANNOT BE USED WITH 100-6669—PAGE 748, 100-6667—PAGE 747, 229-6942—PAGE 658, 240-3118—PAGE 756, 237-8964—PAGE 656, 237-8965—PAGE 655
AN ATTACHMENT

SMCS-6101 **i02419521**

NOTE	REF NO	GRAPHIC REF	PART NUMBER	QTY	PART NAME 1 2 3 4 5 6 (PRODUCT LEVEL)	SEE PAGE
Y	1	1	*251-3054*	1	BUCKET AS-MATERIAL HANDLING	682
Y	2	1	*254-5072*	1	TIP GP-GENERAL PURPOSE (K-90)	768

Y-SEPARATE ILLUSTRATION

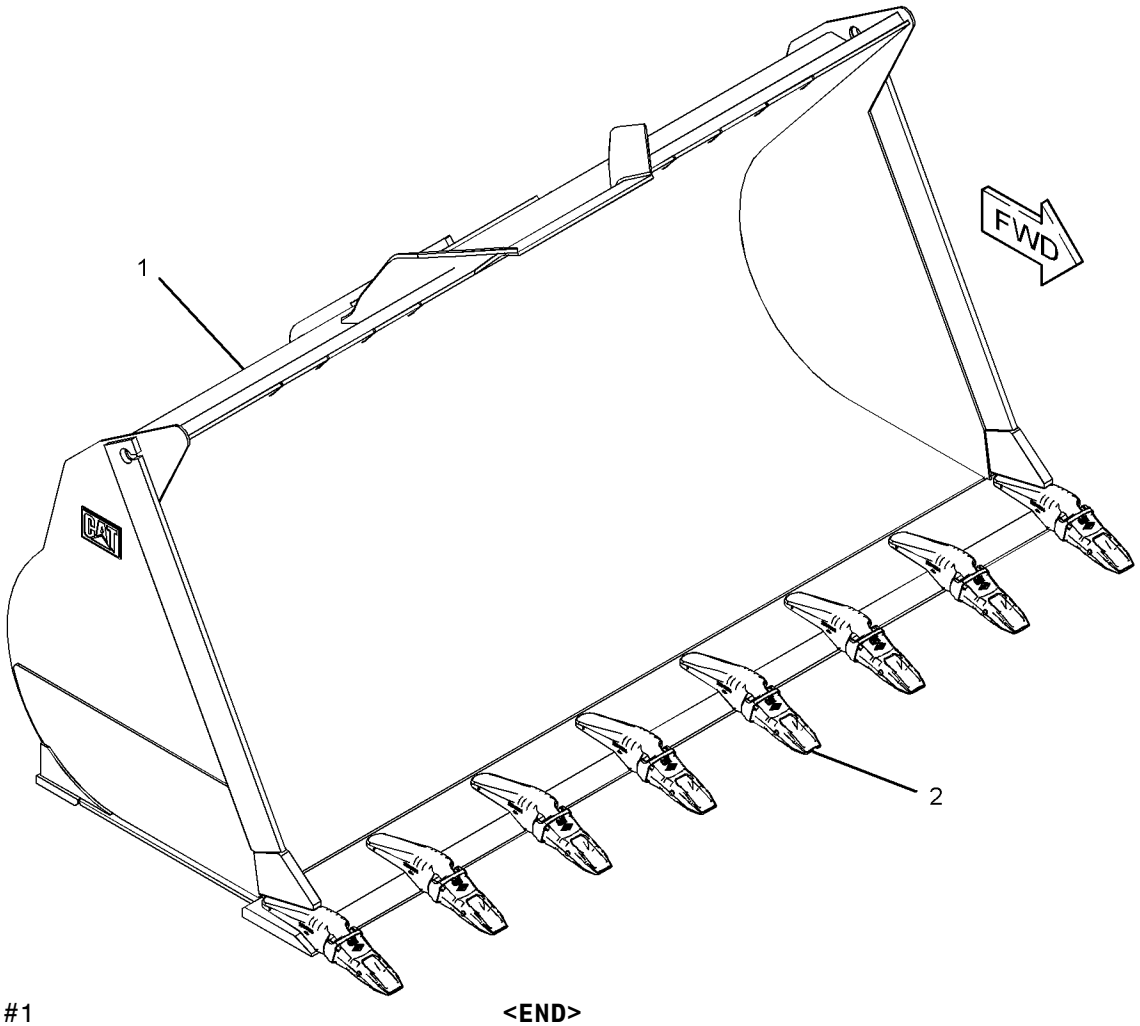

GRAPHIC #1 **<END>** g01209882

WORK TOOLS

251-3055 BUCKET GP-GENERAL PURPOSE

S/N: A7G1-UP

3201-MM (126.02-IN) WIDE X 4.8-CU M (6.3-CU YD). QUICK COUPLER
FOR USE WITH 248-7325—PAGE 757, 100-6669—PAGE 748, 100-6667—PAGE 747,
254-5072—PAGE 768, 254-5073—PAGE 767, 229-6942—PAGE 658, 193-0852—PAGE 741.
CANNOT BE USED WITH 240-3118—PAGE 756
AN ATTACHMENT

SMCS-6101 **i02419631**

NOTE	REF NO	GRAPHIC REF	PART NUMBER	QTY	PART NAME 1 2 3 4 5 6 (PRODUCT LEVEL)	SEE PAGE
Y	1	1	*248-0672*	1	PLATE GP-WEAR	765
Y	2	1	*251-3056*	1	BUCKET AS-GENERAL PURPOSE	669

Y-SEPARATE ILLUSTRATION

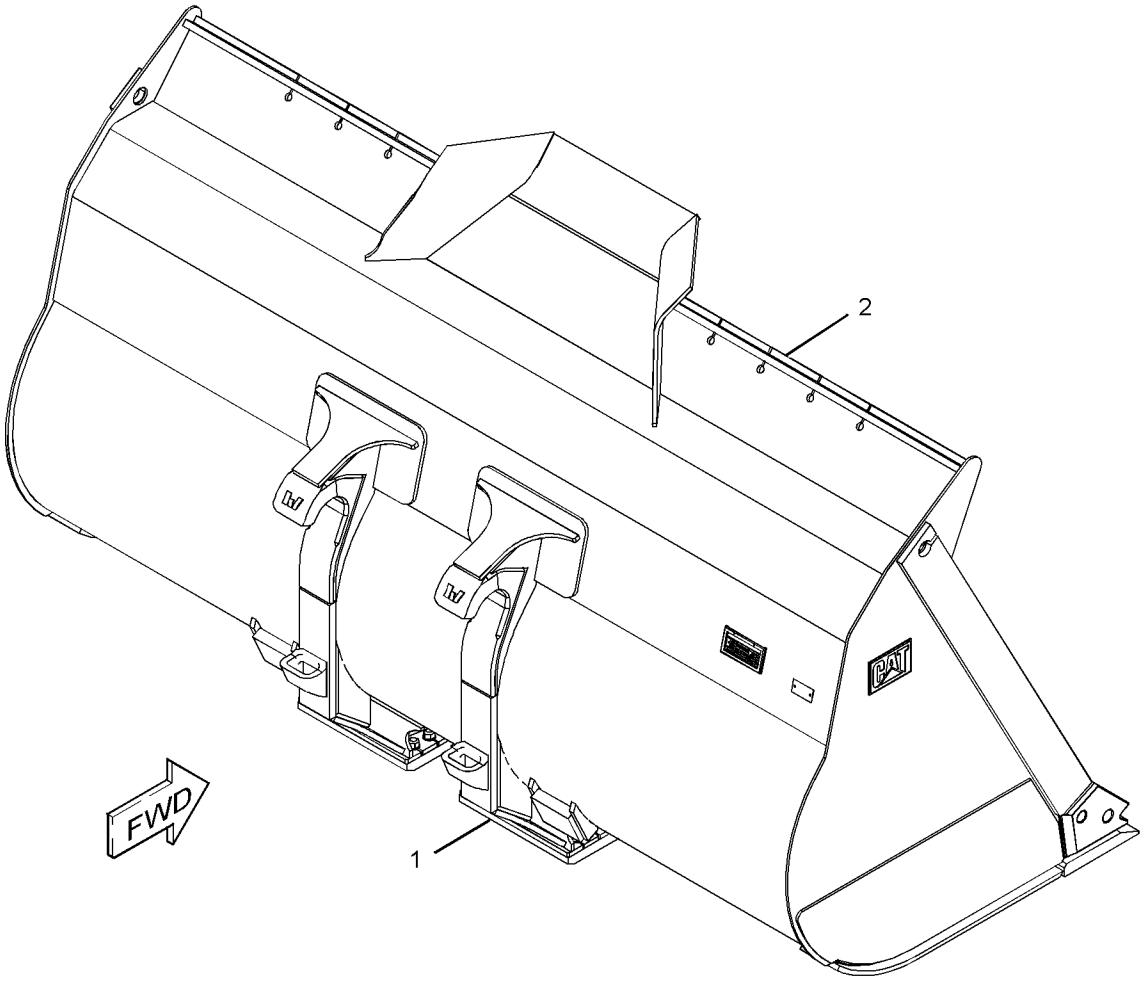

GRAPHIC #1 **<END>** g01209998

251-3057 BUCKET GP-GENERAL PURPOSE

S/N: A7G1-UP
3201-MM (126.02-IN) WIDE X 4.8-CU M (6.3-CU YD)
FOR USE WITH 248-7325—PAGE 757, 193-0852—PAGE 741. CANNOT BE USED WITH 100-6669—PAGE 748, 100-6667—PAGE 747, 254-5072—PAGE 768, 254-5073—PAGE 767, 229-6942—PAGE 658, 240-3118—PAGE 756
AN ATTACHMENT

SMCS-6101 **i02419707**

NOTE	REF NO	GRAPHIC REF	PART NUMBER	QTY	PART NAME 1 2 3 4 5 6 (PRODUCT LEVEL)	SEE PAGE
Y	1	1	*100-6669*	1	EDGE GP-CUTTING	748
Y	2	1	*251-3058*	1	BUCKET AS-GENERAL PURPOSE	671

Y-SEPARATE ILLUSTRATION

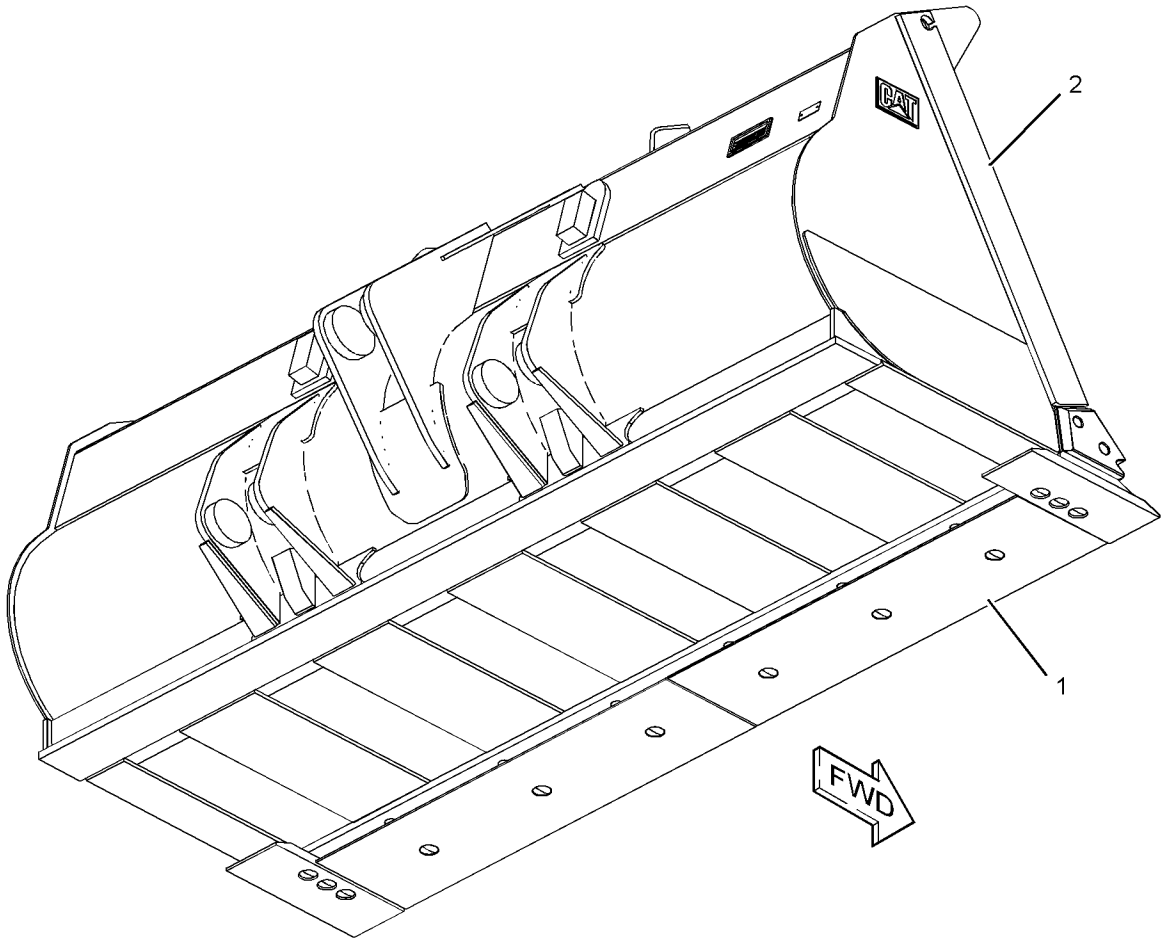

GRAPHIC #1 **<END>** g01210240

251-3059 BUCKET GP-GENERAL PURPOSE

S/N: A7G1-UP

3294-MM (129.69-IN) WIDE X 4.5-CU M (7.06-CU YD). QUICK COUPLER FOR USE WITH 248-7325—PAGE 757, 193-0852—PAGE 741. CANNOT BE USED WITH 100-6669—PAGE 748, 100-6667—PAGE 747, 254-5072—PAGE 768, 229-6942—PAGE 658, 240-3118—PAGE 756 AN ATTACHMENT

SMCS-6101 **i02419730**

NOTE	REF NO	GRAPHIC REF	PART NUMBER	QTY	PART NAME 1 2 3 4 5 6 (PRODUCT LEVEL)	SEE PAGE
Y	1	1	*251-3060*	1	BUCKET AS-GENERAL PURPOSE	672
Y	2	1	*254-5072*	1	TIP GP-GENERAL PURPOSE (K-90)	768

Y-SEPARATE ILLUSTRATION

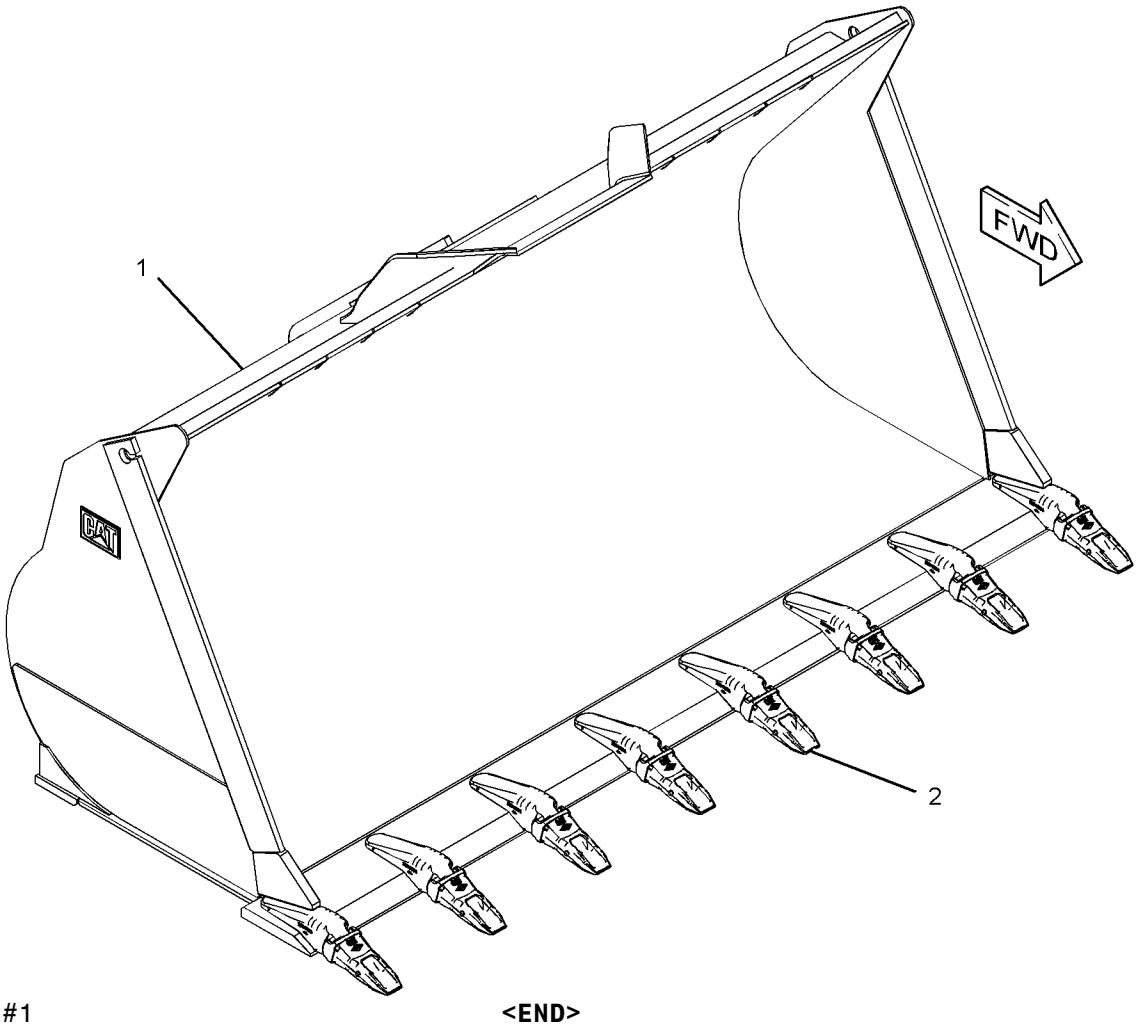

GRAPHIC #1 **<END>** g01209882

147-0131 BUCKET GP-MATERIAL HANDLING

S/N: A7G1-UP
5.5 CU M (7.15 CU YD)
FOR USE WITH 100-6669—PAGE 748, 100-6667—PAGE 747, 237-8964—PAGE 656, 237-8965—PAGE 655. CANNOT BE USED WITH 3G-8956—PAGE 746, 9W-0817—PAGE 747 AN ATTACHMENT

SMCS-6101 **i01929820**

NOTE	REF NO	GRAPHIC REF	PART NUMBER	QTY	PART NAME 1 2 3 4 5 6 (PRODUCT LEVEL)	SEE PAGE
Y	1	1	*161-9131*	1	PLATE GP-WEAR	764
Y	2	1	**147-0133**	1	BUCKET AS-MATERIAL HANDLING	673

Y-SEPARATE ILLUSTRATION

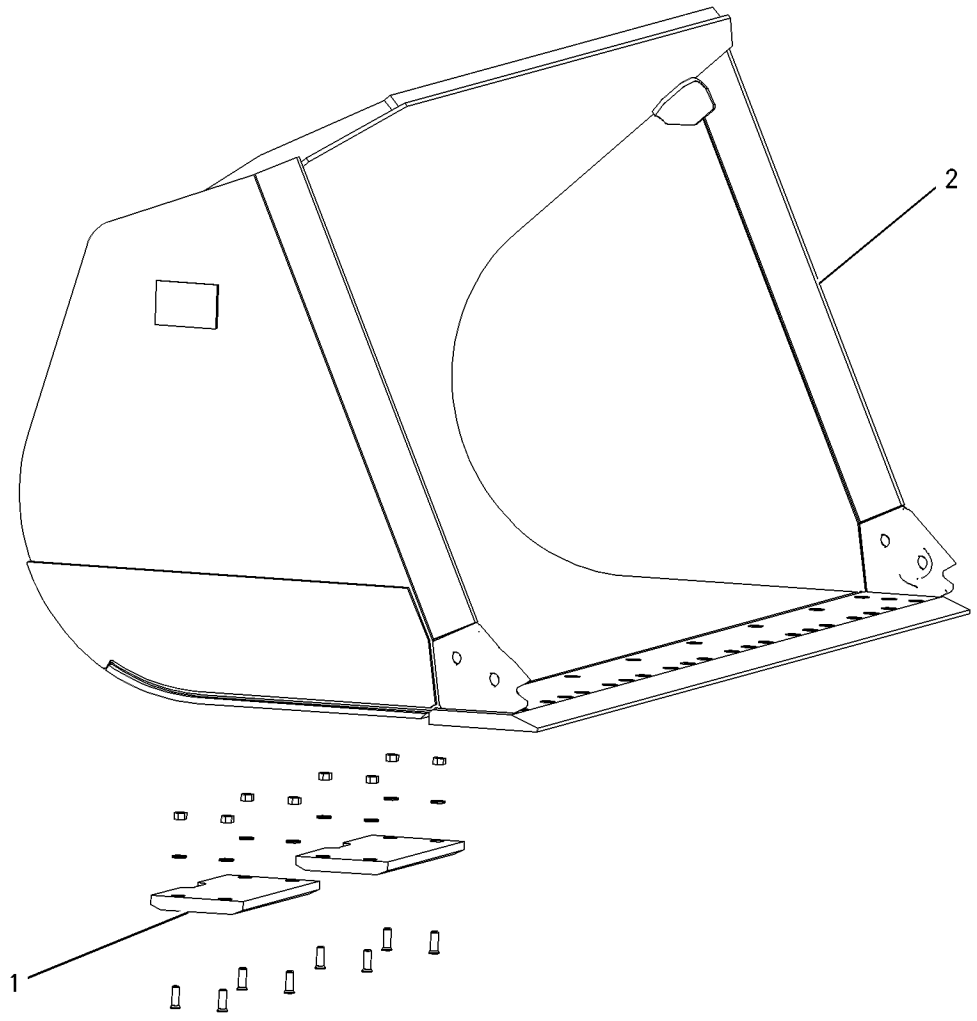

GRAPHIC #1 **<END>** g00502826

WORK TOOLS

248-0567 BUCKET GP-MATERIAL HANDLING

S/N: A7G1-UP
4.8-CU M (6.3-CU YD)
FOR USE WITH 100-6667—PAGE 747, 254-5072—PAGE 768, 254-5073—PAGE 767, 229-6942—PAGE 658
AN ATTACHMENT

SMCS-6101 **i02407592**

NOTE	REF NO	GRAPHIC REF	PART NUMBER	QTY	PART NAME 1 2 3 4 5 6 (PRODUCT LEVEL)	SEE PAGE
Y	1	1	*100-6669*	1	EDGE GP-CUTTING	748
Y	2	1	**248-0568**	1	BUCKET AS-MATERIAL HANDLING	675

Y-SEPARATE ILLUSTRATION

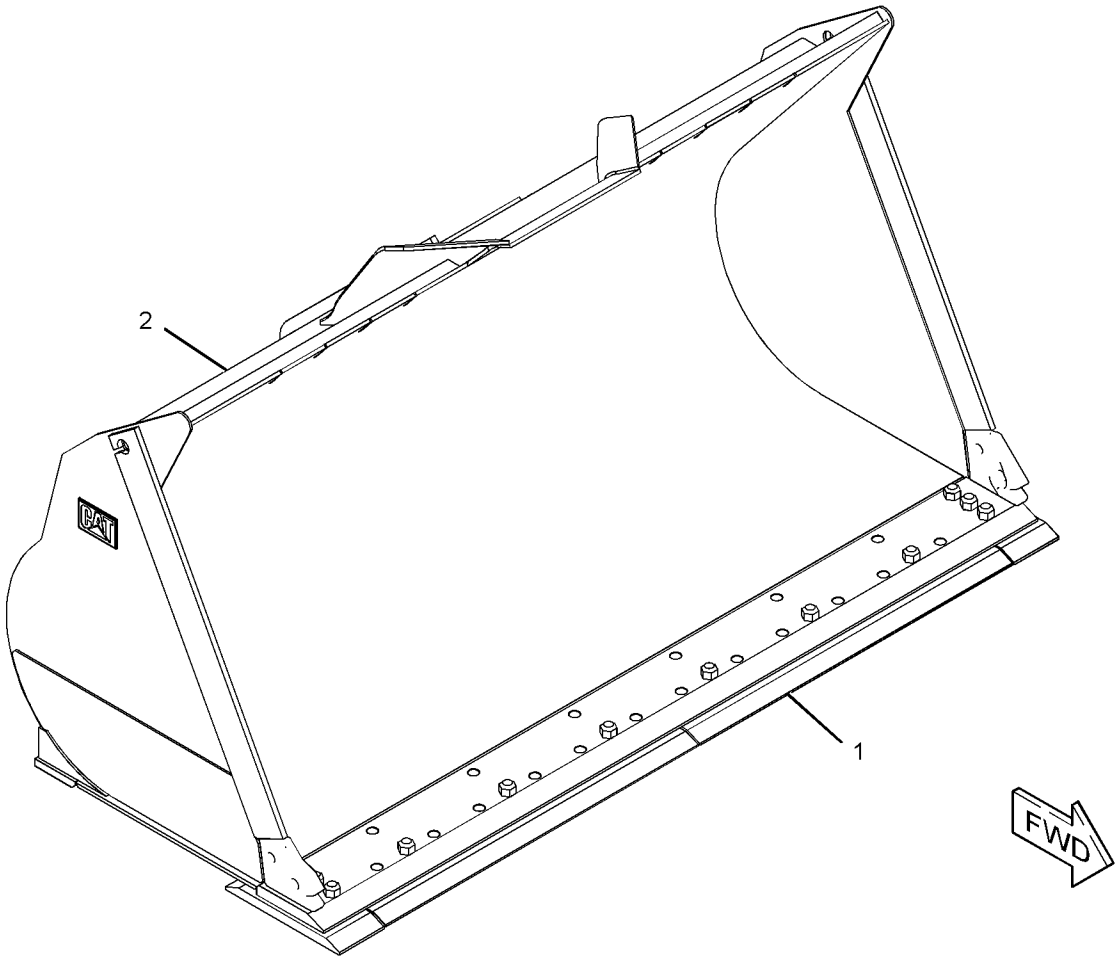

GRAPHIC #1 **<END>** g01210960

251-3039 BUCKET GP-MATERIAL HANDLING

S/N: A7G1-UP

3201-MM (126.02-IN) WIDE X 5.5-CU M (7.19-CU YD)

FOR USE WITH 248-7325—PAGE 757, 100-6669—PAGE 748, 100-6667—PAGE 747, 254-5072—PAGE 768, 254-5073—PAGE 767, 229-6942—PAGE 658. CANNOT BE USED WITH 240-3118—PAGE 756, 237-8964—PAGE 656, 237-8965—PAGE 655

AN ATTACHMENT

SMCS-6101 **i02418909**

NOTE	REF NO	GRAPHIC REF	PART NUMBER	QTY	PART NAME 1 2 3 4 5 6 (PRODUCT LEVEL)	SEE PAGE
Y	1	1	*248-0672*	1	PLATE GP-WEAR	765
Y	2	1	*251-3040*	1	BUCKET GP-MATERIAL HANDLING (AGGREGATE)	717

Y-SEPARATE ILLUSTRATION

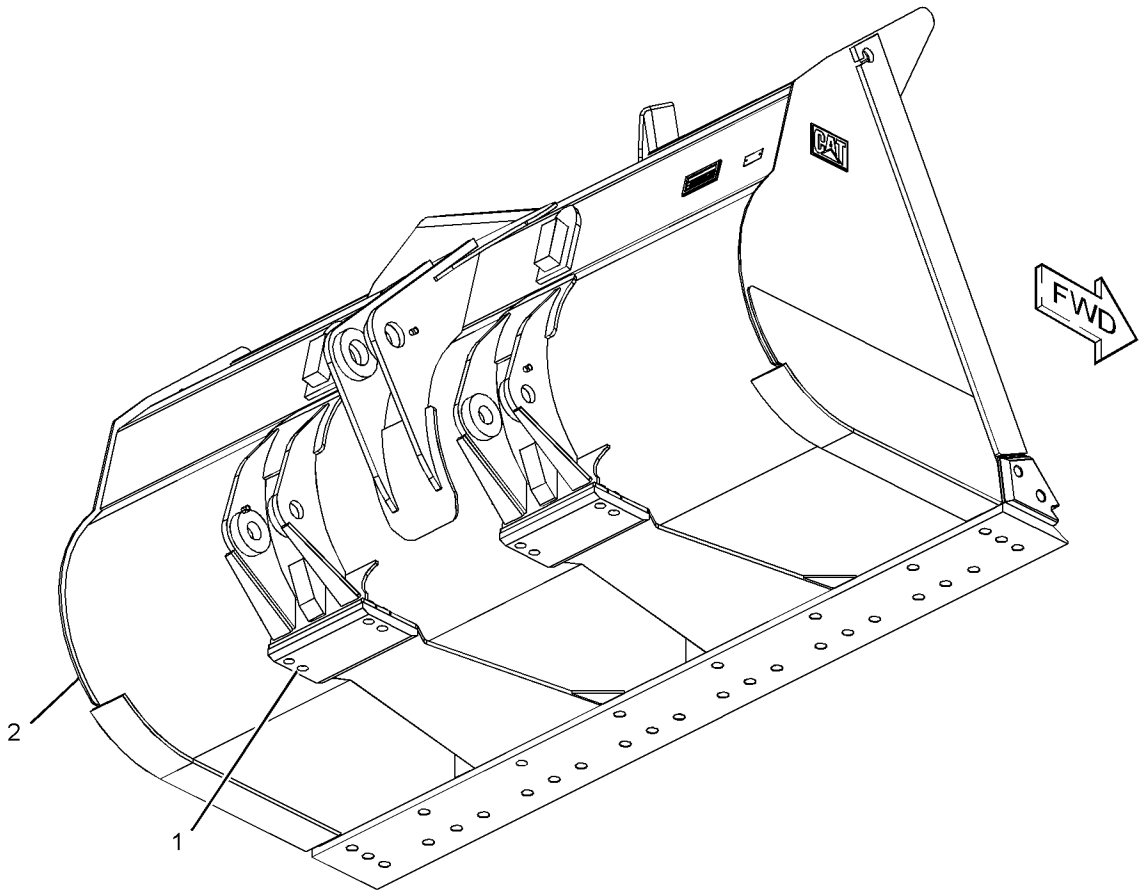

GRAPHIC #1 **<END>** g01209897

251-3040 BUCKET GP-MATERIAL HANDLING

S/N: A7G1-UP
3201-MM (126-02-IN) WIDE X 5.5-CU M (7.19-CU YD)
PART OF 251-3039 BUCKET GP-MATERIAL HANDLING
AN ATTACHMENT

SMCS-6101 **i02418918**

NOTE	REF NO	GRAPHIC REF	PART NUMBER	QTY	PART NAME 1 2 3 4 5 6 (PRODUCT LEVEL)	SEE PAGE
	1	1	**248-5737**	1	HINGE AS (TILT, CENTER)	
	2	1	**248-5747**	1	HINGE AS (LIFT, LH)	
	3	1	**248-5756**	1	HINGE AS (LIFT, RH)	
	4	1	**7I-3015**	1	EDGE-CUTTING	
	5	1	**2C-9259**	2	PLATE-IDENTIFICATION (CAT)	
	6	1	**8E-5310**	1	CORNER-RH	
	7	1	**251-9252**	2	PLATE-WEAR (SIDE)	
	8	1	**251-9255**	2	PLATE-EDGE (SIDE)	
	9	1	**8E-5311**	1	CORNER-LH	
	10	1	**252-8384**	2	PLATE-BOTTOM (PADDLE)	
	11	1	**252-8385**	2	PLATE-WEAR (BOTTOM, SIDE)	

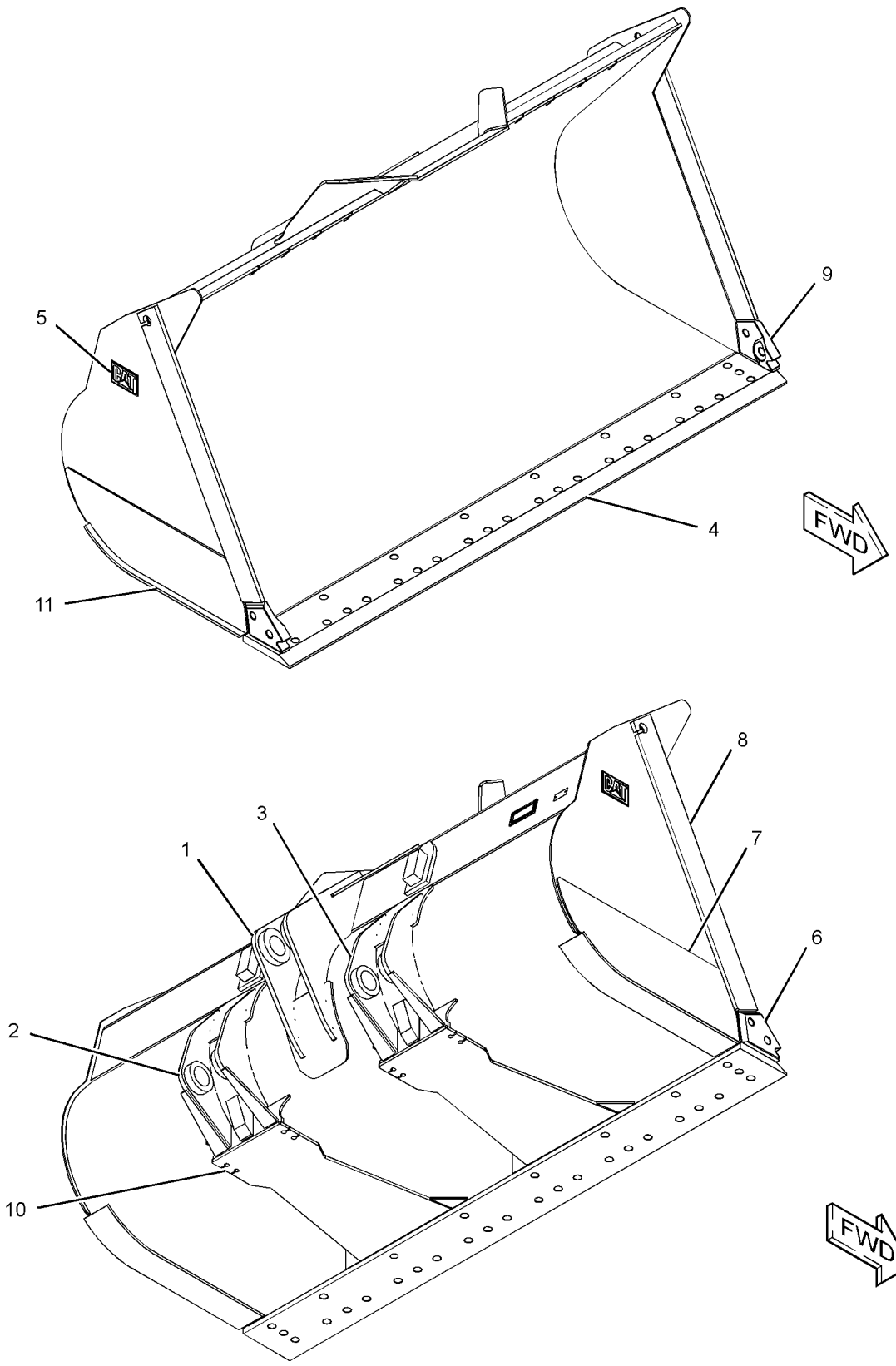

GRAPHIC #1 **<END>** g01210528

WORK TOOLS

251-3041 BUCKET GP-MATERIAL HANDLING

S/N: A7G1-UP

3231-MM (127.20-IN) WIDE X 5.4-CU M (7.06-CU YD)

FOR USE WITH 248-7325—PAGE 757. CANNOT BE USED WITH 100-6669—PAGE 748, 100-6667—PAGE 747, 254-5072—PAGE 768, 254-5073—PAGE 767, 229-6942—PAGE 658, 240-3118—PAGE 756, 237-8964—PAGE 656, 237-8965—PAGE 655

AN ATTACHMENT

SMCS-6101 **i02418922**

NOTE	REF NO	GRAPHIC REF	PART NUMBER	QTY	PART NAME 1 2 3 4 5 6 (PRODUCT LEVEL)	SEE PAGE
Y	1	1	*248-0672*	1	PLATE GP-WEAR	765
Y	2	1	*248-4026*	1	EDGE GP-CUTTING	750
Y	3	1	*251-3042*	1	BUCKET AS-MATERIAL HANDLING (AGGREGATE)	677

Y-SEPARATE ILLUSTRATION

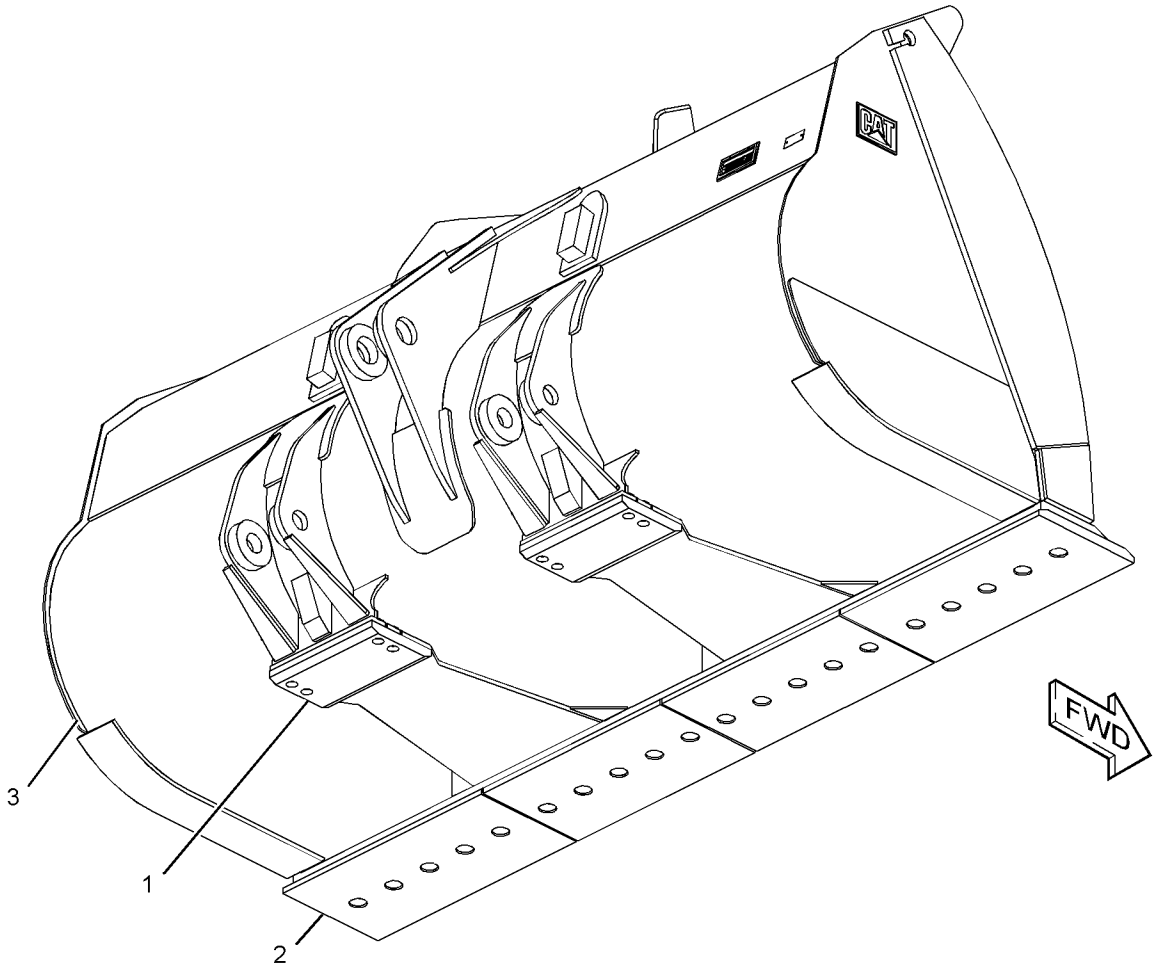

GRAPHIC #1 **<END>** g01209528

251-3045 BUCKET GP-MATERIAL HANDLING

S/N: A7G1-UP
3294-MM (129.69-IN) WIDE X 5.0-CU M (6.59-CU YD)
FOR USE WITH 248-7325—PAGE 757. CANNOT BE USED WITH 100-6669—PAGE 748, 100-6667—PAGE 747, 229-6942—PAGE 658, 240-3118—PAGE 756, 237-8964—PAGE 656, 237-8965—PAGE 655
AN ATTACHMENT

SMCS-6101 **i02418951**

NOTE	REF NO	GRAPHIC REF	PART NUMBER	QTY	PART NAME 1 2 3 4 5 6 (PRODUCT LEVEL)	SEE PAGE
Y	1	1	*251-3046*	1	BUCKET AS-MATERIAL HANDLING	678
Y	2	1	*254-5072*	1	TIP GP-GENERAL PURPOSE (K-90)	768

Y-SEPARATE ILLUSTRATION

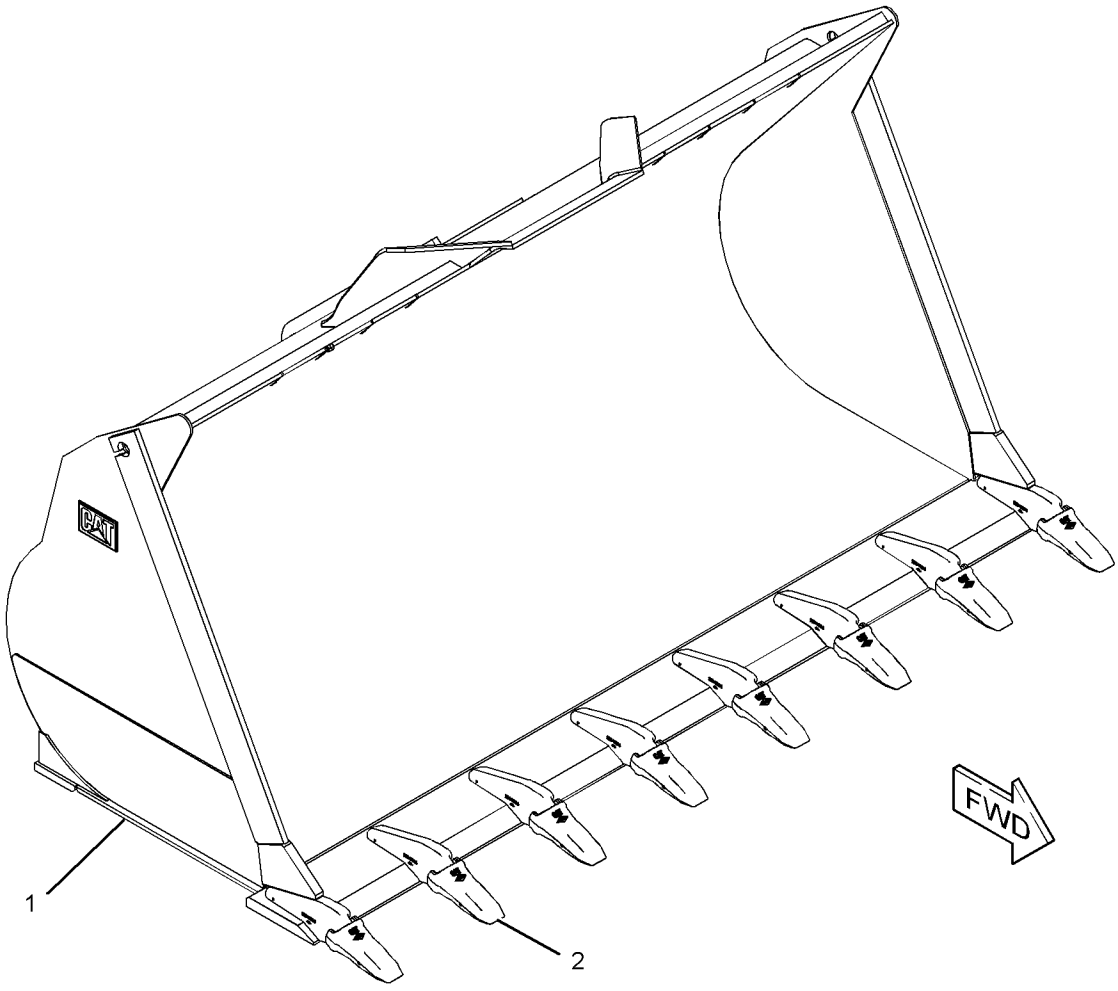

GRAPHIC #1 **<END>** g01209470

WORK TOOLS

251-3047 BUCKET GP-MATERIAL HANDLING

S/N: A7G1-UP

3201-MM (126.02-IN) WIDE X 4.8-CU M (6.3-CU YD)

FOR USE WITH 248-7325—PAGE 757, 100-6669—PAGE 748, 100-6667—PAGE 747, 254-5072—PAGE 768, 254-5073—PAGE 767, 229-6942—PAGE 658. CANNOT BE USED WITH 240-3118—PAGE 756, 237-8964—PAGE 656, 237-8965—PAGE 655

AN ATTACHMENT

SMCS-6101 **i02418963**

NOTE	REF NO	GRAPHIC REF	PART NUMBER	QTY	PART NAME 1 2 3 4 5 6 (PRODUCT LEVEL)	SEE PAGE
Y	1	1	*248-0672*	1	PLATE GP-WEAR	765
Y	2	1	*251-3048*	1	BUCKET AS-MATERIAL HANDLING	679

Y-SEPARATE ILLUSTRATION

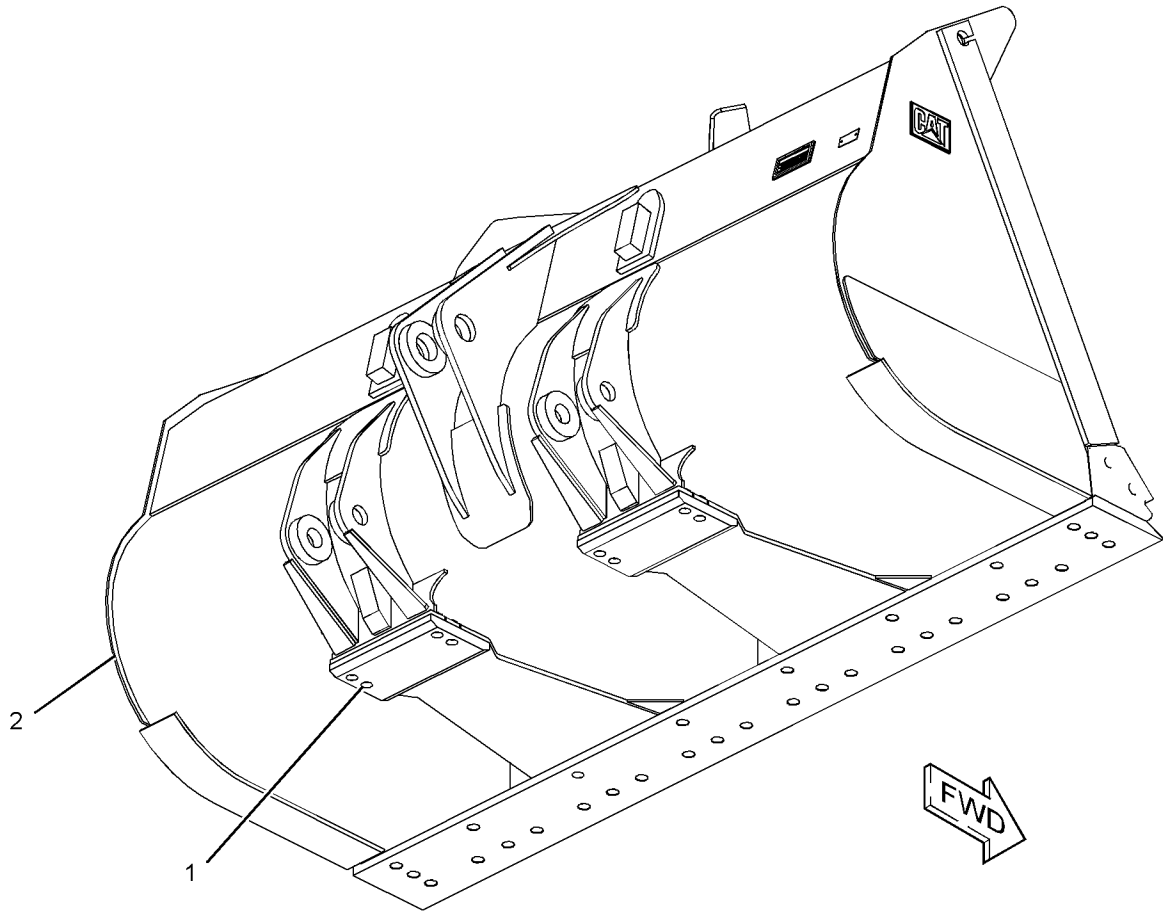

GRAPHIC #1 **<END>** g01209644

251-3049 BUCKET GP-MATERIAL HANDLING

S/N: A7G1-UP

3230-MM (127.16-IN) WIDE X 4.8-CU M (6.3-CU YD)

FOR USE WITH 248-7325—PAGE 757. CANNOT BE USED WITH 100-6669—PAGE 748, 100-6667—PAGE 747, 254-5072—PAGE 768, 254-5073—PAGE 767, 229-6942—PAGE 658, 240-3118—PAGE 756, 237-8964—PAGE 656, 237-8965—PAGE 655

AN ATTACHMENT

SMCS-6101 **i02419018**

NOTE	REF NO	GRAPHIC REF	PART NUMBER	QTY	PART NAME 1 2 3 4 5 6 (PRODUCT LEVEL)	SEE PAGE
Y	1	1	*248-0672*	1	PLATE GP-WEAR	765
Y	2	1	*248-4026*	1	EDGE GP-CUTTING	750
Y	3	1	*251-3050*	1	BUCKET AS-MATERIAL HANDLING	681

Y-SEPARATE ILLUSTRATION

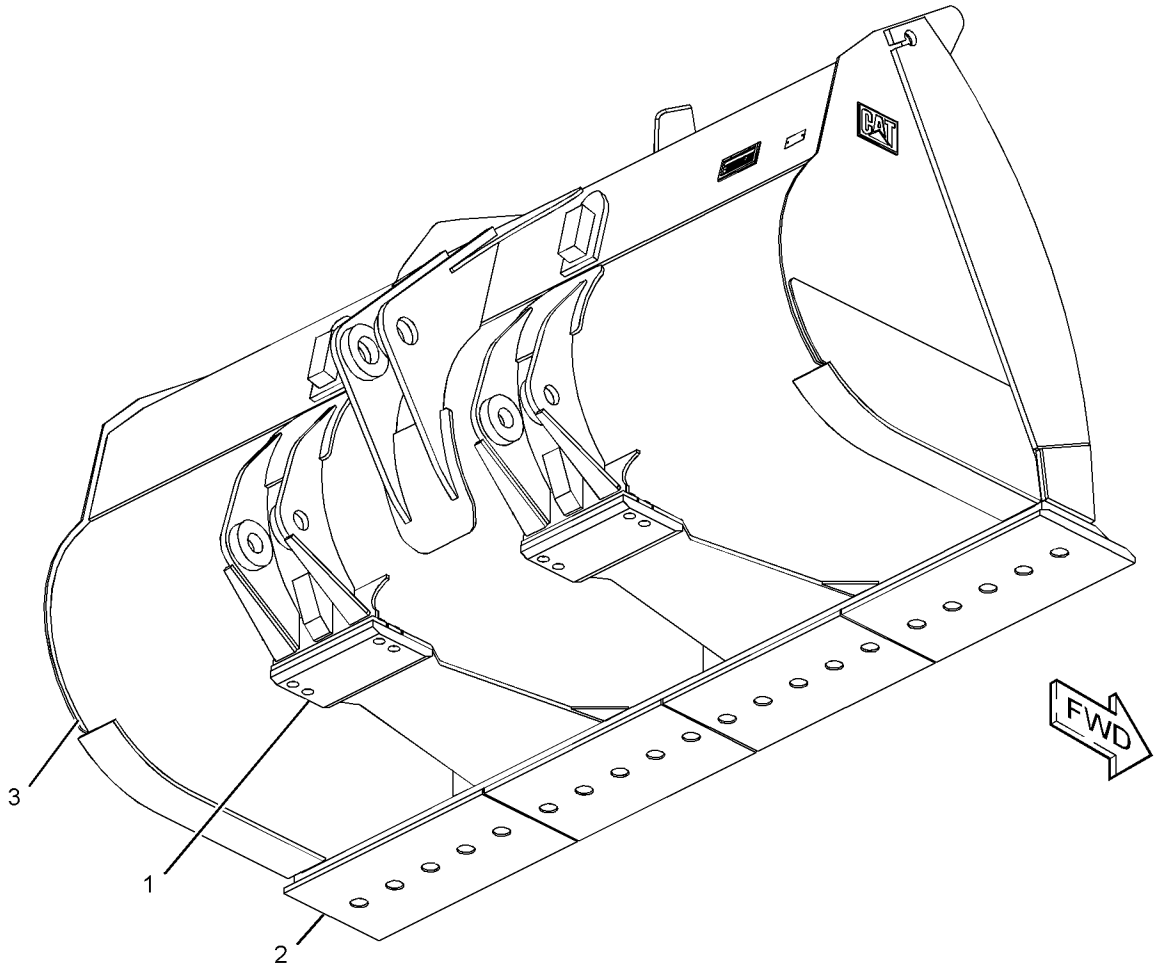

GRAPHIC #1 **<END>** g01209528

251-3061 BUCKET GP-MATERIAL HANDLING

S/N: A7G1-UP
3201-MM (126.02-IN) WIDE X 4.5-CU M (7.06-CU YD)
FOR USE WITH 248-7325—PAGE 757, 100-6669—PAGE 748, 100-6667—PAGE 747, 254-5072—PAGE 768, 254-5073—PAGE 767, 229-6942—PAGE 658. CANNOT BE USED WITH 240-3118—PAGE 756, 237-8964—PAGE 656, 237-8965—PAGE 655
AN ATTACHMENT

SMCS-6101 **i02419751**

NOTE	REF NO	GRAPHIC REF	PART NUMBER	QTY	PART NAME 1 2 3 4 5 6 (PRODUCT LEVEL)	SEE PAGE
Y	1	1	*248-0672*	1	PLATE GP-WEAR	765
Y	2	1	*251-3062*	1	BUCKET GP-MATERIAL HANDLING	724

Y-SEPARATE ILLUSTRATION

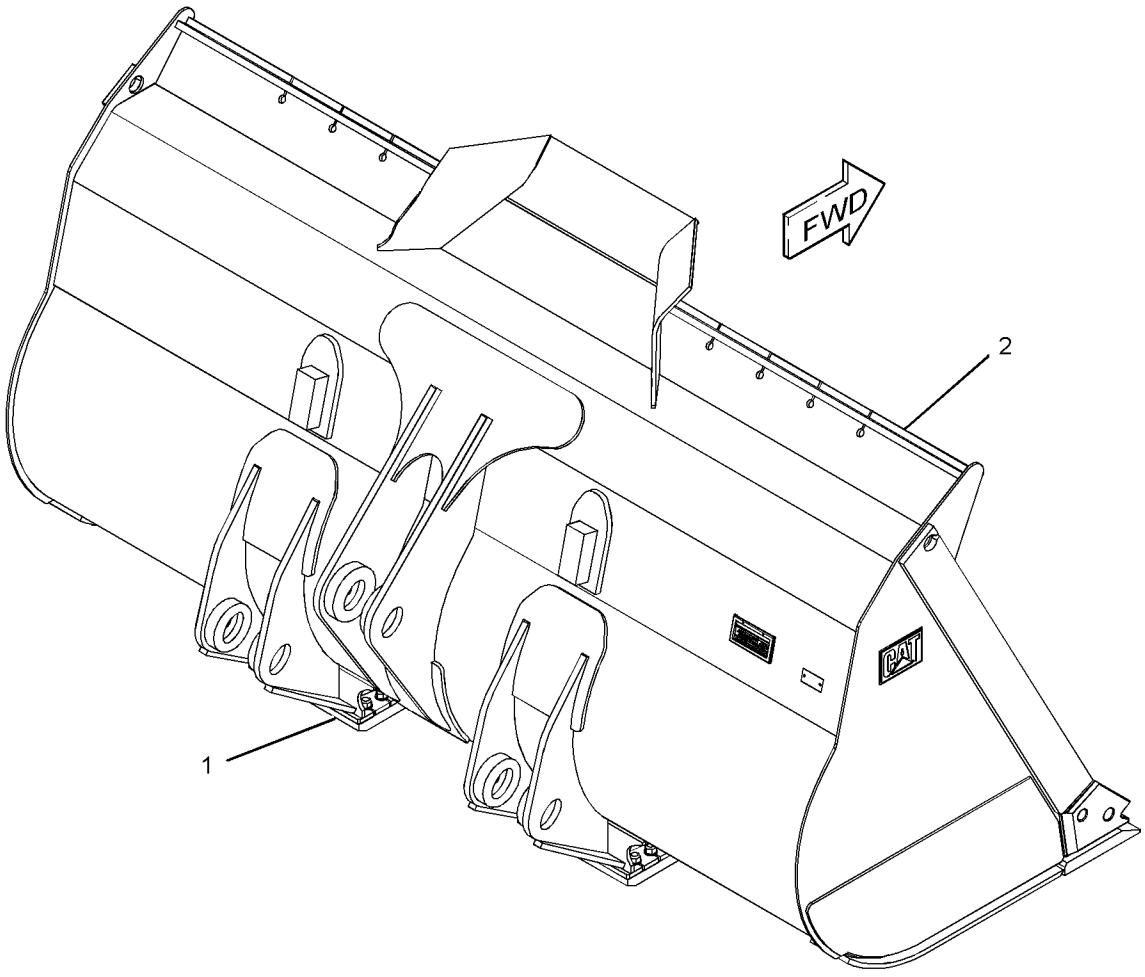

GRAPHIC #1 **<END>** g01210088

251-3062 BUCKET GP-MATERIAL HANDLING

S/N: A7G1-UP
4.8-CU M (6.3-CU YD)
PART OF 251-3061 BUCKET GP-MATERIAL HANDLING
AN ATTACHMENT

SMCS-6101 **i02422313**

NOTE	REF NO	GRAPHIC REF	PART NUMBER	QTY	PART NAME 1 2 3 4 5 6 (PRODUCT LEVEL)	SEE PAGE
	1	1	**248-5737**	1	HINGE AS (TILT, CENTER)	
	2	1	**248-5747**	1	HINGE AS (LIFT, LH)	
	3	1	**248-5756**	1	HINGE AS (LIFT, RH)	
	4	1	**7I-3015**	1	EDGE-CUTTING	
	5	1	**2C-9259**	2	PLATE-IDENTIFICATION (CAT)	
	6	1	**8E-5310**	1	CORNER-RH	
	7	1	**252-7721**	2	PLATE-WEAR (SIDE)	
	8	1	**252-7723**	2	PLATE-WEAR	
	9	1	**8E-5311**	1	CORNER-LH	
	10	1	**252-9434**	2	PLATE-BOTTOM (PADDLE)	
	11	1	**252-9435**	2	PLATE-WEAR (BOTTOM, SIDE)	

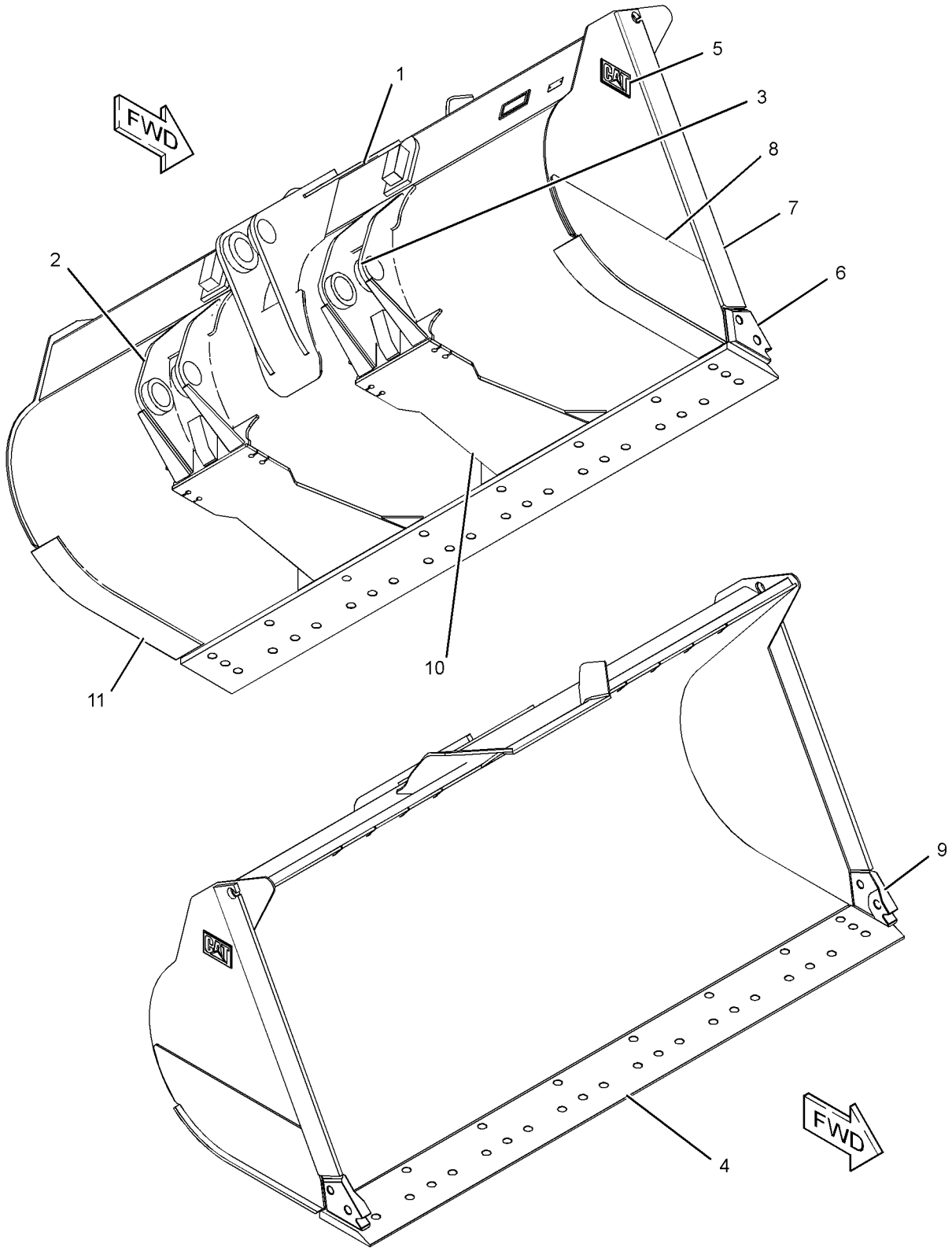

GRAPHIC #1 **<END>** g01209501

251-3063 BUCKET GP-MATERIAL HANDLING

S/N: A7G1-UP

3201-MM (126.02-IN) WIDE X 4.5-CU M (5.89-CU YD)

FOR USE WITH 248-7325—PAGE 757. CANNOT BE USED WITH 100-6669—PAGE 748, 100-6667—PAGE 747, 254-5072—PAGE 768, 254-5073—PAGE 767, 229-6942—PAGE 658, 240-3118—PAGE 756, 237-8964—PAGE 656, 237-8965—PAGE 655

AN ATTACHMENT

SMCS-6101 **i02419757**

NOTE	REF NO	GRAPHIC REF	PART NUMBER	QTY	PART NAME 1 2 3 4 5 6 (PRODUCT LEVEL)	SEE PAGE
Y	1	1	*100-6669*	1	EDGE GP-CUTTING	748
Y	2	1	*251-3064*	1	BUCKET AS-MATERIAL HANDLING	683

Y-SEPARATE ILLUSTRATION

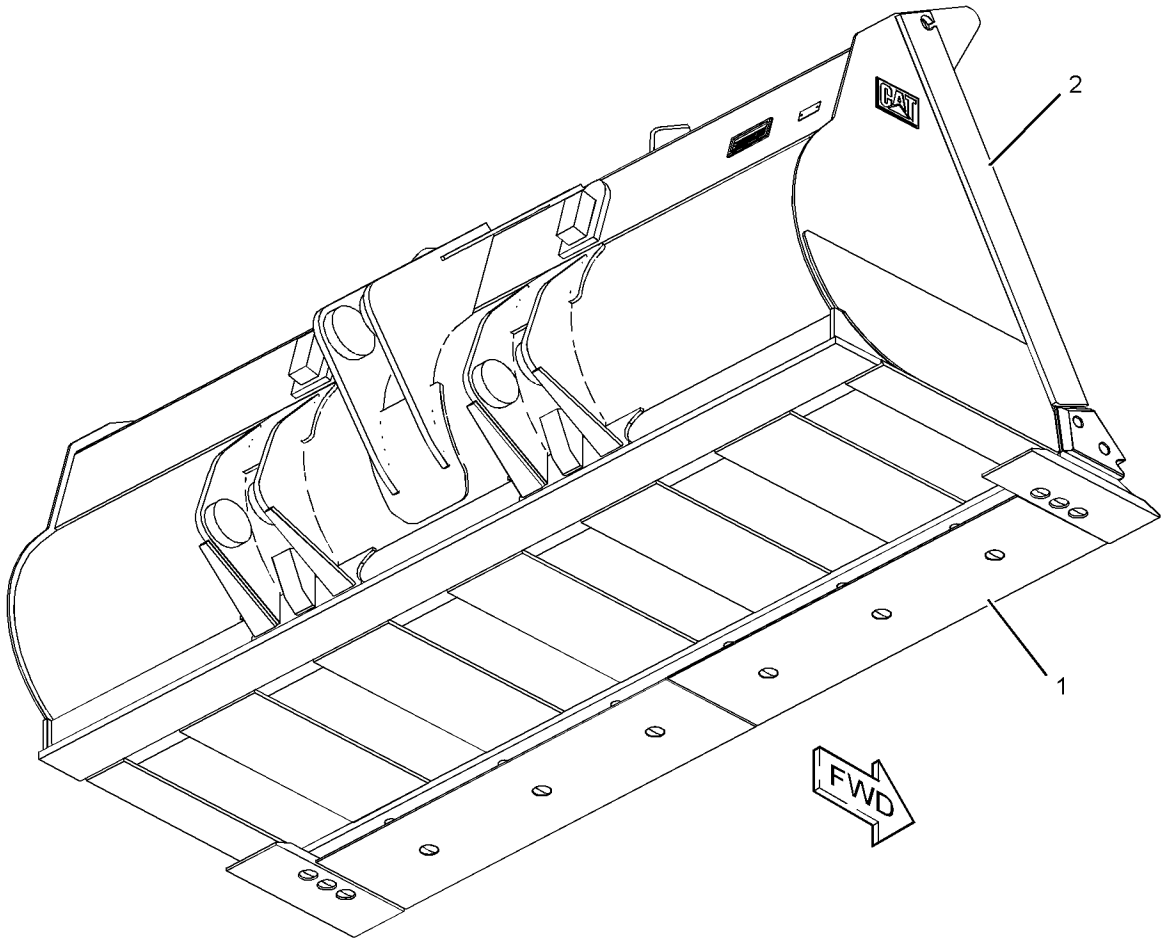

GRAPHIC #1 **<END>** g01210240

256-3695 BUCKET GP-MATERIAL HANDLING

S/N: A7G1-UP

3230-MM (127.20-IN) WIDE X 5.0-CU M (6.59-CU YD)-
FOR USE WITH 248-7325—PAGE 757. CANNOT BE USED WITH 100-6669—PAGE 748, 100-6667—PAGE 747, 254-5072—PAGE 768, 254-5073—PAGE 767, 229-6942—PAGE 658, 240-3118—PAGE 756, 237-8964—PAGE 656, 237-8965—PAGE 655
AN ATTACHMENT

SMCS-6101 **i02419772**

NOTE	REF NO	GRAPHIC REF	PART NUMBER	QTY	PART NAME 1 2 3 4 5 6 (PRODUCT LEVEL)	SEE PAGE
Y	1	1	*248-0672*	1	PLATE GP-WEAR	765
Y	2	1	*248-4026*	1	EDGE GP-CUTTING	750
Y	3	1	*256-3697*	1	BUCKET AS-MATERIAL HANDLING	685

Y-SEPARATE ILLUSTRATION

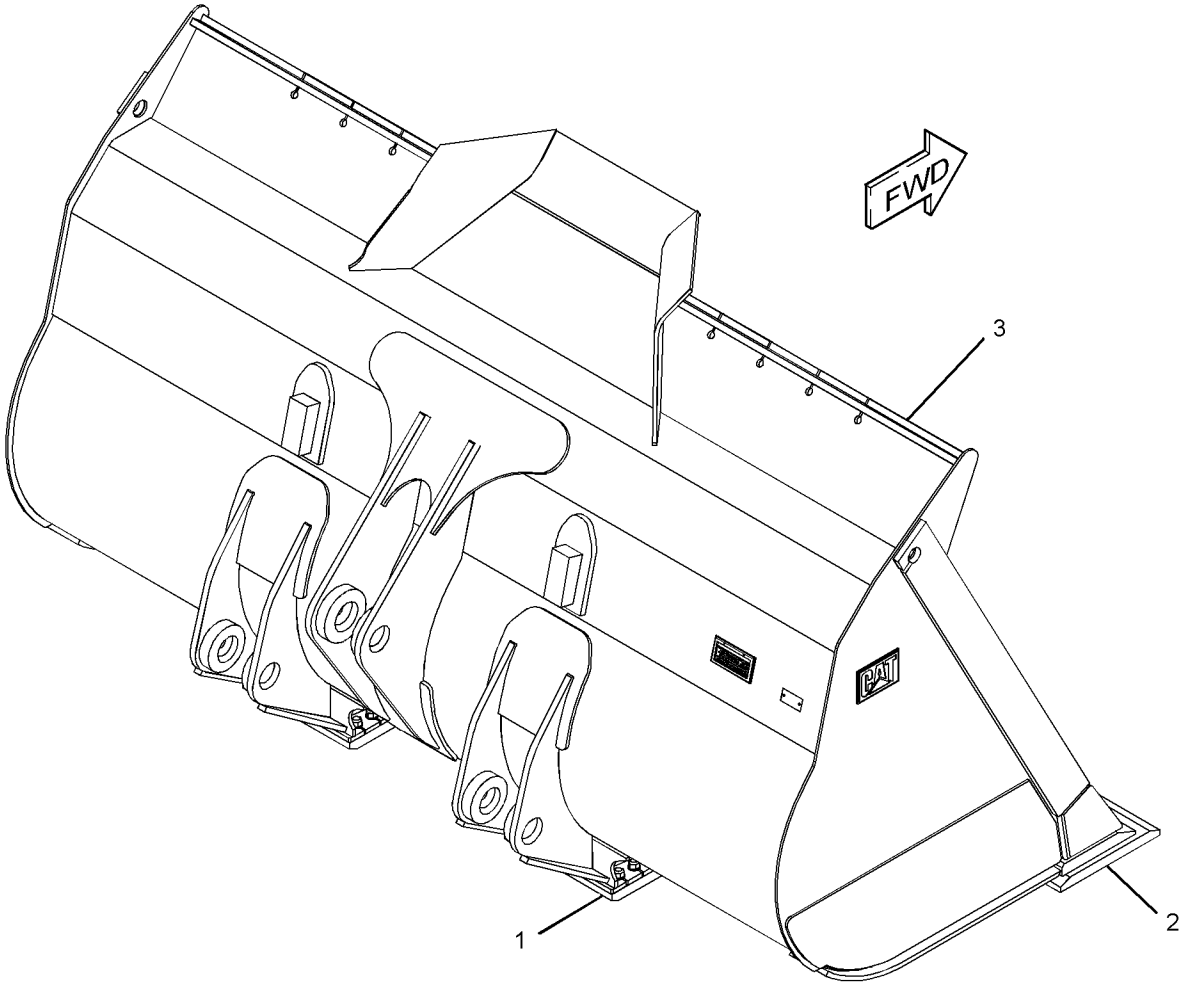

GRAPHIC #1 **<END>** g01209924

262-9094 BUCKET GP-MATERIAL HANDLING

S/N: A7G1-UP
2942-MM (115.82-IN) WIDE X 4.6-CU M (6.01-CU YD)
FOR USE WITH 134-2959–PAGE 748, 100-6665–PAGE 747, 254-5072–PAGE 768, 254-5073–PAGE 767, 229-6942–PAGE 658. CANNOT BE USED WITH 100-6669–PAGE 748, 100-6667–PAGE 747
AN ATTACHMENT

SMCS-6101 **i02419791**

NOTE	REF NO	GRAPHIC REF	PART NUMBER	QTY	PART NAME 1 2 3 4 5 6 (PRODUCT LEVEL)	SEE PAGE
Y	1	1	*248-0672*	1	PLATE GP-WEAR	765
Y	2	1	*262-9097*	1	BUCKET GP-MATERIAL HANDLING	729

Y-SEPARATE ILLUSTRATION

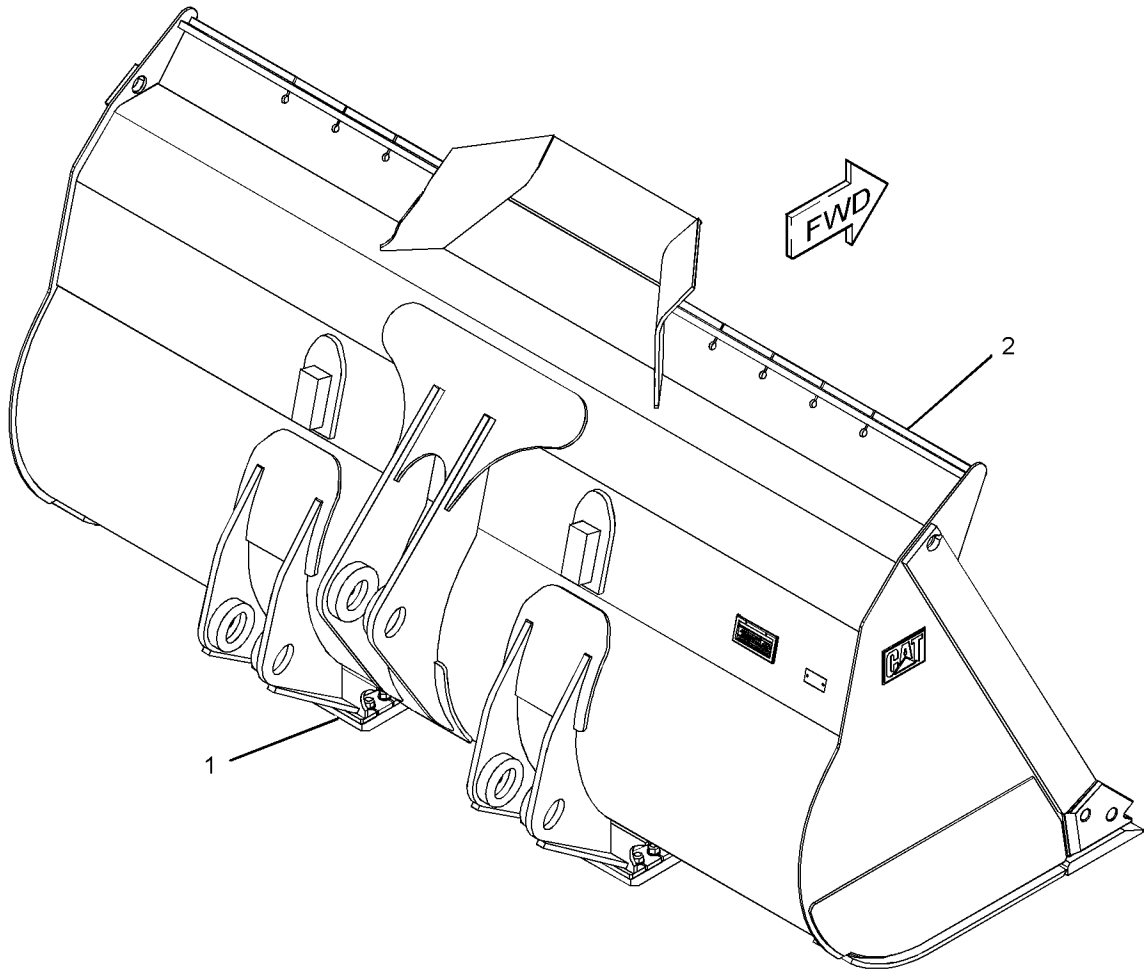

GRAPHIC #1 **<END>** g01210088

WORK TOOLS

262-9097 BUCKET GP-MATERIAL HANDLING

S/N: A7G1-UP
2942-MM (115.82-IN) WIDE X 4.6-CU M (6.01-CU YD)
PART OF 262-9094 BUCKET GP-MATERIAL HANDLING
AN ATTACHMENT

SMCS-6101 **i02422311**

NOTE	REF NO	GRAPHIC REF	PART NUMBER	QTY	PART NAME 1 2 3 4 5 6 (PRODUCT LEVEL)	SEE PAGE
	1	1	**248-5737**	1	HINGE AS (TILT, CENTER)	
	2	1	**248-5747**	1	HINGE AS (LIFT, LH)	
	3	1	**248-5756**	1	HINGE AS (LIFT, RH)	
	4	1	**248-1666**	2	PLATE	
	5	1	**248-7329**	2	PLATE-WEAR	
	6	1	**2C-9259**	2	PLATE-IDENTIFICATION (CAT)	
	7	1	**8E-5310**	1	CORNER-RH	
	8	1	**248-7341**	2	PLATE-WEAR	
	9	1	**249-0656**	2	PLATE-WEAR (SIDE)	
	10	1	**8E-5311**	1	CORNER-LH	
	11	1	**147-1469**	1	EDGE-CUTTING	

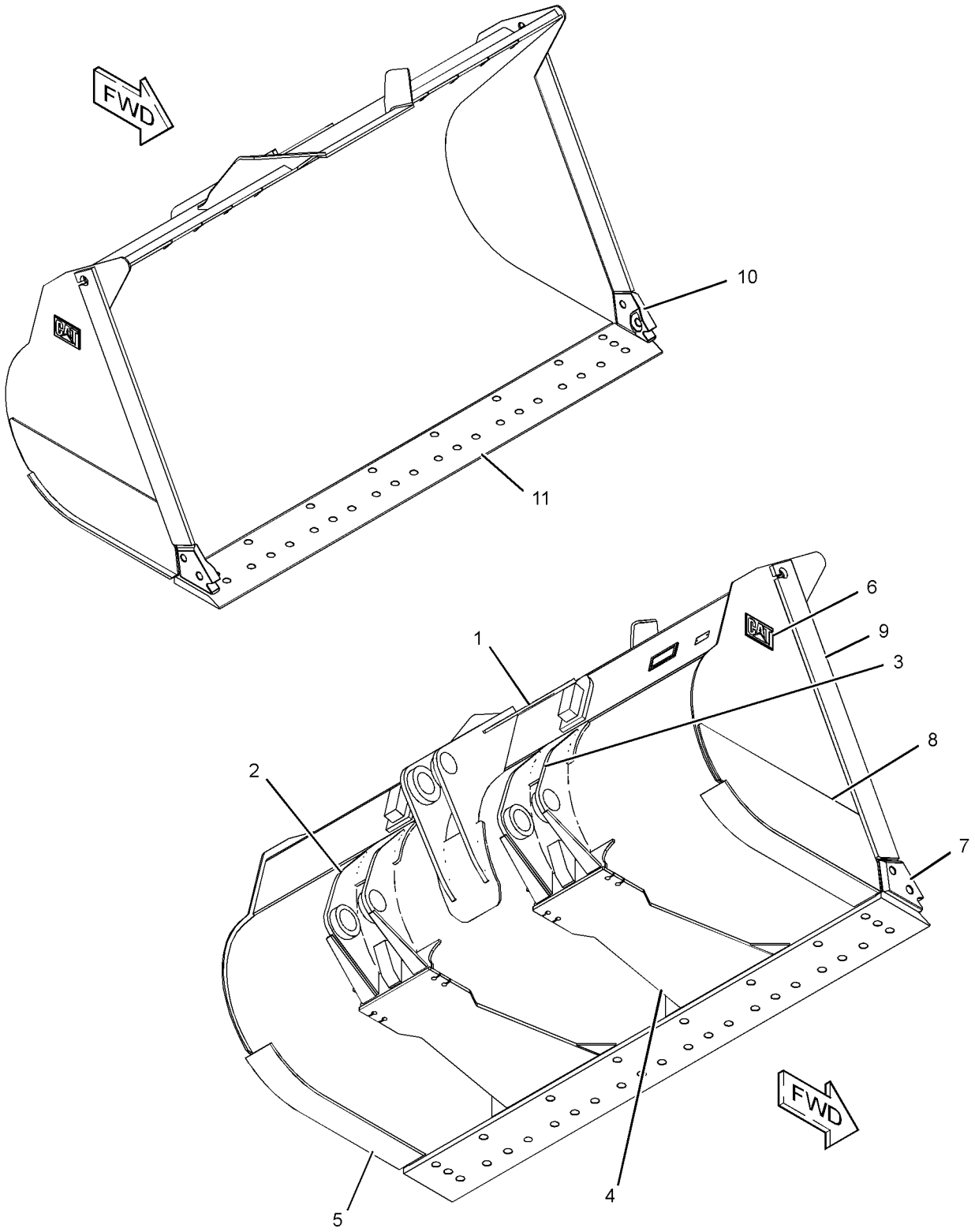

GRAPHIC #1 **<END>** g01209931

WORK TOOLS

146-8070 BUCKET GP-PENETRATION

S/N: A7G1-UP

4.8 CU M (6.25 CU YD). PENETRATION-FLUSH MOUNTED TEETH, GERMAN BUCKET

AN ATTACHMENT

SMCS-6131 **i00964807**

NOTE	PART NUMBER	QTY	PART NAME 1 2 3 4 5 6 (PRODUCT LEVEL)	SEE PAGE
Y	**146-8080**	1	BUCKET AS-PENETRATION	687
Y	*8J-4955*	8	TIP GP-LONG	769

Y-SEPARATE ILLUSTRATION

<END>

WORK TOOLS

148-6898 BUCKET GP-ROCK

S/N: A7G1-UP
3.5 CU M (4.5 CU YD). HEAVY DUTY
FOR USE WITH 135-9297—PAGE 748, 135-8245—PAGE 766, 135-9298—PAGE 764.
CANNOT BE USED WITH 100-6667—PAGE 747, 3G-8956—PAGE 746, 135-9297—PAGE 748, 254-5072—PAGE 768, 254-5073—PAGE 767
AN ATTACHMENT

SMCS-6102 **i01929603**

NOTE	REF NO	GRAPHIC REF	PART NUMBER	QTY	PART NAME 1 2 3 4 5 6 (PRODUCT LEVEL)	SEE PAGE
Y	1	1	**148-6906**	1	BUCKET AS-ROCK	688
Y	2	1	*161-9131*	1	PLATE GP-WEAR	764

Y-SEPARATE ILLUSTRATION

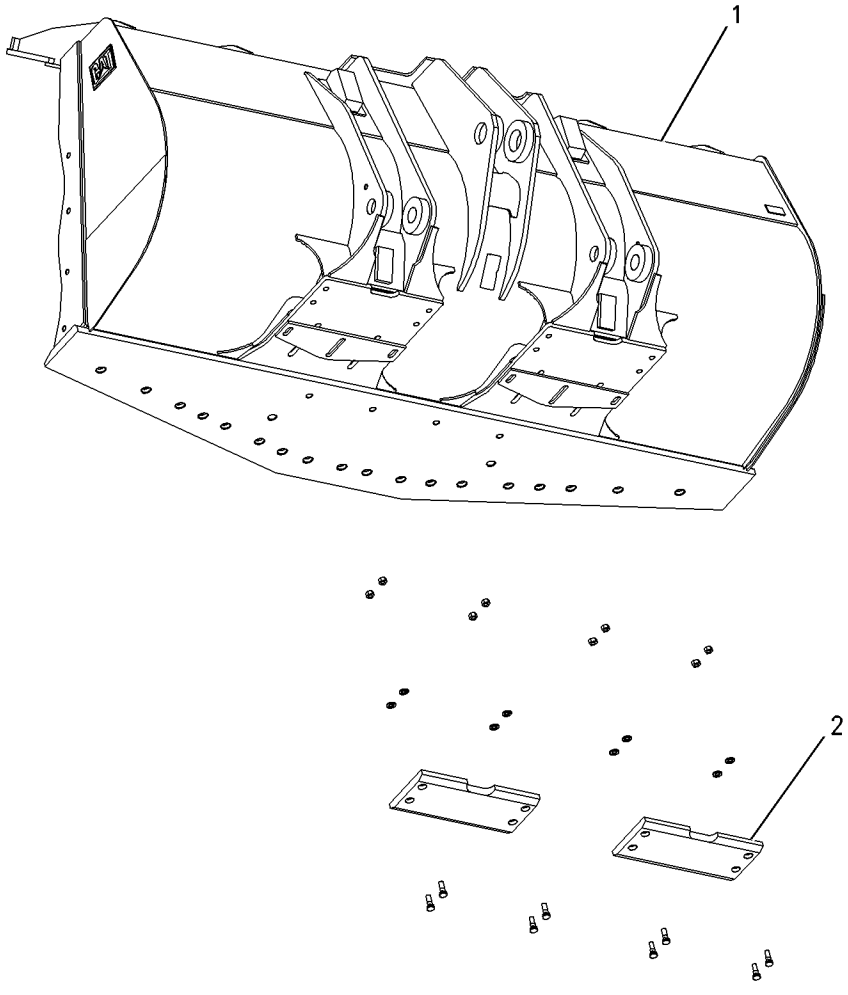

GRAPHIC #1 **<END>** g00710919

148-6902 BUCKET GP-ROCK

S/N: A7G1-UP
4.0-CU M (5.2-CU YD)
FOR USE WITH 135-9297—PAGE 748, 135-8245—PAGE 766, 135-9298—PAGE 764.
CANNOT BE USED WITH 100-6667—PAGE 747, 3G-8956—PAGE 746, 135-9297—PAGE 748, 254-5072—PAGE 768, 254-5073—PAGE 767
AN ATTACHMENT

SMCS-6102 **i02409876**

NOTE	REF NO	GRAPHIC REF	PART NUMBER	QTY	PART NAME 1 2 3 4 5 6 (PRODUCT LEVEL)	SEE PAGE
Y	1	1	**148-6910**	1	BUCKET AS-ROCK	689
Y	2	1	*161-9131*	1	PLATE GP-WEAR	764

Y-SEPARATE ILLUSTRATION

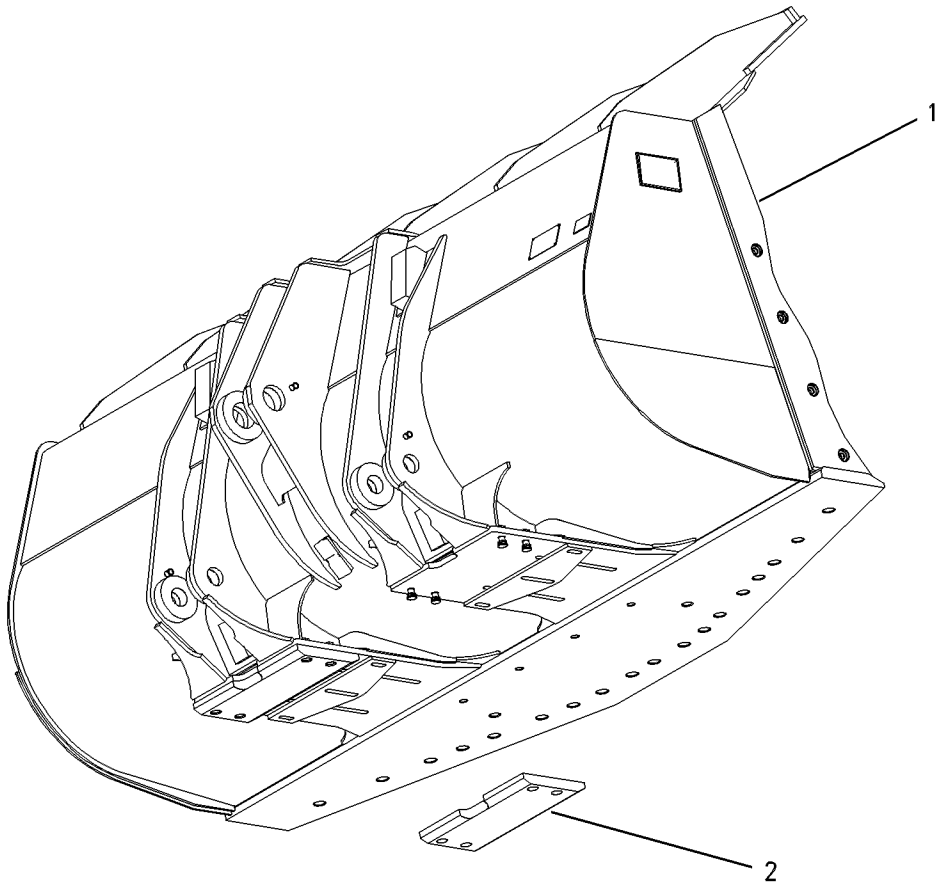

GRAPHIC #1 **<END>** g00584583

WORK TOOLS

248-0561 BUCKET GP-ROCK

S/N: A7G1-UP
5.0-CU M (6.5-CU YD)
CANNOT BE USED WITH 100-6669–PAGE 748, 100-6667–PAGE 747, 229-6942–PAGE 658, 254-5072–PAGE 768, 254-5073–PAGE 767
AN ATTACHMENT

SMCS-6102 **i02420406**

NOTE	REF NO	GRAPHIC REF	PART NUMBER	QTY	PART NAME 1 2 3 4 5 6 (PRODUCT LEVEL)	SEE PAGE
Y	1	1	**248-0562**	1	BUCKET AS-MATERIAL HANDLING	674
Y	2	1	*248-0672*	1	PLATE GP-WEAR	765
Y	3	1	*248-4026*	1	EDGE GP-CUTTING	750

Y-SEPARATE ILLUSTRATION

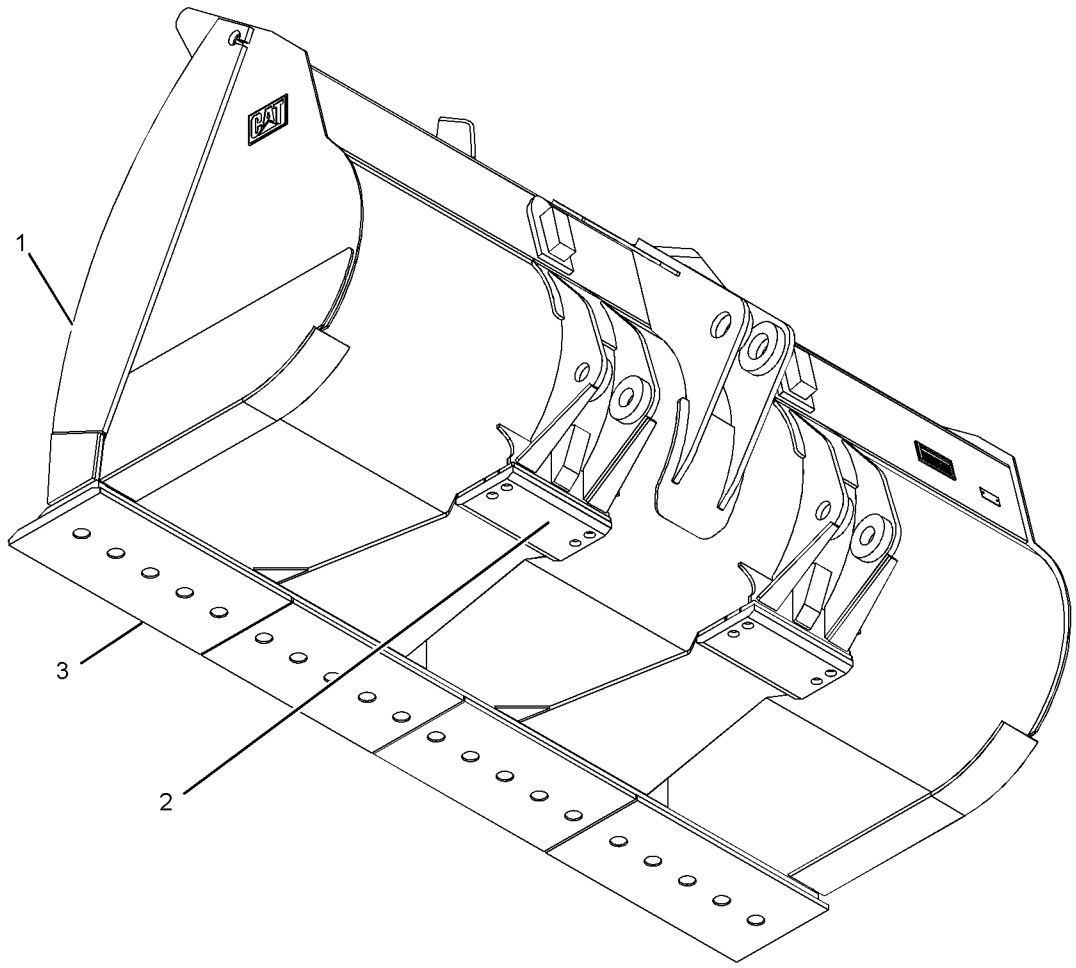

GRAPHIC #1 **<END>** g01131456

WORK TOOLS

248-0563 BUCKET GP-ROCK

S/N: A7G1-UP
4.8-CU M (6.3-CU YD)
FOR USE WITH 248-7325—PAGE 757. CANNOT BE USED WITH 100-6669—PAGE 748, 100-6667—PAGE 747, 229-6942—PAGE 658, 240-3118—PAGE 756, 237-8964—PAGE 656, 237-8965—PAGE 655
AN ATTACHMENT

SMCS-6102 **i02420408**

NOTE	REF NO	GRAPHIC REF	PART NUMBER	QTY	PART NAME 1 2 3 4 5 6 (PRODUCT LEVEL)	SEE PAGE
Y	1	1	**248-0564**	1	BUCKET AS-ROCK	690
Y	2	1	*248-0672*	1	PLATE GP-WEAR	765
Y	3	1	*254-5072*	1	TIP GP-GENERAL PURPOSE (K-90)	768

Y-SEPARATE ILLUSTRATION

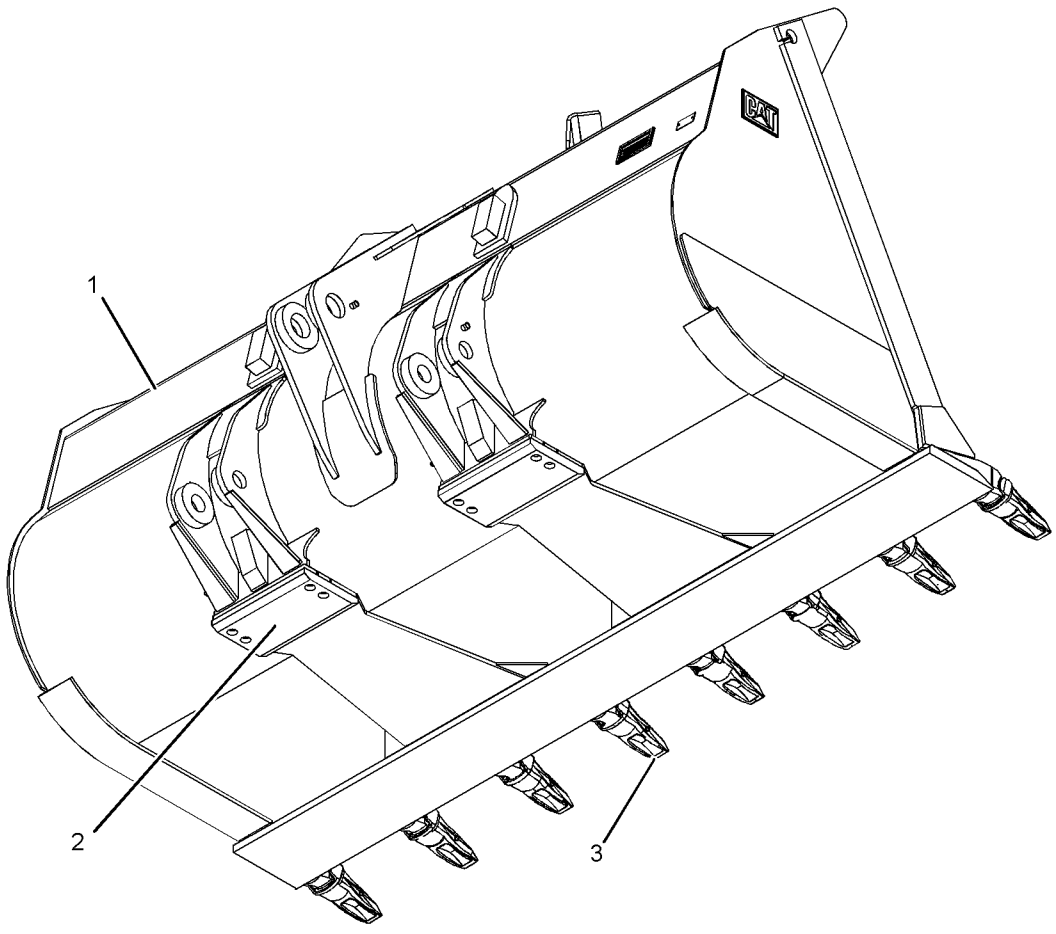

GRAPHIC #1 **<END>** g01131308

248-0565 BUCKET GP-ROCK

S/N: A7G1-UP
5.0-CU M (6.5-CU YD)
FOR USE WITH 248-7325—PAGE 757, 100-6669—PAGE 748, 100-6667—PAGE 747, 254-5072—PAGE 768, 254-5073—PAGE 767, 229-6942—PAGE 658. CANNOT BE USED WITH 240-3118—PAGE 756, 237-8964—PAGE 656, 237-8965—PAGE 655
AN ATTACHMENT

SMCS-6102 **i02420409**

NOTE	REF NO	GRAPHIC REF	PART NUMBER	QTY	PART NAME 1 2 3 4 5 6 (PRODUCT LEVEL)	SEE PAGE
Y	1	1	**248-0566**	1	BUCKET AS-ROCK	691
Y	2	1	*248-0672*	1	PLATE GP-WEAR	765

Y-SEPARATE ILLUSTRATION

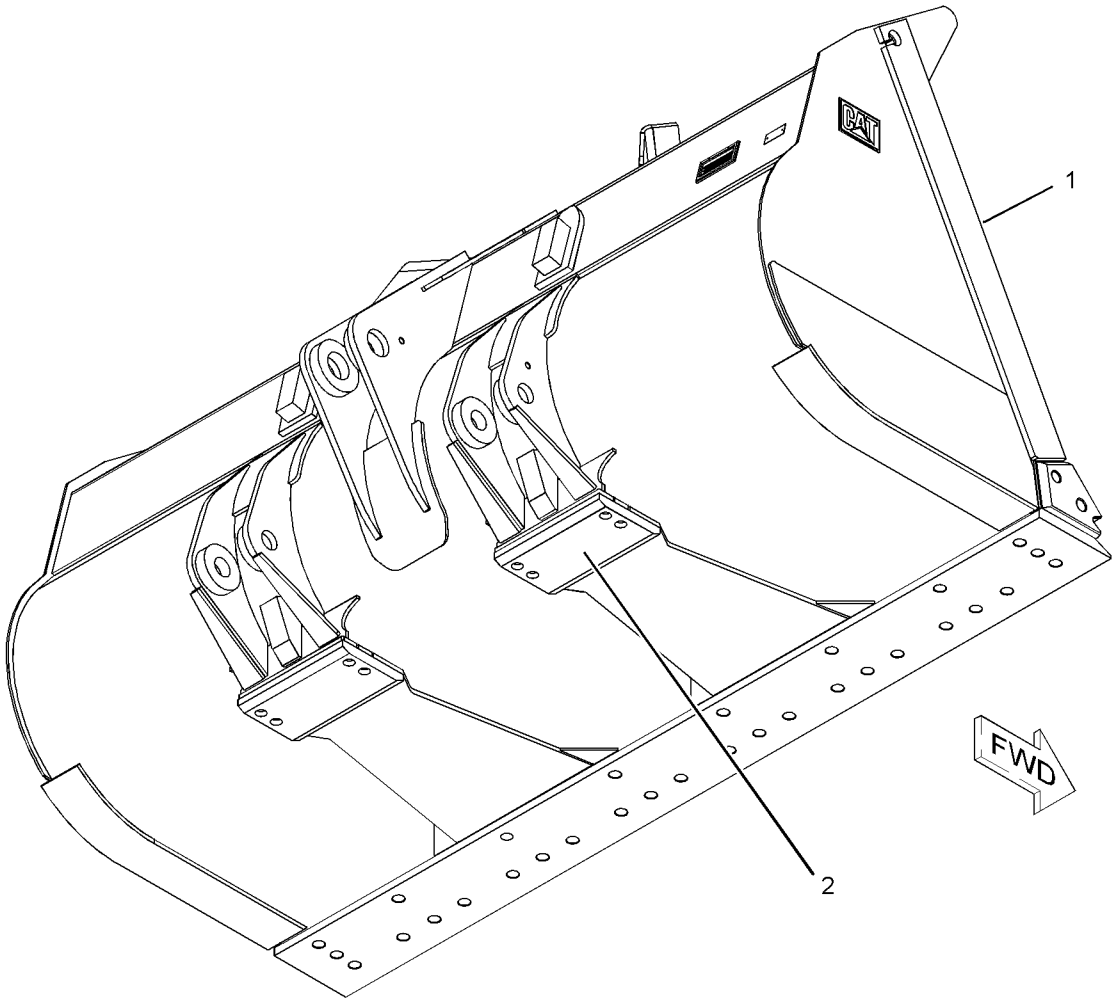

GRAPHIC #1 **<END>** g01131494

WORK TOOLS

254-4496 BUCKET GP-ROCK

S/N: A7G1-UP
AN ATTACHMENT

SMCS-6102 **i02408448**

NOTE	REF NO	GRAPHIC REF	PART NUMBER	QTY	PART NAME 1 2 3 4 5 6 (PRODUCT LEVEL)	SEE PAGE
Y	1	1	*161-9131*	1	PLATE GP-WEAR	764
Y	2	1	*254-4500*	1	BUCKET AS-ROCK	693

Y-SEPARATE ILLUSTRATION

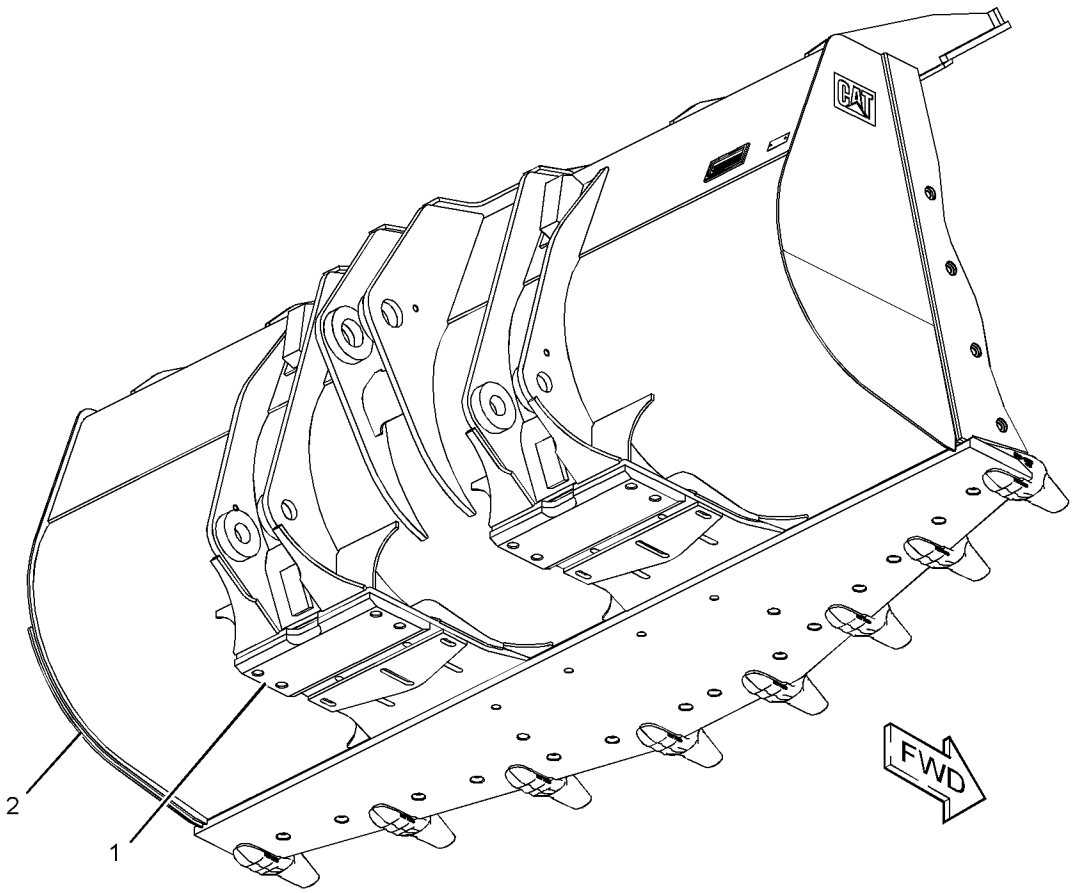

GRAPHIC #1 **<END>** g01209510

WORK TOOLS

254-4498 BUCKET GP-ROCK

S/N: A7G1-UP

AN ATTACHMENT

SMCS-6102 **i02408468**

NOTE	REF NO	GRAPHIC REF	PART NUMBER	QTY	PART NAME 1 2 3 4 5 6 (PRODUCT LEVEL)	SEE PAGE
Y	1	1	*161-9131*	1	PLATE GP-WEAR	764
Y	2	1	*254-4502*	1	BUCKET AS-ROCK	694

Y-SEPARATE ILLUSTRATION

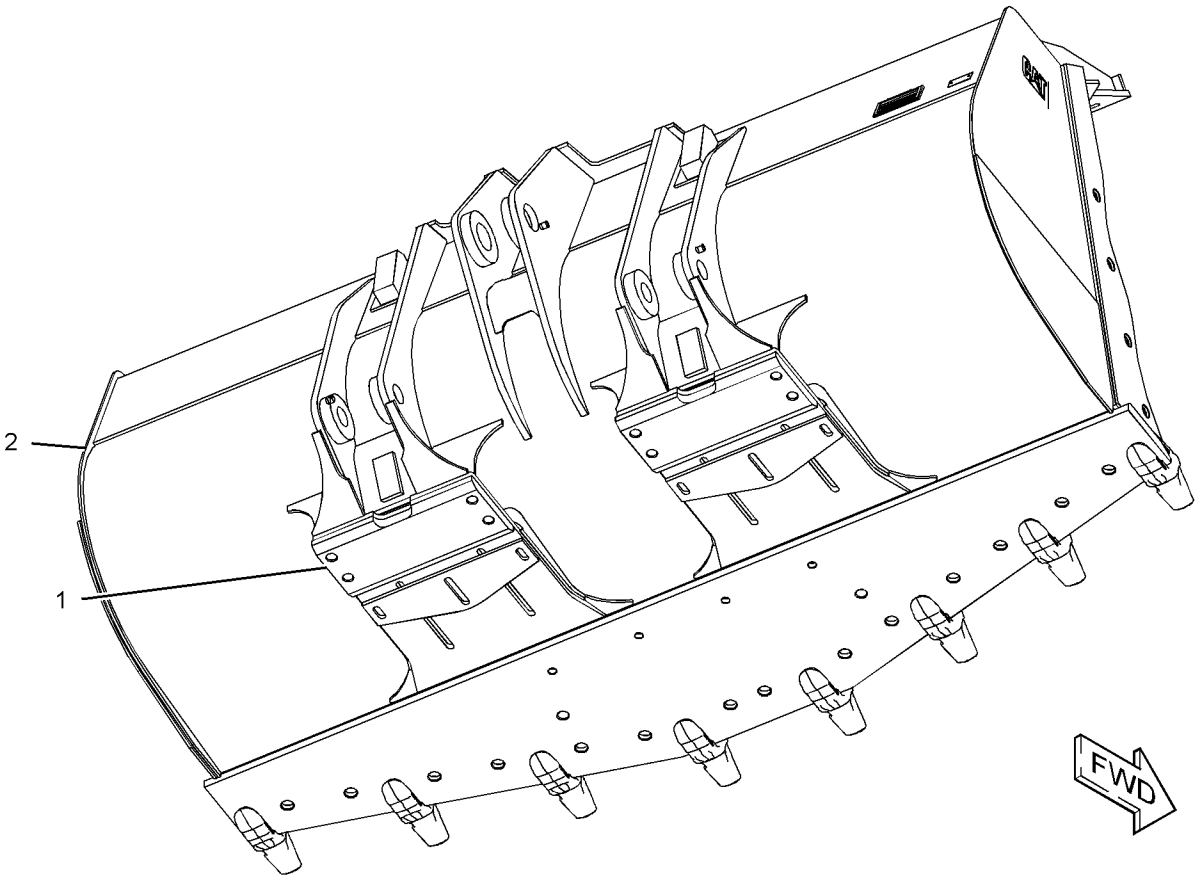

GRAPHIC #1 **<END>** g01209595

269-0133 BUCKET GP-ROCK–HEAVY-DUTY

S/N: A7G1-UP
3350-MM (131.89-IN) WIDE X 4.1-CU M (5.36-CU YD)
AN ATTACHMENT

SMCS-6102 **i02416175**

NOTE	REF NO	GRAPHIC REF	PART NUMBER	QTY	PART NAME 1 2 3 4 5 6 (PRODUCT LEVEL)	SEE PAGE
	1	1	**6Y-6351**	1	EDGE-CUTTING	
Y	2	1	*135-8245*	1	PROTECTOR GP-EDGE	766
Y	3	1	*135-9543*	1	EDGE GP-SEGMENT	751
Y	4	1	*161-9131*	1	PLATE GP-WEAR	764
	5	1	**220-9090**	8	RETAINER-G.E.T. (K-90)	
	6	1	**232-0100**	8	TIP-EXTRA DUTY (K-100, A.R.M.)	
Y	7	1	**269-0134**	1	BUCKET AS-ROCK (HEAVY-DUTY)	696
	9	1	**2J-3505**	7	NUT-FULL (7/8-9-THD)	
	10	1	**5P-8249**	7	WASHER-HARD (24X41.5X4-MM THK)	
	11	1	**6F-0196**	7	BOLT-PLOW (7/8-9X2.75-IN)	

Y-SEPARATE ILLUSTRATION

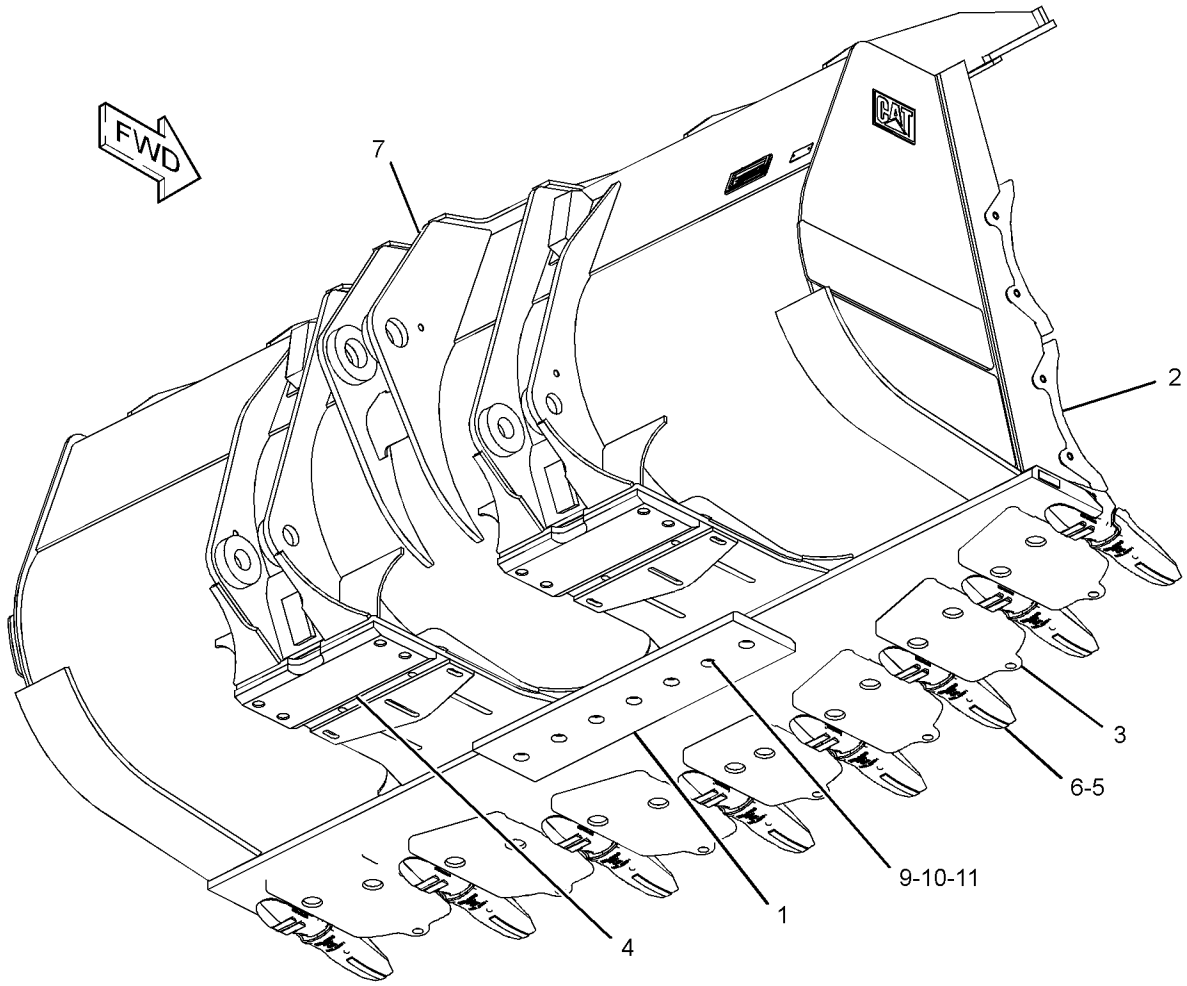

GRAPHIC #1 **<END>** g01209412

WORK TOOLS

247-3999 BUCKET GP-SLAG

S/N: A7G1-UP

AN ATTACHMENT

SMCS-6110 **i02418650**

NOTE	REF NO	GRAPHIC REF	PART NUMBER	QTY	PART NAME 1 2 3 4 5 6 (PRODUCT LEVEL)	SEE PAGE
	1	1	**107-3469**	7	RETAINER AS	
	2	1	**109-9080**	6	EDGE-SEGMENT (CENTER)	
	3	1	**114-0468**	7	PIN	
	4	1	**138-6451**	7	TIP-PENETRATION	
Y	5	1	*247-4000*	1	BUCKET AS-SLAG	698
	7	1	**3K-9770**	18	NUT-FULL (1-1/4-7-THD)	
	8	1	**8T-9079**	18	BOLT-PLOW (1-1/4-7X3.35-IN)	

Y-SEPARATE ILLUSTRATION

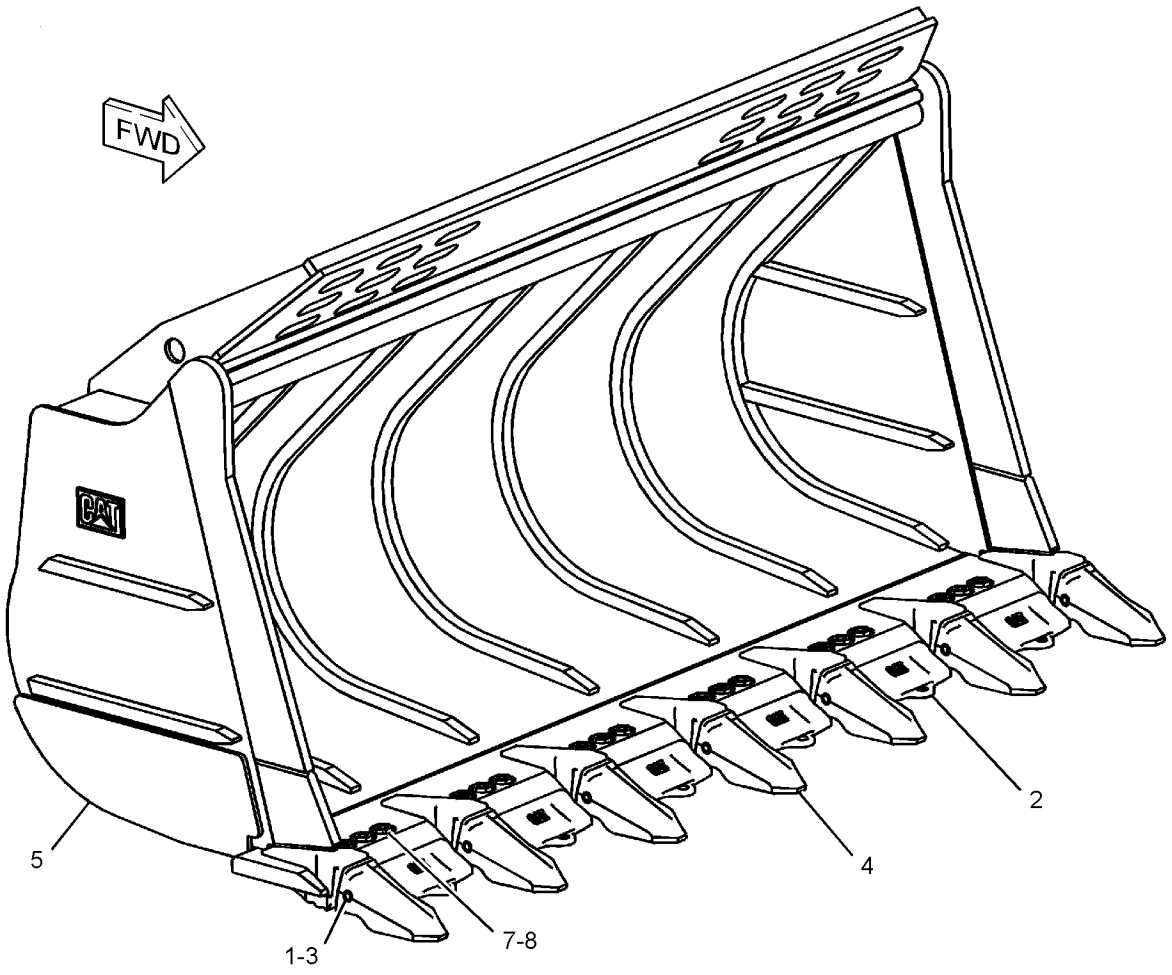

GRAPHIC #1 **<END>** g01210784

WORK TOOLS

193-0852 COUPLER AR-QUICK

S/N: A7G1-UP

AN ATTACHMENT

SMCS-6129 **i01966718**

NOTE	REF NO	GRAPHIC REF	PART NUMBER	QTY	PART NAME 1 2 3 4 5 6 (PRODUCT LEVEL)	SEE PAGE
Y	1	1	*195-7764*	1	COUPLER GP-QUICK	743
Y	2	1	*205-1088*	1	PLATE & FILM GP	915

Y-SEPARATE ILLUSTRATION

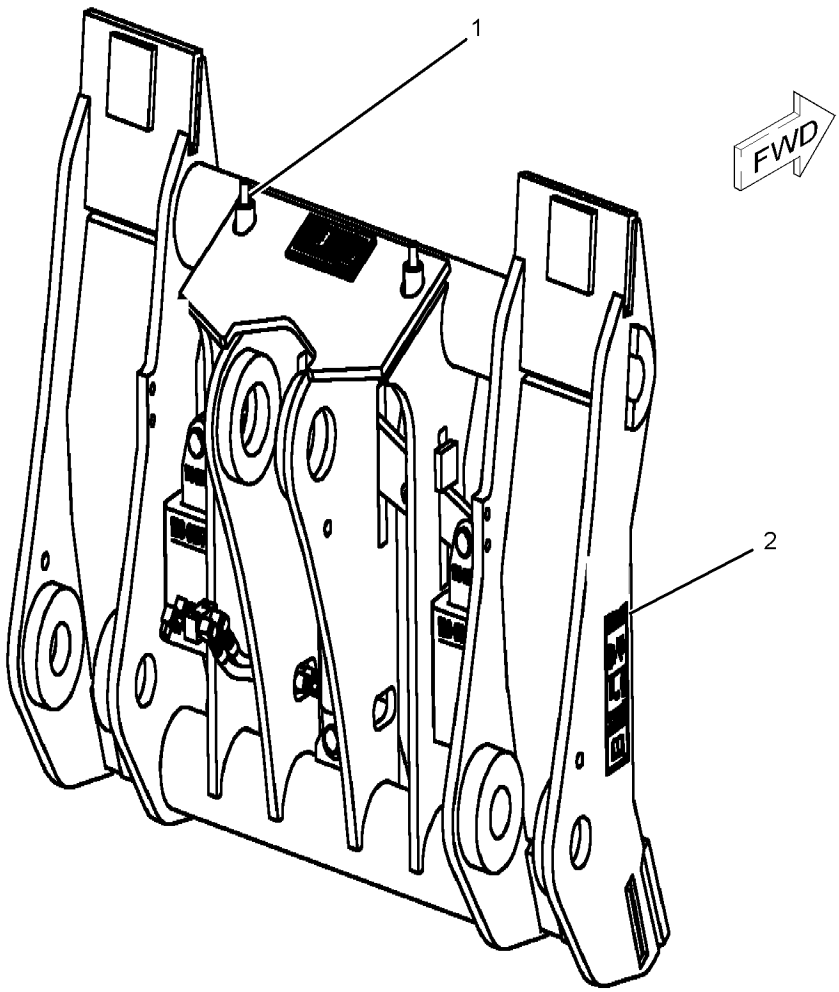

GRAPHIC #1 **<END>** g01024892

WORK TOOLS

193-8526 COUPLER AR-QUICK

S/N: A7G1-UP

AN ATTACHMENT

SMCS-6129 **i01966930**

NOTE	REF NO	GRAPHIC REF	PART NUMBER	QTY	PART NAME 1 2 3 4 5 6 (PRODUCT LEVEL)	SEE PAGE
Y	1	1	*216-1271*	1	PLATE & FILM GP	916
Y	2	1	*216-1273*	1	COUPLER GP-QUICK	744

Y-SEPARATE ILLUSTRATION

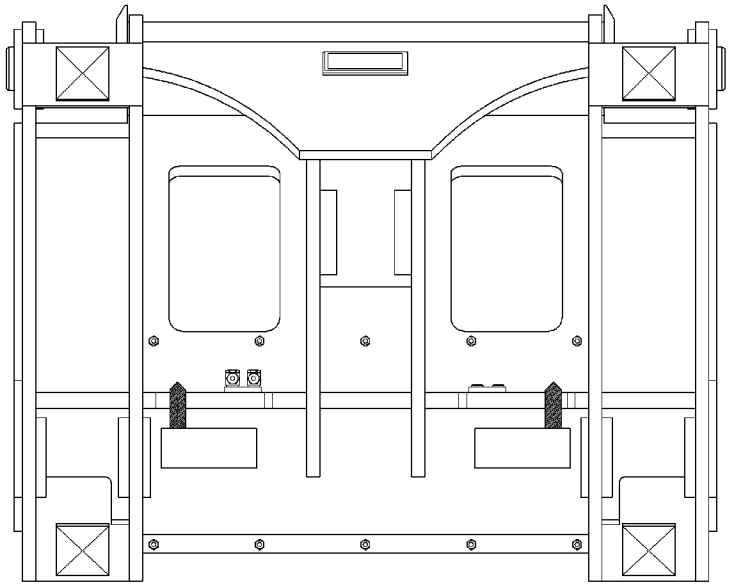

REAR VIEW

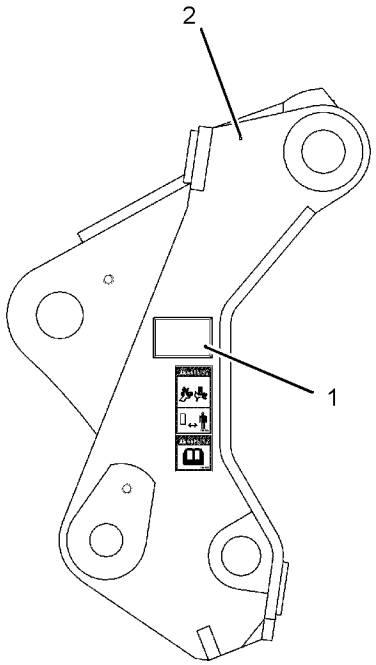

RIGHT SIDE VIEW

GRAPHIC #1

<END>

g01034581

WORK TOOLS

195-7764 COUPLER GP-QUICK

S/N: A7G1-UP

PART OF 193-0852 COUPLER AR-QUICK

AN ATTACHMENT

SMCS-6129 **i01966745**

NOTE	REF NO	GRAPHIC REF	PART NUMBER	QTY	PART NAME 1 2 3 4 5 6 (PRODUCT LEVEL)	SEE PAGE
	1	1	*195-7766*	1	FRAME AS-COUPLER	
	1A	1	**189-0107**	2	HOUSING	
	1B	1	**192-5856**	1	LEVER	
	1C	1	**192-5880**	1	PLATE	
Y	2	1	*195-9045*	1	LOCK GP-QUICK COUPLER	758

Y-SEPARATE ILLUSTRATION

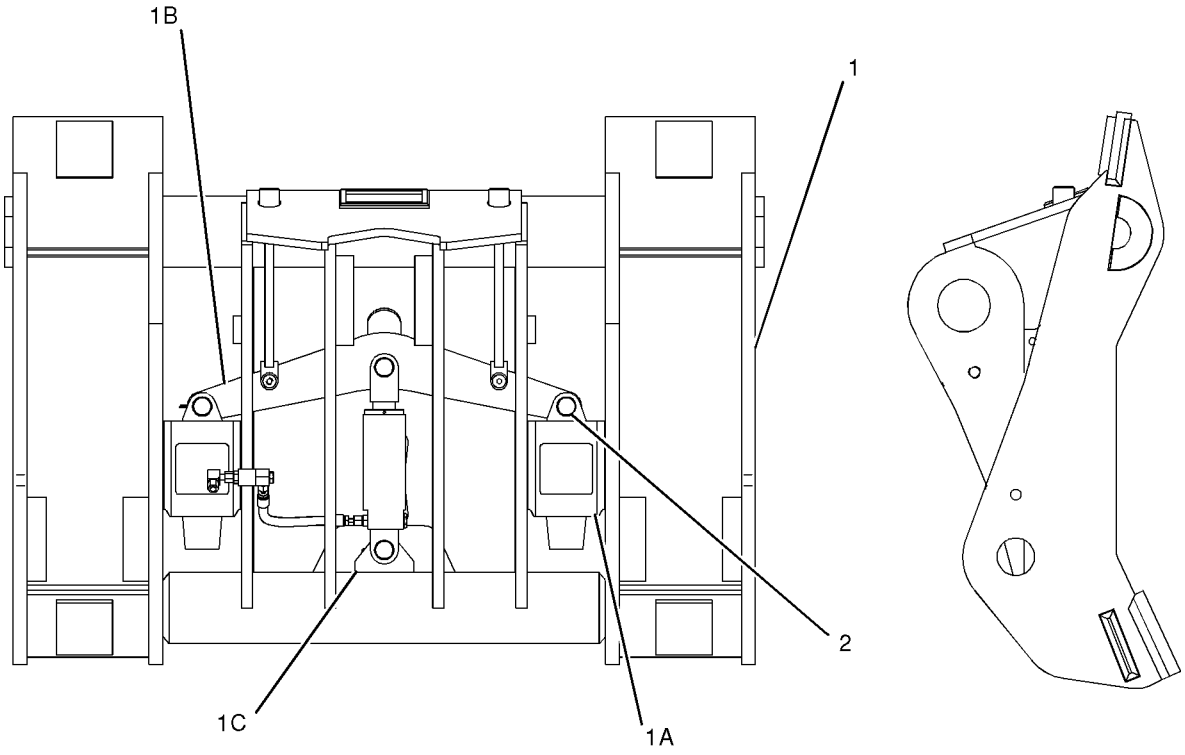

GRAPHIC #1 **<END>** g01021164

WORK TOOLS

216-1273 COUPLER GP-QUICK

S/N: A7G1-UP
PART OF 193-8526 COUPLER AR-QUICK
AN ATTACHMENT

SMCS-6129 **i01966937**

NOTE	REF NO	GRAPHIC REF	PART NUMBER	QTY	PART NAME 1 2 3 4 5 6 (PRODUCT LEVEL)	SEE PAGE
Y	1	1	*216-1275*	1	LOCK GP-QUICK COUPLER	760

Y-SEPARATE ILLUSTRATION

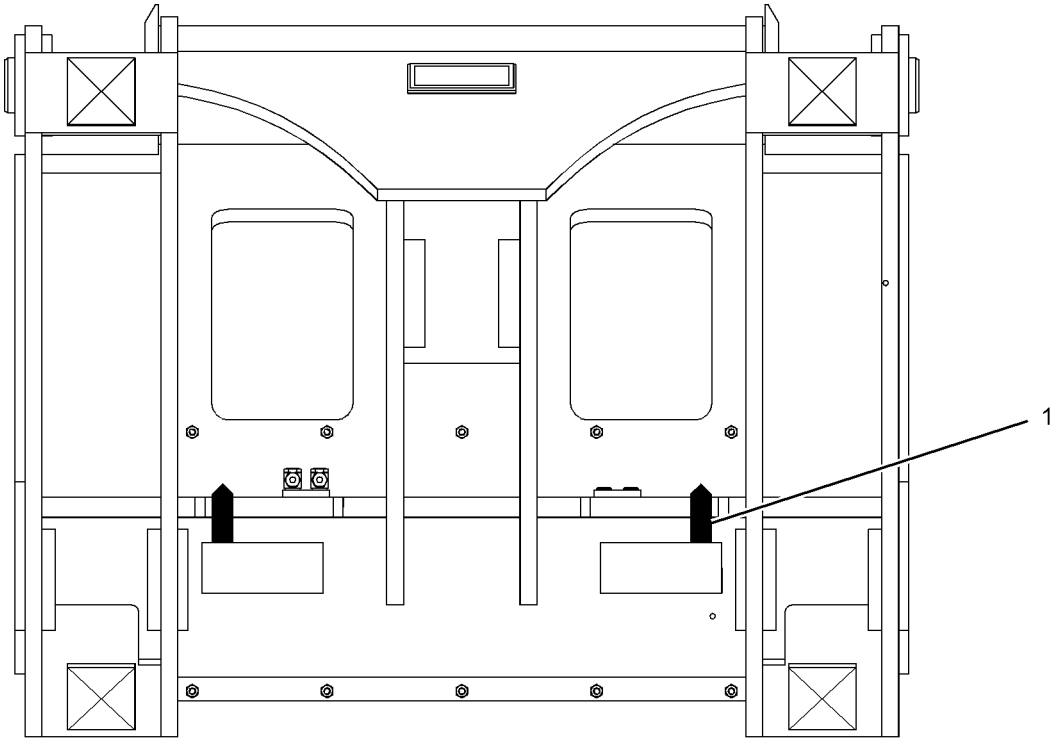

GRAPHIC #1 **<END>** g01021247

WORK TOOLS

270-4122 EDGE AS-CUTTING

S/N: A7G1-UP
PART OF 269-0134 BUCKET AS-ROCK
AN ATTACHMENT

SMCS-6801 **i02418867**

NOTE	REF NO	GRAPHIC REF	PART NUMBER	QTY	PART NAME 1 2 3 4 5 6 (PRODUCT LEVEL)	SEE PAGE
	1	1	**229-7100**	2	ADAPTER-TIP (K-100, 2-STRAP, CENTER)	
	2	1	**229-7101**	3	ADAPTER-TIP (K-100, 2-STRAP, RH)	
	3	1	**229-7102**	3	ADAPTER-TIP (K-100, 2-STRAP, LH)	
	4	1	**270-4953**	1	EDGE	
	5	1	**8P-9770**	1	PLATE	

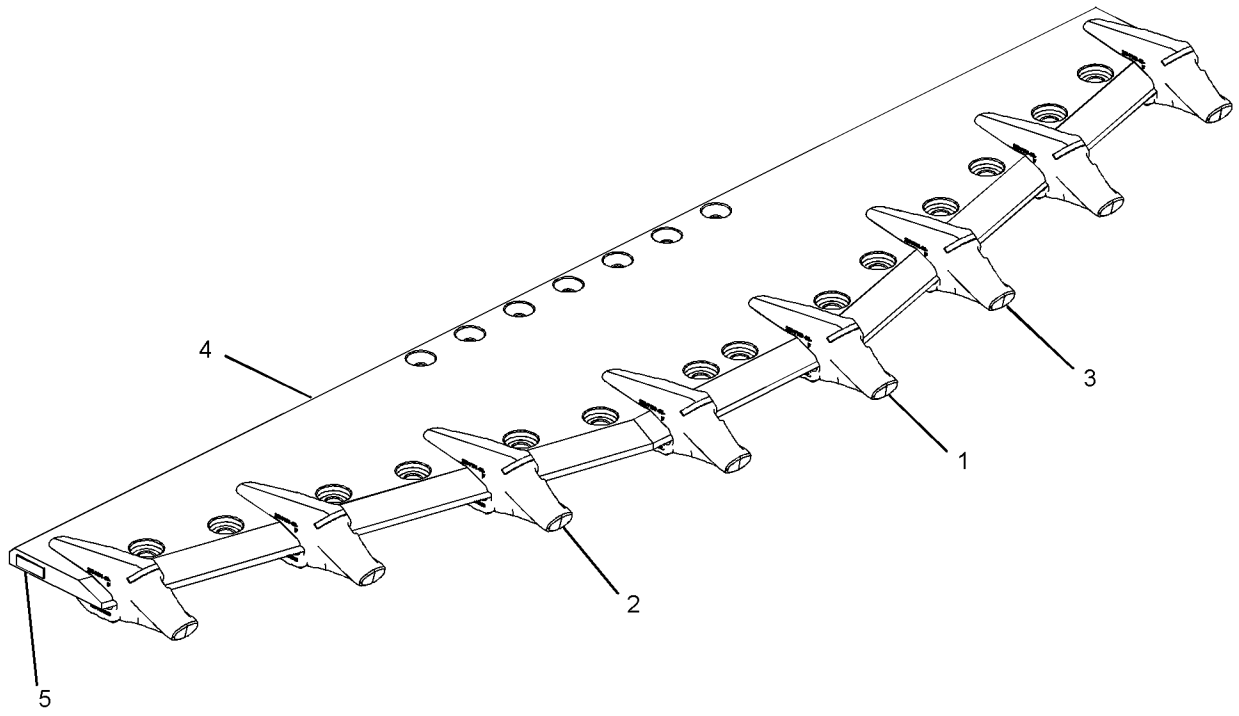

GRAPHIC #1 **<END>** g01210216

WORK TOOLS

3G-8956 EDGE GP-BIT & CUTTING

S/N: A7G1-UP

CANNOT BE USED WITH 147-0131—PAGE 714

AN ATTACHMENT

SMCS-6801 **i01321934**

NOTE	REF NO	GRAPHIC REF	PART NUMBER	QTY	PART NAME 1 2 3 4 5 6 (PRODUCT LEVEL)	SEE PAGE
	1	1	**5P-8823**	12	BOLT-PLOW (1 1/4-7X4.13IN)	
		1	**3K-9770**	12	NUT-FULL (1-1/4-7 THD)	
	2	1	**1U-0593**	2	EDGE-CUTTING	
	3	1	**3G-6395**	2	EDGE-END	

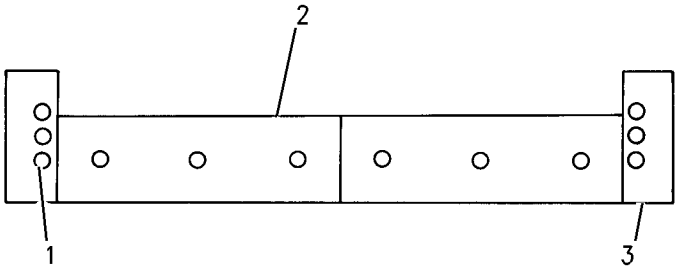

GRAPHIC #1 **<END>** g00699804

WORK TOOLS

9W-0817 EDGE GP-BIT & CUTTING

S/N: A7G1-UP
CANNOT BE USED WITH 147-0131—PAGE 714
AN ATTACHMENT

SMCS-6801 **i00259844**

NOTE	PART NUMBER	QTY	PART NAME 1 2 3 4 5 6 (PRODUCT LEVEL)	SEE PAGE
	5P-8823	14	BOLT-PLOW (1-1/4-7X105MM)	
	4T-6699	7	EDGE-SEGMENT	
	3K-9770	14	NUT-FULL (1-1/4-7 THD)	

<END>

100-6665 EDGE GP-CUTTING

S/N: A7G1-UP
AN ATTACHMENT

SMCS-6801 **i00382876**

NOTE	PART NUMBER	QTY	PART NAME 1 2 3 4 5 6 (PRODUCT LEVEL)	SEE PAGE
	5P-8823	14	BOLT-PLOW (1-1/4-7X105MM)	
	100-6664	7	EDGE-SEGMENT	
	3K-9770	14	NUT-FULL (1-1/4-7 THD)	

<END>

100-6667 EDGE GP-CUTTING

S/N: A7G1-UP
FOR USE WITH 147-0131—PAGE 714, 147-0133—PAGE 673. CANNOT BE USED WITH 100-6669—PAGE 748
AN ATTACHMENT

SMCS-6801 **i00382886**

NOTE	PART NUMBER	QTY	PART NAME 1 2 3 4 5 6 (PRODUCT LEVEL)	SEE PAGE
	5P-8823	14	BOLT-PLOW (1-1/4-7X105MM)	
	100-6666	7	EDGE-SEGMENT	
	3K-9770	14	NUT-FULL (1-1/4-7 THD)	

<END>

WORK TOOLS

100-6669 EDGE GP-CUTTING

S/N: A7G1-UP
PART OF 251-3043, 251-3051, 251-3057 BUCKET GP-GENERAL PURPOSE, 248-0567, 251-3063 BUCKET GP-MATERIAL HANDLING
FOR USE WITH 147-0131—PAGE 714, 147-0133—PAGE 673
AN ATTACHMENT

SMCS-6801 **i00382905**

NOTE	PART NUMBER	QTY	PART NAME 1 2 3 4 5 6 (PRODUCT LEVEL)	SEE PAGE
	5P-8823	12	BOLT-PLOW (1-1/4-7X105MM)	
	100-6668	2	EDGE-CUTTING	
	3G-6395	2	EDGE-END	
	3K-9770	12	NUT-FULL (1-1/4-7 THD)	

<END>

134-2959 EDGE GP-CUTTING

S/N: A7G1-UP
AN ATTACHMENT

SMCS-6801 **i00913657**

NOTE	PART NUMBER	QTY	PART NAME 1 2 3 4 5 6 (PRODUCT LEVEL)	SEE PAGE
	5P-8823	12	BOLT-PLOW (1 1/4-7X105MM)	
	1U-1909	2	EDGE-CUTTING	
	106-9290	2	EDGE-END	
	3K-9770	2	NUT-FULL (1-1/4-7 THD)	

<END>

135-9297 EDGE GP-CUTTING

S/N: A7G1-UP
FOR USE WITH 148-6898 BUCKET GP-ROCK, 148-6902 BUCKET GP-ROCK
AN ATTACHMENT

SMCS-6801 **i01474901**

NOTE	PART NUMBER	QTY	PART NAME 1 2 3 4 5 6 (PRODUCT LEVEL)	SEE PAGE
	8T-9079	18	BOLT-PLOW	
	135-8240	1	EDGE-CUTTING	
	135-8241	1	EDGE-CUTTING	
	135-8242	1	EDGE-CUTTING	
	135-8243	1	EDGE-CUTTING	
	135-8244	1	EDGE-CUTTING	
	3K-9770	18	NUT-FULL (1 1/4X7 THD)	
	4K-0684	18	WASHER-HARD (34X55X6MM THK)	

<END>

140-6824 EDGE GP-CUTTING

S/N: A7G1-UP

FOR USE WITH 133-1693—PAGE 701, 213-1176—PAGE 702, 147-0131—PAGE 714, 248-0565—PAGE 736, 251-3035—PAGE 705, 251-3037—PAGE 707, 251-3039—PAGE 716, 251-3047—PAGE 721, 251-3061—PAGE 723

AN ATTACHMENT

SMCS-6801 **i02413677**

NOTE	PART NUMBER	QTY	PART NAME 1 2 3 4 5 6 (PRODUCT LEVEL)	SEE PAGE
	5P-8823	12	BOLT-PLOW (1-1/4-7X4.13-IN)	
	140-6823	2	EDGE-CUTTING	
	167-7430	2	EDGE-END	
	3K-9770	12	NUT-FULL (1-1/4-7-THD)	

<END>

248-4026 EDGE GP-CUTTING

S/N: A7G1-UP
PART OF 251-3041, 251-3049, 256-3695 BUCKET GP-MATERIAL HANDLING, 248-0561 BUCKET GP-ROCK
AN ATTACHMENT

SMCS-6801 **i02418932**

NOTE	REF NO	GRAPHIC REF	PART NUMBER	QTY	PART NAME 1 2 3 4 5 6 (PRODUCT LEVEL)	SEE PAGE
	1	1	**9W-6615**	2	EDGE-CUTTING	
	2	1	**3K-9770**	20	NUT-FULL (1-1/4-7-THD)	
	3	1	**8T-9079**	20	BOLT-PLOW (1-1/4-7X3.35-IN)	
	4	1	**9W-0775**	2	EDGE-CUTTING	

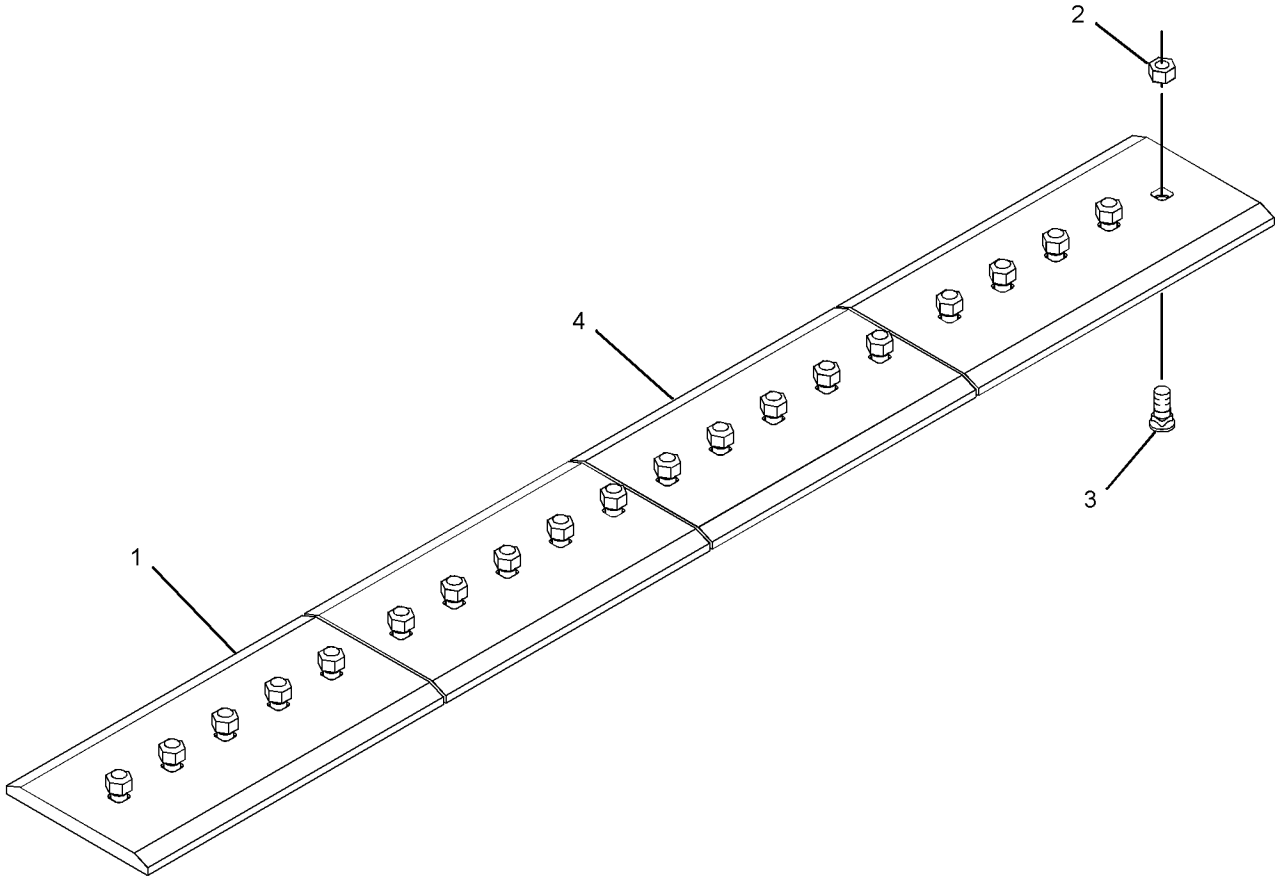

GRAPHIC #1 **<END>** g01209543

135-9293 EDGE GP-SEGMENT

S/N: A7G1-UP
FOR USE WITH 148-6904 BUCKET GP-ROCK, 148-6900 BUCKET GP-ROCK
AN ATTACHMENT

SMCS-6818 **i01474900**

NOTE	PART NUMBER	QTY	PART NAME 1 2 3 4 5 6 (PRODUCT LEVEL)	SEE PAGE
	8T-9079	14	BOLT-PLOW	
	135-9294	1	EDGE-SEGMENT	
	135-9296	3	EDGE-SEGMENT	
	135-9295	3	EDGE-SEGMENT	
	3K-9770	14	NUT-FULL (1 1/4-7-THD)	

<END>

135-9543 EDGE GP-SEGMENT

S/N: A7G1-UP
PART OF 269-0133 BUCKET GP-ROCK
CANNOT BE USED WITH 148-6902—PAGE 733, 148-6902—PAGE 733
AN ATTACHMENT

SMCS-6818 **i00793200**

NOTE	PART NUMBER	QTY	PART NAME 1 2 3 4 5 6 (PRODUCT LEVEL)	SEE PAGE
	6V-6535	14	BOLT-PLOW (1 1/4-7X95MM)	
	135-9544	1	EDGE-SEGMENT	
	135-9546	3	EDGE-SEGMENT	
	135-9545	3	EDGE-SEGMENT-RH	
	3K-9770	14	NUT-FULL (1-1/4-7 THD)	

<END>

WORK TOOLS

194-7817 FORK GP-PALLET

S/N: A7G1-UP

FOR USE WITH 193-0852—PAGE 741

AN ATTACHMENT

SMCS-6405 **i02413951**

NOTE	REF NO	GRAPHIC REF	PART NUMBER	QTY	PART NAME 1 2 3 4 5 6 (PRODUCT LEVEL)	SEE PAGE
	1	1	**150-8896**	2	FILM-NOTICE (LIFT EYE LOCATION)	
	2	1	**159-1121**	4	LOCKWASHER (17X24X2.6-MM THK)	
	3	1	**159-8036**	2	FILM-WARNING (READ OMM)	
	4	1	**161-4130**	2	PLATE-IDENTIFICATION (CAT)	
	6	1	*215-7436*	1	FRAME AS	
J	7	1	*215-7437*	2	FORK GP-PALLET	
M	9	1	**8T-0439**	2	BOLT-SOCKET HEAD (M16X2X30-MM)	
					AVAILABLE REPAIR KIT(S):	
J			**249-8798**	1	LOCK GP-MECHANICAL	

J-KIT MARKED J SERVICES PART MARKED J
M-METRIC PART

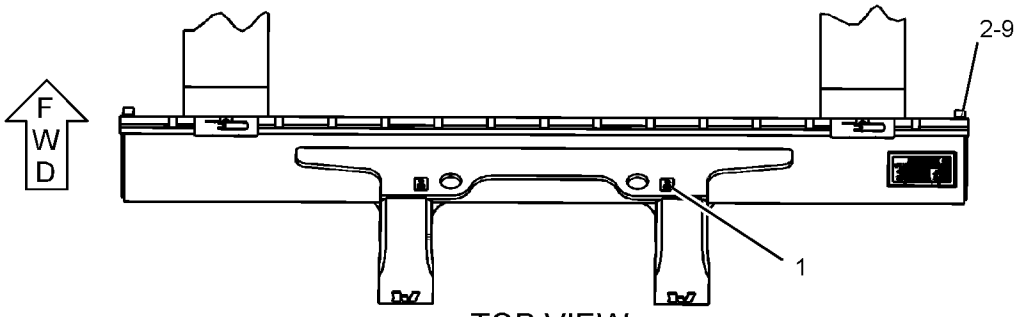

TOP VIEW

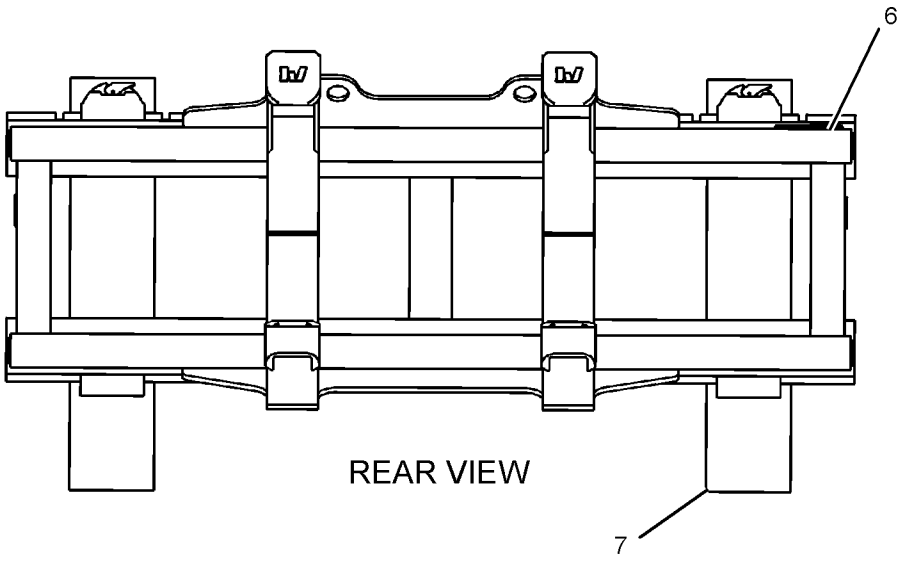

REAR VIEW

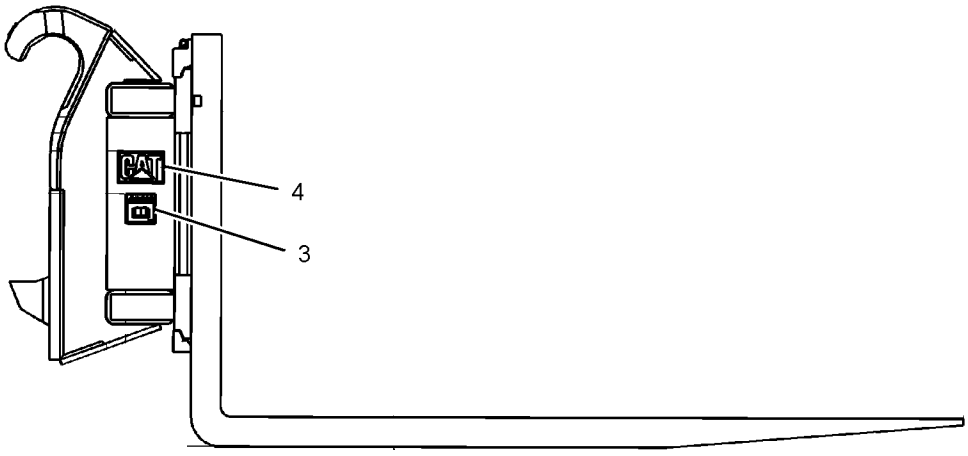

RIGHT SIDE VIEW

GRAPHIC #1 **<END>** g01210790

WORK TOOLS

194-7818 FORK GP-PALLET

S/N: A7G1-UP
FOR USE WITH 193-0852—PAGE 741
AN ATTACHMENT

SMCS-6405 **i02413960**

NOTE	REF NO	GRAPHIC REF	PART NUMBER	QTY	PART NAME 1 2 3 4 5 6 (PRODUCT LEVEL)	SEE PAGE
	1	1	**150-8896**	2	FILM-NOTICE (LIFT EYE LOCATION)	
	2	1	**159-1121**	4	LOCKWASHER (17X24X2.6-MM THK)	
	3	1	**159-8036**	2	FILM-WARNING (READ OMM)	
	4	1	**161-4130**	2	PLATE-IDENTIFICATION (CAT)	
J	6	1	*215-7437*	2	FORK GP-PALLET	
	7	1	*217-5627*	1	FRAME AS	
		1	**201-0115**	2	HOOK AS	
M	9	1	**8T-0439**	2	BOLT-SOCKET HEAD (M16X2X30-MM)	
					AVAILABLE REPAIR KIT(S):	
J			**249-8798**	1	LOCK GP-MECHANICAL	

J-KIT MARKED J SERVICES PART MARKED J
M-METRIC PART

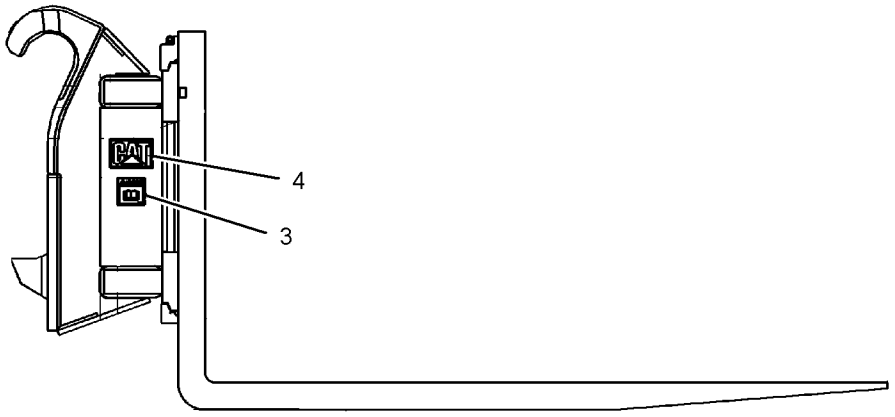

RIGHT SIDE VIEW

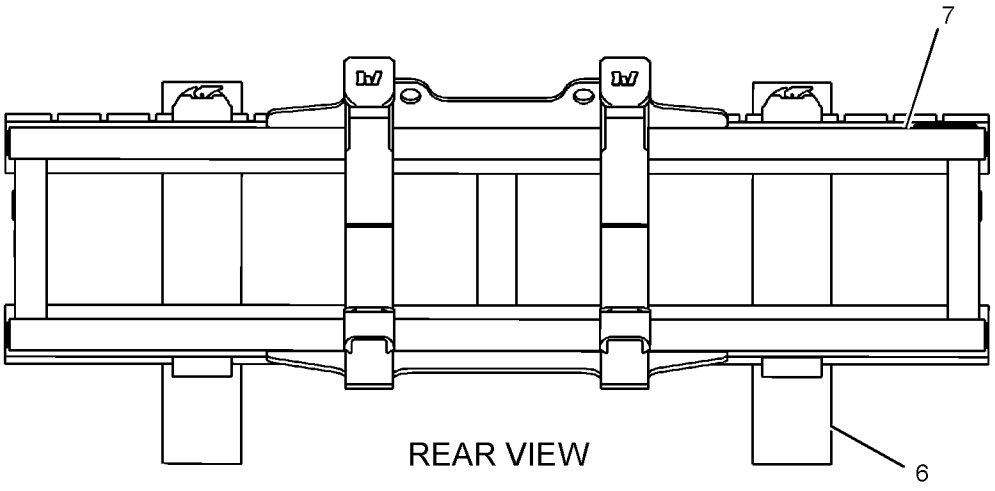

REAR VIEW

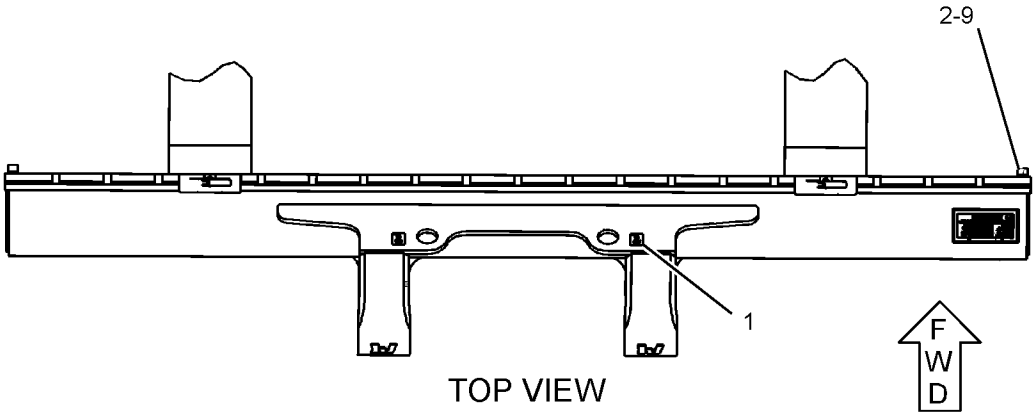

TOP VIEW

GRAPHIC #1 **<END>** g01210722

WORK TOOLS

240-3118 GUARD GP-BUCKET

S/N: A7G1-UP

FOR USE WITH 146-8070—PAGE 731, 147-0131—PAGE 714. CANNOT BE USED WITH 133-1667—PAGE 699, 133-1671—PAGE 700, 133-1693—PAGE 701, 213-1176—PAGE 702 AN ATTACHMENT

SMCS-6001, 6800, 6805 **i02116976**

NOTE	REF NO	GRAPHIC REF	PART NUMBER	QTY	PART NAME 1 2 3 4 5 6 (PRODUCT LEVEL)	SEE PAGE
	1	1	**240-0177**	2	PLATE	
	2	1	**240-1462**	1	DEFLECTOR AS	
		1	**240-1464**	1	PLATE	
		1	**240-1465**	1	PLATE	
	3	1	**252-5475**	2	PLATE	

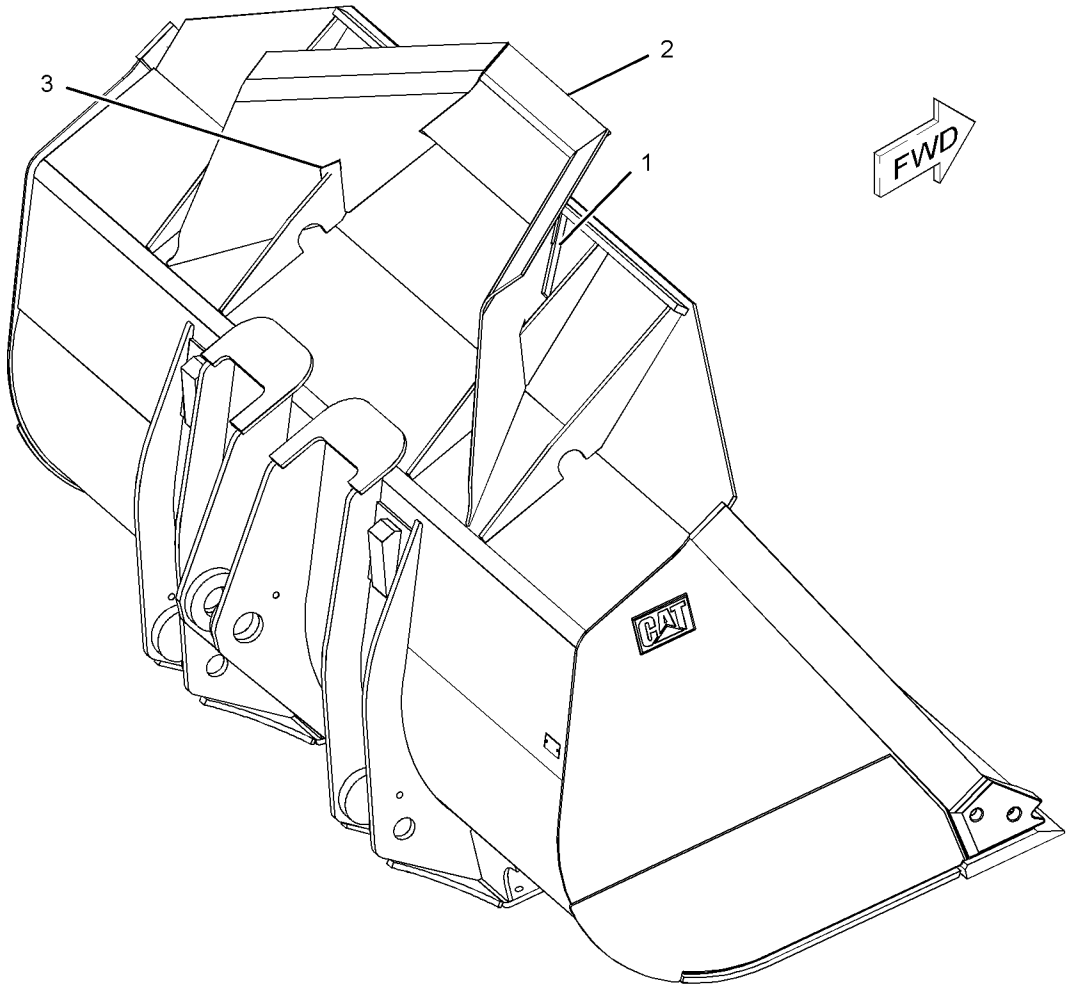

GRAPHIC #1 **<END>** g01078679

WORK TOOLS

248-7325 GUARD GP-BUCKET

S/N: A7G1-UP

AN ATTACHMENT

SMCS-6001, 6800, 6805 **i02253470**

NOTE	REF NO	GRAPHIC REF	PART NUMBER	QTY	PART NAME 1 2 3 4 5 6 (PRODUCT LEVEL)	SEE PAGE
	1	1	**248-7326**	1	PLATE AS-GUARD	
	2	1	**8T-4123**	16	WASHER-PLATED (22X35X3.5-MM THK)	
M	3	1	**8T-4131**	8	NUT (M20X2.5-THD)	
M	4	1	**8T-6430**	8	BOLT (M20X2.5X50-MM)	

M-METRIC PART

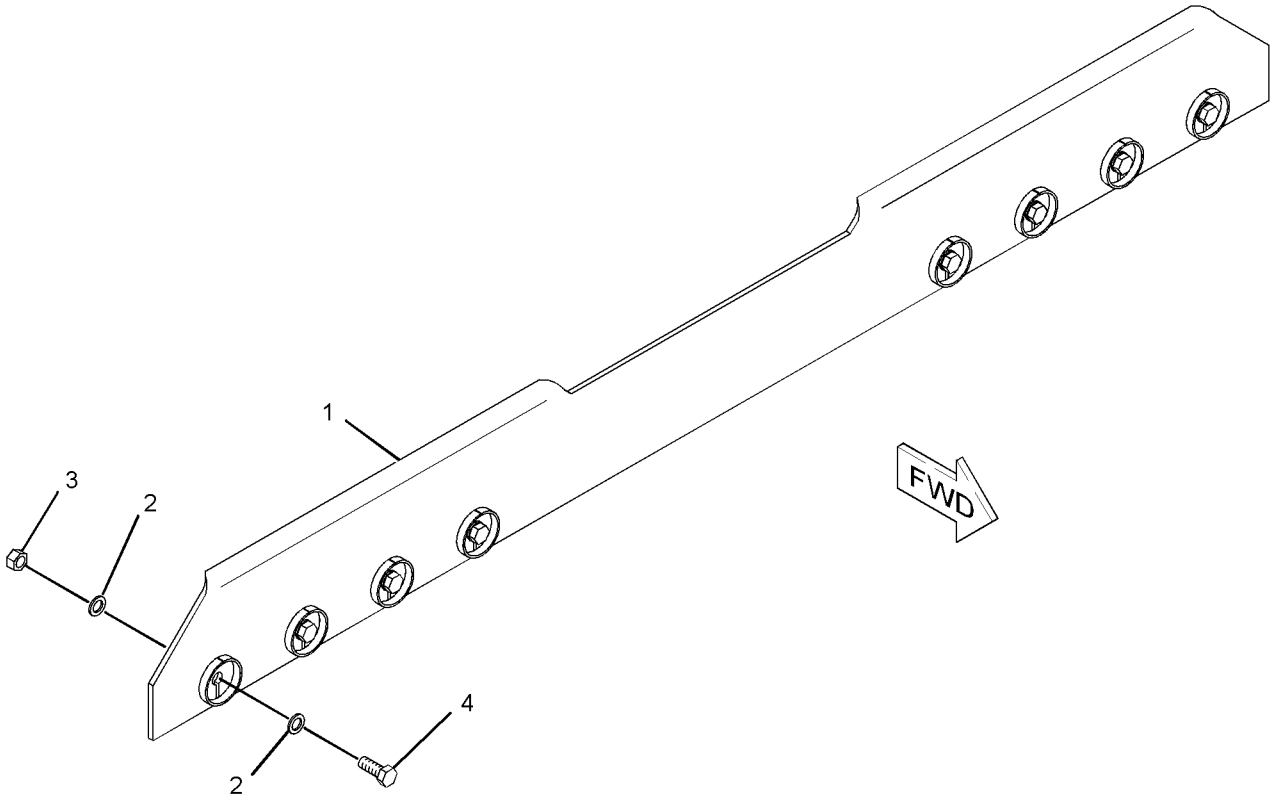

GRAPHIC #1 **<END>** g01135326

WORK TOOLS

195-9045 LOCK GP-QUICK COUPLER—HYDRAULIC

S/N: A7G1-UP
PART OF 195-7764 COUPLER GP-QUICK
AN ATTACHMENT

SMCS-6129 **i02283716**

NOTE	REF NO	GRAPHIC REF	PART NUMBER	QTY	PART NAME 1 2 3 4 5 6 (PRODUCT LEVEL)	SEE PAGE
	1	1	**170-5121**	4	ADAPTER AS	
					(EACH INCLUDES)	
		1	**4J-5477**	1	SEAL-O-RING	
		1	**162-6816**	1	SEAL-FITTING	
	2	1	**183-9044**	2	ELBOW (SWIVEL)	
	3	1	**189-0109**	2	WEDGE	
	4	1	**192-5881**	4	PIN	
	5	1	**192-5884**	2	ROD AS	
J	6	1	**192-5897**	1	CYLINDER GP-COUPLER	
I	7	1	**192-5944**	2	HOSE AS	
	8	1	**202-6450**	2	BOLT-SHOULDER	
	9	1	*148-8351*	2	ELBOW AS	
					(EACH INCLUDES)	
		1	**4J-5477**	1	SEAL-O-RING	
		1	**6V-9849**	1	ELBOW (SWIVEL)	
	10	1	**3B-4631**	4	PIN-COTTER	
	11	1	**6V-9828**	2	CAP AS	
	12	1	**8T-4167**	4	WASHER-HARD (26X44X4-MM THK)	
	13	1	**9X-8257**	4	WASHER (17.5X30X3.5-MM THK)	
					AVAILABLE REPAIR KIT(S):	
J			**169-3923**	1	KIT-VALVE (QUICK COUPLER)	
J			**202-7897**	1	KIT-SEAL (QUICK COUPLER)	

I-REFER TO HYDRAULIC INFORMATION SYSTEM
J-GP MARKED J INCLUDES KITS MARKED J

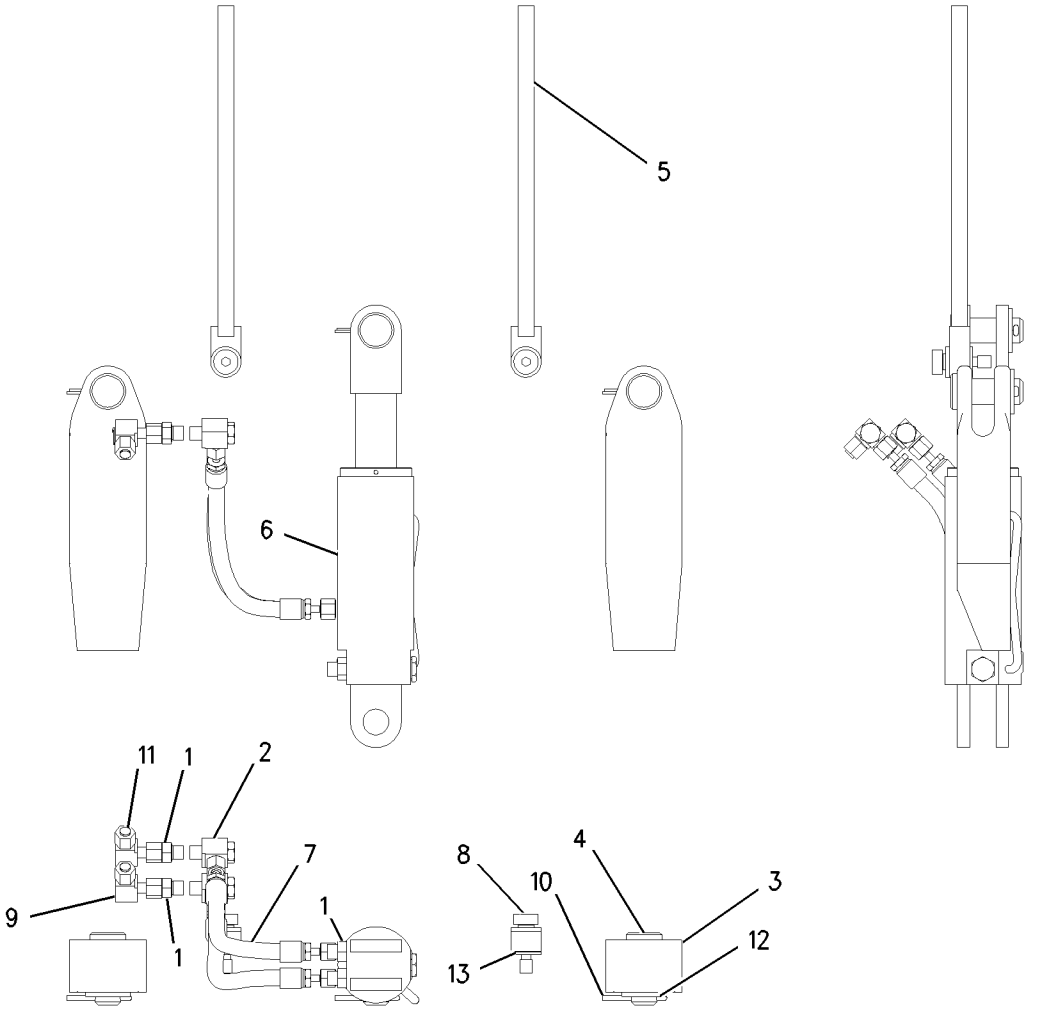

GRAPHIC #1 **<END>** g00840619

WORK TOOLS

216-1275 LOCK GP-QUICK COUPLER

S/N: A7G1-UP
PART OF 216-1273 COUPLER GP-QUICK
AN ATTACHMENT

SMCS-6129 **i01966964**

NOTE	REF NO	GRAPHIC REF	PART NUMBER	QTY	PART NAME 1 2 3 4 5 6 (PRODUCT LEVEL)	SEE PAGE
	1	1	**095-0948**	2	FITTING	
	2	1	*148-8433*	1	TEE AS	
		1	**6V-8397**	2	SEAL-O-RING	
		1	**6V-9836**	1	TEE-SWIVEL	
	3	1	**159-1118**	10	LOCKWASHER (10.5X16X2-MM THK)	
	4	1	**159-1121**	4	LOCKWASHER (17X24X2.6-MM THK)	
M	5	1	**159-3048**	2	SCREW-FLAT HEAD	
	6	1	**162-0476**	3	ADAPTER AS	
					(EACH INCLUDES)	
		1	**6V-8397**	1	SEAL-O-RING	
		1	**162-2254**	1	SEAL	
	7	1	**175-4792**	2	ELBOW (SWIVEL)	
	8	1	**175-7613**	2	ELBOW (SWIVEL)	
	9	1	**198-5904**	2	PLATE	
	10	1	**215-7430**	2	PIN AS	
I	11	1	**216-7281**	1	HOSE AS	
I	12	1	**216-7282**	1	HOSE AS	
I	13	1	**216-7283**	1	HOSE AS	
	14	1	**216-6418**	2	PIN AS	
	15	1	**216-6422**	1	COVER AS	
	16	1	**216-6905**	1	STOP	
	17	1	**216-7267**	1	CYLINDER GP-COUPLER	
		1	**216-8186**	1	KIT-SEAL	
	18	1	**216-7268**	3	PLUG AS	
					(EACH INCLUDES)	
		1	**162-2254**	1	SEAL	
	19	1	**6V-9829**	2	CAP AS	
M	20	1	**7X-2556**	2	BOLT (M16X2X100-MM)	
	21	1	**8T-4121**	10	WASHER-HARD (11X21X2.5-MM THK)	
M	22	1	**8T-4132**	4	NUT (M16X2-THD)	
M	23	1	**8T-4133**	10	NUT (M10X1.15-THD)	
M	24	1	**8T-4182**	10	BOLT (M10X1.5X45-MM)	

I-REFER TO HYDRAULIC INFORMATION SYSTEM
M-METRIC PART

216-1275 **LOCK GP-QUICK COUPLER** *(contd.)* **i01966964**

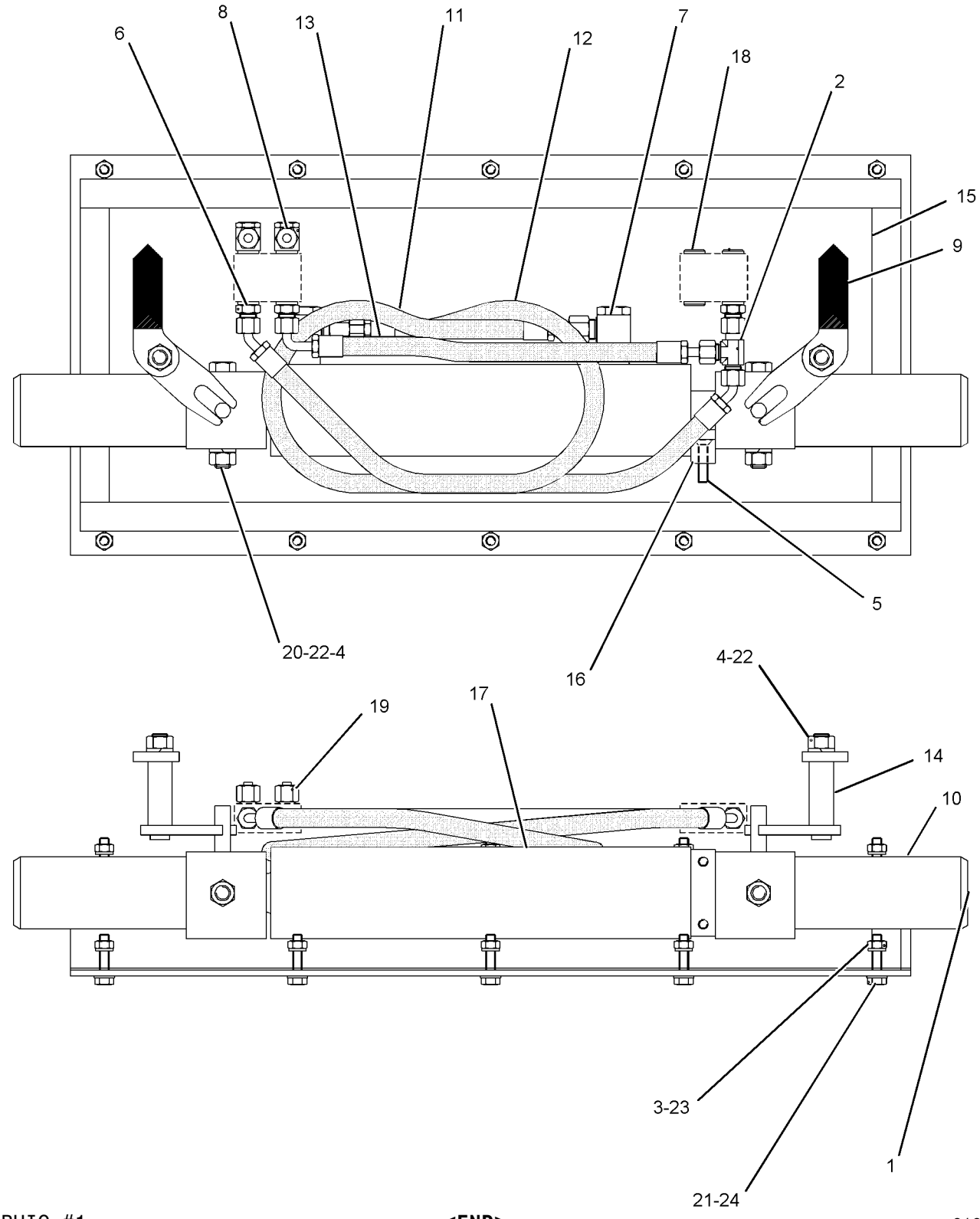

GRAPHIC #1 **<END>** g01021251

WORK TOOLS

277-5331 PIN GP

S/N: A7G1-UP
PART OF 263-6296 LUBRICATION AR-AUTOMATIC
AN ATTACHMENT

SMCS-6108 **i02418545**

NOTE	REF NO	GRAPHIC REF	PART NUMBER	QTY	PART NAME 1 2 3 4 5 6 (PRODUCT LEVEL)	SEE PAGE
	1	1	**209-4865**	1	LINK AS	
		1	**4V-8520**	2	BEARING-SLEEVE	
	2	1	**275-8815**	2	PIN AS	

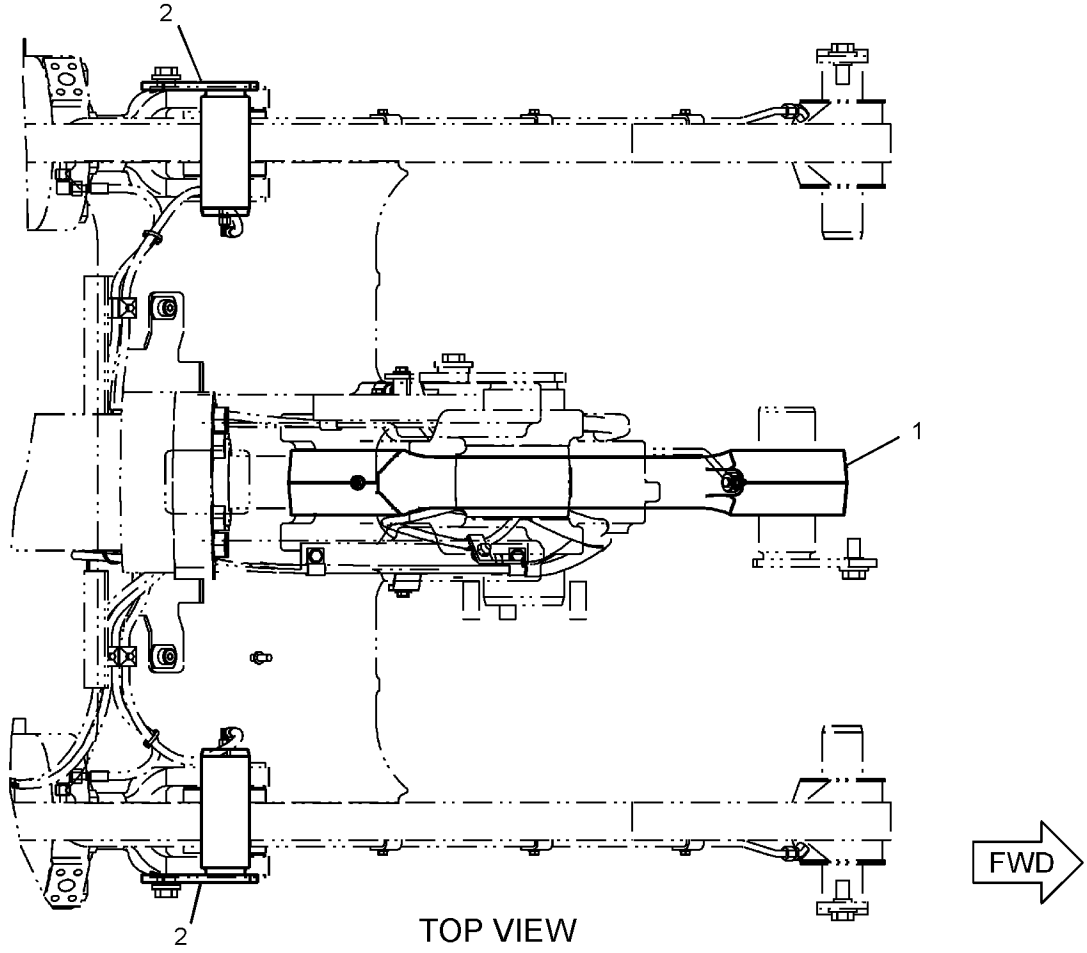

TOP VIEW

GRAPHIC #1 **<END>** g01209282

WORK TOOLS

280-2421 PIN GP

S/N: A7G1-UP
PART OF 277-0038 LUBRICATION AR-AUTOMATIC
AN ATTACHMENT

SMCS-6108 **i02417247**

NOTE	REF NO	GRAPHIC REF	PART NUMBER	QTY	PART NAME 1 2 3 4 5 6 (PRODUCT LEVEL)	SEE PAGE
	1	1	**209-4865**	1	LINK AS	
		1	**4V-8520**	2	BEARING-SLEEVE	
	2	1	**275-8815**	2	PIN AS	

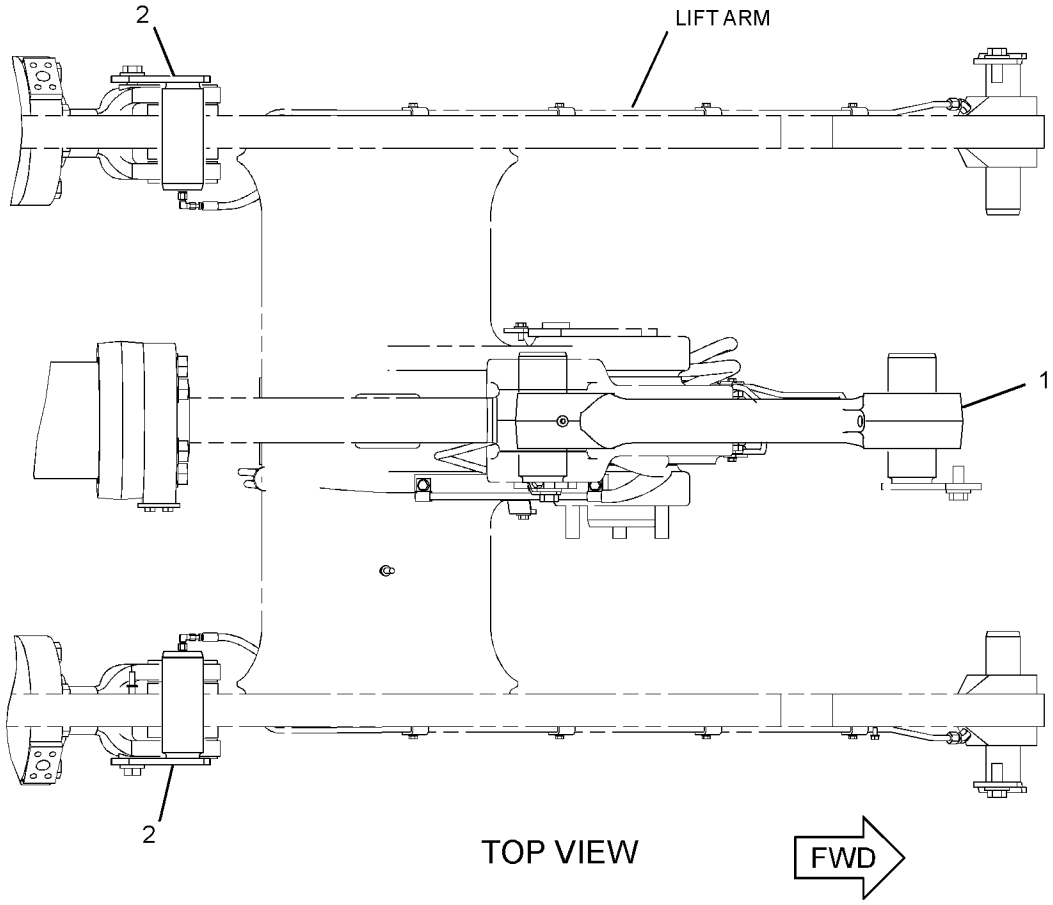

GRAPHIC #1 **<END>** g01210141

WORK TOOLS

135-9298 PLATE GP-WEAR

S/N: A7G1-UP

AN ATTACHMENT

SMCS-6120, 6820 **i00882690**

NOTE	PART NUMBER	QTY	PART NAME 1 2 3 4 5 6 (PRODUCT LEVEL)	SEE PAGE
	6F-0196	4	BOLT-PLOW (7/8-9X2.75IN)	
	6Y-6351	1	EDGE-CUTTING	
	2J-3505	4	NUT-FULL (7/8-9 THD)	
	5P-8249	4	WASHER (4.0MM THK)	

<END>

161-9131 PLATE GP-WEAR

S/N: A7G1-UP

PART OF 133-1667, 133-1671, 133-1693, 213-1176 BUCKET GP-GENERAL PURPOSE, 147-0131 BUCKET GP-MATERIAL HANDLING, 148-6898, 148-6902, 254-4496, 254-4498, 269-0133 BUCKET GP-ROCK

AN ATTACHMENT

SMCS-6120, 6820 **i00936913**

NOTE	PART NUMBER	QTY	PART NAME 1 2 3 4 5 6 (PRODUCT LEVEL)	SEE PAGE
	5J-4773	8	BOLT-PLOW (3/4-10X2.5IN)	
	2J-3506	8	NUT-FULL (3/4-10 THD)	
	161-8573	2	PLATE-WEAR	
	5P-8248	8	WASHER-HARD (3.5MM THK)	

<END>

WORK TOOLS

248-0672 PLATE GP-WEAR

S/N: A7G1-UP

PART OF 251-3035, 251-3037, 251-3055 BUCKET GP-GENERAL PURPOSE, 251-3039, 251-3041, 251-3047, 251-3049, 251-3061, 256-3695, 262-9094 BUCKET GP-MATERIAL HANDLING, 248-0561, 248-0563, 248-0565 BUCKET GP-ROCK AN ATTACHMENT

SMCS-6120, 6820 **i02419011**

NOTE	REF NO	GRAPHIC REF	PART NUMBER	QTY	PART NAME 1 2 3 4 5 6 (PRODUCT LEVEL)	SEE PAGE
	1	1	**248-2419**	2	PLATE-WEAR	
	2	1	**2J-3506**	8	NUT-FULL (3/4-10-THD)	
M	3	1	**4F-7827**	8	BOLT-PLOW (3/4-10X2.5-IN)	
	4	1	**5P-8248**	8	WASHER-HARD (20X36.5X3.5-MM THK)	

M-METRIC PART

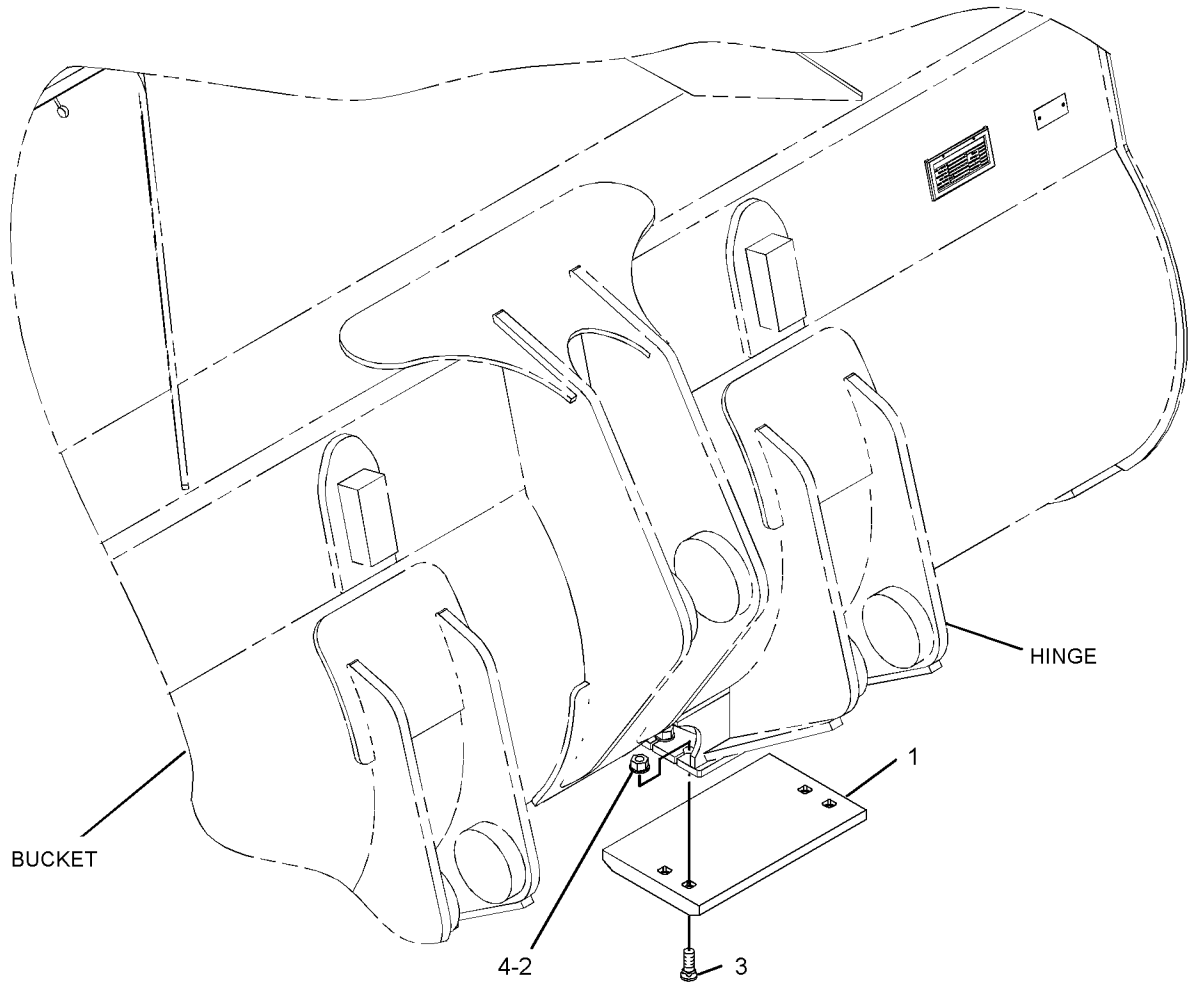

GRAPHIC #1 **<END>** g01210420

WORK TOOLS

135-8245 PROTECTOR GP-EDGE

S/N: A7G1-UP
PART OF 269-0133 BUCKET GP-ROCK
AN ATTACHMENT

SMCS-6120 **i00779062**

NOTE	PART NUMBER	QTY	PART NAME 1 2 3 4 5 6 (PRODUCT LEVEL)	SEE PAGE
	135-9292	4	PIN	
	135-8246	2	PROTECTOR	
	114-0359	4	RETAINER AS (G.E.T.)	

<END>

WORK TOOLS

254-5073 TIP GP-EXTRA DUTY–K-90

S/N: A7G1-UP

AN ATTACHMENT

SMCS-6805 **i02241653**

NOTE	REF NO	GRAPHIC REF	PART NUMBER	QTY	PART NAME 1 2 3 4 5 6 (PRODUCT LEVEL)	SEE PAGE
	1	1	**220-9090**	8	RETAINER-G.E.T. (K-90)	
	2	1	**220-9091**	8	TIP-EXTRA DUTY (K-90)	

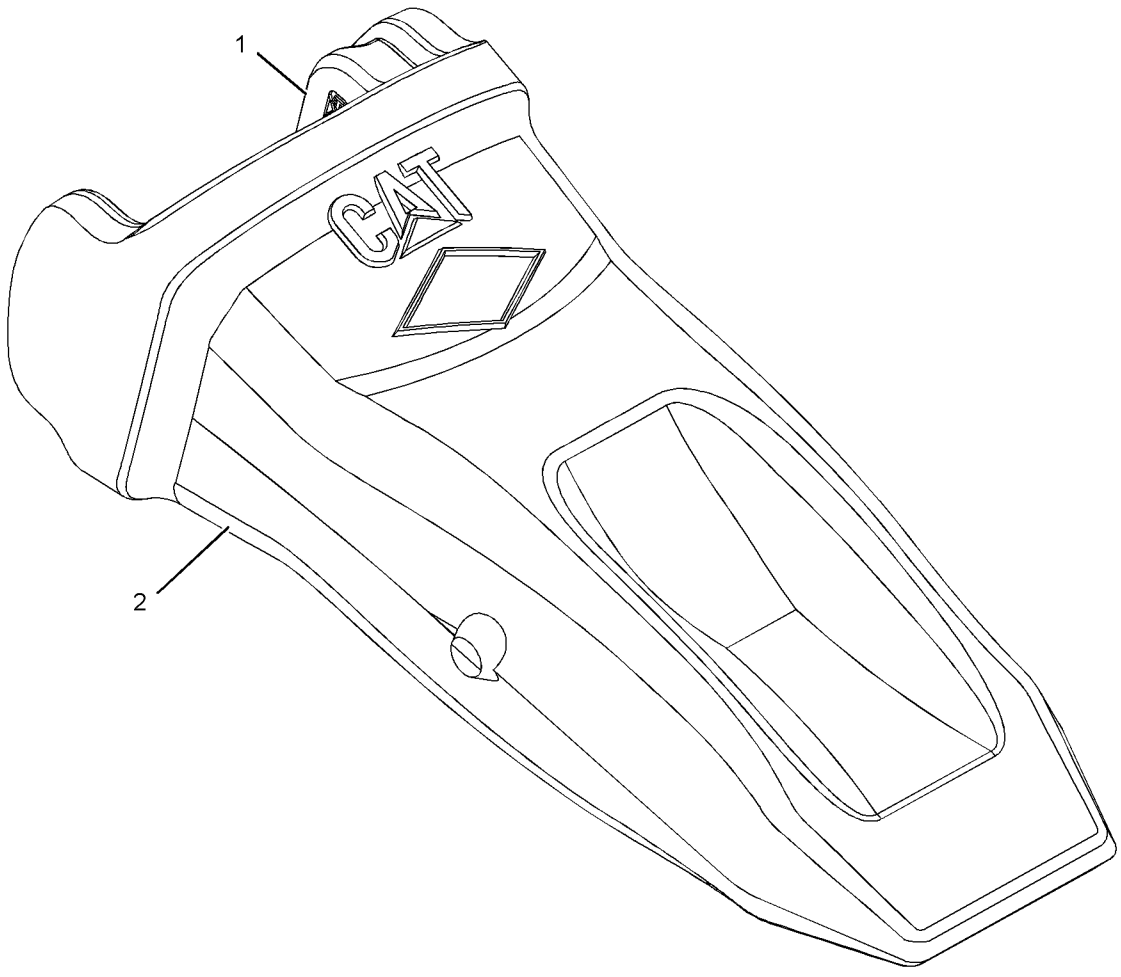

GRAPHIC #1 **<END>** g01130277

WORK TOOLS

254-5072 TIP GP-GENERAL PURPOSE

S/N: A7G1-UP

PART OF 251-3033, 251-3053, 251-3059 BUCKET GP-GENERAL PURPOSE, 251-3045 BUCKET GP-MATERIAL HANDLING, 248-0563 BUCKET GP-ROCK AN ATTACHMENT

SMCS-6805 **i02241558**

NOTE	REF NO	GRAPHIC REF	PART NUMBER	QTY	PART NAME 1 2 3 4 5 6 (PRODUCT LEVEL)	SEE PAGE
	1	1	**220-9090**	8	RETAINER-G.E.T. (K-90)	
	2	1	**220-9099**	8	TIP-GENERAL PURPOSE (K-90)	

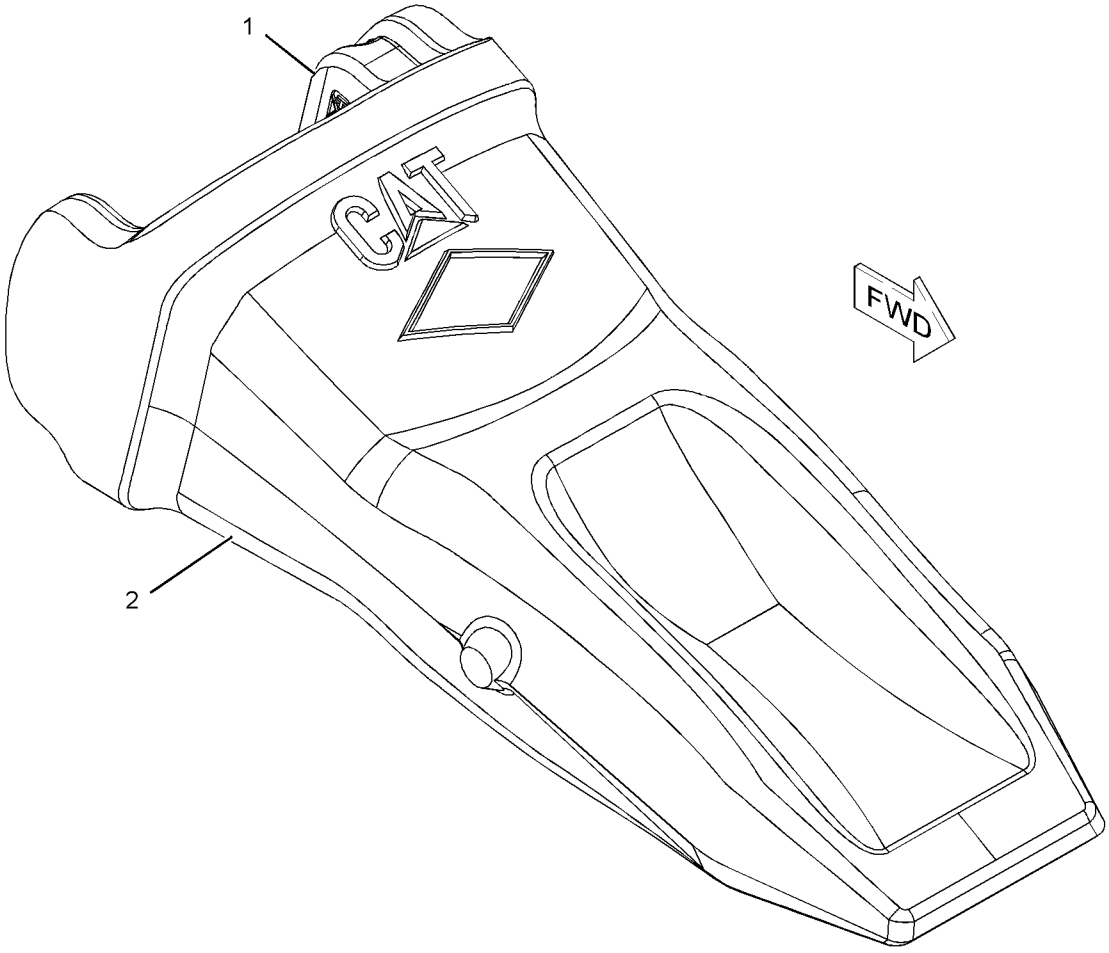

GRAPHIC #1 **<END>** g01130267

WORK TOOLS

8J-4955 TIP GP-LONG

S/N: A7G1-UP
PART OF 146-8070 BUCKET GP-PENETRATION
AN ATTACHMENT

SMCS-6805 **i01492782**

NOTE	REF NO	GRAPHIC REF	PART NUMBER	QTY	PART NAME 1 2 3 4 5 6 (PRODUCT LEVEL)	SEE PAGE
	1	1	**114-0359**	1	RETAINER AS (G.E.T.)	
	2	1	**1U-3352**	1	TIP-LONG	
	3	1	**114-0358**	1	PIN	

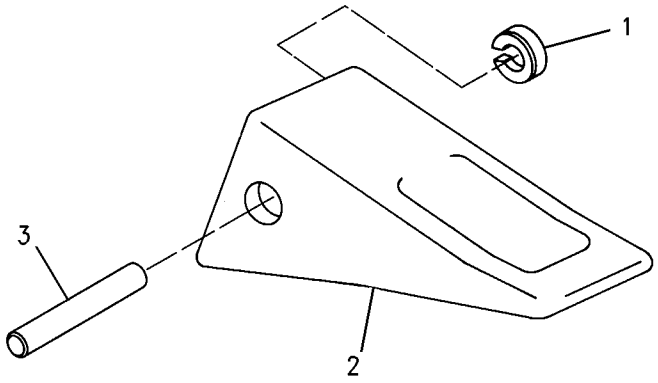

GRAPHIC #1 **<END>** g00699807

OPERATOR STATION

173-1028 ADJUSTER GP-SEAT

S/N: A7G1-UP
PART OF 178-0603 SEAT GP
ALSO AN ATTACHMENT

SMCS-7321 **i01447795**

NOTE	REF NO	GRAPHIC REF	PART NUMBER	QTY	PART NAME 1 2 3 4 5 6 (PRODUCT LEVEL)	SEE PAGE
	1	1	**4V-8256**	4	SPRING	
	2	1	**117-4486**	1	ANCHOR	
	3	1	**117-4492**	1	ROD	
	4	1	**132-0338**	2	WASHER-PLASTIC (13X31.7X.8-MM THK)	
	5	1	**136-1544**	1	LATCH AS-LH	
	6	1	**143-1288**	1	LOCKNUT-FLANGE (3/8-16-THD)	
	7	1	**156-5545**	1	LATCH AS-RH	
	8	1	**164-4531**	1	ROD	
	9	1	**170-1112**	1	PLATE AS	
	10	1	**170-1114**	1	HANDLE	
	11	1	**170-1115**	1	HANDLE	
	12	1	**172-4001**	1	BRACKET	
	13	1	**1D-4675**	1	BOLT-CARRIAGE (3/8-16X0.75-IN)	
	14	1	**2K-4973**	2	LOCKNUT (3/8-16-THD)	
	15	1	**7L-8170**	1	NUT-FULL (5/16-18-THD)	
	16	1	**7X-0608**	2	WASHER-HARD (10.2X16X2-MM THK)	
	17	1	**9M-1974**	1	WASHER-HARD (8.8X16X2-MM THK)	

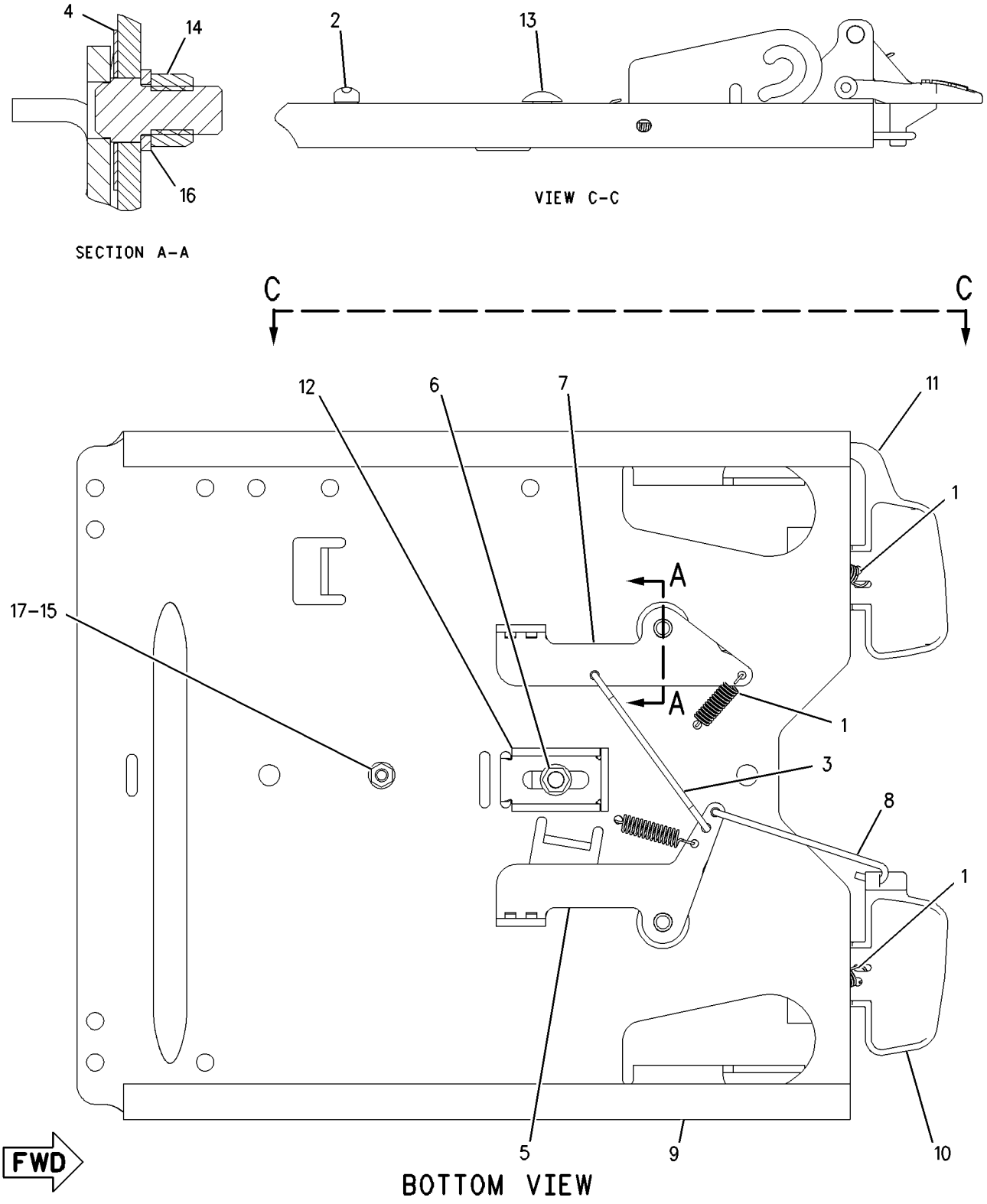

GRAPHIC #1 **<END>** g00759207

OPERATOR STATION

237-3970 AIR COMPRESSOR GP-SEAT

S/N: A7G1-UP

PART OF 191-2933, 256-8768 SUSPENSION GP-SEAT

ALSO AN ATTACHMENT

SMCS-731S, 7324 **i02107198**

NOTE	REF NO	GRAPHIC REF	PART NUMBER	QTY	PART NAME 1 2 3 4 5 6 (PRODUCT LEVEL)	SEE PAGE
					(NO SERVICED PARTS)	

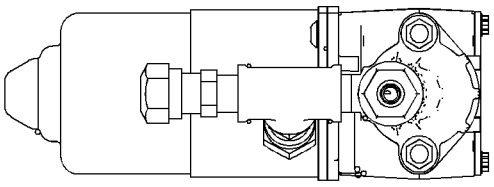

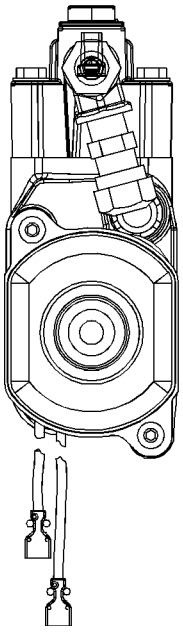

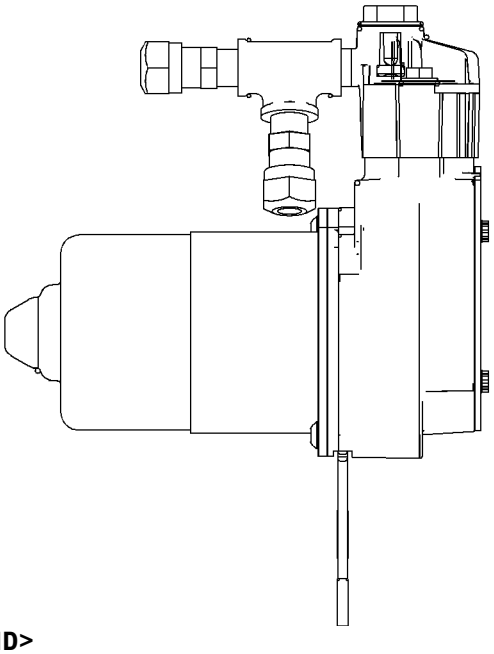

GRAPHIC #1

<END>

g01040576

OPERATOR STATION

236-8960 AIR CONDITIONER AR

S/N: A7G1-UP

AN ATTACHMENT

SMCS-7320 **i02242128**

NOTE	PART NUMBER	QTY	PART NAME 1 2 3 4 5 6 (PRODUCT LEVEL)	SEE PAGE
Y	*243-1088*	1	AIR CONDITIONER GP	774
Y	*245-4387*	1	COMPRESSOR GP-REFRIGERANT	785
Y	*241-4812*	1	CONDENSER & MTG GP-REFRIGERANT	786
Y	*243-7100*	1	LINES GP-AIR CONDITIONER	824
Y	*237-4907*	1	WIRING GP-AIR CONDITIONER	221
	110-6393	1	PLATE-INSTRUCTION (AIR CONDITIONER)	
			INSIDE OF CAB ON RIGHT SIDE BEHIND DOOR BELOW WINDOW	

Y-SEPARATE ILLUSTRATION

<END>

OPERATOR STATION

243-1088 AIR CONDITIONER GP

S/N: A7G1-UP
PART OF 236-8960 AIR CONDITIONER AR
AN ATTACHMENT

SMCS-7320 **i02414653**

NOTE	REF NO	GRAPHIC REF	PART NUMBER	QTY	PART NAME 1 2 3 4 5 6 (PRODUCT LEVEL)	SEE PAGE
	1	1	**9X-8116**	2	TUBE AS	
Y	2	1	*276-3965*	1	AIR CONDITIONER GP	775
Y	3	1	*242-9416*	1	LINES GP-AIR CONDITIONER	822

Y-SEPARATE ILLUSTRATION

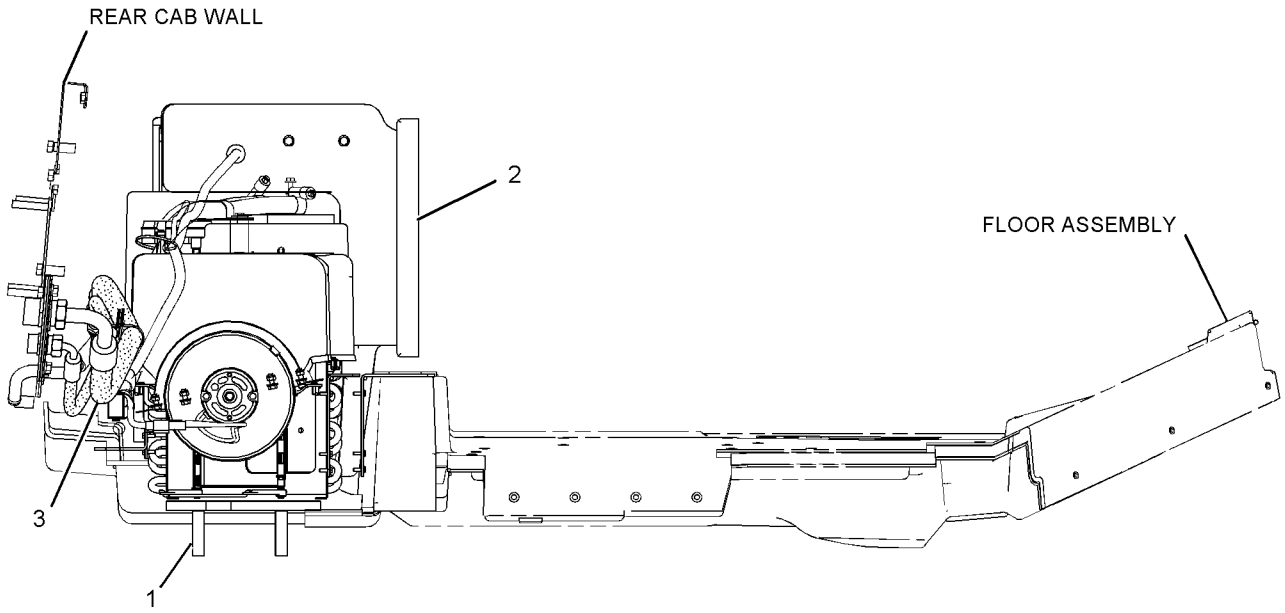

RIGHT SIDE VIEW

GRAPHIC #1 **<END>** g01116353

OPERATOR STATION

276-3965 AIR CONDITIONER GP

S/N: A7G1-UP

PART OF 243-1088 AIR CONDITIONER GP

AN ATTACHMENT

SMCS-7320 **i02414651**

NOTE	REF NO	GRAPHIC REF	PART NUMBER	QTY	PART NAME 1 2 3 4 5 6 (PRODUCT LEVEL)	SEE PAGE
	1	1	**3B-4501**	2	LOCKWASHER	
	2	1	**3E-5464**	1	SWITCH AS-TEMPERATURE (AIR CONDITIONER)	
	3	1	**3S-2093**	1	STRAP-CABLE	
	4	1	**6T-6708**	2	WASHER (7X28.6X4.1-MM THK)	
M	5	1	**8C-7581**	1	SCREW-MACHINE (M4X0.7X8-MM)	
	6	2	**9G-1950**	1	RESISTOR	
	7	2	**133-9012**	1	FUSE (15-AMPERE)	
	8	1	**177-6696**	1	GROMMET	
	9	2	**177-6704**	2	GASKET	
	10	2	**177-6716**	1	DOOR	
	11	1	**177-6727**	1	ACTUATOR	
	12	1	**177-6732**	1	DOOR AS	
		1	**4K-9429**	4	RIVET-POP	
	13	2	**179-4682**	2	LEVER	
	14	2	**179-4683**	1	ROD	
	15	2	**185-4778**	1	HOUSING AS	
	16	2	**185-4780**	1	HOUSING	
	17	2	**185-4782**	1	HOUSING	
	18	2	**185-4783**	1	COVER	
	19	2	**185-4785**	1	DUCT AS	
M	20	1,2	**187-7719**	24	BOLT (M5X2.24X14-MM)	
	21	2	**188-7690**	1	SUPPORT	
	22	1	**189-4680**	1	COIL AS-EVAPORATOR	
	23	1	**189-4682**	1	COIL AS-HEATER	
	24	1	**192-2820**	1	PLATE	
	25	2	**192-2822**	1	GASKET	
	26	1	**192-2823**	1	HARNESS AS-HEATER & AIR COND	
		1	**102-8801**	1	KIT-RECEPTACLE (12-PIN)	
					(INCLUDES RECEPTACLE AS AND WEDGE)	
		1	**155-2270**	1	KIT-CONNECTING PLUG (2-PIN)	
					(INCLUDES PLUG AS AND WEDGE)	
	27	1	**193-0702**	1	GASKET	
	28	2	**197-1397**	1	BRACKET	
	29	2	**197-1398**	1	BRACKET	
	30	1	**197-1399**	1	BRACKET	
	31	2	**197-1400**	1	BRACKET AS	
M		2	**6V-9632**	3	NUT-WELD (M6X1-THD)	
	32	2	**199-7499**	1	GASKET	
	33	1	**202-1327**	1	GASKET	
	34	1	**212-7042**	1	BRACKET	
	35	1	**268-8792**	1	MOTOR AS-BLOWER (24-VOLT, A/C, HEATER)	
		1	**102-8802**	1	KIT-RECEPTACLE (2-PIN)	
					(INCLUDES RECEPTACLE AS AND WEDGE)	
		1	**9W-0852**	2	PIN-CONNECTOR (14-GA)	
M	36	1	**129-3178**	7	LOCKNUT (M6X1-THD)	
	37	1	**130-5300**	1	CLIP	
M	38	2	**141-9784**	1	BOLT (M6X1X190-MM)	
	39	2	**4B-4274**	2	WASHER (5.5X13X1.2-MM THK)	
M	40	1	**5C-9553**	8	BOLT (M6X1X16-MM)	
	41	1	**5P-4115**	3	WASHER-HARD (7.2X19X2-MM THK)	
	42	1	**6V-1668**	2	WASHER (6.5X29.1X3-MM THK)	
	43	1	**6V-4369**	1	CLIP	
M	44	1	**6V-7357**	3	BOLT (M6X1X25-MM)	
	45	1,2	**8T-4205**	11	WASHER-HARD (7.2X14.5X2-MM THK)	
	46	1	**8T-6631**	2	SCREW-MACHINE (8-32X0.5-IN)	

276-3965 **AIR CONDITIONER GP** *(contd.)* **i02414651**

NOTE	REF NO	GRAPHIC REF	PART NUMBER	QTY	PART NAME 1 2 3 4 5 6 (PRODUCT LEVEL)	SEE PAGE
	47	1	**9X-7373**	1	GROMMET	
M-METRIC PART						

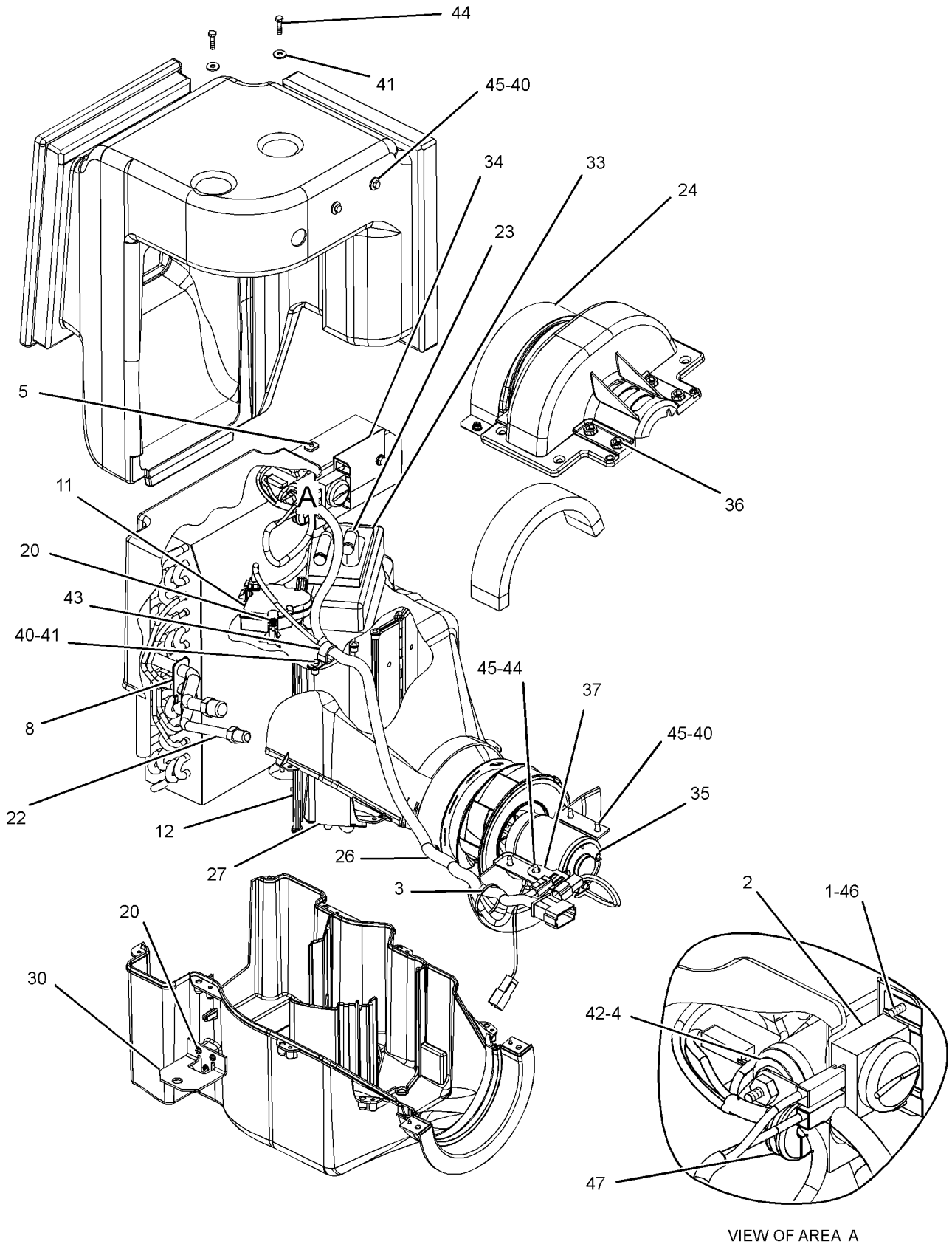

GRAPHIC #1

g01196008

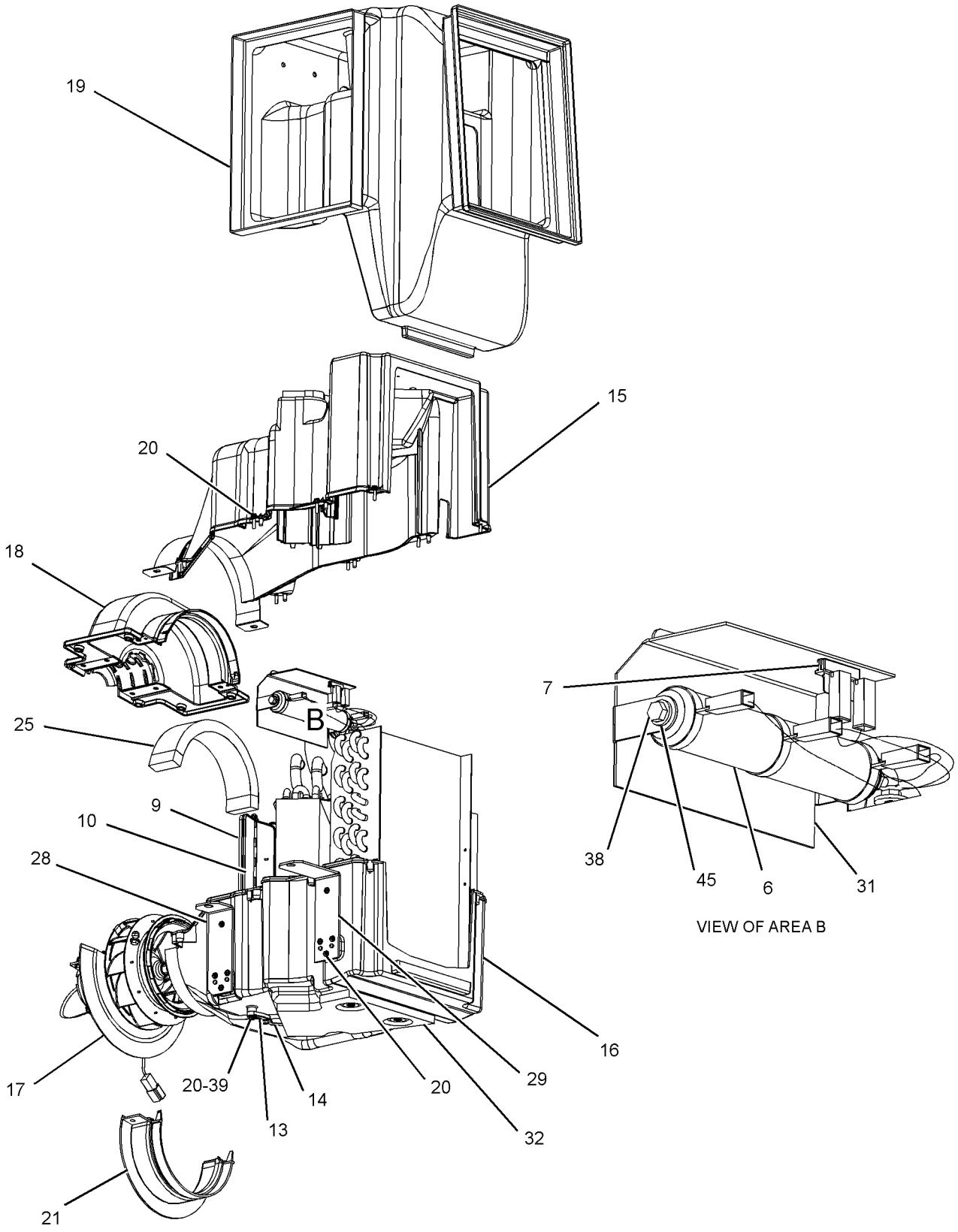

GRAPHIC #2 **<END>** g01196009

214-7634 ARM GP-WINDOW WIPER–REAR

S/N: A7G1-UP
PART OF 257-2016 WIPER GP-WINDOW
ALSO AN ATTACHMENT

SMCS-7305 **i01933217**

NOTE	REF NO	GRAPHIC REF	PART NUMBER	QTY	PART NAME 1 2 3 4 5 6 (PRODUCT LEVEL)	SEE PAGE
M	1	1	**191-8921**	2	BOLT-SOCKET HEAD (M6X1X25-MM)	
	2	1	**227-7392**	2	WASHER (6.3X10.3X0.4-MM THK)	
M	3	1	**6V-8225**	2	NUT (M6X1-THD)	
	4	1	**136-3195**	1	NOZZLE AS-WASHER	
	5	1	**136-3188**	3	CLIP	

M-METRIC PART

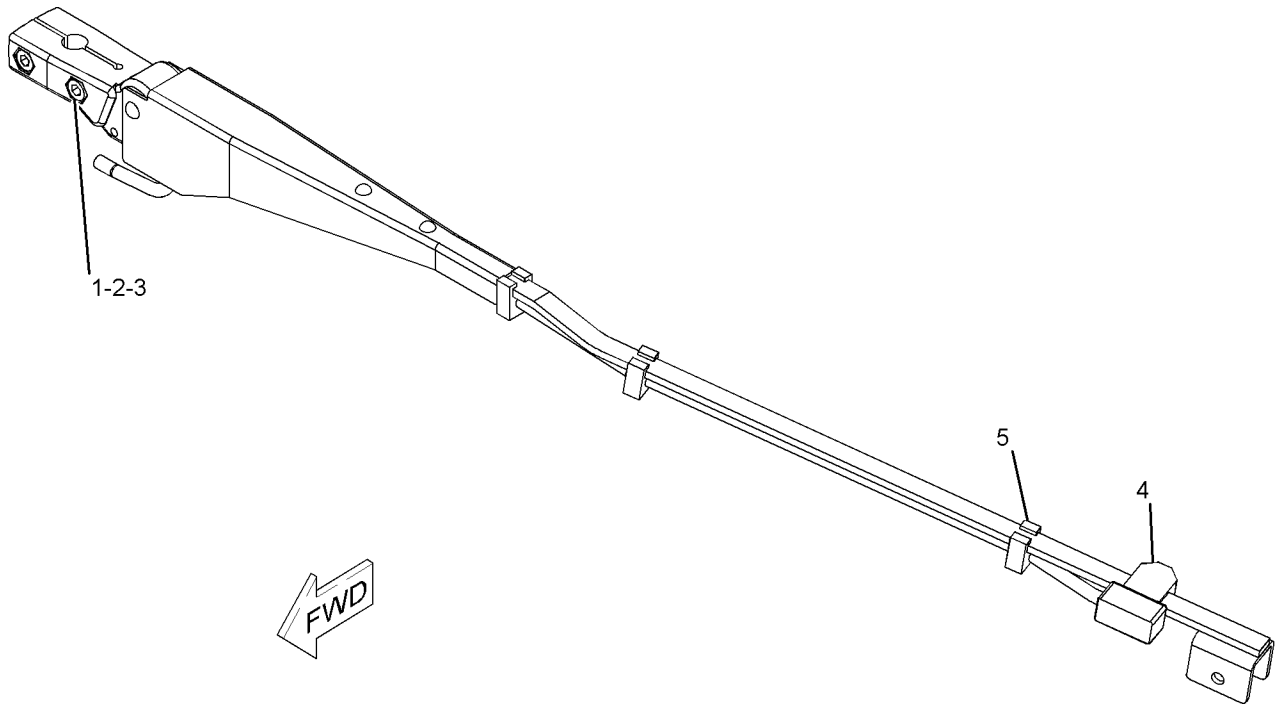

GRAPHIC #1 **<END>** g01024688

OPERATOR STATION

214-7635 ARM GP-WINDOW WIPER—FRONT

S/N: A7G1-UP
PART OF 257-2016 WIPER GP-WINDOW
ALSO AN ATTACHMENT

SMCS-7305 **i01902732**

NOTE	REF NO	GRAPHIC REF	PART NUMBER	QTY	PART NAME 1 2 3 4 5 6 (PRODUCT LEVEL)	SEE PAGE
M	1	1	**191-8921**	4	BOLT-SOCKET HEAD (M6X1X25-MM)	
	2	1	**227-7392**	4	WASHER (6.3X10.3X0.4-MM THK)	
M	3	1	**6V-8225**	4	NUT (M6X1-THD)	
	4	1	**136-3190**	1	NOZZLE AS-WASHER	
	5	1	**136-3188**	3	CLIP	

M-METRIC PART

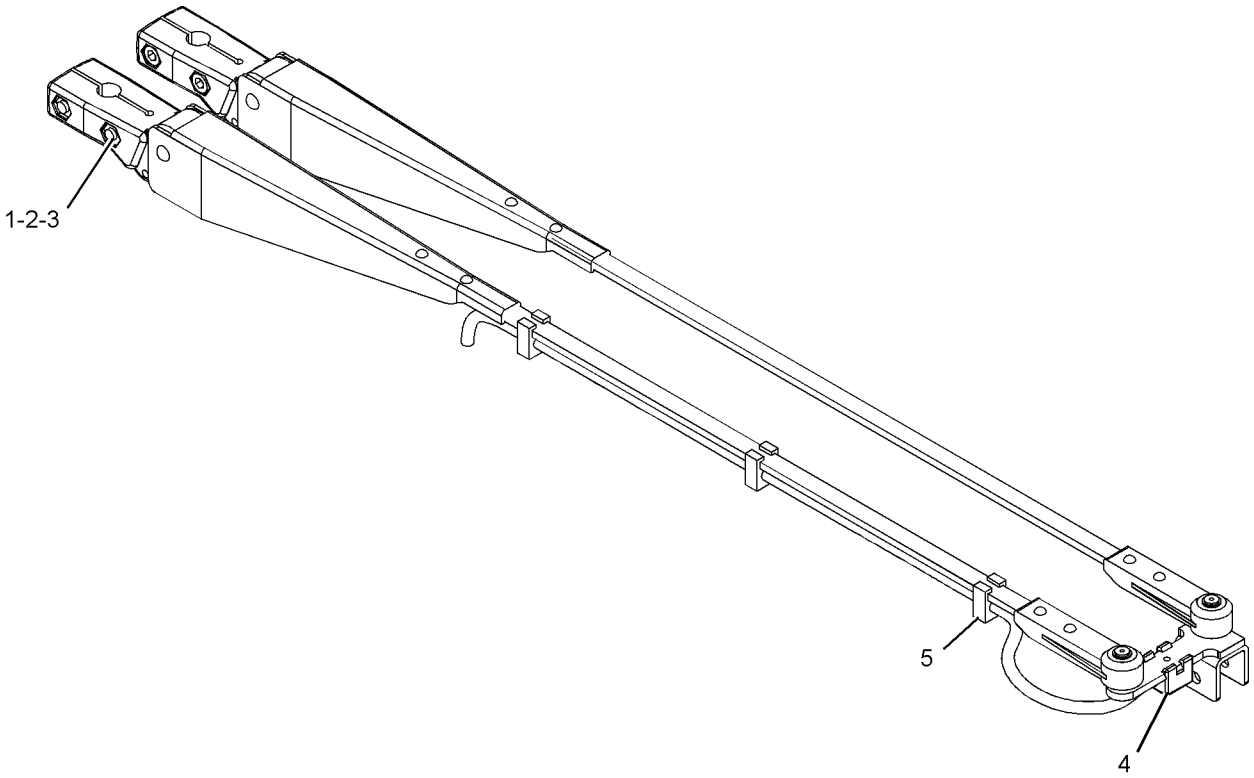

GRAPHIC #1 **<END>** g01021918

OPERATOR STATION

188-9820 ARMREST GP–LH

S/N: A7G1-UP
PART OF 178-7913 SEAT GP
ALSO AN ATTACHMENT

SMCS-7307, 7312 **i01729370**

NOTE	REF NO	GRAPHIC REF	PART NUMBER	QTY	PART NAME 1 2 3 4 5 6 (PRODUCT LEVEL)	SEE PAGE
	1	1	**173-2219**	1	CUSHION AS	
	2	1	**143-1288**	1	LOCKNUT-FLANGE (3/8-16 THD)	
	3	1	**163-1149**	1	BRACKET AS	
	4	1	**1K-6872**	1	LOCKNUT (1/2-13-THD)	
	5	1	**2M-0849**	1	WASHER-HARD (13.5X25.5X5-MM THK)	
	6	1	**3E-4312**	1	NUT-SQUARE (3/8-16 THD)	
	7	1	**4L-6454**	1	BOLT (3/8-16X1-IN)	
	8	1	**6V-2687**	4	SCREW-PAN HEAD (10-24X1-IN)	
	9	1	**8S-7803**	1	RING-RETAINING	
	10	1	**8T-8641**	1	WASHER (M9.8X16X0.8-MM THK)	
	11	1	**8Y-5910**	1	KNOB AS	
	12	1	**8Y-5913**	1	BASE-ARMREST	
	13	1	**8Y-5914**	1	SPRING	
	14	1	**9X-8873**	1	BOLT (1/2-13X2.25-IN)	

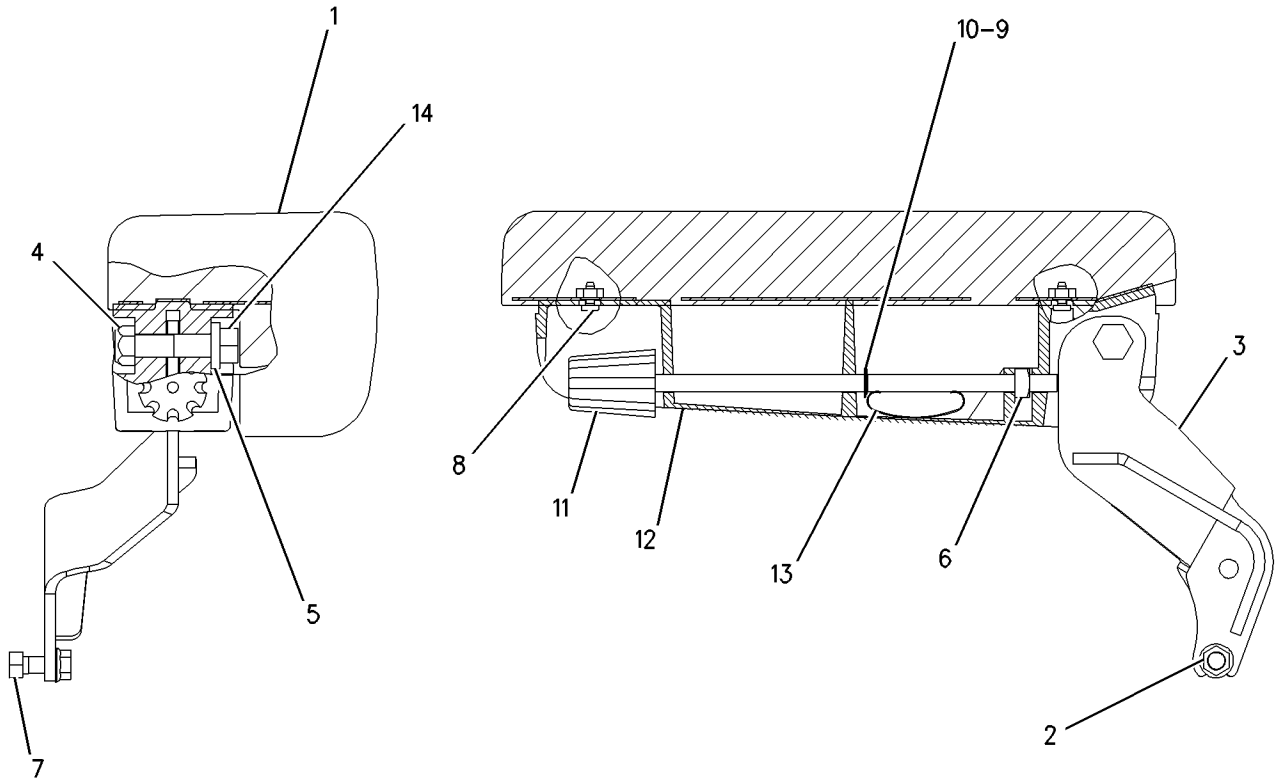

GRAPHIC #1 **<END>** g00812871

OPERATOR STATION

237-2572 CAB AR-ENCLOSED ROPS—HMU STEERING

S/N: A7G1-UP

PART OF 237-2570 OPERATOR AR-ENCLOSED ROPS

SMCS-7301 **i02413377**

NOTE	PART NUMBER	QTY	PART NAME 1 2 3 4 5 6 (PRODUCT LEVEL)	SEE PAGE
Y	*243-1089*	1	CONTROL GP-ELECTROHYDRAULIC (2-FUNCTION)	526
Y	*265-6695*	1	CONTROL GP-FOOT BRAKE	458
Y	*244-2747*	1	CONTROL GP-PARKING BRAKE	460
Y	*141-8802*	1	CONTROL GP-STEERING (HMU STEERING)	468
Y	*121-9300*	1	CONTROL GP-TRANSMISSION	267
Y	*171-8888*	1	DUCT & FILTER GP-AIR	797
Y	**232-1397**	1	FLOOR GP-SOUND SUPPRESSION	799
Y	*243-1092*	1	HEATER GP-CAB	809
Y	*257-2008*	1	INSTALLATION GP-RADIO	815
Y	*235-8559*	1	LIGHTING GP-FLOOD (4-LAMP, CAB)	158
Y	*232-1394*	1	LINER GP-CAB	819
Y	**192-7049**	1	MODULE GP-SPEEDOMETER & TACH	847
Y	*191-5282*	1	PANEL GP-INSTRUMENT (UPPER)	857
Y	*245-6458*	1	PANEL GP-INSTRUMENT (LOWER)	859
Y	*207-1759*	1	PEDAL GP-GOVERNOR	863
Y	*237-2574*	1	ROPS GP-ENCLOSED	868
Y	*174-3624*	1	SEAT GP-SUSPENSION	877
Y	*243-1090*	1	SUPPORT GP-HYDRAULIC CONTROL (REAR)	880
Y	*234-9553*	1	SUPPRESSION GP-CAB SOUND (REAR)	887
Y	*232-1396*	1	SUPPRESSION GP-CAB SOUND (FRONT)	884
Y	*257-2016*	1	WIPER GP-WINDOW	900
Y	*237-4910*	1	WIRING GP-CAB	227
	117-1410	1	SEALING GP-GLASS	
	119-0781	1	ADHESIVE	

Y-SEPARATE ILLUSTRATION

<END>

OPERATOR STATION

237-2573 CAB AR-ENCLOSED ROPS—COMMAND CONTROL STEERING

S/N: A7G1-UP

PART OF 237-2571 OPERATOR AR-ENCLOSED ROPS

AN ATTACHMENT

SMCS-7301 **i02415449**

NOTE	PART NUMBER	QTY	PART NAME 1 2 3 4 5 6 (PRODUCT LEVEL)	SEE PAGE
Y	*243-1089*	1	CONTROL GP-ELECTROHYDRAULIC (2-FUNCTION)	526
Y	*265-6695*	1	CONTROL GP-FOOT BRAKE	458
Y	*244-2747*	1	CONTROL GP-PARKING BRAKE	460
Y	*219-7619*	1	CONTROL GP-STEERING (COMMAND CONTROL STEERING)	470
Y	*171-8888*	1	DUCT & FILTER GP-AIR	797
Y	**232-1397**	1	FLOOR GP-SOUND SUPPRESSION	799
Y	*243-1092*	1	HEATER GP-CAB	809
Y	*257-2008*	1	INSTALLATION GP-RADIO	815
Y	*235-8559*	1	LIGHTING GP-FLOOD (4-LAMP, CAB)	158
Y	*232-1394*	1	LINER GP-CAB	819
Y	**192-7049**	1	MODULE GP-SPEEDOMETER & TACH	847
Y	*171-8881*	1	PANEL GP-INSTRUMENT (UPPER)	855
Y	*245-6458*	1	PANEL GP-INSTRUMENT (LOWER)	859
Y	*207-1759*	1	PEDAL GP-GOVERNOR	863
Y	**237-2574**	1	ROPS GP-ENCLOSED	868
Y	*174-3624*	1	SEAT GP-SUSPENSION	877
Y	*243-1090*	1	SUPPORT GP-HYDRAULIC CONTROL (REAR)	880
Y	*232-1396*	1	SUPPRESSION GP-CAB SOUND (FRONT)	884
Y	*234-9553*	1	SUPPRESSION GP-CAB SOUND (REAR)	887
Y	*257-2016*	1	WIPER GP-WINDOW	900
Y	*237-4910*	1	WIRING GP-CAB	227
	117-1410	1	SEALING GP-GLASS	
	119-0781	1	ADHESIVE	

Y-SEPARATE ILLUSTRATION

<END>

OPERATOR STATION

163-0872 COMPRESSOR GP-REFRIGERANT

S/N: A7G1-UP
PART OF 245-4387 COMPRESSOR GP-REFRIGERANT
AN ATTACHMENT

SMCS-1802 **i02055856**

NOTE	REF NO	GRAPHIC REF	PART NUMBER	QTY	PART NAME 1 2 3 4 5 6 (PRODUCT LEVEL)	SEE PAGE
	1	1	**102-8802**	1	KIT-RECEPTACLE (2-PIN)	
					(INCLUDES RECEPTACLE AND WEDGE)	
	2	1	**114-3469**	1	VALVE GP-RELIEF (REFRIGERANT COMPRESSOR)	
		1	**9X-7378**	1	SEAL-O-RING	
	3	1	**7T-4532**	1	PLUG AS	
	4	1	**9X-7385**	2	SEAL-O-RING	
B	5	1	**206-1990**		OIL-AIR CONDITIONER	

B-USE AS REQUIRED

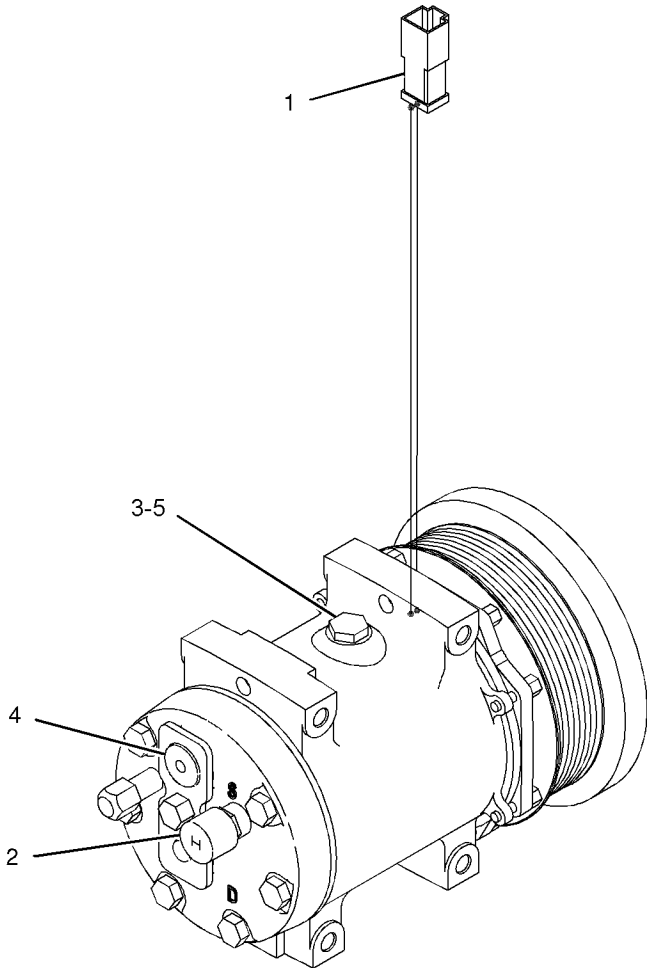

GRAPHIC #1

<END>

g01054497

245-4387 COMPRESSOR GP-REFRIGERANT

S/N: A7G1-UP
PART OF 236-8960 AIR CONDITIONER AR
AN ATTACHMENT

SMCS-1802 **i02242152**

NOTE	REF NO	GRAPHIC REF	PART NUMBER	QTY	PART NAME 1 2 3 4 5 6 (PRODUCT LEVEL)	SEE PAGE
Y	1	1	**163-0872**	1	COMPRESSOR GP-REFRIGERANT	784
Y	2	1	**192-1563**	1	IDLER GP-BELT (ALTERNATOR, REFRIGERANT COMPR)	31
	3	1	**260-1528**	1	BELT-SERPENTINE (A/C COMPRESSOR)	
M	4	1	**7X-2538**	4	BOLT (M8X1.25X100-MM)	
	5	1	**8T-4224**	4	WASHER-HARD (8.8X16X2-MM THK)	

M-METRIC PART
Y-SEPARATE ILLUSTRATION

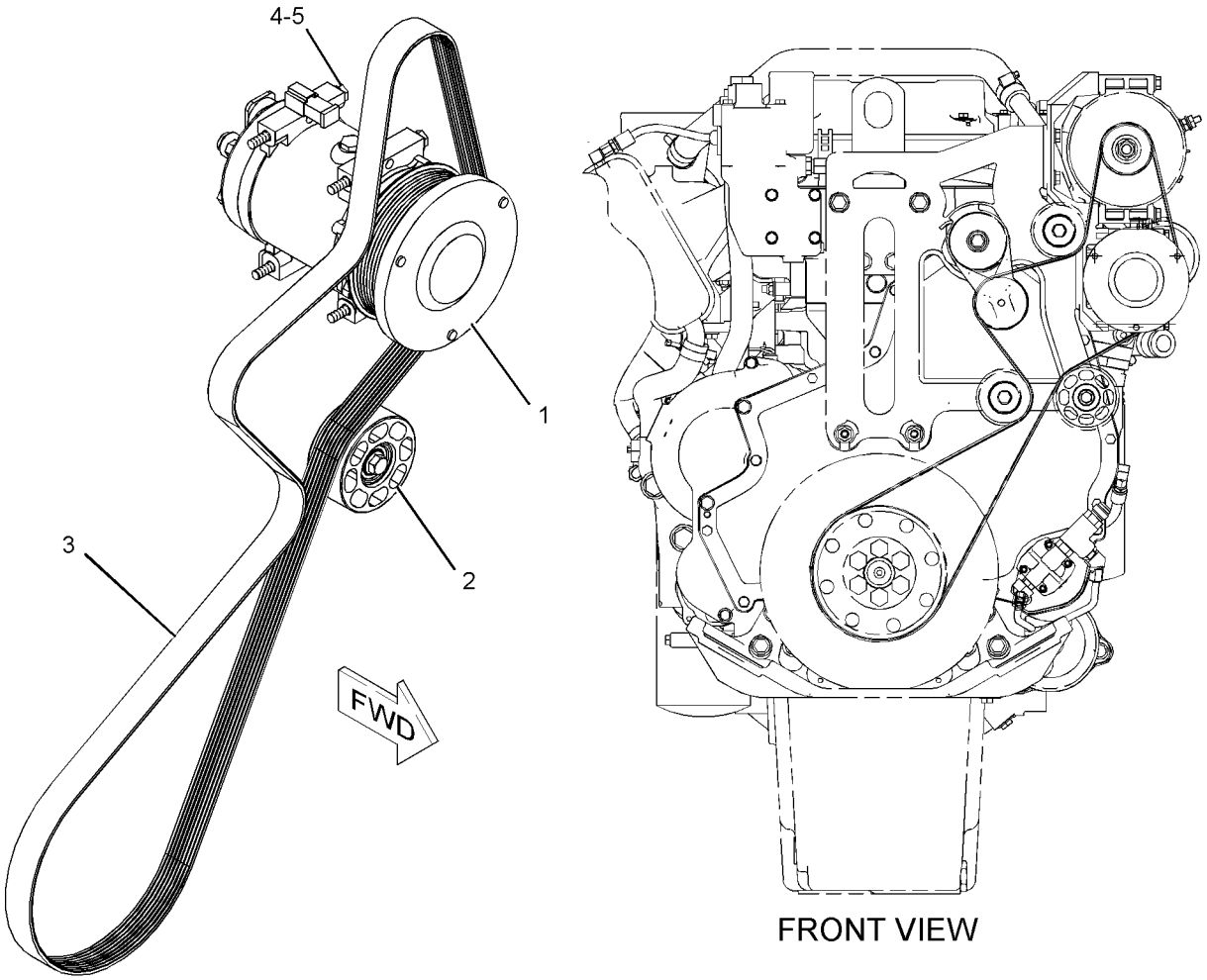

GRAPHIC #1 **<END>** g01116150

OPERATOR STATION

241-4812 CONDENSER & MTG GP-REFRIGERANT

S/N: A7G1-UP
PART OF 236-8960 AIR CONDITIONER AR
AN ATTACHMENT

SMCS-1805 **i02414644**

NOTE	REF NO	GRAPHIC REF	PART NUMBER	QTY	PART NAME 1 2 3 4 5 6 (PRODUCT LEVEL)	SEE PAGE
	1	1	**4E-1384**	2	BUMPER-CONICAL	
	2	1	**244-6855**	1	BRACKET AS	
	3	1	**244-8839**	1	CORE AS-CONDENSER (REFRIGERANT)	
M	4	1	**5C-7261**	2	NUT (M8X1.25-THD)	
	5	1	**7X-7729**	4	WASHER (11X25X3-MM THK)	
M	6	1	**8T-4137**	4	BOLT (M10X1.5X20-MM)	
	7	1	**8T-4121**	1	WASHER-HARD (11X21X2.5-MM THK)	
	8	1	**276-9766**	1	BRACKET AS	
M	9	1	**8T-4196**	1	BOLT (M10X1.5X35-MM)	

M-METRIC PART

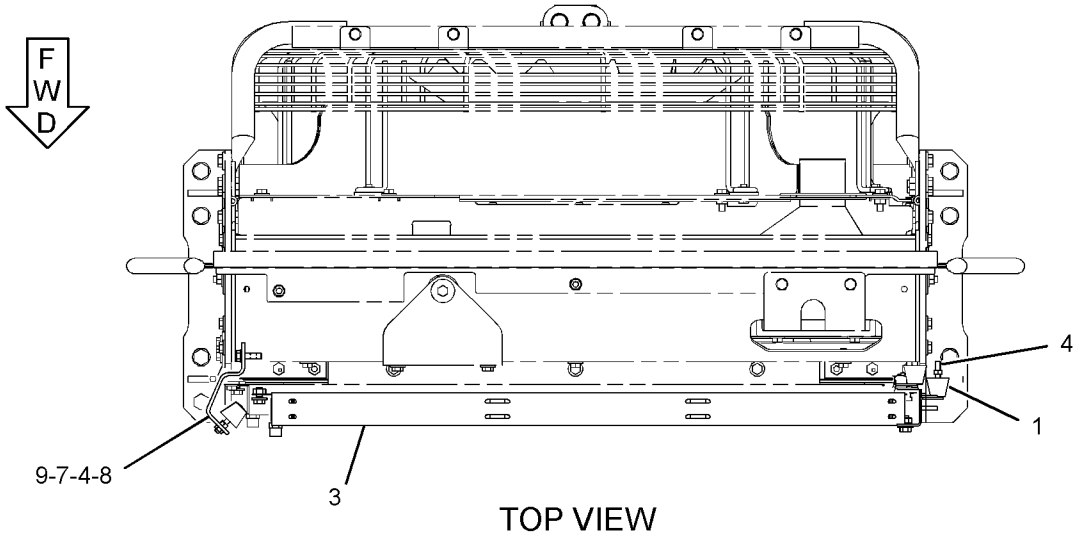

TOP VIEW

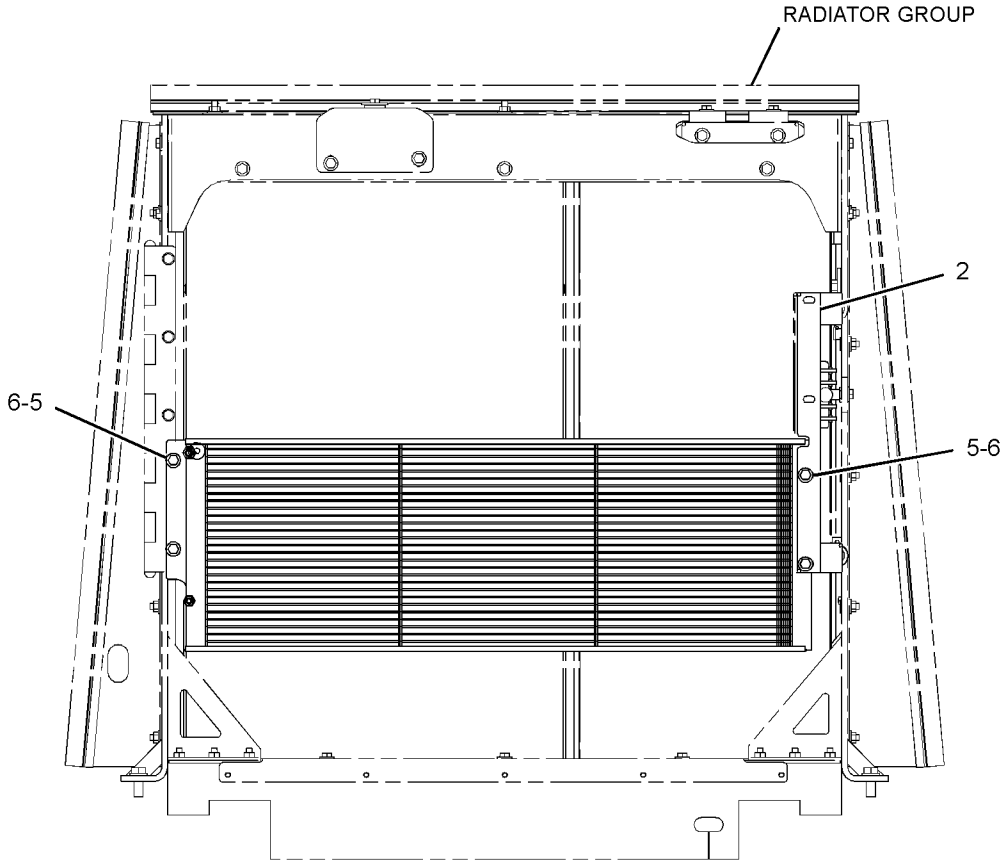

FRONT VIEW

GRAPHIC #1 **<END>** g01196207

OPERATOR STATION

103-5526 CONTROL GP-MONITOR—DIMMER

S/N: A7G1-UP
PART OF 237-4910 WIRING GP-CAB
ALSO AN ATTACHMENT

SMCS-7490, 7494, 7601 **i00717432**

NOTE	REF NO	GRAPHIC REF	PART NUMBER	QTY	PART NAME 1 2 3 4 5 6 (PRODUCT LEVEL)	SEE PAGE
	1	1	**5P-9132**	2	SCREW-HEX FLANGE (6-32X0.187-IN)	
	2	1	**3E-3383**	1	WEDGE-RECEPTACLE LOCK (6-PIN)	
	3	1	**8T-8729**	6	PIN-CONNECTOR	

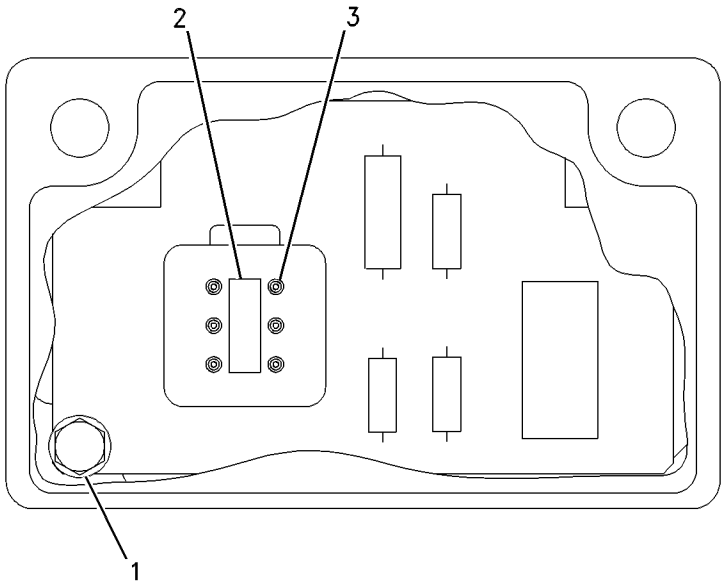

GRAPHIC #1 **<END>** g00316579

OPERATOR STATION

154-7443 CONTROL GP-UNPRGMED MONITOR–

CATERPILLAR MONITORING SYSTEM

S/N: A7G1-UP

PART OF 237-4910 WIRING GP-CAB

ALSO AN ATTACHMENT

SMCS-7610 **i02234769**

NOTE	PART NUMBER	QTY	PART NAME 1 2 3 4 5 6 (PRODUCT LEVEL)	SEE PAGE
			(NO SERVICED PARTS)	

<END>

OPERATOR STATION

185-7534 DOOR GP-CAB—SLIDING WINDOW, RH

S/N: A7G1-UP
PART OF 260-4693 DOOR GP-CAB
AN ATTACHMENT

SMCS-7308 **i02391976**

NOTE	REF NO	GRAPHIC REF	PART NUMBER	QTY	PART NAME 1 2 3 4 5 6 (PRODUCT LEVEL)	SEE PAGE
B	1	1	**5P-7803**	1	PLUG-BUTTON	
	2	1	**103-1122**	1	MOUNT-LATCH	
Y	3	1	*185-7522*	1	WINDOW GP-DOOR (RH)	896
	4	1	**185-7533**	1	GLASS (CAB DOOR, RH)	
	5	1	**185-7538**	1	DOOR AS (RH)	
		1	**107-1161**	2	HINGE	
M	6	1	**9X-2041**	1	SCREW-TRUSS HEAD (M10X1.5X20-MM)	
E	7	1	**3E-3805**		SEAL (470-CM)	

B-USE AS REQUIRED
E-ORDER BY THE CENTIMETER
M-METRIC PART
Y-SEPARATE ILLUSTRATION

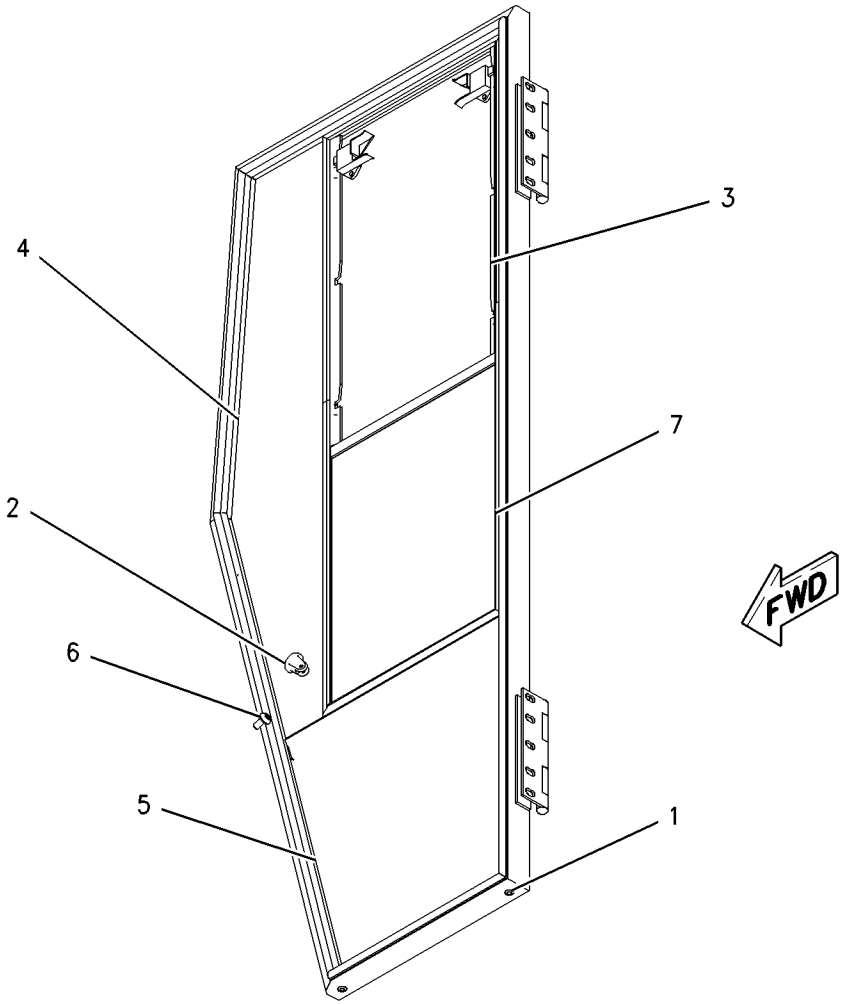

GRAPHIC #1 **<END>** g00819629

OPERATOR STATION

247-1852 DOOR GP-CAB

S/N: A7G1-UP
PART OF 270-3388 DOOR GP-CAB
ALSO AN ATTACHMENT

SMCS-7308 **i02413347**

NOTE	REF NO	GRAPHIC REF	PART NUMBER	QTY	PART NAME 1 2 3 4 5 6 (PRODUCT LEVEL)	SEE PAGE
	1	1	**5P-7803**	2	PLUG-BUTTON	
	2	2	**6V-7636**	2	PIN AS-SPRING	
	3	2	**7W-2108**	1	SPRING-BYPASS VALVE	
	4	2	**8T-4742**	1	END-YOKE ROD	
	5	2	**108-5471**	1	CLEVIS	
	6	1	**109-5008**	1	BUMPER-CONICAL	
	7	2	**141-8580**	1	RING-RETAINING	
	9	2	**168-2457**	1	LATCH AS-DOOR	
	10	1	**170-7709**	1	HANDLE AS-DOOR	
		1	**8Y-4501**	1	SPRING-HANDLE	
		1	**8Y-6338**	2	BRACKET-MOUNTING	
Y	11	1	*185-7523*	1	WINDOW GP-DOOR (LH)	898
	12	1	**187-1469**	1	GLASS (CAB DOOR, LH)	
	13	1	**225-3755**	1	GASKET	
	14	1	**247-1853**	1	DOOR AS-CAB (LH)	
M		1	**8T-3612**	1	NUT-WELD (M8X1.25-THD)	
Y	15	2	**247-1855**	1	LATCH GP-CAB DOOR & WINDOW	817
	16	2	**247-1859**	1	BRACKET AS	
	17	1	**247-1862**	1	BRACKET AS	
	18	2	**247-1869**	1	ROD	
	19	2	**247-1870**	1	ROD AS	
	20	2	**140-4788**	1	PIN-CLEVIS	
	21	2	**4E-2853**	4	WASHER (6.4X12.5X0.8-MM THK)	
M	22	2	**5C-2890**	1	NUT (M6X1-THD)	
M	23	1	**5C-7261**	1	NUT (M8X1.25-THD)	
	24	2	**6V-8185**	1	NUT (1/4-20-THD)	
M	25	1	**8T-4189**	2	BOLT (M8X1.25X20-MM)	
	26	1	**8T-4224**	2	WASHER-HARD (8.8X16X2-MM THK)	
M	27	2	**8T-4971**	4	BOLT (M6X1X30-MM)	
M	28	1,2	**9X-2042**	8	SCREW-TRUSS HEAD (M6X1X12-MM)	
M	29	2	**9X-6155**	4	BOLT-SOCKET HEAD (M6X1X16.7-MM)	
	30	2	**9X-8256**	1	WASHER (6.6X12X2-MM THK)	
E	31	1	**3E-3805**		SEAL (470-CM)	
F		1	**277-6204**	1	COVER	

E-ORDER BY THE CENTIMETER
F-NOT SHOWN
M-METRIC PART
Y-SEPARATE ILLUSTRATION

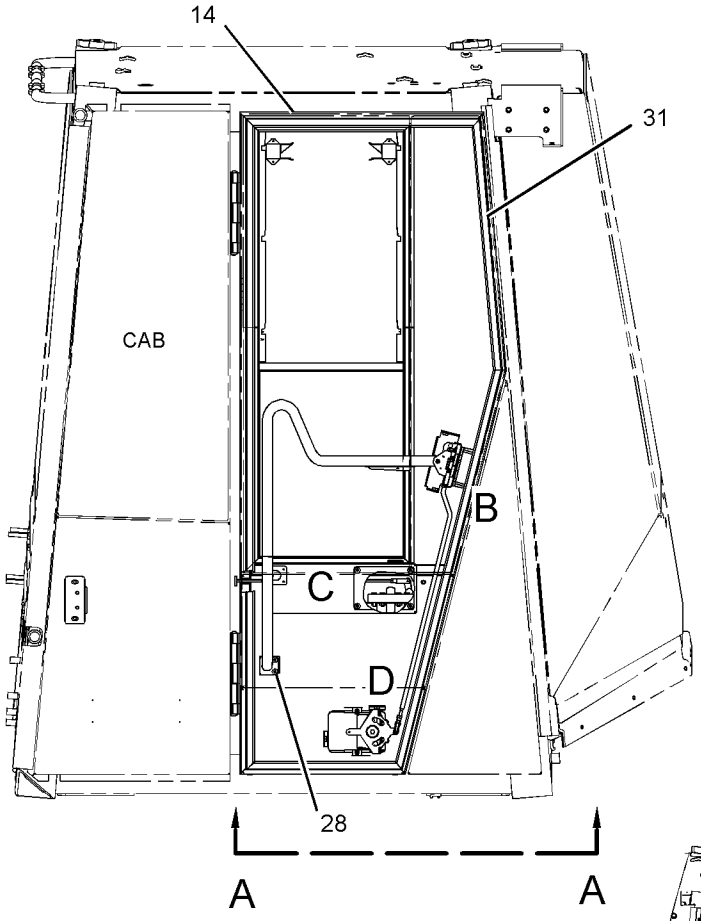

RIGHT SIDE VIEW

REFER TO ALL ILLUSTRATIONS OF
THIS GROUP FOR AUXILIARY VIEWS

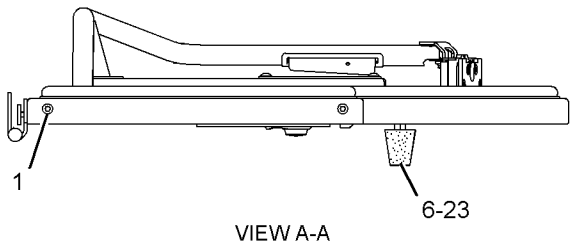

VIEW A-A

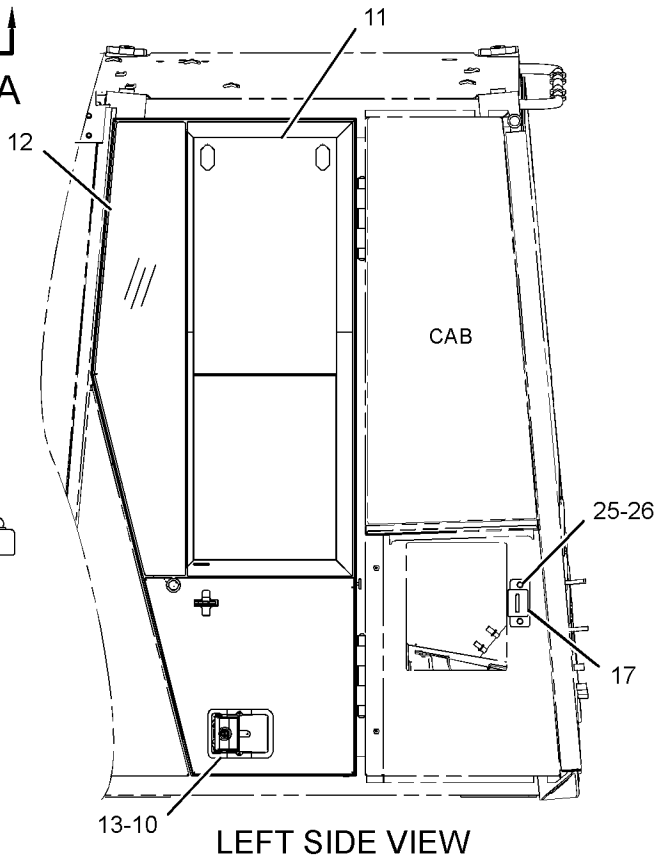

LEFT SIDE VIEW

GRAPHIC #1

g01196625

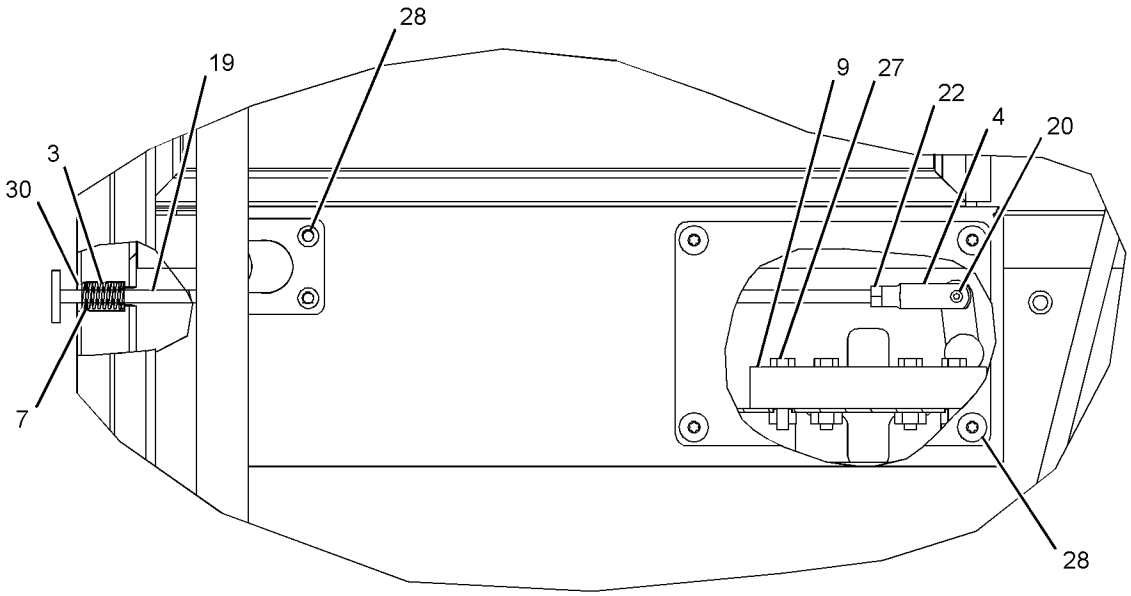

VIEW OF AREA C

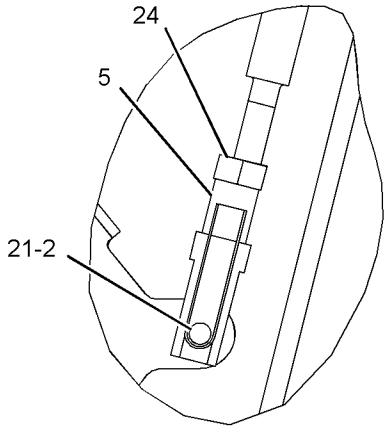

VIEW OF AREA D

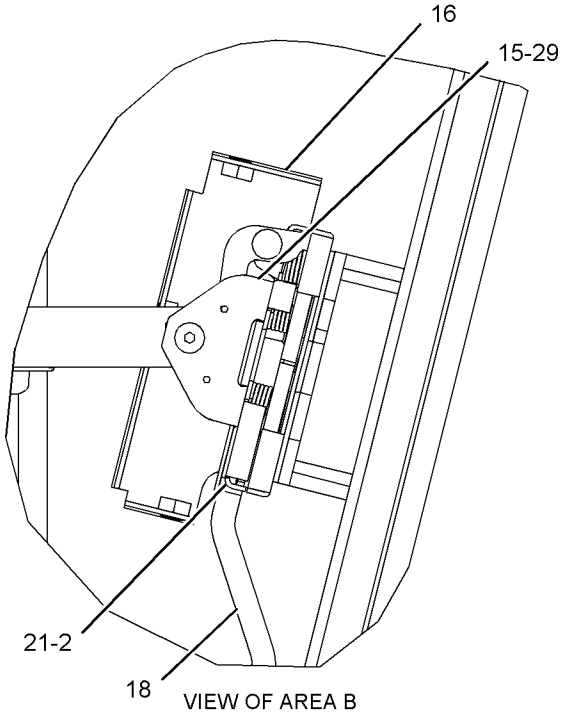

VIEW OF AREA B

GRAPHIC #2 **<END>** g01207087

OPERATOR STATION

260-4693 DOOR GP-CAB—SLIDING WINDOW, RH

S/N: A7G1-UP

AN ATTACHMENT

SMCS-7308 **i02415703**

NOTE	REF NO	GRAPHIC REF	PART NUMBER	QTY	PART NAME 1 2 3 4 5 6 (PRODUCT LEVEL)	SEE PAGE
Y	1	1	*185-7534*	1	DOOR GP-CAB (SLIDING WINDOW, RH)	790

Y-SEPARATE ILLUSTRATION

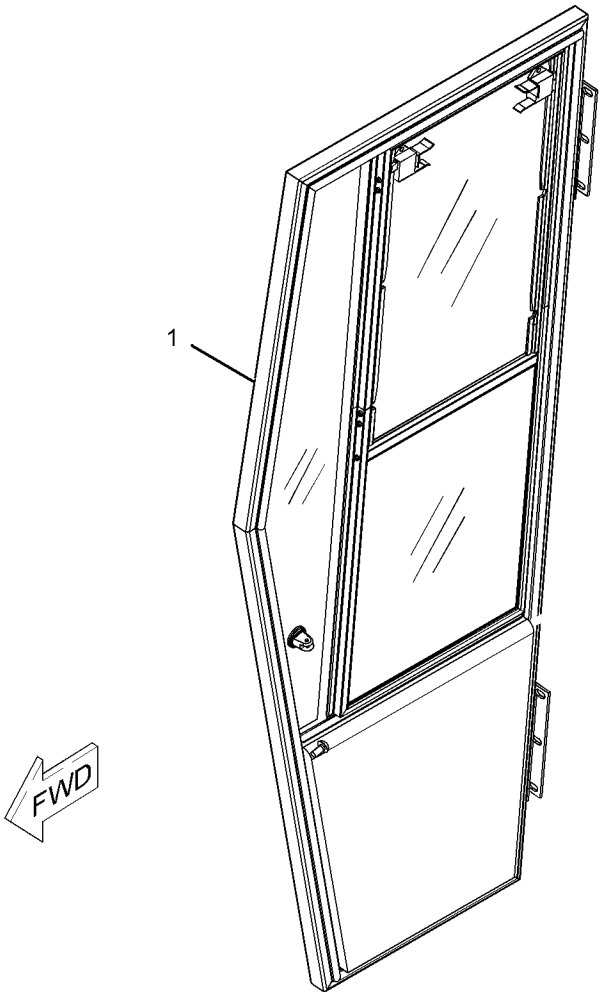

GRAPHIC #1

<END>

g01207873

OPERATOR STATION

264-0688 DOOR GP-CAB–RH

S/N: A7G1-UP
PART OF 270-3388 DOOR GP-CAB
ALSO AN ATTACHMENT

SMCS-7308 **i02304402**

NOTE	REF NO	GRAPHIC REF	PART NUMBER	QTY	PART NAME 1 2 3 4 5 6 (PRODUCT LEVEL)	SEE PAGE
B	1	1	**5P-7803**	2	PLUG-BUTTON	
	2	1	**103-1122**	1	MOUNT-LATCH	
	3	1	**185-7538**	1	DOOR AS (RH)	
		1	**205-0926**	2	HINGE	
	4	1	**264-0690**	1	GLASS-CAB (DOOR, RH)	
M	5	1	**9X-2041**	1	SCREW-TRUSS HEAD (M10X1.5X20-MM)	
	6	1	**3E-3805**		SEAL (470-CM)	

B-USE AS REQUIRED
M-METRIC PART

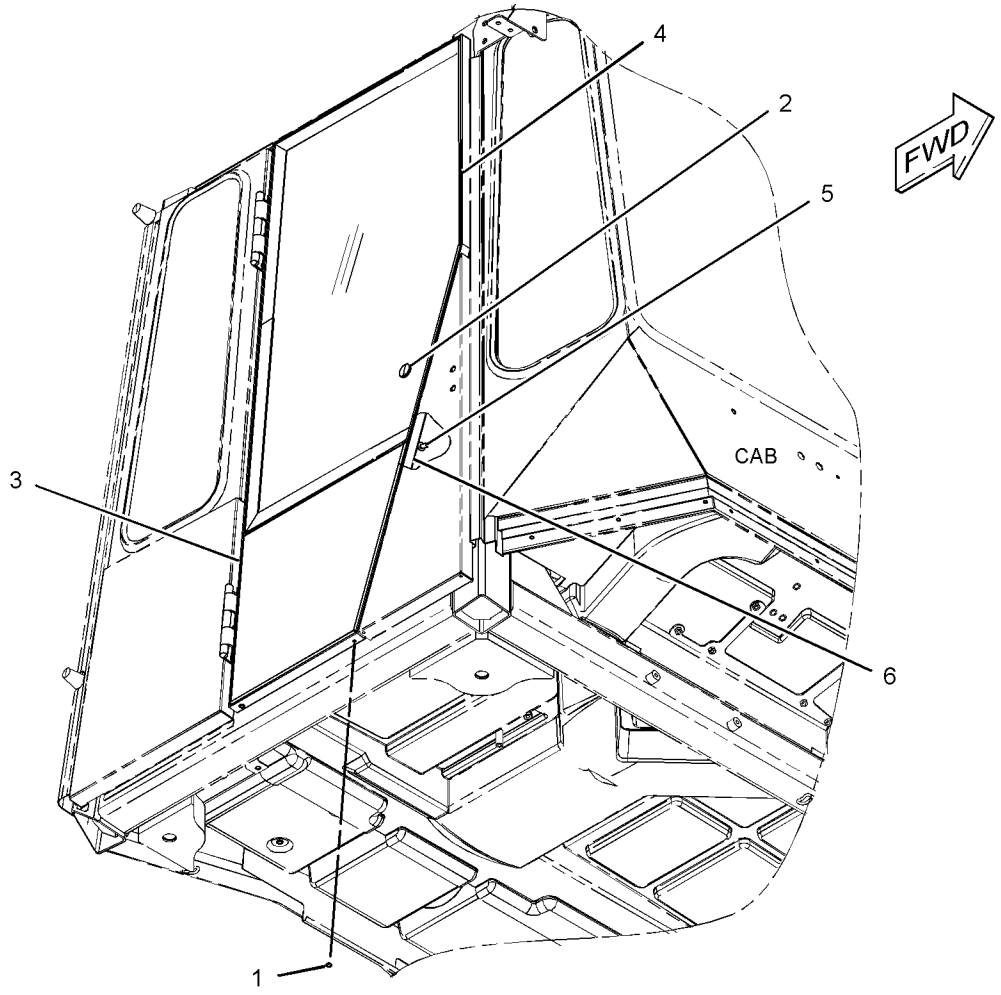

GRAPHIC #1 **<END>** g01206081

OPERATOR STATION

270-3388 DOOR GP-CAB

S/N: A7G1-UP
PART OF 237-2574 ROPS GP-ENCLOSED
ALSO AN ATTACHMENT

SMCS-7308 **i02413337**

NOTE	PART NUMBER	QTY	PART NAME 1 2 3 4 5 6 (PRODUCT LEVEL)	SEE PAGE
Y	*247-1852*	1	DOOR GP-CAB (SLIDING WINDOW, LH)	791
Y	*264-0688*	1	DOOR GP-CAB (RH)	795

Y-SEPARATE ILLUSTRATION

<END>

OPERATOR STATION

171-8888 DUCT & FILTER GP-AIR

S/N: A7G1-UP

PART OF 237-2572, 237-2573 CAB AR-ENCLOSED ROPS

ALSO AN ATTACHMENT

SMCS-7337, 7342 **i02225219**

NOTE	REF NO	GRAPHIC REF	PART NUMBER	QTY	PART NAME 1 2 3 4 5 6 (PRODUCT LEVEL)	SEE PAGE
	1	1	**3V-7476**	1	KEY-HANDLE	
	2	1	**7X-6041**	2	FILTER-CAB AIR	
	3	1	**8Y-6388**	4	LOUVER AS	
	4	1	**135-8280**	2	SEAL	
	5	1	**146-6371**	6	LOUVER AS	
	6	1	**151-5715**	3	LOUVER AS	
E	7	1	**8T-9005**	2	SEAL (60-CM EACH)	
	8	1	**196-0052**	2	DUCT AS (LH)	
					(EACH INCLUDES)	
		1	**8M-7758**	4	RIVET-POP	
		1	**096-5962**	4	WASHER-HARD (3.4X7X0.8-MM THK)	
	9	1	**177-4495**	4	BRACKET AS	
	10	1	**198-8772**	1	DUCT AS	
	11	1	**104-2091**	8	SCREW-FLAT HEAD (6-20X0.5-IN)	
	12	1	**148-3626**	6	SCREW-FLAT HEAD (NO 6X3/4-IN)	
	13	1	**5P-4116**	4	WASHER-HARD (8.8X20.5X2-MM THK)	
M	14	1	**7X-2537**	4	BOLT (M8X1.25X35-MM)	
CM	15	1	**9X-2044**	8	SCREW-TRUSS HEAD (M6X1X16-MM)	
M	16	1	**9X-2043**	6	SCREW-TRUSS HEAD (M6X1X14-MM)	
E	17	1	**117-4473**	2	SEAL (5-CM EACH)	
M	18	1	**9X-2045**	2	SCREW-TRUSS HEAD (M6X1X20-MM)	
	19	1	**117-8929**	2	SPACER (6.6X22X2-MM THK)	
	20	1	**209-0746**	2	STRAP	
E	21	1	**3E-8082**		SEAL (46-CM)	

C-CHANGE FROM PREVIOUS TYPE
E-ORDER BY THE CENTIMETER
M-METRIC PART

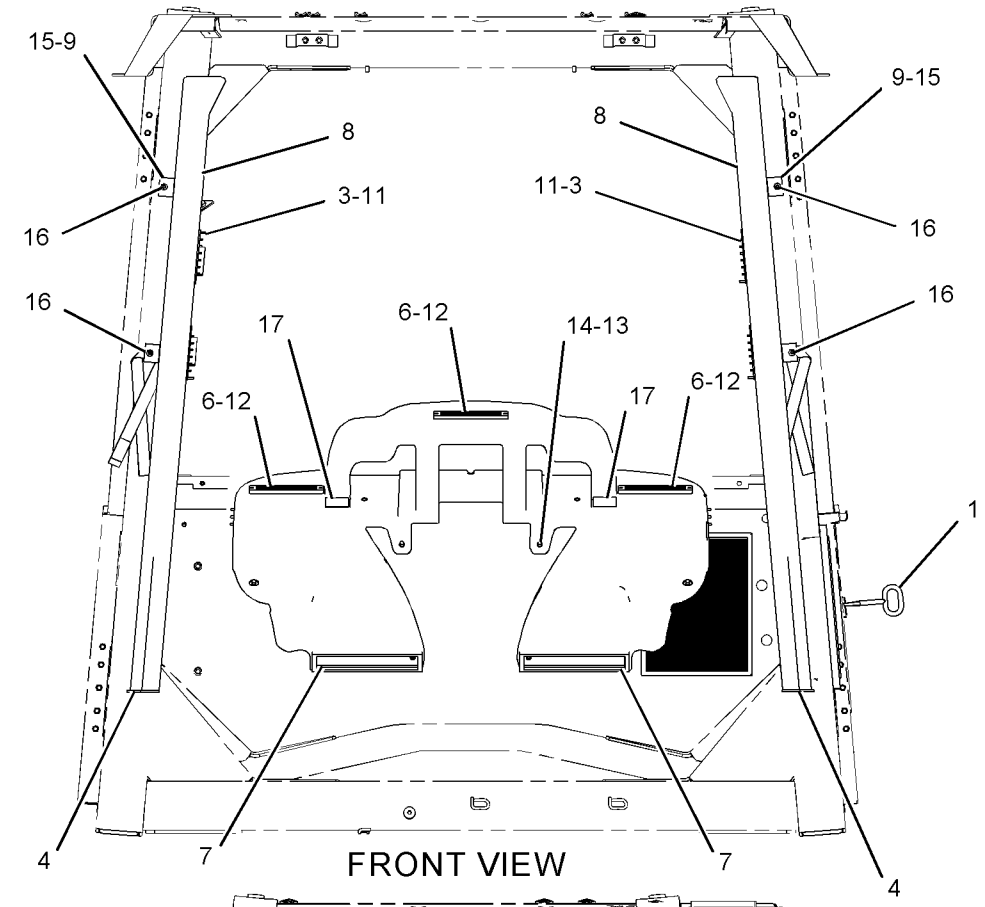

FRONT VIEW

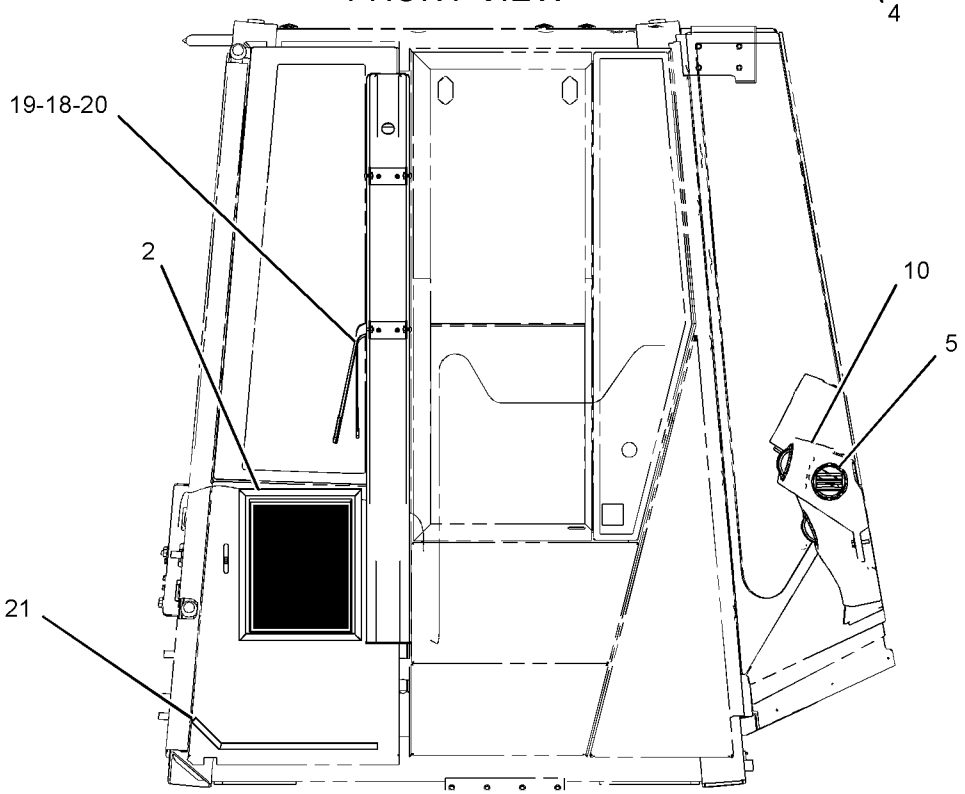

RIGHT SIDE VIEW

GRAPHIC #1

<END>

g01118365

OPERATOR STATION

232-1397 FLOOR GP-SOUND SUPPRESSION

S/N: A7G1-UP

PART OF 237-2572, 237-2573 CAB AR-ENCLOSED ROPS

ALSO AN ATTACHMENT

SMCS-7265, 7301 **i02012426**

NOTE	PART NUMBER	QTY	PART NAME 1 2 3 4 5 6 (PRODUCT LEVEL)	SEE PAGE
M	**8T-4137**	2	BOLT (M10X1.5X20-MM)	
	224-9392	8	FASTENER-SINGLE HEAD	
	247-1639	1	FLOOR GP-SOUND SUPPRESSION	
	225-9578	1	INSULATION	
	236-8896	1	INSULATION	
	225-9423	1	INSULATION	
	225-9422	1	INSULATION	
	225-9579	1	PANEL	
	2D-6416	2	WASHER (7/16-1.25X0.12-IN THK)	

M-METRIC PART

<END>

OPERATOR STATION

232-2964 FLOOR GP-SOUND SUPPRESSION

S/N: A7G1-UP
PART OF 237-2574 ROPS GP-ENCLOSED
ALSO AN ATTACHMENT

SMCS-7265, 7301 **i02208904**

NOTE	REF NO	GRAPHIC REF	PART NUMBER	QTY	PART NAME 1 2 3 4 5 6 (PRODUCT LEVEL)	SEE PAGE
	1	1	**2M-6102**	3	PIPE	
	2	1	*185-5179*	1	PLATE AS	
M		1	**8T-3612**	4	NUT-WELD (M8X1.25-THD)	
	3	1	**6S-3859**	2	WASHER (0.562X1.75X0.063-IN THK)	

M-METRIC PART

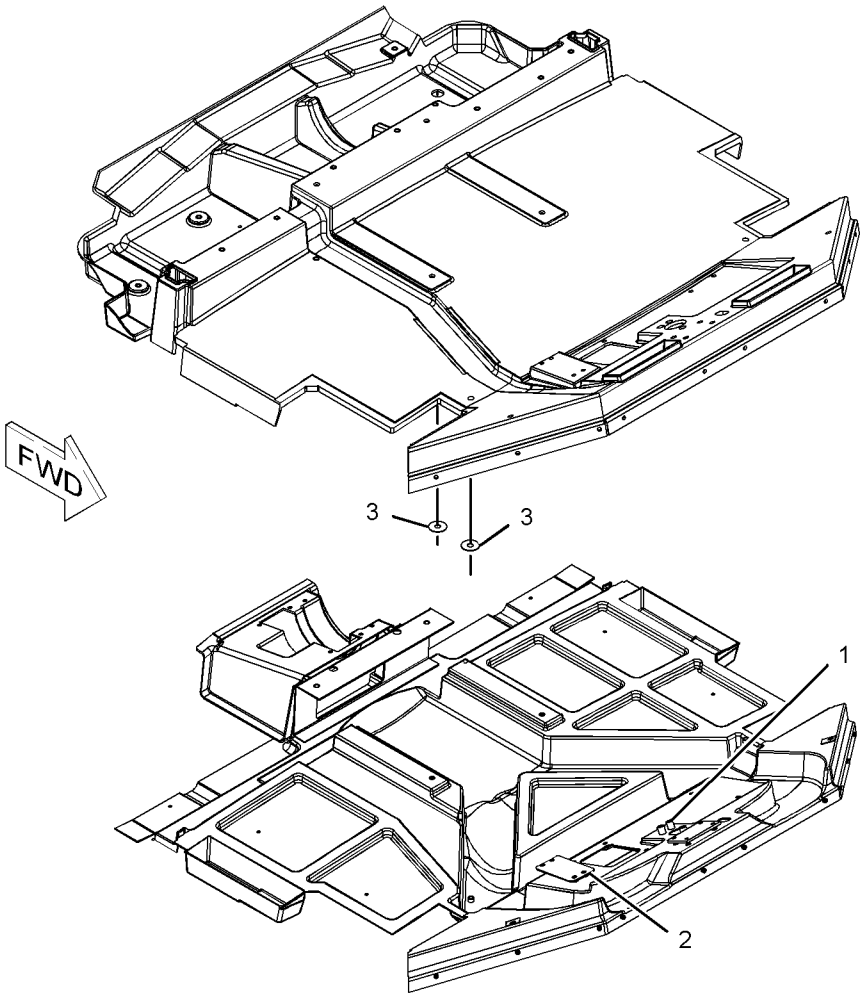

GRAPHIC #1 **<END>** g01116446

OPERATOR STATION

266-6594 FLOOR GP-SOUND SUPPRESSION

S/N: A7G1-UP

PART OF 277-8551 SUPPRESSION AR-SOUND

AN ATTACHMENT

SMCS-7265, 7301 **i02415759**

NOTE	REF NO	GRAPHIC REF	PART NUMBER	QTY	PART NAME 1 2 3 4 5 6 (PRODUCT LEVEL)	SEE PAGE
	1	1	**224-9392**	32	FASTENER-SINGLE HEAD	
	2	1	**266-6590**	1	INSULATION	
	3	1	**266-6591**	1	INSULATION	
	4	1	**266-6592**	1	INSULATION	
	5	1	**266-6593**	1	INSULATION	
	6	1	**266-6631**	1	INSULATION	
	7	1	**266-6632**	1	INSULATION	
	8	1	**266-6633**	1	INSULATION	
	9	1	**266-8944**	2	GROMMET	
	10	1	**275-8294**	1	BRACKET AS	
	11	1	**275-8297**	1	BRACKET AS	
	12	1	**275-8299**	1	BRACKET AS	
	13	1	**275-8301**	1	BRACKET	
	14	1	**275-8302**	1	BRACKET	
	15	1	**275-8303**	7	TUBE	
	16	1	**275-8304**	1	TUBE	
	17	1	**275-8305**	8	TUBE	
	18	1	**280-7000**	2	BRACKET	
	19	1	**8T-4121**	2	WASHER-HARD (11X21X2.5-MM THK)	

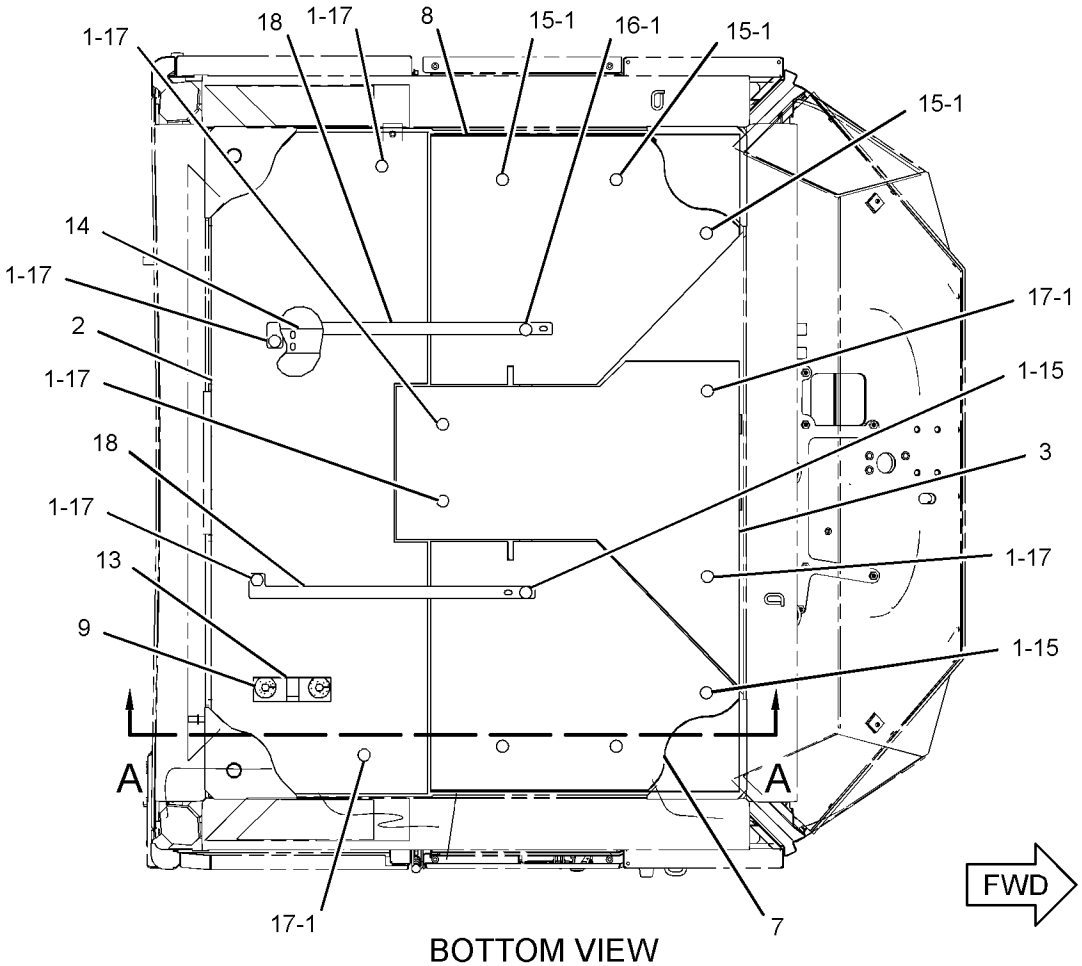

BOTTOM VIEW

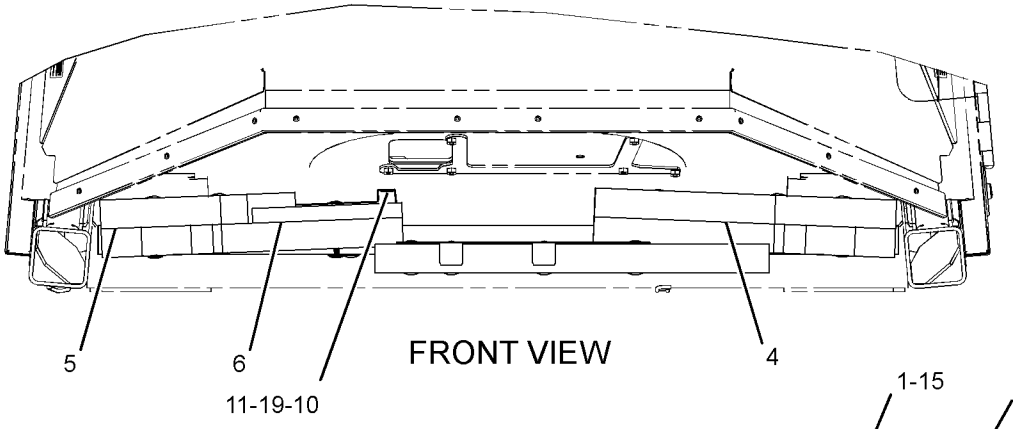

FRONT VIEW

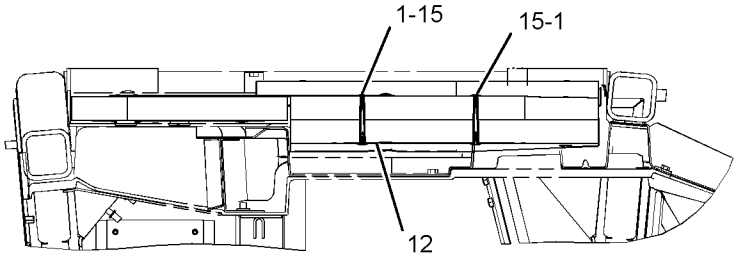

SECTION A-A

GRAPHIC #1 **<END>** g01209351

OPERATOR STATION

240-4542 GUARD GP-WINDOW—FRONT

S/N: A7G1-UP

AN ATTACHMENT

SMCS-7165, 7182, 7310 **i02317904**

NOTE	REF NO	GRAPHIC REF	PART NUMBER	QTY	PART NAME 1 2 3 4 5 6 (PRODUCT LEVEL)	SEE PAGE
	1	1	**2G-9524**	2	LATCH	
	2	1	**6C-3678**	4	RIVET	
	3	1	**6C-3679**	4	RIVET-POP	
	4	1	**6S-6646**	6	PIN-COTTER	
	5	1	**7K-6536**	2	RIVET-POP	
	6	1	**8G-6035**	2	CLIP	
	7	1	**240-4548**	1	GRILL AS-FRONT	
	8	1	**240-4551**	1	GRILL AS-RH	
	9	1	**240-4552**	1	GRILL AS-LH	
	10	1	**240-4557**	1	TUBE	
	11	1	**240-4630**	2	PLATE	
	12	1	**241-6978**	1	TUBE	
	13	1	**241-8651**	1	TUBE AS	
	14	1	**241-8652**	1	TUBE AS	
	15	1	**244-2539**	2	ROD AS	
					(EACH INCLUDES)	
		1	**6V-5839**	2	WASHER (11X21X2.5-MM THK)	
	16	1	**0S-0175**	4	PIN-CLEVIS	
	17	1	**4M-7470**	4	GROMMET	
	18	1	**5P-1076**	12	WASHER-HARD (13.5X30X4-MM THK)	
M	19	1	**7X-2555**	6	BOLT (M16X2X80-MM)	
	20	1	**8T-4121**	2	WASHER-HARD (11X21X2.5-MM THK)	
M	21	1	**8T-4139**	12	BOLT (M12X1.75X30-MM)	
	22	1	**9X-8257**	6	WASHER (17.5X30X3.5-MM THK)	
	23	1	**4E-1384**	2	BUMPER-CONICAL	
M	24	1	**5C-7261**	2	NUT (M8X1.25-THD)	

M-METRIC PART

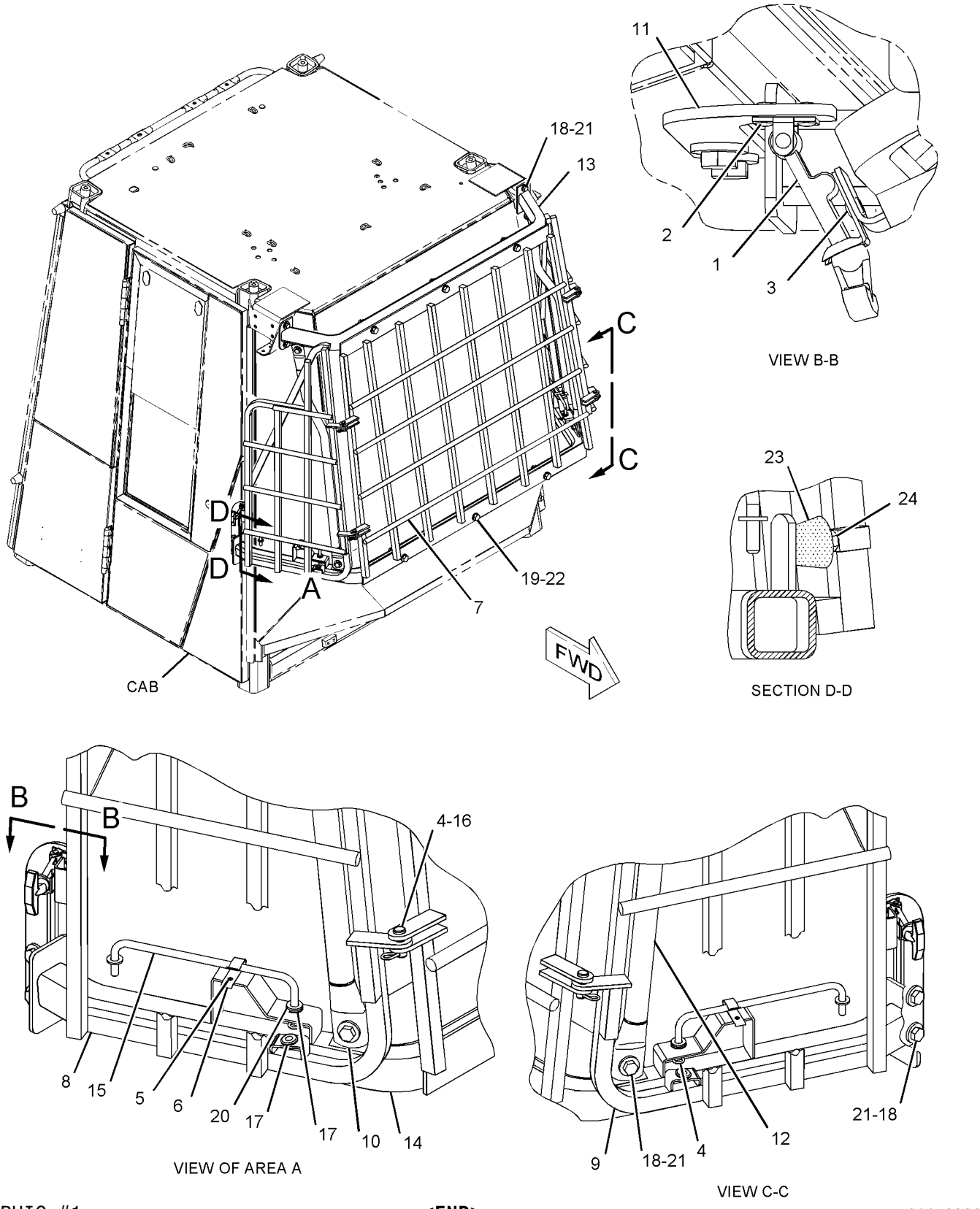

GRAPHIC #1 **<END>** g01143326

OPERATOR STATION

241-8650 GUARD GP-WINDOW—FRONT

S/N: A7G1-UP

AN ATTACHMENT

SMCS-7165, 7182, 7310 **i02317903**

NOTE	REF NO	GRAPHIC REF	PART NUMBER	QTY	PART NAME 1 2 3 4 5 6 (PRODUCT LEVEL)	SEE PAGE
	1	1	**2G-9524**	2	LATCH	
	2	1	**6C-3678**	4	RIVET	
	3	1	**6C-3679**	4	RIVET-POP	
	4	1	**6S-6646**	6	PIN-COTTER	
	5	1	**7K-6536**	2	RIVET-POP	
	6	1	**8G-6035**	2	CLIP	
	7	1	**240-4557**	1	TUBE	
	8	1	**240-4630**	2	PLATE	
	9	1	**241-6978**	1	TUBE	
	10	1	**241-8651**	1	TUBE AS	
	11	1	**241-8652**	1	TUBE AS	
	12	1	**242-0718**	1	GRILL AS (FRONT)	
	13	1	**242-0719**	1	GRILL AS (RH)	
	14	1	**242-0720**	1	GRILL AS (LH)	
	15	1	**244-2539**	2	ROD AS	
					(EACH INCLUDES)	
		1	**6V-5839**	2	WASHER (11X21X2.5-MM THK)	
	16	1	**0S-0175**	4	PIN-CLEVIS	
	17	1	**4M-7470**	4	GROMMET	
	18	1	**5P-1076**	12	WASHER-HARD (13.5X30X4-MM THK)	
M	19	1	**7X-2555**	6	BOLT (M16X2X80-MM)	
	20	1	**8T-4121**	2	WASHER-HARD (11X21X2.5-MM THK)	
M	21	1	**8T-4139**	12	BOLT (M12X1.75X30-MM)	
	22	1	**9X-8257**	6	WASHER (17.5X30X3.5-MM THK)	
	23	1	**4E-1384**	2	BUMPER-CONICAL	
M	24	1	**5C-7261**	2	NUT (M8X1.25-THD)	

M-METRIC PART

241-8650 **GUARD GP-WINDOW** *(contd.)* **i02317903**

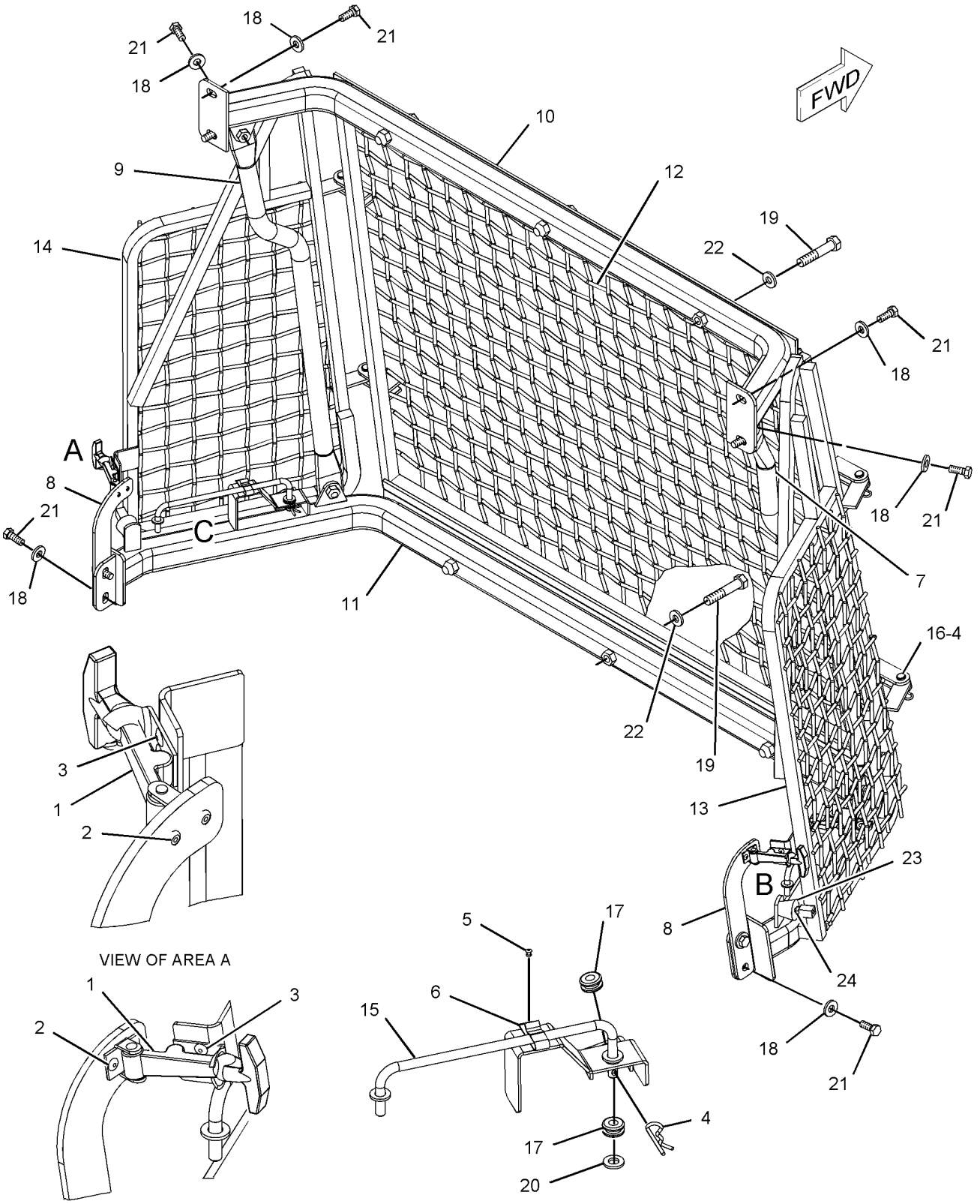

VIEW OF AREA A

VIEW OF AREA B

VIEW OF AREA C
(EXPLODED)

GRAPHIC #1 **<END>** g01144342

OPERATOR STATION

243-1944 HANDHOLD GP–CAB

S/N: A7G1-UP
PART OF 260-4870, 260-4871, 260-4872 PLATFORM AR
AN ATTACHMENT

SMCS-7256 **i02415691**

NOTE	REF NO	GRAPHIC REF	PART NUMBER	QTY	PART NAME 1 2 3 4 5 6 (PRODUCT LEVEL)	SEE PAGE
	1	1	**240-0363**	1	HANDHOLD AS	
	2	1	**251-9885**	1	HANDHOLD AS (LH)	
	3	1	**7X-0589**	2	WASHER-HARD (12X28.5X5-MM THK)	
M	4	1	**8T-4183**	4	BOLT (M12X1.75X40-MM)	
M	5	1	**8T-4192**	4	BOLT (M12X1.75X25-MM)	
M	6	1	**8T-4195**	2	BOLT (M10X1.5X30-MM)	
	7	1	**8T-4223**	8	WASHER-HARD (13.5X25.5X3-MM THK)	
	8	1	**251-9886**	1	HANDHOLD AS (RH)	

M-METRIC PART

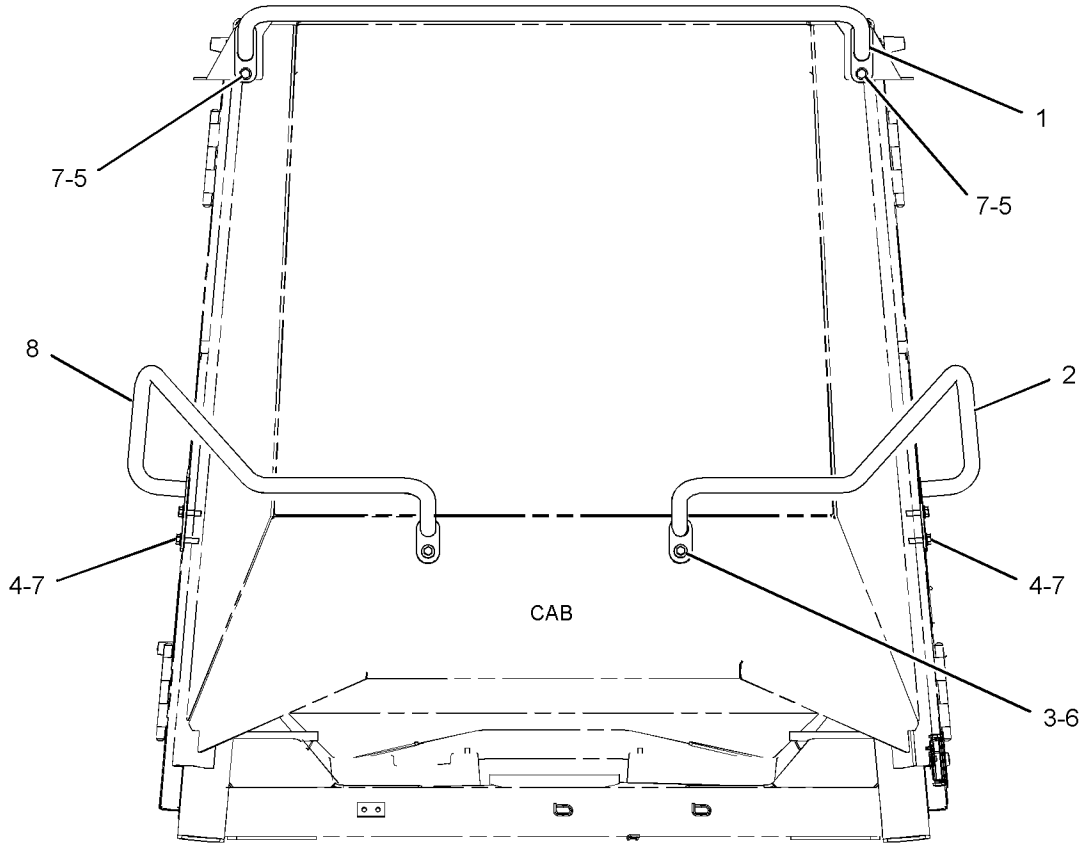

FRONT VIEW

GRAPHIC #1 **<END>** g01195508

OPERATOR STATION

245-6184 HANDHOLD GP

S/N: A7G1-UP
PART OF 260-4870, 260-4871, 260-4872 PLATFORM AR
AN ATTACHMENT

SMCS-7256 **i02379275**

NOTE	REF NO	GRAPHIC REF	PART NUMBER	QTY	PART NAME 1 2 3 4 5 6 (PRODUCT LEVEL)	SEE PAGE
	1	1	**271-6472**	1	STEP	
	2	1	**250-3920**	1	HANDHOLD AS-FRONT (LH)	
	3	1	**250-3923**	1	PLATE-TREAD	
	4	1	**8T-4121**	2	WASHER-HARD (11X21X2.5-MM THK)	
M	5	1	**8T-4137**	6	BOLT (M10X1.5X20-MM)	
M	6	1	**8T-4139**	3	BOLT (M12X1.75X30-MM)	
	7	1	**5P-1076**	3	WASHER-HARD (13.5X30X4-MM THK)	
	8	1	**7X-7729**	4	WASHER (11X25X3-MM THK)	

M-METRIC PART

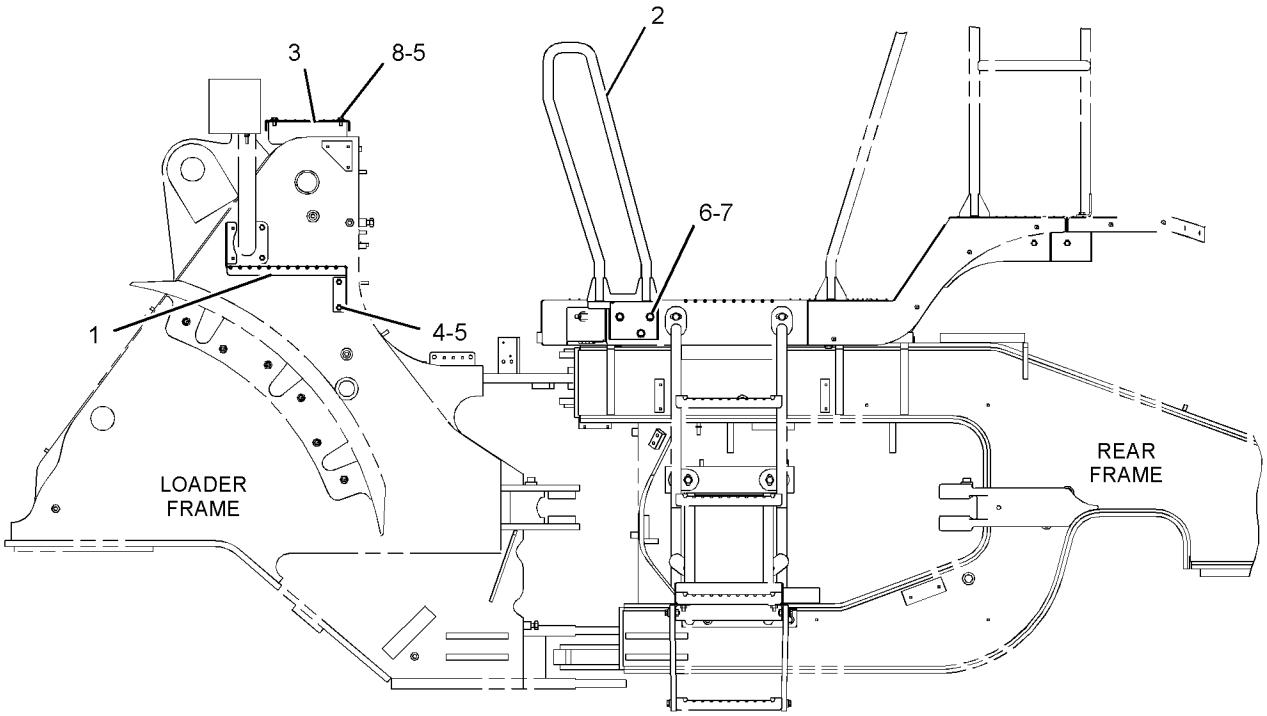

LEFT SIDE VIEW

GRAPHIC #1 **<END>** g01195994

OPERATOR STATION

243-1092 HEATER GP-CAB

S/N: A7G1-UP

PART OF 237-2572, 237-2573 CAB AR-ENCLOSED ROPS

ALSO AN ATTACHMENT

SMCS-7304 **i02413641**

NOTE	REF NO	GRAPHIC REF	PART NUMBER	QTY	PART NAME 1 2 3 4 5 6 (PRODUCT LEVEL)	SEE PAGE
M	1	1	**8T-4971**	4	BOLT (M6X1X30-MM)	
Y	2	1	**276-3964**	1	HEATER GP-CAB	811
	3	1	**192-2822**	1	GASKET	
	4	1	**229-2704**	8	WASHER-RUBBER	
Y	5	1	*243-1093*	1	LINES GP-CAB HEATER	830
M	6	1	**5C-9553**	2	BOLT (M6X1X16-MM)	
M	8	1	**9X-2040**	3	SCREW-TRUSS HEAD (M10X1.5X25-MM)	
	9	1	**8T-4205**	6	WASHER-HARD (7.2X14.5X2-MM THK)	
E	11	1	**123-3827**		SEAL (28-CM EACH)	
E	11A	1	**123-3827**		SEAL (33-CM EACH)	

E-ORDER BY THE CENTIMETER
M-METRIC PART
Y-SEPARATE ILLUSTRATION

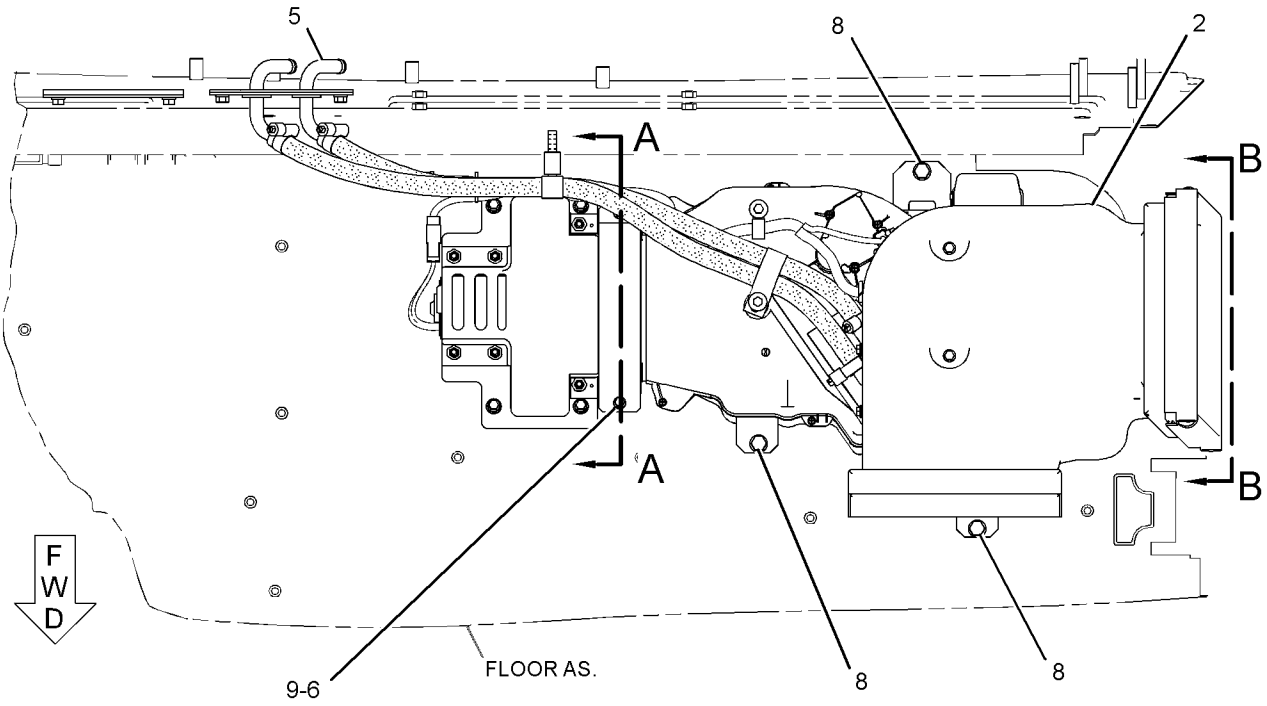

TOP VIEW

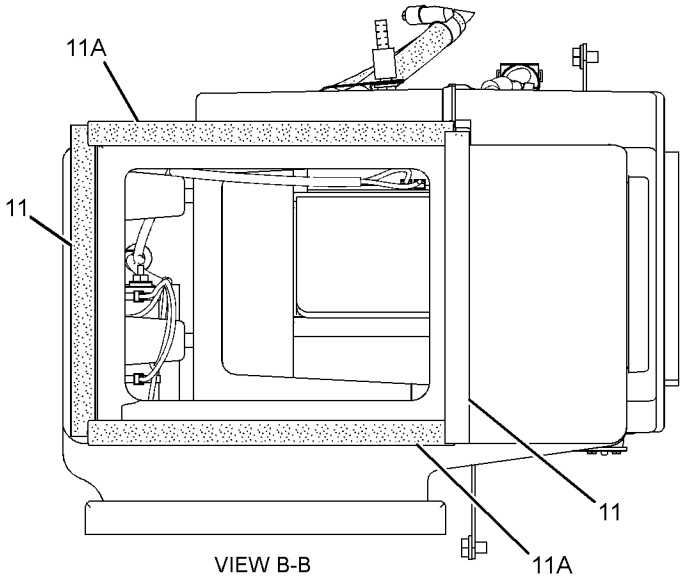

VIEW B-B

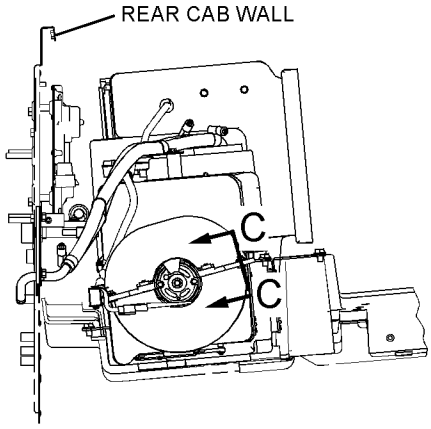

RIGHT SIDE VIEW

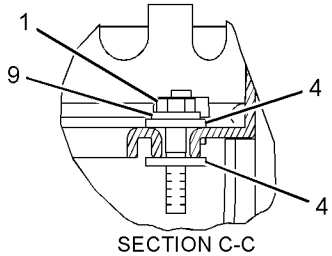

SECTION C-C

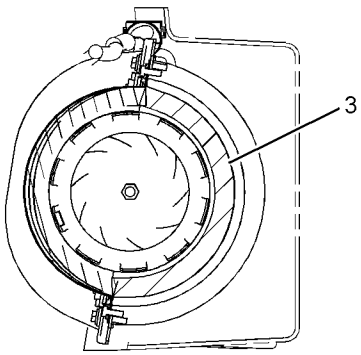

SECTION A-A

GRAPHIC #1 **<END>** g01189860

OPERATOR STATION

276-3964 HEATER GP-CAB

S/N: A7G1-UP
PART OF 243-1092 HEATER GP-CAB
ALSO AN ATTACHMENT

SMCS-7304 **i02413620**

NOTE	REF NO	GRAPHIC REF	PART NUMBER	QTY	PART NAME 1 2 3 4 5 6 (PRODUCT LEVEL)	SEE PAGE
	1	1	**3S-2093**	1	STRAP-CABLE	
	2	1	**6T-6708**	2	WASHER (7X28.6X4.1-MM THK)	
M	3	1	**8C-7581**	1	SCREW-MACHINE (M4X0.7X8-MM)	
	4	1	**9G-1950**	1	RESISTOR	
	5	1	**133-9012**	1	FUSE (15-AMPERE)	
	6	1	**177-6704**	2	GASKET	
	7	1	**177-6716**	1	DOOR	
	8	1	**177-6727**	1	ACTUATOR	
	9	1	**177-6732**	1	DOOR AS	
		1	**4K-9429**	4	RIVET-POP	
	10	1	**179-4682**	2	LEVER	
	11	1	**179-4683**	1	ROD	
	12	1	**185-4778**	1	HOUSING AS	
	13	1	**185-4780**	1	HOUSING	
	14	1	**185-4782**	1	HOUSING	
	15	1	**185-4783**	1	COVER	
	16	1	**185-4785**	1	DUCT AS	
M	17	1	**187-7719**	24	BOLT (M5X2.24X14-MM)	
	18	1	**188-7690**	1	SUPPORT	
	19	1	**189-4682**	1	COIL AS-HEATER	
	20	1	**192-2820**	1	PLATE	
	21	1	**192-2822**	1	GASKET	
	22	1	**192-2823**	1	HARNESS AS-HEATER & AIR COND	
		1	**102-8801**	2	KIT-RECEPTACLE (12-PIN)	
					(EACH KIT INCLUDES RECEPTACE AS AND WEDGE)	
		1	**155-2270**	2	KIT-CONNECTING PLUG (2-PIN)	
					(EACH KIT INCLUDES PLUG AS AND WEDGE)	
	23	1	**193-0702**	1	GASKET	
	24	1	**193-7307**	1	GROMMET	
	25	1	**197-1397**	1	BRACKET	
	26	1	**197-1398**	1	BRACKET	
	27	1	**197-1399**	1	BRACKET	
	28	1	**197-1400**	1	BRACKET AS	
M		1	**6V-9632**	3	NUT-WELD (M6X1-THD)	
	29	1	**199-7499**	1	GASKET	
	30	1	**202-1327**	1	GASKET	
	31	1	**268-8792**	1	MOTOR AS-BLOWER (24-VOLT, A/C, HEATER)	
		1	**102-8802**	2	KIT-RECEPTACLE (2-PIN)	
					(EACH KIT INCLUDES RECEPTACLE AS AND WEDGE)	
		1	**9W-0852**	2	PIN-CONNECTOR (14-GA)	
M	32	1	**129-3178**	7	LOCKNUT (M6X1-THD)	
	33	1	**130-5300**	1	CLIP	
M	34	1	**141-9784**	1	BOLT (M6X1X190-MM)	
	35	1	**4B-4274**	2	WASHER (5.5X13X1.2-MM THK)	
M	36	1	**5C-9553**	8	BOLT (M6X1X16-MM)	
	37	1	**5P-4115**	3	WASHER-HARD (7.2X19X2-MM THK)	
	38	1	**6V-1668**	2	WASHER (6.5X29.1X3-MM THK)	
	39	1	**6V-4369**	1	CLIP	
M	40	1	**6V-7357**	3	BOLT (M6X1X25-MM)	
	41	1	**8T-4205**	11	WASHER-HARD (7.2X14.5X2-MM THK)	
	42	1	**9X-7373**	1	GROMMET	

M-METRIC PART

276-3964 HEATER GP-CAB *(contd.)* i02413620

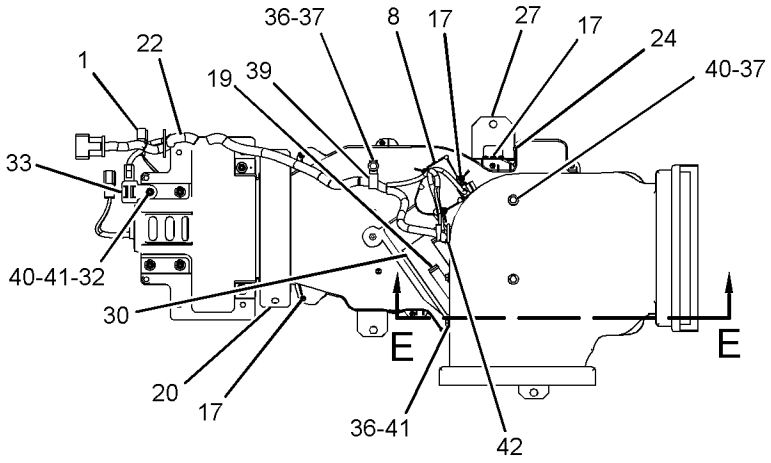

VIEW A-A

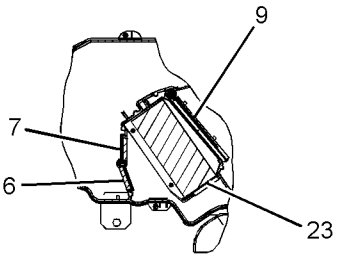

SECTION D-D

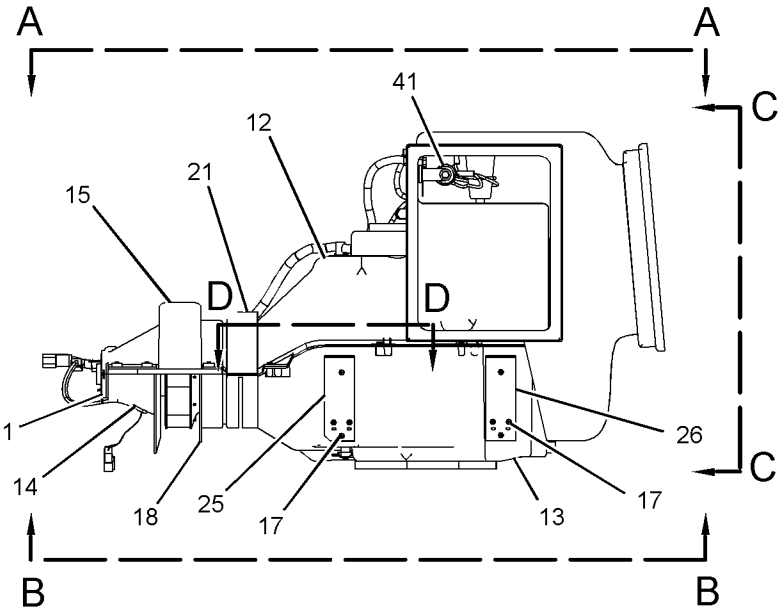

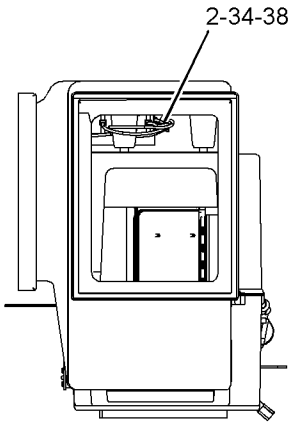

VIEW C-C

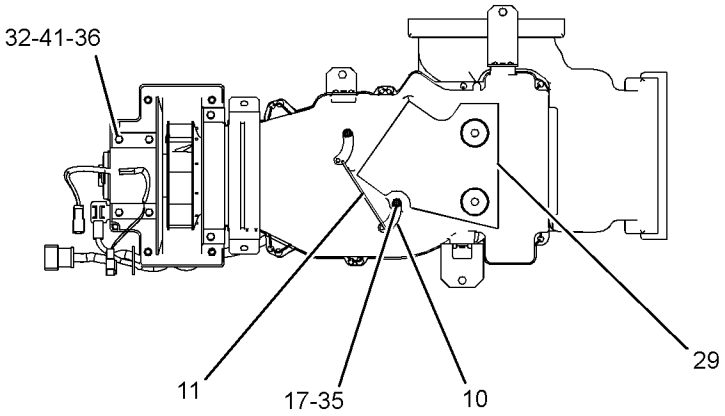

VIEW B-B

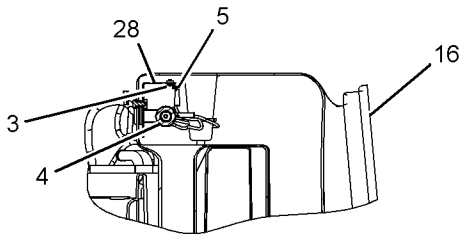

SECTION E-E

GRAPHIC #1 **<END>** g01197019

OPERATOR STATION

246-3292 HORN GP-ELECTRIC

S/N: A7G1-UP

PART OF 236-9053 ELECTRICAL AR

SMCS-7402 **i02306833**

NOTE	REF NO	GRAPHIC REF	PART NUMBER	QTY	PART NAME 1 2 3 4 5 6 (PRODUCT LEVEL)	SEE PAGE
	1	1	**163-1201**	1	HORN AS (24-VOLT, LOW TONE)	
	2	1	**174-7875**	1	HORN AS (24-VOLT, HIGH TONE)	
	3	1	**8T-4121**	2	WASHER-HARD (11X21X2.5-MM THK)	
M	4	1	**8T-4137**	2	BOLT (M10X1.5X20-MM)	

M-METRIC PART

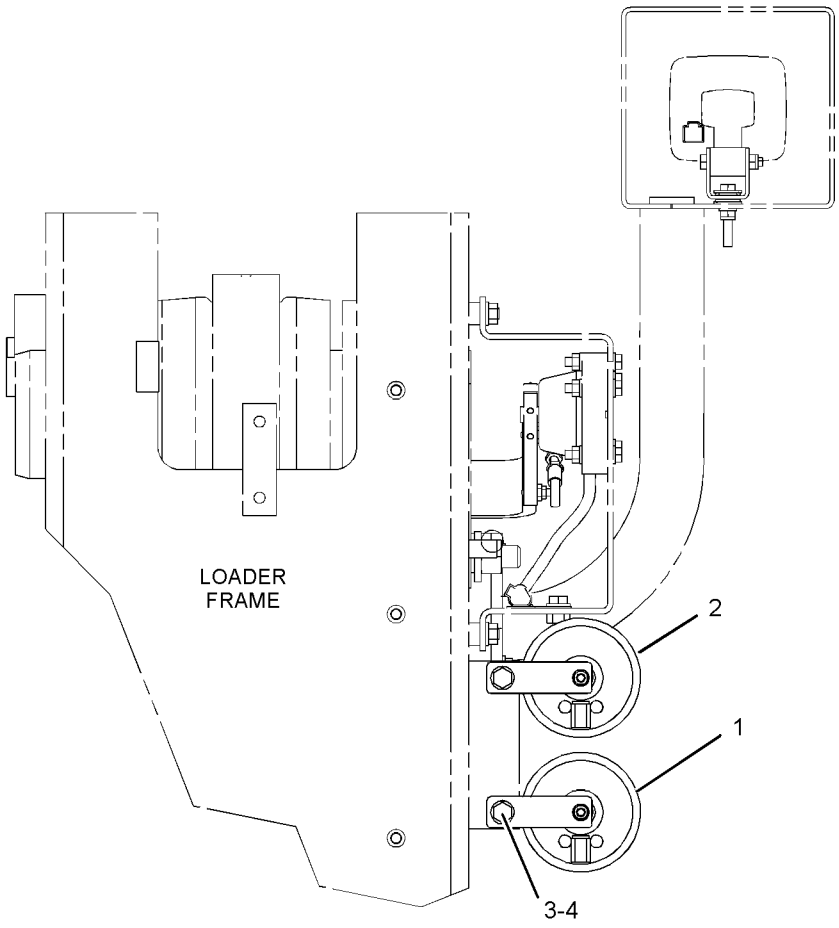

REAR VIEW

GRAPHIC #1 **<END>** g01141471

OPERATOR STATION

244-2787 INSTALLATION GP-CONTROLS–
PARKING BRAKE CABLE
S/N: A7G1-UP
PART OF 237-2570, 237-2571 OPERATOR AR-ENCLOSED ROPS
ALSO AN ATTACHMENT

SMCS-1265, 4284 **i02204110**

NOTE	REF NO	GRAPHIC REF	PART NUMBER	QTY	PART NAME 1 2 3 4 5 6 (PRODUCT LEVEL)	SEE PAGE
	1	1	**9U-0830**	1	END-YOKE ROD	
	2	1	**152-1684**	1	ANGLE	
	3	1	**096-0067**	1	PIN-CLEVIS	
	4	1	**5B-9192**	1	PIN-COTTER	
M	5	1	**5C-2874**	1	NUT (M5X0.8 THD)	
	6	1	**8T-4121**	2	WASHER-HARD (11X21X2.5-MM THK)	
M	7	1	**8T-4137**	2	BOLT (M10X1.5X20-MM)	

M-METRIC PART

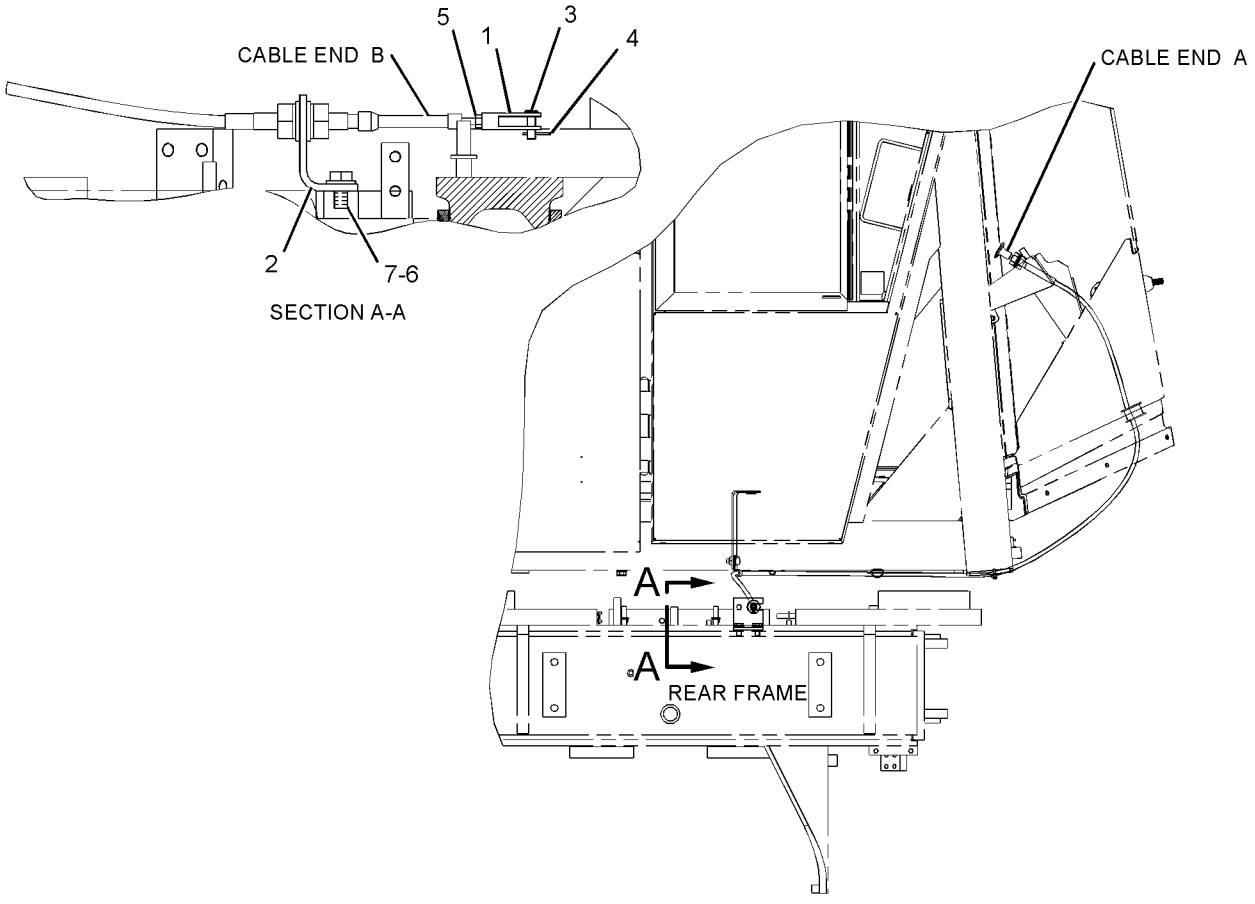

RIGHT SIDE VIEW

GRAPHIC #1 **<END>** g01116706

OPERATOR STATION

257-2008 INSTALLATION GP-RADIO

S/N: A7G1-UP

PART OF 237-2572, 237-2573 CAB AR-ENCLOSED ROPS

ALSO AN ATTACHMENT

SMCS-7338 **i02204467**

NOTE	REF NO	GRAPHIC REF	PART NUMBER	QTY	PART NAME 1 2 3 4 5 6 (PRODUCT LEVEL)	SEE PAGE
	1	1	**3S-2093**	10	STRAP-CABLE	
	2	1	**9U-2331**	1	ANTENNA AS (AM/FM)	
	3	1	**9U-4431**	1	MOUNT-ANTENNA	
	4	1	**9U-8263**	1	COVER	
	5	1	**168-8772**	2	SPEAKER AS-RADIO	
	6	1	**173-2200**	1	CABLE AS	
	7	1	**011-7960**	1	GROMMET	
	8	1	**8T-0328**	8	WASHER-HARD (5.5X10X1-MM THK)	
M	9	1	**8T-0337**	8	SCREW-MACHINE (M4X0.7X12-MM)	

M-METRIC PART

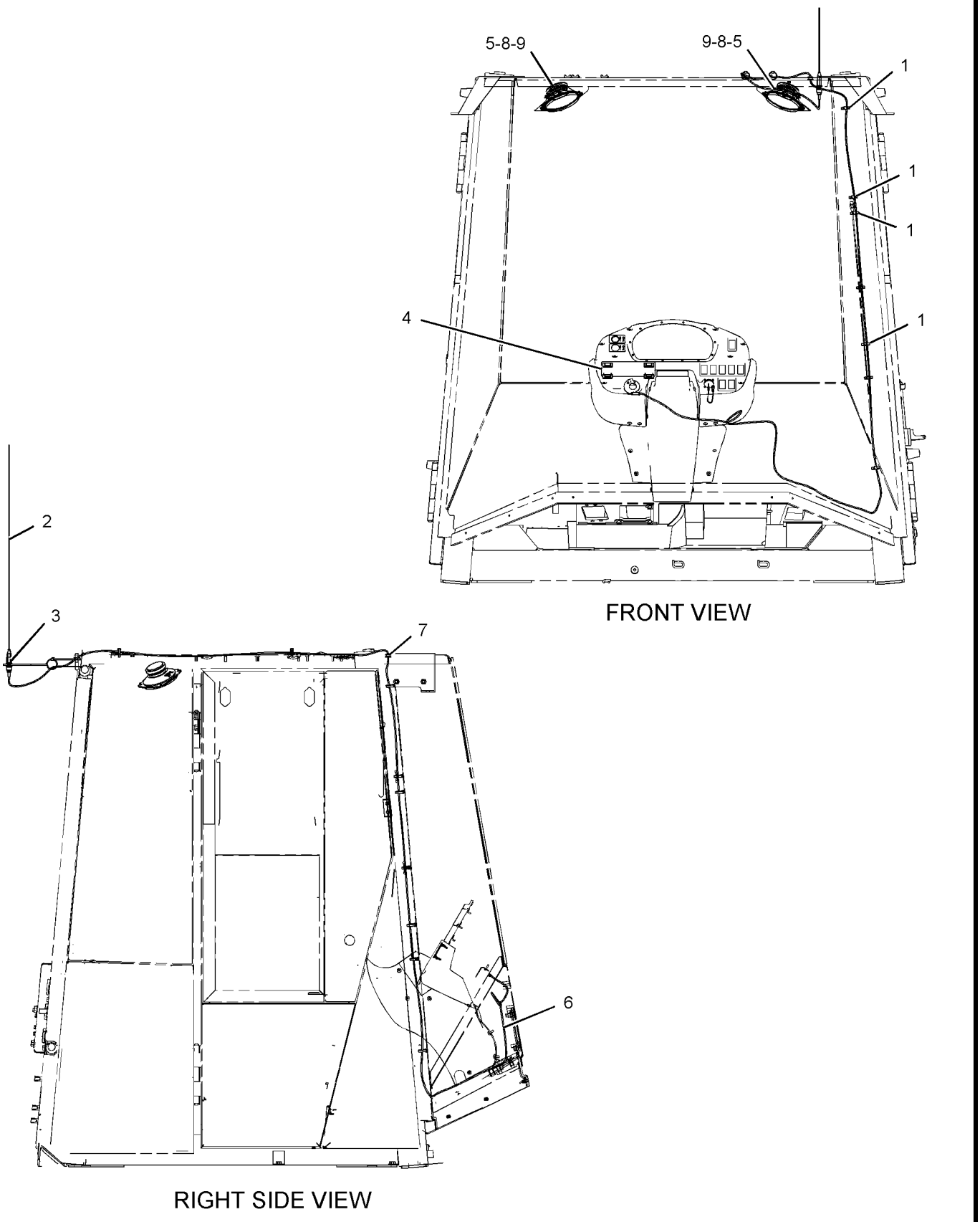

FRONT VIEW

RIGHT SIDE VIEW

GRAPHIC #1 **<END>** g01116665

OPERATOR STATION

247-1855 LATCH GP-CAB DOOR & WINDOW

S/N: A7G1-UP
PART OF 247-1852 DOOR GP-CAB
ALSO AN ATTACHMENT

SMCS-7308, 7310 **i02413355**

NOTE	REF NO	GRAPHIC REF	PART NUMBER	QTY	PART NAME 1 2 3 4 5 6 (PRODUCT LEVEL)	SEE PAGE
	1	1	**247-1865**	1	LATCH AS	
	2	1	**250-9308**	1	CLIP	
	3	1	**250-9309**	1	HANDLE AS	
	4	1	**250-9310**	1	SPRING AS	
	5	1	**250-9311**	1	ROD-LINK	
	6	1	**250-9312**	1	CLIP	
M	7	1	**5C-8917**	1	SCREW (M6X8-MM)	

M-METRIC PART

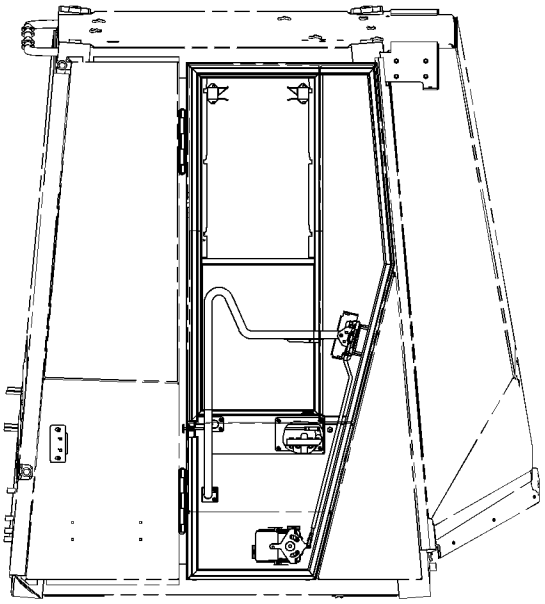

RIGHT SIDE VIEW

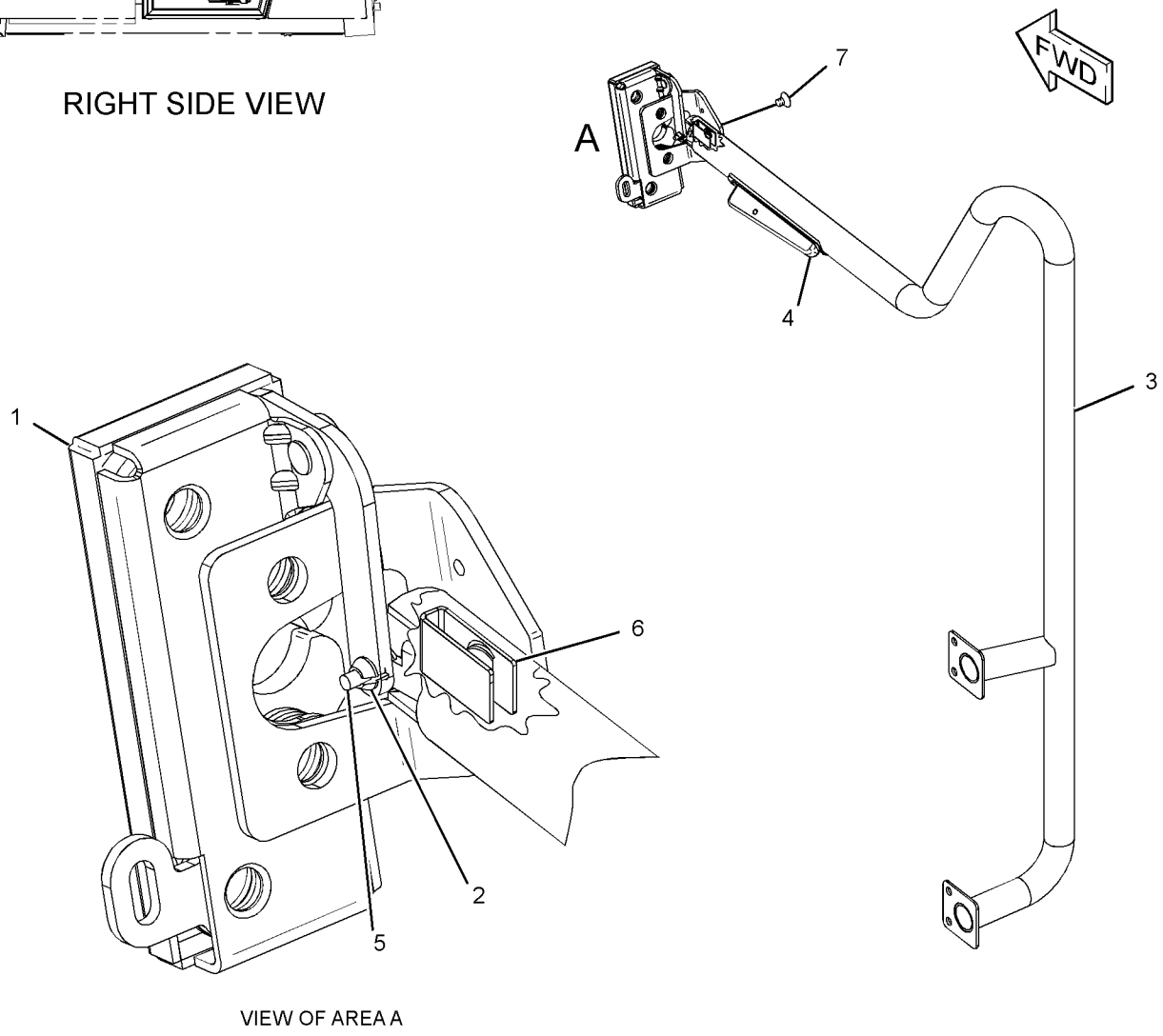

VIEW OF AREA A

GRAPHIC #1 **<END>** g01190518

OPERATOR STATION

232-1394 LINER GP-CAB

S/N: A7G1-UP

PART OF 237-2572, 237-2573 CAB AR-ENCLOSED ROPS

ALSO AN ATTACHMENT

SMCS-7329 **i02412727**

NOTE	REF NO	GRAPHIC REF	PART NUMBER	QTY	PART NAME 1 2 3 4 5 6 (PRODUCT LEVEL)	SEE PAGE
	1	2	**222-3686**	1	BRACKET (LH)	
	2	2	**222-3687**	1	BRACKET (RH)	
	3	1	**3T-4509**	2	PLATE	
	4	2	**5P-7958**	1	SLEEVE-CABLE SPLICE	
	5	1	**6V-8928**	2	HOOK-COAT	
	6	2	**8T-6842**	1	FILM-INSTRUCTION (ALTERNATE EXIT)	
	7	2	**160-9925**	1	LANYARD	
	8	1	**161-3415**	1	STRAP	
	9	1	**173-2115**	1	FLOOR MAT	
	10	1	**173-2185**	1	LINER-CAB	
	11	2	**173-2187**	1	COVER AS	
	12	1	**178-4323**	9	CAP	
	13	2	**190-5497**	1	COVER AS	
	14	1	**197-2027**	1	BRACKET AS	
	15	2	**197-2072**	1	COVER	
	16	2	**210-5551**	1	TRAY	
	17	2	**211-0667**	1	COVER AS	
	18	1	**233-5036**	2	ANGLE AS	
	19	1	**234-1360**	1	INSULATION	
	20	1	**243-3763**	1	INSULATION	
	21	1	**247-1863**	1	COVER-LATCH	
	22	2	**253-9521**	4	SCREW-TRUSS HEAD (M12X1.75X20-MM)	
	23	1	**259-6893**	1	FILM-FUSE PANEL	
	24	2	**272-6674**	1	COVER	
M	25	2	**5C-7261**	4	NUT (M8X1.25-THD)	
	26	1	**8D-6542**	3	GROMMET	
	27	1,2	**8R-3695**	2	GROMMET	
	28	1,2	**8T-4121**	6	WASHER-HARD (11X21X2.5-MM THK)	
M	29	2	**8T-4191**	2	BOLT (M10X1.5X16-MM)	
M	30	1	**8T-4195**	4	BOLT (M10X1.5X30-MM)	
	31	2	**8T-4224**	4	WASHER-HARD (8.8X16X2-MM THK)	
M	32	2	**9X-2040**	6	SCREW-TRUSS HEAD (M10X1.5X25-MM)	
M	33	1,2	**9X-2041**	7	SCREW-TRUSS HEAD (M10X1.5X20-MM)	
M	34	1,2	**9X-2042**	10	SCREW-TRUSS HEAD (M6X1X12-MM)	
M	35	1,2	**9X-2045**	8	SCREW-TRUSS HEAD (M6X1X20-MM)	
M	36	2	**9X-2046**	4	SCREW-TRUSS HEAD (M6X1X35-MM)	
	37	2	**9X-6165**	1	WASHER (6.5X22X2.5-MM THK)	
D	38	2	**5P-5927**		SEAL (0.8-M)	
D	39	2	**128-2596**		SEAL (0.9-M)	
E	40	2	**8T-9005**		SEAL (46-CM)	

D-ORDER BY THE METER
E-ORDER BY THE CENTIMETER
M-METRIC PART

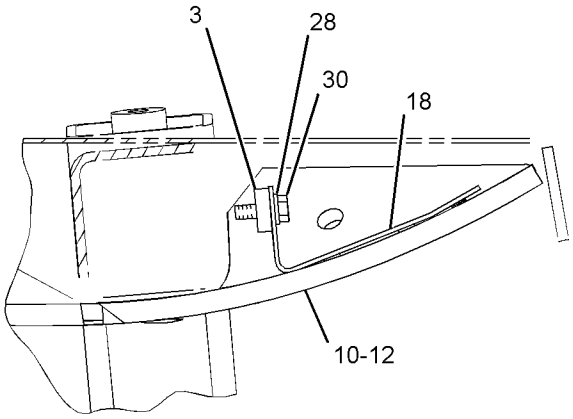

VIEW OF AREA C

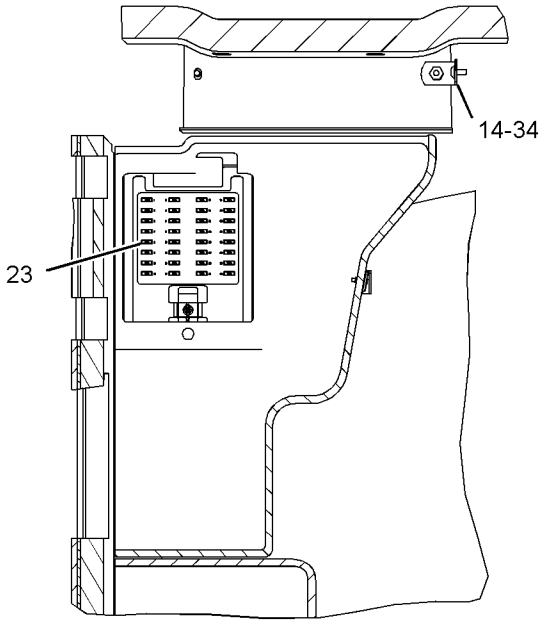

SECTION D-D

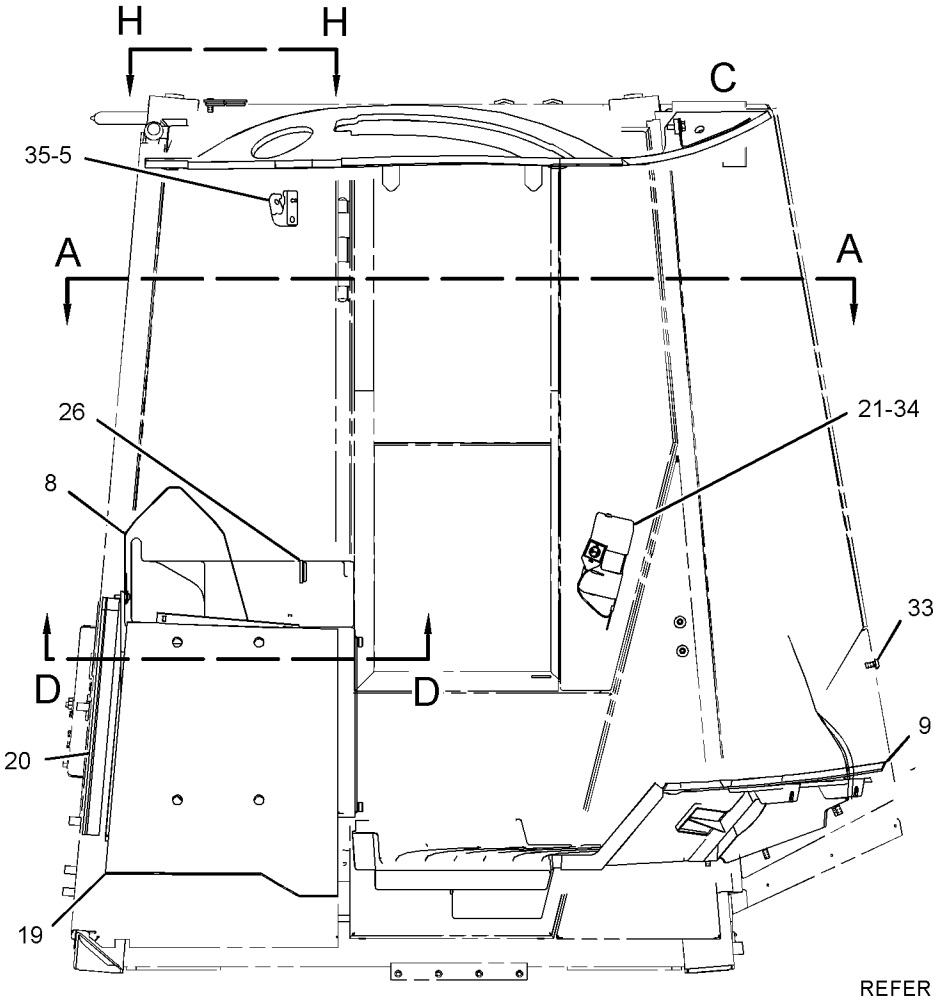

RIGHT SIDE VIEW

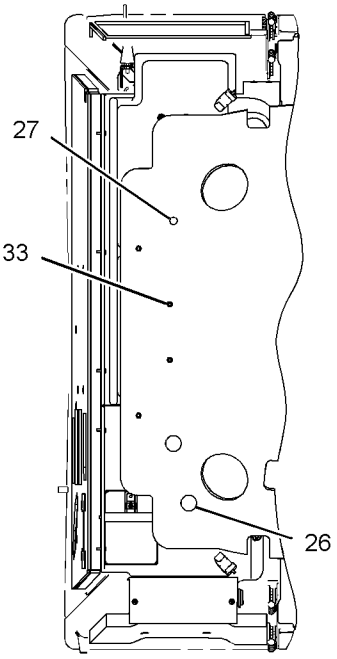

VIEW H-H

REFER TO ALL ILLUSTRATIONS OF THIS GROUP FOR AUXILIARY VIEWS

GRAPHIC #1

g01190545

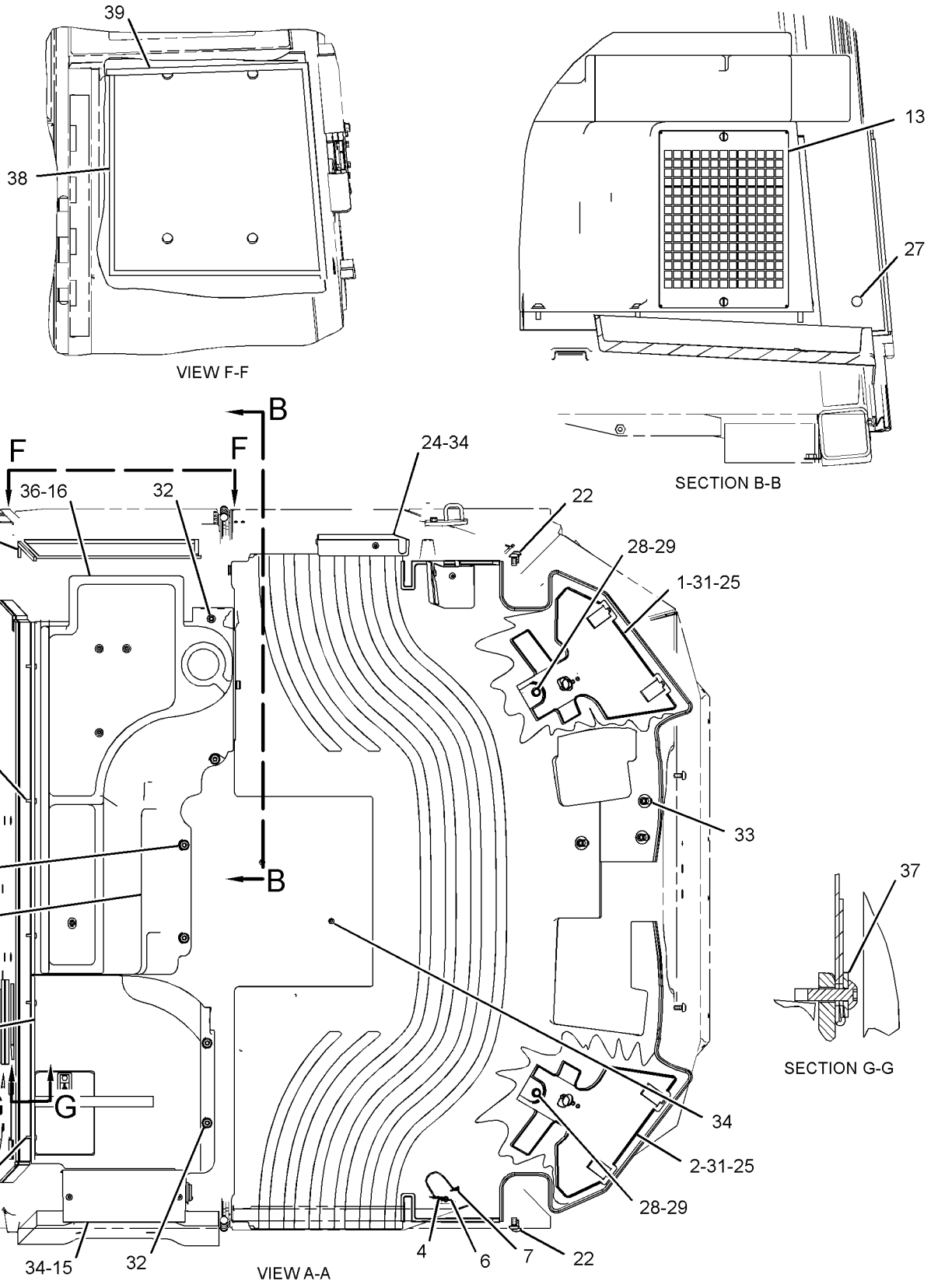

GRAPHIC #2 **<END>** g01190546

OPERATOR STATION

242-9416 LINES GP-AIR CONDITIONER

S/N: A7G1-UP

PART OF 243-1088 AIR CONDITIONER GP

AN ATTACHMENT

SMCS-1808 **i02239708**

NOTE	REF NO	GRAPHIC REF	PART NUMBER	QTY	PART NAME 1 2 3 4 5 6 (PRODUCT LEVEL)	SEE PAGE
	1	1	**5P-3928**	1	COUPLING AS-REFRIGERANT	
		1	**107-4395**	1	VALVE AS	
		1	**107-4396**	1	GASKET	
	2	1	**5P-4106**	1	NUT (1-7/16-THD)	
	3	1	**7K-3176**	1	COUPLING AS-REFRIGERANT	
		1	**107-4393**	1	VALVE AS	
		1	**107-4394**	1	GASKET	
	4	1	**7K-3304**	1	NUT-JAM (1-20-THD)	
	5	1	**170-3447**	1	PLATE	
	6	1	**170-3448**	1	PLATE	
	7	1	**242-8559**	1	PLATE	
I	8	1	**242-9371**	1	HOSE AS	
I	9	1	**242-9372**	1	HOSE AS	
	10	1	**244-2125**	1	GASKET	
	11	1	**9M-4972**	1	CLIP	
	12	1	**9M-8406**	1	CLIP	
	13	1	**9X-7381**	1	SEAL-O-RING	
	14	1	**9X-7382**	1	SEAL-O-RING	
	15	1	**9X-7383**	1	SEAL-O-RING	
	16	1	**9X-7384**	1	SEAL-O-RING	

I-REFER TO HYDRAULIC INFORMATION SYSTEM

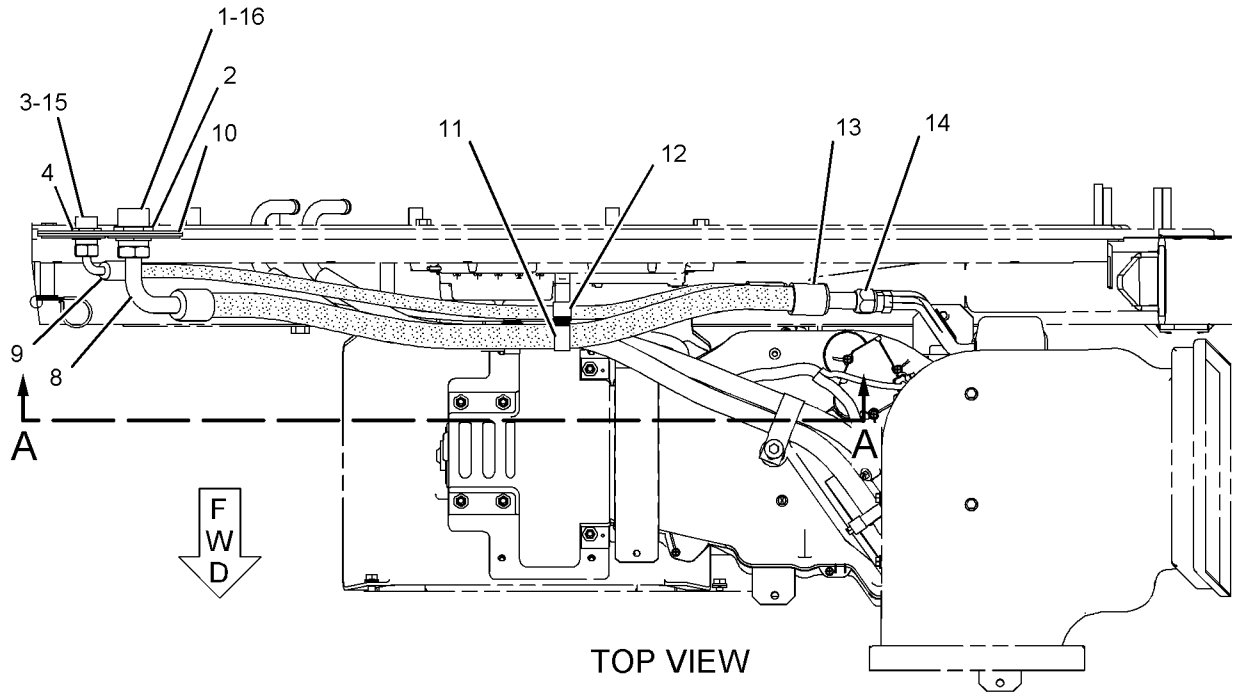

TOP VIEW

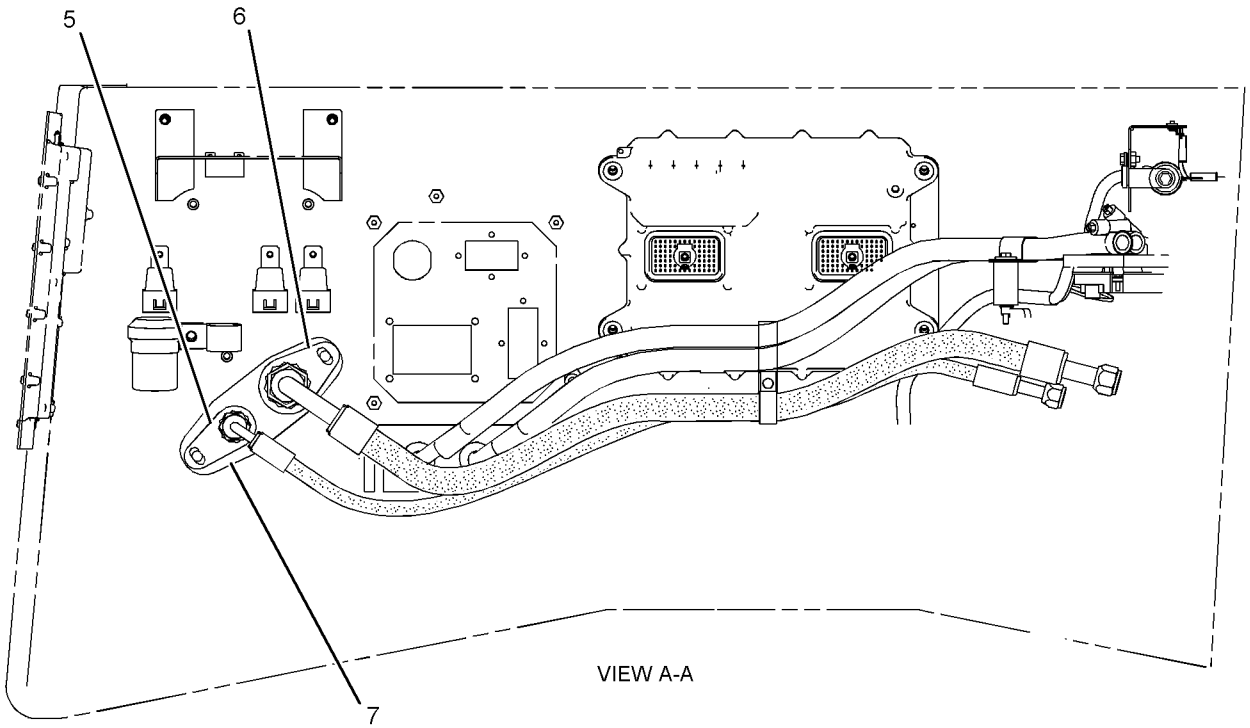

VIEW A-A

GRAPHIC #1 **<END>** g01117021

OPERATOR STATION

243-7100 LINES GP-AIR CONDITIONER

S/N: A7G1-UP
PART OF 236-8960 AIR CONDITIONER AR
AN ATTACHMENT

SMCS-1808 **i02414645**

NOTE	REF NO	GRAPHIC REF	PART NUMBER	QTY	PART NAME 1 2 3 4 5 6 (PRODUCT LEVEL)	SEE PAGE
	1	1	**4H-1225**	1	WASHER (11X22X6-MM THK)	
	2	1	**116-4491**	2	BRACKET AS	
					(EACH INCLUDES)	
M		1	**8T-3490**	1	NUT-WELD (M10X1.5-THD)	
	3	1	**154-6626**	1	BRACKET AS	
	4	1	**186-6189**	1	ACCUMULATOR GP-REFRIGERANT	
	5	1	**242-2445**	1	CLAMP AS	
I	6	1	**243-7104**	1	HOSE AS	
I	7	1	**243-7106**	1	HOSE AS	
I	8	1	**243-7107**	1	HOSE AS	
I	9	1	**243-7108**	1	HOSE AS	
	10	1	**254-7640**	1	TUBE AS	
	11	1	**257-3227**	1	RECEIVER-DRYER (REFRIGERANT)	
	12	1	**272-7942**	1	FITTING AS-AIR CONDITIONER	
		1	**3E-4052**	1	CAP-SEAL	
		1	**3E-4058**	1	VALVE AS	
I	13	1	**276-3967**	1	HOSE AS	
	14	1	**1P-6356**	1	PLATE	
	15	1	**2L-2685**	1	CLIP	
	16	1	**3E-4078**	1	FITTING AS-AIR CONDITIONER	
		1	**3E-4051**	1	CAP-SEAL	
		1	**3E-4057**	1	VALVE AS	
J	17	1	**3E-4321**	4	CLIP	
J	18	1	**3S-8665**	2	CLIP	
	19	1	**4K-8302**	1	CLIP	
	20	1	**5K-5338**	4	CLIP	
	21	1	**5P-3929**	1	COUPLING AS-REFRIGERANT	
		1	**8F-9206**	1	SEAL-O-RING	
		1	**107-4397**	1	VALVE AS	
	22	1	**5P-3948**	1	COUPLING AS-REFRIGERANT	
		1	**7F-8607**	1	SEAL-O-RING	
		1	**107-4399**	1	VALVE AS	
	23	1	**5P-7854**	2	CLIP	
	24	1	**6D-4246**	3	CLIP	
	25	1	**6K-8178**	7	CLIP	
	26	1	**6V-4356**	1	CLIP (SLOT)	
	27	1	**6V-4357**	1	CLIP (TAB)	
J	28	1	**8S-0948**	7	CLIP	
	29	1	**8T-2561**	1	WASHER-HARD (10.5X28.5X5-MM THK)	
	30	1	**8T-4121**	19	WASHER-HARD (11X21X2.5-MM THK)	
M	31	1	**8T-4133**	7	NUT (M10X1.15-THD)	
M	32	1	**8T-4136**	11	BOLT (M10X1.5X25-MM)	
M	33	1	**8T-4137**	1	BOLT (M10X1.5X20-MM)	
	34	1	**8T-4223**	1	WASHER-HARD (13.5X25.5X3-MM THK)	
M	35	1	**8T-4956**	1	BOLT (M12X1.75X35-MM)	
M	36	1	**8T-6466**	1	BOLT (M10X1.5X60-MM)	
	37	1	**9X-7380**	3	SEAL-O-RING	
	38	1	**9X-7381**	2	SEAL-O-RING	
	39	1	**9X-7382**	1	SEAL-O-RING	
	40	1	**9X-7383**	5	SEAL-O-RING	
	41	1	**9X-7384**	2	SEAL-O-RING	
D	42	1	**5P-5923**		SEAL (5-M)	
J	43	1	**6D-4246**	1	CLIP	

D-ORDER BY THE METER
I-REFER TO HYDRAULIC INFORMATION SYSTEM
J-USE OF OPTIONAL CLIPS FOR GOSSELIES
M-METRIC PART

243-7100 **LINES GP-AIR CONDITIONER** *(contd.)* **i02414645**

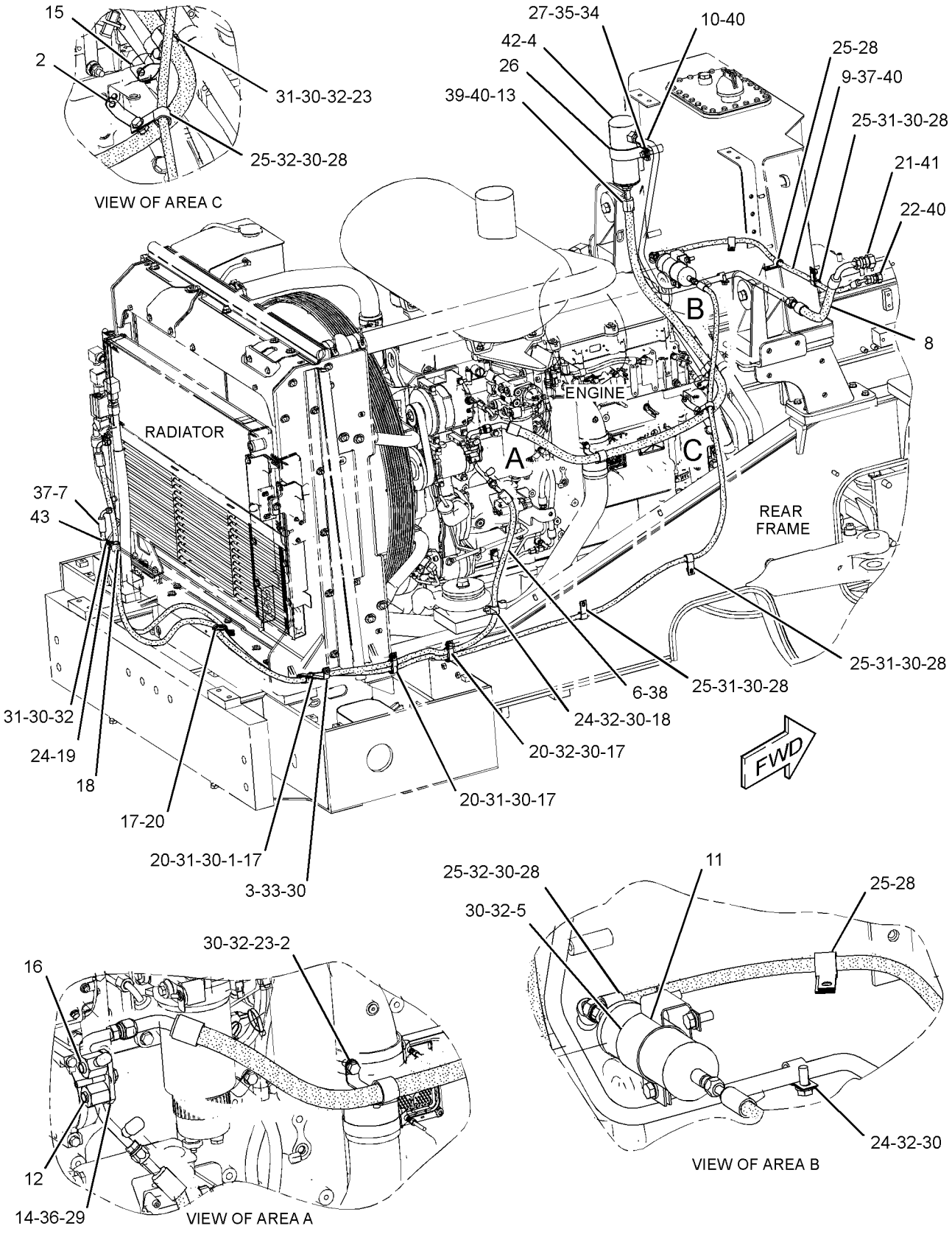

GRAPHIC #1 **<END>** g01208804

OPERATOR STATION

236-8980 LINES GP-CAB HEATER

S/N: A7G1-UP

PART OF 236-9051 CHASSIS AR

SMCS-7304 **i02388989**

NOTE	REF NO	GRAPHIC REF	PART NUMBER	QTY	PART NAME 1 2 3 4 5 6 (PRODUCT LEVEL)	SEE PAGE
	1	2	**9X-2488**	4	CLAMP-HOSE	
	2	1	*161-9916*	1	ADAPTER GP	
		1	**2M-9780**	1	SEAL-O-RING	
		1	**6V-7420**	1	ADAPTER	
	3	2	*165-2273*	1	VALVE GP-SHUTOFF (CAB HEATER)	
	3A	2	*165-2273*	1	VALVE GP-SHUTOFF (WATER PUMP)	
					(EACH INCLUDES)	
		2	**3K-0360**	1	SEAL-O-RING	
		2	**6V-7238**	1	VALVE-SHUTOFF	
	4	1	**274-8330**	1	BRACKET AS	
M		1	**8T-3490**	1	NUT-WELD (M10X1.5-THD)	
	5	2	*155-7321*	1	ADAPTER GP	
		2	**3D-2824**	1	SEAL-O-RING	
		2	**6V-1722**	1	ADAPTER-O-RING	
	6	1	**3E-4321**	3	CLIP	
	7	1	**8T-4121**	4	WASHER-HARD (11X21X2.5-MM THK)	
M	8	1	**8T-4137**	4	BOLT (M10X1.5X20-MM)	
M	9	1	**8T-4200**	1	BOLT (M8X1.25X16-MM)	
	10	1	**8T-4224**	1	WASHER-HARD (8.8X16X2-MM THK)	
	11	1	**9X-8250**	1	CLIP	
E	12	1	**136-1953**		HOSE (222.8-CM)	
E	12A	1	**136-1953**		HOSE (138.5-CM)	

E-ORDER BY THE CENTIMETER
M-METRIC PART

REFER TO ALL ILLUSTRATIONS OF
THIS GROUP FOR AUXILIARY VIEWS

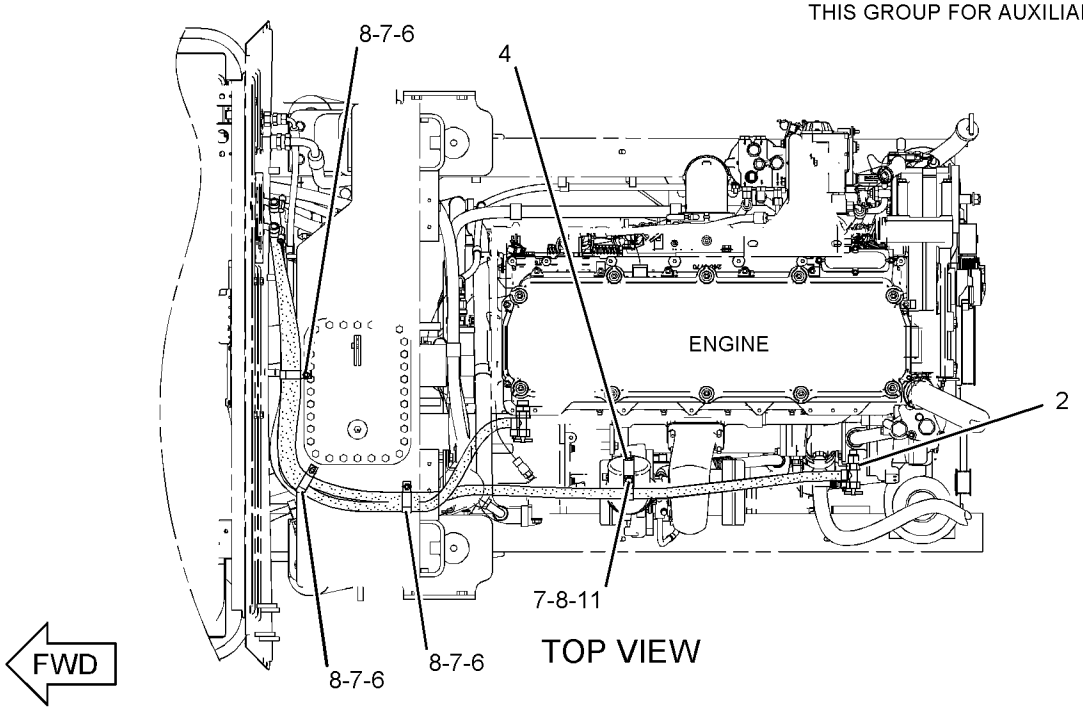

TOP VIEW

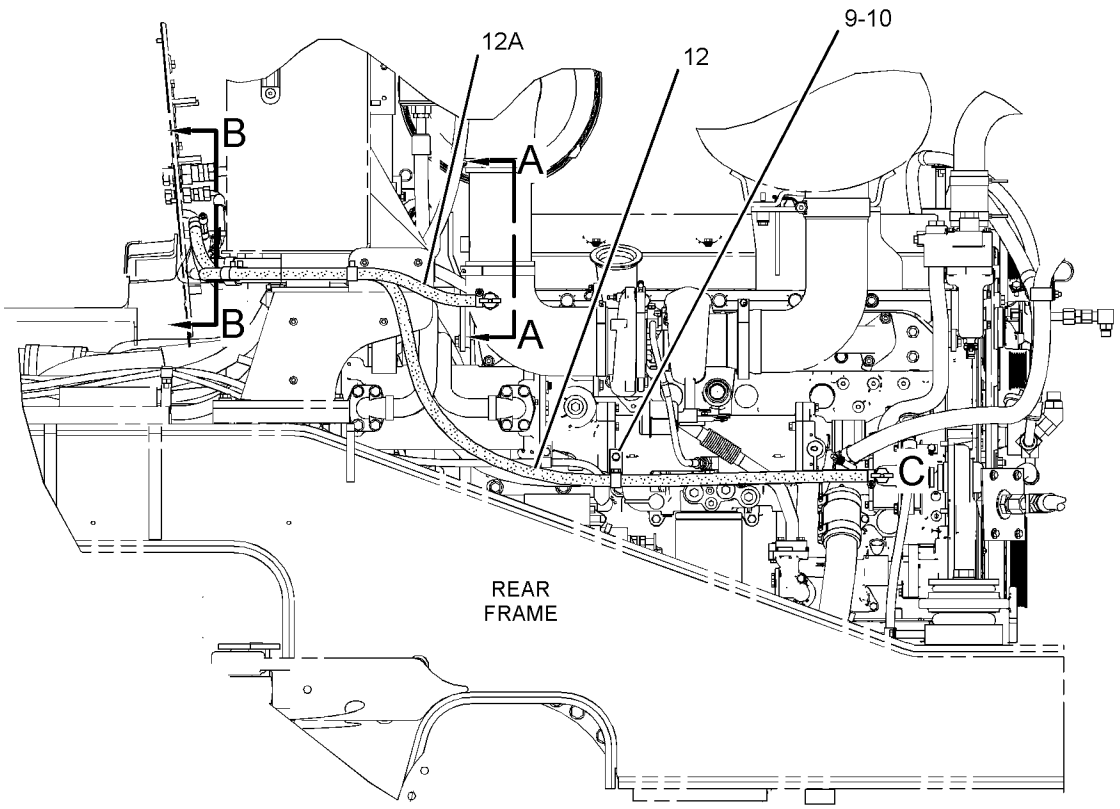

LEFT SIDE VIEW

GRAPHIC #1

g01190578

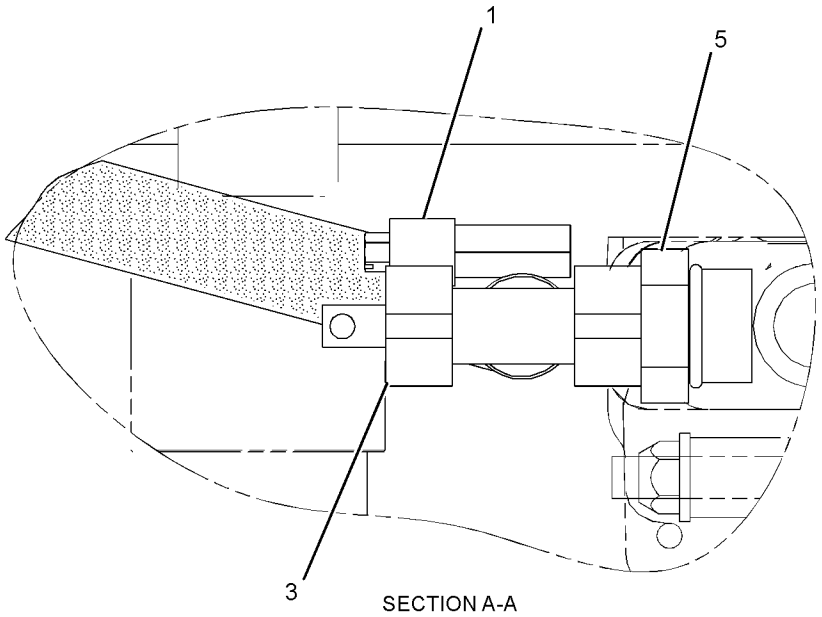

SECTION A-A

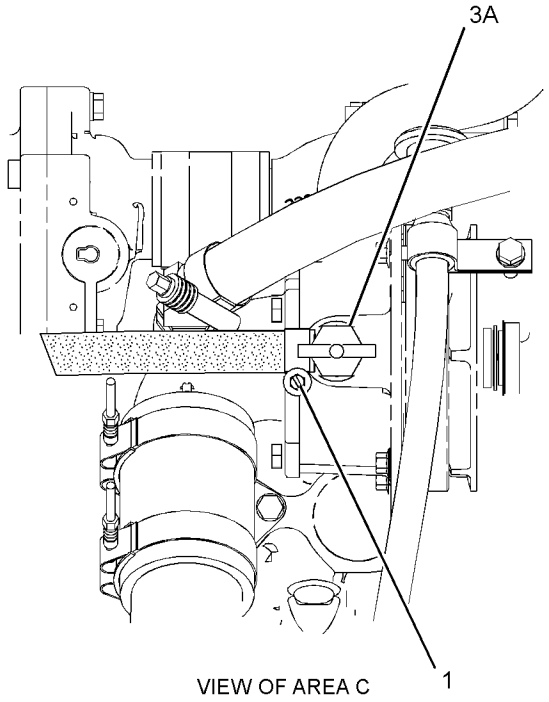

VIEW OF AREA C

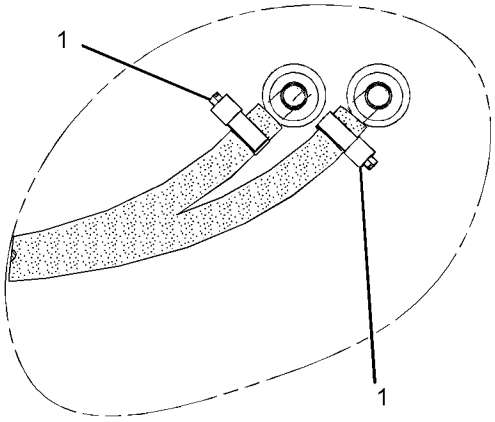

SECTION B-B

GRAPHIC #2 **<END>** g01190766

OPERATOR STATION

243-1093 LINES GP-CAB HEATER

S/N: A7G1-UP
PART OF 243-1092 HEATER GP-CAB
ALSO AN ATTACHMENT

SMCS-7304 **i02204434**

NOTE	REF NO	GRAPHIC REF	PART NUMBER	QTY	PART NAME 1 2 3 4 5 6 (PRODUCT LEVEL)	SEE PAGE
	1	1	**6D-1641**	2	CLIP	
	2	1	**9X-2488**	4	CLAMP-HOSE	
	3	1	**244-2119**	1	PLATE AS	
	4	1	**244-2360**	1	PLATE AS	
	5	1	**246-3231**	1	GASKET	
	6	1	**132-4354**	1	SPACER (10.5X19X26.5-MM THK)	
	7	1	**4I-7889**	1	SPACER (11X25X45-MM THK)	
M	8	1	**5C-7261**	4	NUT (M8X1.25-THD)	
M	9	1	**8T-3844**	1	BOLT (M6X1X70-MM)	
	10	1	**8T-4121**	1	WASHER-HARD (11X21X2.5-MM THK)	
	11	1	**8T-4224**	4	WASHER-HARD (8.8X16X2-MM THK)	
M	12	1	**8T-6466**	1	BOLT (M10X1.5X60-MM)	
	13	1	**9X-6165**	1	WASHER (6.5X22X2.5-MM THK)	
E	14	1	**136-1953**		HOSE (85.1-CM)	
E	15	1	**136-1953**		HOSE (79.1-CM)	

E-ORDER BY THE CENTIMETER
M-METRIC PART

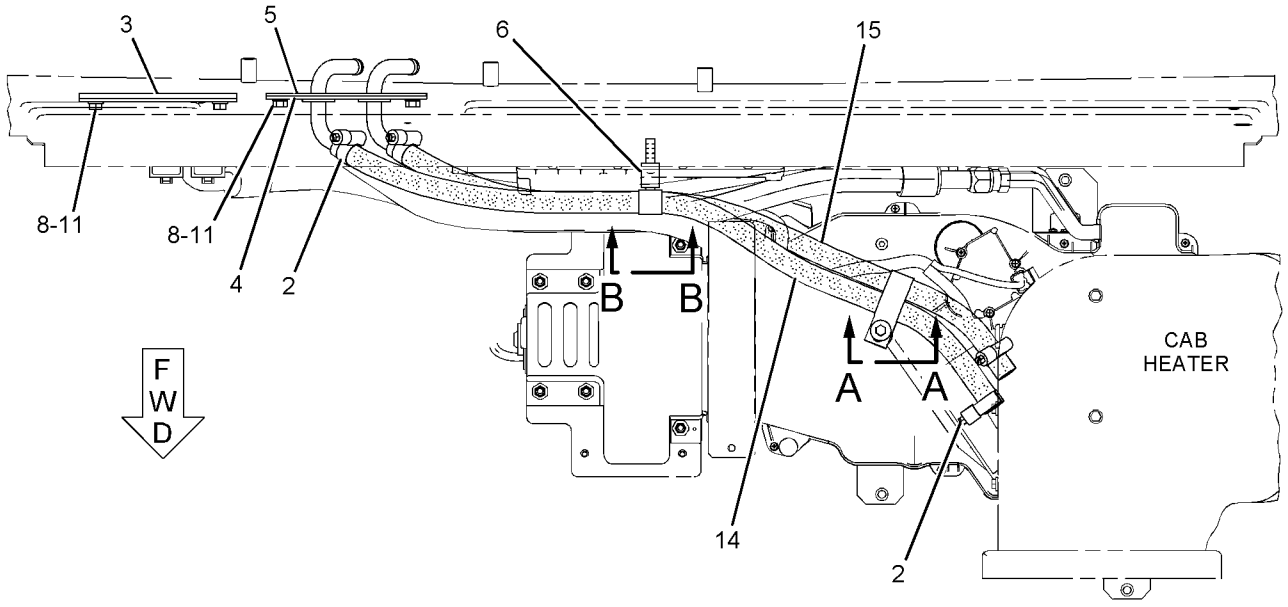

TOP VIEW

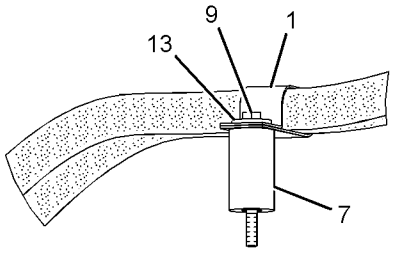

VIEW A-A

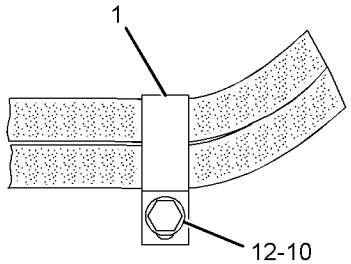

VIEW B-B

GRAPHIC #1 **<END>** g01114136

OPERATOR STATION

109-8203 MIRROR GP-REAR VIEW

S/N: A7G1-UP
AN ATTACHMENT

SMCS-7319 **i02321823**

NOTE	REF NO	GRAPHIC REF	PART NUMBER	QTY	PART NAME 1 2 3 4 5 6 (PRODUCT LEVEL)	SEE PAGE
	1	1	**1B-2578**	2	NUT (3/8-16-THD)	
	2	1	**3B-4506**	2	LOCKWASHER	
	3	1	**5P-6872**	2	MIRROR AS	
					(EACH INCLUDES)	
		1	**3K-6060**	1	LOCKNUT (3/8-16-THD)	
	4	1	**115-2073**	2	BRACKET	

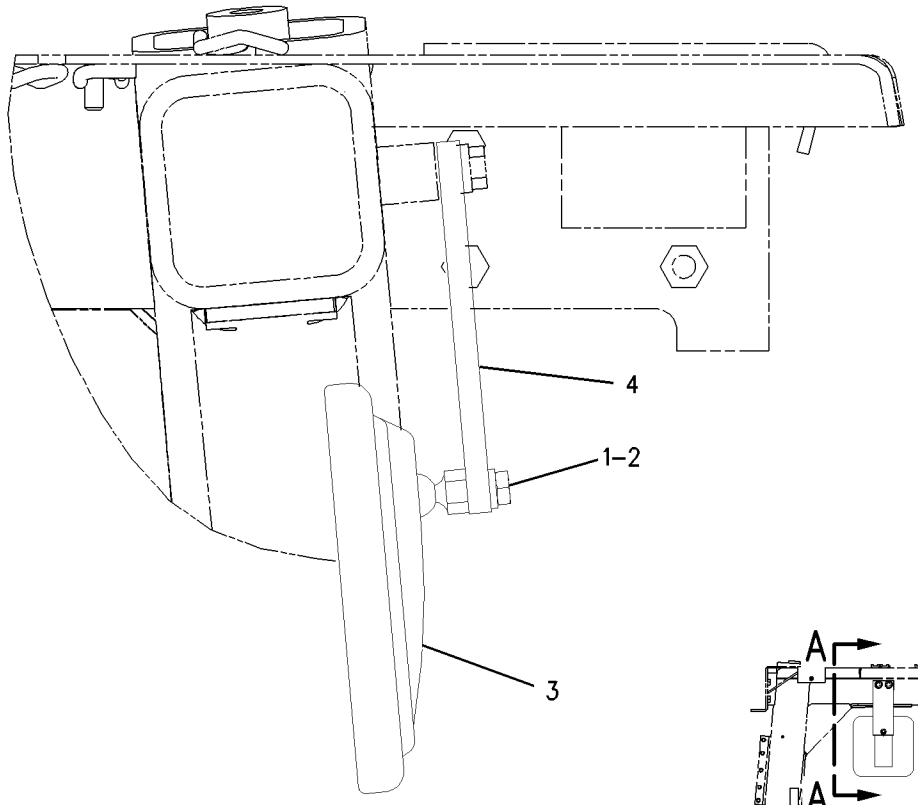

VIEW A–A

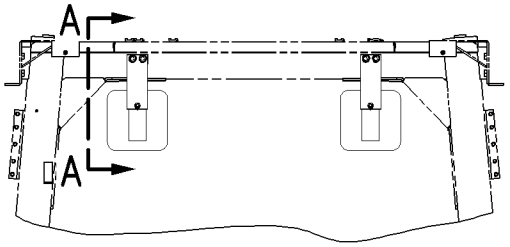

FRONT VIEW

GRAPHIC #1 **<END>** g00889114

OPERATOR STATION

197-6474 MIRROR GP-REAR VIEW

S/N: A7G1-UP

AN ATTACHMENT

SMCS-7319 **i01476003**

NOTE	REF NO	GRAPHIC REF	PART NUMBER	QTY	PART NAME 1 2 3 4 5 6 (PRODUCT LEVEL)	SEE PAGE
	1	1	**6C-1496**	2	MIRROR	
	2	1	**8T-1889**	4	CLIP (SLOT)	
	3	1	**8T-1890**	4	CLIP (TAB)	
	4	1	**200-8895**	1	BRACKET AS	
	5	1	**200-8896**	1	BRACKET AS	
	6	1	**8T-4121**	12	WASHER-HARD (11X21X2.5-MM THK)	
M	7	1	**8T-4133**	4	NUT (M10X1.5 THD)	
M	8	1	**8T-4195**	12	BOLT (M10X1.5X30-MM)	

M-METRIC PART

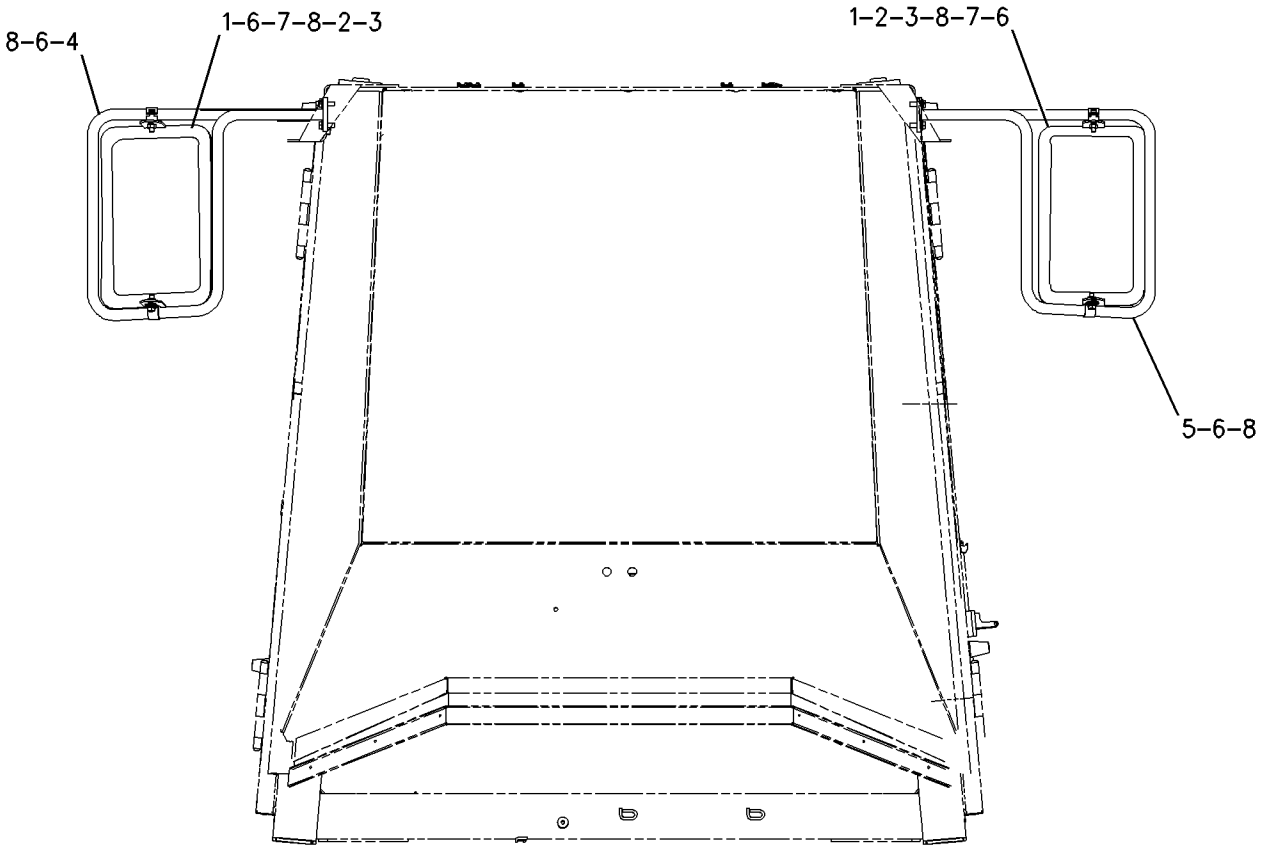

FRONT VIEW

GRAPHIC #1 **<END>** g00769311

236-4970 MIRROR GP-REAR VIEW—HEATED, LH

S/N: A7G1-UP

PART OF 259-1998 MIRROR GP-REAR VIEW

AN ATTACHMENT

SMCS-7319 **i02172456**

NOTE	REF NO	GRAPHIC REF	PART NUMBER	QTY	PART NAME 1 2 3 4 5 6 (PRODUCT LEVEL)	SEE PAGE
	1	1	**3S-2093**	4	STRAP-CABLE	
	2	1	**200-8896**	1	BRACKET AS	
	3	1	**202-8649**	1	MIRROR AS (HEATED)	
		1	**102-8802**	1	KIT-RECEPTACLE (2-PIN)	
					(INCLUDES RECEPTACLE AS AND WEDGE)	
		1	**186-3735**	2	PIN-CONNECTOR (16-GA TO 18-GA)	
	4	1	**130-5300**	1	CLIP	
	5	1	**8T-1889**	2	CLIP (SLOT)	
	6	1	**8T-1890**	2	CLIP (TAB)	
	7	1	**8T-4121**	8	WASHER-HARD (11X21X2.5-MM THK)	
M	8	1	**8T-4133**	2	NUT (M10X1.15-THD)	
M	9	1	**8T-4195**	6	BOLT (M10X1.5X30-MM)	

M-METRIC PART

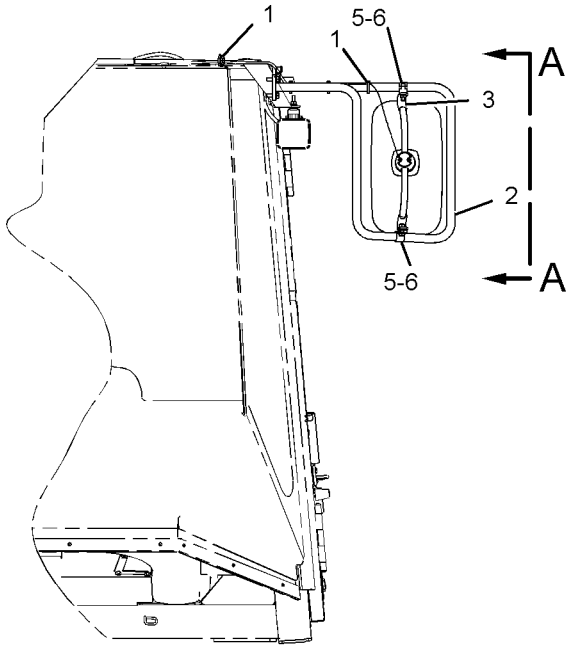

FRONT VIEW

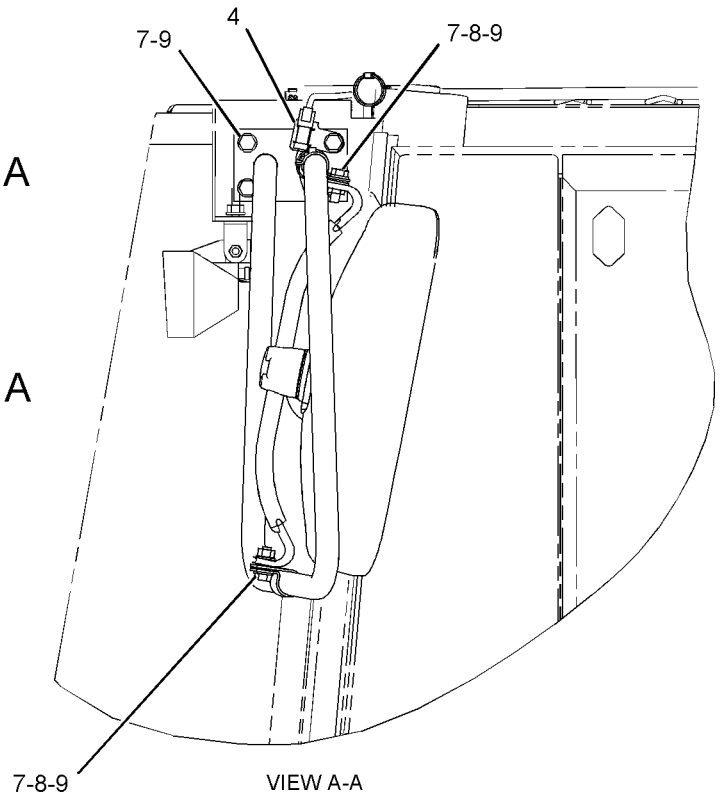

VIEW A-A

GRAPHIC #1

<END>

g01066378

OPERATOR STATION

236-4971 MIRROR GP-REAR VIEW—HEATED, RH

S/N: A7G1-UP

PART OF 259-1998 MIRROR GP-REAR VIEW

AN ATTACHMENT

SMCS-7319 **i02172466**

NOTE	REF NO	GRAPHIC REF	PART NUMBER	QTY	PART NAME 1 2 3 4 5 6 (PRODUCT LEVEL)	SEE PAGE
	1	1	**3S-2093**	4	STRAP-CABLE	
	2	1	**200-8895**	1	BRACKET AS	
	3	1	**202-8649**	1	MIRROR AS (HEATED)	
		1	**102-8802**	1	KIT-RECEPTACLE (2-PIN)	
					(INCLUDES RECEPTACLE AS AND WEDGE)	
		1	**186-3735**	2	PIN-CONNECTOR (16-GA TO 18-GA)	
	4	1	**130-5300**	1	CLIP	
	5	1	**8T-1889**	2	CLIP (SLOT)	
	6	1	**8T-1890**	2	CLIP (TAB)	
	7	1	**8T-4121**	8	WASHER-HARD (11X21X2.5-MM THK)	
M	8	1	**8T-4133**	2	NUT (M10X1.15-THD)	
M	9	1	**8T-4195**	6	BOLT (M10X1.5X30-MM)	

M-METRIC PART

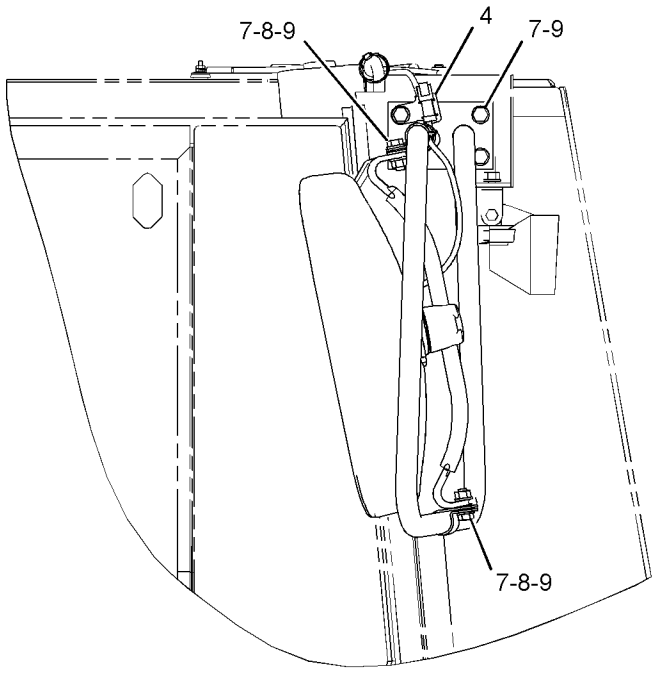

VIEW A-A

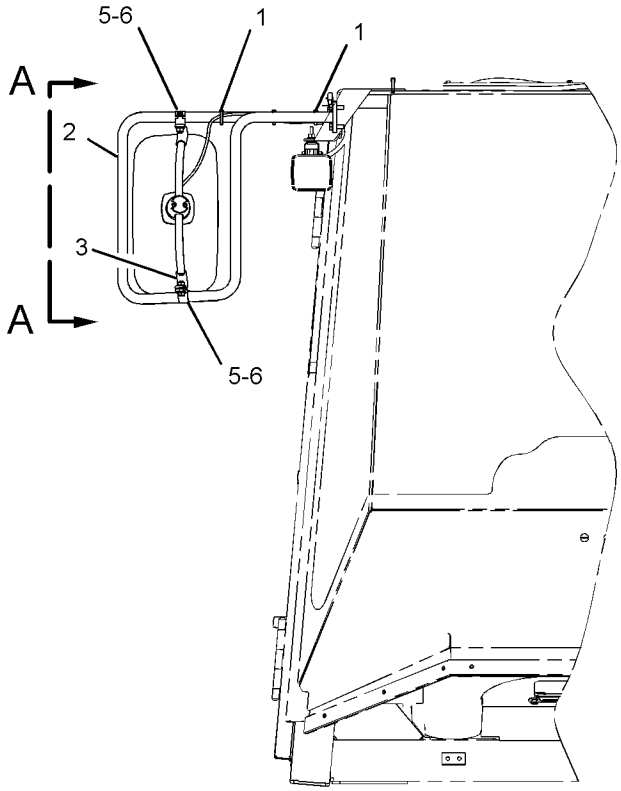

FRONT VIEW

GRAPHIC #1 **<END>** g01066435

OPERATOR STATION

244-2736 MIRROR GP-REAR VIEW

S/N: A7G1-UP
PART OF 260-4871 PLATFORM AR
AN ATTACHMENT

SMCS-7319 **i02310292**

NOTE	REF NO	GRAPHIC REF	PART NUMBER	QTY	PART NAME 1 2 3 4 5 6 (PRODUCT LEVEL)	SEE PAGE
Y	1	1	**244-8782**	1	MIRROR GP-REAR VIEW (LH)	836
Y	2	1	**244-8783**	1	MIRROR GP-REAR VIEW (RH)	837

Y-SEPARATE ILLUSTRATION

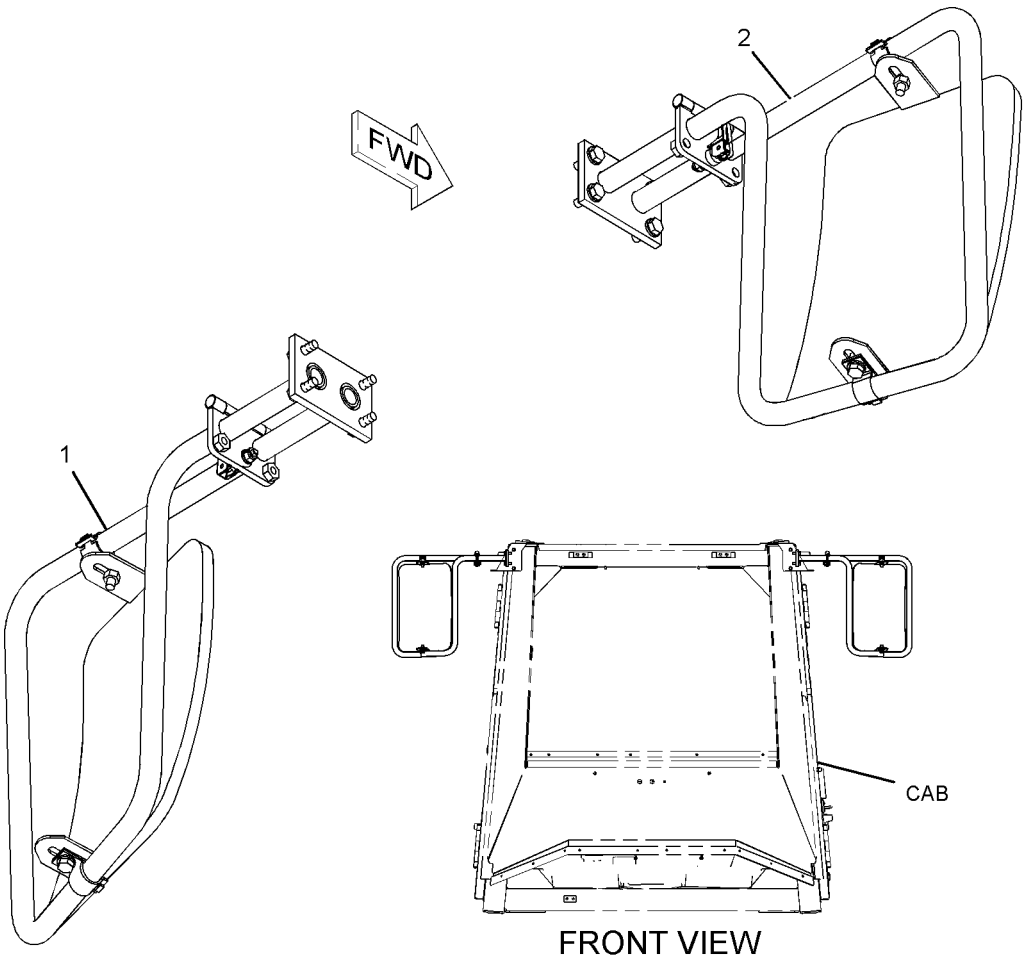

GRAPHIC #1 **<END>** g01116599

OPERATOR STATION

244-8782 MIRROR GP-REAR VIEW—LH

S/N: A7G1-UP
PART OF 244-2736 MIRROR GP-REAR VIEW
AN ATTACHMENT

SMCS-7319 **i02310300**

NOTE	REF NO	GRAPHIC REF	PART NUMBER	QTY	PART NAME 1 2 3 4 5 6 (PRODUCT LEVEL)	SEE PAGE
	1	1	**5P-6879**	1	MIRROR	
	2	1	**8T-1889**	2	CLIP (SLOT)	
	3	1	**8T-1890**	2	CLIP (TAB)	
	4	1	**244-8785**	1	TUBE AS	
	5	1	**8T-4121**	6	WASHER-HARD (11X21X2.5-MM THK)	
M	6	1	**8T-4133**	2	NUT (M10X1.15-THD)	
M	8	1	**8T-4195**	6	BOLT (M10X1.5X30-MM)	
	9	1	**258-7370**	1	LATCH AS	
		1	**3F-2617**	1	LOCKNUT (5/16-24-THD)	
M		1	**8T-4244**	1	NUT (M12X1.75-THD)	

M-METRIC PART

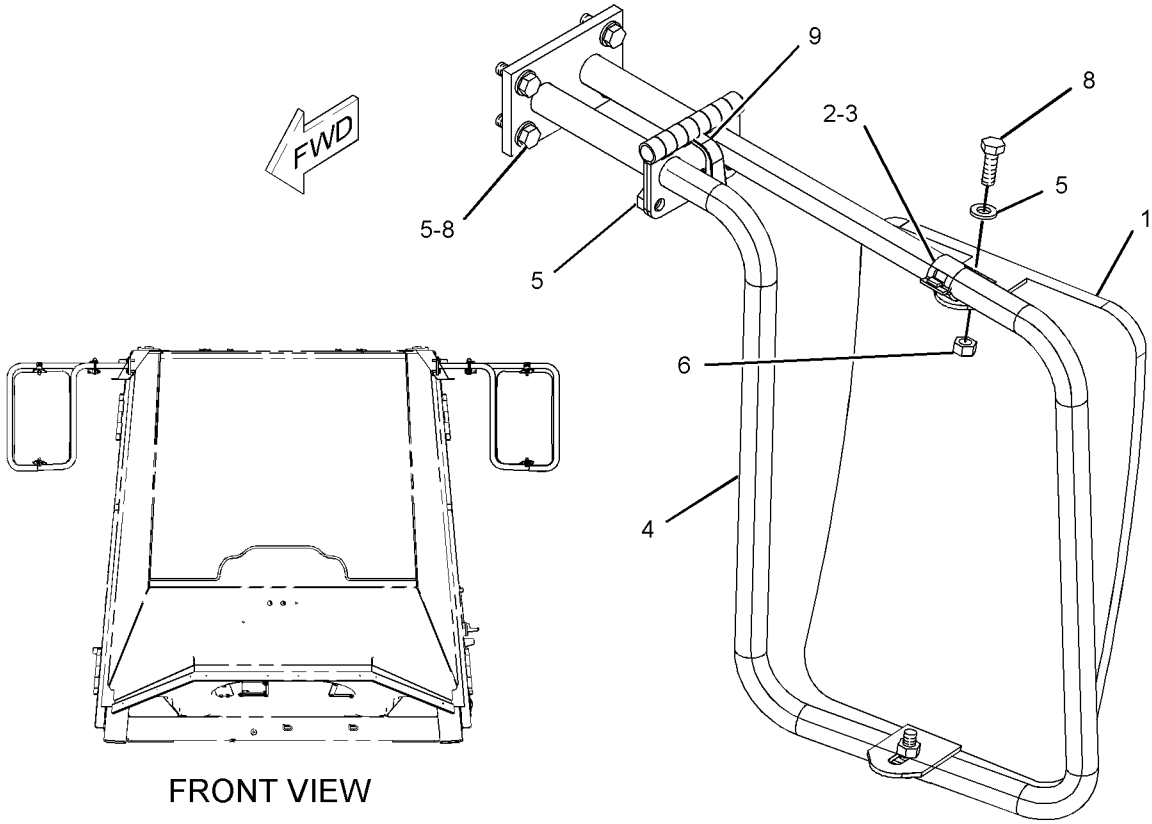

FRONT VIEW

GRAPHIC #1 **<END>** g01116803

OPERATOR STATION

244-8783 MIRROR GP-REAR VIEW—RH

S/N: A7G1-UP
PART OF 244-2736 MIRROR GP-REAR VIEW
AN ATTACHMENT

SMCS-7319 **i02310303**

NOTE	REF NO	GRAPHIC REF	PART NUMBER	QTY	PART NAME 1 2 3 4 5 6 (PRODUCT LEVEL)	SEE PAGE
	1	1	**5P-6879**	1	MIRROR	
	2	1	**8T-1889**	2	CLIP (SLOT)	
	3	1	**8T-1890**	2	CLIP (TAB)	
	4	1	**244-8786**	1	TUBE AS	
	5	1	**8T-4121**	6	WASHER-HARD (11X21X2.5-MM THK)	
M	6	1	**8T-4133**	2	NUT (M10X1.5 THD)	
M	8	1	**8T-4195**	6	BOLT (M10X1.5X30-MM)	
	9	1	**258-7370**	1	LATCH AS	
		1	**3F-2617**	1	LOCKNUT (5/16-24-THD)	
		1	**8T-4224**	1	WASHER-HARD (8.8X16X2-MM THK)	

M-METRIC PART

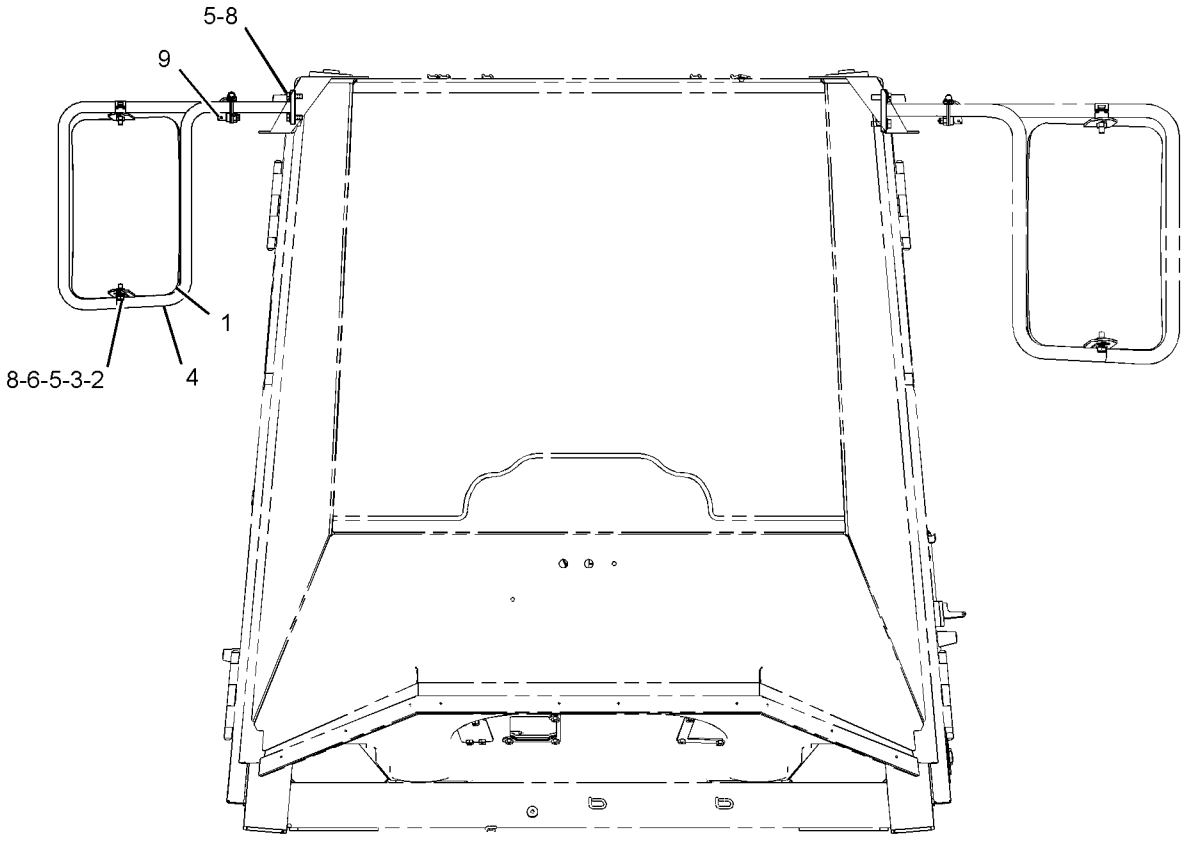

FRONT VIEW

GRAPHIC #1 **<END>** g01116677

OPERATOR STATION

245-8818 MIRROR GP-REAR VIEW

S/N: A7G1-UP
PART OF 259-1999 MIRROR GP-REAR VIEW
AN ATTACHMENT

SMCS-7319 **i02327188**

NOTE	REF NO	GRAPHIC REF	PART NUMBER	QTY	PART NAME 1 2 3 4 5 6 (PRODUCT LEVEL)	SEE PAGE
	1	1	**3S-2093**	4	STRAP-CABLE	
	2	1	**202-8649**	1	MIRROR AS (HEATED)	
		1	**102-8802**	1	KIT-RECEPTACLE (2-PIN)	
					(INCLUDES RECEPTACLE AS AND WEDGE)	
		1	**186-3735**	2	PIN-CONNECTOR (16-GA TO 18-GA)	
	3	1	**244-8786**	1	TUBE AS	
	4	1	**130-5300**	1	CLIP	
	5	1	**8T-1889**	2	CLIP (SLOT)	
	6	1	**8T-1890**	2	CLIP (TAB)	
	7	1	**8T-4121**	8	WASHER-HARD (11X21X2.5-MM THK)	
M	8	1	**8T-4133**	2	NUT (M10X1.15-THD)	
M	10	1	**8T-4195**	6	BOLT (M10X1.5X30-MM)	
	11	1	**258-7370**	1	LATCH AS	
		1	**3F-2617**	1	LOCKNUT (5/16-24-THD)	
		1	**8T-4224**	1	WASHER-HARD (8.8X16X2-MM THK)	

M-METRIC PART

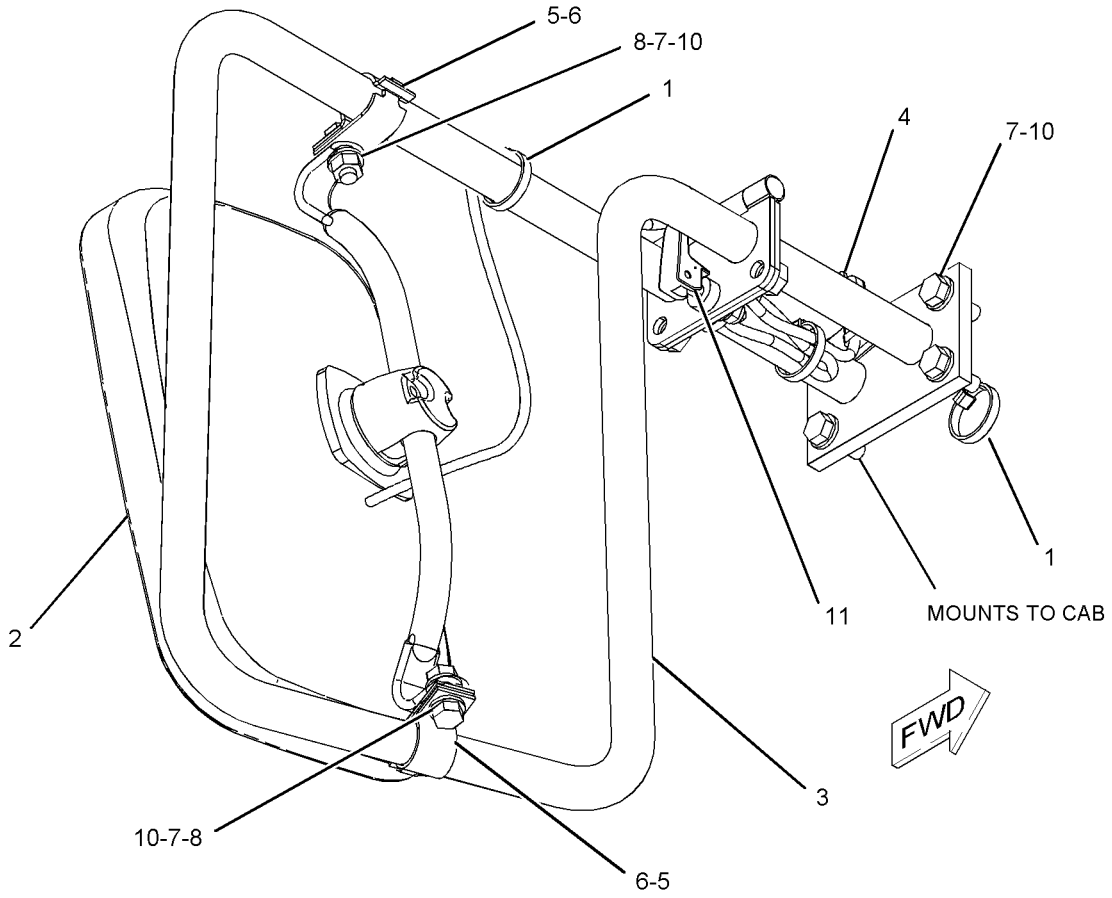

GRAPHIC #1 **<END>** g01115232

OPERATOR STATION

245-8819 MIRROR GP-REAR VIEW

S/N: A7G1-UP

PART OF 259-1999 MIRROR GP-REAR VIEW

AN ATTACHMENT

SMCS-7319 **i02327192**

NOTE	REF NO	GRAPHIC REF	PART NUMBER	QTY	PART NAME 1 2 3 4 5 6 (PRODUCT LEVEL)	SEE PAGE
	1	1	**3S-2093**	4	STRAP-CABLE	
	2	1	**202-8649**	1	MIRROR AS (HEATED)	
		1	**102-8802**	1	KIT-RECEPTACLE (2-PIN)	
					(INCLUDES RECEPTACLE AS AND WEDGE)	
		1	**186-3735**	2	PIN-CONNECTOR (16-GA TO 18-GA)	
	3	1	**244-8785**	1	TUBE AS	
	4	1	**130-5300**	1	CLIP	
	5	1	**8T-1889**	2	CLIP (SLOT)	
	6	1	**8T-1890**	2	CLIP (TAB)	
	7	1	**8T-4121**	8	WASHER-HARD (11X21X2.5-MM THK)	
M	8	1	**8T-4133**	2	NUT (M10X1.15-THD)	
M	10	1	**8T-4195**	6	BOLT (M10X1.5X30-MM)	
	11	1	**258-7370**	1	LATCH AS	
		1	**3F-2617**	1	LOCKNUT (5/16-24-THD)	
		1	**8T-4224**	1	WASHER-HARD (8.8X16X2-MM THK)	

M-METRIC PART

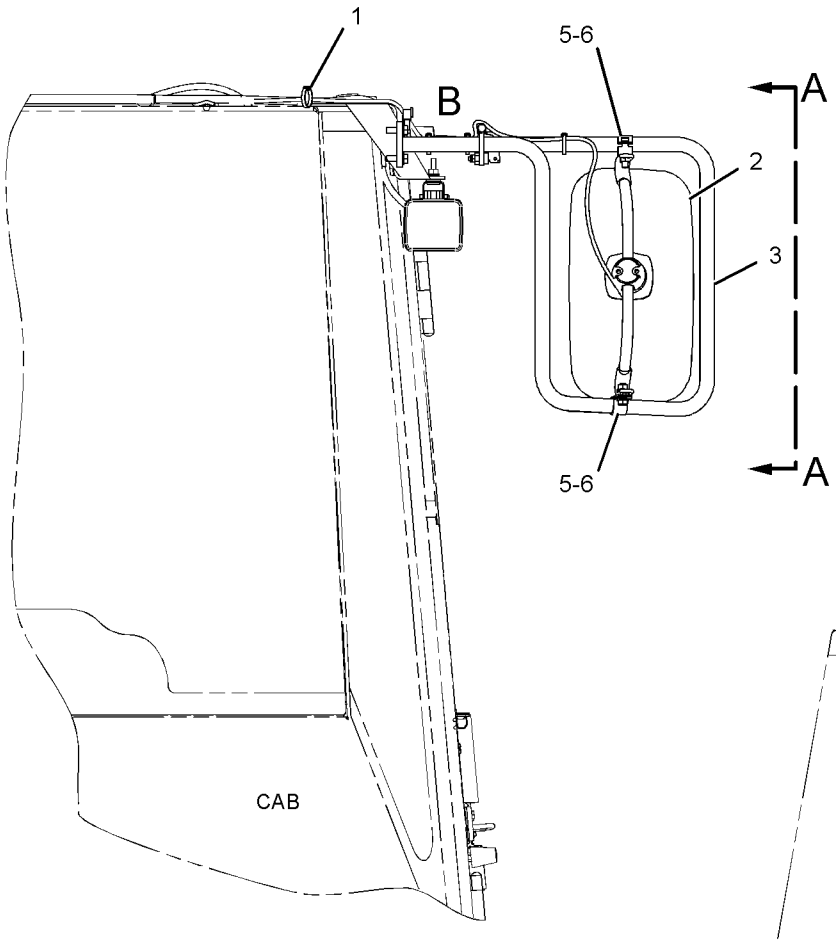

FRONT VIEW

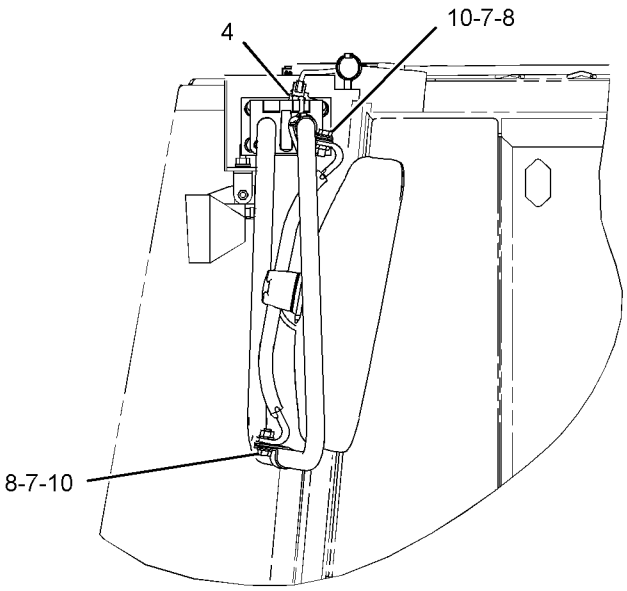

VIEW A-A

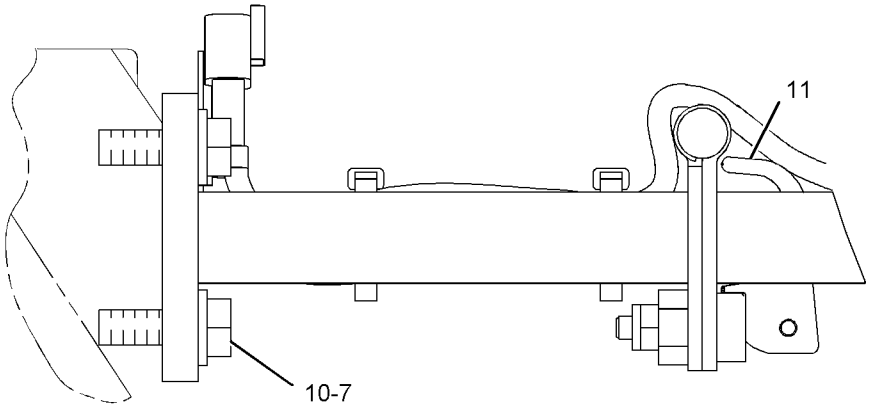

VIEW OF AREA B

GRAPHIC #1 **<END>** g01115258

OPERATOR STATION

259-1998 MIRROR GP-REAR VIEW—HEATED

S/N: A7G1-UP
AN ATTACHMENT

SMCS-7319 **i02416115**

NOTE	REF NO	GRAPHIC REF	PART NUMBER	QTY	PART NAME 1 2 3 4 5 6 (PRODUCT LEVEL)	SEE PAGE
	1	1	**3E-5239**	1	RELAY AS (24-VOLT) (HEATED MIRRORS)	
	2	1	**3S-2093**	1	STRAP-CABLE	
	3	1	**236-4630**	1	SWITCH AS-ROCKER (HEATED MIRRORS)	
Y	4	1	*236-4970*	1	MIRROR GP-REAR VIEW (HEATED, LH)	833
Y	5	1	*236-4971*	1	MIRROR GP-REAR VIEW (HEATED, RH)	834
	6	1	**236-6207**	1	HARNESS AS-CONTROL (HEATED MIRRORS)	
		1	**155-2270**	1	KIT-CONNECTING PLUG (2-PIN)	
					(INCLUDES PLUG AS AND WEDGE)	
M	7	1	**8T-4171**	1	BOLT (M6X1X12-MM)	
	8	1	**9X-8256**	1	WASHER (6.6X12X2-MM THK)	

M-METRIC PART
Y-SEPARATE ILLUSTRATION

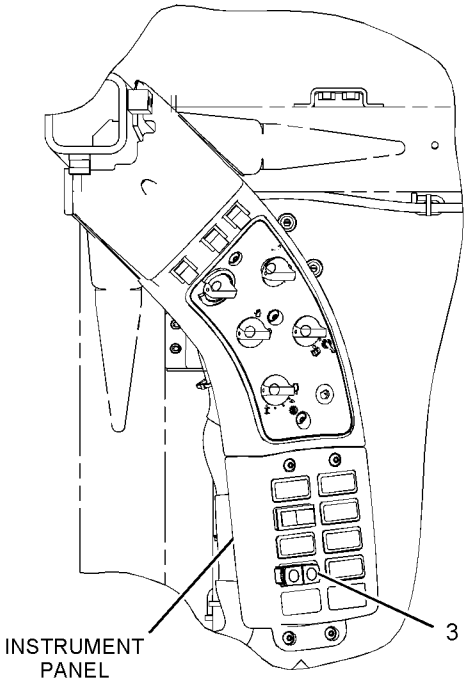

VIEW B-B

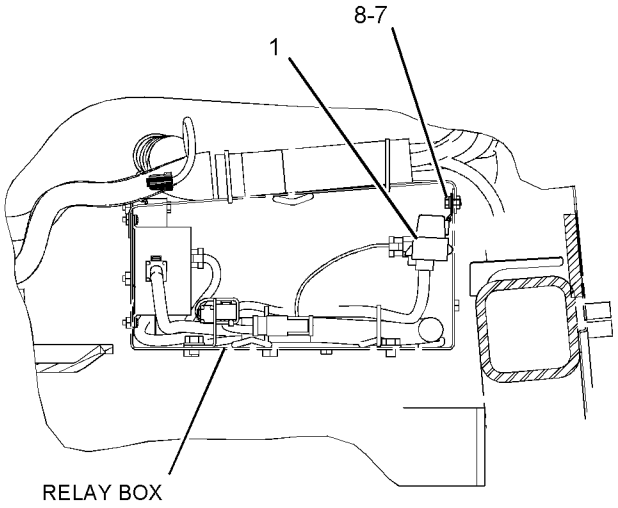

VIEW A-A

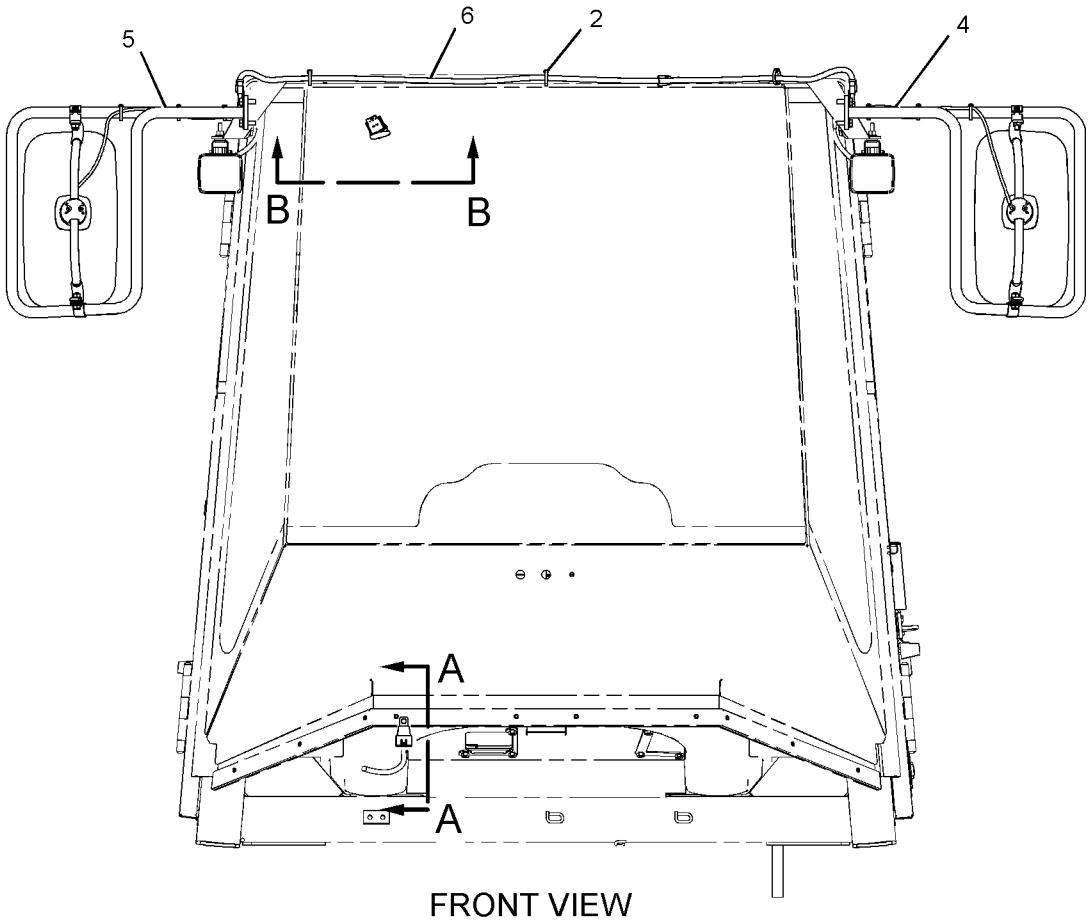

FRONT VIEW

GRAPHIC #1 **<END>** g01115191

259-1999 MIRROR GP-REAR VIEW—HEATED

S/N: A7G1-UP
PART OF 260-4872 PLATFORM AR
AN ATTACHMENT

SMCS-7319 **i02400137**

NOTE	REF NO	GRAPHIC REF	PART NUMBER	QTY	PART NAME 1 2 3 4 5 6 (PRODUCT LEVEL)	SEE PAGE
	1	1	**3E-5239**	1	RELAY AS (24-VOLT) (HEATED MIRRORS)	
	2	1	**3S-2093**	1	STRAP-CABLE	
	3	1	**236-4630**	1	SWITCH AS-ROCKER (HEATED MIRRORS)	
	4	1	**236-6207**	1	HARNESS AS-CONTROL (HEATED MIRRORS)	
		1	**155-2270**	1	KIT-CONNECTING PLUG (2-PIN)	
					(KIT INCLUDES PLUG AS AND WEDGE)	
Y	5	1	**245-8818**	1	MIRROR GP-REAR VIEW (HEATED, RH)	838
Y	6	1	**245-8819**	1	MIRROR GP-REAR VIEW (HEATED, LH)	839
M	7	1	**8T-4171**	1	BOLT (M6X1X12-MM)	
	8	1	**9X-8256**	1	WASHER (6.6X12X2-MM THK)	

M-METRIC PART
Y-SEPARATE ILLUSTRATION

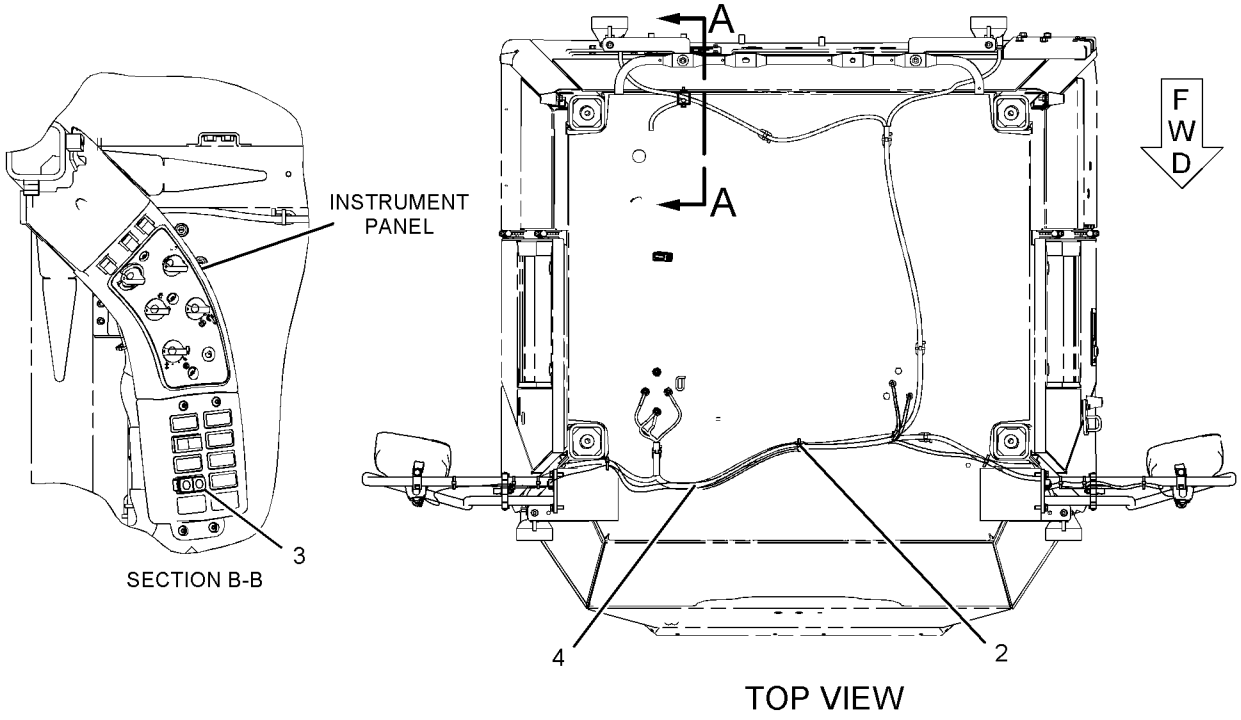

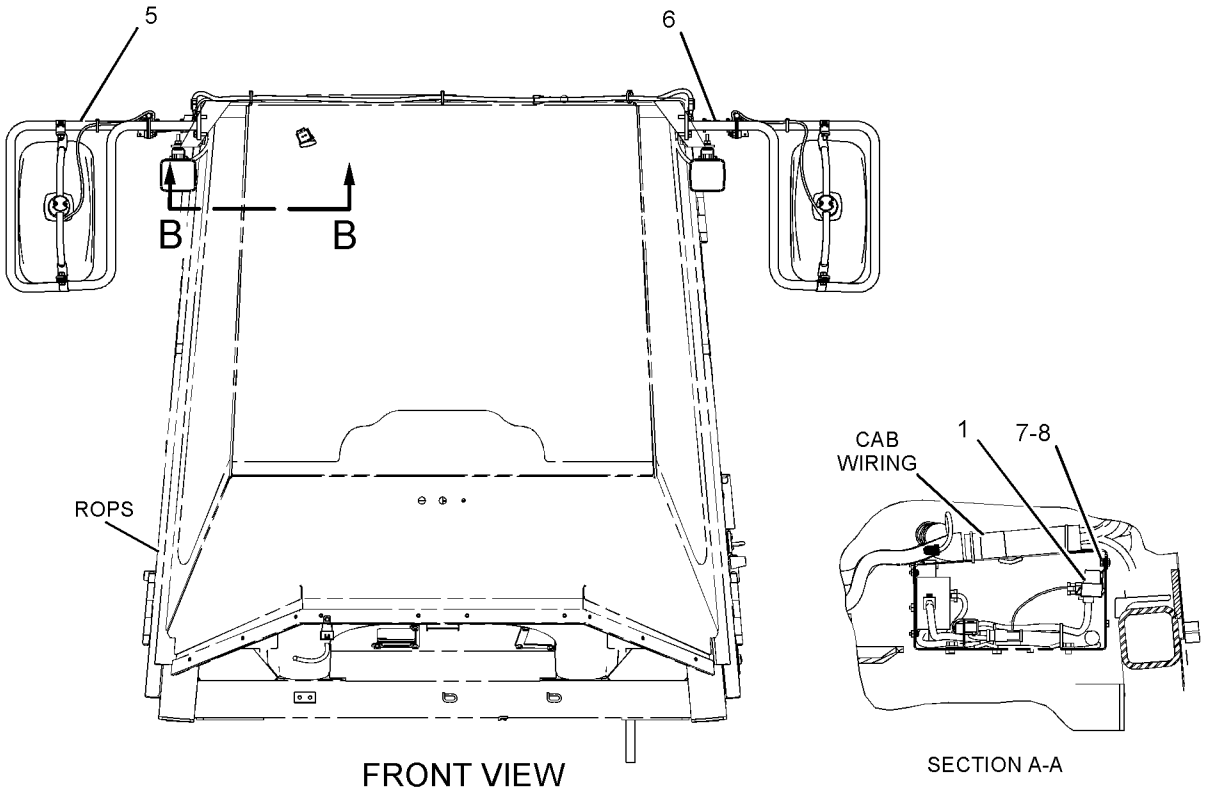

GRAPHIC #1 **<END>** g01114930

OPERATOR STATION

277-5334 MODULE GP-DISPLAY—AUTOMATIC LUBRICATION SYSTEM

S/N: A7G1-UP

PART OF 261-1446, 263-6296, 277-0038 LUBRICATION AR-AUTOMATIC AN ATTACHMENT

SMCS-7450, 7490 **i02389748**

NOTE	REF NO	GRAPHIC REF	PART NUMBER	QTY	PART NAME 1 2 3 4 5 6 (PRODUCT LEVEL)	SEE PAGE
	1	1	**221-6803**	1	DISPLAY	
	2	1	**277-6155**	1	COVER AS	
		1	**200-6206**	1	COVER AS	
M	3	1	**131-3987**	2	SCREW (M4X0.7X12-MM)	
	4	1	**9G-2673**	1	GROMMET	

M-METRIC PART

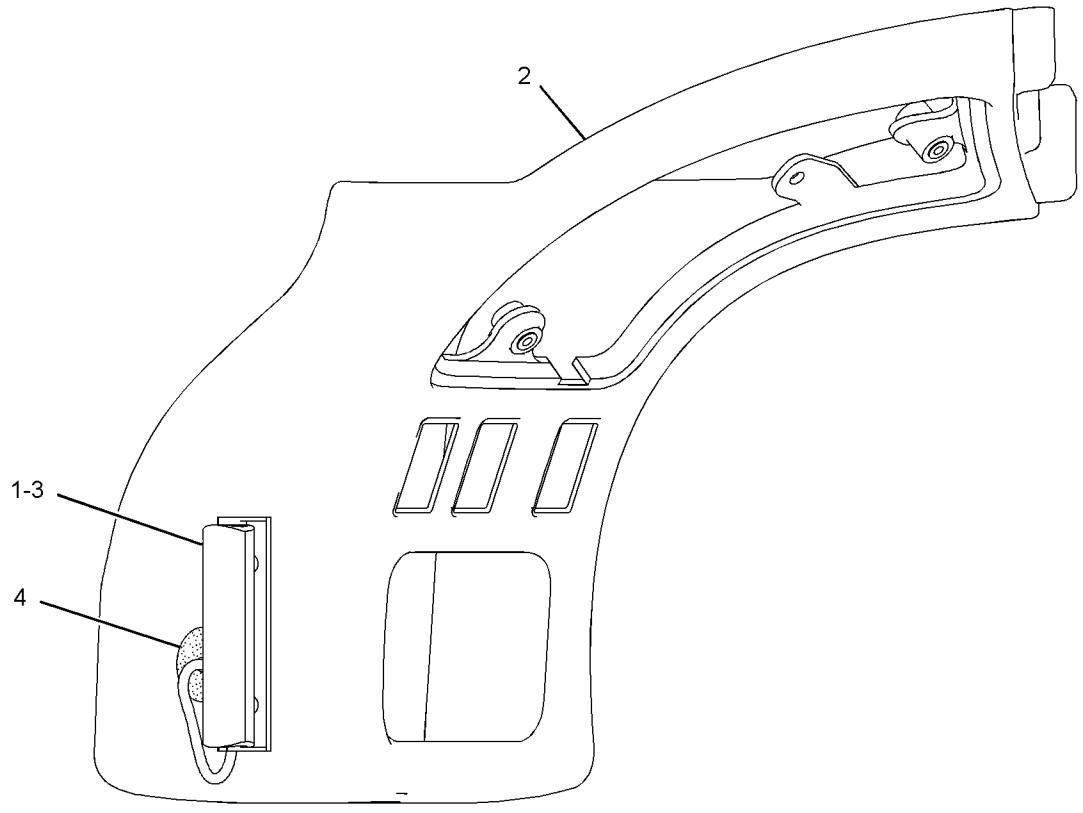

LEFT SIDE VIEW

GRAPHIC #1 **<END>** g01202854

166-6928 MODULE GP-QUAD GAUGE

S/N: A7G1-UP
PART OF 237-4910 WIRING GP-CAB
ALSO AN ATTACHMENT

SMCS-7450, 7451, 7490, 7601 **i01682056**

NOTE	REF NO	GRAPHIC REF	PART NUMBER	QTY	PART NAME 1 2 3 4 5 6 (PRODUCT LEVEL)	SEE PAGE
	1	1	**102-8805**	1	KIT-RECEPTACLE (6-PIN)	
	2	1	**8T-8729**	6	PIN-CONNECTOR	
	3	1	**3E-3383**	1	WEDGE-RECEPTACLE LOCK (6-PIN)	

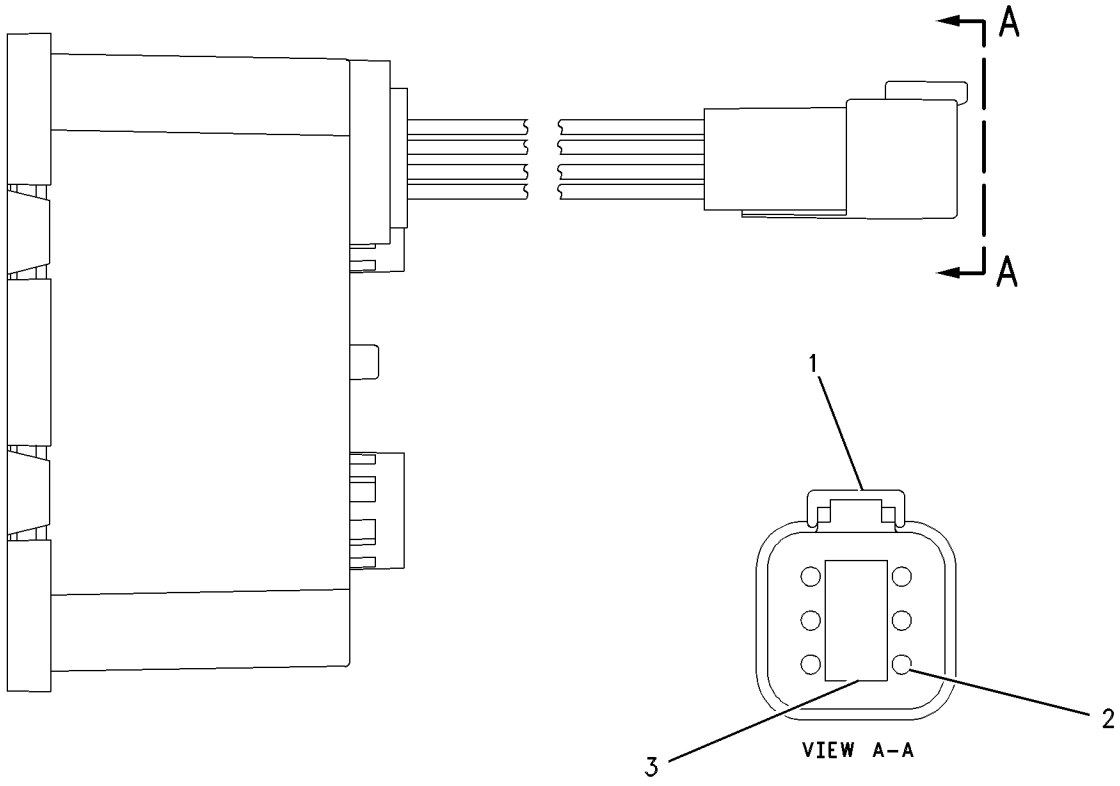

GRAPHIC #1 **<END>** g00591354

192-7049 MODULE GP-SPEEDOMETER & TACH

S/N: A7G1-UP
PART OF 237-2572, 237-2573 CAB AR-ENCLOSED ROPS
ALSO AN ATTACHMENT

SMCS-7451, 7462, 7464, 7490, 7601 **i02100217**

NOTE	REF NO	GRAPHIC REF	PART NUMBER	QTY	PART NAME 1 2 3 4 5 6 (PRODUCT LEVEL)	SEE PAGE
	1	1	**102-8805**	1	KIT-RECEPTACLE (6-PIN)	
					(INCLUDES RECEPTACLE AS & WEDGE)	
	2	1	**8T-8729**	6	PIN-CONNECTOR	
	3	1	**3E-3383**	1	WEDGE-RECEPTACLE LOCK (6-PIN)	

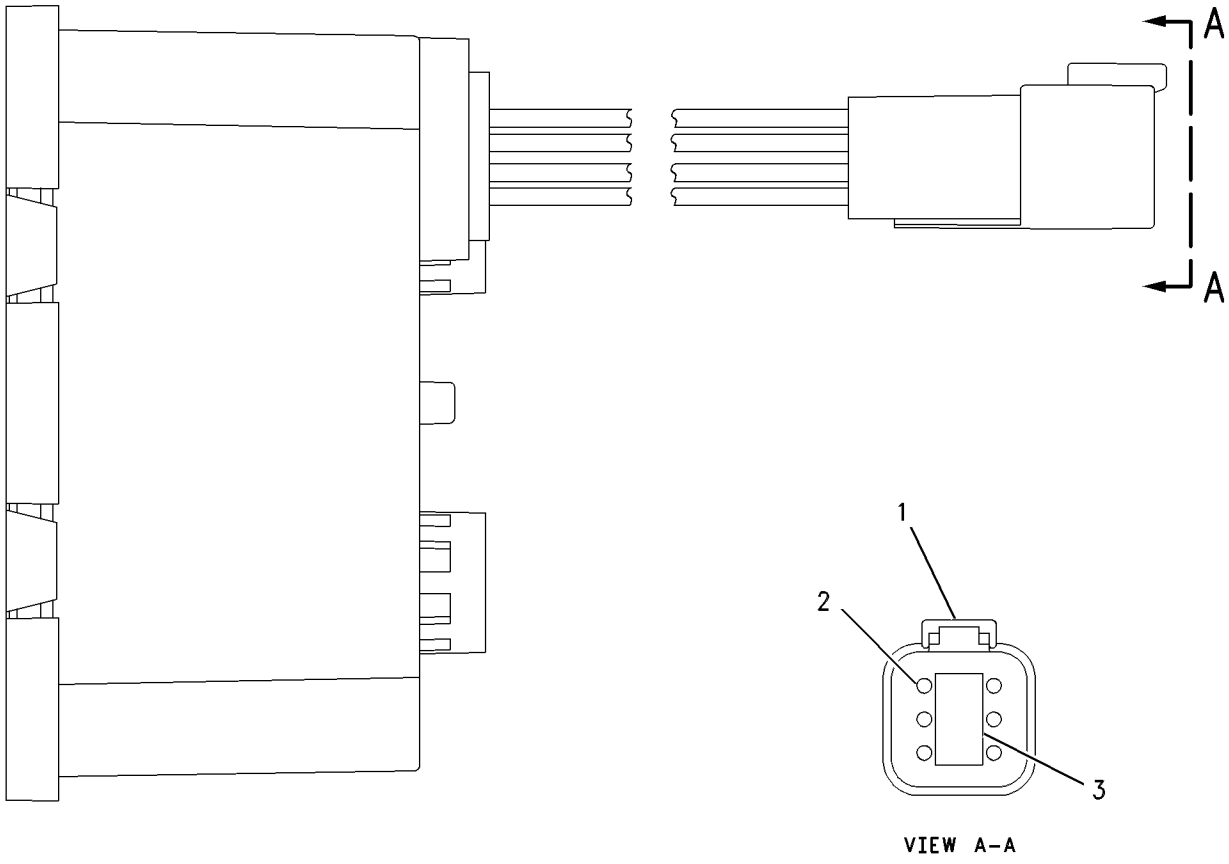

VIEW A-A

GRAPHIC #1 **<END>** g00632090

OPERATOR STATION

155-5789 MOTOR GP-WINDOW WIPER–REAR

S/N: A7G1-UP
PART OF 257-2016 WIPER GP-WINDOW
ALSO AN ATTACHMENT

SMCS-7305 **i01682110**

NOTE	REF NO	GRAPHIC REF	PART NUMBER	QTY	PART NAME 1 2 3 4 5 6 (PRODUCT LEVEL)	SEE PAGE
	1	1	**102-8805**	1	KIT-RECEPTACLE (6-PIN)	
	2	1	**8T-8737**	1	PLUG-SEAL	
	3	1	**8T-8729**	5	PIN-CONNECTOR	

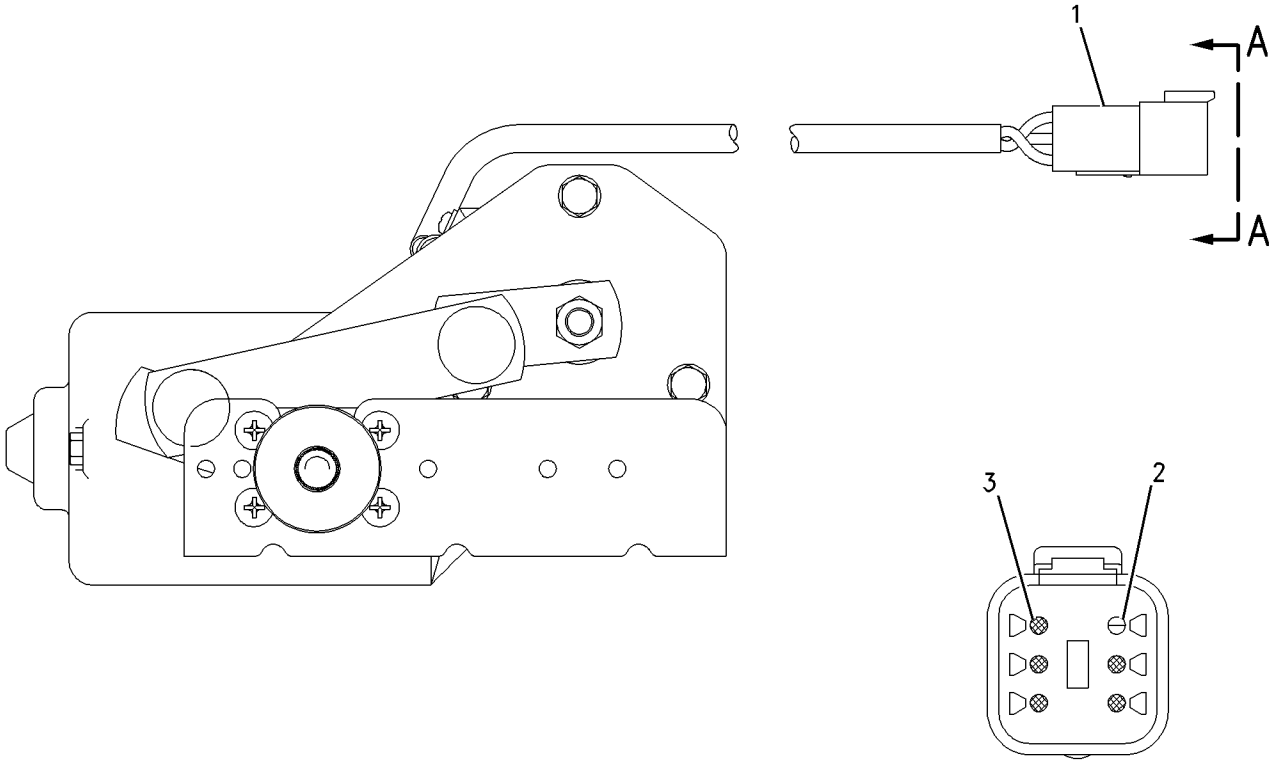

VIEW A-A

GRAPHIC #1 **<END>** g00665801

189-8622 MOTOR GP-WINDOW WIPER–FRONT

S/N: A7G1-UP
PART OF 257-2016 WIPER GP-WINDOW
ALSO AN ATTACHMENT

SMCS-7305 **i01892759**

NOTE	REF NO	GRAPHIC REF	PART NUMBER	QTY	PART NAME 1 2 3 4 5 6 (PRODUCT LEVEL)	SEE PAGE
	1	1	**102-8805**	1	KIT-RECEPTACLE (6-PIN)	
	2	1	**8T-8737**	1	PLUG-SEAL	
	3	1	**186-3735**	5	PIN-CONNECTOR (16-GA TO 18-GA)	
	4	1	**206-5823**	2	CAP (WIPER)	

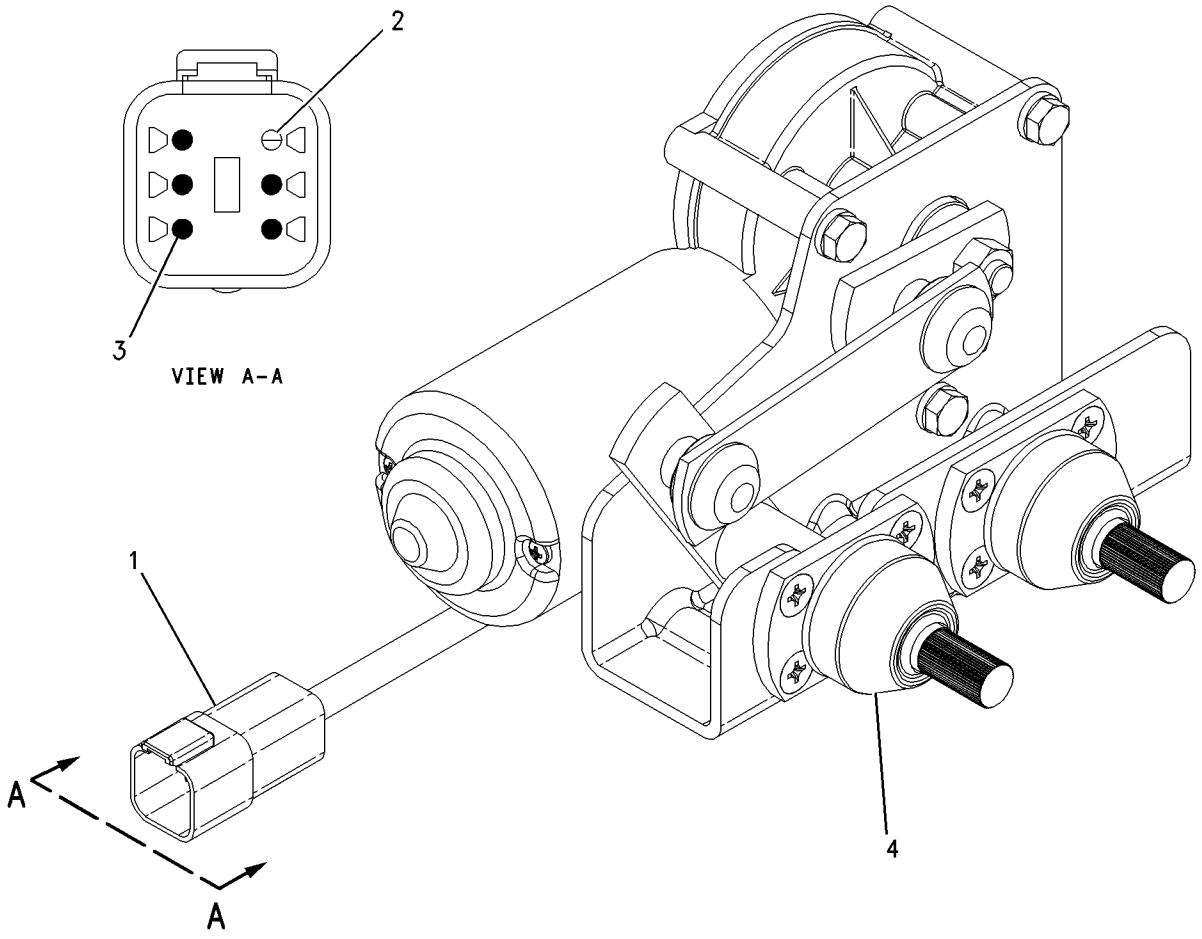

GRAPHIC #1 **<END>** g00847619

OPERATOR STATION

191-8567 MOUNTING GP-CAB

S/N: A7G1-UP

PART OF 237-2570, 237-2571 OPERATOR AR-ENCLOSED ROPS

ALSO AN ATTACHMENT

SMCS-7301 **i01729329**

NOTE	REF NO	GRAPHIC REF	PART NUMBER	QTY	PART NAME 1 2 3 4 5 6 (PRODUCT LEVEL)	SEE PAGE
	1	1	**7X-0593**	4	WASHER-HARD (34X57X6-MM THK)	
	2	1	**9U-0512**	8	WASHER (32X144X12-MM THK)	
M	3	1	**9X-2045**	10	SCREW-TRUSS HEAD (M6X1X20-MM)	
	4	1	**107-3157**	8	WASHER (22X76.2X6-MM THK)	
	5	1	**117-8131**	8	MOUNT	
	6	1	**133-1618**	4	SLEEVE	
	7	1	**173-2118**	1	ROOF	
	8	1	**174-2407**	1	INSULATION	
	9	1	**216-4531**	1	SHROUD	
	10	1	**196-0436**	4	SPACER (25X40X12-MM THK)	
	11	1	**197-5470**	4	GROMMET	
M	12	1	**8T-4122**	4	WASHER-HARD (17X32X3.5-MM THK)	
M	13	1	**8T-4193**	4	BOLT (M16X2X50-MM)	
M	14	1	**8T-6624**	4	BOLT (M30X3.5X180-MM)	

M-METRIC PART

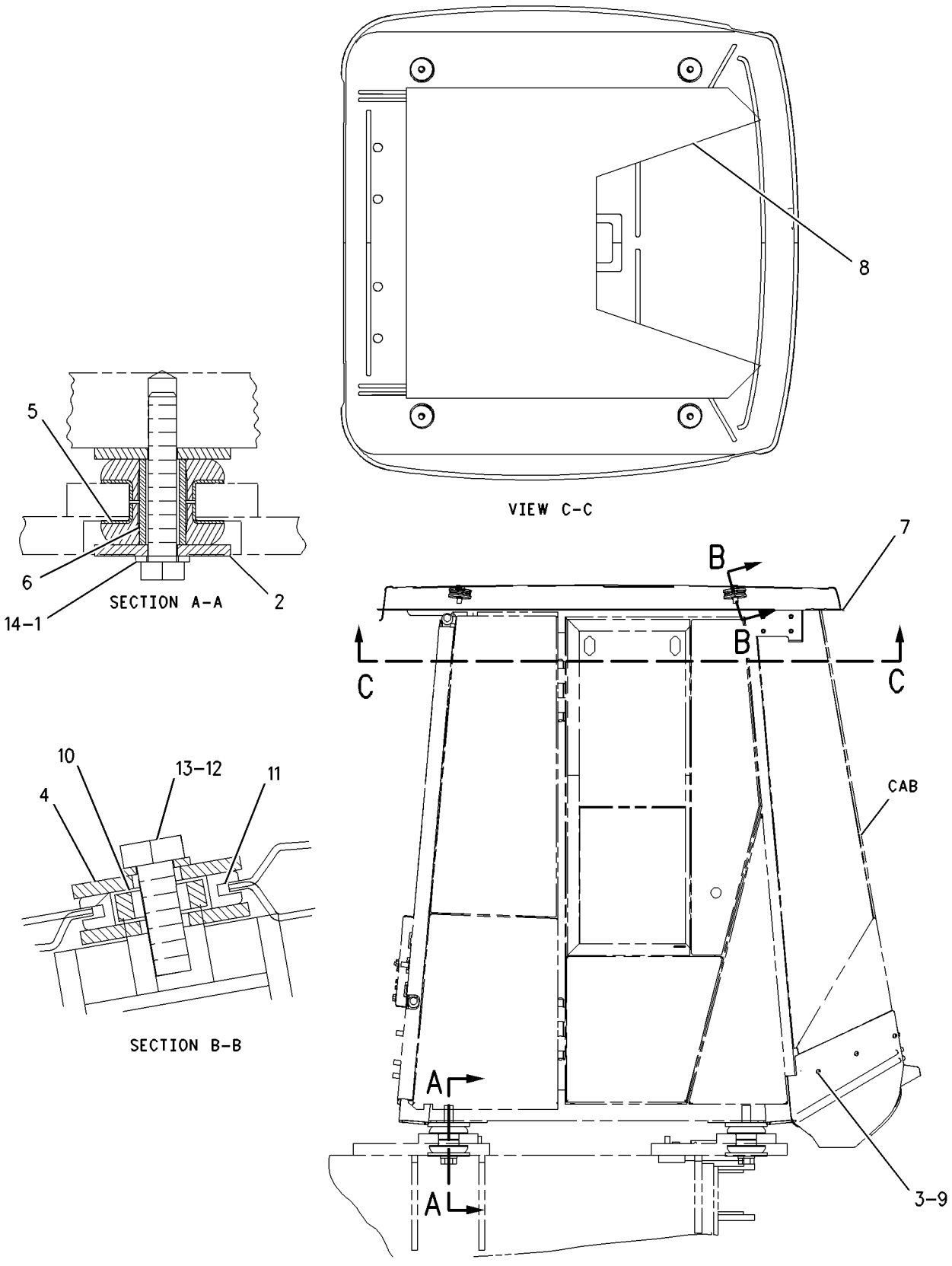

GRAPHIC #1 **<END>** g00870344

OPERATOR STATION

237-2570 OPERATOR AR-ENCLOSED ROPS—HMU STEERING

S/N: A7G1-UP

PART OF 236-9049 GENERAL AR

SMCS-7301 **i02203737**

NOTE	PART NUMBER	QTY	PART NAME 1 2 3 4 5 6 (PRODUCT LEVEL)	SEE PAGE
Y	*237-2572*	1	CAB AR-ENCLOSED ROPS (HMU STEERING)	782
Y	*244-2787*	1	INSTALLATION GP-CONTROLS (PARKING BRAKE CABLE)	814
Y	*191-8567*	1	MOUNTING GP-CAB	850

Y-SEPARATE ILLUSTRATION

<END>

237-2571 OPERATOR AR-ENCLOSED ROPS—COMMAND CONTROL STEERING

S/N: A7G1-UP

PART OF 244-3597 STEERING AR-COMMAND CONTROL AN ATTACHMENT

SMCS-7301 **i02216550**

NOTE	PART NUMBER	QTY	PART NAME 1 2 3 4 5 6 (PRODUCT LEVEL)	SEE PAGE
Y	*237-2573*	1	CAB AR-ENCLOSED ROPS (COMMAND CONTROL STEERING)	783
Y	*244-2787*	1	INSTALLATION GP-CONTROLS (PARKING BRAKE CABLE)	814
Y	*191-8567*	1	MOUNTING GP-CAB	850

Y-SEPARATE ILLUSTRATION

<END>

178-0604 PAN GP-BACKREST–CLOTH

S/N: A7G1-UP
PART OF 178-0603 SEAT GP
ALSO AN ATTACHMENT

SMCS-7312 **i02266997**

NOTE	REF NO	GRAPHIC REF	PART NUMBER	QTY	PART NAME 1 2 3 4 5 6 (PRODUCT LEVEL)	SEE PAGE
	1	1	**164-4883**	1	KNOB-LUMBAR	
Y	2	1	*178-0605*	1	PAN GP-BACKREST (CLOTH)	854
	3	1	**233-6745**	1	CUSHION AS (CLOTH)	
	4	1	**250-4628**	3	PLUG	
	5	1	**8T-7566**	1	PIN-SPRING	

Y-SEPARATE ILLUSTRATION

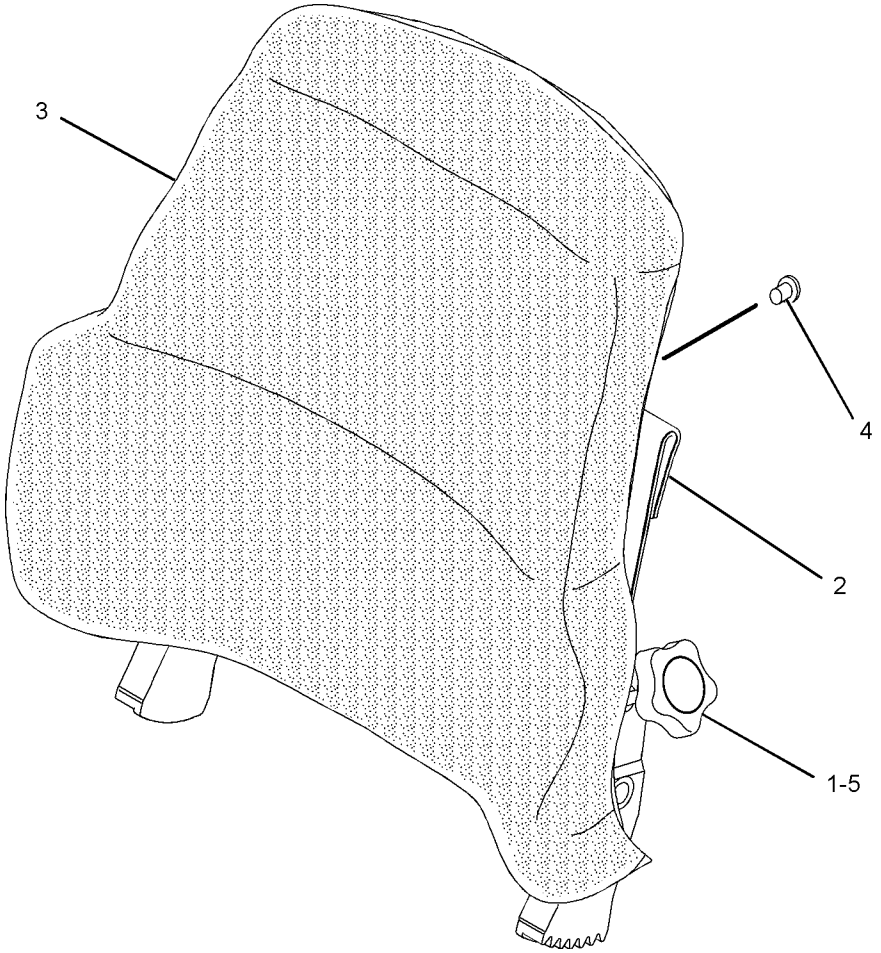

GRAPHIC #1 **<END>** g01092296

OPERATOR STATION

178-0605 PAN GP-BACKREST

S/N: A7G1-UP
PART OF 178-0604 PAN GP-BACKREST
ALSO AN ATTACHMENT

SMCS-7312 **i01589585**

NOTE	REF NO	GRAPHIC REF	PART NUMBER	QTY	PART NAME 1 2 3 4 5 6 (PRODUCT LEVEL)	SEE PAGE
	1	1	**4K-9429**	8	RIVET-POP	
	2	1	**5P-7957**	1	LANYARD	
	3	1	**136-1543**	1	PLATE AS-LUMBAR	
	4	1	**173-2052**	1	RETAINER	
	5	1	**178-7907**	1	HOLDER	
	6	1	**177-4930**	1	PAN AS-BACK	

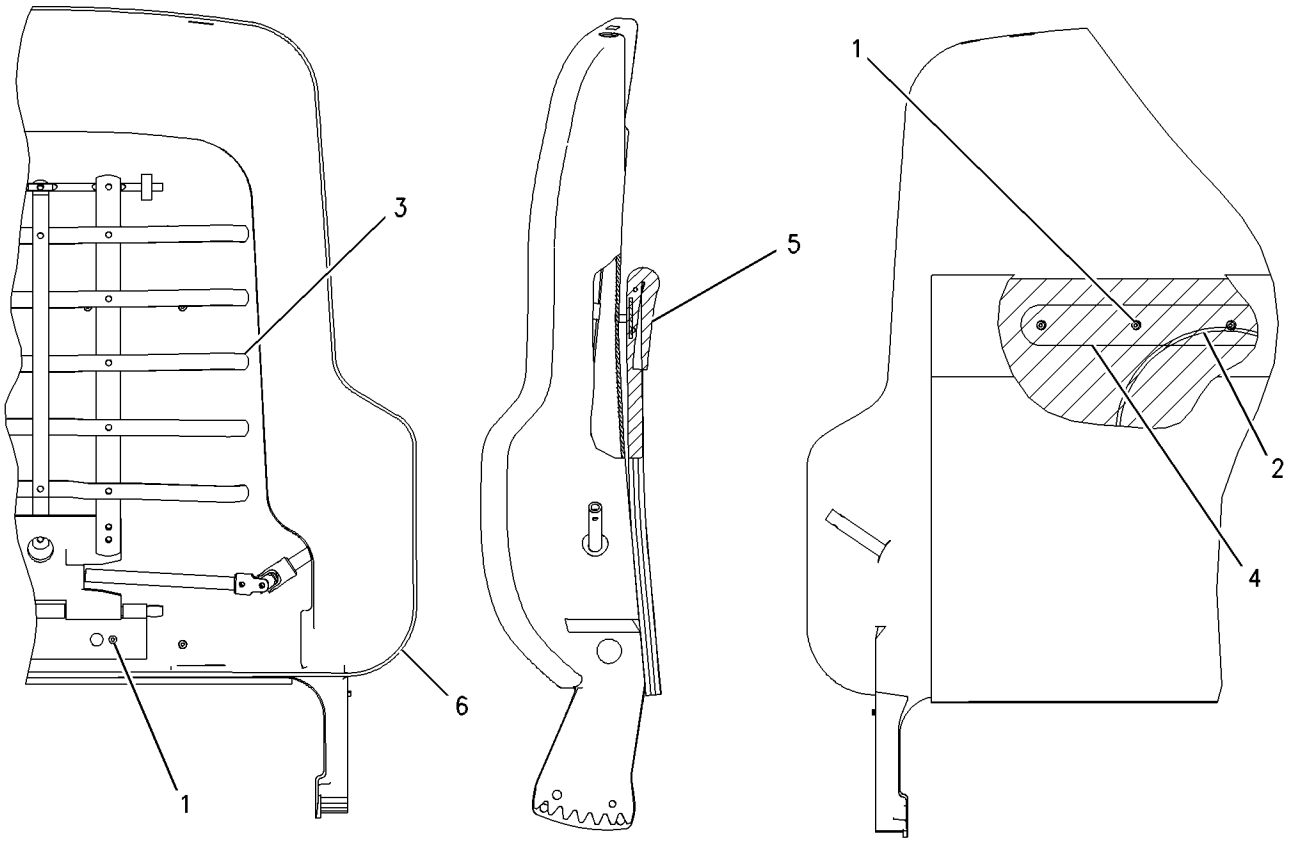

GRAPHIC #1 **<END>** g00716497

OPERATOR STATION

171-8881 PANEL GP-INSTRUMENT–UPPER

S/N: A7G1-UP

PART OF 237-2573 CAB AR-ENCLOSED ROPS

AN ATTACHMENT

SMCS-7451 **i01810473**

NOTE	REF NO	GRAPHIC REF	PART NUMBER	QTY	PART NAME 1 2 3 4 5 6 (PRODUCT LEVEL)	SEE PAGE
	1	1	**173-2148**	1	FILM-MONITOR (CATERPILLAR MONITORING SYSTEM)	
	2	1	**173-2173**	1	FILM-PANEL	
	3	1	**216-7888**	1	PANEL-CONTROL	
	4	1	**211-2126**	1	COVER AS	
	5	1	**200-5951**	1	BRACKET AS	
	6	1	**200-5952**	1	BRACKET AS	
	7	1	**216-8344**	1	BRACKET AS	
	8	1	**211-2109**	1	BRACKET AS	
	9	1	**200-6206**	1	COVER AS	
	10	1	**175-3265**	4	SCREW (8-16X0.63-IN)	
M	11	1	**5C-2890**	8	NUT (M6X1-THD)	
M	12	1	**9X-2044**	2	SCREW-TRUSS HEAD (M6X1X16-MM)	
M	13	1	**9X-2045**	9	SCREW-TRUSS HEAD (M6X1X20-MM)	
	14	1	**9X-8256**	8	WASHER (6.6X12X2-MM THK)	
M	15	1	**9X-2046**	1	SCREW-TRUSS HEAD (M6X1X35-MM)	
E	16	1	**155-0755**		SEAL (34CM)	
E	17	1	**5P-8309**		SEAL (37.7CM)	
E	17A	1	**5P-8309**		SEAL (16.6CM)	
	18	1	**4B-4274**	4	WASHER (5.5X13X1.2-MM THK)	

E-ORDER BY THE CENTIMETER
M-METRIC PART

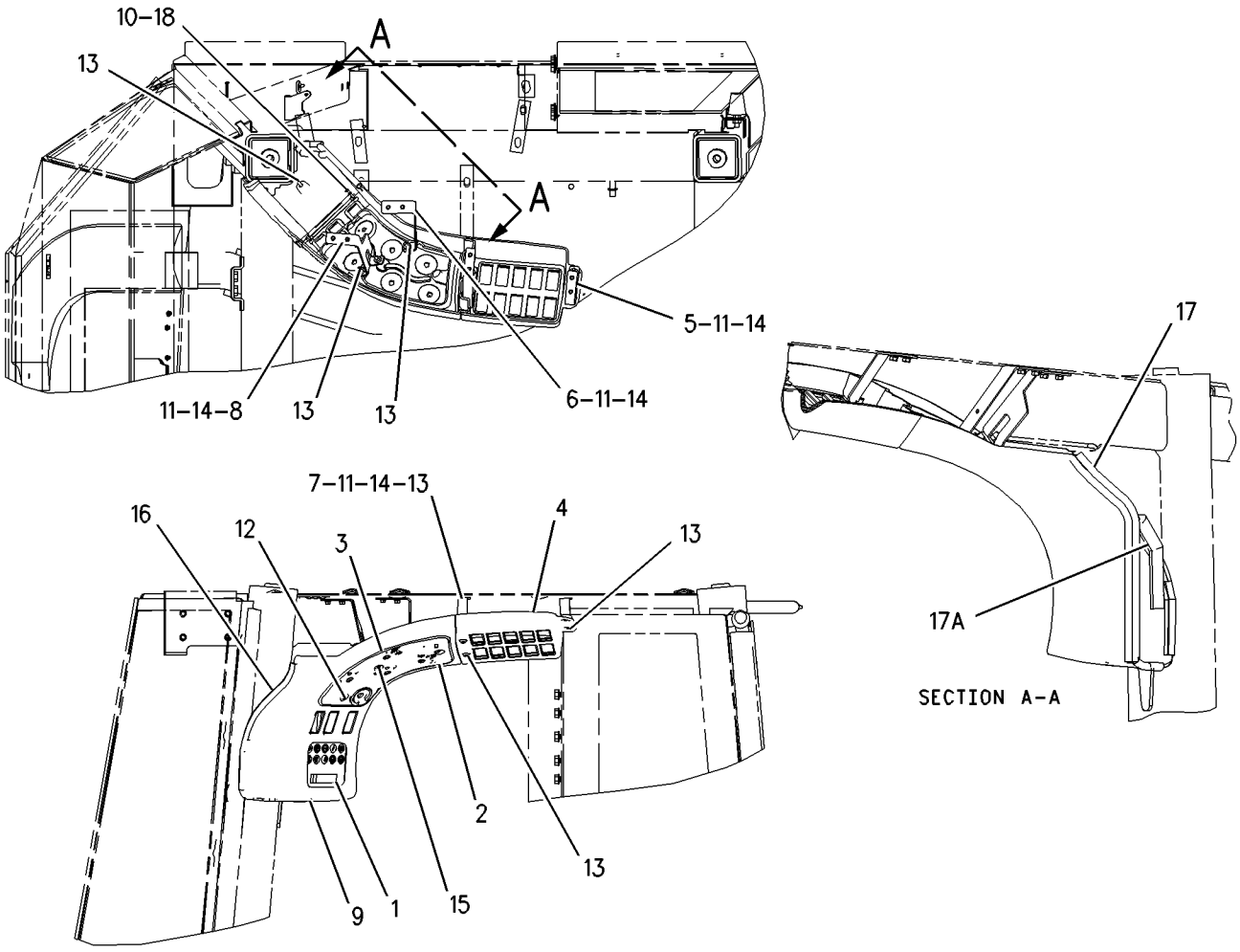

GRAPHIC #1 **<END>** g00885228

OPERATOR STATION

191-5282 PANEL GP-INSTRUMENT–UPPER

S/N: A7G1-UP

PART OF 237-2572 CAB AR-ENCLOSED ROPS

SMCS-7451 **i02014849**

NOTE	REF NO	GRAPHIC REF	PART NUMBER	QTY	PART NAME 1 2 3 4 5 6 (PRODUCT LEVEL)	SEE PAGE
	1	1	**173-2148**	1	FILM-MONITOR (CATERPILLAR MONITORING SYSTEM)	
	2	1	**216-7888**	1	PANEL-CONTROL	
	3	1	**192-1954**	1	FILM-CONTROL (UPPER PANEL)	
	4	1	**200-5951**	1	BRACKET AS	
	5	1	**200-5952**	1	BRACKET AS	
M		1	**6V-9632**	2	NUT-WELD (M6X1-THD)	
	6	1	**200-6206**	1	COVER AS	
	7	1	**211-2109**	1	BRACKET AS	
	8	1	**211-2126**	1	COVER AS	
	9	1	**216-8344**	1	BRACKET AS	
	10	1	**175-3265**	4	SCREW (8-16X0.63-IN)	
	11	1	**4B-4274**	4	WASHER (5.5X13X1.2-MM THK)	
M	12	1	**5C-2890**	8	NUT (M6X1-THD)	
M	13	1	**9X-2044**	2	SCREW-TRUSS HEAD (M6X1X16-MM)	
M	14	1	**9X-2045**	7	SCREW-TRUSS HEAD (M6X1X20-MM)	
M	15	1	**9X-2046**	1	SCREW-TRUSS HEAD (M6X1X35-MM)	
	16	1	**9X-8256**	8	WASHER (6.6X12X2-MM THK)	
E	17	1	**155-0755**		SEAL (34CM)	
E	18	1	**5P-8309**		SEAL (57CM)	

E-ORDER BY THE CENTIMETER
M-METRIC PART

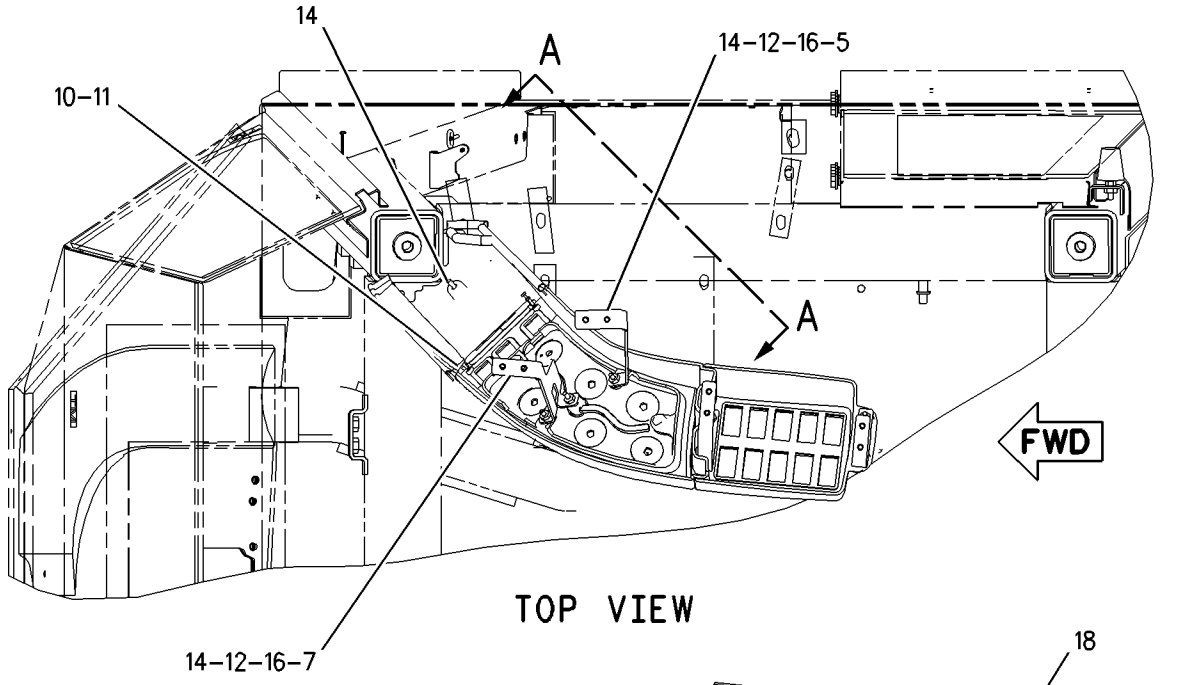

TOP VIEW

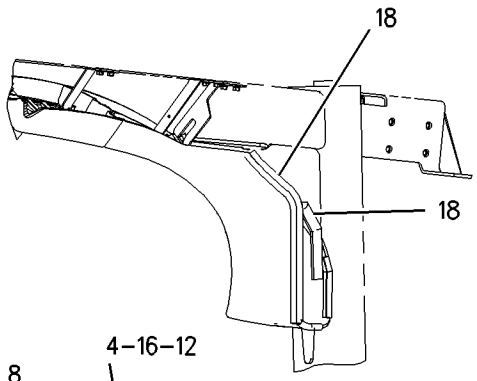

SECTION A-A

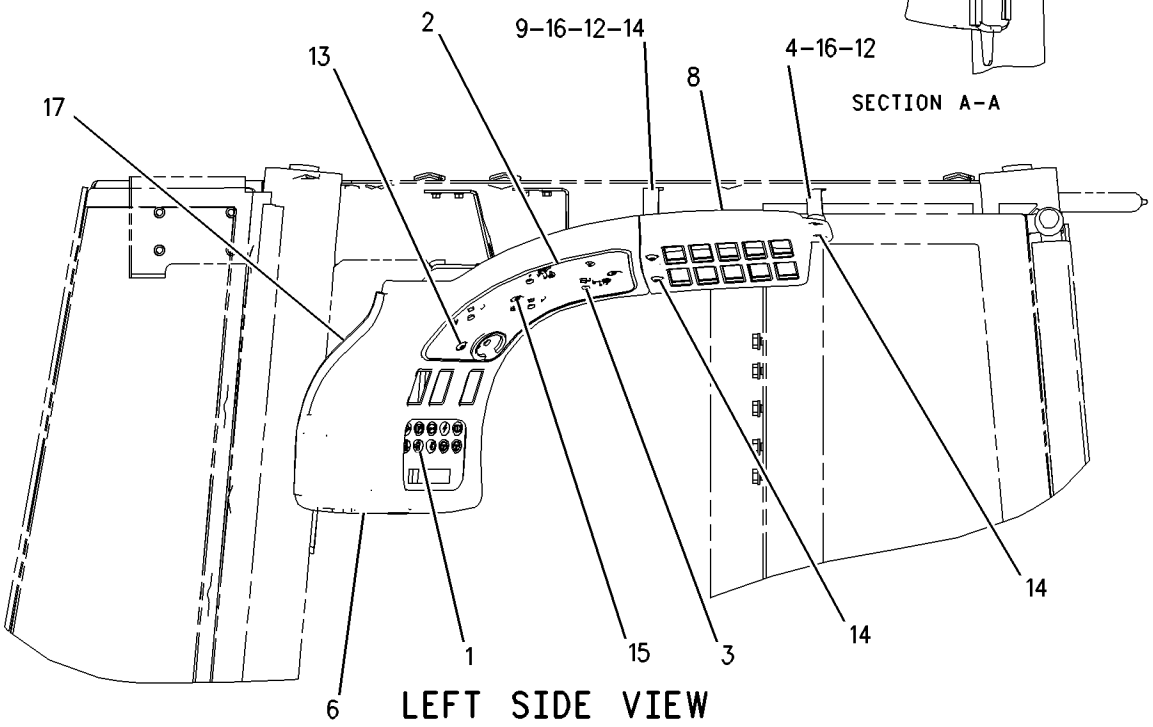

LEFT SIDE VIEW

GRAPHIC #1 **<END>** g00924263

OPERATOR STATION

245-6458 PANEL GP-INSTRUMENT–LOWER

S/N: A7G1-UP

PART OF 237-2572, 237-2573 CAB AR-ENCLOSED ROPS

ALSO AN ATTACHMENT

SMCS-7451 **i02309974**

NOTE	REF NO	GRAPHIC REF	PART NUMBER	QTY	PART NAME 1 2 3 4 5 6 (PRODUCT LEVEL)	SEE PAGE
	1	2	**4E-8722**	4	NUT	
	2	1	**4I-3038**	1	WASHER (3.3X8X0.5-MM THK)	
	3	1	**5P-7958**	1	SLEEVE-CABLE SPLICE	
	4	1	**128-8617**	1	PLATE AS	
	5	1	**129-7184**	1	FILM-INSTRUCTION (ENGINE START)	
	6	1	**165-9104**	2	SPACER (6.5X9.5X10-MM THK)	
	7	2	**173-2205**	1	COVER	
	8	2	**173-2206**	1	COVER	
	9	1	**179-9392**	1	LANYARD	
	10	1	**189-2076**	1	FILM-CONTROLS	
	11	1	**189-2512**	1	PLATE	
	12	1	**198-8774**	1	BEZEL	
	13	1	**199-9641**	1	PANEL-CONTROL	
	14	1	**200-0727**	1	BEZEL	
	15	1	**200-0731**	1	BRACKET AS	
	16	1	**200-8152**	1	BRACKET AS (LH)	
	17	1	**200-8153**	1	BRACKET AS (RH)	
	18	1	**200-8154**	2	FILM-IDENTIFICATION (12-VOLT)	
	19	1	**201-2733**	1	FILM-INFORMATION (INPUT/OUTPUT)	
	20	1	**251-4282**	1	FILM-PANEL (CENTER)	
	21	1	**251-4283**	1	FILM-PANEL (LH)	
	22	1	**251-4284**	1	FILM-PANEL (RH)	
	23	1	**107-1964**	8	SCREW-PAN HEAD (6-19X0.5-IN)	
M	24	1	**155-4098**	4	SCREW-BUTTON HEAD (M3X0.5X1-MM)	
	25	1	**2V-3726**	1	BUMPER	
M	26	1	**5C-2890**	2	NUT (M6X1-THD)	
M	27	1	**7Y-7256**	2	SCREW-TRUSS HEAD (M4X0.7-MM)	
	28	1	**8T-4205**	2	WASHER-HARD (7.2X14.5X2-MM THK)	
M	29	1	**9X-1046**	18	SCREW (M4X0.7X18-MM)	
M	30	1,2	**9X-2044**	25	SCREW-TRUSS HEAD (M6X1X16-MM)	

M-METRIC PART

245-6458 **PANEL GP-INSTRUMENT** *(contd.)* **i02309974**

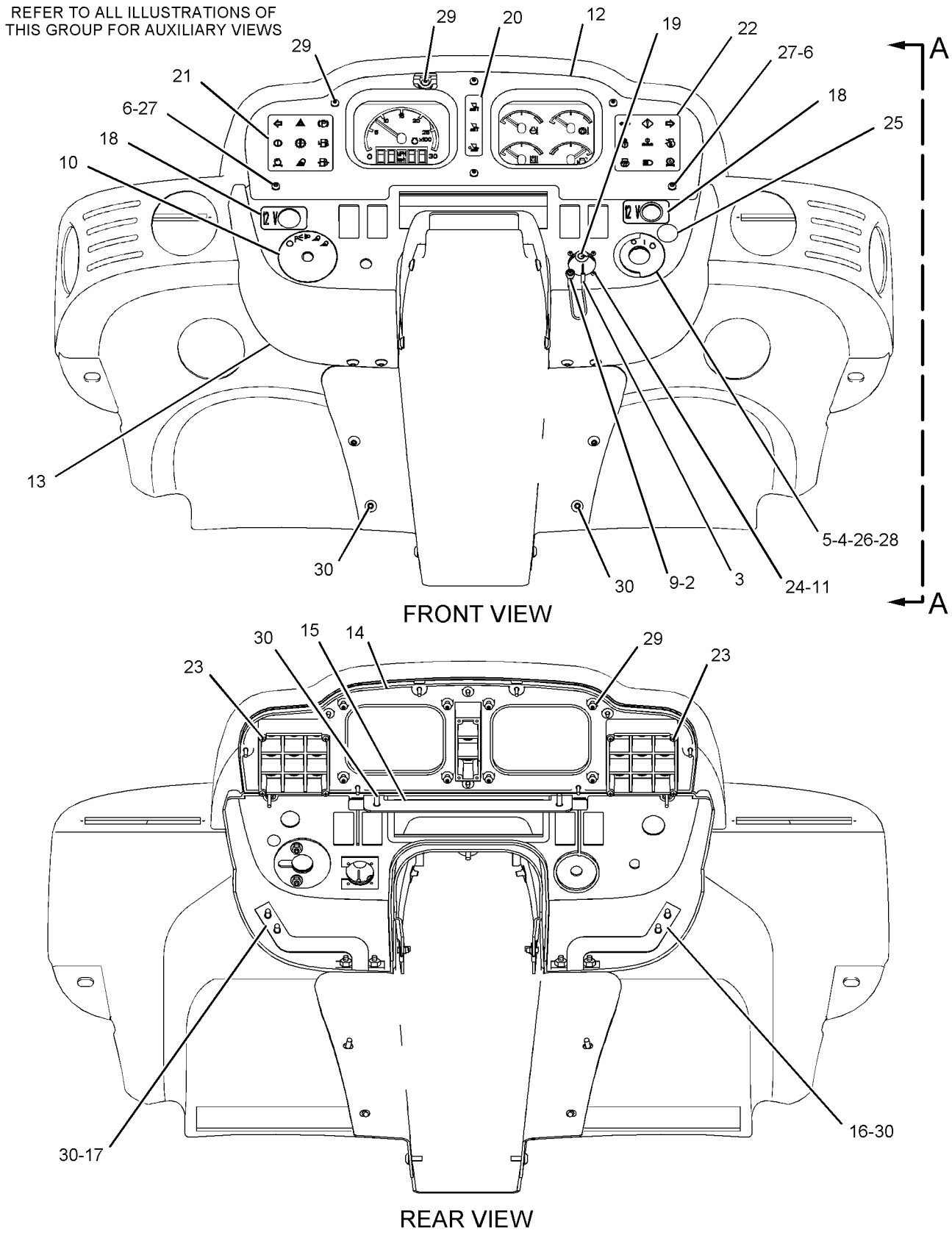

GRAPHIC #1 g01141513

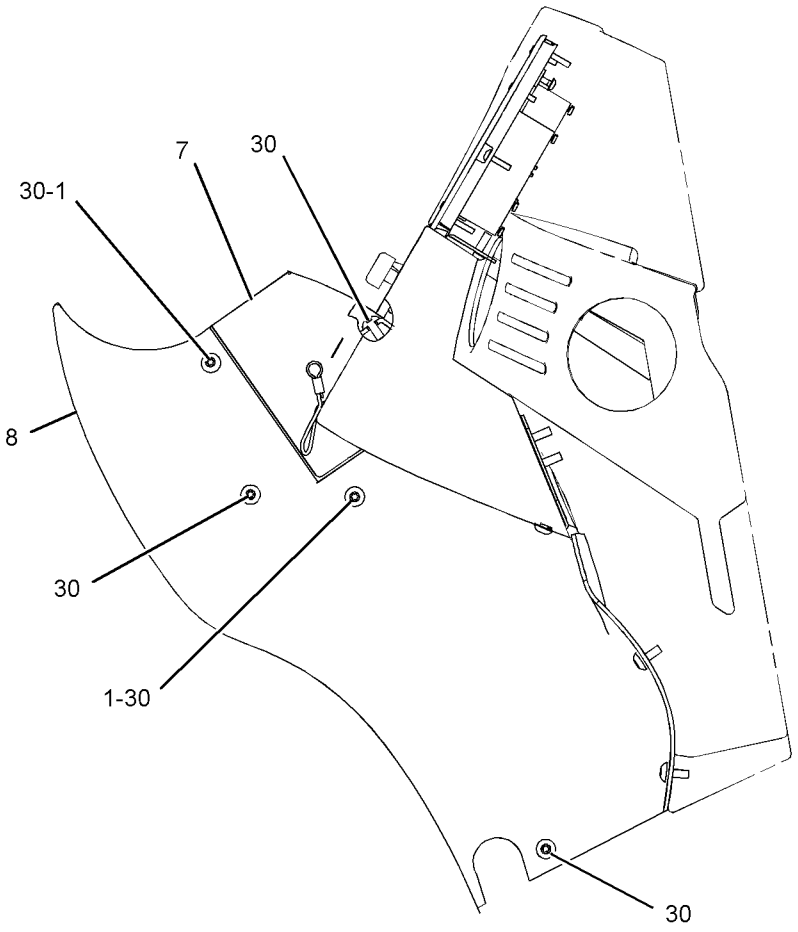

VIEW A-A

GRAPHIC #2 **<END>** g01142232

OPERATOR STATION

201-8616 PEDAL GP-GOVERNOR

S/N: A7G1-UP
PART OF 207-1759 PEDAL GP-GOVERNOR
ALSO AN ATTACHMENT

SMCS-1276 **i01963617**

NOTE	REF NO	GRAPHIC REF	PART NUMBER	QTY	PART NAME 1 2 3 4 5 6 (PRODUCT LEVEL)	SEE PAGE
	1	1	**123-9431**	1	COVER	
Y	2	1	**204-7949**	1	SENSOR GP-POSITION (ROTARY) (THROTTLE)	181
	3	1	**7G-7053**	1	GROMMET	
	4	1	**160-6365**	2	SCREW	
	5	1	**160-6366**	2	CLIP	
	6	1	**140-2961**	1	KIT-ROLLER	
					(INCLUDES ROLLLER AND ROLLER PIN	
	7	1	**140-2962**	1	KIT-TREADLE PIN	
					(INCLUDES 2 SNAP RINGS, 6 BUSHINGS, 2 TREADLE PINS, AND 4 SPRINGS)	
	8	1	**140-2963**	2	SCREW	
	9	1	**208-3703**	1	PLATE AS	

Y-SEPARATE ILLUSTRATION

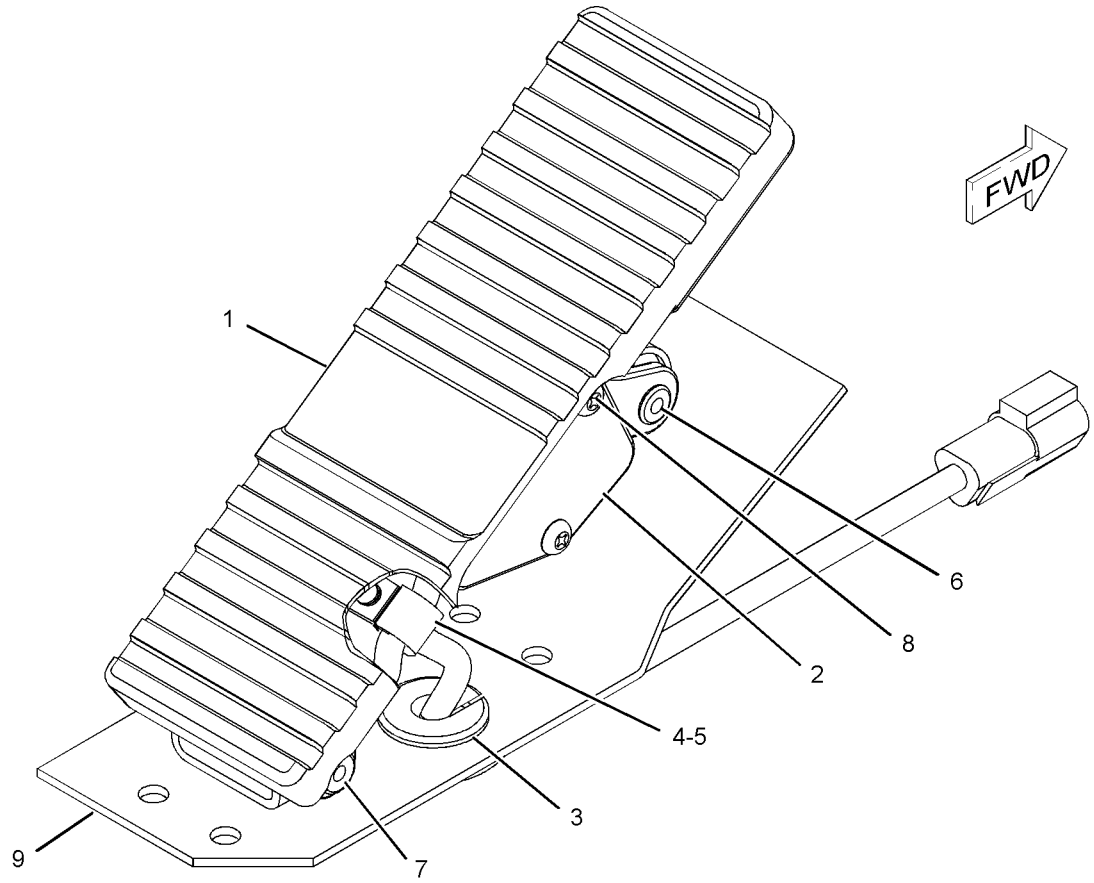

GRAPHIC #1 **<END>** g01020704

207-1759 PEDAL GP-GOVERNOR

S/N: A7G1-UP
PART OF 237-2572, 237-2573 CAB AR-ENCLOSED ROPS
ALSO AN ATTACHMENT

SMCS-1276 **i01961355**

NOTE	REF NO	GRAPHIC REF	PART NUMBER	QTY	PART NAME 1 2 3 4 5 6 (PRODUCT LEVEL)	SEE PAGE
Y	1	1	**201-8616**	1	PEDAL GP-GOVERNOR	862
	2	1	**8T-4224**	4	WASHER-HARD (8.8X16X2MM THK)	
M	3	1	**8T-4908**	4	BOLT (M8X1.25X25MM)	

M-METRIC PART
Y-SEPARATE ILLUSTRATION

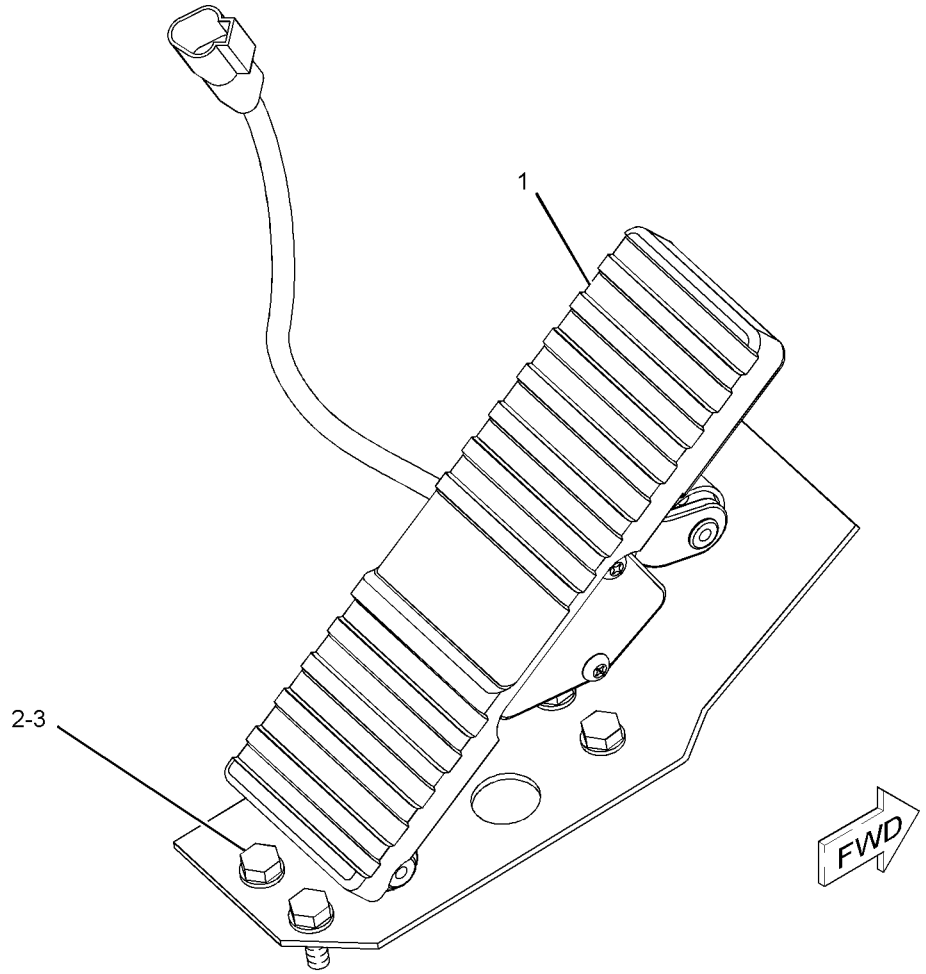

GRAPHIC #1 **<END>** g01020217

OPERATOR STATION

260-4870 PLATFORM AR

S/N: A7G1-UP

AN ATTACHMENT

SMCS-7253 **i02379401**

NOTE	PART NUMBER	QTY	PART NAME 1 2 3 4 5 6 (PRODUCT LEVEL)	SEE PAGE
Y	*243-1944*	1	HANDHOLD GP (CAB)	807
Y	*245-6184*	1	HANDHOLD GP (PLATFORM)	808

Y-SEPARATE ILLUSTRATION

<END>

260-4871 PLATFORM AR

S/N: A7G1-UP

AN ATTACHMENT

SMCS-7253 **i02420579**

NOTE	PART NUMBER	QTY	PART NAME 1 2 3 4 5 6 (PRODUCT LEVEL)	SEE PAGE
Y	*243-1944*	1	HANDHOLD GP (CAB)	807
Y	*245-6184*	1	HANDHOLD GP (PLATFORM)	808
Y	*244-2736*	1	MIRROR GP-REAR VIEW	835

Y-SEPARATE ILLUSTRATION

<END>

260-4872 PLATFORM AR

S/N: A7G1-UP

AN ATTACHMENT

SMCS-7253 **i02415890**

NOTE	PART NUMBER	QTY	PART NAME 1 2 3 4 5 6 (PRODUCT LEVEL)	SEE PAGE
Y	*243-1944*	1	HANDHOLD GP (CAB)	807
Y	*245-6184*	1	HANDHOLD GP (PLATFORM)	808
Y	*259-1999*	1	MIRROR GP-REAR VIEW (HEATED)	843

Y-SEPARATE ILLUSTRATION

<END>

214-8888 RADIO GP–AM/FM

S/N: A7G1-UP

AN ATTACHMENT

SMCS-7338 **i01870729**

NOTE	PART NUMBER	QTY	PART NAME 1 2 3 4 5 6 (PRODUCT LEVEL)	SEE PAGE
	224-1767	1	BUTTON	
	215-1182	1	HARNESS AS-RADIO	

<END>

OPERATOR STATION

273-6356 RADIO GP–AM/FM

S/N: A7G1-UP

AN ATTACHMENT

SMCS-7338 **i02317902**

NOTE	REF NO	GRAPHIC REF	PART NUMBER	QTY	PART NAME 1 2 3 4 5 6 (PRODUCT LEVEL)	SEE PAGE
	1	1	**215-1182**	1	HARNESS AS-RADIO	

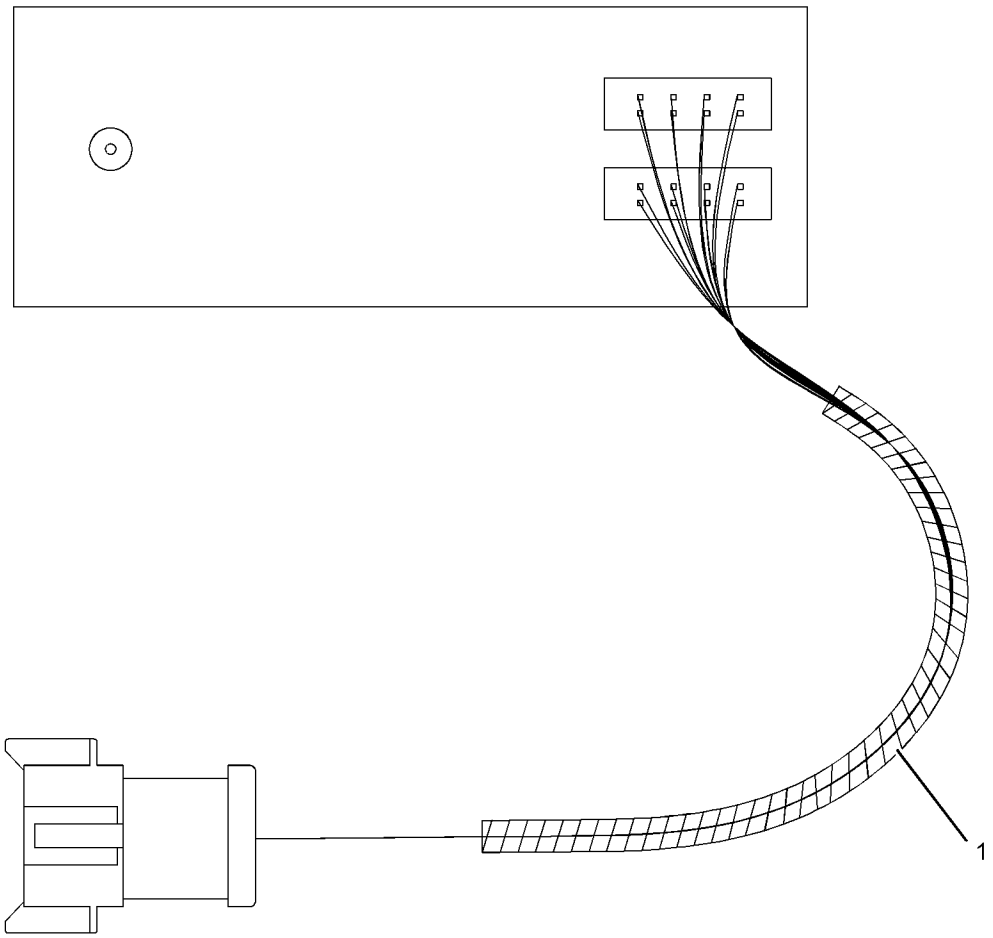

GRAPHIC #1 **<END>** g01159255

OPERATOR STATION

263-9088 RADIO GP-COMMUNICATION—PRODUCT LINK 121SR

S/N: A7G1-UP

PART OF 256-5068 CONTROL & MTG GP-COMMUNICATION

AN ATTACHMENT

SMCS-733T **i02310344**

NOTE	PART NUMBER	QTY	PART NAME 1 2 3 4 5 6 (PRODUCT LEVEL)	SEE PAGE
	267-4603	1	SOFTWARE GP-COMMUNICATION (PRODUCT LINK 121SR)	

<END>

OPERATOR STATION

177-4935 RECLINER GP-SEAT

S/N: A7G1-UP
PART OF 178-0603 SEAT GP
ALSO AN ATTACHMENT

SMCS-7312 **i01447782**

NOTE	REF NO	GRAPHIC REF	PART NUMBER	QTY	PART NAME 1 2 3 4 5 6 (PRODUCT LEVEL)	SEE PAGE
	1	1	**188-2586**	1	LATCH	
	2	1	**164-4146**	1	SPRING	
	3	1	**177-1860**	1	GEAR	
	4	1	**177-1862**	1	BRACKET	
	5	1	**178-0607**	1	SHAFT AS	
	5A	1	**2K-9111**	2	PIN-SPRING	
	5B	1	**9M-6803**	2	DOWEL	
	5C	1	**170-8590**	1	SPRING	
	6	1	**178-0608**	1	BRACKET AS	
	7	1	**178-0609**	1	BRACKET AS	
	8	1	**0S-1614**	1	BOLT (1/4-20X0.5 IN)	
	9	1	**101-2867**	1	WASHER-HARD	
	10	1	**4M-6425**	1	BOLT (5/16-18X1 IN)	
	11	1	**5S-7383**	1	BOLT (3/8-16X1.75 IN)	
	12	1	**8T-4224**	1	WASHER-HARD (8.8X16X2MM THK)	

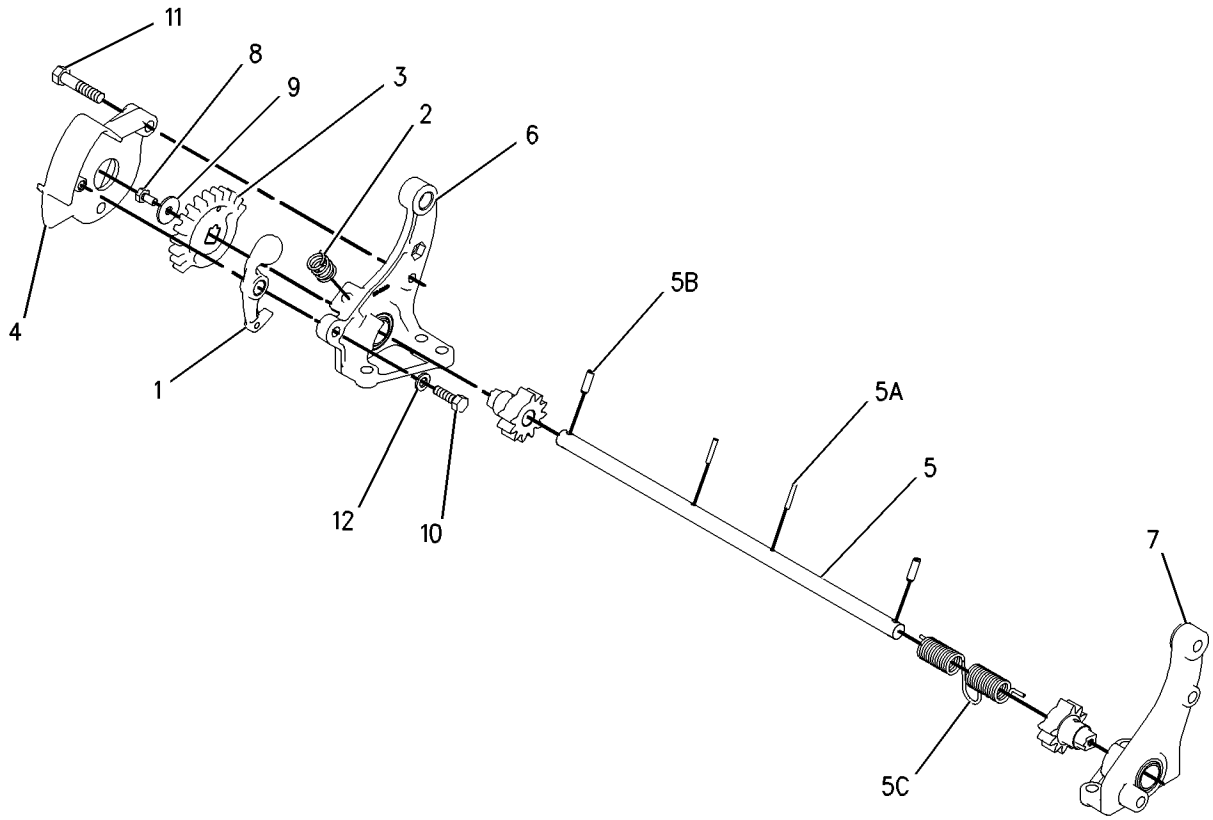

GRAPHIC #1 **<END>** g00673022

OPERATOR STATION

237-2574 ROPS GP-ENCLOSED

S/N: A7G1-UP

PART OF 237-2572, 237-2573 CAB AR-ENCLOSED ROPS

ALSO AN ATTACHMENT

SMCS-7301 **i02413344**

NOTE	REF NO	GRAPHIC REF	PART NUMBER	QTY	PART NAME 1 2 3 4 5 6 (PRODUCT LEVEL)	SEE PAGE
B	1	2	**8T-0318**	3	SHIM (0.8-MM THK)	
M	2	1	**9X-2042**	2	SCREW-TRUSS HEAD (M6X1X12-MM)	
	3	1	**107-4600**	1	GLASS (RIGHT SIDE-REAR)	
	4	1	**107-4602**	1	GLASS (LEFT SIDE-REAR)	
	5	1	**109-5008**	3	BUMPER-CONICAL	
	6	2	**111-0687**	1	STRIKER AS	
	7	2	**258-7623**	1	TRIM (RH)	
	8	2	**258-7624**	1	TRIM (LH)	
	9	2	**114-9252**	1	BRACKET AS	
	13	2	**126-1052**	1	PIN	
	14	2	**128-1026**	1	SHIELD-STRIKER	
	15	1	**136-9351**	1	TRIM (RH)	
	16	1	**154-9508**	1	TRIM (LH)	
	17	1	**173-2142**	1	GLASS (FRONT)	
	18	1	**173-2143**	1	GLASS (RIGHT FRONT CORNER)	
	19	1	**173-2144**	1	GLASS (LEFT FRONT CORNER)	
	21	1	**247-1860**	1	DOOR AS	
		1	**1V-6755**	1	LATCH AS	
		1	**2N-2258**	6	RIVET-POP	
		1	**111-1316**	1	HINGE	
	22	2	**187-4161**	1	SHEET AS	
	23	2	**188-5175**	1	CHANNEL AS (LH)	
	24	2	**188-5177**	1	BRACKET AS	
Y	27	1	*270-3388*	1	DOOR GP-CAB	796
	28	2	**204-6132**	1	CHANNEL	
	31	2	**209-5018**	1	LATCH AS	
	32	3	**210-1254**	2	INSULATION	
Y	33	1	**232-2964**	1	FLOOR GP-SOUND SUPPRESSION	800
	34	1	**237-2577**	1	CAB AS 1/4 WALL	
	35	1	**242-8263**	1	SHEET AS	
	36	1	**243-4369**	1	PLATE AS (RH)	
	37	1	**243-4371**	1	PLATE AS (LH)	
	38	2	**243-5553**	1	TRIM (RH)	
	39	2	**243-5554**	1	TRIM (RH)	
	40	2	**243-5555**	1	TRIM (LH)	
	41	2	**243-5556**	1	TRIM (LH)	
	42	3	**245-4333**	1	INSULATION	
	44	1	**255-4367**	1	GLASS (REAR)	
M	45	1	**5C-7261**	3	NUT (M8X1.25-THD)	
	50	2,3	**8T-4121**	22	WASHER-HARD (11X21X2.5-MM THK)	
M	51	2	**8T-4133**	4	NUT (M10X1.15-THD)	
M	52	2	**8T-4136**	4	BOLT (M10X1.5X25-MM)	
M	53	2,3	**8T-4137**	14	BOLT (M10X1.5X20-MM)	
M	56	2	**9X-2044**	2	SCREW-TRUSS HEAD (M6X1X16-MM)	
D	59	3	**5P-6120**		TRIM-EDGE (0.2-M)	

B-USE AS REQUIRED
D-ORDER BY THE METER
M-METRIC PART
Y-SEPARATE ILLUSTRATION

REFER TO ALL ILLUSTRATIONS OF
THIS GROUP FOR AUXILIARY VIEWS.

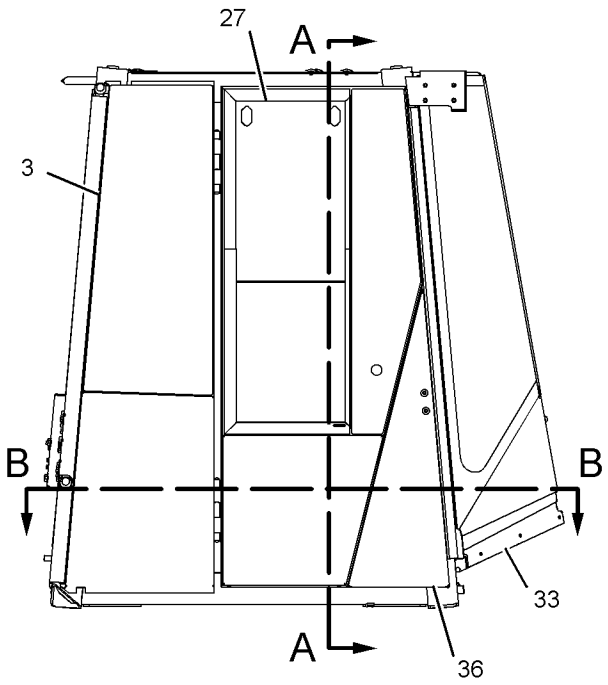

RIGHT SIDE VIEW

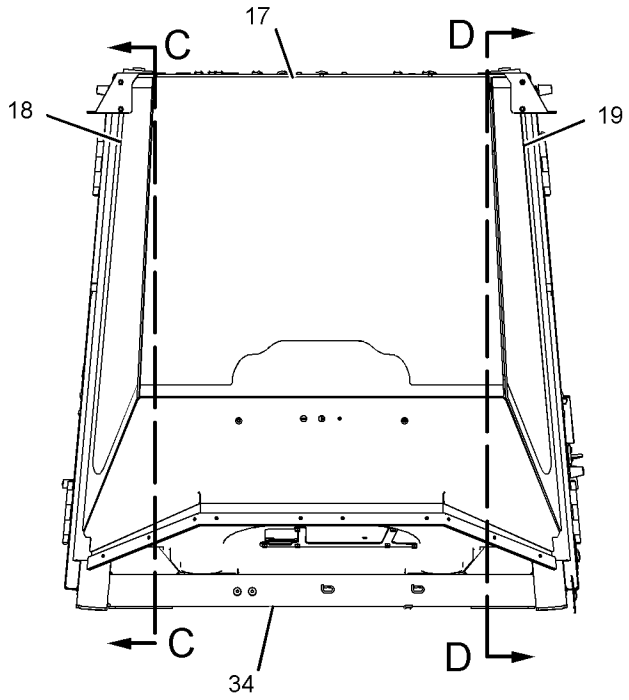

FRONT VIEW

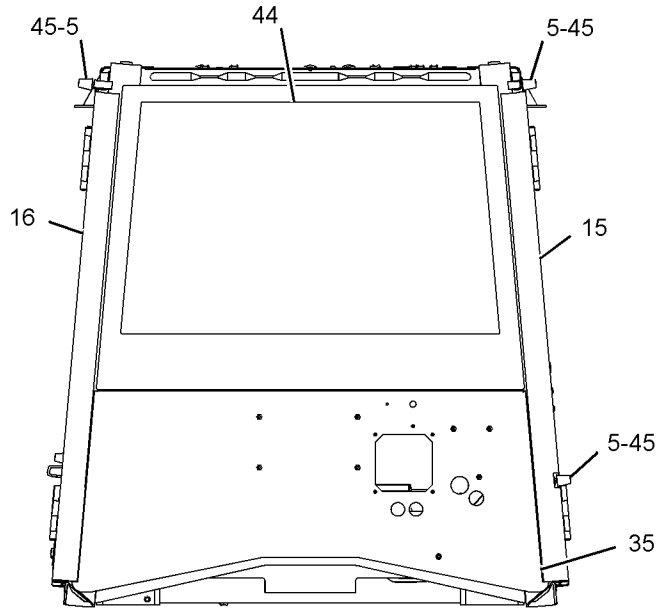

REAR VIEW

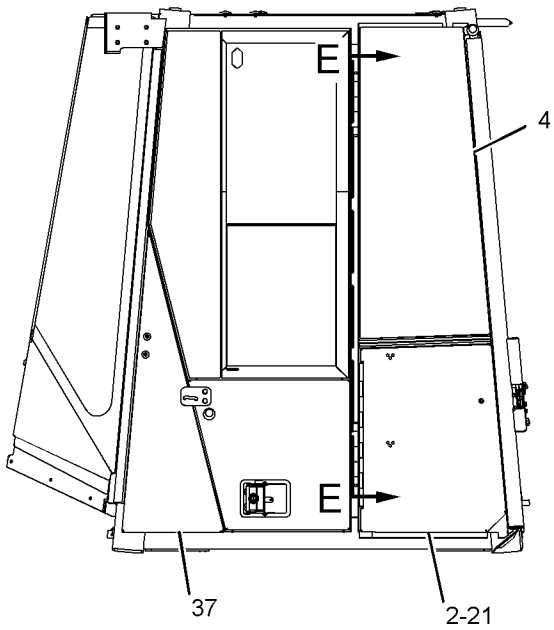

LEFT SIDE VIEW

GRAPHIC #1

g01191894

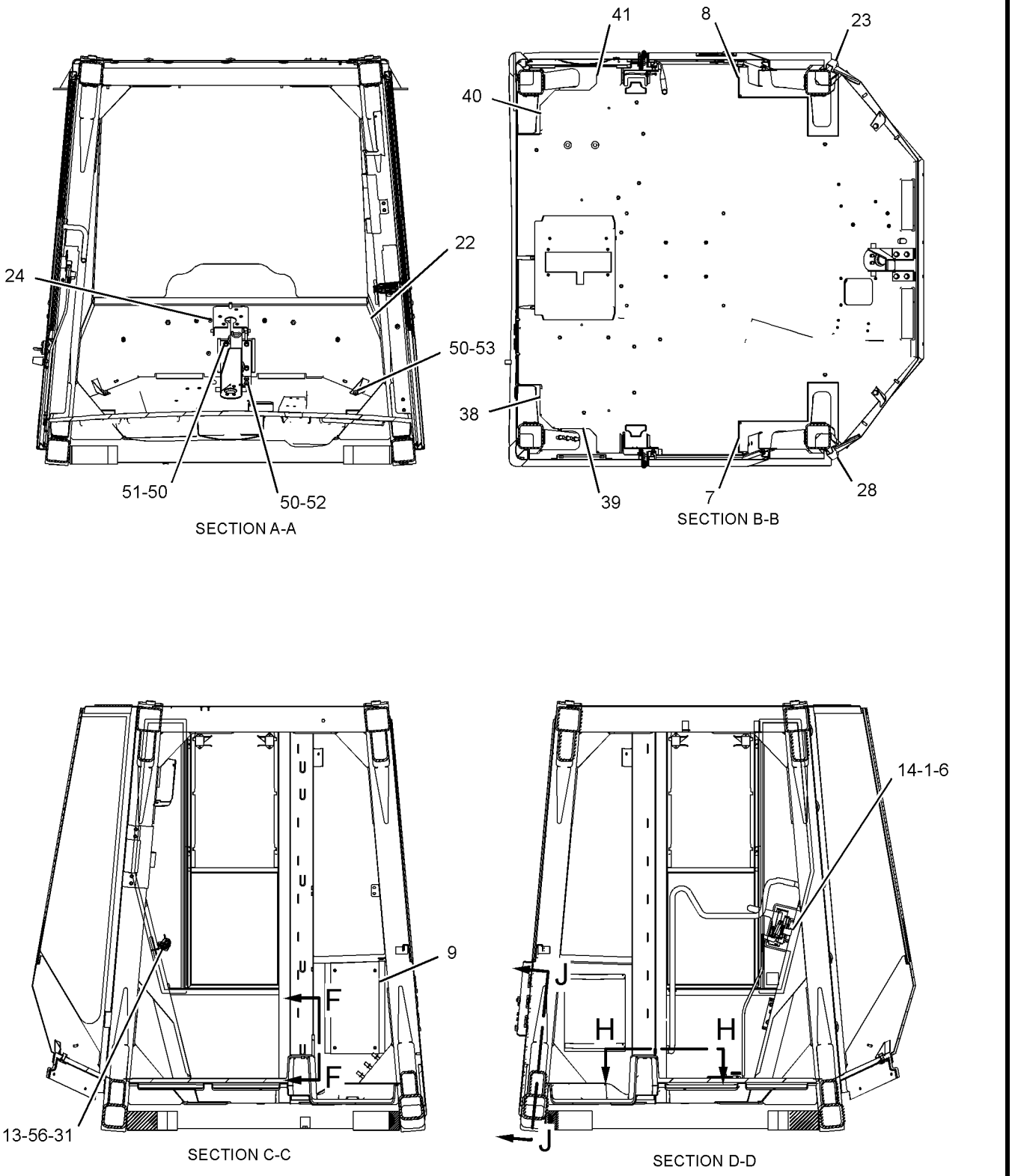

GRAPHIC #2

g01190290

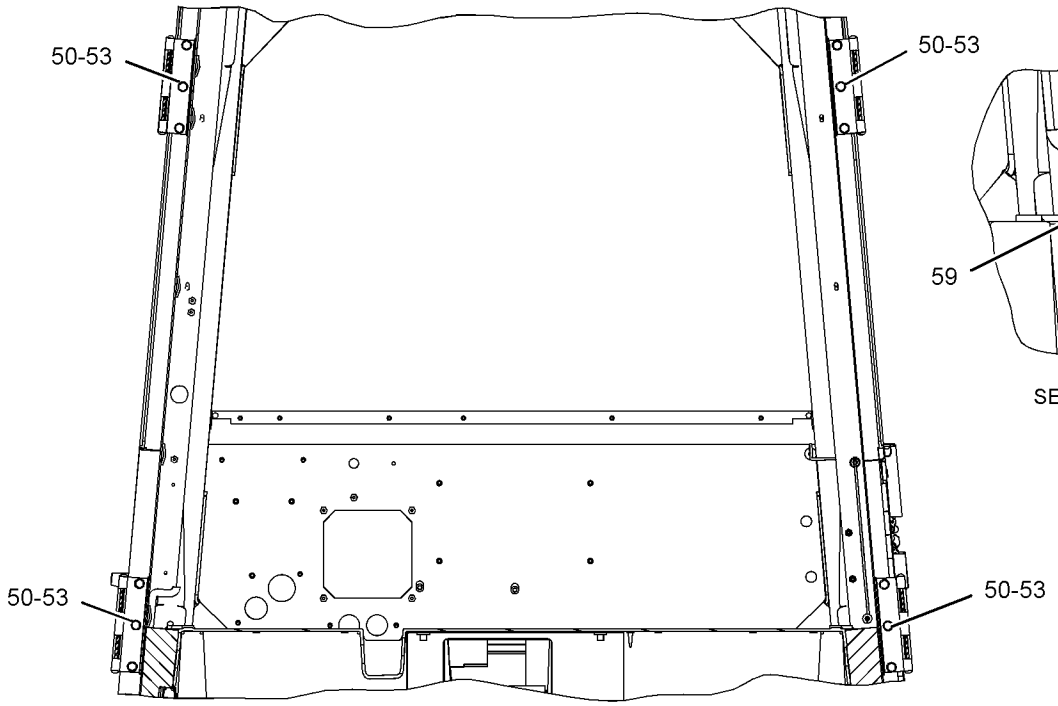

SECTION F-F

SECTION E-E

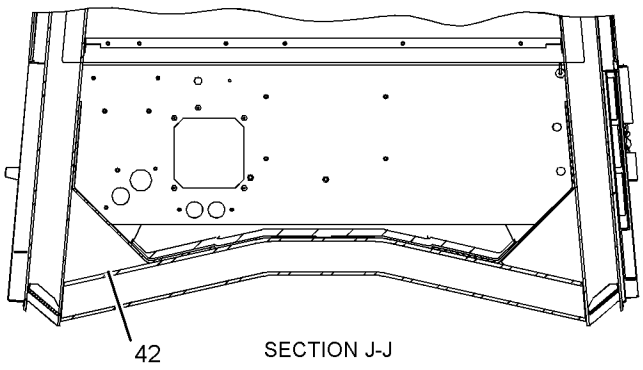

SECTION J-J

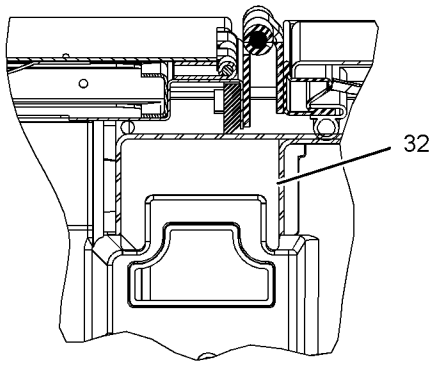

SECTION H-H

GRAPHIC #3 **<END>** g01190291

OPERATOR STATION

236-7019 SEAT BELT GP

S/N: A7G1-UP
PART OF 174-3624 SEAT GP-SUSPENSION
ALSO AN ATTACHMENT

SMCS-7327 **i02104591**

NOTE	REF NO	GRAPHIC REF	PART NUMBER	QTY	PART NAME 1 2 3 4 5 6 (PRODUCT LEVEL)	SEE PAGE
	1	1	**0T-0244**	1	BOLT (7/16-20X1.25-IN)	
	2	1	**205-6388**	1	BOLT (7/16-20X44.45-MM)	

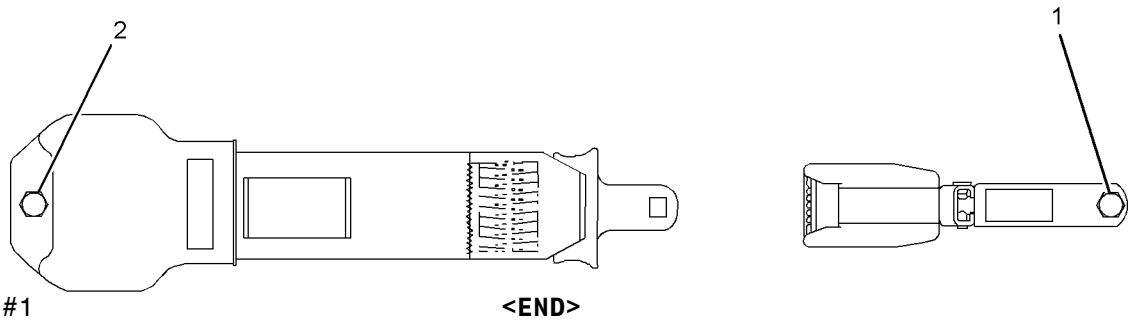

GRAPHIC #1 **<END>** g01072526

OPERATOR STATION

178-0603 SEAT GP–CLOTH

S/N: A7G1-UP
PART OF 178-7913 SEAT GP
ALSO AN ATTACHMENT

SMCS-7312 **i01962581**

NOTE	REF NO	GRAPHIC REF	PART NUMBER	QTY	PART NAME 1 2 3 4 5 6 (PRODUCT LEVEL)	SEE PAGE
	1	1	**218-0861**	1	PAN AS	
		1	**8T-9082**	5	RIVET-POP	
		1	**217-9049**	1	CUSHION AS	
	2	1	**143-1288**	8	LOCKNUT-FLANGE (3/8-16-THD)	
	3	1	**171-1230**	6	SCREW-BUTTON HEAD (3/8-16X1-IN)	
	4	1	**171-6682**	1	BAR	
	5	1	**172-2416**	2	PIN	
Y	6	1	*173-1028*	1	ADJUSTER GP-SEAT	770
	7	1	**177-1863**	2	BOLT-PIVOT (3/8-16X2.89-IN)	
Y	8	1	*177-4935*	1	RECLINER GP-SEAT	867
Y	9	1	*178-0604*	1	PAN GP-BACKREST (CLOTH)	853
	10	1	**184-2298**	1	ROD	
	11	1	**184-2299**	4	WASHER (7X25.4X2.54-MM THK)	
	12	1	**095-0843**	2	PIN-COTTER	
	14	1	**5V-1496**	2	RETAINER	
	15	1	**6V-7646**	2	WASHER-HARD (7.2X25X2-MM THK)	
	16	1	**8T-0328**	1	WASHER-HARD (5.5X10X1-MM THK)	
	17	1	**8T-4205**	1	WASHER-HARD (7.2X14.5X2-MM THK)	
	18	1	**8Y-6277**	2	SPACER (10.5X28.6X10-MM THK)	

Y-SEPARATE ILLUSTRATION

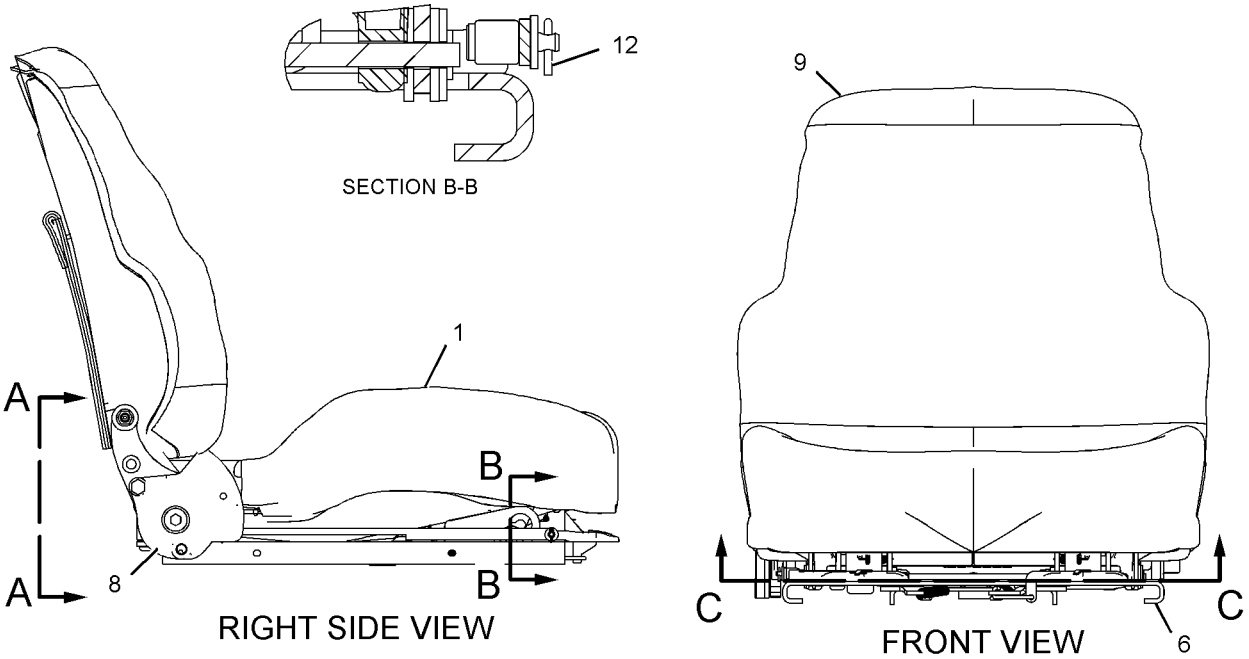

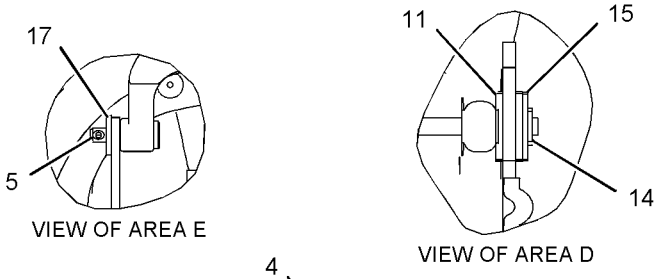

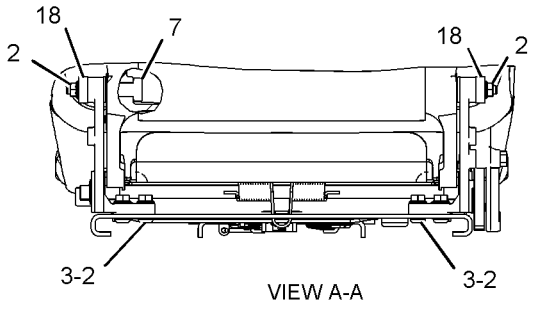

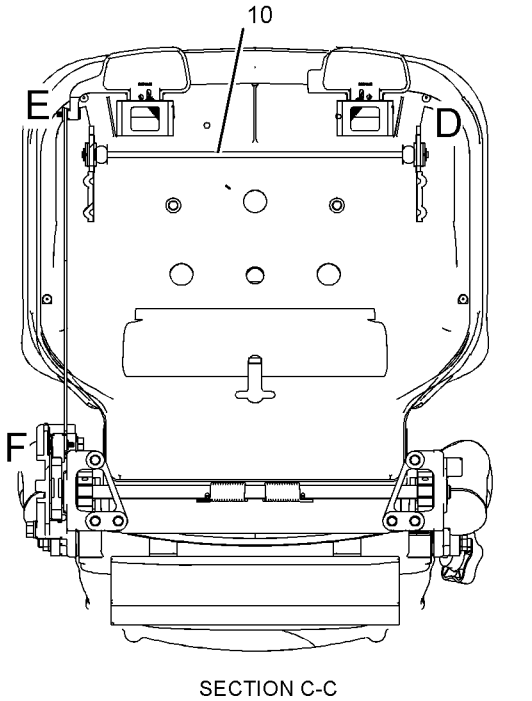

GRAPHIC #1 **<END>** g01024072

OPERATOR STATION

178-7913 SEAT GP

S/N: A7G1-UP

PART OF 219-8094 SEAT GP-SUSPENSION

ALSO AN ATTACHMENT

SMCS-7312 **i02265279**

NOTE	REF NO	GRAPHIC REF	PART NUMBER	QTY	PART NAME 1 2 3 4 5 6 (PRODUCT LEVEL)	SEE PAGE
	1	1	**143-1288**	4	LOCKNUT-FLANGE (3/8-16-THD)	
	2	1	**171-1230**	3	SCREW-BUTTON HEAD (3/8-16X1-IN)	
	3	1	**229-1494**	1	EXTENSION GP-BACKREST (CLOTH)	
Y	4	1	**178-0603**	1	SEAT GP (CLOTH)	873
	5	1	**180-9617**	1	BRACKET AS	
Y	6	1	**188-9820**	1	ARMREST GP	781
	7	1	**4L-6454**	1	BOLT (3/8-16X1-IN)	

Y-SEPARATE ILLUSTRATION

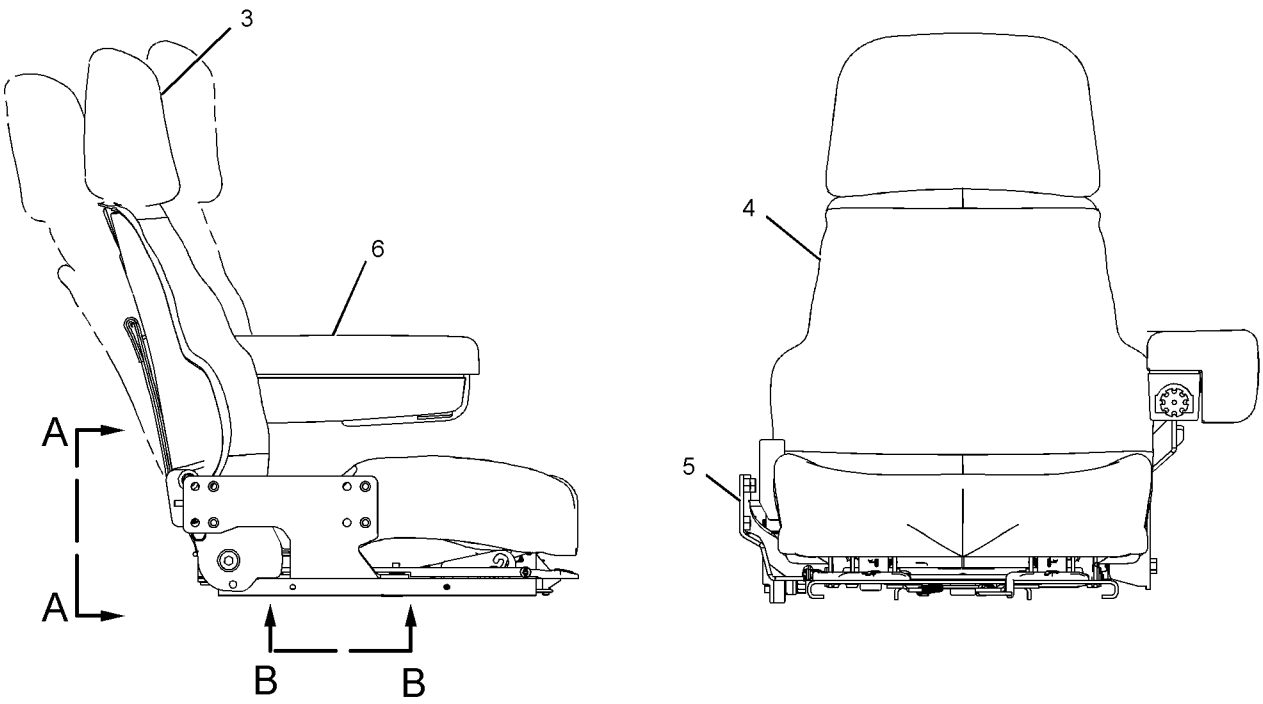

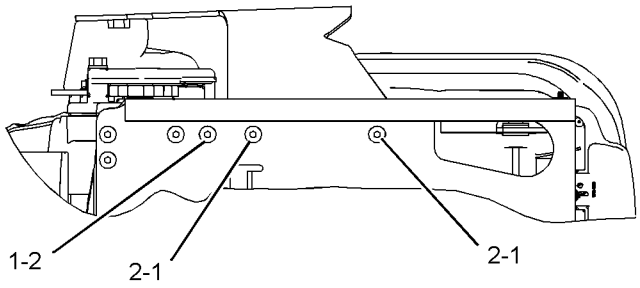

VIEW B-B

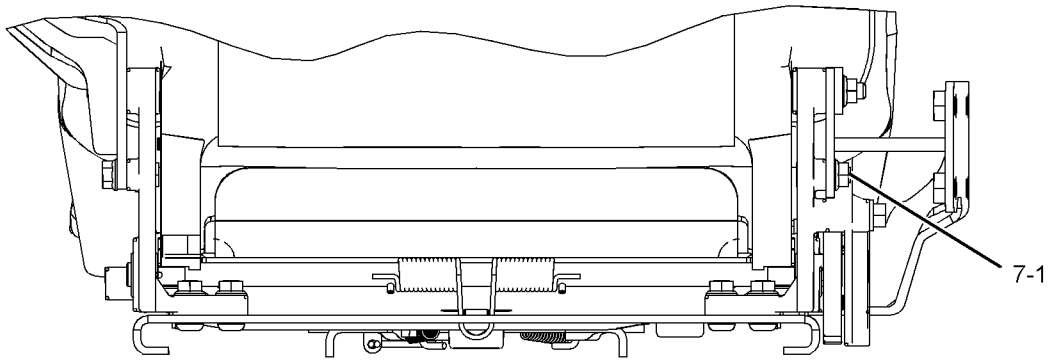

VIEW A-A

GRAPHIC #1

<END>

g01070094

OPERATOR STATION

174-3624 SEAT GP-SUSPENSION

S/N: A7G1-UP
PART OF 237-2572, 237-2573 CAB AR-ENCLOSED ROPS
ALSO AN ATTACHMENT

SMCS-7324, 7336 **i02104624**

NOTE	REF NO	GRAPHIC REF	PART NUMBER	QTY	PART NAME 1 2 3 4 5 6 (PRODUCT LEVEL)	SEE PAGE
	1	1	**192-2175**	1	PLATE AS	
Y	2	1	**219-8094**	1	SEAT GP-SUSPENSION	878
	3	1	**209-3750**	2	BOLT (M10X1.5X75-MM)	
	4	1	**8T-4896**	4	WASHER-HARD (10.2X18.5X2.5-MM THK)	
M	5	1	**7X-2545**	2	BOLT (M10X1.5X150-MM)	
C	6	1	**0T-0244**	1	BOLT (7/16-20X1.25-IN)	
CY	7	1	**236-7019**	1	SEAT BELT GP	872
C	8	1	**205-6388**	1	BOLT (7/16-20X44.45-MM)	
C	9	1	**177-4937**	1	SPACER (11.7X19.8X20.3-MM THK)	

C-CHANGE FROM PREVIOUS TYPE
M-METRIC PART
Y-SEPARATE ILLUSTRATION

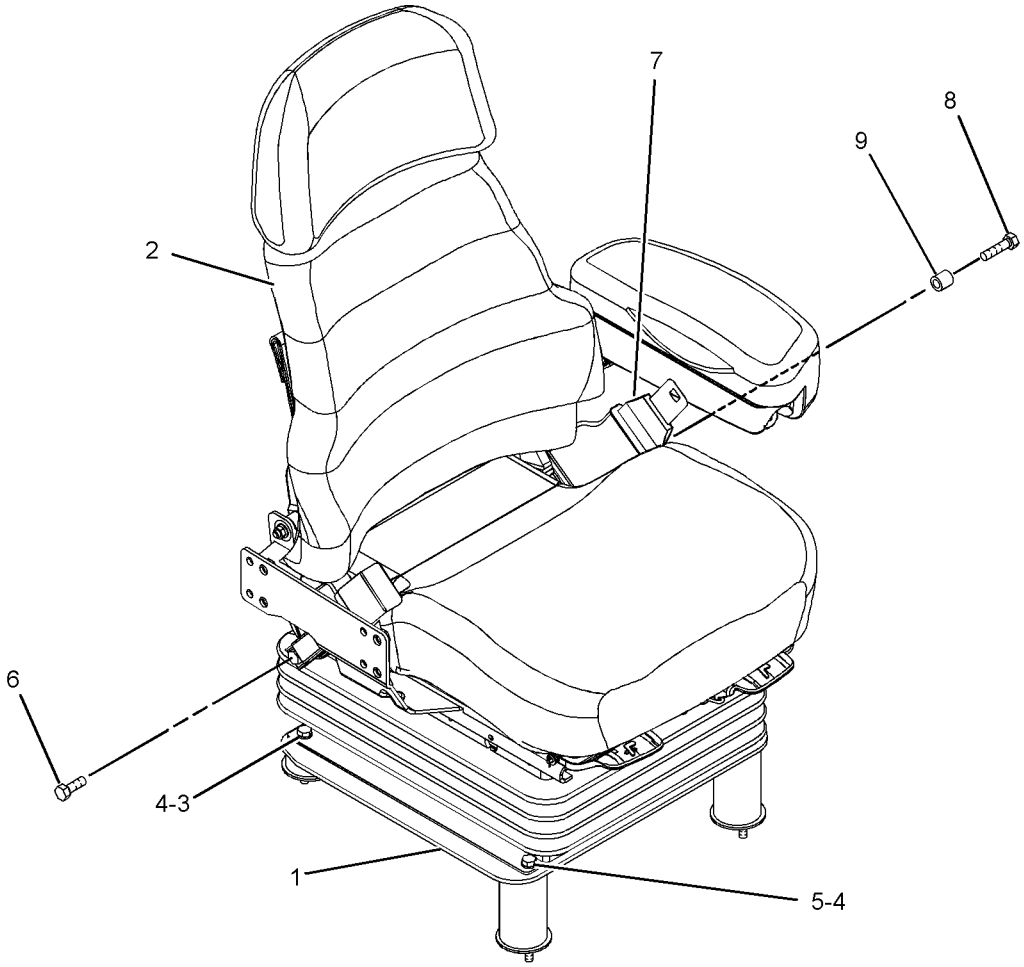

GRAPHIC #1 **<END>** g01072495

OPERATOR STATION

219-8094 SEAT GP-SUSPENSION

S/N: A7G1-UP
PART OF 174-3624 SEAT GP-SUSPENSION
ALSO AN ATTACHMENT

SMCS-7324, 7336 **i02097862**

NOTE	REF NO	GRAPHIC REF	PART NUMBER	QTY	PART NAME 1 2 3 4 5 6 (PRODUCT LEVEL)	SEE PAGE
JZ	1	1		4	BLOCK-SLIDER	
J	2	1	**173-5787**	4	SETSCREW (1/4-20-THD)	
Y	3	1	**178-7913**	1	SEAT GP	875
Y	4	1	**191-2933**	1	SUSPENSION GP-SEAT (AIR)	890
J	5	1	**203-7703**	2	WASHER-HARD (10.2X22.22X2.38-MM THK)	
J	6	1	**4F-4879**	1	BOLT (3/8-16X.5-IN)	
					AVAILABLE REPAIR KIT(S):	
J			**173-7035**	1	KIT-SLIDER BLOCK	

J-KIT MARKED J SERVICES PARTS MARKED J
Y-SEPARATE ILLUSTRATION
Z-NOT SERVICED SEPARATELY

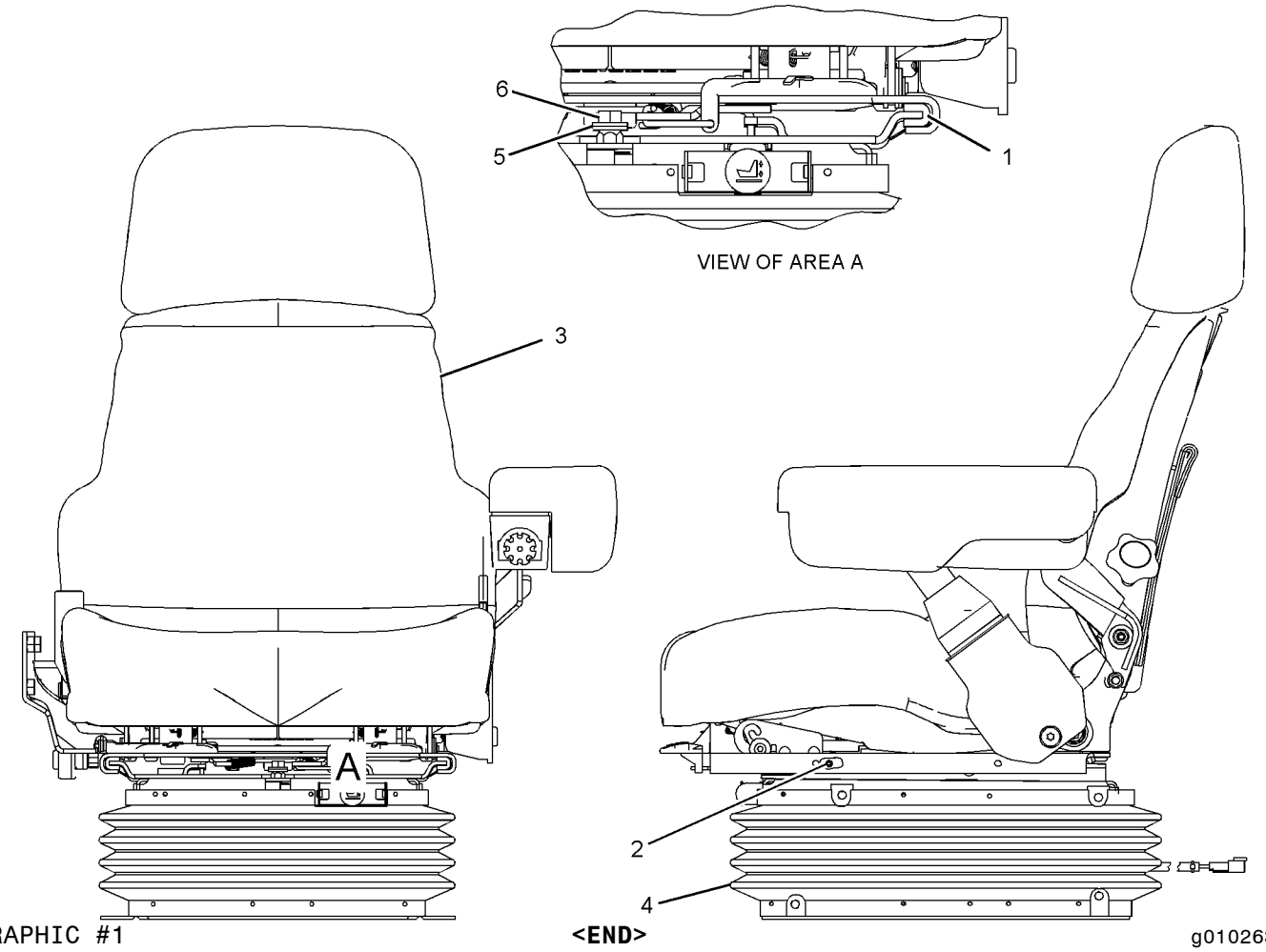

GRAPHIC #1 **<END>** g01026367

OPERATOR STATION

248-6193 SEAT GP-SUSPENSION—HEATED

S/N: A7G1-UP
24-VOLT
PART OF 250-8276 SEAT GP-SUSPENSION
AN ATTACHMENT

SMCS-7324, 7336 **i02225423**

NOTE	PART NUMBER	QTY	PART NAME 1 2 3 4 5 6 (PRODUCT LEVEL)	SEE PAGE
Y	**256-8768**	1	SUSPENSION GP-SEAT (AIR)	892
Y-SEPARATE ILLUSTRATION				

<END>

250-8276 SEAT GP-SUSPENSION—HEATED

S/N: A7G1-UP
FOR USE WITH 250-3730 HYDRAULIC AR-MACHINE, 250-3731 CONVERSION AR-MACHINE, 250-3728 HYDRAULIC AR-MACHINE, 250-3729 HYDRAULIC AR-MACHINE. CANNOT BE USED WITH 204-7243 OPERATOR AR-OPEN ROPS, 204-4488 OPERATOR AR-OPEN ROPS, 204-4487 OPERATOR AR-OPEN ROPS
AN ATTACHMENT

SMCS-7324, 7336 **i02106188**

NOTE	PART NUMBER	QTY	PART NAME 1 2 3 4 5 6 (PRODUCT LEVEL)	SEE PAGE
Y	**248-6193**	1	SEAT GP-SUSPENSION (HEATED, 24-VOLT)	879
Y-SEPARATE ILLUSTRATION				

<END>

OPERATOR STATION

243-1090 SUPPORT GP-HYDRAULIC CONTROL

S/N: A7G1-UP

PART OF 237-2572, 237-2573 CAB AR-ENCLOSED ROPS

ALSO AN ATTACHMENT

SMCS-5258 **i02328140**

NOTE	REF NO	GRAPHIC REF	PART NUMBER	QTY	PART NAME 1 2 3 4 5 6 (PRODUCT LEVEL)	SEE PAGE
	1	3	**4E-6523**	1	SUPPORT-SLIDE	
	2	2	**4E-8722**	2	NUT	
	3	3	**4E-9173**	2	SHAFT-CONTROL	
	4	3	**4E-9174**	2	BEARING	
	5	3	**7V-0445**	1	SPRING	
	6	3	**7X-3310**	1	KNOB-BALL	
	7	2	**8Y-5746**	1	ASHTRAY	
	8	2	**8Y-6333**	1	GASKET	
	9	3	**9U-0952**	1	PIN	
	10	3	**9U-0953**	1	GUIDE	
	11	3	**9U-0954**	1	STUD	
	12	3	**9U-0955**	1	PIN	
	13	3	**9U-0958**	1	SLIDER	
	14	3	**9U-3925**	4	RING-RETAINING	
	15	3	**9U-3926**	2	STOP	
	16	2	**9U-3927**	1	BEARING	
B	17	2	**137-6841**	2	SHIM (0.2-MM THK)	
	18	1	**254-9146**	1	CUSHION AS	
M		1	**6V-9632**	2	NUT-WELD (M6X1-THD)	
	19	3	**174-4301**	1	LEVER AS	
	20	1	**254-9147**	1	CUSHION AS	
M		1	**6V-9632**	4	NUT-WELD (M6X1-THD)	
	21	1	**198-8769**	1	CONSOLE AS	
	22	2	**200-0728**	1	BRACKET	
	23	2	**200-0729**	1	BRACKET	
	24	3	**203-0328**	1	SPACER (16X19X9-MM THK)	
	25	1	**203-9991**	3	KNOB AS	
	26	1	**205-8212**	1	CUSHION AS	
	27	1	**210-6783**	1	BRACKET AS	
M		1	**6V-9632**	2	NUT-WELD (M6X1-THD)	
	28	1	**248-2079**	1	COVER	
	29	3	**253-0575**	1	BRACKET AS	
M		3	**6V-9632**	6	NUT-WELD (M6X1-THD)	
		3	**7T-1099**	3	LINK	
M		3	**8T-3490**	1	NUT-WELD (M10X1.5-THD)	
M	30	3	**099-3649**	4	BOLT (M8X1.25X40-MM)	
	31	3	**3K-4897**	1	PIN-SPRING	
M	32	3	**5C-7261**	4	NUT (M8X1.25-THD)	
M	33	3	**6V-9327**	4	SETSCREW-SOCKET	
M	34	3	**8T-4136**	4	BOLT (M10X1.5X25-MM)	
M	35	2	**8T-4138**	11	BOLT (M6X1X20-MM)	
	36	1,2	**8T-4205**	11	WASHER-HARD (7.2X14.5X2-MM THK)	
	37	2,3	**8T-4224**	9	WASHER-HARD (8.8X16X2-MM THK)	
	38	3	**9X-2027**	1	WASHER (11X18X2-MM THK)	
	39	1,2,3	**9X-2038**	9	WASHER (7X19X2-MM THK)	
M	40	1,2,3	**9X-2044**	9	SCREW-TRUSS HEAD (M6X1X16-MM)	
M	41	2	**9X-2616**	2	SCREW-SOCKET (M8X1.25X16-MM)	

B-USE AS REQUIRED
M-METRIC PART

REFER TO ALL ILLUSTRATIONS OF
THIS GROUP FOR AUXILIARY VIEWS

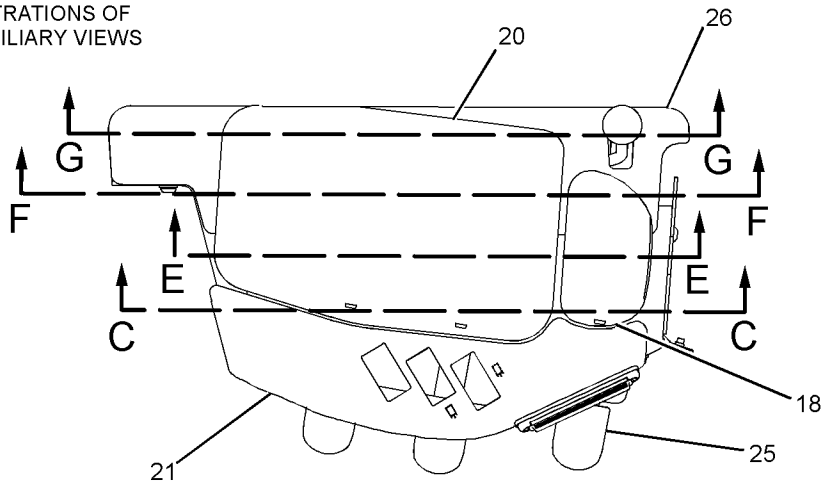

TOP VIEW

FWD

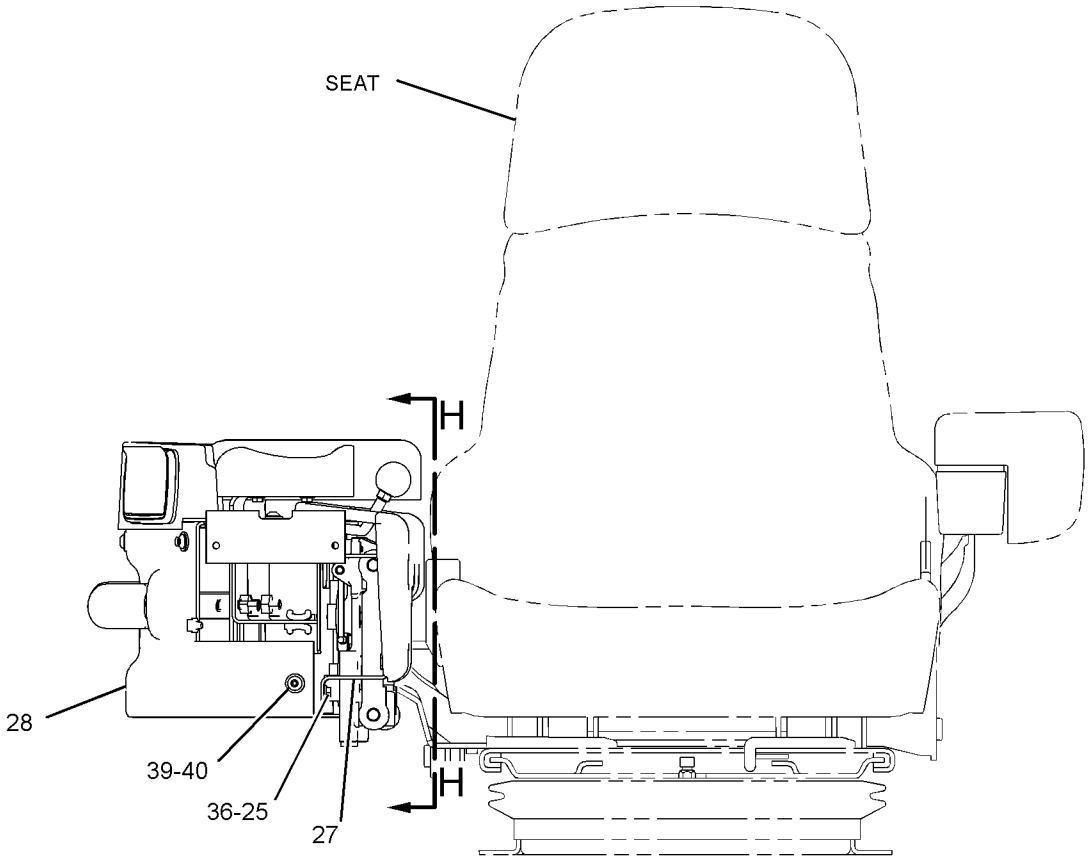

RIGHT SIDE VIEW

GRAPHIC #1

g01210990

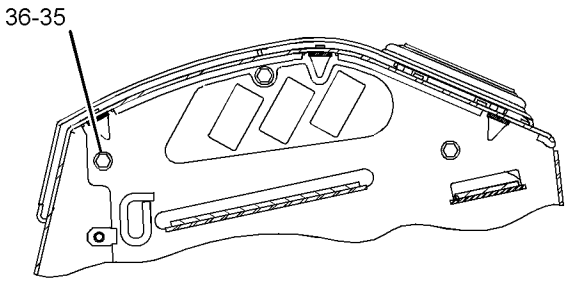

SECTION A-A

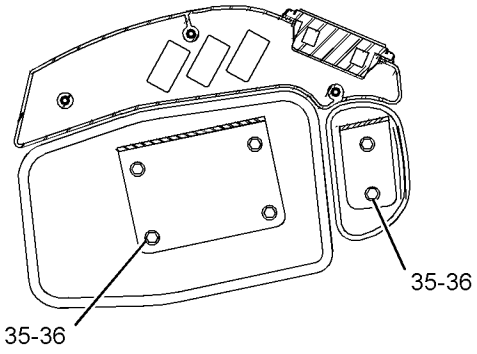

SECTION B-B

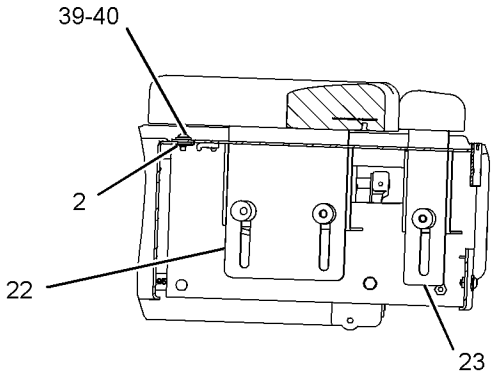

SECTION C-C

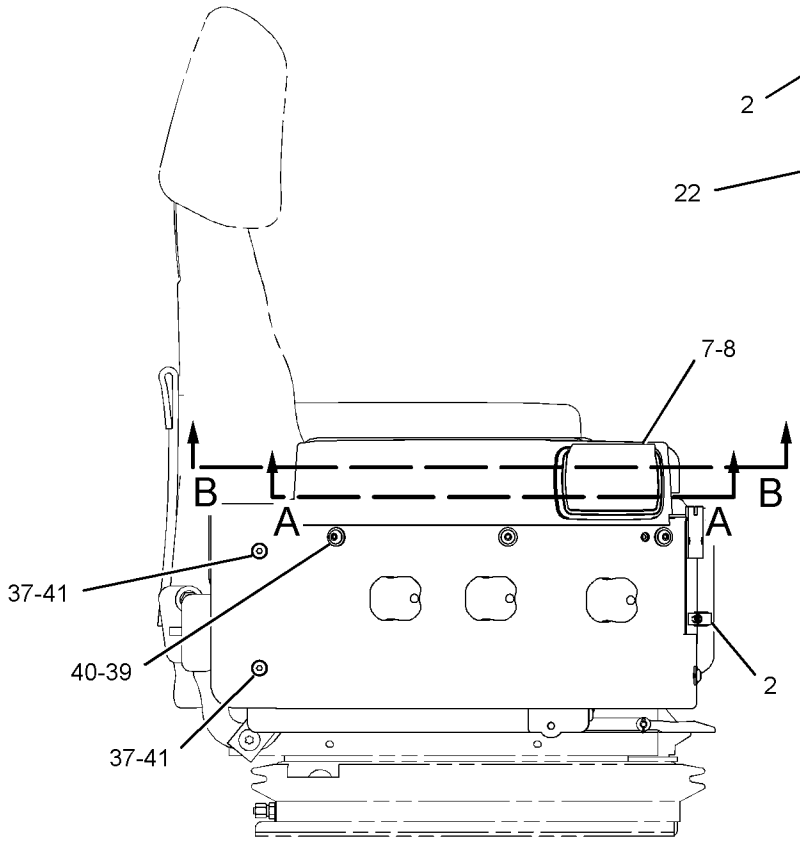

RIGHT SIDE VIEW

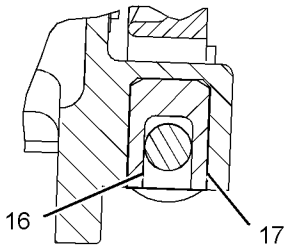

SECTION D-D

GRAPHIC #2

g01210992

REFER TO ALL ILLUSTRATIONS OF THIS GROUP FOR AUXILIARY VIEWS

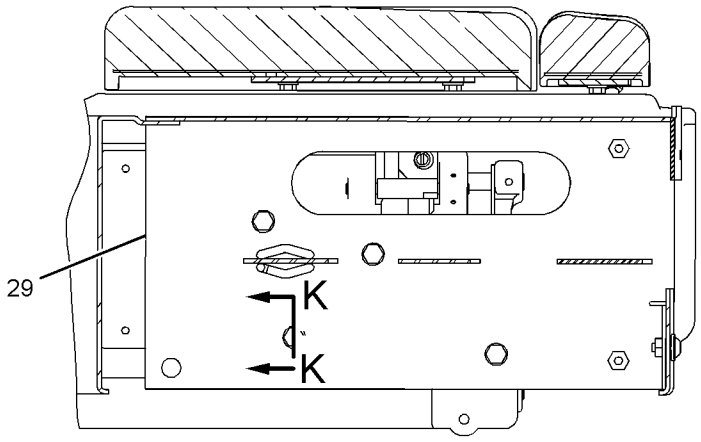

SECTION E-E

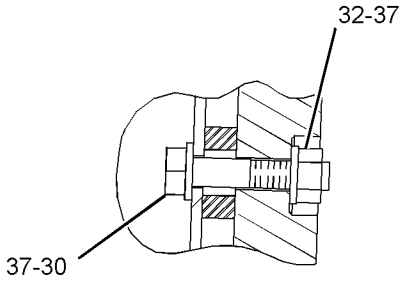

SECTION K-K

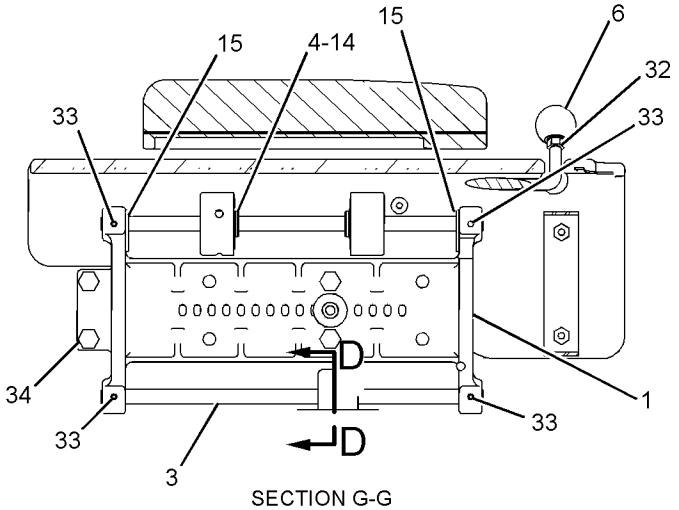

SECTION G-G

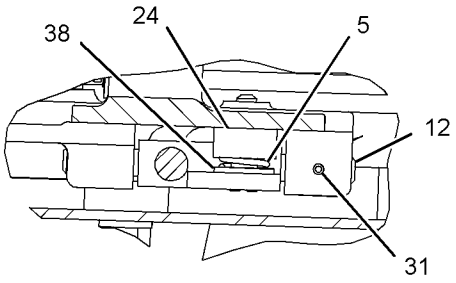

SECTION J-J

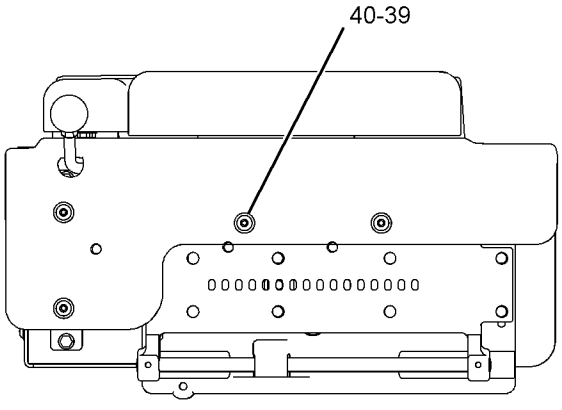

VIEW H-H

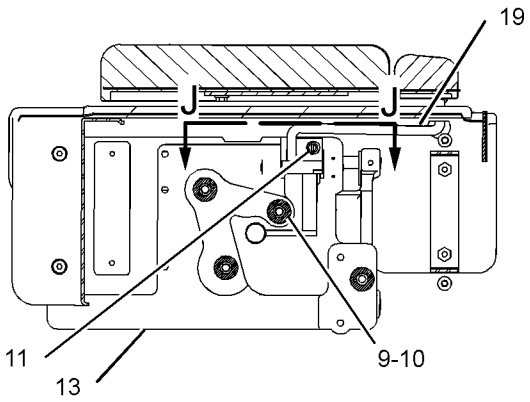

SECTION F-F

GRAPHIC #3 **<END>** g01210994

OPERATOR STATION

232-1396 SUPPRESSION GP-CAB SOUND–FRONT

S/N: A7G1-UP

PART OF 237-2572, 237-2573 CAB AR-ENCLOSED ROPS

ALSO AN ATTACHMENT

SMCS-7329 **i02412730**

NOTE	REF NO	GRAPHIC REF	PART NUMBER	QTY	PART NAME 1 2 3 4 5 6 (PRODUCT LEVEL)	SEE PAGE
	1	1	**232-1684**	1	INSULATION	
	2	1	**232-1685**	1	INSULATION	
	3	1	**232-1686**	1	INSULATION	
	4	1	**232-1687**	1	INSULATION	
	5	1	**251-5872**	1	INSULATION	
	6	1	**233-0915**	1	INSULATION	
	7	1	**233-0916**	1	INSULATION	
	8	1	**232-1712**	1	INSULATION	

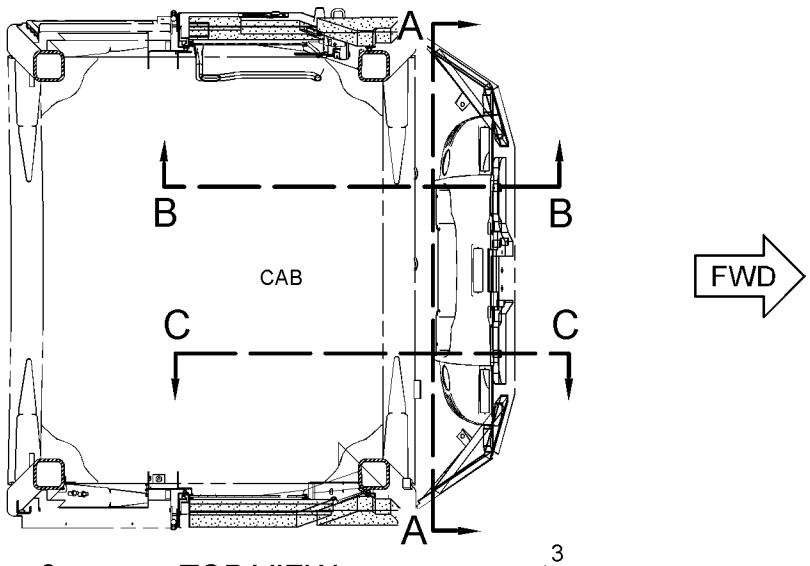

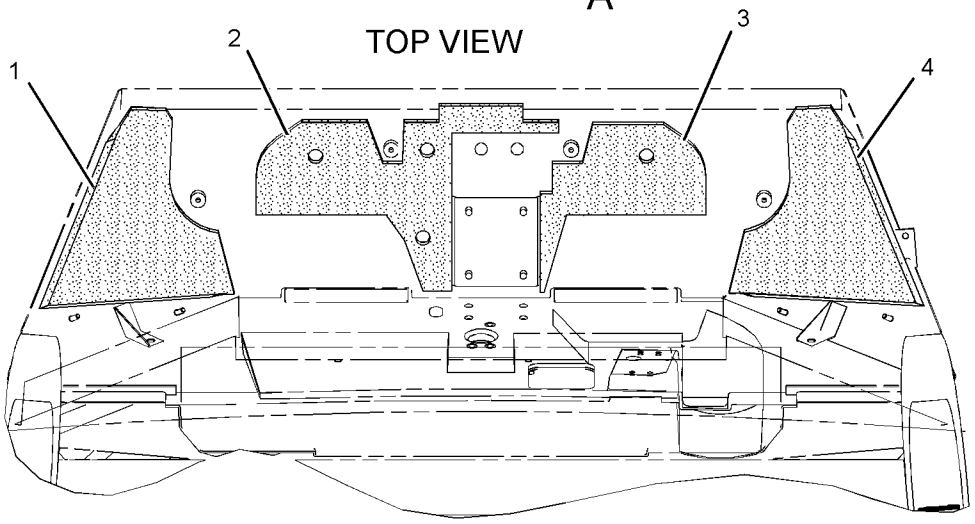

VIEW A-A

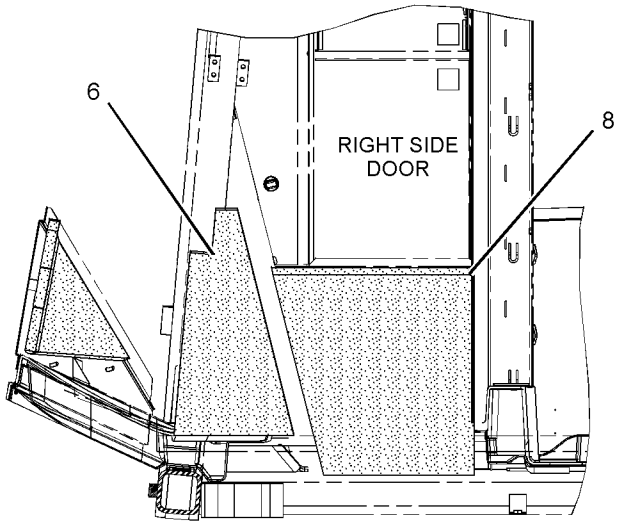

VIEW C-C

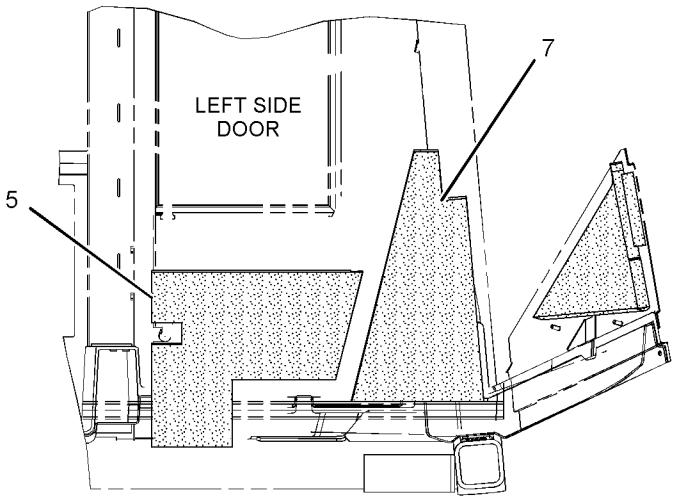

VIEW B-B

GRAPHIC #1 **<END>** g01207687

OPERATOR STATION

233-7676 SUPPRESSION GP-CAB SOUND–A/C, HEATER

S/N: A7G1-UP

PART OF 246-5231 SUPPRESSION GP-CAB SOUND

AN ATTACHMENT

SMCS-7329 **i02414639**

NOTE	REF NO	GRAPHIC REF	PART NUMBER	QTY	PART NAME 1 2 3 4 5 6 (PRODUCT LEVEL)	SEE PAGE
	1	1	**232-1335**	1	INSULATION	
	2	1	**232-1336**	1	INSULATION	
	3	1	**232-1337**	1	INSULATION	
	4	1	**232-1338**	1	INSULATION	
	5	1	**232-1688**	1	INSULATION	
D	6	1	**5P-5637**		SEAL (0.52-M)	

D-ORDER BY THE METER

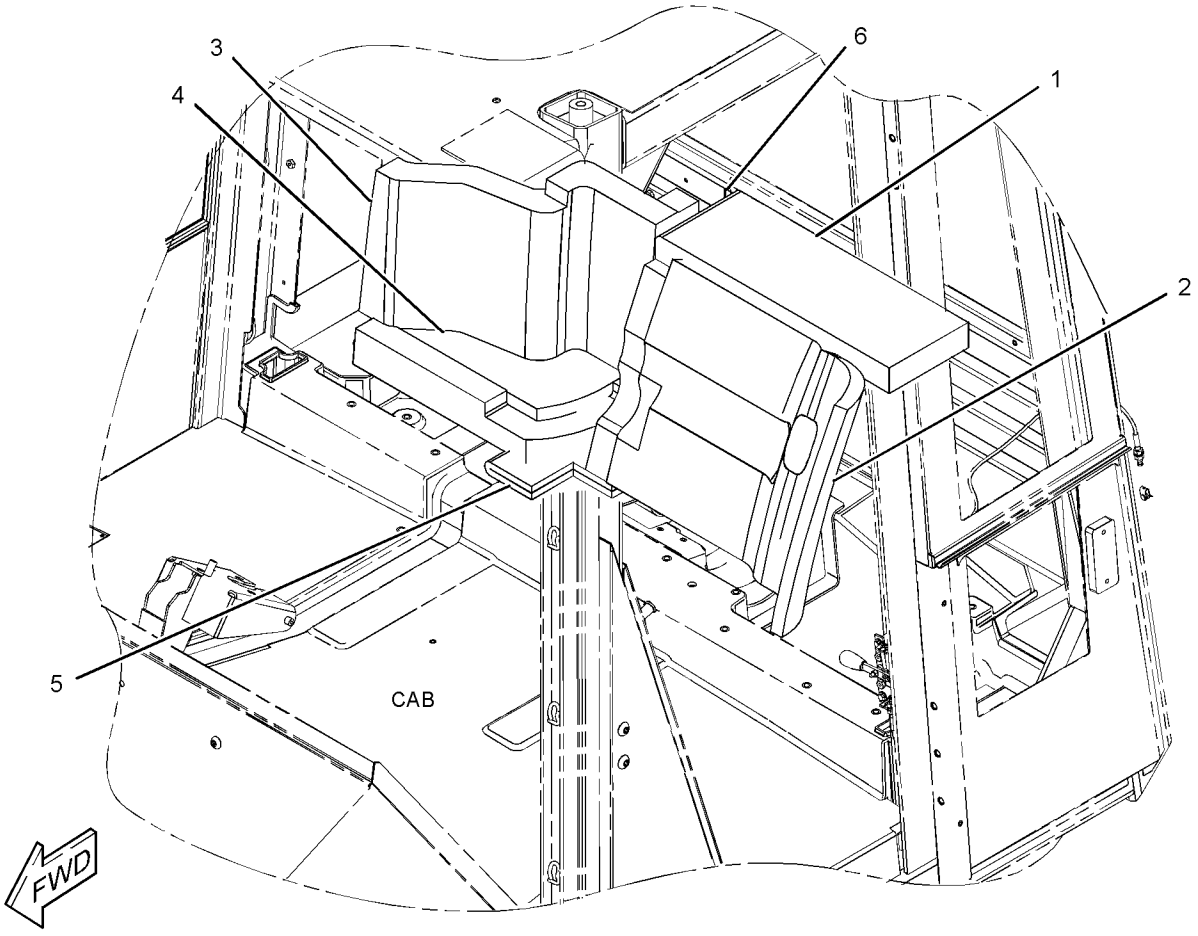

GRAPHIC #1 **<END>** g01187543

OPERATOR STATION

234-9553 SUPPRESSION GP-CAB SOUND–REAR

S/N: A7G1-UP

PART OF 237-2572, 237-2573 CAB AR-ENCLOSED ROPS

ALSO AN ATTACHMENT

SMCS-7329 **i02204365**

NOTE	REF NO	GRAPHIC REF	PART NUMBER	QTY	PART NAME 1 2 3 4 5 6 (PRODUCT LEVEL)	SEE PAGE
	1	1	**228-4428**	1	INSULATION	
	2	1	**234-9571**	1	INSULATION	
	3	1	**234-9572**	2	INSULATION	

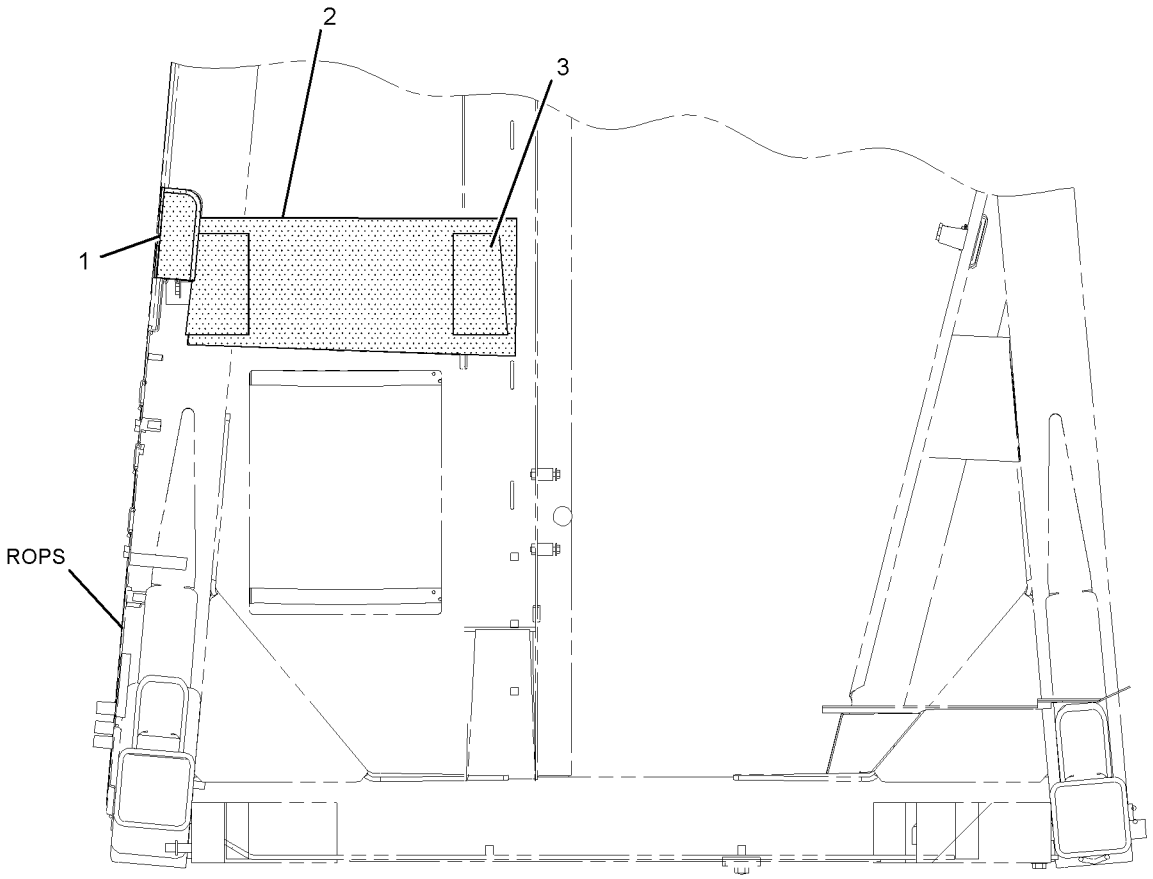

RIGHT SIDE VIEW

GRAPHIC #1

<END>

g01066019

OPERATOR STATION

246-5231 SUPPRESSION GP-CAB SOUND—CAB REAR, CAB ROOF

S/N: A7G1-UP

PART OF 236-9043, 277-8551 SUPPRESSION AR-SOUND

AN ATTACHMENT

SMCS-7329 **i02414646**

NOTE	REF NO	GRAPHIC REF	PART NUMBER	QTY	PART NAME 1 2 3 4 5 6 (PRODUCT LEVEL)	SEE PAGE
	1	1	**174-2407**	1	INSULATION	
Y	2	1	*233-7676*	1	SUPPRESSION GP-CAB SOUND (AIR CONDITIONER, HEATER)	886
	3	1	**236-1068**	1	INSULATION	
	4	1	**236-1069**	1	INSULATION	
	5	1	**236-5898**	1	INSULATION	
	6	1	**248-5249**	1	INSULATION (LH)	
	7	1	**248-5250**	1	INSULATION (LH)	
	8	1	**248-6189**	1	INSULATION (RH)	
	9	1	**248-6190**	1	INSULATION (RH)	

Y-SEPARATE ILLUSTRATION

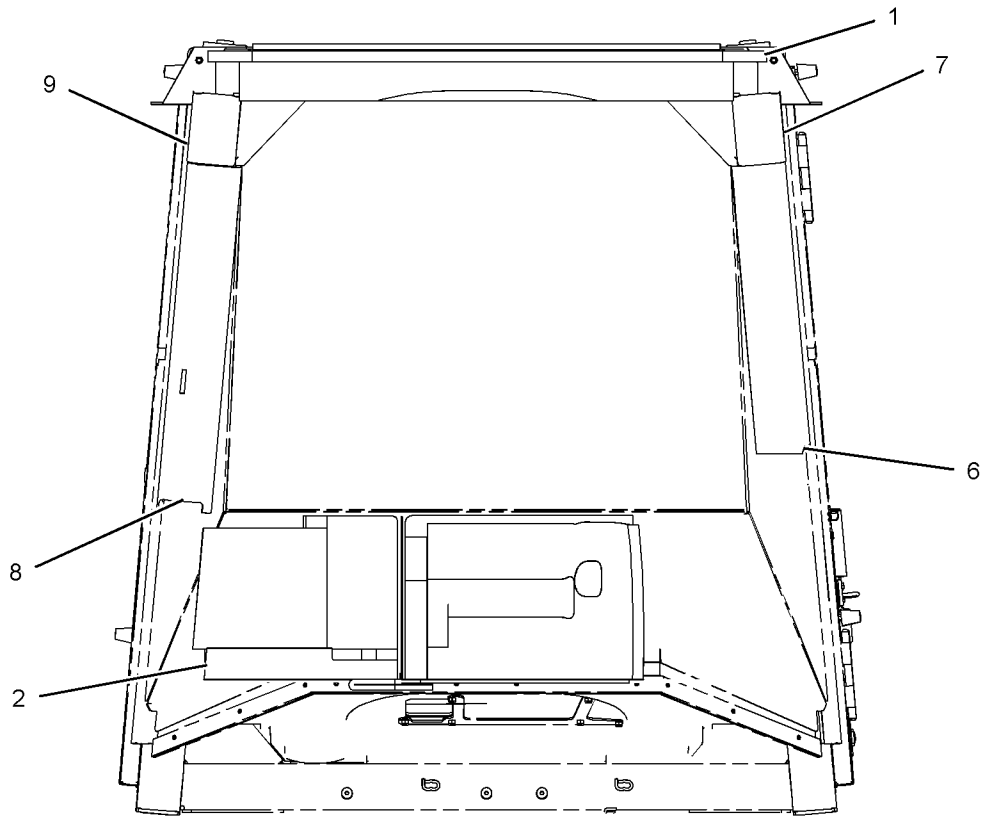

FRONT VIEW

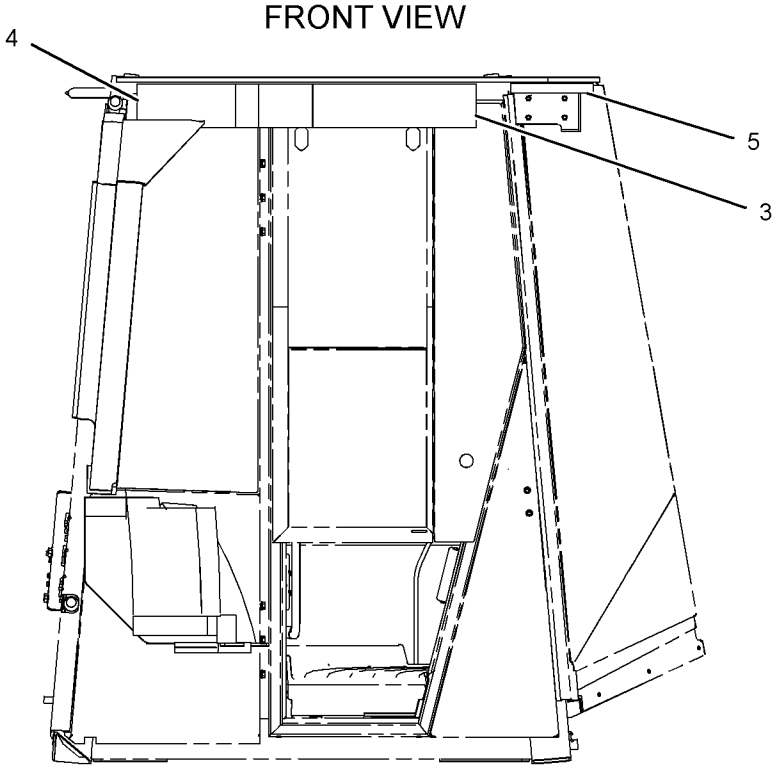

RIGHT SIDE VIEW

GRAPHIC #1

<END>

g01186546

OPERATOR STATION

191-2933 SUSPENSION GP-SEAT—AIR

S/N: A7G1-UP
PART OF 219-8094 SEAT GP-SUSPENSION
ALSO AN ATTACHMENT

SMCS-7324 **i02288081**

NOTE	REF NO	GRAPHIC REF	PART NUMBER	QTY	PART NAME 1 2 3 4 5 6 (PRODUCT LEVEL)	SEE PAGE
	1	1	**3P-9900**	5	WASHER (10.5X30X3-MM THK)	
	2	1	**4B-4278**	2	WASHER (10.2X20.5X1.6-MM THK)	
	3	1	**4V-8577**	12	BEARING	
	4	1	**8L-8413**	1	STRAP-CABLE	
	5	1	**145-0326**	1	FILM-INSTRUCTION (SEAT ADJUSTMENT)	
	6	1	**237-3943**	1	BRACKET	
	7	1	**164-1234**	1	PLATE	
	8	1	**164-1270**	33	FASTENER	
	9	1	**169-7380**	1	BOLT-SOCKET HEAD (3/8-16X0.375-IN)	
	10	1	**186-5107**	2	SCREW (NO 8X1.25-IN)	
	11	1	**192-7752**	4	SHAFT AS	
	12	1	**192-7755**	1	HOUSING AS	
	13	1	**192-7760**	1	SHAFT	
	14	1	**192-7767**	1	SCISSORS AS	
	15	1	**192-7783**	1	TOGGLE AS	
	16	1	**192-7787**	1	TOGGLE AS	
	17	1	**192-7790**	1	HOUSING AS	
	18	1	**192-7795**	1	BOOT	
	19	1	**192-7805**	1	HARNESS AS-VALVE (SEAT AIR COMPRESSOR)	
		1	**102-8802**	1	KIT-RECEPTACLE (2-PIN)	
					(INCLUDES RECEPTACLE AS & WEDGE)	
	20	1	**192-7810**	1	SPRING AS-AIR	
		1	**5P-4423**	1	ELBOW	
		1	**163-1135**	1	SPRING	
	21	1	**192-7812**	1	BOLT-SHOULDER	
	22	1	**192-7820**	3	BUMPER	
	23	1	**192-7822**	1	SHAFT	
Y	24	1	**237-3970**	1	AIR COMPRESSOR GP-SEAT	772
	25	1	**1H-8296**	1	SCREW-MACHINE (3/8-16X0.52-IN)	
	26	1	**2K-4973**	8	LOCKNUT (3/8-16-THD)	
	27	1	**3J-4818**	1	LOCKWASHER	
M	28	1	**5C-2890**	3	NUT (M6X1-THD)	
	29	1	**8T-9371**	1	BOLT (3/8-16X0.5-IN)	
E	30	1	**211-5358**		CONDUIT (100CM)	
D	31	1	**5P-6010**		TUBE (1M)	
	32	1	**192-7799**	1	KIT-AIR VALVE	
					(INCLUDES KNOB AS)	
	33	1	**192-7848**	1	KIT-SHOCK ABSORBER	
					(INCLUDES LOCKNUT, LOCKWASHER, SHOCK ABSORBER, BEARING, WASHER, AND BOLTS)	
	34	1	**211-9294**	1	KIT-TETHER	
					(INCLUDES 2 TETHER STRAPS)	

D-ORDER BY THE METER
E-ORDER BY THE CENTIMETER
M-METRIC PART
Y-SEPARATE ILLUSTRATION

191-2933 SUSPENSION GP-SEAT *(contd.)* i02288081

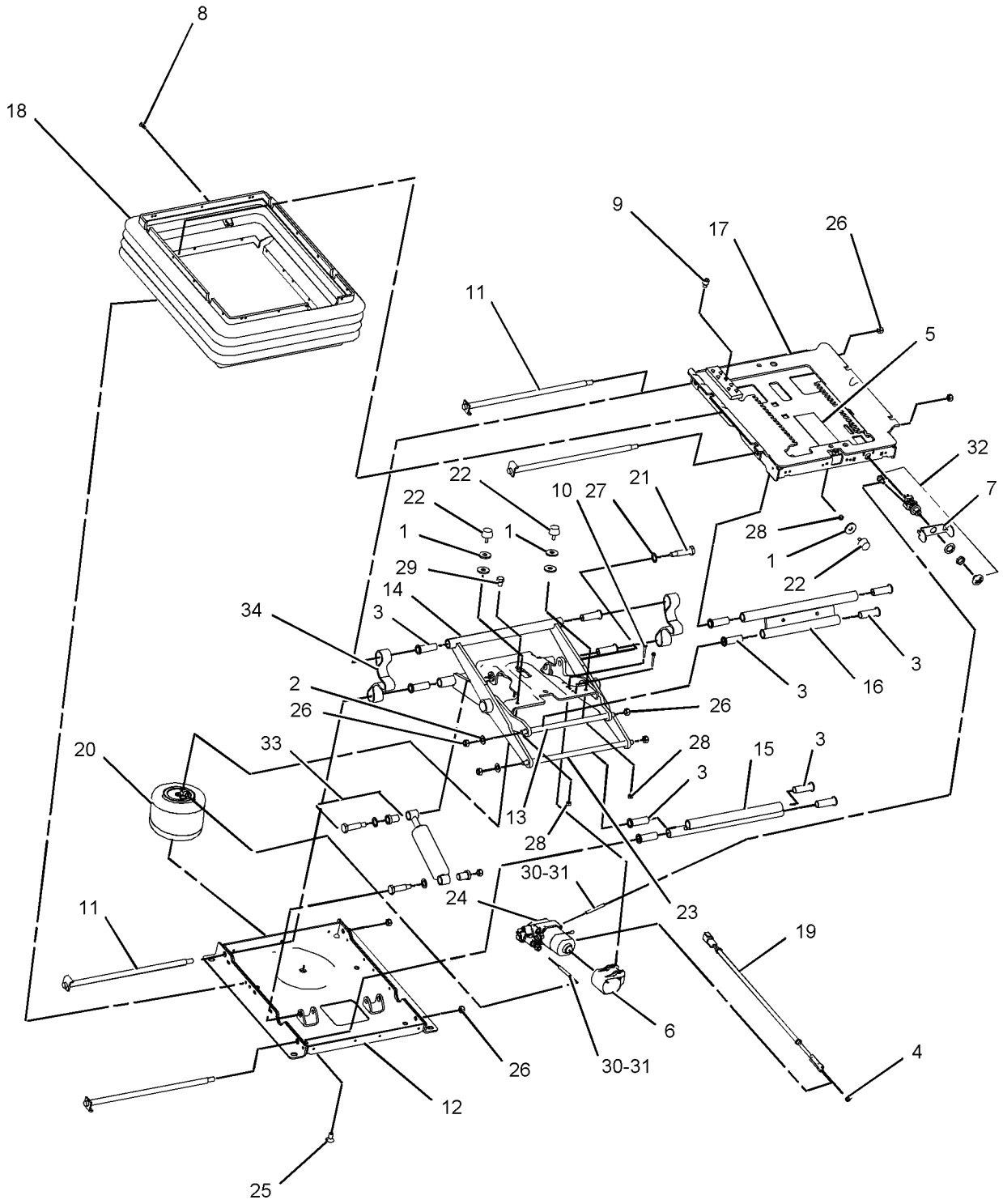

GRAPHIC #1 **<END>** g01074250

OPERATOR STATION

256-8768 SUSPENSION GP-SEAT—AIR

S/N: A7G1-UP
PART OF 248-6193 SEAT GP-SUSPENSION
AN ATTACHMENT

SMCS-7324 **i02288083**

NOTE	REF NO	GRAPHIC REF	PART NUMBER	QTY	PART NAME 1 2 3 4 5 6 (PRODUCT LEVEL)	SEE PAGE
	1	1	**3P-9900**	5	WASHER (10.5X30X3-MM THK)	
	2	1	**4B-4278**	2	WASHER (10.2X20.5X1.6-MM THK)	
	3	1	**4V-8577**	12	BEARING	
	4	1	**8L-8413**	1	STRAP-CABLE	
	5	1	**101-0003**	26	FASTENER	
	6	1	**145-0326**	1	FILM-INSTRUCTION (SEAT ADJUSTMENT)	
	7	1	**164-1234**	1	PLATE	
	8	1	**169-7380**	1	BOLT-SOCKET HEAD (3/8-16X0.375-IN)	
	9	1	**186-5107**	2	SCREW (NO 8X1.25-IN)	
	10	1	**192-7752**	4	SHAFT AS	
	11	1	**192-7755**	1	HOUSING AS	
	12	1	**192-7760**	1	SHAFT	
	13	1	**192-7767**	1	SCISSORS AS	
	14	1	**192-7783**	1	TOGGLE AS	
	15	1	**192-7787**	1	TOGGLE AS	
	16	1	**192-7790**	1	HOUSING AS	
		1	**2K-4973**	1	LOCKNUT (3/8-16-THD)	
	17	1	**192-7795**	1	BOOT	
	18	1	**192-7805**	1	HARNESS AS-VALVE (SEAT AIR COMPRESSOR)	
		1	**102-8802**	1	KIT-RECEPTACLE (2-PIN)	
		1	**102-8802**	1	KIT-RECEPTACLE (2-PIN)	
					(EACH KIT INCLUDES RECEPTACLE AS AND WEDGE)	
	19	1	**192-7810**	1	SPRING AS-AIR	
		1	**5P-4423**	1	ELBOW	
		1	**163-1135**	1	SPRING	
	20	1	**192-7812**	1	BOLT-SHOULDER	
	21	1	**192-7820**	3	BUMPER	
	22	1	**192-7822**	1	SHAFT	
	23	1	**237-3943**	1	BRACKET	
Y	24	1	**237-3970**	1	AIR COMPRESSOR GP-SEAT	772
	25	1	**1H-8296**	1	SCREW-MACHINE (3/8-16X0.52-IN)	
	26	1	**2K-4973**	8	LOCKNUT (3/8-16-THD)	
	27	1	**3J-4818**	1	LOCKWASHER	
M	28	1	**5C-2890**	3	NUT (M6X1-THD)	
	29	1	**5P-6010**	1	TUBE	
	30	1	**8T-9371**	1	BOLT (3/8-16X0.5-IN)	
E	31	1	**211-5358**		CONDUIT (100-CM)	
					AVAILABLE REPAIR KIT(S):	
			192-7799	1	KIT-AIR VALVE	
					(INCLUDES KNOB ASSEMBLY)	
			212-7779	1	KIT-SHOCK ABSORBER	
					(INCLUDES, LOCKNUTS, BALL, LOCKWASHER, STRAP, SPRING, CLAMP, ADJUSTERS, BOLTS, BEARINGS, WASHERS, SHOCK ABSORBER,	
					BRACKETS, KIT, CABLE ASSEMBLY, AND KNOB)	
			213-5170	1	KIT-INDICATOR	
					(INCLUDES BOLTS, NUTS, ROD, ARM, AND HOUSING)	
			211-9294	1	KIT-TETHER	
					(INCLUDES TETHER)	

E-ORDER BY THE CENTIMETER
M-METRIC PART
Y-SEPARATE ILLUSTRATION

256-8768 SUSPENSION GP-SEAT *(contd.)* i02288083

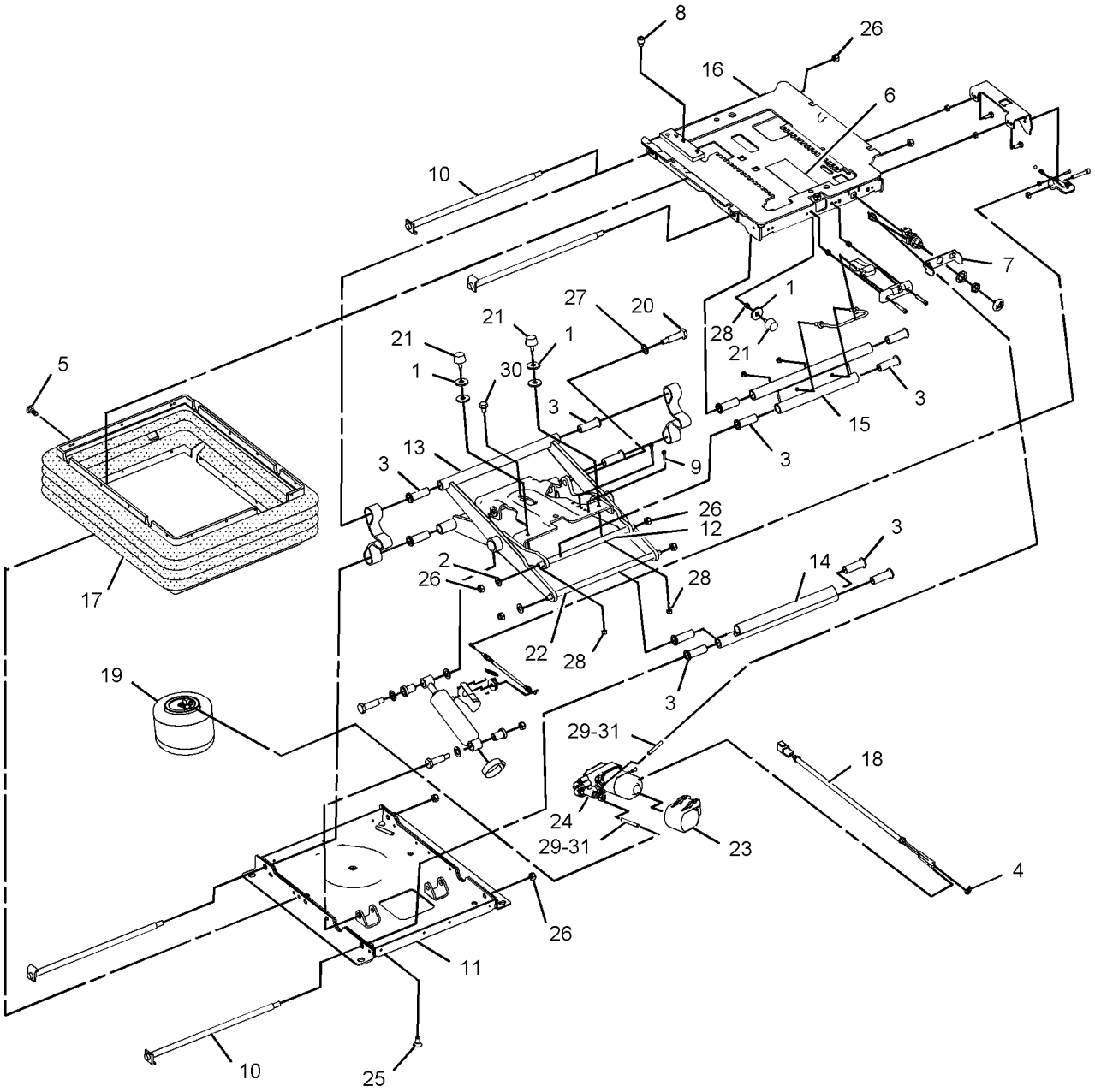

GRAPHIC #1 **<END>** g01100128

OPERATOR STATION

131-2633 VISOR GP-CAB

S/N: A7G1-UP

AN ATTACHMENT

SMCS-7301 **i00342341**

NOTE	REF NO	GRAPHIC REF	PART NUMBER	QTY	PART NAME 1 2 3 4 5 6 (PRODUCT LEVEL)	SEE PAGE
M	1	1	**111-4627**	4	SCREW-MACHINE	
	2	1	**123-4371**	1	VISOR AS	

M-METRIC PART

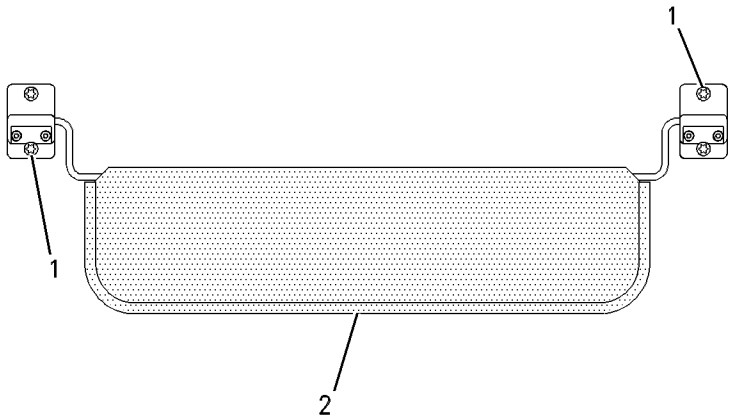

REAR VIEW

GRAPHIC #1 **<END>** g00269542

OPERATOR STATION

236-9039 WASHER GP-WINDOW

S/N: A7G1-UP

PART OF 236-9051 CHASSIS AR

SMCS-7306 **i02226651**

NOTE	REF NO	GRAPHIC REF	PART NUMBER	QTY	PART NAME 1 2 3 4 5 6 (PRODUCT LEVEL)	SEE PAGE
	1	1	**243-3750**	1	TANK GP-WINDOW WASHER	
		1	**223-3383**	2	PUMP AS-WASHER (24-VOLT)	
M	2	1	**5C-9553**	4	BOLT (M6X1X16-MM)	
	3	1	**9X-8256**	4	WASHER (6.6X12X2-MM THK)	

M-METRIC PART

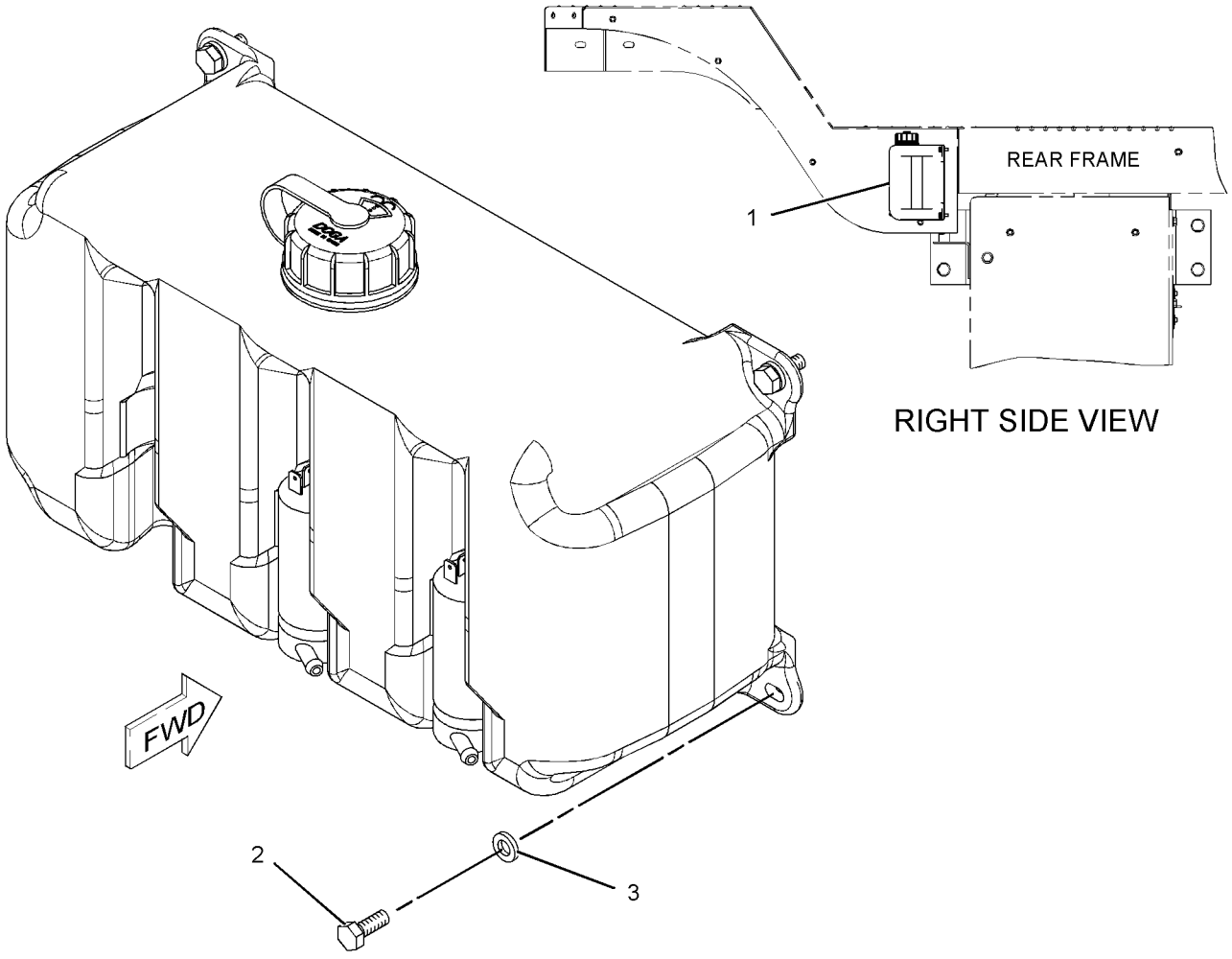

GRAPHIC #1 **<END>** g01116142

OPERATOR STATION

185-7522 WINDOW GP-DOOR–RH

S/N: A7G1-UP
PART OF 185-7534 DOOR GP-CAB
AN ATTACHMENT

SMCS-7310 **i01617776**

NOTE	REF NO	GRAPHIC REF	PART NUMBER	QTY	PART NAME 1 2 3 4 5 6 (PRODUCT LEVEL)	SEE PAGE
	1	1	**8C-6738**	2	SCREW-PAN HEAD (6-20X1 IN)	
	2	1	**187-5128**	1	CATCH AS (RH)	
	3	1	**187-5127**	1	CATCH AS (LH)	
					(EACH CATCH AS INCLUDES)	
		1	**150-8015**	1	GASKET	
	4	1	**211-9856**	1	STRIP AS	
	5	1	**185-7524**	1	GLASS-SLIDING	
	6	1	**185-7525**	1	GLASS-FIXED	
D	7	1	**9X-2532**		SEAL (.36M)	
E	8	1	**208-5022**		SEAL (135CM)	
	9	1	**185-7529**	1	FRAME AS-WINDOW (UPPER RH)	
E	10	1	**137-2170**		SEAL (257CM)	
D	11	1	**9X-2533**		STOP (.12M)	

D-ORDER BY THE METER
E-ORDER BY THE CENTIMETER

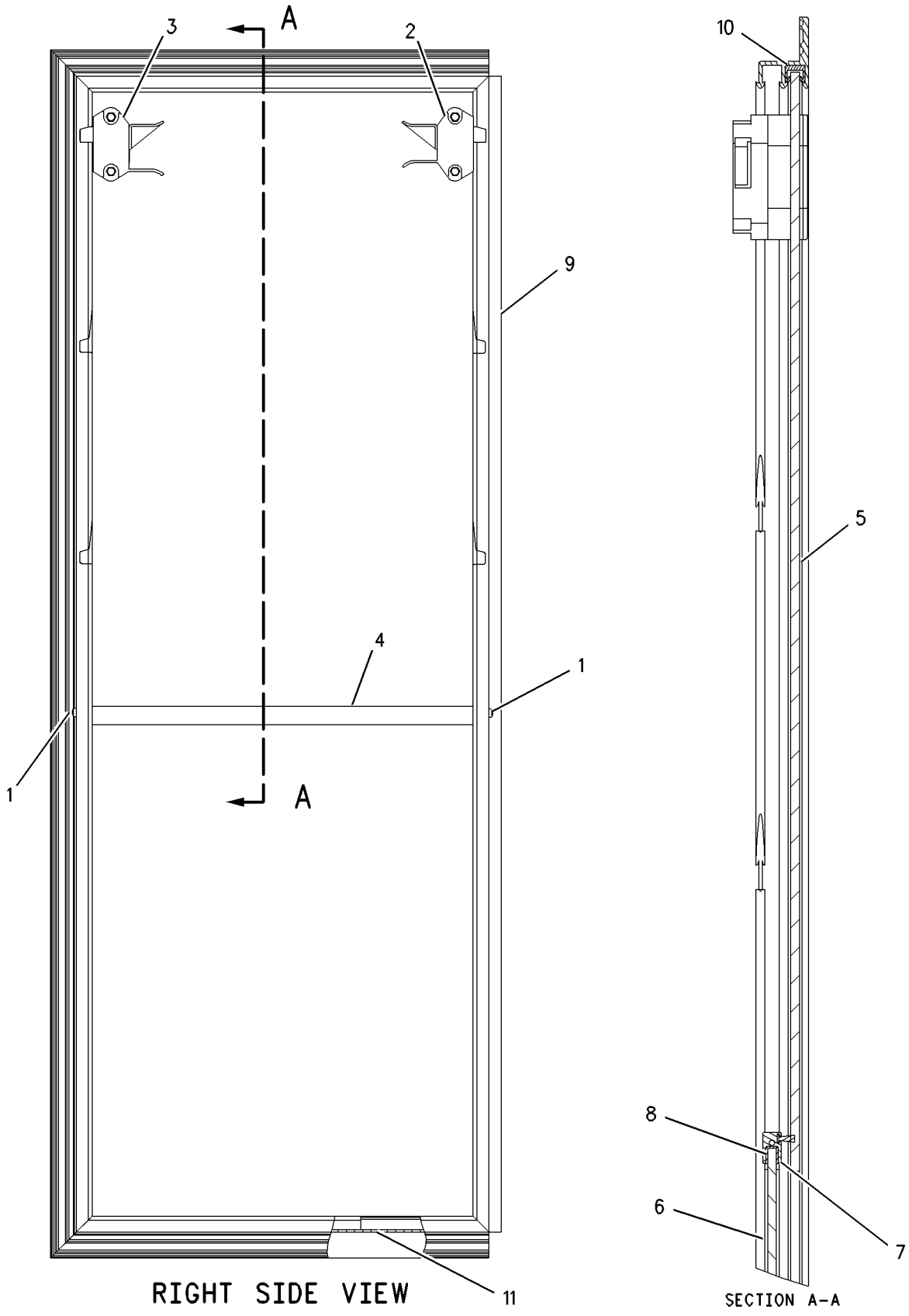

GRAPHIC #1 **<END>** g00829150

OPERATOR STATION

185-7523 WINDOW GP-DOOR–LH

S/N: A7G1-UP
PART OF 247-1852 DOOR GP-CAB
ALSO AN ATTACHMENT

SMCS-7310 **i01617781**

NOTE	REF NO	GRAPHIC REF	PART NUMBER	QTY	PART NAME 1 2 3 4 5 6 (PRODUCT LEVEL)	SEE PAGE
	1	1	**8C-6738**	2	SCREW-PAN HEAD (6-20X1 IN)	
	2	1	**187-5128**	1	CATCH AS (RH)	
	3	1	**187-5127**	1	CATCH AS (LH)	
					(EACH CATCH AS INCLUDES)	
		1	**150-8015**	1	GASKET	
	4	1	**211-9856**	1	STRIP AS	
	5	1	**185-7524**	1	GLASS-SLIDING	
	6	1	**185-7525**	1	GLASS-FIXED	
D	7	1	**9X-2532**		SEAL (.33M)	
E	8	1	**208-5022**		SEAL (123CM)	
	9	1	**185-7531**	1	FRAME AS-WINDOW (UPPER LH)	
E	10	1	**137-2170**		SEAL (257CM)	
D	11	1	**9X-2533**		STOP (1M)	

D-ORDER BY THE METER
E-ORDER BY THE CENTIMETER

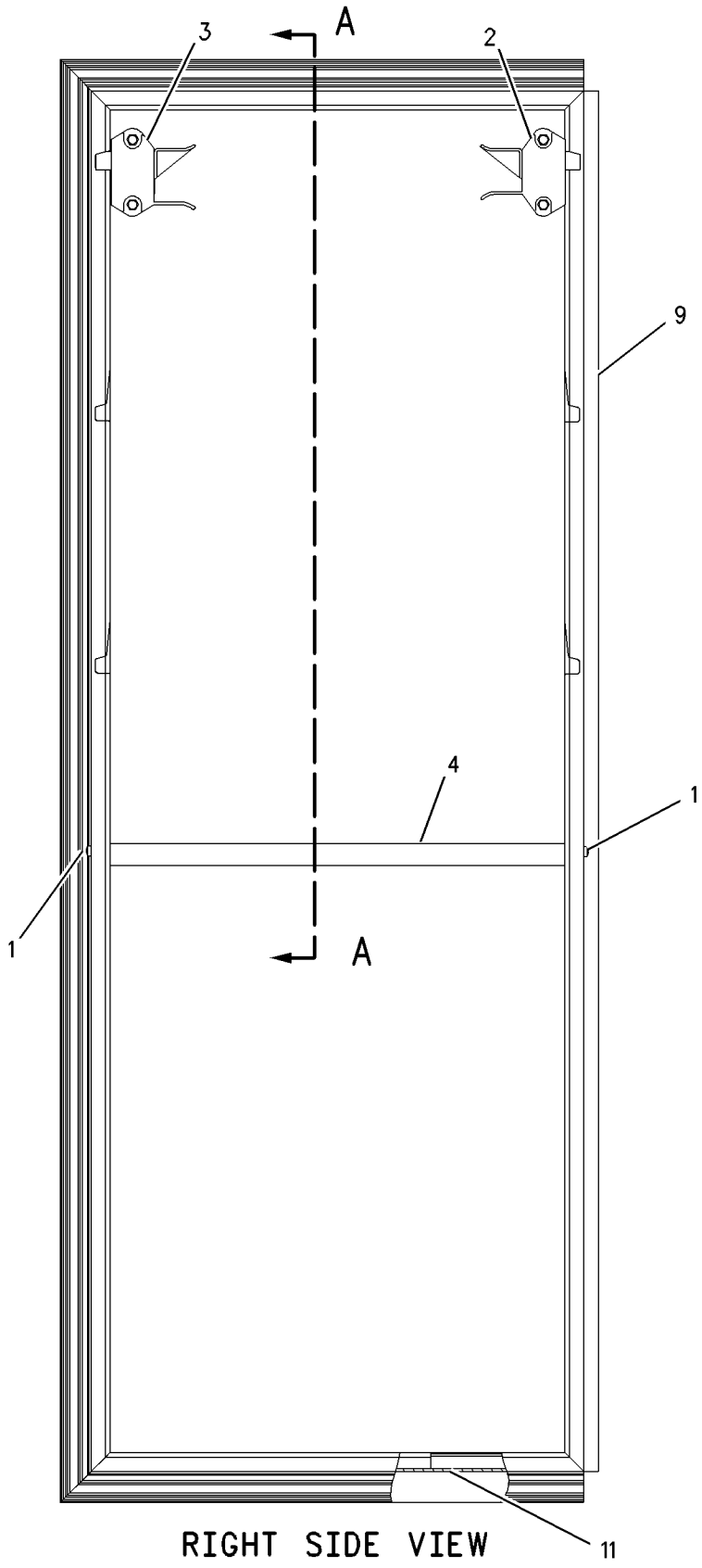

RIGHT SIDE VIEW

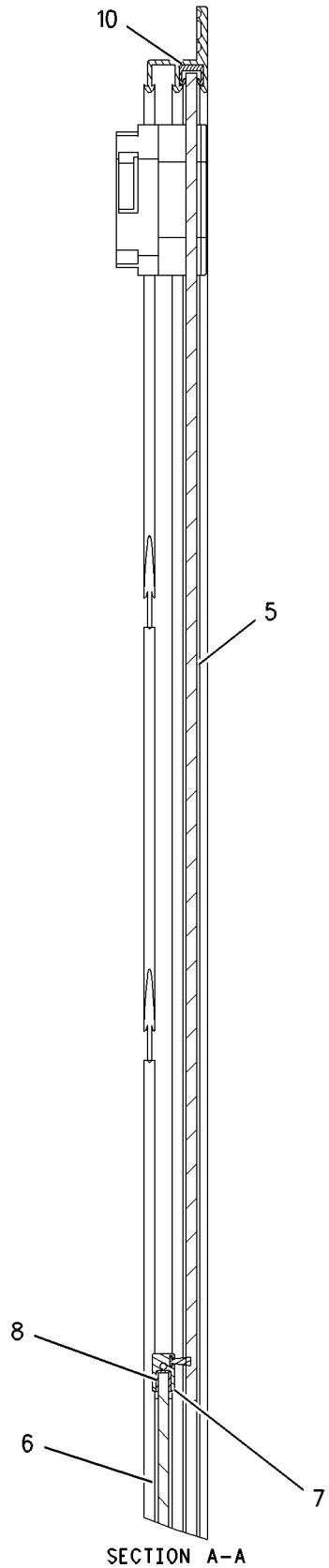

SECTION A-A

GRAPHIC #1 **<END>** g00829150

OPERATOR STATION

257-2016 WIPER GP-WINDOW

S/N: A7G1-UP
PART OF 237-2572, 237-2573 CAB AR-ENCLOSED ROPS
ALSO AN ATTACHMENT

SMCS-7305 **i02413378**

NOTE	REF NO	GRAPHIC REF	PART NUMBER	QTY	PART NAME 1 2 3 4 5 6 (PRODUCT LEVEL)	SEE PAGE
	1	1	**3S-2093**	3	STRAP-CABLE	
	2	2	**3V-3263**	1	CONNECTOR	
	3	2	**6V-6210**	1	GASKET-SHAFT	
	4	1	**6V-7419**	2	BLADE AS-WIPER	
	5	2	**7K-1181**	1	STRAP-CABLE	
	6	2	**8T-5400**	1	CONNECTOR	
	7	1	**9C-9458**	1	BRACKET AS	
	8	2	**124-3637**	1	PLATE-WIPER	
Y	9	2	**155-5789**	1	MOTOR GP-WINDOW WIPER (REAR)	848
Y	10	1	**189-8622**	1	MOTOR GP-WINDOW WIPER (FRONT)	849
	11	2	**211-1167**	1	GROMMET	
Y	12	1	**214-7634**	1	ARM GP-WINDOW WIPER (REAR)	779
Y	13	1	**214-7635**	1	ARM GP-WINDOW WIPER (FRONT)	780
	14	1	**236-6253**	1	GROMMET	
	15	2	**257-2197**	1	PLUG	
	16	2	**2V-3216**	1	CLIP	
M	17	2	**5C-9553**	1	BOLT (M6X1X16-MM)	
	18	1,2	**6V-3265**	6	CLIP	
	19	1,2	**8T-4121**	4	WASHER-HARD (11X21X2.5-MM THK)	
M	20	1	**8T-4136**	1	BOLT (M10X1.5X25-MM)	
M	21	1,2	**8T-4137**	2	BOLT (M10X1.5X20-MM)	
M	22	2	**8T-4138**	1	BOLT (M6X1X20-MM)	
	23	2	**8T-4205**	2	WASHER-HARD (7.2X14.5X2-MM THK)	
E	24	2	**144-0195**		HOSE (334-CM)	
E	24A	2	**144-0195**		HOSE (215.7-CM)	

E-ORDER BY THE CENTIMETER
M-METRIC PART
Y-SEPARATE ILLUSTRATION

REFER TO ALL ILLUSTRATIONS OF
THIS GROUP FOR AUXILIARY VIEWS

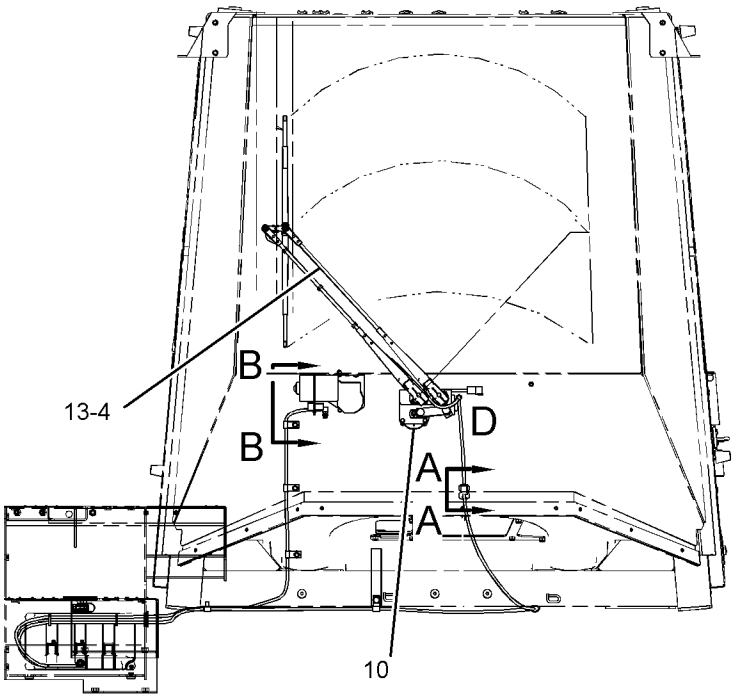

FRONT VIEW

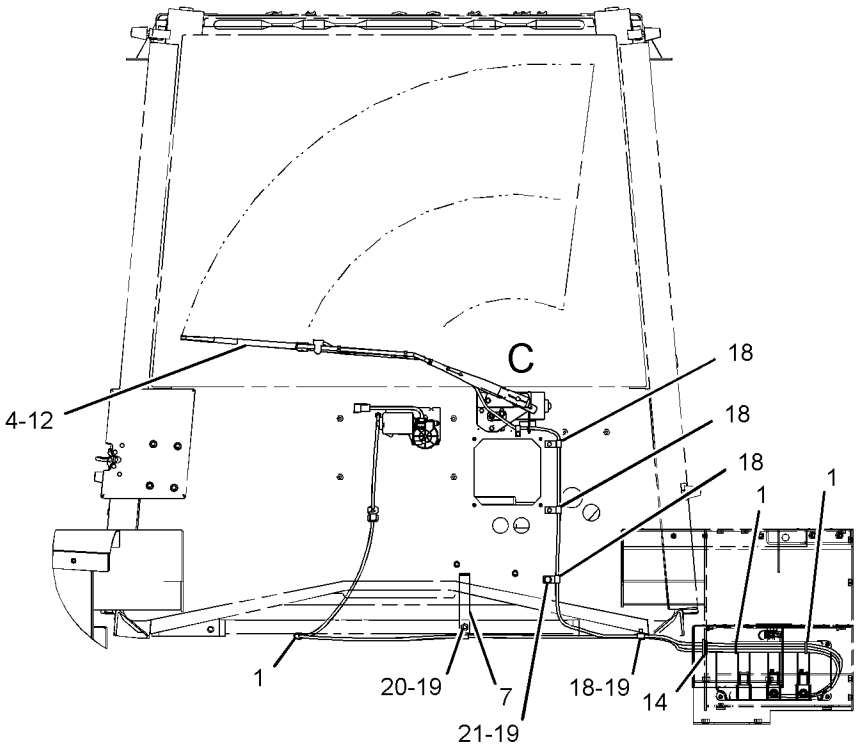

REAR VIEW

GRAPHIC #1 g01203157

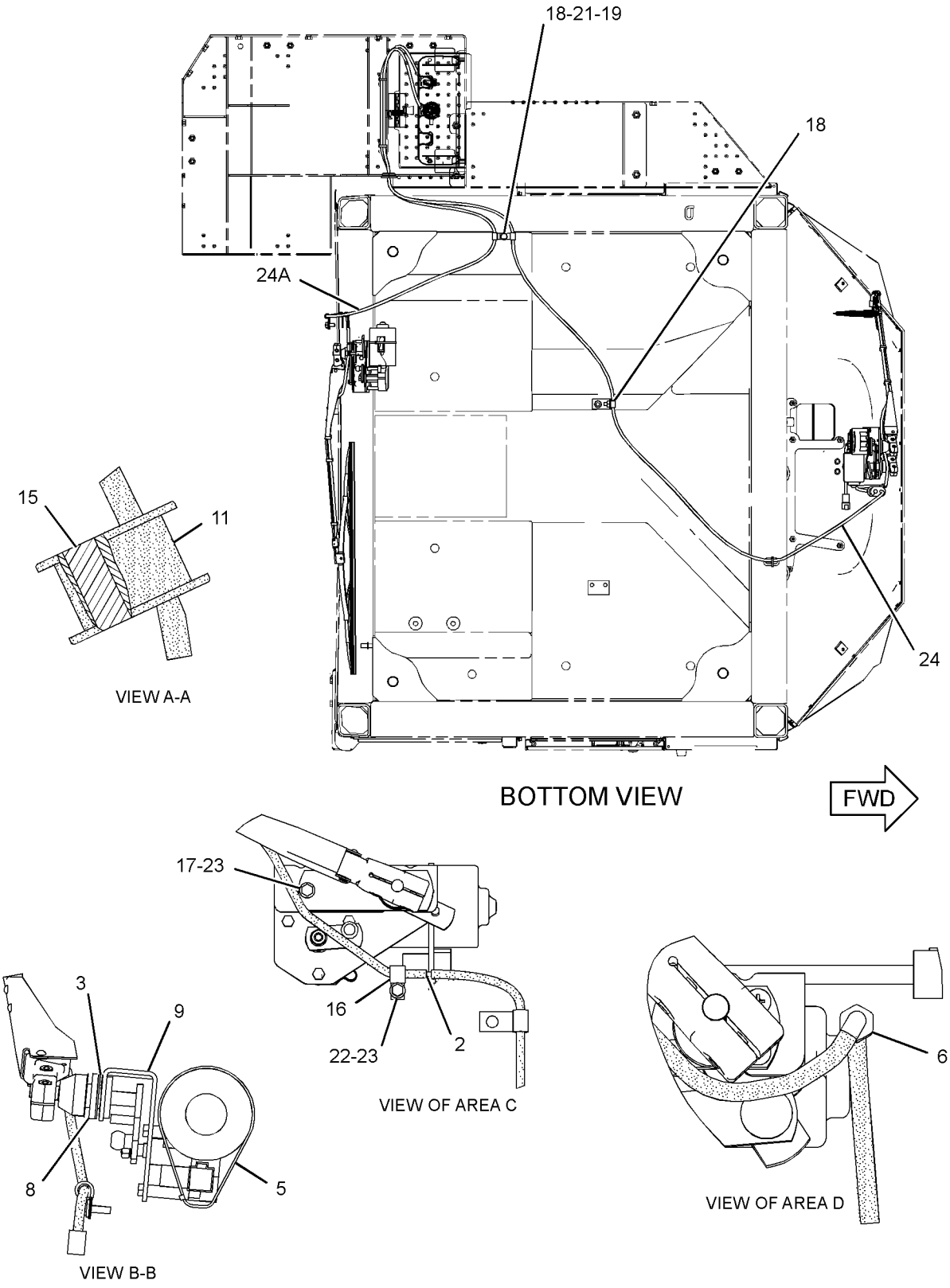

GRAPHIC #2 **<END>** g01206717

SERVICE EQUIPMENT AND SUPPLIES

245-3928 BOX GP-TOOL

S/N: A7G1-UP

AN ATTACHMENT

SMCS-7259 **i02388825**

NOTE	REF NO	GRAPHIC REF	PART NUMBER	QTY	PART NAME 1 2 3 4 5 6 (PRODUCT LEVEL)	SEE PAGE
	1	1	**177-1570**	1	LATCH AS (MINI T)	
		1	**217-0733**	1	LOCK AS	
	2	1	**222-5151**	1	PAWL	
	3	1	**245-3839**	1	BOX AS-TOOL	
M		1	**8T-3597**	8	NUT-WELD (M12X1.75-THD)	
		1	**245-3850**	1	HINGE AS	
M		1	**8T-3490**	2	NUT-WELD (M10X1.5-THD)	
	4	1	**245-3842**	1	SHEET	
	5	1	**255-6653**	1	ANGLE AS	
M		1	**8T-3490**	4	NUT-WELD (M10X1.5-THD)	
	6	1	**255-6654**	1	ANGLE AS	
M		1	**8T-3490**	4	NUT-WELD (M10X1.5-THD)	
	7	1	**5P-1076**	10	WASHER-HARD (13.5X30X4-MM THK)	
	8	1	**8T-4121**	2	WASHER-HARD (11X21X2.5-MM THK)	
M	9	1	**8T-4139**	4	BOLT (M12X1.75X30-MM)	
M	10	1	**8T-4191**	2	BOLT (M10X1.5X16-MM)	
M	11	1	**8T-4192**	6	BOLT (M12X1.75X25-MM)	
BE	12	1	**3E-6602**		SEAL	
	13	1	**4E-1384**	1	BUMPER-CONICAL	

B-USE AS REQUIRED
E-ORDER BY THE CENTIMETER
M-METRIC PART

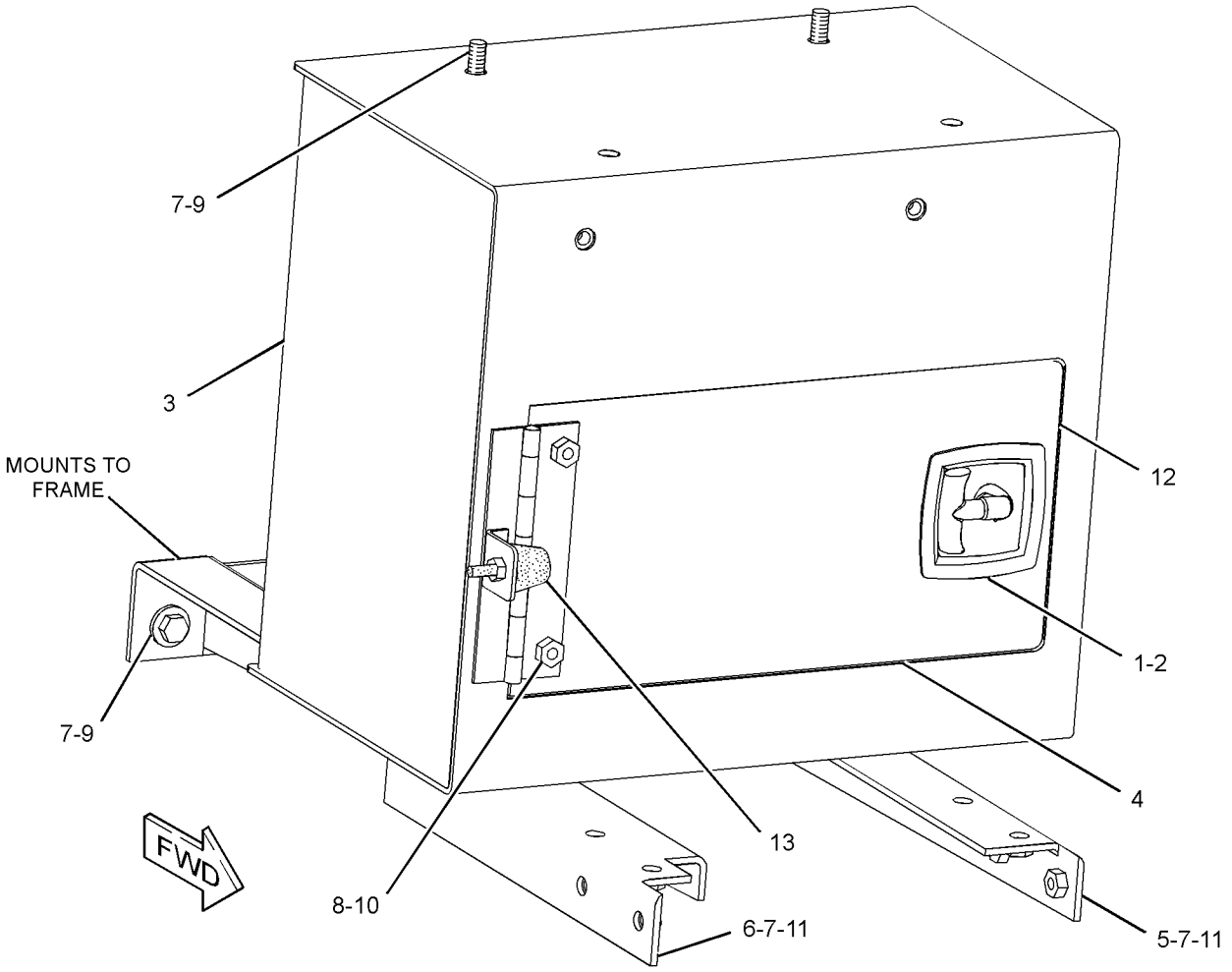

GRAPHIC #1 **<END>** g01196212

SERVICE EQUIPMENT AND SUPPLIES

272-2792 BOX GP-TOOL

S/N: A7G1-UP
PART OF 272-2775 LADDER GP
AN ATTACHMENT

SMCS-7259 **i02416304**

NOTE	REF NO	GRAPHIC REF	PART NUMBER	QTY	PART NAME 1 2 3 4 5 6 (PRODUCT LEVEL)	SEE PAGE
	1	1	**177-1570**	1	LATCH AS (MINI T)	
		1	**272-6628**	1	LOCK AS-CYLINDER	
		1	**272-6629**	1	CAM	
	2	1	**222-5151**	1	PAWL	
	3	1	**267-1702**	2	BRACKET AS	
	4	1	**272-2776**	1	BOX AS-TOOL	
M		1	**8T-3597**	6	NUT-WELD (M12X1.75-THD)	
		1	**272-2783**	1	HINGE AS	
	5	1	**272-2785**	1	SHEET	
	6	1	**5P-1076**	8	WASHER-HARD (13.5X30X4-MM THK)	
	7	1	**8T-4121**	3	WASHER-HARD (11X21X2.5-MM THK)	
M	8	1	**8T-4139**	4	BOLT (M12X1.75X30-MM)	
M	9	1	**8T-4191**	3	BOLT (M10X1.5X16-MM)	
M	10	1	**8T-4192**	4	BOLT (M12X1.75X25-MM)	
E	11	1	**3E-6602**		SEAL (102-CM)	

E-ORDER BY THE CENTIMETER
M-METRIC PART

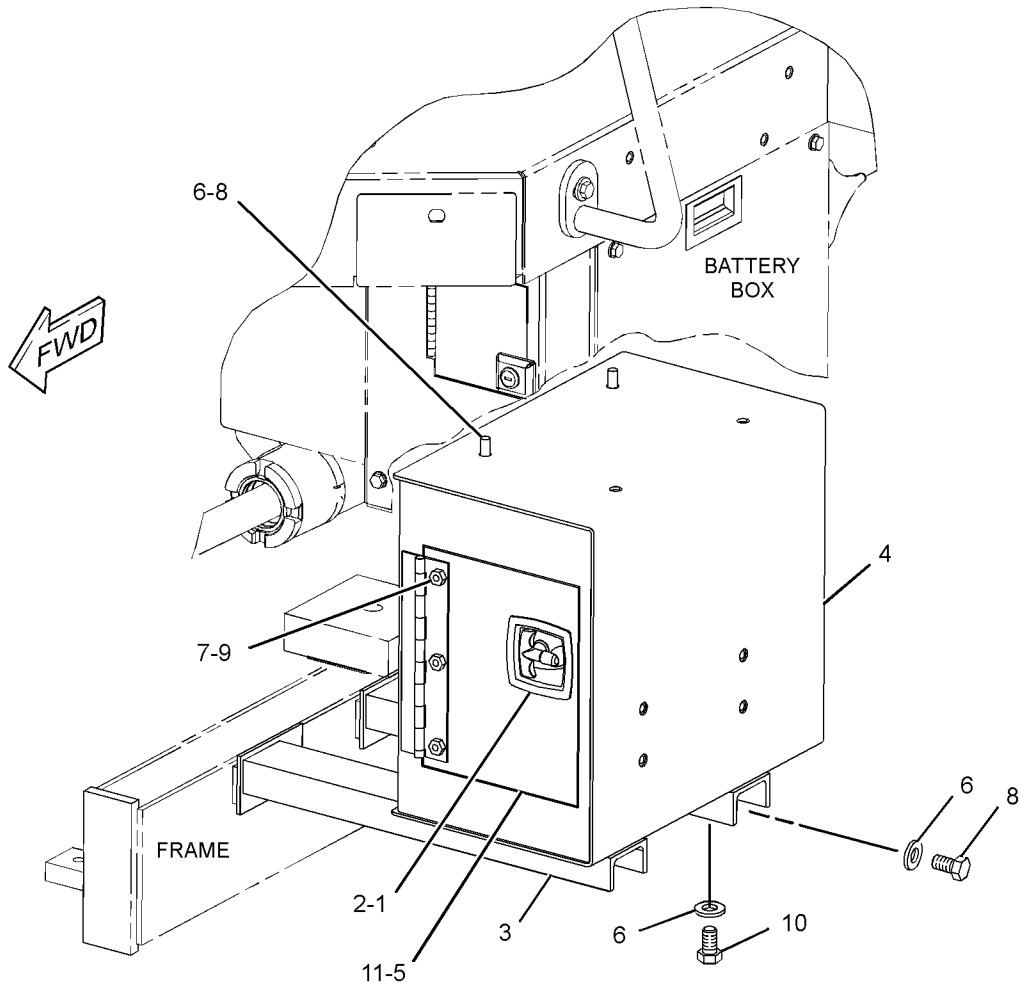

GRAPHIC #1 **<END>** g01210448

SERVICE EQUIPMENT AND SUPPLIES

243-0994 FILM GP

S/N: A7G1-UP

PART OF 236-9067 PLATE & FILM GP

SMCS-7405, 7557 **i02206467**

NOTE	REF NO	GRAPHIC REF	PART NUMBER	QTY	PART NAME 1 2 3 4 5 6 (PRODUCT LEVEL)	SEE PAGE
	1	1	**260-9492**	1	FILM-STRIPE (CAT, 972H, LH)	
	2	1	**261-0151**	1	FILM-STRIPE (REAR HOOD, LH)	
	3	1	**261-0150**	1	FILM-STRIPE (REAR HOOD, RH)	
	4	1	**260-9493**	1	FILM-STRIPE (CAT, 972H, RH)	
	5	1	**206-6305**		FILM (RED REFLECTIVE) (13.5-CM EACH)	
	6	1	**209-0516**	1	FILM-CATERPILLAR (WINDSHIELD)	
	7	1	**197-4859**	1	FILM-CATERPILLAR (REAR CAB)	
	8	1	**253-0861**	2	FILM-INFORMATION (CAT POWER, ACERT TECHNOLOGY)	

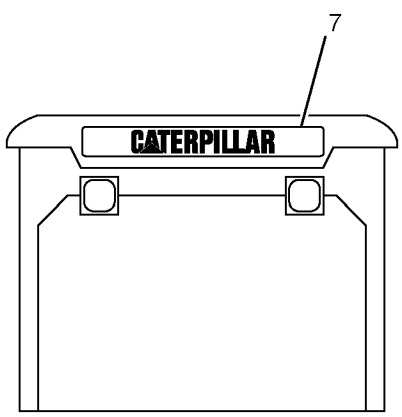

REAR VIEW
(CAB)

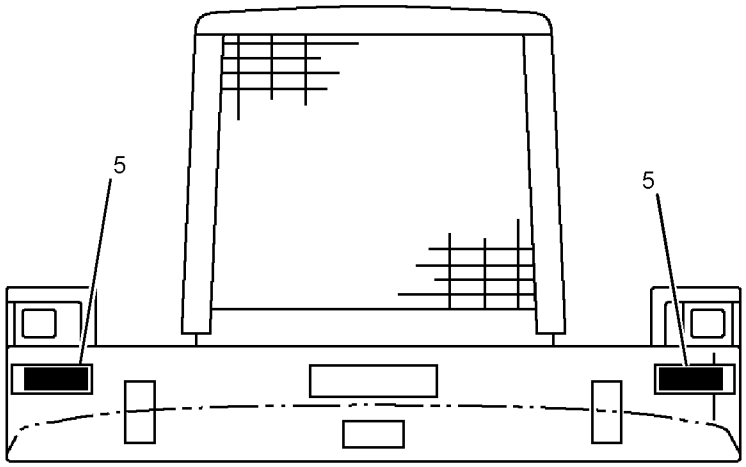

REAR VIEW

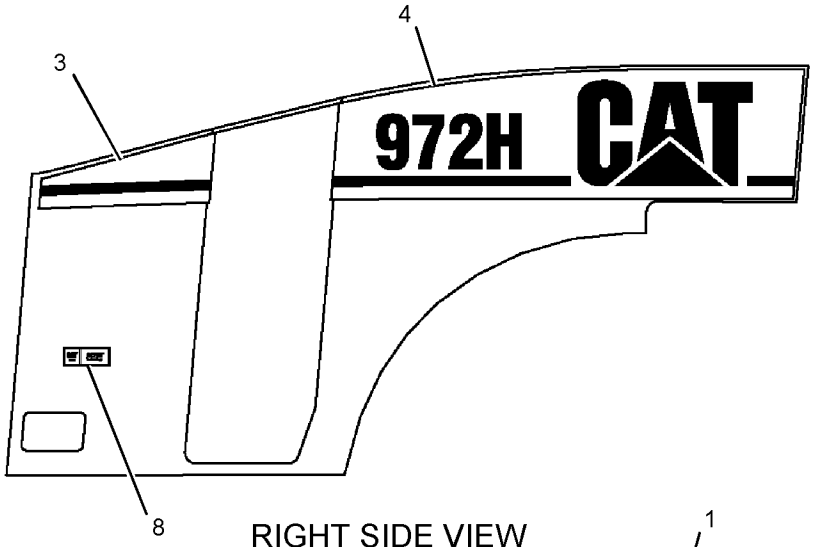

RIGHT SIDE VIEW

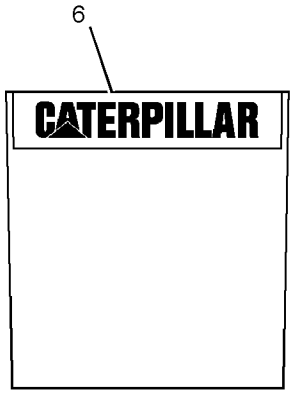

FRONT VIEW
(WINDSHIELD)

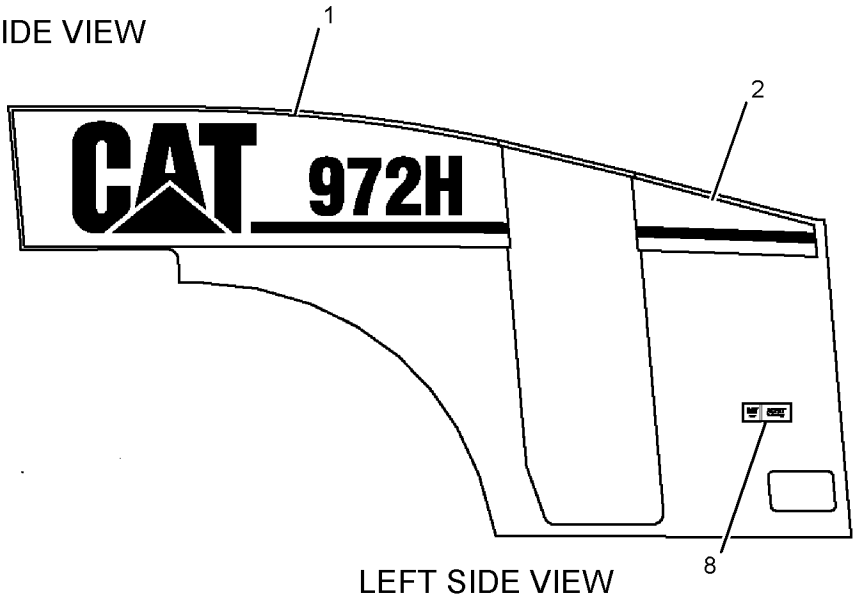

LEFT SIDE VIEW

GRAPHIC #1 **<END>** g01116509

SERVICE EQUIPMENT AND SUPPLIES

236-9046 LINES GP-DIAGNOSTIC—REMOTE PRESSURE TAPS

S/N: A7G1-UP

PART OF 236-9055 HYDRAULIC AR-2 VALVE

SMCS-7554 **i02412065**

NOTE	REF NO	GRAPHIC REF	PART NUMBER	QTY	PART NAME 1 2 3 4 5 6 (PRODUCT LEVEL)	SEE PAGE
	1	1,2	**6V-0852**	7	CAP-DUST	
	2	2	**111-4836**	2	CLIP	
	3	1,2	**185-6250**	7	FITTING AS	
	4	1	**246-0717**	1	HOSE AS	
	5	1	**246-0718**	1	HOSE AS	
	6	1	**246-0719**	1	HOSE AS	
	7	2	**246-0720**	1	HOSE AS	
	8	1	**246-0721**	1	HOSE AS	
	9	2	**256-0854**	1	PLATE	
	10	1	**256-3881**	1	HOSE AS	
	11	1	**256-3882**	1	HOSE AS	
	12	1	*148-8325*	1	CONNECTOR AS	
		1	**3J-1907**	2	SEAL-O-RING	
		1	**4J-5477**	2	SEAL-O-RING	
		1	**6V-8641**	2	CONNECTOR	
	13	2	*148-8351*	6	ELBOW AS	
					(EACH INCLUDES)	
		2	**4J-5477**	1	SEAL-O-RING	
		2	**6V-9849**	1	ELBOW (SWIVEL)	
	14	2	*148-8368*	1	ELBOW AS	
		2	**3J-1907**	1	SEAL-O-RING	
		2	**4J-5477**	1	SEAL-O-RING	
		2	**6V-8627**	1	ELBOW	
	15	1	*150-3033*	2	ELBOW AS	
					(EACH INCLUDES)	
		1	**3J-1907**	1	SEAL-O-RING	
		1	**4J-5477**	1	SEAL-O-RING	
		1	**8T-0164**	1	ELBOW	
	16	1,2	**170-4735**	7	RING-RETAINING	
	17	1,2	**4J-5477**	7	SEAL-O-RING	
	18	1	**6D-3479**	1	CLIP	
	19	1	**6V-3265**	1	CLIP	
	20	1,2	**8T-4121**	8	WASHER-HARD (11X21X2.5-MM THK)	
M	21	2	**8T-4136**	6	BOLT (M10X1.5X25-MM)	
M	22	1	**8T-4137**	2	BOLT (M10X1.5X20-MM)	

M-METRIC PART

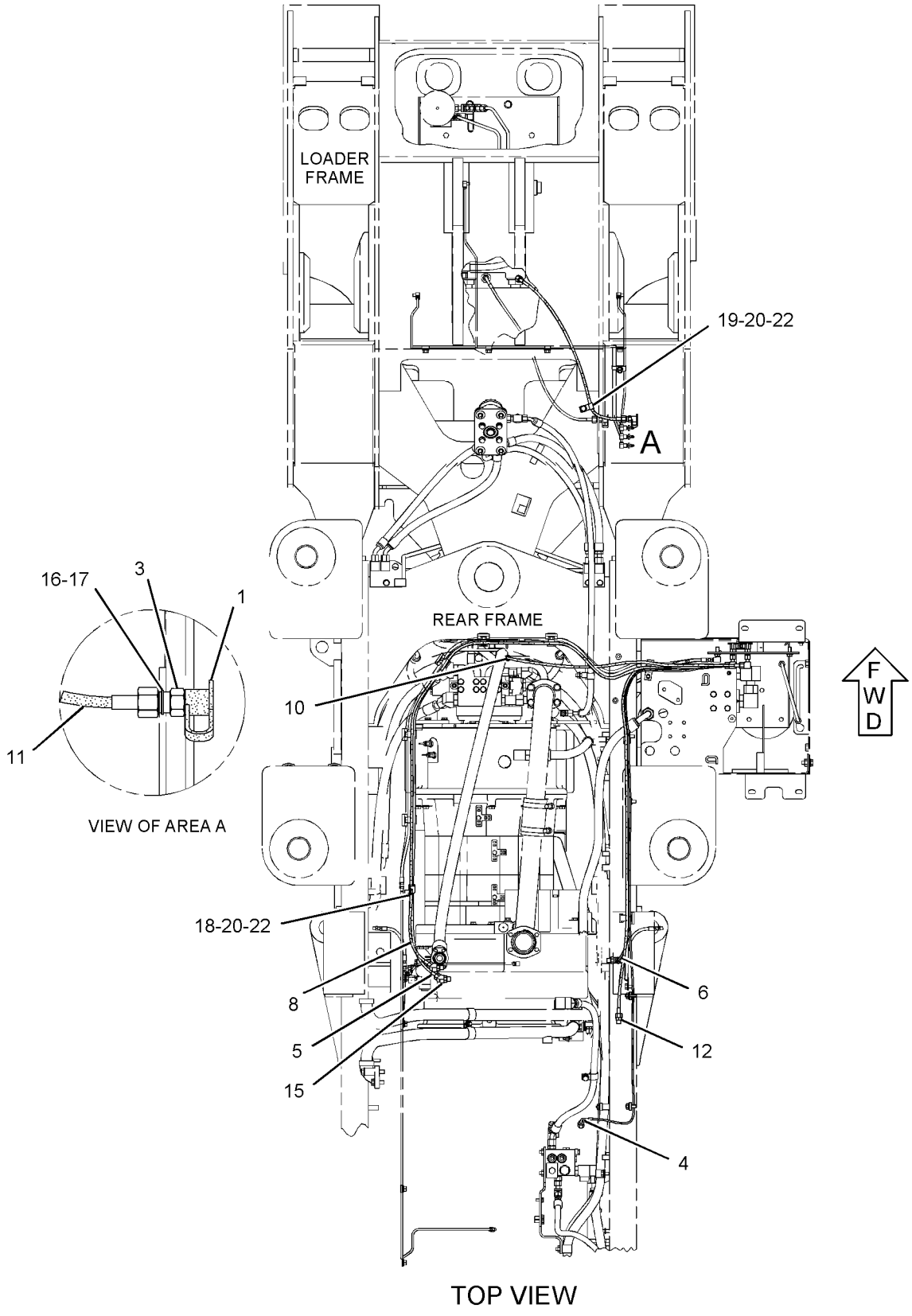

GRAPHIC #1

g01208260

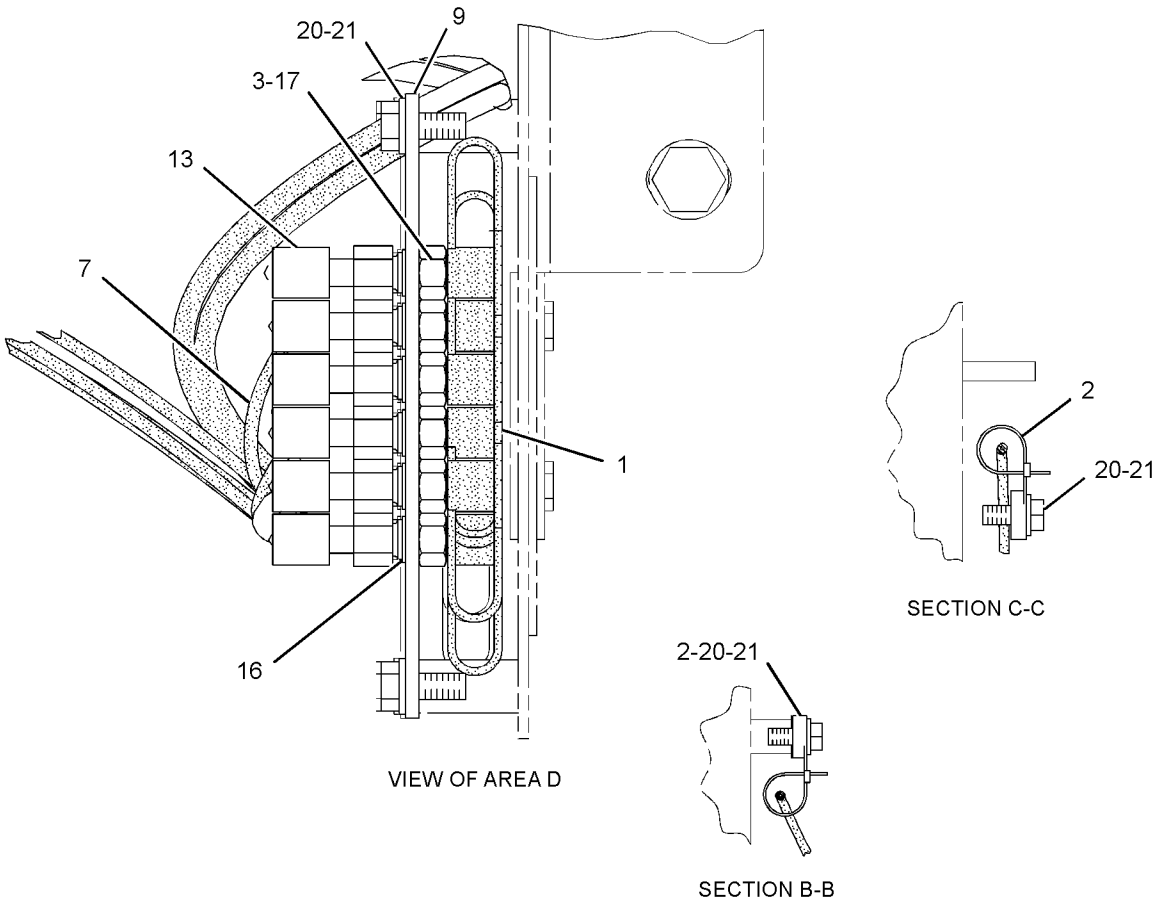

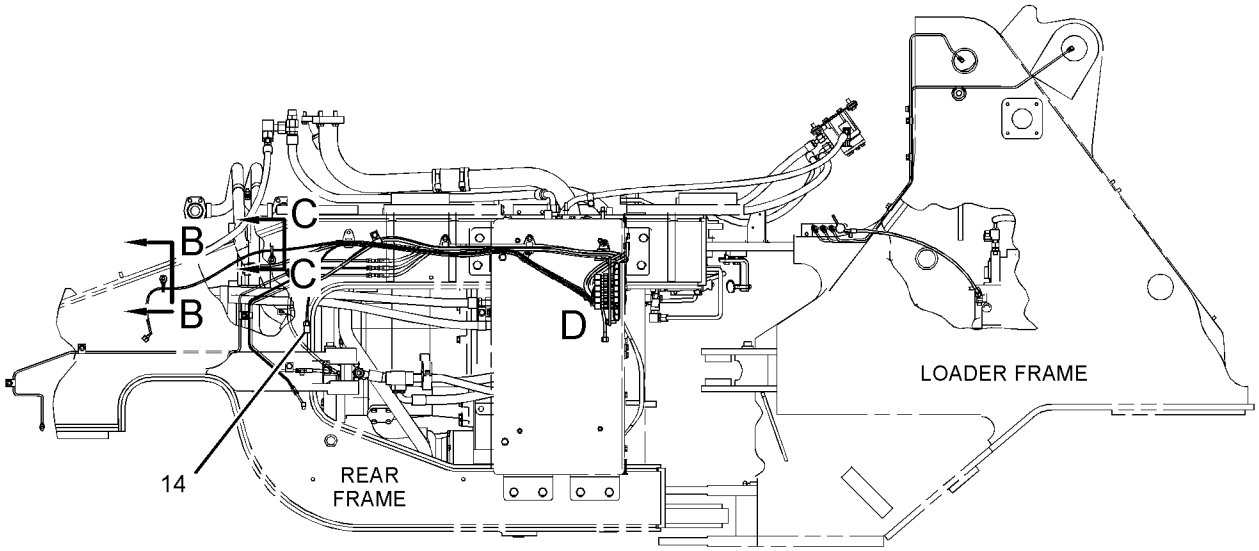

RIGHT SIDE VIEW

GRAPHIC #2 **<END>** g01208261

SERVICE EQUIPMENT AND SUPPLIES

236-9129 LINES GP-DIAGNOSTIC—REMOTE PRESSURE TAPS

S/N: A7G1-UP

AN ATTACHMENT

SMCS-7554 **i02415400**

NOTE	REF NO	GRAPHIC REF	PART NUMBER	QTY	PART NAME 1 2 3 4 5 6 (PRODUCT LEVEL)	SEE PAGE
	1	2	**6V-0852**	6	CAP-DUST	
	2	1	**7K-1181**	2	STRAP-CABLE	
	3	2	**127-9323**	1	BRACKET AS	
M		2	**8T-3490**	1	NUT-WELD (M10X1.5-THD)	
	4	2	**185-6250**	6	FITTING AS	
	5	1,2	**246-0722**	1	HOSE AS (TMSN CLUTCH 1, 1ST GEAR PRESS)	
	6	1,2	**246-0723**	1	HOSE AS (TMSN CLUTCH 2, 2ND GEAR PRESS)	
	7	1,2	**246-0724**	1	HOSE AS (TMSN CLUTCH 3, 3RD GEAR PRESS)	
	8	1,2	**246-0725**	1	HOSE AS (TMSN CLUTCH 4, 4TH GEAR PRESS)	
	9	1,2	**246-0726**	1	HOSE AS (TMSN CLUTCH 5, FORWARD PRESS)	
	10	1,2	**246-0727**	1	HOSE AS (TMSN CLUTCH 6, REVERSE PRESS)	
	11	2	*148-8351*	6	ELBOW AS	
					(EACH INCLUDES)	
		2	**4J-5477**	1	SEAL-O-RING	
		2	**6V-9849**	1	ELBOW (SWIVEL)	
	12	1	*148-8368*	6	ELBOW AS	
					(EACH INCLUDES)	
		1	**3J-1907**	1	SEAL-O-RING	
		1	**4J-5477**	1	SEAL-O-RING	
		1	**6V-8627**	1	ELBOW	
	13	2	**170-4735**	6	RING-RETAINING	
	14	1	**4J-5477**	6	SEAL-O-RING	
	15	2	**5P-7854**	1	CLIP	
	16	2	**6V-1889**	1	CLIP	
	17	2	**7X-7729**	1	WASHER (11X25X3-MM THK)	
M	18	2	**8T-4137**	1	BOLT (M10X1.5X20-MM)	

M-METRIC PART

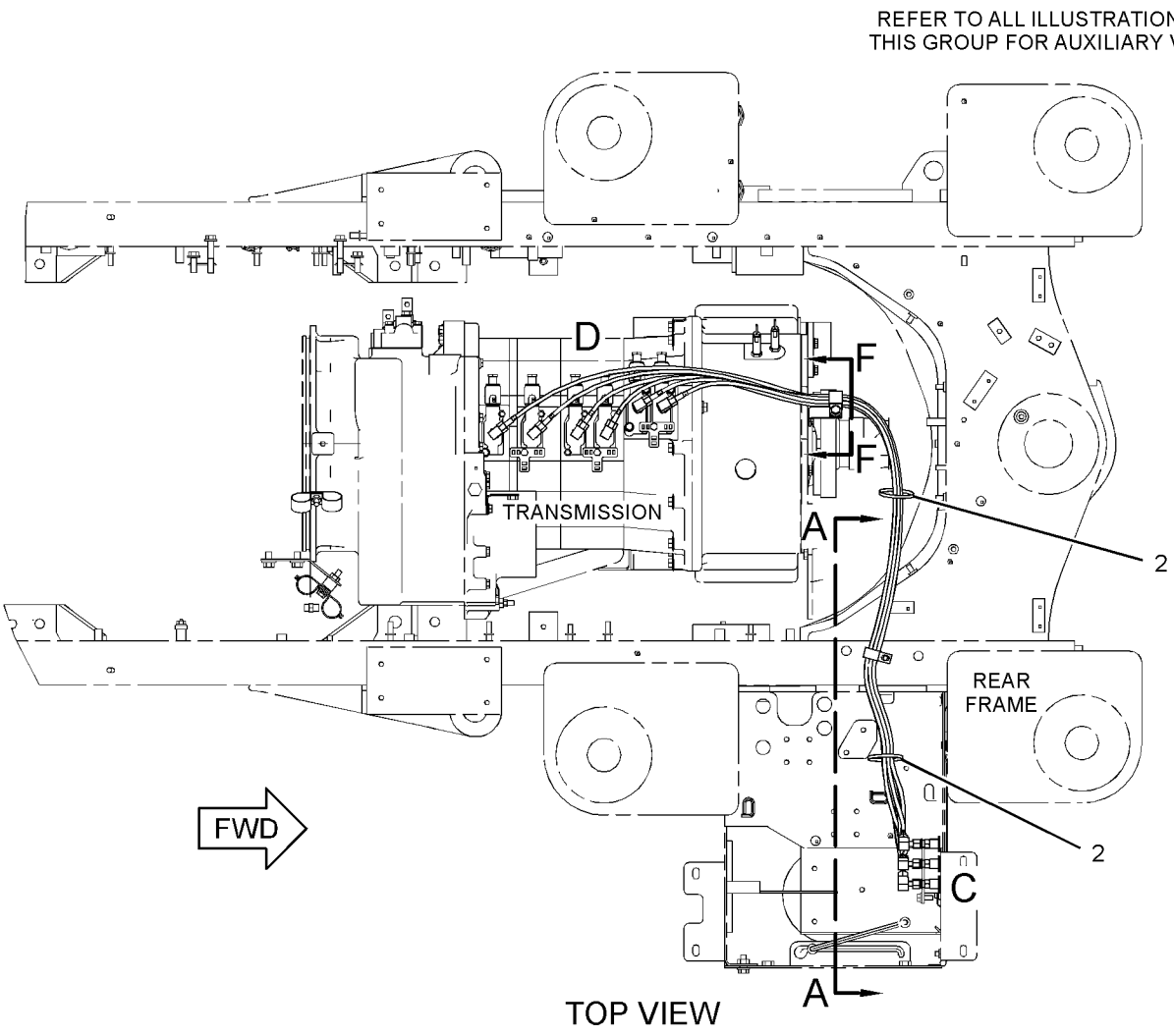

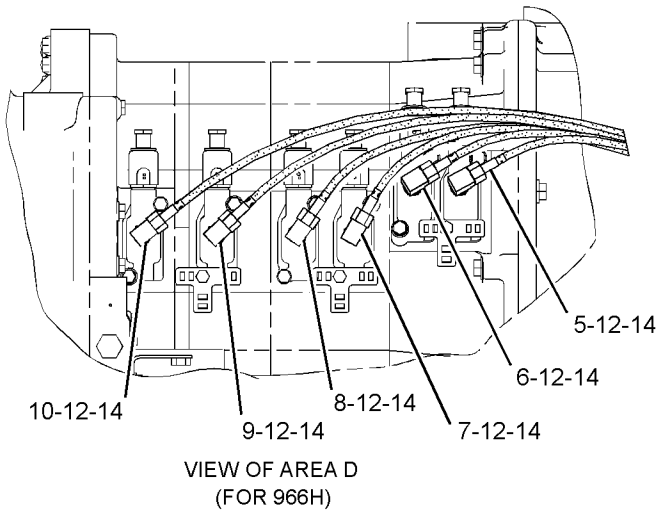

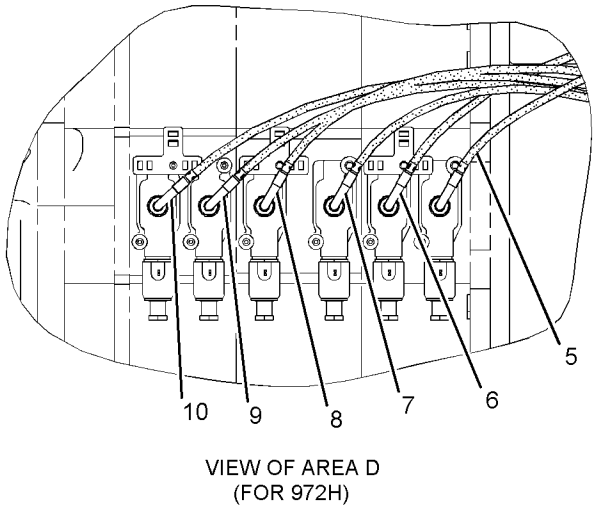

GRAPHIC #1 g01195594

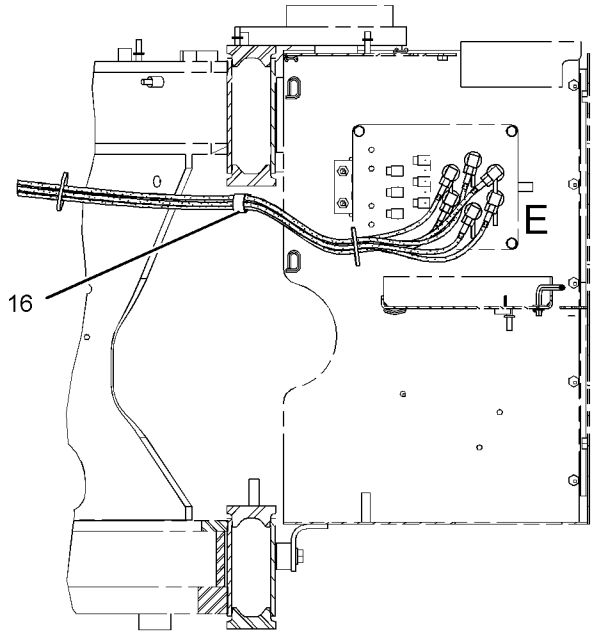

SECTION A-A

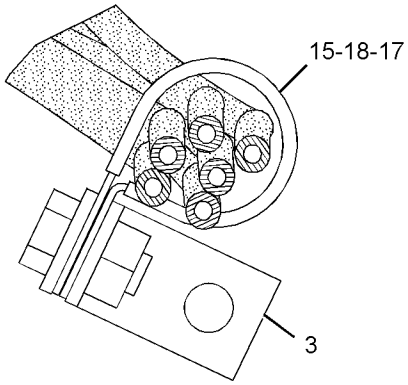

SECTION F-F

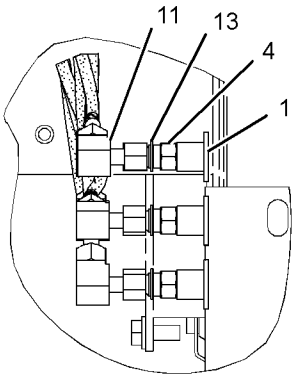

VIEW OF AREA C

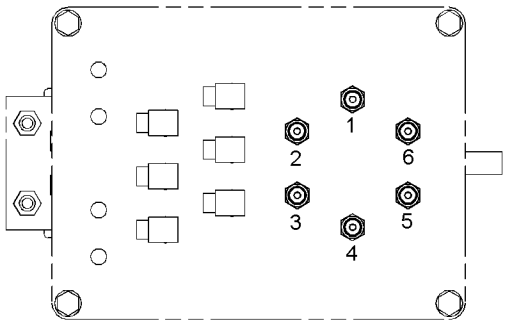

VIEW OF AREA E
(DUST CAPS REMOVED)

REMOTE TRANSMISSION PRESSURE TAPS DESCRIPTION	
1	TRANSMISSION CLUTCH 1, 1ST GEAR PRESSURE
2	TRANSMISSION CLUTCH 2, 2ND GEAR PRESSURE
3	TRANSMISSION CLUTCH 3, 3RD GEAR PRESSURE
4	TRANSMISSION CLUTCH 4, 4TH GEAR PRESSURE
5	TRANSMISSION CLUTCH 5, FORWARD
6	TRANSMISSION CLUTCH 6, REVERSE

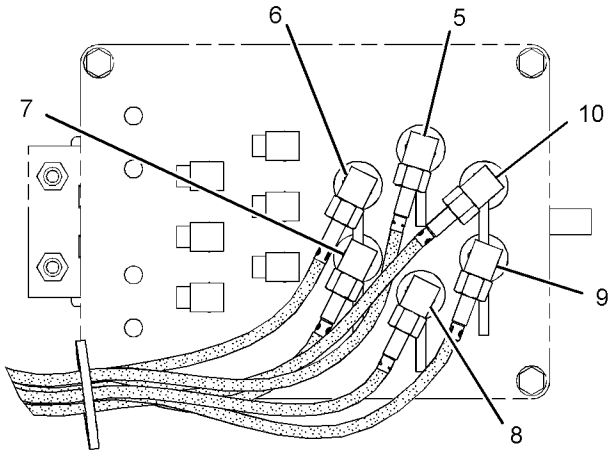

VIEW OF AREA E

GRAPHIC #2 **<END>** g01195599

SERVICE EQUIPMENT AND SUPPLIES

132-3391 PLATE & FILM GP—MACHINE CERTIFICATION

S/N: A7G1-UP

PART OF 277-8157 CONVERSION AR-CERTIFICATION

AN ATTACHMENT

SMCS-7405, 7557 **i01624366**

NOTE	PART NUMBER	QTY	PART NAME 1 2 3 4 5 6 (PRODUCT LEVEL)	SEE PAGE
	132-3392	1	FORM-CERTIFICATION	
	103-2532	1	PLATE & FILM GP (CERTIFICATION)	

<END>

SERVICE EQUIPMENT AND SUPPLIES

205-1088 PLATE & FILM GP

S/N: A7G1-UP
PART OF 193-0852 COUPLER AR-QUICK
AN ATTACHMENT

SMCS-7405, 7557 **i01966748**

NOTE	REF NO	GRAPHIC REF	PART NUMBER	QTY	PART NAME 1 2 3 4 5 6 (PRODUCT LEVEL)	SEE PAGE
	1	1	**159-8035**	2	FILM-WARNING (CRUSH POINT)	
	2	1	**159-8036**	2	FILM-WARNING (MANUAL)	

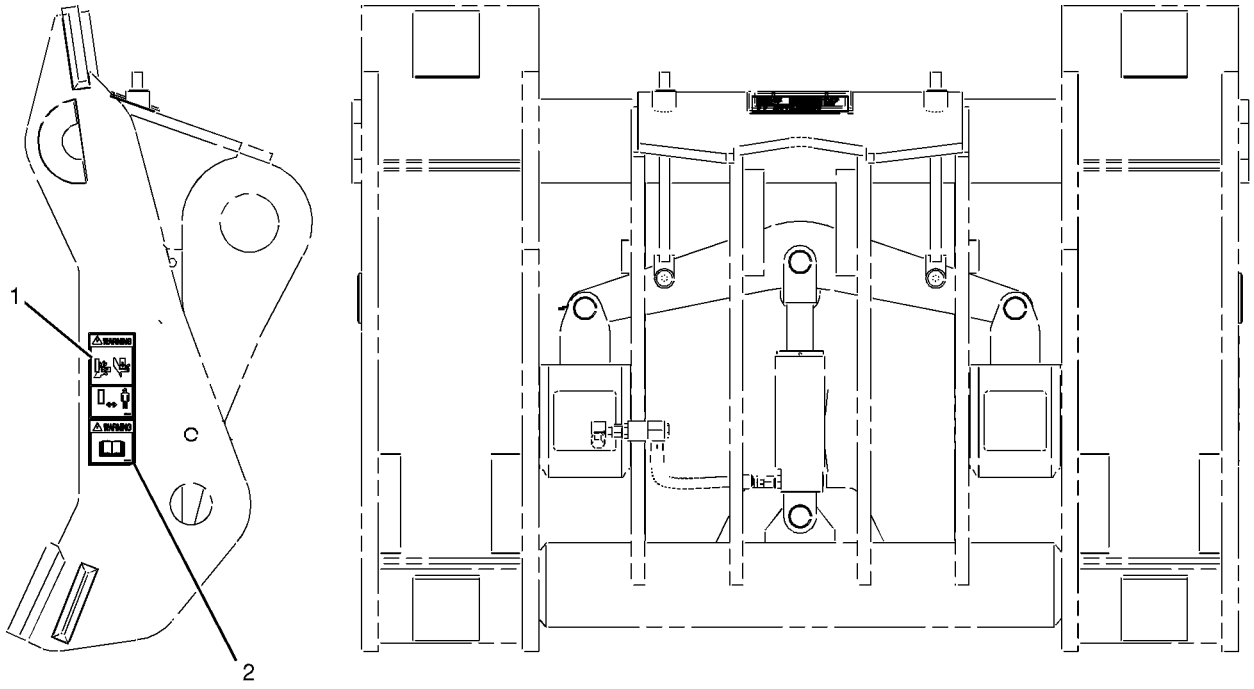

GRAPHIC #1 **<END>** g01021177

SERVICE EQUIPMENT AND SUPPLIES

216-1271 PLATE & FILM GP

S/N: A7G1-UP
PART OF 193-8526 COUPLER AR-QUICK
AN ATTACHMENT

SMCS-7405, 7557 **i01966935**

NOTE	REF NO	GRAPHIC REF	PART NUMBER	QTY	PART NAME 1 2 3 4 5 6 (PRODUCT LEVEL)	SEE PAGE
	1	1	**159-8035**	2	FILM-WARNING (CRUSH POINT)	
	2	1	**159-8036**	2	FILM-WARNING (MANUAL)	
	3	1	**161-4130**	2	PLATE-IDENTIFICATION (CAT)	

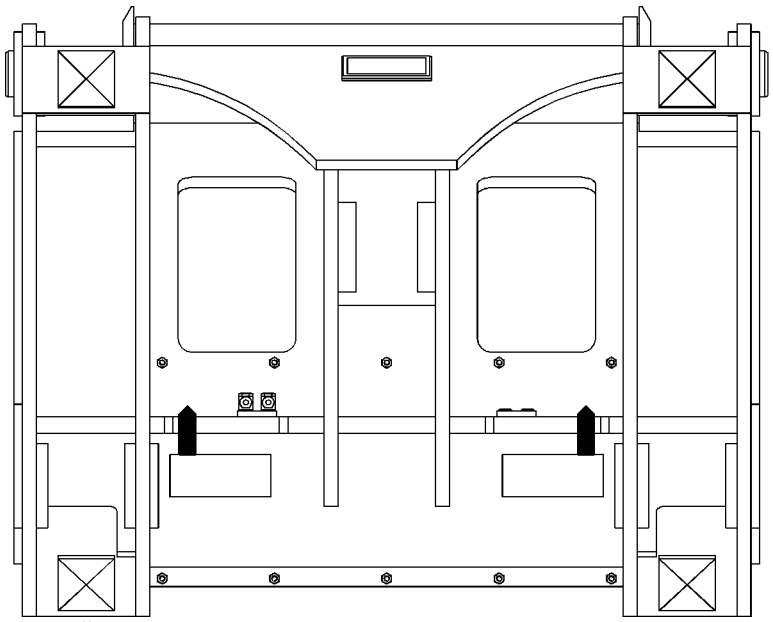

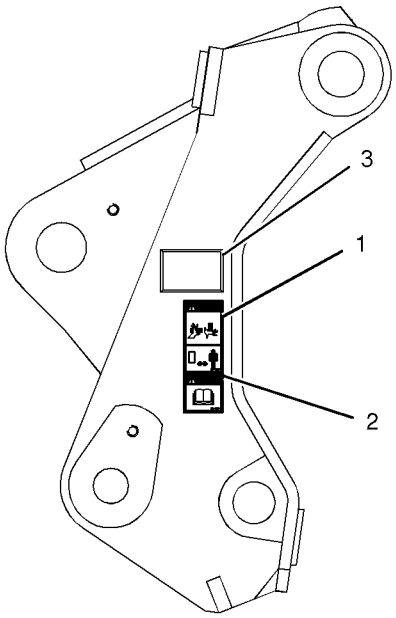

GRAPHIC #1 **<END>** g01021231

SERVICE EQUIPMENT AND SUPPLIES

236-9067 PLATE & FILM GP

S/N: A7G1-UP

PART OF 236-9051 CHASSIS AR

SMCS-7405, 7557 **i02416954**

NOTE	PART NUMBER	QTY	PART NAME 1 2 3 4 5 6 (PRODUCT LEVEL)	SEE PAGE
Y	*243-0994*	1	FILM GP	906
	8C-5346	1	FILM-IDENTIFICATION (HYDRAULIC OIL FILTER)	
			ON HYDRAULIC OIL FILTER IF PAINTED	
	5P-1175	1	FILM-IDENTIFICATION (ENGINE OIL FILL)	
			ATTACHED TO CRANKCASE OIL FILLER CAP	
	8C-8902	1	FILM-IDENTIFICATION (ENGINE OIL FILTER)	
			ON ENGINE OIL FILTER-IF PAINTED	
	261-0471	1	FILM-IDENTIFICATION (REMOTE PRESSURE TAPS)	
			INSIDE OF THE DIAGNOSTIC CONNECTOR DOOR LOCATED ON THE HYD SERVICE CENTER	
	134-7258	1	FILM-INFORMATION (EXTENDED LIFE COOLANT-READ OMM)	
			NEXT TO RADIATOR FILL CAP	
	1P-2807	2	FILM-INFORMATION (LIFT EYE LOCATION)	
			ONE EACH AT FRONT LIFT EYES	
	148-3587	1	FILM-INFORMATION (TRANSMISSION OIL LEVEL)	
			ON FRONT SIDE OF TRANSMISSION SIGHT GAGE	
	188-8044	1	FILM-INFORMATION (FUEL FILTER, WATER SEP IDENT)	
			CENTER ON FUEL/WATER SEPARATOR, LOCATED ON ENGINE IF PAINTED	
	146-6747	1	FILM-INFORMATION (24-VOLT)	
			INSIDE BATTERY BOX, ON REAR WALL 40 MM FROM THE LEFT WALL AND 70 MM FROM TOP EDGE OF REAR WALL	
	7X-7644	2	FILM-INFORMATION (TIE-DOWN)	
			ONE EACH AT FRONT TIE DOWN EYES	
	252-5875	1	FILM-INFORMATION (ROPS, FOPS, READ OMM)	
			ON RH SIDE OF CAB ABOVE PLATFORM AND REARWARD OF DOOR. CENTERED IN PANEL	
	6V-2679	1	FILM-INSTRUCTION (WIPER)	
			ON THE FRONT OF THE FILLER NECK OF THE WINDSHIELD WASHER BOTTLE LOCATED IN THE RH PLATFORM COMPARTMENT	
	187-0661	1	FILM-INSTRUCTION (ALTERNATE EXIT)	
			ON GLASS OF RH DOOR JUST ABOVE THE LATCH	
	158-7864	1	FILM-INSTRUCTION (HYDRAULIC OIL)	
			FORWARD OF AND ABOVE THE HYDRAULIC TANK SIGHT GAUGE ON TANK SURFACE	
	7X-3229	2	FILM-INSTRUCTION (LIFT EYE, TIE-DOWN LOCATION)	
			ONE EACH AT REAR LIFT AND TIEDOWN EYES, RIGHT AND CENTERED ON THE LIFT EYE HOLE	
	124-2456	4	FILM-INSTRUCTION (NO STEP)	
			ON TOP OF HOOD BEHIND CAB ON EACH SIDE	
	263-3180	1	FILM-INSTRUCTION (MACHINE MAINTENANCE)	
			ON INSIDE SURFACE OF HYDRAULIC SERVICE CENTER DOOR	
	276-1858	1	FILM-INSTRUCTION	
			LOCATE ON RH SIDE OF NEEF BELOW GREASE FITTING BLOCK	
	219-0305	1	FILM-WARNING (NO WELD, NO DRILL, READ OMM)	
			ON RH SIDE OF CAB ABOVE PLATFORM AND REARWARD OF DOOR. CENTERED IN PANEL	
	225-0312	1	FILM-WARNING (JUMP START, READ OMM)	
			ON BATTERY BOX COVER	
	226-1240	2	FILM-WARNING (CRUSH HAZARD, STAY BACK)	

236-9067 **PLATE & FILM GP** *(contd.)* **i02416954**

NOTE	PART NUMBER	QTY	PART NAME 1 2 3 4 5 6 (PRODUCT LEVEL)	SEE PAGE
			ON SIDEFACE OF LOADER FRAME 75 MM FORWARD OF REAR EDGE AND UP 500 MM FROM BOTTOM-ON EACH SIDE	
	237-6256	2	FILM-WARNING (FAN)	
			ON EACH SIDE OF RADIATOR CENTERED 25 MM ABOVE THE FAN ACCESS DOOR	
	228-2616	1	FILM-WARNING (UNIVERSAL)	
			INSIDE CAB ON INSIDE SURFACE OF FRONT LH POST APPROXIMATELY 900 MM ABOVE CAB FLOOR	
	226-1274	1	FILM-WARNING (CRUSH HAZARD, READ OMM)	
			BELOW CRUSH WARNING FILM ON THE SIDE OF THE MACHINE WITH THE ARTICULATION LOCK	
	225-4257	2	FILM-WARNING (HOT FLUID UNDER PRESSURE)	
			NEXT TO RADIATOR FILL CAP	
	227-7391	1	FILM-WARNING (SEAT BELT)	
			ON RH CAB POST	
	239-6986	1	PLATE-IDENTIFICATION (SERIAL NUMBER)	
			ON LEFT SIDE OF LOADER FRAME. FRONT EDGE OF PLATE 130-MM TO THE REAR OF CENTER LINE OF LIFT CYLINDER PIN.	
			TOP OF PLATE 15-MM BELOW THE HORIZONTAL CENTER LINE OF THE LIFT CYLINDER PIN. FOR CONCEALED PIN LOCATION SEE CHART	
A	**3N-3790**	1	PLATE-SERIAL NUMBER (ENGINE)	
			ON RH SIDE OF BLOCK	
	8L-8413	4	STRAP-CABLE	

A-NOT PART OF THIS GROUP
Y-SEPARATE ILLUSTRATION

<END>

243-0983 PLATE & FILM GP

S/N: A7G1-UP
AN ATTACHMENT

SMCS-7405, 7557 **i02211352**

NOTE	PART NUMBER	QTY	PART NAME 1 2 3 4 5 6 (PRODUCT LEVEL)	SEE PAGE
	225-0313	1	FILM-WARNING (JUMP START, READ OMM)	
	225-4256	2	FILM-WARNING (HOT FLUID UNDER PRESSURE)	
	226-1242	2	FILM-WARNING (CRUSH HAZARD, STAY BACK)	
	226-1275	1	FILM-WARNING (CRUSH HAZARD, READ MANUAL)	
	227-7390	1	FILM-WARNING (SEAT BELT)	
	228-2615	1	FILM-WARNING (UNIVERSAL)	
	237-6257	2	FILM-WARNING (FAN)	

<END>

220-7925 PLATE GP-AXLE IDENTIFICATION

S/N: A7G1-UP
PART OF 251-4522, 251-4523 AXLE AR-FIXED
ALSO AN ATTACHMENT

SMCS-7557 **i01910833**

NOTE	PART NUMBER	QTY	PART NAME 1 2 3 4 5 6 (PRODUCT LEVEL)	SEE PAGE
	220-3773	1	PLATE GP-IDENTIFICATION	
	109-8895	1	PLATE-IDENTIFICATION	
	220-3681	1	TAPE	
	220-7924	1	PLATE GP-IDENTIFICATION	
	082-2817	4	TACK	
	109-8895	1	PLATE-IDENTIFICATION	

<END>

246-4791 PROTECTION GP-VANDALISM

S/N: A7G1-UP
PART OF 277-8157 CONVERSION AR-CERTIFICATION
AN ATTACHMENT

SMCS-1273, 3005, 3030, 5056, 7315 **i02241355**

NOTE	PART NUMBER	QTY	PART NAME 1 2 3 4 5 6 (PRODUCT LEVEL)	SEE PAGE
Y	*7K-5636*	1	COVER GP-TMSN OIL FILLER CAP	274
	5P-8501	2	PADLOCK	
	246-2641	1	PADLOCK GP	

Y-SEPARATE ILLUSTRATION

<END>

MEMORANDA

PART NUMBER INDEX

Part	Page
0	
0L-1026	33
0S-0175	803
	805
0S-1579	342
0S-1587	272
0S-1590	342
0S-1614	867
0T-0244	872
	877
1	
1A-2170	54
1A-2223	319
1A-2812	470
1A-8096	517
1A-9579	552
1B-0676	367
1B-2578	831
1B-3057	308
1B-3867	75
1B-3934	388
1B-8702	504
1B-8705	8
	470
	485
1B-9575	579
1D-4539	579
1D-4675	770
1D-5117	122
1F-2771	342
1H-0974	323
1H-2629	199
1H-3244	119
1H-3338	205
1H-3937	492
	500
1H-5728	28
1H-8296	890
	892
1H-8306	113
1J-5353	319
1J-8387	327
1J-9671	28
	448
	449
	484
	517
1K-6872	781
1K-6985	473
1K-8850	363
1L-3768	584
1L-5072	274
	591
1L-7388	319
1L-7518	285
	287
	289
1M-4543	431
1M-6119	121
1M-6120	121
1M-6718	511
1M-9351	351
1N-5999	608
	634
1P-0604	344
1P-1367	54
1P-2807	917
1P-3703	478
	485
	569
1P-3704	478
	485
	554
	556
	559
	569
	571
	608
	634
1P-3705	312
	485
	571
	577
	608
	610
	612
	614
	616
	634
1P-3707	265
1P-4278	107
1P-4576	478
	485
1P-4577	474
1P-4578	565
	591
1P-4579	485
	559
	565
	591
1P-4584	478
	485
	591
1P-4585	591
1P-5767	485
	559
	569
	571
1P-6356	824
1R-0762	102
1R-0770	103
1R-1808	60
1R-1809	284
1S-0724	282
1S-0994	236
	485
	559
1S-5596	318
	342
1S-6595	292
1S-7251	121
	172
	201
	250
1S-7252	201
	250
1S-9593	229
1T-0936	495
	575
	610
	612
	614
	616
1T-1621	344
1T-1639	342
1U-0593	746
1U-1354	687
1U-1909	748
1U-2827	619
1U-3142	517
1U-3352	769
1U-8846	28
	113
	296
	298
	300
	302
	304
	306
1V-6341	292
	342
1V-6755	868
1V-8848	388
1V-8852	388
2	
2A-2677	230
	250
	478
2A-4429	20
2B-2404	404
	415
2B-9373	323
2C-9259	663
	665
	667
	669
	671
	672
	674
	675
	677
	678
	679
	681
	682
	683
	685
	690
	691
	693
	694
	696
	698
	704
	706
	717
	724
	729
2D-2443	325
	329
2D-2508	353
2D-2509	353
2D-2511	325
	329
	▶353
2D-4202	591
2D-4867	653
2D-6416	799
2D-6642	49
2F-8509	492
2G-1388	434
2G-4429	279
2G-4987	279
2G-9524	803
	805
2H-1855	203
2H-3088	291
2H-3920	130
	132
	227
	230
2H-3922	204
2H-6338	559
2H-9247	291
2J-3505	739
	764
2J-3506	764
	765
2J-7686	543
	544
2J-7761	274
	591
2K-0337	582
2K-0715	304
	306
2K-4472	631
2K-4821	119
2K-4973	770
	890
	892
2K-5065	291
2K-8199	548
2K-9111	867
2L-2685	312
	824
2M-0849	781
2M-6102	800
2M-9780	54
	110
	323
	351
	474
	506
	508
	512
	513
	515
	559
	563
	564
	573
	588
	606

▶ **PRIMARY REFERENCE**

PART NUMBER INDEX

Part	Page	Part	Page	Part	Page	Part	Page
	608	3B-0623	16		152	3E-7417	492
	610		18		155	3E-7427	317
	612		40		189	3E-7990	256
	614	3B-2062	367		194	3E-8005	110
	616		378		202	3E-8016	37
	618	3B-4501	775		207		296
	827	3B-4505	517		220	3E-8017	91
2N-0475	272	3B-4506	831	3E-3368	182		99
2N-2258	868	3B-4605	386		183	3E-8025	515
2N-2658	263		387	3E-3371	130	3E-8048	180
2P-1293	317	3B-4607	463		143	3E-8082	797
	559	3B-4611	390		153	3E-8320	121
	565		434		180	3F-0379	199
2P-2975	172	3B-4615	367		181	3F-2617	836
2P-4304	54		378		187		837
2P-6470	282	3B-4617	453		228		838
2P-6471	282	3B-4629	386	3E-3383	148		839
2P-8421	513		387		150	3F-5792	292
2P-8986	291	3B-4631	758		212	3F-7183	388
2P-8987	291	3B-4640	463		788	3F-9556	119
2R-1920	645	3B-6552	415		846	3G-3483	579
2S-0669	319	3B-8489	331		847	3G-3484	579
2S-0795	272		386	3E-3389	227	3G-3726	504
2S-1382	318		387	3E-3805	790	3G-6395	746
	350		388		791		748
2S-1384	350		404		795	3G-8054	485
2S-2053	61		472	3E-4051	824	3G-8057	485
2S-2160	470		653	3E-4052	824	3G-8956	▶746
2S-2596	510	3B-8491	653	3E-4057	824	3H-0107	318
	513	3D-0053	582	3E-4058	824	3H-0442	573
	515	3D-2239	353	3E-4078	824		638
2S-4078	262	3D-2824	113	3E-4302	492	3H-2652	265
	608		202	3E-4312	781	3H-5523	272
	610		262	3E-4321	824	3J-1907	63
	612		308		827		69
	614		462	3E-4352	38		92
	616		474		39		100
	634		476		65		105
2S-4663	351		477	3E-4353	125		106
2S-4750	280		478		272		175
	291		483	3E-4888	35		236
2S-5658	23		484	3E-5169	235		243
2S-5835	351		492	3E-5180	229		269
2T-3360	468		513		268		284
	498		515	3E-5239	227		315
2V-3216	222		518		250		342
	256		558		841		349
	900		559		843		350
2V-3726	859		563	3E-5464	775		351
2V-7859	470		564	3E-6328	▶118		398
2Y-5564	236		586		227		401
2Y-5829	46		593	3E-6332	197		461
	47		596	3E-6389	▶143		462
	61		599		227		463
	125		602	3E-6466	▶152		474
	241		607		166		476
			827	3E-6602	903		477
		3D-4603	513		905		478
3		3D-8317	351	3E-6769	236		483
		3D-8417	304	3E-6771	610		484
3B-0551	298		306		612		504
	300	3E-2310	477		614		507
	302		484		616		511
	304	3E-3365	118	3E-6788	65		513
	306		141	3E-6799	344		515

▶ **PRIMARY REFERENCE**

PART NUMBER INDEX

Part	Page	Part	Page	Part	Page	Part	Page
	549		243		161	4B-9782	280
	554		250		170		513
	556		308		178		515
	558		315		227		517
	559		317		229	4B-9784	512
	563		462		236	4B-9880	351
	564		463		241	4D-1577	291
	565		474		243	4D-7388	230
	571		476		250		478
	573		477		252		485
	575		483		254		559
	577		484		256	4D-7794	176
	579		502		267	4D-8123	224
	586		503		269		404
	593		504		404	4D-8948	404
	596		509		406	4D-9517	250
	599		513		410		470
	600		515		413	4E-0684	356
	602		559		460	4E-1384	78
	608		565		470		367
	610		573		775		427
	612		575		811		786
	614		577		815		803
	616		586		833		805
	620		605		834		903
	628		608		838	4E-2229	130
	631		633		839		132
	634		634		841	4E-2240	298
	636		637		843		300
	908		641		900		302
	911		827	3S-2708	318		304
3J-4407	517	3K-0715	579	3S-6049	121		306
3J-4818	890	3K-4897	880	3S-6050	121	4E-2604	201
	892	3K-5178	78	3S-6605	48	4E-2853	791
3J-5553	272	3K-6060	831	3S-8665	824	4E-3196	653
3J-7354	57	3K-6113	631	3S-9643	72	4E-3896	285
	66	3K-8460	28	3S-9896	319		287
	284	3K-9770	658	3T-2662	236		289
	461		740	3T-3422	199	4E-3897	285
	477		746	3T-3434	199		287
	483		747	3T-4377	318		289
	513		748	3T-4509	819	4E-4031	285
	515		749	3T-6965	291		287
	549		750	3T-9549	262		289
	564		751	3V-0046	552	4E-6523	880
	577	3N-3790	918	3V-3263	900	4E-8168	335
	588	3N-8506	344	3V-4791	398		339
	610	3P-0647	62		401		340
	612		342	3V-7476	797	4E-8722	526
	614	3P-0650	57	3W-9117	372		528
	616	3P-2404	559	3Y-2888	197		530
	622		565				532
	624	3P-3839	236				859
	625	3P-7009	318	**4**			880
	626		319			4E-8958	450
	629	3P-7832	263	4B-0418	478	4E-9173	880
	638	3P-9900	890		485	4E-9174	880
3J-7479	510		892	4B-2049	230	4E-9664	450
3J-8500	494	3R-9322	236	4B-4274	775		451
3K-0196	291	3S-2093	100		811	4E-9667	459
3K-0360	28		107		855	4E-9668	459
	100		121		857	4F-2294	206
	105		126	4B-4278	890	4F-4097	269
	107		141		892		492
	224		159	4B-4280	513	4F-4879	878

► **PRIMARY REFERENCE**

PART NUMBER INDEX

Part	Page
4F-5695	15
4F-7389	265
	312
4F-7827	765
4F-7952	513
4F-8925	326
4H-1225	173
	245
	415
	824
4I-1022	586
4I-3038	859
4I-3398	372
4I-5228	375
4I-7889	830
4J-0519	510
4J-0520	282
	474
	478
	485
	515
4J-0521	312
4J-0522	554
	556
	565
4J-0524	485
	559
	565
	577
	608
	610
	612
	616
	634
4J-0525	312
4J-5267	478
4J-5268	628
4J-5309	504
4J-5351	628
4J-5477	398
	401
	476
	483
	564
	593
	596
	599
	602
	758
	908
	911
4J-6888	546
	547
4J-7533	351
	467
	573
	575
	577
	608
	634
4J-8996	614
4J-9224	473
4J-9535	577
	608
	610
	612
	614
	616
	634
4K-0684	748
4K-1388	342
	517
4K-1540	453
4K-2039	641
4K-6780	388
4K-6781	388
4K-6804	298
	300
	302
	304
	306
4K-7461	388
4K-7462	388
4K-8302	824
4K-8864	222
	245
4K-9429	775
	811
	854
4L-6454	781
	875
4M-1751	350
4M-1831	199
4M-2381	351
4M-6425	867
4M-7470	390
	803
	805
4M-8239	350
4M-8973	406
	410
	413
4N-1059	201
4N-8150	54
4P-4369	91
4P-7428	245
4P-7581	100
	230
	236
	241
	267
4P-7582	243
4P-8134	269
4P-8525	227
4S-1936	485
4S-5838	285
	289
4S-5924	318
4S-8541	344
4S-8598	291
4S-8599	291
4S-8603	291
4T-0925	511
4T-0928	511
4T-1860	▶511
	513
4T-4942	633
4T-5070	511
4T-5071	511
4T-5072	628
4T-5613	473
4T-6699	747
4T-7571	633
4T-7581	▶633
	634
4T-8054	473
4T-9905	512
4V-1901	388
4V-1939	224
	252
	254
4V-4164	227
4V-5099	304
	306
4V-7081	330
4V-7099	653
4V-7101	653
4V-8256	770
4V-8519	653
4V-8520	655
	656
	657
	762
	763
4V-8577	890
	892
4V-8673	642
	643
	644
	653
4V-8674	642
	643
	644
	653
4V-8675	642
	643
	644
	653
4W-9149	241
4Y-3046	439
5A-3604	610
	612
	614
	616
5B-0935	415
5B-9192	814
5C-2874	814
5C-2890	78
	164
	166
	205
	367
	390
	460
	791
	855
	857
	859
	890
	892
5C-7261	78
	146
	147
	172
	173
	176
	230
	367
	398
	401
	427
	498
	786
	791
	803
	805
	819
	830
	868
	880
5C-8312	214
	230
5C-8917	817
5C-9553	126
	363
	398
	401
	406
	410
	413
	775
	809
	811
	895
	900
5D-0718	559
5D-1026	69
	107
5D-1911	591
5D-2989	318
5D-7927	591
5D-9344	28
5F-3106	504
5F-8000	265
5F-9035	518
5F-9144	549
5G-6973	649
	650
	652
5G-7020	478
	485
5G-7021	478
	485
5G-7817	398
	476
	482
5G-9603	398
	401
5H-3193	515
5H-3701	298
	300
	302
	304
	306
5H-4020	554

5

▶ PRIMARY REFERENCE

PART NUMBER INDEX

Part	Page	Part	Page	Part	Page	Part	Page
	556		304	5P-4423	890		265
5H-5012	298		306		892		272
	300	5M-6668	236	5P-4484	298		291
	302	5M-9548	350		300		319
	304	5M-9709	21		302	5P-8246	28
	306	5P-0372	378		304	5P-8247	24
5H-6202	318	5P-0537	50		306		26
5H-6734	291		155	5P-4889	112		119
5H-8853	105		256	5P-5045	319		298
	462	5P-0747	121	5P-5296	318		300
5H-8985	579		201	5P-5297	319		302
5I-3333	375		250	5P-5411	291		304
5I-4376	175	5P-0761	121	5P-5461	415		306
5J-2974	280		250	5P-5463	415	5P-8248	14
	515	5P-0767	69	5P-5598	20		456
	628		107	5P-5623	220		764
5J-4773	764	5P-1076	78	5P-5624	203		765
5K-1568	280		280		228	5P-8249	739
5K-1787	546		312	5P-5637	886		764
	547		360	5P-5677	141	5P-8250	546
5K-2298	404		363	5P-5678	6		547
	415		394	5P-5923	824	5P-8309	79
5K-5338	105		398	5P-5927	819		855
	308		401	5P-6010	890		857
	463		431		892	5P-8361	658
	824		559	5P-6120	237	5P-8362	658
5K-8591	318		582		868	5P-8444	280
	344		593	5P-6313	197	5P-8500	1
5K-9065	344		596	5P-6314	197		274
5K-9090	282		599	5P-6414	344	5P-8501	919
	476		602	5P-6719	628	5P-8502	274
	483		803	5P-6724	461	5P-8823	746
	519		805	5P-6727	29		747
	558		808	5P-6872	831		748
	559		903	5P-6879	836		749
	563		905		837	5P-8874	474
	564	5P-1175	917	5P-6944	107	5P-9085	236
	634	5P-1230	69	5P-7211	433	5P-9132	788
5K-9242	415	5P-1251	69		437	5P-9262	629
5K-9243	415	5P-1262	69		439	5P-9297	173
5K-9979	415	5P-1295	476	5P-7468	280		236
5L-1941	318		482	5P-7469	280		245
5L-2952	59	5P-1442	69	5P-7483	378		250
5L-4019	579	5P-1827	579		390	5P-9299	404
5L-4035	398	5P-1828	579		427		406
	401	5P-1941	579	5P-7701	54		410
5L-4141	504	5P-2199	506	5P-7803	790		413
5L-4504	312		508		791	5P-9436	72
5L-4507	236	5P-2248	375		795	5P-9617	57
5L-4763	33	5P-2526	291	5P-7854	824	5P-9806	265
5L-7200	214	5P-2569	504		911	5S-4246	498
	216	5P-3779	523	5P-7957	854	5S-7001	350
5M-2057	619	5P-3928	822	5P-7958	1	5S-7349	119
5M-2894	112	5P-3929	824		819		199
	292	5P-3930	319		859		203
	342	5P-3948	824	5P-8068	65	5S-7383	867
5M-3038	318	5P-4106	822	5P-8194	319	5T-5682	325
5M-3062	448	5P-4115	775	5P-8211	37		329
	449		811	5P-8215	504	5V-0353	653
5M-3154	292	5P-4116	230	5P-8245	22	5V-0354	653
5M-5687	406		431		25	5V-1496	873
	410		565		28	5V-2798	643
	413		797		34		644
5M-6126	318	5P-4295	269		37		653
5M-6592	298		478		51	5V-6152	245

► **PRIMARY REFERENCE**

PART NUMBER INDEX

Part	Page
5V-6153	245
5V-6380	423
5V-8780	78
6	
6A-5591	37
6B-4370	285
	287
	289
6B-4852	298
	304
	306
6B-6122	517
6B-6682	456
6B-6863	319
6C-1496	832
6C-2356	316
6C-3588	336
6C-3678	803
	805
6C-3679	803
	805
6C-3997	173
6C-4018	336
6C-5303	298
	300
	304
6C-5304	298
	300
	304
6C-7369	338
6C-8648	304
	306
6C-8664	2
6D-1641	230
	463
	478
	830
6D-3479	222
	398
	401
	908
6D-4244	478
	565
6D-4246	243
	245
	308
	478
	485
	559
	824
6D-6146	230
6D-7146	64
6E-0198	504
6E-0381	502
	503
	573
	605
6E-0410	506
	508
6E-1436	492
6E-1497	473
6E-1835	633
6E-3268	629
6E-3269	629
6E-3272	629
6E-3273	629
6E-3274	629
6E-3275	629
6E-3276	629
6E-4224	492
6E-4228	507
6E-4229	507
6E-4230	507
6E-4239	507
6E-4241	507
6E-4242	507
6E-4246	507
6E-4318	507
6E-4753	509
6E-4974	473
6E-5066	495
	573
	575
	577
6E-5289	515
6E-5397	515
6E-6140	507
6E-6141	507
6E-6142	507
6E-6527	629
6E-6528	629
6E-6536	629
6E-6537	629
6E-6538	629
6E-6539	629
6E-6540	629
6F-0196	739
	764
6F-0253	130
	132
	228
	229
6F-3930	353
6F-5188	280
6F-7045	204
6F-7062	272
	633
6H-3618	453
6H-3999	388
6H-5139	280
6H-7062	582
6H-9361	591
6I-1418	128
	227
6I-8510	319
6J-2680	478
	485
6J-3134	504
	577
	608
	610
	612
	614
	616
	634
6J-4568	518
6J-4608	517
6J-6439	633
6J-6506	515
6J-6516	513
	515
6J-6517	515
6K-0806	404
6K-2430	304
	306
6K-5528	285
	287
	289
6K-5529	285
	287
	289
6K-8178	122
	224
	824
6L-1649	265
6L-2609	59
6L-3616	415
6L-8617	84
6M-5062	641
6N-6984	476
6N-8744	461
	476
6N-8863	37
6N-9349	237
6P-0593	470
6P-7704	319
6R-7653	526
	528
	530
	532
6S-3859	800
6S-6646	441
	803
	805
6T-3631	218
	235
6T-3632	218
	235
6T-3633	218
	235
6T-3644	237
6T-6052	515
6T-6080	581
6T-6708	775
	811
6V-0292	431
6V-0357	608
6V-0371	201
6V-0400	569
6V-0473	318
6V-0484	269
	474
6V-0852	175
	269
	284
	342
	351
	463
	476
	482
	554
	556
	559
	565
	571
	593
	596
	599
	602
	908
	911
6V-0974	485
6V-1355	69
6V-1668	775
	811
6V-1722	827
6V-1819	265
	291
6V-1820	272
	291
	344
6V-1875	559
6V-1889	230
	463
	474
	559
	565
	911
6V-1949	518
6V-1970	1
6V-2317	29
	64
	66
	272
6V-2478	319
6V-2679	917
6V-2686	197
6V-2687	230
	781
6V-3251	43
	66
	76
6V-3265	230
	415
	460
	485
	900
	908
6V-3505	506
6V-3531	304
	306
6V-3535	29
6V-3536	12
6V-3538	16
6V-3668	34
	265
	272
6V-3822	22
	92
	265
	282
6V-3823	265
	272
	344
6V-3834	65
6V-3907	586
6V-3918	6

► **PRIMARY REFERENCE**

PART NUMBER INDEX

Part	Page	Part	Page	Part	Page	Part	Page
	11	6V-5134	65		751		237
	241	6V-5142	618	6V-6604	390	6V-8378	199
6V-3938	214	6V-5192	29	6V-6609	43	6V-8397	100
6V-3940	59		494		69		106
	74	6V-5195	513		72		110
	351	6V-5217	8		196		175
6V-3965	175		59	6V-6715	141		398
	284	6V-5218	63	6V-6716	235		401
	342		65	6V-6923	116		461
	349		296	6V-7238	37		462
	351		351		827		463
	462	6V-5219	29	6V-7350	77		477
	477		66	6V-7357	365		478
	484		272		367		483
	554	6V-5221	65		775		484
	556		66		811		558
	558	6V-5230	265	6V-7419	900		559
	564	6V-5586	511	6V-7420	827		563
	571	6V-5645	230	6V-7636	791		564
	593	6V-5657	543	6V-7646	873		565
	596		544	6V-7673	492		593
	599	6V-5683	468	6V-7728	256		596
	602		470	6V-7732	298		597
6V-3987	526	6V-5684	265		300		599
	528	6V-5686	298		302		602
	530		300		304		603
	532		302		306		620
6V-4248	100		304	6V-7744	406		760
	291		306		410	6V-8398	63
	342	6V-5696	51		413		105
6V-4249	22	6V-5839	9		591		308
	37		22	6V-7979	304		462
6V-4350	318		57		306		463
	344		61	6V-7981	106		474
6V-4351	318		77		110		476
	344		91	6V-8004	22		477
6V-4356	824		100	6V-8076	461		483
6V-4357	824		106	6V-8116	504		484
6V-4365	269		110	6V-8128	344		559
6V-4369	775		125	6V-8149	22		564
	811		241		291		565
6V-4589	115		243	6V-8185	791		593
	207		265	6V-8187	235		597
6V-4604	390		269	6V-8188	122		599
6V-5002	473		282		199		603
6V-5048	16		291	6V-8189	119		636
	41		323	6V-8197	10	6V-8455	347
	89		344	6V-8200	586		348
	90		803		631	6V-8625	308
	178		805	6V-8212	241		462
	186	6V-5842	9		269		474
	188		100	6V-8214	256		477
6V-5049	18		265	6V-8225	29		483
	42		291		155	6V-8626	474
	54	6V-5843	33		779	6V-8627	908
	57		504		780		911
	66	6V-5844	584	6V-8237	543	6V-8629	564
	178	6V-6210	900		544	6V-8634	100
	185	6V-6317	100	6V-8336	492	6V-8635	634
	272		110	6V-8337	492	6V-8636	105
	639		269	6V-8352	629		461
6V-5063	20		292	6V-8359	54		462
	72	6V-6353	92	6V-8362	203		483
	74		582	6V-8369	227		558
6V-5064	272	6V-6535	658	6V-8376	236		593

► **PRIMARY REFERENCE**

PART NUMBER INDEX

Part	Page
	596
	599
	602
6V-8637	474
	558
	563
6V-8639	105
	476
	483
6V-8641	398
	401
	476
	483
	908
6V-8642	563
6V-8714	476
	483
6V-8722	474
6V-8723	462
6V-8724	462
	477
	484
	559
	593
	596
	599
	602
	620
6V-8731	308
6V-8738	565
6V-8781	593
	596
	599
	602
	620
6V-8782	462
6V-8784	462
	559
6V-8836	241
	256
6V-8837	492
6V-8928	819
6V-8934	564
6V-8980	462
6V-8981	308
	477
6V-8983	564
6V-8984	282
6V-8987	559
6V-8988	477
	559
6V-8995	484
6V-8997	559
	564
6V-9001	564
6V-9003	564
6V-9004	477
	484
	564
6V-9005	519
6V-9007	308
6V-9008	559
	564
6V-9027	31
	72
6V-9162	477
	483
6V-9168	463
	560
6V-9169	308
	463
	478
	485
	560
6V-9170	565
6V-9172	282
6V-9182	564
6V-9189	144
	145
	399
	402
6V-9200	461
6V-9327	880
6V-9350	565
6V-9489	463
6V-9497	498
6V-9632	228
	236
	375
	398
	401
	482
	775
	811
	857
	880
6V-9649	559
6V-9671	180
6V-9673	230
6V-9746	308
	317
	462
	463
	474
	477
	478
	483
	484
	485
	558
	559
	563
	564
	565
	607
6V-9808	477
6V-9828	758
6V-9829	560
	593
	597
	599
	603
	620
	760
6V-9830	594
	597
	600
	603
6V-9832	463
6V-9836	462
	593
	596
	599
	602
	760
6V-9837	462
	484
6V-9839	564
6V-9843	398
	401
	462
6V-9849	758
	908
	911
6V-9850	100
	399
	402
	483
	564
	593
	596
	599
	602
6V-9851	308
	462
	483
6V-9853	474
	559
	564
6V-9854	559
	563
6V-9872	483
6V-9873	477
	484
	564
6V-9877	317
	474
6W-4749	285
	287
	289
6W-4750	285
	287
	289
6W-5752	441
6W-5817	367
	378
6W-5818	378
6W-6005	121
6W-7297	456
6W-7301	456
6Y-1087	344
6Y-1089	344
6Y-1090	344
6Y-1602	318
6Y-2546	298
	304
	306
6Y-2547	298
	304
	306
6Y-3148	344
6Y-4280	492
6Y-4819	318
6Y-4859	344
6Y-5911	318
6Y-5912	319
6Y-6351	739
	764
6Y-9960	35

7

Part	Page
7B-3028	291
7B-3039	619
7B-3642	291
7B-8194	517
7C-1445	59
7C-1583	50
7C-1728	50
7C-1821	65
7C-1822	65
7C-3081	54
7C-3082	54
7C-3083	54
7C-3954	54
7C-4354	237
7C-7851	27
7C-7852	27
7C-8246	106
7D-1553	565
7D-1649	243
7D-1728	237
7D-5252	353
7D-7233	308
	415
7D-7469	326
	327
	328
7D-8636	388
7D-8637	388
7D-9014	584
7E-6508	256
7E-7977	20
7E-8630	87
7E-9898	565
7F-3400	1
7F-5345	406
	410
	413
7F-8607	824
7F-9571	456
7F-9572	456
7F-9578	456
7F-9579	456
7G-2343	319
7G-2516	318
7G-2830	319
7G-3975	319
7G-4998	262
7G-5670	319
7G-6355	318
7G-7053	862
7G-7218	319
7G-7724	319
7G-8430	344
7G-8839	472
7H-1447	591
7H-7055	106
	110

PART NUMBER INDEX

Part	Page	Part	Page	Part	Page	Part	Page
7I-3015	661	7K-9211	542	7T-9370	319		594
	662	7K-9212	653	7T-9755	492		597
	663	7K-9220	653	7V-0445	880		600
	665	7L-2894	199	7V-2882	645		603
	667	7L-6580	72	7V-6715	653	7X-2553	78
	669	7L-8170	770	7V-9791	441		308
	671	7L-9061	207	7W-2108	791		434
	673		492	7W-7381	593	7X-2554	113
	675	7M-1297	262		596		224
	679	7M-5130	513		600		330
	683	7M-8485	69		602	7X-2555	803
	691		113	7W-8106	394		805
	706		139		398	7X-2556	760
	717		291		401	7X-2563	35
	724		298	7X-0334	2		584
7I-3722	237		300	7X-0409	243	7X-2584	361
7I-4078	461		302	7X-0515	78	7X-2586	361
7J-0204	269		304	7X-0562	199	7X-2618	463
	608		306	7X-0578	367	7X-2619	470
	631		504	7X-0579	85	7X-2621	439
	634		510		110	7X-3229	917
7J-4321	515		519	7X-0583	381	7X-3310	880
7J-5311	524		548	7X-0589	363	7X-3373	199
7J-6285	10		559		427	7X-3392	312
7J-6580	319		560		807		554
7J-9108	474		563	7X-0591	560		556
	563		564		591	7X-4776	509
	564		608	7X-0593	850		606
	565		614	7X-0603	390		639
	608		634		439	7X-6041	797
7J-9885	473	7M-8592	350	7X-0607	113	7X-6222	269
7J-9933	608	7M-9918	98	7X-0608	770	7X-6315	134
	633	7N-0140	197	7X-0623	92		136
7K-1181	69	7N-0296	197	7X-0750	372	7X-7644	917
	126	7N-0718	121		375	7X-7662	173
	221		▶204	7X-0752	357		176
	222	7N-2059	197		359	7X-7729	69
	224	7N-5274	121		645		78
	227	7N-5683	16		653		87
	235	7N-5876	227	7X-0772	220		93
	236	7N-9801	197	7X-0818	173		176
	243	7N-9943	143		176		282
	245	7S-2962	291		230		316
	267	7S-4001	285		463		363
	398		289	7X-0870	65		365
	401	7T-0020	143	7X-0872	563		367
	530	7T-1099	228	7X-0901	484		378
	900		236	7X-1550	608		390
	911		372	7X-2459	563		394
7K-1401	560		375	7X-2533	141		404
7K-1402	560		880	7X-2534	224		406
7K-1972	372	7T-3267	199	7X-2537	85		410
7K-3176	822	7T-3268	199		399		413
7K-3304	822	7T-3271	199		402		427
7K-4129	106	7T-3276	199		797		431
	110	7T-3277	199	7X-2538	785		441
7K-5634	274	7T-3278	199	7X-2543	560		463
7K-5636	▶274	7T-3279	199	7X-2544	265		519
	919	7T-3451	199	7X-2545	308		524
7K-6536	803	7T-3454	199		877		565
	805	7T-3973	199	7X-2546	78		584
7K-9205	653	7T-3974	199	7X-2549	388		786
7K-9209	540	7T-4532	784		474		808
	541	7T-6799	227	7X-2552	367		911
	653	7T-8816	318		439	7X-7893	558

▶ **PRIMARY REFERENCE**

PART NUMBER INDEX

Part	Page
7Y-1976	69
7Y-2522	372
	482
7Y-3173	216
7Y-4215	586
7Y-4217	631
7Y-4538	554
	556
	569
	571
7Y-4944	586
7Y-5074	565
7Y-5458	212
7Y-5464	212
7Y-7256	859
7Y-8763	375
8	
8C-0569	558
8C-0596	243
8C-3056	121
8C-3078	579
8C-3085	511
8C-3089	89
8C-3095	141
8C-3097	509
8C-3100	75
8C-3110	588
8C-3132	506
8C-3206	282
	478
	485
	513
	515
	591
8C-3210	113
8C-3312	584
8C-3445	57
8C-3446	66
	284
	549
8C-3447	284
8C-3451	549
8C-3655	199
8C-5346	917
8C-5607	126
	141
8C-5608	126
	141
8C-6354	227
8C-6358	122
8C-6712	549
8C-6738	896
	898
8C-6959	107
8C-7528	402
8C-7563	474
	564
8C-7581	775
	811
8C-8451	126
	252
	254
	419
	421
	444
8C-8498	308
	476
	482
8C-8902	917
8C-8989	308
	477
	484
8D-3791	423
8D-6542	819
8D-9671	105
8D-9739	319
8E-1143	351
8E-5247	344
8E-5310	659
	660
	661
	662
	663
	665
	667
	669
	671
	673
	675
	679
	683
	685
	691
	706
	717
	724
	729
8E-5311	659
	660
	661
	662
	663
	665
	667
	669
	671
	673
	675
	679
	683
	685
	691
	706
	717
	724
	729
8E-6539	344
8E-6648	344
8E-7447	342
8E-7448	318
8E-7926	289
8E-7927	289
8E-8299	319
8E-8304	318
8E-8305	318
8E-8439	33
8E-9571	66
	296
8E-9740	291
8E-9741	291
8E-9893	351
8E-9972	344
8F-0212	291
8F-1434	199
8F-8151	69
8F-9206	513
	515
	824
8G-0871	378
8G-6035	803
	805
8H-1141	199
8H-1603	110
8H-5303	204
8H-5306	204
8H-5352	318
8H-7521	291
8H-9789	29
8J-0548	546
	547
8J-1552	517
8J-1553	482
	▶517
8J-4351	65
8J-4955	731
	▶769
8J-6815	515
8J-6875	482
	▶512
8J-8332	406
	410
	413
8J-8782	619
8J-8783	619
8K-2665	485
8K-4739	66
8L-2777	49
8L-2786	37
	42
	100
	110
	195
	639
8L-5423	93
8L-6565	579
8L-8413	121
	890
	892
	918
8M-2538	350
8M-2770	122
	224
	250
	404
8M-2772	237
	404
8M-2773	106
	404
	415
	463
8M-3107	291
8M-4409	350
8M-4986	350
8M-5010	318
8M-5253	351
8M-5255	319
8M-7160	291
8M-7758	797
8M-8489	323
8M-9307	272
8N-0869	121
8N-1532	229
8N-1533	236
8N-1535	229
	236
8N-1536	229
8N-1540	354
8N-1541	354
8N-1725	121
8N-2622	214
	216
8P-1722	291
8P-1916	319
8P-1918	319
8P-1919	318
8P-1948	318
8P-1964	319
8P-2019	318
8P-2022	318
8P-2023	319
8P-2042	319
8P-2053	318
8P-2155	291
8P-3251	291
8P-7857	344
8P-7858	344
8P-8540	367
8P-9770	745
8R-0512	298
	300
	302
	304
	306
8R-1465	326
8R-2379	327
8R-2918	468
8R-3695	526
	528
	530
	532
	819
8S-0768	269
8S-0948	824
8S-2225	450
8S-2634	172
8S-3020	121
8S-4304	272
8S-7803	781
8S-9075	285
	287
	289
8S-9076	285
	287
	289
8T-0075	100
8T-0077	484
8T-0078	477

▶ **PRIMARY REFERENCE**

PART NUMBER INDEX

Part	Page	Part	Page	Part	Page	Part	Page
	484	8T-0667	543		375		197
8T-0100	38		544		381		214
	39	8T-0722	619		394		224
	110	8T-0741	463		398		230
	269	8T-0788	398		401		237
8T-0106	28		401		406		243
	318	8T-1158	577		410		245
8T-0122	89	8T-1159	468		413		250
8T-0164	593		470		433		252
	596	8T-1718	564		441		254
	599	8T-1779	484		461		265
	602		593		468		267
	908		596		474		280
8T-0207	302		599		482		282
	306		602		582		308
8T-0249	565	8T-1788	543		824		312
8T-0255	170		544		827		350
8T-0275	58	8T-1792	546		880		354
8T-0276	128		547		903		360
8T-0281	24	8T-1889	478		911		378
	27		485	8T-3519	122		380
	342		832	8T-3597	375		381
8T-0285	620		833		398		386
8T-0288	214		834		401		387
	216		836		434		390
8T-0292	72		837		437		394
8T-0293	272		838		571		399
8T-0318	868		839		581		402
8T-0328	199	8T-1890	478		655		404
	214		485		903		406
	216		832		905		410
	815		833	8T-3612	228		413
	873		834		433		415
8T-0336	298		836		791		419
	300		837		800		421
	302		838	8T-3844	245		429
	304		839		830		433
	306	8T-1905	106	8T-3851	357		434
8T-0337	230	8T-2275	591		359		460
	815	8T-2353	477		372		463
8T-0338	8		564		648		468
8T-0358	291	8T-2394	296		649		470
8T-0360	27	8T-2561	380		650		474
8T-0372	265		824		652		478
	492	8T-2893	78	8T-3985	367		485
8T-0389	87		235	8T-4121	78		491
	122	8T-2899	451		87		510
	148	8T-2920	565		96		513
	150	8T-2925	263		97		515
	363	8T-2947	126		105		560
	365	8T-3282	304		120		565
	367		306		122		582
	427	8T-3298	619		126		591
8T-0439	752	8T-3312	563		144		594
	754	8T-3330	546		145		597
8T-0640	50		547		158		600
8T-0642	178	8T-3490	78		159		603
8T-0643	77		121		161		620
	106		228		164		760
	269		243		166		786
	323		265		168		801
8T-0644	22		292		170		803
	109		312		172		805
	419		367		173		808
	421		372		176		813

► **PRIMARY REFERENCE**

PART NUMBER INDEX

Part	Page
	814
	819
	824
	827
	830
	832
	833
	834
	836
	837
	838
	839
	868
	900
	903
	905
	908
8T-4122	170
	367
	594
	597
	600
	603
	850
8T-4123	35
	122
	388
	581
	757
8T-4131	631
	757
8T-4132	78
	622
	624
	625
	626
	760
8T-4133	78
	93
	96
	97
	122
	126
	158
	159
	161
	170
	173
	224
	230
	237
	245
	252
	254
	308
	312
	354
	367
	378
	380
	390
	399
	402
	404
	415
	427
	431
	433
	434
	453
	463
	478
	485
	565
	631
	760
	824
	832
	833
	834
	836
	837
	838
	839
	868
8T-4136	69
	78
	96
	97
	122
	164
	166
	168
	176
	224
	230
	237
	243
	282
	308
	312
	316
	350
	365
	367
	378
	380
	399
	402
	406
	410
	413
	415
	419
	421
	433
	434
	439
	441
	463
	468
	478
	485
	491
	510
	519
	560
	565
	586
	631
	824
	868
	880
	900
	908
8T-4137	69
	79
	122
	166
	170
	173
	176
	197
	220
	224
	230
	237
	245
	250
	252
	254
	267
	282
	308
	354
	360
	367
	399
	402
	404
	415
	460
	463
	474
	478
	485
	560
	565
	620
	786
	799
	808
	813
	814
	824
	827
	868
	900
	908
	911
8T-4138	79
	126
	166
	230
	237
	441
	530
	880
	900
8T-4139	280
	360
	363
	388
	394
	399
	402
	434
	437
	453
	463
	472
	485
	491
	554
	556
	571
	582
	803
	805
	808
	903
	905
8T-4140	441
	586
8T-4167	35
	758
8T-4171	230
	237
	250
	841
	843
8T-4172	312
	399
	402
	474
	594
	597
	600
	603
8T-4176	330
8T-4182	93
	282
	478
	485
	565
	582
	760
8T-4183	280
	388
	427
	431
	478
	485
	560
	569
	571
	581
	582
	594
	597
	600
	603
	807
8T-4184	312
	478
	485
	560
	565
	569
	591

► **PRIMARY REFERENCE**

PART NUMBER INDEX

Part	Page	Part	Page	Part	Page	Part	Page
8T-4185	122		363		809		463
	419		394		811		513
	421		399		859		565
	468		402		873		785
	470		427		880		791
	485		429		900		819
	504		431	8T-4219	372		827
8T-4186	79		463	8T-4222	463		830
	230		470		478		837
	250		485	8T-4223	2		838
	282		504		10		839
	394		524		79		863
	399		565		122		867
	402		807		170		880
	431		819		173	8T-4226	79
	478		832		230		87
	582		833		237		122
8T-4189	144		834		243		431
	145		836		250		439
	296		837		280		478
	406		838		312	8T-4244	230
	410		839		388		237
	413	8T-4196	79		394		250
	565		282		415		280
	791		381		427		437
8T-4191	172		390		434		439
	237		399		437		453
	367		402		453		460
	399		406		460		478
	402		410		463		485
	404		413		474		836
	470		463		478	8T-4648	312
	819		474		485		485
	903		478		491		554
	905		485		554		556
8T-4192	122		504		556		569
	474		513		560		571
	485		515		565	8T-4649	35
	560		584		569	8T-4742	791
	569		591		571	8T-4750	492
	594		786		582	8T-4779	381
	597	8T-4198	120		591	8T-4780	653
	600		474		594	8T-4896	35
	603		478		597		619
	807		485		600		877
	903	8T-4199	230		603	8T-4908	197
	905	8T-4200	216		631		406
8T-4193	560		406		807		410
	591		410		824		413
	850		413	8T-4224	28		431
8T-4194	453		827		119		863
	485	8T-4201	591		146	8T-4910	485
	560	8T-4205	119		147		582
	569		166		172	8T-4935	164
	571		199		173		166
8T-4195	79		203		176		168
	87		216		197		357
	105		230		230		372
	158		235		399	8T-4956	79
	159		470		402		173
	161		526		406		312
	176		528		410		554
	280		530		413		556
	308		532		429		560
	312		775		458		569

► **PRIMARY REFERENCE**

PART NUMBER INDEX

Part	Page
	571
	591
	824
8T-4967	645
8T-4968	367
8T-4970	230
	237
	526
	528
	530
	532
8T-4971	173
	176
	368
	791
	809
8T-4983	69
8T-4984	66
8T-4985	560
8T-4994	582
8T-5005	148
	150
	478
	485
	513
	515
	565
	584
8T-5041	388
8T-5093	29
8T-5373	317
8T-5400	900
8T-5414	291
8T-5436	237
	478
	485
	565
8T-5439	653
8T-5460	653
8T-6381	581
8T-6430	388
	653
	757
8T-6462	236
	645
8T-6466	79
	93
	265
	399
	474
	478
	485
	515
	824
	830
8T-6594	368
8T-6624	850
8T-6631	775
8T-6663	559
8T-6764	272
8T-6842	819
8T-6868	285
	289
	571
8T-6870	230
8T-6876	63
	462
	483
8T-6895	462
8T-6907	558
8T-6912	147
	429
8T-6974	245
8T-7338	453
8T-7501	372
8T-7525	588
8T-7547	172
8T-7566	853
8T-7876	492
8T-7934	269
8T-7970	558
8T-7971	581
8T-8442	444
	588
	629
8T-8569	199
8T-8641	781
8T-8729	143
	148
	150
	152
	189
	194
	498
	788
	846
	847
	848
8T-8737	148
	150
	212
	227
	228
	243
	256
	535
	537
	848
	849
8T-8827	121
	250
8T-8874	228
8T-8899	477
	485
	559
	565
8T-8902	558
	563
	593
	596
	599
	602
8T-8919	243
8T-9005	797
	819
8T-9079	740
	748
	750
	751
8T-9082	873
8T-9371	890
	892
8T-9384	312
8T-9386	559
8T-9515	75
	277
8T-9598	75
8T-9655	110
	128
	227
8T-9884	199
8V-1412	331
8W-5256	279
8W-9602	326
	327
8X-0674	581
8X-4186	563
8X-5027	474
8X-5147	372
	375
8X-5804	227
8Y-4501	791
8Y-5746	880
8Y-5910	781
8Y-5913	781
8Y-5914	781
8Y-6277	873
8Y-6333	880
8Y-6338	791
8Y-6364	274
8Y-6388	797
9	
9B-0453	460
9B-7233	203
	214
	216
	236
	237
9B-7237	453
9C-3879	338
9C-4935	375
	645
9C-5344	61
	241
9C-6023	275
9C-6041	298
	300
	302
	304
	306
9C-6809	372
	375
9C-7863	375
	653
9C-7929	375
9C-9159	331
	347
	348
9C-9191	304
	306
9C-9458	460
	900
9C-9837	456
9F-5644	204
9F-8125	227
9G-0289	319
9G-0290	319
9G-1950	775
	811
9G-2673	845
9G-3695	235
	268
9G-5127	265
9G-5317	298
	302
9G-6743	319
9G-6744	319
9G-8020	319
9H-6454	591
9J-0477	517
9J-0705	639
9J-3866	476
	482
9J-5037	546
	547
9J-5550	543
	544
9J-5696	579
9J-5706	579
9J-7031	619
9J-7099	546
	547
9J-7100	546
	547
9J-9821	515
9K-7951	353
9K-9731	653
9L-6770	119
9L-8493	43
9M-1974	6
	8
	11
	29
	37
	59
	63
	64
	65
	66
	72
	74
	178
	241
	269
	272
	296
	351
	515
	633
	770
9M-2110	351
9M-2904	61
9M-4136	121
9M-4972	230
	822
9M-4995	419
	421

PART NUMBER INDEX

Part	Page	Part	Page	Part	Page	Part	Page
9M-5024	265		608		113	9W-1446	227
9M-5137	456	9S-6154	515		272	9W-6615	750
9M-5139	456	9S-6155	517		298	9W-6684	300
9M-5870	230	9S-8001	351		300		304
9M-5884	390		467		302		306
9M-6803	867		573		304	9W-7385	35
9M-7394	274		575		306	9W-7783	608
	591		577		608		610
9M-8406	159		608		634		612
	214		634	9T-1636	492		614
	216	9S-8002	16	9T-1652	492		616
	224		66	9T-1699	492		634
	252		89	9T-1710	492	9W-8433	319
	254		90	9T-2186	507	9W-8437	318
	822		513	9T-7220	515	9X-0145	229
9N-0869	128		515	9T-7692	608	9X-0262	178
	230		577	9T-7765	494	9X-1046	230
9N-1756	638		588	9T-7767	494		859
9N-1941	88		610	9T-7769	494	9X-1054	229
9P-7121	113		612	9T-7771	494		250
9P-7390	318		614	9T-7773	494	9X-1386	221
9P-7757	318		616	9T-7774	494	9X-1813	180
9P-7766	291		622	9T-7775	492		182
9P-8116	319		624	9T-8556	170		183
9P-8516	319		625	9T-8672	515		187
9P-8623	318		626	9T-8676	543		189
9P-8626	318		629		544		202
9P-9031	319	9S-8004	18	9T-8761	628		205
9R-1733	375		54	9T-9226	591		207
	482		66	9T-9227	591		220
9R-2060	359		272	9T-9963	628		250
	372		284	9U-0512	850		549
	375		315	9U-0830	814	9X-2021	26
9R-2613	372		573	9U-0952	880	9X-2022	50
	375		575	9U-0953	880	9X-2027	21
	645		577	9U-0954	880		298
9R-2640	375		579	9U-0955	880		300
	483		586	9U-0958	880		302
9R-2821	439		608	9U-2331	815		304
9R-3845	384		610	9U-2574	427		306
9S-4167	100		612	9U-3925	880		478
9S-4182	16		614	9U-3926	880		485
	41		616	9U-3927	880		880
	72		631	9U-4143	461	9X-2038	216
	513		634	9U-4431	815		526
9S-4183	74	9S-8005	43	9U-8263	815		528
	492		72	9U-8668	351		530
	515		315	9U-8669	351		532
	586		575	9U-9550	319		880
9S-4185	28		577	9V-0334	378	9X-2040	378
	42		586	9V-0453	378		809
	100		608	9V-1777	390		819
	462		634	9V-1820	390	9X-2041	368
	504	9S-8006	43	9V-2429	330		790
	515		54	9V-6575	659		795
	586		110		660		819
	608		513	9W-0775	750	9X-2042	216
9S-4190	76		588	9W-0817	▶747		791
	323	9S-8007	631	9W-0852	227		819
9S-4191	42	9S-8008	20		228		868
	100		95		235	9X-2043	797
	350		262		775	9X-2044	164
	504	9S-8009	342		811		166
	507	9S-9272	317	9W-1441	227		168
	513	9S-9334	54	9W-1442	227		390

▶ **PRIMARY REFERENCE**

PART NUMBER INDEX

Part	Page
	526
	528
	530
	532
	797
	855
	857
	859
	868
	880
9X-2045	526
	528
	530
	532
	797
	819
	850
	855
	857
9X-2046	126
	819
	855
	857
9X-2075	302
	306
9X-2085	484
9X-2091	559
9X-2097	241
9X-2098	128
9X-2134	110
9X-2480	230
	485
9X-2488	827
	830
9X-2492	461
9X-2532	896
	898
9X-2533	896
	898
9X-2615	316
9X-2616	880
9X-2617	285
	287
	289
9X-2618	285
	287
	289
9X-3066	152
9X-3401	180
	187
9X-3463	146
	147
9X-3465	148
	150
9X-4244	146
	147
	148
	150
9X-4492	154
9X-4493	148
	150
	152
	154
9X-4609	269
9X-4824	199
9X-5699	121
9X-6155	791
9X-6165	126
	141
	230
	365
	368
	399
	402
	819
	830
9X-6274	317
9X-6395	633
9X-6451	37
9X-6494	285
	287
	289
9X-6562	372
9X-6772	126
	229
	236
9X-7317	104
9X-7373	776
	811
9X-7378	16
	221
	784
9X-7380	72
	824
9X-7381	822
	824
9X-7382	822
	824
9X-7383	822
	824
9X-7384	822
	824
9X-7385	784
9X-7430	18
9X-7680	588
	629
9X-7743	291
9X-7849	155
9X-8116	774
9X-8250	245
	565
	827
9X-8256	29
	79
	113
	126
	164
	166
	173
	176
	224
	230
	237
	245
	252
	254
	363
	390
	399
	402
	406
	410
	413
	441
	485
	498
	791
	841
	843
	855
	857
	895
9X-8257	79
	113
	224
	308
	434
	439
	441
	453
	463
	560
	622
	624
	625
	626
	758
	803
	805
9X-8258	316
	361
9X-8267	58
	241
	250
9X-8268	292
	319
	342
	584
9X-8281	91
9X-8399	473
9X-8487	357
	581
9X-8873	781
9X-8896	546
	547
9X-8917	498
9X-8979	588
9X-9865	148
	150
9Y-0810	12
9Y-0821	12
9Y-1758	58
9Y-4357	58
9Y-8075	64
9Y-8076	64
9Y-9236	69
0	
002-1212	492
002-3448	312
005-4362	110
006-8663	492
009-3101	450
	451
	459
011-7960	815
012-0380	205
027-1287	331
	347
	348
030-1712	121
	243
030-7942	106
033-5381	579
033-5879	639
033-6027	507
033-6033	116
	639
033-6034	629
033-6036	492
	507
033-8248	250
036-9823	199
054-7915	79
061-6711	318
061-7540	269
061-8561	65
061-9455	59
061-9458	37
	317
064-3843	344
067-3161	318
068-8093	318
069-2535	448
	449
070-0107	96
	97
070-0345	384
077-3241	548
081-5645	461
082-2817	919
085-7356	351
	563
086-9286	552
089-7338	563
091-1745	461
091-7124	419
	421
092-9741	367
094-1875	586
094-1883	586
095-0670	588
095-0673	302
	586
095-0827	444
095-0843	873
095-0888	492
095-0917	398
	401
095-0919	504
095-0946	586
095-0948	760
095-1586	631
095-1590	631
095-1750	608
	637
095-1751	608
	618

► **PRIMARY REFERENCE**

PART NUMBER INDEX

Part	Page
095-1787	631
095-1788	631
095-7419	586
096-0015	590
096-0067	814
096-2966	631
096-3044	610
	612
	614
	634
096-3781	378
096-4389	586
096-5962	797
096-6166	214
	263
	620
096-6467	653
098-8968	227
099-3649	28
	458
	880
099-8232	610
	612
	614
	634
1	
100-3245	148
	150
100-3248	148
	150
100-3250	148
	150
100-3251	148
	150
100-3253	148
	150
100-3254	148
	150
100-3255	148
	150
100-3402	492
100-3404	492
100-3405	492
100-3408	492
100-3409	492
100-3410	494
100-3411	494
100-3412	492
	▶494
100-3413	492
100-3415	492
100-6664	747
100-6665	▶747
100-6666	747
100-6667	▶747
100-6668	748
100-6669	708
	709
	712
	715
	726
	▶748
100-8010	510
100-8011	510
101-0003	892
101-2867	867
101-3846	461
101-8909	113
101-9161	268
102-2066	492
102-2067	492
102-7509	277
102-7510	277
102-7511	277
102-8801	126
	229
	236
	245
	268
	498
	775
	811
102-8802	100
	113
	118
	141
	152
	154
	155
	161
	189
	190
	191
	194
	197
	202
	205
	207
	220
	221
	222
	224
	227
	229
	230
	235
	241
	243
	245
	549
	775
	784
	811
	833
	834
	838
	839
	890
	892
102-8803	100
	130
	132
	143
	153
	154
	180
	181
	187
	203
	218
	228
	229
	235
	236
	241
	243
	245
	250
	252
	254
102-8804	222
	227
	228
	229
	235
	236
	534
102-8805	148
	150
	212
	214
	216
	227
	228
	229
	235
	236
	250
	535
	537
	846
	847
	848
	849
102-8806	100
	222
	227
	229
	498
103-0010	235
103-1122	790
	795
103-2529	107
103-2532	914
103-5526	227
	▶788
103-5796	361
103-8133	256
104-2091	797
104-3560	15
104-5671	645
105-1797	241
105-2145	629
105-3477	468
	470
105-4849	▶148
	168
105-4850	▶150
	168
105-6117	451
106-0107	130
	132
	▶212
106-0210	212
106-0827	138
106-1774	461
	▶467
106-4155	236
106-9290	748
106-9586	296
107-0071	513
107-1161	790
107-1964	130
	132
	859
107-3157	850
107-3469	740
107-3786	498
107-4393	822
107-4394	822
107-4395	822
107-4396	822
107-4397	824
107-4399	824
107-4600	868
107-4602	868
107-4749	224
	252
	254
107-5769	9
107-6280	50
108-2144	476
108-3320	227
108-5471	791
109-1145	69
109-1645	235
109-3204	492
109-4731	304
	306
109-5008	791
	868
109-8203	▶831
109-8895	919
109-9080	740
110-2023	359
	372
	653
110-6109	130
	132
	227
110-6393	773
110-6845	236
	243
110-6923	330
110-7886	227
110-7887	227
111-0687	868
111-1316	868
111-3200	351
111-4013	164
	166
	168
111-4627	894
111-4836	908
111-4838	415
111-4839	415
111-7775	482

▶ **PRIMARY REFERENCE**

PART NUMBER INDEX

Part	Page	Part	Page	Part	Page	Part	Page
	▶501	115-5572	318	119-0281	390	124-5043	272
111-9110	448	115-6433	439	119-0781	782	124-8333	558
	449	115-6901	513		783	125-1302	▶205
112-0759	263	115-7087	98	119-0959	629		235
112-1817	620	115-8494	265	119-2013	372	125-3295	451
	▶627	115-9976	513	119-3662	180	125-7037	390
112-2014	470	115-9978	513	119-4376	2	125-7876	172
112-3818	318	116-0080	121		▶381	125-8534	224
112-4511	318	116-1089	38		436	125-8807	330
112-5344	78		39	119-4398	1		▶331
112-5585	318	116-1091	3		▶472	125-8808	330
112-6174	227		▶50	119-4401	1		▶347
112-6646	530	116-3715	91		▶388	125-8810	331
	532	116-4491	824	119-5727	344		347
112-6973	1	116-5436	100	119-9080	2		348
	▶423		▶102	120-4394	588	125-8817	330
112-8041	318	116-6653	319	120-5281	390		▶348
112-9714	498	116-8230	319	120-9027	144	125-9358	322
112-9715	498	116-8231	291		145		▶330
112-9716	470	116-8234	318	120-9486	319	125-9774	482
112-9736	79	116-9333	482	121-0628	504	126-1052	868
	390	117-0067	178	121-1340	243	126-1766	229
	431	117-0165	3	121-3307	78	126-1774	243
112-9861	627		▶40	121-5908	92	126-5484	513
113-0580	236	117-0823	492	121-8038	228	126-7574	134
	245	117-1410	782	121-8039	203		136
113-1830	318		783	121-9300	▶267	126-8472	390
113-1832	318	117-1559	354		782	126-8473	515
113-6990	121	117-1801	263	122-1671	460	127-0929	89
113-7752	450	117-1802	256	122-4233	354	127-1579	423
	451	117-1803	263	122-6579	342	127-1960	275
113-8987	3	117-2311	227	122-7197	322		276
	▶9	117-2766	3		▶453	127-4540	228
113-9359	434		▶21	122-8353	280	127-4736	▶316
114-0358	769	117-2771	3	122-8705	126		322
114-0359	766		▶24		158	127-4772	▶332
	769	117-4465	291		170	127-4773	▶332
114-0464	698	117-4473	797	123-0707	214	127-4774	▶332
114-0468	740	117-4486	770	123-0764	25	127-4775	▶332
114-1267	▶506	117-4492	770	123-0789	3	127-4780	332
	513	117-5208	558		▶44	127-4782	▶325
114-3361	631	117-5268	490	123-0790	44		332
114-3469	784	117-6056	470	123-2896	228		333
114-5309	470	117-7798	461	123-3205	342		334
114-5312	470	117-7799	461	123-3827	809		335
114-5333	221	117-8131	850	123-4371	894		336
114-8843	250	117-8801	29	123-5798	636		337
114-9252	868		584	123-5799	636		338
114-9325	419		586	123-6713	468		339
	421	117-8929	797		470		340
	444	117-9734	579	123-8253	98		341
114-9491	459	117-9735	579	123-9313	375	127-4783	325
115-2014	470	117-9736	579	123-9431	862		▶326
115-2073	831	117-9737	579	123-9694	130		338
115-2247	450	118-2943	498		132		340
	451	118-6365	235	124-0065	468	127-8909	263
115-2955	388	118-7997	372		470	127-8910	298
115-2972	38	118-7999	372	124-0786	498		300
	39	118-8000	372	124-1479	69		302
115-2973	38	118-8001	372		245		304
	39	118-8002	372	124-1555	586		306
115-3183	388	118-8003	372		631	127-9094	323
115-5568	318	118-8004	372	124-2456	917	127-9323	265
115-5570	318	118-8078	470	124-3019	461		563
115-5571	318	118-8276	388	124-3637	900		911

▶ **PRIMARY REFERENCE**

PART NUMBER INDEX

Part	Page
127-9483	588
127-9485	588
127-9490	588
128-0317	75
128-0382	12
128-0383	12
128-0384	12
128-0385	12
128-0395	38
	39
128-0396	38
	39
128-0400	12
128-0401	12
128-0402	12
128-0403	12
128-0914	▶325
	333
	334
128-0915	325
	▶327
	337
128-1026	868
128-2596	819
128-8617	859
128-9623	659
	660
	661
129-2339	275
129-2341	275
	276
129-2342	275
	276
129-2905	9
129-3178	775
	811
129-3180	170
129-4278	▶316
	322
129-4281	▶259
	322
129-4283	▶260
129-4286	▶260
129-4289	258
	259
	260
	261
	▶263
129-4290	258
	▶285
129-4292	259
	260
	261
	▶287
129-4293	259
	260
	▶304
129-4296	263
129-4298	258
	259
	260
	▶275
129-4299	263
129-4300	263
129-4304	258
	259
	260
	261
	▶277
129-4308	260
	▶278
129-4323	263
129-4536	323
129-5395	304
	306
129-5398	304
	306
129-5400	287
129-5401	285
	287
129-5403	263
129-7163	236
	354
129-7164	236
	354
129-7184	859
129-7632	507
129-7853	586
129-7921	586
129-7925	586
129-7927	586
129-7979	586
129-8222	▶508
	513
	515
130-0229	284
130-1848	275
	276
	278
130-5300	164
	166
	168
	170
	173
	176
	222
	224
	236
	241
	243
	245
	250
	252
	254
	269
	775
	811
	833
	834
	838
	839
130-5301	243
130-5485	269
	▶350
130-5859	263
130-5860	263
130-5866	263
130-5867	263
130-5869	298
	302
130-8706	304
	306
130-8707	298
	300
	302
	304
	306
130-9811	100
	195
	196
	224
	235
	243
131-0359	235
131-0749	636
131-0752	636
131-1285	296
131-1586	390
131-2633	▶894
131-3718	8
131-3987	845
131-4020	296
131-4091	318
131-4859	579
131-5879	378
131-8215	296
132-0338	770
132-1924	367
132-1928	386
	387
132-1929	367
132-2119	323
132-2453	461
132-3170	21
132-3391	2
	▶914
132-3392	914
132-3421	401
132-4354	830
132-4907	543
	544
132-5258	▶509
	513
	515
132-5789	6
	92
	100
	159
	161
	229
	236
	241
	243
132-6597	285
	287
132-6598	285
	287
132-6964	372
132-7534	296
132-7551	282
	483
132-9713	584
133-0260	190
133-1618	850
133-1644	439
133-1667	▶699
133-1671	▶700
133-1676	▶659
	699
133-1681	▶660
	700
133-1693	▶701
133-1700	▶661
	701
133-1728	482
	▶513
133-1747	472
	▶473
133-2198	262
133-3574	285
133-3605	285
	287
	289
133-3606	285
	287
	289
133-4292	298
	300
	302
	304
	306
133-4952	263
133-5545	573
133-6517	139
133-7097	21
133-9012	775
	811
133-9379	121
134-0165	460
134-1374	267
134-2540	229
134-2959	▶748
134-3030	287
134-3032	285
	289
134-3079	388
134-3080	388
134-3081	388
134-4126	134
	136
134-4500	659
134-5245	57
134-5330	431
134-6635	280
134-7258	917
134-7934	659
	660
	661
	662
134-7935	659
	660
	661
	662
134-7936	659
	660
	661
	662
134-7937	659
	660
	661

▶ **PRIMARY REFERENCE**

PART NUMBER INDEX

Part	Page	Part	Page	Part	Page	Part	Page
	662		830	141-1232	315	145-9105	473
134-7940	659	136-3188	779	141-1236	344	146-0240	235
	660		780	141-2597	474	146-0719	504
	661	136-3190	780		▶510	146-0720	504
	662	136-3195	779	141-3874	367	146-1892	451
134-7941	659	136-3845	148	141-3889	367	146-3728	639
	660	136-3846	150	141-3890	367	146-3793	468
	661	136-3848	148	141-6348	265	146-4055	222
	662		150	141-8275	107	146-4073	222
134-8754	357	136-4183	21	141-8580	791	146-5776	482
134-9569	214		112	141-8802	▶468	146-6371	797
	216	136-7211	337		782	146-6581	476
135-0134	292	136-9351	868	141-8803	468		482
135-0426	▶153	137-2170	896	141-8807	476	146-6747	172
	164		898	141-8808	468		917
135-2037	579	137-3863	660	141-8811	468	146-7571	476
135-3823	461		661	141-9645	375		▶518
135-4404	381		662	141-9784	775	146-8070	▶731
135-4555	381	137-4117	655		811	146-8080	▶687
135-4557	482		656	142-1657	121		731
135-4688	473	137-6841	880		461	146-8107	687
135-4690	473	137-7581	504	142-2623	431	146-8112	687
135-5038	476	137-7668	388	142-2624	431	146-8161	687
	482	137-7669	388	142-3995	515	146-8166	687
135-6260	88	138-1509	291	142-3996	476	146-8179	687
135-6261	88	138-1510	291		▶515	146-8180	687
135-7470	504	138-1645	263	142-8977	315	146-8183	687
135-7471	504	138-3816	330	143-1288	770	146-8184	687
135-7474	504	138-4144	35		781	146-8186	687
135-7475	504	138-6451	740		873	146-8187	687
135-7477	504	138-6674	653		875	146-9047	461
135-7478	504	138-6679	653	143-2643	659	147-0131	▶714
135-7479	504	138-6685	653	143-3330	660	147-0133	▶673
135-7482	504	138-6814	365		661		714
135-7483	504		367	143-4715	279	147-0385	236
135-7492	277	138-6819	365	143-7022	375		245
135-7493	277		367	143-8302	504	147-1445	229
135-7494	277	138-7500	106	144-0195	900	147-1446	229
135-7495	277		110	144-0331	535	147-1469	685
135-7496	277	138-8175	590		537		729
135-8240	748	138-9487	441	144-0367	476	147-1470	687
135-8241	748	139-9101	257		482	147-1685	88
135-8242	748		▶260	144-0832	550	147-1788	504
135-8243	748		271	144-0896	468	147-7131	582
135-8244	748	139-9102	257	144-1636	212	147-8583	476
135-8245	739		▶258	144-4284	318		482
	▶766	139-9103	257	144-4613	243	148-1928	269
135-8246	766		▶261		398	148-3495	121
135-8280	797	139-9106	260		401	148-3587	917
135-9292	766		261		461	148-3626	797
135-9293	▶751		▶306		563	148-6898	▶732
135-9294	751	139-9107	258	144-5611	31	148-6902	▶733
135-9295	751		▶298	144-7739	372	148-6906	▶688
135-9296	751	140-2961	862	144-8299	342		732
135-9297	▶748	140-2962	862	145-0326	890	148-6910	▶689
135-9298	▶764	140-2963	862		892		733
135-9543	739	140-4788	791	145-1144	349	148-6928	688
	▶751	140-5945	526	145-2901	31	148-6934	689
135-9544	751		528	145-6929	▶154	148-6936	688
135-9545	751	140-6823	749		166		693
135-9546	751	140-6824	▶749		168	148-6937	689
136-1543	854	141-0008	385	145-7028	▶194		694
136-1544	770	141-0752	344		269	148-6946	688
136-1711	472	141-1053	492	145-8867	468		689
136-1953	827		▶507		497		693

PART NUMBER INDEX

Part	Page	Part	Page	Part	Page	Part	Page
	694	148-8359	317		602	150-4027	477
	696		474	148-8427	462		484
148-6947	688	148-8360	564	148-8428	462	150-4043	477
	689	148-8361	461	148-8433	462		484
	693	148-8364	308		593		564
	694		462		596	150-4044	484
	696		474		599		593
148-6949	688		477		602		596
	689		483		760		599
	693	148-8365	462	148-8434	398		602
	694		483		401	150-4047	477
	696	148-8366	559		462		564
148-6950	688	148-8367	100	148-8435	593	150-4048	474
	689		483		596	150-4050	398
	693		564		599		401
	694		593		602	150-4651	263
	696		596		620	150-5782	586
148-6952	688		599	148-8440	558	150-6255	504
	689		602	148-8443	563	150-7693	453
	693	148-8368	908	148-8444	462	150-8013	461
	694		911		484	150-8015	896
	696	148-8370	308	148-8447	563		898
148-6953	688		462	148-8449	564	150-8896	752
	689		483	148-8455	559		754
	693	148-8374	462		564	151-0308	673
	694	148-8375	308	148-8457	484	151-0309	673
	696		477	148-9359	608	151-0311	673
148-8240	390	148-8376	564		610	151-0312	673
148-8313	107	148-8377	462		612	151-0314	673
148-8315	563	148-8378	462		614	151-0315	673
148-8317	476		477		616	151-1404	279
	483		483		634	151-2898	31
148-8318	100		559	149-0257	476	151-2900	7
148-8325	476		593	149-0271	476		31
	483		596		482	151-4464	275
	908		599	149-0272	476		276
148-8326	483		602		482	151-5715	797
148-8327	474		620	149-0643	▶455	151-5778	▶333
	558	148-8379	484		457	151-6980	498
	563	148-8380	477	149-0668	216	151-6981	498
148-8328	296		559	149-0774	497	151-6982	498
148-8335	634	148-8388	564	149-2612	235	151-6984	498
148-8336	461	148-8390	474	149-2847	398	151-6985	498
	483	148-8392	474		401	151-6986	498
	558		559	149-2865	672	151-7227	▶333
	593		564		678	151-8754	144
	596	148-8395	575		682		145
	599		577		687	152-1684	814
	602		608		690	152-1870	308
148-8338	100		634		704	152-1872	308
148-8340	105	148-8406	608	149-2906	468	152-2646	593
	476		634		497		596
	483	148-8407	504	149-2907	468		599
148-8344	477	148-8408	515		497		602
	483	148-8410	323	149-7738	236		▶636
148-8347	308	148-8411	462	149-9113	263	152-2788	498
148-8351	758		504	149-9114	263	152-2791	498
	908		515	149-9129	241	152-2794	498
	911		608	150-3033	593	152-3411	593
148-8352	559	148-8413	564		596		596
	563	148-8424	558		599		599
148-8353	563		563		602		602
148-8355	519		593		908	152-6432	498
148-8357	559		596	150-3035	564	153-0067	339
	564		599	150-3068	559	153-1185	331

▶ **PRIMARY REFERENCE**

PART NUMBER INDEX

Part	Page
153-1277	97
153-2655	696
153-2656	696
153-2659	696
153-2661	696
153-3568	498
153-3945	214
153-5043	194
153-6223	399
	402
153-6230	559
153-6237	477
	484
	564
153-6241	308
	477
	484
153-6248	559
153-6256	474
	564
153-6257	477
153-6273	451
153-8002	498
153-8003	498
153-8004	498
153-8623	631
153-9300	498
153-9301	498
154-1604	688
	689
154-2883	482
	▶495
154-4133	639
154-4563	214
	216
154-5581	▶333
154-6626	824
154-7443	228
	▶789
154-8042	453
154-8262	216
154-9023	57
154-9508	868
155-0755	855
	857
155-1632	291
155-1634	291
155-2255	126
	228
	229
	236
	241
	247
	248
	249
	530
	532
155-2260	100
	182
	183
	184
	228
	229
	236
	241
	243
	245
	252
	254
	530
	532
155-2262	268
155-2265	222
	228
	229
	241
	498
	530
	532
155-2270	100
	159
	161
	170
	190
	191
	206
	222
	224
	228
	229
	236
	241
	243
	245
	247
	248
	250
	269
	451
	530
	532
	775
	811
	841
	843
155-2271	228
	229
	236
	268
155-2274	229
	236
	249
	530
	532
155-2276	184
155-3504	564
155-4098	859
155-4979	456
155-5789	▶848
	900
155-6456	304
	306
155-6526	470
155-7321	827
155-7327	105
	462
156-0549	470
	▶497
156-1150	287
156-3722	398
	401
156-4315	497
156-4773	298
	300
	302
	304
	306
156-5104	323
156-5545	770
156-6175	126
	229
	530
156-6418	453
157-0670	66
157-3491	495
158-0494	312
158-0495	312
158-0496	312
158-6634	235
158-7487	673
158-7488	673
158-7492	673
158-7494	673
158-7864	917
158-9956	573
	577
	▶605
159-0268	653
159-0269	653
159-1085	▶333
159-1095	▶334
159-1118	760
159-1121	752
	754
	760
159-3048	760
159-4610	482
159-8035	915
	916
159-8036	752
	754
	915
	916
159-8049	172
159-8050	172
159-9322	229
	236
160-0089	504
160-0718	296
160-0719	258
	259
	260
	261
	▶296
160-0720	296
160-2323	50
160-5738	2
160-6365	862
160-6366	862
160-7689	126
	236
	243
160-8185	26
160-8210	26
160-8229	38
160-8500	173
	176
160-8708	484
160-9925	819
161-3415	819
161-4130	752
	754
	916
161-6149	573
	606
	637
161-6154	502
	503
	573
	605
161-6161	573
	637
161-6958	98
161-6963	98
161-7136	439
161-7137	439
161-8067	312
161-8573	764
161-8919	78
	▶579
161-9030	443
161-9031	443
161-9131	699
	700
	701
	702
	714
	732
	733
	737
	738
	739
	▶764
161-9916	827
162-0053	▶2
162-0177	575
	577
	608
	610
	612
	614
	616
	634
162-0476	760
162-2254	760
162-6448	608
	634
162-6560	504
162-6816	758
162-7039	2
162-7209	543
	544
162-9527	92
162-9728	558
163-0872	▶784
	785
163-1135	890
	892
163-1149	781
163-1201	813

▶ PRIMARY REFERENCE

PART NUMBER INDEX

Part	Page
163-3008	263
163-8781	263
164-1234	890
	892
164-1270	890
164-2108	349
164-3651	269
164-4116	482
	▶504
164-4146	867
164-4180	608
164-4395	2
164-4531	770
164-4883	853
164-5567	175
	462
	477
	484
	554
	556
	558
	564
	571
	593
	596
	599
	602
164-5572	308
164-5573	565
164-5574	462
	559
164-5577	282
164-5580	462
164-5590	66
164-5606	477
	484
164-5611	563
164-5619	110
	515
	610
	612
	614
	616
164-5624	484
164-6860	565
164-6871	175
164-6874	563
164-7556	146
	147
164-7577	▶202
	235
	262
164-8908	484
165-0197	316
165-2273	827
165-3927	35
165-4619	▶199
	201
165-4769	565
165-5970	110
	▶218
165-6178	▶334
165-6365	593
	596
	600
	602
165-9104	859
166-0344	588
166-0599	173
	176
166-1881	375
166-2904	18
166-6358	7
166-6928	228
	▶846
166-7959	565
167-0608	427
167-1801	492
	500
167-2195	473
167-2211	543
	544
167-2214	546
	547
167-2304	473
167-2324	543
	544
167-2328	546
	547
167-7430	749
167-9524	349
168-2166	354
168-2198	588
168-2457	791
168-3504	588
168-6467	224
168-7861	588
168-7940	590
168-7941	590
168-7942	590
168-7943	590
168-8772	815
169-0417	173
	176
	▶180
169-0418	180
169-1616	618
169-1617	618
169-3290	492
	▶500
169-3923	758
169-5792	316
169-7380	890
	892
169-7389	224
169-9955	316
169-9956	316
170-0269	482
170-0494	522
	523
170-0664	372
170-1112	770
170-1114	770
170-1115	770
170-1821	228
170-3447	822
170-3448	822
170-4735	484
	908
	911
170-5121	758
170-7709	791
170-8590	867
171-1230	873
	875
171-1653	498
171-2206	235
171-2210	235
171-2212	235
171-2438	272
171-3258	631
171-3716	354
171-5349	189
171-6348	344
171-6682	873
171-6723	477
	484
	559
	565
171-6726	317
171-6728	565
171-7037	▶334
171-7038	▶334
171-8881	783
	▶855
171-8888	782
	783
	▶797
172-0002	▶335
172-1482	180
172-1483	180
172-2416	873
172-3511	130
	132
	228
	229
172-4001	770
172-4871	235
172-6007	263
172-6011	263
172-6251	363
172-6252	363
172-7940	453
172-9200	214
	216
172-9287	565
173-0566	548
173-1028	▶770
	873
173-1301	▶335
173-1498	7
173-1583	563
173-1785	▶335
173-2052	854
173-2115	819
173-2118	850
173-2142	868
173-2143	868
173-2144	868
173-2148	855
	857
173-2173	855
173-2185	819
173-2187	819
173-2200	815
173-2205	859
173-2206	859
173-2219	781
173-2234	228
173-2972	556
173-3427	586
173-3428	586
173-3807	556
173-3993	575
	577
	608
	634
173-5787	878
173-7035	878
173-7501	285
	287
	289
173-7502	285
	287
	289
173-9683	473
174-1586	28
174-2407	850
	888
174-3085	378
174-3086	378
174-3091	535
	537
174-3624	782
	783
	▶877
174-4301	880
174-4312	235
174-6258	▶335
174-7875	813
174-8663	378
174-9570	▶103
	117
174-9603	269
175-2493	▶336
175-3244	243
175-3265	855
	857
175-4249	78
175-4291	146
	147
175-4292	146
	147
175-4792	760
175-4966	548
175-6796	590
175-7613	760
175-7898	473
175-9079	106
176-2444	333
	334
	335
	336
	337
	338
	339
	340
	341
	▶356
176-6994	75

▶ **PRIMARY REFERENCE**

PART NUMBER INDEX

Part	Page
176-7078	504
176-7921	▶336
176-9369	501
	▶502
176-9371	501
	▶503
177-0035	87
177-0762	474
177-1570	903
	905
177-1581	▶336
177-1860	867
177-1862	867
177-1863	873
177-3463	404
177-3464	404
177-3465	404
177-3466	404
177-3468	404
177-3475	404
	406
	410
	413
177-3477	406
	410
	413
177-3484	406
	410
	413
177-3489	406
	410
	413
177-3490	406
	410
	413
177-3516	446
177-3517	446
	447
177-3518	446
	447
177-3519	446
177-3520	446
177-4495	797
177-4930	854
177-4935	▶867
	873
177-4937	877
177-6696	775
177-6704	775
	811
177-6716	775
	811
177-6727	775
	811
177-6732	775
	811
177-7582	498
178-0399	279
178-0603	▶873
	875
178-0604	▶853
	873
178-0605	853
	▶854
178-0607	867
178-0608	867
178-0609	867
178-1704	278
	▶279
178-2186	▶336
178-2722	444
178-2723	406
	410
	413
178-2737	446
	447
178-2740	446
	447
178-2746	447
178-2766	444
178-2774	444
178-3129	431
178-3620	474
178-4323	819
178-6927	337
178-6928	▶337
178-7907	854
178-7913	▶875
	878
178-9983	535
	537
179-1660	447
179-1661	447
179-3185	330
179-4324	354
179-4682	775
	811
179-4683	775
	811
179-7000	173
179-9375	135
	▶173
179-9392	859
180-1538	6
180-3994	459
180-9340	182
	183
	184
180-9617	875
183-3408	272
183-4365	46
	47
183-5518	3
	▶51
183-6967	490
183-6970	490
183-6971	490
183-7263	515
	577
	610
	612
	614
	616
	622
	624
	625
	626
183-7595	573
	▶639
183-9044	758
184-0704	429
	▶430
184-2298	873
184-2299	873
184-3409	639
184-6259	367
184-6260	367
184-6964	199
184-7415	461
184-7773	312
185-0263	588
185-2638	119
185-2639	119
185-2643	119
185-2644	119
185-2647	119
185-2648	119
185-2650	119
185-2654	119
185-2655	119
185-2658	119
185-3650	1
	▶653
185-3651	644
	653
185-3652	653
185-4778	775
	811
185-4780	775
	811
185-4782	775
	811
185-4783	775
	811
185-4785	775
	811
185-5179	800
185-5298	5
	▶35
185-5803	3
	▶26
185-6250	482
	908
	911
185-6335	228
185-7522	790
	▶896
185-7523	791
	▶898
185-7524	896
	898
185-7525	896
	898
185-7529	896
185-7531	898
185-7533	790
185-7534	▶790
	794
185-7538	790
	795
185-9390	554
185-9391	554
186-2458	269
186-2461	319
186-3735	113
186-3736	206
	268
186-5107	890
	892
186-6189	824
187-0541	637
187-0661	917
187-1469	791
187-3523	272
187-4161	868
187-5127	896
	898
187-5128	896
	898
187-7331	113
187-7719	775
	811
187-8191	639
187-8883	300
187-8889	304
187-8894	298
	302
187-8899	306
187-8969	14
187-8972	12
188-1616	161
188-2008	558
188-2586	867
188-5175	868
188-5177	868
188-6185	235
188-6252	235
188-7497	▶450
	459
188-7690	775
	811

▶ PRIMARY REFERENCE

PART NUMBER INDEX

Part	Page
188-8044	917
188-8844	113
188-9429	190
188-9820	▶781
	875
189-0107	743
189-0109	758
189-0131	439
189-0852	191
189-2076	859
189-2077	526
	528
189-2078	526
	528
189-2079	526
	528
	530
	532
189-2512	859
189-3158	214
	216
189-4680	775
189-4682	775
	811
189-4717	588
189-5594	78
189-5604	250
189-8622	▶849
	900
189-8846	498
189-9304	498
189-9377	95
189-9763	586
	631
190-3443	112
190-5497	819
190-7673	631
190-7674	631
190-8130	▶337
190-8494	316
190-8970	117
190-8977	110
	▶117
191-1782	110
191-2933	878
	▶890
191-5282	782
	▶857
191-8567	▶850
	852
191-8720	344
191-8921	779
	780
191-9253	180
192-0573	586
192-1563	▶31
	785
192-1954	228
	857
192-2175	877
192-2820	775
	811
192-2822	775
	809
	811
192-2823	775
	811
192-5856	743
192-5880	743
192-5881	758
192-5884	758
192-5897	758
192-5918	406
	410
	413
192-5939	444
192-5942	444
192-5944	758
192-5987	447
192-6036	447
192-6118	424
	426
	▶648
192-6212	447
192-7049	782
	783
	▶847
192-7356	78
192-7752	890
	892
192-7755	890
	892
192-7760	890
	892
192-7767	890
	892
192-7783	890
	892
192-7787	890
	892
192-7790	890
	892
192-7795	890
	892
192-7799	890
	892
192-7805	890
	892
192-7810	890
	892
192-7812	890
	892
192-7820	890
	892
192-7822	890
	892
192-7848	890
193-0042	498
193-0702	775
	811
193-0852	▶741
193-1036	629
193-1664	628
193-1665	575
	▶628
193-1736	586
193-2550	▶189
	291
	342
193-3131	551
	▶644
193-7307	811
193-8526	▶742
193-8570	199
194-1723	▶606
	608
	634
194-2453	265
194-4411	344
194-5278	78
194-6722	▶182
	185
	243
194-6725	▶183
	186
194-7817	▶752
194-7818	▶754
195-0882	461
195-2187	460
195-3265	▶552
195-5950	498
195-5951	498
195-7764	741
	▶743
195-7766	743
195-7876	319
195-7877	319
195-7878	318
195-7879	319
195-9045	743
	▶758
196-0052	797
196-0436	850
196-1046	430
196-1047	430
196-1048	430
196-1049	430
196-1050	430
196-1051	430
196-1052	430
196-1053	430
196-1054	430
196-1055	430
196-1056	430
196-1060	430
196-1061	430
196-1062	430
196-1063	430
196-1064	430
196-1065	430
196-1066	430
196-1067	430
196-1068	430
196-1069	430
196-1070	430
196-1071	430
196-1072	430
196-1073	430
196-1074	430
196-1075	430
196-1076	430
196-1077	430
196-1078	430
196-1079	430
196-1251	588
196-1799	▶318
	346
196-2313	▶456
	457
196-2314	456
196-2315	456
196-2316	456
196-5374	453
	▶457
196-7438	▶337
196-8490	331
197-1397	775
	811
197-1398	775
	811
197-1399	775
	811
197-1400	775
	811
197-1762	588
197-2027	819
197-2072	819
197-2417	▶337
197-3295	554
	556
197-3855	415
197-3856	415
197-4859	906
197-5470	431
	850
197-6474	▶832
197-6475	156
	▶203
197-6629	415
197-6667	330
197-7382	461
197-7565	229
197-8418	63
197-8419	63
197-9257	38
	39
197-9326	38
	39
197-9327	38
	39
197-9330	15
198-1092	658
198-2617	588
198-2618	588
198-2820	582
198-3897	419
	421
198-4775	229
	530
198-4777	477
198-4963	19
	▶23
198-5389	141
198-5904	760
198-6570	228
198-6755	250
198-7248	▶548
198-8769	880
198-8772	797
198-8774	859

▶ **PRIMARY REFERENCE**

PART NUMBER INDEX

Part	Page
199-4051	28
199-4064	173
199-7499	775
	811
199-7891	119
199-8436	119
199-9641	859
2	
200-0727	859
200-0728	880
200-0729	880
200-0731	859
200-2217	451
200-2218	451
200-2219	451
200-2220	451
200-2221	451
200-2371	640
200-5951	855
	857
200-5952	855
	857
200-6206	845
	855
	857
200-6282	573
	618
200-8064	130
200-8152	859
200-8153	859
200-8154	859
200-8895	832
	834
200-8896	832
	833
201-0115	669
	671
	672
	706
	754
201-0212	267
	▶268
201-1531	130
	132
201-2733	859
201-5555	214
	216
201-5563	528
201-6615	▶190
	192
201-6616	▶191
	193
201-8255	▶553
201-8256	553
201-8616	▶862
	863
202-0671	627
202-0673	627
202-0674	627
202-1114	▶338
202-1327	775
	811
202-2005	351
202-2006	351
202-4797	375
202-4798	375
202-4799	375
202-4800	375
202-6450	758
202-6612	147
202-6614	146
	147
202-7475	33
202-7897	758
202-8649	833
	834
	838
	839
203-0328	880
203-0351	90
203-1558	448
	449
203-2369	▶261
	271
203-6470	354
203-6473	354
203-7703	878
203-9991	880
204-5131	▶338
204-6132	868
204-6529	78
204-7949	▶181
	862
204-9734	563
	582
205-0826	141
205-0926	795
205-1088	741
	▶915
205-3096	308
205-3582	450
205-3692	110
205-6029	354
205-6388	872
	877
205-7299	121
	172
	236
	250
205-8212	880
205-8257	141
206-1990	784
206-2722	419
	421
206-2726	282
206-5162	141
206-5203	141
206-5823	849
206-6305	906
206-9272	328
206-9279	▶328
	329
206-9280	325
	▶329
	335
	336
	337
	338
207-0697	588
	▶629
207-1759	782
	783
	▶863
207-8118	22
207-8572	14
208-3703	862
208-3906	176
208-3908	176
208-3909	176
208-5022	896
	898
208-7448	87
208-7473	328
208-9281	76
209-0381	228
209-0499	453
209-0516	906
209-0746	797
209-1717	▶338
209-3750	877
209-4573	69
209-4865	762
	763
209-5018	868
209-5528	78
209-6466	96
	97
209-6638	144
	145
209-7309	62
209-7659	110
210-1254	868
210-4460	23
210-5551	819
210-5587	461
210-6783	880
210-8422	▶144
	159
210-8423	▶145
	159
211-0587	12
	32
211-0588	12
	32
211-0667	819
211-1167	900
211-2109	855
	857
211-2126	855
	857
211-5358	890
	892
211-5715	▶338
211-9294	890
	892
211-9856	896
	898
212-0061	640
212-0431	125
212-0443	199
212-6854	354
212-7042	775
212-7728	11
212-7779	892
212-8810	176
213-1176	▶702
213-1177	▶662
	702
213-1183	662
213-1184	662
213-1188	662
213-1366	304
	306
213-1370	304
	306
213-1585	24
213-5170	892
213-7276	▶138
213-7489	535
	537
213-9100	220
214-0113	129
214-0586	20
214-3616	173
	176
214-3617	173
	176
214-4208	229
214-6277	28
214-7634	▶779
	900
214-7635	▶780
	900
214-8888	▶864
214-9453	214
214-9454	214
215-1182	864
	865
215-6672	155
215-6673	155
215-6674	155
215-7430	760
215-7436	752
215-7437	752
	754
215-9962	631
216-1271	742
	▶916
216-1273	742
	▶744
216-1275	744
	▶760
216-4531	850
216-5338	269
	▶349
216-6418	760
216-6422	760
216-6905	760
216-7267	760
216-7268	760
216-7281	760
216-7282	760
216-7283	760
216-7790	121
216-7888	855
	857
216-8186	760

▶ **PRIMARY REFERENCE**

PART NUMBER INDEX

Part	Page	Part	Page	Part	Page	Part	Page
216-8344	855	220-8214	113	224-2675	66		▶112
	857	220-8678	103	224-3028	20	227-7390	918
217-0733	903	220-9090	739	224-3030	20	227-7391	918
217-1601	87		767	224-3117	52	227-7392	779
217-3673	37		768	224-3125	20		780
217-3674	37	220-9091	767	224-3405	54	227-9545	3
217-3682	275	220-9099	768	224-3881	4		▶42
	276	221-3263	59		▶12	227-9920	63
217-5627	754	221-3416	175	224-4140	34	228-2615	918
217-6284	139		▶184	224-4418	48	228-2616	918
217-8166	214	221-6803	845	224-4441	20	228-4428	887
	216	221-9357	29	224-4991	109	228-4947	192
217-8946	89	221-9364	12	224-5389	91		193
217-9049	873	221-9392	19	224-5757	66	228-5810	76
217-9060	57	222-1094	693	224-6360	66	228-5811	▶76
218-0404	141		694	224-6361	72		77
218-0652	498	222-1095	693	224-9392	390	228-5812	4
218-0653	498		694		799		▶77
218-0654	470	222-1096	693		801	228-5847	468
	▶498		694	225-0300	577	228-6089	229
218-0861	873	222-1097	658		▶640	228-9655	119
218-4935	221	222-1098	658	225-0312	917	228-9656	119
	235	222-1099	658	225-0313	172	228-9657	119
	250	222-2367	519		918	229-1494	875
218-7270	27		523	225-3286	543	229-2614	3
218-7272	4	222-3088	4		544		▶11
	▶29		▶27	225-3755	791	229-2616	11
219-0017	361	222-3091	92	225-4118	549	229-2704	126
219-0305	917	222-3092	3	225-4256	918		809
219-4458	38		▶92	225-4257	918	229-2887	51
219-6314	141	222-3686	819	225-4456	631	229-5279	49
219-6485	▶146	222-3687	819	225-4460	631	229-5684	8
	164	222-3902	27	225-4607	631	229-5711	11
	166	222-3904	75	225-6948	63	229-6942	▶658
219-6487	▶147	222-3905	27	225-7003	76	229-7094	672
	158	222-3907	8	225-7657	559		678
	161	222-4297	▶339	225-9422	799		682
219-6607	141	222-5151	903	225-9423	799		690
219-7440	3		905	225-9578	799		704
	▶25	222-9874	291	225-9579	799	229-7100	745
219-7461	241	222-9875	291	226-0291	78	229-7101	745
219-7475	22	223-1341	608		235	229-7102	745
219-7489	22	223-3383	895	226-0321	78	229-7534	378
219-7619	▶470	223-3875	4		235	229-8084	4
	783		▶41	226-1240	917		▶36
219-8094	877	223-4296	126	226-1242	918	229-8810	76
	▶878	223-4434	269	226-1274	918	229-9382	473
219-9526	210		▶351	226-1275	918	229-9969	144
	211	223-6546	14	226-4192	584		145
219-9535	210	223-7463	4	226-4755	29	229-9972	144
	211		▶8	226-6478	38		145
220-0814	558	223-7468	8		39	229-9974	144
220-2612	367	223-7471	8	226-7473	128		145
220-2726	▶448	223-7852	29	227-1149	546	230-0917	197
	461	223-9143	75		547	230-0960	256
220-2727	▶449	223-9144	75	227-2574	3	230-0961	4
220-3681	919	223-9145	75		▶10		▶256
220-3773	919	223-9147	▶75	227-2576	10	230-1341	140
220-3933	468		76	227-4002	241	230-2603	72
220-4126	85	223-9150	39	227-4239	18	230-3518	92
	96	224-0880	3	227-5075	72	230-3728	104
	97		▶34	227-5509	315	230-3775	104
220-7924	919	224-1270	18	227-5518	3	230-4176	476
220-7925	258	224-1767	864		▶95	230-4518	66
	▶919	224-2410	18	227-5723	4	230-4519	66

▶ **PRIMARY REFERENCE**

PART NUMBER INDEX

Part	Page
230-5771	250
230-7149	178
	▶192
230-7167	45
230-7168	3
	▶45
230-7640	451
231-3178	272
231-3492	3
	▶60
231-4158	▶339
231-4476	121
	243
231-9030	91
232-0100	739
232-1335	886
232-1336	886
232-1337	886
232-1338	886
232-1374	110
232-1376	110
232-1394	782
	783
	▶819
232-1396	782
	783
	▶884
232-1397	782
	783
	▶799
232-1684	884
232-1685	884
232-1686	884
232-1687	884
232-1688	886
232-1712	884
232-2964	▶800
	868
232-3116	272
232-3117	272
232-3120	3
	▶272
232-6401	552
233-0455	590
233-0891	128
233-0915	884
233-0916	884
233-4466	390
233-5036	819
233-5220	▶64
	65
233-5221	4
	▶65
233-6191	3
	▶128
233-6742	100
	▶115
233-6745	853
233-7676	▶886
	888
233-8552	330
234-0349	612
234-1360	819
234-1530	394
	398
	401
234-1531	394
234-3545	394
	398
	401
234-4355	178
234-4452	631
234-4845	610
	614
	616
234-4846	610
	614
	616
234-4851	610
	612
	614
	616
234-4860	614
234-4869	614
234-4870	614
234-5001	610
	612
	614
	616
234-5101	394
234-5107	394
234-5925	228
234-7843	3
	▶63
234-7844	100
234-7847	3
	▶37
234-7849	2
	▶3
234-9553	782
	783
	▶887
234-9571	887
234-9572	887
235-1071	63
235-1073	37
235-1074	37
235-1075	5
	▶85
235-1076	5
	▶107
235-1078	5
	▶88
235-1080	3
	▶110
235-1448	65
235-1451	65
235-1498	610
	612
	614
	616
235-3595	100
235-3937	▶155
	170
235-5275	135
	▶164
235-5276	156
	157
	▶166
235-5279	▶156
235-5506	228
235-6157	634
235-6160	575
235-6163	577
235-7133	▶119
	120
235-7511	3
235-8559	▶158
	782
	783
235-8560	▶159
236-1068	888
236-1069	888
236-4608	229
236-4609	229
236-4610	229
236-4611	229
236-4612	209
236-4615	213
236-4616	214
	216
236-4619	229
236-4620	130
	132
236-4621	130
	132
236-4622	229
236-4623	208
236-4630	841
	843
236-4631	228
236-4970	▶833
	841
236-4971	▶834
	841
236-5034	62
236-5035	3
	▶62
236-5898	888
236-5925	388
236-6207	841
	843
236-6253	900
236-6919	586
236-7019	▶872
	877
236-7231	2
	▶5
236-7773	159
236-7775	170
236-8722	228
236-8745	66
236-8896	799
236-8956	▶197
236-8959	▶220
236-8960	▶773
236-8973	1
	▶360
236-8974	1
	▶363
236-8978	1
	▶394
236-8979	1
	▶87
236-8980	1
	▶827
236-8981	1
	▶105
236-8982	1
	▶415
236-8983	1
	▶563
236-8985	1
	▶476
236-8986	▶482
	496
236-8988	1
	▶69
236-8990	1
	▶78
236-8991	1
	▶431
236-8992	1
	▶433
236-8995	135
	▶138
236-8997	551
	▶558
236-8998	551
	▶581
236-8999	▶282
	322
236-9003	135
	▶441
236-9006	312
236-9007	▶474
	496
236-9031	▶540
	551
236-9032	▶541
	551
236-9033	551
	▶569
236-9034	551
	▶571
236-9035	551
	▶593
236-9037	551
	▶620
236-9039	1
	▶895
236-9043	▶436
236-9046	551
	▶908
236-9049	▶2
236-9051	▶1
	2
236-9053	2
	▶135
236-9055	2
	▶551
236-9057	2
	▶322
236-9063	1
	▶375
236-9067	1
	▶917
236-9068	135
	▶138
236-9069	135

▶ PRIMARY REFERENCE

PART NUMBER INDEX

Part	Page	Part	Page	Part	Page	Part	Page
	▶137		892	238-0296	115		805
236-9086	431	237-4227	588		▶116	240-4630	803
236-9087	2	237-4376	▶33	238-1795	624		805
	▶496		52		626	240-4695	608
236-9088	▶491	237-4782	642	238-1796	622	240-4696	614
	496	237-4902	▶121		625	240-7271	4
236-9091	551		135	238-2717	38		▶16
	▶554	237-4903	135		39	240-7272	4
236-9094	▶525		▶243	238-2723	4		▶52
236-9095	525	237-4904	135		▶38	240-7356	638
	▶596		▶245		▶39	240-7679	4
236-9096	▶524	237-4905	135	238-4756	29		▶19
	525		▶235	238-6721	72	240-8246	554
236-9097	▶525	237-4907	▶221	238-6728	72	240-8460	46
236-9098	525		773	238-6730	72	240-8461	▶46
	▶599	237-4908	▶172	238-9842	612		48
236-9099	▶257	237-4909	▶250		614	240-8462	47
236-9100	257		496		616	240-8463	▶47
	271	237-4910	▶227	238-9843	634		48
	▶308		782	238-9844	634	240-9131	439
236-9101	▶655		783	239-0618	573	240-9132	439
236-9102	▶655	237-4987	390	239-0621	573	240-9133	390
236-9104	▶542	237-5049	▶642	239-2395	178	240-9134	390
	551		655		▶185	240-9136	390
236-9105	551		656	239-2396	100	240-9973	78
	▶582	237-6256	918		178	240-9975	78
236-9106	▶317	237-6257	918		▶186	241-0758	100
236-9108	▶129	237-6469	52	239-2397	178	241-0835	▶48
236-9112	▶257	237-7253	52		▶193		52
236-9113	▶257	237-7262	170	239-3450	78	241-0844	49
236-9129	▶911	237-8180	308	239-3451	78	241-0845	48
236-9135	▶96		▶315	239-3453	78		▶49
236-9136	▶97	237-8181	315	239-3454	78	241-0847	36
236-9773	158	237-8183	315	239-3455	78		48
236-9774	158	237-8260	315	239-3456	78	241-1851	197
236-9775	159	237-8964	▶656	239-3478	▶187	241-1852	197
236-9776	159	237-8965	▶655		188	241-2628	593
236-9832	610	237-9310	100	239-4850	129		596
	612	237-9736	170		▶175		599
	614	237-9748	▶54	239-4857	524		602
	616		57	239-5195	573	241-3352	284
236-9939	378	237-9749	54	239-5674	178	241-4812	773
236-9993	228	237-9750	5		▶188		▶786
237-1012	▶170		▶93	239-5858	98	241-6206	351
237-2331	322	237-9751	57	239-6986	918	241-6209	558
	▶346	237-9752	3	239-7359	14	241-6978	803
237-2570	2		▶241	239-8135	72		805
	▶852	237-9753	3	239-8410	390	241-8368	▶206
237-2571	496		▶43	239-9954	126		235
	▶852	237-9754	3		▶134	241-8506	69
237-2572	▶782		▶89	240-0105	78	241-8650	▶805
	852	237-9755	3	240-0107	78	241-8651	803
237-2573	▶783		▶57	240-0177	756		805
	852	237-9756	3	240-0363	807	241-8652	803
237-2574	782		▶90	240-1462	756		805
	783	237-9758	3	240-1464	756	241-8686	▶323
	▶868		▶61	240-1465	756		346
237-2577	868	237-9759	61	240-1880	29	241-8687	323
237-2742	551	237-9767	3	240-2636	33	241-8688	323
	▶591		▶120	240-3118	▶756	241-9157	▶492
237-2743	591	237-9769	3	240-4542	▶803		584
237-3943	890		▶22	240-4548	803	241-9265	88
	892	237-9878	490	240-4551	803	242-0445	▶643
237-3970	▶772	237-9941	653	240-4552	803		645
	890	237-9960	256	240-4557	803		655

▶ **PRIMARY REFERENCE**

PART NUMBER INDEX

Part	Page
242-0446	▶645
	655
242-0718	805
242-0719	805
242-0720	805
242-0772	▶378
	390
242-0773	378
242-1307	563
	▶573
242-1401	48
242-1811	23
242-2445	824
242-3360	98
242-4274	541
	▶543
242-4275	540
	▶544
242-4339	84
242-4340	69
	▶84
242-6099	228
242-6801	586
242-6803	586
242-6804	586
242-7218	427
242-7418	48
242-8263	868
242-8421	228
242-8559	822
242-8890	1
	▶312
242-8892	312
242-9005	582
242-9371	822
242-9372	822
242-9415	78
242-9416	774
	▶822
242-9417	78
242-9418	78
242-9419	78
243-0505	323
243-0507	323
243-0509	323
243-0561	308
243-0562	308
243-0563	308
243-0564	461
243-0565	461
243-0570	461
243-0572	323
243-0573	323
243-0983	▶918
243-0994	▶906
	917
243-1088	773
	▶774
243-1089	▶526
	782
	783
243-1090	782
	783
	▶880
243-1092	782
	783
	▶809
243-1093	809
	▶830
243-1555	3
	▶178
243-1604	342
	▶344
243-1605	▶342
	346
243-1606	342
243-1607	344
243-1667	3
	▶72
243-1670	3
	▶59
243-1673	88
243-1674	93
243-1675	93
243-1676	88
243-1677	88
243-1678	88
243-1679	85
243-1680	3
	▶28
243-1938	▶219
243-1939	129
	▶130
243-1940	▶528
	551
243-1941	▶530
243-1944	▶807
	864
243-1945	▶140
243-1946	▶532
243-2289	78
243-3166	526
	528
	▶534
243-3702	1
	▶361
243-3703	361
243-3720	558
243-3725	342
243-3750	895
243-3763	819
243-4013	383
243-4186	558
243-4187	558
243-4369	868
243-4371	868
243-4566	558
243-4623	482
	558
243-4624	482
	558
243-4625	558
243-4626	558
243-4692	558
243-4786	558
243-5401	431
243-5405	431
243-5412	431
243-5553	868
243-5554	868
243-5555	868
243-5556	868
243-5849	363
	398
	401
243-5850	363
243-6342	698
243-6359	698
243-6386	698
243-6390	394
243-6391	394
243-6409	394
243-6410	394
243-6462	99
243-6529	433
243-6717	12
	▶32
243-6897	558
243-7100	773
	▶824
243-7104	824
243-7106	824
243-7107	824
243-7108	824
244-0405	591
244-0420	591
244-1031	▶549
	563
244-1035	390
244-1037	390
244-1039	390
244-1046	390
244-1047	390
244-1067	390
244-1420	106
244-1426	563
	▶607
244-2119	830
244-2125	822
244-2360	830
244-2539	803
	805
244-2571	363
244-2736	▶835
	864
244-2747	▶460
	782
	783
244-2787	▶814
	852
244-3265	461
244-3268	461
244-3269	461
244-3274	461
	476
244-3279	461
244-3280	308
244-3281	308
244-3282	308
244-3283	308
244-3285	461
244-3287	461
244-3322	569
244-3323	569
244-3324	569
244-3325	569
244-3329	569
244-3330	569
244-3336	569
244-3407	378
244-3525	375
244-3526	375
244-3541	394
244-3597	▶496
244-3599	2
	▶157
244-4498	78
244-6308	360
244-6563	476
244-6577	476
	482
244-6578	476
	482
244-6625	593
	596
	599
	602
244-6628	543
	544
244-6855	786
244-6856	78
244-7025	543
	544
244-7030	543
	544
244-7778	546
	547
244-8772	546
	547
244-8776	546
244-8777	542
	▶546
244-8782	835
	▶836
244-8783	835
	▶837
244-8785	836
	839
244-8786	837
	838
244-8832	563
244-8836	563
244-8837	563
244-8839	786
244-8840	68
245-0577	375
245-0578	375
245-1172	78
245-1173	78
245-1255	375
245-1256	375
245-2974	519
	▶522
245-2975	▶520
	593
	596
	599
	602
245-3017	476
	482

▶ PRIMARY REFERENCE

PART NUMBER INDEX

Part	Page	Part	Page	Part	Page	Part	Page
245-3206	78		▶537	246-2070	257	246-6667	121
245-3217	620	245-7685	547		271	246-7917	135
245-3219	620	245-7686	491		▶539		▶176
245-3257	235	245-7688	474	246-2347	135	247-0507	476
245-3514	243	245-7690	474		▶224	247-1111	437
245-3815	85	245-7691	474	246-2348	224	247-1639	799
	▶86	245-7727	363	246-2349	224	247-1852	▶791
245-3816	85	245-7963	441	246-2641	919		796
245-3818	86	245-8095	586	246-2642	219	247-1853	791
245-3819	86	245-8097	437	246-2889	584	247-1855	791
245-3839	903	245-8098	437	246-2951	554		▶817
245-3842	903	245-8099	437		556	247-1859	791
245-3850	903	245-8335	530	246-3144	12	247-1860	868
245-3862	586		532		32	247-1862	791
245-3928	▶903	245-8355	573	246-3231	830	247-1863	819
245-3936	439	245-8472	631	246-3290	164	247-1865	817
245-3937	439	245-8818	▶838	246-3292	135	247-1869	791
245-3940	439		843		▶813	247-1870	791
245-4018	78	245-8819	▶839	246-3295	166	247-2834	91
245-4053	441		843		168	247-2963	▶98
245-4063	441	245-9087	394	246-3296	166		99
245-4333	868	245-9818	1	246-3371	558	247-3018	476
245-4370	476		▶434	246-3513	139		482
245-4371	476	245-9819	439	246-3514	▶139	247-3019	476
245-4387	773	245-9820	439	246-4374	434		482
	▶785	246-0435	368	246-4488	236	247-3020	476
245-4915	394		427	246-4489	236		482
245-5942	619	246-0535	573	246-4612	86	247-3773	236
245-5943	558	246-0569	439	246-4616	86	247-3999	▶740
	▶619	246-0570	439	246-4617	86	247-4000	▶698
245-6011	78	246-0573	563	246-4777	461		740
245-6095	49	246-0578	228	246-4778	461	247-4184	526
245-6135	434	246-0717	908	246-4779	461		528
245-6173	434	246-0718	908	246-4780	461	247-4285	146
245-6175	434	246-0719	908	246-4781	461	247-4481	608
245-6184	▶808	246-0720	908	246-4782	461	247-4834	546
	864	246-0721	908	246-4783	461	247-4861	269
245-6447	526	246-0722	911	246-4791	2	247-4915	547
	528	246-0723	911		▶919	247-4969	526
	530	246-0724	911	246-4792	▶280		528
	532	246-0725	911		322		530
245-6458	782	246-0726	911	246-4793	105		532
	783	246-0727	911	246-4794	105	247-5855	698
	▶859	246-1133	558	246-4907	657	247-5858	698
245-6564	▶523	246-1151	554	246-5231	436	247-5868	698
245-6566	▶521		556		▶888	247-6728	698
245-6780	439	246-1153	554	246-5288	436	247-6729	698
245-6781	439		556		▶437	247-6730	698
245-6800	415	246-1472	441	246-5289	436	247-6731	698
245-6801	415	246-1553	121		▶439	247-7017	482
245-6802	415	246-1573	563	246-5290	▶556	247-7018	482
245-6804	415	246-1696	121		655	247-7019	482
245-7302	571	246-1697	121	246-5304	▶551	247-7026	482
245-7304	571	246-1698	121	246-5422	291	247-7037	482
245-7306	571	246-1699	121	246-5459	228	247-7601	▶608
245-7307	571	246-1708	563	246-5827	280		626
245-7308	571	246-1715	121	246-6014	556	247-7610	482
245-7428	363	246-1774	243	246-6196	172	247-7611	482
245-7438	631	246-1920	▶129	246-6291	140	247-7612	482
245-7486	▶547	246-1921	▶68		▶141	247-7613	482
	655	246-2053	▶519	246-6292	476	247-7614	482
245-7576	571		524		482	247-7831	▶269
245-7649	532	246-2055	551	246-6293	476		346
	▶535		▶584		482	247-8310	482
245-7650	530	246-2065	584	246-6367	317	247-8311	482

▶ **PRIMARY REFERENCE**

PART NUMBER INDEX

Part	Page
247-8312	482
247-8313	482
247-8413	▶339
247-8414	▶325
	339
247-8495	292
247-8496	292
247-8669	616
247-9760	138
247-9761	138
248-0009	138
248-0010	138
248-0282	482
248-0286	482
248-0287	483
248-0354	372
248-0356	291
248-0357	▶291
	346
248-0400	137
248-0401	137
248-0414	156
	▶168
248-0561	▶734
248-0562	▶674
	734
248-0563	▶735
248-0564	▶690
	735
248-0565	▶736
248-0566	▶691
	736
248-0567	▶715
248-0568	▶675
	715
248-0571	674
	677
	681
248-0672	705
	707
	711
	716
	719
	721
	722
	723
	727
	728
	734
	735
	736
	▶765
248-1545	236
248-1666	663
	674
	685
	690
	691
	706
	729
248-2079	880
248-2419	765
248-3317	543
	544
248-4026	719
	722
	727
	734
	▶750
248-4840	90
248-4841	90
248-5081	210
	211
248-5249	888
248-5250	888
248-5513	72
248-5737	665
	667
	674
	675
	677
	678
	679
	681
	682
	683
	685
	690
	691
	704
	717
	724
	729
248-5747	665
	667
	674
	675
	677
	678
	679
	681
	682
	683
	685
	690
	691
	704
	717
	724
	729
248-5756	665
	667
	674
	675
	677
	678
	679
	681
	682
	683
	685
	690
	691
	704
	717
	724
248-5801	698
248-5805	698
248-5806	698
248-6189	888
248-6190	888
248-6193	879
248-6661	6
248-7325	▶757
248-7326	757
248-7329	663
	674
	685
	690
	691
	706
	729
248-7338	674
	677
	681
248-7339	674
248-7341	663
	674
	675
	685
	690
	691
	704
	706
	729
248-7538	447
248-9953	631
248-9954	631
248-9955	631
248-9956	631
248-9963	631
249-0368	599
	602
249-0554	443
	▶446
249-0656	663
	675
	685
	690
	691
	704
	706
	729
249-0657	672
	678
	682
	690
249-0713	▶104
	109
249-0787	593
	596
249-2334	▶550
	558
249-2763	229
249-2775	130
	132
249-5227	573
	▶637
249-5420	675
	704
249-5421	675
	704
249-5602	210
	211
	228
249-8798	752
	754
250-0241	404
250-0944	96
	97
250-1656	565
250-3337	78
250-3801	444
	▶447
250-3920	808
250-3923	808
250-4262	569
250-4628	853
250-5590	390
250-5593	390
250-5594	390
250-5595	390
250-5596	390
250-5599	390
250-5600	1
	▶390
250-7531	610
	612
	614
	616
250-8276	▶879
250-8383	312
250-9308	817
250-9309	817
250-9310	817
250-9311	817
250-9312	817
250-9969	1
	▶365
251-1005	33
251-1082	132
251-1110	68
	257
	539
251-1197	230
251-2138	406
	410
	413
251-2139	406
	410
	413
251-3033	▶703
251-3034	703
	▶704
251-3035	▶705
251-3036	705
	▶706
251-3037	▶707
251-3038	▶663
	707
251-3039	▶716
251-3040	716
	▶717
251-3041	▶719
251-3042	▶677
	719
251-3043	▶708
251-3044	▶665
	708

▶ PRIMARY REFERENCE

PART NUMBER INDEX

Part	Page
251-3045	▶720
251-3046	▶678
	720
251-3047	▶721
251-3048	▶679
	721
251-3049	▶722
251-3050	▶681
	722
251-3051	▶709
251-3052	▶667
	709
251-3053	▶710
251-3054	▶682
	710
251-3055	▶711
251-3056	▶669
	711
251-3057	▶712
251-3058	▶671
	712
251-3059	▶713
251-3060	▶672
	713
251-3061	▶723
251-3062	723
	▶724
251-3063	▶726
251-3064	▶683
	726
251-3104	406
	410
	649
	650
	652
251-3532	406
251-3533	406
251-3564	430
251-4249	258
	259
	▶276
251-4250	276
251-4251	276
251-4282	859
251-4283	859
251-4284	859
251-4314	29
251-4339	159
251-4522	▶258
	322
	655
	656
251-4523	▶258
251-4524	258
	▶300
251-4525	298
	300
	302
251-4879	258
	259
	▶289
251-5872	884
251-6079	406
	413
251-6162	441
251-6480	300
	302
251-6481	300
	302
251-7294	406
	410
	413
251-7570	257
	▶259
	271
251-7571	257
	▶259
251-7575	259
	▶302
251-7593	5
	▶201
251-7595	3
	▶106
251-7600	3
	▶66
251-7605	3
	▶100
251-7610	3
	▶125
251-9251	677
251-9252	665
	677
	678
	717
251-9255	665
	678
	717
251-9261	681
251-9262	667
	669
	671
	672
	679
	681
	682
251-9265	667
	669
	671
	672
	679
	682
251-9885	807
251-9886	807
252-0257	444
252-0567	289
252-0737	634
252-0995	291
252-2180	▶14
	15
252-2181	▶15
	16
252-5175	390
252-5180	390
252-5182	390
252-5475	756
252-5875	917
252-5917	▶209
	525
252-5920	156
	▶214
252-5924	▶213
	496
252-6971	427
252-6972	427
252-6973	427
252-6974	427
252-6977	427
252-6978	427
252-6979	427
252-6980	1
	▶427
252-6982	427
252-6985	427
252-6986	427
252-7721	683
	724
252-7723	683
	724
252-8211	444
252-8384	677
	717
252-8385	677
	717
252-9256	573
	▶618
252-9423	665
	678
252-9424	665
	678
252-9427	669
	679
	681
252-9428	669
	679
	681
252-9430	667
	671
	672
	682
252-9431	667
	671
	672
	682
252-9434	724
252-9435	724
252-9437	683
252-9438	683
252-9543	1
	▶380
253-0272	616
253-0575	880
253-0861	906
253-1461	4
	▶109
253-1525	582
253-1540	563
253-2111	235
253-2673	549
253-3269	406
	413
253-3270	406
	413
253-3471	129
	▶132
253-3951	156
	157
	▶216
253-4025	608
253-4026	622
	624
	625
	▶634
253-5179	410
253-6088	410
253-8351	▶265
	346
253-8659	410
253-8660	410
253-8661	410
253-9521	819
253-9795	447
254-0004	372
254-1519	497
254-3250	504
254-3446	280
254-3569	571
254-3571	655
254-3918	▶339
254-4109	584
	▶586
254-4151	398
	401
254-4152	398
	401
254-4153	398
	401
254-4154	398
	401
254-4171	398
	401
254-4187	398
	401
254-4189	398
	401
254-4190	398
	401
254-4496	▶737
254-4498	▶738
254-4500	▶693
	737
254-4502	▶694
	738
254-4505	693
	694
254-5072	703
	710
	713
	720
	735
	▶768
254-5073	▶767
254-5147	582
	▶588
254-5254	398
	401
254-5255	398
	401
254-5257	398
	401
254-5258	398

▶ **PRIMARY REFERENCE**

PART NUMBER INDEX

Part	Page	Part	Page	Part	Page	Part	Page
	401		622	258-5031	22		616
254-5525	▶156	256-3565	551	258-5193	588	260-3056	610
254-5762	431		▶602		▶590		612
254-5789	577	256-3644	602	258-5194	590		614
254-6549	586		▶622	258-5426	476		616
254-6555	586	256-3695	▶727	258-5427	476	260-3057	610
254-6561	586	256-3697	▶685	258-5428	476		612
	▶631		727	258-5429	476		614
254-6562	631	256-3881	908	258-5457	106		616
254-6581	563	256-3882	908	258-5458	110	260-3058	610
254-6589	586	256-4362	608	258-7107	250		612
254-7640	824	256-4363	608	258-7370	836		614
254-8272	▶340	256-4552	608		837		616
254-8273	340	256-4884	406		838	260-3597	398
254-8471	398		410		839	260-4693	▶794
	401		413	258-7623	868	260-4870	▶864
254-8501	430	256-5068	▶126	258-7624	868	260-4871	▶864
254-8502	430		140	258-8721	49	260-4872	▶864
254-8503	430	256-5309	78	259-1502	593	260-5764	446
254-9137	535	256-5718	▶656		596	260-6734	612
	537	256-6627	68		599	260-6735	614
254-9139	537	256-6881	197		602	260-6736	616
254-9140	535	256-7280	608	259-1970	599	260-7760	62
254-9146	880	256-7485	586		602	260-7765	▶156
254-9147	880	256-7822	528	259-1971	593	260-8590	608
254-9149	530		532		596		610
254-9150	532	256-7880	415		599		612
254-9941	581	256-7881	415		602		614
254-9942	581	256-7882	415	259-1998	▶841		616
255-0185	563	256-7883	415	259-1999	▶843		634
255-1312	431	256-8686	▶340		864		▶638
255-2395	74	256-8768	879	259-2092	593	260-8636	591
255-2397	3		▶892		596	260-9492	906
	▶74	256-9997	573	259-2186	18	260-9493	906
255-3598	439	257-0267	610	259-2544	340	260-9602	228
255-3613	558		612	259-2545	340	260-9984	168
255-4367	868		614	259-2547	▶340	260-9985	168
255-4369	126		616	259-2548	▶340	261-0015	▶612
	236		▶641	259-2558	437		624
255-4370	170	257-2008	782	259-2561	437		625
255-4371	170		783	259-2562	437		626
255-4499	476		▶815	259-2563	437	261-0016	▶614
	483	257-2015	29	259-2565	437		622
255-4500	476	257-2016	782	259-2566	▶384		624
	483		783		436		625
255-5552	▶362		▶900	259-2567	437		626
255-6653	903	257-2170	▶18	259-3011	398	261-0017	▶616
255-6654	903		20	259-3187	437		622
255-7499	401	257-2197	900	259-3188	437		625
255-7504	399	257-2259	398	259-6893	819	261-0150	906
	402		401	259-7889	631	261-0151	906
255-8482	569	257-3227	824	259-8317	620	261-0471	917
255-8484	569	257-4095	19	260-0354	78	261-1035	3
255-8545	468		▶20	260-1527	7		▶99
256-0083	586	257-4159	433	260-1528	785	261-1446	▶424
256-0854	908	257-4211	1	260-1818	69	261-1712	1
256-2299	693		▶372	260-1939	5		▶461
256-2300	694	257-4323	98		▶7	261-2031	▶385
256-2303	693	257-7315	483	260-3053	610		436
256-2304	693	257-8471	478		612	261-2332	164
256-2305	694	258-0883	100		614	261-2333	164
256-2306	694		▶207		616	261-2337	596
256-2866	610	258-4871	110	260-3055	610		▶624
	612	258-4872	106		612	261-2338	599
256-3364	▶610	258-4873	106		614		▶625

▶ **PRIMARY REFERENCE**

PART NUMBER INDEX

Part	Page
261-3037	▶140
261-3945	593
	▶626
261-4405	166
261-4406	166
261-4884	166
262-1408	229
262-2043	▶136
	140
262-4914	▶354
	441
262-4917	354
262-4918	354
262-5236	526
262-5237	528
262-5238	530
	532
262-5239	526
	528
	530
	532
262-5240	526
	528
262-5265	610
	612
	614
	634
262-5320	558
262-6848	87
262-7397	▶341
262-7398	341
262-9094	▶728
262-9097	728
	▶729
262-9949	▶208
263-1202	631
263-1203	631
263-1204	631
263-1493	229
263-1995	530
	532
263-3180	917
263-3322	▶140
263-4133	▶210
263-4134	▶211
263-6296	▶426
263-7122	▶341
263-7474	586
263-7677	▶341
263-7911	341
263-8763	341
263-8948	126
263-9088	126
	▶866
263-9574	121
264-0551	140
264-0688	▶795
	796
264-0690	795
264-4437	378
264-4872	126
264-7671	126
264-7786	191
265-1113	38
	39
	▶626
265-1313	38
	39
265-5389	▶357
	424
	426
265-6695	▶458
	782
	783
265-8171	130
	132
265-9642	136
265-9643	136
266-2271	▶262
	284
266-2272	282
	▶284
266-6590	801
266-6591	801
266-6592	801
266-6593	801
266-6594	436
	▶801
266-6631	801
266-6632	801
266-6633	801
266-8708	483
	558
266-8944	801
267-0007	3
	▶58
267-0009	3
	▶4
267-0010	4
	▶6
267-1702	905
267-1777	398
267-1778	398
	401
267-1780	401
267-1781	398
	401
267-1782	398
	401
267-1783	398
	401
267-2809	154
267-3476	3
	▶91
267-3506	316
267-4603	866
267-5222	451
267-8937	569
267-9445	569
268-1497	69
268-3755	563
268-8262	316
268-8792	775
	811
269-0133	▶739
269-0134	▶696
	739
269-2727	▶436
269-2860	33
269-2862	33
269-2864	33
269-9397	▶575
	622
	624
	625
	626
269-9398	▶577
	622
	624
	625
	626
270-1738	563
270-1739	563
270-1740	563
270-1768	634
270-2636	519
270-3388	▶796
	868
270-4122	696
	▶745
270-4953	745
270-5320	103
270-7147	558
270-8867	696
271-0263	458
	▶459
271-0264	▶451
	459
271-2609	476
271-2610	476
271-2611	476
271-3633	696
271-3952	236
271-3987	476
271-4016	135
	▶247
271-4017	247
271-4028	156
	157
	▶248
271-4029	248
271-4030	248
271-4037	156
	▶249
271-4038	249
271-4039	249
271-4956	365
	367
271-4958	365
	367
271-6408	483
271-6409	483
271-6472	808
271-7619	308
271-9032	380
271-9033	380
271-9034	380
271-9035	380
272-0292	308
272-0293	308
272-2775	▶398
272-2776	905
272-2783	905
272-2785	905
272-2787	398
	401
272-2790	401
272-2792	398
	▶905
	▶401
272-5550	365
	367
272-6388	401
272-6628	905
272-6629	905
272-6674	819
272-7942	824
272-9821	135
	▶252
272-9822	252
273-0274	229
273-0275	245
273-2554	365
	367
273-2638	308
273-3555	483
273-3591	586
273-3958	558
273-3959	558
273-4066	483
273-4067	483
273-6356	▶865
274-1262	586
274-2363	535
	537
274-3734	390
274-5871	558
274-7032	367
274-7034	367
274-7035	367
274-7036	367
274-7038	367
274-7040	362
	▶367
274-7041	367
274-7042	367
274-7051	362
	▶383
274-7053	367
274-7054	367
274-7055	367
274-7060	367
	▶386
274-7061	367
	▶387
274-7062	386
274-7063	387
274-7066	386
	387
274-7068	367
274-7069	367
274-7070	367
274-7395	178
	▶195
274-7396	178
	▶196
274-7407	69
274-8330	827
275-0024	▶254
	655
275-0026	254

▶ **PRIMARY REFERENCE**

PART NUMBER INDEX

Part	Page	Part	Page	Part	Page	Part	Page
275-0571	363		426	278-9481	398		
275-0572	363	276-9766	786	279-4959	▶129		
275-1235	113	276-9775	282	279-6580	563		
275-3514	415	276-9776	282	280-0508	▶421		
275-4024	236	276-9777	282		426		
275-5635	360	276-9778	282	280-1436	161		
275-7808	365	277-0038	▶426	280-1437	161		
	367	277-0307	▶406	280-1456	▶161		
275-7809	365		426	280-1884	421		
	367	277-0308	▶410	280-2421	426		
275-7810	365		424		▶763		
275-7811	365	277-0731	490	280-7000	801		
275-8294	801	277-2112	282	280-7314	250		
275-8297	801	277-3413	404	280-9604	653		
275-8299	801		▶443	282-6416	▶271		
275-8301	801	277-3437	404				
275-8302	801	277-5330	424				
275-8303	801		▶657				
275-8304	801	277-5331	426				
275-8305	801		▶762				
275-8544	▶490	277-5334	424				
	491		426				
275-8815	657		▶845				
	762	277-5336	▶413				
	763		426				
275-8880	558	277-5341	413				
275-9368	87	277-5343	413				
275-9369	87	277-5617	426				
275-9370	87		▶649				
275-9916	236	277-6155	845				
276-0031	126	277-6204	791				
276-0730	372	277-8157	▶2				
276-1028	87	277-8271	222				
276-1054	1	277-8272	222				
	▶113	277-8551	2				
276-1858	917		▶436				
276-2124	386	277-8628	79				
276-2125	387	277-8986	78				
276-3899	429	278-1808	474				
276-3964	809	278-2071	406				
	▶811		410				
276-3965	774		413				
	▶775		▶444				
276-3967	824	278-2073	444				
276-4167	558	278-2076	649				
276-5073	424		650				
	426		652				
	▶429	278-2078	406				
276-5308	429		410				
276-7255	▶271		413				
276-7398	▶222	278-3310	474				
	424	278-4131	406				
	426		410				
276-7400	222		413				
276-7521	610	278-5297	419				
276-8069	404		421				
276-8075	▶404	278-5299	419				
	424	278-5855	424				
	426		▶650				
276-8173	404	278-8695	426				
276-8227	▶359		▶652				
	424	278-8965	534				
	426	278-8967	534				
276-9599	▶419	278-8970	534				
	424	278-8974	534				

▶ PRIMARY REFERENCE



© 2005 Caterpillar
All Rights Reserved

Printed in U.S.A.