CATERPILLAR®

SEBP4037-01
February 2005

# Parts Manual

SIS

See "General Information" for New Parts Manual Features.

## 980H Wheel Loader

JMS1-Up (Machine)
LHX1-Up (Engine)
DGZ1-Up (Transmission)
MDA1-Up (Transmission)
3JT1-Up (Torque Converter)
TCA1-Up (Torque Converter)

RUTHZIL TRATOR COMERCIAL DE PEÇAS LTDA 11 97083-6812 ROLANDO

**Powered By C15 Engine**
**This Parts Manual is also Available in .PDF Format on Compact Disc(CD-ROM)-Caterpillar Form No. SERP4037**

# Product and Dealer Information

Note: For product identification plate locations, see the section "Product Identification Information" in the Operation and Maintenance Manual.

**Delivery Date:** _____

## Product Information

Model: _____

Product Identification Number: _____

Engine Serial Number: _____

Transmission Serial Number: _____

Generator Serial Number: _____

Attachment Serial Numbers: _____

Attachment Information: _____

Customer Equipment Number: _____

Dealer Equipment Number: _____

## Dealer Information

Name: _____ Branch: _____

Address: _____

_____

_____

| | Dealer Contact | Phone Number | Hours |
|---|---|---|---|
| Sales: | _____ | _____ | _____ |
| Parts: | _____ | _____ | _____ |
| Service: | _____ | _____ | _____ |

# Informations produit et concessionnaire

Nota: Voir l'emplacement de la plaque signalétique du produit au chapitre "Informations produit" du guide d'utilisation et d'entretien.

**Date de livraison:** _____

## Informations produit

Modèle: _____

Numéro d'identification produit: _____

Numéro de série du moteur: _____

Numéro de série de la boîte de vitesses: _____

Numéro de série de l'alternateur: _____

Numéros de série d'équipement: _____

Informations sur l'équipement: _____

Numéro matériel client: _____

Numéro matériel concessionnaire: _____

## Informations concessionnaire

Nom: _____ Agence: _____

Adresse: _____

_____

_____

| | Contact concessionnaire | Numéro de téléphone | Heures |
|---|---|---|---|
| Ventes: | _____ | _____ | _____ |
| Pièces: | _____ | _____ | _____ |
| Service: | _____ | _____ | _____ |

# Información del Producto/Distribuidor

Nota: Para saber la ubicación de las placas de identificación del producto, ver la sección "Información sobre identificación del producto" en el Manual de Operación y Mantenimiento.

**Fecha de entrega:** _____

## Información del producto

Modelo: _____

Número de identificación del producto: _____

Número de serie del motor: _____

Número de serie de la transmisión: _____

Número de serie del generador: _____

Números de serie de los accesorios: _____

Información sobre los accesorios: _____

Número del equipo del cliente: _____

Número del equipo del distribuidor: _____

## Información del distribuidor

Nombre: _____ Sucursal: _____

Dirección: _____

_____

_____

| | Comunicación con el distribuidor | Número de teléfono | Horas |
|---|---|---|---|
| Ventas: | _____ | _____ | _____ |
| Piezas: | _____ | _____ | _____ |
| Servicio: | _____ | _____ | _____ |

# Informações Sobre Produto e Revendedor

Nota: Para localizações da placa de identificação do produto, consulte a seção, "Informações Sobre Identificação do Produto" no Manual de Operação e Manutenção.

**Data de Entrega:** _____

## Informações Sobre o Produto

Modelo: _____

Número de Identificação do Produto: _____

Número de Série do Motor: _____

Número de Série da Transmissão: _____

Número de Série do Gerador: _____

Números de Série de Acessórios: _____

Informações Sobre Acessórios: _____

Número do Equipamento do Cliente: _____

Número do Equipamento do Revendedor: _____

## Informações Sobre o Revendedor

Nome: _____ Filial: _____

Endereço: _____

_____

_____

| | Contato do Revendedor | Telefone | Horas |
|---|---|---|---|
| Vendas: | _____ | _____ | _____ |
| Peças: | _____ | _____ | _____ |
| Serviço: | _____ | _____ | _____ |

# Produkt- und Händlerinformation

Anmerkung: Für die Lage der Produkt-Identnummer und Seriennummern siehe Abschnitt "Produkt-Identinformation" im Betriebs- und Wartungshandbuch.

**Lieferdatum:** _____

## Produkt-Identinformation

Modell: _____

Produkt-Identnummer: _____

Seriennummer des Motors: _____

Seriennummer des Getriebes: _____

Seriennummer des Generators: _____

Seriennummern der Arbeitsgeräte: _____

Arbeitsgeräteinformation: _____

Kundennummer: _____

Händlernummer: _____

## Händlerinformation

Name: _____ Niederlassung: _____

Adresse: _____

_____

_____

| | Kontaktperson beim Händler | Telefon | Dienststunden |
|---|---|---|---|
| Verkauf: | _____ | _____ | _____ |
| Ersatzteile: | _____ | _____ | _____ |
| Service: | _____ | _____ | _____ |

# MEMORANDA

# TABLE OF CONTENTS


| Name | Page |
|---|---|
| **GENERAL INFORMATION** | A29 |
| **REPAIR ALTERNATIVES** | A48 |
| **SUPPLEMENTAL COOLANT ADDITIVES** | A53 |
| **MAINTENANCE PARTS** | A58 |
| **INDEX** | A77 |
| **MACHINE ARRANGEMENT** | 1 |
| CHASSIS AR | 1 |
| GENERAL AR | 2 |
| MACHINE AR | 2 |
| SCRAP HANDLING AR | 2 |
| WASTE HANDLING AR | 3 |
| **ENGINE ARRANGEMENT** | 4 |
| ENGINE AR-COMPLETE | 4 |
| ENGINE AR-CORE | 5 |
| INSTALLATION AR-ENGINE | 6 |
| **BASIC ENGINE** | 7 |
| ADAPTER GP-PUMP DRIVE | 7 |
| BASE GP-VALVE COVER & INJ HARN | 8 |
| BELT TENSIONER GP | 10 |
| CAMSHAFT GP | 11 |
| COVER GP-CYLINDER BLOCK | 12 |
| COVER GP-FRONT HOUSING | 14 |
| COVER GP-SOUND SUPPRESSION | 16 |
| COVER GP-VALVE MECHANISM | 17 |
| CRANKSHAFT GP | 21 |
| CYLINDER BLOCK GP | 22 |
| CYLINDER HEAD AS | 25 |
| CYLINDER HEAD GP | 30 |
| DAMPER GP | 32 |
| DRAIN GP-ENGINE OIL | 33 |
| DRIVE GP-ACCESSORY | 34 |
| DRIVE GP-PUMP | 35 |
| FASTENER GP-FRONT HOUSING | 36 |
| FASTENER GP-OIL PAN | 38 |
| FASTENER GP-VALVE MECHANISM | 39 |
| FLYWHEEL GP | 40 |
| GEAR GP-CAMSHAFT | 41 |
| GEAR GP-FRONT | 42 |
| HOUSING GP-FLYWHEEL | 44 |
| HOUSING GP-FRONT | 46 |
| LIFTING GP-ENGINE | 48 |
| MOUNTING GP-ALTERNATOR & COMPR | 50 |
| PAN GP-OIL | 51 |
| PANEL GP-SOUND SUPPRESSION | 52 |
| PISTON & ROD GP | 54 |
| PLUG GP-CYLINDER BLOCK | 58 |
| PLUG GP-CYLINDER HEAD | 59 |
| PLUG GP-OIL PAN | 60 |
| PULLEY GP-CRANKSHAFT | 61 |
| PULLEY GP-IDLER | 62 |
| ROCKER ARM GP | 63 |
| SUPPORT GP-ENGINE | 65 |
| SUPPORT GP-ENGINE & TMSN | 66 |
| VALVE MECHANISM GP | 68 |
| **LUBRICATION SYSTEM** | 69 |
| FASTENER GP-OIL PUMP MOUNTING | 69 |
| FILLER GP-ENGINE OIL | 70 |
| FILTER GP-ENGINE OIL | 71 |
| FUMES DISPOSAL GP | 73 |
| GAUGE GP-OIL LEVEL (DIPSTICK) | 74 |
| LINES GP-ENGINE OIL | 75 |
| LINES GP-TURBOCHARGER OIL | 77 |
| PUMP GP-ENGINE OIL | 78 |
| VALVE GP-FLUID SAMPLING | 79 |
| **COOLING SYSTEM** | 80 |
| COOLING AR-HIGH AMBIENT TEMP | 80 |
| FASTENER GP-WATER PUMP | 81 |
| LINES GP-WATER | 82 |
| PUMP GP-WATER | 90 |
| RADIATOR & FAN GP | 92 |
| **AIR INLET AND EXHAUST SYSTEM** | 99 |
| AIR CLEANER GP | 99 |
| COVER GP-TURBOCHARGER | 101 |
| DUST EJECTOR GP | 102 |
| INDICATOR GP-AIR FILTER CHANGE | 103 |
| INSULATION GP-HEAT | 104 |
| LINES GP-AFTERCOOLER AIR | 105 |
| LINES GP-AIR | 106 |
| MANIFOLD GP-EXHAUST | 108 |
| MOUNTING GP-MUFFLER | 109 |
| MUFFLER GP | 110 |
| SHIELD GP-HEAT | 111 |
| TURBOCHARGER GP | 112 |
| **FUEL SYSTEM** | 113 |
| ADAPTER GP-FAST FILL FUEL | 113 |
| DRAIN GP-FUEL | 114 |
| FILTER & MTG GP-FUEL | 115 |
| FILTER GP-WATER SEP & FUEL | 119 |
| LINES GP-FUEL | 120 |
| PUMP & MTG GP-FUEL TRANSFER | 124 |
| PUMP GP-FUEL INJECTION | 125 |
| TANK GP-FUEL | 126 |
| VALVE GP-CHECK | 130 |
| WATER SEP & FUEL PRM PUMP GP | 132 |

# TABLE OF CONTENTS


| Name | Page |
|---|---|
| **ELECTRICAL AND STARTING SYSTEM** | 133 |
| ALARM GP | 133 |
| ALTERNATOR GP-CHARGING | 134 |
| BATTERY & WIRING GP | 140 |
| CONNECTION GP-ELECTRICAL | 145 |
| CONTROL & MTG GP-COMMUNICATION | 146 |
| CONTROL & MTG GP-ENGINE ELEK | 150 |
| CONTROL AR-AUTODIG | 152 |
| CONTROL GP-AUTODIG | 153 |
| CONTROL GP-COMMUNICATION | 155 |
| CONTROL GP-ENGINE ELECTRONIC | 156 |
| CONTROL GP-UNPROGRAMMED | 157 |
| ELECTRICAL AR | 162 |
| ELECTRONICS GP-COMMUNICATION | 162 |
| ELECTRONICS GP-IMPLEMENT | 163 |
| ELECTRONICS GP-MACHINE | 164 |
| ELECTRONICS GP-MONITOR | 165 |
| ELECTRONICS GP-POWER TRAIN | 166 |
| INSTALLATION AR-COMMUNICATION | 167 |
| INSTALLATION AR-SECURITY | 168 |
| INSTALLATION GP-SECURITY | 169 |
| LAMP GP-DOME | 171 |
| LAMP GP-FLOOD | 172 |
| LAMP GP-SIGNAL | 176 |
| LAMP GP-STOP & TAIL | 178 |
| LAMP GP-WARNING BEACON | 179 |
| LIGHTING AR-SIGNAL | 180 |
| LIGHTING GP-FLOOD | 180 |
| LIGHTING GP-FLOOD & SIGNAL | 184 |
| LIGHTING GP-SIGNAL | 187 |
| LIGHTING GP-WARNING BEACON | 189 |
| MOUNTING GP-PRESSURE SENSOR | 191 |
| PANEL GP-CIRCUIT BREAKER | 194 |
| RECEPTACLE GP-AUXILIARY START | 197 |
| ROADING AR | 198 |
| SENSOR & MTG GP-LIFT POSITION | 199 |
| SENSOR & MTG GP-TILT POSITION | 200 |
| SENSOR GP-ENGINE | 202 |
| SENSOR GP-POSITION | 204 |
| SENSOR GP-PRESSURE | 208 |
| SENSOR GP-SPEED | 215 |
| SENSOR GP-TEMPERATURE | 219 |
| SERVICE GP-MACHINE | 223 |
| STARTING AID GP-ETHER | 224 |
| STARTING MOTOR GP-ELECTRIC | 226 |
| SWITCH GP-BYPASS | 231 |
| SWITCH GP-DIFFERENTIAL LOCK | 232 |
| SWITCH GP-DISCONNECT | 233 |
| SWITCH GP-LIQUID LEVEL | 234 |
| SWITCH GP-MAGNETIC | 235 |
| SWITCH GP-PRESSURE | 238 |
| SWITCH GP-REVERSING FAN | 239 |
| SWITCH GP-RIDE CONTROL | 240 |
| SWITCH GP-ROCKER | 242 |
| SWITCH GP-ROTARY | 243 |
| SWITCH GP-SIGNAL | 244 |
| SWITCH GP-TOGGLE | 246 |
| VALVE GP-ETHER STARTING | 247 |
| WARNING GP-BACKUP | 248 |
| WIRING GP-AIR CONDITIONER | 249 |
| WIRING GP-AUTOLUBE CONTROL | 250 |
| WIRING GP-AXLE MONITORING | 251 |
| WIRING GP-AXLE OIL COOLER | 253 |
| WIRING GP-CAB | 256 |
| WIRING GP-CHASSIS | 281 |
| WIRING GP-ELECTROHYDRAULIC | 287 |
| WIRING GP-ENGINE | 288 |
| WIRING GP-FRONT | 292 |
| WIRING GP-LIGHTING | 295 |
| WIRING GP-SECONDARY STEERING | 299 |
| WIRING GP-SENSOR | 300 |
| WIRING GP-WASTE HANDLER | 303 |
| **POWER TRAIN** | 305 |
| AXLE AR-FIXED | 305 |
| AXLE AR-OSCILLATING | 305 |
| AXLE GP-FIXED | 307 |
| AXLE GP-OSCILLATING | 308 |
| BASE GP-OIL FILTER | 310 |
| CASE & PARTS GP-PLANETARY | 311 |
| CASE GP-TRANSFER GEAR | 312 |
| CONTROL GP-TRANSMISSION HYD | 313 |
| COOLER & MTG GP-AXLE OIL | 317 |
| COOLER AR-AXLE OIL | 319 |
| COVER GP-SHIPPING | 320 |
| COVER GP-TMSN OIL FILLER CAP | 321 |
| DIFFERENTIAL & BEVEL GEAR GP | 322 |
| DIFFERENTIAL GP-LIMITED SLIP | 335 |
| DIFFERENTIAL GP-NOSPIN | 336 |
| DRAIN GP-ECOLOGY | 338 |
| FILLER GP-POWER TRAIN OIL | 339 |
| FILTER GP-OIL | 340 |
| GEAR GP-OUTPUT TRANSFER | 341 |
| LINES GP-AXLE OIL COOLER | 345 |
| LINES GP-POWER TRAIN OIL | 353 |
| LINES GP-TORQUE CONV COOLER | 355 |
| MOUNTING GP-AXLE | 357 |
| MOUNTING GP-RIM | 358 |
| PLANETARY GP-TRANSMISSION | 359 |
| POWER TRAIN AR | 368 |
| PUMP & MTG GP-AXLE OIL COOLER | 369 |
| PUMP GP-TRANSMISSION | 371 |
| RIM AR | 372 |
| RIM GP-DEMOUNTABLE | 373 |
| SHAFT GP-DRIVE | 375 |
| SLIP JOINT GP | 377 |
| SUPPORT GP-TRANSMISSION | 378 |

# TABLE OF CONTENTS


| Name | Page |
|---|---|
| TIRE & RIM AR | 380 |
| TORQUE CONVERTER & HOUSING GP | 387 |
| TORQUE CONVERTER GP | 391 |
| TRANSMISSION AR | 395 |
| UNIVERSAL JOINT GP | 396 |
| VALVE GP-MODULATING | 398 |
| VALVE GP-RELIEF | 399 |
| WHEEL & FINAL DRIVE GP | 402 |
| **FRAME AND BODY** | 404 |
| ACTUATOR GP-POWER GUARD | 404 |
| COUNTERWEIGHT GP | 406 |
| DOOR GP-ACCESS | 412 |
| FENDER GP | 415 |
| FENDER GP-FRONT | 418 |
| FENDER GP-ROADING | 420 |
| FRAME AS-FRONT | 421 |
| FRAME AS-LOADER | 424 |
| FRAME AS-REAR | 427 |
| GRILL GP-RADIATOR | 429 |
| GUARD GP-BOTTOM | 431 |
| GUARD GP-CRANKCASE | 433 |
| GUARD GP-DRIVE SHAFT | 436 |
| GUARD GP-FRONT | 437 |
| GUARD GP-FUEL & HYDRAULIC TANK | 438 |
| GUARD GP-HITCH & STEERING | 440 |
| GUARD GP-LIGHTING | 442 |
| GUARD GP-LINES | 443 |
| GUARD GP-POWER TRAIN | 444 |
| GUARD GP-SENSOR | 445 |
| HARDWARE GP-LOADER FRAME | 446 |
| HARDWARE GP-REAR FRAME | 449 |
| HITCH GP-ARTICULATING | 455 |
| HOOD & GUARD GP | 457 |
| LADDER GP | 463 |
| LINES GP-AUTOMATIC LUBRICATION | 466 |
| LINES GP-GREASE | 474 |
| LINES GP-LUBRICATION | 479 |
| LINK GP-STEERING FRAME LOCK | 487 |
| LUBRICATION AR-AUTOMATIC | 488 |
| PANEL GP-SIDE | 489 |
| PANEL GP-SOUND SUPPRESSION | 491 |
| PANEL GP-TOP | 495 |
| SHIELD GP-ENGINE COMPARTMENT | 496 |
| STEP GP | 498 |
| SUPPORT GP-AIR INLET | 501 |
| SUPPRESSION AR-SOUND | 505 |
| SUPPRESSION GP-SOUND | 506 |
| TANK GP-GREASE | 512 |
| TILT GP-HOOD | 513 |
| VALVE GP-LUBE DISTRIBUTION | 515 |
| **BRAKING SYSTEM** | 519 |
| ACCUMULATOR GP-BRAKE | 519 |
| BASE GP-FOOT BRAKE | 522 |
| BRAKE GP-PARKING | 525 |
| BRAKE GP-SERVICE | 527 |
| CONTROL GP-FOOT BRAKE | 531 |
| CONTROL GP-PARKING BRAKE | 533 |
| CONTROL GP-SERVICE BRAKE | 534 |
| LINES GP-SERVICE BRAKE | 540 |
| VALVE GP-BRAKE CONTROL | 541 |
| **STEERING SYSTEM** | 542 |
| CONTROL GP-STEERING | 542 |
| CYLINDER & MTG GP-STEERING | 544 |
| CYLINDER GP-HYDRAULIC | 545 |
| LINES GP-SECONDARY STEERING | 547 |
| LINES GP-STEERING | 549 |
| PUMP & MTG GP-SECONDARY STEER | 556 |
| PUMP & MTG GP-STEERING & TMSN | 557 |
| PUMP GP-GEAR | 559 |
| PUMP GP-PISTON | 561 |
| ROTATING GP-PUMP | 563 |
| SCREEN GP-CASE DRAIN | 564 |
| STEERING AR-SECONDARY | 565 |
| STEERING COLUMN GP | 566 |
| STEERING WHEEL GP | 567 |
| SWASHPLATE GP | 569 |
| VALVE GP-CHECK | 570 |
| VALVE GP-DIVERTER | 573 |
| VALVE GP-PILOT | 575 |
| VALVE GP-PUMP CONTROL | 577 |
| VALVE GP-RELIEF | 579 |
| VALVE GP-SHUTTLE | 581 |
| VALVE GP-STEERING | 585 |
| VALVE GP-STEERING NEUTRALIZER | 587 |
| **HYDRAULIC SYSTEM** | 588 |
| ACCUMULATOR AS-RIDE CONTROL | 588 |
| ACCUMULATOR GP-RIDE CONTROL | 589 |
| CONTROL & LINES GP-RIDE | 590 |
| CONTROL AR-FAN | 595 |
| CONTROL AR-RIDE | 595 |
| CONTROL GP-ELECTROHYDRAULIC | 597 |
| CONTROL GP-HANDLE | 611 |
| CONTROL GP-JOYSTICK | 613 |
| CYLINDER & SEAL GP-LIFT | 619 |
| CYLINDER & SEAL GP-TILT | 620 |
| CYLINDER GP-LIFT | 626 |
| CYLINDER GP-TILT | 628 |
| FILTER GP-OIL | 639 |
| HYDRAULIC AR-2 VALVE | 641 |
| HYDRAULIC AR-3 VALVE | 641 |
| LINES GP-FRONT | 642 |
| LINES GP-HOOD TILT | 643 |

# TABLE OF CONTENTS


| Name | Page |
|---|---|
| LINES GP-HYDRAULIC | 645 |
| LINES GP-HYDRAULIC FAN | 649 |
| LINES GP-HYDRAULIC OIL COOLER | 651 |
| LINES GP-LIFT CYLINDER | 656 |
| LINES GP-TILT CYLINDER | 658 |
| MOTOR GP-PISTON | 660 |
| MOUNTING GP-HYDRAULIC TANK | 663 |
| PUMP & MOTOR GP-HOOD TILT | 664 |
| PUMP & MTG GP-HYDRAULIC FAN | 665 |
| PUMP & MTG GP-IMPLEMENT | 666 |
| PUMP GP-GEAR | 667 |
| PUMP GP-PISTON | 670 |
| ROTATING GP-PUMP | 672 |
| SUPPORT GP-FAN ELECTRICAL | 674 |
| TANK GP-EXPANSION | 676 |
| TANK GP-HYDRAULIC | 677 |
| VALVE & MTG GP-MAIN CONTROL | 682 |
| VALVE GP-CHECK | 697 |
| VALVE GP-CONTROL | 698 |
| VALVE GP-DEMAND FAN | 699 |
| VALVE GP-DIVERTER | 700 |
| VALVE GP-FAN REVERSING | 702 |
| VALVE GP-LOWERING CONTROL | 704 |
| VALVE GP-MAIN CONTROL | 706 |
| VALVE GP-MANUAL | 710 |
| VALVE GP-PILOT | 711 |
| VALVE GP-PRESSURE REDUCING | 715 |
| VALVE GP-PUMP CONTROL | 719 |
| VALVE GP-RELIEF | 721 |
| VALVE GP-SEQUENCE | 729 |
| VALVE GP-SHUTTLE | 730 |
| VALVE GP-SOLENOID | 733 |
| **IMPLEMENTS** | 737 |
| ARM & BEARING AS | 737 |
| CONTROL GP-BUCKET | 738 |
| HARDWARE GP-LIFT ARM | 740 |
| LEVER GP-TILT | 743 |
| LIFT AR | 744 |
| LOGGING AR | 745 |
| **WORK TOOLS** | 746 |
| ADAPTER GP-TIP | 746 |
| BUCKET AR-GENERAL PURPOSE | 748 |
| BUCKET AS-GENERAL PURPOSE | 749 |
| BUCKET AS-ROCK | 753 |
| BUCKET GP-GENERAL PURPOSE | 763 |
| BUCKET GP-ROCK | 765 |
| EDGE GP-CUTTING | 770 |
| TIP GP-ABRASION | 772 |
| TIP GP-EXTRA DUTY | 773 |
| TIP GP-GENERAL PURPOSE | 775 |
| TIP GP-PENETRATION | 777 |
| **OPERATOR STATION** | 779 |
| ADJUSTER GP-SEAT | 779 |
| AIR COMPRESSOR GP-SEAT | 780 |
| AIR CONDITIONER AR | 781 |
| AIR CONDITIONER GP | 782 |
| ARM GP-WINDOW WIPER | 786 |
| ARMREST GP | 788 |
| CAB AR-ENCLOSED ROPS | 789 |
| CANOPY AR-OPEN ROPS | 790 |
| COMPRESSOR GP-REFRIGERANT | 791 |
| CONDENSER & MTG GP-REFRIGERANT | 793 |
| CONTROL GP-MONITOR | 795 |
| DOOR GP-CAB | 799 |
| DUCT & FILTER GP-AIR | 803 |
| DUCT GP-AIR | 805 |
| FLOOR GP-SOUND SUPPRESSION | 808 |
| GUARD AR-WINDOW | 810 |
| GUARD GP-VANDALISM | 811 |
| GUARD GP-WINDOW | 812 |
| HANDHOLD GP | 816 |
| HEATER GP-CAB | 818 |
| HORN GP-ELECTRIC | 822 |
| INSTALLATION GP-CONTROLS | 823 |
| INSTALLATION GP-RADIO | 826 |
| LINER GP-CAB | 829 |
| LINES GP-AIR CONDITIONER | 838 |
| LINES GP-CAB HEATER | 842 |
| MIRROR GP-REAR VIEW | 844 |
| MODULE GP-QUAD GAUGE | 864 |
| MODULE GP-SPEEDOMETER & TACH | 865 |
| MONITOR AR-PAYLOAD | 866 |
| MONITOR GP-PAYLOAD | 867 |
| MOTOR GP-WINDOW WIPER | 869 |
| MOUNTING GP-CAB | 872 |
| OPERATOR AR-ENCLOSED ROPS | 874 |
| OPERATOR AR-OPEN ROPS | 874 |
| PAN GP-BACKREST | 875 |
| PANEL GP-INSTRUMENT | 878 |
| PEDAL GP-GOVERNOR | 887 |
| PLATFORM AR | 889 |
| PLATFORM GP-OPERATOR | 890 |
| RADIO GP | 892 |
| RECLINER GP-SEAT | 894 |
| ROPS GP-ENCLOSED | 895 |
| ROPS GP-OPEN | 905 |
| SEALING GP-GLASS | 908 |
| SEAT BELT GP | 909 |
| SEAT GP | 910 |
| SEAT GP-SUSPENSION | 918 |
| SHROUD GP-CAB | 925 |
| SUPPORT GP-HYDRAULIC CONTROL | 926 |
| SUPPRESSION GP-CAB SOUND | 929 |

# TABLE OF CONTENTS


| Name | Page | Name | Page |
|---|---|---|---|
| SUSPENSION GP-SEAT | 938 | | |
| VISOR GP-CAB | 942 | | |
| WASHER GP-WINDOW | 943 | | |
| WINDOW GP-DOOR | 944 | | |
| WIPER GP-WINDOW | 948 | | |
| **SERVICE EQUIPMENT AND SUPPLIES** | 951 | | |
| FILM GP | 951 | | |
| LINES GP-DIAGNOSTIC | 953 | | |
| MOUNTING GP-LUBRICATION CHART | 956 | | |
| PLATE & FILM GP | 956 | | |
| PROTECTION GP-VANDALISM | 958 | | |
| **PART NUMBER INDEX** | B1 | | |

# TABLE DES MATIÈRES


| Désignation | Page |
|---|---|
| **GÉNÉRALITÉS** | A32 |
| **OPTIONS DE RÉPARATION** | A49 |
| **ADDITIFS POUR LIQUIDE DE REFROIDISSEMENT** | A54 |
| **PIÈCES DE RECHANGE** | A61 |
| **INDEX** | A90 |
| **VERSION DE MACHINE** | 1 |
| VERSION DE CHASSIS | 1 |
| VUE DU MODÈLE | 2 |
| VERSION DE MACHINE | 2 |
| VERSION REBUT | 2 |
| ÉLIMINATION DES DÉCHETS (VERSION) | 3 |
| **MOTEUR (VERSION)** | 4 |
| VERSION DE MOTEUR COMPLET | 4 |
| MOTEUR - PARTIE CENTRALE (VERSION) | 5 |
| MONTAGE DE MOTEUR (VERSION) | 6 |
| **MOTEUR STANDARD** | 7 |
| ADAPTATEUR - ENTRAÎNEMENT DE POMPE (ASS) | 7 |
| SUPPORT DE CACHE-SOUPAPE ET FAISC. DE CABL. D'IN. | 8 |
| TENDEUR DE COURROIE (ASS) | 10 |
| ARBRE A CAMES (ASS) | 11 |
| BLOC-CYLINDRES - COUVERCLE (ASS) | 12 |
| COUVERCLE DE CARTER AV (ASS) | 14 |
| INSONORISATION - COUVERCLE (ASS) | 16 |
| CACHE-SOUPAPES (ASS) | 17 |
| VILEBREQUIN (ASS) | 21 |
| BLOC-CYLINDRES (ASS) | 22 |
| CULASSE (ENS) | 25 |
| CULASSE (ASS) | 30 |
| AMORTISSEUR DE VIBRATIONS (ASS) | 32 |
| VIDANGE-HUILE DE MOTEUR (ASS) | 33 |
| ENTRAÎNEMENT AUXILIAIRE (ASS) | 34 |
| ENTRAÎNEMENT DE POMPE (ASS) | 35 |
| BOULONNERIE DE CARTER AV (ASS) | 36 |
| BOULONNERIE DU CARTER D'HUILE (ASS) | 38 |
| CULBUTERIE - BOULONNERIE (ASS) | 39 |
| VOLANT MOTEUR (ASS) | 40 |
| PIGNONNERIE D'ARBRE À CAME | 41 |
| PIGNONNERIE AV (ASS) | 42 |
| CARTER DE VOLANT (ASS) | 44 |
| CARTER AV (ASS) | 46 |
| OEILLETONS DE LEVAGE MOTEUR (ASS) | 48 |
| MONTAGE DE L'ALTERNATEUR ET COMPRESSEUR (ASS) | 50 |
| HUILE MOTEUR - CARTER (ASS) | 51 |
| PANNEAU D'INSONORISATION (ASS) | 52 |
| PISTON ET BIELLE (ASS) | 54 |
| BOUCHON DE BLOC-CYLINDRES (ASS) | 58 |
| BOUCHON - CULASSE (ASS) | 59 |
| BOUGIE (ASS)-CARTER D'HUILE | 60 |
| VILEBREQUIN - POULIE (ASS) | 61 |
| POULIE-ROUE AVANT (ASS) | 62 |
| AXE DE CULBUTEUR (ASS) | 63 |
| SUPPORT DE MOTEUR (ASS) | 65 |
| SUPPORT DE MOTEUR ET BOÎTE (ASS) | 66 |
| CULBUTERIE (ASS) | 68 |
| **CIRCUIT DE GRAISSAGE** | 69 |
| BOULONNERIE DE MONTAGE DE LA POMPE A HUILE (ASS) | 69 |
| BOUCHON DE REMPLISSAGE D'HUILE MOTEUR (ASS) | 70 |
| FILTRE À HUILE MOTEUR (ASS) | 71 |
| DISPOSITIF D'EVACUATION DES VAPEURS DE CARTER | 73 |
| JAUGE D'HUILE MOTEUR (BAIONNETTE) (ASS) | 74 |
| CANALISATIONS D'HUILE MOTEUR (ASS) | 75 |
| CANALISATIONS D'HUILE DE TURBOCOMPRESSEUR (ASS) | 77 |
| POMPE A HUILE MOTEUR (ASS) | 78 |
| ROBINET-PRÉLÈVEMENT D'ÉCHANTILLON DE LIQUIDE (ASS) | 79 |
| **CIRCUIT DE REFROIDISSEMENT** | 80 |
| REFROIDISSEMENT AUX TEMPÉRATURES ÉLEVÉES (VERSION) | 80 |
| POMPE A EAU - BOULONNERIE | 81 |
| CANALISATIONS D'EAU (ASS) | 82 |
| POMPE A EAU (ASS) | 90 |
| RADIATEUR ET VENTILATEUR (ASS) | 92 |
| **CIRCUIT D'ADMISSION D'AIR ET D'ÉCHAPPEMENT** | 99 |
| FILTRE A AIR (ASS) | 99 |


* TRADUCTION NON DISPONIBLE AU MOMENT DE LA PUBLICATION

# TABLE DES MATIÈRES


| Désignation | Page |
|---|---|
| COUVERCLE DE TURBOCOMPRESSEUR (ASS) | 101 |
| ÉJECTEUR AUTOMATIQUE DE POUSSIÈRE (ASS) | 102 |
| INDICATEUR DE COLMATAGE DE FILTRE À AIR (ASS) | 103 |
| GROUPE D'ISOLATION DE CHALEUR | 104 |
| CANALISATIONS D'AIR DE REFROIDISSEUR D'ADMISSION (ASS) | 105 |
| CANALISATIONS D'AIR (ASS) | 106 |
| COLLECTEUR D'ÉCHAPPEMENT (ASS) | 108 |
| MONTAGE DE SILENCIEUX (ASS) | 109 |
| SILENCIEUX (ASS) | 110 |
| ÉCRAN THERMIQUE (ASS) | 111 |
| TURBOCOMPRESSEUR (ASS) | 112 |
| **CIRCUIT DE CARBURANT** | 113 |
| ADAPTATEUR DE REMPLIS. RAPIDE DE CARBURANT (ASS) | 113 |
| VIDANGE DE CARBURANT (ASS) | 114 |
| FILTRE A CARBURANT ET MONTAGE (ASS) | 115 |
| FILTRE DE SÉPARATEUR D'EAU ET DE CARBURANT (ASS) | 119 |
| CANALISATIONS DE CARBURANT (ASS) | 120 |
| POMPE D'ALIMENTATION ET MONTAGE (ASS) | 124 |
| POMPE D'INJECTION DE CARBURANT (ASS) | 125 |
| RÉSERVOIR DE CARBURANT (ASS) | 126 |
| CLAPET DE RETENUE (ENS) | 130 |
| POMPE DE SÉPARATEUR D'EAU ET D'AMORÇAGE DE CARBURANT (ASS) | 132 |
| **CIRCUIT ELECTRIQUE ET DE DEMARRAGE** | 133 |
| AVERTISSEUR (ASS) | 133 |
| ALTERNATEUR DE CHARGE (ASS) | 134 |
| BATTERIE ET CÂBLAGE | 140 |
| BRANCHEMENT ÉLECTRIQUE (ASS) | 145 |
| COMMANDE ET MONTAGE-COMMUNICATION (ASS) | 146 |
| COMMANDE ET MONTAGE - MOTEUR | 150 |
| VERSION DE COMMANDE-AUTODIG | 152 |
| COMMANDE DE CREUSAGE AUTOMATIQUE AUTODIG (ASS) | 153 |
| COMMANDE DE COMMUNICATION (ASS) | 155 |
| COMMANDE ELECTRONIQUE DE MOTEUR (ASS) | 156 |
| COMMANDE NON PROGRAMMEE (ASS) | 157 |
| VERSION ÉLECTRIQUE | 162 |
| ÉLECTRONIQUE - COMMUNICATION (ASS) | 162 |
| COMMANDE ÉLECTRONIQUE D'ÉQUIPEMENT (ASS) | 163 |
| ÉLECTRONIQUE - MACHINE (ENS) | 164 |
| ÉLECTRONIQUE-MONITEUR (ASS) | 165 |
| ÉLECTRONIQUE DE TRANSMISSION (ASS) | 166 |
| VERSION DE MONTAGE-COMMUNICATION | 167 |
| VERSION DE MONTAGE-SÉCURITÉ | 168 |
| MONTAGE-SÉCURITÉ (ASS) | 169 |
| PLAFONNIER (ASS) | 171 |
| LAMPE - PHARE (ASS) | 172 |
| LAMPE - CLIGNOTANT DE DIRECTION (ASS) | 176 |
| FEUX ARRIÈRE ET FEUX D'ARRÊT | 178 |
| LAMPE - GYROPHARE (ASS) | 179 |
| ÉCLAIRAGE - CLIGNOTANT (VERSION) | 180 |
| ÉCLAIRAGE - PROJECTEURS (ASS) | 180 |
| ÉCLAIRAGE - PROJECTEURS ET CLIGNOTANTS (ASS) | 184 |
| ÉCLAIRAGE CLIGNOTANT | 187 |
| ÉCLAIRAGE - GYROPHARE (ASS) | 189 |
| CAPTEUR DE PRESSION - MONTAGE (ASS) | 191 |
| DISJONCTEUR DU PANNEAU DE COMMANDE (ASS) | 194 |
| PRISE DE BATTERIE AUXILIAIRE (ASS) | 197 |
| ÉQUIPEMENT POUR DÉPLACEMENT ROUTIER (VERSION) | 198 |
| CAPTEUR ET MONTAGE-POSITION DE LEVAGE (ASS) | 199 |
| CAPTEUR ET MONTAGE-POSITION D'INCLINAISON (ASS) | 200 |
| CAPTEUR - MOTEUR (ASS) | 202 |
| SONDE - CIRCUIT DE CARBURANT | 204 |
| CAPTEUR DE PRESSION (ASS) | 208 |
| CAPTEUR DE VITESSE (ASS) | 215 |
| CAPTEUR DE TEMPERATURE (ASS) | 219 |
| ENTRETIEN DE LA MACHINE (ASS) | 223 |
| AUXILIAIRE DE DÉMARRAGE À L'ÉTHER | 224 |
| DÉMARREUR ÉLECTRIQUE (ASS) | 226 |
| INTERRUPTEUR - DÉRIVATION (ASS) | 231 |


* TRADUCTION NON DISPONIBLE AU MOMENT DE LA PUBLICATION

# TABLE DES MATIÈRES


| Désignation | Page |
|---|---|
| CONTACTEUR DE VERROUILLAGE DE DIFFÉRENTIEL (ASS) | 232 |
| ROBINET DE BATTERIE (ASS) | 233 |
| CONTACTEUR - NIVEAU DE LIQUIDE (ASS) | 234 |
| CONTACTEUR MAGNETIQUE (ASS) | 235 |
| MANOCONTACT | 238 |
| CONTACTEUR DE MARCHE ARRIÈRE DES PALES DE VENTILATEUR | 239 |
| CONTACTEUR DE COMMANDE DU SYSTÈME ANTITANGAGE (ASS) | 240 |
| INTERRUPTEUR À BASCULE (ASS) | 242 |
| CONTACTEUR ROTATIF (ASS) | 243 |
| INTERRUPTEUR - SIGNAL (ASS) | 244 |
| INTERRUPTEUR À BASCULE (ASS) | 246 |
| SOUPAPE DE DÉMARRAGE À L'ÉTHER (ASS) | 247 |
| AVERTISSEUR DE RECUL (ASS) | 248 |
| CABLAGE - CLIMATISEUR (ASS) | 249 |
| CÂBLAGE DE COMMANDE DE GRAISSAGE AUTOMATIQUE (ASS) | 250 |
| CÂBLE DE SURVEILLANCE D'ESSIEU (ASS) | 251 |
| CABLAGE | 253 |
| CABLAGE DE CABINE (ASS) | 256 |
| CABLAGE DE CHASSIS (ASS) | 281 |
| CABLAGE - COMMANDE ELECTRONIQUE HYDRAULIQUE (ASS) | 287 |
| CABLAGE DE MOTEUR (ASS) | 288 |
| CABLAGE AV (ASS) | 292 |
| CABLAGE D'ÉCLAIRAGE (ASS) | 295 |
| CABLAGE DE DIRECTION AUXILIAIRE (ASS) | 299 |
| CABLAGE - CAPTEUR (ASS) | 300 |
| *WIRING GP-WASTE HANDLER | 303 |
| **TRANSMISSION** | 305 |
| ESSIEU FIXE (VERSION) | 305 |
| ESSIEU OSCILLANT (VERSION) | 305 |
| ESSIEU FIXE | 307 |
| ESSIEU OSCILLANT | 308 |
| SUPPORT DE FILTRE À HUILE (ASS) | 310 |
| TRAINS PLANÉTAIRES - CARTER ET PIÈCES | 311 |
| CARTER D'ENGRENAGES DE TRANSFERT | 312 |
| COMMANDE HYDRAULIQUE DE BOÎTE (ASS) | 313 |
| REFROIDISSEUR D'HUILE D'ESSIEU ET MONTAGE (ASS) | 317 |
| REFROIDISSEUR D'HUILE D'ESSIEU (VERSION) | 319 |
| COUVERCLES D'EXPEDITION (ASS) | 320 |
| BOUCHON DE REMPLISSAGE D'HUILE DE BOÎTE (ASS) | 321 |
| COURONNE ET DIFFERENTIEL (ASS) | 322 |
| DIFFÉRENTIEL - GLISSEMENT LIMITÉ (ASS) | 335 |
| DIFFÉRENTIEL NOSPIN (ASS) | 336 |
| VIDANGE-ÉCOLOGIE (ASS) | 338 |
| GOULOTTE DE REMPLISSAGE D'HUILE DE TRANSMISSION | 339 |
| FILTRE A HUILE (ASS) | 340 |
| ENGRENAGE DE TRANSFERT DE RENDEMENT (ASS) | 341 |
| CANALISATIONS DE REFROIDISSEUR D'HUILE D'ESSIEU (ASS) | 345 |
| CANALISATIONS D'HUILE DE TRANSMISSION (ASS) | 353 |
| CANALIS. DE REFROIDISSEMENT DU CONV. DE COUPLE | 355 |
| MONTAGE D'ESSIEU (ASS) | 357 |
| MONTAGE DE JANTE (ASS) | 358 |
| BOÎTE PLANÉTAIRE (ASS) | 359 |
| TRANSMISSION (VERSION) | 368 |
| POMPE ET MONTAGE DE REFROIDISSEUR D'HUILE D'ESSIEU | 369 |
| POMPE DE BOÎTE DE VITESSES (ASS) | 371 |
| JANTE (VERSION) | 372 |
| JANTE DÉMONTABLE (ASS) | 373 |
| ARBRE D'ENTRAÎNEMENT (ASS) | 375 |
| CARDAN COULISSANT (ASS) | 377 |
| SUPPORT DE TRANSMISSION (ASS) | 378 |
| PNEU ET JANTE (VERSION) | 380 |
| CONVERTISSEUR DE COUPLE ET CARTER (ASS) | 387 |
| CONVERTISSEUR DE COUPLE (ASS) | 391 |
| BOÎTE DE VITESSES (VERSION) | 395 |
| JOINT UNIVERSEL (ASS) | 396 |
| SOUPAPE DE MODULATION (ASS) | 398 |
| CLAPET DE DECHARGE (ASS) | 399 |
| ROUE ET RÉDUCTEURS (ASS) | 402 |
| **CHÂSSIS ET BENNE** | 404 |
| MÉCANISME DE COMMANDE DE GR. MOTO-PROPUL. (ASS) | 404 |
| CONTREPOIDS (ASS) | 406 |
| PORTE DE VISITE (ASS) | 412 |
| GARDE-BOUE (ASS) | 415 |
| GARDE-BOUE AV (ASS) | 418 |
| GARDE-BOUE (ASS) | 420 |
| BÂTI AV (ENS) | 421 |
| BÂTI - CHARGEUSE (ENS) | 424 |
| BÂTI AR (ENS) | 427 |


* TRADUCTION NON DISPONIBLE AU MOMENT DE LA PUBLICATION

# TABLE DES MATIÈRES


| Désignation | Page |
|---|---|
| GRILLE DE RADIATEUR (ASS) | 429 |
| BLINDAGE INFÉRIEUR (ASS) | 431 |
| CARTER - BLINDAGE (ASS) | 433 |
| BLINDAGE D'ARBRE DE TRANSMISSION (ASS) | 436 |
| PROTECTION AV (ASS) | 437 |
| PROTECTION-RÉSERVOIR HYDRAULIQUE ET CARBURANT (ASS) | 438 |
| PROTECTION D'ATTELAGE ET DE DIRECTION (ASS) | 440 |
| PROTECTION - ÉCLAIRAGE (ASS) | 442 |
| PROTECTEUR DES CANALISATIONS (ASS) | 443 |
| BLINDAGE DE TRANSMISSION (ASS) | 444 |
| PROTÈGE-CAPTEUR (ASS) | 445 |
| BOULONNERIE DE BÂTI DE CHARGEUSE (ASS) | 446 |
| BOULONNERIE DE BÂTI ARRIÈRE (ASS) | 449 |
| ATTELAGE D'ARTICULATION (ASS) | 455 |
| CAPOT ET PROTECTION (ASS) | 457 |
| ECHELLE (ASS) | 463 |
| CANALISATIONS DE GRAISSAGE AUTOMATIQUE (ASS) | 466 |
| CANALISATIONS DE GRAISSAGE (ASS) | 474 |
| LIAISON - VERROUILLAGE DE CHÂSSIS DE DIRECTION (ASS) | 487 |
| GRAISSAGE AUTOMATIQUE (VERSION) | 488 |
| PANNEAU LATERAL (ASS) | 489 |
| PANNEAU D'INSONORISATION (ASS) | 491 |
| PANNEAU SUPERIEUR (ASS) | 495 |
| ÉCRAN THERMIQUE DE COMPARTIMENT MOTEUR | 496 |
| MARCHEPIED (ASS) | 498 |
| SUPPORTS D'ADMISSION D'AIR (ASS) | 501 |
| INSONORISATION (VERSION) | 505 |
| INSONORISATION (ASS) | 506 |
| RÉSERVOIR - GRAISSE (ASS) | 512 |
| INCLINAISON DU CAPOT (ASS) | 513 |
| SOUPAPE DE DISTRIBUTION DE GRAISSAGE (ASS) | 515 |
| **CIRCUIT DE FREINS** | 519 |
| ACCUMULATEUR - FREIN | 519 |
| SUPPORT - PÉDALE DE FREIN (ASS) | 522 |
| FREIN DE STATIONNEMENT (ASS) | 525 |
| FREIN DE MANOEUVRE (ASS) | 527 |
| COMMANDE DE LA PÉDALE DE FREIN (ASS) | 531 |
| COMMANDE DE FREIN DE STATIONNEMENT (ASS) | 533 |
| FREIN DE MANOEUVRE - COMMANDE (ASS) | 534 |
| CANALISATIONS DU FREIN DE MANOEUVRE (ASS) | 540 |
| DISTRIBUTEUR DE FREIN (ASS) | 541 |
| **CIRCUIT DE DIRECTION** | 542 |
| COMMANDE DE DIRECTION (ASS) | 542 |
| VERIN DE DIRECTION ET MONTAGE (ASS) | 544 |
| VÉRIN HYDRAULIQUE (ASS) | 545 |
| CANALISATION DE DIRECTION AUXILIAIRE | 547 |
| CANALISATIONS DE DIRECTION (ASS) | 549 |
| POMPE DE DIRECTION AUXILIAIRE ET MONTAGE (ASS) | 556 |
| POMPE ET MONTAGE - DIRECTION ET BOÎTE (ASS) | 557 |
| POMPE A ENGRENAGES (ASS) | 559 |
| POMPE A PISTONS (ASS) | 561 |
| GROUPE DE ROTATION DE POMPE | 563 |
| *SCREEN GP-CASE DRAIN | 564 |
| DIRECTION AUXILIAIRE (VERSION) | 565 |
| COLONNE DE DIRECTION (ASS) | 566 |
| VOLANT DE DIRECTION (ASS) | 567 |
| PLATEAU OSCILLANT (ASS) | 569 |
| CLAPET DE RETENUE (ENS) | 570 |
| SOUPAPE DE DERIVATION (ASS) | 573 |
| SOUPAPE PILOTE (ASS) | 575 |
| DISTRIBUTEUR DE POMPE (ASS) | 577 |
| CLAPET DE DECHARGE (ASS) | 579 |
| VANNE PILOTE (ASS) | 581 |
| SOUPAPE DE DIRECTION (ASS) | 585 |
| SOUPAPE DE NEUTRALISATION DE DIRECTION (ASS) | 587 |
| **CIRCUIT HYDRAULIQUE** | 588 |
| ACCUMULATEUR - COMMANDE DE TRANSLATION (ENS) | 588 |
| ACCUMULATEUR - COMMANDE DE TRANSLATION (ASS) | 589 |
| COMMANDE ET CANALIS. - TRANSLATION (ASS) | 590 |
| COMMANDE (VERSION)-VENTILATEUR | 595 |
| COMMANDE DE TRANSLATION (VERSION) | 595 |
| COMMANDE ÉLECTROHYDRAULIQUE (ASS) | 597 |
| COMMANDE DE POIGNÉE (ASS) | 611 |


* TRADUCTION NON DISPONIBLE AU MOMENT DE LA PUBLICATION

# TABLE DES MATIÈRES


| Désignation | Page |
|---|---|
| PALONNIER - GROUPE DE COMMANDE (ASS) | 613 |
| VÉRIN DE LEVAGE ET JOINT (ASS) | 619 |
| VÉRIN D'INCLINAISON ET JOINT (ASS) | 620 |
| VÉRIN DE LEVAGE (ASS) | 626 |
| VÉRIN D'INCLINAISON (ASS) | 628 |
| FILTRE A HUILE (ASS) | 639 |
| DISTRIBUTEUR - 2 VOIES (VERSION) | 641 |
| DISTRIBUTEUR - 3 VOIES (VERSION) | 641 |
| CANALISATIONS AV | 642 |
| *LINES GP-HOOD TILT | 643 |
| CANALISATIONS HYDRAULIQUES (ASS) | 645 |
| CANALISATIONS HYDRAULIQUES DE VENTILATEUR (ASS) | 649 |
| CANALISATIONS DE REFROIDISSEUR D'HUILE HYDR. (ASS) | 651 |
| CANALISATIONS DE VÉRIN DE LEVAGE (ASS) | 656 |
| CANALISATIONS DU VÉRIN D'INCLINAISON (ASS) | 658 |
| GROUPE DE MOTEUR A PISTONS | 660 |
| RÉSERVOIR HYDRAULIQUE - MONTAGE (ASS) | 663 |
| *PUMP & MOTOR GP-HOOD TILT | 664 |
| POMPE ET MONTAGE-VENTILATEUR HYDRAULIQUE | 665 |
| POMPE D'EQUIPEMENT ET MONTAGE (ASS) | 666 |
| POMPE A ENGRENAGES (ASS) | 667 |
| POMPE A PISTONS (ASS) | 670 |
| GROUPE DE ROTATION DE POMPE | 672 |
| *SUPPORT GP-FAN ELECTRICAL | 674 |
| RESERVOIR D'EXPANSION (ASS) | 676 |
| RÉSERVOIR HYDRAULIQUE (ASS) | 677 |
| COMMANDE PRINCIPALE DE SOUPAPE ET MONTAGE (ASS) | 682 |
| CLAPET DE RETENUE (ENS) | 697 |
| DISTRIBUTEUR (ASS) | 698 |
| SOUPAPE DE VENTILATEUR À VITESSE VARIABLE (ASS) | 699 |
| SOUPAPE DE DERIVATION (ASS) | 700 |
| CLAPET (ASS)-VENTILATEUR À PALES RÉVERSIBLES | 702 |
| SOUPAPE DE COMMANDE D'ABAISSEMENT (ASS) | 704 |
| SOUPAPE DE COMMANDE PRINCIPALE (ASS) | 706 |
| SOUPAPE A COMMANDE MANUELLE (ASS) | 710 |
| SOUPAPE PILOTE (ASS) | 711 |
| SOUPAPE RÉDUCTRICE DE PRESSION (ASS) | 715 |
| *VALVE GP-PUMP CONTROL | 719 |
| CLAPET DE DECHARGE (ASS) | 721 |
| SOUPAPE DE SÉQUENCE (ASS) | 729 |
| VANNE PILOTE (ASS) | 730 |
| SOUPAPE - SOLÉNOÏDE (ASS) | 733 |
| **ÉQUIPEMENTS** | 737 |
| BRAS ET PALIER (ENS) | 737 |
| COMMANDE DE GODET (ASS) | 738 |
| *HARDWARE GP-LIFT ARM | 740 |
| *LEVER GP-TILT | 743 |
| LEVAGE (VERSION) | 744 |
| VERSION POUR ÉQUIPEMENT FORESTIER | 745 |
| **OUTILS DE TRAVAIL** | 746 |
| PORTE-POINTE (ASS) | 746 |
| GODET NORMAL (VERSION) | 748 |
| GODET NORMAL (ENS) | 749 |
| GODET-ROCHE (ENS) | 753 |
| GODET NORMAL (ASS) | 763 |
| GODET-ROCHE (ASS) | 765 |
| LAME DE COUPE (ASS) | 770 |
| POINTE ABRASION (ASS) | 772 |
| *TIP GP-EXTRA DUTY | 773 |
| POINTE - UNIVERSELLE (ASS) | 775 |
| POINTE PENETRATION | 777 |
| **POSTE DE CONDUITE** | 779 |
| REGLAGE DE SIEGE (ASS) | 779 |
| SIÈGE - COMPRESSEUR D'AIR (ASS) | 780 |
| CLIMATISEUR (VERSION) | 781 |
| CLIMATISEUR (ASS) | 782 |
| BRAS D'ESSUIE-GLACE (ASS) | 786 |
| ACCOUDOIR (ASS) | 788 |
| CABINE ROPS FERMÉE (VERSION) | 789 |
| VERSION DE TOIT - ROPS OUVERT | 790 |
| COMPRESSEUR DE REFRIGERANT (ASS) | 791 |
| CONDENSATEUR ET MONTAGE (RÉFRIGÉRANT) | 793 |
| GROUPE DE CONTROLE | 795 |
| PORTIÈRE DE CABINE (ASS) | 799 |
| CONDUIT ET FILTRE À AIR (ASS) | 803 |
| GAINE D'AIR (ASS) | 805 |
| PLANCHER-ISOLATION (ASS) | 808 |
| *GUARD AR-WINDOW | 810 |
| PROTECTION ANTIVANDALISME (ASS) | 811 |
| PROTECTION DE GLACE (ASS) | 812 |
| POIGNÉE | 816 |


* TRADUCTION NON DISPONIBLE AU MOMENT DE LA PUBLICATION

# TABLE DES MATIÈRES


| Désignation | Page |
|---|---|
| CHAUFFAGE DE CABINE (ASS) | 818 |
| KLAXON ÉLECTRIQUE (ASS) | 822 |
| MONTAGE DES COMMANDES (ASS) | 823 |
| MONTAGE DE RADIO (ASS) | 826 |
| CABINE - REVÊTEMENT (ASS) | 829 |
| CANALISATIONS DE CLIMATISEUR (ASS) | 838 |
| *LINES GP-CAB HEATER | 842 |
| CANALISATIONS DE CHAUFFAGE DE CABINE (ASS) | 843 |
| RÉTROVISEUR (ASS) | 844 |
| MODULE - QUATRE INSTRUMENTS (ASS) | 864 |
| MODULE D'INDICATEUR DE VITESSE ET COMPTE-TOURS (ASS) | 865 |
| ELECTROMODULE DE CHARGE UTILE DE BENNE | 866 |
| ÉLECTROMODULE DE CHARGE UTILE DE BENNE | 867 |
| MOTEUR D'ESSUIE-GLACE (ASS) | 869 |
| MONTAGE DE CABINE (ASS) | 872 |
| CABINE ROPS FERMÉE (VERSION) | 874 |
| CABINE ROPS OUVERTE (VERSION) | 874 |
| COUVERCLE INFÉRIEUR-DOSSIER (ASS) | 875 |
| TABLEAU DE BORD (ASS) | 878 |
| RÉGULATEUR - PÉDALE (ASS) | 887 |
| PLATE-FORME (VERSION) | 889 |
| PLATE-FORME DE CABINE | 890 |
| RADIO (ASS) | 892 |
| SIÈGE INCLINABLE (ASS) | 894 |
| CABINE ROPS FERMÉE (ASS) | 895 |
| TOIT ROPS - OUVERT (ASS) | 905 |
| ÉTANCHÉITÉ - GLACE (ASS) | 908 |
| CEINTURE DE SECURITE (ASS) | 909 |
| SIÈGE (ASS) | 910 |
| SIÈGE AVEC SUSPENSION (ASS) | 918 |
| BOUCLIER DE CABINE (ASS) | 925 |
| SUPPORT DE COMMANDE HYDRAULIQUE (ASS) | 926 |
| INSONORISATION DE CABINE (ASS) | 929 |
| SIÈGE AVEC SUSPENSION (ASS) | 938 |
| RETROVISEUR - CABINE (ASS) | 942 |
| LAVE-GLACE - VITRE (ASS) | 943 |
| GLACE DE PORTIÈRE (ASS) | 944 |
| ESSUIE-GLACE (ASS) | 948 |
| **MATÉRIEL ET FOURNITURES D'ENTRETIEN** | 951 |
| PLAQUE SIGNALÉTIQUE (ASS) | 951 |
| CANALISATIONS DE DIAGNOSTIC (ASS) | 953 |
| MONTAGE DU TABLEAU DE GRAISSAGE (ASS) | 956 |
| PLAQUES SIGNALETIQUES ET AUTOCOLLANTS (ASS) | 956 |
| PROTECTION ANTIVANDALISME (ASS) | 958 |
| **INDEX DE NUMÉROS DE PIÈCES** | B1 |


* TRADUCTION NON DISPONIBLE AU MOMENT DE LA PUBLICATION

# CONTENIDO


| Nombre | Página |
|---|---|
| **INFORMACIÓN GENERAL** | A36 |
| **ALTERNATIVAS DE REPARACIÓN** | A50 |
| **ADITIVOS DE REFRIGERANTE SUPLEMENTARIOS** | A55 |
| **PIEZAS DE MANTENIMIENTO** | A65 |
| **INDICE** | A105 |
| **CONFIGURACIÓN DE MÁQUINAS** | 1 |
| CHASIS (CONFIG) | 1 |
| CONFIGURACIÓN GENERAL | 2 |
| MÁQUINA (CONFIG) | 2 |
| CONFIGURACIÓN DE TRAÍLLA | 2 |
| CONFIGURACIÓN DE ELIMINACIÓN DE BASURAS | 3 |
| **CONFIGURACION DE MOTOR** | 4 |
| MOTOR COMPLETO (CONFIG) | 4 |
| MOTOR - NÚCLEO (CONFIG) | 5 |
| CONFIGURACIÓN DE INSTALACIÓN DEL MOTOR | 6 |
| **MOTOR BÁSICO** | 7 |
| ADAPTADOR DEL MANDO DE LA BOMBA | 7 |
| BASE DE LA TAPA DE VÁLVULAS Y MAZO DE CABLES DE INYECTOR (GR) | 8 |
| TENSOR DE CORREA (GR) | 10 |
| ÁRBOL DE LEVAS (GR) | 11 |
| TAPA DEL BLOQUE MOTOR (GR) | 12 |
| TAPA DE LA CAJA DELANTERA (GR) | 14 |
| TAPA DEL INSONORIZADOR (GR) | 16 |
| TAPA DEL MECANISMO DE VÁLVULAS (GR) | 17 |
| CIGÜEÑAL (GR) | 21 |
| BLOQUE MOTOR (GR) | 22 |
| CULATA DE CILINDROS (CONJ) | 25 |
| CULATA DE CILINDROS (GR) | 30 |
| AMORTIGUADOR DE VIBRACIONES (GR) | 32 |
| DRENAJE DEL ACEITE DE MOTOR | 33 |
| ACCESORIOS - IMPULSOR DE (GR) | 34 |
| MANDO DE BOMBA (GR) | 35 |
| CAJA DELANTERA - TORNILLERÍA DE LA (GR) | 36 |
| TORNILLERÍA DEL COLECTOR DEL CÁRTER (GR) | 38 |
| TORNILLERÍA DEL MECANISMO DE VÁLVULAS (GR) | 39 |
| VOLANTE (GR) | 40 |
| ENGRANAJE DE ARBOL DE LEVAS (GR) | 41 |
| ENGRANAJE DELANTERO (GR) | 42 |
| VOLANTE - CAJA DE (GR) | 44 |
| CAJA DELANTERA (GR) | 46 |
| CÁNCAMOS DE LEVANTAMIENTO DEL MOTOR (GR) | 48 |
| MONTAJE DE ALTERNADOR Y COMPRESOR (GR) | 50 |
| CÁRTER - COLECTOR DEL (GR) | 51 |
| PANEL DE INSONORIZACIÓN (GR) | 52 |
| PISTÓN Y BIELA (GR) | 54 |
| TAPÓN DEL BLOQUE MOTOR (GR) | 58 |
| TAPÓN DE CULATA (GR) | 59 |
| TAPON DEL COLECTOR DEL CARTER (GR) | 60 |
| CIGÜEÑAL - POLEA DE (GR) | 61 |
| POLEA DE RUEDA GUIA (GR) | 62 |
| BALANCÍN (GR) | 63 |
| MOTOR - SOPORTE DEL (GR) | 65 |
| SOPORTE DEL MOTOR Y LA TRANSMISIÓN (GR) | 66 |
| MECANISMO DE VÁLVULAS (GR) | 68 |
| **SISTEMA DE LUBRICACIÓN** | 69 |
| TORNILLERÍA DE MONT. DE LA BOMBA DE ACEITE (GR) | 69 |
| TUBO DE LLENADO DE ACEITE (GR) | 70 |
| FILTRO DE ACEITE DEL MOTOR (GR) | 71 |
| ESCAPE DE GASES (GR) | 73 |
| INDICADOR DEL NIVEL DE ACEITE (VARILLA) (GR) | 74 |
| TUBERÍAS DE ACEITE DEL MOTOR (GR) | 75 |
| TURBOCOMPRESOR - TUBERÍAS DE ACEITE DEL (GR) | 77 |
| BOMBA DE ACEITE DEL MOTOR (GR) | 78 |
| VÁLVULA DE MUESTREO (GR) | 79 |
| **SISTEMA DE ENFRIAMIENTO** | 80 |
| ENFRIADOR PARA ALTA TEMPERATURA DE AMBIENTE (CONFIG) | 80 |
| TORNILLERÍA DE LA BOMBA DE AGUA (GR) | 81 |
| TUBERÍAS DEL AGUA (GR) | 82 |
| BOMBA DE AGUA (GR) | 90 |
| RADIADOR Y VENTILADOR (GR) | 92 |
| **SISTEMA DE AIRE DE ADMISIÓN Y ESCAPE** | 99 |
| FILTRO DE AIRE (GR) | 99 |
| TAPA DE TURBOCOMPRESOR (GR) | 101 |


* NO HAY TRADUCCION DISPONIBLE EN EL MOMENTO DE LA IMPRESION

# CONTENIDO


| Nombre | Página |
|---|---|
| EXPULSOR DE POLVO (GR) | 102 |
| INDICADOR DE CAMBIO DE FILTRO DE ACEITE (GR) | 103 |
| AISLACIÓN DE CALOR (GR) | 104 |
| *LINES GP-AFTERCOOLER AIR | 105 |
| AIRE - TUBERÍAS DE (GR) | 106 |
| MÚLTIPLE DE ESCAPE (GR) | 108 |
| MONTAJE DEL SILENCIADOR (GR) | 109 |
| SILENCIADOR (GR) | 110 |
| PROTECTOR TÉRMICO (GR) | 111 |
| TURBOCOMPRESOR (GR) | 112 |
| **SISTEMA DE COMBUSTIBLE** | 113 |
| ADAPTADOR DE LLENADO RÁPIDO DE COMBUSTIBLE (GR) | 113 |
| DRENAJE DE COMBUSTIBLE (GR) | 114 |
| FILTRO DE COMBUSTIBLE Y MONTAJE (GR) | 115 |
| FILTRO DE COMBUSTIBLE Y SEPARADOR DE AGUA (GR) | 119 |
| TUBERÍAS DE COMBUSTIBLE (GR) | 120 |
| BOMBA DE TRANSFERENCIA DE COMBUSTIBLE Y MONTAJE (GR) | 124 |
| BOMBA DE INYECCIÓN DE COMBUSTIBLE (GR) | 125 |
| COMBUSTIBLE - TANQUE DE (GR) | 126 |
| VÁLVULA DE RETENCIÓN (GR) | 130 |
| SEPARADOR DE AGUA Y BOMBA DE CEBADO DE COMBUSTIBLE (GR) | 132 |
| **SISTEMA ELECTRICO Y DE ARRANQUE** | 133 |
| ALARMA (GR) | 133 |
| CARGA - ALTERNADOR DE (GR) | 134 |
| BATERÍA Y CABLES (GR) | 140 |
| CONEXIÓN ELÉCTRICA (GR) | 145 |
| CONTROL DE COMUNICACION Y MONTAJE (GR) | 146 |
| CONTROL ELECTRÓNICO DEL MOTOR Y MONTAJE | 150 |
| CONTROL DE AUTOCARGA (CONFIG) | 152 |
| CONTROL DE AUTOCARGA (GR) | 153 |
| CONTROL DE COMUNICACION (GR) | 155 |
| CONTROL ELECTRÓNICO DEL MOTOR (GR) | 156 |
| CONTROL NO PROGRAMADO (GR) | 157 |
| CONFIGURACIÓN ELÉCTRICA | 162 |
| GRUPO ELECTRONICO-COMUNICACION | 162 |
| IMPLEMENTOS (GR ELECTRÓNICO) | 163 |
| ELECTRONICA DE LA MAQUINA (GR) | 164 |
| ELECTRONICA DE MONITOR (GR) | 165 |
| TREN DE FUERZA-GRUPO ELECTRÓNICO | 166 |
| INSTALACION DE COMUNICATION (CONFIG) | 167 |
| INSTALACION DE SEGURIDAD (CONFIG) | 168 |
| INSTALACION DE SEGURIDAD (GR) | 169 |
| LÁMPARA DEL TECHO (GR) | 171 |
| REFLECTOR (GR) | 172 |
| LUZ DE SEÑAL DE GIRO (GR) | 176 |
| LUCES DE PARADA Y COLA (GR) | 178 |
| LÁMPARA DE BALIZA DE ADVERTENCIA (GR) | 179 |
| SEÑAL DE LUCES (CONFIG) | 180 |
| LUCES DE REFLECTOR (GR) | 180 |
| LUCES DE REFLECTOR Y CAMBIO DE DIRECCION (GR) | 184 |
| LUCES DE GIRO (GR) | 187 |
| LUZ DE BALIZA (GR) | 189 |
| SENSOR DE PRESIÓN Y MONTAJE (GR) | 191 |
| PANEL DE DISYUNTORES (GR) | 194 |
| ENCHUFE DE ARRANQUE AUXILIAR (GR) | 197 |
| CONFIGURACIÓN PARA CARRETERA | 198 |
| SENSOR DE LA POSICION DE LEVANTAMIENTO Y MONTAJE (GR) | 199 |
| SENSOR DE LA POSICION DE INCLINACION Y MONTAJE (GR) | 200 |
| SENSOR DEL MOTOR (GR) | 202 |
| DETECTOR DE POSICIÓN (SISTEMA DE COMBUST.) (GR) | 204 |
| SENSOR DE PRESIÓN (GR) | 208 |
| SENSOR DE VELOCIDAD (GR) | 215 |
| SENSOR DE TEMPERATURA (GR) | 219 |
| SERVICIO DE MAQUINA (GR) | 223 |
| AUXILIAR DE ARRANQUE CON ÉTER (GR) | 224 |
| MOTOR DE ARRANQUE ELÉCTRICO (GR) | 226 |
| INTERRUPTOR DE DERIVACIÓN | 231 |
| GRUPO DE INTERRUPTOR, TRABA DEL DIFERENCIAL | 232 |
| DISYUNTOR (GR) | 233 |
| INTERRUPTOR DE NIVEL DE LIQUIDO (GR) | 234 |
| INTERRUPTOR MAGNÉTICO (GR) | 235 |
| INTERRUPTOR DE PRESIÓN (GR) | 238 |
| *SWITCH GP-REVERSING FAN | 239 |
| INTERRUPTOR DEL CONTROL DE AMORTIGUACIÓN (GR) | 240 |
| INTERRUPTOR DE VOLQUETE (GR) | 242 |


* NO HAY TRADUCCION DISPONIBLE EN EL MOMENTO DE LA IMPRESION

# CONTENIDO


| Nombre | Página |
|---|---|
| GRUPO DE INTERRUPTOR ROTATORIO | 243 |
| INTERRUPTOR DEL SEÑALERO (GR) | 244 |
| INTERRUPTOR DE VOLQUETE (GR) | 246 |
| GRUPO DE VÁLVULA-ARRANQUE CON ÉTER | 247 |
| RETROCESO - ALARMA DE (GR) | 248 |
| CABLES DEL ACONDICIONADOR DE AIRE (GR) | 249 |
| GRUPO DE CABLES-CONTROL DE AUTOLUBRICACIÓN | 250 |
| GRUPO DE CABLES, MONITOREO DEL EJE | 251 |
| CABLES DEL INTERRUPTOR DE LA TEMP. DE REFRIGERANTE DEL EJE (GR) | 253 |
| CABLES DE LA CABINA (GR) | 256 |
| CABLES DEL CHASIS (GR) | 281 |
| CABLES DEL SISTEMA ELECTRÓNICO HIDRÁULICO (GR) | 287 |
| CABLES DEL MOTOR (GR) | 288 |
| CABLES DELANTEROS (GR) | 292 |
| CABLES DE LAS LUCES (GR) | 295 |
| CABLES DE LA DIRECCIÓN SECUNDARIA | 299 |
| CABLES DE SENSOR (GR) | 300 |
| *WIRING GP-WASTE HANDLER | 303 |
| **TREN DE FUERZA** | 305 |
| EJE FIJO (CONFIG) | 305 |
| EJE OSCILANTE (CONFIG) | 305 |
| EJE FIJO (GR) | 307 |
| EJE OSCILANTE (GR) | 308 |
| FILTRO DE ACEITE - BASE DEL (GR) | 310 |
| CAJA Y PIEZAS DE LOS PLANETARIOS | 311 |
| CAJA DE ENGRANAJE DE TRANSFERENCIA (GR) | 312 |
| CONTROL HIDRÁULICO DE LA TRANSMISIÓN (GR) | 313 |
| ENFRIADOR DE ACEITE DEL EJE Y MONTAJE (GR) | 317 |
| ENFRIADOR DEL ACEITE DEL EJE (CONFIG) | 319 |
| TAPAS PROTECTORAS DE EMBARQUE (GR) | 320 |
| CUBIERTA (GR)-TAPA DE LLENADO DE ACEITE DE LA TRANSMISIÓN | 321 |
| DIFERENCIAL Y CORONA (GR) | 322 |
| DIFERENCIAL DE DESLIZAMIENTO LIMITADO (GR) | 335 |
| DIFERENCIAL NOSPIN (GR) | 336 |
| DRENAJE DE SEGURIDAD ECOLÓGICA (GR) | 338 |
| TUBO DE LLENADO DE ACEITE DE LA TRANSMISIÓN (GR) | 339 |
| FILTRO DE ACEITE (GR) | 340 |
| ENGRANAJE DE TRANSFERENCIA DE SALIDA | 341 |
| TUBERÍAS DEL ENFRIADOR DE ACEITE DEL EJE (GR) | 345 |
| TUBERÍAS DE ACEITE DEL TREN DE FUERZA (GR) | 353 |
| TUBERIAS DEL ENFRIADOR DEL CONVERTIDOR DE PAR | 355 |
| EJE - GRUPO DE MONTAJE | 357 |
| MONTAJE DE ARO | 358 |
| TRANSMISIÓN PLANETARIA (GR) | 359 |
| TREN DE FUERZA (CONFIG) | 368 |
| BOMBA DEL ENFRIADOR DE ACEITE DEL EJE Y MONTAJE (GR) | 369 |
| BOMBA DE LA TRANSMISIÓN (GR) | 371 |
| LLANTA (CONFIG) | 372 |
| ARO DESMONTABLE (GR) | 373 |
| EJE DE MANDO (GR) | 375 |
| JUNTA DESLIZANTE (GR) | 377 |
| SOPORTE DE LA TRANSMISIÓN (GR) | 378 |
| ARO Y RUEDA | 380 |
| CONVERTIDOR DE PAR Y CAJA (GR) | 387 |
| CONVERTIDOR DE PAR (GR) | 391 |
| TRANSMISION (CONFIG) | 395 |
| JUNTA UNIVERSAL (GR) | 396 |
| VÁLVULA DE MODULACIÓN (GR) | 398 |
| VÁLVULA DE ALIVIO (GR) | 399 |
| RUEDA Y MANDOS FINALES | 402 |
| **BASTIDOR Y CAJA** | 404 |
| ACCIONADOR DEL PROTECTOR DEL TREN DE FUERZA (GR) | 404 |
| CONTRAPESO (GR) | 406 |
| PUERTA DE ACCESO (GR) | 412 |
| GUARDABARROS (GR) | 415 |
| GUARDABARROS DELANTERO (GR) | 418 |
| GUARDABARROS PARA DESPLAZAMIENTO EN CARRETERA (GR) | 420 |
| BASTIDOR DELANTERO (CONJ) | 421 |
| BASTIDOR DEL CARGADOR (CONJ) | 424 |
| BASTÍDOR TRASERO (CONJ) | 427 |
| REJILLA DEL RADIADOR (GR) | 429 |
| PROTECTOR INFERIOR (GR) | 431 |
| CÁRTER - PROTECTOR DEL (GR) | 433 |
| PROTECTOR DEL EJE IMPULSOR (GR) | 436 |
| PROTECTOR DELANTERO (GR) | 437 |
| PROTECTOR DEL COMBUSTIBLE Y DEL TANQUE HIDRÁULICO(GR) | 438 |


* NO HAY TRADUCCION DISPONIBLE EN EL MOMENTO DE LA IMPRESION

# CONTENIDO


| Nombre | Página |
|---|---|
| GRUPO DE PROTECTOR DE ENGANCHE Y DIRECCION | 440 |
| PROTECTOR DE LAS LUCES (GR) | 442 |
| PROTECTOR DE LAS TUBERÍAS (GR) | 443 |
| PROTECTOR DEL TREN DE FUERZA (GR) | 444 |
| PROTECTOR GR-SENSOR | 445 |
| TORNILLERIA GR-BASTIDOR CARGADOR | 446 |
| TORNILLERIA GR-BASTIDOR TRASERO | 449 |
| ENGANCHE ARTICULADO (GR) | 455 |
| CAPO Y PROTECTOR (GR) | 457 |
| ESCALERILLA (GR) | 463 |
| GRUPO DE TUBERIAS DE LUBRICACIÓN AUTOMÁTICA | 466 |
| TUBERÍAS DE ENGRASE (GR) | 474 |
| TUBERÍAS DE LUBRICACIÓN (GR) | 479 |
| TIRANTE DE TRABA DEL BASTIDOR DE DIRECCIÓN (GR) | 487 |
| LUBRICACION AUTOMATICA (CONFIG) | 488 |
| PANEL LATERAL (GR) | 489 |
| PANEL DE INSONORIZACIÓN (GR) | 491 |
| PANEL SUPERIOR (GR) | 495 |
| PROTECTOR TÉRMICO DEL COMPARTIMIENTO DEL MOTOR (GR) | 496 |
| ESTRIBO DEL OPERADOR (GR) | 498 |
| SOPORTE DE LA ADMISIÓN DE AIRE (GR) | 501 |
| INSONORIZADOR (CONFIG) | 505 |
| INSONORIZADOR (GR) | 506 |
| TANQUE DE GRASA (GR) | 512 |
| INCLINACIÓN DEL CAPÓ (GR) | 513 |
| VÁLVULA DE DISTRIBUCIÓN DE LUBRICACIÓN (GR) | 515 |
| **SISTEMA DE FRENOS** | 519 |
| ACUMULADOR DEL FRENO (GR) | 519 |
| BASE DEL FRENO DE PIE (GR) | 522 |
| FRENO DE ESTACIONAMIENTO (GR) | 525 |
| FRENO DE SERVICIO (GR) | 527 |
| CONTROL DEL PEDAL DE FRENO (GR) | 531 |
| CONTROL DEL FRENO DE ESTACIONAMIENTO | 533 |
| FRENO DE SERVICIO - CONTROL (GR) | 534 |
| TUBERÍAS DEL FRENO DE SERVICIO (GR) | 540 |
| VÁLVULA DE CONTROL DEL FRENO (GR) | 541 |
| **SISTEMA DE DIRECCIÓN** | 542 |
| CONTROL DE DIRECCIÓN (GR) | 542 |
| CILINDRO DE DIRECCIÓN Y MONTAJE (GR) | 544 |
| CILINDRO HIDRÁULICO (GRUPO) | 545 |
| TUBERÍAS DE LA DIRECCIÓN SECUNDARIA (GR) | 547 |
| TUBERÍAS DE DIRECCIÓN (GR) | 549 |
| BOMBA Y MONTAJE DE LA DIRECCIÓN SECUNDARIA (GR) | 556 |
| BOMBA DE TRANSMISIÓN Y DIRECCIÓN Y MONTAJE (GR) | 557 |
| BOMBA DE ENGRANAJES (GR) | 559 |
| BOMBA DE PISTONES (GR) | 561 |
| GRUPO GIRATORIO DE BOMBA | 563 |
| *SCREEN GP-CASE DRAIN | 564 |
| DIRECCIÓN SECUNDARIA (CONFIG) | 565 |
| COLUMNA DE DIRECCIÓN (GR) | 566 |
| VOLANTE DE DIRECCIÓN (GR) | 567 |
| PLATO OSCILANTE (GR) | 569 |
| VÁLVULA DE RETENCIÓN (GR) | 570 |
| VÁLVULA DE DERIVACIÓN (GR) | 573 |
| VÁLVULA PILOTO (GR) | 575 |
| VALVULA DE CONTROL DE LA BOMBA (GR) | 577 |
| VÁLVULA DE ALIVIO (GR) | 579 |
| VÁLVULA DE LANZADERA (GR) | 581 |
| VÁLVULAS DE LA DIRECCIÓN (GR) | 585 |
| VÁLVULA NEUTRALIZADORA DE DIRECCIÓN (GR) | 587 |
| **SISTEMA HIDRÁULICO** | 588 |
| ACUMULADOR DE CONTROL DE AMORTIGUACIÓN | 588 |
| ACUMULADOR DE CONTROL DE AMORTIGUACION (GR) | 589 |
| CONTROL DE DESPLAZAMIENTO Y TUBERÍAS (GR) | 590 |
| CONFIGURACIÓN DE CONTROL DEL VENTILADOR | 595 |
| CONTROL DE AMORTIGUACIÓN (CONFIG) | 595 |
| CONTROL ELECTROHIDRAULICO (GR) | 597 |
| CONTROL DE MANIJA (GR) | 611 |
| PALANCA UNIVERSAL DE CONTROL (GR) | 613 |
| CILINDRO DE LEVANTAMIENTO Y SELLO (GR) | 619 |


* NO HAY TRADUCCION DISPONIBLE EN EL MOMENTO DE LA IMPRESION

# CONTENIDO


| Nombre | Página |
|---|---|
| CILINDRO DE INCLINACIÓN Y SELLO (GR) | 620 |
| CILINDRO DE LEVANTAMIENTO (GR) | 626 |
| INCLINACIÓN HORIZONTAL - CILINDRO DE (GR) | 628 |
| FILTRO DE ACEITE (GR) | 639 |
| CONFIGURACIÓN HIDRÁULICA DE 2 VÁLVULAS | 641 |
| VÁLVULA HIDRÁULICA DE 3 VÍAS (CONFIG) | 641 |
| TUBERÍAS DELANTERAS (GR) | 642 |
| *LINES GP-HOOD TILT | 643 |
| TUBERÍAS HIDRÁULICAS (GR) | 645 |
| TUBERÍAS HIDRÁULICAS DEL VENTILADOR (GR) | 649 |
| TUBERÍAS DEL ENFRIADOR DE ACEITE HIDRÁULICO (GR) | 651 |
| CILINDRO DE LEVANTAMIENTO - TUBERÍAS DEL (GR) | 656 |
| TUBERÍAS DEL CILINDRO DE INCLINACIÓN (GR) | 658 |
| PISTONES DEL MOTOR (GR) | 660 |
| MONTAJE DEL TANQUE HIDRÁULICO (GR) | 663 |
| *PUMP & MOTOR GP-HOOD TILT | 664 |
| BOMBA Y MONTAJE DE VENTILADOR HIDRAULICO (GR) | 665 |
| BOMBA DE IMPLEMENTOS Y MONTAJE (GR) | 666 |
| BOMBA DE ENGRANAJES (GR) | 667 |
| BOMBA DE PISTONES (GR) | 670 |
| GRUPO GIRATORIO DE BOMBA | 672 |
| *SUPPORT GP-FAN ELECTRICAL | 674 |
| TANQUE DE EXPANSIÓN (GR) | 676 |
| TANQUE HIDRÁULICO (GR) | 677 |
| MONTAJE Y VALVULA DEL CONTROL PRINCIPAL (GR) | 682 |
| VÁLVULA DE RETENCIÓN (GR) | 697 |
| VÁLVULA DE CONTROL (GR) | 698 |
| GRUPO DE VÁLVULA, VENTILADOR | 699 |
| VÁLVULA DE DERIVACIÓN (GR) | 700 |
| VALVULA DE INVERSION DE VENTILADOR (GR) | 702 |
| VÁLVULA DE CONTROL DE BAJADA (GR) | 704 |
| VÁLVULA DEL CONTROL PRINCIPAL (GR) | 706 |
| VÁLVULA DE CONTROL MANUAL (GR) | 710 |
| VÁLVULA PILOTO (GR) | 711 |
| VÁLVULA REDUCTORA DE PRESIÓN (GR) | 715 |
| *VALVE GP-PUMP CONTROL | 719 |
| VÁLVULA DE ALIVIO (GR) | 721 |
| VÁLVULA DE SECUENCIA (GR) | 729 |
| VÁLVULA DE LANZADERA (GR) | 730 |
| VÁLVULA DE SOLENOIDE (GR) | 733 |
| **IMPLEMENTOS** | 737 |
| BRAZO Y COJINETE (CONJ) | 737 |
| CONTROL DEL CUCHARÓN (GR) | 738 |
| *HARDWARE GP-LIFT ARM | 740 |
| *LEVER GP-TILT | 743 |
| LEVANTAMIENTO (CONFIG) | 744 |
| CONFIGURACIÓN PARA EXPLOTACIÓN FORESTAL | 745 |
| **HERRAMIENTAS** | 746 |
| GRUPO DE PUNTA Y ADAPTADOR | 746 |
| CUCHARÓN DE USO GENERAL (CONFIG) | 748 |
| CUCHARÓN DE USO GENERAL (CONJ) | 749 |
| CUCHARÓN PARA ROCA (CONJ) | 753 |
| CUCHARÓN DE USO GENERAL (GR) | 763 |
| CUCHARÓN PARA ROCA (GR) | 765 |
| CUCHILLA (GR) | 770 |
| PUNTA RESISTENTE A LA ABRASIÓN (GR) | 772 |
| *TIP GP-EXTRA DUTY | 773 |
| PUNTA PARA CUCHARON DE USO GENERAL (GR) | 775 |
| PUNTA PARA PENETRACIÓN (GR) | 777 |
| **PUESTO DEL OPERADOR** | 779 |
| AJUSTADOR DEL ASIENTO (GR) | 779 |
| COMPRESOR DE AIRE DEL ASIENTO (GR) | 780 |
| ACONDICIONADOR DE AIRE (CONFIG) | 781 |
| ACONDICIONADOR DE AIRE (GR) | 782 |
| BRAZO DE LIMPIAPARABRISAS (GR) | 786 |
| POSABRAZOS (GR) | 788 |
| SISTEMA ROPS DE CABINA CERRADA (CONFIG) | 789 |
| TECHO ROPS ABIERTO (CONFIG) | 790 |
| COMPRESOR DE REFRIGERANTE (GR) | 791 |
| CONDENSADOR DEL REFRIGERANTE Y MONTAJE (GR) | 793 |
| CONTROL DE MONITOR (GR) | 795 |
| PUERTA DE CABINA | 799 |
| CONDUCTO Y FILTRO DE AIRE (GR) | 803 |
| CONDUCTO DE AIRE (GR) | 805 |
| *FLOOR GP-SOUND SUPPRESSION | 808 |
| *GUARD AR-WINDOW | 810 |


* NO HAY TRADUCCION DISPONIBLE EN EL MOMENTO DE LA IMPRESION

# CONTENIDO


| Nombre | Página |
|---|---|
| PROTECTOR CONTRA EL VANDALISMO (GR) | 811 |
| PROTECTOR DE LA VENTANA | 812 |
| PASAMANOS (GR) | 816 |
| CALEFACCIÓN DE LA CABINA (GR) | 818 |
| BOCINA ELÉCTRICA (GR) | 822 |
| INSTALACIÓN DE CONTROLES (GR) | 823 |
| INSTALACIÓN DE RADIO (GR) | 826 |
| REVESTIMIENTO DE LA CABINA (GR) | 829 |
| TUBERÍAS DE ACONDICIONADOR DE AIRE (GR) | 838 |
| *LINES GP-CAB HEATER | 842 |
| TUBERÍAS DE CALEFACCIÓN DE LA CABINA | 843 |
| RETROVISOR (GR) | 844 |
| MODULO ELECTRÓNICO DE CUATRO INDICADORES (GR) | 864 |
| MÓDULO DEL TACÓMETRO Y DEL VELOCÍMETRO (GR) | 865 |
| MONITOR DE CARGA ÚTIL (CONFIG) | 866 |
| MONITOR DE CARGA ÚTIL (GR) | 867 |
| MOTOR-LIMPIAPARABRISAS (GR) | 869 |
| GRUPO DE MONTAJE DE LA CABINA | 872 |
| CABINA ROPS CERRADA (CONFIG) | 874 |
| CABINA ROPS ABIERTA (CONFIG) | 874 |
| SOPORTE DEL RESPALDO (GR) | 875 |
| TABLERO DE INSTRUMENTOS (GR) | 878 |
| REGULADOR - PEDAL DEL (GR) | 887 |
| PLATAFORMA (CONFIG) | 889 |
| PLATAFORMA DE LA CABINA | 890 |
| RADIO (GR) | 892 |
| RECLINACION DE ASIENTO (GR) | 894 |
| CABINA ROPS CERRADA (GR) | 895 |
| ESTRUCTURA ROPS ABIERTA (GR) | 905 |
| SELLADO DEL VIDRIO (GR) | 908 |
| CINTURÓN DE SEGURIDAD (GR) | 909 |
| ASIENTO (GR) | 910 |
| SUSPENSIÓN - ASIENTO CON (GR) | 918 |
| GRUPO DE PROTECTOR, CABINA | 925 |
| SOPORTE DEL CONTROL HIDRÁULICO (GR) | 926 |
| INSONORIZACION DE CABINA (GR) | 929 |
| ASIENTO CON SUSPENSIÓN (GR) | 938 |
| VISERA (GR) | 942 |
| LAVAPARABRISAS DE LA VENTANA (GR) | 943 |
| VENTANA DE LA PUERTA (GR) | 944 |
| LIMPIAPARABRISAS DE LA VENTANA (GR) | 948 |
| **EQUIPO DE SERVICIO Y SUMINISTROS** | 951 |
| ETIQUETA DE ADVERTENCIA (GR) | 951 |
| GRUPO DE TUBERIAS DE DIAGNÓSTICO | 953 |
| MONTAJE DE LA TABLA DE LUBRICACION (GR) | 956 |
| CALCOMANÍAS Y PLACAS DE IDENTIFICACIÓN (GR) | 956 |
| GRUPO DE PROTECCIÓN CONTRA EL VANDALISMO | 958 |
| **INDICE DE NUMEROS DE PIEZA** | B1 |


* NO HAY TRADUCCION DISPONIBLE EN EL MOMENTO DE LA IMPRESION

# ÍNDICE


| Designação | Página |
|---|---|
| **INFORMAÇÃO GERAL** | A40 |
| **ALTERNATIVAS DE REPARO** | A51 |
| **ADITIVOS SUPLEMENTARES DO LÍQUIDO ARREFECEDOR** | A56 |
| **PEÇAS DE MANUTENÇÃO** | A69 |
| **ÍNDICE** | A120 |
| **MÁQUINA - ARRANJO** | 1 |
| CHASSI | 1 |
| ARRANJO GERAL | 2 |
| MÁQUINA | 2 |
| APARAS | 2 |
| ATERRO SANITÁRIO | 3 |
| **MOTOR - ARRANJO** | 4 |
| MOTOR COMPLETO | 4 |
| MOTOR - NÚCLEO | 5 |
| GRUPO DE INSTALAÇÃO - MOTOR | 6 |
| **MOTOR BÁSICO** | 7 |
| ADAPTADOR DO COMANDO DA BOMBA | 7 |
| GR. BÁSICO - TAMPA DAS VÁLVULAS E CHICOTE DE INJEÇÃO | 8 |
| TENSOR DA CORREIA | 10 |
| EIXO-COMANDO DE VÁLVULA | 11 |
| TAMPA - BLOCO DO MOTOR | 12 |
| TAMPA - CAIXA DIANTEIRA | 14 |
| TAMPA - REDUÇÃO DE RUÍDOS | 16 |
| TAMPA - MECANISMO DAS VÁLVULAS | 17 |
| VIRABREQUIM | 21 |
| BLOCO DO MOTOR | 22 |
| CABEÇOTE DO MOTOR | 25 |
| AMORTECEDOR | 32 |
| DRENO - ÓLEO DO MOTOR | 33 |
| COMANDO DE ACESSÓRIOS | 34 |
| COMANDO DA BOMBA | 35 |
| FIXADORES - CAIXA DIANTEIRA | 36 |
| FIXADORES - CÁRTER DO ÓLEO | 38 |
| FIXADORES - MECANISMO DAS VÁLVULAS | 39 |
| VOLANTE DO MOTOR | 40 |
| ENGRENAGEM - EIXO-COMANDO DE VÁLVULAS | 41 |
| ENGRENAGENS DE DISTRIBUIÇÃO | 42 |
| CAIXA DO VOLANTE DO MOTOR | 44 |
| CAIXA DIANTEIRA | 46 |
| LEVANTAMENTO DO MOTOR | 48 |
| MONTAGEM - ALTERNADOR E COMPRESSOR | 50 |
| CÁRTER DO ÓLEO DO MOTOR | 51 |
| PAINEL- REDUÇÃO DE RUÍDO | 52 |
| PISTÃO E BIELA | 54 |
| BUJÃO DO BLOCO DO CILINDRO | 58 |
| BUJÃO - CABEÇA DO CILINDRO | 59 |
| BUJÃO - CÁRTER DO ÓLEO | 60 |
| POLIA DO VIRABREQUIM | 61 |
| POLIA DA RODA-GUIA | 62 |
| BALANCIM | 63 |
| SUPORTE DO MOTOR | 65 |
| SUPORTE - MOTOR E TRANSMISSÃO | 66 |
| MECANISMO DAS VÁLVULAS | 68 |
| **SISTEMA DE LUBRIFICAÇÃO** | 69 |
| FIXADORES - BOMBA DE ÓLEO DO MOTOR | 69 |
| BOCAL DE ENCHIMENTO DE ÓLEO DO MOTOR | 70 |
| FILTRO - ÓLEO DO MOTOR | 71 |
| ELIMINAÇÃO DE VAPORES DO CÁRTER | 73 |
| INDICADOR - NÍVEL DO ÓLEO (VARETA) | 74 |
| TUBOS - ÓLEO DO MOTOR | 75 |
| TUBOS - ÓLEO DO TURBOALIMENTADOR | 77 |
| BOMBA DE ÓLEO - MOTOR | 78 |
| VÁLVULA PARA TIRAR AMOSTRAS DE FLUIDOS | 79 |
| **SISTEMA DE ARREFECIMENTO** | 80 |
| ARREFECIMENTO - TEMP. AMBIENTE ALTA | 80 |
| FIXADORES - BOMBA DE ÁGUA | 81 |
| TUBOS - ÁGUA | 82 |
| BOMBA DE ÁGUA | 90 |
| RADIADOR E VENTILADOR | 92 |
| **SISTEMA DA ADMISSÃO DE AR E DE ESCAPE** | 99 |
| PURIFICADOR DE AR | 99 |
| TAMPA - TURBOALIMENTADOR | 101 |
| EJETOR DE POEIRA | 102 |
| INDICADOR - TROCA DO FILTRO DE AR | 103 |
| ISOLAMENTO CONTRA CALOR | 104 |
| TUBULAÇÕES - AR DO PÓS-ARREFECEDOR | 105 |
| TUBOS - AR | 106 |
| COLETOR DE ESCAPE | 108 |


* TRADUÇÃO NÃO DISPONÍVEL NO MOMENTO DA IMPRESSÃO

# ÍNDICE


| Designação | Página |
|---|---|
| MONTAGEM - SILENCIADOR | 109 |
| SILENCIADOR | 110 |
| DEFLETOR TÉRMICO DE CALOR | 111 |
| TURBOALIMENTADOR | 112 |
| **SISTEMA DE COMBUSTÍVEL** | 113 |
| ADAPTADOR - ABASTECIMENTO RÁPIDO DE COMBUSTÍVEL | 113 |
| DRENO DO COMBUSTÍVEL | 114 |
| FILTRO E MONTAGEM-COMBUSTÍVEL | 115 |
| FILTRO DE COMBUSTÍVEL E SEPARADOR DE ÁGUA | 119 |
| TUBOS - COMBUSTÍVEL | 120 |
| BOMBA E MONTAGEM - TRANSFERÊNCIA DE COMBUSTÍVEL | 124 |
| BOMBA DE INJEÇÃO DO COMBUSTÍVEL | 125 |
| TANQUE DE COMBUSTÍVEL | 126 |
| VÁLVULA DE RETENÇÃO | 130 |
| SEPARADOR DE ÁGUA E BOMBA DE ESCORVA DE COMBUSTÍVEL | 132 |
| **SISTEMA ELÉTRICO E DE PARTIDA** | 133 |
| ALARME | 133 |
| ALTERNADOR DE CORRENTE | 134 |
| BATERIA E CABOS / FIOS ELÉTRICOS | 140 |
| CONEXÃO - ELÉTRICA | 145 |
| CONTROLE & MONTAGEM-COMUNICAÇÃO | 146 |
| CONTROLE ELETRÔNICO E MONTAGEM - MOTOR | 150 |
| CONTROLE-ESCAVAÇÃO AUTOMÁTICA | 152 |
| CONTROLE-COMUNICAÇÃO | 155 |
| CONTROLE ELETRÔNICO - MOTOR | 156 |
| CONTROLE - NÃO PROGRAMADO | 157 |
| SISTEMA ELÉTRICO | 162 |
| SISTEMA ELETRÔNICO-COMUNICAÇÃO | 162 |
| SIST. ELETRÔNICO - ACESSÓRIO | 163 |
| SISTEMA ELETRÔNICO - MÁQUINA | 164 |
| SISTEMA ELETRÔNICO - MONITOR | 165 |
| SISTEMA ELETRÔNICO - TREM DE FORÇA | 166 |
| INSTALAÇÃO-COMUNICAÇÃO | 167 |
| INSTALAÇÃO-SEGURANÇA | 168 |
| LÂMPADA - TETO | 171 |
| LÂMPADA - FAROL | 172 |
| LÂMPADA - SINALIZAÇÃO | 176 |
| LUZ TRASEIRA E DE FREIO | 178 |
| LUZ GIRATÓRIA DE ALARME | 179 |
| ILUMINAÇÃO - SINALIZAÇÃO | 180 |
| SISTEMA DE ILUMINAÇÃO - FARÓIS | 180 |
| SISTEMA DE ILUMINAÇÃO - FARÓIS E SINAL | 184 |
| ILUMINAÇÃO - SINALIZAÇÃO | 187 |
| SIST. DE ILUMINAÇÃO - PISCA-PISCA GIRATÓRIO DE ADVERTÊNCIA | 189 |
| MONTAGEM - SENSOR DE PRESSÃO | 191 |
| PAINEL - DISJUNTOR ELÉTRICO AUTOMÁTICO | 194 |
| RECEPTÁCULO-PARTIDA AUXILIAR | 197 |
| ARRANJO RODOVIÁRIO | 198 |
| SENSOR - POSIÇÃO DE LEVANTAMENTO E MONTAGEM | 199 |
| SENSOR - POSIÇÃO DE INCLINAÇÃO E MONTAGEM | 200 |
| SENSOR DO MOTOR | 202 |
| EMISSOR - POSIÇÃO | 204 |
| SENSOR - PRESSÃO | 208 |
| SENSOR DE VELOCIDADE | 215 |
| SENSOR - TEMPERATURA | 219 |
| GR. DE SERVIÇO - MÁQUINA | 223 |
| AUXILIAR DE PARTIDA A ÉTER | 224 |
| MOTOR ELÉTRICO DE PARTIDA | 226 |
| INTERRUPTOR DE DERIVAÇÃO | 231 |
| INTERRUPTOR - TRAVA DO DIFERENCIAL | 232 |
| CHAVE GERAL | 233 |
| INTERRUPTOR - NÍVEL DO LÍQUIDO | 234 |
| INTERRUPTOR - MAGNÉTICO | 235 |
| INTERRUPTOR - PRESSÃO | 238 |
| INTERRUPTOR-VENTILADOR DE INVERSÃO | 239 |
| INTERRUPTOR - SISTEMA DE ABSORCAO DE IMPACTOS | 240 |
| INTERRUPTOR - BALANCIM | 242 |
| INTERRUPTOR GIRATÓRIO | 243 |
| INTERRUPTOR DE SINALIZAÇÃO | 244 |
| INTERRUPTOR - BALANCIM | 246 |
| VALVULA - PARTIDA A ETER | 247 |
| ALARME DE MARCHA À RÉ | 248 |
| CABOS/FIOS ELÉTRICOS - AR CONDICIONADO | 249 |
| FIAÇÃO - CONTROLE DE LUBRIFICAÇÃO AUTOMÁTICA | 250 |
| FIAÇÃO - MONITORAÇÃO DO EIXO | 251 |
| CABOS/FIOS ELÉTRICOS - INTERRUPTOR DE TEMPERATURA DO EIXO | 253 |
| CABOS/FIOS ELÉTRICOS - CABINE | 256 |
| CABOS/FIOS ELÉTRICOS - CHASSI | 281 |
| CABOS / FIOS ELÉTRICOS - SISTEMA HIDRÁULICO ELETRÔNICO | 287 |
| CABOS/FIOS ELÉTRICOS - MOTOR | 288 |


* TRADUÇÃO NÃO DISPONÍVEL NO MOMENTO DA IMPRESSÃO

# ÍNDICE


| Designação | Página |
|---|---|
| CABOS/FIOS ELÉTRICOS - DIANTEIROS | 292 |
| CABOS/FIOS ELÉTRICOS DE ILUMINAÇÃO | 295 |
| CABOS/FIOS ELÉTRICOS - DIREÇÃO SECUNDÁRIA | 299 |
| CABOS/FIOS ELÉTRICOS - SENSOR | 300 |
| FIAÇÃO - MANIPULADOR DE RESÍDUOS | 303 |
| **TREM DE FORÇA** | 305 |
| EIXO FIXO | 305 |
| EIXO OSCILANTE | 305 |
| EIXO FIXO | 307 |
| EIXO OSCILANTE | 308 |
| BASE DO FILTRO DE ÓLEO | 310 |
| CARCAÇA DAS ENGRENAGENS PLANETÁRIAS E COMPONENTES | 311 |
| CAIXA - ENGRENAGEM DE TRANSFERÊNCIA | 312 |
| CONTROLE HIDRÁULICO DA TRANSMISSÃO | 313 |
| ARREFECEDOR DE ÓLEO DO EIXO E MONTAGEM | 317 |
| ARREFECEDOR DO ÓLEO DO EIXO | 319 |
| TAMPA - EMBARQUE | 320 |
| TAMPA - BOCAL DE ENCHIMENTO DE ÓLEO DA TRANSMISSÃO | 321 |
| DIFERENCIAL E COROA | 322 |
| DIFERENCIAL - DESLIZAMENTO LIMITADO | 335 |
| DIFERENCIAL - NOSPIN | 336 |
| DRENO - ECOLOGIA | 338 |
| BOCAL DE ENCHIMENTO DE ÓLEO DO TREM DE FORÇA | 339 |
| FILTRO - ÓLEO | 340 |
| ENGRENAGENS DE SAÍDA DE TRANSFERÊNCIA | 341 |
| TUBOS - ARREFECEDOR DE ÓLEO DO EIXO | 345 |
| TUBOS - ÓLEO DA TRANSMISSÃO | 353 |
| TUBOS - ARREFECEDOR DO CONVERSOR DE TORQUE | 355 |
| MONTAGEM DO EIXO | 357 |
| MONTAGEM - ARO | 358 |
| ENGRENAGENS PLANETÁRIAS - TRANSMISSÃO | 359 |
| TREM DE FORÇA | 368 |
| BOMBA DO ARREFECEDOR DE ÓLEO DO EIXO E MONTAGEM | 369 |
| BOMBA DA TRANSMISSÃO | 371 |
| ARO | 372 |
| ARO DESMONTÁVEL | 373 |
| EIXO DE TRANSMISSÃO | 375 |
| JUNTA CORREDIÇA | 377 |
| SUPORTE - TRANSMISSÃO | 378 |
| PNEU E ARO | 380 |
| CONVERSOR DE TORQUE E CARCAÇA | 387 |
| CONVERSOR DE TORQUE | 391 |
| TRANSMISSÃO | 395 |
| JUNTA UNIVERSAL | 396 |
| VÁLVULA DE MODULAÇÃO | 398 |
| VÁLVULA DE ALÍVIO | 399 |
| RODA E COMANDO FINAL | 402 |
| **CHASSI E CARROCERIA** | 404 |
| ACIONADOR - PROTETOR DE POTÊNCIA | 404 |
| CONTRAPESO | 406 |
| PORTA DE ACESSO | 412 |
| PÁRA-LAMA | 415 |
| PÁRA-LAMA DIANTEIRO | 418 |
| PÁRA-LAMA | 420 |
| ARMAÇÃO DIANTEIRA | 421 |
| CHASSI DIANTEIRO | 424 |
| CHASSI TRASEIRO | 427 |
| GRADE DO RADIADOR | 429 |
| PROTETOR INFERIOR | 431 |
| PROTETOR - CÁRTER DO ÓLEO DO MOTOR | 433 |
| PROTETOR - EIXO DE TRANSMISSÃO | 436 |
| PROTETOR - DIANTEIRO | 437 |
| PROTETOR - TANQUE DE COMBUSTÍVEL E HIDRÁULICO | 438 |
| PROTEÇÃO - ENGATE E DIREÇÃO | 440 |
| PROTETOR - ILUMINAÇÃO | 442 |
| PROTETOR - TUBOS | 443 |
| PROTETOR - TREM DE FORÇA | 444 |
| PROTETOR - SENSOR | 445 |
| FERRAGEM - CHASSI DA CARREGADEIRA | 446 |
| FERRAGEM - CHASSI TRASEIRO | 449 |
| ENGATE - ARTICULAÇÃO | 455 |
| CAPÔ E PROTETOR | 457 |
| ESCADA | 463 |
| TUBULAÇÕES - LUBRIFICAÇÃO AUTOMÁTICA | 466 |
| TUBOS - GRAXA | 474 |
| TUBOS - LUBRIFICAÇÃO | 479 |
| ELO - TRAVA DA ARMAÇÃO DA DIREÇÃO | 487 |
| LUBRIFICAÇÃO - AUTOMÁTICA | 488 |
| PAINEL LATERAL | 489 |
| PAINEL- REDUÇÃO DE RUÍDO | 491 |


* TRADUÇÃO NÃO DISPONÍVEL NO MOMENTO DA IMPRESSÃO

# ÍNDICE


| Designação | Página |
|---|---|
| PAINEL - SUPERIOR | 495 |
| BLINDAGEM DO COMPARTIMENTO DO MOTOR | 496 |
| DEGRAU | 498 |
| SUPORTE - ADMISSÃO DE AR | 501 |
| RUÍDO - ARRANJO PARA SUPRESSÃO | 505 |
| REDUÇÃO DE RUÍDO | 506 |
| TANQUE - GRAXA | 512 |
| INCLINAÇÃO - CAPÔ | 513 |
| VÁLVULA DE LUBRIFICAÇÃO - DISTRIBUIÇÃO | 515 |
| **SISTEMA DE FREIO** | 519 |
| ACUMULADOR - FREIO | 519 |
| BASE DO FREIO - PEDAL | 522 |
| FREIO DE ESTACIONAMENTO | 525 |
| FREIO DE SERVIÇO | 527 |
| CONTROLE DO PEDAL DO FREIO | 531 |
| CONTROLE DO FREIO DE ESTACIONAMENTO | 533 |
| CONTROLE DO FREIO DE SERVIÇO | 534 |
| TUBOS - FREIO DE SERVIÇO | 540 |
| VÁLVULA DE CONTROLE DOS FREIOS | 541 |
| **SISTEMA DE DIREÇÃO** | 542 |
| CONTROLE DE DIREÇÃO | 542 |
| CILINDRO DE DIREÇÃO E MONTAGEM | 544 |
| CILINDRO HIDRÁULICO | 545 |
| TUBOS - DIREÇÃO SECUNDÁRIA | 547 |
| TUBOS - DIREÇÃO | 549 |
| BOMBA DA DIREÇÃO SECUNDÁRIA E MONTAGEM | 556 |
| BOMBA DE DIREÇÃO E TRANSMISSÃO E MONTAGEM | 557 |
| BOMBA DE ENGRENAGENS | 559 |
| BOMBA DE PISTÃO | 561 |
| GRUPO ROTATIVO DA BOMBA | 563 |
| *SCREEN GP-CASE DRAIN | 564 |
| DIREÇÃO SECUNDÁRIA | 565 |
| COLUNA DA DIREÇÃO | 566 |
| VOLANTE | 567 |
| PLACA BASCULANTE | 569 |
| VÁLVULA DE RETENÇÃO | 570 |
| VÁLVULA DESVIADORA | 573 |
| VÁLVULA DE CONTROLE PILOTO | 575 |
| VÁLVULA DE CONTROLE DA BOMBA | 577 |
| VÁLVULA DE ALÍVIO | 579 |
| VÁLVULA DE SEPARAÇÃO | 581 |
| VÁLVULA DA DIREÇÃO | 585 |
| VÁLVULA - NEUTRALIZADOR DA DIREÇÃO | 587 |
| **SISTEMA HIDRÁULICO** | 588 |
| ACUMULADOR DO SISTEMA DE ABSORÇÃO DE IMPACTOS | 588 |
| SISTEMA DE ABSORÇÃO DE IMPACTOS E TUBOS | 590 |
| CONTROLE DO VENTILADOR | 595 |
| SISTEMA DE ABSORÇÃO DE IMPACTOS | 595 |
| CONTROLE-ELETROIDRÁULICO | 597 |
| CONTROLE-CABO | 611 |
| CONTROLE - ALAVANCA | 613 |
| CILINDRO DE LEVANTAMENTO E RETENTOR | 619 |
| CILINDRO DE INCLINAÇÃO E RETENTOR | 620 |
| CILINDRO DE LEVANTAMENTO | 626 |
| CILINDRO DE INCLINAÇÃO | 628 |
| FILTRO - ÓLEO | 639 |
| ARRANJO HIDRÁULICO - 2 VÁLVULAS | 641 |
| ARRANJO HIDRÁULICO - 3 VÁLVULAS | 641 |
| TUBOS - DIANTEIROS | 642 |
| TUBULAÇÕES-INCLINAÇÃO DO CAPÔ | 643 |
| TUBOS - ÓLEO HIDRÁULICO | 645 |
| TUBOS - VENTILADOR HIDRÁULICOS | 649 |
| TUBOS - ARREFECEDOR DE ÓLEO HIDRÁULICO | 651 |
| TUBOS - CILINDRO DE LEVANTAMENTO | 656 |
| TUBOS - CILINDRO DE INCLINAÇÃO | 658 |
| MOTOR - PISTÃO | 660 |
| MONTAGEM - TANQUE HIDRÁULICO | 663 |
| BOMBA E MOTOR - INCLINAÇÃO DO CAPÔ | 664 |
| BOMBA DO VENTILADOR HIDRÁULICO E MONTAGEM | 665 |
| BOMBA E MONTAGEM - ACESSÓRIO | 666 |
| BOMBA DE ENGRENAGENS | 667 |
| BOMBA DE PISTÃO | 670 |
| GRUPO ROTATIVO DA BOMBA | 672 |
| SUPORTE-SISTEMA ELÉTRICO DO VENTILADOR | 674 |
| TANQUE DE EXPANSÃO | 676 |
| TANQUE HIDRÁULICO | 677 |
| VÁLVULA DO CONTROLE PRINCIPAL E MONTAGEM | 682 |
| VÁLVULA DE RETENÇÃO | 697 |


* TRADUÇÃO NÃO DISPONÍVEL NO MOMENTO DA IMPRESSÃO

# ÍNDICE


| Designação | Página |
|---|---|
| VÁLVULA DE CONTROLE | 698 |
| VÁLVULA - VENTILADOR POR DEMANDA | 699 |
| VÁLVULA DESVIADORA | 700 |
| VÁLVULA REVERSORA DO VENTILADO | 702 |
| VÁLVULA DE CONTROLE DE ABAIXAMENTO | 704 |
| VÁLVULA - CONTROLE PRINCIPAL | 706 |
| VÁLVULA MANUAL | 710 |
| VÁLVULA DE CONTROLE PILOTO | 711 |
| VÁLVULA DE REDUÇÃO DE PRESSÃO | 715 |
| *VALVE GP-PUMP CONTROL | 719 |
| VÁLVULA DE ALÍVIO | 721 |
| VÁLVULA DE SEQUÊNCIA | 729 |
| VÁLVULA DE SEPARAÇÃO | 730 |
| VÁLVULA SOLENÓIDE | 733 |
| **ACESSÓRIOS** | 737 |
| BRAÇO E MANCAL TIPO LUVA | 737 |
| CONTROLE DA CAÇAMBA | 738 |
| FERRAGENS-BRAÇO DE LEVANTAMENTO | 740 |
| ALAVANCA-INCLINAÇÃO | 743 |
| LEVANTAMENTO - ARRANJO | 744 |
| ARRANJO PARA EXTRAÇÃO DE MADEIRA | 745 |
| **FERRAMENTAS DE TRABALHO** | 746 |
| ADAPTADOR DA PONTA | 746 |
| CAÇAMBA - PARA APLICAÇAO GERAL | 748 |
| CAÇAMBA PARA APLICAÇÃO GERAL | 749 |
| CAÇAMBA PARA ROCHAS | 753 |
| CAÇAMBA PARA APLICAÇÃO GERAL | 763 |
| CAÇAMBA PARA ROCHAS | 765 |
| BORDA CORTANTE | 770 |
| PONTA - ABRASÃO | 772 |
| PONTA-SERVIÇO PESADO | 773 |
| PONTA PARA APLICAÇÕES GERAIS | 775 |
| PONTA - PENETRAÇÃO | 777 |
| **ESTAÇÃO DO OPERADOR** | 779 |
| AJUSTADOR DO ASSENTO | 779 |
| COMPRESSOR DE AR - ASSENTO | 780 |
| CONDICIONADOR DE AR | 781 |
| BRACO DO LIMPADOR | 786 |
| BRAÇO DO ASSENTO | 788 |
| CABINE - ESTRUTURA ROPS COBERTA | 789 |
| TOLDO - ROPS ABERTA | 790 |
| COMPRESSOR DE REFRIGERANTE | 791 |
| CONDENSADOR DO REFRIGERANTE E MONTAGEM | 793 |
| CONTROLE DO PAINEL MONITOR | 795 |
| PORTA DA CABINE | 799 |
| DUCTO E FILTRO | 803 |
| DUCTO DE AR | 805 |
| PISO-SUPRESSÃO DE RUÍDOS | 808 |
| PROTETOR-VIDRO | 810 |
| PROTETOR CONTRA VANDALISMO | 811 |
| PROTETOR - JANELA | 812 |
| PEGA-MÃO | 816 |
| AQUECEDOR DA CABINE | 818 |
| BUZINA ELÉTRICA | 822 |
| INSTALAÇÃO DOS CONTROLES | 823 |
| INSTALAÇÃO DO RÁDIO | 826 |
| REVESTIMENTO DA CABINE | 829 |
| TUBOS - AR CONDICIONADO | 838 |
| *LINES GP-CAB HEATER | 842 |
| TUBOS - AQUECEDOR DA CABINE | 843 |
| ESPELHO RETROVISOR | 844 |
| MÓDULO ELETRÔNICO DE QUATRO INDICADORES | 864 |
| MÓDULO - VELOCÍMETRO E TACÔMETRO | 865 |
| PAINEL MONITOR DE CARGA ÚTIL | 866 |
| MOTOR - LIMPADOR DO VIDRO | 869 |
| MONTAGEM - CABINE | 872 |
| CABINE - ESTRUTURA ROPS COBERTA | 874 |
| CABINE - ROPS ABERTA | 874 |
| FUNDO - ENCOSTO | 875 |
| PAINEL DE INSTRUMENTOS | 878 |
| PEDAL DO GOVERNADOR | 887 |
| PISO | 889 |
| PLATAFORMA DO OPERADOR | 890 |
| RÁDIO | 892 |
| RECLINAÇÃO - ASSENTO | 894 |
| ROPS FECHADA | 895 |
| ROPS ABERTA | 905 |
| RETENÇÃO - VIDRO | 908 |
| CINTO DE SEGURANÇA | 909 |
| ASSENTO | 910 |
| ASSENTO COM SUSPENSÃO | 918 |
| DEFLETOR - CABINE | 925 |
| SUPORTE - CONTROLE HIDRÁULICO | 926 |
| SUPRESSÃO DE RUÍDOS - CABINE | 929 |
| SUSPENSÃO - ASSENTO | 938 |
| PÁRA-SOL DA CABINE | 942 |
| LAVADOR DO VIDRO | 943 |
| VIDRO DA PORTA | 944 |
| LIMPADOR DO VIDRO | 948 |


* TRADUÇÃO NÃO DISPONÍVEL NO MOMENTO DA IMPRESSÃO

# ÍNDICE


| Designação | Página | Designação | Página |
|---|---|---|---|
| **EQUIPAMENTOS DE SERVIÇO E SUPRIMENTOS** | 951 | | |
| DECALQUE | 951 | | |
| TUBULAÇÕES DE DIAGNÓSTICO | 953 | | |
| MONTAGEM - QUADRO DE LUBRIFICAÇÃO | 956 | | |
| PLACA E DECALQUE | 956 | | |
| PROTEÇÃO CONTRA VANDALISMO | 958 | | |
| **ÍNDICE DE NÚMERO DE PEÇA** | B1 | | |


* TRADUÇÃO NÃO DISPONÍVEL NO MOMENTO DA IMPRESSÃO

# INHALTSVERZEICHNIS


| Bezeichnung | Seite |
|---|---|
| **ALLGEMEINE HINWEISE** | A44 |
| **REPARATURALTERNATIVEN** | A52 |
| **KÜHLMITTELZUSATZ** | A57 |
| **WARTUNGSTEILE** | A73 |
| **STICHWORTVERZEICHNIS** | A134 |
| **MASCHINE** | 1 |
| FAHRWERK | 1 |
| GRUNDAUSFÜHRUNG | 2 |
| MASCHINE | 2 |
| AUSFÜHRUNG FÜR SCHROTT | 2 |
| ABFALLBESEITIGUNGSMONTAGE | 3 |
| **MOTOR** | 4 |
| MOTOR, KOMPLETT | 4 |
| MOTORKÜHLERBLOCK | 5 |
| MOTOR-EINBAUSATZ | 6 |
| **MOTOR (GRUNDAUSFÜHRUNG)** | 7 |
| PUMPENANTRIEBSADAPTER | 7 |
| SOCKEL FÜR VENTILDECKEL U. EINSPRITZKABELBAUM | 8 |
| RIEMENSPANNER | 10 |
| NOCKENWELLE | 11 |
| MOTORBLOCKDECKEL | 12 |
| STIRNRADGEHÄUSEDECKEL | 14 |
| SCHALLDÄMPFENDE VERKLEIDUNG | 16 |
| VENTILDECKEL | 17 |
| KURBELWELLE | 21 |
| MOTORBLOCK | 22 |
| ZYLINDERKOPF | 25 |
| DÄMPFER | 32 |
| MOTORÖLABLASS | 33 |
| NEBENANTRIEB | 34 |
| PUMPENANTRIEB | 35 |
| STIRNRADGEHÄUSE-HALTETEILE | 36 |
| ÖLWANNEN-HALTETEILE | 38 |
| VENTILMECHANISMUS-HALTETEILE | 39 |
| SCHWUNGRAD | 40 |
| NOCKENWELLENZAHNRAD | 41 |
| STIRNRAD | 42 |
| SCHWUNGRADGEHÄUSE | 44 |
| STIRNRADGEHÄUSE | 46 |
| MOTORHUBÖSE | 48 |
| DREHSTROMGENERATOR - UND KOMPRESSORAUFHAENGUNG | 50 |
| ÖLWANNE | 51 |
| SCHALLDÄMPFUNG | 52 |
| PLEUELSTANGE UND KOLBEN | 54 |
| ZYLINDERBLOCKSCHRAUBE | 58 |
| ZYLINDERKOPFSTOPFEN | 59 |
| ÖLWANNENSCHRAUBE | 60 |
| KURBELWELLEN-RIEMENSCHEIBE | 61 |
| RIEMENSPANNER | 62 |
| VENTILKIPPHEBEL | 63 |
| MOTORAUFHÄNGUNG | 65 |
| MOTOR- UND GETRIEBEAUFHÄNGUNG | 66 |
| VENTILSTEUERUNG | 68 |
| **SCHMIERSYSTEM** | 69 |
| ÖLPUMPEN-BEFESTIGUNGSTEILE | 69 |
| MOTORÖLEINFÜLLSTUTZEN | 70 |
| ÖLFILTER | 71 |
| ENTDUNSTER | 73 |
| ÖLMESSSTAB | 74 |
| MOTORÖLLEITUNGEN | 75 |
| TURBOLADERÖLLEITUNGEN | 77 |
| SCHMIERPUMPE | 78 |
| PROBEENTNAHMEVENTIL | 79 |
| **KÜHLSYSTEM** | 80 |
| KÜHLSYSTEM - HOHE UMGEBUNGSTEMPERATUREN | 80 |
| KÜHLWASSERPUMPE - HALTETEILE | 81 |
| KÜHLWASSERLEITUNGEN | 82 |
| KÜHLWASSERPUMPE | 90 |
| KÜHLER UND LÜFTER | 92 |
| **LUFTANSAUG- UND ABGASSYSTEM** | 99 |
| LUFTREINIGER | 99 |
| TURBOLADERVERKLEIDUNG | 101 |
| STAUBAUSWERFER | 102 |
| LUFTFILTERWARTUNGSANZEIGE | 103 |
| WÄRMEISOLIERUNG | 104 |
| LADELUFTKÜHLERLEITUNGEN | 105 |
| DRUCKLUFTLEITUNGEN | 106 |
| AUSPUFFKRÜMMER | 108 |
| SCHALLDÄMPFERSTÜTZEN | 109 |
| SCHALLDÄMPFER | 110 |
| WÄRMESCHIRM | 111 |
| TURBOLADER | 112 |
| **KRAFTSTOFFSYSTEM** | 113 |
| SCHNELLBETANKUNGSANSCHLUSS | 113 |
| KRAFTSTOFFABLASS | 114 |
| KRAFTSTOFFFILTER U. BEFESTIGUNGSTEILE | 115 |
| WASSERABSCHEIDER- U. KRAFTSTOFFILTER | 119 |


* ÜBERSETZUNG ZUM ZEITPUNKT DER DRUCKLEGUNG NICHT VORHANDEN

# INHALTSVERZEICHNIS


| Bezeichnung | Seite |
|---|---|
| KRAFTSTOFFLEITUNGEN | 120 |
| KRAFTSTOFFÖRDERPUMPE UND BEFESTIGUNGSTEILE | 124 |
| KRAFTSTOFFEINSPRITZPUMPE | 125 |
| KRAFTSTOFFTANK | 126 |
| SPERRVENTIL | 130 |
| WASSERABSCHEIDER U. KRAFTSTOFFENTLÜFTUNGSPUMPE | 132 |
| **ELEKTRISCHE ANLAGE U. STARTSYSTEM** | 133 |
| WARNVORRICHTUNG | 133 |
| DREHSTROMGENERATOR | 134 |
| BATTERIE UND VERDRAHTUNG | 140 |
| ANSCHLUSS, ELEKTR. | 145 |
| ÜBERTRAGUNGSSTEUERUNG U. BEFESTIGUNG | 146 |
| STEUERUNGSEINHEIT, ELEKTRON. FÜR MOTOR UND BEFEST. | 150 |
| AUTOMATISCHES LADESYSTEM (AUTODIG) - STEUERUNG | 152 |
| ÜBERTRAGUNGSSTEUERUNG | 155 |
| MOTORSTEUERUNG, ELEKTRON. | 156 |
| STEUERUNG - NICHT PROGRAMMIERT | 157 |
| ELEKTR. ANLAGE | 162 |
| ELEKTRONIK, KOMMUNIKATION | 162 |
| ARBEITSGERÄTEELEKTRONIK | 163 |
| ELEKTRONIK - MASCHINE | 164 |
| ELEKTRONIK - MONITOR | 165 |
| KRAFTÜBERTRAGUNGSELEKTRONIK | 166 |
| ÜBERTRAGUNGSEINBAUSATZ | 167 |
| SICHERHEITSEINBAUSATZ | 168 |
| FAHRERHAUSBELEUCHTUNG | 171 |
| ARBEITSLEUCHTEN | 172 |
| BLINKLEUCHTE | 176 |
| BREMS- UND RÜCKLEUCHTE | 178 |
| RUNDUM-KENNLEUCHTE | 179 |
| BLINKERLEUCHTEN | 180 |
| ARBEITSLEUCHTEN | 180 |
| ARBEITS- U. SIGNALLEUCHTE | 184 |
| BLINKERLEUCHTEN | 187 |
| RUNDUM-KENNLEUCHTE | 189 |
| DRUCKSENSOR U. BEFESTIGUNGSTEILE | 191 |
| UNTERBRECHER - INSTRUMENTENTAFEL | 194 |
| STARTHILFEANSCHLUSS | 197 |
| AUSRÜSTUNG FÜR STRASSENFAHRT | 198 |
| HUBSTELLUNGSSENSOR U. BEFESTIGUNGSTEILE | 199 |
| KIPPSTELLUNGS-SENSOR U. BEFESTIGUNGSTEILE | 200 |
| MOTORSENSOR | 202 |
| STELLUNGSSENSOR | 204 |
| DRUCKSENSOR | 208 |
| DREHZAHLSENSOR | 215 |
| TEMPERATURSENSOR | 219 |
| SERVICE MASCHINE | 223 |
| ÄTHERSTARTHILFE | 224 |
| STARTERMOTOR | 226 |
| UMGEHUNGSSCHALTER | 231 |
| DIFFERENZIALSPERRENSCHALTER | 232 |
| TRENNSCHALTER | 233 |
| FLÜSSIGKEITSSCHALTER | 234 |
| MAGNETSCHALTER | 235 |
| DRUCKSCHALTER | 238 |
| SCHALTER - UMKEHRLÜFTER | 239 |
| SCHALTER FÜR HYDRAULISCHE SCHWINGUNGSDÄMPFUNG | 240 |
| KIPPSCHALTER | 242 |
| DREHSCHALTER | 243 |
| RICHTUNGSSIGNALSCHALTER | 244 |
| KIPPSCHALTER | 246 |
| ÄTHERSTARTVENTIL | 247 |
| RÜCKFAHRWARNHORN | 248 |
| KLIMAANLAGENVERDRAHTUNG | 249 |
| AUTOM. SCHMIERVORRICHTUNG - STEUERUNGSVERDRAHTUNG | 250 |
| ACHSENÜBERWACHUNG - VERDRAHTUNG | 251 |
| ACHSTEMPERATURSCHALTERVERDRAHTUNG | 253 |
| FAHRERHAUSVERDRAHTUNG | 256 |
| FAHRGESTELLVERDRAHTUNG | 281 |
| HYDRAULIKELEKTRONIKVERDRAHTUNG | 287 |
| MOTORVERDRAHTUNG | 288 |
| VERDRAHTUNG, VORNE | 292 |
| BELEUCHTUNGSVERDRAHTUNG | 295 |
| NOTLENKUNGSVERDRAHTUNG | 299 |
| SENSORVERDRAHTUNG | 300 |
| *WIRING GP-WASTE HANDLER | 303 |
| **KRAFTÜBERTRAGUNG** | 305 |
| STARRACHSE | 305 |
| PENDELACHSE | 305 |
| STARRACHSE | 307 |
| PENDELACHSE | 308 |
| ÖLFILTERSOCKEL | 310 |
| PLANETENANTRIEBSGEHÄUSE U. TEILE | 311 |
| VERTEILERGETRIEBEGEHÄUSE | 312 |
| GETRIEBEHYDRAULIK | 313 |


* ÜBERSETZUNG ZUM ZEITPUNKT DER DRUCKLEGUNG NICHT VORHANDEN

# INHALTSVERZEICHNIS


| Bezeichnung | Seite |
|---|---|
| ACHSENÖLKÜHLER U. BEFESTIGUNGS-TEILE | 317 |
| ACHSÖLKÜHLER | 319 |
| VERSANDDECKEL | 320 |
| GETRIEBEÖLEINFÜLLKAPPE | 321 |
| DIFFERENTIAL UND TELLERRAD | 322 |
| DIFFERENTIAL (BEGRENZTER SCHLUPF) | 335 |
| NOSPIN-DIFFERENTIAL | 336 |
| ABLASS (UMWELTFREUNDLICH) | 338 |
| GETRIEBEÖLFÜLLSTUTZEN | 339 |
| ÖLFILTER | 340 |
| VERTEILERGETRIEBEANTRIEB | 341 |
| ACHSENÖLKÜHLERLEITUNGEN | 345 |
| ÖLLEITUNGEN - KRAFTÜBERTRAGUNG | 353 |
| DREHMOMENTWANDLER-KÜHLERLEITUNGEN | 355 |
| ACHSENANBAUSATZ | 357 |
| FELGENAUFHÄNGUNG | 358 |
| PLANETENGETRIEBE | 359 |
| KRAFTÜBERTRAGUNG | 368 |
| ACHSENÖLKÜHLERPUMPE U. BEFESTIGUNGSTEILE | 369 |
| GETRIEBEPUMPE | 371 |
| FELGE | 372 |
| FELGE (TEILBAR) | 373 |
| ANTRIEBSWELLE | 375 |
| ANTRIEBSWELLEN-KEILVERZAHNUNG | 377 |
| GETRIEBEAUFHÄNGUNG | 378 |
| REIFEN UND FELGE | 380 |
| DREHZAHLWANDLER U. GEHÄUSE | 387 |
| DREHMOMENTWANDLER | 391 |
| GETRIEBE | 395 |
| KREUZGELENK | 396 |
| MODULATORVENTIL | 398 |
| ÜBERDRUCKVENTIL | 399 |
| SEITENANTRIEB UND RAD | 402 |
| **RAHMEN UND FAHRGESTELL** | 404 |
| STROMSCHUTZSCHALTER | 404 |
| GEGENGEWICHT | 406 |
| ZUGANGSKLAPPE | 412 |
| SCHUTZBLECHE | 415 |
| SCHUTZBLECHE, VORNE | 418 |
| SCHUTZBLECHE (STRASSENAUSRÜSTUNG) | 420 |
| VORDERRAHMEN | 421 |
| LADERRAHMEN | 424 |
| HINTERRAHMEN | 427 |
| KÜHLERGRILL | 429 |
| PANZERWANNE | 431 |
| ANTRIEBSWELLENVERKLEIDUNG | 436 |
| VERKLEIDUNGEN, VORN | 437 |
| KRAFTSTOFF- U. HYDRAULIKTANK-SCHUTZ | 438 |
| ANHÄNGUNGS- U. LENKUNGSSCHUTZABDECKUNG | 440 |
| BLITZSCHUTZ | 442 |
| LEITUNGSVERKLEIDUNG | 443 |
| ANTRIEBSSCHUTZ | 444 |
| SENSORSCHUTZ | 445 |
| RAHMEN - BEFESTIGUNGSTEILE | 446 |
| HARDWARE, HINTERRAHMEN | 449 |
| KNICKGELENK-ANHÄNGUNG | 455 |
| MOTORHAUBE UND VERKLEIDUNG | 457 |
| STEIGLEITER | 463 |
| AUTOMATISCHE SCHMIERLEITUNGEN | 466 |
| SCHMIERLEITUNGEN | 474 |
| KNICKGELENKSPERRE | 487 |
| SCHMIERSYSTEM, AUTOM. | 488 |
| SEITENVERKLEIDUNG | 489 |
| SCHALLDÄMPFUNG | 491 |
| OBERE ABDECKPLATTE | 495 |
| MOTORRAUM-SCHUTZVERKLEIDUNG | 496 |
| STEIGLEITER | 498 |
| LUFTEINLASS-TRÄGER | 501 |
| SCHALLDÄMPFUNG | 505 |
| SCHMIERFETTANK | 512 |
| MOTORHAUBEN-KIPPSTELLUNG | 513 |
| SCHMIERÖLVERTEILERVENTIL | 515 |
| **BREMSSYSTEM** | 519 |
| BREMSDRUCKSPEICHER | 519 |
| FUSSBREMSSOCKEL | 522 |
| FESTSTELLBREMSE | 525 |
| BETRIEBSBREMSE | 527 |
| FUSSBREMSGESTÄNGE | 531 |
| FESTSTELLBREMSGESTÄNGE | 533 |
| BREMSGESTÄNGE | 534 |
| BETRIEBSBREMSLEITUNGEN | 540 |
| BREMSSTEUERVENTIL | 541 |
| **LENKSYSTEM** | 542 |
| LENKBETÄTIGUNG | 542 |
| LENKZYLINDER UND AUFHÄNGUNG | 544 |
| HYDRAULIKZYLINDER | 545 |
| NOTLENKUNGSLEITUNGEN | 547 |
| LENKÖLLEITUNGEN | 549 |
| NOTLENKUNGSPUMPE UND BEFESTIGUNGSTEILE | 556 |
| LENK- U. GETRIEBEPUMPE U. BEFESTIGUNGSTEILE | 557 |


* ÜBERSETZUNG ZUM ZEITPUNKT DER DRUCKLEGUNG NICHT VORHANDEN

# INHALTSVERZEICHNIS


| Bezeichnung | Seite |
|---|---|
| ZAHNRADPUMPE | 559 |
| KOLBENPUMPE | 561 |
| KOLBENPUMPENUMLAUFSATZ | 563 |
| *SCREEN GP-CASE DRAIN | 564 |
| NOTLENKUNG | 565 |
| LENKSÄULE | 566 |
| LENKRAD | 567 |
| SCHWENKSCHEIBE | 569 |
| SPERRVENTIL | 570 |
| UMLEITVENTIL | 573 |
| VORSTEUERVENTIL | 575 |
| PUMPENSTEUERVENTIL | 577 |
| ÜBERDRUCKVENTIL | 579 |
| PENDELVENTIL | 581 |
| LENKVENTIL | 585 |
| LENKNEUTRALISIERVENTIL | 587 |
| **HYDRAULIKSYSTEM** | 588 |
| SCHWINGUNGSDÄMPFER-DRUCKSAMMLER | 588 |
| DRUCKSPEICHER, HYDRAULISCHE SCHWINGUNGSDÄMPFUNG | 589 |
| SCHWINGUNGSDÄMPFUNG U. LEITUNGEN | 590 |
| LÜFTERSTEUERUNG | 595 |
| HYDRAULISCHE SCHWINGUNGSDÄMPFUNG | 595 |
| ELEKTROHYDRAULISCHE STEUERUNG | 597 |
| STEUERHEBEL | 611 |
| JOYSTICK -STEUERUNG | 613 |
| HUBZYLINDER UND DICHTUNG | 619 |
| KIPPZYLINDER UND DICHTUNG | 620 |
| HUBZYLINDER | 626 |
| KIPPZYLINDER | 628 |
| ÖLFILTER | 639 |
| HYDRAULIKANORDNUNG (2-VENTIL-HYDRAULIK) | 641 |
| HYDRAULIKANORDNUNG (3-VENTIL-HYDRAULIK) | 641 |
| LEITUNGEN, VORNE | 642 |
| *LINES GP-HOOD TILT | 643 |
| HYDRAULIKLEITUNGEN | 645 |
| HYDRAULIKLÜFTERLEITUNGEN | 649 |
| HYDRAULIKÖLKÜHLERLEITUNGEN | 651 |
| HUBZYLINDERLEITUNGEN | 656 |
| NEIGEZYLINDERLEITUNGEN | 658 |
| KOLBENMOTOR | 660 |
| HYDRAULIKTANK UND ANBAUSATZ | 663 |
| *PUMP & MOTOR GP-HOOD TILT | 664 |
| HYDRAULIKLÜFTERPUMPE U. BEFESTIGUNG | 665 |
| ARBEITSGERÄTEPUMPE UND AUFHÄNGUNG | 666 |
| ZAHNRADPUMPE | 667 |
| KOLBENPUMPE | 670 |
| KOLBENPUMPENUMLAUFSATZ | 672 |
| *SUPPORT GP-FAN ELECTRICAL | 674 |
| AUSGLEICHSBEHÄLTER | 676 |
| HYDRAULIKTANK | 677 |
| VENTIL UND BEFESTIGUNGSTEILE - HAUPTSTEUERUNG | 682 |
| SPERRVENTIL | 697 |
| STEUERVENTIL | 698 |
| VENTIL - TEMPERATURGESTEUERTER LÜFTER | 699 |
| UMLEITVENTIL | 700 |
| LÜFTERUMKEHRVENTIL | 702 |
| ABSENKSTEUERVENTIL | 704 |
| HAUPTSTEUERVENTIL | 706 |
| VENTIL, MECH. | 710 |
| VORSTEUERVENTIL | 711 |
| DRUCKREDUZIERVENTIL | 715 |
| *VALVE GP-PUMP CONTROL | 719 |
| ÜBERDRUCKVENTIL | 721 |
| FOLGEVENTIL | 729 |
| PENDELVENTIL | 730 |
| MAGNETVENTIL | 733 |
| **ARBEITSGERÄTE** | 737 |
| ARM U. LAGER | 737 |
| SCHAUFELSTEUERUNG | 738 |
| *HARDWARE GP-LIFT ARM | 740 |
| *LEVER GP-TILT | 743 |
| HUBVORRICHTUNG | 744 |
| FORSTAUSRÜSTUNG | 745 |
| **ARBEITSGERÄTE** | 746 |
| ZAHNHALTER | 746 |
| UNIVERSALSCHAUFEL | 748 |
| FELSSCHAUFEL | 753 |
| UNIVERSALSCHAUFEL | 763 |
| FELSSCHAUFEL | 765 |
| SCHNEIDMESSER | 770 |
| ZAHNSPITZE, VERSTÄRKT | 772 |
| *TIP GP-EXTRA DUTY | 773 |
| NORMALZAHNSPITZE | 775 |
| ZAHNSPITZE, SCHARF | 777 |
| **FAHRERHAUS** | 779 |
| FAHRERSITZVERSTELLER | 779 |
| LUFTKOMPRESSORSITZ | 780 |
| KLIMAANLAGE | 781 |
| SCHEIBENWISCHERARM | 786 |
| ARMLEHNE | 788 |


* ÜBERSETZUNG ZUM ZEITPUNKT DER DRUCKLEGUNG NICHT VORHANDEN

# INHALTSVERZEICHNIS


| Bezeichnung | Seite |
|---|---|
| FAHRERHAUS MIT ÜBERROLL-SCHUTZ | 789 |
| OFFENES FAHRERHAUS MIT ÜBERROLLSCHUTZ | 790 |
| KÄLTEMITTELKOMPRESSOR | 791 |
| KÄLTEMITTELKONDENSATOR U. BEFESTIGUNGSTEILE | 793 |
| MONITORSTEUERUNG | 795 |
| FAHRERHAUSTÜR | 799 |
| LUFTKANAL U. FILTER | 803 |
| LUFTKANAL | 805 |
| BODEN - GERÄUSCHSCHUTZ | 808 |
| *GUARD AR-WINDOW | 810 |
| SCHUTZVERKLEIDUNG | 811 |
| SCHEIBENSCHUTZ | 812 |
| HALTEGRIFF | 816 |
| FAHRERHAUSHEIZUNG | 818 |
| WARNHORN, ELEKTR. | 822 |
| BEDIENUNGSEINBAUSATZ | 823 |
| RADIOEINBAUSATZ | 826 |
| FAHRERHAUSAUSKLEIDUNG | 829 |
| KLIMAANLAGENLEITUNGEN | 838 |
| *LINES GP-CAB HEATER | 842 |
| FAHRERHAUSHEIZUNGSLEITUNGEN | 843 |
| RÜCKSPIEGEL | 844 |
| MODUL - VIER ELEKTRON. ANZEIGEN | 864 |
| GESCHWINDIGKEITS- U. DREHZAHLMESSERMODUL | 865 |
| WÄGEEINRICHTUNG - MONITOR | 866 |
| WÄGEEINRICHTUNG | 867 |
| SCHEIBENWISCHERMOTOR | 869 |
| FAHRERHAUSANBAUSATZ | 872 |
| FAHRERHAUSAUSFÜHRUNG MIT GESCHL. ÜBERROLLSCHUTZ | 874 |
| FAHRERHAUS - OFFEN MIT ÜBERROLLSCHUTZ | 874 |
| SCHALE - RÜCKENLEHNE | 875 |
| INSTRUMENTENTAFEL | 878 |
| GASPEDAL | 887 |
| PLATTFORM | 889 |
| FAHRERPLATTFORM | 890 |
| RADIO | 892 |
| VERSTELLBARER SITZ | 894 |
| ÜBERROLL-SCHUTZKABINE | 895 |
| ÜBERROLL-SCHUTZDACH | 905 |
| GLASDICHTUNG | 908 |
| SICHERHEITSGURT | 909 |
| FAHRERSITZ | 910 |
| SCHWINGSITZ | 918 |
| ABDECKUNG - FAHRERHAUS | 925 |
| HYDRAULIKSTEUERAUFHÄNGUNG | 926 |
| FAHRERHAUSLÄRMDÄMPFUNG | 929 |
| FAHRERSITZFEDERUNG | 938 |
| FAHRERHAUS, SONNENBLENDE | 942 |
| SCHEIBENWASCHANLAGE | 943 |
| TÜRFENSTER | 944 |
| SCHEIBENWISCHER | 948 |
| **WARTUNGSAUSRÜSTUNG UND -ZUBEHÖR** | 951 |
| AUFKLEBER | 951 |
| DIAGNOSELEITUNGEN | 953 |
| BEFESTIGUNG - SCHMIERMITTELWARTUNGSTABELLE | 956 |
| SCHILD UND AUFKLEBER | 956 |
| SCHUTZABDECKUNG | 958 |
| **ERSATZTEILNUMMERNINDEX** | B1 |


* ÜBERSETZUNG ZUM ZEITPUNKT DER DRUCKLEGUNG NICHT VORHANDEN

## 1. MACHINE IDENTIFICATION

Caterpillar machines are identified by Product Identification Numbers (PIN). Some components included in a machine may be identified by Serial Numbers (S/N). Typical components that will be serialized include engines, transmissions, bulldozers, and rippers. The machine and engine are further identified by arrangement numbers and in some cases modification numbers. These numbers are shown on the product identification plate(s) and on the master plate in the operator's compartment.

Caterpillar dealers need all of these numbers to determine accurate parts identification.

SIS *New Feature*

Effective First Quarter 2001 the Caterpillar Product Identification Number (PIN) changed from 8 to 17 characters. In an effort to provide uniform equipment identification, Caterpillar and other construction equipment manufacturers are moving to comply with the latest version of the product identification numbering standard. Non-road machine PINs are defined by ISO 10261. The new PIN format will apply to all Caterpillar machines and generator sets. The PIN plates and frame marking will display the 17 character PIN. The new format will look like the following:

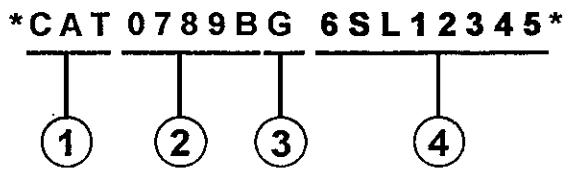


Where:

1. Caterpillar's World Manufacturing Code (characters 1-3)

2. Machine Descriptor (characters 4-8)

3. Check Character (character 9)

4. Machine Indicator Section (MIS) or Product Sequence Number (characters 10-17). These were previously referred to as the Serial Number.

Machines and generator sets produced before First Quarter 2001 will maintain their 8 character PIN format.

Components such as engines, transmissions, axles, etc. and work tools will continue to use an 8 character Serial Number (S/N).

## 2. ORDERING PARTS

**⚠ WARNING**

**When replacement parts are required for this product Caterpillar recommends using Caterpillar replacement parts or parts with equivalent specifications including, but not limited to, physical dimensions, type, strength and material.**

**Failure to heed this warning can lead to premature failures, product damage, personal injury or death.**

Quality Caterpillar replacement parts are available from Caterpillar dealers throughout the world. Their parts inventories are up to date and include all parts normally required to protect your investment in Caterpillar machines. Dealers may offer repair kits or remanufactured parts to allow selection of the most effective repair alternative for a particular situation. When ordering parts, your order should specify the quantity, part number, part name, and the serial number/product identification number of the machine for which the parts are needed.

## 3. PARTS MANUAL ORGANIZATION

Product information in this manual is presented as "information elements" that represent all of the components for the specific model. Engine Arrangement and Seat Group are examples of information elements. The information elements are organized alphabetically by part name and secondarily by part number within each major section of the manual.

## 4. TABLE OF CONTENTS

A table of contents (TOC) is found at the beginning of the manual. The TOC lists each section of the manual with a complete list of all information elements organized as they appear in the manual. Page numbers are provided for quick reference to detailed parts identification illustrations and serviceable consist lists.

## 5. MAINTENANCE PARTS INDEX

The Maintenance Parts Index, located near the beginning of the manual, references most frequently used maintenance part numbers, providing description, quantity, usage and page number. This information is organized alphabetically by part description.

### 6. INDEX

The index located near the front of the manual is an alphabetical listing of all information elements included in the manual. Page numbers are provided for quick reference to detailed parts identification illustrations and serviceable consist lists.

### 7. PART NUMBER INDEX

A numerical index listing all part numbers and the corresponding page number(s) appears at the back of the manual.

### 8. CAPTIONS

Captions located at the beginning of each information element identify the part number and part name along with additional descriptive information. PIN and S/N information found in each caption should be used to select correct information for a specific machine. Field replacement options, identification of optional attachment components, and where used ("part of") information is also provided.

The first line of a caption is shown in larger type font to indicate the beginning of an information element. Captions for additional pages that may be required to illustrate an information element will be shown in standard type font and will include the term *(contd.)* .

### 9. NON-SERVICED PARTS

In some instances it is necessary to display non-serviced parts that are a link to a lower level serviceable consist lists. These non-serviced part numbers are shown in *italic* type indicating that they are not available.

### 10. PARTS LIST REFERENCE NUMBERS

Numbers shown in the Ref No column correspond to numbers used in the associated graphic(s). An alphabetic suffix may be added to a reference number to identify lower level consist items. Numbers shown in the Graphic Ref column refer to the graphic number identifier displayed in the lower left corner of each illustration. The Graphic Ref number may be used in combination with the item Ref No to determine the correct part number. There may be intentional omission of a Ref No in a consist list as information is updated to reflect the latest serviceable part numbers.

### 11. INDENTED PART NAMES

When a part name is indented in a parts list, it is part of (included in) the group or assembly under which it is indented.

### 12. ILLUSTRATION REFERENCE LETTERS

When necessary, illustrations contain reference letters (A, B, C etc.) that are intended to track lines and harnesses from one point to another. They are also used to show where to reconnect illustrations that have been separated.

### 13. ABBREVIATIONS AND SYMBOLS

**O.D.** – Outside Diameter
**I.D.** – Inside Diameter
**A** – Not Part Of This Group
**B** – Use As Required
**C** – Change From Previous Type
**D** – Order By The Meter
**E** – Order By The Centimeter
**F** – Not Shown
**G** – Order By The Inch
**I** – Refer To Hydraulic Information System
**M** – Metric Part
**R** – Remfg Part May Be Available
**Y** – Separate Illustration
**Z** – Not Serviced Separately

SIS ***New Feature***

### 14.<END>

This symbol indicates the end of an information element.

**NOTE:**

**Continuing improvement and advancement of product design may cause changes to your machine which may not be included in this publication. Whenever a question arises regarding your caterpillar product or this publication, please consult your caterpillar dealer for the latest available information.**

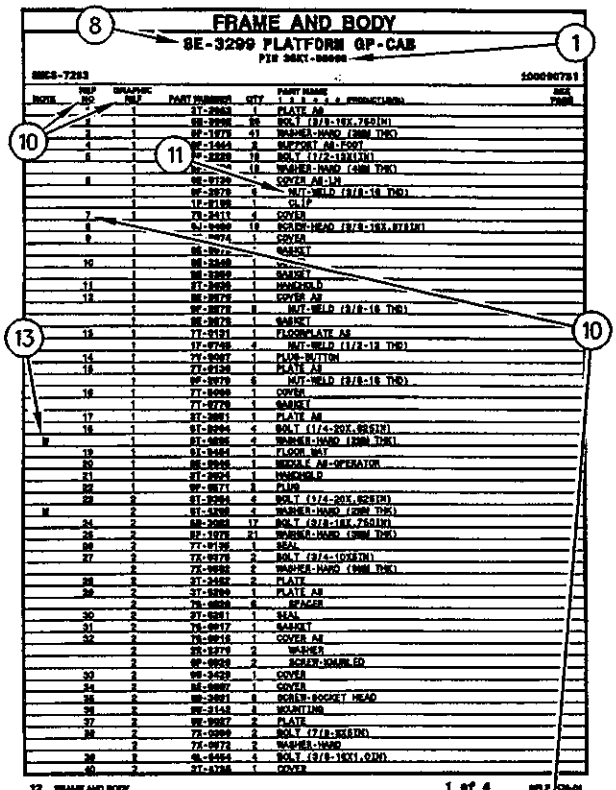
FRAME AND BODY
SE-3299 PLATFORM GP-CAB
1 of 4

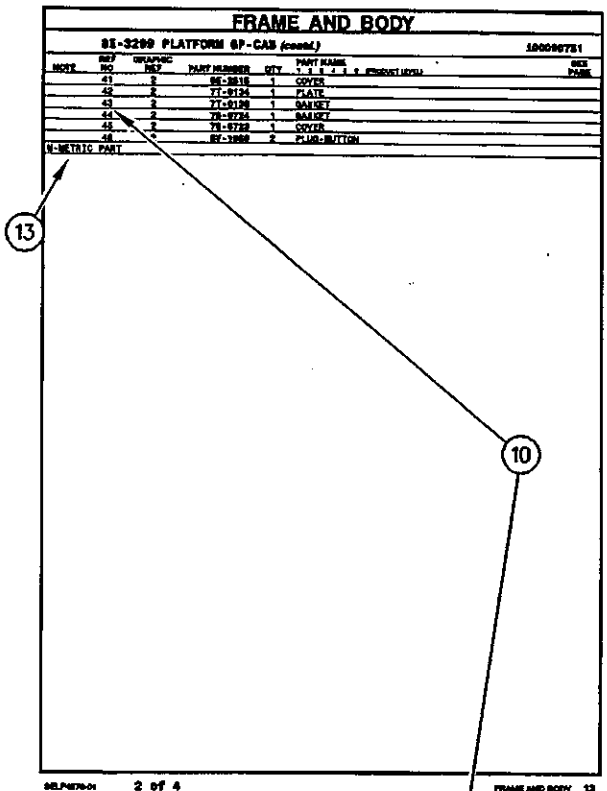
FRAME AND BODY
SE-3299 PLATFORM GP-CAB (cont.)
2 of 4

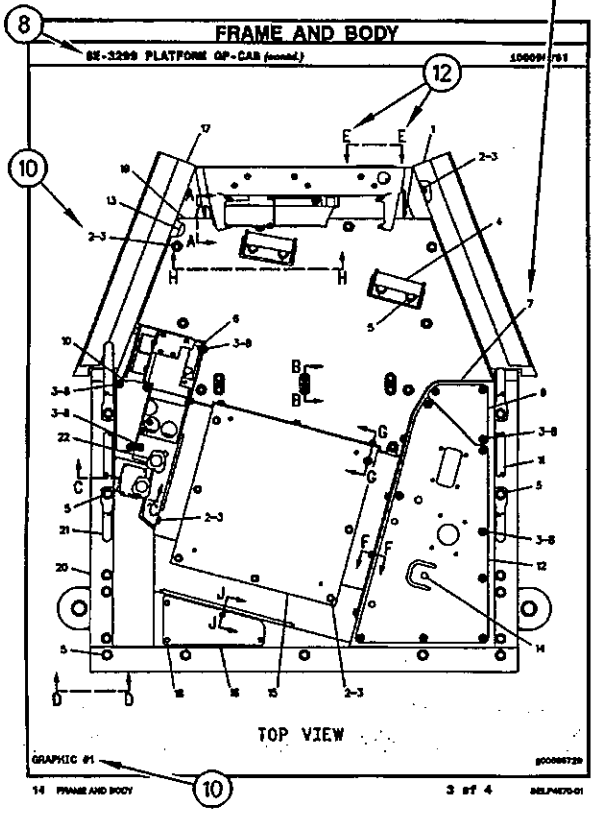
FRAME AND BODY
SE-3299 PLATFORM GP-CAB (cont.)
TOP VIEW
3 of 4

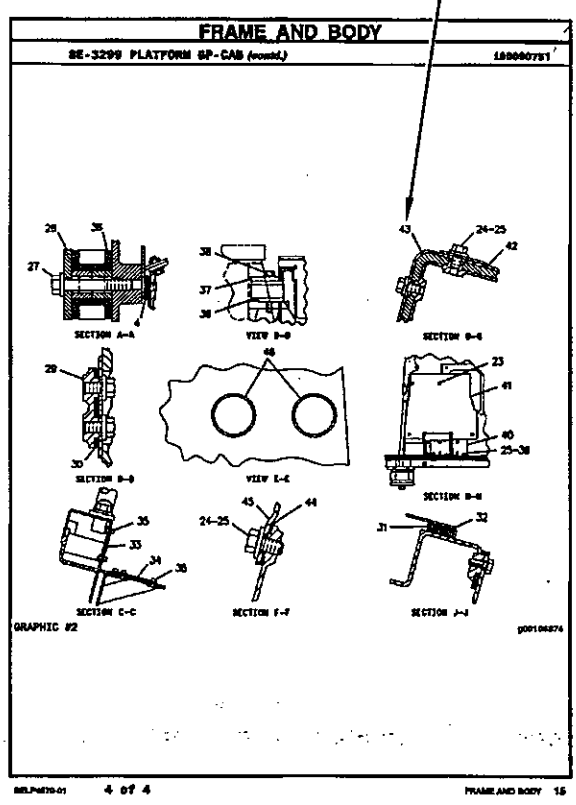
FRAME AND BODY
SE-3299 PLATFORM GP-CAB (cont.)
4 of 4

## 1. IDENTIFICATION DE LA MACHINE

Toutes les machines Caterpillar portent un numéro d'identification (PIN). Certains composants des machines peuvent porter des numéros de série (S/N). En général, parmi les composants qui portent des numéros de série il y a les moteurs, les transmissions, les bulldozers et les rippers. En plus, la machine et le moteur peuvent recevoir des numéros de version, et dans certains cas, de modification. Ces numéros figurent sur les plaques de numéro de série et sur la plaque signalétique principale qui se trouve dans le poste de conduite.

Les concessionnaires Caterpillar doivent connaître tous ces numéros pour identifier correctement les pièces.

SIS *Nouvelle Caractéristique*

À partir du premier trimestre 2001, le numéro d'identification produit (PIN) Caterpillar passe de 8 à 17 caractères. Afin de permettre une identification uniforme des matériels, Caterpillar et d'autres constructeurs de machines de travaux publics s'efforcent de se conformer à la norme la plus récente portant sur les numéros d'identification des produits. Les numéros d'identification (PIN) de machines de chantier sont définis par la norme ISO 10261. Le nouveau format du numéro d'identification est valable pour toutes les machines et tous les groupes électrogènes Caterpillar. Le numéro d'identification produit (PIN) figurant sur la plaque et sur le châssis se composera de 17 caractères. Le nouveau format ressemblera à ceci:

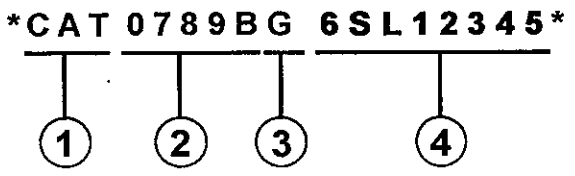


Il se décomposera de la façon suivante:

1. Code international de fabrication de Caterpillar (caractères 1 à 3)

2. Descriptif de la machine (caractères 4 à 8)

3. Contrôle (caractère 9)

4. Indicateur machine (MIS) ou numéro de séquence produit (caractères 10 à 17). Ceux-ci étaient auparavant désignés sous le terme de numéro de série.

Les machines et les groupes électrogènes construits avant le premier trimestre 2001 garderont le format à 8 caractères du numéro d'identification produit (PIN).

Les organes tels que les moteurs, les boîtes de vitesses, les essieux, etc., continueront d'être désignés par un numéro de série (S/N) à 8 caractères.

## 2. COMMANDE DE PIÈCES

**⚠ DANGER**

**Lorsqu'il faut remplacer des pièces de rechange pour ce produit Caterpillar recommande d'utiliser les pièces de rechange Caterpillar ou les pièces qui ont des spécifications équivalentes dont les dimensions physiques, le type, la force et le matériau. Ces équivalences ne se limitent pas à l'énoncé précédent.**

**L'inobservation de cette mise en garde peut entraîner des défaillances prématurées, des dommages au produit, des blessures ou même la mort.**

Les concessionnaires Caterpillar fournissent dans le monde entier des pièces de rechange de qualité Caterpillar. Leurs stocks de pièces sont constamment réapprovisionnés et comptent toutes les pièces nécessaires pour assurer la bonne marche de vos machines Caterpillar. Certains concessionnaires proposent également des kits de réparation ou des pièces rénovées, ce qui permet de choisir la solution la plus économique dans une situation donnée. Lors des commandes de pièces, mentionner la quantité, le numéro et la désignation des pièces ainsi que le numéro de série ou le numéro d'identification (PIN) de la machine pour laquelle ces pièces sont requises.

## 3. ORGANISATION DU CATALOGUE DE PIÈCES

Les renseignements sur les produits sont présentés sous forme de "Information element" (élément d'information) représentant tous les composants d'un modèle donné. "Engine Arrangement" (version de moteur) et "Seat Group" (assemblage de siège)" sont des exemples d'éléments d'information. Les éléments d'information sont classés par ordre alphabétique par la désignation standard des pièces et par numéros de pièces dans chaque partie importante du manuel.

### 4. TABLE DES MATIÈRES

SIS *Nouvelle Caractéristique*

La table des matières se trouve au début du manuel. La table des matières fournit la liste de tous les chapitres du manuel avec une liste complète de tous les éléments d'information classés par ordre d'apparition dans le manuel. Les numéros de page sont fournis afin que l'utilisateur puisse trouver rapidement les illustrations détaillées concernant l'identification des pièces et les listes des pièces d'entretien.

### 5. INDEX DES PIÈCES D'ENTRETIEN

La rubrique "Index des pièces d'entretien" qui se trouve au début du manuel renvoie aux pièces d'entretien les plus fréquemment utilisées en précisant la désignation, la quantité, là où la pièce est utilisée et le numéro de page. Ces pièces sont classés par ordre alphabétique.

### 6. INDEX

L'index qui se trouve vers le début du manuel est une liste alphabétique de tous les éléments d'information du manuel. Les numéros de page sont fournis afin que l'utilisateur puisse trouver rapidement les illustrations détaillées concernant l'identification des pièces et les listes des pièces d'entretien.

### 7. INDEX DES NUMÉROS DE PIÈCES

Une liste numérique de tous les numéros de pièces et des pages correspondantes se trouve à la fin du manuel.

### 8. LÉGENDES

Les légendes qui se trouvent en haut de chaque page de chaque élément d'information fournissent le numéro de pièce, la désignation ainsi que des renseignements supplémentaires sur les pièces. Les renseignements concernant les numéros de série (S/N) qui se trouvent dans chaque légende doivent être utilisés pour sélectionner les informations correctes pour un moteur donné. Les informations concernant les options de remplacement sur le chantier, l'identification des composants des équipements offerts en option et les lieux d'application sont aussi fournies.

SIS *Nouvelle Caractéristique*

Les lettres de la première ligne d'une légende sont présentées en police plus grande afin d'indiquer le début d'une unité d'information. Les légendes qui pourraient être requises pour des pages supplémentaires afin d'illustrer une unité d'information seront présentées en police standard et comprendront le terme (à suivre).

### 9. PIÈCES NON FOURNIES

SIS *Nouvelle Caractéristique*

Dans certains cas, il est nécessaire d'indiquer les pièces non fournies qui sont en aval de la liste des pièces d'entretien. Les numéros des pièces non fournies dans la liste des pièces et les légendes seront en italique pour signaler qu'ils ne sont pas disponibles.

### 10. NUMÉROS DE RÉFÉRENCE DE LA LISTE DES PIÈCES

SIS *Nouvelle Caractéristique*

Les numéros indiqués dans la colonne des numéros de références correspondent aux numéros utilisés dans les illustrations auxquelles ils sont associés. Un suffixe alphabétique peut être ajouté à un numéro de référence pour identifier la liste des articles en aval. Les numéros indiqués dans la colonne de référence de l'illustration renvoient à l'identification du numéro affiché dans le coin inférieur gauche de chaque illustration. Le numéro de référence de l'illustration pourrait être utilisé avec le numéro de référence de l'article pour déterminer le numéro de pièce correct. Il peut y avoir une omission intentionnelle d'un numéro de référence dans une liste de pièces suite à la mise à jour des informations en vue de refléter les numéros de pièces les plus récentes.

### 11. DÉSIGNATIONS DE PIÈCES EN RETRAIT

Lorsqu'une désignation de pièce est en retrait, cela veut dire que l'article en regard fait partie de l'ensemble sous lequel il figure.

### 12. LETTRES DE RÉFÉRENCE DES ILLUSTRATIONS

Quand cela est nécessaire, les illustrations comportent des lettres de référence (A, B, C, etc.) pour montrer le trajet des canalisations et faisceaux de câbles d'un point à l'autre. Elles sont utilisées également pour indiquer où relier les illustrations séparées auparavant.

## 13. ABRÉVIATIONS ET SYMBOLES

**O.D.** – Diamètre extérieur
**I.D.** – Diamètre intérieur
**A** – Ne fait pas partie de ce groupe
**B** – Utiliser selon besoin
**C** – Modification
**D** – Commander par mètre
**E** – Commander par centimètre
**F** – Non représenté
**G** – Commander par pouce
**I** – Voir "Hydraulic Information System"
**M** – Pièce métrique
**R** – Pièce rénovée éventuellement disponible
**Y** – Illustration séparée
**Z** – Non fourni séparément

**NOTA:**

En raison du progrès technique et des améliorations continuelles apportées au matériel, votre machine comporte peut-être des modifications qui n'apparaissent pas dans la présente publication. En cas de doute sur un détail de votre machine Caterpillar ou sur le texte de la présente publication, adressez-vous à votre concessionnaire Caterpillar.

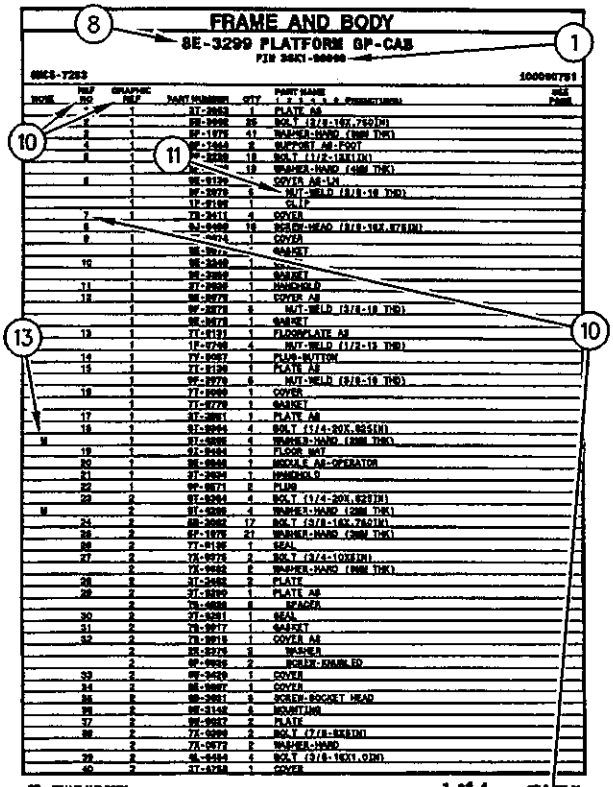
FRAME AND BODY
8E-3299 PLATFORM GP-CAB
1 of 4

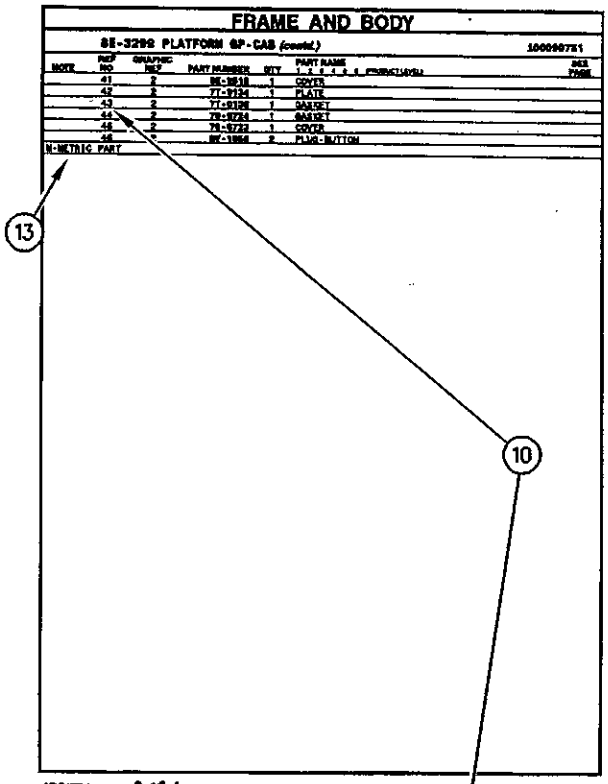
FRAME AND BODY
8E-3299 PLATFORM GP-CAB (contd.)
2 of 4

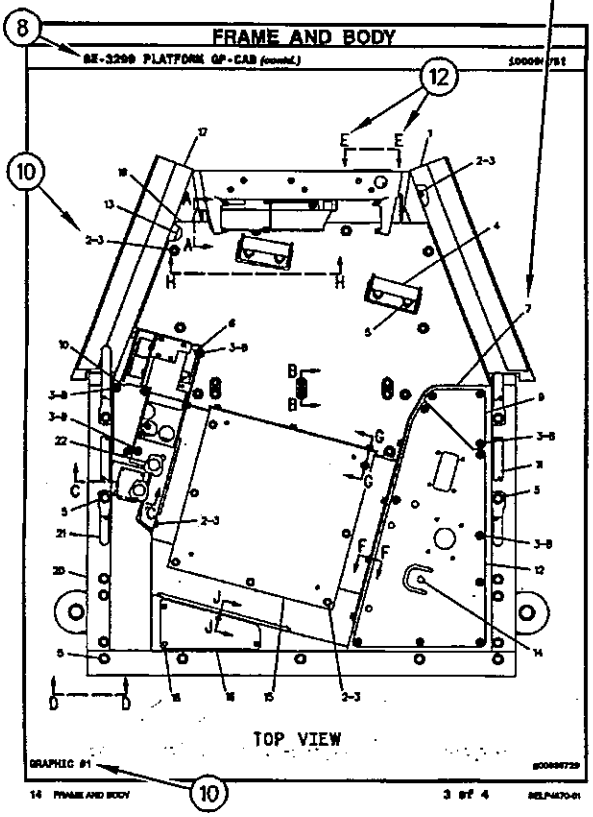
FRAME AND BODY
8E-3299 PLATFORM GP-CAB (contd.)
TOP VIEW
3 of 4

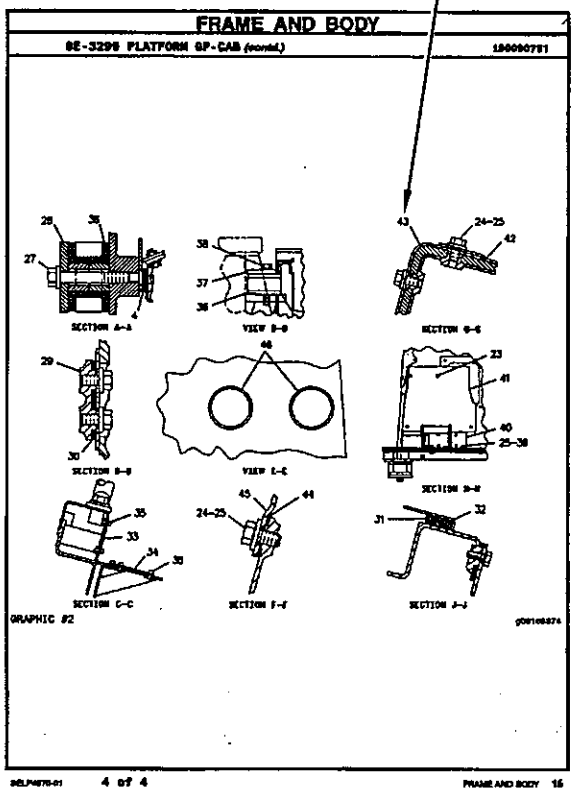
FRAME AND BODY
8E-3299 PLATFORM GP-CAB (contd.)
4 of 4

# INFORMACIÓN GENERAL

## 1. MÁQUINAS

Las máquinas Caterpillar se identifican con Números de Identificación del Producto (PIN). Algunos componentes incluídos en la máquina pueden estar identificados con Números de Serie (N/S). Los componentes que tienen típicamente esta identificación incluyen motores, transmisiones, hojas topadoras y desgarradores. La máquina y el motor se identifican además con Números de Configuración y en algunos casos, Números de Modificación. Estos números están en las placas de identificación del producto o en la placa principal en la cabina del operador.

Los distribuidores Caterpillar necesitan estos números para identificar con exactitud los números de piezas de repuesto.

SIS ***Nueva Característica***

A partir del primer trimestre del 2001, el Número de Identificación de Producto (PIN) de Caterpillar cambió de 8 a 17 caracteres. Para hacer más uniforme el método de identificación de equipos, Caterpillar y otros fabricantes de equipo de construcción han tomado medidas para cumplir con la versión más reciente de la norma de numeración de identificación de productos. Los Números de Identificación de Producto para máquinas que no se operan en carreteras son definidos por la norma ISO 10261. El nuevo formato PIN corresponderá a todas las máquinas y grupos electrógenos Caterpillar. Las placas y los caracteres PIN estampados en el bastidor mostrarán el PIN de 17 caracteres. El nuevo formato tendrá la apariencia siguiente:

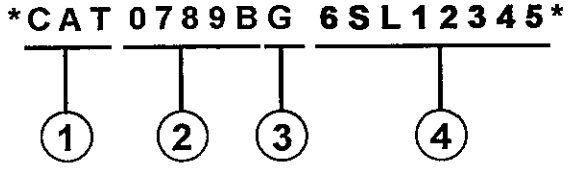


Significado de los caracteres:

1. Código de Fabricación Mundial de Caterpillar (caracteres 1-3)

2. Sección Descriptor de la Máquina (caracteres 4-8)

3. Carácter de Verificación (carácter 9)

4. Sección Indicador de la Máquina (MIS) o Número de Secuencia de Producto (caracteres 10-17). Anteriormente, estos caracteres constituían el Número de Serie.

Las máquinas y grupos electrógenos producidos antes del primer semestre del 2001 mantendrán su formato PIN de 8 caracteres.

Los componentes como motores, transmisiones, ejes, herramientas de trabajo, etc., continuarán usando un Número de Serie (S/N) de 8 caracteres.

## 2. COMO PEDIR REPUESTOS

**⚠ ADVERTENCIA**

**Cuando se necesiten piezas de repuesto para este producto, Caterpillar recomienda usar piezas de repuesto Caterpillar o piezas que tengan especificaciones equivalentes incluyendo, pero sin estar limitadas a, dimensiones físicas, tipo, fortaleza y material.**

**El no hacer caso de esta advertencia puede llevar a fallas prematuras, daños al producto y lesiones graves o mortales.**

Las piezas de repuesto Caterpillar de calidad están a la disposición de los distribuidores Caterpillar en todo el mundo. Sus existencias actualizadas incluyen todas las piezas normalmente requeridas para proteger su inversión en máquinas Caterpillar. Los distribuidores pueden tener juegos de reparación o piezas remanufacturadas para permitir la selección de la mejor alternativa de reparación en un caso en particular. Al pedir piezas de repuesto, especifique en su pedido la cantidad, el número de pieza, el nombre de la pieza y el número de serie/número de identificación del producto, de la máquina para la cual se necesitan estas piezas.

## 3. ORGANIZACION DEL MANUAL DE PIEZAS

La información sobre el producto, se presenta en este manual, como "elementos de información" que representan todos los componentes de un modelo específico. Las configuraciones de motores y los grupos de asientos son ejemplos de elementos de información. Los elementos de información están organizados primeramente por nombres de piezas en orden alfabético y en segundo lugar, por el número de pieza dentro de cada sección principal del manual.

### 4. CONTENIDO

La página de Contenido se encuentra al principio del manual. El Contenido indica cada sección del manual con una lista completa de todos los elementos de información organizados en el orden que aparecen en el manual. Los números de página proporcionan una referencia rápida a las ilustraciones detalladas de identificación de piezas y a las listas de componentes de repuesto de dichas piezas.

### 5. ÍNDICE DE PIEZAS DE MANTENIMIENTO

Al principio de este catálogo se encuentra un índice de los números de piezas utilizadas más frecuentemente para el mantenimiento, que incluye descripción, cantidad necesaria, lugar de utilización y número de página. Esta información está organizada alfabéticamente, por descripción de la pieza.

### 6. ÍNDICE

El Índice, ubicado cerca del principio del manual, es una lista en orden alfabético de todos los elementos de información incluídos en el manual. Los números de página proporcionan una referencia rápida a las ilustraciones detalladas de identificación de piezas y a las listas de componentes de repuesto de dichas piezas.

### 7. INDICE NUMÉRICO DE PIEZAS

Un índice numérico de piezas con el correspondiente número de página aparece al final de este catálogo.

### 8. TÍTULOS

Los títulos ubicados al principio de cada elemento de información identifican el número y el nombre de la pieza junto con información descriptiva. Se debe usar información sobre los Números de Identificación de Pieza (PIN) y los números de serie (S/N) para seleccionar la información que corresponda a una máquina en particular. También se suministra información sobre las opciones de reparación en el campo, la identificación de componentes de accesorios optativos y el lugar de ubicación de la pieza ("es parte de").

La primera línea del título se muestra con un tipo de letra más grande para indicar el comienzo de un elemento de información. Si se requieren páginas adicionales para ilustrar un elemento de información, los títulos se muestran con un tipo de letra normal y la continuación se indica entre paréntesis.

### 9. PIEZAS QUE NO SE SUMINISTRAN COMO REPUESTO

En algunos casos es necesario indicar piezas que no se suministran como repuesto pero que pueden estar conectadas a listas de componentes de otras piezas de repuesto. En tal caso, dichas piezas se muestran en cursiva para indicar que no son piezas disponibles.

### 10. NÚMEROS DE REFERENCIA

Los números en la columna de No. de Referencia corresponden a los números indicados en la ilustración que pertenece a ese número de pieza. Los números que tienen un sufijo alfabético identifican artículos de las listas de componentes de piezas. Los números en la columna de Referencia de la ilustración se identifican en la esquina inferior izquierda de cada ilustración. Para determinar el número de pieza correcto se puede utilizar tanto el No. de Referencia de la ilustración como el No. de Referencia del artículo. A medida que se actualiza la información para indicar los más recientes números de piezas de repuesto, puede omitirse intencionalmente un No. de Referencia en una lista de componentes de piezas.

### 11. NOMBRES DE PIEZA SANGRADOS

Cuando el nombre de una pieza está sangrado en una lista, significa que esta pieza forma parte del grupo o conjunto del renglón inmediatamente superior.

### 12. LETRAS DE REFERENCIA DE ILUSTRACIONES

Las ilustraciones contienen algunas veces letras de referencia (A, B, C etc.) cuyo propósito es seguir el trayecto de líneas y mazos de cables de un punto a otro. También se utilizan para mostrar dónde volver a unir ilustraciones que se habían separado.

## 13. ABREVIATURAS Y SIMBOLOS

**O.D.** – Diámetro exterior
**I.D.** – Diámetro interior
**A** – No es pieza de este grupo
**B** – Utilizado según la demanda
**C** – Indica cambio
**D** – Se pide por metro
**E** – Se pide por centímetro
**F** – No se muestra
**G** – Se pide por pulgada
**I** – Consulte el sistema de información hidráulica
**M** – Pieza métrica
**R** – Puede estar disponible como pieza remanufacturada
**Y** – Ilustración separada
**Z** – No se suministra por separado

SIS ***Nueva Característica***

**14.<END>**

Este símbolo indica el final de un elemento de información.

**NOTA:**

**Las contínuas mejoras y adelantos en diseño podrían originar cambios a su máquina que no se incluyen en esta publicación. Cuando tenga alguna pregunta acerca de su producto Caterpillar o de esta publicación, consulte al distribuidor Caterpillar para obtener la información más reciente.**

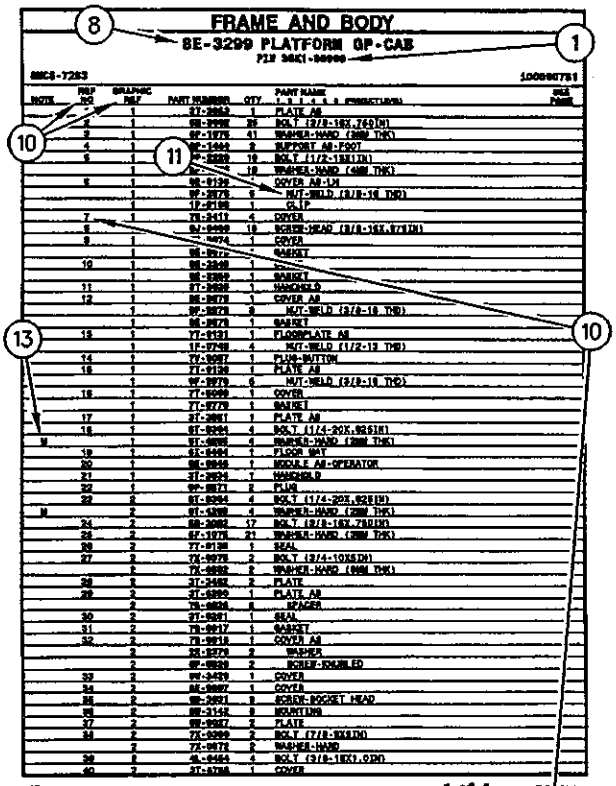
FRAME AND BODY
SE-3299 PLATFORM GP-CAB
8
1
10
11
13
10

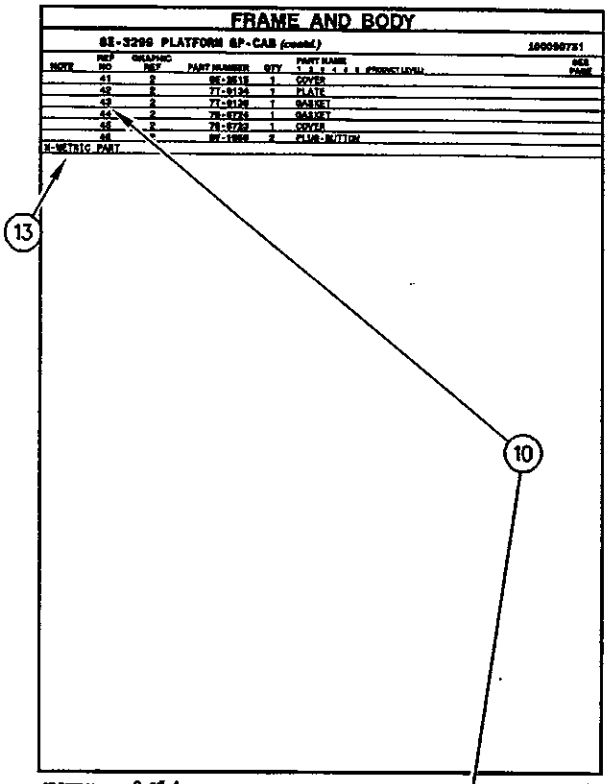
FRAME AND BODY
SE-3299 PLATFORM GP-CAB (contd.)
13
10

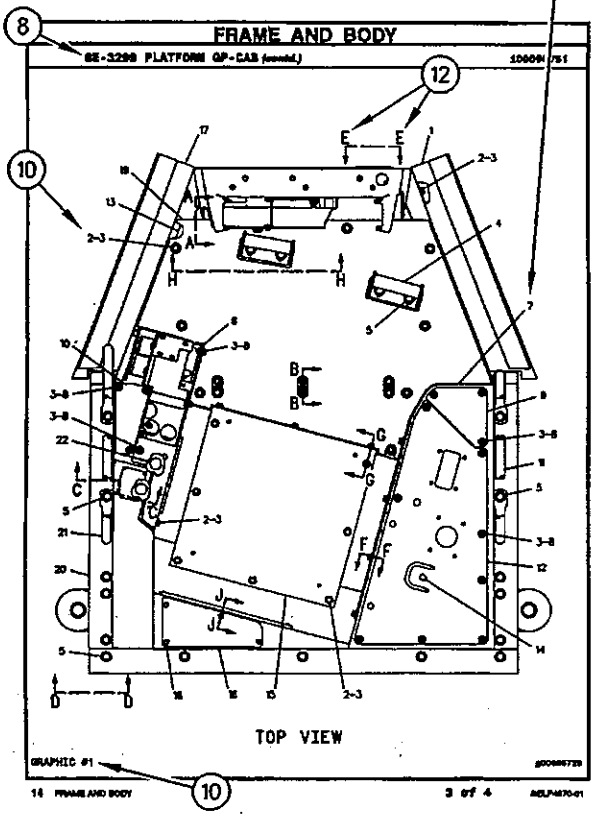
FRAME AND BODY
SE-3299 PLATFORM GP-CAB (contd.)
8
12
10
TOP VIEW
GRAPHIC #1
10

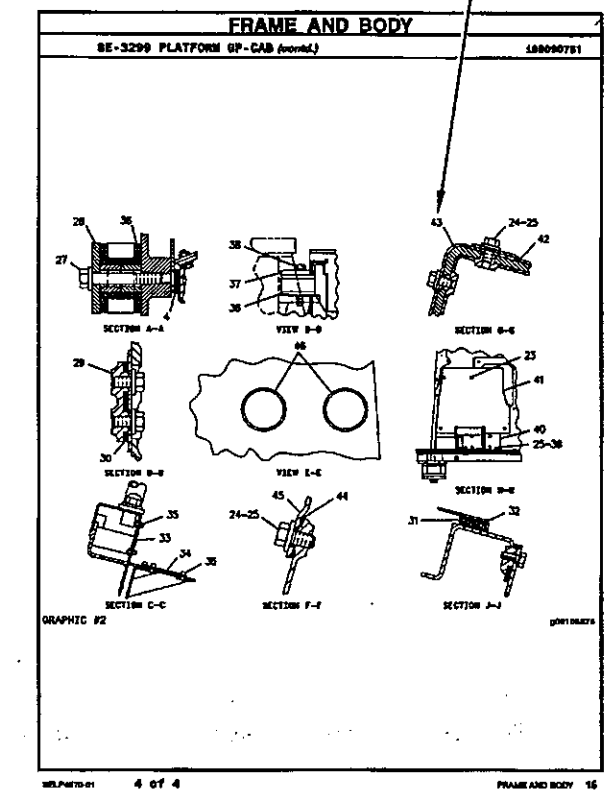
FRAME AND BODY
SE-3299 PLATFORM GP-CAB (contd.)
GRAPHIC #2

# INFORMAÇÃO GERAL

## 1. IDENTIFICAÇÃO DA MÁQUINA

As máquinas Caterpillar são identificadas pelos Números de Informação do Produto (PIN). Alguns componentes incluídos numa máquina podem ser identificados por Números de Série (S/N). Componentes típicos que serão enumerados com números de série incluem motores, transmissões, lâminas e ríperes. Além do número de série, a máquina e o motor são ainda identificados por números de arranjo e, em alguns casos, números de modificações. Tais números encontram-se na(s) placa(s) de identificação do produto e na placa mestre no compartimento do operador.

SIS ***Novidades***

A partir do primeiro trimestre de 2001 o Número de Identificação de Produto da Caterpillar (PIN) precisa ser mudado de 8 para 17 caracteres. Esforçando-se para fornecer uma identificação uniforme de equipamentos, a Caterpillar e outros fabricantes de equipamento de construção estão mudando para atender a versão mais atualizada do padrão de identificação de produtos. Os números de PIN para produtos de aplicações não rodoviárias são definidos pela ISO 10261. O novo formato de número PIN será adotado em todas as máquinas e grupos geradores Caterpillar. As placas e as marcações do chassi mostrarão os 17 dígitos de PIN. O novo formato terá a seguinte disposição:

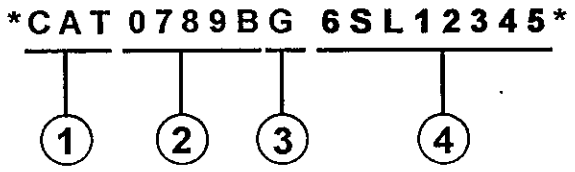


Onde:

1. Código de Fabricação Mundial da Caterpillar (dígitos 1-3)

2. Descrição da Máquina (dígitos 4-8)

3. Dígito de Verificação (dígito 9)

4. Seção de Indicador da Máquina (MIS) ou Número de Seqüência de Produto (dígitos 10-17). Estes eram anteriormente chamados de Número de Série.

Máquinas e grupos geradores produzidos antes do primeiro trimestre de 2001 manterão o formato de 8 caracteres de PIN.

Componentes como motores, transmissões, eixos, ferramentas de trabalho, etc. continuarão a usar Número de Série (S/N) com oito caracteres.

## 2. COMO OBTER PEÇAS

**⚠ CUIDADO**

**Quando peças de substituição são exigidas para este produto, a Caterpillar recomenda a utilização de peças de substituição Caterpillar ou peças com as especificações equivalentes incluindo, mas não limitadas, à dimensões físicas, tipos, resistência e materiais.**

**A inobservância desta advertência poderá resultar em falhas prematuras, danos ao produto, ferimentos ou morte.**

As Peças de Reposição de Qualidade Caterpillar encontram-se disponíveis nos revendedores Caterpillar no mundo inteiro. Seus estoques de peças são atualizados e incluem todas as peças normalmente necessárias para proteger seu investimento em máquinas Caterpillar. Alguns revendedores podem oferecer jogos de reparo ou peças de troca/remanufaturadas disponíveis como uma opção da alternativa de reparo mais eficaz para uma situação específica. Ao encomendar peças, seu pedido deve especificar a quantidade, o número e o nome da peça e o número de série/número de identificação do produto referentes à máquina para a qual as peças se destinam.

## 3. ORGANIZAÇÃO DO MANUAL DE PEÇAS

A informação do produto neste manual é apresentada em forma de "elementos de informação" que representam todos os componentes para o modelo específico. Arranjo de Motor e Grupo de Assento são exemplos de elementos de informação. Os elementos de informação são organizados em ordem alfabética por nome de peça ou secundariamente, por número de peça incluído em cada seção principal do manual.

## 4. LISTA DE CONTEÚDOS

A Lista de Conteúdos (TOC) se encontra no princípio do manual. A Lista de Conteúdos (TOC) relaciona em cada seção do manual uma lista completa com todos os elementos de informação organizados conforme aparecem no manual. Números de página são fornecidos para que se tenha referência rápida de ilustrações de peças detalhadas e listas de conteúdos que podem receber serviço de manutenção.

### 5. ÍNDICE DE PEÇAS DE MANUTENÇÃO

O Índice de Peças de Manutenção, localizado perto do princípio do manual, faz referência aos números de peça de manutenção usados com maior frequência, fornecendo uma descrição, a quantidade, o uso e o número de página. Esta informação é organizada com a descrição da peça em ordem alfabética.

### 6. ÍNDICE

O Índice localizado perto do princípio do manual, consiste de uma lista em ordem alfabética de todos os elementos de informação incluídos no manual. Números de página são fornecidos para que se tenha referência rápida de ilustrações de peças detalhadas e listas de conteúdos que podem receber serviço de manutenção.

### 7. ÍNDICE DE NÚMERO DE PEÇA

Um índice numérico relacionando todos os números de peça e a(s) página(s) correspondentes, aparece no final do manual.

### 8. LEGENDAS

As legendas localizadas no início de cada elemento de informação identificam o número e o nome de peça, juntamente com informação descritiva adicional. Informações sobre o Número de Informação do Produto (PIN) e o Número de Série (S/N) encontradas em cada legenda devem ser usadas para selecionar a informação correta sobre uma máquina específica. Opções de substituição no campo, identificação de componentes de acessórios opcionais e informações sobre onde são utilizados ("parte de") são também fornecidas.

A primeira linha de uma legenda é indicada em tipo maior para indicar o princípio de um elemento de informação. Legendas para páginas adicionais que podem ser necessárias para ilustrar um elemento de informação serão apresentadas em tipo padrão e incluirão o termo *(continua)* .

### 9. NÃO DISPONÍVEL SEPARADAMENTE

Em alguns casos, é necessário mostrar peças não disponíveis separadamente que têm uma ligação com listas de conteúdos de nível inferior que podem receber serviço de manutenção. Os números de peça destes componentes não disponíveis aparecerão em *itálico* , a fim de indicar que não estão disponíveis.

### 10. NÙMEROS DE REFERÊNCIA À LISTA DE PEÇAS

Os números indicados na coluna Ref No (No. de Referência) correspondem-se aos números usados no(s) gráfico(s) correspondente(s). Um sufixo com letras pode ser acrescentado a um número de referência para identificar itens de conteúdo de nível inferior. Os números indicados na coluna Graphic Ref (Referência de Gráfico) referem-se ao identificador de número de gráfico presente no canto esquerdo inferior de cada ilustração. O número de Referência de Gráfico pode ser usado em combinação com o item Ref No para determinar-se o número de peça correto. Poderá haver omissão intencional de um número de referência (Ref No) de uma lista de conteúdos uma vez que as informações são atualizadas para refletir os números de peça mais recentes que podem receber serviço de manutenção.

### 11. NOMES DE PEÇAS DESALINHADOS

Quando um nome de peça encontra-se desalinhado numa lista de peças, significa que tal item faz parte do (está incluído no) grupo ou conjunto sob o qual está relacionado.

### 12. LETRAS DE REFERÊNCIA NAS ILUSTRAÇÕES

Quando necessário, as ilustrações contêm letras de referência (A, B, C, etc.) que são utilizadas para seguir tubulações e cabos elétricos de um ponto a outro. Também foram utilizadas para indicar onde se pode reconectar as ilustrações que foram separadas.

### 13. ABREVIAÇÕES E SÍMBOLOS

**O.D.** – "Outside Diameter" (Diâmetro Externo)
**I.D.** – "Inside Diameter" (Diâmetro Interno)
**A** – Não faz parte deste grupo
**B** – Use conforme necessário
**C** – Indica modificação
**D** – Vendido por metro
**E** – Vendido por centímetro
**F** – Não ilustrado
**G** – Vendido por polegada
**I** – Consultar o Sistema de Informações Hidráulicas
**M** – Peça métrica
**R** – Peça remanufaturada pode estar disponível; consulte o seu revendedor Cat
**Y** – Ilustração separada
**Z** – Não disponível separadamente

SIS ***Novidades***

### 14. <END>

Este símbolo indica o final de um elemento de informação.

# INFORMAÇÃO GERAL

**NOTA:**

**Os contínuos aperfeiçoamentos e avanços no projeto do produto podem ocasionar modificações em sua máquina que talvez ainda não estejam incluídas nesta publicação. Sempre que surgirem dúvidas quanto a um produto Caterpillar ou quanto à presente publicação, consulte o seu revendedor Caterpillar para obter as informações mais recentes disponíveis.**

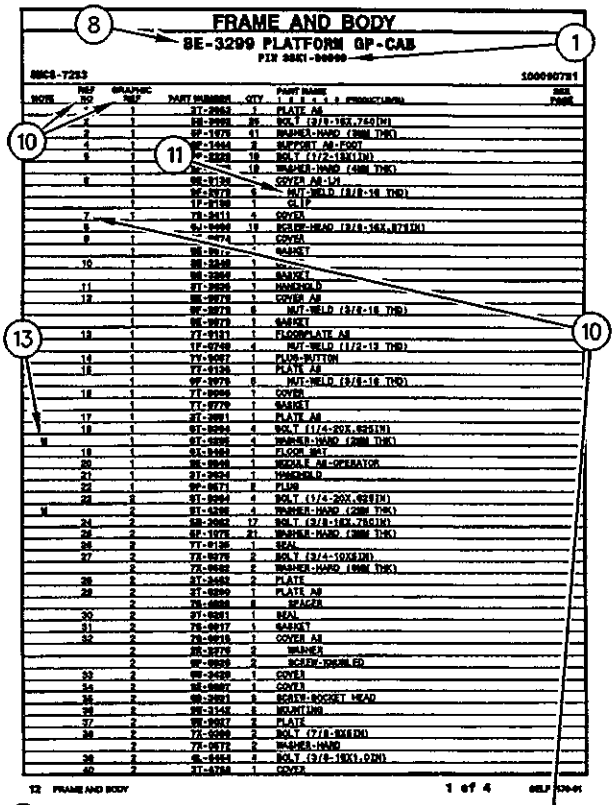
FRAME AND BODY
8E-3299 PLATFORM GP-CAB
1 of 4

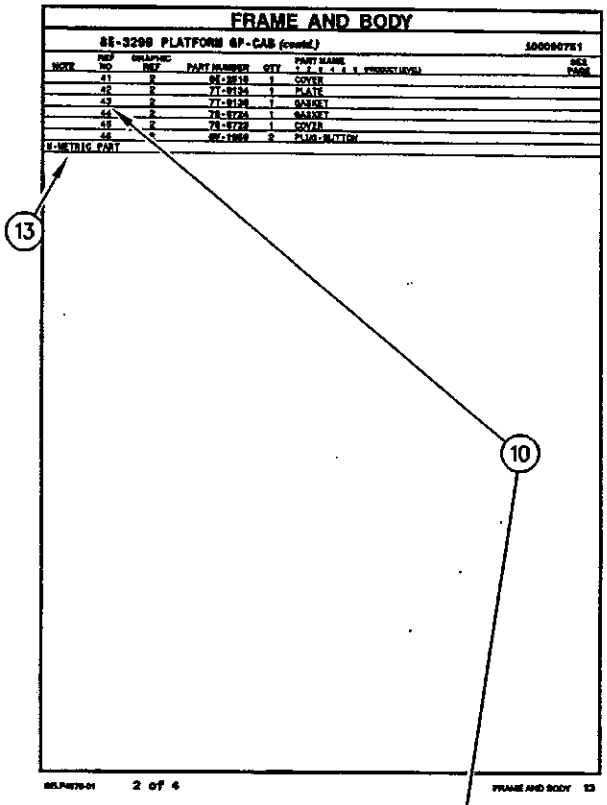
FRAME AND BODY
8E-3299 PLATFORM GP-CAB (contd.)
2 of 4

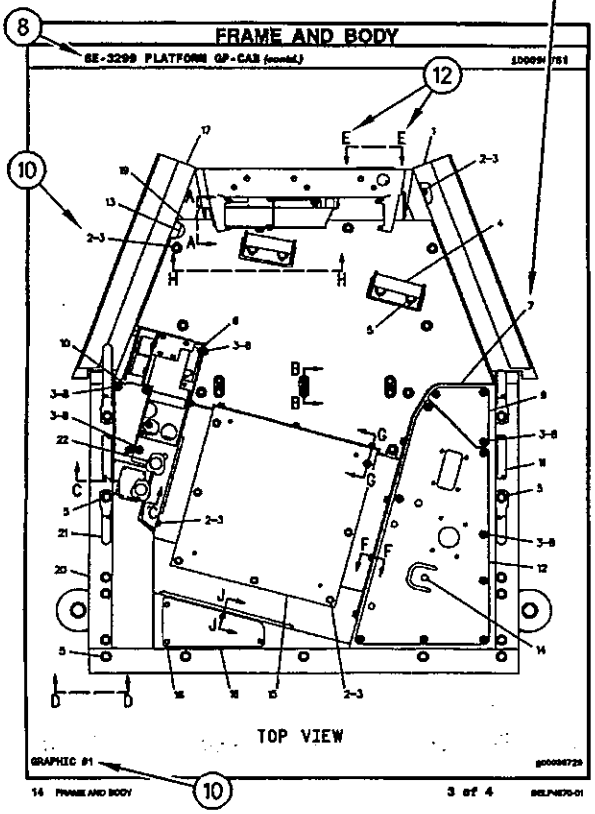
FRAME AND BODY
8E-3299 PLATFORM GP-CAB (contd.)
TOP VIEW
GRAPHIC #1
3 of 4

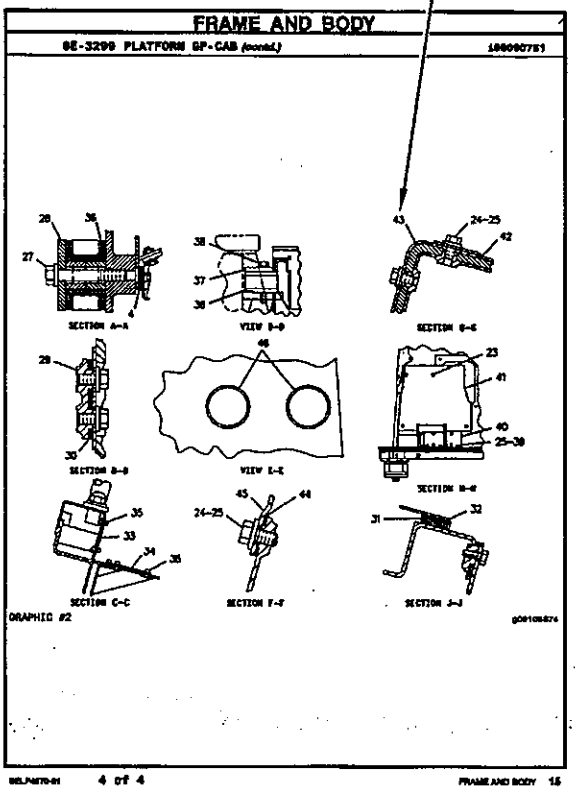
FRAME AND BODY
8E-3299 PLATFORM GP-CAB (contd.)
GRAPHIC #2
4 of 4

# ALLGEMEINE HINWEISE

## 1. MASCHINENKENNZEICHNUNG

Caterpillar-Maschinen sind mit PRODUCT IDENTIFICATION NUMBERS (PIN) (Produkt-Identnummern) gekennzeichnet. Einige Baugruppen, z.B. Motoren, Getriebe, Planierschilde und Aufreißer, sind mit SERIAL NUMBERS (S/N) (Seriennummern) gekennzeichnet. An der Maschine und am Motor befinden sich außerdem ARRANGEMENT NUMBERS (Ausrüstungsnummern) sowie in einigen Fällen MODIFICATION NUMBERS (Änderungsnummern). Sie befinden sich auf den PIN-Schildern und auf dem Typenschild im Fahrerhaus.

Bei Ersatzteilbestellungen müssen dem Händler alle diese Nummern zur Verfügung gestellt werden.

SIS ***Neu im Parts Manual***

Vom ersten Quartal 2001 ab wurde die Caterpillar Produkt-Identnummer (PIN) von 8 auf 17 Zeichen geändert. Um zur Standardisierung der Produkt-Identnummer beizutragen, sind Caterpillar und andere Baumaschinenhersteller bestrebt, die aktuellste Norm zur Produkt-Identnummerierung einzuführen. Produkt-Identnummern für Baumaschinen sind durch ISO 10261 definiert. Das neue Format der Produkt-Identnummern gilt für alle Caterpillar-Maschinen und -Stromaggregate. Die Produkt-Identschilder und -Identrahmenmarkierung enthalten die aus 17 Zeichen bestehende Identnummer. Das neue Format hat folgende Abschnitte:

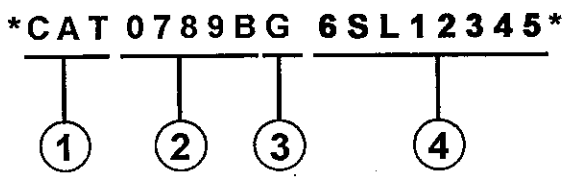


Abschnitte:

1. Caterpillars weltweiter Herstellungscode (Zeichen 1-3)

2. Modell (Zeichen 4-8)

3. Kontrollzeichen (Zeichen 9)

4. Maschinenspezifische Kennung (MIS) oder Produktsequenznummer (Zeichen 10-17). Diese wurde früher als Seriennummer bezeichnet.

Für vor dem ersten Quartal 2001 hergestellte Maschinen und Stromaggregate wird das aus 8 Zeichen bestehende PIN-Format beibehalten.

Bauteile wie z.B. Motoren, Getriebe, Achsen sowie Arbeitsgeräte werden weiterhin eine aus 8 Zeichen bestehende Seriennummer (S/N) aufweisen.

## 2. BESTELLEN VON ERSATZTEILEN

**⚠ WARNUNG**

**Wenn für diese Maschine Ersatzteile benötigt werden, empfiehlt Caterpillar, ausschließlich Caterpillar-Ersatzteile oder solche zu verwenden, die die gleichen technischen Merkmale hinsichtlich Typ, Festigkeit, Werkzeugeigenschaften und die gleichen Maße aufweisen.**

**Bei Nichtbeachtung dieser Warnung besteht Verletzungs- oder sogar Lebensgefahr! Ferner kann Nichtbeachtung vorzeitige Ausfälle der Teile und Beschädigung der Maschine zur Folge haben.**

Original Caterpillar-Ersatzteile können weltweit bei jedem Caterpillar-Händlern bestellt werden. Die umfangreichen Händlerlager enthalten normalerweise alle Teile, die Sie für Ihre Caterpillar-Maschine benötigen. Einige Händler bieten Reparatursätze, Austausch- oder werküberholte Teile an, so daß Sie eine Auswahl unter verschiedenen Reparaturmöglichkeiten treffen können. Ihre Bestellung muß folgende Angaben enthalten: Anzahl der benötigten Teile, Bestellnummer, Bezeichnung des Teils, Serien-Nr./Produkt-Ident-Nr., Ausrüstungs-Nr. und Änderungs-Nr. der Maschine, für die diese Teile benötigt werden.

## 3. AUFBAU DES PARTS MANUAL

Die Produktinformationen für alle Komponenten eines bestimmten Modells sind in INFORMATION ELEMENTS (Informationseinheiten) gegliedert. ENGINE ARRANGEMENT (Motorausführung) und SEAT GROUP (Fahrersitz) sind Beispiele für solche Informationseinheiten. Sie sind innerhalb jeder Gruppe alphabetisch, entsprechend der Ersatzteilbezeichnung, und zusätzlich numerisch, entsprechend der Ersatzteilnummer, geordnet.

## 4. INHALTSVERZEICHNIS

Das Inhaltsverzeichnis befindet sich am Anfang des Buches. Im Inhaltsverzeichnis werden die einzelnen Abschnitte des Buches aufgeführt. Die Abschnitte enthalten eine vollständige Aufstellung aller Informationseinheiten. Diese sind entsprechend ihrem Erscheinen im Buch geordnet. Das Inhaltsverzeichnis enthält Seitenangaben für Schnellverweise auf detaillierte Abbildungen und Teillisten.

### 5. INDEX FÜR WARTUNGSTEILE

Der Index für Wartungsteile vorn im Buch enthält die Bestellnummern, Seitenangaben, Mengenangaben und Informationen über den Einsatzbereich für die am häufigsten benötigten Ersatzteile. Die Angaben sind alphabetisch entsprechend der Teilebezeichnung geordnet.

### 6. INDEX

Der Index vorn im Buch enthält eine alphabetische Liste aller Informationseinheiten. Er enthält Seitenangaben für Schnellverweise auf detaillierte Abbildungen und Teillisten.

### 7. INDEX FÜR BESTELLNUMMERN

Hinten im Buch befindet sich ein numerischer Index, mit allen Bestellnummern und dem Hinweis auf die Seite, auf der sich die betreffende Abbildung befindet.

### 8. ÜBERSCHRIFTEN

Die Überschriften, die sich am Anfang jeder der Informationseinheiten befinden, enthalten Bestellnummern, Ersatzteilbezeichnungen und zusätzliche beschreibende Informationen. Produkt-Ident- und Seriennummern in den Überschriften sollten zur Auswahl der richtigen Informationen für die betreffende Maschine verwendet werden. Die Überschriften enthalten außerdem Informationen über möglichen Außendienstersatz, mögliche Baugerätekomponenten und die Baugruppe, zu der das Teil gehört.

Die erste Zeile einer Überschrift erscheint in einer größeren Schriftart, um den Anfang einer Informationseinheit zu kennzeichnen. Überschriften für zusätzliche Seiten, die zur Erläuterung einer Informationseinheit notwendig sind, erscheinen in normaler Schriftart und enthalten den Begriff "(contd.)".

### 9. NICHT EINZELN LIEFERBARE TEILE

In einigen Fällen ist es notwendig nicht lieferbare Teile, die selbst mit einer eigenen Teilliste im Buch vertreten sind, aufzuführen. Die Bestellnummern dieser nicht einzeln lieferbaren Teile erscheinen kursiv, wodurch angezeigt wird, daß sie nur in Verbindung mit anderen Teilen lieferbar sind.

### 10. REFERENZNUMMER FÜR ERSATZTEILE

Die Zahlen, die in der Spalte "Ref No" aufgeführt sind, stimmen mit den Zahlen in den beigefügten Abbildungen überein. Ein Buchstaben-Suffix kann zu einer Referenznummer hinzugefügt werden, um zu kennzeichnen, daß das Teil mit einer eigenen Teilliste im Buch aufgeführt ist. Die in der Spalte "Graphic Ref" angeführten Zahlen verweisen auf die Identifikationsnummer der Abbildung, die sich in der linken unteren Ecke der Abbildung befindet. Diese Nummer kann zusammen mit der Referenznummer des Teils angegeben werden, um die richtige Ersatzteilnummer zu ermitteln. Referenznummern können absichtlich weggelassen werden, da die Nummern der lieferbaren Ersatzteile ständig aktualisiert werden.

### 11. EINGERÜCKTE BEZEICHNUNGEN

Wenn eine Bezeichnung eingerückt ist, wird dadurch angezeigt, daß das Teil zu einer Baugruppe gehört, unter deren Bezeichnung es eingerückt ist.

### 12. REFERENZBUCHSTABEN

Falls erforderlich sind in den Abbildungen Referenzbuchstaben enthalten (z.B. A, B, C, usw.), die Leitungen und Kabelbäume von einem Punkt zum anderen verfolgen. Außerdem geben sie die Stelle an, an der getrennte Abbildungen fortgesetzt werden.

### 13. ABKÜRZUNGEN UND SYMBOLE

**O.D.** – Außendurchmesser
**I.D.** – Innendurchmesser
**A** – kein Teil dieser Gruppe
**B** – nach Bedarf verwenden
**C** – Hinweis auf eine Änderung
**D** – in Meter-Länge bestellen
**E** – in Zentimeter-Länge bestellen
**F** – nicht gezeigt
**G** – in Zoll-Länge bestellen
**I** – siehe Hydraulikinformationssystem
**M** – metrisches Teil
**R** – werküberholtes Teil unter Umständen lieferbar
**Y** – separate Abbildung
**Z** – nicht einzeln lieferbar

SIS ***Neu im Parts Manual***

### 14. <END>

Dieses Symbol zeigt das Ende eines Informationselements an.

# ALLGEMEINE HINWEISE

**ANMERKUNG:**

**Ständig vorgenommene Verbesserungen und Weiterentwicklungen an Ihrer Maschine können Änderungen verursachen, die in der vorliegenden Ausgabe noch nicht berücksichtigt sind. Fragen zu Ihrer Caterpillar-Maschine oder diesem Ersatzteilbuch beantwortet Ihr Caterpillar-Händler.**

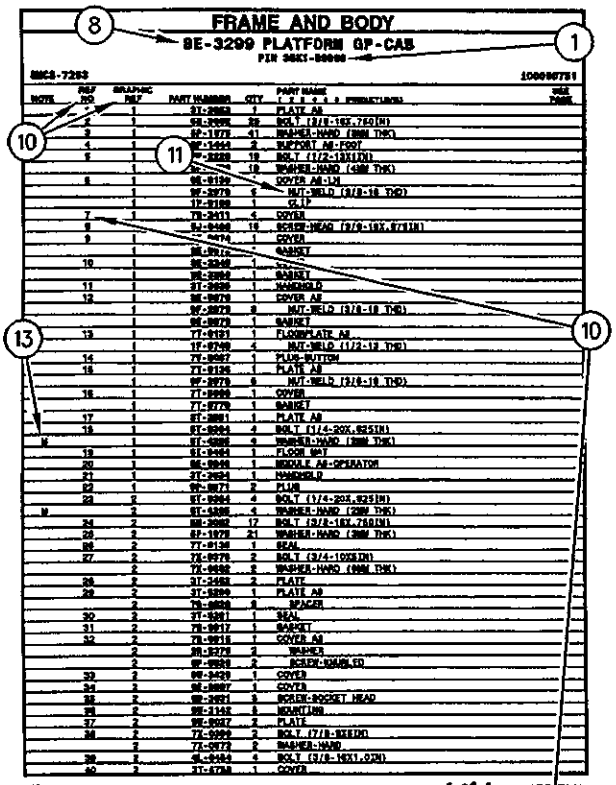
FRAME AND BODY
8E-3299 PLATFORM GP-CAB
1
8
10
11
13
10
12 FRAME AND BODY
1 of 4

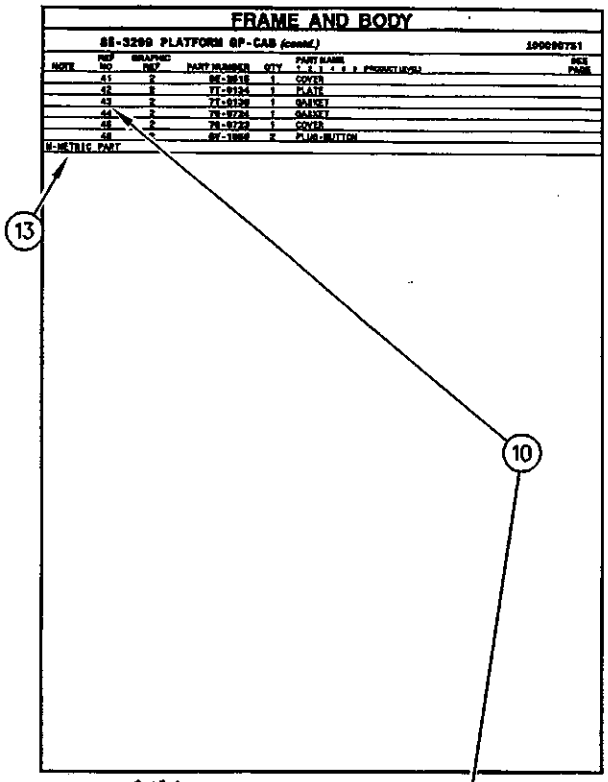
FRAME AND BODY
8E-3299 PLATFORM GP-CAB (contd.)
13
10
2 of 4
FRAME AND BODY 13

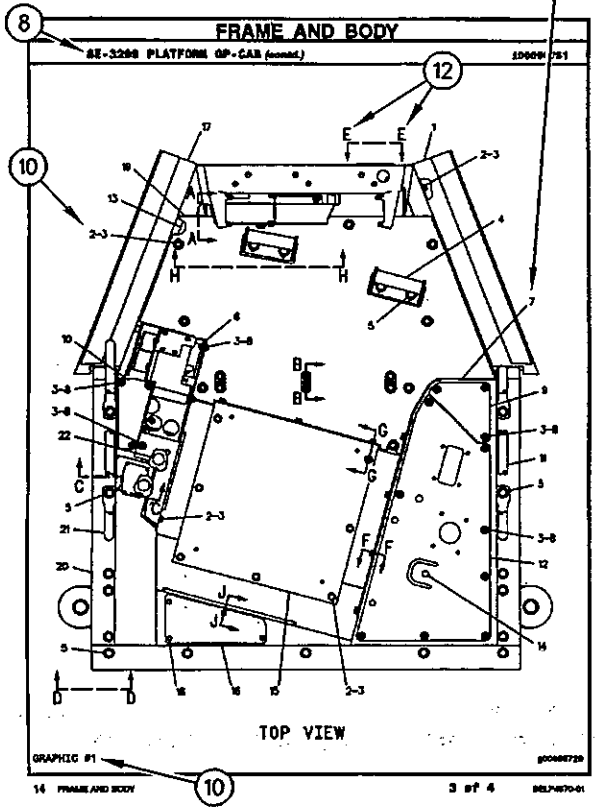
FRAME AND BODY
8E-3299 PLATFORM GP-CAB (contd.)
8
12
10
TOP VIEW
GRAPHIC #1
10
14 FRAME AND BODY
3 of 4

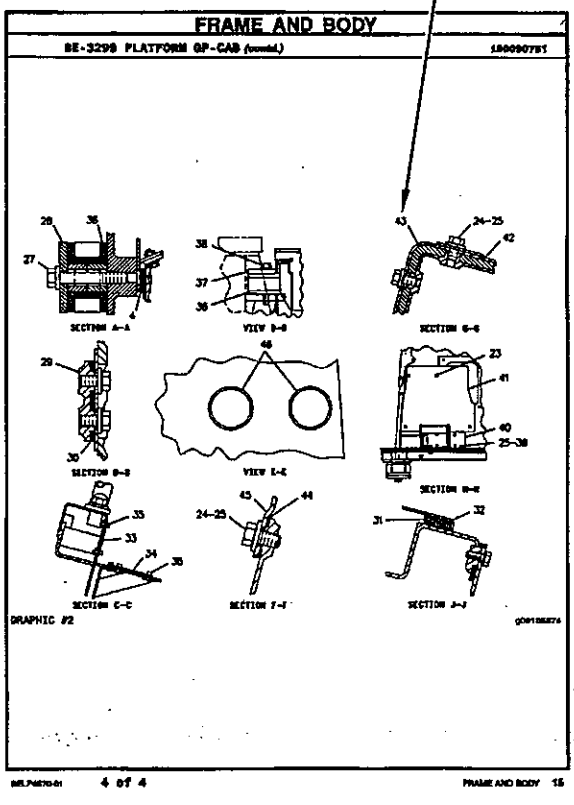
FRAME AND BODY
8E-3299 PLATFORM GP-CAB (contd.)
GRAPHIC #2
4 of 4
FRAME AND BODY 15

# REPAIR ALTERNATIVES

**REMANUFACTURED COMPONENTS**

As an option when making repairs consider Caterpillar Remanufactured Components. Components that are available through the Caterpillar Remanufactured Program are identified three ways in the parts book:

- with the letter R in the note field of the parts list
- with an R* at the beginning of the first line of the caption
- with an *R at the end of the first line of the caption

Typical components included in the Remanufacturing Program include:

ALTERNATORS
CONNECTING RODS
CRANKSHAFTS - UNDERSIZE
CRANKSHAFTS - UPGRADE TO NEW
CYLINDER HEADS
ELECTRONIC CONTROL MODULES (ECM)
ELECTRONIC SENSORS
FUEL INJECTORS
FUEL NOZZLES
FUEL PUMPS
GOVERNORS
OIL PUMPS
PISTONS
SHORT BLOCKS
STARTERS
TURBOCHARGERS - COMPLETE
TURBOCHARGER CARTRIDGES
WATER PUMPS

Caterpillar Remanufactured engines for many engine arrangements are also available.

**COMPOSANTS RÉNOVÉS**

Comme option de réparation, considérer les composants rénovés Caterpillar. Les composants disponibles dans le cadre du programme Caterpillar de composants rénovés sont identifiés de trois façons dans le catalogue de pièces:

- avec la lettre "R" dans l'espace note de la liste des pièces
- avec R* au début de la première ligne des légendes
- avec *R à la fin de la première ligne des légendes

Les composants suivants figurent parmi les composants typiques du programme de rénovation:

ALTERNATEURS
BIELLES
VILEBREQUINS - SOUS-DIMENSIONNÉS
VILEBREQUINS - REMIS À NEUF
CULASSES
MODULES DE COMMANDE ÉLECTRONIQUE (ECM)
CAPTEURS ÉLECTRONIQUES
INJECTEURS
TÊTES D'INJECTEURS
POMPES À CARBURANT
RÉGULATEURS
POMPES À HUILE
PISTONS
BLOCS EMBIELLÉS
DÉMARREURS
TURBOCOMPRESSEURS - COMPLETS
CARTOUCHES DE TURBOCOMPRESSEUR
POMPES À EAU

Des moteurs rénovés sont aussi disponibles pour plusieurs versions de moteur.

# ALTERNATIVAS DE REPARACIÓN

## COMPONENTES REMANUFACTURADOS

Al hacer reparaciones, tenga en cuenta la opción de Componentes Remanufacturados Caterpillar. Los componentes que están disponibles por medio del programa de Productos Remanufacturados Caterpillar se identifican de tres maneras en el manual de piezas:

- con la letra R en el espacio de Nota de la lista de piezas
- con una R* al comienzo de la primera línea de la leyenda
- con una *R al final de la primera línea de la leyenda

Los componentes que se incluyen típicamente en el Programa de Productos Remanufacturados son:

ALTERNADORES
BIELAS
CIGÜEÑALES - BAJOMEDIDA
CIGÜEÑALES - REMANUFACTURADOS A NUEVO
CULATAS
MÓDULOS DE CONTROL ELECTRÓNICO (ECM)
SENSORES ELECTRONICOS
INYECTORES
BOQUILLAS
BOMBAS DE COMBUSTIBLE
REGULADORES
BOMBAS DE ACEITE
PISTONES
MONOBLOQUES
MOTORES DE ARRANQUE
TURBOCOMPRESORES - COMPLETOS
NÚCLEOS DE TURBOCOMPRESOR
BOMBAS DE AGUA

También hay disponibles motores Remanufacturados Caterpillar para muchas de las configuraciones de motores.

**COMPONENTES REMANUFATURADOS**

Considere o uso de Componentes Remanufaturados Caterpillar ao efetuar reparos. Os componentes disponíveis através do Programa de Remanufatura Caterpillar são identificados de três formas no manual de peças:

- com um R na área da nota da lista de peças
- com um R* no princípio da primeira linha da legenda
- com um *R no final da primeira linha da legenda

Os componentes típicos que constam no Programa de Remanufatura incluem:

ALTERNADORES
BIELAS
VIRABREQUINS - SUBMEDIDAS
VIRABREQUINS - ATUALIZAÇÃO
CABEÇOTES
MÓDULOS DE CONTROLE ELETRÔNICO (ECM)
SENSORES ELETRÔNICOS
INJETORES DE COMBUSTÍVEL
BICOS DE ABASTECIMENTO DE COMBUSTÍVEL
BOMBAS DE COMBUSTÍVEL
GOVERNADORES
BOMBAS DE ÓLEO
PISTÕES
BLOCOS BÁSICOS DO MOTOR
MOTORES DE PARTIDA
TURBOALIMENTADORES - COMPLETOS
CARTUCHOS DE TURBOALIMENTADORES
BOMBAS D'ÁGUA

Motores Remanufaturados Caterpillar também encontram-se disponíveis para diversos arranjos de motor.

# REPARATURALTERNATIVEN

## WERKÜBERHOLTE AT-PRODUKTE

Bei Reparaturen sollten werküberholte AT-Produkte von Caterpillar in Betracht gezogen werden. Die durch das AT-Programm von Caterpillar erhältlichen Teile sind im Parts Book auf drei verschiedene Arten gekennzeichnet:

- mit dem Buchstaben R in der Spalte NOTE der Ersatzteilliste
- mit einem R* am Anfang der ersten Zeile der Überschrift
- mit einem *R am Ende der ersten Zeile der Überschrift

Das AT-Programm umfaßt u.a. folgende Produkte:

DREHSTROMGENERATOREN
PLEUELSTANGEN
KURBELWELLEN - MIT UNTERMASS
KURBELWELLEN - MIT ORIGINALMASS
ZYLINDERKÖPFE
ELEKTRONISCHE STEUEREINHEITEN (EMC)
ELEKTRONISCHE SENSOREN
PUMPENDÜSEN
EINSPRITZDÜSEN
KRAFTSTOFFPUMPEN
DREHZAHLREGLER
ÖLPUMPEN
KOLBEN
TEILMOTOREN
ANLASSER
TURBOLADER - KOMPLETT
TURBOLADERLAUFZEUGE
KÜHLWASSERPUMPEN

Viele Motoren können durch werküberholte AT-Motoren von Caterpillar ersetzt werden.

# SUPPLEMENTAL COOLANT ADDITIVES

**CUSTOMER BENEFITS:**

Protects against cavitation, foam, erosion, corrosion, and scale buildup in cooling systems.

- Provides measured coolant conditioner.

**DESCRIPTION:**

Additives deplete from the coolant with normal operation. For this reason, Supplemental Coolant Additives (SCA) must be added to all heavy duty coolants at regular intervals. In addition, when not using a fully formulated, pre-charged antifreeze, like Caterpillar's DEAC, an initial charge of SCA must be added to the cooling system. The amount of SCA added to the system is dependent on the capacity of the system.

The SCA for initial fill is provided as a liquid. SCA's for maintenance intervals are available in liquid form and as a spin-on element. (No Spin-on available for 3600 Family of Engines)

**NOTE:**

The amount of SCA added at initial fill is not the same as the amount added at maintenance intervals.

The coolant additive elements can be used with any ethylene or propylene glycol type antifreeze which meets ASTM D4985 or ASTM D5345 Specifications.

**NOTE:**

For use with standard heavy duty coolant only, not for use with Extended Life Coolant.

**PARTS NEEDED:**

| Cooling System Capacity | | Liquid SCA at Initial Fill | Liquid SCA at Maintenance* | Spin-on SCA Maintenance Element* |
|---|---|---|---|---|
| Liters | Gallons | | | |
| 22-30 | (6-8) | 3P-2044 (1) | 6V-3542 (1) | 111-2370 (1) |
| 30-38 | (8-10) | 3P-2044 (1)<br>6V-3542 (1) | 111-2372 (1) | 111-2369 (1) |
| 38-49 | (10-13) | 3P-2044 (1)<br>8T-1589 (1) | 111-2372 (1) | 111-2369 (1) |
| 49-64 | (13-17) | 3P-2044 (2) | 8T-1589 (1) | 9N-3368 (1) |
| 64-83 | (17-22) | 3P-2044 (2)<br>8T-1589 (1) | 111-2372 (1)<br>6V-3542 (1) | 111-2371 (1) |
| 83-114 | (22-30) | 3P-2044 (3)<br>8T-1589 (1) | 3P-2044 (1) | 9N-3718 (1) |
| 114-163 | (30-43) | 3P-2044 (5) | 3P-2044 (1)<br>6V-3542 (1) | 111-2371 (2) |
| 163-242 | (43-64) | 3P-2044 (8) | 3P-2044 (2) | 9N-3718 (2) |

** Normal maintenance period is 250 hrs. See your Operation and Maintenance Manual for complete coolant maintenance instructions.*

( ) Indicates quantity required.

# ADDITIFS POUR LIQUIDE DE REFROIDISSEMENT

## AVANTAGES POUR LE CLIENT

L'additif protège contre la cavitation, la mousse, l'érosion, la corrosion et l'accumulation de dépôts dans le circuit de refroidissement.

- L'additif complémentaire fournit une quantité mesurée d'additif.

## DESCRIPTION:

Les additifs s'épuisent pendant l'utilisation du moteur. C'est pourquoi l'on doit ajouter de l'additif au liquide de refroidissement/antigel pour moteurs diesel à intervalles réguliers. En plus, si l'on n'utilise pas de l'antigel entièrement formulé et pré-chargé comme le liquide de refroidissement/antigel Caterpillar pour moteurs diesel, une quantité initiale d'additif doit être ajoutée au circuit de refroidissement. La quantité d'additif à ajouter au circuit dépend de la contenance du circuit.

L'additif pour le remplissage initial est fourni sous forme liquide. L'additif pour l'entretien ultérieur est disponible sous forme liquide et sous forme d'élément à visser. (Il n'y a pas d'élément à visser pour les moteurs de la famille 3600).

## NOTA:

La quantité d'additif à ajouter au remplissage initial diffère de la quantité à ajouter aux intervalles d'entretien.

Les éléments d'additif peuvent être utilisés avec tout antigel de type éthylène ou propylène-glycol conforme à la norme ASTM D4985 ou ASTM D5345.

## NOTA:

A utiliser uniquement avec du liquide de refroidissement pour moteurs diesel et non avec le liquide de refroidissement longue durée.

## PIÈCES NÉCESSAIRES:

| Contenance du circuit de refroidissement | | Additif liquide au remplissage initial | Additif liquide aux intervalles d'entretien* | Elément d'additif à visser aux intervalles d'entretien* |
|---|---|---|---|---|
| Litres | Gallons U.S. | | | |
| 22-30 | (6-8) | 3P-2044 (1) | 6V-3542 (1) | 111-2370 (1) |
| 30-38 | (8-10) | 3P-2044 (1)<br>6V-3542 (1) | 111-2372 (1) | 111-2369 (1) |
| 38-49 | (10-13) | 3P-2044 (1)<br>8T-1589 (1) | 111-2372 (1) | 111-2369 (1) |
| 49-64 | (13-17) | 3P-2044 (2) | 8T-1589 (1) | 9N-3368 (1) |
| 64-83 | (17-22) | 3P-2044 (2)<br>8T-1589 (1) | 111-2372 (1)<br>6V-3542 (1) | 111-2371 (1) |
| 83-114 | (22-30) | 3P-2044 (3)<br>8T-1589 (1) | 3P-2044 (1) | 9N-3718 (1) |
| 114-163 | (30-43) | 3P-2044 (5) | 3P-2044 (1)<br>6V-3542 (1) | 111-2371 (2) |
| 163-242 | (43-64) | 3P-2044 (8) | 3P-2044 (2) | 9N-3718 (2) |

** L'intervalle d'entretien normal est de 250 heures-service. Voir le Guide d'utilisation et d'entretien pour de plus amples renseignements concernant l'entretien du circuit de refroidissement.*

( ) Indique la quantité exigée.

# ADITIVOS DE REFRIGERANTE SUPLEMENTARIOS

**VENTAJAS PARA EL USUARIO:**

Protegen contra la cavitación, la formación de espuma, la corrosión y la acumulación de escamas en los sistemas de enfriamiento.

- Suministra un acondicionador dosificado de refrigerante.

**DESCRIPCIÓN:**

Los aditivos en el refrigerante se agotan con la operación normal. Por esta razón, se debe agregar Aditivo de refrigerante suplementario (SCA) a todos los refrigerantes para servicio pesado, a intervalos regulares. Además, cuando no se usa un anticongelante de precarga completo, tal como el DEAC de Caterpillar, es necesario agregar una cantidad de aditivo de refrigerante suplementario inicial al sistema de enfriamiento. La cantidad de aditivo que se debe agregar depende de la capacidad del sistema.

El SCA de llenado inicial es líquido. El que se usa para el mantenimiento está disponible tanto en líquido como en un elemento enroscable. (No hay elemento enroscable disponible para la Familia de Motores 3600).

**NOTA:**

La cantidad de aditivo de llenado inicial no es la misma que se agrega en los intervalos de mantenimiento.

Los elementos de aditivo de refrigerante se pueden usar con cualquier anticongelante de tipo glicol etilénico o propílico que esté de acuerdo con las especificaciones de las normas ASTM D4985 o ASTM D5345.

**NOTA:**

Se debe utilizar únicamente con refrigerante estándar para servicio pesado; no se debe usar con Refrigerante de Larga Duración.

**PIEZAS NECESARIAS:**

| Capacidad del Sistema de Enfriamiento | | SCA líquido de llenado inicial | SCA líquido de mantenimiento* | Elemento de mantenimiento enroscable* |
|---|---|---|---|---|
| litros | gal EE.UU. | | | |
| 22-30 | 6-8 | 3P-2044 (1) | 6V-3542 (1) | 111-2370 (1) |
| 30-38 | 8-10 | 3P-2044 (1)<br>6V-3542 (1) | 111-2372 (1) | 111-2369 (1) |
| 38-49 | 10-13 | 3P-2044 (1)<br>8T-1589 (1) | 111-2372 (1) | 111-2369 (1) |
| 49-64 | 13-17 | 3P-2044 (2) | 8T-1589 (1) | 9N-3368 (1) |
| 64-83 | 17-22 | 3P-2044 (2)<br>8T-1589 (1) | 111-2372 (1)<br>6V-3542 (1) | 111-2371 (1) |
| 83-114 | 22-30 | 3P-2044 (3)<br>8T-1589 (1) | 3P-2044 (1) | 9N-3718 (1) |
| 114-163 | 30-43 | 3P-2044 (5) | 3P-2044 (1)<br>6V-3542 (1) | 111-2371 (2) |
| 163-242 | 43-64 | 3P-2044 (8) | 3P-2044 (2) | 9N-3718 (2) |

** El período normal de mantenimiento es de 250 horas. Para ver las instrucciones completas sobre el mantenimiento del refrigerante, consulte el Manual de Operación y Mantenimiento.*

( ) Indica la cantidad necesaria.

# ADITIVOS SUPLEMENTARES DO LÍQUIDO ARREFECEDOR

**BENEFÍCIOS PARA O CLIENTE:**

Protege contra cavitação, espuma, erosão, corrosão e acúmulo de crostas nos sistemas de arrefecimento.

- Fornece uma quantidade pré-determinada de condicionador de arrefecimento.

**DESCRIÇÃO:**

Com a operação normal, os aditivos se esgotam do líquido arrefecedor. Por isso, Aditivos Suplementares do Líquido Arrefecedor (SCA) devem ser acrescentados a todos os líquidos arrefecedores para serviço pesado em intervalos regulares. Além disso, quando um anticongelante pré-carregado, totalmente formulado não for usado, como o DEAC Caterpillar, uma carga inicial de SCA deve ser acrescentada ao sistema de arrefecimento. A quantidade de SCA acrescentada ao sistema depende da capacidade do sistema.

O SCA para abastecimento inicial é fornecido em forma de líquido. Os aditivos suplementares (SCA) para intervalos de manutenção estão à disposição em forma líquida e como um elemento com roscas. (Exceto os Motores da Família 3600)

**NOTA:**

A quantidade de SCA adicionada no abastecimento inicial não é a mesma que a acrescentada nos intervalos de manutenção.

Os elementos do aditivo do líquido arrefecedor podem ser usados com qualquer tipo de anticongelante etileno ou propileno que satisfaz as Especificações ASTM D4985 ou ASTM D5345.

**NOTA:**

Para uso apenas com líquido arrefecedor para serviço pesado padrão, não deve ser usado com Líquido Arrefecedor de Vida Longa.

**PEÇAS NECESSÁRIAS:**

| Capacidade do Sistema de Arrefecimento | | Líquido SCA Durante Abastecimento Inicial | Líquido SCA Durante Manutenção* | Elemento de Manutenção de SCA com Roscas* |
|---|---|---|---|---|
| Litros | Galões | | | |
| 22-30 | 6-8 | 3P-2044 (1) | 6V-3542 (1) | 111-2370 (1) |
| 30-38 | 8-10 | 3P-2044 (1)<br>6V-3542 (1) | 111-2372 (1) | 111-2369 (1) |
| 38-49 | 10-13 | 3P-2044 (1)<br>8T-1589 (1) | 111-2372 (1) | 111-2369 (1) |
| 49-64 | 13-17 | 3P-2044 (2) | 8T-1589 (1) | 9N-3368 (1) |
| 64-83 | 17-22 | 3P-2044 (2)<br>8T-1589 (1) | 111-2372 (1)<br>6V-3542 (1) | 111-2371 (1) |
| 83-114 | 22-30 | 3P-2044 (3)<br>8T-1589 (1) | 3P-2044 (1) | 9N-3718 (1) |
| 114-163 | 30-43 | 3P-2044 (5) | 3P-2044 (1)<br>6V-3542 (1) | 111-2371 (2) |
| 163-242 | 43-64 | 3P-2044 (8) | 3P-2044 (2) | 9N-3718 (2) |

** O período normal de manutenção é de 250 horas. Consulte o Manual de Operação e Manutenção para obter instruções completas quanto à manutenção do líquido arrefecedor.*

( ) Indica a quantidade exigida.

# KÜHLMITTELZUSATZ

**VORTEILE FÜR DEN KUNDEN:**

Schutz gegen Kavitation, Schaumbildung, Erosion, Korrosion und Kesselsteinbildung in Kühlsystemen.

- Richtig dosierter Kühlmittelzusatz

**BESCHREIBUNG:**

Additive erschöpfen sich während des Motorbetriebs. Deshalb muß allen HD-Kühlmitteln regelmäßig Kühlmittelzusatz beigefügt werden. Wenn bei Erstfüllung kein vollwertiges Fertigkühlmittel, wie das Frostschutz- und Kühlmittel für Dieselmotoren von Caterpiller (DEAC), verwendet wird, muß bei Erstfüllung Kühlmittelzusatz beigefügt werden. Wieviel Kühlmittelzusatz beigefügt werden muß, hängt vom Inhalt des Kühlsystems ab.

Für Erstfüllung ist Kühlmittelzusatz nur in flüssiger Form erhältlich. Für Wartungsintervalle ist Kühlmittelzusatz in flüssiger Form und als Zusatzelement erhältlich. (Für die Motorbaureihe 3600 sind keine Zusatzelemente erhältlich.)

**ANMERKUNG:**

Die Kühlmittelmenge bei Erstfüllung ist nicht die gleiche Menge, die bei Wartungsintervallen beigefügt werden muß.

Die Kühlmittelzusatzelemente können mit allen Frostschutzmitteln auf Ethylen- oder Propylenglykolbasis verwendet werden, die den Standards nach ASTM D4985 oder ASTM D5345 entsprechen.

**ANMERKUNG:**

Den Kühlmittelzusatz nicht mit Langzeitkühlmittel (ELC) von Caterpillar verwenden. Der Kühlmittelzusatz ist nur für HD-Kühlmittel bestimmt.

**TEILEBEZEICHNUNG:**

| Kühlsysteminhalt | | Kühlmittelzusatz bei Erstfüllung | Flüssiger Kühlmittelzusatz bei Wartung* | Kühlmittelzusatzelement bei Wartung* |
|---|---|---|---|---|
| Liter | US-Gall. | | | |
| 22-30 | (6-8) | 3P-2044 (1) | 6V-3542 (1) | 111-2370 (1) |
| 30-38 | (8-10) | 3P-2044 (1)<br>6V-3542 (1) | 111-2372 (1) | 111-2369 (1) |
| 38-49 | (10-13) | 3P-2044 (1)<br>8T-1589 (1) | 111-2372 (1) | 111-2369 (1) |
| 49-64 | (13-17) | 3P-2044 (2) | 8T-1589 (1) | 9N-3368 (1) |
| 64-83 | (17-22) | 3P-2044 (2)<br>8T-1589 (1) | 111-2372 (1)<br>6V-3542 (1) | 111-2371 (1) |
| 83-114 | (22-30) | 3P-2044 (3)<br>8T-1589 (1) | 3P-2044 (1) | 9N-3718 (1) |
| 114-163 | (30-43) | 3P-2044 (5) | 3P-2044 (1)<br>6V-3542 (1) | 111-2371 (2) |
| 163-242 | (43-64) | 3P-2044 (8) | 3P-2044 (2) | 9N-3718 (2) |

** Der normale Wartungsintervall beträgt 250 Betriebsstunden. Für vollständige Anweisungen zur Wartung des Kühlsystems, siehe Betriebs- und Wartungshandbuch.*

( ) Erforderliche Anzahl

# MAINTENANCE PARTS

| DESCRIPTION | PART NUMBER | QTY | WHERE USED | PAGE |
|---|---|---|---|---|
| **AIR INLET AND EXHAUST SYSTEM** | | | | |
| FILTER ELEMENT AS-AIR (PRIMARY) | 6I-2509 | 1 | AIR CLEANER GP | 100 |
| FILTER ELEMENT AS-AIR (SECONDARY) | 6I-2510 | 1 | AIR CLEANER GP | 100 |
| HOSE-ELBOW | 217-1601 | 1 | LINES GP-AFTERCOOLER AIR | 105 |
| INDICATOR-AIR FILTER CHANGE | 1W-0613 | 1 | INDICATOR GP-AIR FILTER CHANGE | 103 |
| **BASIC ENGINE** | | | | |
| PLUG-DRAIN (ENGINE OIL) | 9X-6451 | 1 | PLUG GP-OIL PAN | 60 |
| SEAL (COVER, VALVE MECHANISM) | 242-9537 | 1 | COVER GP-VALVE MECHANISM | 18 |
| | | 1 | COVER GP-VALVE MECHANISM | 19 |
| **COOLING SYSTEM** | | | | |
| FILTER-WATER PUMP | 136-3742 | 1 | PUMP GP-WATER | 90 |
| GASKET-REGULATOR COVER (TEMPERATURE REGULATOR HOUSING) | 4N-1156 | 1 | LINES GP-WATER | 87 |
| GASKET-REGULATOR (HOUSING) (WATER, COOLANT TEMPERATURE) | 139-3550 | 1 | LINES GP-WATER | 87 |
| HOSE-ELBOW | 169-5836 | 1 | LINES GP-WATER | 82 |
| REGULATOR-WATER TEMPERATURE (92-DEG C) (COOLANT) | 248-5513 | 2 | LINES GP-WATER | 87 |
| SEAL-LIP TYPE | 3S-9643 | 2 | LINES GP-WATER | 87 |
| **ELECTRICAL AND STARTING SYSTEM** | | | | |
| BATTERY (12-VOLT) | 115-2422 | 4 | BATTERY & WIRING GP | 140 |
| CIRCUIT BREAKER AS (105-AMPERE) (ALTERNATOR) | 171-2212 | 1 | PANEL GP-CIRCUIT BREAKER | 194 |
| CIRCUIT BREAKER AS (15-AMPERE) (A/C, HEATER CONTROL) | 6T-3643 | 2 | WIRING GP-CAB | 258 |
| CIRCUIT BREAKER AS (15-AMPERE) (POWER GUARD ACTUATOR) | 3T-2662 | 1 | WIRING GP-WASTE HANDLER | 303 |
| CIRCUIT BREAKER AS (15-AMPERE) (RUNNING LIGHTS) | 3T-2662 | 1 | PANEL GP-CIRCUIT BREAKER | 195 |
| CIRCUIT BREAKER AS (50-AMPERE) (START) | 171-2206 | 1 | PANEL GP-CIRCUIT BREAKER | 194 |
| CIRCUIT BREAKER AS (80-AMPERE) (MAIN) | 171-2210 | 1 | PANEL GP-CIRCUIT BREAKER | 194 |
| CIRCUIT BREAKER GP (20-AMPERE) (UNSWITCHED BAT POWER TO CAB) | 6T-3644 | 1 | PANEL GP-CIRCUIT BREAKER | 195 |
| CIRCUIT BREAKER GP (60-AMPERE) (HOOD TILT ACTUATOR) | 171-2208 | 1 | PANEL GP-CIRCUIT BREAKER | 194 |
| FUSE (10-AMPERE) | 9W-1442 | 29 | WIRING GP-CAB | 256 |
| | | 27 | WIRING GP-CAB | 266 |
| | | 27 | WIRING GP-CAB | 274 |
| FUSE (15-AMPERE) | 9W-1441 | 2 | WIRING GP-CAB | 256 |
| | | 4 | WIRING GP-CAB | 266 |
| | | 4 | WIRING GP-CAB | 274 |
| FUSE (20-AMPERE) | 9W-1446 | 1 | WIRING GP-CAB | 256 |
| | | 1 | WIRING GP-CAB | 266 |
| | | 1 | WIRING GP-CAB | 274 |
| KEY AS-ELECTRONIC (SECURITY, GRAY) | 206-5165 | 2 | SERVICE GP-MACHINE | 223 |

# MAINTENANCE PARTS

| DESCRIPTION | PART NUMBER | QTY | WHERE USED | PAGE |
|---|---|---|---|---|
| KEY AS-ELECTRONIC (SECURITY, GRAY) (BLANK) | 206-5165 | 1 | INSTALLATION GP-SECURITY | 169 |
| KEY AS-ELECTRONIC (SECURITY, YELLOW) | 206-5162 | 2 | SERVICE GP-MACHINE | 223 |
| KEY AS-ELECTRONIC (SECURITY, YELLOW) (PROGRAMMED) | 206-5162 | 2 | INSTALLATION GP-SECURITY | 169 |
| KEY (BATTERY DISCONNECT) | 8H-5306 | 1 | SWITCH GP-DISCONNECT | 233 |
| LAMP AS (RED, GREEN, LED, 12-VOLT) | 165-5655 | 1 | INSTALLATION GP-SECURITY | 169 |
| LAMP GP-SIGNAL (24-VOLT) | 3E-6466 | 2 | LIGHTING GP-FLOOD & SIGNAL | 185 |
| | | 2 | LIGHTING GP-SIGNAL | 187 |
| LAMP-HALOGEN (24-VOLT, 65-WATT) | 9X-3463 | 1 | LAMP GP-FLOOD | 174 |
| LAMP-HALOGEN (24-VOLT, 65-WATT) (FLOODLIGHT) | 9X-3463 | 1 | LAMP GP-FLOOD | 175 |
| LAMP (12-VOLT, 24-VOLT, 35-WATT) | 209-6638 | 1 | LAMP GP-FLOOD | 172 |
| | | 1 | LAMP GP-FLOOD | 173 |
| LAMP (24-VOLT) | 7N-5876 | 4 | WIRING GP-CAB | 256 |
| | | 4 | WIRING GP-CAB | 266 |
| | | 4 | WIRING GP-CAB | 274 |
| | 7N-9943 | 1 | LAMP GP-DOME | 171 |
| LAMP (24-VOLT, 21-WATT) | 9X-4493 | 1 | LAMP GP-SIGNAL | 176 |
| | | 1 | LAMP GP-STOP & TAIL | 178 |
| LAMP (24-VOLT, 5-WATT) | 9X-4492 | 1 | LAMP GP-STOP & TAIL | 178 |
| LAMP (24-VOLT, 70-WATT) | 9X-7849 | 1 | LAMP GP-WARNING BEACON | 179 |
| LENS-AMBER | 9X-3066 | 1 | LAMP GP-SIGNAL | 176 |
| **FUEL SYSTEM** | | | | |
| CAP AS-FILLER (FUEL) | 123-6319 | 1 | TANK GP-FUEL | 126 |
| FILTER AS-FUEL | 1R-0762 | 1 | FILTER & MTG GP-FUEL | 115 |
| FILTER AS-WATER SEP & FUEL (PRIMARY) | 1R-0770 | 1 | FILTER GP-WATER SEP & FUEL | 119 |
| SEAL (WATER SEPARATOR, FUEL) | 220-8678 | 1 | FILTER GP-WATER SEP & FUEL | 119 |
| STRAINER-FUEL | 9P-7121 | 1 | TANK GP-FUEL | 126 |
| **HYDRAULIC SYSTEM** | | | | |
| CAP AS-RADIATOR | 031-1119 | 1 | TANK GP-EXPANSION | 676 |
| CAP-FILLER (HYDRAULIC TANK) | 7H-1447 | 1 | TANK GP-HYDRAULIC | 677 |
| | | 1 | TANK GP-HYDRAULIC | 679 |
| FILTER AS-OIL (HYDRAULIC) | 102-2828 | 1 | FILTER GP-OIL | 639 |
| | 126-1818 | 1 | FILTER GP-OIL | 640 |
| GASKET | 9H-6454 | 1 | TANK GP-HYDRAULIC | 677 |
| | | 1 | TANK GP-HYDRAULIC | 679 |
| PLUG-DRAIN | 9J-7031 | 1 | TANK GP-HYDRAULIC | 677 |
| | | 1 | TANK GP-HYDRAULIC | 679 |
| SCREEN AS (HYDRAULIC TANK) | 9T-9227 | 2 | TANK GP-HYDRAULIC | 677 |
| | | 2 | TANK GP-HYDRAULIC | 679 |
| STRAINER | 200-5978 | 2 | VALVE & MTG GP-MAIN CONTROL | 683 |
| | | 2 | VALVE & MTG GP-MAIN CONTROL | 687 |
| | | 2 | VALVE & MTG GP-MAIN CONTROL | 690 |
| | | 2 | VALVE & MTG GP-MAIN CONTROL | 693 |
| STRAINER (FILLER) | 9J-3047 | 1 | TANK GP-HYDRAULIC | 677 |
| | | 1 | TANK GP-HYDRAULIC | 679 |

# MAINTENANCE PARTS

| DESCRIPTION | PART NUMBER | QTY | WHERE USED | PAGE |
|---|---|---|---|---|
| **LUBRICATION SYSTEM** | | | | |
| BREATHER AS (CRANKCASE) | 162-2266 | 1 | FUMES DISPOSAL GP | 73 |
| CAP AS (OIL FILLER) | 205-6405 | 1 | FILLER GP-ENGINE OIL | 70 |
| FILTER AS-ENGINE OIL | 1R-0716 | 1 | FILTER GP-ENGINE OIL | 71 |
| **MACHINE ARRANGEMENT** | | | | |
| KEY | 5P-8500 | 2 | CHASSIS AR | 1 |
| **OPERATOR STATION** | | | | |
| ACCUMULATOR GP-REFRIGERANT | 186-6189 | 1 | LINES GP-AIR CONDITIONER | 840 |
| BATTERY (LITHIUM) | 101-1785 | 1 | CONTROL GP-MONITOR | 798 |
| BLADE AS-WIPER | 6V-7419 | 2 | WIPER GP-WINDOW | 948 |
| CAP | 3W-6398 | 1 | WASHER GP-WINDOW | 943 |
| FILTER-CAB AIR | 7X-6041 | 2 | DUCT & FILTER GP-AIR | 803 |
| FUSE (15-AMPERE) | 133-9012 | 1 | AIR CONDITIONER GP | 782 |
| | | 1 | HEATER GP-CAB | 818 |
| KEY-HANDLE | 3V-7476 | 1 | DUCT & FILTER GP-AIR | 803 |
| LAMP (24-VOLT) | 7N-5876 | 1 | CONTROL GP-MONITOR | 796 |
| | | 1 | MONITOR GP-PAYLOAD | 867 |
| RECEIVER-DRYER GP (AIR CONDITIONER) | 175-7162 | 1 | LINES GP-AIR CONDITIONER | 840 |
| SCREEN-FILTER | 8T-5913 | 2 | WASHER GP-WINDOW | 943 |
| SEAT BELT GP | 236-7019 | 1 | SEAT GP-SUSPENSION | 918 |
| | | 1 | SEAT GP-SUSPENSION | 919 |
| **POWER TRAIN** | | | | |
| BREATHER AS | 9G-5127 | 1 | CONTROL GP-TRANSMISSION HYD | 313 |
| | | 1 | CONTROL GP-TRANSMISSION HYD | 315 |
| CAP-FILLER (POWER TRAIN) | 5K-1568 | 1 | FILLER GP-POWER TRAIN OIL | 339 |
| FILTER ELEMENT AS-OIL (HIGH EFFICIENCY) | 1R-1809 | 1 | FILTER GP-OIL | 340 |
| FILTER-MAGNETIC (AXLE OIL COOLER) | 251-6351 | 2 | LINES GP-AXLE OIL COOLER | 347 |
| KEY | 5P-8500 | 1 | COVER GP-TMSN OIL FILLER CAP | 321 |
| PLUG | 129-0988 | 1 | GEAR GP-OUTPUT TRANSFER | 341 |
| PLUG-MAGNETIC | 5P-4484 | 1 | AXLE GP-FIXED | 307 |
| | | 1 | AXLE GP-OSCILLATING | 308 |
| | 8M-3837 | 1 | WHEEL & FINAL DRIVE GP | 402 |
| SCREEN GP-MAGNETIC | 4S-8603 | 1 | GEAR GP-OUTPUT TRANSFER | 341 |
| SCREEN-SUCTION | 4S-8598 | 1 | GEAR GP-OUTPUT TRANSFER | 341 |
| V-BELT | 1N-3743 | 1 | PUMP & MTG GP-AXLE OIL COOLER | 369 |
| **SERVICE EQUIPMENT AND SUPPLIES** | | | | |
| PADLOCK GP | 246-2641 | 6 | PROTECTION GP-VANDALISM | 958 |
| **STEERING SYSTEM** | | | | |
| SCREEN | 6E-5066 | 2 | SCREEN GP-CASE DRAIN | 564 |
| STRAINER (CASE DRAIN SCREEN) | 233-7419 | 1 | LINES GP-STEERING | 550 |

# PIÈCES DE RECHANGE

| DESCRIPTION | NUMÉRO DE PIECÈS | QTÉ | DOMAINE D'APPLICATION | PAGE |
|---|---|---|---|---|
| **CIRCUIT D'ADMISSION D'AIR ET D'ÉCHAPPEMENT** | | | | |
| COUDE DE FLEXIBLE | 217-1601 | 1 | CANALISATIONS D'AIR DE REFROIDISSEUR D'ADMISSION (ASS) | 105 |
| ÉLÉMENT DE FILTRE À AIR (ENS) (PRINCIPAL) | 6I-2509 | 1 | FILTRE A AIR (ASS) | 100 |
| ÉLÉMENT DE FILTRE À AIR (ENS) (SECONDAIRE) | 6I-2510 | 1 | FILTRE A AIR (ASS) | 100 |
| INDICATEUR DE REMPLACEMENT DE FILTRE À AIR | 1W-0613 | 1 | INDICATEUR DE COLMATAGE DE FILTRE À AIR (ASS) | 103 |
| **CIRCUIT DE CARBURANT** | | | | |
| BOUCHON DE GOULOTTE DE REMPLISSAGE (ENS) (CARBURANT) | 123-6319 | 1 | RÉSERVOIR DE CARBURANT (ASS) | 126 |
| BOURRELET D'ÉTANCHÉITÉ (SÉPARATEUR D'EAU) | 220-8678 | 1 | FILTRE DE SÉPARATEUR D'EAU ET DE CARBURANT (ASS) | 119 |
| FILTRE - SÉPARATEUR D'EAU ET DE CARBURANT (ENS) (PRINCIPAL) | 1R-0770 | 1 | FILTRE DE SÉPARATEUR D'EAU ET DE CARBURANT (ASS) | 119 |
| FILTRE À CARBURANT | 9P-7121 | 1 | RÉSERVOIR DE CARBURANT (ASS) | 126 |
| FILTRE A CARBURANT (ENS) | 1R-0762 | 1 | FILTRE A CARBURANT ET MONTAGE (ASS) | 115 |
| **CIRCUIT DE DIRECTION** | | | | |
| CREPINE (TAMIS DE RETOUR DE CARTER) | 233-7419 | 1 | CANALISATIONS DE DIRECTION (ASS) | 550 |
| ÉCRAN | 6E-5066 | 2 | *SCREEN GP-CASE DRAIN | 564 |
| **CIRCUIT DE GRAISSAGE** | | | | |
| CHAPEAU (ENS) (GOULOTTE DE REMPLISSAGE D'HUILE) | 205-6405 | 1 | BOUCHON DE REMPLISSAGE D'HUILE MOTEUR (ASS) | 70 |
| FILTRE A HUILE MOTEUR (ENS) | 1R-0716 | 1 | FILTRE À HUILE MOTEUR (ASS) | 71 |
| RENIFLARD (ENS) (CARTER) | 162-2266 | 1 | DISPOSITIF D'EVACUATION DES VAPEURS DE CARTER | 73 |
| **CIRCUIT DE REFROIDISSEMENT** | | | | |
| COUDE DE FLEXIBLE | 169-5836 | 1 | CANALISATIONS D'EAU (ASS) | 82 |
| FILTRE DE POMPE À EAU | 136-3742 | 1 | POMPE A EAU (ASS) | 90 |
| JOINT DE COUVERCLE DE RÉGULATEUR (BOÎTIER DE RÉGULATEUR DE TEMPÉRATURE) | 4N-1156 | 1 | CANALISATIONS D'EAU (ASS) | 87 |
| JOINT DE RÉGULATEUR (CARTER) (TEMPÉRATURE D'EAU, LIQUIDE DE REFROIDISSEMENT) | 139-3550 | 1 | CANALISATIONS D'EAU (ASS) | 87 |
| THERMOSTAT-TEMPÉRATURE D'EAU (92-DEG C) (LIQUIDE DE REFROIDISSEMENT) | 248-5513 | 2 | CANALISATIONS D'EAU (ASS) | 87 |
| TYPE LÈVRE À JOINT | 3S-9643 | 2 | CANALISATIONS D'EAU (ASS) | 87 |
| **CIRCUIT ELECTRIQUE ET DE DEMARRAGE** | | | | |
| AMPOULE (12V, 24V, 35W) | 209-6638 | 1 | LAMPE - PHARE (ASS) | 172 |
| | | 1 | LAMPE - PHARE (ASS) | 173 |
| AMPOULE (24 VOLTS) | 7N-5876 | 4 | CABLAGE DE CABINE (ASS) | 256 |
| | | 4 | CABLAGE DE CABINE (ASS) | 266 |
| | | 4 | CABLAGE DE CABINE (ASS) | 274 |
| | 7N-9943 | 1 | PLAFONNIER (ASS) | 171 |

# PIÈCES DE RECHANGE

| DESCRIPTION | NUMÉRO DE PIECÈS | QTÉ | DOMAINE D'APPLICATION | PAGE |
|---|---|---|---|---|
| AMPOULE (24V, 21W) | 9X-4493 | 1 | FEUX ARRIÈRE ET FEUX D'ARRÊT | 178 |
| | | 1 | LAMPE - CLIGNOTANT DE DIRECTION (ASS) | 176 |
| AMPOULE (24V, 5W) | 9X-4492 | 1 | FEUX ARRIÈRE ET FEUX D'ARRÊT | 178 |
| AMPOULE (24V, 70W) | 9X-7849 | 1 | LAMPE - GYROPHARE (ASS) | 179 |
| BATTERIE (12 VOLTS) | 115-2422 | 4 | BATTERIE ET CÂBLAGE | 140 |
| CLÉ (COUPE-BATTERIE) | 8H-5306 | 1 | ROBINET DE BATTERIE (ASS) | 233 |
| CLÉ ÉLECTRONIQUE (ENS) (SÉCURITÉ, GRIS) | 206-5165 | 2 | ENTRETIEN DE LA MACHINE (ASS) | 223 |
| CLÉ ÉLECTRONIQUE (ENS) (SÉCURITÉ, GRIS) (BLANC/VIDE) | 206-5165 | 1 | MONTAGE-SÉCURITÉ (ASS) | 169 |
| CLÉ ÉLECTRONIQUE (ENS) (SÉCURITÉ, JAUNE) | 206-5162 | 2 | ENTRETIEN DE LA MACHINE (ASS) | 223 |
| CLÉ ÉLECTRONIQUE (ENS) (SÉCURITÉ, JAUNE) (PROGRAMMÉE) | 206-5162 | 2 | MONTAGE-SÉCURITÉ (ASS) | 169 |
| DISJONCTEUR (ASS) (20A) (ALIM BAT NON RELIÉE À LA CABINE) | 6T-3644 | 1 | DISJONCTEUR DU PANNEAU DE COMMANDE (ASS) | 195 |
| DISJONCTEUR (ASS) (60A) (COMMANDE VÉRIN DE CAPOT) | 171-2208 | 1 | DISJONCTEUR DU PANNEAU DE COMMANDE (ASS) | 194 |
| DISJONCTEUR (ENS) (105A) (ALTERNATEUR) | 171-2212 | 1 | DISJONCTEUR DU PANNEAU DE COMMANDE (ASS) | 194 |
| DISJONCTEUR (ENS) (15A) (COMMANDE DE CHAUFFAGE, CLIMATISATION) | 6T-3643 | 2 | CABLAGE DE CABINE (ASS) | 258 |
| DISJONCTEUR (ENS) (15A) (COMMANDE DE PROTECTION À ASSISTANCE) | 3T-2662 | 1 | *WIRING GP-WASTE HANDLER | 303 |
| DISJONCTEUR (ENS) (15A) (FEUX DE ROUTE) | 3T-2662 | 1 | DISJONCTEUR DU PANNEAU DE COMMANDE (ASS) | 195 |
| DISJONCTEUR (ENS) (32-AMPÈRES) (DÉMARRAGE) | 171-2206 | 1 | DISJONCTEUR DU PANNEAU DE COMMANDE (ASS) | 194 |
| DISJONCTEUR (ENS) (80A) (PRINCIPAL) | 171-2210 | 1 | DISJONCTEUR DU PANNEAU DE COMMANDE (ASS) | 194 |
| FUSIBLE (10A) | 9W-1442 | 29 | CABLAGE DE CABINE (ASS) | 256 |
| | | 27 | CABLAGE DE CABINE (ASS) | 266 |
| | | 27 | CABLAGE DE CABINE (ASS) | 274 |
| FUSIBLE (15A) | 9W-1441 | 2 | CABLAGE DE CABINE (ASS) | 256 |
| | | 4 | CABLAGE DE CABINE (ASS) | 266 |
| | | 4 | CABLAGE DE CABINE (ASS) | 274 |
| FUSIBLE (20A) | 9W-1446 | 1 | CABLAGE DE CABINE (ASS) | 256 |
| | | 1 | CABLAGE DE CABINE (ASS) | 266 |
| | | 1 | CABLAGE DE CABINE (ASS) | 274 |
| LAMPE - CLIGNOTANT DE DIRECTION (ASS) (24 VOLTS) | 3E-6466 | 2 | ÉCLAIRAGE - PROJECTEURS ET CLIGNOTANTS (ASS) | 185 |
| | | 2 | ÉCLAIRAGE CLIGNOTANT | 187 |
| LAMPE (ENS) (ROUGE, VERT, TÉMOIN LUMINEUX, 12V) | 165-5655 | 1 | MONTAGE-SÉCURITÉ (ASS) | 169 |
| LAMPE HALOGÈNE (24V, 65W) | 9X-3463 | 1 | LAMPE - PHARE (ASS) | 174 |
| LAMPE HALOGÈNE (24V, 65W) (PROJECTEUR) | 9X-3463 | 1 | LAMPE - PHARE (ASS) | 175 |
| LENTILLE ORANGE | 9X-3066 | 1 | LAMPE - CLIGNOTANT DE DIRECTION (ASS) | 176 |

# PIÈCES DE RECHANGE

| DESCRIPTION | NUMÉRO DE PIECÈS | QTÉ | DOMAINE D'APPLICATION | PAGE |
|---|---|---|---|---|
| **CIRCUIT HYDRAULIQUE** | | | | |
| BOUCHON DE GOULOTTE DE REMPLISSAGE (RÉSERVOIR HYDRAULIQUE) | 7H-1447 | 1 | RÉSERVOIR HYDRAULIQUE (ASS) | 679 |
| | | 1 | RÉSERVOIR HYDRAULIQUE (ASS) | 677 |
| BOUCHON DE RADIATEUR (ENS) | 031-1119 | 1 | RESERVOIR D'EXPANSION (ASS) | 676 |
| BOUCHON DE VIDANGE | 9J-7031 | 1 | RÉSERVOIR HYDRAULIQUE (ASS) | 677 |
| | | 1 | RÉSERVOIR HYDRAULIQUE (ASS) | 679 |
| CREPINE | 200-5978 | 2 | COMMANDE PRINCIPALE DE SOUPAPE ET MONTAGE (ASS) | 683 |
| | | 2 | COMMANDE PRINCIPALE DE SOUPAPE ET MONTAGE (ASS) | 687 |
| | | 2 | COMMANDE PRINCIPALE DE SOUPAPE ET MONTAGE (ASS) | 690 |
| | | 2 | COMMANDE PRINCIPALE DE SOUPAPE ET MONTAGE (ASS) | 693 |
| CREPINE (GOULOTTE DE REMPLISSAGE) | 9J-3047 | 1 | RÉSERVOIR HYDRAULIQUE (ASS) | 677 |
| | | 1 | RÉSERVOIR HYDRAULIQUE (ASS) | 679 |
| ÉCRAN (ENS) (RÉSERVOIR HYDRAULIQUE) | 9T-9227 | 2 | RÉSERVOIR HYDRAULIQUE (ASS) | 677 |
| | | 2 | RÉSERVOIR HYDRAULIQUE (ASS) | 679 |
| FILTRE À HUILE (ENS) (HYDRAULIQUE) | 102-2828 | 1 | FILTRE A HUILE (ASS) | 639 |
| | 126-1818 | 1 | FILTRE A HUILE (ASS) | 640 |
| JOINT PLAT | 9H-6454 | 1 | RÉSERVOIR HYDRAULIQUE (ASS) | 677 |
| | | 1 | RÉSERVOIR HYDRAULIQUE (ASS) | 679 |
| **MATÉRIEL ET FOURNITURES D'ENTRETIEN** | | | | |
| CADENAS (ASS) | 246-2641 | 6 | PROTECTION ANTIVANDALISME (ASS) | 958 |
| **MOTEUR STANDARD** | | | | |
| BOUCHON DE VIDANGE (HUILE MOTEUR) | 9X-6451 | 1 | BOUGIE (ASS)-CARTER D'HUILE | 60 |
| BOURRELET D'ÉTANCHÉITÉ (COUVERCLE DE CULBUTERIE) | 242-9537 | 1 | CACHE-SOUPAPES (ASS) | 18 |
| | | 1 | CACHE-SOUPAPES (ASS) | 19 |

# PIÈCES DE RECHANGE

| DESCRIPTION | NUMÉRO DE PIECÈS | QTÉ | DOMAINE D'APPLICATION | PAGE |
|---|---|---|---|---|
| **POSTE DE CONDUITE** | | | | |
| ACCUMULATEUR - CLIMATISEUR (ASS) | 186-6189 | 1 | CANALISATIONS DE CLIMATISEUR (ASS) | 840 |
| AMPOULE (24 VOLTS) | 7N-5876 | 1 | ÉLECTROMODULE DE CHARGE UTILE DE BENNE | 867 |
| | | 1 | GROUPE DE CONTROLE | 796 |
| BALAI D'ESSUIE-GLACE (ENS) | 6V-7419 | 2 | ESSUIE-GLACE (ASS) | 948 |
| BATTERIE (LITHIUM) | 101-1785 | 1 | GROUPE DE CONTROLE | 798 |
| CEINTURE DE SECURITE (ASS) | 236-7019 | 1 | SIÈGE AVEC SUSPENSION (ASS) | 918 |
| | | 1 | SIÈGE AVEC SUSPENSION (ASS) | 919 |
| CHAPEAU | 3W-6398 | 1 | LAVE-GLACE - VITRE (ASS) | 943 |
| CLAVETTE - POIGNÉE | 3V-7476 | 1 | CONDUIT ET FILTRE À AIR (ASS) | 803 |
| FILTRE | 8T-5913 | 2 | LAVE-GLACE - VITRE (ASS) | 943 |
| FILTRE À AIR DE CABINE | 7X-6041 | 2 | CONDUIT ET FILTRE À AIR (ASS) | 803 |
| FUSIBLE (15A) | 133-9012 | 1 | CHAUFFAGE DE CABINE (ASS) | 818 |
| | | 1 | CLIMATISEUR (ASS) | 782 |
| RÉCEPTEUR-DÉSHYDRATEUR (ASS) (CLIMATISEUR) | 175-7162 | 1 | CANALISATIONS DE CLIMATISEUR (ASS) | 840 |
| **TRANSMISSION** | | | | |
| BOUCHON AIMANTÉ | 5P-4484 | 1 | ESSIEU FIXE | 307 |
| | | 1 | ESSIEU OSCILLANT | 308 |
| | 8M-3837 | 1 | ROUE ET RÉDUCTEURS (ASS) | 402 |
| BOUCHON DE GOULOTTE DE REMPLISSAGE (TRANSMISSION) | 5K-1568 | 1 | GOULOTTE DE REMPLISSAGE D'HUILE DE TRANSMISSION | 339 |
| BOUCHON FILETÉ | 129-0988 | 1 | ENGRENAGE DE TRANSFERT DE RENDEMENT (ASS) | 341 |
| CLÉ | 5P-8500 | 1 | BOUCHON DE REMPLISSAGE D'HUILE DE BOÎTE (ASS) | 321 |
| COURROIE TRAPEZOIDALE | 1N-3743 | 1 | POMPE ET MONTAGE DE REFROIDISSEUR D'HUILE D'ESSIEU | 369 |
| ÉCRAN MAGNÉTIQUE (ASS) | 4S-8603 | 1 | ENGRENAGE DE TRANSFERT DE RENDEMENT (ASS) | 341 |
| ÉCRAN MAGNÉTIQUE (REFROIDISSEUR D'HUILE D'ESSIEU) | 251-6351 | 2 | CANALISATIONS DE REFROIDISSEUR D'HUILE D'ESSIEU (ASS) | 347 |
| ÉLÉMENT DE FILTRE À HUILE (ENS) (GRANDE EFFICACITÉ) | 1R-1809 | 1 | FILTRE A HUILE (ASS) | 340 |
| RENIFLARD (ENS) | 9G-5127 | 1 | COMMANDE HYDRAULIQUE DE BOÎTE (ASS) | 313 |
| | | 1 | COMMANDE HYDRAULIQUE DE BOÎTE (ASS) | 315 |
| TAMIS D'ASPIRATION | 4S-8598 | 1 | ENGRENAGE DE TRANSFERT DE RENDEMENT (ASS) | 341 |
| **VERSION DE MACHINE** | | | | |
| CLÉ | 5P-8500 | 2 | VERSION DE CHASSIS | 1 |

# PIEZAS DE MANTENIMIENTO

| DESCRIPCION | NUMERO DE PIEZA | CANT | SE UTILIZA EN | PAGINA |
|---|---|---|---|---|
| **CONFIGURACIÓN DE MÁQUINAS** | | | | |
| LLAVE | 5P-8500 | 2 | CHASIS (CONFIG) | 1 |
| **EQUIPO DE SERVICIO Y SUMINISTROS** | | | | |
| CANDADO (GR) | 246-2641 | 6 | GRUPO DE PROTECCIÓN CONTRA EL VANDALISMO | 958 |
| **MOTOR BÁSICO** | | | | |
| SELLO (TAPA DEL MECANISMO DE LA VÁLVULA) | 242-9537 | 1 | TAPA DEL MECANISMO DE VÁLVULAS (GR) | 18 |
| | | 1 | TAPA DEL MECANISMO DE VÁLVULAS (GR) | 19 |
| TAPÓN DE DRENAJE (ACEITE DEL MOTOR) | 9X-6451 | 1 | TAPON DEL COLECTOR DEL CARTER (GR) | 60 |
| **PUESTO DEL OPERADOR** | | | | |
| ACUMULADOR DEL ACONDICIONADOR DE AIRE (GR) | 186-6189 | 1 | TUBERÍAS DE ACONDICIONADOR DE AIRE (GR) | 840 |
| BATERÍA (LITIO) | 101-1785 | 1 | CONTROL DE MONITOR (GR) | 798 |
| CINTURÓN DE SEGURIDAD (GR) | 236-7019 | 1 | SUSPENSIÓN - ASIENTO CON (GR) | 918 |
| | | 1 | SUSPENSIÓN - ASIENTO CON (GR) | 919 |
| FILTRO DE AIRE DE CABINA | 7X-6041 | 2 | CONDUCTO Y FILTRO DE AIRE (GR) | 803 |
| FUSIBLE (15 AMPERIOS) | 133-9012 | 1 | ACONDICIONADOR DE AIRE (GR) | 782 |
| | | 1 | CALEFACCIÓN DE LA CABINA (GR) | 818 |
| HOJA DE LIMPIAPARABRISAS (CONJ) | 6V-7419 | 2 | LIMPIAPARABRISAS DE LA VENTANA (GR) | 948 |
| LÁMPARA (24 VOLTIOS) | 7N-5876 | 1 | MONITOR DE CARGA ÚTIL (GR) | 867 |
| | | 1 | CONTROL DE MONITOR (GR) | 796 |
| LLAVE - MANIJA | 3V-7476 | 1 | CONDUCTO Y FILTRO DE AIRE (GR) | 803 |
| RECEPTOR-SECADOR (GR) (ACONDICIONADOR DE AIRE) | 175-7162 | 1 | TUBERÍAS DE ACONDICIONADOR DE AIRE (GR) | 840 |
| REJILLA DE FILTRO | 8T-5913 | 2 | LAVAPARABRISAS DE LA VENTANA (GR) | 943 |
| TAPA | 3W-6398 | 1 | LAVAPARABRISAS DE LA VENTANA (GR) | 943 |
| **SISTEMA DE AIRE DE ADMISIÓN Y ESCAPE** | | | | |
| ELEMENTO DEL FILTRO DE AIRE (CONJ) (PRIMARIO) | 6I-2509 | 1 | FILTRO DE AIRE (GR) | 100 |
| ELEMENTO DEL FILTRO DE AIRE (CONJ) (SECUNDARIO) | 6I-2510 | 1 | FILTRO DE AIRE (GR) | 100 |
| INDICADOR- CAMBIO DE FILTRO DE AIRE | 1W-0613 | 1 | INDICADOR DE CAMBIO DE FILTRO DE ACEITE (GR) | 103 |
| MANGUERA-CODO | 217-1601 | 1 | *LINES GP-AFTERCOOLER AIR | 105 |

* NO HAY TRADUCCION DISPONIBLE EN EL MOMENTO DE LA IMPRESION

# PIEZAS DE MANTENIMIENTO

| DESCRIPCION | NUMERO DE PIEZA | CANT | SE UTILIZA EN | PAGINA |
|---|---|---|---|---|
| **SISTEMA DE COMBUSTIBLE** | | | | |
| COLADOR DE COMBUSTIBLE | 9P-7121 | 1 | COMBUSTIBLE - TANQUE DE (GR) | 126 |
| FILTRO DE COMBUSTIBLE (CONJ) | 1R-0762 | 1 | FILTRO DE COMBUSTIBLE Y MONTAJE (GR) | 115 |
| FILTRO DE COMBUSTIBLE Y SEPARADOR DE AGUA (CONJ) (PRIMARIO) | 1R-0770 | 1 | FILTRO DE COMBUSTIBLE Y SEPARADOR DE AGUA (GR) | 119 |
| SELLO (SEPARADOR DE AGUA, COMBUSTIBLE) | 220-8678 | 1 | FILTRO DE COMBUSTIBLE Y SEPARADOR DE AGUA (GR) | 119 |
| TAPA DE LLENADO (CONJ) (COMBUSTIBLE) | 123-6319 | 1 | COMBUSTIBLE - TANQUE DE (GR) | 126 |
| **SISTEMA DE DIRECCIÓN** | | | | |
| COLADOR (REJILLA, CAJA DE DRENAJE) | 233-7419 | 1 | TUBERÍAS DE DIRECCIÓN (GR) | 550 |
| REJILLA | 6E-5066 | 2 | *SCREEN GP-CASE DRAIN | 564 |
| **SISTEMA DE ENFRIAMIENTO** | | | | |
| EMPAQUETADURA DE REGULADOR (*HOUSING) (AGUA, TEMPERATURA DEL REFRIGERANTE) | 139-3550 | 1 | TUBERÍAS DEL AGUA (GR) | 87 |
| EMPAQUETADURA, TAPA DE REGULADOR (CAJA DEL REGULADOR DE TEMPERATURA) | 4N-1156 | 1 | TUBERÍAS DEL AGUA (GR) | 87 |
| FILTRO DE LA BOMBA DE AGUA | 136-3742 | 1 | BOMBA DE AGUA (GR) | 90 |
| MANGUERA-CODO | 169-5836 | 1 | TUBERÍAS DEL AGUA (GR) | 82 |
| REGULADOR DE TEMPERATURA DEL AGUA (92 GRADOS CENTÍGRADOS) (REFRIGERANTE) | 248-5513 | 2 | TUBERÍAS DEL AGUA (GR) | 87 |
| SELLO DE LABIO | 3S-9643 | 2 | TUBERÍAS DEL AGUA (GR) | 87 |
| **SISTEMA DE LUBRICACIÓN** | | | | |
| FILTRO DE ACEITE DEL MOTOR (CONJ) | 1R-0716 | 1 | FILTRO DE ACEITE DEL MOTOR (GR) | 71 |
| RESPIRADERO (CONJ) (CÁRTER DEL MOTOR) | 162-2266 | 1 | ESCAPE DE GASES (GR) | 73 |
| TAPÓN (CONJ) (RELLENADOR DE ACEITE) | 205-6405 | 1 | TUBO DE LLENADO DE ACEITE (GR) | 70 |
| **SISTEMA ELECTRICO Y DE ARRANQUE** | | | | |
| BATERÍA (12 VOLTIOS) | 115-2422 | 4 | BATERÍA Y CABLES (GR) | 140 |
| CONJUNTO DE LLAVE, ELECTRONICA (SEGURIDAD, AMARILLO) | 206-5162 | 2 | SERVICIO DE MAQUINA (GR) | 223 |
| CONJUNTO DE LLAVE, ELECTRONICA (SEGURIDAD, AMARILLO) (PROGRAMADO) | 206-5162 | 2 | INSTALACION DE SEGURIDAD (GR) | 169 |
| CONJUNTO DE LLAVE, ELECTRONICA (SEGURIDAD, GRIS) | 206-5165 | 2 | SERVICIO DE MAQUINA (GR) | 223 |
| CONJUNTO DE LLAVE, ELECTRONICA (SEGURIDAD, GRIS) (EN BLANCO) | 206-5165 | 1 | INSTALACION DE SEGURIDAD (GR) | 169 |
| DISYUNTOR (CONJ) (105 AMPERIOS) (ALTERNADOR) | 171-2212 | 1 | PANEL DE DISYUNTORES (GR) | 194 |

* NO HAY TRADUCCION DISPONIBLE EN EL MOMENTO DE LA IMPRESION

# PIEZAS DE MANTENIMIENTO

| DESCRIPCION | NUMERO DE PIEZA | CANT | SE UTILIZA EN | PAGINA |
|---|---|---|---|---|
| DISYUNTOR (CONJ) (15 AMPERIOS) (ACCIONADOR DE PROTECTOR ELÉCTRICO) | 3T-2662 | 1 | *WIRING GP-WASTE HANDLER | 303 |
| DISYUNTOR (CONJ) (15 AMPERIOS) (CONTROL DE CALEFACCION, ACONDICIOANDOR DE AIRE) | 6T-3643 | 2 | CABLES DE LA CABINA (GR) | 258 |
| DISYUNTOR (CONJ) (15 AMPERIOS) (LUCES DE TRABAJO) | 3T-2662 | 1 | PANEL DE DISYUNTORES (GR) | 195 |
| DISYUNTOR (CONJ) (50 AMPERIOS) (ARRANQUE) | 171-2206 | 1 | PANEL DE DISYUNTORES (GR) | 194 |
| DISYUNTOR (CONJ) (80 AMPERIOS) (PRINCIPAL) | 171-2210 | 1 | PANEL DE DISYUNTORES (GR) | 194 |
| DISYUNTOR DE CIRCUITO (GR) (20-AMPERIOS) (*UNSWITCHED BAT POWER TO CAB) | 6T-3644 | 1 | PANEL DE DISYUNTORES (GR) | 195 |
| DISYUNTOR DE CIRCUITO (GR) (60 AMPERIOS) (ACCIONADOR DE INCLINACION DE CAPO) | 171-2208 | 1 | PANEL DE DISYUNTORES (GR) | 194 |
| FUSIBLE (10-AMPERIOS) | 9W-1442 | 29 | CABLES DE LA CABINA (GR) | 256 |
| | | 27 | CABLES DE LA CABINA (GR) | 266 |
| | | 27 | CABLES DE LA CABINA (GR) | 274 |
| FUSIBLE (15 AMPERIOS) | 9W-1441 | 2 | CABLES DE LA CABINA (GR) | 256 |
| | | 4 | CABLES DE LA CABINA (GR) | 266 |
| | | 4 | CABLES DE LA CABINA (GR) | 274 |
| FUSIBLE (20-AMPERIOS) | 9W-1446 | 1 | CABLES DE LA CABINA (GR) | 256 |
| | | 1 | CABLES DE LA CABINA (GR) | 266 |
| | | 1 | CABLES DE LA CABINA (GR) | 274 |
| LÁMPARA (CONJ) (ROJO, VERDE, DIODO, 12 VOLTIOS) | 165-5655 | 1 | INSTALACION DE SEGURIDAD (GR) | 169 |
| LÁMPARA (*12-VOLT, 24-VOLT, 35-WATT) | 209-6638 | 1 | REFLECTOR (GR) | 172 |
| | | 1 | REFLECTOR (GR) | 173 |
| LÁMPARA (24 VOLTIOS) | 7N-5876 | 4 | CABLES DE LA CABINA (GR) | 256 |
| | | 4 | CABLES DE LA CABINA (GR) | 266 |
| | 7N-9943 | 1 | LÁMPARA DEL TECHO (GR) | 171 |
| | 7N-5876 | 4 | CABLES DE LA CABINA (GR) | 274 |
| LÁMPARA (24-VOLTIOS, 21 VATIOS) | 9X-4493 | 1 | LUCES DE PARADA Y COLA (GR) | 178 |
| | | 1 | LUZ DE SEÑAL DE GIRO (GR) | 176 |
| LÁMPARA (24 VOLTIOS, 5 VATIOS) | 9X-4492 | 1 | LUCES DE PARADA Y COLA (GR) | 178 |
| LÁMPARA (24-VOLTIOS, 70-VATIOS) | 9X-7849 | 1 | LÁMPARA DE BALIZA DE ADVERTENCIA (GR) | 179 |
| LENTE AMBAR | 9X-3066 | 1 | LUZ DE SEÑAL DE GIRO (GR) | 176 |
| LLAVE (DESCONECTAR BATERIA) | 8H-5306 | 1 | DISYUNTOR (GR) | 233 |
| LUCES DE ALÓGENO (24 VOLTIOS, 65 VATIOS) | 9X-3463 | 1 | REFLECTOR (GR) | 174 |
| LUCES DE ALÓGENO (24 VOLTIOS, 65 VATIOS) (REFLECTOR) | 9X-3463 | 1 | REFLECTOR (GR) | 175 |
| LUZ DE SEÑAL DE GIRO (GR) (24 VOLTIOS) | 3E-6466 | 2 | LUCES DE GIRO (GR) | 187 |
| | | 2 | LUCES DE REFLECTOR Y CAMBIO DE DIRECCION (GR) | 185 |

* NO HAY TRADUCCION DISPONIBLE EN EL MOMENTO DE LA IMPRESION

# PIEZAS DE MANTENIMIENTO

| DESCRIPCION | NUMERO DE PIEZA | CANT | SE UTILIZA EN | PAGINA |
|---|---|---|---|---|
| **SISTEMA HIDRÁULICO** | | | | |
| COLADOR | 200-5978 | 2 | MONTAJE Y VALVULA DEL CONTROL PRINCIPAL (GR) | 683 |
| | | 2 | MONTAJE Y VALVULA DEL CONTROL PRINCIPAL (GR) | 687 |
| | | 2 | MONTAJE Y VALVULA DEL CONTROL PRINCIPAL (GR) | 690 |
| | | 2 | MONTAJE Y VALVULA DEL CONTROL PRINCIPAL (GR) | 693 |
| COLADOR (*FILLER) | 9J-3047 | 1 | TANQUE HIDRÁULICO (GR) | 677 |
| | | 1 | TANQUE HIDRÁULICO (GR) | 679 |
| EMPAQUETADURA | 9H-6454 | 1 | TANQUE HIDRÁULICO (GR) | 677 |
| | | 1 | TANQUE HIDRÁULICO (GR) | 679 |
| FILTRO DE ACEITE (CONJ) (HIDRAULICO) | 102-2828 | 1 | FILTRO DE ACEITE (GR) | 639 |
| FILTRO DE ACEITE (CONJ) (HIDRÁULICO) | 126-1818 | 1 | FILTRO DE ACEITE (GR) | 640 |
| PANTALLA (CONJ) (TANQUE HIDRAULICO) | 9T-9227 | 2 | TANQUE HIDRÁULICO (GR) | 677 |
| | | 2 | TANQUE HIDRÁULICO (GR) | 679 |
| TAPA DE RADIADOR (CONJ) | 031-1119 | 1 | TANQUE DE EXPANSIÓN (GR) | 676 |
| TAPA DEL TUBO DE LLENADO (TANQUE HIDRÁULICO) | 7H-1447 | 1 | TANQUE HIDRÁULICO (GR) | 679 |
| | | 1 | TANQUE HIDRÁULICO (GR) | 677 |
| TAPÓN DE DRENAJE | 9J-7031 | 1 | TANQUE HIDRÁULICO (GR) | 677 |
| | | 1 | TANQUE HIDRÁULICO (GR) | 679 |
| **TREN DE FUERZA** | | | | |
| CORREA TRAPEZOIDAL | 1N-3743 | 1 | BOMBA DEL ENFRIADOR DE ACEITE DEL EJE Y MONTAJE (GR) | 369 |
| ELEMENTO DE FILTRO DE ACEITE (CONJ) (ALTA EFICIENCIA) | 1R-1809 | 1 | FILTRO DE ACEITE (GR) | 340 |
| FILTRO MAGNÉTICO (ENFRIADOR DE ACEITE DE EJE) | 251-6351 | 2 | TUBERÍAS DEL ENFRIADOR DE ACEITE DEL EJE (GR) | 347 |
| LLAVE | 5P-8500 | 1 | CUBIERTA (GR)-TAPA DE LLENADO DE ACEITE DE LA TRANSMISIÓN | 321 |
| REJILLA DE SUCCIÓN | 4S-8598 | 1 | ENGRANAJE DE TRANSFERENCIA DE SALIDA | 341 |
| REJILLA MAGNÉTICA (GR) | 4S-8603 | 1 | ENGRANAJE DE TRANSFERENCIA DE SALIDA | 341 |
| RESPIRADERO (CONJ) | 9G-5127 | 1 | CONTROL HIDRÁULICO DE LA TRANSMISIÓN (GR) | 313 |
| | | 1 | CONTROL HIDRÁULICO DE LA TRANSMISIÓN (GR) | 315 |
| TAPA DEL TUBO DE LLENADO (TREN DE FUERZA) | 5K-1568 | 1 | TUBO DE LLENADO DE ACEITE DE LA TRANSMISIÓN (GR) | 339 |
| TAPÓN | 129-0988 | 1 | ENGRANAJE DE TRANSFERENCIA DE SALIDA | 341 |
| TAPÓN MAGNÉTICO | 5P-4484 | 1 | EJE FIJO (GR) | 307 |
| | | 1 | EJE OSCILANTE (GR) | 308 |
| | 8M-3837 | 1 | RUEDA Y MANDOS FINALES | 402 |

* NO HAY TRADUCCION DISPONIBLE EN EL MOMENTO DE LA IMPRESION

# PEÇAS DE MANUTENÇÃO

| DESCRIÇÃO | NÚMERO DE PEÇA | QUANT | UTILIZADA EM | PÁGINA |
|---|---|---|---|---|
| **EQUIPAMENTOS DE SERVIÇO E SUPRIMENTOS** | | | | |
| CADEADO | 246-2641 | 6 | PROTEÇÃO CONTRA VANDALISMO | 958 |
| **ESTAÇÃO DO OPERADOR** | | | | |
| ACUMULADOR - AR CONDICIONADO | 186-6189 | 1 | TUBOS - AR CONDICIONADO | 840 |
| BATERIA (LÍTIO) | 101-1785 | 1 | CONTROLE DO PAINEL MONITOR | 798 |
| CHAVE - ALAVANCA | 3V-7476 | 1 | DUCTO E FILTRO | 803 |
| CINTO DE SEGURANÇA | 236-7019 | 1 | ASSENTO COM SUSPENSÃO | 918 |
| | | 1 | ASSENTO COM SUSPENSÃO | 919 |
| FILTRO DE AR DE CABINA | 7X-6041 | 2 | DUCTO E FILTRO | 803 |
| FUSÍVEL (15 AMPERES) | 133-9012 | 1 | AQUECEDOR DA CABINE | 818 |
| | | 1 | CONDICIONADOR DE AR | 782 |
| LÂMINA DO LIMPADOR DE PÁRA-BRISA | 6V-7419 | 2 | LIMPADOR DO VIDRO | 948 |
| LÂMPADA (24 VOLTS) | 7N-5876 | 1 | CONTROLE DO PAINEL MONITOR | 796 |
| | | 1 | PAINEL MONITOR DE CARGA ÚTIL | 867 |
| RECEPTOR - SECADOR (CONDICIONADOR DE AR) | 175-7162 | 1 | TUBOS - AR CONDICIONADO | 840 |
| TAMPA | 3W-6398 | 1 | LAVADOR DO VIDRO | 943 |
| TELA - FILTRO | 8T-5913 | 2 | LAVADOR DO VIDRO | 943 |
| **MÁQUINA - ARRANJO** | | | | |
| CHAVE | 5P-8500 | 2 | CHASSI | 1 |
| **MOTOR BÁSICO** | | | | |
| BUJÃO DO DRENO (ÓLEO DO MOTOR) | 9X-6451 | 1 | BUJÃO - CÁRTER DO ÓLEO | 60 |
| RETENTOR (TAMPA, MECANISMO DA VÁLVULA) | 242-9537 | 1 | TAMPA - MECANISMO DAS VÁLVULAS | 18 |
| | | 1 | TAMPA - MECANISMO DAS VÁLVULAS | 19 |
| **SISTEMA DA ADMISSÃO DE AR E DE ESCAPE** | | | | |
| ELEMENTO DO FILTRO DE AR (PRIMÁRIO) | 6I-2509 | 1 | PURIFICADOR DE AR | 100 |
| ELEMENTO DO FILTRO DE AR (SECUNDÁRIO) | 6I-2510 | 1 | PURIFICADOR DE AR | 100 |
| INDICADOR-TROCAR FILTRO DE AR | 1W-0613 | 1 | INDICADOR - TROCA DO FILTRO DE AR | 103 |
| MANGUEIRA - COTOVELO | 217-1601 | 1 | TUBULAÇÕES - AR DO PÓS-ARREFECEDOR | 105 |
| **SISTEMA DE ARREFECIMENTO** | | | | |
| FILTRO - BOMBA DE ÁGUA | 136-3742 | 1 | BOMBA DE ÁGUA | 90 |
| JUNTA - REGULADOR (ALOJAMENTO) (ÁGUA, TEMPERATURA DO LÍQUIDO ARREFECEDOR) | 139-3550 | 1 | TUBOS - ÁGUA | 87 |
| JUNTA - TAMPA DO REGULADOR (ALOJAMENTO DO REGULADOR DE TEMPERATURA) | 4N-1156 | 1 | TUBOS - ÁGUA | 87 |
| MANGUEIRA - COTOVELO | 169-5836 | 1 | TUBOS - ÁGUA | 82 |
| REGULADOR DE TEMPERATURA DA ÁGUA (92 GRAUS C) (LÍQUIDO ARREFECEDOR) | 248-5513 | 2 | TUBOS - ÁGUA | 87 |
| VEDADOR TIPO LABIO | 3S-9643 | 2 | TUBOS - ÁGUA | 87 |

# PEÇAS DE MANUTENÇÃO

| DESCRIÇÃO | NÚMERO DE PEÇA | QUANT | UTILIZADA EM | PÁGINA |
|---|---|---|---|---|
| **SISTEMA DE COMBUSTÍVEL** | | | | |
| FILTRO - COMBUSTÍVEL | 1R-0762 | 1 | FILTRO E MONTAGEM-COMBUSTÍVEL | 115 |
| | 9P-7121 | 1 | TANQUE DE COMBUSTÍVEL | 126 |
| FILTRO - SEPARADOR DE ÁGUA E COMBUSTÍVEL (PRIMÁRIO) | 1R-0770 | 1 | FILTRO DE COMBUSTÍVEL E SEPARADOR DE ÁGUA | 119 |
| RETENTOR (SEPARADOR DE ÁGUA, COMBUSTÍVEL) | 220-8678 | 1 | FILTRO DE COMBUSTÍVEL E SEPARADOR DE ÁGUA | 119 |
| TAMPA - BOCAL DE ENCHIMENTO (COMBUSTÍVEL) | 123-6319 | 1 | TANQUE DE COMBUSTÍVEL | 126 |
| **SISTEMA DE DIREÇÃO** | | | | |
| TELA FILTRANTE | 6E-5066 | 2 | *SCREEN GP-CASE DRAIN | 564 |
| TELA FILTRANTE (TELA DE DRENAGEM DA CAIXA) | 233-7419 | 1 | TUBOS - DIREÇÃO | 550 |
| **SISTEMA DE LUBRIFICAÇÃO** | | | | |
| FILTRO - ÓLEO DO MOTOR | 1R-0716 | 1 | FILTRO - ÓLEO DO MOTOR | 71 |
| RESPIRO (CÁRTER DO MOTOR) | 162-2266 | 1 | ELIMINAÇÃO DE VAPORES DO CÁRTER | 73 |
| TAMPA (BOCAL DE ENCHIMENTO DE ÓLEO) | 205-6405 | 1 | BOCAL DE ENCHIMENTO DE ÓLEO DO MOTOR | 70 |
| **SISTEMA ELÉTRICO E DE PARTIDA** | | | | |
| BATERIA (12-VOLTS) | 115-2422 | 4 | BATERIA E CABOS / FIOS ELÉTRICOS | 140 |
| CHAVE - ELETRÔNICO (SEGURANÇA, AMARELO) | 206-5162 | 2 | GR. DE SERVIÇO - MÁQUINA | 223 |
| CHAVE - ELETRÔNICO (SEGURANÇA, AMARELO) (PROGRAMADO) | 206-5162 | 2 | INSTALAÇÃO-SEGURANÇA | 169 |
| CHAVE - ELETRÔNICO (SEGURANÇA, CINZA) | 206-5165 | 2 | GR. DE SERVIÇO - MÁQUINA | 223 |
| CHAVE - ELETRÔNICO (SEGURANÇA, CINZA) (SEM DESIGNAÇÃO) | 206-5165 | 1 | INSTALAÇÃO-SEGURANÇA | 169 |
| CHAVE (DESCONECTAR A BATERIA) | 8H-5306 | 1 | CHAVE GERAL | 233 |
| DISJUNTOR AUTOMÁTICO DE CIRCUITO (105 AMPERES) (ALTERNADOR) | 171-2212 | 1 | PAINEL - DISJUNTOR ELÉTRICO AUTOMÁTICO | 194 |
| DISJUNTOR AUTOMÁTICO DE CIRCUITO (15 AMPERES) (ACIONADOR DO PROTETOR DE ENERGIA) | 3T-2662 | 1 | FIAÇÃO - MANIPULADOR DE RESÍDUOS | 303 |
| DISJUNTOR AUTOMÁTICO DE CIRCUITO (15 AMPERES) (CONTROLE DO AR CONDICIONADO, AQUECEDOR) | 6T-3643 | 2 | CABOS/FIOS ELÉTRICOS - CABINE | 258 |
| DISJUNTOR AUTOMÁTICO DE CIRCUITO (15 AMPERES) (ILUMINAÇÃO DE OPERAÇÃO) | 3T-2662 | 1 | PAINEL - DISJUNTOR ELÉTRICO AUTOMÁTICO | 195 |
| DISJUNTOR AUTOMÁTICO DE CIRCUITO (50 AMPÈRES) (PARTIDA) | 171-2206 | 1 | PAINEL - DISJUNTOR ELÉTRICO AUTOMÁTICO | 194 |
| DISJUNTOR AUTOMÁTICO DE CIRCUITO (80 AMPERES) (PRINCIPAL) | 171-2210 | 1 | PAINEL - DISJUNTOR ELÉTRICO AUTOMÁTICO | 194 |
| FUSÍVEL (10 AMPERES) | 9W-1442 | 29 | CABOS/FIOS ELÉTRICOS - CABINE | 256 |

# PEÇAS DE MANUTENÇÃO

| DESCRIÇÃO | NÚMERO DE PEÇA | QUANT | UTILIZADA EM | PÁGINA |
|---|---|---|---|---|
| | | 27 | CABOS/FIOS ELÉTRICOS - CABINE | 266 |
| | | 27 | CABOS/FIOS ELÉTRICOS - CABINE | 274 |
| FUSÍVEL (15 AMPERES) | 9W-1441 | 2 | CABOS/FIOS ELÉTRICOS - CABINE | 256 |
| | | 4 | CABOS/FIOS ELÉTRICOS - CABINE | 266 |
| | | 4 | CABOS/FIOS ELÉTRICOS - CABINE | 274 |
| FUSÍVEL (20-AMPERES) | 9W-1446 | 1 | CABOS/FIOS ELÉTRICOS - CABINE | 256 |
| | | 1 | CABOS/FIOS ELÉTRICOS - CABINE | 266 |
| | | 1 | CABOS/FIOS ELÉTRICOS - CABINE | 274 |
| INTERRUPTOR - CIRCUITO (20-AMPERES) (ENERGIA DA BATERIA PARA CABINE DESLIGADA) | 6T-3644 | 1 | PAINEL - DISJUNTOR ELÉTRICO AUTOMÁTICO | 195 |
| INTERRUPTOR - CIRCUITO (60 AMPERES) (ACIONADOR DE INCLINAÇÃO DO CAPÔ) | 171-2208 | 1 | PAINEL - DISJUNTOR ELÉTRICO AUTOMÁTICO | 194 |
| LÂMPADA - HALOGÊNEO (24 VOLTS, 65 WATTS) | 9X-3463 | 1 | LÂMPADA - FAROL | 174 |
| LÂMPADA - HALOGÊNEO (24 VOLTS, 65 WATTS) (FAROL) | 9X-3463 | 1 | LÂMPADA - FAROL | 175 |
| LÂMPADA - SINALIZAÇÃO (24 VOLTS) | 3E-6466 | 2 | ILUMINAÇÃO - SINALIZAÇÃO | 187 |
| | | 2 | SISTEMA DE ILUMINAÇÃO - FARÓIS E SINAL | 185 |
| LÂMPADA (VERMELHA, VERDE, LED, 12 VOLTS) | 165-5655 | 1 | INSTALAÇÃO-SEGURANÇA | 169 |
| LÂMPADA (12 VOLTS, 24 VOLTS, 35 WATTS) | 209-6638 | 1 | LÂMPADA - FAROL | 172 |
| | | 1 | LÂMPADA - FAROL | 173 |
| LÂMPADA (24 VOLTS) | 7N-5876 | 4 | CABOS/FIOS ELÉTRICOS - CABINE | 256 |
| | | 4 | CABOS/FIOS ELÉTRICOS - CABINE | 266 |
| | | 4 | CABOS/FIOS ELÉTRICOS - CABINE | 274 |
| | 7N-9943 | 1 | LÂMPADA - TETO | 171 |
| LÂMPADA (24 VOLTS, 21 WATTS) | 9X-4493 | 1 | LÂMPADA - SINALIZAÇÃO | 176 |
| | | 1 | LUZ TRASEIRA E DE FREIO | 178 |
| LÂMPADA (24 VOLTS, 5 WATTS) | 9X-4492 | 1 | LUZ TRASEIRA E DE FREIO | 178 |
| LÂMPADA (24 VOLTS, 70 WATTS) | 9X-7849 | 1 | LUZ GIRATÓRIA DE ALARME | 179 |
| LENTE ÂMBAR | 9X-3066 | 1 | LÂMPADA - SINALIZAÇÃO | 176 |

# PEÇAS DE MANUTENÇÃO

| DESCRIÇÃO | NÚMERO DE PEÇA | QUANT | UTILIZADA EM | PÁGINA |
|---|---|---|---|---|
| **SISTEMA HIDRÁULICO** | | | | |
| BUJÃO DO DRENO | 9J-7031 | 1 | TANQUE HIDRÁULICO | 677 |
| | | 1 | TANQUE HIDRÁULICO | 679 |
| FILTRO - ÓLEO (HIDRÁULICO) | 102-2828 | 1 | FILTRO - ÓLEO | 639 |
| | 126-1818 | 1 | FILTRO - ÓLEO | 640 |
| JUNTA | 9H-6454 | 1 | TANQUE HIDRÁULICO | 677 |
| | | 1 | TANQUE HIDRÁULICO | 679 |
| TAMPA - BOCAL DE ENCHIMENTO (TANQUE HIDRÁULICO) | 7H-1447 | 1 | TANQUE HIDRÁULICO | 677 |
| | | 1 | TANQUE HIDRÁULICO | 679 |
| TAMPA - RADIADOR | 031-1119 | 1 | TANQUE DE EXPANSÃO | 676 |
| TELA FILTRANTE | 200-5978 | 2 | VÁLVULA DO CONTROLE PRINCIPAL E MONTAGEM | 683 |
| | | 2 | VÁLVULA DO CONTROLE PRINCIPAL E MONTAGEM | 687 |
| | | 2 | VÁLVULA DO CONTROLE PRINCIPAL E MONTAGEM | 690 |
| | | 2 | VÁLVULA DO CONTROLE PRINCIPAL E MONTAGEM | 693 |
| TELA FILTRANTE (BOCAL DE ENCHIMENTO) | 9J-3047 | 1 | TANQUE HIDRÁULICO | 677 |
| | | 1 | TANQUE HIDRÁULICO | 679 |
| TELA FILTRANTE (TANQUE HIDRÁULICO) | 9T-9227 | 2 | TANQUE HIDRÁULICO | 677 |
| | | 2 | TANQUE HIDRÁULICO | 679 |
| **TREM DE FORÇA** | | | | |
| BUJÃO MAGNÉTICO | 5P-4484 | 1 | EIXO FIXO | 307 |
| | | 1 | EIXO OSCILANTE | 308 |
| | 8M-3837 | 1 | RODA E COMANDO FINAL | 402 |
| CHAVE | 5P-8500 | 1 | TAMPA - BOCAL DE ENCHIMENTO DE ÓLEO DA TRANSMISSÃO | 321 |
| CORREIA EM V | 1N-3743 | 1 | BOMBA DO ARREFECEDOR DE ÓLEO DO EIXO E MONTAGEM | 369 |
| ELEMENTO FILTRANTE - ÓLEO (ALTA EFICIÊNCIA) | 1R-1809 | 1 | FILTRO - ÓLEO | 340 |
| FILTRO - MAGNÉTICO | 4S-8603 | 1 | ENGRENAGENS DE SAÍDA DE TRANSFERÊNCIA | 341 |
| FILTRO - MAGNÉTICO (ARREFECEDOR DO ÓLEO DO EIXO) | 251-6351 | 2 | TUBOS - ARREFECEDOR DE ÓLEO DO EIXO | 347 |
| RESPIRO | 9G-5127 | 1 | CONTROLE HIDRÁULICO DA TRANSMISSÃO | 313 |
| | | 1 | CONTROLE HIDRÁULICO DA TRANSMISSÃO | 315 |
| TAMPA - BOCAL DE ENCHIMENTO (TREM DE FORÇA) | 5K-1568 | 1 | BOCAL DE ENCHIMENTO DE ÓLEO DO TREM DE FORÇA | 339 |
| TAMPÃO | 129-0988 | 1 | ENGRENAGENS DE SAÍDA DE TRANSFERÊNCIA | 341 |
| TELA DE SUCÇÃO | 4S-8598 | 1 | ENGRENAGENS DE SAÍDA DE TRANSFERÊNCIA | 341 |

# WARTUNGSTEILE

| BESCHREIBUNG | ERSATZTEIL-NUMMER | MENGE | VERWENDET IN | SEITE |
|---|---|---|---|---|
| **ELEKTRISCHE ANLAGE U. STARTSYSTEM** | | | | |
| ABDECKGLAS (GELB) | 9X-3066 | 1 | BLINKLEUCHTE | 176 |
| BATTERIE (12 V) | 115-2422 | 4 | BATTERIE UND VERDRAHTUNG | 140 |
| BELEUCHTUNGSANLAGE (ROT, GRÜN, LED, 12 V) | 165-5655 | 1 | SICHERHEITSEINBAUSATZ | 169 |
| BLINKLEUCHTE (24 V) | 3E-6466 | 2 | ARBEITS- U. SIGNALLEUCHTE | 185 |
| | | 2 | BLINKERLEUCHTEN | 187 |
| ELEKTRONISCHER SCHLÜSSEL (SICHERHEIT, GELB) | 206-5162 | 2 | SERVICE MASCHINE | 223 |
| ELEKTRONISCHER SCHLÜSSEL (SICHERHEIT, GELB) (PROGRAMMIERT) | 206-5162 | 2 | SICHERHEITSEINBAUSATZ | 169 |
| ELEKTRONISCHER SCHLÜSSEL (SICHERHEIT, GRAU) | 206-5165 | 2 | SERVICE MASCHINE | 223 |
| ELEKTRONISCHER SCHLÜSSEL (SICHERHEIT, GRAU) (UNBESCHRIFTET) | 206-5165 | 1 | SICHERHEITSEINBAUSATZ | 169 |
| HALOGENSCHINWERFER (24V)(65W) | 9X-3463 | 1 | ARBEITSLEUCHTEN | 174 |
| HALOGENSCHINWERFER (24V)(65W) (ARBEITSSCHEINWERFER) | 9X-3463 | 1 | ARBEITSLEUCHTEN | 175 |
| LEUCHTE (12 V, 24 V, 35 W) | 209-6638 | 1 | ARBEITSLEUCHTEN | 172 |
| | | 1 | ARBEITSLEUCHTEN | 173 |
| LEUCHTE (24 V) | 7N-5876 | 4 | FAHRERHAUSVERDRAHTUNG | 256 |
| | | 4 | FAHRERHAUSVERDRAHTUNG | 266 |
| | | 4 | FAHRERHAUSVERDRAHTUNG | 274 |
| | 7N-9943 | 1 | FAHRERHAUSBELEUCHTUNG | 171 |
| LEUCHTE (24 V, 5 W) | 9X-4492 | 1 | BREMS- UND RÜCKLEUCHTE | 178 |
| LEUCHTE (24 V, 70 W) | 9X-7849 | 1 | RUNDUM-KENNLEUCHTE | 179 |
| LEUCHTE (24V, 21W) | 9X-4493 | 1 | BLINKLEUCHTE | 176 |
| | | 1 | BREMS- UND RÜCKLEUCHTE | 178 |
| SCHLÜSSEL (HAUPTSCHALTER) | 8H-5306 | 1 | TRENNSCHALTER | 233 |
| SICHERUNG (10 A) | 9W-1442 | 29 | FAHRERHAUSVERDRAHTUNG | 256 |
| | | 27 | FAHRERHAUSVERDRAHTUNG | 266 |
| | | 27 | FAHRERHAUSVERDRAHTUNG | 274 |
| SICHERUNG (15 A) | 9W-1441 | 2 | FAHRERHAUSVERDRAHTUNG | 256 |
| | | 4 | FAHRERHAUSVERDRAHTUNG | 266 |
| | | 4 | FAHRERHAUSVERDRAHTUNG | 274 |
| SICHERUNG (20 A) | 9W-1446 | 1 | FAHRERHAUSVERDRAHTUNG | 256 |
| | | 1 | FAHRERHAUSVERDRAHTUNG | 266 |
| | | 1 | FAHRERHAUSVERDRAHTUNG | 274 |
| UNTERBRECHER (105 A) (DREHSTROMGENERATOR) | 171-2212 | 1 | UNTERBRECHER - INSTRUMENTENTAFEL | 194 |
| UNTERBRECHER (15 A) (FAHRSCHEINWERFER) | 3T-2662 | 1 | UNTERBRECHER - INSTRUMENTENTAFEL | 195 |
| UNTERBRECHER (15 A) (KLIMAANLAGE, HEIZUNGSSTEUERUNG) | 6T-3643 | 2 | FAHRERHAUSVERDRAHTUNG | 258 |
| UNTERBRECHER (15 A) (STELLGLIED - ELEKTRISCH BETRIEBENE SCHUTZVORRICHTUNG) | 3T-2662 | 1 | *WIRING GP-WASTE HANDLER | 303 |
| UNTERBRECHER (20 A) (UNGESCHALTETER BATTREIESTROM ZUM FAHRERHAUS) | 6T-3644 | 1 | UNTERBRECHER - INSTRUMENTENTAFEL | 195 |

# WARTUNGSTEILE

| BESCHREIBUNG | ERSATZTEIL-NUMMER | MENGE | VERWENDET IN | SEITE |
|---|---|---|---|---|
| UNTERBRECHER (50 A) (STARTEN) | 171-2206 | 1 | UNTERBRECHER - INSTRUMENTENTAFEL | 194 |
| UNTERBRECHER (60 A) (HAUBENNEIGESTELLGLIED) | 171-2208 | 1 | UNTERBRECHER - INSTRUMENTENTAFEL | 194 |
| UNTERBRECHER (80 A) (HAUPTUNTERBRECHER) | 171-2210 | 1 | UNTERBRECHER - INSTRUMENTENTAFEL | 194 |
| **FAHRERHAUS** | | | | |
| BATTERIE (LITHIUM) | 101-1785 | 1 | MONITORSTEUERUNG | 798 |
| FAHRERHAUSLUFTFILTER | 7X-6041 | 2 | LUFTKANAL U. FILTER | 803 |
| FILTERSIEB | 8T-5913 | 2 | SCHEIBENWASCHANLAGE | 943 |
| KÄLTEMITTELTROCKNER (KLIMAANLAGE) | 175-7162 | 1 | KLIMAANLAGENLEITUNGEN | 840 |
| KAPPE | 3W-6398 | 1 | SCHEIBENWASCHANLAGE | 943 |
| KLIMAANLAGENDRUCKSPEICHER | 186-6189 | 1 | KLIMAANLAGENLEITUNGEN | 840 |
| LEUCHTE (24 V) | 7N-5876 | 1 | MONITORSTEUERUNG | 796 |
| | | 1 | WÄGEEINRICHTUNG | 867 |
| SCHEIBENWISCHERBLATT | 6V-7419 | 2 | SCHEIBENWISCHER | 948 |
| SCHLÜSSELGRIFF | 3V-7476 | 1 | LUFTKANAL U. FILTER | 803 |
| SICHERHEITSGURT | 236-7019 | 1 | SCHWINGSITZ | 918 |
| | | 1 | SCHWINGSITZ | 919 |
| SICHERUNG (15 A) | 133-9012 | 1 | FAHRERHAUSHEIZUNG | 818 |
| | | 1 | KLIMAANLAGE | 782 |
| **HYDRAULIKSYSTEM** | | | | |
| ABLASSSTOPFEN | 9J-7031 | 1 | HYDRAULIKTANK | 677 |
| | | 1 | HYDRAULIKTANK | 679 |
| DICHTUNG | 9H-6454 | 1 | HYDRAULIKTANK | 677 |
| | | 1 | HYDRAULIKTANK | 679 |
| EINFÜLLSTUTZENKAPPE (HYDRAULIKTANK) | 7H-1447 | 1 | HYDRAULIKTANK | 677 |
| | | 1 | HYDRAULIKTANK | 679 |
| KÜHLERKAPPE | 031-1119 | 1 | AUSGLEICHSBEHÄLTER | 676 |
| ÖLFILTER (HYDRAULIK) | 126-1818 | 1 | ÖLFILTER | 640 |
| ÖLFILTER (HYDRAULISCH) | 102-2828 | 1 | ÖLFILTER | 639 |
| SIEB | 200-5978 | 2 | VENTIL UND BEFESTIGUNGSTEILE - HAUPTSTEUERUNG | 683 |
| | | 2 | VENTIL UND BEFESTIGUNGSTEILE - HAUPTSTEUERUNG | 687 |
| | | 2 | VENTIL UND BEFESTIGUNGSTEILE - HAUPTSTEUERUNG | 690 |
| | | 2 | VENTIL UND BEFESTIGUNGSTEILE - HAUPTSTEUERUNG | 693 |
| SIEB (FÜLLER) | 9J-3047 | 1 | HYDRAULIKTANK | 677 |
| | | 1 | HYDRAULIKTANK | 679 |
| SIEB (HYDRAULIKTANK) | 9T-9227 | 2 | HYDRAULIKTANK | 677 |
| | | 2 | HYDRAULIKTANK | 679 |

# WARTUNGSTEILE

| BESCHREIBUNG | ERSATZTEIL-NUMMER | MENGE | VERWENDET IN | SEITE |
|---|---|---|---|---|
| **KRAFTSTOFFSYSTEM** | | | | |
| DICHTUNG (WASSERABSCHEIDER, KRAFTSTOFF) | 220-8678 | 1 | WASSERABSCHEIDER- U. KRAFTSTOFFILTER | 119 |
| EINFÜLLKAPPE (KRAFTSTOFF) | 123-6319 | 1 | KRAFTSTOFFTANK | 126 |
| KRAFTSTOFFILTER | 1R-0762 | 1 | KRAFTSTOFFFILTER U. BEFESTIGUNGSTEILE | 115 |
| KRAFTSTOFFSIEB | 9P-7121 | 1 | KRAFTSTOFFTANK | 126 |
| WASSERABSCHEIDER UND KRAFTSTOFFILTER (HAUPTELEMENT) | 1R-0770 | 1 | WASSERABSCHEIDER- U. KRAFTSTOFFILTER | 119 |
| **KRAFTÜBERTRAGUNG** | | | | |
| ANSAUGSIEB | 4S-8598 | 1 | VERTEILERGETRIEBEANTRIEB | 341 |
| EINFÜLLSTUTZENKAPPE (KRAFTÜBERTRAGUNG) | 5K-1568 | 1 | GETRIEBEÖLFÜLLSTUTZEN | 339 |
| ENTLÜFTER | 9G-5127 | 1 | GETRIEBEHYDRAULIK | 313 |
| | | 1 | GETRIEBEHYDRAULIK | 315 |
| KEILRIEMEN | 1N-3743 | 1 | ACHSENÖLKÜHLERPUMPE U. BEFESTIGUNGSTEILE | 369 |
| MAGNETFILTER (ACHSÖLKÜHLER) | 251-6351 | 2 | ACHSENÖLKÜHLERLEITUNGEN | 347 |
| MAGNETSIEB | 4S-8603 | 1 | VERTEILERGETRIEBEANTRIEB | 341 |
| MAGNETSTOPFEN | 5P-4484 | 1 | PENDELACHSE | 308 |
| | | 1 | STARRACHSE | 307 |
| | 8M-3837 | 1 | SEITENANTRIEB UND RAD | 402 |
| ÖLFILTERELEMENT (HOCHLEISTUNG) | 1R-1809 | 1 | ÖLFILTER | 340 |
| SCHLÜSSEL | 5P-8500 | 1 | GETRIEBEÖLEINFÜLLKAPPE | 321 |
| SCHRAUBE | 129-0988 | 1 | VERTEILERGETRIEBEANTRIEB | 341 |
| **KÜHLSYSTEM** | | | | |
| DICHTUNG - REGLER (GEHÄUSE) (WASSER, KÜHLMITTELTEMPERATUR) | 139-3550 | 1 | KÜHLWASSERLEITUNGEN | 87 |
| DICHTUNG - THERMOSTATABDECKUNG (TEMPERATURREGELGEHÄUSE) | 4N-1156 | 1 | KÜHLWASSERLEITUNGEN | 87 |
| LIPPENDICHTUNG | 3S-9643 | 2 | KÜHLWASSERLEITUNGEN | 87 |
| SCHLAUCH - KNIESTÜCK | 169-5836 | 1 | KÜHLWASSERLEITUNGEN | 82 |
| WASSERPUMPENFILTER | 136-3742 | 1 | KÜHLWASSERPUMPE | 90 |
| WASSERTEMPERATURREGLER (92 GRAD) (KÜHLMITTEL) | 248-5513 | 2 | KÜHLWASSERLEITUNGEN | 87 |
| **LENKSYSTEM** | | | | |
| SCREEN | 6E-5066 | 2 | *SCREEN GP-CASE DRAIN | 564 |
| SIEB (GEHÄUSEABLAUFSIEB) | 233-7419 | 1 | LENKÖLLEITUNGEN | 550 |
| **LUFTANSAUG- UND ABGASSYSTEM** | | | | |
| LUFTFILTER (HAUPTELEMENT) | 6I-2509 | 1 | LUFTREINIGER | 100 |
| LUFTFILTER (HILFSELEMENT) | 6I-2510 | 1 | LUFTREINIGER | 100 |
| LUFTFILTERWECHSELANZEIGE | 1W-0613 | 1 | LUFTFILTERWARTUNGSANZEIGE | 103 |
| SCHLAUCH - KNIESTÜCK | 217-1601 | 1 | LADELUFTKÜHLERLEITUNGEN | 105 |
| **MASCHINE** | | | | |
| SCHLÜSSEL | 5P-8500 | 2 | FAHRWERK | 1 |

# WARTUNGSTEILE

| BESCHREIBUNG | ERSATZTEIL-NUMMER | MENGE | VERWENDET IN | SEITE |
|---|---|---|---|---|
| **MOTOR (GRUNDAUSFÜHRUNG)** | | | | |
| ABLASSSTOPFEN (MOTORÖL) | 9X-6451 | 1 | ÖLWANNENSCHRAUBE | 60 |
| DICHTUNG (VENTILMECHANISMUS-DECKEL) | 242-9537 | 1 | VENTILDECKEL | 18 |
| | | 1 | VENTILDECKEL | 19 |
| **SCHMIERSYSTEM** | | | | |
| ENTLÜFTER (KURBELGEHÄUSE) | 162-2266 | 1 | ENTDUNSTER | 73 |
| KAPPE (ÖLEINFÜLLSTUTZEN) | 205-6405 | 1 | MOTORÖLEINFÜLLSTUTZEN | 70 |
| ÖLFILTER | 1R-0716 | 1 | ÖLFILTER | 71 |
| **WARTUNGSAUSRÜSTUNG UND -ZUBEHÖR** | | | | |
| VORHÄNGESCHLOSS | 246-2641 | 6 | SCHUTZABDECKUNG | 958 |

# INDEX


| Name | Page |
|---|---|
| **A** | |
| ACCUMULATOR AS-RIDE CONTROL–CHARGED | 588 |
| ACCUMULATOR GP-BRAKE | 519 |
| ACCUMULATOR GP-BRAKE–UNCHARGED | 520 |
| ACCUMULATOR GP-BRAKE–UNCHARGED, COLD WEATHER | 521 |
| ACCUMULATOR GP-REFRIGERANT | 840 |
| ACCUMULATOR GP-RIDE CONTROL–UNCHARGED | 589 |
| ACTUATOR GP-POWER GUARD | 404 |
| ADAPTER GP-FAST FILL FUEL | 113 |
| ADAPTER GP-PUMP DRIVE | 7 |
| ADAPTER GP-TIP | 746 |
| | 748 |
| ADJUSTER GP-SEAT | 779 |
| AIR CLEANER GP | 99 |
| | 100 |
| AIR COMPRESSOR GP-SEAT | 780 |
| AIR CONDITIONER AR | 781 |
| AIR CONDITIONER GP | 782 |
| | 785 |
| ALARM GP–ACTION | 133 |
| ALTERNATOR GP-CHARGING | 134 |
| | 136 |
| | 138 |
| | 139 |
| ARM & BEARING AS | 737 |
| ARM GP-WINDOW WIPER–FRONT | 787 |
| ARM GP-WINDOW WIPER–REAR | 786 |
| ARMREST GP–LH | 788 |
| AXLE AR-FIXED–FRONT | 305 |
| AXLE AR-FIXED–FRONT, LIMITED SLIP DIFFERENTIAL | 305 |
| AXLE AR-OSCILLATING–REAR | 305 |
| AXLE AR-OSCILLATING–REAR, LIMITED SLIP DIFFERENTIAL | 306 |
| AXLE AR-OSCILLATING–REAR, NO-SPIN DIFFERENTIAL | 306 |
| AXLE GP-FIXED–FRONT | 307 |
| AXLE GP-OSCILLATING–REAR | 308 |
| **B** | |
| BASE GP-FOOT BRAKE–PEDAL, LH | 523 |
| BASE GP-FOOT BRAKE–PEDAL, RH | 522 |
| BASE GP-OIL FILTER–POWER TRAIN | 310 |
| BASE GP-VALVE COVER & INJ HARN | 8 |
| BATTERY & WIRING GP | 140 |
| BATTERY (LITHIUM) | 798 |
| BATTERY (12-VOLT) | 140 |
| BELT TENSIONER GP | 10 |
| BLADE AS-WIPER | 948 |
| BLOCK AS-FUSE | 267 |
| | 275 |
| BLOCK GP-JUNCTION | 140 |
| BODY-COOLER BYPASS (ENGINE OIL) (ENGINE OIL) | 75 |
| BRAKE GP-PARKING | 525 |
| | 526 |
| BRAKE GP-SERVICE | 527 |
| | 529 |
| BREATHER AS | 313 |
| | 315 |
| BREATHER AS (CRANKCASE) | 73 |
| BUCKET AR-GENERAL PURPOSE | 748 |
| BUCKET AS-GENERAL PURPOSE | 749 |
| | 751 |
| BUCKET AS-ROCK | 753 |
| | 755 |
| | 757 |
| | 759 |
| | 761 |
| BUCKET GP-GENERAL PURPOSE | 763 |
| | 764 |
| BUCKET GP-ROCK | 765 |
| | 766 |
| | 767 |
| | 768 |
| | 769 |
| **C** | |
| CAB AR-ENCLOSED ROPS | 789 |
| CAB AR-ENCLOSED ROPS–WITH SEAL MOUNTED GLASS | 789 |
| CAMSHAFT GP | 11 |
| CANOPY AR-OPEN ROPS | 790 |
| CAP | 943 |
| CAP AS-FILLER (FUEL) | 126 |
| CAP AS (OIL FILLER) | 70 |
| CAP AS-RADIATOR | 676 |
| CAP-FILLER (HYDRAULIC TANK) | 677 |
| | 679 |
| CAP-FILLER (POWER TRAIN) | 339 |
| CASE & PARTS GP-PLANETARY | 311 |
| CASE GP-TRANSFER GEAR | 312 |
| CHASSIS AR | 1 |
| CIRCUIT BREAKER AS (105-AMPERE) (ALTERNATOR) | 194 |
| CIRCUIT BREAKER AS (15-AMPERE) (A/C, HEATER CONTROL) | 258 |
| CIRCUIT BREAKER AS (15-AMPERE) (POWER GUARD ACTUATOR) | 303 |
| CIRCUIT BREAKER AS (15-AMPERE) (RUNNING LIGHTS) | 195 |
| CIRCUIT BREAKER AS (50-AMPERE) (START) | 194 |
| CIRCUIT BREAKER AS (80-AMPERE) (MAIN) | 194 |

# INDEX


| Name | Page |
|---|---|
| CIRCUIT BREAKER GP (20-AMPERE) (UNSWITCHED BAT POWER TO CAB) | 195 |
| CIRCUIT BREAKER GP (60-AMPERE) (HOOD TILT ACTUATOR) | 194 |
| CLUTCH GP-ELECTRIC (AXLE OIL COOLER PUMP) | 369 |
| COMPRESSOR GP-REFRIGERANT | 791<br>792 |
| CONDENSER & MTG GP-REFRIGERANT | 793 |
| CONNECTION GP-ELECTRICAL | 145 |
| CONTROL & LINES GP-RIDE | 590 |
| CONTROL & MTG GP-COMMUNICATION–PRODUCT LINK 201 | 146 |
| CONTROL & MTG GP-COMMUNICATION–PRODUCT LINK 321SR | 148 |
| CONTROL & MTG GP-ENGINE ELEK | 150 |
| CONTROL AR-AUTODIG | 152 |
| CONTROL AR-FAN–AUTOMATIC REVERSING | 595 |
| CONTROL AR-RIDE | 595 |
| CONTROL AR-RIDE–2-VALVE | 596 |
| CONTROL AR-RIDE–3-VALVE | 596 |
| CONTROL GP-AUTODIG | 153 |
| CONTROL GP-BUCKET | 738 |
| CONTROL GP-COMMUNICATION–PRODUCT LINK 201 | 155 |
| CONTROL GP-COMMUNICATION (PRODUCT LINK 201) | 146 |
| CONTROL GP-DISPLAY ELECTRONIC (INDICATOR PANEL, CENTER) | 153<br>257 |
| CONTROL GP-DISPLAY ELECTRONIC (INDICATOR PANEL, LH) | 257 |
| CONTROL GP-DISPLAY ELECTRONIC (INDICATOR PANEL, RH) | 257 |
| CONTROL GP-DISPLAY ELECTRONIC (INDICATOR PANEL, RH, LH) | 268<br>276 |
| CONTROL GP-ELECTROHYDRAULIC–JOYSTICK, 2-FUNCTION W/AUTODIG | 605 |
| CONTROL GP-ELECTROHYDRAULIC–JOYSTICK, 3-FUNCTION W/AUTODIG | 608 |
| CONTROL GP-ELECTROHYDRAULIC–2-FUNCTION | 597 |
| CONTROL GP-ELECTROHYDRAULIC–3-FUNCTION | 601 |
| CONTROL GP-ENGINE ELECTRONIC | 156 |
| CONTROL GP-FOOT BRAKE | 531<br>532 |
| CONTROL GP-HANDLE | 611 |
| CONTROL GP-HANDLE–JOYSTICK | 612 |
| CONTROL GP-HANDLE (JOYSTICK) | 617 |
| CONTROL GP-JOYSTICK–2-FUNCTION WITH AUTODIG | 617 |
| CONTROL GP-JOYSTICK–3-FUNCTION WITH AUTODIG | 613<br>615 |
| CONTROL GP-MONITOR–DIMMER | 795 |
| CONTROL GP-MONITOR–PAYLOAD | 796<br>798 |
| CONTROL GP-MONITOR (DIMMER) | 256<br>266<br>274 |
| CONTROL GP-PARKING BRAKE | 533 |
| CONTROL GP-SERVICE BRAKE | 534 |
| CONTROL GP-STEERING–COMMAND CONTROL STEERING | 542 |
| CONTROL GP-TRANSMISSION HYD | 313<br>315 |
| CONTROL GP-UNPROGRAMMED | 156<br>161 |
| CONTROL GP-UNPROGRAMMED–CATERPILLAR MONITORING SYSTEM | 157 |
| CONTROL GP-UNPROGRAMMED–IMPLEMENT | 160 |
| CONTROL GP-UNPROGRAMMED–POWER TRAIN | 159 |
| CONTROL GP-UNPROGRAMMED–PRODUCT LINK 201 | 158 |
| CONTROL GP-UNPROGRAMMED (CATERPILLAR MONITORING SYSTEM) | 256<br>274 |
| CONTROL GP-UNPROGRAMMED (CATERPILLAR MONITORING SYSTEM) | 267 |
| CONTROL GP-UNPROGRAMMED (IMPLEMENT) | 256<br>267<br>274 |
| CONTROL GP-UNPROGRAMMED (POWER TRAIN) | 256<br>267<br>274 |
| CONTROL GP-UNPROGRAMMED (PRODUCT LINK 300) | 148 |
| CONTROL GP-UNPROGRAMMED (SECURITY) | 223 |
| CONTROL GP-UNPROGRAMMED (SECURITY SYSTEM) | 169 |
| CONVERTER-POWER (24-VOLT TO 12-VOLT) | 258 |
| CONVERTER-POWER (24-VOLT TO 12-VOLT) | 267<br>275 |
| COOLANT HEATER LINES | 842<br>843 |
| COOLER & MTG GP-AXLE OIL | 317 |
| COOLER AR-AXLE OIL | 319 |
| COOLING AR-HIGH AMBIENT TEMP | 80 |
| CORE AS-AFTERCOOLER | 92 |

# INDEX


| Name | Page |
|---|---|
| CORE AS-ENGINE OIL COOLER | 87 |
| CORE AS-HYDRAULIC OIL COOLER | 92 |
| CORE AS-POWER TRAIN OIL COOLER (TRANSMISSION) | 87 |
| CORE AS-RADIATOR (INNER) | 93 |
| CORE AS-RADIATOR (OUTER) | 93 |
| COUNTERWEIGHT GP | 406 |
| | 407 |
| | 408 |
| | 409 |
| | 410 |
| | 411 |
| COVER GP-CYLINDER BLOCK | 12 |
| | 13 |
| COVER GP-FRONT HOUSING | 14 |
| | 15 |
| COVER GP-SHIPPING | 320 |
| COVER GP-SOUND SUPPRESSION–FRONT HOUSING | 16 |
| COVER GP-TMSN OIL FILLER CAP | 321 |
| | 958 |
| COVER GP-TURBOCHARGER | 101 |
| COVER GP-VALVE MECHANISM | 17 |
| | 18 |
| | 19 |
| | 20 |
| CRANKSHAFT GP | 21 |
| CYLINDER & MTG GP-STEERING | 544 |
| CYLINDER & SEAL GP-LIFT | 619 |
| CYLINDER & SEAL GP-TILT–LH | 621 |
| | 623 |
| | 624 |
| CYLINDER & SEAL GP-TILT–RH | 620 |
| | 622 |
| | 625 |
| CYLINDER AS-ETHER | 224 |
| CYLINDER BLOCK GP | 22 |
| | 23 |
| CYLINDER GP-HYDRAULIC–STEERING | 545 |
| CYLINDER GP-LIFT–2 REQUIRED | 626 |
| CYLINDER GP-TILT–HIGH LIFT MACHINES, LH | 635 |
| CYLINDER GP-TILT–HIGH LIFT MACHINES, RH | 637 |
| CYLINDER GP-TILT–LH | 630 |
| CYLINDER GP-TILT–LOGGING MACHINES, LH | 633 |
| CYLINDER GP-TILT–LOGGING MACHINES, RH | 632 |
| CYLINDER GP-TILT–RH | 628 |
| CYLINDER HEAD AS | 25 |
| | 26 |
| | 27 |
| CYLINDER HEAD GP | 30 |
| | 31 |

## D

| Name | Page |
|---|---|
| DAMPER AS-ALARM | 153 |
| DAMPER GP | 32 |
| DIFFERENTIAL & BEVEL GEAR GP | 322 |
| | 323 |
| | 325 |
| | 329 |
| | 333 |
| DIFFERENTIAL & BEVEL GEAR GP–LIMITED SLIP, FIXED AXLE | 327 |
| DIFFERENTIAL & BEVEL GEAR GP–NOSPIN | 331 |
| DIFFERENTIAL GP-LIMITED SLIP | 335 |
| DIFFERENTIAL GP-NOSPIN | 336 |
| | 337 |
| DOOR GP-ACCESS–BATTERY | 412 |
| DOOR GP-CAB | 802 |
| DOOR GP-CAB–LH | 799 |
| DOOR GP-CAB–SLIDING WINDOW, RH | 801 |
| DRAIN GP-ECOLOGY–POWER TRAIN | 338 |
| DRAIN GP-ENGINE OIL | 33 |
| DRAIN GP-FUEL | 114 |
| DRIVE GP-ACCESSORY | 34 |
| DRIVE GP-PUMP | 35 |
| DUCT & FILTER GP-AIR | 803 |
| DUCT GP-AIR | 805 |
| DUST EJECTOR GP | 102 |

## E

| Name | Page |
|---|---|
| EDGE GP-CUTTING | 770 |
| | 771 |
| ELECTRICAL AR | 162 |
| ELECTRONICS GP-COMMUNICATION–PRODUCT LINK 300 | 162 |
| ELECTRONICS GP-IMPLEMENT | 163 |
| ELECTRONICS GP-MACHINE–SECURITY | 164 |
| ELECTRONICS GP-MONITOR–CATERPILLAR MONITORING SYSTEM | 165 |
| ELECTRONICS GP-POWER TRAIN | 166 |
| ENGINE AR-COMPLETE | 4 |
| ENGINE AR-CORE | 5 |
| EXTENSION GP-BACKREST | 915 |
| EXTENSION GP-BACKREST (CLOTH) | 912 |
| | 917 |

## F

| Name | Page |
|---|---|
| FASTENER GP-CYLINDER HEAD | 31 |
| FASTENER GP-FRONT HOUSING | 36 |
| | 37 |
| FASTENER GP-OIL PAN | 38 |
| FASTENER GP-OIL PUMP MOUNTING–ENGINE | 69 |
| FASTENER GP-VALVE MECHANISM | 39 |

# INDEX


| Name | Page |
|---|---|
| FASTENER GP-WATER PUMP | 81 |
| FENDER GP | 415 |
| FENDER GP-FRONT | 418 |
| | 419 |
| FENDER GP-ROADING | 420 |
| FILLER GP-ENGINE OIL | 70 |
| FILLER GP-POWER TRAIN OIL | 339 |
| FILM (AUTODIG) | 153 |
| FILM-CIRCUIT BREAKER (FUSE) | 194 |
| FILM-CIRCUIT BREAKER (PANEL) | 194 |
| FILM-CONTROL (AUTODIG) | 153 |
| FILM-CONTROL (DUMP, TILT BACK) | 597 |
| | 601 |
| FILM-CONTROL (JOYSTICK, 2-FUNCTION, AUTODIG) | 605 |
| FILM-CONTROL (LIFT, FLOAT, LOWER) | 597 |
| | 601 |
| FILM-CONTROLS | 880 |
| | 884 |
| FILM-EXIT (SECONDARY) | 796 |
| | 867 |
| FILM (FUSE PANEL) | 829 |
| FILM-FUSE PANEL | 832 |
| | 835 |
| FILM GP | 951 |
| FILM-IDENTIFICATION (AUXILIARY HYDRAULIC) | 601 |
| FILM-IDENTIFICATION (ELECTRONIC CONTROL MODULE) | 163 |
| FILM-IDENTIFICATION (HORN) | 597 |
| | 601 |
| FILM-IDENTIFICATION (12-VOLT) | 880 |
| | 884 |
| FILM (IGNITION SWITCH) | 169 |
| FILM-INFORMATION (PRODUCT LINK) | 155 |
| FILM-INFORMATION (24-VOLT) | 197 |
| | 956 |
| FILM-INPUT/OUTPUT | 884 |
| FILM-INPUT/OUTPUT | 880 |
| FILM-INSTRUCTION (ALTERNATE EXIT) | 832 |
| | 956 |
| FILM-INSTRUCTION (ENGINE START) | 880 |
| | 884 |
| FILM-INSTRUCTION (MAINTENANCE) | 605 |
| | 608 |
| FILM-INSTRUCTION (MAINTENANCE) | 597 |
| | 601 |
| FILM-INSTRUCTION (READ OWNERS MANUAL) | 169 |
| FILM-INSTRUCTION (SEAT ADJUSTMENT) | 940 |
| FILM-INSTRUCTION (SEAT ADJUSTMENT) | 938 |
| FILM (MACHINE SECURITY SYSTEM) | 169 |
| FILM-PANEL (CENTER) | 880 |
| FILM-PANEL (CENTER) | 884 |
| FILM-PANEL (LH) | 880 |
| | 884 |
| FILM-PANEL (RH) | 880 |
| | 884 |
| FILM (SECURITY) | 169 |
| FILM-STRIPE (SCRAP HANDLER, LH) | 2 |
| FILM-STRIPE (SCRAP HANDLER, RH) | 2 |
| FILM-WARNING (JUMP START, READ OMM) | 197 |
| FILM-WARNING (PRODUCT LINK RADIO, NACD) | 155 |
| | 167 |
| FILM-WARNING (PRODUCT LINK RADIO, NON NACD) | 155 |
| | 167 |
| FILTER & MTG GP-FUEL | 115 |
| FILTER AS-ENGINE OIL | 71 |
| FILTER AS-FUEL | 115 |
| FILTER AS-OIL (HYDRAULIC) | 639 |
| | 640 |
| FILTER AS-WATER SEP & FUEL (PRIMARY) | 119 |
| FILTER-CAB AIR | 803 |
| FILTER ELEMENT AS-AIR (PRIMARY) | 100 |
| FILTER ELEMENT AS-AIR (SECONDARY) | 100 |
| FILTER ELEMENT AS-OIL (HIGH EFFICIENCY) | 340 |
| FILTER GP-ENGINE OIL | 71 |
| FILTER GP-OIL | 640 |
| FILTER GP-OIL–HYDRAULIC | 639 |
| FILTER GP-OIL–POWER TRAIN | 340 |
| FILTER GP-WATER SEP & FUEL–PRIMARY | 119 |
| FILTER-MAGNETIC (AXLE OIL COOLER) | 347 |
| FILTER-WATER PUMP | 90 |
| FINAL DRIVE & WHEEL | 402 |
| FLOOR GP-SOUND SUPPRESSION | 808 |
| | 809 |
| FLOOR MAT | 824 |
| | 832 |
| | 835 |
| FLYWHEEL GP | 40 |
| FRAME AS-FRONT | 421 |
| FRAME AS-LOADER | 424 |
| FRAME AS-REAR | 427 |
| FUMES DISPOSAL GP | 73 |
| FUSE (10-AMPERE) | 256 |
| | 266 |
| | 274 |
| FUSE (15-AMPERE) | 256 |
| | 266 |
| | 274 |
| | 782 |
| | 818 |
| FUSE (20-AMPERE) | 256 |
| | 266 |
| | 274 |

# INDEX


| Name | Page |
|---|---|
| **G** | |
| GASKET | 677, 679 |
| GASKET-REGULATOR COVER (TEMPERATURE REGULATOR HOUSING) | 87 |
| GASKET-REGULATOR (HOUSING) (WATER, COOLANT TEMPERATURE) | 87 |
| GAUGE AS-OIL LEVEL (DIPSTICK) | 74 |
| GAUGE GP-OIL LEVEL (DIPSTICK) | 74 |
| GEAR GP-CAMSHAFT | 41 |
| GEAR GP-FRONT | 42 |
| GEAR GP-OUTPUT TRANSFER | 341 |
| GENERAL AR | 2 |
| GLASS-SIGHT | 677, 679 |
| GRILL GP-RADIATOR | 429 |
| GUARD AR-WINDOW | 810 |
| GUARD GP-BOTTOM | 431 |
| GUARD GP-CRANKCASE | 433, 434 |
| GUARD GP-DRIVE SHAFT | 436 |
| GUARD GP-FRONT | 437 |
| GUARD GP-FUEL & HYDRAULIC TANK | 438 |
| GUARD GP-HITCH & STEERING | 440 |
| GUARD GP-LIGHTING | 442 |
| GUARD GP-LINES–AXLE OIL | 443 |
| GUARD GP-POWER TRAIN | 444 |
| GUARD GP-SENSOR–AXLE OIL TEMPERATURE | 445 |
| GUARD GP-VANDALISM–INSTRUMENT PANEL | 811 |
| GUARD GP-WINDOW–FRONT | 814 |
| GUARD GP-WINDOW–REAR | 812 |
| **H** | |
| HANDHOLD GP–CAB | 816 |
| HANDHOLD GP–PLATFORM | 817 |
| HARDWARE GP-LIFT ARM | 741 |
| HARDWARE GP-LIFT ARM–AUTOMATIC LUBRICATION SYSTEM | 740, 742 |
| HARDWARE GP-LOADER FRAME–AUTOMATIC LUBRICATION SYSTEM | 446 |
| HARDWARE GP-LOADER FRAME–AXLE OIL COOLER | 447 |
| HARDWARE GP-LOADER FRAME–3RD VALVE | 448 |
| HARDWARE GP-REAR FRAME–AUTOMATIC LUBRICATION SYSTEM | 449 |
| HARDWARE GP-REAR FRAME–AXLE OIL COOLER | 450 |
| HARDWARE GP-REAR FRAME–WASTE HANDLER | 454 |
| HARDWARE GP-REAR FRAME–WASTER HANDLER | 452 |
| HARNESS AS-AXLE (AXLE OIL COOLER) | 253 |
| HARNESS AS-BRAKE | 281 |
| HARNESS AS-BRAKE (STOP LIGHT) | 523 |
| HARNESS AS-CAB (MAIN) | 267, 275 |
| HARNESS AS-CONTROL (HEATED MIRROR TIMER RELAY) | 848, 853 |
| HARNESS AS-CONTROL (HEATED MIRRORS) | 848, 853, 860, 862 |
| HARNESS AS-CONTROL (MACHINE SECURITY) | 169 |
| HARNESS AS-CONTROL (POWER GUARD ACTUATOR) | 303 |
| HARNESS AS-CONTROL (PRODUCT LINK) | 146 |
| HARNESS AS-CONTROL (PRODUCT LINK) | 148 |
| HARNESS AS-ENGINE | 290 |
| HARNESS AS-ENGINE (INJECTOR, VARIABLE VALVE) | 8 |
| HARNESS AS-FRONT CHASSIS | 292 |
| HARNESS AS-HEATER & AIR COND | 782, 818 |
| HARNESS AS-HYDRAULIC TANK | 281 |
| HARNESS AS (JUMPER) (FUEL PRIMING PUMP) | 115 |
| HARNESS AS-LIGHTING | 295 |
| HARNESS AS-LIGHTING (CAB FLOODLIGHTS) | 267, 275 |
| HARNESS AS-LIGHTING (FLOOD, SIGNAL LIGHTS, LH) | 297 |
| HARNESS AS-LIGHTING (FLOOD, SIGNAL LIGHTS, RH) | 297 |
| HARNESS AS-LIGHTING (FRONT FLOODLIGHTS) | 257 |
| HARNESS AS-LIGHTING (TURN SIGNAL) | 244 |
| HARNESS AS-LIGHTING (WARNING BEACON) | 189 |
| HARNESS AS-MONITOR | 302 |
| HARNESS AS-MONITOR (PAYLOAD CONTROL) | 796 |
| HARNESS AS-MONITOR (PAYLOAD CONTROL) | 867 |
| HARNESS AS-OPERATOR CONTROLS | 256 |
| HARNESS AS-OPERATOR CONTROLS (JOYSTICK) | 605 |
| HARNESS AS-OPERATOR CONTROLS (JOYSTICK) | 608 |
| HARNESS AS-PANEL | 194 |
| HARNESS AS-RADIO | 826 |

# INDEX


| Name | Page |
|---|---|
| HARNESS AS-RADIO (SPEAKER) | 892 |
| HARNESS AS-REAR LIGHTING | 297 |
| HARNESS AS-SENSOR (FRONT AXLE OIL TEMPERATURE) | 251 |
| HARNESS AS-SENSOR (LIFT CYLINDER OIL) | 300 |
| HARNESS AS-SENSOR (REAR AXLE OIL TEMPERATURE) | 251 |
| HARNESS AS-SENSOR (TILT) | 301 |
| HARNESS AS-STEERING (COLUMN, WHEEL) | 567 |
| HARNESS AS-SWITCH (DIFFERENTIAL LOCK) | 232 |
| HARNESS AS-TRANSMISSION | 313 315 |
| HARNESS AS-TRANSMISSION CONT (STEERING WHEEL) | 567 |
| HARNESS AS-VALVE (SEAT AIR COMPRESSOR) | 938 940 |
| HARNESS AS-WIRING (SERVICE TOOL) | 257 267 274 |
| HEATER GP-CAB | 818 820 |
| HITCH GP-ARTICULATING | 455 |
| HOOD & GUARD GP | 457 |
| HORN GP-ELECTRIC | 822 |
| HOSE-ELBOW | 82 105 |
| HOUSING GP-FLYWHEEL | 44 |
| HOUSING GP-FRONT | 46 |
| HYDRAULIC AR-2 VALVE | 641 |
| HYDRAULIC AR-3 VALVE | 641 |
| HYDRAULIC AR-3 VALVE–LOGGING | 641 |


## I


| Name | Page |
|---|---|
| INDICATOR-AIR FILTER CHANGE | 103 |
| INDICATOR GP-AIR FILTER CHANGE | 103 |
| INJECTOR GP-FUEL | 125 |
| INSTALLATION AR-COMMUNICATION–PRODUCT LINK 201 | 167 |
| INSTALLATION AR-COMMUNICATION–PRODUCT LINK 321SR | 167 |
| INSTALLATION AR-ENGINE | 6 |
| INSTALLATION AR-SECURITY | 168 |
| INSTALLATION GP-CONTROLS | 823 824 |
| INSTALLATION GP-RADIO | 828 |
| INSTALLATION GP-RADIO–CB | 826 |
| INSTALLATION GP-SECURITY | 169 |
| INSULATION GP-HEAT–MANIFOLD, MUFFLER, TURBOCHARGER | 104 |


## K


| Name | Page |
|---|---|
| KEY | 1 321 |
| KEY AS-ELECTRONIC (SECURITY, GRAY) | 223 |
| KEY AS-ELECTRONIC (SECURITY, GRAY) (BLANK) | 169 |
| KEY AS-ELECTRONIC (SECURITY, YELLOW) | 223 |
| KEY AS-ELECTRONIC (SECURITY, YELLOW) (PROGRAMMED) | 169 |
| KEY (BATTERY DISCONNECT) | 233 |
| KEY-HANDLE | 803 |
| KIT-AIR CLEANER CLAMP | 100 |
| KIT-AIR VALVE | 940 |
| KIT-AIR VALVE (SUSPENSION SEAT) | 938 |
| KIT-BEARING (ALTERNATOR) | 136 |
| KIT-BEARING (ALTERNATOR) | 134 |
| KIT-BIAS PISTON | 561 |
| KIT-BRAKE CHARGE VALVE | 536 |
| KIT-BRAKE LINING | 526 |
| KIT-CONTROL PISTON | 561 |
| KIT-GAS ASSIST (STEERING COLUMN) | 566 |
| KIT-HARDWARE (ALTERNATOR) | 134 136 |
| KIT-HOUSING (STEERING COLUMN) | 566 |
| KIT-KNOB (RADIO) | 892 |
| KIT-NUT (STEERING COLUMN) | 566 |
| KIT-PUMP REBUILD (WATER) | 90 |
| KIT-REPAIR (FUEL LEVEL SENSOR) | 126 |
| KIT-RETAINING BOLT (M5X0.8X53.24-MM) | 166 |
| KIT-RETAINING BOLT (M5X0.8X53.24-MM) (UNPROGRAMMED CONTROL) | 159 160 |
| KIT-ROLLER | 887 |
| KIT-SEAL | 520 534 588 589 |
| KIT-SEAL (BRAKE ACCUMULATOR) | 519 |
| KIT-SEAL (CHECK VALVE) | 697 702 |
| KIT-SEAL (DEAD ENGINE LOWERING) | 710 |
| KIT-SEAL (DIVERTER VALVE) | 702 |
| KIT-SEAL (DRIVE SHAFT) | 377 |
| KIT-SEAL (PILOT PROPORTIONING VALVE) | 713 |
| KIT-SEAL (RELIEF VALVE) | 728 |
| KIT-SEAL (SOLENOID VALVE) | 733 736 |
| KIT-SEAL (SOLENOID VALVE) (PILOT PROPORTIONING VALVE) | 711 |
| KIT-SHIM (INCLUDES 17-SHIMS) | 561 |
| KIT-SHOCK ABSORBER (SUSPENSION SEAT) | 938 |
| KIT-SLIDER BLOCK | 920 |

# INDEX


| Name | Page |
|---|---|
| | 921 |
| | 923 |
| KIT-TERMINAL (ALTERNATOR) | 134 |
| | 136 |
| KIT-TERMINAL (LOCK) | 275 |
| KIT-TERMINAL (STARTING MOTOR) | 228 |
| KIT-TETHER | 940 |
| KIT-TETHER (SUSPENSION SEAT) | 938 |
| KIT-TILT LEVER (STEERING COLUMN) | 566 |
| KIT-TREADLE PIN | 887 |
| **L** | |
| LADDER GP | 463 |
| LAMP AS (RED, GREEN, LED, 12-VOLT) | 169 |
| LAMP GP-DOME | 171 |
| LAMP GP-FLOOD–SUSPENDED MOUNT | 175 |
| LAMP GP-FLOOD–SUSPENDED MOUNT–HIGH INTENSITY DISCHARGE, REAR | 172 |
| LAMP GP-FLOOD–VERTICAL MOUNT | 174 |
| LAMP GP-FLOOD–VERTICAL MOUNT–HIGH INTENSITY DISCHARGE, FR | 173 |
| LAMP GP-SIGNAL | 176 |
| LAMP GP-SIGNAL–STOP, TAIL | 177 |
| LAMP GP-SIGNAL (24-VOLT) | 185 |
| | 187 |
| LAMP GP-STOP & TAIL | 178 |
| LAMP GP-WARNING BEACON–AMBER | 179 |
| LAMP-HALOGEN (24-VOLT, 65-WATT) | 174 |
| LAMP-HALOGEN (24-VOLT, 65-WATT) (FLOODLIGHT) | 175 |
| LAMP (12-VOLT, 24-VOLT, 35-WATT) | 172 |
| | 173 |
| LAMP (24-VOLT) | 256 |
| | 266 |
| | 274 |
| | 796 |
| | 867 |
| LAMP (24-VOLT) | 171 |
| LAMP (24-VOLT, 21-WATT) | 176 |
| | 178 |
| LAMP (24-VOLT, 5-WATT) | 178 |
| LAMP (24-VOLT, 70-WATT) | 179 |
| LENS-AMBER | 176 |
| LEVER GP-TILT | 743 |
| LIFT AR | 744 |
| | 745 |
| LIFT AR–WITH 3RD VALVE | 744 |
| LIFTING GP-ENGINE | 48 |
| | 49 |
| LIGHTER GP-CIGAR (12-VOLT) | 257 |
| | 267 |
| | 274 |
| LIGHTING AR-SIGNAL | 180 |
| LIGHTING GP-FLOOD–2-LAMP, CAB REAR | 180 |
| LIGHTING GP-FLOOD–4-LAMP, CAB | 181 |
| LIGHTING GP-FLOOD–4-LAMP, CAB–HIGH INTENSITY DISCHARGE | 182 |
| LIGHTING GP-FLOOD & SIGNAL | 184 |
| | 185 |
| LIGHTING GP-SIGNAL | 187 |
| LIGHTING GP-WARNING BEACON | 189 |
| LINER GP-CAB | 829 |
| | 832 |
| | 835 |
| LINES GP-AFTERCOOLER AIR | 105 |
| LINES GP-AIR | 107 |
| LINES GP-AIR–TURBOCHARGER OUTLET | 106 |
| LINES GP-AIR CONDITIONER | 838 |
| | 840 |
| LINES GP-AUTOMATIC LUBRICATION–CHASSIS | 472 |
| LINES GP-AUTOMATIC LUBRICATION–LOADER FRAME | 468 |
| | 470 |
| LINES GP-AUTOMATIC LUBRICATION–REAR FRAME | 466 |
| LINES GP-AXLE OIL COOLER | 345 |
| | 347 |
| LINES GP-CAB HEATER | 842 |
| | 843 |
| LINES GP-DIAGNOSTIC–REMOTE PRESSURE TAPS | 953 |
| LINES GP-ENGINE OIL | 75 |
| LINES GP-FRONT | 642 |
| LINES GP-FUEL | 120 |
| | 122 |
| LINES GP-GREASE | 474 |
| LINES GP-HOOD TILT | 643 |
| LINES GP-HYDRAULIC | 645 |
| LINES GP-HYDRAULIC FAN–AUTOMATIC REVERSING | 649 |
| LINES GP-HYDRAULIC OIL COOLER | 651 |
| LINES GP-LIFT CYLINDER | 656 |
| LINES GP-LUBRICATION–B-PINS, TILT LEVERS | 479 |
| LINES GP-LUBRICATION–BUCKET LINKS, TILT CYLINDER | 481 |
| LINES GP-LUBRICATION–BUCKET PINS, TILT LEVER | 486 |
| LINES GP-LUBRICATION–LIFT, TILT, STEERING CYLINDERS, UPPER HITCH | 484 |
| LINES GP-LUBRICATION–LOWER HITCH, STEERING CYLINDERS, TRUNNIONS | 482 |
| LINES GP-LUBRICATION–TILT LEVER | 485 |
| LINES GP-POWER TRAIN OIL | 353 |
| LINES GP-SECONDARY STEERING | 547 |
| LINES GP-SERVICE BRAKE | 540 |
| LINES GP-STEERING | 549 |
| LINES GP-TILT CYLINDER | 658 |

# INDEX


| Name | Page |
|---|---|
| LINES GP-TORQUE CONV COOLER | 355 |
| LINES GP-TURBOCHARGER OIL | 77 |
| LINES GP-WATER | 87 |
| LINES GP-WATER–RADIATOR | 82 |
| LINES GP-WATER–TURBOCHARGER | 85 |
| LINK GP-STEERING FRAME LOCK | 487 |
| LOGGING AR | 745 |
| LUBRICATION AR-AUTOMATIC | 488 |

## M

| | |
|---|---|
| MACHINE AR–VALUE PACKAGE | 2 |
| MANIFOLD GP-EXHAUST | 108 |
| MIRROR GP-REAR VIEW | 844 |
| | 845 |
| | 852 |
| | 855 |
| | 860 |
| | 862 |
| MIRROR GP-REAR VIEW–HEATED | 848 |
| | 853 |
| MIRROR GP-REAR VIEW–HEATED, LH | 850 |
| | 858 |
| MIRROR GP-REAR VIEW–HEATED, RH | 851 |
| | 857 |
| MIRROR GP-REAR VIEW–LH | 847 |
| MIRROR GP-REAR VIEW–RH | 846 |
| | 856 |
| MODULE GP-PAYLOAD KEYPAD | 796 |
| | 867 |
| MODULE GP-QUAD GAUGE | 864 |
| MODULE GP-SPEEDOMETER & TACH | 865 |
| MONITOR AR-PAYLOAD | 866 |
| MONITOR GP-PAYLOAD | 867 |
| MOTOR AS-BLOWER (24-VOLT, A/C, HEATER) | 782 |
| | 818 |
| MOTOR GP-PISTON–HYDRAULIC FAN | 661 |
| MOTOR GP-PISTON–HYDRAULIC FAN, AUTO REVERSING | 660 |
| MOTOR GP-WINDOW WIPER–FRONT | 871 |
| MOTOR GP-WINDOW WIPER–REAR | 869 |
| | 870 |
| MOTOR GP-WINDOW WIPER (FRONT) | 789 |
| MOUNTING GP-ALTERNATOR & COMPR | 50 |
| MOUNTING GP-AXLE | 357 |
| MOUNTING GP-CAB | 872 |
| MOUNTING GP-HYDRAULIC TANK | 663 |
| MOUNTING GP-LUBRICATION CHART | 956 |
| MOUNTING GP-MUFFLER | 109 |
| MOUNTING GP-PRESSURE SENSOR–AUTODIG | 193 |
| MOUNTING GP-PRESSURE SENSOR–PAYLOAD | 191 |
| MOUNTING GP-RIM | 358 |
| MUFFLER GP | 110 |

## O

| | |
|---|---|
| OPERATOR AR-ENCLOSED ROPS | 874 |
| OPERATOR AR-OPEN ROPS | 874 |

## P

| | |
|---|---|
| PADLOCK GP | 958 |
| PAN GP-BACKREST | 876 |
| PAN GP-BACKREST–CLOTH | 875 |
| PAN GP-BACKREST–VINYL | 877 |
| PAN GP-OIL | 51 |
| PANEL GP-CIRCUIT BREAKER | 194 |
| PANEL GP-INSTRUMENT–LOWER | 880 |
| | 884 |
| PANEL GP-INSTRUMENT–UPPER | 878 |
| | 882 |
| PANEL GP-SIDE | 489 |
| PANEL GP-SOUND SUPPRESSION | 52 |
| PANEL GP-SOUND SUPPRESSION–ENGINE FRONT HOUSING | 53 |
| PANEL GP-SOUND SUPPRESSION–LH | 491 |
| | 494 |
| PANEL GP-SOUND SUPPRESSION–RH | 492 |
| | 493 |
| PANEL GP-TOP–HOOD | 495 |
| PEDAL GP-GOVERNOR | 887 |
| | 888 |
| PISTON & ROD GP | 54 |
| | 56 |
| PLANETARY GP-TRANSMISSION | 359 |
| PLANETARY GP-TRANSMISSION–HEAVY-DUTY | 364 |
| PLATE & FILM GP | 956 |
| | 958 |
| PLATE-INFORMATION (MANUAL FUEL) | 115 |
| PLATE-INSTRUCTION (AIR CONDITIONER) | 781 |
| PLATE-INSTRUCTION (BATTERY) | 140 |
| PLATE-SERIAL NUMBER (TRANSMISSION) | 361 |
| | 366 |
| PLATFORM AR | 889 |
| PLATFORM GP-OPERATOR | 890 |
| PLUG | 341 |
| PLUG-DRAIN | 677 |
| | 679 |
| PLUG-DRAIN (ENGINE OIL) | 60 |
| PLUG GP-CYLINDER BLOCK | 58 |
| PLUG GP-CYLINDER HEAD | 59 |
| PLUG GP-OIL PAN | 60 |
| PLUG-MAGNETIC | 307 |
| | 308 |
| | 402 |

# INDEX


| Name | Page |
|---|---|
| POTENTIOMETER AS (TEMPERATURE SELECT) | 266 |
| POWER TRAIN AR | 368 |
| PROTECTION GP-VANDALISM | 958 |
| PULLEY GP-CRANKSHAFT | 61 |
| PULLEY GP-IDLER | 62 |
| PUMP & MOTOR GP-HOOD TILT | 664 |
| PUMP & MTG GP-AXLE OIL COOLER | 369 |
| PUMP & MTG GP-FUEL TRANSFER | 124 |
| PUMP & MTG GP-HYDRAULIC FAN | 665 |
| PUMP & MTG GP-IMPLEMENT | 666 |
| PUMP & MTG GP-SECONDARY STEER | 556 |
| PUMP & MTG GP-STEERING & TMSN | 557 |
| PUMP GP-ENGINE OIL | 78 |
| PUMP GP-FUEL INJECTION | 125 |
| PUMP GP-FUEL PRM & WATER SEP | 132 |
| PUMP GP-FUEL TRANSFER | 124 |
| PUMP GP-GEAR–IMPLEMENT | 667 |
| PUMP GP-GEAR–PILOT, BRAKE | 669 |
| PUMP GP-GEAR–SECONDARY STEERING | 559 |
| PUMP GP-GEAR (AXLE OIL COOLER) | 369 |
| PUMP GP-PISTON–HYDRAULIC FAN | 670 |
| PUMP GP-PISTON–STEERING | 561 |
| PUMP GP-TRANSMISSION | 371 |
| PUMP GP-WATER | 90 91 |


## R


| Name | Page |
|---|---|
| RADIATOR & FAN GP | 92 |
| RADIO GP–AM/FM CASSETTE | 892 893 |
| RADIO GP-COMMUNICATION (PRODUCT LINK 121SR) | 148 |
| RECEIVER-DRYER GP (AIR CONDITIONER) | 840 |
| RECEPTACLE GP-AUXILIARY START | 197 |
| RECLINER GP-SEAT | 894 |
| REGULATOR AS-VOLTAGE (24-VOLT) (ALTERNATOR) | 134 136 |
| REGULATOR-WATER TEMPERATURE (92-DEG C) (COOLANT) | 87 |
| RELAY AS (HEATED MIRRORS) | 848 853 |
| RELAY AS (24-VOLT) (AXLE OIL COOLER) | 253 |
| RELAY AS (24-VOLT) (FRONT CAB FLOOD LIGHTS) | 266 |
| RELAY AS (24-VOLT) (FRONT CAB FLOODLIGHTS) | 256 |
| RELAY AS (24-VOLT) (FRONT FLOODLIGHTS) | 274 |
| RELAY AS (24-VOLT) (HEATED MIRRORS) | 860 |
| RELAY AS (24-VOLT) (HEATED MIRRORS) | 862 |
| RELAY AS (24-VOLT) (HORN) | 256 274 |
| RELAY AS (24-VOLT) (HORN) | 266 |
| RELAY AS (24-VOLT) (REAR FLOOD LIGHT) | 266 |
| RELAY AS (24-VOLT) (REAR FLOODLIGHTS) | 256 |
| RELAY AS (24-VOLT) (REAR FLOODLIGHTS) | 274 |
| RIM AR | 372 |
| RIM GP-DEMOUNTABLE | 373 374 |
| ROADING AR–VALUE PACKAGE | 198 |
| ROCKER ARM GP | 63 |
| ROPS GP-ENCLOSED | 895 900 |
| ROPS GP-OPEN | 905 |
| ROTATING GP-PUMP–HYDRAULIC FAN | 672 673 |
| ROTATING GP-PUMP–STEERING | 563 |
| ROTOR-SENSOR | 341 |


## S


| Name | Page |
|---|---|
| SCRAP HANDLING AR | 2 |
| SCREEN | 564 |
| SCREEN AS (HYDRAULIC TANK) | 677 679 |
| SCREEN-FILTER | 943 |
| SCREEN GP-CASE DRAIN–STEERING PILOT | 564 |
| SCREEN GP-MAGNETIC | 341 |
| SCREEN-SUCTION | 341 |
| SEAL (COVER, VALVE MECHANISM) | 18 19 |
| SEAL GP-CRANKSHAFT | 44 |
| SEAL GP-CRANKSHAFT (FRONT) | 21 |
| SEAL GP (WATER PUMP) | 90 |
| SEAL-LIP TYPE | 87 |
| SEAL (WATER SEPARATOR, FUEL) | 119 |
| SEALING GP-GLASS | 908 |
| SEAT BELT GP | 909 918 919 |
| SEAT GP | 912 |
| SEAT GP–CLOTH | 910 |
| SEAT GP–CLOTH, HEATED | 916 |
| SEAT GP–HEATED, 24-VOLT | 917 |
| SEAT GP–VINYL | 913 915 |
| SEAT GP-SUSPENSION | 918 919 920 921 |
| SEAT GP-SUSPENSION–HEATED | 924 |
| SEAT GP-SUSPENSION–HEATED, 24-VOLT | 923 |
| SENDER AS-FUEL LEVEL | 126 |
| SENSOR & MTG GP-LIFT POSITION | 199 |
| SENSOR & MTG GP-TILT POSITION | 200 |
| SENSOR AS-POSITION (LIFT) | 615 |

# INDEX


| Name | Page |
|---|---|
| | 617 |
| SENSOR GP-ENGINE | 202 |
| SENSOR GP-POSITION–CONTROL LEVER | 206 |
| SENSOR GP-POSITION–LEFT BRAKE PEDAL | 207 |
| SENSOR GP-POSITION–LIFT, TILT | 204 |
| SENSOR GP-POSITION–THROTTLE | 205 |
| SENSOR GP-POSITION (LIFT) | 613 |
| SENSOR GP-POSITION (SPRINGLESS) (CONTROL LEVER) | 597 |
| | 601 |
| SENSOR GP-POSITION (TILT) | 613 |
| | 615 |
| | 617 |
| SENSOR GP-PRESSURE | 209 |
| SENSOR GP-PRESSURE–AIR INLET MANIFOLD | 213 |
| | 214 |
| SENSOR GP-PRESSURE–ATMOSPHERIC AIR | 211 |
| SENSOR GP-PRESSURE–ENGINE OIL | 210 |
| SENSOR GP-PRESSURE–ENGINE OIL, FUEL | 212 |
| SENSOR GP-PRESSURE–LIFT CYLINDER OIL | 208 |
| SENSOR GP-PRESSURE (AIR) | 211 |
| SENSOR GP-SPEED–TIMING, CAMSHAFT | 216 |
| | 218 |
| SENSOR GP-SPEED–TIMING, CRANKSHAFT | 217 |
| SENSOR GP-SPEED–TRANSMISSION OUTPUT | 215 |
| SENSOR GP-SPEED (ENGINE) | 217 |
| SENSOR GP-SPEED (MAGNETIC, HIGH OUTPUT) (TRANSMISSION OUTPUT 1) | 341 |
| SENSOR GP-SPEED (MAGNETIC, HIGH OUTPUT) (TRANSMISSION OUTPUT 2) | 341 |
| SENSOR GP-SPEED (TRANSMISSION INPUT) | 341 |
| SENSOR GP-TEMPERATURE–AIR INLET MANIFOLD, FUEL | 221 |
| SENSOR GP-TEMPERATURE–HYDRAULIC OIL | 220 |
| SENSOR GP-TEMPERATURE–TORQUE CONVERTER, TMSN OIL | 219 |
| SENSOR GP-TEMPERATURE–WATER, COOLANT | 222 |
| SENSOR GP-TEMPERATURE (HYDRAULIC OIL) | 281 |
| SERVICE GP-MACHINE–SECURITY | 223 |
| SHAFT GP-DRIVE | 375 |
| SHIELD GP-ENGINE COMPARTMENT | 496 |
| SHIELD GP-HEAT | 111 |
| SHROUD GP-CAB | 925 |
| SLIP JOINT GP | 377 |
| SOFTWARE GP-COMMUNICATION (PRODUCT LINK 201) | 155 |
| SOFTWARE GP-MACHINE (PRODUCT LINK 121SR) | 148 |
| SOFTWARE GP-MACHINE (SECURITY) | 223 |
| SOLENOID AS (24-VOLT, STARTING MOTOR) | 228 |
| SPIDER & BEARING GP | 377 |
| | 397 |
| STARTING AID GP-ETHER | 224 |
| STARTING MOTOR GP-ELECTRIC | 226 |
| | 227 |
| STEERING AR-SECONDARY | 565 |
| STEERING COLUMN GP | 566 |
| STEERING WHEEL GP | 567 |
| STEP GP | 498 |
| STEP GP–REAR | 499 |
| STRAINER | 683 |
| | 687 |
| | 690 |
| | 693 |
| STRAINER (CASE DRAIN SCREEN) | 550 |
| STRAINER (FILLER) | 677 |
| | 679 |
| STRAINER-FUEL | 126 |
| SUN VISOR | 942 |
| SUPPORT GP-AIR INLET | 501 |
| SUPPORT GP-AIR INLET–ANGLED PLATE | 504 |
| SUPPORT GP-ENGINE | 65 |
| SUPPORT GP-ENGINE & TMSN | 66 |
| SUPPORT GP-FAN ELECTRICAL–AUTOMATIC REVERSING | 674 |
| SUPPORT GP-HYDRAULIC CONTROL | 926 |
| SUPPORT GP-TRANSMISSION | 378 |
| SUPPRESSION AR-SOUND | 505 |
| SUPPRESSION GP-CAB SOUND–A/C, HEATER | 931 |
| SUPPRESSION GP-CAB SOUND–CAB REAR, CAB ROOF | 935 |
| SUPPRESSION GP-CAB SOUND–FRONT | 929 |
| SUPPRESSION GP-CAB SOUND–REAR | 934 |
| SUPPRESSION GP-CAB SOUND–ROOF | 937 |
| SUPPRESSION GP-SOUND | 506 |
| | 509 |
| SUPPRESSION GP-SOUND–REAR FRAME | 510 |
| SUSPENSION GP-SEAT–AIR | 938 |
| | 940 |
| SWASHPLATE GP | 569 |
| SWITCH AS-ADJUSTABLE (STOP LIGHT LIMIT) | 523 |
| SWITCH AS-FOOT (DIFFERENTIAL LOCK) | 232 |
| SWITCH AS-LIMIT (STOP LIGHT) | 523 |

# INDEX


| Name | Page |
|---|---|
| SWITCH AS-PRESSURE (HYDRAULIC OIL COOLER BYPASS) | 639 |
| SWITCH AS-PRESSURE (HYDRAULIC OIL FILTER BYPASS) | 640 |
| SWITCH AS-PRESSURE (PARKING BRAKE OIL) | 281 |
| SWITCH AS-PRESSURE (REFRIGERANT) | 249 |
| SWITCH AS-PRESSURE (SECONDARY STEERING OIL) | 299 |
| SWITCH AS-PRESSURE (SERVICE BRAKE OIL) | 281 |
| SWITCH AS-PUSH BUTTON (AUTODIG TRIGGER) | 153 |
| SWITCH AS-PUSH BUTTON (HORN) | 597<br>601 |
| SWITCH AS-PUSH BUTTON (TRANSMISSION DOWNSHIFT) | 567 |
| SWITCH AS-PUSH BUTTON (TRANSMISSION UPSHIFT) | 567 |
| SWITCH AS-ROCKER (A/C, HEATER SELECT) | 268 |
| SWITCH AS-ROCKER (AUTO LOADING KICKOUT SET) | 153 |
| SWITCH AS-ROCKER (AUTO LOADING MODE SELECT) | 153 |
| SWITCH AS-ROCKER (AUTOMATIC REVERSING FAN) | 239 |
| SWITCH AS-ROCKER (FAN BLOWER SPEED) | 268 |
| SWITCH AS-ROCKER (FINE MODULATION) | 268<br>276 |
| SWITCH AS-ROCKER (FINE MODULATION) | 256 |
| SWITCH AS-ROCKER (FRONT, REAR FLOODLIGHTS) | 182 |
| SWITCH AS-ROCKER (HAZARD) | 244 |
| SWITCH AS-ROCKER (HEATED MIRRORS) | 848<br>853 |
| SWITCH AS-ROCKER (HEATED MIRRORS) | 860<br>862 |
| SWITCH AS-ROCKER (HYDRAULIC LOCKOUT) | 258<br>268<br>276 |
| SWITCH AS-ROCKER (LIFT, TILT KICKOUT) | 276 |
| SWITCH AS-ROCKER (LIFT, TILT KICKOUT) | 268 |
| SWITCH AS-ROCKER (LIFT,TILT KICKOUT) | 257 |
| SWITCH AS-ROCKER (MODE SELECT) | 258<br>268<br>276 |
| SWITCH AS-ROCKER (NEUTRALIZER OVERRIDE) | 268 |
| SWITCH AS-ROCKER (QUICK COUPLER) | 242 |
| SWITCH AS-ROCKER (RIDE CONTROL) | 240<br>241 |
| SWITCH AS-ROCKER (TMSN NEUTRALIZER OVERRIDE) | 257<br>276 |
| SWITCH AS-ROCKER (TRANSMISSION DIRECTION) | 567 |
| SWITCH AS-ROCKER (WARNING BEACON) | 189 |
| SWITCH AS-ROTARY (AUTOSHIFT CONTROL) | 257<br>267<br>274 |
| SWITCH AS-ROTARY (24-VOLT) (REAR WIPER) | 266 |
| SWITCH AS-ROTARY (24-VOLT) (RUNNING LIGHTS) | 266<br>274 |
| SWITCH AS-ROTARY (24-VOLT) (RUNNING LIGHTS) | 256 |
| SWITCH AS-ROTARY (24-VOLT) (VARIABLE SHIFT CONTROL) | 257<br>267<br>274 |
| SWITCH AS-TEMPERATURE (REFRIGERANT) | 782 |
| SWITCH AS-TOGGLE (FRONT POWER GUARD ACTUATOR) | 303 |
| SWITCH AS-TOGGLE (REAR POWER GUARD ACTUATOR) | 303 |
| SWITCH AS-TURN SIGNAL | 244 |
| SWITCH AS-WIPER (24-VOLT) (FRONT INTERMITTENT) | 266 |
| SWITCH GP-BYPASS–POWER TRAIN OIL FILTER | 231 |
| SWITCH GP-BYPASS (POWER TRAIN OIL FILTER) | 310 |
| SWITCH GP-DIFFERENTIAL LOCK | 232 |
| SWITCH GP-DISCONNECT–BATTERY | 233 |
| SWITCH GP-LIQUID LEVEL–HYDRAULIC OIL | 234 |
| SWITCH GP-MAGNETIC–MAIN RELAY | 236<br>237 |
| SWITCH GP-MAGNETIC–START RELAY | 235 |
| SWITCH GP-PRESSURE | 238 |
| SWITCH GP-REVERSING FAN | 239 |
| SWITCH GP-RIDE CONTROL | 240<br>241 |
| SWITCH GP-ROCKER–QUICK COUPLER, BUCKET/FORK SELECT, KICKOUT | 242 |
| SWITCH GP-ROTARY–AUTODIG MATERIAL SELECT | 243 |
| SWITCH GP-ROTARY (AUTODIG MATERIAL SELECT) | 153 |
| SWITCH GP-SIGNAL–TURN | 244 |
| SWITCH GP-START (KEY) | 256<br>266<br>274 |

# INDEX


| Name | Page |
|---|---|
| SWITCH GP-TOGGLE | 246 |
| SWITCH GP-TOGGLE (GROUND LEVEL SHUTDOWN) | 281 |
| SWITCH GP-TOGGLE (HOOD TILT ACTUATOR) | 281 |
| **T** | |
| TANK GP-EXPANSION–COOLANT | 676 |
| TANK GP-FUEL | 126, 128, 129 |
| TANK GP-GREASE | 466, 512 |
| TANK GP-HYDRAULIC | 677, 679 |
| TILT GP-HOOD | 513 |
| TIP GP-ABRASION | 772 |
| TIP GP-EXTRA DUTY | 773, 774 |
| TIP GP-GENERAL PURPOSE | 775, 776 |
| TIP GP-PENETRATION | 777, 778 |
| TIRE & RIM AR | 380, 381, 382, 383, 384, 385, 386 |
| TORQUE CONVERTER & HOUSING GP–FREEWHEEL STATOR | 387 |
| TORQUE CONVERTER & HOUSING GP–HEAVY-DUTY TRANSMISSION | 389 |
| TORQUE CONVERTER GP–FREEWHEEL STATOR | 393 |
| TORQUE CONVERTER GP–HEAVY-DUTY TRANSMISSION | 391 |
| TRANSMISSION AR–FREEWHEEL STATOR TORQUE CONVERTER | 395 |
| TRANSMISSION AR–HEAVY-DUTY | 395 |
| TURBOCHARGER GP | 112 |
| **U** | |
| UNIVERSAL JOINT GP–FRONT | 396 |
| UNIVERSAL JOINT GP–REAR | 397 |
| UNIVERSAL JOINT GP-ROTOR DRIVE | 396 |
| **V** | |
| V-BELT | 369 |
| VALVE & MTG GP-MAIN CONTROL–2-FUNCTION | 682 |
| VALVE & MTG GP-MAIN CONTROL–2-FUNCTION WITH RIDE CONTROL | 686 |
| VALVE & MTG GP-MAIN CONTROL–3-FUNCTION | 689 |
| VALVE & MTG GP-MAIN CONTROL–3-FUNCTION WITH RIDE CONTROL | 693 |
| VALVE-BREAKER RELIEF | 126 |
| VALVE-GAS | 520 |
| VALVE-GAS (BRAKE ACCUMULATOR) | 519 |
| VALVE GP | 575 |
| VALVE GP-BRAKE CONTROL–PARKING | 541 |
| VALVE GP-CHECK | 590, 697 |
| VALVE GP-CHECK–FUEL FILTER | 130, 131 |
| VALVE GP-CHECK–STEERING | 571, 572 |
| VALVE GP-CHECK–STEERING QUAD | 570 |
| VALVE GP-CHECK (AXLE OIL COOLER BYPASS) | 317 |
| VALVE GP-CHECK (STEERING QUAD) | 549 |
| VALVE GP-CONTROL–AUXILIARY | 698 |
| VALVE GP-DEMAND FAN | 699 |
| VALVE GP-DIVERTER–RIDE CONTROL | 700 |
| VALVE GP-DIVERTER–SECONDARY STEERING | 573 |
| VALVE GP-ETHER STARTING–24-VOLT | 247 |
| VALVE GP-FAN REVERSING | 702 |
| VALVE GP-FLUID SAMPLING–FUEL, AIR PURGE | 79 |
| VALVE GP-FLUID SAMPLING (HYDRAULIC OIL) | 645 |
| VALVE GP-LOWERING CONTROL | 704 |
| VALVE GP-LUBE DISTRIBUTION–11-INJECTOR | 517 |
| VALVE GP-LUBE DISTRIBUTION–4-INJECTOR | 515 |
| VALVE GP-LUBE DISTRIBUTION–5-INJECTOR | 516 |
| VALVE GP-LUBE DISTRIBUTION–6-INJECTOR | 518 |
| VALVE GP-MAIN CONTROL–2-FUNCTION | 706 |
| VALVE GP-MAIN CONTROL–3-FUNCTION | 708 |
| VALVE GP-MANUAL–LOWERING CONTROL | 710 |
| VALVE GP-MODULATING–TRANSMISSION CLUTCH | 398 |
| VALVE GP-PILOT–OIL MANIFOLD, 2-FUNCTION | 711 |
| VALVE GP-PILOT–OIL MANIFOLD, 3-FUNCTION | 713 |
| VALVE GP-PILOT–STEERING | 575 |
| VALVE GP-PRESSURE REDUCING | 715, 716, 717, 718 |

# INDEX


| Name | Page |
|---|---|
| VALVE GP-PUMP CONTROL–PRESSURE, FLOW COMPENSATOR | 577 |
| VALVE GP-PUMP CONTROL–PRESSURE, FLOW COMPENSATOR–HYDRAULIC FAN | 719 |
| VALVE GP-RELIEF | 727 |
| VALVE GP-RELIEF–LINE | 721 |
| | 722 |
| | 723 |
| | 724 |
| | 725 |
| | 726 |
| VALVE GP-RELIEF–MAIN | 727 |
| VALVE GP-RELIEF–PUMP BACKUP | 579 |
| VALVE GP-RELIEF–REVERSING FAN | 728 |
| VALVE GP-RELIEF–SECONDARY STEERING | 580 |
| VALVE GP-RELIEF–TORQUE CONVERTER OUTLET | 399 |
| VALVE GP-RELIEF–TRANSMISSION HYDRAULIC CONTROL | 400 |
| VALVE GP-RELIEF (LINE, AUX CYL HEAD END PORT) | 708 |
| VALVE GP-RELIEF (LINE, AUX CYL ROD END PORT) | 708 |
| VALVE GP-RELIEF (LINE, TILT CYL HEAD END PORT) | 706 |
| VALVE GP-RELIEF (LINE, TILT CYL ROD END PORT) | 706 |
| VALVE GP-RELIEF (REFRIGERANT) | 791 |
| VALVE GP-RELIEF (STEERING CYLINDER CROSSOVER) | 585 |
| VALVE GP-SEQUENCE | 729 |
| VALVE GP-SHUTOFF (RADIATOR DRAIN) | 82 |
| VALVE GP-SHUTTLE | 549 |
| | 581 |
| | 582 |
| | 730 |
| | 731 |
| | 732 |
| VALVE GP-SHUTTLE–BALL RESOLVER | 583 |
| | 584 |
| VALVE GP-SOLENOID–DEMAND FAN | 735 |
| VALVE GP-SOLENOID–HYDRAULIC LOCKOUT | 736 |
| VALVE GP-SOLENOID–REVERSING FAN, RIDE CONTROL | 733 |
| VALVE GP-STEERING | 585 |
| VALVE GP-STEERING NEUTRALIZER | 587 |
| VALVE MECHANISM GP | 68 |
| VISOR GP-CAB | 942 |


## W


| Name | Page |
|---|---|
| WARNING GP-BACKUP | 248 |
| WASHER GP-WINDOW | 943 |
| WASTE HANDLING AR | 3 |
| WATER SEP & FUEL PRM PUMP GP–PRIMARY FUEL FILTER | 132 |
| WHEEL & FINAL DRIVE GP | 402 |
| WINDOW GP-DOOR–LH | 946 |
| WINDOW GP-DOOR–RH | 944 |
| WIPER GP-WINDOW | 948 |
| WIRING GP-AIR CONDITIONER | 249 |
| WIRING GP-AUTOLUBE CONTROL | 250 |
| WIRING GP-AXLE MONITORING | 251 |
| WIRING GP-AXLE OIL COOLER | 253 |
| WIRING GP-CAB | 256 |
| | 266 |
| | 274 |
| WIRING GP-CHASSIS | 281 |
| WIRING GP-ELECTROHYDRAULIC | 287 |
| WIRING GP-ENGINE | 288 |
| | 290 |
| WIRING GP-FRONT | 292 |
| WIRING GP-LIGHTING | 295 |
| | 297 |
| WIRING GP-LIGHTING–FLOOD, SIGNAL LIGHTS, LOADER FRAME | 296 |
| WIRING GP-SECONDARY STEERING | 299 |
| WIRING GP-SENSOR–AUTODIG | 300 |
| WIRING GP-SENSOR–PAYLOAD MONITOR | 302 |
| WIRING GP-SENSOR–TILT | 301 |
| WIRING GP-WASTE HANDLER | 303 |

# INDEX


| Désignation | Page |
|---|---|
| **A** | |
| ACCOUDOIR (ASS) | 788 |
| ACCUMULATEUR - CLIMATISEUR (ASS) | 840 |
| ACCUMULATEUR - COMMANDE DE TRANSLATION (ASS) | 589 |
| ACCUMULATEUR - COMMANDE DE TRANSLATION (ENS) | 588 |
| ACCUMULATEUR - FREIN | 519<br>520<br>521 |
| ADAPTATEUR - ENTRAÎNEMENT DE POMPE (ASS) | 7 |
| ADAPTATEUR DE REMPLIS. RAPIDE DE CARBURANT (ASS) | 113 |
| ALLUME-CIGARETTES (ASS) (12 VOLTS) | 257<br>267<br>274 |
| ALTERNATEUR DE CHARGE (ASS) | 134<br>136<br>138<br>139 |
| AMORTISSEUR DE VIBRATIONS (ASS) | 32 |
| AMPOULE (12V, 24V, 35W) | 172<br>173 |
| AMPOULE (24 VOLTS) | 171<br>256<br>266<br>274<br>796<br>867 |
| AMPOULE (24V, 21W) | 176<br>178 |
| AMPOULE (24V, 5W) | 178 |
| AMPOULE (24V, 70W) | 179 |
| ARBRE A CAMES (ASS) | 11 |
| ARBRE D'ENTRAÎNEMENT (ASS) | 375 |
| ATTELAGE D'ARTICULATION (ASS) | 455 |
| AUTOCOLLANT (AUTODIG) | 153 |
| AUTOCOLLANT-COMMANDE (AUTODIG) | 153 |
| AUTOCOLLANT-COMMANDE (*JOYSTICK, 2-FUNCTION, AUTODIG) | 605 |
| AUTOCOLLANT-COMMANDE (RELEVAGE, LIBRE, ABAISSEMENT) | 597<br>601 |
| AUTOCOLLANT-COMMANDE (VIDAGE, REDRESSEMENT) | 597<br>601 |
| AUTOCOLLANT (CONTACTEUR D'ALLUMAGE) | 169 |
| AUTOCOLLANT DE DISJONCTEUR (FUSIBLE) | 194 |
| AUTOCOLLANT DE DISJONCTEUR (PANNEAU) | 194 |
| AUTOCOLLANT DE MISE EN GARDE (*JUMP START, READ OMM) | 197 |
| AUTOCOLLANT DE MISE EN GARDE (RADIO PRODUCT LINK, AUTRE QUE NACD) | 155<br>167 |
| AUTOCOLLANT DE MISE EN GARDE (RADIO PRODUCT LINK, NACD) | 155<br>167 |
| AUTOCOLLANT DE PANNEAU DE FUSIBLES | 832<br>835 |
| AUTOCOLLANT DES COMMANDES | 880<br>884 |
| AUTOCOLLANT D'IDENTIFICATION (HYDRAULIQUE AUXILIAIRE) | 601 |
| AUTOCOLLANT D'IDENTIFICATION (KLAXON) | 597<br>601 |
| AUTOCOLLANT D'IDENTIFICATION (MODULE DE COMMANDE ÉLECTRONIQUE) | 163 |
| AUTOCOLLANT D'IDENTIFICATION (12 VOLTS) | 880<br>884 |
| AUTOCOLLANT DU PANNEAU (CENTRE) | 880<br>884 |
| AUTOCOLLANT DU PANNEAU (DROITE) | 880<br>884 |
| AUTOCOLLANT DU PANNEAU (GAUCHE) | 880<br>884 |
| AUTOCOLLANT-ENTRÉE/ SORTIE | 880<br>884 |
| AUTOCOLLANT-INFORMATION (LIAISON DE PRODUIT) | 155 |
| AUTOCOLLANT-INFORMATION (24 VOLTS) | 197<br>956 |
| AUTOCOLLANT (PANNEAU DE FUSIBLES) | 829 |
| AUTOCOLLANT (SÉCURITÉ) | 169 |
| AUTOCOLLANT, SORTIE (SECONDAIRE) | 796<br>867 |
| AUTOCOLLANT (SYSTÈME DE SÉCURITÉ DE LA MACHINE) | 169 |
| AUXILIAIRE DE DÉMARRAGE À L'ÉTHER | 224 |
| AVERTISSEUR (ASS) | 133 |
| AVERTISSEUR DE RECUL (ASS) | 248 |
| AXE DE CULBUTEUR (ASS) | 63 |
| **B** | |
| BALAI D'ESSUIE-GLACE (ENS) | 948 |
| BANDE AUTOCOLLANTE (*SCRAP HANDLER, LH) | 2 |
| BANDE AUTOCOLLANTE (*SCRAP HANDLER, RH) | 2 |
| BÂTI - CHARGEUSE (ENS) | 424 |


* TRADUCTION NON DISPONIBLE AU MOMENT DE LA PUBLICATION

# INDEX


| Désignation | Page |
|---|---|
| BÂTI AR (ENS) | 427 |
| BÂTI AV (ENS) | 421 |
| BATTERIE ET CÂBLAGE | 140 |
| BATTERIE (LITHIUM) | 798 |
| BATTERIE (12 VOLTS) | 140 |
| BLINDAGE D'ARBRE DE TRANSMISSION (ASS) | 436 |
| BLINDAGE DE TRANSMISSION (ASS) | 444 |
| BLINDAGE INFÉRIEUR (ASS) | 431 |
| BLOC-CYLINDRES - COUVERCLE (ASS) | 12 |
| | 13 |
| BLOC-CYLINDRES (ASS) | 22 |
| | 23 |
| BLOC DE BRANCHEMENT (ASS) | 140 |
| BLOC-FUSIBLE (ENS) | 267 |
| | 275 |
| *BODY-COOLER BYPASS (*ENGINE OIL) (HUILE MOTEUR) | 75 |
| BOÎTE DE VITESSES (VERSION) | 395 |
| BOÎTE PLANÉTAIRE (ASS) | 364 |
| BOÎTE PLANÉTAIRE (ASS) | 359 |
| BOUCHON - CULASSE (ASS) | 59 |
| BOUCHON AIMANTÉ | 307 |
| | 308 |
| | 402 |
| BOUCHON DE BLOC-CYLINDRES (ASS) | 58 |
| BOUCHON DE GOULOTTE DE REMPLISSAGE (ENS) (CARBURANT) | 126 |
| BOUCHON DE GOULOTTE DE REMPLISSAGE (RÉSERVOIR HYDRAULIQUE) | 679 |
| BOUCHON DE GOULOTTE DE REMPLISSAGE (RÉSERVOIR HYDRAULIQUE) | 677 |
| BOUCHON DE GOULOTTE DE REMPLISSAGE (TRANSMISSION) | 339 |
| BOUCHON DE RADIATEUR (ENS) | 676 |
| BOUCHON DE REMPLISSAGE D'HUILE DE BOÎTE (ASS) | 958 |
| BOUCHON DE REMPLISSAGE D'HUILE DE BOÎTE (ASS) | 321 |
| BOUCHON DE REMPLISSAGE D'HUILE MOTEUR (ASS) | 70 |
| BOUCHON DE VIDANGE | 677 |
| | 679 |
| BOUCHON DE VIDANGE (HUILE MOTEUR) | 60 |
| BOUCHON FILETÉ | 341 |
| BOUCLIER DE CABINE (ASS) | 925 |
| BOUGIE (ASS)-CARTER D'HUILE | 60 |
| BOULONNERIE DE BÂTI ARRIÈRE (ASS) | 449 |
| | 450 |
| | 452 |
| | 454 |
| BOULONNERIE DE BÂTI DE CHARGEUSE (ASS) | 446 |
| | 447 |
| | 448 |
| BOULONNERIE DE CARTER AV (ASS) | 36 |
| | 37 |
| BOULONNERIE DE LA CULASSE (ASS) | 31 |
| BOULONNERIE DE MONTAGE DE LA POMPE A HUILE (ASS) | 69 |
| BOULONNERIE DU CARTER D'HUILE (ASS) | 38 |
| BOURRELET D'ÉTANCHÉITÉ (COUVERCLE DE CULBUTERIE) | 18 |
| | 19 |
| BOURRELET D'ÉTANCHÉITÉ (SÉPARATEUR D'EAU) | 119 |
| BRANCHEMENT ÉLECTRIQUE (ASS) | 145 |
| BRAS D'ESSUIE-GLACE (ASS) | 786 |
| | 787 |
| BRAS ET PALIER (ENS) | 737 |


## C


| | |
|---|---|
| CABINE - REVÊTEMENT (ASS) | 829 |
| | 832 |
| | 835 |
| CABINE-FAISCEAU DE CÂBLES (ENS) (PRINCIPAL) | 267 |
| | 275 |
| CABINE ROPS FERMÉE (ASS) | 895 |
| | 900 |
| CABINE ROPS FERMÉE (VERSION) | 789 |
| | 874 |
| CABINE ROPS OUVERTE (VERSION) | 874 |
| CABLAGE | 253 |
| CABLAGE - CAPTEUR (ASS) | 300 |
| | 301 |
| | 302 |
| CABLAGE - CLIMATISEUR (ASS) | 249 |
| CABLAGE - COMMANDE ELECTRONIQUE HYDRAULIQUE (ASS) | 287 |
| CABLAGE AV (ASS) | 292 |
| CABLAGE DE CABINE (ASS) | 266 |
| | 274 |
| CABLAGE DE CABINE (ASS) | 256 |
| CABLAGE DE CHASSIS (ASS) | 281 |
| CÂBLAGE DE COMMANDE DE GRAISSAGE AUTOMATIQUE (ASS) | 250 |
| CABLAGE DE DIRECTION AUXILIAIRE (ASS) | 299 |
| CABLAGE DE MOTEUR (ASS) | 288 |
| | 290 |
| CABLAGE D'ÉCLAIRAGE (ASS) | 295 |
| CABLAGE D'ÉCLAIRAGE (ASS) | 296 |
| | 297 |
| CÂBLAGE-MONITEUR | 302 |


* TRADUCTION NON DISPONIBLE AU MOMENT DE LA PUBLICATION

# INDEX


| Désignation | Page |
|---|---|
| CÂBLAGE-MONITEUR (COMMANDE DE CHARGE UTILE) | 796, 867 |
| CABLAGE MOTEUR (ENS) | 290 |
| CABLAGE MOTEUR (ENS) (SOUPAPE D'INJECTION VARIABLE) | 8 |
| CÂBLE DE SURVEILLANCE D'ESSIEU (ASS) | 251 |
| CACHE-SOUPAPES (ASS) | 17, 18, 19, 20 |
| CADENAS (ASS) | 958 |
| CANALIS. DE REFROIDISSEMENT DU CONV. DE COUPLE | 355 |
| CANALISATION DE DIRECTION AUXILIAIRE | 547 |
| CANALISATIONS AV | 642 |
| CANALISATIONS D'AIR (ASS) | 106, 107 |
| CANALISATIONS D'AIR DE REFROIDISSEUR D'ADMISSION (ASS) | 105 |
| CANALISATIONS DE CARBURANT (ASS) | 120, 122 |
| CANALISATIONS DE CHAUFFAGE DE CABINE (ASS) | 843 |
| CANALISATIONS DE CLIMATISEUR (ASS) | 838, 840 |
| CANALISATIONS DE DIAGNOSTIC (ASS) | 953 |
| CANALISATIONS DE DIRECTION (ASS) | 549 |
| CANALISATIONS DE GRAISSAGE (ASS) | 474, 479, 481, 482, 484, 485, 486 |
| CANALISATIONS DE GRAISSAGE AUTOMATIQUE (ASS) | 466, 468, 470, 472 |
| CANALISATIONS DE RÉCHAUFFEUR DE LIQUIDE DE REFROIDISSEMENT | 843 |
| CANALISATIONS DE REFROIDISSEUR D'HUILE D'ESSIEU (ASS) | 345, 347 |
| CANALISATIONS DE REFROIDISSEUR D'HUILE HYDR. (ASS) | 651 |
| CANALISATIONS DE VÉRIN DE LEVAGE (ASS) | 656 |
| CANALISATIONS D'EAU (ASS) | 82 |
| CANALISATIONS D'EAU (ASS) | 85, 87 |
| CANALISATIONS D'HUILE DE TRANSMISSION (ASS) | 353 |
| CANALISATIONS D'HUILE DE TURBOCOMPRESSEUR (ASS) | 77 |
| CANALISATIONS D'HUILE MOTEUR (ASS) | 75 |
| CANALISATIONS DU FREIN DE MANOEUVRE (ASS) | 540 |
| CANALISATIONS DU VÉRIN D'INCLINAISON (ASS) | 658 |
| CANALISATIONS HYDRAULIQUES (ASS) | 645 |
| CANALISATIONS HYDRAULIQUES DE VENTILATEUR (ASS) | 649 |
| CAPOT ET PROTECTION (ASS) | 457 |
| CAPTEUR - MOTEUR (ASS) | 202 |
| CAPTEUR DE POSITION (ENS) (LEVAGE) | 615, 617 |
| CAPTEUR DE PRESSION - MONTAGE (ASS) | 191, 193 |
| CAPTEUR DE PRESSION (ASS) | 208, 209, 210, 211, 212, 213, 214 |
| CAPTEUR DE PRESSION (ASS) (AIR) | 211 |
| CAPTEUR DE TEMPERATURE (ASS) | 219, 220, 221, 222 |
| CAPTEUR DE TEMPERATURE (ASS) (HUILE HYDRAULIQUE) | 281 |
| CAPTEUR DE VITESSE (ASS) | 215, 216, 217, 218 |
| CAPTEUR DE VITESSE (ASS) (DONNÉES DE BOÎTE) | 341 |
| CAPTEUR DE VITESSE (ASS) (MAGNÉTIQUE, GRANDE PUISSANCE) (SORTIE 1 DE BOÎTE) | 341 |
| CAPTEUR DE VITESSE (ASS) (MAGNÉTIQUE, GRANDE PUISSANCE) (SORTIE 2 DE BOÎTE) | 341 |
| CAPTEUR DE VITESSE (ASS) (MOTEUR) | 217 |
| CAPTEUR ET MONTAGE-POSITION DE LEVAGE (ASS) | 199 |
| CAPTEUR ET MONTAGE-POSITION D'INCLINAISON (ASS) | 200 |
| CARDAN COULISSANT (ASS) | 377 |
| CARTER - BLINDAGE (ASS) | 433, 434 |
| CARTER AV (ASS) | 46 |


* TRADUCTION NON DISPONIBLE AU MOMENT DE LA PUBLICATION

# INDEX


| Désignation | Page |
|---|---|
| CARTER DE VOLANT (ASS) | 44 |
| CARTER D'ENGRENAGES DE TRANSFERT | 312 |
| CEINTURE DE SECURITE (ASS) | 909 |
| CEINTURE DE SECURITE (ASS) | 918 |
| | 919 |
| CHAPEAU | 943 |
| CHAPEAU (ENS) (GOULOTTE DE REMPLISSAGE D'HUILE) | 70 |
| CHAUFFAGE DE CABINE (ASS) | 820 |
| CHAUFFAGE DE CABINE (ASS) | 818 |
| CLAPET (ASS) | 575 |
| CLAPET (ASS)-VENTILATEUR À PALES RÉVERSIBLES | 702 |
| CLAPET DE DECHARGE (ASS) | 399 |
| | 400 |
| | 579 |
| | 580 |
| | 721 |
| | 722 |
| | 723 |
| | 724 |
| | 725 |
| | 726 |
| | 727 |
| | 728 |
| CLAPET DE DECHARGE (ASS) (CANALISATION, ORIFICE CÔTÉ TÊTE DE VÉRIN AUXILIAIRE) | 708 |
| CLAPET DE DECHARGE (ASS) (CANALISATION, ORIFICE DU CÔTÉ TÊTE DU VÉRIN D'INCLINAISON) | 706 |
| CLAPET DE DECHARGE (ASS) (CANALISATION, ORIFICE DU CÔTÉ TIGE DU VÉRIN AUXILIAIRE) | 708 |
| CLAPET DE DECHARGE (ASS) (CANALISATION, ORIFICE DU CÔTÉ TIGE DU VÉRIN D'INCLINAISON) | 706 |
| CLAPET DE DECHARGE (ASS) (DOUBLE ALIMENTATION DE VÉRIN DE DIRECTION) | 585 |
| CLAPET DE DECHARGE (ASS) (RÉFRIGÉRANT) | 791 |
| CLAPET DE DÉCHARGE HYDRAULIQUE | 126 |
| CLAPET DE RETENUE (ENS) | 130 |
| | 131 |
| | 570 |
| | 571 |
| | 572 |
| | 697 |
| CLAPET DE RETENUE (ENS) | 590 |
| CLAPET DE RETENUE (ENS) (DÉRIVATION DE REFROIDISSEUR D'HUILE D'ESSIEU) | 317 |
| CLAPET DE RETENUE (ENS) (DIRECTION QUADRUPLE) | 549 |
| CLAVETTE - POIGNÉE | 803 |
| CLÉ | 1 |
| | 321 |
| CLÉ (COUPE-BATTERIE) | 233 |
| CLÉ ÉLECTRONIQUE (ENS) (SÉCURITÉ, GRIS) | 223 |
| CLÉ ÉLECTRONIQUE (ENS) (SÉCURITÉ, GRIS) (BLANC/VIDE) | 169 |
| CLÉ ÉLECTRONIQUE (ENS) (SÉCURITÉ, JAUNE) | 223 |
| CLÉ ÉLECTRONIQUE (ENS) (SÉCURITÉ, JAUNE) (PROGRAMMÉE) | 169 |
| CLIMATISEUR (ASS) | 782 |
| | 785 |
| CLIMATISEUR (VERSION) | 781 |
| *CLUTCH GP-ELECTRIC (*AXLE OIL COOLER PUMP) | 369 |
| COLLECTEUR D'ÉCHAPPEMENT (ASS) | 108 |
| COLONNE DE DIRECTION (ASS) | 566 |
| COMMANDE D'AFFICHAGE ÉLECTRONIQUE (PANNEAU DE TÉMOINS, DROIT, GAUCHE) | 268 |
| | 276 |
| COMMANDE D'AFFICHAGE ÉLECTRONIQUE (TABLEAU DE TÉMOINS, CENTRE) | 153 |
| | 257 |
| COMMANDE D'AFFICHAGE ÉLECTRONIQUE (TABLEAU DE TÉMOINS, DROITE) | 257 |
| COMMANDE D'AFFICHAGE ÉLECTRONIQUE (TABLEAU DE TÉMOINS, GAUCHE) | 257 |
| COMMANDE DE COMMUNICATION (ASS) | 155 |
| COMMANDE DE COMMUNICATION (ASS) (PRODUCT LINK 201) | 146 |
| COMMANDE DE CREUSAGE AUTOMATIQUE AUTODIG (ASS) | 153 |
| COMMANDE DE DIRECTION (ASS) | 542 |
| COMMANDE DE FAISCEAU (ENS) (COMMANDE DE BLINDAGE HYDRAULIQUE) | 303 |
| COMMANDE DE FAISCEAU (ENS) (*HEATED MIRROR TIMER RELAY) | 848 |
| | 853 |
| COMMANDE DE FAISCEAU (ENS) (*HEATED MIRRORS) | 848 |
| | 853 |
| | 860 |
| | 862 |
| COMMANDE DE FAISCEAU (ENS) (LIAISON DE PRODUIT) | 146 |
| COMMANDE DE FAISCEAU (ENS) (LIAISON DE PRODUIT) | 148 |


* TRADUCTION NON DISPONIBLE AU MOMENT DE LA PUBLICATION

# INDEX


| Désignation | Page |
|---|---|
| COMMANDE DE FAISCEAU (ENS) (SÉCURITÉ MACHINE) | 169 |
| COMMANDE DE FREIN DE STATIONNEMENT (ASS) | 533 |
| COMMANDE DE GODET (ASS) | 738 |
| COMMANDE DE LA PÉDALE DE FREIN (ASS) | 531 |
| | 532 |
| COMMANDE DE POIGNÉE (ASS) | 611 |
| | 612 |
| COMMANDE DE POIGNÉE (ASS) (LEVIER) | 617 |
| COMMANDE DE TRANSLATION (VERSION) | 595 |
| | 596 |
| COMMANDE ÉLECTROHYDRAULIQUE (ASS) | 597 |
| | 601 |
| | 605 |
| | 608 |
| COMMANDE ELECTRONIQUE DE MOTEUR (ASS) | 156 |
| COMMANDE ÉLECTRONIQUE D'ÉQUIPEMENT (ASS) | 163 |
| COMMANDE ET CANALIS. - TRANSLATION (ASS) | 590 |
| COMMANDE ET MONTAGE - MOTEUR | 150 |
| COMMANDE ET MONTAGE-COMMUNICATION (ASS) | 146 |
| | 148 |
| COMMANDE HYDRAULIQUE DE BOÎTE (ASS) | 313 |
| | 315 |
| COMMANDE NON PROGRAMMEE (ASS) | 156 |
| | 157 |
| | 158 |
| | 159 |
| | 160 |
| | 161 |
| COMMANDE NON PROGRAMMEE (ASS) (ÉQUIPEMENT) | 256 |
| | 267 |
| | 274 |
| COMMANDE NON PROGRAMMEE (ASS) (PRODUCT LINK 300) | 148 |
| COMMANDE NON PROGRAMMEE (ASS) (SÉCURITÉ) | 223 |
| COMMANDE NON PROGRAMMEE (ASS) (SYSTÈME DE SÉCURITÉ) | 169 |
| COMMANDE NON PROGRAMMEE (ASS) (SYSTÈME DE SURVEILLANCE CATERPILLAR) | 256 |
| | 267 |
| | 274 |
| COMMANDE NON PROGRAMMEE (ASS) (TRANSMISSION) | 256 |
| | 267 |
| | 274 |
| COMMANDE PRINCIPALE DE SOUPAPE ET MONTAGE (ASS) | 682 |
| | 686 |
| | 689 |
| | 693 |
| COMMANDE (VERSION)-VENTILATEUR | 595 |
| COMPRESSEUR DE REFRIGERANT (ASS) | 791 |
| | 792 |
| CONDENSATEUR ET MONTAGE (RÉFRIGÉRANT) | 793 |
| CONDUIT ET FILTRE À AIR (ASS) | 803 |
| CONTACTEUR - NIVEAU DE LIQUIDE (ASS) | 234 |
| CONTACTEUR DE CLIGNOTANT (ENS) | 244 |
| CONTACTEUR DE COMMANDE DU SYSTÈME ANTITANGAGE (ASS) | 240 |
| | 241 |
| CONTACTEUR DE MARCHE ARRIÈRE DES PALES DE VENTILATEUR | 239 |
| CONTACTEUR DE VERROUILLAGE DE DIFFÉRENTIEL (ASS) | 232 |
| CONTACTEUR MAGNETIQUE (ASS) | 235 |
| | 236 |
| | 237 |
| CONTACTEUR ROTATIF (ASS) | 243 |
| CONTACTEUR ROTATIF (ASS) (SÉLECTION DU MATÉRIEL AUTODIG) | 153 |
| CONTREPOIDS (ASS) | 406 |
| | 407 |
| | 408 |
| | 409 |
| | 410 |
| | 411 |
| CONVERTISSEUR DE COUPLE (ASS) | 391 |
| | 393 |
| CONVERTISSEUR DE COUPLE ET CARTER (ASS) | 387 |
| | 389 |
| *COOLANT HEATER LINES | 842 |
| COUDE DE FLEXIBLE | 82 |
| | 105 |
| COURONNE ET DIFFERENTIEL (ASS) | 322 |
| | 323 |
| | 325 |
| | 327 |
| | 329 |
| | 331 |
| | 333 |
| COURROIE TRAPEZOIDALE | 369 |
| COUVERCLE DE CARTER AV (ASS) | 14 |


* TRADUCTION NON DISPONIBLE AU MOMENT DE LA PUBLICATION

# INDEX


| Désignation | Page |
|---|---|
| | 15 |
| COUVERCLE DE TURBOCOMPRESSEUR (ASS) | 101 |
| COUVERCLE INFÉRIEUR-DOSSIER (ASS) | 875 |
| | 876 |
| | 877 |
| COUVERCLES D'EXPEDITION (ASS) | 320 |
| CREPINE | 683 |
| | 687 |
| | 690 |
| | 693 |
| CREPINE (GOULOTTE DE REMPLISSAGE) | 677 |
| | 679 |
| CREPINE (TAMIS DE RETOUR DE CARTER) | 550 |
| CROISILLON ET ROULEMENT | 377 |
| | 397 |
| CULASSE (ASS) | 30 |
| | 31 |
| CULASSE (ENS) | 25 |
| | 26 |
| | 27 |
| CULBUTERIE - BOULONNERIE (ASS) | 39 |
| CULBUTERIE (ASS) | 68 |
| CYLINDRE D'ETHER (ENS) | 224 |

## D

| | |
|---|---|
| DÉMARREUR ÉLECTRIQUE (ASS) | 226 |
| | 227 |
| DIFFÉRENTIEL - GLISSEMENT LIMITÉ (ASS) | 335 |
| DIFFÉRENTIEL NOSPIN (ASS) | 336 |
| | 337 |
| DIRECTION AUXILIAIRE (VERSION) | 565 |
| DISJONCTEUR (ASS) (20A) (ALIM BAT NON RELIÉE À LA CABINE) | 195 |
| DISJONCTEUR (ASS) (60A) (COMMANDE VÉRIN DE CAPOT) | 194 |
| DISJONCTEUR DE SECURITE (ENS) (FEUX D'ARRÊT) | 523 |
| DISJONCTEUR DU PANNEAU DE COMMANDE (ASS) | 194 |
| DISJONCTEUR (ENS) (105A) (ALTERNATEUR) | 194 |
| DISJONCTEUR (ENS) (15A) (COMMANDE DE CHAUFFAGE, CLIMATISATION) | 258 |
| DISJONCTEUR (ENS) (15A) (COMMANDE DE PROTECTION À ASSISTANCE) | 303 |
| DISJONCTEUR (ENS) (15A) (FEUX DE ROUTE) | 195 |
| DISJONCTEUR (ENS) (32-AMPÈRES) (DÉMARRAGE) | 194 |
| DISJONCTEUR (ENS) (80A) (PRINCIPAL) | 194 |
| DISPOSITIF D'EVACUATION DES VAPEURS DE CARTER | 73 |
| DISTRIBUTEUR - 2 VOIES (VERSION) | 641 |
| DISTRIBUTEUR - 3 VOIES (VERSION) | 641 |
| DISTRIBUTEUR (ASS) | 698 |
| DISTRIBUTEUR DE FREIN (ASS) | 541 |
| DISTRIBUTEUR DE POMPE (ASS) | 577 |

## E

| | |
|---|---|
| ECHELLE (ASS) | 463 |
| ÉCLAIRAGE - CLIGNOTANT (VERSION) | 180 |
| ÉCLAIRAGE - GYROPHARE (ASS) | 189 |
| ÉCLAIRAGE - PROJECTEURS (ASS) | 180 |
| | 181 |
| | 182 |
| ÉCLAIRAGE - PROJECTEURS ET CLIGNOTANTS (ASS) | 184 |
| | 185 |
| ÉCLAIRAGE CLIGNOTANT | 187 |
| ÉCRAN | 564 |
| ÉCRAN (ENS) (RÉSERVOIR HYDRAULIQUE) | 677 |
| | 679 |
| ÉCRAN MAGNÉTIQUE (ASS) | 341 |
| ÉCRAN MAGNÉTIQUE (REFROIDISSEUR D'HUILE D'ESSIEU) | 347 |
| ÉCRAN THERMIQUE (ASS) | 111 |
| ÉCRAN THERMIQUE DE COMPARTIMENT MOTEUR | 496 |
| ÉJECTEUR AUTOMATIQUE DE POUSSIÈRE (ASS) | 102 |
| ELECTROMODULE DE CHARGE UTILE DE BENNE | 866 |
| ÉLECTROMODULE DE CHARGE UTILE DE BENNE | 867 |
| ÉLECTRONIQUE - COMMUNICATION (ASS) | 162 |
| ÉLECTRONIQUE - MACHINE (ENS) | 164 |
| ÉLECTRONIQUE DE TRANSMISSION (ASS) | 166 |
| ÉLECTRONIQUE-MONITEUR (ASS) | 165 |
| ÉLÉMENT DE FILTRE À AIR (ENS) (PRINCIPAL) | 100 |
| ÉLÉMENT DE FILTRE À AIR (ENS) (SECONDAIRE) | 100 |
| ÉLÉMENT DE FILTRE À HUILE (ENS) (GRANDE EFFICACITÉ) | 340 |
| ÉLIMINATION DES DÉCHETS (VERSION) | 3 |
| ENGRENAGE DE TRANSFERT DE RENDEMENT (ASS) | 341 |
| ENTRAÎNEMENT AUXILIAIRE (ASS) | 34 |
| ENTRAÎNEMENT DE POMPE (ASS) | 35 |
| ENTRETIEN DE LA MACHINE (ASS) | 223 |
| ÉQUIPEMENT POUR DÉPLACEMENT ROUTIER (VERSION) | 198 |


* TRADUCTION NON DISPONIBLE AU MOMENT DE LA PUBLICATION

# INDEX


| Désignation | Page |
|---|---|
| ESSIEU FIXE | 307 |
| ESSIEU FIXE (VERSION) | 305 |
| ESSIEU OSCILLANT | 308 |
| ESSIEU OSCILLANT (VERSION) | 305 |
| | 306 |
| ESSUIE-GLACE (ASS) | 948 |
| ÉTANCHÉITÉ - GLACE (ASS) | 908 |

## F

| | |
|---|---|
| FAISCEAU-BOÎTE DE TRANSMISSION | 313 |
| | 315 |
| FAISCEAU DE CABLES - CAPTEUR (ENS) (INCLINAISON) | 301 |
| FAISCEAU DE CABLES - CAPTEUR (ENS) (*LIFT CYLINDER OIL) | 300 |
| FAISCEAU DE CABLES - CAPTEUR (ENS) (TEMPÉRATURE D'HUILE D'ESSIEU ARRIÈRE) | 251 |
| FAISCEAU DE CABLES - CAPTEUR (ENS) (TEMPÉRATURE D'HUILE D'ESSIEU AVANT) | 251 |
| FAISCEAU DE CÂBLES DE FREINS (ENS) | 281 |
| FAISCEAU DE CÂBLES DE FREINS (ENS) (FEU DE STOP) | 523 |
| FAISCEAU DE CABLES (ENS) (CAVALIER) (POMPE D'AMORÇAGE DE CARBURANT) | 115 |
| FAISCEAU DE CABLES (ENS) (OUTIL D'ENTRETIEN) | 267 |
| | 274 |
| FAISCEAU DE CABLES (ENS) (OUTIL D'ENTRETIEN) | 257 |
| FAISCEAU DE CHÂSSIS AVANT (ENS) | 292 |
| FAISCEAU DE CHAUFFAGE ET CLIMATISATION | 782 |
| | 818 |
| FAISCEAU DE COMMANDES (ENS) | 256 |
| FAISCEAU DE COMMANDES (ENS) (LEVIER) | 608 |
| FAISCEAU DE COMMANDES (ENS) (LEVIER) | 605 |
| FAISCEAU DE CONTACTEUR (ENS) (VERROUILLAGE DE DIFFÉRENTIEL) | 232 |
| FAISCEAU DE DIRECTION (ENS) (*COLUMN, WHEEL) | 567 |
| FAISCEAU DE RADIO (ENS) | 826 |
| FAISCEAU DE RADIO (ENS) (HAUT-PARLEUR) | 892 |
| FAISCEAU DE REFROIDISSEUR D'ADMISSION (ENS) | 92 |
| FAISCEAU DE REFROIDISSEUR D'HUILE DE TRANSMISSION (ENS) (BOITE DE VITESSE) | 87 |
| FAISCEAU DE REFROIDISSEUR D'HUILE HYDRAULIQUE (ENS) | 92 |
| FAISCEAU DE REFROIDISSEUR D'HUILE MOTEUR (ENS) | 87 |
| FAISCEAU DE RÉSERVOIR HYDRAULIQUE (ENS) | 281 |
| FAISCEAU DE SOUPAPE (ENS) (COMPRESSEUR PNEUMATIQUE DE SIÈGE) | 938 |
| | 940 |
| FAISCEAU D'ÉCLAIRAGE ARRIÈRE (ENS) | 297 |
| FAISCEAU D'ÉCLAIRAGE (ENS) | 295 |
| FAISCEAU D'ÉCLAIRAGE (ENS) (CLIGNOTANT) | 244 |
| FAISCEAU D'ÉCLAIRAGE (ENS) (*FLOOD, SIGNAL LIGHTS, LH) | 297 |
| FAISCEAU D'ÉCLAIRAGE (ENS) (*FLOOD, SIGNAL LIGHTS, RH) | 297 |
| FAISCEAU D'ÉCLAIRAGE (ENS) (GYROPHARE) | 189 |
| FAISCEAU D'ÉCLAIRAGE (ENS) (PROJECTEURS AVANT) | 257 |
| FAISCEAU D'ÉCLAIRAGE (ENS) (PROJECTEURS DE CABINE) | 267 |
| | 275 |
| FAISCEAU D'ESSIEU (ENS) (*AXLE OIL COOLER) | 253 |
| FEUX ARRIÈRE ET FEUX D'ARRÊT | 178 |
| FILTRE | 943 |
| FILTRE - SÉPARATEUR D'EAU ET DE CARBURANT (ENS) (PRINCIPAL) | 119 |
| FILTRE A AIR (ASS) | 99 |
| | 100 |
| FILTRE À AIR DE CABINE | 803 |
| FILTRE À CARBURANT | 126 |
| FILTRE A CARBURANT (ENS) | 115 |
| FILTRE A CARBURANT ET MONTAGE (ASS) | 115 |
| FILTRE A HUILE (ASS) | 340 |
| FILTRE A HUILE (ASS) | 639 |
| | 640 |
| FILTRE À HUILE (ENS) (HYDRAULIQUE) | 639 |
| | 640 |
| FILTRE À HUILE MOTEUR (ASS) | 71 |
| FILTRE A HUILE MOTEUR (ENS) | 71 |
| FILTRE DE POMPE À EAU | 90 |
| FILTRE DE SÉPARATEUR D'EAU ET DE CARBURANT (ASS) | 119 |
| FREIN DE MANOEUVRE - COMMANDE (ASS) | 534 |
| FREIN DE MANOEUVRE (ASS) | 527 |
| | 529 |
| FREIN DE STATIONNEMENT (ASS) | 525 |
| | 526 |


* TRADUCTION NON DISPONIBLE AU MOMENT DE LA PUBLICATION

# INDEX


| Désignation | Page |
|---|---|
| FUSIBLE (10A) | 256 |
| | 266 |
| | 274 |
| FUSIBLE (15A) | 256 |
| | 266 |
| | 274 |
| | 782 |
| | 818 |
| FUSIBLE (20A) | 256 |
| | 266 |
| | 274 |

## G

| | |
|---|---|
| GAINE D'AIR (ASS) | 805 |
| GARDE-BOUE (ASS) | 420 |
| GARDE-BOUE (ASS) | 415 |
| GARDE-BOUE AV (ASS) | 418 |
| | 419 |
| *GAUGE AS-OIL LEVEL (DIPSTICK) | 74 |
| GLACE DE PORTIÈRE (ASS) | 944 |
| | 946 |
| GODET NORMAL (ASS) | 763 |
| | 764 |
| GODET NORMAL (ENS) | 749 |
| | 751 |
| GODET NORMAL (VERSION) | 748 |
| GODET-ROCHE (ASS) | 765 |
| | 766 |
| | 767 |
| | 768 |
| | 769 |
| GODET-ROCHE (ENS) | 753 |
| | 755 |
| | 757 |
| | 759 |
| | 761 |
| GOULOTTE DE REMPLISSAGE D'HUILE DE TRANSMISSION | 339 |
| GRAISSAGE AUTOMATIQUE (VERSION) | 488 |
| GRILLE DE RADIATEUR (ASS) | 429 |
| GROUPE DE CONTROLE | 795 |
| | 796 |
| | 798 |
| GROUPE DE CONTROLE (INVERSEUR DINTENSITÉ) | 256 |
| | 266 |
| | 274 |
| GROUPE DE MOTEUR A PISTONS | 660 |
| | 661 |
| GROUPE DE ROTATION DE POMPE | 563 |
| | 672 |
| | 673 |
| GROUPE D'ISOLATION DE CHALEUR | 104 |
| *GUARD AR-WINDOW | 810 |

## H

| | |
|---|---|
| *HARDWARE GP-LIFT ARM | 740 |
| | 741 |
| | 742 |
| *HARNESS AS-TRANSMISSION CONT (VOLANT DE DIRECTION) | 567 |
| HUILE MOTEUR - CARTER (ASS) | 51 |

## I

| | |
|---|---|
| INCLINAISON DU CAPOT (ASS) | 513 |
| INDICATEUR DE COLMATAGE DE FILTRE À AIR (ASS) | 103 |
| INDICATEUR DE REMPLACEMENT DE FILTRE À AIR | 103 |
| INJECTEUR DE CARBURANT (ASS) | 125 |
| INSONORISATION - COUVERCLE (ASS) | 16 |
| INSONORISATION (ASS) | 506 |
| | 509 |
| | 510 |
| INSONORISATION DE CABINE (ASS) | 929 |
| | 931 |
| | 934 |
| | 935 |
| | 937 |
| INSONORISATION (VERSION) | 505 |
| INTERRUPTEUR - BOUTON-POUSSOIR (ENS) (DÉCLENCHEUR DE FONCTION AUTODIG) | 153 |
| INTERRUPTEUR - BOUTON-POUSSOIR (ENS) (KLAXON) | 597 |
| | 601 |
| INTERRUPTEUR - BOUTON-POUSSOIR (ENS) (MONTÉE EN VITESSE DE LA BOÎTE) | 567 |
| INTERRUPTEUR - BOUTON-POUSSOIR (ENS) (RETROGRADATION) | 567 |
| INTERRUPTEUR - DÉRIVATION (ASS) | 231 |
| INTERRUPTEUR - DÉRIVATION (ASS) (FILTRE À HUILE DE TRANSMISSION) | 310 |
| INTERRUPTEUR - SIGNAL (ASS) | 244 |
| INTERRUPTEUR À BASCULE (ASS) | 242 |
| | 246 |
| INTERRUPTEUR À BASCULE (ASS) (ARRÊT DEPUIS LE SOL) | 281 |
| INTERRUPTEUR À BASCULE (ASS) (COMMANDE VÉRIN DE CAPOT) | 281 |
| INTERRUPTEUR À BASCULE (ENS) (*FRONT POWER GUARD ACTUATOR) | 303 |


* TRADUCTION NON DISPONIBLE AU MOMENT DE LA PUBLICATION

# INDEX


| Désignation | Page |
|---|---|
| INTERRUPTEUR À BASCULE (ENS) (*REAR POWER GUARD ACTUATOR) | 303 |
| INTERRUPTEUR A PEDALE (ENS) (VERROUILLAGE DE DIFFÉRENTIEL) | 232 |
| INTERRUPTEUR AJUSTABLE (VERSION) (LIMITE DES FEUXD'ARRÊT) | 523 |
| INTERRUPTEUR BALANCIER (ENS) (*AUTOMATIC REVERSING FAN) | 239 |
| INTERRUPTEUR BALANCIER (ENS) (BLOCAGE HYDRAULIQUE) | 258<br>268<br>276 |
| INTERRUPTEUR BALANCIER (ENS) (COMMANDE DE SENS DE MARCHE) | 567 |
| INTERRUPTEUR BALANCIER (ENS) (COMMANDE DE TRANSLATION) | 240<br>241 |
| INTERRUPTEUR BALANCIER (ENS) (COUPLEUR EXPRESS) | 242 |
| INTERRUPTEUR BALANCIER (ENS) (FEUX DE DÉTRESSE) | 244 |
| INTERRUPTEUR BALANCIER (ENS) (GYROPHARE) | 189 |
| INTERRUPTEUR BALANCIER (ENS) (*LIFT,TILT KICKOUT) | 257 |
| INTERRUPTEUR BALANCIER (ENS) (LIMITEUR DE LEVAGE , D'INCLINAISON) | 268<br>276 |
| INTERRUPTEUR BALANCIER (ENS) (MISE HORS SERVICE DE LA NEUTRALISATION) | 268 |
| INTERRUPTEUR BALANCIER (ENS) (MODULATION PRÉCISE) | 268<br>276 |
| INTERRUPTEUR BALANCIER (ENS) (MODULATION PRÉCISE) | 256 |
| INTERRUPTEUR BALANCIER (ENS) (NEUTRALISATION DE LA BOÎTE DE VITESSES) | 276 |
| INTERRUPTEUR BALANCIER (ENS) (NEUTRALISATION DE LA BOÎTE DE VITESSES) | 257 |
| INTERRUPTEUR BALANCIER (ENS) (PROJECTEURS AVANT, ARRIÈRE) | 182 |
| INTERRUPTEUR BALANCIER (ENS) (RÉGLAGE DU LIMITEUR DE CHARGEMENT AUTOMATIQUE) | 153 |
| INTERRUPTEUR BALANCIER (ENS) (RÉTROVISEURS À CHAUFFAGE INTÉGRÉ) | 848<br>853<br>860<br>862 |
| INTERRUPTEUR BALANCIER (ENS) (SÉLECTEUR DE CLIMATISATION/ CHAUFFAGE) | 268 |
| INTERRUPTEUR BALANCIER (ENS) (SÉLECTEUR DE MODE DE CHARGEMENT AUTOMATIQUE) | 153 |
| INTERRUPTEUR BALANCIER (ENS) (SÉLECTION DE MODE) | 258<br>268<br>276 |
| INTERRUPTEUR BALANCIER (ENS) (VITESSE DU VENTILATEUR SOUFFLANT) | 268 |
| INTERRUPTEUR DE DÉMARRAGE (ASS) (CLAVETTE) | 256<br>266<br>274 |
| INTERRUPTEUR D'ESSUIE-GLACE (24 VOLTS) (AV, INTERMITTENT) | 266 |
| INTERRUPTEUR ROTATIF (ENS) (COMMANDE DE PASSAGE AUTOMATIQUE DES VITESSES) | 257<br>267<br>274 |
| INTERRUPTEUR ROTATIF (ENS) (24 VOLTS) (COMMANDE DE CHANGEMENT DE VITESSES VARIABLE) | 257<br>267<br>274 |
| INTERRUPTEUR ROTATIF (ENS) (24 VOLTS) (ESSUIE-GLACE ARRIÈRE) | 266 |
| INTERRUPTEUR ROTATIF (ENS) (24 VOLTS) (FEUX DE ROUTE) | 256<br>274 |
| INTERRUPTEUR ROTATIF (ENS) (24 VOLTS) (FEUX DE ROUTE) | 266 |


## J


| | |
|---|---|
| JANTE DÉMONTABLE (ASS) | 373<br>374 |
| JANTE (VERSION) | 372 |
| JAUGE D'HUILE MOTEUR (BAIONNETTE) (ASS) | 74 |
| JOINT (ASS) (POMPE À EAU) | 90 |
| JOINT DE COUVERCLE DE RÉGULATEUR (BOÎTIER DE RÉGULATEUR DE TEMPÉRATURE) | 87 |
| JOINT DE RÉGULATEUR (CARTER) (TEMPÉRATURE D'EAU, LIQUIDE DE REFROIDISSEMENT) | 87 |
| JOINT DE VILEBREQUIN (ASS) | 44 |
| JOINT DE VILEBREQUIN (ASS) (AVANT) | 21 |
| JOINT PLAT | 677 |


* TRADUCTION NON DISPONIBLE AU MOMENT DE LA PUBLICATION

# INDEX


| Désignation | Page |
|---|---|
| | 679 |
| JOINT UNIVERSEL - ENTRAÎNEMENT DE ROTOR | 396 |
| JOINT UNIVERSEL (ASS) | 396 |
| | 397 |

## K

| | |
|---|---|
| KIT D'AMORTISSEUR (SIEGE A SUSPENSION) | 938 |
| KIT D'ASSISTANCE À L'ACCÉLÉRATION (COLONNE DE DIRECTION) | 566 |
| KIT D'ATTACHE | 940 |
| KIT D'ATTACHE (SIEGE A SUSPENSION) | 938 |
| KIT D'AXE À PÉDALE | 887 |
| KIT DE BLOC COULISSANT | 920 |
| | 921 |
| | 923 |
| KIT DE BORNE (ALTERNATEUR) | 134 |
| | 136 |
| KIT DE BORNE (DÉMARREUR) | 228 |
| KIT DE BORNE (VERROUILLAGE) | 275 |
| KIT DE BOULONNERIE (ALTERNATEUR) | 134 |
| | 136 |
| KIT DE BOUTON (RADIO) | 892 |
| KIT DE BRIDE DE FIXATION DE FILTRE A AIR | 100 |
| KIT DE CALES (COMPREND 17 CALES) | 561 |
| KIT DE CARTER (COLONNE DE DIRECTION) | 566 |
| KIT DE COUSSINET (ALTERNATEUR) | 134 |
| | 136 |
| KIT DE GARNITURE DE FREIN | 526 |
| KIT DE JOINTS | 520 |
| | 534 |
| | 588 |
| | 589 |
| KIT DE JOINTS (ABAISSEMENT MOTEUR COUPÉ) | 710 |
| KIT DE JOINTS (ACCUMULATEUR DE FREIN) | 519 |
| KIT DE JOINTS (ARBRE DE TRANSMISSION) | 377 |
| KIT DE JOINTS (CLAPET DE DÉCHARGE) | 728 |
| KIT DE JOINTS (CLAPET DE RETENUE) | 697 |
| | 702 |
| KIT DE JOINTS (ÉLECTROVANNE) | 733 |
| | 736 |
| KIT DE JOINTS (ÉLECTROVANNE) (SOUPAPE PROPORTIONNELLE PILOTE) | 711 |
| KIT DE JOINTS (SOUPAPE DE DÉRIVATION) | 702 |
| KIT DE JOINTS (SOUPAPE PROPORTIONNELLE PILOTE) | 713 |
| KIT DE LEVIER D'INCLINAISON (COLONNE DE DIRECTION) | 566 |
| KIT DE PISTON DE COMMANDE | 561 |
| KIT DE PISTON EXCENTRIQUE | 561 |
| KIT DE RÉNOVATION DE LA POMPE À EAU (EAU) | 90 |
| KIT DE RÉPARATION (CAPTEUR DE NIVEAU DE CARBURANT) | 126 |
| KIT DE ROULEAU | 887 |
| KIT DE SOUPAPE DE CHARGE DE FREIN | 536 |
| KIT DE SOUPAPE PNEUMATIQUE | 940 |
| KIT DE SOUPAPE PNEUMATIQUE (SIEGE A SUSPENSION) | 938 |
| KIT DE VIS DE RETENUE (M5X0,8X53,24-MM) | 166 |
| KIT DE VIS DE RETENUE (M5X0,8X53,24-MM) (COMMANDE NON PROGRAMMÉE) | 160 |
| KIT DE VIS DE RETENUE (*M5X0.8X53.24-MM) (COMMANDE NON PROGRAMMÉE) | 159 |
| KIT D'ÉCROU (COLONNE DE DIRECTION) | 566 |
| KLAXON ÉLECTRIQUE (ASS) | 822 |

## L

| | |
|---|---|
| LAME DE COUPE (ASS) | 770 |
| | 771 |
| LAMPE - CLIGNOTANT DE DIRECTION (ASS) | 176 |
| | 177 |
| LAMPE - CLIGNOTANT DE DIRECTION (ASS) (24 VOLTS) | 185 |
| | 187 |
| LAMPE - GYROPHARE (ASS) | 179 |
| LAMPE - PHARE (ASS) | 172 |
| | 173 |
| | 174 |
| LAMPE - PHARE (ASS) | 175 |
| LAMPE (ENS) (ROUGE, VERT, TÉMOIN LUMINEUX, 12V) | 169 |
| LAMPE HALOGÈNE (24V, 65W) | 174 |
| LAMPE HALOGÈNE (24V, 65W) (PROJECTEUR) | 175 |
| LAVE-GLACE - VITRE (ASS) | 943 |
| LENTILLE ORANGE | 176 |
| LEVAGE (VERSION) | 744 |
| | 745 |
| *LEVER GP-TILT | 743 |
| LIAISON - VERROUILLAGE DE CHÂSSIS DE DIRECTION (ASS) | 487 |
| *LINES GP-CAB HEATER | 842 |
| *LINES GP-HOOD TILT | 643 |
| LOGICIEL - MACHINE (ENS) (*PRODUCT LINK 121SR) | 148 |
| LOGICIEL - MACHINE (ENS) (SÉCURITÉ) | 223 |


* TRADUCTION NON DISPONIBLE AU MOMENT DE LA PUBLICATION

# INDEX


| Désignation | Page |
|---|---|
| LOGICIEL DE COMMUNICATION (ASS) (PRODUCT LINK 201) | 155 |
| **M** | |
| MANOCONTACT | 238 |
| MANOCONTACT (ENS) (DÉRIVATION DE FILTRE À HUILE HYDRAULIQUE) | 640 |
| MANOCONTACT (ENS) (DÉRIVATION DE REFROIDISSEUR D'HUILE HYDRAULIQUE) | 639 |
| MANOCONTACT (ENS) (HUILE DE DIRECTION AUXILIAIRE) | 299 |
| MANOCONTACT (ENS) (HUILE DE FREIN DE MANOEUVRE) | 281 |
| MANOCONTACT (ENS) (HUILE DE FREIN DE STATIONNEMENT) | 281 |
| MANOCONTACT (ENS) (RÉFRIGÉRANT) | 249 |
| MARCHEPIED (ASS) | 498<br>499 |
| MÉCANISME DE COMMANDE DE GR. MOTO-PROPUL. (ASS) | 404 |
| MODULE - QUATRE INSTRUMENTS (ASS) | 864 |
| MODULE (ASS)-TOUCHE DE CHARGE UTILE | 796<br>867 |
| MODULE D'INDICATEUR DE VITESSE ET COMPTE-TOURS (ASS) | 865 |
| MONTAGE DE CABINE (ASS) | 872 |
| MONTAGE DE JANTE (ASS) | 358 |
| MONTAGE DE L'ALTERNATEUR ET COMPRESSEUR (ASS) | 50 |
| MONTAGE DE MOTEUR (VERSION) | 6 |
| MONTAGE DE RADIO (ASS) | 826 |
| MONTAGE DE RADIO (ASS) | 828 |
| MONTAGE DE SILENCIEUX (ASS) | 109 |
| MONTAGE DES COMMANDES (ASS) | 823<br>824 |
| MONTAGE D'ESSIEU (ASS) | 357 |
| MONTAGE DU TABLEAU DE GRAISSAGE (ASS) | 956 |
| MONTAGE-SÉCURITÉ (ASS) | 169 |
| MOTEUR - PARTIE CENTRALE (VERSION) | 5 |
| MOTEUR DE VENTILATEUR (ENS) (CLIMATISATION, CHAUFFAGE, 24V) | 818 |
| MOTEUR DE VENTILATEUR (ENS) (CLIMATISATION, CHAUFFAGE, 24V) | 782 |
| MOTEUR D'ESSUIE-GLACE (ASS) | 869<br>870<br>871 |
| MOTEUR D'ESSUIE-GLACE (ASS) (AVANT) | 789 |

| Désignation | Page |
|---|---|
| **O** | |
| OEILLETONS DE LEVAGE MOTEUR (ASS) | 48<br>49 |
| **P** | |
| PALONNIER - GROUPE DE COMMANDE (ASS) | 613<br>615<br>617 |
| PANNEAU DE FAISCEAU (ENS) | 194 |
| PANNEAU D'INSONORISATION (ASS) | 491<br>492<br>493<br>494 |
| PANNEAU D'INSONORISATION (ASS) | 52<br>53 |
| PANNEAU LATERAL (ASS) | 489 |
| PANNEAU SUPERIEUR (ASS) | 495 |
| PARE-SOLEIL | 942 |
| PIGNONNERIE AV (ASS) | 42 |
| PIGNONNERIE D'ARBRE À CAME | 41 |
| PISTON ET BIELLE (ASS) | 54<br>56 |
| PLAFONNIER (ASS) | 171 |
| PLANCHER-ISOLATION (ASS) | 808<br>809 |
| PLAQUE DE NUMÉRO DE SÉRIE (BOITE DE VITESSE) | 361<br>366 |
| PLAQUE D'INSTRUCTIONS (BATTERIE) | 140 |
| PLAQUE D'INSTRUCTIONS (CLIMATISEUR) | 781 |
| PLAQUE SIGNALÉTIQUE (ASS) | 951 |
| PLAQUE SIGNALÉTIQUE (CARBURANT MANUEL) | 115 |
| PLAQUES SIGNALETIQUES ET AUTOCOLLANTS (ASS) | 956<br>958 |
| PLATE-FORME DE CABINE | 890 |
| PLATE-FORME (VERSION) | 889 |
| PLATEAU OSCILLANT (ASS) | 569 |
| PNEU ET JANTE (VERSION) | 380<br>381<br>382<br>383<br>384<br>385<br>386 |
| POIGNÉE | 816<br>817 |
| POINTE - UNIVERSELLE (ASS) | 775<br>776 |
| POINTE ABRASION (ASS) | 772 |


* TRADUCTION NON DISPONIBLE AU MOMENT DE LA PUBLICATION

# INDEX


| Désignation | Page |
|---|---|
| POINTE PENETRATION | 777, 778 |
| POMPE A EAU - BOULONNERIE | 81 |
| POMPE A EAU (ASS) | 90, 91 |
| POMPE A ENGRENAGES (ASS) | 559, 667, 669 |
| POMPE A ENGRENAGES (ASS) (REFROIDISSEUR D'HUILE D'ESSIEU) | 369 |
| POMPE A HUILE MOTEUR (ASS) | 78 |
| POMPE A PISTONS (ASS) | 561, 670 |
| POMPE D'ALIMENTATION EN CARBURANT (ASS) | 124 |
| POMPE D'ALIMENTATION ET MONTAGE (ASS) | 124 |
| POMPE D'AMORÇAGE DE CARBURANT ET SÉPARATEUR D'EAU (ASS) | 132 |
| POMPE DE BOÎTE DE VITESSES (ASS) | 371 |
| POMPE DE DIRECTION AUXILIAIRE ET MONTAGE (ASS) | 556 |
| POMPE DE SÉPARATEUR D'EAU ET D'AMORÇAGE DE CARBURANT (ASS) | 132 |
| POMPE D'EQUIPEMENT ET MONTAGE (ASS) | 666 |
| POMPE D'INJECTION DE CARBURANT (ASS) | 125 |
| POMPE ET MONTAGE - DIRECTION ET BOÎTE (ASS) | 557 |
| POMPE ET MONTAGE DE REFROIDISSEUR D'HUILE D'ESSIEU | 369 |
| POMPE ET MONTAGE-VENTILATEUR HYDRAULIQUE | 665 |
| PORTE DE VISITE (ASS) | 412 |
| PORTE-POINTE (ASS) | 746, 748 |
| PORTIÈRE DE CABINE (ASS) | 799, 801, 802 |
| POTENTIOMETRE (ENS) (SÉLECTION DE TEMPÉRATURE) | 266 |
| POULIE-ROUE AVANT (ASS) | 62 |
| PRISE DE BATTERIE AUXILIAIRE (ASS) | 197 |
| PROTECTEUR DES CANALISATIONS (ASS) | 443 |
| PROTECTION - ÉCLAIRAGE (ASS) | 442 |
| PROTECTION ANTIVANDALISME (ASS) | 811, 958 |
| PROTECTION AV (ASS) | 437 |
| PROTECTION D'ATTELAGE ET DE DIRECTION (ASS) | 440 |
| PROTECTION DE GLACE (ASS) | 812, 814 |
| PROTECTION-RÉSERVOIR HYDRAULIQUE ET CARBURANT (ASS) | 438 |
| PROTÈGE-CAPTEUR (ASS) | 445 |
| *PUMP & MOTOR GP-HOOD TILT | 664 |


## R


| Désignation | Page |
|---|---|
| RADIATEUR-CORPS (ENS) (EXTÉRIEUR) | 93 |
| RADIATEUR-CORPS (ENS) (INTÉRIEUR) | 93 |
| RADIATEUR ET VENTILATEUR (ASS) | 92 |
| RADIO -COMMUNICATION (ASS) (*PRODUCT LINK 121SR) | 148 |
| RADIO (ASS) | 892, 893 |
| RALLONGE DU DOSSIER DE SIEGE | 915 |
| RALLONGE DU DOSSIER DE SIEGE (TOILE) | 912, 917 |
| RÉCEPTEUR-DÉSHYDRATEUR (ASS) (CLIMATISEUR) | 840 |
| RÉDUCTEUR ET ROUE | 402 |
| REFROIDISSEMENT AUX TEMPÉRATURES ÉLEVÉES (VERSION) | 80 |
| REFROIDISSEUR D'HUILE D'ESSIEU ET MONTAGE (ASS) | 317 |
| REFROIDISSEUR D'HUILE D'ESSIEU (VERSION) | 319 |
| REGARD DE NIVEAU | 677, 679 |
| REGISTRE D'AVERTISSEUR | 153 |
| REGLAGE DE SIEGE (ASS) | 779 |
| RÉGULATEUR - PÉDALE (ASS) | 887, 888 |
| REGULATEUR DE LA TENSION (ENS) (24 VOLTS) (ALTERNATEUR) | 134, 136 |
| RELAIS (ENS) (RÉTROVISEURS À CHAUFFAGE INTÉGRÉ) | 848, 853 |
| RELAIS (ENS) (24 VOLTS) (KLAXON) | 256, 266, 274 |
| RELAIS (ENS) (24 VOLTS) (PROJECTEUR ARRIÈRE) | 266 |
| RELAIS (ENS) (24 VOLTS) (PROJECTEURS ARRIÈRE) | 256, 274 |
| RELAIS (ENS) (24 VOLTS) (PROJECTEURS AVANT) | 274 |
| RELAIS (ENS) (24 VOLTS) (PROJECTEURS DE CABINE AVANT) | 256 |
| RELAIS (ENS) (24 VOLTS) (PROJECTEURS SUR CABINE AVANT) | 266 |


* TRADUCTION NON DISPONIBLE AU MOMENT DE LA PUBLICATION

# INDEX


| Désignation | Page |
|---|---|
| RELAIS (ENS) (24 VOLTS) (REFROIDISSEUR D'HUILE D'ESSIEU) | 253 |
| RELAIS (ENS) (24 VOLTS) (RÉTROVISEURS À CHAUFFAGE INTÉGRÉ) | 860 |
| RELAIS (ENS) (24 VOLTS) (RÉTROVISEURS À CHAUFFAGE INTÉGRÉ) | 862 |
| RENIFLARD (ENS) | 313 |
| | 315 |
| RENIFLARD (ENS) (CARTER) | 73 |
| RÉSERVOIR - GRAISSE (ASS) | 466 |
| | 512 |
| RÉSERVOIR DE CARBURANT (ASS) | 126 |
| | 128 |
| | 129 |
| RESERVOIR D'EXPANSION (ASS) | 676 |
| RÉSERVOIR HYDRAULIQUE - MONTAGE (ASS) | 663 |
| RÉSERVOIR HYDRAULIQUE (ASS) | 679 |
| RÉSERVOIR HYDRAULIQUE (ASS) | 677 |
| RETROVISEUR - CABINE (ASS) | 942 |
| RÉTROVISEUR (ASS) | 844 |
| | 845 |
| | 846 |
| | 847 |
| | 848 |
| | 850 |
| | 851 |
| | 852 |
| | 853 |
| | 855 |
| | 856 |
| | 857 |
| | 858 |
| | 860 |
| | 862 |
| ROBINET DE BATTERIE (ASS) | 233 |
| ROBINET-PRÉLÈVEMENT D'ÉCHANTILLON DE LIQUIDE (ASS) | 79 |
| ROBINET-PRÉLÈVEMENT D'ÉCHANTILLON DE LIQUIDE (ASS) (HUILE HYDRAULIQUE) | 645 |
| ROTATION DE LA ROUE DU VENTILATEUR SOUFFLANT (DÉMARRAGE DU MOTEUR) | 880 |
| | 884 |
| ROTATION DE LA ROUE DU VENTILATEUR SOUFFLANT (ENTRETIEN) | 597 |
| | 601 |
| | 605 |
| | 608 |
| ROTATION DE LA ROUE DU VENTILATEUR SOUFFLANT (ISSUE DE SECOURS) | 956 |
| ROTATION DE LA ROUE DU VENTILATEUR SOUFFLANT (ISSUE DE SECOURS) | 832 |
| ROTATION DE LA ROUE DU VENTILATEUR SOUFFLANT (LIRE LE MANUEL DU PROPRIÉTAIRE) | 169 |
| ROTATION DE LA ROUE DU VENTILATEUR SOUFFLANT (RÉGLAGE DU SIÈGE) | 938 |
| | 940 |
| ROTOR-CAPTEUR | 341 |
| ROUE ET RÉDUCTEURS (ASS) | 402 |


## S


| | |
|---|---|
| *SCREEN GP-CASE DRAIN | 564 |
| SIÈGE - COMPRESSEUR D'AIR (ASS) | 780 |
| SIÈGE (ASS) | 910 |
| | 912 |
| | 913 |
| | 915 |
| | 916 |
| | 917 |
| SIÈGE AVEC SUSPENSION (ASS) | 918 |
| | 919 |
| | 920 |
| | 921 |
| | 923 |
| | 924 |
| | 938 |
| | 940 |
| SIÈGE INCLINABLE (ASS) | 894 |
| SILENCIEUX (ASS) | 110 |
| SOLÉNOÏDE (ENS) (24V, DÉMARREUR) | 228 |
| SONDE - CIRCUIT DE CARBURANT | 204 |
| | 205 |
| | 206 |
| | 207 |
| SONDE - CIRCUIT DE CARBURANT (INCLINAISON) | 613 |
| | 615 |
| | 617 |
| SONDE - CIRCUIT DE CARBURANT (LEVAGE) | 613 |
| SONDE - CIRCUIT DE CARBURANT (SANS RESSORT) (LEVIER DE COMMANDE) | 601 |
| SONDE - CIRCUIT DE CARBURANT (SANS RESSORT) (LEVIER DE COMMANDE) | 597 |
| SONDE - NIVEAU DE CARBURANT (ENS) | 126 |
| SOUPAPE - GAZ (CIRCUIT DE FREINAGE) | 520 |
| SOUPAPE - GAZ (CIRCUIT DE FREINAGE) (ACCUMULATEUR DE FREIN) | 519 |
| SOUPAPE - SOLÉNOÏDE (ASS) | 733 |
| | 735 |
| | 736 |


* TRADUCTION NON DISPONIBLE AU MOMENT DE LA PUBLICATION

# INDEX


| Désignation | Page |
|---|---|
| SOUPAPE A COMMANDE MANUELLE (ASS) | 710 |
| SOUPAPE D'ARRÊT (ASS) (VIDANGE DE RADIATEUR) | 82 |
| SOUPAPE DE COMMANDE D'ABAISSEMENT (ASS) | 704 |
| SOUPAPE DE COMMANDE PRINCIPALE (ASS) | 706 |
| | 708 |
| SOUPAPE DE DÉMARRAGE À L'ÉTHER (ASS) | 247 |
| SOUPAPE DE DERIVATION (ASS) | 700 |
| SOUPAPE DE DERIVATION (ASS) | 573 |
| SOUPAPE DE DIRECTION (ASS) | 585 |
| SOUPAPE DE DISTRIBUTION DE GRAISSAGE (ASS) | 515 |
| | 516 |
| | 517 |
| | 518 |
| SOUPAPE DE MODULATION (ASS) | 398 |
| SOUPAPE DE NEUTRALISATION DE DIRECTION (ASS) | 587 |
| SOUPAPE DE SÉQUENCE (ASS) | 729 |
| SOUPAPE DE VENTILATEUR À VITESSE VARIABLE (ASS) | 699 |
| SOUPAPE PILOTE (ASS) | 575 |
| | 711 |
| | 713 |
| SOUPAPE RÉDUCTRICE DE PRESSION (ASS) | 715 |
| | 716 |
| | 717 |
| | 718 |
| SUPPORT - PÉDALE DE FREIN (ASS) | 522 |
| | 523 |
| SUPPORT DE CACHE-SOUPAPE ET FAISC. DE CABL. D'IN. | 8 |
| SUPPORT DE COMMANDE HYDRAULIQUE (ASS) | 926 |
| SUPPORT DE FILTRE À HUILE (ASS) | 310 |
| SUPPORT DE MOTEUR (ASS) | 65 |
| SUPPORT DE MOTEUR ET BOÎTE (ASS) | 66 |
| SUPPORT DE TRANSMISSION (ASS) | 378 |
| *SUPPORT GP-FAN ELECTRICAL | 674 |
| SUPPORTS D'ADMISSION D'AIR (ASS) | 501 |
| | 504 |


## T


| Désignation | Page |
|---|---|
| TABLEAU DE BORD (ASS) | 878 |
| | 880 |
| | 882 |
| | 884 |
| TAMIS D'ASPIRATION | 341 |
| TAPIS DE PLANCHER | 824 |
| | 832 |
| | 835 |
| TENDEUR DE COURROIE (ASS) | 10 |
| THERMOCONTACT (ENS) (RÉFRIGÉRANT) | 782 |
| THERMOSTAT-TEMPÉRATURE D'EAU (92-DEG C) (LIQUIDE DE REFROIDISSEMENT) | 87 |
| *TIP GP-EXTRA DUTY | 773 |
| | 774 |
| TOIT ROPS - OUVERT (ASS) | 905 |
| TRAINS PLANÉTAIRES - CARTER ET PIÈCES | 311 |
| TRANSFORMATEUR DE PUISSANCE (24-VOLTS À 12-VOLTS) | 258 |
| TRANSFORMATEUR DE PUISSANCE (24-VOLTS À 12-VOLTS) | 267 |
| | 275 |
| TRANSMISSION (VERSION) | 368 |
| TURBOCOMPRESSEUR (ASS) | 112 |
| TYPE LÈVRE À JOINT | 87 |


## V


| Désignation | Page |
|---|---|
| *VALVE GP-PUMP CONTROL | 719 |
| VANNE PILOTE (ASS) | 549 |
| | 730 |
| | 731 |
| | 732 |
| VANNE PILOTE (ASS) | 581 |
| | 582 |
| | 583 |
| | 584 |
| VERIN DE DIRECTION ET MONTAGE (ASS) | 544 |
| VÉRIN DE LEVAGE (ASS) | 626 |
| VÉRIN DE LEVAGE ET JOINT (ASS) | 619 |
| VÉRIN D'INCLINAISON (ASS) | 628 |
| | 630 |
| | 632 |
| | 633 |
| | 635 |
| | 637 |
| VÉRIN D'INCLINAISON ET JOINT (ASS) | 620 |
| | 621 |
| | 622 |
| | 623 |
| | 624 |
| | 625 |
| VÉRIN HYDRAULIQUE (ASS) | 545 |
| VERSION DE CHASSIS | 1 |
| VERSION DE COMMANDE-AUTODIG | 152 |
| VERSION DE MACHINE | 2 |
| VERSION DE MONTAGE-COMMUNICATION | 167 |


* TRADUCTION NON DISPONIBLE AU MOMENT DE LA PUBLICATION

# INDEX


| Désignation | Page |
|---|---|
| VERSION DE MONTAGE-SÉCURITÉ | 168 |
| VERSION DE MOTEUR COMPLET | 4 |
| VERSION DE TOIT - ROPS OUVERT | 790 |
| VERSION ÉLECTRIQUE | 162 |
| VERSION POUR ÉQUIPEMENT FORESTIER | 745 |
| VERSION REBUT | 2 |
| VIDANGE DE CARBURANT (ASS) | 114 |
| VIDANGE-ÉCOLOGIE (ASS) | 338 |
| VIDANGE-HUILE DE MOTEUR (ASS) | 33 |
| VILEBREQUIN - POULIE (ASS) | 61 |
| VILEBREQUIN (ASS) | 21 |
| VOLANT DE DIRECTION (ASS) | 567 |
| VOLANT MOTEUR (ASS) | 40 |
| VUE DU MODÈLE | 2 |


## W


| Désignation | Page |
|---|---|
| *WIRING GP-WASTE HANDLER | 303 |


* TRADUCTION NON DISPONIBLE AU MOMENT DE LA PUBLICATION

# INDICE


| Nombre | Página |
|---|---|

## A

ACCESORIOS - IMPULSOR DE (GR) ..... 34
ACCIONADOR DEL PROTECTOR DEL TREN DE FUERZA (GR) ..... 404
ACONDICIONADOR DE AIRE (CONFIG) ..... 781
ACONDICIONADOR DE AIRE (GR) ..... 782
785
ACUMULADOR DE CONTROL DE AMORTIGUACIÓN ..... 588
ACUMULADOR DE CONTROL DE AMORTIGUACION (GR) ..... 589
ACUMULADOR DEL ACONDICIONADOR DE AIRE (GR) ..... 840
ACUMULADOR DEL FRENO (GR) ..... 519
520
521
ADAPTADOR DE LLENADO RÁPIDO DE COMBUSTIBLE (GR) ..... 113
ADAPTADOR DEL MANDO DE LA BOMBA ..... 7
AIRE - TUBERÍAS DE (GR) ..... 106
107
AISLACIÓN DE CALOR (GR) ..... 104
AJUSTADOR DEL ASIENTO (GR) ..... 779
ALARMA (GR) ..... 133
ALFOMBRILLA DEL PISO ..... 824
832
835
AMORTIGUADOR DE VIBRACIONES (GR) ..... 32
ÁRBOL DE LEVAS (GR) ..... 11
ARO DESMONTABLE (GR) ..... 373
374
ARO Y RUEDA ..... 380
381
382
383
384
385
386
ARRANQUE - INTERRUPTOR DE (GR) (LLAVE) ..... 266
ARRANQUE - INTERRUPTOR DE (GR) (LLAVE) ..... 256
274
ASIENTO CON SUSPENSIÓN (GR) ..... 938
940
ASIENTO (GR) ..... 910
912
913
915
916
917
AUXILIAR DE ARRANQUE CON ÉTER (GR) .... 224

## B

BALANCÍN (GR) ..... 63
BASE DE LA TAPA DE VÁLVULAS Y MAZO DE CABLES DE INYECTOR (GR) ..... 8
BASE DEL FRENO DE PIE (GR) ..... 522
523
BASTIDOR DEL CARGADOR (CONJ) ..... 424
BASTIDOR DELANTERO (CONJ) ..... 421
BASTIDOR TRASERO (CONJ) ..... 427
BATERÍA (LITIO) ..... 798
BATERÍA Y CABLES (GR) ..... 140
BATERÍA (12 VOLTIOS) ..... 140
BLOQUE DE EMPALME (GR) ..... 140
BLOQUE DE FUSIBLES (CONJ) ..... 267
275
BLOQUE DESLIZANTE-JUEGO ..... 920
921
923
BLOQUE MOTOR (GR) ..... 22
23
BOCINA ELÉCTRICA (GR) ..... 822
*BODY-COOLER BYPASS (*ENGINE OIL) (ACEITE DEL MOTOR) ..... 75
BOMBA DE ACEITE DEL MOTOR (GR) ..... 78
BOMBA DE AGUA (GR) ..... 90
91
BOMBA DE ENGRANAJES (GR) ..... 559
667
669
BOMBA DE ENGRANAJES (GR) (ENFRIADOR DE ACEITE DE EJE) ..... 369
BOMBA DE IMPLEMENTOS Y MONTAJE (GR) ..... 666
BOMBA DE INYECCIÓN DE COMBUSTIBLE (GR) ..... 125
BOMBA DE LA TRANSMISIÓN (GR) ..... 371
BOMBA DE PISTONES (GR) ..... 561
670
BOMBA DE SEPARADOR DE AGUA Y CEBADO DE COMBUSTIBLE (GR) ..... 132
BOMBA DE TRANSFERENCIA DE COMBUSTIBLE (GR) ..... 124
BOMBA DE TRANSFERENCIA DE COMBUSTIBLE Y MONTAJE (GR) ..... 124
BOMBA DE TRANSMISIÓN Y DIRECCIÓN Y MONTAJE (GR) ..... 557
BOMBA DEL ENFRIADOR DE ACEITE DEL EJE Y MONTAJE (GR) ..... 369
BOMBA Y MONTAJE DE LA DIRECCIÓN SECUNDARIA (GR) ..... 556
BOMBA Y MONTAJE DE VENTILADOR HIDRAULICO (GR) ..... 665
BRAZO DE LIMPIAPARABRISAS (GR) ..... 786


* NO HAY TRADUCCION DISPONIBLE EN EL MOMENTO DE LA IMPRESION

# INDICE


| Nombre | Página |
|---|---|
| | 787 |
| BRAZO Y COJINETE (CONJ) | 737 |

## C

| Nombre | Página |
|---|---|
| CABINA - MAZO DE CABLES DE LA (PRINCIPAL) | 267<br>275 |
| CABINA ROPS ABIERTA (CONFIG) | 874 |
| CABINA ROPS CERRADA (CONFIG) | 874 |
| CABINA ROPS CERRADA (GR) | 895<br>900 |
| CABLES CONJ. - TANQUE HIDRÁULICO | 281 |
| CABLES DE LA CABINA (GR) | 256<br>266<br>274 |
| CABLES DE LA DIRECCIÓN SECUNDARIA | 299 |
| CABLES DE LAS LUCES (GR) | 295<br>296<br>297 |
| CABLES DE SENSOR (GR) | 300<br>301<br>302 |
| CABLES DEL ACONDICIONADOR DE AIRE (GR) | 249 |
| CABLES DEL CHASIS (GR) | 281 |
| CABLES DEL INTERRUPTOR DE LA TEMP. DE REFRIGERANTE DEL EJE (GR) | 253 |
| CABLES DEL MOTOR (GR) | 288<br>290 |
| CABLES DEL SISTEMA ELECTRÓNICO HIDRÁULICO (GR) | 287 |
| CABLES DELANTEROS (GR) | 292 |
| CAJA DE ENGRANAJE DE TRANSFERENCIA (GR) | 312 |
| CAJA DELANTERA - TORNILLERÍA DE LA (GR) | 36<br>37 |
| CAJA DELANTERA (GR) | 46 |
| CAJA Y PIEZAS DE LOS PLANETARIOS | 311 |
| CALCOMANÍA (AUTOCARGA) | 153 |
| CALCOMANÍA DE ADVERTENCIA (ARRANQUE DEL MOTOR) | 880<br>884 |
| CALCOMANÍA DE ADVERTENCIA (ASIENTO AJUSTABLE) | 940 |
| CALCOMANÍA DE ADVERTENCIA (ASIENTO AJUSTABLE) | 938 |
| CALCOMANÍA DE ADVERTENCIA (*JUMP START, READ OMM) | 197 |
| CALCOMANÍA DE ADVERTENCIA (LEER EL MANUAL) | 169 |
| CALCOMANÍA DE ADVERTENCIA (MANTENIMIENTO) | 597<br>601<br>605<br>608 |
| CALCOMANÍA DE ADVERTENCIA (PRODUCTO DE ENLACE DE RADIO, NO NACD) | 155<br>167 |
| CALCOMANÍA DE ADVERTENCIA (RADIO DE PRODUCTO DE ENLACE, NACD) | 155<br>167 |
| CALCOMANÍA DE ADVERTENCIA (SALIDA ALTERNATIVA) | 956 |
| CALCOMANÍA DE ADVERTENCIA (SALIDA ALTERNATIVA) | 832 |
| CALCOMANÍA DE IDENTIFICACIÓN (BOCINA) | 597<br>601 |
| CALCOMANÍA DE IDENTIFICACIÓN (HIDRAULICO AUXILIAR) | 601 |
| CALCOMANÍA DE IDENTIFICACIÓN (MÓDULO DE CONTROL ELECTRONICO) | 163 |
| CALCOMANÍA DE IDENTIFICACIÓN (12 VOLTIOS) | 880<br>884 |
| CALCOMANÍA DE RAYAS (*SCRAP HANDLER, LH) | 2 |
| CALCOMANÍA DE RAYAS (*SCRAP HANDLER, RH) | 2 |
| CALCOMANIA, DISYUNTOR (FUSIBLE) | 194 |
| CALCOMANIA, DISYUNTOR (TABLERO) | 194 |
| CALCOMANIA, ENTRADA/SALIDA | 880<br>884 |
| CALCOMANÍA (INTERRUPTOR DE ENCENDIDO) | 169 |
| CALCOMANÍA (SEGURIDAD) | 169 |
| CALCOMANÍA (SISTEMA DE SEGURIDAD DE LA MÁQUINA) | 169 |
| CALCOMANIA, TABLERO DE FUSIBLE | 832<br>835 |
| CALCOMANÍA (TABLERO DE FUSIBLES) | 829 |
| CALCOMANÍAS Y PLACAS DE IDENTIFICACIÓN (GR) | 956<br>958 |
| CALEFACCIÓN DE LA CABINA (GR) | 818<br>820 |
| CÁNCAMOS DE LEVANTAMIENTO DEL MOTOR (GR) | 48<br>49 |
| CANDADO (GR) | 958 |
| CAPO Y PROTECTOR (GR) | 457 |
| CARGA - ALTERNADOR DE (GR) | 134<br>136 |


* NO HAY TRADUCCION DISPONIBLE EN EL MOMENTO DE LA IMPRESION

# INDICE


| Nombre | Página |
|---|---|
| | 138 |
| | 139 |
| CÁRTER - COLECTOR DEL (GR) | 51 |
| CÁRTER - PROTECTOR DEL (GR) | 433 |
| | 434 |
| CHASIS (CONFIG) | 1 |
| CIGÜEÑAL - POLEA DE (GR) | 61 |
| CIGÜEÑAL (GR) | 21 |
| CILINDRO DE DIRECCIÓN Y MONTAJE (GR) | 544 |
| CILINDRO DE ÉTER (CONJ) | 224 |
| CILINDRO DE INCLINACIÓN Y SELLO (GR) | 620 |
| | 621 |
| | 622 |
| | 623 |
| | 624 |
| | 625 |
| CILINDRO DE LEVANTAMIENTO - TUBERÍAS DEL (GR) | 656 |
| CILINDRO DE LEVANTAMIENTO (GR) | 626 |
| CILINDRO DE LEVANTAMIENTO Y SELLO (GR) | 619 |
| CILINDRO HIDRÁULICO (GRUPO) | 545 |
| CINTURÓN DE SEGURIDAD (GR) | 918 |
| | 919 |
| CINTURÓN DE SEGURIDAD (GR) | 909 |
| *CLUTCH GP-ELECTRIC (*AXLE OIL COOLER PUMP) | 369 |
| COLADOR | 683 |
| | 687 |
| | 690 |
| | 693 |
| COLADOR DE COMBUSTIBLE | 126 |
| COLADOR (*FILLER) | 677 |
| | 679 |
| COLADOR (REJILLA, CAJA DE DRENAJE) | 550 |
| COLUMNA DE DIRECCIÓN (GR) | 566 |
| COMBUSTIBLE - TANQUE DE (GR) | 126 |
| | 128 |
| | 129 |
| COMPRESOR DE AIRE DEL ASIENTO (GR) | 780 |
| COMPRESOR DE REFRIGERANTE (GR) | 792 |
| COMPRESOR DE REFRIGERANTE (GR) | 791 |
| CONDENSADOR DEL REFRIGERANTE Y MONTAJE (GR) | 793 |
| CONDUCTO DE AIRE (GR) | 805 |
| CONDUCTO Y FILTRO DE AIRE (GR) | 803 |
| CONEXIÓN ELÉCTRICA (GR) | 145 |
| (CONFIG) CABLERIA, CHASIS DELANTERO | 292 |
| CONFIGURACIÓN DE CABLERIA, CALENTADOR Y ACONDICIONADOR DE AIRE | 782 |
| | 818 |
| CONFIGURACIÓN DE CONTROL DEL VENTILADOR | 595 |
| CONFIGURACIÓN DE ELIMINACIÓN DE BASURAS | 3 |
| CONFIGURACIÓN DE INSTALACIÓN DEL MOTOR | 6 |
| CONFIGURACIÓN DE TRAÍLLA | 2 |
| CONFIGURACIÓN ELÉCTRICA | 162 |
| CONFIGURACIÓN GENERAL | 2 |
| CONFIGURACIÓN HIDRÁULICA DE 2 VÁLVULAS | 641 |
| CONFIGURACIÓN PARA CARRETERA | 198 |
| CONFIGURACIÓN PARA EXPLOTACIÓN FORESTAL | 745 |
| CONJUNTO DE ALARMA Y DEFLECTOR | 153 |
| CONJUNTO DE CABLERIA, RADIO | 826 |
| CONJUNTO DE CABLERIA, RADIO (ALTAVOZ) | 892 |
| CONJUNTO DE CABLES, VÁLVULA (COMPRESOR DE AIRE DEL ASIENTO) | 938 |
| | 940 |
| CONJUNTO DE INTERRUPTOR DE SEÑAL DE GIRO | 244 |
| CONJUNTO DE LLAVE, ELECTRONICA (SEGURIDAD, AMARILLO) | 223 |
| CONJUNTO DE LLAVE, ELECTRONICA (SEGURIDAD, AMARILLO) (PROGRAMADO) | 169 |
| CONJUNTO DE LLAVE, ELECTRONICA (SEGURIDAD, GRIS) | 223 |
| CONJUNTO DE LLAVE, ELECTRONICA (SEGURIDAD, GRIS) (EN BLANCO) | 169 |
| CONJUNTO MAZO DE CABLES-CONTROLES DEL OPERADOR | 256 |
| CONJUNTO MAZO DE CABLES-CONTROLES DEL OPERADOR (PALANCA UNIVERSAL) | 605 |
| | 608 |
| CONTRAPESO (GR) | 406 |
| | 407 |
| | 408 |
| | 409 |
| | 410 |
| | 411 |
| CONTROL DE AMORTIGUACIÓN (CONFIG) | 595 |
| | 596 |
| CONTROL DE AUTOCARGA (CONFIG) | 152 |
| CONTROL DE AUTOCARGA (GR) | 153 |
| CONTROL DE COMUNICACION (GR) | 155 |
| CONTROL DE COMUNICACION (GR) (PRODUCTO DE ENLACE 201) | 146 |
| CONTROL DE COMUNICACION Y MONTAJE (GR) | 146 |


* NO HAY TRADUCCION DISPONIBLE EN EL MOMENTO DE LA IMPRESION

# INDICE


| Nombre | Página |
|---|---|
| CONTROL DE COMUNICACION Y MONTAJE (GR) | 148 |
| CONTROL DE DESPLAZAMIENTO Y TUBERÍAS (GR) | 590 |
| CONTROL DE DIRECCIÓN (GR) | 542 |
| CONTROL DE MANIJA (GR) | 611 612 |
| CONTROL DE MANIJA (GR) (PALANCA UNIVERSAL) | 617 |
| CONTROL DE MONITOR (GR) | 795 796 798 |
| CONTROL DE MONITOR (GR) (REDUCTOR DE INTENSIDAD DE LAS LUCES) | 266 274 |
| CONTROL DE MONITOR (GR) (REDUCTOR DE INTENSIDAD DE LAS LUCES) | 256 |
| CONTROL DEL CUCHARÓN (GR) | 738 |
| CONTROL DEL FRENO DE ESTACIONAMIENTO | 533 |
| CONTROL DEL PEDAL DE FRENO (GR) | 531 532 |
| CONTROL ELECTROHIDRAULICO (GR) | 597 601 605 608 |
| CONTROL ELECTRÓNICO DEL MOTOR (GR) | 156 |
| CONTROL ELECTRÓNICO DEL MOTOR Y MONTAJE | 150 |
| CONTROL HIDRÁULICO DE LA TRANSMISIÓN (GR) | 313 315 |
| CONTROL NO PROGRAMADO (GR) | 156 157 158 159 160 161 |
| CONTROL NO PROGRAMADO (GR) (IMPLEMENTO) | 256 274 |
| CONTROL NO PROGRAMADO (GR) (IMPLEMENTO) | 267 |
| CONTROL NO PROGRAMADO (GR) (PRODUCTO DE ENLACE 300) | 148 |
| CONTROL NO PROGRAMADO (GR) (SEGURIDAD) | 223 |
| CONTROL NO PROGRAMADO (GR) (SISTEMA DE SEGURIDAD) | 169 |
| CONTROL NO PROGRAMADO (GR) (SISTEMA MONITOR CATERPILLAR) | 256 274 |
| CONTROL NO PROGRAMADO (GR) (SISTEMA MONITOR CATERPILLAR) | 267 |
| CONTROL NO PROGRAMADO (GR) (TREN DE FUERZA) | 256 274 |
| CONTROL NO PROGRAMADO (GR) (TREN DE FUERZA) | 267 |
| CONVERTIDOR DE PAR (GR) | 391 393 |
| CONVERTIDOR DE PAR Y CAJA (GR) | 387 389 |
| CONVERTIDOR DE VOLTAJE (24 VOLTIOS A 12 VOLTIOS) | 258 267 275 |
| *COOLANT HEATER LINES | 842 |
| CORREA TRAPEZOIDAL | 369 |
| CRUCETA Y COJINETE (GR) | 377 |
| CRUCETA Y COJINETE (GR) | 397 |
| CUBIERTA (GR)-TAPA DE LLENADO DE ACEITE DE LA TRANSMISIÓN | 321 958 |
| CUCHARÓN DE USO GENERAL (CONFIG) | 748 |
| CUCHARÓN DE USO GENERAL (CONJ) | 749 751 |
| CUCHARÓN DE USO GENERAL (GR) | 763 764 |
| CUCHARÓN PARA ROCA (CONJ) | 753 755 757 759 761 |
| CUCHARÓN PARA ROCA (GR) | 765 766 767 768 769 |
| CUCHILLA (GR) | 770 771 |
| CULATA DE CILINDROS - TORNILLERÍA DE LA (GR) | 31 |
| CULATA DE CILINDROS (CONJ) | 25 26 27 |
| CULATA DE CILINDROS (GR) | 30 31 |


## D


| | |
|---|---|
| DETECTOR DE NIVEL DEL COMBUSTIBLE | 126 |
| DETECTOR DE POSICIÓN (SISTEMA DE COMBUST.) (GR) | 204 205 |


* NO HAY TRADUCCION DISPONIBLE EN EL MOMENTO DE LA IMPRESION

# INDICE


| Nombre | Página |
|---|---|
| | 206 |
| | 207 |
| DETECTOR DE POSICIÓN (SISTEMA DE COMBUST.) (GR) (INCLINACIÓN) | 613 |
| DETECTOR DE POSICIÓN (SISTEMA DE COMBUST.) (GR) (INCLINACIÓN) | 615 |
| | 617 |
| DETECTOR DE POSICIÓN (SISTEMA DE COMBUST.) (GR) (LEVANTAMIENTO) | 613 |
| DETECTOR DE POSICIÓN (SISTEMA DE COMBUST.) (GR) (SIN RESORTE) (PALANCA DE CONTROL) | 597 |
| | 601 |
| DIFERENCIAL DE DESLIZAMIENTO LIMITADO (GR) | 335 |
| DIFERENCIAL NOSPIN (GR) | 336 |
| | 337 |
| DIFERENCIAL Y CORONA (GR) | 322 |
| | 323 |
| | 325 |
| | 327 |
| | 329 |
| | 331 |
| | 333 |
| DIRECCIÓN SECUNDARIA (CONFIG) | 565 |
| DISYUNTOR (CONJ) (105 AMPERIOS) (ALTERNADOR) | 194 |
| DISYUNTOR (CONJ) (15 AMPERIOS) (ACCIONADOR DE PROTECTOR ELÉCTRICO) | 303 |
| DISYUNTOR (CONJ) (15 AMPERIOS) (CONTROL DE CALEFACCION, ACONDICIOANDOR DE AIRE) | 258 |
| DISYUNTOR (CONJ) (15 AMPERIOS) (LUCES DE TRABAJO) | 195 |
| DISYUNTOR (CONJ) (50 AMPERIOS) (ARRANQUE) | 194 |
| DISYUNTOR (CONJ) (80 AMPERIOS) (PRINCIPAL) | 194 |
| DISYUNTOR DE CIRCUITO (GR) (20-AMPERIOS) (*UNSWITCHED BAT POWER TO CAB) | 195 |
| DISYUNTOR DE CIRCUITO (GR) (60 AMPERIOS) (ACCIONADOR DE INCLINACION DE CAPO) | 194 |
| DISYUNTOR (GR) | 233 |
| DRENAJE DE COMBUSTIBLE (GR) | 114 |
| DRENAJE DE SEGURIDAD ECOLÓGICA (GR) | 338 |
| DRENAJE DEL ACEITE DE MOTOR | 33 |

| Nombre | Página |
|---|---|
| **E** | |
| EJE - GRUPO DE MONTAJE | 357 |
| EJE DE MANDO (GR) | 375 |
| EJE FIJO (CONFIG) | 305 |
| EJE FIJO (GR) | 307 |
| EJE OSCILANTE (CONFIG) | 305 |
| | 306 |
| EJE OSCILANTE (GR) | 308 |
| ELECTRONICA DE LA MAQUINA (GR) | 164 |
| ELECTRONICA DE MONITOR (GR) | 165 |
| ELEMENTO DE FILTRO DE ACEITE (CONJ) (ALTA EFICIENCIA) | 340 |
| ELEMENTO DEL FILTRO DE AIRE (CONJ) (PRIMARIO) | 100 |
| ELEMENTO DEL FILTRO DE AIRE (CONJ) (SECUNDARIO) | 100 |
| EMPAQUETADURA | 677 |
| | 679 |
| EMPAQUETADURA DE REGULADOR (*HOUSING) (AGUA, TEMPERATURA DEL REFRIGERANTE) | 87 |
| EMPAQUETADURA, TAPA DE REGULADOR (CAJA DEL REGULADOR DE TEMPERATURA) | 87 |
| ENCENDEDOR DE CIGARRILLOS (GR) (12 VOLTIOS) | 257 |
| | 267 |
| | 274 |
| ENCHUFE DE ARRANQUE AUXILIAR (GR) | 197 |
| ENFRIADOR DE ACEITE DEL EJE Y MONTAJE (GR) | 317 |
| ENFRIADOR DEL ACEITE DEL EJE (CONFIG) | 319 |
| ENFRIADOR PARA ALTA TEMPERATURA DE AMBIENTE (CONFIG) | 80 |
| ENGANCHE ARTICULADO (GR) | 455 |
| ENGRANAJE DE ARBOL DE LEVAS (GR) | 41 |
| ENGRANAJE DE TRANSFERENCIA DE SALIDA | 341 |
| ENGRANAJE DELANTERO (GR) | 42 |
| ESCALERILLA (GR) | 463 |
| ESCAPE DE GASES (GR) | 73 |
| ESTRIBO DEL OPERADOR (GR) | 498 |
| | 499 |
| ESTRUCTURA ROPS ABIERTA (GR) | 905 |
| ETIQUETA DE ADVERTENCIA (GR) | 951 |
| EXPULSOR DE POLVO (GR) | 102 |
| EXTENSIÓN DEL RESPALDO (GR) | 915 |
| EXTENSIÓN DEL RESPALDO (GR) (DE TELA) | 912 |
| | 917 |


* NO HAY TRADUCCION DISPONIBLE EN EL MOMENTO DE LA IMPRESION

# INDICE


| Nombre | Página |
|---|---|

## F

| | |
|---|---|
| *FILM-EXIT (SECUNDARIO) | 796 |
| | 867 |
| FILTRO DE ACEITE - BASE DEL (GR) | 310 |
| FILTRO DE ACEITE (CONJ) (HIDRAULICO) | 639 |
| FILTRO DE ACEITE (CONJ) (HIDRÁULICO) | 640 |
| FILTRO DE ACEITE DEL MOTOR (CONJ) | 71 |
| FILTRO DE ACEITE DEL MOTOR (GR) | 71 |
| FILTRO DE ACEITE (GR) | 340 |
| | 639 |
| | 640 |
| FILTRO DE AIRE DE CABINA | 803 |
| FILTRO DE AIRE (GR) | 99 |
| | 100 |
| FILTRO DE COMBUSTIBLE (CONJ) | 115 |
| FILTRO DE COMBUSTIBLE Y MONTAJE (GR) | 115 |
| FILTRO DE COMBUSTIBLE Y SEPARADOR DE AGUA (CONJ) (PRIMARIO) | 119 |
| FILTRO DE COMBUSTIBLE Y SEPARADOR DE AGUA (GR) | 119 |
| FILTRO DE LA BOMBA DE AGUA | 90 |
| FILTRO MAGNÉTICO (ENFRIADOR DE ACEITE DE EJE) | 347 |
| *FLOOR GP-SOUND SUPPRESSION | 808 |
| | 809 |
| FRENO DE ESTACIONAMIENTO (GR) | 525 |
| | 526 |
| FRENO DE SERVICIO - CONTROL (GR) | 534 |
| FRENO DE SERVICIO (GR) | 527 |
| | 529 |
| FUSIBLE (10-AMPERIOS) | 256 |
| | 266 |
| | 274 |
| FUSIBLE (15 AMPERIOS) | 256 |
| | 266 |
| | 274 |
| | 782 |
| | 818 |
| FUSIBLE (20-AMPERIOS) | 256 |
| | 266 |
| | 274 |

## G

| | |
|---|---|
| *GAUGE AS-OIL LEVEL (DIPSTICK) | 74 |
| GRUPO DE CABLES-CONTROL DE AUTOLUBRICACIÓN | 250 |
| GRUPO DE CABLES, MONITOREO DEL EJE | 251 |
| GRUPO DE INTERRUPTOR ROTATORIO | 243 |
| GRUPO DE INTERRUPTOR ROTATORIO (*AUTODIG MATERIAL SELECT) | 153 |
| GRUPO DE INTERRUPTOR, TRABA DEL DIFERENCIAL | 232 |
| GRUPO DE MONTAJE DE LA CABINA | 872 |
| GRUPO DE PROTECCIÓN CONTRA EL VANDALISMO | 958 |
| GRUPO DE PROTECTOR, CABINA | 925 |
| GRUPO DE PROTECTOR DE ENGANCHE Y DIRECCION | 440 |
| GRUPO DE PUNTA Y ADAPTADOR | 746 |
| | 748 |
| GRUPO DE SELLO (BOMBA DE AGUA) | 90 |
| GRUPO DE SOFTWARE, COMUNICACIÓN (PRODUCTO DE ENLACE 201) | 155 |
| GRUPO DE TUBERIAS DE DIAGNÓSTICO | 953 |
| GRUPO DE TUBERIAS DE LUBRICACIÓN AUTOMÁTICA | 466 |
| | 468 |
| | 470 |
| | 472 |
| GRUPO DE VÁLVULA-ARRANQUE CON ÉTER | 247 |
| GRUPO DE VÁLVULA, VENTILADOR | 699 |
| GRUPO DE VÁLVULAS | 575 |
| GRUPO ELECTRONICO-COMUNICACION | 162 |
| GRUPO GIRATORIO DE BOMBA | 563 |
| | 672 |
| | 673 |
| *GUARD AR-WINDOW | 810 |
| GUARDABARROS DELANTERO (GR) | 418 |
| | 419 |
| GUARDABARROS (GR) | 415 |
| GUARDABARROS PARA DESPLAZAMIENTO EN CARRETERA (GR) | 420 |

## H

| | |
|---|---|
| *HARDWARE GP-LIFT ARM | 740 |
| | 741 |
| | 742 |
| *HARNESS AS-TRANSMISSION CONT (VOLANTE DE DIRECCION) | 567 |
| HOJA DE LIMPIAPARABRISAS (CONJ) | 948 |

## I

| | |
|---|---|
| IMPLEMENTOS (GR ELECTRÓNICO) | 163 |
| INCLINACIÓN DEL CAPÓ (GR) | 513 |
| INCLINACIÓN HORIZONTAL - CILINDRO DE (GR) | 628 |
| | 630 |
| | 632 |
| | 633 |
| | 635 |


* NO HAY TRADUCCION DISPONIBLE EN EL MOMENTO DE LA IMPRESION

# INDICE


| Nombre | Página |
|---|---|
| | 637 |
| INDICADOR- CAMBIO DE FILTRO DE AIRE | 103 |
| INDICADOR DE CAMBIO DE FILTRO DE ACEITE (GR) | 103 |
| INDICADOR DEL NIVEL DE ACEITE (VARILLA) (GR) | 74 |
| INSONORIZACION DE CABINA (GR) | 929 |
| | 931 |
| | 934 |
| | 935 |
| | 937 |
| INSONORIZADOR (CONFIG) | 505 |
| INSONORIZADOR (GR) | 506 |
| | 509 |
| | 510 |
| INSTALACION DE COMUNICATION (CONFIG) | 167 |
| INSTALACION DE COMUNICATION (CONFIG) | 167 |
| INSTALACIÓN DE CONTROLES (GR) | 823 |
| | 824 |
| INSTALACIÓN DE RADIO (GR) | 826 |
| | 828 |
| INSTALACION DE SEGURIDAD (CONFIG) | 168 |
| INSTALACION DE SEGURIDAD (GR) | 169 |
| INTERRUPTOR AJUSTABLE (CONJ) (LIMITE DE LUZ DE PARADA) | 523 |
| INTERRUPTOR DE DERIVACIÓN | 231 |
| INTERRUPTOR DE DERIVACIÓN (FILTRO DE ACEITE DEL TREN DE FUERZA) | 310 |
| INTERRUPTOR DE LÍMITE (CONJ) (LUZ DE PARADA) | 523 |
| INTERRUPTOR DE NIVEL DE LIQUIDO (GR) | 234 |
| INTERRUPTOR DE PEDAL (CONFIG) (TRABA DE DIFERENCIAL) | 232 |
| INTERRUPTOR DE PRESIÓN (CONJ) (ACEITE DE FRENO DE ESTACIONAMIENTO) | 281 |
| INTERRUPTOR DE PRESIÓN (CONJ) (ACEITE DE LA DIRECCION SECUNDARIA) | 299 |
| INTERRUPTOR DE PRESIÓN (CONJ) (ACEITE DEL FRENO DE SERVICIO) | 281 |
| INTERRUPTOR DE PRESIÓN (CONJ) (DERIVACION DE ENFRIADOR DE ACEITE HIDRAULICO) | 639 |
| INTERRUPTOR DE PRESIÓN (CONJ) (DERIVACION DEL FILTRO DEL ACEITE HIDRAULICO) | 640 |
| INTERRUPTOR DE PRESIÓN (CONJ) (REFRIGERANTE) | 249 |
| INTERRUPTOR DE PRESIÓN (GR) | 238 |
| INTERRUPTOR DE TEMPERATURA (CONJ) (REFRIGERANTE) | 782 |
| INTERRUPTOR DE VOLQUETE (CONJ) (ACOPLADOR RAPIDO) | 242 |
| INTERRUPTOR DE VOLQUETE (CONJ) (ANULACIÓN DEL NEUTRALIZADOR DE LA TRANSMISIÓN) | 257 |
| INTERRUPTOR DE VOLQUETE (CONJ) (ANULACIÓN DEL NEUTRALIZADOR DE LA TRANSMISIÓN) | 276 |
| INTERRUPTOR DE VOLQUETE (CONJ) (*AUTOMATIC REVERSING FAN) | 239 |
| INTERRUPTOR DE VOLQUETE (CONJ) (BALIZA DE ADVERTENCIA) | 189 |
| INTERRUPTOR DE VOLQUETE (CONJ) (CONTROL DE AMORT.) | 240 |
| | 241 |
| INTERRUPTOR DE VOLQUETE (CONJ) (DESCONEXIÓN HIDRÁULICA) | 258 |
| INTERRUPTOR DE VOLQUETE (CONJ) (DESCONEXIÓN HIDRÁULICA) | 268 |
| | 276 |
| INTERRUPTOR DE VOLQUETE (CONJ) (*FRONT POWER GUARD ACTUATOR) | 303 |
| INTERRUPTOR DE VOLQUETE (CONJ) (*FRONT, REAR FLOODLIGHTS) | 182 |
| INTERRUPTOR DE VOLQUETE (CONJ) (*HAZARD) | 244 |
| INTERRUPTOR DE VOLQUETE (CONJ) (*HEATED MIRRORS) | 848 |
| | 853 |
| | 860 |
| | 862 |
| INTERRUPTOR DE VOLQUETE (CONJ) (JUEGO DE DESCONEXIÓN DE CARGADOR AUTOMÁTICO) | 153 |
| INTERRUPTOR DE VOLQUETE (CONJ) (*LIFT, TILT KICKOUT) | 268 |
| | 276 |
| INTERRUPTOR DE VOLQUETE (CONJ) (*LIFT,TILT KICKOUT) | 257 |
| INTERRUPTOR DE VOLQUETE (CONJ) (MODULACIÓN PRECISA) | 256 |
| INTERRUPTOR DE VOLQUETE (CONJ) (MODULACIÓN PRECISA) | 268 |
| | 276 |
| INTERRUPTOR DE VOLQUETE (CONJ) (*NEUTRALIZER OVERRIDE) | 268 |
| INTERRUPTOR DE VOLQUETE (CONJ) (*REAR POWER GUARD ACTUATOR) | 303 |
| INTERRUPTOR DE VOLQUETE (CONJ) (SELECCIÓN DE MODALIDAD) | 258 |
| INTERRUPTOR DE VOLQUETE (CONJ) (SELECCIÓN DE MODALIDAD) | 268 |
| | 276 |


* NO HAY TRADUCCION DISPONIBLE EN EL MOMENTO DE LA IMPRESION

# INDICE


| Nombre | Página |
|---|---|
| INTERRUPTOR DE VOLQUETE (CONJ) (SELECTOR DE CALEFACCIÓN YACONDICIONADOR DE AIRE) | 268 |
| INTERRUPTOR DE VOLQUETE (CONJ) (SELECTOR DE MODALIDAD DE CARGADOR AUTOMÁTICO) | 153 |
| INTERRUPTOR DE VOLQUETE (CONJ) (SENTIDO DE TRANSMISION) | 567 |
| INTERRUPTOR DE VOLQUETE (CONJ) (VELOCIDAD DEL VENTILADOR SOPLADOR) | 268 |
| INTERRUPTOR DE VOLQUETE (GR) | 242 246 |
| INTERRUPTOR DE VOLQUETE (GR) (ACCIONADOR DE INCLINACION DE CAPO) | 281 |
| INTERRUPTOR DE VOLQUETE (GR) (APAGADO A NIVEL DEL SUELO) | 281 |
| INTERRUPTOR DEL CONTROL DE AMORTIGUACIÓN (GR) | 240 241 |
| INTERRUPTOR DEL LIMPIAPARABRISAS (CONJ) (24 VOLTIOS) (INTERMITENTE DELANTERO) | 266 |
| INTERRUPTOR DEL SEÑALERO (GR) | 244 |
| INTERRUPTOR MAGNÉTICO (GR) | 235 236 237 |
| INTERRUPTOR PULSADOR (CONJ) (*AUTODIG TRIGGER) | 153 |
| INTERRUPTOR PULSADOR (CONJ) (BOCINA) | 597 601 |
| INTERRUPTOR PULSADOR (CONJ) (CAMBIO ASCENDENTE DE TRANSMISION) | 567 |
| INTERRUPTOR PULSADOR (CONJ) (CAMBIO DESCENDENTE DE LA TRANSMISION) | 567 |
| INTERRUPTOR ROTATIVO (CONJ) (CONTROL DE CAMBIO AUTOMATICO) | 257 267 274 |
| INTERRUPTOR ROTATIVO (CONJ) (24 VOLTIOS) (CONTROL VARIABLE DE PALANCA) | 257 |
| INTERRUPTOR ROTATIVO (CONJ) (24 VOLTIOS) (CONTROL VARIABLE DE PALANCA) | 267 274 |
| INTERRUPTOR ROTATIVO (CONJ) (24 VOLTIOS) (LIMPIAPARABRISAS TRASERO) | 266 |
| INTERRUPTOR ROTATIVO (CONJ) (24 VOLTIOS) (LUCES DE TRABAJO) | 266 |
| INTERRUPTOR ROTATIVO (CONJ) (24 VOLTIOS) (LUCES DE TRABAJO) | 256 |
| INYECTOR DE COMBUSTIBLE (GR) | 125 |


## J


| Nombre | Página |
|---|---|
| JUEGO DE ABRAZADERA DEL FILTRO DE AIRE | 100 |
| JUEGO DE AMORTIGUADOR (ASIENTO DE SUSPENSION) | 938 |
| JUEGO DE ATADURA | 940 |
| JUEGO DE ATADURA (ASIENTO DE SUSPENSION) | 938 |
| JUEGO DE BOTÓN (RADIO) | 892 |
| JUEGO DE CAJA (COLUMNA DE LA DIRECCION) | 566 |
| JUEGO DE CALCES (*INCLUDES 17-SHIMS) | 561 |
| JUEGO DE COJINETES (ALTERNADOR) | 134 136 |
| JUEGO DE CONTROL DE PISTÓN | 561 |
| JUEGO DE DISPOSITIVO DE GAS AUXILIAR (COLUMNA DE LA DIRECCION) | 566 |
| JUEGO DE PALANCA DE INCLINACIÓN (COLUMNA DE LA DIRECCION) | 566 |
| JUEGO DE PASADOR DE PEDAL | 887 |
| JUEGO DE PERNO RETENEDOR (M5X0.8X53.24 MM) | 166 |
| JUEGO DE PERNO RETENEDOR (M5X0.8X53.24 MM) (CONTROL NO PROGRAMADO) | 160 |
| JUEGO DE PERNO RETENEDOR (*M5X0.8X53.24-MM) (CONTROL NO PROGRAMADO) | 159 |
| JUEGO DE PISTÓN | 561 |
| JUEGO DE RECONSTRUCCIÓN DE LA BOMBA (AGUA) | 90 |
| JUEGO DE REPARACIÓN (TUBERÍAS DEL FRENO) (*FUEL LEVEL SENSOR) | 126 |
| JUEGO DE REVESTIMIENTO DE FRENO | 526 |
| JUEGO DE RODILLO | 887 |
| JUEGO DE SELLOS | 520 534 588 589 |
| JUEGO DE SELLOS (ACUMULADOR DEL FRENO) | 519 |
| JUEGO DE SELLOS (BAJADA DE MOTOR INOPERANTE) | 710 |
| JUEGO DE SELLOS (EJE MOTRIZ) | 377 |
| JUEGO DE SELLOS (VALVULA DE ALIVIO) | 728 |
| JUEGO DE SELLOS (VÁLVULA DE DERIVADOR) | 702 |


* NO HAY TRADUCCION DISPONIBLE EN EL MOMENTO DE LA IMPRESION

# INDICE


| Nombre | Página |
|---|---|
| JUEGO DE SELLOS (VÁLVULA DE RETENCIÓN) | 697 |
| JUEGO DE SELLOS (VÁLVULA DE RETENCIÓN) | 702 |
| JUEGO DE SELLOS (VALVULA DE SOLENOIDE) | 733, 736 |
| JUEGO DE SELLOS (VALVULA DE SOLENOIDE) (VÁLVULA PILOTO PROPORCIONANTE) | 711 |
| JUEGO DE SELLOS (VÁLVULA PILOTO PROPORCIONANTE) | 713 |
| JUEGO DE TERMINAL (ALTERNADOR) | 134 |
| JUEGO DE TERMINAL (ALTERNADOR) | 134, 136 |
| JUEGO DE TERMINAL (*LOCK) | 275 |
| JUEGO DE TERMINAL (MOTOR DE ARRANQUE) | 228 |
| JUEGO DE TORNILLERÍA (ALTERNADOR) | 134, 136 |
| JUEGO DE TUERCAS (COLUMNA DE LA DIRECCION) | 566 |
| JUEGO DE VALVULA DE AIRE | 940 |
| JUEGO DE VALVULA DE AIRE (ASIENTO DE SUSPENSION) | 938 |
| JUEGO DE VÁLVULA DE CARGA DEL FRENO | 536 |
| JUNTA DESLIZANTE (GR) | 377 |
| JUNTA UNIVERSAL DEL MANDO DE ROTOR (GR) | 396 |
| JUNTA UNIVERSAL (GR) | 396, 397 |
| LEVANTAMIENTO (CONFIG) | 744, 745 |
| *LEVER GP-TILT | 743 |
| LIMPIAPARABRISAS DE LA VENTANA (GR) | 948 |
| *LINES GP-AFTERCOOLER AIR | 105 |
| *LINES GP-CAB HEATER | 842 |
| *LINES GP-HOOD TILT | 643 |
| LLANTA (CONFIG) | 372 |
| LLAVE | 1, 321 |
| LLAVE - MANIJA | 803 |
| LLAVE (DESCONECTAR BATERIA) | 233 |
| LUBRICACION AUTOMATICA (CONFIG) | 488 |
| LUCES DE ALÓGENO (24 VOLTIOS, 65 VATIOS) | 174 |
| LUCES DE ALÓGENO (24 VOLTIOS, 65 VATIOS) (REFLECTOR) | 175 |
| LUCES DE GIRO (GR) | 187 |
| LUCES DE PARADA Y COLA (GR) | 178 |
| LUCES DE REFLECTOR (GR) | 180, 181, 182 |
| LUCES DE REFLECTOR Y CAMBIO DE DIRECCION (GR) | 184, 185 |
| LUZ DE BALIZA (GR) | 189 |
| LUZ DE SEÑAL DE GIRO (GR) | 176, 177 |
| LUZ DE SEÑAL DE GIRO (GR) (24 VOLTIOS) | 185, 187 |


## L


| | |
|---|---|
| LÁMPARA (CONJ) (ROJO, VERDE, DIODO, 12 VOLTIOS) | 169 |
| LÁMPARA DE BALIZA DE ADVERTENCIA (GR) | 179 |
| LÁMPARA DEL TECHO (GR) | 171 |
| LÁMPARA (*12-VOLT, 24-VOLT, 35-WATT) | 172, 173 |
| LÁMPARA (24 VOLTIOS) | 171, 256, 266, 274, 796, 867 |
| LÁMPARA (24-VOLTIOS, 21 VATIOS) | 178 |
| LÁMPARA (24-VOLTIOS, 21 VATIOS) | 176 |
| LÁMPARA (24 VOLTIOS, 5 VATIOS) | 178 |
| LÁMPARA (24-VOLTIOS, 70-VATIOS) | 179 |
| LAVAPARABRISAS DE LA VENTANA (GR) | 943 |
| LENTE AMBAR | 176 |


## M


| | |
|---|---|
| MANDO DE BOMBA (GR) | 35 |
| MANGUERA-CODO | 82, 105 |
| MÁQUINA (CONFIG) | 2 |
| MAZO DE CABLES (CONJ) (HERRAMIENTA DE SERVICIO) | 257 |
| MAZO DE CABLES (CONJ) (HERRAMIENTA DE SERVICIO) | 267, 274 |
| MAZO DE CABLES DE CONTROL (CONJ) (ESLABON DE PRODUCTO) | 146, 148 |
| MAZO DE CABLES DE CONTROL (CONJ) (*HEATED MIRROR TIMER RELAY) | 848 |
| MAZO DE CABLES DE CONTROL (CONJ) (*HEATED MIRROR TIMER RELAY) | 853 |
| MAZO DE CABLES DE CONTROL (CONJ) (*HEATED MIRRORS) | 848 |
| MAZO DE CABLES DE CONTROL (CONJ) (*HEATED MIRRORS) | 853 |


* NO HAY TRADUCCION DISPONIBLE EN EL MOMENTO DE LA IMPRESION

# INDICE


| Nombre | Página |
|---|---|
| | 860 |
| | 862 |
| MAZO DE CABLES DE CONTROL (CONJ) (*MACHINE SECURITY) | 169 |
| MAZO DE CABLES DE CONTROL (CONJ) (*POWER GUARD ACTUATOR) | 303 |
| MAZO DE CABLES DE DIRECCION (CONJ) (*COLUMN, WHEEL) | 567 |
| MAZO DE CABLES DE LA TRANSMISION | 313 |
| | 315 |
| MAZO DE CABLES DE LOS FRENOS (CONJ) | 281 |
| MAZO DE CABLES DE LOS FRENOS (CONJ) (LUZ DE PARADA) | 523 |
| MAZO DE CABLES DE LUCES TRASERAS (CONJ) | 297 |
| MAZO DE CABLES DE SENSOR (CONJ) (*FRONT AXLE OIL TEMPERATURE) | 251 |
| MAZO DE CABLES DE SENSOR (CONJ) (*LIFT CYLINDER OIL) | 300 |
| MAZO DE CABLES DE SENSOR (CONJ) (*REAR AXLE OIL TEMPERATURE) | 251 |
| MAZO DE CABLES DE SENSOR (CONJ) (*TILT) | 301 |
| MAZO DE CABLES DEL EJE (*AXLE OIL COOLER) | 253 |
| MAZO DE CABLES DEL INTERRUPTOR (CONFIG) (TRABA DE DIFERENCIAL) | 232 |
| MAZO DE CABLES DEL MONITOR (CONJ) | 302 |
| MAZO DE CABLES DEL MONITOR (CONJ) (*PAYLOAD CONTROL) | 796 |
| | 867 |
| MAZO DE CABLES DEL MOTOR (CONJ) | 290 |
| MAZO DE CABLES DEL MOTOR (CONJ) (INYECTOR, VÁLVULA VARIABLE) | 8 |
| MAZO DE CABLES DEL TABLERO (CONJ) | 194 |
| MAZO DE CABLES, LUCES | 295 |
| MAZO DE CABLES, LUCES (BALIZA DE ADVERTENCIA) | 189 |
| MAZO DE CABLES, LUCES (*CAB FLOODLIGHTS) | 267 |
| MAZO DE CABLES, LUCES (*CAB FLOODLIGHTS) | 275 |
| MAZO DE CABLES, LUCES (*FLOOD, SIGNAL LIGHTS, LH) | 297 |
| MAZO DE CABLES, LUCES (*FLOOD, SIGNAL LIGHTS, RH) | 297 |
| MAZO DE CABLES, LUCES (REFLECTORES DELANTEROS) | 257 |
| MAZO DE CABLES, LUCES (SEÑAL DE GIRO) | 244 |
| MAZO DE CABLES (PUENTE) (BOMBA DE CEBADO DE COMBUSTIBLE) | 115 |
| MECANISMO DE VÁLVULAS (GR) | 68 |
| MIRILLA INDICADORA | 677 |
| | 679 |
| MÓDULO DEL TACÓMETRO Y DEL VELOCÍMETRO (GR) | 865 |
| MODULO DEL TECLADO DE CARGA UTIL (GR) | 796 |
| | 867 |
| MODULO ELECTRÓNICO DE CUATRO INDICADORES (GR) | 864 |
| MONITOR DE CARGA ÚTIL (CONFIG) | 866 |
| MONITOR DE CARGA ÚTIL (GR) | 867 |
| MONTAJE DE ALTERNADOR Y COMPRESOR (GR) | 50 |
| MONTAJE DE ARO | 358 |
| MONTAJE DE LA TABLA DE LUBRICACION (GR) | 956 |
| MONTAJE DEL SILENCIADOR (GR) | 109 |
| MONTAJE DEL TANQUE HIDRÁULICO (GR) | 663 |
| MONTAJE Y VALVULA DEL CONTROL PRINCIPAL (GR) | 682 |
| | 686 |
| | 689 |
| | 693 |
| MOTOR - NÚCLEO (CONFIG) | 5 |
| MOTOR - SOPORTE DEL (GR) | 65 |
| MOTOR COMPLETO (CONFIG) | 4 |
| MOTOR CONJ-SOPLADOR (*24-VOLT, A/C, HEATER) | 782 |
| MOTOR CONJ-SOPLADOR (*24-VOLT, A/C, HEATER) | 818 |
| MOTOR DE ARRANQUE ELÉCTRICO (GR) | 226 |
| | 227 |
| MOTOR-LIMPIAPARABRISAS (GR) | 869 |
| | 870 |
| | 871 |
| MOTOR-LIMPIAPARABRISAS (GR) (DELANTERO) | 789 |
| MÚLTIPLE DE ESCAPE (GR) | 108 |


## N


| | |
|---|---|
| NÚCLEO CONJ.-ENFRIADOR DE ACEITE DE TREN DE FUERZA (TRANSMISION) | 87 |
| NUCLEO DE ENFRIADOR DE ACEITE DE MOTOR (CONJ) | 87 |
| NUCLEO DE RADIADOR (CONJ) (EXTERIOR) | 93 |
| NUCLEO DE RADIADOR (CONJ) (INTERIOR) | 93 |
| NÚCLEO DEL POSENFRIADOR (CONJ) | 92 |


## P


| | |
|---|---|
| PALANCA UNIVERSAL DE CONTROL (GR) | 613 |


* NO HAY TRADUCCION DISPONIBLE EN EL MOMENTO DE LA IMPRESION

# INDICE


| Nombre | Página |
|---|---|
| | 615 |
| | 617 |
| PANEL DE DISYUNTORES (GR) | 194 |
| PANEL DE INSONORIZACIÓN (GR) | 52 |
| | 53 |
| | 491 |
| | 492 |
| | 493 |
| | 494 |
| PANEL LATERAL (GR) | 489 |
| PANEL SUPERIOR (GR) | 495 |
| PANTALLA (CONJ) (TANQUE HIDRAULICO) | 677 |
| | 679 |
| PASAMANOS (GR) | 816 |
| | 817 |
| PISTÓN Y BIELA (GR) | 54 |
| | 56 |
| PISTONES DEL MOTOR (GR) | 660 |
| | 661 |
| PLACA DE CONTROL (AUTOCARGA) | 153 |
| PLACA DE CONTROL (*DUMP, TILT BACK) | 597 |
| | 601 |
| PLACA DE CONTROL (*JOYSTICK, 2-FUNCTION, AUTODIG) | 605 |
| PLACA DE CONTROL (*LIFT, FLOAT, LOWER) | 597 |
| | 601 |
| PLACA DE INFORMACION (COMBUSTIBLE MANUAL) | 115 |
| PLACA DE INFORMACION (ESLABON DE PRODUCTO) | 155 |
| PLACA DE INFORMACION (24 VOLTIOS) | 197 |
| | 956 |
| PLACA DE INSTRUCCIONES (ACONDICIONADOR DE AIRE) | 781 |
| PLACA DE INSTRUCCIONES (BATERÍA) | 140 |
| PLACA DE PATRÓN DE LOS CONTROLES | 880 |
| | 884 |
| PLACA DEL NÚMERO DE SERIE (TRANSMISION) | 361 |
| | 366 |
| PLACA DEL TABLERO (CENTRAL) | 880 |
| | 884 |
| PLACA DEL TABLERO (IZQUIERDO) | 880 |
| | 884 |
| PLACA DEL TABLERO (LADO DERECHO) | 880 |
| | 884 |
| PLATAFORMA (CONFIG) | 889 |
| PLATAFORMA DE LA CABINA | 890 |
| PLATO OSCILANTE (GR) | 569 |
| POLEA DE RUEDA GUIA (GR) | 62 |
| POSABRAZOS (GR) | 788 |
| POSICIÓN DEL SENSOR (CONJ) (LEVANTAMIENTO) | 615 |
| | 617 |
| POTENCIOMETRO (CONJ) (SELECTOR DE TEMPERATURA) | 266 |
| PROTECTOR CONTRA EL VANDALISMO (GR) | 811 |
| PROTECTOR DE LA VENTANA | 812 |
| | 814 |
| PROTECTOR DE LAS LUCES (GR) | 442 |
| PROTECTOR DE LAS TUBERÍAS (GR) | 443 |
| PROTECTOR DEL COMBUSTIBLE Y DEL TANQUE HIDRÁULICO(GR) | 438 |
| PROTECTOR DEL EJE IMPULSOR (GR) | 436 |
| PROTECTOR DEL TREN DE FUERZA (GR) | 444 |
| PROTECTOR DELANTERO (GR) | 437 |
| PROTECTOR GR-SENSOR | 445 |
| PROTECTOR INFERIOR (GR) | 431 |
| PROTECTOR TÉRMICO DEL COMPARTIMIENTO DEL MOTOR (GR) | 496 |
| PROTECTOR TÉRMICO (GR) | 111 |
| PUERTA DE ACCESO (GR) | 412 |
| PUERTA DE CABINA | 799 |
| | 801 |
| | 802 |
| *PUMP & MOTOR GP-HOOD TILT | 664 |
| PUNTA PARA CUCHARON DE USO GENERAL (GR) | 775 |
| | 776 |
| PUNTA PARA PENETRACIÓN (GR) | 777 |
| | 778 |
| PUNTA RESISTENTE A LA ABRASIÓN (GR) | 772 |


## R


| | |
|---|---|
| RADIADOR Y VENTILADOR (GR) | 92 |
| *RADIO GP-COMMUNICATION (*PRODUCT LINK 121SR) | 148 |
| RADIO (GR) | 892 |
| | 893 |
| RECEPTOR-SECADOR (GR) (ACONDICIONADOR DE AIRE) | 840 |
| RECLINACION DE ASIENTO (GR) | 894 |
| REFLECTOR (GR) | 172 |
| | 173 |
| | 174 |
| | 175 |
| REFRIGERANTE DE ACEITE, NÚCLEO (CONJ) | 92 |
| REGULADOR - PEDAL DEL (GR) | 887 |
| | 888 |


* NO HAY TRADUCCION DISPONIBLE EN EL MOMENTO DE LA IMPRESION

# INDICE


| Nombre | Página |
|---|---|
| REGULADOR DE TEMPERATURA DEL AGUA (92 GRADOS CENTÍGRADOS) (REFRIGERANTE) | 87 |
| REGULADOR DE VOLTAJE (24 VOLTIOS) (ALTERNADOR) | 134 |
| | 136 |
| REJILLA | 564 |
| REJILLA DE FILTRO | 943 |
| REJILLA DE SUCCIÓN | 341 |
| REJILLA DEL RADIADOR (GR) | 429 |
| REJILLA MAGNÉTICA (GR) | 341 |
| RELÉ (CONJ) (*HEATED MIRRORS) | 848 |
| | 853 |
| RELÉ (CONJ) (24 VOLTIOS) (BOCINA) | 256 |
| | 266 |
| RELÉ (CONJ) (24 VOLTIOS) (BOCINA) | 274 |
| RELÉ (CONJ) (24 VOLTIOS) (ENFRIADOR DE ACEITE DE EJE) | 253 |
| RELÉ (CONJ) (24 VOLTIOS) (*FRONT CAB FLOODLIGHTS) | 256 |
| RELÉ (CONJ) (24 VOLTIOS) (*HEATED MIRRORS) | 862 |
| RELÉ (CONJ) (24 VOLTIOS) (*HEATED MIRRORS) | 860 |
| RELÉ (CONJ) (24 VOLTIOS) (REFLECTOR TRASERO) | 266 |
| RELÉ (CONJ) (24 VOLTIOS) (REFLECTORES DE CABINA DELANTERA) | 266 |
| RELÉ (CONJ) (24 VOLTIOS) (REFLECTORES DELANTEROS) | 274 |
| RELÉ (CONJ) (24 VOLTIOS) (REFLECTORES TRASEROS) | 256 |
| RELÉ (CONJ) (24 VOLTIOS) (REFLECTORES TRASEROS) | 274 |
| RESPIRADERO (CONJ) | 313 |
| | 315 |
| RESPIRADERO (CONJ) (CÁRTER DEL MOTOR) | 73 |
| RETROCESO - ALARMA DE (GR) | 248 |
| RETROVISOR (GR) | 844 |
| | 845 |
| | 846 |
| | 847 |
| | 848 |
| | 850 |
| | 851 |
| | 852 |
| | 853 |
| | 855 |
| | 856 |
| | 857 |
| | 858 |
| | 860 |
| | 862 |
| REVESTIMIENTO DE LA CABINA (GR) | 829 |
| | 835 |
| REVESTIMIENTO DE LA CABINA (GR) | 832 |
| ROTOR DE SENSOR | 341 |
| RUEDA Y MANDOS FINALES | 402 |


## S


| Nombre | Página |
|---|---|
| *SCREEN GP-CASE DRAIN | 564 |
| SELLADO DEL VIDRIO (GR) | 908 |
| SELLO DE CIGÜEÑAL (GR) | 44 |
| SELLO DE CIGÜEÑAL (GR) (DELANTERO) | 21 |
| SELLO DE LABIO | 87 |
| SELLO (SEPARADOR DE AGUA, COMBUSTIBLE) | 119 |
| SELLO (TAPA DEL MECANISMO DE LA VÁLVULA) | 18 |
| | 19 |
| SEÑAL DE LUCES (CONFIG) | 180 |
| SENSOR DE LA POSICION DE INCLINACION Y MONTAJE (GR) | 200 |
| SENSOR DE LA POSICION DE LEVANTAMIENTO Y MONTAJE (GR) | 199 |
| SENSOR DE PRESIÓN (GR) | 208 |
| | 209 |
| | 210 |
| | 211 |
| | 212 |
| | 213 |
| | 214 |
| SENSOR DE PRESIÓN (GR) (AIRE) | 211 |
| SENSOR DE PRESIÓN Y MONTAJE (GR) | 191 |
| | 193 |
| SENSOR DE TEMPERATURA (GR) | 219 |
| | 220 |
| | 221 |
| | 222 |
| SENSOR DE TEMPERATURA (GR) (ACEITE HIDRÁULICO) | 281 |
| SENSOR DE VELOCIDAD (GR) | 215 |
| | 216 |
| | 217 |
| | 218 |
| SENSOR DE VELOCIDAD (GR) (ENTRADA DE TRANSMISIÓN) | 341 |
| SENSOR DE VELOCIDAD (GR) (MAGNETICO, ALTA SALIDA) (SALIDA DE TRANSMISIÓN 1) | 341 |
| SENSOR DE VELOCIDAD (GR) (MAGNETICO, ALTA SALIDA) (SALIDA DE TRANSMISIÓN 2) | 341 |
| SENSOR DE VELOCIDAD (GR) (MOTOR) | 217 |


* NO HAY TRADUCCION DISPONIBLE EN EL MOMENTO DE LA IMPRESION

# INDICE


| Nombre | Página |
|---|---|
| SENSOR DEL MOTOR (GR) | 202 |
| SEPARADOR DE AGUA Y BOMBA DE CEBADO DE COMBUSTIBLE (GR) | 132 |
| SERVICIO DE MAQUINA (GR) | 223 |
| SILENCIADOR (GR) | 110 |
| SISTEMA ROPS DE CABINA CERRADA (CONFIG) | 789 |
| SOFTWARE PARA LA MAQUINA (GR) (*PRODUCT LINK 121SR) | 148 |
| SOFTWARE PARA LA MAQUINA (GR) (SEGURIDAD) | 223 |
| SOLENOIDE (CONJ) (24 VOLTIOS, MOTOR DE ARRANQUE) | 228 |
| SOPORTE DE LA ADMISIÓN DE AIRE (GR) | 501 |
| | 504 |
| SOPORTE DE LA TRANSMISIÓN (GR) | 378 |
| SOPORTE DEL CONTROL HIDRÁULICO (GR) | 926 |
| SOPORTE DEL MOTOR Y LA TRANSMISIÓN (GR) | 66 |
| SOPORTE DEL RESPALDO (GR) | 875 |
| | 876 |
| | 877 |
| *SUPPORT GP-FAN ELECTRICAL | 674 |
| SUSPENSIÓN - ASIENTO CON (GR) | 918 |
| SUSPENSIÓN - ASIENTO CON (GR) | 919 |
| | 920 |
| | 921 |
| | 923 |
| | 924 |
| *SWITCH GP-REVERSING FAN | 239 |


## T


| Nombre | Página |
|---|---|
| TABLERO DE INSTRUMENTOS (GR) | 882 |
| | 884 |
| TABLERO DE INSTRUMENTOS (GR) | 878 |
| | 880 |
| TABLERO ELECTRÓNICO DE CONTROL (GR) (*INDICATOR PANEL, CENTER) | 153 |
| | 257 |
| TABLERO ELECTRÓNICO DE CONTROL (GR) (*INDICATOR PANEL, LH) | 257 |
| TABLERO ELECTRÓNICO DE CONTROL (GR) (*INDICATOR PANEL, RH) | 257 |
| TABLERO ELECTRÓNICO DE CONTROL (GR) (*INDICATOR PANEL, RH, LH) | 268 |
| | 276 |
| TANQUE DE EXPANSIÓN (GR) | 676 |
| TANQUE DE GRASA (GR) | 466 |
| | 512 |
| TANQUE HIDRÁULICO (GR) | 679 |
| TANQUE HIDRÁULICO (GR) | 677 |
| TAPA | 943 |
| TAPA DE LA CAJA DELANTERA (GR) | 14 |
| | 15 |
| TAPA DE LLENADO (CONJ) (COMBUSTIBLE) | 126 |
| TAPA DE RADIADOR (CONJ) | 676 |
| TAPA DE TURBOCOMPRESOR (GR) | 101 |
| TAPA DEL BLOQUE MOTOR (GR) | 12 |
| | 13 |
| TAPA DEL INSONORIZADOR (GR) | 16 |
| TAPA DEL MECANISMO DE VÁLVULAS (GR) | 17 |
| | 18 |
| | 19 |
| | 20 |
| TAPA DEL TUBO DE LLENADO (TANQUE HIDRÁULICO) | 677 |
| | 679 |
| TAPA DEL TUBO DE LLENADO (TREN DE FUERZA) | 339 |
| TAPAS PROTECTORAS DE EMBARQUE (GR) | 320 |
| TAPÓN | 341 |
| TAPÓN (CONJ) (RELLENADOR DE ACEITE) | 70 |
| TAPÓN DE CULATA (GR) | 59 |
| TAPÓN DE DRENAJE | 677 |
| | 679 |
| TAPÓN DE DRENAJE (ACEITE DEL MOTOR) | 60 |
| TAPÓN DEL BLOQUE MOTOR (GR) | 58 |
| TAPON DEL COLECTOR DEL CARTER (GR) | 60 |
| TAPÓN MAGNÉTICO | 307 |
| | 308 |
| | 402 |
| TECHO ROPS ABIERTO (CONFIG) | 790 |
| TENSOR DE CORREA (GR) | 10 |
| *TIP GP-EXTRA DUTY | 773 |
| | 774 |
| TIRANTE DE TRABA DEL BASTIDOR DE DIRECCIÓN (GR) | 487 |
| TORNILLERÍA DE LA BOMBA DE AGUA (GR) | 81 |
| TORNILLERÍA DE MONT. DE LA BOMBA DE ACEITE (GR) | 69 |
| TORNILLERÍA DEL COLECTOR DEL CÁRTER (GR) | 38 |
| TORNILLERÍA DEL MECANISMO DE VÁLVULAS (GR) | 39 |
| TORNILLERIA GR-BASTIDOR CARGADOR | 446 |
| | 447 |
| | 448 |
| TORNILLERIA GR-BASTIDOR TRASERO | 449 |
| | 450 |
| | 452 |
| | 454 |
| TRANSMISION (CONFIG) | 395 |
| TRANSMISIÓN PLANETARIA (GR) | 359 |


* NO HAY TRADUCCION DISPONIBLE EN EL MOMENTO DE LA IMPRESION

# INDICE


| Nombre | Página |
|---|---|
| | 364 |
| TREN DE FUERZA (CONFIG) | 368 |
| TREN DE FUERZA-GRUPO ELECTRÓNICO | 166 |
| TUBERÍAS DE ACEITE DEL MOTOR (GR) | 75 |
| TUBERÍAS DE ACEITE DEL TREN DE FUERZA (GR) | 353 |
| TUBERÍAS DE ACONDICIONADOR DE AIRE (GR) | 838 |
| | 840 |
| TUBERIAS DE CALEFACCION | 843 |
| TUBERÍAS DE CALEFACCIÓN DE LA CABINA | 843 |
| TUBERÍAS DE COMBUSTIBLE (GR) | 120 |
| | 122 |
| TUBERÍAS DE DIRECCIÓN (GR) | 549 |
| TUBERÍAS DE ENGRASE (GR) | 474 |
| TUBERÍAS DE LA DIRECCIÓN SECUNDARIA (GR) | 547 |
| TUBERÍAS DE LUBRICACIÓN (GR) | 479 |
| | 481 |
| | 482 |
| | 484 |
| | 485 |
| | 486 |
| TUBERÍAS DEL AGUA (GR) | 82 |
| | 85 |
| | 87 |
| TUBERÍAS DEL CILINDRO DE INCLINACIÓN (GR) | 658 |
| TUBERÍAS DEL ENFRIADOR DE ACEITE DEL EJE (GR) | 345 |
| | 347 |
| TUBERÍAS DEL ENFRIADOR DE ACEITE HIDRÁULICO (GR) | 651 |
| TUBERIAS DEL ENFRIADOR DEL CONVERTIDOR DE PAR | 355 |
| TUBERÍAS DEL FRENO DE SERVICIO (GR) | 540 |
| TUBERÍAS DELANTERAS (GR) | 642 |
| TUBERÍAS HIDRÁULICAS DEL VENTILADOR (GR) | 649 |
| TUBERÍAS HIDRÁULICAS (GR) | 645 |
| TUBO DE LLENADO DE ACEITE DE LA TRANSMISIÓN (GR) | 339 |
| TUBO DE LLENADO DE ACEITE (GR) | 70 |
| TURBOCOMPRESOR - TUBERÍAS DE ACEITE DEL (GR) | 77 |
| TURBOCOMPRESOR (GR) | 112 |

## V

| | |
|---|---|
| *VALVE GP-PUMP CONTROL | 719 |
| VÁLVULA DE ALIVIO DEL FRENO | 126 |
| VÁLVULA DE ALIVIO (GR) | 579 |
| | 580 |
| | 721 |
| | 722 |
| | 723 |
| | 724 |
| | 725 |
| | 726 |
| | 727 |
| | 728 |
| VÁLVULA DE ALIVIO (GR) | 399 |
| | 400 |
| VÁLVULA DE ALIVIO (GR) (CRUCE DEL CILINDRO DE DIRECCION) | 585 |
| VÁLVULA DE ALIVIO (GR) (REFRIGERANTE) | 791 |
| VÁLVULA DE ALIVIO (GR) (TUBERIA, ORIFICIO DE CILINDRO AUXILIAR DEL EXTREMO DE VASTAGO) | 708 |
| VÁLVULA DE ALIVIO (GR) (TUBERIA, ORIFICIO DE EXTREMO DE CABEZA DE CILINDRO AUXILIAR) | 708 |
| VÁLVULA DE ALIVIO (GR) (TUBERIA, ORIFICIO DE EXTREMO DE CABEZA DE CILINDRO DE INCLINACION) | 706 |
| VÁLVULA DE ALIVIO (GR) (TUBERIA, ORIFICIO DE EXTREMO DE VARILLA DE CILIND. DE INCLIN.) | 706 |
| VÁLVULA DE CONTROL DE BAJADA (GR) | 704 |
| VALVULA DE CONTROL DE LA BOMBA (GR) | 577 |
| VÁLVULA DE CONTROL DEL FRENO (GR) | 541 |
| VÁLVULA DE CONTROL (GR) | 698 |
| VÁLVULA DE CONTROL MANUAL (GR) | 710 |
| VÁLVULA DE CORTE (GR) (DRENAJE DEL RADIADOR) | 82 |
| VÁLVULA DE DERIVACIÓN (GR) | 573 |
| | 700 |
| VÁLVULA DE DISTRIBUCIÓN DE LUBRICACIÓN (GR) | 515 |
| | 516 |
| | 517 |
| | 518 |
| VÁLVULA DE GAS | 520 |
| VÁLVULA DE GAS (ACUMULADOR DEL FRENO) | 519 |
| VALVULA DE INVERSION DE VENTILADOR (GR) | 702 |
| VÁLVULA DE LANZADERA (GR) | 730 |
| | 731 |
| | 732 |
| VÁLVULA DE LANZADERA (GR) | 549 |
| VÁLVULA DE LANZADERA (GR) | 581 |
| | 582 |
| | 583 |
| | 584 |


* NO HAY TRADUCCION DISPONIBLE EN EL MOMENTO DE LA IMPRESION

# INDICE


| Nombre | Página |
|---|---|
| VÁLVULA DE MODULACIÓN (GR) | 398 |
| VÁLVULA DE MUESTREO (GR) | 79 |
| VÁLVULA DE MUESTREO (GR) (ACEITE HIDRÁULICO) | 645 |
| VÁLVULA DE RETENCIÓN (GR) | 130 |
| | 131 |
| | 570 |
| | 571 |
| | 572 |
| | 590 |
| | 697 |
| VÁLVULA DE RETENCIÓN (GR) (DERIVACION DE ENFRIADOR DE ACEITE DEL EJE) | 317 |
| VÁLVULA DE RETENCIÓN (GR) (GRUPO DE CUATRO VALVULAS HIDRAULICAS DE LA DIRECCION) | 549 |
| VÁLVULA DE SECUENCIA (GR) | 729 |
| VÁLVULA DE SOLENOIDE (GR) | 733 |
| | 735 |
| | 736 |
| VÁLVULA DEL CONTROL PRINCIPAL (GR) | 706 |
| | 708 |
| VÁLVULA HIDRÁULICA DE 3 VÍAS (CONFIG) | 641 |
| VÁLVULA NEUTRALIZADORA DE DIRECCIÓN (GR) | 587 |
| VÁLVULA PILOTO (GR) | 575 |
| VÁLVULA PILOTO (GR) | 711 |
| | 713 |
| VÁLVULA REDUCTORA DE PRESIÓN (GR) | 715 |
| | 716 |
| | 717 |
| | 718 |
| VÁLVULAS DE LA DIRECCIÓN (GR) | 585 |
| VENTANA DE LA PUERTA (GR) | 944 |
| | 946 |
| VISERA | 942 |
| VISERA (GR) | 942 |
| VOLANTE - CAJA DE (GR) | 44 |
| VOLANTE DE DIRECCIÓN (GR) | 567 |
| VOLANTE (GR) | 40 |


## W


| | |
|---|---|
| *WIRING GP-WASTE HANDLER | 303 |


* NO HAY TRADUCCION DISPONIBLE EN EL MOMENTO DE LA IMPRESION

# ÍNDICE


| Designação | Página |
|---|---|
| **A** | |
| ACENDEDOR DE CIGARROS (12-VOLTS) | 257, 267, 274 |
| ACIONADOR - PROTETOR DE POTÊNCIA | 404 |
| ACUMULADOR - AR CONDICIONADO | 840 |
| ACUMULADOR - FREIO | 519, 520, 521 |
| ACUMULADOR DO SISTEMA DE ABSORÇÃO DE IMPACTOS | 588, 589 |
| ADAPTADOR - ABASTECIMENTO RÁPIDO DE COMBUSTÍVEL | 113 |
| ADAPTADOR DA PONTA | 746, 748 |
| ADAPTADOR DO COMANDO DA BOMBA | 7 |
| ADESIVO - PAINEL DE FUSÍVEIS | 832, 835 |
| ADESIVO-SAÍDA (SECUNDÁRIO) | 796, 867 |
| AJUSTADOR DO ASSENTO | 779 |
| ALARME | 133 |
| ALARME DE MARCHA À RÉ | 248 |
| ALAVANCA-INCLINAÇÃO | 743 |
| ALTERNADOR DE CORRENTE | 134, 136, 138, 139 |
| AMORTECEDOR | 32 |
| AMORTECEDOR - ALARME | 153 |
| APARAS | 2 |
| AQUECEDOR DA CABINE | 818, 820 |
| ARMAÇÃO DIANTEIRA | 421 |
| ARO | 372 |
| ARO DESMONTÁVEL | 373, 374 |
| ARRANJO GERAL | 2 |
| ARRANJO HIDRÁULICO - 2 VÁLVULAS | 641 |
| ARRANJO HIDRÁULICO - 3 VÁLVULAS | 641 |
| ARRANJO PARA EXTRAÇÃO DE MADEIRA | 745 |
| ARRANJO RODOVIÁRIO | 198 |
| ARREFECEDOR DE ÓLEO DO EIXO E MONTAGEM | 317 |
| ARREFECEDOR DO ÓLEO DO EIXO | 319 |
| ARREFECIMENTO - TEMP. AMBIENTE ALTA | 80 |
| ASSENTO | 910, 912, 913, 915, 916, 917 |
| ASSENTO COM SUSPENSÃO | 918, 919, 920, 921, 923, 924 |
| ATERRO SANITÁRIO | 3 |
| AUXILIAR DE PARTIDA A ÉTER | 224 |
| **B** | |
| BALANCIM | 63 |
| BASE DO FILTRO DE ÓLEO | 310 |
| BASE DO FREIO - PEDAL | 522, 523 |
| BATERIA E CABOS / FIOS ELÉTRICOS | 140 |
| BATERIA (LÍTIO) | 798 |
| BATERIA (12-VOLTS) | 140 |
| BLINDAGEM DO COMPARTIMENTO DO MOTOR | 496 |
| BLOCO DE FUSÍVEIS | 267, 275 |
| BLOCO DE JUNÇÃO | 140 |
| BLOCO DO MOTOR | 22, 23 |
| BOCAL DE ENCHIMENTO DE ÓLEO DO MOTOR | 70 |
| BOCAL DE ENCHIMENTO DE ÓLEO DO TREM DE FORÇA | 339 |
| *BODY-COOLER BYPASS (*ENGINE OIL) (ÓLEO DO MOTOR) | 75 |
| BOMBA - ESCORVA DE COMBUSTÍVEL E SEPARADOR DE ÁGUA | 132 |
| BOMBA DA DIREÇÃO SECUNDÁRIA E MONTAGEM | 556 |
| BOMBA DA TRANSMISSÃO | 371 |
| BOMBA DE ÁGUA | 90, 91 |
| BOMBA DE DIREÇÃO E TRANSMISSÃO E MONTAGEM | 557 |
| BOMBA DE ENGRENAGENS | 559, 667, 669 |
| BOMBA DE ENGRENAGENS (ARREFECEDOR DO ÓLEO DO EIXO) | 369 |
| BOMBA DE INJEÇÃO DO COMBUSTÍVEL | 125 |
| BOMBA DE ÓLEO - MOTOR | 78 |
| BOMBA DE PISTÃO | 561, 670 |
| BOMBA DE TRANSFERÊNCIA DO COMBUSTÍVEL | 124 |
| BOMBA DO ARREFECEDOR DE ÓLEO DO EIXO E MONTAGEM | 369 |


* TRADUÇÃO NÃO DISPONÍVEL NO MOMENTO DA IMPRESSÃO

# ÍNDICE


| Designação | Página |
|---|---|
| BOMBA DO VENTILADOR HIDRÁULICO E MONTAGEM | 665 |
| BOMBA E MONTAGEM - ACESSÓRIO | 666 |
| BOMBA E MONTAGEM - TRANSFERÊNCIA DE COMBUSTÍVEL | 124 |
| BOMBA E MOTOR - INCLINAÇÃO DO CAPÔ | 664 |
| BORDA CORTANTE | 770 |
| | 771 |
| BRAÇO DO ASSENTO | 788 |
| BRACO DO LIMPADOR | 786 |
| | 787 |
| BRAÇO E MANCAL TIPO LUVA | 737 |
| BUJÃO - CABEÇA DO CILINDRO | 59 |
| BUJÃO - CÁRTER DO ÓLEO | 60 |
| BUJÃO DO BLOCO DO CILINDRO | 58 |
| BUJÃO DO DRENO | 677 |
| | 679 |
| BUJÃO DO DRENO (ÓLEO DO MOTOR) | 60 |
| BUJÃO MAGNÉTICO | 307 |
| | 308 |
| | 402 |
| BUZINA ELÉTRICA | 822 |

## C

| | |
|---|---|
| CABEÇOTE DO MOTOR | 25 |
| | 26 |
| | 27 |
| | 30 |
| | 31 |
| CABINE - ESTRUTURA ROPS COBERTA | 789 |
| | 874 |
| CABINE - ROPS ABERTA | 874 |
| CABOS / FIOS ELÉTRICOS - SISTEMA HIDRÁULICO ELETRÔNICO | 287 |
| CABOS/FIOS ELÉTRICOS - AR CONDICIONADO | 249 |
| CABOS/FIOS ELÉTRICOS - CABINE | 256 |
| | 266 |
| | 274 |
| CABOS/FIOS ELÉTRICOS - CHASSI | 281 |
| CABOS/FIOS ELÉTRICOS - DIANTEIROS | 292 |
| CABOS/FIOS ELÉTRICOS - DIREÇÃO SECUNDÁRIA | 299 |
| CABOS/FIOS ELÉTRICOS - INTERRUPTOR DE TEMPERATURA DO EIXO | 253 |
| CABOS/FIOS ELÉTRICOS - MOTOR | 288 |
| | 290 |
| CABOS/FIOS ELÉTRICOS - SENSOR | 300 |
| | 301 |
| | 302 |
| CABOS/FIOS ELÉTRICOS DE ILUMINAÇÃO | 295 |
| | 296 |
| | 297 |
| CAÇAMBA - PARA APLICAÇAO GERAL | 748 |
| CAÇAMBA PARA APLICAÇÃO GERAL | 749 |
| | 751 |
| | 763 |
| | 764 |
| CAÇAMBA PARA ROCHAS | 753 |
| | 755 |
| | 757 |
| | 759 |
| | 761 |
| | 765 |
| | 766 |
| | 767 |
| | 768 |
| | 769 |
| CADEADO | 958 |
| CAIXA - ENGRENAGEM DE TRANSFERÊNCIA | 312 |
| CAIXA DIANTEIRA | 46 |
| CAIXA DO VOLANTE DO MOTOR | 44 |
| CAPÔ E PROTETOR | 457 |
| CARCAÇA DAS ENGRENAGENS PLANETÁRIAS E COMPONENTES | 311 |
| CÁRTER DO ÓLEO DO MOTOR | 51 |
| CHASSI | 1 |
| CHASSI DIANTEIRO | 424 |
| CHASSI TRASEIRO | 427 |
| CHAVE | 1 |
| | 321 |
| CHAVE - ALAVANCA | 803 |
| CHAVE - ELETRÔNICO (SEGURANÇA, AMARELO) | 223 |
| CHAVE - ELETRÔNICO (SEGURANÇA, AMARELO) (PROGRAMADO) | 169 |
| CHAVE - ELETRÔNICO (SEGURANÇA, CINZA) | 223 |
| CHAVE - ELETRÔNICO (SEGURANÇA, CINZA) (SEM DESIGNAÇÃO) | 169 |
| CHAVE (DESCONECTAR A BATERIA) | 233 |
| CHAVE GERAL | 233 |
| CHICOTE - CABINE (PRINCIPAL) | 267 |
| | 275 |
| CHICOTE - CABOS ELÉTRICOS (FERRAMENTA DE SERVIÇO) | 257 |
| | 267 |
| | 274 |
| CHICOTE - FREIOS | 281 |
| CHICOTE - FREIOS (LUZ DO FREIO) | 523 |
| CHICOTE - ILUMINAÇÃO | 295 |
| CHICOTE - ILUMINAÇÃO (FARÓIS DA CABINE) | 267 |


* TRADUÇÃO NÃO DISPONÍVEL NO MOMENTO DA IMPRESSÃO

# ÍNDICE


| Designação | Página |
|---|---|
| | 275 |
| CHICOTE - ILUMINAÇÃO (FARÓIS DIANTEIROS) | 257 |
| CHICOTE - ILUMINAÇÃO (HOLOFOTE, SETAS DE DIREÇÃO, LADO DIREITO) | 297 |
| CHICOTE - ILUMINAÇÃO (HOLOFOTE, SETAS DE DIREÇÃO, LADO ESQUERDO) | 297 |
| CHICOTE - ILUMINAÇÃO (PISCA-ALERTA) | 189 |
| CHICOTE - ILUMINAÇÃO (SETA DE DIREÇÃO) | 244 |
| CHICOTE - MONITOR | 302 |
| CHICOTE - MONITOR (CONTROLE DE CARGA ÚTIL) | 796 |
| | 867 |
| CHICOTE - MOTOR | 290 |
| CHICOTE - MOTOR (INJETOR, VÁLVULA VARIÁVEL) | 8 |
| CHICOTE - SENSOR (INCLINAÇÃO) | 301 |
| CHICOTE - SENSOR (ÓLEO DO CILINDRO DE LEVANTAMENTO) | 300 |
| CHICOTE - SENSOR (TEMPERATURA DO ÓLEO DO EIXO DIANTEIRO) | 251 |
| CHICOTE - SENSOR (TEMPERATURA DO ÓLEO DO EIXO TRASEIRO) | 251 |
| CHICOTE - TRANSMISSÃO | 313 |
| | 315 |
| CHICOTE - VÁLVULA (COMPRESSOR DE AR DO ASSENTO) | 938 |
| | 940 |
| CHICOTE (CABO AUXILIAR DE PARTIDA) (BOMBA DE ESCORVA DO COMBUSTÍVEL) | 115 |
| CHICOTE-CHASSI DIANTEIRO | 292 |
| CHICOTE-DIREÇÃO (COLUNA, RODA) | 567 |
| CILINDRO DE DIREÇÃO E MONTAGEM | 544 |
| CILINDRO DE ÉTER | 224 |
| CILINDRO DE INCLINAÇÃO | 628 |
| | 630 |
| | 632 |
| | 633 |
| | 635 |
| | 637 |
| CILINDRO DE INCLINAÇÃO E RETENTOR | 620 |
| | 621 |
| | 622 |
| | 623 |
| | 624 |
| | 625 |
| CILINDRO DE LEVANTAMENTO | 626 |
| CILINDRO DE LEVANTAMENTO E RETENTOR | 619 |
| CILINDRO HIDRÁULICO | 545 |
| CINTO DE SEGURANÇA | 909 |
| | 918 |
| | 919 |
| COLETOR DE ESCAPE | 108 |
| COLMÉIA - ARREFECEDOR DE ÓLEO HIDRÁULICO | 92 |
| COLMÉIA-ARREFECEDOR DE ÓLEO DO MOTOR | 87 |
| COLMÉIA-ARREFECEDOR DO ÓLEO DO TREM DE FORÇA (TRANSMISSÃO) | 87 |
| COLMEIA DO ARREFECEDOR DA ADMISSAO | 92 |
| COLMEIA DO RADIADOR (EXTERNO) | 93 |
| COLMEIA DO RADIADOR (INTERNO) | 93 |
| COLUNA DA DIREÇÃO | 566 |
| COMANDO DA BOMBA | 35 |
| COMANDO DE ACESSÓRIOS | 34 |
| COMANDO FINAL E RODA | 402 |
| COMPRESSOR DE AR - ASSENTO | 780 |
| COMPRESSOR DE REFRIGERANTE | 791 |
| | 792 |
| CONDENSADOR DO REFRIGERANTE E MONTAGEM | 793 |
| CONDICIONADOR DE AR | 781 |
| | 782 |
| | 785 |
| CONEXÃO - ELÉTRICA | 145 |
| CONTRAPESO | 406 |
| | 407 |
| | 408 |
| | 409 |
| | 410 |
| | 411 |
| CONTROLE - ALAVANCA | 613 |
| | 615 |
| | 617 |
| CONTROLE - NÃO PROGRAMADO | 156 |
| | 157 |
| | 158 |
| | 159 |
| | 160 |
| | 161 |
| CONTROLE - NÃO PROGRAMADO (IMPLEMENTO) | 256 |
| | 267 |
| | 274 |
| CONTROLE - NÃO PROGRAMADO (PRODUCT LINK 300) | 148 |
| CONTROLE - NÃO PROGRAMADO (SEGURANÇA) | 223 |
| CONTROLE - NÃO PROGRAMADO (SISTEMA DE MONITORIZAÇÃO CATERPILLAR) | 256 |
| | 267 |
| | 274 |


* TRADUÇÃO NÃO DISPONÍVEL NO MOMENTO DA IMPRESSÃO

# ÍNDICE


| Designação | Página |
|---|---|
| CONTROLE - NÃO PROGRAMADO (SISTEMA DE SEGURANÇA) | 169 |
| CONTROLE - NÃO PROGRAMADO (TREM DE FORÇA) | 256, 267, 274 |
| CONTROLE & MONTAGEM-COMUNICAÇÃO | 146, 148 |
| CONTROLE-CABO | 611, 612 |
| CONTROLE-CABO (ALAVANCA DE CONTROLE) | 617 |
| CONTROLE-COMUNICAÇÃO | 155 |
| CONTROLE-COMUNICAÇÃO (PRODUCT LINK 201) | 146 |
| CONTROLE DA CAÇAMBA | 738 |
| CONTROLE DE DIREÇÃO | 542 |
| CONTROLE DO FREIO DE ESTACIONAMENTO | 533 |
| CONTROLE DO FREIO DE SERVIÇO | 534 |
| CONTROLE DO PAINEL MONITOR | 795, 796, 798 |
| CONTROLE DO PAINEL MONITOR (REDUTOR DE LUMINOSIDADE) | 256, 266, 274 |
| CONTROLE DO PEDAL DO FREIO | 531, 532 |
| CONTROLE DO VENTILADOR | 595 |
| CONTROLE-ELETROIDRÁULICO | 597, 601, 605, 608 |
| CONTROLE ELETRÔNICO - MOTOR | 156 |
| CONTROLE ELETRÔNICO - VISOR (PAINEL DE INDICADORES, CENTRAL) | 153 |
| CONTROLE ELETRÔNICO - VISOR (PAINEL DE INDICADORES, CENTRAL) | 257 |
| CONTROLE ELETRÔNICO - VISOR (PAINEL DE INDICADORES, DIREITO) | 257 |
| CONTROLE ELETRÔNICO - VISOR (PAINEL DE INDICADORES, DIREITO, ESQUERDO) | 268, 276 |
| CONTROLE ELETRÔNICO - VISOR (PAINEL DE INDICADORES, ESQUERDO) | 257 |
| CONTROLE ELETRÔNICO E MONTAGEM - MOTOR | 150 |
| CONTROLE-ESCAVAÇÃO AUTOMÁTICA | 152, 153 |
| CONTROLE HIDRÁULICO DA TRANSMISSÃO | 313, 315 |
| CONVERSOR DE POTÊNCIA (24-VOLTS A 12-VOLTS) | 258 |
| CONVERSOR DE POTÊNCIA (24-VOLTS A 12-VOLTS) | 267, 275 |
| CONVERSOR DE TORQUE | 391, 393 |
| CONVERSOR DE TORQUE E CARCAÇA | 387, 389 |
| *COOLANT HEATER LINES | 842 |
| CORREIA EM V | 369 |
| CRUZETA E MANCAL | 377, 397 |


## D


| Designação | Página |
|---|---|
| DECALQUE | 951 |
| DECALQUE - ADVERTÊNCIA (PARTIDA COM CABO AUXILIAR, CONSULTAR OMM) | 197 |
| DECALQUE - ADVERTÊNCIA (RÁDIO DO PRODUCT LINK, NACD) | 155 |
| DECALQUE - ADVERTÊNCIA (RÁDIO DO PRODUCT LINK, NACD) | 167 |
| DECALQUE - ADVERTÊNCIA (RÁDIO DO PRODUCT LINK, NÃO NACD) | 155 |
| DECALQUE - ADVERTÊNCIA (RÁDIO DO PRODUCT LINK, NÃO NACD) | 167 |
| DECALQUE - CONTROLE (ALAVANCA DE CONTROLE, 2 FUNÇÕES, AUTODIG) | 605 |
| DECALQUE - CONTROLE (DESPEJAR, INCLINAR PARA TRÁS) | 597, 601 |
| DECALQUE - CONTROLE (ESCAVAÇÃO AUTOMÁTICA) | 153 |
| DECALQUE - CONTROLE (LEVANTAR, FLUTUAR, ABAIXAR) | 597, 601 |
| DECALQUE - CONTROLES | 880, 884 |
| DECALQUE - IDENTIFICAÇÃO (AUXILIAR HIDRÁULICO) | 601 |
| DECALQUE - IDENTIFICAÇÃO (BUZINA) | 597, 601 |
| DECALQUE - IDENTIFICAÇÃO (MÓDULO DE CONTROLE ELETRÔNICO) | 163 |
| DECALQUE - IDENTIFICAÇÃO (12-VOLTS) | 880, 884 |
| DECALQUE - INFORMAÇÕES (PRODUCT LINK) | 155 |
| DECALQUE - INFORMAÇÕES (24 VOLTS) | 197, 956 |
| DECALQUE - INSTRUÇÃO (AJUSTE DO ASSENTO) | 938 |


* TRADUÇÃO NÃO DISPONÍVEL NO MOMENTO DA IMPRESSÃO

# ÍNDICE


| Designação | Página |
|---|---|
| | 940 |
| DECALQUE - INSTRUÇÃO (LER MANUAL DO PROPRIETÁRIO) | 169 |
| DECALQUE - INSTRUÇÃO (MANUTENÇÃO) | 597 |
| | 601 |
| | 605 |
| | 608 |
| DECALQUE - INSTRUÇÃO (PARTIDA DO MOTOR) | 880 |
| | 884 |
| DECALQUE - INSTRUÇÃO (SAÍDA DE EMERGÊNCIA) | 832 |
| | 956 |
| DECALQUE - PAINEL (CENTRAL) | 880 |
| | 884 |
| DECALQUE - PAINEL (LADO DIREITO) | 880 |
| DECALQUE - PAINEL (LADO DIREITO) | 884 |
| DECALQUE - PAINEL (LADO ESQUERDO) | 880 |
| | 884 |
| DECALQUE - TIRA (MANIPULADOR DE REFUGOS, LADO DIREITO) | 2 |
| DECALQUE - TIRA (MANIPULADOR DE REFUGOS, LADO ESQUERDO) | 2 |
| DECALQUE (ESCAVAÇÃO AUTOMÁTICA) | 153 |
| DECALQUE (IGNIÇÃO) | 169 |
| DECALQUE (PAINEL DE FUSÍVEIS) | 829 |
| DECALQUE (SEGURANÇA) | 169 |
| DECALQUE (SISTEMA DE SEGURANÇA DA MÁQUINA) | 169 |
| DEFLETOR - CABINE | 925 |
| DEFLETOR TÉRMICO DE CALOR | 111 |
| DEGRAU | 498 |
| | 499 |
| DIFERENCIAL - DESLIZAMENTO LIMITADO | 335 |
| DIFERENCIAL - NOSPIN | 336 |
| | 337 |
| DIFERENCIAL E COROA | 322 |
| | 323 |
| | 325 |
| | 327 |
| | 329 |
| | 331 |
| | 333 |
| DIREÇÃO SECUNDÁRIA | 565 |
| DISJUNTOR AUTOMÁTICO DE CIRCUITO (105 AMPERES) (ALTERNADOR) | 194 |
| DISJUNTOR AUTOMÁTICO DE CIRCUITO (15 AMPERES) (ACIONADOR DO PROTETOR DE ENERGIA) | 303 |
| DISJUNTOR AUTOMÁTICO DE CIRCUITO (15 AMPERES) (CONTROLE DO AR CONDICIONADO, AQUECEDOR) | 258 |
| DISJUNTOR AUTOMÁTICO DE CIRCUITO (15 AMPERES) (ILUMINAÇÃO DE OPERAÇÃO) | 195 |
| DISJUNTOR AUTOMÁTICO DE CIRCUITO (50 AMPÈRES) (PARTIDA) | 194 |
| DISJUNTOR AUTOMÁTICO DE CIRCUITO (80 AMPERES) (PRINCIPAL) | 194 |
| DRENO - ECOLOGIA | 338 |
| DRENO - ÓLEO DO MOTOR | 33 |
| DRENO DO COMBUSTÍVEL | 114 |
| DUCTO DE AR | 805 |
| DUCTO E FILTRO | 803 |


## E


| | |
|---|---|
| EIXO-COMANDO DE VÁLVULA | 11 |
| EIXO DE TRANSMISSÃO | 375 |
| EIXO FIXO | 305 |
| | 307 |
| EIXO OSCILANTE | 305 |
| | 306 |
| | 308 |
| EJETOR DE POEIRA | 102 |
| ELEMENTO DO FILTRO DE AR (PRIMÁRIO) | 100 |
| ELEMENTO DO FILTRO DE AR (SECUNDÁRIO) | 100 |
| ELEMENTO FILTRANTE - ÓLEO (ALTA EFICIÊNCIA) | 340 |
| ELIMINAÇÃO DE VAPORES DO CÁRTER | 73 |
| ELO - TRAVA DA ARMAÇÃO DA DIREÇÃO | 487 |
| EMBREAGEM - ELÉTRICA (BOMBA DO ARREFECEDOR DO ÓLEO DO EIXO) | 369 |
| EMISSOR - NÍVEL DO COMBUSTÍVEL | 126 |
| EMISSOR - POSIÇÃO | 204 |
| | 205 |
| | 206 |
| | 207 |
| EMISSOR - POSIÇÃO (INCLINAÇÃO) | 613 |
| | 615 |
| | 617 |
| EMISSOR - POSIÇÃO (LEVANTAMENTO) | 613 |
| EMISSOR - POSIÇÃO (SEM MOLA) (ALAVANCA DE CONTROLE) | 597 |
| | 601 |
| ENGATE - ARTICULAÇÃO | 455 |
| ENGRENAGEM - EIXO-COMANDO DE VÁLVULAS | 41 |
| ENGRENAGENS DE DISTRIBUIÇÃO | 42 |
| ENGRENAGENS DE SAÍDA DE TRANSFERÊNCIA | 341 |
| ENGRENAGENS PLANETÁRIAS - TRANSMISSÃO | 359 |
| | 364 |


* TRADUÇÃO NÃO DISPONÍVEL NO MOMENTO DA IMPRESSÃO

# ÍNDICE


| Designação | Página |
|---|---|
| ESCADA | 463 |
| ESPELHO RETROVISOR | 844 |
| | 845 |
| | 846 |
| | 847 |
| | 848 |
| | 850 |
| | 851 |
| | 852 |
| | 853 |
| | 855 |
| | 856 |
| | 857 |
| | 858 |
| | 860 |
| | 862 |
| EXTENSÃO - ENCOSTO | 915 |
| EXTENSÃO - ENCOSTO (TECIDO) | 912 |
| | 917 |
| **F** | |
| FERRAGEM - CHASSI DA CARREGADEIRA | 446 |
| | 447 |
| | 448 |
| FERRAGEM - CHASSI TRASEIRO | 449 |
| | 450 |
| | 452 |
| | 454 |
| FERRAGENS-BRAÇO DE LEVANTAMENTO | 740 |
| | 741 |
| | 742 |
| FIAÇÃO - AQUECEDOR E AR CONDICIONADO | 782 |
| | 818 |
| FIAÇÃO - CONTROLE (ACIONADOR DO PROTETOR DE ENERGIA) | 303 |
| FIAÇÃO - CONTROLE DE LUBRIFICAÇÃO AUTOMÁTICA | 250 |
| FIAÇÃO - CONTROLE (ESPELHOS AQUECIDOS) | 848 |
| | 853 |
| | 860 |
| | 862 |
| FIAÇÃO - CONTROLE (PRODUCT LINK) | 146 |
| FIAÇÃO - CONTROLE (PRODUCT LINK) | 148 |
| FIAÇÃO - CONTROLE (RELÉ DE REGULAGEM DO ESPELHO AQUECIDO) | 848 |
| | 853 |
| FIAÇÃO - CONTROLE (SEGURANÇA DA MÁQUINA) | 169 |
| FIAÇAO - CONTROLES DO OPERADOR | 256 |
| FIAÇAO - CONTROLES DO OPERADOR (ALAVANCA DE CONTROLE) | 605 |
| | 608 |
| FIAÇÃO - EIXO (ARREFECEDOR DO ÓLEO DO EIXO) | 253 |
| FIAÇÃO - INTERRUPTOR (TRAVA DE DIFERENCIAL) | 232 |
| FIAÇÃO - LUZES TRASEIRAS | 297 |
| FIAÇÃO - MANIPULADOR DE RESÍDUOS | 303 |
| FIAÇÃO - MONITORAÇÃO DO EIXO | 251 |
| FIAÇÃO - PAINEL | 194 |
| FIAÇÃO-CONT TRANSMISSÃO (VOLANTE) | 567 |
| FIAÇÃO-RÁDIO | 826 |
| FIAÇÃO-RÁDIO (ALTO-FALANTE) | 892 |
| FIAÇÃO-TANQUE HIDRÁULICO | 281 |
| FILTRO - BOMBA DE ÁGUA | 90 |
| FILTRO - COMBUSTÍVEL | 115 |
| | 126 |
| FILTRO - MAGNÉTICO | 341 |
| FILTRO - MAGNÉTICO (ARREFECEDOR DO ÓLEO DO EIXO) | 347 |
| FILTRO - ÓLEO | 340 |
| | 639 |
| | 640 |
| FILTRO - ÓLEO DO MOTOR | 71 |
| FILTRO - ÓLEO (HIDRÁULICO) | 639 |
| | 640 |
| FILTRO - SEPARADOR DE ÁGUA E COMBUSTÍVEL (PRIMÁRIO) | 119 |
| FILTRO DE AR DE CABINA | 803 |
| FILTRO DE COMBUSTÍVEL E SEPARADOR DE ÁGUA | 119 |
| FILTRO E MONTAGEM-COMBUSTÍVEL | 115 |
| FIXADORES - BOMBA DE ÁGUA | 81 |
| FIXADORES - BOMBA DE ÓLEO DO MOTOR | 69 |
| FIXADORES - CABEÇOTE DO MOTOR | 31 |
| FIXADORES - CAIXA DIANTEIRA | 36 |
| | 37 |
| FIXADORES - CÁRTER DO ÓLEO | 38 |
| FIXADORES - MECANISMO DAS VÁLVULAS | 39 |
| FREIO DE ESTACIONAMENTO | 525 |
| | 526 |
| FREIO DE SERVIÇO | 527 |
| | 529 |
| FUNDO - ENCOSTO | 875 |
| | 876 |
| | 877 |
| FUSÍVEL (10 AMPERES) | 256 |
| | 266 |
| | 274 |
| FUSÍVEL (15 AMPERES) | 256 |
| | 266 |
| | 274 |


* TRADUÇÃO NÃO DISPONÍVEL NO MOMENTO DA IMPRESSÃO

# ÍNDICE


| Designação | Página |
|---|---|
| | 782 |
| | 818 |
| FUSÍVEL (20-AMPERES) | 256 |
| | 266 |
| | 274 |

## G

| | |
|---|---|
| *GAUGE AS-OIL LEVEL (DIPSTICK) | 74 |
| GR. BÁSICO - TAMPA DAS VÁLVULAS E CHICOTE DE INJEÇÃO | 8 |
| GR. DE SERVIÇO - MÁQUINA | 223 |
| GRADE DO RADIADOR | 429 |
| GRUPO DE INSTALAÇÃO - MOTOR | 6 |
| GRUPO ROTATIVO DA BOMBA | 563 |
| | 672 |
| | 673 |

## I

| | |
|---|---|
| ILUMINAÇÃO - SINALIZAÇÃO | 180 |
| | 187 |
| INCLINAÇÃO - CAPÔ | 513 |
| INDICADOR - NÍVEL DO ÓLEO (VARETA) | 74 |
| INDICADOR - TROCA DO FILTRO DE AR | 103 |
| INDICADOR-TROCAR FILTRO DE AR | 103 |
| INDICADOR VISUAL | 677 |
| | 679 |
| INJETOR DE COMBUSTÍVEL | 125 |
| INSTALAÇÃO-COMUNICAÇÃO | 167 |
| INSTALAÇÃO DO RÁDIO | 826 |
| | 828 |
| INSTALAÇÃO DOS CONTROLES | 823 |
| | 824 |
| INSTALAÇÃO-SEGURANÇA | 168 |
| | 169 |
| INTERRUPTOR - BALANCIM | 242 |
| | 246 |
| INTERRUPTOR - BALANCIM (ACIONADOR DE INCLINAÇÃO DO CAPÔ) | 281 |
| INTERRUPTOR - BALANCIM (ACIONADOR DO PROTETOR DE ENERGIA DIANTEIRO) | 303 |
| INTERRUPTOR - BALANCIM (ACIONADOR DO PROTETOR DE ENERGIA TRASEIRO) | 303 |
| INTERRUPTOR - BALANCIM (ACOPLADOR RÁPIDO) | 242 |
| INTERRUPTOR - BALANCIM (AJUSTE DE ATIVAÇÃO DE CARREGAMENTO AUTOMÁTICO) | 153 |
| INTERRUPTOR - BALANCIM (ANULAR NEUTRALIZADOR DA TRANSMISSÃO) | 257 |
| INTERRUPTOR - BALANCIM (ANULAR NEUTRALIZADOR DA TRANSMISSÃO) | 276 |
| INTERRUPTOR - BALANCIM (AQUECIMENTO DOS ESPELHOS) | 848 |
| | 853 |
| INTERRUPTOR - BALANCIM (AQUECIMENTO DOS ESPELHOS) | 860 |
| | 862 |
| INTERRUPTOR - BALANCIM (CANCELAMENTO DO NEUTRALIZADOR) | 268 |
| INTERRUPTOR - BALANCIM (DESENGATE AUTOM[ATICO DE LEVANTAMENTO, INCLINAÇÃO) | 257 |
| INTERRUPTOR - BALANCIM (DESENGATE AUTOMÁTICO DE LEVANTAMENTO, INCLINAÇÃO) | 268 |
| | 276 |
| INTERRUPTOR - BALANCIM (FARÓIS DIANTEIRO, TRASEIRO) | 182 |
| INTERRUPTOR - BALANCIM (MODULAÇÃO PRECISA) | 256 |
| | 268 |
| | 276 |
| INTERRUPTOR - BALANCIM (PARADA A NÍVEL DO SOLO) | 281 |
| INTERRUPTOR - BALANCIM (PERIGO) | 244 |
| INTERRUPTOR - BALANCIM (PISCA-ALERTA) | 189 |
| INTERRUPTOR - BALANCIM (SELEÇÃO A-C, AQUECEDOR) | 268 |
| INTERRUPTOR - BALANCIM (SELEÇÃO DE MODO) | 258 |
| | 268 |
| | 276 |
| INTERRUPTOR - BALANCIM (SELETOR DE MODO DE CARREGAMENTO AUTOMÁTICO) | 153 |
| INTERRUPTOR - BALANCIM (SENTIDO DA TRANSMISSÃO) | 567 |
| INTERRUPTOR - BALANCIM (SISTEMA DE ABSORÇÃO DE IMPACTOS) | 240 |
| | 241 |
| INTERRUPTOR - BALANCIM (TRAVA HIDRÁULICA) | 258 |
| | 268 |
| INTERRUPTOR - BALANCIM (TRAVA HIDRÁULICA) | 276 |
| INTERRUPTOR - BALANCIM (VELOCIDADE DO VENTILADOR) | 268 |
| INTERRUPTOR - BALANCIM (VENTILADOR DE INVERSÃO AUTOMÁTICA) | 239 |
| INTERRUPTOR - BOTÃO (ACIONADOR DO AUTODIG) | 153 |
| INTERRUPTOR - BOTÃO (BUZINA) | 597 |
| | 601 |


* TRADUÇÃO NÃO DISPONÍVEL NO MOMENTO DA IMPRESSÃO

# ÍNDICE


| Designação | Página |
|---|---|
| INTERRUPTOR - BOTÃO (REDUÇÃO DE MARCHA) | 567 |
| INTERRUPTOR - BOTÃO (TRANSMISSÃO - MUDANÇA DE MARCHAS ACIMA) | 567 |
| INTERRUPTOR - CIRCUITO (20-AMPERES) (ENERGIA DA BATERIA PARA CABINE DESLIGADA) | 195 |
| INTERRUPTOR - CIRCUITO (60 AMPERES) (ACIONADOR DE INCLINAÇÃO DO CAPÔ) | 194 |
| INTERRUPTOR - LIMITADOR (LUZ DE FREIO) | 523 |
| INTERRUPTOR - LIMPADOR (24 VOLTS) (PISCA-PISCA DIANTEIRA) | 266 |
| INTERRUPTOR - MAGNÉTICO | 235<br>236<br>237 |
| INTERRUPTOR - NÍVEL DO LÍQUIDO | 234 |
| INTERRUPTOR - PARTIDA (CHAVE) | 256<br>266<br>274 |
| INTERRUPTOR - PEDAL (TRAVA DE DIFERENCIAL) | 232 |
| INTERRUPTOR - PISCA-PISCA | 244 |
| INTERRUPTOR - PRESSÃO | 238 |
| INTERRUPTOR - PRESSÃO (DERIVAÇÃO DO ARREFECEDOR DE ÓLEO HIDRÁULICO) | 639 |
| INTERRUPTOR - PRESSÃO (FILTRO DE DERIVAÇÃO DO ÓLEO HIDRÁULICO) | 640 |
| INTERRUPTOR - PRESSÃO (ÓLEO DA DIREÇÃO SECUNDÁRIA) | 299 |
| INTERRUPTOR - PRESSÃO (ÓLEO DO FREIO DE ESTACIONAMENTO) | 281 |
| INTERRUPTOR - PRESSÃO (ÓLEO DO FREIO DE SERVIÇO) | 281 |
| INTERRUPTOR - PRESSÃO (REFRIGERANTE) | 249 |
| INTERRUPTOR - ROTATIVO (CONTROLE DE MUDANÇA AUTOMÁTICA) | 257<br>267<br>274 |
| INTERRUPTOR - ROTATIVO (24 VOLTS) (CONTROLE VARÍAVEL DE MUDANÇA DAS MARCHAS) | 257<br>267<br>274 |
| INTERRUPTOR - ROTATIVO (24 VOLTS) (ILUMINAÇÃO DE OPERAÇÃO) | 256<br>266 |
| INTERRUPTOR - ROTATIVO (24 VOLTS) (ILUMINAÇÃO DE OPERAÇÃO) | 274 |
| INTERRUPTOR - ROTATIVO (24 VOLTS) (LIMPADOR TRASEIRO) | 266 |
| INTERRUPTOR - SISTEMA DE ABSORCAO DE IMPACTOS | 240<br>241 |
| INTERRUPTOR - TEMPERATURA (REFRIGERANTE) | 782 |
| INTERRUPTOR - TRAVA DO DIFERENCIAL | 232 |
| INTERRUPTOR AJUSTÁVEL (LIMITE DA LUZ DO FREIO) | 523 |
| INTERRUPTOR DE DERIVAÇÃO | 231 |
| INTERRUPTOR DE DERIVAÇÃO (FILTRO DE ÓLEO DO TREM DE FORÇA) | 310 |
| INTERRUPTOR DE SINALIZAÇÃO | 244 |
| INTERRUPTOR GIRATÓRIO | 243 |
| INTERRUPTOR GIRATÓRIO (SELEÇÃO DE,O MATERIAL DE AUTOESCAVAÇÃO) | 153 |
| INTERRUPTOR-VENTILADOR DE INVERSÃO | 239 |
| ISOLAMENTO CONTRA CALOR | 104 |


## J


| Designação | Página |
|---|---|
| JOGO DE ABRAÇADEIRA DO PURIFICADOR DE AR | 100 |
| JOGO DE ACONDICIONAMENTO DA BOMBA D'ÁGUA (ÁGUA) | 90 |
| JOGO DE ALAVANCA DE INCLINAÇÃO (COLUNA DA DIREÇÃO) | 566 |
| JOGO DE AMORTECEDOR DE CHOQUES (ASSENTO DA SUSPENSÃO) | 938 |
| JOGO DE BLOCO DESLIZADOR | 920<br>921<br>923 |
| JOGO DE CAIXA (COLUNA DA DIREÇÃO) | 566 |
| JOGO DE CALÇOS (INCLUI 17 CALÇOS) | 561 |
| JOGO DE CORDÃO | 940 |
| JOGO DE CORDÃO (ASSENTO DA SUSPENSÃO) | 938 |
| JOGO DE DISPOSITIVO AUXILIAR DE GÁS (COLUNA DA DIREÇÃO) | 566 |
| JOGO DE FIXADORES (ALTERNADOR) | 134<br>136 |
| JOGO DE LONA DO FREIO | 526 |
| JOGO DE MAÇANETA (RADIO) | 892 |
| JOGO DE MANCAL (ALTERNADOR) | 134<br>136 |
| JOGO DE PARAFUSO DE RETENÇÃO (*M5X0.8X53.24-MM) (CONTROLE NÃO PROGRAMADO) | 159 |
| JOGO DE PARAFUSO DE RETENÇÃO (M5X0,8X53,24MM) | 166 |
| JOGO DE PARAFUSO DE RETENÇÃO (M5X0,8X53,24MM) (CONTROLE NÃO PROGRAMADO) | 160 |


* TRADUÇÃO NÃO DISPONÍVEL NO MOMENTO DA IMPRESSÃO

# ÍNDICE


| Designação | Página |
|---|---|
| JOGO DE PINO DO PEDAL | 887 |
| JOGO DE PISTÃO | 561 |
| JOGO DE PISTÃO DE CONTROLE | 561 |
| JOGO DE PORCAS (COLUNA DA DIREÇÃO) | 566 |
| JOGO DE REPARO (SENSOR DE NÍVEL DE COMBUSTÍVEL) | 126 |
| JOGO DE RETENTOR | 520<br>534<br>588<br>589 |
| JOGO DE RETENTOR (ABAIXAMENTO DO MOTOR DESLIGADO) | 710 |
| JOGO DE RETENTOR (ACUMULADOR DO FREIO) | 519 |
| JOGO DE RETENTOR (EIXO DA TRANSMISSÃO) | 377 |
| JOGO DE RETENTOR (VALVULA DE ALIVIO) | 728 |
| JOGO DE RETENTOR (VÁLVULA DE DESVIO) | 702 |
| JOGO DE RETENTOR (VÁLVULA DE RETENÇÃO) | 697<br>702 |
| JOGO DE RETENTOR (VÁLVULA PILOTO DE PROPORÇÃO) | 713 |
| JOGO DE RETENTOR (VÁLVULA SOLENÓIDE) | 733<br>736 |
| JOGO DE RETENTOR (VÁLVULA SOLENÓIDE) (VÁLVULA PILOTO DE PROPORÇÃO) | 711 |
| JOGO DE ROLO | 887 |
| JOGO DE TERMINAL (ALTERNADOR) | 134<br>136 |
| JOGO DE TERMINAL (MOTOR DE PARTIDA) | 228 |
| JOGO DE TERMINAL (TRAVA) | 275 |
| JOGO DE VÁLVULA DE AR | 940 |
| JOGO DE VÁLVULA DE AR (ASSENTO DA SUSPENSÃO) | 938 |
| JOGO DE VÁLVULA DE CARREGAMENTO DO FREIO | 536 |
| JUNTA | 677<br>679 |
| JUNTA - REGULADOR (ALOJAMENTO) (ÁGUA, TEMPERATURA DO LÍQUIDO ARREFECEDOR) | 87 |
| JUNTA - TAMPA DO REGULADOR (ALOJAMENTO DO REGULADOR DE TEMPERATURA) | 87 |
| JUNTA CORREDIÇA | 377 |
| JUNTA UNIVERSAL | 396<br>397 |
| JUNTA UNIVERSAL - COMANDO DO ROTOR | 396 |

## L

| Designação | Página |
|---|---|
| LÂMINA DO LIMPADOR DE PÁRA-BRISA | 948 |
| LÂMPADA - FAROL | 172<br>173<br>174<br>175 |
| LÂMPADA - HALOGÊNEO (24 VOLTS, 65 WATTS) | 174 |
| LÂMPADA - HALOGÊNEO (24 VOLTS, 65 WATTS) (FAROL) | 175 |
| LÂMPADA - SINALIZAÇÃO | 176<br>177 |
| LÂMPADA - SINALIZAÇÃO (24 VOLTS) | 185<br>187 |
| LÂMPADA - TETO | 171 |
| LÂMPADA (VERMELHA, VERDE, LED, 12 VOLTS) | 169 |
| LÂMPADA (12 VOLTS, 24 VOLTS, 35 WATTS) | 172<br>173 |
| LÂMPADA (24 VOLTS) | 171<br>256<br>266<br>274<br>796<br>867 |
| LÂMPADA (24 VOLTS, 21 WATTS) | 176<br>178 |
| LÂMPADA (24 VOLTS, 5 WATTS) | 178 |
| LÂMPADA (24 VOLTS, 70 WATTS) | 179 |
| LAVADOR DO VIDRO | 943 |
| LENTE ÂMBAR | 176 |
| LEVANTAMENTO - ARRANJO | 744<br>745 |
| LEVANTAMENTO DO MOTOR | 48<br>49 |
| LIMPADOR DO VIDRO | 948 |
| *LINES GP-CAB HEATER | 842 |
| LUBRIFICAÇÃO - AUTOMÁTICA | 488 |
| LUZ GIRATÓRIA DE ALARME | 179 |
| LUZ TRASEIRA E DE FREIO | 178 |

## M

| Designação | Página |
|---|---|
| MANGUEIRA - COTOVELO | 82<br>105 |
| MÁQUINA | 2 |
| MECANISMO DAS VÁLVULAS | 68 |
| MÓDULO - TECLADO DA CARGA ÚTIL | 796<br>867 |
| MÓDULO - VELOCÍMETRO E TACÔMETRO | 865 |
| MÓDULO ELETRÔNICO DE QUATRO INDICADORES | 864 |


* TRADUÇÃO NÃO DISPONÍVEL NO MOMENTO DA IMPRESSÃO

# ÍNDICE


| Designação | Página |
|---|---|
| MONTAGEM - ALTERNADOR E COMPRESSOR | 50 |
| MONTAGEM - ARO | 358 |
| MONTAGEM - CABINE | 872 |
| MONTAGEM - QUADRO DE LUBRIFICAÇÃO | 956 |
| MONTAGEM - SENSOR DE PRESSÃO | 191 |
| | 193 |
| MONTAGEM - SILENCIADOR | 109 |
| MONTAGEM - TANQUE HIDRÁULICO | 663 |
| MONTAGEM DO EIXO | 357 |
| MOTOR - LIMPADOR DO VIDRO | 869 |
| | 870 |
| | 871 |
| MOTOR - LIMPADOR DO VIDRO (DIANTEIRO) | 789 |
| MOTOR - NÚCLEO | 5 |
| MOTOR - PISTÃO | 660 |
| | 661 |
| MOTOR COMPLETO | 4 |
| MOTOR ELÉTRICO DE PARTIDA | 226 |
| | 227 |
| MOTOR-SOPRADOR (24 VOLTS, A/C, AQUECEDOR) | 782 |
| MOTOR-SOPRADOR (24 VOLTS, A/C, AQUECEDOR) | 818 |


## P


| Designação | Página |
|---|---|
| PAINEL - DISJUNTOR ELÉTRICO AUTOMÁTICO | 194 |
| PAINEL - SUPERIOR | 495 |
| PAINEL- REDUÇÃO DE RUÍDO | 52 |
| | 53 |
| | 491 |
| | 492 |
| | 493 |
| | 494 |
| PAINEL DE INSTRUMENTOS | 878 |
| | 880 |
| | 882 |
| | 884 |
| PAINEL LATERAL | 489 |
| PAINEL MONITOR DE CARGA ÚTIL | 866 |
| | 867 |
| PÁRA-LAMA | 415 |
| | 420 |
| PÁRA-LAMA DIANTEIRO | 418 |
| | 419 |
| PÁRA-SOL | 942 |
| PÁRA-SOL DA CABINE | 942 |
| PEDAL DO GOVERNADOR | 887 |
| | 888 |
| PEGA-MÃO | 816 |
| | 817 |
| PELÍCULA - DISJUNTOR (FUSÍVEL) | 194 |
| PELÍCULA - DISJUNTOR (PAINEL) | 194 |
| PELÍCULA - ENTRADA - SAÍDA | 880 |
| | 884 |
| PISO | 889 |
| PISO-SUPRESSÃO DE RUÍDOS | 808 |
| | 809 |
| PISTÃO E BIELA | 54 |
| | 56 |
| PLACA - NÚMERO DE SÉRIE (TRANSMISSÃO) | 361 |
| | 366 |
| PLACA BASCULANTE | 569 |
| PLACA DE INFORMAÇÃO (COMBUSTIVEL MANUAL) | 115 |
| PLACA DE INSTRUÇÃO (BATERIA) | 140 |
| PLACA DE INSTRUÇÃO (CONDICIONADOR DE AR) | 781 |
| PLACA E DECALQUE | 956 |
| | 958 |
| PLATAFORMA DO OPERADOR | 890 |
| PNEU E ARO | 380 |
| | 381 |
| | 382 |
| | 383 |
| | 384 |
| | 385 |
| | 386 |
| POLIA DA RODA-GUIA | 62 |
| POLIA DO VIRABREQUIM | 61 |
| PONTA - ABRASÃO | 772 |
| PONTA - PENETRAÇÃO | 777 |
| | 778 |
| PONTA PARA APLICAÇÕES GERAIS | 775 |
| | 776 |
| PONTA-SERVIÇO PESADO | 773 |
| | 774 |
| PORTA DA CABINE | 799 |
| | 801 |
| | 802 |
| PORTA DE ACESSO | 412 |
| POSIÇÃO DO SENSOR (LEVANTAMENTO) | 615 |
| | 617 |
| POTENCIÔMETRO (SELEÇÃO DE TEMPERATURA) | 266 |
| PROTEÇÃO - ENGATE E DIREÇÃO | 440 |
| PROTEÇÃO CONTRA VANDALISMO | 958 |
| PROTETOR - CÁRTER DO ÓLEO DO MOTOR | 433 |
| | 434 |
| PROTETOR - DIANTEIRO | 437 |
| PROTETOR - EIXO DE TRANSMISSÃO | 436 |


* TRADUÇÃO NÃO DISPONÍVEL NO MOMENTO DA IMPRESSÃO

# ÍNDICE


| Designação | Página |
|---|---|
| PROTETOR - ILUMINAÇÃO | 442 |
| PROTETOR - JANELA | 812 |
| | 814 |
| PROTETOR - SENSOR | 445 |
| PROTETOR - TANQUE DE COMBUSTÍVEL E HIDRÁULICO | 438 |
| PROTETOR - TREM DE FORÇA | 444 |
| PROTETOR - TUBOS | 443 |
| PROTETOR CONTRA VANDALISMO | 811 |
| PROTETOR INFERIOR | 431 |
| PROTETOR-VIDRO | 810 |
| PURIFICADOR DE AR | 99 |
| | 100 |

## R

| | |
|---|---|
| RADIADOR E VENTILADOR | 92 |
| RÁDIO | 892 |
| | 893 |
| RÁDIO - COMUNICAÇÃO (PRODUCT LINK 121SR) | 148 |
| RECEPTÁCULO-PARTIDA AUXILIAR | 197 |
| RECEPTOR - SECADOR (CONDICIONADOR DE AR) | 840 |
| RECLINAÇÃO - ASSENTO | 894 |
| REDUÇÃO DE RUÍDO | 506 |
| | 509 |
| | 510 |
| REGULADOR DE TEMPERATURA DA ÁGUA (92 GRAUS C) (LÍQUIDO ARREFECEDOR) | 87 |
| REGULADOR DE VOLTAGEM (24 VOLTS) (ALTERNADOR) | 134 |
| | 136 |
| RELÉ (CONJ) (AQUECIMENTO DOS ESPELHOS) | 848 |
| | 853 |
| RELÉ (CONJ) (24 VOLTS) (AQUECIMENTO DOS ESPELHOS) | 860 |
| | 862 |
| RELÉ (CONJ) (24 VOLTS) (ARREFECEDOR DO ÓLEO DO EIXO) | 253 |
| RELÉ (CONJ) (24 VOLTS) (BUZINA) | 256 |
| | 266 |
| | 274 |
| RELÉ (CONJ) (24 VOLTS) (FARÓIS DIANTEIROS) | 274 |
| RELÉ (CONJ) (24 VOLTS) (FARÓIS DIANTEIROS DA CABINE) | 256 |
| | 266 |
| RELÉ (CONJ) (24 VOLTS) (FARÓIS TRASEIROS) | 256 |
| RELÉ (CONJ) (24 VOLTS) (FARÓIS TRASEIROS) | 274 |
| RELÉ (CONJ) (24 VOLTS) (LUZES TRASEIRAS DE OPERAÇÃO) | 266 |
| RESPIRO | 313 |
| | 315 |
| RESPIRO (CÁRTER DO MOTOR) | 73 |
| RETENÇÃO - VIDRO | 908 |
| RETENTOR DO VIRABREQUIM | 44 |
| RETENTOR DO VIRABREQUIM (DIANTEIRO) | 21 |
| RETENTOR (SEPARADOR DE ÁGUA, COMBUSTÍVEL) | 119 |
| RETENTOR (TAMPA, MECANISMO DA VÁLVULA) | 18 |
| | 19 |
| REVESTIMENTO DA CABINE | 829 |
| | 832 |
| | 835 |
| RODA E COMANDO FINAL | 402 |
| ROPS ABERTA | 905 |
| ROPS FECHADA | 895 |
| | 900 |
| ROTOR-SENSOR | 341 |
| RUÍDO - ARRANJO PARA SUPRESSÃO | 505 |

## S

| | |
|---|---|
| *SCREEN GP-CASE DRAIN | 564 |
| SENSOR - POSIÇÃO DE INCLINAÇÃO E MONTAGEM | 200 |
| SENSOR - POSIÇÃO DE LEVANTAMENTO E MONTAGEM | 199 |
| SENSOR - PRESSÃO | 208 |
| | 209 |
| | 210 |
| | 211 |
| | 212 |
| | 213 |
| | 214 |
| SENSOR - PRESSÃO (AR) | 211 |
| SENSOR - TEMPERATURA | 219 |
| | 220 |
| | 221 |
| | 222 |
| SENSOR - TEMPERATURA (ÓLEO HIDRÁULICO) | 281 |
| SENSOR DE VELOCIDADE | 215 |
| | 216 |
| | 217 |
| | 218 |
| SENSOR DE VELOCIDADE (ENTRADA DA TRANSMISSÃO) | 341 |


* TRADUÇÃO NÃO DISPONÍVEL NO MOMENTO DA IMPRESSÃO

# ÍNDICE


| Designação | Página |
|---|---|
| SENSOR DE VELOCIDADE (MAGNÉTICO, ALTO RENDIMENTO) (SAÍDA DA TRANSMISSÃO 1) | 341 |
| SENSOR DE VELOCIDADE (MAGNÉTICO, ALTO RENDIMENTO) (SAÍDA DA TRANSMISSÃO 2) | 341 |
| SENSOR DE VELOCIDADE (MOTOR) | 217 |
| SENSOR DO MOTOR | 202 |
| SEPARADOR DE ÁGUA E BOMBA DE ESCORVA DE COMBUSTÍVEL | 132 |
| SILENCIADOR | 110 |
| SIST. DE ILUMINAÇÃO - PISCA-PISCA GIRATÓRIO DE ADVERTÊNCIA | 189 |
| SIST. ELETRÔNICO - ACESSÓRIO | 163 |
| SISTEMA DE ABSORÇÃO DE IMPACTOS | 595<br>596 |
| SISTEMA DE ABSORÇÃO DE IMPACTOS E TUBOS | 590 |
| SISTEMA DE ILUMINAÇÃO - FARÓIS | 180<br>181<br>182 |
| SISTEMA DE ILUMINAÇÃO - FARÓIS E SINAL | 184<br>185 |
| SISTEMA ELÉTRICO | 162 |
| SISTEMA ELETRÔNICO - MÁQUINA | 164 |
| SISTEMA ELETRÔNICO - MONITOR | 165 |
| SISTEMA ELETRÔNICO - TREM DE FORÇA | 166 |
| SISTEMA ELETRÔNICO-COMUNICAÇÃO | 162 |
| SOFTWARE - COMUNICAÇÃO (PRODUCT LINK 201) | 155 |
| SOFTWARE - MÁQUINA (PRODUCT LINK 121SR) | 148 |
| SOFTWARE - MÁQUINA (SEGURANÇA) | 223 |
| SOLENÓIDE (24 VOLTS, MOTOR DE PARTIDA) | 228 |
| SUPORTE - ADMISSÃO DE AR | 501<br>504 |
| SUPORTE - CONTROLE HIDRÁULICO | 926 |
| SUPORTE - MOTOR E TRANSMISSÃO | 66 |
| SUPORTE - TRANSMISSÃO | 378 |
| SUPORTE DO MOTOR | 65 |
| SUPORTE-SISTEMA ELÉTRICO DO VENTILADOR | 674 |
| SUPRESSÃO DE RUÍDOS - CABINE | 929<br>931<br>934<br>935<br>937 |
| SUSPENSÃO - ASSENTO | 938<br>940 |

## T

| Designação | Página |
|---|---|
| TAMPA | 943 |
| TAMPA - BLOCO DO MOTOR | 12<br>13 |
| TAMPA - BOCAL DE ENCHIMENTO (COMBUSTÍVEL) | 126 |
| TAMPA - BOCAL DE ENCHIMENTO DE ÓLEO DA TRANSMISSÃO | 321<br>958 |
| TAMPA - BOCAL DE ENCHIMENTO (TANQUE HIDRÁULICO) | 677<br>679 |
| TAMPA - BOCAL DE ENCHIMENTO (TREM DE FORÇA) | 339 |
| TAMPA - CAIXA DIANTEIRA | 14<br>15 |
| TAMPA - EMBARQUE | 320 |
| TAMPA - MECANISMO DAS VÁLVULAS | 17<br>18<br>19<br>20 |
| TAMPA - RADIADOR | 676 |
| TAMPA - REDUÇÃO DE RUÍDOS | 16 |
| TAMPA - TURBOALIMENTADOR | 101 |
| TAMPA (BOCAL DE ENCHIMENTO DE ÓLEO) | 70 |
| TAMPÃO | 341 |
| TANQUE - GRAXA | 466<br>512 |
| TANQUE DE COMBUSTÍVEL | 126<br>128<br>129 |
| TANQUE DE EXPANSÃO | 676 |
| TANQUE HIDRÁULICO | 677<br>679 |
| TAPETE | 824<br>832<br>835 |
| TELA - FILTRO | 943 |
| TELA DE SUCÇÃO | 341 |
| TELA FILTRANTE | 564<br>683<br>687<br>690<br>693 |
| TELA FILTRANTE (BOCAL DE ENCHIMENTO) | 677<br>679 |
| TELA FILTRANTE (TANQUE HIDRÁULICO) | 677<br>679 |
| TELA FILTRANTE (TELA DE DRENAGEM DA CAIXA) | 550 |
| TENSOR DA CORREIA | 10 |
| TOLDO - ROPS ABERTA | 790 |


* TRADUÇÃO NÃO DISPONÍVEL NO MOMENTO DA IMPRESSÃO

# ÍNDICE


| Designação | Página |
|---|---|
| TRANSMISSÃO | 395 |
| TREM DE FORÇA | 368 |
| TUBOS - ÁGUA | 82 |
| | 85 |
| | 87 |
| TUBOS - AQUECEDOR DA CABINE | 843 |
| TUBOS - AR | 106 |
| | 107 |
| TUBOS - AR CONDICIONADO | 838 |
| | 840 |
| TUBOS - ARREFECEDOR DE ÓLEO DO EIXO | 345 |
| | 347 |
| TUBOS - ARREFECEDOR DE ÓLEO HIDRÁULICO | 651 |
| TUBOS - ARREFECEDOR DO CONVERSOR DE TORQUE | 355 |
| TUBOS - CILINDRO DE INCLINAÇÃO | 658 |
| TUBOS - CILINDRO DE LEVANTAMENTO | 656 |
| TUBOS - COMBUSTÍVEL | 120 |
| | 122 |
| TUBOS - DIANTEIROS | 642 |
| TUBOS - DIREÇÃO | 549 |
| TUBOS - DIREÇÃO SECUNDÁRIA | 547 |
| TUBOS - FREIO DE SERVIÇO | 540 |
| TUBOS - GRAXA | 474 |
| TUBOS - LUBRIFICAÇÃO | 479 |
| | 481 |
| | 482 |
| | 484 |
| | 485 |
| | 486 |
| TUBOS - ÓLEO DA TRANSMISSÃO | 353 |
| TUBOS - ÓLEO DO MOTOR | 75 |
| TUBOS - ÓLEO DO TURBOALIMENTADOR | 77 |
| TUBOS - ÓLEO HIDRÁULICO | 645 |
| TUBOS - VENTILADOR HIDRÁULICOS | 649 |
| TUBOS DO AQUECEDOR | 843 |
| TUBULAÇÕES - AR DO PÓS-ARREFECEDOR | 105 |
| TUBULAÇÕES - LUBRIFICAÇÃO AUTOMÁTICA | 466 |
| | 468 |
| | 470 |
| | 472 |
| TUBULAÇÕES DE DIAGNÓSTICO | 953 |
| TUBULAÇÕES-INCLINAÇÃO DO CAPÔ | 643 |
| TURBOALIMENTADOR | 112 |

## V

| | |
|---|---|
| *VALVE GP-PUMP CONTROL | 719 |
| VÁLVULA | 575 |
| VÁLVULA - CONTROLE PRINCIPAL | 706 |
| | 708 |
| VÁLVULA - NEUTRALIZADOR DA DIREÇÃO | 587 |
| VALVULA - PARTIDA A ETER | 247 |
| VÁLVULA - VENTILADOR POR DEMANDA | 699 |
| VÁLVULA DA DIREÇÃO | 585 |
| VÁLVULA DE ALÍVIO | 399 |
| | 400 |
| | 579 |
| | 580 |
| | 721 |
| | 722 |
| | 723 |
| | 724 |
| | 725 |
| | 726 |
| | 727 |
| | 728 |
| VÁLVULA DE ALÍVIO (ABERTURA DA EXTREMIDADE DA HASTE DO CILINDRO DE INCLINAÇÃO, TUBULAÇÃO) | 706 |
| VÁLVULA DE ALÍVIO (CILINDRO DE DIREÇÃO - DUAS DIREÇÕES) | 585 |
| VÁLVULA DE ALÍVIO (REFRIGERANTE) | 791 |
| VÁLVULA DE ALÍVIO (TUBULAÇÃO, ABERTURA DA ENTRADA DA HASTE DO CILINDRO AUXILIAR) | 708 |
| VÁLVULA DE ALÍVIO (TUBULAÇÃO, ABERTURA DA EXTREMIDADE DO CABEÇOTE DO CILINDRO DE LEVANT.) | 706 |
| VÁLVULA DE ALÍVIO (TUBULAÇÃO, ENTRADA DA EXTREMIDADE DA CABEÇA DO CILINDRO AUXILIAR) | 708 |
| VÁLVULA DE CONTROLE | 698 |
| VÁLVULA DE CONTROLE DA BOMBA | 577 |
| VÁLVULA DE CONTROLE DE ABAIXAMENTO | 704 |
| VÁLVULA DE CONTROLE DOS FREIOS | 541 |
| VÁLVULA DE CONTROLE PILOTO | 575 |
| | 711 |
| | 713 |
| VÁLVULA DE GÁS | 520 |
| VÁLVULA DE GÁS (ACUMULADOR DO FREIO) | 519 |
| VÁLVULA DE LUBRIFICAÇÃO - DISTRIBUIÇÃO | 515 |
| | 516 |
| | 517 |
| | 518 |
| VÁLVULA DE MODULAÇÃO | 398 |
| VÁLVULA DE PARADA (DRENO DO RADIAOR) | 82 |
| VÁLVULA DE REDUÇÃO DE PRESSÃO | 715 |


* TRADUÇÃO NÃO DISPONÍVEL NO MOMENTO DA IMPRESSÃO

# ÍNDICE


| Designação | Página |
|---|---|
| | 716 |
| | 717 |
| | 718 |
| VÁLVULA DE RETENÇÃO | 130 |
| | 131 |
| | 570 |
| | 571 |
| | 572 |
| | 590 |
| | 697 |
| VÁLVULA DE RETENÇÃO (DERIVAÇÃO DO ARREFECEDOR DE ÓLEO DO EIXO) | 317 |
| VÁLVULA DE RETENÇÃO (DIREÇÃO) | 549 |
| VÁLVULA DE SEPARAÇÃO | 549 |
| | 581 |
| | 582 |
| | 583 |
| | 584 |
| | 730 |
| | 731 |
| | 732 |
| VÁLVULA DE SEQUÊNCIA | 729 |
| VÁLVULA DESVIADORA | 573 |
| | 700 |
| VÁLVULA DISJUNTORA | 126 |
| VÁLVULA DO CONTROLE PRINCIPAL E MONTAGEM | 682 |
| | 686 |
| | 689 |
| | 693 |
| VÁLVULA MANUAL | 710 |
| VÁLVULA PARA TIRAR AMOSTRAS DE FLUIDOS | 79 |
| VÁLVULA PARA TIRAR AMOSTRAS DE FLUIDOS (ÓLEO HIDRÁULICO) | 645 |
| VÁLVULA REVERSORA DO VENTILADO | 702 |
| VÁLVULA SOLENÓIDE | 733 |
| | 735 |
| | 736 |
| VEDADOR (BOMBA D'ÁGUA) | 90 |
| VEDADOR TIPO LABIO | 87 |
| VIDRO DA PORTA | 944 |
| | 946 |
| VIRABREQUIM | 21 |
| VOLANTE | 567 |
| VOLANTE DO MOTOR | 40 |


* TRADUÇÃO NÃO DISPONÍVEL NO MOMENTO DA IMPRESSÃO

# STICHWORTVERZEICHNIS


| Bezeichnung | Seite |
|---|---|
| **A** | |
| ABDECKGLAS (GELB) | 176 |
| ABDECKUNG - FAHRERHAUS | 925 |
| ABFALLBESEITIGUNGSMONTAGE | 3 |
| ABLASS (UMWELTFREUNDLICH) | 338 |
| ABLASSSTOPFEN | 677 679 |
| ABLASSSTOPFEN (MOTORÖL) | 60 |
| ABSENKSTEUERVENTIL | 704 |
| ABSPERRVENTIL (KÜHLERABLASS) | 82 |
| ACHSENANBAUSATZ | 357 |
| ACHSENÖLKÜHLER U. BEFESTIGUNGSTEILE | 317 |
| ACHSENÖLKÜHLERLEITUNGEN | 345 347 |
| ACHSENÖLKÜHLERPUMPE U. BEFESTIGUNGSTEILE | 369 |
| ACHSENÜBERWACHUNG - VERDRAHTUNG | 251 |
| ACHSÖLKÜHLER | 319 |
| ACHSTEMPERATURSCHALTERVERDRAHTUNG | 253 |
| ALARM - DÄMPFER | 153 |
| ANHÄNGUNGS- U. LENKUNGSSCHUTZABDECKUNG | 440 |
| ANSAUGSIEB | 341 |
| ANSCHLUSS, ELEKTR. | 145 |
| ANSCHLUSSKLEMMENSATZ (DREHSTROMGENERATOR) | 134 136 |
| ANSCHLUSSKLEMMENSATZ (DREHSTROMGENERATOR) | 134 |
| ANSCHLUSSKLEMMENSATZ (SPERRE) | 275 |
| ANSCHLUSSKLEMMENSATZ (STARTERMOTOR) | 228 |
| ANTRIEBSSCHUTZ | 444 |
| ANTRIEBSWELLE | 375 |
| ANTRIEBSWELLEN-KEILVERZAHNUNG | 377 |
| ANTRIEBSWELLENVERKLEIDUNG | 436 |
| ANZUGSLEINE | 940 |
| ANZUGSLEINE (SCHWINGSITZ) | 938 |
| ARBEITS- U. SIGNALLEUCHTE | 184 185 |
| ARBEITSGERÄTEELEKTRONIK | 163 |
| ARBEITSGERÄTEPUMPE UND AUFHÄNGUNG | 666 |
| ARBEITSLEUCHTEN | 172 173 174 175 180 181 182 |
| ARM U. LAGER | 737 |
| ARMLEHNE | 788 |
| ÄTHERSTARTHILFE | 224 |
| ÄTHERSTARTHILFEZYLINDER | 224 |
| ÄTHERSTARTVENTIL | 247 |
| AUFKLEBER | 951 |
| AUFKLEBER - AUSGANG (HILFSELEMENT) | 796 867 |
| AUFKLEBER - INFORMATION (PRODUCT LINK RADIO) | 155 |
| AUFKLEBER - INFORMATION (24 V) | 197 956 |
| AUFKLEBER - SICHERUNGSTAFEL | 832 835 |
| AUFKLEBER (AUTODIG) | 153 |
| AUFKLEBER-EINGANG/AUSGANG | 880 884 |
| AUFKLEBER (KONTROLLE) (ABKIPPEN, ZURÜCKNEIGEN) | 597 601 |
| AUFKLEBER (KONTROLLE) (ANHEBEN, SCHWIMMEN, ABSENKEN) | 597 601 |
| AUFKLEBER (KONTROLLE) (AUTODIG) | 153 |
| AUFKLEBER (KONTROLLE) (*JOYSTICK, 2-FUNCTION, AUTODIG) | 605 |
| AUFKLEBER (MASCHINENSICHERHEITSSYSTEM) | 169 |
| AUFKLEBER (*SCRAP HANDLER, LH) | 2 |
| AUFKLEBER (*SCRAP HANDLER, RH) | 2 |
| AUFKLEBER (SICHERHEIT) | 169 |
| AUFKLEBER (SICHERUNGSTAFEL) | 829 |
| AUFKLEBER (STARTSCHLÜSSELSCHALTER) | 169 |
| AUSFÜHRUNG FÜR SCHROTT | 2 |
| AUSGLEICHSBEHÄLTER | 676 |
| AUSPUFFKRÜMMER | 108 |
| AUSRÜSTUNG FÜR STRASSENFAHRT | 198 |
| AUTOM. SCHMIERVORRICHTUNG - STEUERUNGSVERDRAHTUNG | 250 |
| AUTOMATISCHE SCHMIERLEITUNGEN | 466 468 470 472 |
| AUTOMATISCHES LADESYSTEM (AUTODIG) - STEUERUNG | 152 153 |
| **B** | |
| BATTERIE (LITHIUM) | 798 |
| BATTERIE UND VERDRAHTUNG | 140 |
| BATTERIE (12 V) | 140 |


* ÜBERSETZUNG ZUM ZEITPUNKT DER DRUCKLEGUNG NICHT VORHANDEN

# STICHWORTVERZEICHNIS


| Bezeichnung | Seite |
|---|---|
| BEDIENUNGSEINBAUSATZ | 823, 824 |
| BEDIENUNGSELEMENTE - KABELSTRANG | 256 |
| BEDIENUNGSELEMENTE - KABELSTRANG (JOYSTICK) | 605, 608 |
| BEDIENUNGSHEBEL-AUFKLEBER | 880, 884 |
| BEFESTIGUNG - SCHMIERMITTELWARTUNGS-TABELLE | 956 |
| BEFESTIGUNGSSCHRAUBENSATZ (M5X0,8X3,24 MM) | 166 |
| BEFESTIGUNGSSCHRAUBENSATZ (M5X0,8X3,24 MM) (NICHT PROGRAMMIER-TE STEUERUNG) | 160 |
| BEFESTIGUNGSSCHRAUBENSATZ (*M5X0.8X53.24-MM) (NICHT PROGRAMMIERTE STEUERUNG) | 159 |
| BEFESTIGUNGSTEILE (DREHSTROMGENE-RATOR) | 134, 136 |
| BELEUCHTUNGSANLAGE (ROT, GRÜN, LED, 12 V) | 169 |
| BELEUCHTUNGSKABELSTRANG | 295 |
| BELEUCHTUNGSKABELSTRANG (FAHRER-HAUS-ARBEITSSCHEINWERFER) | 267, 275 |
| BELEUCHTUNGSKABELSTRANG (FAHRTRICHTUNGSBLINKER) | 244 |
| BELEUCHTUNGSKABELSTRANG (*FLOOD, SIGNAL LIGHTS, LH) | 297 |
| BELEUCHTUNGSKABELSTRANG (*FLOOD, SIGNAL LIGHTS, RH) | 297 |
| BELEUCHTUNGSKABELSTRANG (RUNDUM-KENNLEUCHTE) | 189 |
| BELEUCHTUNGSKABELSTRANG (VORDERE ARBEITSSCHEINWERFER) | 257 |
| BELEUCHTUNGSVERDRAHTUNG | 295, 296, 297 |
| BETRIEBSBREMSE | 527, 529 |
| BETRIEBSBREMSLEITUNGEN | 540 |
| BLINKERLEUCHTEN | 180, 187 |
| BLINKLEUCHTE | 176, 177 |
| BLINKLEUCHTE (24 V) | 185, 187 |
| BLITZSCHUTZ | 442 |
| BODEN - GERÄUSCHSCHUTZ | 808, 809 |
| *BODY-COOLER BYPASS (*ENGINE OIL) (MOTORÖL) | 75 |
| BREMS- UND RÜCKLEUCHTE | 178 |
| BREMS-KABELBAUM | 281 |
| BREMS-KABELBAUM (BREMSLEUCHTE) | 523 |
| BREMSBELAG-EINBAUSATZ | 526 |
| BREMSDRUCKSPEICHER | 519, 520, 521 |
| BREMSGESTÄNGE | 534 |
| BREMSSTEUERVENTIL | 541 |


## C


| | |
|---|---|
| *CLUTCH GP-ELECTRIC (*AXLE OIL COOLER PUMP) | 369 |
| *COOLANT HEATER LINES | 842 |


## D


| | |
|---|---|
| DÄMPFER | 32 |
| DIAGNOSELEITUNGEN | 953 |
| DICHTUNG | 677, 679 |
| DICHTUNG - REGLER (GEHÄUSE) (WASSER, KÜHLMITTELTEMPERATUR) | 87 |
| DICHTUNG - THERMOSTATABDECKUNG (TEMPERATURREGELGEHÄUSE) | 87 |
| DICHTUNG (VENTILMECHANISMUS-DECKEL) | 18, 19 |
| DICHTUNG (WASSERABSCHEIDER, KRAFTSTOFF) | 119 |
| DICHTUNG (WASSERPUMPE) | 90 |
| DICHTUNGSSATZ | 520, 534, 588, 589 |
| DICHTUNGSSATZ (ABSENKEN BEI DEFEKTEM MOTOR) | 710 |
| DICHTUNGSSATZ (ANTRIEBSWELLE) | 377 |
| DICHTUNGSSATZ (AUSGELEICHSVENTIL) | 728 |
| DICHTUNGSSATZ (BREMSDRUCKSPEI-CHER) | 519 |
| DICHTUNGSSATZ (RÜCKSCHLAGVENTIL) | 697, 702 |
| DICHTUNGSSATZ (SOLENOIDVENTIL) | 733, 736 |
| DICHTUNGSSATZ (SOLENOIDVENTIL) (VORSTEUERPROPORTIONALVENTIL) | 711 |
| DICHTUNGSSATZ (VERTEILERVENTIL) | 702 |
| DICHTUNGSSATZ (VORSTEUERPROPORTIO-NALVENTIL) | 713 |


* ÜBERSETZUNG ZUM ZEITPUNKT DER DRUCKLEGUNG NICHT VORHANDEN

# STICHWORTVERZEICHNIS


| Bezeichnung | Seite |
|---|---|
| DIFFERENTIAL (BEGRENZTER SCHLUPF) | 335 |
| DIFFERENTIAL UND TELLERRAD | 322 |
| | 323 |
| | 325 |
| | 327 |
| | 329 |
| | 331 |
| | 333 |
| DIFFERENZIALSPERRENSCHALTER | 232 |
| DREHKNOPFSCHALTER (AUTOSHIFT STEUERUNG) | 257 |
| | 267 |
| | 274 |
| DREHKNOPFSCHALTER (24 V) (FAHRSCHEINWERFER) | 256 |
| | 266 |
| | 274 |
| DREHKNOPFSCHALTER (24 V) (HINTERER SCHEIBENWISCHER) | 266 |
| DREHKNOPFSCHALTER (24 V) (VARIABLE SCHALTSTEUERUNG) | 267 |
| | 274 |
| DREHKNOPFSCHALTER (24 V) (VARIABLE SCHALTSTEUERUNG) | 257 |
| DREHMOMENTWANDLER | 391 |
| | 393 |
| DREHMOMENTWANDLER-KÜHLERLEITUNGEN | 355 |
| DREHSCHALTER | 243 |
| DREHSCHALTER (AUTOGIG MATERIAL-WAHL) | 153 |
| DREHSTROMGENERATOR | 134 |
| | 136 |
| | 138 |
| | 139 |
| DREHSTROMGENERATOR - UND KOMPRESSORAUFHAENGUNG | 50 |
| DREHZAHLSENSOR | 215 |
| | 216 |
| | 217 |
| | 218 |
| DREHZAHLSENSOR (GETRIEBEEINGABE) | 341 |
| DREHZAHLSENSOR (MAGNETISCH, HOCHLEISTUNG) (GETRIEBEAUSGANG 1) | 341 |
| DREHZAHLSENSOR (MAGNETISCH, HOCHLEISTUNG) (GETRIEBEAUSGANG 2) | 341 |
| DREHZAHLSENSOR (MOTOR) | 217 |
| DREHZAHLWANDLER U. GEHÄUSE | 387 |
| | 389 |
| DRUCKKNOPFSCHALTER (AUTODIG AUSLÖSER) | 153 |

| Bezeichnung | Seite |
|---|---|
| DRUCKKNOPFSCHALTER (GETRIEBE-HERUNTERSCHALTUNG) | 567 |
| DRUCKKNOPFSCHALTER (GETRIEBE HOCHSCHALTEN) | 567 |
| DRUCKKNOPFSCHALTER (HUPE) | 597 |
| | 601 |
| DRUCKLUFTLEITUNGEN | 106 |
| | 107 |
| DRUCKLUFTVENTILSATZ | 940 |
| DRUCKLUFTVENTILSATZ (SCHWINGSITZ) | 938 |
| DRUCKREDUZIERVENTIL | 715 |
| | 716 |
| | 717 |
| | 718 |
| DRUCKSCHALTER | 238 |
| DRUCKSCHALTER (BETRIEBSBREMSEN-ÖL) | 281 |
| DRUCKSCHALTER (FESTSTELLBREMSÖL) | 281 |
| DRUCKSCHALTER (HYDRAULIKÖLFILTER - UMGEHUNG) | 640 |
| DRUCKSCHALTER (HYDRAULIKÖLNEBEN-STROM) | 639 |
| DRUCKSCHALTER (KÜHLMITTEL) | 249 |
| DRUCKSCHALTER (NOTLENKUNGSÖL) | 299 |
| DRUCKSENSOR | 208 |
| | 209 |
| | 210 |
| | 211 |
| | 212 |
| | 213 |
| | 214 |
| DRUCKSENSOR (DRUCKLUFT) | 211 |
| DRUCKSENSOR U. BEFESTIGUNGSTEILE | 191 |
| | 193 |
| DRUCKSPEICHER, HYDRAULISCHE SCHWINGUNGSDÄMPFUNG | 589 |


## E


| | |
|---|---|
| EINBAUSATZ - BREMSLADEVENTIL | 536 |
| EINFÜLLKAPPE (KRAFTSTOFF) | 126 |
| EINFÜLLSTUTZENKAPPE (HYDRAULIK-TANK) | 677 |
| | 679 |
| EINFÜLLSTUTZENKAPPE (KRAFTÜBERTRAGUNG) | 339 |
| ELEKTR. ANLAGE | 162 |
| ELEKTR. UMFORMER (24V - 24V) | 258 |
| ELEKTR. UMFORMER (24V - 24V) | 267 |
| | 275 |
| ELEKTROHYDRAULISCHE STEUERUNG | 597 |
| | 601 |
| | 605 |


* ÜBERSETZUNG ZUM ZEITPUNKT DER DRUCKLEGUNG NICHT VORHANDEN

# STICHWORTVERZEICHNIS


| Bezeichnung | Seite |
|---|---|
| | 608 |
| ELEKTRONIK - MASCHINE | 164 |
| ELEKTRONIK - MONITOR | 165 |
| ELEKTRONIK, KOMMUNIKATION | 162 |
| ELEKTRONISCHER SCHLÜSSEL (SICHERHEIT, GELB) | 223 |
| ELEKTRONISCHER SCHLÜSSEL (SICHERHEIT, GELB) (PROGRAMMIERT) | 169 |
| ELEKTRONISCHER SCHLÜSSEL (SICHERHEIT, GRAU) | 223 |
| ELEKTRONISCHER SCHLÜSSEL (SICHERHEIT, GRAU) (UNBESCHRIFTET) | 169 |
| ENDSCHALTER (BREMSLEUCHTE) | 523 |
| ENTDUNSTER | 73 |
| ENTLÜFTER | 313 |
| | 315 |
| ENTLÜFTER (KURBELGEHÄUSE) | 73 |


## F


| Bezeichnung | Seite |
|---|---|
| FAHRERHAUS - OFFEN MIT ÜBERROLL-SCHUTZ | 874 |
| FAHRERHAUS-KABELBAUM (HAUPT) | 267 |
| | 275 |
| FAHRERHAUS MIT ÜBERROLLSCHUTZ | 789 |
| FAHRERHAUS, SONNENBLENDE | 942 |
| FAHRERHAUSANBAUSATZ | 872 |
| FAHRERHAUSAUSFÜHRUNG MIT GESCHL. ÜBERROLLSCHUTZ | 874 |
| FAHRERHAUSAUSKLEIDUNG | 829 |
| | 832 |
| | 835 |
| FAHRERHAUSBELEUCHTUNG | 171 |
| FAHRERHAUSHEIZUNG | 818 |
| | 820 |
| FAHRERHAUSHEIZUNGSLEITUNGEN | 843 |
| FAHRERHAUSLÄRMDÄMPFUNG | 929 |
| | 931 |
| | 934 |
| | 935 |
| | 937 |
| FAHRERHAUSLUFTFILTER | 803 |
| FAHRERHAUSTÜR | 799 |
| | 801 |
| | 802 |
| FAHRERHAUSVERDRAHTUNG | 256 |
| | 266 |
| | 274 |
| FAHRERPLATTFORM | 890 |
| FAHRERSITZ | 910 |
| | 912 |
| | 913 |
| | 915 |
| | 916 |
| | 917 |
| FAHRERSITZFEDERUNG | 938 |
| | 940 |
| FAHRERSITZVERSTELLER | 779 |
| FAHRGESTELLVERDRAHTUNG | 281 |
| FAHRWERK | 1 |
| FELGE | 372 |
| FELGE (TEILBAR) | 373 |
| | 374 |
| FELGENAUFHÄNGUNG | 358 |
| FELSSCHAUFEL | 753 |
| | 755 |
| | 757 |
| | 759 |
| | 761 |
| | 765 |
| | 766 |
| | 767 |
| | 768 |
| | 769 |
| FESTSTELLBREMSE | 525 |
| | 526 |
| FESTSTELLBREMSGESTÄNGE | 533 |
| FILTERSIEB | 943 |
| FLÜSSIGKEITSSCHALTER | 234 |
| FOLGEVENTIL | 729 |
| FORSTAUSRÜSTUNG | 745 |
| FUSSBREMSGESTÄNGE | 531 |
| | 532 |
| FUSSBREMSSOCKEL | 522 |
| | 523 |
| FUSSMATTE | 824 |
| | 832 |
| | 835 |


## G


| Bezeichnung | Seite |
|---|---|
| GASFÜLLSATZ (LENKSÄULE) | 566 |
| GASPEDAL | 887 |
| | 888 |
| GASVENTIL | 520 |
| GASVENTIL (BREMSDRUCKSPEICHER) | 519 |
| *GAUGE AS-OIL LEVEL (DIPSTICK) | 74 |
| GEBLÄSEMOTOR (*24-VOLT, A/C, HEATER) | 782 |
| GEBLÄSEMOTOR (*24-VOLT, A/C, HEATER) | 818 |
| GEGENGEWICHT | 406 |
| | 407 |
| | 408 |
| | 409 |
| | 410 |
| | 411 |
| GEHÄUSE-EINBAUSATZ (LENKSÄULE) | 566 |


* ÜBERSETZUNG ZUM ZEITPUNKT DER DRUCKLEGUNG NICHT VORHANDEN

# STICHWORTVERZEICHNIS


| Bezeichnung | Seite |
|---|---|
| GESCHWINDIGKEITS- U. DREHZAHLMESSER-MODUL | 865 |
| GETRIEBE | 395 |
| GETRIEBE-KABELBAUM | 313 |
| | 315 |
| GETRIEBEAUFHÄNGUNG | 378 |
| GETRIEBEHYDRAULIK | 313 |
| | 315 |
| GETRIEBEÖLEINFÜLLKAPPE | 321 |
| | 958 |
| GETRIEBEÖLFÜLLSTUTZEN | 339 |
| GETRIEBEPUMPE | 371 |
| GLASDICHTUNG | 908 |
| GLEITSCHIENENBLOCK-EINBAUSATZ | 920 |
| | 921 |
| | 923 |
| GRUNDAUSFÜHRUNG | 2 |
| *GUARD AR-WINDOW | 810 |

## H

| | |
|---|---|
| HALOGENSCHINWERFER (24V)(65W) | 174 |
| HALOGENSCHINWERFER (24V)(65W) (ARBEITSSCHEINWERFER) | 175 |
| HALTEGRIFF | 816 |
| | 817 |
| *HARDWARE GP-LIFT ARM | 740 |
| | 741 |
| | 742 |
| HARDWARE, HINTERRAHMEN | 449 |
| | 450 |
| | 452 |
| | 454 |
| *HARNESS AS-TRANSMISSION CONT (LENKRAD) | 567 |
| HAUPTSTEUERVENTIL | 706 |
| | 708 |
| HEIZUNGSLEITUNGEN | 843 |
| HINTERRAHMEN | 427 |
| HUBSTELLUNGSSENSOR U. BEFESTIGUNGS-TEILE | 199 |
| HUBVORRICHTUNG | 744 |
| | 745 |
| HUBZYLINDER | 626 |
| HUBZYLINDER UND DICHTUNG | 619 |
| HUBZYLINDERLEITUNGEN | 656 |
| HYDRAULIKANORDNUNG (2-VENTIL-HYDRAULIK) | 641 |
| HYDRAULIKANORDNUNG (3-VENTIL-HYDRAULIK) | 641 |
| HYDRAULIKELEKTRONIKVERDRAHTUNG | 287 |
| HYDRAULIKLEITUNGEN | 645 |
| HYDRAULIKLÜFTERLEITUNGEN | 649 |
| HYDRAULIKLÜFTERPUMPE U. BEFESTIGUNG | 665 |
| HYDRAULIKÖLKÜHLERBLOCK | 92 |
| HYDRAULIKÖLKÜHLERLEITUNGEN | 651 |
| HYDRAULIKSTEUERAUFHÄNGUNG | 926 |
| HYDRAULIKTANK | 677 |
| | 679 |
| HYDRAULIKTANK-KABELSTRANG | 281 |
| HYDRAULIKTANK UND ANBAUSATZ | 663 |
| HYDRAULIKZYLINDER | 545 |
| HYDRAULISCHE SCHWINGUNGSDÄMP-FUNG | 595 |
| | 596 |

## I

| | |
|---|---|
| IDENTIFIZIERUNGS-AUFKLEBER (ELEKTRN. STEUERMODUL) | 163 |
| IDENTIFIZIERUNGS-AUFKLEBER (WARNHORN) | 597 |
| | 601 |
| IDENTIFIZIERUNGS-AUFKLEBER (ZUSATZHYDRAULIK) | 601 |
| IDENTIFIZIERUNGS-AUFKLEBER (12 V) | 880 |
| | 884 |
| INFORMATIONSSCHILD (MANUELL KRAFTSTOFF) | 115 |
| INSTRUKTIONS-AUFKLEBER (BETRIEBS-HANDBUCH LESEN) | 169 |
| INSTRUKTIONS-AUFKLEBER (FÜR SITZVERSTELLUNG) | 938 |
| | 940 |
| INSTRUKTIONS-AUFKLEBER (MOTOR-START) | 880 |
| INSTRUKTIONS-AUFKLEBER (MOTOR-START) | 884 |
| INSTRUKTIONS-AUFKLEBER (NOTAUS-GANG) | 832 |
| INSTRUKTIONS-AUFKLEBER (NOTAUS-GANG) | 956 |
| INSTRUKTIONS-AUFKLEBER (WARTUNG) | 605 |
| INSTRUKTIONS-AUFKLEBER (WARTUNG) | 608 |
| INSTRUKTIONS-AUFKLEBER (WARTUNG) | 597 |
| | 601 |
| INSTRUKTONSSCHILD (BATTERIE) | 140 |
| INSTRUKTONSSCHILD (KLIMAANLAGE) | 781 |
| INSTRUMENTENBRETT-AUFKLEBER (LINKS) | 880 |
| | 884 |
| INSTRUMENTENBRETT-AUFKLEBER (MITTE) | 880 |
| INSTRUMENTENBRETT-AUFKLEBER (MITTE) | 884 |


* ÜBERSETZUNG ZUM ZEITPUNKT DER DRUCKLEGUNG NICHT VORHANDEN

# STICHWORTVERZEICHNIS


| Bezeichnung | Seite |
|---|---|
| INSTRUMENTENBRETT-AUFKLEBER (RECHTS) | 880 |
| | 884 |
| INSTRUMENTENTAFEL | 878 |
| | 880 |
| | 882 |
| | 884 |
| INSTRUMENTENTAFEL-KABELSTRANG | 194 |
| **J** | |
| JOYSTICK -STEUERUNG | 613 |
| | 615 |
| | 617 |
| **K** | |
| KABELSTRANG - ACHSE (*AXLE OIL COOLER) | 253 |
| KABELSTRANG - HECKBELEUCHTUNG | 297 |
| KABELSTRANG - HEIZUNG U. KLIMAANLAGE | 782 |
| | 818 |
| KABELSTRANG - LENKUNG (*COLUMN, WHEEL) | 567 |
| KABELSTRANG - VORDERES FAHRWERK | 292 |
| KABELSTRANG (ÜBERBRÜCKUNG) (KRAFTSTOFFENTLÜFTUNGSPUMPE) | 115 |
| KÄLTEMITTELKOMPRESSOR | 791 |
| | 792 |
| KÄLTEMITTELKONDENSATOR U. BEFESTIGUNGSTEILE | 793 |
| KÄLTEMITTELTROCKNER (KLIMAANLAGE) | 840 |
| KAPPE | 943 |
| KAPPE (ÖLEINFÜLLSTUTZEN) | 70 |
| KEILRIEMEN | 369 |
| KIPPHEBELSATZ (LENKSÄULE) | 566 |
| KIPPSCHALTER | 242 |
| | 246 |
| KIPPSCHALTER (ABSTELLUNG AUF STANDEBENE) | 281 |
| KIPPSCHALTER (AUTO LOADING AUSSCHALTEINSTELLUNG) | 153 |
| KIPPSCHALTER (AUTO LOADING MODUSSCHALTER) | 153 |
| KIPPSCHALTER (*AUTOMATIC REVERSING FAN) | 239 |
| KIPPSCHALTER (BEHEIZTE SPIEGEL) | 848 |
| | 853 |
| | 860 |
| | 862 |
| KIPPSCHALTER (BETRIEBSART WÄHLEN) | 258 |
| | 268 |
| | 276 |
| KIPPSCHALTER (FEINMODULATION) | 256 |
| | 268 |
| | 276 |
| KIPPSCHALTER (*FRONT POWER GUARD ACTUATOR) | 303 |
| KIPPSCHALTER (GEBLÄSEGESCHWINDIG-KEIT) | 268 |
| KIPPSCHALTER (GEFAHR) | 244 |
| KIPPSCHALTER (GETRIEBENEUTRALISIER-ÜBERSTEUERUNG) | 257 |
| | 276 |
| KIPPSCHALTER (HAUBENNEIGESTELL-GLIED) | 281 |
| KIPPSCHALTER (HEIZUNG/KLIMAANLAGE, HEIZUNGSWAHL) | 268 |
| KIPPSCHALTER (HUB, NEIGUNG AUSSCHALTUNG) | 268 |
| | 276 |
| KIPPSCHALTER (HYDRAULIKSPERRE) | 258 |
| | 268 |
| | 276 |
| KIPPSCHALTER (*LIFT,TILT KICKOUT) | 257 |
| KIPPSCHALTER (NEUTRALISIERÜBERSTEUE-RUNG) | 268 |
| KIPPSCHALTER (*REAR POWER GUARD ACTUATOR) | 303 |
| KIPPSCHALTER (RUNDUM-KENNLEUCH-TE) | 189 |
| KIPPSCHALTER (SCHNELLWECHSELEINRICH-TUNG) | 242 |
| KIPPSCHALTER (SCHWINGUNGSDÄMP-FUNG) | 240 |
| | 241 |
| KIPPSCHALTER (*TRANSMISSION DIRECTION) | 567 |
| KIPPSCHALTER (VORN, HINTERE ARBEITSSCHEINWERFER) | 182 |
| KIPPSTELLUNGS-SENSOR U. BEFESTI-GUNGSTEILE | 200 |
| KIPPZYLINDER | 628 |
| | 630 |
| | 632 |
| | 633 |
| | 635 |
| | 637 |
| KIPPZYLINDER UND DICHTUNG | 620 |
| | 621 |
| | 622 |
| | 623 |
| | 624 |
| | 625 |
| KLEMMLEISTE | 140 |


* ÜBERSETZUNG ZUM ZEITPUNKT DER DRUCKLEGUNG NICHT VORHANDEN

# STICHWORTVERZEICHNIS


| Bezeichnung | Seite |
|---|---|
| KLIMAANLAGE | 781 |
| | 782 |
| | 785 |
| KLIMAANLAGENDRUCKSPEICHER | 840 |
| KLIMAANLAGENLEITUNGEN | 838 |
| | 840 |
| KLIMAANLAGENVERDRAHTUNG | 249 |
| KNICKGELENK-ANHÄNGUNG | 455 |
| KNICKGELENKSPERRE | 487 |
| KOLBENMOTOR | 660 |
| | 661 |
| KOLBENPUMPE | 561 |
| | 670 |
| KOLBENPUMPENUMLAUFSATZ | 563 |
| | 672 |
| | 673 |
| KRAFTSTOFF- U. HYDRAULIKTANK-SCHUTZ | 438 |
| KRAFTSTOFFABLASS | 114 |
| KRAFTSTOFFEINSPRITZDÜSE | 125 |
| KRAFTSTOFFEINSPRITZPUMPE | 125 |
| KRAFTSTOFFFILTER U. BEFESTIGUNGSTEILE | 115 |
| KRAFTSTOFFILTER | 115 |
| KRAFTSTOFFLEITUNGEN | 120 |
| | 122 |
| KRAFTSTOFFÖRDERPUMPE | 124 |
| KRAFTSTOFFÖRDERPUMPE UND BEFESTIGUNGSTEILE | 124 |
| KRAFTSTOFFSIEB | 126 |
| KRAFTSTOFFSTANDGEBER | 126 |
| KRAFTSTOFFTANK | 126 |
| | 128 |
| | 129 |
| KRAFTÜBERTRAGUNG | 368 |
| KRAFTÜBERTRAGUNGSELEKTRONIK | 166 |
| KRAFTÜBERTRAGUNGSÖLKÜHLERBLOCK (GETRIEBE) | 87 |
| KREUZGELENK | 396 |
| | 397 |
| KREUZGELENK UND LAGER | 377 |
| | 397 |
| KÜHLER UND LÜFTER | 92 |
| KÜHLERBLOCK (AUSSEN) | 93 |
| KÜHLERBLOCK (INNEN) | 93 |
| KÜHLERGRILL | 429 |
| KÜHLERKAPPE | 676 |
| KÜHLSYSTEM - HOHE UMGEBUNGSTEMPERATUREN | 80 |
| KÜHLWASSERLEITUNGEN | 82 |
| | 85 |
| | 87 |
| KÜHLWASSERPUMPE | 90 |
| | 91 |
| KÜHLWASSERPUMPE - HALTETEILE | 81 |
| KÜHLWASSERPUMPEN-REGENERIERSATZ (WASSER) | 90 |
| KURBELWELLE | 21 |
| KURBELWELLEN-RIEMENSCHEIBE | 61 |
| KURBELWELLENDICHTUNG | 44 |
| KURBELWELLENDICHTUNG (VORNE) | 21 |

## L

| | |
|---|---|
| LADELUFTKÜHLERBLOCK | 92 |
| LADELUFTKÜHLERLEITUNGEN | 105 |
| LADERRAHMEN | 424 |
| LAGERSATZ (DREHSTROMGENERATOR) | 134 |
| | 136 |
| LEITUNGEN, VORNE | 642 |
| LEITUNGSVERKLEIDUNG | 443 |
| LENK- U. GETRIEBEPUMPE U. BEFESTIGUNGSTEILE | 557 |
| LENKBETÄTIGUNG | 542 |
| LENKNEUTRALISIERVENTIL | 587 |
| LENKÖLLEITUNGEN | 549 |
| LENKRAD | 567 |
| LENKSÄULE | 566 |
| LENKVENTIL | 585 |
| LENKZYLINDER UND AUFHÄNGUNG | 544 |
| LEUCHTE (12 V, 24 V, 35 W) | 172 |
| | 173 |
| LEUCHTE (24 V) | 171 |
| | 256 |
| | 266 |
| | 274 |
| | 796 |
| | 867 |
| LEUCHTE (24 V, 5 W) | 178 |
| LEUCHTE (24 V, 70 W) | 179 |
| LEUCHTE (24V, 21W) | 176 |
| LEUCHTE (24V, 21W) | 178 |
| *LEVER GP-TILT | 743 |
| *LINES GP-CAB HEATER | 842 |
| *LINES GP-HOOD TILT | 643 |
| LIPPENDICHTUNG | 87 |
| LUFTEINLASS-TRÄGER | 501 |
| | 504 |
| LÜFTERSTEUERUNG | 595 |
| LÜFTERUMKEHRVENTIL | 702 |
| LUFTFILTER (HAUPTELEMENT) | 100 |
| LUFTFILTER (HILFSELEMENT) | 100 |
| LUFTFILTERWARTUNGSANZEIGE | 103 |
| LUFTFILTERWECHSELANZEIGE | 103 |
| LUFTKANAL | 805 |
| LUFTKANAL U. FILTER | 803 |


* ÜBERSETZUNG ZUM ZEITPUNKT DER DRUCKLEGUNG NICHT VORHANDEN

# STICHWORTVERZEICHNIS


| Bezeichnung | Seite |
|---|---|
| LUFTKOMPRESSORSITZ | 780 |
| LUFTREINIGER | 99 |
| | 100 |
| LUFTREINIGERKLEMMEN-EINBAUSATZ | 100 |

## M

| | |
|---|---|
| MAGNETFILTER (ACHSÖLKÜHLER) | 347 |
| MAGNETSCHALTER | 235 |
| | 236 |
| | 237 |
| MAGNETSIEB | 341 |
| MAGNETSPULE (24 V, STARTERMOTOR) | 228 |
| MAGNETSTOPFEN | 307 |
| | 308 |
| | 402 |
| MAGNETVENTIL | 733 |
| | 735 |
| | 736 |
| MASCHINE | 2 |
| MODUL - VIER ELEKTRON. ANZEIGEN | 864 |
| MODULATORVENTIL | 398 |
| MONITOR - KABELBAUM | 302 |
| MONITOR - KABELBAUM (NUTZLASTSTEUERUNG) | 796 |
| | 867 |
| MONITORSTEUERUNG | 795 |
| | 796 |
| | 798 |
| MONITORSTEUERUNG (LICHTREGLER) | 256 |
| | 266 |
| | 274 |
| MOTOR- UND GETRIEBEAUFHÄNGUNG | 66 |
| MOTOR-EINBAUSATZ | 6 |
| MOTOR, KOMPLETT | 4 |
| MOTORAUFHÄNGUNG | 65 |
| MOTORBLOCK | 22 |
| | 23 |
| MOTORBLOCKDECKEL | 12 |
| | 13 |
| MOTORHAUBE UND VERKLEIDUNG | 457 |
| MOTORHAUBEN-KIPPSTELLUNG | 513 |
| MOTORHUBÖSE | 48 |
| | 49 |
| MOTORKABELSTRANG | 290 |
| MOTORKABELSTRANG (EINSPRITZDÜSE, VARIABLES VENTIL) | 8 |
| MOTORKÜHLERBLOCK | 5 |
| MOTORÖLABLASS | 33 |
| MOTORÖLEINFÜLLSTUTZEN | 70 |
| MOTORÖLKÜHLERBLOCK | 87 |
| MOTORÖLLEITUNGEN | 75 |
| MOTORRAUM-SCHUTZVERKLEIDUNG | 496 |

| Bezeichnung | Seite |
|---|---|
| MOTORSENSOR | 202 |
| MOTORSTEUERUNG, ELEKTRON. | 156 |
| MOTORVERDRAHTUNG | 288 |
| | 290 |
| MUTTERNSATZ (LENKSÄULE) | 566 |

## N

| | |
|---|---|
| NEBENANTRIEB | 34 |
| NEIGEZYLINDERLEITUNGEN | 658 |
| NOCKENWELLE | 11 |
| NOCKENWELLENZAHNRAD | 41 |
| NORMALZAHNSPITZE | 775 |
| | 776 |
| NOSPIN-DIFFERENTIAL | 336 |
| | 337 |
| NOTLENKUNG | 565 |
| NOTLENKUNGSLEITUNGEN | 547 |
| NOTLENKUNGSPUMPE UND BEFESTIGUNGSTEILE | 556 |
| NOTLENKUNGSVERDRAHTUNG | 299 |

## O

| | |
|---|---|
| OBERE ABDECKPLATTE | 495 |
| OFFENES FAHRERHAUS MIT ÜBERROLLSCHUTZ | 790 |
| ÖLFILTER | 71 |
| | 340 |
| | 639 |
| | 640 |
| ÖLFILTER (HYDRAULIK) | 640 |
| ÖLFILTER (HYDRAULISCH) | 639 |
| ÖLFILTERELEMENT (HOCHLEISTUNG) | 340 |
| ÖLFILTERSOCKEL | 310 |
| ÖLLEITUNGEN - KRAFTÜBERTRAGUNG | 353 |
| ÖLMESSSTAB | 74 |
| ÖLPUMPEN-BEFESTIGUNGSTEILE | 69 |
| ÖLWANNE | 51 |
| ÖLWANNEN-HALTETEILE | 38 |
| ÖLWANNENSCHRAUBE | 60 |

## P

| | |
|---|---|
| PANZERWANNE | 431 |
| | 433 |
| | 434 |
| PEDALBOLZEN | 887 |
| PENDELACHSE | 305 |
| | 306 |
| | 308 |
| PENDELVENTIL | 549 |
| | 581 |


* ÜBERSETZUNG ZUM ZEITPUNKT DER DRUCKLEGUNG NICHT VORHANDEN

# STICHWORTVERZEICHNIS


| Bezeichnung | Seite |
|---|---|
| | 582 |
| | 583 |
| | 584 |
| | 730 |
| | 731 |
| | 732 |
| PLANETENANTRIEBSGEHÄUSE U. TEILE | 311 |
| PLANETENGETRIEBE | 359 |
| | 364 |
| PLATTFORM | 889 |
| PLEUELSTANGE UND KOLBEN | 54 |
| | 56 |
| POTENTIOMETER (TEMPERATURWAHL) | 266 |
| PROBEENTNAHMEVENTIL | 79 |
| PROBEENTNAHMEVENTIL (HYDRAULIKÖL) | 645 |
| *PUMP & MOTOR GP-HOOD TILT | 664 |
| PUMPE FÜR KRAFTSTOFFENTLÜFTUNG U. WASSERABSCHEIDER | 132 |
| PUMPENANTRIEB | 35 |
| PUMPENANTRIEBSADAPTER | 7 |
| PUMPENSTEUERVENTIL | 577 |

## R

| | |
|---|---|
| RADIO | 892 |
| | 893 |
| RADIO - KABELSTRANG | 826 |
| RADIO - KABELSTRANG (LAUTSPRECHER) | 892 |
| RADIO - KOMMUNIKATION (*PRODUCT LINK 121SR) | 148 |
| RADIOEINBAUSATZ | 826 |
| | 828 |
| RAHMEN - BEFESTIGUNGSTEILE | 446 |
| | 447 |
| | 448 |
| REIFEN UND FELGE | 380 |
| | 381 |
| | 382 |
| | 383 |
| | 384 |
| | 385 |
| | 386 |
| RELAIS (BEHEIZTE SPIEGEL) | 848 |
| | 853 |
| RELAIS (24 V) (ACHSÖLKÜHLER) | 253 |
| RELAIS (24 V) (BEHEIZTE SPIEGEL) | 860 |
| | 862 |
| RELAIS (24 V) (HINT. ARBEITSLEUCHTE) | 266 |
| RELAIS (24 V) (HINTERE ARBEITSLEUCHTEN) | 256 |
| | 274 |
| RELAIS (24 V) (HUPE) | 256 |
| | 266 |
| | 274 |
| RELAIS (24 V) (VORDERE ARBEITSLEUCHTEN) | 274 |
| RELAIS (24 V) (VORDERE FAHRERHAUS-ARBEITSSCHEINWERFER) | 256 |
| | 266 |
| REPARATURSATZ (KRAFTSTOFFSTANDSENSOR) | 126 |
| RICHTUNGSBLINKERSCHALTER | 244 |
| RICHTUNGSSIGNALSCHALTER | 244 |
| RIEMENSPANNER | 10 |
| | 62 |
| ROLLENSATZ | 887 |
| ROTORANTRIEB - KREUZGELENK | 396 |
| ROTORSENSOR | 341 |
| RÜCKFAHRWARNHORN | 248 |
| RÜCKLEHNENVERLÄNGERUNG | 915 |
| RÜCKLEHNENVERLÄNGERUNG (STOFF) | 912 |
| | 917 |
| RÜCKSCHLAGVENTIL (GEGEN VAKUUM) | 126 |
| RÜCKSPIEGEL | 844 |
| | 845 |
| | 846 |
| | 847 |
| | 848 |
| | 850 |
| | 851 |
| | 852 |
| | 853 |
| | 855 |
| | 856 |
| | 857 |
| | 858 |
| | 860 |
| | 862 |
| RUNDUM-KENNLEUCHTE | 179 |
| | 189 |

## S

| | |
|---|---|
| SCHALE - RÜCKENLEHNE | 875 |
| | 876 |
| | 877 |
| SCHALLDÄMPFENDE VERKLEIDUNG | 16 |
| SCHALLDÄMPFER | 110 |
| SCHALLDÄMPFERSTÜTZEN | 109 |
| SCHALLDÄMPFUNG | 52 |
| | 53 |
| | 491 |
| | 492 |
| | 493 |
| | 494 |
| | 505 |


* ÜBERSETZUNG ZUM ZEITPUNKT DER DRUCKLEGUNG NICHT VORHANDEN

# STICHWORTVERZEICHNIS


| Bezeichnung | Seite |
|---|---|
| | 506 |
| | 509 |
| | 510 |
| SCHALTER - UMKEHRLÜFTER | 239 |
| SCHALTER FÜR HYDRAULISCHE SCHWINGUNGSDÄMPFUNG | 240 |
| | 241 |
| SCHALTER, FUSSBETÄTIGT (DIFFERENTIAL-SPERRE) | 232 |
| SCHALTER (VERSTELLBAR) (BREMSLEUCHTENBEGRENZUNG) | 523 |
| SCHALTERKABELSTRANG (DIFFERENTIAL-SPERRE) | 232 |
| SCHALTKNOPFEINBAUSATZ (RADIO) | 892 |
| SCHAUFELSTEUERUNG | 738 |
| SCHAUGLAS | 677 |
| | 679 |
| SCHEIBENSCHUTZ | 812 |
| | 814 |
| SCHEIBENWASCHANLAGE | 943 |
| SCHEIBENWISCHER | 948 |
| SCHEIBENWISCHERARM | 786 |
| | 787 |
| SCHEIBENWISCHERBLATT | 948 |
| SCHEIBENWISCHERMOTOR | 869 |
| | 870 |
| | 871 |
| SCHEIBENWISCHERMOTOR (VORNE) | 789 |
| SCHEIBENWISCHERSCHALTER (24 V) (VORN, INTERVALLSCHALTUNG) | 266 |
| SCHILD UND AUFKLEBER | 956 |
| | 958 |
| SCHLAUCH - KNIESTÜCK | 82 |
| | 105 |
| SCHLÜSSEL | 1 |
| | 321 |
| SCHLÜSSEL (HAUPTSCHALTER) | 233 |
| SCHLÜSSELGRIFF | 803 |
| SCHMIERFETTANK | 466 |
| | 512 |
| SCHMIERLEITUNGEN | 474 |
| | 479 |
| | 481 |
| | 482 |
| | 484 |
| | 485 |
| | 486 |
| SCHMIERÖLVERTEILERVENTIL | 515 |
| | 516 |
| | 517 |
| | 518 |
| SCHMIERPUMPE | 78 |
| SCHMIERSYSTEM, AUTOM. | 488 |
| SCHNEIDMESSER | 770 |
| | 771 |
| SCHNELLBETANKUNGSANSCHLUSS | 113 |
| SCHRÄGKOLBEN-EINBAUSATZ | 561 |
| SCHRAUBE | 341 |
| SCHUTZABDECKUNG | 958 |
| SCHUTZBLECHE | 415 |
| SCHUTZBLECHE (STRASSENAUSRÜSTUNG) | 420 |
| SCHUTZBLECHE, VORNE | 418 |
| | 419 |
| SCHUTZSCHLATERAUFKLEBER (PANEL) | 194 |
| SCHUTZSCHLATERAUFKLEBER (SICHERUNG) | 194 |
| SCHUTZVERKLEIDUNG | 811 |
| SCHWENKSCHEIBE | 569 |
| SCHWINGSITZ | 918 |
| | 919 |
| | 920 |
| | 921 |
| | 923 |
| | 924 |
| SCHWINGUNGSDÄMPFER-DRUCKSAMMLER | 588 |
| SCHWINGUNGSDÄMPFUNG U. LEITUNGEN | 590 |
| SCHWUNGRAD | 40 |
| SCHWUNGRADGEHÄUSE | 44 |
| SCREEN | 564 |
| *SCREEN GP-CASE DRAIN | 564 |
| SEITENANTRIEB U. RAD | 402 |
| SEITENANTRIEB UND RAD | 402 |
| SEITENVERKLEIDUNG | 489 |
| SENSOR, KABELSTRANG (HINTERACHSÖL-TEMPERATUR) | 251 |
| SENSOR, KABELSTRANG (KIPPEN) | 301 |
| SENSOR, KABELSTRANG (*LIFT CYLINDER OIL) | 300 |
| SENSOR, KABELSTRANG (VORDERACHSÖL-TEMPERATUR) | 251 |
| SENSORSCHUTZ | 445 |
| SENSORVERDRAHTUNG | 300 |
| | 301 |
| | 302 |
| SERIENNUMMERNSCHILD (GETRIEBE) | 361 |
| | 366 |
| SERVICE MASCHINE | 223 |
| SICHERHEITSEINBAUSATZ | 168 |
| | 169 |
| SICHERHEITSGURT | 909 |
| | 918 |
| | 919 |
| SICHERUNG (10 A) | 256 |
| | 266 |


* ÜBERSETZUNG ZUM ZEITPUNKT DER DRUCKLEGUNG NICHT VORHANDEN

# STICHWORTVERZEICHNIS


| Bezeichnung | Seite |
|---|---|
| SICHERUNG (15 A) | 274<br>256<br>266<br>274<br>782<br>818 |
| SICHERUNG (20 A) | 256<br>266<br>274 |
| SICHERUNGSBLOCK | 267<br>275 |
| SIEB | 683<br>687<br>690<br>693 |
| SIEB (FÜLLER) | 677<br>679 |
| SIEB (GEHÄUSEABLAUFSIEB) | 550 |
| SIEB (HYDRAULIKTANK) | 677<br>679 |
| SOCKEL FÜR VENTILDECKEL U. EINSPRITZKABELBAUM | 8 |
| SOFTWARE - KOMMUNIKATION (PRODUCT LINK 201) | 155 |
| SOFTWARE - MASCHINE (*PRODUCT LINK 121SR) | 148 |
| SOFTWARE - MASCHINE (SICHERHEIT) | 223 |
| SONNENBLENDE | 942 |
| SPANNUNGSREGLER (24 V) (DREHSTROMGENERATOR) | 134<br>136 |
| SPERRVENTIL | 130<br>131<br>570<br>571<br>572<br>590<br>697 |
| SPERRVENTIL (ACHSÖLKÜHLERNEBENSTROM-VENTIL) | 317 |
| SPERRVENTIL (VIERWEGLENKVENTIL) | 549 |
| STARRACHSE | 305<br>307 |
| STARTERMOTOR | 226<br>227 |
| STARTHILFEANSCHLUSS | 197 |
| STARTSCHALTER (TASTE) | 256<br>266<br>274 |
| STAUBAUSWERFER | 102 |
| STEIGLEITER | 463<br>498<br>499 |
| STELLUNGSSENSOR | 204<br>205<br>206<br>207 |
| STELLUNGSSENSOR (HUB) | 613<br>615 |
| STELLUNGSSENSOR (HUB) | 617 |
| STELLUNGSSENSOR (KIPPEN) | 613<br>615<br>617 |
| STELLUNGSSENSOR (OHNE FEDER) (STEUERHEBEL) | 597<br>601 |
| STEUERHEBEL | 611<br>612 |
| STEUERHEBEL (JOYSTICK) | 617 |
| STEUERKOLBENSATZ | 561 |
| STEUERUNG - NICHT PROGRAMMIERT | 156<br>157<br>158<br>159<br>160<br>161 |
| STEUERUNG - NICHT PROGRAMMIERT (ARBEITSGERÄT) | 256<br>267<br>274 |
| STEUERUNG - NICHT PROGRAMMIERT (CATERPILLAR ÜBERWACHUNGSSYSTEM) | 256<br>267<br>274 |
| STEUERUNG - NICHT PROGRAMMIERT (KRAFTÜBERTRAGUNG) | 256<br>267<br>274 |
| STEUERUNG - NICHT PROGRAMMIERT (PRODUCT LINK 300) | 148 |
| STEUERUNG - NICHT PROGRAMMIERT (SICHERHEIT) | 223 |
| STEUERUNG - NICHT PROGRAMMIERT (SICHERHEITSSYSTEM) | 169 |
| STEUERUNG, ELEKTRON. ANZEIGE (ANZEIGENTAFEL, RECHTS, LINKS) | 268<br>276 |
| STEUERUNG, ELEKTRON. ANZEIGE (ANZEIGETAFEL, LINKS) | 257 |
| STEUERUNG, ELEKTRON. ANZEIGE (ANZEIGETAFEL, MITTE) | 153 |
| STEUERUNG, ELEKTRON. ANZEIGE (ANZEIGETAFEL, MITTE) | 257 |
| STEUERUNG, ELEKTRON. ANZEIGE (ANZEIGETAFEL, RECHTS) | 257 |


* ÜBERSETZUNG ZUM ZEITPUNKT DER DRUCKLEGUNG NICHT VORHANDEN

# STICHWORTVERZEICHNIS


| Bezeichnung | Seite |
|---|---|
| STEUERUNGS-KABELSTRANG (*HEATED MIRROR TIMER RELAY) | 848, 853 |
| STEUERUNGS-KABELSTRANG (*HEATED MIRRORS) | 848, 853, 860, 862 |
| STEUERUNGS-KABELSTRANG (MASCHINENSICHERHEIT) | 169 |
| STEUERUNGS-KABELSTRANG (*POWER GUARD ACTUATOR) | 303 |
| STEUERUNGS-KABELSTRANG (PRODUCT LINK RADIO) | 146, 148 |
| STEUERUNGSEINHEIT, ELEKTRON. FÜR MOTOR UND BEFEST. | 150 |
| STEUERVENTIL | 698 |
| STIRNRAD | 42 |
| STIRNRADGEHÄUSE | 46 |
| STIRNRADGEHÄUSE-HALTETEILE | 36, 37 |
| STIRNRADGEHÄUSEDECKEL | 14, 15 |
| STOSSDÄMPFER-REPARATURSATZ (SCHWINGSITZ) | 938 |
| STROMSCHUTZSCHALTER | 404 |
| *SUPPORT GP-FAN ELECTRICAL | 674 |


## T


| Bezeichnung | Seite |
|---|---|
| TASTENFELDMODUL FÜR WÄGEEINRICHTUNG | 796, 867 |
| TEMPERATURSCHALTER (KÜHLMITTEL) | 782 |
| TEMPERATURSENSOR | 219, 220, 221, 222 |
| TEMPERATURSENSOR (HYDRAULIKÖL) | 281 |
| *TIP GP-EXTRA DUTY | 773, 774 |
| TRENNSCHALTER | 233 |
| TURBOLADER | 112 |
| TURBOLADERÖLLEITUNGEN | 77 |
| TURBOLADERVERKLEIDUNG | 101 |
| TÜRFENSTER | 944, 946 |


## U


| Bezeichnung | Seite |
|---|---|
| ÜBERDRUCKVENTIL | 399, 400, 579, 580, 721, 722, 723, 724, 725, 726, 727, 728 |
| ÜBERDRUCKVENTIL (KÜHLMITTEL) | 791 |
| ÜBERDRUCKVENTIL (LEITUNG F. BODENENDÖFFNUNG D. KIPPZYLINDERS) | 706 |
| ÜBERDRUCKVENTIL (LEITUNG F. BODENENDÖFFNUNG D. ZUSATZHYDRAULIKZYLINDERS) | 708 |
| ÜBERDRUCKVENTIL (LEITUNG F. STANGENENDÖFFNUNG D. ZUSATZHYDRAULIKZYLINDERS) | 708 |
| ÜBERDRUCKVENTIL (LEITUNG, KIPPZYLINDER-STANGENSEITENÖFFNUNG) | 706 |
| ÜBERDRUCKVENTIL (UMSCHALTVENTIL - LENKZYLINDER) | 585 |
| ÜBERROLL-SCHUTZDACH | 905 |
| ÜBERROLL-SCHUTZKABINE | 895, 900 |
| ÜBERTRAGUNGSEINBAUSATZ | 167 |
| ÜBERTRAGUNGSSTEUERUNG U. BEFESTIGUNG | 146, 148 |
| ÜBERTRAGUNGSSTEURUNG | 155 |
| ÜBERTRAGUNGSSTEURUNG (PRODUCT LINK 201) | 146 |
| UMGEHUNGSSCHALTER | 231 |
| UMGEHUNGSSCHALTER (ÖLFILTER - KRAFTÜBERTRAGUNG) | 310 |
| UMLEITVENTIL | 573, 700 |
| UNIVERSALSCHAUFEL | 748, 749, 751, 763, 764 |
| UNTERBRECHER - INSTRUMENTENTAFEL | 194 |
| UNTERBRECHER (105 A) (DREHSTROMGENERATOR) | 194 |
| UNTERBRECHER (15 A) (FAHRSCHEINWERFER) | 195 |
| UNTERBRECHER (15 A) (KLIMAANLAGE, HEIZUNGSSTEUERUNG) | 258 |
| UNTERBRECHER (15 A) (STELLGLIED - ELEKTRISCH BETRIEBENE SCHUTZVORRICHTUNG) | 303 |


* ÜBERSETZUNG ZUM ZEITPUNKT DER DRUCKLEGUNG NICHT VORHANDEN

# STICHWORTVERZEICHNIS


| Bezeichnung | Seite |
|---|---|
| UNTERBRECHER (20 A) (UNGESCHALTETER BATTREIESTROM ZUM FAHRERHAUS) | 195 |
| UNTERBRECHER (50 A) (STARTEN) | 194 |
| UNTERBRECHER (60 A) (HAUBENNEIGE-STELLGLIED) | 194 |
| UNTERBRECHER (80 A) (HAUPTUNTERBRE-CHER) | 194 |
| UNTERLEGSCHEIBE (EINSCHL. 17 BEILAGSCHEIBEN) | 561 |

## V

| | |
|---|---|
| *VALVE GP-PUMP CONTROL | 719 |
| VENTIL | 575 |
| VENTIL - TEMPERATURGESTEUERTER LÜFTER | 699 |
| VENTIL, MECH. | 710 |
| VENTIL UND BEFESTIGUNGSTEILE - HAUPTSTEUERUNG | 682<br>686<br>689<br>693 |
| VENTILDECKEL | 17<br>18<br>19<br>20 |
| VENTILKABELSTRANG (SITZ LUFTKOMPRES-SOR) | 938<br>940 |
| VENTILKIPPHEBEL | 63 |
| VENTILMECHANISMUS-HALTETEILE | 39 |
| VENTILSTEUERUNG | 68 |
| VERDRAHTUNG, VORNE | 292 |
| VERDRAHTUNGSKABELBAUM (WARTUNGSWERKZEUG) | 257<br>267<br>274 |
| VERKLEIDUNGEN, VORN | 437 |
| VERSANDDECKEL | 320 |
| VERSTELLBARER SITZ | 894 |
| VERTEILERGETRIEBEANTRIEB | 341 |
| VERTEILERGETRIEBEGEHÄUSE | 312 |
| VORDERRAHMEN | 421 |
| VORHÄNGESCHLOSS | 958 |
| VORSTEUERVENTIL | 575<br>711<br>713 |

## W

| | |
|---|---|
| WÄGEEINRICHTUNG | 867 |
| WÄGEEINRICHTUNG - MONITOR | 866 |
| WÄRMEISOLIERUNG | 104 |
| WÄRMESCHIRM | 111 |
| WARNAUFKLEBER (*JUMP START, READ OMM) | 197 |
| WARNAUFKLEBER (PRODUCT LINK RADIO, NACD) | 155<br>167 |
| WARNAUFKLEBER (PRODUCT LINK RADIO, NICHT NACD) | 155<br>167 |
| WARNHORN, ELEKTR. | 822 |
| WARNVORRICHTUNG | 133 |
| WASSERABSCHEIDER- U. KRAFTSTOFFIL-TER | 119 |
| WASSERABSCHEIDER U. KRAFTSTOFFENT-LÜFTUNGSPUMPE | 132 |
| WASSERABSCHEIDER UND KRAFTSTOFFIL-TER (HAUPTELEMENT) | 119 |
| WASSERPUMPENFILTER | 90 |
| WASSERTEMPERATURREGLER (92 GRAD) (KÜHLMITTEL) | 87 |
| *WIRING GP-WASTE HANDLER | 303 |

## Z

| | |
|---|---|
| ZAHNHALTER | 746<br>748 |
| ZAHNRADPUMPE | 559<br>667<br>669 |
| ZAHNRADPUMPE (ACHSÖLKÜHLER) | 369 |
| ZAHNSPITZE, SCHARF | 777<br>778 |
| ZAHNSPITZE, VERSTÄRKT | 772 |
| ZIGARETTENANZÜNDER (12 V) | 257<br>267<br>274 |
| ZUGANGSKLAPPE | 412 |
| ZYLINDERBLOCKSCHRAUBE | 58 |
| ZYLINDERKOPF | 25<br>26<br>27<br>30<br>31 |
| ZYLINDERKOPF-HALTETEILE | 31 |
| ZYLINDERKOPFSTOPFEN | 59 |


* ÜBERSETZUNG ZUM ZEITPUNKT DER DRUCKLEGUNG NICHT VORHANDEN

# MACHINE ARRANGEMENT

## 225-5538 CHASSIS AR

**S/N: JMS1-UP**

**PART OF 225-5537 GENERAL AR**

**SMCS-7000** **i02278895**

| NOTE | PART NUMBER | QTY | PART NAME 1 2 3 4 5 6 (PRODUCT LEVEL) | SEE PAGE |
|---|---|---|---|---|
| Y | *175-4197* | 1 | CONTROL GP-BUCKET | 738 |
| Y | *191-1265* | 1 | CONTROL GP-SERVICE BRAKE | 534 |
| Y | *234-3094* | 1 | COUNTERWEIGHT GP | 406 |
| Y | *110-8118* | 1 | CYLINDER & MTG GP-STEERING | 544 |
| Y | *235-5341* | 1 | DOOR GP-ACCESS (BATTERY) | 412 |
| Y | *231-3500* | 1 | FENDER GP | 415 |
| Y | *245-7477* | 1 | FRAME AS-LOADER | 424 |
| Y | *228-0909* | 1 | FRAME AS-REAR | 427 |
| Y | *175-4201* | 1 | GUARD GP-CRANKCASE | 433 |
| Y | *210-1759* | 1 | GUARD GP-FRONT | 437 |
| Y | *110-8050* | 1 | HITCH GP-ARTICULATING | 455 |
| Y | *234-9757* | 1 | HOOD & GUARD GP | 457 |
| Y | *235-5817* | 1 | INDICATOR GP-AIR FILTER CHANGE | 103 |
| Y | *231-3498* | 1 | LADDER GP | 463 |
| Y | *231-5909* | 1 | LINES GP-AFTERCOOLER AIR | 105 |
| Y | *235-5326* | 1 | LINES GP-CAB HEATER | 843 |
| Y | *235-5300* | 1 | LINES GP-FUEL | 122 |
| Y | *247-7600* | 1 | LINES GP-GREASE | 474 |
| Y | *232-4929* | 1 | LINES GP-HYDRAULIC OIL COOLER | 651 |
| Y | *171-4656* | 1 | LINES GP-STEERING | 549 |
| Y | *232-6403* | 1 | LINES GP-TORQUE CONV COOLER | 355 |
| Y | *233-0699* | 1 | LINES GP-WATER (RADIATOR) | 82 |
| Y | *115-4788* | 1 | LINK GP-STEERING FRAME LOCK | 487 |
| Y | *165-4104* | 1 | MOUNTING GP-LUBRICATION CHART | 956 |
| Y | *251-4870* | 1 | PANEL GP-SIDE | 489 |
| Y | *235-5835* | 1 | PLATE & FILM GP | 956 |
| Y | *231-3499* | 1 | PLATFORM GP-OPERATOR | 890 |
| Y | *232-3321* | 1 | RADIATOR & FAN GP | 92 |
| Y | *234-9563* | 1 | SHIELD GP-ENGINE COMPARTMENT | 496 |
| Y | *234-9507* | 1 | SUPPORT GP-AIR INLET | 501 |
| Y | *232-0281* | 1 | SUPPORT GP-ENGINE & TMSN | 66 |
| Y | *233-6074* | 1 | TANK GP-FUEL | 126 |
| Y | *119-5783* | 1 | WASHER GP-WINDOW | 943 |
| | *6V-1970* | 1 | LITERATURE GP | |
| | **5P-7958** | 1 | SLEEVE-CABLE SPLICE | |
| | **5P-8500** | 2 | KEY | |
| | **7F-3400** | 1 | BAG-POLYETHYLENE | |

Y-SEPARATE ILLUSTRATION

**<END>**

# MACHINE ARRANGEMENT

## 225-5537 GENERAL AR

**S/N: JMS1-UP**

**SMCS-7000** i02060264

| NOTE | PART NUMBER | QTY | PART NAME 1 2 3 4 5 6 (PRODUCT LEVEL) | SEE PAGE |
|---|---|---|---|---|
| Y | 225-5538 | 1 | CHASSIS AR | 1 |
| Y | 225-5539 | 1 | ELECTRICAL AR | 162 |
| Y | 225-0992 | 1 | ENGINE AR-COMPLETE | 4 |
| Y | 235-1303 | 1 | HYDRAULIC AR-2 VALVE | 641 |
| Y | 226-9644 | 1 | INSTALLATION AR-ENGINE | 6 |
| Y | 232-1392 | 1 | OPERATOR AR-ENCLOSED ROPS | 874 |
| Y | 232-6585 | 1 | POWER TRAIN AR | 368 |

Y-SEPARATE ILLUSTRATION

**<END>**

## 266-1620 MACHINE AR–VALUE PACKAGE

**S/N: JMS1-UP**

**AN ATTACHMENT**

**SMCS-7000** i02284053

| NOTE | PART NUMBER | QTY | PART NAME 1 2 3 4 5 6 (PRODUCT LEVEL) | SEE PAGE |
|---|---|---|---|---|
| Y | 233-9781 | 1 | CONTROL AR-AUTODIG | 152 |
| Y | 267-3803 | 1 | CONTROL AR-RIDE (2-VALVE) | 596 |
| Y | 233-9750 | 1 | COOLER AR-AXLE OIL | 319 |
| Y | 191-0154 | 1 | INSTALLATION GP-RADIO (CB) | 826 |
| Y | 263-8419 | 1 | LIGHTING AR-SIGNAL | 180 |
| Y | 235-8560 | 1 | LIGHTING GP-FLOOD (4-LAMP, CAB) | 182 |
| Y | 245-9432 | 1 | LUBRICATION AR-AUTOMATIC | 488 |
| Y | 109-8203 | 1 | MIRROR GP-REAR VIEW | 844 |
| Y | 238-6681 | 1 | MONITOR AR-PAYLOAD | 866 |
| Y | 227-9981 | 1 | RADIO GP (AM/FM CASSETTE) | 893 |
| Y | 245-8412 | 1 | TANK GP-FUEL | 128 |
| Y | 131-2633 | 1 | VISOR GP-CAB | 942 |

Y-SEPARATE ILLUSTRATION

**<END>**

## 266-5821 SCRAP HANDLING AR

**S/N: JMS1-UP**

**AN ATTACHMENT**

**SMCS-7000** i02284057

| NOTE | PART NUMBER | QTY | PART NAME 1 2 3 4 5 6 (PRODUCT LEVEL) | SEE PAGE |
|---|---|---|---|---|
| Y | 243-2046 | 1 | WASTE HANDLING AR | 3 |
| | **262-9893** | 1 | FILM-STRIPE (SCRAP HANDLER, RH) | |
| | **262-9894** | 1 | FILM-STRIPE (SCRAP HANDLER, LH) | |

Y-SEPARATE ILLUSTRATION

**<END>**

# MACHINE ARRANGEMENT

## *243-2046* WASTE HANDLING AR

**S/N: JMS1-UP**

**PART OF 266-5821 SCRAP HANDLING AR**

**AN ATTACHMENT**

**SMCS-7000** **i02290298**

| NOTE | PART NUMBER | QTY | PART NAME 1 2 3 4 5 6 (PRODUCT LEVEL) | SEE PAGE |
|---|---|---|---|---|
| Y | *243-2045* | 1 | ACTUATOR GP-POWER GUARD | 404 |
| Y | *256-4728* | 1 | COUNTERWEIGHT GP | 411 |
| Y | *246-8119* | 1 | FENDER GP-FRONT | 419 |
| Y | **252-5680** | 1 | FRAME AS-FRONT | 421 |
| Y | *243-2048* | 1 | GUARD GP-BOTTOM | 431 |
| Y | *2Q-7713* | 1 | GUARD GP-DRIVE SHAFT | 436 |
| Y | *240-8591* | 1 | GUARD GP-FUEL & HYDRAULIC TANK | 438 |
| Y | *243-2016* | 1 | GUARD GP-HITCH & STEERING | 440 |
| Y | *262-1379* | 1 | GUARD GP-LIGHTING | 442 |
| Y | *245-9934* | 1 | GUARD GP-SENSOR (AXLE OIL TEMPERATURE) | 445 |
| Y | **249-3199** | 1 | HARDWARE GP-REAR FRAME (WASTER HANDLER) | 452 |
| Y | *189-8057* | 1 | SHROUD GP-CAB (LOWER FRONT) | 925 |
| Y | *254-3311* | 1 | STEP GP (REAR) | 499 |
| Y | *247-3027* | 1 | SUPPORT GP-TRANSMISSION | 378 |
| | **262-9889** | 1 | FILM-IDENTIFICATION (WASTE HANDLER, RH) | |
| | **262-9890** | 1 | FILM-IDENTIFICATION (WASTE HANDLER, LH) | |

Y-SEPARATE ILLUSTRATION

**<END>**

# ENGINE ARRANGEMENT

## 225-0992 ENGINE AR-COMPLETE

**S/N: LHX1-UP**
**256 BRAKE KW (343 BHP) AT 2000 RPM**
**PART OF 225-5537 GENERAL AR**

**SMCS-1000** i02251625

| NOTE | PART NUMBER | QTY | PART NAME 1 2 3 4 5 6 (PRODUCT LEVEL) | SEE PAGE |
|---|---|---|---|---|
| Y | 126-7631 | 1 | CONNECTION GP-ELECTRICAL | 145 |
| Y | 235-1521 | 1 | CONTROL & MTG GP-ENGINE ELEK | 150 |
| Y | 140-9746 | 1 | COVER GP-CYLINDER BLOCK | 12 |
| Y | 228-7083 | 1 | COVER GP-CYLINDER BLOCK | 13 |
| Y | 120-9847 | 1 | COVER GP-FRONT HOUSING (FRONT) | 14 |
| Y | 159-6159 | 1 | COVER GP-FRONT HOUSING (CAM, IDLER GEAR) | 15 |
| Y | 230-0104 | 1 | COVER GP-SOUND SUPPRESSION | 16 |
| Y | 237-1964 | 1 | COVER GP-TURBOCHARGER | 101 |
| Y | 239-5223 | 1 | COVER GP-VALVE MECHANISM | 20 |
| Y | 4P-5893 | 1 | DAMPER GP | 32 |
| Y | 206-4227 | 1 | DRIVE GP-ACCESSORY | 34 |
| Y | 6I-3638 | 1 | DRIVE GP-PUMP | 35 |
| Y | 241-5929 | 1 | ENGINE AR-CORE | 5 |
| Y | 108-9382 | 1 | FASTENER GP-FRONT HOUSING (STUD, WASHER, NUT) | 37 |
| Y | 4P-6846 | 1 | FASTENER GP-FRONT HOUSING | 36 |
| Y | 217-0683 | 1 | FASTENER GP-OIL PAN | 38 |
| Y | 4N-2481 | 1 | FASTENER GP-OIL PUMP MOUNTING | 69 |
| Y | 109-2373 | 1 | FASTENER GP-WATER PUMP | 81 |
| Y | 255-2753 | 1 | FILTER & MTG GP-FUEL | 115 |
| Y | 238-5454 | 1 | FILTER GP-ENGINE OIL | 71 |
| Y | 4P-6817 | 1 | FLYWHEEL GP | 40 |
| Y | 237-1965 | 1 | FUMES DISPOSAL GP | 73 |
| Y | 160-2612 | 1 | HOUSING GP-FLYWHEEL | 44 |
| Y | 243-5786 | 1 | HOUSING GP-FRONT | 46 |
| Y | 111-2088 | 1 | LIFTING GP-ENGINE (REAR) | 48 |
| Y | 111-2355 | 1 | LIFTING GP-ENGINE (FRONT) | 49 |
| Y | 126-0081 | 1 | LINES GP-AIR (INLET ELBOW) | 106 |
| Y | 219-4443 | 1 | LINES GP-ENGINE OIL | 75 |
| Y | 235-3231 | 1 | LINES GP-FUEL | 120 |
| Y | 262-9967 | 1 | LINES GP-TURBOCHARGER OIL | 77 |
| Y | 263-9091 | 1 | LINES GP-WATER | 87 |
| Y | 225-0998 | 1 | MANIFOLD GP-EXHAUST | 108 |
| Y | 188-1754 | 1 | MOUNTING GP-ALTERNATOR & COMPR | 50 |
| Y | 233-8673 | 1 | MOUNTING GP-MUFFLER | 109 |
| Y | 239-5527 | 1 | PAN GP-OIL | 51 |
| Y | 174-3874 | 1 | PANEL GP-SOUND SUPPRESSION (ENGINE, LH) | 52 |
| Y | 227-9980 | 1 | PANEL GP-SOUND SUPPRESSION (FRONT HOUSING) | 53 |
| Y | 230-5379 | 1 | PLUG GP-CYLINDER BLOCK | 58 |
| Y | 230-5378 | 1 | PLUG GP-CYLINDER HEAD | 59 |
| Y | 239-5528 | 1 | PLUG GP-OIL PAN | 60 |
| Y | 150-4279 | 1 | PUMP & MTG GP-FUEL TRANSFER | 124 |
| YR | **161-4113** | 1 | PUMP GP-ENGINE OIL | 78 |
| Y | 174-5986 | 1 | PUMP GP-WATER | 91 |
| Y | 231-1973 | 1 | SENSOR GP-ENGINE | 202 |
| Y | 232-4648 | 1 | SUPPORT GP-ENGINE | 65 |
| Y | 262-0974 | 1 | TURBOCHARGER GP | 112 |
| Y | 243-1547 | 1 | WIRING GP-ENGINE | 290 |
| | 226-8790 | 1 | ELECTRONICS GP-ENGINE RATINGS | |
| | | | | |
| | | | GASKET KITS WILL BE PROVIDED WHEN AVAILABLE | |

R-REMFG PART MAY BE AVAILABLE
Y-SEPARATE ILLUSTRATION

# ENGINE ARRANGEMENT

## *241-5929* ENGINE AR-CORE

**S/N: LHX1-UP**

**PART OF 225-0992 ENGINE AR-COMPLETE**

**SMCS-1000** **i02040797**

| NOTE | PART NUMBER | QTY | PART NAME 1 2 3 4 5 6 (PRODUCT LEVEL) | SEE PAGE |
|---|---|---|---|---|
| Y | *234-5005* | 1 | BASE GP-VALVE COVER & INJ HARN | 8 |
| Y | *234-7935* | 1 | CAMSHAFT GP | 11 |
| Y | *223-9731* | 1 | CRANKSHAFT GP | 21 |
| Y | **223-9252** | 1 | CYLINDER BLOCK GP | 23 |
| Y | *235-2974* | 1 | CYLINDER HEAD GP | 31 |
| Y | *109-1657* | 1 | FASTENER GP-VALVE MECHANISM | 39 |
| Y | *208-9490* | 1 | GEAR GP-FRONT | 42 |
| Y | *229-2863* | 6 | PISTON & ROD GP | 54 |
| Y | *235-1401* | 6 | PUMP GP-FUEL INJECTION | 125 |
| Y | *148-7482* | 1 | VALVE MECHANISM GP | 68 |

Y-SEPARATE ILLUSTRATION

# ENGINE ARRANGEMENT

## *226-9644* INSTALLATION AR-ENGINE

**S/N: JMS1-UP**

**PART OF 225-5537 GENERAL AR**

**SMCS-1000** **i02279246**

| NOTE | PART NUMBER | QTY | PART NAME 1 2 3 4 5 6 (PRODUCT LEVEL) | SEE PAGE |
|---|---|---|---|---|
| Y | *233-7181* | 1 | AIR CLEANER GP | 99 |
| Y | *236-6713* | 1 | ALTERNATOR GP-CHARGING (24-VOLT, 80-AMPERE) | 139 |
| Y | *190-6562* | 1 | BELT TENSIONER GP | 10 |
| Y | *196-5763* | 1 | DRAIN GP-ENGINE OIL | 33 |
| Y | *233-8672* | 1 | DRAIN GP-FUEL | 114 |
| Y | *232-0358* | 1 | DUST EJECTOR GP | 102 |
| Y | *187-6234* | 1 | FILLER GP-ENGINE OIL | 70 |
| Y | *185-1572* | 1 | GAUGE GP-OIL LEVEL (DIPSTICK) | 74 |
| Y | *232-0357* | 1 | LINES GP-AIR | 107 |
| Y | *233-1509* | 1 | LINES GP-WATER (TURBOCHARGER) | 85 |
| Y | *232-0356* | 1 | MUFFLER GP | 110 |
| Y | *170-1757* | 1 | PULLEY GP-CRANKSHAFT | 61 |
| Y | *172-0988* | 1 | PULLEY GP-IDLER | 62 |
| Y | *255-4958* | 1 | SHIELD GP-HEAT | 111 |
| Y | *180-2435* | 1 | STARTING MOTOR GP-ELECTRIC | 226 |
| Y | *263-7357* | 1 | VALVE GP-FLUID SAMPLING (FUEL, AIR PURGE) | 79 |

Y-SEPARATE ILLUSTRATION

# BASIC ENGINE

## *133-9907* ADAPTER GP-PUMP DRIVE

**S/N: LHX1-UP**

**PART OF 6I-3638 DRIVE GP-PUMP**

**SMCS-3108** **i01152889**

| NOTE | REF NO | GRAPHIC REF | PART NUMBER | QTY | PART NAME 1 2 3 4 5 6 (PRODUCT LEVEL) | SEE PAGE |
|---|---|---|---|---|---|---|
| | 1 | 1 | **1B-3867** | 2 | BALL BEARING | |
| | 2 | 1 | **4F-7957** | 3 | BOLT (1/4-20X.875IN) | |
| | 3 | 1 | **6I-4575** | 1 | GEAR (34 TEETH) | |
| | 4 | 1 | **9X-2038** | 3 | WASHER (2MM THK) | |
| | 5 | 1 | **133-9906** | 1 | ADAPTER | |
| | 6 | 1 | **1H-8647** | 1 | RING-SNAP | |

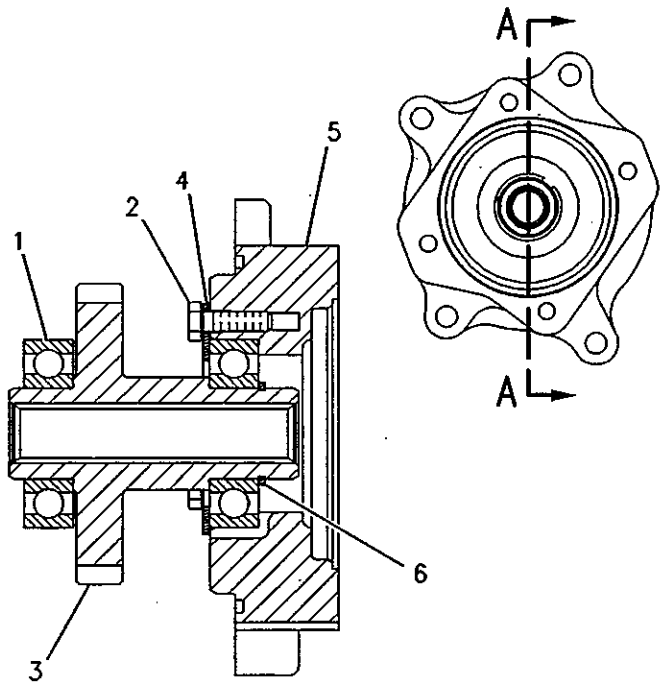


VIEW A-A

GRAPHIC #1 **<END>** g00263602

# BASIC ENGINE

## *234-5005* BASE GP-VALVE COVER & INJ HARN

**S/N: LHX1-UP**

**PART OF 241-5929 ENGINE AR-CORE**

**SMCS-1120, 1408** **i02230630**

| NOTE | REF NO | GRAPHIC REF | PART NUMBER | QTY | PART NAME 1 2 3 4 5 6 (PRODUCT LEVEL) | SEE PAGE |
|---|---|---|---|---|---|---|
| | 1 | 1 | **123-3202** | 3 | STRAP-CABLE | |
| | 2 | 1 | **6V-0128** | 1 | SEAL-CONNECTOR | |
| | 3 | 1 | **7E-6508** | 6 | CAP AS | |
| | 4 | 1 | **9L-8925** | 14 | BOLT (5/16-18X1.25-IN) | |
| | 5 | 1 | **122-1472** | 1 | BOLT (5/16-18X2.36-IN) | |
| | 6 | 1 | **177-4152** | 1 | BASE-VALVE COVER | |
| | 7 | 1 | **234-5002** | 1 | HARNESS AS-ENGINE (INJECTOR, VARIABLE VALVE) | |
| | | 1 | **103-8134** | 1 | KIT-RECEPTACLE (12-PIN) (INCLUDES RECEPTACLE AS & WEDGE) | |
| | 8 | 1 | **100-5218** | 3 | CLIP | |
| | 9 | 1 | **100-5219** | 3 | CLIP | |
| | 10 | 1 | **4F-7957** | 2 | BOLT (1/4-20X0.875-IN) | |
| | 11 | 1 | **5P-0537** | 8 | WASHER-HARD (7.2X14.5X2-MM THK) | |
| | 12 | 1 | **8H-3127** | 6 | BOLT (1/4-20X3/4-IN) | |
| BD | 13 | 1 | **5P-5678** | | SEAL | |
| J | 14 | 1 | **123-3202** | 3 | STRAP-CABLE | |

B-USE AS REQUIRED
D-ORDER BY THE METER
J-ONLY FOR USE WITH ACTUATOR GROUP-EVA

## 234-5005 BASE GP-VALVE COVER & INJ HARN (contd.) i02230630

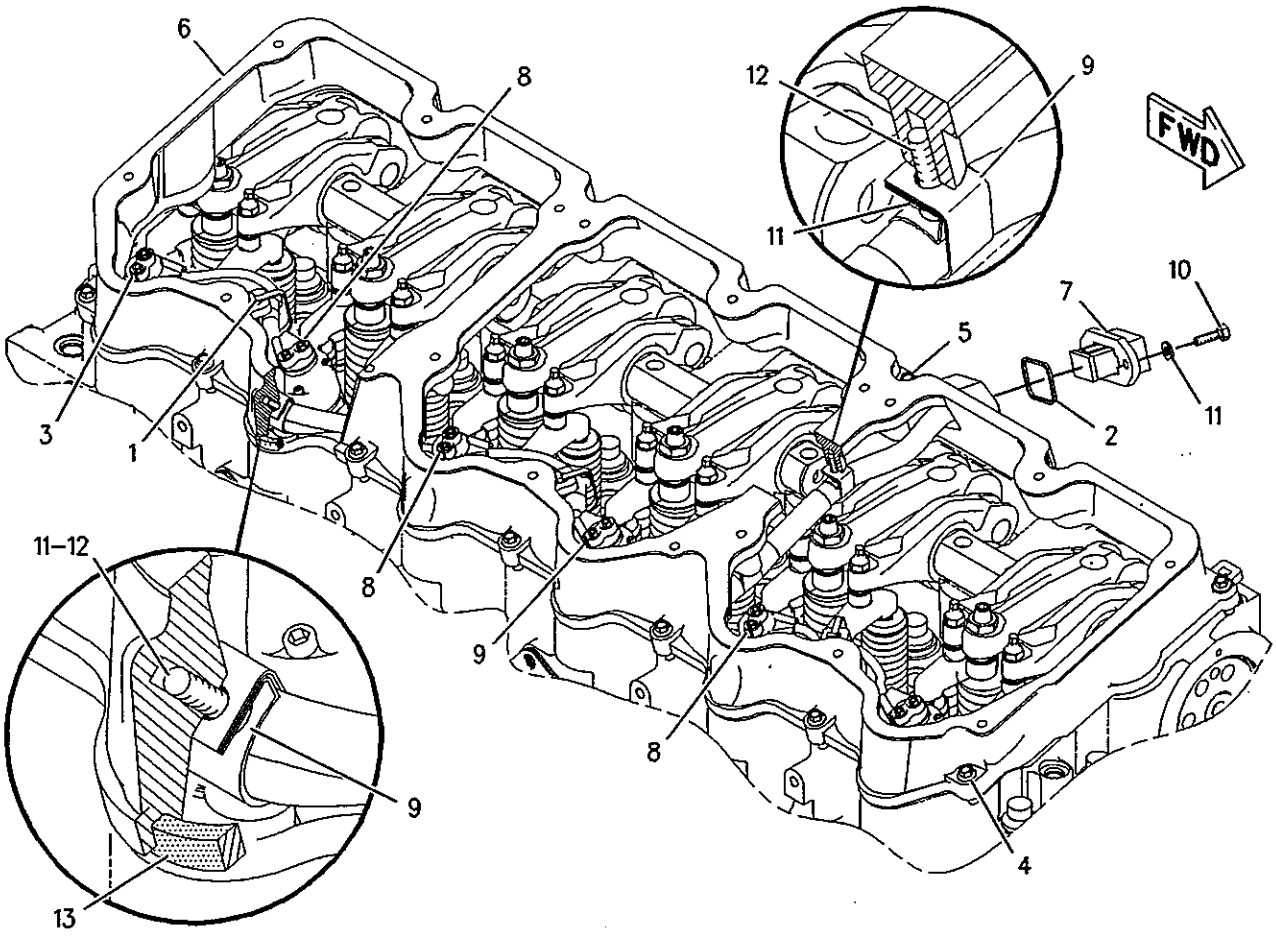


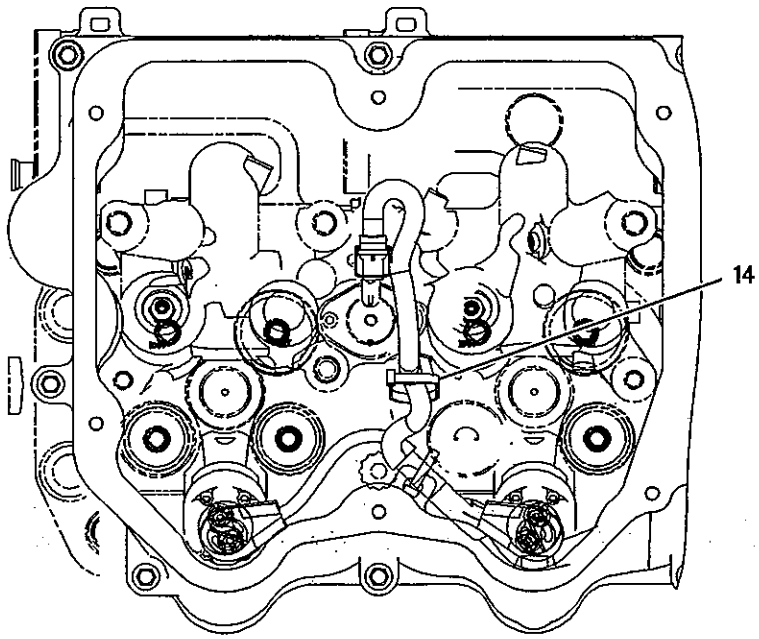


WIRING FOR
ACTUATOR GROUP-EVA

GRAPHIC #1 <END> g01003162

# BASIC ENGINE

## *190-6562* BELT TENSIONER GP

**S/N: JMS1-UP**

**PART OF 226-9644 INSTALLATION AR-ENGINE**

**FOR USE WITH 68.5MM DIAMETER PULLEY**

**SMCS-1357, 1358, 1397** **i02188127**

| NOTE | REF NO | GRAPHIC REF | PART NUMBER | QTY | PART NAME 1 2 3 4 5 6 (PRODUCT LEVEL) | SEE PAGE |
|---|---|---|---|---|---|---|
| | 1 | 1 | 164-4599 | 1 | BELT (ALTERNATOR) | |
| | 2 | 1 | 217-8938 | 1 | TENSIONER AS-BELT | |
| | 3 | 1 | 8T-4121 | 1 | WASHER-HARD (11X21X2.5-MM THK) | |
| M | 4 | 1 | 8T-4178 | 1 | BOLT (M10X1.5X90-MM) | |

M-METRIC PART

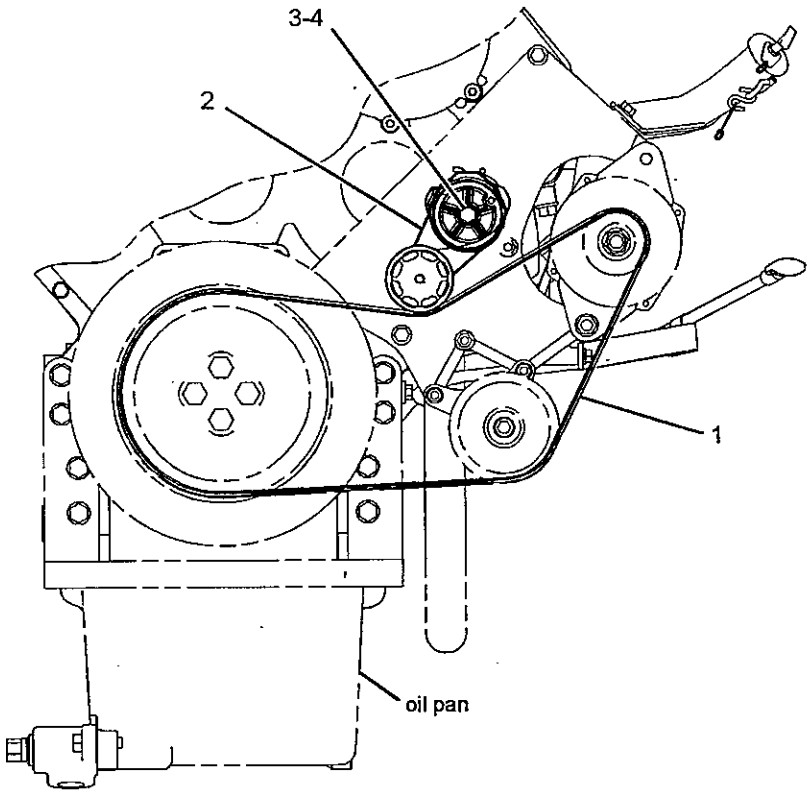


FRONT VIEW

GRAPHIC #1 **<END>** g01054556

# BASIC ENGINE

## 234-7935 CAMSHAFT GP

S/N: LHX1-UP

PART OF 241-5929 ENGINE AR-CORE

SMCS-1210, 1211, 1212 i01924802

| NOTE | REF NO | GRAPHIC REF | PART NUMBER | QTY | PART NAME 1 2 3 4 5 6 (PRODUCT LEVEL) | SEE PAGE |
|---|---|---|---|---|---|---|
| | 1 | 1 | 6V-1197 | 1 | SEAL-O-RING | |
| | 2 | 1 | 102-9089 | 1 | COVER | |
| | 3 | 1 | 119-0036 | 3 | SCREW-FLAT HEAD | |
| | 4 | 1 | 234-7900 | 1 | CAMSHAFT | |

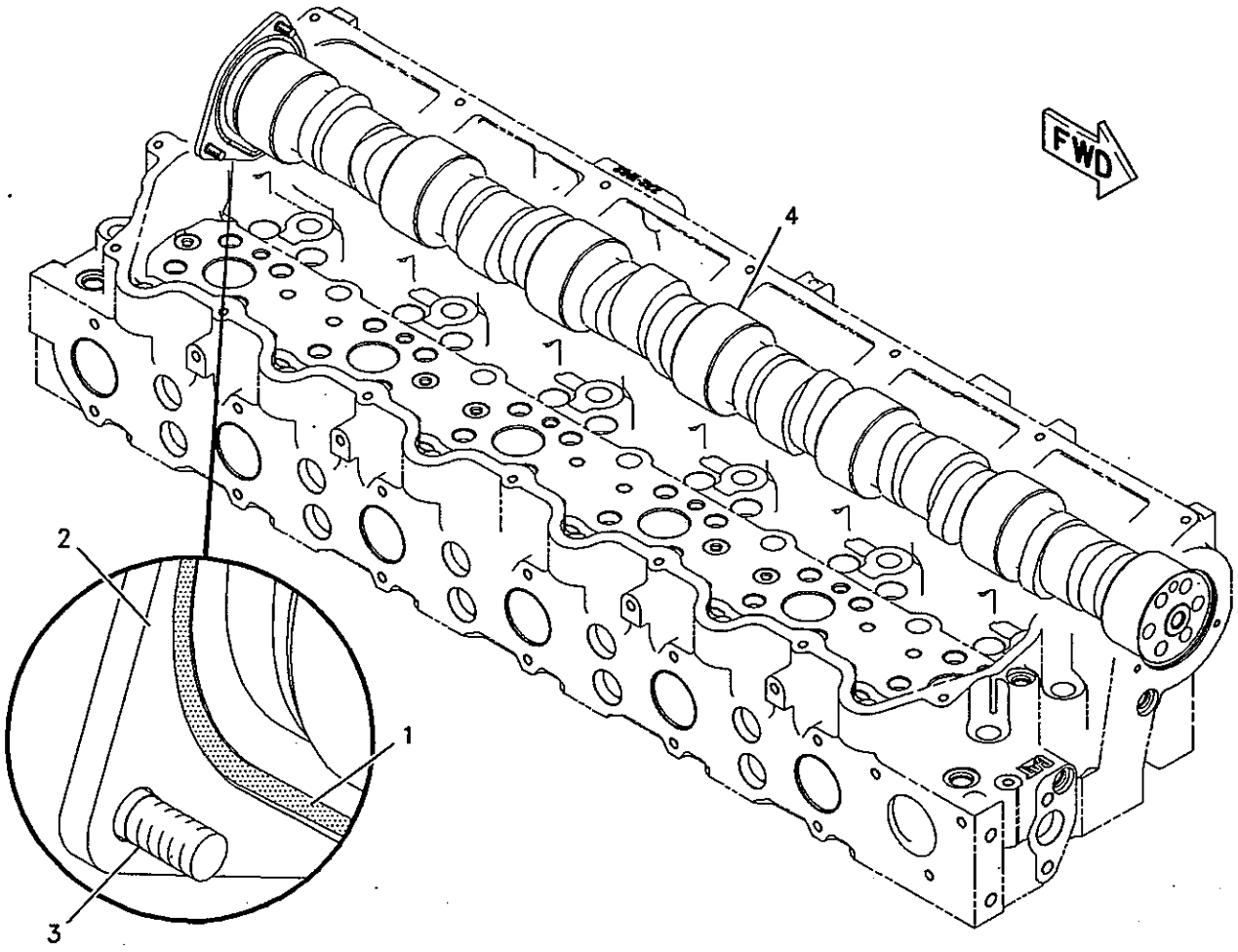


GRAPHIC #1 <END> g01002422

# 140-9746 COVER GP-CYLINDER BLOCK

S/N: LHX1-UP
NO. 4 CYLINDER WATER OPENING
PART OF 225-0992 ENGINE AR-COMPLETE

SMCS-1201 i00990977

| NOTE | REF NO | GRAPHIC REF | PART NUMBER | QTY | PART NAME 1 2 3 4 5 6 (PRODUCT LEVEL) | SEE PAGE |
|---|---|---|---|---|---|---|
| | 1 | 1 | 145-3849 | 1 | COVER | |
| | 2 | 1 | 126-4935 | 1 | SEAL-INTEGRAL | |
| | 3 | 1 | 0S-1594 | 4 | BOLT (3/8-16X1.0IN) | |
| | 4 | 1 | 5M-2894 | 4 | WASHER (2.5MM THK) | |

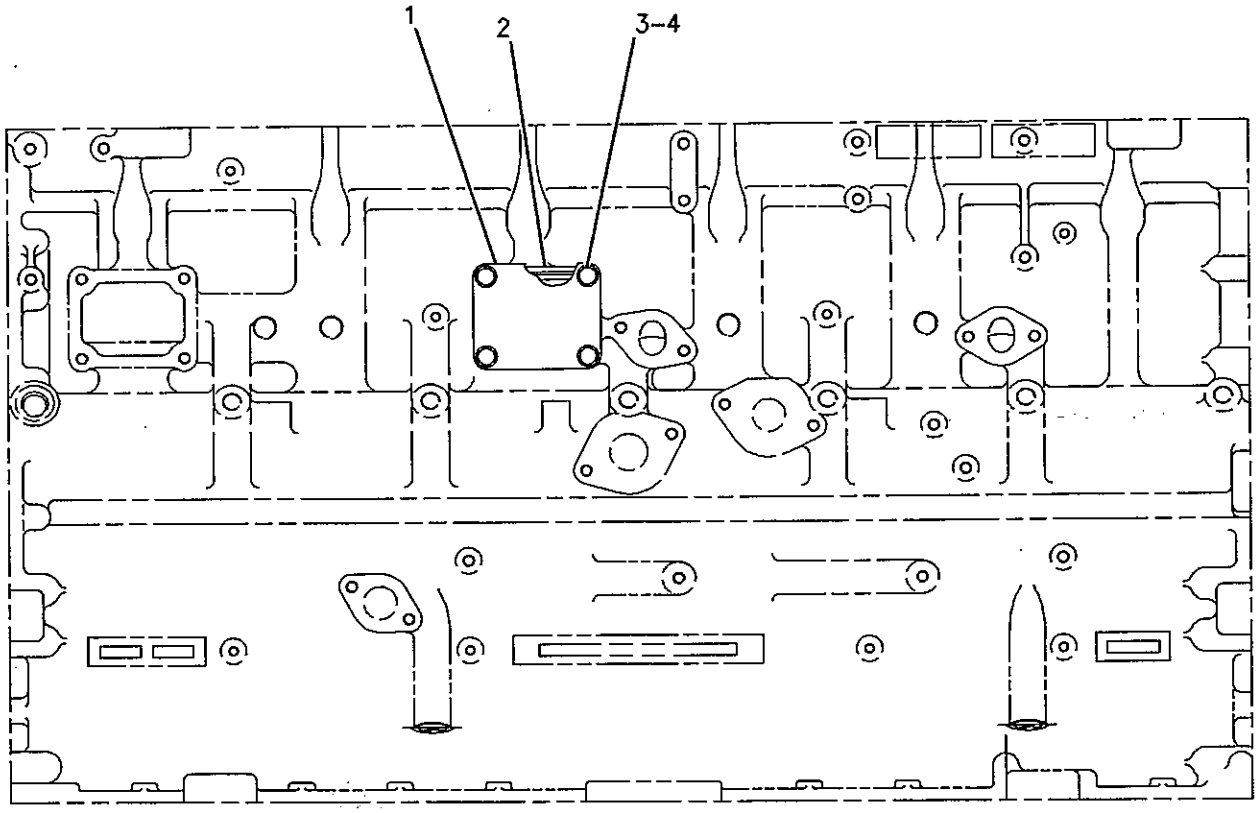


GRAPHIC #1 <END> g00506684

# BASIC ENGINE

## *228-7083* COVER GP-CYLINDER BLOCK

**S/N: LHX1-UP**

**PART OF 225-0992 ENGINE AR-COMPLETE**

**SMCS-1201** **i02055468**

| NOTE | REF NO | GRAPHIC REF | PART NUMBER | QTY | PART NAME 1 2 3 4 5 6 (PRODUCT LEVEL) | SEE PAGE |
|---|---|---|---|---|---|---|
| J | 1 | 1 | **165-6170** | 3 | PLUG | |
| | 2 | 1 | **228-7082** | 1 | ADAPTER | |
| | 3 | 1 | **0S-1594** | 4 | BOLT (3/8-16X25.4-IN) | |
| | 4 | 1 | **1T-0720** | 2 | BOLT-12 POINT HEAD (3/8-16X1.25-IN) | |
| | 5 | 1 | **2S-3625** | 2 | COVER | |
| | 6 | 1 | **3H-1461** | 2 | SEAL-O-RING | |
| | 7 | 1 | **5M-2894** | 4 | WASHER-HARD (10.2X18.5X2.5-MM THK) | |
| | 8 | 1 | **6V-3683** | 1 | SEAL-O-RING | |
| | 9 | 1 | **8J-4351** | 1 | SEAL-O-RING | |

J-USE TO PLUG OPTIONAL DIPSTICK LOCATIONS

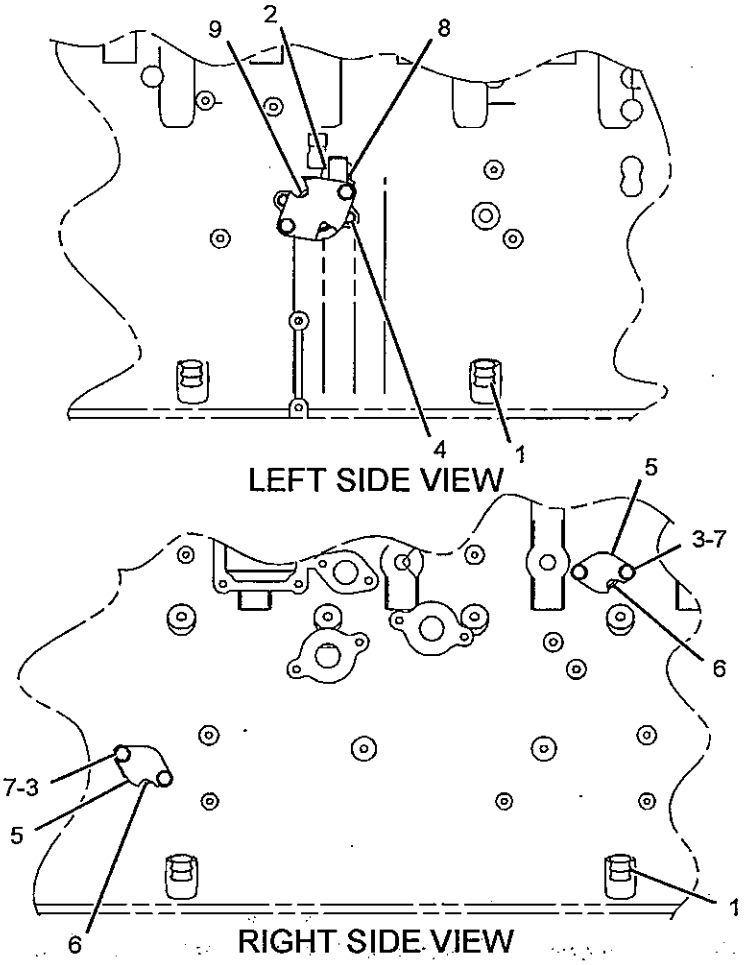


GRAPHIC #1

**<END>**

g01057663

# 120-9847 COVER GP-FRONT HOUSING

S/N: LHX1-UP

PROVIDES COVER FOR OIL FILLER OPENING ON FRONT HOUSING

PART OF 225-0992 ENGINE AR-COMPLETE

SMCS-1151, 1166

i00670788

| NOTE | REF NO | GRAPHIC REF | PART NUMBER | QTY | PART NAME 1 2 3 4 5 6 (PRODUCT LEVEL) | SEE PAGE |
|---|---|---|---|---|---|---|
| | 1 | 1 | 7C-1445 | 1 | COVER | |
| | 2 | 1 | 2B-2695 | 2 | BOLT (5/16-18X.875IN) | |
| | 3 | 1 | 9M-1974 | 2 | WASHER-HARD (2MM THK) | |
| | 4 | 1 | 061-9455 | 1 | SEAL-O-RING | |

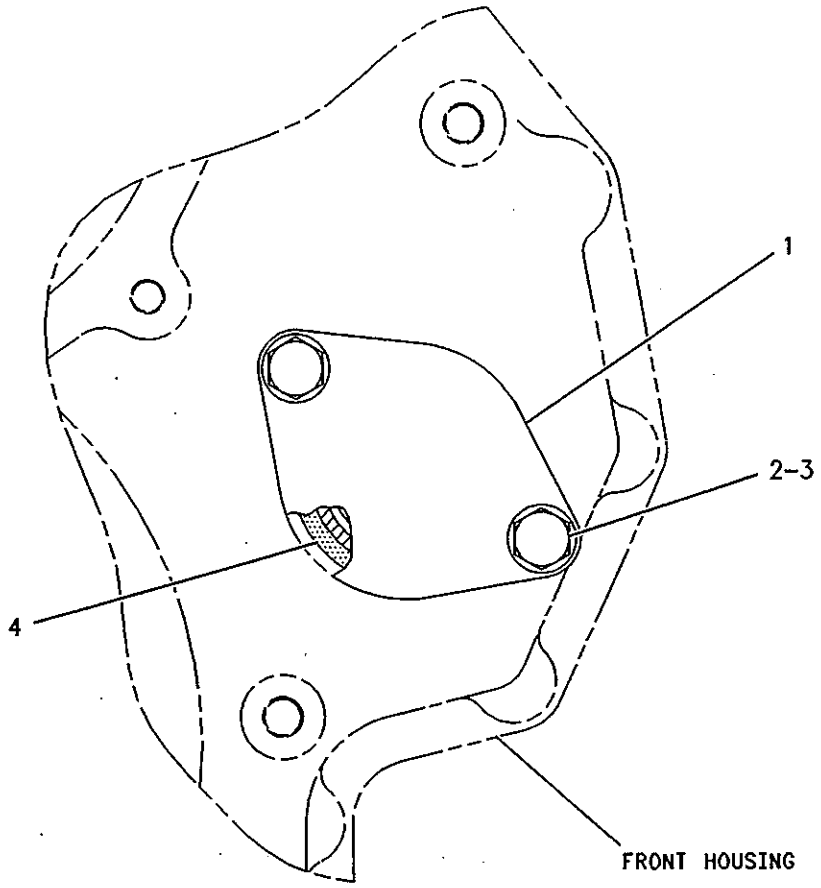


GRAPHIC #1

<END>

g00252251

# 159-6159 COVER GP-FRONT HOUSING

S/N: LHX1-UP
CAM AND IDLER GEAR ACCESS
PART OF 225-0992 ENGINE AR-COMPLETE

SMCS-1151, 1166 i01565580

| NOTE | REF NO | GRAPHIC REF | PART NUMBER | QTY | PART NAME 1 2 3 4 5 6 (PRODUCT LEVEL) | SEE PAGE |
|---|---|---|---|---|---|---|
| | 1 | 1 | 174-7462 | 12 | SCREW-BUTTON HEAD | |
| | 2 | 1 | 175-1367 | 2 | SPACER (8.8X16X10MM THK) (MARKED X) | |
| | 3 | 1 | 209-3569 | 1 | COVER AS | |
| | | 1 | 160-7271 | 1 | SEAL | |
| | 4 | 1 | 5S-0003 | 2 | NUT (5/16-18 THD) (MARKED X) | |
| | 5 | 1 | 175-1366 | 2 | STUD (MARKED X) | |
| | 6 | 1 | 163-4565 | 2 | SEAL-O-RING (MARKED X) | |

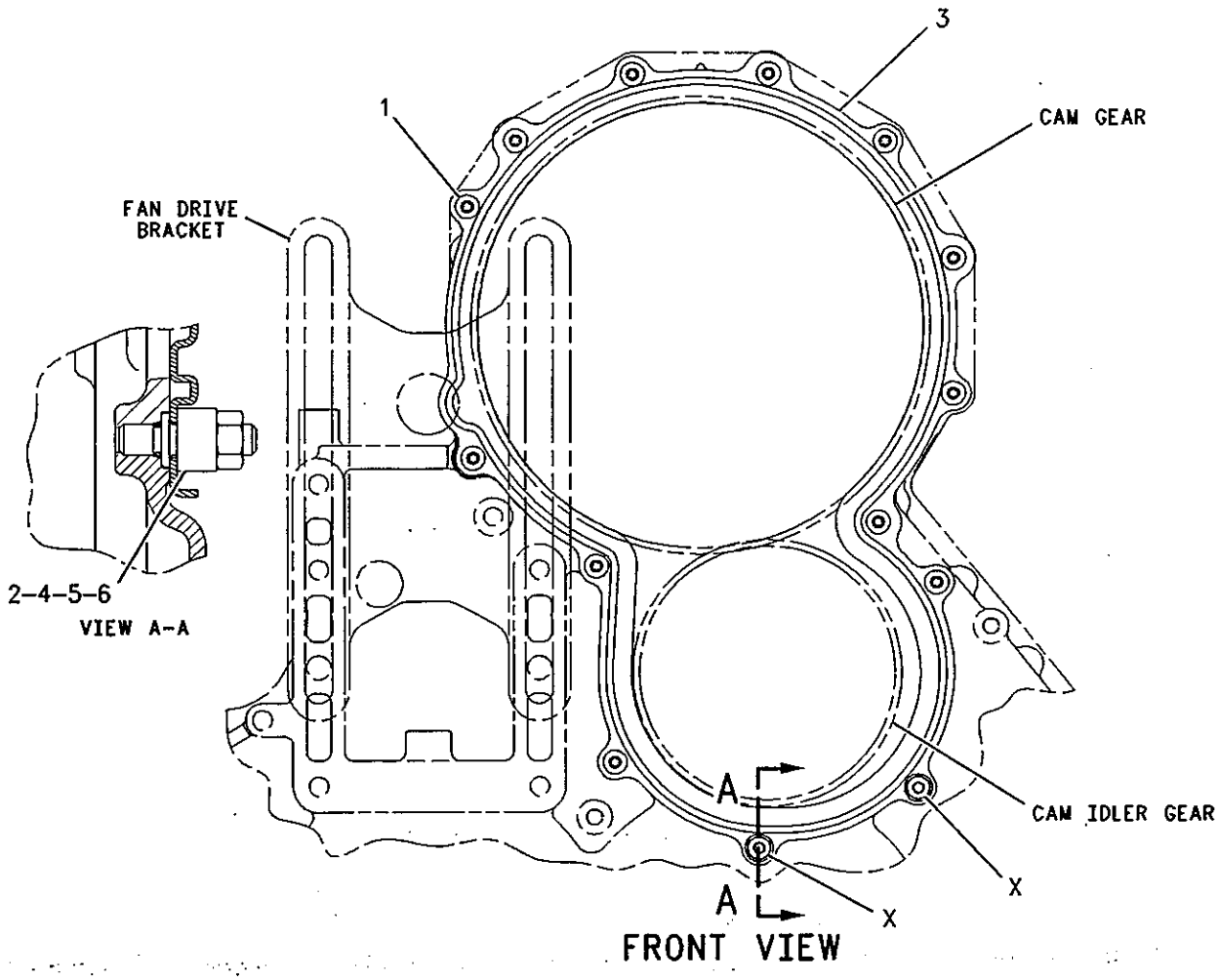


GRAPHIC #1 <END> g00631258

## 230-0104 COVER GP-SOUND SUPPRESSION–FRONT HOUSING

S/N: LHX1-UP

FOR THE WATER PUMP AREA

PART OF 225-0992 ENGINE AR-COMPLETE

FOR USE WITH FULL FRONT SOUND SUPPRESSION PANEL GROUP. CANNOT BE USED WITH ALTERNATOR MOUNTING GROUP AND ACCESSORY DRIVE GROUP

SMCS-1801

i01897574

| NOTE | REF NO | GRAPHIC REF | PART NUMBER | QTY | PART NAME 1 2 3 4 5 6 (PRODUCT LEVEL) | SEE PAGE |
|---|---|---|---|---|---|---|
| | 1 | 1 | 100-3098 | 1 | COVER AS-PANEL | |
| | 2 | 1 | 0S-1588 | 1 | BOLT (3/8-16X1.25 IN) | |
| | 3 | 1 | 0T-0055 | 1 | BOLT (3/8-16X4.25 IN) | |
| | 4 | 1 | 1A-5183 | 2 | BOLT (3/8-16X4.75 IN) | |
| | 5 | 1 | 5M-2894 | 1 | WASHER-HARD (10.2X18.5X2.5MM THK) | |
| | 6 | 1 | 9X-6458 | 3 | WASHER-HARD (10.2X22.5X3MM THK) | |

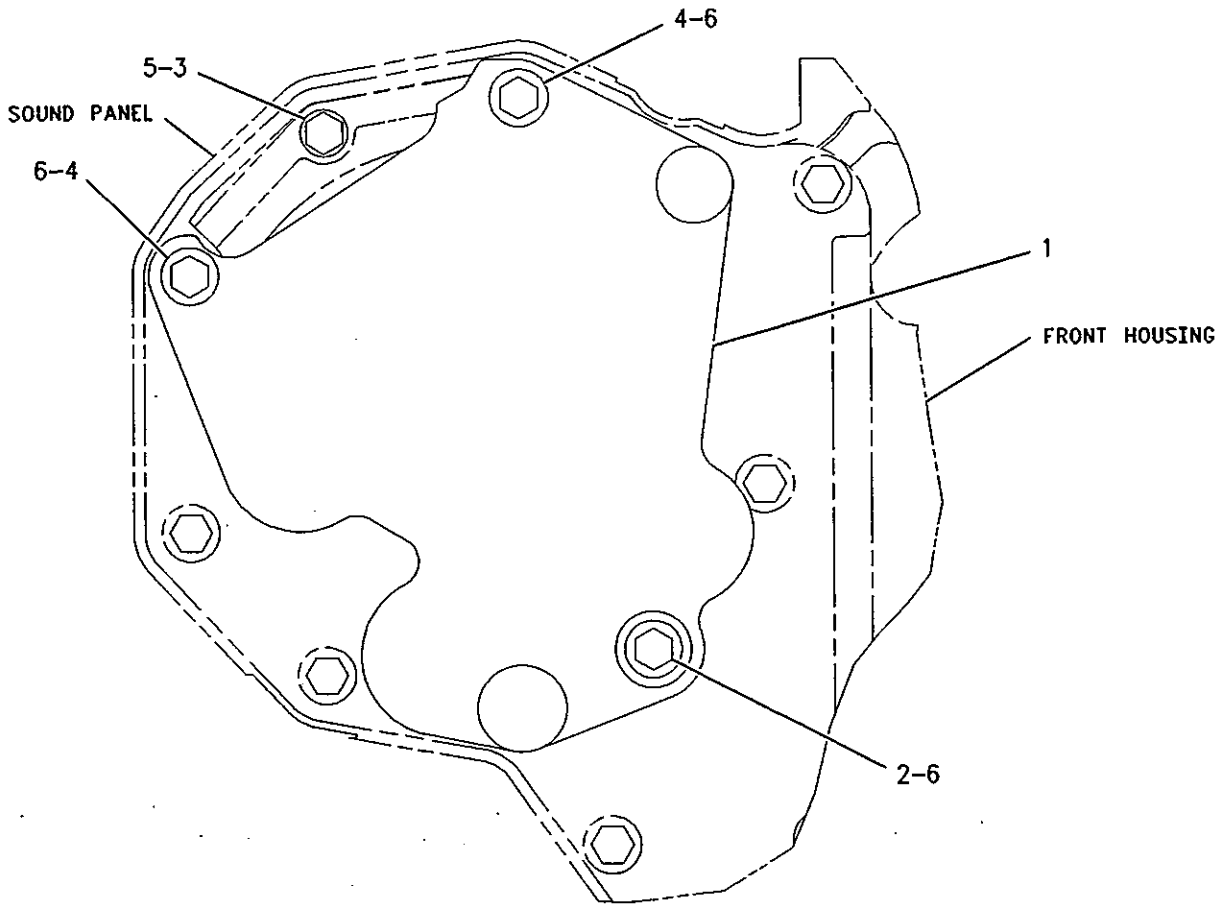


FRONT VIEW

GRAPHIC #1

<END>

g00987886

# 225-1147 COVER GP-VALVE MECHANISM

**S/N: LHX1-UP**

**PART OF 236-2230 COVER GP-VALVE MECHANISM**

**SMCS-1107** **i01900540**

| NOTE | REF NO | GRAPHIC REF | PART NUMBER | QTY | PART NAME 1 2 3 4 5 6 (PRODUCT LEVEL) | SEE PAGE |
|---|---|---|---|---|---|---|
| | 1 | 1 | 7C-6514 | 1 | ADAPTER | |
| | 2 | 1 | 225-1145 | 1 | COVER-VALVE | |
| | 3 | 1 | 6V-5100 | 1 | SEAL-O-RING | |

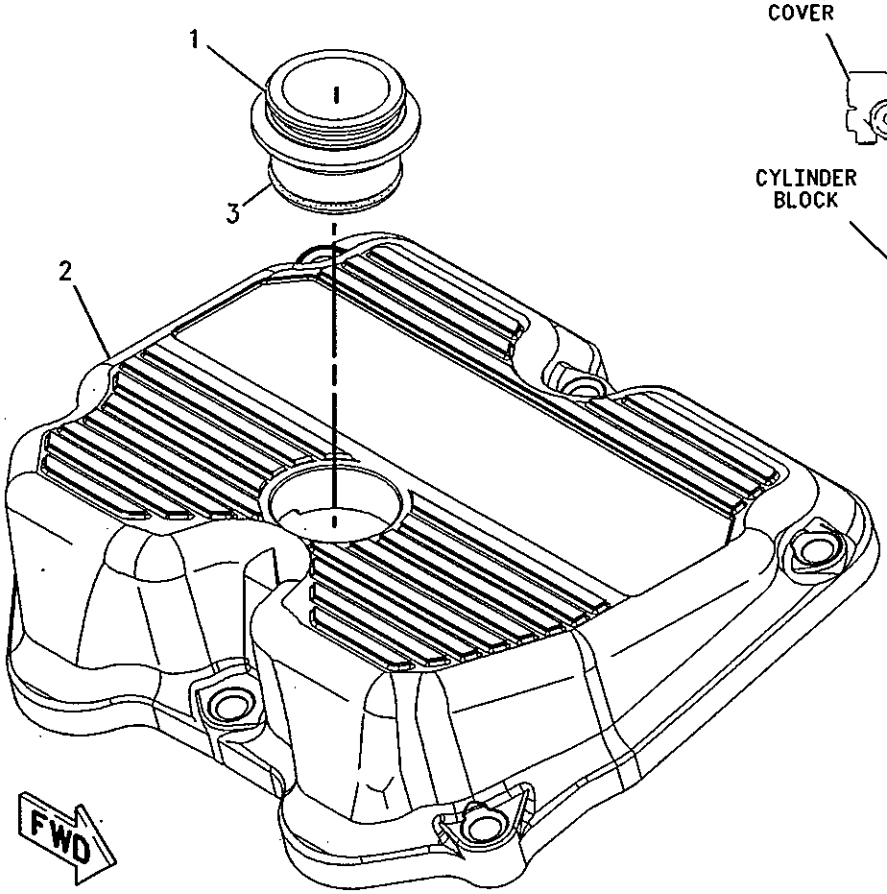


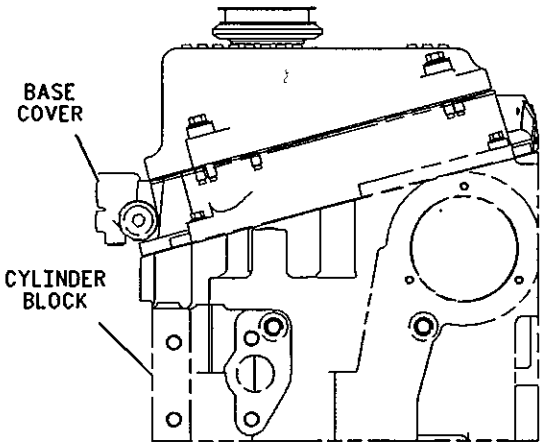


FRONT VIEW
(TYPICAL INSTALLATION)

GRAPHIC #1 **<END>** g00991129

# BASIC ENGINE

## *225-1148* COVER GP-VALVE MECHANISM

**S/N: LHX1-UP**

**PART OF 239-5223 COVER GP-VALVE MECHANISM**

**SMCS-1107** **i02085796**

| NOTE | REF NO | GRAPHIC REF | PART NUMBER | QTY | PART NAME 1 2 3 4 5 6 (PRODUCT LEVEL) | SEE PAGE |
|---|---|---|---|---|---|---|
| | 1 | 1 | **242-9537** | 1 | SEAL (COVER, VALVE MECHANISM) | |
| | 2 | 1 | **243-1159** | 6 | FASTENER AS | |
| | 3 | 1 | **225-1144** | 1 | COVER-VALVE | |

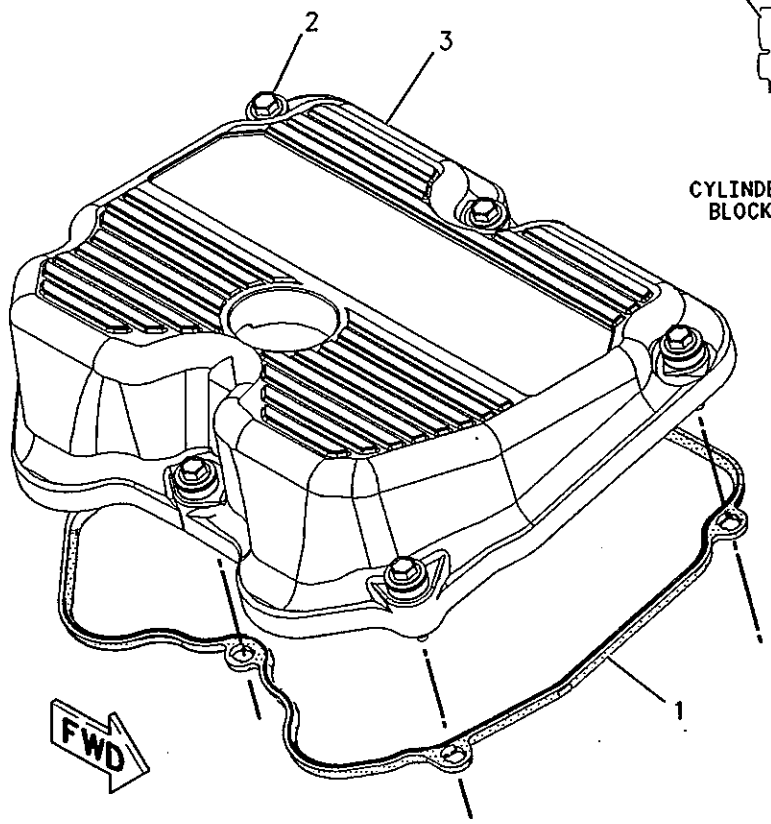


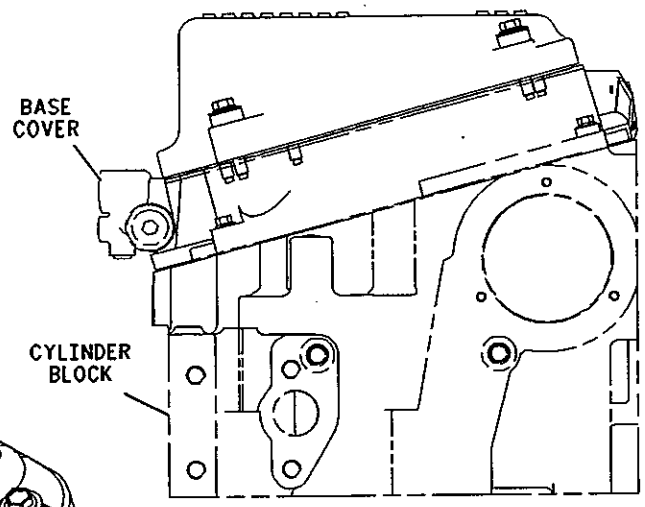


FRONT VIEW
(TYPICAL INSTALLATION)

GRAPHIC #1 **<END>** g00991113

# 236-2230 COVER GP-VALVE MECHANISM

**S/N: LHX1-UP**

**PART OF 239-5223 COVER GP-VALVE MECHANISM**

**SMCS-1107** **i02085803**

| NOTE | REF NO | GRAPHIC REF | PART NUMBER | QTY | PART NAME 1 2 3 4 5 6 (PRODUCT LEVEL) | SEE PAGE |
|---|---|---|---|---|---|---|
| | 1 | 1 | 242-9537 | 1 | SEAL (COVER, VALVE MECHANISM) | |
| | 2 | 1 | 243-1159 | 6 | FASTENER AS | |
| Y | 3 | 1 | 225-1147 | 1 | COVER GP-VALVE MECHANISM | 17 |

Y-SEPARATE ILLUSTRATION

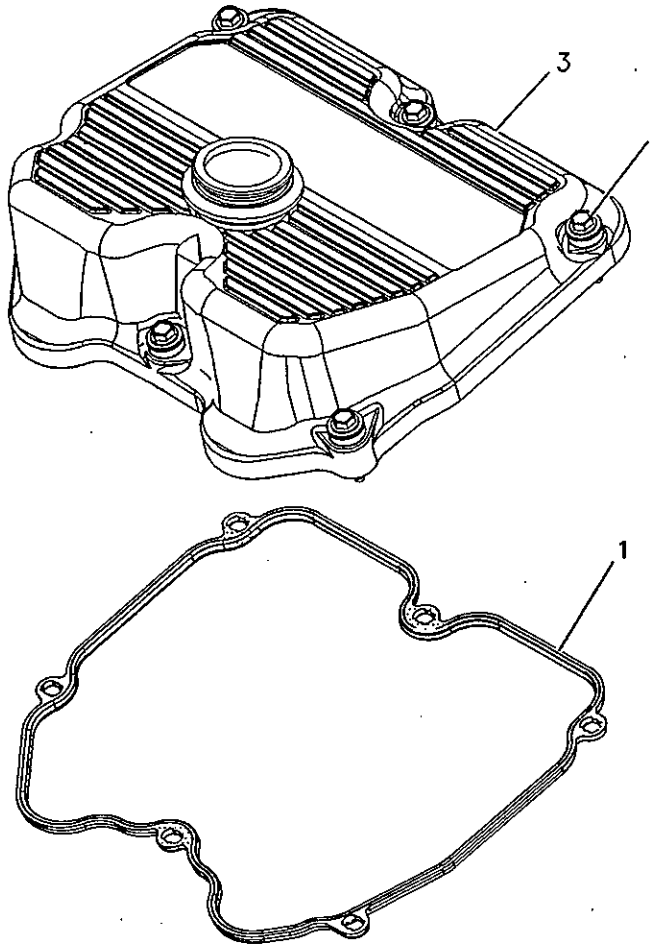


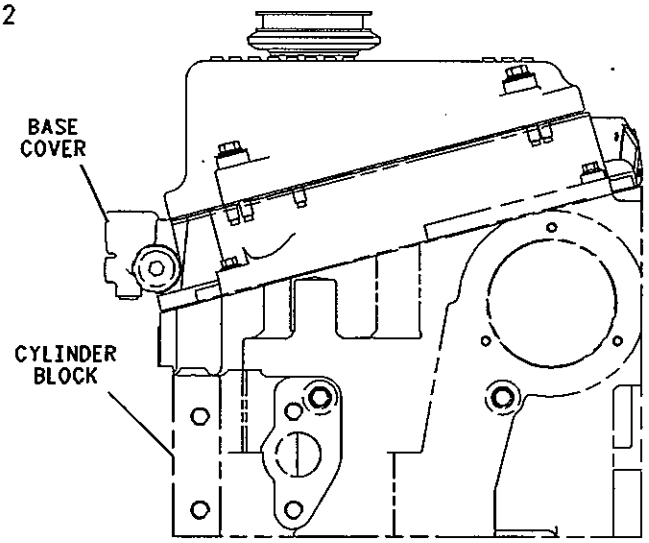


FRONT VIEW

GRAPHIC #1 **<END>** g00990932

# 239-5223 COVER GP-VALVE MECHANISM

**S/N: LHX1-UP**

**REAR ADAPTER COVER ASSEMBLY TO ALLOW FOR VARIOUS BREATHER ORIENTATIONS**

**PART OF 225-0992 ENGINE AR-COMPLETE**

**SMCS-1107** **i02041059**

| NOTE | REF NO | GRAPHIC REF | PART NUMBER | QTY | PART NAME 1 2 3 4 5 6 (PRODUCT LEVEL) | SEE PAGE |
|---|---|---|---|---|---|---|
| Y | 1 | 1 | *225-1148* | 2 | COVER GP-VALVE MECHANISM | 18 |
| Y | 2 | 1 | *236-2230* | 1 | COVER GP-VALVE MECHANISM | 19 |

Y-SEPARATE ILLUSTRATION

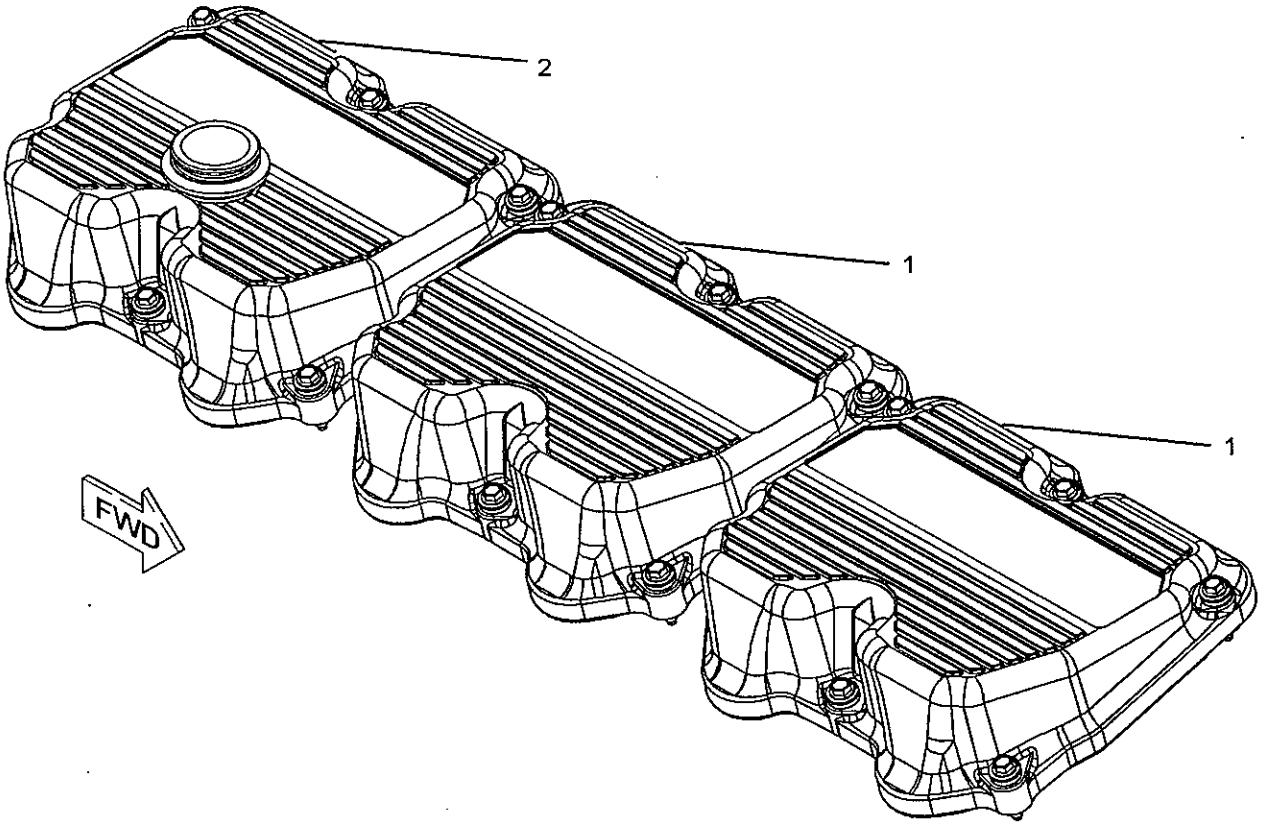


TOP VIEW

GRAPHIC #1 **<END>** g01058298

# BASIC ENGINE

## 223-9731 CRANKSHAFT GP

**S/N: LHX1-UP**

**PART OF 241-5929 ENGINE AR-CORE**

**SMCS-1202** **i02207387**

| NOTE | REF NO | GRAPHIC REF | PART NUMBER | QTY | PART NAME 1 2 3 4 5 6 (PRODUCT LEVEL) | SEE PAGE |
|---|---|---|---|---|---|---|
| | 1 | 1 | **7E-9262** | 2 | PLATE-THRUST | |
| | 2 | 1 | **142-5867** | 1 | SEAL GP-CRANKSHAFT (FRONT) | |
| | 3 | 1 | **211-0592** | 7 | BEARING-MAIN (STANDARD) | |
| AB | | 1 | **4W-5698** | | BEARING-MAIN (0.63-MM US) | |
| AB | | 1 | **4W-5699** | | BEARING-MAIN (1.27-MM US) | |
| AB | | 1 | **4W-5700** | | BEARING-MAIN (0.63-MM OS) | |
| AB | | 1 | **4W-5701** | | BEARING-MAIN (0.63-MM US, 0.63-MM OS) | |
| | 4 | 1 | **221-9360** | 1 | CRANKSHAFT AS | |
| | 4A | 1 | **4N-0684** | 1 | DOWEL | |
| | 4B | 1 | **7S-5005** | 1 | DOWEL | |
| | 4C | 1 | **160-5120** | 1 | GEAR-CRANKSHAFT (80-TEETH) | |

A-NOT PART OF THIS GROUP
B-USE AS REQUIRED

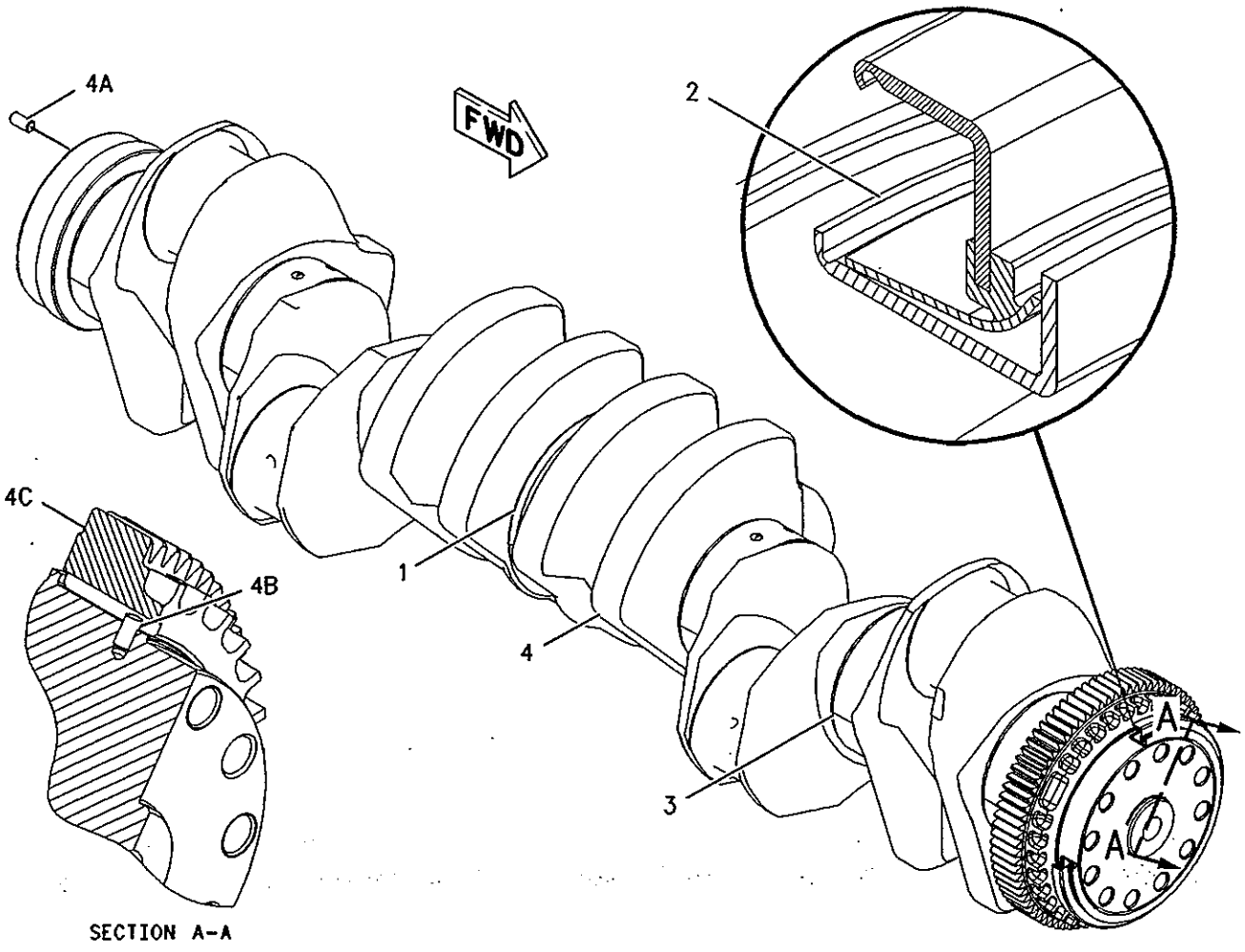


GRAPHIC #1 **<END>** g00955077

# BASIC ENGINE

## *222-1976* CYLINDER BLOCK GP

**S/N: LHX1-UP**

**PART OF 223-9252 CYLINDER BLOCK GP**

SMCS-1201 i02207401

| NOTE | REF NO | GRAPHIC REF | PART NUMBER | QTY | PART NAME 1 2 3 4 5 6 (PRODUCT LEVEL) | SEE PAGE |
|---|---|---|---|---|---|---|
| | 1 | 1 | 238-2700 | 6 | LINER-CYLINDER | |
| | 2 | 1 | 229-8568 | 1 | CYLINDER BLOCK AS | |
| | 2A | 1 | 167-8081 | 7 | CAP-CRANKSHAFT BEARING | |
| | 2B | 1 | 167-8083 | 14 | BOLT (7/8-14X7.5-IN) | |
| | | 1 | 9H-1031 | 14 | WASHER-HARD (24X41.5X6-MM THK) | |
| | 3 | 1 | 110-2220 | 6 | SEAL-LINER (141-MM ID) | |
| | 4 | 1 | 142-6217 | 6 | SEAL-O-RING (140.2-MM ID) | |
| | 5 | 1 | 142-7072 | 6 | SEAL-LINER (140.2-MM ID) | |
| | 6 | 1 | 9L-5854 | 6 | BAND-FILLER (130.2-MM ID) | |

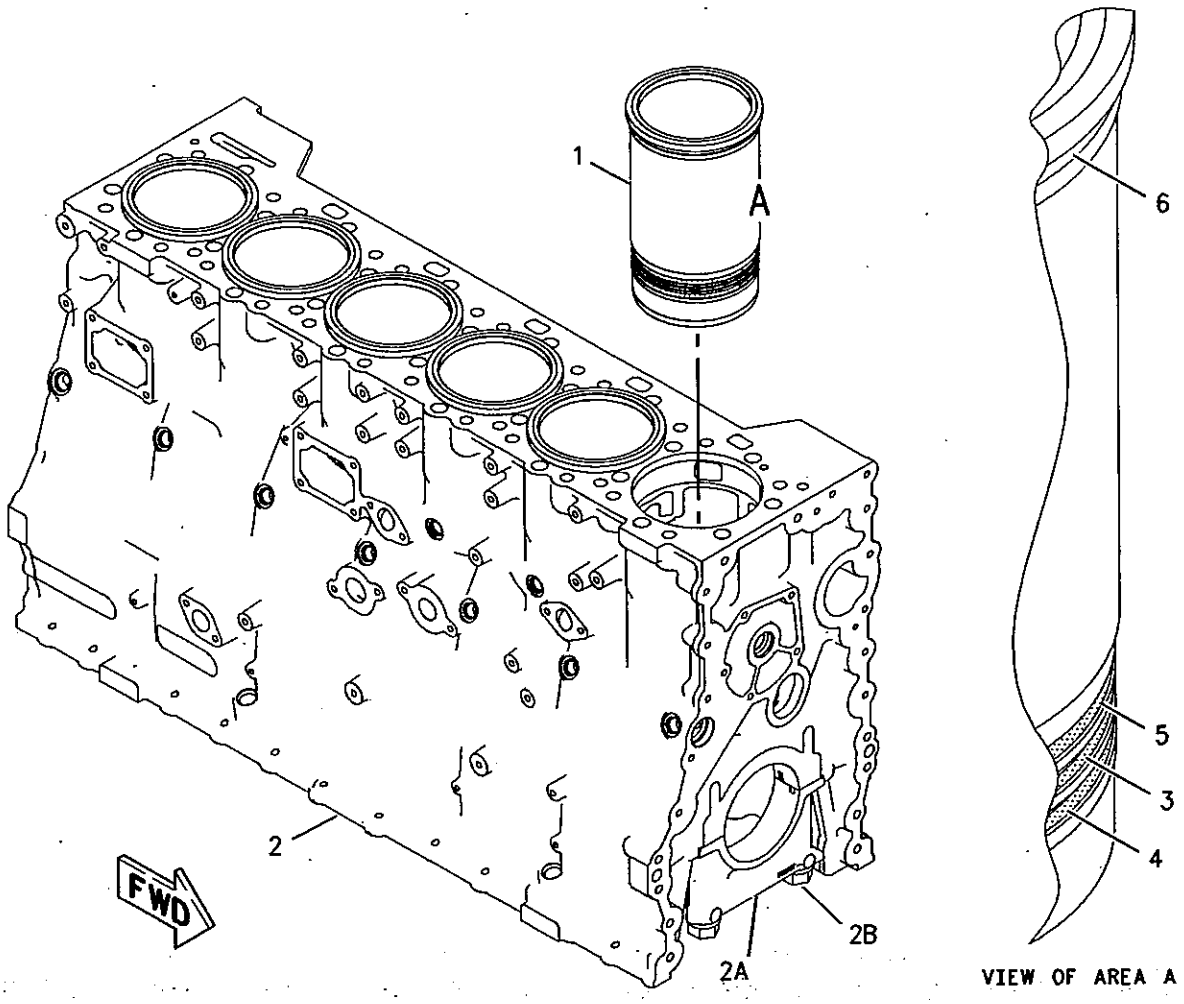


GRAPHIC #1 **<END>** g00977436

# BASIC ENGINE

## 223-9252 CYLINDER BLOCK GP

**S/N: LHX1-UP**

**PART OF 241-5929 ENGINE AR-CORE**

**SMCS-1201** **i02103897**

| NOTE | REF NO | GRAPHIC REF | PART NUMBER | QTY | PART NAME 1 2 3 4 5 6 (PRODUCT LEVEL) | SEE PAGE |
|---|---|---|---|---|---|---|
| | 1 | 1 | **1S-9540** | 1 | DOWEL | |
| | 2 | 1 | **4N-1650** | 1 | DOWEL | |
| | 3 | 1 | **6I-1055** | 1 | DOWEL | |
| | 4 | 1 | **6I-4421** | 1 | PLATE-SPACER | |
| | 5 | 1 | **8S-9094** | 1 | PLUG-ORIFICE | |
| | 6 | 1 | **142-2329** | 1 | SEAL | |
| Y | 7 | 1 | **222-1976** | 1 | CYLINDER BLOCK GP | 22 |
| | 8 | 1 | **227-1204** | 1 | GASKET | |
| | 9 | 1 | **100-7399** | 2 | PLUG | |
| | 10 | 1 | **250-0466** | 2 | SEAL-O-RING | |
| | 11 | 1 | **4N-0683** | 4 | DOWEL | |
| | 12 | 1 | **5P-0840** | 1 | SEAL-O-RING | |

Y-SEPARATE ILLUSTRATION

## 223-9252 CYLINDER BLOCK GP *(contd.)*

i02103897

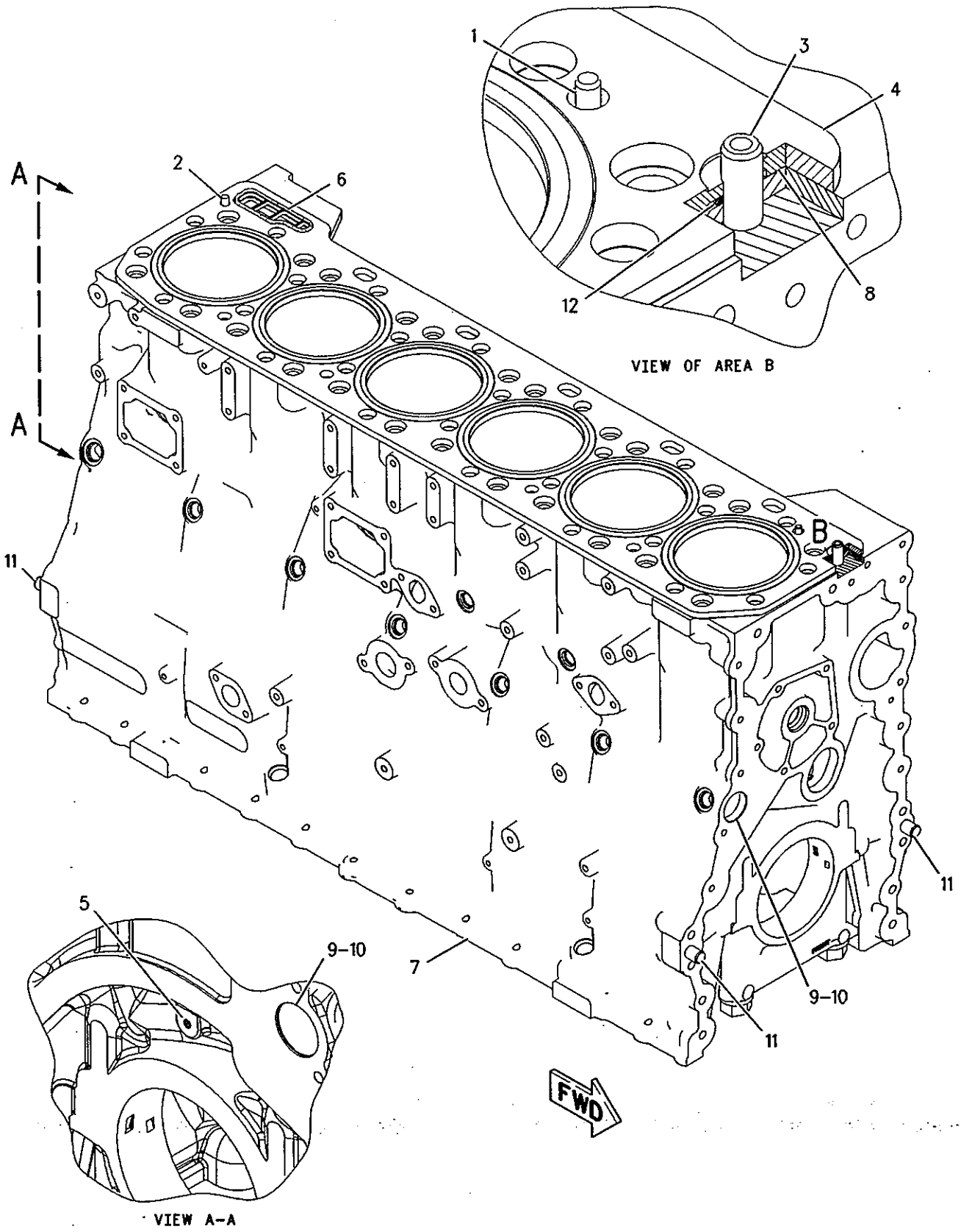


GRAPHIC #1

<END>

g00977363

# 223-7263 CYLINDER HEAD AS

S/N: LHX1-UP
WITH PRE-FINISHED VALVE SEAT INSERTS
PART OF 243-6741 CYLINDER HEAD AS

SMCS-1100, 1101 i02118405

| NOTE | REF NO | GRAPHIC REF | PART NUMBER | QTY | PART NAME 1 2 3 4 5 6 (PRODUCT LEVEL) | SEE PAGE |
|---|---|---|---|---|---|---|
| | 1 | 1 | 122-7375 | 24 | GUIDE-VALVE | |
| B | 2 | 1 | 216-5582 | 7 | BEARING-SLEEVE | |
| AB | | 1 | 217-0751 | | BEARING-SLEEVE (0.254-MM OS) | |
| AB | | 1 | 217-0752 | | BEARING-SLEEVE (0.762-MM OS) | |
| | 3 | 1 | 222-1982 | 1 | CYLINDER HEAD | |
| | | 1 | 224-3983 | 12 | INSERT-SEAT (INLET) | |
| | | 1 | 226-5561 | 12 | INSERT-VALVE (EXHAUST) | |
| | 4 | 1 | 227-4239 | 1 | SLEEVE-INJECTOR | |
| | 5 | 1 | 166-2903 | 6 | SEAL-O-RING | |
| | 6 | 1 | 166-2904 | 6 | SEAL-O-RING | |
| | 7 | 1 | 3B-0623 | 17 | PLUG-CUP | |
| | 8 | 1 | 3B-0645 | 20 | PLUG-CUP | |
| | 9 | 1 | 8T-6757 | 3 | PLUG-PIPE | |
| | 10 | 1 | 9X-7430 | 6 | SEAL-O-RING | |

A-NOT PART OF THIS GROUP
B-USE AS REQUIRED

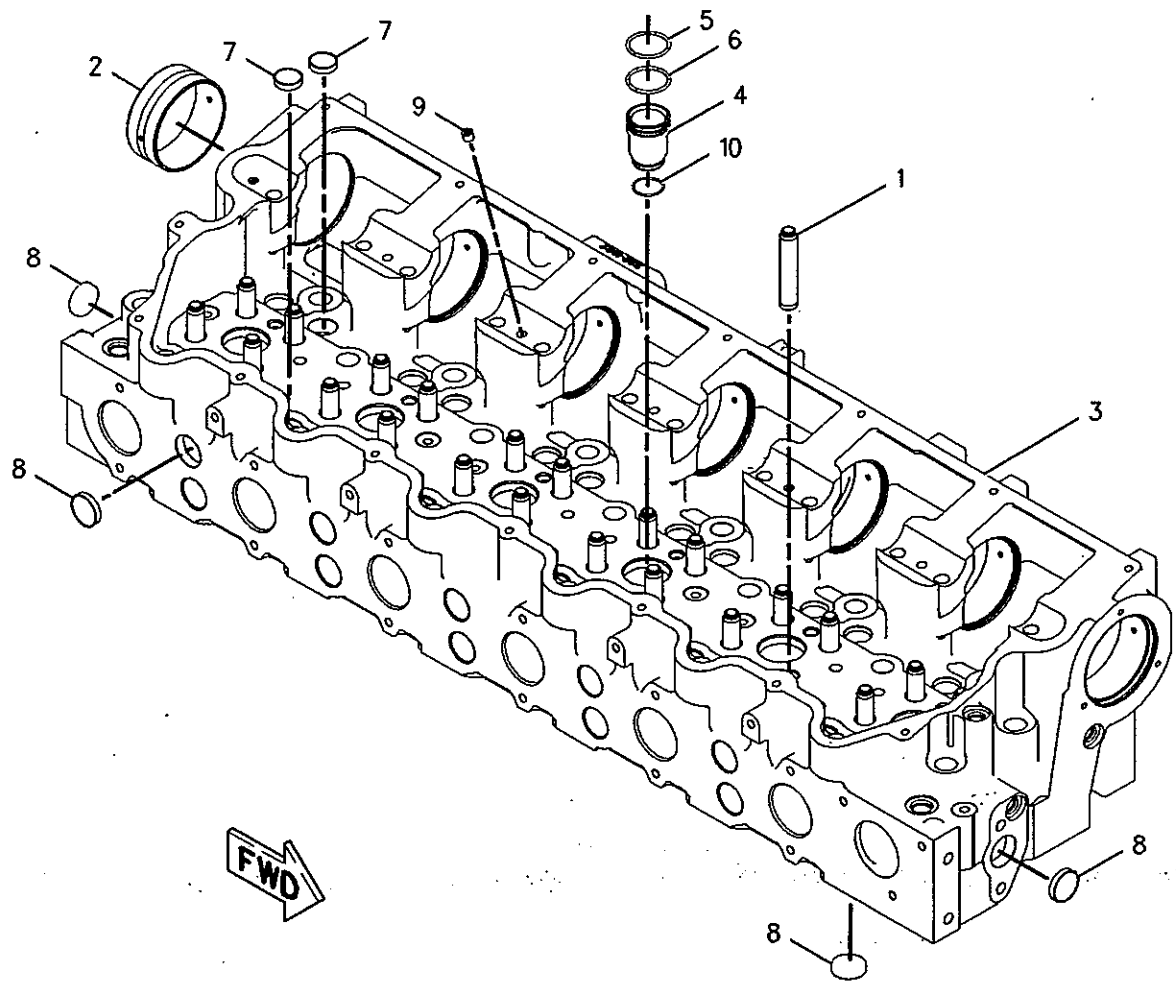


GRAPHIC #1 <END> g00956436

# BASIC ENGINE

## 243-0943 CYLINDER HEAD AS

**S/N: LHX1-UP**

**PART OF 243-6741 CYLINDER HEAD AS**

**SMCS-1100, 1101** **i01983776**

| NOTE | REF NO | GRAPHIC REF | PART NUMBER | QTY | PART NAME 1 2 3 4 5 6 (PRODUCT LEVEL) | SEE PAGE |
|---|---|---|---|---|---|---|
| | 1 | 1 | **152-7582** | 12 | INSERT-VALVE SEAT (EXHAUST) (STANDARD) | |
| AB | | 1 | **167-0642** | | INSERT-VALVE SEAT (0.76 MM O.S.) | |
| AB | | 1 | **170-4737** | | INSERT-VALVE SEAT (0.51 MM O.S.) | |
| | 2 | 1 | **175-3617** | 12 | INSERT-VALVE SEAT (INLET) (STANDARD) | |
| AB | | 1 | **167-0643** | | INSERT-VALVE SEAT (0.76 MM O.S.) | |
| AB | | 1 | **170-4738** | | INSERT-VALVE SEAT (0.51 MM O.S.) | |

A-NOT PART OF THIS GROUP
B-USE AS REQUIRED

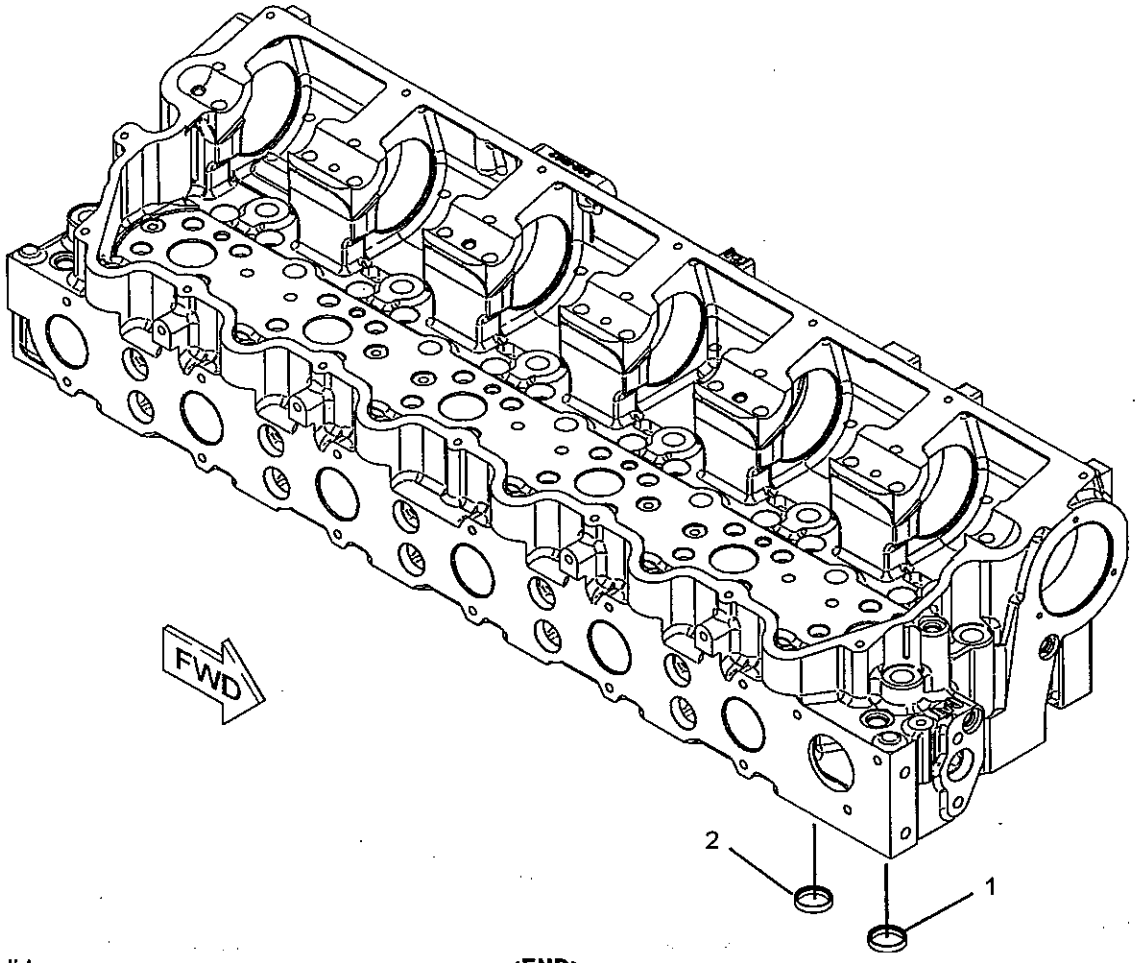


GRAPHIC #1 **<END>** g01028691

# 243-6741 CYLINDER HEAD AS

S/N: LHX1-UP
WITH MACHINE IN PLACE VALVE SEAT INSERTS
PART OF 223-9250 CYLINDER HEAD GP

SMCS-1100, 1101 i01983686

| NOTE | REF NO | GRAPHIC REF | PART NUMBER | QTY | PART NAME 1 2 3 4 5 6 (PRODUCT LEVEL) | SEE PAGE |
|---|---|---|---|---|---|---|
| | 1 | 2 | 122-7375 | 24 | GUIDE-VALVE (STANDARD) | |
| AB | | 2 | 122-0447 | | GUIDE-VALVE (0.51-MM OS) | |
| AB | | 2 | 122-8612 | | GUIDE-VALVE (0.13-MM OS) | |
| | 2 | 1 | 216-5582 | 7 | BEARING-SLEEVE (STANDARD) | |
| AB | | 1 | 217-0751 | | BEARING-SLEEVE (0.254-MM OS) | |
| AB | | 1 | 217-0752 | | BEARING-SLEEVE (0.762-MM OS) | |
| | 3 | 2 | 227-4239 | 6 | SLEEVE-INJECTOR | |
| Y | 4 | 1 | 243-0943 | 1 | CYLINDER HEAD AS | 26 |
| | | | | | —OR— | |
| Y | | 1 | 223-7263 | 1 | CYLINDER HEAD AS | 25 |
| | 5 | 2 | 166-2903 | 6 | SEAL-O-RING | |
| | 6 | 2 | 166-2904 | 6 | SEAL-O-RING | |
| | 7 | 1 | 3B-0623 | 17 | PLUG-CUP | |
| | 8 | 1,2 | 3B-0645 | 20 | PLUG-CUP | |
| | 9 | 2 | 8T-6757 | 3 | PLUG-PIPE | |
| | 10 | 2 | 9X-7430 | 6 | SEAL-O-RING | |

A-NOT PART OF THIS GROUP
B-USE AS REQUIRED
Y-SEPARATE ILLUSTRATION

## 243-6741 CYLINDER HEAD AS (contd.) i01983686

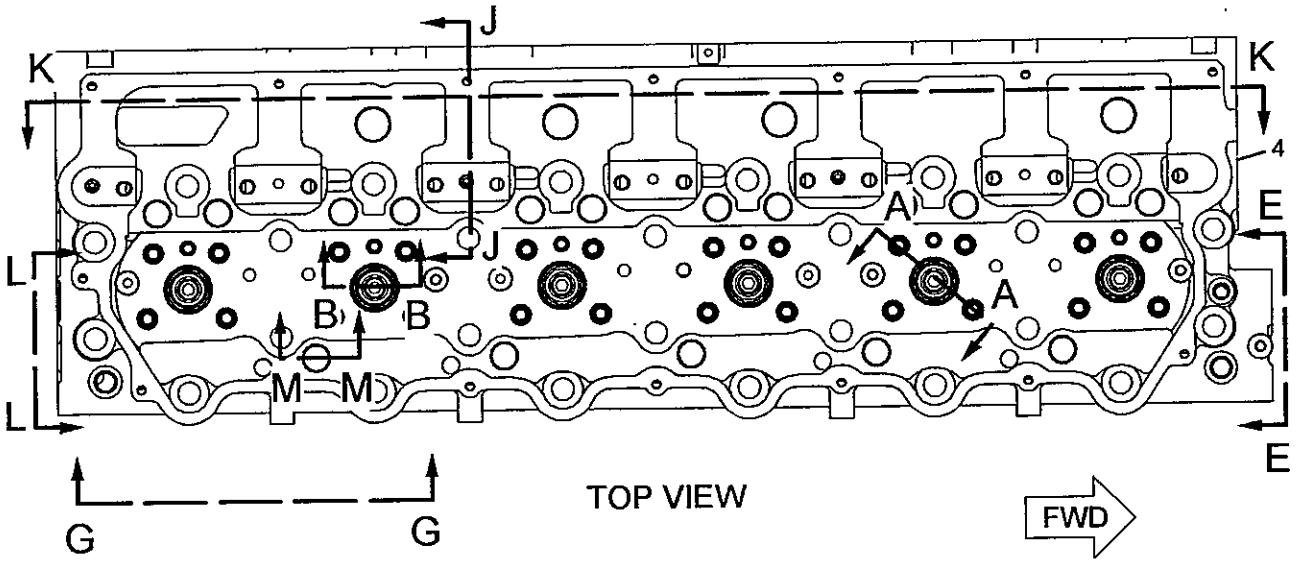


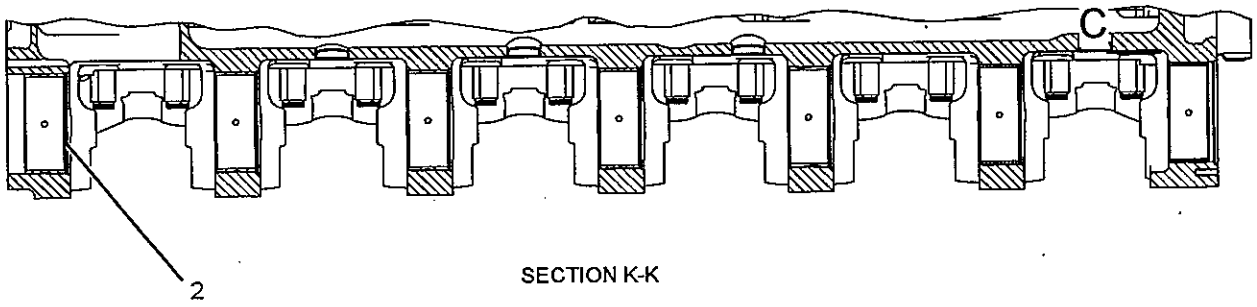


SECTION K-K

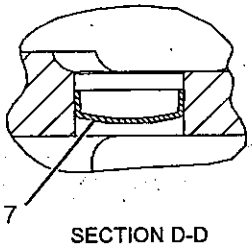


SECTION D-D

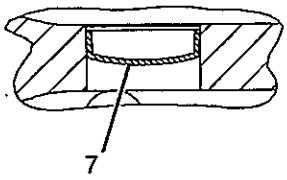


SECTION M-M

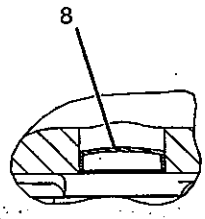


VIEW OF AREA C

REFER TO ALL ILLUSTRATIONS OF THIS GROUP FOR AUXILIARY VIEWS

GRAPHIC #1

g01029133

*243-6741* **CYLINDER HEAD AS** *(contd.)* i01983686

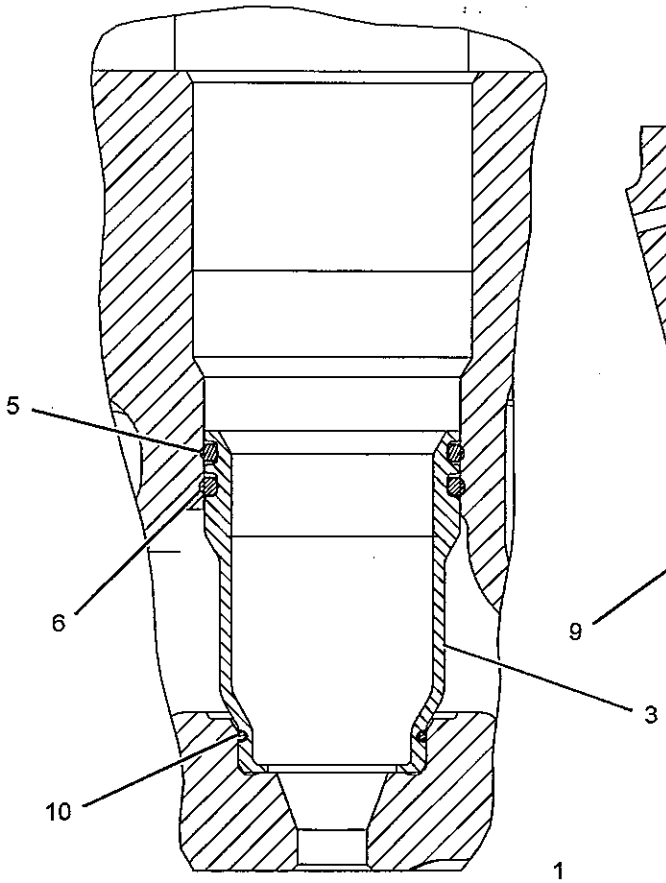


SECTION B-B

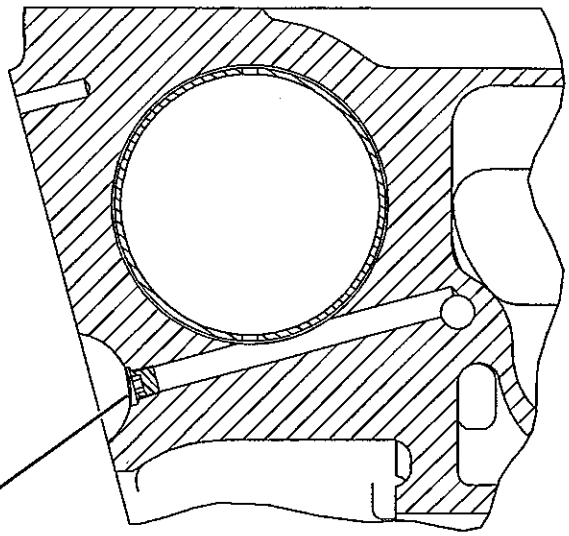


SECTION J-J

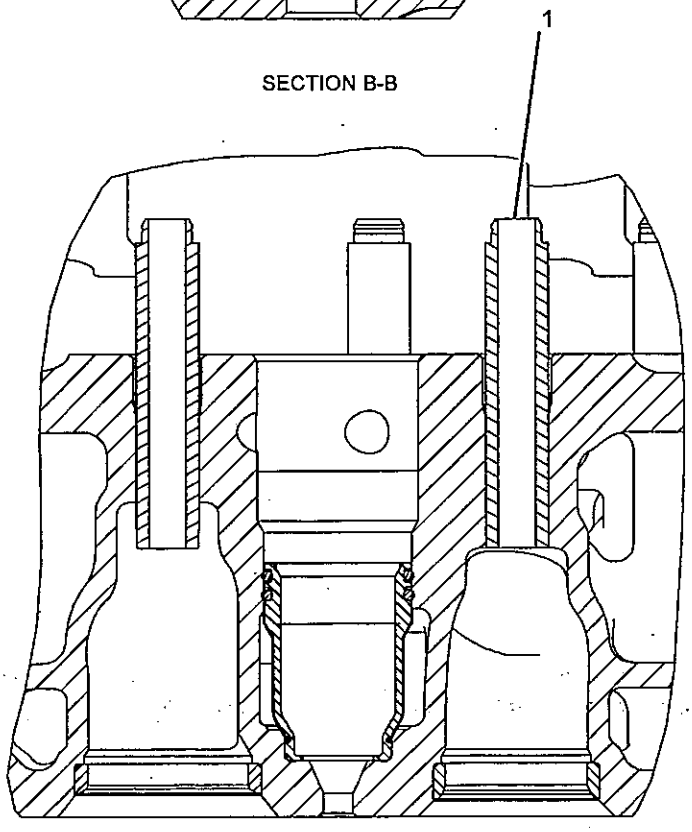


SECTION A-A

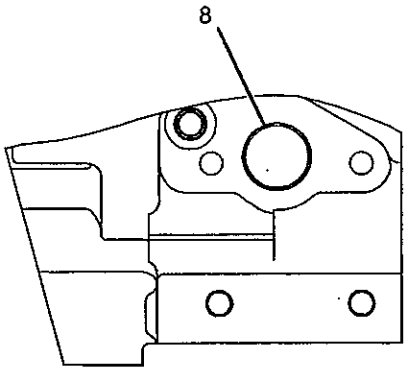


VIEW E-E

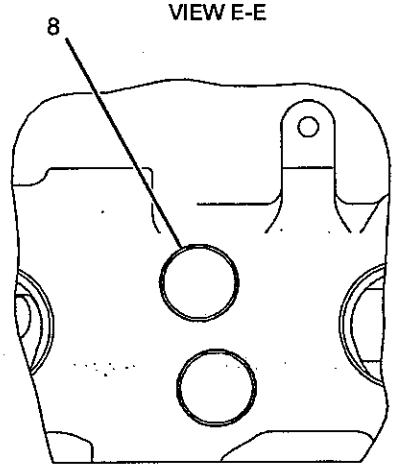


VIEW G-G

GRAPHIC #2 **<END>** g01029134

# 223-9250 CYLINDER HEAD GP

S/N: LHX1-UP

PART OF 235-2974 CYLINDER HEAD GP

SMCS-1100

i02011745

| NOTE | REF NO | GRAPHIC REF | PART NUMBER | QTY | PART NAME 1 2 3 4 5 6 (PRODUCT LEVEL) | SEE PAGE |
|---|---|---|---|---|---|---|
| | 1 | 1 | 2A-4429 | 48 | LOCK-RETAINER | |
| | 2 | 1 | 6I-0928 | 24 | WASHER | |
| | 3 | 1 | 153-7023 | 12 | VALVE-INLET | |
| | 4 | 1 | 153-7024 | 12 | VALVE-EXHAUST | |
| | 5 | 1 | 163-2478 | 24 | SEAL-VALVE STEM | |
| | 6 | 1 | 211-3123 | 24 | SPRING-VALVE | |
| CY | 7 | 1 | 243-6741 | 1 | CYLINDER HEAD AS | 27 |
| | 8 | 1 | 186-2001 | 24 | ROTOCOIL AS | |
| | 9 | 1 | 211-3122 | 24 | SPRING-VALVE | |

C-CHANGE FROM PREVIOUS TYPE
Y-SEPARATE ILLUSTRATION

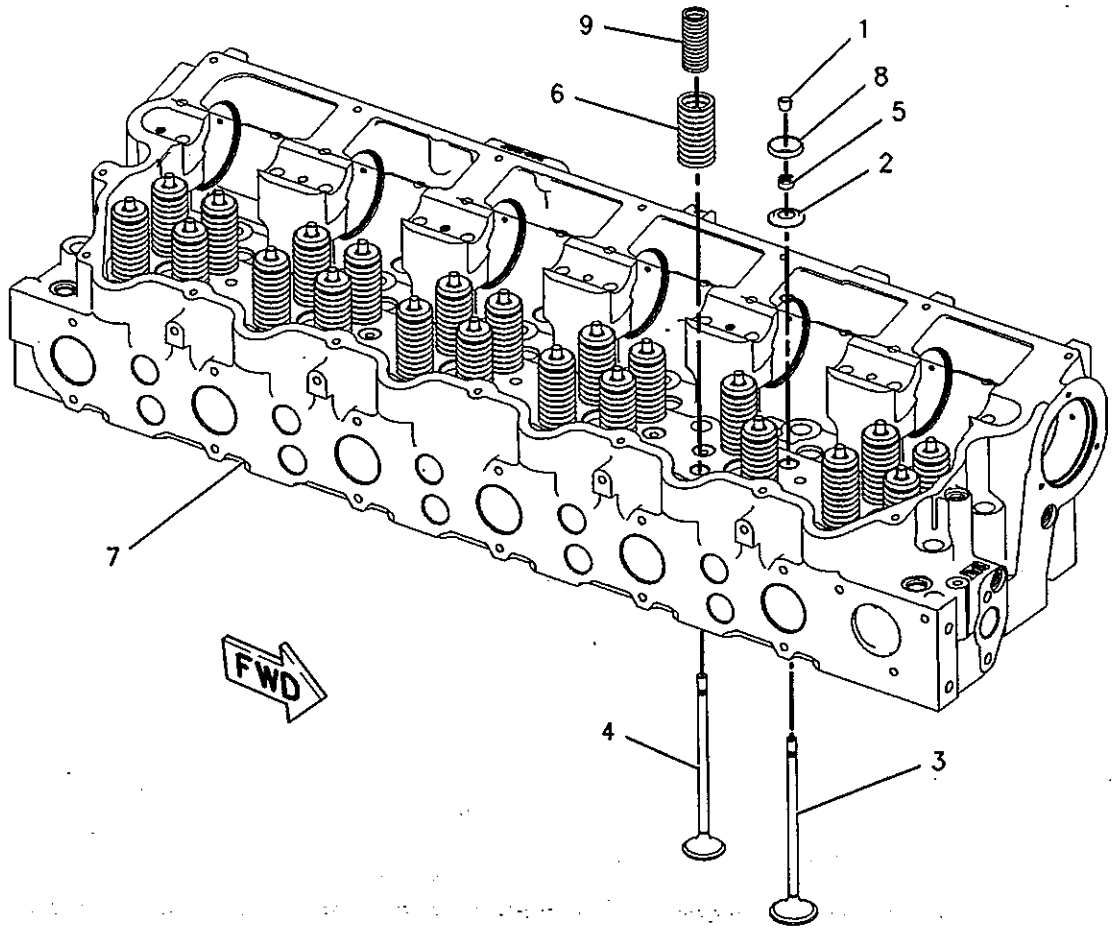


GRAPHIC #1

<END>

g00955632

# BASIC ENGINE

## *235-2974* CYLINDER HEAD GP

**S/N: LHX1-UP**

**PART OF 241-5929 ENGINE AR-CORE**

**SMCS-1100** **i02021458**

| NOTE | REF NO | GRAPHIC REF | PART NUMBER | QTY | PART NAME 1 2 3 4 5 6 (PRODUCT LEVEL) | SEE PAGE |
|---|---|---|---|---|---|---|
| | 1 | 1 | **3E-6772** | 24 | SEAL | |
| | 2 | 1 | *6I-4025* | 16 | FASTENER GP-CYLINDER HEAD | |
| | | 1 | **5H-1504** | 1 | WASHER-HARD (20X33.5X5-MM THK) | |
| | | 1 | **124-1855** | 1 | BOLT-12 POINT HEAD (3/4-16X194-MM) | |
| | 3 | 1 | *106-5673* | 10 | FASTENER GP-CYLINDER HEAD | |
| | | 1 | **5H-1504** | 1 | WASHER-HARD (20X33.5X5-MM THK) | |
| | | 1 | **124-1854** | 1 | BOLT-12 POINT HEAD (3/4-16X216-MM) | |
| | 4 | 1 | **195-3187** | 6 | SLEEVE AS (EXHAUST) | |
| YR | 5 | 1 | **223-9250** | 1 | CYLINDER HEAD GP | 30 |
| | 6 | 1 | **224-5122** | 1 | GASKET | |
| | 7 | 1 | **5P-0840** | 1 | SEAL-O-RING | |
| | 8 | 1 | **6V-5049** | 3 | SEAL-O-RING | |
| | 9 | 1 | **9S-8004** | 3 | PLUG | |

R-REMFG PART MAY BE AVAILABLE
Y-SEPARATE ILLUSTRATION

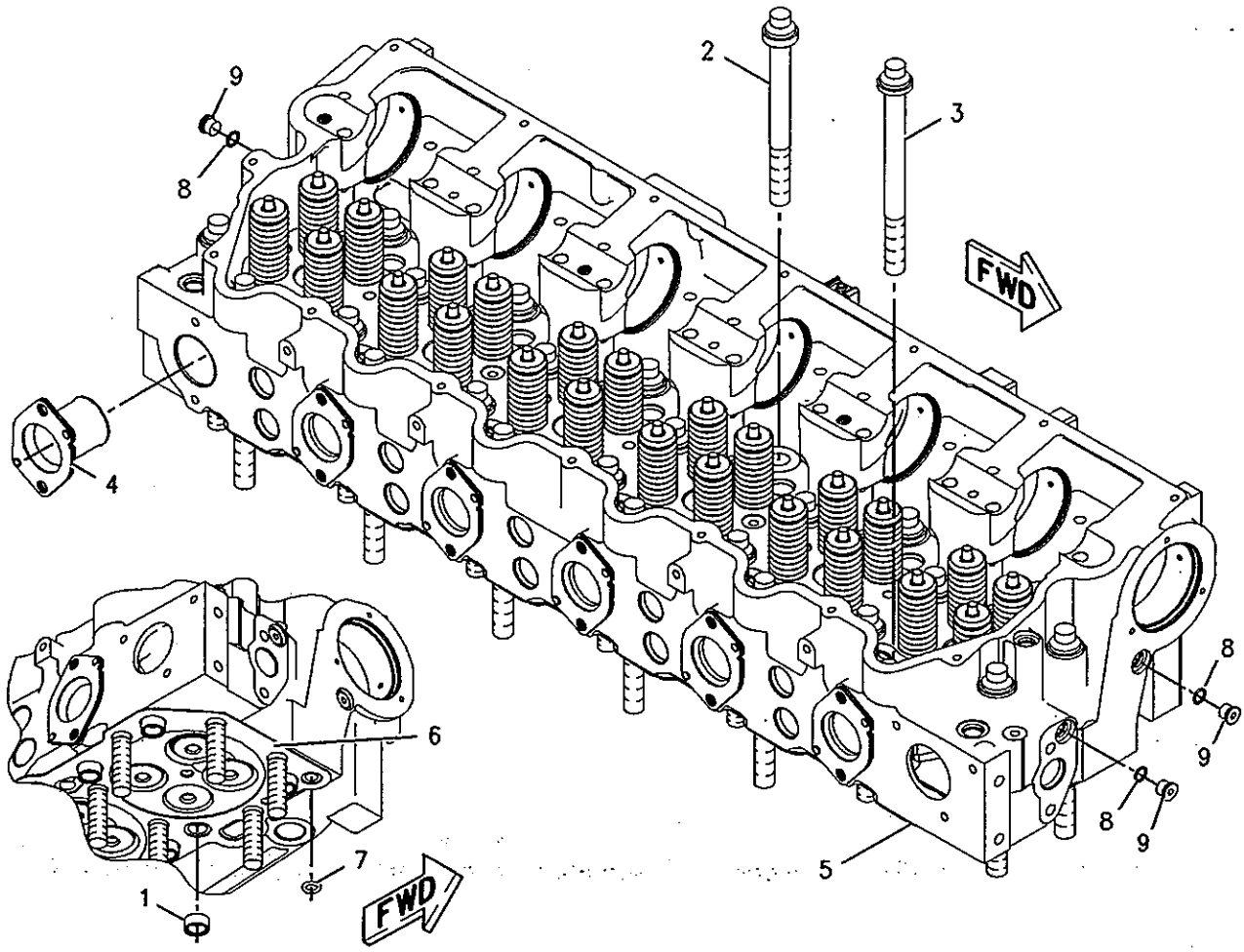


GRAPHIC #1 **<END>** g01002373

# BASIC ENGINE

## *4P-5893* DAMPER GP

**S/N: LHX1-UP**

**PART OF 225-0992 ENGINE AR-COMPLETE**

**SMCS-1205** **i01203695**

| NOTE | REF NO | GRAPHIC REF | PART NUMBER | QTY | PART NAME 1 2 3 4 5 6 (PRODUCT LEVEL) | SEE PAGE |
|---|---|---|---|---|---|---|
| | 1 | 1 | **167-8126** | 1 | DAMPER AS | |
| | 2 | 1 | **1A-3203** | 6 | BOLT (5/8-18X4.75IN) | |
| | 3 | 1 | **4N-2109** | 1 | ADAPTER-DAMPER | |
| | 4 | 1 | **168-2100** | 1 | SPACER | |

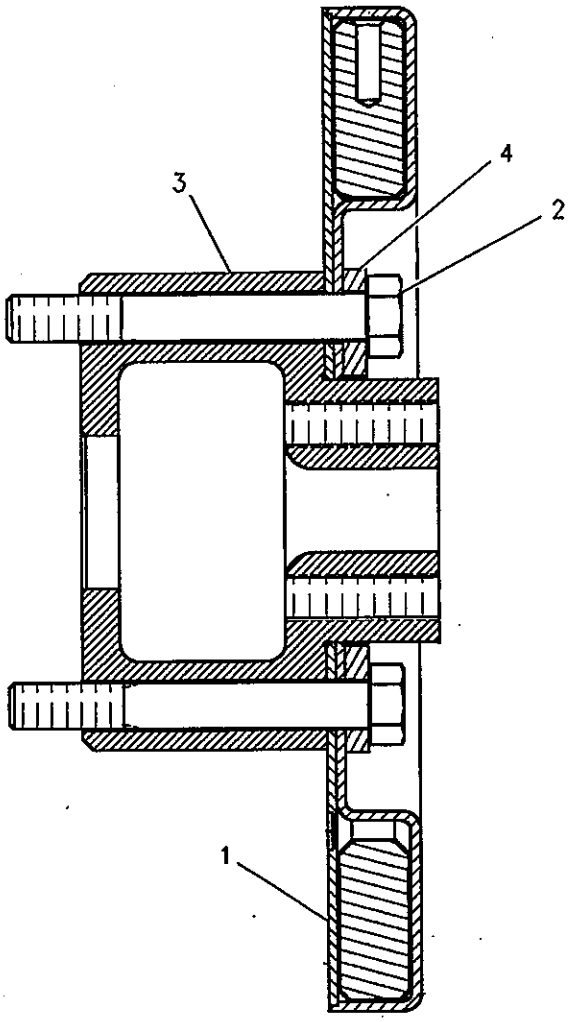


GRAPHIC #1 **<END>** g00643655

## 196-5763 DRAIN GP-ENGINE OIL

S/N: JMS1-UP

PART OF 226-9644 INSTALLATION AR-ENGINE

SMCS-1302 i01747047

| NOTE | REF NO | GRAPHIC REF | PART NUMBER | QTY | PART NAME 1 2 3 4 5 6 (PRODUCT LEVEL) | SEE PAGE |
|---|---|---|---|---|---|---|
| E | 1 | 1 | 5P-0767 | | HOSE (18 CM) | |
| | 2 | 1 | 5D-1026 | 1 | CLAMP-HOSE | |

E-ORDER BY THE CENTIMETER

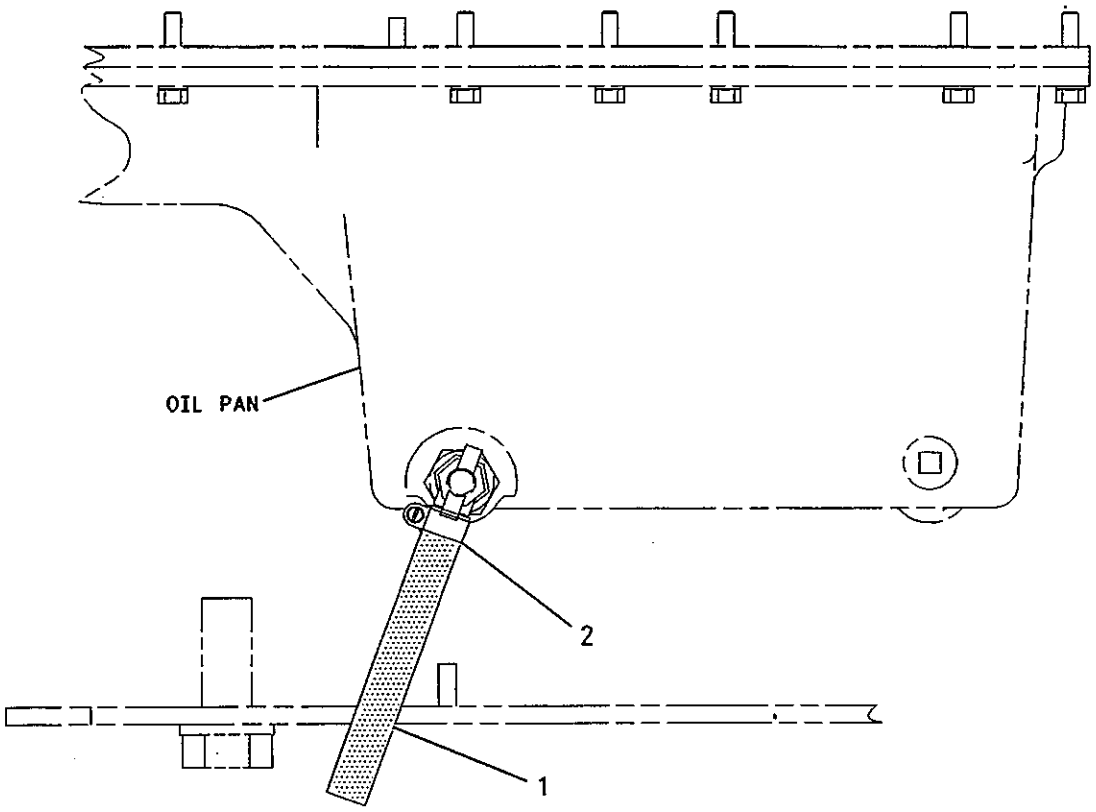


LEFT SIDE VIEW

GRAPHIC #1 <END> g00751801

# BASIC ENGINE

## 206-4227 DRIVE GP-ACCESSORY

**S/N: LHX1-UP**

**PART OF 225-0992 ENGINE AR-COMPLETE**

**SMCS-1207** **i02211659**

| NOTE | REF NO | GRAPHIC REF | PART NUMBER | QTY | PART NAME 1 2 3 4 5 6 (PRODUCT LEVEL) | SEE PAGE |
|---|---|---|---|---|---|---|
| | 1 | 1 | 1N-3974 | 1 | COUPLING | |
| I | 4 | 1 | 101-6596 | 1 | HOSE AS | |
| | 5 | 1 | 143-8971 | 1 | BEARING-DRIVE | |
| | 6 | 1 | 143-9732 | 1 | GEAR (40-TEETH) | |
| | 7 | 1 | 144-6142 | 1 | SEAL-INTEGRAL | |
| | 8 | 1 | 030-7946 | 1 | ELBOW | |
| | 10 | 1 | 3J-7352 | 1 | CONNECTOR | |
| | 11 | 1 | 3J-7354 | 2 | SEAL-O-RING | |
| | 13 | 1 | 6V-8188 | 3 | NUT (1/2-13-THD) | |
| | 14 | 1 | 8T-4223 | 3 | WASHER-HARD (13.5X25.5X3-MM THK) | |

I-REFER TO HYDRAULIC INFORMATION SYSTEM

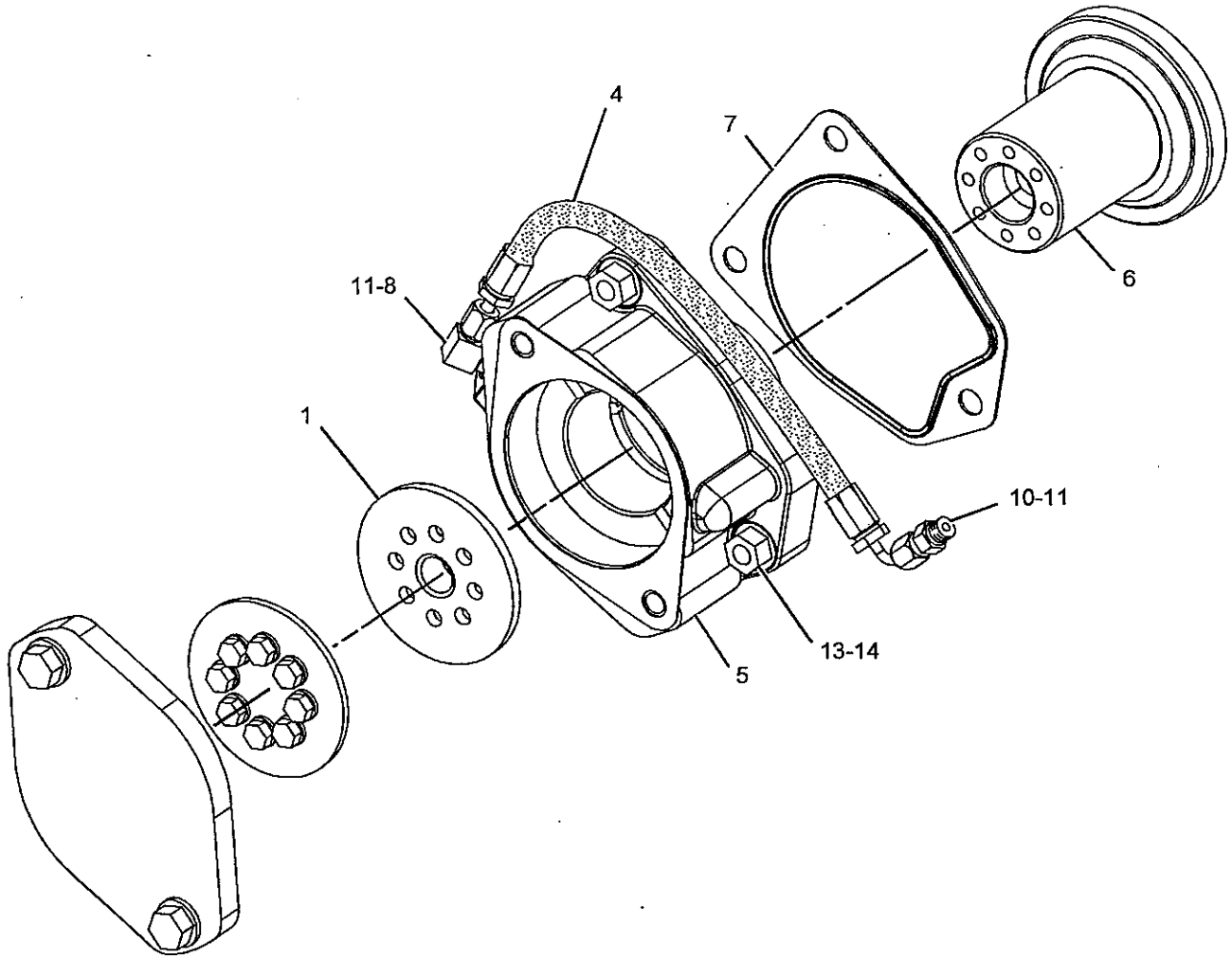


GRAPHIC #1 **<END>** g01118874

# 6I-3638 DRIVE GP-PUMP

S/N: LHX1-UP

LEFT HAND REARWARD FACING SAE 2 BOLT FLANGE WITH SPLINE DRIVE

PART OF 225-0992 ENGINE AR-COMPLETE

FOR USE WITH THE 2.5 BASE MODULE LARGE CAM GEAR TRAIN, CUSTOMER SUPPLIED SAE "A" PUMP WITH 11 TOOTH 16/32 DEPTH SPLINE

SMCS-1207 i01949792

| NOTE | REF NO | GRAPHIC REF | PART NUMBER | QTY | PART NAME 1 2 3 4 5 6 (PRODUCT LEVEL) | SEE PAGE |
|---|---|---|---|---|---|---|
| | 1 | 1 | 0S-1590 | 3 | BOLT (3/8-16X2-IN) | |
| | 2 | 1 | 8T-9527 | 1 | SEAL-O-RING | |
| YC | 3 | 1 | *133-9907* | 1 | ADAPTER GP-PUMP DRIVE | 7 |
| | 4 | 1 | 5M-2894 | 4 | WASHER-HARD (10.2X18.5X2.5-MM THK) | |
| | 5 | 1 | 9S-8752 | 1 | NUT-FULL (3/8-16-THD) | |

C-CHANGE FROM PREVIOUS TYPE
Y-SEPARATE ILLUSTRATION

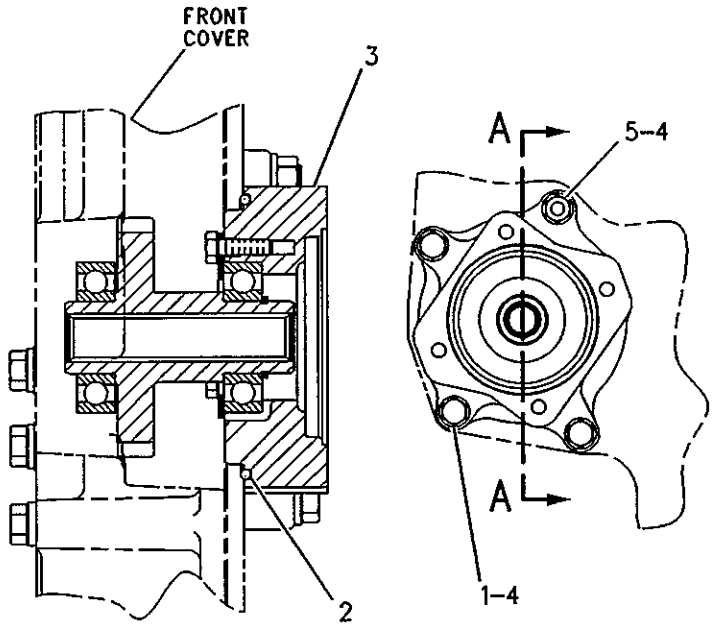


VIEW A–A

GRAPHIC #1 <END> g00263601

# BASIC ENGINE

## *4P-6846* FASTENER GP-FRONT HOUSING

**S/N: LHX1-UP**

**PART OF 225-0992 ENGINE AR-COMPLETE**

**SMCS-1151, 1162** **i00670557**

| NOTE | REF NO | GRAPHIC REF | PART NUMBER | QTY | PART NAME 1 2 3 4 5 6 (PRODUCT LEVEL) | SEE PAGE |
|---|---|---|---|---|---|---|
| | 1 | 1 | 7N-0452 | 1 | PLATE | |
| | 2 | 1 | 0S-1594 | 2 | BOLT (3/8-16X1IN) | |
| | 3 | 1 | 5M-2894 | 2 | WASHER (2.5MM THK) | |

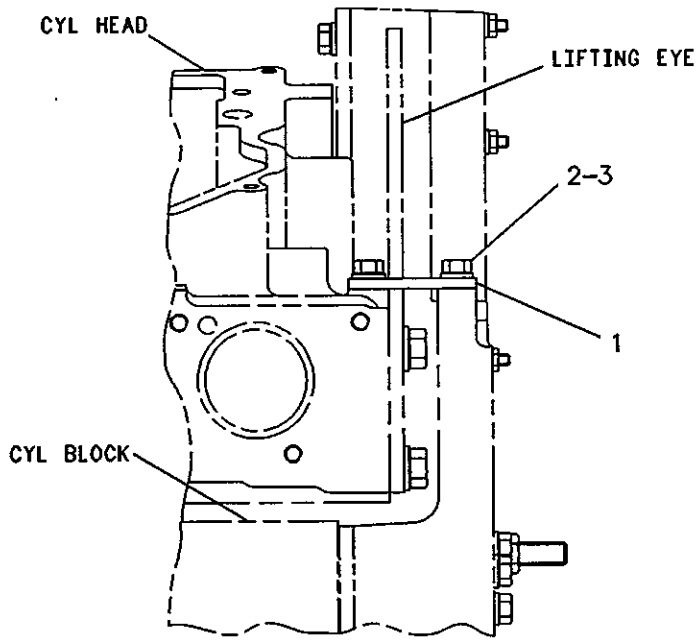


RIGHT SIDE VIEW

GRAPHIC #1

**<END>**

g00231021

# 108-9382 FASTENER GP-FRONT HOUSING

S/N: LHX1-UP

PART OF 225-0992 ENGINE AR-COMPLETE

FOR USE WITH FRONT HOUSING WHEN FAN DRIVE IS NOT INSTALLED

SMCS-1151, 1162 i00670762

| NOTE | REF NO | GRAPHIC REF | PART NUMBER | QTY | PART NAME 1 2 3 4 5 6 (PRODUCT LEVEL) | SEE PAGE |
|---|---|---|---|---|---|---|
| | 1 | 1 | 1F-7958 | 2 | NUT-FULL (1/2-13 THD) | |
| | 2 | 1 | 5P-8245 | 2 | WASHER (3MM THK) | |
| | 3 | 1 | 149-5268 | 2 | STUD-TAPERLOCK | |

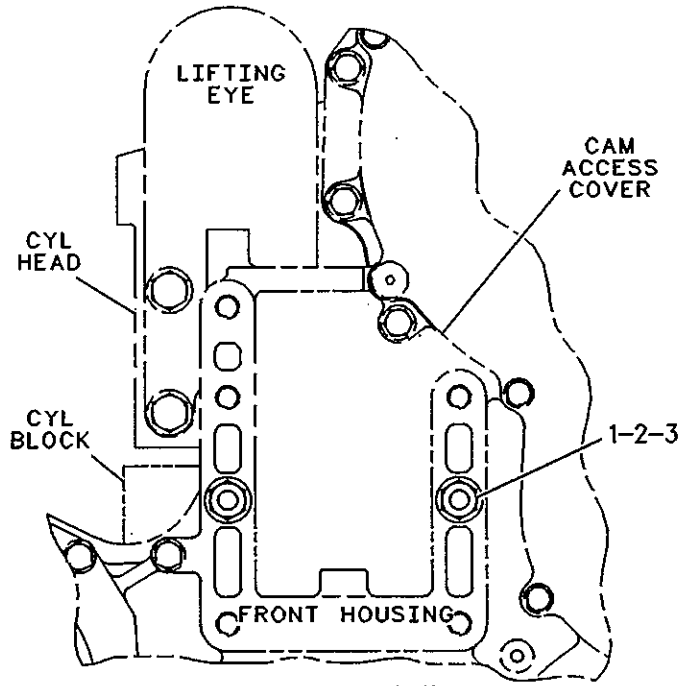


FRONT VIEW

GRAPHIC #1 <END> g00237936

# BASIC ENGINE

## *217-0683* FASTENER GP-OIL PAN

**S/N: LHX1-UP**

**PART OF 225-0992 ENGINE AR-COMPLETE**

**SMCS-1302** **i02172111**

| NOTE | REF NO | GRAPHIC REF | PART NUMBER | QTY | PART NAME 1 2 3 4 5 6 (PRODUCT LEVEL) | SEE PAGE |
|---|---|---|---|---|---|---|
| | 1 | 1 | 240-1614 | 24 | SLEEVE AS | |
| C | 2 | 1 | 0L-2070 | 21 | BOLT (3/8-16X2.25-IN) | |
| C | 3 | 1 | 238-4664 | 3 | STUD | |
| C | 4 | 1 | 5M-2894 | 2 | WASHER-HARD (10.2X18.5X2.5-MM THK) | |
| | 5 | 1 | 9L-9132 | 24 | WASHER (10.2X25.5X2.5-MM THK) | |
| C | 6 | 1 | 9S-8752 | 1 | NUT-FULL (3/8-16-THD) | |

C-CHANGE FROM PREVIOUS TYPE

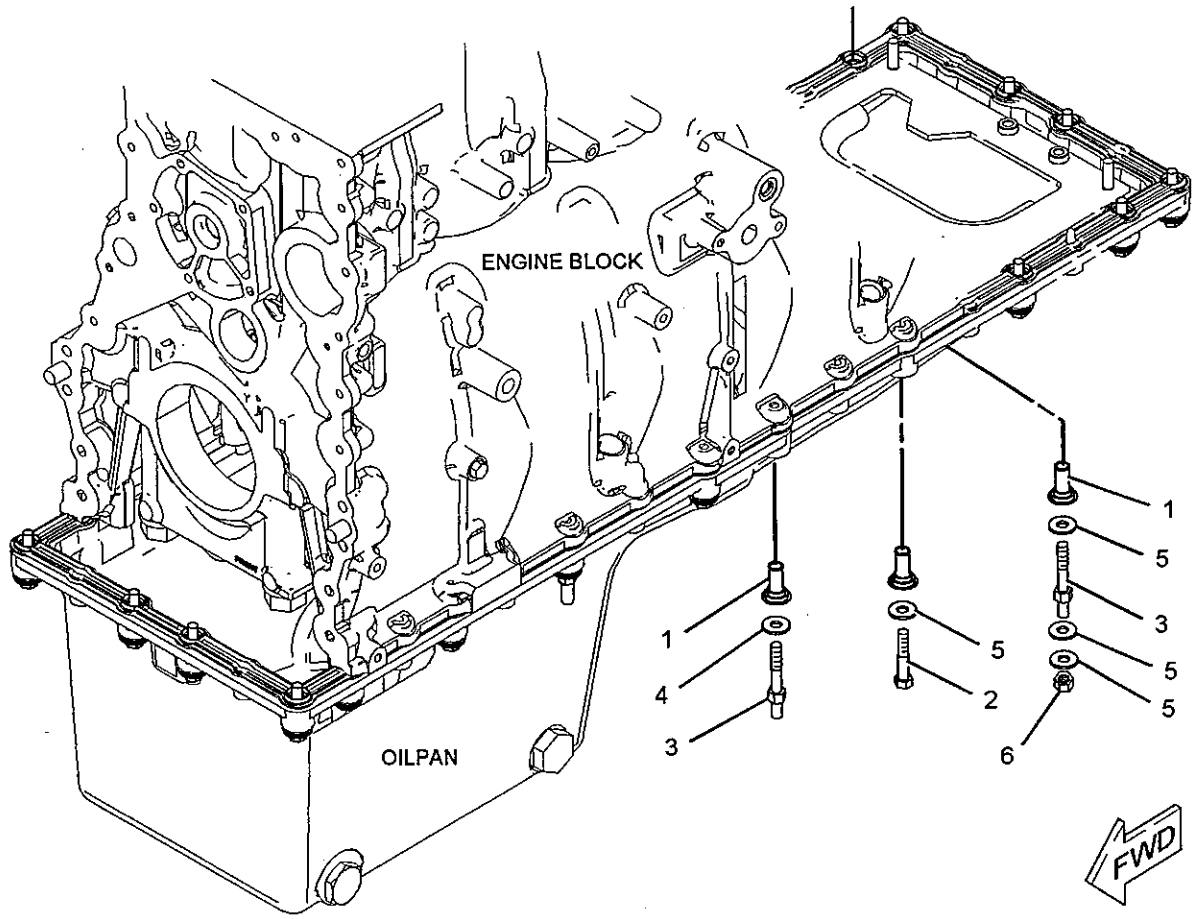


GRAPHIC #1 **<END>** g01031130

# 109-1657 FASTENER GP-VALVE MECHANISM

S/N: LHX1-UP

PART OF 241-5929 ENGINE AR-CORE

SMCS-1102 i01090405

| NOTE | REF NO | GRAPHIC REF | PART NUMBER | QTY | PART NAME 1 2 3 4 5 6 (PRODUCT LEVEL) | SEE PAGE |
|---|---|---|---|---|---|---|
| | 1 | 1 | 5J-5794 | 12 | BOLT (1/2-13X3.5-IN) | |
| | 2 | 1 | 8L-8413 | 6 | STRAP-CABLE | |

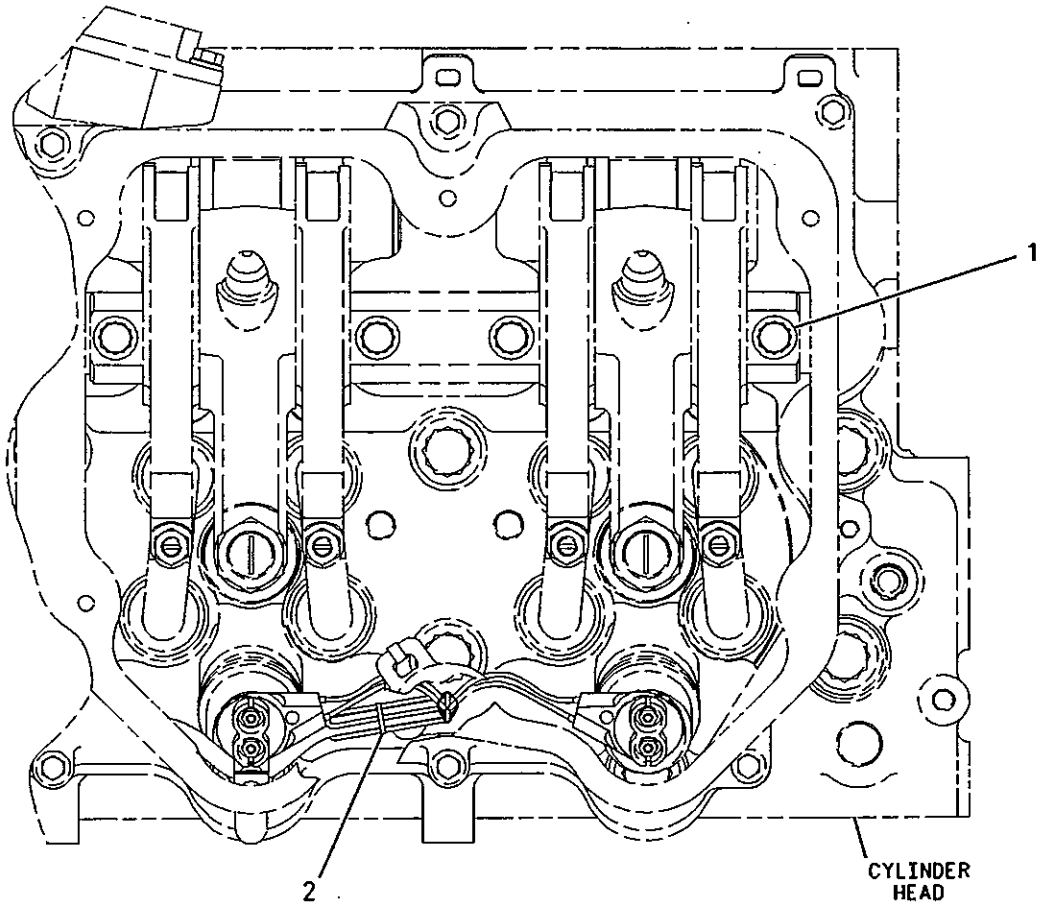


TOP VIEW

GRAPHIC #1 <END> g00571205

# BASIC ENGINE

## *4P-6817* FLYWHEEL GP

**S/N: LHX1-UP**

**PART OF 225-0992 ENGINE AR-COMPLETE**

**SMCS-1156** **i01124563**

| NOTE | REF NO | GRAPHIC REF | PART NUMBER | QTY | PART NAME 1 2 3 4 5 6 (PRODUCT LEVEL) | SEE PAGE |
|---|---|---|---|---|---|---|
| | 1 | 1 | 0S-1577 | 12 | BOLT (5/8-18X2.25IN) | |
| | | 1 | 4D-3704 | 12 | WASHER-HARD (5MM THK) | |
| | 2 | 1 | 4P-6818 | 1 | FLYWHEEL AS | |
| | 3 | 1 | 4N-2514 | 1 | GEAR (113 TEETH) | |

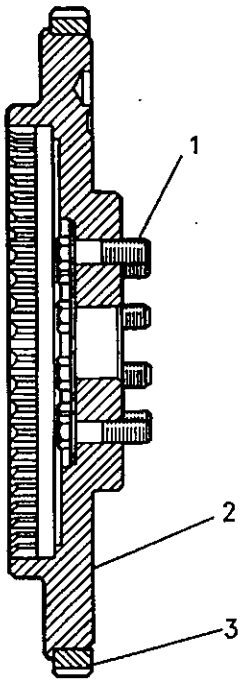


GRAPHIC #1 **<END>** g00594779

# 204-9316 GEAR GP-CAMSHAFT

S/N: LHX1-UP

PART OF 208-9490 GEAR GP-FRONT

SMCS-1212 i01549424

| NOTE | REF NO | GRAPHIC REF | PART NUMBER | QTY | PART NAME 1 2 3 4 5 6 (PRODUCT LEVEL) | SEE PAGE |
|---|---|---|---|---|---|---|
| | 1 | 1 | 9X-8872 | 16 | BOLT-LOCKING (3/8-16X0.875 IN) | |

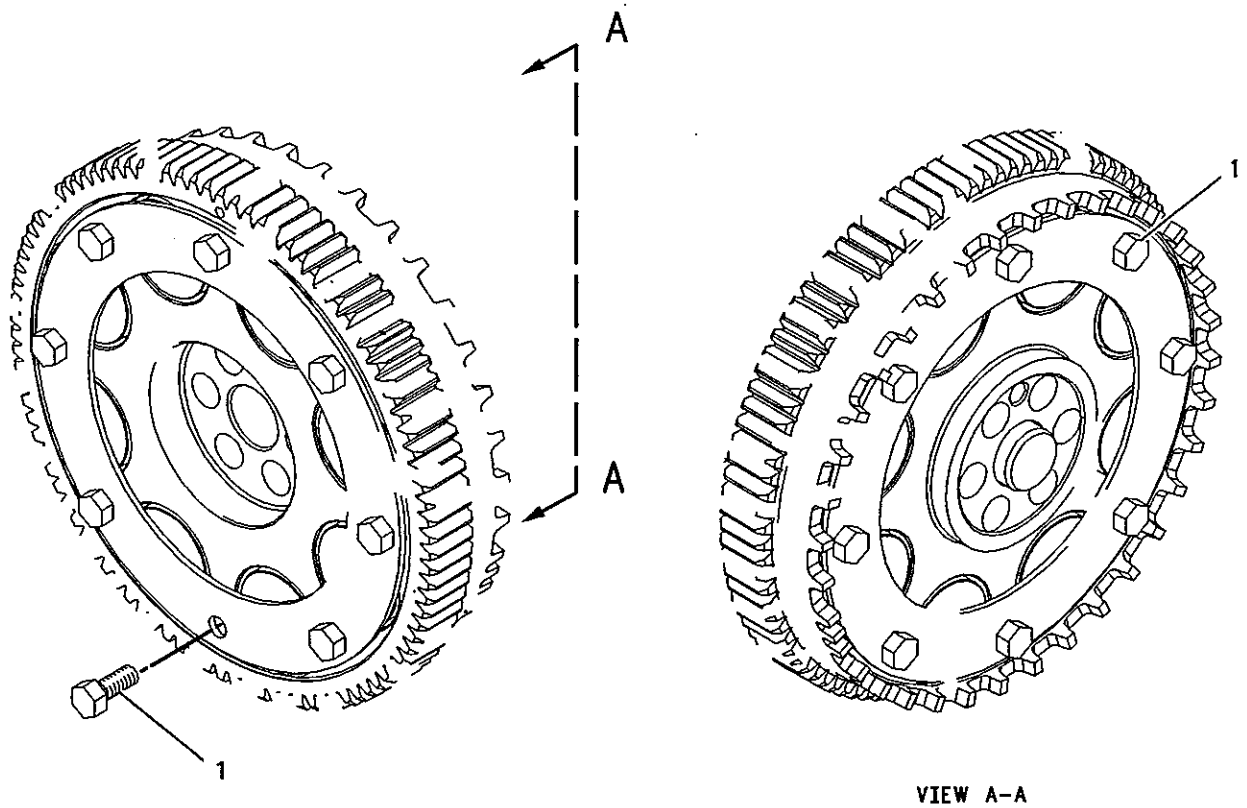


VIEW A-A

GRAPHIC #1 <END> g00809033

# BASIC ENGINE

## *208-9490* GEAR GP-FRONT

**S/N: LHX1-UP**

**PART OF 241-5929 ENGINE AR-CORE**

**SMCS-1206** **i02286533**

| NOTE | REF NO | GRAPHIC REF | PART NUMBER | QTY | PART NAME 1 2 3 4 5 6 (PRODUCT LEVEL) | SEE PAGE |
|---|---|---|---|---|---|---|
| | 1 | 1 | **0S-1571** | 1 | BOLT (3/8-16X1.75-IN) | |
| | 2 | 1 | **2J-3118** | 5 | BOLT-LOCKING (3/8-16X1.25-IN) | |
| | 3 | 1 | **5P-4142** | 2 | BOLT-LOCKING (3/8-16X1.5-IN) | |
| | 4 | 1 | **1B-8705** | 1 | KEY-WOODRUFF | |
| | 5 | 1 | **1P-7346** | 1 | WASHER-HARD (10.2X35X6-MM THK) | |
| | 6 | 1 | **126-1756** | 10 | BOLT-LOCKING (5/16-18X22.22-MM) | |
| | 7 | 1 | **112-9217** | 1 | PLATE-THRUST | |
| | 8 | 1 | **130-4701** | 1 | GEAR AS (56-TEETH) | |
| | | 1 | **130-4698** | 1 | BEARING-SLEEVE | |
| | 9 | 1 | **151-5966** | 1 | SHAFT AS-STUB | |
| | | 1 | **6I-3623** | 1 | DOWEL | |
| | 10 | 1 | **6I-3624** | 2 | PLATE-THRUST | |
| | 11 | 1 | **6I-3625** | 1 | GEAR AS (71-TEETH) | |
| | | 1 | **101-8468** | 1 | BEARING-SLEEVE | |
| | 12 | 1 | **149-9107** | 1 | GEAR AS-CLUSTER (105/63-TEETH) | |
| | | 1 | **1B-8705** | 1 | KEY-WOODRUFF | |
| | | 1 | **128-2661** | 1 | BEARING-SLEEVE | |
| | 13 | 1 | **197-4971** | 1 | SHAFT-STUB | |
| | 14 | 1 | **158-3416** | 1 | SHAFT-STUB | |
| | 15 | 1 | **031-3185** | 6 | BOLT-12 POINT HEAD (5/8-11X3-IN) | |
| | 16 | 1 | **149-9110** | 1 | GEAR-OIL PUMP DRIVE (69-TEETH) | |
| | 17 | 1 | **9S-8752** | 10 | NUT-FULL (3/8-16-THD) | |
| | 18 | 1 | **9X-6458** | 12 | WASHER-HARD (10.2X22.5X3-MM THK) | |
| | 19 | 1 | **117-8801** | 1 | SEAL-O-RING | |
| | 20 | 1 | **5E-8771** | 1 | SEAL-O-RING | |
| | 21 | 1 | **159-1533** | 1 | PLATE-SEALING | |
| | 22 | 1 | **159-8524** | 1 | ADAPTER AS | |
| | | 1 | **6V-3677** | 1 | DOWEL | |
| | 23 | 1 | **102-5861** | 1 | PLATE-THRUST | |
| | 24 | 1 | **107-0583** | 3 | BOLT-LOCKING (1/4-20X0.87-IN) | |
| Y | 25 | 1 | **204-9316** | 1 | GEAR GP-CAMSHAFT | 41 |

Y-SEPARATE ILLUSTRATION

*208-9490* **GEAR GP-FRONT** *(contd.)* i02286533

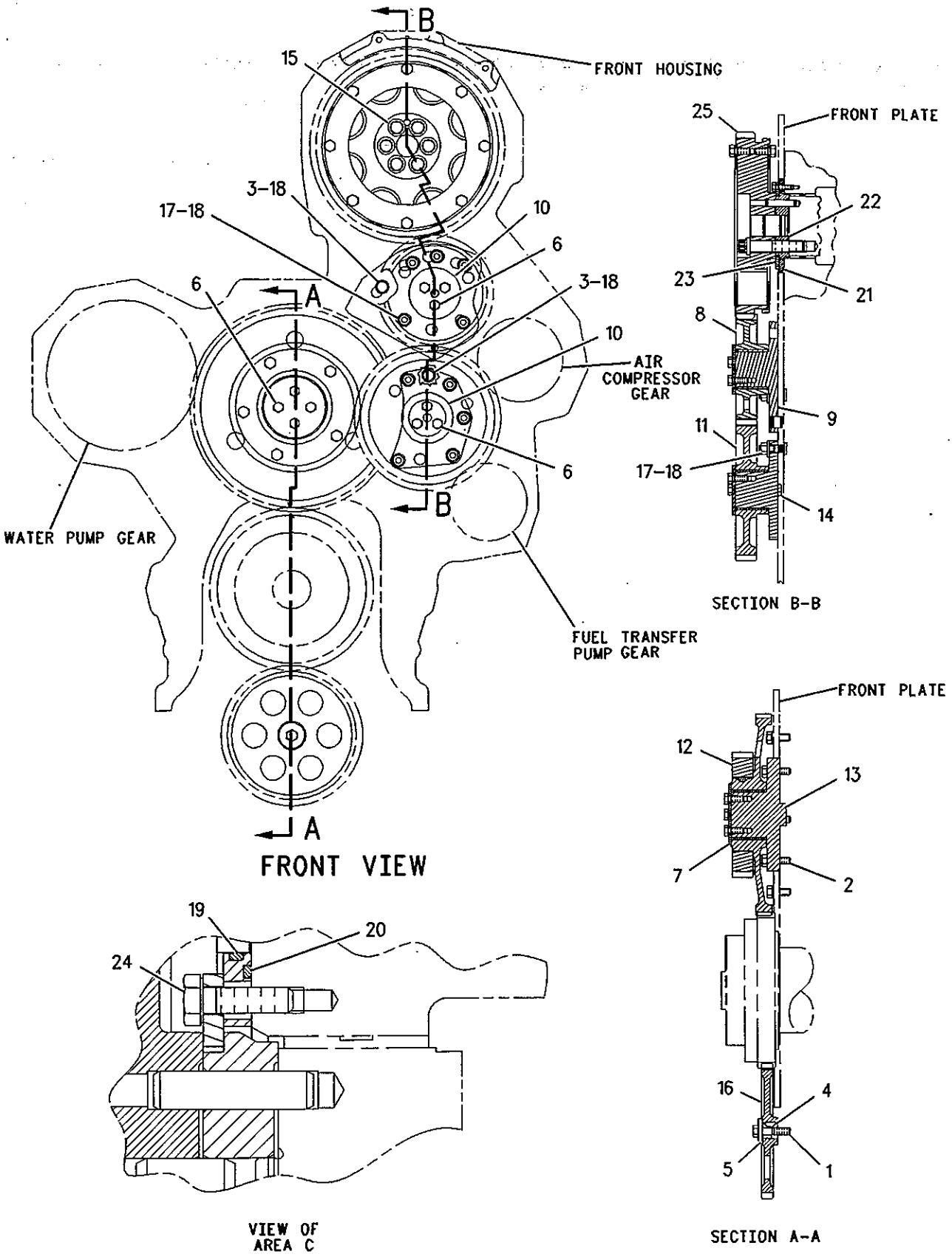


GRAPHIC #1 **<END>** g00840424

## 160-2612 HOUSING GP-FLYWHEEL

S/N: LHX1-UP

PART OF 225-0992 ENGINE AR-COMPLETE

SMCS-1157

i01871538

| NOTE | REF NO | GRAPHIC REF | PART NUMBER | QTY | PART NAME 1 2 3 4 5 6 (PRODUCT LEVEL) | SEE PAGE |
|---|---|---|---|---|---|---|
| | 1 | 1 | 2P-2772 | 1 | COVER | |
| | 2 | 1 | 142-5868 | 1 | SEAL GP-CRANKSHAFT | |
| | 3 | 1 | 5F-0304 | 1 | PLUG (FLYWHEEL HOUSING) | |
| | 4 | 1 | 9Y-6089 | 1 | GASKET | |
| | 5 | 1 | 108-4758 | 1 | HOUSING AS | |
| | | 1 | 3B-1925 | 1 | WASHER (0.316X1X0.064-IN THK) | |
| | | 1 | 9L-9653 | 1 | PLUG | |
| | | 1 | 1W-3136 | 1 | BAFFLE | |
| | 6 | 1 | 155-5619 | 1 | GASKET | |
| | 7 | 1 | 160-2563 | 1 | ADAPTER | |
| | 8 | 1 | 165-3929 | 10 | BOLT (3/8-16X38.1-MM) (3/8-16) | |
| | | | | | (LOCATIONS MARKED X) | |
| | 9 | 1 | 165-3933 | 5 | BOLT (3/8-16) | |
| | | | | | (LOCATIONS MARKED Y) | |
| | 10 | 1 | 0S-1566 | 3 | BOLT (5/8-11X1.5-IN) | |
| | 11 | 1 | 0S-1594 | 1 | BOLT (3/8-16X1-IN) | |
| | 12 | 1 | 0S-1619 | 1 | BOLT (3/8-16X3-IN) | |
| | 13 | 1 | 2A-1162 | 1 | GASKET | |
| | 14 | 1 | 4N-0933 | 1 | GASKET | |
| | 15 | 1 | 5M-2894 | 17 | WASHER-HARD (10.2X18.5X2.5-MM THK) | |
| | | | | | (LOCATIONS MARKED X,Y) | |
| M | 16 | 1 | 5P-8245 | 9 | WASHER-HARD (13.5X25.5X3-MM THK) | |
| | | | | | (LOCATIONS MARKED P) | |
| | 17 | 1 | 5P-8247 | 3 | WASHER-HARD (17X32X3.5-MM THK) | |
| | 18 | 1 | 7K-6058 | 9 | BOLT-12 POINT HEAD (1/2-13X2.5-IN) | |
| | | | | | (LOCATIONS MARKED P) | |
| | 19 | 1 | 7X-7731 | 2 | PLUG-PIPE | |
| | 20 | 1 | 8T-6765 | 2 | PLUG-PIPE | |

M-METRIC PART

## 160-2612 HOUSING GP-FLYWHEEL *(contd.)*

i01871538

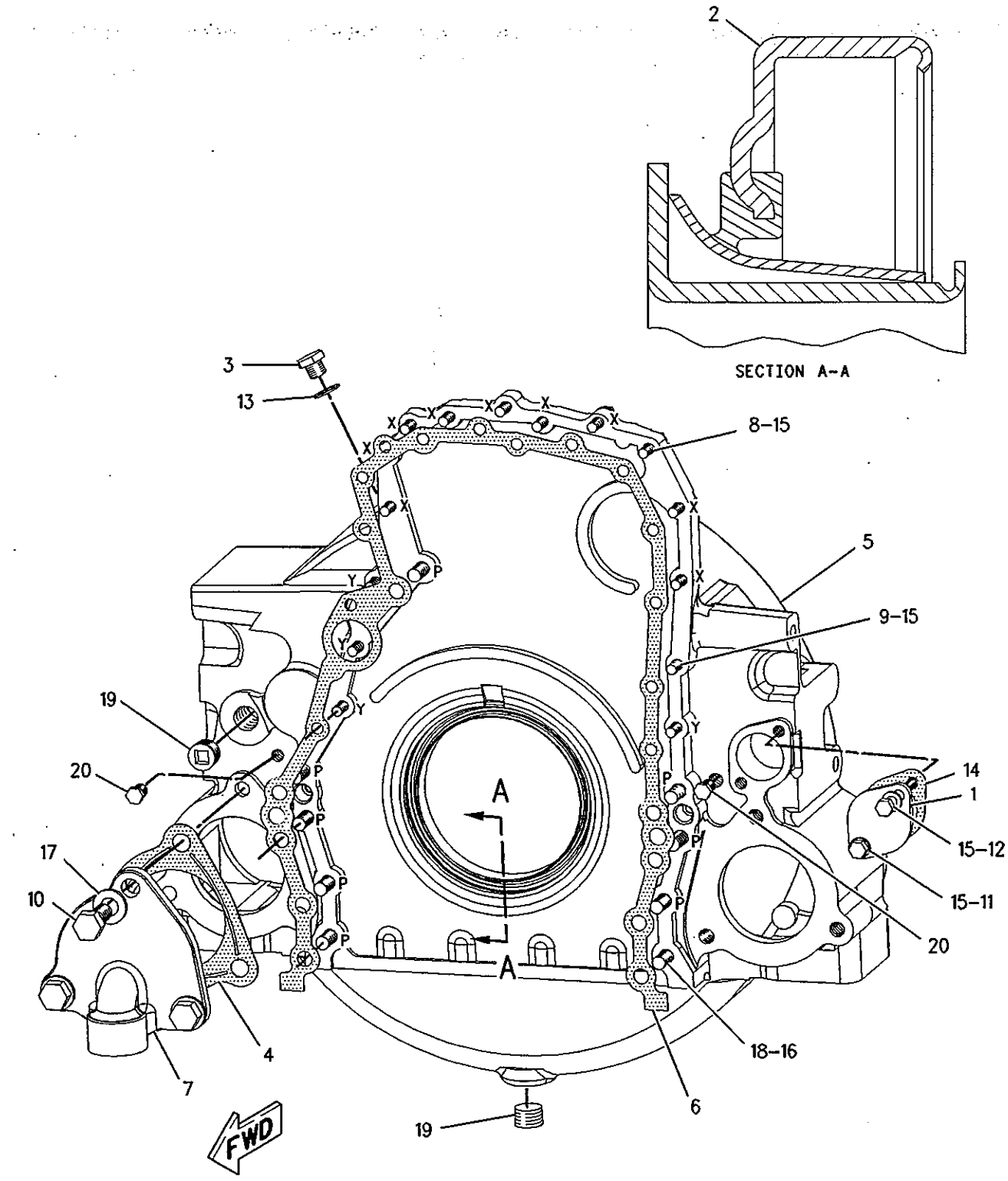


GRAPHIC #1

<END>

g00976214

# BASIC ENGINE

## *243-5786* HOUSING GP-FRONT

**S/N: LHX1-UP**

**PART OF 225-0992 ENGINE AR-COMPLETE**

**SMCS-1151, 1162** **i02168863**

| NOTE | REF NO | GRAPHIC REF | PART NUMBER | QTY | PART NAME 1 2 3 4 5 6 (PRODUCT LEVEL) | SEE PAGE |
|---|---|---|---|---|---|---|
| | 1 | 1 | **120-9243** | 2 | STUD | |
| | 2 | 1 | **126-1757** | 9 | WASHER (10.85X19.3X1.27-MM THK) | |
| | 3 | 1 | **129-5427** | 2 | WASHER (14X27X1.27-MM THK) | |
| | 4 | 1 | **129-5428** | 12 | STUD | |
| | 5 | 1 | **155-9524** | 1 | SEAL-INTEGRAL | |
| | 6 | 1 | **158-8881** | 1 | PLATE | |
| | 7 | 1 | **166-9144** | 1 | GASKET | |
| | 8 | 1 | **241-0478** | 1 | HOUSING GP-FRONT | |
| | | 1 | **3E-8044** | 1 | STUD | |
| | | 1 | **187-5420** | 1 | HOUSING-FRONT | |
| | 9 | 1 | **0L-2070** | 1 | BOLT (3/8-16X2.25-IN) | |
| | 10 | 1 | **0S-1588** | 9 | BOLT (3/8-16X1.25-IN) | |
| | 11 | 1 | **0T-0055** | 1 | BOLT (3/8-16X4.25-IN) | |
| | 12 | 1 | **5M-2894** | 20 | WASHER-HARD (10.2X18.5X2.5-MM THK) | |
| | 13 | 1 | **5P-4255** | 8 | BOLT-LOCKING (3/8-16X1-IN) | |
| | 14 | 1 | **9S-8752** | 1 | NUT-FULL (3/8-16-THD) | |

## *243-5786* **HOUSING GP-FRONT** *(contd.)*

i02168863

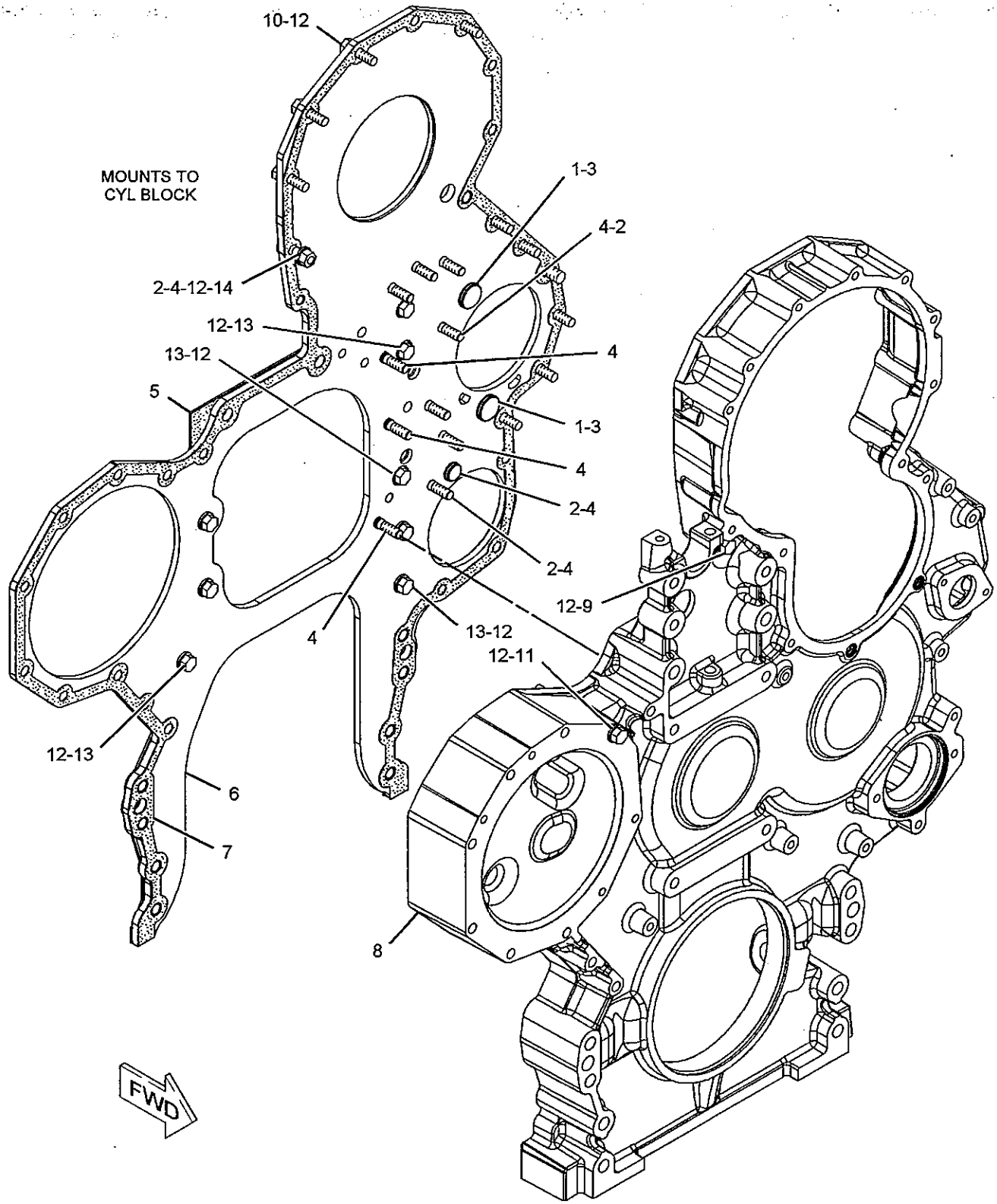


GRAPHIC #1

<END>

g01099059

# BASIC ENGINE

## *111-2088* LIFTING GP-ENGINE

**S/N: LHX1-UP**

**REAR, LOW PROFILE LIFTING EYE**

**PART OF 225-0992 ENGINE AR-COMPLETE**

**SMCS-1122** **i00702749**

| NOTE | REF NO | GRAPHIC REF | PART NUMBER | QTY | PART NAME 1 2 3 4 5 6 (PRODUCT LEVEL) | SEE PAGE |
|---|---|---|---|---|---|---|
| | 1 | 1 | 109-9985 | 1 | EYE-LIFTING | |
| | 2 | 1 | 0S-1594 | 8 | BOLT (3/8-16X1IN) | |
| | 3 | 1 | 5M-2894 | 8 | WASHER (2.5MM THK) | |

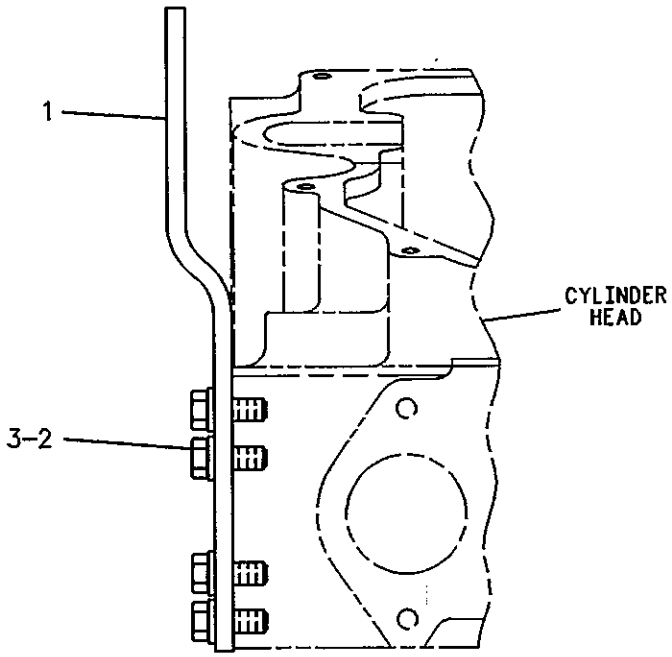


GRAPHIC #1 **<END>** g00238183

# BASIC ENGINE

## *111-2355* LIFTING GP-ENGINE

S/N: LHX1-UP
FRONT- OFFSET LIFTING EYE
PART OF 225-0992 ENGINE AR-COMPLETE
CANNOT BE USED WITH ALTERNATOR MOUNTING

SMCS-1122 i00833389

| NOTE | REF NO | GRAPHIC REF | PART NUMBER | QTY | PART NAME 1 2 3 4 5 6 (PRODUCT LEVEL) | SEE PAGE |
|---|---|---|---|---|---|---|
| | 1 | 1 | 110-4344 | 1 | EYE-LIFTING | |
| | 2 | 1 | 0S-1595 | 4 | BOLT (1/2-13X1.25IN) | |
| | 3 | 1 | 5P-8245 | 4 | WASHER (3MM THK) | |

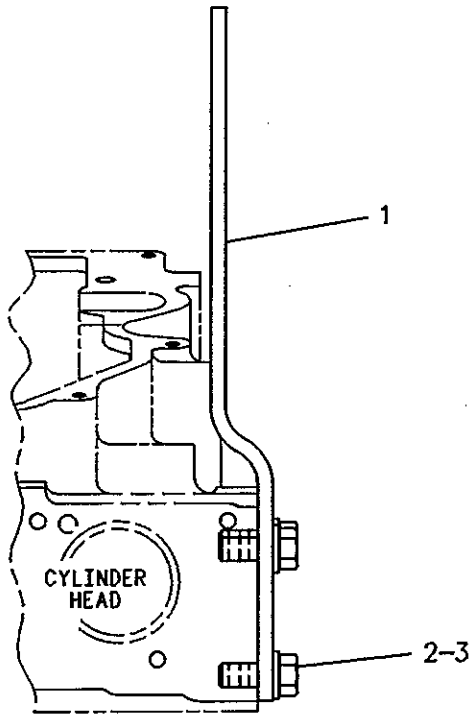


GRAPHIC #1 <END> g00238181

# 188-1754 MOUNTING GP-ALTERNATOR & COMPR

**S/N: LHX1-UP**

**PART OF 225-0992 ENGINE AR-COMPLETE**

**SMCS-1405, 1802** **i01444958**

| NOTE | REF NO | GRAPHIC REF | PART NUMBER | QTY | PART NAME 1 2 3 4 5 6 (PRODUCT LEVEL) | SEE PAGE |
|---|---|---|---|---|---|---|
| | 1 | 1 | 188-1755 | 1 | SUPPORT | |
| | 2 | 1 | 0S-1608 | 2 | BOLT (3/8-16X3.75-IN) | |
| | 3 | 1 | 0T-0573 | 2 | BOLT (3/8-16X2.75-IN) | |
| | 4 | 1 | 2P-1974 | 2 | STUD-TAPERLOCK (3/8-16X4.2-IN OAL) | |
| | 5 | 1 | 5M-2894 | 6 | WASHER-HARD (10.2X18.5X2.5-MM THK) | |
| | 6 | 1 | 9S-8752 | 2 | NUT-FULL (3/8-16-THD) | |

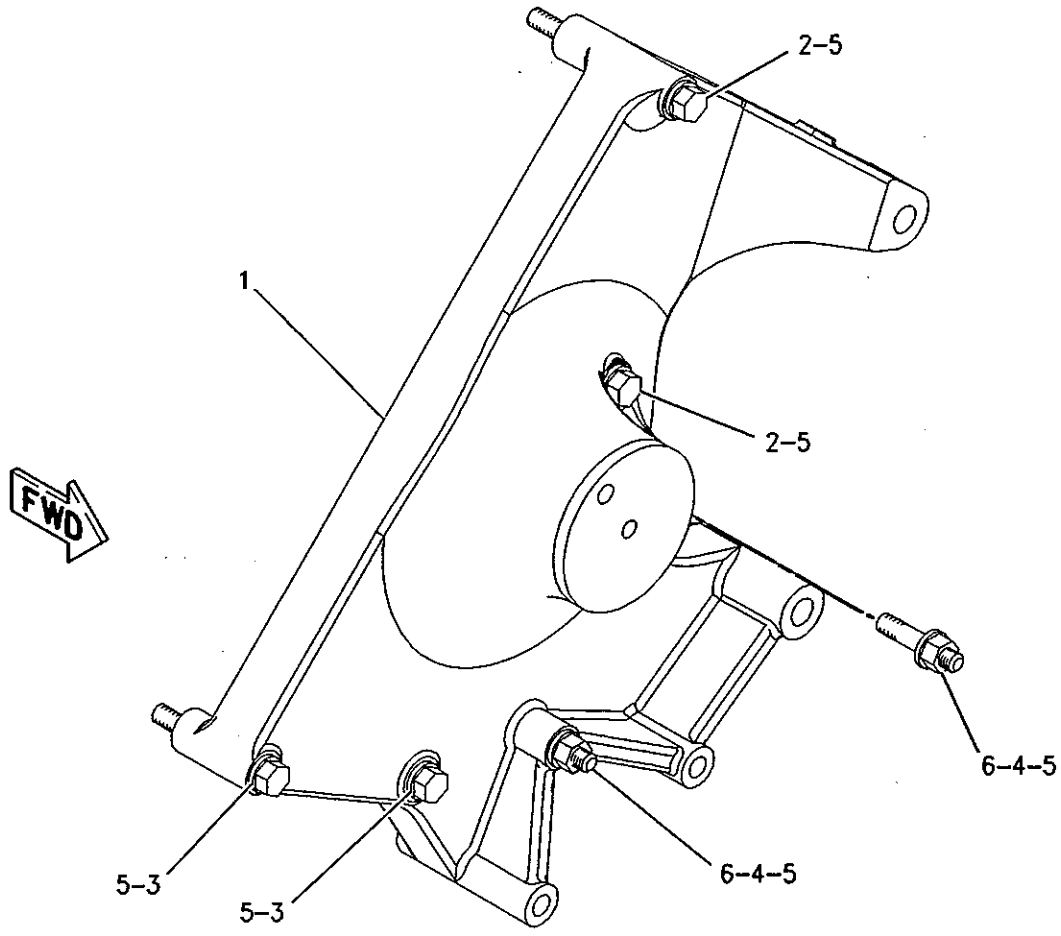


GRAPHIC #1 **<END>** g00759989

# BASIC ENGINE

## 239-5527 PAN GP-OIL

**S/N: LHX1-UP**

**PART OF 225-0992 ENGINE AR-COMPLETE**

**SMCS-1302** **i02082689**

| NOTE | REF NO | GRAPHIC REF | PART NUMBER | QTY | PART NAME 1 2 3 4 5 6 (PRODUCT LEVEL) | SEE PAGE |
|---|---|---|---|---|---|---|
| | 1 | 1 | 4P-7373 | 1 | TUBE AS | |
| | 3 | 1 | 115-2359 | 1 | TUBE AS | |
| | 4 | 1 | 115-2365 | 1 | BRACKET-TUBE | |
| | 5 | 1 | 118-2019 | 1 | UNDERFRAME AS | |
| | 6 | 1 | 168-5248 | 1 | SEAL-ISOLATION | |
| | 7 | 1 | 227-3004 | 1 | PAN-OIL | |
| | 8 | 1 | 0L-1351 | 3 | BOLT (3/8-16X0.875-IN) | |
| | 9 | 1 | 0S-1591 | 4 | BOLT (3/8-16X1.5-IN) | |
| | 10 | 1 | 0S-1594 | 5 | BOLT (3/8-16X1-IN) | |
| | 11 | 1 | 109-0072 | 1 | SEAL-O-RING | |
| | 12 | 1 | 109-0078 | 1 | SEAL-O-RING | |
| | 13 | 1 | 2K-4973 | 2 | LOCKNUT (3/8-16-THD) | |
| | 14 | 1 | 5M-2894 | 7 | WASHER-HARD (10.2X18.5X2.5-MM THK) | |
| | 15 | 1 | 9X-6458 | 5 | WASHER-HARD (10.2X22.5X3-MM THK) | |

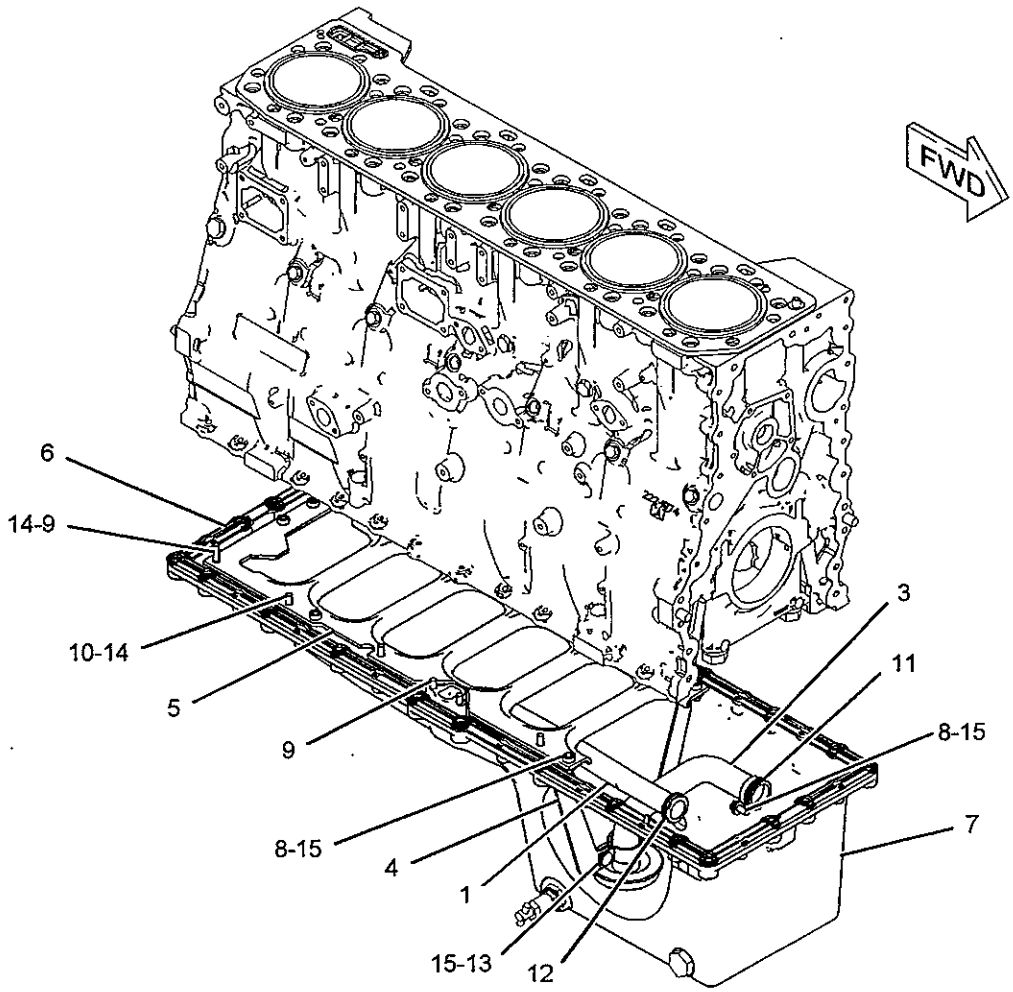


GRAPHIC #1

**<END>**

g01068193

# 174-3874 PANEL GP-SOUND SUPPRESSION

S/N: LHX1-UP
LEFT HAND MOUNTED SOUND PANEL
PART OF 225-0992 ENGINE AR-COMPLETE
FOR USE WITH BRAKESAVER OR NON-BRAKESAVER ENGINES, ALL APPLICATIONS

SMCS-1801 i01161493

| NOTE | REF NO | GRAPHIC REF | PART NUMBER | QTY | PART NAME 1 2 3 4 5 6 (PRODUCT LEVEL) | SEE PAGE |
|---|---|---|---|---|---|---|
| | 1 | 1 | 173-1957 | 1 | PANEL AS | |
| | 2 | 1 | 0S-1588 | 3 | BOLT (3/8-16X1.25IN) | |
| | 3 | 1 | 5M-2894 | 3 | WASHER (2.5MM THK) | |

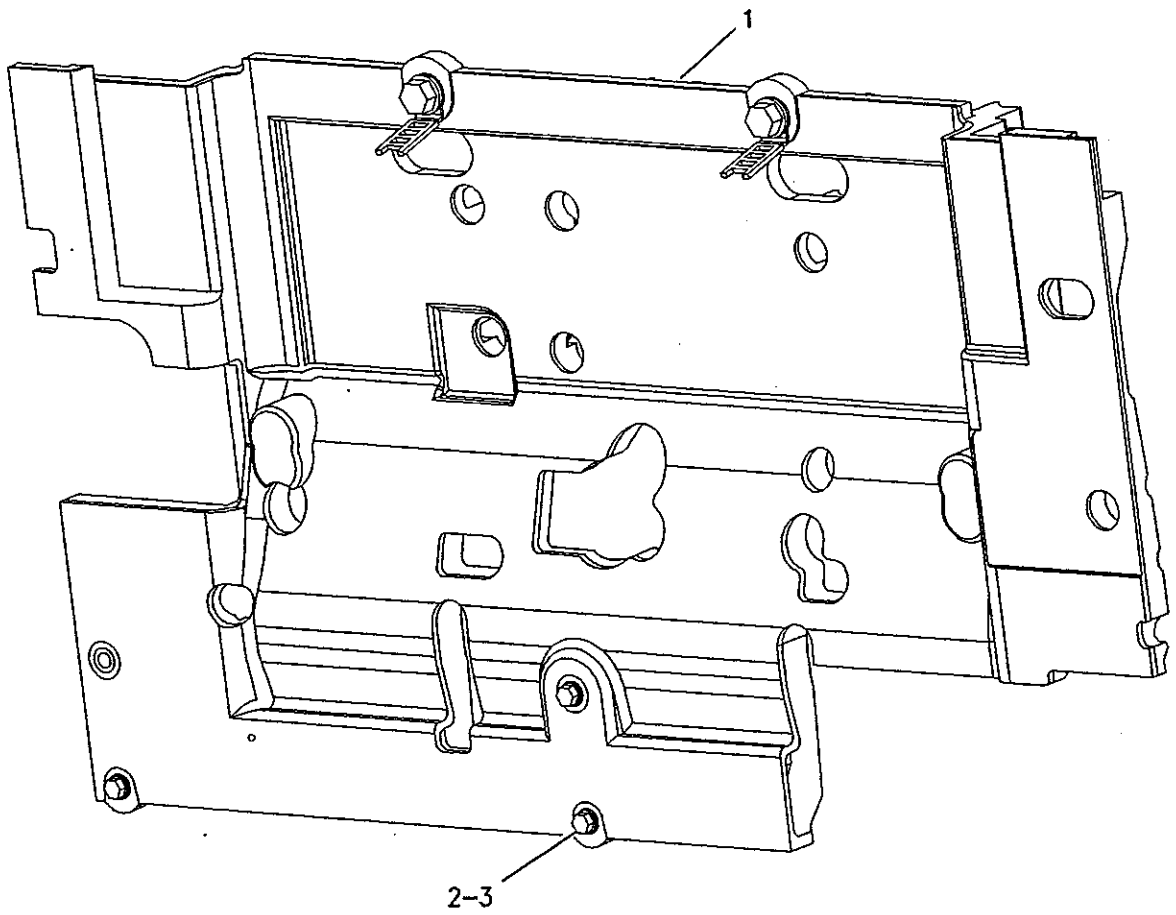


GRAPHIC #1 <END> g00618571

# 227-9980 PANEL GP-SOUND SUPPRESSION-

## ENGINE FRONT HOUSING

S/N: LHX1-UP

PART OF 225-0992 ENGINE AR-COMPLETE

CANNOT BE USED WITH ALTERNATOR MOUNTING GROUPS AND ACCESSORY DRIVE GROUPS

SMCS-1801 i02161892

| NOTE | REF NO | GRAPHIC REF | PART NUMBER | QTY | PART NAME 1 2 3 4 5 6 (PRODUCT LEVEL) | SEE PAGE |
|---|---|---|---|---|---|---|
| | 1 | 1 | 178-7597 | 1 | COVER AS | |
| | 2 | 1 | 0S-1588 | 1 | BOLT (3/8-16X1.25-IN) | |
| | 3 | 1 | 0S-1594 | 3 | BOLT (3/8-16X1-IN) | |
| | 4 | 1 | 0T-0055 | 2 | BOLT (3/8-16X4.25-IN) | |
| | 5 | 1 | 1A-5964 | 4 | BOLT (3/8-16X4.5-IN) | |
| | 6 | 1 | 5M-2894 | 2 | WASHER-HARD (10.2X18.5X2.5-MM THK) | |
| | 7 | 1 | 9S-8752 | 1 | NUT-FULL (3/8-16-THD) | |
| | 8 | 1 | 9X-6458 | 9 | WASHER-HARD (10.2X22.5X3-MM THK) | |

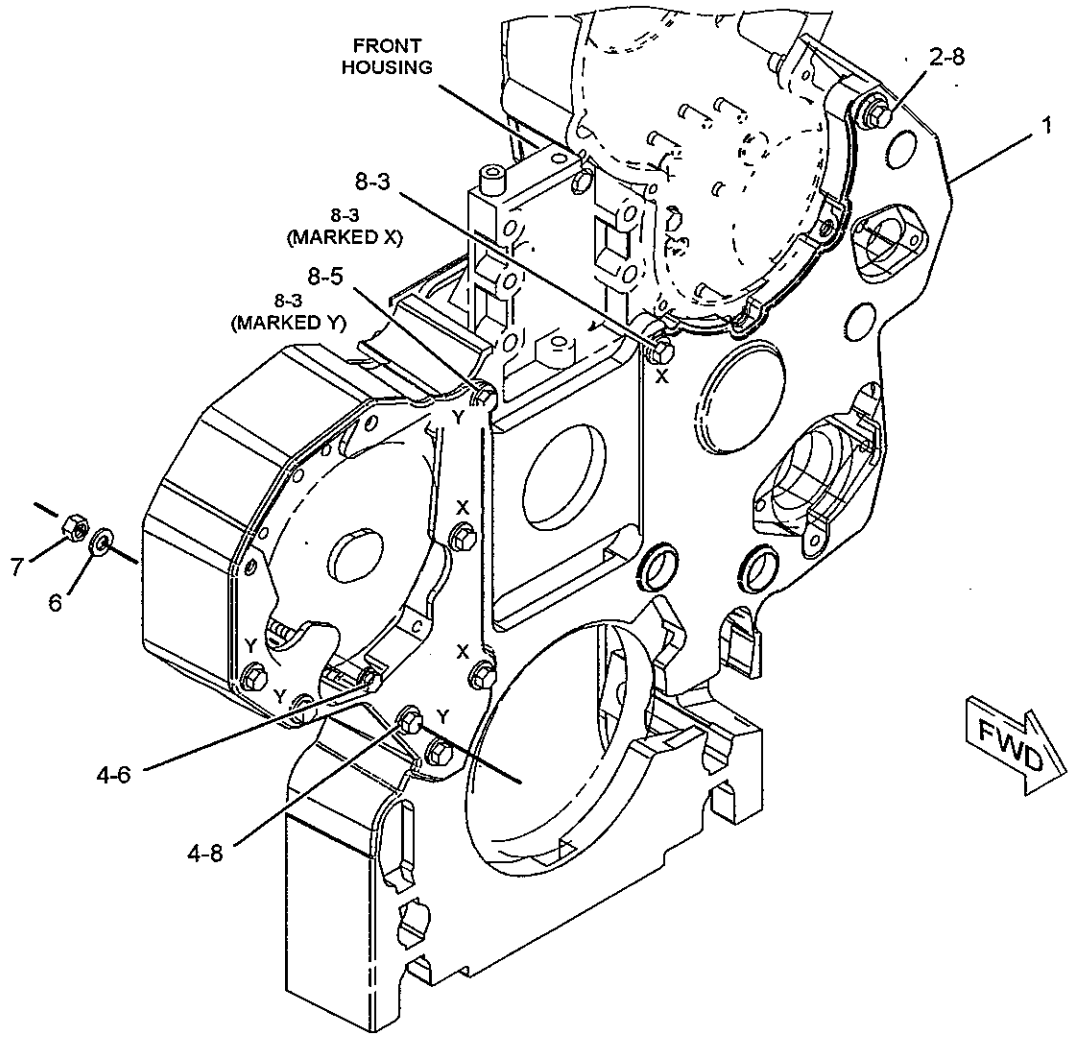


GRAPHIC #1

<END>

g01096506

# 229-2863 PISTON & ROD GP

S/N: LHX1-157
18:1 COMPRESSION RATIO
PART OF 241-5929 ENGINE AR-CORE

SMCS-1225 i02207426

| NOTE | REF NO | GRAPHIC REF | PART NUMBER | QTY | PART NAME 1 2 3 4 5 6 (PRODUCT LEVEL) | SEE PAGE |
|---|---|---|---|---|---|---|
| | 1 | 1 | 151-5925 | 1 | BOLT (7/16-14-2A THD) (OIL JET) | |
| | 2 | 1 | 176-5749 | 1 | RING-PISTON (INTERMEDIATE) | |
| | 3 | 1 | 180-7350 | 1 | PIN-PISTON | |
| | 4 | 1 | 197-9361 | 1 | JET AS-PISTON COOLING (OIL) | |
| R | 5 | 1 | 224-3245 | 1 | ROD AS | |
| | 5A | 1 | 7N-2043 | 2 | DOWEL | |
| | 5B | 1 | 213-3217 | 4 | BOLT | |
| | 5C | 1 | 229-6259 | 1 | BEARING | |
| | 6 | 1 | 224-3246 | 1 | BEARING-CONNECTING ROD (STANDARD) | |
| AB | | 1 | 232-3235 | | BEARING-CONNECTING ROD (0.64-MM US) | |
| AB | | 1 | 232-3236 | | BEARING-CONNECTING ROD (1.27-MM US) | |
| | 7 | 1 | 229-2861 | 1 | BODY AS | |
| | 8 | 1 | 230-2569 | 2 | RETAINER-PIN | |
| | 9 | 1 | 237-0194 | 1 | RING-PISTON-TOP | |
| | 10 | 1 | 238-0294 | 1 | RING-PISTON-OIL | |

A-NOT PART OF THIS GROUP
B-USE AS REQUIRED
R-REMFG PART MAY BE AVAILABLE

## 229-2863 PISTON & ROD GP *(contd.)*

i02207426

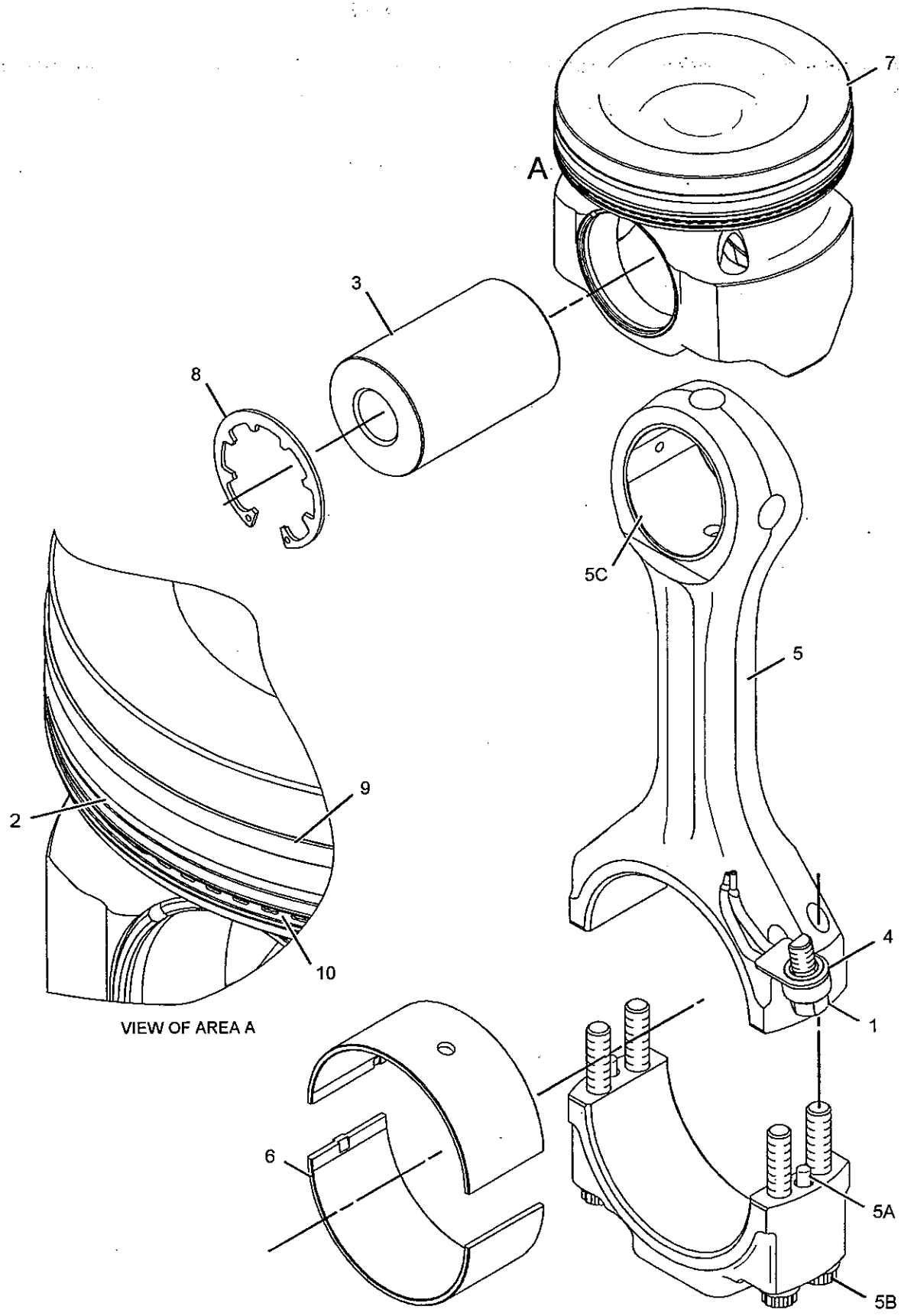


GRAPHIC #1

<END>

g01024548

# BASIC ENGINE

## 229-2863 PISTON & ROD GP

**S/N: LHX158-UP**
**18:1 COMPRESSION RATIO**
**PART OF 241-5929 ENGINE AR-CORE**

**SMCS-1225** **i02104570**

| NOTE | REF NO | GRAPHIC REF | PART NUMBER | QTY | PART NAME 1 2 3 4 5 6 (PRODUCT LEVEL) | SEE PAGE |
|---|---|---|---|---|---|---|
| | 1 | 1 | **151-5925** | 1 | BOLT (7/16-14-2A THD) (OIL JET) | |
| C | 2 | 1 | **164-4187** | 1 | RING-PISTON (INTERMEDIATE) | |
| | 3 | 1 | **180-7350** | 1 | PIN-PISTON | |
| | 4 | 1 | **197-9361** | 1 | JET AS-PISTON COOLING (OIL) | |
| | 5 | 1 | **224-3245** | 1 | ROD AS | |
| | 5A | 1 | **7N-2043** | 2 | DOWEL | |
| | 5B | 1 | **213-3217** | 4 | BOLT | |
| | 5C | 1 | **229-6259** | 1 | BEARING | |
| | 6 | 1 | **224-3246** | 1 | BEARING-CONNECTING ROD (STANDARD) | |
| AB | | 1 | **232-3235** | | BEARING-CONNECTING ROD (0.64-MM US) | |
| AB | | 1 | **232-3236** | | BEARING-CONNECTING ROD (1.27-MM US) | |
| C | 7 | 1 | **247-6123** | 1 | BODY AS-PISTON | |
| | 8 | 1 | **230-2569** | 2 | RETAINER-PIN | |
| C | 9 | 1 | **247-6130** | 1 | RING-PISTON-TOP | |
| | 10 | 1 | **238-0294** | 1 | RING-PISTON-OIL | |

A-NOT PART OF THIS GROUP
B-USE AS REQUIRED
C-CHANGE FROM PREVIOUS TYPE

## 229-2863 PISTON & ROD GP *(contd.)*

i02104570

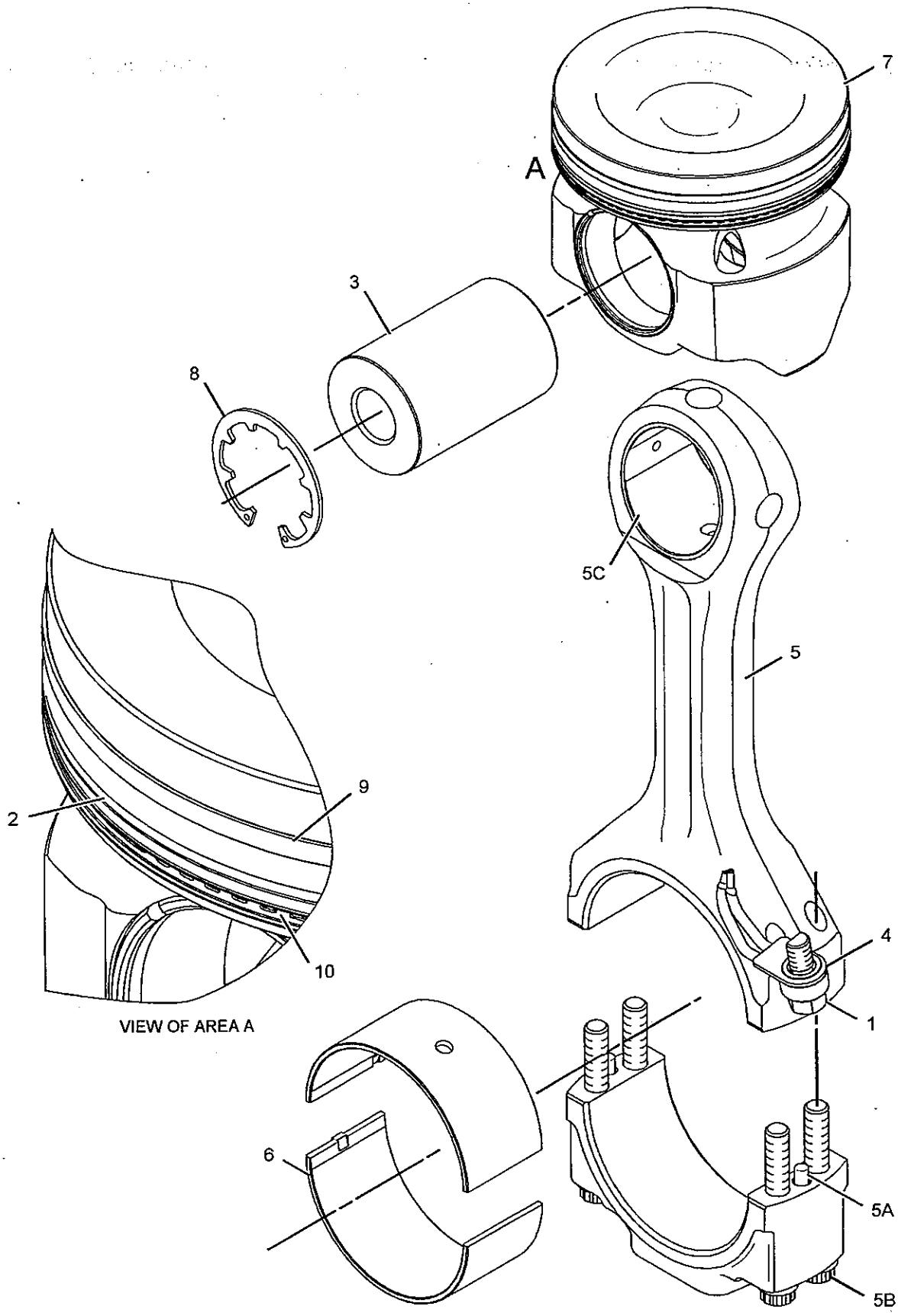


GRAPHIC #1

**<END>**

g01024548

# BASIC ENGINE

## 230-5379 PLUG GP-CYLINDER BLOCK

S/N: LHX1-UP

PART OF 225-0992 ENGINE AR-COMPLETE

SMCS-1201 i02014500

| NOTE | REF NO | GRAPHIC REF | PART NUMBER | QTY | PART NAME 1 2 3 4 5 6 (PRODUCT LEVEL) | SEE PAGE |
|---|---|---|---|---|---|---|
| | 1 | 1 | 136-7227 | 1 | SEAL-O-RING | |
| | 2 | 1 | 6V-6609 | 3 | SEAL-O-RING | |
| | 3 | 1 | 9S-8002 | 1 | PLUG | |
| | 4 | 1 | 8L-2786 | 6 | SEAL-O-RING | |
| | 5 | 1 | 9S-8005 | 9 | PLUG | |
| | 6 | 1 | 9S-8006 | 1 | PLUG | |

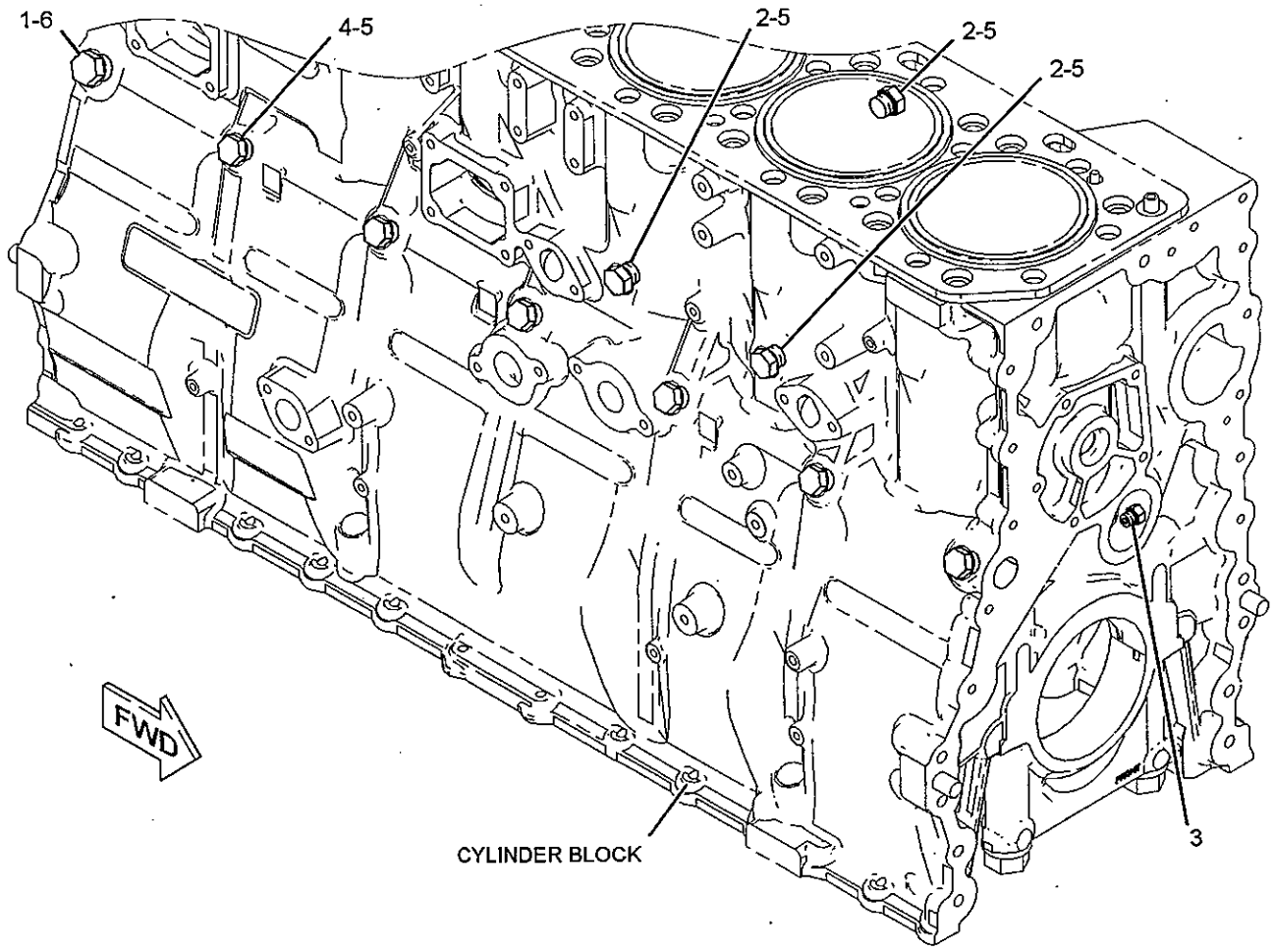


GRAPHIC #1 <END> g01045398

# 230-5378 PLUG GP-CYLINDER HEAD

S/N: LHX1-UP

PART OF 225-0992 ENGINE AR-COMPLETE

SMCS-1100 i02286568

| NOTE | REF NO | GRAPHIC REF | PART NUMBER | QTY | PART NAME 1 2 3 4 5 6 (PRODUCT LEVEL) | SEE PAGE |
|---|---|---|---|---|---|---|
| | 1 | 1 | 6V-6609 | 2 | SEAL-O-RING | |
| | 2 | 1 | *183-3408* | 4 | PLUG AS | |
| | | | | | (EACH INCLUDES) | |
| | | 1 | 9S-8004 | 1 | PLUG | |
| | 2A | 1 | 6V-5049 | 1 | SEAL-O-RING | |
| | 3 | 1 | 6V-3251 | 1 | SEAL-O-RING | |
| | 4 | 1 | 8L-2786 | 1 | SEAL-O-RING | |
| | 5 | 1 | 9S-8005 | 3 | PLUG | |
| | 6 | 1 | 9S-8006 | 1 | PLUG | |

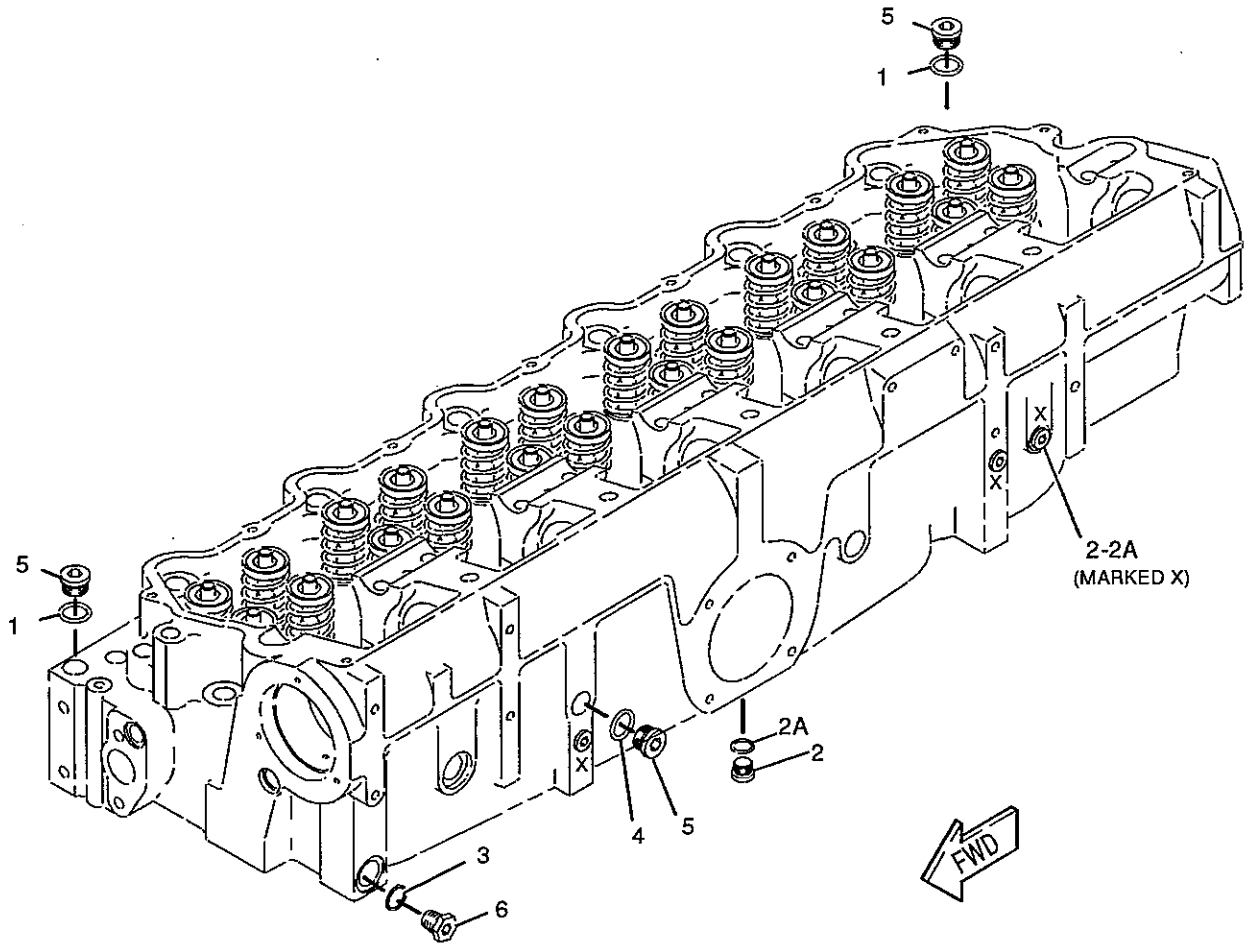


GRAPHIC #1 <END> g01045985

## 239-5528 PLUG GP-OIL PAN

**S/N: LHX1-UP**

**PART OF 225-0992 ENGINE AR-COMPLETE**

**SMCS-1302** **i02001254**

| NOTE | REF NO | GRAPHIC REF | PART NUMBER | QTY | PART NAME 1 2 3 4 5 6 (PRODUCT LEVEL) | SEE PAGE |
|---|---|---|---|---|---|---|
| | 1 | 1 | 3E-7427 | 1 | ADAPTER | |
| | 2 | 1 | 6V-7238 | 1 | VALVE-SHUTOFF (ENGINE OIL) | |
| | 3 | 1 | 9X-6451 | 1 | PLUG-DRAIN (ENGINE OIL) | |
| | 4 | 1 | 061-9458 | 1 | SEAL-O-RING | |
| | 5 | 1 | 121-0145 | 1 | SEAL-O-RING | |
| | 6 | 1 | 5P-7701 | 2 | SEAL-O-RING | |
| | 7 | 1 | 8L-2786 | 1 | SEAL-O-RING | |
| | 8 | 1 | 9S-4181 | 2 | PLUG | |

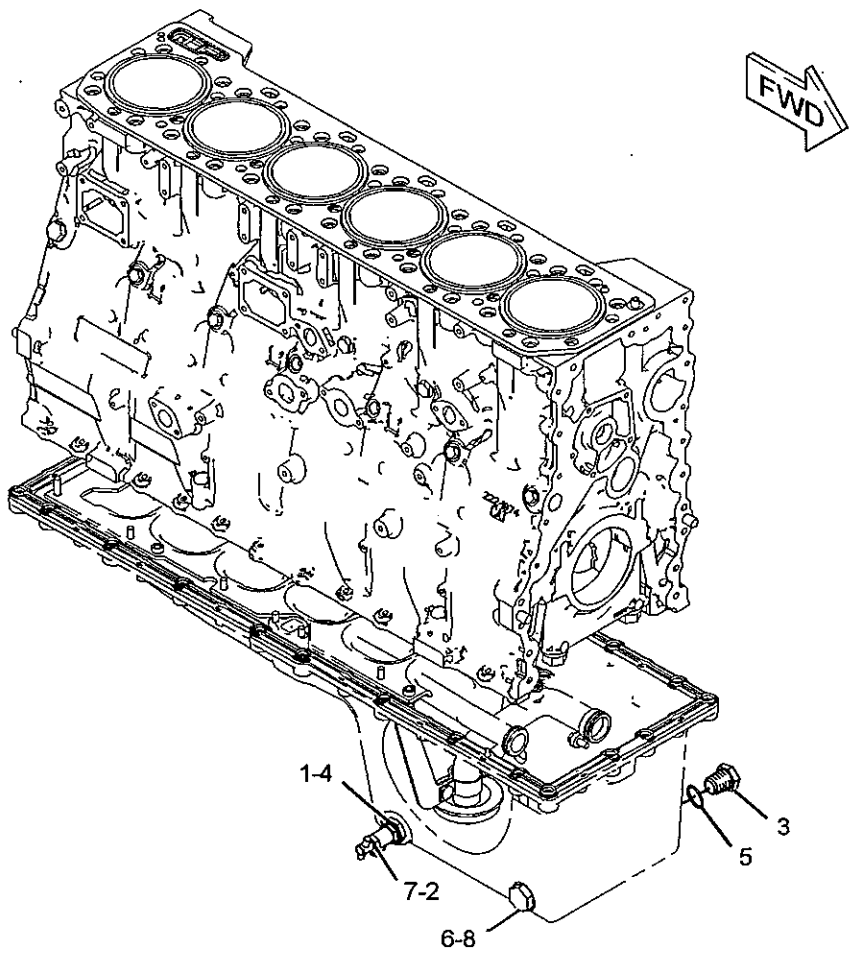


GRAPHIC #1

**<END>**

g01031356

# 170-1757 PULLEY GP-CRANKSHAFT

S/N: JMS1-UP

PART OF 226-9644 INSTALLATION AR-ENGINE

SMCS-1205 i01288019

| NOTE | REF NO | GRAPHIC REF | PART NUMBER | QTY | PART NAME 1 2 3 4 5 6 (PRODUCT LEVEL) | SEE PAGE |
|---|---|---|---|---|---|---|
| | 1 | 1 | 172-4848 | 1 | PULLEY (8 GROOVE) | |
| | 2 | 1 | 7X-0345 | 4 | BOLT (5/8-11X1.75IN) | |

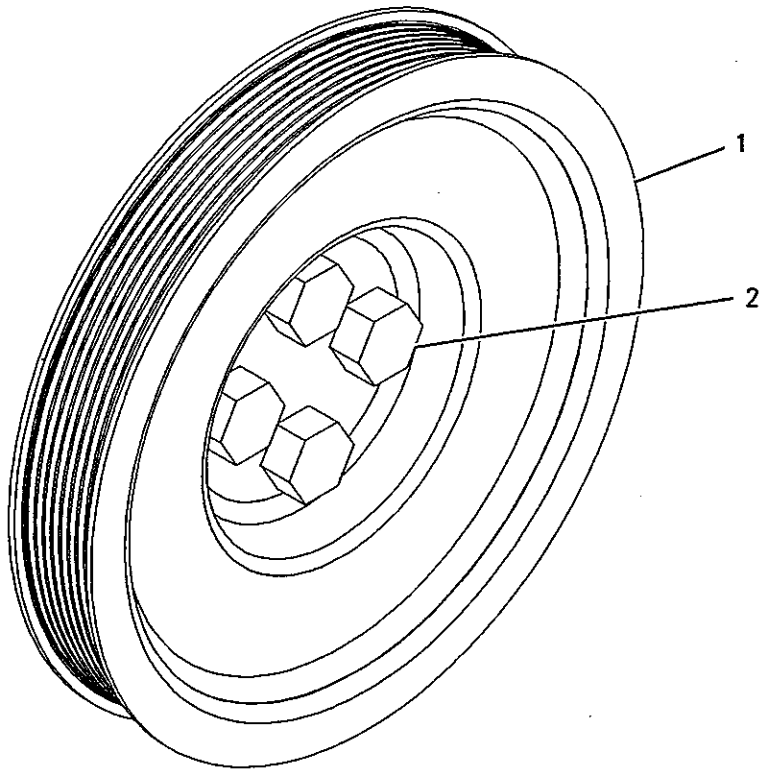


GRAPHIC #1 <END> g00684206

# BASIC ENGINE

## *172-0988* PULLEY GP-IDLER

**S/N: JMS1-UP**

**PART OF 226-9644 INSTALLATION AR-ENGINE**

**SMCS-1358** **i01288001**

| NOTE | REF NO | GRAPHIC REF | PART NUMBER | QTY | PART NAME 1 2 3 4 5 6 (PRODUCT LEVEL) | SEE PAGE |
|---|---|---|---|---|---|---|
| | 1 | 1 | 7E-3443 | 2 | BUSHING-TERMINAL | |
| | 2 | 1 | 151-0862 | 1 | PULLEY AS-IDLER | |
| | 2A | 1 | 124-7792 | 1 | PULLEY AS-IDLER (8 GROOVE) | |
| | 2B | 1 | 145-2901 | 1 | COVER-DUST | |
| | 2C | 1 | 144-8123 | 1 | SPACER (26.05MM) | |
| M | 2D | 1 | 144-8122 | 1 | BOLT-SPECIAL (M10X1.5X65-MM) | |
| | 2E | 1 | 6V-9027 | 1 | SEAL-O-RING | |
| | 3 | 1 | 175-4863 | 1 | SUPPORT AS | |
| M | 4 | 1 | 7X-2544 | 2 | BOLT (M10X1.5X104-MM) | |
| | 5 | 1 | 8T-4121 | 2 | WASHER-HARD (11X21X2.5-MM THK) | |
| M | 6 | 1 | 8T-4133 | 2 | NUT (M10X1.5-THD) | |
| | 7 | 1 | 8T-7934 | 2 | WASHER-HARD (11X21X5-MM THK) | |

M-METRIC PART

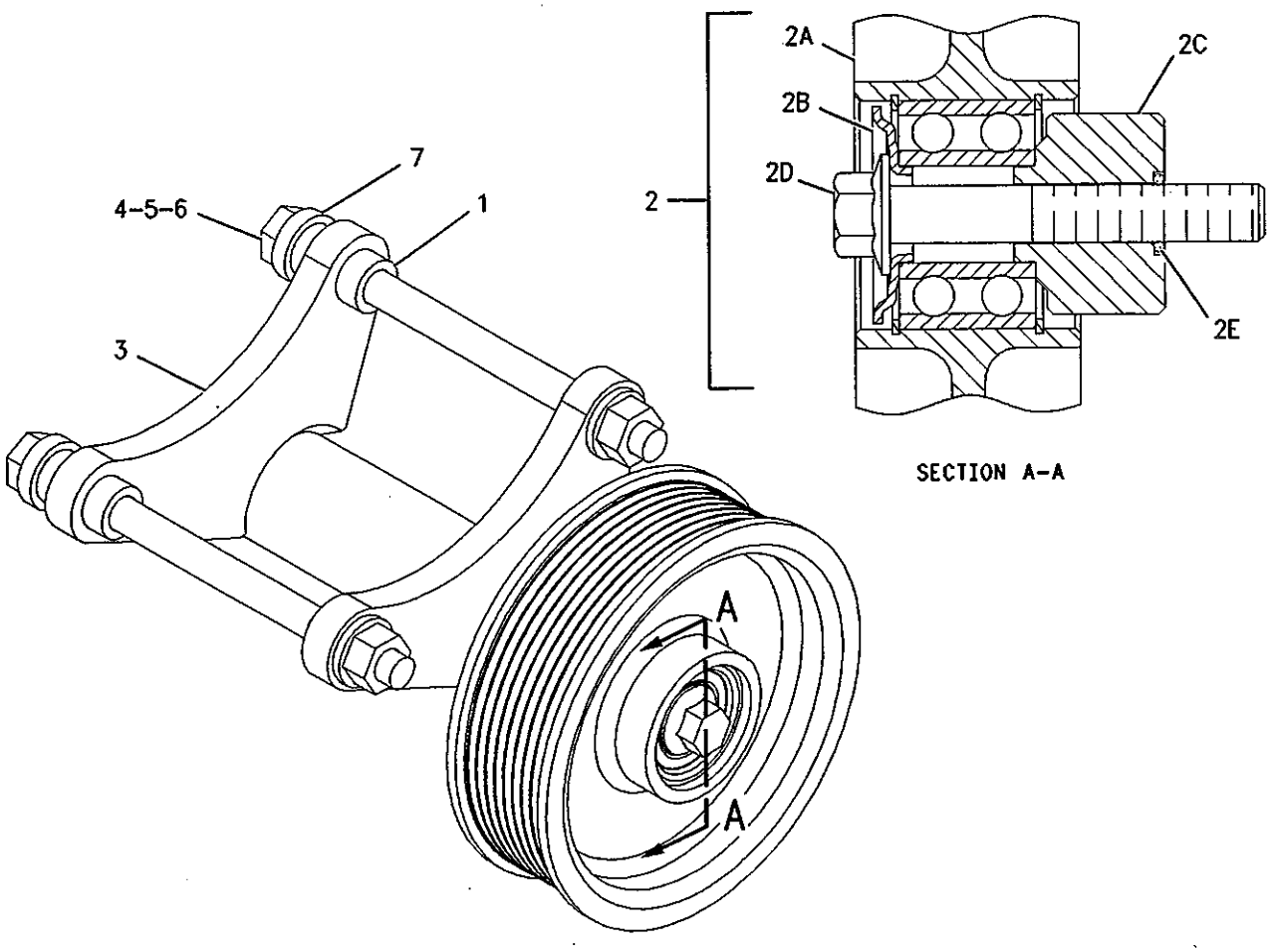


SECTION A-A

GRAPHIC #1 **<END>** g00684168

# 198-9898 ROCKER ARM GP

S/N: LHX1-UP

PART OF 148-7482 VALVE MECHANISM GP

SMCS-1123 i02034566

| NOTE | REF NO | GRAPHIC REF | PART NUMBER | QTY | PART NAME 1 2 3 4 5 6 (PRODUCT LEVEL) | SEE PAGE |
|---|---|---|---|---|---|---|
| | 1 | 1 | 6I-0901 | 1 | SHAFT AS-ROCKER ARM | |
| | | 1 | 4B-9782 | 2 | BALL | |
| | 2 | 1 | 9L-7712 | 4 | NUT (3/8-24-THD) | |
| | 3 | 1 | 104-9270 | 4 | BUTTON | |
| W | 4 | 1 | 192-4151 | 2 | BUTTON (24MM ID) | |
| | | | | | —OR— | |
| J | | 1 | 4P-7371 | 2 | INSERT (14.75MM ID) | |
| W | 5 | 1 | 196-5069 | 2 | SCREW (9/16-18 THD) | |
| | | | | | —OR— | |
| J | | 1 | 4P-4278 | 2 | SCREW-UNIT INJ ADJUSTMENT (7/8-18 THD) | |
| W | 6 | 1 | 196-5070 | 2 | NUT-JAM (9/16-18-THD) | |
| | | | | | —OR— | |
| J | | 1 | 4P-4279 | 2 | NUT-JAM (7/8-18 THD) | |
| | 7 | 1 | 232-0253 | 4 | SCREW | |
| R | 8 | 1 | 203-8822 | 2 | ROCKER ARM AS (EXHAUST VALVE ROCKER) | |
| R | 9 | 1 | 203-8824 | 2 | ROCKER ARM AS (INLET VALVE ROCKER) | |
| R | 10 | 1 | 207-5248 | 2 | ROCKER ARM AS (UNIT INJECTOR ROCKER) | |
| W | 11 | 1 | 061-8639 | 2 | SEAL-O-RING (15.54MM ID) | |
| | | | | | —OR— | |
| J | | 1 | 032-9313 | 2 | SEAL-O-RING (12.37MM ID) | |
| | 12 | 1 | 8L-2777 | 4 | SEAL-O-RING (10.77MM ID) | |

J-PARTS MARKED J MUST BE USED TOGETHER ON OLDER ROCKER ARM ASSEMBLIES
R-REMFG PART MAY BE AVAILABLE
W-PARTS MARKED W MUST BE USED TOGETHER ON NEWER ROCKER ARM ASSEMBLIES

*198-9898* **ROCKER ARM GP** *(contd.)* i02034566

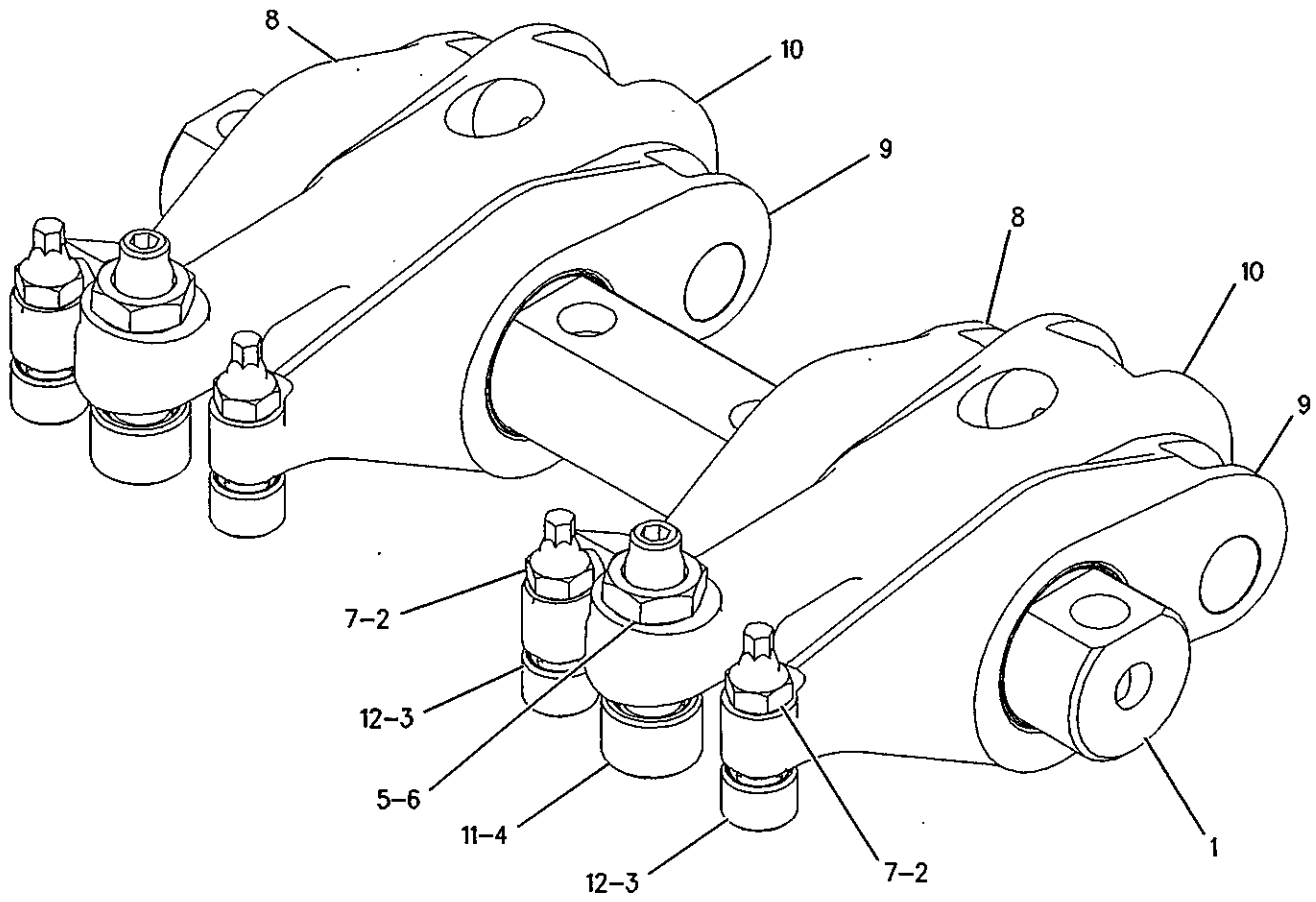


GRAPHIC #1 **<END>** g00905507

# 232-4648 SUPPORT GP-ENGINE

S/N: LHX1-UP

PART OF 225-0992 ENGINE AR-COMPLETE

FOR USE WITH AXLE OIL COOLER

SMCS-1152, 1153, 1154 i01900865

| NOTE | REF NO | GRAPHIC REF | PART NUMBER | QTY | PART NAME 1 2 3 4 5 6 (PRODUCT LEVEL) | SEE PAGE |
|---|---|---|---|---|---|---|
| | 1 | 1 | 6F-5282 | 8 | BOLT (1/2-13X5.25IN) | |
| | 2 | 1 | 232-1768 | 1 | SUPPORT AS | |
| | 3 | 1 | 2M-0849 | 8 | WASHER-HARD (13.5X25.5X5MM THK) | |

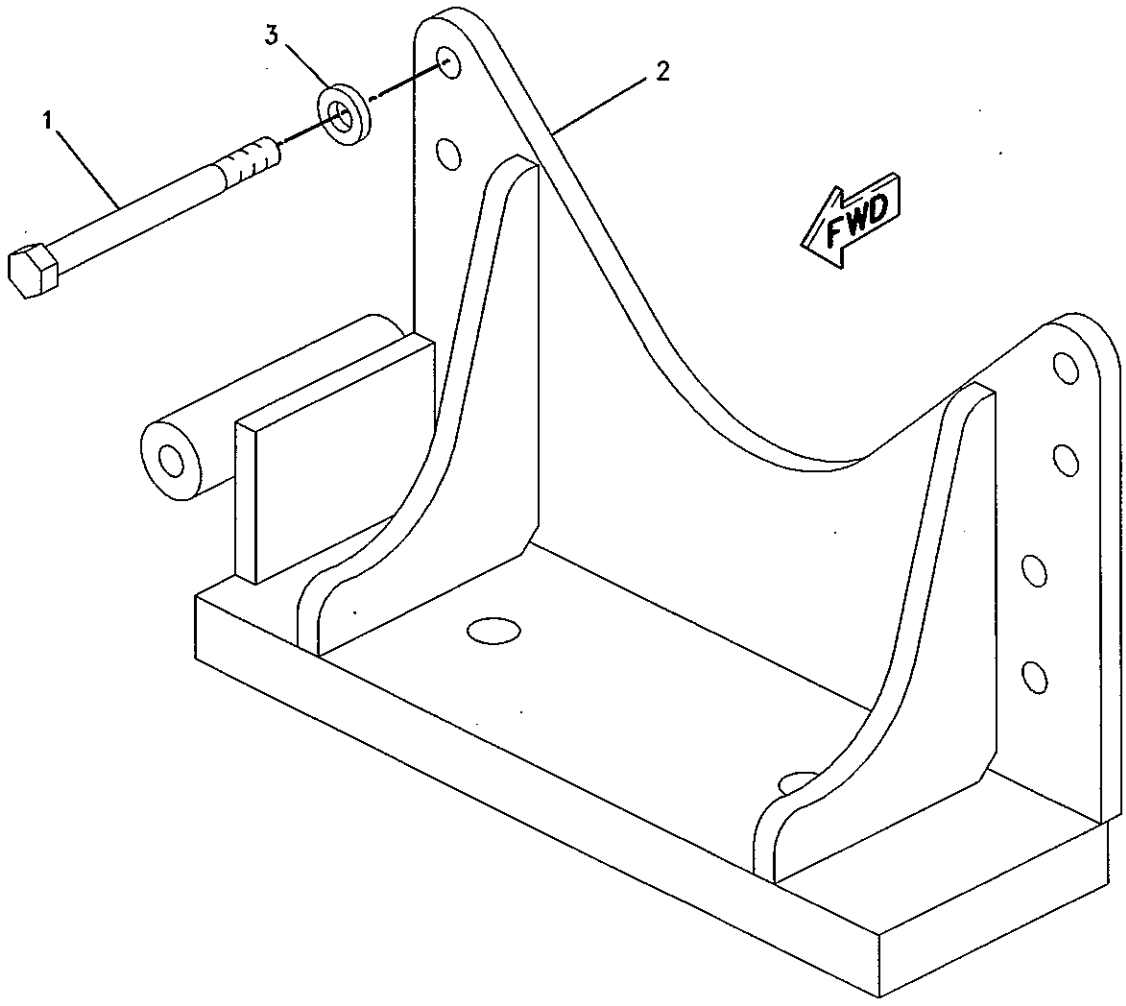


GRAPHIC #1 <END> g00989095

# BASIC ENGINE

## *232-0281* SUPPORT GP-ENGINE & TMSN

**S/N: JMS1-UP**

**PART OF 225-5538 CHASSIS AR**

**SMCS-1153, 1154, 3082** **i02279597**

| NOTE | REF NO | GRAPHIC REF | PART NUMBER | QTY | PART NAME 1 2 3 4 5 6 (PRODUCT LEVEL) | SEE PAGE |
|---|---|---|---|---|---|---|
| | 1 | 1 | 3E-9411 | 4 | WASHER-HARD (17.5X38X6-MM THK) | |
| | 2 | 1 | 4V-4818 | 4 | DOWEL | |
| | 3 | 1 | 6Y-9960 | 2 | MOUNT AS | |
| | | | | | (EACH INCLUDES) | |
| | | 1 | 9W-8095 | 1 | PAD-REBOUND | |
| | 4 | 1 | 9W-7385 | 2 | SLEEVE | |
| | 5 | 1 | 9W-7388 | 2 | WASHER (26X144X12-MM THK) | |
| | 6 | 1 | 114-2430 | 1 | BEAM AS | |
| | | 1 | 6Y-2090 | 1 | MOUNT AS | |
| | 7 | 1 | 114-2432 | 1 | BEAM AS | |
| | | 1 | 6Y-2090 | 1 | MOUNT AS | |
| | 8 | 1 | 114-2435 | 2 | SUPPORT AS | |
| | | | | | (EACH INCLUDES) | |
| | | 1 | 8K-0589 | 1 | DOWEL | |
| M | | 1 | 7X-2465 | 2 | BOLT (M24X3X180-MM) | |
| | | 1 | 8T-4167 | 2 | WASHER-HARD (26X44X4-MM THK) | |
| | 9 | 1 | 265-6982 | 1 | BAR AS | |
| M | | 1 | 8T-3490 | 8 | NUT-WELD (M10X1.5-THD) | |
| M | | 1 | 8T-3851 | 2 | BOSS-WELD (M10X1.5X17.5-MM) | |
| M | 10 | 1 | 7X-2563 | 2 | BOLT (M20X2.5X60-MM) | |
| M | 11 | 1 | 8C-3290 | 2 | BOLT (M24X3X150-MM) | |
| | 12 | 1 | 8T-4123 | 16 | WASHER-PLATED (22X35X3.5-MM THK) | |
| M | 13 | 1 | 8T-4140 | 4 | BOLT (M16X2X60-MM) | |
| M | 14 | 1 | 8T-4141 | 14 | BOLT (M20X2.5X70-MM) | |
| | 15 | 1 | 8T-4167 | 2 | WASHER-HARD (26X44X4-MM THK) | |
| | 16 | 1 | 8T-5360 | 17 | WASHER (12X22.5X2.5-MM THK) | |
| | 17 | 1 | 8T-8916 | 1 | BOLT (7/16-14X1.5-IN) | |
| | 18 | 1 | 8T-9382 | 16 | BOLT (7/16-14X1.25-IN) | |

M-METRIC PART

## 232-0281 SUPPORT GP-ENGINE & TMSN (contd.) i02279597

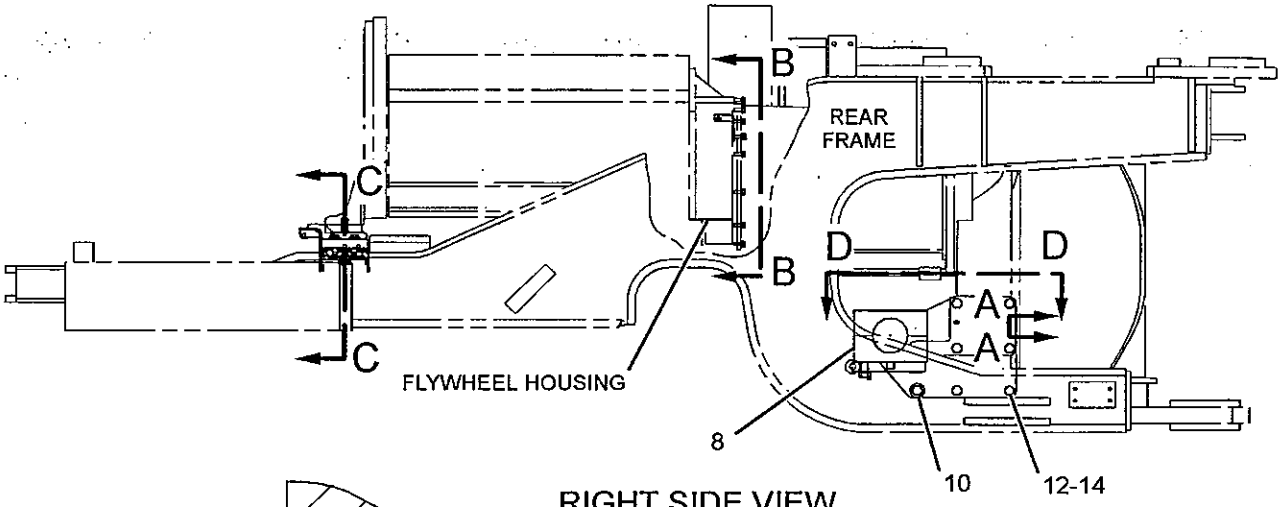


RIGHT SIDE VIEW

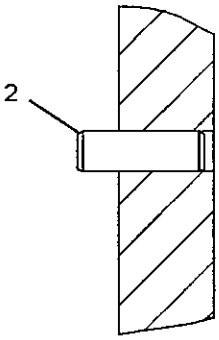


SECTION A-A

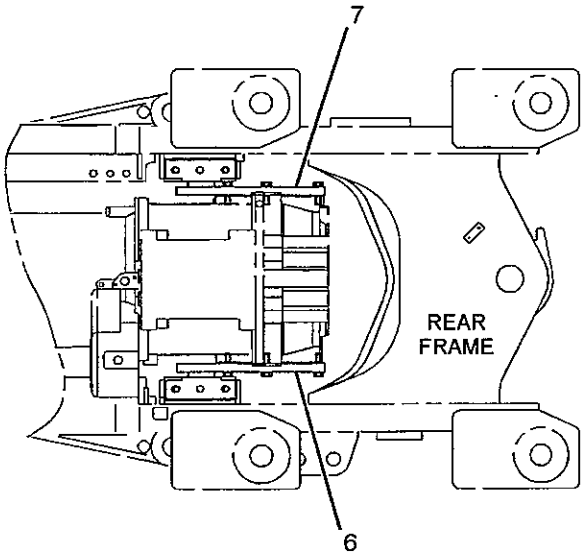


VIEW D-D

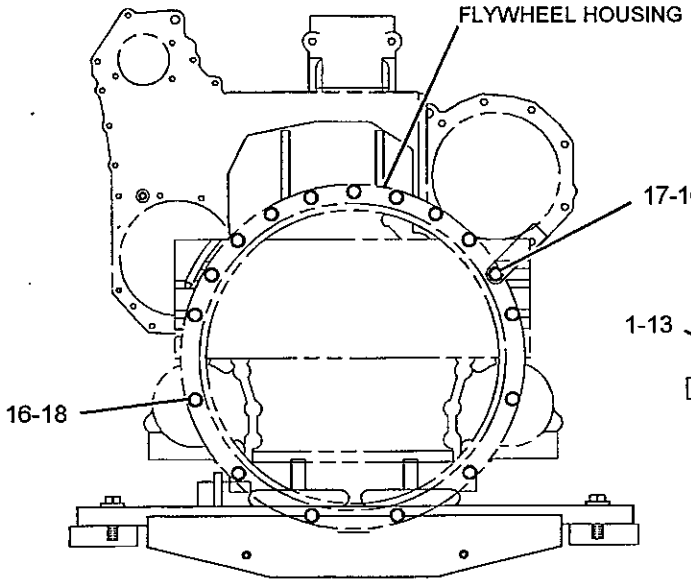


VIEW B-B

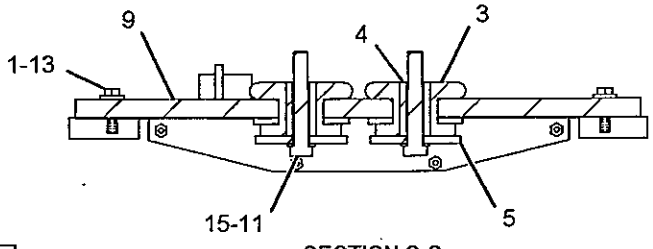


SECTION C-C

GRAPHIC #1 **<END>** g01066366

# 148-7482 VALVE MECHANISM GP

S/N: LHX1-UP

PART OF 241-5929 ENGINE AR-CORE

SMCS-1102, 1121, 1123 i01768605

| NOTE | REF NO | GRAPHIC REF | PART NUMBER | QTY | PART NAME 1 2 3 4 5 6 (PRODUCT LEVEL) | SEE PAGE |
|---|---|---|---|---|---|---|
| CY | 1 | 1 | *198-9898* | 3 | ROCKER ARM GP | 63 |
| | 2 | 1 | **6I-1458** | 12 | BRIDGE-VALVE | |

C-CHANGE FROM PREVIOUS TYPE
Y-SEPARATE ILLUSTRATION

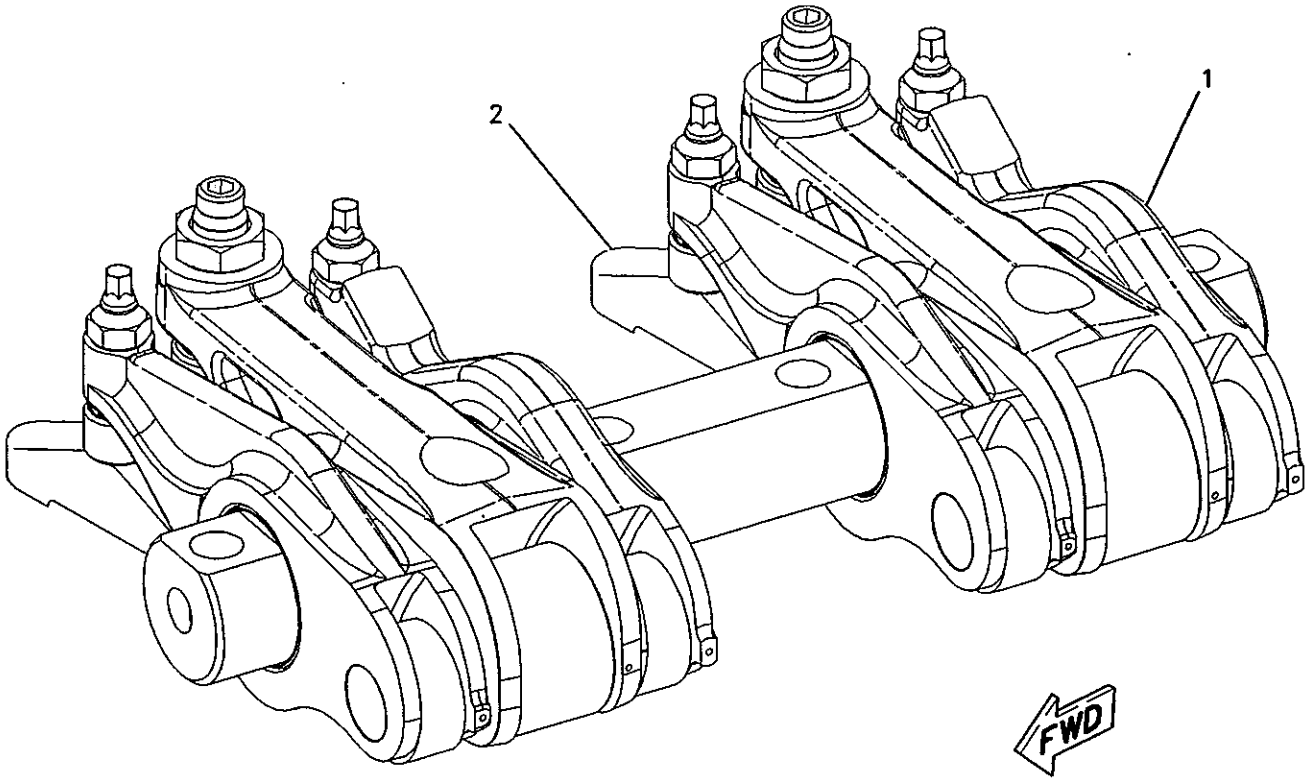


GRAPHIC #1 **<END>** g00905240

# *4N-2481* FASTENER GP-OIL PUMP MOUNTING–ENGINE

S/N: LHX1-UP

PART OF 225-0992 ENGINE AR-COMPLETE

SMCS-1304 i01446823

| NOTE | REF NO | GRAPHIC REF | PART NUMBER | QTY | PART NAME 1 2 3 4 5 6 (PRODUCT LEVEL) | SEE PAGE |
|---|---|---|---|---|---|---|
| | 1 | 1 | 0L-1143 | 2 | BOLT (3/8-16X2.50 IN) | |
| | 2 | 1 | 0S-1590 | 1 | BOLT (3/8-16X2 IN) | |
| | 3 | 1 | 5M-2894 | 3 | WASHER-HARD (10.2X18.5X2.5MM THK) | |

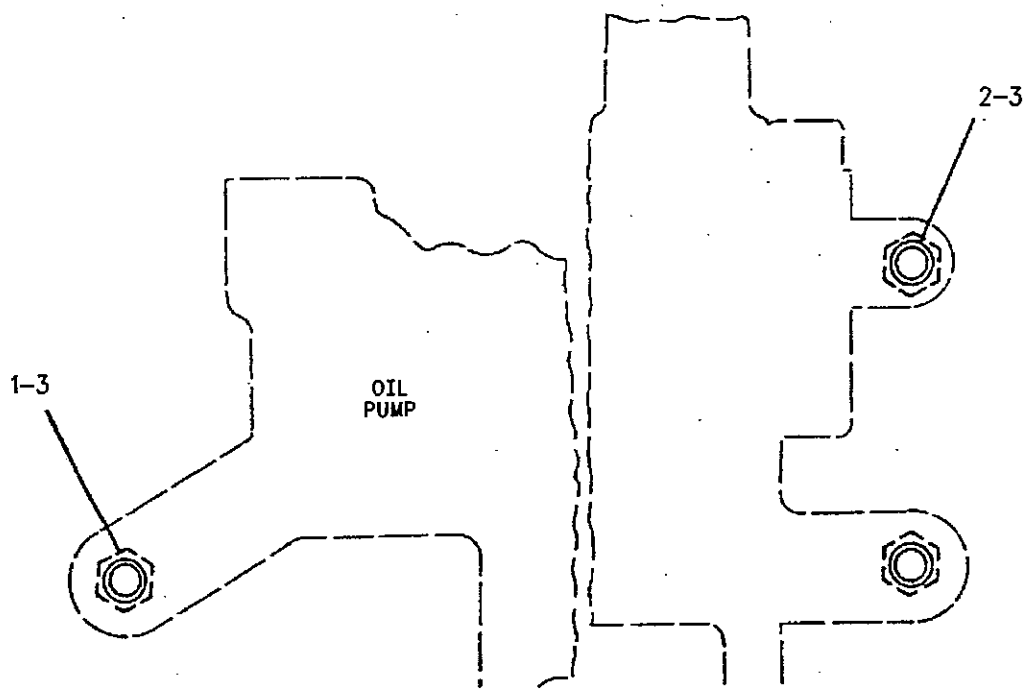


GRAPHIC #1 <END> g00604525

# LUBRICATION SYSTEM

## *187-6234* FILLER GP-ENGINE OIL

**S/N: JMS1-UP**

**PART OF 226-9644 INSTALLATION AR-ENGINE**

**SMCS-1316** **i02156556**

| NOTE | REF NO | GRAPHIC REF | PART NUMBER | QTY | PART NAME 1 2 3 4 5 6 (PRODUCT LEVEL) | SEE PAGE |
|---|---|---|---|---|---|---|
| | 1 | 1 | 3F-6156 | 1 | HOOK | |
| | 2 | 1 | 143-4535 | 1 | CLIP (SLOT) | |
| | 3 | 1 | 143-4536 | 1 | CLIP (TAB) | |
| | 4 | 1 | 185-7577 | 1 | TUBE AS | |
| | 5 | 1 | 205-6405 | 1 | CAP AS (OIL FILLER) | |
| | 6 | 1 | 208-2349 | 1 | BRACKET AS | |
| M | 6A | 1 | 8T-3490 | 1 | NUT-WELD (M10X1.5-THD) | |
| | 8 | 1 | 6V-8676 | 1 | SEAL-O-RING | |
| | 9 | 1 | 8T-4121 | 2 | WASHER-HARD (11X21X2.5-MM THK) | |
| M | 10 | 1 | 8T-4136 | 1 | BOLT (M10X1.5X25-MM) | |
| M | 11 | 1 | 8T-4195 | 1 | BOLT (M10X1.5X30-MM) | |
| | 12 | 1 | 8T-4896 | 2 | WASHER-HARD (10.2X18.5X2.5-MM THK) | |
| | 13 | 1 | 4L-6454 | 2 | BOLT (3/8-16X1-IN) | |

M-METRIC PART

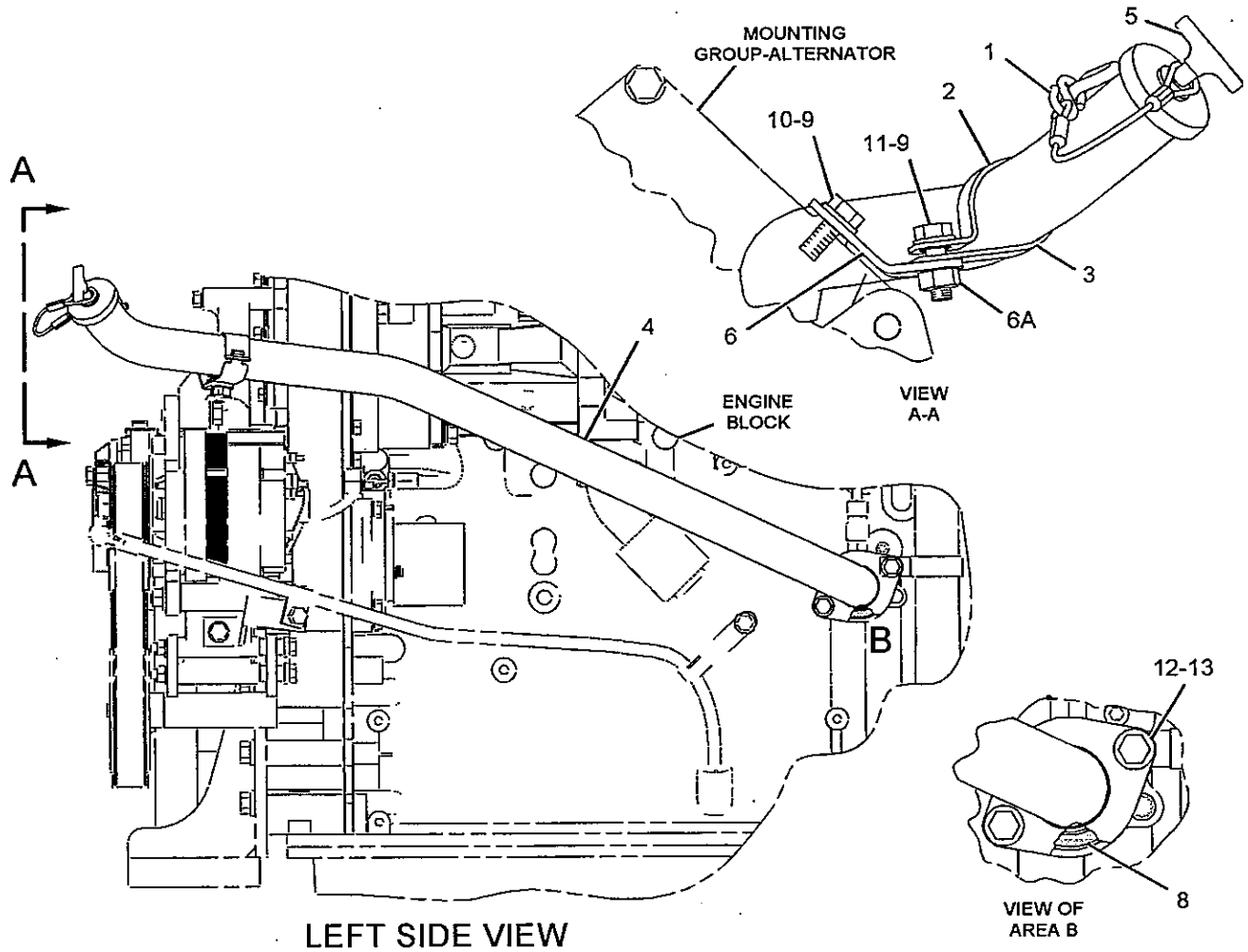


LEFT SIDE VIEW

GRAPHIC #1 **<END>** g01094624

# LUBRICATION SYSTEM

## *238-5454* FILTER GP-ENGINE OIL

**S/N: LHX1-UP**

**PART OF 225-0992 ENGINE AR-COMPLETE**

**SMCS-1306, 1308** **i02282871**

| NOTE | REF NO | GRAPHIC REF | PART NUMBER | QTY | PART NAME 1 2 3 4 5 6 (PRODUCT LEVEL) | SEE PAGE |
|---|---|---|---|---|---|---|
| | 1 | 1 | **1R-0716** | 1 | FILTER AS-ENGINE OIL | |
| | 2 | 1 | **2P-3760** | 1 | GASKET | |
| | 3 | 1 | **2P-3761** | 1 | COVER | |
| | 4 | 1 | **2P-4301** | 1 | BASE AS | |
| | 4A | 1 | **2P-4304** | 1 | STUD-TAPERLOCK | |
| | 5 | 1 | **2P-4305** | 2 | GASKET | |
| | 6 | 1 | **4N-0827** | 1 | ADAPTER-FILTER | |
| | 7 | 1 | **4N-8150** | 1 | SPRING | |
| | 8 | 1 | **8C-3445** | 1 | CAP-DUST | |
| | 9 | 1 | **8C-3446** | 1 | VALVE AS-FLUID SAMPLING (ENGINE OIL) | |
| | 10 | 1 | **9M-0853** | 1 | PLUNGER-VALVE | |
| | 11 | 1 | **191-0965** | 1 | SHIELD-OIL FILTER | |
| | 12 | 1 | **249-7734** | 1 | COVER | |
| | 14 | 1 | **0S-1588** | 6 | BOLT (3/8-16X1.25-IN) | |
| | 15 | 1 | **0S-1590** | 4 | BOLT (3/8-16X2-IN) | |
| | 16 | 1 | **0S-1594** | 4 | BOLT (3/8-16X1-IN) | |
| | 17 | 1 | **136-7227** | 1 | SEAL-O-RING | |
| | 18 | 1 | **3J-1907** | 1 | SEAL-O-RING | |
| | 19 | 1 | **3J-7354** | 1 | SEAL-O-RING | |
| | 20 | 1 | **5M-2894** | 14 | WASHER-HARD (10.2X18.5X2.5-MM THK) | |
| | 21 | 1 | **7F-9090** | 2 | SCREW-DRIVE (NO 8X3/8-IN) | |
| | 23 | 1 | **9S-8004** | 1 | PLUG | |
| | 24 | 1 | **9S-8006** | 1 | PLUG | |
| | 25 | 1 | **9S-8752** | 4 | NUT-FULL (3/8-16-THD) | |

## *238-5454* FILTER GP-ENGINE OIL *(contd.)* i02282871

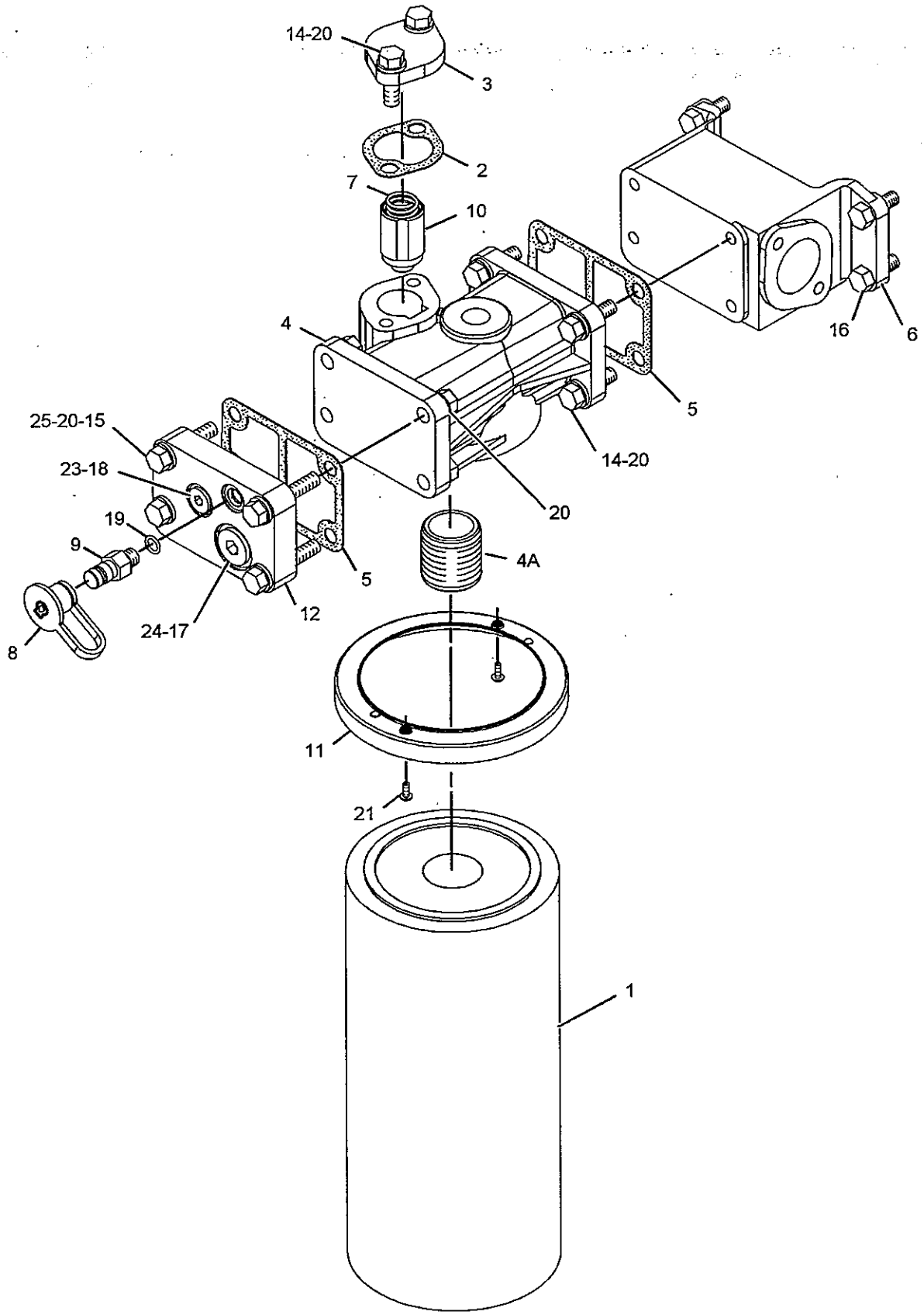


GRAPHIC #1

<END>

g01078132

# LUBRICATION SYSTEM

## *237-1965* FUMES DISPOSAL GP

**S/N: LHX1-UP**

**PART OF 225-0992 ENGINE AR-COMPLETE**

**SMCS-1317** **i02224942**

| NOTE | REF NO | GRAPHIC REF | PART NUMBER | QTY | PART NAME 1 2 3 4 5 6 (PRODUCT LEVEL) | SEE PAGE |
|---|---|---|---|---|---|---|
| | 1 | 1 | **2N-8109** | 1 | CLAMP | |
| E | 2 | 1 | **5P-1255** | | HOSE (10-CM)(FUMES DISPOSAL) | |
| | 3 | 1 | **9M-2904** | 2 | CLAMP-HOSE | |
| | 4 | 1 | **114-5214** | 1 | BRACKET | |
| | 5 | 1 | **199-5061** | 1 | TUBE | |
| | 6 | 1 | **0L-1351** | 1 | BOLT (3/8-16X0.875-IN) | |
| | 7 | 1 | **0S-1588** | 1 | BOLT (3/8-16X1.25-IN) | |
| | 8 | 1 | **162-2266** | 1 | BREATHER AS (CRANKCASE) | |
| | 9 | 1 | **2S-2053** | 2 | CLIP | |
| | 10 | 1 | **4F-7390** | 1 | SEAL-O-RING (CRANKCASE BREATHER) | |
| | 11 | 1 | **5M-2894** | 3 | WASHER-HARD (10.2X18.5X2.5-MM THK) | |
| | 12 | 1 | **9S-8752** | 1 | NUT-FULL (3/8-16-THD) | |

E-ORDER BY THE CENTIMETER

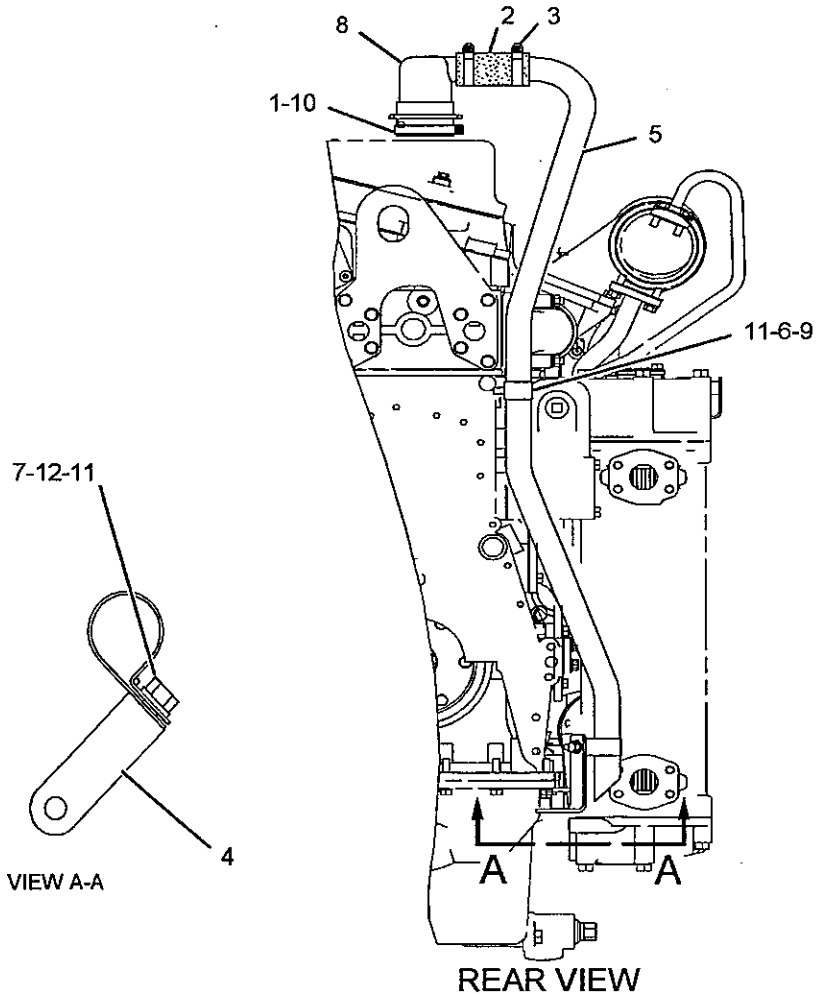


GRAPHIC #1

**<END>**

g01126529

# LUBRICATION SYSTEM

## *185-1572* GAUGE GP-OIL LEVEL (DIPSTICK)

**S/N: JMS1-UP**

**PART OF 226-9644 INSTALLATION AR-ENGINE**

**SMCS-1326** **i01635866**

| NOTE | REF NO | GRAPHIC REF | PART NUMBER | QTY | PART NAME 1 2 3 4 5 6 (PRODUCT LEVEL) | SEE PAGE |
|---|---|---|---|---|---|---|
| | 1 | 1 | **197-0035** | 1 | TUBE AS | |
| | 2 | 1 | **118-5068** | 1 | SEAL-O-RING | |
| | 3 | 1 | **175-6789** | 1 | BRACKET | |
| | 4 | 1 | **5P-9299** | 1 | CLIP | |
| | 5 | 1 | **8T-4121** | 3 | WASHER-HARD (11X21X2.5-MM THK) | |
| M | 6 | 1 | **8T-4136** | 2 | BOLT (M10X1.5X25-MM) | |
| M | 7 | 1 | **8T-4133** | 1 | NUT (M10X1.5-THD) | |
| | 8 | 1 | **196-9942** | 1 | GAUGE AS-OIL LEVEL (DIPSTICK) | |

M-METRIC PART

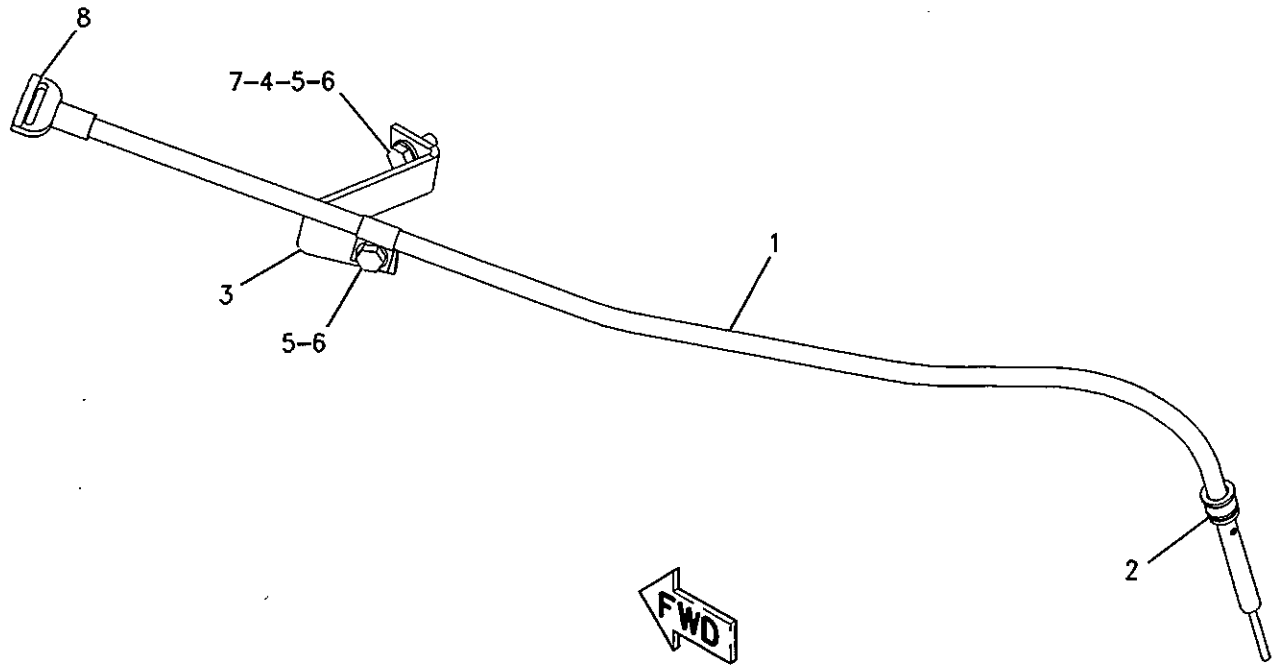


GRAPHIC #1 **<END>** g00848977

# LUBRICATION SYSTEM

## *219-4443* LINES GP-ENGINE OIL

**S/N: LHX1-UP**

**PART OF 225-0992 ENGINE AR-COMPLETE**

**SMCS-1307** **i01924716**

| NOTE | REF NO | GRAPHIC REF | PART NUMBER | QTY | PART NAME 1 2 3 4 5 6 (PRODUCT LEVEL) | SEE PAGE |
|---|---|---|---|---|---|---|
| | 1 | 1 | **1W-6137** | 1 | TUBE AS | |
| | 2 | 1 | **2P-3760** | 1 | GASKET | |
| | 3 | 1 | **4N-0826** | 1 | ELBOW | |
| | 4 | 1 | **4N-1216** | 1 | TUBE-COOLER BYPASS | |
| | 5 | 1 | **4N-8150** | 1 | SPRING | |
| | 6 | 1 | **9M-0853** | 1 | PLUNGER-VALVE | |
| | 7 | 1 | **203-0147** | 1 | TUBE AS | |
| | 8 | 1 | **223-5814** | 1 | BODY-COOLER BYPASS (ENGINE OIL) (ENGINE OIL) | |
| | 9 | 1 | **0S-1588** | 4 | BOLT (3/8-16X1.25-IN) | |
| | 10 | 1 | **0S-1594** | 10 | BOLT (3/8-16X1-IN) | |
| | 11 | 1 | **3K-8460** | 2 | PLUG | |
| | | 1 | **1J-9671** | 1 | SEAL-O-RING | |
| | 12 | 1 | **2N-3350** | 2 | SEAL-O-RING | |
| | 13 | 1 | **2P-3761** | 1 | COVER | |
| | 14 | 1 | **3E-6790** | 1 | SEAL-O-RING | |
| | 15 | 1 | **3P-0650** | 2 | SEAL-O-RING | |
| | 16 | 1 | **5M-2894** | 6 | WASHER-HARD (10.2X18.5X2.5-MM THK) | |
| | 17 | 1 | **5P-8068** | 2 | SEAL-O-RING | |
| | 18 | 1 | **8C-5230** | 2 | SEAL-O-RING | |

## *219-4443* LINES GP-ENGINE OIL *(contd.)*

i01924716

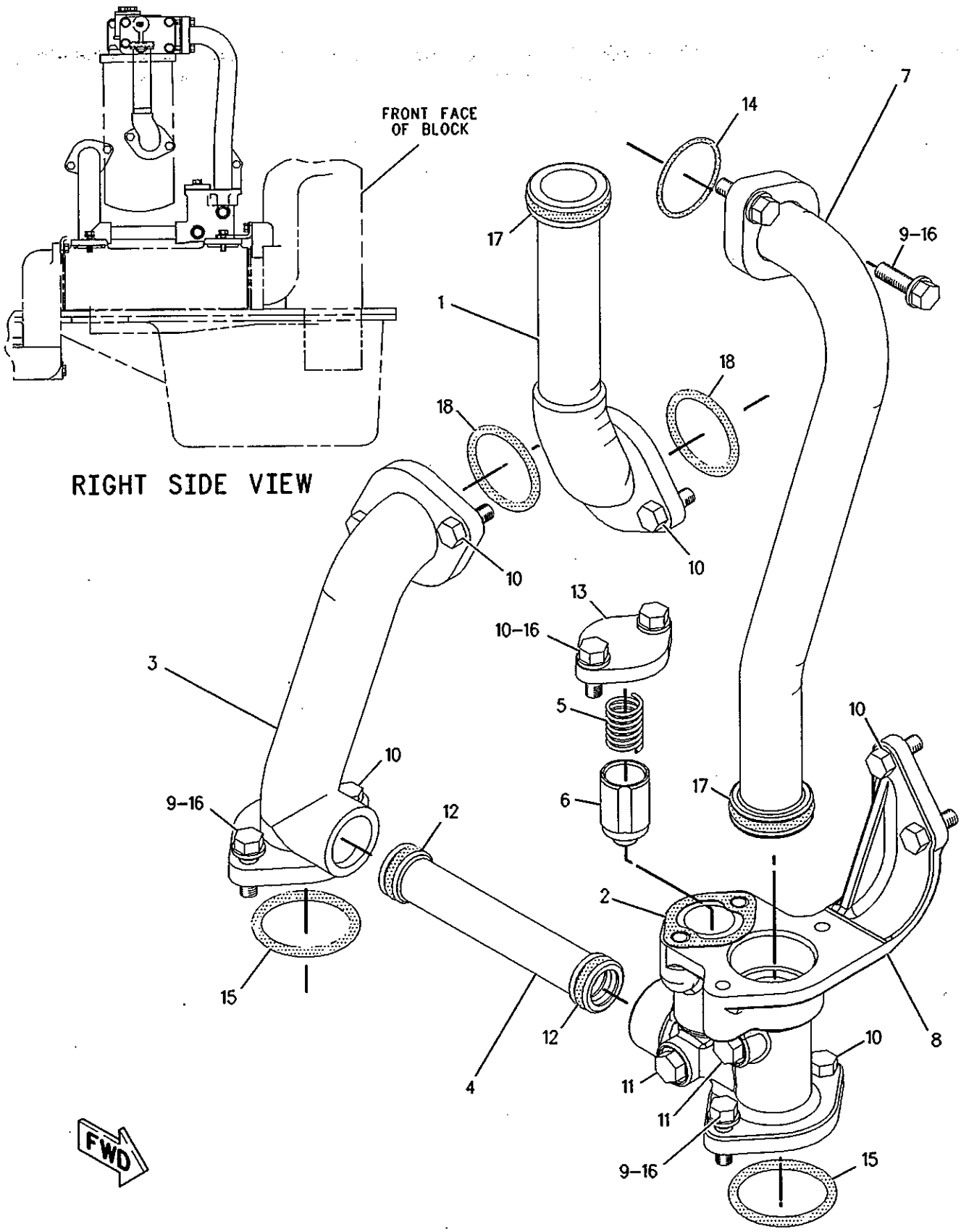


GRAPHIC #1

<END>

g01002356

# LUBRICATION SYSTEM

## 262-9967 LINES GP-TURBOCHARGER OIL

S/N: LHX1-UP

PART OF 225-0992 ENGINE AR-COMPLETE

SMCS-1052, 1307 i02273390

| NOTE | REF NO | GRAPHIC REF | PART NUMBER | QTY | PART NAME 1 2 3 4 5 6 (PRODUCT LEVEL) | SEE PAGE |
|---|---|---|---|---|---|---|
| | 1 | 1 | 7N-7559 | 1 | GASKET | |
| | 2 | 1 | 210-9246 | 1 | SEAL-O-RING | |
| | 3 | 1 | 217-2610 | 1 | TUBE AS | |
| | 4 | 1 | 242-8511 | 2 | CLAMP | |
| | 5 | 1 | 246-6036 | 1 | HOSE | |
| | 6 | 1 | 255-0746 | 1 | TUBE AS | |
| | 7 | 1 | 255-0751 | 1 | TUBE AS | |
| | 8 | 1 | 0S-1571 | 2 | BOLT (3/8-16X1.75-IN) | |
| | 9 | 1 | 0S-1591 | 2 | BOLT (3/8-16X1.5-IN) | |
| | 10 | 1 | 136-7226 | 1 | SEAL-O-RING | |
| | 11 | 1 | 1A-2029 | 2 | BOLT (3/8-16X1.125-IN) | |
| | 12 | 1 | 5M-2894 | 6 | WASHER-HARD (10.2X18.5X2.5-MM THK) | |
| | 13 | 1 | 7N-8875 | 1 | GASKET | |
| | 14 | 1 | 8C-6873 | 1 | CONNECTOR | |

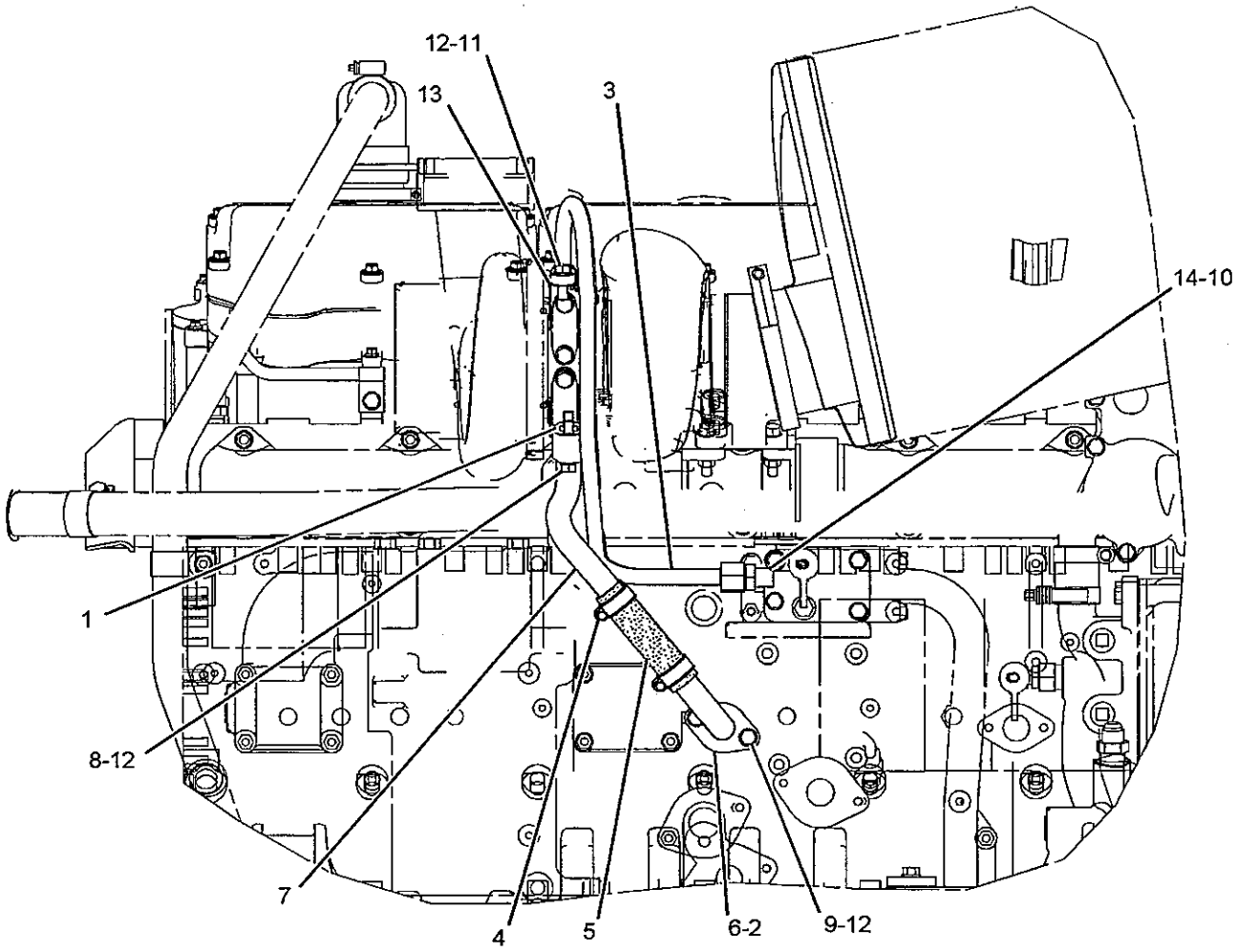


GRAPHIC #1 <END> g01127400

# LUBRICATION SYSTEM

## *161-4113* PUMP GP-ENGINE OIL*R

**S/N: LHX1-UP**

**PART OF 225-0992 ENGINE AR-COMPLETE**

**SMCS-1304, 1315** **i02086285**

| NOTE | REF NO | GRAPHIC REF | PART NUMBER | QTY | PART NAME 1 2 3 4 5 6 (PRODUCT LEVEL) | SEE PAGE |
|---|---|---|---|---|---|---|
| | 1 | 1 | 1W-7238 | 1 | SHAFT AS-PUMP DRIVE | |
| | 2 | 1 | 1W-7239 | 1 | SHAFT AS-IDLER | |
| | 3 | 1 | 2P-3205 | 4 | BOLT-WASHER HEAD (3/8-16X44.45-MM) | |
| | 4 | 1 | 2S-2760 | 1 | SPRING | |
| | 5 | 1 | 6N-1931 | 1 | PLUNGER-RELIEF | |
| | 6 | 1 | 9Y-1792 | 1 | RETAINER | |
| | 7 | 1 | 235-1587 | 1 | BODY AS | |
| | | 1 | 7N-2156 | 2 | BEARING-SLEEVE | |
| | | 1 | 8M-8489 | 2 | DOWEL | |
| | 8 | 1 | 127-6356 | 1 | COVER AS-PUMP | |
| | | 1 | 8S-6511 | 2 | BEARING-SLEEVE | |
| | 9 | 1 | 1M-0644 | 2 | BOLT (3/8-16X2-1/4-IN) | |
| | 10 | 1 | 2S-7905 | 1 | PLUG-PIPE | |
| | 11 | 1 | 5M-2894 | 2 | WASHER-HARD (10.2X18.5X2.5-MM THK) | |

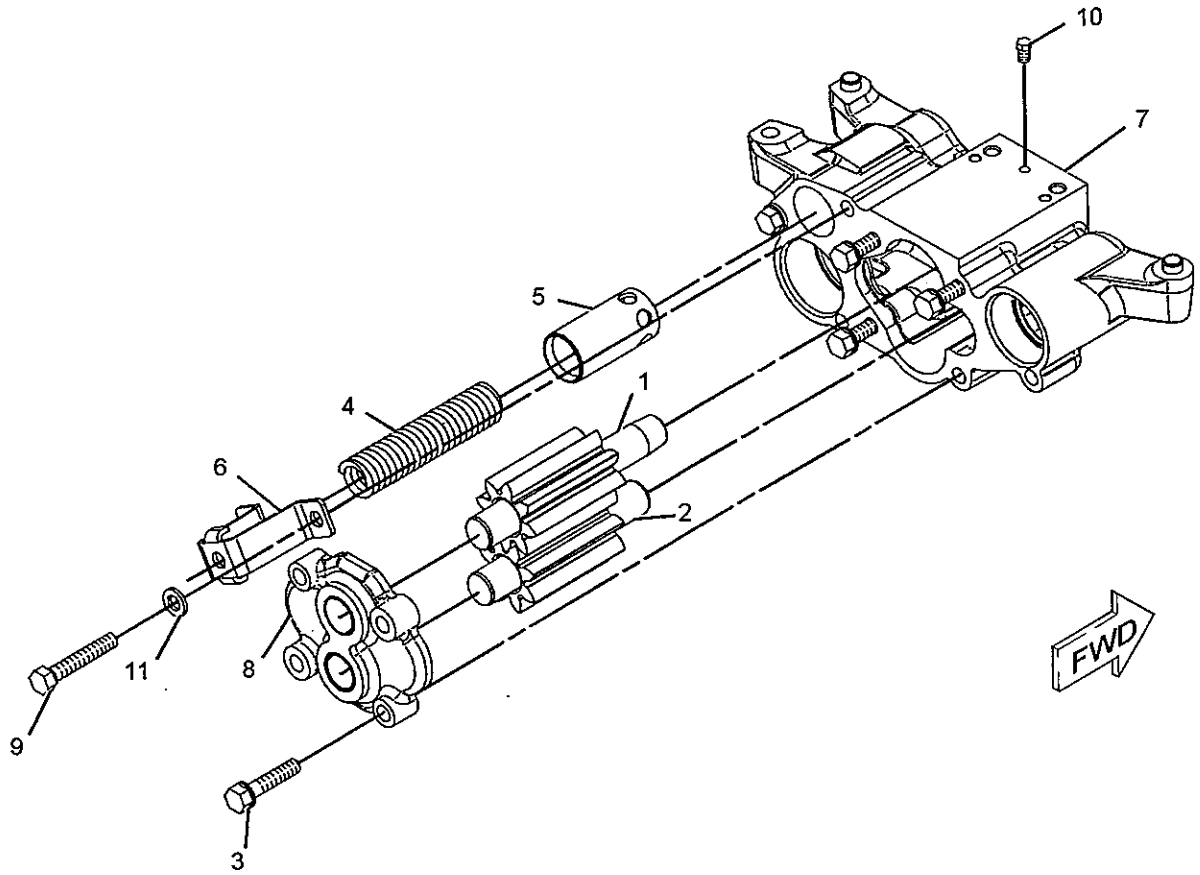


GRAPHIC #1 **<END>** g01066948

# 263-7357 VALVE GP-FLUID SAMPLING–FUEL, AIR PURGE

S/N: JMS1-UP

PART OF 226-9644 INSTALLATION AR-ENGINE

SMCS-7542 i02279575

| NOTE | REF NO | GRAPHIC REF | PART NUMBER | QTY | PART NAME 1 2 3 4 5 6 (PRODUCT LEVEL) | SEE PAGE |
|---|---|---|---|---|---|---|
| | 1 | 1 | 6V-5048 | 1 | SEAL-O-RING | |
| | 2 | 1 | 8C-3446 | 1 | VALVE AS-FLUID SAMPLING (FUEL, AIR PURGE) | |

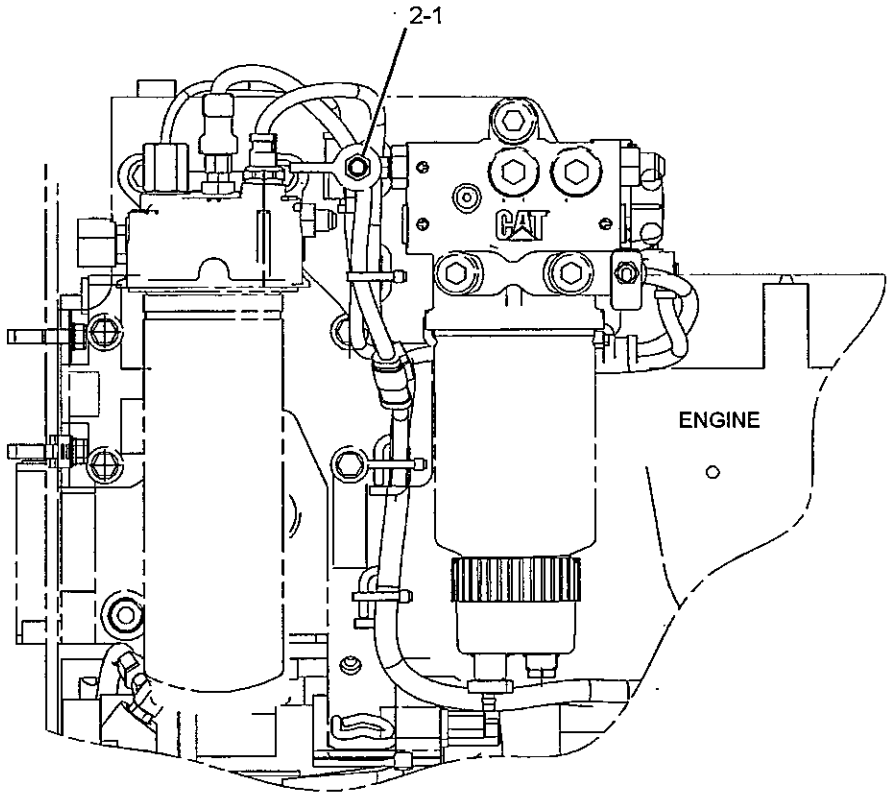


LEFT SIDE VIEW

GRAPHIC #1 <END> g01141919

# COOLING SYSTEM

## 245-4757 COOLING AR-HIGH AMBIENT TEMP

**S/N: JMS1-UP**
**AN ATTACHMENT**

**SMCS-1350, 1353, 1374, 1386, 1387, 5057** i02090120

| NOTE | PART NUMBER | QTY | PART NAME 1 2 3 4 5 6 (PRODUCT LEVEL) | SEE PAGE |
|---|---|---|---|---|
| | 235-3169 | 1 | CORE AS-CONDENSER (REFRIGERANT) | |
| | 234-3032 | 1 | CORE AS-HYDRAULIC OIL COOLER | |
| | 223-5073 | 2 | CORE AS-RADIATOR | |
| | 223-5086 | 2 | CORE AS-RADIATOR | |

**<END>**

# 109-2373 FASTENER GP-WATER PUMP

S/N: LHX1-UP

FOR USE WHEN ALTERNATOR MOUNTING BRACKET IS NOT INSTALLED

PART OF 225-0992 ENGINE AR-COMPLETE

CANNOT BE USED WITH RH FRONT OIL GUIDE

SMCS-1361 i01606278

| NOTE | REF NO | GRAPHIC REF | PART NUMBER | QTY | PART NAME 1 2 3 4 5 6 (PRODUCT LEVEL) | SEE PAGE |
|---|---|---|---|---|---|---|
| | 1 | 1 | 0S-1591 | 1 | BOLT (3/8-16X1.5 IN) | |

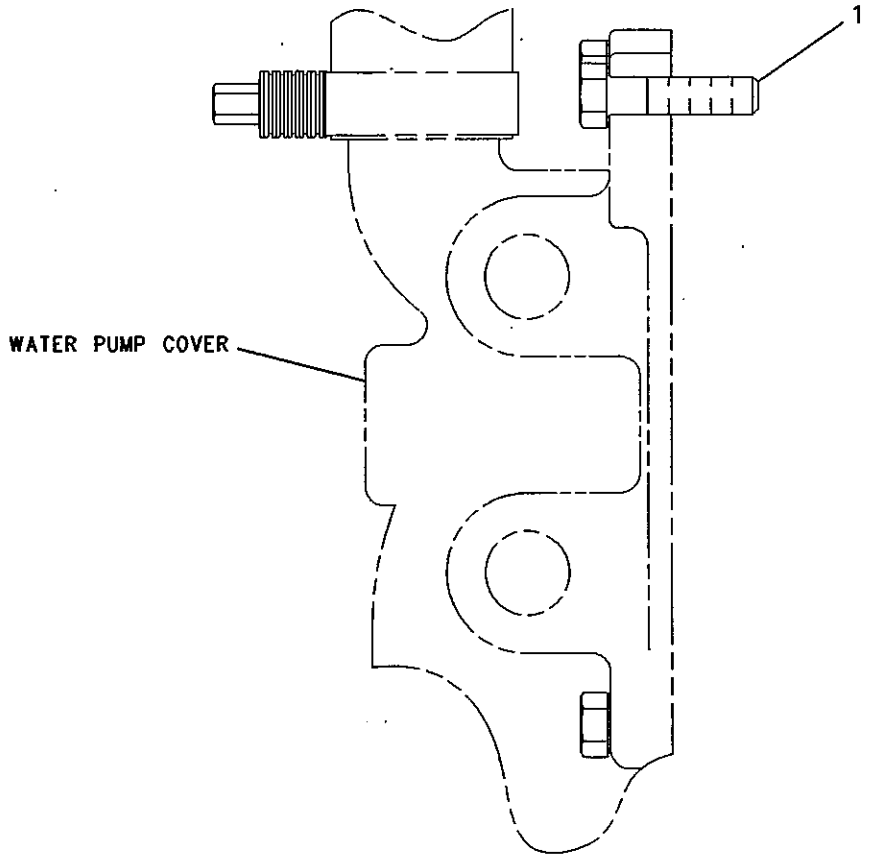


RIGHT SIDE VIEW

GRAPHIC #1 <END> g00832155

# COOLING SYSTEM

## 233-0699 LINES GP-WATER–RADIATOR

**S/N: JMS1-UP**

**PART OF 225-5538 CHASSIS AR**

**SMCS-1380** **i02280856**

| NOTE | REF NO | GRAPHIC REF | PART NUMBER | QTY | PART NAME 1 2 3 4 5 6 (PRODUCT LEVEL) | SEE PAGE |
|---|---|---|---|---|---|---|
| E | 1 | 2 | **5P-1265** | | HOSE (18-CM) | |
| E | 2 | 2 | **5P-1262** | | HOSE (18-CM) | |
| | 3 | 2 | **5D-1026** | 1 | CLAMP-HOSE | |
| | 4 | 2 | **7X-7958** | 2 | CLAMP-HOSE | |
| | 5 | 2 | **9Y-9236** | 1 | BODY AS-GAUGE | |
| | 6 | 2 | **053-2313** | 1 | CONNECTOR | |
| | 7 | 2 | *150-3024* | 2 | ELBOW GP | |
| | | | | | (EACH INCLUDES) | |
| | | 2 | **3J-1907** | 1 | SEAL-O-RING | |
| | | 2 | **5P-4924** | 1 | ELBOW | |
| | 8 | 2 | *150-3030* | 2 | ELBOW AS | |
| | | | | | (EACH INCLUDES) | |
| | | 2 | **3J-1907** | 1 | SEAL-O-RING | |
| | | 2 | **7X-1448** | 1 | ELBOW | |
| | 9 | 2 | **169-5836** | 1 | HOSE-ELBOW | |
| | 10 | 2 | **209-4573** | 4 | CLAMP | |
| | 11 | 2 | **209-4580** | 4 | CLAMP | |
| Y | 12 | 2 | *233-0701* | 1 | TANK GP-EXPANSION (COOLANT) | 676 |
| | 13 | 2 | **233-0709** | 1 | TUBE AS | |
| | 14 | 2 | **233-0710** | 1 | TUBE AS | |
| | 15 | 2 | **234-9787** | 1 | BRACKET | |
| I | 16 | 2 | **235-1572** | 1 | HOSE AS | |
| I | 17 | 1 | **251-0059** | 1 | HOSE AS | |
| | 18 | 2 | **000-7246** | 1 | ELBOW | |
| | 19 | 2 | **109-1145** | 4 | CLAMP-HOSE | |
| | 20 | 1 | *148-8318* | 1 | CONNECTOR AS | |
| | | 1 | **3K-0360** | 1 | SEAL-O-RING | |
| | | 1 | **6V-8397** | 1 | SEAL-O-RING | |
| | | 1 | **6V-8634** | 1 | CONNECTOR | |
| | 21 | 2 | *148-8336* | 2 | CONNECTOR AS | |
| | | | | | (EACH INCLUDES) | |
| | | 2 | **3J-1907** | 1 | SEAL-O-RING | |
| | | 2 | **6V-8397** | 1 | SEAL-O-RING | |
| | | 2 | **6V-8636** | 1 | CONNECTOR | |
| | 22 | 2 | *165-2273* | 1 | VALVE GP-SHUTOFF (RADIATOR DRAIN) | |
| | | 2 | **3K-0360** | 1 | SEAL-O-RING | |
| | | 2 | **6V-7238** | | VALVE-SHUTOFF | |
| | 23 | 2 | *203-2059* | 1 | CONNECTOR AS | |
| | | 2 | **6V-8397** | 1 | SEAL-O-RING | |
| | | 2 | **6V-8397** | 1 | SEAL-O-RING | |
| | | 2 | **8C-6869** | 2 | CONNECTOR | |
| | 24 | 2 | **5P-9299** | 2 | CLIP | |
| E | 25 | 2 | **5P-1265** | | HOSE (12-CM) | |
| | 26 | 2 | **7D-7233** | 2 | CLIP | |
| | 27 | 2 | **7M-8485** | 1 | SEAL-O-RING | |
| | 28 | 2 | **8T-4121** | 6 | WASHER-HARD (11X21X2.5-MM THK) | |
| M | 29 | 2 | **8T-4133** | 1 | NUT (M10X1.5-THD) | |
| M | 30 | 2 | **8T-4137** | 4 | BOLT (M10X1.5X20-MM) | |
| M | 31 | 2 | **8T-4195** | 1 | BOLT (M10X1.5X30-MM) | |
| E | 32 | 2 | **5P-0767** | | HOSE (33-CM) | |
| E | 33 | 2 | **5P-1442** | | HOSE (30.3-CM) | |
| E | 33A | 2 | **5P-1442** | | HOSE (44.3-CM) | |
| E | 34 | 1 | **5P-1251** | | HOSE (146-CM) | |
| E | 35 | 2 | **7Y-1976** | | HOSE (194.3-CM) | |

## *233-0699* **LINES GP-WATER** *(contd.)* i02280856

E-ORDER BY THE CENTIMETER
I-REFER TO HYDRAULIC INFORMATION SYSTEM
M-METRIC PART
Y-SEPARATE ILLUSTRATION

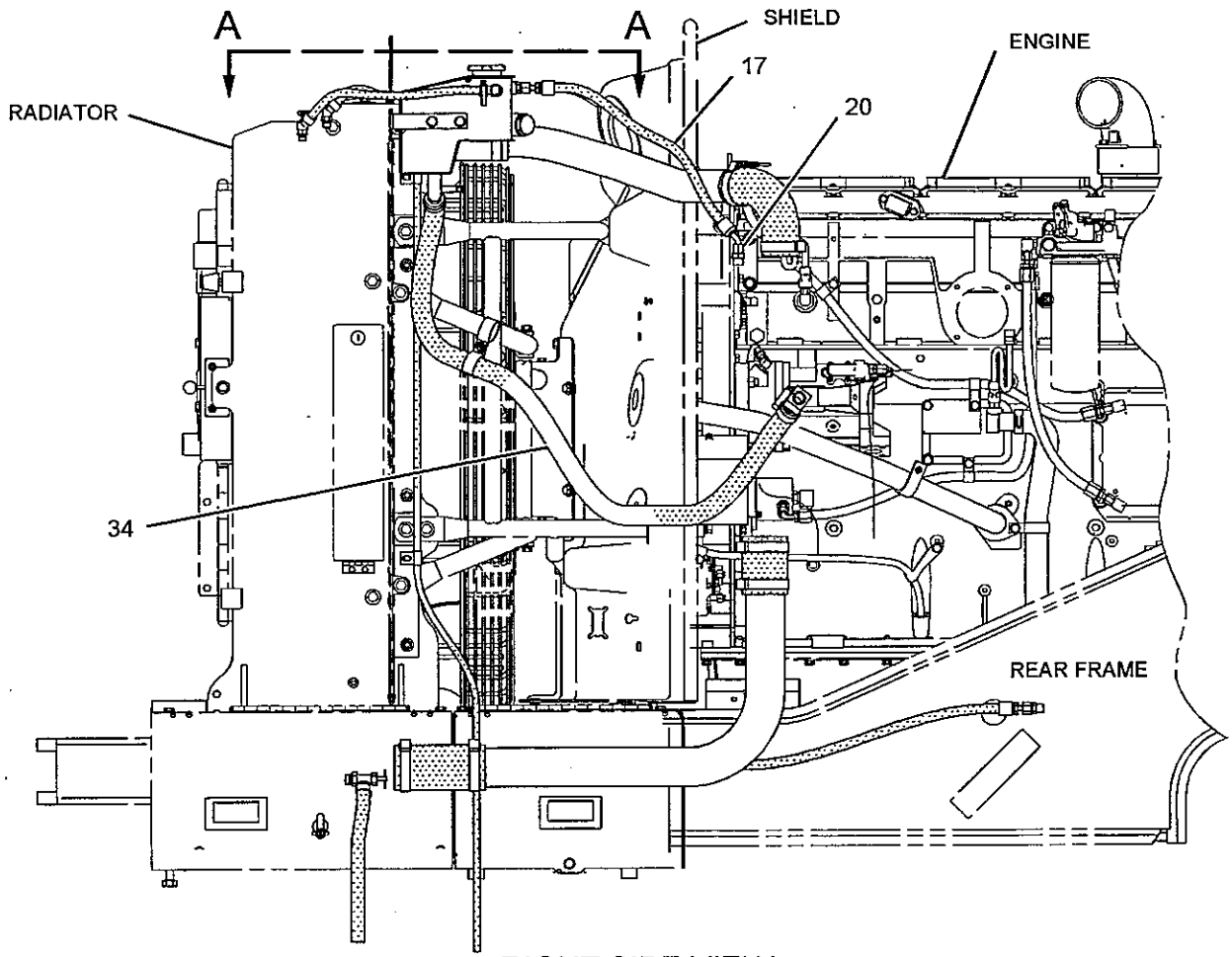


RIGHT SIDE VIEW

GRAPHIC #1 g01067110

## *233-0699* LINES GP-WATER *(contd.)* i02280856

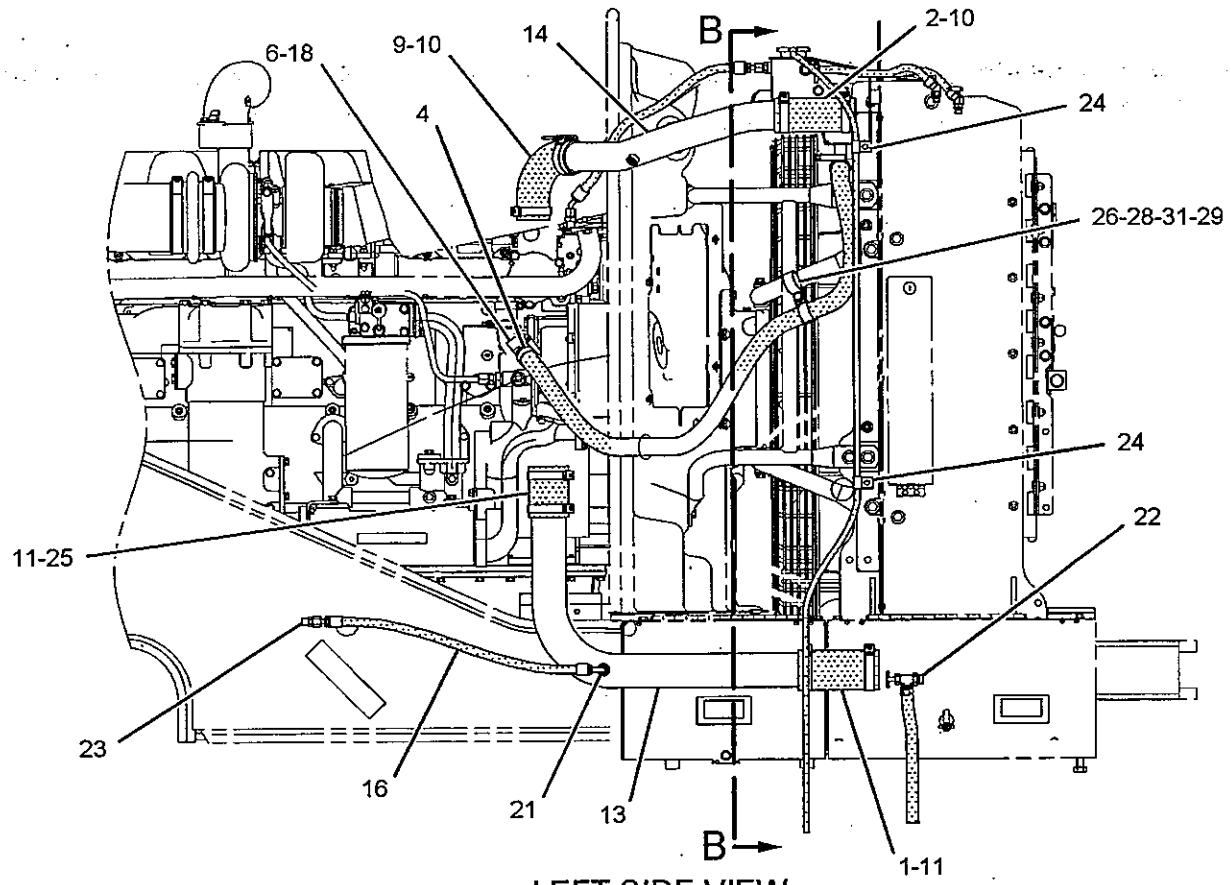


LEFT SIDE VIEW

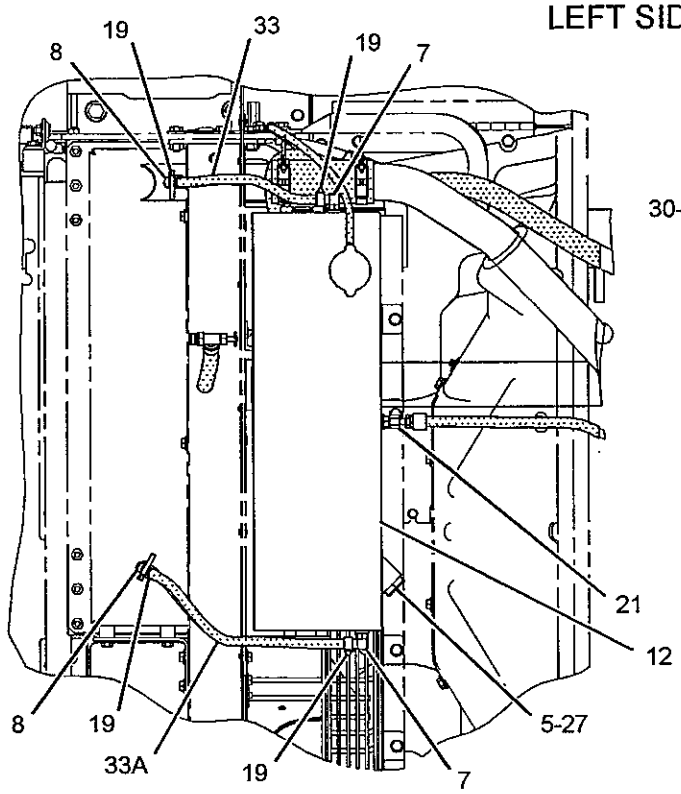


VIEW A-A

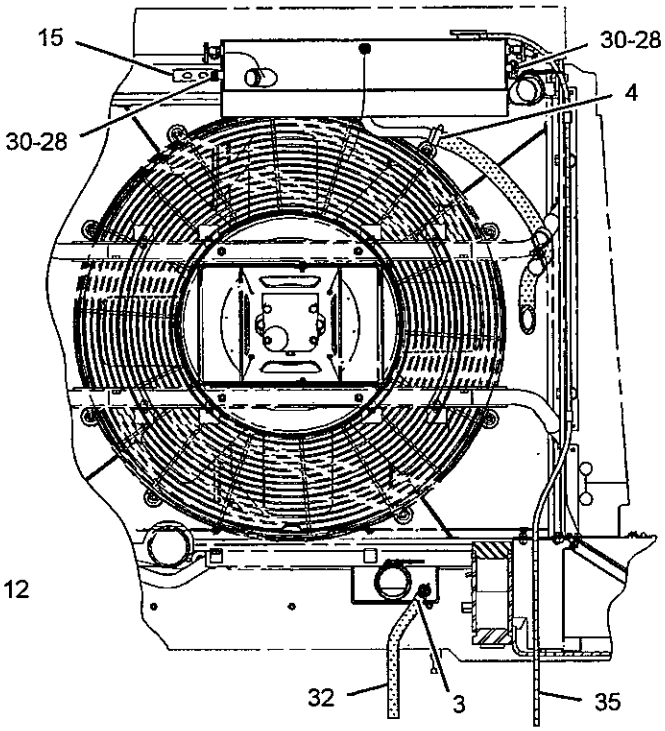


SECTION B-B

GRAPHIC #2 **<END>** g01067111

# COOLING SYSTEM

## 233-1509 LINES GP-WATER–TURBOCHARGER

**S/N: JMS1-UP**

**PART OF 226-9644 INSTALLATION AR-ENGINE**

**SMCS-1380** **i02281411**

| NOTE | REF NO | GRAPHIC REF | PART NUMBER | QTY | PART NAME 1 2 3 4 5 6 (PRODUCT LEVEL) | SEE PAGE |
|---|---|---|---|---|---|---|
| | 1 | 1 | **241-3483** | 2 | SUPPORT AS | |
| | 2 | 1 | **178-2500** | 2 | FLANGE | |
| | 3 | 1 | **233-1507** | 1 | BRACKET AS | |
| M | | 1 | **8T-3490** | 1 | NUT-WELD (M10X1.5-THD) | |
| | 4 | 1 | **260-1579** | 1 | TUBE AS | |
| I | 5 | 1 | **233-7186** | 1 | HOSE AS | |
| | 6 | 1 | **233-8671** | 1 | TUBE AS | |
| | 7 | 1 | **4L-6454** | 4 | BOLT (3/8-16X1-IN) | |
| | 8 | 1 | **122-8905** | 1 | ELBOW | |
| | 9 | 1 | **6V-9872** | 1 | CONNECTOR | |
| | 10 | 1 | **6V-9027** | 1 | SEAL-O-RING | |
| | 11 | 1 | **2T-2171** | 1 | ELBOW | |
| | 12 | 1 | **4B-0418** | 2 | CLIP | |
| | 14 | 1 | **6D-7128** | 2 | SEAL | |
| | 15 | 1 | **6V-8398** | 3 | SEAL-O-RING | |
| | 17 | 1 | **8C-6871** | 1 | CONNECTOR | |
| | 19 | 1 | **8T-4121** | 1 | WASHER-HARD (11X21X2.5-MM THK) | |
| M | 20 | 1 | **8T-4137** | 1 | BOLT (M10X1.5X20-MM) | |
| | 21 | 1 | **8T-4896** | 4 | WASHER-HARD (10.2X18.5X2.5-MM THK) | |

I-REFER TO HYDRAULIC INFORMATION SYSTEM
M-METRIC PART

*233-1509* **LINES GP-WATER** *(contd.)* **i02281411**

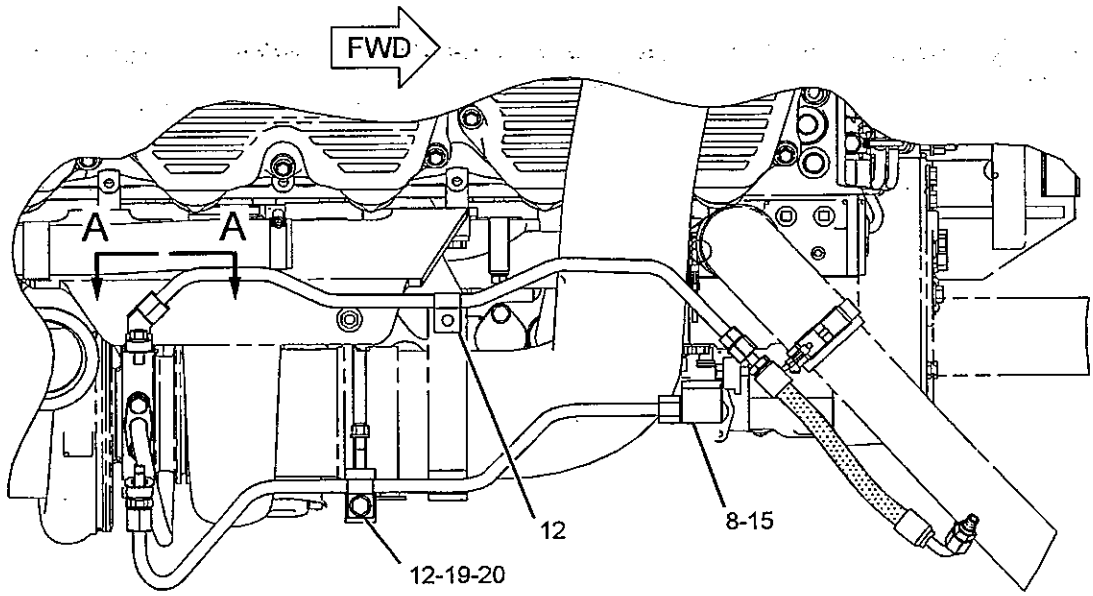


TOP VIEW

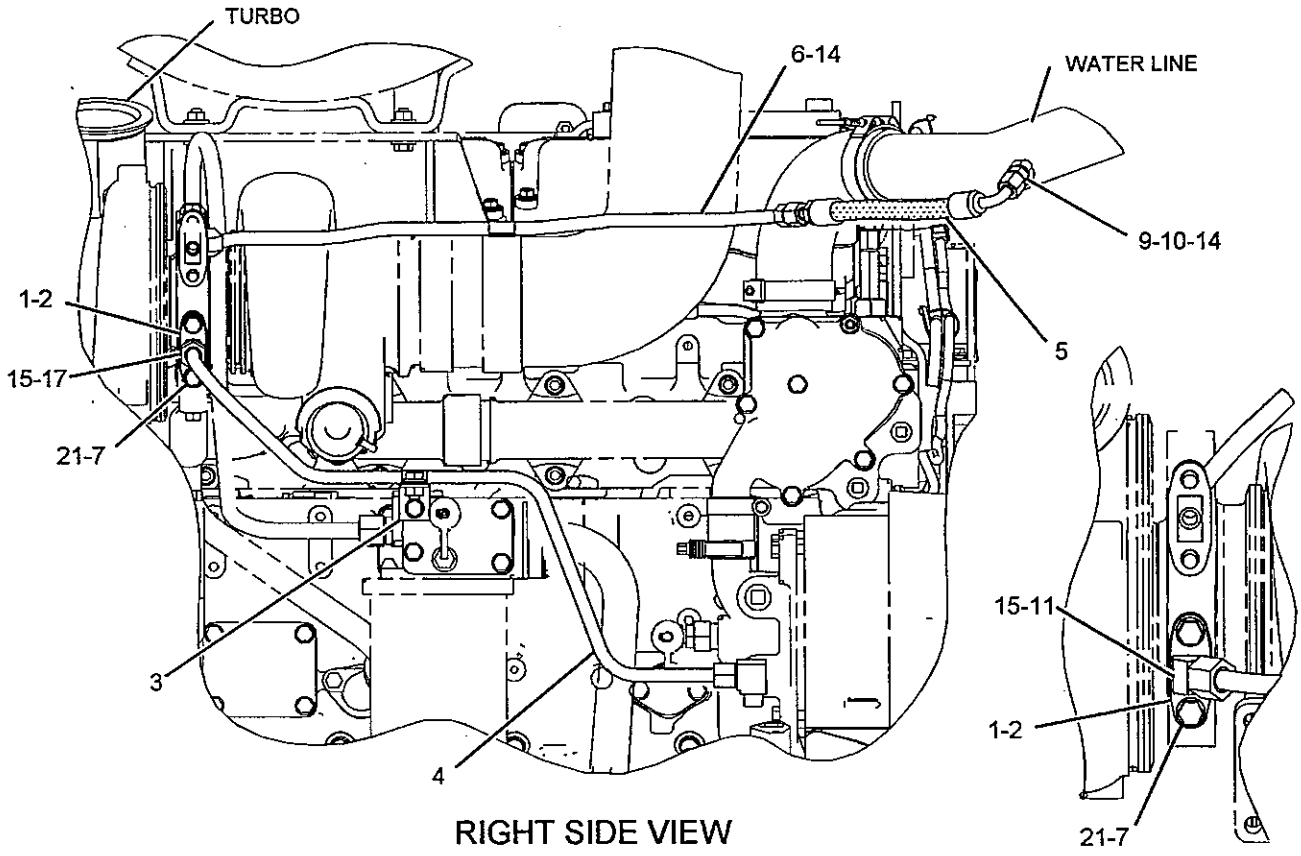


RIGHT SIDE VIEW

GRAPHIC #1 **<END>** g01142113

# COOLING SYSTEM

## *263-9091* LINES GP-WATER

**S/N: LHX1-UP**

**PART OF 225-0992 ENGINE AR-COMPLETE**

**SMCS-1380** **i02251624**

| NOTE | REF NO | GRAPHIC REF | PART NUMBER | QTY | PART NAME 1 2 3 4 5 6 (PRODUCT LEVEL) | SEE PAGE |
|---|---|---|---|---|---|---|
| | 1 | 1 | 2S-0795 | 2 | GASKET | |
| | 2 | 2 | 3S-9643 | 2 | SEAL-LIP TYPE | |
| | 3 | 2 | 4N-1156 | 1 | GASKET-REGULATOR COVER (TEMPERATURE REGULATOR HOUSING) | |
| | 4 | 1 | 4N-1199 | 2 | CLIP | |
| | 5 | 1 | 8T-4983 | 2 | CLAMP-HOSE | |
| | 6 | 1 | 9Y-4104 | 1 | HOSE | |
| | 7 | 1 | 125-0434 | 1 | SEAL-INTEGRAL | |
| | 8 | 2 | 126-4935 | 1 | SEAL-INTEGRAL | |
| R | 9 | 1 | 133-0125 | 1 | CORE AS-ENGINE OIL COOLER | |
| | 10 | 1 | 135-5577 | 1 | CORE AS-POWER TRAIN OIL COOLER (TRANSMISSION) | |
| | 11 | 1 | 135-7076 | 1 | BONNET-INLET | |
| | 12 | 1 | 137-7331 | 1 | HOUSING-REGULATOR | |
| | 13 | 2 | 139-3550 | 1 | GASKET-REGULATOR (HOUSING) (WATER, COOLANT TEMPERATURE) | |
| | 14 | 1 | 143-9393 | 1 | STUD | |
| | 15 | 1 | 154-9023 | 1 | VALVE-SAMPLING (WATER, COOLANT) | |
| | 16 | 1 | 157-0670 | 1 | CAP-DUST | |
| | 17 | 1 | 161-3565 | 1 | COVER-WATER PUMP | |
| | 18 | 1 | 170-4673 | 1 | BONNET-INLET | |
| | 19 | 1 | 187-6237 | 1 | ADAPTER | |
| | 20 | 1 | 205-9293 | 1 | BONNET | |
| | 21 | 2 | 235-8159 | 1 | BRACKET AS | |
| | 22 | 1 | 239-6304 | 1 | MANIFOLD-HOUSING | |
| | 23 | 2 | 248-5513 | 2 | REGULATOR-WATER TEMPERATURE (92-DEG C) (COOLANT) | |
| | 24 | 1 | 0L-1351 | 2 | BOLT (3/8-16X0.875-IN) | |
| | 25 | 1 | 0L-2070 | 2 | BOLT (3/8-16X2.25-IN) | |
| | 26 | 2 | 0S-1588 | 1 | BOLT (3/8-16X1.25-IN) | |
| | 27 | 1 | 0S-1591 | 3 | BOLT (3/8-16X1.5-IN) | |
| | 28 | 1 | 0S-1608 | 1 | BOLT (3/8-16X3.75-IN) | |
| | 29 | 1 | 0T-0065 | 2 | BOLT (3/8-16X3.5-IN) | |
| | 30 | 1 | 109-0077 | 3 | SEAL-O-RING | |
| | 31 | 2 | 1A-2029 | 4 | BOLT (3/8-16X1.125-IN) | |
| | 32 | 2 | 1B-2790 | 1 | BOLT (5/16-18X1.375-IN) | |
| | 33 | 1 | 1D-4566 | 4 | BOLT (1/2-13X3.5-IN) | |
| | 34 | 2 | 3E-4352 | 1 | WASHER-HARD (8.8X20.5X2.5-MM THK) | |
| | 35 | 1 | 3J-7354 | 1 | SEAL-O-RING | |
| | 36 | 1 | 3K-0360 | 4 | SEAL-O-RING | |
| | 37 | 1 | 3P-1932 | 1 | ADAPTER | |
| | 38 | 1 | 4F-0411 | 3 | BOLT (3/8-16X6.5-IN) | |
| | 39 | 1 | 5B-2638 | 4 | BOLT (3/8-16X5.25-IN) | |
| | 40 | 1 | 5M-2894 | 9 | WASHER-HARD (10.2X18.5X2.5-MM THK) | |
| | 41 | 1 | 6V-9027 | 1 | SEAL-O-RING | |
| | 42 | 1 | 7X-7731 | 4 | PLUG-PIPE | |
| | 43 | 1 | 8S-9089 | 6 | BOLT (1/2-13X4.5-IN) | |
| | 44 | 1 | 8T-6761 | 1 | PLUG-PIPE | |
| | 45 | 1 | 8T-6767 | 1 | PLUG-PIPE | |
| | 46 | 1 | 9S-8002 | 1 | PLUG | |
| | 47 | 1 | 9S-8005 | 3 | PLUG | |
| | 48 | 2 | 9X-6458 | 5 | WASHER-HARD (10.2X22.5X3-MM THK) | |
| | 49 | 1 | 9X-8873 | 2 | BOLT (1/2-13X2.25-IN) | |

R-REMFG PART MAY BE AVAILABLE

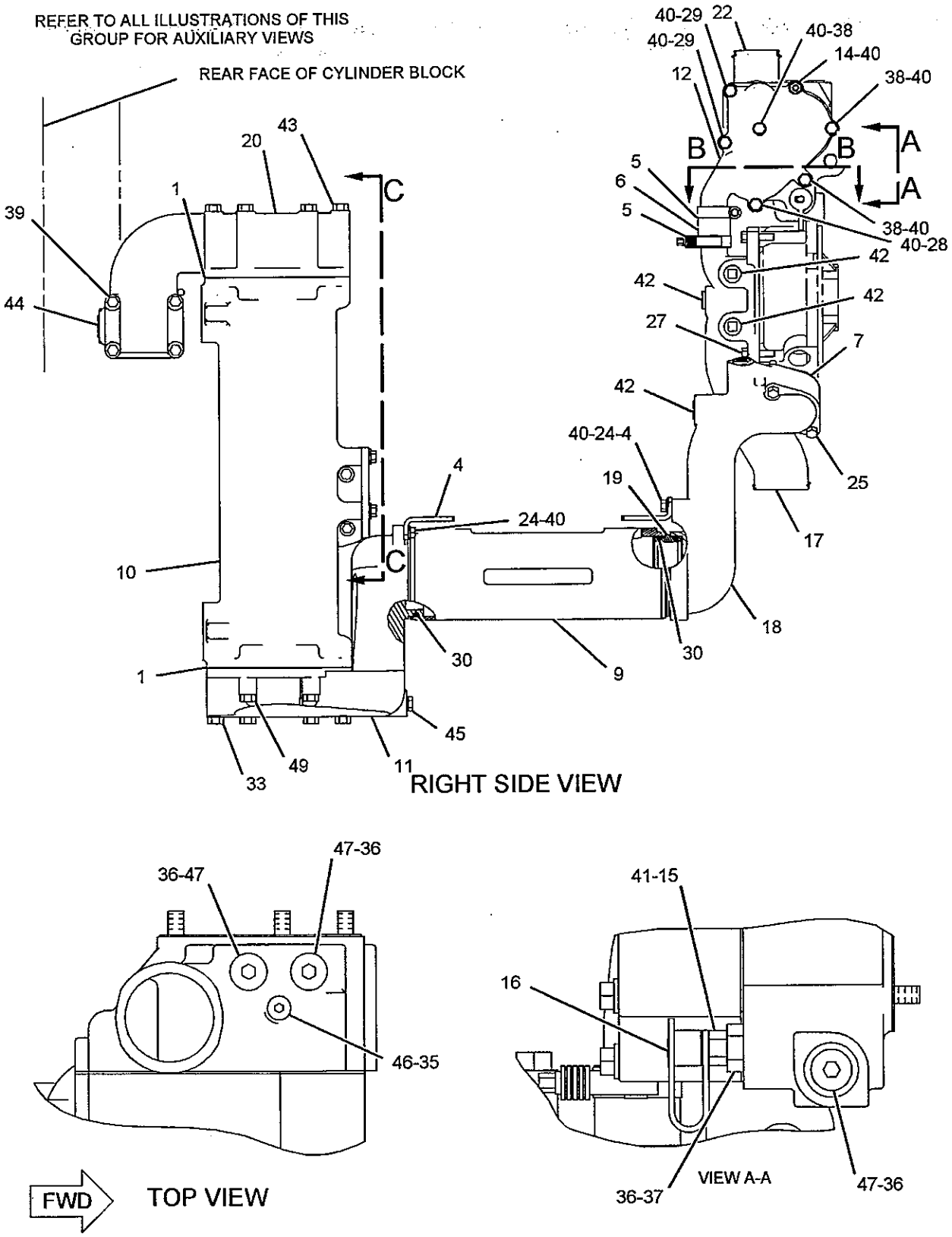


GRAPHIC #1 g01140503

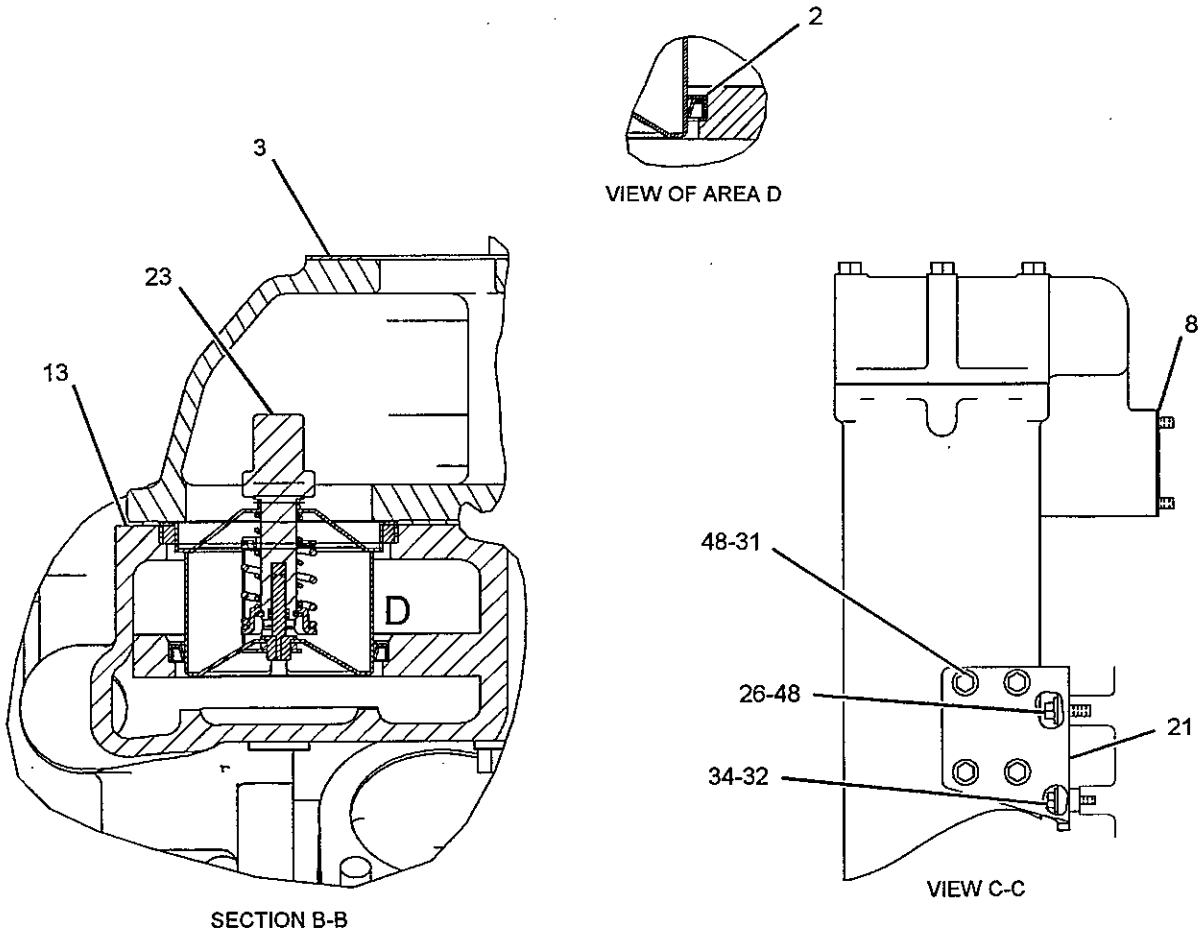


GRAPHIC #2 **<END>** g01140504

# COOLING SYSTEM

## *161-5719* PUMP GP-WATER*R

**S/N: LHX1-UP**

**PART OF 174-5986 PUMP GP-WATER**

**SMCS-1361** **i01937122**

| NOTE | REF NO | GRAPHIC REF | PART NUMBER | QTY | PART NAME 1 2 3 4 5 6 (PRODUCT LEVEL) | SEE PAGE |
|---|---|---|---|---|---|---|
| | 1 | 1 | **161-5718** | 1 | HOUSING-WATER PUMP | |
| | 2 | 1 | **129-9907** | 1 | IMPELLER-PUMP | |
| W | 3 | 1 | **9M-6527** | 1 | WASHER-HARD (10.2X25.5X5MM THK) | |
| | 4 | 1 | **0S-1591** | 1 | BOLT (3/8-16X1.5 IN) | |
| | 5 | 1 | **1A-1135** | 1 | BOLT (5/8-11X2 IN) | |
| W | 6 | 1 | **128-0317** | 1 | SEAL GP (WATER PUMP) | |
| | 7 | 1 | **153-9023** | 1 | GEAR (74 TEETH) | |
| W | 8 | 1 | **153-1256** | 1 | SEAL-LIP TYPE | |
| W | 9 | 1 | **135-4928** | 1 | SHAFT-WATER PUMP | |
| W | 10 | 1 | **5S-0581** | 1 | WASHER-HARD (17X38X8MM THK) | |
| | 11 | 1 | **1B-7182** | 4 | BOLT (5/16-18X1.25 IN) | |
| W | 12 | 1 | **108-7930** | 1 | BEARING AS-ROLLER | |
| W | 13 | 1 | **136-1107** | 1 | RETAINER | |
| W | 14 | 1 | **136-3742** | 1 | FILTER-WATER PUMP | |
| | | | | | AVAILABLE REPAIR KIT(S): | |
| W | | | **138-6744** | 1 | KIT-PUMP REBUILD (WATER) | |

W-KIT MARKED W INCLUDES PARTS MARKED W

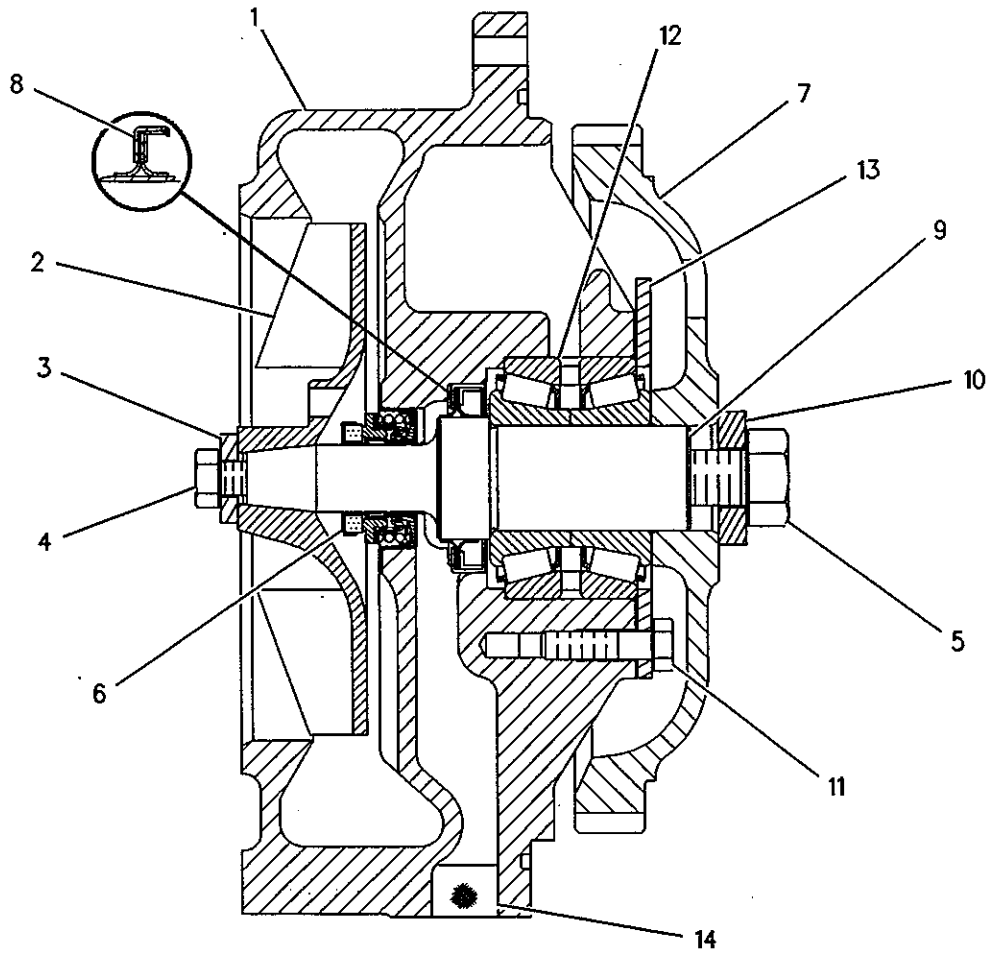


GRAPHIC #1 **<END>** g00263499

# COOLING SYSTEM

## 174-5986 PUMP GP-WATER

**S/N: LHX1-UP**
**HEAVY DUTY PUMP**
**PART OF 225-0992 ENGINE AR-COMPLETE**

**SMCS-1361** **i02230510**

| NOTE | REF NO | GRAPHIC REF | PART NUMBER | QTY | PART NAME 1 2 3 4 5 6 (PRODUCT LEVEL) | SEE PAGE |
|---|---|---|---|---|---|---|
| YR | 1 | 1 | **161-5719** | 1 | PUMP GP-WATER | 90 |
| | 2 | 1 | **4P-2383** | 1 | ADAPTER | |
| | 3 | 1 | **9M-3786** | 1 | SEAL-O-RING | |
| | 4 | 1 | **122-3772** | 1 | SEAL-O-RING | |
| | 5 | 1 | **109-0077** | 1 | SEAL-O-RING | |

R-REMFG PART MAY BE AVAILABLE
Y-SEPARATE ILLUSTRATION

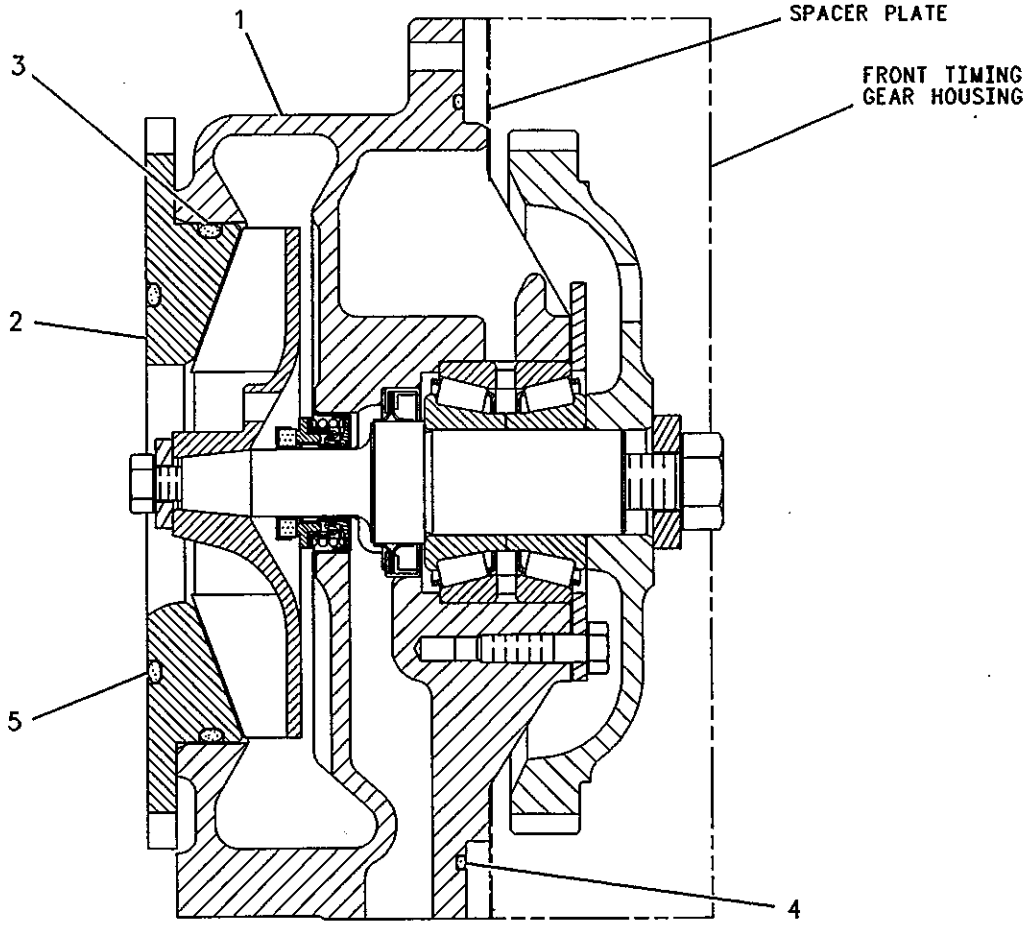


GRAPHIC #1 **<END>** g00263504

# COOLING SYSTEM

## *232-3321* RADIATOR & FAN GP

**S/N: JMS1-UP**

**PART OF 225-5538 CHASSIS AR**

**SMCS-1353, 1356** **i02279642**

| NOTE | REF NO | GRAPHIC REF | PART NUMBER | QTY | PART NAME 1 2 3 4 5 6 (PRODUCT LEVEL) | SEE PAGE |
|---|---|---|---|---|---|---|
| | 1 | 3 | 4E-1384 | 1 | BUMPER-CONICAL | |
| | 2 | 3 | 5V-8780 | 1 | KNOB | |
| | 3 | 3 | *8T-2893* | 2 | LOCK AS-CYLINDER | |
| | | | | | (EACH INCLUDES) | |
| | | 3 | 226-0291 | 1 | LOCK AS | |
| | | 3 | 226-0321 | 1 | CAM | |
| | 4 | 3 | 112-5344 | 1 | LATCH AS-DOOR | |
| | 5 | 5 | 121-3307 | 2 | MOUNT AS-RESILIENT | |
| | 6 | 4 | 175-4249 | 1 | SPIDER AS-FAN (8-BLADE) | |
| | 7 | 1 | 178-3129 | 1 | GROMMET | |
| | 8 | 3 | 189-5594 | 2 | COVER AS | |
| | | | | | (EACH INCLUDES) | |
| | | 3 | 194-5278 | 1 | HINGE | |
| | 9 | 4 | 192-7356 | 1 | ADAPTER | |
| | 10 | 3 | 263-7280 | 1 | STRIKER | |
| | 11 | 3 | 257-7193 | 1 | SUPPORT AS | |
| M | | 3 | 6V-9632 | 4 | NUT-WELD (M6X1-THD) | |
| M | | 3 | 8T-3490 | 1 | NUT-WELD (M10X1.5-THD) | |
| M | | 3 | 8T-3597 | 4 | NUT-WELD (M12X1.75-THD) | |
| M | | 3 | 8T-3612 | 2 | NUT-WELD (M8X1.25-THD) | |
| | 12 | 3 | 228-6448 | 1 | SUPPORT AS | |
| M | | 3 | 6V-9632 | 2 | NUT-WELD (M6X1-THD) | |
| M | | 3 | 8T-3490 | 5 | NUT-WELD (M10X1.5-THD) | |
| M | | 3 | 8T-3597 | 4 | NUT-WELD (M12X1.75-THD) | |
| | 13 | 2 | 231-4321 | 1 | CORE AS-AFTERCOOLER | |
| | 14 | 3 | 232-1736 | 1 | SUPPORT AS | |
| M | | 3 | 8T-3490 | 12 | NUT-WELD (M10X1.5-THD) | |
| M | | 3 | 8T-3597 | 10 | NUT-WELD (M12X1.75-THD) | |
| | 15 | 5 | 232-6126 | 1 | SUPPORT AS | |
| M | | 5 | 8T-3490 | 16 | NUT-WELD (M10X1.5-THD) | |
| | 16 | 5 | 232-6128 | 1 | SUPPORT AS | |
| M | | 5 | 8T-3490 | 12 | NUT-WELD (M10X1.5-THD) | |
| | 17 | 5 | 232-6132 | 1 | SUPPORT AS | |
| | 18 | 2 | 232-6175 | 1 | SUPPORT AS | |
| | 19 | 5 | 233-1891 | 1 | BRACKET AS | |
| M | | 5 | 8T-3490 | 2 | NUT-WELD (M10X1.5-THD) | |
| | 20 | 1 | 234-2441 | 1 | SHROUD AS | |
| | 21 | 5 | 234-3475 | 1 | TANK AS-RADIATOR TOP | |
| M | | 5 | 8T-3490 | 12 | NUT-WELD (M10X1.5-THD) | |
| | | 5 | 9R-2060 | 2 | BOSS (M10X1.5X21-MM) | |
| | 22 | 5 | 234-3477 | 1 | TANK AS-RADIATOR BOTTOM | |
| | 23 | 1 | 234-4301 | 1 | BAFFLE AS | |
| | 24 | 1 | 234-4302 | 1 | BAFFLE AS | |
| | 25 | 1 | 234-4303 | 1 | BAFFLE AS | |
| | 26 | 5 | 234-4304 | 1 | BAFFLE AS | |
| | | | | | (EACH BAFFLE AS INCLUDES) | |
| | | 5 | 6B-4594 | 7 | RIVET | |
| | 27 | 4 | 257-7195 | 1 | BAFFLE | |
| | 28 | 2 | 234-4306 | 1 | BAFFLE | |
| Y | 29 | 4 | 255-6805 | 1 | MOTOR GP-PISTON (HYDRAULIC FAN) | 661 |
| | 30 | 2 | 235-4510 | 1 | ANGLE | |
| | 31 | 2 | 235-5933 | 1 | BRACKET AS | |
| M | | 2 | 8T-3490 | 2 | NUT-WELD (M10X1.5-THD) | |
| | 32 | 1 | 258-8600 | 4 | SEAL | |
| | 33 | 1 | 258-8601 | 4 | SEAL | |
| | 34 | 2 | 240-7313 | 1 | CORE AS-HYDRAULIC OIL COOLER | |

## 232-3321 RADIATOR & FAN GP (contd.)

i02279642

| NOTE | REF NO | GRAPHIC REF | PART NUMBER | QTY | PART NAME 1 2 3 4 5 6 (PRODUCT LEVEL) | SEE PAGE |
|---|---|---|---|---|---|---|
| | 35 | 3 | 244-8952 | 1 | HINGE AS | |
| M | | 3 | 8T-5413 | 6 | STUD-WELD (M10X1.5X25-MM OAL) | |
| | 36 | 3 | 246-6280 | 1 | BRACKET AS | |
| | 37 | 1 | 250-3337 | 1 | GUARD AS | |
| M | | 1 | 8T-3490 | 8 | NUT-WELD (M10X1.5-THD) | |
| | | 1 | 204-6529 | 8 | WASHER | |
| | 38 | 2 | 223-5047 | 2 | CORE AS-RADIATOR (OUTER) | |
| | 39 | 2 | 223-5060 | 2 | CORE AS-RADIATOR (INNER) | |
| | 40 | 1 | 3R-8530 | 8 | BOSS (31.75-MM THK) | |
| M | 41 | 3 | 5C-2890 | 4 | NUT (M6X1-THD) | |
| M | 42 | 3 | 5C-7261 | 1 | NUT (M8X1.25-THD) | |
| | 43 | 3 | 5P-1076 | 12 | WASHER-HARD (13.5X30X4-MM THK) | |
| | 44 | 1,4 | 7X-0515 | 9 | WASHER-HARD (17X35X5-MM THK) | |
| M | 45 | 1 | 7X-2555 | 8 | BOLT (M16X2X80-MM) | |
| | 46 | 1,2,3,4,5 | 7X-7729 | 87 | WASHER (11X25X3-MM THK) | |
| | 47 | 1,4,5 | 8T-4121 | 18 | WASHER-HARD (11X21X2.5-MM THK) | |
| M | 48 | 4 | 8T-4132 | 1 | NUT (M16X2-THD) | |
| M | 49 | 3 | 8T-4133 | 15 | NUT (M10X1.5-THD) | |
| M | 50 | 1,2,3,4,5 | 8T-4136 | 44 | BOLT (M10X1.5X25-MM) | |
| M | 51 | 3 | 8T-4138 | 4 | BOLT (M6X1X20-MM) | |
| M | 52 | 1,2,3,4,5 | 8T-4195 | 32 | BOLT (M10X1.5X30-MM) | |
| M | 53 | 1 | 8T-4196 | 12 | BOLT (M10X1.5X35-MM) | |
| | 54 | 4 | 8T-4223 | 2 | WASHER-HARD (13.5X25.5X3-MM THK) | |
| | 55 | 5 | 8T-4226 | 2 | WASHER-PLATED (10.5X45X3-MM THK) | |
| M | 56 | 3,4 | 8T-4956 | 14 | BOLT (M12X1.75X35-MM) | |
| M | 57 | 5 | 8T-5005 | 2 | BOLT (M10X1.5X70-MM) | |
| | 58 | 3 | 9X-8256 | 8 | WASHER (6.6X12X2-MM THK) | |
| D | 59 | 4 | 054-7915 | | SEAL (0.9-M) | |
| D | 59A | 4 | 054-7915 | | SEAL (1.11-M) | |
| D | 59B | 4 | 054-7915 | | SEAL (1.06-M) | |
| D | 59C | 4 | 054-7915 | | SEAL (1.13-M) | |
| E | 60 | 4 | 8C-5058 | | SEAL (52-CM) | |
| D | 61 | 2 | 5P-7483 | | SEAL (0.3-M) | |

D-ORDER BY THE METER
E-ORDER BY THE CENTIMETER
M-METRIC PART
Y-SEPARATE ILLUSTRATION

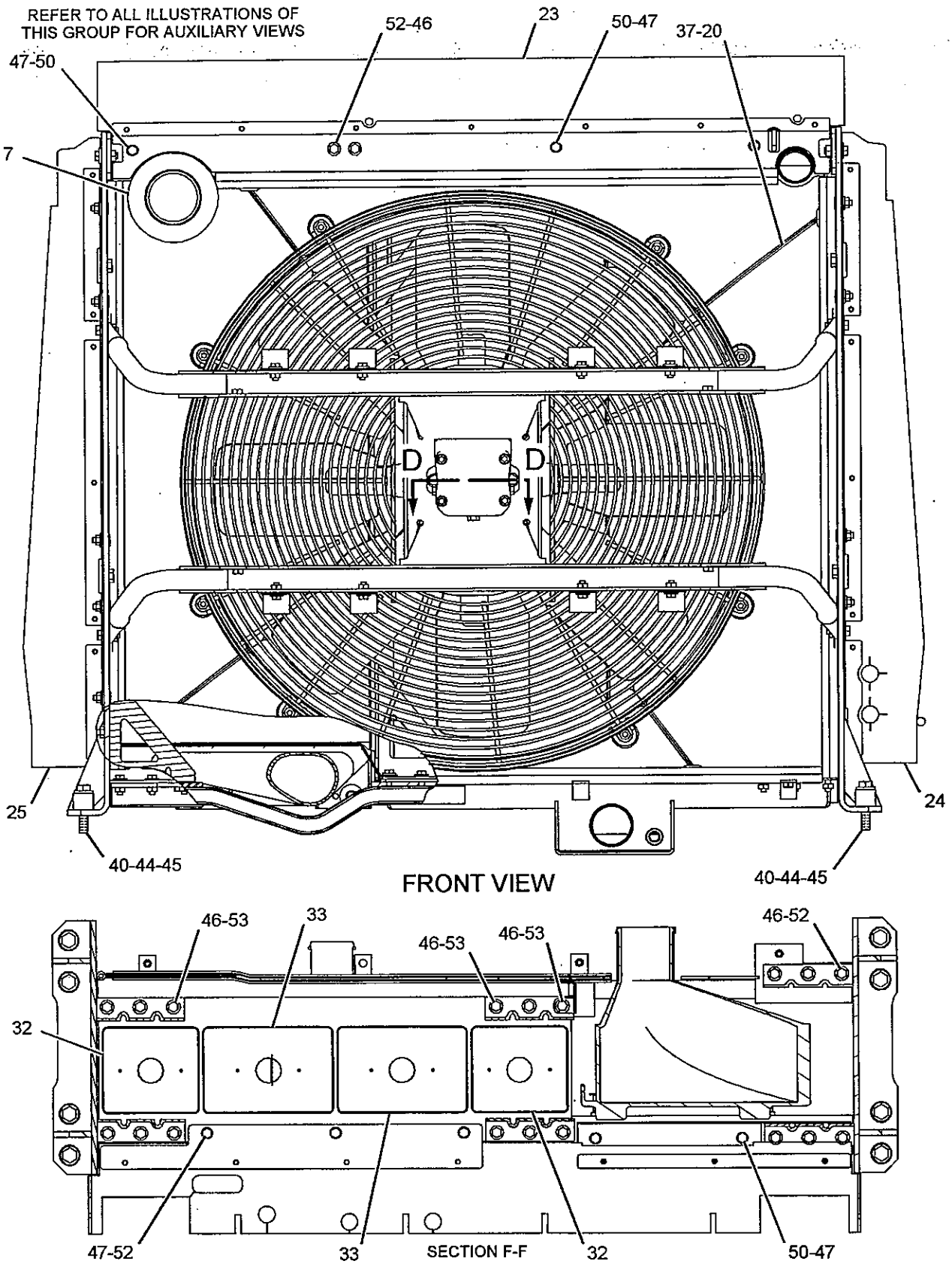


GRAPHIC #1

g01142260

REFER TO ALL ILLUSTRATIONS OF
THIS GROUP FOR AUXILIARY VIEWS

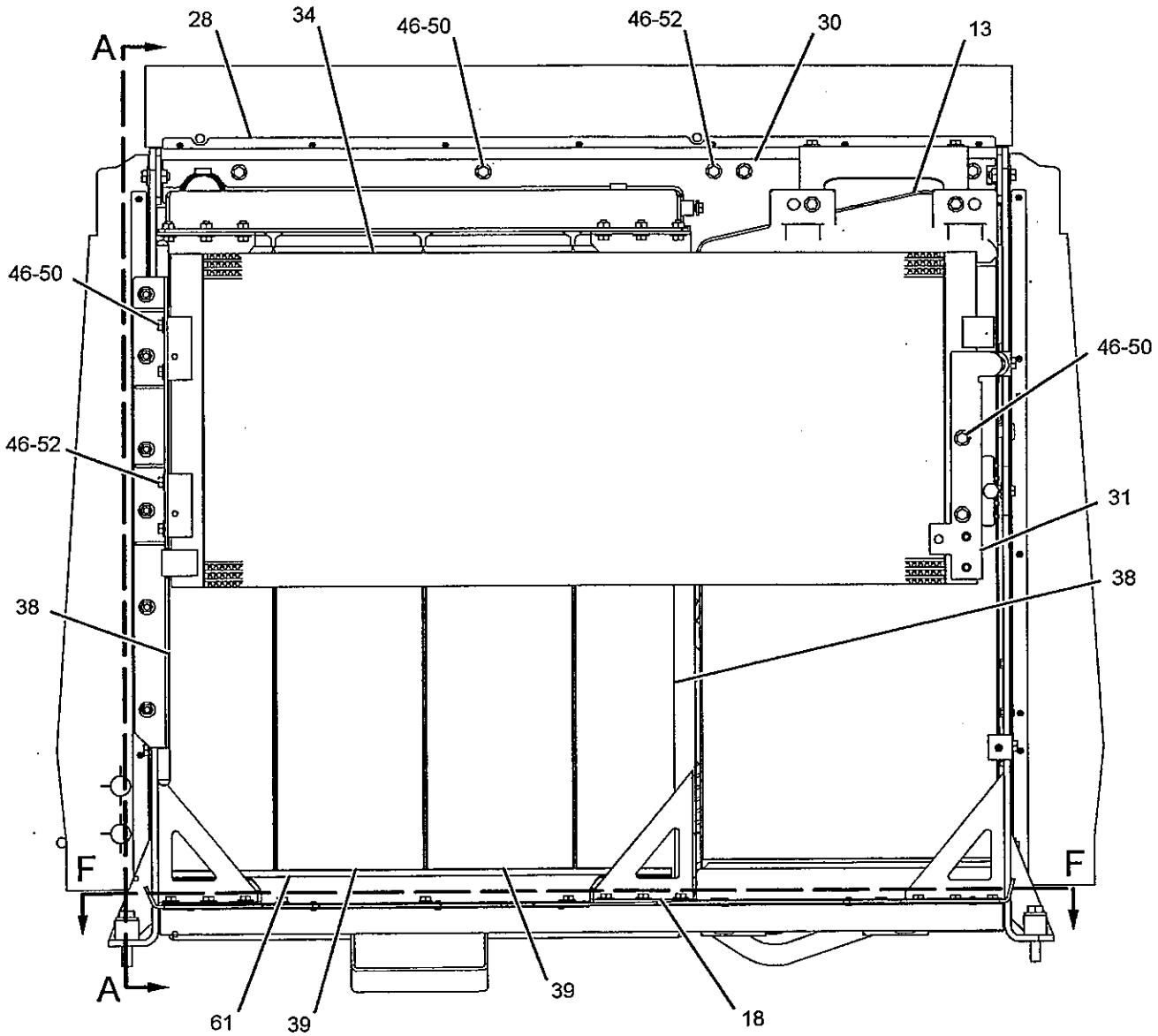


REAR VIEW

GRAPHIC #2 g01142262

REFER TO ALL ILLUSTRATIONS OF
THIS GROUP FOR AUXILIARY VIEWS

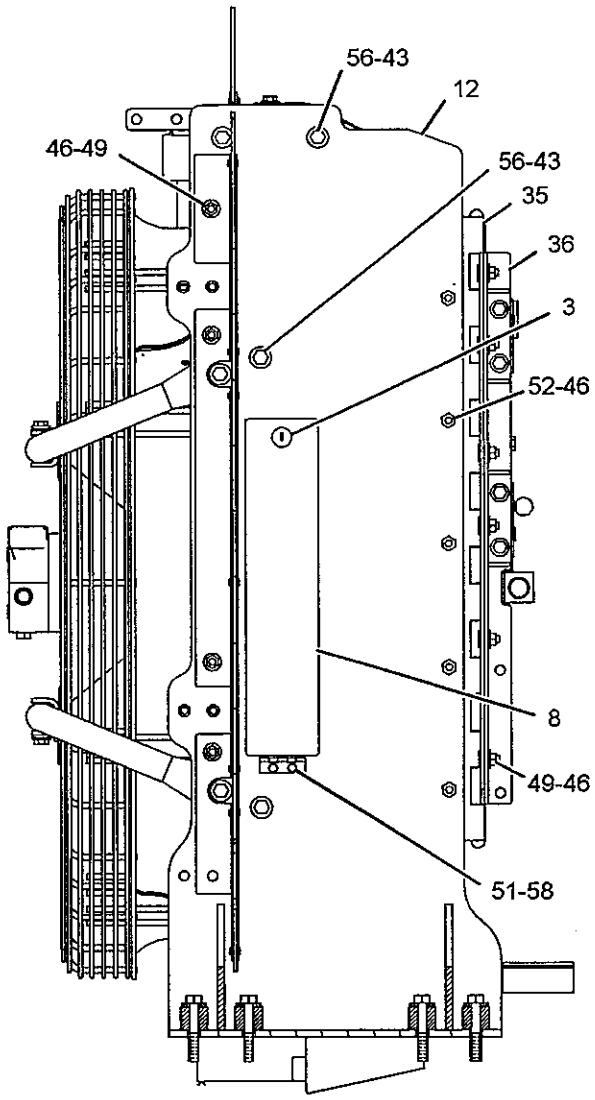


SECTION A-A

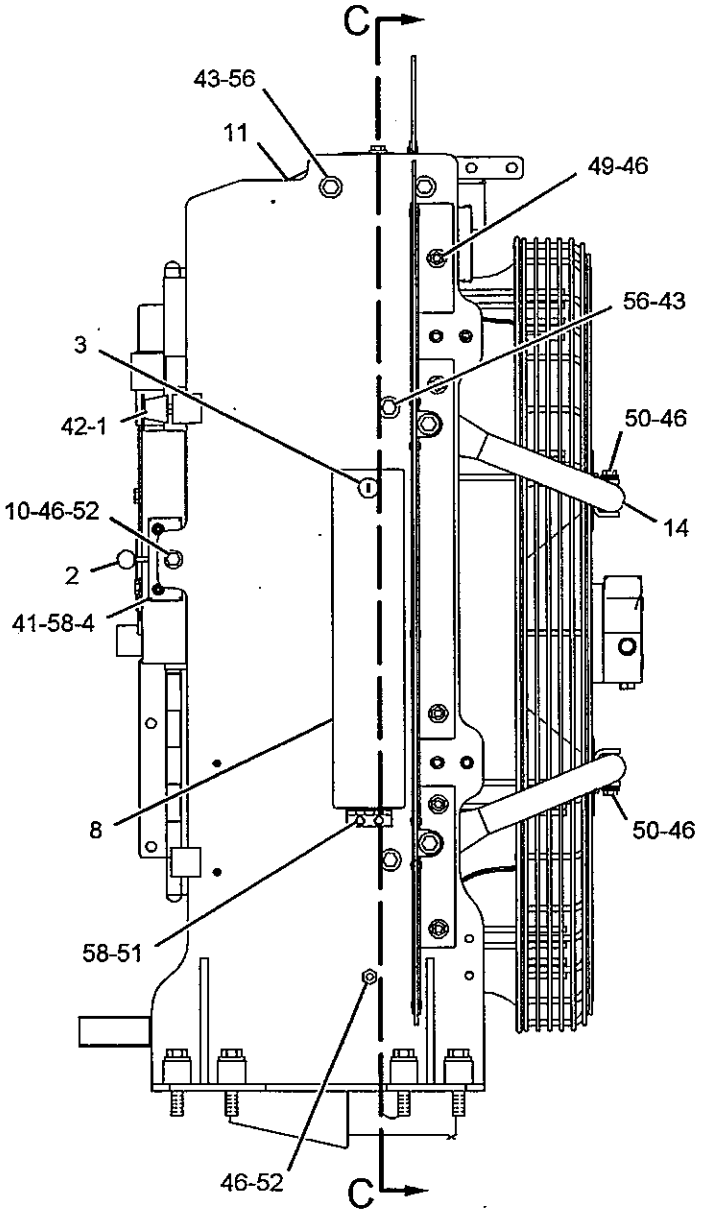


RIGHT SIDE VIEW

GRAPHIC #3 g01142263

## *232-3321* RADIATOR & FAN GP *(contd.)*

i02279642

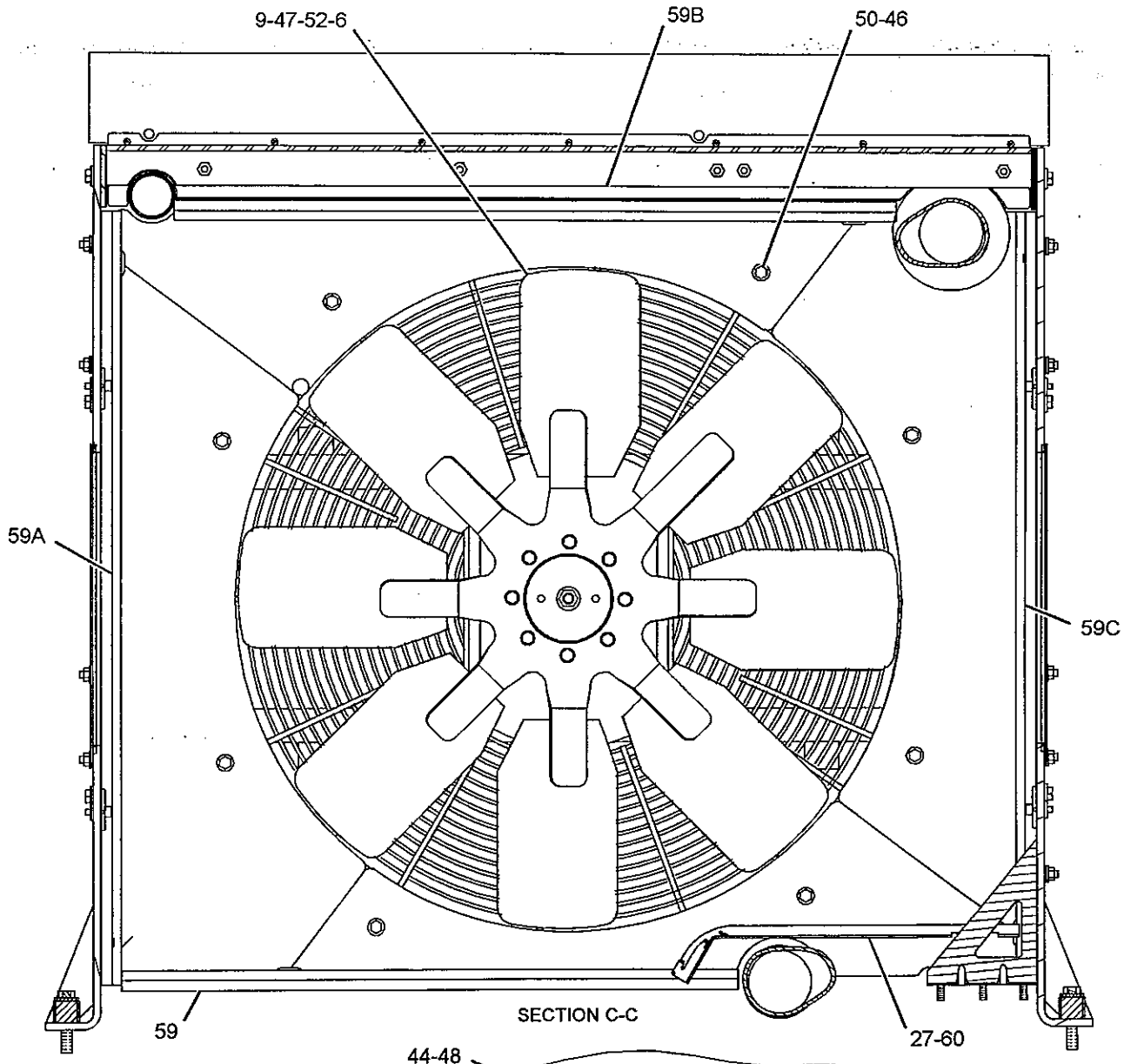


SECTION C-C

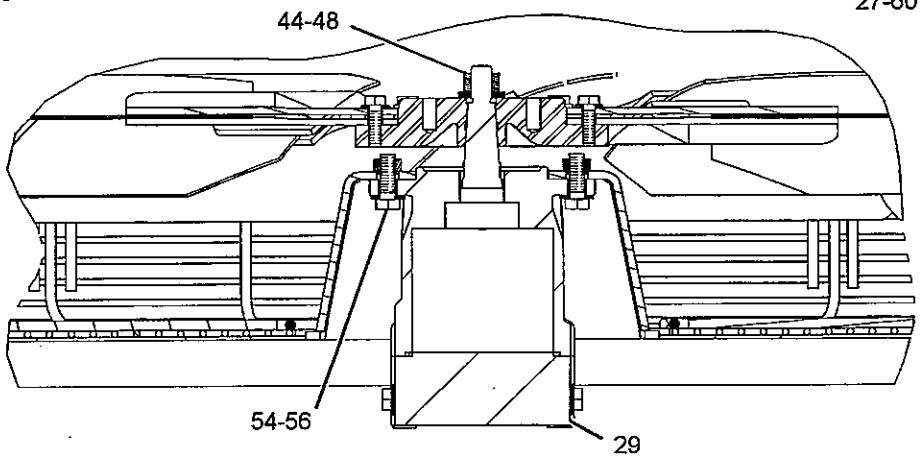


SECTION D-D

GRAPHIC #4

g01142264

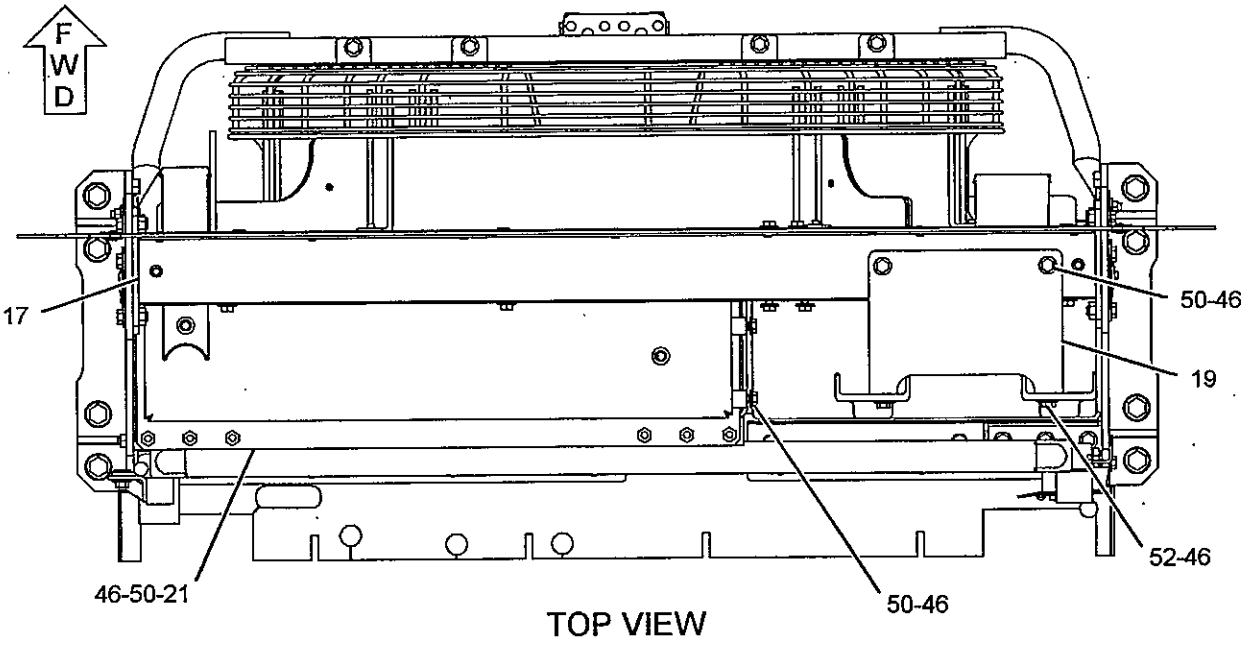


TOP VIEW

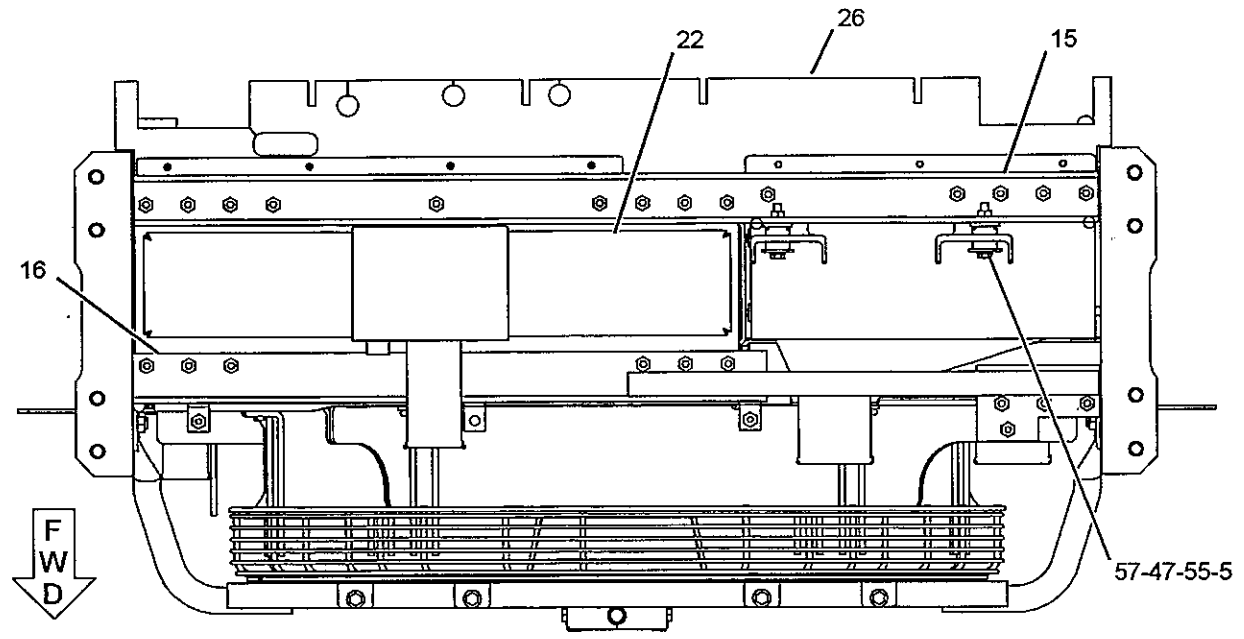


BOTTOM VIEW

GRAPHIC #5

**<END>**

g01142265

# AIR INLET AND EXHAUST SYSTEM

## 233-7181 AIR CLEANER GP

**S/N: JMS1-UP**

**PART OF 226-9644 INSTALLATION AR-ENGINE**

**SMCS-1051, 1054** **i02281311**

| NOTE | REF NO | GRAPHIC REF | PART NUMBER | QTY | PART NAME 1 2 3 4 5 6 (PRODUCT LEVEL) | SEE PAGE |
|---|---|---|---|---|---|---|
| | 1 | 1 | 8S-6823 | 1 | HOOD AS | |
| | 2 | 1 | 8S-6824 | 1 | CLAMP AS | |
| | 3 | 1 | 100-4995 | 1 | BODY AS-PRECLEANER | |
| Y | 4 | 1 | 249-2802 | 1 | AIR CLEANER GP | 100 |
| | 5 | 1 | 8T-4121 | 4 | WASHER-HARD (11X21X2.5-MM THK) | |
| | 6 | 1 | 128-8678 | 4 | SPACER | |
| M | 7 | 1 | 8T-4182 | 4 | BOLT (M10X1.5X45-MM) | |

M-METRIC PART
Y-SEPARATE ILLUSTRATION

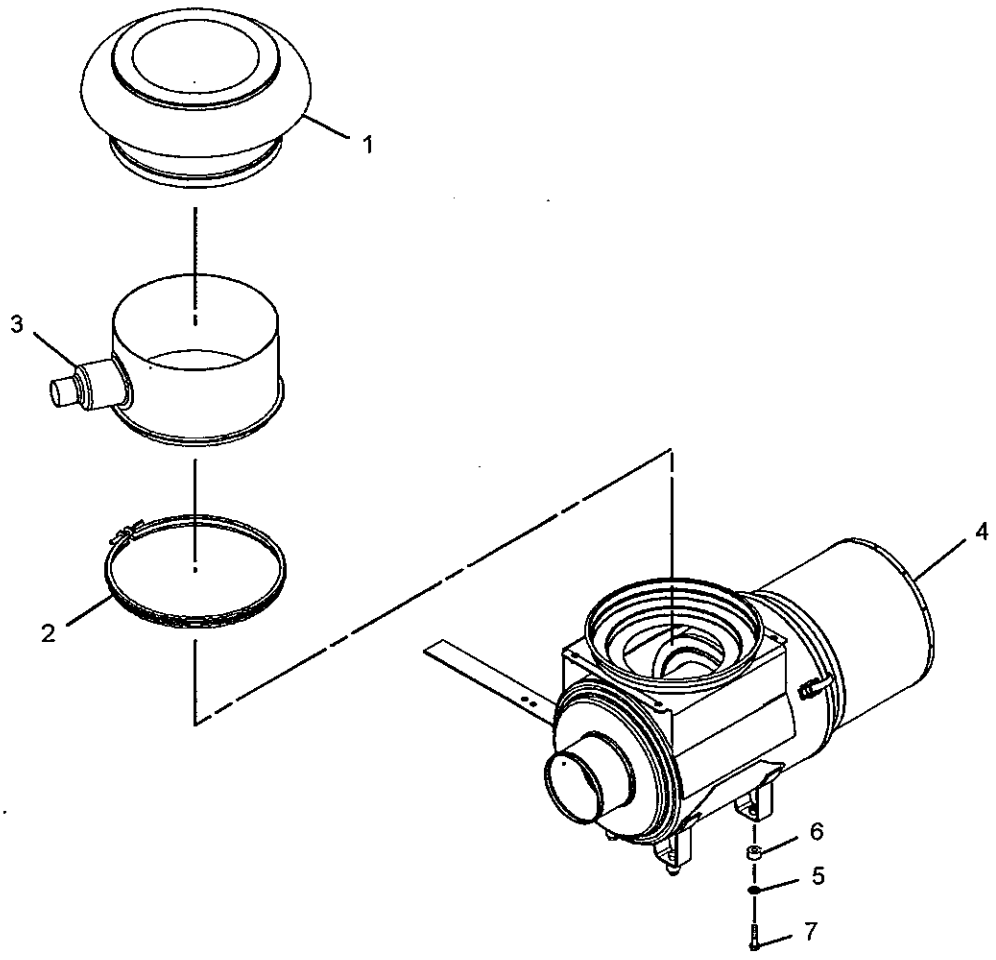


GRAPHIC #1 **<END>** g01141828

# AIR INLET AND EXHAUST SYSTEM

## 249-2802 AIR CLEANER GP

**S/N: JMS1-UP**

**PART OF 233-7181 AIR CLEANER GP**

**SMCS-1051, 1054** i02176725

| NOTE | REF NO | GRAPHIC REF | PART NUMBER | QTY | PART NAME 1 2 3 4 5 6 (PRODUCT LEVEL) | SEE PAGE |
|---|---|---|---|---|---|---|
| | 1 | 1 | **6I-2509** | 1 | FILTER ELEMENT AS-AIR (PRIMARY) | |
| | 2 | | **6I-2510** | 1 | FILTER ELEMENT AS-AIR (SECONDARY) | |
| | 3 | 1 | **6I-4465** | 1 | COVER AS-AIR CLEANER | |
| | 4 | 1 | **8N-4617** | 2 | KIT-AIR CLEANER CLAMP | |
| | | | | | (EACH INCLUDES CLIP AS & RIVET) | |

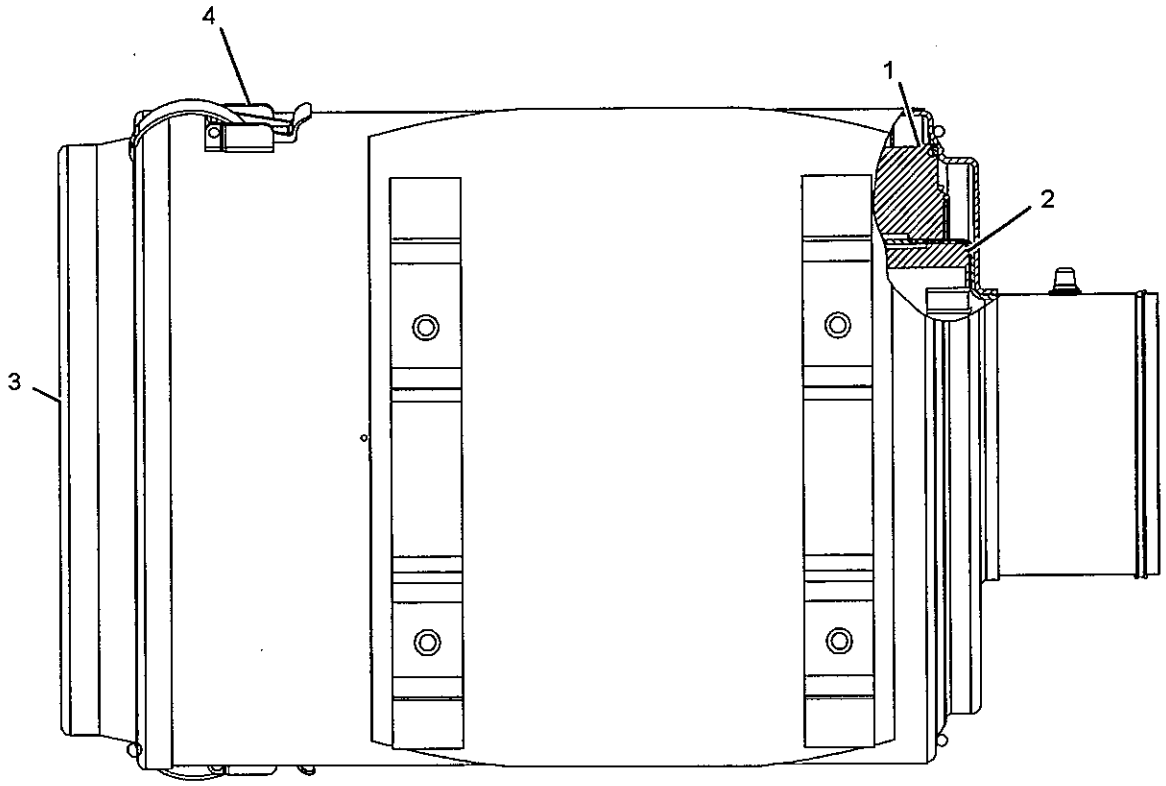


GRAPHIC #1 **<END>** g01105383

# AIR INLET AND EXHAUST SYSTEM

## *237-1964* COVER GP-TURBOCHARGER

**S/N: LHX1-UP**

**PART OF 225-0992 ENGINE AR-COMPLETE**

**SMCS-1052, 1073** **i02224997**

| NOTE | REF NO | GRAPHIC REF | PART NUMBER | QTY | PART NAME 1 2 3 4 5 6 (PRODUCT LEVEL) | SEE PAGE |
|---|---|---|---|---|---|---|
| | 1 | 1 | 241-3283 | 2 | GASKET | |
| | 2 | 1 | 7N-7878 | 2 | PLATE-COVER | |
| | 3 | 1 | 0S-1594 | 4 | BOLT (3/8-16X1-IN) | |
| | 4 | 1 | 5M-2894 | 4 | WASHER-HARD (10.2X18.5X2.5-MM THK) | |

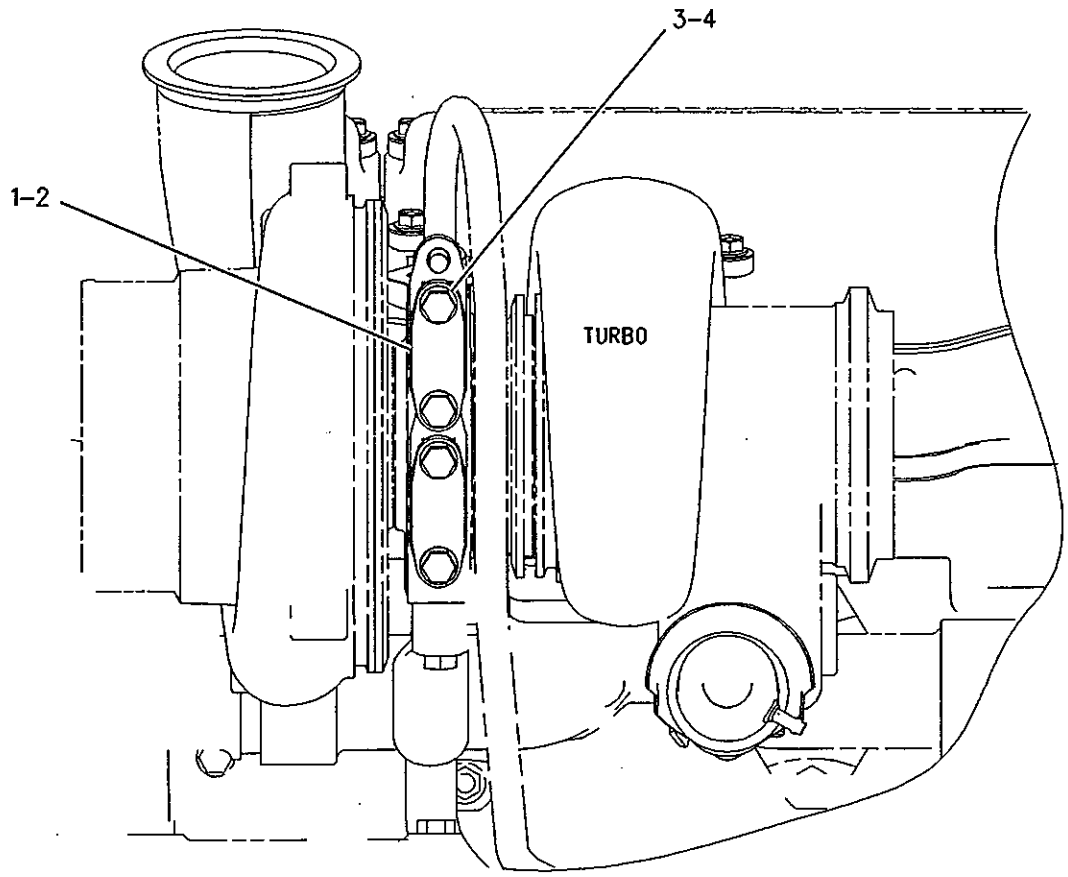


RIGHT SIDE VIEW

GRAPHIC #1 **<END>** g01002636

# AIR INLET AND EXHAUST SYSTEM

## *232-0358* DUST EJECTOR GP

**S/N: JMS1-UP**

**PART OF 226-9644 INSTALLATION AR-ENGINE**

**SMCS-1068** **i02087654**

| NOTE | REF NO | GRAPHIC REF | PART NUMBER | QTY | PART NAME 1 2 3 4 5 6 (PRODUCT LEVEL) | SEE PAGE |
|---|---|---|---|---|---|---|
| | 1 | 1 | 2S-4460 | 1 | HOSE-DISPOSAL | |
| | 2 | 1 | 5P-0597 | 4 | CLAMP-HOSE | |
| | 3 | 1 | 233-7182 | 1 | TUBE | |
| | 4 | 1 | 3S-2093 | 1 | STRAP-CABLE | |
| E | 5 | 1 | 5P-2817 | | HOSE (105.7-CM) | |

E-ORDER BY THE CENTIMETER

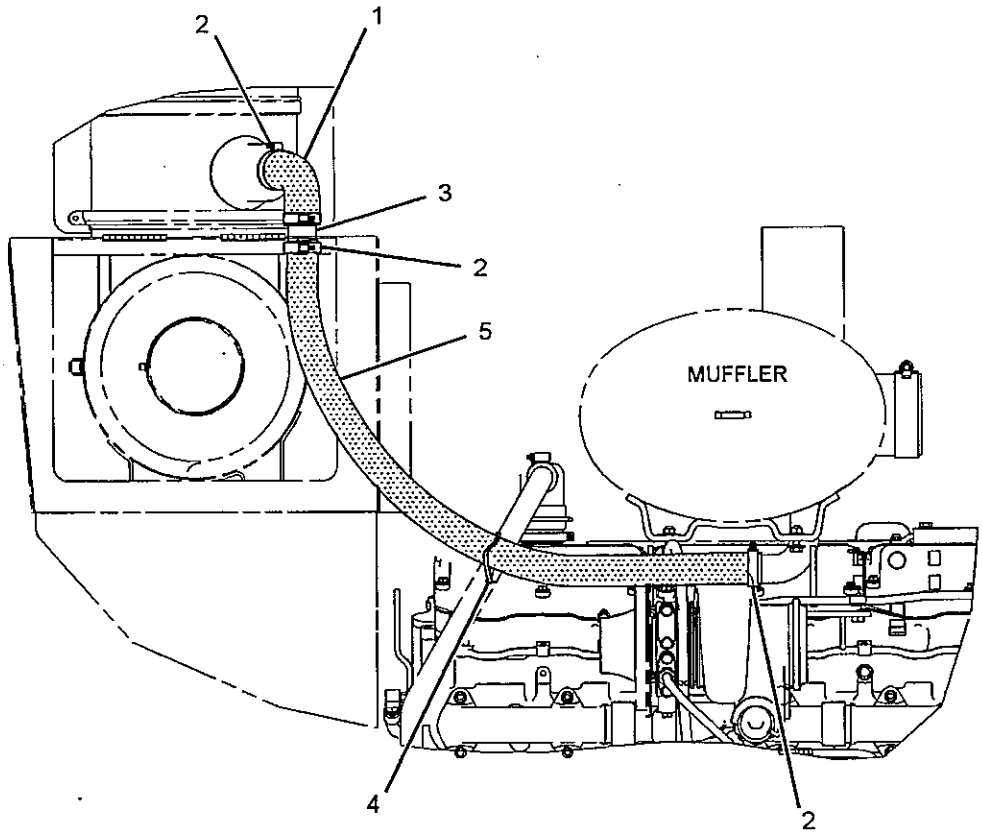


RIGHT SIDE VIEW

GRAPHIC #1

**<END>**

g01065922

# AIR INLET AND EXHAUST SYSTEM

## *235-5817* INDICATOR GP-AIR FILTER CHANGE

**S/N: JMS1-UP**

**PART OF 225-5538 CHASSIS AR**

**SMCS-7452** **i02280995**

| NOTE | REF NO | GRAPHIC REF | PART NUMBER | QTY | PART NAME 1 2 3 4 5 6 (PRODUCT LEVEL) | SEE PAGE |
|---|---|---|---|---|---|---|
| | 1 | 1 | **1P-6886** | 1 | ADAPTER | |
| | 2 | 1 | **1W-0613** | 1 | INDICATOR-AIR FILTER CHANGE | |
| | 3 | 1 | **5P-4428** | 2 | ELBOW-AIR BRAKE | |
| | 4 | 1 | **6V-2610** | 1 | FITTING | |
| | 5 | 1 | **7K-1181** | 13 | STRAP-CABLE | |
| | 6 | 1 | **173-8293** | 1 | BRACKET | |
| M | 7 | 1 | **5C-2890** | 4 | NUT (M6X1-THD) | |
| | 8 | 1 | **5P-4115** | 4 | WASHER-HARD (7.2X19X2-MM THK) | |
| M | 9 | 1 | **6V-7357** | 4 | BOLT (M6X1X25-MM) | |
| | 10 | 1 | **9X-8256** | 4 | WASHER (6.6X12X2-MM THK) | |
| D | 11 | 1 | **5P-6011** | 1 | TUBE (3.1-M) | |

D-ORDER BY THE METER
M-METRIC PART

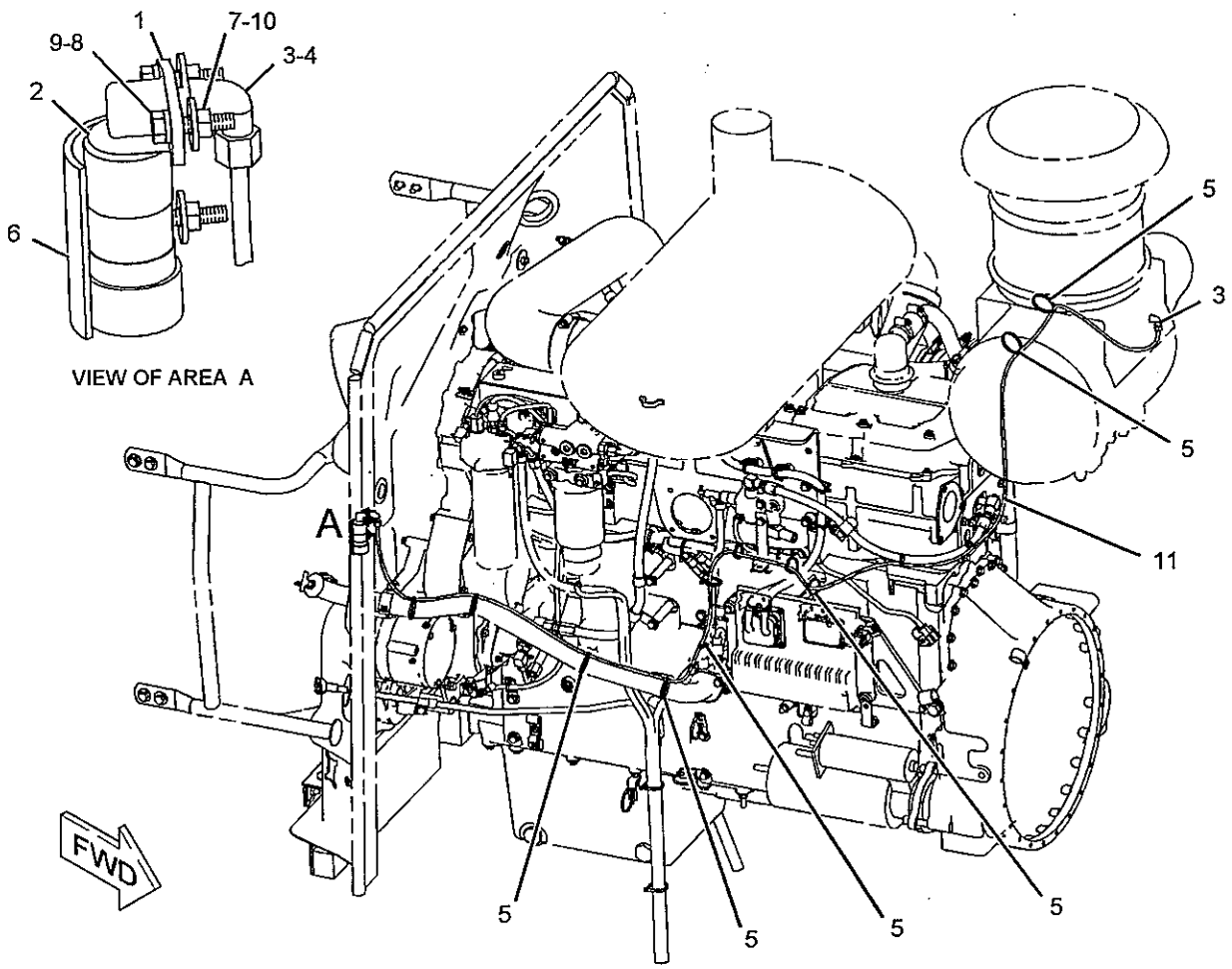


GRAPHIC #1 **<END>** g01141844

# AIR INLET AND EXHAUST SYSTEM

## *252-9550* INSULATION GP-HEAT-
### MANIFOLD, MUFFLER, TURBOCHARGER
S/N: JMS1-UP

PART OF 251-5801 CONTROL AR-FAN

AN ATTACHMENT

SMCS-1052, 1059, 1062 i02283996

| NOTE | PART NUMBER | QTY | PART NAME 1 2 3 4 5 6 (PRODUCT LEVEL) | SEE PAGE |
|---|---|---|---|---|
| | 254-5736 | 1 | COVER-TURBOCHARGER | |
| | 254-5734 | 1 | INSULATION-MANIFOLD (LH) | |
| | 254-5735 | 1 | INSULATION-MANIFOLD (RH) | |
| | 254-5742 | 1 | INSULATION-MUFFLER (LOWER) | |
| | 254-5745 | 1 | INSULATION-MUFFLER (UPPER) | |
| | 254-5738 | 1 | INSULATION-TURBOCHARGER | |
| | 254-5747 | 1 | INSULATION-TURBOCHARGER (LOWER) | |
| | 254-5754 | 1 | INSULATION-TURBOCHARGER (CENTER) | |
| | 254-5755 | 1 | INSULATION-TURBOCHARGER (UPPER) | |

<END>

# AIR INLET AND EXHAUST SYSTEM

## *231-5909* LINES GP-AFTERCOOLER AIR

**S/N: JMS1-UP**

**PART OF 225-5538 CHASSIS AR**

**SMCS-1063, 1071** **i02279557**

| NOTE | REF NO | GRAPHIC REF | PART NUMBER | QTY | PART NAME 1 2 3 4 5 6 (PRODUCT LEVEL) | SEE PAGE |
|---|---|---|---|---|---|---|
| | 1 | 1 | **7E-8630** | 3 | HOSE-AIR INLET | |
| M | 2 | 1 | **8T-0389** | 2 | LOCKNUT (M10X1.5-THD) | |
| | 3 | 1 | **177-0035** | 1 | U-BOLT (M10X1.5-THD) | |
| | 4 | 1 | **177-0063** | 1 | ELBOW | |
| | 5 | 1 | **217-1601** | 1 | HOSE-ELBOW | |
| | 6 | 1 | **231-5904** | 1 | TUBE | |
| | 7 | 1 | **264-0476** | 1 | BRACKET | |
| | 8 | 1 | **265-0877** | 1 | TUBE | |
| | 9 | 1 | **101-3125** | 1 | GASKET (AIR INLET MANIFOLD) | |
| | 10 | 1 | **208-7448** | 8 | CLAMP (M5X0.8-THD) | |
| | 11 | 1 | **3E-7428** | 1 | PLUG-PIPE | |
| | 12 | 1 | **8T-4121** | 3 | WASHER-HARD (11X21X2.5-MM THK) | |
| M | 13 | 1 | **8T-4137** | 1 | BOLT (M10X1.5X20-MM) | |
| | 14 | 1 | **8T-4896** | 4 | WASHER-HARD (10.2X18.5X2.5-MM THK) | |
| | 15 | 1 | **9B-7237** | 4 | BOLT (3/8-16X1.25-IN) | |

M-METRIC PART

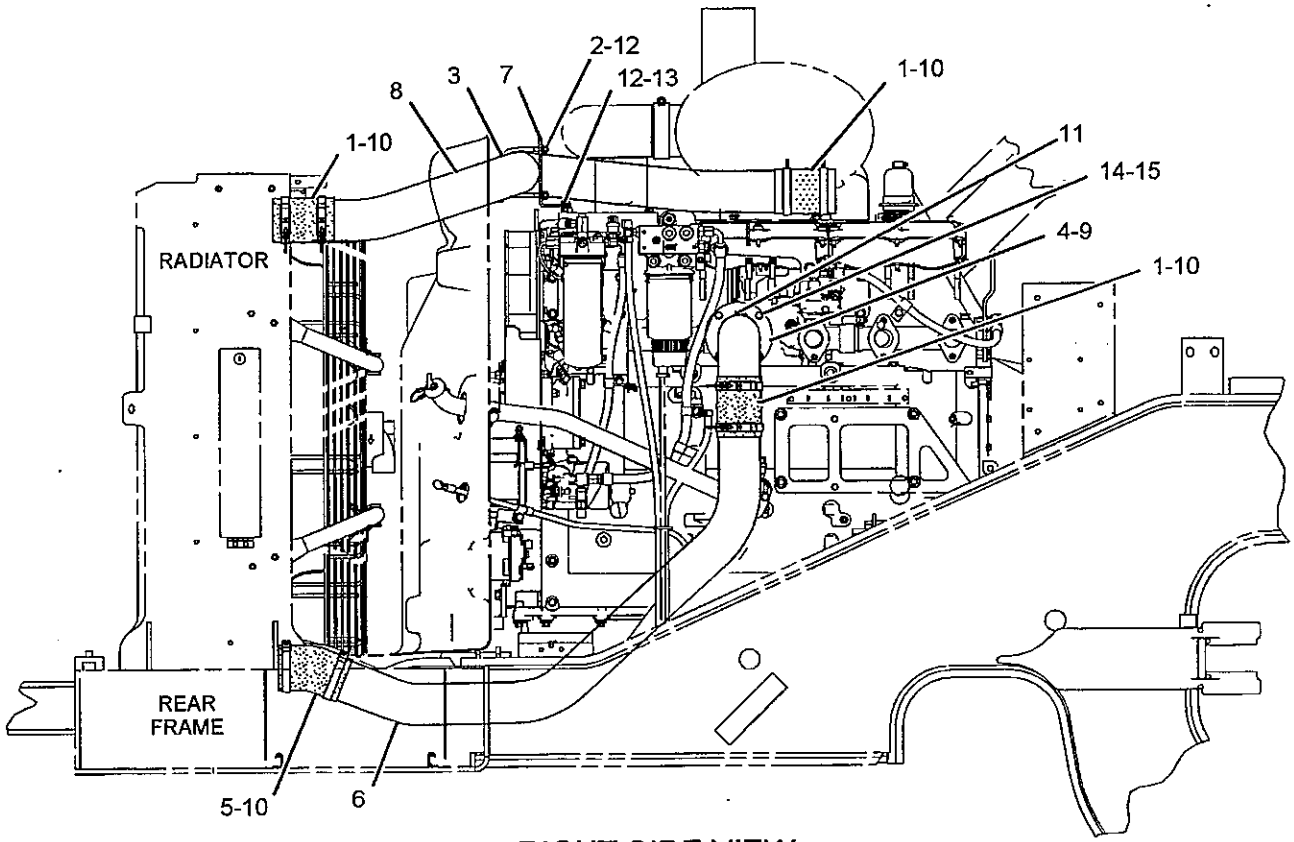


RIGHT SIDE VIEW

GRAPHIC #1 **<END>** g01141516

# AIR INLET AND EXHAUST SYSTEM

## *126-0081* LINES GP-AIR–TURBOCHARGER OUTLET

**S/N: LHX1-UP**

**90 DEGREE OUTLET ELBOW**

**PART OF 225-0992 ENGINE AR-COMPLETE**

**SMCS-1071** **i02047203**

| NOTE | REF NO | GRAPHIC REF | PART NUMBER | QTY | PART NAME 1 2 3 4 5 6 (PRODUCT LEVEL) | SEE PAGE |
|---|---|---|---|---|---|---|
| | 1 | 1 | 127-0929 | 1 | CLAMP | |
| C | 2 | 1 | 217-8946 | 1 | ELBOW | |
| C | 3 | 1 | 6V-5048 | 1 | SEAL-O-RING | |
| | 4 | 1 | 8C-3089 | 1 | SEAL-O-RING | |
| C | 5 | 1 | 9S-8002 | 1 | PLUG | |

C-CHANGE FROM PREVIOUS TYPE

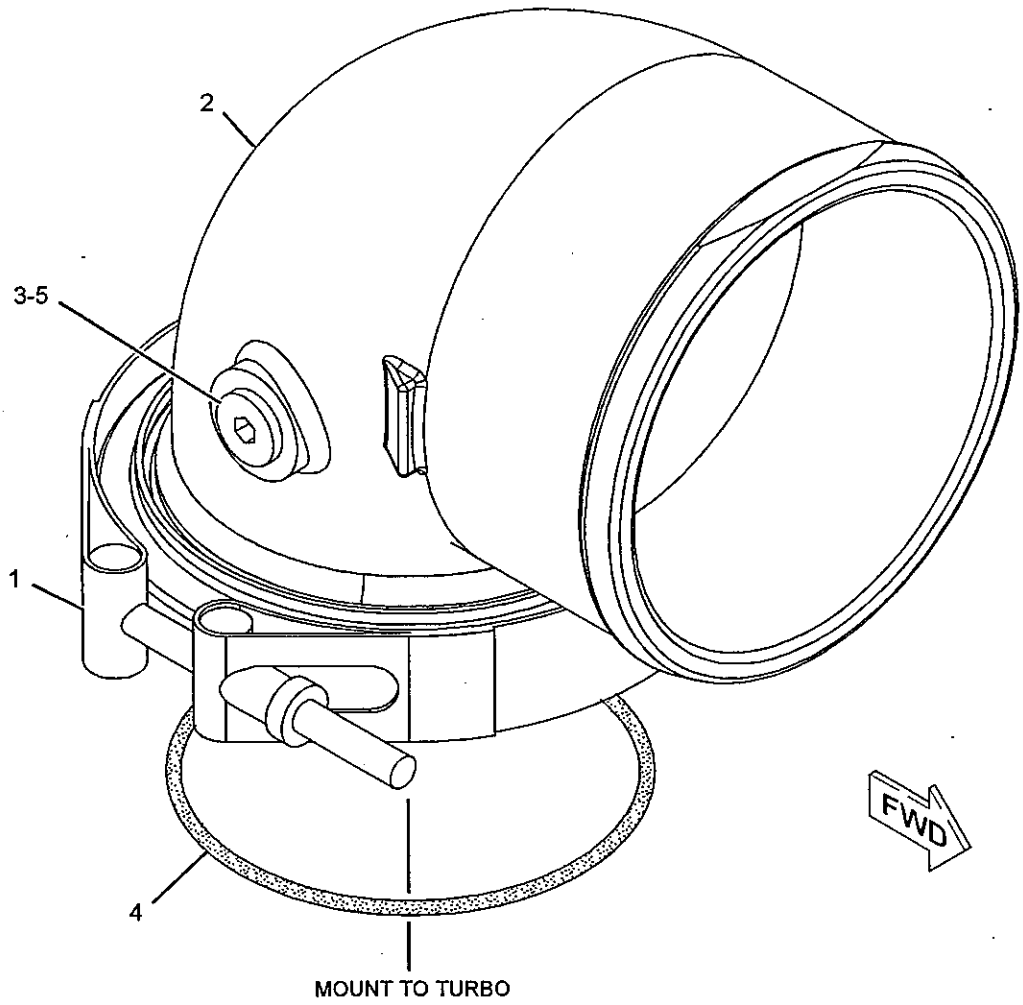


GRAPHIC #1

**<END>**

g01053358

# AIR INLET AND EXHAUST SYSTEM

## *232-0357* LINES GP-AIR

**S/N: JMS1-UP**

**PART OF 226-9644 INSTALLATION AR-ENGINE**

**SMCS-1071** **i02279283**

| NOTE | REF NO | GRAPHIC REF | PART NUMBER | QTY | PART NAME 1 2 3 4 5 6 (PRODUCT LEVEL) | SEE PAGE |
|---|---|---|---|---|---|---|
| | 1 | 1 | **4W-9160** | 1 | CLAMP AS | |
| | 2 | 1 | **8T-4988** | 8 | CLAMP-HOSE | |
| | 3 | 1 | **242-7406** | 1 | HOSE | |
| | 4 | 1 | **9Y-6102** | 1 | ELBOW | |
| | 5 | 1 | **237-2313** | 1 | TUBE AS | |
| | 6 | 1 | **247-8202** | 1 | TUBE AS | |
| | 7 | 1 | **7W-2033** | 1 | CLIP (TAB) | |
| | 8 | 1 | **7W-2034** | 1 | CLIP (SLOT) | |
| | 9 | 1 | **7X-7729** | 1 | WASHER (11X25X3-MM THK) | |
| M | 10 | 1 | **8T-4196** | 1 | BOLT (M10X1.5X35-MM) | |

M-METRIC PART

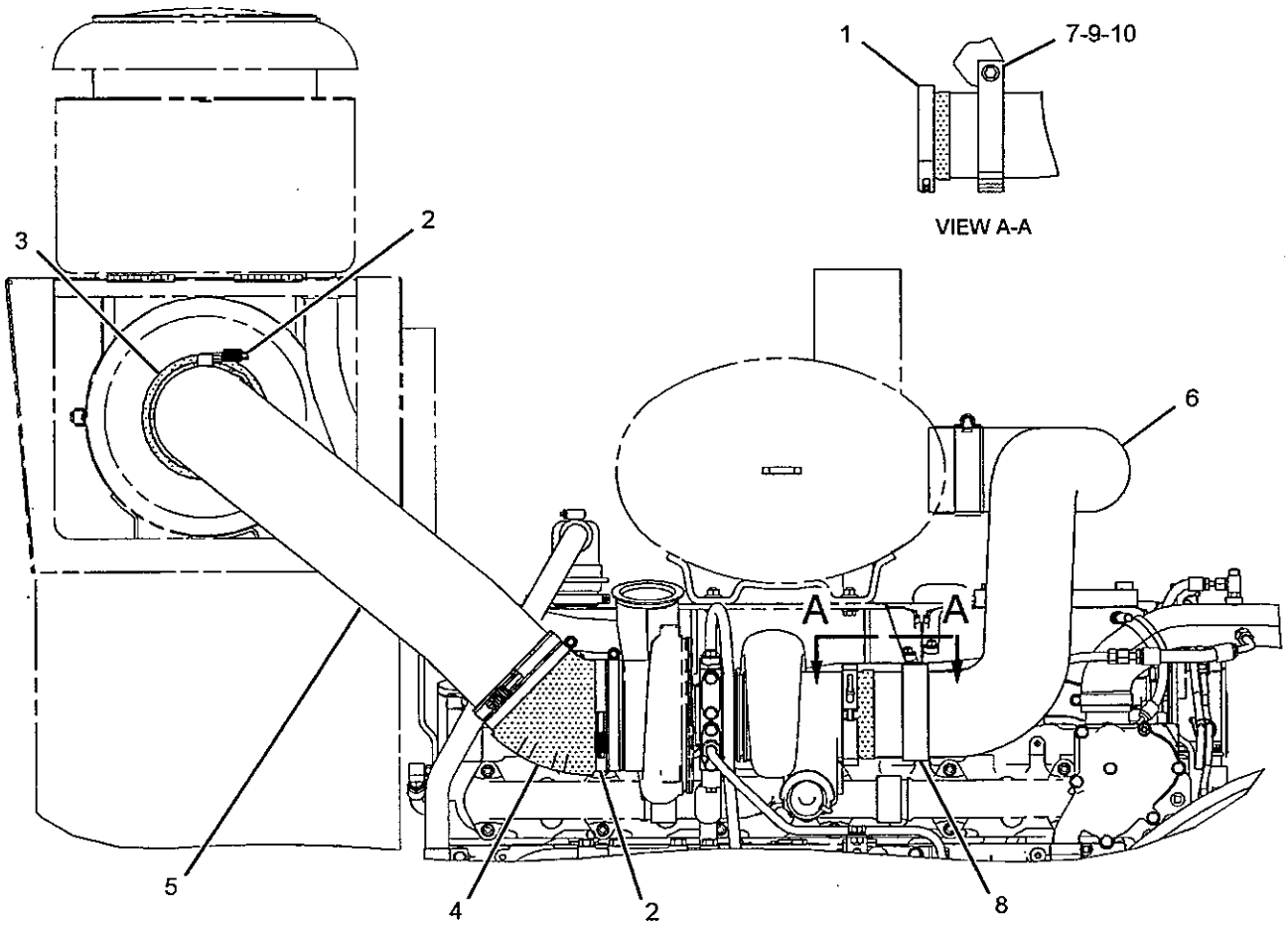


RIGHT SIDE VIEW

GRAPHIC #1

**<END>**

g01065950

# AIR INLET AND EXHAUST SYSTEM

## *225-0998* MANIFOLD GP-EXHAUST

**S/N: LHX1-UP**

**PART OF 225-0992 ENGINE AR-COMPLETE**

**SMCS-1059** **i01983154**

| NOTE | REF NO | GRAPHIC REF | PART NUMBER | QTY | PART NAME 1 2 3 4 5 6 (PRODUCT LEVEL) | SEE PAGE |
|---|---|---|---|---|---|---|
| | 1 | 1 | **106-1792** | 12 | STUD-TAPERLOCK | |
| | 2 | 1 | **108-3612** | 12 | SPACER (11.13X19.05X53MM THK) | |
| | 3 | 1 | **133-3359** | 2 | MANIFOLD-EXHAUST | |
| | 4 | 1 | **150-1916** | 1 | MANIFOLD-EXHAUST | |
| | 5 | 1 | **2N-2766** | 12 | LOCKNUT (3/8X16X2 THD) | |

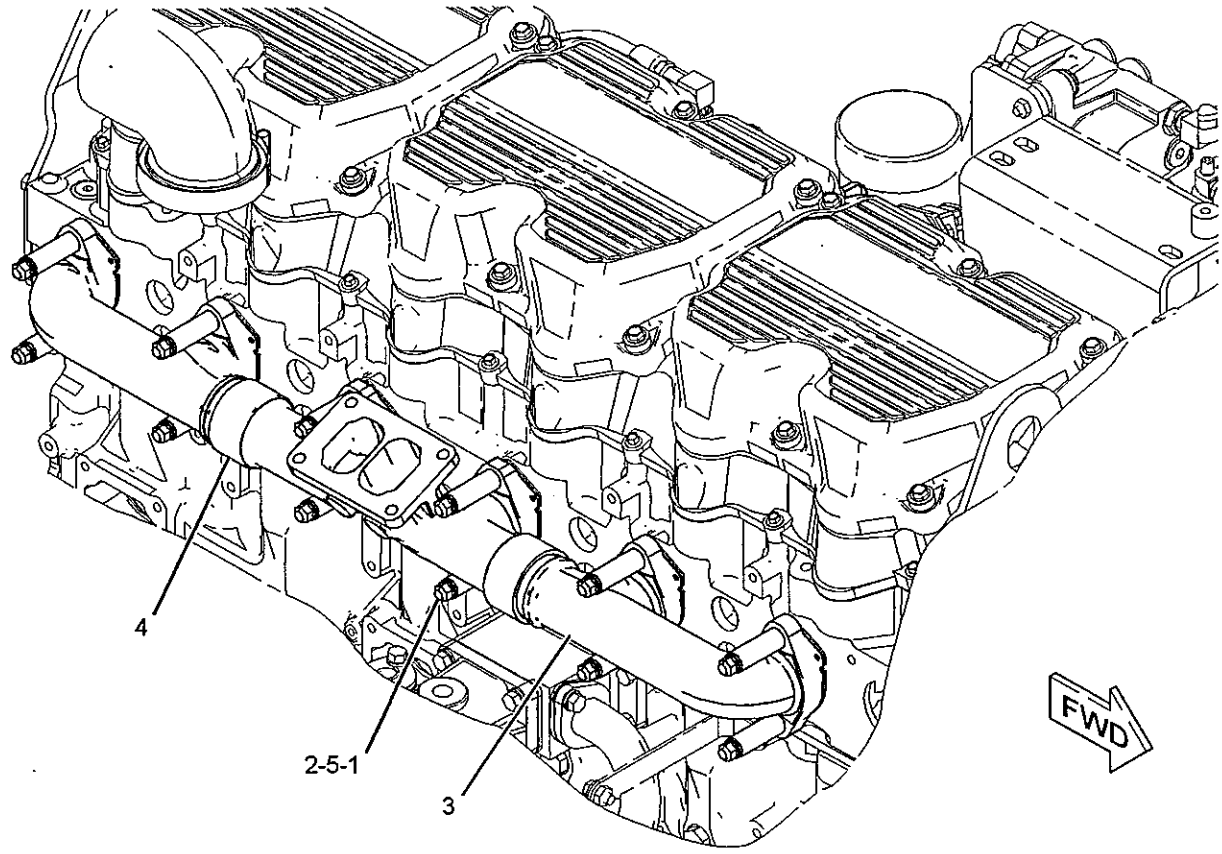


GRAPHIC #1 **<END>** g01031054

# AIR INLET AND EXHAUST SYSTEM

## *233-8673* MOUNTING GP-MUFFLER

**S/N: LHX1-UP**

**PART OF 225-0992 ENGINE AR-COMPLETE**

**SMCS-1062** **i02211780**

| NOTE | REF NO | GRAPHIC REF | PART NUMBER | QTY | PART NAME 1 2 3 4 5 6 (PRODUCT LEVEL) | SEE PAGE |
|---|---|---|---|---|---|---|
| | 1 | 1 | **101-3120** | 4 | SPACER (10.5X25X20-MM THK) | |
| | 2 | 1 | **232-0354** | 1 | BRACKET AS | |
| | 3 | 1 | **1C-2251** | 4 | BOLT (3/8-16X1.87-IN) | |
| | 4 | 1 | **4P-7581** | 2 | CLIP | |
| | 5 | 1 | **4P-8134** | 2 | CLIP | |
| M | 6 | 1 | **6V-1820** | 2 | BOLT (M10X1.5X30-MM) | |
| | 7 | 1 | **3E-4353** | 2 | WASHER-HARD (11X25X3-MM THK) | |
| | 8 | 1 | **8M-9024** | 4 | WASHER-HARD (10.2X22.5X5-MM THK) | |

M-METRIC PART

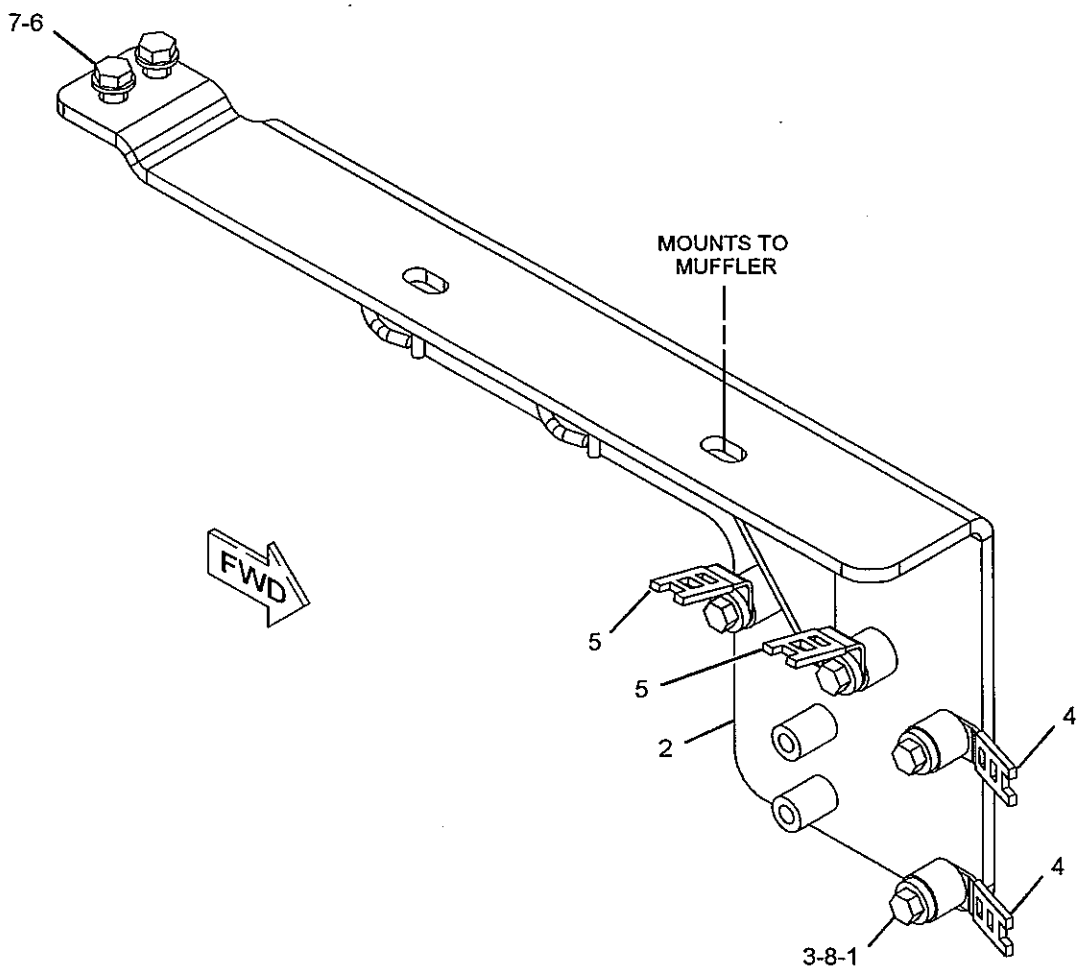


GRAPHIC #1 **<END>** g01057651

# AIR INLET AND EXHAUST SYSTEM

## *232-0356* MUFFLER GP

**S/N: JMS1-UP**

**PART OF 226-9644 INSTALLATION AR-ENGINE**

**SMCS-1062** **i02279248**

| NOTE | REF NO | GRAPHIC REF | PART NUMBER | QTY | PART NAME 1 2 3 4 5 6 (PRODUCT LEVEL) | SEE PAGE |
|---|---|---|---|---|---|---|
| M | 1 | 1 | 8T-4910 | 4 | BOLT (M12X1.75X60-MM) | |
| | 2 | 1 | 231-7081 | 1 | MUFFLER AS | |
| | 2A | 1 | 141-1480 | 1 | CLAMP AS | |
| | 3 | 1 | 255-4957 | 1 | BRACKET AS | |
| M | | 1 | 8T-3490 | 1 | NUT-WELD (M10X1.5-THD) | |
| | | 1 | 1F-0750 | 1 | NUT-WELD (3/8-16-THD) | |
| | 4 | 1 | 122-4026 | 4 | SPACER (13X25X25-MM THK) | |
| | 5 | 1 | 5P-1075 | 2 | WASHER-HARD (10.2X22.5X3-MM THK) | |
| | 6 | 1 | 8T-9377 | 2 | BOLT (3/8-16X2.25-IN) | |

M-METRIC PART

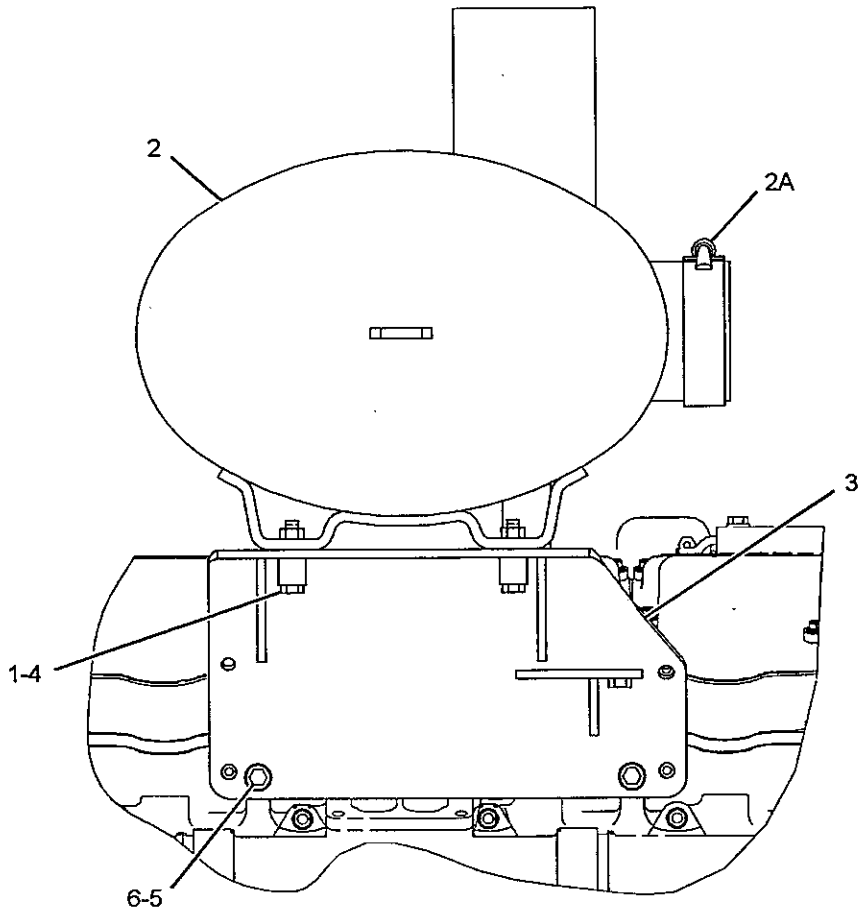


RIGHT SIDE VIEW

GRAPHIC #1

**<END>**

g01141170

# AIR INLET AND EXHAUST SYSTEM

## *255-4958* SHIELD GP-HEAT

**S/N: JMS1-UP**

**PART OF 226-9644 INSTALLATION AR-ENGINE**

**SMCS-1067** **i02279559**

| NOTE | REF NO | GRAPHIC REF | PART NUMBER | QTY | PART NAME 1 2 3 4 5 6 (PRODUCT LEVEL) | SEE PAGE |
|---|---|---|---|---|---|---|
| | 1 | 1 | **255-4955** | 1 | PLATE AS | |
| | | 1 | **1F-0750** | 1 | NUT-WELD (3/8-16-THD) | |
| | 2 | 1 | **255-4956** | 1 | PLATE AS | |
| | 3 | 1 | **5P-1075** | 2 | WASHER-HARD (10.2X22.5X3-MM THK) | |
| | 4 | 1 | **8T-2502** | 4 | BOLT (3/8-16X1.125-IN) | |
| | 5 | 1 | **8T-4896** | 4 | WASHER-HARD (10.2X18.5X2.5-MM THK) | |
| | 6 | 1 | **8T-9377** | 2 | BOLT (3/8-16X2.25-IN) | |

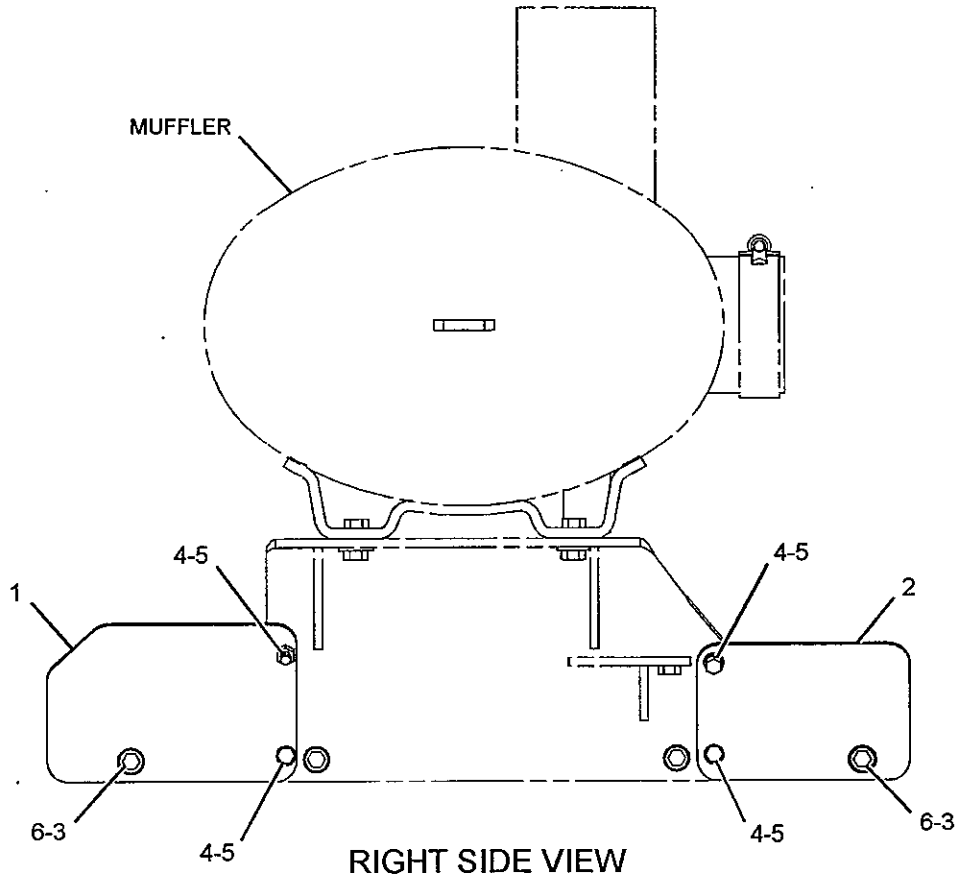


RIGHT SIDE VIEW

GRAPHIC #1 **<END>** g01141540

# AIR INLET AND EXHAUST SYSTEM

## *262-0974* TURBOCHARGER GP

**S/N: LHX1-UP**
**WET CENTER SECTION, EXHAUST FRONT**
**PART OF 225-0992 ENGINE AR-COMPLETE**

**SMCS-1052, 1053** i02251477

| NOTE | REF NO | GRAPHIC REF | PART NUMBER | QTY | PART NAME 1 2 3 4 5 6 (PRODUCT LEVEL) | SEE PAGE |
|---|---|---|---|---|---|---|
| | 1 | 1 | 1S-4295 | 1 | GASKET (TURBOCHARGER) | |
| | 2 | 1 | 2N-2765 | 4 | BOLT-HIGH TEMPERATURE (3/8-16X1.75-IN) | |
| | 3 | 1 | 2N-2766 | 4 | LOCKNUT (3/8-16-THD) | |
| | 4 | 1 | 262-7096 | 1 | TURBOCHARGER GP | |

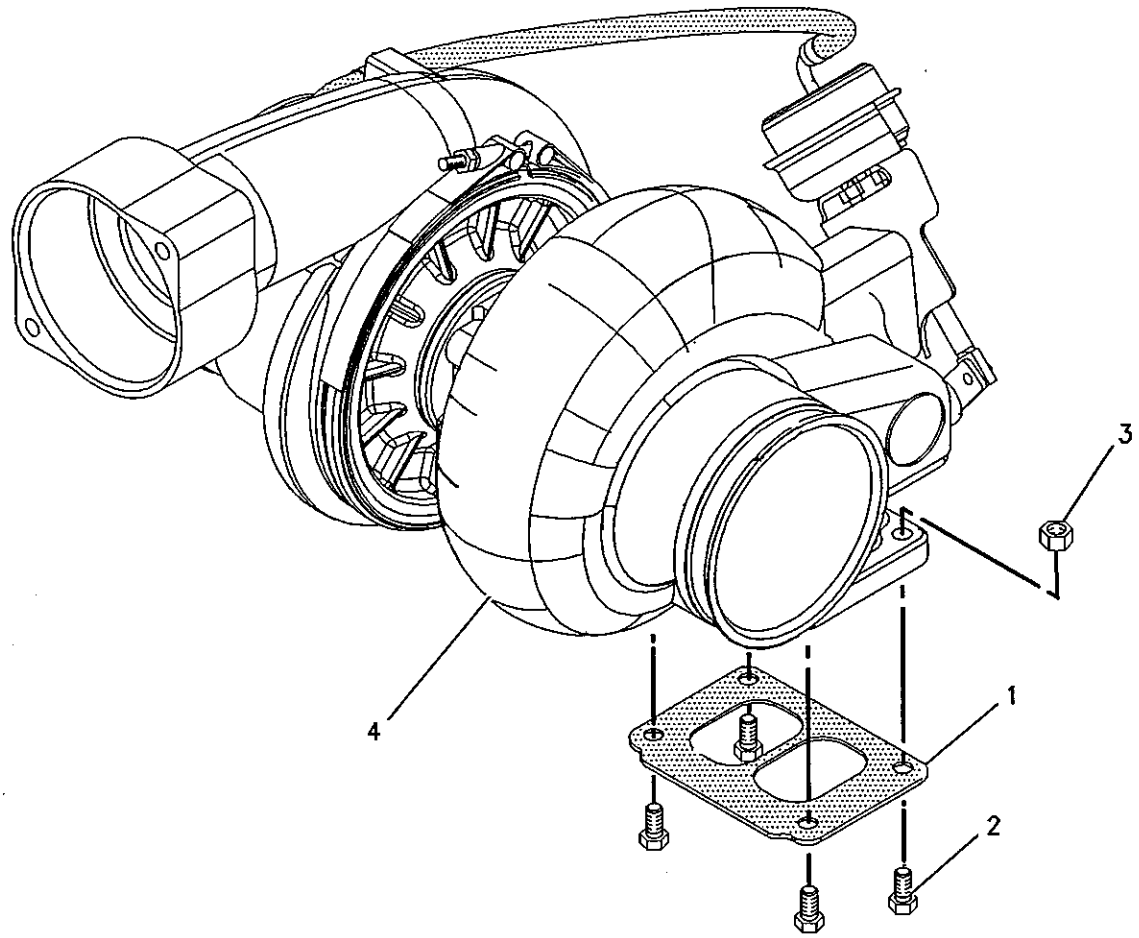


GRAPHIC #1 **<END>** g00752171

# 245-8416 ADAPTER GP-FAST FILL FUEL

**S/N: JMS1-UP**

**AN ATTACHMENT**

**SMCS-1710** **i02090125**

| NOTE | REF NO | GRAPHIC REF | PART NUMBER | QTY | PART NAME 1 2 3 4 5 6 (PRODUCT LEVEL) | SEE PAGE |
|---|---|---|---|---|---|---|
| | 1 | 1 | 9D-0630 | 1 | CAP-DUST | |
| | 2 | 1 | 221-7693 | 1 | VALVE (FAST FILL FUEL) | |
| | 3 | 1 | 222-1980 | 1 | HOSE AS | |
| | 4 | 1 | 232-1767 | 1 | RECEIVER AS (FAST FILL FUEL) | |
| | 5 | 1 | 246-7027 | 1 | VENT AS | |
| M | 6 | 1 | 105-3484 | 6 | BOLT-SOCKET HEAD (M10X1.5X25-MM) | |
| | 7 | 1 | 1H-8128 | 1 | SEAL-O-RING | |
| | 8 | 1 | 1J-9671 | 2 | SEAL-O-RING | |
| | 9 | 1 | 1P-4582 | 2 | FLANGE-HALF | |
| | 10 | 1 | 4J-0527 | 1 | SEAL-O-RING | |
| | 11 | 1 | 5H-6734 | 1 | SEAL-O-RING | |
| | 12 | 1 | 5P-2618 | 2 | CONNECTOR | |
| M | 13 | 1 | 8T-0273 | 4 | BOLT-SOCKET HEAD (M12X1.75X40-MM) | |
| | 14 | 1 | 8T-4121 | 12 | WASHER-HARD (11X21X2.5-MM THK) | |
| M | 15 | 1 | 8T-4195 | 6 | BOLT (M10X1.5X30-MM) | |

M-METRIC PART

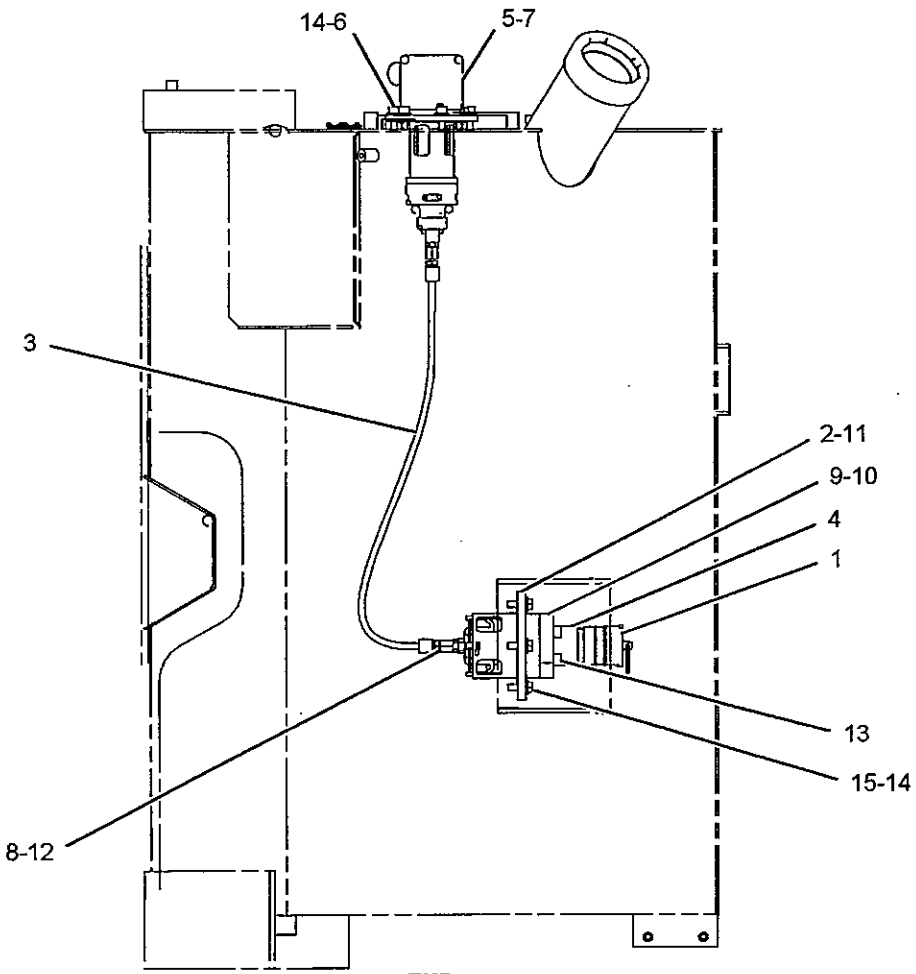


GRAPHIC #1 **<END>** g01066994

# 233-8672 DRAIN GP-FUEL

S/N: JMS1-UP

PART OF 226-9644 INSTALLATION AR-ENGINE

SMCS-1274 i02281214

| NOTE | REF NO | GRAPHIC REF | PART NUMBER | QTY | PART NAME 1 2 3 4 5 6 (PRODUCT LEVEL) | SEE PAGE |
|---|---|---|---|---|---|---|
| | 1 | 1 | 3S-2093 | 1 | STRAP-CABLE | |
| E | 2 | 1 | 8C-6959 | | HOSE (114-CM) | |

E-ORDER BY THE CENTIMETER

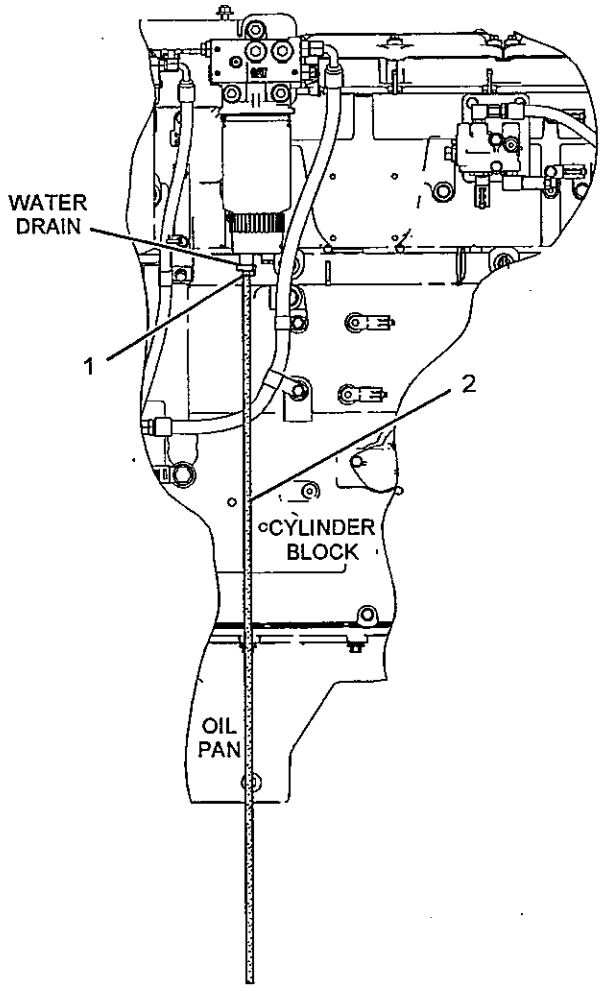


GRAPHIC #1 <END> g01142117

# FUEL SYSTEM

## 255-2753 FILTER & MTG GP-FUEL

**S/N: LHX1-UP**

**PART OF 225-0992 ENGINE AR-COMPLETE**

**SMCS-1261, 1262** **i02251619**

| NOTE | REF NO | GRAPHIC REF | PART NUMBER | QTY | PART NAME 1 2 3 4 5 6 (PRODUCT LEVEL) | SEE PAGE |
|---|---|---|---|---|---|---|
| | 1 | 1 | 1R-0762 | 1 | FILTER AS-FUEL | |
| | 2 | 1,2 | 3S-2093 | 7 | STRAP-CABLE | |
| | 3 | 1,2 | 6V-0852 | 1 | CAP-DUST | |
| | 4 | 1 | 8K-4739 | 1 | ADAPTER | |
| | 5 | 1,2 | 8T-9655 | 8 | MOUNT-ISOLATION | |
| | 6 | 2 | 9X-0262 | 1 | ADAPTER | |
| | 7 | 2 | 101-3120 | 4 | SPACER (10.5X25X20-MM THK) | |
| | 8 | 2 | 127-0785 | 1 | ELBOW 90 DEGREE | |
| Y | 9 | 1 | 165-5970 | 1 | SWITCH GP-TOGGLE (FUEL PRIMING PUMP) | 246 |
| Y | 10 | 2 | 190-8977 | 1 | WATER SEP & FUEL PRM PUMP GP | 132 |
| | 11 | 1 | 191-1782 | 1 | SPACER (8.5X12.7X38.2-MM THK) | |
| Y | 12 | 2 | *197-8391* | 1 | SENSOR GP-TEMPERATURE (FUEL) | 221 |
| | 13 | 1 | 201-4340 | 2 | PLUG AS | |
| | | 1 | 6V-4589 | 1 | SEAL-O-RING | |
| | 14 | 1 | 209-7659 | 1 | PLATE-INFORMATION (MANUAL FUEL) | |
| | 15 | 1 | 227-3815 | 1 | HARNESS AS (JUMPER) (FUEL PRIMING PUMP) | |
| | | 1 | 102-8802 | 1 | KIT-RECEPTACLE (2-PIN) | |
| | | | | | (INCLUDES RECEPTACLE AS AND WEDGE) | |
| | | 1 | 102-8803 | 1 | KIT-RECEPTACLE (3-PIN) | |
| | | | | | (INCLUDES RECEPTACLE AS AND WEDGE) | |
| | | 1 | 102-8806 | 1 | KIT-RECEPTACLE (8-PIN) | |
| | | | | | (INCLUDES RECEPTACLE AS AND WEDGE) | |
| | | 1 | 8T-8737 | 4 | PLUG-SEAL | |
| | | 1 | 155-2260 | 1 | KIT-CONNECTING PLUG (3-PIN) | |
| | | | | | (INCLUDES PLUG AS AND WEDGE) | |
| | | 1 | 155-2270 | 4 | KIT-CONNECTING PLUG (2-PIN) | |
| | | | | | (EACH INCLUDES PLUG AS AND WEDGE) | |
| | 16 | 2 | 231-7086 | 1 | BRACKET AS | |
| | | 2 | 1F-0750 | 3 | NUT-WELD (3/8-16-THD) | |
| | | 2 | 4K-9097 | 3 | NUT-WELD (5/16-18-THD) | |
| | 17 | 2 | 232-1374 | 1 | BRACKET | |
| | 18 | 2 | 232-1376 | 2 | SPACER (8.5X12.7X139.1-MM THK) | |
| | 19 | 1 | 237-9308 | 1 | BASE AS | |
| | | 1 | 9S-4167 | 1 | STUD-HOLLOW | |
| Y | 20 | 2 | *239-2396* | 1 | SENSOR GP-PRESSURE (FUEL) | 212 |
| Y | 21 | 2 | 258-0883 | 1 | SWITCH GP-PRESSURE (FUEL) | 238 |
| | 22 | 2 | 005-4362 | 1 | ELBOW | |
| | 23 | 2 | 030-8188 | 1 | CONNECTOR | |
| | 24 | 2 | 0S-1571 | 8 | BOLT (3/8-16X1.75-IN) | |
| | 25 | 2 | 0S-1617 | 1 | BOLT (5/16-18X0.75-IN) | |
| | 26 | 2 | 130-5300 | 1 | CLIP | |
| | 27 | 1,2 | *148-8395* | 2 | PLUG AS | |
| | | 1,2 | 3K-0360 | 1 | SEAL-O-RING | |
| | | 1,2 | 9S-8005 | 1 | PLUG | |
| | 28 | 1,2 | 1D-4539 | 1 | BOLT (5/16-18X2.5-IN) | |
| | 29 | 2 | 3K-0360 | 3 | SEAL-O-RING | |
| | 30 | 2 | 3P-1932 | 1 | ADAPTER | |
| | 31 | 2 | 4F-3508 | 2 | BOLT (5/16-18X6.5-IN) | |
| | 32 | 2 | 4P-8134 | 1 | CLIP | |
| | 33 | 2 | 5M-2894 | 6 | WASHER-HARD (10.2X18.5X2.5-MM THK) | |
| | 34 | 2 | 6K-3607 | 1 | CONNECTOR | |
| | 35 | 1,2 | 6V-4589 | 2 | SEAL-O-RING | |
| | 37 | 1,2 | 7X-0613 | 3 | WASHER-HARD (8.8X25.5X5-MM THK) | |
| | 38 | 2 | 9M-1974 | 1 | WASHER-HARD (8.8X16X2-MM THK) | |
| | 39 | 1 | 9N-0869 | 3 | WASHER-HARD (8.8X25.5X2-MM THK) | |
| | 40 | 2 | 9X-6458 | 2 | WASHER-HARD (10.2X22.5X3-MM THK) | |

## 255-2753 FILTER & MTG GP-FUEL *(contd.)* i02251619

Y-SEPARATE ILLUSTRATION

## 255-2753 FILTER & MTG GP-FUEL *(contd.)*

i02251619

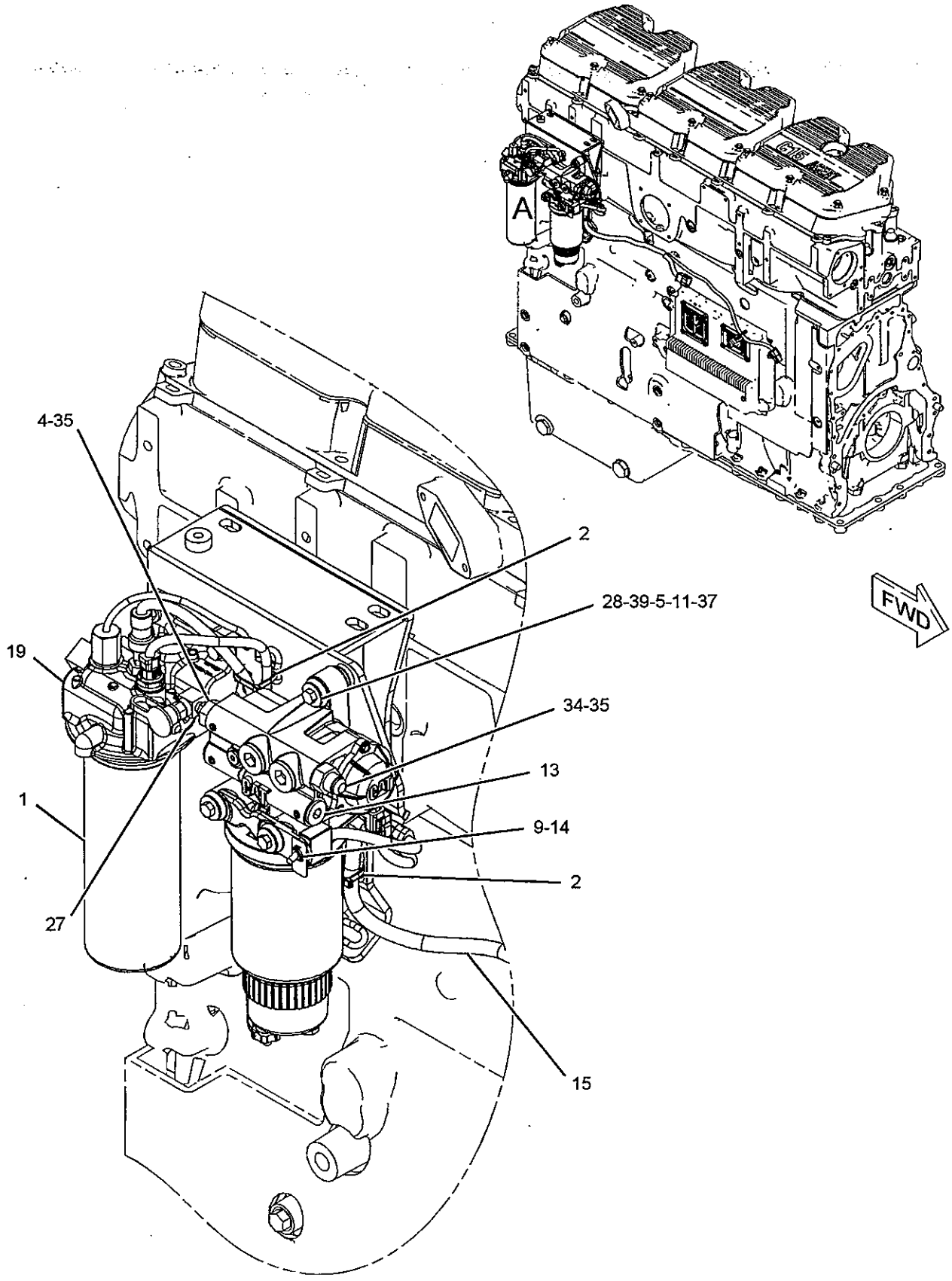


VIEW OF AREA A

GRAPHIC #1

g01140380

## 255-2753 FILTER & MTG GP-FUEL (contd.) i02251619

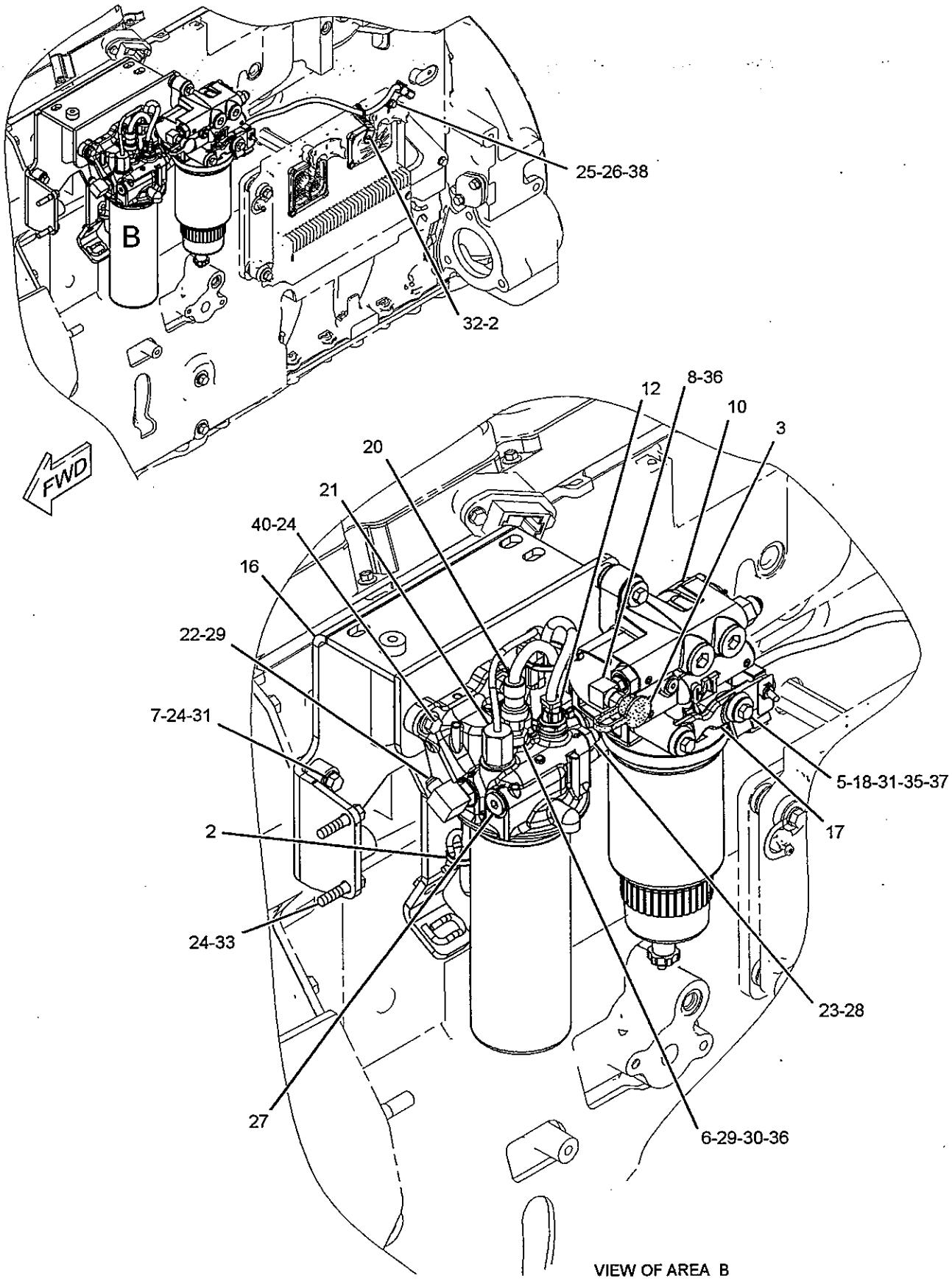


GRAPHIC #2

<END>

g01140379

# *174-9570* FILTER GP-WATER SEP & FUEL–PRIMARY

S/N: LHX1-UP

PART OF 190-8977 WATER SEP & FUEL PRM PUMP GP

SMCS-1261, 1263 i02195362

| NOTE | REF NO | GRAPHIC REF | PART NUMBER | QTY | PART NAME 1 2 3 4 5 6 (PRODUCT LEVEL) | SEE PAGE |
|---|---|---|---|---|---|---|
| | 1 | 1 | 173-7126 | 1 | BOWL AS | |
| | 2 | 1 | 1R-0770 | 1 | FILTER AS-WATER SEP & FUEL (PRIMARY) | |
| | | 1 | 220-8678 | 1 | SEAL (WATER SEPARATOR, FUEL) | |

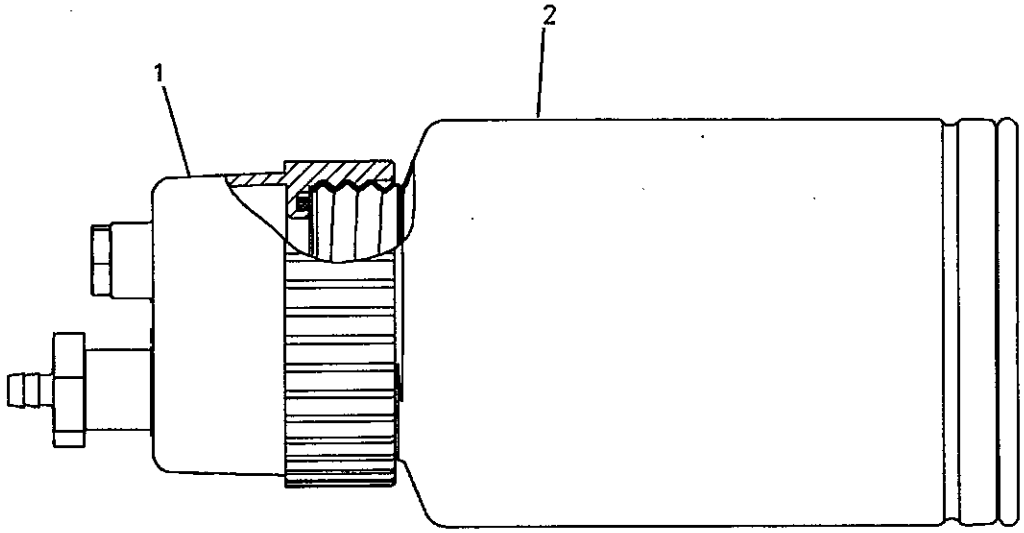


GRAPHIC #1 <END> g00787237

# FUEL SYSTEM

## *235-3231* LINES GP-FUEL

**S/N: LHX1-UP**

**PART OF 225-0992 ENGINE AR-COMPLETE**

**SMCS-1274** **i02225742**

| NOTE | REF NO | GRAPHIC REF | PART NUMBER | QTY | PART NAME 1 2 3 4 5 6 (PRODUCT LEVEL) | SEE PAGE |
|---|---|---|---|---|---|---|
| | 1 | 1 | **8S-4950** | 1 | CAP | |
| | 2 | 1 | **103-4656** | 1 | MANIFOLD-FUEL (INLET TEMP CONTROL) | |
| | 3 | 1 | **110-8330** | 2 | SPACER (11.13X10.05X90-MM THK) | |
| | 4 | 1 | **134-8226** | 1 | BRACKET | |
| | 5 | 1 | **147-3396** | 1 | CONNECTOR-PORT | |
| | 6 | 1 | **191-7805** | 1 | ELBOW AS | |
| | | 1 | **6V-5049** | 1 | SEAL-O-RING | |
| | | 1 | **030-7947** | 1 | ELBOW | |
| Y | 7 | 1 | *233-6742* | 1 | VALVE GP-CHECK | 130 |
| I | 8 | 1 | **253-2713** | 1 | HOSE AS | |
| I | 9 | 1 | **257-4154** | 1 | HOSE AS | |
| I | 10 | 1 | **257-4155** | 1 | HOSE AS | |
| I | 11 | 1 | **257-4156** | 1 | HOSE AS | |
| | 12 | 1 | **030-7947** | 1 | ELBOW | |
| | 13 | 1 | **118-4728** | 1 | ELBOW | |
| | 14 | 1 | **033-6042** | 1 | SEAL-O-RING | |
| | 15 | 1 | **0L-1143** | 1 | BOLT (3/8-16X2.5-IN) | |
| | 16 | 1 | **0S-1588** | 2 | BOLT (3/8-16X1.25-IN) | |
| | 17 | 1 | **0T-0573** | 2 | BOLT (3/8-16X2.75-IN) | |
| | 18 | 1 | **1A-5964** | 2 | BOLT (3/8-16X4.5-IN) | |
| | 19 | 1 | **1S-0994** | 1 | CLIP | |
| | 20 | 1 | **1S-6420** | 2 | CLIP | |
| | 21 | 1 | **2P-7214** | 1 | ELBOW | |
| | 22 | 1 | **4D-7735** | 1 | CLIP | |
| | 23 | 1 | **5G-9603** | 1 | SPACER (11.03X26.6X50-MM THK) | |
| | 24 | 1 | **5M-2894** | 6 | WASHER-HARD (10.2X18.5X2.5-MM THK) | |
| | 25 | 1 | **6V-0484** | 1 | ADAPTER-O-RING | |
| | 26 | 1 | **6V-0852** | 1 | CAP-DUST | |
| | 27 | 1 | **6V-5048** | 2 | SEAL-O-RING | |
| | 28 | 1 | **6V-5049** | 7 | SEAL-O-RING | |
| | 29 | 1 | **8C-3446** | 1 | VALVE AS-FLUID SAMPLING (FUEL) | |
| | 30 | 1 | **8L-2786** | 2 | SEAL-O-RING | |
| | 31 | 1 | **8S-0948** | 1 | CLIP | |
| | 32 | 1 | **9S-8002** | 1 | PLUG (7/16-20-THD) | |
| | 33 | 1 | **9S-8004** | 4 | PLUG (9/16-18-THD) | |
| | 34 | 1 | **9S-8005** | 1 | PLUG (3/4-16-THD) | |
| | 35 | 1 | **9X-6458** | 1 | WASHER-HARD (10.2X22.5X3-MM THK) | |

I-REFER TO HYDRAULIC INFORMATION SYSTEM
Y-SEPARATE ILLUSTRATION

## 235-3231 LINES GP-FUEL (contd.)

i02225742

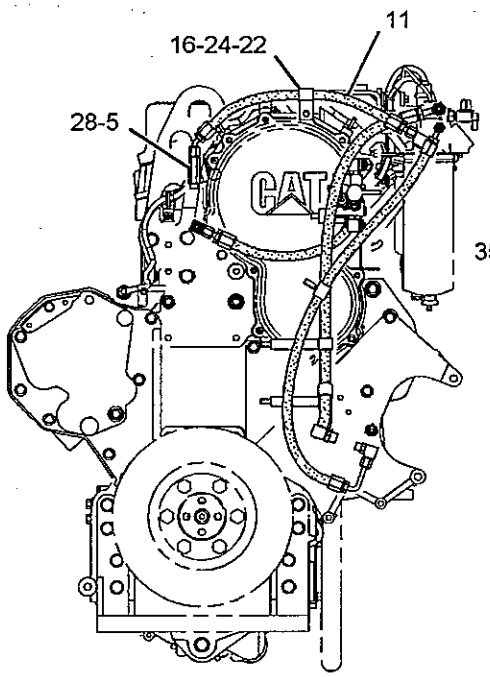


FRONT VIEW

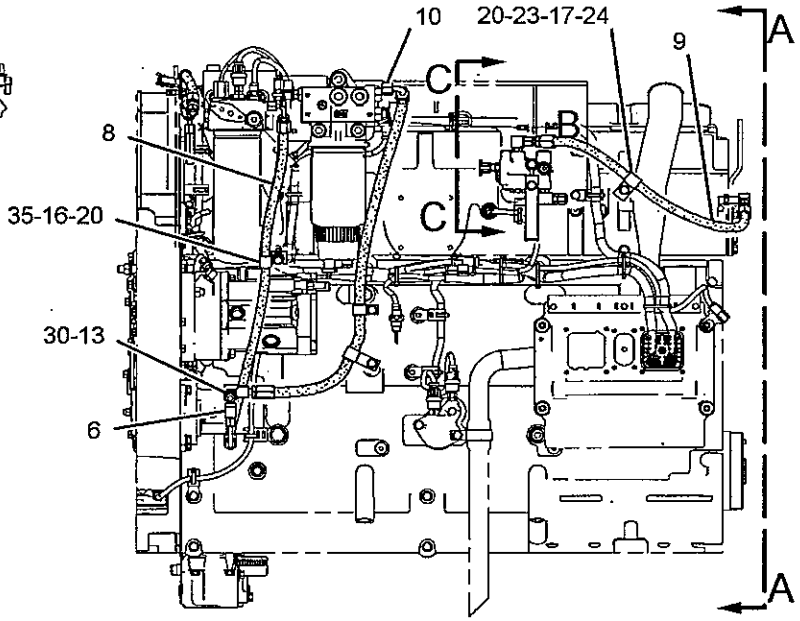


LEFT SIDE VIEW

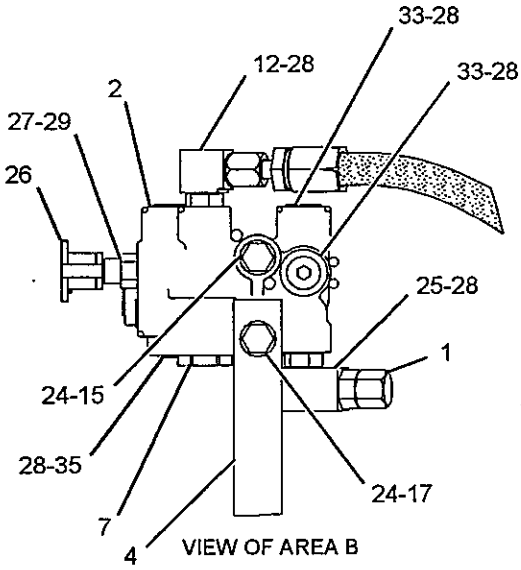


VIEW OF AREA B

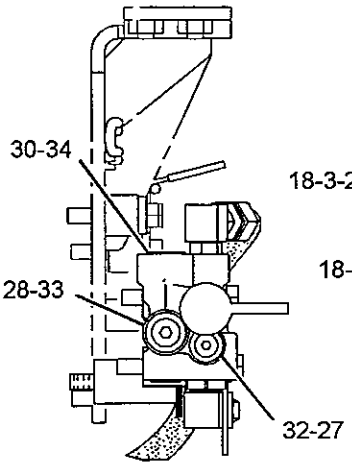


SECTION C-C

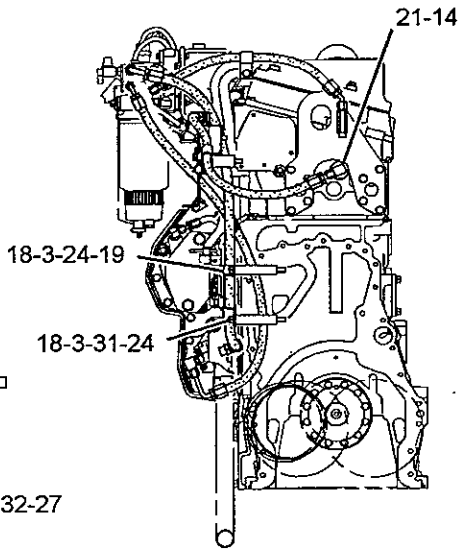


SECTION A-A

GRAPHIC #1

<END>

g01126542

# FUEL SYSTEM

## *235-5300* LINES GP-FUEL

**S/N: JMS1-UP**

**PART OF 225-5538 CHASSIS AR**

**SMCS-1274** **i02279179**

| NOTE | REF NO | GRAPHIC REF | PART NUMBER | QTY | PART NAME 1 2 3 4 5 6 (PRODUCT LEVEL) | SEE PAGE |
|---|---|---|---|---|---|---|
| | 1 | 1 | **154-6626** | 4 | BRACKET AS | |
| | | | | | (EACH INCLUDES) | |
| M | | 1 | **8T-3490** | 1 | NUT-WELD (M10X1.5-THD) | |
| | 4 | 1 | **160-8708** | 1 | BRACKET AS | |
| M | | 1 | **8T-3490** | 1 | NUT-WELD (M10X1.5-THD) | |
| I | 5 | 1 | **236-4281** | 1 | HOSE AS | |
| I | 6 | 1 | **236-4282** | 1 | HOSE AS | |
| | 7 | 1 | **033-6033** | 2 | SEAL-O-RING | |
| | 8 | 1 | **6D-4244** | 7 | CLIP | |
| | 9 | 1 | **6V-4589** | 1 | SEAL-O-RING | |
| | 10 | 1 | **6V-5048** | 1 | SEAL-O-RING | |
| | 11 | 1 | **6V-5049** | 2 | SEAL-O-RING | |
| | 12 | 1 | **6V-8636** | 1 | CONNECTOR | |
| | 13 | 1 | **6V-8638** | 1 | CONNECTOR | |
| | 14 | 1 | **8L-2779** | 2 | SEAL-O-RING | |
| | 15 | 1 | **8M-2773** | 6 | CLIP | |
| | 17 | 1 | **8T-4121** | 8 | WASHER-HARD (11X21X2.5-MM THK) | |
| M | 19 | 1 | **8T-4136** | 1 | BOLT (M10X1.5X25-MM) | |
| M | 20 | 1,1 | **8T-4195** | 6 | BOLT (M10X1.5X30-MM) | |
| | 21 | 1 | **8T-7546** | 1 | ELBOW | |
| | 22 | 1 | **9X-2085** | 1 | ELBOW | |
| | 23 | 1 | **261-2269** | 1 | BRACKET AS | |
| M | | 1 | **8T-3490** | 1 | NUT-WELD (M10X1.5-THD) | |
| | 24 | 1 | **101-3120** | 1 | SPACER (10.5X25X20-MM THK) | |
| M | 25 | 1 | **8T-4648** | 1 | BOLT (M12X1.75X70-MM) | |
| M | 26 | 1 | **8T-4182** | 1 | BOLT (M10X1.5X45-MM) | |

I-REFER TO HYDRAULIC INFORMATION SYSTEM
M-METRIC PART

## 235-5300 LINES GP-FUEL (contd.) i02279179

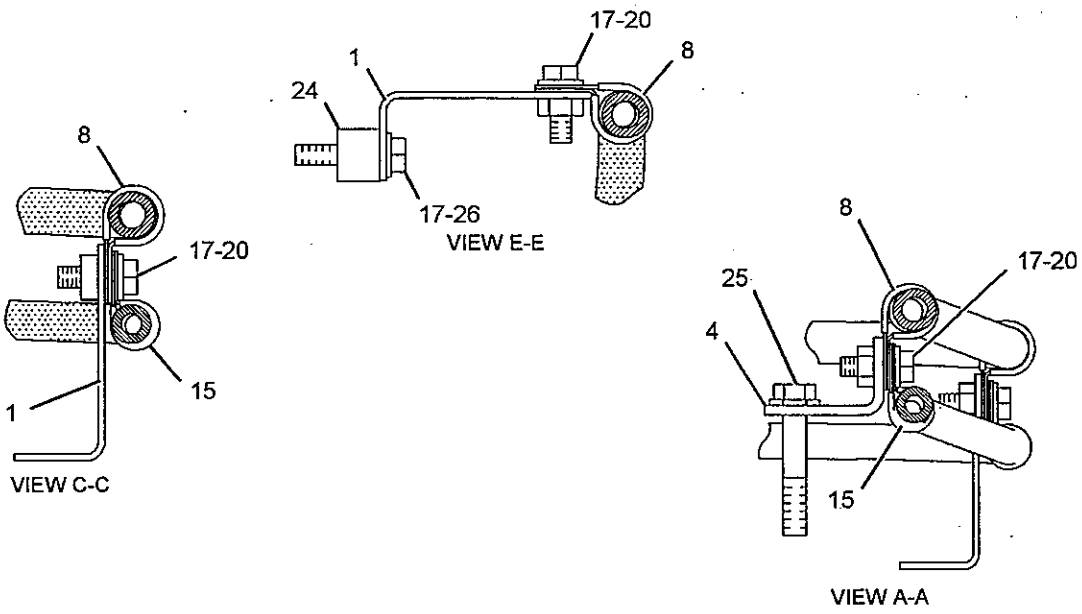


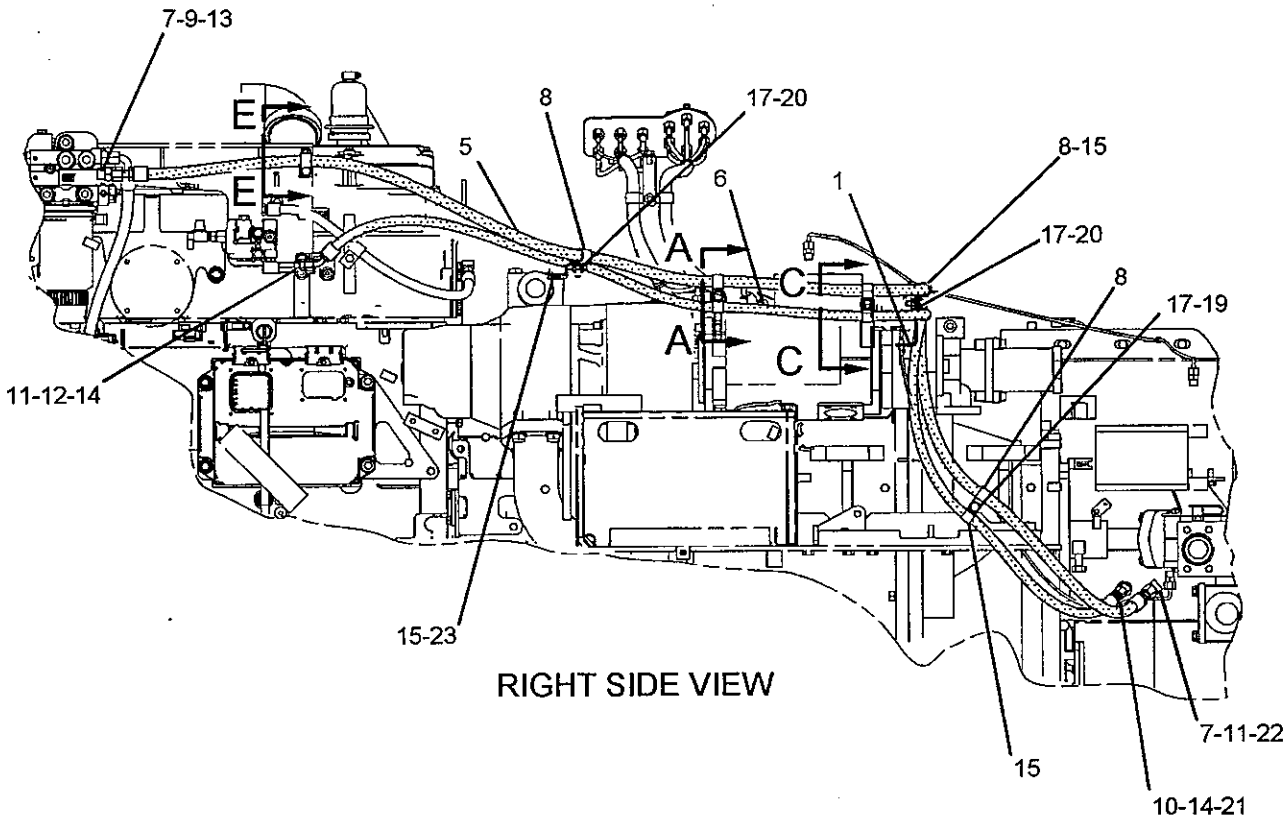


RIGHT SIDE VIEW

GRAPHIC #1 <END> g01141486

# 150-4279 PUMP & MTG GP-FUEL TRANSFER

S/N: LHX1-UP

ALLOWS USE OF FRONT MOUNTED PUMP EXCEPT WHEN LH MOUNTING GP-ALTERNATOR IS PROVIDED

PART OF 225-0992 ENGINE AR-COMPLETE

SMCS-1256 i01932174

| NOTE | REF NO | GRAPHIC REF | PART NUMBER | QTY | PART NAME 1 2 3 4 5 6 (PRODUCT LEVEL) | SEE PAGE |
|---|---|---|---|---|---|---|
| C | 1 | 1 | 190-3443 | 1 | PUMP GP-FUEL TRANSFER | |
| | 2 | 1 | 1T-0765 | 2 | BOLT (3/8-16X1 IN) | |
| | 3 | 1 | 5M-2894 | 2 | WASHER-HARD (10.2X18.5X2.5MM THK) | |
| | 4 | 1 | 107-5769 | 2 | SEAL-O-RING | |
| | 5 | 1 | 0S-0699 | 2 | STUD | |
| | 6 | 1 | 9S-8752 | 2 | NUT-FULL (3/8-16 THD) | |
| | 7 | 1 | 133-9116 | 1 | COVER | |

C-CHANGE FROM PREVIOUS TYPE

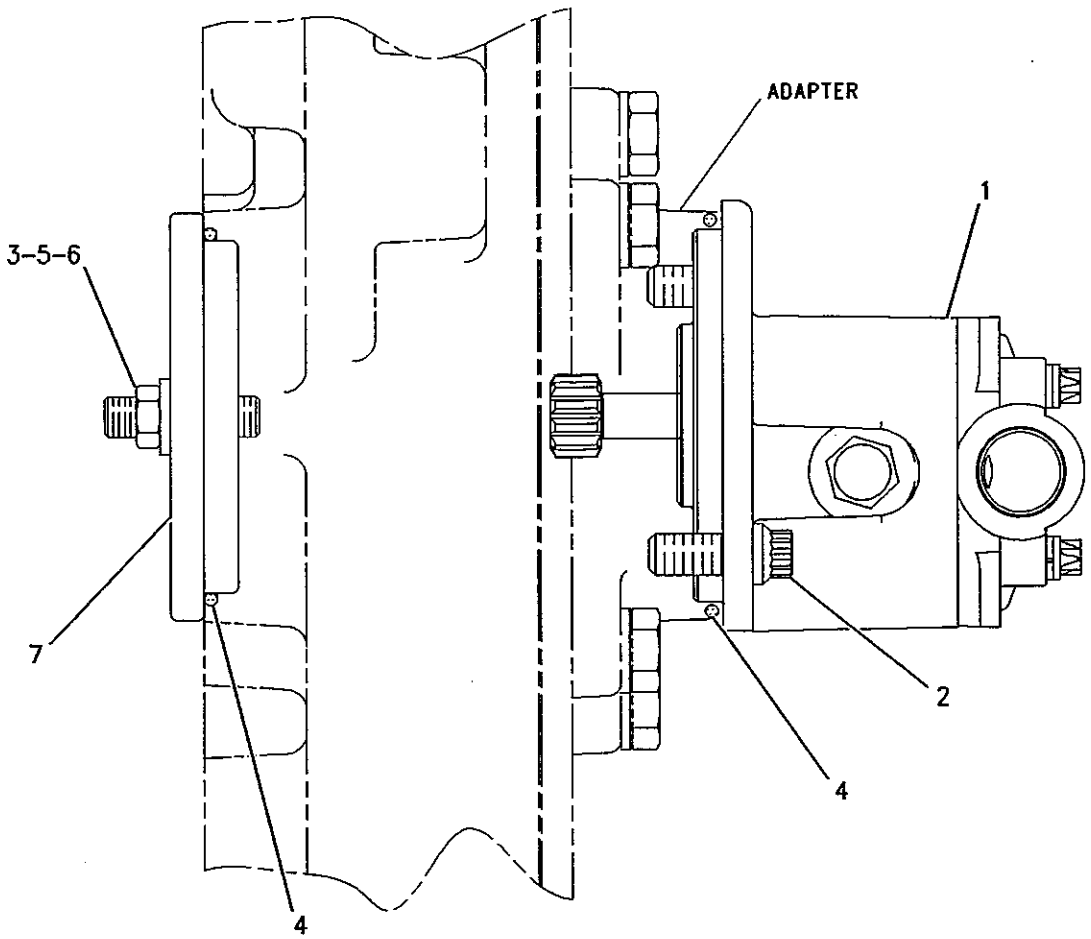


LEFT SIDE VIEW

GRAPHIC #1 <END> g00762253

# 235-1401 PUMP GP-FUEL INJECTION

S/N: LHX1-UP

PART OF 241-5929 ENGINE AR-CORE

SMCS-1251, 1290 i02223602

| NOTE | REF NO | GRAPHIC REF | PART NUMBER | QTY | PART NAME 1 2 3 4 5 6 (PRODUCT LEVEL) | SEE PAGE |
|---|---|---|---|---|---|---|
| | 1 | 1 | 6I-0213 | 1 | CLAMP | |
| | 2 | 1 | 8S-9191 | 1 | BOLT (3/8-16X4-IN) | |
| | 3 | 1 | 100-5072 | 1 | SPACER (9.8X15.85X37.6-MM THK) | |
| | 4 | 1 | 253-0615 | 1 | INJECTOR GP-FUEL | |
| | 4A | 1 | 230-3775 | 1 | SEAL-O-RING | |
| | 4B | 1 | 230-3728 | 1 | SEAL-O-RING | |
| | 4C | 1 | 9X-7317 | 1 | SEAL-O-RING | |

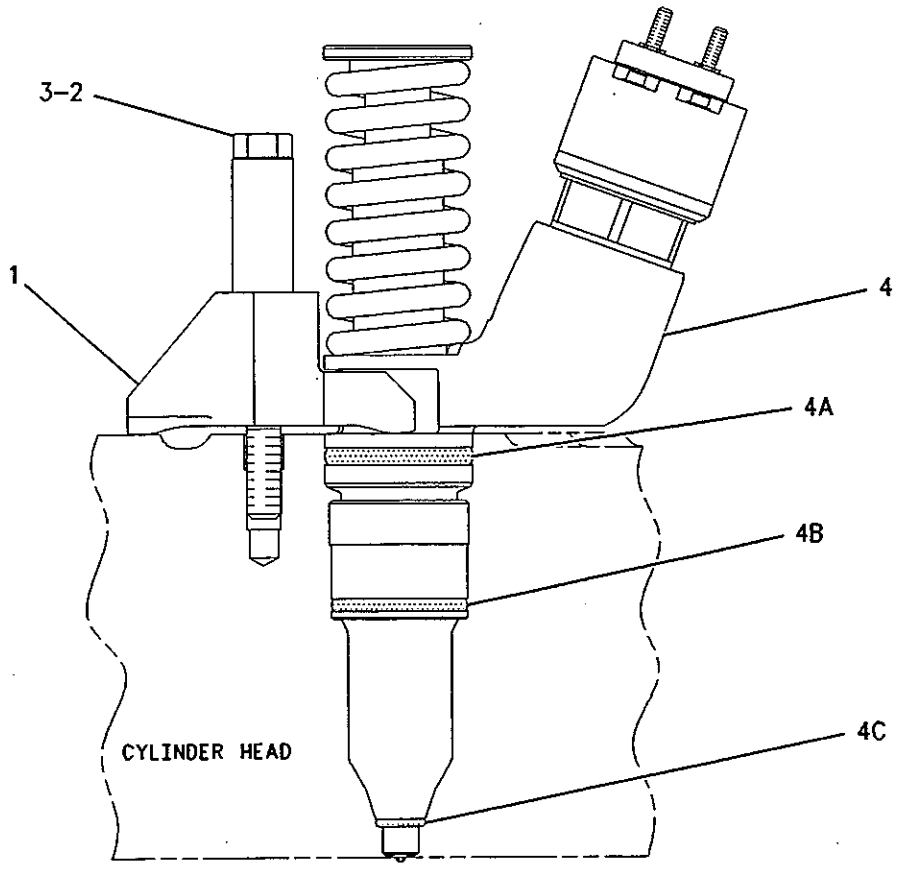


GRAPHIC #1 <END> g00900391

# FUEL SYSTEM

## *233-6074* TANK GP-FUEL

**S/N: JMS1-UP**
**515-L**
**PART OF 225-5538 CHASSIS AR**

**SMCS-1273** **i02280859**

| NOTE | REF NO | GRAPHIC REF | PART NUMBER | QTY | PART NAME 1 2 3 4 5 6 (PRODUCT LEVEL) | SEE PAGE |
|---|---|---|---|---|---|---|
| | 1 | 1 | **9P-7121** | 1 | STRAINER-FUEL | |
| | 2 | 1 | **123-6319** | 1 | CAP AS-FILLER (FUEL) | |
| | 3 | 1 | **188-8844** | 1 | VALVE-BREAKER RELIEF | |
| | 4 | 1 | **200-1138** | 1 | SENDER AS-FUEL LEVEL | |
| | | 1 | **138-0444** | 1 | KIT-REPAIR (FUEL LEVEL SENSOR) | |
| | | | | | (INCLUDES RECEPTACLE AS, WEDGE, AND PIN CONNECTOR) | |
| | 5 | 1 | **245-8413** | 1 | TANK AS-FUEL | |
| | 6 | 1 | **1H-8306** | 1 | SCREW-PURGE (1/2-20X1.625-IN) | |
| | 7 | 1 | **3D-2824** | 1 | SEAL-O-RING | |
| B | 8 | 1 | **8C-8422** | 1 | SEALANT | |
| | 9 | 1 | **7M-8485** | 1 | SEAL-O-RING | |
| M | 10 | 1 | **7X-2553** | 6 | BOLT (M16X2X40-MM) | |
| M | 11 | 1 | **8T-4138** | 6 | BOLT (M6X1X20-MM) | |
| | 12 | 1 | **9S-9334** | 1 | PLUG | |
| | 13 | 1 | **8T-4205** | 6 | WASHER-HARD (7.2X14.5X2-MM THK) | |
| | 14 | 1 | **9X-8257** | 6 | WASHER (17.5X30X3.5-MM THK) | |

B-USE AS REQUIRED
M-METRIC PART

*233-6074* **TANK GP-FUEL** *(contd.)* **i02280859**

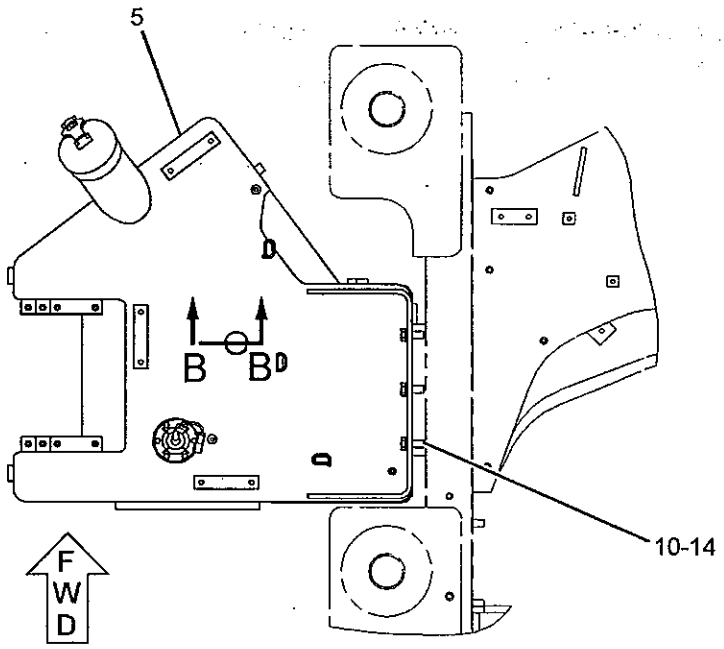


TOP VIEW

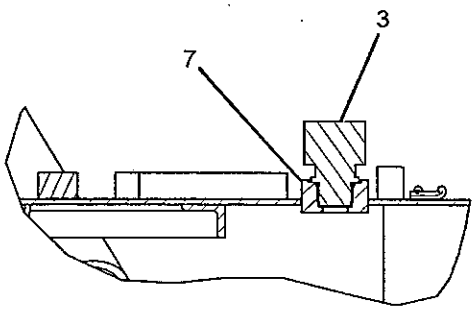


SECTION B-B

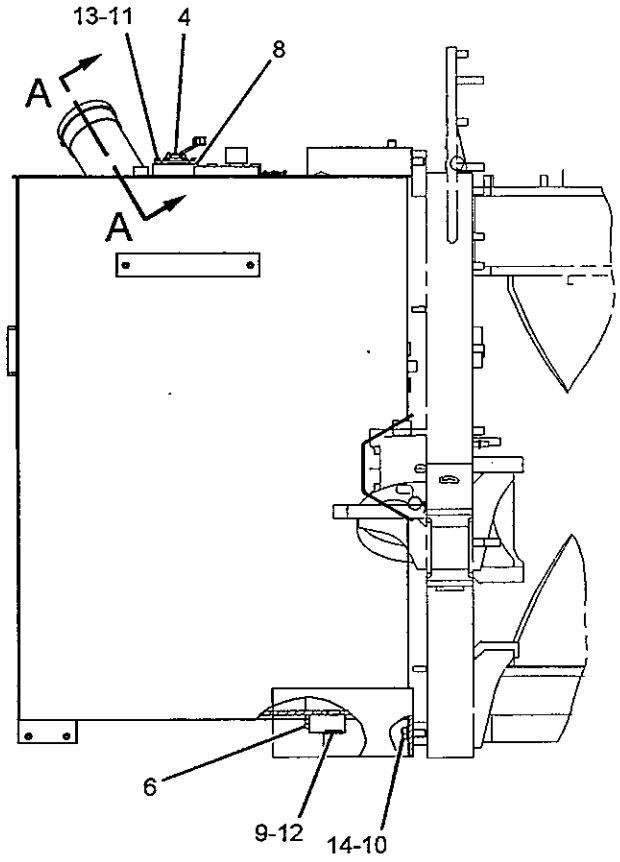


REAR VIEW

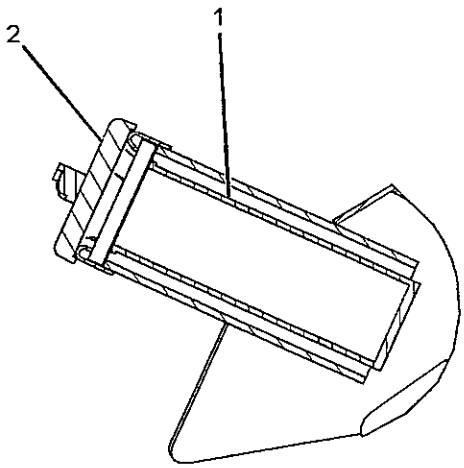


SECTION A-A

GRAPHIC #1 **<END>** g01066014

# FUEL SYSTEM

## *245-8412* TANK GP-FUEL

**S/N: JMS1-UP**
**PART OF 266-1620 MACHINE AR**
**AN ATTACHMENT**

**SMCS-1273** **i02090124**

| NOTE | REF NO | GRAPHIC REF | PART NUMBER | QTY | PART NAME 1 2 3 4 5 6 (PRODUCT LEVEL) | SEE PAGE |
|---|---|---|---|---|---|---|
| | 1 | 1 | **164-3417** | 1 | COVER | |
| | 2 | 1 | **187-1679** | 1 | COVER | |
| | 3 | 1 | **233-6073** | 1 | TANK AS-FUEL | |
| | 4 | 1 | **1H-8128** | 1 | SEAL-O-RING | |
| | 5 | 1 | **5H-6734** | 1 | SEAL-O-RING | |
| | 6 | 1 | **8T-4121** | 12 | WASHER-HARD (11X21X2.5-MM THK) | |
| M | 7 | 1 | **8T-4136** | 12 | BOLT (M10X1.5X25-MM) | |

M-METRIC PART

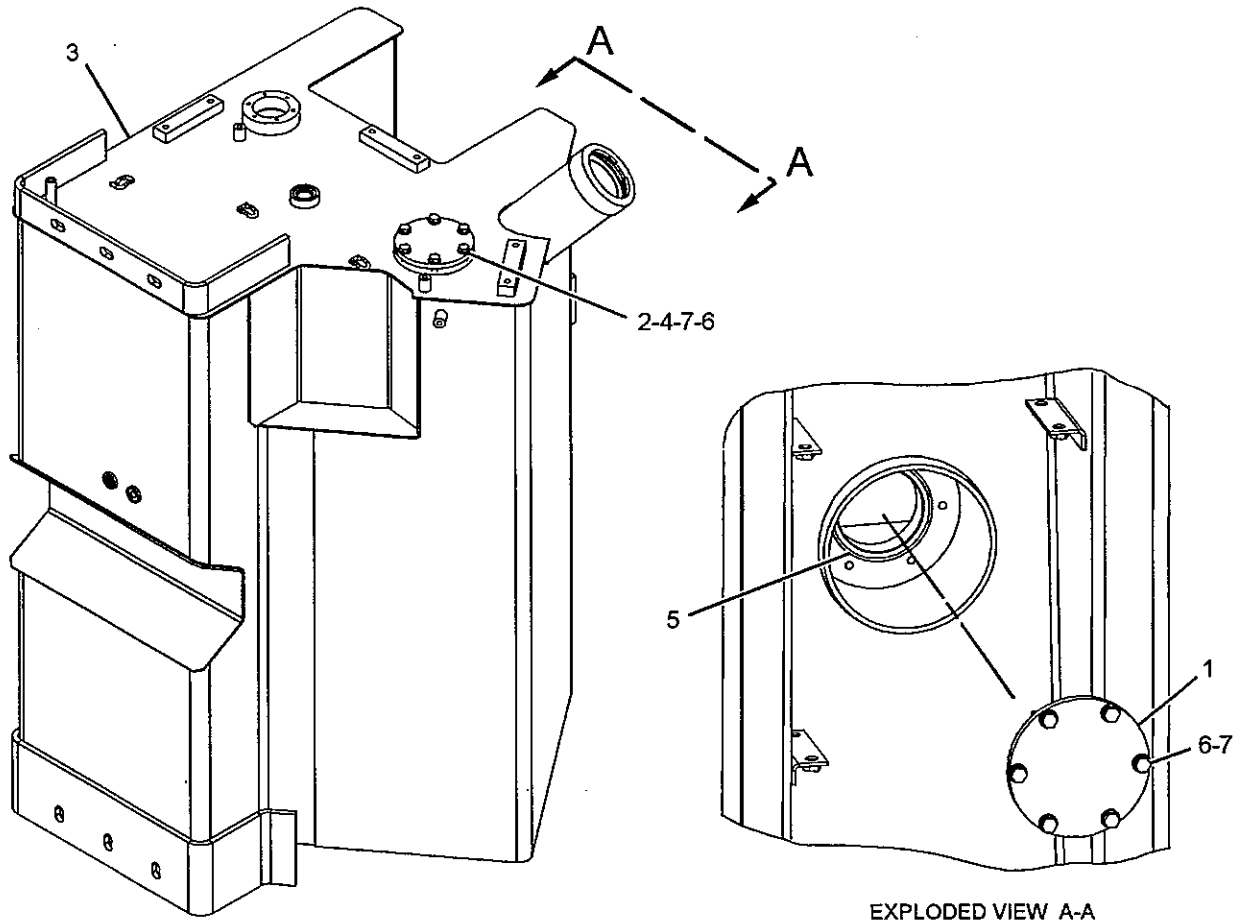


EXPLODED VIEW A-A

GRAPHIC #1 **<END>** g01066611

# 246-8216 TANK GP-FUEL

**S/N: JMS1-UP**

**PART OF 240-8591 GUARD GP-FUEL & HYDRAULIC TANK**

**AN ATTACHMENT**

**SMCS-1273** **i02090746**

| NOTE | REF NO | GRAPHIC REF | PART NUMBER | QTY | PART NAME 1 2 3 4 5 6 (PRODUCT LEVEL) | SEE PAGE |
|---|---|---|---|---|---|---|
| | 1 | 1 | 164-3417 | 1 | COVER | |
| | 2 | 1 | 187-1679 | 1 | COVER | |
| | 3 | 1 | 240-8592 | 1 | TANK AS-FUEL | |
| | 4 | 1 | 1H-8128 | 1 | SEAL-O-RING | |
| | 5 | 1 | 5H-6734 | 1 | SEAL-O-RING | |
| | 6 | 1 | 8T-4121 | 12 | WASHER-HARD (11X21X2.5-MM THK) | |
| M | 7 | 1 | 8T-4136 | 12 | BOLT (M10X1.5X25-MM) | |

M-METRIC PART

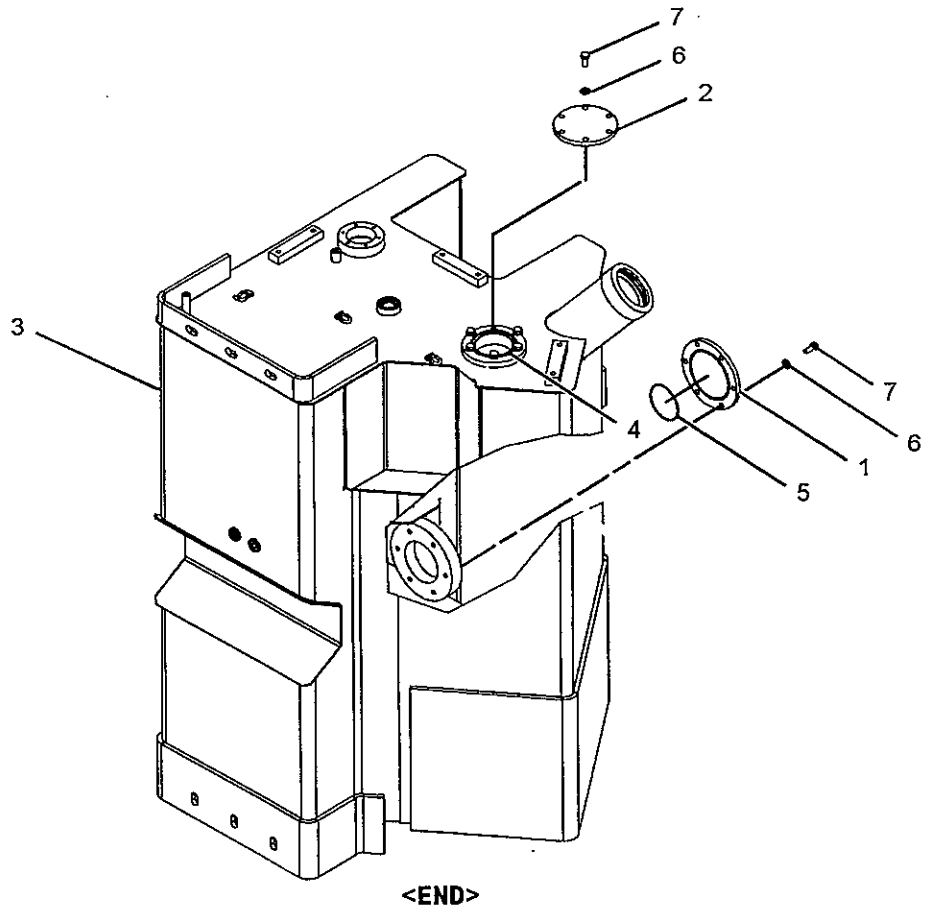


GRAPHIC #1

**<END>**

g01067331

# 233-6742 VALVE GP-CHECK–FUEL FILTER

**S/N: LHX1-UP**

**PART OF 235-3231 LINES GP-FUEL**

**SMCS-1251, 1274** i02274525

| NOTE | REF NO | GRAPHIC REF | PART NUMBER | QTY | PART NAME 1 2 3 4 5 6 (PRODUCT LEVEL) | SEE PAGE |
|---|---|---|---|---|---|---|
| Y | 1 | 1 | 238-0296 | 1 | VALVE GP-CHECK (FUEL FILTER) | 131 |
| | 2 | 1 | 6V-4589 | 1 | SEAL-O-RING | |

Y-SEPARATE ILLUSTRATION

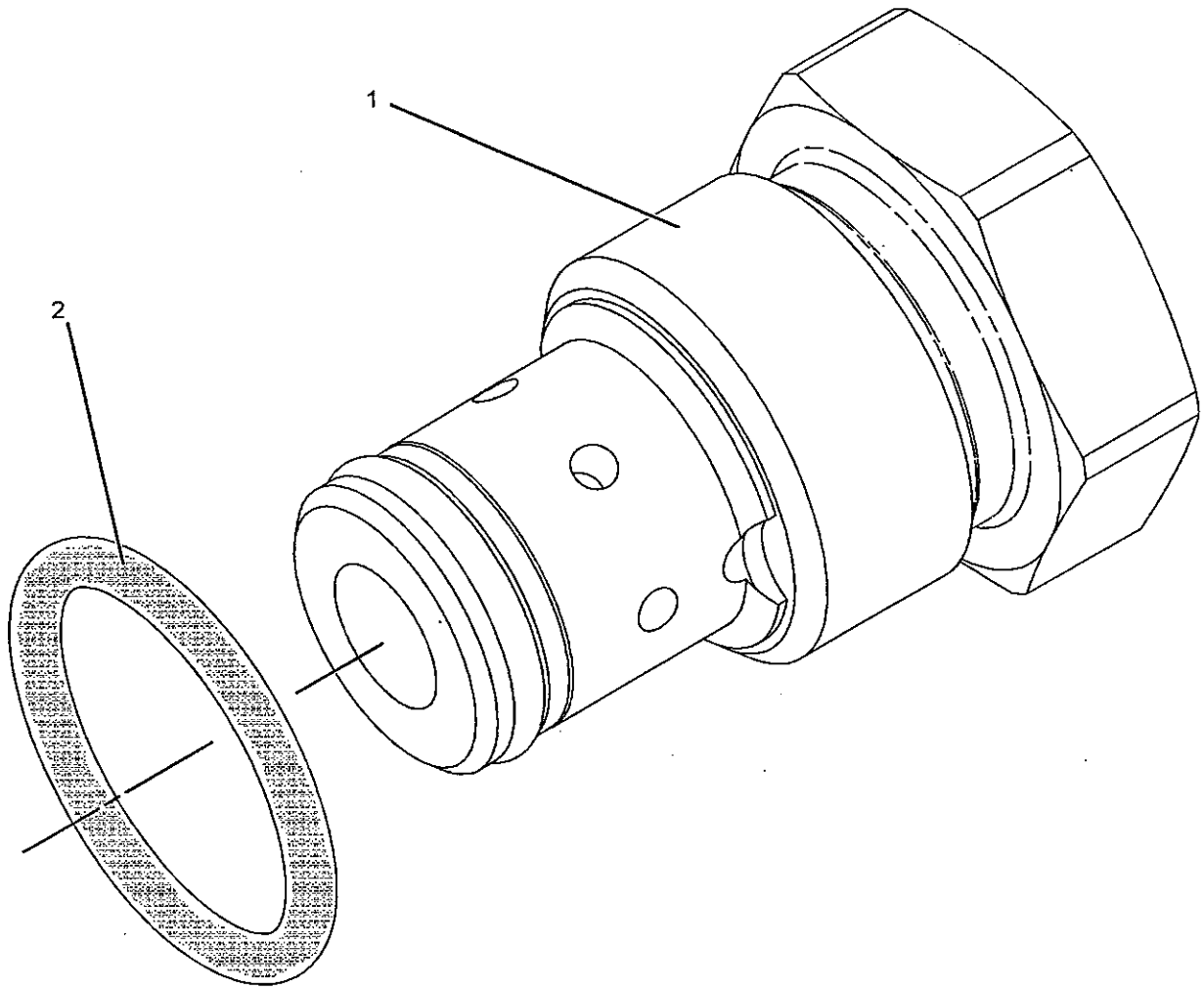


GRAPHIC #1 **<END>** g01031823

# 238-0296 VALVE GP-CHECK–FUEL FILTER

S/N: LHX1-UP

PART OF 233-6742 VALVE GP-CHECK

SMCS-1251, 1274 i02140024

| NOTE | REF NO | GRAPHIC REF | PART NUMBER | QTY | PART NAME 1 2 3 4 5 6 (PRODUCT LEVEL) | SEE PAGE |
|---|---|---|---|---|---|---|
| | 1 | 1 | 6V-6923 | 1 | RING-BACKUP | |
| | 2 | 1 | 033-6033 | 1 | SEAL-O-RING | |

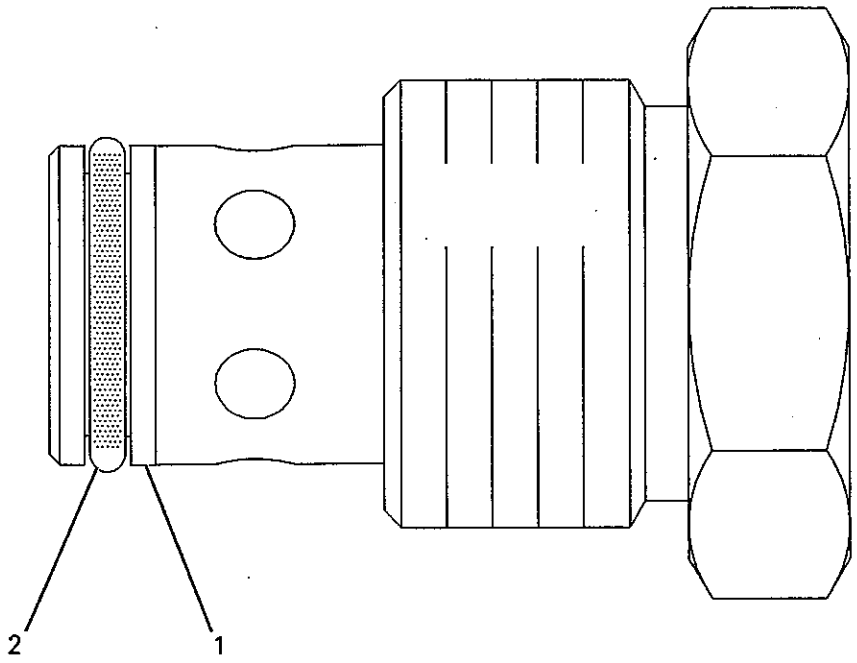


GRAPHIC #1 <END> g00864141

# 190-8977 WATER SEP & FUEL PRM PUMP GP-
## PRIMARY FUEL FILTER
**S/N: LHX1-UP**

**PART OF 255-2753 FILTER & MTG GP-FUEL**

**SMCS-1258, 1263** i01934894

| NOTE | REF NO | GRAPHIC REF | PART NUMBER | QTY | PART NAME 1 2 3 4 5 6 (PRODUCT LEVEL) | SEE PAGE |
|---|---|---|---|---|---|---|
| Y | 1 | 1 | *174-9570* | 1 | FILTER GP-WATER SEP & FUEL (PRIMARY) | 119 |
| | 2 | 1 | **190-8970** | 1 | BASE AS | |

Y-SEPARATE ILLUSTRATION

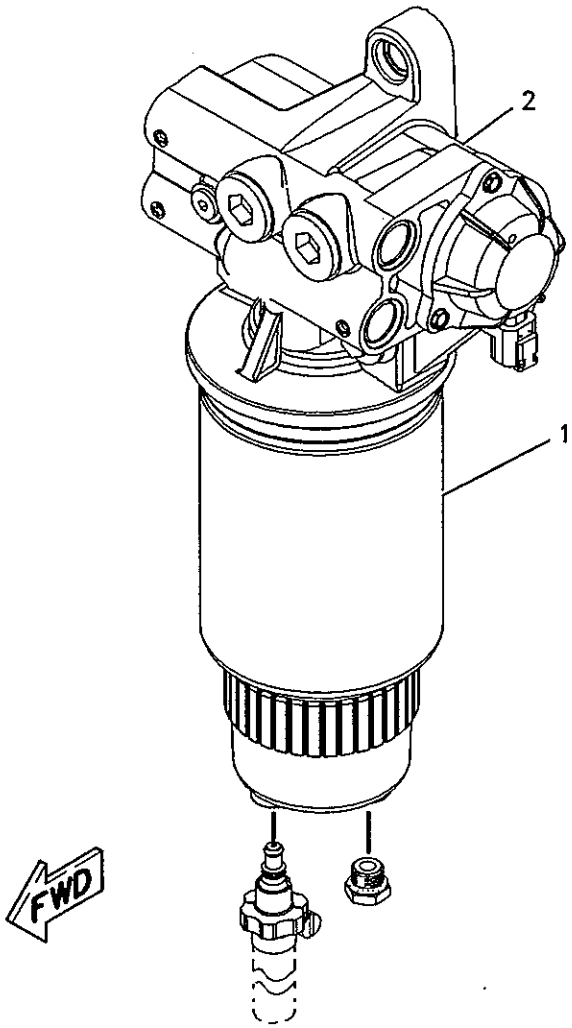


GRAPHIC #1

**<END>**

g00904493

# 3E-6328 ALARM GP–ACTION

S/N: JMS1-UP
24-VOLT
PART OF 207-8617, 235-5503, 262-9950 WIRING GP-CAB
ALSO AN ATTACHMENT

SMCS-7400, 7402, 7407 i02160203

| NOTE | REF NO | GRAPHIC REF | PART NUMBER | QTY | PART NAME 1 2 3 4 5 6 (PRODUCT LEVEL) | SEE PAGE |
|---|---|---|---|---|---|---|
| | 1 | 1 | 102-8802 | 1 | KIT-RECEPTACLE (2-PIN) | |
| | | | | | (INCLUDES RECEPTACLE AS & WEDGE) | |
| | 2 | 1 | 186-3735 | 2 | PIN-CONNECTOR | |
| | 3 | 1 | 3E-3365 | 1 | WEDGE-RECEPTACLE LOCK (2-PIN) | |

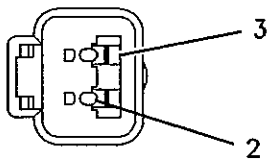


VIEW A–A

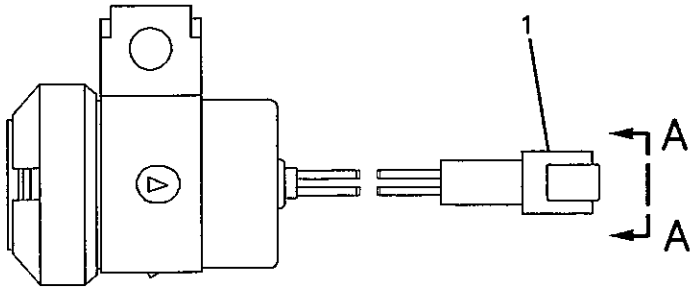


GRAPHIC #1 <END> g00826023

# ELECTRICAL AND STARTING SYSTEM

## 177-9953 ALTERNATOR GP-CHARGING*R

S/N: JMS1-UP
24-VOLT, 80-AMPERE
PART OF 236-6713 ALTERNATOR GP-CHARGING

SMCS-1405 i02202094

| NOTE | REF NO | GRAPHIC REF | PART NUMBER | QTY | PART NAME 1 2 3 4 5 6 (PRODUCT LEVEL) | SEE PAGE |
|---|---|---|---|---|---|---|
| | 1 | 1 | 185-2653 | 1 | FRAME | |
| | 2 | 1 | 5S-7349 | 1 | BOLT (1/4-20X0.5-IN) | |
| | 3 | 1 | 185-2639 | 1 | FAN AS | |
| | 4 | 1 | 1H-3244 | 1 | LOCKWASHER | |
| | 5 | 1 | 185-2645 | 1 | FRAME | |
| | 6 | 1 | 2K-4821 | 1 | LOCKNUT (5/8-18-THD) | |
| | 7 | 1 | 5P-8247 | 1 | WASHER-HARD (17X32X3.5-MM THK) | |
| | 8 | 1 | 185-2651 | 1 | COVER | |
| | 9 | 1 | 8T-4205 | 1 | WASHER-HARD (7.2X14.5X2-MM THK) | |
| | 10 | 1 | 185-2647 | 1 | GROMMET | |
| | 11 | 1 | 9L-6770 | 1 | CAP | |
| | 12 | 1 | 185-2643 | 1 | STATOR AS | |
| | 13 | 1 | 185-2638 | 2 | COLLAR | |
| | 14 | 1 | 185-2654 | 1 | PLATE | |
| | 15 | 1 | 185-2650 | 1 | ROTOR AS | |
| | 16 | 1 | 185-2644 | 1 | COIL AS | |
| | 17 | 1 | 185-2648 | 1 | REGULATOR AS-VOLTAGE (24-VOLT) (ALTERNATOR) | |
| J | 18 | 1 | 6V-8189 | 1 | NUT (5/16-18-THD) | |
| J | 19 | 1 | 8T-4224 | 1 | WASHER-HARD (8.8X16X2-MM THK) | |
| J | 20 | 1 | 3F-9556 | 1 | LOCKWASHER | |
| | | | | | AVAILABLE REPAIR KIT(S): | |
| J | | | 199-7891 | | KIT-TERMINAL (ALTERNATOR) | |
| | | | | | (INCLUDES INSULATORS, WASHERS, NUT, AND STEP NUT) | |
| | | | 185-2655 | | KIT-BEARING (ALTERNATOR) | |
| | | | | | (INCLUDES 3 BEARINGS) | |
| | | | 199-8436 | | KIT-TERMINAL (ALTERNATOR) | |
| | | | | | (INCLUDES HOLDER AS, PLATE, INSULATOR, PIN, BOLT, GROMMET, AND NUT) | |
| | | | 185-2658 | | KIT-HARDWARE (ALTERNATOR) | |
| | | | | | (INCLUDES BOLTS) | |

J-KIT MARKED J SERVICES PARTS MARKED J

## 177-9953 ALTERNATOR GP-CHARGING *(contd.)*

i02202094

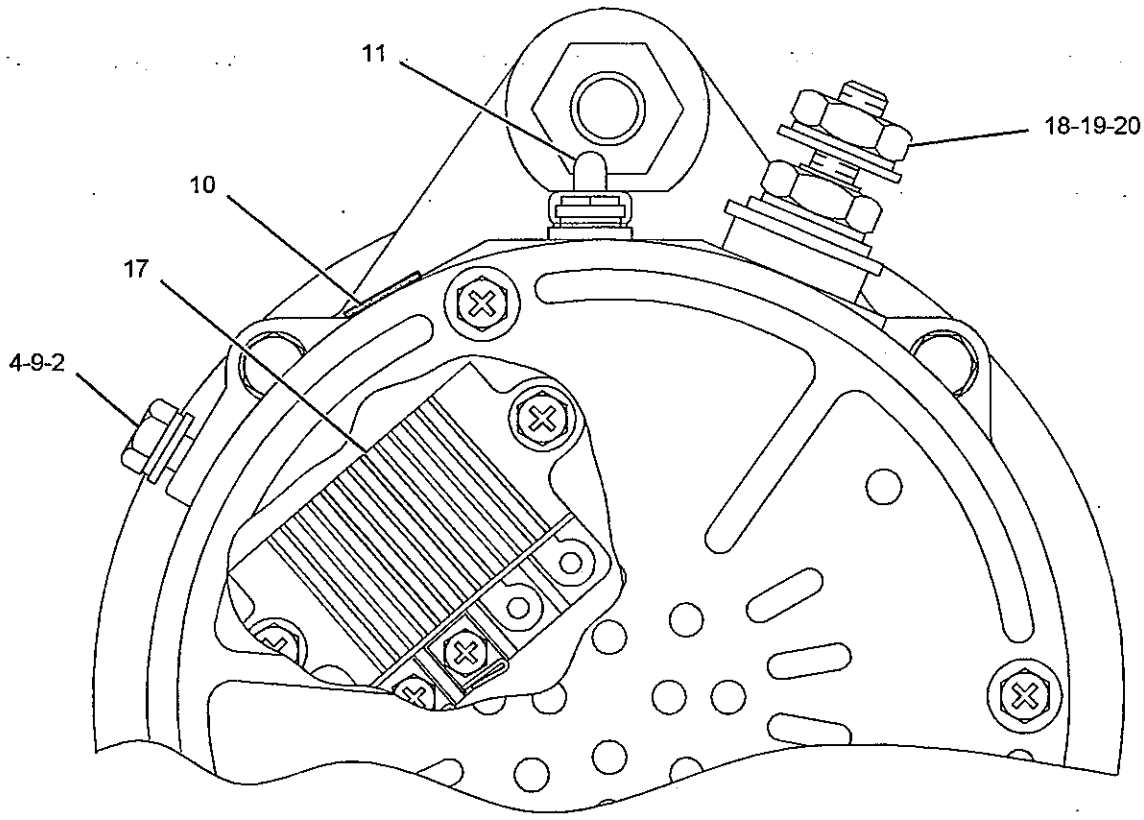


VIEW A-A

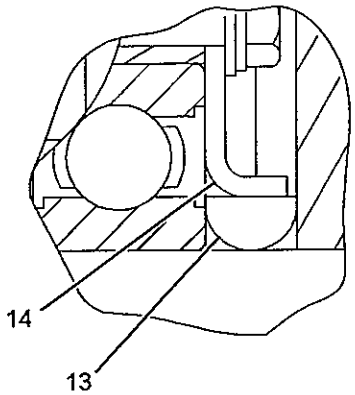


VIEW OF AREA B

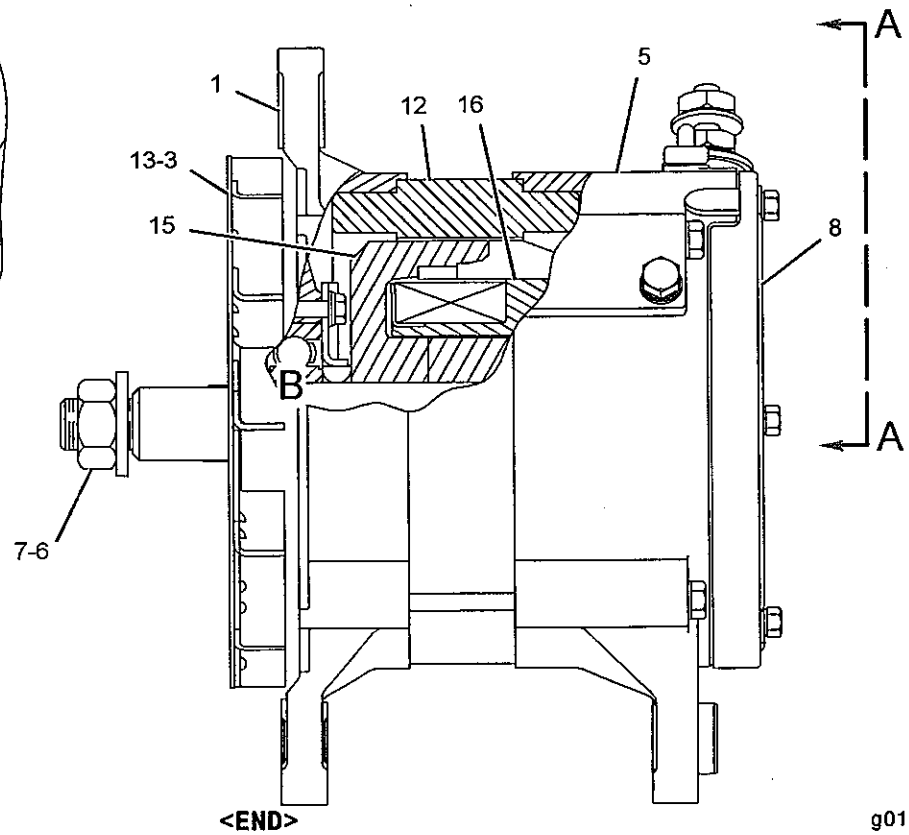


GRAPHIC #1

<END>

g01102837

# ELECTRICAL AND STARTING SYSTEM

## *197-8820* ALTERNATOR GP-CHARGING*R

S/N: JMS1-UP
24-VOLT, 95-AMPERE
PART OF 233-1511 ALTERNATOR GP-CHARGING
AN ATTACHMENT

SMCS-1405 i02197631

| NOTE | REF NO | GRAPHIC REF | PART NUMBER | QTY | PART NAME 1 2 3 4 5 6 (PRODUCT LEVEL) | SEE PAGE |
|---|---|---|---|---|---|---|
| | 1 | 1 | 185-2653 | 1 | FRAME | |
| | 2 | 1 | 5S-7349 | 1 | BOLT (1/4-20X0.5-IN) | |
| | 3 | 1 | 185-2639 | 1 | FAN AS | |
| | 4 | 1 | 1H-3244 | 1 | LOCKWASHER | |
| | 5 | 1 | 185-2645 | 1 | FRAME | |
| | 6 | 1 | 2K-4821 | 1 | LOCKNUT (5/8-18-THD) | |
| | 7 | 1 | 5P-8247 | 1 | WASHER-HARD (17X32X3.5-MM THK) | |
| | 8 | 1 | 185-2651 | 1 | COVER | |
| | 9 | 1 | 8T-4205 | 1 | WASHER-HARD (7.2X14.5X2-MM THK) | |
| | 10 | 1 | 185-2647 | 1 | GROMMET | |
| | 11 | 1 | 9L-6770 | 1 | CAP | |
| | 12 | 1 | 205-0626 | 1 | STATOR AS-ALTERNATOR | |
| | 13 | 1 | 185-2638 | 2 | COLLAR | |
| | 14 | 1 | 185-2654 | 1 | PLATE | |
| | 15 | 1 | 185-2650 | 1 | ROTOR AS | |
| | 16 | 1 | 185-2644 | 1 | COIL AS | |
| | 17 | 1 | 185-2648 | 1 | REGULATOR AS-VOLTAGE (24-VOLT) (ALTERNATOR) | |
| | 18 | 1 | 6V-8189 | 1 | NUT (5/16-18-THD) | |
| | 19 | 1 | 8T-4224 | 1 | WASHER-HARD (8.8X16X2-MM THK) | |
| | 20 | 1 | 3F-9556 | 1 | LOCKWASHER | |
| | | | | | AVAILABLE REPAIR KIT(S): | |
| | | | 185-2655 | 1 | KIT-BEARING (ALTERNATOR) | |
| | | | | | (INCLUDES 2 BEARINGS) | |
| | | | 199-8436 | 1 | KIT-TERMINAL (ALTERNATOR) | |
| | | | | | (INCLUDES HOLDER AS, PLATE, INSULATOR, PIN, BOLTS, GROMMET, AND NUT) | |
| | | | 199-7891 | 1 | KIT-TERMINAL (ALTERNATOR) | |
| | | | | | (INCLUDES INSULATORS, WASHERS, AND NUTS) | |
| | | | 185-2658 | 1 | KIT-HARDWARE (ALTERNATOR) | |
| | | | | | (INCLUDES BOLTS) | |

*197-8820* **ALTERNATOR GP-CHARGING** *(contd.)* **i02197631**

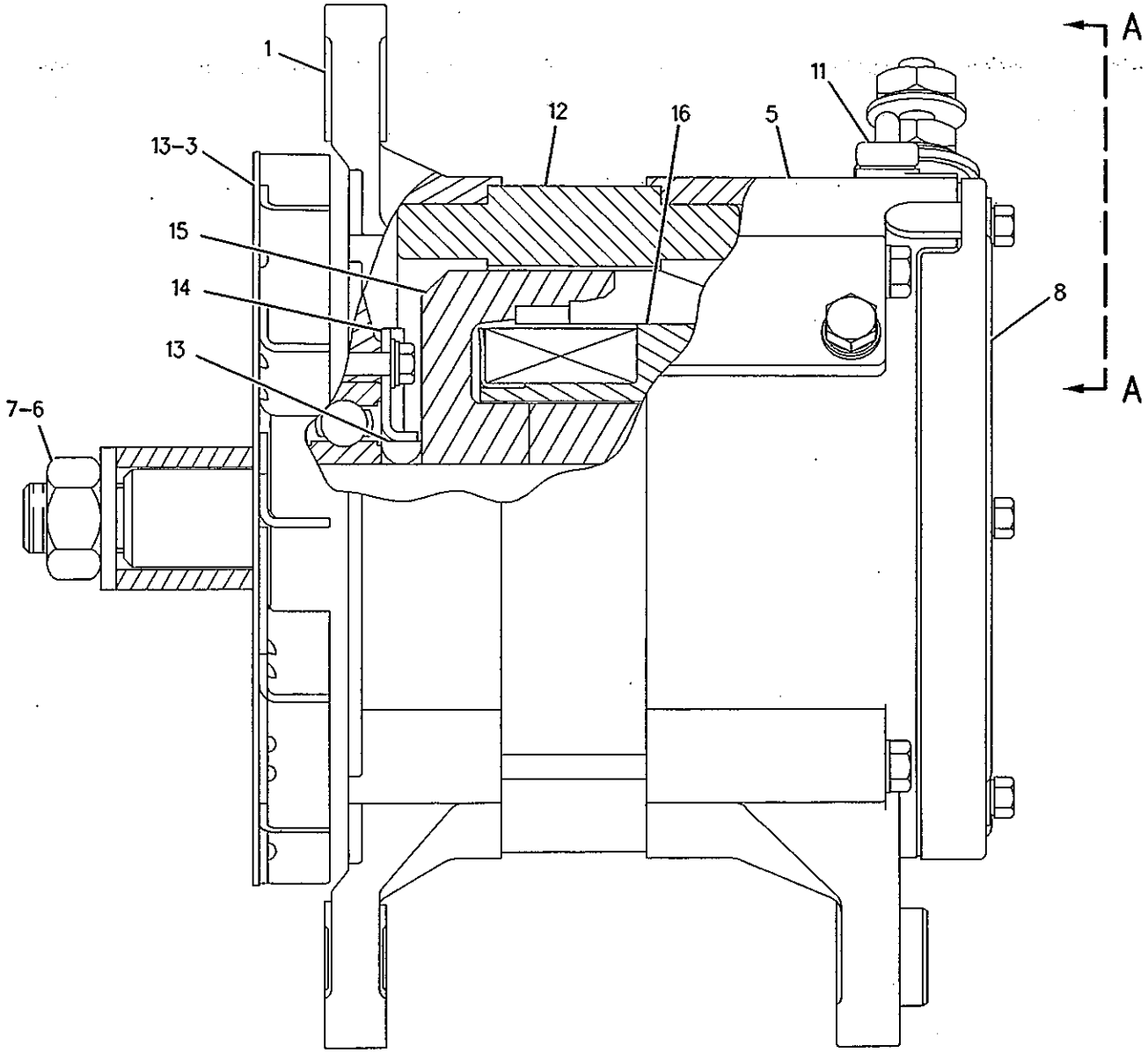


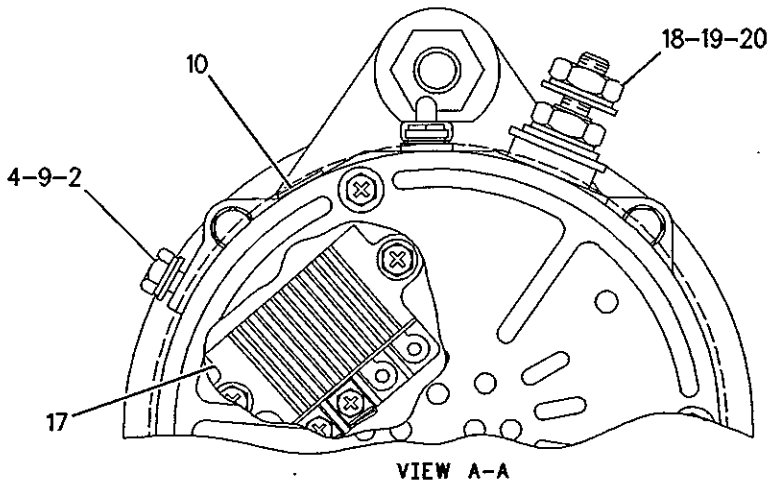


VIEW A-A

GRAPHIC #1 **<END>** g00873198

# 233-1511 ALTERNATOR GP-CHARGING

**S/N: JMS1-UP**
**95-AMPERE, 24-VOLT**
**AN ATTACHMENT**

**SMCS-1405** **i02230988**

| NOTE | REF NO | GRAPHIC REF | PART NUMBER | QTY | PART NAME 1 2 3 4 5 6 (PRODUCT LEVEL) | SEE PAGE |
|---|---|---|---|---|---|---|
| | 1 | 1 | **123-0791** | 1 | PULLEY (8-GROOVE) | |
| YR | 2 | 1 | **197-8820** | 1 | ALTERNATOR GP-CHARGING (24-VOLT, 95-AMPERE) | 136 |
| | 3 | 1 | **5P-1076** | 1 | WASHER-HARD (13.5X30X4-MM THK) | |
| | 4 | 1 | **8T-4223** | 2 | WASHER-HARD (13.5X25.5X3-MM THK) | |
| M | 5 | 1 | **8T-4244** | 1 | NUT (M12X1.75-THD) | |
| | 6 | 1 | **8T-4835** | 1 | BOLT (1/2-13X2-IN) | |
| M | 7 | 1 | **8T-7930** | 1 | BOLT (M12X1.75X160-MM) | |

M-METRIC PART
R-REMFG PART MAY BE AVAILABLE
Y-SEPARATE ILLUSTRATION

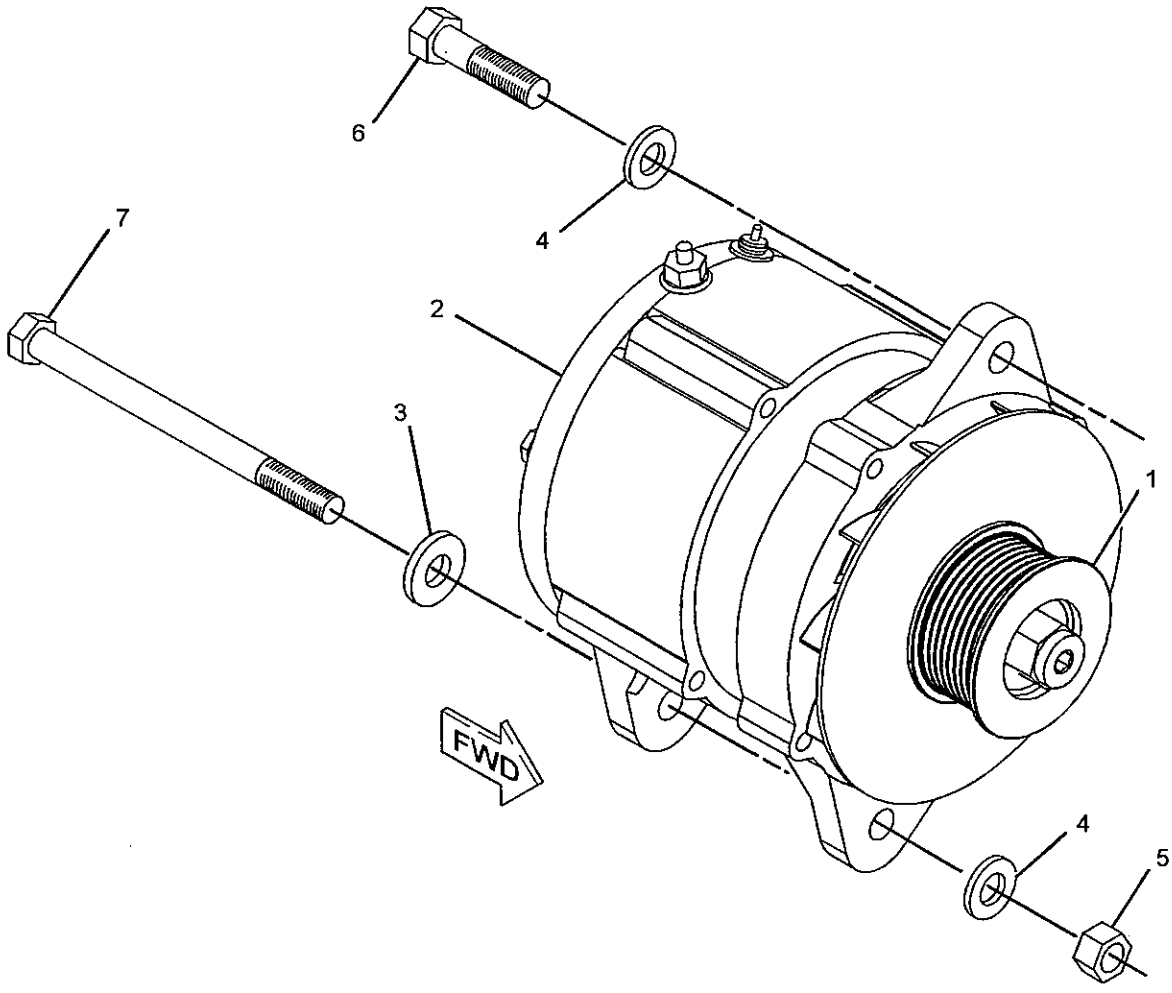


GRAPHIC #1 **<END>** g01136856

# 236-6713 ALTERNATOR GP-CHARGING

S/N: JMS1-UP
24-VOLT, 80-AMPERE
PART OF 226-9644 INSTALLATION AR-ENGINE

SMCS-1405 i02280495

| NOTE | REF NO | GRAPHIC REF | PART NUMBER | QTY | PART NAME 1 2 3 4 5 6 (PRODUCT LEVEL) | SEE PAGE |
|---|---|---|---|---|---|---|
| YR | 1 | 1 | 177-9953 | 1 | ALTERNATOR GP-CHARGING (24-VOLT, 80-AMPERE) | 134 |
| | 2 | 1 | 123-0791 | 1 | PULLEY (8-GROOVE) | |
| | 3 | 1 | 8T-4223 | 2 | WASHER-HARD (13.5X25.5X3-MM THK) | |
| M | 4 | 1 | 8T-4244 | 1 | NUT (M12X1.75-THD) | |
| | 5 | 1 | 8T-4835 | 1 | BOLT (1/2-13X2-IN) | |
| M | 6 | 1 | 8T-7930 | 1 | BOLT (M12X1.75X160-MM) | |
| | 7 | 1 | 5P-1076 | 1 | WASHER-HARD (13.5X30X4-MM THK) | |

M-METRIC PART
R-REMFG PART MAY BE AVAILABLE
Y-SEPARATE ILLUSTRATION

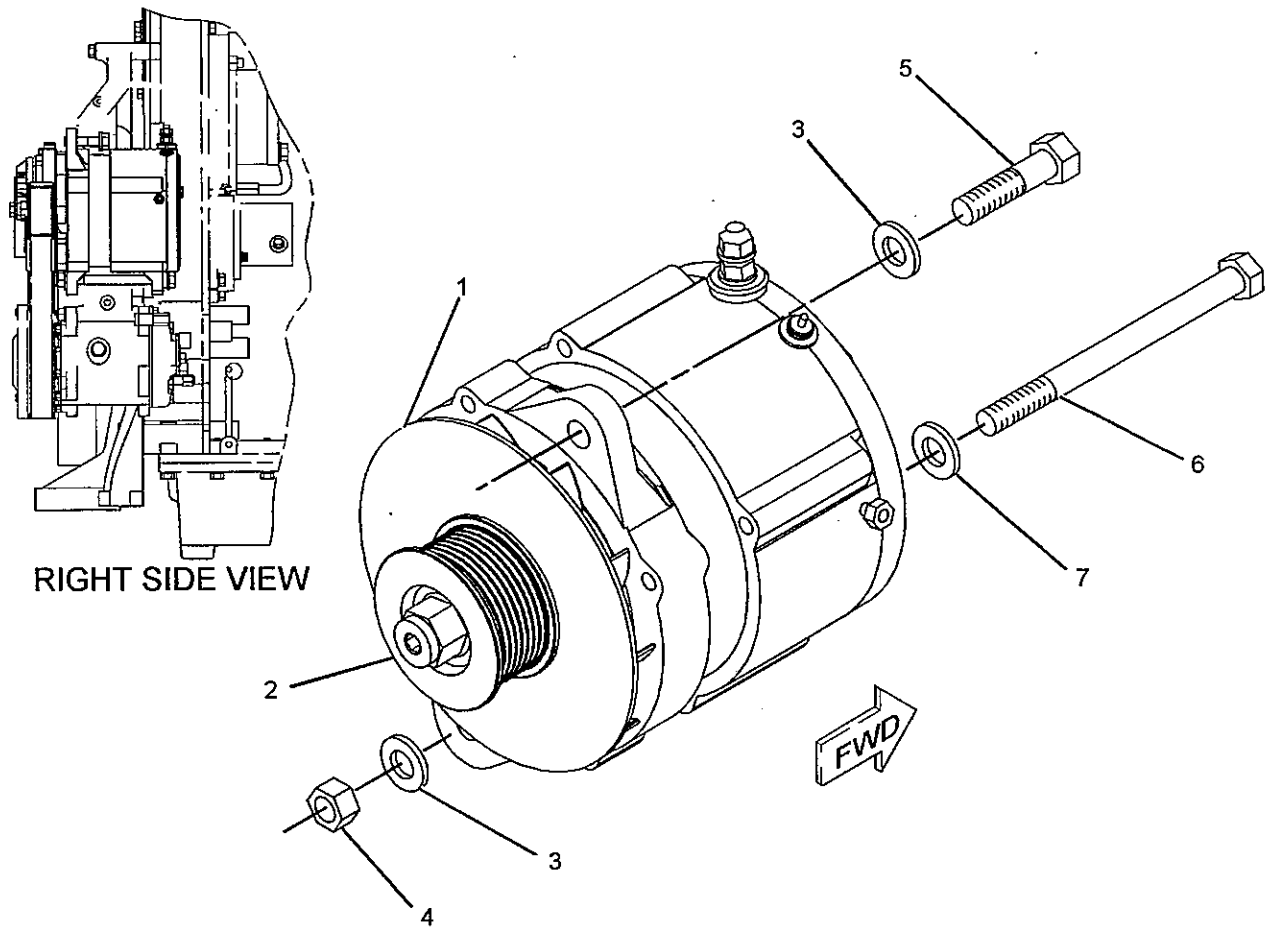


GRAPHIC #1 <END> g01141388

# ELECTRICAL AND STARTING SYSTEM

## *232-4520* BATTERY & WIRING GP

**S/N: JMS1-UP**

**PART OF 225-5539 ELECTRICAL AR**

**SMCS-1401, 1402, 1408** **i02279565**

| NOTE | REF NO | GRAPHIC REF | PART NUMBER | QTY | PART NAME 1 2 3 4 5 6 (PRODUCT LEVEL) | SEE PAGE |
|---|---|---|---|---|---|---|
| | 1 | 2 | 3E-8320 | 1 | PLATE-INSTRUCTION (BATTERY) | |
| | 2 | 1,2 | 3S-2093 | 12 | STRAP-CABLE | |
| | 3 | 1 | 6W-6005 | 2 | HOLD-DOWN-BATTERY | |
| Y | 4 | 2 | 7N-0718 | 1 | SWITCH GP-DISCONNECT (BATTERY) | 233 |
| | 5 | 3 | 7Y-3948 | 1 | CABLE AS | |
| | | 3 | 1S-7251 | 2 | TERMINAL-RING (FOR 1/2-IN BOLT) | |
| E | | 3 | 5P-0747 | | CABLE (00-GA, BLACK) (42-CM) | |
| | 6 | 2 | 8C-6358 | 1 | BLOCK GP-JUNCTION | |
| | | 2 | 1D-5117 | 3 | NUT-JAM (1/2-13-THD) | |
| | | 2 | 8T-3519 | 3 | BOLT-BRONZE (1/2-13X2-IN) | |
| | 7 | 3 | 097-0832 | 1 | SPACER (14-MM THK) | |
| | 8 | 1 | 5I-8304 | 2 | ROD | |
| | 9 | 1 | 115-2422 | 4 | BATTERY (12-VOLT) | |
| | | | | | (EACH INCLUDES) | |
| | | 1 | 123-1373 | 6 | PLUG AS | |
| | 10 | 1 | 116-0080 | 2 | CABLE AS | |
| | | | | | (EACH INCLUDES) | |
| E | | 1 | 5P-0761 | | CABLE (00-GA, RED) (31-CM) | |
| | | 1 | 7N-5274 | 1 | COVER-TERMINAL (BLACK) | |
| | | 1 | 8N-1725 | 1 | COVER-TERMINAL (RED) | |
| | | 1 | 3S-6050 | 1 | TERMINAL AS-BATTERY (NEGATIVE) | |
| | | 1 | 1M-6119 | 1 | BOLT (5/16-18X1.375-IN) | |
| | | 1 | 1M-6120 | 1 | NUT (5/16-18-THD) | |
| | | 1 | 3S-6049 | 1 | TERMINAL AS-BATTERY (POSITIVE) | |
| | | 1 | 1M-6119 | 1 | BOLT (5/16-18X1.375-IN) | |
| | | 1 | 1M-6120 | 1 | NUT (5/16-18-THD) | |
| | 11 | 2 | 122-0493 | 1 | COVER | |
| | 12 | 3 | 122-4026 | 1 | SPACER (13X25X25-MM THK) | |
| | 13 | 1 | 188-6185 | 4 | GROMMET | |
| | 14 | 3 | 193-1730 | 1 | BRACKET AS | |
| | 15 | 1 | 236-6555 | 1 | CABLE AS | |
| E | | 1 | 5P-0747 | | CABLE (00-GA, BLACK) (217-CM) | |
| | | 1 | 7N-5274 | 1 | COVER-TERMINAL (BLACK) | |
| | | 1 | 3S-6050 | 1 | TERMINAL AS-BATTERY (NEGATIVE) | |
| | | 1 | 1M-6119 | 1 | BOLT (5/16-18X1.375-IN) | |
| | | 1 | 1M-6120 | 1 | NUT (5/16-18-THD) | |
| | | 1 | 9X-9825 | 1 | TERMINAL-CABLE (FOR 1/2-IN BOLT) | |
| | 16 | 1 | 236-6556 | 1 | CABLE AS | |
| | | 1 | 1S-7252 | 1 | TERMINAL-RING (FOR 3/8-IN BOLT) | |
| E | | 1 | 5P-0747 | | CABLE (00-GA, BLACK) (34-CM) | |
| | | 1 | 6T-0465 | 1 | COVER-TERMINAL (BLACK) | |
| | | 1 | 7N-5274 | 1 | COVER-TERMINAL (BLACK) | |
| | | 1 | 3S-6050 | 1 | TERMINAL AS-BATTERY (NEGATIVE) | |
| | | 1 | 1M-6119 | 1 | BOLT (5/16-18X1.375-IN) | |
| | | 1 | 1M-6120 | 1 | NUT (5/16-18-THD) | |
| | 17 | 2 | 236-6557 | 1 | CABLE AS | |
| | | 2 | 1S-7251 | 1 | TERMINAL-RING (FOR 1/2-IN BOLT) | |
| | | 2 | 1S-7252 | 1 | TERMINAL-RING (FOR 3/8-IN BOLT) | |
| E | | 2 | 5P-0747 | | CABLE (00-GA, BLACK) (23-CM) | |
| | 18 | 1 | 236-6558 | 1 | CABLE AS | |
| | | 1 | 1S-7251 | 1 | TERMINAL-RING (FOR 1/2-IN BOLT) | |
| E | | 1 | 5P-0761 | | CABLE (00-GA, RED) (56-CM) | |
| | | 1 | 8N-0869 | 1 | COVER-TERMINAL (RED) | |
| | | 1 | 8N-1725 | 1 | COVER-TERMINAL (RED) | |
| | | 1 | 3S-6049 | 1 | TERMINAL AS-BATTERY (POSITIVE) | |
| | | 1 | 1M-6119 | 1 | BOLT (5/16-18X1.375-IN) | |

## *232-4520* BATTERY & WIRING GP *(contd.)*

i02279565

| NOTE | REF NO | GRAPHIC REF | PART NUMBER | QTY | PART NAME 1 2 3 4 5 6 (PRODUCT LEVEL) | SEE PAGE |
|---|---|---|---|---|---|---|
| | | 1 | 1M-6120 | 1 | NUT (5/16-18-THD) | |
| | 19 | 1 | 236-6559 | 1 | CABLE AS | |
| | | 1 | 1S-7251 | 1 | TERMINAL-RING (FOR 1/2-IN BOLT) | |
| E | | 1 | 5P-0761 | | CABLE (00-GA, RED) (176-CM) | |
| | | 1 | 9X-9120 | 1 | BOOT (RED) | |
| | | 1 | 9X-9825 | 1 | TERMINAL-CABLE (FOR 1/2-IN BOLT) | |
| E | | 1 | 114-8843 | | SLEEVE-PLASTIC (10-CM) | |
| | 20 | 3 | 236-6561 | 1 | CABLE AS | |
| E | | 3 | 8C-3056 | | CABLE (02-GA, RED) (184-CM) | |
| | | 3 | 8T-8827 | 1 | BOOT | |
| | | 3 | 030-1712 | | TERMINAL-RING (FOR 1/4-IN BOLT) | |
| | | 3 | 231-4476 | 1 | TERMINAL AS | |
| E | | 3 | 125-7876 | | TUBE-HEAT SHRINK (4-CM) | |
| | 21 | 1 | 236-6563 | 1 | CABLE AS | |
| | | 1 | 1S-7251 | 1 | TERMINAL-RING (FOR 1/2-IN BOLT) | |
| E | | 1 | 5P-0761 | | CABLE (00-GA, RED) (308-CM) | |
| | | 1 | 8N-0869 | 1 | COVER-TERMINAL (RED) | |
| | | 1 | 8N-1725 | 1 | COVER-TERMINAL (RED) | |
| | | 1 | 3S-6049 | 1 | TERMINAL AS-BATTERY (POSITIVE) | |
| | | 1 | 1M-6119 | 1 | BOLT (5/16-18X1.375-IN) | |
| | | 1 | 1M-6120 | 1 | NUT (5/16-18-THD) | |
| | 22 | 3 | 124-3019 | 1 | BRACKET AS | |
| M | | 3 | 8T-3490 | 1 | NUT-WELD (M10X1.5-THD) | |
| | 23 | 2,3 | 124-1479 | 11 | CLIP | |
| | 24 | 2,3 | 205-7299 | 31 | CLIP | |
| | 25 | 2 | 5G-6505 | 3 | WASHER (25X38X14-MM THK) | |
| M | 26 | 1 | 6V-7744 | 2 | LOCKNUT (M10X1.5-THD) | |
| | 27 | 2 | 6V-8188 | 6 | NUT (1/2-13-THD) | |
| | 28 | 2 | 7F-0560 | 6 | WASHER (0.516X0.938X0.101-IN THK) | |
| | 29 | 3 | 7X-0274 | 2 | BOLT (5/16-18X2.75-IN) | |
| | 30 | 3 | 8M-2770 | 2 | CLIP | |
| M | 31 | 2 | 8T-0389 | 2 | LOCKNUT (M10X1.5-THD) | |
| | 32 | 2,3 | 8T-4121 | 34 | WASHER-HARD (11X21X2.5-MM THK) | |
| M | 33 | 2,3 | 8T-4133 | 3 | NUT (M10X1.5-THD) | |
| M | 34 | 3 | 8T-4136 | 7 | BOLT (M10X1.5X25-MM) | |
| M | 35 | 2,3 | 8T-4137 | 18 | BOLT (M10X1.5X20-MM) | |
| M | 37 | 1 | 8T-4191 | 1 | BOLT (M10X1.5X16-MM) | |
| | 38 | 2,3 | 8T-4223 | 2 | WASHER-HARD (13.5X25.5X3-MM THK) | |
| | 39 | 3 | 8T-4224 | 2 | WASHER-HARD (8.8X16X2-MM THK) | |
| | 40 | 1 | 8T-4226 | 2 | WASHER-PLATED (10.5X45X3-MM THK) | |
| M | 41 | 3 | 8T-4244 | 1 | NUT (M12X1.75-THD) | |
| | 42 | 3 | 263-4135 | 1 | CABLE AS | |
| E | | 3 | 8C-3056 | | CABLE (02-GA, RED) (220-CM) | |
| | | 3 | 030-1712 | 1 | TERMINAL-RING (FOR 1/4-IN BOLT) | |
| M | 43 | 3 | 8T-4195 | 4 | BOLT (M10X1.5X30-MM) | |
| | 44 | 3 | 4H-1225 | 3 | WASHER (11X22X6-MM THK) | |

E-ORDER BY THE CENTIMETER
M-METRIC PART
Y-SEPARATE ILLUSTRATION

REFER TO ALL ILLUSTRATIONS OF
THIS GROUP FOR AUXILIARY VIEWS

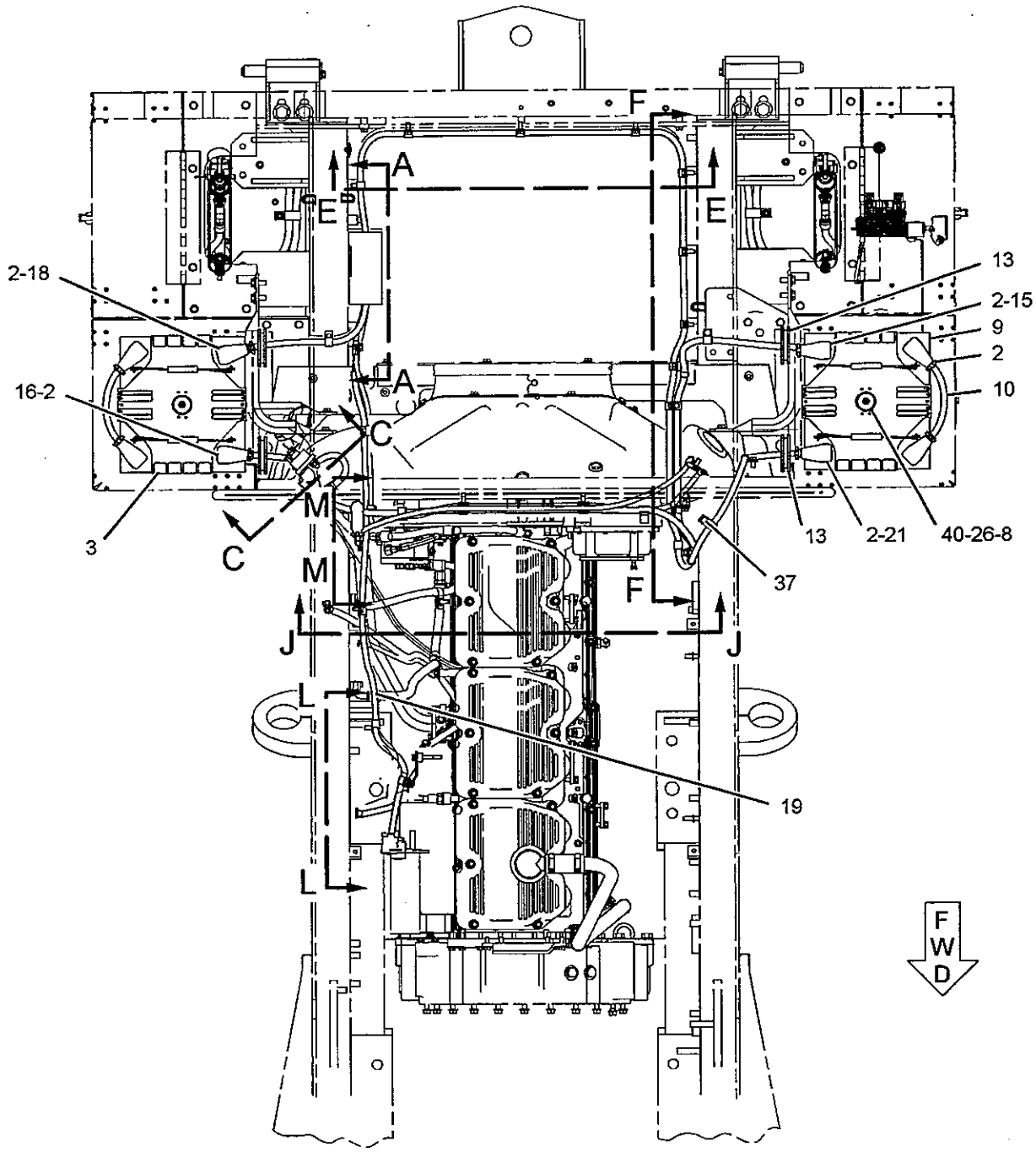


TOP VIEW

GRAPHIC #1 g01141695

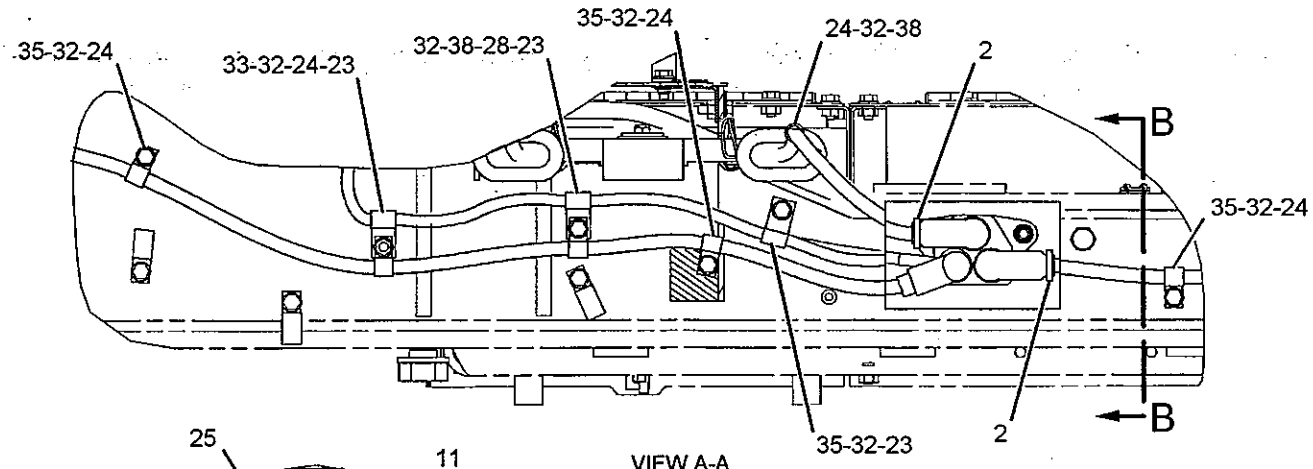


VIEW A-A

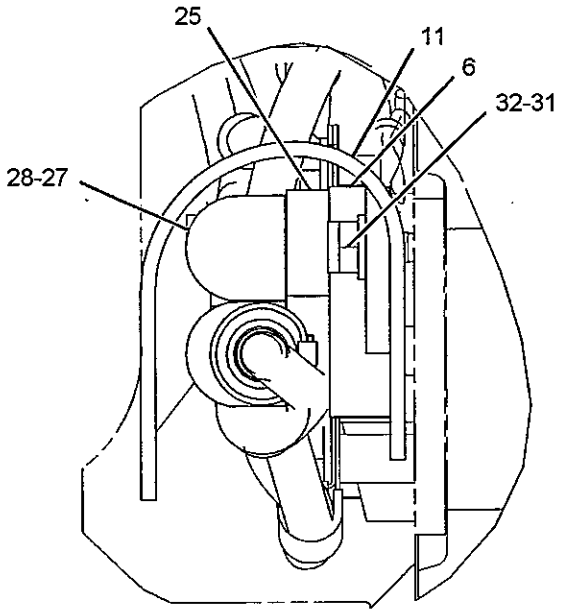


VIEW B-B

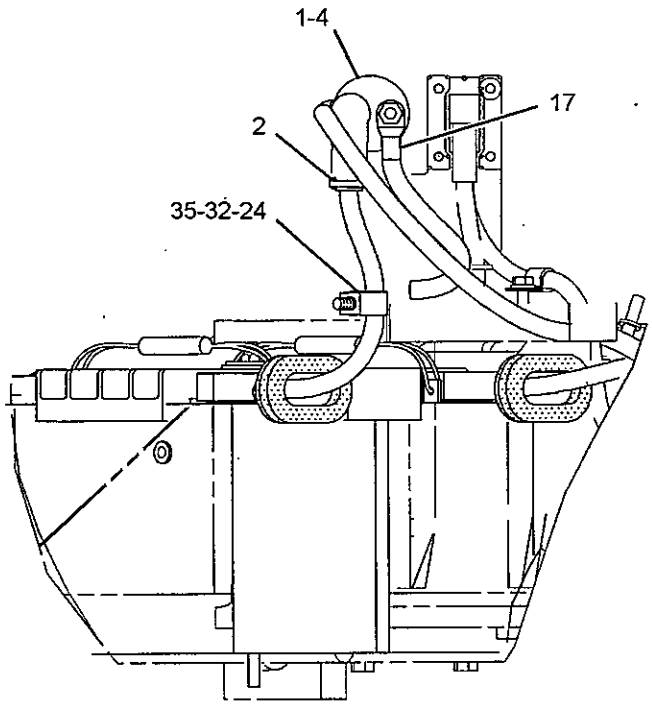


VIEW C-C

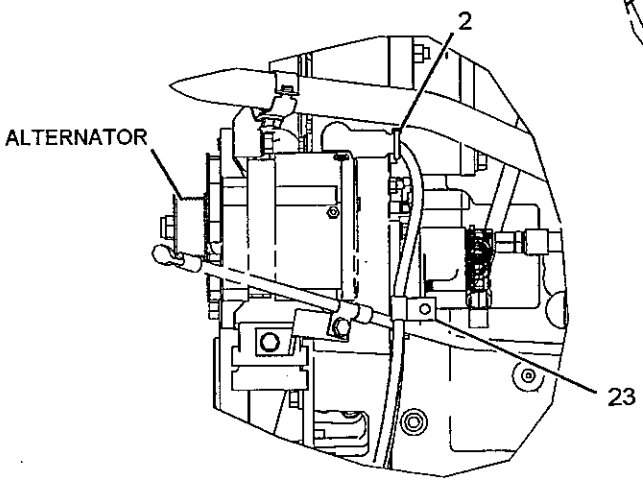


SECTION M-M

REFER TO ALL ILLUSTRATIONS OF THIS GROUP FOR AUXILIARY VIEWS

GRAPHIC #2

g01141696

## 232-4520 BATTERY & WIRING GP (contd.) i02279565

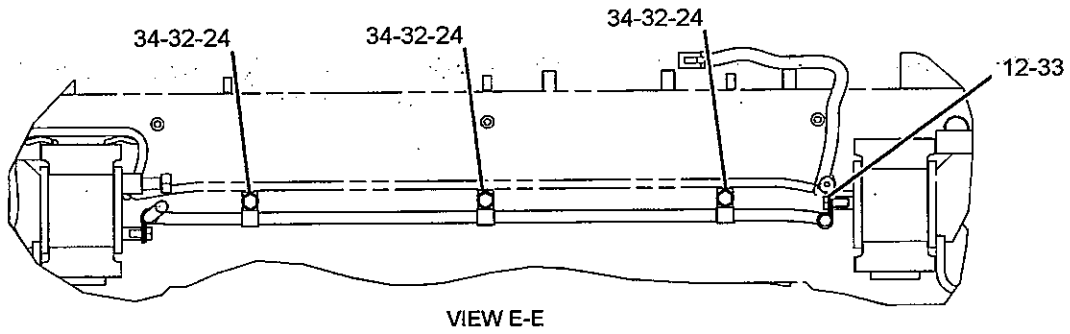


VIEW E-E

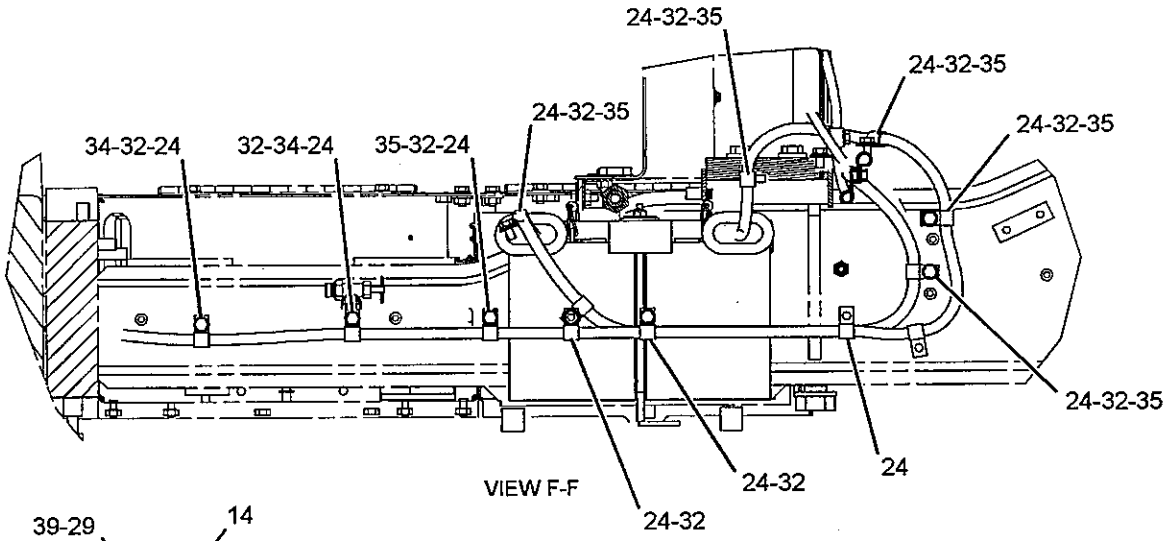


VIEW F-F

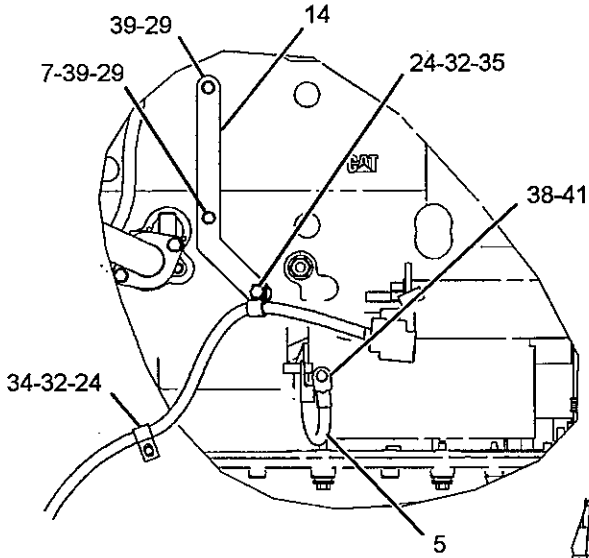


VIEW L-L

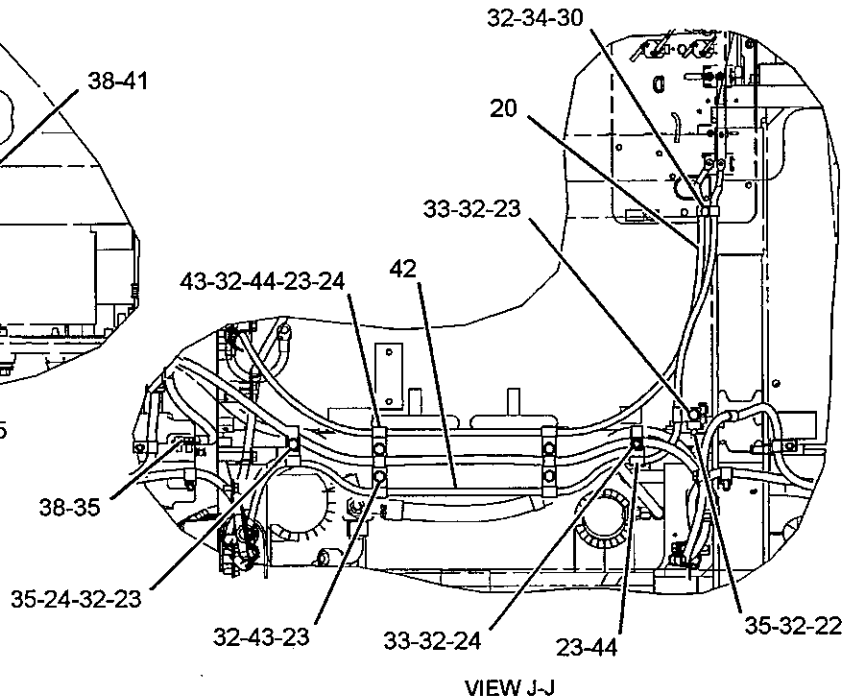


VIEW J-J

REFER TO ALL ILLUSTRATIONS OF THIS GROUP FOR AUXILIARY VIEWS

GRAPHIC #3 <END> g01141697

# 126-7631 CONNECTION GP-ELECTRICAL

S/N: LHX1-UP

PART OF 225-0992 ENGINE AR-COMPLETE

FOR USE WITH BLOCK SOUND PANEL

SMCS-1408 i00834312

| NOTE | REF NO | GRAPHIC REF | PART NUMBER | QTY | PART NAME 1 2 3 4 5 6 (PRODUCT LEVEL) | SEE PAGE |
|---|---|---|---|---|---|---|
| | 1 | 1 | 126-8449 | 1 | STUD-BOLT | |
| | 2 | 1 | 8T-4896 | 2 | WASHER-HARD (2.5MM THK) | |
| | 3 | 1 | 6V-8801 | 1 | NUT (3/8-16 THD) | |
| | 4 | 1 | 9M-7783 | 1 | SPACER | |
| | 5 | 1 | 5P-8247 | 1 | WASHER-HARD (3.5MM THK) | |
| | 6 | 1 | 101-6603 | 1 | CAP | |

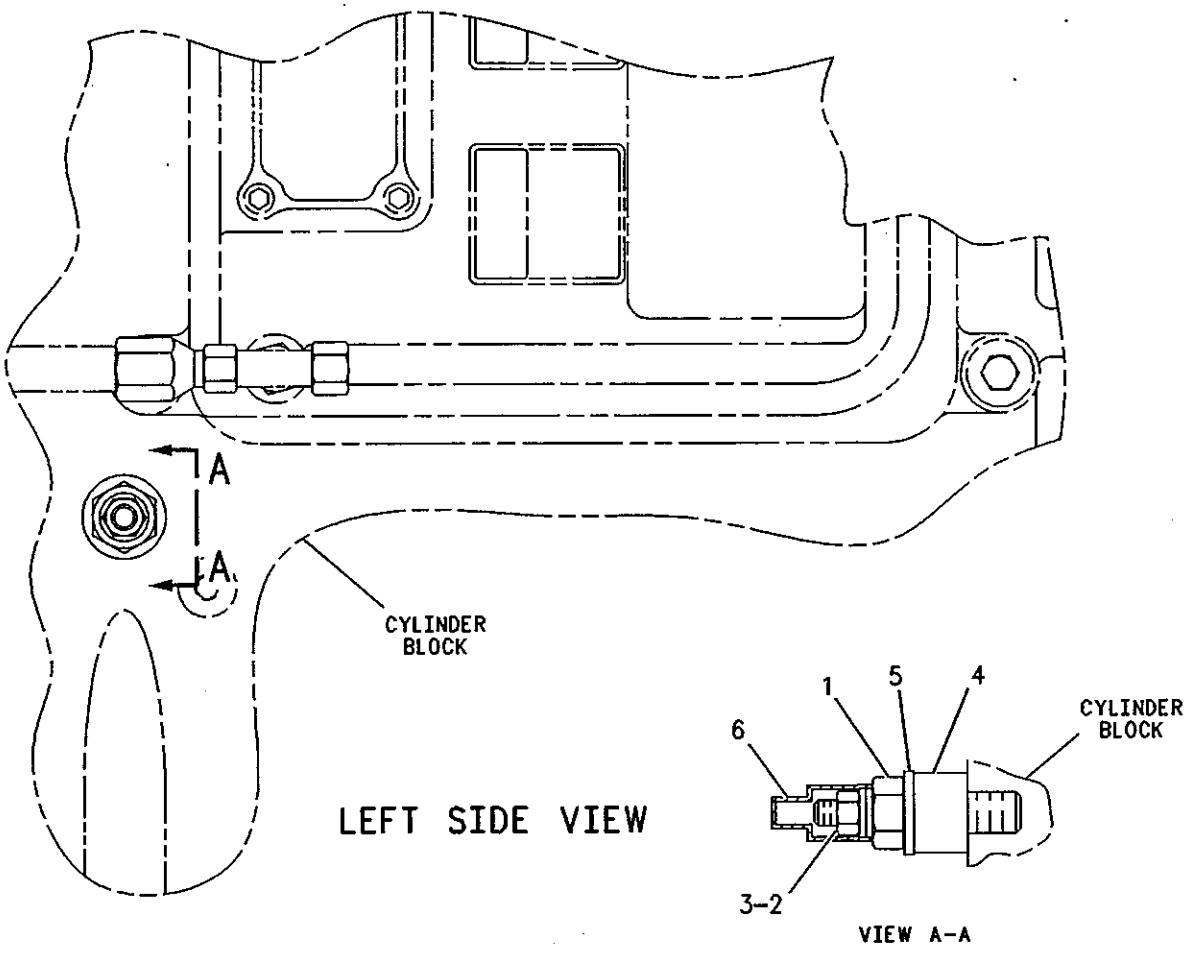


GRAPHIC #1 <END> g00263455

# ELECTRICAL AND STARTING SYSTEM

## *245-8435* CONTROL & MTG GP-COMMUNICATION–

**PRODUCT LINK 201**

**S/N: JMS1-UP**

**PART OF 236-1190, 247-8336 INSTALLATION AR-COMMUNICATION**

**AN ATTACHMENT**

**SMCS-7606** **i02212250**

| NOTE | REF NO | GRAPHIC REF | PART NUMBER | QTY | PART NAME 1 2 3 4 5 6 (PRODUCT LEVEL) | SEE PAGE |
|---|---|---|---|---|---|---|
| | 1 | 1 | **7K-1181** | 10 | STRAP-CABLE | |
| | 2 | 1 | **207-6796** | 1 | ANTENNA AS (WHIP) | |
| | 3 | 1 | **212-3290** | 1 | BRACKET | |
| | 4 | 1 | **229-2704** | 8 | WASHER-RUBBER | |
| Y | 5 | 1 | **242-7205** | 1 | CONTROL GP-COMMUNICATION (PRODUCT LINK 201) | 155 |
| | 6 | 1 | **246-3400** | 1 | HARNESS AS-CONTROL (PRODUCT LINK) | |
| | | 1 | **7X-6222** | 1 | PLUG AS-CONNECTOR (24-PIN) | |
| | | 1 | **8T-8737** | 20 | PLUG-SEAL | |
| | | 1 | **155-2265** | 1 | KIT-CONNECTING PLUG (8-PIN) | |
| | | | | | (INCLUDES PLUG AS AND WEDGE) | |
| M | 7 | 1 | **6V-7357** | 4 | BOLT (M6X1X25-MM) | |
| | 8 | 1 | **9X-6165** | 4 | WASHER (6.5X22X2.5-MM THK) | |
| | 9 | 1 | **8T-4223** | 2 | WASHER-HARD (13.5X25.5X3-MM THK) | |
| M | 10 | 1 | **8T-4244** | 1 | NUT (M12X1.75-THD) | |
| M | 11 | 1 | **8T-4956** | 1 | BOLT (M12X1.75X35-MM) | |
| | 12 | 1 | **9M-5870** | 1 | GROMMET | |

M-METRIC PART
Y-SEPARATE ILLUSTRATION

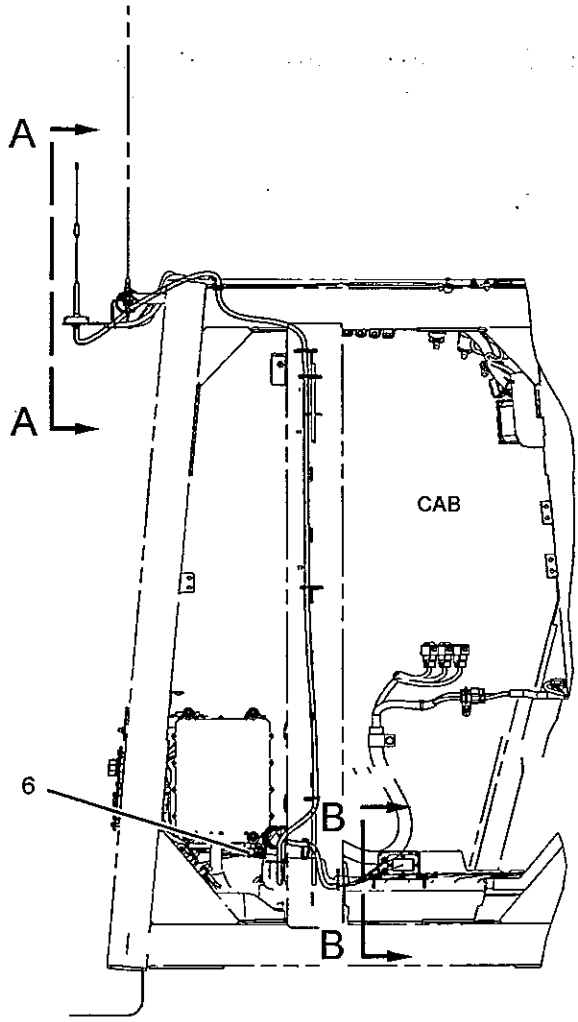


RIGHT SIDE VIEW

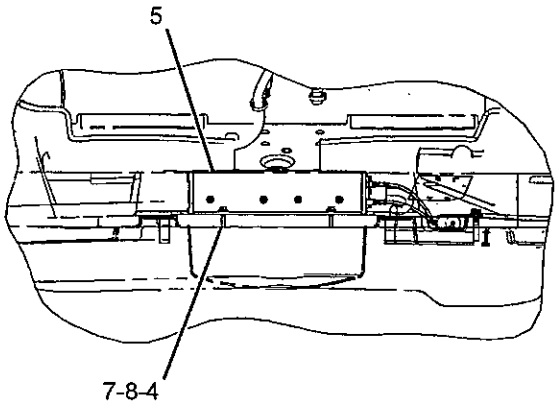


SECTION B-B

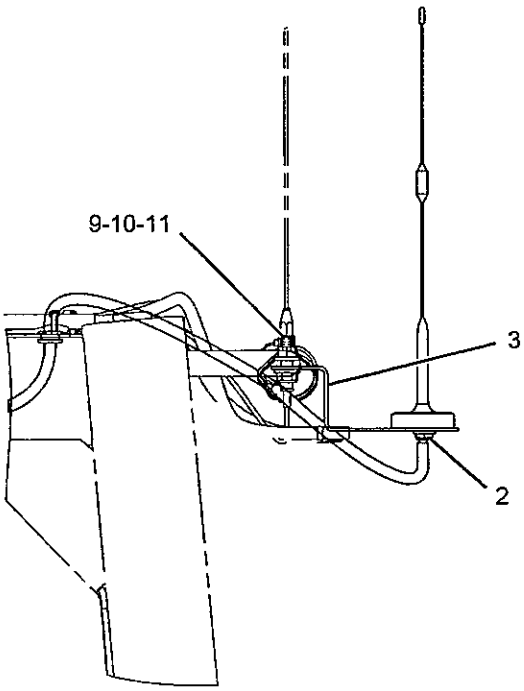


VIEW C-C

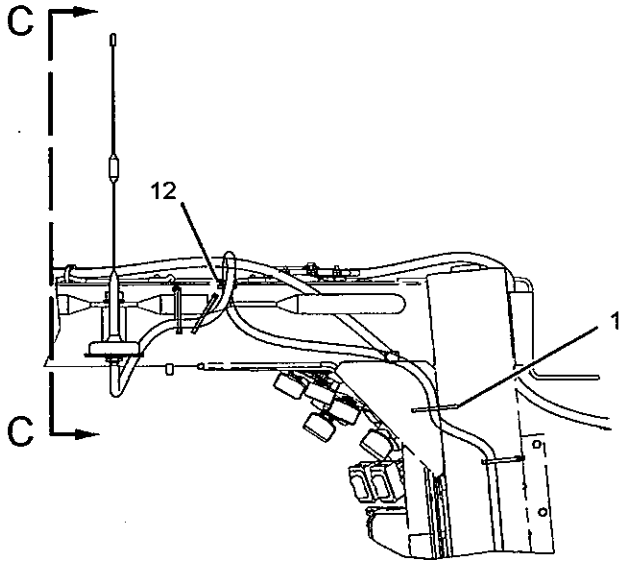


VIEW A-A

GRAPHIC #1 **<END>** g01066987

# 256-5068 CONTROL & MTG GP-COMMUNICATION-
## PRODUCT LINK 321SR
S/N: JMS1-UP
PART OF 263-3322 INSTALLATION AR-COMMUNICATION
AN ATTACHMENT

SMCS-7606 i02283943

| NOTE | REF NO | GRAPHIC REF | PART NUMBER | QTY | PART NAME 1 2 3 4 5 6 (PRODUCT LEVEL) | SEE PAGE |
|---|---|---|---|---|---|---|
| | 1 | 1 | 3S-2093 | 3 | STRAP-CABLE | |
| | 2 | 1 | 7K-1181 | 9 | STRAP-CABLE | |
| | 3 | 1 | 8C-5607 | 8 | MOUNT-ISOLATION | |
| | 4 | 1 | 8C-5608 | 4 | SPACER (6.5X9.5X25.4-MM THK) | |
| | 5 | 1 | 236-6253 | 1 | GROMMET | |
| | 6 | 1 | 239-9954 | 1 | CONTROL GP-UNPROGRAMMED (PRODUCT LINK 300) | |
| | | 1 | 7X-6315 | 1 | STRAP AS-GROUND | |
| | | 1 | 126-7574 | 1 | SCREW-PAN HEAD (8-32X9.52-MM) | |
| | | 1 | 134-4126 | 1 | WASHER (4.52X8.28X0.76-MM THK) | |
| | 7 | 1 | 263-8948 | 1 | ANTENNA AS | |
| | 8 | 1 | 263-9088 | 1 | RADIO GP-COMMUNICATION (PRODUCT LINK 121SR) | |
| | | 1 | 267-4603 | 1 | SOFTWARE GP-MACHINE (PRODUCT LINK 121SR) | |
| | 9 | 1 | 264-4872 | 1 | BRACKET AS | |
| M | | 1 | 6V-9632 | 9 | NUT-WELD (M6X1-THD) | |
| | | 1 | 5G-2003 | 4 | SPACER | |
| | 10 | 1 | 264-7671 | 1 | BRACKET | |
| | 11 | 1 | 266-4266 | 1 | HARNESS AS-CONTROL (PRODUCT LINK) | |
| | | 1 | 102-8801 | 2 | KIT-RECEPTACLE (12-PIN) | |
| | | | | | (INCLUDES RECEPTACLE AS AND WEDGE) | |
| | | 1 | 8T-8737 | 58 | PLUG-SEAL | |
| | | 1 | 9X-6772 | 2 | STRAP-CABLE | |
| | | 1 | 155-2255 | 2 | KIT-CONNECTING PLUG (12-PIN) | |
| | | | | | (EACH KIT INCLUDES PLUG AS AND WEDGE) | |
| | | 1 | 160-7690 | 1 | PLUG AS-CONNECTOR (70-PIN) | |
| | | 1 | 159-9322 | 1 | SEAL-O-RING | |
| | 12 | 1 | 122-8705 | 1 | U-BOLT | |
| | 13 | 1 | 156-6175 | 2 | CLIP | |
| M | 14 | 1 | 5C-9553 | 1 | BOLT (M6X1X16-MM) | |
| M | 15 | 1 | 7X-2533 | 4 | BOLT (M6X1X35-MM) | |
| | 16 | 1 | 8T-4121 | 2 | WASHER-HARD (11X21X2.5-MM THK) | |
| M | 17 | 1 | 8T-4133 | 2 | NUT (M10X1.5-THD) | |
| M | 18 | 1 | 8T-4138 | 4 | BOLT (M6X1X20-MM) | |
| M | 19 | 1 | 9X-2046 | 2 | SCREW-TRUSS HEAD (M6X1X35-MM) | |
| | 20 | 1 | 9X-6165 | 8 | WASHER (6.5X22X2.5-MM THK) | |
| | 21 | 1 | 9X-8256 | 5 | WASHER (6.6X12X2-MM THK) | |

M-METRIC PART

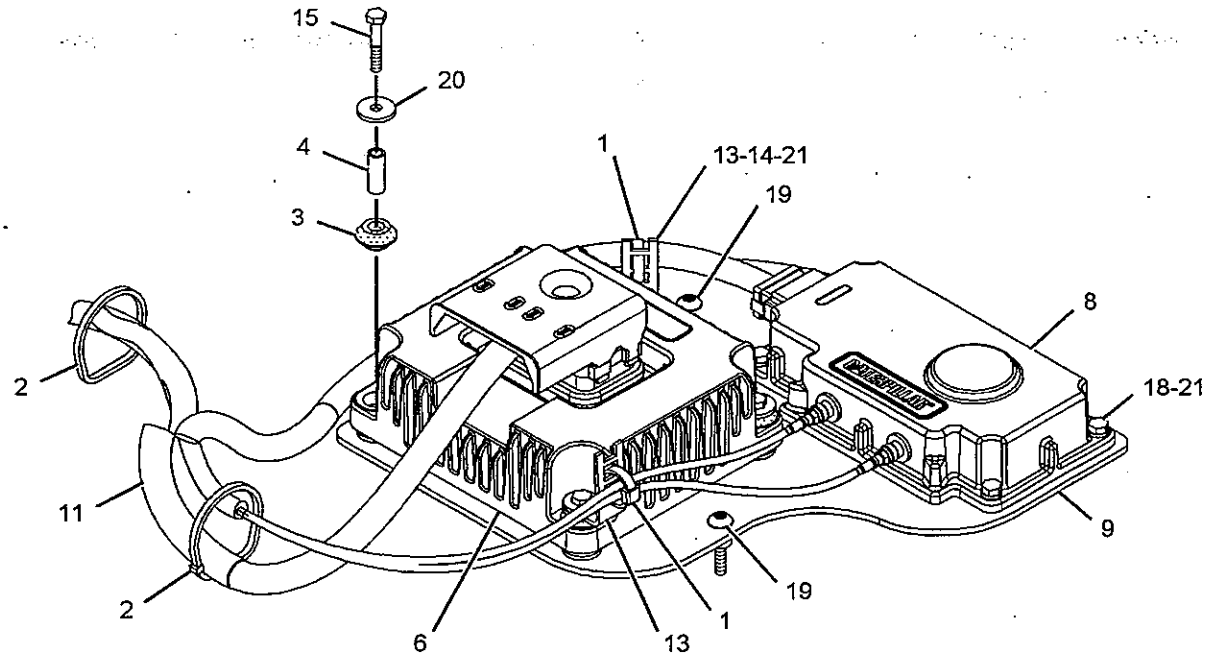


VIEW OF AREA A

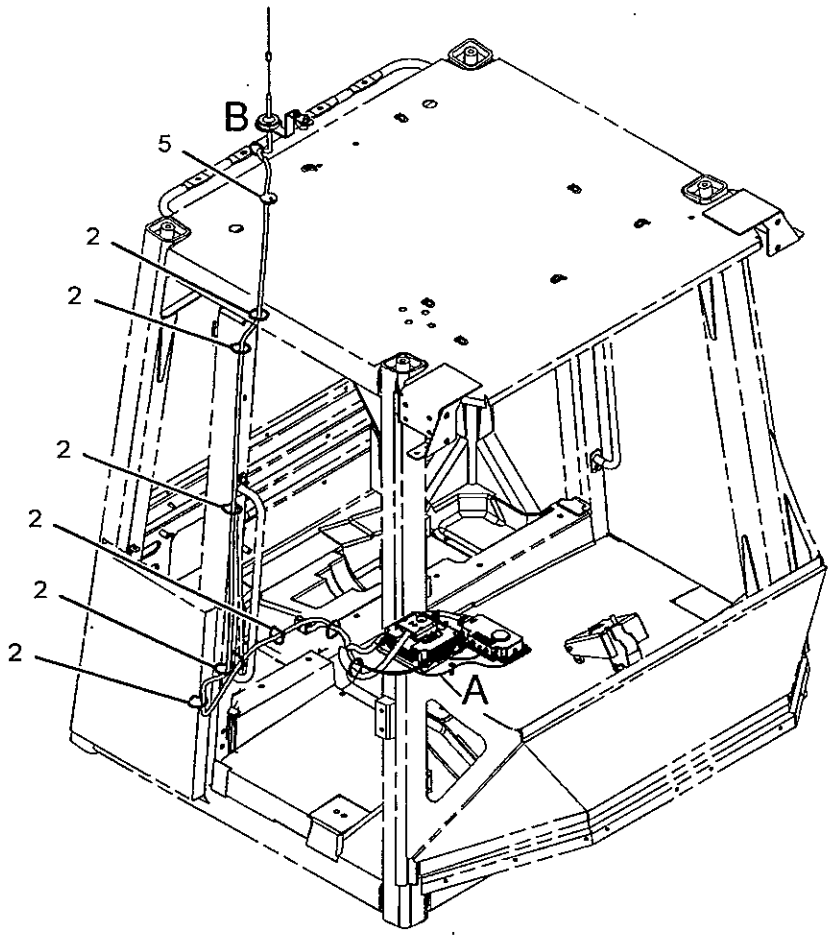


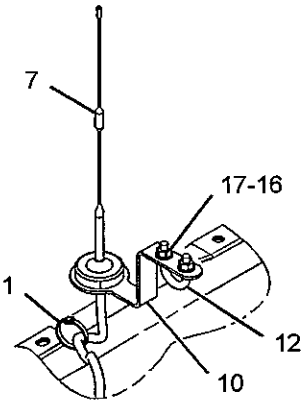


VIEW OF AREA B




GRAPHIC #1

**<END>**

g01143680

## *235-1521* CONTROL & MTG GP-ENGINE ELEK

S/N: LHX1-UP

PART OF 225-0992 ENGINE AR-COMPLETE

SMCS-1901, 7620 i02188407

| NOTE | REF NO | GRAPHIC REF | PART NUMBER | QTY | PART NAME 1 2 3 4 5 6 (PRODUCT LEVEL) | SEE PAGE |
|---|---|---|---|---|---|---|
| | 1 | 1 | **6I-1418** | 4 | SPACER (8.2X12.7X28.7-MM THK) | |
| | 2 | 1 | **8T-9655** | 8 | MOUNT-ISOLATION | |
| | 4 | 1 | **155-0696** | 1 | SUPPORT AS | |
| | | 1 | **5L-3708** | 1 | STUD-TAPERLOCK | |
| | 5 | 1 | **155-0698** | 1 | SUPPORT AS | |
| | | 1 | **5L-3708** | 1 | STUD-TAPERLOCK | |
| | 6 | 1 | **191-3034** | 1 | SUPPORT | |
| Y | 7 | 1 | *226-7473* | 1 | CONTROL GP-ENGINE ELECTRONIC | 156 |
| | 8 | 1 | **233-0891** | 2 | BRACKET AS (HARNESS) | |
| | 9 | 1 | **2B-2694** | 4 | BOLT (5/16-18X2-IN) | |
| | 10 | 1 | **4B-3388** | 3 | BOLT (5/16-18X1.125-IN) | |
| | 11 | 1 | **7X-0613** | 4 | WASHER-HARD (8.8X25.5X5-MM THK) | |
| | 12 | 1 | **9M-1974** | 7 | WASHER-HARD (8.8X16X2-MM THK) | |
| | 13 | 1 | **9N-0869** | 4 | WASHER-HARD (8.8X25.5X2-MM THK) | |

Y-SEPARATE ILLUSTRATION

235-1521 CONTROL & MTG GP-ENGINE ELEK *(contd.)* i02188407

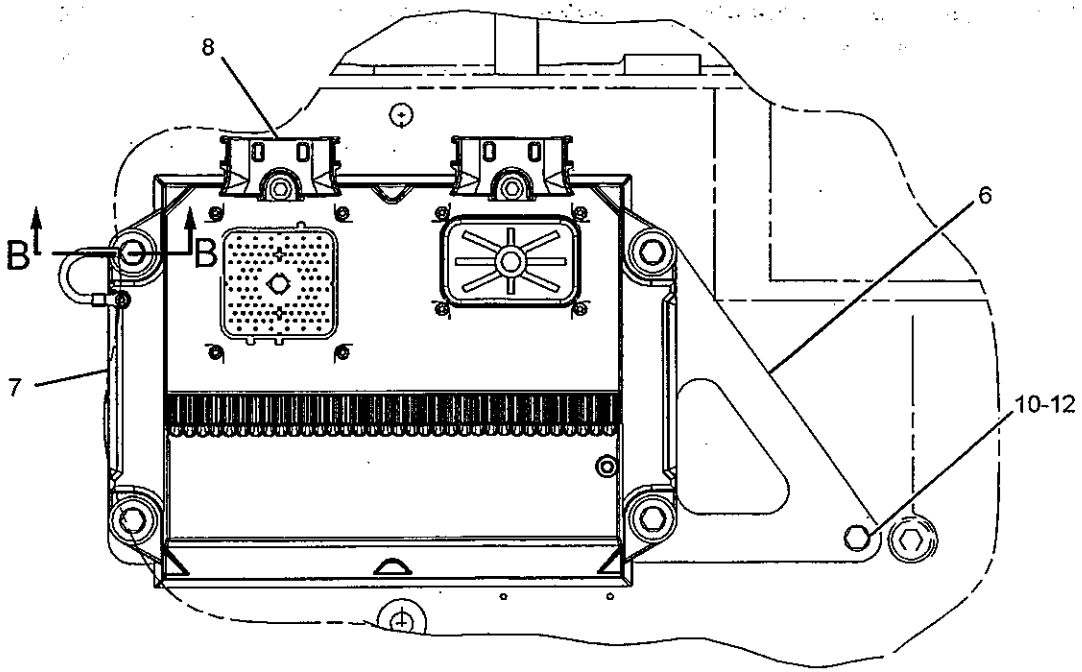


LEFT SIDE VIEW

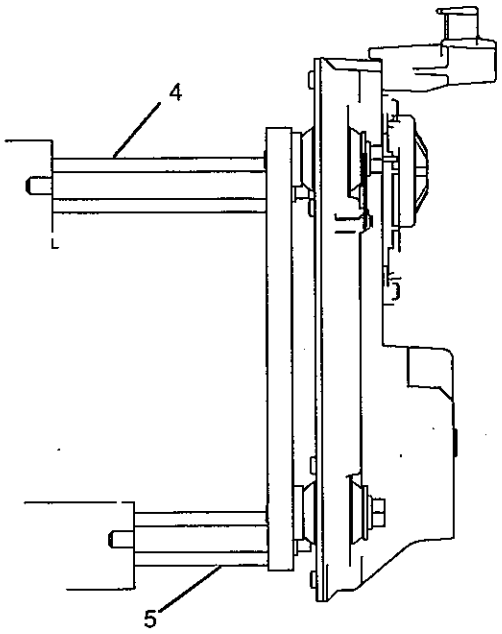


FRONT VIEW

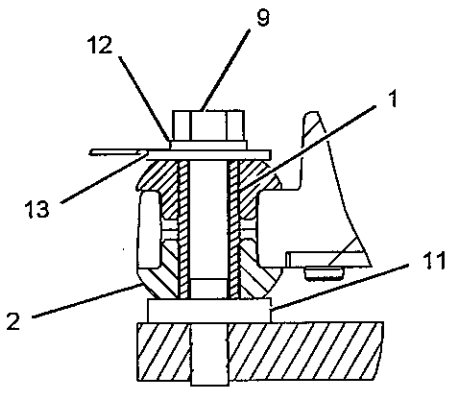


SECTION B-B

GRAPHIC #1 <END> g01055128

# ELECTRICAL AND STARTING SYSTEM

## *233-9781* CONTROL AR-AUTODIG

**S/N: JMS1-UP**
**PART OF 266-1620 MACHINE AR**
**AN ATTACHMENT**

**SMCS-5741** **i02089889**

| NOTE | PART NUMBER | QTY | PART NAME 1 2 3 4 5 6 (PRODUCT LEVEL) | SEE PAGE |
|---|---|---|---|---|
| Y | *238-9645* | 1 | CONTROL GP-AUTODIG | 153 |
| Y | *178-7917* | 1 | MOUNTING GP-PRESSURE SENSOR (AUTODIG CONTROL) | 193 |
| Y | *150-0343* | 1 | WIRING GP-SENSOR (AUTODIG) | 300 |
| | **214-0113** | 1 | SOFTWARE GP-IMPLEMENT (AUTODIG) | |

Y-SEPARATE ILLUSTRATION

**<END>**

# 238-9645 CONTROL GP-AUTODIG

**S/N: JMS1-UP**
**PART OF 233-9781 CONTROL AR-AUTODIG**
**AN ATTACHMENT**

**SMCS-5741** **i02283504**

| NOTE | REF NO | GRAPHIC REF | PART NUMBER | QTY | PART NAME 1 2 3 4 5 6 (PRODUCT LEVEL) | SEE PAGE |
|---|---|---|---|---|---|---|
| | 1 | 1 | **4E-2229** | 1 | DAMPER AS-ALARM | |
| Y | 2 | 1 | **106-0107** | 1 | SWITCH GP-ROTARY (AUTODIG MATERIAL SELECT) | 243 |
| | 3 | 1 | **110-6109** | 1 | KNOB-CONTROL (AUTODIG SELECT SWITCH) | |
| | 4 | 1 | **123-9694** | 1 | HORN | |
| | 5 | 1 | **175-2209** | 1 | SWITCH AS-PUSH BUTTON (AUTODIG TRIGGER) | |
| | | 1 | **102-8803** | 2 | KIT-RECEPTACLE (3-PIN) | |
| | | | | | (INCLUDES RECEPTACLE AS AND WEDGE) | |
| | | 1 | **6F-0253** | 1 | LOCKWASHER | |
| | | 1 | **172-3511** | 1 | NUT (5/8-24-THD) | |
| | | 1 | **186-3735** | 3 | PIN-CONNECTOR (16-GA TO 18-GA) | |
| B | 6 | 1 | **200-8064** | 1 | FILM-CONTROL (AUTODIG) | |
| | 7 | 1 | **201-1531** | 1 | FILM (AUTODIG) | |
| | 8 | 1 | **236-4620** | 1 | SWITCH AS-ROCKER (AUTO LOADING MODE SELECT) | |
| | 9 | 1 | **236-4621** | 1 | SWITCH AS-ROCKER (AUTO LOADING KICKOUT SET) | |
| | 10 | 1 | **2H-3920** | 1 | LOCKWASHER | |
| | 11 | 1 | **249-2775** | 1 | CONTROL GP-DISPLAY ELECTRONIC (INDICATOR PANEL, CENTER) | |
| | | 1 | **186-3735** | 5 | PIN-CONNECTOR (16-GA TO 18-GA) | |
| | | 1 | **102-8803** | 1 | KIT-RECEPTACLE (3-PIN) | |
| | | 1 | **1S-9593** | 1 | STRAP-CABLE | |
| | 12 | 1 | **107-1964** | 4 | SCREW-PAN HEAD (6-19X0.5-IN) | |

B-USE AS REQUIRED
Y-SEPARATE ILLUSTRATION

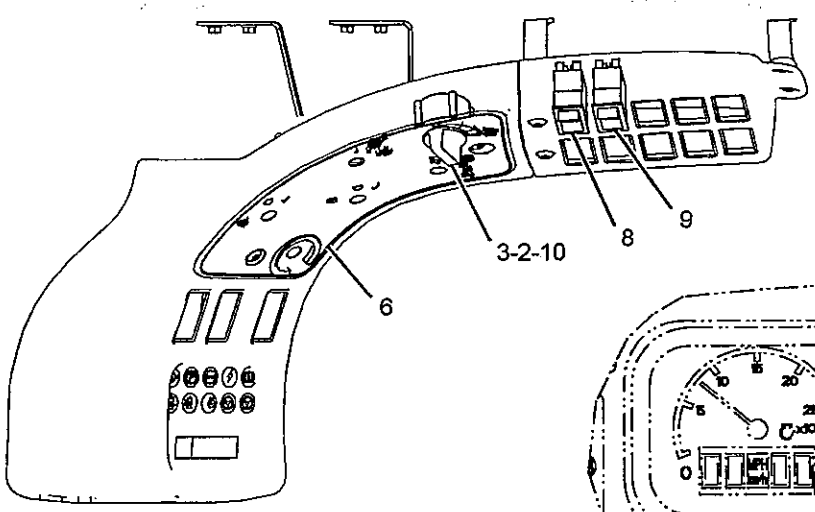


VIEW OF AREA A

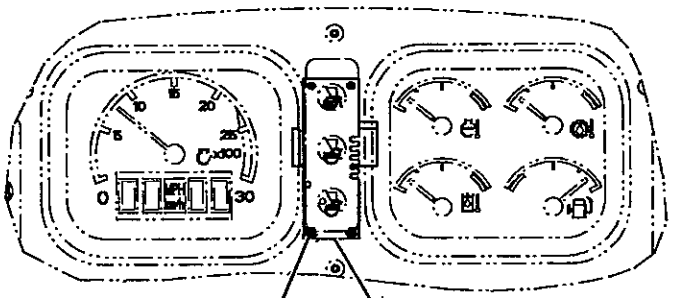


VIEW D-D

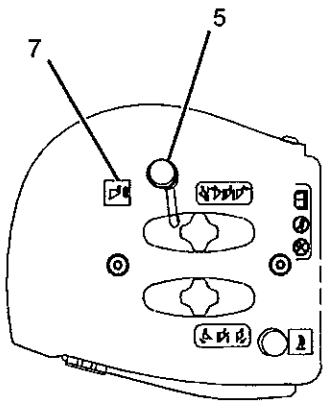


VIEW C-C

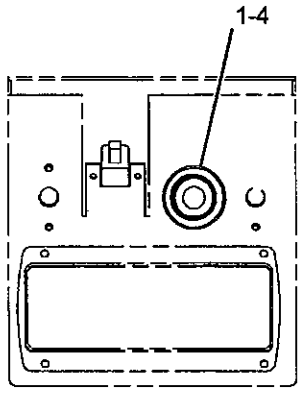


VIEW B-B

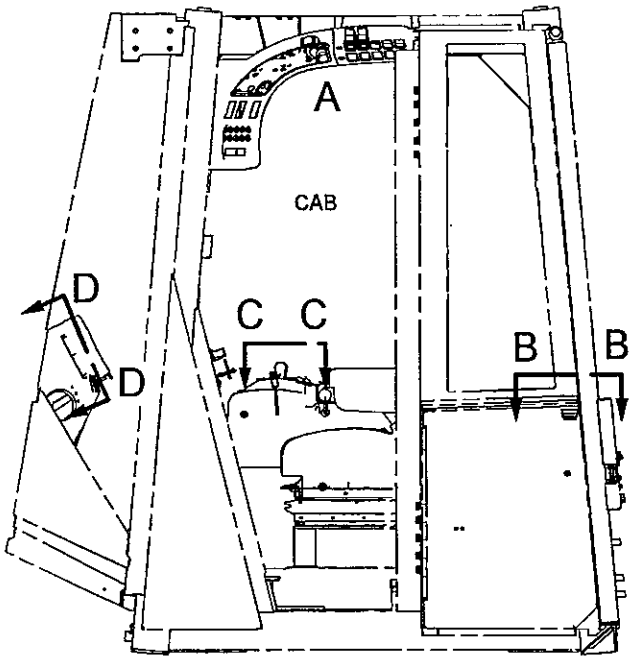


LEFT SIDE VIEW

GRAPHIC #1 **<END>** g01143597

# 242-7205 CONTROL GP-COMMUNICATION–PRODUCT LINK 201

**S/N: JMS1-UP**

**PART OF 245-8435 CONTROL & MTG GP-COMMUNICATION**

**AN ATTACHMENT**

**SMCS-7610, 7620** i02279217

| NOTE | REF NO | GRAPHIC REF | PART NUMBER | QTY | PART NAME 1 2 3 4 5 6 (PRODUCT LEVEL) | SEE PAGE |
|---|---|---|---|---|---|---|
| Y | 1 | 1 | *168-7314* | 1 | CONTROL GP-UNPROGRAMMED (PRODUCT LINK 201) | 158 |
| | 3 | 1 | **231-1403** | 1 | FILM-INFORMATION (PRODUCT LINK) | |
| | 4 | 1 | **248-6254** | 1 | SOFTWARE GP-COMMUNICATION (PRODUCT LINK 201) | |
| | 5 | 1 | **254-9115** | 1 | SOFTWARE GP-MONITOR (PRODUCT LINK) | |
| | | | | | | |
| FJ | | | **230-1340** | 1 | FILM-WARNING (PRODUCT LINK RADIO, NACD) | |
| FJ | | | **230-1341** | 1 | FILM-WARNING (PRODUCT LINK RADIO, NON NACD) | |

F-NOT SHOWN
J-SHIPPED LOOSE IN PACKAGE
Y-SEPARATE ILLUSTRATION

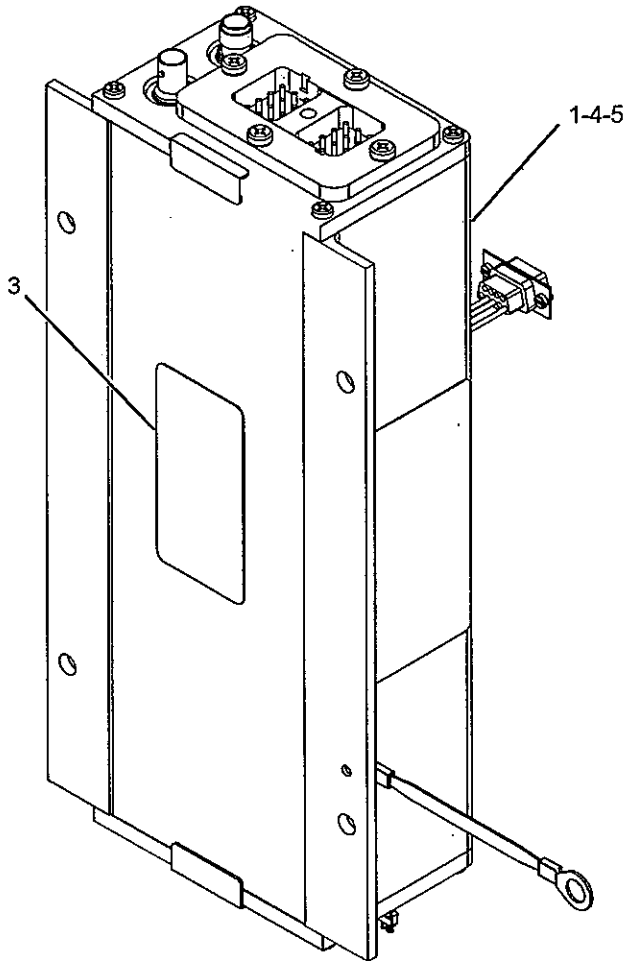


GRAPHIC #1

**<END>**

g01069139

# ELECTRICAL AND STARTING SYSTEM

## *226-7473* CONTROL GP-ENGINE ELECTRONIC

**S/N: LHX1-UP**

**PART OF 235-1521 CONTROL & MTG GP-ENGINE ELEK**

**SMCS-1901** **i02171748**

| NOTE | REF NO | GRAPHIC REF | PART NUMBER | QTY | PART NAME 1 2 3 4 5 6 (PRODUCT LEVEL) | SEE PAGE |
|---|---|---|---|---|---|---|
| Y | 1 | 1 | 255-5284 | 1 | CONTROL GP-UNPROGRAMMED | 161 |

Y-SEPARATE ILLUSTRATION

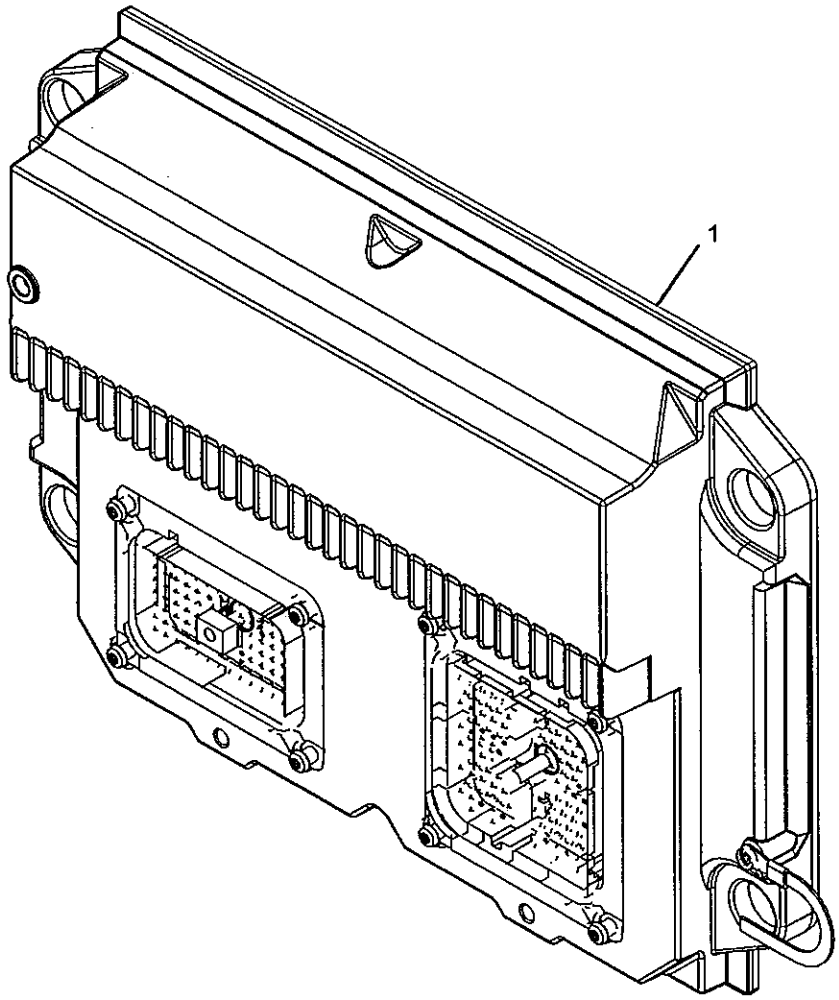


GRAPHIC #1 **<END>** g01101798

# ELECTRICAL AND STARTING SYSTEM

## *154-7443* CONTROL GP-UNPROGRAMMED–

**CATERPILLAR MONITORING SYSTEM**

**S/N: JMS1-UP**

**PART OF 262-9950 WIRING GP-CAB**

**AN ATTACHMENT**

**SMCS-7610** i02135553

| NOTE | PART NUMBER | QTY | PART NAME 1 2 3 4 5 6 (PRODUCT LEVEL) | SEE PAGE |
|---|---|---|---|---|
| | | | (NO SERVICED PARTS) | |

**<END>**

## *168-7314* CONTROL GP-UNPROGRAMMED–PRODUCT LINK 201

S/N: JMS1-UP

PART OF 242-7205 CONTROL GP-COMMUNICATION

AN ATTACHMENT

SMCS-7610 i02098214

| NOTE | REF NO | GRAPHIC REF | PART NUMBER | QTY | PART NAME 1 2 3 4 5 6 (PRODUCT LEVEL) | SEE PAGE |
|---|---|---|---|---|---|---|
| | 1 | 1 | 7T-7370 | 2 | SEAL-SECURITY | |
| | 2 | 1 | 7X-6315 | 1 | STRAP AS-GROUND | |
| | | 1 | 2L-8078 | 1 | TERMINAL | |
| | 3 | 1 | 9X-1365 | 1 | SEAL-CONNECTOR | |
| | 4 | 1 | 178-3339 | 4 | SCREW (8-32X0.5-IN) | |
| | 5 | 1 | 3B-4501 | 1 | LOCKWASHER | |
| | 6 | 1 | 4D-0514 | 1 | PLUG-PIPE | |
| | 7 | 1 | 6V-6718 | 1 | SCREW-SELF-TAPPING (M8X32X6.35-MM) | |
| | 8 | 1 | 9X-6257 | 8 | SCREW-MACHINE (6-32X0.625-IN) | |

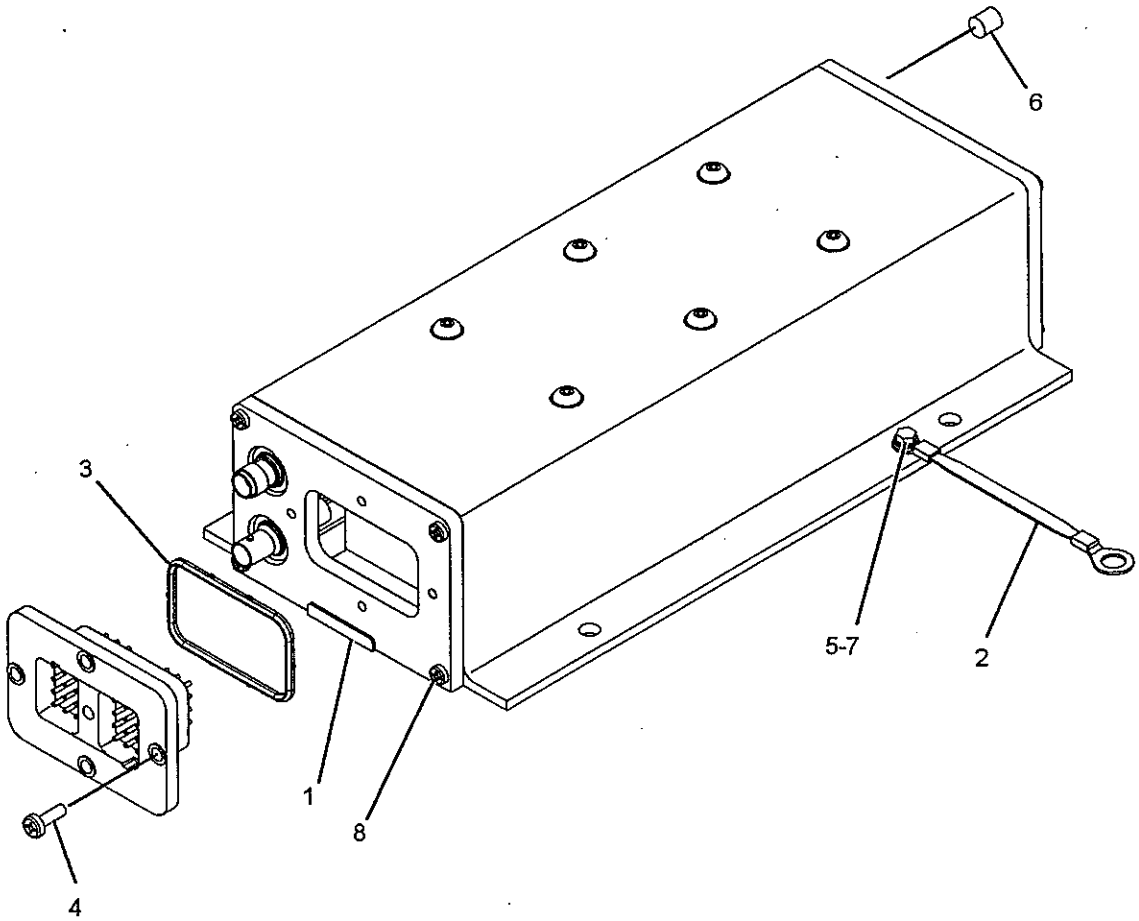


GRAPHIC #1 <END> g01015086

# 172-9389 CONTROL GP-UNPROGRAMMED–POWER TRAIN

S/N: JMS1-UP

PART OF 207-8617, 235-5503, 262-9950 WIRING GP-CAB

ALSO AN ATTACHMENT

SMCS-7610 i02127652

| NOTE | REF NO | GRAPHIC REF | PART NUMBER | QTY | PART NAME 1 2 3 4 5 6 (PRODUCT LEVEL) | SEE PAGE |
|---|---|---|---|---|---|---|
| | 1 | 1 | 7X-6315 | 1 | STRAP AS-GROUND | |
| | 2 | 1 | 101-0852 | 1 | SCREW-PAN HEAD (NO 8X3/8-IN) | |
| M | 3 | 1 | 6V-6703 | 2 | KIT-RETAINING BOLT (M5X0.8X53.24-MM) (UNPROGRAMMED CONTROL) | |
| | | | | | (EACH INCLUDES BOLT, RING, AND SEALS) | |
| | 4 | 1 | 134-4126 | 1 | WASHER (4.52X8.28X0.76-MM THK) | |

M-METRIC PART

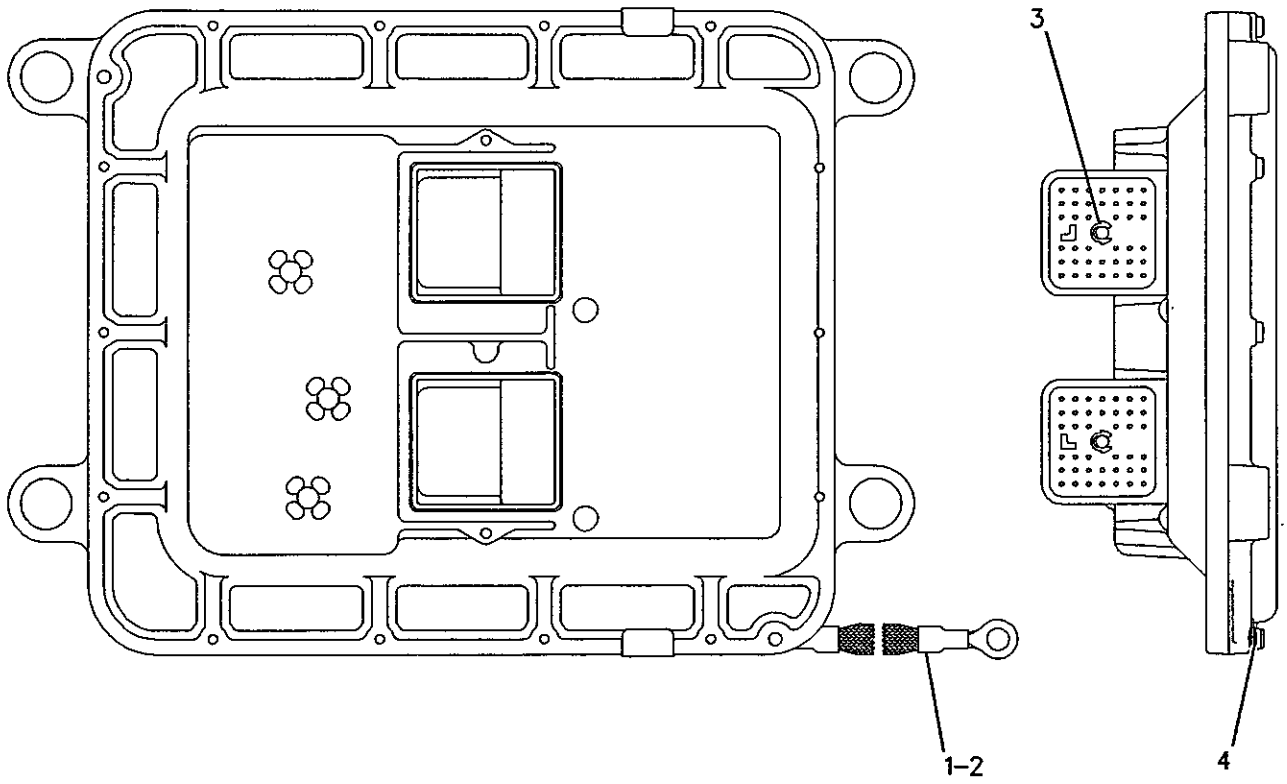


GRAPHIC #1 <END> g00951290

# ELECTRICAL AND STARTING SYSTEM

## *172-9391* CONTROL GP-UNPROGRAMMED–IMPLEMENT

**S/N: JMS1-UP**

**PART OF 207-8617, 235-5503, 262-9950 WIRING GP-CAB**

**ALSO AN ATTACHMENT**

**SMCS-7610** i02279220

| NOTE | REF NO | GRAPHIC REF | PART NUMBER | QTY | PART NAME 1 2 3 4 5 6 (PRODUCT LEVEL) | SEE PAGE |
|---|---|---|---|---|---|---|
| | 1 | 1 | 7X-6315 | 1 | STRAP AS-GROUND | |
| | 2 | 1 | 101-0852 | 1 | SCREW-PAN HEAD (NO 8X3/8-IN) | |
| M | 3 | 1 | 6V-6703 | 2 | KIT-RETAINING BOLT (M5X0.8X53.24-MM) (UNPROGRAMMED CONTROL) | |
| | | | | | (INCLUDES BOLT, RING, AND SEALS) | |
| | 4 | 1 | 134-4126 | 1 | WASHER (4.52X8.28X0.76-MM THK) | |

M-METRIC PART

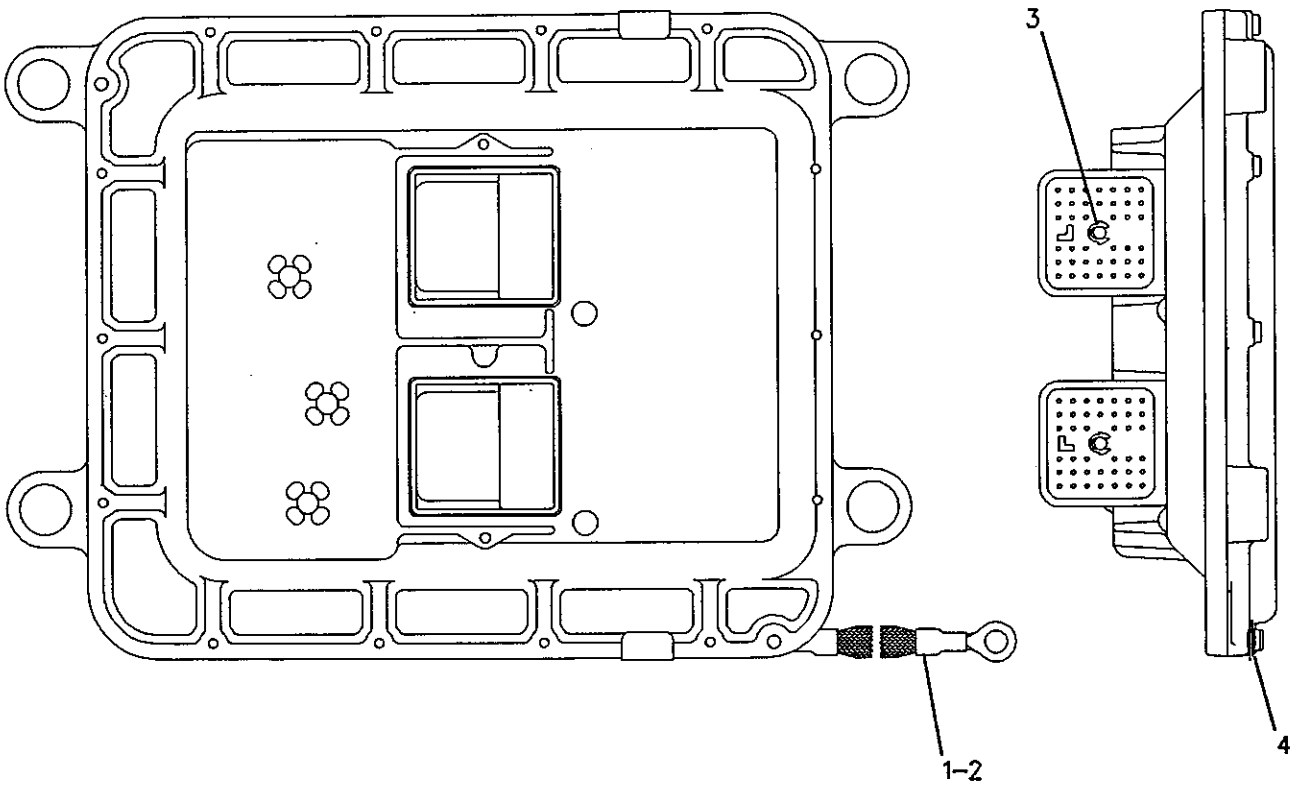


GRAPHIC #1 **<END>** g00951283

# ELECTRICAL AND STARTING SYSTEM

## *255-5284* CONTROL GP-UNPROGRAMMED

S/N: LHX1-UP

PART OF 226-7473 CONTROL GP-ENGINE ELECTRONIC

SMCS-7610 i02171750

| NOTE | REF NO | GRAPHIC REF | PART NUMBER | QTY | PART NAME 1 2 3 4 5 6 (PRODUCT LEVEL) | SEE PAGE |
|---|---|---|---|---|---|---|
| | | | | | (NO SERVICED PARTS) | |

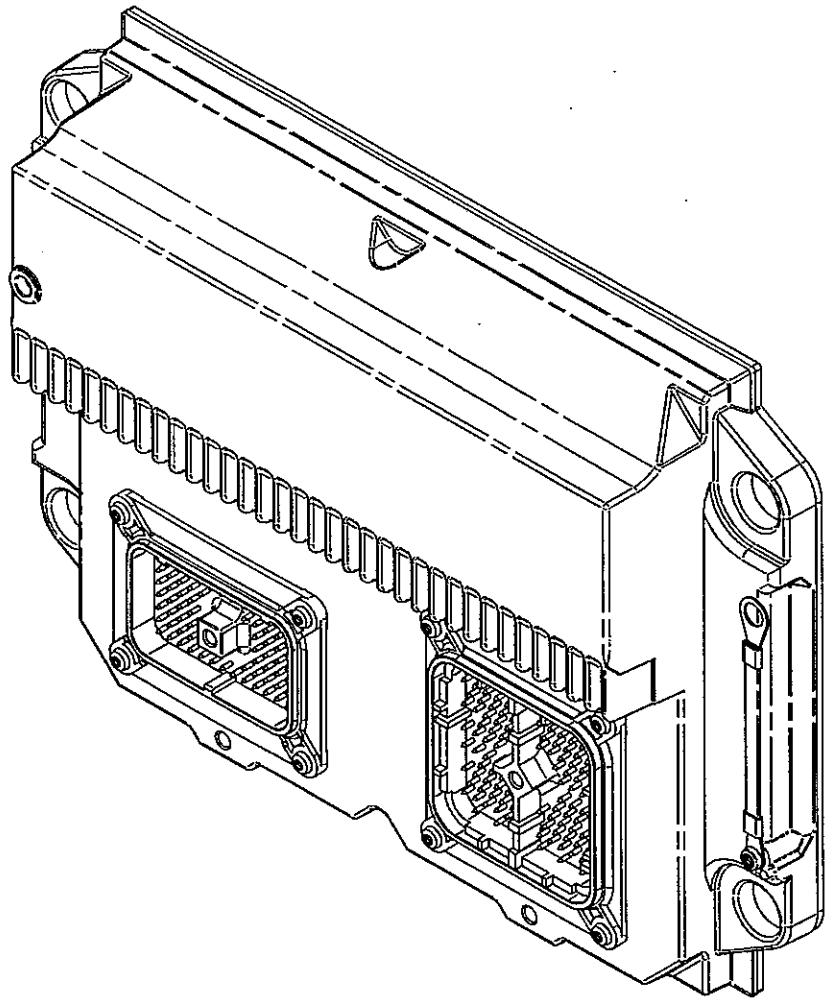

GRAPHIC #1 <END> g01103255

# ELECTRICAL AND STARTING SYSTEM

## *225-5539* ELECTRICAL AR

**S/N: JMS1-UP**

**PART OF 225-5537 GENERAL AR**

**SMCS-1408, 1429, 7402, 7406** **i02282244**

| NOTE | PART NUMBER | QTY | PART NAME 1 2 3 4 5 6 (PRODUCT LEVEL) | SEE PAGE |
|---|---|---|---|---|
| Y | *232-4520* | 1 | BATTERY & WIRING GP | 140 |
| Y | *235-5689* | 1 | ELECTRONICS GP-IMPLEMENT | 163 |
| Y | *235-5690* | 1 | ELECTRONICS GP-MONITOR (CATERPILLAR MONITORING SYSTEM) | 165 |
| Y | *235-5688* | 1 | ELECTRONICS GP-POWER TRAIN | 166 |
| Y | *246-3292* | 1 | HORN GP-ELECTRIC | 822 |
| Y | *235-5275* | 1 | LIGHTING GP-FLOOD & SIGNAL | 184 |
| Y | *174-4082* | 1 | SENSOR & MTG GP-LIFT POSITION | 199 |
| Y | *178-7908* | 1 | SENSOR & MTG GP-TILT POSITION | 200 |
| Y | *235-5334* | 1 | TILT GP-HOOD | 513 |
| Y | *249-9173* | 1 | WIRING GP-AXLE MONITORING | 251 |
| Y | *232-4555* | 1 | WIRING GP-CHASSIS | 281 |
| Y | *232-4521* | 1 | WIRING GP-ENGINE | 288 |
| Y | *232-4522* | 1 | WIRING GP-FRONT | 292 |
| Y | *263-4166* | 1 | WIRING GP-LIGHTING | 295 |
| Y | *228-2704* | 1 | WIRING GP-SENSOR (TILT) | 301 |

Y-SEPARATE ILLUSTRATION

**<END>**

## *262-2043* ELECTRONICS GP-COMMUNICATION-

**PRODUCT LINK 300**

**S/N: JMS1-UP**

**PART OF 263-3322 INSTALLATION AR-COMMUNICATION AN ATTACHMENT**

**SMCS-7606, 7610, 7620** **i02284426**

| NOTE | PART NUMBER | QTY | PART NAME 1 2 3 4 5 6 (PRODUCT LEVEL) | SEE PAGE |
|---|---|---|---|---|
| | **265-9642** | 1 | SOFTWARE GP-COMMUNICATION (PRODUCT LINK 300) | |
| | | | -OR- | |
| | | | (OPTIONAL SERVICE REPLACEMENT) | |
| | **265-9643** | 1 | SERVICE GP-COMMUNICATION (PRODUCT LINK 300) | |
| | | | (INCLUDES CONTROL GP AND SOFTWARE) | |
| | **7X-6315** | 1 | STRAP AS-GROUND | |
| | **126-7574** | 1 | SCREW-PAN HEAD (8-32X9.52-MM) | |
| | **134-4126** | 1 | WASHER (4.52X8.28X0.76-MM THK) | |

**<END>**

# ELECTRICAL AND STARTING SYSTEM

## 235-5689 ELECTRONICS GP-IMPLEMENT

**S/N: JMS1-UP**

**PART OF 225-5539 ELECTRICAL AR**

**SMCS-5701, 7610, 7620** **i02088887**

| NOTE | PART NUMBER | QTY | PART NAME 1 2 3 4 5 6 (PRODUCT LEVEL) | SEE PAGE |
|---|---|---|---|---|
| | 134-3379 | 1 | FILM-IDENTIFICATION (ELECTRONIC CONTROL MODULE) | |
| | | | (NOT SERVICED SEPARATELY-FACTORY INSTALLED) | |
| | 241-3741 | 1 | SOFTWARE GP-IMPLEMENT | |
| | | | NOTE: 241-3742 SERVICE GP-IMPLEMENT IS AVAILABLE | |
| | | | NOTE:THIS ELECTRONICS GP CONTAINS SOFTWARE FOR CONTROL GP-UNPROGRAMMED (IMPLEMENT) | |
| | | | **<END>** | |

## *213-1198* ELECTRONICS GP-MACHINE–SECURITY

S/N: JMS1-UP

PART OF 213-1151 INSTALLATION AR-SECURITY

AN ATTACHMENT

SMCS-7610, 7620 i02282448

| NOTE | REF NO | GRAPHIC REF | PART NUMBER | QTY | PART NAME 1 2 3 4 5 6 (PRODUCT LEVEL) | SEE PAGE |
|---|---|---|---|---|---|---|
| | 1 | 1 | 243-6464 | 1 | SOFTWARE GP-MACHINE | |
| | | | | | -OR- | |
| | | | | | (OPTIONAL SERVICE REPLACEMENT) | |
| Y | 2 | 1 | 207-5262 | 1 | SERVICE GP-MACHINE (SECURITY) | 223 |

Y-SEPARATE ILLUSTRATION

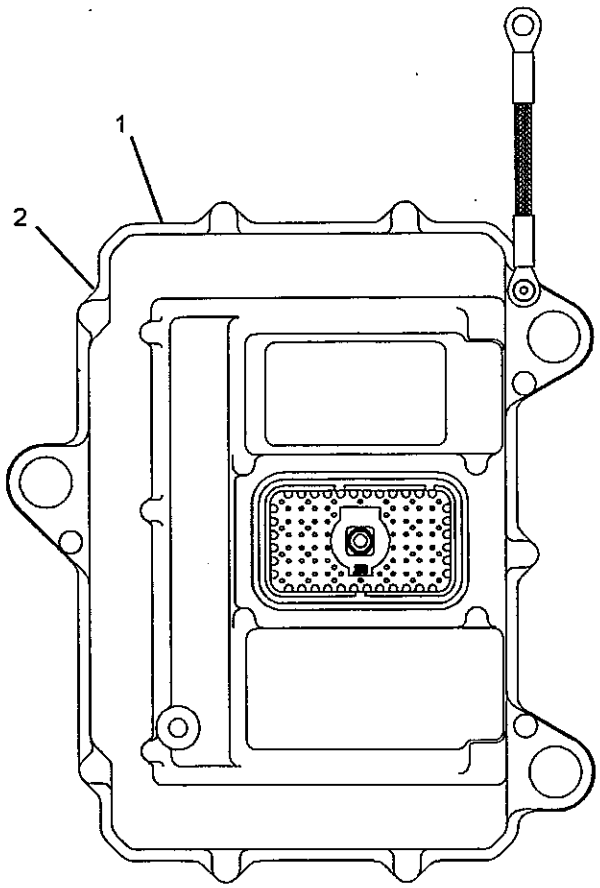


GRAPHIC #1 <END> g01140031

## 235-5690 ELECTRONICS GP-MONITOR–
### CATERPILLAR MONITORING SYSTEM
**S/N: JMS1-UP**

**PART OF 225-5539 ELECTRICAL AR**

**SMCS-7490, 7494, 7601, 7603, 7610, 7620** i02275989

| NOTE | PART NUMBER | QTY | PART NAME 1 2 3 4 5 6 (PRODUCT LEVEL) | SEE PAGE |
|---|---|---|---|---|
| | 241-3802 | 1 | SOFTWARE GP-MONITOR (CATERPILLAR MONITORING SYSTEM) | |
| | | | (SOFTWARE ONLY) | |
| | | | –OR– | |
| | 241-3803 | 1 | SERVICE GP-MONITOR (CATERPILLAR MONITORING SYSTEM) | |
| | | | (INCLUDES SOFTWARE)(OPTIONAL SERVICE REPLACEMENT) | |
| | | | **<END>** | |

# ELECTRICAL AND STARTING SYSTEM

## *235-5688* ELECTRONICS GP-POWER TRAIN

**S/N: JMS1-UP**

**PART OF 225-5539 ELECTRICAL AR**

**SMCS-4800, 4808, 7610, 7620** **i02276010**

| NOTE | REF NO | GRAPHIC REF | PART NUMBER | QTY | PART NAME 1 2 3 4 5 6 (PRODUCT LEVEL) | SEE PAGE |
|---|---|---|---|---|---|---|
| | 1 | 1 | **241-3748** | 1 | SOFTWARE GP-POWER TRAIN | |
| | | | | | -OR- | |
| | | | | | (OPTIONAL SERVICE REPLACEMENT) | |
| | 2 | 1 | **241-3749** | 1 | SERVICE GP-POWER TRAIN | |
| | 2A | 1 | **101-0852** | 1 | SCREW-PAN HEAD (NO 8X3/8-IN) | |
| | | 1 | **134-4126** | 1 | WASHER (4.52X8.28X0.76-MM THK) | |
| | 2B | 1 | **7X-6315** | 1 | STRAP AS-GROUND | |
| M | 2C | 1 | **6V-6703** | 2 | KIT-RETAINING BOLT (M5X0.8X53.24-MM) | |
| | | | | | (EACH INCLUDES BOLT, RING, & SEAL) | |

M-METRIC PART

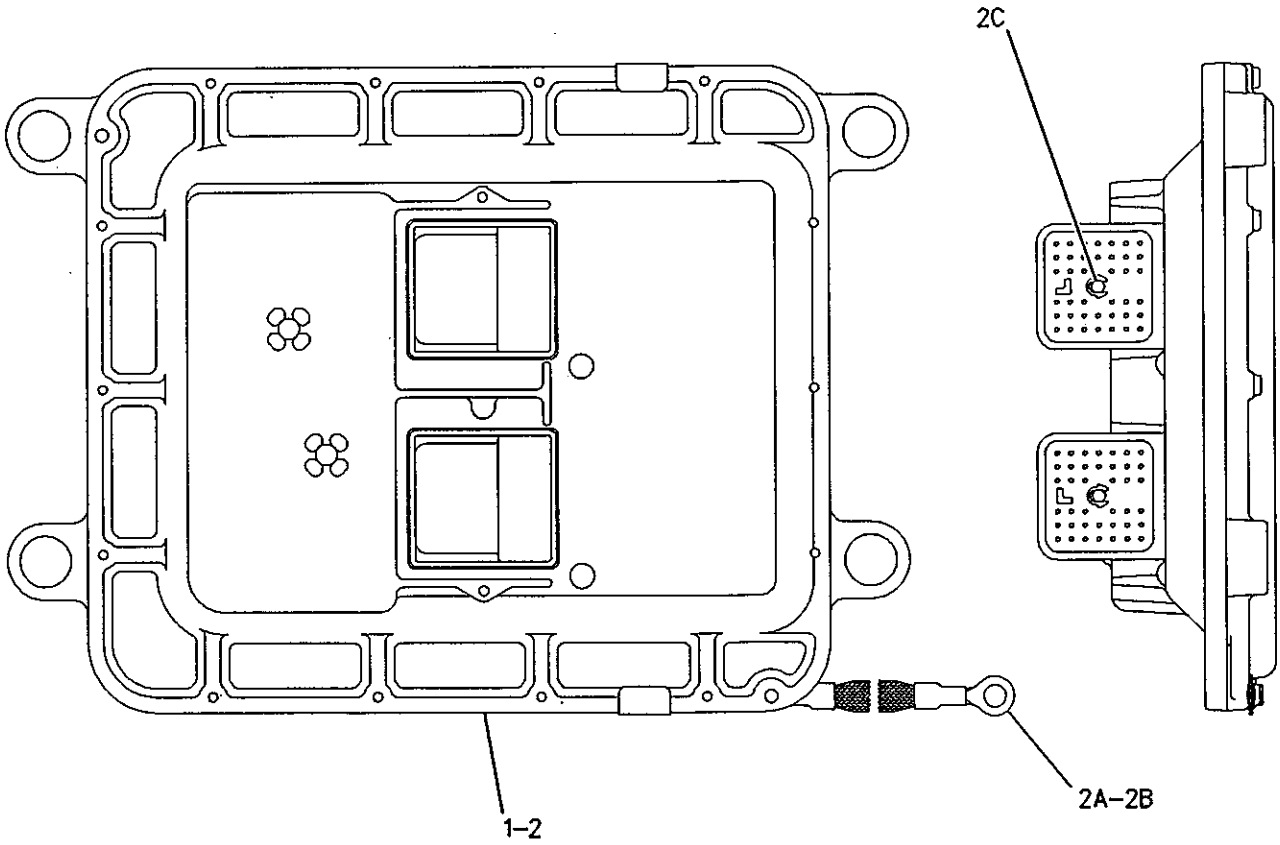


GRAPHIC #1 **<END>** g00914782

## *236-1190* INSTALLATION AR-COMMUNICATION-
**PRODUCT LINK 201**
**S/N: JMS1-UP**
**AN ATTACHMENT**

**SMCS-7606** **i02224301**

| NOTE | PART NUMBER | QTY | PART NAME 1 2 3 4 5 6 (PRODUCT LEVEL) | SEE PAGE |
|---|---|---|---|---|
| Y | **245-8435** | 1 | CONTROL & MTG GP-COMMUNICATION (PRODUCT LINK 201) | 146 |
| | **230-1340** | 1 | FILM-WARNING (PRODUCT LINK RADIO, NACD) | |
| | | | INSIDE CAB ON LEFT FRONT METAL POST 1200-MM ABOVE CAB FLOOR | |

Y-SEPARATE ILLUSTRATION

**<END>**

## *247-8336* INSTALLATION AR-COMMUNICATION-
**PRODUCT LINK 201**
**S/N: JMS1-UP**
**AN ATTACHMENT**

**SMCS-7606** **i02274976**

| NOTE | PART NUMBER | QTY | PART NAME 1 2 3 4 5 6 (PRODUCT LEVEL) | SEE PAGE |
|---|---|---|---|---|
| Y | **245-8435** | 2 | CONTROL & MTG GP-COMMUNICATION (PRODUCT LINK 201) | 146 |
| | **230-1341** | 1 | FILM-WARNING (PRODUCT LINK RADIO, NON NACD) | |
| | | | (LOCATE INSIDE CAB ON LEFT FRONT METAL POST 1200 MM ABOVE CAB FLOOR) | |

Y-SEPARATE ILLUSTRATION

**<END>**

## *263-3322* INSTALLATION AR-COMMUNICATION-
**PRODUCT LINK 321SR**
**S/N: JMS1-UP**
**AN ATTACHMENT**

**SMCS-7606** **i02251399**

| NOTE | PART NUMBER | QTY | PART NAME 1 2 3 4 5 6 (PRODUCT LEVEL) | SEE PAGE |
|---|---|---|---|---|
| Y | *256-5068* | 1 | CONTROL & MTG GP-COMMUNICATION (PRODUCT LINK 321SR) | 148 |
| Y | *262-2043* | 1 | ELECTRONICS GP-COMMUNICATION (PRODUCT LINK 300) | 162 |
| | **230-1341** | 1 | FILM-WARNING (PRODUCT LINK RADIO, NON NACD) | |
| | | | INSIDE CAB ON LEFT FRONT METAL POST 1200-MM ABOVE CAB FLOOR | |

Y-SEPARATE ILLUSTRATION

**<END>**

# ELECTRICAL AND STARTING SYSTEM

## *213-1151* INSTALLATION AR-SECURITY

**S/N: JMS1-UP**
**AN ATTACHMENT**

**SMCS-7631** **i01596581**

| NOTE | PART NUMBER | QTY | PART NAME 1 2 3 4 5 6 (PRODUCT LEVEL) | SEE PAGE |
|---|---|---|---|---|
| Y | **213-1198** | 1 | ELECTRONICS GP-MACHINE (SECURITY) | 164 |
| Y | *191-0166* | 1 | INSTALLATION GP-SECURITY | 169 |

Y-SEPARATE ILLUSTRATION

**<END>**

# ELECTRICAL AND STARTING SYSTEM

## *191-0166* INSTALLATION GP-SECURITY

**S/N: JMS1-UP**

**PART OF 213-1151 INSTALLATION AR-SECURITY**

**AN ATTACHMENT**

**SMCS-7631** **i01891949**

| NOTE | REF NO | GRAPHIC REF | PART NUMBER | QTY | PART NAME 1 2 3 4 5 6 (PRODUCT LEVEL) | SEE PAGE |
|---|---|---|---|---|---|---|
| | 1 | 1 | **6I-1418** | 3 | SPACER (8.2X12.7X28.7-MM THK) | |
| | 2 | 1 | **8T-9655** | 6 | MOUNT-ISOLATION | |
| | 3 | 1 | **165-5655** | 1 | LAMP AS (RED, GREEN, LED, 12-VOLT) | |
| | 4 | 1 | **9N-0869** | 3 | WASHER-HARD (8.8X25.5X2-MM THK) | |
| | 5 | 1 | **223-3913** | 1 | HARNESS AS-CONTROL (MACHINE SECURITY) | |
| | | 1 | **102-8801** | 1 | KIT-RECEPTACLE (12-PIN) | |
| | 6 | 1 | **156-6155** | 1 | CONTROL GP-UNPROGRAMMED (SECURITY SYSTEM) | |
| | | 1 | **7X-6315** | 1 | STRAP AS-GROUND | |
| | | 1 | **134-4126** | 1 | WASHER (4.52X8.28X0.76-MM THK) | |
| | | 1 | **184-2472** | 1 | SCREW-PAN HEAD (NO 8-32X9.52-MM) | |
| | 7 | 1 | **3E-3371** | 1 | WEDGE-RECEPTACLE LOCK (3-PIN) | |
| | 8 | 1 | **206-5208** | 1 | COIL AS (EXCITER) | |
| M | 9 | 1 | **099-3649** | 3 | BOLT (M8X1.25X40-MM) | |
| | 10 | 1 | **102-8803** | 1 | KIT-RECEPTACLE (3-PIN) | |
| | 11 | 1 | **206-5162** | 2 | KEY AS-ELECTRONIC (SECURITY, YELLOW) (PROGRAMMED) | |
| | | | | | —OR— | |
| | | 1 | **206-5165** | 1 | KEY AS-ELECTRONIC (SECURITY, GRAY) (BLANK) | |
| | 12 | 1 | **205-0825** | 1 | FILM (MACHINE SECURITY SYSTEM) | |
| | 13 | 1 | **205-0826** | 1 | FILM-INSTRUCTION (READ OWNERS MANUAL) | |
| | 14 | 1 | **213-2323** | 1 | PLATE AS | |
| | 15 | 1 | **198-5389** | 1 | FILM (IGNITION SWITCH) | |
| | 16 | 1 | **219-6314** | 2 | KEY RING (IDENTIFICATION) | |
| | 17 | 1 | **7K-1181** | 2 | STRAP-CABLE | |
| | 18 | 1 | **225-5927** | 1 | FILM (SECURITY) | |

M-METRIC PART

*191-0166* **INSTALLATION GP-SECURITY** *(contd.)* i01891949

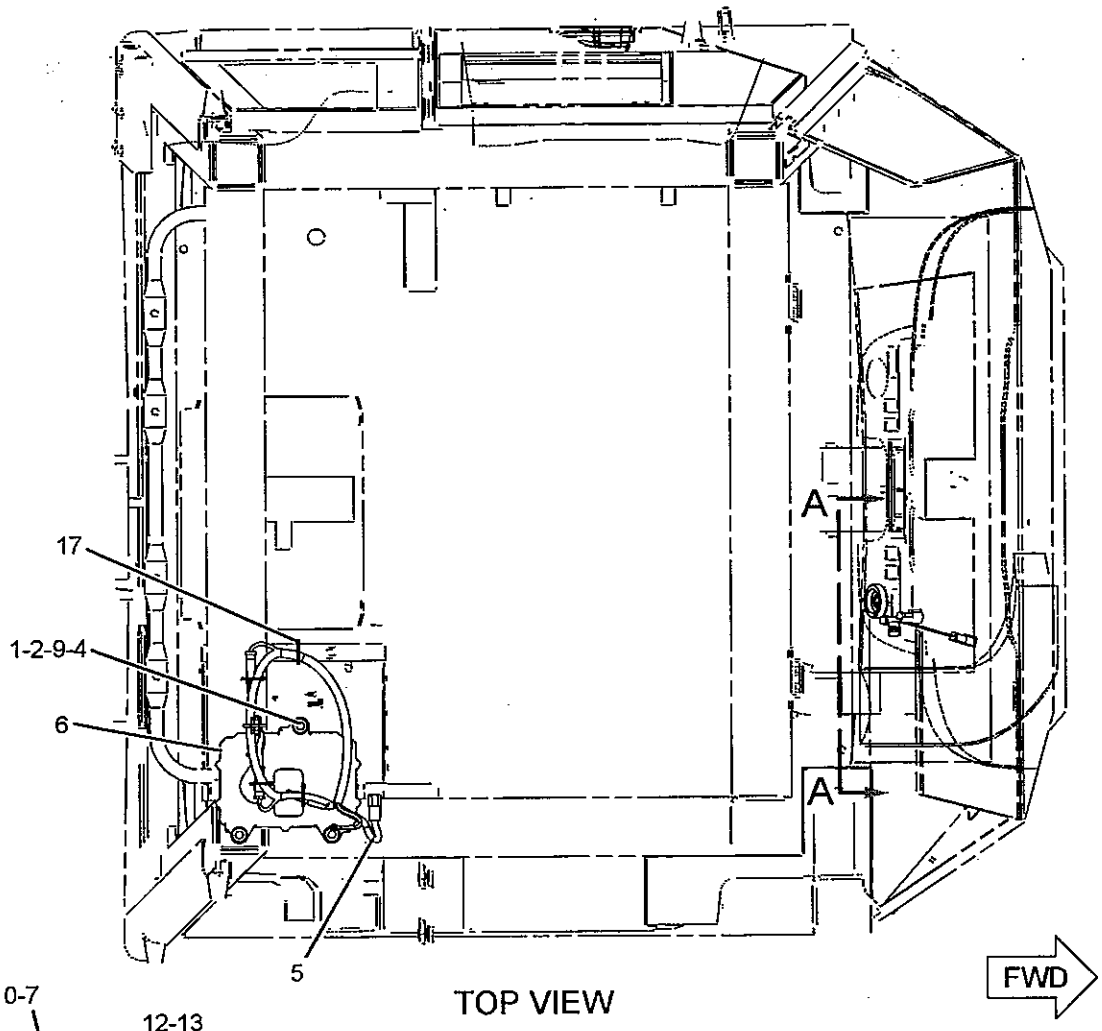


TOP VIEW

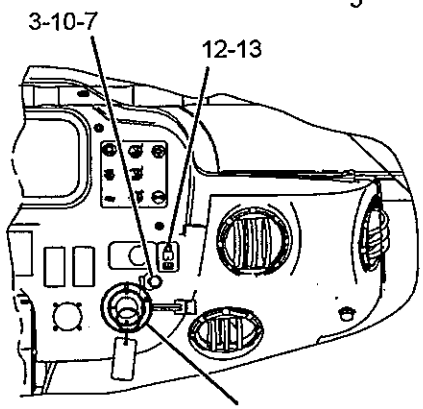


VIEW A-A

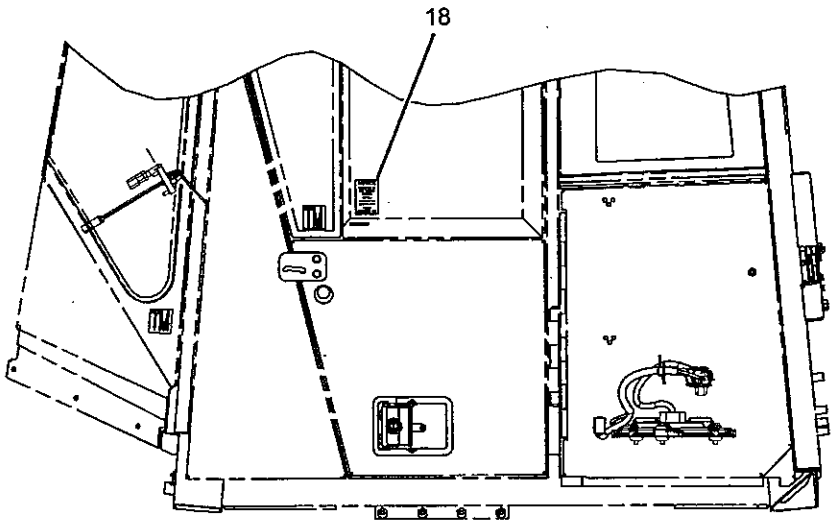


LEFT SIDE VIEW OF CAB

GRAPHIC #1 **<END>** g01064491

# *3E-6389* LAMP GP-DOME

**S/N: JMS1-UP**
**24-VOLT. WITH SWITCH**
**PART OF 207-8617, 235-5503, 262-9950 WIRING GP-CAB**
**ALSO AN ATTACHMENT**

**SMCS-1433** **i02286066**

| NOTE | REF NO | GRAPHIC REF | PART NUMBER | QTY | PART NAME 1 2 3 4 5 6 (PRODUCT LEVEL) | SEE PAGE |
|---|---|---|---|---|---|---|
| | 1 | 1 | 7N-9943 | 1 | LAMP (24-VOLT) | |
| | 2 | 1 | 102-8803 | 1 | KIT-RECEPTACLE (3-PIN) | |
| | | | | | (INCLUDES RECEPTACLE AS & WEDGE) | |
| | 3 | 1 | 3E-3371 | 1 | WEDGE-RECEPTACLE LOCK (3-PIN) | |
| | 4 | 1 | 8T-8729 | 3 | PIN-CONNECTOR | |
| | 5 | 1 | 7T-0020 | 1 | LENS-DOME LAMP | |

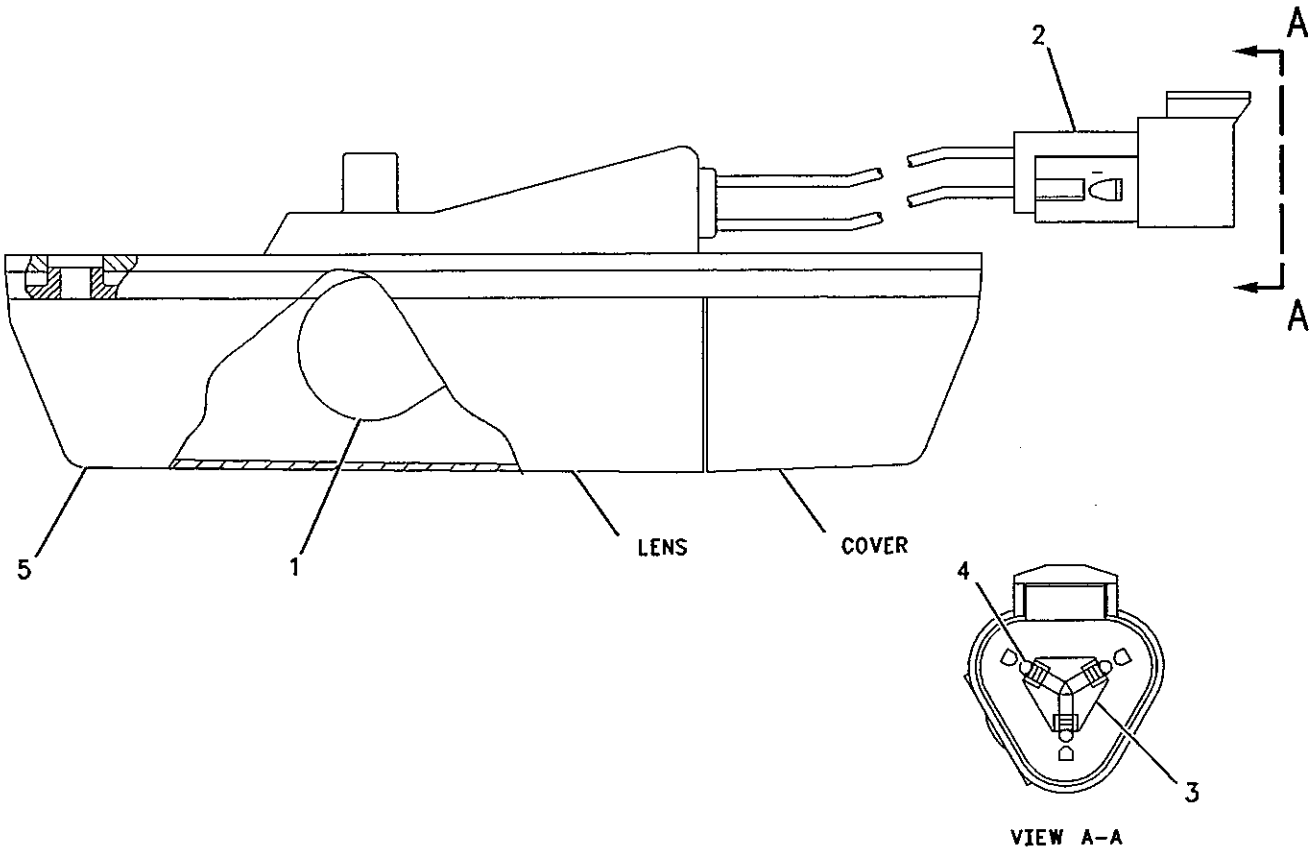


GRAPHIC #1 **<END>** g00647928

# 210-8422 LAMP GP-FLOOD–SUSPENDED MOUNT–HIGH INTENSITY DISCHARGE, REAR

S/N: JMS1-UP
24-VOLT,35-WATT
PART OF 235-8560 LIGHTING GP-FLOOD
AN ATTACHMENT

SMCS-1434 i02254158

| NOTE | REF NO | GRAPHIC REF | PART NUMBER | QTY | PART NAME 1 2 3 4 5 6 (PRODUCT LEVEL) | SEE PAGE |
|---|---|---|---|---|---|---|
| | 1 | 1 | 229-9969 | 1 | LENS AS (WORK LIGHT) | |
| | 2 | 1 | 209-6638 | 1 | LAMP (12-VOLT, 24-VOLT, 35-WATT) | |
| M | 3 | 1 | 151-8754 | 1 | BOLT (M10X1.5X40-MM) | |
| | 4 | 1 | 8T-4121 | 1 | WASHER-HARD (11X21X2.5-MM THK) | |
| M | 5 | 1 | 120-9027 | 4 | SCREW-PAN HEAD (M3X0.5X16-MM) | |
| M | 6 | 1 | 8T-4189 | 2 | BOLT (M8X1.25X20-MM) | |
| M | 7 | 1 | 6V-9189 | 2 | LOCKNUT (M8X1.25-THD) | |
| | 8 | 1 | 229-9972 | 1 | BRACKET AS | |
| | 9 | 1 | 229-9974 | 1 | BEZEL | |

M-METRIC PART

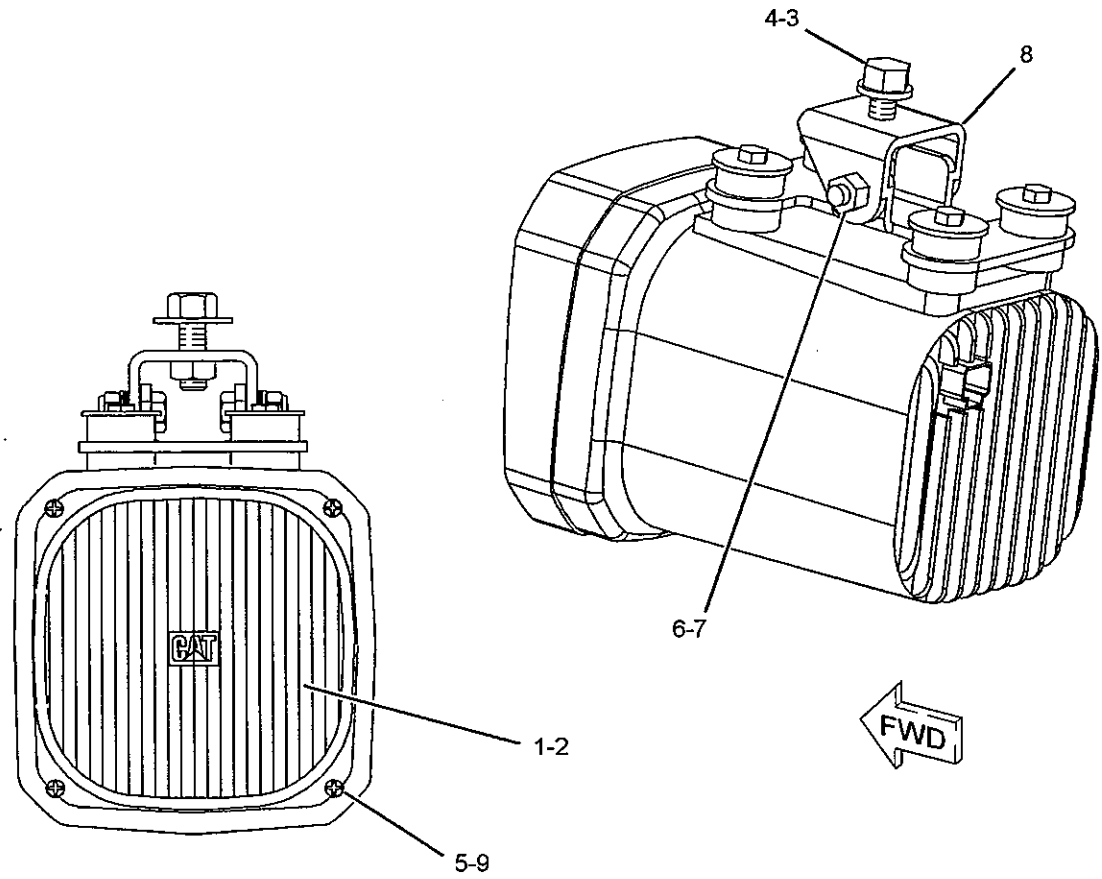


FRONT VIEW

GRAPHIC #1 <END> g01069665

# *210-8423* LAMP GP-FLOOD–VERTICAL MOUNT–
## HIGH INTENSITY DISCHARGE, FR

S/N: JMS1-UP
24-VOLT, 35-WATT
PART OF 235-8560 LIGHTING GP-FLOOD
AN ATTACHMENT

SMCS-1434 i02254177

| NOTE | REF NO | GRAPHIC REF | PART NUMBER | QTY | PART NAME 1 2 3 4 5 6 (PRODUCT LEVEL) | SEE PAGE |
|---|---|---|---|---|---|---|
| | 1 | 1 | 229-9969 | 1 | LENS AS (FLOODLIGHT) | |
| | 2 | 1 | 209-6638 | 1 | LAMP (12-VOLT, 24-VOLT, 35-WATT) | |
| M | 3 | 1 | 151-8754 | 1 | BOLT (M10X1.5X40-MM) | |
| | 4 | 1 | 8T-4121 | 1 | WASHER-HARD (11X21X2.5-MM THK) | |
| M | 5 | 1 | 120-9027 | 4 | SCREW-PAN HEAD (M3X0.5X16-MM) | |
| M | 6 | 1 | 8T-4189 | 2 | BOLT (M8X1.25X20-MM) | |
| M | 7 | 1 | 6V-9189 | 2 | LOCKNUT (M8X1.25-THD) | |
| | 8 | 1 | 229-9972 | 1 | BRACKET AS | |
| | 9 | 1 | 229-9974 | 1 | BEZEL | |

M-METRIC PART

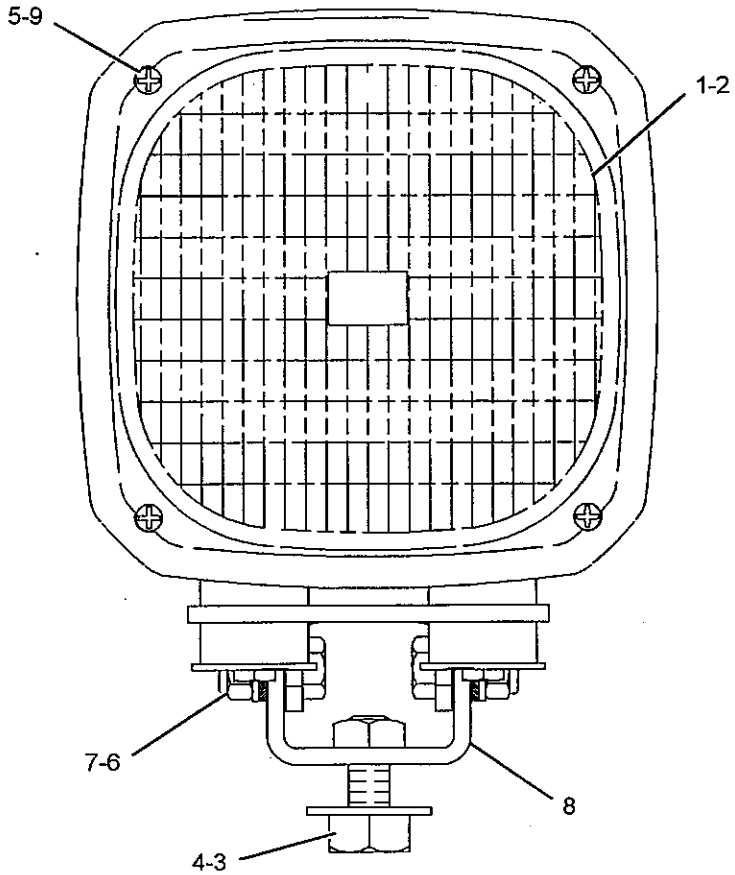


GRAPHIC #1

<END>

g01022778

# 219-6485 LAMP GP-FLOOD–VERTICAL MOUNT

S/N: JMS1-UP
24-VOLT
PART OF 235-5275, 261-4660 LIGHTING GP-FLOOD & SIGNAL, 261-8673 LIGHTING GP-SIGNAL
ALSO AN ATTACHMENT

SMCS-1434 i02290273

| NOTE | REF NO | GRAPHIC REF | PART NUMBER | QTY | PART NAME 1 2 3 4 5 6 (PRODUCT LEVEL) | SEE PAGE |
|---|---|---|---|---|---|---|
| | 1 | 1 | 9X-3463 | 1 | LAMP-HALOGEN (24-VOLT, 65-WATT) | |
| | 2 | 1 | 9X-4244 | 2 | SCREW | |
| | 4 | 1 | 202-6614 | 1 | LENS AS (FLOODLIGHT) | |
| | 5 | 1 | 175-4292 | 1 | BODY AS | |
| | 6 | 1 | 164-7556 | 1 | CLIP | |
| | 7 | 1 | 247-4285 | 1 | BOLT (M8X1.25X50-MM) | |
| M | 8 | 1 | 5C-7261 | 1 | NUT (M8X1.25-THD) | |
| | 9 | 1 | 8T-4224 | 2 | WASHER-HARD (8.8X16X2-MM THK) | |
| | 10 | 1 | 175-4291 | 1 | BRACKET AS | |

M-METRIC PART

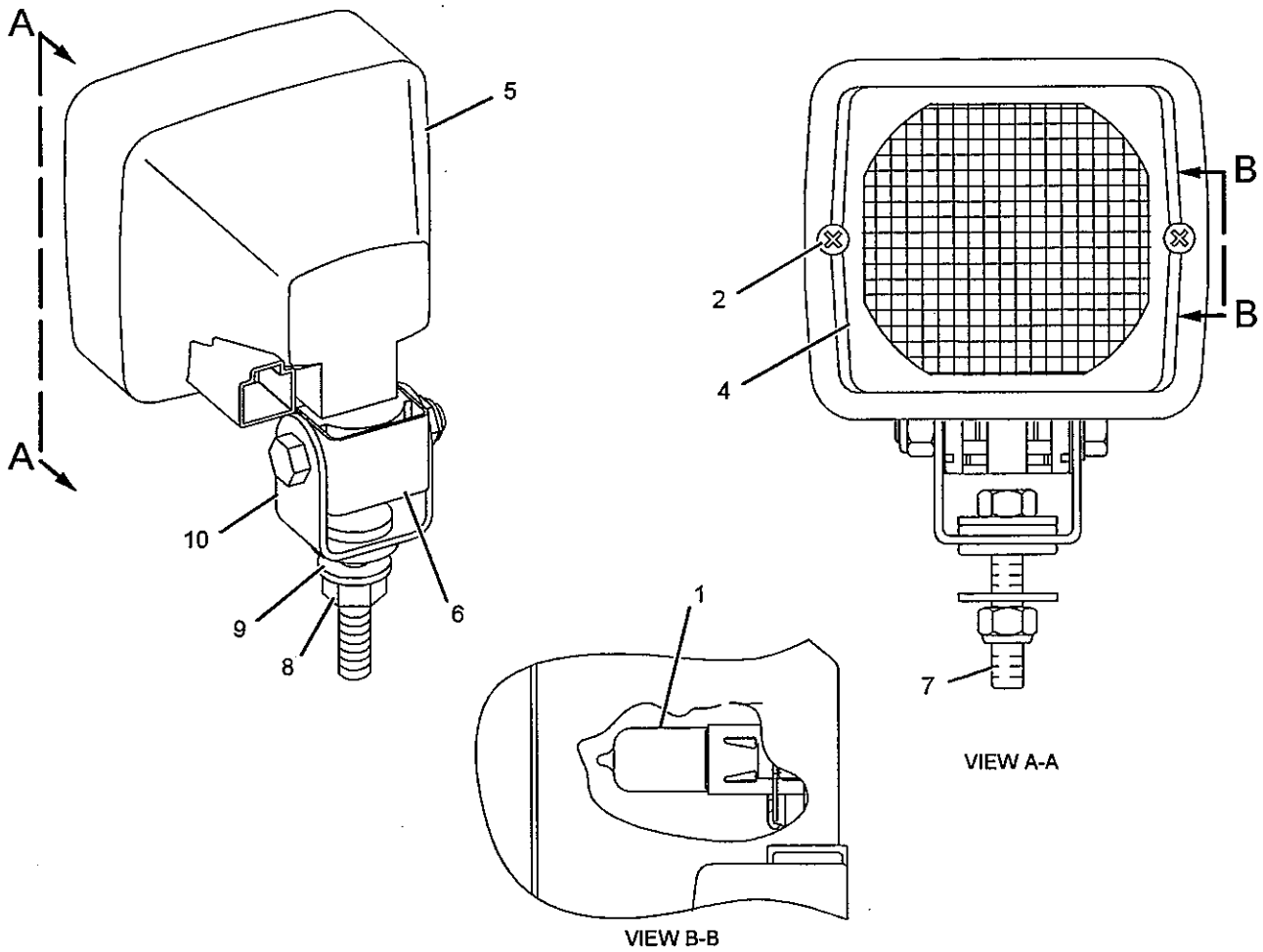


GRAPHIC #1

<END>

g01146647

# 219-6487 LAMP GP-FLOOD–SUSPENDED MOUNT

S/N: JMS1-UP
24-VOLT
PART OF 232-7783, 235-8559 LIGHTING GP-FLOOD
ALSO AN ATTACHMENT

SMCS-1434 i02286102

| NOTE | REF NO | GRAPHIC REF | PART NUMBER | QTY | PART NAME 1 2 3 4 5 6 (PRODUCT LEVEL) | SEE PAGE |
|---|---|---|---|---|---|---|
| | 1 | 1 | 9X-3463 | 1 | LAMP-HALOGEN (24-VOLT, 65-WATT) (FLOODLIGHT) | |
| M | 2 | 1 | 8T-6912 | 1 | BOLT (M8X1.25X50-MM) | |
| M | 3 | 1 | 5C-7261 | 1 | NUT (M8X1.25-THD) | |
| | 4 | 1 | 8T-4224 | 2 | WASHER-HARD (8.8X16X2-MM THK) | |
| | 5 | 1 | 9X-4244 | 2 | SCREW | |
| | 6 | 1 | 202-6612 | 1 | SEAL | |
| | 7 | 1 | 202-6614 | 1 | LENS AS (FLOODLIGHT) | |
| | 8 | 1 | 175-4292 | 1 | BODY AS | |
| | 9 | 1 | 164-7556 | 1 | CLIP | |
| | 10 | 1 | 175-4291 | 1 | BRACKET AS | |

M-METRIC PART

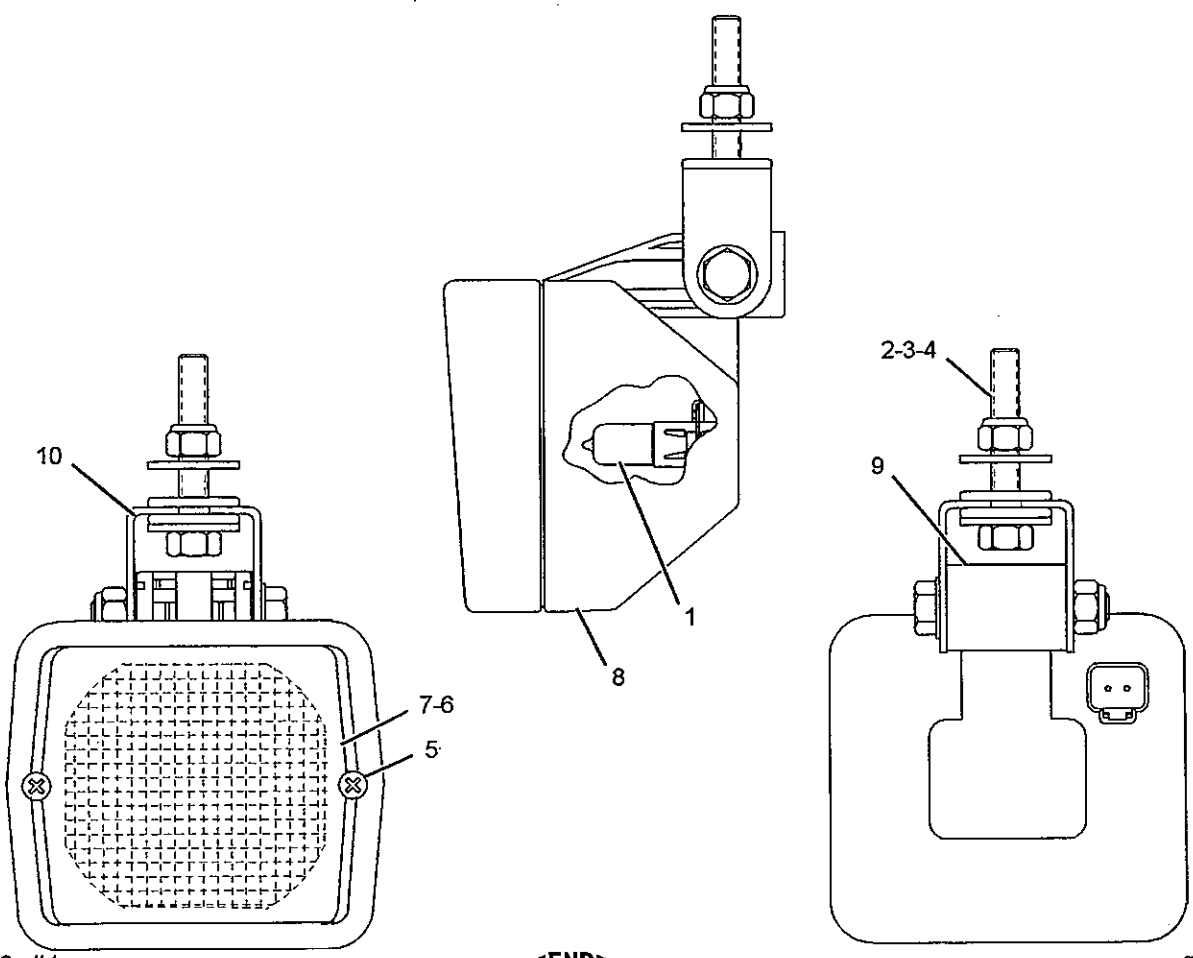


GRAPHIC #1

<END>

g01021977

# 3E-6466 LAMP GP-SIGNAL

S/N: JMS1-UP
24 VOLT
PART OF 261-4660 LIGHTING GP-FLOOD & SIGNAL, 261-8673 LIGHTING GP-SIGNAL
AN ATTACHMENT

SMCS-1430 i02219628

| NOTE | REF NO | GRAPHIC REF | PART NUMBER | QTY | PART NAME 1 2 3 4 5 6 (PRODUCT LEVEL) | SEE PAGE |
|---|---|---|---|---|---|---|
| | 1 | 1 | 9X-3066 | 1 | LENS-AMBER | |
| | 2 | 1 | 9X-4493 | 1 | LAMP (24-VOLT, 21-WATT) | |
| | 3 | 1 | 102-8802 | 1 | KIT-RECEPTACLE (2-PIN) | |
| | | | | | (INCLUDES RECEPTACLE AS & WEDGE) | |
| | 4 | 1 | 8T-8729 | 2 | PIN-CONNECTOR | |

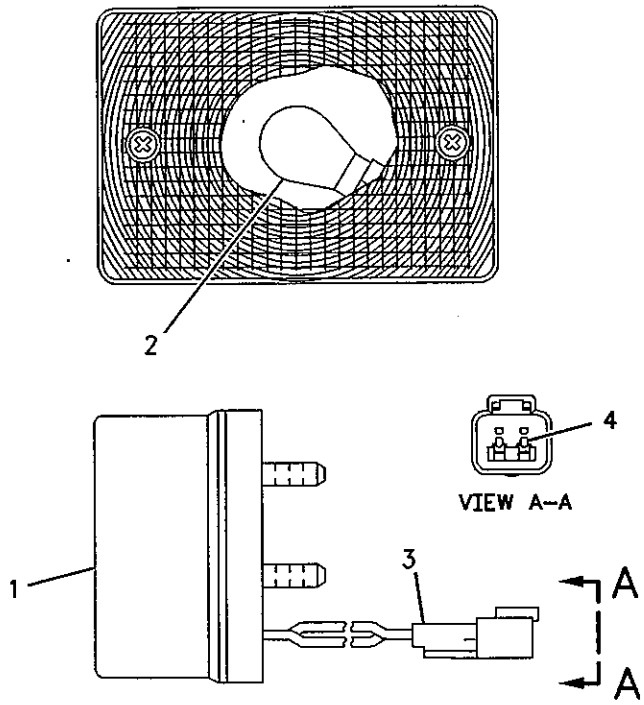


GRAPHIC #1 <END> g00728141

# 135-0426 LAMP GP-SIGNAL–STOP, TAIL

S/N: JMS1-UP
24-VOLT
PART OF 235-5275 LIGHTING GP-FLOOD & SIGNAL

SMCS-1430 i02266998

| NOTE | REF NO | GRAPHIC REF | PART NUMBER | QTY | PART NAME 1 2 3 4 5 6 (PRODUCT LEVEL) | SEE PAGE |
|---|---|---|---|---|---|---|
| | 1 | 1 | 102-8803 | 1 | KIT-RECEPTACLE (3-PIN) | |
| | | | | | (INCLUDES RECEPTACLE AS & WEDGE) | |
| | 2 | 1 | 3E-3371 | 1 | WEDGE-RECEPTACLE LOCK (3-PIN) | |
| | 3 | 1 | 186-3735 | 3 | PIN-CONNECTOR (16-GA TO 18-GA) | |

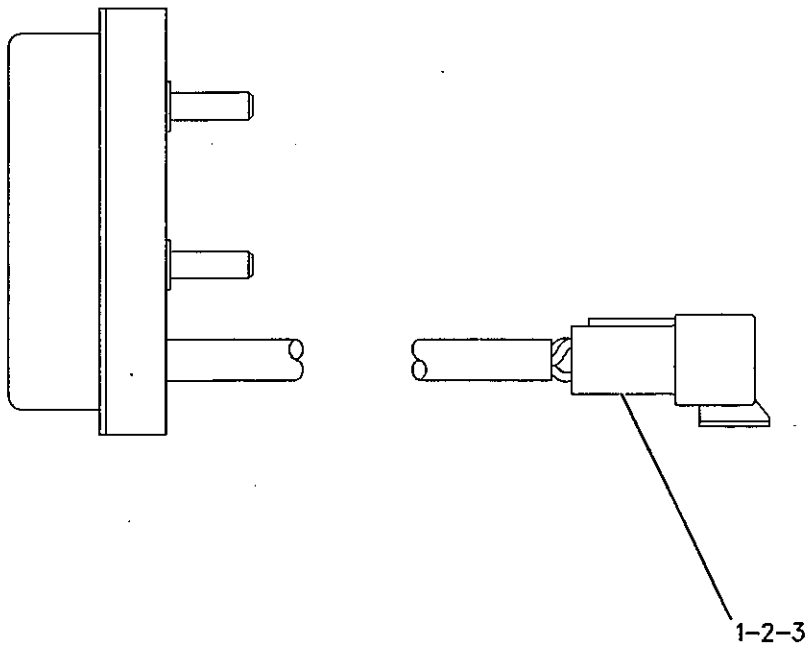


GRAPHIC #1 <END> g00305543

# *145-6929* LAMP GP-STOP & TAIL

S/N: JMS1-UP
24-VOLT
PART OF 261-4660 LIGHTING GP-FLOOD & SIGNAL, 261-8673 LIGHTING GP-SIGNAL
AN ATTACHMENT

SMCS-1432 i02290015

| NOTE | REF NO | GRAPHIC REF | PART NUMBER | QTY | PART NAME 1 2 3 4 5 6 (PRODUCT LEVEL) | SEE PAGE |
|---|---|---|---|---|---|---|
| | 1 | 1 | 102-8803 | 1 | KIT-RECEPTACLE (3-PIN) | |
| | | | | | (INCLUDES RECEPTACLE AS AND WEDGE) | |
| | 2 | 1 | 267-2809 | 1 | LENS | |
| | 3 | 1 | 186-3735 | 5 | PIN-CONNECTOR (16-GA TO 18-GA) | |
| | 4 | 1 | 9X-4492 | 1 | LAMP (24-VOLT, 5-WATT) | |
| | 5 | 1 | 9X-4493 | 1 | LAMP (24-VOLT, 21-WATT) | |
| | 6 | 1 | 102-8802 | 1 | KIT-RECEPTACLE (2-PIN) | |
| | | | | | (INCLUDES RECEPTACLE AS AND WEDGE) | |

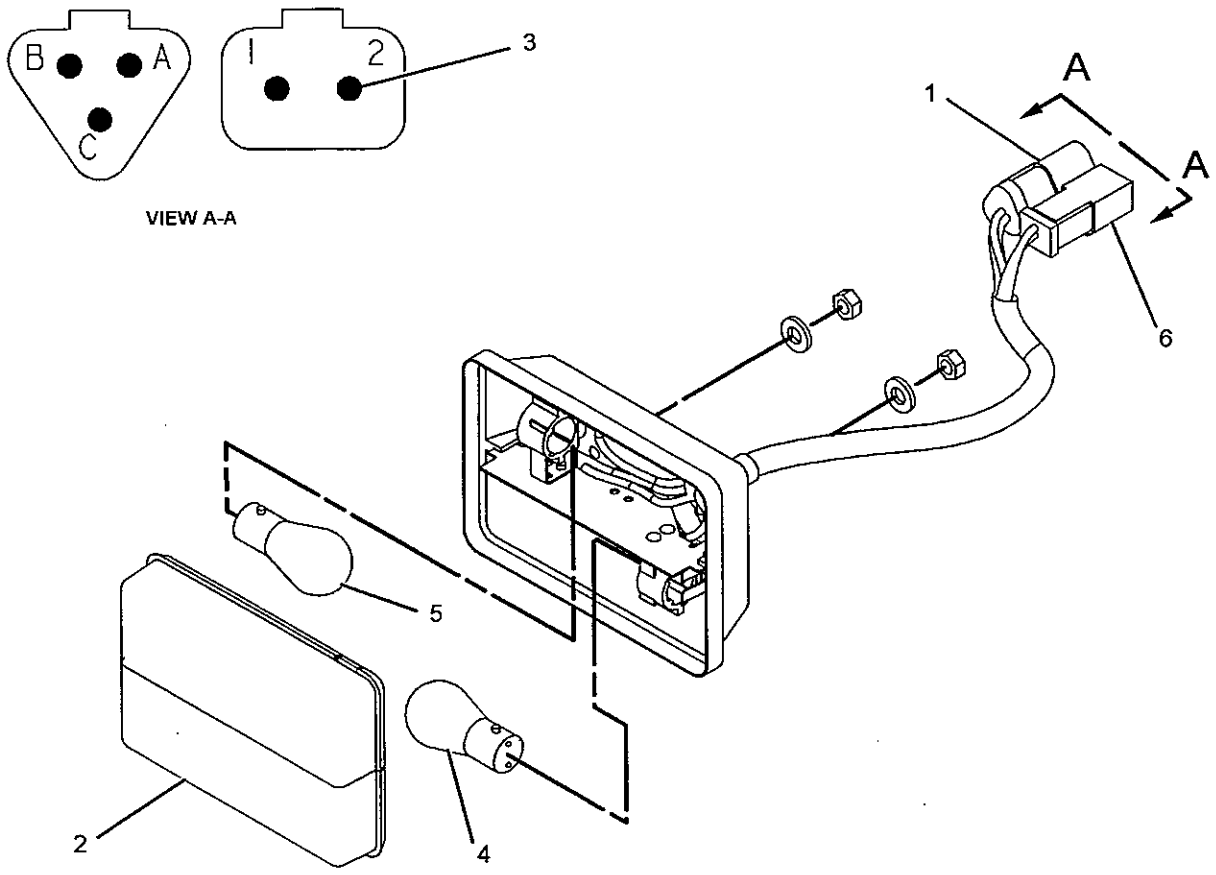


GRAPHIC #1 <END> g01146590

# 235-3937 LAMP GP-WARNING BEACON–AMBER

S/N: JMS1-UP
24-VOLT
PART OF 256-9812 LIGHTING GP-WARNING BEACON
AN ATTACHMENT

SMCS-1431 i02290308

| NOTE | REF NO | GRAPHIC REF | PART NUMBER | QTY | PART NAME 1 2 3 4 5 6 (PRODUCT LEVEL) | SEE PAGE |
|---|---|---|---|---|---|---|
| | 1 | 1 | 215-6672 | 1 | LENS-AMBER (WARNING BEACON) | |
| | 2 | 1 | 9X-7849 | 1 | LAMP (24-VOLT, 70-WATT) | |
| | 3 | 1 | 215-6673 | 1 | BELT-WARNING BEACON | |
| | 4 | 1 | 215-6674 | 1 | CLIP | |
| M | 5 | 1 | 6V-8225 | 3 | NUT (M6X1-THD) | |
| | 6 | 1 | 5P-0537 | 3 | WASHER-HARD (7.2X14.5X2-MM THK) | |
| | 7 | 1 | 102-8802 | 1 | KIT-RECEPTACLE (2-PIN) | |
| | | | | | (KIT INCLUDES RECEPTACLE AS & WEDGE) | |
| | 8 | 1 | 3E-3365 | 1 | WEDGE-RECEPTACLE LOCK (2-PIN) | |
| | 9 | 1 | 186-3735 | 2 | PIN-CONNECTOR (16-GA TO 18-GA) | |

M-METRIC PART

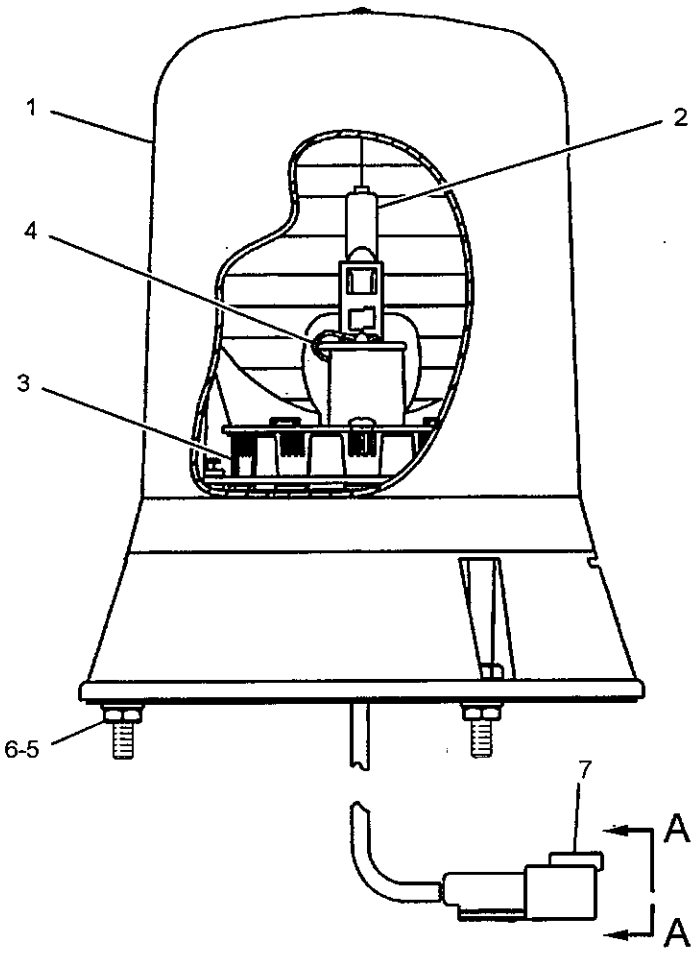


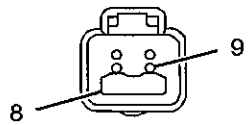


VIEW A-A

GRAPHIC #1

<END>

g01047107

## *246-3564* LIGHTING AR-SIGNAL

S/N: JMS1-UP

CANNOT BE USED WITH 246-3121–PAGE 745, 243-2046–PAGE 3, 246-8696–PAGE 198, 246-8697–PAGE 198

AN ATTACHMENT

SMCS-1430 i02283981

| NOTE | PART NUMBER | QTY | PART NAME 1 2 3 4 5 6 (PRODUCT LEVEL) | SEE PAGE |
|---|---|---|---|---|
| Y | *261-8673* | 1 | LIGHTING GP-SIGNAL | 187 |
| Y | *247-0514* | 1 | PANEL GP-SOUND SUPPRESSION (RH) | 493 |
| Y | *247-0517* | 1 | PANEL GP-SOUND SUPPRESSION (LH) | 494 |
| Y | *252-5920* | 1 | SWITCH GP-SIGNAL (TURN) | 244 |
| Y | *263-9161* | 1 | WIRING GP-LIGHTING | 297 |

Y-SEPARATE ILLUSTRATION

<END>

## *263-8419* LIGHTING AR-SIGNAL

S/N: JMS1-UP

PART OF 266-1620 MACHINE AR, 246-8696, 246-8697 ROADING AR

AN ATTACHMENT

SMCS-1430 i02282102

| NOTE | PART NUMBER | QTY | PART NAME 1 2 3 4 5 6 (PRODUCT LEVEL) | SEE PAGE |
|---|---|---|---|---|
| Y | *261-4660* | 1 | LIGHTING GP-FLOOD & SIGNAL | 185 |
| Y | *252-5920* | 1 | SWITCH GP-SIGNAL (TURN) | 244 |
| Y | *263-4167* | 1 | WIRING GP-LIGHTING (FLOOD, SIGNAL, LOADER FRAME) | 296 |

Y-SEPARATE ILLUSTRATION

<END>

## *232-7783* LIGHTING GP-FLOOD–2-LAMP, CAB REAR

S/N: JMS1-UP

PART OF 203-9837 CANOPY AR-OPEN ROPS

AN ATTACHMENT

SMCS-1434 i01979412

| NOTE | PART NUMBER | QTY | PART NAME 1 2 3 4 5 6 (PRODUCT LEVEL) | SEE PAGE |
|---|---|---|---|---|
| Y | 219-6487 | 2 | LAMP GP-FLOOD (24-VOLT, SUSPENDED MOUNT) | 175 |

Y-SEPARATE ILLUSTRATION

<END>

# 235-8559 LIGHTING GP-FLOOD–4-LAMP, CAB

**S/N: JMS1-UP**

**PART OF 232-1393 CAB AR-ENCLOSED ROPS, 258-1565 CANOPY AR-OPEN ROPS ALSO AN ATTACHMENT**

**SMCS-1434** **i02204373**

| NOTE | REF NO | GRAPHIC REF | PART NUMBER | QTY | PART NAME 1 2 3 4 5 6 (PRODUCT LEVEL) | SEE PAGE |
|---|---|---|---|---|---|---|
| Y | 1 | 1 | **219-6487** | 4 | LAMP GP-FLOOD (24-VOLT, SUSPENDED MOUNT) | 175 |
| | 2 | 1 | **236-9773** | 1 | BRACKET (LH) | |
| | 3 | 1 | **236-9774** | 1 | BRACKET (RH) | |
| | 4 | 1 | **122-8705** | 2 | U-BOLT | |
| | 5 | 1 | **8T-4121** | 8 | WASHER-HARD (11X21X2.5-MM THK) | |
| M | 6 | 1 | **8T-4133** | 6 | NUT (M10X1.5-THD) | |
| M | 7 | 1 | **8T-4195** | 2 | BOLT (M10X1.5X30-MM) | |

M-METRIC PART
Y-SEPARATE ILLUSTRATION

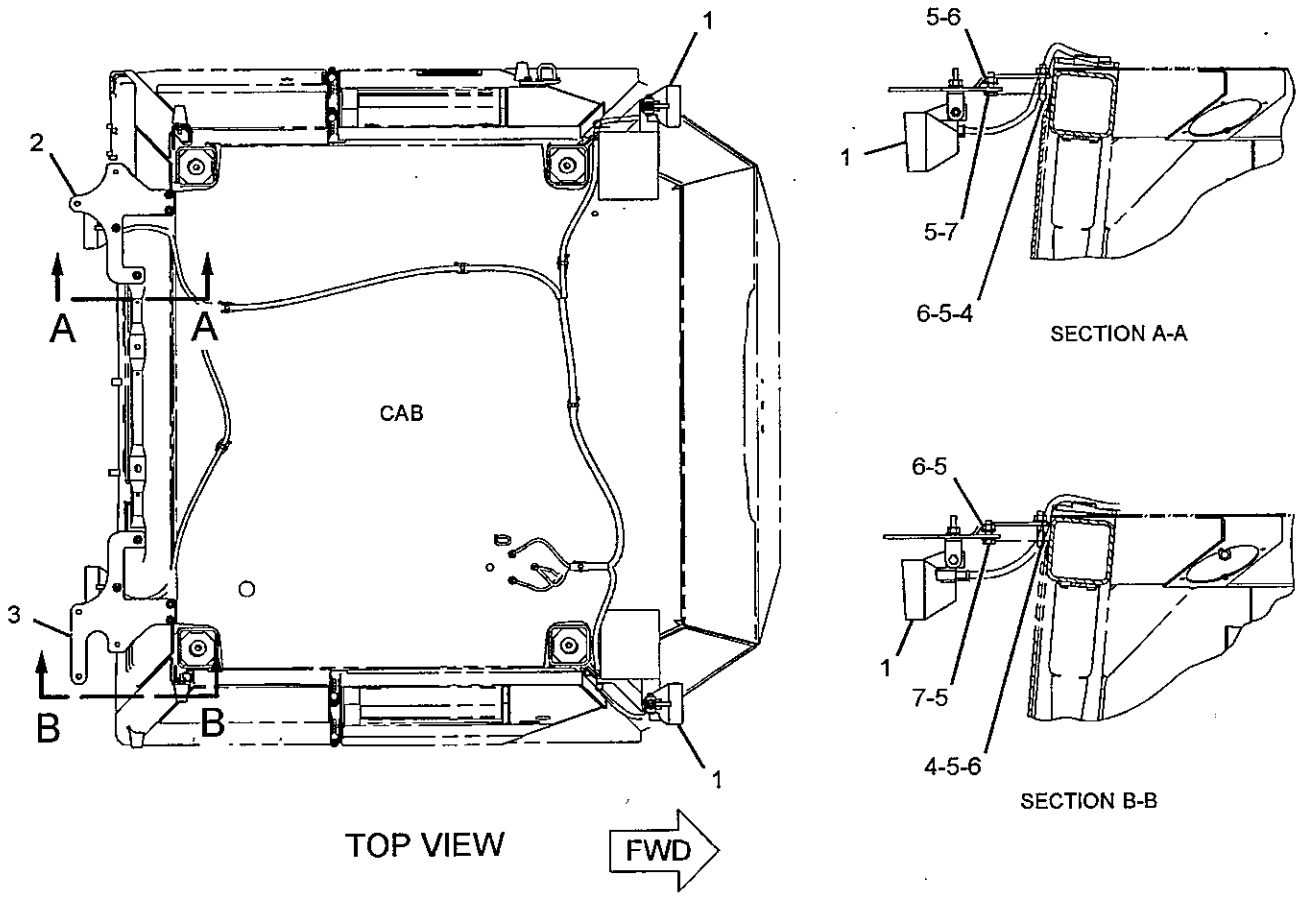


GRAPHIC #1 **<END>** g01116742

## 235-8560 LIGHTING GP-FLOOD–4-LAMP, CAB–HIGH INTENSITY DISCHARGE

S/N: JMS1-UP

PART OF 266-1620 MACHINE AR, 246-8697 ROADING AR AN ATTACHMENT

SMCS-1434 i02286137

| NOTE | REF NO | GRAPHIC REF | PART NUMBER | QTY | PART NAME 1 2 3 4 5 6 (PRODUCT LEVEL) | SEE PAGE |
|---|---|---|---|---|---|---|
| | 1 | 1 | 3S-2093 | 8 | STRAP-CABLE | |
| | 2 | 1 | 236-7773 | 1 | HARNESS AS-LIGHTING | |
| | | 1 | 155-2270 | 8 | KIT-CONNECTING PLUG (2-PIN) | |
| | | | | | (EACH INCLUDES PLUG AS AND WEDGE) | |
| | 5 | 1 | 236-9775 | 1 | BRACKET AS (LH) | |
| | 6 | 1 | 236-9776 | 1 | BRACKET AS (RH) | |
| | 8 | 1 | 132-5789 | 2 | CLIP | |
| Y | 9 | 1 | 210-8422 | 2 | LAMP GP-FLOOD (24-VOLT, 35-WATT, SUSPENDED MT) | 172 |
| Y | 10 | 1 | 210-8423 | 2 | LAMP GP-FLOOD (24-VOLT, 35-WATT, VERTICAL MT) | 173 |
| | 11 | 1 | 251-4339 | 1 | SWITCH AS-ROCKER (FRONT, REAR FLOODLIGHTS) | |
| | 12 | 1 | 8T-4121 | 4 | WASHER-HARD (11X21X2.5-MM THK) | |
| M | 13 | 1 | 8T-4133 | 2 | NUT (M10X1.5-THD) | |
| M | 14 | 1 | 8T-4195 | 2 | BOLT (M10X1.5X30-MM) | |
| | 15 | 1 | 9M-8406 | 4 | CLIP | |

M-METRIC PART
Y-SEPARATE ILLUSTRATION

*235-8560* **LIGHTING GP-FLOOD** *(contd.)* **i02286137**

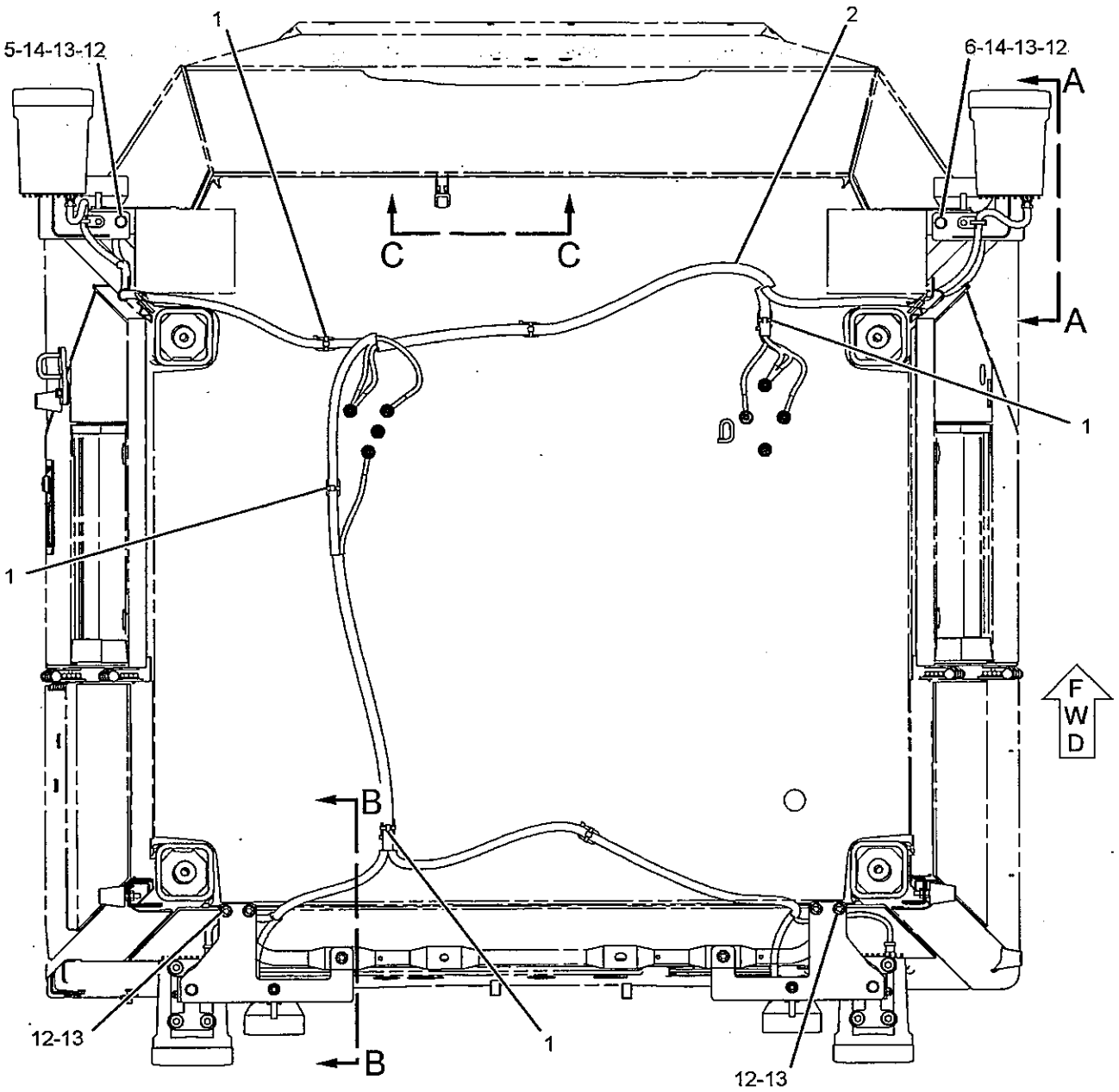


TOP VIEW

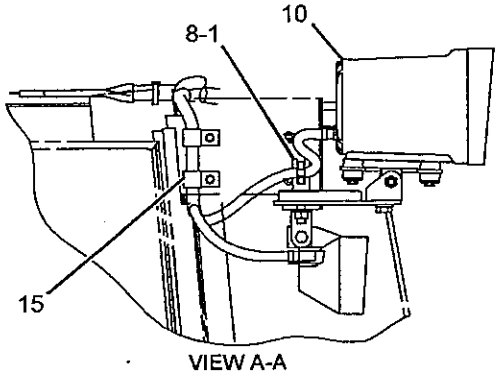


VIEW A-A

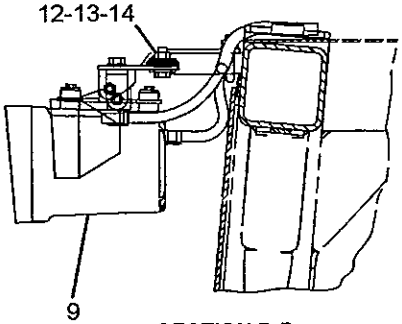


SECTION B-B

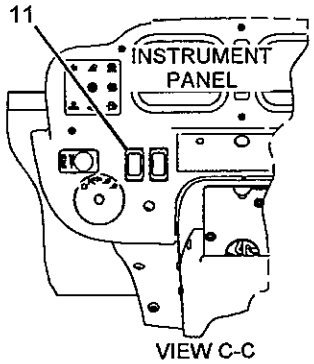


VIEW C-C

GRAPHIC #1

**<END>**

g01144307

# ELECTRICAL AND STARTING SYSTEM

## *235-5275* LIGHTING GP-FLOOD & SIGNAL

**S/N: JMS1-UP**

**PART OF 225-5539 ELECTRICAL AR**

**SMCS-1430, 1434** **i02209259**

| NOTE | REF NO | GRAPHIC REF | PART NUMBER | QTY | PART NAME 1 2 3 4 5 6 (PRODUCT LEVEL) | SEE PAGE |
|---|---|---|---|---|---|---|
| Y | 1 | 1 | **135-0426** | 2 | LAMP GP-SIGNAL (24-VOLT, STOP, TAIL) | 177 |
| Y | 2 | 1 | **219-6485** | 2 | LAMP GP-FLOOD (24-VOLT, VERTICAL MOUNT) | 174 |
| | 3 | 1 | **261-2332** | 1 | BRACKET AS (RH) | |
| | 4 | 1 | **261-2333** | 1 | BRACKET AS (LH) | |
| | 5 | 1 | **246-3290** | 2 | PLATE AS | |
| | | | | | (EACH INCLUDES) | |
| M | | 1 | **8T-4935** | 1 | BOSS-WELD (M10X1.5X45-MM OAL) | |
| | 6 | 1 | **130-5300** | 4 | CLIP | |
| M | 7 | 1 | **5C-2890** | 6 | NUT (M6X1-THD) | |
| | 8 | 1 | **111-4013** | 2 | GROMMET | |
| | 9 | 1 | **8T-4121** | 10 | WASHER-HARD (11X21X2.5-MM THK) | |
| M | 10 | 1 | **8T-4136** | 10 | BOLT (M10X1.5X25-MM) | |
| M | 11 | 1 | **9X-2044** | 8 | SCREW-TRUSS HEAD (M6X1X16-MM) | |
| | 12 | 1 | **9X-8256** | 6 | WASHER (6.6X12X2-MM THK) | |

M-METRIC PART
Y-SEPARATE ILLUSTRATION

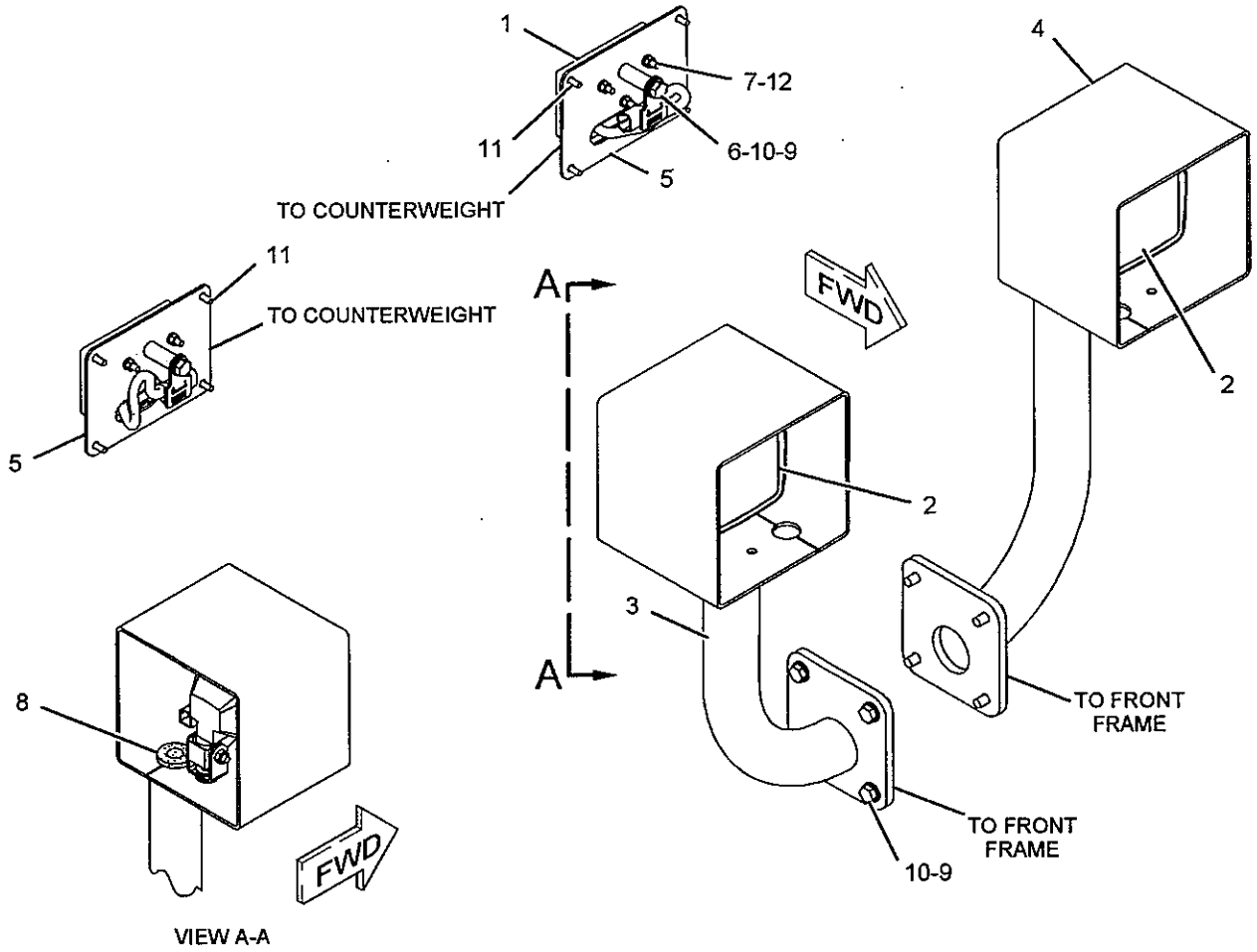


GRAPHIC #1 **<END>** g01117150

# 261-4660 LIGHTING GP-FLOOD & SIGNAL

S/N: JMS1-UP

PART OF 263-8419 LIGHTING AR-SIGNAL AN ATTACHMENT

SMCS-1430, 1434 i02282107

| NOTE | REF NO | GRAPHIC REF | PART NUMBER | QTY | PART NAME 1 2 3 4 5 6 (PRODUCT LEVEL) | SEE PAGE |
|---|---|---|---|---|---|---|
| Y | 1 | 1 | 3E-6466 | 2 | LAMP GP-SIGNAL (24-VOLT) | 176 |
| | 2 | 1 | 111-4013 | 2 | GROMMET | |
| Y | 3 | 1 | 145-6929 | 2 | LAMP GP-STOP & TAIL (24-VOLT) | 178 |
| Y | 4 | 1 | 219-6485 | 2 | LAMP GP-FLOOD (24-VOLT) | 174 |
| | 5 | 1 | 246-3295 | 2 | PLATE AS | |
| | | | | | (EACH INCLUDES) | |
| M | | 1 | 8T-4935 | 1 | BOSS-WELD (M10X1.5X45-MM) | |
| | 6 | 1 | 261-4403 | 1 | BRACKET AS (RH) | |
| M | | 1 | 6V-9632 | 4 | NUT-WELD (M6X1-THD) | |
| M | | 1 | 8T-3851 | 1 | BOSS-WELD (M10X1.5X17.5-MM) | |
| | 7 | 1 | 261-4404 | 1 | BRACKET AS (LH) | |
| M | | 1 | 6V-9632 | 4 | NUT-WELD (M6X1-THD) | |
| M | | 1 | 8T-3851 | 1 | BOSS-WELD (M10X1.5X17.5-MM) | |
| | 8 | 1 | 261-4884 | 2 | COVER | |
| | 9 | 1 | 130-5300 | 6 | CLIP | |
| M | 10 | 1 | 5C-2890 | 6 | NUT (M6X1-THD) | |
| | 11 | 1 | 8T-4121 | 12 | WASHER-HARD (11X21X2.5-MM THK) | |
| M | 12 | 1 | 8T-4136 | 10 | BOLT (M10X1.5X25-MM) | |
| M | 13 | 1 | 8T-4137 | 2 | BOLT (M10X1.5X20-MM) | |
| M | 14 | 1 | 8T-4138 | 8 | BOLT (M6X1X20-MM) | |
| | 15 | 1 | 8T-4205 | 8 | WASHER-HARD (7.2X14.5X2-MM THK) | |
| M | 16 | 1 | 9X-2044 | 8 | SCREW-TRUSS HEAD (M6X1X16-MM) | |
| | 17 | 1 | 9X-8256 | 6 | WASHER (6.6X12X2-MM THK) | |

M-METRIC PART
Y-SEPARATE ILLUSTRATION

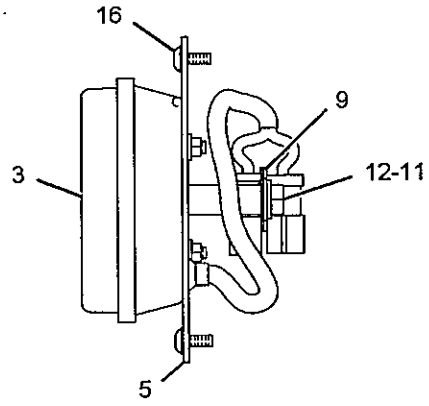


VIEW OF AREA B

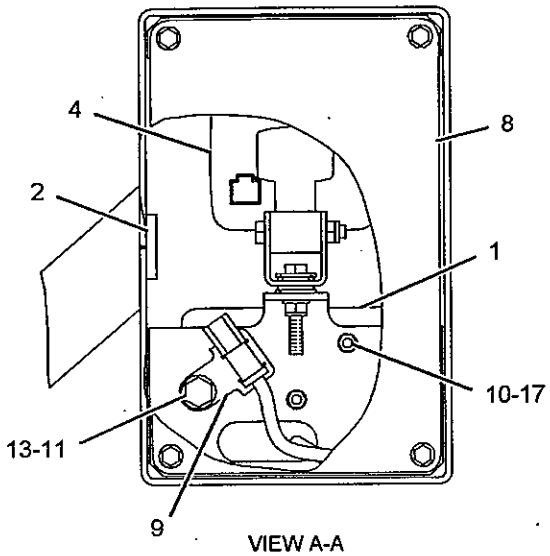


VIEW A-A

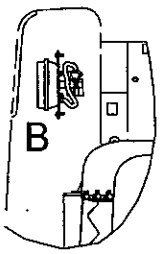


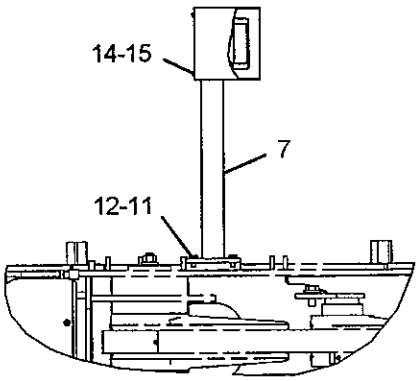


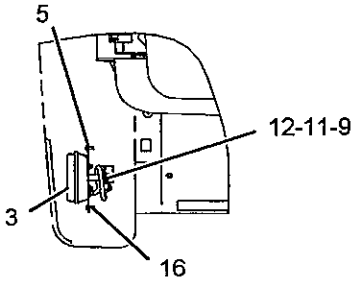


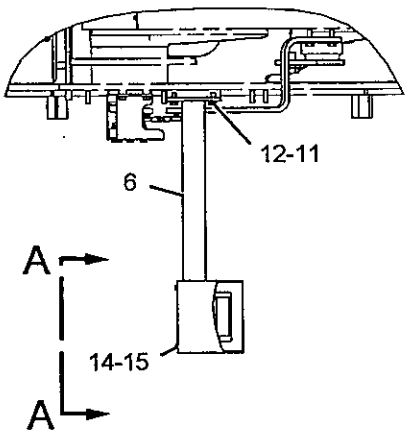


FWD

TOP VIEW

GRAPHIC #1 **<END>** g01142187

# *261-8673* LIGHTING GP-SIGNAL

**S/N: JMS1-UP**

**PART OF 246-3564 LIGHTING AR-SIGNAL**

**AN ATTACHMENT**

**SMCS-1430** **i02283985**

| NOTE | REF NO | GRAPHIC REF | PART NUMBER | QTY | PART NAME 1 2 3 4 5 6 (PRODUCT LEVEL) | SEE PAGE |
|---|---|---|---|---|---|---|
| Y | 1 | 1 | **3E-6466** | 2 | LAMP GP-SIGNAL (24-VOLT) | 176 |
| | 2 | 1 | **111-4013** | 2 | GROMMET | |
| Y | 3 | 1 | **145-6929** | 2 | LAMP GP-STOP & TAIL (24-VOLT) | 178 |
| Y | 4 | 1 | **219-6485** | 2 | LAMP GP-FLOOD (24-VOLT, VERTICAL MOUNT) | 174 |
| | 5 | 1 | **248-0423** | 1 | BRACKET AS (RH) | |
| M | | 1 | **6V-9632** | 2 | NUT-WELD (M6X1-THD) | |
| M | | 1 | **8T-4935** | 1 | BOSS-WELD (M10X1.5X45-MM) | |
| | 6 | 1 | **248-0424** | 1 | BRACKET AS (LH) | |
| M | | 1 | **6V-9632** | 2 | NUT-WELD (M6X1-THD) | |
| M | | 1 | **8T-4935** | 1 | BOSS-WELD (M10X1.5X45-MM) | |
| | 7 | 1 | **248-0426** | 2 | COVER | |
| | 8 | 1 | **261-4403** | 1 | BRACKET AS (RH) | |
| M | | 1 | **6V-9632** | 4 | NUT-WELD (M6X1-THD) | |
| M | | 1 | **8T-3851** | 1 | BOSS-WELD (M10X1.5X17.5-MM) | |
| | 9 | 1 | **261-4404** | 1 | BRACKET AS (LH) | |
| M | | 1 | **6V-9632** | 4 | NUT-WELD (M6X1-THD) | |
| M | | 1 | **8T-3851** | 1 | BOSS-WELD (M10X1.5X17.5-MM) | |
| | 10 | 1 | **261-4884** | 2 | COVER | |
| | 11 | 1 | **130-5300** | 6 | CLIP | |
| M | 12 | 1 | **5C-2890** | 6 | NUT (M6X1-THD) | |
| M | 13 | 1 | **5C-9553** | 4 | BOLT (M6X1X16-MM) | |
| | 14 | 1 | **8T-4121** | 16 | WASHER-HARD (11X21X2.5-MM THK) | |
| M | 15 | 1 | **8T-4136** | 14 | BOLT (M10X1.5X25-MM) | |
| M | 16 | 1 | **8T-4137** | 2 | BOLT (M10X1.5X20-MM) | |
| M | 17 | 1 | **8T-4138** | 8 | BOLT (M6X1X20-MM) | |
| | 18 | 1 | **8T-4205** | 8 | WASHER-HARD (7.2X14.5X2-MM THK) | |
| | 19 | 1 | **9X-8256** | 10 | WASHER (6.6X12X2-MM THK) | |

M-METRIC PART
Y-SEPARATE ILLUSTRATION

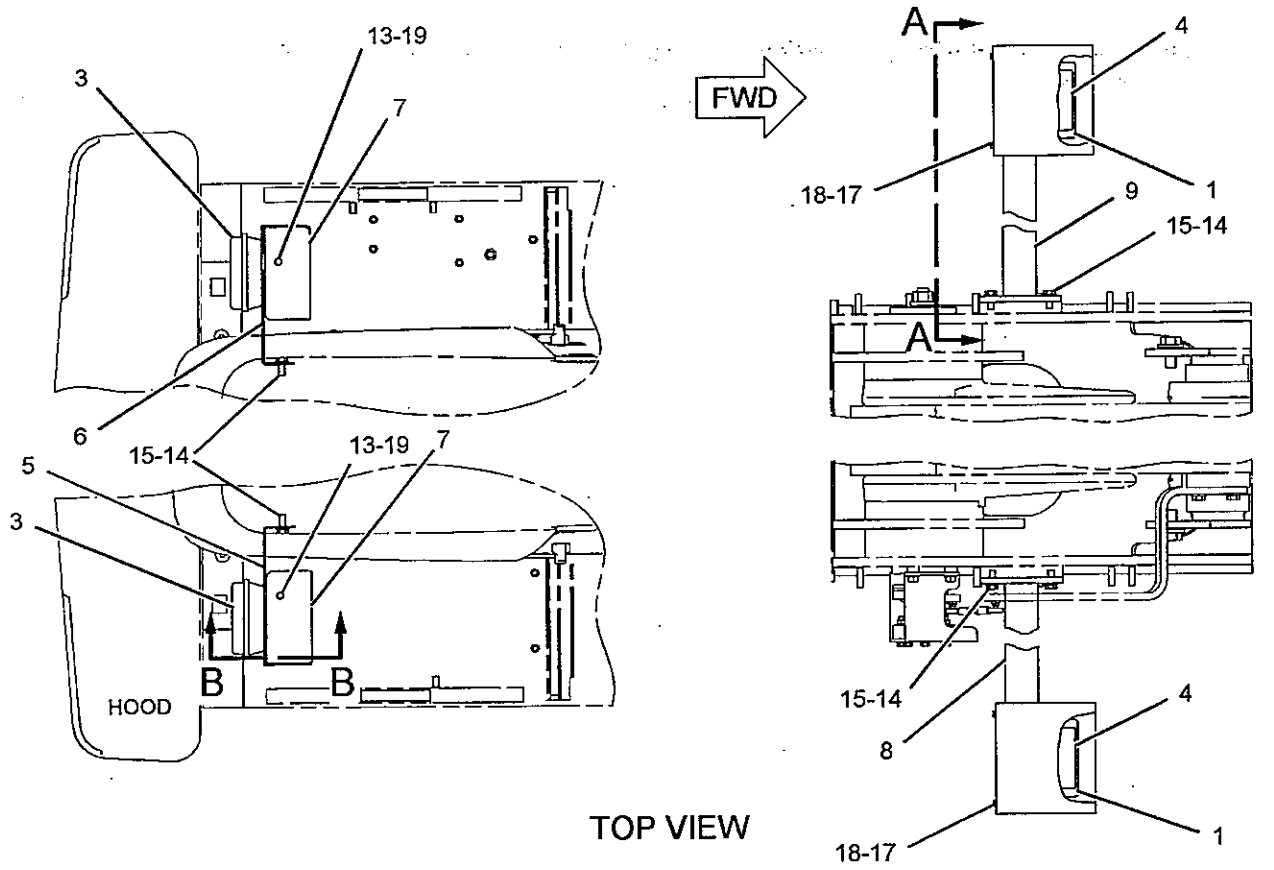


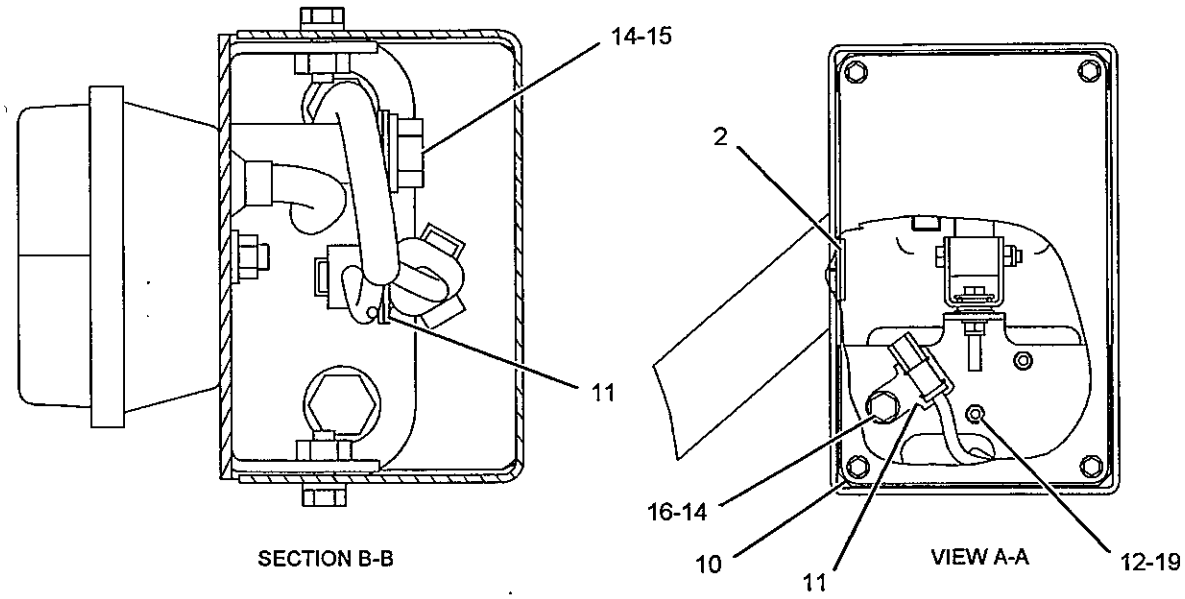


GRAPHIC #1 **<END>** g01144283

# 256-9812 LIGHTING GP-WARNING BEACON

S/N: JMS1-UP
AN ATTACHMENT

SMCS-1431 i02267001

| NOTE | REF NO | GRAPHIC REF | PART NUMBER | QTY | PART NAME 1 2 3 4 5 6 (PRODUCT LEVEL) | SEE PAGE |
|---|---|---|---|---|---|---|
| | 1 | 1 | 3S-2093 | 5 | STRAP-CABLE | |
| | 2 | 1 | 9T-8556 | 1 | SPRING | |
| Y | 3 | 1 | 235-3937 | 1 | LAMP GP-WARNING BEACON (24-VOLT, AMBER) | 179 |
| | 4 | 1 | 236-7775 | 1 | HARNESS AS-LIGHTING (WARNING BEACON) | |
| | | 1 | 155-2270 | 1 | KIT-CONNECTING PLUG (2-PIN) | |
| | | | | | (KIT INCLUDES PLUG AS AND WEDGE) | |
| | 5 | 1 | 237-7262 | 1 | PLATE AS | |
| | 6 | 1 | 237-9736 | 1 | SWITCH AS-ROCKER (WARNING BEACON) | |
| | 7 | 1 | 255-4370 | 1 | BRACKET | |
| M | | 1 | 6V-9632 | 4 | NUT-WELD (M6X1-THD) | |
| M | | 1 | 8T-3490 | 2 | NUT-WELD (M10X1.5-THD) | |
| | 8 | 1 | 255-4371 | 1 | BRACKET | |
| M | | 1 | 8T-3490 | 4 | NUT-WELD (M10X1.5-THD) | |
| | 9 | 1 | 122-8705 | 2 | U-BOLT | |
| M | 10 | 1 | 129-3180 | 1 | LOCKNUT (M12X1.75-THD) | |
| | 11 | 1 | 130-5300 | 1 | CLIP | |
| | 12 | 1 | 8T-0255 | 1 | PIN-SPRING | |
| | 13 | 1 | 8T-4121 | 11 | WASHER-HARD (11X21X2.5-MM THK) | |
| | 14 | 1 | 8T-4122 | 1 | WASHER-HARD (17X32X3.5-MM THK) | |
| M | 15 | 1 | 8T-4133 | 4 | NUT (M10X1.5-THD) | |
| M | 16 | 1 | 8T-4137 | 7 | BOLT (M10X1.5X20-MM) | |
| | 17 | 1 | 8T-4223 | 1 | WASHER-HARD (13.5X25.5X3-MM THK) | |

M-METRIC PART
Y-SEPARATE ILLUSTRATION

## *256-9812* LIGHTING GP-WARNING BEACON *(contd.)* i02267001

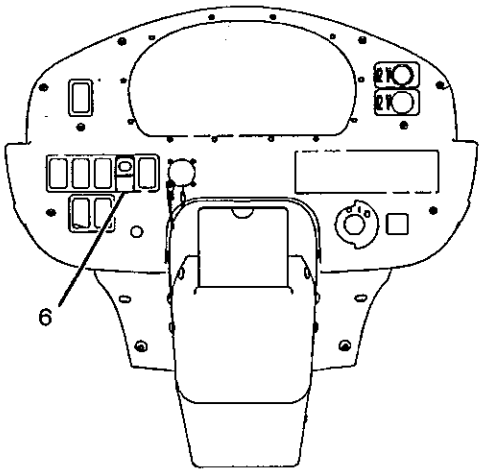


VIEW A-A

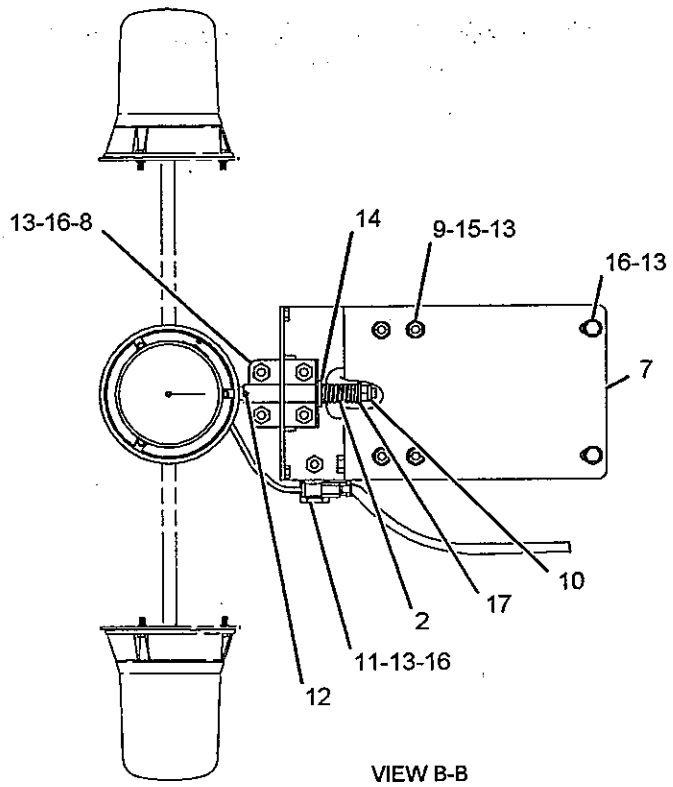


VIEW B-B

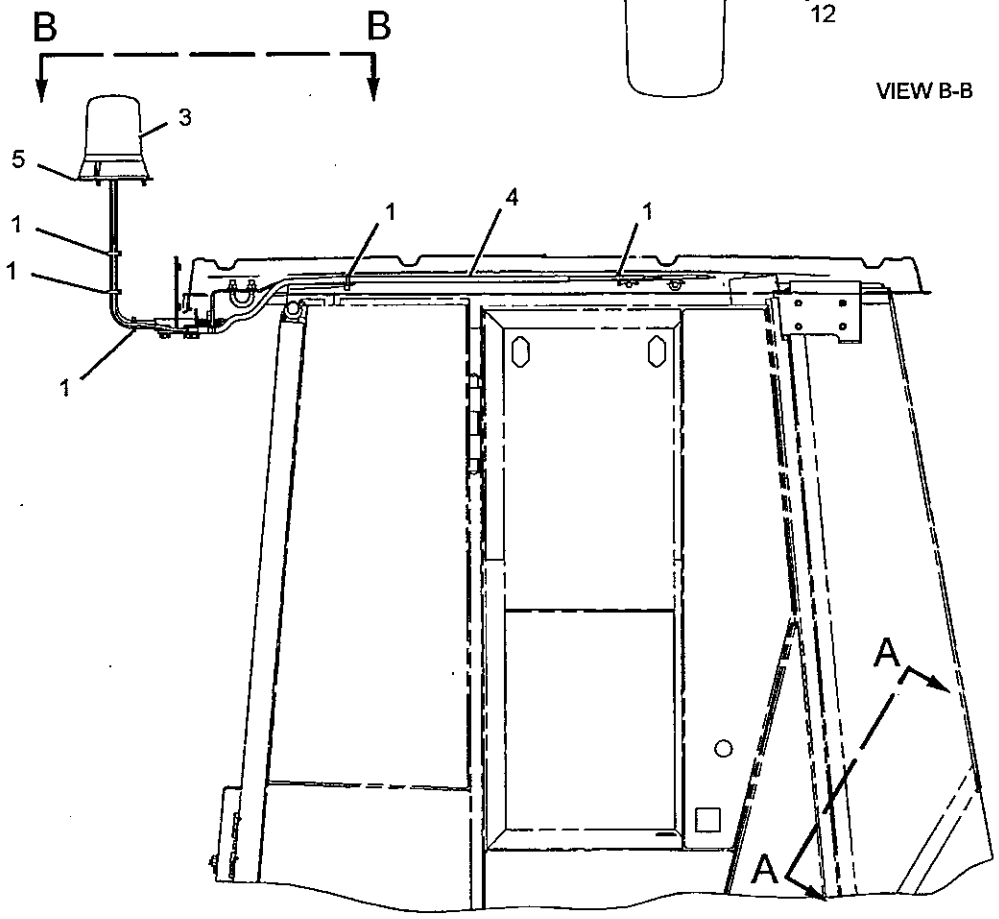


RIGHT SIDE VIEW

GRAPHIC #1 **<END>** g01115367

# *149-0175* MOUNTING GP-PRESSURE SENSOR–PAYLOAD

**S/N: JMS1-UP**

**PART OF 238-6681 MONITOR AR-PAYLOAD**

**AN ATTACHMENT**

**SMCS-1923, 1924, 7494** i02194149

| NOTE | REF NO | GRAPHIC REF | PART NUMBER | QTY | PART NAME 1 2 3 4 5 6 (PRODUCT LEVEL) | SEE PAGE |
|---|---|---|---|---|---|---|
| | 1 | 1 | **6V-0852** | 2 | CAP-DUST | |
| | 2 | 1 | *164-5567* | 2 | FITTING GP-COUPLING | |
| | | | | | (EACH INCLUDES) | |
| | | 1 | **3J-1907** | 1 | SEAL-O-RING | |
| | | 1 | **6V-3965** | 1 | FITTING AS (QUICK DISCONNECT) | |
| | 3 | 1 | *148-8424* | 2 | TEE AS | |
| | | | | | (EACH INCLUDES) | |
| | | 1 | **6V-8397** | 1 | SEAL-O-RING | |
| | | 1 | **8T-8902** | 1 | TEE | |
| | 4 | 1 | **164-6871** | 2 | ADAPTER AS | |
| Y | 5 | 1 | **124-4672** | 1 | SENSOR GP-PRESSURE (PAYLOAD, LIFT CYL HEAD END OIL) | 208 |
| Y | 5A | 1 | **124-4672** | 1 | SENSOR GP-PRESSURE (PAYLOAD, LIFT CYL ROD END OIL) | 208 |
| | 6 | 1 | **226-6640** | 2 | BRACKET AS | |
| I | 7 | 1 | **226-9738** | 2 | HOSE AS | |
| | 10 | 1 | *155-7327* | 2 | CONNECTOR AS | |
| | | | | | (EACH INCLUDES) | |
| | | 1 | **3J-1907** | 1 | SEAL-O-RING | |
| | | 1 | **5H-8853** | 1 | SEAL-O-RING | |
| | | 1 | **6V-8636** | 1 | CONNECTOR | |
| | 11 | 1 | *148-8378* | 1 | ELBOW AS | |
| | | 1 | **3J-1907** | 1 | SEAL-O-RING | |
| | | 1 | **6V-8397** | 1 | SEAL-O-RING | |
| | | 1 | **6V-8724** | 1 | ELBOW | |
| | 12 | 1 | *150-3036* | 1 | ELBOW AS | |
| | | 1 | **3J-1907** | 1 | SEAL-O-RING | |
| | | 1 | **6V-8397** | 1 | SEAL-O-RING | |
| | | 1 | **8T-1905** | 1 | ELBOW | |
| M | 13 | 1 | **8T-4139** | 4 | BOLT (M12X1.75X30-MM) | |
| | 14 | 1 | **8T-4223** | 4 | WASHER-HARD (13.5X25.5X3-MM THK) | |

I-REFER TO HYDRAULIC INFORMATION SYSTEM
M-METRIC PART
Y-SEPARATE ILLUSTRATION

149-0175 **MOUNTING GP-PRESSURE SENSOR** *(contd.)* i02194149

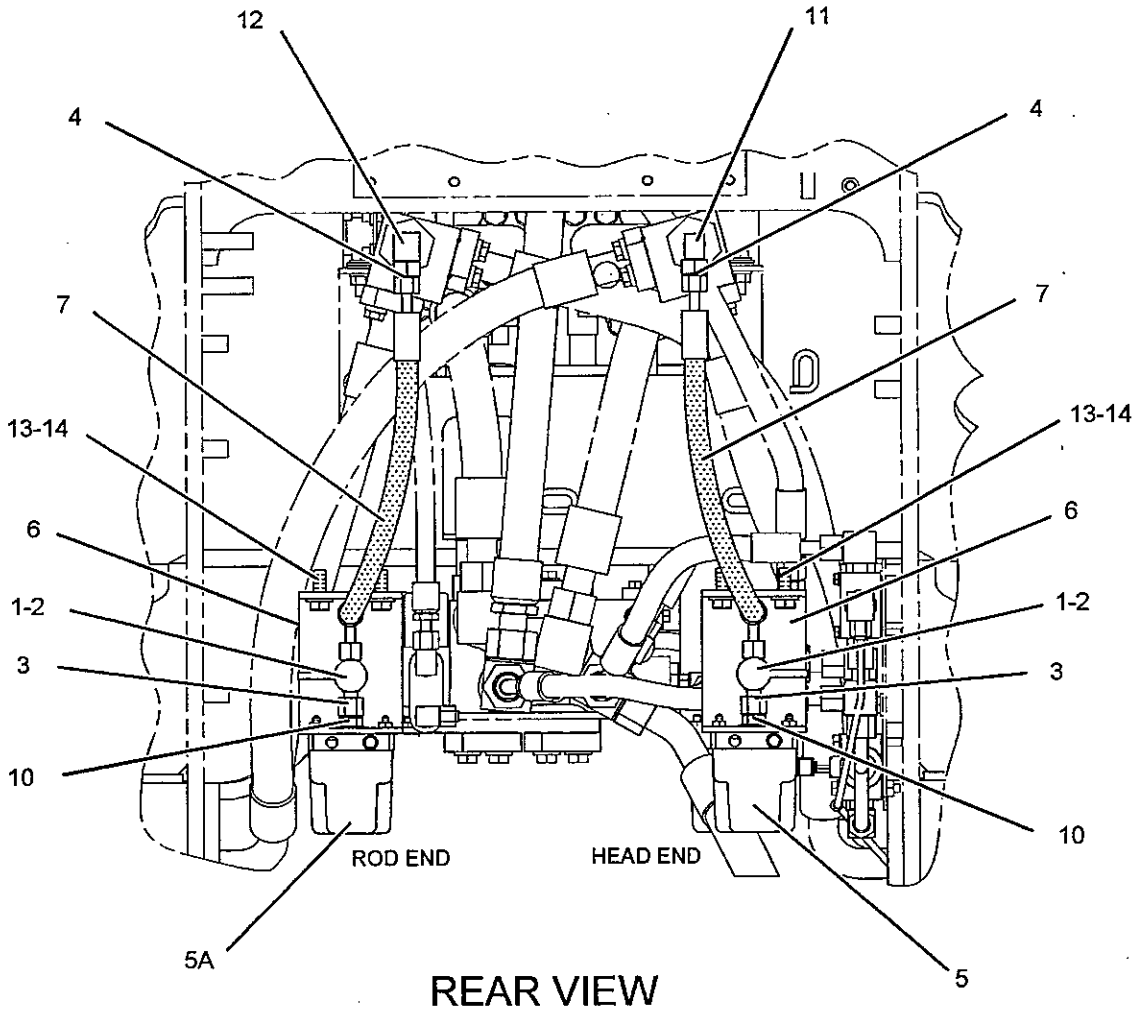


REAR VIEW

GRAPHIC #1 **<END>** g01108234

# 178-7917 MOUNTING GP-PRESSURE SENSOR–AUTODIG

S/N: JMS1-UP
PART OF 233-9781 CONTROL AR-AUTODIG
AN ATTACHMENT

SMCS-1923, 1924, 7494 i02124173

| NOTE | REF NO | GRAPHIC REF | PART NUMBER | QTY | PART NAME 1 2 3 4 5 6 (PRODUCT LEVEL) | SEE PAGE |
|---|---|---|---|---|---|---|
| | 1 | 1 | 3J-1907 | 3 | SEAL-O-RING | |
| C | 2 | 1 | 226-6640 | 1 | BRACKET AS | |
| | 3 | 1 | 6V-0852 | 1 | CAP-DUST | |
| | 4 | 1 | 6V-3965 | 1 | FITTING AS | |
| | 5 | 1 | 6V-8397 | 4 | SEAL-O-RING | |
| | 6 | 1 | 8T-8902 | 1 | TEE | |
| | 7 | 1 | 122-2222 | 1 | ADAPTER | |
| Y | 8 | 1 | 124-4672 | 1 | SENSOR GP-PRESSURE (AUTODIG, LIFT CYLINDER OIL) | 208 |
| CI | 9 | 1 | 226-9738 | 1 | HOSE AS | |
| | 10 | 1 | 6V-8636 | 1 | CONNECTOR | |
| | 11 | 1 | 6V-8724 | 1 | ELBOW | |
| M | 12 | 1 | 8T-4139 | 2 | BOLT (M12X1.75X30-MM) | |
| | 13 | 1 | 8T-4223 | 2 | WASHER-HARD (13.5X25.5X3-MM THK) | |

C-CHANGE FROM PREVIOUS TYPE
I-REFER TO HYDRAULIC INFORMATION SYSTEM
M-METRIC PART
Y-SEPARATE ILLUSTRATION

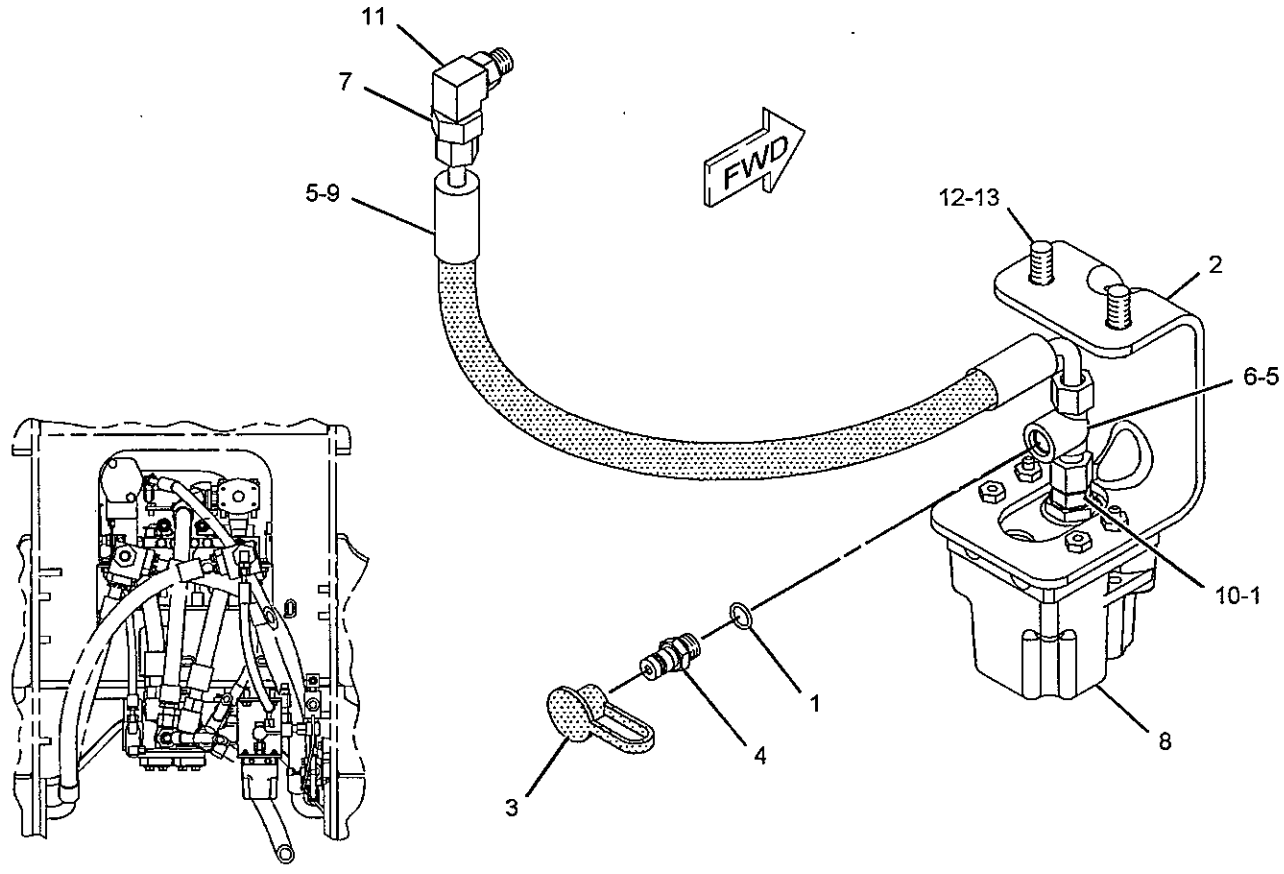


REAR VIEW

GRAPHIC #1 **<END>** g01083567

# ELECTRICAL AND STARTING SYSTEM

## *232-4568* PANEL GP-CIRCUIT BREAKER

**S/N: JMS1-UP**

**PART OF 232-4555 WIRING GP-CHASSIS**

**SMCS-1417, 1420** **i02281330**

| NOTE | REF NO | GRAPHIC REF | PART NUMBER | QTY | PART NAME 1 2 3 4 5 6 (PRODUCT LEVEL) | SEE PAGE |
|---|---|---|---|---|---|---|
| | 2 | 1 | 7K-1181 | 4 | STRAP-CABLE | |
| Y | 3 | 1 | 125-1302 | 1 | SWITCH GP-MAGNETIC (24-VOLT) (START RELAY) | 235 |
| Y | 4 | 1 | 241-8368 | 1 | SWITCH GP-MAGNETIC (24-VOLT) (MAIN RELAY) | 236 |
| | 5 | 1 | 218-4935 | 1 | SUPPRESSOR-ARC | |
| | 6 | 1 | 225-2600 | 1 | STRAP | |
| | 7 | 1 | 232-4569 | 1 | HARNESS AS-PANEL | |
| | | 1 | 102-8802 | 8 | KIT-RECEPTACLE (2-PIN) | |
| | | 1 | 102-8803 | 2 | KIT-RECEPTACLE (3-PIN) | |
| | | 1 | 102-8804 | 1 | KIT-RECEPTACLE (4-PIN) | |
| | | 1 | 102-8801 | 1 | KIT-RECEPTACLE (12-PIN) | |
| | | | | | (EACH KIT INCLUDES RECEPTACLE AS AND WEDGE) | |
| | | 1 | 7G-7917 | 1 | PLUG-SEAL | |
| | | 1 | 7G-7918 | 1 | PLUG-SEAL | |
| | | 1 | 7G-7919 | 1 | PLUG-SEAL | |
| | | 1 | 7K-1181 | 4 | STRAP-CABLE | |
| | | 1 | 8N-1533 | 1 | PLUG AS-CONNECTOR (7-PIN) | |
| | | 1 | 8N-1535 | 1 | BELL AS-END | |
| | | 1 | 8T-8737 | 89 | PLUG-SEAL | |
| | | 1 | 9X-1054 | 1 | PLUG AS-CONNECTOR (4-PIN) | |
| | | 1 | 9X-1343 | 1 | RECEPTACLE AS (40-PIN) | |
| | | 1 | 9X-6772 | 1 | STRAP-CABLE | |
| | | 1 | 113-0580 | 1 | RECEPTACLE AS (40-PIN) | |
| | | 1 | 127-5485 | 1 | PLUG AS-CONNECTOR (1-PIN) | |
| | | 1 | 155-2255 | 2 | KIT-CONNECTING PLUG (12-PIN) | |
| | | 1 | 155-2260 | 4 | KIT-CONNECTING PLUG (3-PIN) | |
| | | 1 | 155-2270 | 11 | KIT-CONNECTING PLUG (2-PIN) | |
| | | 1 | 155-2271 | 2 | KIT-CONNECTING PLUG (4-PIN) | |
| | | | | | (EACH KIT INCLUDES PLUG AS AND WEDGE) | |
| | | 1 | 160-7689 | 1 | PLUG AS-CONNECTOR (70-PIN) | |
| | 8 | 1 | 237-1879 | 1 | PLATE AS | |
| M | | 1 | 6V-9632 | 5 | NUT-WELD (M6X1-THD) | |
| | | 1 | 7T-1099 | 3 | LINK | |
| M | | 1 | 8T-3490 | 3 | NUT-WELD (M10X1.5-THD) | |
| M | | 1 | 8T-3851 | 3 | BOSS-WELD (M10X1.5X17.5-MM) | |
| | 9 | 1 | 237-1880 | 1 | COVER | |
| | 10 | 1 | 237-3931 | 1 | BAR-BUS | |
| | 11 | 1 | 237-3932 | 1 | BAR-BUS | |
| | 12 | 1 | 237-9876 | 1 | FILM-CIRCUIT BREAKER (FUSE) | |
| | 13 | 1 | 249-8928 | 1 | WIRE AS | |
| | 14 | 1 | 250-1122 | 1 | FILM-CIRCUIT BREAKER (PANEL) | |
| | 15 | 1 | 130-5300 | 3 | CLIP | |
| | 16 | 1 | 171-2206 | 1 | CIRCUIT BREAKER AS (50-AMPERE) (START) | |
| | | 1 | 1H-3244 | 2 | LOCKWASHER | |
| | | 1 | 6V-8187 | 2 | NUT (1/4-28-THD) | |
| | | 1 | 8T-4205 | 2 | WASHER-HARD (7.2X14.5X2-MM THK) | |
| | 17 | 1 | 171-2208 | 1 | CIRCUIT BREAKER GP (60-AMPERE) (HOOD TILT ACTUATOR) | |
| | | 1 | 1H-3244 | 2 | LOCKWASHER | |
| | | 1 | 6V-8187 | 2 | NUT (1/4-28-THD) | |
| | | 1 | 8T-4205 | 2 | WASHER-HARD (7.2X14.5X2-MM THK) | |
| | 18 | 1 | 171-2210 | 1 | CIRCUIT BREAKER AS (80-AMPERE) (MAIN) | |
| | | 1 | 1H-3244 | 2 | LOCKWASHER | |
| | | 1 | 6V-8187 | 2 | NUT (1/4-28-THD) | |
| | | 1 | 8T-4205 | 2 | WASHER-HARD (7.2X14.5X2-MM THK) | |
| | 19 | 1 | 171-2212 | 1 | CIRCUIT BREAKER AS (105-AMPERE) (ALTERNATOR) | |
| | | 1 | 1H-3244 | 2 | LOCKWASHER | |

## *232-4568* PANEL GP-CIRCUIT BREAKER *(contd.)*

i02281330

| NOTE | REF NO | GRAPHIC REF | PART NUMBER | QTY | PART NAME 1 2 3 4 5 6 (PRODUCT LEVEL) | SEE PAGE |
|---|---|---|---|---|---|---|
| | | 1 | **6V-8187** | 2 | NUT (1/4-28-THD) | |
| | | 1 | **8T-4205** | 2 | WASHER-HARD (7.2X14.5X2-MM THK) | |
| | 20 | 1 | **3T-2662** | 1 | CIRCUIT BREAKER AS (15-AMPERE) (RUNNING LIGHTS) | |
| | | 1 | **6V-8376** | 2 | SCREW-MACHINE (8-32X0.25-IN) | |
| | | 1 | **9B-7233** | 2 | LOCKWASHER | |
| M | 21 | 1 | **5C-9553** | 4 | BOLT (M6X1X16-MM) | |
| | 22 | 1 | **5L-4507** | 8 | SCREW-MACHINE (10-32X0.875-IN) | |
| | 23 | 1 | **5M-6668** | 4 | SCREW-MACHINE (8-32X0.75-IN) | |
| | 24 | 1 | **7P-3895** | 2 | BUTTON-PLUG | |
| | 25 | 1 | **6T-3644** | 1 | CIRCUIT BREAKER GP (20-AMPERE) (UNSWITCHED BAT POWER TO CAB) | |
| | | 1 | **6V-8376** | 2 | SCREW-MACHINE (8-32X0.25-IN) | |
| | | 1 | **9B-7233** | 2 | LOCKWASHER | |
| | 26 | 1 | **8T-4121** | 3 | WASHER-HARD (11X21X2.5-MM THK) | |
| M | 27 | 1 | **8T-4137** | 3 | BOLT (M10X1.5X20-MM) | |
| | 28 | 1 | **9D-3767** | 1 | PLUG-BUTTON | |
| | 29 | 1 | **9X-8250** | 1 | CLIP | |
| | 30 | 1 | **9X-8256** | 4 | WASHER (6.6X12X2-MM THK) | |

M-METRIC PART
Y-SEPARATE ILLUSTRATION

## *232-4568* PANEL GP-CIRCUIT BREAKER *(contd.)*

i02281330

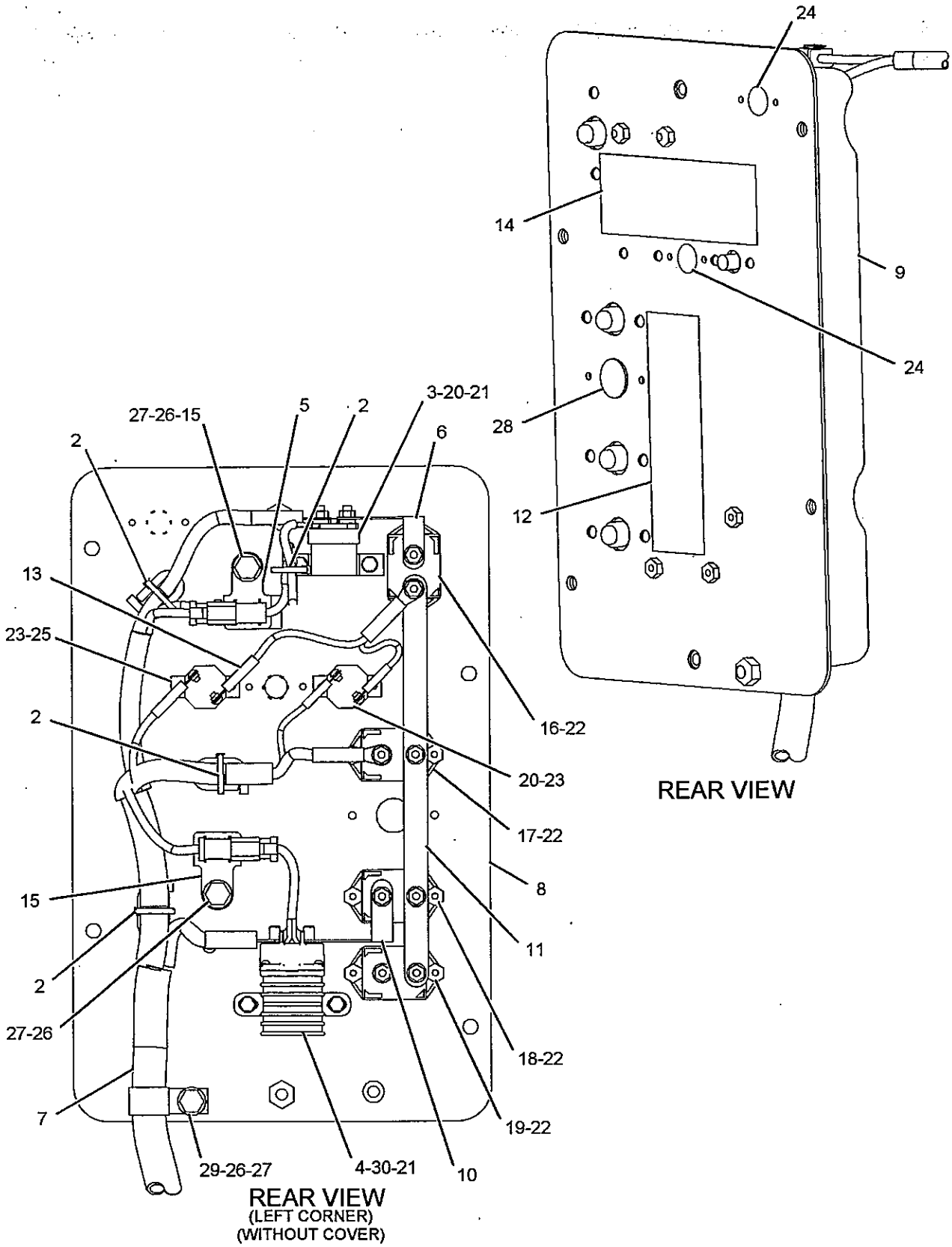


GRAPHIC #1

**<END>**

g01142042

# ELECTRICAL AND STARTING SYSTEM

## *232-4557* RECEPTACLE GP-AUXILIARY START

**S/N: JMS1-UP**
**AN ATTACHMENT**

**SMCS-1463** **i02279288**

| NOTE | REF NO | GRAPHIC REF | PART NUMBER | QTY | PART NAME 1 2 3 4 5 6 (PRODUCT LEVEL) | SEE PAGE |
|---|---|---|---|---|---|---|
| | 1 | 1 | 8S-2634 | 1 | COVER AS | |
| | | 1 | 2P-2975 | 2 | SEAL-O-RING | |
| | 2 | 1 | 121-7848 | 2 | PLATE | |
| | 3 | 1 | 237-4944 | 1 | RECEPTACLE AS | |
| | | 1 | 1S-7251 | 2 | TERMINAL-RING (FOR 1/2-IN BOLT) | |
| E | | 1 | 125-7876 | | TUBE-HEAT SHRINK (5-CM) | |
| E | | 1 | 159-8049 | | CABLE (00-GA, RED) (77-CM) | |
| E | | 1 | 159-8050 | | CABLE (00-GA, BLACK) (28-CM) | |
| | 4 | 1 | 205-7299 | 1 | CLIP | |
| | 5 | 1 | 8T-4121 | 1 | WASHER-HARD (11X21X2.5-MM THK) | |
| M | 6 | 1 | 8T-4137 | 1 | BOLT (M10X1.5X20-MM) | |
| | 7 | 1 | 8T-4224 | 4 | WASHER-HARD (8.8X16X2-MM THK) | |
| M | 8 | 1 | 8T-4908 | 4 | BOLT (M8X1.25X25-MM) | |
| | 9 | 1 | 250-1722 | 1 | PLATE | |
| | 10 | 1 | 225-0313 | 1 | FILM-WARNING (JUMP START, READ OMM) | |
| | 11 | 1 | 146-6747 | 1 | FILM-INFORMATION (24-VOLT) | |

E-ORDER BY THE CENTIMETER
M-METRIC PART

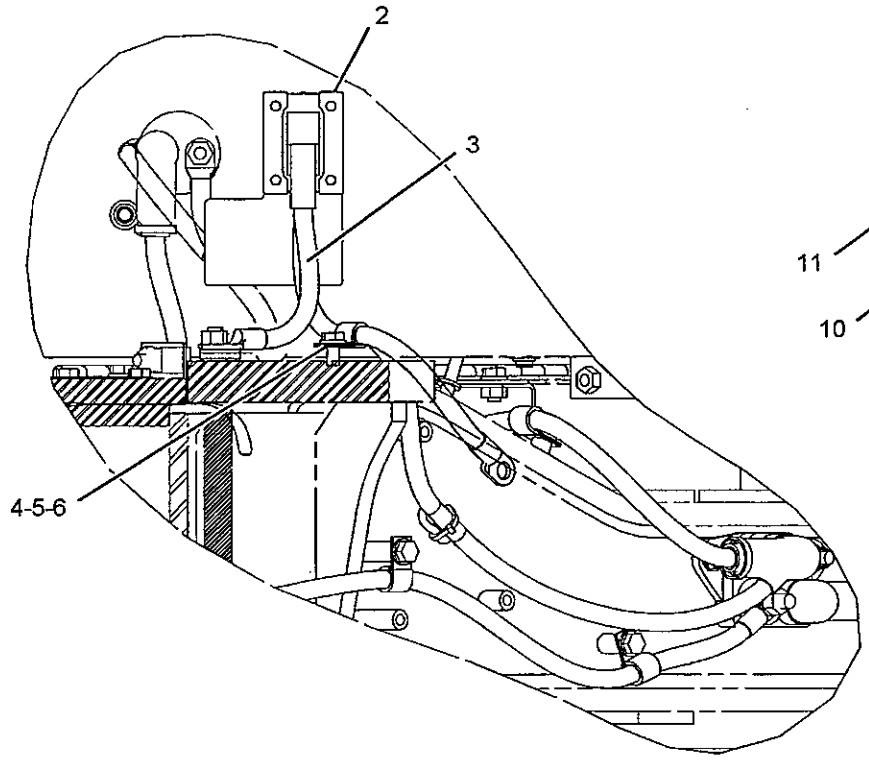


REAR VIEW

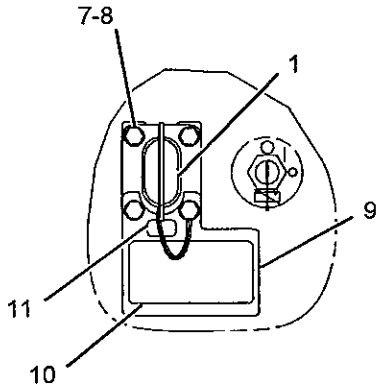


FRONT VIEW

GRAPHIC #1 **<END>** g01141704

## 246-8696 ROADING AR–VALUE PACKAGE

**S/N: JMS1-UP**
**AN ATTACHMENT**

**SMCS-1408, 1429** **i02282098**

| NOTE | PART NUMBER | QTY | PART NAME 1 2 3 4 5 6 (PRODUCT LEVEL) | SEE PAGE |
|---|---|---|---|---|
| Y | *263-8419* | 1 | LIGHTING AR-SIGNAL | 180 |
| Y | *109-8203* | 1 | MIRROR GP-REAR VIEW | 844 |
| Y | *227-9981* | 1 | RADIO GP (AM/FM CASSETTE) | 893 |
| Y | *131-2633* | 1 | VISOR GP-CAB | 942 |

Y-SEPARATE ILLUSTRATION

**<END>**

## 246-8697 ROADING AR–VALUE PACKAGE

**S/N: JMS1-UP**
**AN ATTACHMENT**

**SMCS-1408, 1429** **i02282144**

| NOTE | PART NUMBER | QTY | PART NAME 1 2 3 4 5 6 (PRODUCT LEVEL) | SEE PAGE |
|---|---|---|---|---|
| Y | *236-5683* | 1 | FENDER GP-ROADING | 420 |
| Y | *263-8419* | 1 | LIGHTING AR-SIGNAL | 180 |
| Y | *235-8560* | 1 | LIGHTING GP-FLOOD (4-LAMP, CAB) | 182 |
| Y | *109-8203* | 1 | MIRROR GP-REAR VIEW | 844 |
| Y | *227-9981* | 1 | RADIO GP (AM/FM CASSETTE) | 893 |
| Y | *131-2633* | 1 | VISOR GP-CAB | 942 |

Y-SEPARATE ILLUSTRATION

**<END>**

# 174-4082 SENSOR & MTG GP-LIFT POSITION

**S/N: JMS1-UP**

**PART OF 225-5539 ELECTRICAL AR**

**SMCS-5736** i02126605

| NOTE | REF NO | GRAPHIC REF | PART NUMBER | QTY | PART NAME 1 2 3 4 5 6 (PRODUCT LEVEL) | SEE PAGE |
|---|---|---|---|---|---|---|
| | 1 | 1 | 7X-7662 | 2 | ROD END | |
| | 2 | 1 | 6C-3997 | 3 | SPACER (15X20X10-MM THK) | |
| | 3 | 1 | 130-5300 | 1 | CLIP | |
| | 4 | 1 | 166-0599 | 1 | ROD | |
| Y | 5 | 1 | 169-0417 | 1 | SENSOR GP-POSITION (LIFT LINKAGE) | 204 |
| | 6 | 1 | 179-4876 | 1 | ARM-BAIL | |
| | 7 | 1 | 214-3616 | 1 | PLATE | |
| | 8 | 1 | 214-3617 | 1 | PLATE | |
| | 9 | 1 | 199-4064 | 1 | BRACKET AS | |
| M | 10 | 1 | 160-8500 | 4 | NUT (M8X1.25-THD) | |
| M | 11 | 1 | 5C-7261 | 5 | NUT (M8X1.25-THD) | |
| M | 12 | 1 | 7X-0818 | 5 | BOLT (M8X1.25X45-MM) | |
| | 13 | 1 | 8T-4121 | 4 | WASHER-HARD (11X21X2.5-MM THK) | |
| M | 14 | 1 | 8T-4133 | 3 | NUT (M10X1.5-THD) | |
| M | 15 | 1 | 8T-4137 | 1 | BOLT (M10X1.5X20-MM) | |
| | 16 | 1 | 8T-4223 | 2 | WASHER-HARD (13.5X25.5X3-MM THK) | |
| | 17 | 1 | 8T-4224 | 10 | WASHER-HARD (8.8X16X2-MM THK) | |
| M | 18 | 1 | 8T-4956 | 2 | BOLT (M12X1.75X35-MM) | |
| M | 19 | 1 | 8T-4971 | 2 | BOLT (M6X1X30-MM) | |
| | 20 | 1 | 9X-8256 | 2 | WASHER (6.6X12X2-MM THK) | |

M-METRIC PART
Y-SEPARATE ILLUSTRATION

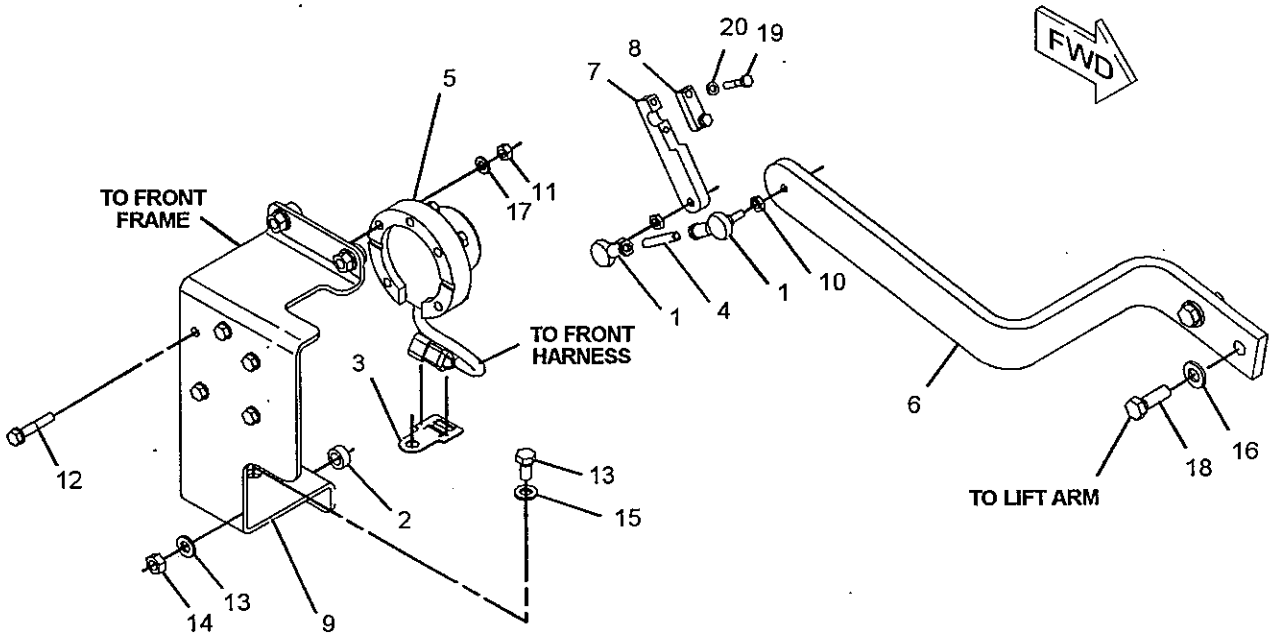


GRAPHIC #1 **<END>** g01083863

# ELECTRICAL AND STARTING SYSTEM

## *178-7908* SENSOR & MTG GP-TILT POSITION

**S/N: JMS1-UP**

**PART OF 225-5539 ELECTRICAL AR**

**SMCS-5736** **i02290311**

| NOTE | REF NO | GRAPHIC REF | PART NUMBER | QTY | PART NAME 1 2 3 4 5 6 (PRODUCT LEVEL) | SEE PAGE |
|---|---|---|---|---|---|---|
| | 1 | 1 | **7X-7662** | 2 | ROD END | |
| | 2 | 1 | **130-5300** | 1 | CLIP | |
| | 3 | 1 | **166-0599** | 1 | ROD | |
| Y | 4 | 1 | **169-0417** | 1 | SENSOR GP-POSITION (TILT LINKAGE) | 204 |
| | 5 | 1 | **206-5591** | 1 | ARM AS-TILT (BAIL) | |
| | 6 | 1 | **206-5595** | 1 | COVER | |
| C | 7 | 1 | **212-8810** | 1 | BRACKET AS | |
| | 8 | 1 | **214-3616** | 1 | PLATE | |
| | 9 | 1 | **214-3617** | 1 | PLATE | |
| C | 10 | 1 | **216-8508** | 1 | COVER AS | |
| M | 11 | 1 | **160-8500** | 5 | NUT (M8X1.25-THD) | |
| M | 12 | 1 | **5C-7261** | 5 | NUT (M8X1.25-THD) | |
| M | 13 | 1 | **7X-0818** | 5 | BOLT (M8X1.25X45-MM) | |
| | 14 | 1 | **7X-7729** | 4 | WASHER (11X25X3-MM THK) | |
| C | 15 | 1 | **8T-4121** | 6 | WASHER-HARD (11X21X2.5-MM THK) | |
| M | 16 | 1 | **8T-4136** | 4 | BOLT (M10X1.5X25-MM) | |
| M | 17 | 1 | **8T-4137** | 2 | BOLT (M10X1.5X20-MM) | |
| M | 18 | 1 | **8T-4195** | 4 | BOLT (M10X1.5X30-MM) | |
| | 19 | 1 | **8T-4224** | 12 | WASHER-HARD (8.8X16X2-MM THK) | |
| M | 20 | 1 | **8T-4971** | 2 | BOLT (M6X1X30-MM) | |
| | 21 | 1 | **9X-8256** | 2 | WASHER (6.6X12X2-MM THK) | |

C-CHANGE FROM PREVIOUS TYPE
M-METRIC PART
Y-SEPARATE ILLUSTRATION

## *178-7908* SENSOR & MTG GP-TILT POSITION *(contd.)* i02290311

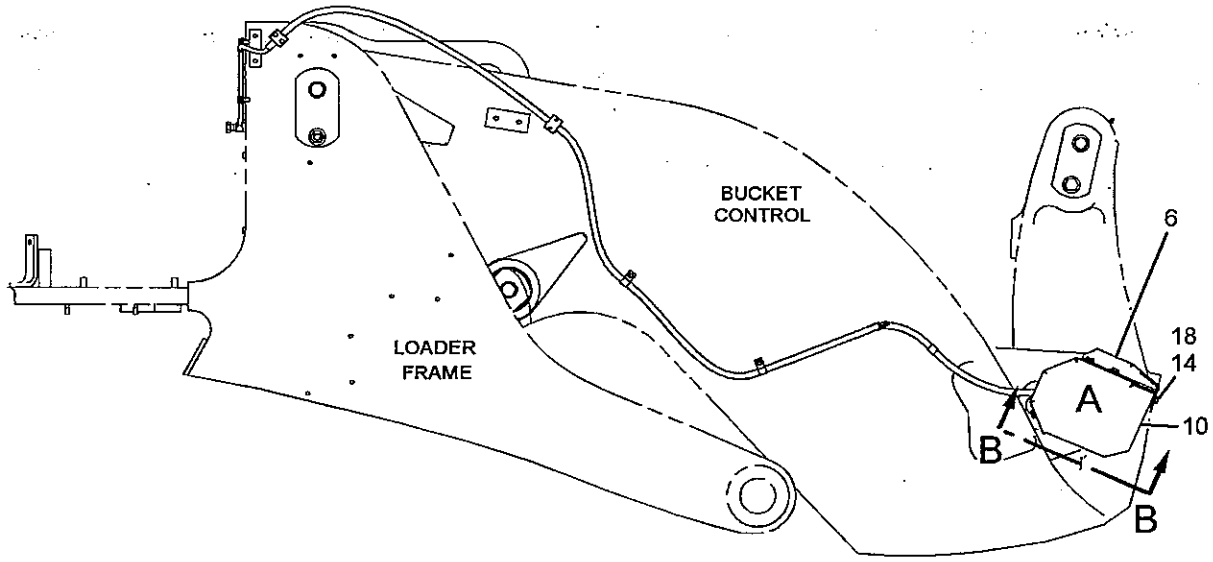


RIGHT SIDE VIEW

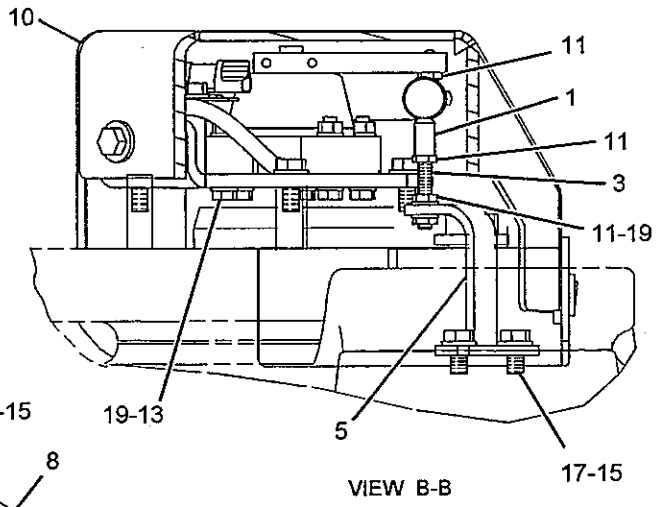


VIEW B-B

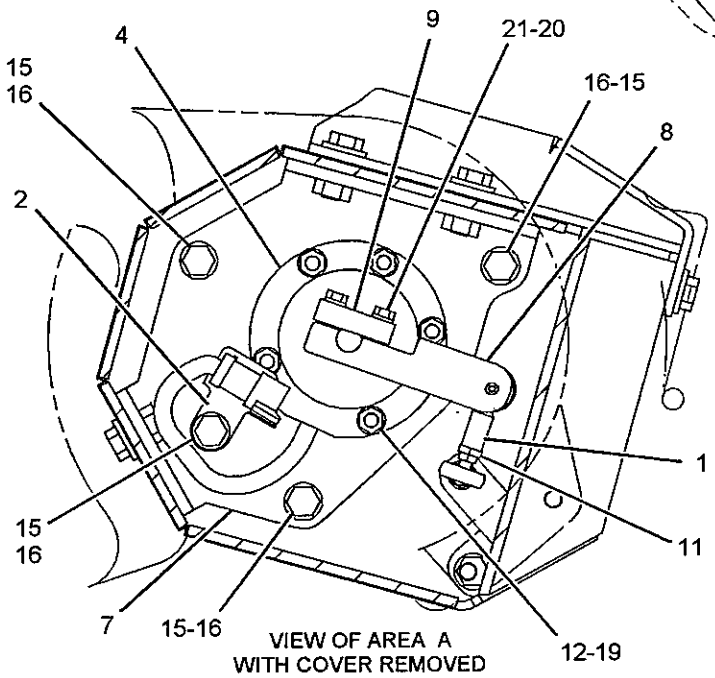


VIEW OF AREA A
WITH COVER REMOVED

GRAPHIC #1 **<END>** g01146653

# ELECTRICAL AND STARTING SYSTEM

## *231-1973* SENSOR GP-ENGINE

**S/N: LHX1-UP**

**PART OF 225-0992 ENGINE AR-COMPLETE**

**SMCS-1718, 1906, 1907, 1912, 1917, 1923, 1924, 1928, 1929, 7400**

i02277877

| NOTE | REF NO | GRAPHIC REF | PART NUMBER | QTY | PART NAME 1 2 3 4 5 6 (PRODUCT LEVEL) | SEE PAGE |
|---|---|---|---|---|---|---|
| | 1 | 1 | **9X-0262** | 1 | ADAPTER | |
| | 2 | 1 | **132-9770** | 1 | SPACER AS | |
| | | 1 | **1W-6448** | 2 | DOWEL | |
| Y | 3 | 1 | *197-8391* | 1 | SENSOR GP-TEMPERATURE (INTAKE AIR MANIFOLD) | 221 |
| Y | 4 | 1 | *197-8392* | 1 | SENSOR GP-TEMPERATURE (WATER, COOLANT) | 222 |
| Y | 5 | 1 | *214-2484* | 1 | SENSOR GP-SPEED (TIMING, CRANKSHAFT) | 217 |
| Y | 6 | 1 | *239-2395* | 1 | SENSOR GP-PRESSURE (ATMOSPHERIC) | 211 |
| Y | 7 | 1 | *239-2396* | 1 | SENSOR GP-PRESSURE (ENGINE OIL) | 212 |
| Y | 8 | 1 | *239-5928* | 1 | SENSOR GP-SPEED (TIMING, CAMSHAFT) | 218 |
| | 9 | 1 | **241-6186** | 1 | ELBOW | |
| | 10 | 1 | **0S-1591** | 1 | BOLT (3/8-16X1.5-IN) | |
| Y | 11 | 1 | *239-5674* | 1 | SENSOR GP-PRESSURE (INTAKE AIR MANIFOLD) | 214 |
| | 12 | 1 | **2H-3755** | 2 | BOLT (5/16-18X0.62-IN) | |
| | 13 | 1 | **3P-1155** | 1 | SEAL-O-RING | |
| | 14 | 1 | **5M-2894** | 1 | WASHER-HARD (10.2X18.5X2.5-MM THK) | |
| | 15 | 1 | **6V-5048** | 1 | SEAL-O-RING | |
| | 16 | 1 | **6V-5049** | 1 | SEAL-O-RING | |
| | 17 | 1 | **9M-1974** | 2 | WASHER-HARD (8.8X16X2-MM THK) | |

Y-SEPARATE ILLUSTRATION

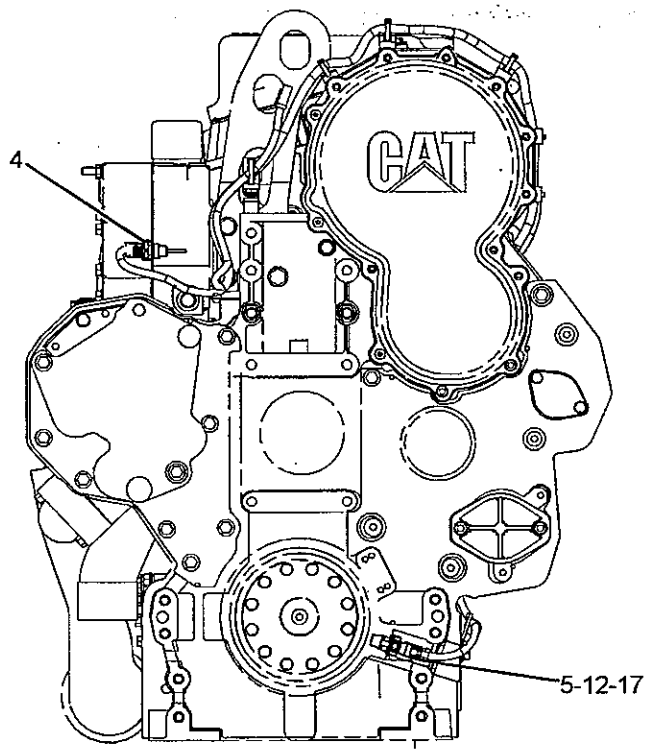


FRONT VIEW

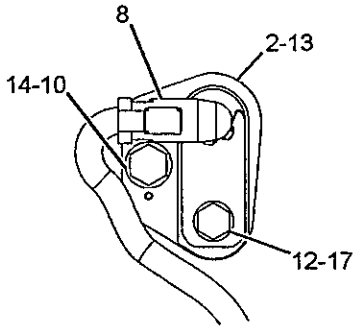


SECTION A-A

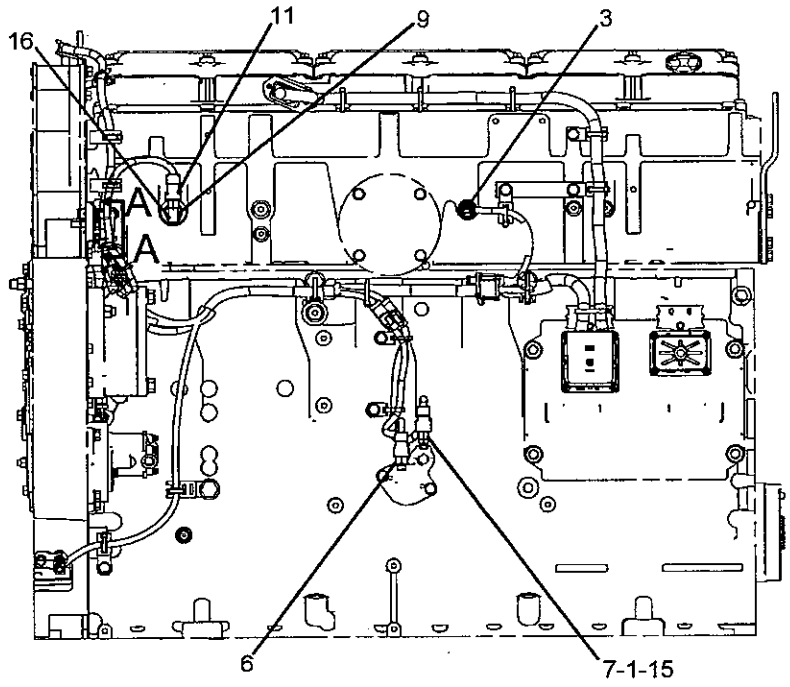


LEFT SIDE VIEW

GRAPHIC #1

**<END>**

g01055021

# 169-0417 SENSOR GP-POSITION–LIFT, TILT

S/N: JMS1-UP
ROTARY(140 DEG)
PART OF 174-4082 SENSOR & MTG GP-LIFT POSITION, 178-7908 SENSOR & MTG GP-TILT POSITION

SMCS-4269, 5702, 5736, 5737, 7494 i02267066

| NOTE | REF NO | GRAPHIC REF | PART NUMBER | QTY | PART NAME 1 2 3 4 5 6 (PRODUCT LEVEL) | SEE PAGE |
|---|---|---|---|---|---|---|
| | 2 | 1 | 102-8803 | 1 | KIT-RECEPTACLE (3-PIN) | |
| | | | | | (INCLUDES RECEPTACLE AS AND WEDGE) | |
| | 3 | 1 | 9X-3401 | 3 | PIN-CONNECTOR | |
| | 4 | 1 | 3E-3371 | 1 | WEDGE-RECEPTACLE LOCK (3-PIN) | |
| E | 5 | 1 | 119-3662 | | TUBE-HEAT SHRINK (5-CM) | |
| E | 6 | 1 | 9X-1813 | | SLEEVE (17-CM) | |
| | 7 | 1 | 172-1482 | 1 | CLAMP | |
| M | 8 | 1 | 3E-8048 | 2 | SCREW-MACHINE (M3X0.5X6-MM) | |

E-ORDER BY THE CENTIMETER
M-METRIC PART

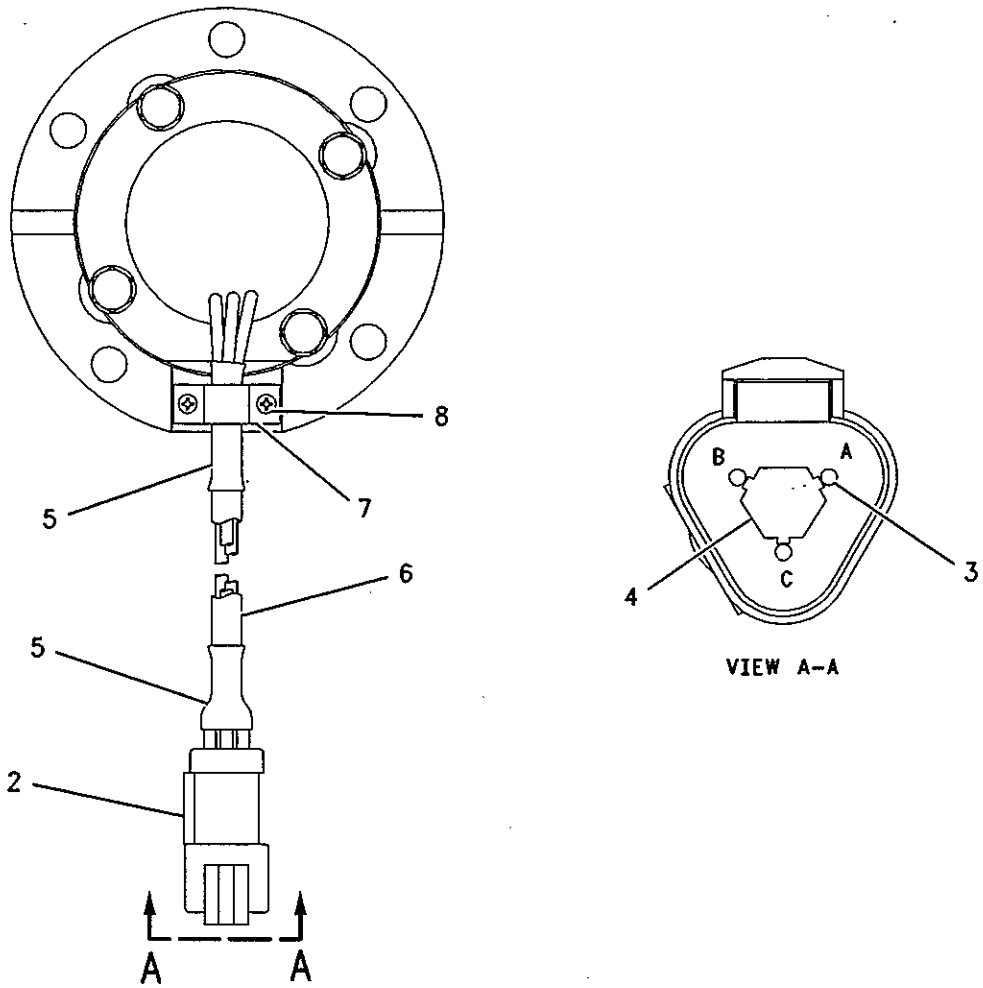


GRAPHIC #1 <END> g00934905

# *204-7949* SENSOR GP-POSITION–THROTTLE

**S/N: JMS1-UP**
**500 HZ, 72 DEGREE**
**PART OF 201-8616 PEDAL GP-GOVERNOR**
**ALSO AN ATTACHMENT**

**SMCS-4269, 5702, 5736, 5737, 7494** i02277576

| NOTE | REF NO | GRAPHIC REF | PART NUMBER | QTY | PART NAME 1 2 3 4 5 6 (PRODUCT LEVEL) | SEE PAGE |
|---|---|---|---|---|---|---|
| | 1 | 1 | **102-8803** | 1 | KIT-RECEPTACLE (3-PIN) | |
| | | | | | (INCLUDES RECEPTACLE AS AND WEDGE) | |
| | 2 | 1 | **3E-3371** | 1 | WEDGE-RECEPTACLE LOCK (3-PIN) | |
| | 3 | 1 | **186-3735** | 3 | PIN-CONNECTOR (16-GA TO 18-GA) | |

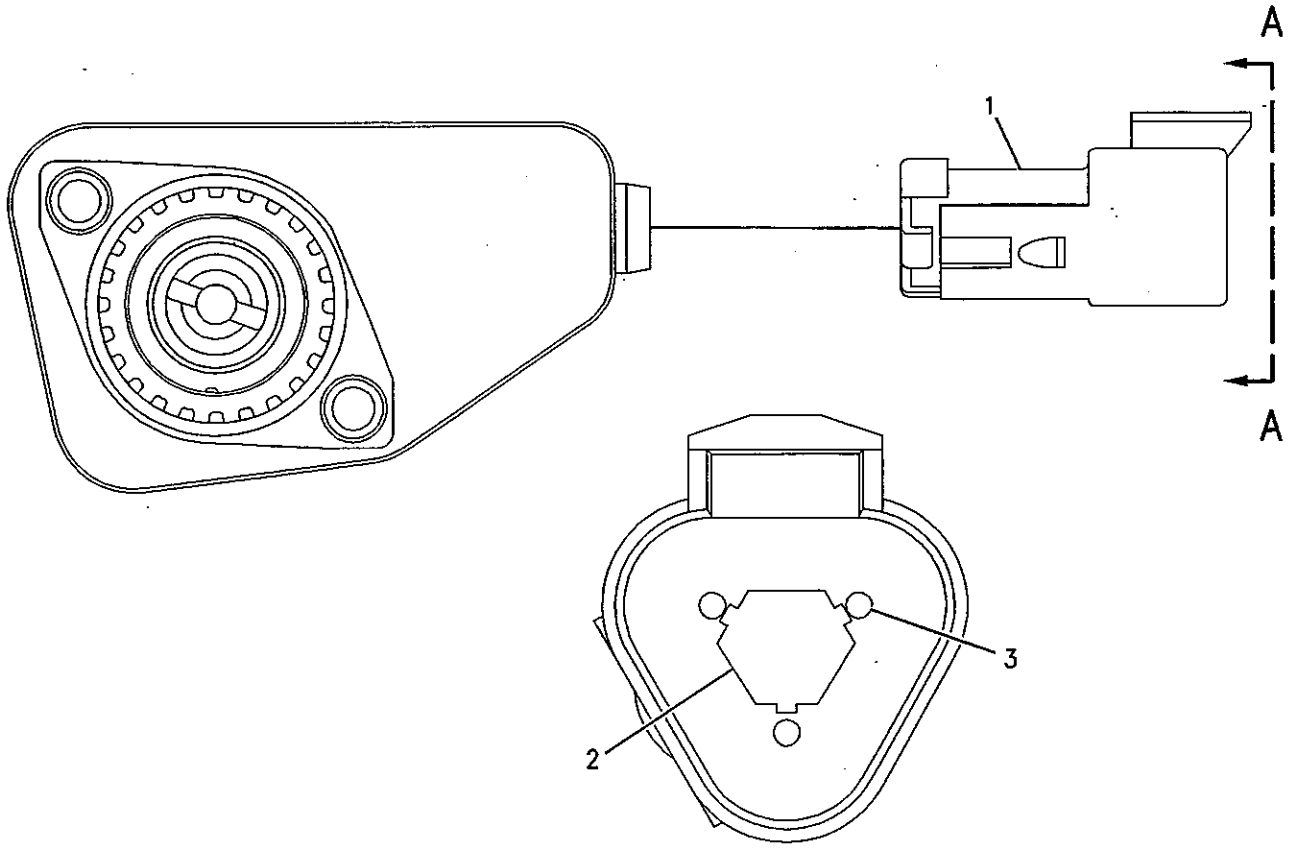


VIEW A-A

GRAPHIC #1 **<END>** g00925280

# ELECTRICAL AND STARTING SYSTEM

## *214-4862* SENSOR GP-POSITION–CONTROL LEVER

**S/N: JMS1-UP**

**PART OF 208-3915, 210-9583 CONTROL GP-ELECTROHYDRAULIC**

**ALSO AN ATTACHMENT**

**SMCS-4269, 5702, 5736, 5737, 7494** i01988610

| NOTE | REF NO | GRAPHIC REF | PART NUMBER | QTY | PART NAME 1 2 3 4 5 6 (PRODUCT LEVEL) | SEE PAGE |
|---|---|---|---|---|---|---|
| | 1 | 1 | **102-8803** | 1 | KIT-RECEPTACLE (3-PIN) | |
| | | | | | (INCLUDES RECEPTACLE AS & WEDGE) | |
| | 2 | 1 | **186-3735** | 3 | PIN-CONNECTOR (16-GA TO 18-GA) | |
| | 3 | 1 | **3E-3371** | 1 | WEDGE-RECEPTACLE LOCK (3-PIN) | |

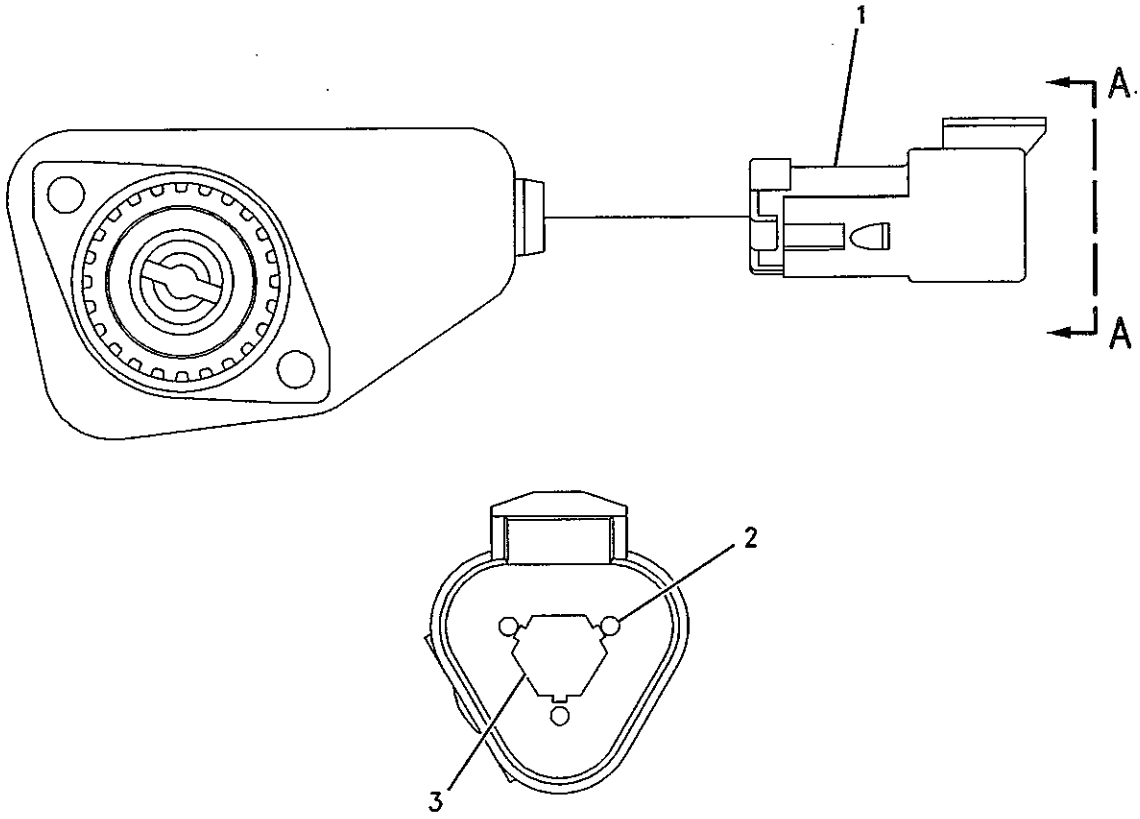


VIEW A-A

GRAPHIC #1 **<END>** g00893828

## 214-4863 SENSOR GP-POSITION–LEFT BRAKE PEDAL

S/N: JMS1-UP

PART OF 227-1107 BASE GP-FOOT BRAKE

ALSO AN ATTACHMENT

SMCS-4269, 5702, 5736, 5737, 7494 i02267084

| NOTE | REF NO | GRAPHIC REF | PART NUMBER | QTY | PART NAME 1 2 3 4 5 6 (PRODUCT LEVEL) | SEE PAGE |
|---|---|---|---|---|---|---|
| | 1 | 1 | 102-8803 | 1 | KIT-RECEPTACLE (3-PIN) | |
| | | | | | (INCLUDES RECEPTACLE AS & WEDGE) | |
| | 2 | 1 | 186-3735 | 1 | PIN-CONNECTOR (16-GA TO 18-GA) | |
| | 3 | 1 | 3E-3371 | 1 | WEDGE-RECEPTACLE LOCK (3-PIN) | |

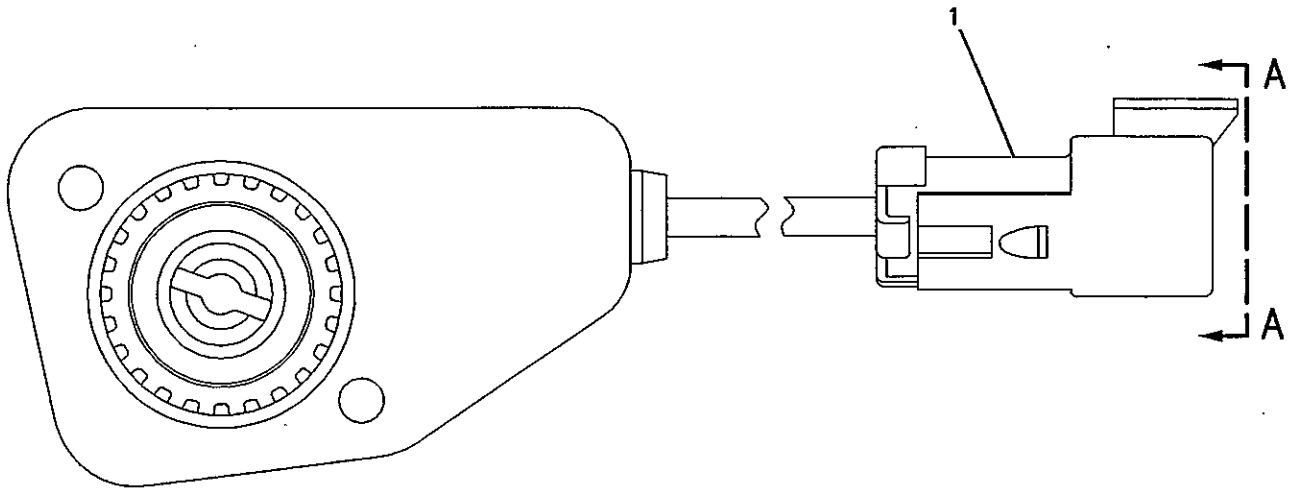


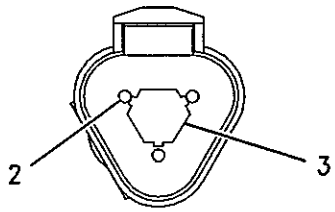


VIEW A-A

GRAPHIC #1 <END> g00925281

# 124-4672 SENSOR GP-PRESSURE–LIFT CYLINDER OIL

S/N: JMS1-UP

PART OF 149-0175, 178-7917 MOUNTING GP-PRESSURE SENSOR AN ATTACHMENT

SMCS-1408, 1925, 7494 i02267085

| NOTE | REF NO | GRAPHIC REF | PART NUMBER | QTY | PART NAME 1 2 3 4 5 6 (PRODUCT LEVEL) | SEE PAGE |
|---|---|---|---|---|---|---|
| | 1 | 1 | 7T-7370 | 1 | SEAL-SECURITY | |
| E | 2 | 1 | 9X-1813 | | SLEEVE (16-CM) | |
| | 3 | 1 | 102-8803 | 1 | KIT-RECEPTACLE (3-PIN) | |
| | | | | | (INCLUDES RECEPTACLE AS AND WEDGE) | |
| | 4 | 1 | 186-3735 | 3 | PIN-CONNECTOR (16-GA TO 18-GA) | |
| | 5 | 1 | 3E-3371 | 1 | WEDGE-RECEPTACLE LOCK (3-PIN) | |

E-ORDER BY THE CENTIMETER

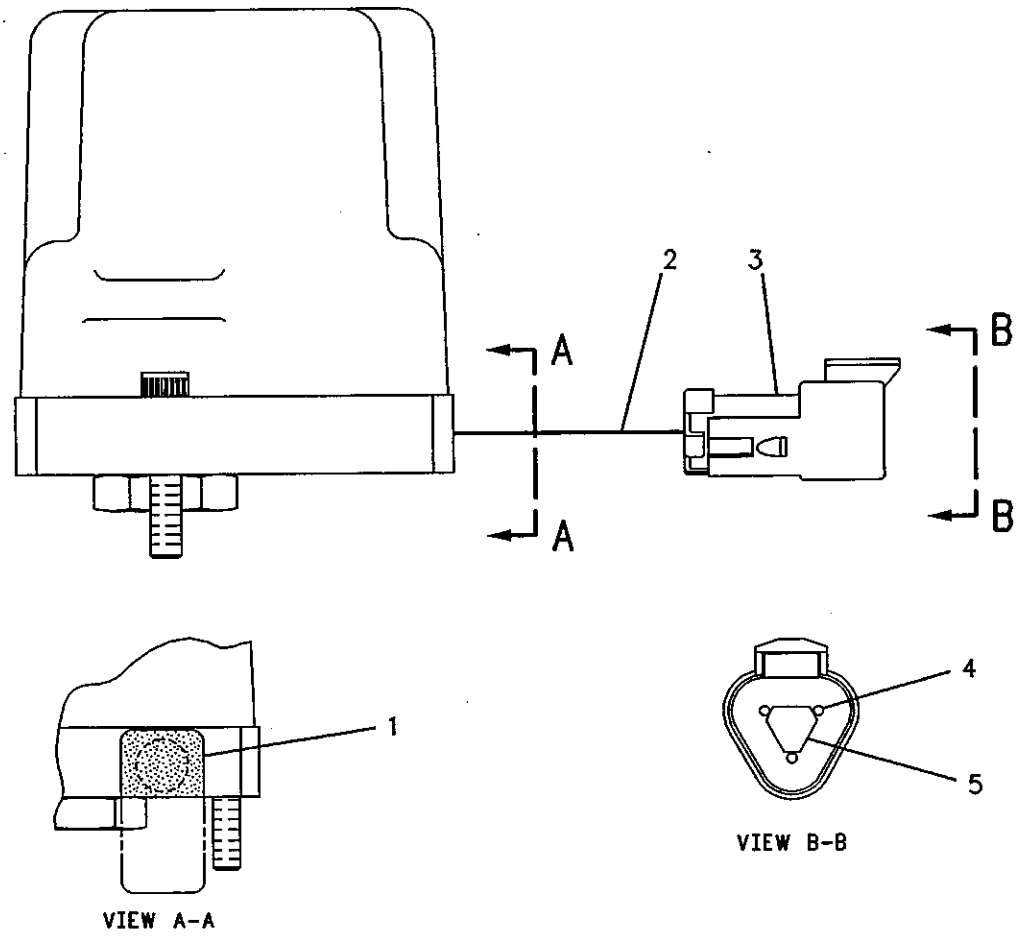


GRAPHIC #1 <END> g00109035

# 194-6722 SENSOR GP-PRESSURE

S/N: JMS1-UP; LHX1-UP

PART OF 239-2395 SENSOR GP-PRESSURE, 232-4555 WIRING GP-CHASSIS

SMCS-1408, 1925, 7494 i02230727

| NOTE | REF NO | GRAPHIC REF | PART NUMBER | QTY | PART NAME 1 2 3 4 5 6 (PRODUCT LEVEL) | SEE PAGE |
|---|---|---|---|---|---|---|
| BE | 1 | 1 | 9X-1813 | | SLEEVE | |
| | 2 | 1 | 155-2260 | 1 | KIT-CONNECTING PLUG (3-PIN) | |
| | | | | | (INCLUDES PLUG AS & WEDGE) | |
| | 3 | 1 | 180-9340 | 3 | SOCKET-CONNECTOR | |
| | 4 | 1 | 3E-3368 | 1 | WEDGE-PLUG LOCK (3-PIN) | |

B-USE AS REQUIRED
E-ORDER BY THE CENTIMETER

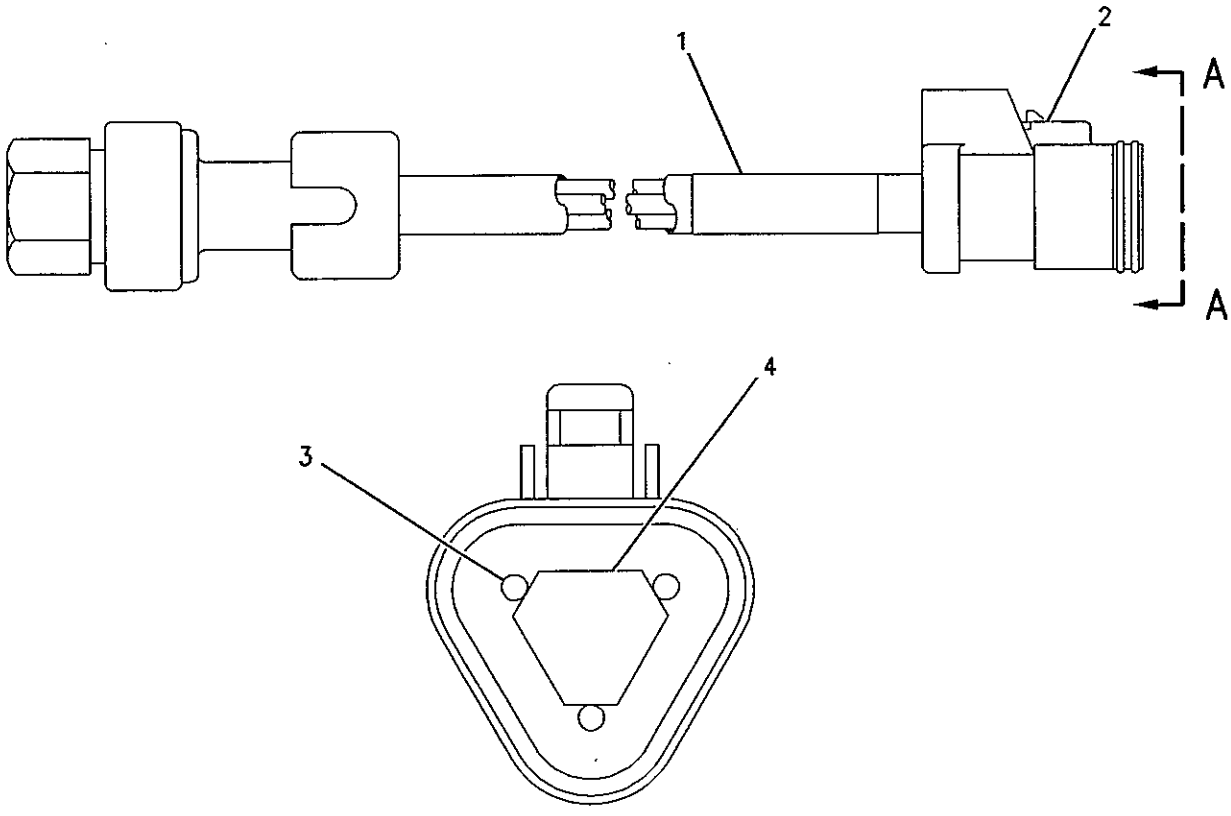


VIEW A-A

GRAPHIC #1 <END> g00934579

# ELECTRICAL AND STARTING SYSTEM

## *194-6725* SENSOR GP-PRESSURE–ENGINE OIL

**S/N: LHX1-UP**

**PART OF 239-2396 SENSOR GP-PRESSURE**

**SMCS-1408, 1925, 7494** i02276739

| NOTE | REF NO | GRAPHIC REF | PART NUMBER | QTY | PART NAME 1 2 3 4 5 6 (PRODUCT LEVEL) | SEE PAGE |
|---|---|---|---|---|---|---|
| E | 1 | 1 | 9X-1813 | | SLEEVE (34-CM) | |
| | 2 | 1 | 155-2260 | 1 | KIT-CONNECTING PLUG (3-PIN) | |
| | | | | | (INCLUDES PLUG AS AND WEDGE) | |
| | 3 | 1 | 194-5226 | 3 | WIRE AS-HARNESS (16-GA TO 18-GA) | |
| | 4 | 1 | 3E-3368 | 1 | WEDGE-PLUG LOCK (3-PIN) | |

E-ORDER BY THE CENTIMETER

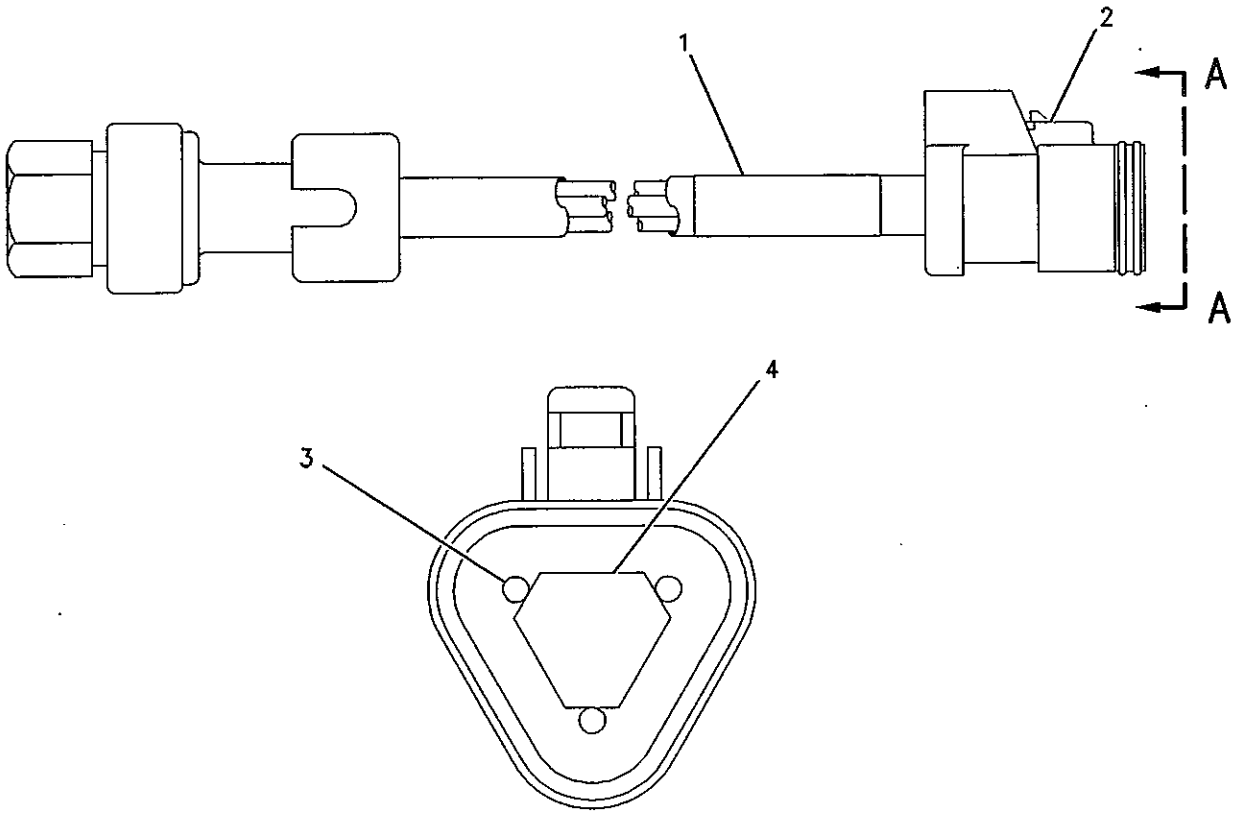


VIEW A–A

GRAPHIC #1 **<END>** g00851220

## 239-2395 SENSOR GP-PRESSURE–ATMOSPHERIC AIR

S/N: LHX1-UP

PART OF 231-1973 SENSOR GP-ENGINE

SMCS-1408, 1925, 7494 i02274649

| NOTE | REF NO | GRAPHIC REF | PART NUMBER | QTY | PART NAME 1 2 3 4 5 6 (PRODUCT LEVEL) | SEE PAGE |
|---|---|---|---|---|---|---|
| Y | 1 | 1 | 194-6722 | 1 | SENSOR GP-PRESSURE (AIR) | 209 |
| | 2 | 1 | 6V-5049 | 1 | SEAL-O-RING | |

Y-SEPARATE ILLUSTRATION

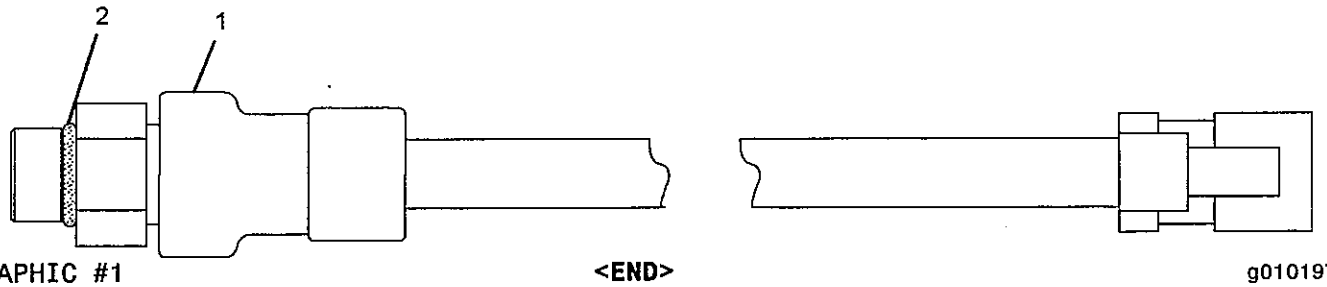


GRAPHIC #1 <END> g01019702

## *239-2396* SENSOR GP-PRESSURE–ENGINE OIL, FUEL

S/N: LHX1-UP

PART OF 255-2753 FILTER & MTG GP-FUEL, 231-1973 SENSOR GP-ENGINE

SMCS-1408, 1925, 7494 i02279684

| NOTE | REF NO | GRAPHIC REF | PART NUMBER | QTY | PART NAME 1 2 3 4 5 6 (PRODUCT LEVEL) | SEE PAGE |
|---|---|---|---|---|---|---|
| Y | 1 | 1 | 194-6725 | 1 | SENSOR GP-PRESSURE | 210 |
| | 2 | 1 | 6V-5048 | 1 | SEAL-O-RING | |

Y-SEPARATE ILLUSTRATION

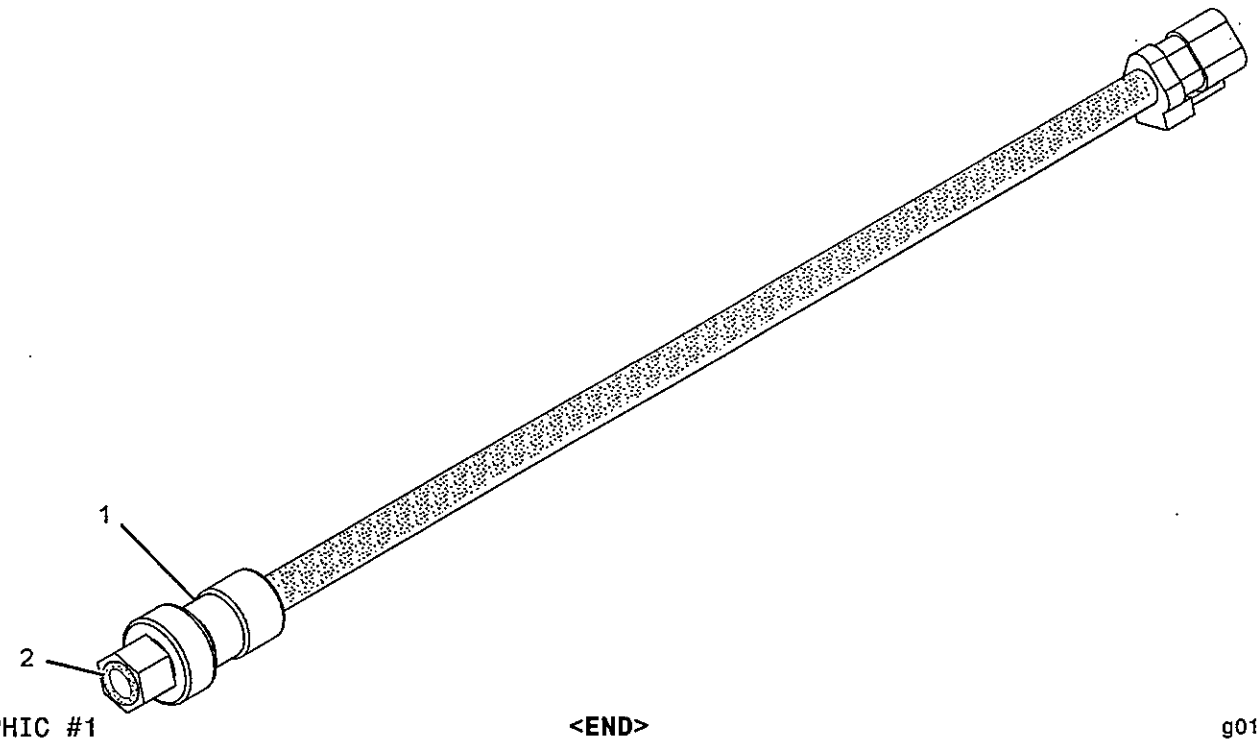


GRAPHIC #1 <END> g01019323

## 239-3478 SENSOR GP-PRESSURE–AIR INLET MANIFOLD

S/N: LHX1-UP

PART OF 239-5674 SENSOR GP-PRESSURE

SMCS-1408, 1925, 7494 i02178818

| NOTE | REF NO | GRAPHIC REF | PART NUMBER | QTY | PART NAME 1 2 3 4 5 6 (PRODUCT LEVEL) | SEE PAGE |
|---|---|---|---|---|---|---|
| BE | 1 | 1 | 9X-1813 | | SLEEVE | |
| | 2 | 1 | 102-8803 | 1 | KIT-RECEPTACLE (3-PIN) | |
| | | | | | (INCLUDES RECEPTACLE AS AND WEDGE) | |
| | 3 | 1 | 9X-3401 | 3 | PIN-CONNECTOR | |
| | 4 | 1 | 3E-3371 | 1 | WEDGE-RECEPTACLE LOCK (3-PIN) | |

B-USE AS REQUIRED
E-ORDER BY THE CENTIMETER

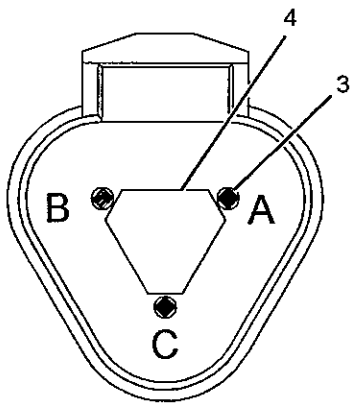


VIEW A-A

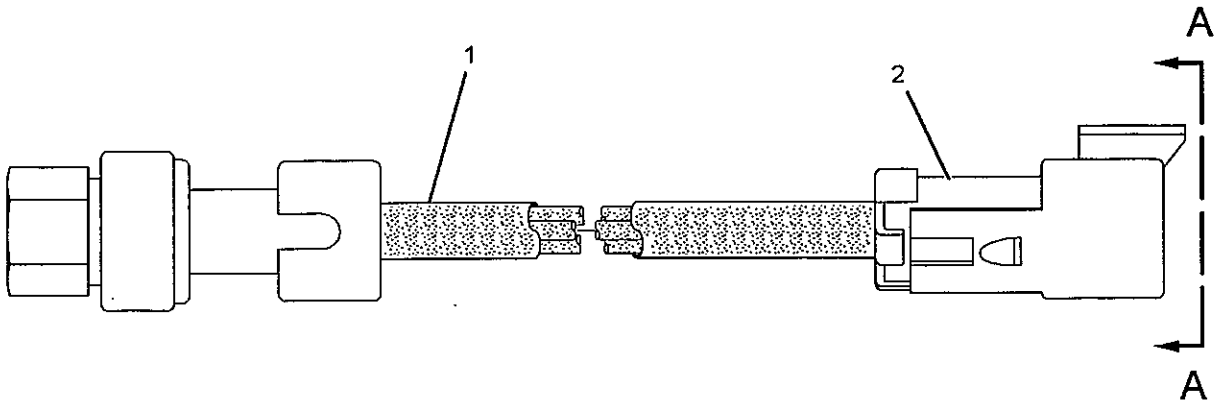


GRAPHIC #1 <END> g01019421

## 239-5674 SENSOR GP-PRESSURE–AIR INLET MANIFOLD

S/N: LHX1-UP

PART OF 231-1973 SENSOR GP-ENGINE

SMCS-1408, 1925, 7494 i02289634

| NOTE | REF NO | GRAPHIC REF | PART NUMBER | QTY | PART NAME 1 2 3 4 5 6 (PRODUCT LEVEL) | SEE PAGE |
|---|---|---|---|---|---|---|
| Y | 1 | 1 | 239-3478 | 1 | SENSOR GP-PRESSURE | 213 |
| | 2 | 1 | 6V-5048 | 1 | SEAL-O-RING | |

Y-SEPARATE ILLUSTRATION

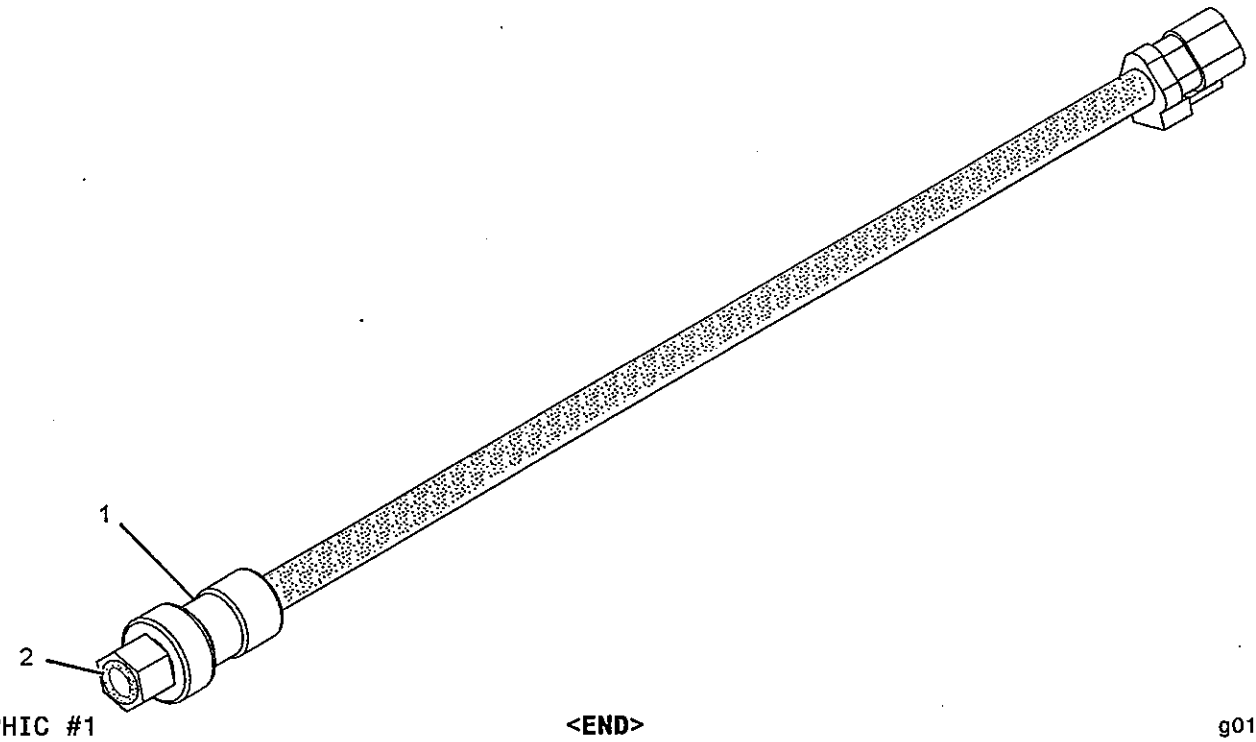


GRAPHIC #1

<END>

g01019323

## *193-2550* SENSOR GP-SPEED–TRANSMISSION OUTPUT

**S/N: MDA1-UP; DGZ1-UP**
**PART OF 230-6312 GEAR GP-OUTPUT TRANSFER**
**ALSO AN ATTACHMENT**

**SMCS-1907, 1912, 3175, 4803, 7493** **i02267098**

| NOTE | REF NO | GRAPHIC REF | PART NUMBER | QTY | PART NAME 1 2 3 4 5 6 (PRODUCT LEVEL) | SEE PAGE |
|---|---|---|---|---|---|---|
| | 1 | 1 | **171-5349** | 1 | MARKER | |
| | 2 | 1 | **102-8802** | 1 | KIT-RECEPTACLE (2-PIN) | |
| | | | | | (INCLUDES RECEPTACLE AS AND WEDGE) | |
| | 3 | 1 | **8T-8729** | 2 | PIN-CONNECTOR | |
| | 4 | 1 | **3E-3365** | 1 | WEDGE-RECEPTACLE LOCK (2-PIN) | |
| E | 5 | 1 | **9X-1813** | | SLEEVE (14-CM) | |

E-ORDER BY THE CENTIMETER

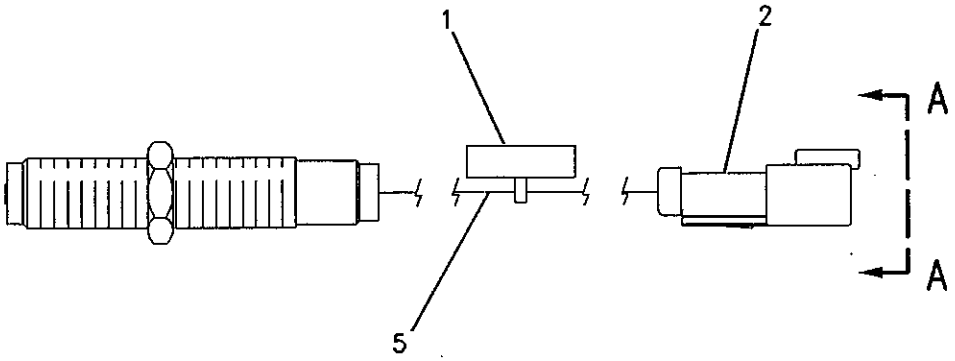


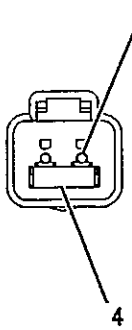


VIEW A–A

GRAPHIC #1 **<END>** g00690327

## 201-6617 SENSOR GP-SPEED–TIMING, CAMSHAFT

**S/N: LHX1-UP**

**PART OF 239-5928 SENSOR GP-SPEED**

**SMCS-1907, 1912, 3175, 4803, 7493** i02230734

| NOTE | REF NO | GRAPHIC REF | PART NUMBER | QTY | PART NAME 1 2 3 4 5 6 (PRODUCT LEVEL) | SEE PAGE |
|---|---|---|---|---|---|---|
| | 1 | 1 | **133-0261** | 1 | BRACKET | |
| | 2 | 1 | **189-0852** | 1 | HARNESS AS-WIRING (CAM TIMING) | |
| | | 1 | **102-8802** | 1 | KIT-RECEPTACLE (2-PIN) | |
| | | | | | (INCLUDES RECEPTACLE AS & WEDGE) | |
| | | 1 | **155-2270** | 1 | KIT-CONNECTING PLUG (2-PIN) | |
| | | | | | (INCLUDES PLUG AS & WEDGE) | |

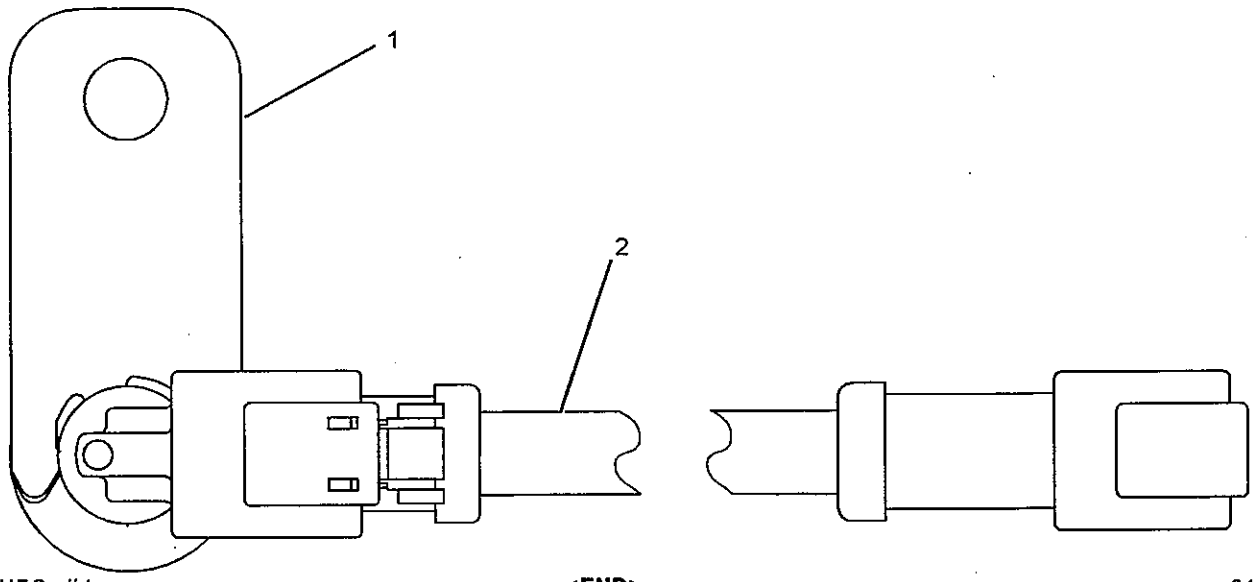


GRAPHIC #1

**<END>**

g01071396

# *214-2484* SENSOR GP-SPEED–TIMING, CRANKSHAFT

S/N: LHX1-UP

PART OF 231-1973 SENSOR GP-ENGINE

SMCS-1907, 1912, 3175, 4803, 7493 i02276763

| NOTE | REF NO | GRAPHIC REF | PART NUMBER | QTY | PART NAME 1 2 3 4 5 6 (PRODUCT LEVEL) | SEE PAGE |
|---|---|---|---|---|---|---|
| | 1 | 1 | 203-3940 | 1 | SEAL-O-RING | |
| | 2 | 1 | 191-8303 | 1 | SENSOR GP-SPEED (ENGINE) | |

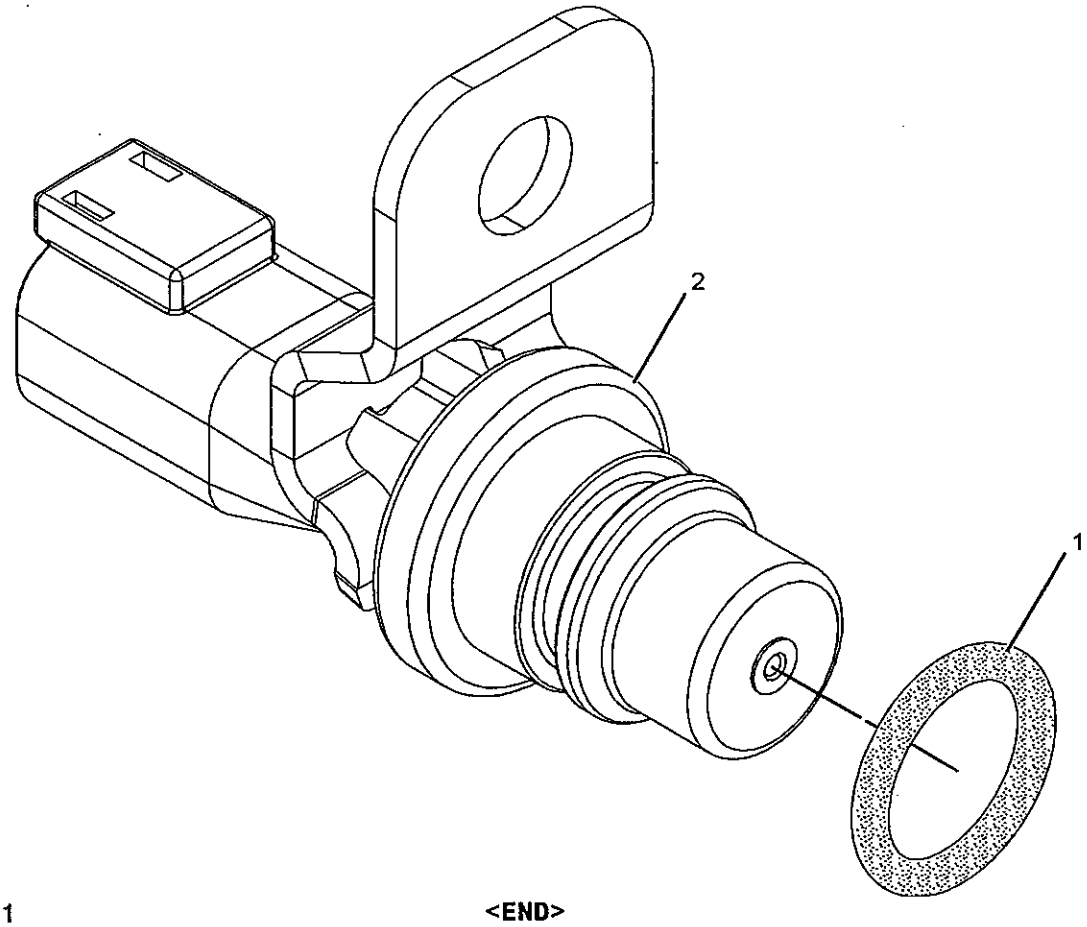


GRAPHIC #1 <END> g01021497

# ELECTRICAL AND STARTING SYSTEM

## *239-5928* SENSOR GP-SPEED–TIMING, CAMSHAFT

**S/N: LHX1-UP**

**PART OF 231-1973 SENSOR GP-ENGINE**

**SMCS-1907, 1912, 3175, 4803, 7493** i02160187

| NOTE | REF NO | GRAPHIC REF | PART NUMBER | QTY | PART NAME 1 2 3 4 5 6 (PRODUCT LEVEL) | SEE PAGE |
|---|---|---|---|---|---|---|
| | 1 | 1 | 228-4947 | 1 | SEAL-O-RING | |
| Y | 2 | 1 | 201-6617 | 1 | SENSOR GP-SPEED (TIMING, CAMSHAFT) | 216 |

Y-SEPARATE ILLUSTRATION

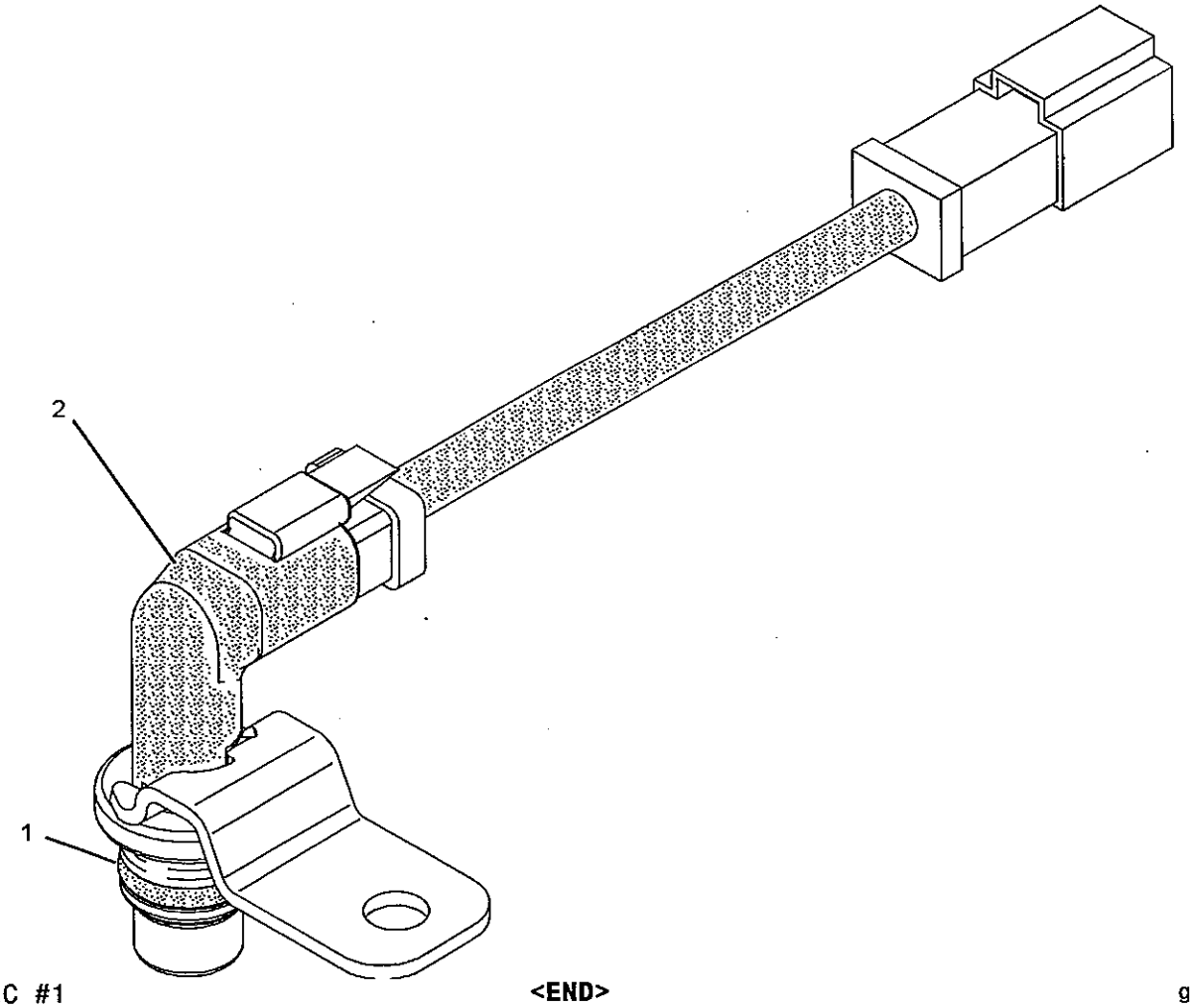


GRAPHIC #1 **<END>** g01019337

# 118-7226 SENSOR GP-TEMPERATURE-

**TORQUE CONVERTER, TMSN OIL**
**S/N: MDA1-UP; JMS1-UP; DGZ1-UP**
**8-VOLT. PULSE WIDTH MODULATION**
**PART OF 230-6314, 234-3738 CONTROL GP-TRANSMISSION HYD, 232-4521 WIRING GP-ENGINE**
**ALSO AN ATTACHMENT**

**SMCS-1408, 1906, 1921, 1922, 301T, 429T, 509T** i02128103

| NOTE | REF NO | GRAPHIC REF | PART NUMBER | QTY | PART NAME 1 2 3 4 5 6 (PRODUCT LEVEL) | SEE PAGE |
|---|---|---|---|---|---|---|
| E | 1 | 1 | 9X-1813 | | SLEEVE (33-CM) | |
| | 2 | 1 | 102-8803 | 1 | KIT-RECEPTACLE (3-PIN) | |
| | | | | | (INCLUDES RECEPTACLE AS & WEDGE) | |
| | 3 | 1 | 186-3735 | 3 | PIN-CONNECTOR (16-GA TO 18-GA) | |
| | 4 | 1 | 3E-3371 | 1 | WEDGE-RECEPTACLE LOCK (3-PIN) | |

E-ORDER BY THE CENTIMETER

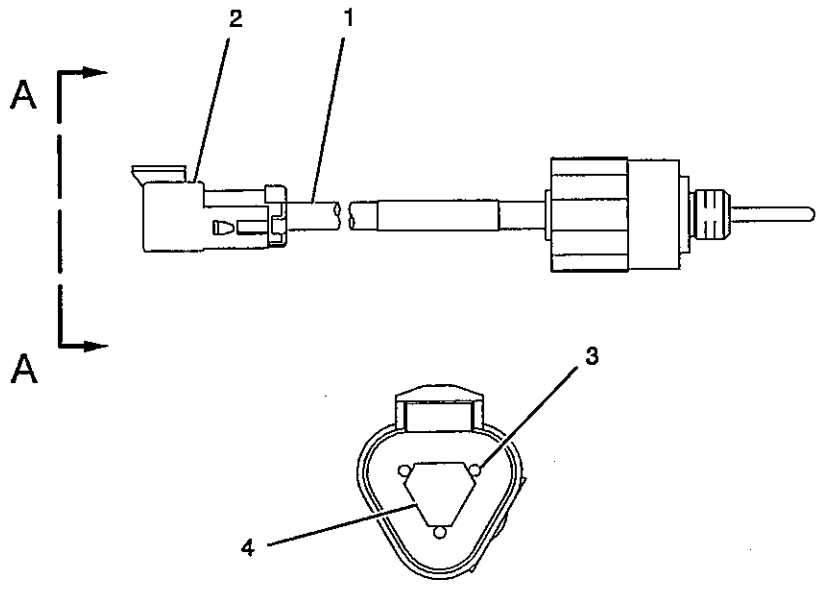


VIEW A-A

GRAPHIC #1

**<END>**

g01023677

# ELECTRICAL AND STARTING SYSTEM

## *134-2252* SENSOR GP-TEMPERATURE–HYDRAULIC OIL

**S/N: JMS1-UP**
**8 VOLT**
**PART OF 232-4555 WIRING GP-CHASSIS**

**SMCS-1408, 1906, 1921, 1922, 301T, 429T, 509T** i02279274

| NOTE | REF NO | GRAPHIC REF | PART NUMBER | QTY | PART NAME 1 2 3 4 5 6 (PRODUCT LEVEL) | SEE PAGE |
|---|---|---|---|---|---|---|
| | 1 | 1 | **3E-3371** | 1 | WEDGE-RECEPTACLE LOCK (3-PIN) | |
| E | 2 | 1 | **9X-1386** | | SLEEVE (33-CM) | |
| | 3 | 1 | **102-8803** | 1 | KIT-RECEPTACLE (3-PIN) | |
| | | | | | (INCLUDES RECEPTACLE AS & WEDGE) | |
| | 4 | 1 | **8T-8729** | 3 | PIN-CONNECTOR | |

E-ORDER BY THE CENTIMETER

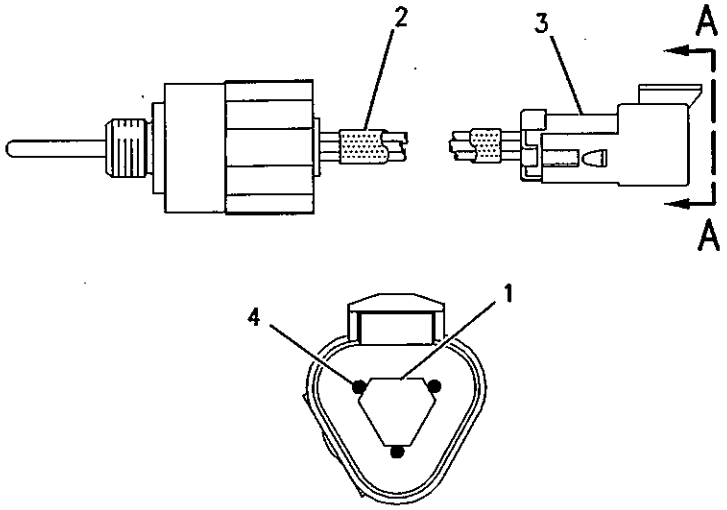


VIEW A-A

GRAPHIC #1 **<END>** g00658816

# *197-8391* SENSOR GP-TEMPERATURE–

## AIR INLET MANIFOLD, FUEL

**S/N: LHX1-UP**

**PART OF 255-2753 FILTER & MTG GP-FUEL, 231-1973 SENSOR GP-ENGINE**

**SMCS-1408, 1906, 1921, 1922, 301T, 429T, 509T** i02277443

| NOTE | REF NO | GRAPHIC REF | PART NUMBER | QTY | PART NAME 1 2 3 4 5 6 (PRODUCT LEVEL) | SEE PAGE |
|---|---|---|---|---|---|---|
| | 1 | 1 | **130-9811** | 1 | SENSOR GP-TEMPERATURE | |
| | 2 | 1 | **8L-2786** | 1 | SEAL-O-RING | |

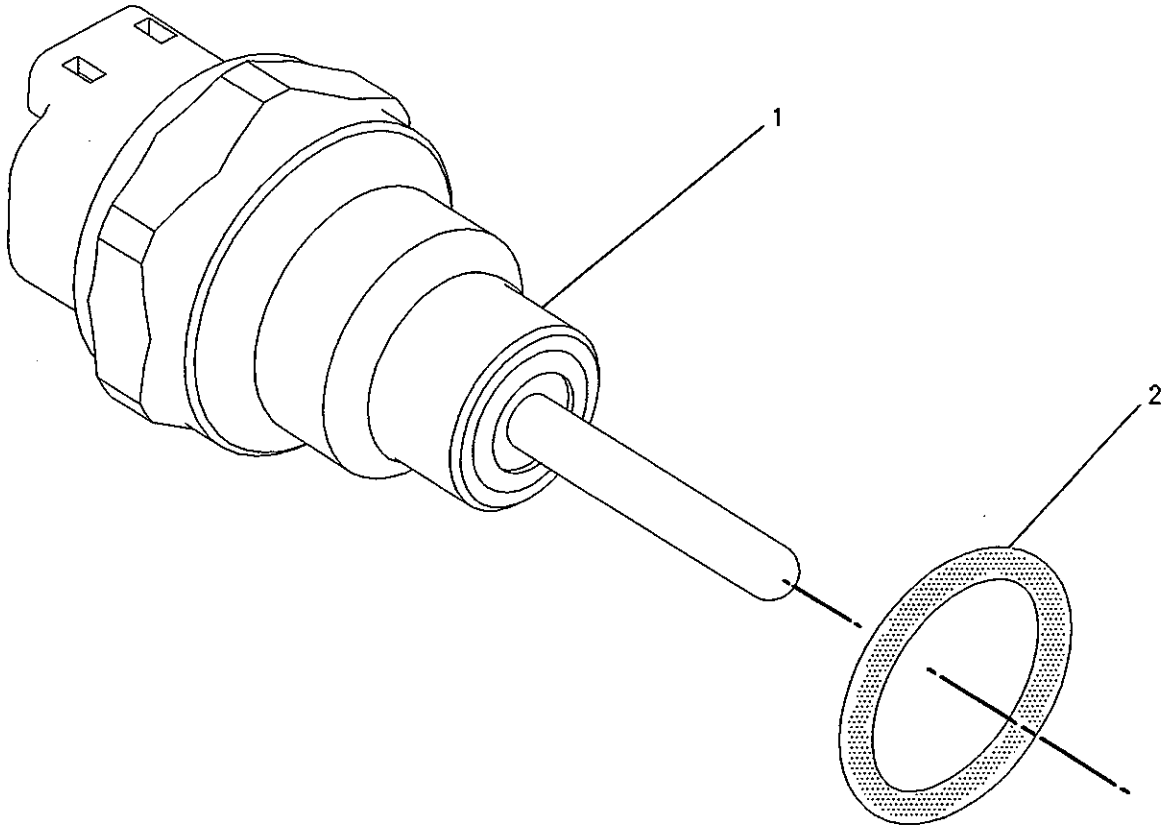


GRAPHIC #1 **<END>** g00856011

# 197-8392 SENSOR GP-TEMPERATURE–WATER, COOLANT

S/N: LHX1-UP

PART OF 231-1973 SENSOR GP-ENGINE

SMCS-1408, 1906, 1921, 1922, 301T, 429T, 509T

i02277444

| NOTE | REF NO | GRAPHIC REF | PART NUMBER | QTY | PART NAME 1 2 3 4 5 6 (PRODUCT LEVEL) | SEE PAGE |
|---|---|---|---|---|---|---|
| | 1 | 1 | 130-9811 | 1 | SENSOR GP-TEMPERATURE | |
| | 2 | 1 | 6V-6609 | 1 | SEAL-O-RING | |

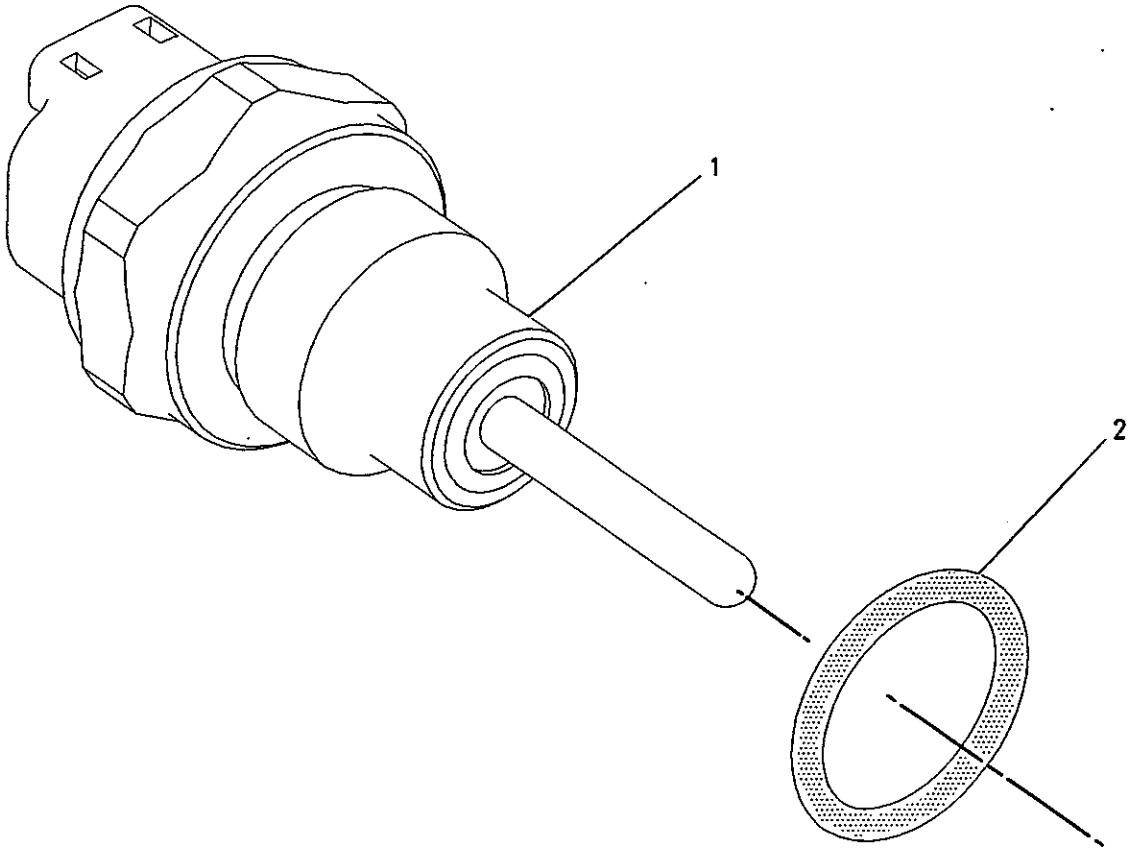


GRAPHIC #1

<END>

g00856005

# ELECTRICAL AND STARTING SYSTEM

## *207-5262* SERVICE GP-MACHINE–SECURITY

**S/N: JMS1-UP**

**PART OF 213-1198 ELECTRONICS GP-MACHINE**

**AN ATTACHMENT**

**SMCS-7610, 7631** **i02224397**

| NOTE | REF NO | GRAPHIC REF | PART NUMBER | QTY | PART NAME 1 2 3 4 5 6 (PRODUCT LEVEL) | SEE PAGE |
|---|---|---|---|---|---|---|
| | 1 | 1 | *156-6155* | 1 | CONTROL GP-UNPROGRAMMED (SECURITY) | |
| | 1A | 1 | **7X-6315** | 1 | STRAP AS-GROUND | |
| | 1B | 1 | **184-2472** | 1 | SCREW-PAN HEAD (NO 8-32X9.52-MM) | |
| | 1C | 1 | **134-4126** | 1 | WASHER (4.52X8.28X0.76-MM THK) | |
| | 2 | 1 | **232-9737** | 1 | SOFTWARE GP-MACHINE (SECURITY) | |
| | 3 | 1 | **206-5162** | 2 | KEY AS-ELECTRONIC (SECURITY, YELLOW) | |
| | | | | | –OR– | |
| | | 1 | **206-5165** | 2 | KEY AS-ELECTRONIC (SECURITY, GRAY) | |
| | 4 | 1 | **219-6314** | 2 | KEY RING (IDENTIFICATION) | |

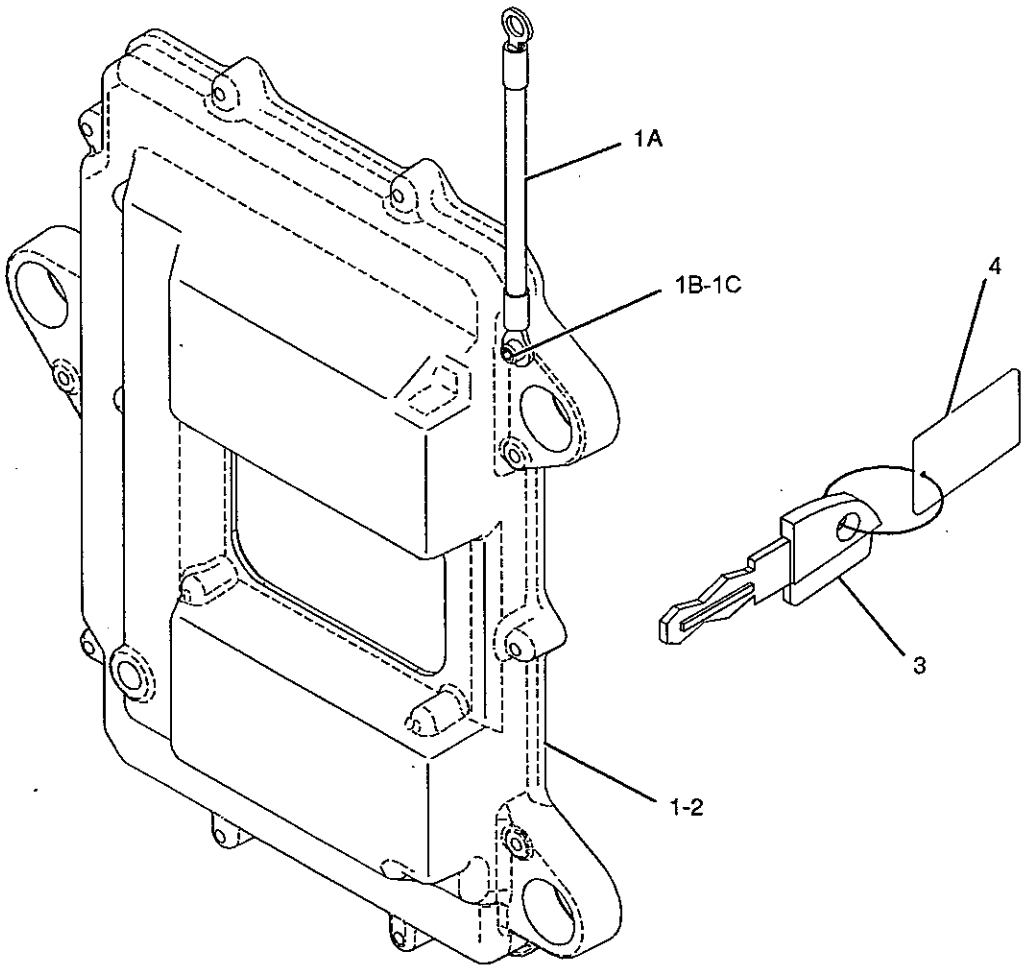


GRAPHIC #1

**<END>**

g01026135

# ELECTRICAL AND STARTING SYSTEM

## *235-5313* STARTING AID GP-ETHER

**S/N: JMS1-UP**
**AN ATTACHMENT**

**SMCS-1456** **i02282656**

| NOTE | REF NO | GRAPHIC REF | PART NUMBER | QTY | PART NAME 1 2 3 4 5 6 (PRODUCT LEVEL) | SEE PAGE |
|---|---|---|---|---|---|---|
| | 1 | 1 | **5P-6313** | 1 | NUT-FLARELESS (5/16-24-THD) | |
| | 2 | 1 | **5P-6314** | 1 | SLEEVE | |
| | 3 | 1 | **7N-0140** | 1 | TUBE AS-COIL | |
| | 4 | 1 | **7N-2059** | 1 | CLAMP AS | |
| | 5 | 1 | **130-5300** | 1 | CLIP | |
| | 6 | 1 | **230-1434** | 1 | FITTING | |
| | 7 | 1 | **238-7797** | 1 | BRACKET AS | |
| M | | 1 | **8T-3612** | 2 | NUT-WELD (M8X1.25-THD) | |
| Y | 8 | 1 | **239-1134** | 1 | VALVE GP-ETHER STARTING (24-VOLT) | 247 |
| | 9 | 1 | **247-0731** | 1 | TUBE | |
| | 10 | 1 | **247-0732** | 1 | TUBE | |
| | 11 | 1 | **149-7738** | 1 | CLIP | |
| | 12 | 1 | **247-3774** | 1 | ATOMIZER AS | |
| | 13 | 1 | **6V-2686** | 2 | CLIP | |
| | 15 | 1 | **8T-4121** | 2 | WASHER-HARD (11X21X2.5-MM THK) | |
| M | 16 | 1 | **8T-4133** | 1 | NUT (M10X1.5-THD) | |
| M | 17 | 1 | **8T-4137** | 1 | BOLT (M10X1.5X20-MM) | |
| M | 18 | 1 | **8T-4200** | 2 | BOLT (M8X1.25X16-MM) | |
| | 19 | 1 | **8T-4224** | 4 | WASHER-HARD (8.8X16X2-MM THK) | |
| M | 21 | 1 | **8T-4908** | 2 | BOLT (M8X1.25X25-MM) | |
| | | | | | | |
| AF | | | **7N-0296** | 1 | CYLINDER AS-ETHER | |
| | | | | | (MUST BE PROCURED LOCALLY FROM YOUR CATERPILLAR DEALER) | |

A-NOT PART OF THIS GROUP
F-NOT SHOWN
M-METRIC PART
Y-SEPARATE ILLUSTRATION

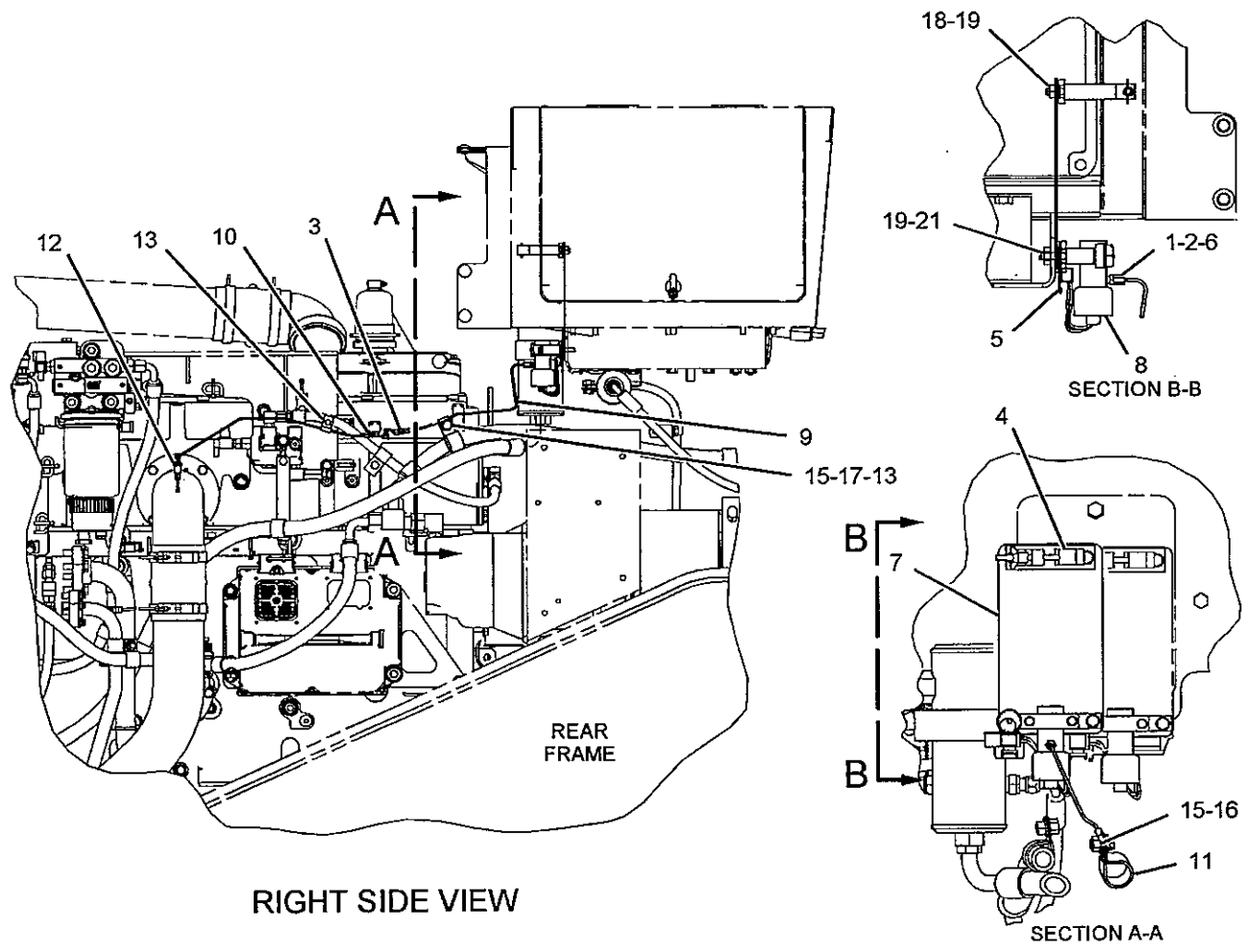


GRAPHIC #1 **<END>** g01142634

# ELECTRICAL AND STARTING SYSTEM

## *180-2435* STARTING MOTOR GP-ELECTRIC

**S/N: JMS1-UP**
**24-VOLT**
**PART OF 226-9644 INSTALLATION AR-ENGINE**

**SMCS-1453** **i02061342**

| NOTE | REF NO | GRAPHIC REF | PART NUMBER | QTY | PART NAME 1 2 3 4 5 6 (PRODUCT LEVEL) | SEE PAGE |
|---|---|---|---|---|---|---|
| | 1 | 1 | **8S-2332** | 3 | BOLT-12 POINT HEAD (5/8-11X1.75-IN) | |
| YR | 2 | 1 | **237-1962** | 1 | STARTING MOTOR GP-ELECTRIC | 227 |
| | 3 | 1 | **4N-1059** | 1 | GASKET | |
| | 4 | 1 | **8Y-9603** | 1 | CABLE AS-STARTING MOTOR | |
| | | 1 | **1S-7251** | 1 | TERMINAL-RING | |
| | | 1 | **1S-7252** | 1 | TERMINAL-RING | |
| E | | 1 | **5P-0747** | | CABLE (00-GA, BLACK) (28-CM) | |

E-ORDER BY THE CENTIMETER
R-REMFG PART MAY BE AVAILABLE
Y-SEPARATE ILLUSTRATION

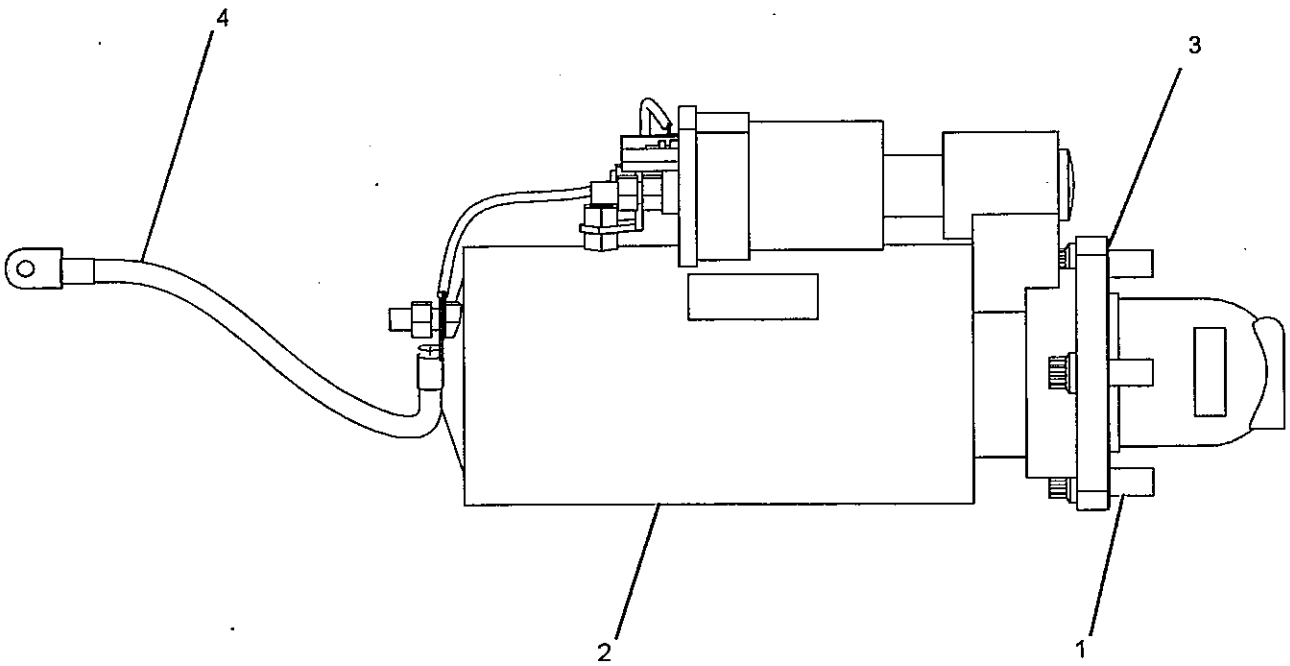


GRAPHIC #1 **<END>** g01061029

# ELECTRICAL AND STARTING SYSTEM

## 237-1962 STARTING MOTOR GP-ELECTRIC*R

S/N: JMS1-UP

24-VOLT

PART OF 180-2435 STARTING MOTOR GP-ELECTRIC

SMCS-1453 i02249643

| NOTE | REF NO | GRAPHIC REF | PART NUMBER | QTY | PART NAME 1 2 3 4 5 6 (PRODUCT LEVEL) | SEE PAGE |
|---|---|---|---|---|---|---|
| | 1 | 1 | 7M-0326 | 1 | CONNECTOR | |
| | 2 | 1 | 9H-3757 | 2 | WASHER (0.516X1X0.094-IN THK) | |
| | 3 | 1 | 1S-7446 | 3 | SCREW-MACHINE (8-32X0.437-IN) | |
| | 4 | 1 | 8C-9660 | 3 | WASHER (4.6X7.9X0.8-MM THK) | |
| | 5 | 1 | 9S-2544 | 9 | SCREW-HEX HEAD (8-32X11.13-MM) | |
| | 6 | 1 | 7M-0327 | 1 | WASHER-THRUST (17.4X25.4X1.6-MM THK) | |
| | 7 | 1 | 3T-3418 | 1 | FRAME AS-END | |
| | | 1 | 3T-3423 | 1 | CUP | |
| | | 1 | 3T-3424 | 1 | PLUG-FELT | |
| | | 1 | 9G-4101 | 1 | BUSHING-END | |
| | 8 | 1 | 3T-9525 | 1 | PLATE AS-BRUSH | |
| | 8A | 2 | 6T-0371 | 1 | INSULATOR | |
| | 8B | 2 | 5P-6298 | 12 | SCREW-MACHINE (10-32X0.5-IN) | |
| | | 1 | 9F-5599 | 12 | LOCKWASHER | |
| | 8C | 2 | 7F-3525 | 6 | WASHER-BUSHING (0.209X0.39X0.09-MM THK) | |
| | 8D | 2 | 6T-0372 | 1 | PLATE | |
| | 8E | 2 | 3T-4709 | 3 | PLATE | |
| | 8F | 2 | 2L-6679 | 3 | PLATE-INSULATOR | |
| | 8G | 2 | 3T-4710 | 3 | PLATE | |
| | 8H | 2 | 6T-0363 | 6 | HOLDER AS-BRUSH | |
| | | | | | (EACH INCLUDES) | |
| | 8J | 2 | 3T-9494 | 1 | SPRING | |
| | 9 | 1 | 7F-3491 | 2 | WASHER (0.516X1X0.094-IN THK) | |
| | 10 | 1 | 3T-3422 | 1 | WIRE AS (STARTER) | |
| | 11 | 1 | 2J-8163 | 2 | SEAL-O-RING | |
| | 12 | 1 | 7X-3373 | 1 | BOLT (5/16-18X0.88-IN) | |
| | 13 | 1 | 3T-3434 | 6 | PLUG | |
| | 14 | 1 | 5J-5314 | 5 | BOLT (5/16-18X1.5-IN) | |
| | 15 | 1 | 3L-3380 | 1 | BUSHING-TERMINAL | |
| | 16 | 2 | 036-9821 | 1 | WASHER | |
| | 17 | 2 | 4M-1828 | 1 | RETAINER-SPRING | |
| | 18 | 2 | 4M-1829 | 1 | BOOT-RUBBER | |
| | 19 | 2 | 9M-7609 | 1 | SPRING (SHIFT LEVER) | |
| | 20 | 2 | 4M-1827 | 1 | RETAINER-SPRING | |
| | 21 | 1 | 8C-3089 | 1 | SEAL-O-RING | |
| | 22 | 2 | 4M-1853 | 1 | LEVER AS-SHIFT | |
| | 23 | 2 | 5M-3034 | 1 | LOCKNUT (5/16-24-IN THD) | |
| | 24 | 1 | 7L-2894 | 4 | GASKET | |
| | 25 | 1 | 4M-1831 | 4 | PLUG-LEVER HOUSING | |
| | 26 | 1 | 4M-1854 | 1 | SHAFT-LEVER | |
| | 27 | 1 | 1H-1023 | 1 | SEAL-O-RING | |
| | 28 | 1 | 2D-6392 | 1 | SEAL-O-RING | |
| | 29 | 1 | 7T-3974 | 1 | HOUSING AS-DRIVE | |
| | 30 | 1 | 6N-3826 | 1 | DRIVE AS-MOTOR | |
| | 31 | 1,2 | 2H-3429 | 2 | RING-RETAINING | |
| | 32 | 1 | 6V-1322 | 4 | BOLT (1/4-20X0.375-IN) | |
| | 33 | 1 | 8T-4205 | 4 | WASHER-HARD (7.2X14.5X2-MM THK) | |
| | 34 | 1 | 6N-3279 | 1 | INSULATOR | |
| | 35 | 1 | 036-9823 | 13 | BOLT (1/4-28X1-IN) | |
| | 36 | 1 | 1M-9971 | 1 | SPACER (0.84X1.72X1.88-IN THK) | |
| | 37 | 1 | 1H-2629 | 3 | STRIP-INSULATION | |
| | 38 | 1 | 7M-0324 | 1 | COIL AS-FIELD | |
| | 39 | 1 | 3F-0379 | 12 | SCREW-POLE SHOE (3/8-24-THD) | |
| | 40 | 1 | 7F-3488 | 6 | SHOE-POLE | |
| | 41 | 1 | 7M-8651 | 1 | ARMATURE AS | |

# ELECTRICAL AND STARTING SYSTEM

## *237-1962* STARTING MOTOR GP-ELECTRIC *(contd.)*

i02249643

| NOTE | REF NO | GRAPHIC REF | PART NUMBER | QTY | PART NAME 1 2 3 4 5 6 (PRODUCT LEVEL) | SEE PAGE |
|---|---|---|---|---|---|---|
| | 42 | 1 | 7M-0325 | 1 | INSULATOR (COIL) | |
| | 43 | 1 | 3T-9524 | 6 | BRUSH AS | |
| | 44 | 1 | 3N-3763 | 1 | KIT-TERMINAL (STARTING MOTOR) (INCLUDES BUSHINGS AND WASHERS) | |
| | 45 | 1 | 125-6537 | 1 | INSULATOR (STARTER) | |
| | 46 | 2 | 3R-8801 | 1 | CLAMP | |
| | 47 | 1 | 8F-1434 | 2 | LOCKWASHER | |
| | 48 | 1 | 6V-8188 | 6 | NUT (1/2-13-THD) | |
| | 49 | 1 | 7X-0562 | 6 | WASHER-HARD (13.5X19X0.8-MM THK) | |
| | 50 | 1 | 4B-2049 | 6 | NUT (10-32-THD) | |
| | 51 | 1 | 8T-0328 | 10 | WASHER-HARD (5.5X10X1-MM THK) | |
| | 52 | 1 | 3T-9494 | 6 | SPRING | |
| | 53 | 1 | 3E-7771 | 1 | HOUSING AS | |
| | 54 | 1 | 9G-4101 | 1 | BUSHING-END | |
| | 55 | 1 | 3T-3424 | 3 | PLUG-FELT | |
| | 56 | 1 | 3T-3423 | 3 | CUP | |
| | 57 | 1 | 1M-9968 | 1 | BUSHING | |
| | 58 | 1 | 2F-6678 | 1 | SEAL-LIP TYPE | |
| | 59 | 1 | 4L-2729 | 1 | WASHER (0.844X1.9X0.188-IN THK) | |
| | 60 | 1 | 4M-1896 | 1 | BUSHING-TERMINAL | |
| | 61 | 1 | 045-4065 | 4 | SCREW-MACHINE (10-32X0.75-IN) | |
| | 62 | 1 | 125-6535 | 1 | COVER-STARTING MOTOR | |
| | 63 | 1 | 7T-9123 | 1 | GASKET-PLATE | |
| | 64 | 1 | 238-1851 | 1 | SOLENOID AS (24-VOLT, STARTING MOTOR) | |
| | 65 | 1 | 125-6536 | 1 | TERMINAL AS | |

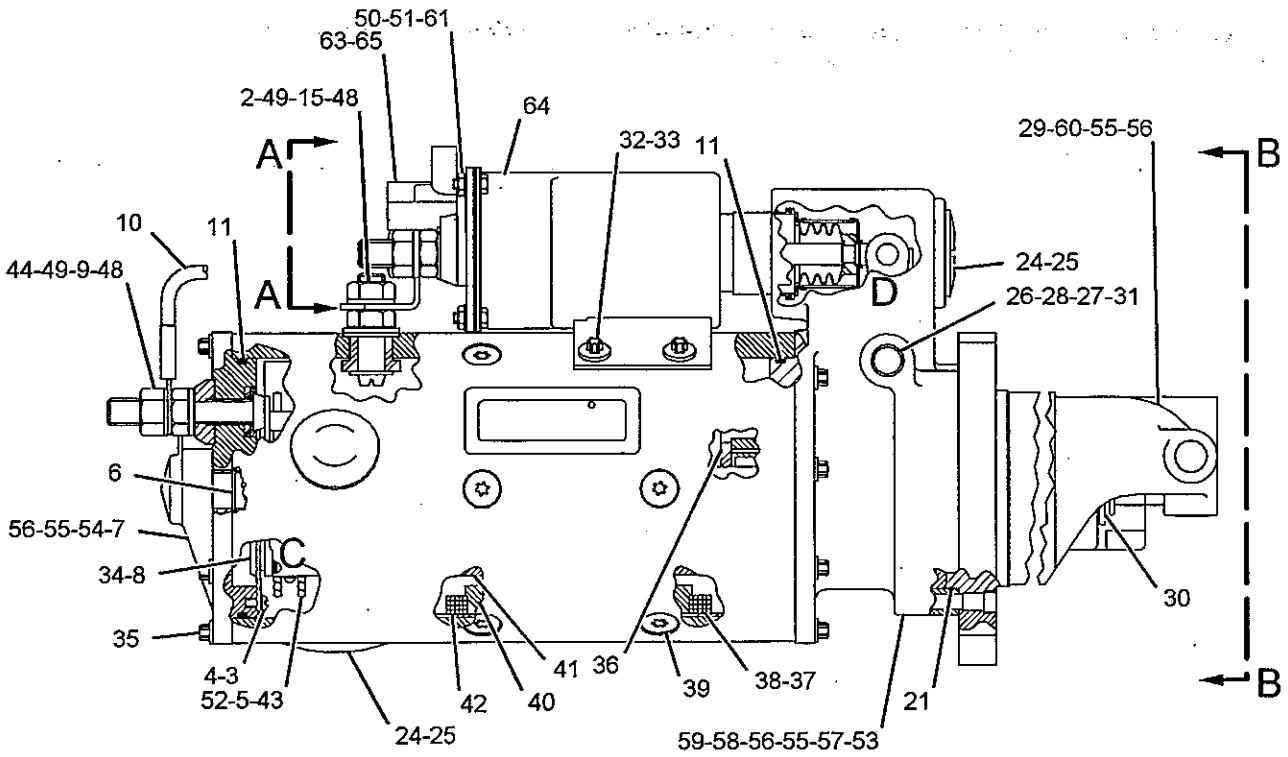


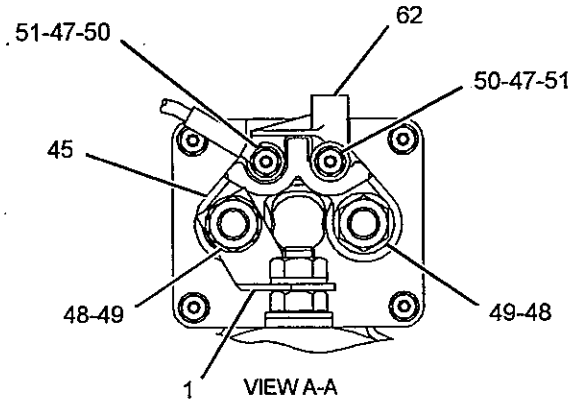


VIEW A-A

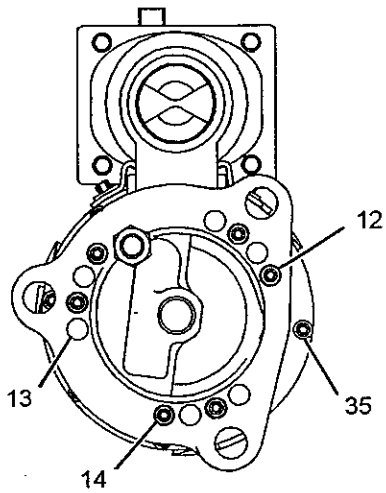


VIEW B-B

REFER TO ALL ILLUSTRATIONS OF THIS GROUP FOR AUXILIARY VIEWS

GRAPHIC #1

g01087643

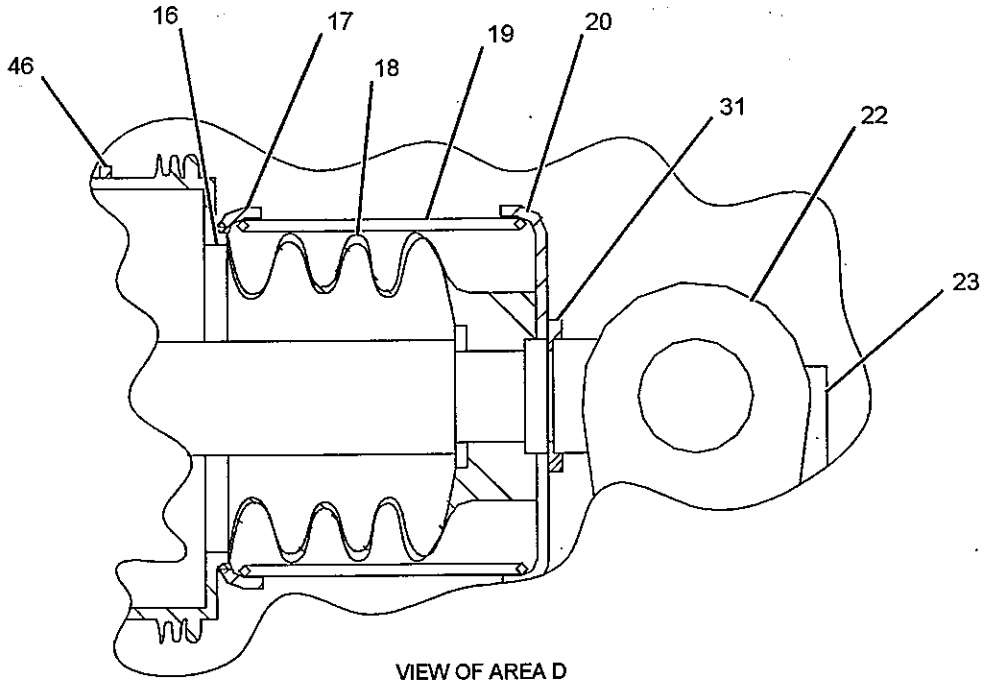


VIEW OF AREA D

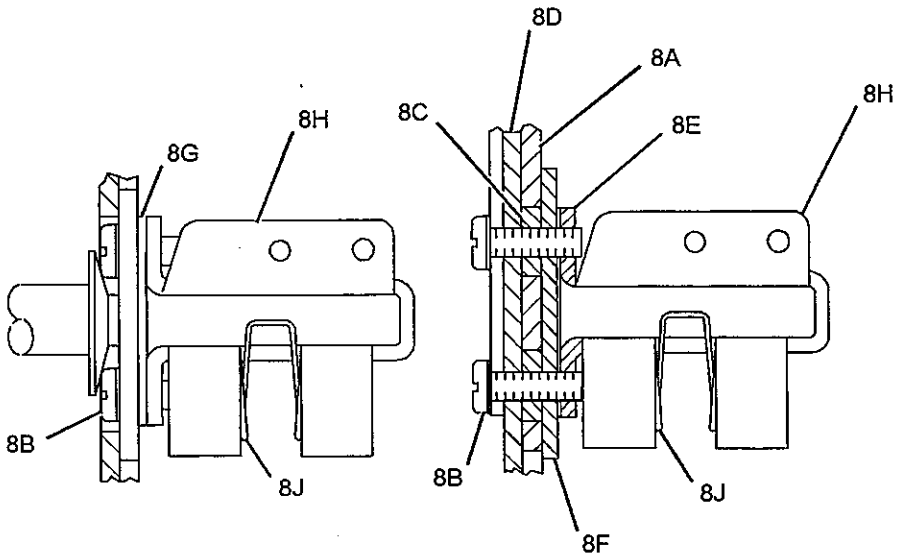


VIEW OF AREA C

GRAPHIC #2

**<END>**

g01087783

## 164-7577 SWITCH GP-BYPASS–POWER TRAIN OIL FILTER

**S/N: JMS1-UP**

**PART OF 266-2271 BASE GP-OIL FILTER, 232-4555 WIRING GP-CHASSIS**

**SMCS-1408, 1435** **i02274425**

| NOTE | REF NO | GRAPHIC REF | PART NUMBER | QTY | PART NAME 1 2 3 4 5 6 (PRODUCT LEVEL) | SEE PAGE |
|---|---|---|---|---|---|---|
| E | 1 | 1 | **9X-1813** | | SLEEVE (19-CM) | |
| | 2 | 1 | **102-8802** | 1 | KIT-RECEPTACLE (2-PIN) | |
| | | | | | (INCLUDES RECEPTACLE AS AND WEDGE) | |
| | 3 | 1 | **186-3735** | 2 | PIN-CONNECTOR (16-GA TO 18-GA) | |
| | 4 | 1 | **3E-3365** | 1 | WEDGE-RECEPTACLE LOCK (2-PIN) | |
| | 5 | 1 | **3D-2824** | 1 | SEAL-O-RING | |
| Z | 6 | 1 | | 1 | SWITCH AS (FILTER BYPASS) | |

E-ORDER BY THE CENTIMETER
Z-NOT SERVICED SEPARATELY

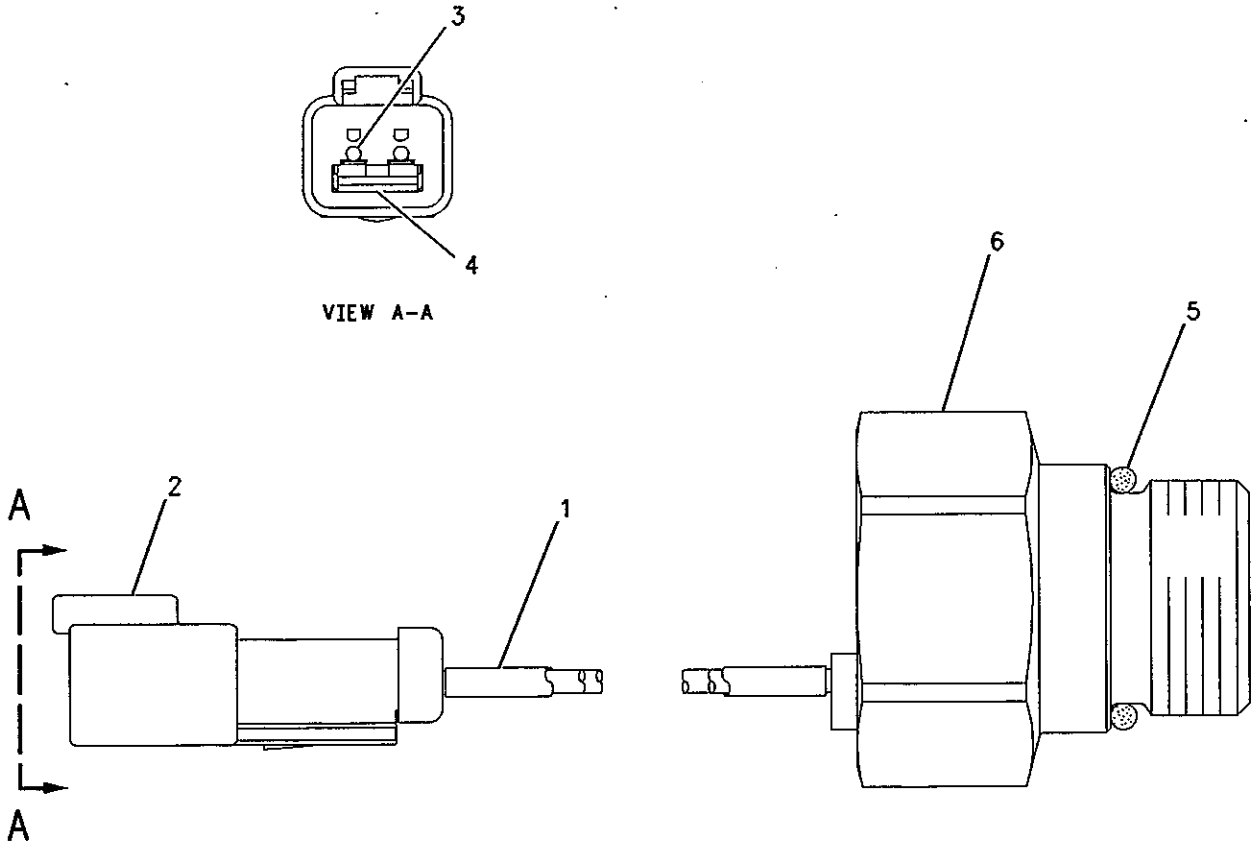


GRAPHIC #1 **<END>** g00750019

# ELECTRICAL AND STARTING SYSTEM

## *261-8121* SWITCH GP-DIFFERENTIAL LOCK

**S/N: JMS1-UP**
**AN ATTACHMENT**

**SMCS-1435, 3264** **i02267110**

| NOTE | REF NO | GRAPHIC REF | PART NUMBER | QTY | PART NAME 1 2 3 4 5 6 (PRODUCT LEVEL) | SEE PAGE |
|---|---|---|---|---|---|---|
| | 1 | 1 | **3S-2093** | 1 | STRAP-CABLE | |
| | 2 | 1 | **201-9459** | 1 | BOOT | |
| | 3 | 1 | **204-0775** | 1 | SWITCH AS-FOOT (DIFFERENTIAL LOCK) | |
| | 4 | 1 | **205-6298** | 1 | ACTUATOR | |
| | 5 | 1 | **228-0712** | 1 | BRACKET AS | |
| | 6 | 1 | **228-9768** | 1 | HARNESS AS-SWITCH (DIFFERENTIAL LOCK) | |
| | | 1 | **102-8802** | 1 | KIT-RECEPTACLE (2-PIN) | |
| | | | | | (INCLUDES RECEPTACLE AS AND WEDGE) | |
| | | 1 | **100-6674** | 2 | SEAL-CONNECTOR | |
| | | 1 | **205-9362** | 1 | PLUG AS | |
| | 7 | 1 | **261-8275** | 1 | BRACKET AS | |
| M | | 1 | **6V-9632** | 3 | NUT-WELD (M6X1-THD) | |
| M | 8 | 1 | **9X-2041** | 3 | SCREW-TRUSS HEAD (M10X1.5X20-MM) | |
| M | 9 | 1 | **9X-2044** | 3 | SCREW-TRUSS HEAD (M6X1X16-MM) | |

M-METRIC PART

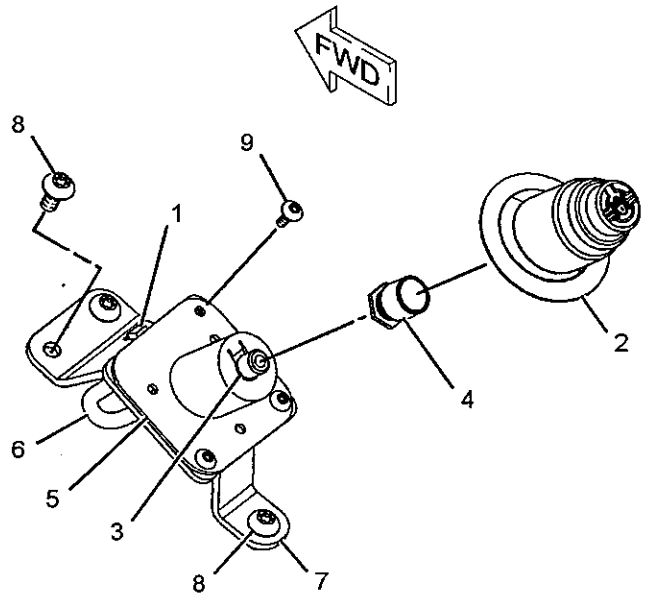


EXPLODED VIEW OF AREA A

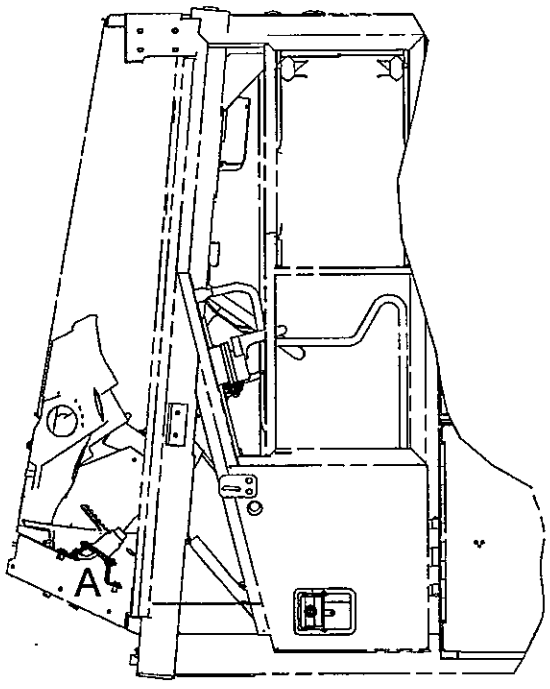


LEFT SIDE VIEW

GRAPHIC #1 **<END>** g01137065

# ELECTRICAL AND STARTING SYSTEM

## *7N-0718* SWITCH GP-DISCONNECT–BATTERY

**S/N: JMS1-UP**

**PART OF 232-4520 BATTERY & WIRING GP**

**SMCS-1411** **i02163014**

| NOTE | REF NO | GRAPHIC REF | PART NUMBER | QTY | PART NAME 1 2 3 4 5 6 (PRODUCT LEVEL) | SEE PAGE |
|---|---|---|---|---|---|---|
| | 1 | 1 | **8H-5306** | 1 | KEY (BATTERY DISCONNECT) | |
| | 2 | 1 | **8H-5303** | 1 | NUT (3/4-16-THD) | |
| | 3 | 1 | **2H-3922** | 2 | LOCKWASHER | |
| | 4 | 1 | **9F-5644** | 2 | LOCKWASHER | |
| | 5 | 1 | **6F-7045** | 2 | NUT-FULL (3/8X24-THD) | |

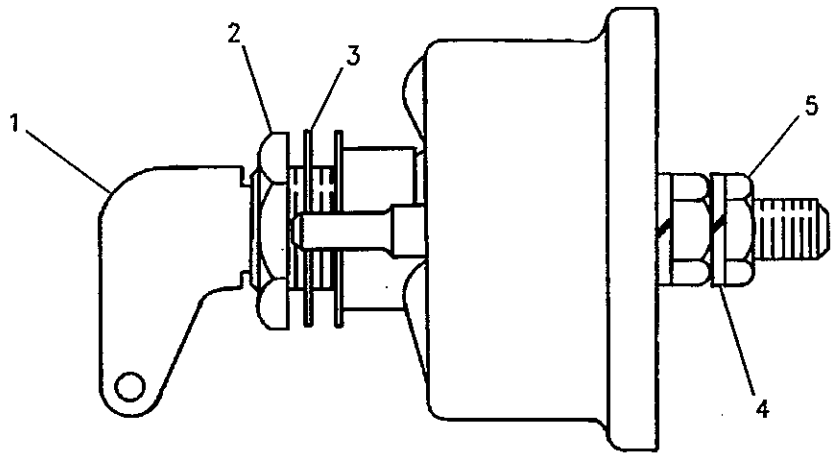


GRAPHIC #1 **<END>** g00715584

# ELECTRICAL AND STARTING SYSTEM

## 172-8660 SWITCH GP-LIQUID LEVEL–HYDRAULIC OIL

S/N: JMS1-UP

PART OF 232-4555 WIRING GP-CHASSIS

SMCS-7422 i02163018

| NOTE | REF NO | GRAPHIC REF | PART NUMBER | QTY | PART NAME 1 2 3 4 5 6 (PRODUCT LEVEL) | SEE PAGE |
|---|---|---|---|---|---|---|
| | 1 | 1 | 102-8802 | 1 | KIT-RECEPTACLE (2-PIN) | |
| | | | | | (INCLUDES RECEPTACLE AS AND WEDGE) | |
| | 2 | 1 | 3E-3365 | 1 | WEDGE-RECEPTACLE LOCK (2-PIN) | |
| | 3 | 1 | 186-3735 | 2 | PIN-CONNECTOR (16-GA TO 18-GA) | |

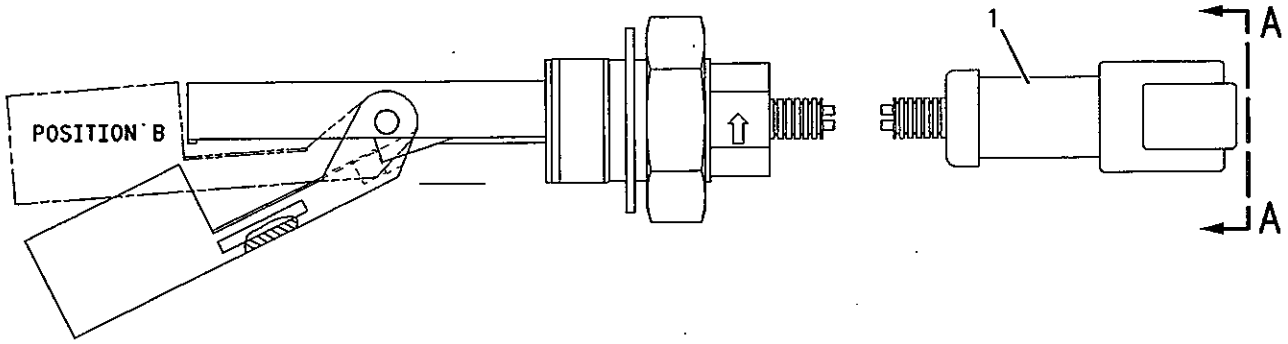


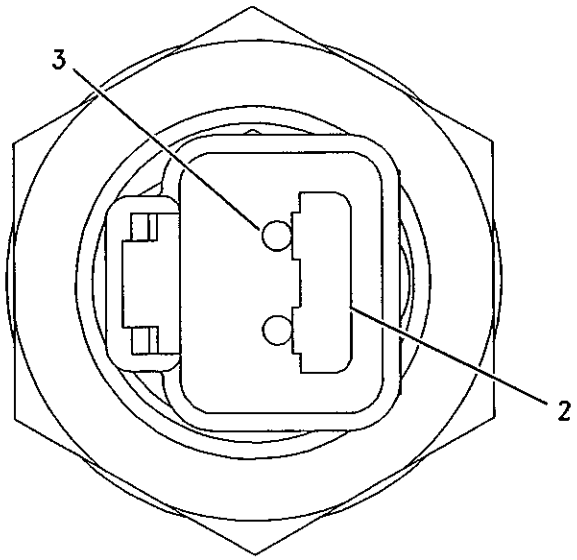


VIEW A-A

GRAPHIC #1 <END> g00946221

# 125-1302 SWITCH GP-MAGNETIC–START RELAY

S/N: JMS1-UP
24-VOLT
PART OF 232-4568 PANEL GP-CIRCUIT BREAKER

SMCS-7499 i02279719

| NOTE | REF NO | GRAPHIC REF | PART NUMBER | QTY | PART NAME 1 2 3 4 5 6 (PRODUCT LEVEL) | SEE PAGE |
|---|---|---|---|---|---|---|
| | 1 | 1 | 102-8802 | 1 | KIT-RECEPTACLE (2-PIN) | |
| | | | | | (INCLUDES RECEPTACLE AS & WEDGE) | |
| | 2 | 1 | 186-3735 | 2 | PIN-CONNECTOR (16-GA TO 18-GA) | |
| | 3 | 1 | 1H-3338 | 2 | LOCKWASHER | |
| | 4 | 1 | 012-0380 | 2 | LOCKWASHER | |
| M | 5 | 1 | 5C-2890 | 2 | NUT (M6X1-THD) | |
| E | 6 | 1 | 9X-1813 | | SLEEVE (16-CM) | |

E-ORDER BY THE CENTIMETER
M-METRIC PART

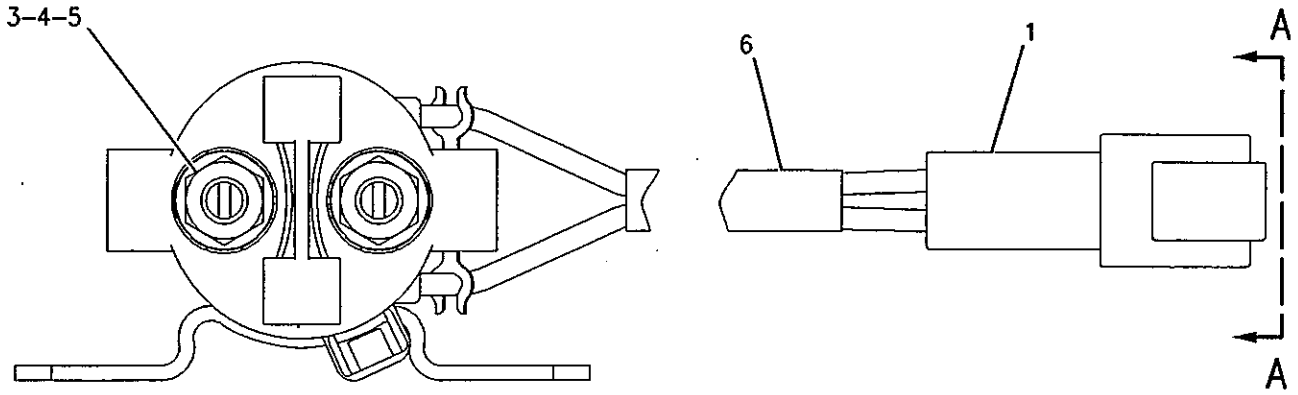


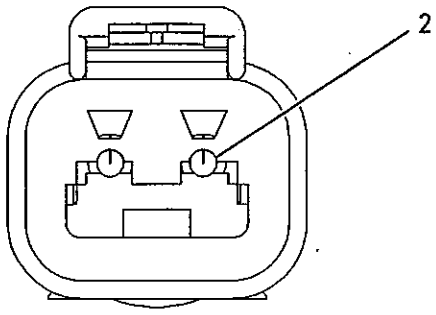


VIEW A–A

GRAPHIC #1 <END> g00988001

# *241-8368* SWITCH GP-MAGNETIC—MAIN RELAY

S/N: JMS1-UP
24 VOLTS
PART OF 232-4568 PANEL GP-CIRCUIT BREAKER

SMCS-7499 i02290098

| NOTE | REF NO | GRAPHIC REF | PART NUMBER | QTY | PART NAME 1 2 3 4 5 6 (PRODUCT LEVEL) | SEE PAGE |
|---|---|---|---|---|---|---|
| | 1 | 1 | 155-2270 | 1 | KIT-CONNECTING PLUG (2-PIN) | |
| | | | | | (INCLUDES PLUG AS, WEDGE & INTERFACE SEAL) | |
| | 2 | 1 | 4F-2294 | 2 | NUT-JAM (5/16-24-THD) | |
| | 3 | 1 | 186-3736 | 2 | SOCKET-CONNECTOR (16-AWG TO 18-AWG) | |

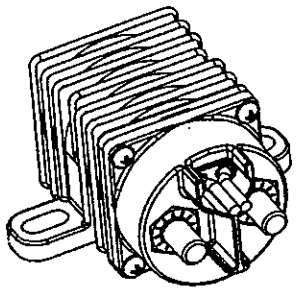

ISOMETRIC VIEW

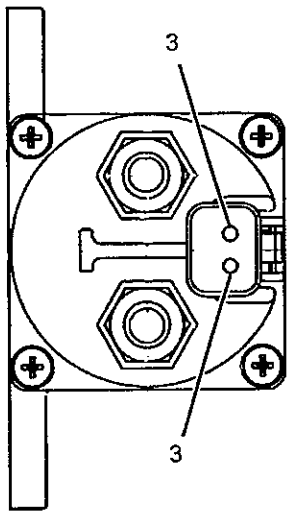


VIEW A-A

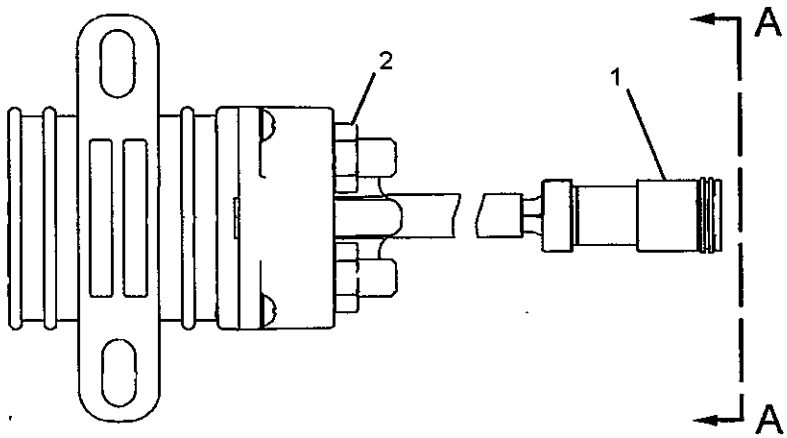


GRAPHIC #1 <END> g01077362

# ELECTRICAL AND STARTING SYSTEM

## 254-3783 SWITCH GP-MAGNETIC–MAIN RELAY

S/N: JMS1-UP
24 VOLTS
FIELD INSTALLATION

SMCS-7499 i02280323

| NOTE | REF NO | GRAPHIC REF | PART NUMBER | QTY | PART NAME 1 2 3 4 5 6 (PRODUCT LEVEL) | SEE PAGE |
|---|---|---|---|---|---|---|
| | 1 | 1 | 4F-2294 | 2 | NUT-JAM (5/16-24-THD) | |
| | 2 | 1 | 6V-8186 | 2 | NUT-FULL (5/16-24-THD) | |
| | 3 | 1 | 155-2270 | 1 | KIT-CONNECTING PLUG (2-PIN) | |
| | | | | | (INCLUDES PLUG AS & WEDGE) | |
| | 4 | 1 | 186-3736 | 2 | SOCKET-CONNECTOR (16-AWG TO 18-AWG) | |

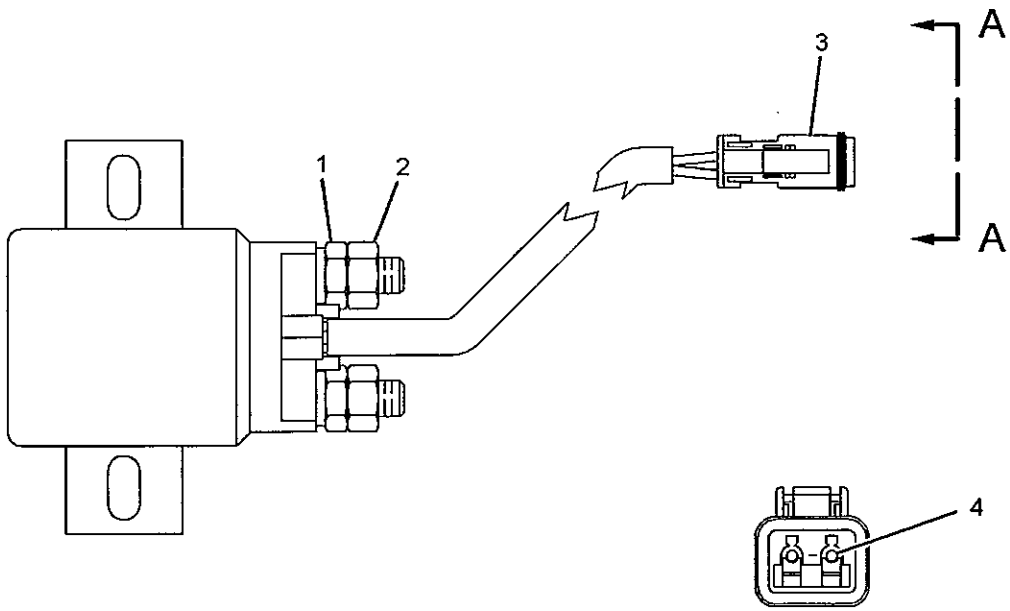


VIEW A-A

GRAPHIC #1 **<END>** g01141735

# ELECTRICAL AND STARTING SYSTEM

## *258-0883* SWITCH GP-PRESSURE

**S/N: LHX1-UP**

**PART OF 255-2753 FILTER & MTG GP-FUEL**

**SMCS-1435** **i02267120**

| NOTE | REF NO | GRAPHIC REF | PART NUMBER | QTY | PART NAME 1 2 3 4 5 6 (PRODUCT LEVEL) | SEE PAGE |
|---|---|---|---|---|---|---|
| | 1 | 1 | **102-8802** | 1 | KIT-RECEPTACLE (2-PIN) | |
| | | | | | (INCLUDES RECEPTACLE AS AND WEDGE) | |
| | 2 | 1 | **3E-3365** | 1 | WEDGE-RECEPTACLE LOCK (2-PIN) | |
| | 3 | 1 | **186-3735** | 2 | PIN-CONNECTOR (16-GA TO 18-GA) | |
| E | 4 | 1 | **9X-1813** | | SLEEVE (14-CM) | |
| | 5 | 1 | **6V-4589** | 1 | SEAL-O-RING | |
| | 6 | 1 | **7L-9061** | 1 | SEAL-O-RING | |

E-ORDER BY THE CENTIMETER

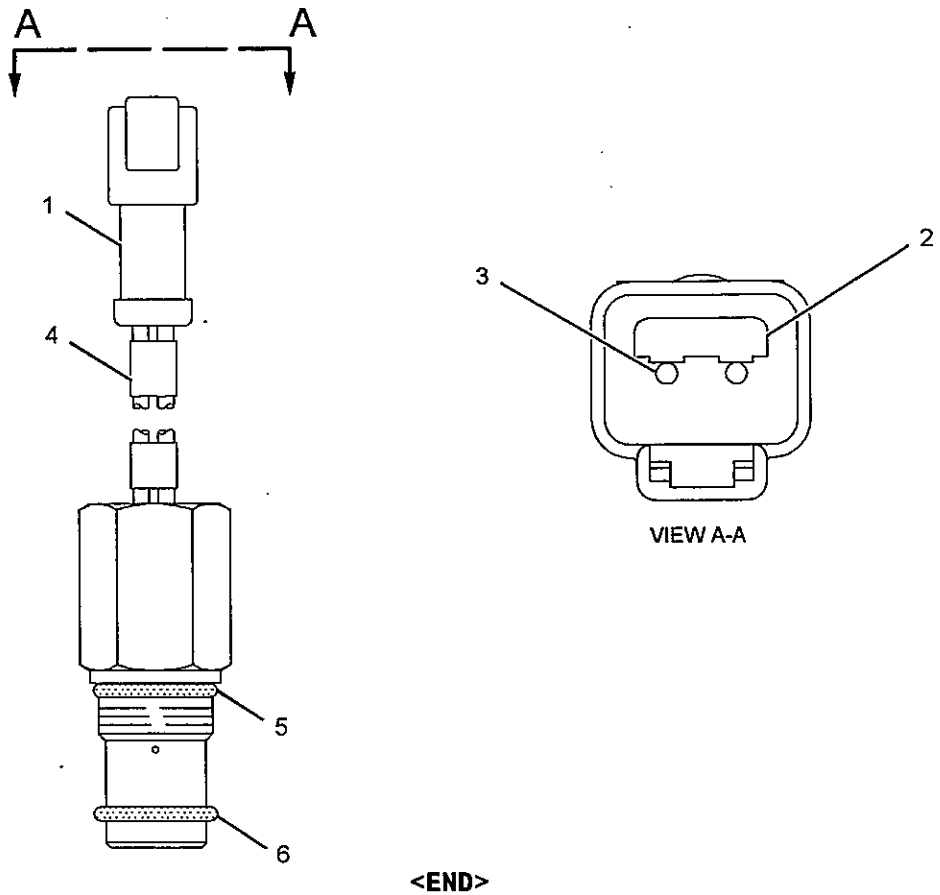


GRAPHIC #1 **<END>** g01072091

# 262-9949 SWITCH GP-REVERSING FAN

S/N: JMS1-UP

PART OF 251-5801 CONTROL AR-FAN

AN ATTACHMENT

SMCS-7332 i02285342

| NOTE | REF NO | GRAPHIC REF | PART NUMBER | QTY | PART NAME 1 2 3 4 5 6 (PRODUCT LEVEL) | SEE PAGE |
|---|---|---|---|---|---|---|
| | 1 | 1 | 236-4623 | 1 | SWITCH AS-ROCKER (AUTOMATIC REVERSING FAN) | |

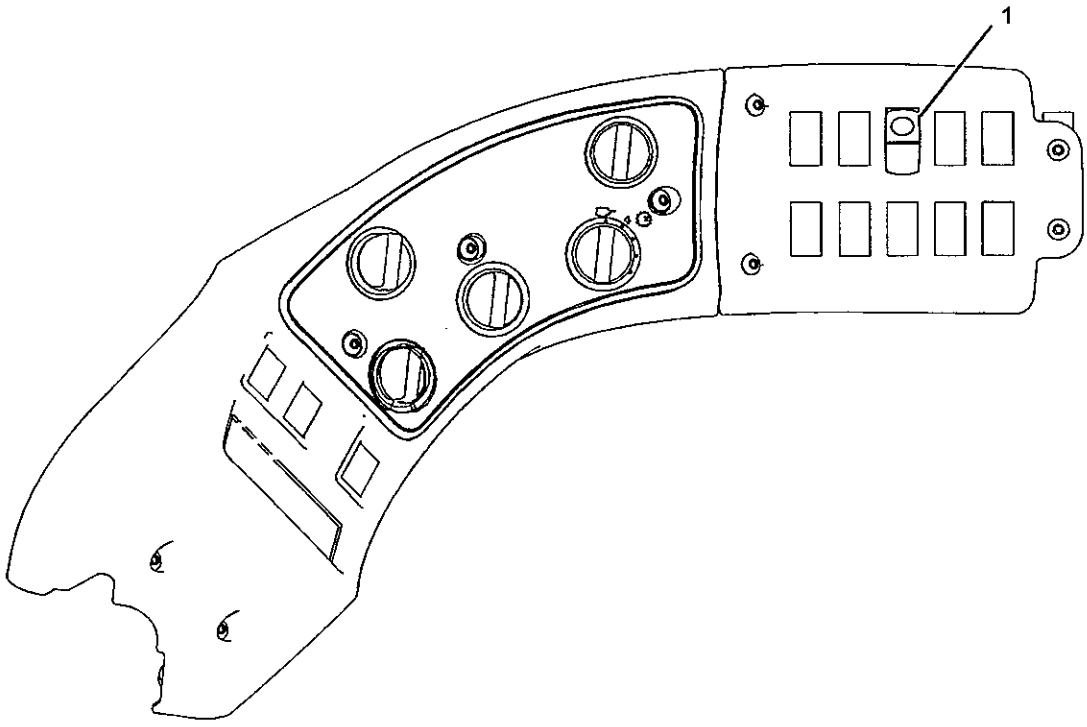


LEFT SIDE VIEW

GRAPHIC #1

<END>

g01116598

# ELECTRICAL AND STARTING SYSTEM

## *197-4147* SWITCH GP-RIDE CONTROL

S/N: JMS1-UP

PART OF 196-8529, 196-8530 CONTROL AR-RIDE

AN ATTACHMENT

SMCS-7332 i01790940

| NOTE | REF NO | GRAPHIC REF | PART NUMBER | QTY | PART NAME 1 2 3 4 5 6 (PRODUCT LEVEL) | SEE PAGE |
|---|---|---|---|---|---|---|
| | 1 | 1 | 219-9531 | 1 | SWITCH AS-ROCKER (RIDE CONTROL) | |

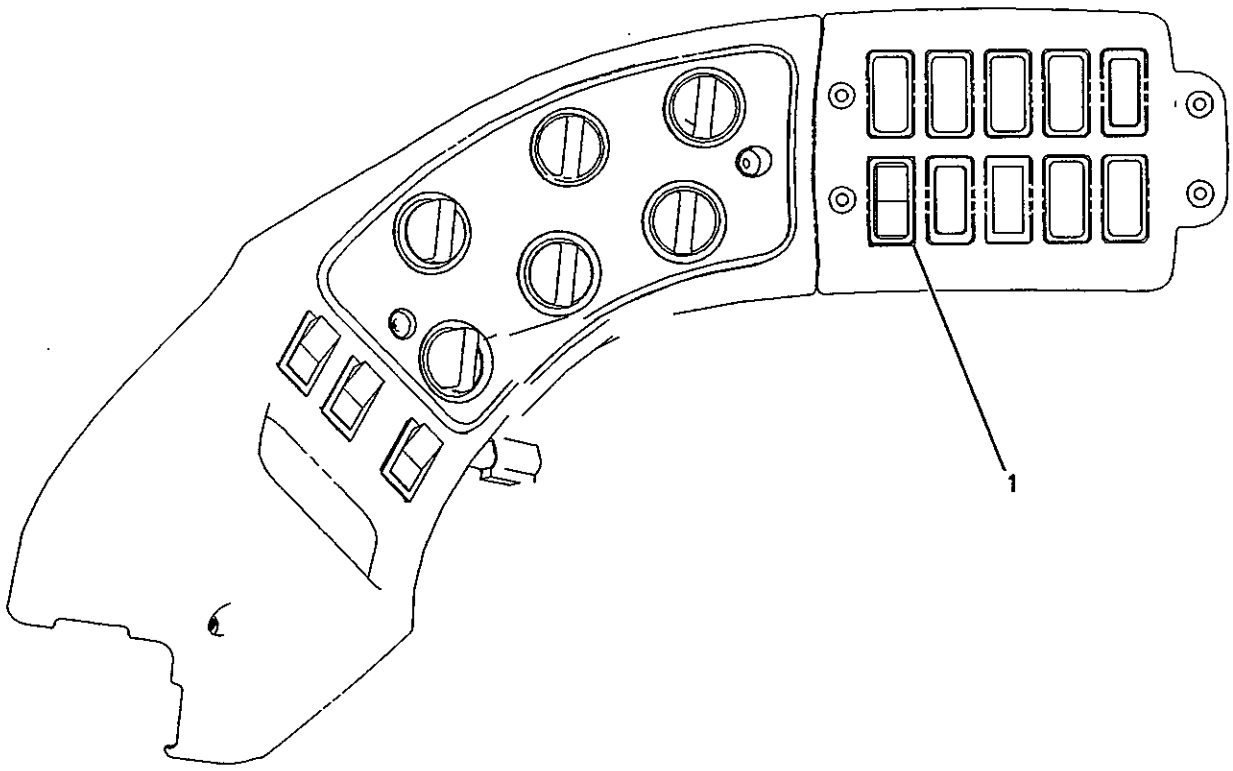


GRAPHIC #1 **<END>** g00770543

# ELECTRICAL AND STARTING SYSTEM

## *252-5917* SWITCH GP-RIDE CONTROL

S/N: JMS1-UP

PART OF 267-3803, 267-3804 CONTROL AR-RIDE

AN ATTACHMENT

SMCS-7332 i02207809

| NOTE | REF NO | GRAPHIC REF | PART NUMBER | QTY | PART NAME 1 2 3 4 5 6 (PRODUCT LEVEL) | SEE PAGE |
|---|---|---|---|---|---|---|
| | 1 | 1 | 236-4612 | 1 | SWITCH AS-ROCKER (RIDE CONTROL) | |

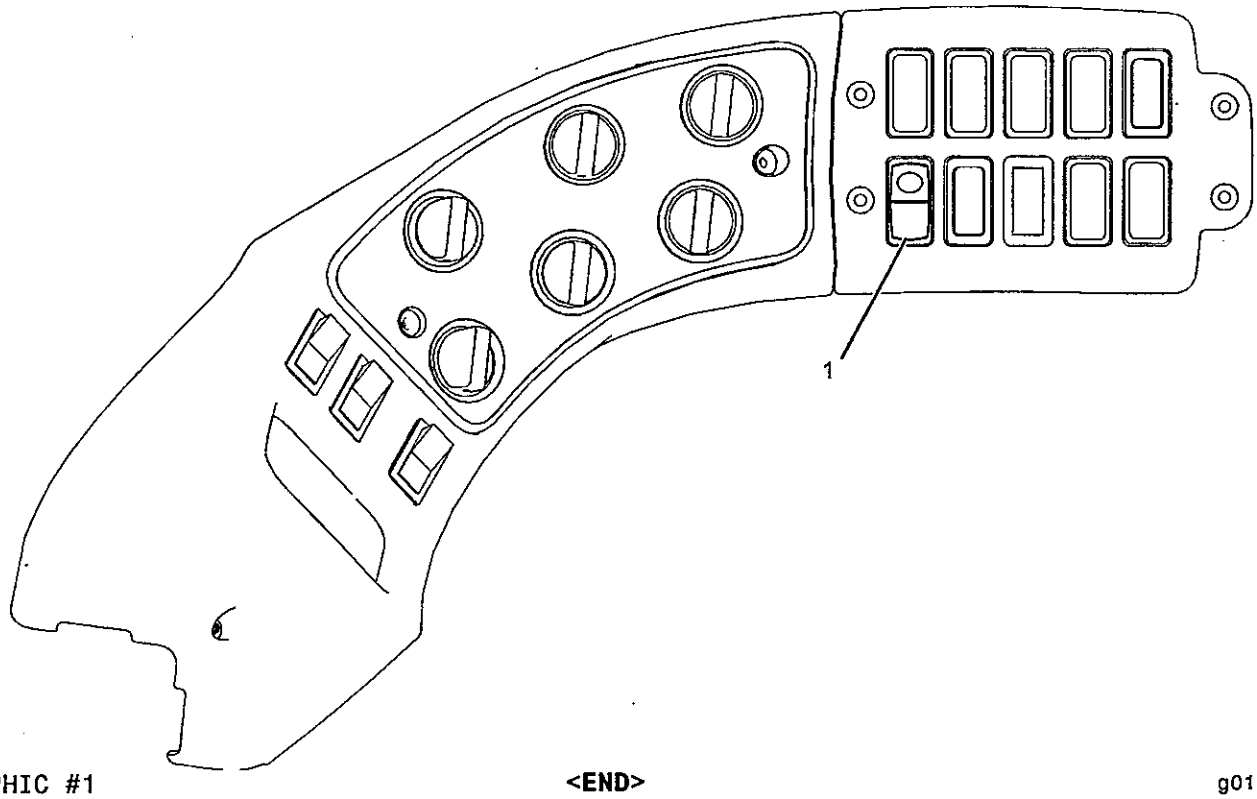


GRAPHIC #1 **<END>** g01080120

# ELECTRICAL AND STARTING SYSTEM

## *263-4133* SWITCH GP-ROCKER-
### QUICK COUPLER, BUCKET/FORK SELECT, KICKOUT
**S/N: JMS1-UP**
**AN ATTACHMENT**

**SMCS-7332** i02206621

| NOTE | REF NO | GRAPHIC REF | PART NUMBER | QTY | PART NAME 1 2 3 4 5 6 (PRODUCT LEVEL) | SEE PAGE |
|---|---|---|---|---|---|---|
| | 1 | 1 | **248-5081** | 1 | SWITCH AS-ROCKER (QUICK COUPLER) | |
| | 2 | 1 | **219-9526** | 1 | SWITCH AS-ROCKER (BUCKET, FORK SELECT) | |
| | 3 | 1 | **219-9535** | 1 | SWITCH AS-ROCKER (KICKOUT ON, OFF) | |
| | 4 | 1 | **249-5602** | 1 | GUARD | |

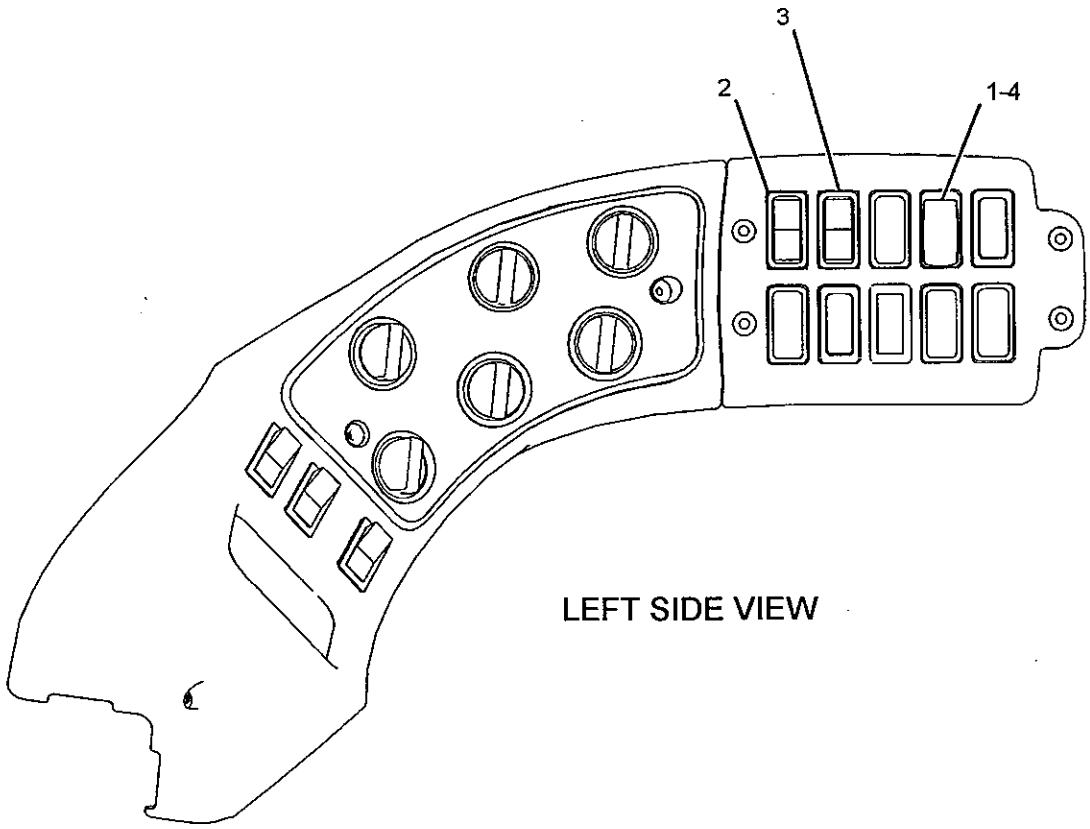


LEFT SIDE VIEW

GRAPHIC #1 **<END>** g01116634

## *106-0107* SWITCH GP-ROTARY–AUTODIG MATERIAL SELECT

S/N: JMS1-UP

PART OF 238-9645 CONTROL GP-AUTODIG

AN ATTACHMENT

SMCS-7332 i02096966

| NOTE | REF NO | GRAPHIC REF | PART NUMBER | QTY | PART NAME 1 2 3 4 5 6 (PRODUCT LEVEL) | SEE PAGE |
|---|---|---|---|---|---|---|
| | 1 | 1 | 102-8805 | 1 | KIT-RECEPTACLE (6-PIN) | |
| | | | | | (INCLUDES RECEPTACLE AS & WEDGE) | |
| | 2 | 1 | 3E-3383 | 1 | WEDGE-RECEPTACLE LOCK (6-PIN) | |
| | 3 | 1 | 8T-8737 | 1 | PLUG-SEAL | |
| | 4 | 1 | 144-1636 | 5 | PIN-CONNECTOR | |
| M | 5 | 1 | 7Y-5458 | 1 | NUT (M12X1-THD) | |
| | 6 | 1 | 7Y-5464 | 1 | WASHER (M12.2X15.4X0.5-MM THK) | |
| | 7 | 1 | 106-0210 | 1 | SEAL | |

M-METRIC PART

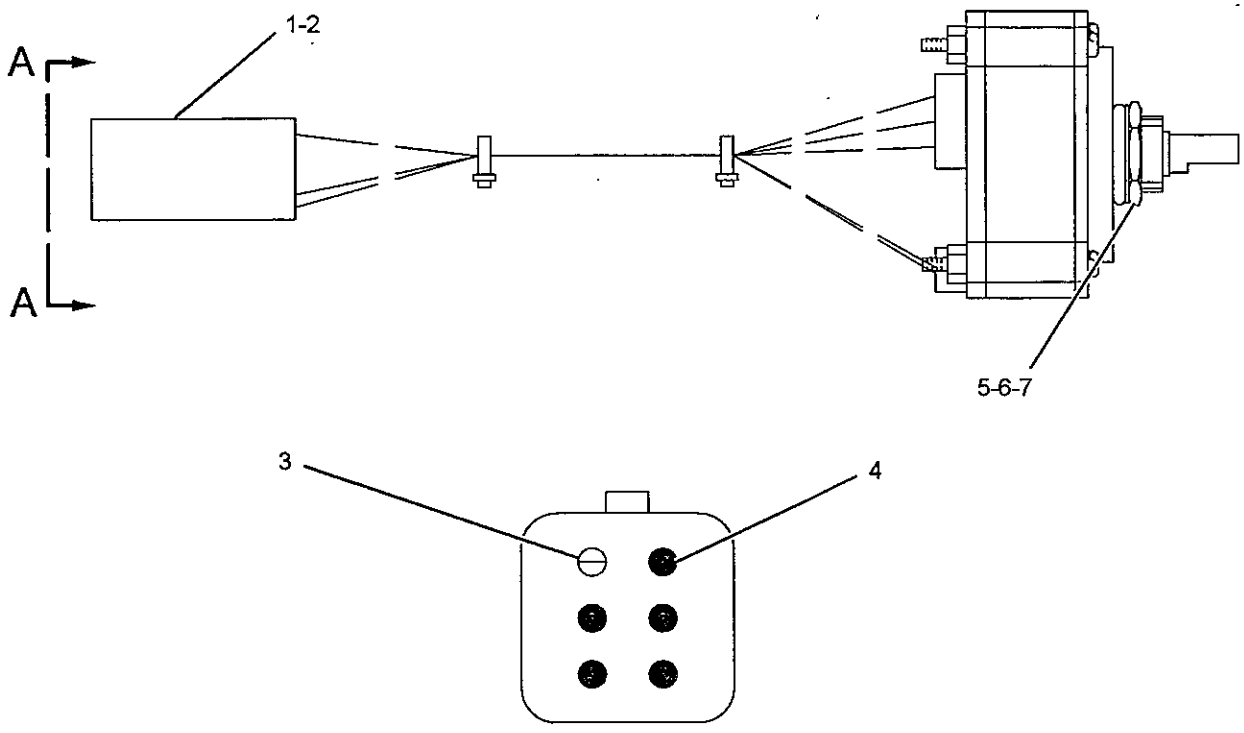


VIEW A-A

GRAPHIC #1

<END>

g01098706

# ELECTRICAL AND STARTING SYSTEM

## *252-5920* SWITCH GP-SIGNAL–TURN

**S/N: JMS1-UP**

**PART OF 246-3564, 263-8419 LIGHTING AR-SIGNAL**

**AN ATTACHMENT**

**SMCS-7332** **i02253420**

| NOTE | REF NO | GRAPHIC REF | PART NUMBER | QTY | PART NAME 1 2 3 4 5 6 (PRODUCT LEVEL) | SEE PAGE |
|---|---|---|---|---|---|---|
| | 1 | 1 | **8N-2622** | 1 | LEVER | |
| | 2 | 1 | **134-9569** | 1 | SWITCH AS-TURN SIGNAL | |
| | | 1 | **5L-7200** | 1 | SCREW (8-32X0.375-IN) | |
| | | 1 | **9B-7233** | 1 | LOCKWASHER | |
| | 3 | 1 | **153-3945** | 1 | COVER AS | |
| | 4 | 1 | **154-4563** | 1 | HARNESS AS-LIGHTING (TURN SIGNAL) | |
| | | 1 | **102-8805** | 1 | KIT-RECEPTACLE (6-PIN) | |
| | | | | | (INCLUDES RECEPTACLE AS AND WEDGE) | |
| | 5 | 1 | **172-9200** | 1 | SUPPRESSOR-ARC | |
| | 6 | 1 | **201-5555** | 1 | PLATE-INSTRUCTION (TURN SIGNAL) | |
| | 7 | 1 | **214-9453** | 1 | BOOT | |
| | 8 | 1 | **214-9454** | 1 | BRACKET AS | |
| | 9 | 1 | **217-8166** | 1 | FLASHER AS | |
| | 10 | 1 | **236-4616** | 1 | SWITCH AS-ROCKER (HAZARD) | |
| | 11 | 1 | **096-6166** | 3 | WASHER-HARD (4.5X9X1-MM THK) | |
| M | 12 | 1 | **123-0707** | 3 | SCREW-HEX SOCKET (M4X0.7X20-MM) | |
| | 13 | 1 | **189-3158** | 1 | SUPPRESSOR-ARC | |
| M | 14 | 1 | **5C-8312** | 3 | NUT (M4X0.7-THD) | |
| M | 15 | 1 | **6V-3938** | 2 | BOLT (M10X1.5X20-MM) | |
| M | 16 | 1 | **8T-0288** | 2 | BOLT (M5X0.8X12-MM) | |
| | 17 | 1 | **8T-0328** | 2 | WASHER-HARD (5.5X10X1-MM THK) | |
| | 18 | 1 | **8T-4121** | 6 | WASHER-HARD (11X21X2.5-MM THK) | |
| | 19 | 1 | **9M-8406** | 1 | CLIP | |

M-METRIC PART

## 252-5920 SWITCH GP-SIGNAL *(contd.)*

i02253420

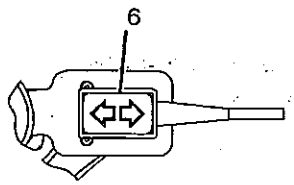


VIEW G-G

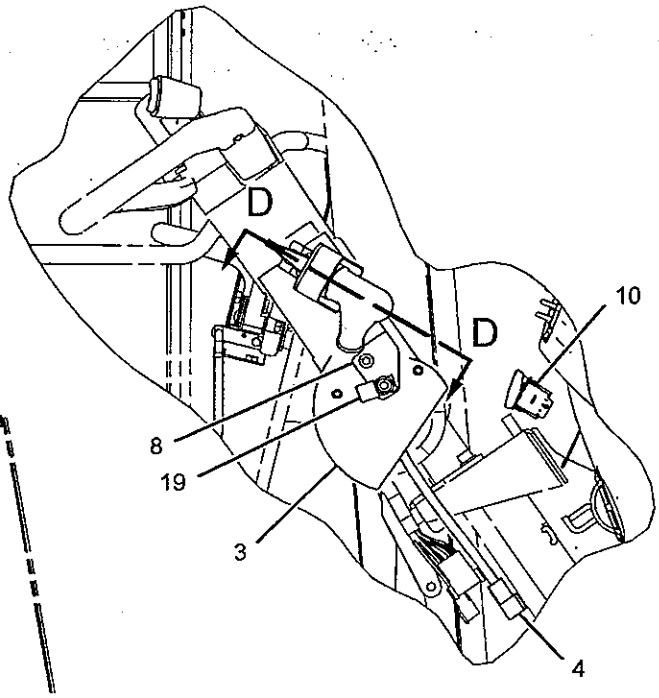


VIEW OF AREA A

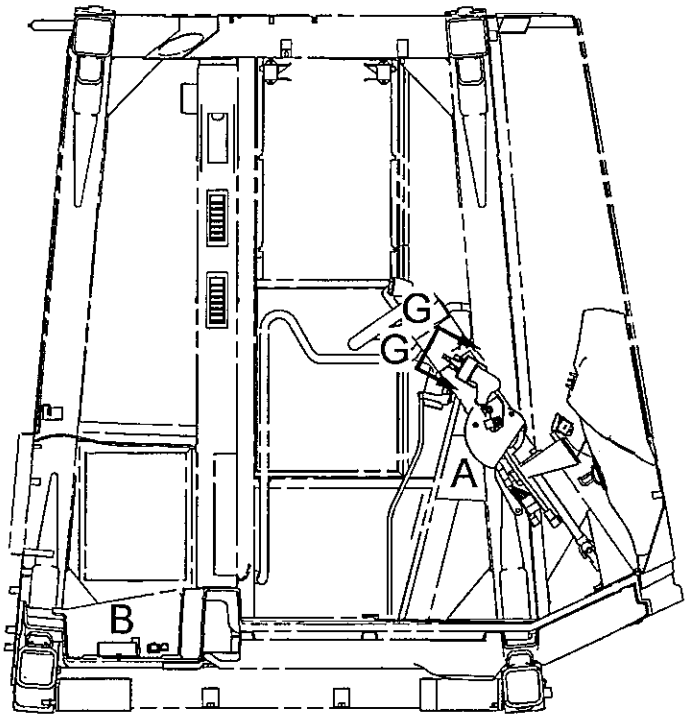


RIGHT SIDE VIEW

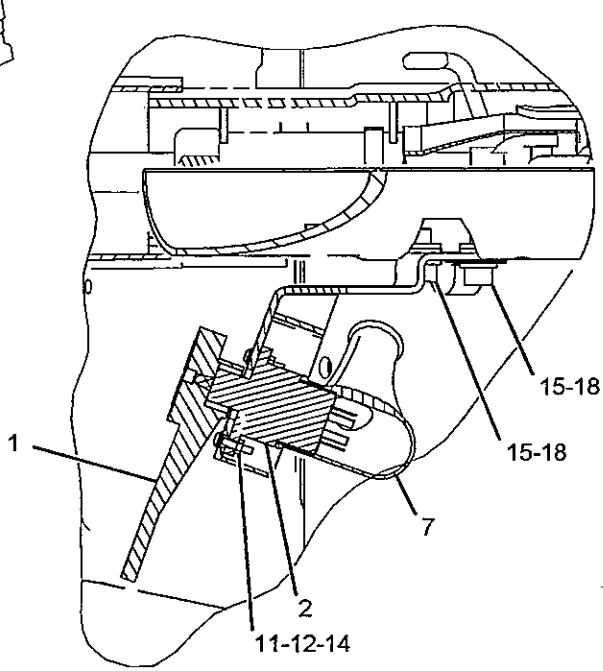


SECTION D-D

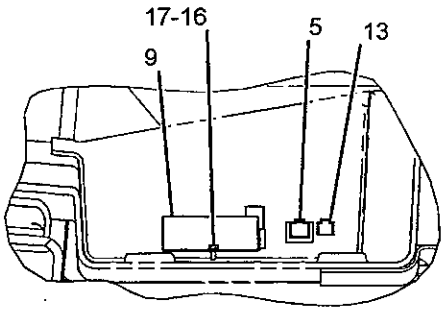


VIEW OF AREA B

GRAPHIC #1

<END>

g01116771

# 165-5970 SWITCH GP-TOGGLE

**S/N: LHX1-UP**

**PART OF 255-2753 FILTER & MTG GP-FUEL**

**SMCS-7332** i02262653

| NOTE | REF NO | GRAPHIC REF | PART NUMBER | QTY | PART NAME 1 2 3 4 5 6 (PRODUCT LEVEL) | SEE PAGE |
|---|---|---|---|---|---|---|
| | 1 | 1 | **6T-3631** | 2 | NUT-HEX (15/32-32-THD) | |
| | 2 | 1 | **6T-3632** | 1 | LOCKWASHER | |
| | 3 | 1 | **6T-3633** | 1 | RING-LOCKING | |
| | 4 | 1 | **102-8803** | 1 | KIT-RECEPTACLE (3-PIN) | |
| | | | | | (INCLUDES RECEPTACLE AS & WEDGE) | |
| | 5 | 1 | **3E-3371** | 1 | WEDGE-RECEPTACLE LOCK (3-PIN) | |
| | 6 | 1 | **186-3735** | 3 | PIN-CONNECTOR (16-GA TO 18-GA) | |

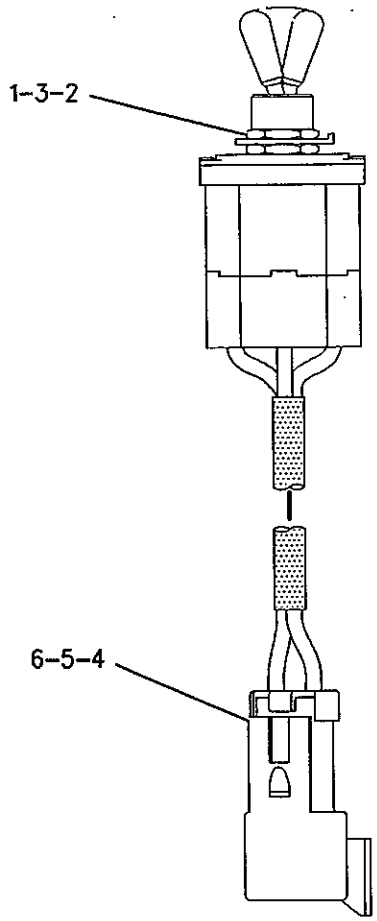


GRAPHIC #1

**<END>**

g00749466

# 239-1134 VALVE GP-ETHER STARTING–24-VOLT

S/N: JMS1-UP

PART OF 235-5313 STARTING AID GP-ETHER

AN ATTACHMENT

SMCS-1456 i02145416

| NOTE | REF NO | GRAPHIC REF | PART NUMBER | QTY | PART NAME 1 2 3 4 5 6 (PRODUCT LEVEL) | SEE PAGE |
|---|---|---|---|---|---|---|
| | 1 | 1 | 3E-3365 | 1 | WEDGE-RECEPTACLE LOCK (2-PIN) | |
| | 2 | 1 | 7N-9801 | 1 | GASKET | |
| | 3 | 1 | 102-8802 | 1 | KIT-RECEPTACLE (2-PIN) | |
| | | | | | (KIT INCLUDES RECEPTACLE AS & WEDGE) | |
| | 4 | 1 | 186-3735 | 2 | PIN-CONNECTOR (16-GA TO 18-GA) | |

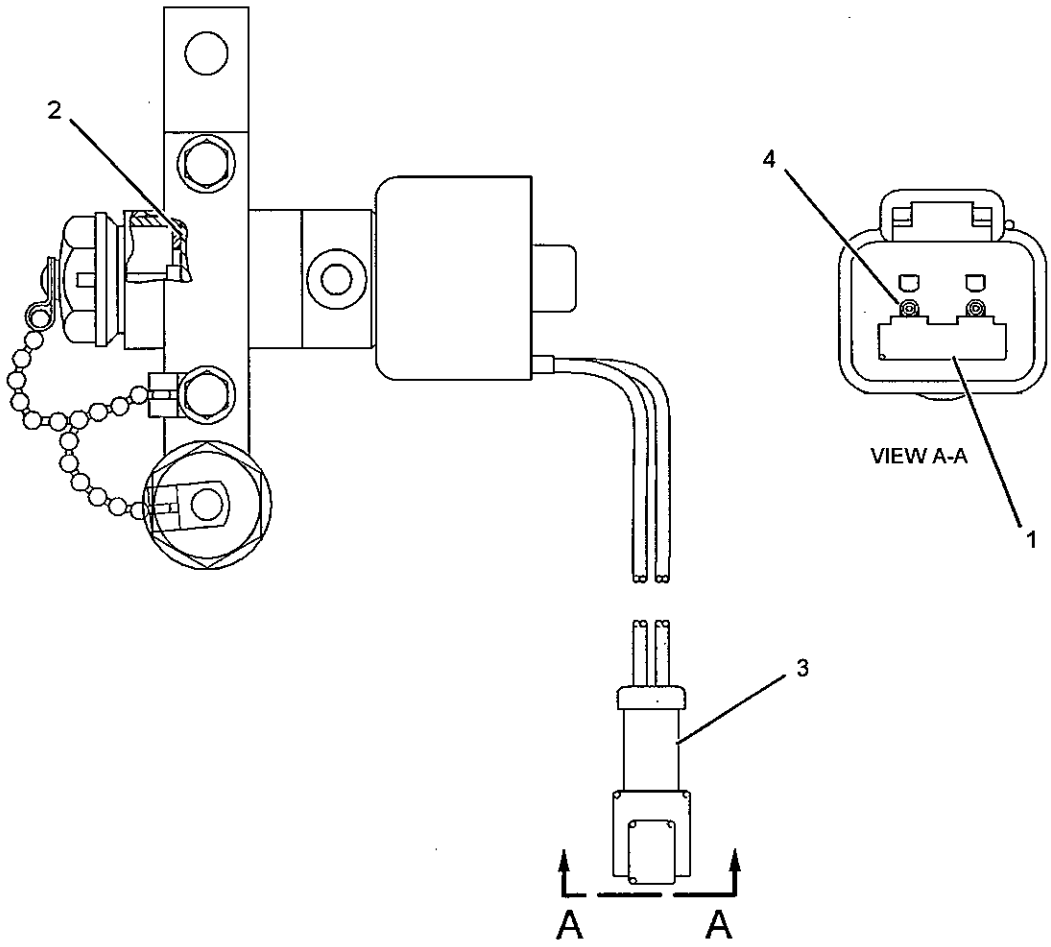


GRAPHIC #1

<END>

g01053000

# ELECTRICAL AND STARTING SYSTEM

## 235-5277 WARNING GP-BACKUP

**S/N: JMS1-UP**

**AN ATTACHMENT**

**SMCS-7406** **i02089892**

| NOTE | REF NO | GRAPHIC REF | PART NUMBER | QTY | PART NAME 1 2 3 4 5 6 (PRODUCT LEVEL) | SEE PAGE |
|---|---|---|---|---|---|---|
| | 1 | 1 | 213-9100 | 1 | ALARM AS | |
| | | 1 | 102-8802 | 1 | KIT-RECEPTACLE (2-PIN) | |
| | | | | | (INCLUDES RECEPTACLE & WEDGE) | |
| | | 1 | 3E-3365 | 1 | WEDGE-RECEPTACLE LOCK (2-PIN) | |
| | | 1 | 186-3735 | 2 | PIN-CONNECTOR (16-GA TO 18-GA) | |
| E | | 1 | 9X-1813 | | SLEEVE (31-CM) | |
| | 2 | 1 | 130-5300 | 1 | CLIP | |
| | 3 | 1 | 7K-1181 | 1 | STRAP-CABLE | |
| | 4 | 1 | 7X-0772 | 3 | WASHER-HARD (10.2X25.5X2.5-MM THK) | |
| M | 5 | 1 | 8T-4137 | 3 | BOLT (M10X1.5X20-MM) | |

E-ORDER BY THE CENTIMETER
M-METRIC PART

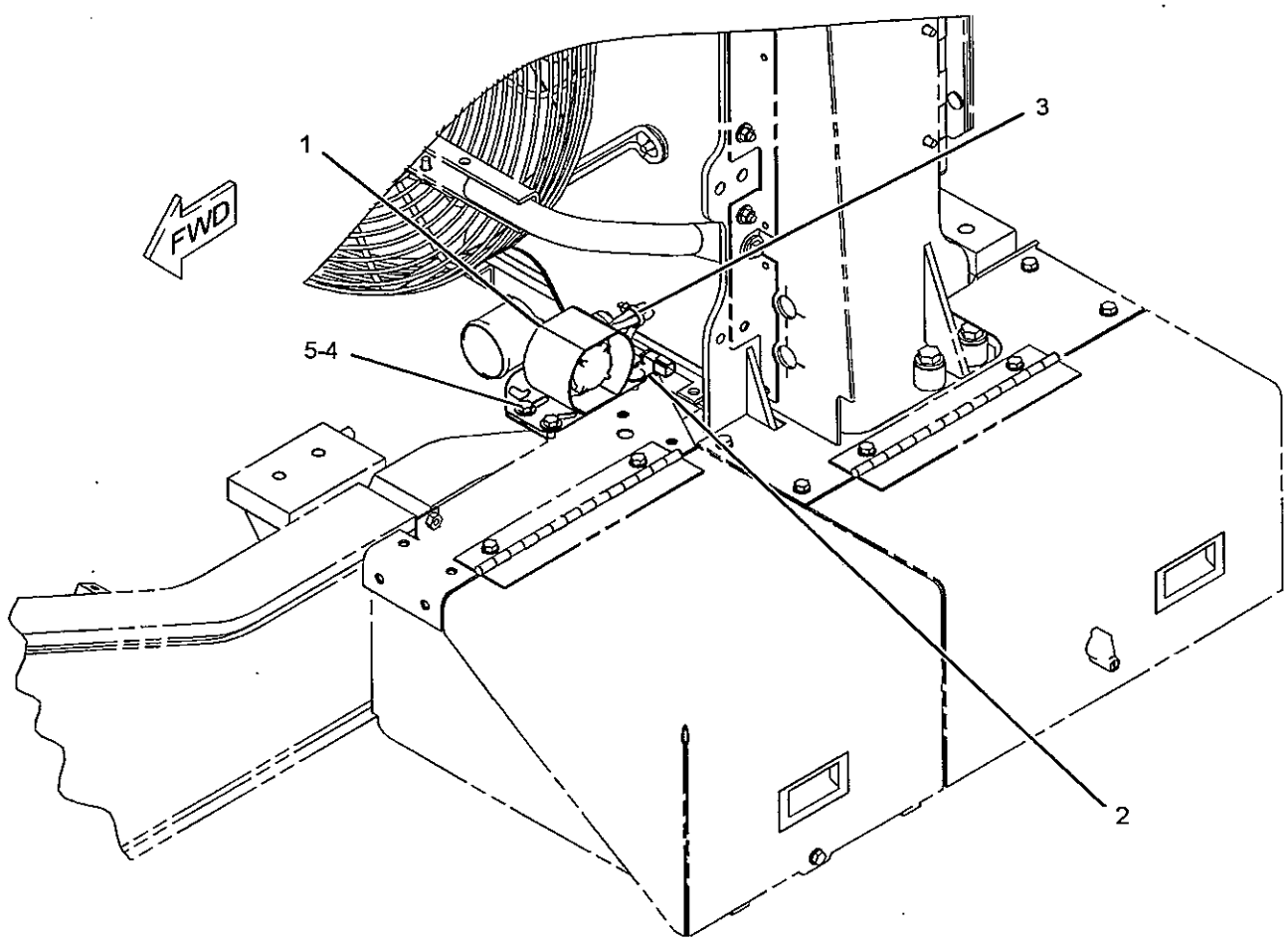


GRAPHIC #1

**<END>**

g01067446

# ELECTRICAL AND STARTING SYSTEM

## *246-3264* WIRING GP-AIR CONDITIONER

**S/N: JMS1-UP**

**PART OF 235-5315 AIR CONDITIONER AR**

**AN ATTACHMENT**

**SMCS-1408, 7320** i02290322

| NOTE | REF NO | GRAPHIC REF | PART NUMBER | QTY | PART NAME 1 2 3 4 5 6 (PRODUCT LEVEL) | SEE PAGE |
|---|---|---|---|---|---|---|
| | 1 | 1 | 7K-1181 | 2 | STRAP-CABLE | |
| | 2 | 1 | 114-5333 | 1 | SWITCH AS-PRESSURE (REFRIGERANT) | |
| E | | 1 | 9X-1386 | | SLEEVE (25-CM) | |
| | | 1 | 102-8802 | 1 | KIT-RECEPTACLE (2-PIN) | |
| | | | | | (INCLUDES RECEPTACLE AS AND WEDGE) | |
| | | 1 | 3E-3365 | 1 | WEDGE-RECEPTACLE LOCK (2-PIN) | |
| | | 1 | 8T-8729 | 2 | PIN-CONNECTOR | |
| | 3 | 1 | 218-4935 | 1 | SUPPRESSOR-ARC | |
| | 4 | 1 | 130-5301 | 1 | CLIP | |
| | 5 | 1 | 8M-2772 | 1 | CLIP | |
| | 6 | 1 | 9X-7378 | 1 | SEAL-O-RING | |

E-ORDER BY THE CENTIMETER

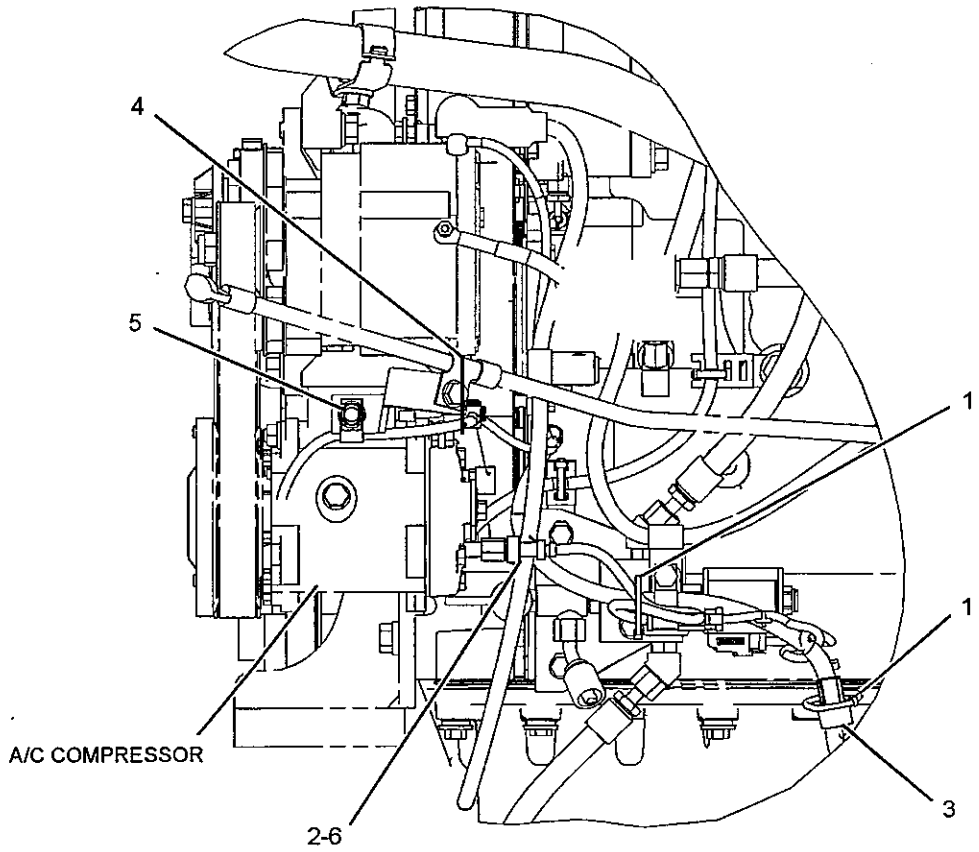


RIGHT SIDE VIEW

GRAPHIC #1

**<END>**

g01067293

# ELECTRICAL AND STARTING SYSTEM

## *247-8469* WIRING GP-AUTOLUBE CONTROL

**S/N: JMS1-UP**

**PART OF 245-9432, 245-9433 LUBRICATION AR-AUTOMATIC AN ATTACHMENT**

**SMCS-1408, 7540** **i02089945**

| NOTE | REF NO | GRAPHIC REF | PART NUMBER | QTY | PART NAME 1 2 3 4 5 6 (PRODUCT LEVEL) | SEE PAGE |
|---|---|---|---|---|---|---|
| | 1 | 1 | **250-6890** | 1 | HARNESS AS-CONTROL (AUTOMATIC LUBRICATION SYSTEM) | |
| | | 1 | **102-8803** | 1 | KIT-RECEPTACLE (3-PIN) | |
| | | 1 | **102-8804** | 1 | KIT-RECEPTACLE (4-PIN) | |
| | | | | | (EACH INCLUDES RECEPTACLE AS & WEDGE) | |
| | 2 | 1 | **250-9149** | 1 | BRACKET | |
| | 3 | 1 | **130-5300** | 2 | CLIP | |
| | 4 | 1 | **4D-7794** | 3 | CLIP | |
| | 5 | 1 | **8T-4121** | 3 | WASHER-HARD (11X21X2.5-MM THK) | |
| M | 6 | 1 | **8T-4133** | 1 | NUT (M10X1.5-THD) | |
| M | 7 | 1 | **8T-4137** | 2 | BOLT (M10X1.5X20-MM) | |

M-METRIC PART

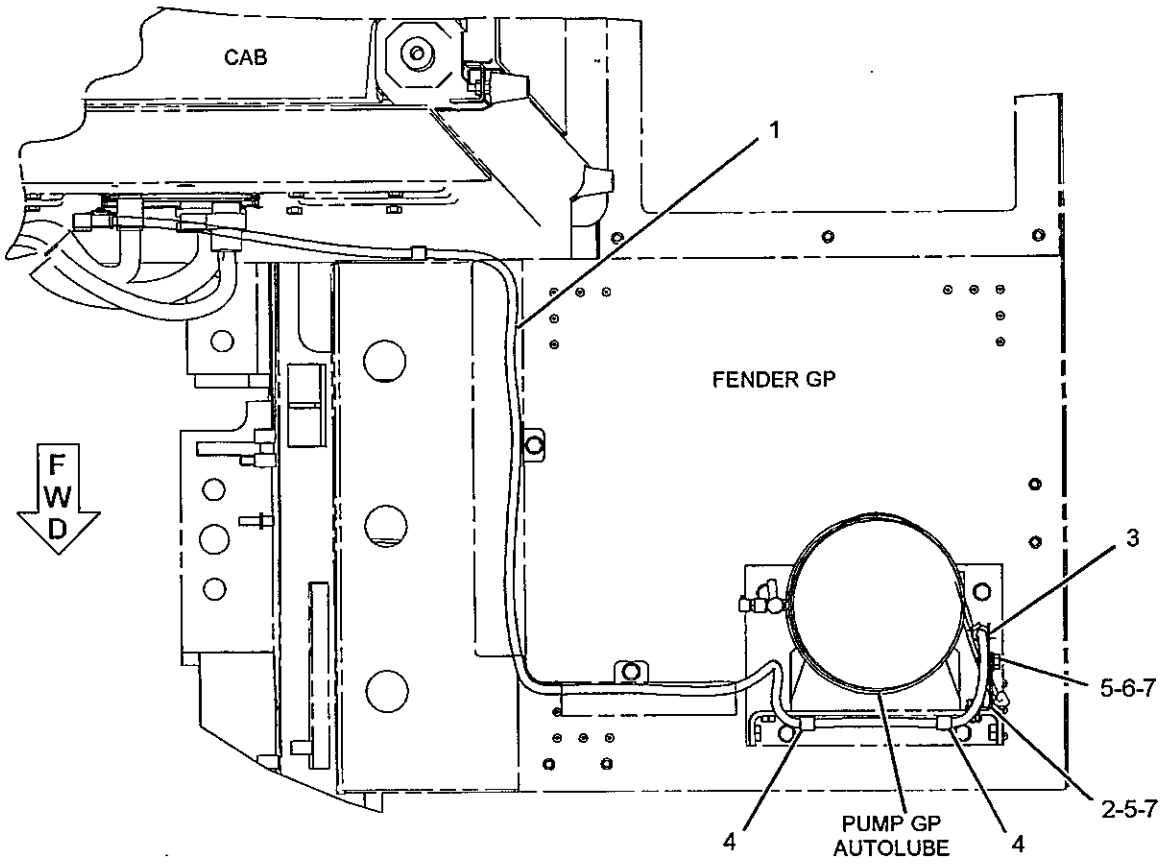


TOP VIEW

GRAPHIC #1

**<END>**

g01067213

# ELECTRICAL AND STARTING SYSTEM

## *249-9173* WIRING GP-AXLE MONITORING

**S/N: JMS1-UP**

**PART OF 225-5539 ELECTRICAL AR**

**SMCS-1408, 7490** **i02280810**

| NOTE | REF NO | GRAPHIC REF | PART NUMBER | QTY | PART NAME 1 2 3 4 5 6 (PRODUCT LEVEL) | SEE PAGE |
|---|---|---|---|---|---|---|
| | 1 | 1 | **4V-1939** | 4 | CLAMP | |
| | 2 | 1 | **5V-6439** | 2 | PLATE | |
| | 3 | 1 | **122-4026** | 2 | SPACER (13X25X25-MM THK) | |
| | 4 | 1 | **130-9811** | 2 | SENSOR GP-TEMPERATURE (AXLE OIL) | |
| | 5 | 1 | **160-7183** | 4 | WASHER | |
| | 6 | 1 | **174-1572** | 2 | COVER | |
| | 7 | 1 | **174-4941** | 2 | COVER AS | |
| | 8 | 1 | **174-4942** | 1 | PLATE AS | |
| | 9 | 1 | **221-6765** | 2 | STUD | |
| | 10 | 1 | **249-9174** | 1 | HARNESS AS-SENSOR (FRONT AXLE OIL TEMPERATURE) | |
| | | 1 | **155-2270** | 2 | KIT-CONNECTING PLUG (2-PIN) (INCLUDES PLUG AS AND WEDGE) | |
| | 11 | 1 | **249-9175** | 1 | HARNESS AS-SENSOR (REAR AXLE OIL TEMPERATURE) | |
| | | 1 | **155-2270** | 2 | KIT-CONNECTING PLUG (2-PIN) (INCLUDES PLUG AS AND WEDGE) | |
| | 13 | 1 | **3K-0360** | 2 | SEAL-O-RING | |
| | 14 | 1 | **5P-9085** | 2 | CLIP | |
| | 15 | 1 | **6V-2383** | 2 | CLIP | |
| M | 16 | 1 | **7X-2534** | 4 | BOLT (M6X1X50-MM) | |
| | 17 | 1 | **8M-2770** | 3 | CLIP | |
| | 18 | 1 | **8T-4121** | 6 | WASHER-HARD (11X21X2.5-MM THK) | |
| M | 19 | 1 | **8T-4136** | 1 | BOLT (M10X1.5X25-MM) | |
| M | 20 | 1 | **8T-4137** | 5 | BOLT (M10X1.5X20-MM) | |
| M | 21 | 1 | **8T-4139** | 6 | BOLT (M12X1.75X30-MM) | |
| M | 22 | 1 | **8T-4194** | 2 | BOLT (M12X1.75X50-MM) | |
| | 23 | 1 | **8T-4223** | 8 | WASHER-HARD (13.5X25.5X3-MM THK) | |
| | 24 | 1 | **9X-8256** | 4 | WASHER (6.6X12X2-MM THK) | |

M-METRIC PART

## *249-9173* WIRING GP-AXLE MONITORING *(contd.)* i02280810

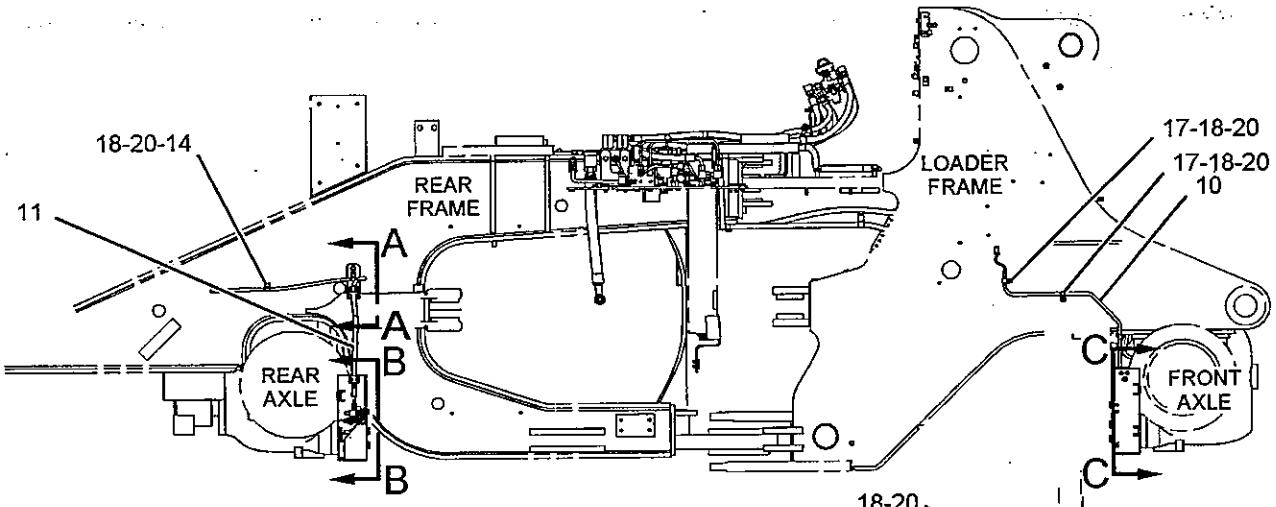


RIGHT SIDE VIEW

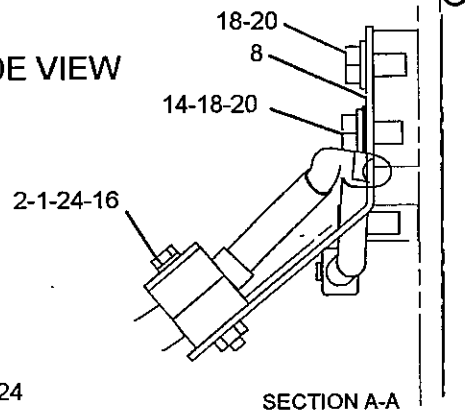


SECTION A-A

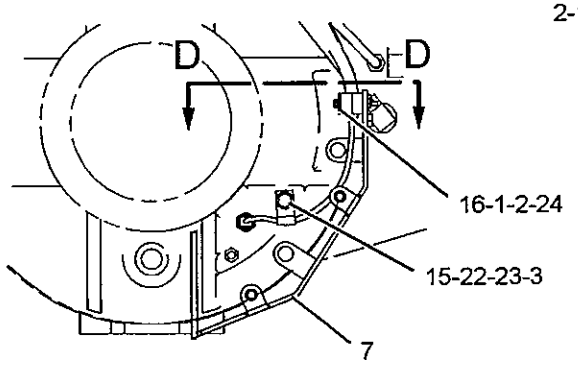


SECTION B-B

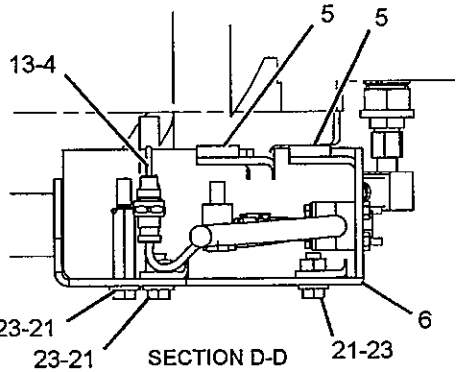


SECTION D-D

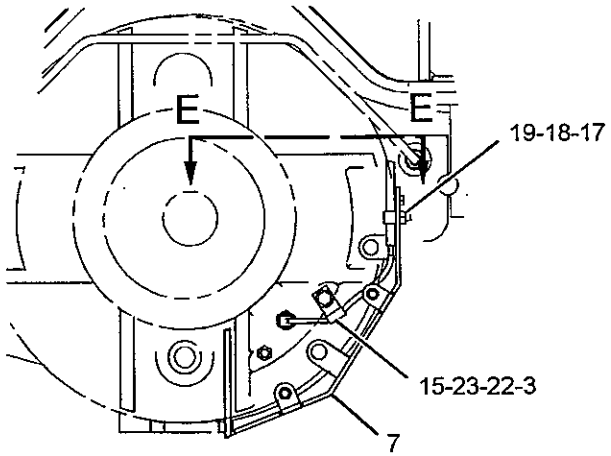


SECTION C-C

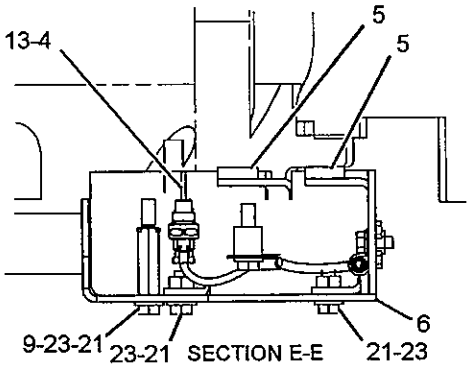


SECTION E-E

GRAPHIC #1 **<END>** g01141415

# *248-6574* WIRING GP-AXLE OIL COOLER

S/N: JMS1-UP

PART OF 233-9749 COOLER AR-AXLE OIL

AN ATTACHMENT

SMCS-1365, 1408 i02194469

| NOTE | REF NO | GRAPHIC REF | PART NUMBER | QTY | PART NAME 1 2 3 4 5 6 (PRODUCT LEVEL) | SEE PAGE |
|---|---|---|---|---|---|---|
| | 1 | 2 | **3E-5239** | 1 | RELAY AS (24-VOLT) (AXLE OIL COOLER) | |
| | 2 | 2 | **7K-1181** | 4 | STRAP-CABLE | |
| | 3 | 1 | **228-7290** | 1 | HARNESS AS-AXLE (AXLE OIL COOLER) | |
| | | 1 | **102-8802** | 2 | KIT-RECEPTACLE (2-PIN) | |
| | | | | | (EACH KIT INCLUDES RECEPTACLE AS AND WEDGE) | |
| | | 1 | **155-2270** | 2 | KIT-CONNECTING PLUG (2-PIN) | |
| | | | | | (EACH KIT INCLUDES PLUG AS AND WEDGE) | |
| | 4 | 2 | **5P-9085** | 2 | CLIP | |
| | 5 | 2 | **8T-4121** | 1 | WASHER-HARD (11X21X2.5-MM THK) | |
| M | 6 | 2 | **8T-4136** | 1 | BOLT (M10X1.5X25-MM) | |

M-METRIC PART

*248-6574* **WIRING GP-AXLE OIL COOLER** *(contd.)* **i02194469**

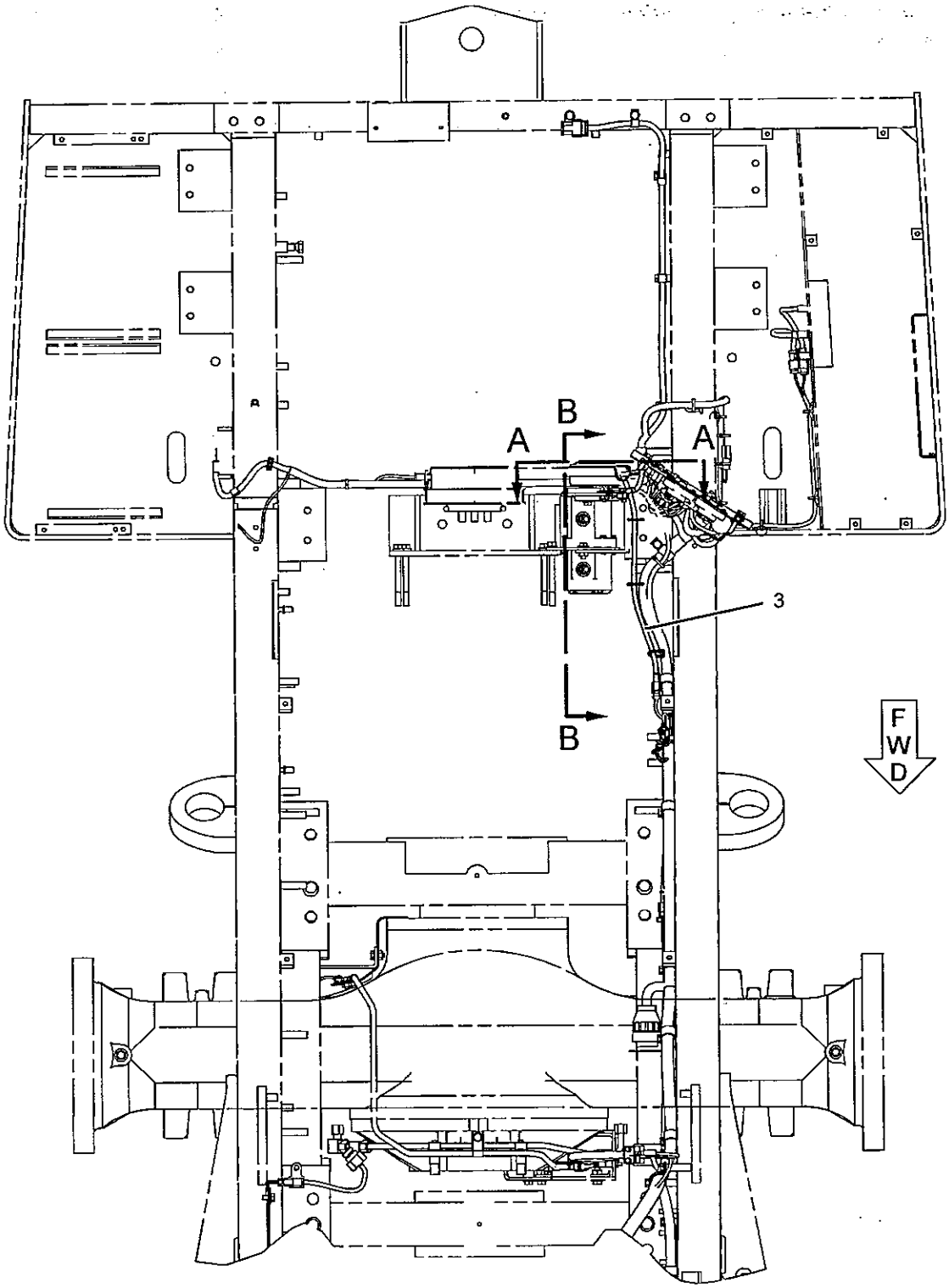


TOP VIEW

GRAPHIC #1 g01142857

*248-6574* **WIRING GP-AXLE OIL COOLER** *(contd.)* **i02194469**

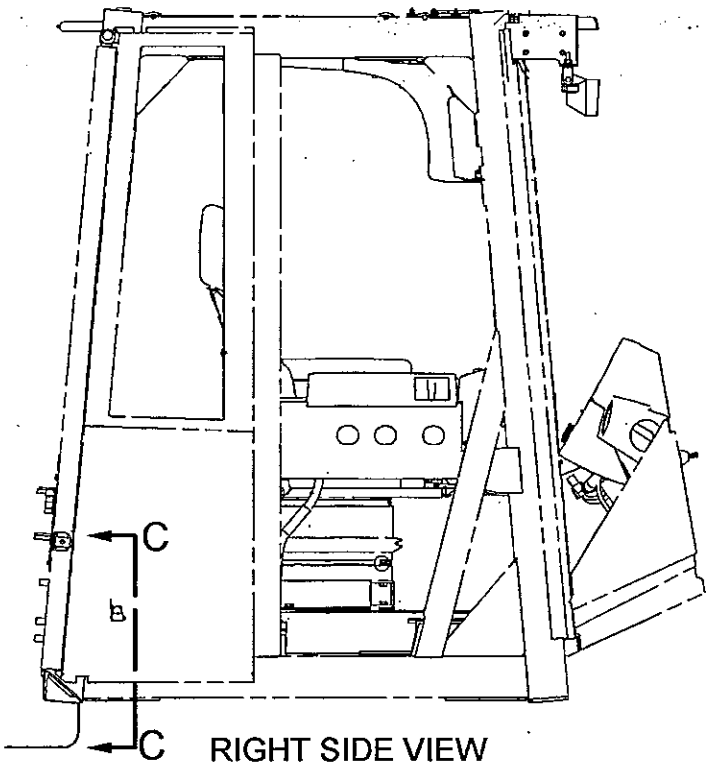


RIGHT SIDE VIEW

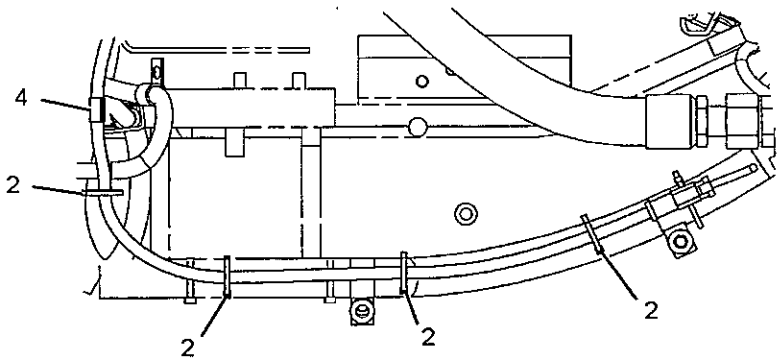


SECTION B-B

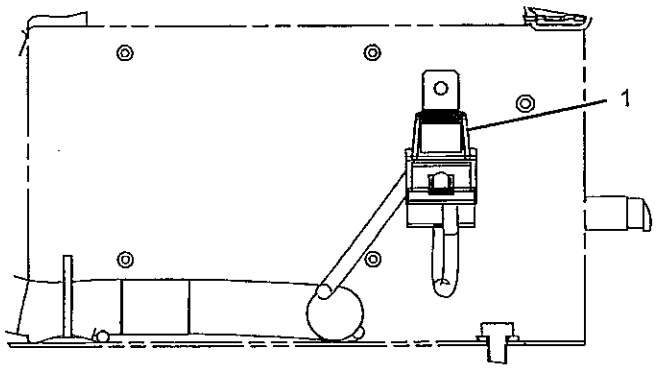


SECTION C-C

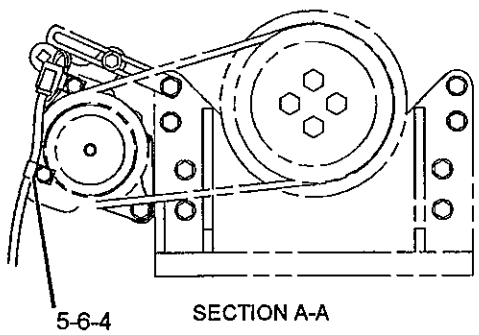


SECTION A-A

GRAPHIC #2 **<END>** g01142878

# ELECTRICAL AND STARTING SYSTEM

## *207-8617* WIRING GP-CAB

**S/N: JMS1-UP**

**PART OF 203-9837 CANOPY AR-OPEN ROPS**

**AN ATTACHMENT**

**SMCS-1408, 7301** i02282472

| NOTE | REF NO | GRAPHIC REF | PART NUMBER | QTY | PART NAME 1 2 3 4 5 6 (PRODUCT LEVEL) | SEE PAGE |
|---|---|---|---|---|---|---|
| | 1 | 1,2,6 | **3E-0109** | 15 | PLUG (ROCKER SWITCH) | |
| | 2 | 5 | **3E-5239** | 2 | RELAY AS (24-VOLT) (HORN) | |
| | 2A | 5 | **3E-5239** | 1 | RELAY AS (24-VOLT) (REAR FLOODLIGHTS) | |
| | 2B | 5 | **3E-5239** | 1 | RELAY AS (24-VOLT) (FRONT CAB FLOODLIGHTS) | |
| Y | 3 | 5 | **3E-6328** | 1 | ALARM GP (24-VOLT) | 133 |
| Y | 4 | 6 | **3E-6389** | 2 | LAMP GP-DOME (24-VOLT, WITH SWITCH) | 171 |
| C | 5 | 1,2,3, 4,6 | **3S-2093** | 20 | STRAP-CABLE | |
| | 6 | 4 | **4V-4164** | 8 | BUSHING-TERMINAL | |
| | 7 | 5 | **6I-1418** | 8 | SPACER (8.2X12.7X28.7-MM THK) | |
| | 8 | 1,2,3, 5,6 | **7K-1181** | 21 | STRAP-CABLE | |
| | 9 | 2 | **7N-5876** | 4 | LAMP (24-VOLT) | |
| | 10 | 2 | **8C-6354** | 1 | CAP-RECEPTACLE (DUST) | |
| C | 11 | 2,5,6 | **8T-8737** | 45 | PLUG-SEAL | |
| | 12 | 5 | **8T-9655** | 16 | MOUNT-ISOLATION | |
| | 13 | 1 | **8X-5804** | 1 | STRAP AS-GROUND | |
| | 14 | 4 | **9F-8125** | 8 | LOCKWASHER | |
| | 15 | 3 | **9W-1441** | 2 | FUSE (15-AMPERE) | |
| | 16 | 3 | **9W-1442** | 29 | FUSE (10-AMPERE) | |
| | 17 | 3 | **9W-1446** | 1 | FUSE (20-AMPERE) | |
| | 18 | 4 | **098-8968** | 8 | WASHER (5X16X1.2-MM THK) | |
| Y | 19 | 3 | **103-5526** | 1 | CONTROL GP-MONITOR (DIMMER) | 795 |
| | 20 | 2 | **108-3320** | 1 | SWITCH AS-ROTARY (24-VOLT) (RUNNING LIGHTS) | |
| | 21 | 2,6 | **110-6109** | 3 | KNOB-CONTROL (CONTROL PANEL SWITCHES) | |
| | 22 | 2 | **110-7887** | 1 | SWITCH GP-START (KEY) | |
| | | 2 | **102-8804** | 1 | KIT-RECEPTACLE (4-PIN) | |
| | | 2 | **8T-8729** | 4 | PIN-CONNECTOR | |
| | | 2 | **7T-6799** | 1 | NUT-MOUNTING (1-32-THD) | |
| | | 2 | **3E-3377** | 1 | WEDGE-RECEPTACLE LOCK (4-PIN) | |
| | 23 | 2 | **117-2311** | 1 | RECEPTACLE AS-POWER (12-VOLT) | |
| | 24 | 1 | **121-8038** | 1 | RECEPTACLE AS | |
| | | 1 | **3E-3371** | 1 | WEDGE-RECEPTACLE LOCK (3-PIN) | |
| | | 1 | **5P-5624** | 1 | WIRE (14-GA) | |
| | | 1 | **8T-8737** | 1 | PLUG-SEAL | |
| | | 1 | **9W-0852** | 2 | PIN-CONNECTOR (14-GA) | |
| | 25 | 3 | **6V-5645** | 1 | SCREW-MACHINE (10-32X0.87-IN) | |
| M | 26 | 5 | **131-3987** | 4 | SCREW (M4X0.7X12-MM) | |
| C | 27 | 2 | **156-6175** | 1 | CLIP | |
| | 28 | 6 | **154-7443** | 1 | CONTROL GP-UNPROGRAMMED (CATERPILLAR MONITORING SYSTEM) | |
| Y | 29 | 2 | **166-6928** | 1 | MODULE GP-QUAD GAUGE | 864 |
| Y | 30 | 5 | **172-9389** | 1 | CONTROL GP-UNPROGRAMMED (POWER TRAIN) | 159 |
| Y | 31 | 5 | **172-9391** | 1 | CONTROL GP-UNPROGRAMMED (IMPLEMENT) | 160 |
| | 32 | 3 | **173-2234** | 1 | PLATE AS | |
| | 33 | 5 | **173-2235** | 1 | PLATE AS | |
| | 34 | 3 | **173-2236** | 1 | PLATE AS | |
| | 35 | 4 | **177-3187** | 1 | PLATE | |
| | 36 | 1 | **219-9538** | 1 | SWITCH AS-ROCKER (FINE MODULATION) | |
| | 37 | 1 | **185-2172** | 1 | HARNESS AS-OPERATOR CONTROLS | |
| | | 1 | **102-8803** | 1 | KIT-RECEPTACLE (3-PIN) | |
| | | 1 | **8T-8737** | 11 | PLUG-SEAL | |
| | | 1 | **155-2274** | 1 | KIT-CONNECTING PLUG (6-PIN) | |
| | | 1 | **155-2270** | 1 | KIT-CONNECTING PLUG (2-PIN) | |
| | | 1 | **155-2260** | 4 | KIT-CONNECTING PLUG (3-PIN) | |

## 207-8617 WIRING GP-CAB *(contd.)*

i02282472

| NOTE | REF NO | GRAPHIC REF | PART NUMBER | QTY | PART NAME 1 2 3 4 5 6 (PRODUCT LEVEL) | SEE PAGE |
|---|---|---|---|---|---|---|
| | | 1 | 155-2274 | 1 | KIT-CONNECTING PLUG (6-PIN) | |
| | | 1 | 155-2255 | 1 | KIT-CONNECTING PLUG (12-PIN) | |
| | 38 | 6 | 219-9524 | 1 | SWITCH AS-ROCKER (LIFT,TILT KICKOUT) | |
| | 39 | 6 | 185-6335 | 1 | SWITCH AS-ROTARY (24-VOLT) (VARIABLE SHIFT CONTROL) | |
| | | 6 | 3E-3383 | 1 | WEDGE-RECEPTACLE LOCK (6-PIN) | |
| | | 6 | 8T-8737 | 2 | PLUG-SEAL | |
| | | 6 | 9W-0852 | 4 | PIN-CONNECTOR (14-GA) | |
| | | 6 | 102-8805 | 1 | KIT-RECEPTACLE (6-PIN) | |
| | 40 | 6 | 219-9530 | 1 | SWITCH AS-ROCKER (TMSN NEUTRALIZER OVERRIDE) | |
| | 41 | 3 | 197-4840 | 1 | HARNESS AS-LIGHTING (FRONT FLOODLIGHTS) | |
| | | 3 | 155-2270 | 2 | KIT-CONNECTING PLUG (2-PIN) | |
| | 42 | 2 | 197-4845 | 1 | HARNESS AS-WIRING (SERVICE TOOL) | |
| | | 2 | 102-8805 | 1 | KIT-RECEPTACLE (6-PIN) | |
| | | 2 | 8T-8737 | 7 | PLUG-SEAL | |
| | | 2 | 9W-1951 | 1 | RECEPTACLE (9-PIN) | |
| | 43 | 2 | 198-6570 | 1 | LIGHTER GP-CIGAR (12-VOLT) | |
| | | 2 | 198-6571 | 1 | ELEMENT AS (LIGHTER) | |
| C | 44 | 4 | 9X-8256 | 1 | WASHER (6.6X12X2-MM THK) | |
| | 45 | 6 | 201-7952 | 1 | SWITCH AS-ROTARY (AUTOSHIFT CONTROL) | |
| | | 6 | 3E-3383 | 1 | WEDGE-RECEPTACLE LOCK (6-PIN) | |
| | | 6 | 9W-0852 | 6 | PIN-CONNECTOR (14-GA) | |
| | | 6 | 102-8805 | 1 | KIT-RECEPTACLE (6-PIN) | |
| | 46 | 2 | 202-9803 | 1 | CONTROL GP-DISPLAY ELECTRONIC (INDICATOR PANEL, RH) | |
| | | 2 | 1S-9593 | 1 | STRAP-CABLE | |
| | | 2 | 3E-5180 | 1 | WEDGE-RECEPTACLE LOCK (12-PIN) | |
| | | 2 | 186-3735 | 12 | PIN-CONNECTOR (16-GA TO 18-GA) | |
| | | 2 | 190-7614 | 1 | KIT-RECEPTACLE (12-PIN) | |
| | 47 | 2 | 202-9804 | 1 | CONTROL GP-DISPLAY ELECTRONIC (INDICATOR PANEL, LH) | |
| | | 2 | 1S-9593 | 1 | STRAP-CABLE | |
| | | 2 | 102-8801 | 1 | KIT-RECEPTACLE (12-PIN) | |
| | | 2 | 3E-5180 | 1 | WEDGE-RECEPTACLE LOCK (12-PIN) | |
| | | 2 | 186-3735 | 12 | PIN-CONNECTOR (16-GA TO 18-GA) | |
| | 48 | 2 | 202-9805 | 1 | CONTROL GP-DISPLAY ELECTRONIC (INDICATOR PANEL, CENTER) | |
| | | 2 | 1S-9593 | 1 | STRAP-CABLE | |
| | | 2 | 102-8805 | 1 | KIT-RECEPTACLE (6-PIN) | |
| | | 2 | 3E-3383 | 1 | WEDGE-RECEPTACLE LOCK (6-PIN) | |
| | | 2 | 186-3735 | | PIN-CONNECTOR (16-GA TO 18-GA) | |
| | 49 | 1 | 242-9229 | 1 | HARNESS AS-CAB (MAIN, ELECTROHYDRAULIC CONTROL) | |
| | | 1 | 102-8802 | 3 | KIT-RECEPTACLE (2-PIN) | |
| | | 1 | 102-8803 | 1 | KIT-RECEPTACLE (3-PIN) | |
| | | 1 | 102-8804 | 2 | KIT-RECEPTACLE (4-PIN) | |
| | | 1 | 102-8805 | 6 | KIT-RECEPTACLE (6-PIN) | |
| | | 1 | 102-8806 | 1 | KIT-RECEPTACLE (8-PIN) | |
| | | 1 | 102-8801 | 4 | KIT-RECEPTACLE (12-PIN) | |
| | | 1 | 197-7565 | 1 | KIT-RECEPTACLE (4-PIN) | |
| | | 1 | 8T-8737 | 212 | PLUG-SEAL | |
| | | 1 | 7G-7917 | 1 | PLUG-SEAL | |
| | | 1 | 7G-7919 | 2 | PLUG-SEAL | |
| | | 1 | 3E-7996 | 17 | PLUG-CONNECTOR (6-PIN) | |
| | | 1 | 8T-9834 | 1 | PLUG AS-CONNECTOR (40-PIN) | |
| | | 1 | 3E-4367 | 1 | RING-RETAINING | |
| M | | 1 | 3E-8557 | 1 | BOLT (M5X0.8X39.37-MM) | |
| | | 1 | 9X-3132 | 2 | SEAL-CONNECTOR (40-PIN) | |
| | | 1 | 101-0205 | 2 | PLUG AS-CONNECTOR (EACH INCLUDES) | |

# ELECTRICAL AND STARTING SYSTEM

## 207-8617 WIRING GP-CAB (contd.)

i02282472

| NOTE | REF NO | GRAPHIC REF | PART NUMBER | QTY | PART NAME 1 2 3 4 5 6 (PRODUCT LEVEL) | SEE PAGE |
|---|---|---|---|---|---|---|
| | | 1 | 110-6844 | 1 | SEAL | |
| | | 1 | 110-6848 | 2 | PLUG AS-CONNECTOR (40-PIN) | |
| | | | | | (EACH INCLUDES) | |
| | | 1 | 110-6844 | 1 | SEAL | |
| | | 1 | 9X-1054 | 3 | PLUG AS-CONNECTOR (4-PIN) | |
| | | 1 | 9X-0145 | 1 | RECEPTACLE AS (24-PIN) | |
| | | 1 | 9X-1343 | 1 | RECEPTACLE AS (40-PIN) | |
| | | 1 | 9X-7148 | 1 | RECEPTACLE AS (40-PIN) | |
| | | 1 | 8T-9834 | 1 | PLUG AS-CONNECTOR (40-PIN) | |
| | | 1 | 155-2256 | 1 | KIT-CONNECTING PLUG (12-PIN) | |
| | | 1 | 155-2274 | 28 | KIT-CONNECTING PLUG (6-PIN) | |
| | | 1 | 155-2270 | 8 | KIT-CONNECTING PLUG (2-PIN) | |
| | | 1 | 155-2260 | 14 | KIT-CONNECTING PLUG (3-PIN) | |
| | | 1 | 155-2271 | 5 | KIT-CONNECTING PLUG (4-PIN) | |
| | | 1 | 155-2265 | 4 | KIT-CONNECTING PLUG (8-PIN) | |
| | | 1 | 155-2255 | 5 | KIT-CONNECTING PLUG (12-PIN) | |
| | 50 | 3 | 209-0381 | 1 | CONVERTER-POWER (24-VOLT TO 12-VOLT) | |
| | 51 | 2 | 6V-1889 | 1 | CLIP | |
| M | 52 | 5 | 099-3649 | 8 | BOLT (M8X1.25X40-MM) | |
| | 53 | 6 | 220-8358 | 1 | SWITCH AS-ROCKER (MODE SELECT) | |
| | 54 | 1 | 219-9533 | 1 | SWITCH AS-ROCKER (HYDRAULIC LOCKOUT) | |
| C | 55 | 1,3 | 130-5300 | 3 | CLIP | |
| C | 56 | 3,5 | 132-5789 | 2 | CLIP | |
| | 57 | 5 | 149-7738 | 1 | CLIP | |
| C | 58 | 2 | 2H-3920 | 4 | LOCKWASHER | |
| C | 59 | 6 | 102-8802 | 1 | KIT-RECEPTACLE (2-PIN) | |
| | 60 | 6 | 102-8803 | 1 | KIT-RECEPTACLE (3-PIN) | |
| | 61 | 2,5 | 102-8805 | 2 | KIT-RECEPTACLE (6-PIN) | |
| | 62 | 6 | 102-8806 | 2 | KIT-RECEPTACLE (8-PIN) | |
| | 63 | 5 | 102-8801 | 1 | KIT-RECEPTACLE (12-PIN) | |
| | 64 | 4 | 4B-2049 | 8 | NUT (10-32-THD) | |
| | 65 | 5 | 4S-1962 | 1 | CLIP | |
| M | 66 | 3 | 5C-7261 | 2 | NUT (M8X1.25-THD) | |
| M | 67 | 3 | 5C-8312 | 4 | NUT (M4X0.7-THD) | |
| | 68 | 1 | 6D-1641 | 1 | CLIP | |
| | 69 | 4 | 6D-6146 | 4 | SCREW-MACHINE (10-32X1.25) | |
| | 70 | 3 | 6T-3643 | 2 | CIRCUIT BREAKER AS (15-AMPERE) (A/C, HEATER CONTROL) | |
| | | | | | (EACH INCLUDES) | |
| | | 3 | 6V-8376 | 2 | SCREW-MACHINE (8-32X0.25-IN) | |
| | | 3 | 9B-7233 | 2 | LOCKWASHER | |
| | 71 | 4 | 6V-2687 | 16 | SCREW-PAN HEAD (10-24X1-IN) | |
| M | 72 | 3,5 | 6V-9673 | 3 | SCREW-MACHINE (M5X0.8X12-MM) | |
| M | 73 | 3,5 | 7X-2621 | 3 | BOLT (M10X1.5X12-MM) | |
| | 74 | 1 | 4D-7388 | 1 | CLIP | |
| M | 75 | 3 | 8T-0337 | 4 | SCREW-MACHINE (M4X0.7X12-MM) | |
| | 76 | 1,3,5 | 8T-4121 | 16 | WASHER-HARD (11X21X2.5-MM THK) | |
| M | 77 | 1 | 8T-4133 | 1 | NUT (M10X1.5-THD) | |
| M | 78 | 1 | 8T-4136 | 1 | BOLT (M10X1.5X25-MM) | |
| CM | 79 | 1,3,5 | 8T-4137 | 5 | BOLT (M10X1.5X20-MM) | |
| M | 80 | 4 | 8T-4138 | 4 | BOLT (M6X1X20-MM) | |
| M | 81 | 3,5 | 8T-4191 | 5 | BOLT (M10X1.5X16-MM) | |
| M | 82 | 2 | 8T-4199 | 1 | BOLT (M8X1.25X12-MM) | |
| | 83 | 4,5 | 8T-4205 | 7 | WASHER-HARD (7.2X14.5X2-MM THK) | |
| | 84 | 1,5 | 8T-4223 | 5 | WASHER-HARD (13.5X25.5X3-MM THK) | |
| | 85 | 3 | 8T-4224 | 2 | WASHER-HARD (8.8X16X2-MM THK) | |
| M | 86 | 1,5 | 8T-4244 | 5 | NUT (M12X1.75-THD) | |
| CM | 87 | 2,5 | 8T-4970 | 5 | BOLT (M6X1X14-MM) | |
| | 88 | 4 | 9M-5870 | 4 | GROMMET | |
| | 89 | 5 | 9N-0869 | 8 | WASHER-HARD (8.8X25.5X2-MM THK) | |

## 207-8617 WIRING GP-CAB (contd.)

i02282472

| NOTE | REF NO | GRAPHIC REF | PART NUMBER | QTY | PART NAME 1 2 3 4 5 6 (PRODUCT LEVEL) | SEE PAGE |
|---|---|---|---|---|---|---|
| M | 90 | 6 | 9X-1046 | 6 | SCREW (M4X0.7X18-MM) | |
| M | 91 | 3 | 9X-2480 | 2 | BOLT (M6X1X45-MM) | |
| | 92 | 3 | 9X-8486 | 4 | SCREW-MACHINE (8-32X0.75-IN) | |
| | 94 | 6 | 6V-8369 | 2 | NUT (7/16-28-THD) | |
| C | 95 | 2 | 9X-6165 | 1 | WASHER (6.5X22X2.5-MM THK) | |
| | 96 | 2 | 5P-4116 | 1 | WASHER-HARD (8.8X20.5X2-MM THK) | |
| C | 97 | 2 | 4P-7581 | 1 | CLIP | |
| | 98 | 1 | 2A-2677 | 1 | SPACER (0.75-IN THK) | |
| M | 99 | 1 | 8T-4186 | 1 | BOLT (M10X1.5X40-MM) | |
| | 100 | 1 | 242-6099 | 1 | CLIP | |

C-CHANGE FROM PREVIOUS TYPE
M-METRIC PART
Y-SEPARATE ILLUSTRATION

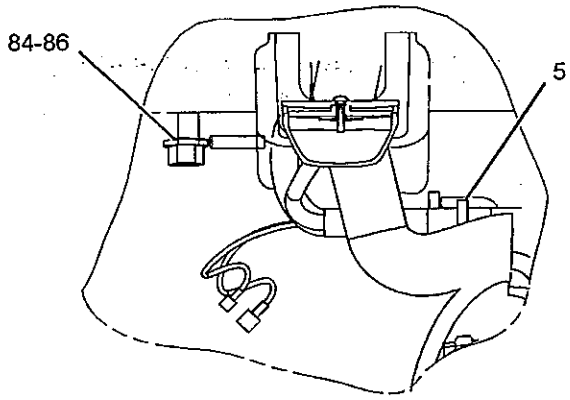


VIEW OF AREA H

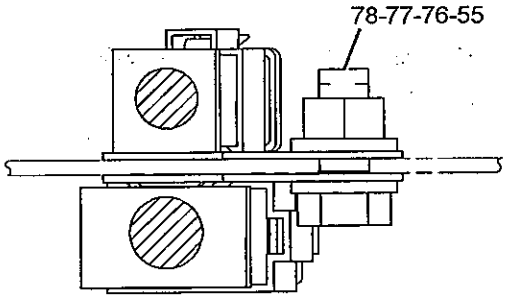


SECTION K-K

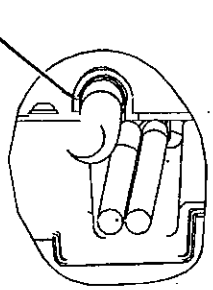


VIEW X-X

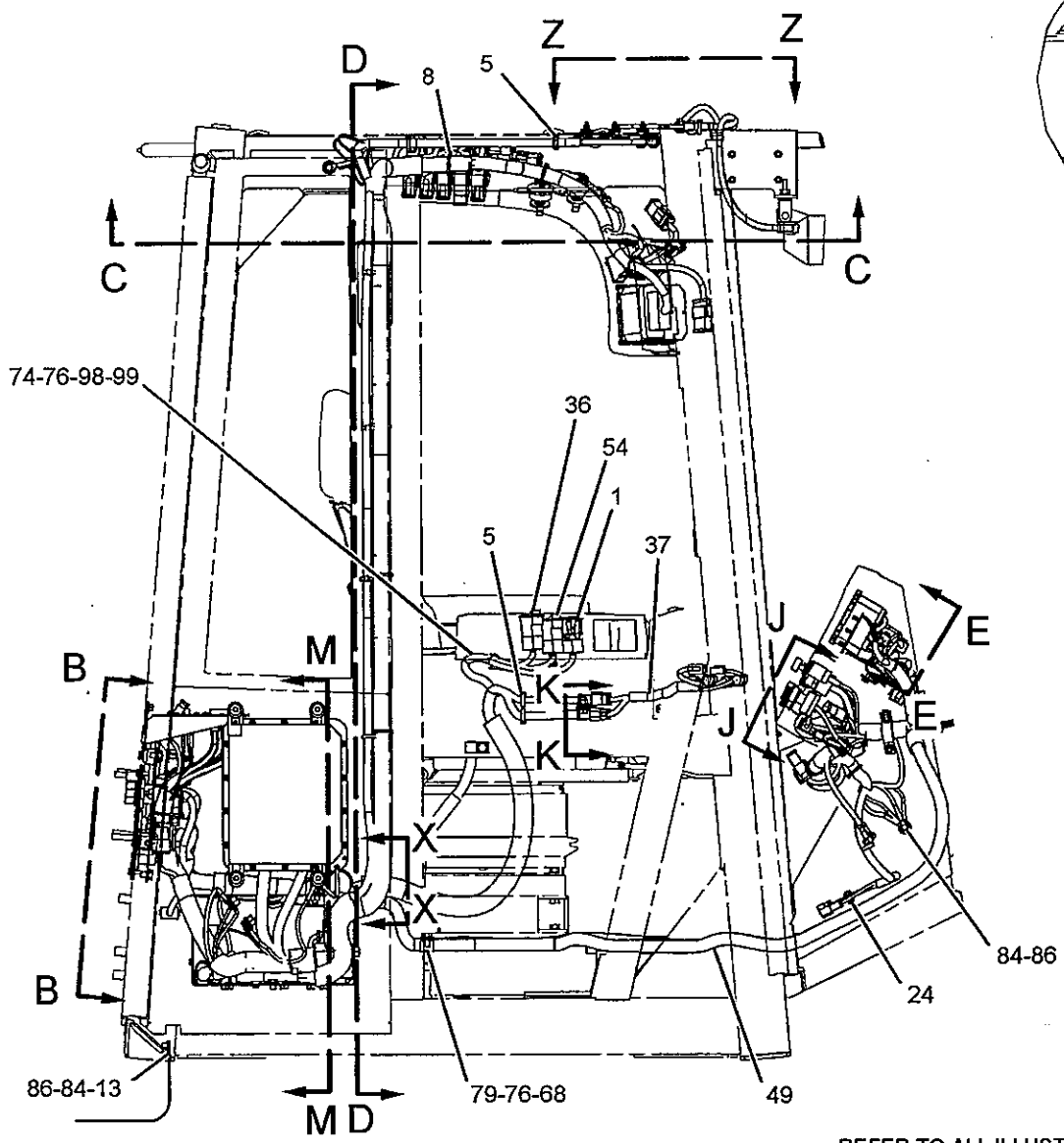


RIGHT SIDE VIEW

REFER TO ALL ILLUSTRATIONS OF THIS GROUP FOR AUXILIARY VIEWS

GRAPHIC #1

g01145088

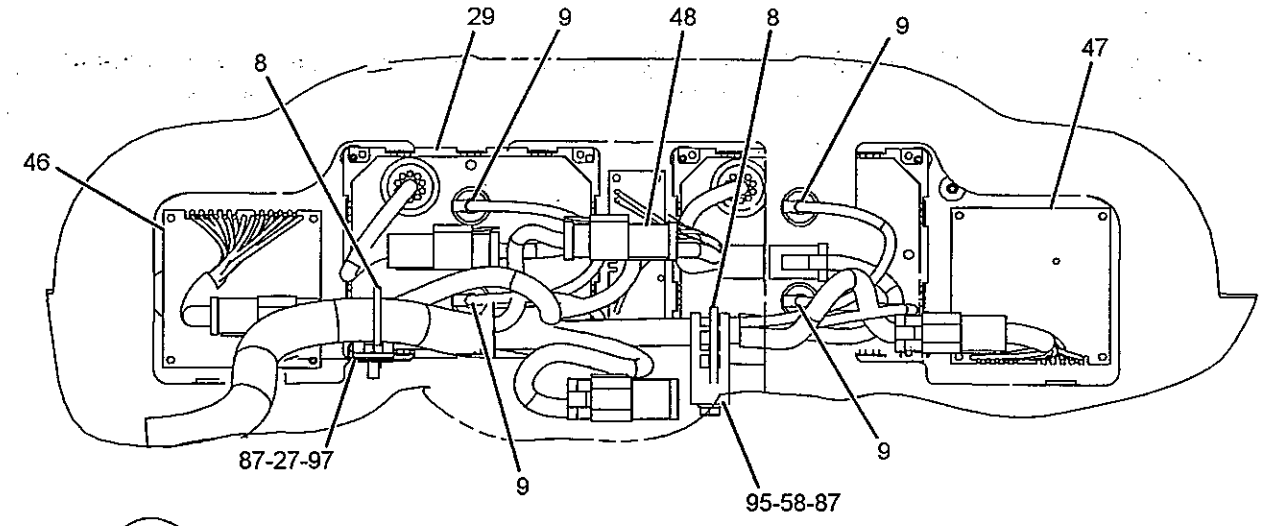


SECTION E-E

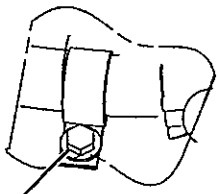


SECTION V-V

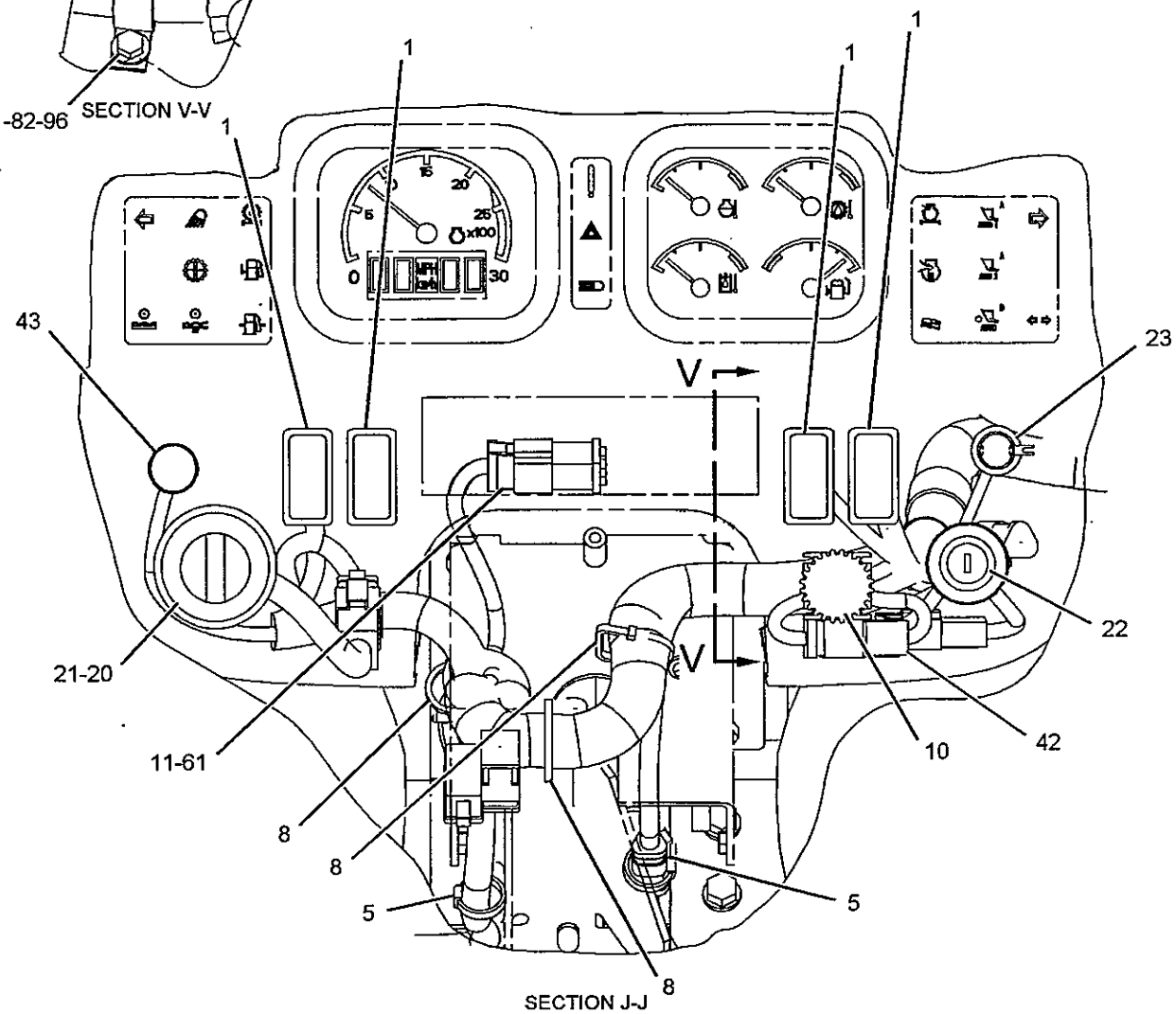


SECTION J-J

GRAPHIC #2 g01025823

*207-8617* **WIRING GP-CAB** *(contd.)* **i02282472**

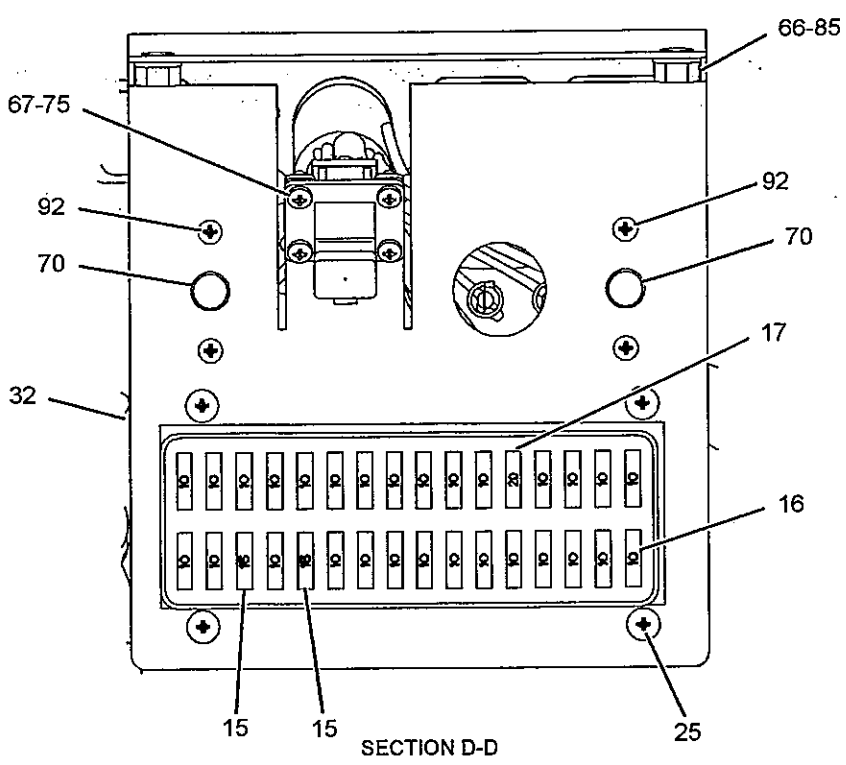


SECTION D-D

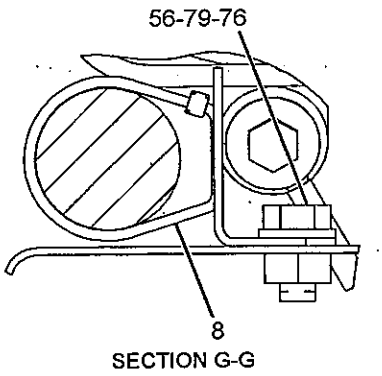


SECTION G-G

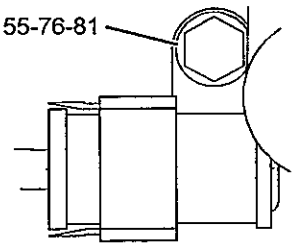


SECTION T-T

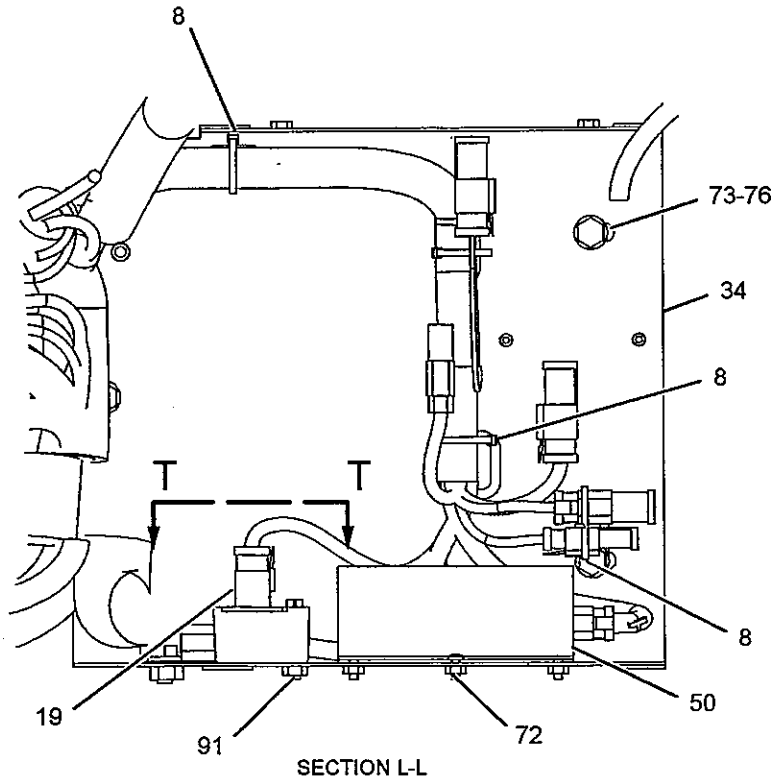


SECTION L-L

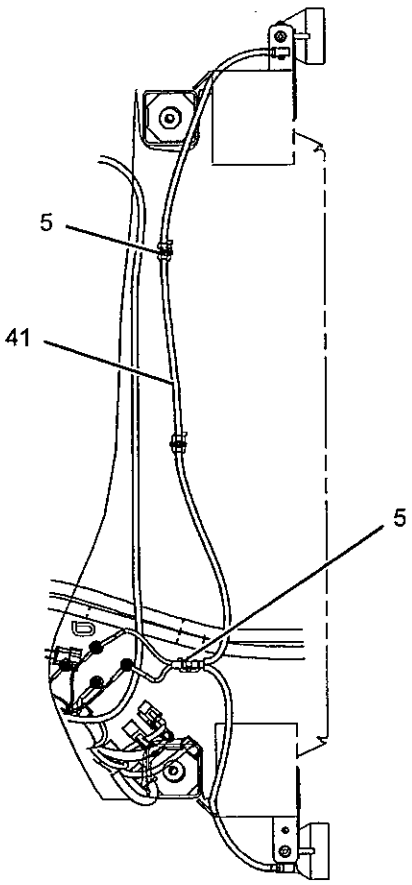


SECTION Z-Z

GRAPHIC #3 g01145101

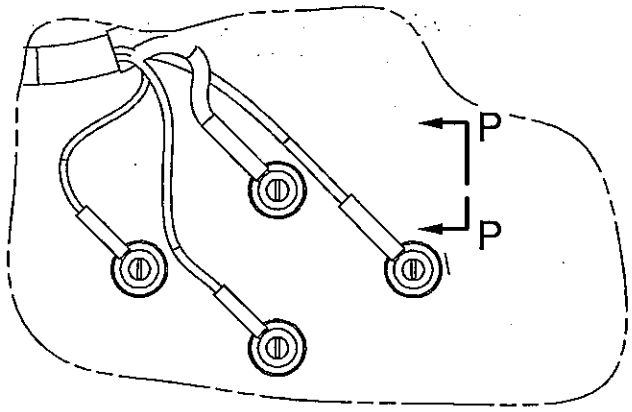


SECTION U-U

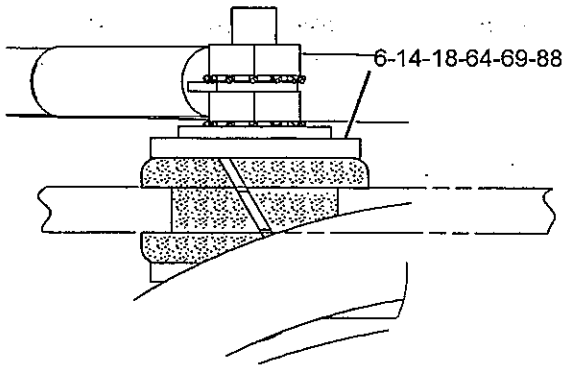


SECTION P-P

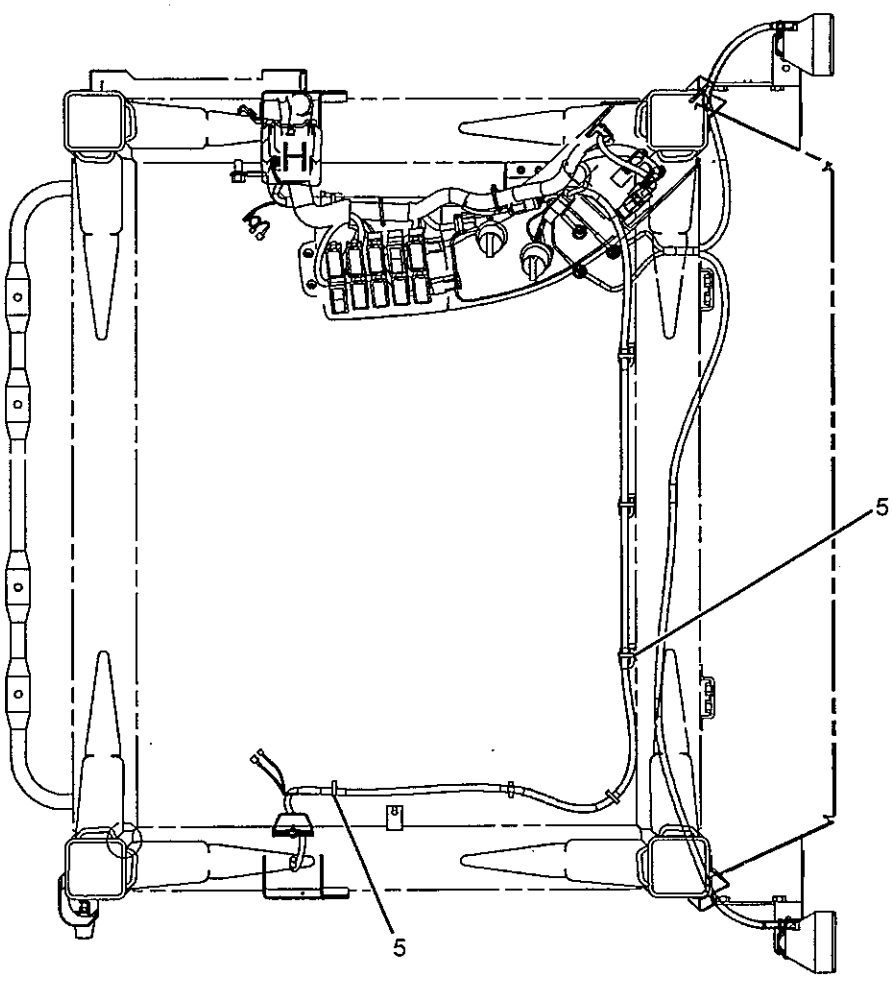


SECTION C-C

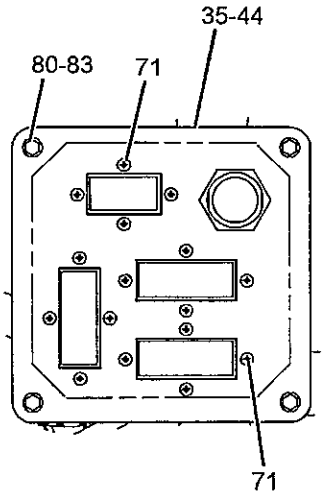


SECTION B-B

GRAPHIC #4

g01145093

*207-8617* **WIRING GP-CAB** *(contd.)* **i02282472**

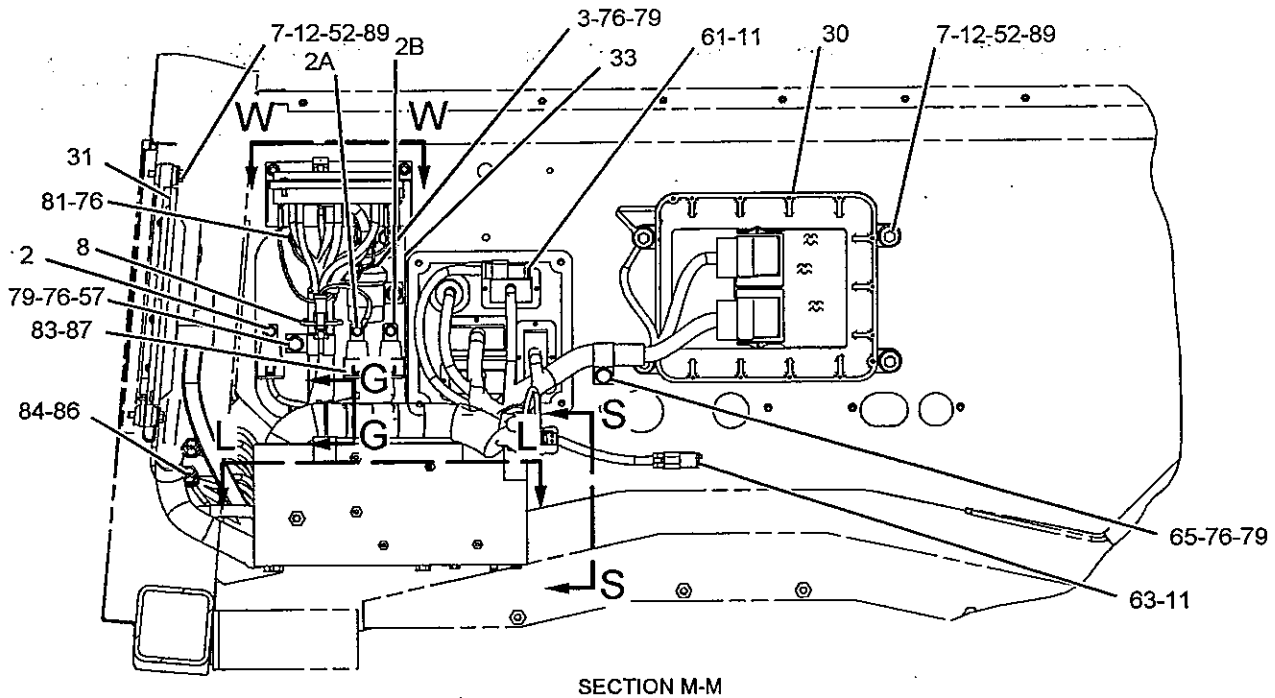


SECTION M-M

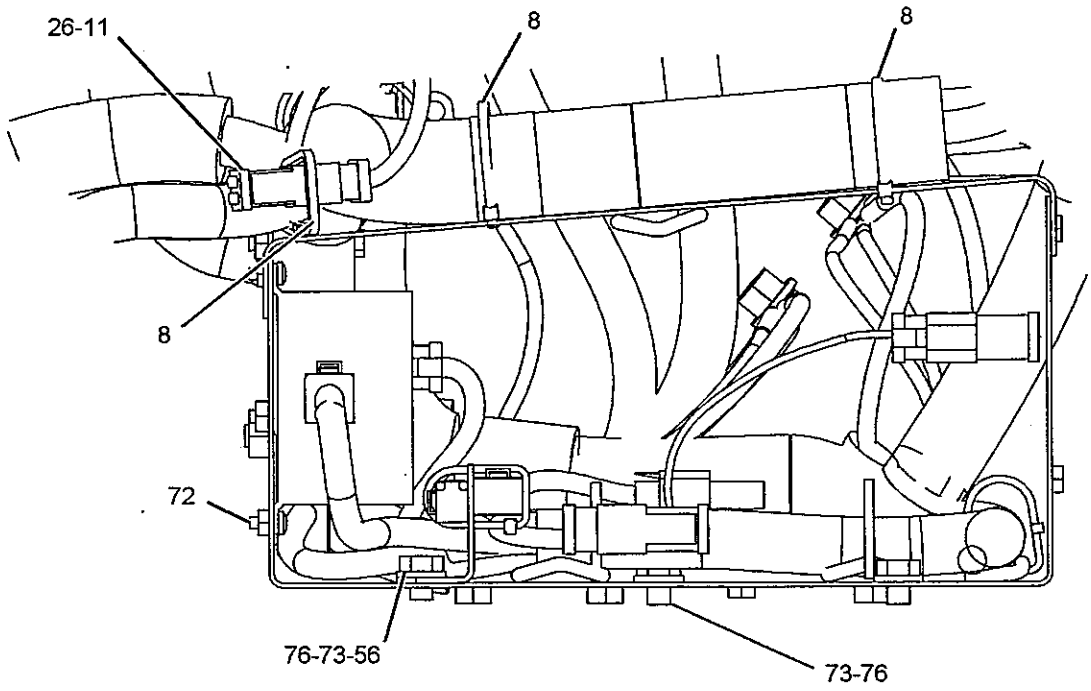


SECTION S-S

REFER TO ALL ILLUSTRATIONS OF
THIS GROUP FOR AUXILIARY VIEWS

GRAPHIC #5 g01139732

*207-8617* **WIRING GP-CAB** *(contd.)* **i02282472**

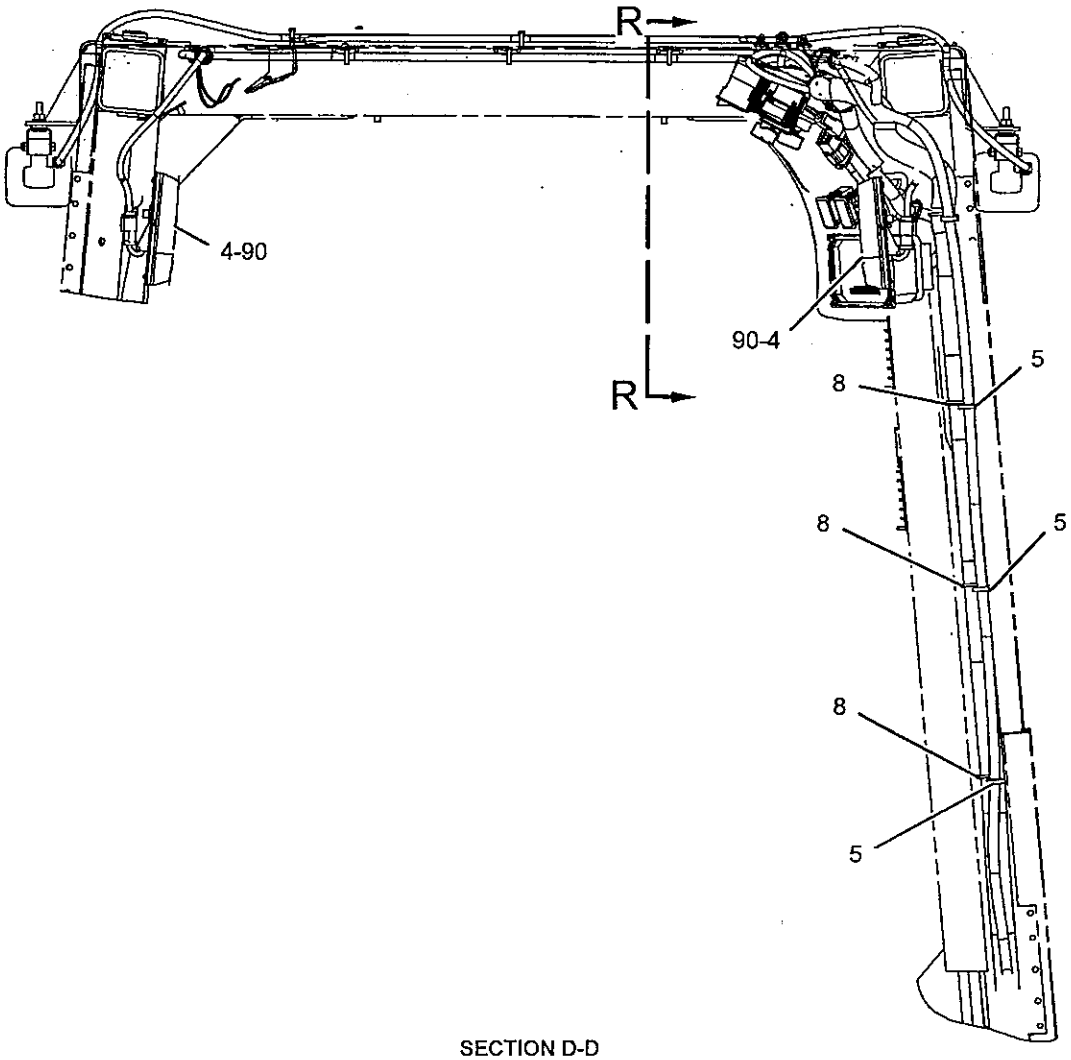


SECTION D-D

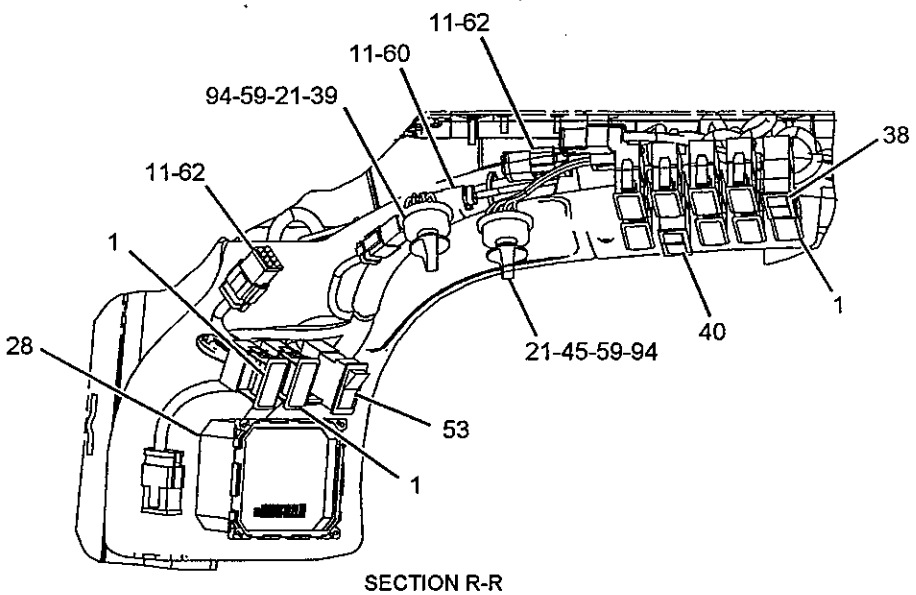


SECTION R-R

GRAPHIC #6 **<END>** g01145103

# ELECTRICAL AND STARTING SYSTEM

## 235-5503 WIRING GP-CAB

**S/N: JMS1-UP**

**PART OF 232-1393 CAB AR-ENCLOSED ROPS**

**SMCS-1408, 7301** i02113576

| NOTE | REF NO | GRAPHIC REF | PART NUMBER | QTY | PART NAME 1 2 3 4 5 6 (PRODUCT LEVEL) | SEE PAGE |
|---|---|---|---|---|---|---|
| | 1 | 4 | 3E-5239 | 1 | RELAY AS (24-VOLT) (FRONT CAB FLOOD LIGHTS) | |
| | 1A | 4 | 3E-5239 | 1 | RELAY AS (24-VOLT) (REAR FLOOD LIGHT) | |
| | 1B | 4 | 3E-5239 | 1 | RELAY AS (24-VOLT) (HORN) | |
| Y | 2 | 4 | 3E-6328 | 1 | ALARM GP (24-VOLT) (ACTION) | 133 |
| Y | 3 | 2 | 3E-6389 | 2 | LAMP GP-DOME (24-VOLT, WITH SWITCH) | 171 |
| | 4 | 1,2,3 | 3S-2093 | 23 | STRAP-CABLE | |
| | 5 | 4 | 4P-8525 | 8 | SPACER (9X16X30-MM THK) | |
| | 6 | 1 | 4V-4164 | 16 | BUSHING-TERMINAL | |
| | 7 | 4 | 6I-1418 | 8 | SPACER (8.2X12.7X28.7-MM THK) | |
| | 8 | 2 | 6V-8369 | 2 | NUT (7/16-28-THD) | |
| | 9 | 1,2,3, 4 | 7K-1181 | 22 | STRAP-CABLE | |
| | 10 | 3 | 7N-5876 | 4 | LAMP (24-VOLT) | |
| | 11 | 3 | 8C-6354 | 1 | CAP-RECEPTACLE (DUST) | |
| | 12 | 4 | 8T-9655 | 16 | MOUNT-ISOLATION | |
| | 13 | 1 | 8X-5804 | 1 | STRAP AS-GROUND | |
| | 14 | 1 | 9F-8125 | 16 | LOCKWASHER | |
| | 15 | 4 | 9W-1441 | 4 | FUSE (15-AMPERE) | |
| | 16 | 4 | 9W-1442 | 27 | FUSE (10-AMPERE) | |
| | 17 | 4 | 9W-1446 | 1 | FUSE (20-AMPERE) | |
| | 18 | 1 | 098-8968 | 16 | WASHER (5X16X1.2-MM THK) | |
| Y | 19 | 4 | 103-5526 | 1 | CONTROL GP-MONITOR (DIMMER) | 795 |
| | 20 | 3 | 108-3320 | 1 | SWITCH AS-ROTARY (24-VOLT) (RUNNING LIGHTS) | |
| | | 3 | 102-8806 | 2 | KIT-RECEPTACLE (8-PIN) | |
| | | | | | (INCLUDES RECEPTACLE AS AND WEDGE) | |
| | | 3 | 9W-0852 | 8 | PIN-CONNECTOR (14-GA) | |
| | 21 | 2,3 | 110-6109 | 6 | KNOB-CONTROL (CONTROL PANEL SWITCHES) | |
| | 22 | 2 | 110-7886 | 1 | SWITCH AS-WIPER (24-VOLT) (FRONT INTERMITTENT) | |
| | | 2 | 2H-3920 | 1 | LOCKWASHER | |
| | | 2 | 102-8806 | 2 | KIT-RECEPTACLE (8-PIN) | |
| | | | | | (INCLUDES RECEPTACLE AS AND WEDGE) | |
| | | 2 | 6V-8369 | 1 | NUT (7/16-28-THD) | |
| | | 2 | 8T-8737 | 1 | PLUG-SEAL | |
| | | 2 | 9W-0852 | 4 | PIN-CONNECTOR (14-GA) | |
| | | 2 | 186-3735 | 3 | PIN-CONNECTOR (16-GA TO 18-GA) | |
| | 23 | 3 | 110-7887 | 1 | SWITCH GP-START (KEY) | |
| | | 3 | 7T-6799 | 1 | NUT-MOUNTING (1-32-THD) | |
| | | 3 | 102-8804 | 1 | KIT-RECEPTACLE (4-PIN) | |
| | | | | | (INCLUDES RECEPTACLE AS AND WEDGE) | |
| | | 3 | 186-3735 | 4 | PIN-CONNECTOR (16-GA TO 18-GA) | |
| | 24 | 2 | 112-6174 | 1 | SWITCH AS-ROTARY (24-VOLT) (REAR WIPER) | |
| | | 2 | 2H-3920 | 1 | LOCKWASHER | |
| | | 2 | 102-8806 | 2 | KIT-RECEPTACLE (8-PIN) | |
| | | | | | (INCLUDES RECEPTACLE AS AND WEDGE) | |
| | | 2 | 6V-8369 | 1 | NUT (7/16-28-THD) | |
| | | 2 | 186-3735 | 6 | PIN-CONNECTOR (16-GA TO 18-GA) | |
| | | 2 | 8T-8737 | 2 | PLUG-SEAL | |
| | 25 | 3 | 117-2311 | 1 | RECEPTACLE AS-POWER (12-VOLT) | |
| | 26 | 1 | 121-8038 | 1 | RECEPTACLE AS | |
| | | 1 | 102-8803 | 2 | KIT-RECEPTACLE (3-PIN) | |
| | | | | | (INCLUDES RECEPTACLE AS AND WEDGE) | |
| | | 1 | 8T-8737 | 1 | PLUG-SEAL | |
| | | 1 | 9W-0852 | 2 | PIN-CONNECTOR (14-GA) | |
| | 27 | 1 | 123-2896 | 1 | GASKET | |
| | 28 | 2 | 127-4540 | 1 | POTENTIOMETER AS (TEMPERATURE SELECT) | |

# ELECTRICAL AND STARTING SYSTEM

## 235-5503 WIRING GP-CAB *(contd.)*

i02113576

| NOTE | REF NO | GRAPHIC REF | PART NUMBER | QTY | PART NAME 1 2 3 4 5 6 (PRODUCT LEVEL) | SEE PAGE |
|---|---|---|---|---|---|---|
| | | 2 | 186-3735 | 6 | PIN-CONNECTOR (16-GA TO 18-GA) | |
| | | 2 | 102-8803 | 1 | KIT-RECEPTACLE (3-PIN) | |
| | | | | | (INCLUDES RECEPTACLE AS AND WEDGE) | |
| | | 2 | 236-8722 | 1 | WASHER | |
| | 29 | 2 | 154-7443 | 1 | CONTROL GP-UNPROGRAMMED (CATERPILLAR MONITORING SYSTEM) | |
| Y | 30 | 3 | 166-6928 | 1 | MODULE GP-QUAD GAUGE | 864 |
| Y | 31 | 4 | 172-9389 | 1 | CONTROL GP-UNPROGRAMMED (POWER TRAIN) | 159 |
| Y | 32 | 4 | 172-9391 | 1 | CONTROL GP-UNPROGRAMMED (IMPLEMENT) | 160 |
| | 33 | 4 | 173-2234 | 1 | PLATE AS | |
| | 34 | 4 | 173-2235 | 1 | PLATE AS | |
| | 35 | 2 | 185-6335 | 1 | SWITCH AS-ROTARY (24-VOLT) (VARIABLE SHIFT CONTROL) | |
| | | 2 | 102-8805 | 2 | KIT-RECEPTACLE (6-PIN) | |
| | | | | | (INCLUDES RECEPTACLE AS AND WEDGE) | |
| | | 2 | 8T-8737 | 2 | PLUG-SEAL | |
| | | 2 | 9W-0852 | 4 | PIN-CONNECTOR (14-GA) | |
| | 36 | 3 | 197-4845 | 1 | HARNESS AS-WIRING (SERVICE TOOL) | |
| | | 3 | 102-8805 | 1 | KIT-RECEPTACLE (6-PIN) | |
| | | | | | (INCLUDES RECEPTACLE AS AND WEDGE) | |
| | | 3 | 8T-8737 | 7 | PLUG-SEAL | |
| | 37 | 3 | 198-6570 | 1 | LIGHTER GP-CIGAR (12-VOLT) | |
| | 38 | 2 | 201-7952 | 1 | SWITCH AS-ROTARY (AUTOSHIFT CONTROL) | |
| | | 2 | 102-8805 | 2 | KIT-RECEPTACLE (6-PIN) | |
| | | | | | (INCLUDES RECEPTACLE AS AND WEDGE) | |
| | | 2 | 9W-0852 | 6 | PIN-CONNECTOR (14-GA) | |
| | 39 | 4 | 209-0381 | 1 | CONVERTER-POWER (24-VOLT TO 12-VOLT) | |
| | 40 | 1 | 234-5925 | 1 | GASKET | |
| | 41 | 1 | 235-5504 | 1 | HARNESS AS-CAB (MAIN) | |
| | | 1 | 102-8802 | 4 | KIT-RECEPTACLE (2-PIN) | |
| | | 1 | 102-8803 | 1 | KIT-RECEPTACLE (3-PIN) | |
| | | 1 | 102-8804 | 3 | KIT-RECEPTACLE (4-PIN) | |
| | | 1 | 102-8805 | 5 | KIT-RECEPTACLE (6-PIN) | |
| | | 1 | 102-8806 | 2 | KIT-RECEPTACLE (8-PIN) | |
| | | 1 | 102-8801 | 3 | KIT-RECEPTACLE (12-PIN) | |
| | | 1 | 197-7565 | 1 | KIT-RECEPTACLE (4-PIN) | |
| | | | | | (EACH KIT INCLUDES RECEPTACLE AS AND WEDGE) | |
| | | 1 | 110-6846 | 2 | PLUG AS-CONNECTOR (40-PIN) | |
| | | 1 | 7G-7917 | 1 | PLUG-SEAL | |
| | | 1 | 7G-7918 | 1 | PLUG-SEAL | |
| | | 1 | 7G-7919 | 1 | PLUG-SEAL | |
| | | 1 | 8N-1532 | 1 | RECEPTACLE AS (6-PIN) | |
| | | 1 | 8N-1535 | 1 | BELL AS-END | |
| | | 1 | 8T-8737 | 225 | PLUG-SEAL | |
| | | 1 | 8T-9834 | 1 | PLUG AS-CONNECTOR (40-PIN) | |
| | | 1 | 9X-0145 | 1 | RECEPTACLE AS (24-PIN) | |
| | | 1 | 9X-1054 | 3 | PLUG AS-CONNECTOR (4-PIN) | |
| | | 1 | 9X-6772 | 1 | STRAP-CABLE | |
| | | 1 | 110-6848 | 2 | PLUG AS-CONNECTOR (40-PIN) | |
| | | 1 | 155-2255 | 5 | KIT-CONNECTING PLUG (12-PIN) | |
| | | 1 | 155-2256 | 1 | KIT-CONNECTING PLUG (12-PIN) | |
| | | 1 | 155-2265 | 5 | KIT-CONNECTING PLUG (8-PIN) | |
| | | 1 | 155-2260 | 7 | KIT-CONNECTING PLUG (3-PIN) | |
| | | 1 | 155-2270 | 4 | KIT-CONNECTING PLUG (2-PIN) | |
| | | 1 | 155-2271 | 5 | KIT-CONNECTING PLUG (4-PIN) | |
| | | 1 | 155-2274 | 13 | KIT-CONNECTING PLUG (6-PIN) | |
| | | | | | (EACH KIT INCLUDES PLUG AS AND WEDGE) | |
| | | 1 | 185-1861 | 95 | PLUG | |
| | | 1 | 188-6253 | 1 | BLOCK AS-FUSE | |
| | 42 | 2 | 235-5506 | 1 | HARNESS AS-LIGHTING (CAB FLOODLIGHTS) | |

# ELECTRICAL AND STARTING SYSTEM

## 235-5503 WIRING GP-CAB *(contd.)* i02113576

| NOTE | REF NO | GRAPHIC REF | PART NUMBER | QTY | PART NAME 1 2 3 4 5 6 (PRODUCT LEVEL) | SEE PAGE |
|---|---|---|---|---|---|---|
| | | 2 | 155-2270 | 4 | KIT-CONNECTING PLUG (2-PIN) | |
| | | | | | (INCLUDES PLUG AS AND WEDGE) | |
| | 43 | 1 | 236-2525 | 1 | HARNESS AS-OPERATOR CONTROLS (ELECTROHYDRAULIC) | |
| | | 1 | 155-2260 | 4 | KIT-CONNECTING PLUG (3-PIN) | |
| | | 1 | 155-2270 | 1 | KIT-CONNECTING PLUG (2-PIN) | |
| | | 1 | 155-2274 | 2 | KIT-CONNECTING PLUG (6-PIN) | |
| | | 1 | 155-2255 | 1 | KIT-CONNECTING PLUG (12-PIN) | |
| | | | | | (EACH KIT INCLUDES PLUG AS AND WEDGE) | |
| | | 1 | 8T-8737 | 11 | PLUG-SEAL | |
| | | 1 | 102-8803 | 2 | KIT-RECEPTACLE (3-PIN) | |
| | | | | | (INCLUDES RECEPTACLE AS AND WEDGE) | |
| | 44 | 1,2,3 | 236-4631 | 20 | BEZEL | |
| | 45 | 4 | 236-9993 | 1 | PLATE AS | |
| | 46 | 1 | 242-6099 | 1 | CLIP | |
| | 47 | 1 | 246-5459 | 1 | PLATE | |
| | 48 | 3 | 249-2763 | 2 | CONTROL GP-DISPLAY ELECTRONIC (INDICATOR PANEL, RH, LH) | |
| | | | | | (EACH INCLUDES) | |
| | | 3 | 1S-9593 | 1 | STRAP-CABLE | |
| | | 3 | 102-8801 | 1 | KIT-RECEPTACLE (12-PIN) | |
| | | 3 | 190-7614 | 1 | KIT-RECEPTACLE (12-PIN) | |
| | | | | | (EACH KIT INCLUDES RECEPTACLE AS AND WEDGE) | |
| | | 3 | 186-3735 | 11 | PIN-CONNECTOR (16-GA TO 18-GA) | |
| | | 3 | 155-2255 | 1 | KIT-CONNECTING PLUG (12-PIN) | |
| | | | | | (INCLUDES PLUG AS AND WEDGE) | |
| | 50 | 3 | 130-5300 | 1 | CLIP | |
| | 51 | 1,3,4 | 132-5789 | 3 | CLIP | |
| | 52 | 4 | 149-7738 | 1 | CLIP | |
| | 53 | 3 | 156-6175 | 1 | CLIP | |
| | 54 | 1,2,3 | 228-6089 | 13 | PLUG | |
| | 55 | 2 | 236-4608 | 1 | SWITCH AS-ROCKER (MODE SELECT) | |
| | 56 | 2 | 236-4609 | 1 | SWITCH AS-ROCKER (NEUTRALIZER OVERRIDE) | |
| | 57 | 2 | 236-4610 | 1 | SWITCH AS-ROCKER (A/C, HEATER SELECT) | |
| | 58 | 2 | 236-4611 | 1 | SWITCH AS-ROCKER (FAN BLOWER SPEED) | |
| | 59 | 1 | 236-4617 | 1 | SWITCH AS-ROCKER (HYDRAULIC LOCKOUT) | |
| | 60 | 2 | 236-4619 | 1 | SWITCH AS-ROCKER (LIFT, TILT KICKOUT) | |
| | 61 | 1 | 236-4622 | 1 | SWITCH AS-ROCKER (FINE MODULATION) | |
| | 62 | 1 | 2A-2677 | 1 | SPACER (0.75-IN THK) | |
| | 63 | 2 | 2H-3920 | 6 | LOCKWASHER | |
| | 64 | 1 | 4B-2049 | 16 | NUT (10-32-THD) | |
| | 65 | 1 | 4D-7388 | 1 | CLIP | |
| | 66 | 3 | 4P-7581 | 1 | CLIP | |
| | 67 | 4 | 4S-1962 | 1 | CLIP | |
| M | 68 | 4 | 5C-7261 | 2 | NUT (M8X1.25-THD) | |
| M | 69 | 4 | 5C-8312 | 4 | NUT (M4X0.7-THD) | |
| | 70 | 3 | 5P-4116 | 1 | WASHER-HARD (8.8X20.5X2-MM THK) | |
| | 71 | 1 | 6D-1641 | 1 | CLIP | |
| | 72 | 1 | 6D-6146 | 8 | SCREW-MACHINE (10-32X1.25) | |
| | 73 | 3 | 6V-1889 | 1 | CLIP | |
| | 74 | 1 | 6V-2687 | 8 | SCREW-PAN HEAD (10-24X1-IN) | |
| | 75 | 2 | 6V-3265 | 4 | CLIP | |
| | 76 | 4 | 6V-5645 | 4 | SCREW-MACHINE (10-32X0.87-IN) | |
| M | 77 | 4 | 6V-9673 | 3 | SCREW-MACHINE (M5X0.8X12-MM) | |
| M | 78 | 4 | 8T-0337 | 4 | SCREW-MACHINE (M4X0.7X12-MM) | |
| | 79 | 1,2,3, 4 | 8T-4121 | 20 | WASHER-HARD (11X21X2.5-MM THK) | |
| M | 80 | 1 | 8T-4133 | 1 | NUT (M10X1.5-THD) | |
| M | 81 | 1,2,3, 4 | 8T-4137 | 13 | BOLT (M10X1.5X20-MM) | |

## 235-5503 WIRING GP-CAB *(contd.)*

i02113576

| NOTE | REF NO | GRAPHIC REF | PART NUMBER | QTY | PART NAME 1 2 3 4 5 6 (PRODUCT LEVEL) | SEE PAGE |
|---|---|---|---|---|---|---|
| M | 82 | 1 | **8T-4138** | 8 | BOLT (M6X1X20-MM) | |
| M | 83 | 1 | **8T-4186** | 1 | BOLT (M10X1.5X40-MM) | |
| M | 84 | 3,4 | **8T-4191** | 5 | BOLT (M10X1.5X16-MM) | |
| M | 85 | 3 | **8T-4199** | 1 | BOLT (M8X1.25X12-MM) | |
| | 86 | 1,4 | **8T-4205** | 7 | WASHER-HARD (7.2X14.5X2-MM THK) | |
| | 87 | 1,4 | **8T-4223** | 5 | WASHER-HARD (13.5X25.5X3-MM THK) | |
| | 88 | 4 | **8T-4224** | 2 | WASHER-HARD (8.8X16X2-MM THK) | |
| M | 89 | 1,4 | **8T-4244** | 5 | NUT (M12X1.75-THD) | |
| M | 90 | 3,4 | **8T-4970** | 5 | BOLT (M6X1X14-MM) | |
| M | 91 | 4 | **8T-6870** | 8 | BOLT (M8X1.25X70-MM) | |
| | 92 | 1 | **9M-5870** | 8 | GROMMET | |
| | 93 | 4 | **9N-0869** | 8 | WASHER-HARD (8.8X25.5X2-MM THK) | |
| M | 94 | 2 | **9X-1046** | 6 | SCREW (M4X0.7X18-MM) | |
| M | 95 | 4 | **9X-2480** | 2 | BOLT (M6X1X45-MM) | |
| | 96 | 3 | **9X-6165** | 1 | WASHER (6.5X22X2.5-MM THK) | |
| | 97 | 1,3,4 | **9X-8256** | 6 | WASHER (6.6X12X2-MM THK) | |
| M | 98 | 4 | **8T-4171** | 1 | BOLT (M6X1X12-MM) | |

M-METRIC PART
Y-SEPARATE ILLUSTRATION

## 235-5503 WIRING GP-CAB (contd.) i02113576

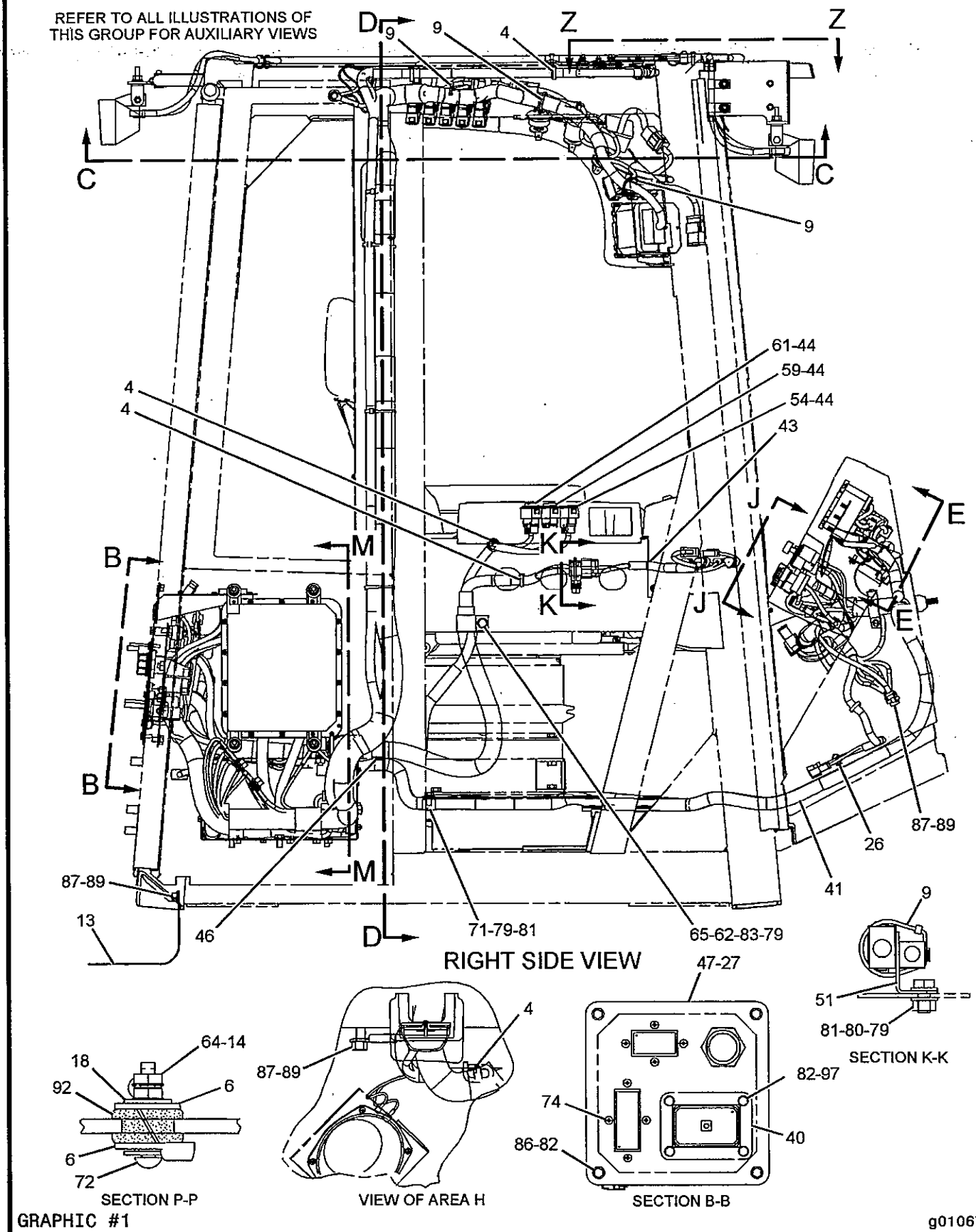


GRAPHIC #1 g01067164

REFER TO ALL ILLUSTRATIONS OF THIS GROUP FOR AUXILIARY VIEWS

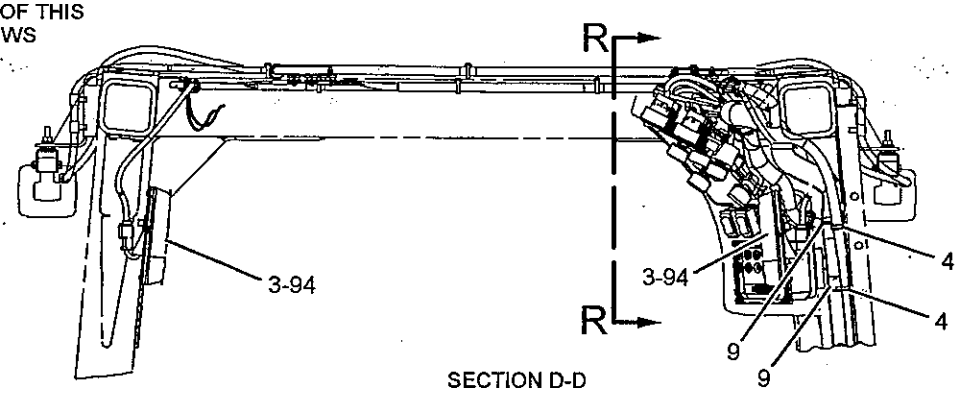


SECTION D-D

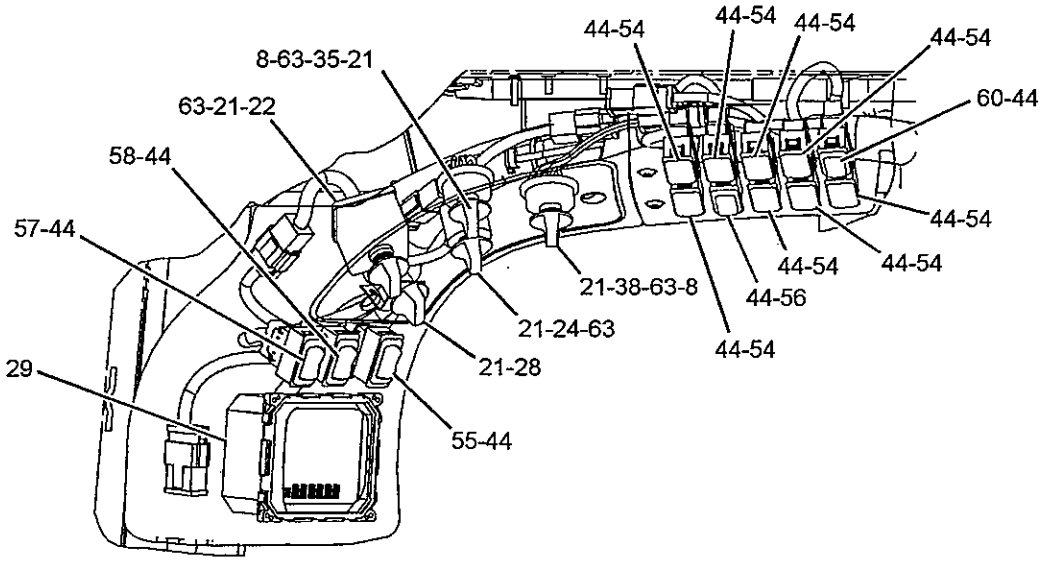


SECTION R-R

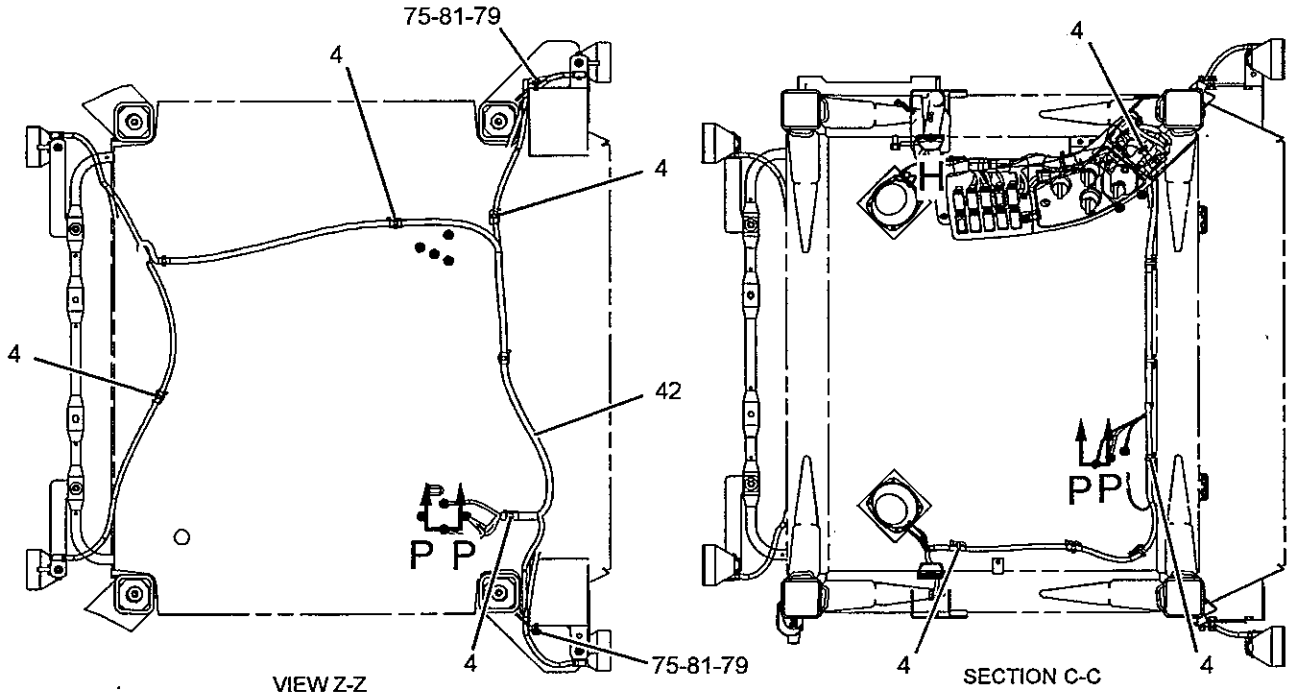


VIEW Z-Z

SECTION C-C

GRAPHIC #2

g01067165

## *235-5503* WIRING GP-CAB *(contd.)* i02113576

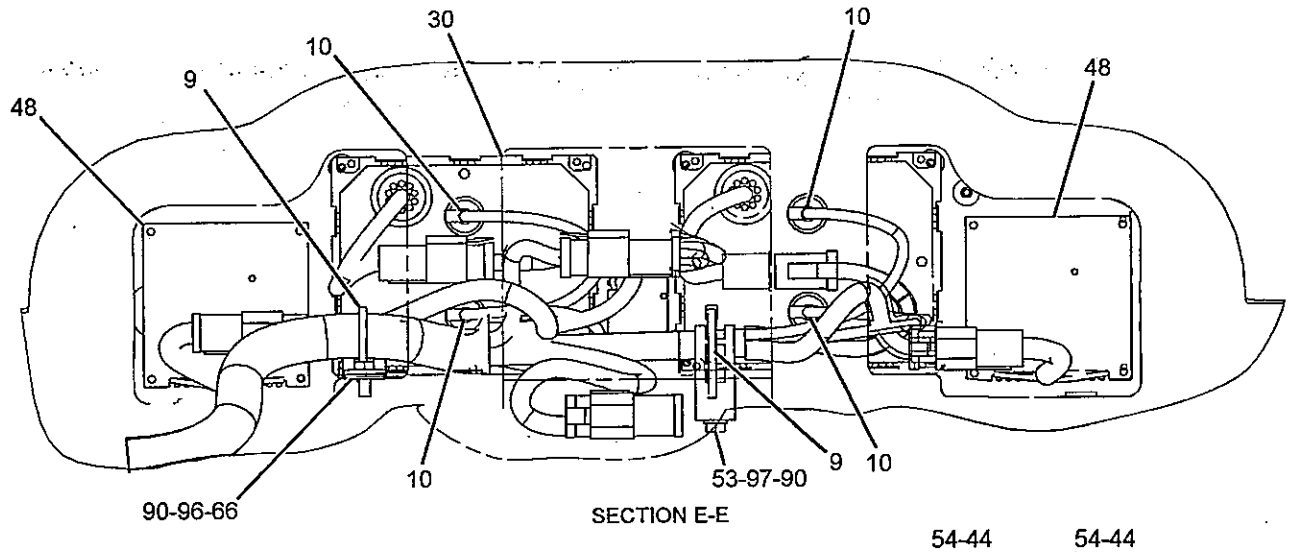


SECTION E-E

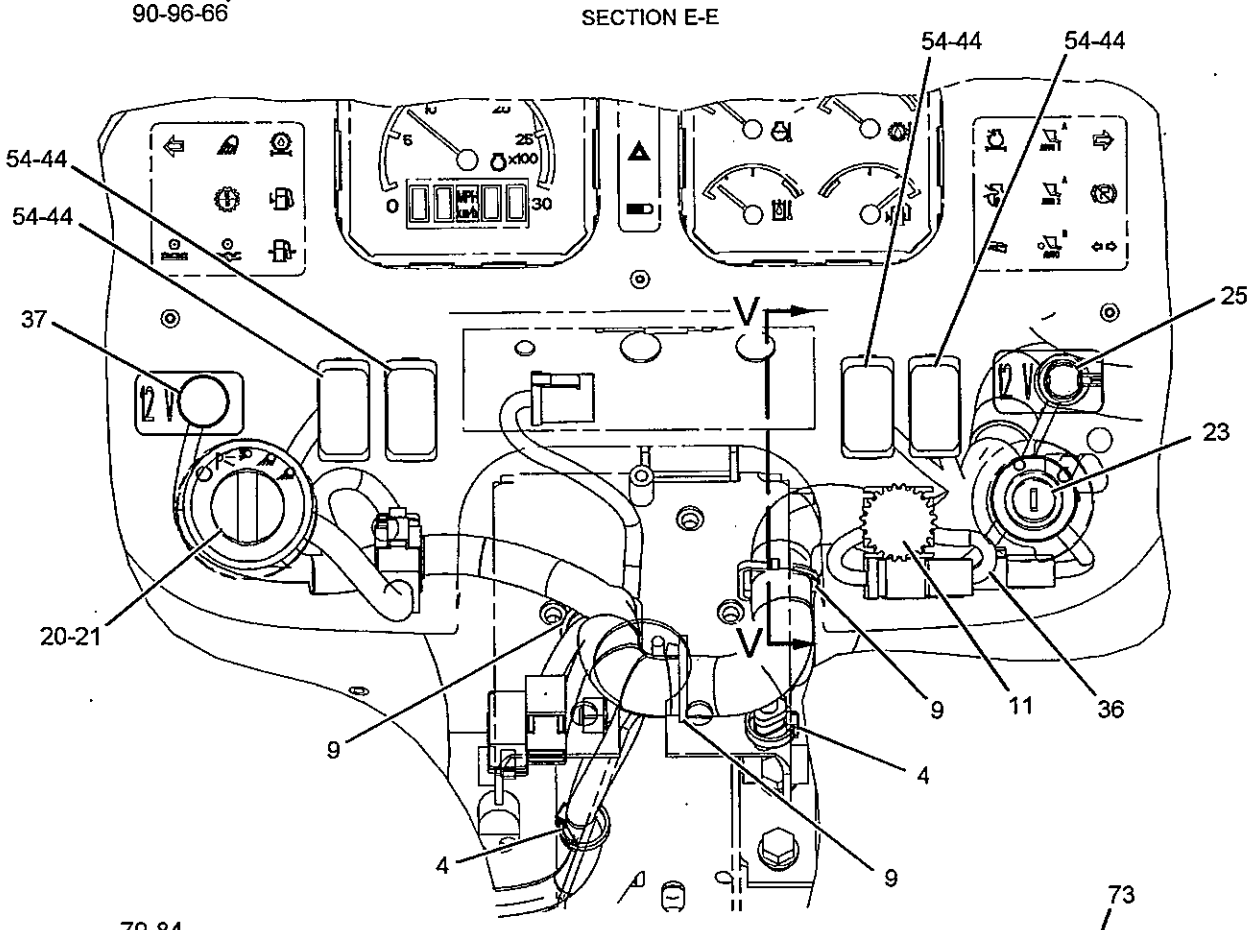


SECTION J-J

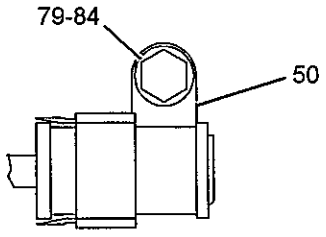


SECTION T-T

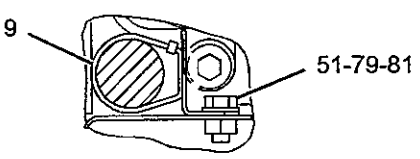


SECTION G-G

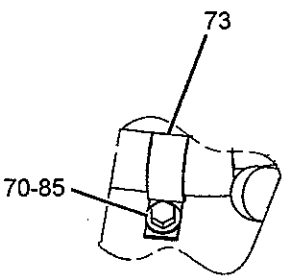


SECTION V-V

GRAPHIC #3 g01145115

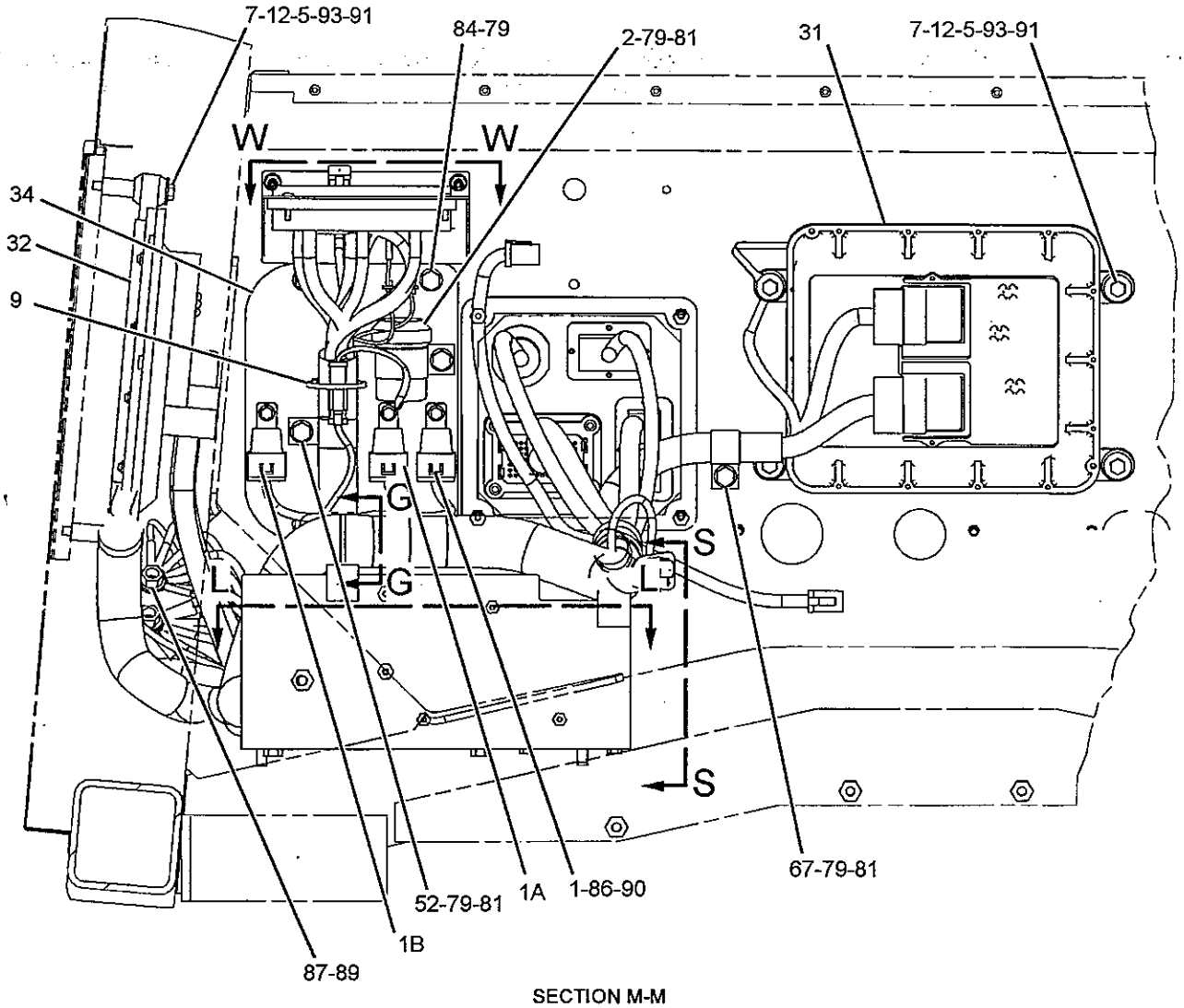


SECTION M-M

REFER TO ALL ILLUSTRATIONS OF THIS GROUP FOR AUXILIARY VIEWS

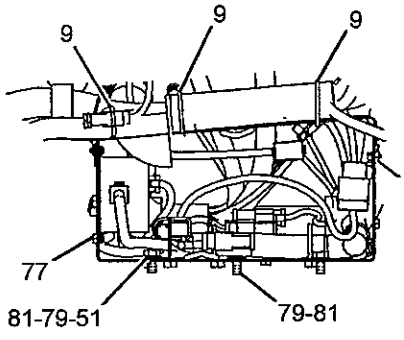


SECTION S-S

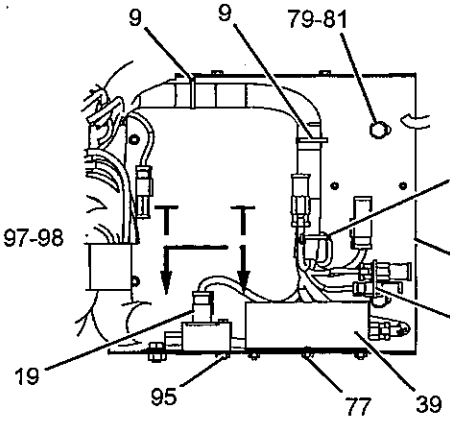


SECTION L-L

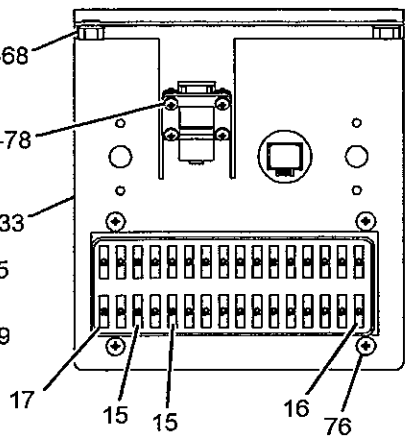


SECTION W-W

GRAPHIC #4

**<END>**

g01076743

# ELECTRICAL AND STARTING SYSTEM

## 262-9950 WIRING GP-CAB

**S/N: JMS1-UP**

**PART OF 258-1565 CANOPY AR-OPEN ROPS**

**AN ATTACHMENT**

**SMCS-1408, 7301** i02283986

| NOTE | REF NO | GRAPHIC REF | PART NUMBER | QTY | PART NAME 1 2 3 4 5 6 (PRODUCT LEVEL) | SEE PAGE |
|---|---|---|---|---|---|---|
| | 1 | 2 | 3E-5239 | 1 | RELAY AS (24-VOLT) (HORN) | |
| | 1A | 2 | 3E-5239 | 1 | RELAY AS (24-VOLT) (FRONT FLOODLIGHTS) | |
| | 1B | 2 | 3E-5239 | 1 | RELAY AS (24-VOLT) (REAR FLOODLIGHTS) | |
| Y | 2 | 2 | 3E-6328 | 1 | ALARM GP (24-VOLT) (ACTION) | 133 |
| Y | 3 | 1 | 3E-6389 | 2 | LAMP GP-DOME (24-VOLT, WITH SWITCH) | 171 |
| | 4 | 1,2,3 | 3S-2093 | 23 | STRAP-CABLE | |
| | 5 | 2,3 | 4P-8525 | 8 | SPACER (9X16X30-MM THK) | |
| | 6 | 1 | 4V-4164 | 16 | BUSHING-TERMINAL | |
| | 7 | 2,3 | 6I-1418 | 8 | SPACER (8.2X12.7X28.7-MM THK) | |
| | 8 | 3 | 6V-8369 | 2 | NUT (7/16-28-THD) | |
| | 9 | 2,3 | 7K-1181 | 22 | STRAP-CABLE | |
| | 10 | 2 | 7N-5876 | 4 | LAMP (24-VOLT) | |
| | 11 | 2 | 8C-6354 | 1 | CAP-RECEPTACLE (DUST) | |
| | 12 | 1,2,3 | 8T-8737 | 45 | PLUG-SEAL | |
| | 13 | 2,3 | 8T-9655 | 16 | MOUNT-ISOLATION | |
| | 14 | 1 | 8X-5804 | 1 | STRAP AS-GROUND | |
| | 15 | 1 | 9F-8125 | 16 | LOCKWASHER | |
| | 16 | 2 | 9W-1441 | 4 | FUSE (15-AMPERE) | |
| | 17 | 2 | 9W-1442 | 27 | FUSE (10-AMPERE) | |
| | 18 | 2 | 9W-1446 | 1 | FUSE (20-AMPERE) | |
| | 19 | 1 | 098-8968 | 16 | WASHER (5X16X1.2-MM THK) | |
| Y | 20 | 3 | 103-5526 | 1 | CONTROL GP-MONITOR (DIMMER) | 795 |
| | 21 | 2 | 108-3320 | 1 | SWITCH AS-ROTARY (24-VOLT) (RUNNING LIGHTS) | |
| | | 2 | 102-8806 | 1 | KIT-RECEPTACLE (8-PIN) | |
| | | | | | (INCLUDES RECEPTACLE AS AND WEDGE) | |
| | 22 | 2,3 | 110-6109 | 3 | KNOB-CONTROL (CONTROL PANEL SWITCHES) | |
| | 23 | 2 | 110-7887 | 1 | SWITCH GP-START (KEY) | |
| | | 2 | 7T-6799 | 1 | NUT-MOUNTING (1-32-THD) | |
| | | 2 | 102-8804 | 1 | KIT-RECEPTACLE (4-PIN) | |
| | | | | | (INCLUDES RECEPTACLE AS AND WEDGE) | |
| | 24 | 2 | 117-2311 | 1 | RECEPTACLE AS-POWER (12-VOLT) | |
| | 25 | 1 | 121-8038 | 1 | RECEPTACLE AS | |
| | | 1 | 102-8803 | 1 | KIT-RECEPTACLE (3-PIN) | |
| | | | | | (INCLUDES RECEPTACLE AS AND WEDGE) | |
| | 26 | 3 | 123-2896 | 1 | GASKET | |
| Y | 27 | 3 | 154-7443 | 1 | CONTROL GP-UNPROGRAMMED (CATERPILLAR MONITORING SYSTEM) | 157 |
| Y | 28 | 2 | 166-6928 | 1 | MODULE GP-QUAD GAUGE | 864 |
| Y | 29 | 2 | 172-9389 | 1 | CONTROL GP-UNPROGRAMMED (POWER TRAIN) | 159 |
| Y | 30 | 2 | 172-9391 | 1 | CONTROL GP-UNPROGRAMMED (IMPLEMENT) | 160 |
| | 31 | 2 | 173-2234 | 1 | PLATE AS | |
| | 32 | 2 | 173-2235 | 1 | PLATE AS | |
| M | | 2 | 6V-9632 | 3 | NUT-WELD (M6X1-THD) | |
| M | | 2 | 8T-3490 | 2 | NUT-WELD (M10X1.5-THD) | |
| | 33 | 3 | 185-6335 | 1 | SWITCH AS-ROTARY (24-VOLT) (VARIABLE SHIFT CONTROL) | |
| | | 3 | 102-8805 | 1 | KIT-RECEPTACLE (6-PIN) | |
| | | | | | (INCLUDES RECEPTACLE AS AND WEDGE) | |
| | 34 | 2 | 197-4845 | 1 | HARNESS AS-WIRING (SERVICE TOOL) | |
| | | 2 | 102-8805 | 1 | KIT-RECEPTACLE (6-PIN) | |
| | | | | | (INCLUDES RECEPTACLE AS AND WEDGE) | |
| | 35 | 2 | 198-6570 | 1 | LIGHTER GP-CIGAR (12-VOLT) | |
| | 36 | 3 | 201-7952 | 1 | SWITCH AS-ROTARY (AUTOSHIFT CONTROL) | |
| | | 3 | 102-8805 | 1 | KIT-RECEPTACLE (6-PIN) | |
| | | | | | (INCLUDES RECEPTACLE AS AND WEDGE) | |

## 262-9950 WIRING GP-CAB *(contd.)*

i02283986

| NOTE | REF NO | GRAPHIC REF | PART NUMBER | QTY | PART NAME 1 2 3 4 5 6 (PRODUCT LEVEL) | SEE PAGE |
|---|---|---|---|---|---|---|
| | 37 | 2 | 209-0381 | 1 | CONVERTER-POWER (24-VOLT TO 12-VOLT) | |
| | 38 | 3 | 234-5925 | 1 | GASKET | |
| | 39 | 1 | 235-5504 | 1 | HARNESS AS-CAB (MAIN) | |
| | | 1 | 102-8802 | 1 | KIT-RECEPTACLE (2-PIN) | |
| | | 1 | 102-8803 | 1 | KIT-RECEPTACLE (3-PIN) | |
| | | 1 | 102-8804 | 1 | KIT-RECEPTACLE (4-PIN) | |
| | | 1 | 102-8805 | 1 | KIT-RECEPTACLE (6-PIN) | |
| | | 1 | 102-8806 | 1 | KIT-RECEPTACLE (8-PIN) | |
| | | 1 | 102-8801 | 1 | KIT-RECEPTACLE (12-PIN) | |
| | | | | | (EACH RECEPTACLE KIT INCLUDES RECEPTACLE AS AND WEDGE) | |
| | | 1 | 110-6846 | 1 | PLUG AS-CONNECTOR (40-PIN) | |
| | | 1 | 1U-9053 | 1 | CAPSULE-LUBRICANT | |
| | | 1 | 110-6844 | 1 | SEAL | |
| | | 1 | 3T-3278 | 4 | BOOT | |
| | | 1 | 5P-1251 | 63 | HOSE | |
| | | 1 | 8N-1532 | 1 | RECEPTACLE AS (6-PIN) | |
| | | 1 | 8N-1536 | 1 | NUT (1-5/8-18-THD) | |
| | | 1 | 8N-1535 | 1 | BELL AS-END | |
| | | 1 | 8T-9834 | 1 | PLUG AS-CONNECTOR (40-PIN) | |
| | | 1 | 3E-4367 | 1 | RING-RETAINING | |
| M | | 1 | 3E-8557 | 1 | BOLT (M5X0.8X39.37-MM) | |
| | | 1 | 9X-3132 | 2 | SEAL-CONNECTOR (40-PIN) | |
| | | 1 | 9X-0145 | 1 | RECEPTACLE AS (24-PIN) | |
| | | 1 | 9X-1054 | 3 | PLUG AS-CONNECTOR (4-PIN) | |
| | | 1 | 9X-6772 | 1 | STRAP-CABLE | |
| | | 1 | 100-5041 | 13 | TERMINAL-RECEPTACLE | |
| | | 1 | 1U-9053 | 1 | CAPSULE-LUBRICANT | |
| | | 1 | 110-6848 | 1 | PLUG AS-CONNECTOR (40-PIN) | |
| | | 1 | 1U-9053 | 1 | CAPSULE-LUBRICANT | |
| | | 1 | 110-6844 | 1 | SEAL | |
| | | 1 | 155-2255 | 1 | KIT-CONNECTING PLUG (12-PIN) | |
| | | 1 | 155-2265 | 1 | KIT-CONNECTING PLUG (8-PIN) | |
| | | 1 | 155-2260 | 1 | KIT-CONNECTING PLUG (3-PIN) | |
| | | 1 | 155-2270 | 1 | KIT-CONNECTING PLUG (2-PIN) | |
| | | | | | (EACH PLUG KIT INCLUES PLUG AS AND WEDGE) | |
| | | 1 | 155-2272 | 6 | PLUG AS-CONNECTOR (4-PIN) | |
| | | 1 | 155-2271 | 1 | KIT-CONNECTING PLUG (4-PIN) | |
| | | | | | (INCLUDES PLUG AS AND WEDGE) | |
| | | 1 | 155-2274 | 1 | KIT-CONNECTING PLUG (6-PIN) | |
| | | | | | (INCLUDES PLUG AS AND WEDGE) | |
| | | 1 | 185-1861 | 98 | PLUG | |
| | | 1 | 188-6253 | 1 | BLOCK AS-FUSE | |
| | | 1 | 1H-3244 | 2 | LOCKWASHER | |
| | | 1 | 6V-8185 | 2 | NUT (1/4-20-THD) | |
| | | 1 | 8T-4205 | 2 | WASHER-HARD (7.2X14.5X2-MM THK) | |
| | | 1 | 151-1398 | 3 | KIT-TERMINAL (LOCK) | |
| | | 1 | 199-6592 | 1 | BLOCK AS | |
| | | 1 | 1H-3244 | 2 | LOCKWASHER | |
| | | 1 | 6V-8185 | 2 | NUT (1/4-20-THD) | |
| | | 1 | 8T-4205 | 2 | WASHER-HARD (7.2X14.5X2-MM THK) | |
| | | 1 | 188-6254 | 1 | COVER | |
| | | 1 | 200-8789 | 1 | SEAL | |
| | | 1 | 197-7565 | 1 | KIT-RECEPTACLE (4-PIN) | |
| | | | | | (INCLUDES RECEPTACLE AS AND WEDGE) | |
| | | 1 | 214-4208 | 1 | RECEPTACLE AS (70-PIN) | |
| | | 1 | 245-7434 | 1 | PLUG GP-CONNECTOR | |
| | 40 | 1 | 235-5506 | 1 | HARNESS AS-LIGHTING (CAB FLOODLIGHTS) | |
| | | 1 | 155-2270 | 1 | KIT-CONNECTING PLUG (2-PIN) | |

# ELECTRICAL AND STARTING SYSTEM

## 262-9950 WIRING GP-CAB *(contd.)*

i02283986

| NOTE | REF NO | GRAPHIC REF | PART NUMBER | QTY | PART NAME 1 2 3 4 5 6 (PRODUCT LEVEL) | SEE PAGE |
|---|---|---|---|---|---|---|
| | 41 | 2 | 236-2525 | 1 | HARNESS AS-OPERATOR CONTROLS (ELECTROHYDRAULIC) | |
| | | 2 | 102-8803 | 1 | KIT-RECEPTACLE (3-PIN) | |
| | | | | | (INCLUDES RECEPTACLE AS AND WEDGE) | |
| | | 2 | 155-2255 | 1 | KIT-CONNECTING PLUG (12-PIN) | |
| | | 2 | 155-2260 | 1 | KIT-CONNECTING PLUG (3-PIN) | |
| | | 2 | 155-2270 | 1 | KIT-CONNECTING PLUG (2-PIN) | |
| | | 2 | 155-2274 | 1 | KIT-CONNECTING PLUG (6-PIN) | |
| | | | | | (EACH PLUG KIT INCLUDES PLUG AS AND WEDGE) | |
| | 42 | 2,3 | 236-4631 | 18 | BEZEL | |
| | 43 | 2 | 236-9993 | 1 | PLATE AS | |
| | 44 | 2 | 242-6099 | 1 | CLIP | |
| | 45 | 3 | 246-5459 | 1 | PLATE | |
| | 46 | 2 | 249-2763 | 2 | CONTROL GP-DISPLAY ELECTRONIC (INDICATOR PANEL, RH, LH) | |
| | | 2 | 1S-9593 | 1 | STRAP-CABLE | |
| | | 2 | 102-8801 | 1 | KIT-RECEPTACLE (12-PIN) | |
| | | 2 | 186-3735 | 1 | PIN-CONNECTOR (16-GA TO 18-GA) | |
| | 47 | 2 | 249-5602 | 2 | GUARD | |
| | 48 | 3 | 130-5300 | 1 | CLIP | |
| | 49 | 2,3 | 132-5789 | 3 | CLIP | |
| | 50 | 2 | 149-7738 | 1 | CLIP | |
| | 51 | 2 | 156-6175 | 1 | CLIP | |
| | 52 | 2,3 | 228-6089 | 15 | PLUG | |
| | 53 | 3 | 236-4608 | 1 | SWITCH AS-ROCKER (MODE SELECT) | |
| | 54 | 3 | 236-4609 | 1 | SWITCH AS-ROCKER (TMSN NEUTRALIZER OVERRIDE) | |
| | 55 | 3 | 236-4619 | 1 | SWITCH AS-ROCKER (LIFT, TILT KICKOUT) | |
| | 56 | 2 | 236-4622 | 1 | SWITCH AS-ROCKER (FINE MODULATION) | |
| | 57 | 2 | 251-1197 | 1 | SWITCH AS-ROCKER (HYDRAULIC LOCKOUT) | |
| | 58 | 2 | 2A-2677 | 1 | SPACER (0.75-IN THK) | |
| | 59 | 3 | 2H-3920 | 4 | LOCKWASHER | |
| | 60 | 1 | 102-8802 | 1 | KIT-RECEPTACLE (2-PIN) | |
| | | | | | (INCLUDES RECEPTACLE AS AND WEDGE) | |
| | 61 | 3 | 102-8803 | 1 | KIT-RECEPTACLE (3-PIN) | |
| | | | | | (INCLUDES RECEPTACLE AS AND WEDGE) | |
| | 62 | 2,3 | 102-8805 | 1 | KIT-RECEPTACLE (6-PIN) | |
| | | | | | (INCLUDES RECEPTACLE AS AND WEDGE) | |
| | 63 | 3 | 102-8806 | 1 | KIT-RECEPTACLE (8-PIN) | |
| | | | | | (INCLUDES RECEPTACLE AS AND WEDGE) | |
| | 64 | 2 | 102-8801 | 1 | KIT-RECEPTACLE (12-PIN) | |
| | | | | | (INCLUDES RECEPTACLE AS AND WEDGE) | |
| | 65 | 1 | 4B-2049 | 16 | NUT (10-32-THD) | |
| | 66 | 2 | 4D-7388 | 1 | CLIP | |
| | 67 | 2 | 4P-7581 | 1 | CLIP | |
| | 68 | 2,3 | 4S-1962 | 1 | CLIP | |
| M | 69 | 2 | 5C-7261 | 2 | NUT (M8X1.25-THD) | |
| M | 70 | 2 | 5C-8312 | 4 | NUT (M4X0.7-THD) | |
| | 71 | 2 | 5P-4116 | 1 | WASHER-HARD (8.8X20.5X2-MM THK) | |
| | 72 | 1 | 6D-1641 | 1 | CLIP | |
| | 73 | 1 | 6D-6146 | 8 | SCREW-MACHINE (10-32X1.25) | |
| | 74 | 2 | 6V-1889 | 1 | CLIP | |
| | 75 | 3 | 6V-2687 | 8 | SCREW-PAN HEAD (10-24X1-IN) | |
| | 76 | 1 | 6V-3265 | 4 | CLIP | |
| | 77 | 2 | 6V-5645 | 4 | SCREW-MACHINE (10-32X0.87-IN) | |
| M | 78 | 2 | 6V-9673 | 3 | SCREW-MACHINE (M5X0.8X12-MM) | |
| M | 79 | 2 | 8T-0337 | 4 | SCREW-MACHINE (M4X0.7X12-MM) | |
| | 80 | 1,2,3 | 8T-4121 | 20 | WASHER-HARD (11X21X2.5-MM THK) | |
| M | 81 | 2 | 8T-4133 | 1 | NUT (M10X1.5-THD) | |
| M | 82 | 1,2,3 | 8T-4137 | 13 | BOLT (M10X1.5X20-MM) | |
| M | 83 | 3 | 8T-4138 | 8 | BOLT (M6X1X20-MM) | |

## 262-9950 WIRING GP-CAB *(contd.)*

i02283986

| NOTE | REF NO | GRAPHIC REF | PART NUMBER | QTY | PART NAME 1 2 3 4 5 6 (PRODUCT LEVEL) | SEE PAGE |
|---|---|---|---|---|---|---|
| M | 84 | 3 | **8T-4171** | 1 | BOLT (M6X1X12-MM) | |
| M | 85 | 2 | **8T-4186** | 1 | BOLT (M10X1.5X40-MM) | |
| M | 86 | 3 | **8T-4191** | 5 | BOLT (M10X1.5X16-MM) | |
| M | 87 | 2 | **8T-4199** | 1 | BOLT (M8X1.25X12-MM) | |
| | 88 | 2,3 | **8T-4205** | 7 | WASHER-HARD (7.2X14.5X2-MM THK) | |
| | 89 | 1,2 | **8T-4223** | 5 | WASHER-HARD (13.5X25.5X3-MM THK) | |
| | 90 | 2 | **8T-4224** | 2 | WASHER-HARD (8.8X16X2-MM THK) | |
| M | 91 | 1,2 | **8T-4244** | 5 | NUT (M12X1.75-THD) | |
| M | 92 | 2 | **8T-4970** | 5 | BOLT (M6X1X14-MM) | |
| M | 93 | 2,3 | **8T-6870** | 8 | BOLT (M8X1.25X70-MM) | |
| | 94 | 1 | **9M-5870** | 8 | GROMMET | |
| | 95 | 2,3 | **9N-0869** | 8 | WASHER-HARD (8.8X25.5X2-MM THK) | |
| M | 96 | 1 | **9X-1046** | 6 | SCREW (M4X0.7X18-MM) | |
| M | 97 | 2 | **9X-2480** | 2 | BOLT (M6X1X45-MM) | |
| | 98 | 2 | **9X-6165** | 1 | WASHER (6.5X22X2.5-MM THK) | |
| | 99 | 2,3 | **9X-8256** | 6 | WASHER (6.6X12X2-MM THK) | |

M-METRIC PART
Y-SEPARATE ILLUSTRATION

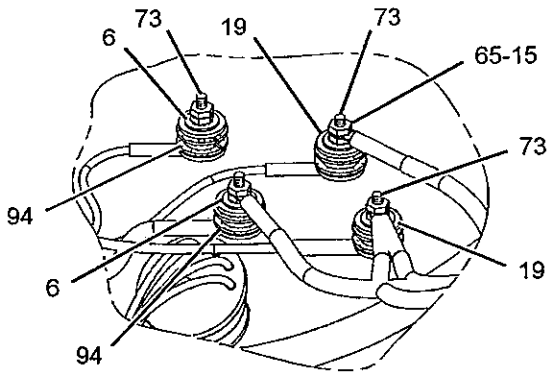


VIEW OF AREA H

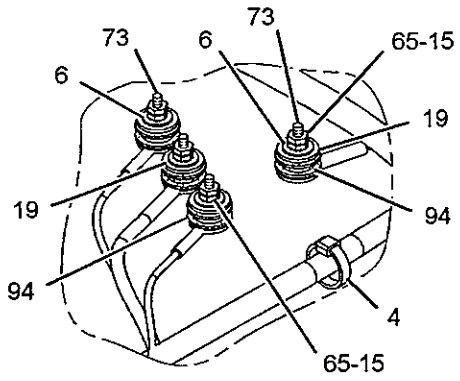


VIEW OF AREA B

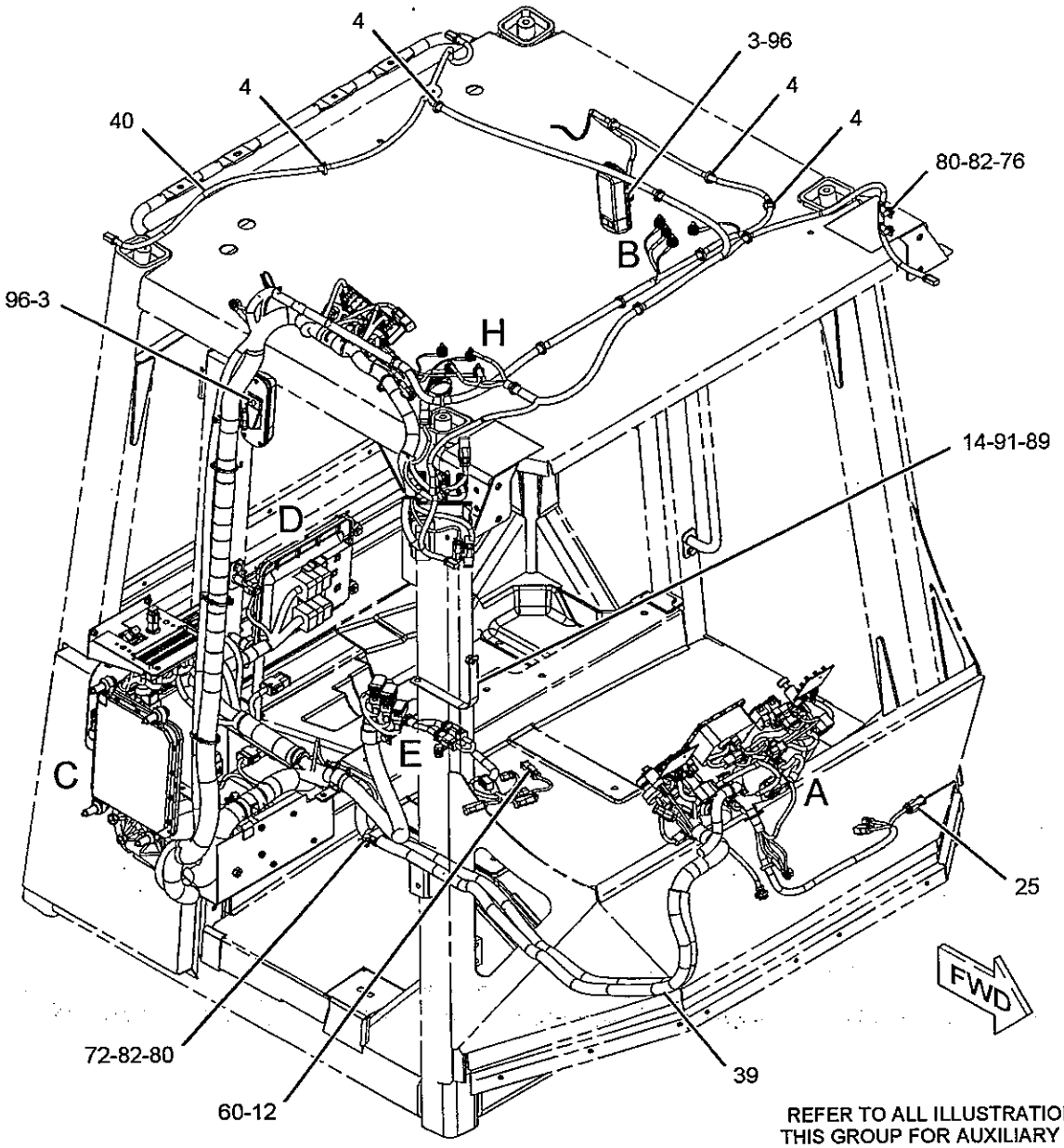


REFER TO ALL ILLUSTRATIONS OF THIS GROUP FOR AUXILIARY VIEWS

GRAPHIC #1

g01144869

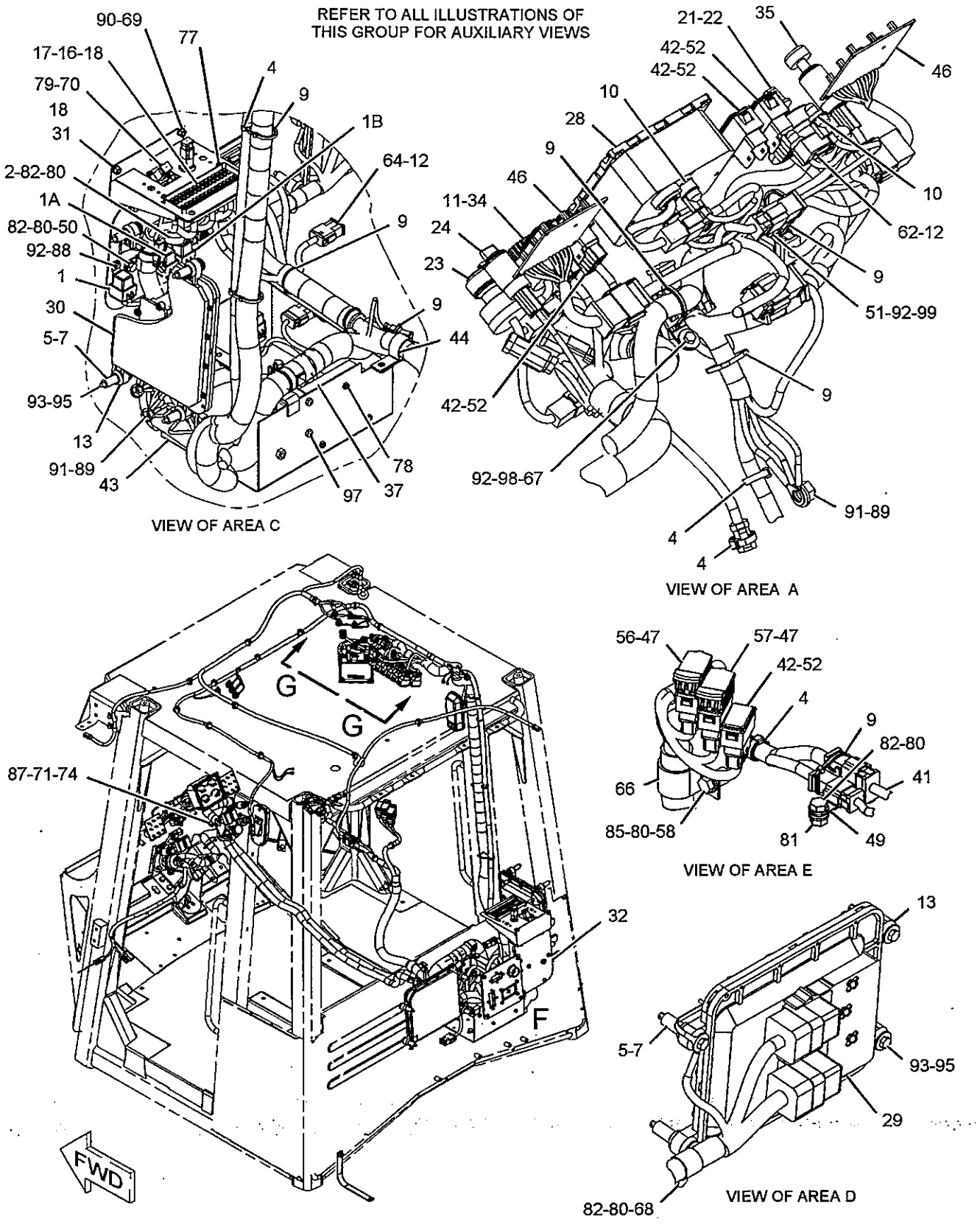


GRAPHIC #2 g01144871

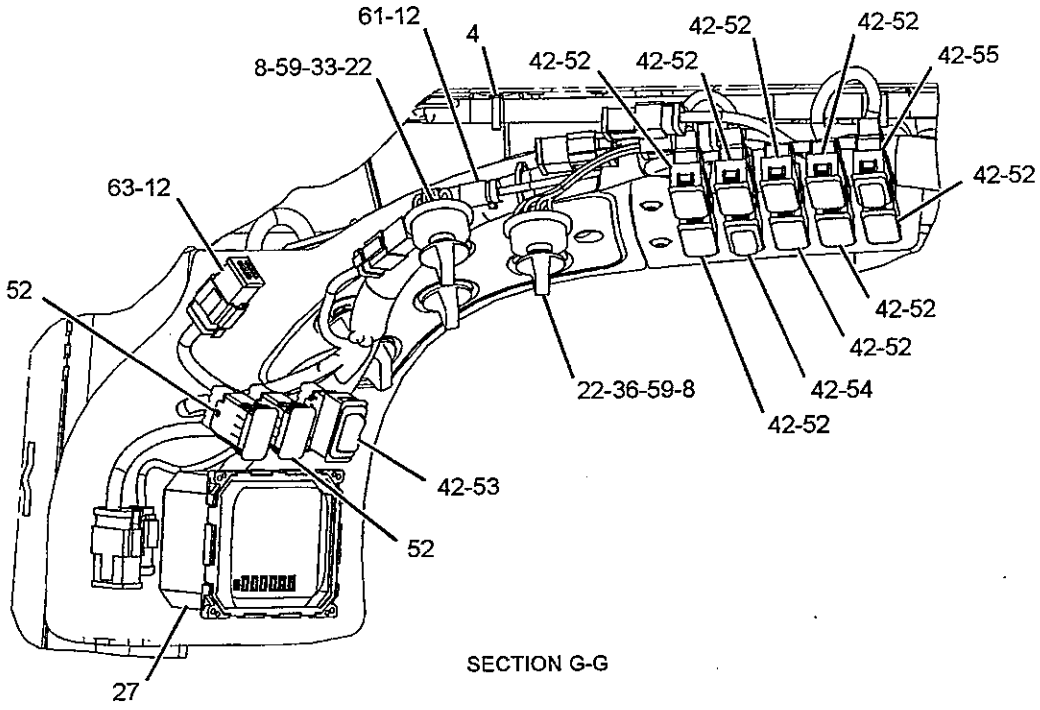


SECTION G-G

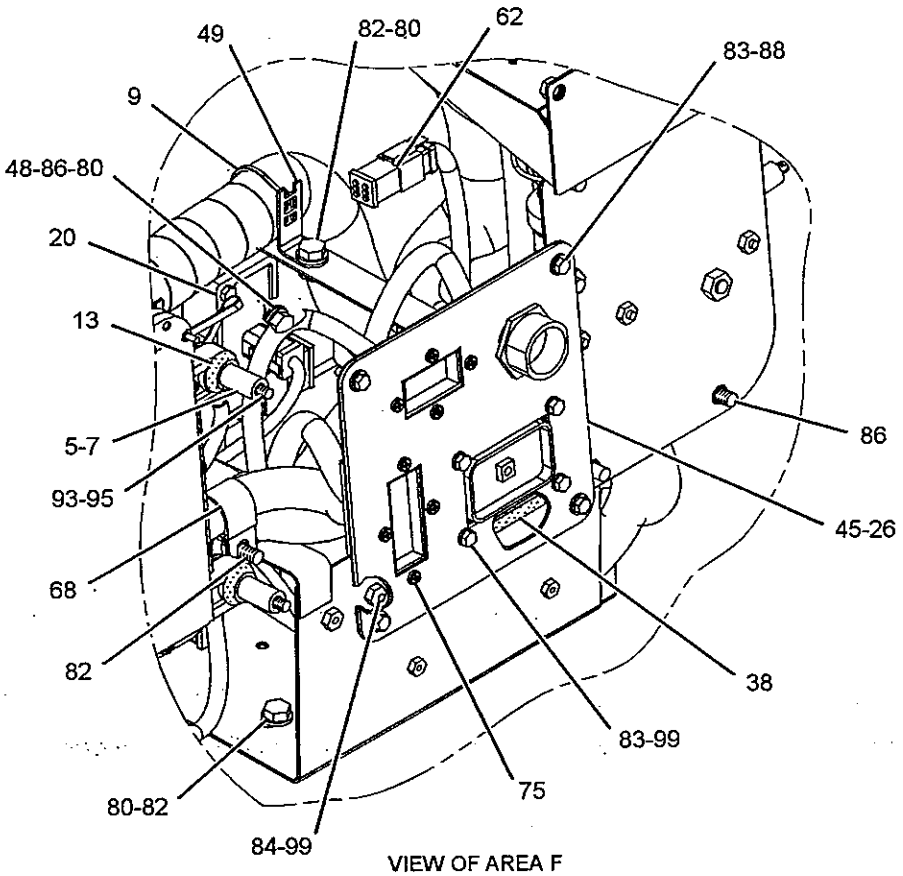


VIEW OF AREA F

GRAPHIC #3 **<END>** g01144872

# ELECTRICAL AND STARTING SYSTEM

## 232-4555 WIRING GP-CHASSIS

**S/N: JMS1-UP**

**PART OF 225-5539 ELECTRICAL AR**

**SMCS-1408** **i02275017**

| NOTE | REF NO | GRAPHIC REF | PART NUMBER | QTY | PART NAME 1 2 3 4 5 6 (PRODUCT LEVEL) | SEE PAGE |
|---|---|---|---|---|---|---|
| | 1 | 4 | 3E-5169 | 1 | GUARD-SWITCH (GROUND LEVEL SHUTDOWN) | |
| | 2 | 3 | 4E-6859 | 1 | BRACKET AS | |
| M | | 3 | 8T-3490 | 1 | NUT-WELD (M10X1.5-THD) | |
| | 3 | 1,2,3, 4 | 7K-1181 | 30 | STRAP-CABLE | |
| | 4 | 4 | 116-8247 | 1 | PLATE-INSTRUCTION | |
| | 5 | 4 | 118-6365 | 1 | PLATE AS | |
| | | 4 | 6V-6716 | 2 | RIVET-TRUSS HEAD | |
| | | 4 | 109-1645 | 1 | CLIP | |
| Y | 6 | 2 | 134-2252 | 1 | SENSOR GP-TEMPERATURE (HYDRAULIC OIL) | 220 |
| | 7 | 4 | 146-0240 | 1 | SWITCH GP-TOGGLE (HOOD TILT ACTUATOR) | |
| | | 4 | 3E-3371 | 1 | WEDGE-RECEPTACLE LOCK (3-PIN) | |
| | | | | | (INCLUDES RECEPTACLE & WEDGE) | |
| | | 4 | 6T-3631 | 2 | NUT-HEX (15/32-32-THD) | |
| | | 4 | 6T-3632 | 1 | LOCKWASHER | |
| | | 4 | 6T-3633 | 1 | RING-LOCKING | |
| | | 4 | 186-3735 | 3 | PIN-CONNECTOR (16-GA TO 18-GA) | |
| | | 4 | 102-8803 | 1 | KIT-RECEPTACLE (3-PIN) | |
| | | | | | (KIT INCLUDES RECEPTACLE AND WEDGE) | |
| | 8 | 3 | 158-6634 | 1 | SWITCH GP-TOGGLE (GROUND LEVEL SHUTDOWN) | |
| | | 3 | 3E-3377 | 1 | WEDGE-RECEPTACLE LOCK (4-PIN) | |
| | | 3 | 6T-3631 | 2 | NUT-HEX (15/32-32-THD) | |
| | | 3 | 6T-3632 | 1 | LOCKWASHER | |
| | | 3 | 6T-3633 | 1 | RING-LOCKING | |
| | | 3 | 186-3735 | 3 | PIN-CONNECTOR (16-GA TO 18-GA) | |
| | | 3 | 9G-3695 | 1 | PLUG (GROMMET SEALING) | |
| | | 3 | 102-8804 | 1 | KIT-RECEPTACLE (4-PIN) | |
| | | | | | (KIT INCLUDES RECEPTACLE & WEDGE) | |
| Y | 9 | 3 | 164-7577 | 1 | SWITCH GP-BYPASS (POWER TRAIN OIL FILTER) | 231 |
| | 10 | 4 | 172-4871 | 1 | CLAMP | |
| Y | 11 | 2 | 172-8660 | 1 | SWITCH GP-LIQUID LEVEL (HYDRAULIC OIL) | 234 |
| | 12 | 2 | 174-4312 | 1 | SWITCH AS-PRESSURE (PARKING BRAKE OIL) | |
| | | 2 | 102-8803 | 1 | KIT-RECEPTACLE (3-PIN) | |
| | | 2 | 3E-3371 | 1 | WEDGE-RECEPTACLE LOCK (3-PIN) | |
| D | | 2 | 5P-6008 | 1 | TUBE (0.2-M) | |
| | | 2 | 186-3735 | 1 | PIN-CONNECTOR (16-GA TO 18-GA) | |
| | 13 | 2 | 175-3244 | 1 | SWITCH AS-PRESSURE (SERVICE BRAKE OIL) | |
| | | 2 | 102-8803 | 1 | KIT-RECEPTACLE (3-PIN) | |
| | | 2 | 3E-3371 | 1 | WEDGE-RECEPTACLE LOCK (3-PIN) | |
| | | 2 | 5P-6008 | 2 | TUBE | |
| | | 2 | 186-3735 | 3 | PIN-CONNECTOR (16-GA TO 18-GA) | |
| | 14 | 4 | 184-6636 | 1 | PLATE-IDENTIFICATION (ENGINE SHUTOFF) | |
| | 15 | 2 | 191-8041 | 1 | ANGLE AS | |
| M | | 2 | 8T-3490 | 1 | NUT-WELD (M10X1.5-THD) | |
| Y | 16 | 3 | 194-6722 | 1 | SENSOR GP-PRESSURE (TURBOCHARGER INLET) | 209 |
| Y | 17 | 1 | 232-4568 | 1 | PANEL GP-CIRCUIT BREAKER | 194 |
| | 18 | 2 | 232-4570 | 1 | HARNESS AS-BRAKE | |
| | | 2 | 102-8801 | 1 | KIT-RECEPTACLE (12-PIN) | |
| | | | | | (KIT INCLUDES RECEPTACLE & WEDGE) | |
| | | 2 | 155-2260 | 1 | KIT-CONNECTING PLUG (3-PIN) | |
| | | | | | (KIT INCLUDES PLUG & WEDGE) | |
| | | 2 | 155-2274 | 1 | KIT-CONNECTING PLUG (6-PIN) | |
| | | | | | (KIT INCLUDES PLUG & WEDGE) | |
| | 19 | 3 | 232-4572 | 1 | HARNESS AS-HYDRAULIC TANK | |
| | | 3 | 102-8805 | 1 | KIT-RECEPTACLE (6-PIN) | |
| | | | | | (KIT INCLUDE RECEPTACLE & WEDGE) | |

# ELECTRICAL AND STARTING SYSTEM

## 232-4555 WIRING GP-CHASSIS *(contd.)* i02275017

| NOTE | REF NO | GRAPHIC REF | PART NUMBER | QTY | PART NAME 1 2 3 4 5 6 (PRODUCT LEVEL) | SEE PAGE |
|---|---|---|---|---|---|---|
| | | 3 | 155-2260 | 1 | KIT-CONNECTING PLUG (3-PIN) | |
| | | | | | (KIT INCLUDES PLUG & WEDGE) | |
| | | 3 | 155-2270 | 1 | KIT-CONNECTING PLUG (2-PIN) | |
| | | | | | (KIT INCLUDES PLUG & WEDGE) | |
| | 20 | 3 | 237-8366 | 1 | WIRE AS | |
| | 21 | 2,4 | 033-8248 | 2 | CLIP | |
| | 22 | 3 | 124-9633 | 2 | CLIP | |
| | 23 | 1,2,3,4 | 130-5300 | 14 | CLIP | |
| | 24 | 3 | 132-5789 | 2 | CLIP | |
| M | 25 | 4 | 133-7810 | 1 | STUD-TAPERLOCK | |
| | 26 | 2 | 174-5907 | 1 | CLIP | |
| | 27 | 1 | 189-3158 | 1 | SUPPRESSOR-ARC | |
| | 28 | 2 | 2M-9780 | 1 | SEAL-O-RING | |
| | 29 | 2,3 | 2T-3019 | 4 | CLIP | |
| | 30 | 1 | 3E-4353 | 2 | WASHER-HARD (11X25X3-MM THK) | |
| | 31 | 2,3 | 3J-1907 | 4 | SEAL-O-RING | |
| | 32 | 1,3 | 4D-7388 | 4 | CLIP | |
| | 33 | 3 | 4D-7794 | 2 | CLIP | |
| | 34 | 2,4 | 4D-9517 | 1 | CLIP | |
| | 35 | 1,2,3,4 | 4K-8864 | 12 | CLIP | |
| | 36 | 1,2 | 4P-7429 | 2 | CLIP | |
| | 37 | 1,4 | 4P-7581 | 2 | CLIP | |
| | 38 | 4 | 4S-1962 | 5 | CLIP | |
| | 39 | 4 | 4S-4455 | 1 | CLIP | |
| | 40 | 2,4 | 5P-9297 | 3 | CLIP | |
| | 41 | 4 | 6D-4244 | 1 | CLIP | |
| | 42 | 1,4 | 6V-1889 | 5 | CLIP | |
| | 43 | 1,4 | 8M-2770 | 4 | CLIP | |
| | 44 | 4 | 8M-2773 | 3 | CLIP | |
| | 45 | 1,2,3,4 | 8T-4121 | 52 | WASHER-HARD (11X21X2.5-MM THK) | |
| M | 46 | 4 | 8T-4133 | 1 | NUT (M10X1.5-THD) | |
| M | 47 | 1,2,3,4 | 8T-4136 | 5 | BOLT (M10X1.5X25-MM) | |
| M | 48 | 1,2,3,4 | 8T-4137 | 44 | BOLT (M10X1.5X20-MM) | |
| M | 49 | 2 | 8T-4195 | 4 | BOLT (M10X1.5X30-MM) | |
| | 50 | 3,4 | 8T-4223 | 2 | WASHER-HARD (13.5X25.5X3-MM THK) | |
| | 51 | 1 | 8T-4224 | 4 | WASHER-HARD (8.8X16X2-MM THK) | |
| M | 52 | 3,4 | 8T-4244 | 2 | NUT (M12X1.75-THD) | |
| M | 53 | 1 | 8T-7547 | 4 | BOLT (M8X1.25X30-MM) | |

D-ORDER BY THE METER
M-METRIC PART
Y-SEPARATE ILLUSTRATION

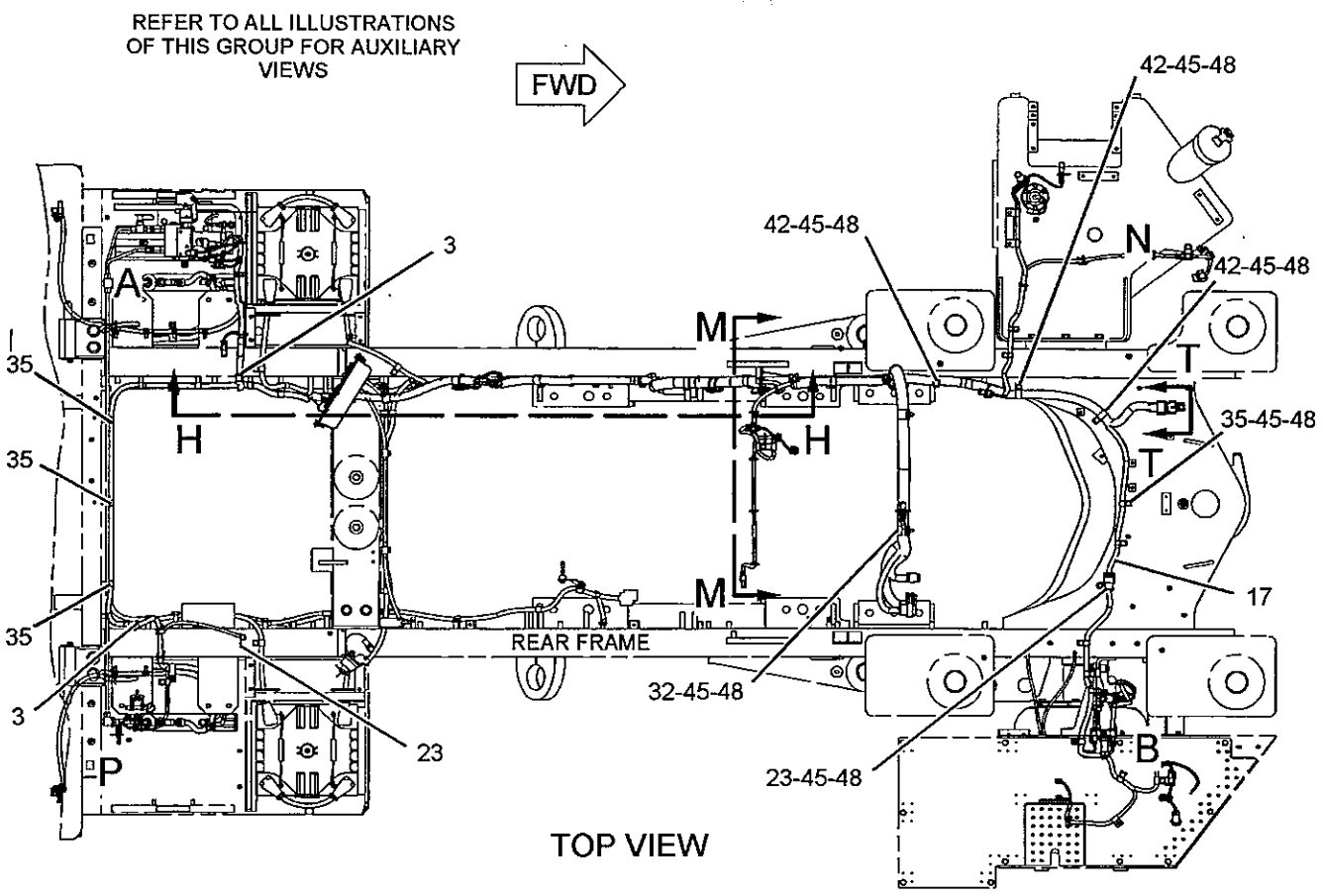


TOP VIEW

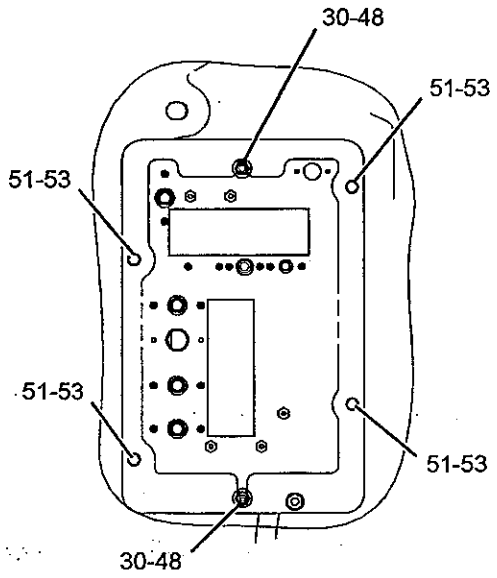


FRONT VIEW
(BREAKER PANEL)

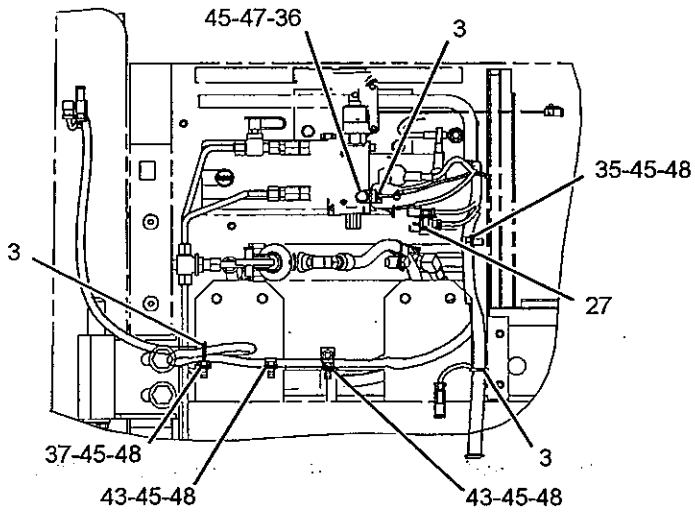


VIEW OF AREA A

GRAPHIC #1 g01142870

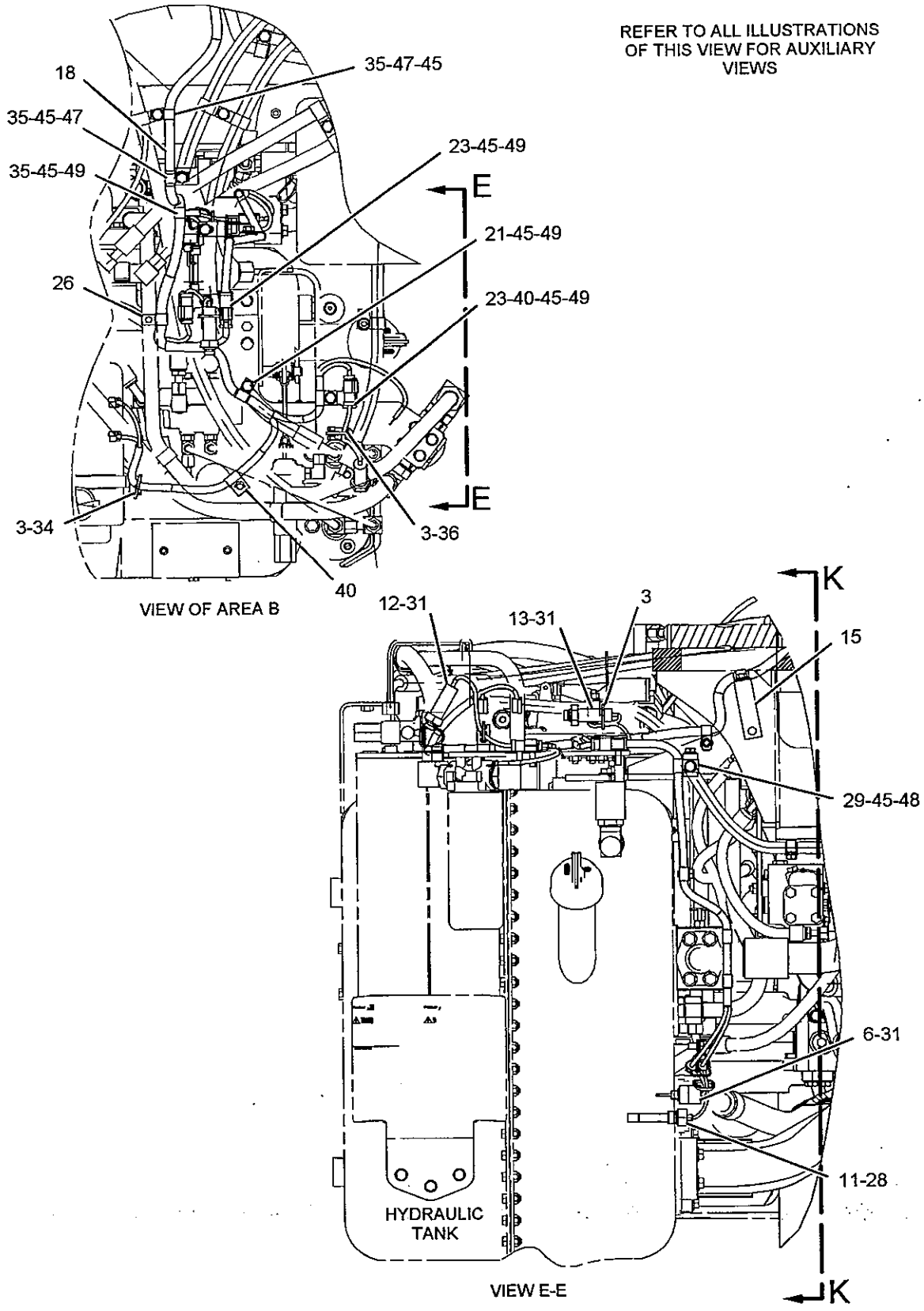


GRAPHIC #2 g01145293

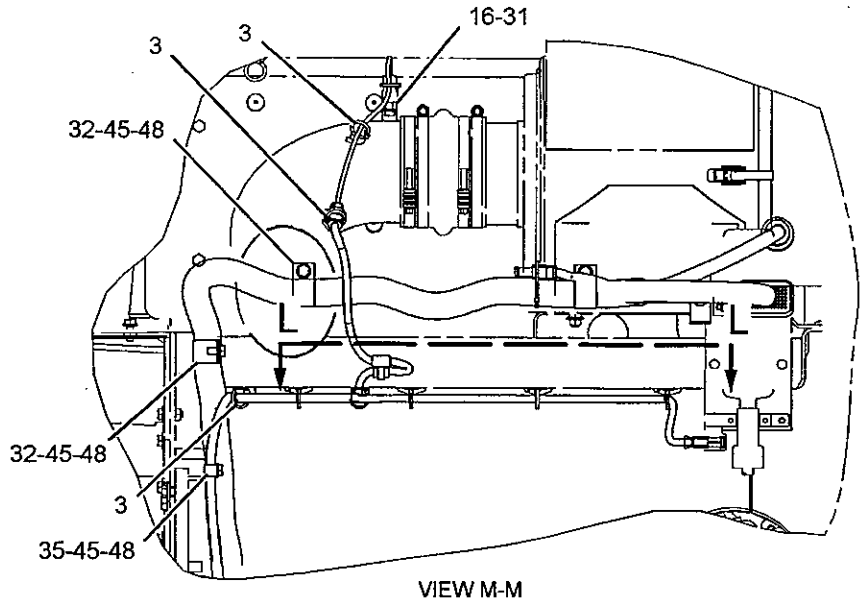


VIEW M-M

REFER TO ALL ILLUSTRATIONS OF THIS GROUP FOR AUXILIARY VIEWS

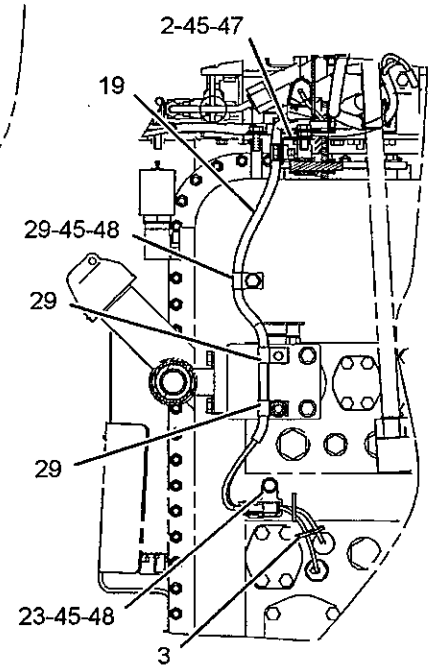


VIEW K-K

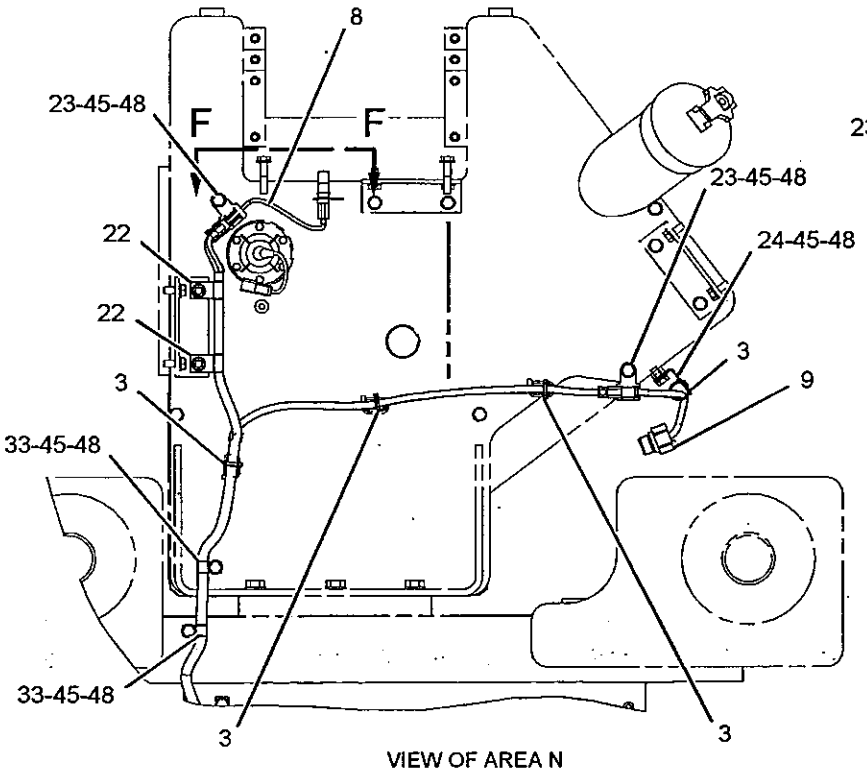


VIEW OF AREA N

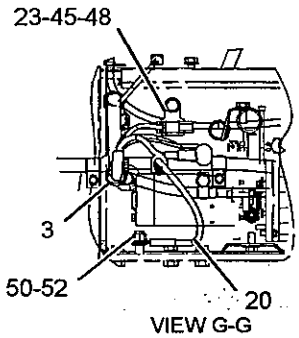


VIEW G-G

GRAPHIC #3 g01145294

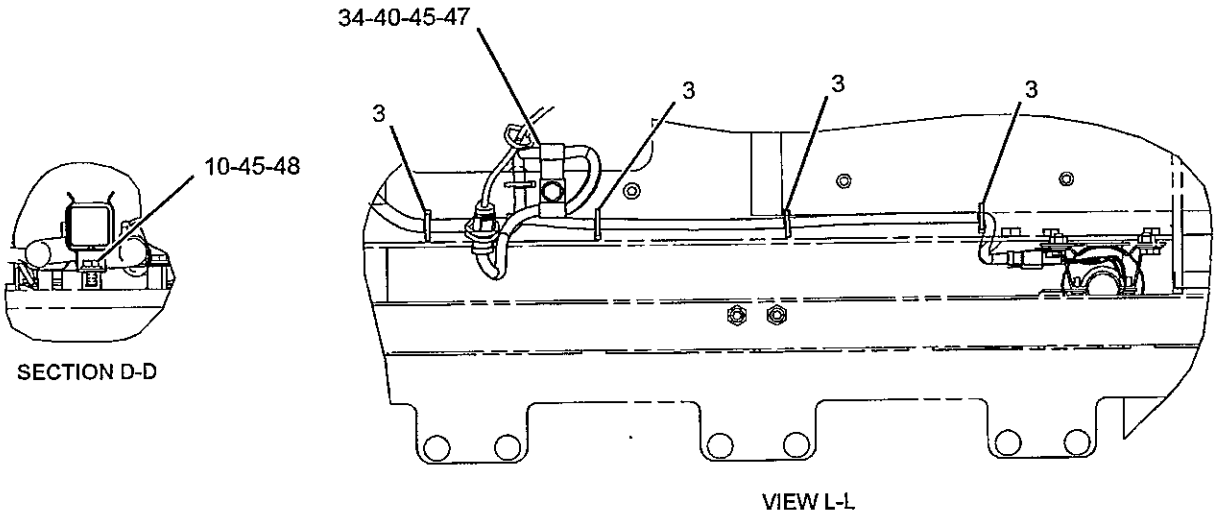


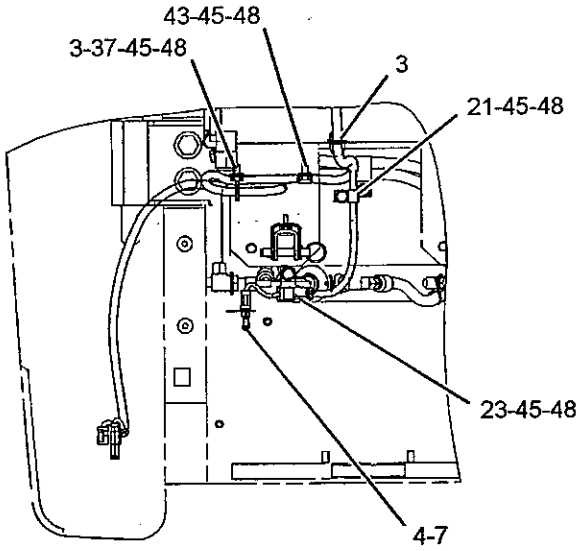


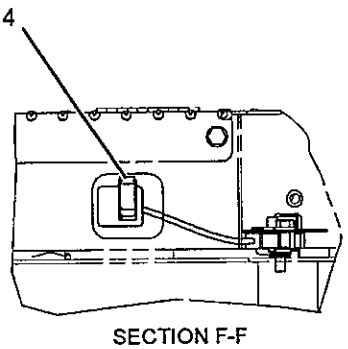


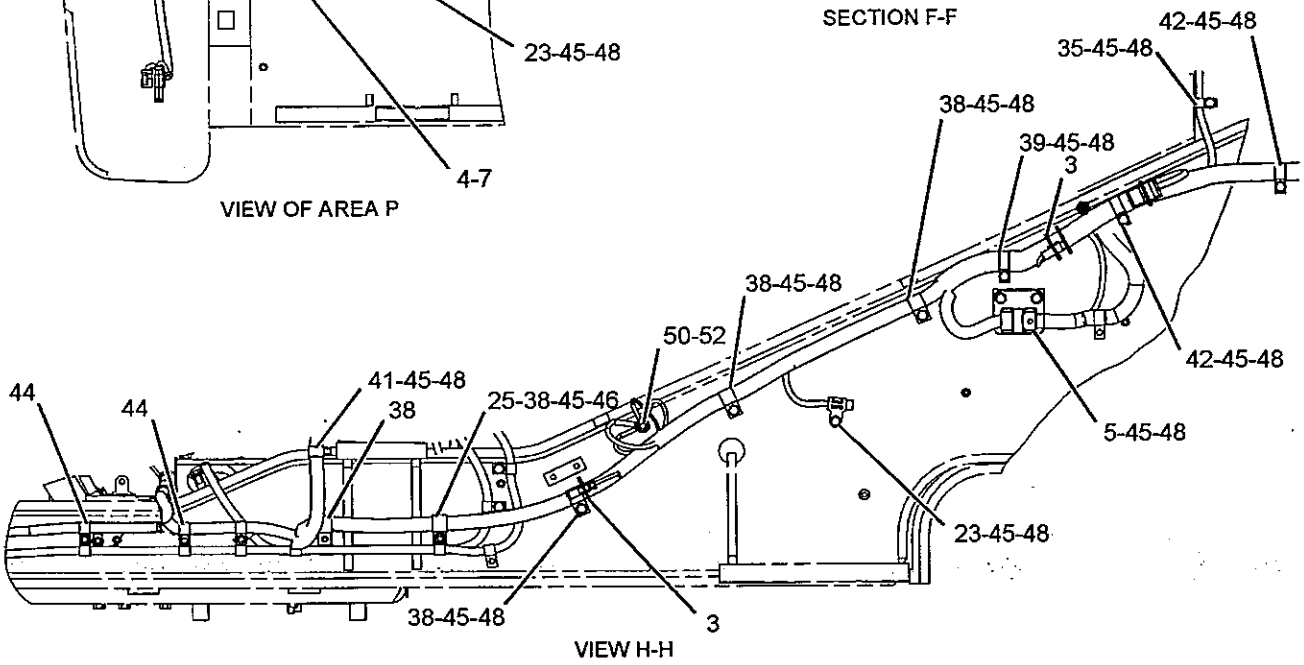


GRAPHIC #4 **<END>** g01143233

# *175-4207* WIRING GP-ELECTROHYDRAULIC

S/N: JMS1-UP

PART OF 206-9057, 206-9058, 206-9059, 206-9060 VALVE & MTG GP-MAIN CONTROL ALSO AN ATTACHMENT

SMCS-5734 i02156881

| NOTE | REF NO | GRAPHIC REF | PART NUMBER | QTY | PART NAME 1 2 3 4 5 6 (PRODUCT LEVEL) | SEE PAGE |
|---|---|---|---|---|---|---|
| M | 1 | 1 | 8T-4195 | 2 | BOLT (M10X1.5X30-MM) | |
| | 2 | 1 | 7K-1181 | 5 | STRAP-CABLE | |
| C | 3 | 1 | 238-5643 | 1 | HARNESS AS | |
| | | 1 | 102-8802 | 2 | KIT-RECEPTACLE (2-PIN) | |
| | | 1 | 102-8801 | 1 | KIT-RECEPTACLE (12-PIN) | |
| | | | | | (EACH KIT-RECEPTACLE INCLUDES RECEPTACLE AS AND WEDGE) | |
| | | 1 | 8T-8737 | 8 | PLUG-SEAL | |
| | | 1 | 155-2270 | 7 | KIT-CONNECTING PLUG (2-PIN) | |
| | | | | | (EACH KIT-CONNECTING PLUG INCLUDES PLUG AS AND WEDGE) | |
| | 4 | 1 | 130-5300 | 2 | CLIP | |
| | 5 | 1 | 4D-9517 | 1 | CLIP | |
| | 6 | 1 | 174-5907 | 1 | CLIP | |
| | 7 | 1 | 8T-4121 | 4 | WASHER-HARD (11X21X2.5-MM THK) | |
| M | 8 | 1 | 8T-4137 | 2 | BOLT (M10X1.5X20-MM) | |

C-CHANGE FROM PREVIOUS TYPE
M-METRIC PART

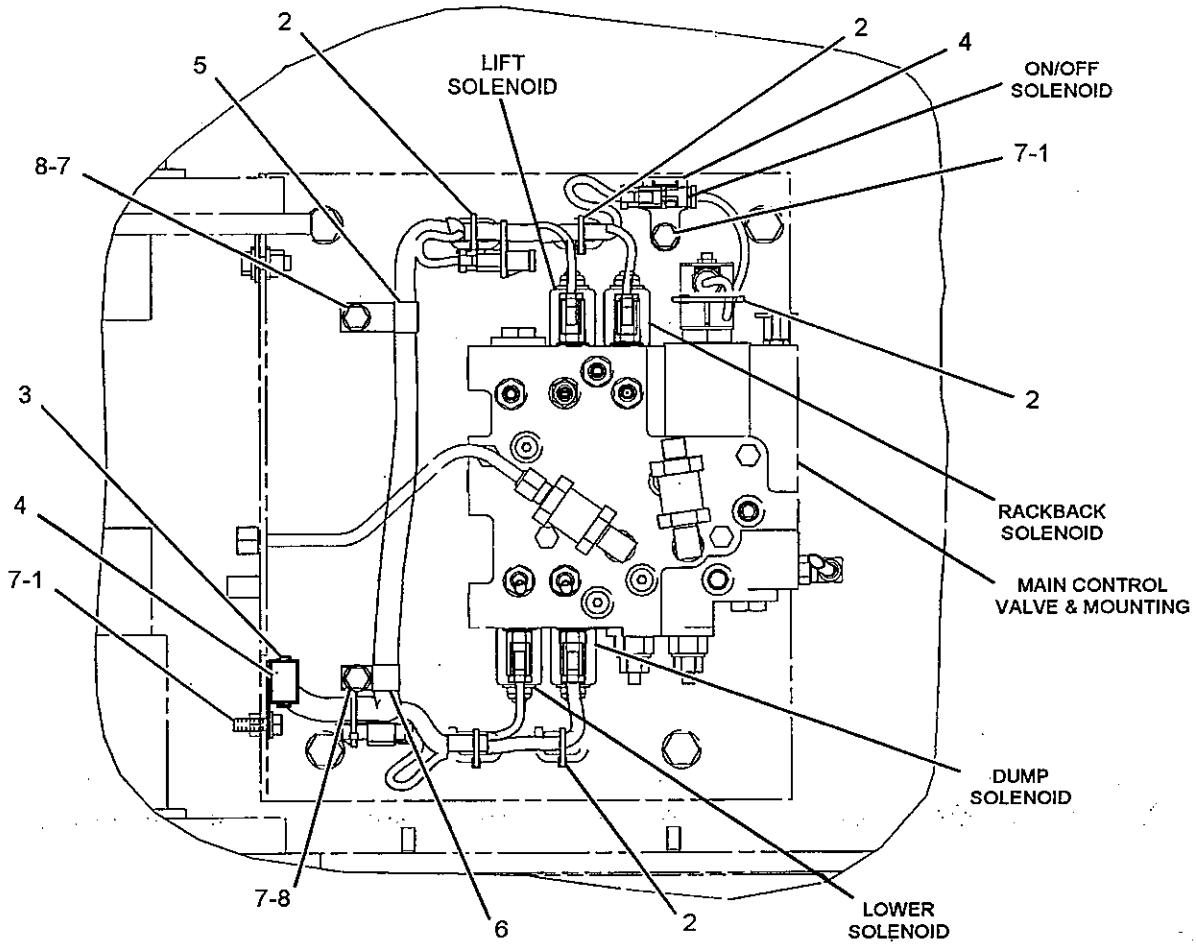


GRAPHIC #1 **<END>** g01100257

# ELECTRICAL AND STARTING SYSTEM

## *232-4521* WIRING GP-ENGINE

**S/N: JMS1-UP**

**PART OF 225-5539 ELECTRICAL AR**

**SMCS-1403, 1408** **i02281680**

| NOTE | REF NO | GRAPHIC REF | PART NUMBER | QTY | PART NAME 1 2 3 4 5 6 (PRODUCT LEVEL) | SEE PAGE |
|---|---|---|---|---|---|---|
| | 1 | 1 | 7K-1181 | 9 | STRAP-CABLE | |
| | 2 | 1 | 262-6019 | 1 | BRACKET AS | |
| M | | 1 | 8T-3490 | 1 | NUT-WELD (M10X1.5-THD) | |
| | 3 | 1 | 118-6878 | 1 | BRACKET AS | |
| M | | 1 | 8T-3490 | 1 | NUT-WELD (M10X1.5-THD) | |
| Y | 4 | 1 | 118-7226 | 1 | SENSOR GP-TEMPERATURE (TORQUE CONVERTER OIL) | 219 |
| | 5 | 1 | 124-3019 | 1 | BRACKET AS | |
| M | | 1 | 8T-3490 | 1 | NUT-WELD (M10X1.5-THD) | |
| | 6 | 1 | 192-5017 | 1 | BRACKET AS | |
| M | | 1 | 8T-3490 | 1 | NUT-WELD (M10X1.5-THD) | |
| | 7 | 1 | 197-6453 | 1 | BRACKET AS | |
| M | | 1 | 8T-3490 | 1 | NUT-WELD (M10X1.5-THD) | |
| | 8 | 1 | 232-4561 | 1 | HARNESS AS-ENGINE | |
| | | 1 | 160-7689 | 1 | PLUG AS-CONNECTOR (70-PIN) | |
| | | 1 | 155-2270 | 6 | KIT-CONNECTING PLUG (2-PIN) | |
| | | 1 | 155-2260 | 1 | KIT-CONNECTING PLUG (3-PIN) | |
| | | | | | (EACH KIT INCLUDES PLUG AS AND WEDGE) | |
| | | 1 | 102-8802 | 5 | KIT-RECEPTACLE (2-PIN) | |
| | | | | | (EACH KIT INCLUDES RECEPTACLE AS AND WEDGE) | |
| | | 1 | 127-5486 | 1 | RECEPTACLE AS (1-PIN) | |
| | | 1 | 3S-2093 | 2 | STRAP-CABLE | |
| | | 1 | 7K-1181 | 2 | STRAP-CABLE | |
| | 9 | 1 | 236-6560 | 1 | CABLE AS | |
| | | 1 | 030-1712 | 1 | TERMINAL-RING (FOR 1/4-IN BOLT) | |
| E | | 1 | 8C-0596 | | CABLE (02-GA) (78-CM) | |
| | 10 | 1 | 033-8248 | 1 | CLIP | |
| | 11 | 1 | 124-1479 | 2 | CLIP | |
| | 12 | 1 | 130-5300 | 3 | CLIP | |
| | 13 | 1 | 132-5789 | 2 | CLIP | |
| | 14 | 1 | 137-6722 | 2 | CLIP | |
| | 17 | 1 | 3J-1907 | 1 | SEAL-O-RING | |
| | 18 | 1 | 4D-7794 | 1 | CLIP | |
| | 19 | 1 | 4D-8123 | 1 | CLIP | |
| | 20 | 1 | 4K-8864 | 1 | CLIP | |
| | 21 | 1 | 4L-6454 | 1 | BOLT (3/8-16X1-IN) | |
| | 22 | 1 | 4P-7581 | 2 | CLIP | |
| | 23 | 1 | 5M-3062 | 1 | BOLT (3/8-16X0.75-IN) | |
| | 24 | 1 | 6D-4244 | 3 | CLIP | |
| | 25 | 1 | 6V-8801 | 1 | NUT (3/8-16-THD) | |
| | 26 | 1 | 7N-3718 | 1 | CLIP | |
| | 27 | 1 | 7X-0343 | 1 | BOLT (5/8-11X1.25-IN) | |
| | 28 | 1 | 7X-7729 | 1 | WASHER (11X25X3-MM THK) | |
| | 29 | 1 | 8M-2773 | 1 | CLIP | |
| | 30 | 1 | 8T-4121 | 8 | WASHER-HARD (11X21X2.5-MM THK) | |
| | 31 | 1 | 8T-4122 | 2 | WASHER-HARD (17X32X3.5-MM THK) | |
| M | 32 | 1 | 8T-4136 | 4 | BOLT (M10X1.5X25-MM) | |
| M | 33 | 1 | 8T-4137 | 2 | BOLT (M10X1.5X20-MM) | |
| | 34 | 1 | 8T-4896 | 1 | WASHER-HARD (10.2X18.5X2.5-MM THK) | |
| M | 35 | 1 | 8T-4133 | 1 | NUT (M10X1.5-THD) | |
| | 36 | 1 | 7X-0349 | 1 | BOLT (5/8-11X3-IN) | |
| | 37 | 1 | 5C-2082 | 1 | SPACER (17X20X45-MM THK) | |

E-ORDER BY THE CENTIMETER
M-METRIC PART
Y-SEPARATE ILLUSTRATION

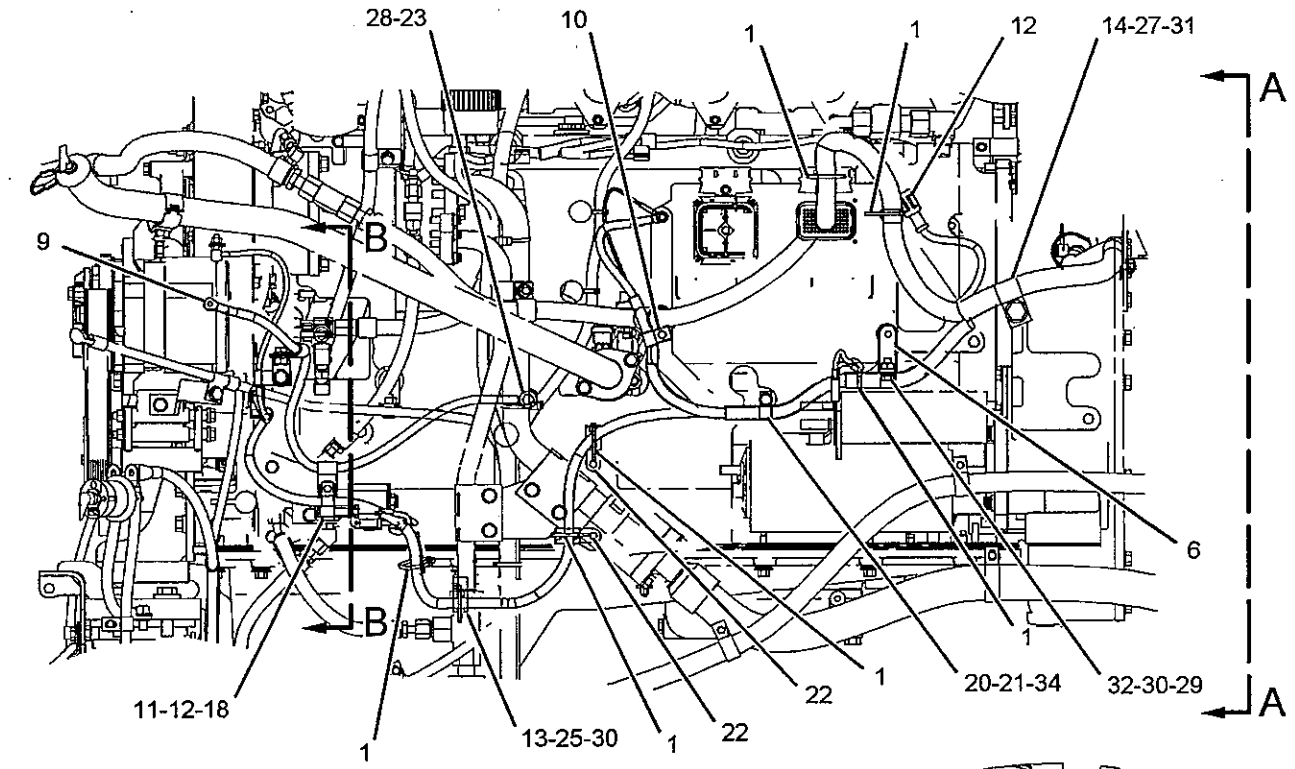


RIGHT SIDE VIEW
(ENGINE)

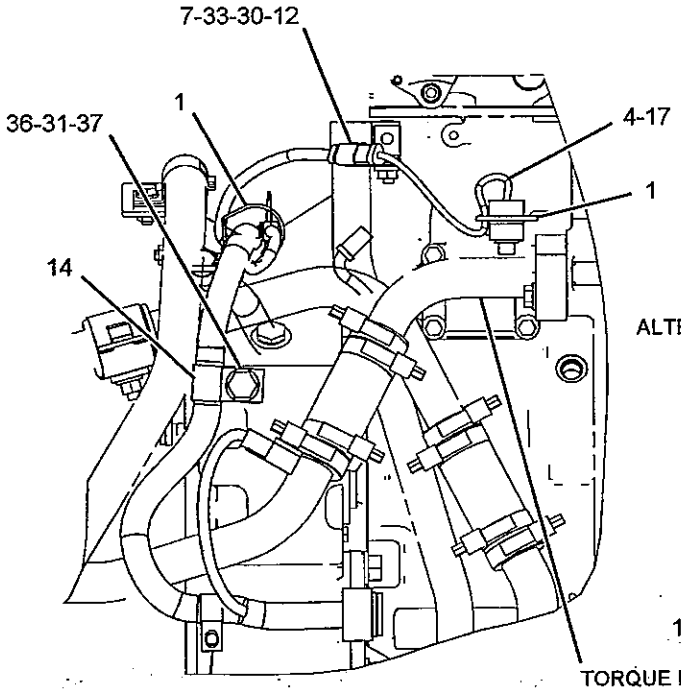


LEFT SIDE VIEW
(ENGINE)

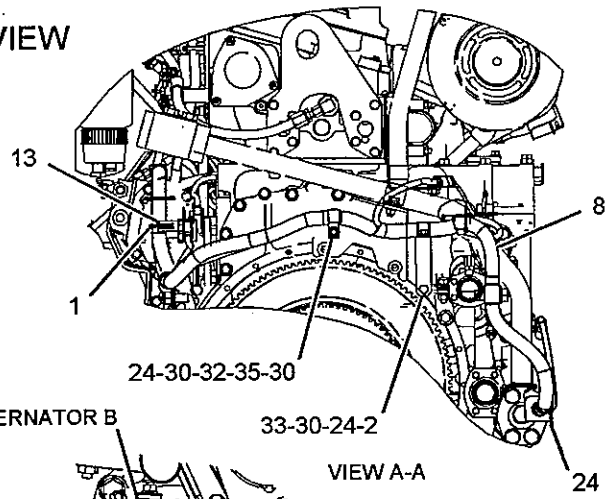


VIEW A-A

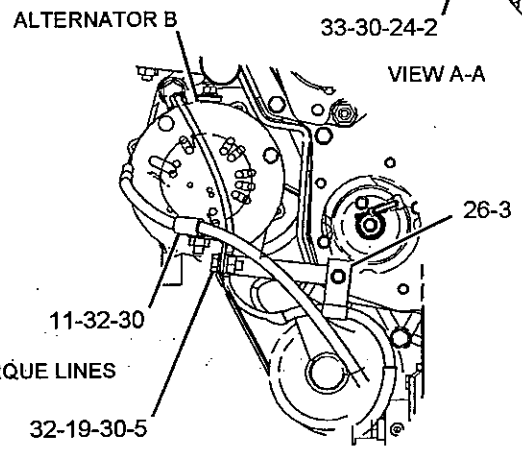


SECTION B-B

GRAPHIC #1 **<END>** g01143724

# 243-1547 WIRING GP-ENGINE

S/N: LHX1-UP

PART OF 225-0992 ENGINE AR-COMPLETE

SMCS-1403, 1408

i02224350

| NOTE | REF NO | GRAPHIC REF | PART NUMBER | QTY | PART NAME 1 2 3 4 5 6 (PRODUCT LEVEL) | SEE PAGE |
|---|---|---|---|---|---|---|
| | 1 | 1 | 3S-2093 | 25 | STRAP-CABLE | |
| | 3 | 1 | 239-5929 | 1 | HARNESS AS-ENGINE | |
| | | 1 | 102-8802 | 1 | KIT-RECEPTACLE (2-PIN) | |
| | | | | | (INCLUDES RECEPTACLE AS AND WEDGE) | |
| | | 1 | 102-8803 | 1 | KIT-RECEPTACLE (3-PIN) | |
| | | | | | (INCLUDES RECEPTACLE AS AND WEDGE) | |
| | | 1 | 8T-8737 | 80 | PLUG-SEAL | |
| | | 1 | 155-2255 | 1 | KIT-CONNECTING PLUG (12-PIN) | |
| | | | | | (INCLUDES PLUG AS AND WEDGE) | |
| | | 1 | 155-2265 | 1 | KIT-CONNECTING PLUG (8-PIN) | |
| | | | | | (INCLUDES PLUG AS AND WEDGE) | |
| | | 1 | 155-2260 | 1 | KIT-CONNECTING PLUG (3-PIN) | |
| | | | | | (INCLUDES PLUG AS AND WEDGE) | |
| | | 1 | 155-2270 | 1 | KIT-CONNECTING PLUG (2-PIN) | |
| | | | | | (INCLUDES PLUG AS AND WEDGE) | |
| | | 1 | 227-4002 | 1 | PLUG AS-CONNECTOR (108-PIN) | |
| | 4 | 1 | 0S-0509 | 2 | BOLT (3/8-16X0.75-IN) | |
| | 5 | 1 | 0S-1576 | 2 | BOLT (5/8-18X2-IN) | |
| | 6 | 1 | 104-6202 | 2 | CLIP | |
| | 7 | 1 | 132-5789 | 6 | CLIP | |
| | 8 | 1 | 1A-4273 | 1 | BOLT (5/8-18X1.25-IN) | |
| | 9 | 1 | 3B-1915 | 1 | BOLT (3/8-16X1.75-IN) | |
| | 10 | 1 | 4P-7429 | 1 | CLIP | |
| | 11 | 1 | 4P-7581 | 1 | CLIP | |
| | 12 | 1 | 4P-7582 | 1 | CLIP | |
| | 13 | 1 | 4P-8134 | 4 | CLIP | |
| | 14 | 1 | 5M-2894 | 3 | WASHER-HARD (10.2X18.5X2.5-MM THK) | |
| | 15 | 1 | 5P-8247 | 3 | WASHER-HARD (17X32X3.5-MM THK) | |
| | 16 | 1 | 8T-4223 | 1 | WASHER-HARD (13.5X25.5X3-MM THK) | |

*243-1547* **WIRING GP-ENGINE** *(contd.)* **i02224350**

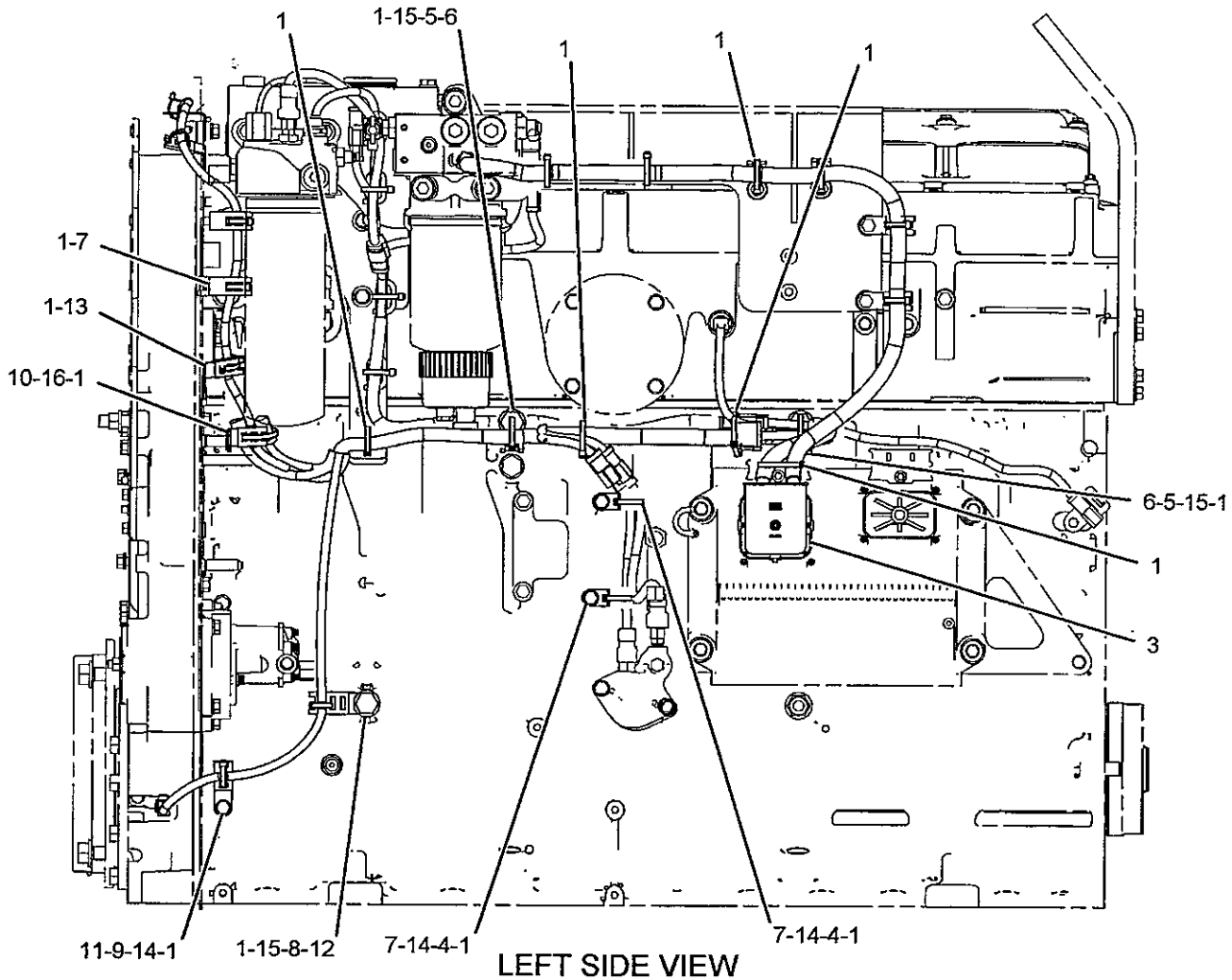


LEFT SIDE VIEW

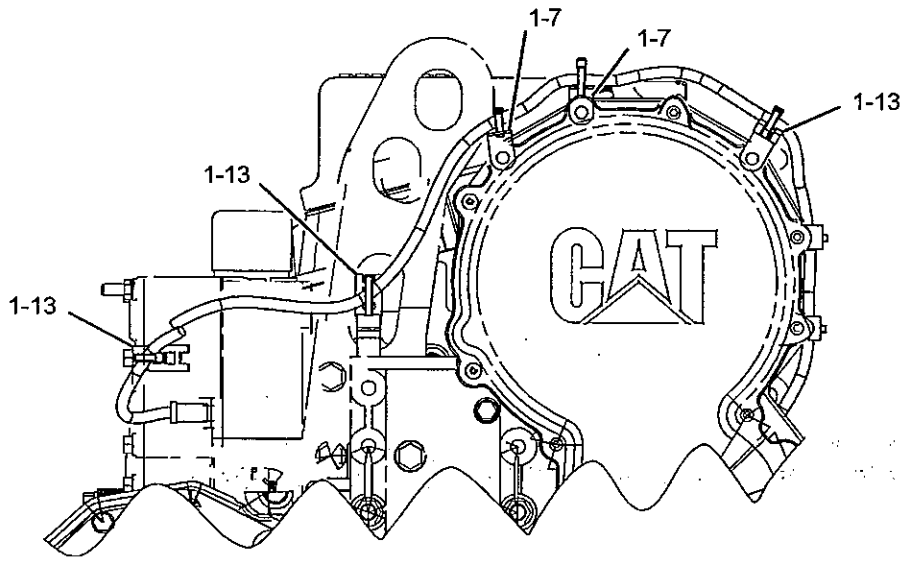


FRONT VIEW

GRAPHIC #1

**<END>**

g01126572

# ELECTRICAL AND STARTING SYSTEM

## 232-4522 WIRING GP-FRONT

**S/N: JMS1-UP**

**PART OF 225-5539 ELECTRICAL AR**

**SMCS-5734** **i02281705**

| NOTE | REF NO | GRAPHIC REF | PART NUMBER | QTY | PART NAME 1 2 3 4 5 6 (PRODUCT LEVEL) | SEE PAGE |
|---|---|---|---|---|---|---|
| | 1 | 1 | **5V-6152** | 4 | CLAMP | |
| | 2 | 1 | **5V-6153** | 2 | PLATE-COVER | |
| | 3 | 1,2 | **7K-1181** | 7 | STRAP-CABLE | |
| | 4 | 1 | **7V-5515** | 2 | SPACER (11X26.7X12-MM THK) | |
| | 6 | 1 | **232-4562** | 1 | HARNESS AS-FRONT CHASSIS | |
| | | 1 | **102-8802** | 3 | KIT-RECEPTACLE (2-PIN) | |
| | | 1 | **102-8803** | 2 | KIT-RECEPTACLE (3-PIN) | |
| | | 1 | **102-8804** | 3 | KIT-RECEPTACLE (4-PIN) | |
| | | | | | (EACH KIT INCLUDES RECEPTACLE AS AND WEDGE) | |
| | | 1 | **7K-1181** | 1 | STRAP-CABLE | |
| | | 1 | **8T-8737** | 44 | PLUG-SEAL | |
| | | 1 | **9X-0141** | 1 | PLUG AS-CONNECTOR (40-PIN) | |
| | | 1 | **155-2255** | 3 | KIT-CONNECTING PLUG (12-PIN) | |
| | | 1 | **155-2260** | 2 | KIT-CONNECTING PLUG (3-PIN) | |
| | | 1 | **155-2270** | 2 | KIT-CONNECTING PLUG (2-PIN) | |
| | | 1 | **155-2271** | 3 | KIT-CONNECTING PLUG (4-PIN) | |
| | | | | | (EACH KIT INCLUDES PLUG AS AND WEDGE) | |
| | 8 | 1 | **4P-7428** | 2 | CLIP | |
| | 9 | 1 | **129-9959** | 1 | CLAMP | |
| | 10 | 1,2 | **130-5300** | 6 | CLIP | |
| | 11 | 2 | **1S-0994** | 1 | CLIP | |
| | 12 | 2 | **5P-9297** | 1 | CLIP | |
| | 13 | 1 | **6D-4244** | 4 | CLIP | |
| | 15 | 1,2 | **8M-2770** | 11 | CLIP | |
| | 16 | 1,2 | **8M-2773** | 5 | CLIP | |
| M | 17 | 1 | **8T-3844** | 4 | BOLT (M6X1X70-MM) | |
| | 18 | 1,2 | **8T-4121** | 27 | WASHER-HARD (11X21X2.5-MM THK) | |
| M | 19 | 1,2 | **8T-4133** | 2 | NUT (M10X1.5-THD) | |
| M | 20 | 1,2 | **8T-4137** | 23 | BOLT (M10X1.5X20-MM) | |
| M | 21 | 1 | **8T-4195** | 2 | BOLT (M10X1.5X30-MM) | |
| | 22 | 1,2 | **9M-8406** | 2 | CLIP | |
| | 23 | 1 | **9X-8256** | 4 | WASHER (6.6X12X2-MM THK) | |

M-METRIC PART

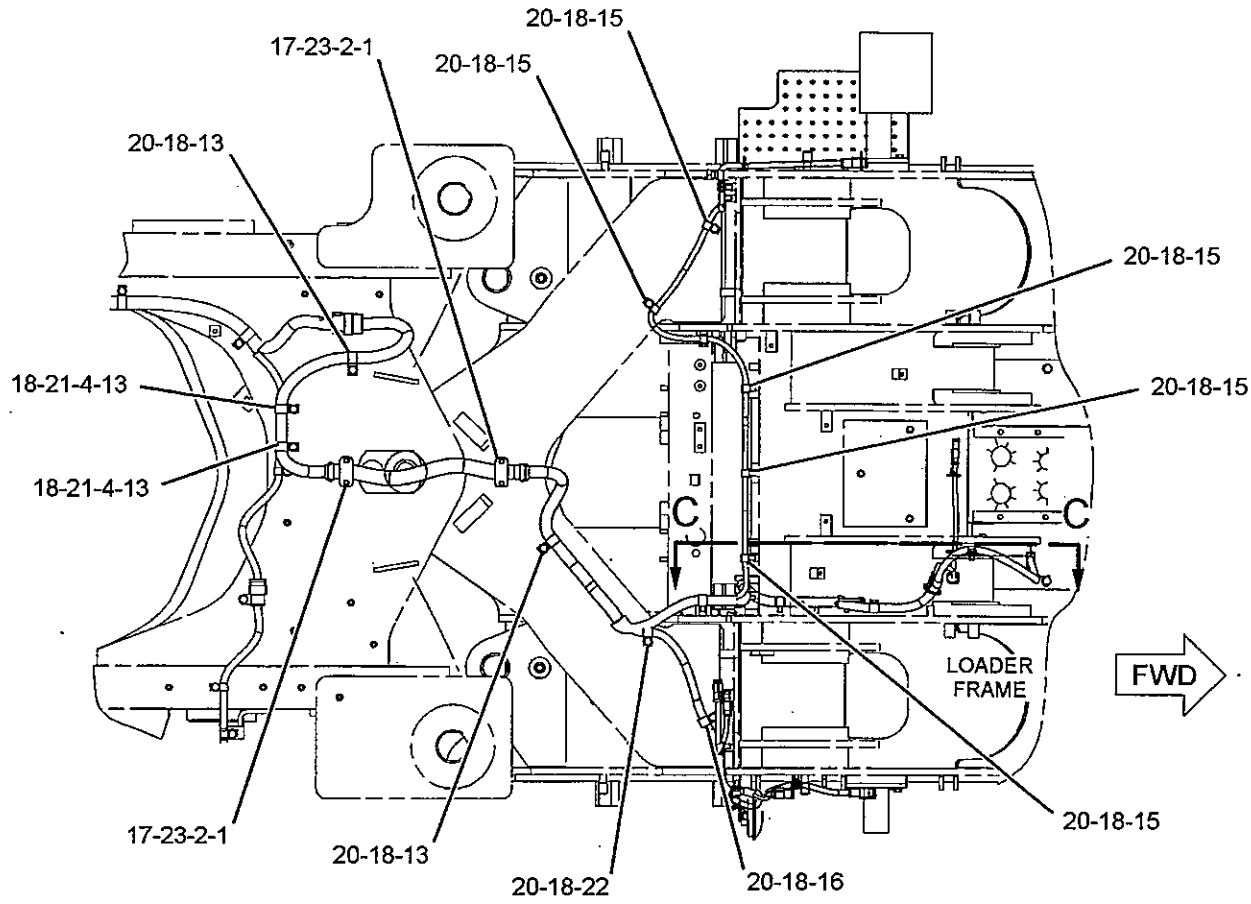


TOP VIEW

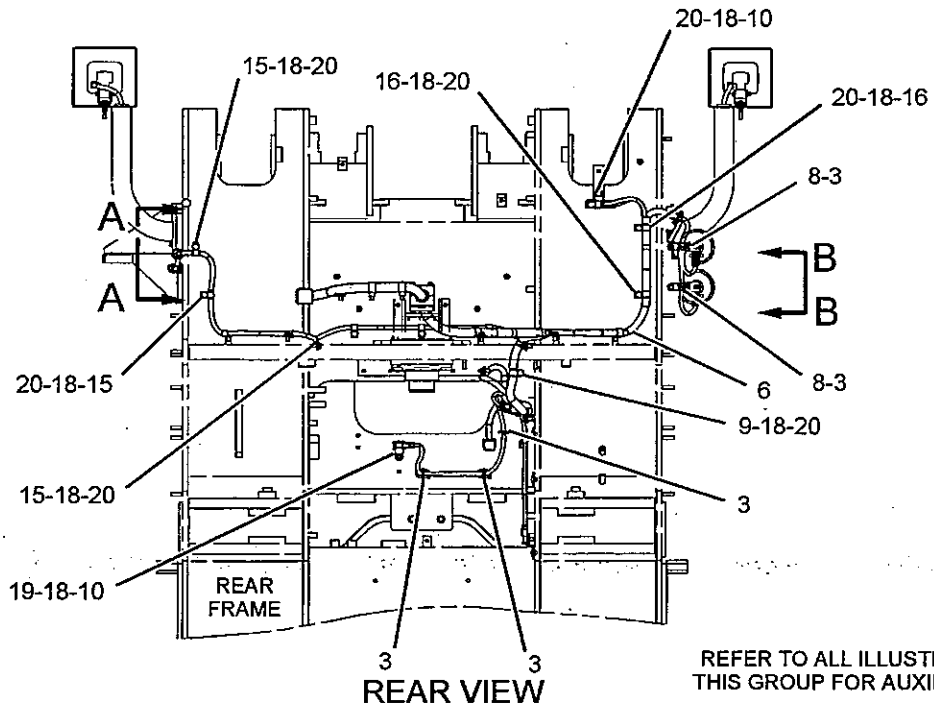


REAR VIEW

REFER TO ALL ILLUSTRATIONS OF THIS GROUP FOR AUXILIARY VIEWS

GRAPHIC #1 g01142553

232-4522 **WIRING GP-FRONT** *(contd.)* i02281705

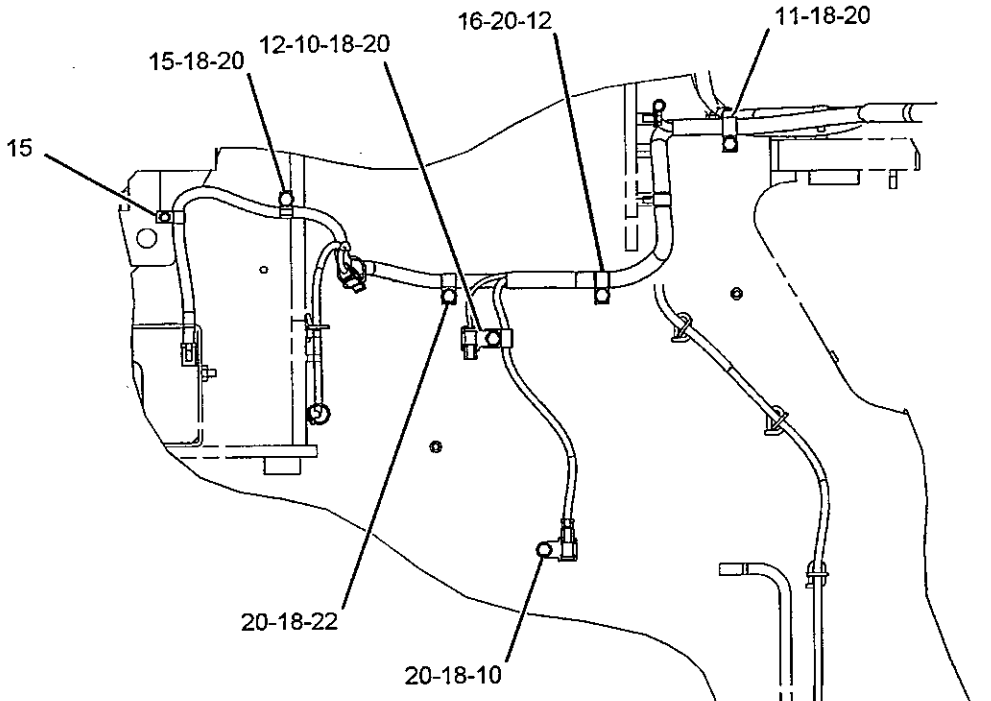


SECTION C-C

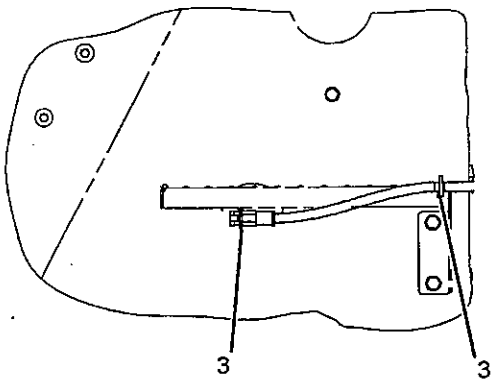


SECTION A-A

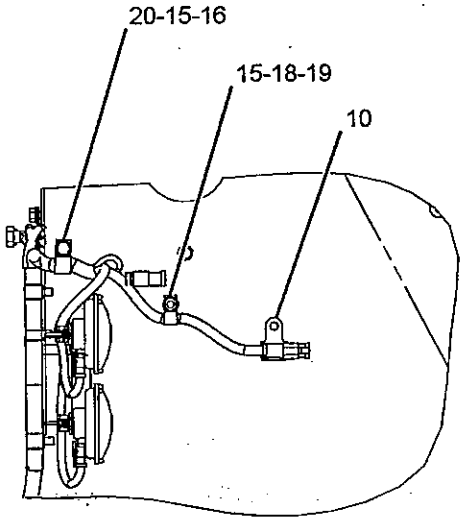


SECTION B-B

GRAPHIC #2 **<END>** g01142556

# ELECTRICAL AND STARTING SYSTEM

## *263-4166* WIRING GP-LIGHTING

**S/N: JMS1-UP**

**PART OF 225-5539 ELECTRICAL AR**

**SMCS-1408, 1429** **i02279561**

| NOTE | REF NO | GRAPHIC REF | PART NUMBER | QTY | PART NAME 1 2 3 4 5 6 (PRODUCT LEVEL) | SEE PAGE |
|---|---|---|---|---|---|---|
| | 1 | 1 | **263-4163** | 2 | HARNESS AS-LIGHTING | |
| | | 1 | **8T-8737** | 4 | PLUG-SEAL | |
| | | 1 | **155-2270** | 1 | KIT-CONNECTING PLUG (2-PIN) | |
| | | 1 | **155-2274** | 1 | KIT-CONNECTING PLUG (6-PIN) | |
| | | | | | (INCLUDES PLUG AS AND WEDGE) | |

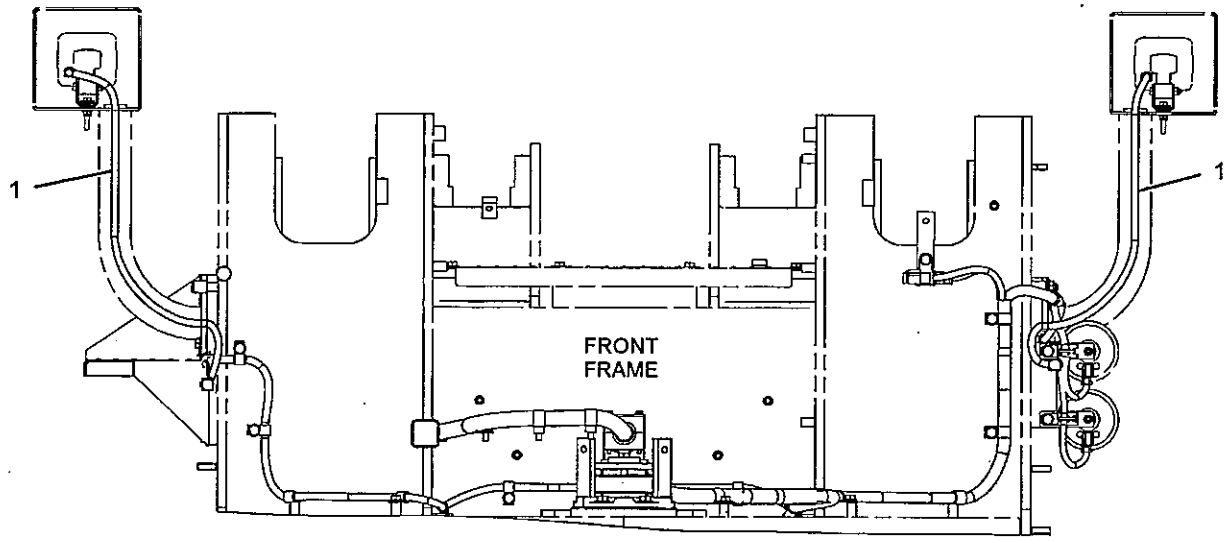


REAR VIEW

GRAPHIC #1 **<END>** g01141971

# *263-4167* WIRING GP-LIGHTING-
## FLOOD, SIGNAL LIGHTS, LOADER FRAME

S/N: JMS1-UP

PART OF 263-8419 LIGHTING AR-SIGNAL

AN ATTACHMENT

SMCS-1408, 1429

i02282109

| NOTE | REF NO | GRAPHIC REF | PART NUMBER | QTY | PART NAME 1 2 3 4 5 6 (PRODUCT LEVEL) | SEE PAGE |
|---|---|---|---|---|---|---|
| | 1 | 1 | 263-4164 | 1 | HARNESS AS-LIGHTING (FLOOD, SIGNAL LIGHTS, LH) | |
| | | 1 | 8T-8737 | 2 | PLUG-SEAL | |
| | | 1 | 155-2270 | 1 | KIT-CONNECTING PLUG (2-PIN) | |
| | | 1 | 155-2274 | 1 | KIT-CONNECTING PLUG (6-PIN) | |
| | | | | | (EACH PLUG KIT INCLUDES PLUG AS AND WEDGE) | |
| | 2 | 1 | 263-4165 | 1 | HARNESS AS-LIGHTING (FLOOD, SIGNAL LIGHTS, RH) | |
| | | 1 | 8T-8737 | 2 | PLUG-SEAL | |
| | | 1 | 155-2270 | 1 | KIT-CONNECTING PLUG (2-PIN) | |
| | | 1 | 155-2274 | 1 | KIT-CONNECTING PLUG (6-PIN) | |
| | | | | | (EACH PLUG KIT INCLUDES PLUG AS AND WEDGE) | |

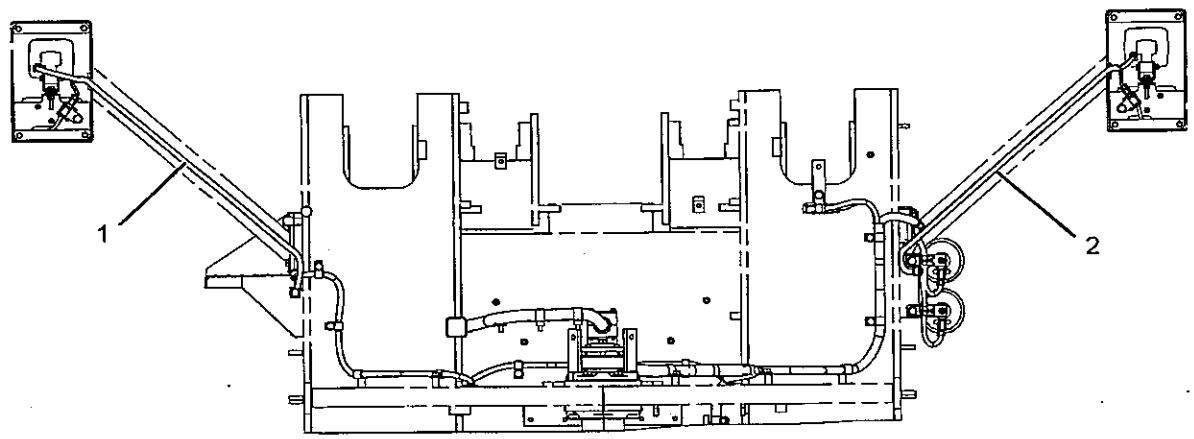


REAR VIEW
(LOADER FRAME)

GRAPHIC #1

<END>

g01142627

# ELECTRICAL AND STARTING SYSTEM

## *263-9161* WIRING GP-LIGHTING

**S/N: JMS1-UP**
**PART OF 246-3564 LIGHTING AR-SIGNAL**
**AN ATTACHMENT**

**SMCS-1408, 1429** **i02283988**

| NOTE | REF NO | GRAPHIC REF | PART NUMBER | QTY | PART NAME 1 2 3 4 5 6 (PRODUCT LEVEL) | SEE PAGE |
|---|---|---|---|---|---|---|
| | 1 | 1 | 263-4164 | 1 | HARNESS AS-LIGHTING (FLOOD, SIGNAL LIGHTS, LH) | |
| | | 1 | 8T-8737 | 2 | PLUG-SEAL | |
| | | 1 | 155-2270 | 1 | KIT-CONNECTING PLUG (2-PIN) | |
| | | 1 | 155-2274 | 1 | KIT-CONNECTING PLUG (6-PIN) | |
| | | | | | (EACH PLUG KIT INCLUDES PLUG AS AND WEDGE) | |
| | 2 | 1 | 263-4165 | 1 | HARNESS AS-LIGHTING (FLOOD, SIGNAL LIGHTS, RH) | |
| | | 1 | 8T-8737 | 2 | PLUG-SEAL | |
| | | 1 | 155-2270 | 1 | KIT-CONNECTING PLUG (2-PIN) | |
| | | 1 | 155-2274 | 1 | KIT-CONNECTING PLUG (6-PIN) | |
| | | | | | (EACH PLUG KIT INCLUDES PLUG AS AND WEDGE) | |
| | 3 | 1 | 263-9184 | 1 | HARNESS AS-REAR LIGHTING | |
| | | 1 | 102-8802 | 1 | KIT-RECEPTACLE (2-PIN) | |
| | | 1 | 102-8803 | 1 | KIT-RECEPTACLE (3-PIN) | |
| | | | | | (EACH RECEPTACLE KIT INCLUDES RECEPTACLE AS AND WEDGE) | |
| | | 1 | 155-2260 | 1 | KIT-CONNECTING PLUG (3-PIN) | |
| | | 1 | 155-2270 | 1 | KIT-CONNECTING PLUG (2-PIN) | |
| | | | | | (EACH PLUG KIT INCLUDES PLUG AS AND WEDGE) | |
| | 4 | 1 | 263-9191 | 1 | HARNESS AS-REAR LIGHTING | |
| | | 1 | 102-8802 | 1 | KIT-RECEPTACLE (2-PIN) | |
| | | 1 | 102-8803 | 1 | KIT-RECEPTACLE (3-PIN) | |
| | | | | | (EACH RECEPTACLE KIT INCLUDES RECEPTACLE AS AND WEDGE) | |
| | | 1 | 155-2260 | 1 | KIT-CONNECTING PLUG (3-PIN) | |
| | | 1 | 155-2270 | 1 | KIT-CONNECTING PLUG (2-PIN) | |
| | | | | | (EACH PLUG KIT INCLUDES PLUG AS AND WEDGE) | |
| | 5 | 1 | 130-5300 | 4 | CLIP | |
| | 6 | 1 | 8M-2770 | 8 | CLIP | |
| | 7 | 1 | 8T-4121 | 10 | WASHER-HARD (11X21X2.5-MM THK) | |
| M | 8 | 1 | 8T-4133 | 2 | NUT (M10X1.5-THD) | |
| M | 9 | 1 | 8T-4137 | 8 | BOLT (M10X1.5X20-MM) | |

M-METRIC PART

263-9161 **WIRING GP-LIGHTING** *(contd.)* i02283988

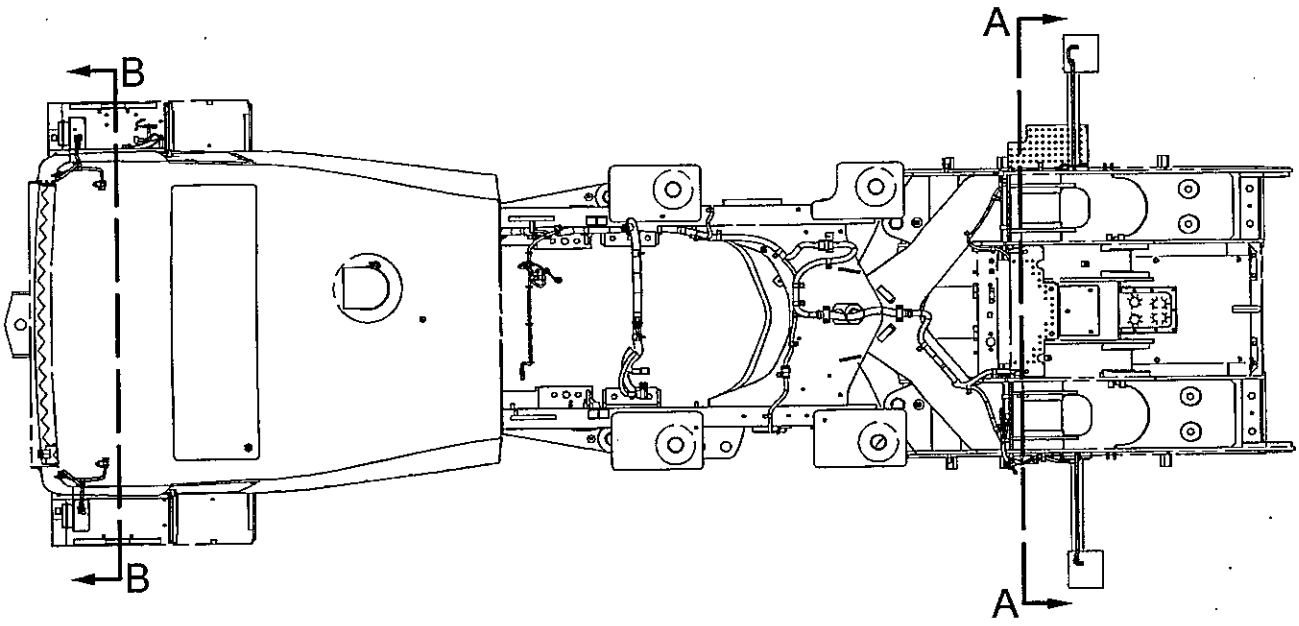


TOP VIEW

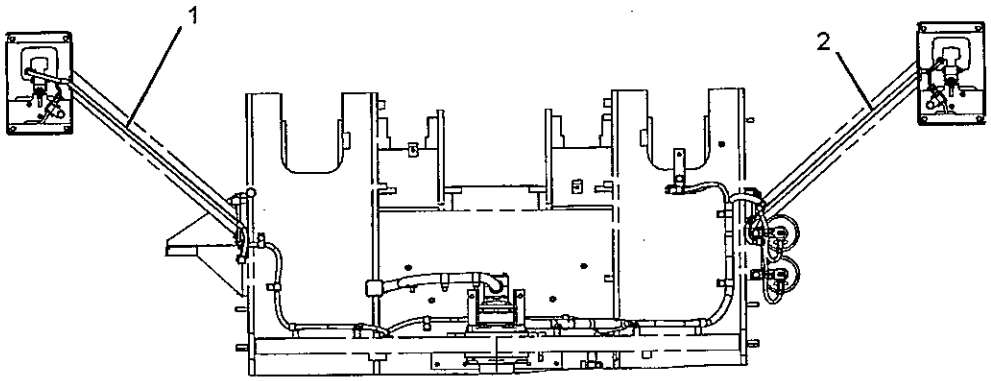


SECTION A-A

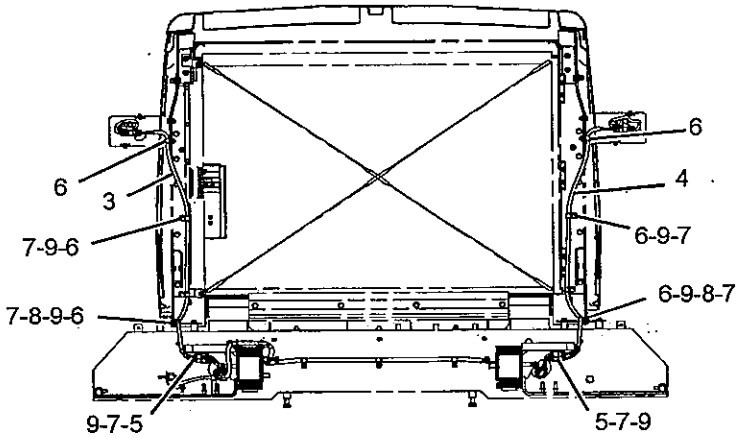


SECTION B-B

GRAPHIC #1 **<END>** g01143853

# 183-9234 WIRING GP-SECONDARY STEERING

S/N: JMS1-UP
PART OF 184-4740 STEERING AR-SECONDARY
AN ATTACHMENT

SMCS-1408, 4334

i02145953

| NOTE | REF NO | GRAPHIC REF | PART NUMBER | QTY | PART NAME 1 2 3 4 5 6 (PRODUCT LEVEL) | SEE PAGE |
|---|---|---|---|---|---|---|
| | 1 | 1 | 230-5771 | 1 | SWITCH AS-PRESSURE (SECONDARY STEERING OIL) | |
| | | 1 | 102-8803 | 1 | KIT-RECEPTACLE (3-PIN) | |
| | | 1 | 3E-3371 | 1 | WEDGE-RECEPTACLE LOCK (3-PIN) | |
| | | 1 | 186-3735 | 3 | PIN-CONNECTOR (16-GA TO 18-GA) | |
| | 2 | 1 | 3S-2093 | 2 | STRAP-CABLE | |
| | 3 | 1 | 228-7287 | 1 | HARNESS AS-STEERING (SECONDARY) | |
| | | 1 | 102-8803 | 1 | KIT-RECEPTACLE (3-PIN) | |
| | | 1 | 155-2260 | 1 | KIT-CONNECTING PLUG (3-PIN) | |
| | 4 | 1 | 130-5301 | 1 | CLIP | |
| | 5 | 1 | 2T-3019 | 2 | CLIP | |
| | 6 | 1 | 3K-0360 | 1 | SEAL-O-RING | |
| | 7 | 1 | 5P-9297 | 1 | CLIP | |

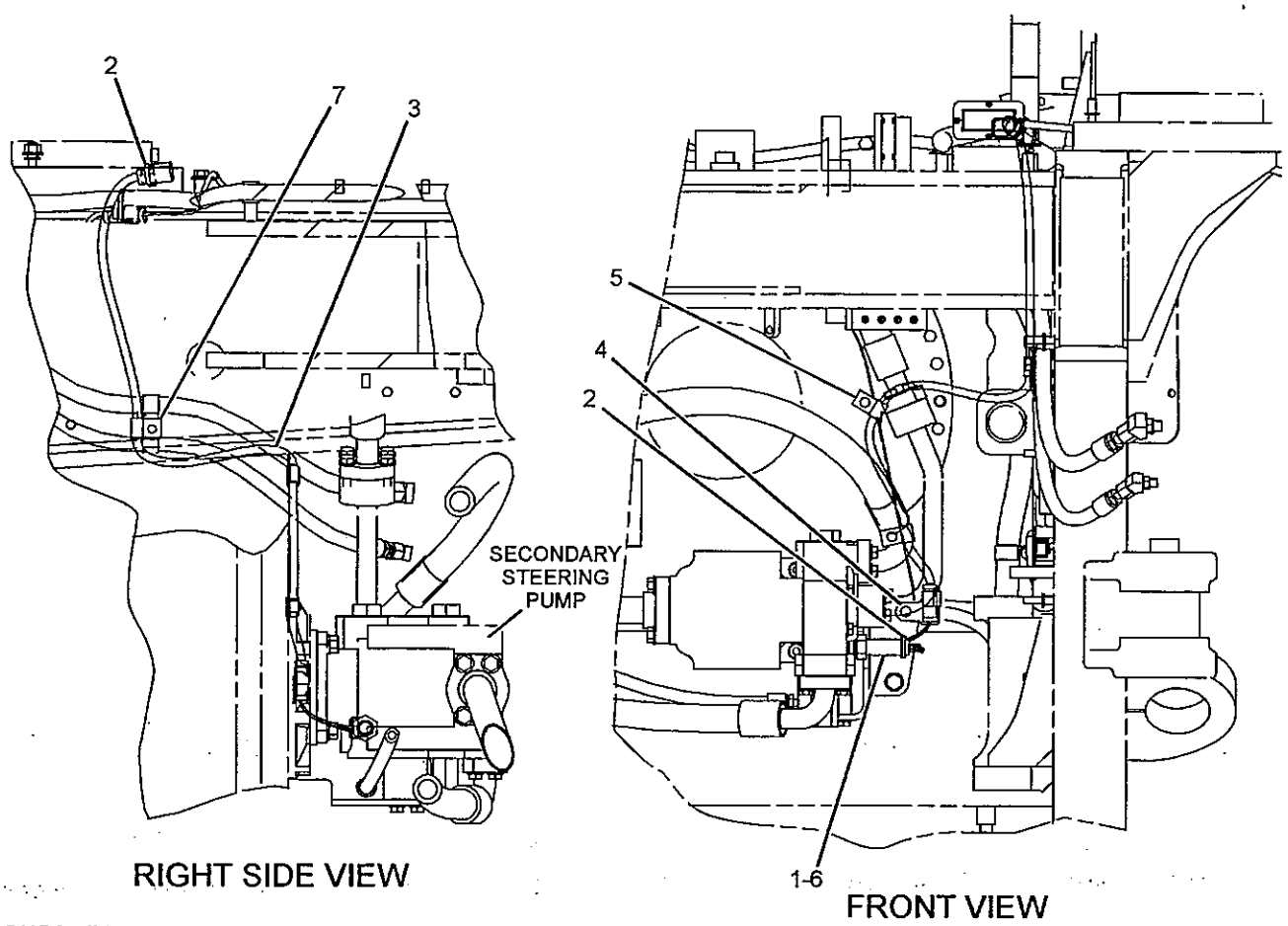


GRAPHIC #1

<END>

g01035562

# 150-0343 WIRING GP-SENSOR–AUTODIG

S/N: JMS1-UP
PART OF 233-9781 CONTROL AR-AUTODIG
AN ATTACHMENT

SMCS-1408 i02275027

| NOTE | REF NO | GRAPHIC REF | PART NUMBER | QTY | PART NAME 1 2 3 4 5 6 (PRODUCT LEVEL) | SEE PAGE |
|---|---|---|---|---|---|---|
| | 1 | 1 | 7K-1181 | 4 | STRAP-CABLE | |
| | 2 | 1 | 8X-7517 | 2 | BRACKET AS | |
| | | | | | (EACH INCLUDES) | |
| M | | 1 | 8T-3490 | 1 | NUT-WELD (M10X1.5-THD) | |
| | 3 | 1 | 228-5075 | 1 | HARNESS AS-SENSOR (LIFT CYLINDER OIL) | |
| | | 1 | 102-8804 | 1 | KIT-RECEPTACLE (4-PIN) | |
| | | | | | (INCLUDES RECEPTACLE AS AND WEDGE) | |
| | | 1 | 155-2260 | 1 | KIT-CONNECTING PLUG (3-PIN) | |
| | | | | | (INCLUDES PLUG AS AND WEDGE) | |
| | 4 | 1 | 130-5300 | 2 | CLIP | |
| | 5 | 1 | 5P-9297 | 2 | CLIP | |
| | 6 | 1 | 8T-4121 | 2 | WASHER-HARD (11X21X2.5-MM THK) | |
| M | 7 | 1 | 8T-4136 | 2 | BOLT (M10X1.5X25-MM) | |

M-METRIC PART

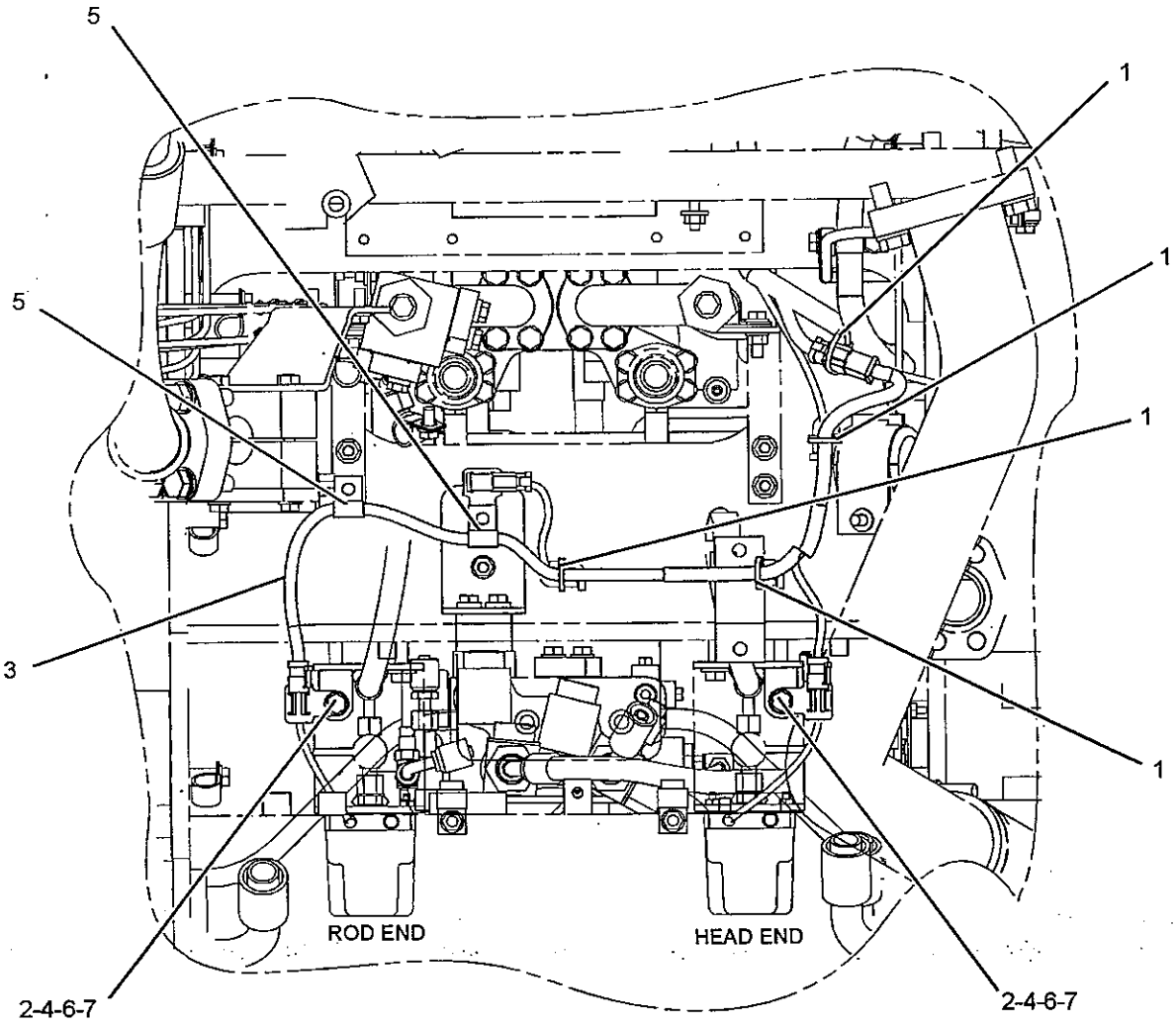


REAR VIEW

<END>

GRAPHIC #1 g01058695

# ELECTRICAL AND STARTING SYSTEM

## *228-2704* WIRING GP-SENSOR–TILT

S/N: JMS1-UP

PART OF 225-5539 ELECTRICAL AR

CS-1408

i02279556

| NOTE | REF NO | GRAPHIC REF | PART NUMBER | QTY | PART NAME 1 2 3 4 5 6 (PRODUCT LEVEL) | SEE PAGE |
|---|---|---|---|---|---|---|
| | 1 | 1 | 4V-1939 | 4 | CLAMP | |
| | 2 | 1 | 107-4749 | 2 | PLATE | |
| C | 3 | 1 | 261-8627 | 1 | HARNESS AS-SENSOR (TILT) | |
| | | 1 | 155-2260 | 2 | KIT-CONNECTING PLUG (3-PIN) | |
| | | | | | (EACH KIT INCLUDES PLUG AS AND WEDGE) | |
| C | 4 | 1 | 8S-0948 | 1 | CLIP | |
| CM | 5 | 1 | 8C-8451 | 4 | BOLT (M6X1X40-MM) | |
| C | 6 | 1 | 8T-4121 | 10 | WASHER-HARD (11X21X2.5-MM THK) | |
| CM | 7 | 1 | 8T-4133 | 4 | NUT (M10X1.5-THD) | |
| CM | 8 | 1 | 8T-4137 | 2 | BOLT (M10X1.5X20-MM) | |
| C | 9 | 1 | 9M-8406 | 6 | CLIP | |
| | 11 | 1 | 9X-8256 | 4 | WASHER (6.6X12X2-MM THK) | |
| C | 12 | 1 | 7K-1181 | 1 | STRAP-CABLE | |

C-CHANGE FROM PREVIOUS TYPE
M-METRIC PART

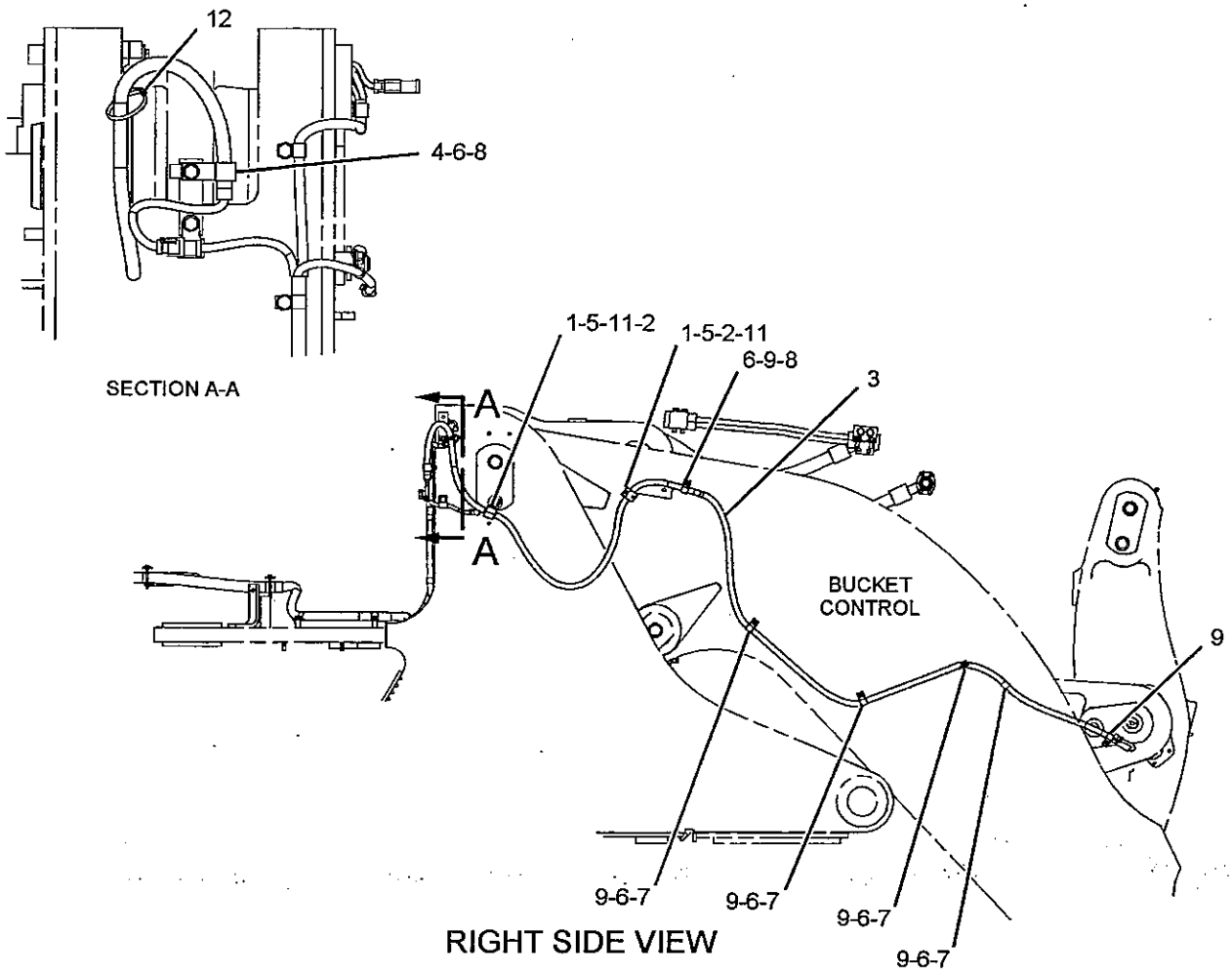


RIGHT SIDE VIEW

GRAPHIC #1

<END>

g01142445

# 263-4168 WIRING GP-SENSOR–PAYLOAD MONITOR

S/N: JMS1-UP
PART OF 238-6681 MONITOR AR-PAYLOAD
AN ATTACHMENT

SMCS-1408 i02283498

| NOTE | REF NO | GRAPHIC REF | PART NUMBER | QTY | PART NAME 1 2 3 4 5 6 (PRODUCT LEVEL) | SEE PAGE |
|---|---|---|---|---|---|---|
| | 1 | 1 | 7K-1181 | 4 | STRAP-CABLE | |
| | 2 | 1 | 8X-7517 | 2 | BRACKET AS | |
| | | | | | (EACH INCLUDES) | |
| M | | 1 | 8T-3490 | 1 | NUT-WELD (M10X1.5-THD) | |
| | 3 | 1 | 263-4169 | 1 | HARNESS AS-MONITOR | |
| | | 1 | 102-8803 | 2 | KIT-RECEPTACLE (3-PIN) | |
| | | 1 | 102-8804 | 1 | KIT-RECEPTACLE (4-PIN) | |
| | | | | | (EACH KIT INCLUDES RECEPTACLE AS AND WEDGE) | |
| | 4 | 1 | 130-5300 | 2 | CLIP | |
| | 5 | 1 | 5P-9297 | 2 | CLIP | |
| | 6 | 1 | 8T-4121 | 2 | WASHER-HARD (11X21X2.5-MM THK) | |
| M | 7 | 1 | 8T-4136 | 2 | BOLT (M10X1.5X25-MM) | |

M-METRIC PART

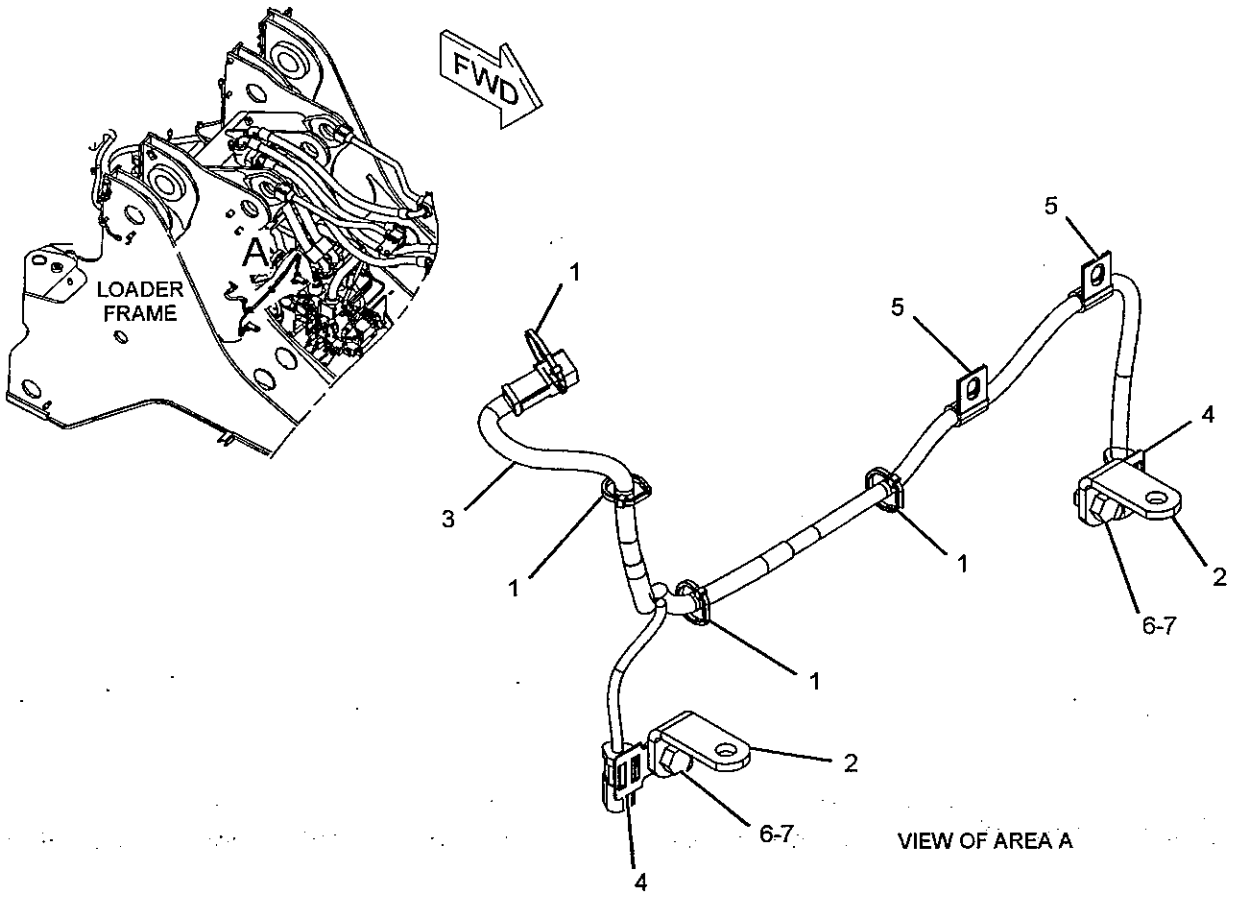


GRAPHIC #1 <END> g01144635

# ELECTRICAL AND STARTING SYSTEM

## *248-5554* WIRING GP-WASTE HANDLER

**S/N: JMS1-UP**
**PART OF 243-2045 ACTUATOR GP-POWER GUARD**
**AN ATTACHMENT**

**SMCS-1408** **i02283812**

| NOTE | REF NO | GRAPHIC REF | PART NUMBER | QTY | PART NAME 1 2 3 4 5 6 (PRODUCT LEVEL) | SEE PAGE |
|---|---|---|---|---|---|---|
| | 1 | 1 | 7K-1181 | 21 | STRAP-CABLE | |
| | 2 | 1 | 157-1364 | 1 | SWITCH AS-TOGGLE (FRONT POWER GUARD ACTUATOR) | |
| | 2A | 1 | 157-1364 | 1 | SWITCH AS-TOGGLE (REAR POWER GUARD ACTUATOR) | |
| | | | | | (EACH SWITCH AS INCLUDES) | |
| | | 1 | 3E-3383 | 1 | WEDGE-RECEPTACLE LOCK (6-PIN) | |
| | | 1 | 102-8805 | 1 | KIT-RECEPTACLE (6-PIN) | |
| | | 1 | 6T-3631 | 2 | NUT-HEX (15/32-32-THD) | |
| | | 1 | 6T-3632 | 1 | LOCKWASHER | |
| | | 1 | 6T-3633 | 1 | RING-LOCKING | |
| | | 1 | 8T-8729 | 6 | PIN-CONNECTOR | |
| | 3 | 1 | 215-4248 | 1 | PLATE | |
| | 4 | 1 | 232-6174 | 1 | WIRE AS | |
| | 5 | 1 | 248-5555 | 1 | HARNESS AS-CONTROL (POWER GUARD ACTUATOR) | |
| | | 1 | 155-2270 | 1 | KIT-CONNECTING PLUG (2-PIN) | |
| | | 1 | 155-2274 | 1 | KIT-CONNECTING PLUG (6-PIN) | |
| | | | | | (EACH KIT-CONNECTING INCLUDES PLUG AND WEDGE) | |
| | 6 | 1 | 130-5300 | 3 | CLIP | |
| | 7 | 1 | 174-5907 | 2 | CLIP | |
| | 8 | 1 | 3T-2662 | 1 | CIRCUIT BREAKER AS (15-AMPERE) (POWER GUARD ACTUATOR) | |
| | | 1 | 6V-8376 | 2 | SCREW-MACHINE (8-32X0.25-IN) | |
| | | 1 | 9B-7233 | 2 | LOCKWASHER | |
| | 9 | 1 | 5L-4507 | 2 | SCREW-MACHINE (10-32X0.875-IN) | |
| | 10 | 1 | 5P-9297 | 2 | CLIP | |
| | 11 | 1 | 8T-4121 | 3 | WASHER-HARD (11X21X2.5-MM THK) | |
| M | 12 | 1 | 8T-4137 | 3 | BOLT (M10X1.5X20-MM) | |

M-METRIC PART

## 248-5554 WIRING GP-WASTE HANDLER (contd.) i02283812

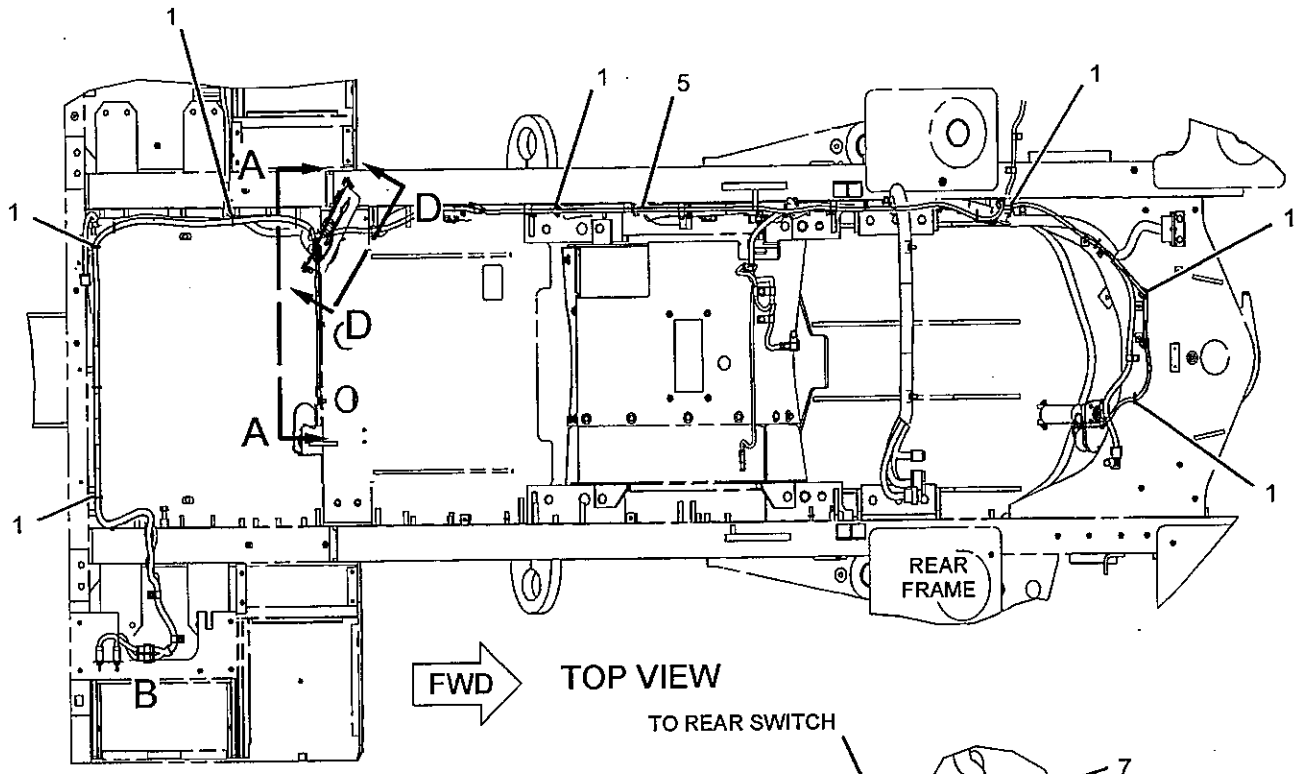


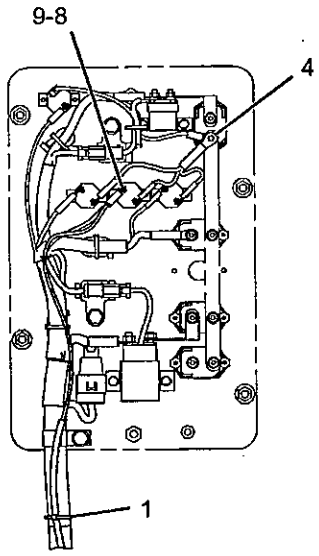


SECTION D-D

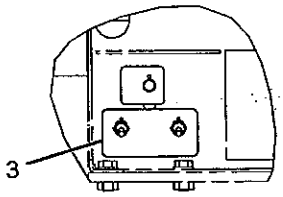


SECTION C-C

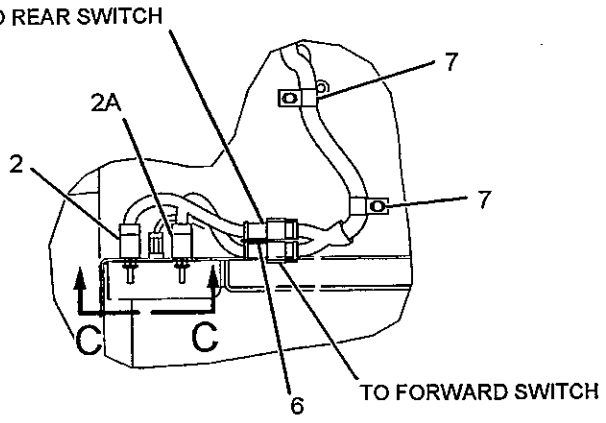


VIEW OF AREA B

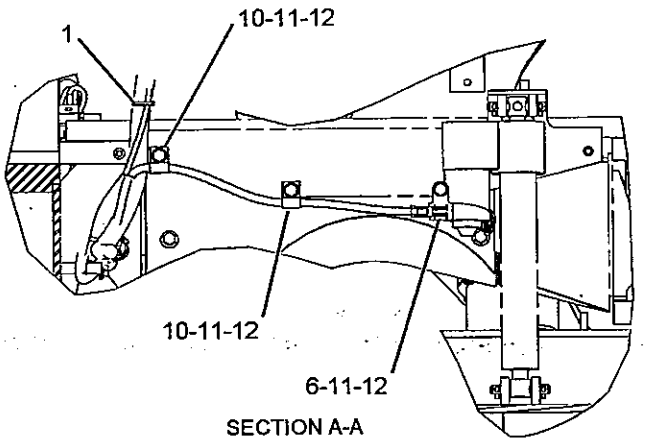


SECTION A-A

GRAPHIC #1 <END> g01143189

## 232-7559 AXLE AR-FIXED—FRONT

S/N: JMS1-UP

PART OF 232-6585 POWER TRAIN AR

SMCS-3013, 3278

i02087840

| NOTE | PART NUMBER | QTY | PART NAME 1 2 3 4 5 6 (PRODUCT LEVEL) | SEE PAGE |
|---|---|---|---|---|
| Y | *173-0547* | 1 | AXLE GP-FIXED (FRONT) | 307 |
| Y | *208-5972* | 1 | BRAKE GP-SERVICE | 527 |
| Y | *208-5974* | 1 | BRAKE GP-SERVICE | 529 |
| Y | *232-7555* | 1 | DIFFERENTIAL & BEVEL GEAR GP | 323 |
| Y | *124-3758* | 1 | LINES GP-SERVICE BRAKE | 540 |
| Y | **232-7554** | 2 | WHEEL & FINAL DRIVE GP | 402 |

Y-SEPARATE ILLUSTRATION

<END>

## 232-7735 AXLE AR-FIXED—FRONT, LIMITED SLIP DIFFERENTIAL

S/N: JMS1-UP

AN ATTACHMENT

SMCS-3013, 3278

i02196673

| NOTE | PART NUMBER | QTY | PART NAME 1 2 3 4 5 6 (PRODUCT LEVEL) | SEE PAGE |
|---|---|---|---|---|
| Y | *173-0547* | 1 | AXLE GP-FIXED (FRONT) | 307 |
| Y | *208-5972* | 1 | BRAKE GP-SERVICE | 527 |
| Y | *208-5974* | 1 | BRAKE GP-SERVICE | 529 |
| Y | **251-7687** | 1 | DIFFERENTIAL & BEVEL GEAR GP (LIMITED SLIP) | 327 |
| Y | *124-3758* | 1 | LINES GP-SERVICE BRAKE | 540 |
| Y | **232-7554** | 2 | WHEEL & FINAL DRIVE GP | 402 |

Y-SEPARATE ILLUSTRATION

<END>

## 232-7558 AXLE AR-OSCILLATING—REAR

S/N: JMS1-UP

PART OF 232-6585 POWER TRAIN AR

SMCS-3013, 3278

i02273074

| NOTE | PART NUMBER | QTY | PART NAME 1 2 3 4 5 6 (PRODUCT LEVEL) | SEE PAGE |
|---|---|---|---|---|
| Y | *232-7557* | 1 | AXLE GP-OSCILLATING (REAR) | 308 |
| Y | *208-5972* | 1 | BRAKE GP-SERVICE | 527 |
| Y | *208-5974* | 1 | BRAKE GP-SERVICE | 529 |
| Y | *252-7848* | 1 | DIFFERENTIAL & BEVEL GEAR GP | 333 |
| Y | *124-3758* | 1 | LINES GP-SERVICE BRAKE | 540 |
| Y | **232-7554** | 2 | WHEEL & FINAL DRIVE GP | 402 |

Y-SEPARATE ILLUSTRATION

<END>

## *232-7731* AXLE AR-OSCILLATING-
### REAR, NO-SPIN DIFFERENTIAL
**S/N: JMS1-UP**
**AN ATTACHMENT**

**SMCS-3013, 3278** **i02272918**

| NOTE | PART NUMBER | QTY | PART NAME 1 2 3 4 5 6 (PRODUCT LEVEL) | SEE PAGE |
|---|---|---|---|---|
| Y | *232-7557* | 1 | AXLE GP-OSCILLATING (REAR) | 308 |
| Y | *208-5972* | 1 | BRAKE GP-SERVICE | 527 |
| Y | *208-5974* | 1 | BRAKE GP-SERVICE | 529 |
| Y | **251-7689** | 1 | DIFFERENTIAL & BEVEL GEAR GP (NOSPIN) | 331 |
| Y | *124-3758* | 1 | LINES GP-SERVICE BRAKE | 540 |
| Y | **232-7554** | 2 | WHEEL & FINAL DRIVE GP | 402 |

Y-SEPARATE ILLUSTRATION

**<END>**

## *232-7733* AXLE AR-OSCILLATING-
### REAR, LIMITED SLIP DIFFERENTIAL
**S/N: JMS1-UP**
**AN ATTACHMENT**

**SMCS-3013, 3278** **i02274511**

| NOTE | PART NUMBER | QTY | PART NAME 1 2 3 4 5 6 (PRODUCT LEVEL) | SEE PAGE |
|---|---|---|---|---|
| Y | *232-7557* | 1 | AXLE GP-OSCILLATING (REAR) | 308 |
| Y | *208-5972* | 1 | BRAKE GP-SERVICE | 527 |
| Y | *208-5974* | 1 | BRAKE GP-SERVICE | 529 |
| Y | **251-7688** | 1 | DIFFERENTIAL & BEVEL GEAR GP (LIMITED SLIP) | 329 |
| Y | *124-3758* | 1 | LINES GP-SERVICE BRAKE | 540 |
| Y | **232-7554** | 2 | WHEEL & FINAL DRIVE GP | 402 |

Y-SEPARATE ILLUSTRATION

**<END>**

# POWER TRAIN

## *173-0547* AXLE GP-FIXED–FRONT

**S/N: JMS1-UP**

**PART OF 232-7559, 232-7735 AXLE AR-FIXED**

**ALSO AN ATTACHMENT**

**SMCS-3278** **i01739630**

| NOTE | REF NO | GRAPHIC REF | PART NUMBER | QTY | PART NAME 1 2 3 4 5 6 (PRODUCT LEVEL) | SEE PAGE |
|---|---|---|---|---|---|---|
| | 1 | 1 | 171-6874 | 1 | HOUSING AS-FIXED | |
| | | 1 | 6M-1622 | 2 | DOWEL | |
| | 2 | 1 | 105-8727 | 2 | SHAFT-AXLE | |
| | 3 | 1 | 6V-8128 | 2 | RING-RETAINING | |
| M | 4 | 1 | 8T-0666 | 48 | BOLT (M24X3X90-MM) | |
| | 5 | 1 | 5P-6604 | 48 | WASHER-HARD (25.4X40X5-MM THK) | |
| | 6 | 1 | 9S-4181 | 1 | PLUG | |
| | 7 | 1 | 7M-8485 | 4 | SEAL-O-RING | |
| | 8 | 1 | 5P-4484 | 1 | PLUG-MAGNETIC | |
| | 9 | 1 | 149-8220 | 1 | FITTING-PRESSURE RELIEF | |
| | 10 | 1 | 5P-7684 | 1 | PLUG | |
| | 11 | 1 | 6K-6307 | 1 | SEAL-O-RING | |
| | 12 | 1 | 9S-4190 | 2 | PLUG | |
| | 13 | 1 | 2M-9780 | 2 | SEAL-O-RING | |
| | 14 | 1 | 5P-4483 | 2 | PLUG | |

M-METRIC PART

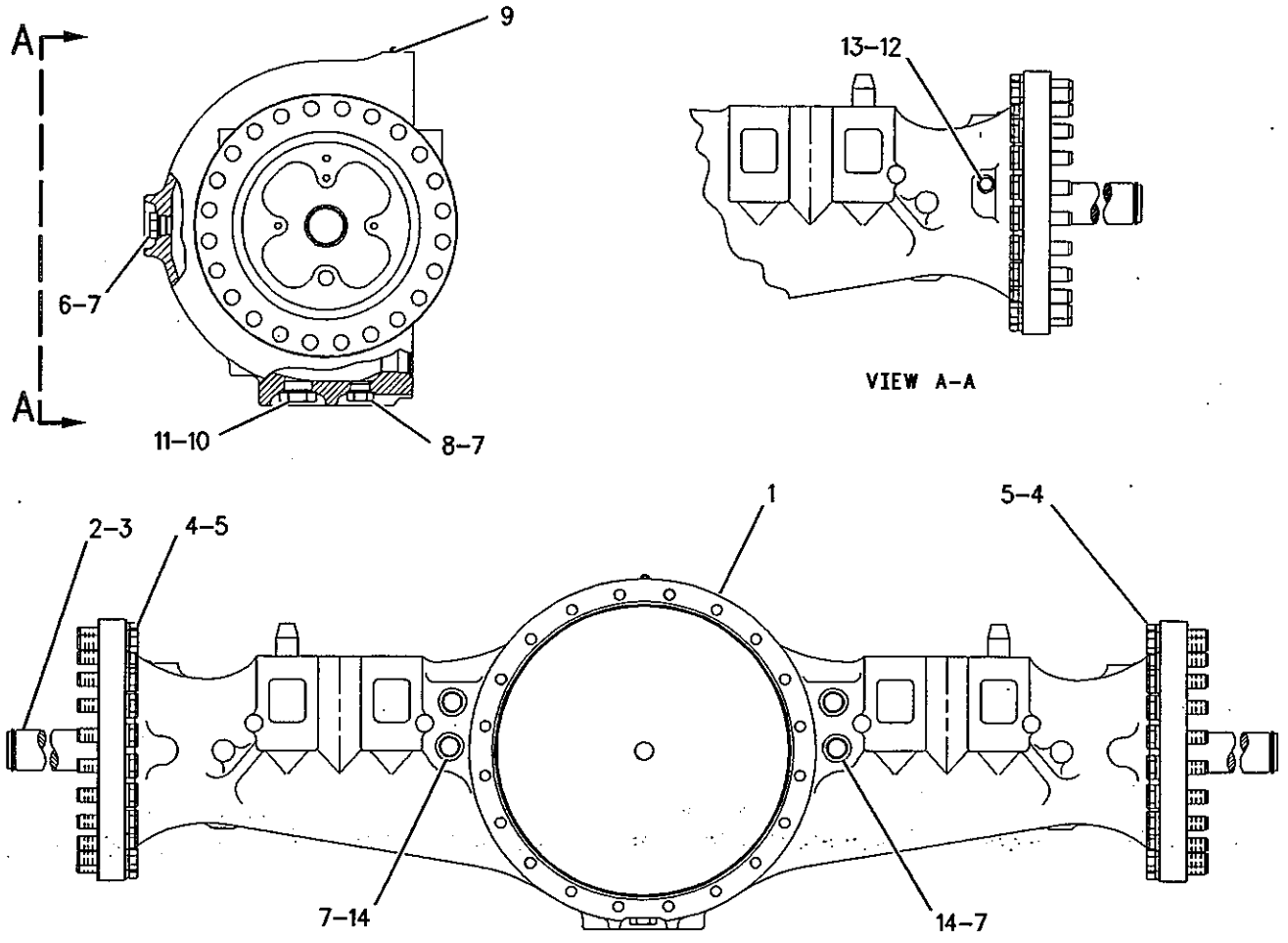


GRAPHIC #1 **<END>** g00890894

# 232-7557 AXLE GP-OSCILLATING–REAR

S/N: JMS1-UP

PART OF 232-7558, 232-7731, 232-7733 AXLE AR-OSCILLATING

ALSO AN ATTACHMENT

SMCS-3278

i02279631

| NOTE | REF NO | GRAPHIC REF | PART NUMBER | QTY | PART NAME 1 2 3 4 5 6 (PRODUCT LEVEL) | SEE PAGE |
|---|---|---|---|---|---|---|
| | 1 | 1 | 1K-6853 | 2 | FITTING | |
| | 2 | 1 | 105-8704 | 1 | SUPPORT-TRUNNION | |
| | 3 | 1 | 105-8727 | 2 | SHAFT-AXLE | |
| | 4 | 1 | 6V-8128 | 2 | RING-RETAINING | |
| | 5 | 1 | 105-8703 | 1 | SUPPORT-TRUNNION | |
| | 6 | 1 | 104-7006 | 4 | DOWEL-HOLLOW (35X45-MM) | |
| M | 7 | 1 | 8T-0666 | 48 | BOLT (M24X3X90-MM) | |
| | 8 | 1 | 5P-6604 | 48 | WASHER-HARD (25.4X40X5-MM THK) | |
| | 9 | 1 | 9S-4190 | 2 | PLUG | |
| | 10 | 1 | 6K-6307 | 1 | SEAL-O-RING | |
| | 11 | 1 | 9S-4181 | 3 | PLUG | |
| | 12 | 1 | 7M-8485 | 4 | SEAL-O-RING | |
| | 13 | 1 | 105-8705 | 1 | COVER | |
| | 14 | 1 | 109-3202 | 1 | PLATE-THRUST | |
| | 15 | 1 | 105-8753 | 2 | BEARING-THRUST | |
| | 16 | 1 | 105-8754 | 1 | BEARING-SLEEVE | |
| | 17 | 1 | 5P-4484 | 1 | PLUG-MAGNETIC | |
| | 18 | 1 | 105-8739 | 1 | BEARING-SLEEVE | |
| | 19 | 1 | 1M-9011 | 2 | RING-TORIC | |
| | 20 | 1 | 149-8220 | 1 | FITTING-PRESSURE RELIEF | |
| | 21 | 1 | 171-1279 | 1 | HOUSING | |
| | 22 | 1 | 2D-6533 | 1 | SEAL-O-RING | |
| | 23 | 1 | 105-8702 | 1 | TRUNNION | |
| M | 24 | 1 | 6V-3532 | 36 | BOLT (M20X2.5X60-MM) | |
| | 25 | 1 | 5P-8248 | 26 | WASHER-HARD (20X36.5X3.5-MM THK) | |
| | 26 | 1 | 4M-0660 | 1 | RING-SEALING | |
| B | 27 | 1 | 6V-6640 | | SEALANT | |
| | 28 | 1 | 5P-7684 | 1 | PLUG | |
| | 29 | 1 | 2M-9780 | 2 | SEAL-O-RING | |
| | 30 | 1 | 9S-4185 | 1 | PLUG | |
| | 31 | 1 | 3K-0360 | 1 | SEAL-O-RING | |

B-USE AS REQUIRED
M-METRIC PART

## 232-7557 AXLE GP-OSCILLATING *(contd.)*

i02279631

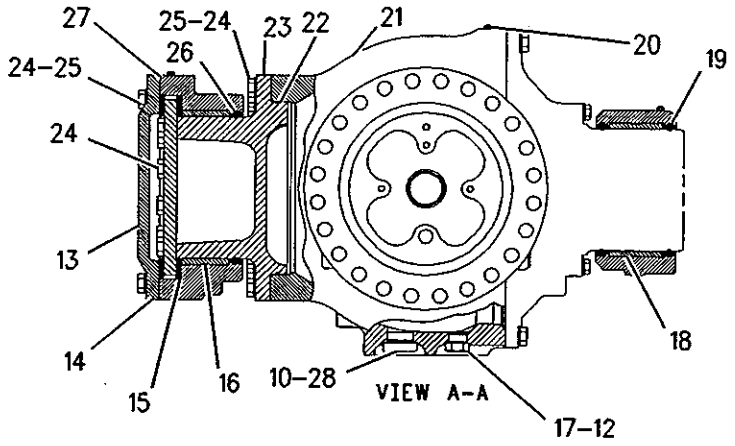


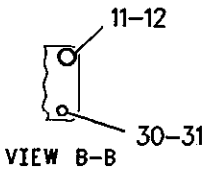


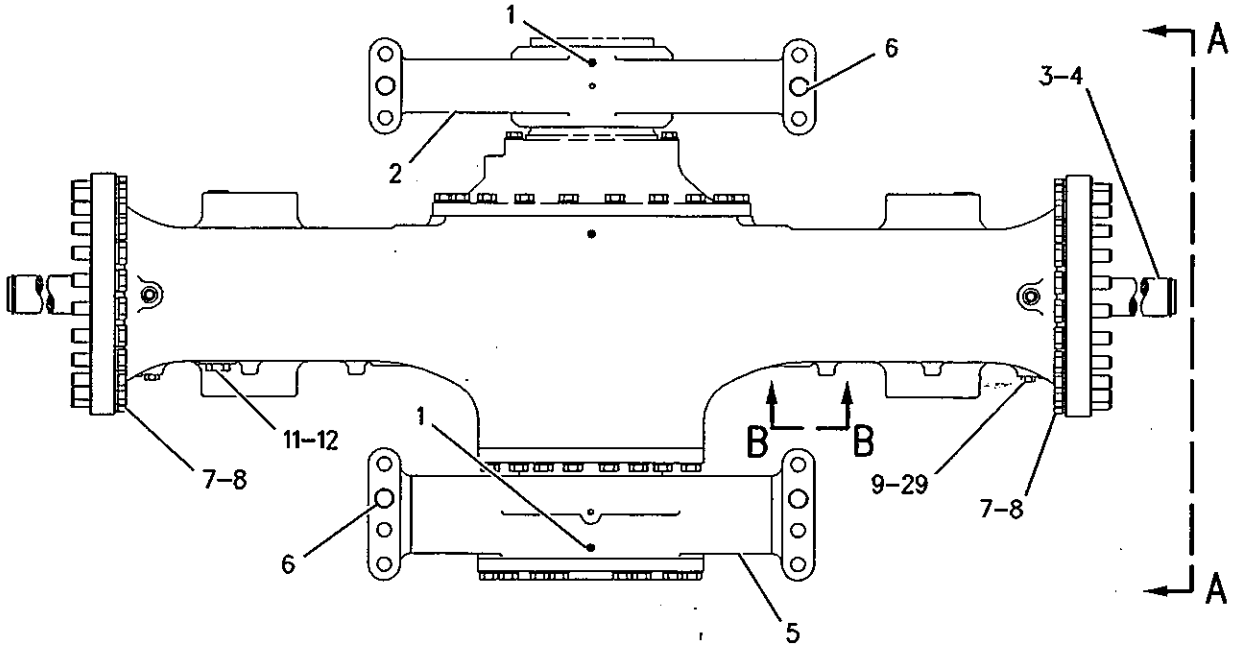


GRAPHIC #1

<END>

g00789572

# 266-2271 BASE GP-OIL FILTER—POWER TRAIN

S/N: JMS1-UP

PART OF 266-2272 FILTER GP-OIL

SMCS-3004, 3067

i02279589

| NOTE | REF NO | GRAPHIC REF | PART NUMBER | QTY | PART NAME 1 2 3 4 5 6 (PRODUCT LEVEL) | SEE PAGE |
|---|---|---|---|---|---|---|
| | 1 | 1 | 3T-9549 | 1 | ADAPTER | |
| | 2 | 1 | 7G-4998 | 1 | SPOOL-BYPASS | |
| | 3 | 1 | 7M-1297 | 1 | SPRING (OUTER) | |
| | 4 | 1 | 133-2198 | 1 | SPRING (INNER) | |
| Y | 5 | 1 | 164-7577 | 1 | SWITCH GP-BYPASS (POWER TRAIN OIL FILTER) | 231 |
| Z | 6 | 1 | | 1 | BASE-FILTER | |
| | 7 | 1 | 2S-4078 | 1 | SEAL-O-RING | |
| | 8 | 1 | 3D-2824 | 1 | SEAL-O-RING | |
| | 9 | 1 | 9S-8008 | 1 | PLUG | |

Y-SEPARATE ILLUSTRATION
Z-NOT SERVICED SEPARATELY

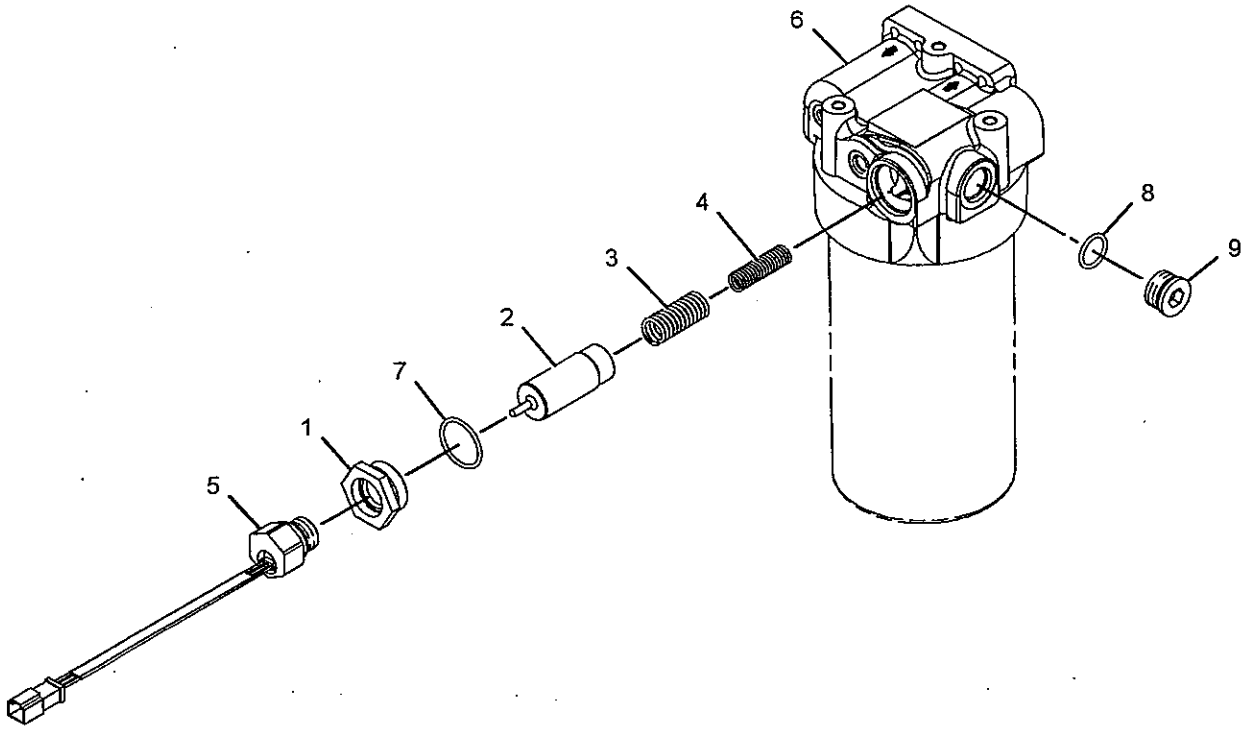


GRAPHIC #1

<END>

g01141585

# 230-6317 CASE & PARTS GP-PLANETARY

S/N: MDA1-UP; DGZ1-UP
PART OF 230-6311, 230-6321 TRANSMISSION AR
ALSO AN ATTACHMENT

SMCS-3064

i01919798

| NOTE | REF NO | GRAPHIC REF | PART NUMBER | QTY | PART NAME 1 2 3 4 5 6 (PRODUCT LEVEL) | SEE PAGE |
|---|---|---|---|---|---|---|
| | 1 | 1 | 231-5295 | 1 | CASE AS-TRANSMISSION | |
| | | 1 | 1A-2223 | 2 | DOWEL | |
| | 2 | 1 | 0S-1587 | 2 | BOLT (1/2-13X1.75-IN) | |
| | 3 | 1 | 5P-2587 | 1 | SEAL-O-RING | |
| M | 4 | 1 | 5P-8245 | 2 | WASHER-HARD (13.5X25.5X3-MM THK) | |
| B | 5 | 1 | 1U-8846 | | SEALANT-GASKET | |

B-USE AS REQUIRED
M-METRIC PART

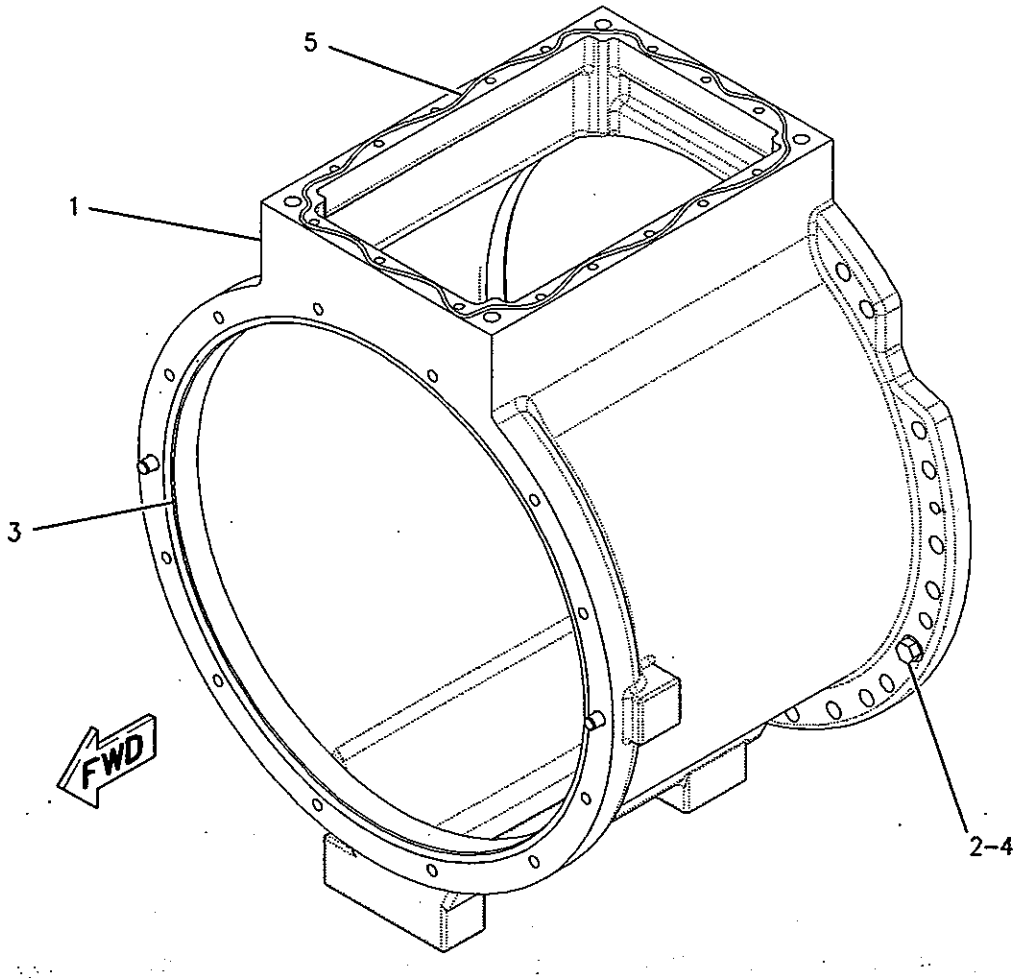


GRAPHIC #1

<END>

g01003868

# 234-0604 CASE GP-TRANSFER GEAR

S/N: MDA1-UP; DGZ1-UP
PART OF 230-6312 GEAR GP-OUTPUT TRANSFER
ALSO AN ATTACHMENT

SMCS-3159 i02092075

| NOTE | REF NO | GRAPHIC REF | PART NUMBER | QTY | PART NAME 1 2 3 4 5 6 (PRODUCT LEVEL) | SEE PAGE |
|---|---|---|---|---|---|---|
| | 1 | 1 | 234-0605 | 1 | CASE AS-TRANSFER | |
| | | 1 | 8M-8659 | 2 | DOWEL | |
| | 2 | 1 | 2A-3798 | 2 | DOWEL | |
| | 3 | 1 | 0S-1594 | 1 | BOLT (3/8-16X1-IN) | |
| | 4 | 1 | 5M-2894 | 1 | WASHER-HARD (10.2X18.5X2.5-MM THK) | |
| | 5 | 1 | 8P-8837 | 1 | TUBE AS | |

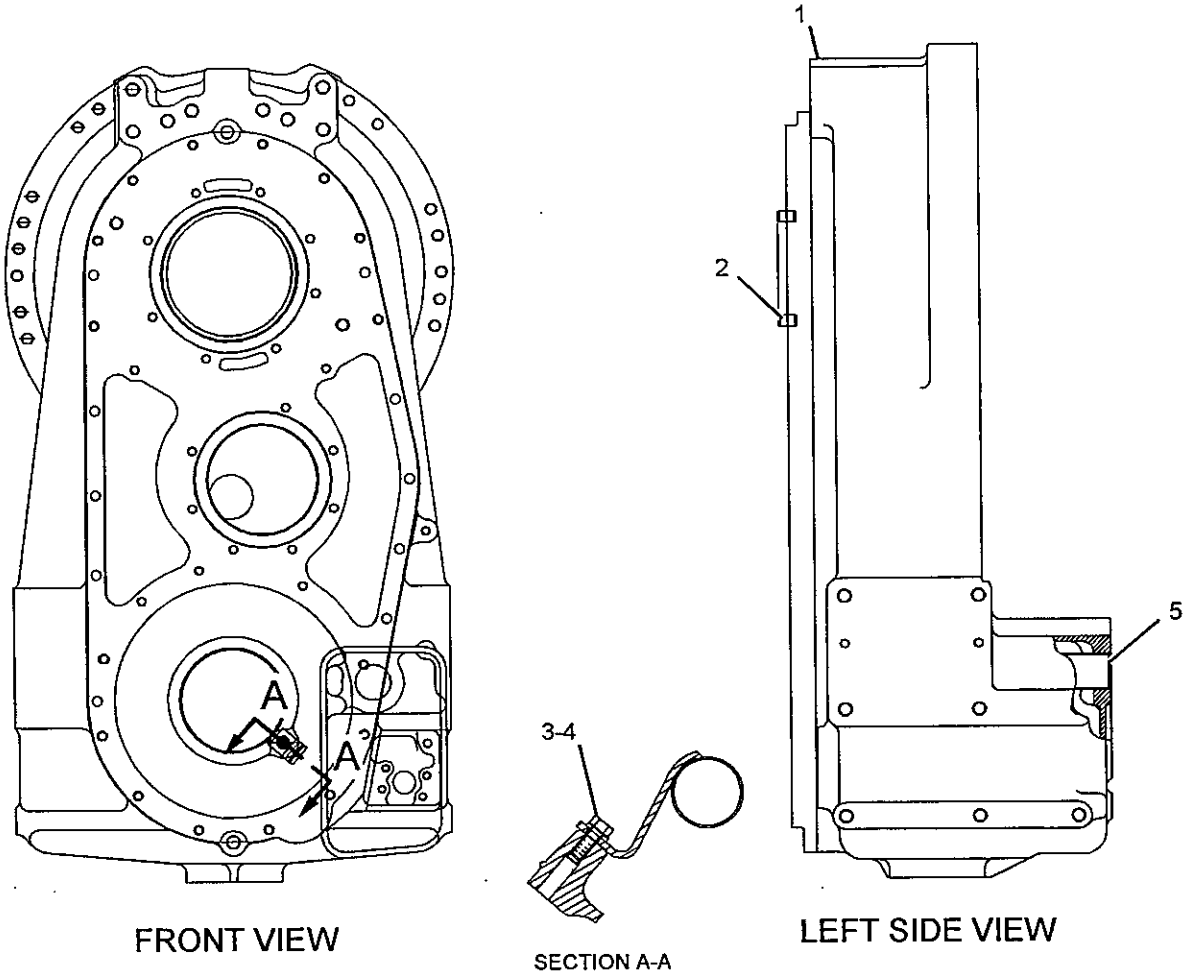


FRONT VIEW

SECTION A-A

LEFT SIDE VIEW

GRAPHIC #1 <END> g01145850

# 230-6314 CONTROL GP-TRANSMISSION HYD

S/N: DGZ1-UP

PART OF 230-6311 TRANSMISSION AR

SMCS-3073, 3167

i02282676

| NOTE | REF NO | GRAPHIC REF | PART NUMBER | QTY | PART NAME 1 2 3 4 5 6 (PRODUCT LEVEL) | SEE PAGE |
|---|---|---|---|---|---|---|
| | 1 | 1 | 3S-2093 | 8 | STRAP-CABLE | |
| | 2 | 1 | 8S-0768 | 6 | SEAL-O-RING | |
| | 3 | 1 | 9G-5127 | 1 | BREATHER AS | |
| Y | 4 | 1 | 118-7226 | 1 | SENSOR GP-TEMPERATURE (TRANSMISSION OIL) | 219 |
| Y | 5 | 1 | 244-3114 | 6 | VALVE GP-MODULATING (24-VOLT) (TRANSMISSION CLUTCH) | 398 |
| | 6 | 1 | 225-8512 | 1 | ADAPTER | |
| | 7 | 1 | 231-0860 | 1 | ELBOW | |
| | 8 | 1 | 231-4779 | 1 | COVER | |
| | 9 | 1 | 231-4780 | 6 | SLEEVE | |
| | 10 | 1 | 231-8899 | 1 | TUBE AS | |
| | 11 | 1 | 231-9379 | 1 | HARNESS AS-TRANSMISSION | |
| | | 1 | 7X-6222 | 1 | PLUG AS-CONNECTOR (24-PIN) | |
| | | 1 | 155-2270 | 9 | KIT-CONNECTING PLUG (2-PIN) | |
| | | 1 | 155-2260 | 1 | KIT-CONNECTING PLUG (3-PIN) | |
| | | | | | (EACH KIT-CONNECTING INCLUDES PLUG AS AND WEDGE) | |
| | 12 | 1 | 232-1293 | 1 | GASKET | |
| Y | 13 | 1 | 233-1759 | 1 | VALVE GP-RELIEF (TRANSMISSION HYDRAULIC CONTROL) | 400 |
| | 14 | 1 | 030-7947 | 1 | ELBOW | |
| | 15 | 1 | 130-5300 | 1 | CLIP | |
| | 16 | 1 | 132-5789 | 5 | CLIP | |
| | 17 | 1 | 2L-3793 | 3 | BOLT (3/8-16X2.25-IN) | |
| | 18 | 1 | 2R-6806 | 1 | CONNECTOR | |
| | 19 | 1 | 3J-1907 | 3 | SEAL-O-RING | |
| | 20 | 1 | 4J-5573 | 1 | SEAL-O-RING | |
| M | 21 | 1 | 5P-8245 | 4 | WASHER-HARD (13.5X25.5X3-MM THK) | |
| M | 22 | 1 | 8T-0281 | 4 | BOLT (M16X2X80-MM) | |
| M | 23 | 1 | 6V-3823 | 4 | BOLT (M12X1.75X60-MM) | |
| | 24 | 1 | 6V-5839 | 15 | WASHER (11X21X2.5-MM THK) | |
| M | 25 | 1 | 6V-5842 | 16 | BOLT (M10X1.5X40-MM) | |
| | 26 | 1 | 7B-1597 | 1 | CLIP | |
| | 27 | 1 | 8M-2773 | 1 | CLIP | |
| | 28 | 1 | 5P-6718 | 12 | SEAL-O-RING | |
| M | 29 | 1 | 8T-6869 | 12 | BOLT (M8X1.25X60-MM) | |
| | 30 | 1 | 9M-1974 | 12 | WASHER-HARD (8.8X16X2-MM THK) | |
| | 31 | 1 | 9X-8268 | 4 | WASHER (17.5X30X3.5-MM THK) | |

M-METRIC PART
Y-SEPARATE ILLUSTRATION

## 230-6314 CONTROL GP-TRANSMISSION HYD (contd.)

i02282676

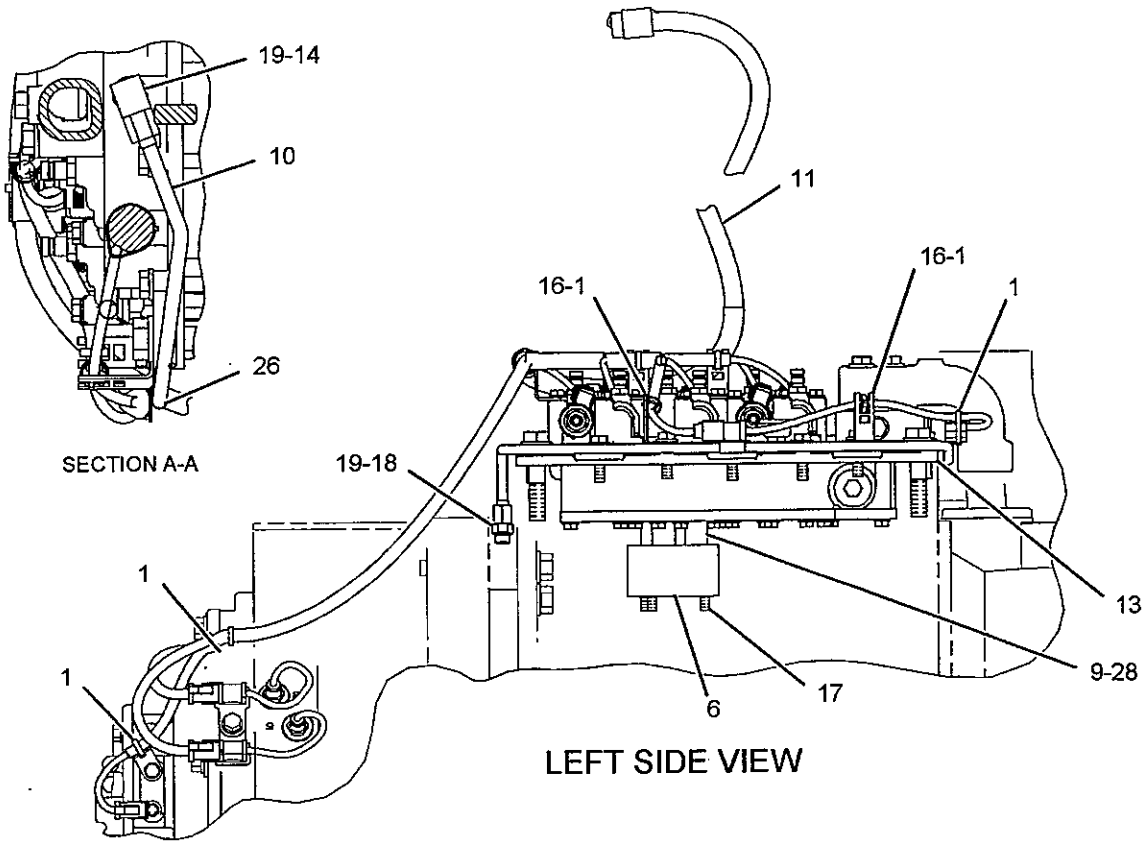


LEFT SIDE VIEW

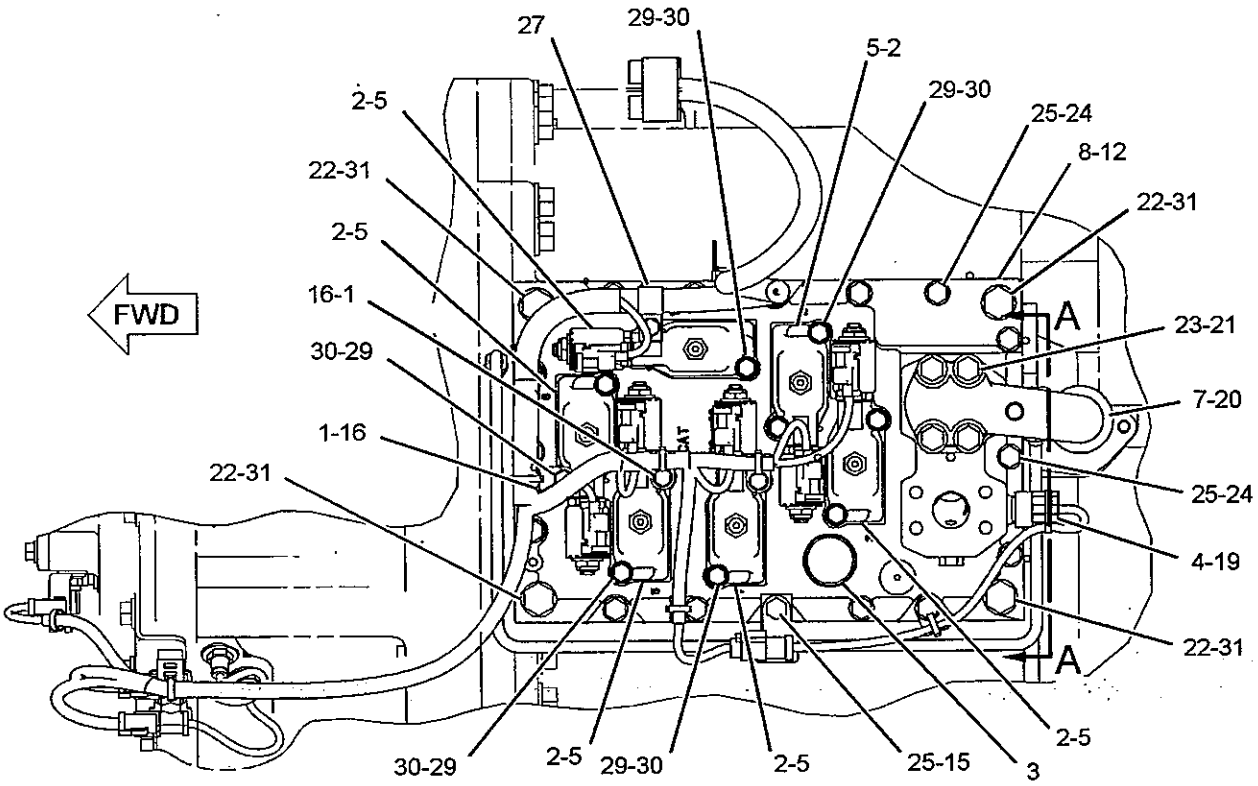


TOP VIEW

GRAPHIC #1

<END>

g01142867

# POWER TRAIN

## 234-3738 CONTROL GP-TRANSMISSION HYD

S/N: MDA1-UP
PART OF 230-6321 TRANSMISSION AR
AN ATTACHMENT

SMCS-3073, 3167

i02283509

| NOTE | REF NO | GRAPHIC REF | PART NUMBER | QTY | PART NAME 1 2 3 4 5 6 (PRODUCT LEVEL) | SEE PAGE |
|---|---|---|---|---|---|---|
| | 1 | 1 | 3S-2093 | 8 | STRAP-CABLE | |
| | 2 | 1 | 8S-0768 | 6 | SEAL-O-RING | |
| | 3 | 1 | 9G-5127 | 1 | BREATHER AS | |
| Y | 4 | 1 | 118-7226 | 1 | SENSOR GP-TEMPERATURE (TRANSMISSION OIL) | 219 |
| Y | 5 | 1 | 244-3114 | 6 | VALVE GP-MODULATING (24-VOLT) (TRANSMISSION CLUTCH) | 398 |
| | 6 | 1 | 231-0860 | 1 | ELBOW | |
| | 7 | 1 | 231-4779 | 1 | COVER | |
| | 8 | 1 | 231-4780 | 6 | SLEEVE | |
| | 9 | 1 | 231-8900 | 1 | TUBE AS | |
| | 10 | 1 | 231-9379 | 1 | HARNESS AS-TRANSMISSION | |
| | | 1 | 7X-6222 | 1 | PLUG AS-CONNECTOR (24-PIN) | |
| | | 1 | 3E-4367 | 1 | RING-RETAINING | |
| M | | 1 | 3E-8558 | 1 | BOLT (M5X0.8X39.37-MM) | |
| | | 1 | 9X-3265 | 2 | SEAL-CONNECTOR (24-PIN) | |
| | | 1 | 8T-8737 | 8 | PLUG-SEAL | |
| | | 1 | 155-2270 | 9 | KIT-CONNECTING PLUG (2-PIN) | |
| | | 1 | 155-2260 | 1 | KIT-CONNECTING PLUG (3-PIN) | |
| | | | | | (EACH KIT-CONNECTING INCLUDES PLUG & WEDGE) | |
| | 11 | 1 | 232-1293 | 1 | GASKET | |
| Y | 12 | 1 | *233-1759* | 1 | VALVE GP-RELIEF (TRANSMISSION HYDRAULIC CONTROL) | 400 |
| | 13 | 1 | 030-7947 | 2 | ELBOW | |
| | 14 | 1 | 130-5300 | 1 | CLIP | |
| | 15 | 1 | 132-5789 | 5 | CLIP | |
| | 16 | 1 | 3J-1907 | 3 | SEAL-O-RING | |
| | 17 | 1 | 4J-5573 | 1 | SEAL-O-RING | |
| M | 18 | 1 | 5P-8245 | 4 | WASHER-HARD (13.5X25.5X3-MM THK) | |
| M | 19 | 1 | 8T-0281 | 4 | BOLT (M16X2X80-MM) | |
| M | 20 | 1 | 6V-3823 | 4 | BOLT (M12X1.75X60-MM) | |
| | 21 | 1 | 6V-5839 | 15 | WASHER (11X21X2.5-MM THK) | |
| M | 22 | 1 | 6V-5842 | 16 | BOLT (M10X1.5X40-MM) | |
| | 23 | 1 | 7B-1597 | 1 | CLIP | |
| | 24 | 1 | 8M-2773 | 1 | CLIP | |
| | 25 | 1 | 5P-6718 | 12 | SEAL-O-RING | |
| M | 26 | 1 | 8T-6869 | 12 | BOLT (M8X1.25X60-MM) | |
| | 27 | 1 | 9M-1974 | 12 | WASHER-HARD (8.8X16X2-MM THK) | |
| | 28 | 1 | 9X-8268 | 4 | WASHER (17.5X30X3.5-MM THK) | |

M-METRIC PART
Y-SEPARATE ILLUSTRATION

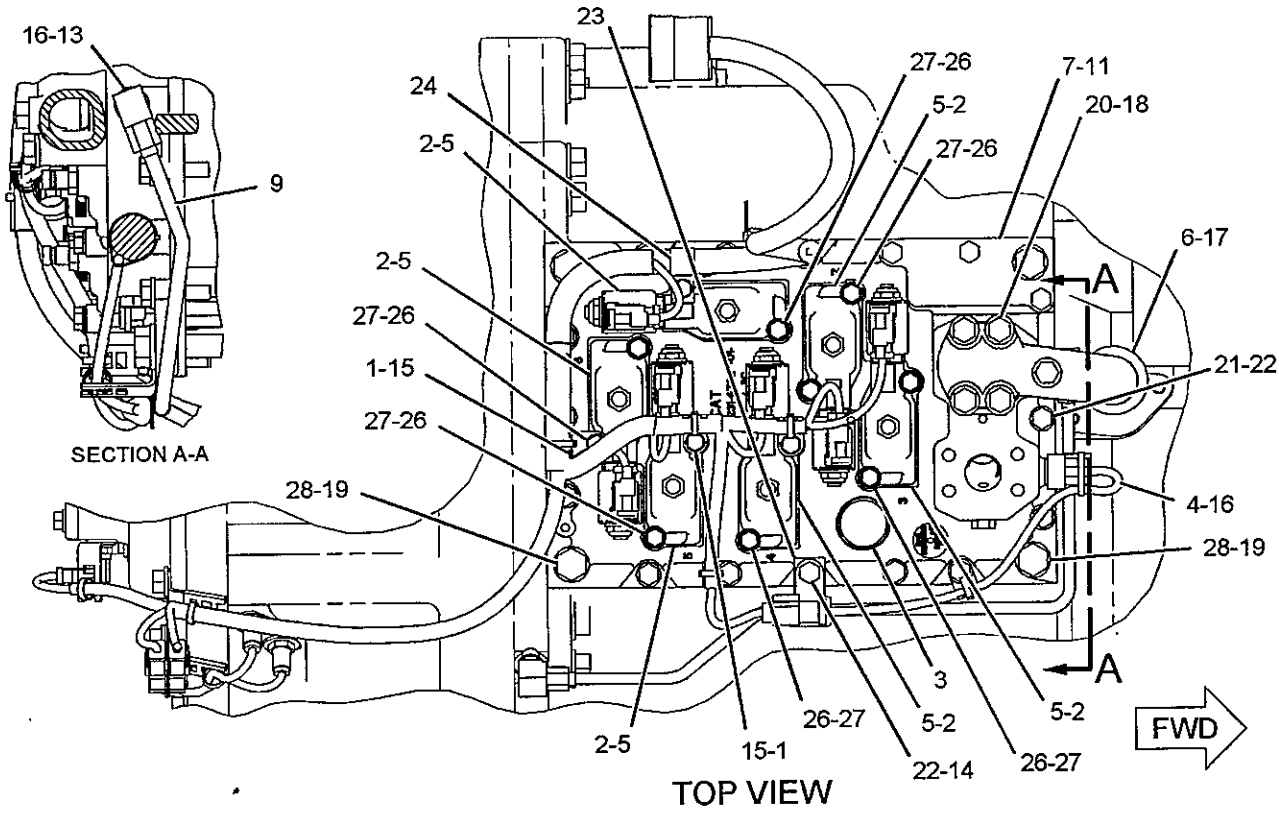


TOP VIEW

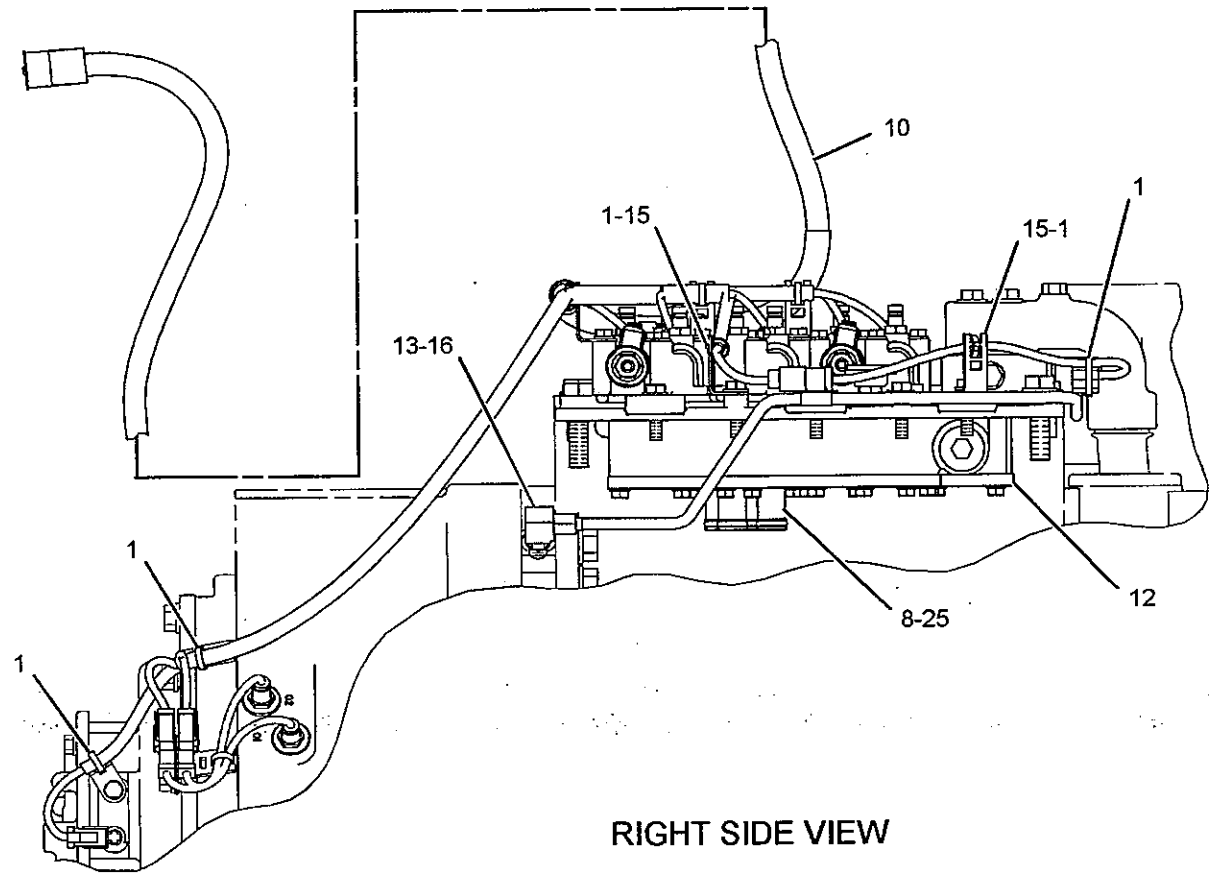


RIGHT SIDE VIEW

GRAPHIC #1 **<END>** g01143683

# 203-8105 COOLER & MTG GP-AXLE OIL

S/N: JMS1-UP
PART OF 233-9749 COOLER AR-AXLE OIL
AN ATTACHMENT

SMCS-1365

i01633281

| NOTE | REF NO | GRAPHIC REF | PART NUMBER | QTY | PART NAME 1 2 3 4 5 6 (PRODUCT LEVEL) | SEE PAGE |
|---|---|---|---|---|---|---|
| | 1 | 1 | **9C-2538** | 2 | PLATE | |
| | 2 | 1 | **130-5202** | 2 | VALVE GP-CHECK (AXLE OIL COOLER BYPASS) | |
| | | | | | (EACH INCLUDES) | |
| | | 1 | **6V-9746** | 1 | SEAL-O-RING | |
| | | 1 | **4K-1388** | 1 | SEAL-O-RING | |
| | | 1 | **3D-2824** | 1 | SEAL-O-RING | |
| | 3 | 1 | **200-4169** | 1 | COOLER AS-AXLE OIL (AXLE) | |
| | 4 | 1 | **203-8657** | 2 | BRACKET | |
| I | 5 | 1 | **204-8744** | 2 | HOSE AS | |
| | 6 | 1 | *148-8392* | 2 | ELBOW AS | |
| | | | | | (EACH INCLUDES) | |
| | | 1 | **6V-9853** | 1 | ELBOW | |
| | | 1 | **6V-9746** | 1 | SEAL-O-RING | |
| | 7 | 1 | *148-8442* | 4 | TEE AS | |
| | | | | | (EACH INCLUDES) | |
| | | 1 | **8T-1685** | 1 | TEE | |
| | | 1 | **6V-9746** | 2 | SEAL-O-RING | |
| | | 1 | **7M-8485** | 1 | SEAL-O-RING | |
| | 8 | 1 | **8T-4121** | 12 | WASHER-HARD (11X21X2.5-MM THK) | |
| M | 9 | 1 | **8T-4133** | 4 | NUT (M10X1.5-THD) | |
| M | 10 | 1 | **8T-4136** | 4 | BOLT (M10X1.5X25-MM) | |
| M | 11 | 1 | **8T-4195** | 4 | BOLT (M10X1.5X30-MM) | |

I-REFER TO HYDRAULIC INFORMATION SYSTEM
M-METRIC PART

## 203-8105 COOLER & MTG GP-AXLE OIL (contd.) i01633281

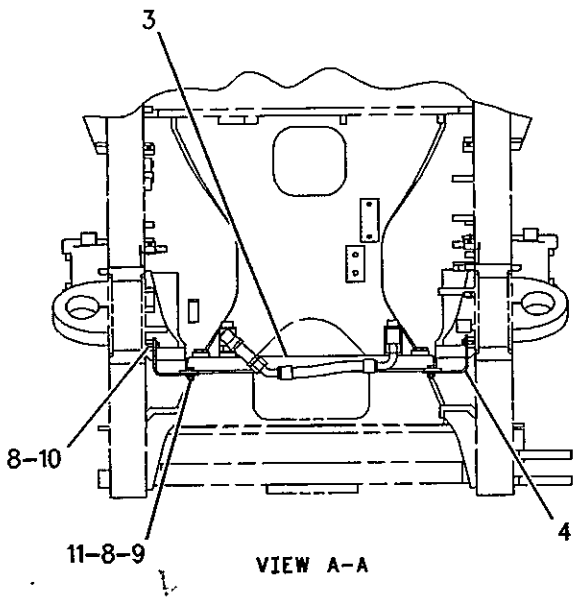


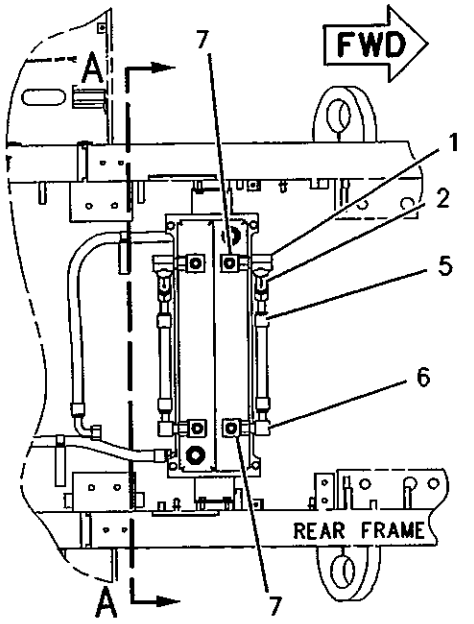


TOP VIEW

GRAPHIC #1 <END> g00829131

## 233-9749 COOLER AR-AXLE OIL

S/N: JMS1-UP
AN ATTACHMENT

SMCS-1365 i02282980

| NOTE | PART NUMBER | QTY | PART NAME 1 2 3 4 5 6 (PRODUCT LEVEL) | SEE PAGE |
|---|---|---|---|---|
| Y | *203-8105* | 1 | COOLER & MTG GP-AXLE OIL | 317 |
| Y | *206-2758* | 1 | GUARD GP-CRANKCASE | 434 |
| Y | *267-2172* | 1 | GUARD GP-LINES (AXLE OIL) | 443 |
| Y | *249-1269* | 1 | HARDWARE GP-LOADER FRAME (AXLE OIL COOLER) | 447 |
| Y | *249-1265* | 1 | HARDWARE GP-REAR FRAME (AXLE OIL COOLER) | 450 |
| Y | *199-0924* | 1 | LINES GP-AXLE OIL COOLER (AXLE) | 345 |
| Y | *237-4821* | 1 | LINES GP-AXLE OIL COOLER (CHASSIS) | 347 |
| Y | *249-0045* | 1 | PUMP & MTG GP-AXLE OIL COOLER | 369 |
| Y | *248-6574* | 1 | WIRING GP-AXLE OIL COOLER | 253 |

Y-SEPARATE ILLUSTRATION

<END>

## 233-9750 COOLER AR-AXLE OIL

S/N: JMS1-UP
PART OF 266-1620 MACHINE AR
AN ATTACHMENT

SMCS-1365 i02282984

| NOTE | PART NUMBER | QTY | PART NAME 1 2 3 4 5 6 (PRODUCT LEVEL) | SEE PAGE |
|---|---|---|---|---|
| Y | *249-1269* | 1 | HARDWARE GP-LOADER FRAME (AXLE OIL COOLER) | 447 |
| Y | *249-1265* | 1 | HARDWARE GP-REAR FRAME (AXLE OIL COOLER) | 450 |
| Y | *199-0924* | 1 | LINES GP-AXLE OIL COOLER (AXLE) | 345 |
| M | **6V-5845** | 2 | BOLT (M20X2.5X70-MM) | |
| | **204-7806** | 1 | BRACKET | |
| | **205-1632** | 2 | BRACKET AS | |
| M | **8T-3597** | 2 | NUT-WELD (M12X1.75-THD) | |
| | **6V-9832** | 1 | CAP AS | |
| | **204-0136** | 1 | PULLEY | |
| | *148-8451* | 1 | TEE AS | |
| | **6V-8791** | 1 | TEE-FACE SEAL | |
| | **6V-9746** | 3 | SEAL-O-RING | |
| | **204-7435** | 1 | TUBE AS | |
| | **205-7131** | 1 | TUBE AS | |
| | **160-7183** | 2 | WASHER | |
| | **5P-8248** | 2 | WASHER-HARD (20X36.5X3.5-MM THK) | |

M-METRIC PART
Y-SEPARATE ILLUSTRATION

<END>

# POWER TRAIN

## 229-8335 COVER GP-SHIPPING

**S/N: MDA1-UP; DGZ1-UP**
**PART OF 230-6311, 230-6321 TRANSMISSION AR**
**ALSO AN ATTACHMENT**

**SMCS-3064** i02089878

| NOTE | PART NUMBER | QTY | PART NAME 1 2 3 4 5 6 (PRODUCT LEVEL) | SEE PAGE |
|---|---|---|---|---|
| | 0S-0509 | 2 | BOLT (3/8-16X0.75-IN) | |
| | 0T-0573 | 6 | BOLT (3/8-16X2.75-IN) | |
| M | 6A-5591 | 20 | BOLT (M12X1.75X25-MM) | |
| | 1S-3730 | 1 | COVER | |
| | 5M-1152 | 2 | COVER | |
| | 5M-3154 | 1 | COVER | |
| | 7J-0402 | 1 | COVER | |
| | 8X-6166 | 3 | COVER | |
| | 117-2927 | 1 | COVER-SHIPPING | |
| | 1S-6595 | 1 | GASKET-OIL SUPPLY | |
| | 8E-7365 | 1 | GASKET | |
| | 8E-7366 | 3 | GASKET | |
| | 8E-7367 | 1 | GASKET | |
| | 4K-0367 | 2 | NUT-FULL (5/8-11-THD) | |
| | 9S-8752 | 6 | NUT-FULL (3/8-16-THD) | |
| | 5F-3106 | 2 | SEAL-O-RING | |
| | 6V-5839 | 6 | WASHER (11X21X2.5-MM THK) | |

M-METRIC PART

**<END>**

# 7K-5636 COVER GP-TMSN OIL FILLER CAP

S/N: JMS1-UP
PART OF 246-5480 PROTECTION GP-VANDALISM
AN ATTACHMENT

SMCS-3005, 3030, 7315

i02282461

| NOTE | REF NO | GRAPHIC REF | PART NUMBER | QTY | PART NAME 1 2 3 4 5 6 (PRODUCT LEVEL) | SEE PAGE |
|---|---|---|---|---|---|---|
| | 1 | 1 | 1L-5072 | 1 | DOWEL | |
| | 2 | 1 | 9M-7394 | 1 | LEVER (COVER) | |
| | 3 | 1 | 7K-5634 | 1 | COVER | |
| | 4 | 1 | 2J-7761 | 1 | RING-RETAINING | |
| | 5 | 1 | 5P-8502 | 1 | PADLOCK GP | |
| | | 1 | 5P-8500 | 1 | KEY | |
| | | 1 | 8Y-6364 | 1 | SLEEVE | |

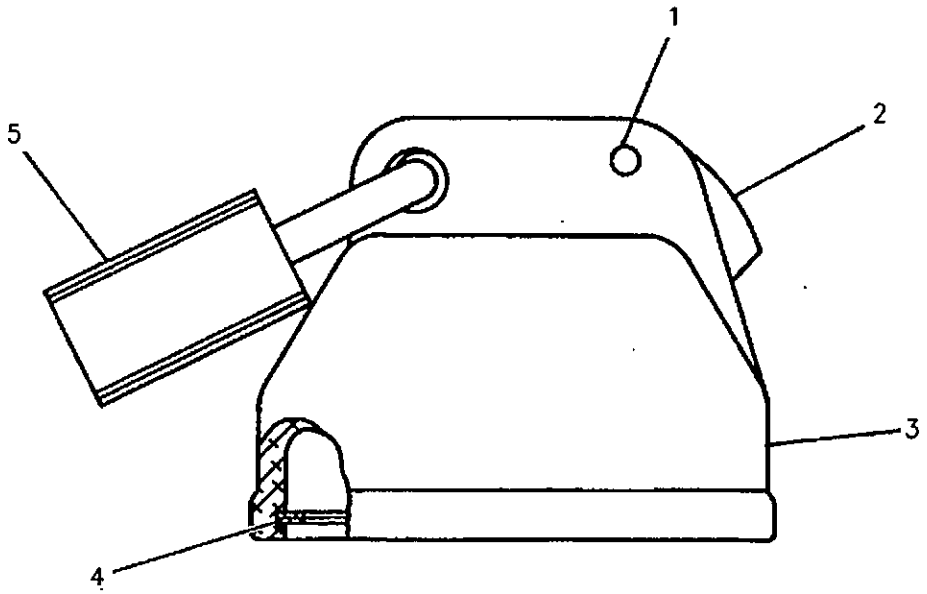


GRAPHIC #1

<END>

g00523924

# POWER TRAIN

## 232-7553 DIFFERENTIAL & BEVEL GEAR GP

S/N: JMS1-UP

PART OF 232-7555, 232-7556, 252-7848 DIFFERENTIAL & BEVEL GEAR GP

SMCS-3256, 3258

i01990372

| NOTE | REF NO | GRAPHIC REF | PART NUMBER | QTY | PART NAME 1 2 3 4 5 6 (PRODUCT LEVEL) | SEE PAGE |
|---|---|---|---|---|---|---|
| | 1 | 1 | 217-3683 | 4 | WASHER-THRUST | |
| | 2 | 1 | 233-6755 | 4 | PINION-DIF BEVEL | |
| | 3 | 1 | 149-2915 | 4 | BEARING-SLEEVE | |
| | 4 | 1 | 105-8735 | 2 | GEAR-DIFFERENTIAL BEVEL (20 TEETH) | |
| | 5 | 1 | 208-7535 | 2 | WASHER-THRUST | |
| M | 6 | 1 | 127-1960 | 8 | SCREW-FLAT HEAD (M6X1X16MM) | |
| | 7 | 1 | 232-7352 | 1 | SPIDER | |
| | 8 | 1 | 208-7534 | 1 | CASE AS | |
| | 9 | 1 | 5P-8247 | 12 | WASHER-HARD (17X32X3.5MM THK) | |
| M | 10 | 1 | 8T-0207 | 12 | BOLT (M16X2.0X100MM) | |

M-METRIC PART

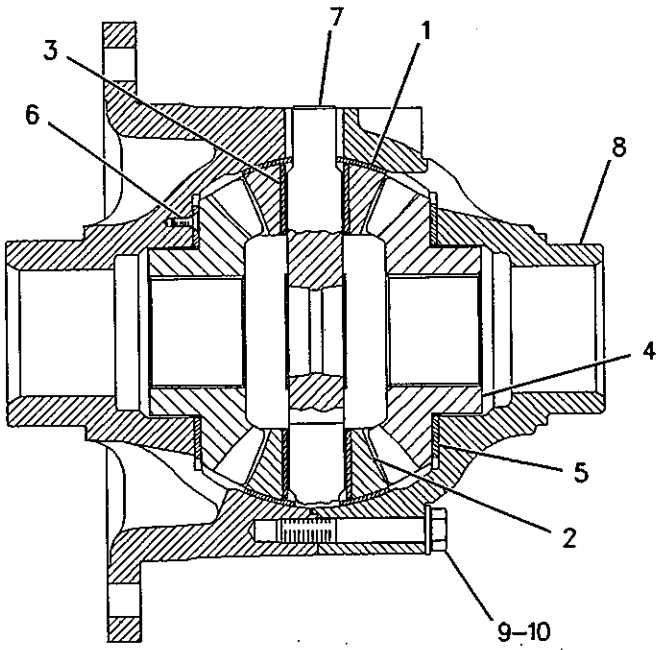


GRAPHIC #1

<END>

g00290821

# POWER TRAIN

## 232-7555 DIFFERENTIAL & BEVEL GEAR GP

S/N: JMS1-UP

PART OF 232-7559 AXLE AR-FIXED

FIELD REPLACEMENT ORDER 232-7556–PAGE 325

SMCS-3256, 3258

i02087976

| NOTE | REF NO | GRAPHIC REF | PART NUMBER | QTY | PART NAME 1 2 3 4 5 6 (PRODUCT LEVEL) | SEE PAGE |
|---|---|---|---|---|---|---|
| M | 1 | 1 | 6V-8455 | 2 | BOLT (M10X1.5X16-MM) | |
| | 2 | 1 | 5K-3661 | 2 | LOCK-BEARING | |
| | 3 | 1 | 108-8369 | 1 | RING-ADJUSTABLE | |
| | 4 | 1 | 8S-9076 | 1 | CUP-BEARING | |
| | 5 | 1 | 8S-9075 | 1 | CONE-BEARING | |
| | 6 | 1 | 9H-0846 | 1 | SEAL-O-RING | |
| | 7 | 1 | 173-0545 | 1 | CARRIER AS | |
| M | | 1 | 6V-8132 | 2 | BOLT (M24X3X120-MM) | |
| | | 1 | 6V-8237 | 2 | WASHER (26X44X4-MM THK) | |
| | | 1 | 7M-8485 | 1 | SEAL-O-RING | |
| M | | 1 | 8T-0370 | 2 | BOLT (M30X3.5X140-MM) | |
| | | 1 | 9S-4181 | 1 | PLUG | |
| | | 1 | 9X-8399 | 2 | WASHER (33X56X6-MM THK) | |
| M | 8 | 1 | 160-8510 | 18 | BOLT (M20X2.5X60-MM) | |
| B | 9 | 1 | 108-0058 | 1 | SHIM PACK (INCLUDES 14-SHIMS) | |
| M | 10 | 1 | 6V-5686 | 16 | BOLT (M16X2X50-MM) | |
| | 11 | 1 | 5P-8247 | 16 | WASHER-HARD (17X32X3.5-MM THK) | |
| | 12 | 1 | 105-8719 | 1 | HOUSING-PINION | |
| | 13 | 1 | 6K-5529 | 1 | CONE-BEARING | |
| | 14 | 1 | 9F-1399 | 1 | SEAL-O-RING | |
| M | 15 | 1 | 8T-4136 | 6 | BOLT (M10X1.5X25-MM) | |
| | 16 | 1 | 8T-4121 | 6 | WASHER-HARD (11X21X2.5-MM THK) | |
| | 17 | 1 | 6W-4750 | 1 | NUT-SPECIAL | |
| | 18 | 1 | 6W-4749 | 1 | WASHER (75.5X106X5-MM THK) | |
| | 19 | 1 | 105-8730 | 1 | SHAFT-BEVEL PINION (13-TEETH) | |
| | | 1 | 105-8731 | 1 | GEAR-BEVEL (44-TEETH) | |
| | 20 | 1 | 133-4292 | 1 | SEAL-LIP TYPE | |
| | 21 | 1 | 8R-7425 | 1 | RETAINER | |
| | 22 | 1 | 6K-5528 | 1 | CUP-BEARING | |
| | 23 | 1 | 8E-7926 | 1 | CONE-BEARING | |
| | 24 | 1 | 8E-7927 | 1 | CUP-BEARING | |
| | 25 | 1 | 8F-5900 | 1 | SEAL-O-RING | |
| | 26 | 1 | 6B-4370 | 1 | CUP-BEARING | |
| | 27 | 1 | 1L-7518 | 1 | CONE-BEARING | |
| M | 28 | 1 | 8T-0652 | 24 | BOLT (M20X2.5X45-MM) | |
| | 29 | 1 | 5P-8248 | 44 | WASHER-HARD (20X36.5X3.5-MM THK) | |
| Y | 30 | 1 | 232-7553 | 1 | DIFFERENTIAL & BEVEL GEAR GP | 322 |
| | 31 | 1 | 8R-2861 | 1 | RING-ADJUSTMENT | |
| | 32 | 1 | 156-3640 | 1 | YOKE AS | |
| | | 1 | 107-5612 | 1 | GUARD | |
| | | 1 | 156-4308 | 1 | KIT-SERVICE (INCLUDES PLUG, SEAL, & RETAINING RING) | |
| M | 33 | 1 | 6V-5845 | 2 | BOLT (M20X2.5X70-MM) | |

B-USE AS REQUIRED
M-METRIC PART
Y-SEPARATE ILLUSTRATION

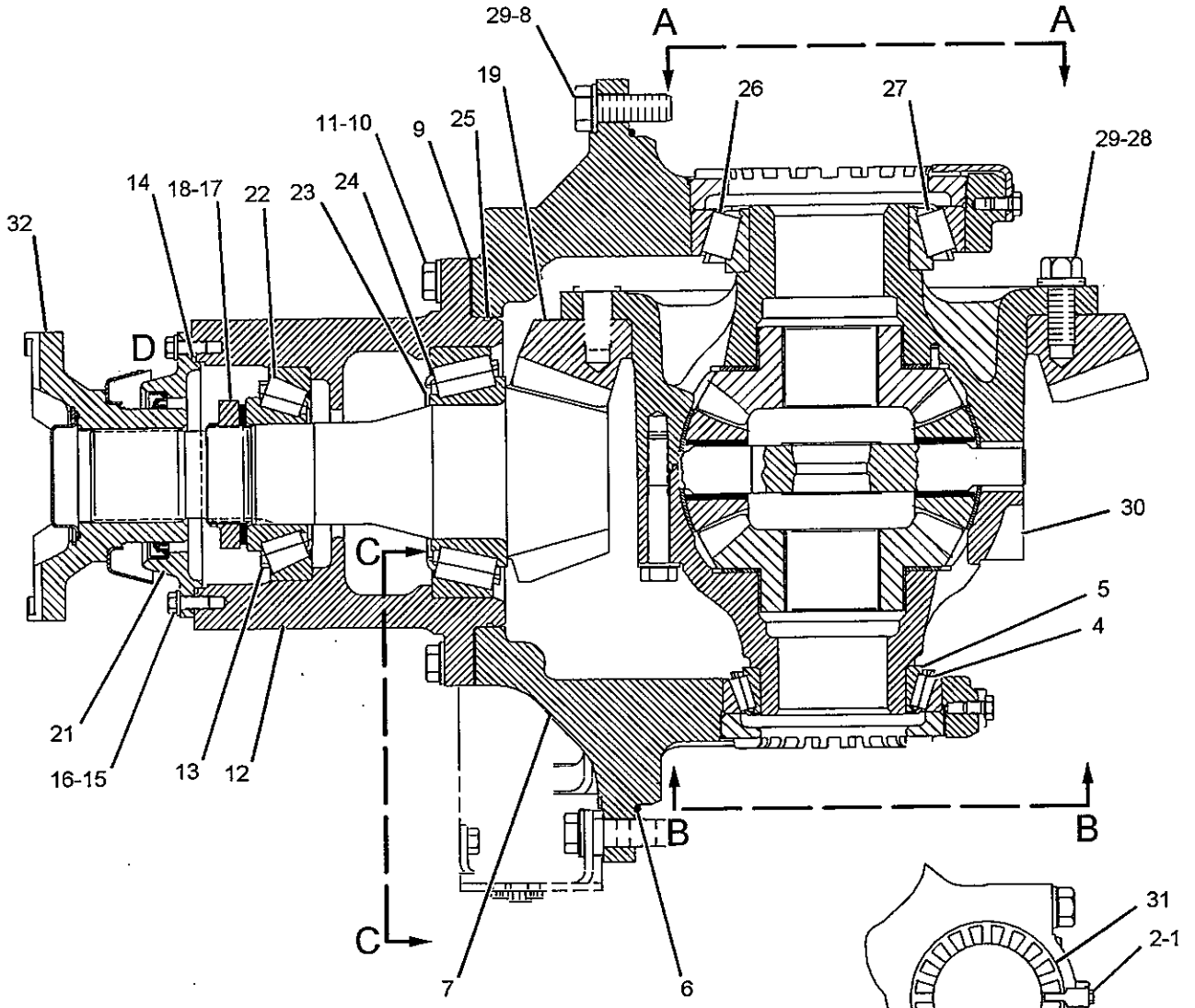





VIEW A-A

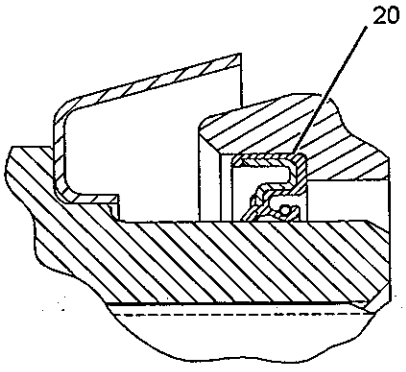


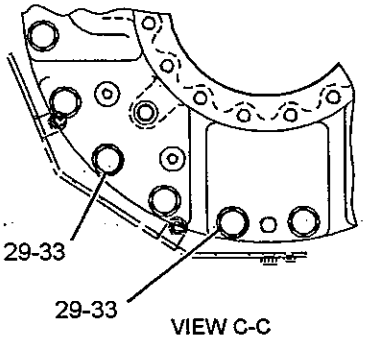


VIEW C-C

VIEW OF AREA D

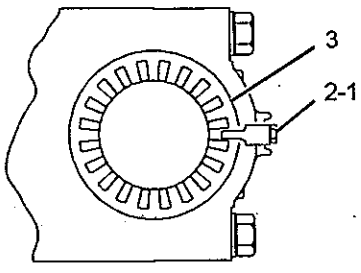


VIEW B-B

GRAPHIC #1

**<END>**

g01066482

# POWER TRAIN

## 232-7556 DIFFERENTIAL & BEVEL GEAR GP

S/N: JMS1-UP

FIELD REPLACEMENT FOR 232-7555–PAGE 323

SMCS-3256, 3258

i02087969

| NOTE | REF NO | GRAPHIC REF | PART NUMBER | QTY | PART NAME 1 2 3 4 5 6 (PRODUCT LEVEL) | SEE PAGE |
|---|---|---|---|---|---|---|
| M | 1 | 1 | 6V-8455 | 2 | BOLT (M10X1.5X16-MM) | |
| | 2 | 1 | 5K-3661 | 2 | LOCK-BEARING | |
| | 3 | 1 | 108-8369 | 1 | RING-ADJUSTABLE | |
| | 4 | 1 | 8S-9076 | 1 | CUP-BEARING | |
| | 5 | 1 | 8S-9075 | 1 | CONE-BEARING | |
| | 6 | 1 | 9H-0846 | 1 | SEAL-O-RING | |
| | 7 | 1 | 173-0545 | 1 | CARRIER AS | |
| M | | 1 | 6V-8132 | 2 | BOLT (M24X3X120-MM) | |
| | | 1 | 6V-8237 | 2 | WASHER (26X44X4-MM THK) | |
| | | 1 | 7M-8485 | 1 | SEAL-O-RING | |
| M | | 1 | 8T-0370 | 2 | BOLT (M30X3.5X140-MM) | |
| | | 1 | 9S-4181 | 1 | PLUG | |
| | | 1 | 9X-8399 | 2 | WASHER (33X56X6-MM THK) | |
| Z | | 1 | | 1 | CAP-BEARING END | |
| Z | | 1 | | 1 | CAP-BEARING END | |
| Z | | 1 | | 1 | CARRIER | |
| M | 8 | 1 | 160-8510 | 18 | BOLT (M20X2.5X60-MM) | |
| B | 9 | 1 | 108-0058 | 1 | SHIM PACK (INCLUDES 14-SHIMS) | |
| M | 10 | 1 | 6V-5686 | 16 | BOLT (M16X2X50-MM) | |
| | 11 | 1 | 5P-8247 | 16 | WASHER-HARD (17X32X3.5-MM THK) | |
| | 12 | 1 | 105-8719 | 1 | HOUSING-PINION | |
| | 13 | 1 | 6K-5529 | 1 | CONE-BEARING | |
| | 14 | 1 | 9F-1399 | 1 | SEAL-O-RING | |
| M | 15 | 1 | 8T-4136 | 6 | BOLT (M10X1.5X25-MM) | |
| | 16 | 1 | 8T-4121 | 6 | WASHER-HARD (11X21X2.5-MM THK) | |
| | 17 | 1 | 6W-4750 | 1 | NUT-SPECIAL | |
| | 18 | 1 | 6W-4749 | 1 | WASHER (75.5X106X5-MM THK) | |
| | 19 | 1 | 105-8730 | 1 | SHAFT-BEVEL PINION (13-TEETH) | |
| | | 1 | 105-8731 | 1 | GEAR-BEVEL (44-TEETH) | |
| | 20 | 1 | 133-4292 | 1 | SEAL-LIP TYPE | |
| | 21 | 1 | 8R-7425 | 1 | RETAINER | |
| | 22 | 1 | 6K-5528 | 1 | CUP-BEARING | |
| | 23 | 1 | 8E-7926 | 1 | CONE-BEARING | |
| | 24 | 1 | 8E-7927 | 1 | CUP-BEARING | |
| | 25 | 1 | 8F-5900 | 1 | SEAL-O-RING | |
| | 26 | 1 | 6B-4370 | 1 | CUP-BEARING | |
| | 27 | 1 | 1L-7518 | 1 | CONE-BEARING | |
| M | 28 | 1 | 8T-0652 | 24 | BOLT (M20X2.5X45-MM) | |
| | 29 | 1 | 5P-8248 | 44 | WASHER-HARD (20X36.5X3.5-MM THK) | |
| Y | 30 | 1 | 232-7553 | 1 | DIFFERENTIAL & BEVEL GEAR GP | 322 |
| | 31 | 1 | 8R-2861 | 1 | RING-ADJUSTMENT | |
| | 32 | 1 | 156-3640 | 1 | YOKE AS | |
| | | 1 | 107-5612 | 1 | GUARD | |
| | | 1 | 156-4308 | 1 | KIT-SERVICE | |
| | | | | | (INCLUDES PLUG, SEAL, & RETAINING RING) | |
| M | 33 | 1 | 6V-5845 | 2 | BOLT (M20X2.5X70-MM) | |

B-USE AS REQUIRED
M-METRIC PART
Y-SEPARATE ILLUSTRATION
Z-NOT SERVICED SEPARATELY

## 232-7556 DIFFERENTIAL & BEVEL GEAR GP *(contd.)* i02087969

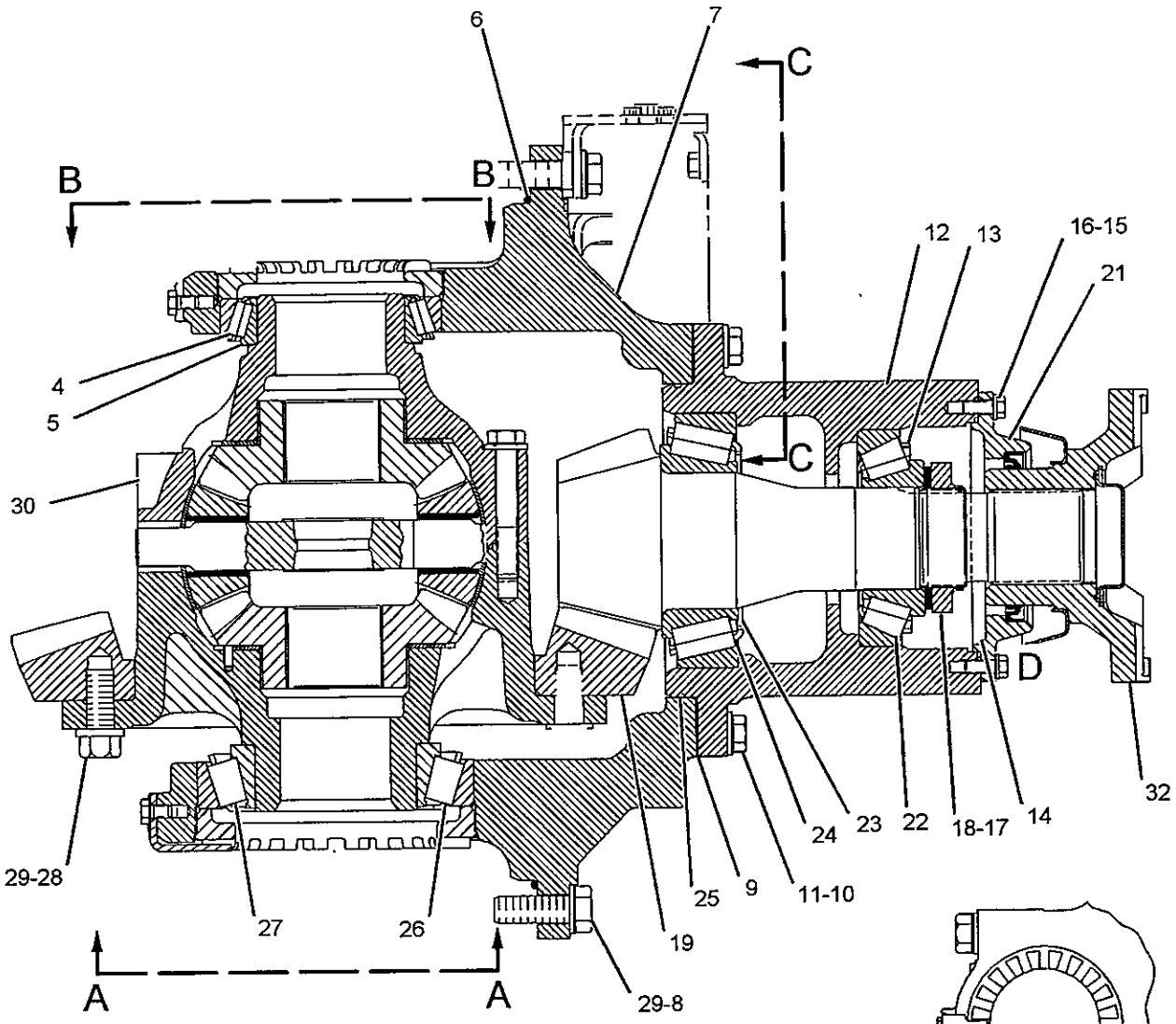


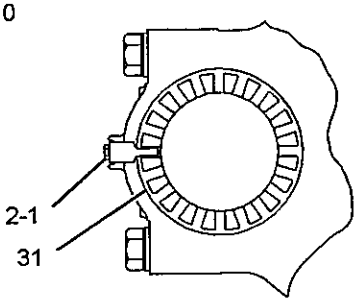


VIEW A-A

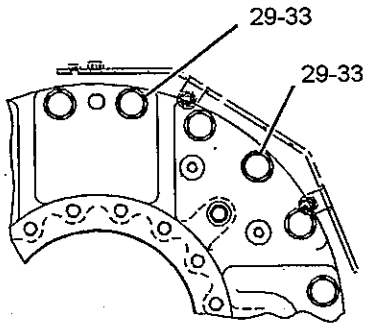


VIEW C-C

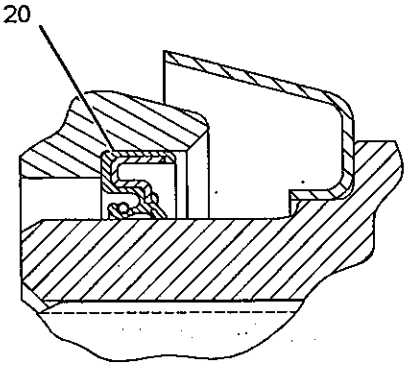


VIEW OF AREA D

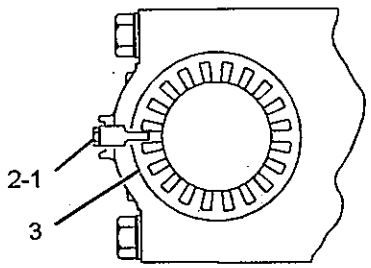


VIEW B-B

GRAPHIC #1

**<END>**

g01066503

# 251-7687 DIFFERENTIAL & BEVEL GEAR GP-
## LIMITED SLIP, FIXED AXLE
S/N: JMS1-UP
PART OF 232-7735 AXLE AR-FIXED
AN ATTACHMENT

SMCS-3256, 3258

i02148316

| NOTE | REF NO | GRAPHIC REF | PART NUMBER | QTY | PART NAME 1 2 3 4 5 6 (PRODUCT LEVEL) | SEE PAGE |
|---|---|---|---|---|---|---|
| | 1 | 1 | 6K-5528 | 1 | CUP-BEARING | |
| | 2 | 1 | 6K-5529 | 1 | CONE-BEARING | |
| | 3 | 1 | 8E-7926 | 1 | CONE-BEARING | |
| | 4 | 1 | 8E-7927 | 1 | CUP-BEARING | |
| | 5 | 1 | 5K-3661 | 2 | LOCK-BEARING | |
| | 6 | 1 | 6W-4749 | 1 | WASHER (75.5X106X5-MM THK) | |
| | 7 | 1 | 8F-5900 | 1 | SEAL-O-RING | |
| | 8 | 1 | 8R-2861 | 1 | RING-ADJUSTMENT | |
| | 9 | 1 | 8R-7425 | 1 | RETAINER | |
| | 10 | 1 | 9F-1399 | 1 | SEAL-O-RING | |
| | 11 | 1 | 9H-0846 | 1 | SEAL-O-RING | |
| | 12 | 1 | 105-8719 | 1 | HOUSING-PINION | |
| B | 13 | 1 | 108-0058 | 1 | SHIM PACK (INCLUDES 14-SHIMS) | |
| | 14 | 1 | 108-8369 | 1 | RING-ADJUSTABLE | |
| | 15 | 1 | 105-8730 | 1 | SHAFT-BEVEL PINION (13-TEETH) | |
| | 15A | 1 | 105-8731 | 1 | GEAR-BEVEL (44-TEETH) | |
| | 16 | 1 | 133-4292 | 1 | SEAL-LIP TYPE | |
| | 17 | 1 | 156-3640 | 1 | YOKE AS | |
| | 17A | 1 | 107-5612 | 1 | GUARD | |
| | 17B | 1 | 156-4308 | 1 | KIT-SERVICE (INCLUDES PLUG, SEAL, AND RETAINING RING) | |
| Y | 18 | 1 | 159-5963 | 1 | DIFFERENTIAL GP-LIMITED SLIP | 335 |
| | 19 | 1 | 173-0545 | 1 | CARRIER AS | |
| M | 19A | 1 | 6V-8132 | 2 | BOLT (M24X3X120-MM) | |
| | 19B | 1 | 6V-8237 | 2 | WASHER (26X44X4-MM THK) | |
| | 19C | 1 | 7M-8485 | 1 | SEAL-O-RING | |
| M | 19D | 1 | 8T-0370 | 2 | BOLT (M30X3.5X140-MM) | |
| | 19E | 1 | 9S-4181 | 1 | PLUG | |
| | 19F | 1 | 9X-8399 | 2 | WASHER (33X56X6-MM THK) | |
| Z | 19G | 1 | | 1 | CAP-BEARING END | |
| Z | 19H | 1 | | 1 | CAP-BEARING END | |
| | 20 | 1 | 251-6482 | 1 | BEARING AS-TAPERED ROLLER | |
| | 21 | 1 | 251-6483 | 1 | BEARING AS-TAPERED ROLLER | |
| M | 22 | 1 | 160-8510 | 18 | BOLT (M20X2.5X60-MM) | |
| | 23 | 1 | 219-7569 | 24 | BOLT (M20X2.5X45-MM) | |
| | 24 | 1 | 5P-8247 | 16 | WASHER-HARD (17X32X3.5-MM THK) | |
| | 25 | 1 | 5P-8248 | 44 | WASHER-HARD (20X36.5X3.5-MM THK) | |
| M | 26 | 1 | 6V-5686 | 16 | BOLT (M16X2X50-MM) | |
| M | 27 | 1 | 6V-5845 | 2 | BOLT (M20X2.5X70-MM) | |
| M | 28 | 1 | 6V-8455 | 2 | BOLT (M10X1.5X16-MM) | |
| | 29 | 1 | 6W-4750 | 1 | NUT-SPECIAL | |
| | 30 | 1 | 8T-4121 | 6 | WASHER-HARD (11X21X2.5-MM THK) | |
| M | 31 | 1 | 8T-4136 | 6 | BOLT (M10X1.5X25-MM) | |

B-USE AS REQUIRED
M-METRIC PART
Y-SEPARATE ILLUSTRATION
Z-NOT SERVICED SEPARATELY

## 251-7687 DIFFERENTIAL & BEVEL GEAR GP *(contd.)*

i02148316

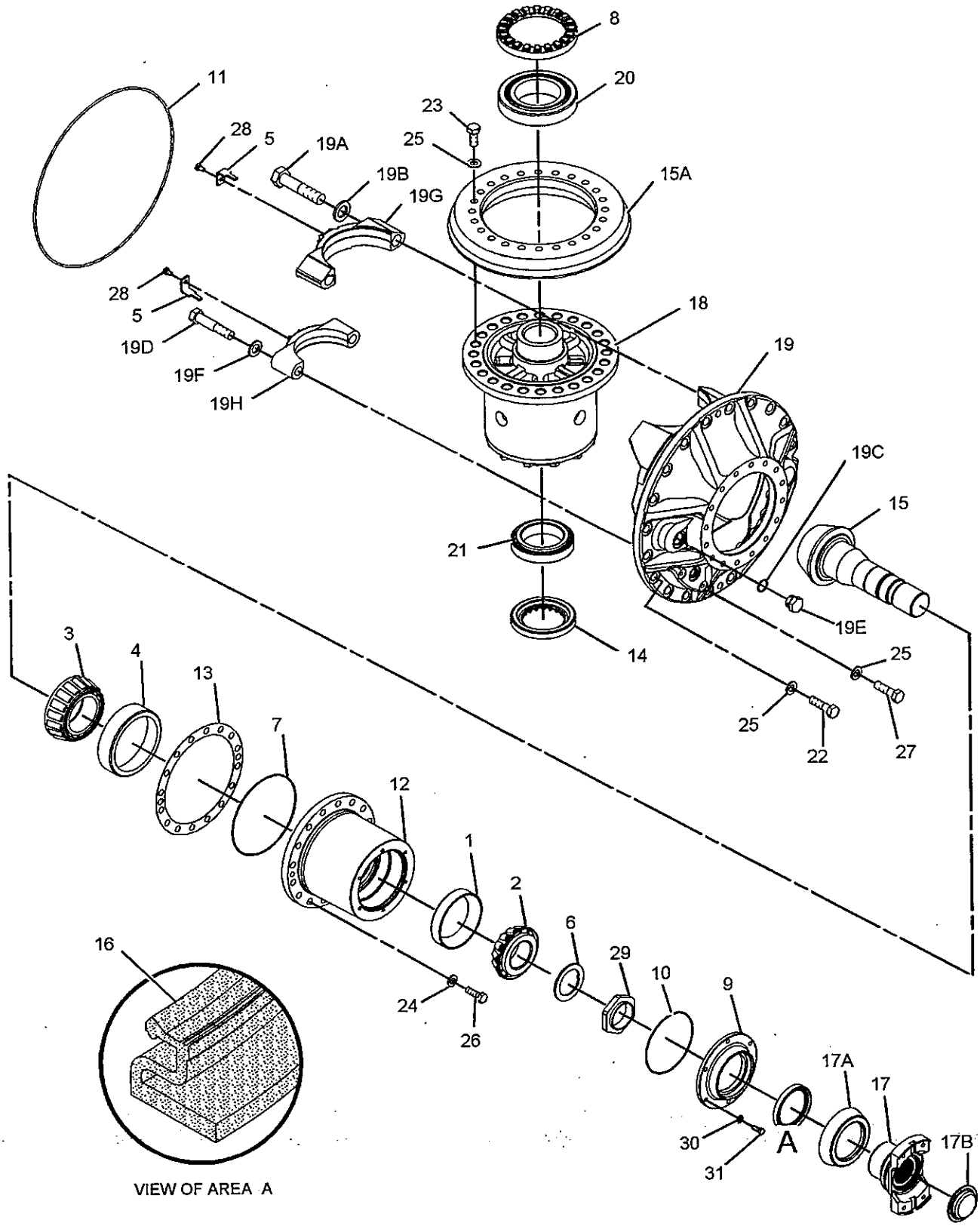


VIEW OF AREA A

GRAPHIC #1

**<END>**

g01091430

# POWER TRAIN

## 251-7688 DIFFERENTIAL & BEVEL GEAR GP

S/N: JMS1-UP

PART OF 232-7733 AXLE AR-OSCILLATING

AN ATTACHMENT

SMCS-3256, 3258

i02148299

| NOTE | REF NO | GRAPHIC REF | PART NUMBER | QTY | PART NAME 1 2 3 4 5 6 (PRODUCT LEVEL) | SEE PAGE |
|---|---|---|---|---|---|---|
| | 1 | 1 | 6K-5528 | 1 | CUP-BEARING | |
| | 2 | 1 | 6K-5529 | 1 | CONE-BEARING | |
| | 3 | 1 | 8E-7926 | 1 | CONE-BEARING | |
| | 4 | 1 | 8E-7927 | 1 | CUP-BEARING | |
| | 5 | 1 | 5K-3661 | 2 | LOCK-BEARING | |
| | 6 | 1 | 6W-4749 | 1 | WASHER (75.5X106X5-MM THK) | |
| | 7 | 1 | 8F-5900 | 1 | SEAL-O-RING | |
| | 8 | 1 | 8R-2861 | 1 | RING-ADJUSTMENT | |
| | 9 | 1 | 8R-7425 | 1 | RETAINER | |
| | 10 | 1 | 9F-1399 | 1 | SEAL-O-RING | |
| | 11 | 1 | 9H-0846 | 1 | SEAL-O-RING | |
| | 12 | 1 | 105-8719 | 1 | HOUSING-PINION | |
| B | 13 | 1 | 108-0058 | 1 | SHIM PACK (INCLUDES 14-SHIMS) | |
| | 14 | 1 | 108-8369 | 1 | RING-ADJUSTABLE | |
| | 15 | 1 | 105-8730 | 1 | SHAFT-BEVEL PINION (13-TEETH) | |
| | | | 105-8731 | 1 | GEAR-BEVEL (44-TEETH) | |
| | 16 | 1 | 133-4292 | 1 | SEAL-LIP TYPE | |
| | 17 | 1 | 156-3640 | 1 | YOKE AS | |
| | | 1 | 107-5612 | 1 | GUARD | |
| | | 1 | 156-4308 | 1 | KIT-SERVICE (INCLUDES PLUG, SEAL, AND RETAINING RING) | |
| Y | 18 | 1 | 159-5963 | 1 | DIFFERENTIAL GP-LIMITED SLIP | 335 |
| | 19 | 1 | 173-0545 | 1 | CARRIER AS | |
| M | 19A | 1 | 8T-0370 | 2 | BOLT (M30X3.5X140-MM) | |
| | 19B | 1 | 9X-8399 | 2 | WASHER (33X56X6-MM THK) | |
| | 19C | 1 | 7M-8485 | 1 | SEAL-O-RING | |
| M | 19D | 1 | 6V-8132 | 2 | BOLT (M24X3X120-MM) | |
| | 19E | 1 | 9S-4181 | 1 | PLUG | |
| | 19F | 1 | 6V-8237 | 2 | WASHER (26X44X4-MM THK) | |
| | 20 | 1 | 251-6482 | 1 | BEARING AS-TAPERED ROLLER | |
| | 21 | 1 | 251-6483 | 1 | BEARING AS-TAPERED ROLLER | |
| M | 22 | 1 | 160-8510 | 18 | BOLT (M20X2.5X60-MM) | |
| | 23 | 1 | 219-7569 | 24 | BOLT (M20X2.5X45-MM) | |
| | 24 | 1 | 5P-8247 | 16 | WASHER-HARD (17X32X3.5-MM THK) | |
| | 25 | 1 | 5P-8248 | 44 | WASHER-HARD (20X36.5X3.5-MM THK) | |
| M | 26 | 1 | 6V-5686 | 16 | BOLT (M16X2X50-MM) | |
| M | 27 | 1 | 6V-5845 | 2 | BOLT (M20X2.5X70-MM) | |
| M | 28 | 1 | 6V-8455 | 2 | BOLT (M10X1.5X16-MM) | |
| | 29 | 1 | 6W-4750 | 1 | NUT-SPECIAL | |
| | 30 | 1 | 8T-4121 | 6 | WASHER-HARD (11X21X2.5-MM THK) | |
| M | 31 | 1 | 8T-4136 | 6 | BOLT (M10X1.5X25-MM) | |

B-USE AS REQUIRED
M-METRIC PART
Y-SEPARATE ILLUSTRATION

## 251-7688 DIFFERENTIAL & BEVEL GEAR GP *(contd.)* i02148299

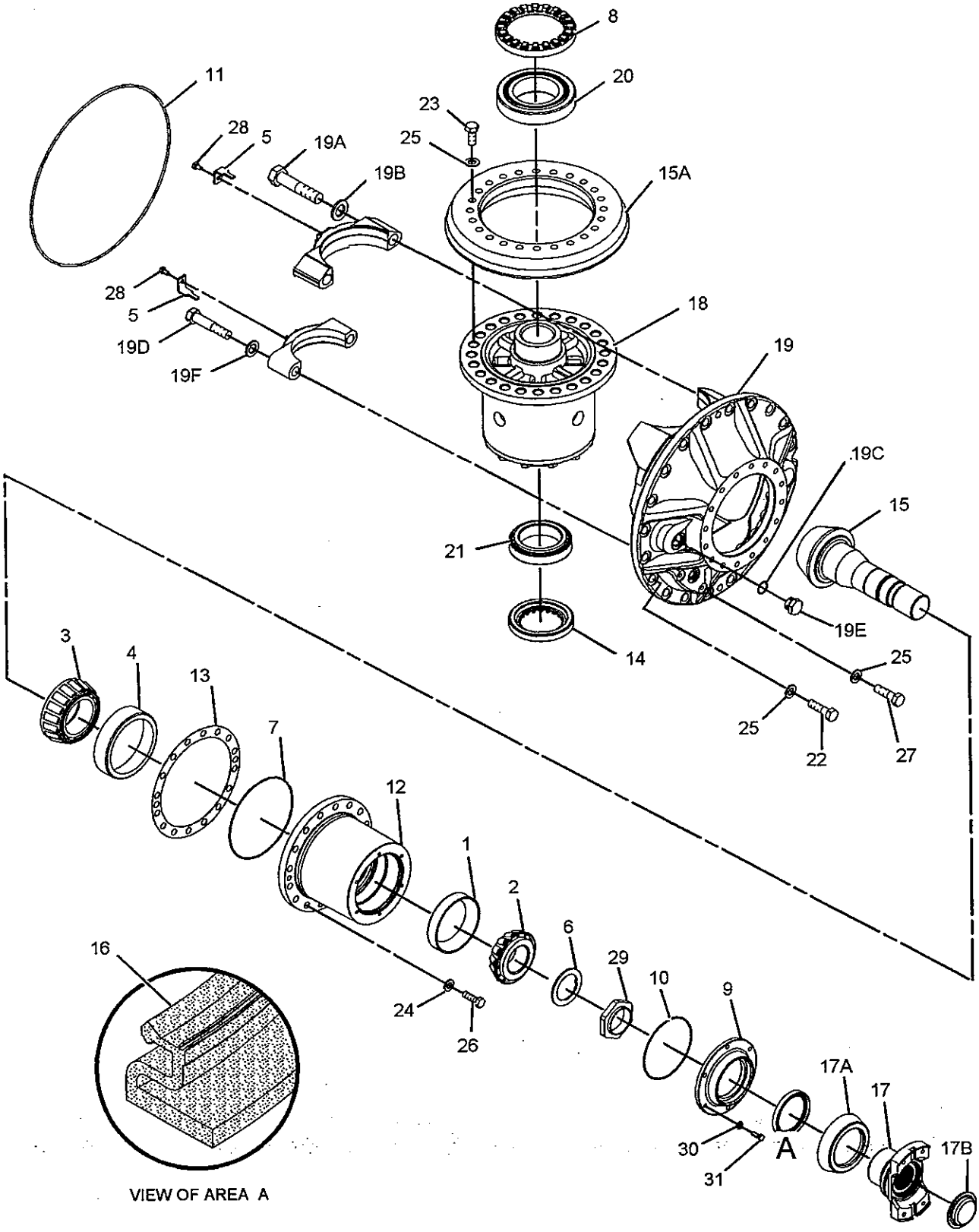


VIEW OF AREA A

GRAPHIC #1 **<END>** g01129133

# POWER TRAIN

## 251-7689 DIFFERENTIAL & BEVEL GEAR GP–NOSPIN

S/N: JMS1-UP
PART OF 232-7731 AXLE AR-OSCILLATING
AN ATTACHMENT

SMCS-3256, 3258

i02281402

| NOTE | REF NO | GRAPHIC REF | PART NUMBER | QTY | PART NAME 1 2 3 4 5 6 (PRODUCT LEVEL) | SEE PAGE |
|---|---|---|---|---|---|---|
| | 1 | 1 | 6K-5528 | 1 | CUP-BEARING | |
| | 2 | 1 | 6K-5529 | 1 | CONE-BEARING | |
| | 3 | 1 | 8E-7926 | 1 | CONE-BEARING | |
| | 4 | 1 | 8E-7927 | 1 | CUP-BEARING | |
| | 5 | 1 | 5K-3661 | 2 | LOCK-BEARING | |
| | 6 | 1 | 6W-4749 | 1 | WASHER (75.5X106X5-MM THK) | |
| | 7 | 1 | 8F-5900 | 1 | SEAL-O-RING | |
| | 8 | 1 | 8R-2861 | 1 | RING-ADJUSTMENT | |
| | 9 | 1 | 8R-7425 | 1 | RETAINER | |
| | 10 | 1 | 9F-1399 | 1 | SEAL-O-RING | |
| | 11 | 1 | 9H-0846 | 1 | SEAL-O-RING | |
| | 12 | 1 | 105-8719 | 1 | HOUSING-PINION | |
| B | 13 | 1 | 108-0058 | 1 | SHIM PACK (INCLUDES 14-SHIMS) | |
| | 14 | 1 | 108-8369 | 1 | RING-ADJUSTABLE | |
| | 15 | 1 | 105-8730 | 1 | SHAFT-BEVEL PINION (13-TEETH) | |
| | 15A | 1 | 105-8731 | 1 | GEAR-BEVEL (44-TEETH) | |
| Y | 16 | 1 | *124-6555* | 1 | DIFFERENTIAL GP-NOSPIN | 337 |
| | 17 | 1 | 133-4292 | 1 | SEAL-LIP TYPE | |
| | 18 | 1 | 156-3640 | 1 | YOKE AS | |
| | 18A | 1 | 107-5612 | 1 | GUARD | |
| | 18B | 1 | 156-4308 | 1 | KIT-SERVICE (INCLUDES PLUG, SEAL, AND RETAINING RING) | |
| | 19 | 1 | 173-0545 | 1 | CARRIER AS | |
| M | 19A | 1 | 6V-8132 | 2 | BOLT (M24X3X120-MM) | |
| | 19B | 1 | 6V-8237 | 2 | WASHER (26X44X4-MM THK) | |
| | 19C | 1 | 7M-8485 | 1 | SEAL-O-RING | |
| M | 19D | 1 | 8T-0370 | 2 | BOLT (M30X3.5X140-MM) | |
| | 19E | 1 | 9S-4181 | 1 | PLUG | |
| | 19F | 1 | 9X-8399 | 2 | WASHER (33X56X6-MM THK) | |
| Z | 19G | 1 | | 1 | CAP-BEARING END | |
| Z | 19H | 1 | | 1 | CAP-BEARING END | |
| | 20 | 1 | 251-6482 | 1 | BEARING AS-TAPERED ROLLER | |
| | 21 | 1 | 251-6483 | 1 | BEARING AS-TAPERED ROLLER | |
| M | 22 | 1 | 160-8510 | 18 | BOLT (M20X2.5X60-MM) | |
| | 23 | 1 | 219-7569 | 24 | BOLT (M20X2.5X45-MM) | |
| | 24 | 1 | 5P-8247 | 16 | WASHER-HARD (17X32X3.5-MM THK) | |
| | 25 | 1 | 5P-8248 | 44 | WASHER-HARD (20X36.5X3.5-MM THK) | |
| M | 26 | 1 | 6V-5686 | 16 | BOLT (M16X2X50-MM) | |
| M | 27 | 1 | 6V-5845 | 2 | BOLT (M20X2.5X70-MM) | |
| M | 28 | 1 | 6V-8455 | 2 | BOLT (M10X1.5X16-MM) | |
| | 29 | 1 | 6W-4750 | 1 | NUT-SPECIAL | |
| | 30 | 1 | 8T-4121 | 6 | WASHER-HARD (11X21X2.5-MM THK) | |
| M | 31 | 1 | 8T-4136 | 6 | BOLT (M10X1.5X25-MM) | |

B-USE AS REQUIRED
M-METRIC PART
Y-SEPARATE ILLUSTRATION
Z-NOT SERVICED SEPARATELY

## 251-7689 DIFFERENTIAL & BEVEL GEAR GP *(contd.)*

i02281402

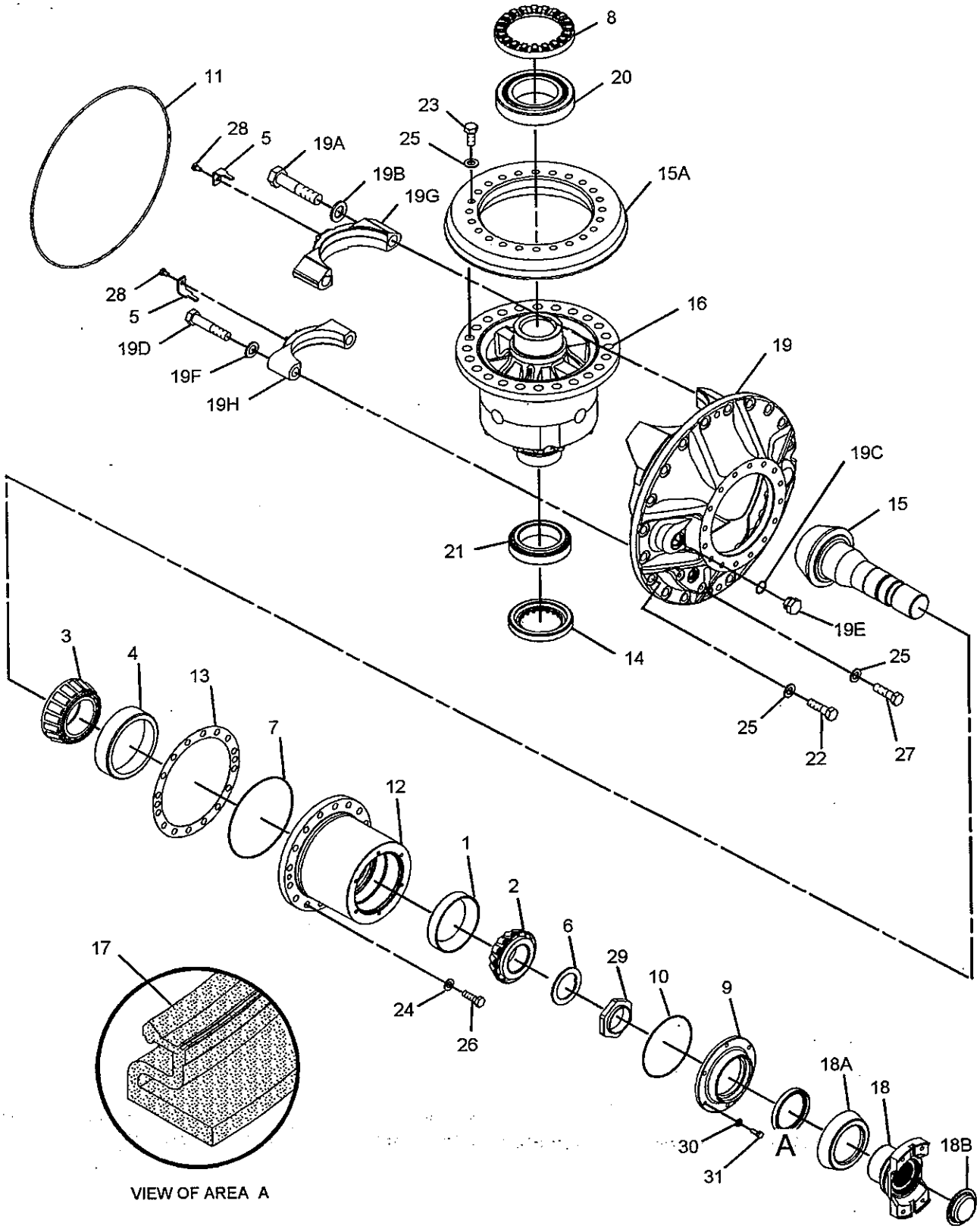


GRAPHIC #1

**<END>**

g01090442

# POWER TRAIN

## 252-7848 DIFFERENTIAL & BEVEL GEAR GP

S/N: JMS1-UP

PART OF 232-7558 AXLE AR-OSCILLATING

SMCS-3256, 3258

i02199241

| NOTE | REF NO | GRAPHIC REF | PART NUMBER | QTY | PART NAME 1 2 3 4 5 6 (PRODUCT LEVEL) | SEE PAGE |
|---|---|---|---|---|---|---|
| | 1 | 1 | 6K-5528 | 1 | CUP-BEARING | |
| | 2 | 1 | 6K-5529 | 1 | CONE-BEARING | |
| | 3 | 1 | 8E-7926 | 1 | CONE-BEARING | |
| | 4 | 1 | 8E-7927 | 1 | CUP-BEARING | |
| | 5 | 1 | 5K-3661 | 2 | LOCK-BEARING | |
| | 6 | 1 | 6W-4749 | 1 | WASHER (75.5X106X5-MM THK) | |
| | 7 | 1 | 8F-5900 | 1 | SEAL-O-RING | |
| | 8 | 1 | 8R-2861 | 1 | RING-ADJUSTMENT | |
| | 9 | 1 | 8R-7425 | 1 | RETAINER | |
| | 10 | 1 | 9F-1399 | 1 | SEAL-O-RING | |
| | 11 | 1 | 9H-0846 | 1 | SEAL-O-RING | |
| | 12 | 1 | 105-8719 | 1 | HOUSING-PINION | |
| B | 13 | 1 | 108-0058 | 1 | SHIM PACK (INCLUDES 14-SHIMS) | |
| | 14 | 1 | 108-8369 | 1 | RING-ADJUSTABLE | |
| | 15 | 1 | 105-8730 | 1 | SHAFT-BEVEL PINION (13-TEETH) | |
| | | | 105-8731 | 1 | GEAR-BEVEL (44-TEETH) | |
| | 16 | 1 | 133-4292 | 1 | SEAL-LIP TYPE | |
| | 17 | 1 | 156-3640 | 1 | YOKE AS | |
| | | 1 | 107-5612 | 1 | GUARD | |
| | | 1 | 156-4308 | 1 | KIT-SERVICE | |
| | | | | | (INCLUDES PLUG, SEAL, AND RETAINING RING) | |
| | 18 | 1 | 173-0545 | 1 | CARRIER AS | |
| M | | 1 | 6V-8132 | 2 | BOLT (M24X3X120-MM) | |
| | | 1 | 6V-8237 | 2 | WASHER (26X44X4-MM THK) | |
| | | 1 | 7M-8485 | 1 | SEAL-O-RING | |
| M | | 1 | 8T-0370 | 2 | BOLT (M30X3.5X140-MM) | |
| | | 1 | 9S-4181 | 1 | PLUG | |
| | | 1 | 9X-8399 | 2 | WASHER (33X56X6-MM THK) | |
| Y | 19 | 1 | 232-7553 | 1 | DIFFERENTIAL & BEVEL GEAR GP. | 322 |
| | 20 | 1 | 251-6482 | 1 | BEARING AS-TAPERED ROLLER | |
| | 21 | 1 | 251-6483 | 1 | BEARING AS-TAPERED ROLLER | |
| M | 22 | 1 | 160-8510 | 18 | BOLT (M20X2.5X60-MM) | |
| | 23 | 1 | 219-7569 | 24 | BOLT (M20X2.5X45-MM) | |
| | 24 | 1 | 5P-8247 | 16 | WASHER-HARD (17X32X3.5-MM THK) | |
| | 25 | 1 | 5P-8248 | 44 | WASHER-HARD (20X36.5X3.5-MM THK) | |
| M | 26 | 1 | 6V-5686 | 16 | BOLT (M16X2X50-MM) | |
| M | 27 | 1 | 6V-5845 | 2 | BOLT (M20X2.5X70-MM) | |
| M | 28 | 1 | 6V-8455 | 2 | BOLT (M10X1.5X16-MM) | |
| | 29 | 1 | 6W-4750 | 1 | NUT-SPECIAL | |
| | 30 | 1 | 8T-4121 | 6 | WASHER-HARD (11X21X2.5-MM THK) | |
| M | 31 | 1 | 8T-4136 | 6 | BOLT (M10X1.5X25-MM) | |

B-USE AS REQUIRED
M-METRIC PART
Y-SEPARATE ILLUSTRATION

## 252-7848 DIFFERENTIAL & BEVEL GEAR GP *(contd.)*

i02199241

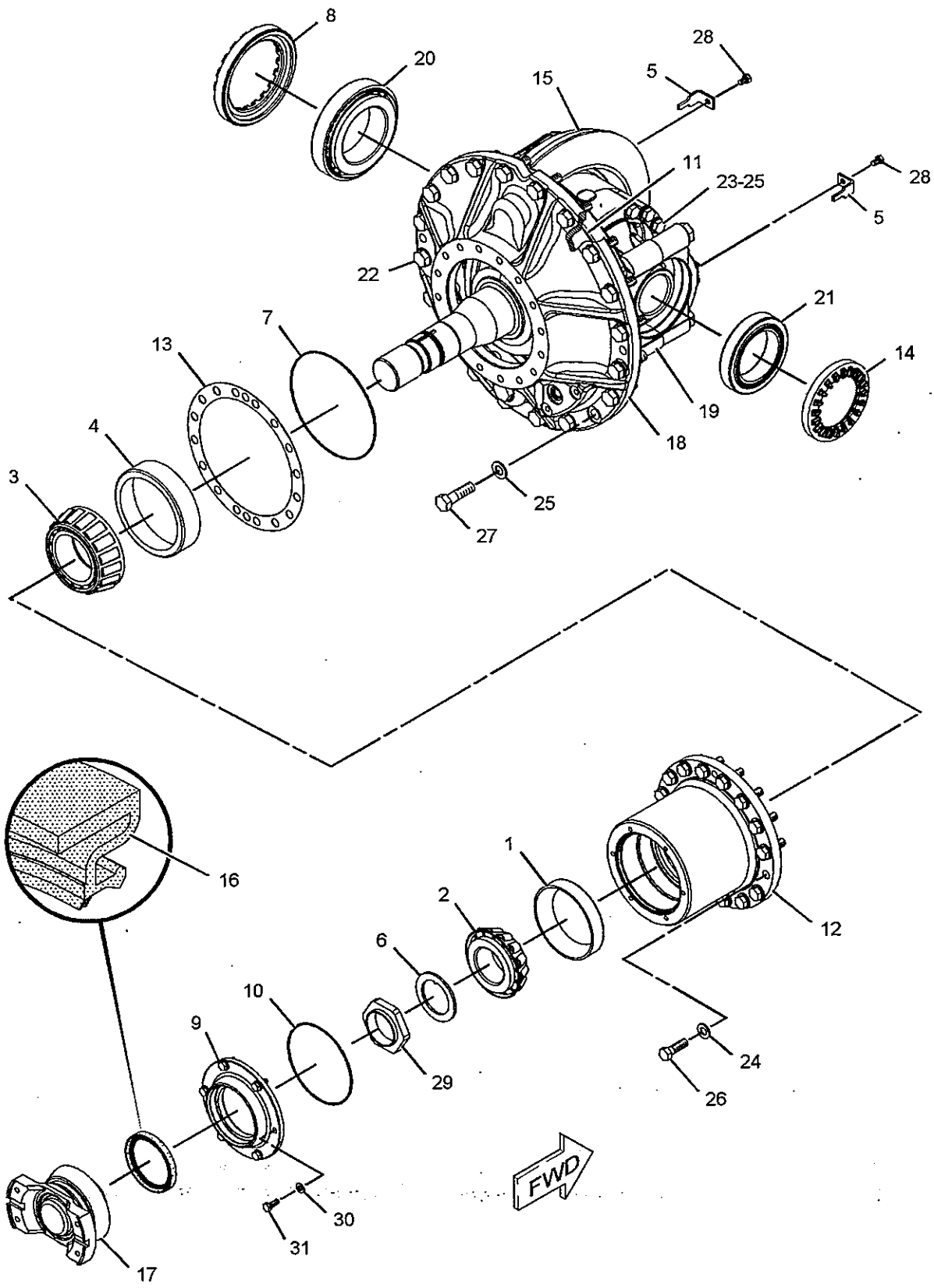


GRAPHIC #1

<END>

g01110975

# 159-5963 DIFFERENTIAL GP-LIMITED SLIP

**S/N: JMS1-UP**

**PART OF 251-7687, 251-7688 DIFFERENTIAL & BEVEL GEAR GP**

**AN ATTACHMENT**

**SMCS-3263**

**i01125538**

| NOTE | REF NO | GRAPHIC REF | PART NUMBER | QTY | PART NAME 1 2 3 4 5 6 (PRODUCT LEVEL) | SEE PAGE |
|---|---|---|---|---|---|---|
| | 1 | 1 | 112-7522 | 2 | GEAR-DIFFERENTIAL BEVEL (44 TEETH) | |
| | 2 | 1 | 104-6765 | 4 | PINION-DIFFERENTIAL BEVEL | |
| | 3 | 1 | 104-6766 | 2 | SHAFT-PINION | |
| | 4 | 1 | 104-6767 | 2 | HOUSING-ACTUATOR | |
| | 5 | 1 | 159-5964 | 2 | KIT-THIN DISC. | |
| | 6 | 1 | 159-5965 | 2 | KIT-THICK DISC | |
| | 7 | 1 | 112-7523 | 2 | WASHER-THRUST | |
| | 8 | 1 | 112-7524 | 1 | CASE AS | |
| M | 9 | 1 | 6V-4429 | 12 | BOLT (M16X2.0X40MM) | |
| | 10 | 1 | 9X-8268 | 12 | WASHER (3.0MM THK) | |

M-METRIC PART

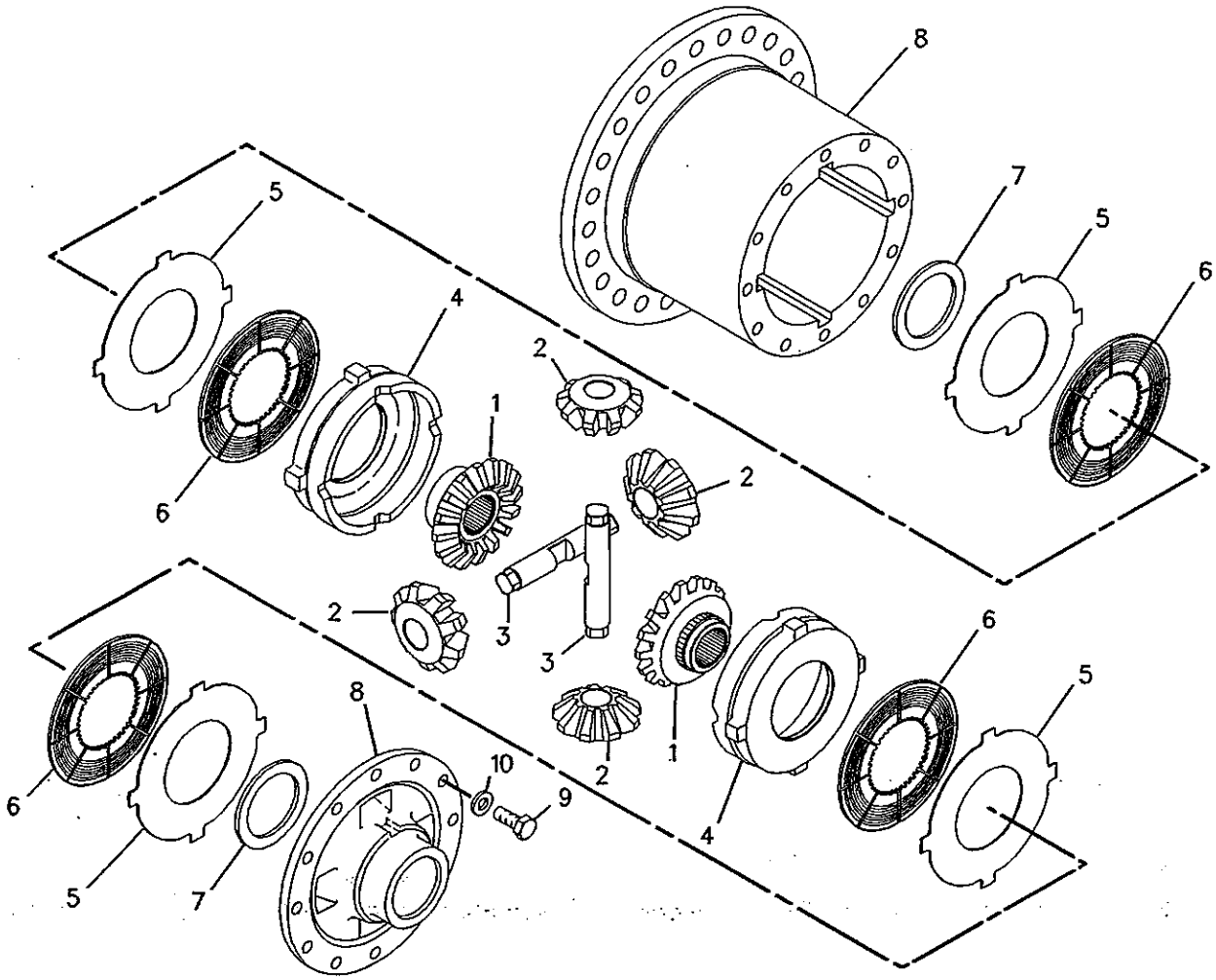


GRAPHIC #1

**<END>**

g00492562

# 110-3799 DIFFERENTIAL GP-NOSPIN

S/N: JMS1-UP

PART OF 124-6555 DIFFERENTIAL GP-NOSPIN

AN ATTACHMENT

SMCS-3265

i01135019

| NOTE | REF NO | GRAPHIC REF | PART NUMBER | QTY | PART NAME 1 2 3 4 5 6 (PRODUCT LEVEL) | SEE PAGE |
|---|---|---|---|---|---|---|
| | 1 | 1 | 112-8120 | 2 | GEAR-SIDE (72 TEETH) | |
| | 2 | 1 | 2G-4987 | 2 | SPRING | |
| | 3 | 1 | 112-8990 | 2 | CLUTCH AS | |
| | 4 | 1 | 112-8119 | 1 | SPIDER AS | |
| | 5 | 1 | 8W-5256 | 2 | RETAINER | |

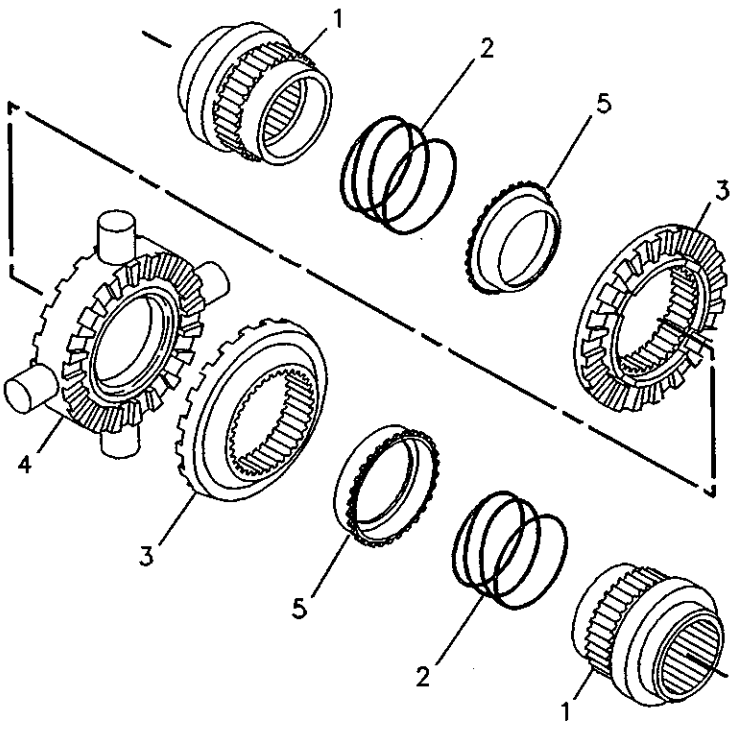


GRAPHIC #1

<END>

g00121091

# 124-6555 DIFFERENTIAL GP-NOSPIN

S/N: JMS1-UP

PART OF 251-7689 DIFFERENTIAL & BEVEL GEAR GP

AN ATTACHMENT

SMCS-3265 i01581688

| NOTE | REF NO | GRAPHIC REF | PART NUMBER | QTY | PART NAME 1 2 3 4 5 6 (PRODUCT LEVEL) | SEE PAGE |
|---|---|---|---|---|---|---|
| | 1 | 1 | 208-7534 | 1 | CASE AS | |
| | 2 | 1 | 5P-8247 | 12 | WASHER-HARD (17X32X3.5MM THK) | |
| M | 3 | 1 | 8T-0207 | 12 | BOLT (M16X2.0X100MM) | |
| Y | 4 | 1 | 110-3799 | 1 | DIFFERENTIAL GP-NOSPIN | 336 |

M-METRIC PART
Y-SEPARATE ILLUSTRATION

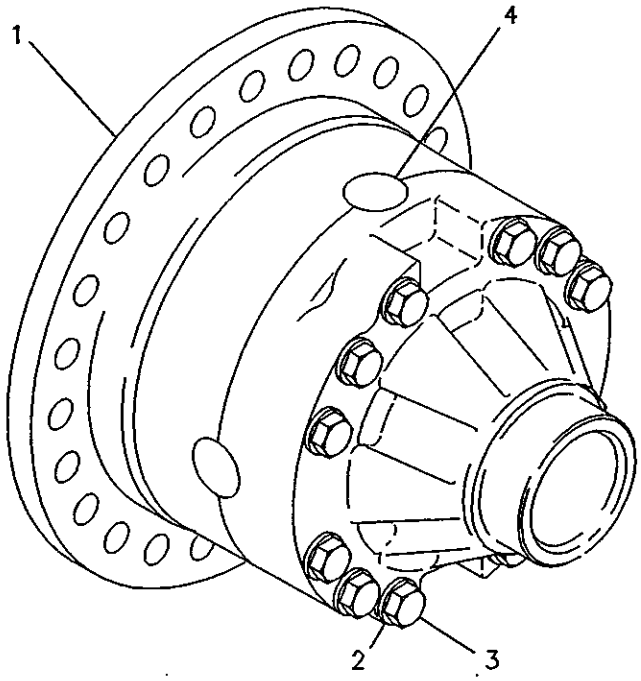


GRAPHIC #1 <END> g00121090

# 173-0558 DRAIN GP-ECOLOGY–POWER TRAIN

S/N: JMS1-UP
AN ATTACHMENT

SMCS-3260

i01593284

| NOTE | REF NO | GRAPHIC REF | PART NUMBER | QTY | PART NAME 1 2 3 4 5 6 (PRODUCT LEVEL) | SEE PAGE |
|---|---|---|---|---|---|---|
| J | 1 | 1 | 173-0562 | 2 | DRAIN AS | |
| L | 2 | 1 | 173-0566 | 4 | DRAIN AS | |

J-1" PIPE NEEDED TO ACTIVATE THE VALVE FOR DRAINING
L-3/4" PIPE NEEDED TO ACTIVATE THE VALVE FOR DRAINING

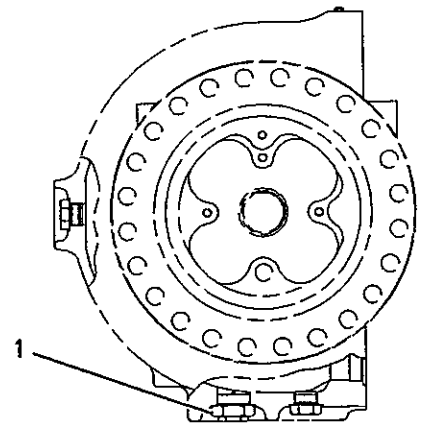


HOUSING GP-AXLE (FIXED)

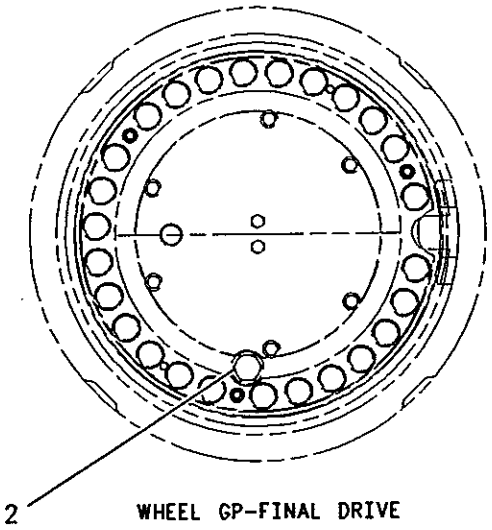


WHEEL GP-FINAL DRIVE

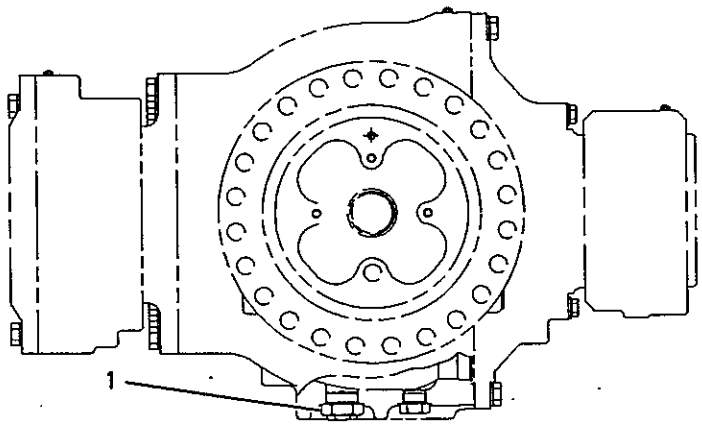


HOUSING GP-AXLE (OSC)

GRAPHIC #1

<END>

g00676458

# 242-7376 FILLER GP-POWER TRAIN OIL

S/N: JMS1-UP

PART OF 232-6585 POWER TRAIN AR

SMCS-3005, 3081

i02290326

| NOTE | REF NO | GRAPHIC REF | PART NUMBER | QTY | PART NAME 1 2 3 4 5 6 (PRODUCT LEVEL) | SEE PAGE |
|---|---|---|---|---|---|---|
| | 1 | 1 | 4B-9782 | 1 | BALL | |
| BE | 2 | 1 | 5P-1291 | | HOSE | |
| | 3 | 1 | 5K-1568 | 1 | CAP-FILLER (POWER TRAIN) | |
| | 4 | 1 | 6F-5188 | 1 | SEAL-RING | |
| | 5 | 1 | 6H-5139 | 1 | PLATE-PRESSURE | |
| | 6 | 1 | 141-1667 | 2 | CLAMP-HOSE | |
| | 7 | 1 | 242-7377 | 1 | TUBE AS | |
| | 8 | 1 | 242-9242 | 1 | BRACKET AS | |
| | 9 | 1 | 242-9243 | 1 | TUBE AS | |
| | 10 | 1 | 1P-3705 | 1 | SEAL-RECTANGULAR | |
| | 11 | 1 | 5P-7468 | 2 | CLIP (SLOT) | |
| | 12 | 1 | 5P-7469 | 2 | CLIP (TAB) | |
| | 13 | 1 | 5P-8444 | 2 | GROMMET | |
| | 14 | 1 | 7X-0311 | 4 | BOLT (7/16-14X2.25-IN) | |
| | 15 | 1 | 7X-7729 | 2 | WASHER (11X25X3-MM THK) | |
| | 16 | 1 | 8T-4121 | 2 | WASHER-HARD (11X21X2.5-MM THK) | |
| M | 17 | 1 | 8T-4137 | 2 | BOLT (M10X1.5X20-MM) | |
| M | 18 | 1 | 8T-4195 | 2 | BOLT (M10X1.5X30-MM) | |
| | 19 | 1 | 8T-5360 | 4 | WASHER (12X22.5X2.5-MM THK) | |

B-USE AS REQUIRED
E-ORDER BY THE CENTIMETER
M-METRIC PART

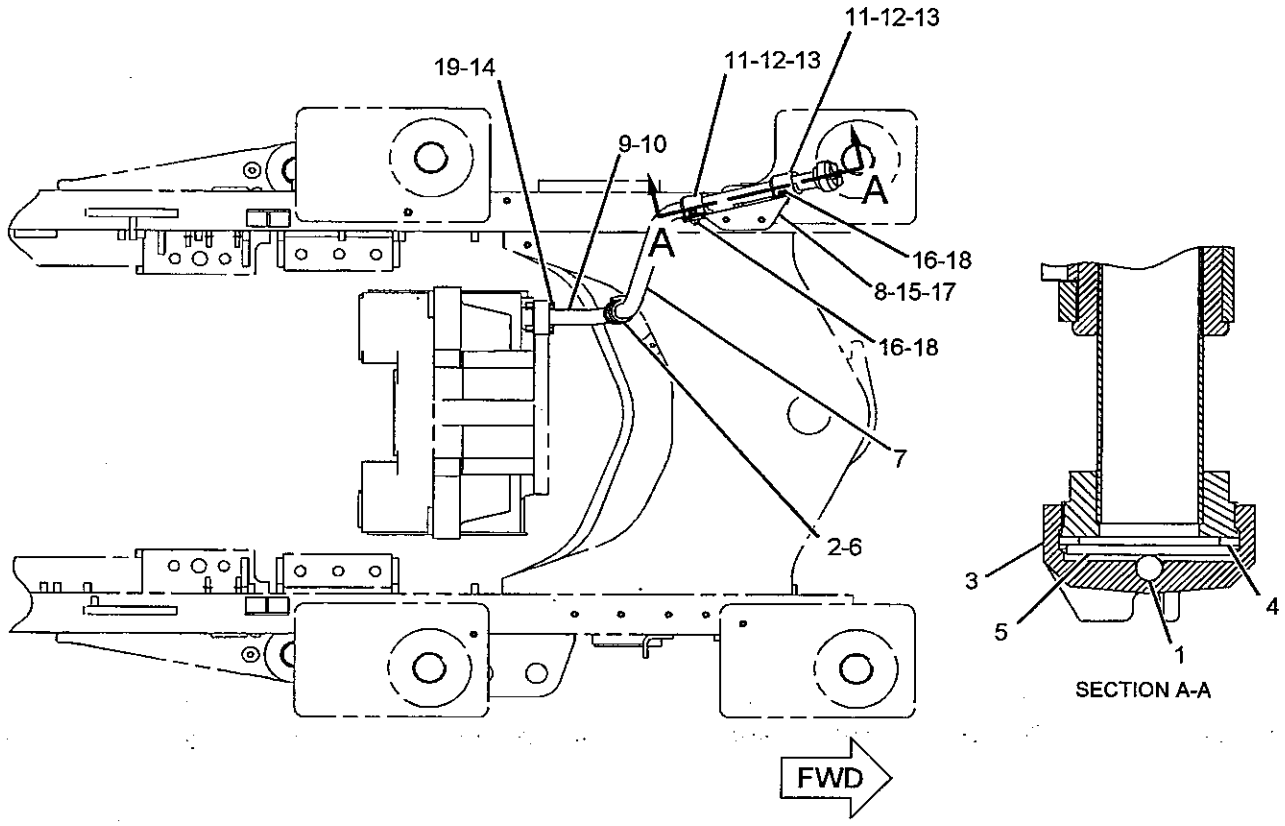


TOP VIEW

<END>

GRAPHIC #1

g01065859

## 266-2272 FILTER GP-OIL—POWER TRAIN

S/N: JMS1-UP

PART OF 232-6406 LINES GP-POWER TRAIN OIL

SMCS-3004, 3067

i02280220

| NOTE | REF NO | GRAPHIC REF | PART NUMBER | QTY | PART NAME 1 2 3 4 5 6 (PRODUCT LEVEL) | SEE PAGE |
|---|---|---|---|---|---|---|
| | 1 | 1 | 1R-1809 | 1 | FILTER ELEMENT AS-OIL (HIGH EFFICIENCY) | |
| | | 1 | 130-0229 | 1 | SEAL-O-RING | |
| | 2 | 1 | 6V-0852 | 1 | CAP-DUST | |
| | 3 | 1 | 8C-3447 | 1 | CAP-DUST | |
| Y | 4 | 1 | 266-2271 | 1 | BASE GP-OIL FILTER (POWER TRAIN) | 310 |
| | 5 | 1 | 241-3352 | 1 | HOUSING AS | |
| | | 1 | 3J-1907 | 1 | SEAL-O-RING | |
| | | 1 | 9S-8004 | 1 | PLUG | |
| | 6 | 1 | 3J-1907 | 1 | SEAL-O-RING | |
| | 7 | 1 | 3J-7354 | 1 | SEAL-O-RING | |
| | 8 | 1 | 6V-3965 | 1 | FITTING AS (QUICK DISCONNECT) | |
| | 9 | 1 | 8C-3446 | 1 | VALVE AS-FLUID SAMPLING (POWER TRAIN OIL) | |

Y-SEPARATE ILLUSTRATION

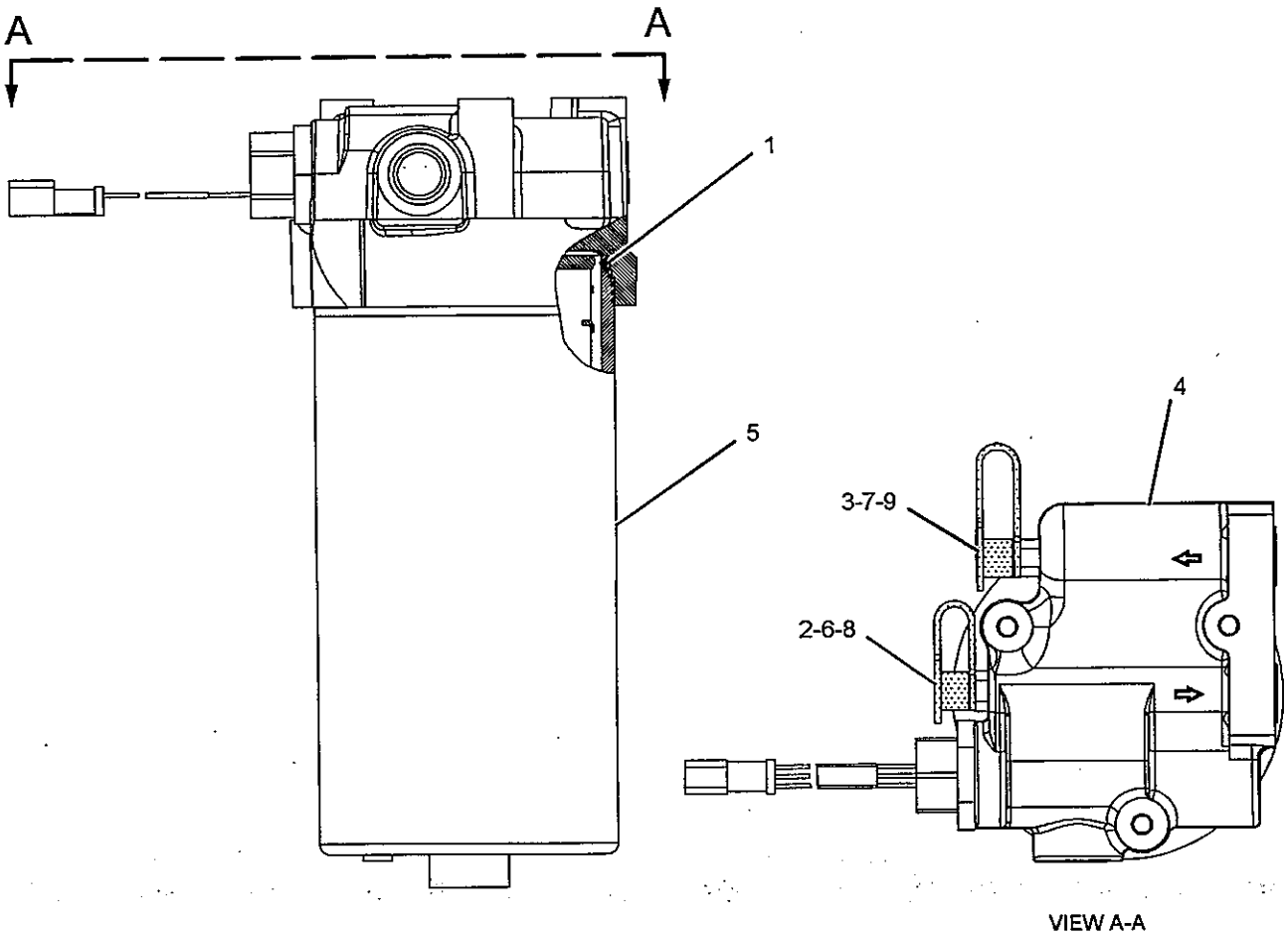


VIEW A-A

GRAPHIC #1

<END>

g01141240

# POWER TRAIN

## 230-6312 GEAR GP-OUTPUT TRANSFER

S/N: MDA1-UP; DGZ1-UP
PART OF 230-6311, 230-6321 TRANSMISSION AR
ALSO AN ATTACHMENT

SMCS-3075, 3159

i02282029

| NOTE | REF NO | GRAPHIC REF | PART NUMBER | QTY | PART NAME 1 2 3 4 5 6 (PRODUCT LEVEL) | SEE PAGE |
|---|---|---|---|---|---|---|
| | 1 | 1 | 1P-4078 | 1 | SPACER (10.08-MM THK) | |
| | 2 | 1 | 1P-9269 | 1 | COVER | |
| | 3 | 1 | 1V-6341 | 2 | SEAL | |
| | 4 | 1 | 142-5603 | 1 | GAUGE AS | |
| | 4A | 1 | 122-8352 | 4 | SEAL-O-RING | |
| | 4B | 1 | 122-8353 | 2 | BOLT (M12X46.5-MM) | |
| | 5 | 1 | 4S-8598 | 1 | SCREEN-SUCTION | |
| | 6 | 1 | 4S-8603 | 1 | SCREEN GP-MAGNETIC | |
| | 6A | 1 | 8M-7160 | 3 | MAGNET | |
| | 7 | 2 | 6P-4903 | 1 | PLATE AS | |
| | 7A | 2 | 7B-3028 | 2 | SCREW-DRIVE (NO 4X3/16-IN) | |
| | 7B | 2 | 7S-2962 | 1 | WASHER-SPRING (52.3X82.5X9.1-MM THK) | |
| | 8 | 1 | 6P-4947 | 1 | RETAINER | |
| | 9 | 2 | 6Y-6326 | 1 | CAGE AS-BEARING | |
| | 9A | 2 | 3D-0490 | 4 | STUD-TAPERLOCK (1/2-13X1.97-IN) | |
| | 10 | 1 | 6Y-6327 | 1 | CAGE-BEARING | |
| B | 11 | 1 | 6Y-6328 | 1 | SHIM PACK (INCLUDES 13-SHIMS) | |
| B | 12 | 1 | 6Y-6329 | 1 | SHIM PACK (INCLUDES 13-SHIMS) | |
| | 13 | 1 | 266-9266 | 2 | RETAINER | |
| | 14 | 1 | 7T-7371 | 1 | HOUSING-SCREEN | |
| | 15 | 1 | 9W-0780 | 1 | SHAFT-TRANSFER | |
| | 16 | 1 | 9W-0781 | 1 | SPACER (71.4X95X10.9-MM THK) | |
| | 17 | 1 | 105-2485 | 1 | GEAR-OUTPUT (34-TEETH) | |
| | 18 | 1 | 105-2486 | 1 | GEAR-TRANSFER (41-TEETH) | |
| | 19 | 1 | 105-2487 | 1 | GEAR-OUTPUT (40-TEETH) | |
| | 20 | 2 | 129-0987 | 1 | DRAIN AS | |
| | 20A | 2 | 6J-2419 | 1 | SEAL-O-RING | |
| | 20B | 2 | 8F-0212 | 1 | SEAL-O-RING | |
| | 20C | 2 | 129-0988 | 1 | PLUG | |
| | 21 | 1 | 133-4292 | 2 | SEAL-LIP TYPE | |
| | 22 | 1 | 148-1507 | 1 | ROTOR-SENSOR | |
| | 23 | 1 | 171-3942 | 1 | YOKE | |
| | 24 | 2 | 174-3405 | 1 | YOKE AS | |
| | 24A | 2 | 3S-9880 | 1 | GUARD | |
| | 25 | 1 | 8T-4121 | 2 | WASHER-HARD (11X21X2.5-MM THK) | |
| | 26 | 1 | 191-5000 | 1 | SHAFT-SPEED | |
| | 27 | 1 | 191-5002 | 1 | CAGE-BEARING | |
| | 28 | 1 | 191-5006 | 1 | COVER | |
| | 29 | 1 | 191-8304 | 1 | SENSOR GP-SPEED (TRANSMISSION INPUT) | |
| Y | 30 | 1 | 193-2550 | 1 | SENSOR GP-SPEED (MAGNETIC, HIGH OUTPUT) (TRANSMISSION OUTPUT 2) | 215 |
| Y | 30A | 1 | 193-2550 | 1 | SENSOR GP-SPEED (MAGNETIC, HIGH OUTPUT) (TRANSMISSION OUTPUT 1) | 215 |
| | 31 | 1 | 203-2060 | 1 | RETAINER-BEARING | |
| Y | 32 | 1 | 234-0604 | 1 | CASE GP-TRANSFER GEAR | 312 |
| | 33 | 1 | 237-9848 | 1 | CAGE-BEARING | |
| | 34 | 1 | 237-9849 | 1 | CAGE-BEARING | |
| | 35 | 1 | 034-3557 | 10 | BOLT-LOCKING (3/8-16X1.125-IN) | |
| M | 36 | 1 | 8T-4137 | 2 | BOLT (M10X1.5X20-MM) | |
| | 37 | 1 | 0S-1587 | 8 | BOLT (1/2-13X1.75-IN) | |
| | 38 | 1,2 | 0S-1594 | 9 | BOLT (3/8-16X1-IN) | |
| | 39 | 1 | 117-1385 | 1 | SEAL-O-RING | |
| | 40 | 1 | 130-5301 | 2 | CLIP | |
| | 41 | 1 | 132-5789 | 1 | CLIP | |
| | 42 | 2 | 1A-1460 | 7 | BOLT (1/2-13X2-IN) | |

# POWER TRAIN

## 230-6312 GEAR GP-OUTPUT TRANSFER *(contd.)* i02282029

| NOTE | REF NO | GRAPHIC REF | PART NUMBER | QTY | PART NAME 1 2 3 4 5 6 (PRODUCT LEVEL) | SEE PAGE |
|---|---|---|---|---|---|---|
| | 43 | 1 | 0L-1328 | 2 | BOLT | |
| | 44 | 1 | 1A-5822 | 6 | BOLT (1/2-13X2.75-IN) | |
| | 45 | 1 | 1A-8651 | 2 | BOLT (5/8-11X4.5-IN) | |
| | 46 | 1 | 1B-3867 | 1 | BALL BEARING | |
| | 47 | 1 | 1B-4367 | 18 | BOLT (5/8-11X3-IN) | |
| | 48 | 1 | 1F-7958 | 4 | NUT-FULL (1/2-13-THD) | |
| | 49 | 1 | 1P-7834 | 4 | CUP-BEARING | |
| | 50 | 1 | 1P-7835 | 4 | CONE-BEARING | |
| | 51 | 1 | 2A-4639 | 6 | BOLT (3/8-16X1.625-IN) | |
| | 52 | 1 | 2D-9457 | 2 | CONE-BEARING | |
| | 53 | 1 | 2H-2665 | 2 | SEAL-O-RING | |
| | 54 | 1 | 2H-6489 | 1 | RACE-BEARING OUTER | |
| | 55 | 1 | 2H-6490 | 1 | BEARING-INNER | |
| | 56 | 1 | 2K-4472 | 2 | SEAL-O-RING | |
| | 57 | 1 | 3F-5792 | 1 | SEAL-O-RING | |
| | 58 | 1 | 4F-2041 | 2 | CUP-BEARING (TAPERED ROLLER) | |
| | 59 | 1 | 4P-7429 | 1 | CLIP | |
| | 60 | 1 | 5F-0149 | 1 | SEAL-O-RING | |
| | 61 | 1 | 5F-3092 | 1 | SEAL-O-RING | |
| | 62 | 2 | 5F-8000 | 1 | SEAL-O-RING | |
| | 63 | 1 | 5J-1086 | 1 | SEAL-O-RING | |
| | 64 | 1,2 | 5M-2894 | 25 | WASHER-HARD (10.2X18.5X2.5-MM THK) | |
| | 65 | 1 | 5P-0537 | 4 | WASHER-HARD (7.2X14.5X2-MM THK) | |
| | 66 | 1 | 5P-2587 | 1 | SEAL-O-RING | |
| M | 67 | 1,2 | 5P-8245 | 51 | WASHER-HARD (13.5X25.5X3-MM THK) | |
| | 68 | 1 | 5P-8247 | 20 | WASHER-HARD (17X32X3.5-MM THK) | |
| | 69 | 1 | 6H-1717 | 2 | BOLT (1/2-13X1.125-IN) | |
| | 70 | 1 | 7B-3235 | 3 | BOLT (1/2-13X1.375-IN) | |
| | 71 | 1 | 7L-2181 | 1 | SEAL-O-RING | |
| | 72 | 1 | 8H-3128 | 4 | BOLT-SOCKET HEAD (1/4-20X0.625-IN) | |
| | 73 | 1 | 8H-3981 | 1 | RING-RETAINING | |
| | 74 | 1 | 8H-8257 | 1 | SEAL-O-RING | |
| M | 75 | 1 | 8T-4200 | 1 | BOLT (M8X1.25X16-MM) | |
| | 76 | 1 | 8T-4224 | 1 | WASHER-HARD (8.8X16X2-MM THK) | |
| | 77 | 1 | 9X-8268 | 2 | WASHER (17.5X30X3.5-MM THK) | |
| | 78 | 1 | 9X-8873 | 8 | BOLT (1/2-13X2.25-IN) | |
| | 79 | 1 | 9X-8874 | 9 | BOLT (1/2-13X3-IN) | |
| | 80 | 1 | 9X-8875 | 4 | BOLT (1/2-13X3.5-IN) | |
| B | 81 | 1 | 6V-6640 | | SEALANT (20-ML) | |
| | 82 | 1 | 200-8824 | 1 | BRACKET AS | |

B-USE AS REQUIRED
M-METRIC PART
Y-SEPARATE ILLUSTRATION

## 230-6312 GEAR GP-OUTPUT TRANSFER *(contd.)*

i02282029

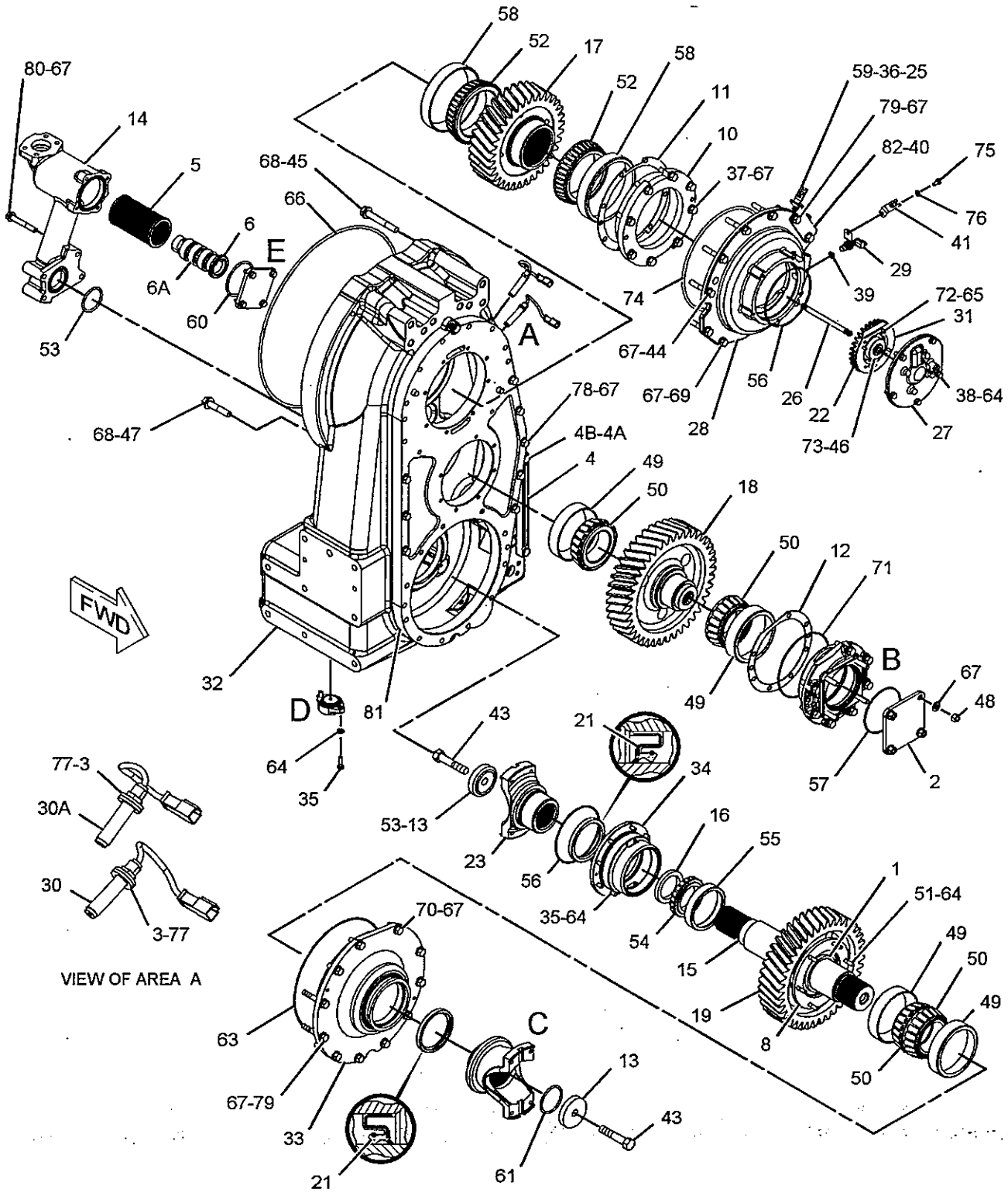


GRAPHIC #1

g01142968

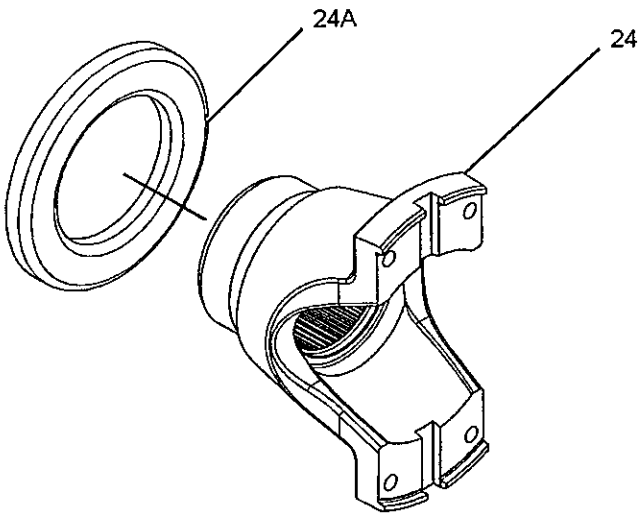


VIEW OF AREA C

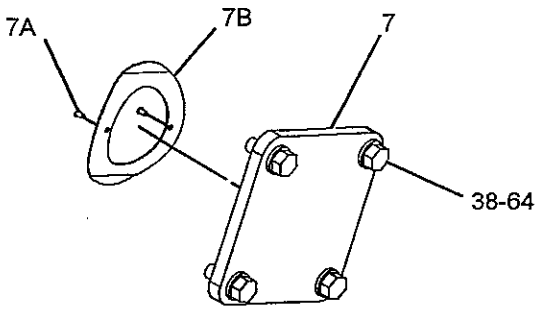


VIEW OF AREA E

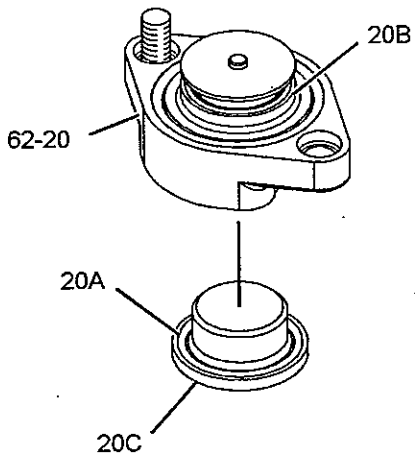


VIEW OF AREA D

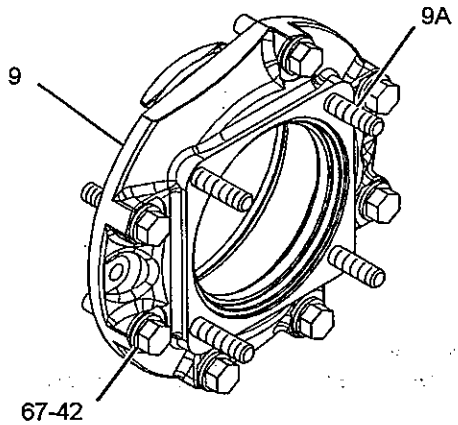


VIEW OF AREA B

GRAPHIC #2 **<END>** g01142969

# *199-0924* LINES GP-AXLE OIL COOLER

S/N: JMS1-UP

PART OF 233-9749, 233-9750 COOLER AR-AXLE OIL

AN ATTACHMENT

SMCS-1365, 3016

i01832998

| NOTE | REF NO | GRAPHIC REF | PART NUMBER | QTY | PART NAME 1 2 3 4 5 6 (PRODUCT LEVEL) | SEE PAGE |
|---|---|---|---|---|---|---|
| | 1 | 1 | **125-0966** | 2 | PLUG | |
| | 2 | 1 | **193-5444** | 1 | TUBE AS | |
| | 3 | 1 | **193-5445** | 1 | TUBE AS | |
| | 4 | 1 | **193-5446** | 1 | TUBE AS | |
| | 5 | 1 | **193-5447** | 1 | TUBE AS | |
| | 6 | 1 | **193-8606** | 4 | GROMMET | |
| | 7 | 1 | **195-5847** | 2 | ELBOW AS | |
| | 8 | 1 | **1H-8171** | 2 | SEAL-O-RING | |
| | 9 | 1 | **6V-8398** | 6 | SEAL-O-RING | |
| | 10 | 1 | **6V-9169** | 2 | NUT-BULKHEAD (13/16-16-THD) | |
| | 11 | 1 | **6V-9830** | 4 | CAP AS | |
| | 12 | 1 | **7M-8485** | 4 | SEAL-O-RING | |
| | 13 | 1 | **8T-5439** | 2 | WASHER (21.5X45X6-MM THK) | |

*199-0924* **LINES GP-AXLE OIL COOLER** *(contd.)* i01832998

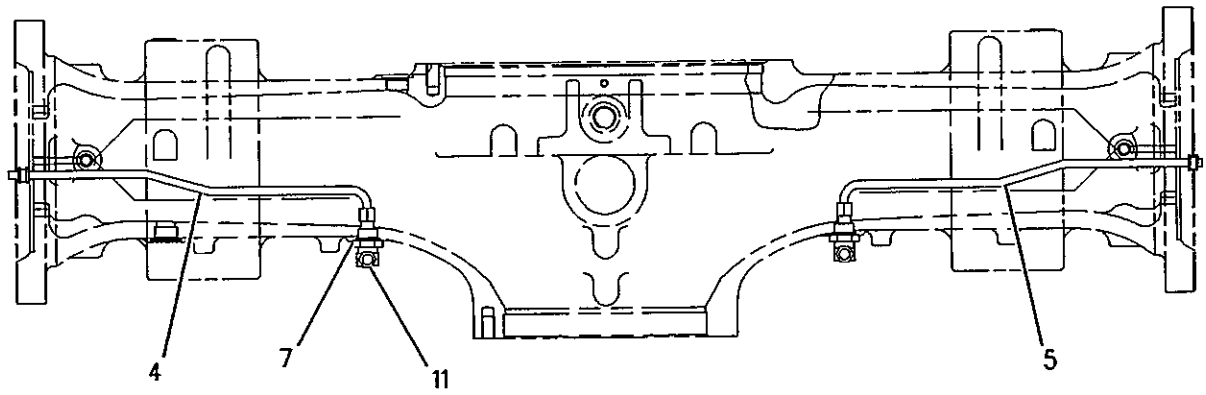


TOP VIEW
(REAR AXLE)

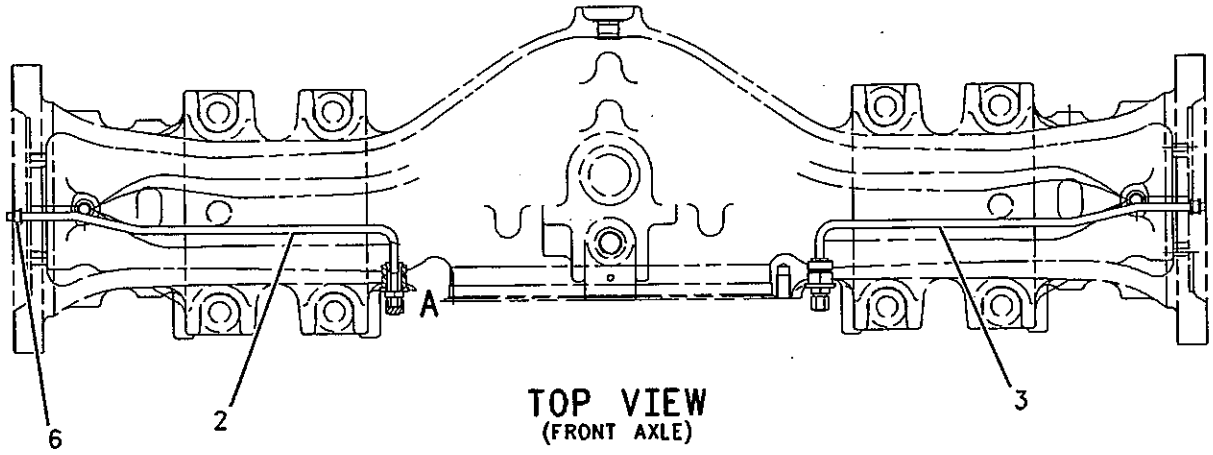


TOP VIEW
(FRONT AXLE)

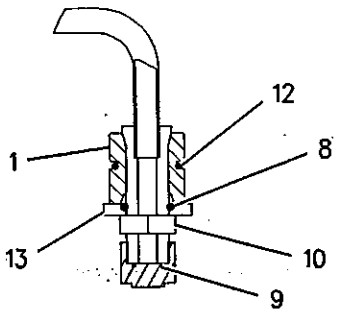


VIEW OF AREA A
(COMMON LH & RH)

GRAPHIC #1 **<END>** g00995322

# POWER TRAIN

## *237-4821* LINES GP-AXLE OIL COOLER

**S/N: JMS1-UP**
**PART OF 233-9749 COOLER AR-AXLE OIL**
**AN ATTACHMENT**

**SMCS-1365, 3016** **i02283505**

| NOTE | REF NO | GRAPHIC REF | PART NUMBER | QTY | PART NAME 1 2 3 4 5 6 (PRODUCT LEVEL) | SEE PAGE |
|---|---|---|---|---|---|---|
| | 1 | 3 | **1K-4649** | 2 | SPACER (0.516X1X1-IN THK) | |
| | 2 | 4 | **091-9035** | 4 | SPACER (11X25X20-MM THK) | |
| | 3 | 3,4 | **251-6351** | 2 | FILTER-MAGNETIC (AXLE OIL COOLER) | |
| | 4 | 2 | **196-3858** | 1 | TUBE AS | |
| I | 5 | 2 | **196-9829** | 1 | HOSE AS | |
| I | 6 | 1 | **198-0326** | 1 | HOSE AS | |
| I | 7 | 1 | **198-0327** | 1 | HOSE AS | |
| I | 8 | 1 | **198-0328** | 1 | HOSE AS | |
| I | 9 | 2 | **198-0335** | 1 | HOSE AS | |
| I | 10 | 4 | **203-9263** | 2 | HOSE AS | |
| | 11 | 3 | **204-7435** | 1 | TUBE AS | |
| | 12 | 3 | **204-7806** | 1 | BRACKET | |
| | 13 | 3 | **205-3611** | 1 | PLATE | |
| | 14 | 3 | **205-7131** | 1 | TUBE AS | |
| | 15 | 3,4 | **205-8113** | 2 | BRACKET AS | |
| I | 16 | 4 | **206-3143** | 1 | HOSE AS | |
| | 17 | 2 | **206-6968** | 1 | TUBE AS | |
| | 18 | 3 | **213-2432** | 1 | BRACKET | |
| I | 19 | 2 | **237-4830** | 1 | HOSE AS | |
| I | 20 | 2 | **243-1132** | 1 | HOSE AS | |
| | 21 | 3 | **243-5821** | 1 | BRACKET AS | |
| M | | 3 | **8T-3490** | 1 | NUT-WELD (M10X1.5-THD) | |
| I | 22 | 1 | **243-7160** | 1 | HOSE AS | |
| I | 23 | 1 | **245-0173** | 1 | HOSE AS | |
| | 24 | 1 | *148-8335* | 1 | CONNECTOR AS | |
| | | 1 | **5K-9090** | 1 | SEAL-O-RING | |
| | | 1 | **6V-8635** | 1 | CONNECTOR | |
| | | 1 | **7M-8485** | 1 | SEAL-O-RING | |
| | 25 | 4 | *148-8360* | 2 | ELBOW AS | |
| | | | | | (EACH INCLUDES) | |
| | | 4 | **6V-9182** | 1 | ELBOW | |
| | | 4 | **6V-9746** | 1 | SEAL-O-RING | |
| | | 4 | **7M-8485** | 1 | SEAL-O-RING | |
| | 26 | 3 | *148-8362* | 2 | ELBOW GP | |
| | | | | | (EACH INCLUDES) | |
| | | 3 | **3D-2824** | 1 | SEAL-O-RING | |
| | | 3 | **5K-9090** | 1 | SEAL-O-RING | |
| | | 3 | **8T-6684** | 1 | ELBOW (90-DEG) | |
| | 27 | 2 | *148-8370* | 1 | ELBOW AS | |
| | | 2 | **6V-8398** | 1 | SEAL-O-RING | |
| | | 2 | **6V-9851** | 1 | ELBOW | |
| | 28 | 3 | *148-8388* | 2 | ELBOW AS | |
| | | | | | (EACH INCLUDES) | |
| | | 3 | **2M-9780** | 1 | SEAL-O-RING | |
| | | 3 | **6V-8629** | 1 | ELBOW | |
| | | 3 | **6V-9746** | 1 | SEAL-O-RING | |
| | 29 | 4 | *148-8392* | 1 | ELBOW AS | |
| | | 4 | **6V-9746** | 1 | SEAL-O-RING | |
| | | 4 | **6V-9853** | 1 | ELBOW | |
| | 30 | 2,3 | *148-8451* | 2 | TEE AS | |
| | | | | | (EACH INCLUDES) | |
| | | 2,3 | **6V-8791** | 1 | TEE-FACE SEAL | |
| | | 2,3 | **6V-9746** | 3 | SEAL-O-RING | |
| | 31 | 3 | *148-8455* | 1 | UNION AS | |
| | | 3 | **6V-8997** | 1 | UNION | |

## 237-4821 LINES GP-AXLE OIL COOLER (contd.)

i02283505

| NOTE | REF NO | GRAPHIC REF | PART NUMBER | QTY | PART NAME 1 2 3 4 5 6 (PRODUCT LEVEL) | SEE PAGE |
|---|---|---|---|---|---|---|
| | | 3 | 6V-9746 | 2 | SEAL-O-RING | |
| | 32 | 1 | 155-2027 | 1 | CONNECTOR AS | |
| | | 1 | 5K-9090 | 1 | SEAL-O-RING | |
| | | 1 | 7M-8485 | 1 | SEAL-O-RING | |
| | | 1 | 8T-8898 | 1 | CONNECTOR | |
| | 33 | 3,4 | 162-8352 | 2 | U-BOLT | |
| | 34 | 3 | 164-5577 | 1 | ELBOW GP | |
| | | 3 | 5K-9090 | 2 | SEAL-O-RING | |
| | | 3 | 6V-8984 | 1 | ELBOW | |
| | 35 | 3 | 2P-1293 | 1 | LOCKNUT (1-3/16-12-THD) | |
| | 36 | 1 | 3P-2404 | 1 | CLIP | |
| | 37 | 3 | 5P-7466 | 1 | CLIP (SLOT) | |
| | 38 | 3 | 5P-7467 | 1 | CLIP (TAB) | |
| | 39 | 3 | 5P-7468 | 2 | CLIP (SLOT) | |
| | 40 | 3 | 5P-7469 | 2 | CLIP (TAB) | |
| | 41 | 3 | 5P-8112 | 1 | GROMMET | |
| | 42 | 2 | 5P-9299 | 5 | CLIP | |
| | 43 | 3 | 6F-0295 | 1 | CLIP | |
| | 44 | 4 | 6V-1572 | 1 | CLIP (SLOT) | |
| | 45 | 4 | 6V-1573 | 1 | CLIP (TAB) | |
| | 46 | 4 | 6V-1574 | 1 | GROMMET | |
| | 47 | 1,2,3, 4 | 6V-1889 | 12 | CLIP | |
| | 48 | 3 | 6V-4349 | 1 | GROMMET | |
| | 49 | 4 | 6V-5386 | 2 | CLIP | |
| | 50 | 3 | 6V-9172 | 1 | NUT (1-7/16-12-THD) | |
| | 51 | 3,4 | 7D-4092 | 9 | CLIP | |
| | 52 | 3 | 8T-2525 | 1 | GROMMET | |
| | 53 | 2,3,4 | 8T-4121 | 35 | WASHER-HARD (11X21X2.5-MM THK) | |
| M | 54 | 2,3,4 | 8T-4133 | 16 | NUT (M10X1.5-THD) | |
| M | 55 | 3,4 | 8T-4136 | 9 | BOLT (M10X1.5X25-MM) | |
| M | 56 | 2,3,4 | 8T-4137 | 7 | BOLT (M10X1.5X20-MM) | |
| M | 57 | 3 | 8T-4139 | 5 | BOLT (M12X1.75X30-MM) | |
| M | 58 | 1,3 | 8T-4183 | 3 | BOLT (M12X1.75X40-MM) | |
| M | 59 | 3 | 8T-4185 | 2 | BOLT (M10X1.5X50-MM) | |
| | 60 | 1 | 269-0089 | 1 | GUARD-HOSE | |
| M | 61 | 4 | 8T-4196 | 1 | BOLT (M10X1.5X35-MM) | |
| | 62 | 1,3 | 8T-4223 | 10 | WASHER-HARD (13.5X25.5X3-MM THK) | |
| M | 63 | 3 | 8T-4244 | 2 | NUT (M12X1.75-THD) | |
| | 64 | 3,4 | 148-8323 | 4 | CONNECTOR GP | |
| | | | | | (EACH INCLUDES) | |
| | | 3,4 | 2S-4078 | 1 | SEAL-O-RING | |
| | | 3,4 | 5K-9090 | 1 | SEAL-O-RING | |
| | | 3,4 | 6V-9875 | 1 | CONNECTOR | |
| M | 65 | 4 | 9X-6485 | 4 | STUD | |
| | 66 | 4 | 9P-9550 | 1 | TUBE | |
| M | 67 | 4 | 8T-4172 | 1 | BOLT (M10X1.5X80-MM) | |

I-REFER TO HYDRAULIC INFORMATION SYSTEM
M-METRIC PART

## 237-4821 LINES GP-AXLE OIL COOLER (contd.) i02283505

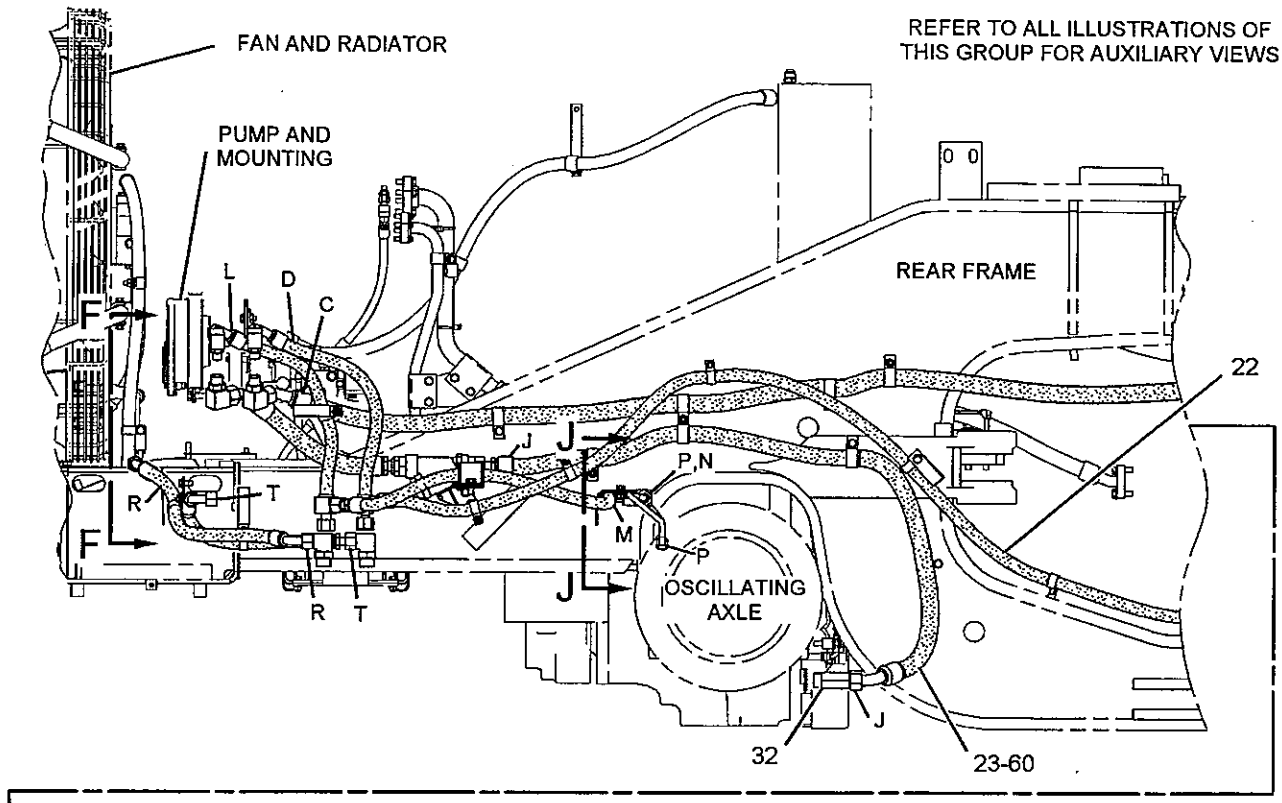


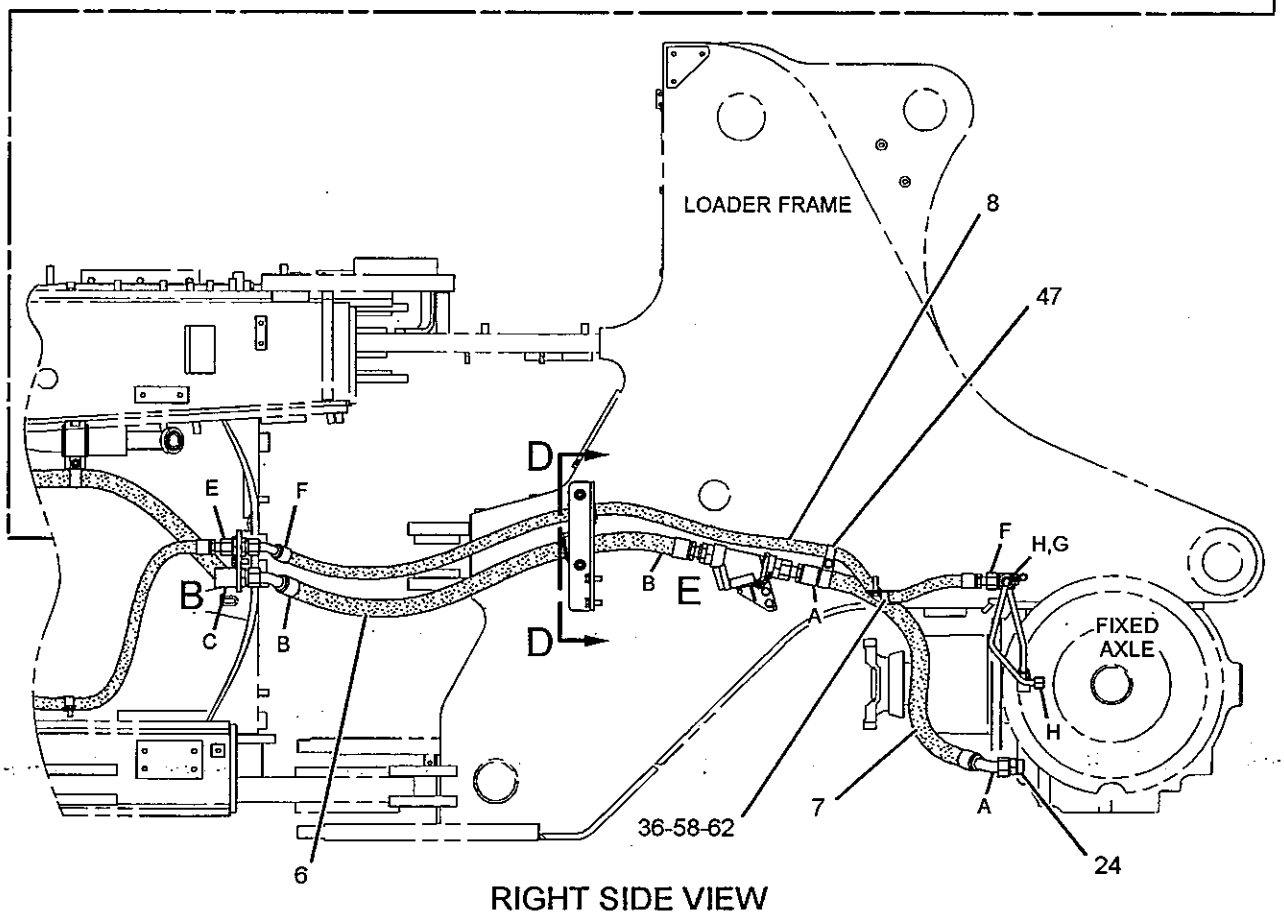


RIGHT SIDE VIEW

GRAPHIC #1 g01145733

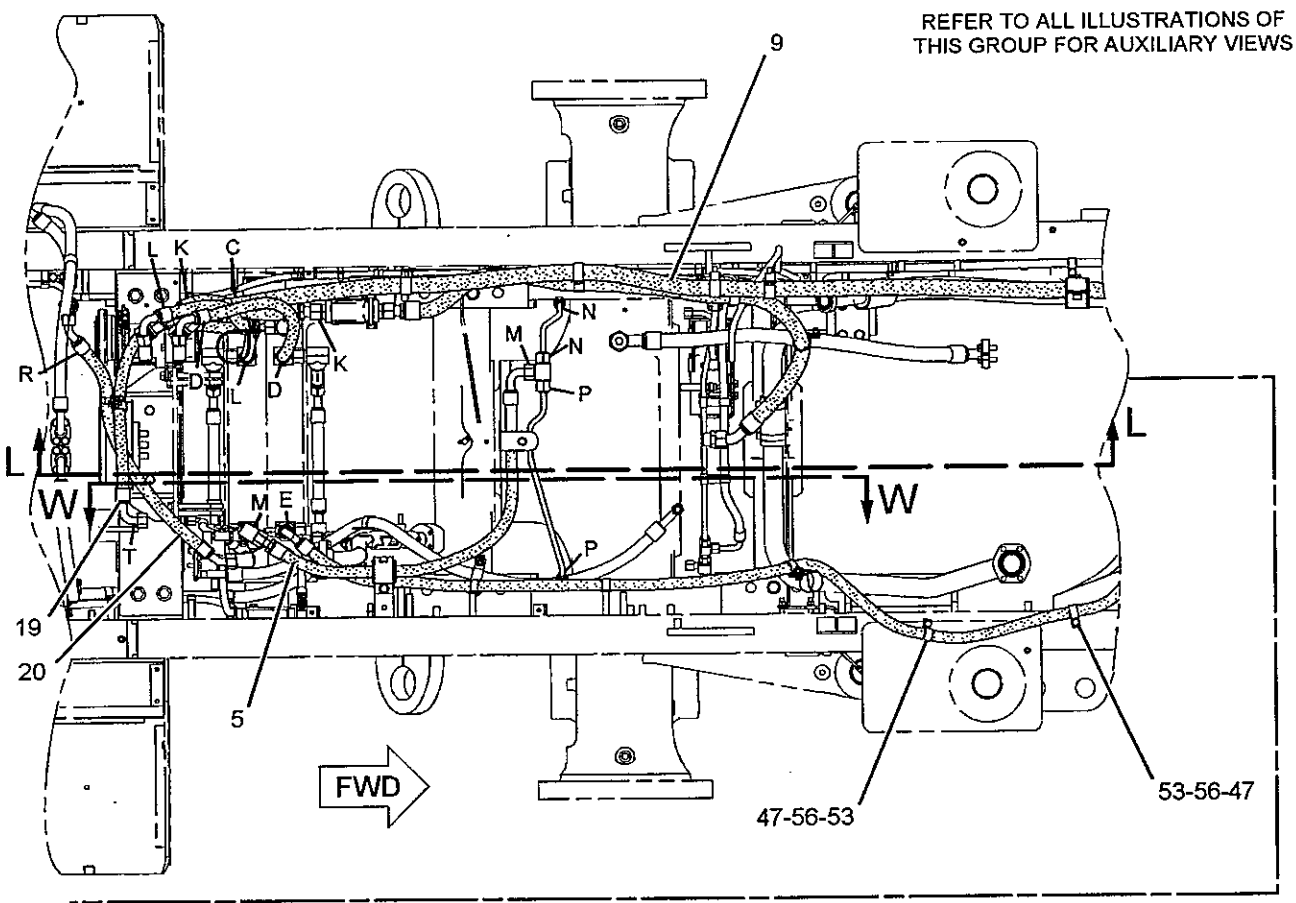


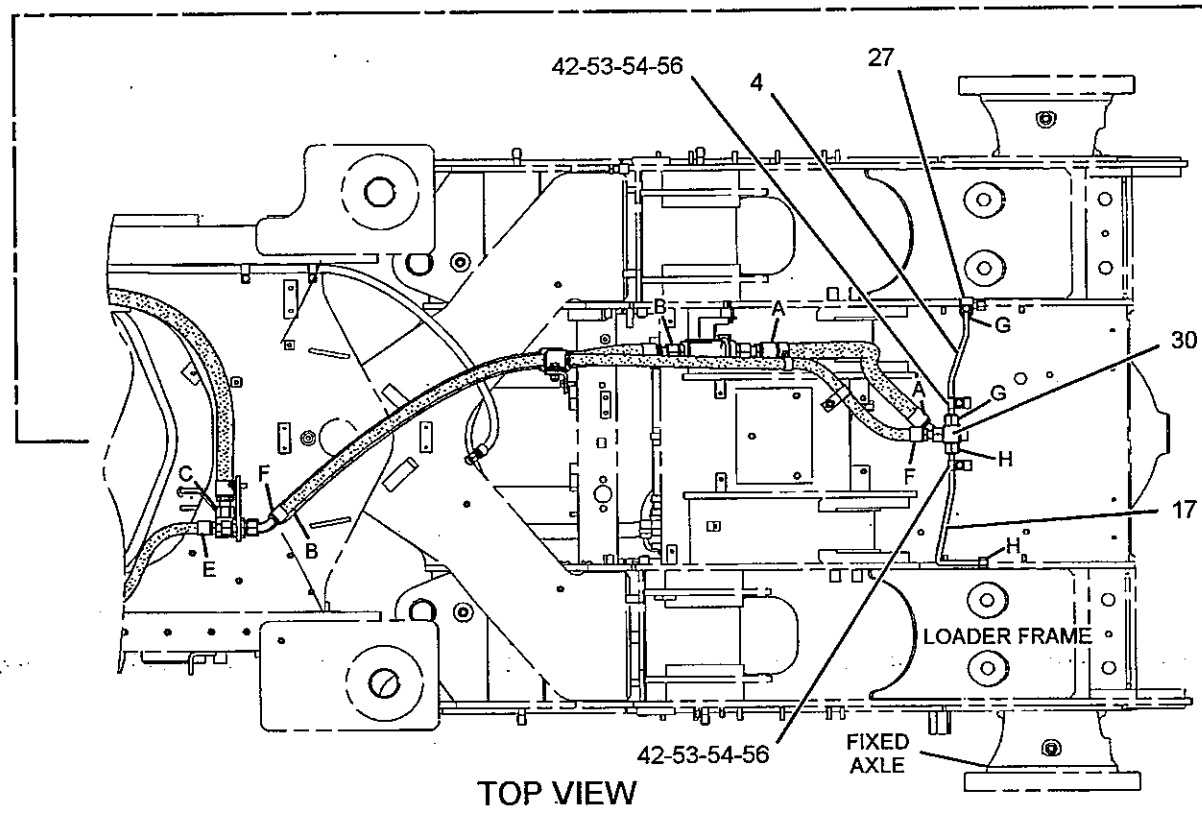


TOP VIEW

GRAPHIC #2

g01145734

## 237-4821 LINES GP-AXLE OIL COOLER (contd.) i02283505

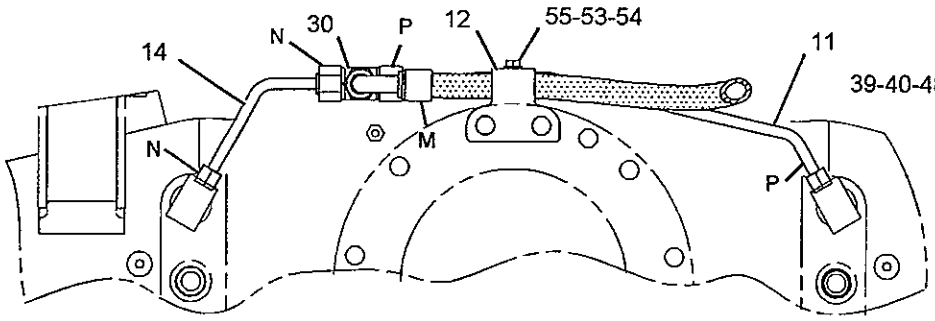


SECTION J-J

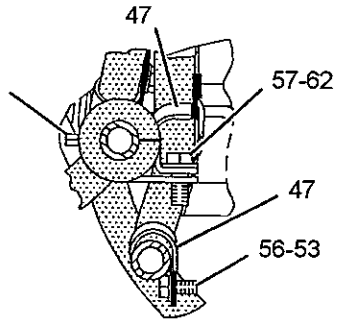


SECTION AA-AA

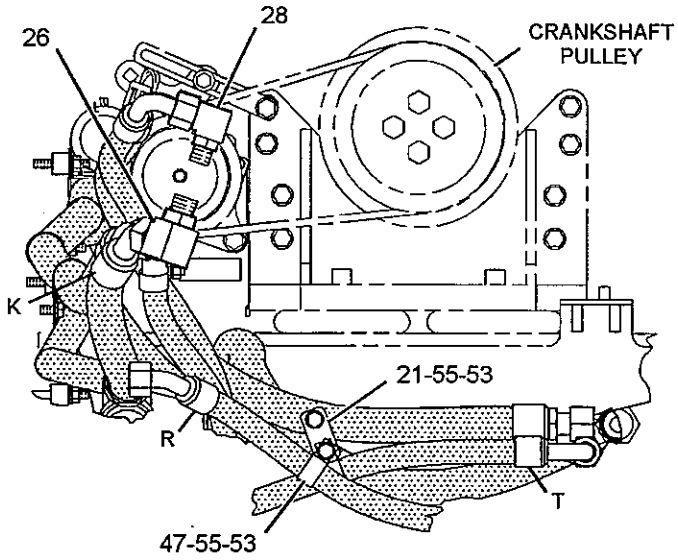


VIEW F-F

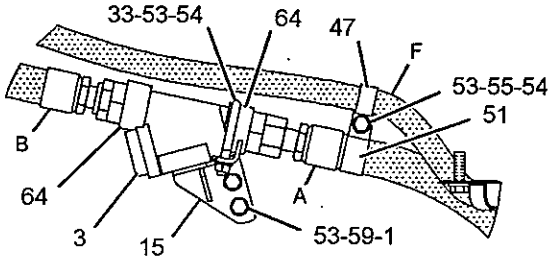


VIEW OF AREA E

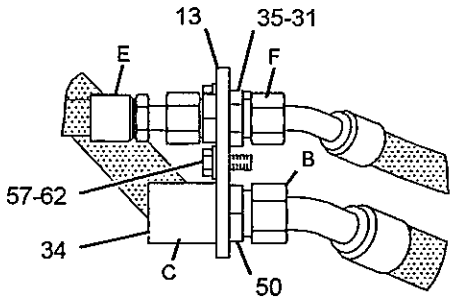


VIEW OF AREA B

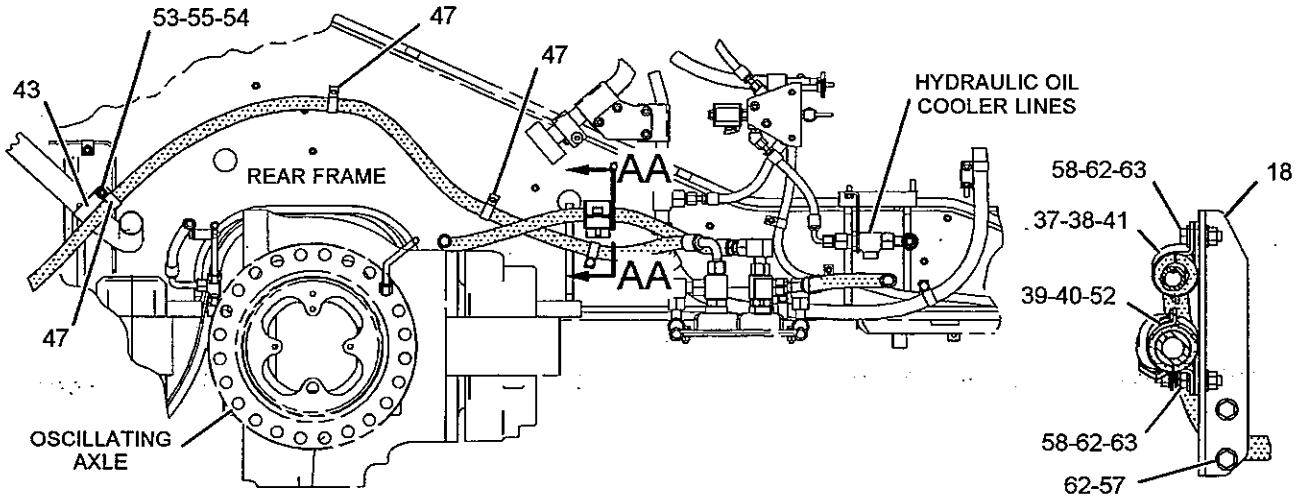


SECTION W-W

SECTION D-D

GRAPHIC #3

g01145735

## 237-4821 LINES GP-AXLE OIL COOLER (contd.) i02283505

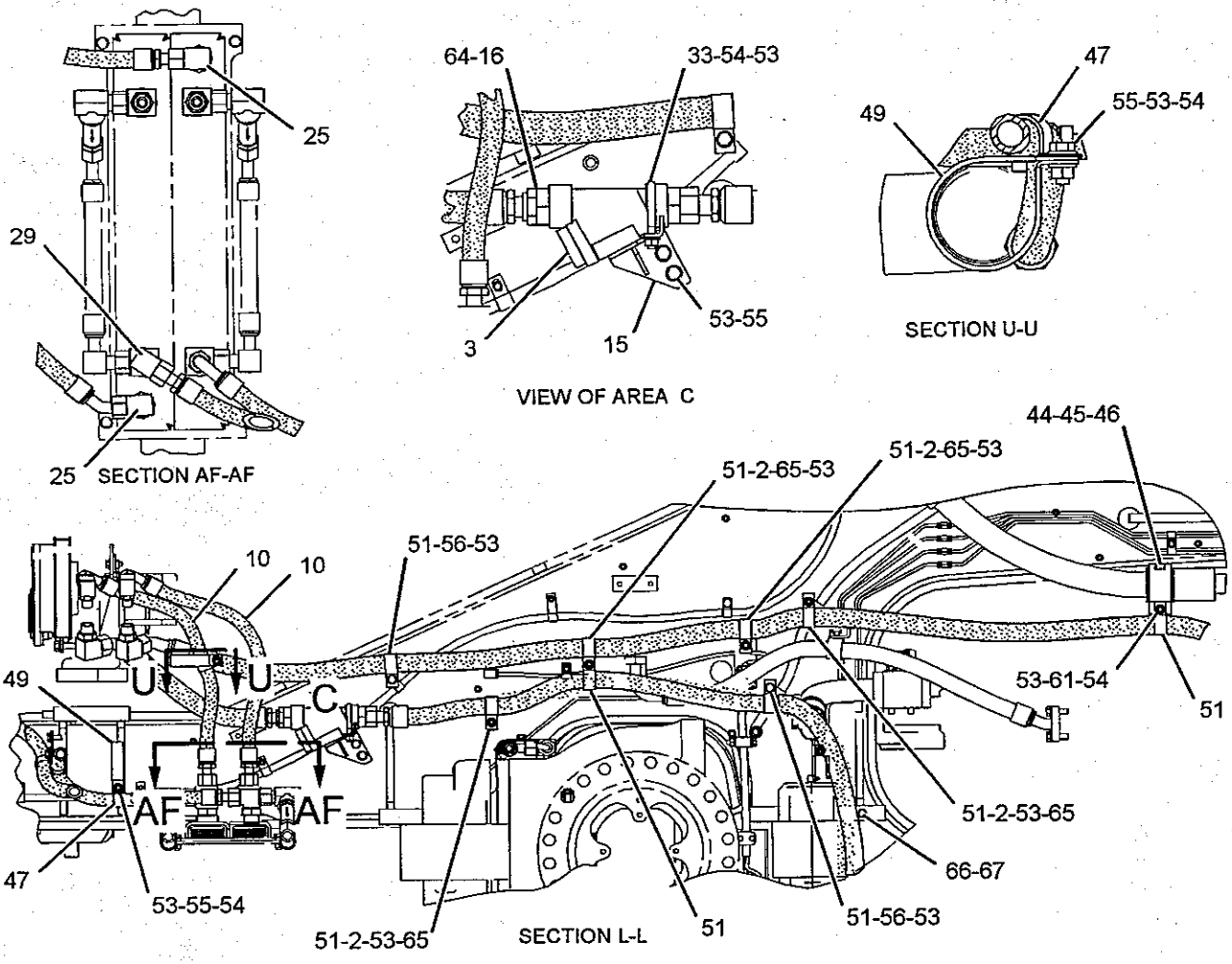


GRAPHIC #4 <END> g01145737

# 232-6406 LINES GP-POWER TRAIN OIL

S/N: JMS1-UP

PART OF 232-6585 POWER TRAIN AR

SMCS-3016

i02279664

| NOTE | REF NO | GRAPHIC REF | PART NUMBER | QTY | PART NAME 1 2 3 4 5 6 (PRODUCT LEVEL) | SEE PAGE |
|---|---|---|---|---|---|---|
| | 1 | 1 | 1P-3708 | 1 | SEAL-RECTANGULAR | |
| | 2 | 1 | 5P-0597 | 2 | CLAMP-HOSE | |
| BE | 3 | 1 | 5P-1293 | 1 | HOSE | |
| I | 4 | 1 | 9U-2965 | 1 | HOSE AS | |
| | 5 | 1 | 115-8507 | 1 | TUBE AS | |
| | 6 | 1 | 119-6018 | 1 | TUBE AS | |
| C | 7 | 1 | 134-2636 | 1 | BRACKET AS | |
| M | | 1 | 8T-3490 | 1 | NUT-WELD (M10X1.5-THD) | |
| I | 8 | 1 | 154-5650 | 1 | HOSE AS | |
| | 9 | 1 | 197-3295 | 6 | FLANGE-HALF | |
| CM | 10 | 1 | 8T-4186 | 11 | BOLT (M10X1.5X40-MM) | |
| CY | 11 | 1 | *266-2272* | 1 | FILTER GP-OIL (POWER TRAIN) | 340 |
| | 12 | 1 | 242-1772 | 1 | BRACKET AS | |
| C | 13 | 1 | 132-7551 | 1 | SPACER (11X19X6-MM THK) | |
| C | 14 | 1 | 262-1580 | 2 | TUBE AS | |
| CI | 15 | 1 | 262-1581 | 1 | HOSE AS | |
| CI | 16 | 1 | 262-1582 | 1 | HOSE AS | |
| C | 17 | 1 | 262-0795 | 1 | PLATE | |
| | 18 | 1 | *148-8323* | 1 | CONNECTOR GP | |
| | | 1 | 2S-4078 | 1 | SEAL-O-RING | |
| | | 1 | 5K-9090 | 1 | SEAL-O-RING | |
| | | 1 | 6V-9875 | 1 | CONNECTOR | |
| | 19 | 1 | *148-8378* | 2 | ELBOW AS | |
| | | | | | (EACH INCLUDES) | |
| | | 1 | 3J-1907 | 1 | SEAL-O-RING | |
| | | 1 | 6V-8397 | 1 | SEAL-O-RING | |
| | | 1 | 6V-8724 | 1 | ELBOW | |
| C | 20 | 1 | 3A-3692 | 2 | CLIP | |
| C | 21 | 1 | *148-8408* | 1 | PLUG AS | |
| | | 1 | 3D-2824 | 1 | SEAL-O-RING | |
| | | 1 | 9S-4183 | 1 | PLUG | |
| | 22 | 1 | 4D-7388 | 1 | CLIP | |
| | 23 | 1 | 4J-0520 | 4 | SEAL-O-RING | |
| | 24 | 1 | 4J-0522 | 3 | SEAL-O-RING | |
| | 25 | 1 | 4J-0527 | 1 | SEAL-O-RING | |
| CM | 26 | 1 | 8T-4137 | 1 | BOLT (M10X1.5X20-MM) | |
| C | 27 | 1 | 6V-4432 | 4 | BOLT (1/2-13X4-IN) | |
| | 33 | 1 | 7X-3392 | 8 | WASHER-HARD (13.5X22.5X3-MM THK) | |
| | 34 | 1 | 8C-3206 | 8 | FLANGE-HALF | |
| C | 35 | 1 | 8T-4121 | 13 | WASHER-HARD (11X21X2.5-MM THK) | |
| M | 36 | 1 | 8T-4136 | 1 | BOLT (M10X1.5X25-MM) | |
| M | 37 | 1 | 8T-4139 | 2 | BOLT (M12X1.75X30-MM) | |
| M | 39 | 1 | 8T-4183 | 12 | BOLT (M12X1.75X40-MM) | |
| CM | 41 | 1 | 8T-4196 | 8 | BOLT (M10X1.5X35-MM) | |
| C | 42 | 1 | 8T-4223 | 14 | WASHER-HARD (13.5X25.5X3-MM THK) | |
| | 43 | 1 | 8T-8916 | 4 | BOLT (7/16-14X1.5-IN) | |

B-USE AS REQUIRED
C-CHANGE FROM PREVIOUS TYPE
E-ORDER BY THE CENTIMETER
I-REFER TO HYDRAULIC INFORMATION SYSTEM
M-METRIC PART
Y-SEPARATE ILLUSTRATION

## 232-6406 LINES GP-POWER TRAIN OIL (contd.)

i02279664

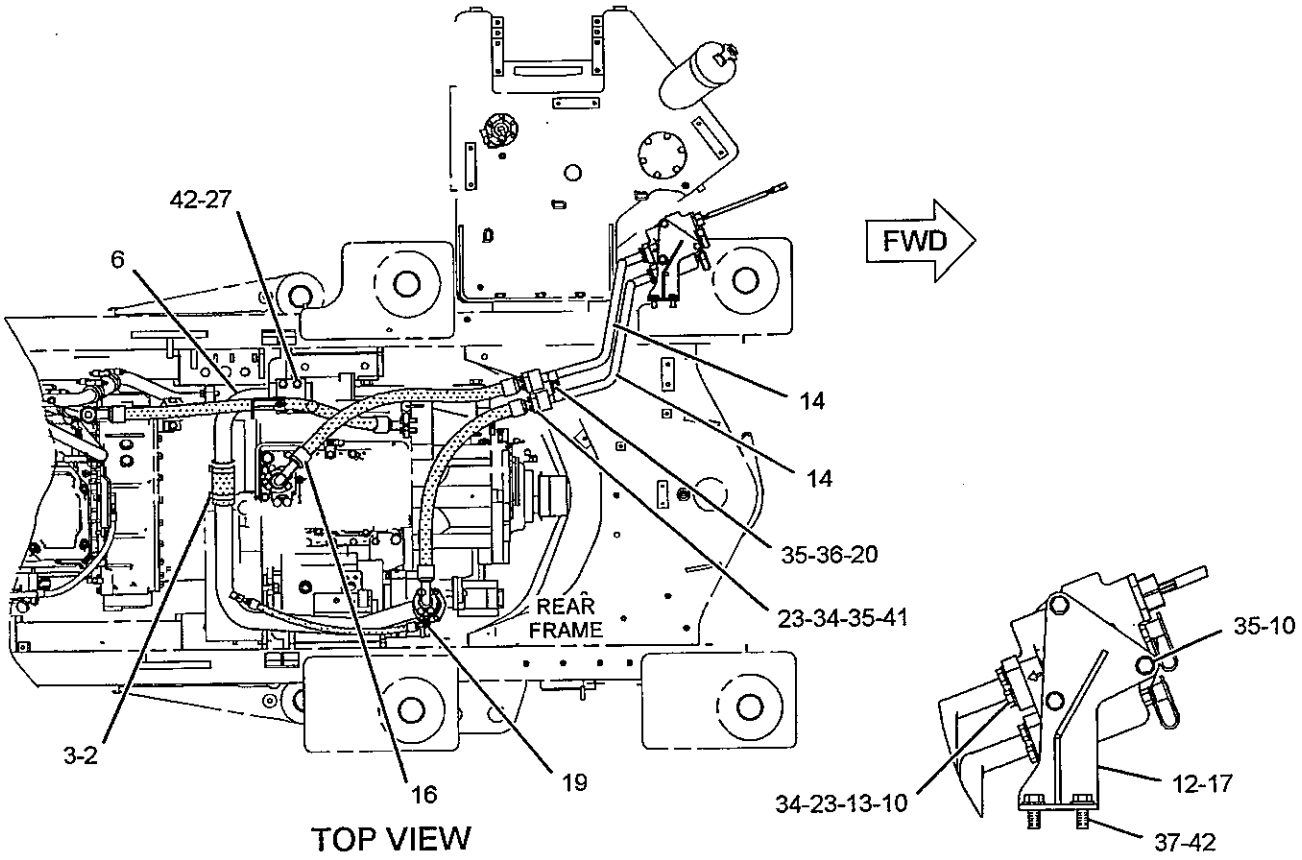


TOP VIEW

VIEW OF AREA A

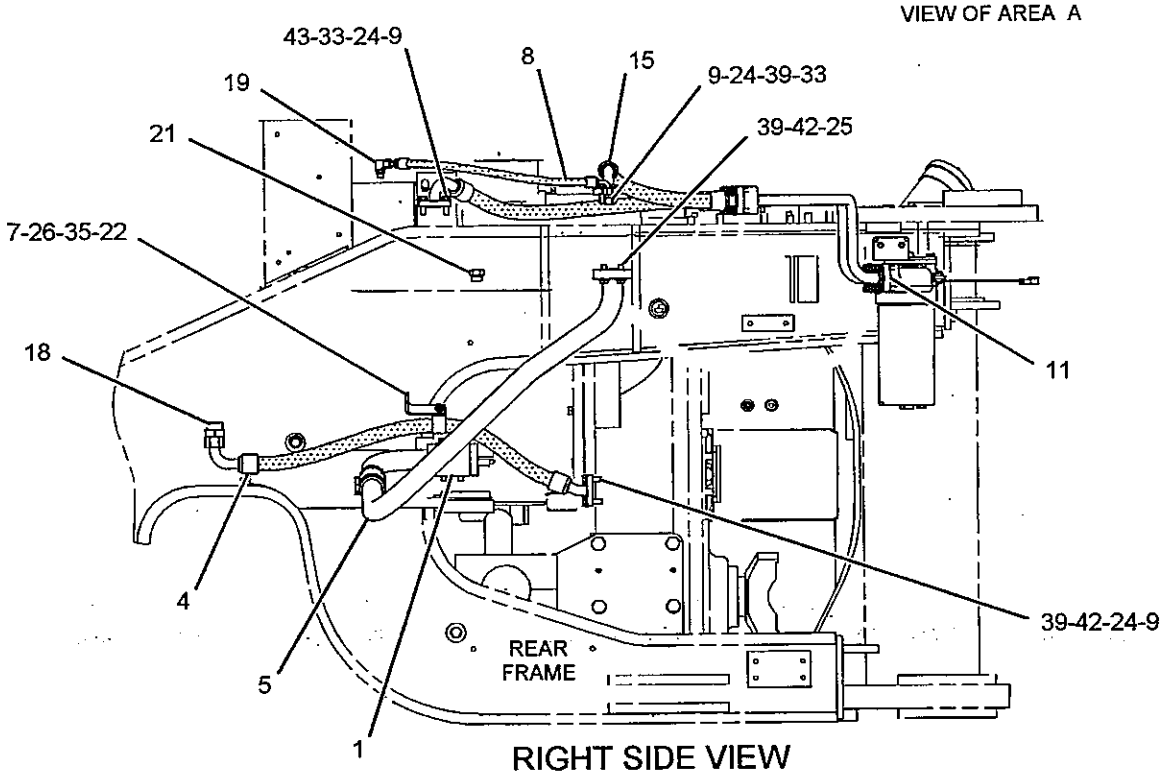


RIGHT SIDE VIEW

GRAPHIC #1

<END>

g01141453

# POWER TRAIN

## *232-6403* LINES GP-TORQUE CONV COOLER

S/N: JMS1-UP

PART OF 225-5538 CHASSIS AR

SMCS-1375, 3016

i02280832

| NOTE | REF NO | GRAPHIC REF | PART NUMBER | QTY | PART NAME 1 2 3 4 5 6 (PRODUCT LEVEL) | SEE PAGE |
|---|---|---|---|---|---|---|
| | 1 | 1 | 3K-0360 | 1 | SEAL-O-RING | |
| | 2 | 1 | 8T-6703 | 8 | CLAMP-HOSE | |
| | 3 | 1 | 169-7077 | 1 | BRACKET | |
| | 4 | 1 | 173-1026 | 1 | TUBE AS | |
| | 5 | 1 | 173-1027 | 1 | TUBE AS | |
| | | 1 | 6V-0423 | 1 | PLUG | |
| | 6 | 1 | 224-9046 | 1 | TUBE AS | |
| | 7 | 1 | 232-6405 | 1 | TUBE AS | |
| | 8 | 1 | 243-2746 | 2 | HOSE | |
| | 9 | 1 | 9S-4185 | 1 | PLUG | |
| | 10 | 1 | 1P-3705 | 4 | SEAL-RECTANGULAR | |
| | 11 | 1 | 1P-5762 | 4 | FLANGE-HALF | |
| | 12 | 1 | 5P-7468 | 1 | CLIP (SLOT) | |
| | 13 | 1 | 5P-7469 | 1 | CLIP (TAB) | |
| | 14 | 1 | 5P-8444 | 1 | GROMMET | |
| | 15 | 1 | 7X-0589 | 1 | WASHER-HARD (12X28.5X5-MM THK) | |
| | 16 | 1 | 8C-6877 | 1 | BOLT (7/16-14X1.75-IN) | |
| M | 17 | 1 | 8T-4183 | 1 | BOLT (M12X1.75X40-MM) | |
| M | 18 | 1 | 8T-4194 | 8 | BOLT (M12X1.75X50-MM) | |
| | 19 | 1 | 8T-4223 | 18 | WASHER-HARD (13.5X25.5X3-MM THK) | |
| M | 20 | 1 | 8T-4244 | 1 | NUT (M12X1.75-THD) | |
| M | 21 | 1 | 8T-4910 | 4 | BOLT (M12X1.75X60-MM) | |
| M | 22 | 1 | 8T-6868 | 4 | BOLT (M12X1.75X80-MM) | |

M-METRIC PART

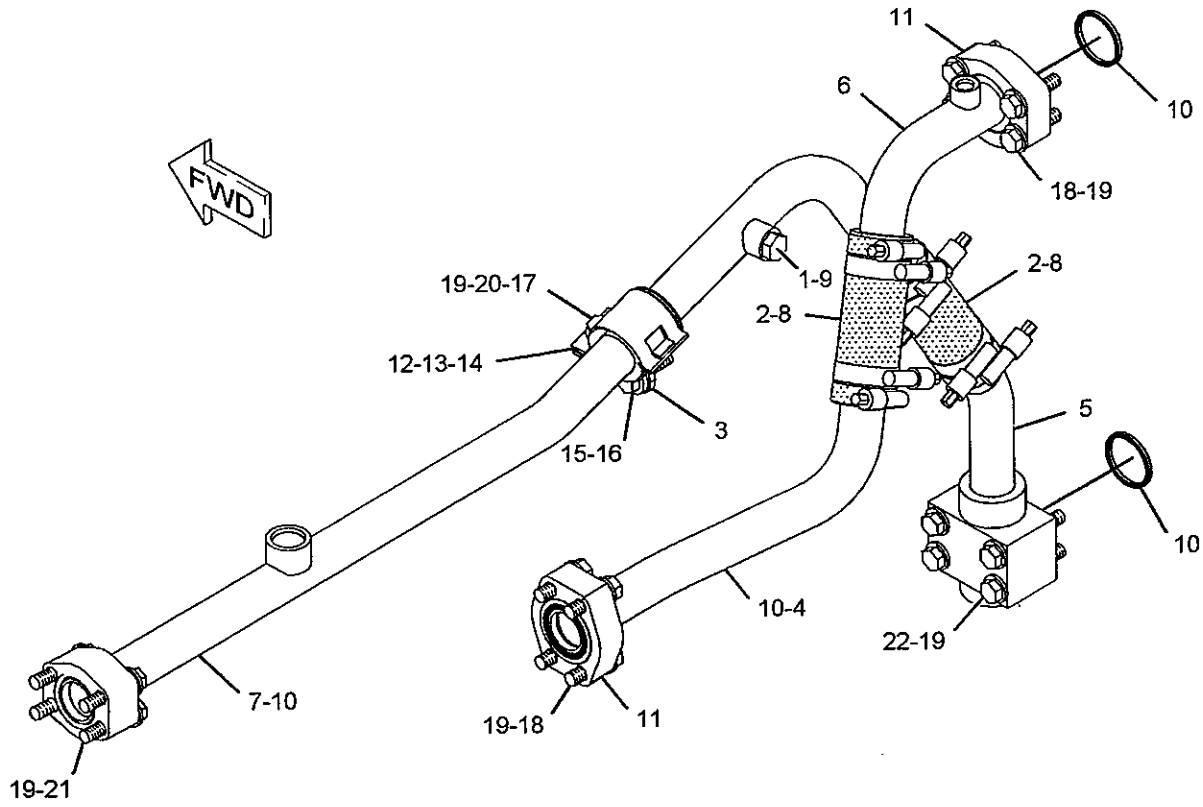


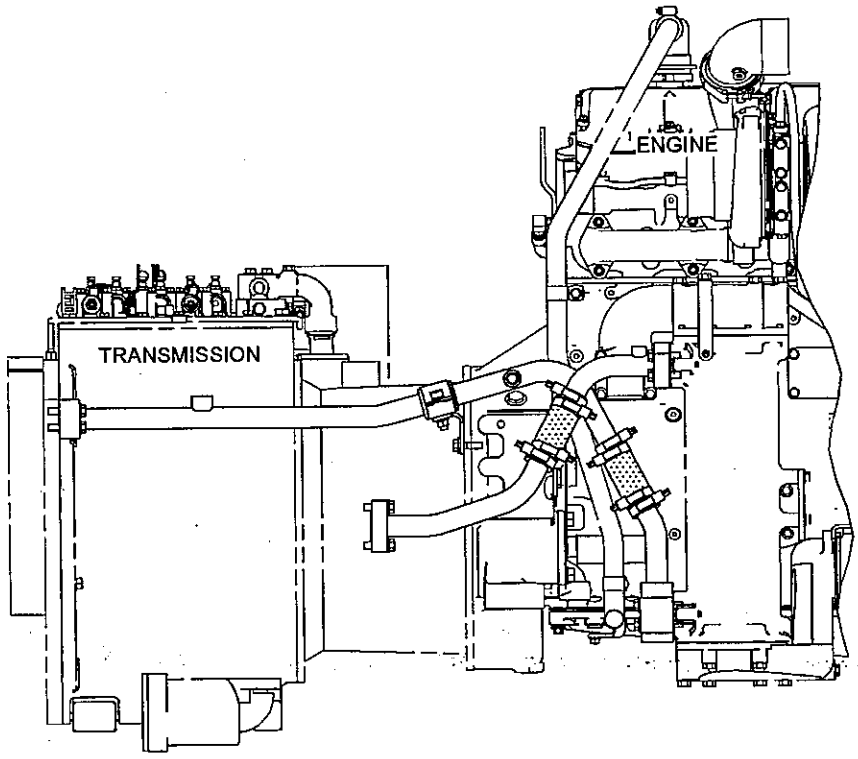


REAR VIEW

GRAPHIC #1

**<END>**

g01142268

# 115-1779 MOUNTING GP-AXLE

S/N: JMS1-UP

PART OF 232-6585 POWER TRAIN AR

SMCS-3268, 3278

i02148636

| NOTE | REF NO | GRAPHIC REF | PART NUMBER | QTY | PART NAME 1 2 3 4 5 6 (PRODUCT LEVEL) | SEE PAGE |
|---|---|---|---|---|---|---|
| | 1 | 1 | 132-7191 | 4 | PLATE | |
| M | 2 | 1 | 108-7931 | 4 | BOLT (M30X3.5X280-MM) | |
| | 3 | 1 | 132-5528 | 4 | SPACER (30-MM THK) | |
| M | 4 | 1 | 7X-0851 | 8 | NUT (M24X3-THD) | |
| M | 5 | 1 | 7Y-5231 | 4 | BOLT (M30X3.5X260-MM) | |
| M | 6 | 1 | 8C-8722 | 8 | NUT (M30X3.5-THD) | |
| M | 7 | 1 | 8T-0364 | 8 | BOLT (M24X3X220-MM) | |
| | 8 | 1 | 6V-8237 | 16 | WASHER (26X44X4-MM THK) | |
| | 9 | 1 | 9X-8258 | 12 | WASHER (33X56X6-MM THK) | |

M-METRIC PART

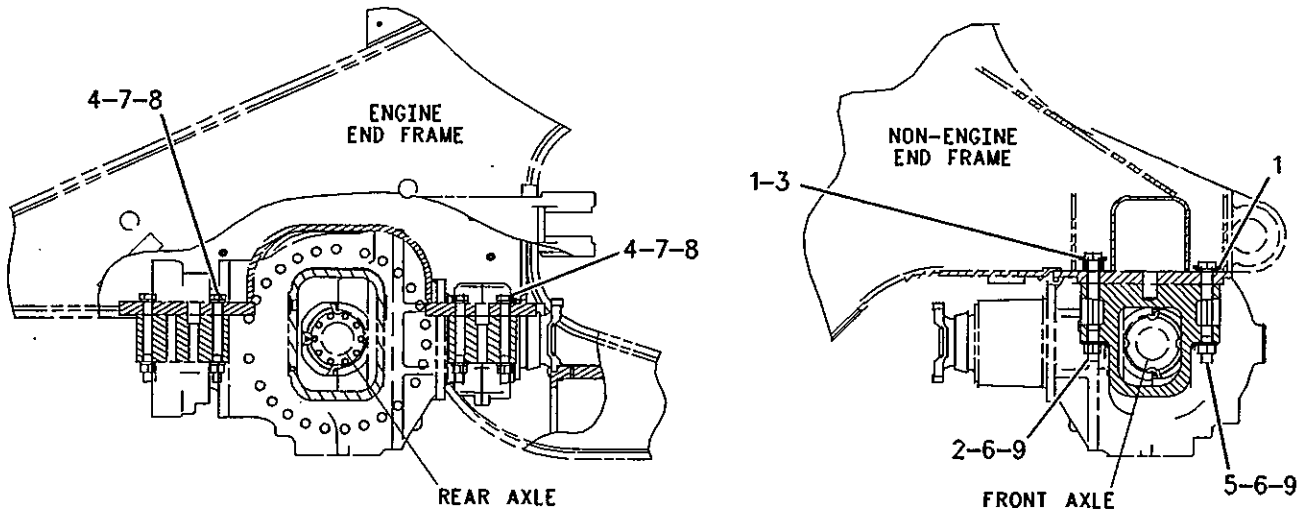


RIGHT SIDE VIEW

GRAPHIC #1

<END>

g00986046

# 123-5925 MOUNTING GP-RIM

S/N: JMS1-UP
PART OF 123-5923, 246-1577 RIM AR
AN ATTACHMENT

SMCS-4202, 4209

i00679286

| NOTE | PART NUMBER | QTY | PART NAME 1 2 3 4 5 6 (PRODUCT LEVEL) | SEE PAGE |
|---|---|---|---|---|
| M | 6V-8132 | 26 | BOLT (M24X3.0X120MM) | |
| | 6V-8237 | 26 | WASHER (4.0MM THK) | |

M-METRIC PART

<END>

# POWER TRAIN

## 230-6313 PLANETARY GP-TRANSMISSION

**S/N: DGZ1-UP**

**PART OF 230-6311 TRANSMISSION AR**

**SMCS-3160**

**i02087693**

| NOTE | REF NO | GRAPHIC REF | PART NUMBER | QTY | PART NAME 1 2 3 4 5 6 (PRODUCT LEVEL) | SEE PAGE |
|---|---|---|---|---|---|---|
| | 1 | 1 | 8C-6761 | 1 | RING-RETAINING | |
| | 2 | 1 | 2D-5658 | 1 | BALL BEARING | |
| | 3 | 1 | 8K-2692 | 1 | RING-RETAINING | |
| | 4 | 1 | 8T-1141 | 1 | RING-RETAINING | |
| | 5 | 1 | 6V-0836 | 1 | RING-RETAINING | |
| | 6 | 1 | 6Y-3484 | 1 | BALL BEARING | |
| | 7 | 1 | 1M-3937 | 1 | RING-METAL SEAL | |
| | 8 | 1 | 6F-0156 | 1 | RING-METAL SEAL | |
| | 9 | 1 | 8P-5778 | 1 | CARRIER-RING | |
| | 10 | 1 | 6Y-1603 | 1 | HOUSING-CLUTCH | |
| | 11 | 1 | 6Y-4771 | 1 | COUPLING | |
| | 12 | 1 | 9G-0280 | 1 | PISTON-CLUTCH | |
| | 13 | 2 | 9P-7390 | 10 | DISC AS-FRICTION | |
| R | 14 | 2 | 8P-2051 | 8 | PLATE-CLUTCH | |
| | 15 | 1 | 9W-8437 | 1 | GEAR-SUN (32-TEETH) | |
| | | 1 | 5M-3038 | 1 | SEAL-O-RING | |
| | 16 | 1 | 8P-1948 | 1 | GEAR-RING (88-TEETH) | |
| | 17 | 2 | 6Y-4769 | 1 | PLATE AS | |
| | | 2 | 5H-6202 | 2 | PIN | |
| | 18 | 1 | 6V-0473 | 3 | RING-RETAINING | |
| | 19 | 1 | 7T-8816 | 3 | BALL BEARING | |
| | 20 | 1 | 9P-7757 | 1 | GEAR-SUN (42-TEETH) | |
| | 21 | 2 | 7T-9542 | 1 | GEAR-RING (90-TEETH) | |
| | 22 | 2 | 9G-0285 | 1 | PISTON-CLUTCH | |
| | 23 | 1 | 9G-0284 | 1 | HOUSING-CLUTCH | |
| | 24 | 1 | 1A-5183 | 2 | BOLT (3/8-16X4.75-IN) | |
| | 25 | 1,2 | 6Y-5911 | 5 | DISC-FRICTION | |
| | 26 | 2 | 061-6711 | 1 | RING-RETAINING | |
| | 27 | 1,2 | 5P-5296 | 2 | RING-RETAINING | |
| | 28 | 2 | 9M-4355 | 10 | DAMPER-BOLT | |
| | 29 | 1 | 9P-8626 | 1 | GEAR-SUN (42-TEETH) | |
| | 30 | 1 | 8P-9507 | 1 | PISTON-CLUTCH | |
| | 31 | 1 | 9P-8614 | 1 | GEAR-RING (90-TEETH) | |
| | 32 | 1 | 144-4284 | 3 | RING-LOCK | |
| | 33 | 1 | 7G-7218 | 1 | CARRIER-PLANETARY | |
| | 34 | 1 | 7T-9370 | 1 | GEAR-SUN (51-TEETH) | |
| | 35 | 2 | 9W-8269 | 1 | PLATE-REACTION | |
| | 36 | 2 | 9G-0290 | 1 | HUB-CLUTCH | |
| | 37 | 2 | 8P-1964 | 3 | PLATE-CLUTCH | |
| | 38 | 2 | 9G-8020 | 1 | PLATE-RETAINER | |
| | 39 | 2 | 6V-2478 | 1 | RING-RETAINING | |
| | 40 | 2 | 7G-2343 | 3 | SPRING-DISC | |
| | 41 | 1 | 7G-7724 | 1 | PISTON-CLUTCH | |
| | 42 | 1 | 5P-8194 | 1 | RING-RETAINING | |
| | 43 | 1 | 9W-8270 | 1 | GEAR-RING (90-TEETH) | |
| | 44 | 2 | 108-3322 | 1 | HOUSING AS-CLUTCH | |
| | | 2 | 6B-6863 | 1 | PIN-SPRING | |
| | | 2 | 6P-7704 | 1 | CARRIER-RING | |
| M | 45 | 1 | 5P-8245 | 28 | WASHER-HARD (13.5X25.5X3-MM THK) | |
| | 46 | 1 | 1M-8657 | 10 | BOLT (1/2-13X15.69-IN) | |
| | 47 | 1 | 9X-8875 | 18 | BOLT (1/2-13X3.5-IN) | |
| | 48 | 1 | 3P-2793 | 1 | SEAL-RING | |
| | 49 | 1 | 3P-2794 | 1 | SEAL-RING | |
| | 50 | 1 | 3S-2708 | 11 | PIN-SPRING | |
| | 51 | 1 | 7G-2486 | 4 | GEAR-PLANETARY (20-TEETH) | |
| | 52 | 2 | 7G-2830 | 2 | RING-SEAL | |

## 230-6313 PLANETARY GP-TRANSMISSION (contd.) i02087693

| NOTE | REF NO | GRAPHIC REF | PART NUMBER | QTY | PART NAME 1 2 3 4 5 6 (PRODUCT LEVEL) | SEE PAGE |
|---|---|---|---|---|---|---|
| | 53 | 2 | 3P-3242 | 4 | SHAFT-PLANETARY | |
| | 54 | 2 | 5M-2054 | 8 | BEARING | |
| | 55 | 2 | 8E-8304 | 24 | DISC-THRUST | |
| | 56 | 2 | 3P-3060 | 1 | GEAR-SUN (50-TEETH) | |
| | 57 | 2 | 1N-5410 | 1 | RING-RETAINING | |
| | 58 | 1 | 7J-6580 | 1 | RING-RETAINING | |
| | 59 | 1 | 9W-8433 | 1 | SHAFT AS-OUTPUT | |
| | | 1 | 5M-3038 | 1 | SEAL-O-RING | |
| | | 1 | 9G-6743 | 1 | BEARING-SLEEVE | |
| | | 1 | 9G-6744 | 1 | BEARING-SLEEVE | |
| | 60 | 1 | 231-3624 | 1 | SHAFT AS | |
| | | 1 | 7M-5130 | 1 | PIN-SPRING | |
| | | 1 | 8M-5661 | 1 | SEAL-O-RING | |
| | | 1 | 8T-3601 | 2 | SETSCREW-SOCKET (1/4-20-THD) | |
| | | 1 | 190-3769 | 1 | ADAPTER-SPEED | |
| | | 1 | 231-3625 | 1 | SHAFT-INPUT | |
| | 61 | 1 | 108-2227 | 1 | CARRIER-PLANETARY | |
| | 62 | 1 | 5P-5297 | 1 | RING-RETAINING | |
| | 63 | 1 | 8M-5255 | 1 | SEAL-O-RING | |
| | 64 | 1 | 5P-5045 | 1 | BALL BEARING | |
| | 65 | 1 | 1L-7388 | 1 | RING-RETAINING | |
| | 66 | 1 | 108-2896 | 1 | SLINGER | |
| | 67 | 1 | 6Y-8864 | 1 | GASKET-SLINGER | |
| | 68 | 1 | 7G-0283 | 1 | GEAR-RING (80-TEETH) | |
| | 69 | 1 | 1T-0738 | 8 | WASHER (8.4X19X1.83-MM THK) | |
| | 70 | 1 | 031-4630 | 8 | BOLT-LOCKING (5/16-18X0.75-IN) | |
| | 71 | 1 | 3P-2685 | 1 | PISTON-CLUTCH | |
| | 72 | 1 | 106-6450 | 1 | HOUSING-CLUTCH | |
| | 73 | 1 | 1S-9989 | 6 | DOWEL-REACTION | |
| | 74 | 1 | 233-9748 | 2 | DISC-FRICTION | |
| | 75 | 1 | 238-1867 | 2 | PLATE-CLUTCH | |
| | 76 | 1 | 9H-5537 | 12 | SPRING | |
| | 77 | 1 | 8P-2023 | 1 | RING-SEAL | |
| | 78 | 1 | 232-2583 | 1 | MANIFOLD AS | |
| | | 1 | 3F-3442 | 1 | DOWEL | |
| | | 1 | 4B-9784 | 1 | BALL | |
| | | 1 | 6T-6052 | 1 | PLUG-ORIFICE | |
| | | 1 | 7M-8480 | 2 | DOWEL | |
| | | 1 | 9S-1343 | 1 | PLUG-CUP | |
| | | 1 | 232-2582 | 1 | MANIFOLD | |
| | 79 | 1 | 7F-2122 | 2 | SEAL-O-RING | |
| | 80 | 1 | 2D-8363 | 1 | SEAL-O-RING | |
| | 81 | 1 | 8D-9739 | 1 | SEAL-RING | |
| | 82 | 1 | 6Y-5912 | 4 | DISC-FRICTION | |
| | 83 | 1 | 6I-8500 | 3 | PLATE-CLUTCH | |
| | 84 | 1 | 8P-1892 | 1 | PISTON-CLUTCH | |
| | 85 | 1 | 5P-3930 | 3 | BEARING AS-ROLLER | |
| | 86 | 1 | 8P-2019 | 2 | RING-SEAL | |
| | 87 | 1 | 8P-1916 | 3 | GEAR-PLANETARY (20-TEETH) | |
| | 88 | 1 | 8E-8299 | 6 | DISC-THRUST | |
| | 89 | 2 | 117-7826 | 1 | HOUSING AS-CLUTCH | |
| | | 2 | 1A-2223 | 4 | DOWEL | |
| | 90 | 2 | 9G-0289 | 3 | SHAFT-PLANETARY | |
| | 91 | 2 | 8P-2053 | 1 | SEAL-RING | |
| | 92 | 1 | 4M-9592 | 20 | SPRING | |
| | 93 | 1 | 7G-2516 | 8 | GEAR-PLANETARY (24-TEETH) | |
| | 94 | 1,2 | 8P-2022 | 4 | RING-SEAL | |
| | 95 | 2 | 9G-0286 | 1 | RING-SEAL | |
| | 96 | 2 | 112-4511 | 4 | PIN-SPRING | |

## 230-6313 PLANETARY GP-TRANSMISSION (contd.) i02087693

| NOTE | REF NO | GRAPHIC REF | PART NUMBER | QTY | PART NAME 1 2 3 4 5 6 (PRODUCT LEVEL) | SEE PAGE |
|---|---|---|---|---|---|---|
| | 97 | 2 | 5M-6126 | 8 | BEARING AS-ROLLER | |
| | 98 | 2 | 112-8042 | 1 | CARRIER-PLANETARY | |
| | 99 | 1 | 112-5585 | 4 | SHAFT-PLANETARY | |
| | 100 | 1 | 5M-3038 | 2 | SEAL-O-RING | |
| | 101 | 1 | 8P-1919 | 4 | GEAR-PLANETARY (20-TEETH) | |
| | 102 | 1 | 7H-7658 | 10 | SPRING | |
| | 103 | 1 | 3K-2511 | 10 | DOWEL-REACTION | |
| | 104 | 1 | 5D-2989 | 4 | BEARING | |
| | 105 | 1 | 9G-0281 | 1 | RING-SEAL | |
| | 106 | 1 | 131-4091 | 1 | SEAL-RING | |
| | 107 | 1 | 9P-8623 | 4 | SHAFT-PLANETARY | |
| | 108 | 1 | 8E-8305 | 8 | DISC-THRUST | |
| | 109 | 2 | 8E-2974 | 1 | CARRIER AS | |
| | | 2 | 4S-8537 | 1 | DOWEL | |
| | | 2 | 8E-2975 | 1 | CARRIER-PLANETARY | |
| | | 2 | 8P-5777 | 1 | CARRIER-RING | |
| | 110 | 2 | 8M-5661 | 1 | SEAL-O-RING | |
| | 111 | 2 | 3J-1907 | 1 | SEAL-O-RING | |
| | 112 | 2 | 9S-4191 | 1 | PLUG | |
| | 113 | 2 | 6V-1720 | 1 | PLATE-SERIAL NUMBER (TRANSMISSION) | |

M-METRIC PART
R-REMFG PART MAY BE AVAILABLE

## 230-6313 PLANETARY GP-TRANSMISSION (contd.) i02087693

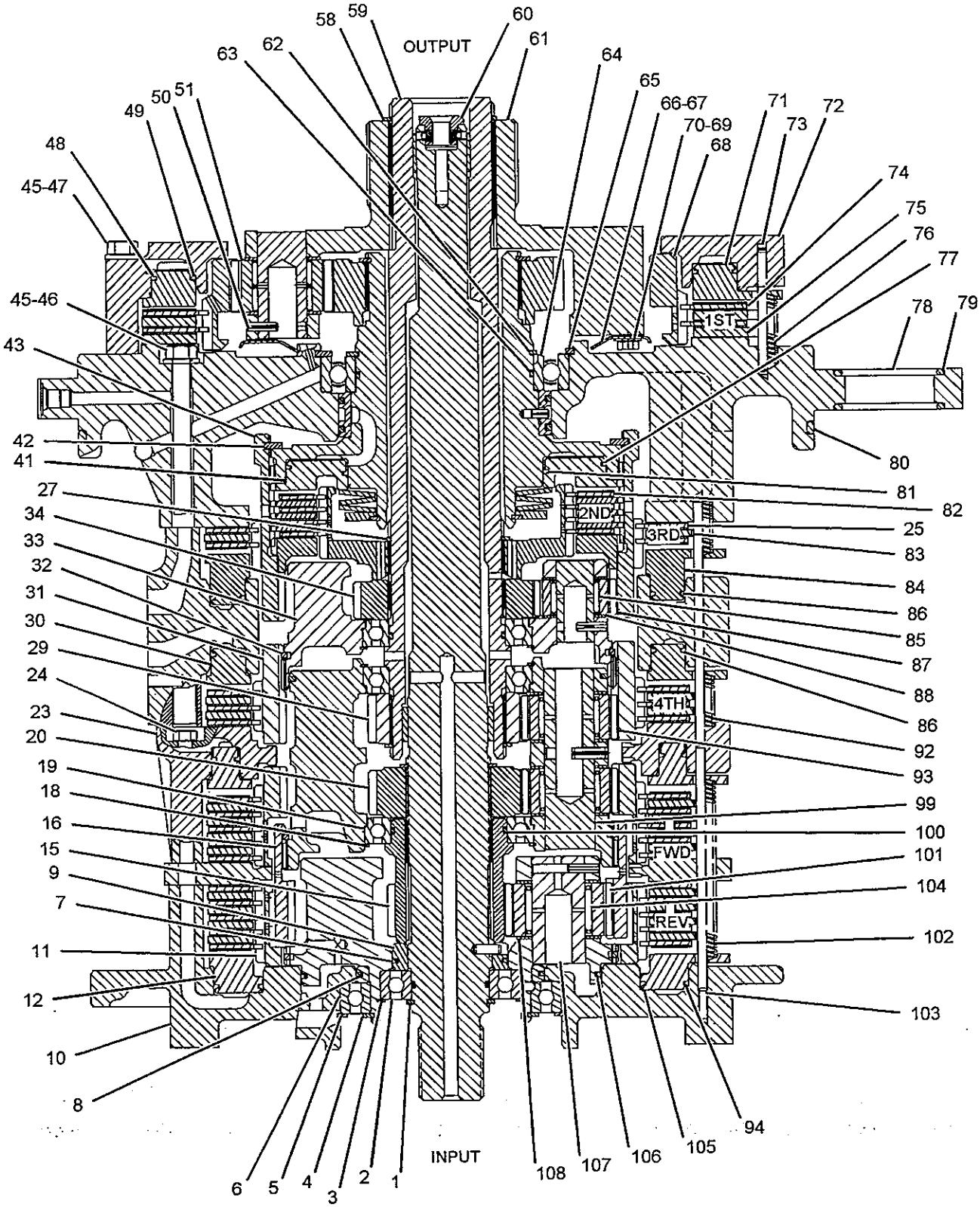


GRAPHIC #1 g01066409

## 230-6313 PLANETARY GP-TRANSMISSION *(contd.)*

i02087693

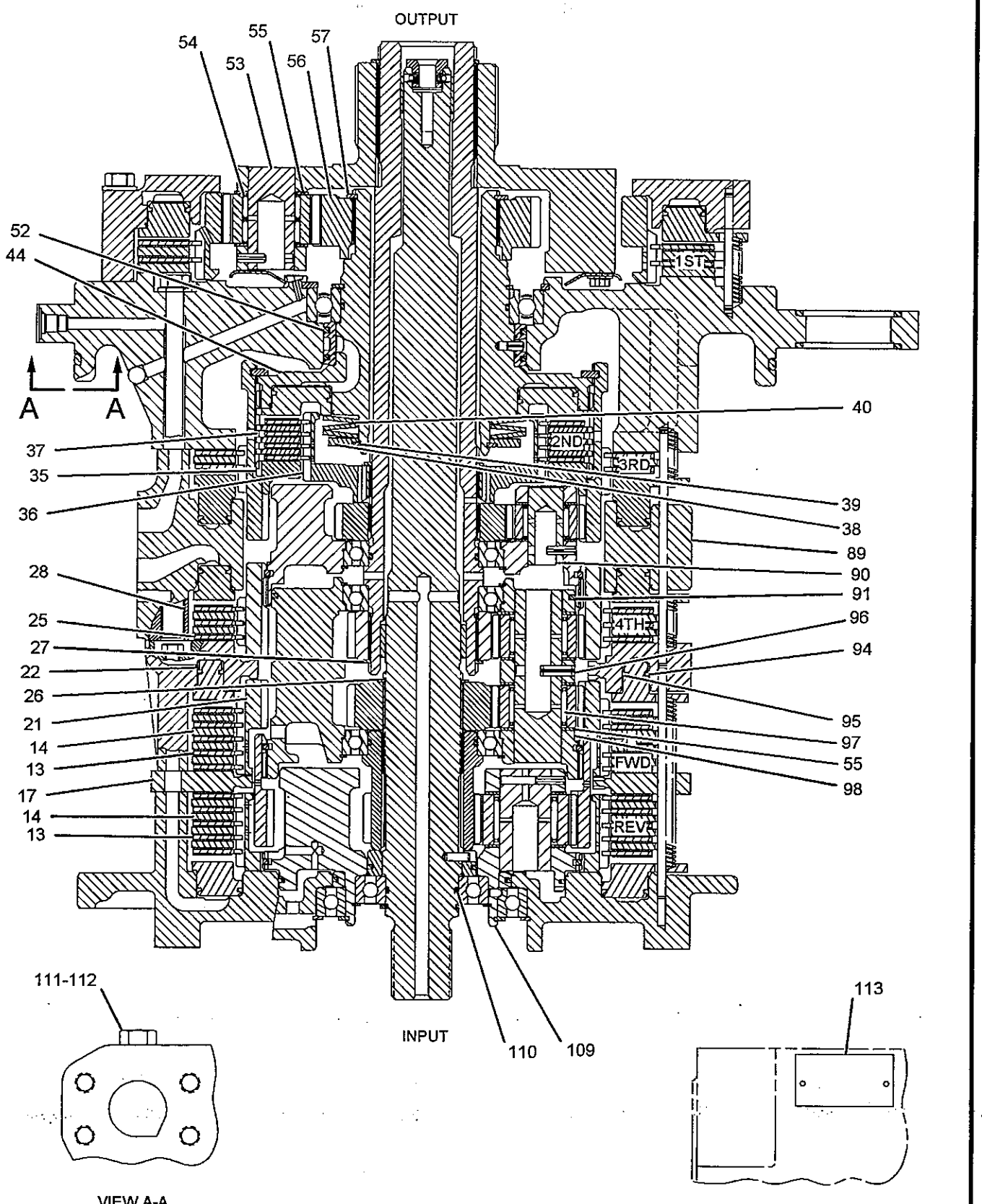


GRAPHIC #2

<END>

g01066410

# POWER TRAIN

## 230-6322 PLANETARY GP-TRANSMISSION–HEAVY-DUTY

S/N: MDA1-UP
PART OF 230-6321 TRANSMISSION AR
AN ATTACHMENT

SMCS-3160 i02283062

| NOTE | REF NO | GRAPHIC REF | PART NUMBER | QTY | PART NAME 1 2 3 4 5 6 (PRODUCT LEVEL) | SEE PAGE |
|---|---|---|---|---|---|---|
| | 1 | 1 | 200-8629 | 1 | SHAFT AS-INPUT | |
| | | 1 | 1K-6979 | 2 | SETSCREW-HEX SOCKET (1/4-20-THD) | |
| | | 1 | 8M-4390 | 2 | SEAL-O-RING | |
| | | 1 | 8M-5661 | 1 | SEAL-O-RING | |
| | | 1 | 190-3769 | 1 | ADAPTER-SPEED | |
| | 2 | 1 | 8C-6761 | 1 | RING-RETAINING | |
| | 3 | 1 | 8K-2692 | 1 | RING-RETAINING | |
| | 4 | 1 | 6P-3458 | 1 | SPACER (21.79X30X3.66-MM THK) | |
| | 5 | 1 | 2P-5755 | 12 | SPRING | |
| | 6 | 1 | 8T-1141 | 2 | RING-RETAINING | |
| | 7 | 1 | 6Y-3484 | 3 | BALL BEARING | |
| | 8 | 1 | 6V-0836 | 3 | RING-RETAINING | |
| | 9 | 1 | 6F-0156 | 1 | RING-METAL SEAL | |
| | 10 | 1 | 8E-6575 | 1 | HOUSING AS-CLUTCH | |
| | | 1 | 9S-1343 | 1 | PLUG-CUP | |
| | 11 | 1 | 3P-3321 | 2 | SEAL-METAL RING | |
| | 12 | 1 | 108-2736 | 2 | RING-LOCK | |
| | 13 | 1 | 3P-9366 | 1 | PISTON-CLUTCH | |
| | 14 | 1 | 6T-3720 | 1 | GEAR-RING (92, 80-TEETH) | |
| | 15 | 1 | 3P-2793 | 5 | SEAL-RING | |
| | 16 | 1 | 5B-9603 | 2 | BOLT (3/8-16X5-IN) | |
| | 17 | 1 | 9F-3788 | 1 | RING-METAL SEAL | |
| | 18 | 1 | 106-7798 | 2 | BALL BEARING | |
| | 19 | 1 | 8S-9104 | 2 | RING-RETAINING | |
| | 20 | 1 | 8P-4617 | 1 | SEAL-METAL RING | |
| | 21 | 1 | 164-4891 | 1 | PLATE AS | |
| | | 1 | 2D-6642 | 2 | BALL | |
| | | 1 | 7M-8479 | 2 | DOWEL | |
| | 22 | 1 | 7G-3355 | 1 | HOUSING-CLUTCH | |
| | 23 | 1 | 3P-3059 | 1 | GEAR-SUN (42-TEETH) | |
| | 24 | 1 | 9P-7039 | 1 | RING-SEAL | |
| | 25 | 1 | 231-1270 | 1 | HOUSING AS-CLUTCH | |
| | | 1 | 7M-8480 | 4 | DOWEL | |
| | 26 | 1 | 3P-3098 | 1 | GEAR-RING (90-TEETH) | |
| | 27 | 1 | 7G-8211 | 1 | CARRIER AS | |
| | 28 | 1 | 5M-6187 | 1 | RING-METAL SEAL | |
| | 29 | 1 | 108-2735 | 1 | RING-LOCK | |
| | 30 | 1 | 9M-4355 | 20 | DAMPER-BOLT | |
| | 31 | 1 | 255-8850 | 1 | CARRIER-PLANETARY | |
| | 32 | 1 | 3P-2685 | 3 | PISTON-CLUTCH | |
| | 33 | 1 | 3P-2794 | 4 | SEAL-RING | |
| | 34 | 1 | 9M-1503 | 1 | RING-METAL SEAL | |
| | 35 | 1 | 7G-3356 | 1 | PISTON-CLUTCH | |
| | 36 | 1 | 3P-2791 | 1 | HOUSING-CLUTCH | |
| | 37 | 1 | 6P-5751 | 1 | GEAR-RING (90-TEETH) | |
| | 38 | 1 | 9W-2977 | 1 | HUB AS | |
| | | 1 | 4S-8537 | 1 | DOWEL | |
| | 39 | 1 | 7J-6525 | 1 | RING-RETAINING | |
| | 40 | 1 | 3P-3304 | 1 | PLATE-RETAINER | |
| | 41 | 1 | 9M-2095 | 1 | RING-RETAINING | |
| | 42 | 1 | 3P-3635 | 3 | SPRING-DISC | |
| | 43 | 1 | 232-4685 | 1 | MANIFOLD AS | |
| | | 1 | 3D-2824 | 2 | SEAL-O-RING | |
| | | 1 | 3F-3442 | 1 | DOWEL | |
| | | 1 | 3J-1907 | 1 | SEAL-O-RING | |

# POWER TRAIN

## 230-6322 PLANETARY GP-TRANSMISSION *(contd.)* i02283062

| NOTE | REF NO | GRAPHIC REF | PART NUMBER | QTY | PART NAME 1 2 3 4 5 6 (PRODUCT LEVEL) | SEE PAGE |
|---|---|---|---|---|---|---|
| | | 1 | 6T-6052 | 1 | PLUG-ORIFICE | |
| | | 1 | 7M-8480 | 4 | DOWEL | |
| | | 1 | 9S-4191 | 1 | PLUG | |
| | | 1 | 9S-8008 | 2 | PLUG | |
| | 44 | 1 | 0T-0065 | 20 | BOLT (3/8-16X3.5-IN) | |
| | 45 | 1 | 5M-2894 | 20 | WASHER-HARD (10.2X18.5X2.5-MM THK) | |
| | 46 | 1 | 6Y-5793 | 2 | RING-SEAL | |
| | 47 | 1 | 0S-1617 | 8 | BOLT (5/16-18X0.75-IN) | |
| | 48 | 1 | 6P-5724 | 4 | LOCK | |
| | 49 | 1 | 6P-5725 | 1 | SLINGER | |
| | 50 | 1 | 6Y-8864 | 1 | GASKET-SLINGER | |
| | 51 | 1 | 6J-6721 | 18 | BOLT (1/2-13X19.25-IN) | |
| M | 52 | 1 | 5P-8245 | 20 | WASHER-HARD (13.5X25.5X3-MM THK) | |
| | 53 | 1 | 3P-2761 | 1 | HOUSING-CLUTCH | |
| | 54 | 1 | 7G-0283 | 2 | GEAR-RING (80-TEETH) | |
| | 55 | 1 | 3P-2415 | 1 | CARRIER-PLANETARY | |
| | 56 | 1 | 3P-3060 | 1 | GEAR-SUN (50-TEETH) | |
| | 57 | 1 | 1N-5410 | 1 | RING-RETAINING | |
| | 58 | 1 | 3P-3735 | 1 | HOUSING AS-CARRIER | |
| | | 1 | 4S-8537 | 1 | DOWEL | |
| | | 1 | 6B-6863 | 1 | PIN-SPRING | |
| | | 1 | 6P-7705 | 1 | CARRIER-RING | |
| | 59 | 1 | 5J-5794 | 2 | BOLT (1/2-13X3.5-IN) | |
| | 60 | 1 | 8S-6212 | 2 | BOLT (1/2-13X13-IN) | |
| | 61 | 1 | 200-8627 | 1 | SHAFT AS-OUTPUT | |
| | | 1 | 3P-3103 | 1 | CARRIER-RING | |
| | | 1 | 5P-0403 | 1 | BEARING-ROLLER | |
| | 62 | 1 | 3P-4050 | 1 | SPACER (0.125-IN THK) | |
| | 63 | 1 | 3P-3743 | 1 | RING-RETAINING | |
| | 64 | 1 | 1P-0014 | 1 | RING-LOCK | |
| | 65 | 1 | 3P-3242 | 4 | SHAFT-PLANETARY | |
| | 66 | 1 | 5M-2054 | 8 | BEARING | |
| | 67 | 1 | 8E-8304 | 14 | DISC-THRUST | |
| | 68 | 1 | 7G-2486 | 4 | GEAR-PLANETARY (20-TEETH) | |
| | 69 | 1 | 3S-2708 | 10 | PIN-SPRING | |
| | 70 | 1 | 1S-9989 | 6 | DOWEL-REACTION | |
| | 71 | 1 | 9H-5537 | 36 | SPRING | |
| | 72 | 1 | 1P-9261 | 1 | SEAL-RING | |
| | 73 | 1 | 3P-2768 | 1 | PISTON-CLUTCH | |
| | 74 | 1 | 7F-2122 | 2 | SEAL-O-RING | |
| | 75 | 1 | 3P-2792 | 1 | SEAL-RING | |
| | 76 | 1 | 2D-8363 | 1 | SEAL-O-RING | |
| R | 77 | 1 | 3P-7489 | 4 | PLATE-CLUTCH | |
| | | 1 | *OR-4583* | 1 | PLATE-CLUTCH | |
| | 78 | 1 | 6I-9255 | 5 | DISC-FRICTION | |
| | 79 | 1 | 6P-7379 | 1 | HOUSING AS | |
| | | 1 | 8B-1312 | 3 | DOWEL | |
| | 80 | 1 | 9W-8298 | 6 | DOWEL | |
| | 81 | 1 | 7G-2476 | 3 | GEAR-PLANETARY (20-TEETH) | |
| | 82 | 1 | 5M-6126 | 3 | BEARING AS-ROLLER | |
| | 83 | 1 | 6P-6739 | 3 | SHAFT-PLANETARY | |
| | 84 | 1 | 233-9748 | 8 | DISC-FRICTION | |
| | 85 | 1 | 238-1867 | 9 | PLATE-CLUTCH | |
| | 86 | 1 | 3P-3096 | 1 | GEAR-SUN (51-TEETH) | |
| | 87 | 1 | 6S-1753 | 1 | RING-RETAINING | |
| | 88 | 1 | 112-7309 | 3 | SHAFT-PLANETARY | |
| | 89 | 1 | 112-4511 | 3 | PIN-SPRING | |
| | 90 | 1 | 7G-0897 | 12 | DISC-THRUST | |
| | 91 | 1 | 7G-3457 | 6 | GEAR (25-TEETH) | |

## 230-6322 PLANETARY GP-TRANSMISSION *(contd.)* i02283062

| NOTE | REF NO | GRAPHIC REF | PART NUMBER | QTY | PART NAME 1 2 3 4 5 6 (PRODUCT LEVEL) | SEE PAGE |
|---|---|---|---|---|---|---|
| | 92 | 1 | **5M-7925** | 6 | BEARING AS-ROLLER | |
| | 93 | 1 | **6Y-1616** | 1 | CARRIER AS | |
| | | 1 | **4S-8537** | 1 | DOWEL | |
| | 94 | 1 | **9W-9856** | 6 | DISC AS-FRICTION | |
| | 95 | 1 | **3P-3418** | 1 | GEAR-RING (88-TEETH) | |
| | 96 | 1 | **9W-8297** | 6 | DOWEL | |
| | 97 | 1 | **9W-3898** | 3 | GEAR (28-TEETH) | |
| | 98 | 1 | **1P-3958** | 3 | ROLLER AS-SPECIAL | |
| | 99 | 1 | **8E-8316** | 6 | DISC-THRUST | |
| | 100 | 1 | **3P-3246** | 3 | SHAFT-PLANETARY | |
| | 101 | 1 | **8M-4390** | 2 | SEAL-O-RING | |
| | 102 | 1 | **3P-2983** | 1 | GEAR-SUN (32-TEETH) | |
| | 103 | 1 | **2D-5658** | 1 | BALL BEARING | |
| | 104 | 1 | **8M-5661** | 1 | SEAL-O-RING | |
| | 105 | 1 | **9S-4191** | 1 | PLUG | |
| | 106 | 1 | **3J-1907** | 1 | SEAL-O-RING | |
| | 107 | 1 | **6V-1720** | 1 | PLATE-SERIAL NUMBER (TRANSMISSION) | |

M-METRIC PART
R-REMFG PART MAY BE AVAILABLE

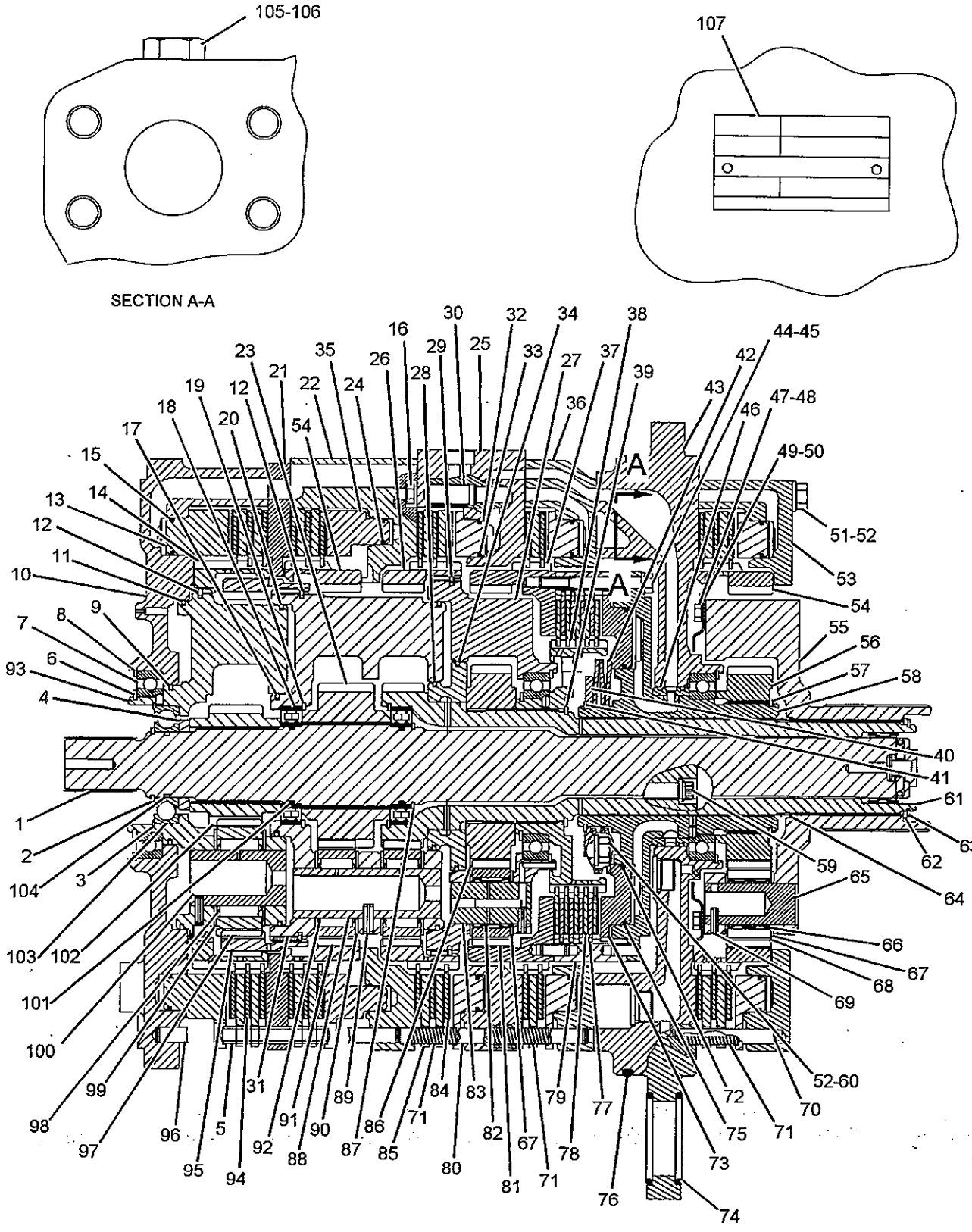


GRAPHIC #1 **<END>** g01145763

# 232-6585 POWER TRAIN AR

S/N: JMS1-UP

PART OF 225-5537 GENERAL AR

SMCS-3000, 4000

i02096354

| NOTE | PART NUMBER | QTY | PART NAME 1 2 3 4 5 6 (PRODUCT LEVEL) | SEE PAGE |
|---|---|---|---|---|
| Y | *232-7559* | 1 | AXLE AR-FIXED (FRONT) | 305 |
| Y | *232-7558* | 1 | AXLE AR-OSCILLATING (REAR) | 305 |
| Y | *110-4774* | 1 | BRAKE GP-PARKING | 525 |
| Y | *242-7376* | 1 | FILLER GP-POWER TRAIN OIL | 339 |
| Y | *232-6406* | 1 | LINES GP-POWER TRAIN OIL | 353 |
| Y | *115-1779* | 1 | MOUNTING GP-AXLE | 357 |
| Y | *107-5001* | 1 | SHAFT GP-DRIVE | 375 |
| Y | **230-6311** | 1 | TRANSMISSION AR (FREEWHEEL STATOR TORQUE CONV) | 395 |
| | **218-0481** | 1 | SOFTWARE GP-POWER TRAIN | |

Y-SEPARATE ILLUSTRATION

**<END>**

# 249-0045 PUMP & MTG GP-AXLE OIL COOLER

S/N: JMS1-UP

PART OF 233-9749 COOLER AR-AXLE OIL

AN ATTACHMENT

SMCS-5073

i02199423

| NOTE | REF NO | GRAPHIC REF | PART NUMBER | QTY | PART NAME 1 2 3 4 5 6 (PRODUCT LEVEL) | SEE PAGE |
|---|---|---|---|---|---|---|
| | 1 | 1 | 1N-3743 | 1 | V-BELT | |
| | 2 | 1 | 153-5741 | 1 | STRAP | |
| | 3 | 1 | 168-6452 | 1 | CLUTCH GP-ELECTRIC (AXLE OIL COOLER PUMP) | |
| | 4 | 1 | 197-7999 | 1 | BRACKET AS | |
| M | | 1 | 8T-3490 | 1 | NUT-WELD (M10X1.5-THD) | |
| | 5 | 1 | 197-8000 | 1 | BRACKET AS | |
| M | | 1 | 8T-3490 | 2 | NUT-WELD (M10X1.5-THD) | |
| | 6 | 1 | 204-0136 | 1 | PULLEY | |
| | 7 | 1 | 206-0065 | 1 | PLATE | |
| | 8 | 1 | 215-3013 | 1 | PUMP GP-GEAR (AXLE OIL COOLER) | |
| | 9 | 1 | 219-0682 | 2 | SPACER (10.75X13.72X13.2-MM THK) | |
| | 10 | 1 | 225-9199 | 1 | SPACER (13.5X22X14-MM THK) | |
| | 11 | 1 | 118-9573 | 2 | BOLT-12 POINT HEAD (M10X1.5-THD) | |
| | 12 | 1 | 130-5300 | 1 | CLIP | |
| M | 13 | 1 | 5C-2890 | 4 | NUT (M6X1-THD) | |
| | 14 | 1 | 6K-8179 | 1 | CLIP | |
| | 15 | 1 | 6V-3960 | 1 | BOLT (1/4-28X0.875-IN) | |
| | 16 | 1 | 6V-8188 | 1 | NUT (1/2-13-THD) | |
| | 17 | 1 | 7X-0338 | 1 | BOLT (1/2-13X6-IN) | |
| | 18 | 1 | 7X-0339 | 1 | BOLT (1/2-13X6.25-IN) | |
| | 19 | 1 | 7X-0345 | 4 | BOLT (5/8-11X1.75-IN) | |
| M | 20 | 1 | 7X-2534 | 2 | BOLT (M6X1X50-MM) | |
| M | 21 | 1 | 7X-2535 | 2 | BOLT (M6X1X60-MM) | |
| | 22 | 1 | 7X-7729 | 1 | WASHER (11X25X3-MM THK) | |
| | 23 | 1 | 8T-4121 | 1 | WASHER-HARD (11X21X2.5-MM THK) | |
| M | 24 | 1 | 8T-4136 | 1 | BOLT (M10X1.5X25-MM) | |
| M | 25 | 1 | 8T-4195 | 1 | BOLT (M10X1.5X30-MM) | |
| | 26 | 1 | 8T-4205 | 1 | WASHER-HARD (7.2X14.5X2-MM THK) | |
| | 27 | 1 | 8T-4223 | 3 | WASHER-HARD (13.5X25.5X3-MM THK) | |
| | 28 | 1 | 9X-8256 | 4 | WASHER (6.6X12X2-MM THK) | |

M-METRIC PART

## 249-0045 PUMP & MTG GP-AXLE OIL COOLER (contd.) i02199423

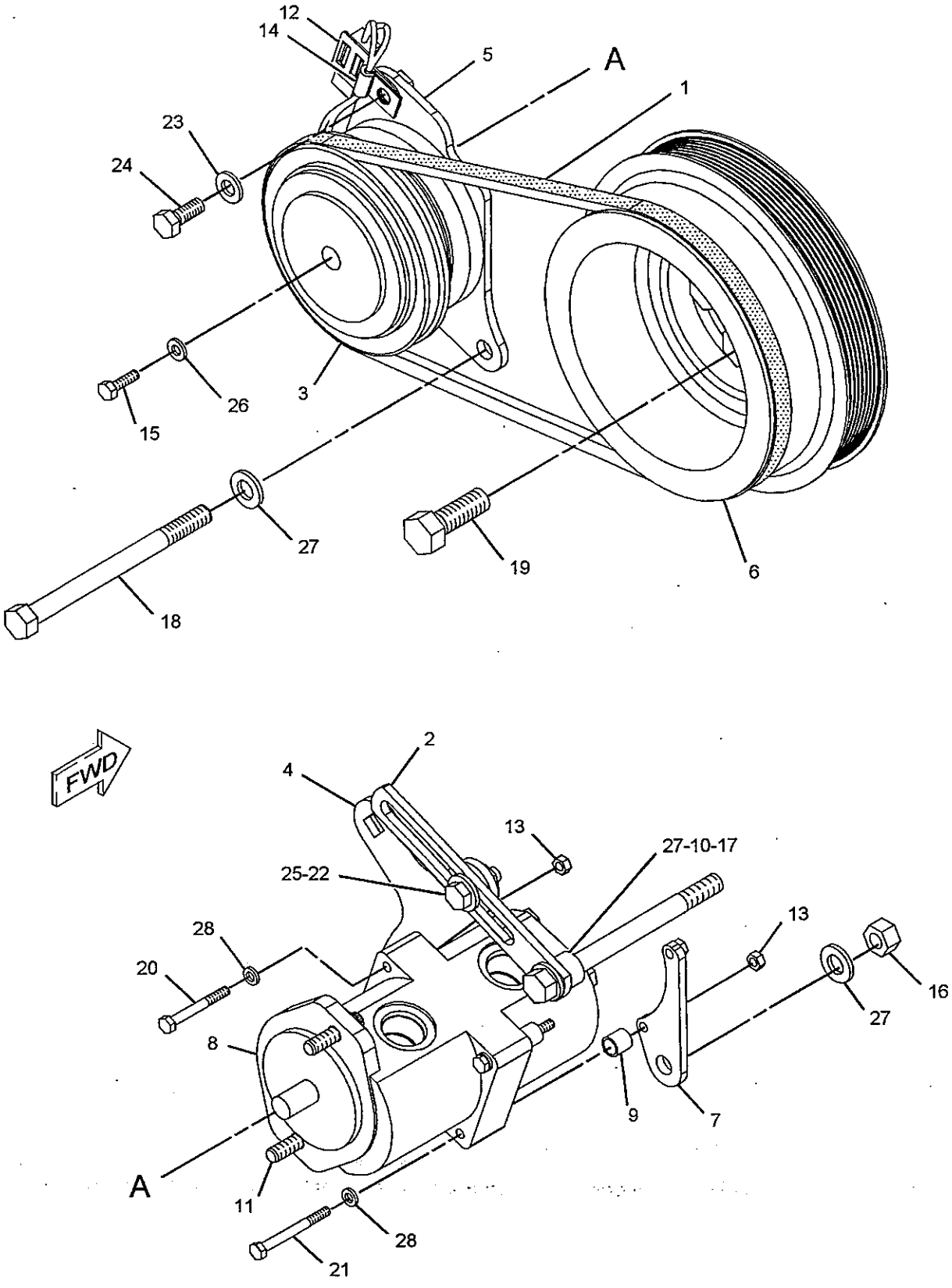


GRAPHIC #1 <END> g01145682

# 117-9611 PUMP GP-TRANSMISSION

S/N: JMS1-UP

PART OF 235-5331 PUMP & MTG GP-STEERING & TMSN

SMCS-3066

i01663166

| NOTE | REF NO | GRAPHIC REF | PART NUMBER | QTY | PART NAME 1 2 3 4 5 6 (PRODUCT LEVEL) | SEE PAGE |
|---|---|---|---|---|---|---|
| | 1 | 1 | 150-2515 | 1 | COVER AS | |
| | | 1 | 5M-3320 | 2 | BEARING-SLEEVE | |
| | 2 | 1 | 128-7351 | 1 | BODY AS | |
| | | 1 | 8M-8489 | 4 | DOWEL | |
| | 3 | 1 | 114-5386 | 1 | MANIFOLD AS-PUMP | |
| | | 1 | 5M-3320 | 2 | BEARING-SLEEVE | |
| M | 4 | 1 | 101-7399 | 1 | BOLT-HEX SOCKET (M10X1.5X120MM) | |
| | 5 | 1 | 117-9710 | 1 | GEAR AS-OIL PUMP | |
| | 6 | 1 | 117-9711 | 1 | GEAR AS-OIL PUMP | |
| | | | | | (EACH GEAR AS INCLUDES) | |
| | | 1 | 2B-9373 | 1 | KEY-WOODRUFF | |
| M | 7 | 1 | 105-3479 | 1 | BOLT-HEX SOCKET (M10X1.5X90MM) | |
| | 8 | 1 | 2D-8009 | 2 | SEAL-O-RING | |
| | 9 | 1 | 135-7273 | 1 | SEAL-LIP TYPE | |
| | 10 | 1 | 6Y-5010 | 8 | WASHER (10.16X19X.84MM THK) | |
| | 11 | 1 | 3S-0004 | 4 | WASHER (0.406X0.728X0.09 IN THK) | |
| M | 12 | 1 | 095-0658 | 4 | BOLT-SOCKET HEAD (M10X1.5X70MM) | |

M-METRIC PART

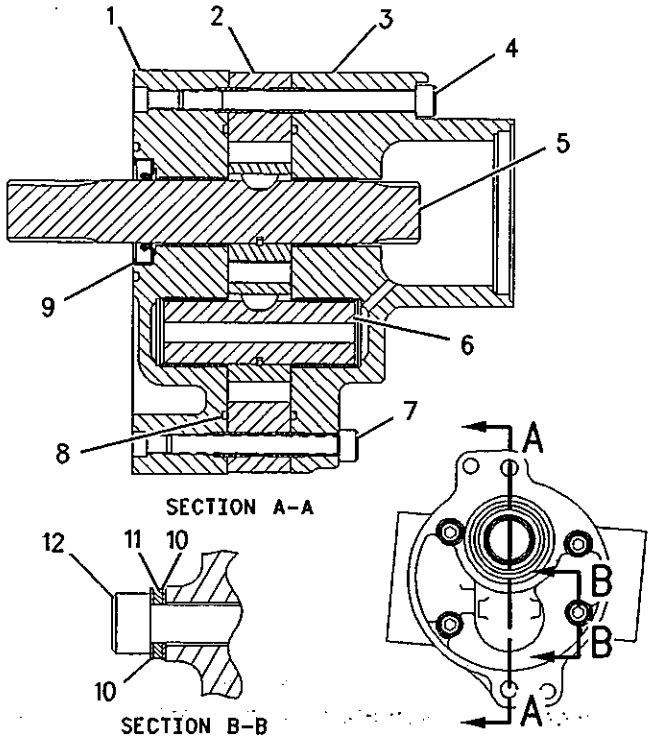


GRAPHIC #1

<END>

g00858532

## *123-5923* RIM AR

**S/N: JMS1-UP**
**(25.00X25)**
**PART OF 115-5005, 115-5006, 127-3495, 128-8485, 128-8487, 128-8488, 128-8490, 134-0149, 134-4127, 134-4128, 134-4129, 134-8341, 135-0197, 137-9830, 139-4640, 140-3647, 143-4732, 165-6176, 165-6177, 202-4901, 220-1602, 220-1605, 235-2301, 259-6247, 259-6248 TIRE & RIM AR**
**AN ATTACHMENT**

**SMCS-4209** **i00679280**

| NOTE | PART NUMBER | QTY | PART NAME 1 2 3 4 5 6 (PRODUCT LEVEL) | SEE PAGE |
|---|---|---|---|---|
| Y | *123-5925* | 1 | MOUNTING GP-RIM | 358 |
| Y | *110-4603* | 4 | RIM GP-DEMOUNTABLE | 373 |

Y-SEPARATE ILLUSTRATION

**<END>**

## *246-1577* RIM AR

**S/N: JMS1-UP**
**PART OF 246-1586 TIRE & RIM AR**
**AN ATTACHMENT**

**SMCS-4209** **i02090145**

| NOTE | PART NUMBER | QTY | PART NAME 1 2 3 4 5 6 (PRODUCT LEVEL) | SEE PAGE |
|---|---|---|---|---|
| Y | *123-5925* | 1 | MOUNTING GP-RIM | 358 |
| Y | *246-1580* | 4 | RIM GP-DEMOUNTABLE | 374 |

Y-SEPARATE ILLUSTRATION

**<END>**

# 110-4603 RIM GP-DEMOUNTABLE

S/N: JMS1-UP
PART OF 123-5923 RIM AR
AN ATTACHMENT

SMCS-4209 i01444248

| NOTE | REF NO | GRAPHIC REF | PART NUMBER | QTY | PART NAME 1 2 3 4 5 6 (PRODUCT LEVEL) | SEE PAGE |
|---|---|---|---|---|---|---|
| | 1 | 1 | 146-6779 | 1 | VALVE AS | |
| | 2 | 1 | 2D-2443 | 1 | SEAL-O-RING | |
| | 3 | 1 | 110-4604 | 1 | RIM AS | |
| | 4 | 1 | 8W-9602 | 1 | BAND AS | |
| | 5 | 1 | 5T-5682 | 1 | DRIVER | |
| | 6 | 1 | 5K-4865 | 2 | FLANGE | |
| | 7 | 1 | 7D-7469 | 1 | LOCK RING | |

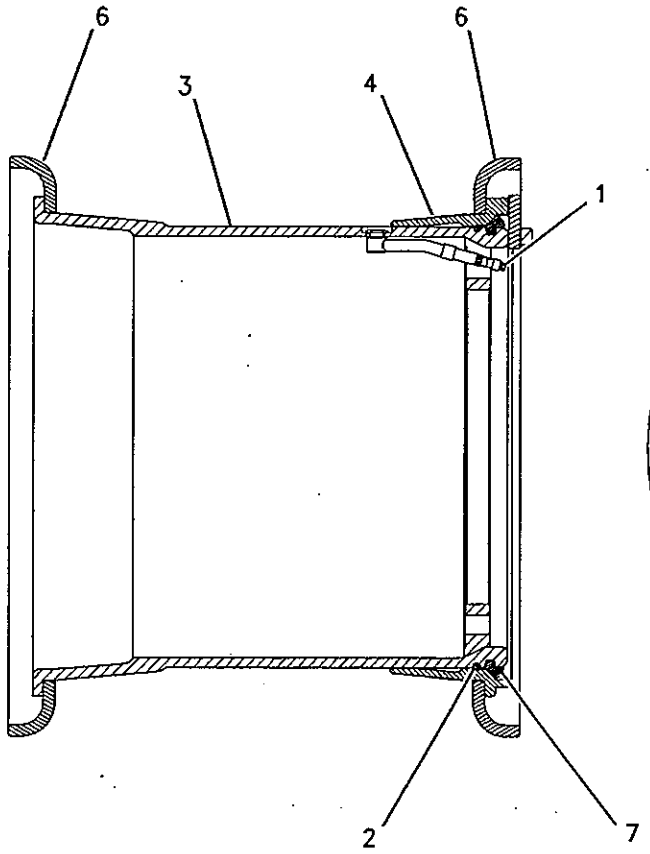


SECTION A-A

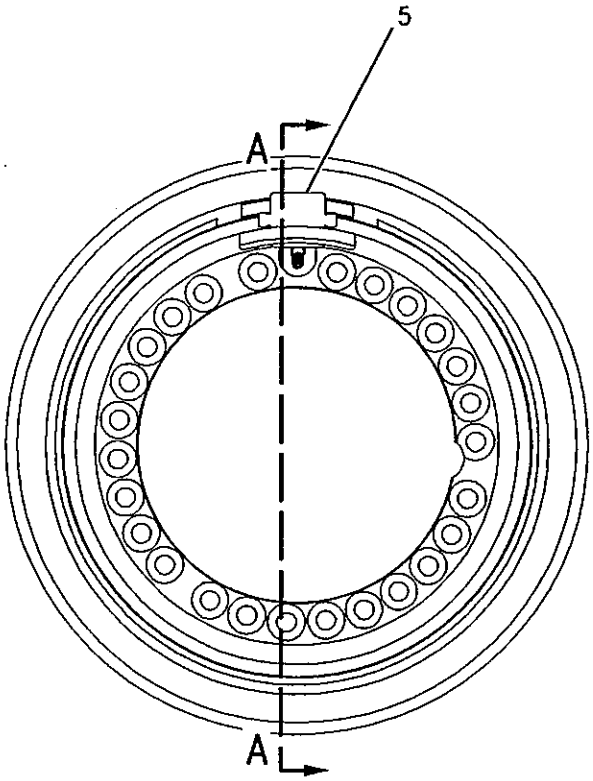


FRONT VIEW

GRAPHIC #1 <END> g00756380

# *246-1580* RIM GP-DEMOUNTABLE

S/N: JMS1-UP
(27X29)
PART OF 246-1577 RIM AR
AN ATTACHMENT

SMCS-4209

i02090705

| NOTE | PART NUMBER | QTY | PART NAME 1 2 3 4 5 6 (PRODUCT LEVEL) | SEE PAGE |
|---|---|---|---|---|
| | *245-7610* | 1 | RIM GP-DEMOUNTABLE | |
| | **3D-5852** | 1 | RING-LOCK | |
| | **3F-9194** | 1 | FLANGE | |
| | **5T-5682** | 1 | DRIVER | |
| | **8W-9597** | 1 | BAND AS | |
| | **245-7614** | 1 | RIM AS | |
| | **2D-2444** | 1 | SEAL-O-RING | |
| | **146-6779** | 1 | VALVE AS | |

<END>

# POWER TRAIN

## *107-5001* SHAFT GP-DRIVE

**S/N: JMS1-UP**

**PART OF 232-6585 POWER TRAIN AR**

**SMCS-3253** **i01969636**

| NOTE | REF NO | GRAPHIC REF | PART NUMBER | QTY | PART NAME 1 2 3 4 5 6 (PRODUCT LEVEL) | SEE PAGE |
|---|---|---|---|---|---|---|
| | 1 | 1 | **8T-0336** | 1 | FITTING-PRESSURE RELIEF | |
| | 2 | 1 | **234-6681** | 20 | BOLT-12 POINT HEAD | |
| | 3 | 1 | **107-5610** | 1 | YOKE-BRAKE | |
| M | 4 | 1 | **7X-2555** | 6 | BOLT (M16X2X80-MM) | |
| | 5 | 1 | **9X-8257** | 6 | WASHER (17.5X30X3.5-MM THK) | |
| | 6 | 1 | **8T-3007** | 2 | SEAL-LIP TYPE | |
| M | 7 | 1 | **8T-0362** | 1 | BOLT (M20X2.5X110-MM) | |
| | 8 | 1 | **3J-0634** | 1 | SEAL-O-RING | |
| | 9 | 1 | **5P-8432** | 1 | SEAL-O-RING | |
| | 10 | 1 | **159-3945** | 1 | BEARING | |
| | 11 | 1 | **6W-4795** | 1 | GUARD | |
| M | 12 | 1 | **8T-4186** | 2 | BOLT (M10X1.5X40-MM) | |
| | 13 | 1 | **8T-4121** | 2 | WASHER-HARD (11X21X2.5-MM THK) | |
| | 14 | 1 | **107-5002** | 1 | CAGE-BEARING | |
| | 15 | 1 | **161-9918** | 1 | RETAINER-BEARING | |
| | 16 | 1 | **8V-5386** | 1 | RETAINER | |
| Y | 17 | 1 | **107-5005** | 1 | UNIVERSAL JOINT GP (FRONT) | 396 |
| Y | 18 | 1 | **107-5006** | 1 | UNIVERSAL JOINT GP (REAR) | 397 |
| Y | 19 | 1 | **107-5007** | 1 | SLIP JOINT GP | 377 |

M-METRIC PART
Y-SEPARATE ILLUSTRATION

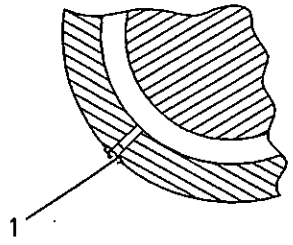


SECTION B-B

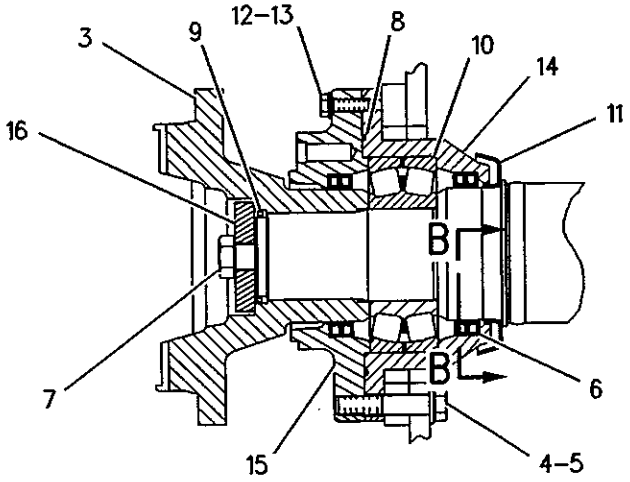


SECTION OF AREA A

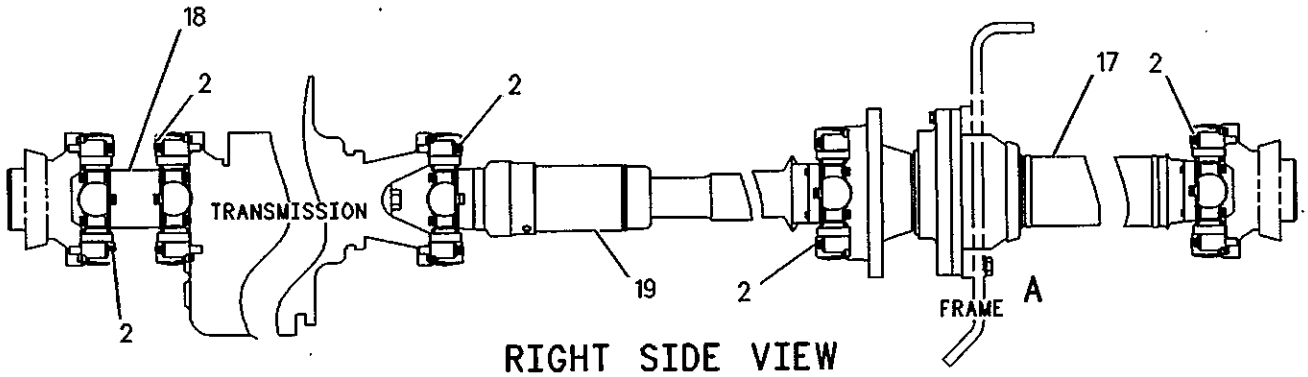


RIGHT SIDE VIEW

GRAPHIC #1 **<END>** g00121043

# 107-5007 SLIP JOINT GP

**S/N: JMS1-UP**

**PART OF 107-5001 SHAFT GP-DRIVE**

**SMCS-3251** **i01939237**

| NOTE | REF NO | GRAPHIC REF | PART NUMBER | QTY | PART NAME 1 2 3 4 5 6 (PRODUCT LEVEL) | SEE PAGE |
|---|---|---|---|---|---|---|
| | 1 | 1 | **8W-9912** | 2 | SPIDER & BEARING GP | |
| | 2 | 1 | **107-5009** | 1 | SHAFT AS-DRIVE | |
| | | 1 | **1K-6853** | 1 | FITTING | |
| | | 1 | **3B-8489** | 1 | FITTING-GREASE | |
| | | 1 | **9M-4107** | 1 | KIT-SEAL (DRIVE SHAFT) | |
| | | | | | (INCLUDES SEAL, 2 WASHERS & STUFFING CAP) | |
| | | 1 | **105-8049** | 1 | CUP-DUST | |
| | 3 | 1 | **234-6681** | 8 | BOLT-12 POINT HEAD | |

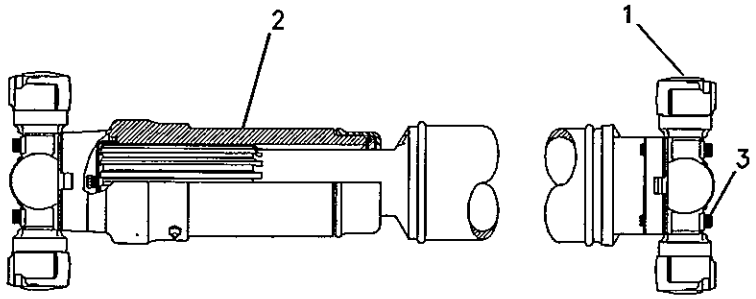


LEFT SIDE VIEW

GRAPHIC #1 **<END>** g00862017

# 247-3027 SUPPORT GP-TRANSMISSION

S/N: JMS1-UP
PART OF 243-2046 WASTE HANDLING AR
AN ATTACHMENT

SMCS-3030

i02090753

| NOTE | REF NO | GRAPHIC REF | PART NUMBER | QTY | PART NAME 1 2 3 4 5 6 (PRODUCT LEVEL) | SEE PAGE |
|---|---|---|---|---|---|---|
| | 1 | 1 | 1H-8134 | 2 | RING-RETAINING | |
| | 2 | 1 | 4V-2048 | 1 | PIN | |
| | 3 | 1 | 4V-2051 | 1 | PIN | |
| | 4 | 1 | 4V-2052 | 1 | SUPPORT AS | |
| B | | 1 | 4V-2053 | 2 | SHIM | |
| | | 1 | 7X-0368 | 4 | BOLT (3/4-10X3-IN) | |
| | | 1 | 8T-4994 | 4 | WASHER-HARD (20X36.5X3.5-MM THK) | |
| | 5 | 1 | 4V-2054 | 2 | BLOCK | |
| B | 6 | 1 | 4V-2056 | 2 | SHIM | |
| | 7 | 1 | 4V-9694 | 1 | COVER AS (RH) | |
| | 8 | 1 | 4V-9695 | 1 | COVER AS (LH) | |
| | | | | | (EACH COVER AS INCLUDES) | |
| | | 1 | 4V-9678 | 1 | STRIP | |
| | 9 | 1 | *119-5864* | 1 | LINK AS | |
| | | 1 | 4V-2049 | 1 | LINK | |
| | | 1 | 4V-2057 | 1 | BEARING-SPHERICAL | |
| | | 1 | 119-1284 | 1 | MOUNT AS | |
| | 10 | 1 | 119-5865 | 1 | BEAM AS | |
| | 11 | 1 | 119-5866 | 1 | BEAM AS | |
| | | | | | (EACH BEAM AS INCLUDES) | |
| | | 1 | 122-3536 | 1 | MOUNT AS | |
| | 12 | 1 | 4V-4818 | 4 | DOWEL | |
| | 13 | 1 | 7X-0369 | 4 | BOLT (3/4-10X3.25-IN) | |
| | 14 | 1 | 7X-0371 | 4 | BOLT (3/4-10X3.75-IN) | |
| | 15 | 1 | 7X-3179 | 2 | BOLT (3/4X10X9-IN) | |
| | 16 | 1 | 8T-4994 | 6 | WASHER-HARD (20X36.5X3.5-MM THK) | |

B-USE AS REQUIRED

## 247-3027 SUPPORT GP-TRANSMISSION *(contd.)*

i02090753

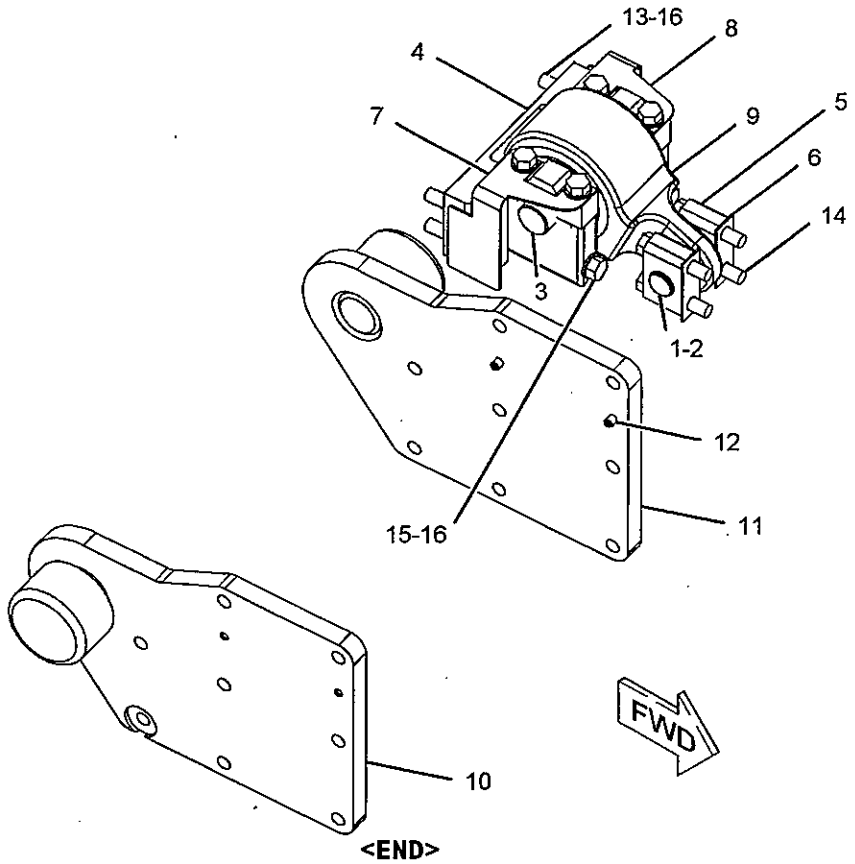


GRAPHIC #1

<END>

g01067606

## *115-5005* TIRE & RIM AR

S/N: JMS1-UP
(29.5 R 25 * L-3)
AN ATTACHMENT

SMCS-4202 i00173939

| NOTE | PART NUMBER | QTY | PART NAME 1 2 3 4 5 6 (PRODUCT LEVEL) | SEE PAGE |
|---|---|---|---|---|
| Y | *123-5923* | 1 | RIM AR | 372 |

Y-SEPARATE ILLUSTRATION

<END>

## *115-5006* TIRE & RIM AR

S/N: JMS1-UP
(29.5 R 25 * L-2/3)
AN ATTACHMENT

SMCS-4202 i00173947

| NOTE | PART NUMBER | QTY | PART NAME 1 2 3 4 5 6 (PRODUCT LEVEL) | SEE PAGE |
|---|---|---|---|---|
| Y | *123-5923* | 1 | RIM AR | 372 |

Y-SEPARATE ILLUSTRATION

<END>

## *127-3495* TIRE & RIM AR

S/N: JMS1-UP
29.5 R 25 * L-5
AN ATTACHMENT

SMCS-4202 i00178311

| NOTE | PART NUMBER | QTY | PART NAME 1 2 3 4 5 6 (PRODUCT LEVEL) | SEE PAGE |
|---|---|---|---|---|
| Y | *123-5923* | 1 | RIM AR | 372 |

Y-SEPARATE ILLUSTRATION

<END>

## *128-8485* TIRE & RIM AR

S/N: JMS1-UP
(29.5-25 22 PR L-4)
AN ATTACHMENT

SMCS-4202 i00173713

| NOTE | PART NUMBER | QTY | PART NAME 1 2 3 4 5 6 (PRODUCT LEVEL) | SEE PAGE |
|---|---|---|---|---|
| Y | *123-5923* | 1 | RIM AR | 372 |

Y-SEPARATE ILLUSTRATION

<END>

## *128-8487* TIRE & RIM AR

S/N: JMS1-UP
(29.5-25 22 PR L-4)
AN ATTACHMENT

SMCS-4202 i00173729

| NOTE | PART NUMBER | QTY | PART NAME 1 2 3 4 5 6 (PRODUCT LEVEL) | SEE PAGE |
|---|---|---|---|---|
| Y | *123-5923* | 1 | RIM AR | 372 |
| Y-SEPARATE ILLUSTRATION | | | | |

<END>

## *128-8488* TIRE & RIM AR

S/N: JMS1-UP
(29.5-25 22 PR L-5)
AN ATTACHMENT

SMCS-4202 i00173755

| NOTE | PART NUMBER | QTY | PART NAME 1 2 3 4 5 6 (PRODUCT LEVEL) | SEE PAGE |
|---|---|---|---|---|
| Y | *123-5923* | 1 | RIM AR | 372 |
| Y-SEPARATE ILLUSTRATION | | | | |

<END>

## *128-8490* TIRE & RIM AR

S/N: JMS1-UP
(29.5-25 22 PR L-5)
AN ATTACHMENT

SMCS-4202 i00173777

| NOTE | PART NUMBER | QTY | PART NAME 1 2 3 4 5 6 (PRODUCT LEVEL) | SEE PAGE |
|---|---|---|---|---|
| Y | *123-5923* | 1 | RIM AR | 372 |
| Y-SEPARATE ILLUSTRATION | | | | |

<END>

## *134-0149* TIRE & RIM AR

S/N: JMS1-UP
29.5 R 25 L-5
AN ATTACHMENT

SMCS-4202 i00178374

| NOTE | PART NUMBER | QTY | PART NAME 1 2 3 4 5 6 (PRODUCT LEVEL) | SEE PAGE |
|---|---|---|---|---|
| Y | *123-5923* | 1 | RIM AR | 372 |
| Y-SEPARATE ILLUSTRATION | | | | |

<END>

## 134-4127 TIRE & RIM AR

S/N: JMS1-UP
AN ATTACHMENT

SMCS-4202 i02283544

| NOTE | PART NUMBER | QTY | PART NAME 1 2 3 4 5 6 (PRODUCT LEVEL) | SEE PAGE |
|---|---|---|---|---|
| Y | 123-5923 | 1 | RIM AR | 372 |
| | 134-4130 | 4 | TIRE (29.5-25) | |

Y-SEPARATE ILLUSTRATION

<END>

## 134-4128 TIRE & RIM AR

S/N: JMS1-UP
AN ATTACHMENT

SMCS-4202 i02283518

| NOTE | PART NUMBER | QTY | PART NAME 1 2 3 4 5 6 (PRODUCT LEVEL) | SEE PAGE |
|---|---|---|---|---|
| Y | 123-5923 | 1 | RIM AR | 372 |
| | 134-4131 | 4 | TIRE (29.5-25) | |

Y-SEPARATE ILLUSTRATION

<END>

## 134-4129 TIRE & RIM AR

S/N: JMS1-UP
AN ATTACHMENT

SMCS-4202 i02283520

| NOTE | PART NUMBER | QTY | PART NAME 1 2 3 4 5 6 (PRODUCT LEVEL) | SEE PAGE |
|---|---|---|---|---|
| Y | 123-5923 | 1 | RIM AR | 372 |
| | 6W-8943 | 4 | TIRE (29.5-25) | |

Y-SEPARATE ILLUSTRATION

<END>

## 134-8341 TIRE & RIM AR

S/N: JMS1-UP
AN ATTACHMENT

SMCS-4202 i02283523

| NOTE | PART NUMBER | QTY | PART NAME 1 2 3 4 5 6 (PRODUCT LEVEL) | SEE PAGE |
|---|---|---|---|---|
| Y | 123-5923 | 1 | RIM AR | 372 |
| | 135-0731 | 4 | TIRE (29.5-25) | |

Y-SEPARATE ILLUSTRATION

<END>

# POWER TRAIN

## 135-0197 TIRE & RIM AR

**S/N: JMS1-UP**
**AN ATTACHMENT**

**SMCS-4202** **i02283524**

| NOTE | PART NUMBER | QTY | PART NAME 1 2 3 4 5 6 (PRODUCT LEVEL) | SEE PAGE |
|---|---|---|---|---|
| Y | 123-5923 | 1 | RIM AR | 372 |
| | 135-0198 | 4 | TIRE (29.5-25) | |

Y-SEPARATE ILLUSTRATION

**<END>**

## 137-9830 TIRE & RIM AR

**S/N: JMS1-UP**
**AN ATTACHMENT**

**SMCS-4202** **i02283525**

| NOTE | PART NUMBER | QTY | PART NAME 1 2 3 4 5 6 (PRODUCT LEVEL) | SEE PAGE |
|---|---|---|---|---|
| Y | 123-5923 | 1 | RIM AR | 372 |
| | 8R-1909 | 4 | TIRE (29.5-25) | |

Y-SEPARATE ILLUSTRATION

**<END>**

## 139-4640 TIRE & RIM AR

**S/N: JMS1-UP**
**AN ATTACHMENT**

**SMCS-4202** **i02283527**

| NOTE | PART NUMBER | QTY | PART NAME 1 2 3 4 5 6 (PRODUCT LEVEL) | SEE PAGE |
|---|---|---|---|---|
| Y | 123-5923 | 1 | RIM AR | 372 |
| | 139-4637 | 4 | TIRE (29.5-25) | |

Y-SEPARATE ILLUSTRATION

**<END>**

## 140-3647 TIRE & RIM AR

**S/N: JMS1-UP**
**AN ATTACHMENT**

**SMCS-4202** **i02283528**

| NOTE | PART NUMBER | QTY | PART NAME 1 2 3 4 5 6 (PRODUCT LEVEL) | SEE PAGE |
|---|---|---|---|---|
| Y | 123-5923 | 1 | RIM AR | 372 |
| | 140-3646 | 4 | TIRE (29.5-R25) | |

Y-SEPARATE ILLUSTRATION

**<END>**

# POWER TRAIN

## 143-4732 TIRE & RIM AR

S/N: JMS1-UP
AN ATTACHMENT

SMCS-4202 i02283530

| NOTE | PART NUMBER | QTY | PART NAME 1 2 3 4 5 6 (PRODUCT LEVEL) | SEE PAGE |
|---|---|---|---|---|
| Y | 123-5923 | 1 | RIM AR | 372 |
| | 143-4733 | 4 | TIRE (29.5-25) | |

Y-SEPARATE ILLUSTRATION

<END>

## 165-6176 TIRE & RIM AR

S/N: JMS1-UP
AN ATTACHMENT

SMCS-4202 i02089874

| NOTE | PART NUMBER | QTY | PART NAME 1 2 3 4 5 6 (PRODUCT LEVEL) | SEE PAGE |
|---|---|---|---|---|
| Y | 123-5923 | 1 | RIM AR | 372 |
| | 165-6165 | 4 | TIRE (29.5-R25) | |

Y-SEPARATE ILLUSTRATION

<END>

## 165-6177 TIRE & RIM AR

S/N: JMS1-UP
29.5 R25 * L-3
AN ATTACHMENT

SMCS-4202 i01309167

| NOTE | PART NUMBER | QTY | PART NAME 1 2 3 4 5 6 (PRODUCT LEVEL) | SEE PAGE |
|---|---|---|---|---|
| Y | 123-5923 | 1 | RIM AR | 372 |

Y-SEPARATE ILLUSTRATION

<END>

## 202-4901 TIRE & RIM AR

S/N: JMS1-UP
AN ATTACHMENT

SMCS-4202 i02283533

| NOTE | PART NUMBER | QTY | PART NAME 1 2 3 4 5 6 (PRODUCT LEVEL) | SEE PAGE |
|---|---|---|---|---|
| Y | 123-5923 | 1 | RIM AR | 372 |
| | 107-4681 | 1 | TIRE (29.5-25) | |

Y-SEPARATE ILLUSTRATION

<END>

# POWER TRAIN

## 220-1602 TIRE & RIM AR

**S/N: JMS1-UP**
**AN ATTACHMENT**

**SMCS-4202** **i02283540**

| NOTE | PART NUMBER | QTY | PART NAME 1 2 3 4 5 6 (PRODUCT LEVEL) | SEE PAGE |
|---|---|---|---|---|
| Y | *123-5923* | 1 | RIM AR | 372 |
| | *220-1600* | 4 | TIRE (29.5-R25) | |

Y-SEPARATE ILLUSTRATION

**<END>**

## 220-1605 TIRE & RIM AR

**S/N: JMS1-UP**
**AN ATTACHMENT**

**SMCS-4202** **i02283541**

| NOTE | PART NUMBER | QTY | PART NAME 1 2 3 4 5 6 (PRODUCT LEVEL) | SEE PAGE |
|---|---|---|---|---|
| Y | *123-5923* | 1 | RIM AR | 372 |
| | *220-1603* | 4 | TIRE (29.5-R25) | |

Y-SEPARATE ILLUSTRATION

**<END>**

## 235-2301 TIRE & RIM AR

**S/N: JMS1-UP**
**29.5-25 28PR L-5**
**AN ATTACHMENT**

**SMCS-4202** **i01916002**

| NOTE | PART NUMBER | QTY | PART NAME 1 2 3 4 5 6 (PRODUCT LEVEL) | SEE PAGE |
|---|---|---|---|---|
| Y | *123-5923* | 1 | RIM AR (25.00X25) | 372 |

Y-SEPARATE ILLUSTRATION

**<END>**

## 246-1586 TIRE & RIM AR

**S/N: JMS1-UP**
**AN ATTACHMENT**

**SMCS-4202** **i02090707**

| NOTE | PART NUMBER | QTY | PART NAME 1 2 3 4 5 6 (PRODUCT LEVEL) | SEE PAGE |
|---|---|---|---|---|
| Y | *246-1577* | 1 | RIM AR | 372 |
| | *246-1582* | 4 | TIRE (875/65-R29) | |

Y-SEPARATE ILLUSTRATION

**<END>**

## 259-6247 TIRE & RIM AR

S/N: JMS1-UP
AN ATTACHMENT

SMCS-4202

i02196441

| NOTE | PART NUMBER | QTY | PART NAME 1 2 3 4 5 6 (PRODUCT LEVEL) | SEE PAGE |
|---|---|---|---|---|
| Y | 123-5923 | 1 | RIM AR | 372 |
| | 259-6245 | 4 | TIRE (29.5-R25) | |

Y-SEPARATE ILLUSTRATION

<END>

## 259-6248 TIRE & RIM AR

S/N: JMS1-UP
AN ATTACHMENT

SMCS-4202

i02196442

| NOTE | PART NUMBER | QTY | PART NAME 1 2 3 4 5 6 (PRODUCT LEVEL) | SEE PAGE |
|---|---|---|---|---|
| Y | 123-5923 | 1 | RIM AR | 372 |
| | 259-6246 | 4 | TIRE (29.5-R25) | |

Y-SEPARATE ILLUSTRATION

<END>

# 256-6456 TORQUE CONVERTER & HOUSING GP-
## FREEWHEEL STATOR
### S/N: DGZ1-UP
### PART OF 230-6311 TRANSMISSION AR

SMCS-3101, 3105

i02223335

| NOTE | REF NO | GRAPHIC REF | PART NUMBER | QTY | PART NAME 1 2 3 4 5 6 (PRODUCT LEVEL) | SEE PAGE |
|---|---|---|---|---|---|---|
| | 1 | 1 | 1T-1639 | 1 | RING | |
| | 2 | 1 | 9H-0846 | 1 | SEAL-O-RING | |
| Y | 3 | 1 | 174-1411 | 1 | TORQUE CONVERTER GP (FREEWHEEL STATOR) | 393 |
| | 4 | 1 | 9X-8873 | 1 | BOLT (1/2-13X2.25-IN) | |
| M | 5 | 1 | 5P-8245 | 18 | WASHER-HARD (13.5X25.5X3-MM THK) | |
| | 6 | 1 | 3T-4363 | 1 | COVER AS-TORQUE CONVERTER | |
| | | 1 | 2D-5238 | 2 | STUD-TAPERLOCK (5/8-11X2.5-IN) | |
| | 7 | 1 | 8M-0903 | 1 | RING-RETAINING | |
| | 8 | 1 | 105-0228 | 1 | GEAR-IDLER (64-TEETH) | |
| | 9 | 1 | 7J-8894 | 1 | CUP-BEARING | |
| | 10 | 1 | 7J-8893 | 1 | CONE-BEARING | |
| | 11 | 1 | 6T-0470 | 1 | ADAPTER | |
| | 12 | 1 | 2H-9247 | 1 | SEAL-O-RING | |
| | 13 | 1 | 1H-9696 | 1 | SEAL-O-RING | |
| | 14 | 1 | 4L-6454 | 4 | BOLT (3/8-16X1-IN) | |
| | 15 | 1 | 8T-4896 | 20 | WASHER-HARD (10.2X18.5X2.5-MM THK) | |
| | 16 | 1 | 8T-2502 | 13 | BOLT (3/8-16X1.125-IN) | |
| | 17 | 1 | 6P-6325 | 1 | ADAPTER-PUMP | |
| | 18 | 1 | 144-0214 | 1 | GEAR-DRIVE (14-TEETH) | |
| | 19 | 1 | 7K-5449 | 1 | CONE-BEARING | |
| | 20 | 1 | 7K-5448 | 1 | CUP-BEARING | |
| | 21 | 1 | 2M-0340 | 1 | SEAL-O-RING | |
| B | 22 | 1 | 6P-7767 | 1 | SHIM PACK (INCLUDES 10-SHIMS) | |
| | 23 | 1 | 8S-0768 | 1 | SEAL-O-RING | |
| | 24 | 1 | 6P-6326 | 1 | SHAFT AS | |
| | | 1 | 4B-9782 | 1 | BALL | |
| | 25 | 1 | 2S-0679 | 1 | BEARING AS-ROLLER | |
| | 26 | 1 | 7B-3235 | 17 | BOLT (1/2-13X1.375-IN) | |
| | 27 | 1 | 1N-5981 | 2 | PIN-SPRING | |
| | 30 | 1 | 8M-4986 | 2 | SEAL-O-RING | |
| | 31 | 1 | 6P-5559 | 1 | ELBOW | |
| Y | 32 | 1 | 104-5013 | 1 | VALVE GP-RELIEF (TORQUE CONVERTER OUTLET) | 399 |
| | 33 | 1 | 7X-0290 | 3 | BOLT (3/8-16X3.5-IN) | |
| | 34 | 1 | 8J-4351 | 1 | SEAL-O-RING | |
| | 35 | 1 | 6V-4365 | 1 | SEAL-O-RING | |
| | 36 | 1 | 3S-1223 | 1 | SEAL-O-RING | |

B-USE AS REQUIRED
M-METRIC PART
Y-SEPARATE ILLUSTRATION

## 256-6456 TORQUE CONVERTER & HOUSING GP *(contd.)*

i02223335

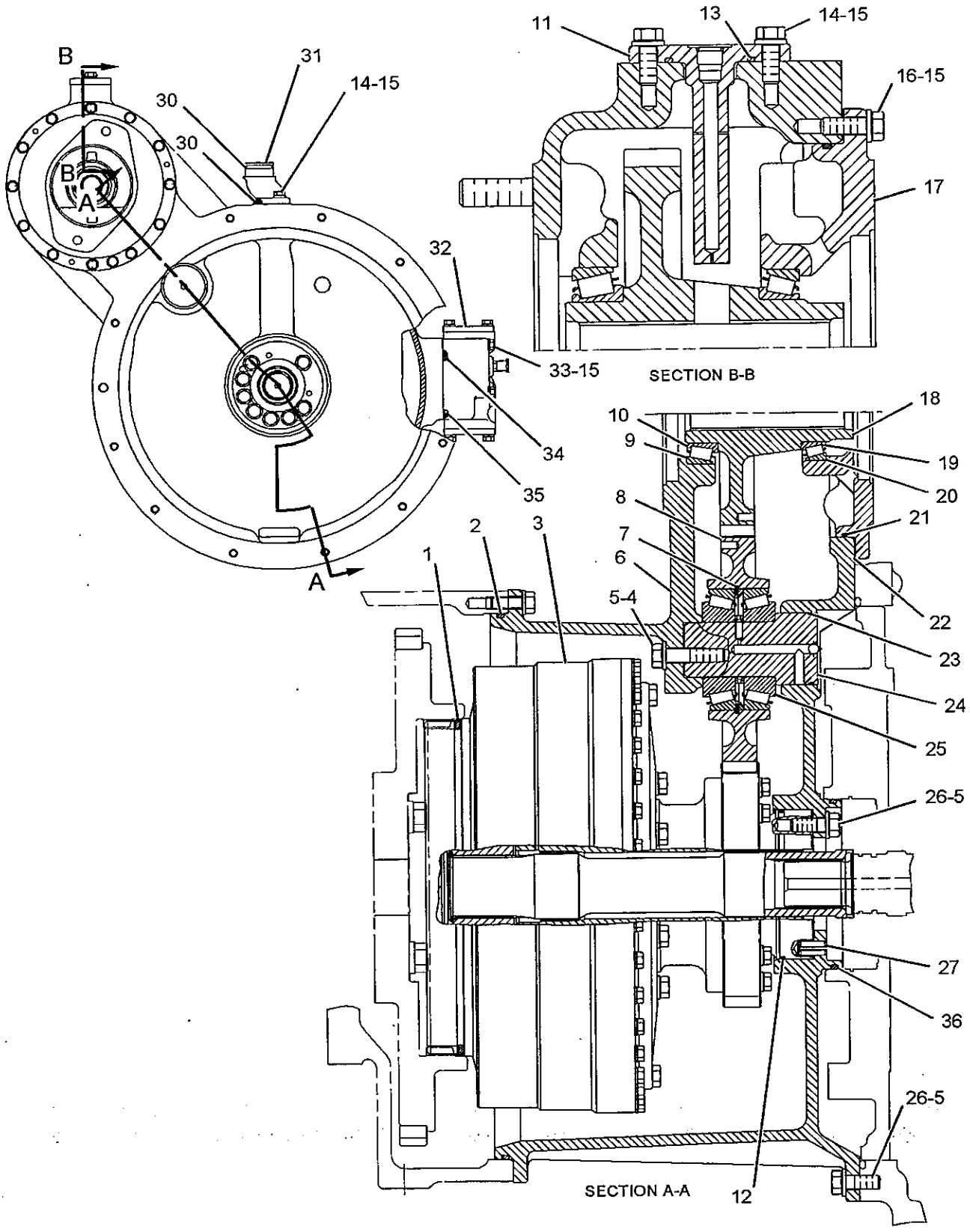


GRAPHIC #1

<END>

g01145757

# POWER TRAIN

## 256-6766 TORQUE CONVERTER & HOUSING GP-

### HEAVY-DUTY TRANSMISSION

S/N: MDA1-UP

PART OF 230-6321 TRANSMISSION AR

AN ATTACHMENT

SMCS-3101, 3105

i02282923

| NOTE | REF NO | GRAPHIC REF | PART NUMBER | QTY | PART NAME 1 2 3 4 5 6 (PRODUCT LEVEL) | SEE PAGE |
|---|---|---|---|---|---|---|
| | 1 | 1 | 7J-8893 | 1 | CONE-BEARING | |
| | 2 | 1 | 7J-8894 | 1 | CUP-BEARING | |
| | 3 | 1 | 7K-5448 | 1 | CUP-BEARING | |
| | 4 | 1 | 7K-5449 | 1 | CONE-BEARING | |
| | 5 | 1 | 2S-0679 | 1 | BEARING AS-ROLLER | |
| | 6 | 1 | 3T-4363 | 1 | COVER AS-TORQUE CONVERTER | |
| | | 1 | 2D-5238 | 2 | STUD-TAPERLOCK (5/8-11X2.5-IN) | |
| | 7 | 1 | 6P-5559 | 1 | ELBOW | |
| | 8 | 1 | 6P-6325 | 1 | ADAPTER-PUMP | |
| | 9 | 1 | 6P-6326 | 1 | SHAFT AS | |
| | | 1 | 4B-9782 | 1 | BALL | |
| B | 10 | 1 | 6P-7767 | 1 | SHIM PACK (INCLUDES 10-SHIMS) | |
| | 11 | 1 | 6T-0470 | 1 | ADAPTER | |
| | 12 | 1 | 6T-3709 | 1 | SHAFT AS | |
| | | 1 | 5D-0302 | 1 | PLUG-CORE | |
| Y | 13 | 1 | 8E-4735 | 1 | TORQUE CONVERTER GP (HEAVY-DUTY TRANSMISSION) | 391 |
| Y | 14 | 1 | 104-5013 | 1 | VALVE GP-RELIEF (TORQUE CONVERTER OUTLET) | 399 |
| | 15 | 1 | 105-0228 | 1 | GEAR-IDLER (64-TEETH) | |
| | 16 | 1 | 144-0214 | 1 | GEAR-DRIVE (14-TEETH) | |
| | 17 | 1 | 1H-9696 | 1 | SEAL-O-RING | |
| | 18 | 1 | 1N-5981 | 2 | PIN-SPRING | |
| | 19 | 1 | 1T-1639 | 1 | RING | |
| | 20 | 1 | 2H-9247 | 1 | SEAL-O-RING | |
| | 21 | 1 | 2M-0340 | 1 | SEAL-O-RING | |
| | 22 | 1 | 4L-6454 | 4 | BOLT (3/8-16X1-IN) | |
| M | 23 | 1 | 5P-8245 | 18 | WASHER-HARD (13.5X25.5X3-MM THK) | |
| | 24 | 1 | 6V-4365 | 1 | SEAL-O-RING | |
| | 25 | 1 | 7B-3235 | 17 | BOLT (1/2-13X1.375-IN) | |
| | 26 | 1 | 7X-0290 | 3 | BOLT (3/8-16X3.5-IN) | |
| | 27 | 1 | 8J-4351 | 1 | SEAL-O-RING | |
| | 28 | 1 | 8M-0903 | 1 | RING-RETAINING | |
| | 29 | 1 | 8M-4986 | 2 | SEAL-O-RING | |
| | 30 | 1 | 8S-0768 | 1 | SEAL-O-RING | |
| | 31 | 1 | 8T-2502 | 13 | BOLT (3/8-16X1.125-IN) | |
| | 32 | 1 | 8T-4896 | 20 | WASHER-HARD (10.2X18.5X2.5-MM THK) | |
| | 33 | 1 | 9H-0846 | 1 | SEAL-O-RING | |
| | 34 | 1 | 9X-8873 | 1 | BOLT (1/2-13X2.25-IN) | |

B-USE AS REQUIRED
M-METRIC PART
Y-SEPARATE ILLUSTRATION

## 256-6766 TORQUE CONVERTER & HOUSING GP *(contd.)*

i02282923

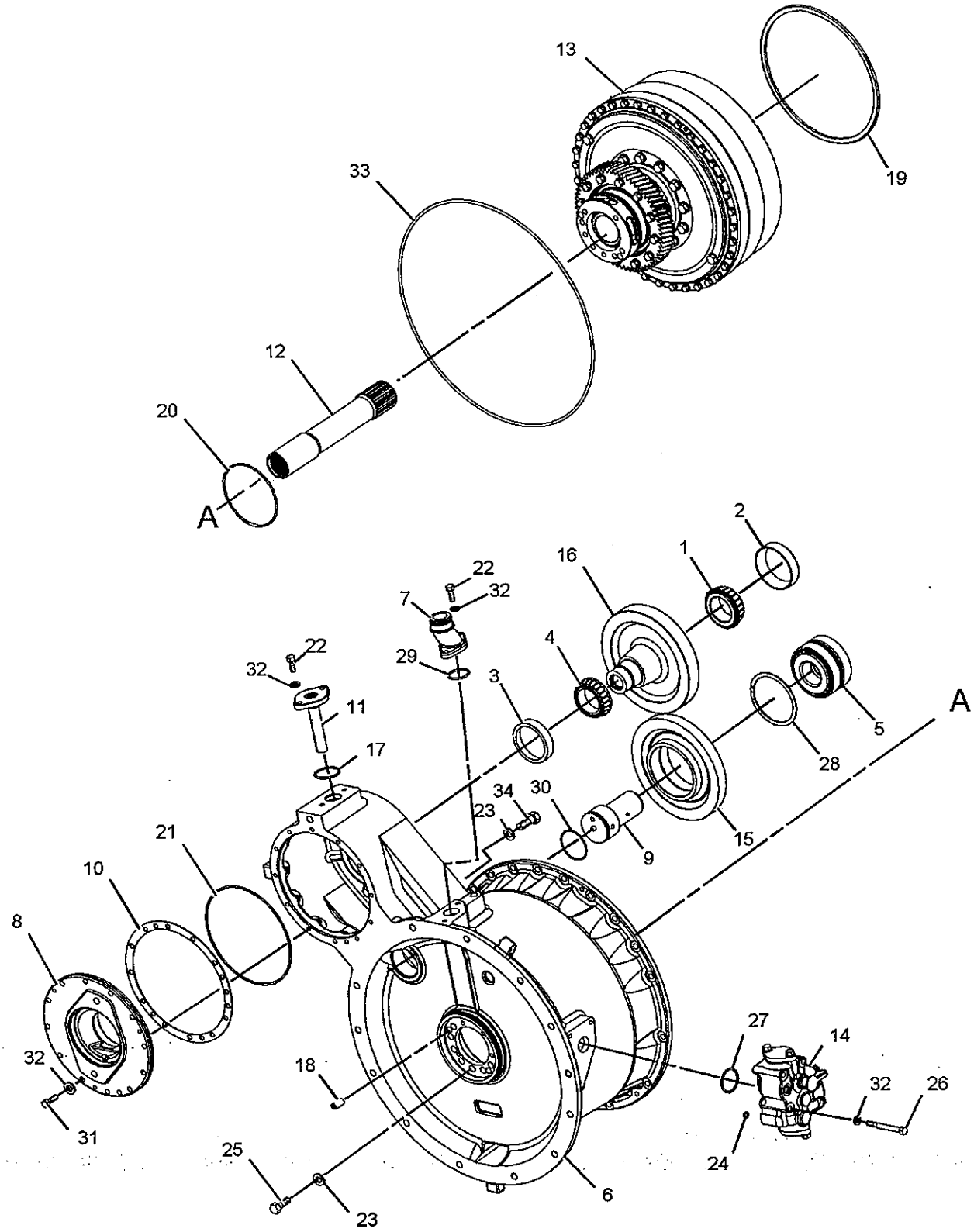


GRAPHIC #1

**<END>**

g01143749

# POWER TRAIN

## 8E-4735 TORQUE CONVERTER GP—HEAVY-DUTY TRANSMISSION

S/N: 3JT1-UP

PART OF 256-6766 TORQUE CONVERTER & HOUSING GP

AN ATTACHMENT

SMCS-3101

i01230736

| NOTE | REF NO | GRAPHIC REF | PART NUMBER | QTY | PART NAME 1 2 3 4 5 6 (PRODUCT LEVEL) | SEE PAGE |
|---|---|---|---|---|---|---|
| | 1 | 1 | 9W-6435 | 1 | FLANGE-DRIVE | |
| | 2 | 1 | 8E-4850 | 1 | HOUSING-ROTATING | |
| | 3 | 1 | 9W-5278 | 1 | IMPELLER-CONVERTER | |
| | 4 | 1 | 9S-4191 | 2 | PLUG | |
| | | 1 | 3J-1907 | 2 | SEAL-O-RING | |
| | 5 | 1 | 9W-6434 | 1 | HUB-IMPELLER | |
| | 6 | 1 | 105-0226 | 1 | GEAR-DRIVE (64-TEETH) | |
| | 8 | 1 | 1T-1339 | 1 | CARRIER-BEARING | |
| | 9 | 1 | 1T-0649 | 1 | RING-RETAINING | |
| | 10 | 1 | 6P-6556 | 1 | CARRIER AS | |
| | 11 | 1 | 1T-0577 | 1 | BEARING-SLEEVE | |
| | 12 | 1 | 9S-5279 | 1 | BEARING AS-ROLLER | |
| | 13 | 1 | 0L-2070 | 12 | BOLT (3/8-16X2.25-IN) | |
| | 14 | 1 | 5M-2894 | 12 | WASHER-HARD (10.2X18.5X2.5-MM THK) | |
| | 15 | 1 | 5P-3867 | 1 | RACE-BEARING OUTER | |
| | 16 | 1 | 6H-6043 | 1 | RING-RETAINING | |
| | 17 | 1 | 6Y-5793 | 1 | RING-SEAL | |
| | 18 | 1 | 1T-1534 | 1 | CARRIER-RING | |
| | 19 | 1 | 0T-0768 | 12 | BOLT (7/16-14X1.75-IN) | |
| | 20 | 1 | 2B-2695 | 8 | BOLT (5/16-18X0.875-IN) | |
| | 21 | 1 | 9M-1974 | 44 | WASHER-HARD (8.8X16X2-MM THK) | |
| | 22 | 1 | 9W-4702 | 1 | STATOR-CONVERTER | |
| | 23 | 1 | 2P-5680 | 1 | CONVERTER | |
| | 24 | 1 | 1T-0651 | 1 | RING-RETAINING | |
| | 25 | 1 | 0S-1594 | 20 | BOLT (3/8-16X1-IN) | |
| | 26 | 1 | 1T-0762 | 1 | RACE-THRUST BEARING | |
| | 27 | 1 | 1T-1078 | 1 | BEARING-THRUST | |
| | 28 | 1 | 8P-0769 | 1 | HUB | |
| | 29 | 1 | 2D-1523 | 1 | RING-RETAINING | |
| | 30 | 1 | 2P-9183 | 1 | COVER AS | |
| | 31 | 1 | 1T-0577 | 1 | BEARING-SLEEVE | |
| | 32 | 1 | 1T-0686 | 4 | RACE-THRUST BEARING | |
| | 33 | 1 | 1T-0655 | 2 | BEARING-THRUST | |
| | 34 | 1 | 1T-0763 | 1 | RACE-THRUST BEARING | |
| | 35 | 1 | 0S-1618 | 36 | BOLT (5/16-18X1-IN) | |
| | 36 | 1 | 1T-0689 | 20 | WASHER (9.93X22.22X2.54-MM THK) | |
| | 37 | 1 | 5P-8244 | 12 | WASHER (12X22.5X2.5-MM THK) | |
| | 38 | 1 | 8B-7789 | 1 | RING-SNAP | |

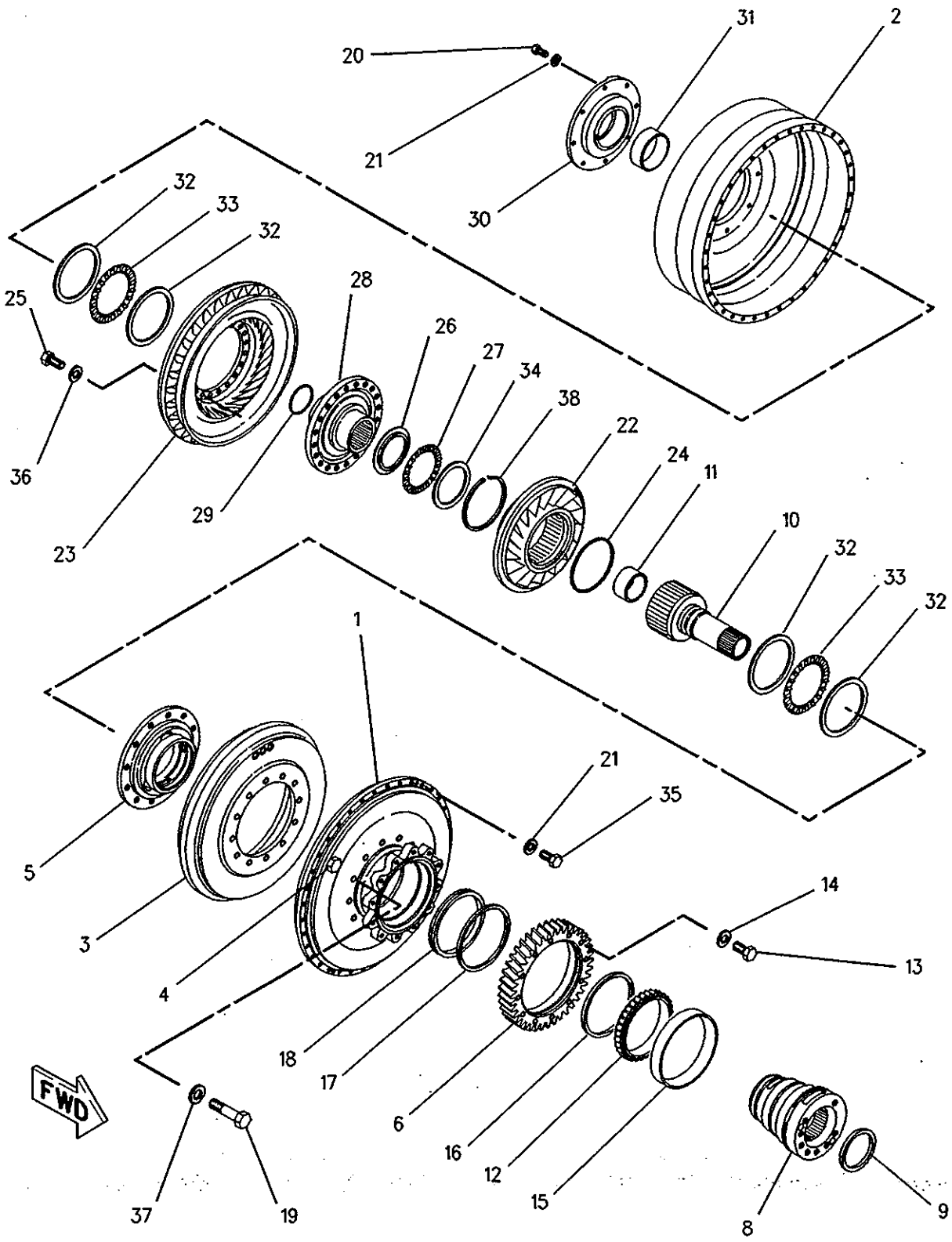


GRAPHIC #1 **<END>** g00458230

# POWER TRAIN

## 174-1411 TORQUE CONVERTER GP–FREEWHEEL STATOR

S/N: TCA1-UP

PART OF 256-6456 TORQUE CONVERTER & HOUSING GP

SMCS-3101

i01511534

| NOTE | REF NO | GRAPHIC REF | PART NUMBER | QTY | PART NAME 1 2 3 4 5 6 (PRODUCT LEVEL) | SEE PAGE |
|---|---|---|---|---|---|---|
| | 1 | 1 | 8E-4850 | 1 | HOUSING-ROTATING | |
| | 2 | 1 | 9W-5278 | 1 | IMPELLER-CONVERTER | |
| | 3 | 1 | 9W-6434 | 1 | HUB-IMPELLER | |
| | 4 | 1 | 9W-6435 | 1 | FLANGE-DRIVE | |
| | 5 | 1 | 105-0226 | 1 | GEAR-DRIVE (64-TEETH) | |
| | 6 | 1 | 1T-1339 | 1 | CARRIER-BEARING | |
| | 7 | 1 | 1T-0649 | 1 | RING-RETAINING | |
| | 8 | 1 | 174-1410 | 1 | CARRIER AS | |
| | | 1 | 1T-0279 | 1 | BEARING-SLEEVE | |
| | | 1 | 174-1409 | 1 | CARRIER-STATOR | |
| | 9 | 1 | 9S-5279 | 1 | BEARING AS-ROLLER | |
| | 10 | 1 | 5P-3867 | 1 | RACE-BEARING OUTER | |
| | 11 | 1 | 0L-2070 | 12 | BOLT (3/8-16X2.25-IN) | |
| | 12 | 1 | 5M-2894 | 12 | WASHER-HARD (10.2X18.5X2.5-MM THK) | |
| | 13 | 1 | 6H-6043 | 1 | RING-RETAINING | |
| | 14 | 1 | 1T-1534 | 1 | CARRIER-RING | |
| | 15 | 1 | 6Y-5793 | 1 | RING-SEAL | |
| | 16 | 1 | 0T-0768 | 12 | BOLT (7/16-14X1.75-IN) | |
| | 17 | 1 | 5P-8244 | 12 | WASHER (12X22.5X2.5-MM THK) | |
| | 18 | 1 | 1T-0686 | 3 | RACE-THRUST BEARING | |
| | 19 | 1 | 9S-4191 | 2 | PLUG | |
| | 20 | 1 | 3J-1907 | 2 | SEAL-O-RING | |
| | 21 | 1 | 0S-1618 | 36 | BOLT (5/16-18X1-IN) | |
| | 22 | 1 | 9M-1974 | 44 | WASHER-HARD (8.8X16X2-MM THK) | |
| | 23 | 1 | 1T-0655 | 2 | BEARING-THRUST | |
| | 24 | 1 | 1T-0651 | 1 | RING-RETAINING | |
| | 25 | 1 | 9W-4702 | 1 | STATOR-CONVERTER | |
| | 26 | 1 | 2P-5680 | 1 | CONVERTER | |
| | 27 | 1 | 1T-0681 | 1 | CAM-FREEWHEEL | |
| | 28 | 1 | 8B-7789 | 1 | RING-SNAP | |
| | 29 | 1 | 2B-2695 | 8 | BOLT (5/16-18X0.875-IN) | |
| | 30 | 1 | 2P-5715 | 1 | COVER | |
| | | 1 | 1T-0577 | 1 | BEARING-SLEEVE | |
| | 31 | 1 | 174-1406 | 1 | HUB | |
| | 32 | 1 | 2D-1523 | 1 | RING-RETAINING | |
| | 33 | 1 | 1T-0762 | 1 | RACE-THRUST BEARING | |
| | 34 | 1 | 1T-1078 | 2 | BEARING-THRUST | |
| | 35 | 1 | 0S-1594 | 20 | BOLT (3/8-16X1-IN) | |
| | 36 | 1 | 1T-0689 | 20 | WASHER (9.93X22.22X2.54-MM THK) | |
| | 37 | 1 | 1T-0657 | 2 | PLATE | |
| | 38 | 1 | 1T-0679 | 11 | ROLLER-FREEWHEEL | |
| | 39 | 1 | 1T-0680 | 11 | SPRING-FREEWHEEL | |
| | 40 | 1 | 174-1405 | 1 | SHAFT | |

## *174-1411* TORQUE CONVERTER GP *(contd.)*

i01511534

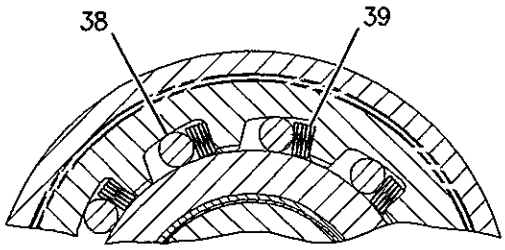


SECTION A-A

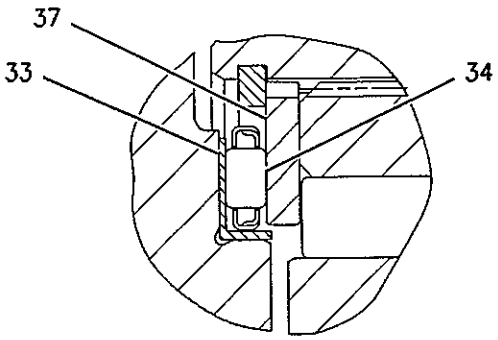


VIEW OF AREA B

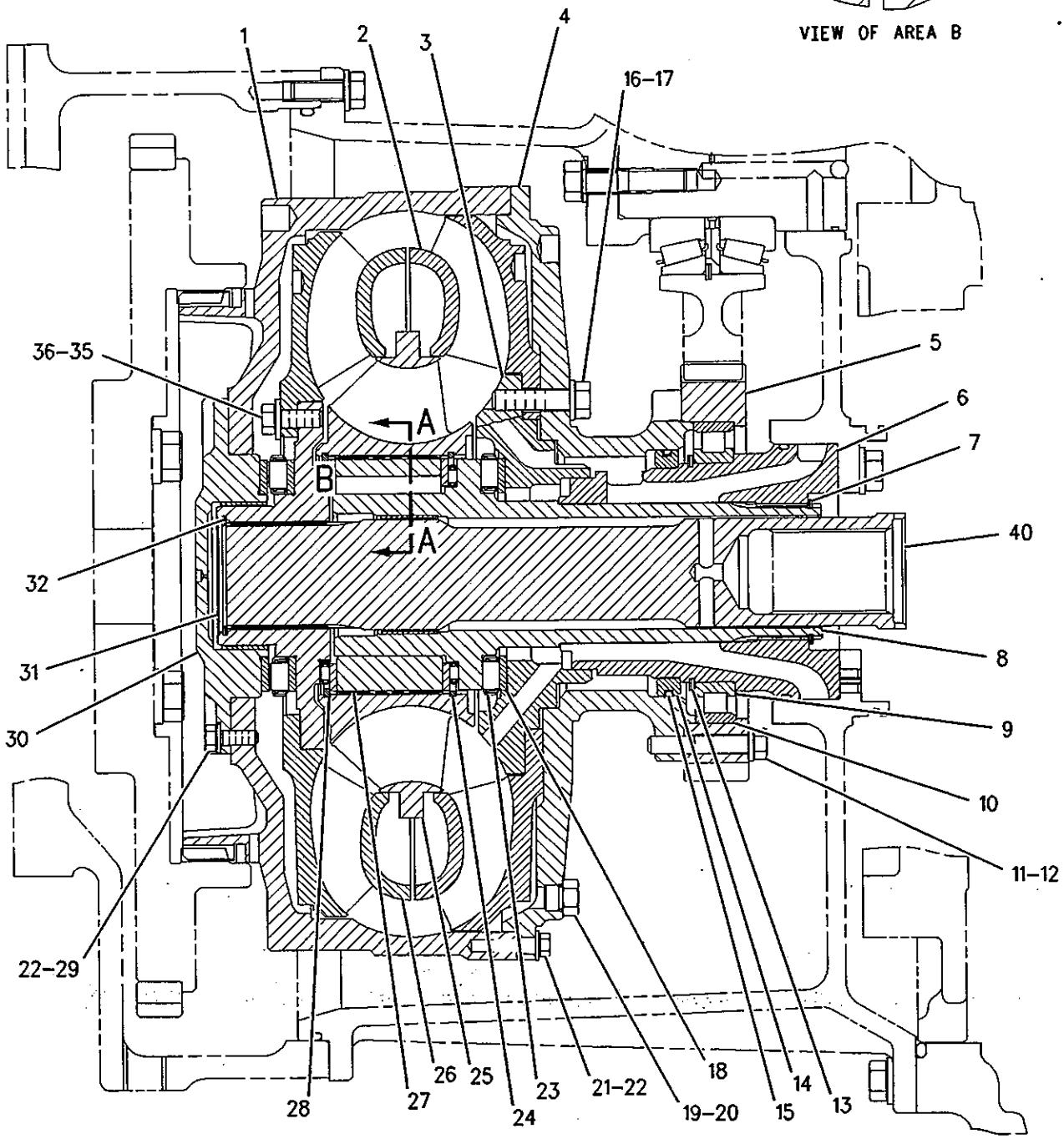


GRAPHIC #1

<END>

g00791356

## 230-6311 TRANSMISSION AR–
### FREEWHEEL STATOR TORQUE CONVERTER
**S/N: DGZ1-UP**
**PART OF 232-6585 POWER TRAIN AR**

**SMCS-3030** **i02289996**

| NOTE | PART NUMBER | QTY | PART NAME 1 2 3 4 5 6 (PRODUCT LEVEL) | SEE PAGE |
|---|---|---|---|---|
| Y | *230-6317* | 1 | CASE & PARTS GP-PLANETARY | 311 |
| Y | *230-6314* | 1 | CONTROL GP-TRANSMISSION HYD | 313 |
| Y | *229-8335* | 1 | COVER GP-SHIPPING | 320 |
| Y | *230-6312* | 1 | GEAR GP-OUTPUT TRANSFER | 341 |
| Y | *230-6313* | 1 | PLANETARY GP-TRANSMISSION | 359 |
| Y | *256-6456* | 1 | TORQUE CONVERTER & HOUSING GP (FREEWHEEL STATOR) | 387 |

Y-SEPARATE ILLUSTRATION

**<END>**

## 230-6321 TRANSMISSION AR–HEAVY-DUTY
**S/N: MDA1-UP**
**PART OF 246-3121 LOGGING AR, 233-9688 TRANSMISSION AR AN ATTACHMENT**

**SMCS-3030** **i02284077**

| NOTE | PART NUMBER | QTY | PART NAME 1 2 3 4 5 6 (PRODUCT LEVEL) | SEE PAGE |
|---|---|---|---|---|
| Y | *230-6317* | 1 | CASE & PARTS GP-PLANETARY | 311 |
| Y | *234-3738* | 1 | CONTROL GP-TRANSMISSION HYD | 315 |
| Y | *229-8335* | 1 | COVER GP-SHIPPING | 320 |
| Y | *230-6312* | 1 | GEAR GP-OUTPUT TRANSFER | 341 |
| Y | *230-6322* | 1 | PLANETARY GP-TRANSMISSION (HEAVY-DUTY) | 364 |
| Y | *256-6766* | 1 | TORQUE CONVERTER & HOUSING GP (HEAVY-DUTY TRANSMISSION) | 389 |

Y-SEPARATE ILLUSTRATION

**<END>**

## *233-9688* TRANSMISSION AR–HEAVY-DUTY
**S/N: JMS1-UP**
**AN ATTACHMENT**

**SMCS-3030** **i02089888**

| NOTE | PART NUMBER | QTY | PART NAME 1 2 3 4 5 6 (PRODUCT LEVEL) | SEE PAGE |
|---|---|---|---|---|
| Y | **230-6321** | 1 | TRANSMISSION AR (HEAVY-DUTY) | 395 |

Y-SEPARATE ILLUSTRATION

**<END>**

# 107-5005 UNIVERSAL JOINT GP–FRONT

S/N: JMS1-UP

PART OF 107-5001 SHAFT GP-DRIVE

SMCS-3251, 3253

i02280871

| NOTE | REF NO | GRAPHIC REF | PART NUMBER | QTY | PART NAME 1 2 3 4 5 6 (PRODUCT LEVEL) | SEE PAGE |
|---|---|---|---|---|---|---|
| | 1 | 1 | 107-5008 | 1 | SHAFT | |
| | 2 | 1 | 173-0888 | 1 | UNIVERSAL JOINT GP-ROTOR DRIVE | |
| | 3 | 1 | 234-6681 | 4 | BOLT-12 POINT HEAD | |

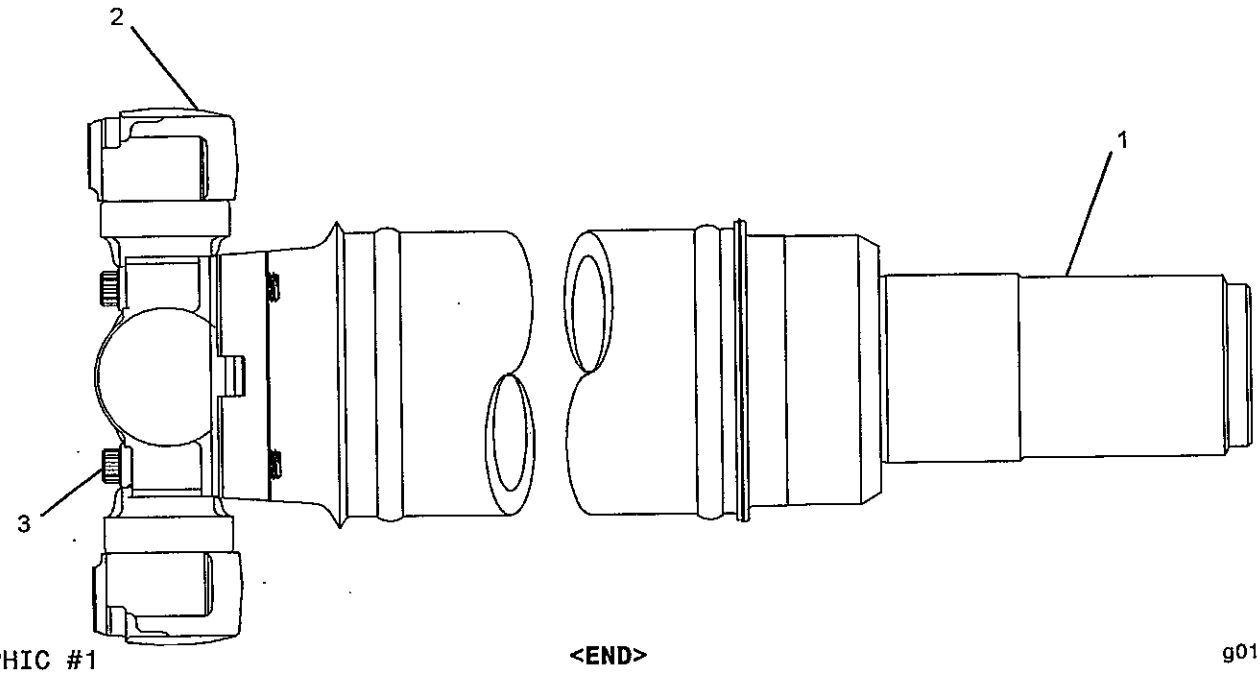


GRAPHIC #1

<END>

g01031409

# 107-5006 UNIVERSAL JOINT GP–REAR

S/N: JMS1-UP

PART OF 107-5001 SHAFT GP-DRIVE

SMCS-3251, 3253

i01442840

| NOTE | REF NO | GRAPHIC REF | PART NUMBER | QTY | PART NAME 1 2 3 4 5 6 (PRODUCT LEVEL) | SEE PAGE |
|---|---|---|---|---|---|---|
| | 1 | 1 | 8W-9912 | 2 | SPIDER & BEARING GP | |
| | 2 | 1 | 107-5010 | 1 | YOKE-COUPLING | |
| | 3 | 1 | 189-6123 | 8 | BOLT-12 POINT HEAD (M12X1.75X60MM) | |

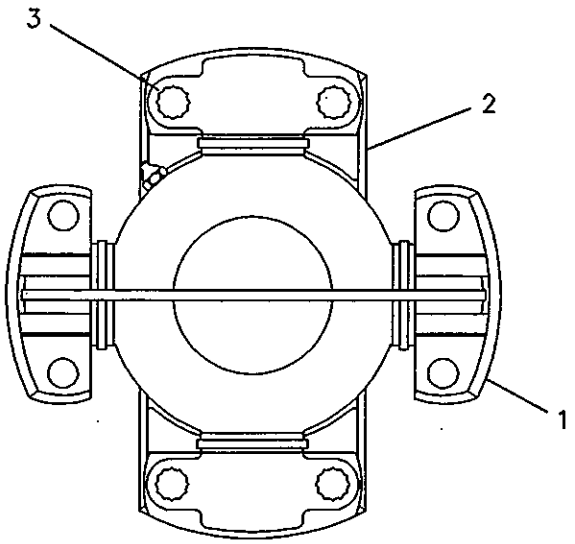


GRAPHIC #1

<END>

g00119777

# 244-3114 VALVE GP-MODULATING–TRANSMISSION CLUTCH

S/N: MDA1-UP; DGZ1-UP
24-VOLT
PART OF 230-6314, 234-3738 CONTROL GP-TRANSMISSION HYD
ALSO AN ATTACHMENT

SMCS-3139

i02288027

| NOTE | REF NO | GRAPHIC REF | PART NUMBER | QTY | PART NAME 1 2 3 4 5 6 (PRODUCT LEVEL) | SEE PAGE |
|---|---|---|---|---|---|---|
| | 1 | 1 | 6V-3965 | 1 | FITTING AS (QUICK DISCONNECT) | |
| | 2 | 1 | 226-9622 | 1 | COIL AS | |
| | 3 | 1 | 3J-1907 | 1 | SEAL-O-RING | |
| | 4 | 1 | 164-2108 | 1 | WASHER (13.03X25.4X2.38-MM THK) | |
| | 5 | 1 | 167-9524 | 1 | NUT-SELF-LOCKING (1/2-28-THD) | |

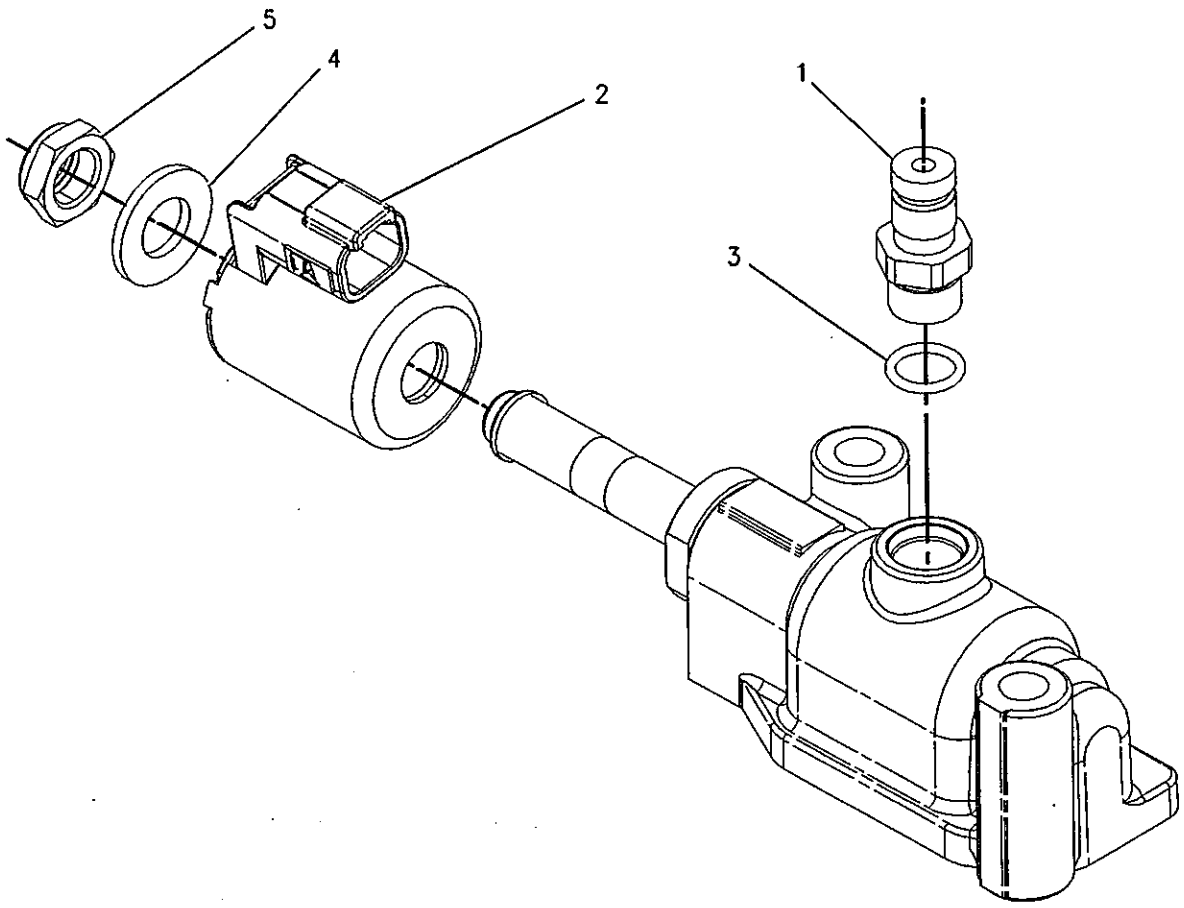


GRAPHIC #1

<END>

g00919065

# 104-5013 VALVE GP-RELIEF–TORQUE CONVERTER OUTLET

S/N: MDA1-UP; DGZ1-UP

PART OF 256-6456, 256-6766 TORQUE CONVERTER & HOUSING GP

ALSO AN ATTACHMENT

SMCS-3133, 3182, 3210, 3213

i00174173

| NOTE | REF NO | GRAPHIC REF | PART NUMBER | QTY | PART NAME 1 2 3 4 5 6 (PRODUCT LEVEL) | SEE PAGE |
|---|---|---|---|---|---|---|
| | 1 | 1 | 104-5014 | 1 | BODY-RELIEF VALVE | |
| | 2 | 1 | 4M-8239 | 2 | COVER | |
| | 3 | 1 | 0S-1594 | 4 | BOLT (3/8-16X1-IN) | |
| | 4 | 1 | 5M-2894 | 4 | WASHER-HARD (10.2X18.5X2.5-MM THK) | |
| | 5 | 1 | 8M-8627 | 1 | SPRING | |
| B | 6 | 1 | 5M-9622 | 2 | SHIM (1.6-MM THK) | |
| B | | 1 | 5M-9623 | 3 | SHIM (0.9-MM THK) | |
| B | | 1 | 5M-9624 | 1 | SHIM (0.25-MM THK) | |
| | 7 | 1 | 8M-4986 | 2 | SEAL-O-RING | |
| | 8 | 1 | 2P-4538 | 1 | SPOOL AS-RELIEF | |
| | 9 | 1 | 9M-4313 | 1 | POPPET | |
| | 10 | 1 | 5M-9548 | 1 | SPRING | |
| | 11 | 1 | 1L-3162 | 1 | RING-RETAINING | |
| | 12 | 1 | 8M-2537 | 1 | RETAINER | |
| | 13 | 1 | 6V-0852 | 1 | CAP-DUST | |
| | 14 | 1 | 3J-1907 | 1 | SEAL-O-RING | |
| | 15 | 1 | 6V-3965 | 1 | FITTING AS | |

B-USE AS REQUIRED

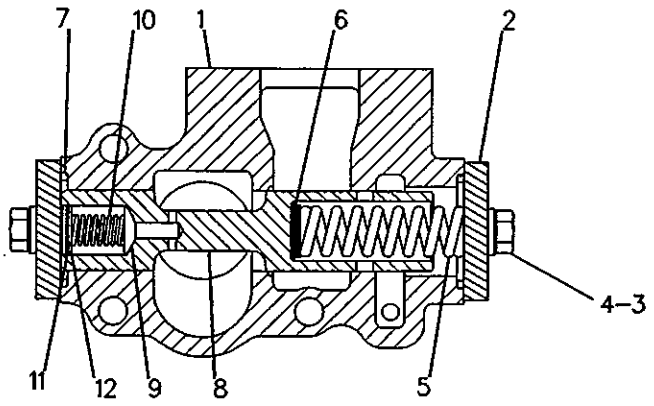


SECTION A-A

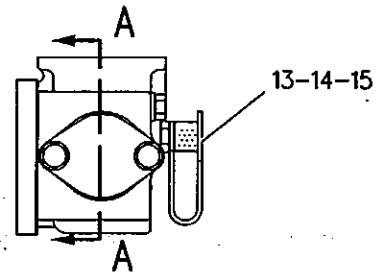


GRAPHIC #1

<END>

g00122362

# 233-1759 VALVE GP-RELIEF–TRANSMISSION HYDRAULIC CONTROL

S/N: MDA1-UP; DGZ1-UP

PART OF 230-6314, 234-3738 CONTROL GP-TRANSMISSION HYD

ALSO AN ATTACHMENT

SMCS-3133, 3182, 3210, 3213

i02113398

| NOTE | REF NO | GRAPHIC REF | PART NUMBER | QTY | PART NAME 1 2 3 4 5 6 (PRODUCT LEVEL) | SEE PAGE |
|---|---|---|---|---|---|---|
| | 1 | 1 | 4M-5905 | 1 | SCREW-ADJUSTMENT (5/16-18X1-IN) | |
| | 2 | 1 | 5B-3180 | 1 | NUT (5/16-18-THD) | |
| | 4 | 1 | 9W-5568 | 1 | SLUG | |
| | 5 | 1 | 106-9212 | 1 | SPRING | |
| | 6 | 1 | 109-3969 | 1 | STOP | |
| | 7 | 1 | 133-6567 | 1 | SPOOL AS-RELIEF | |
| | | 1 | 3D-8317 | 1 | RING-RETAINING | |
| | | 1 | 4B-9880 | 1 | BALL | |
| | | 1 | 4M-2381 | 1 | SPRING | |
| | | 1 | 8M-1013 | 1 | RETAINER | |
| | 8 | 1 | 148-1928 | 1 | VALVE-RELIEF | |
| | 9 | 1 | 231-4781 | 1 | PLATE | |
| | 10 | 1 | 231-4782 | 1 | MANIFOLD | |
| M | 12 | 1 | 6V-2317 | 27 | BOLT (M8X1.25X30-MM) | |
| | 13 | 1 | 6Y-4638 | 1 | PLUG-HEX SOCKET (1 5/16-12-2A THD) | |
| | 14 | 1 | 7M-8485 | 1 | SEAL-O-RING | |
| | 15 | 1 | 9M-1974 | 28 | WASHER-HARD (8.8X16X2-MM THK) | |
| | 16 | 1 | 9X-4609 | 1 | SEAL-O-RING | |

M-METRIC PART

## 233-1759 VALVE GP-RELIEF *(contd.)*

i02113398

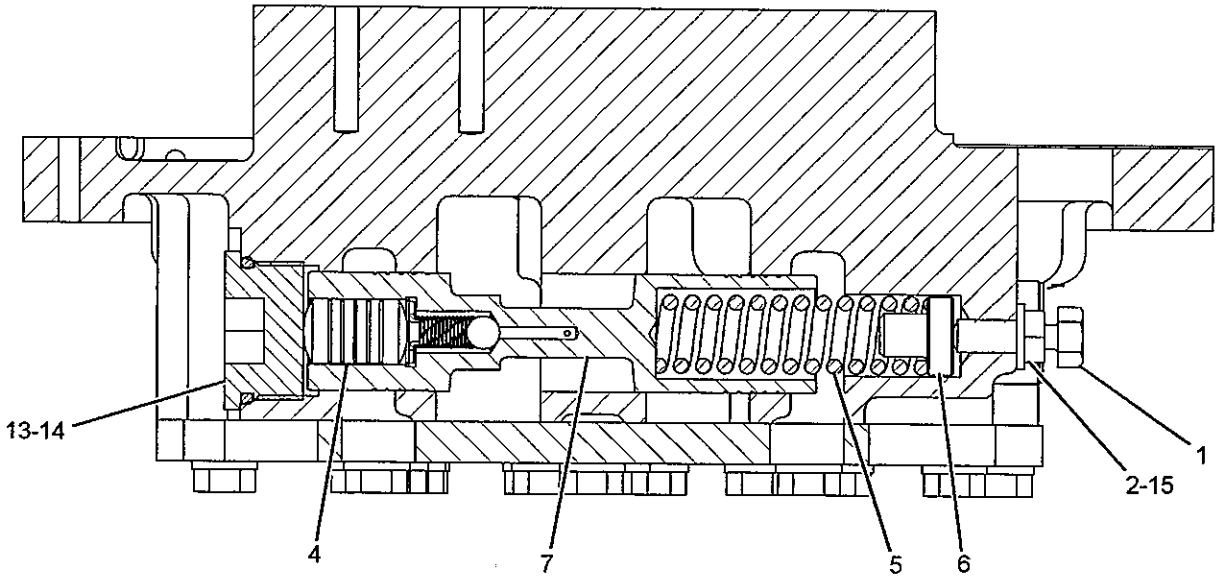


SECTION A-A

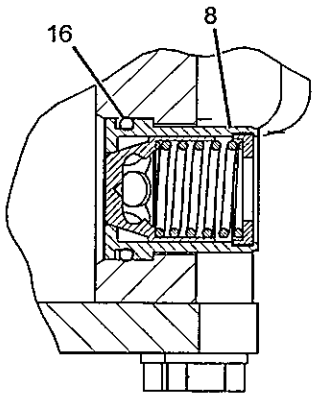


SECTION B-B

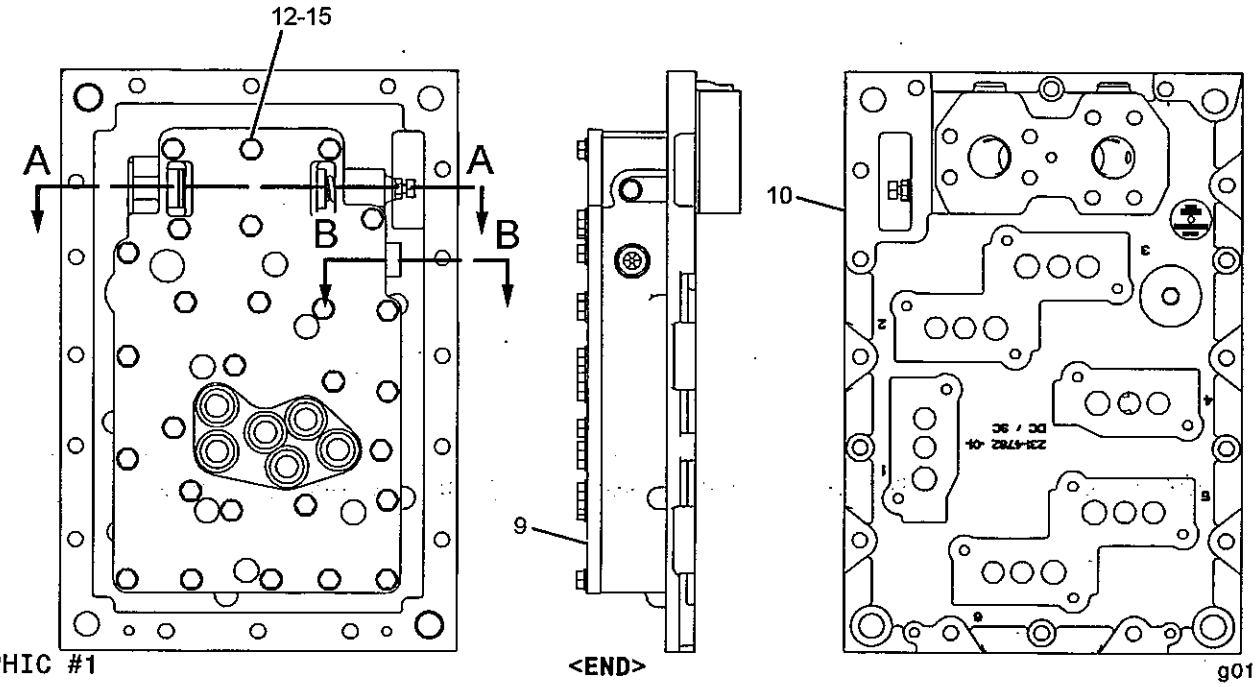


GRAPHIC #1

<END>

g01033018

# POWER TRAIN

## 232-7554 WHEEL & FINAL DRIVE GP

S/N: JMS1-UP

PART OF 232-7559, 232-7735 AXLE AR-FIXED, 232-7558, 232-7731, 232-7733 AXLE AR-OSCILLATING

ALSO AN ATTACHMENT

SMCS-4001, 4051

i02279665

| NOTE | REF NO | GRAPHIC REF | PART NUMBER | QTY | PART NAME 1 2 3 4 5 6 (PRODUCT LEVEL) | SEE PAGE |
|---|---|---|---|---|---|---|
| M | 1 | 1 | 6V-8097 | 6 | BOLT (M12X1.75X30-MM) | |
| M | 2 | 1 | 5P-8245 | 6 | WASHER-HARD (13.5X25.5X3-MM THK) | |
| | 3 | 1 | 129-3046 | 1 | CARRIER-PLANETARY | |
| | 4 | 1 | 105-8748 | 3 | SHAFT-PLANETARY | |
| | 5 | 1 | 6T-5545 | 3 | DOWEL | |
| | 6 | 1 | 105-8743 | 3 | BEARING-SLEEVE | |
| | 7 | 1 | 109-9719 | 6 | WASHER-THRUST | |
| | 8 | 1 | 5J-1086 | 1 | SEAL-O-RING | |
| | 9 | 1 | 9X-3977 | 1 | SEAL-RING | |
| M | 10 | 1 | 8T-8441 | 3 | BOLT-SOCKET HEAD (M12X1.75X25-MM) | |
| | 11 | 1 | 163-4527 | 1 | PLATE-BEARING | |
| M | 12 | 1 | 8T-2393 | 10 | BOLT-SOCKET HEAD (M16X2X60-MM) | |
| B | 13 | 1 | 8K-0066 | 1 | SHIM (0.112-IN THK) | |
| | 14 | 1 | 110-0551 | 1 | HUB AS | |
| | | 1 | 8K-0079 | 1 | BUSHING-TERMINAL | |
| | 15 | 1 | 108-0350 | 1 | RING-RETAINING | |
| M | 16 | 1 | 8T-5091 | 3 | BOLT (M8X1.25X20-MM) | |
| | 17 | 1 | 8E-9571 | 3 | WASHER-HARD (8.8X16X7-MM THK) | |
| | 18 | 1 | 129-3045 | 1 | WHEEL | |
| | 19 | 1 | 7M-5334 | 1 | CONE-BEARING | |
| | 20 | 1 | 5F-2465 | 1 | CUP-BEARING | |
| | 21 | 1 | 2P-8353 | 1 | CONE-BEARING | |
| | 22 | 1 | 2D-6511 | 1 | CUP-BEARING | |
| R | 23 | 1 | 135-7742 | 1 | SPINDLE | |
| | 24 | 1 | 163-4526 | 1 | WASHER-THRUST | |
| | 25 | 1 | 5P-4483 | 1 | PLUG | |
| | 26 | 1 | 7M-8485 | 1 | SEAL-O-RING | |
| | 27 | 1 | 249-7870 | 1 | GEAR-SUN (17-TEETH) | |
| | 28 | 1 | 159-8169 | 3 | GEAR-PLANETARY (22-TEETH) | |
| | 29 | 1 | 110-4802 | 1 | GEAR-RING (64-TEETH) | |
| | 30 | 1 | 110-2055 | 1 | COVER AS | |
| B | | 1 | 1U-8846 | | SEALANT-GASKET | |
| M | | 1 | 099-4691 | 2 | BOLT-LOCKING (M12X1.75X25-MM) | |
| | | 1 | 109-7848 | 1 | BUTTON | |
| | 31 | 1 | 6D-0692 | 1 | SEAL-O-RING | |
| | 32 | 1 | 2S-0736 | 10 | WASHER-HARD (17X27X3.5-MM THK) | |
| | 33 | 1 | 8M-3837 | 1 | PLUG-MAGNETIC | |
| | 34 | 1 | 1S-3889 | 1 | WASHER-PLUG | |
| | 35 | 1 | 5F-1678 | 1 | SEAL-O-RING | |
| | 36 | 1 | 9G-5319 | 1 | SEAL GP-DUO-CONE | |

B-USE AS REQUIRED
M-METRIC PART
R-REMFG PART MAY BE AVAILABLE

## 232-7554 WHEEL & FINAL DRIVE GP *(contd.)*

i02279665

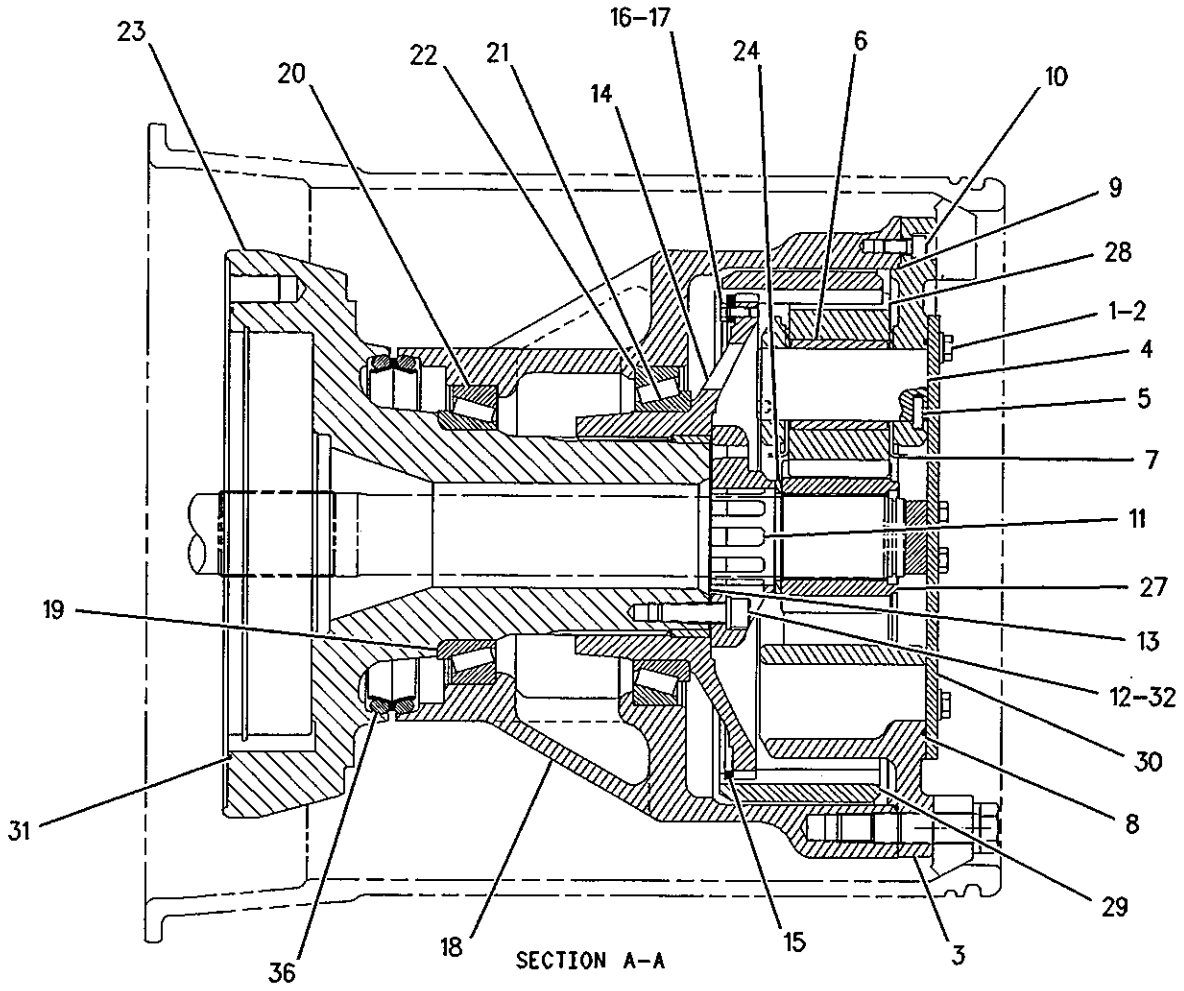


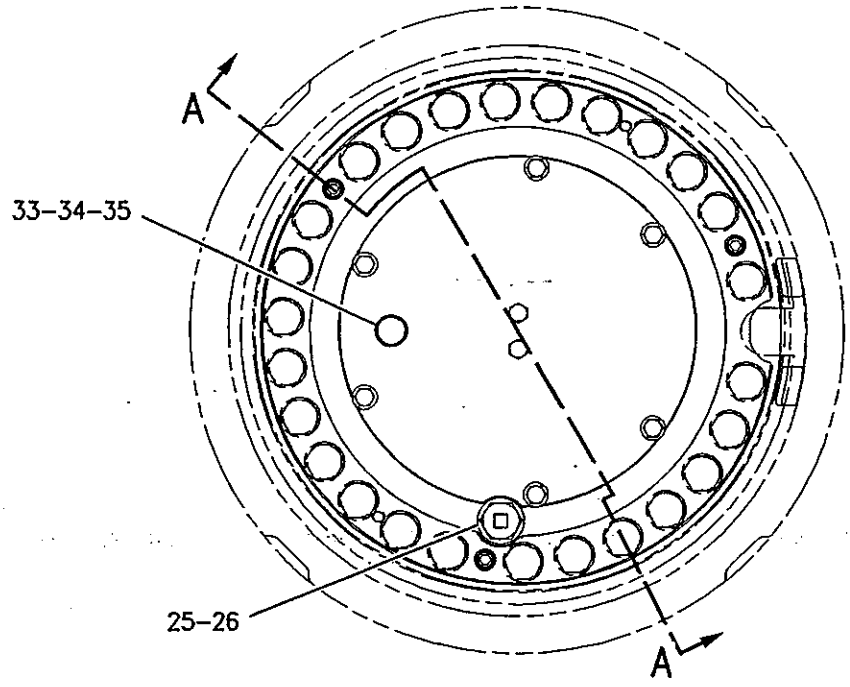


GRAPHIC #1

<END>

g00682299

# 243-2045 ACTUATOR GP-POWER GUARD

S/N: JMS1-UP
PART OF 243-2046 WASTE HANDLING AR
AN ATTACHMENT

SMCS-1427, 7153

i02283625

| NOTE | REF NO | GRAPHIC REF | PART NUMBER | QTY | PART NAME 1 2 3 4 5 6 (PRODUCT LEVEL) | SEE PAGE |
|---|---|---|---|---|---|---|
| | 1 | 1 | 3B-4628 | 8 | PIN-COTTER | |
| | 2 | 1 | 3W-9225 | 4 | HANDLE AS | |
| | | | | | (EACH INCLUDES) | |
| | | 1 | 2V-6034 | 1 | RING | |
| | 3 | 1 | 7K-1181 | 8 | STRAP-CABLE | |
| | 4 | 1 | 196-7329 | 1 | ACTUATOR GP-POWER (POWER TRAIN GUARD) | |
| | | 1 | 102-8802 | | KIT-RECEPTACLE (2-PIN) | |
| | | | | | (INCLUDES RECEPTACLE & WEDGE) | |
| | | 1 | 3E-3365 | | WEDGE-RECEPTACLE LOCK (2-PIN) | |
| | | 1 | 9W-0852 | | PIN-CONNECTOR (14-GA) | |
| Y | 5 | 1 | *248-5554* | 1 | WIRING GP-WASTE HANDLER | 303 |
| | 6 | 1 | 255-0949 | 1 | ACTUATOR GP-POWER (CRANKCASE GUARD) | |

Y-SEPARATE ILLUSTRATION

## 243-2045 ACTUATOR GP-POWER GUARD *(contd.)* i02283625

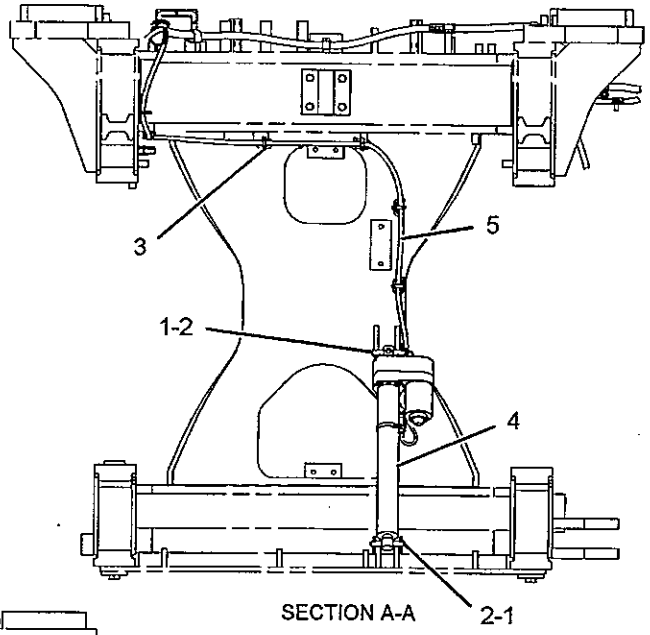


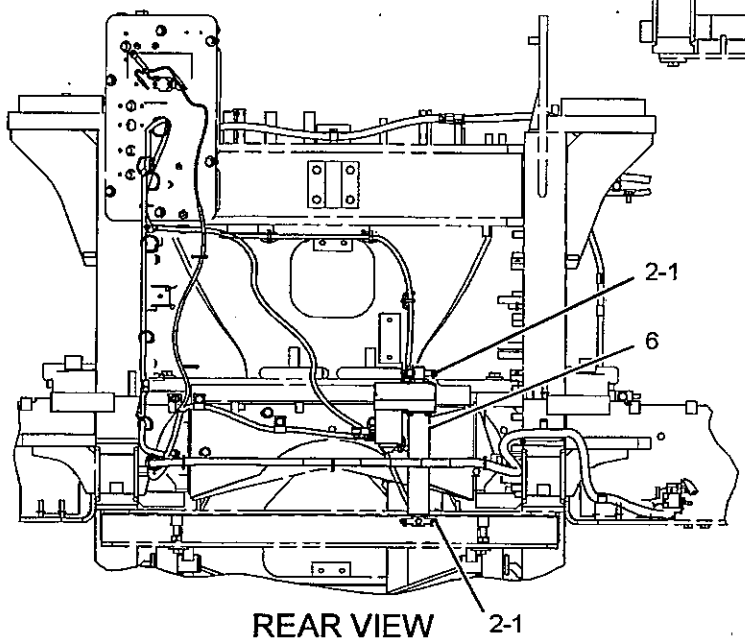


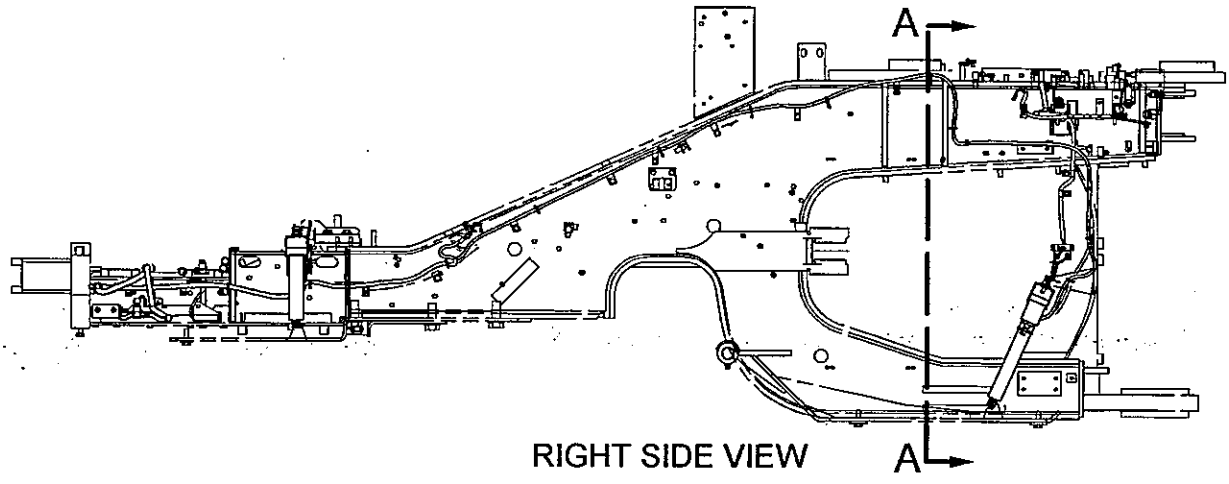


GRAPHIC #1

<END>

g01143146

# FRAME AND BODY

## *234-3094* COUNTERWEIGHT GP

S/N: JMS1-UP

PART OF 225-5538 CHASSIS AR

SMCS-7056

i02280911

| NOTE | REF NO | GRAPHIC REF | PART NUMBER | QTY | PART NAME 1 2 3 4 5 6 (PRODUCT LEVEL) | SEE PAGE |
|---|---|---|---|---|---|---|
| | 1 | 1 | 103-5796 | 1 | PIN-KEEPER | |
| | 2 | 1 | 115-5669 | 1 | PIN | |
| | 3 | 1 | 253-9352 | 1 | PLATE | |
| | 4 | 1 | 243-3704 | 1 | COUNTERWEIGHT | |
| | | 1 | 1K-6932 | 2 | PIN | |
| M | 5 | 1 | 7X-2581 | 6 | BOLT (M30X3.5X100-MM) | |
| M | 6 | 1 | 130-0099 | 4 | BOLT (M30X3.5X130-MM) | |
| | 7 | 1 | 9X-8258 | 10 | WASHER (33X56X6-MM THK) | |

M-METRIC PART

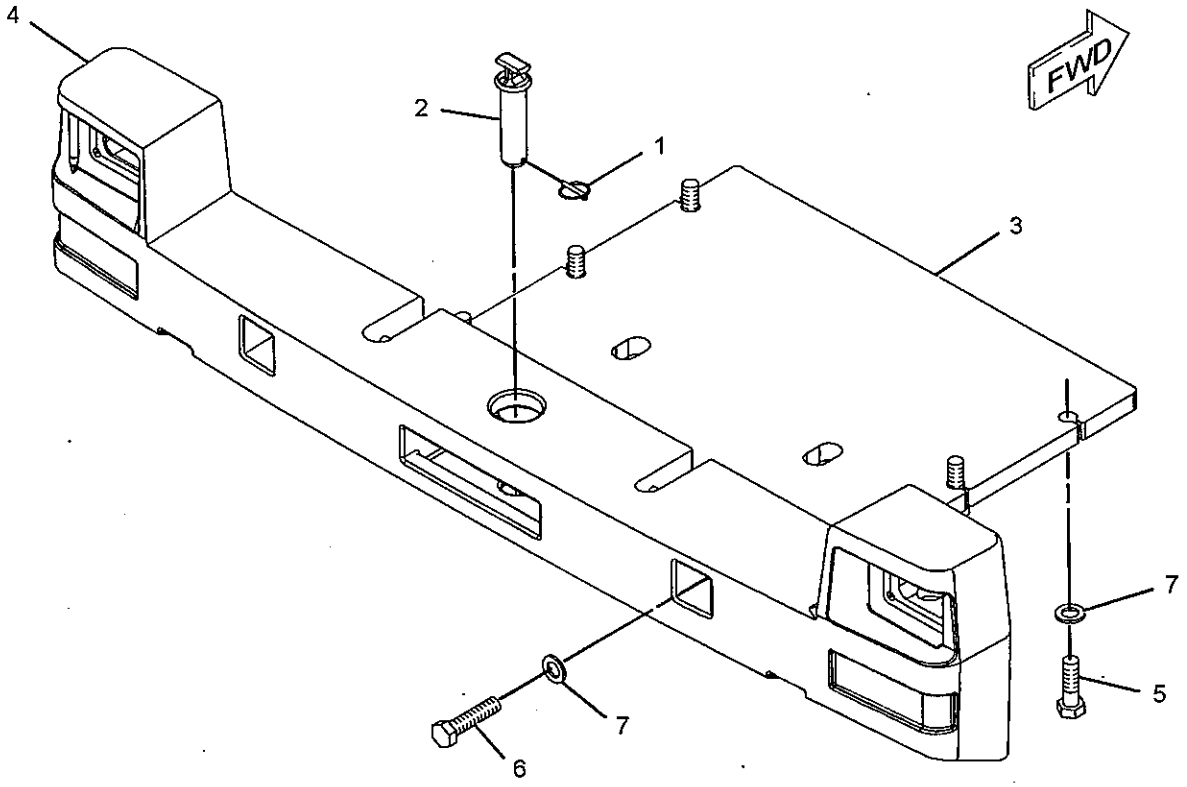


GRAPHIC #1

<END>

g01142134

# 235-5987 COUNTERWEIGHT GP

S/N: JMS1-UP

PART OF 251-1099, 266-2302 BUCKET AR-GENERAL PURPOSE, 245-4765 COUNTERWEIGHT GP

AN ATTACHMENT

SMCS-7056

i02283972

| NOTE | REF NO | GRAPHIC REF | PART NUMBER | QTY | PART NAME 1 2 3 4 5 6 (PRODUCT LEVEL) | SEE PAGE |
|---|---|---|---|---|---|---|
| | 1 | 1 | 103-5796 | 1 | PIN-KEEPER | |
| | 2 | 1 | 115-5669 | 1 | PIN | |
| | 3 | 1 | 234-3096 | 1 | COUNTERWEIGHT | |
| | 4 | 1 | 243-3704 | 1 | COUNTERWEIGHT | |
| | | 1 | 1K-6932 | 2 | PIN | |
| M | 5 | 1 | 7X-2583 | 6 | BOLT (M30X3.5X120-MM) | |
| M | 6 | 1 | 130-0099 | 4 | BOLT (M30X3.5X130-MM) | |
| | 7 | 1 | 9X-8258 | 10 | WASHER (33X56X6-MM THK) | |

M-METRIC PART

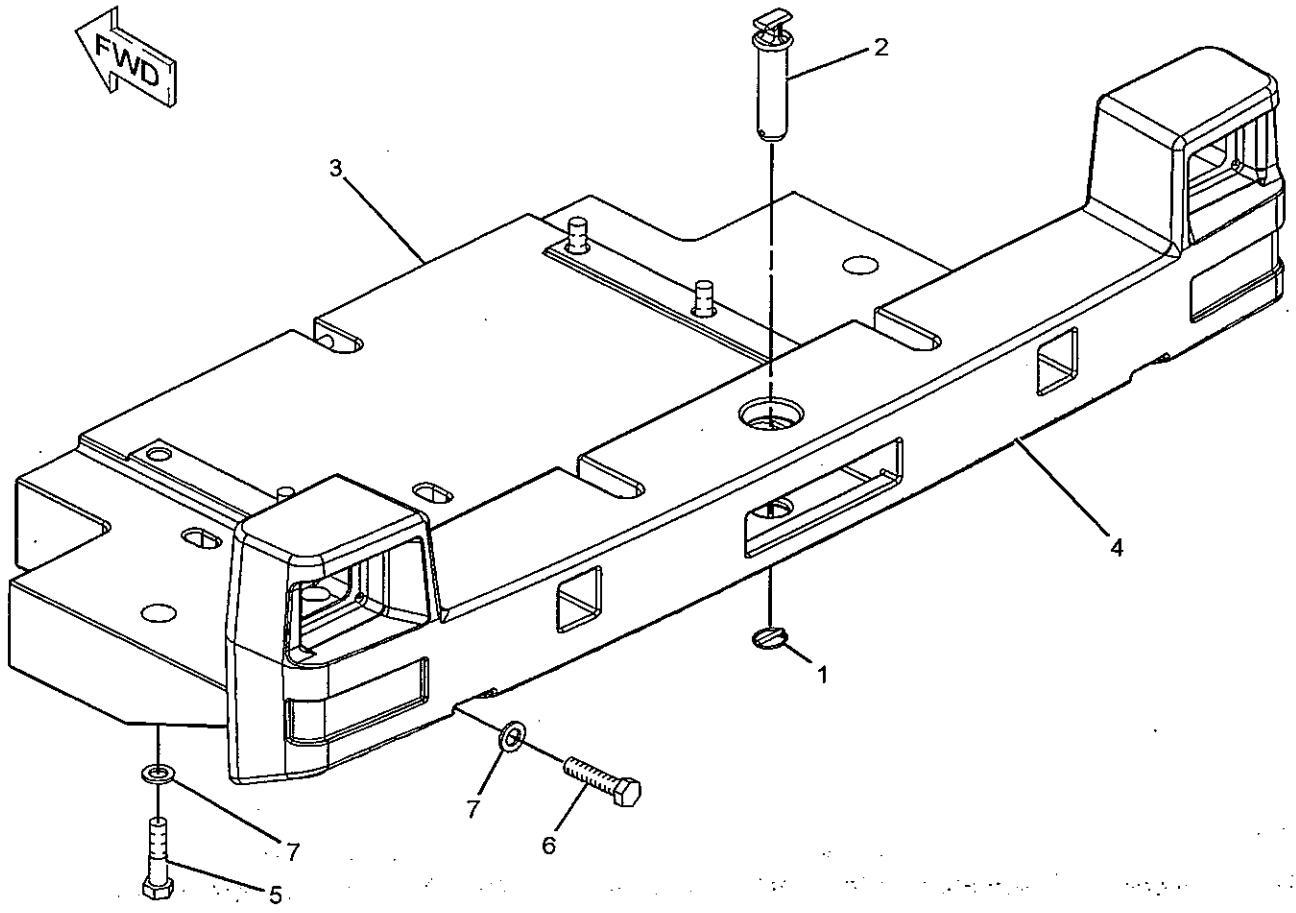


GRAPHIC #1

<END>

g01143403

# FRAME AND BODY

## *235-5988* COUNTERWEIGHT GP

S/N: JMS1-UP
PART OF 246-3121 LOGGING AR
AN ATTACHMENT

SMCS-7056

i02283956

| NOTE | REF NO | GRAPHIC REF | PART NUMBER | QTY | PART NAME 1 2 3 4 5 6 (PRODUCT LEVEL) | SEE PAGE |
|---|---|---|---|---|---|---|
| | 1 | 1 | 103-5796 | 1 | PIN-KEEPER | |
| | 2 | 1 | 115-5669 | 1 | PIN | |
| | 3 | 1 | 260-6563 | 1 | COUNTERWEIGHT | |
| | 4 | 1 | 243-3704 | 1 | COUNTERWEIGHT | |
| | | 1 | 1K-6932 | 2 | PIN | |
| M | 5 | 1 | 9X-6385 | 6 | BOLT (M30X3.5X200-MM) | |
| M | 6 | 1 | 130-0099 | 4 | BOLT (M30X3.5X130-MM) | |
| | 7 | 1 | 9X-8258 | 10 | WASHER (33X56X6-MM THK) | |

M-METRIC PART

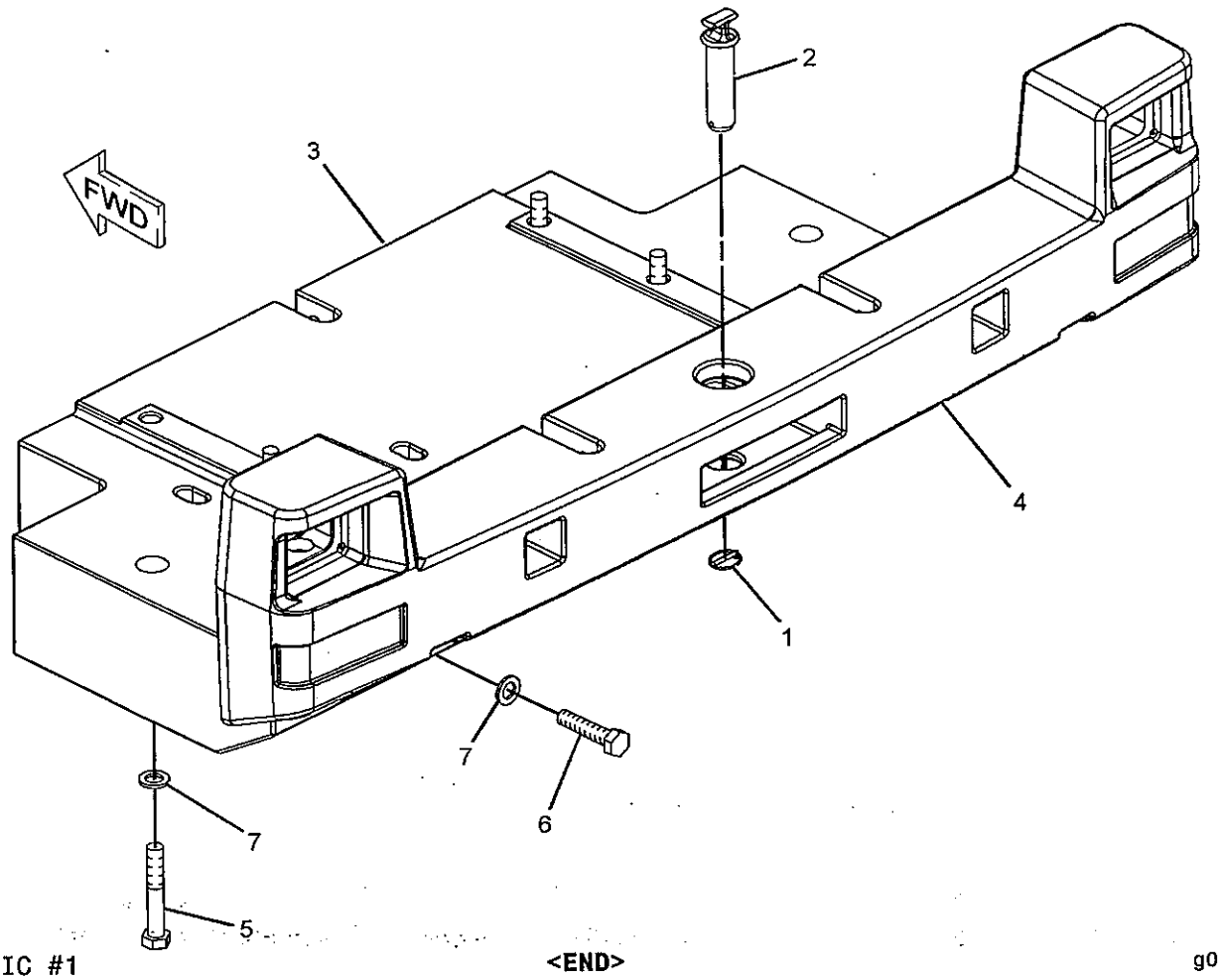


GRAPHIC #1

<END>

g01143467

## 245-3370 COUNTERWEIGHT GP

S/N: JMS1-UP
AN ATTACHMENT

SMCS-7056 i02150173

| NOTE | PART NUMBER | QTY | PART NAME 1 2 3 4 5 6 (PRODUCT LEVEL) | SEE PAGE |
|---|---|---|---|---|
| Y | 245-4769 | 1 | COUNTERWEIGHT GP | 410 |

Y-SEPARATE ILLUSTRATION

<END>

## 245-4765 COUNTERWEIGHT GP

S/N: JMS1-UP
AN ATTACHMENT

SMCS-7056 i02090122

| NOTE | PART NUMBER | QTY | PART NAME 1 2 3 4 5 6 (PRODUCT LEVEL) | SEE PAGE |
|---|---|---|---|---|
| Y | 235-5987 | 1 | COUNTERWEIGHT GP | 407 |

Y-SEPARATE ILLUSTRATION

<END>

# 245-4769 COUNTERWEIGHT GP

S/N: JMS1-UP
PART OF 245-3370 COUNTERWEIGHT GP
AN ATTACHMENT

SMCS-7056

i02150200

| NOTE | REF NO | GRAPHIC REF | PART NUMBER | QTY | PART NAME 1 2 3 4 5 6 (PRODUCT LEVEL) | SEE PAGE |
|---|---|---|---|---|---|---|
| | 1 | 1 | 103-5796 | 1 | PIN-KEEPER | |
| | 2 | 1 | 110-8117 | 1 | COUNTERWEIGHT | |
| | 3 | 1 | 115-5669 | 1 | PIN | |
| | 4 | 1 | 234-3097 | 1 | COUNTERWEIGHT | |
| M | 5 | 1 | 7X-2583 | 6 | BOLT (M30X3.5X120-MM) | |
| M | 6 | 1 | 7X-2584 | 4 | BOLT (M30X3.5X140-MM) | |
| | 7 | 1 | 9X-8258 | 10 | WASHER (33X56X6-MM THK) | |

M-METRIC PART

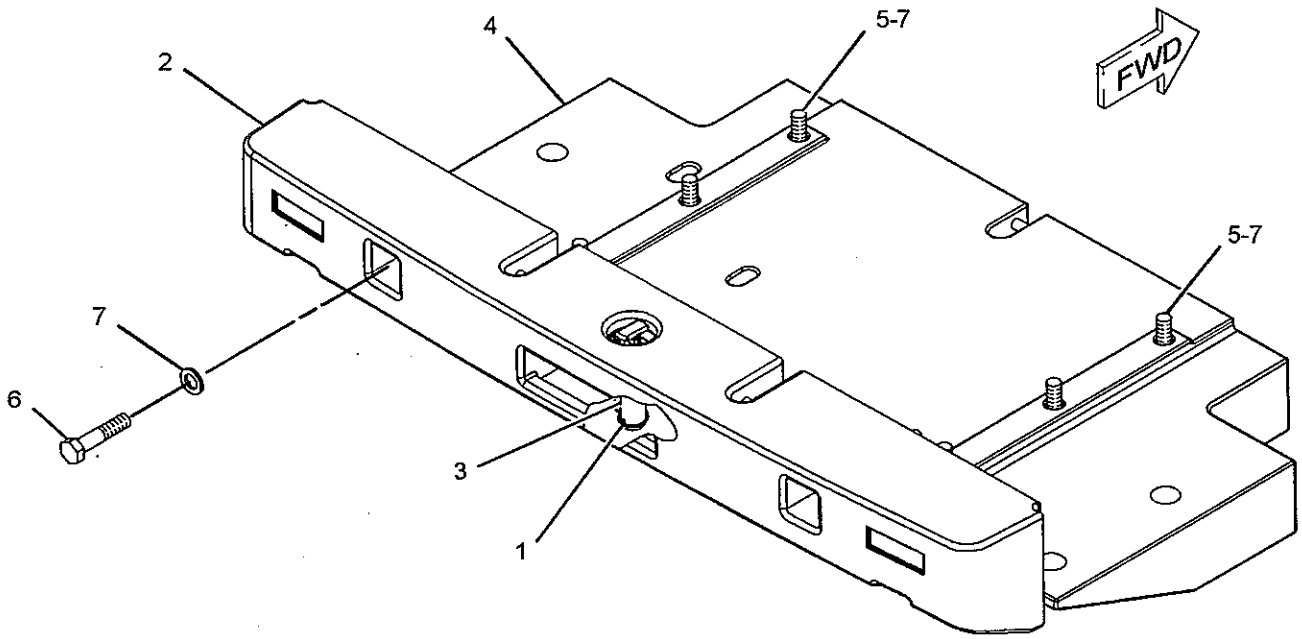


GRAPHIC #1

<END>

g01096996

# 256-4728 COUNTERWEIGHT GP

S/N: JMS1-UP
PART OF 243-2046 WASTE HANDLING AR
AN ATTACHMENT

SMCS-7056 i02283502

| NOTE | REF NO | GRAPHIC REF | PART NUMBER | QTY | PART NAME 1 2 3 4 5 6 (PRODUCT LEVEL) | SEE PAGE |
|---|---|---|---|---|---|---|
| | 1 | 1 | 256-4729 | 1 | COUNTERWEIGHT AS | |
| | 2 | 1 | 7X-0593 | 6 | WASHER-HARD (34X57X6-MM THK) | |
| M | 3 | 1 | 9X-6618 | 6 | BOLT (M30X3.5X130-MM) | |

M-METRIC PART

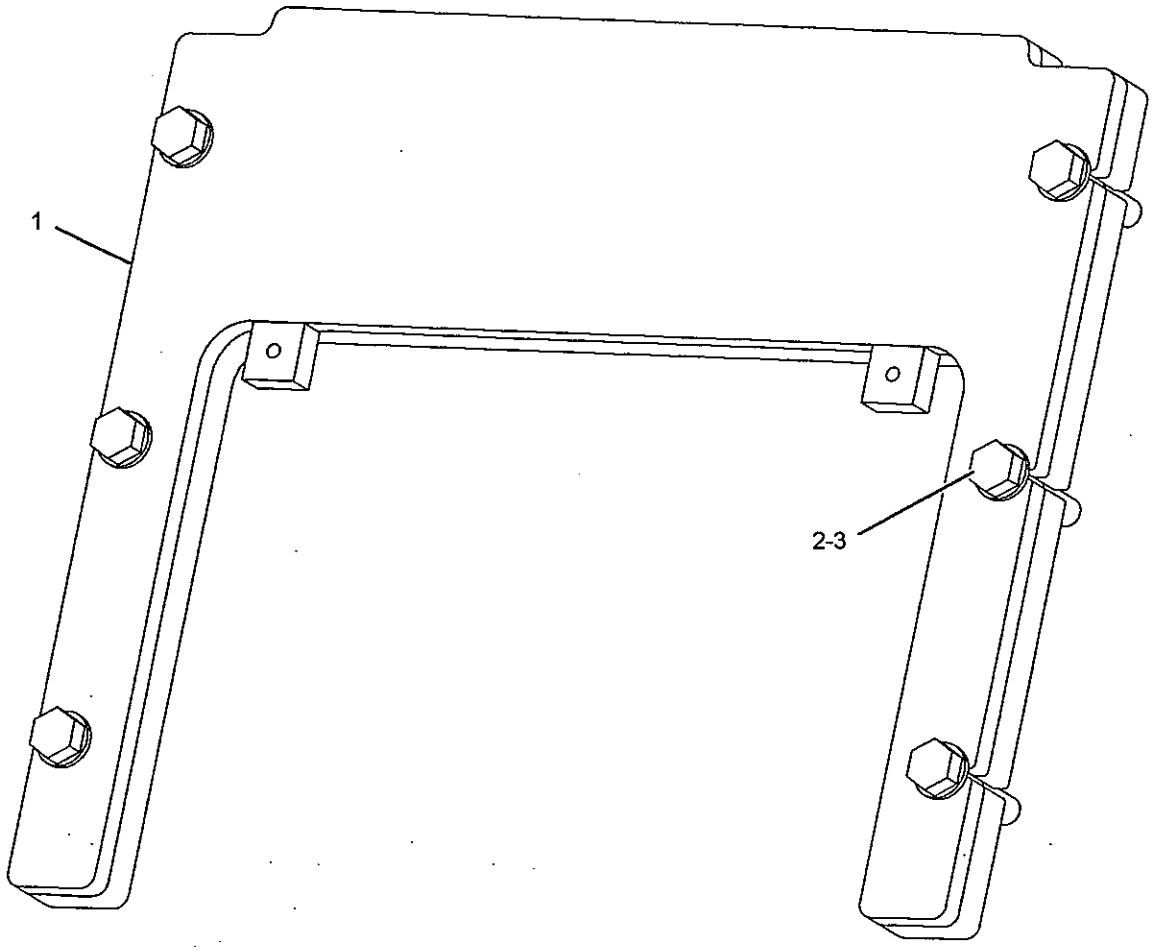


GRAPHIC #1 <END> g01144192

# FRAME AND BODY

## 235-5341 DOOR GP-ACCESS-BATTERY

**S/N: JMS1-UP**

**PART OF 225-5538 CHASSIS AR**

SMCS-7273

i02279445

| NOTE | REF NO | GRAPHIC REF | PART NUMBER | QTY | PART NAME 1 2 3 4 5 6 (PRODUCT LEVEL) | SEE PAGE |
|---|---|---|---|---|---|---|
| | 1 | 2 | 7X-2484 | 2 | LATCH-HANDLE | |
| | 2 | 2 | 167-1192 | 1 | CLIP | |
| | 3 | 1 | 235-5343 | 1 | DOOR AS-ACCESS (TOOL BOX) | |
| | 4 | 1 | 235-5344 | 1 | DOOR AS-ACCESS (BATTERY, RH) | |
| | 5 | 1 | 235-5346 | 1 | DOOR AS-ACCESS (PUMP) | |
| | 6 | 1 | 235-5347 | 1 | DOOR AS-ACCESS (BATTERY, LH) | |
| | 7 | 1 | 235-5349 | 1 | BOX AS-STORAGE (PUMP) | |
| | | 1 | 7T-1099 | 1 | LINK | |
| M | | 1 | 8T-3490 | 5 | NUT-WELD (M10X1.5-THD) | |
| M | | 1 | 8T-3851 | 1 | BOSS-WELD (M10X1.5X17.5-MM) | |
| M | | 1 | 8T-8874 | 1 | NUT-WELD (M5X0.8-THD) | |
| | 8 | 1 | 236-2193 | 2 | COVER | |
| | 9 | 1 | 236-6749 | 1 | BOX AS-TOOL | |
| M | | 1 | 8T-3490 | 5 | NUT-WELD (M10X1.5-THD) | |
| M | | 1 | 110-2023 | 1 | STUD-WELD (M10X1.5X25-MM) | |
| | | 1 | 165-4065 | 1 | PLATE AS | |
| | 10 | 1 | 236-6751 | 1 | COVER AS (LH) | |
| M | | 1 | 8T-3490 | 7 | NUT-WELD (M10X1.5-THD) | |
| | 11 | 1 | 236-6752 | 1 | COVER AS (RH) | |
| M | | 1 | 8T-3490 | 4 | NUT-WELD (M10X1.5-THD) | |
| | 12 | 1 | 236-8944 | 1 | SUPPORT AS (LH) | |
| | | 1 | 8T-4121 | 2 | WASHER-HARD (11X21X2.5-MM THK) | |
| | 13 | 1 | 236-8945 | 1 | SUPPORT AS (RH) | |
| | | 1 | 8T-4121 | 2 | WASHER-HARD (11X21X2.5-MM THK) | |
| | 14 | 1 | 238-5649 | 2 | PLATE AS | |
| | | 1 | 8T-4121 | 2 | WASHER-HARD (11X21X2.5-MM THK) | |
| | 15 | 2 | 264-0605 | 2 | BRACKET | |
| M | 16 | 2 | 095-0735 | 1 | SCREW-MACHINE (M5X0.8X8-MM) | |
| | 17 | 2 | 3B-4617 | 4 | PIN-COTTER | |
| M | 18 | 2 | 5C-9553 | 4 | BOLT (M6X1X16-MM) | |
| | 19 | 2 | 6V-2370 | 8 | RIVET-POP | |
| | 20 | 1,2 | 8T-4121 | 44 | WASHER-HARD (11X21X2.5-MM THK) | |
| M | 21 | 2 | 8T-4136 | 8 | BOLT (M10X1.5X25-MM) | |
| M | 22 | 1,1 | 8T-4137 | 26 | BOLT (M10X1.5X20-MM) | |
| | 23 | 2 | 9X-8256 | 4 | WASHER (6.6X12X2-MM THK) | |
| BD | 24 | 1,2 | 5P-7211 | | SEAL | |

B-USE AS REQUIRED
D-ORDER BY THE METER
M-METRIC PART

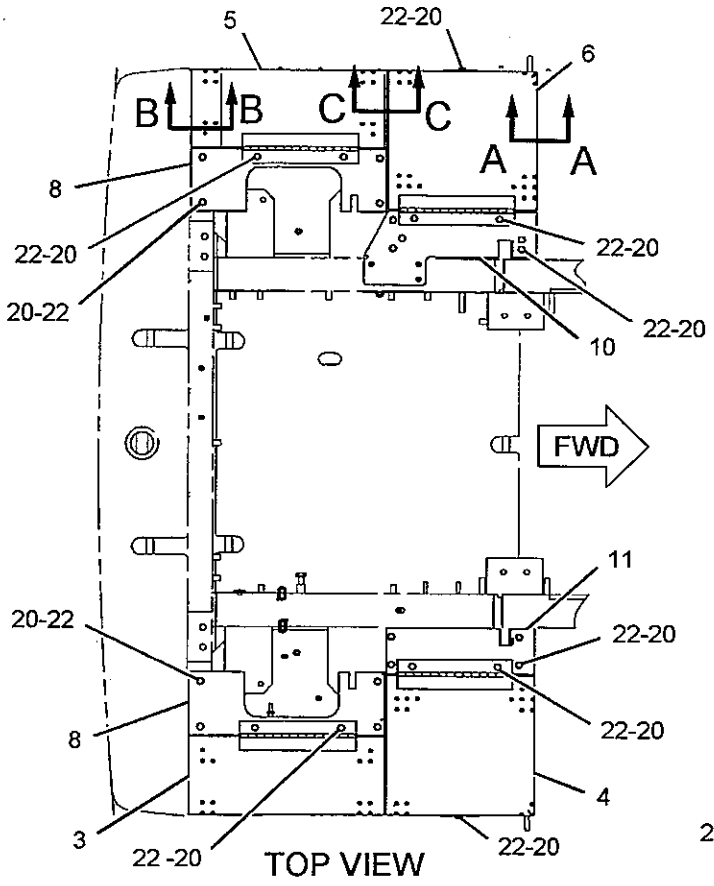


TOP VIEW

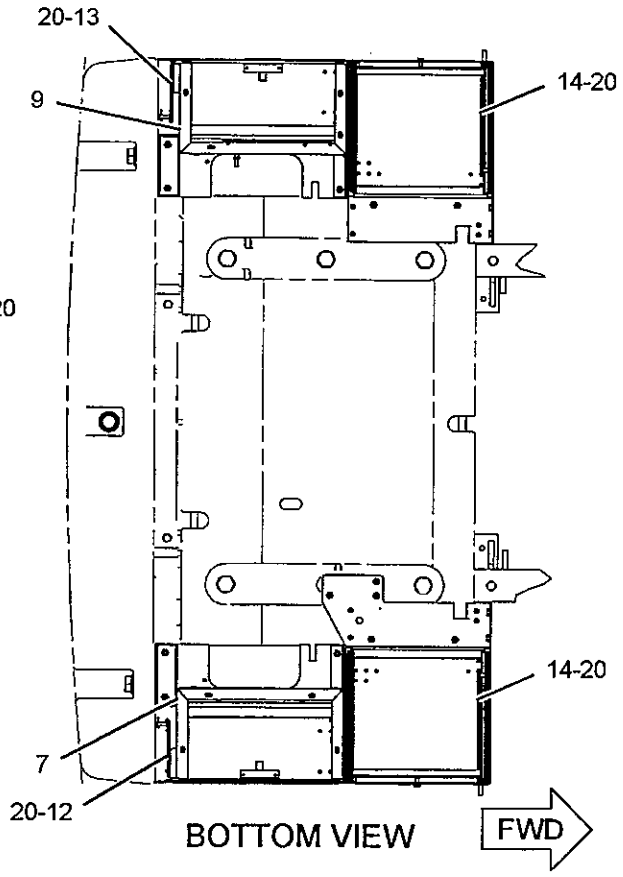


BOTTOM VIEW

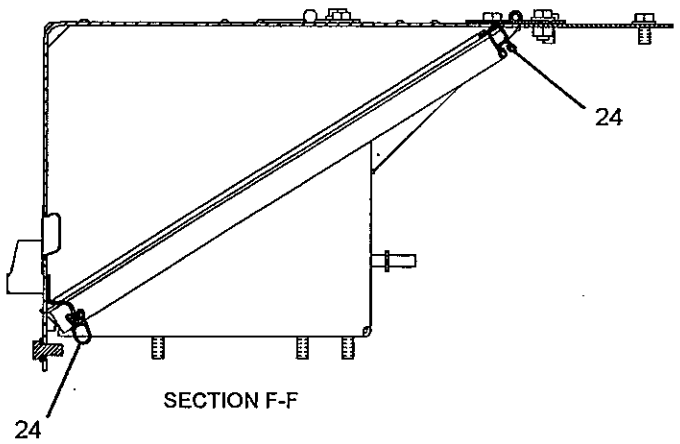


SECTION F-F

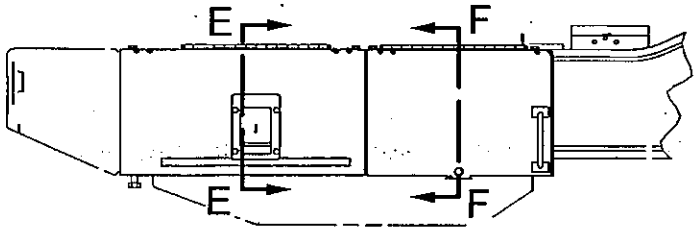


RIGHT SIDE VIEW

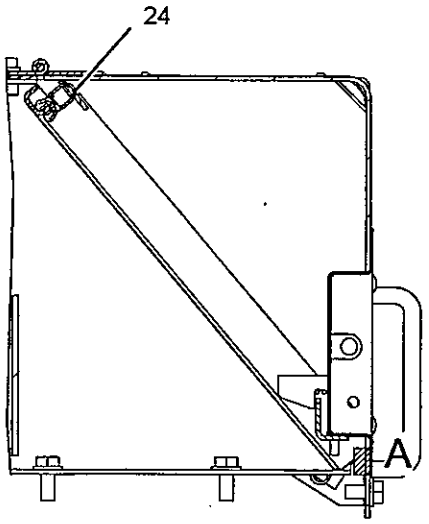


SECTION E-E

REFER TO ALL ILLUSTRATIONS OF THIS GROUP FOR AUXILIARY VIEWS

GRAPHIC #1

g01141836

## 235-5341 DOOR GP-ACCESS *(contd.)* i02279445

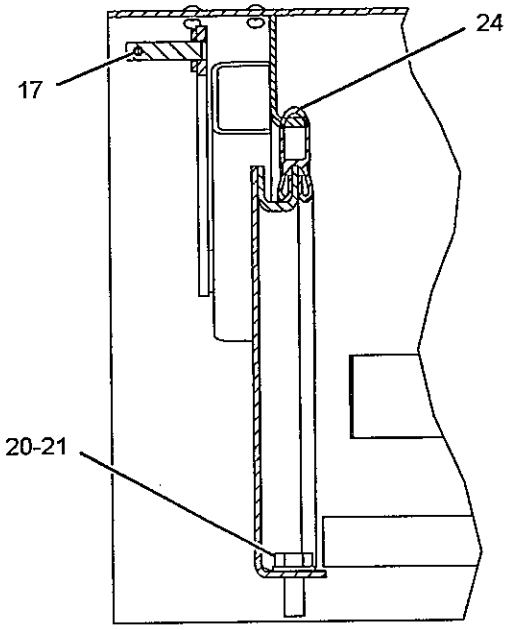


SECTION B-B

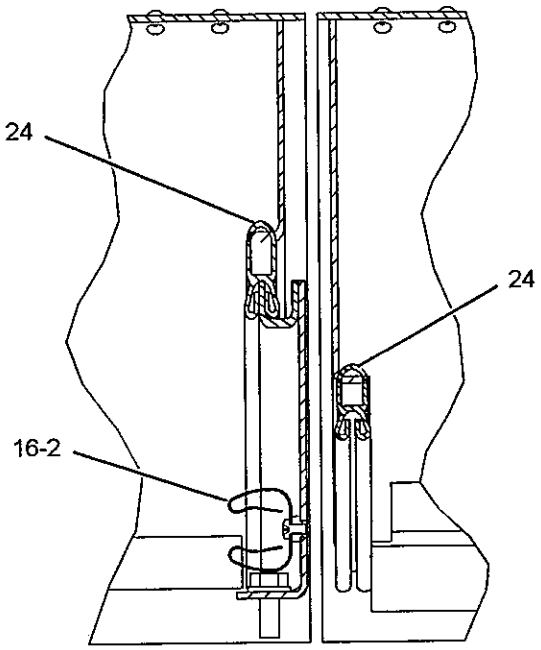


SECTION C-C

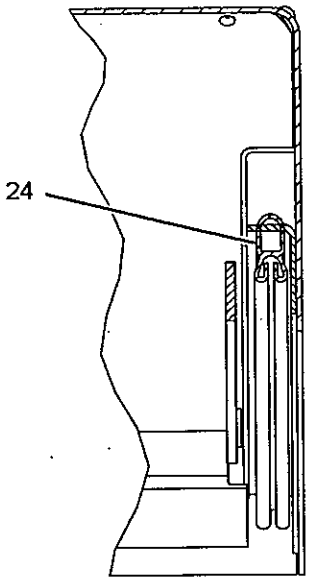


SECTION A-A

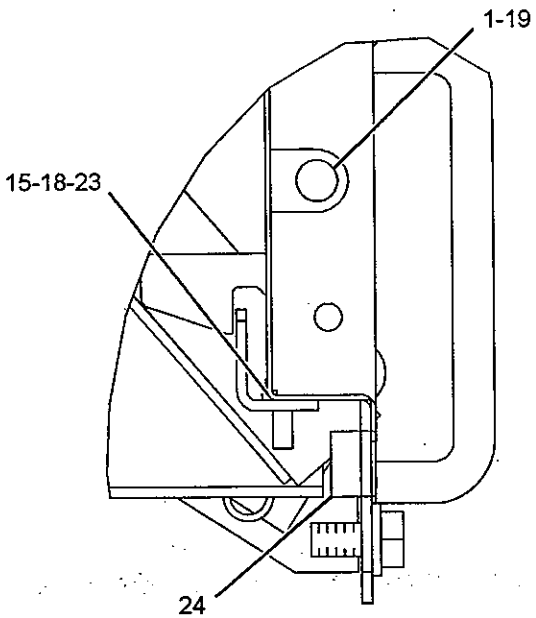


VIEW OF AREA A

GRAPHIC #2

**<END>**

g01141837

# FRAME AND BODY

## 231-3500 FENDER GP

S/N: JMS1-UP

PART OF 225-5538 CHASSIS AR

SMCS-7252

i02279106

| NOTE | REF NO | GRAPHIC REF | PART NUMBER | QTY | PART NAME 1 2 3 4 5 6 (PRODUCT LEVEL) | SEE PAGE |
|---|---|---|---|---|---|---|
| | 1 | 2 | 5R-4787 | 2 | PLATE | |
| | 2 | 1 | 113-9497 | 2 | FLAP | |
| | 3 | 1 | 115-7441 | 3 | STRIP | |
| | 4 | 1 | 179-1453 | 1 | FENDER AS-FRONT (LH) | |
| | 5 | 1 | 179-1454 | 1 | FENDER AS-FRONT (RH) | |
| | 6 | 1 | 232-4638 | 1 | FENDER AS-REAR (FRONT SECTION, LH) | |
| M | | 1 | 8T-3490 | 15 | NUT-WELD (M10X1.5-THD) | |
| | 7 | 1 | 232-4639 | 1 | FENDER AS-REAR (FRONT SECTION, RH) | |
| M | | 1 | 8T-3490 | 22 | NUT-WELD (M10X1.5-THD) | |
| | 8 | 1,2 | 233-7056 | 2 | BRACKET (RH) | |
| | 9 | 1 | 234-5104 | 1 | DEFLECTOR (LH) | |
| | 10 | 1 | 234-5105 | 1 | DEFLECTOR (RH) | |
| | 11 | 1 | 234-5108 | 1 | FLAP | |
| | 12 | 1 | 235-0554 | 1 | SUPPORT AS (LH) | |
| M | | 1 | 7X-0752 | 4 | BOSS-WELD (M10X1.5X65-MM OAL) | |
| M | | 1 | 8T-3490 | 16 | NUT-WELD (M10X1.5-THD) | |
| M | | 1 | 8T-3851 | 1 | BOSS-WELD (M10X1.5X17.5-MM) | |
| M | | 1 | 112-9073 | 2 | STUD-WELD (M12X1.75X21.1-MM) | |
| | 13 | 1 | 235-0555 | 1 | SUPPORT AS (RH) | |
| M | | 1 | 8T-3490 | 16 | NUT-WELD (M10X1.5-THD) | |
| M | | 1 | 8T-3851 | 2 | BOSS-WELD (M10X1.5X17.5-MM) | |
| M | | 1 | 112-9073 | 2 | STUD-WELD (M12X1.75X21.1-MM) | |
| | 14 | 2 | 235-1045 | 1 | DEFLECTOR (RH) | |
| | 15 | 1 | 236-5686 | 1 | FENDER (REAR SECTION, LH) | |
| | 16 | 1 | 236-5687 | 1 | FENDER (REAR SECTION, RH) | |
| | 17 | 1 | 236-5688 | 1 | DEFLECTOR (LH) | |
| | 18 | 1 | 236-5689 | 1 | DEFLECTOR (RH) | |
| | 19 | 1 | 251-7119 | 1 | SUPPORT | |
| | 20 | 1 | 251-7117 | 1 | SUPPORT AS | |
| M | 21 | 1 | 131-3540 | 18 | LOCKNUT (M8X1.25-THD) | |
| | 22 | 1,2 | 5P-1076 | 12 | WASHER-HARD (13.5X30X4-MM THK) | |
| | 23 | 1 | 7X-0579 | 36 | WASHER-HARD (8.8X25.5X2-MM THK) | |
| | 24 | 1,2 | 7X-7729 | 90 | WASHER (11X25X3-MM THK) | |
| M | 25 | 1,2 | 8T-0389 | 14 | LOCKNUT (M10X1.5-THD) | |
| M | 26 | 1 | 8T-4133 | 19 | NUT (M10X1.5-THD) | |
| M | 27 | 2 | 8T-4139 | 8 | BOLT (M12X1.75X30-MM) | |
| M | 28 | 1 | 8T-4186 | 18 | BOLT (M10X1.5X40-MM) | |
| M | 29 | 1,2 | 8T-4195 | 49 | BOLT (M10X1.5X30-MM) | |
| M | 30 | 1 | 8T-4244 | 4 | NUT (M12X1.75-THD) | |
| M | 31 | 1 | 8T-7547 | 18 | BOLT (M8X1.25X30-MM) | |
| | 32 | 1,2 | 9M-5884 | 6 | BUMPER | |
| | 33 | 1 | 254-2313 | 1 | SUPPORT | |
| | 34 | 1 | 254-2314 | 1 | SUPPORT | |

M-METRIC PART

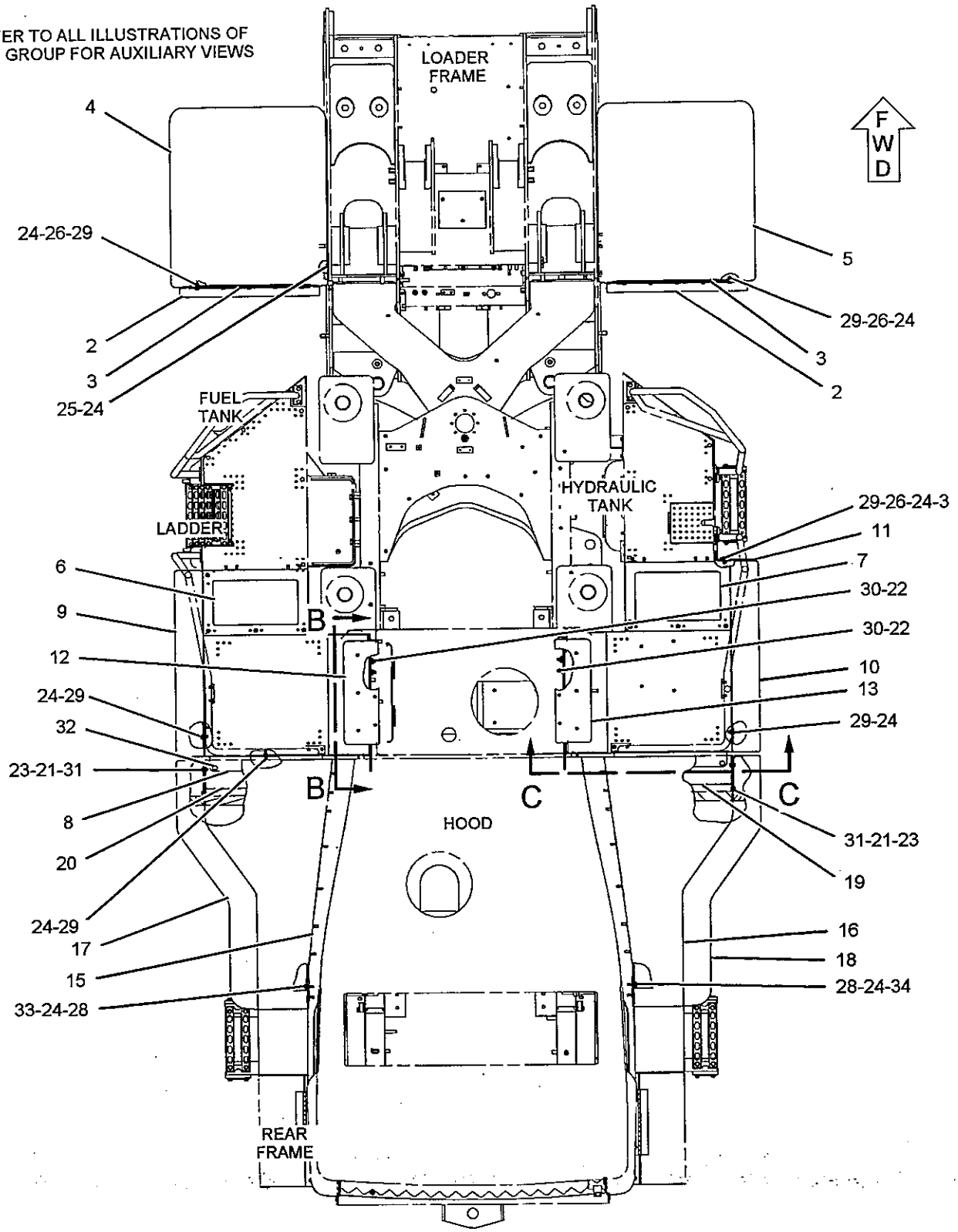


TOP VIEW

GRAPHIC #1 g01140942

*231-3500* **FENDER GP** *(contd.)* **i02279106**

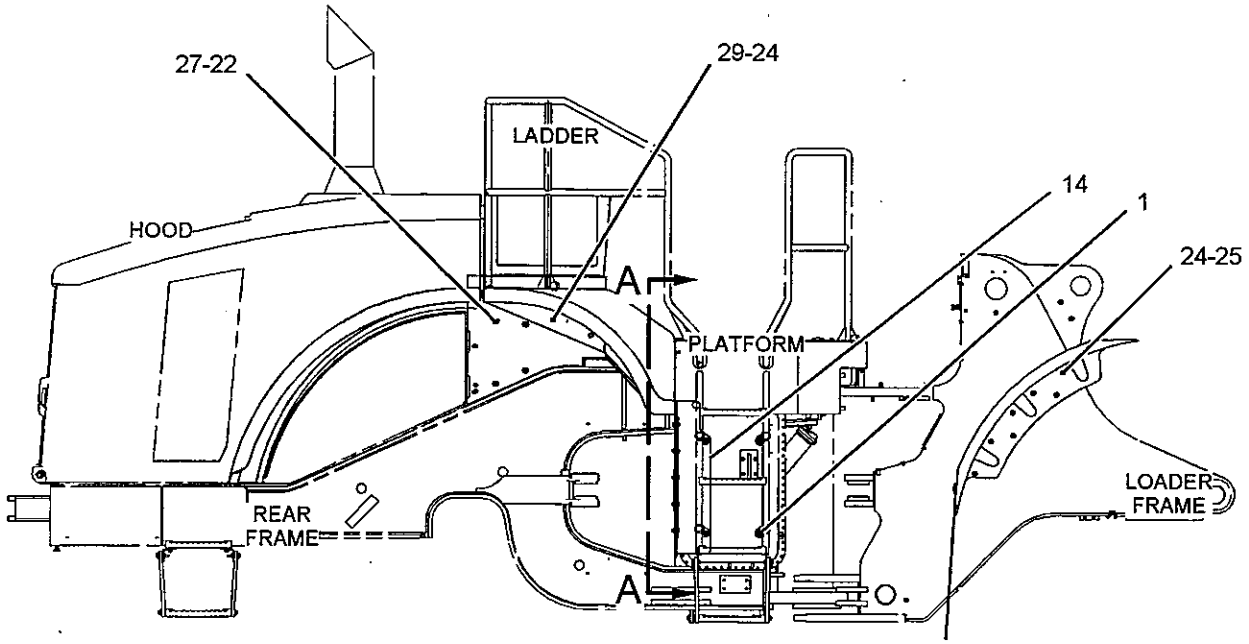


RIGHT SIDE VIEW

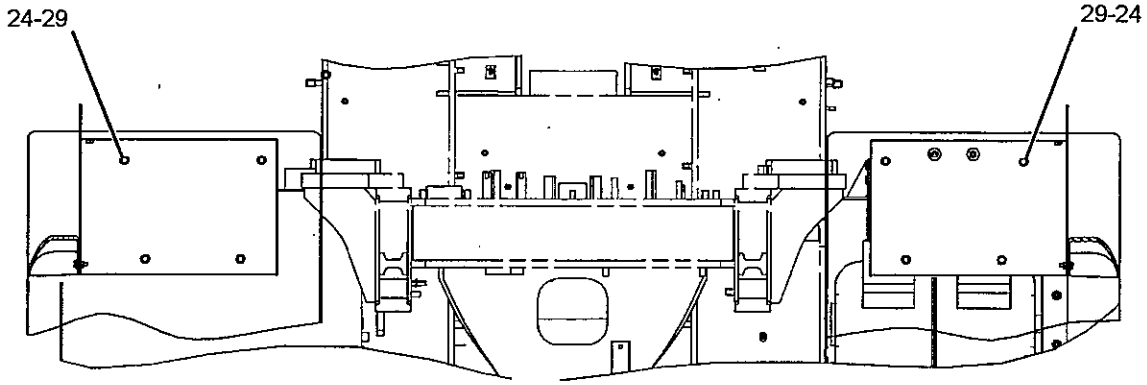


SECTION A-A

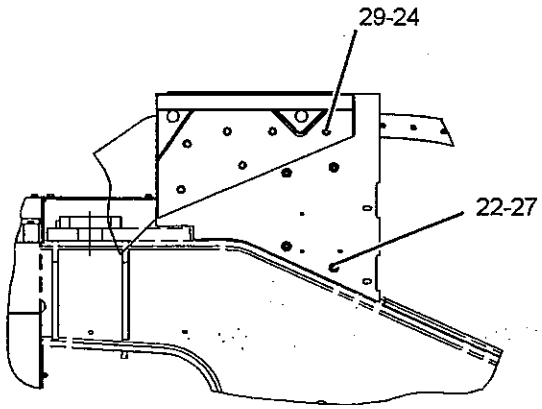


SECTION B-B

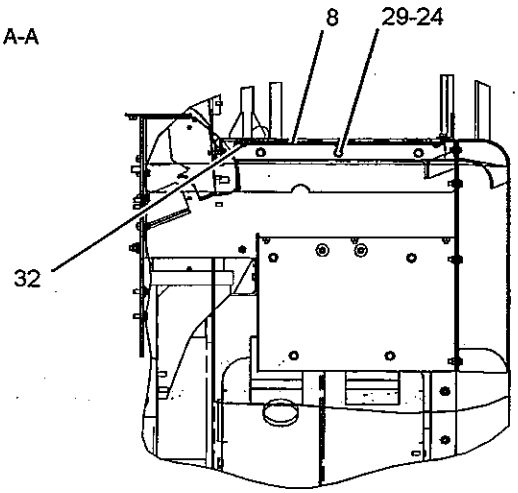


SECTION C-C

GRAPHIC #2

**<END>**

g01141429

# FRAME AND BODY

## *161-8204* FENDER GP-FRONT

**S/N: JMS1-UP**
**AN ATTACHMENT**

**SMCS-7252** **i02126824**

| NOTE | REF NO | GRAPHIC REF | PART NUMBER | QTY | PART NAME 1 2 3 4 5 6 (PRODUCT LEVEL) | SEE PAGE |
|---|---|---|---|---|---|---|
| | 1 | 1 | **169-4370** | 2 | FLAP | |
| | 2 | 1 | **161-8213** | 1 | FENDER AS-RH | |
| | 3 | 1 | **161-8216** | 1 | FENDER AS-LH | |
| | 4 | 1 | **161-8287** | 2 | ANGLE | |
| | 5 | 1 | **161-8289** | 4 | PLATE AS | |
| | | | | | (EACH INCLUDES) | |
| M | | 1 | **8T-7501** | 5 | STUD-WELD (M10X1.5X38-MM OAL) | |
| | 6 | 1 | **7X-7729** | 12 | WASHER (11X25X3-MM THK) | |
| M | 7 | 1 | **8T-0389** | 12 | LOCKNUT (M10X1.5-THD) | |
| | 8 | 1 | **8T-4121** | 20 | WASHER-HARD (11X21X2.5-MM THK) | |
| M | 9 | 1 | **8T-4133** | 20 | NUT (M10X1.5-THD) | |

M-METRIC PART

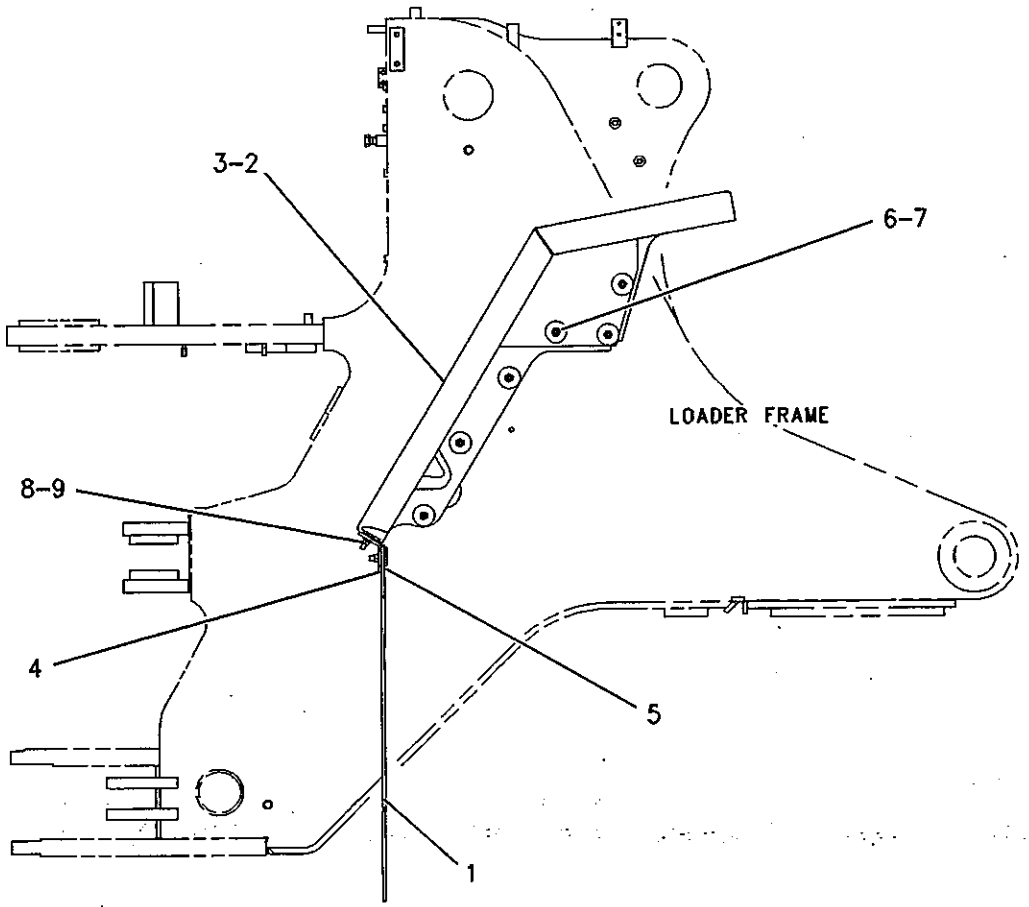


GRAPHIC #1

**<END>**

g00527010

# 246-8119 FENDER GP-FRONT

**S/N: JMS1-UP**
**PART OF 243-2046 WASTE HANDLING AR**
**AN ATTACHMENT**

**SMCS-7252** **i02090744**

| NOTE | REF NO | GRAPHIC REF | PART NUMBER | QTY | PART NAME 1 2 3 4 5 6 (PRODUCT LEVEL) | SEE PAGE |
|---|---|---|---|---|---|---|
| | 1 | 1 | 161-8213 | 1 | FENDER AS-RH | |
| | 2 | 1 | 161-8216 | 1 | FENDER AS-LH | |
| | 3 | 1 | 161-8287 | 2 | ANGLE | |
| | 4 | 1 | 161-8289 | 4 | PLATE AS | |
| | 5 | 1 | 169-4370 | 2 | FLAP | |
| | 6 | 1 | 7X-7729 | 12 | WASHER (11X25X3-MM THK) | |
| M | 7 | 1 | 8T-0389 | 12 | LOCKNUT (M10X1.5-THD) | |
| | 8 | 1 | 8T-4121 | 20 | WASHER-HARD (11X21X2.5-MM THK) | |
| M | 9 | 1 | 8T-4133 | 20 | NUT (M10X1.5-THD) | |
| M | 10 | 1 | 9X-2039 | 18 | SCREW-TRUSS HEAD | |
| M | 11 | 1 | 9X-2040 | 14 | SCREW-TRUSS HEAD | |

M-METRIC PART

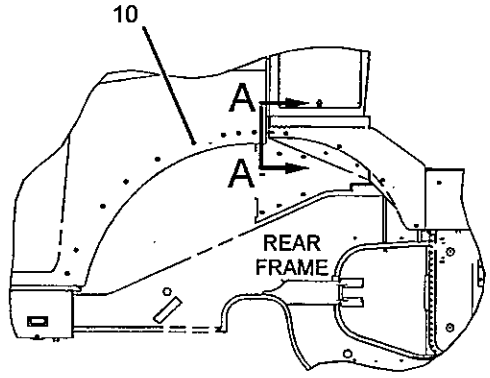


RIGHT SIDE VIEW

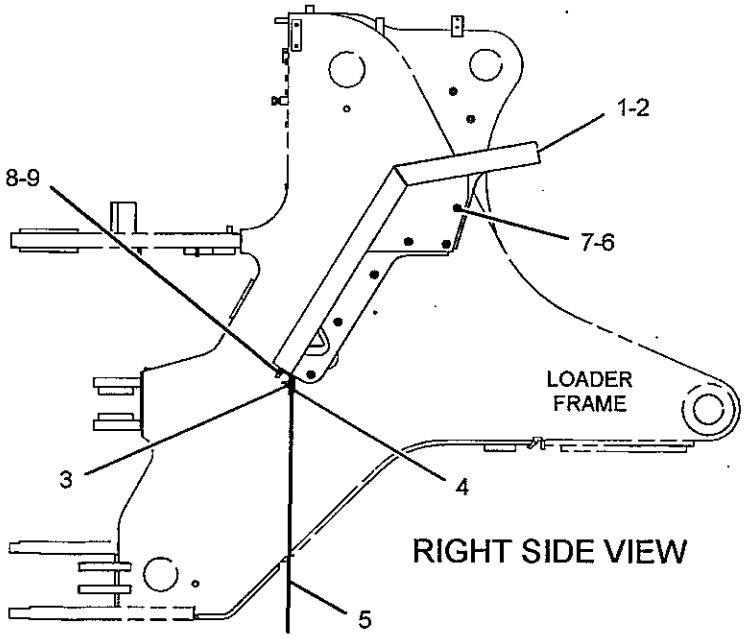


RIGHT SIDE VIEW

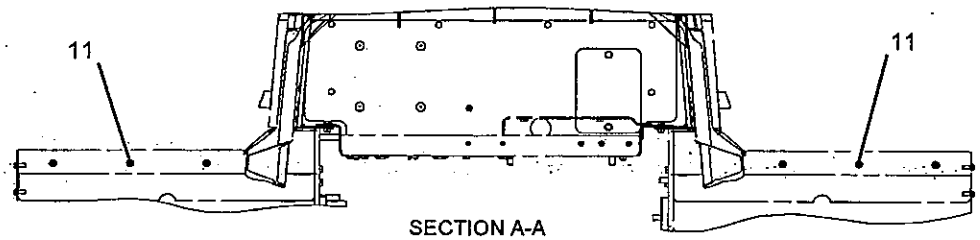


SECTION A-A

**<END>**

GRAPHIC #1 g01067166

# 236-5683 FENDER GP-ROADING

S/N: JMS1-UP
PART OF 246-8697 ROADING AR
AN ATTACHMENT

SMCS-7252 i02089909

| NOTE | REF NO | GRAPHIC REF | PART NUMBER | QTY | PART NAME 1 2 3 4 5 6 (PRODUCT LEVEL) | SEE PAGE |
|---|---|---|---|---|---|---|
| | 1 | 1 | 236-5690 | 1 | FENDER (LH) | |
| | 2 | 1 | 236-5691 | 1 | FENDER (RH) | |
| M | 3 | 1 | 131-3540 | 18 | LOCKNUT (M8X1.25-THD) | |
| | 4 | 1 | 7X-0579 | 36 | WASHER-HARD (8.8X25.5X2-MM THK) | |
| M | 5 | 1 | 8T-4908 | 18 | BOLT (M8X1.25X25-MM) | |

M-METRIC PART

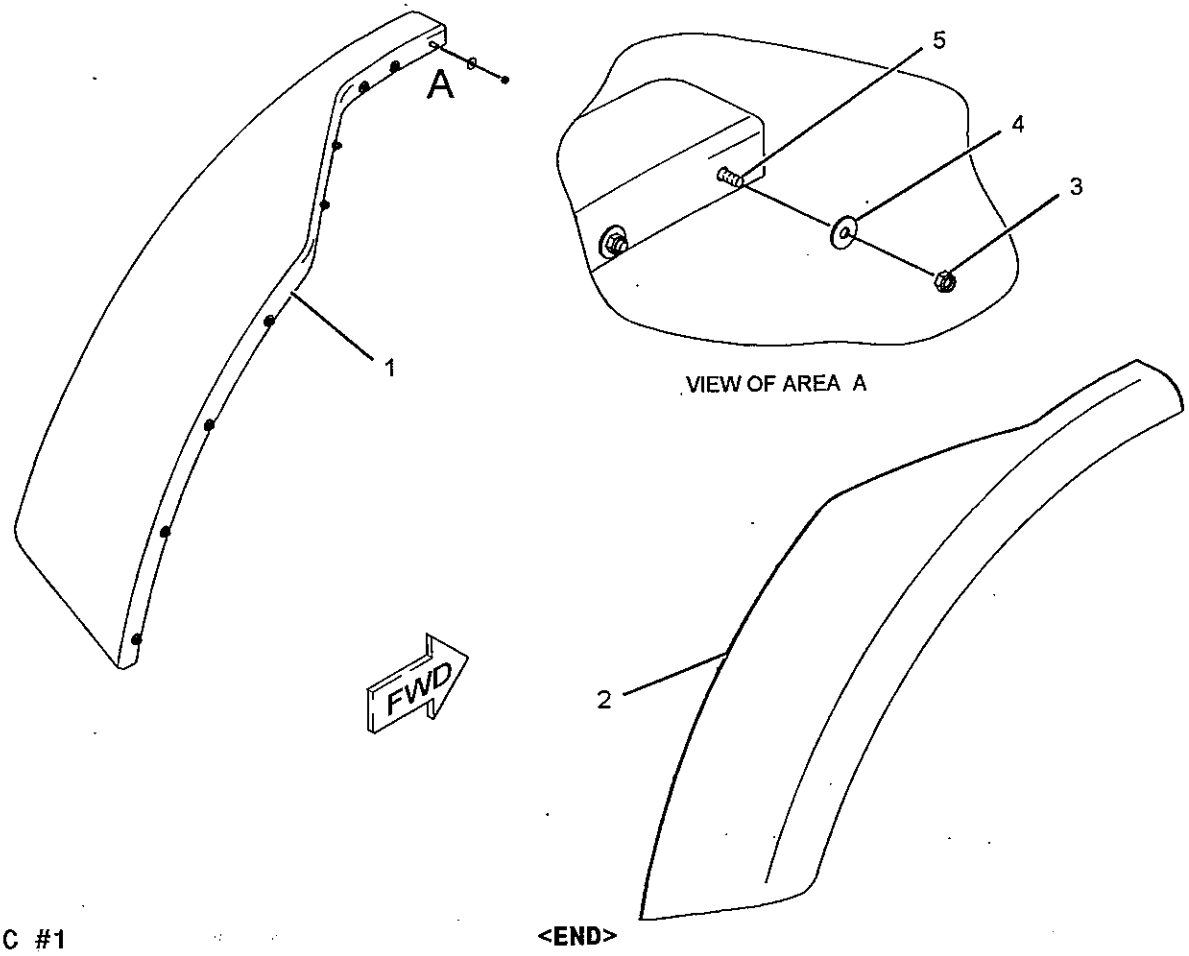


GRAPHIC #1

<END>

g01066433

# FRAME AND BODY

## 252-5680 FRAME AS-FRONT

S/N: JMS1-UP
PART OF 243-2046 WASTE HANDLING AR
AN ATTACHMENT

SMCS-7051

i02091826

| NOTE | REF NO | GRAPHIC REF | PART NUMBER | QTY | PART NAME 1 2 3 4 5 6 (PRODUCT LEVEL) | SEE PAGE |
|---|---|---|---|---|---|---|
| | 1 | 2 | 2R-1920 | 4 | BLOCK | |
| M | 2 | 1,2 | 8T-3851 | 39 | BOSS-WELD (M10X1.5X17.5-MM) | |
| M | 3 | 2 | 8T-4219 | 7 | STUD-WELD (M10X1.5X17.5-MM) | |
| | 4 | 2 | 9C-6809 | 2 | BLOCK | |
| | 5 | 1 | 9C-7863 | 2 | BLOCK | |
| | 6 | 1 | 9U-0853 | 1 | BAR | |
| | 7 | 2 | 9U-3893 | 1 | BRACKET | |
| | 8 | 1,2 | 087-6059 | 4 | BOSS | |
| M | 9 | 1,2 | 108-6966 | 4 | STUD-WELD (M20X2.5X29-MM) | |
| | 10 | 2 | 123-0713 | 1 | BRACKET AS | |
| M | | 2 | 8T-3597 | 3 | NUT-WELD (M12X1.75-THD) | |
| | 11 | 2 | 124-0230 | 2 | ANGLE AS | |
| M | | 2 | 8T-3490 | 4 | NUT-WELD (M10X1.5-THD) | |
| | 12 | 1 | 124-4813 | 1 | BRACKET AS | |
| | | 1 | 9U-3230 | 1 | SPACER | |
| | | 1 | 9U-3888 | 1 | SPACER | |
| | 13 | 2 | 132-6964 | 2 | PLATE | |
| | 14 | 2 | 168-9208 | 2 | BRACKET | |
| | 15 | 2 | 248-1161 | 2 | PLATE | |
| | 16 | 2 | 7T-1099 | 9 | LINK | |
| M | 17 | 1 | 7X-0750 | 2 | BOSS-WELD | |
| M | 18 | 2 | 8T-4967 | 14 | STUD-WELD (M10X1.5X23-MM OAL) | |
| M | 19 | 1,2 | 8T-7501 | 14 | STUD-WELD (M10X1.5X38-MM OAL) | |
| | 20 | 2 | 9R-2060 | 4 | BOSS (M10X1.5X21-MM OAL) | |
| | 21 | 2 | 9T-6943 | 1 | BLOCK | |

M-METRIC PART

252-5680 **FRAME AS-FRONT** *(contd.)* i02091826

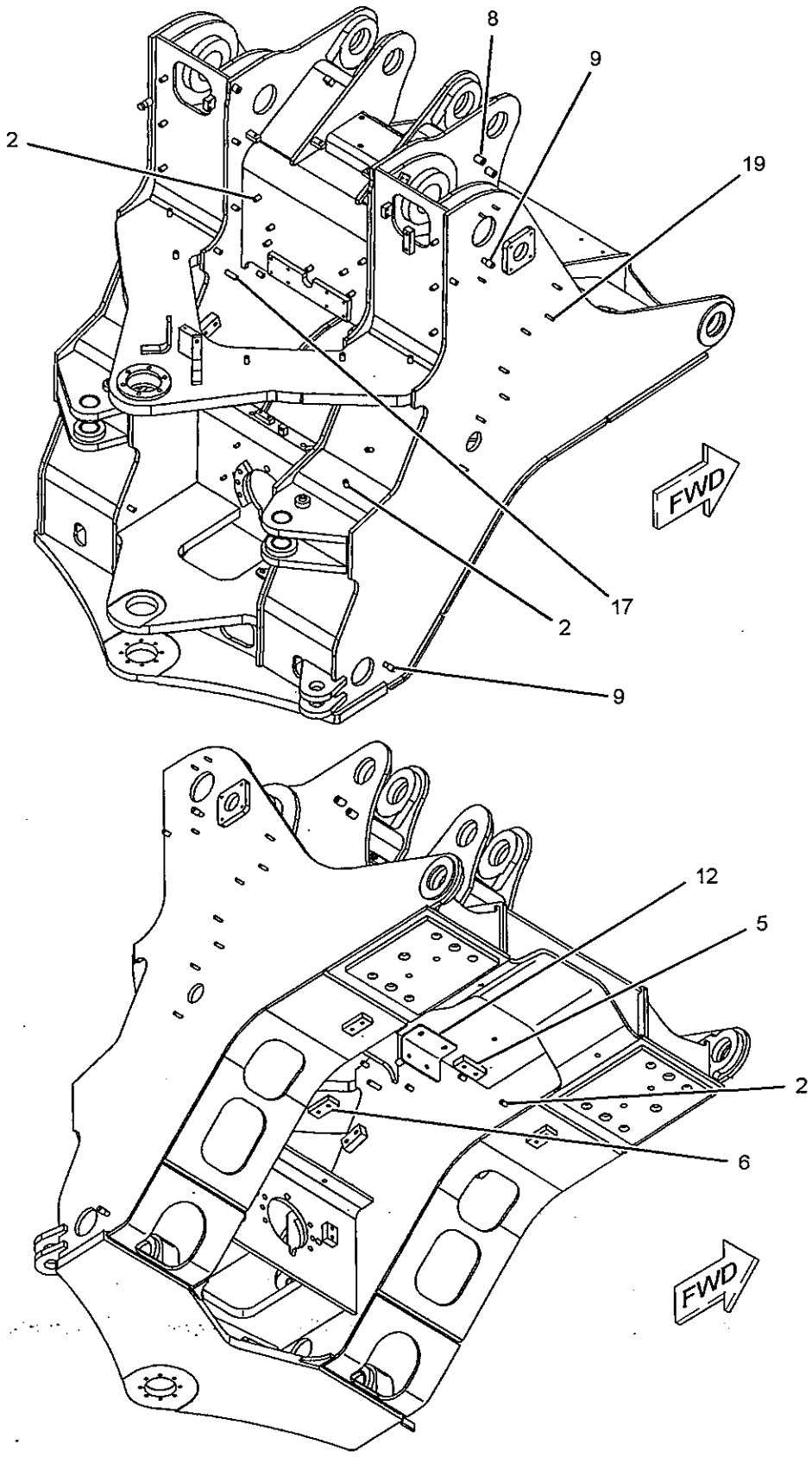


GRAPHIC #1 g01067107

## 252-5680 FRAME AS-FRONT *(contd.)*

i02091826

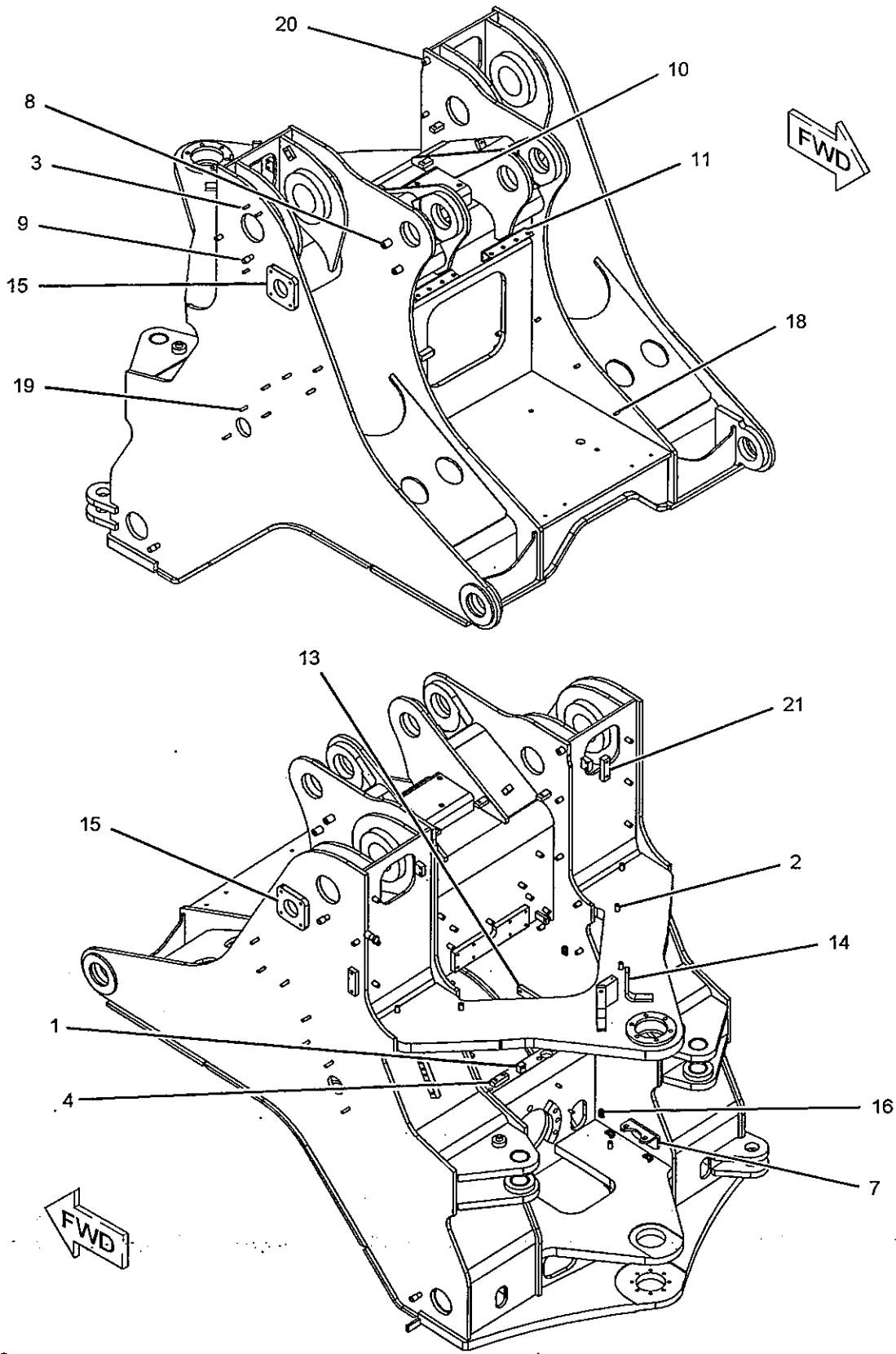


GRAPHIC #2

<END>

g01067108

# FRAME AND BODY

## 245-7477 FRAME AS-LOADER

S/N: JMS1-UP

PART OF 225-5538 CHASSIS AR

SMCS-7054

i02088652

| NOTE | REF NO | GRAPHIC REF | PART NUMBER | QTY | PART NAME 1 2 3 4 5 6 (PRODUCT LEVEL) | SEE PAGE |
|---|---|---|---|---|---|---|
| | 1 | 1 | 2R-1920 | 4 | BLOCK | |
| M | 3 | 1 | 8T-3851 | 40 | BOSS-WELD (M10X1.5X17.5-MM) | |
| M | 4 | 2 | 8T-4219 | 7 | STUD-WELD (M10X1.5X17.5-MM) | |
| | 5 | 2 | 9C-6809 | 2 | BLOCK | |
| | 6 | 1 | 9C-7863 | 2 | BLOCK | |
| | 7 | 2 | 9U-0853 | 1 | BAR | |
| | 8 | 1 | 9U-3893 | 1 | BRACKET | |
| | 9 | 1,2 | 087-6059 | 4 | BOSS | |
| M | 10 | 1,2 | 108-6966 | 4 | STUD-WELD (M20X2.5X29-MM) | |
| | 14 | 1 | 123-0713 | 1 | BRACKET AS | |
| M | | 1 | 8T-3597 | 3 | NUT-WELD (M12X1.75-THD) | |
| | 15 | 2 | 124-0230 | 2 | ANGLE AS | |
| | | | | | (EACH INCLUDES) | |
| M | | 2 | 8T-3490 | 4 | NUT-WELD (M10X1.5-THD) | |
| | 16 | 1 | 124-4813 | 1 | BRACKET AS | |
| | | 1 | 9U-3230 | 1 | SPACER | |
| | | 1 | 9U-3888 | 1 | SPACER | |
| | 19 | 1 | 132-6964 | 2 | PLATE | |
| | 20 | 1 | 168-9208 | 2 | BRACKET | |
| | 25 | 1,2 | 248-1161 | 2 | PLATE | |
| | 27 | 1 | 7T-1099 | 9 | LINK | |
| M | 28 | 2 | 7X-0750 | 2 | BOSS-WELD | |
| M | 29 | 2 | 8T-4967 | 14 | STUD-WELD (M10X1.5X23-MM OAL) | |
| M | 30 | 2 | 8T-7501 | 14 | STUD-WELD (M10X1.5X38-MM OAL) | |
| | 31 | 2 | 9R-2060 | 4 | BOSS (M10X1.5X21-MM OAL) | |
| | 32 | 1 | 9T-6943 | 1 | BLOCK | |

M-METRIC PART

245-7477 **FRAME AS-LOADER** *(contd.)* i02088652

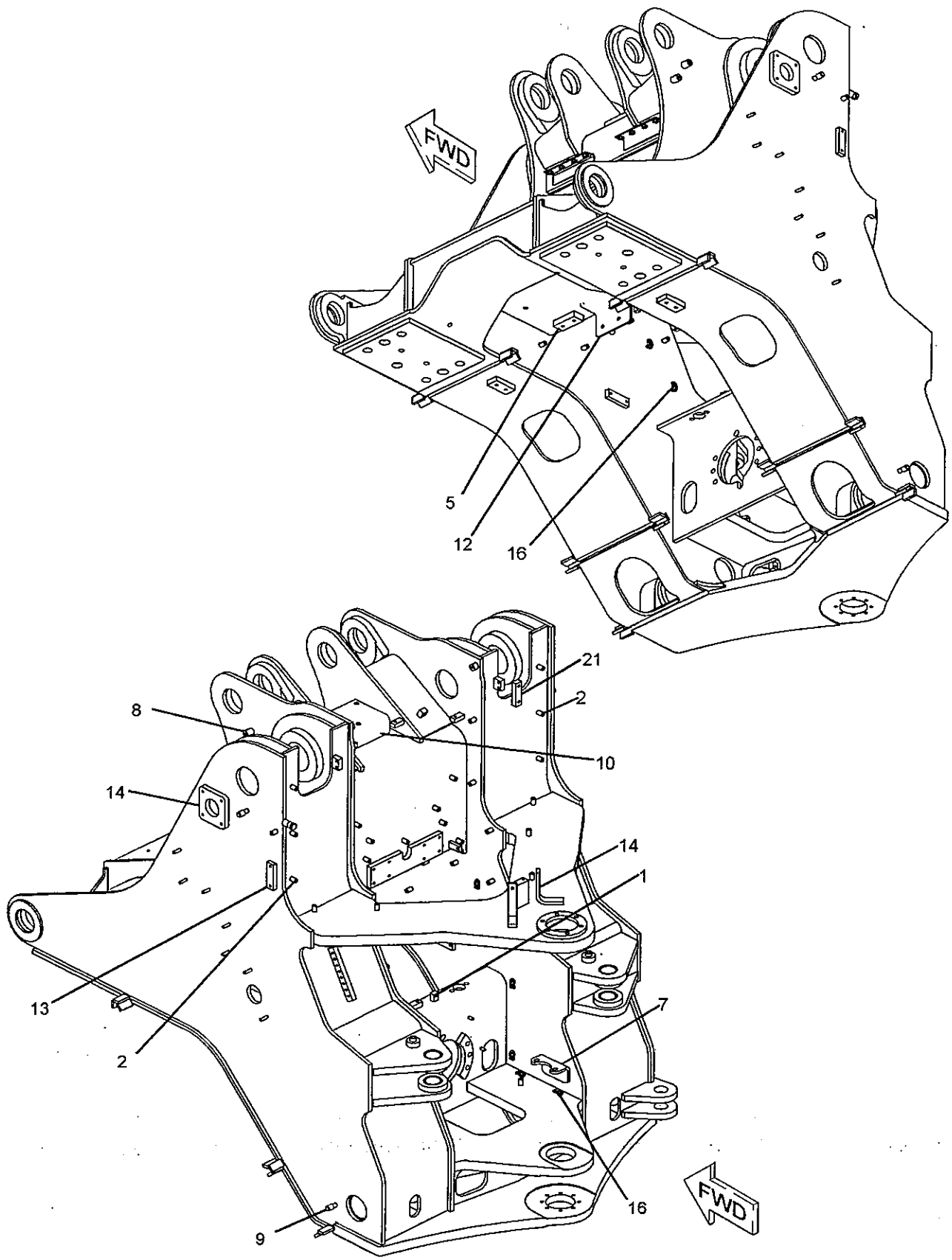


GRAPHIC #1 g01067353

## 245-7477 FRAME AS-LOADER *(contd.)*

i02088652

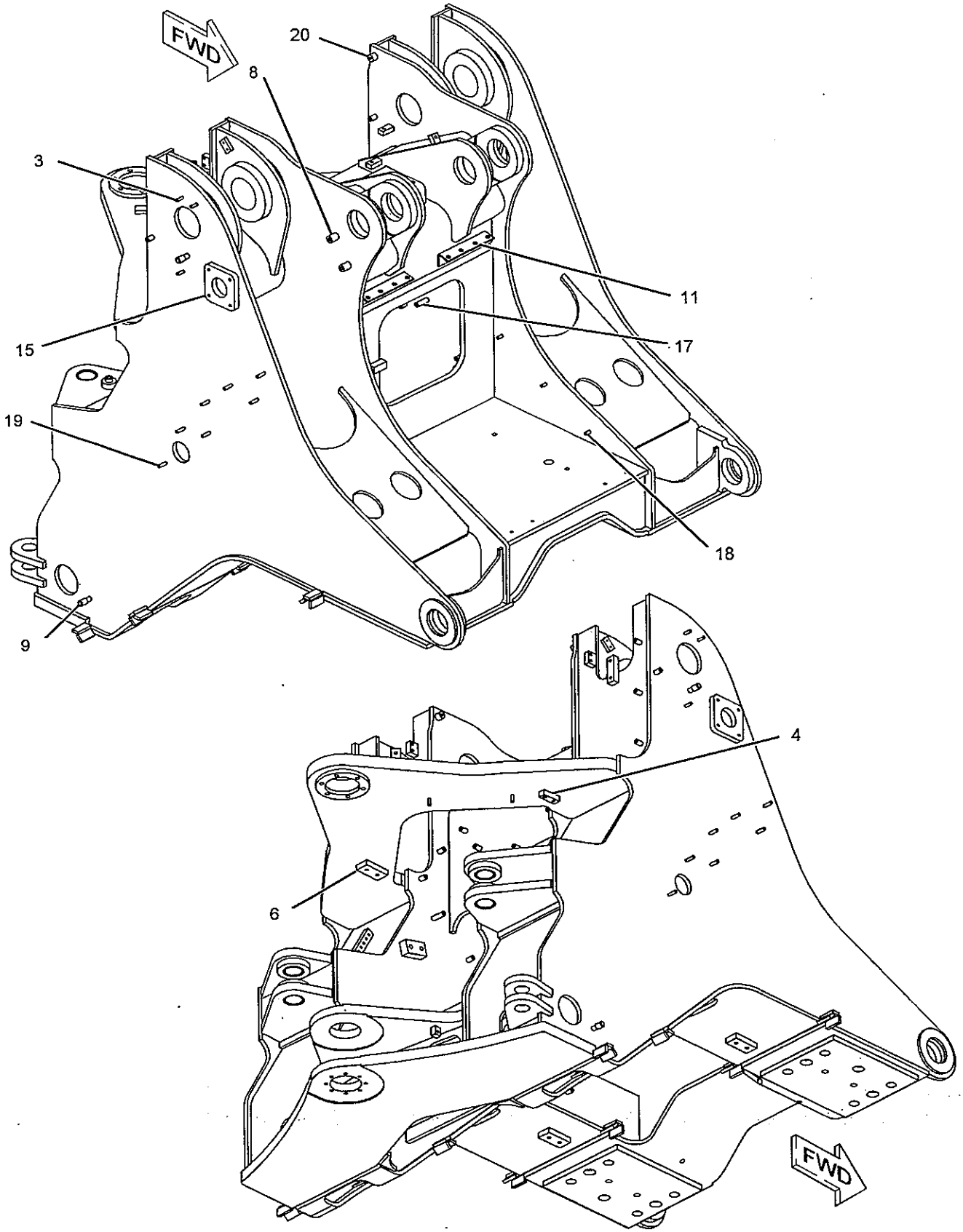


GRAPHIC #2

<END>

g01067354

# FRAME AND BODY

## 228-0909 FRAME AS-REAR

**S/N: JMS1-UP**

**PART OF 225-5538 CHASSIS AR**

**SMCS-7051** **i02088597**

| NOTE | REF NO | GRAPHIC REF | PART NUMBER | QTY | PART NAME 1 2 3 4 5 6 (PRODUCT LEVEL) | SEE PAGE |
|---|---|---|---|---|---|---|
| | 1 | 1 | **228-0908** | 1 | FRAME AS | |
| | | 1 | **7K-1972** | 2 | EYE | |
| | | 1 | **9U-0853** | 1 | BAR | |
| | | 1 | **117-9369** | 2 | BRACKET | |
| | | | | | (EACH INCLUDES) | |
| | | 1 | **8P-0420** | 2 | BEARING | |
| | 2 | 1 | **087-5140** | 1 | PLATE | |
| M | 3 | 1 | **110-2023** | 8 | STUD-WELD (M10X1.5X25-MM) | |
| M | 4 | 1 | **112-9073** | 8 | STUD-WELD (M12X1.75X21.1-MM) | |
| | 5 | 1 | **132-6964** | 3 | PLATE | |
| | 6 | 1 | **4I-6289** | 2 | PLATE | |
| | 7 | 1 | **7T-1099** | 4 | LINK | |
| M | 8 | 1 | **7X-0750** | 7 | BOSS-WELD | |
| M | 9 | 1 | **7X-0752** | 13 | BOSS-WELD (M10X1.5X65-MM OAL) | |
| M | 10 | 1 | **8T-3635** | 6 | STUD-WELD (M12X1.75X34.93-MM OAL) | |
| M | 11 | 1 | **8T-3734** | 1 | BOSS-WELD (M10X1.5X40-MM) | |
| M | 12 | 1 | **8T-3851** | 68 | BOSS-WELD (M10X1.5X17.5-MM) | |
| M | 13 | 1 | **8T-4935** | 4 | BOSS-WELD (M10X1.5X45-MM OAL) | |
| M | 14 | 1 | **8T-4967** | 3 | STUD-WELD (M10X1.5X23-MM OAL) | |
| M | 15 | 1 | **8T-7501** | 2 | STUD-WELD (M10X1.5X38-MM OAL) | |
| | 16 | 1 | **8X-5147** | 4 | BLOCK | |
| | 17 | 1 | **9C-7929** | 1 | BLOCK | |
| | 18 | 1 | **9R-9866** | 1 | BOSS (M10X1.5X45-MM) | |
| M | 19 | 1 | **9X-8487** | 2 | BOSS-WELD (M10X1.5X35-MM) | |

M-METRIC PART

## 228-0909 FRAME AS-REAR *(contd.)*

i02088597

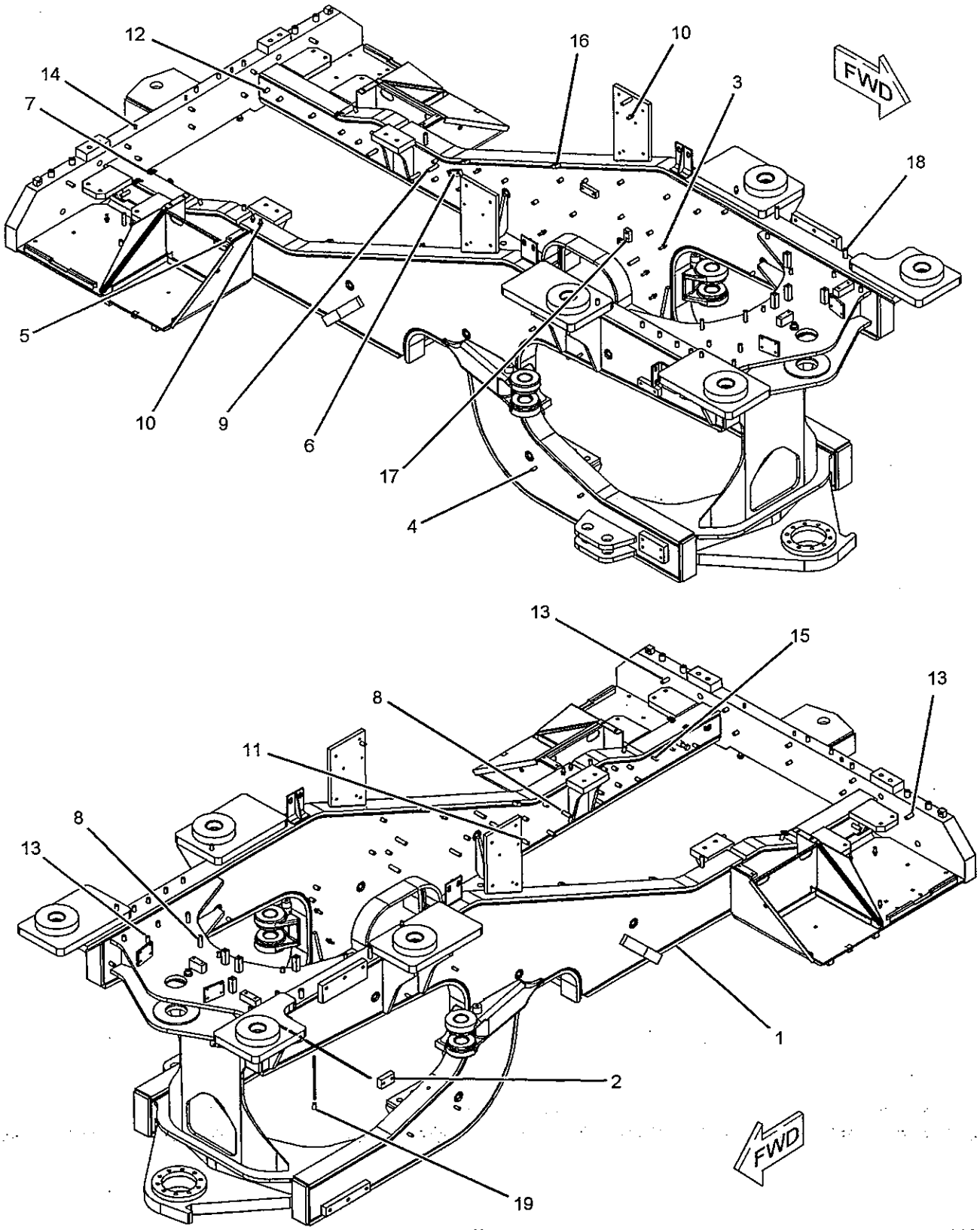


GRAPHIC #1

**<END>**

g01067233

# FRAME AND BODY

## 234-9599 GRILL GP-RADIATOR

**S/N: JMS1-UP**

**PART OF 234-9757 HOOD & GUARD GP**

**SMCS-7170**

**i02279164**

| NOTE | REF NO | GRAPHIC REF | PART NUMBER | QTY | PART NAME 1 2 3 4 5 6 (PRODUCT LEVEL) | SEE PAGE |
|---|---|---|---|---|---|---|
| | 1 | 1 | **174-3086** | 1 | PIN AS | |
| | 2 | 1 | **234-3402** | 1 | LATCH AS | |
| | 3 | 1 | **248-2171** | 1 | HANDLE AS | |
| | 4 | 1 | **234-9600** | 1 | GRILL AS | |
| | | 1 | **174-3085** | 3 | HINGE AS | |
| | 5 | 1 | **236-9939** | 1 | PLATE AS | |
| | | 1 | **8T-4121** | 2 | WASHER-HARD (11X21X2.5-MM THK) | |
| | 6 | 1 | **245-4049** | 2 | BAFFLE | |
| | 7 | 1 | **245-4062** | 1 | SCREEN AS (RADIATOR) | |
| | 8 | 1 | **096-3781** | 1 | PIN-CLEVIS | |
| | 9 | 1 | **3B-4615** | 1 | PIN-COTTER | |
| | 10 | 1 | **7X-7729** | 11 | WASHER (11X25X3-MM THK) | |
| | 11 | 1 | **8T-4121** | 2 | WASHER-HARD (11X21X2.5-MM THK) | |
| M | 12 | 1 | **8T-4133** | 3 | NUT (M10X1.5-THD) | |
| M | 13 | 1 | **8T-4136** | 8 | BOLT (M10X1.5X25-MM) | |
| M | 14 | 1 | **9X-2040** | 2 | SCREW-TRUSS HEAD (M10X1.5X25-MM) | |
| M | 15 | 1 | **9X-2045** | 8 | SCREW-TRUSS HEAD (M6X1X20-MM) | |
| D | 16 | 1 | **6V-2803** | | SEAL (1.02-M) | |

D-ORDER BY THE METER
M-METRIC PART

## 234-9599 GRILL GP-RADIATOR (contd.) i02279164

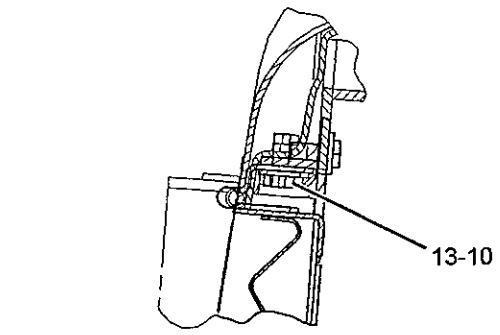


SECTION D-D

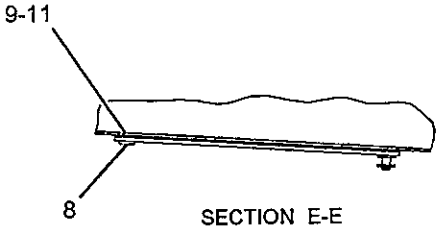


SECTION E-E

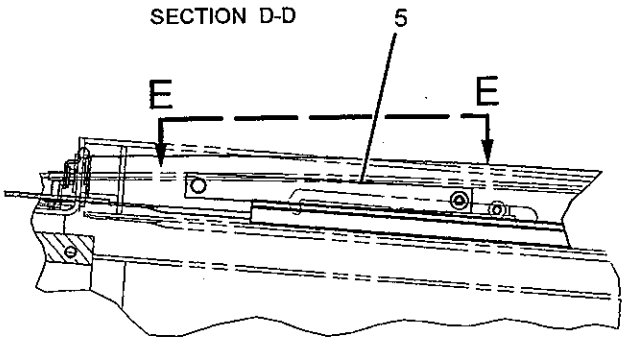


SECTION C-C

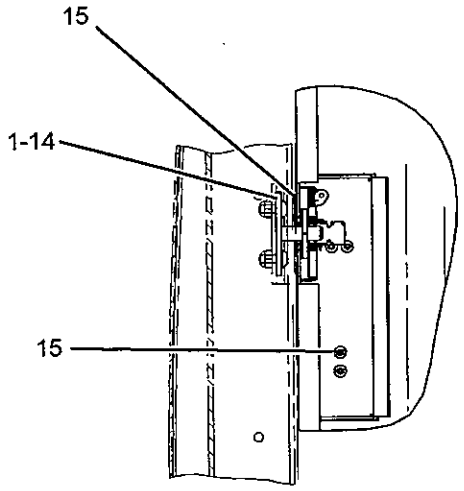


SECTION B-B

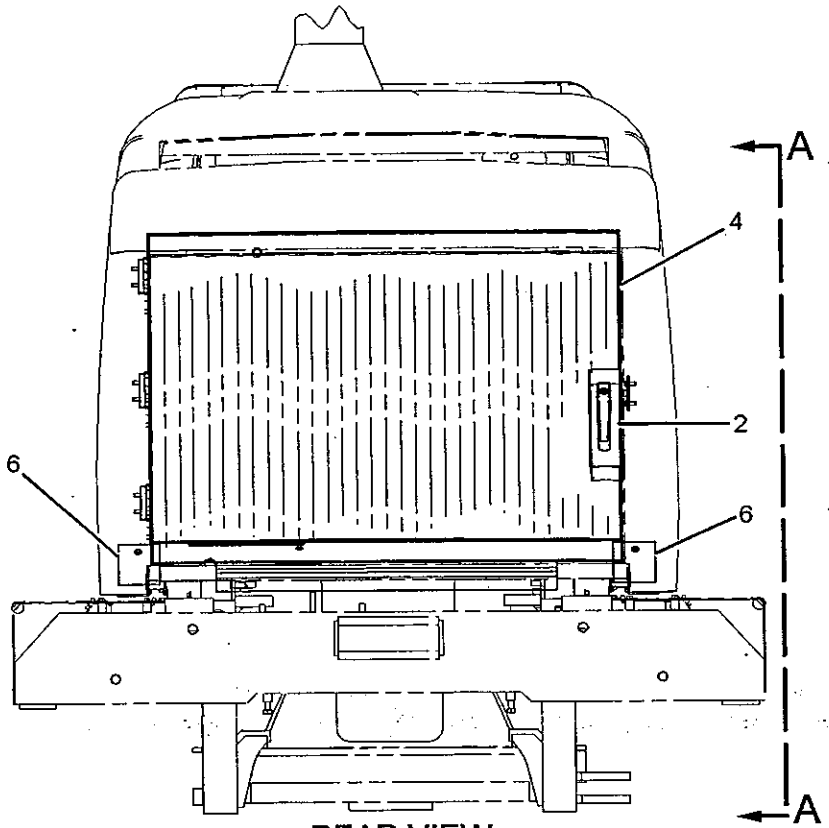


REAR VIEW

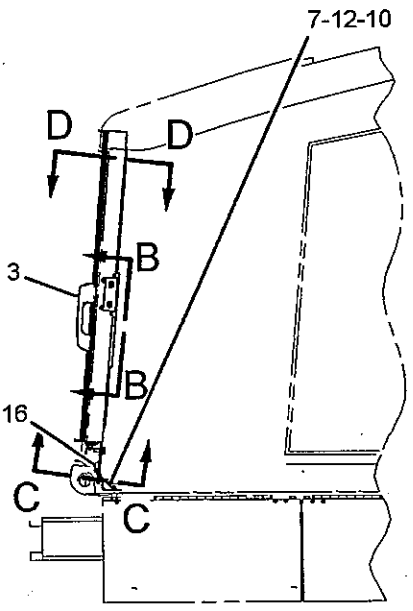


VIEW A-A

GRAPHIC #1 <END> g01065854

# 243-2048 GUARD GP-BOTTOM

S/N: JMS1-UP
PART OF 243-2046 WASTE HANDLING AR
AN ATTACHMENT

SMCS-7153

i02283593

| NOTE | REF NO | GRAPHIC REF | PART NUMBER | QTY | PART NAME 1 2 3 4 5 6 (PRODUCT LEVEL) | SEE PAGE |
|---|---|---|---|---|---|---|
| | 1 | 1 | 3B-4640 | 4 | PIN-COTTER | |
| | 2 | 1 | 4V-9824 | 2 | PIN | |
| | 3 | 1 | 7X-3151 | 4 | WASHER (17.5X63.5X9.6-MM THK) | |
| | 4 | 1 | 9S-1302 | 8 | WASHER (27X44.45X2.5-MM THK) | |
| | 5 | 1 | 119-7899 | 2 | SUPPORT AS | |
| | 6 | 1 | 119-7904 | 1 | GUARD AS | |
| M | | 1 | 8T-3490 | 8 | NUT-WELD (M10X1.5-THD) | |
| | 7 | 1 | 119-7906 | 1 | PLATE | |
| | 8 | 1 | 189-7926 | 1 | PLATE | |
| | 9 | 1 | 189-7927 | 1 | BAFFLE | |
| | 10 | 1 | 189-7928 | 1 | GUARD AS | |
| M | | 1 | 8T-3490 | 6 | NUT-WELD (M10X1.5-THD) | |
| | 11 | 1 | 256-3871 | 1 | GUARD AS | |
| | 12 | 1 | 256-3874 | 1 | GUARD AS | |
| | 13 | 1 | 251-9756 | 1 | GUARD AS | |
| M | 14 | 1 | 6V-7732 | 4 | BOLT (M10X1.5X25-MM) | |
| | 15 | 1 | 7X-0583 | 2 | WASHER-HARD (17X45X6-MM THK) | |
| | 16 | 1 | 7X-0593 | 6 | WASHER-HARD (34X57X6-MM THK) | |
| M | 17 | 1 | 7X-2549 | 2 | BOLT (M12X1.75X100-MM) | |
| | 18 | 1 | 7X-7729 | 4 | WASHER (11X25X3-MM THK) | |
| M | 19 | 1 | 8C-8723 | 6 | BOLT (M30X3.5X80-MM) | |
| M | 20 | 1 | 8T-4193 | 6 | BOLT (M16X2X50-MM) | |
| M | 21 | 1 | 8T-4195 | 10 | BOLT (M10X1.5X30-MM) | |
| | 22 | 1 | 8T-4222 | 6 | WASHER-PLATED (11X32X2.5-MM THK) | |
| | 23 | 1 | 8T-4223 | 2 | WASHER-HARD (13.5X25.5X3-MM THK) | |
| M | 24 | 1 | 8T-4244 | 2 | NUT (M12X1.75-THD) | |
| | 25 | 1 | 9C-2175 | 2 | PIN | |

M-METRIC PART

## 243-2048 GUARD GP-BOTTOM *(contd.)* i02283593

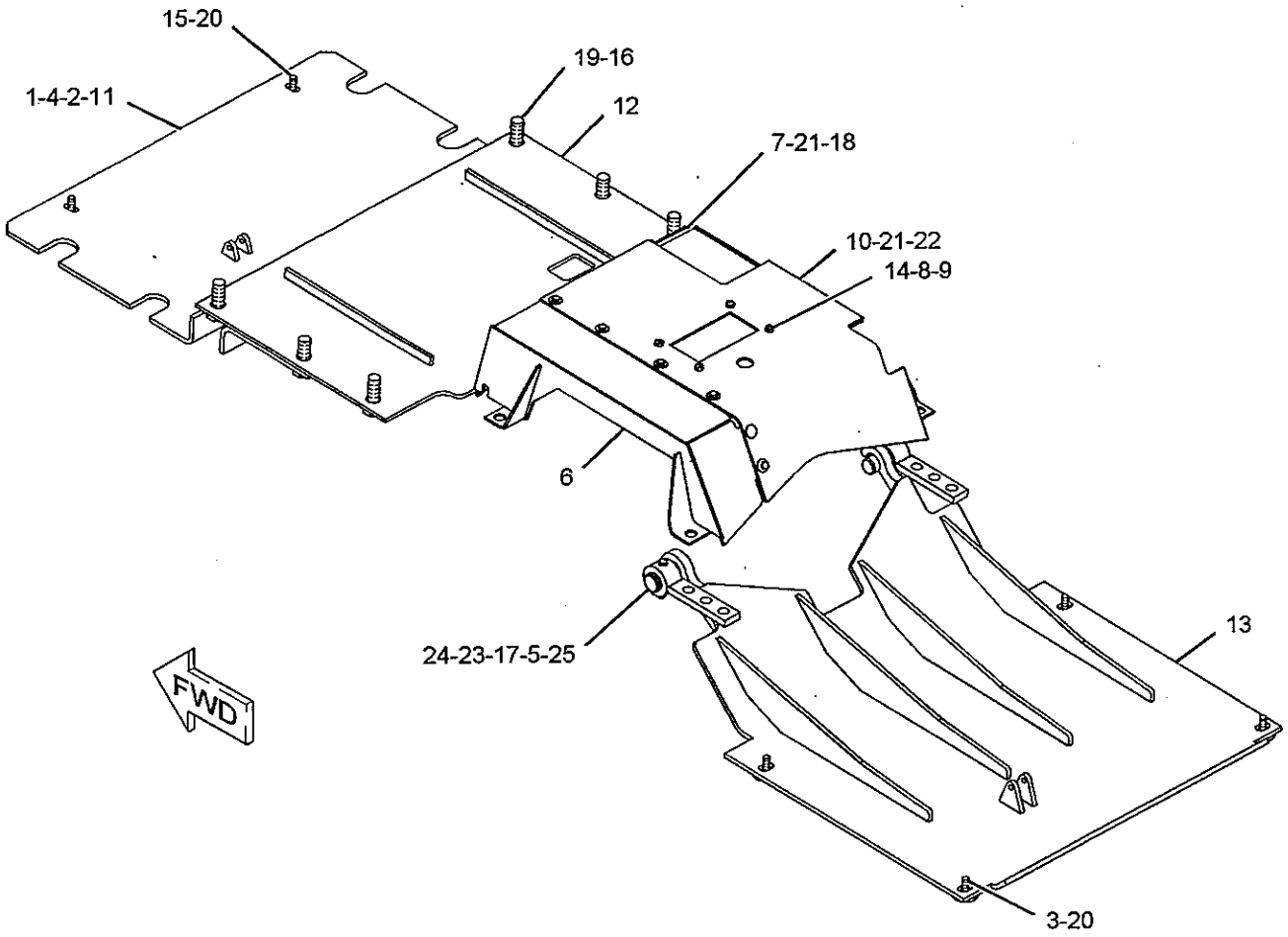


GRAPHIC #1 **<END>** g01144417

# FRAME AND BODY

## *175-4201* GUARD GP-CRANKCASE

**S/N: JMS1-UP**

**PART OF 225-5538 CHASSIS AR**

**SMCS-7151** **i01454958**

| NOTE | REF NO | GRAPHIC REF | PART NUMBER | QTY | PART NAME 1 2 3 4 5 6 (PRODUCT LEVEL) | SEE PAGE |
|---|---|---|---|---|---|---|
| M | 1 | 1 | 8C-8723 | 4 | BOLT (M30X3.5X80MM) | |
| | 2 | 1 | 176-7337 | 1 | PLATE AS | |
| | 3 | 1 | 9X-8258 | 4 | WASHER (33X56X6MM THK) | |

M-METRIC PART

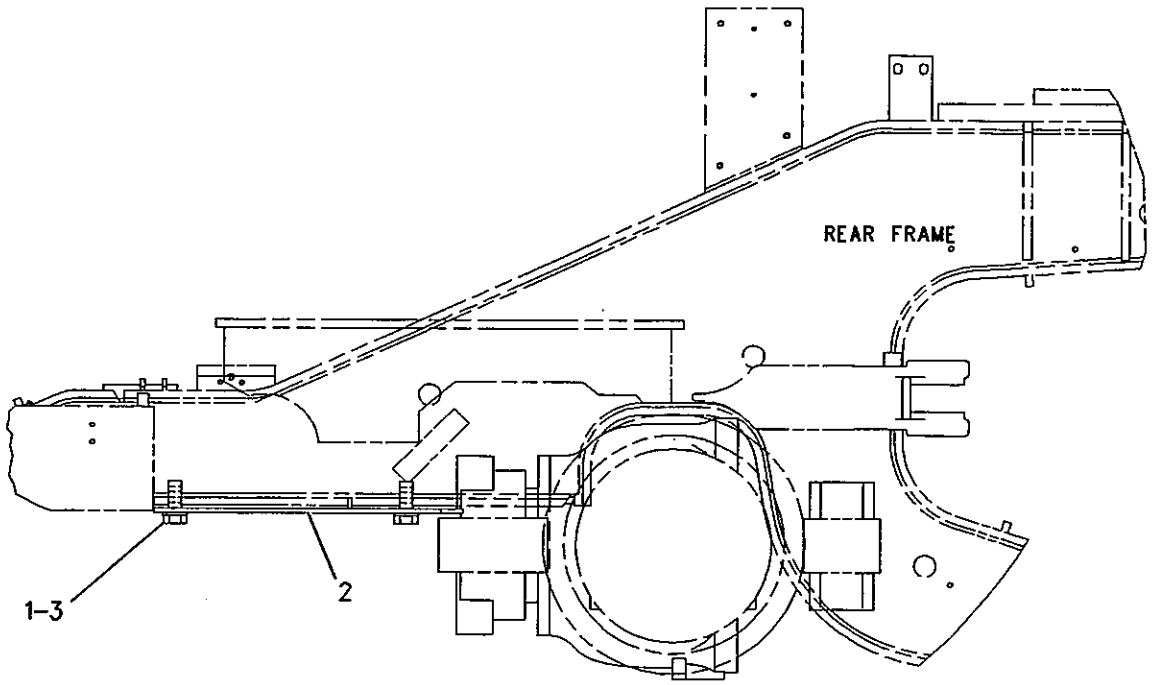


GRAPHIC #1 **<END>** g00760964

# FRAME AND BODY

## *206-2758* GUARD GP-CRANKCASE

**S/N: JMS1-UP**

**PART OF 233-9749 COOLER AR-AXLE OIL**

**AN ATTACHMENT**

**SMCS-7151** **i01596136**

| NOTE | REF NO | GRAPHIC REF | PART NUMBER | QTY | PART NAME 1 2 3 4 5 6 (PRODUCT LEVEL) | SEE PAGE |
|---|---|---|---|---|---|---|
| | 1 | 1 | **206-2719** | 1 | GUARD AS | |
| | 2 | 1 | **207-6133** | 1 | INSULATION | |
| M | 3 | 1 | **8C-8723** | 4 | BOLT (M30X3.5X80MM) | |
| | 4 | 1 | **9X-8258** | 4 | WASHER (33X56X6MM THK) | |

M-METRIC PART

206-2758 **GUARD GP-CRANKCASE** *(contd.)* i01596136

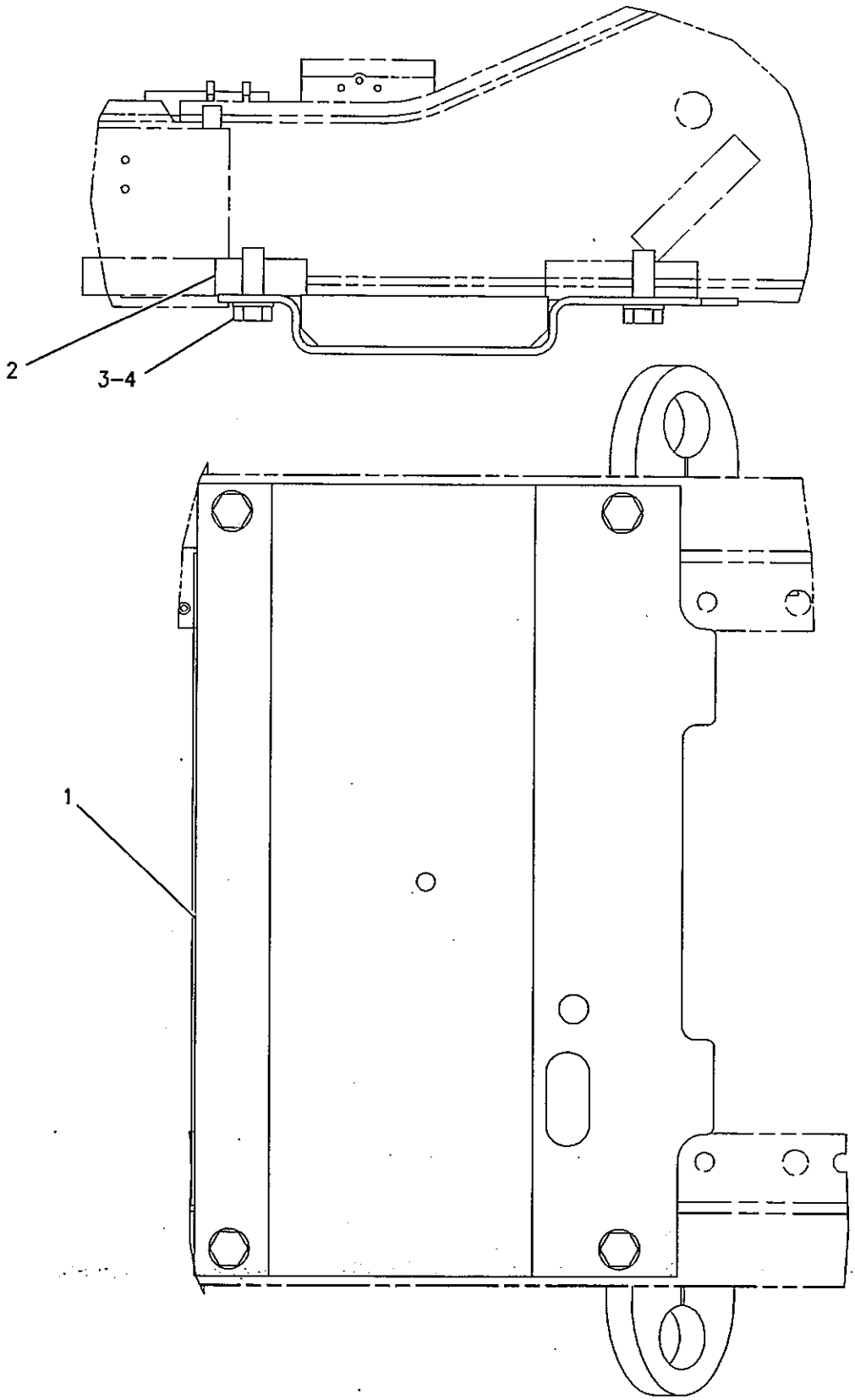


GRAPHIC #1

<END>

g00829163

# FRAME AND BODY

## *2Q-7713* GUARD GP-DRIVE SHAFT

**S/N: JMS1-UP**
**PART OF 243-2046 WASTE HANDLING AR**
**AN ATTACHMENT**

**SMCS-7153**

**i00947777**

| NOTE | PART NUMBER | QTY | PART NAME 1 2 3 4 5 6 (PRODUCT LEVEL) | SEE PAGE |
|---|---|---|---|---|
| M | 8T-4192 | 10 | BOLT (M12X1.75X25-MM) | |
| | 2Q-7719 | 1 | CHANNEL AS | |
| | 2Q-7720 | 1 | CHANNEL AS | |
| M | 8T-3597 | 6 | NUT-WELD (M12X1.75-THD) | |
| M | 8T-4244 | 2 | NUT (M12X1.75-THD) | |
| | 145-8045 | 1 | U-BOLT | |
| | 8T-4223 | 12 | WASHER-HARD (13.5X25.5X3-MM THK) | |

M-METRIC PART

**<END>**

# FRAME AND BODY

## 210-1759 GUARD GP-FRONT

**S/N: JMS1-UP**

**PART OF 225-5538 CHASSIS AR**

**SMCS-7167**

**i01602343**

| NOTE | REF NO | GRAPHIC REF | PART NUMBER | QTY | PART NAME 1 2 3 4 5 6 (PRODUCT LEVEL) | SEE PAGE |
|---|---|---|---|---|---|---|
| | 1 | 1 | 127-5680 | 1 | ANGLE AS | |
| | 2 | 1 | 145-5027 | 1 | SHEET AS | |
| M | | 1 | 6V-9632 | 7 | NUT-WELD (M6X1 THD) | |
| | 3 | 1 | 145-5028 | 1 | PLATE | |
| | 4 | 1 | 145-6928 | 1 | SHEET AS | |
| M | | 1 | 8T-3490 | 2 | NUT-WELD (M10X1.5-THD) | |
| | 5 | 1 | 145-6930 | 1 | SHEET AS | |
| M | | 1 | 8T-3490 | 2 | NUT-WELD (M10X1.5-THD) | |
| | 6 | 1 | 203-4249 | 1 | CHANNEL (LH) | |
| | 7 | 1 | 203-4250 | 1 | CHANNEL (RH) | |
| | 8 | 1 | 206-8611 | 1 | COVER | |
| | 9 | 1 | 8T-4121 | 22 | WASHER-HARD (11X21X2.5-MM THK) | |
| M | 10 | 1 | 8T-4133 | 6 | NUT (M10X1.5-THD) | |
| M | 11 | 1 | 8T-4136 | 16 | BOLT (M10X1.5X25-MM) | |
| M | 12 | 1 | 8T-4138 | 7 | BOLT (M6X1X20-MM) | |
| | 13 | 1 | 9X-8256 | 7 | WASHER (6.6X12X2-MM THK) | |

M-METRIC PART

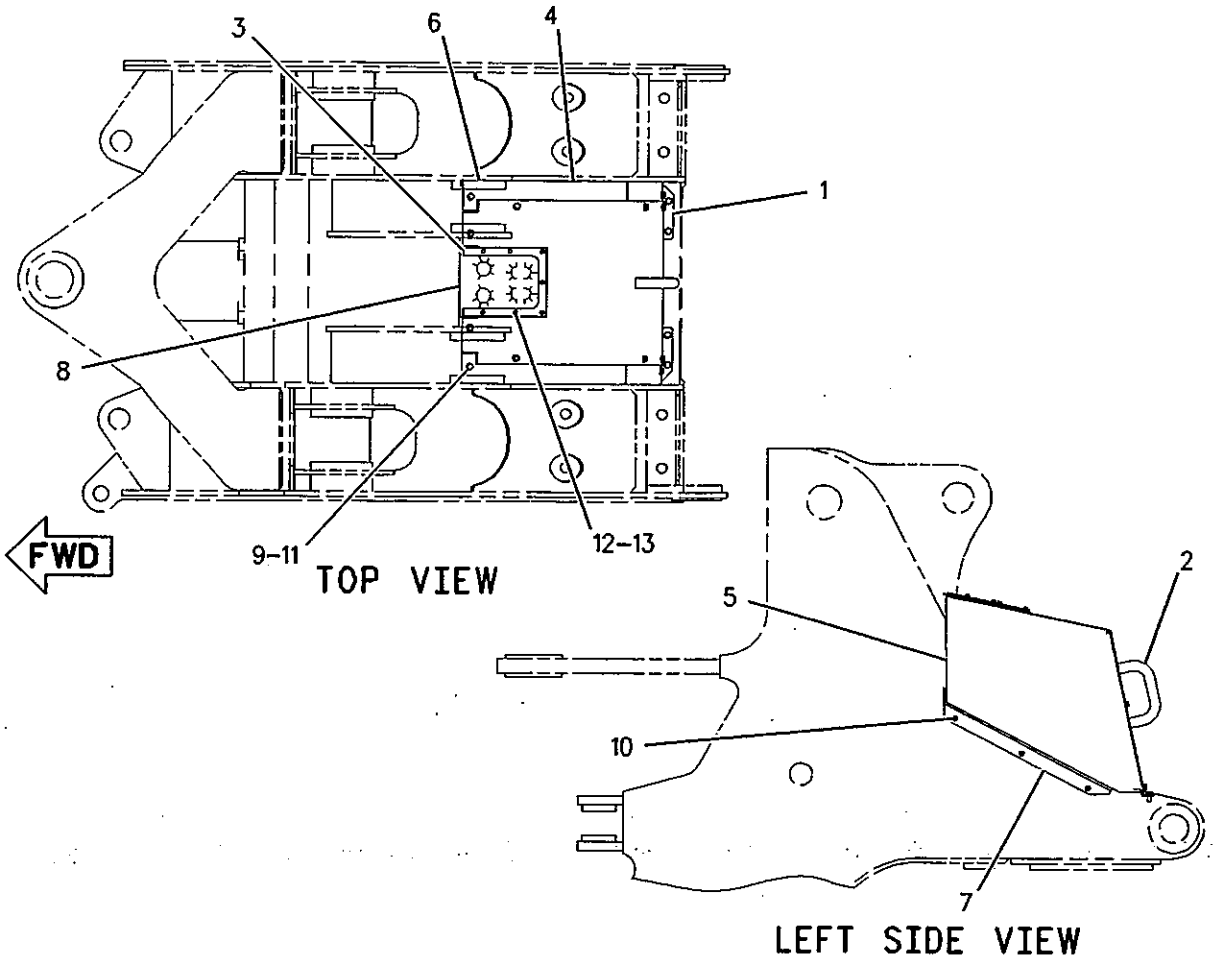


GRAPHIC #1

**<END>**

g00830203

# 240-8591 GUARD GP-FUEL & HYDRAULIC TANK

S/N: JMS1-UP
PART OF 243-2046 WASTE HANDLING AR
AN ATTACHMENT

SMCS-1273, 5056, 7150

i02283529

| NOTE | REF NO | GRAPHIC REF | PART NUMBER | QTY | PART NAME 1 2 3 4 5 6 (PRODUCT LEVEL) | SEE PAGE |
|---|---|---|---|---|---|---|
| | 1 | 1 | **2Q-0330** | 1 | PLATE | |
| Y | 2 | 1 | **240-8704** | 1 | TANK GP-HYDRAULIC | 679 |
| Y | 3 | 1 | *245-2886* | 1 | STEP GP | 498 |
| | 4 | 1 | **245-9042** | 1 | BRACKET | |
| | 5 | 1 | **245-9043** | 1 | BRACKET | |
| Y | 6 | 1 | *246-8216* | 1 | TANK GP-FUEL | 129 |
| M | 7 | 1 | **6V-3822** | 1 | BOLT (M10X1.5X35-MM) | |
| M | 8 | 1 | **6V-7744** | 1 | LOCKNUT (M10X1.5-THD) | |
| | 9 | 1 | **8T-4121** | 4 | WASHER-HARD (11X21X2.5-MM THK) | |
| M | 10 | 1 | **8T-4133** | 1 | NUT (M10X1.5-THD) | |
| M | 11 | 1 | **8T-4136** | 2 | BOLT (M10X1.5X25-MM) | |
| M | 12 | 1 | **8T-4195** | 1 | BOLT (M10X1.5X30-MM) | |
| | 13 | 1 | **8T-4223** | 6 | WASHER-HARD (13.5X25.5X3-MM THK) | |
| | 14 | 1 | **8T-8917** | 6 | BOLT (1/2-13X1.25-IN) | |
| Y | 15 | 1 | **174-6173** | 1 | FILTER GP-OIL (HIGH EFFICIENCY) (HYDRAULIC) | 639 |

M-METRIC PART
Y-SEPARATE ILLUSTRATION

## 240-8591 GUARD GP-FUEL & HYDRAULIC TANK *(contd.)* i02283529

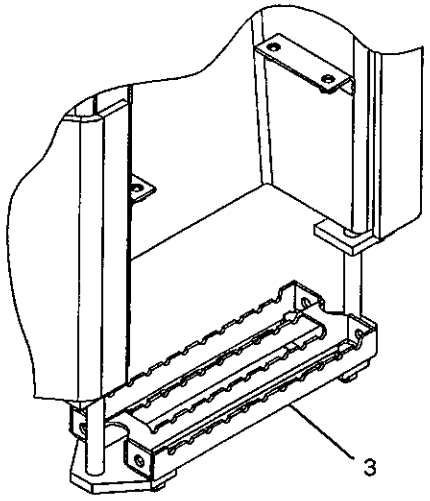


VIEW A-A

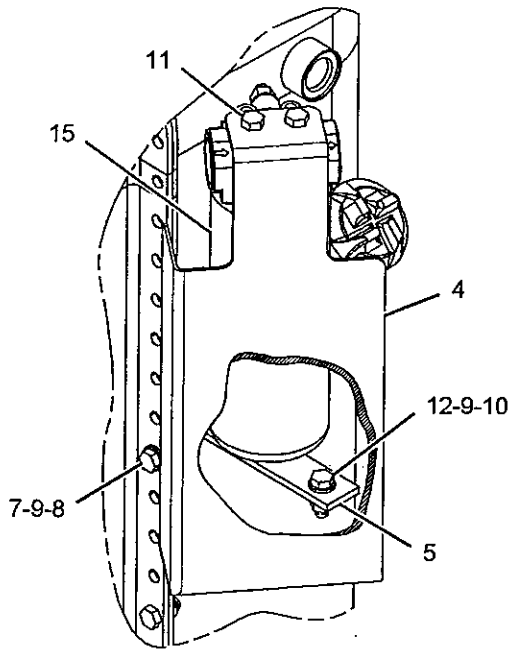


VIEW OF AREA B

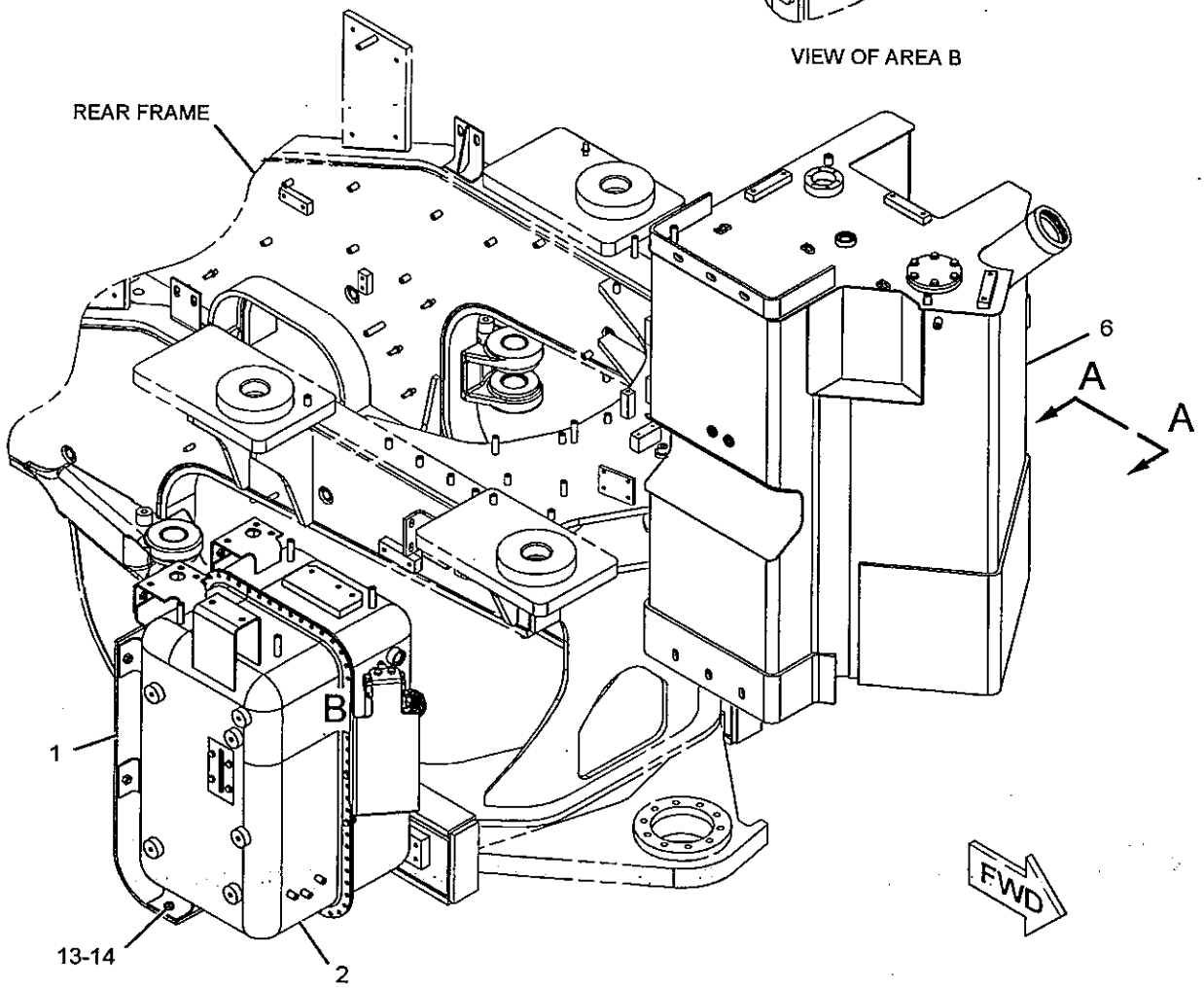


GRAPHIC #1

**<END>**

g01143114

# 243-2016 GUARD GP-HITCH & STEERING

S/N: JMS1-UP
PART OF 243-2046 WASTE HANDLING AR
AN ATTACHMENT

SMCS-7150

i02283666

| NOTE | REF NO | GRAPHIC REF | PART NUMBER | QTY | PART NAME 1 2 3 4 5 6 (PRODUCT LEVEL) | SEE PAGE |
|---|---|---|---|---|---|---|
| | 1 | 1 | 2Q-7740 | 1 | GUARD AS | |
| | 2 | 1 | 262-3932 | 1 | GUARD AS | |
| | 3 | 1 | 2Q-7765 | 1 | BRACKET AS | |
| | 4 | 1 | 245-3347 | 1 | PLATE | |
| | 5 | 1 | 246-5208 | 1 | COVER AS (LH) | |
| | 6 | 1 | 246-5209 | 1 | COVER AS (RH) | |
| | 7 | 1 | 5P-1076 | 17 | WASHER-HARD (13.5X30X4-MM THK) | |
| M | 8 | 1 | 8T-4139 | 1 | BOLT (M12X1.75X30-MM) | |
| M | 9 | 1 | 8T-4192 | 11 | BOLT (M12X1.75X25-MM) | |
| | 10 | 1 | 8T-4223 | 3 | WASHER-HARD (13.5X25.5X3-MM THK) | |
| M | 11 | 1 | 8T-4244 | 8 | NUT (M12X1.75-THD) | |
| D | 12 | 1 | 5P-7211 | | SEAL (0.46-M) | |
| D | 12A | 1 | 5P-7211 | | SEAL (0.76-M) | |
| D | 12B | 1 | 5P-7211 | | SEAL (0.75-M) | |

D-ORDER BY THE METER
M-METRIC PART

243-2016 **GUARD GP-HITCH & STEERING** *(contd.)* i02283666

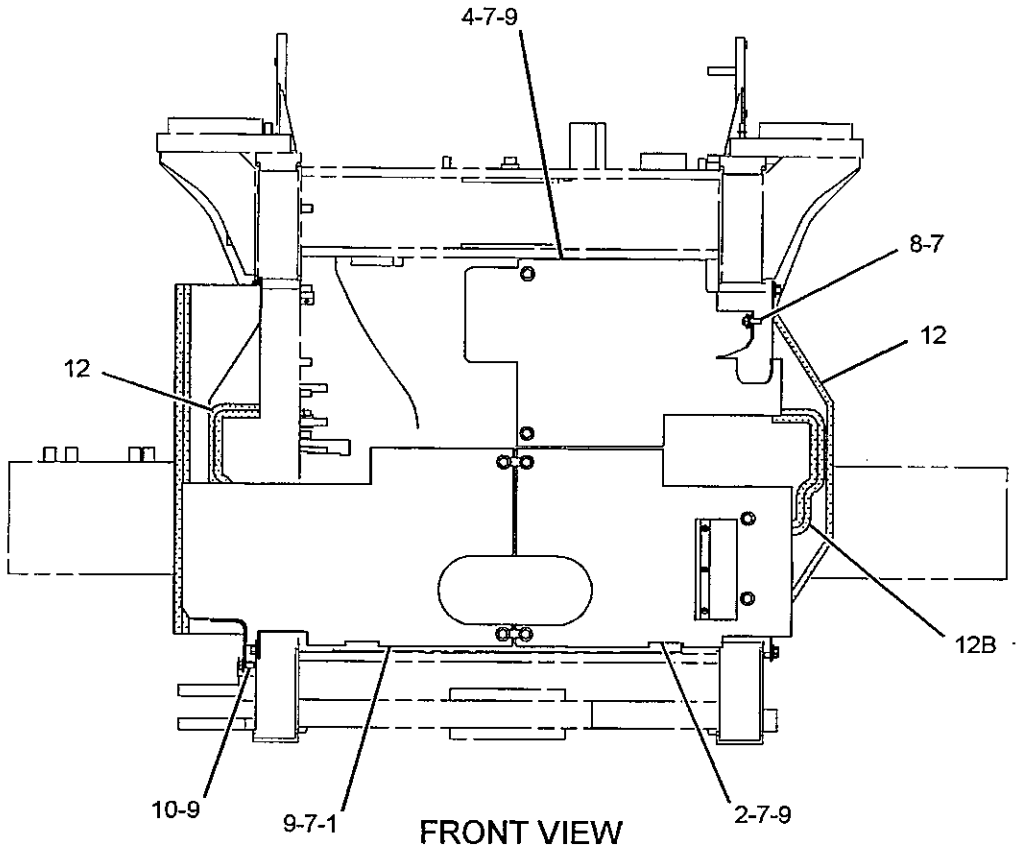


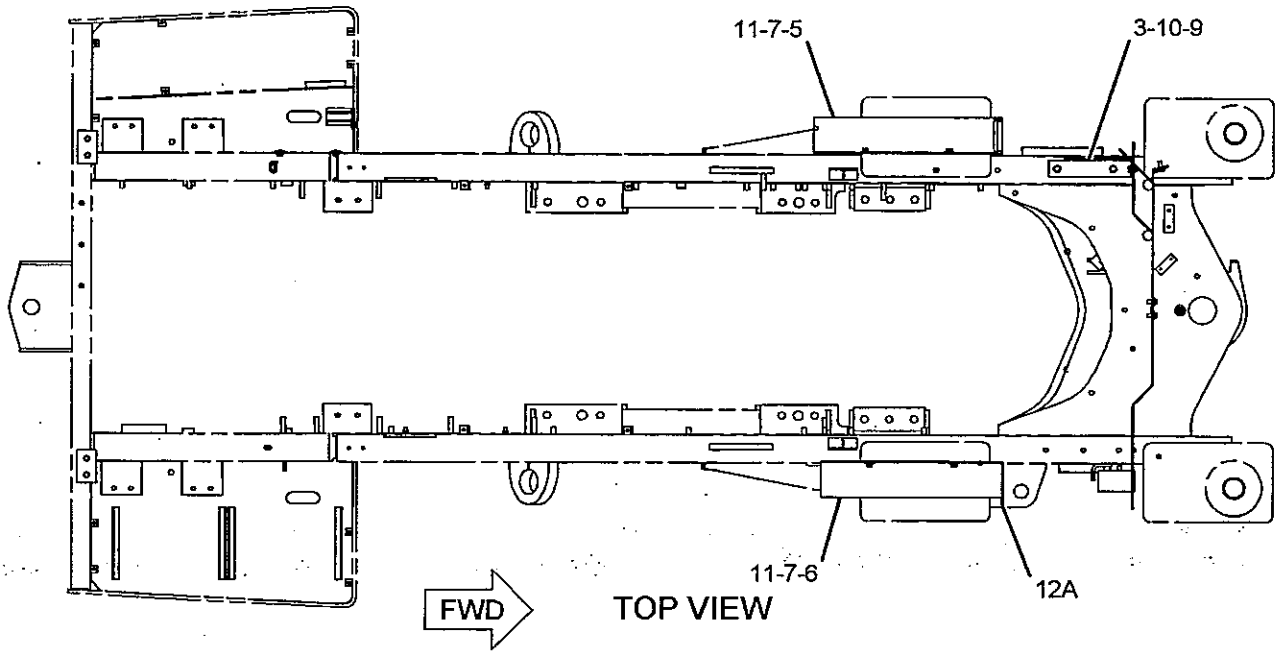


GRAPHIC #1

**<END>**

g01143158

# FRAME AND BODY

## *262-1379* GUARD GP-LIGHTING

**S/N: JMS1-UP**

**PART OF 246-3121 LOGGING AR, 243-2046 WASTE HANDLING AR AN ATTACHMENT**

**SMCS-7150** **i02254058**

| NOTE | REF NO | GRAPHIC REF | PART NUMBER | QTY | PART NAME 1 2 3 4 5 6 (PRODUCT LEVEL) | SEE PAGE |
|---|---|---|---|---|---|---|
| | 1 | 1 | **262-1380** | 1 | BRACKET AS (RH) | |
| M | | 1 | **6V-9632** | 4 | NUT-WELD (M6X1-THD) | |
| | 2 | 1 | **262-1381** | 1 | BRACKET AS (LH) | |
| M | | 1 | **6V-9632** | 4 | NUT-WELD (M6X1-THD) | |
| | 3 | 1 | **262-1383** | 2 | COVER | |
| M | 4 | 1 | **8T-4138** | 8 | BOLT (M6X1X20-MM) | |
| | 5 | 1 | **8T-4205** | 8 | WASHER-HARD (7.2X14.5X2-MM THK) | |

M-METRIC PART

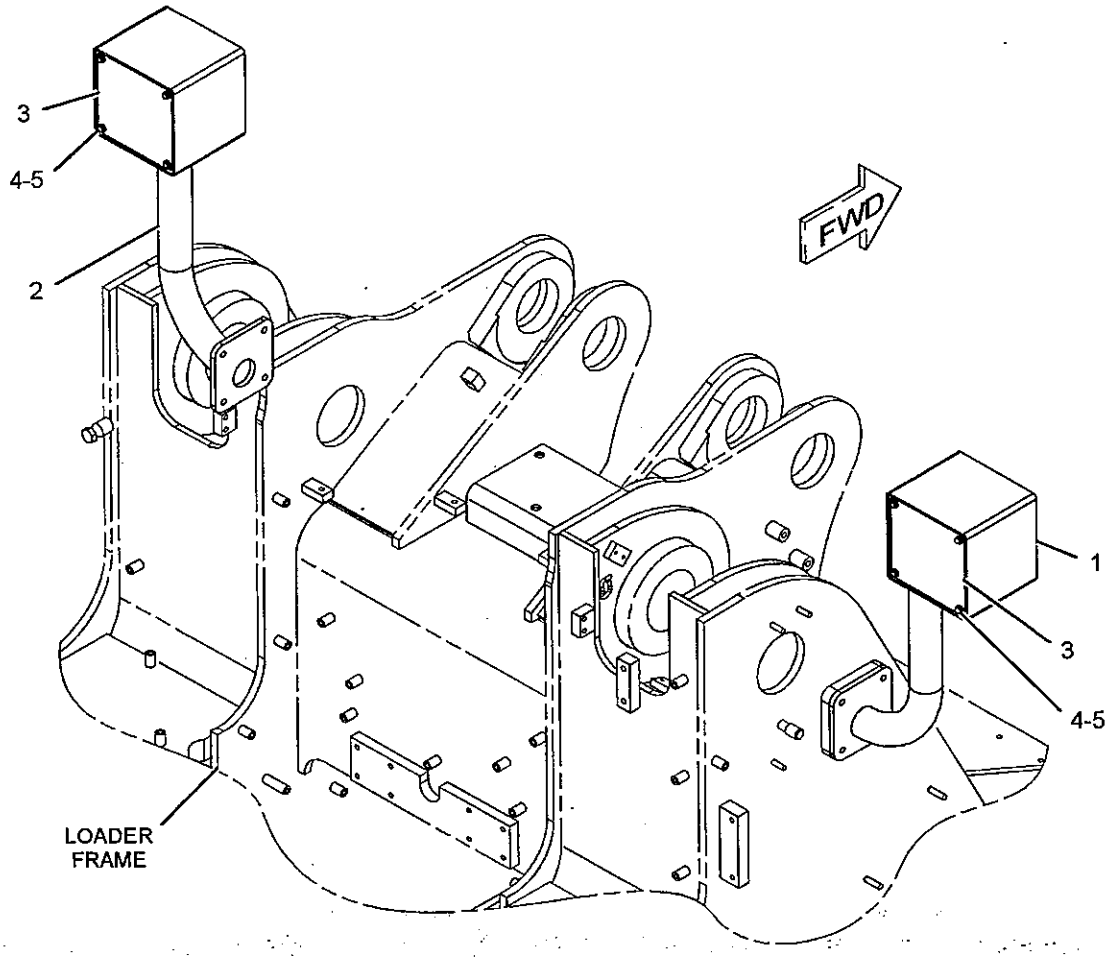


GRAPHIC #1 **<END>** g01134011

# 267-2172 GUARD GP-LINES–AXLE OIL

S/N: JMS1-UP

PART OF 233-9749 COOLER AR-AXLE OIL

AN ATTACHMENT

SMCS-7167

i02283492

| NOTE | REF NO | GRAPHIC REF | PART NUMBER | QTY | PART NAME 1 2 3 4 5 6 (PRODUCT LEVEL) | SEE PAGE |
|---|---|---|---|---|---|---|
| | 1 | 1 | 160-7183 | 2 | WASHER | |
| | 2 | 1 | 267-2173 | 1 | PLATE | |
| | 3 | 1 | 267-2174 | 1 | BRACKET AS | |
| M | | 1 | 8T-3597 | 2 | NUT-WELD (M12X1.75-THD) | |
| | 4 | 1 | 5P-8248 | 2 | WASHER-HARD (20X36.5X3.5-MM THK) | |
| M | 5 | 1 | 6V-5845 | 2 | BOLT (M20X2.5X70-MM) | |
| M | 6 | 1 | 8T-4139 | 2 | BOLT (M12X1.75X30-MM) | |
| | 7 | 1 | 8T-4223 | 2 | WASHER-HARD (13.5X25.5X3-MM THK) | |

M-METRIC PART

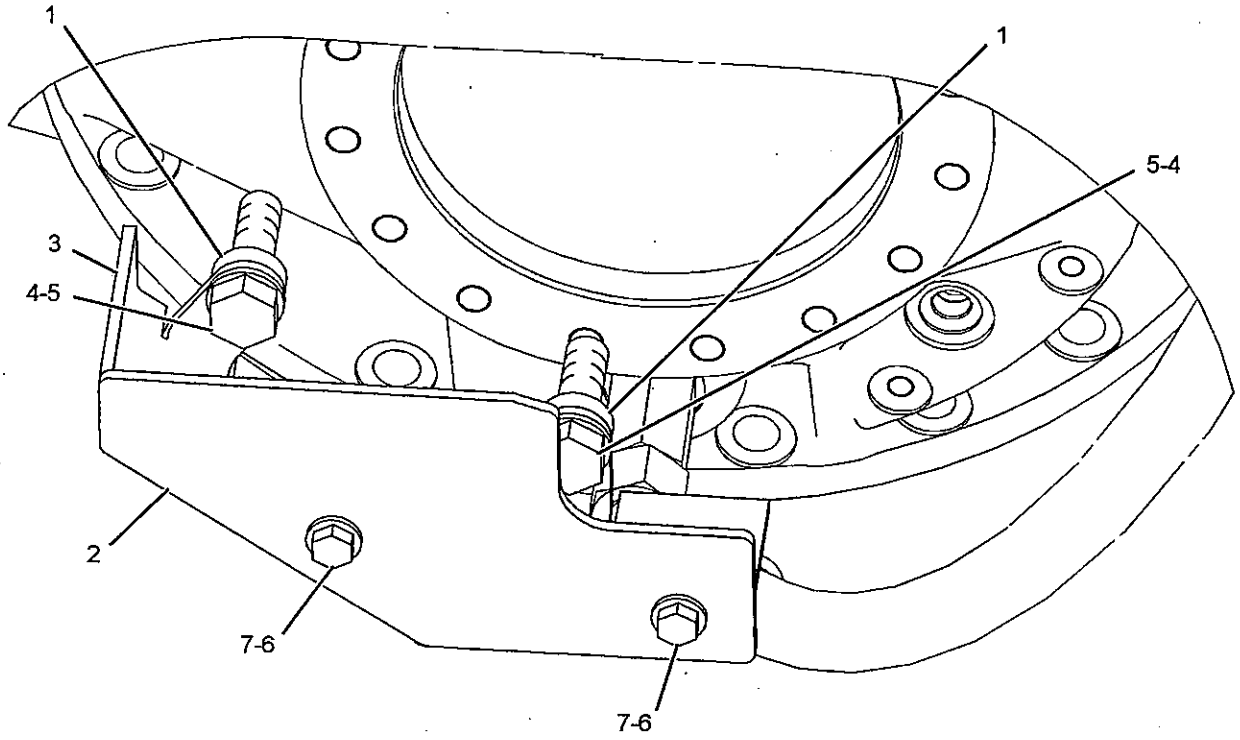


GRAPHIC #1

<END>

g01144117

# FRAME AND BODY

## *175-4196* GUARD GP-POWER TRAIN

**S/N: JMS1-UP**

**AN ATTACHMENT**

**SMCS-7153** **i02283659**

| NOTE | REF NO | GRAPHIC REF | PART NUMBER | QTY | PART NAME 1 2 3 4 5 6 (PRODUCT LEVEL) | SEE PAGE |
|---|---|---|---|---|---|---|
| | 1 | 1 | **7X-3151** | 4 | WASHER (17.5X63.5X9.6-MM THK) | |
| | 2 | 1 | **267-2178** | 1 | PLATE AS. | |
| M | 3 | 1 | **8T-4193** | 4 | BOLT (M16X2X50-MM) | |

M-METRIC PART

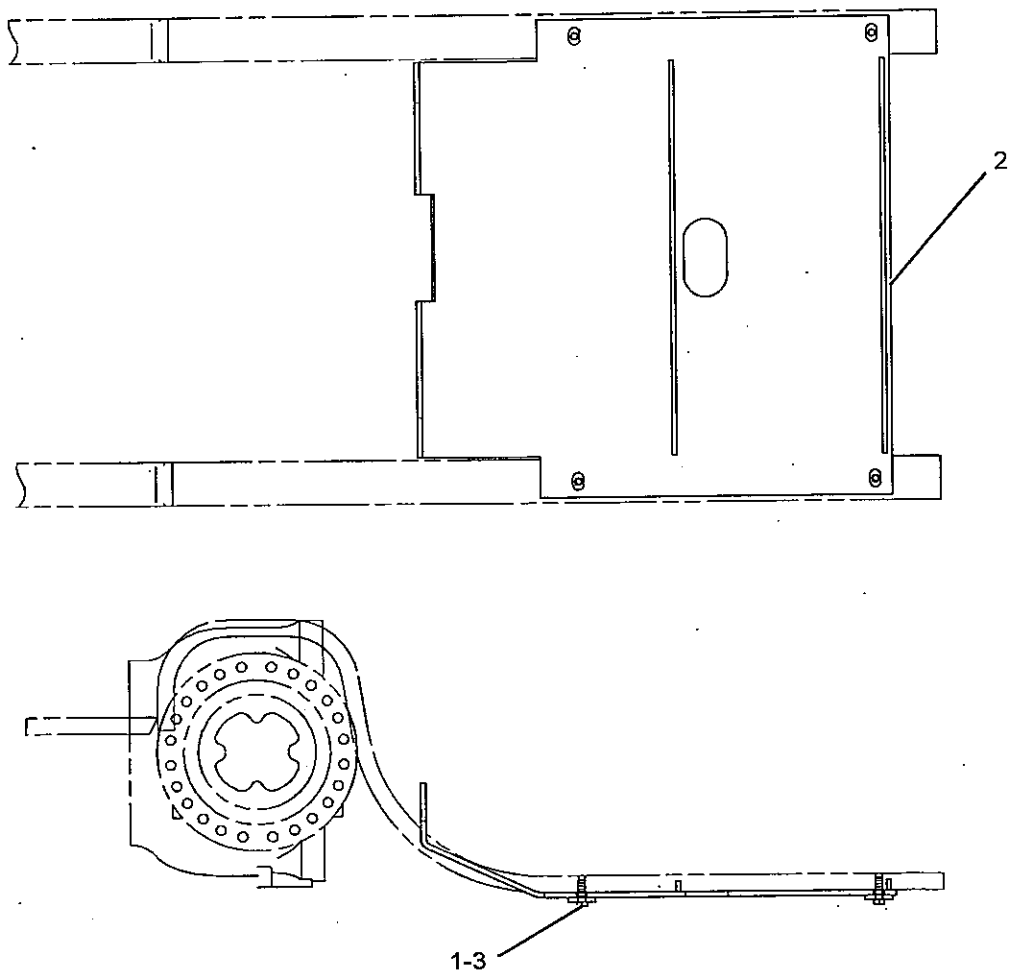


GRAPHIC #1 **<END>** g01142922

# 245-9934 GUARD GP-SENSOR–AXLE OIL TEMPERATURE

S/N: JMS1-UP

PART OF 243-2046 WASTE HANDLING AR

AN ATTACHMENT

SMCS-301T, 5736, 7150

i02090144

| NOTE | REF NO | GRAPHIC REF | PART NUMBER | QTY | PART NAME 1 2 3 4 5 6 (PRODUCT LEVEL) | SEE PAGE |
|---|---|---|---|---|---|---|
| | 1 | 1 | 189-8193 | 1 | BRACKET AS | |
| | 2 | 1 | 189-8196 | 1 | PLATE | |
| | 3 | 1 | 8T-4121 | 2 | WASHER-HARD (11X21X2.5-MM THK) | |
| M | 4 | 1 | 8T-4136 | 2 | BOLT (M10X1.5X25-MM) | |

M-METRIC PART

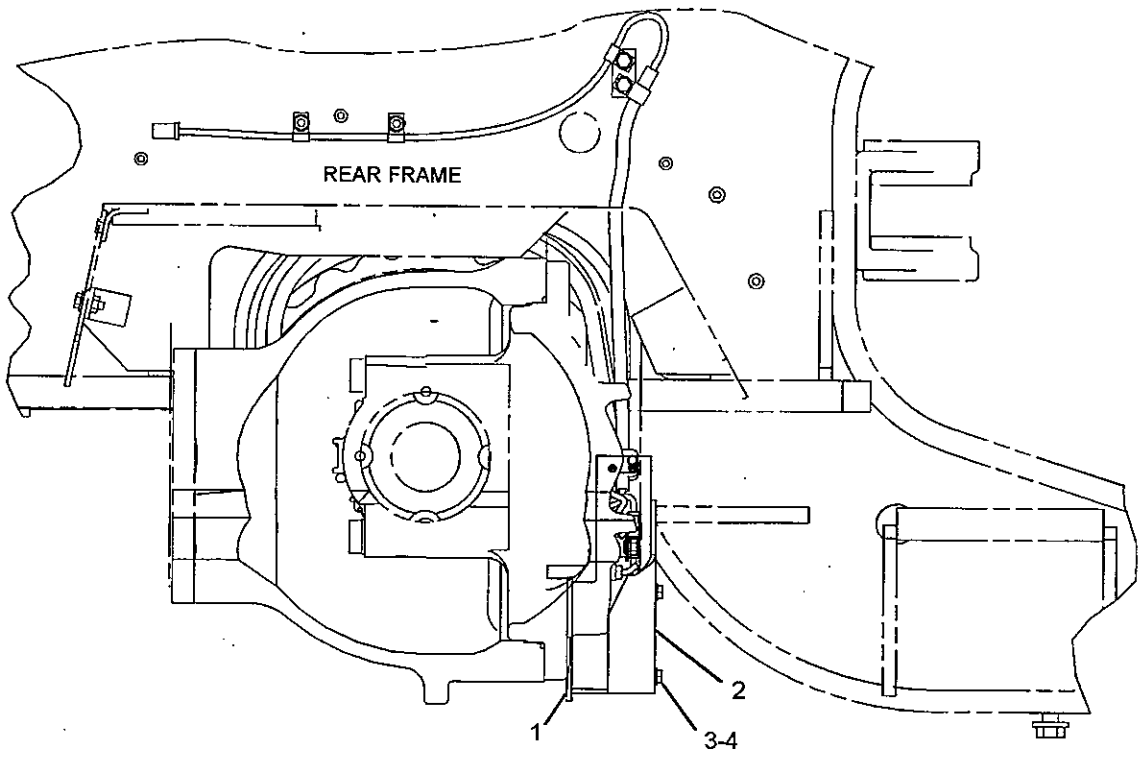


RIGHT SIDE VIEW

GRAPHIC #1

<END>

g01066930

# 249-1268 HARDWARE GP-LOADER FRAME-
## AUTOMATIC LUBRICATION SYSTEM
S/N: JMS1-UP
PART OF 245-9432, 245-9433 LUBRICATION AR-AUTOMATIC
AN ATTACHMENT

SMCS-7054, 7553

i02091696

| NOTE | REF NO | GRAPHIC REF | PART NUMBER | QTY | PART NAME 1 2 3 4 5 6 (PRODUCT LEVEL) | SEE PAGE |
|---|---|---|---|---|---|---|
| M | 1 | 1 | 8T-3851 | 7 | BOSS-WELD (M10X1.5X17.5-MM) | |
| M | 2 | 1 | 8T-4967 | 5 | STUD-WELD (M10X1.5X23-MM OAL) | |

M-METRIC PART

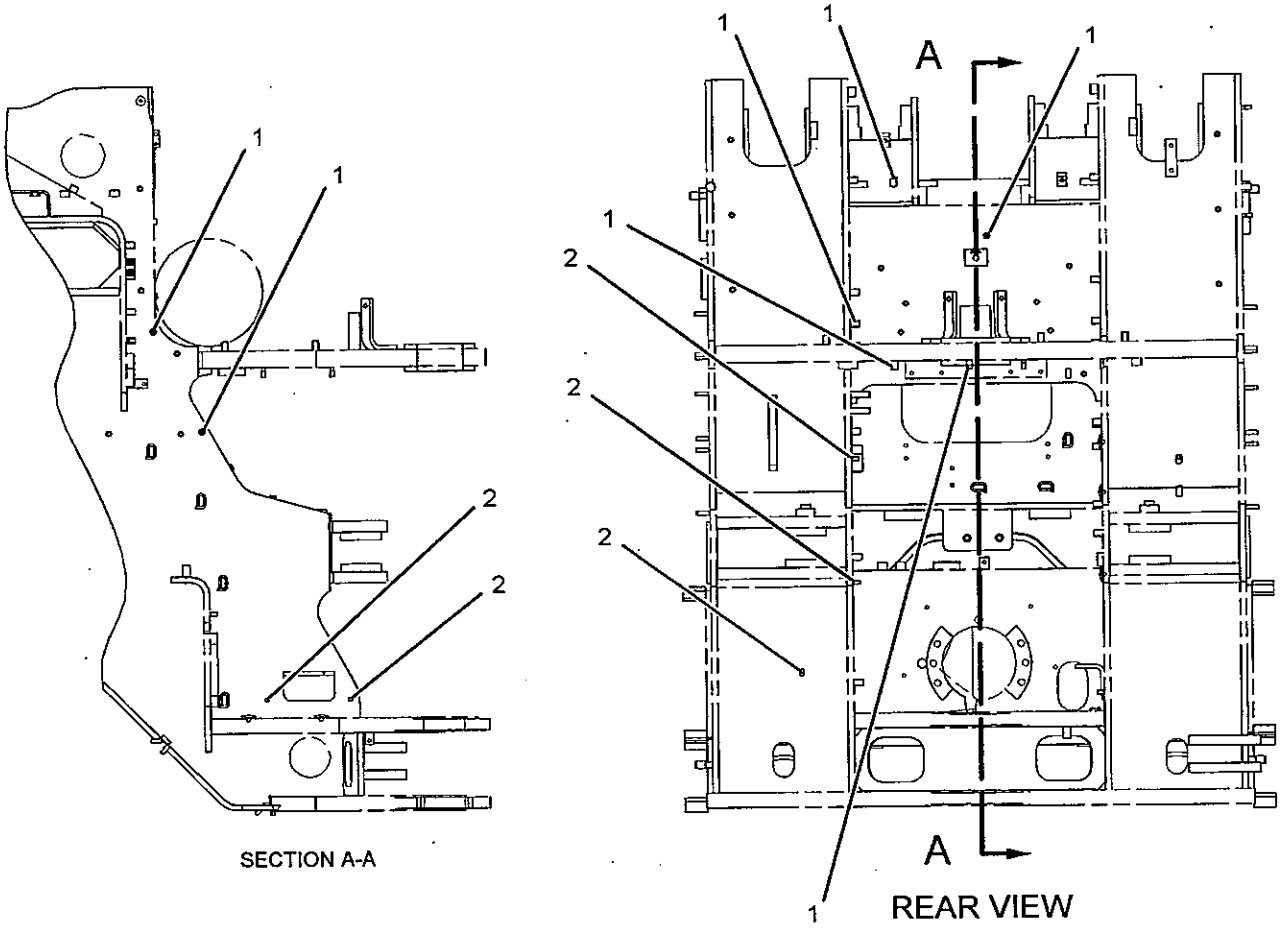


GRAPHIC #1

<END>

g01066907

# 249-1269 HARDWARE GP-LOADER FRAME-AXLE OIL COOLER

S/N: JMS1-UP

PART OF 233-9749, 233-9750 COOLER AR-AXLE OIL

AN ATTACHMENT

SMCS-7054, 7553

i02283508

| NOTE | REF NO | GRAPHIC REF | PART NUMBER | QTY | PART NAME 1 2 3 4 5 6 (PRODUCT LEVEL) | SEE PAGE |
|---|---|---|---|---|---|---|
| | 1 | 1 | *091-1735* | 1 | BLOCK | |
| | 2 | 1 | **9C-7863** | 1 | BLOCK | |

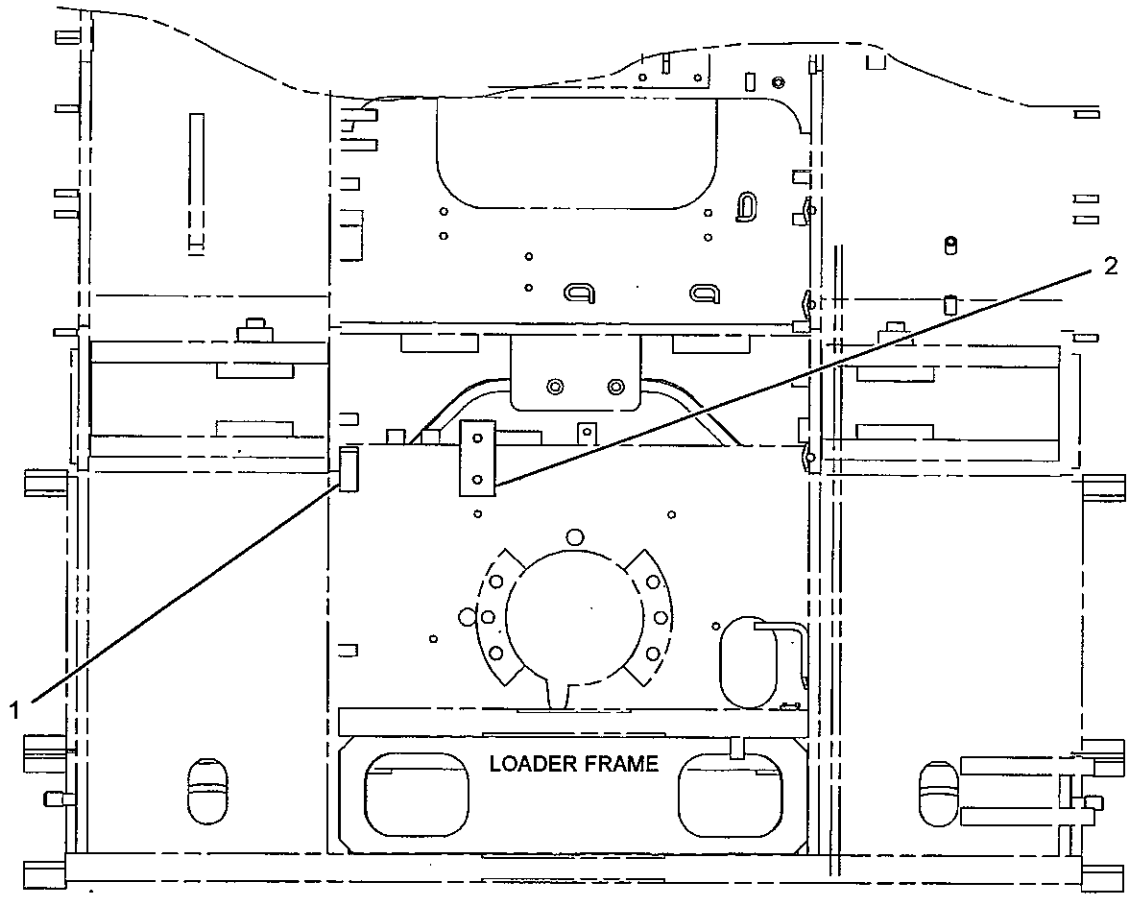


REAR VIEW

GRAPHIC #1

<END>

g01144005

# 249-1272 HARDWARE GP-LOADER FRAME-3RD VALVE

S/N: JMS1-UP

PART OF 249-6704 HYDRAULIC AR-3 VALVE, 246-3121 LOGGING AR AN ATTACHMENT

SMCS-7054, 7553

i02091698

| NOTE | REF NO | GRAPHIC REF | PART NUMBER | QTY | PART NAME 1 2 3 4 5 6 (PRODUCT LEVEL) | SEE PAGE |
|---|---|---|---|---|---|---|
| M | 1 | 1 | 9R-2640 | 2 | BOSS | |
| | 2 | 1 | 7Y-2522 | 2 | PLATE | |

M-METRIC PART

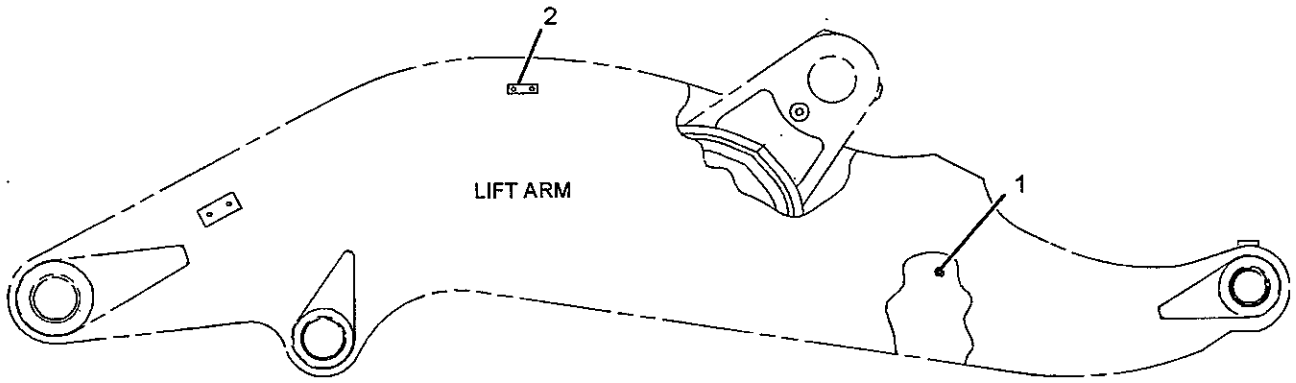


RIGHT SIDE VIEW

GRAPHIC #1

<END>

g01066844

# 249-1264 HARDWARE GP-REAR FRAME-
## AUTOMATIC LUBRICATION SYSTEM
S/N: JMS1-UP
PART OF 245-9432, 245-9433 LUBRICATION AR-AUTOMATIC
AN ATTACHMENT

SMCS-7051, 7553

i02091694

| NOTE | REF NO | GRAPHIC REF | PART NUMBER | QTY | PART NAME 1 2 3 4 5 6 (PRODUCT LEVEL) | SEE PAGE |
|---|---|---|---|---|---|---|
| M | 1 | 1 | 8T-3851 | 6 | BOSS-WELD (M10X1.5X17.5-MM) | |

M-METRIC PART

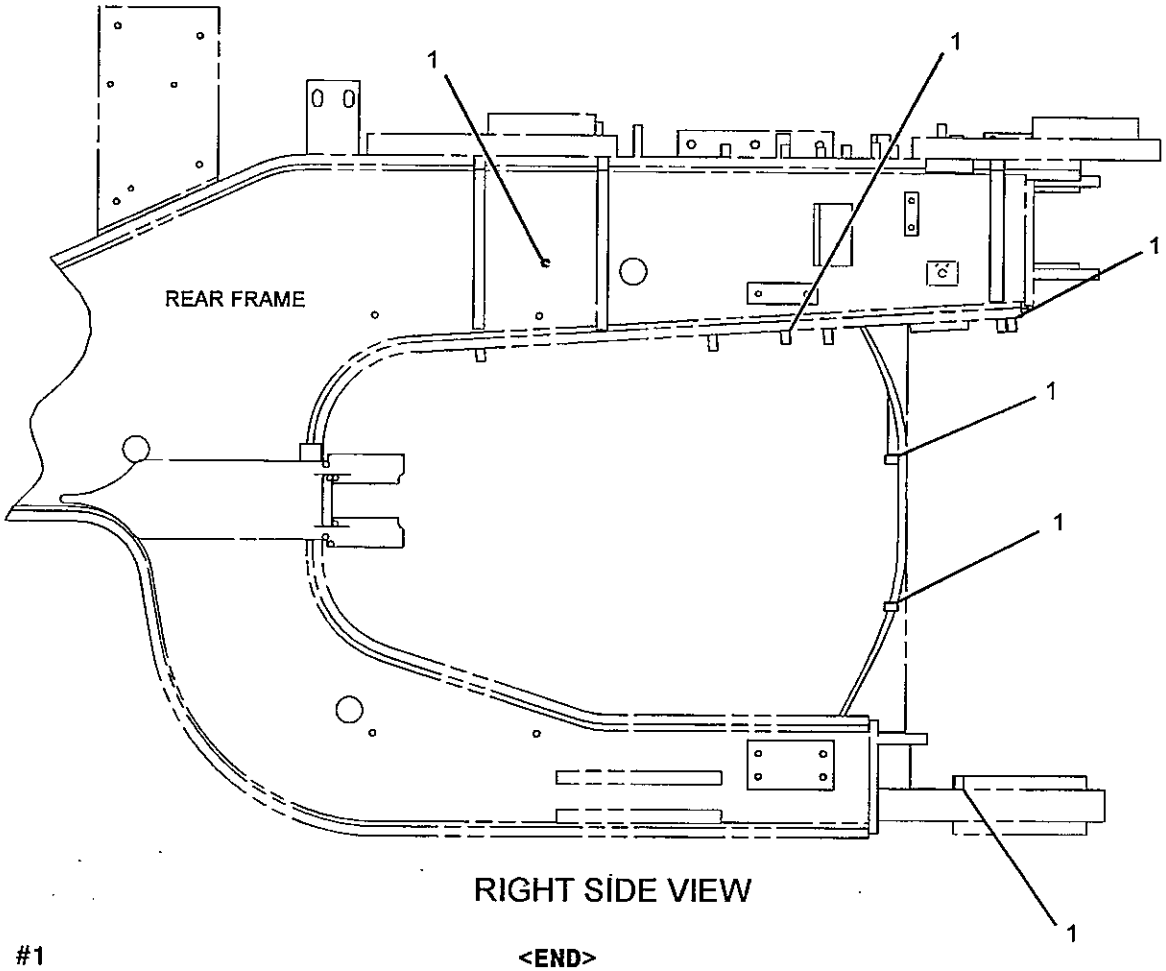


RIGHT SIDE VIEW

GRAPHIC #1

<END>

g01066939

# FRAME AND BODY

## 249-1265 HARDWARE GP-REAR FRAME–AXLE OIL COOLER

S/N: JMS1-UP

PART OF 233-9749, 233-9750 COOLER AR-AXLE OIL

AN ATTACHMENT

SMCS-7051, 7553

i02283512

| NOTE | REF NO | GRAPHIC REF | PART NUMBER | QTY | PART NAME 1 2 3 4 5 6 (PRODUCT LEVEL) | SEE PAGE |
|---|---|---|---|---|---|---|
| | 1 | 1 | *091-1735* | 1 | BLOCK | |
| | 2 | 1 | *171-8862* | 1 | BLOCK | |
| | 3 | 1 | *185-1366* | 1 | PLATE | |
| M | 4 | 1 | **110-2023** | 2 | STUD-WELD (M10X1.5X25-MM) | |
| M | 5 | 1 | **8T-3851** | 7 | BOSS-WELD (M10X1.5X17.5-MM) | |
| M | 6 | 1 | *8T-9374* | 1 | BOSS-WELD | |
| | 7 | 1 | **9T-6943** | 2 | BLOCK | |
| | 8 | 1 | **9U-0853** | 2 | BAR | |

M-METRIC PART

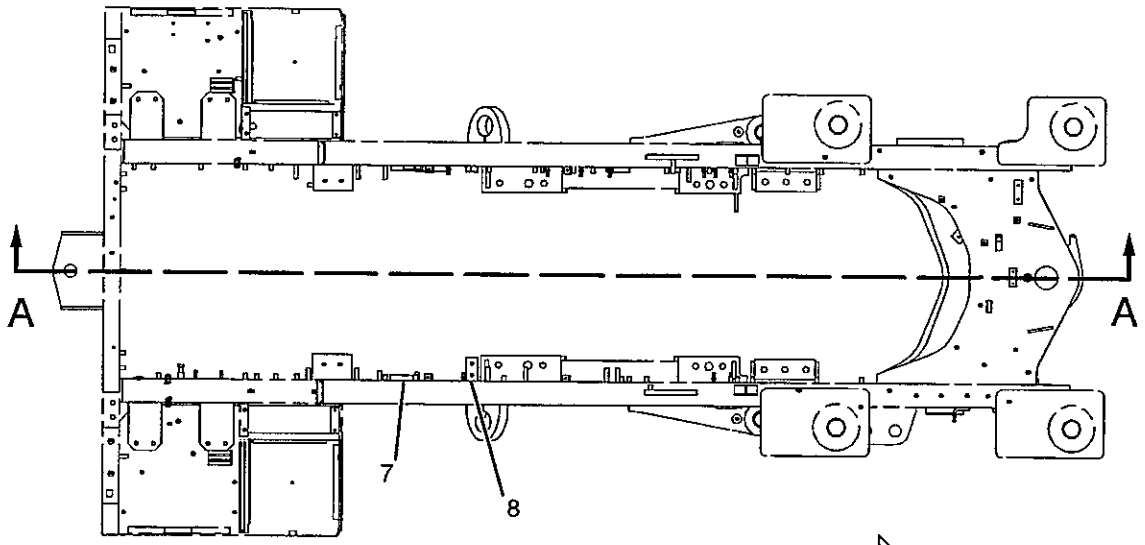


TOP VIEW

FWD

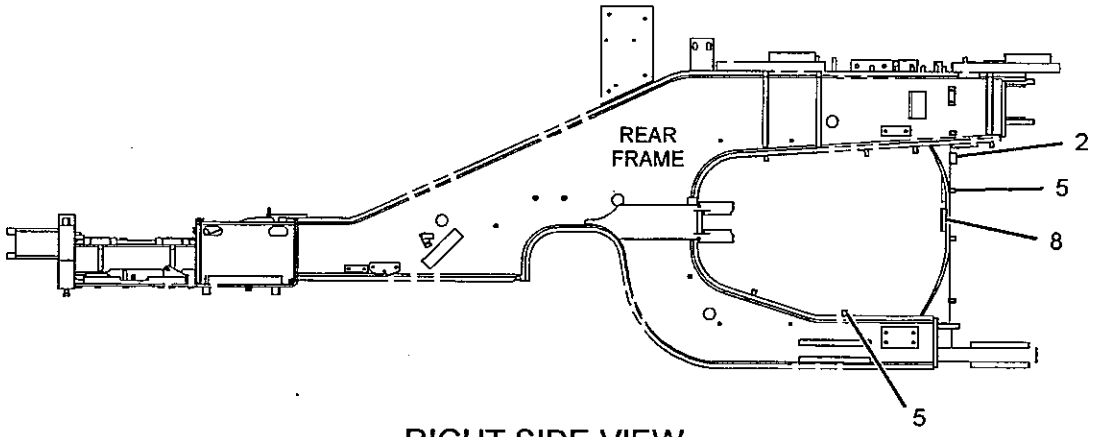


RIGHT SIDE VIEW

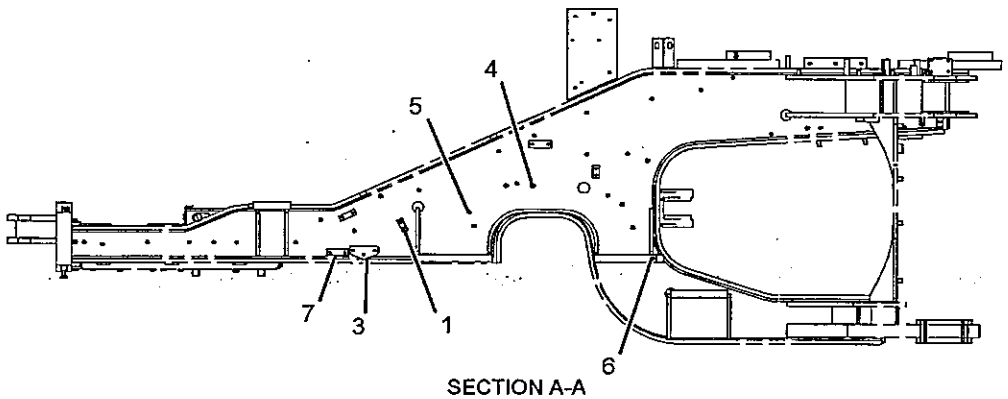


SECTION A-A

GRAPHIC #1

**<END>**

g01144029

## 249-3199 HARDWARE GP-REAR FRAME–WASTER HANDLER

S/N: JMS1-UP
PART OF 243-2046 WASTE HANDLING AR
AN ATTACHMENT

SMCS-7051, 7553

i02283839

| NOTE | REF NO | GRAPHIC REF | PART NUMBER | QTY | PART NAME 1 2 3 4 5 6 (PRODUCT LEVEL) | SEE PAGE |
|---|---|---|---|---|---|---|
| | 1 | 1 | *2Q-7766* | 1 | PLATE | |
| | 2 | 1 | **4V-0368** | 1 | BLOCK | |
| | 3 | 1 | *7I-8061* | 4 | BAR | |
| | 4 | 1 | **7T-1099** | 7 | LINK | |
| | 5 | 1 | *119-7902* | 2 | PLATE | |
| | 6 | 1 | *140-8188* | 1 | BLOCK | |

## 249-3199 HARDWARE GP-REAR FRAME *(contd.)*

i02283839

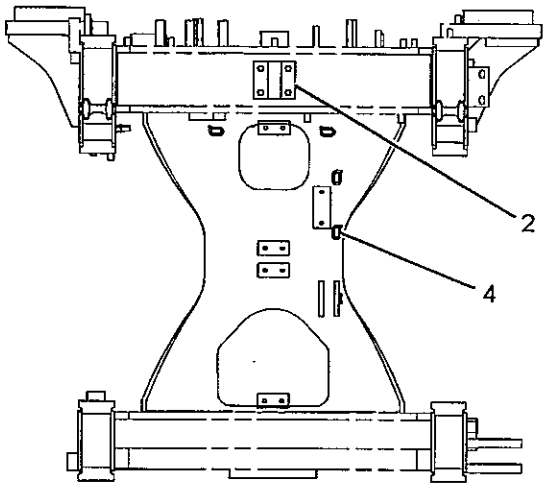


VIEW B-B

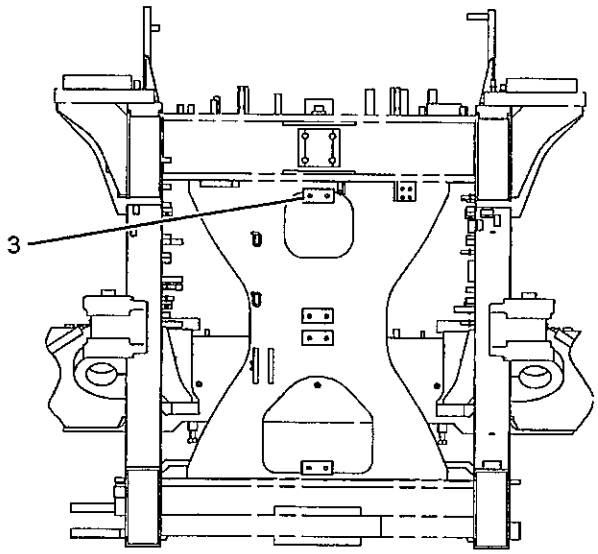


VIEW A-A

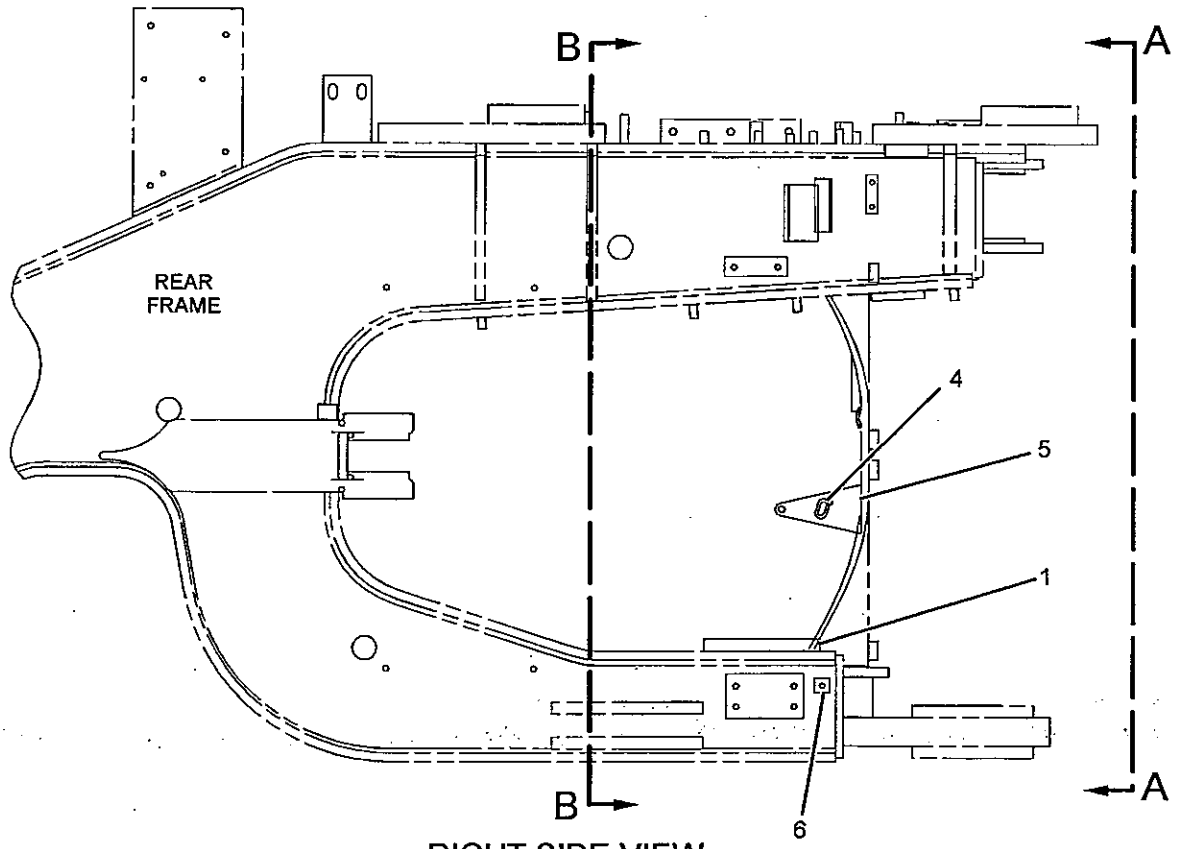


RIGHT SIDE VIEW

GRAPHIC #1

<END>

g01143503

# FRAME AND BODY

## 258-7063 HARDWARE GP-REAR FRAME–WASTE HANDLER

S/N: JMS1-UP
PART OF 263-7277 SUPPRESSION AR-SOUND
AN ATTACHMENT

SMCS-7051, 7553

i02284055

| NOTE | REF NO | GRAPHIC REF | PART NUMBER | QTY | PART NAME 1 2 3 4 5 6 (PRODUCT LEVEL) | SEE PAGE |
|---|---|---|---|---|---|---|
| | 1 | 1 | 2Q-7766 | 1 | PLATE | |
| | 2 | 1 | 7I-8061 | 4 | BAR | |
| | 3 | 1 | 140-8188 | 1 | BLOCK | |

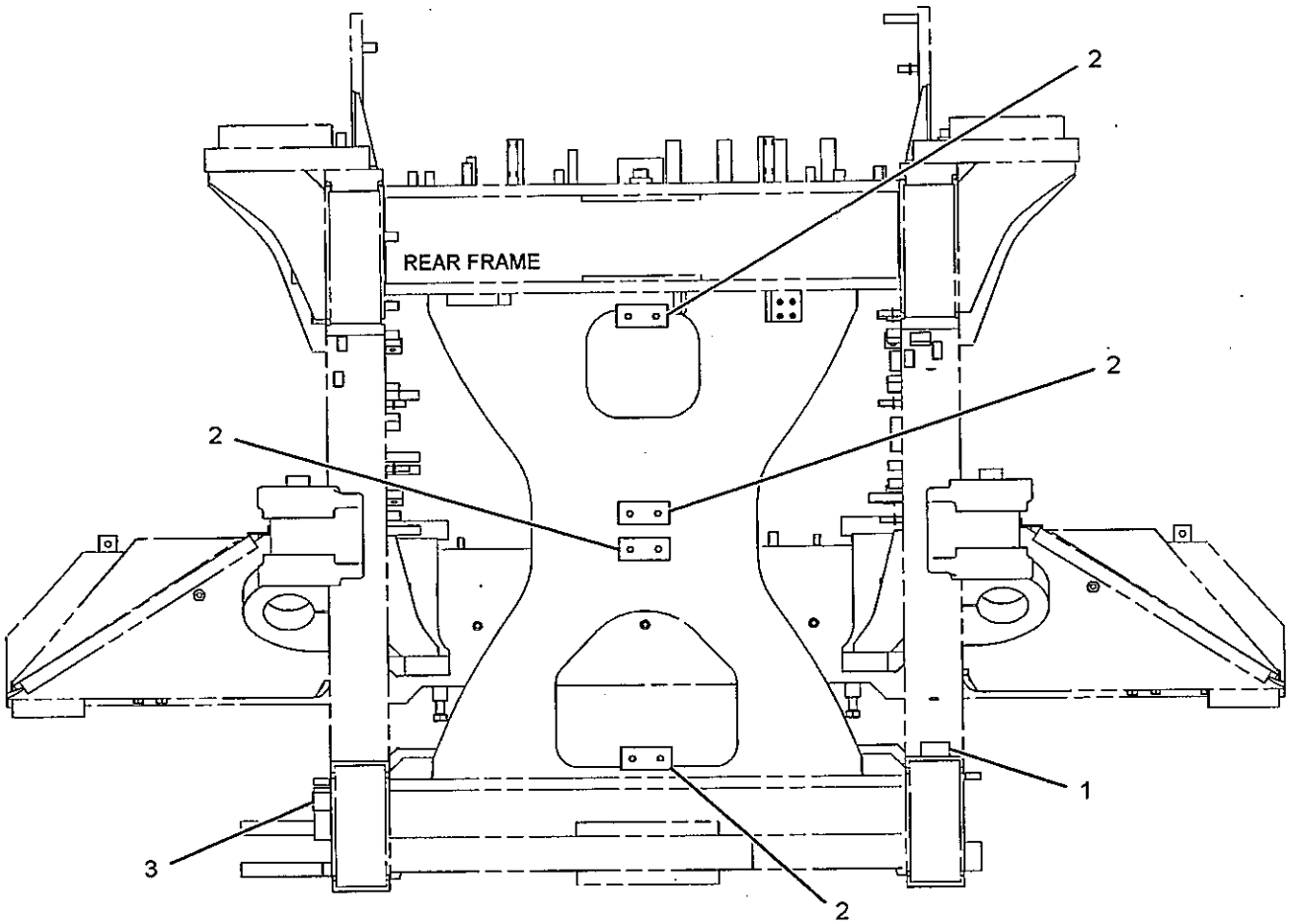


FRONT VIEW

GRAPHIC #1

<END>

g01143773

# FRAME AND BODY

## *110-8050* HITCH GP-ARTICULATING

**S/N: JMS1-UP**

**PART OF 225-5538 CHASSIS AR**

**SMCS-7057, 7100** **i01734209**

| NOTE | REF NO | GRAPHIC REF | PART NUMBER | QTY | PART NAME 1 2 3 4 5 6 (PRODUCT LEVEL) | SEE PAGE |
|---|---|---|---|---|---|---|
| | 1 | 1 | **7T-5947** | 1 | WASHER-RETAINING | |
| M | 2 | 1 | **8T-4139** | 1 | BOLT (M12X1.75X30-MM) | |
| | 3 | 1 | **115-2955** | 1 | PIN AS | |
| | 4 | 1 | **4V-1901** | 2 | BEARING-SLEEVE | |
| M | 5 | 1 | **7X-2549** | 6 | BOLT (M12X1.75X100-MM) | |
| | 6 | 1 | **8T-4223** | 24 | WASHER-HARD (13.5X25.5X3-MM THK) | |
| | 7 | 1 | **1V-8852** | 1 | CAP | |
| B | 8 | 1 | **1V-8848** | 1 | SHIM PACK (INCLUDES 20) | |
| | 9 | 1 | **115-3183** | 1 | CAP | |
| | 10 | 1 | **7D-8637** | 2 | CUP-BEARING | |
| | 11 | 1 | **7D-8636** | 2 | CONE-BEARING | |
| | 12 | 1 | **3B-8489** | 2 | FITTING-GREASE | |
| | 13 | 1 | **115-2958** | 1 | PIN-LOWER | |
| M | 14 | 1 | **8T-5092** | 10 | BOLT (M12X1.75X150-MM) | |
| | 15 | 1 | **5K-3501** | 1 | CAP-UPPER | |
| B | 16 | 1 | **5K-3492** | 1 | SHIM PACK (INCLUDES 20) | |
| | 17 | 1 | **115-3184** | 1 | CAP-LOWER | |
| B | 18 | 1 | **5K-3489** | 1 | SHIM PACK (INCLUDES 18) | |
| | 19 | 1 | **131-6096** | 1 | PLATE-LOCK | |
| M | 20 | 1 | **8T-5878** | 2 | BOLT (M24X3X80-MM) | |
| | 21 | 1 | **8T-4167** | 2 | WASHER-HARD (26X44X4-MM THK) | |
| M | 22 | 1 | **8T-4183** | 8 | BOLT (M12X1.75X40-MM) | |
| | 23 | 1 | **3K-6454** | 2 | SEAL-LIP TYPE (REAR FRAME) | |
| | 24 | 1 | **5K-3491** | 1 | SPACER | |
| | 25 | 1 | **1J-2860** | 2 | CUP-BEARING | |
| | 26 | 1 | **1J-4757** | 2 | CONE-BEARING | |
| | 27 | 1 | **5K-3490** | 1 | SPACER | |
| | 28 | 1 | **6H-3999** | 2 | SEAL-LIP TYPE (FRONT FRAME) | |
| | | | | | (THE FOLLOWING SHIM IS USED TO IMPROVE BOLT RETENTION ON MACHINE SERIAL #'S 2KR1-UP, 6RN1-UP, 4SN1-UP & 7LN1-UP) | |
| ABF | | | **115-3185** | 1 | SHIM | |

A-NOT PART OF THIS GROUP
B-USE AS REQUIRED
F-NOT SHOWN
M-METRIC PART

## 110-8050 HITCH GP-ARTICULATING (contd.)

i01734209

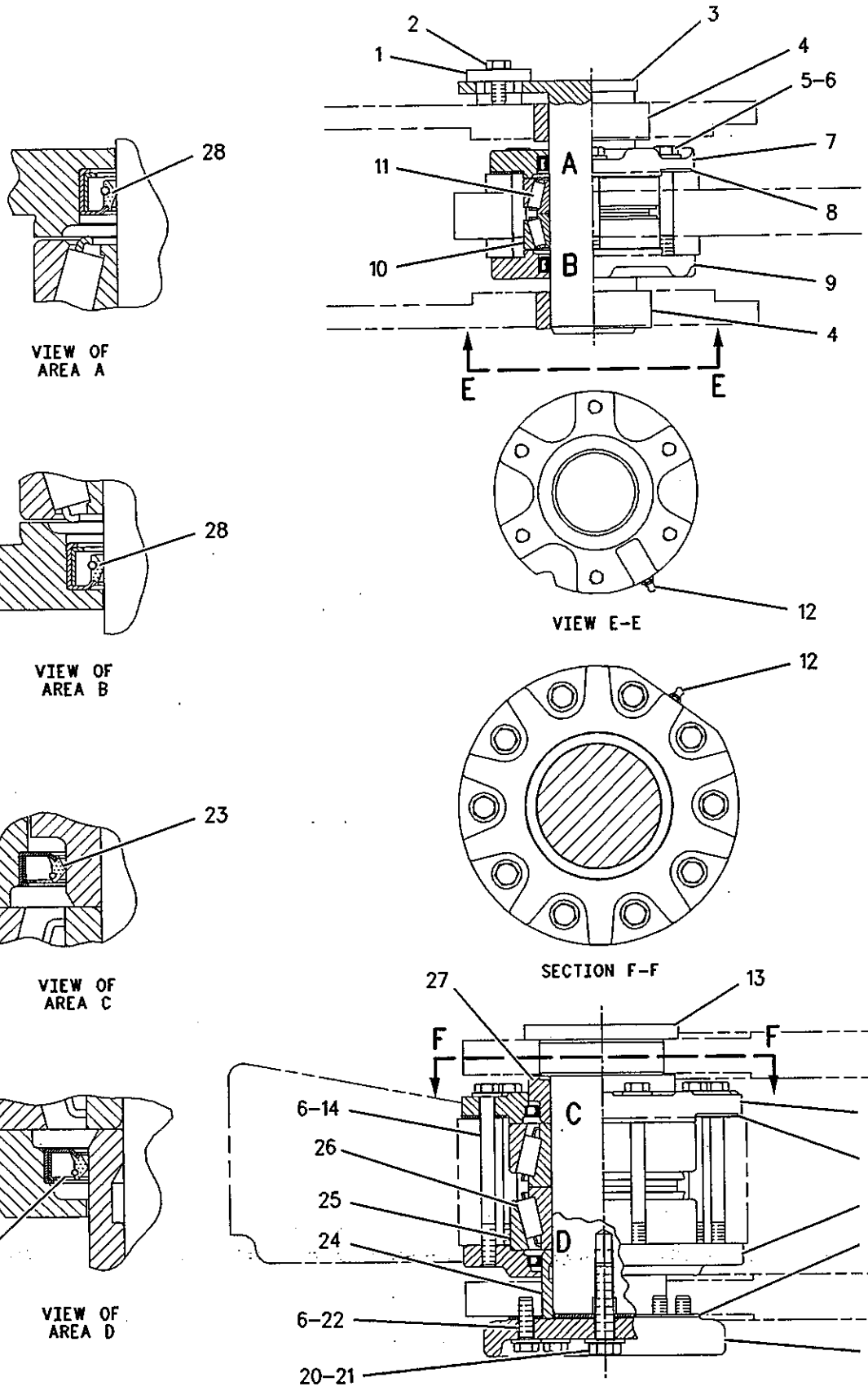


GRAPHIC #1

<END>

g00889218

# FRAME AND BODY

## *234-9757* HOOD & GUARD GP

**S/N: JMS1-UP**

**PART OF 225-5538 CHASSIS AR**

**SMCS-7251** **i02275037**

| NOTE | REF NO | GRAPHIC REF | PART NUMBER | QTY | PART NAME 1 2 3 4 5 6 (PRODUCT LEVEL) | SEE PAGE |
|---|---|---|---|---|---|---|
| | 1 | 3 | **4D-6716** | 6 | RIVET-POP | |
| | 2 | 3 | **4E-1384** | 2 | BUMPER-CONICAL | |
| | 3 | 3 | **125-7037** | 1 | INSERT | |
| | 4 | 2 | **131-1586** | 2 | ROD AS | |
| | | | | | (EACH INCLUDES) | |
| | | 2 | **6V-5839** | 2 | WASHER (11X21X2.5-MM THK) | |
| | 5 | 2 | **257-5702** | 1 | SUPPORT AS | |
| M | | 2 | **8T-3490** | 22 | NUT-WELD (M10X1.5-THD) | |
| | | 2 | **9R-2613** | 6 | BOSS (M10X1.5X25-MM OAL) | |
| | | 2 | **103-0280** | 4 | SPACER (13X20X7-MM THK) | |
| | | 2 | **115-4968** | 4 | BUSHING | |
| | | 2 | **239-6320** | 1 | ANGLE | |
| Y | 6 | 2 | *234-9599* | 1 | GRILL GP-RADIATOR | 429 |
| Y | 7 | 3 | *234-9758* | 1 | PANEL GP-TOP (HOOD) | 495 |
| Y | 8 | 3 | *234-9762* | 1 | PANEL GP-SOUND SUPPRESSION (LH) | 491 |
| Y | 9 | 3 | *234-9766* | 1 | PANEL GP-SOUND SUPPRESSION (RH) | 492 |
| | 10 | 3 | **234-9770** | 1 | DOOR AS-ACCESS (LH) | |
| | 11 | 3 | **234-9771** | 1 | DOOR AS-ACCESS (RH) | |
| | | | | | (EACH DOOR AS INCLUDES) | |
| | 11A | 1 | **6V-4604** | 1 | RIVET-POP | |
| | 11B | 1 | **9V-1820** | 1 | SPACER | |
| | 11C | 1 | **119-0281** | 3 | HINGE AS | |
| | | | | | (EACH INCLUDES) | |
| M | | 1 | **8T-5413** | 2 | STUD-WELD (M10X1.5X25-MM OAL) | |
| | 11D | 1 | **233-4463** | 1 | CAM | |
| | 11E | 1 | **233-4466** | 1 | LATCH AS | |
| | | 3 | **9V-1777** | 1 | CABLE | |
| | 12 | 3 | **234-9772** | 1 | GRILL AS (TOP) | |
| | 13 | 1 | **251-6313** | 1 | TUBE | |
| | 14 | 1 | **237-4986** | 1 | PIPE AS-EXTENSION | |
| | | 1 | **237-4987** | 1 | CLAMP AS | |
| | 15 | 1 | **238-7785** | 1 | BRACKET AS (RH) | |
| | 16 | 1 | **238-7786** | 1 | BRACKET AS (LH) | |
| | 17 | 2 | **238-7830** | 2 | BRACKET | |
| | 18 | 1 | **239-8410** | 2 | PLATE | |
| | 19 | 3 | **247-5547** | 1 | SEAL | |
| | 20 | 3 | **251-4371** | 2 | STRIP-SEAL | |
| | 21 | 3 | **251-4373** | 2 | SEAL-LIP | |
| | 23 | 2 | **3B-4611** | 2 | PIN-COTTER | |
| | 24 | 2 | **4M-7470** | 6 | GROMMET | |
| M | 25 | 3 | **5C-7261** | 2 | NUT (M8X1.25-THD) | |
| | 26 | 1,2 | **7X-7729** | 54 | WASHER (11X25X3-MM THK) | |
| | 27 | 2,3 | **8T-4121** | 56 | WASHER-HARD (11X21X2.5-MM THK) | |
| M | 28 | 1,2,3 | **8T-4133** | 28 | NUT (M10X1.5-THD) | |
| M | 29 | 3 | **8T-4195** | 4 | BOLT (M10X1.5X30-MM) | |
| M | 30 | 1,2,3 | **8T-4196** | 76 | BOLT (M10X1.5X35-MM) | |
| M | 31 | 1 | **9X-2044** | 4 | SCREW-TRUSS HEAD (M6X1X16-MM) | |
| E | 32 | 3 | **120-5281** | 2 | SEAL (108-CM EACH) | |
| D | 33 | 1 | **5P-7211** | | SEAL (0.5-M) | |
| E | 34 | 3 | **247-5838** | | SEAL (100-CM) | |
| E | 35 | 2 | **246-0435** | | SEAL (140-CM) | |
| | 36 | 3 | **255-9274** | 1 | PLATE | |
| | 37 | 4 | **252-5185** | 1 | BRACKET | |
| | 38 | 4 | **252-5184** | 1 | BRACKET AS | |
| M | | 4 | **8T-3490** | 1 | NUT-WELD (M10X1.5-THD) | |
| | 39 | 4 | **163-7988** | 6 | BUMPER AS | |

# FRAME AND BODY

## 234-9757 HOOD & GUARD GP *(contd.)* i02275037

| NOTE | REF NO | GRAPHIC REF | PART NUMBER | QTY | PART NAME 1 2 3 4 5 6 (PRODUCT LEVEL) | SEE PAGE |
|---|---|---|---|---|---|---|
| E | 40 | 2 | 112-9736 | | SEAL (212-CM) | |

D-ORDER BY THE METER
E-ORDER BY THE CENTIMETER
M-METRIC PART
Y-SEPARATE ILLUSTRATION

## 234-9757 HOOD & GUARD GP (contd.) i02275037

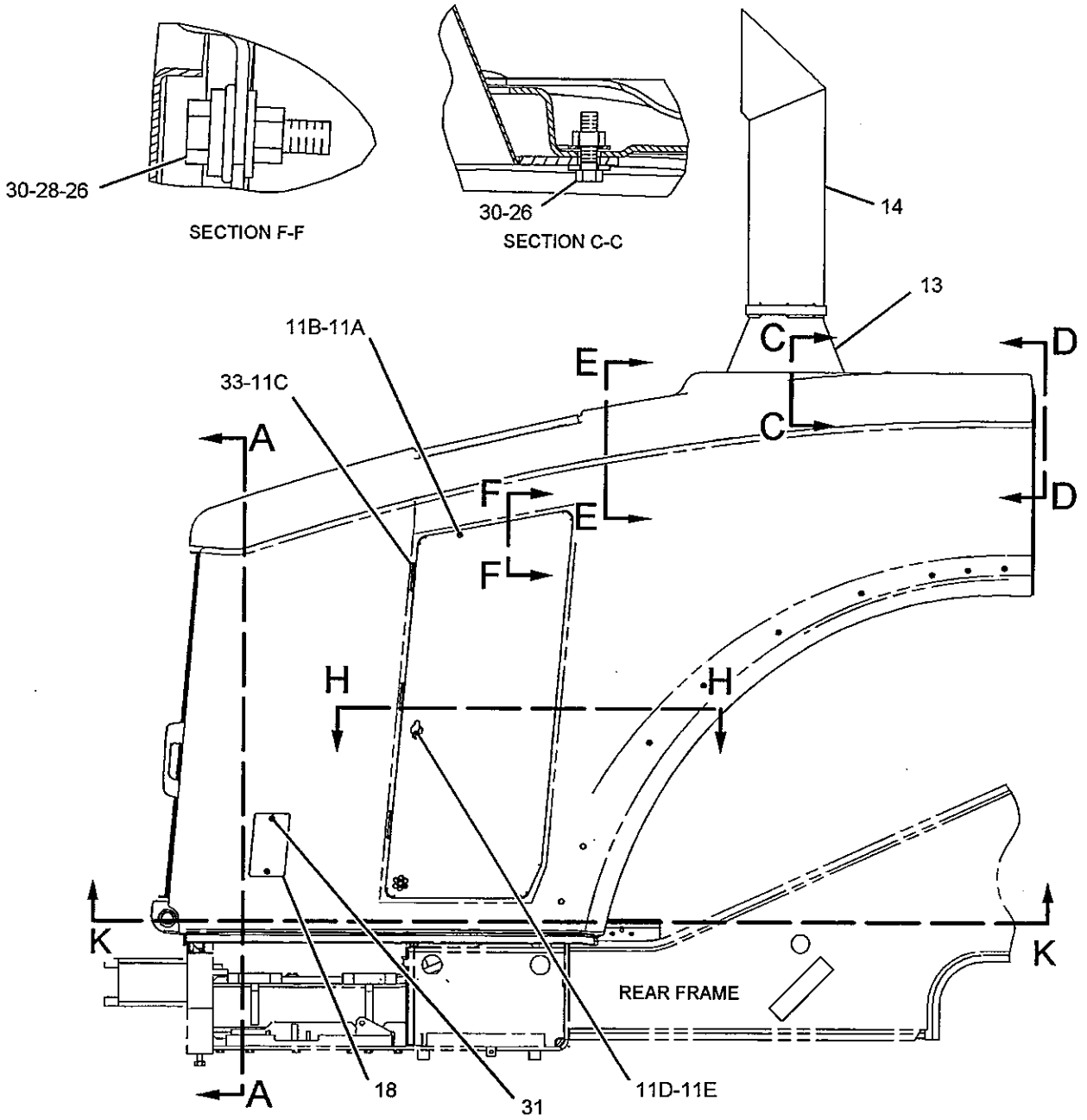


REFER TO ALL ILLUSTRATIONS OF THIS GROUP FOR AUXILIARY VIEWS

GRAPHIC #1

g01142142

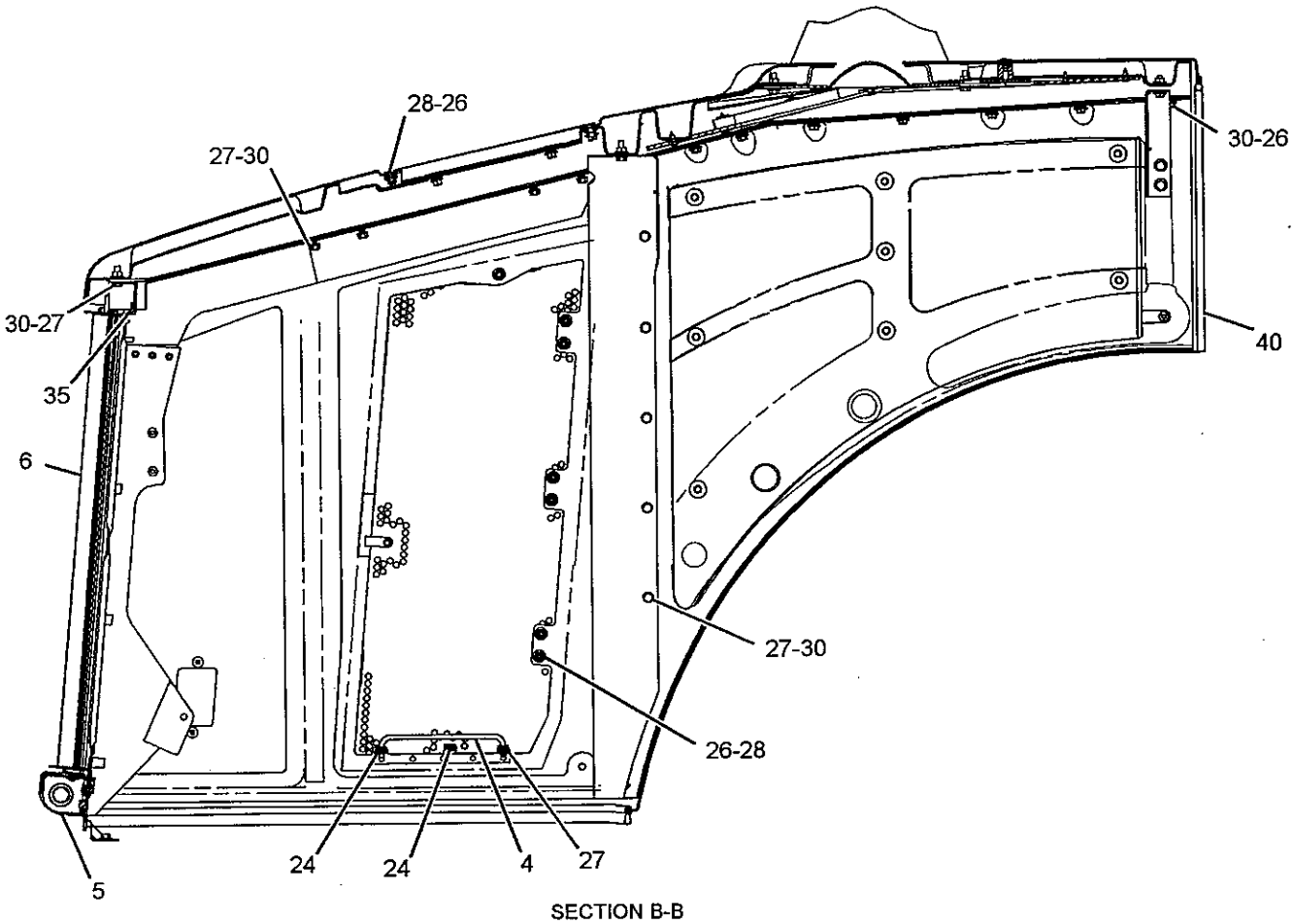


SECTION B-B

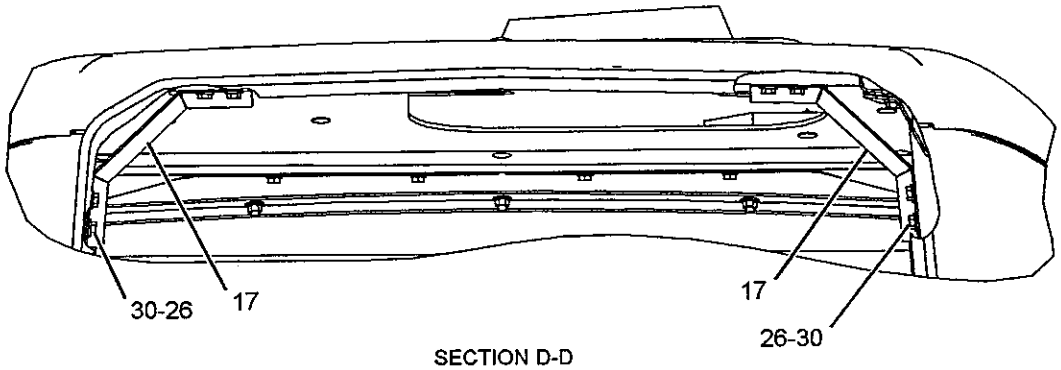


SECTION D-D

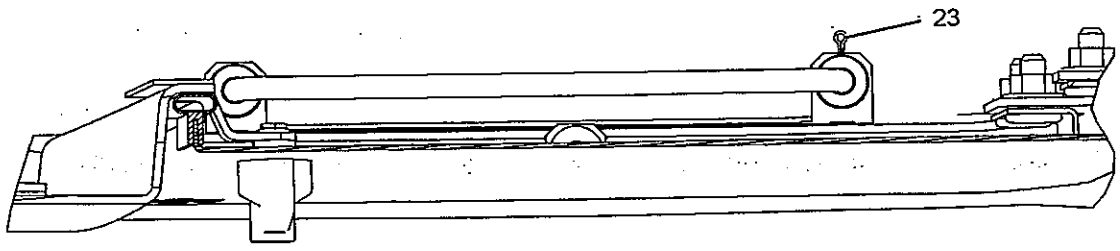


SECTION H-H

GRAPHIC #2 g01142143

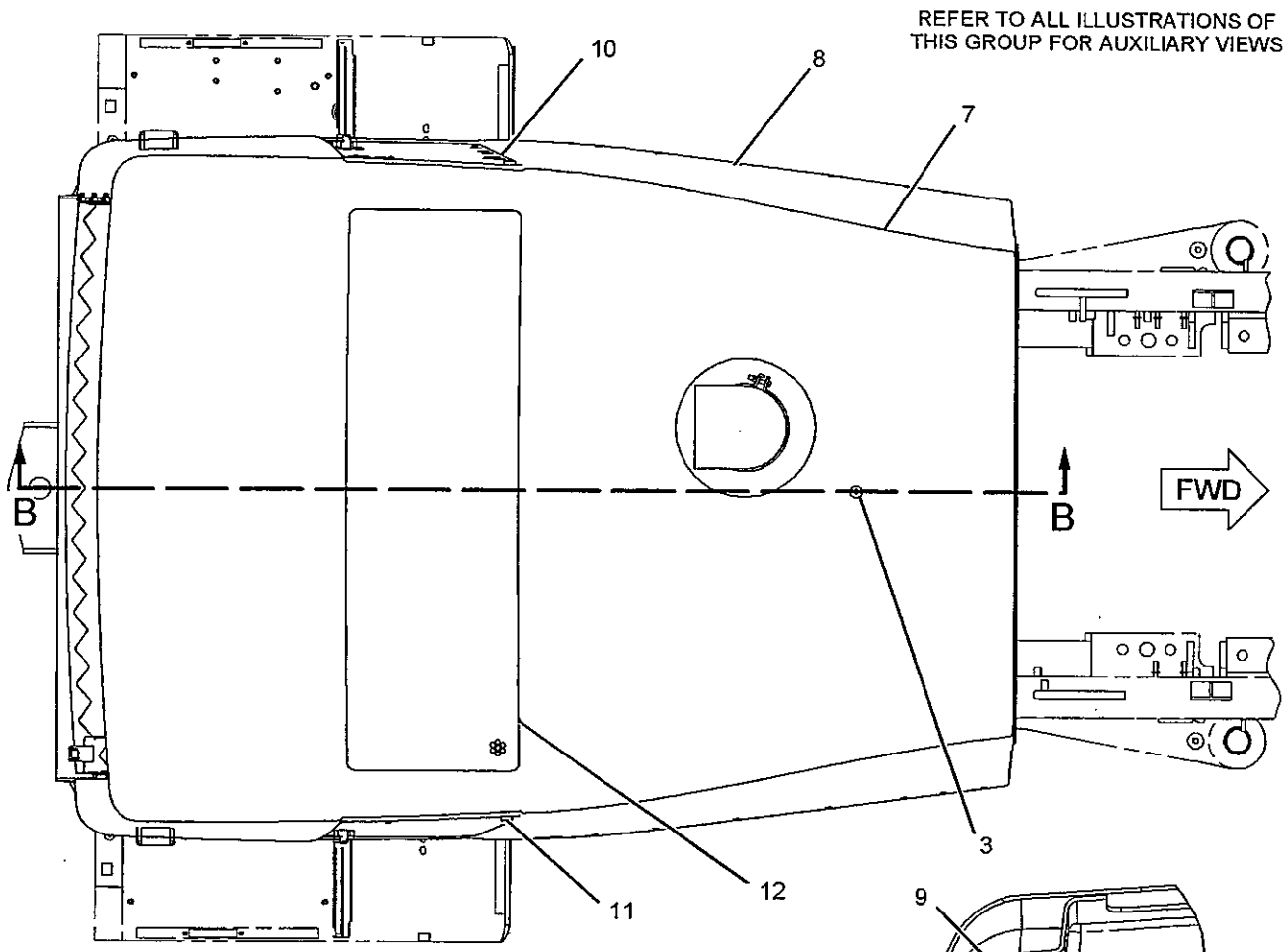


TOP VIEW

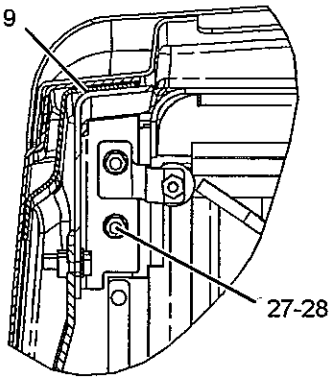


VIEW OF AREA L

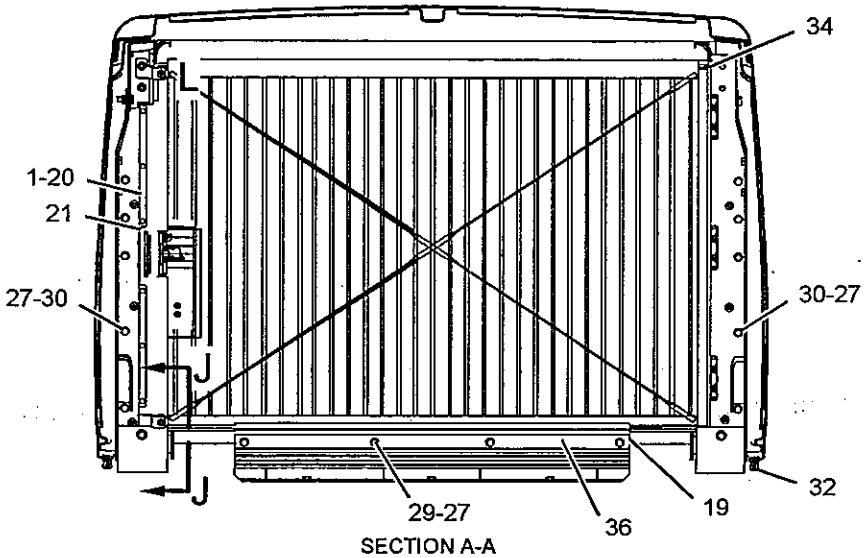


SECTION A-A

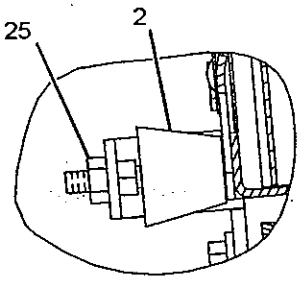


SECTION J-J

GRAPHIC #3

g01142144

234-9757 **HOOD & GUARD GP** *(contd.)* i02275037

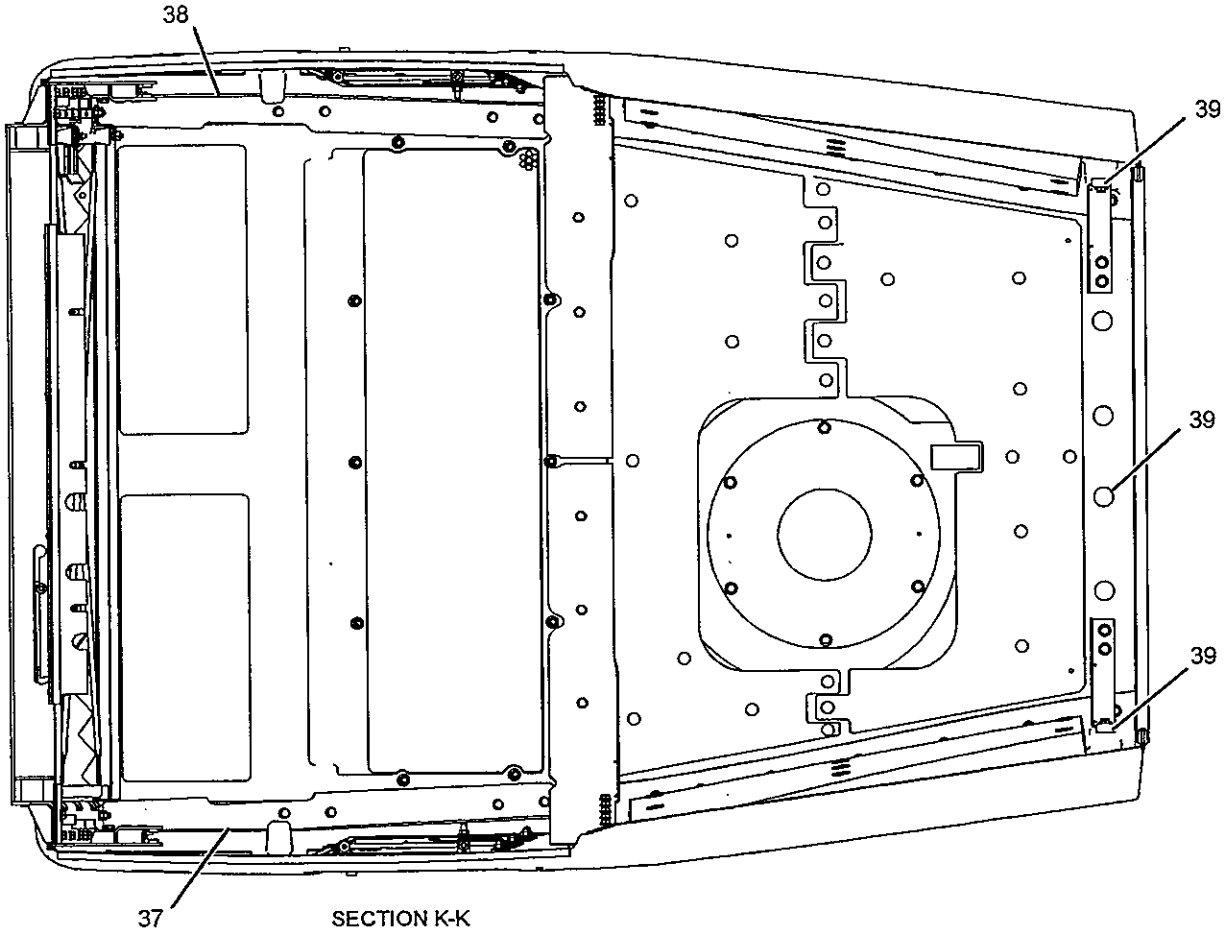


SECTION K-K

GRAPHIC #4 **<END>** g01142190

# FRAME AND BODY

## *231-3498* LADDER GP

**S/N: JMS1-UP**

**PART OF 225-5538 CHASSIS AR**

**SMCS-7254** **i02290327**

| NOTE | REF NO | GRAPHIC REF | PART NUMBER | QTY | PART NAME 1 2 3 4 5 6 (PRODUCT LEVEL) | SEE PAGE |
|---|---|---|---|---|---|---|
| | 1 | 1 | **7W-8106** | 32 | SPACER (15-MM THK) | |
| | 2 | 1 | **234-0385** | 1 | LADDER AS (RH) | |
| M | | 1 | **8T-3490** | 4 | NUT-WELD (M10X1.5-THD) | |
| | 3 | 1 | **234-0567** | 1 | HANDHOLD AS (FRONT, LH) | |
| | 4 | 1 | **234-0568** | 1 | HANDHOLD AS (FRONT, RH) | |
| | 5 | 1 | **234-0576** | 1 | HANDHOLD AS (REAR, LH) | |
| | 6 | 1 | **234-0577** | 1 | HANDHOLD AS (REAR, RH) | |
| | 7 | 1 | **234-1530** | 4 | STEP AS | |
| M | | 1 | **8T-3490** | 4 | NUT-WELD (M10X1.5-THD) | |
| | 8 | 1 | **234-1531** | 5 | STEP | |
| | 9 | 1 | **234-3545** | 16 | PLATE | |
| | 10 | 2 | **234-5101** | 4 | BRACKET AS | |
| M | | 2 | **8T-3490** | 4 | NUT-WELD (M10X1.5-THD) | |
| | 11 | 1 | **234-5106** | 2 | BELT-STEP | |
| | 12 | 1 | **234-5107** | 6 | BELT-STEP | |
| | 13 | 1,2 | **5P-1076** | 7 | WASHER-HARD (13.5X30X4-MM THK) | |
| | 14 | 1,2 | **7X-7729** | 20 | WASHER (11X25X3-MM THK) | |
| | 15 | 1,2 | **8T-4121** | 42 | WASHER-HARD (11X21X2.5-MM THK) | |
| M | 16 | 1,2 | **8T-4139** | 19 | BOLT (M12X1.75X30-MM) | |
| M | 17 | 1 | **8T-4186** | 32 | BOLT (M10X1.5X40-MM) | |
| M | 18 | 1,2 | **8T-4195** | 28 | BOLT (M10X1.5X30-MM) | |
| | 19 | 1,2 | **8T-4223** | 12 | WASHER-HARD (13.5X25.5X3-MM THK) | |
| M | 20 | 2 | **8T-6466** | 2 | BOLT (M10X1.5X60-MM) | |

M-METRIC PART

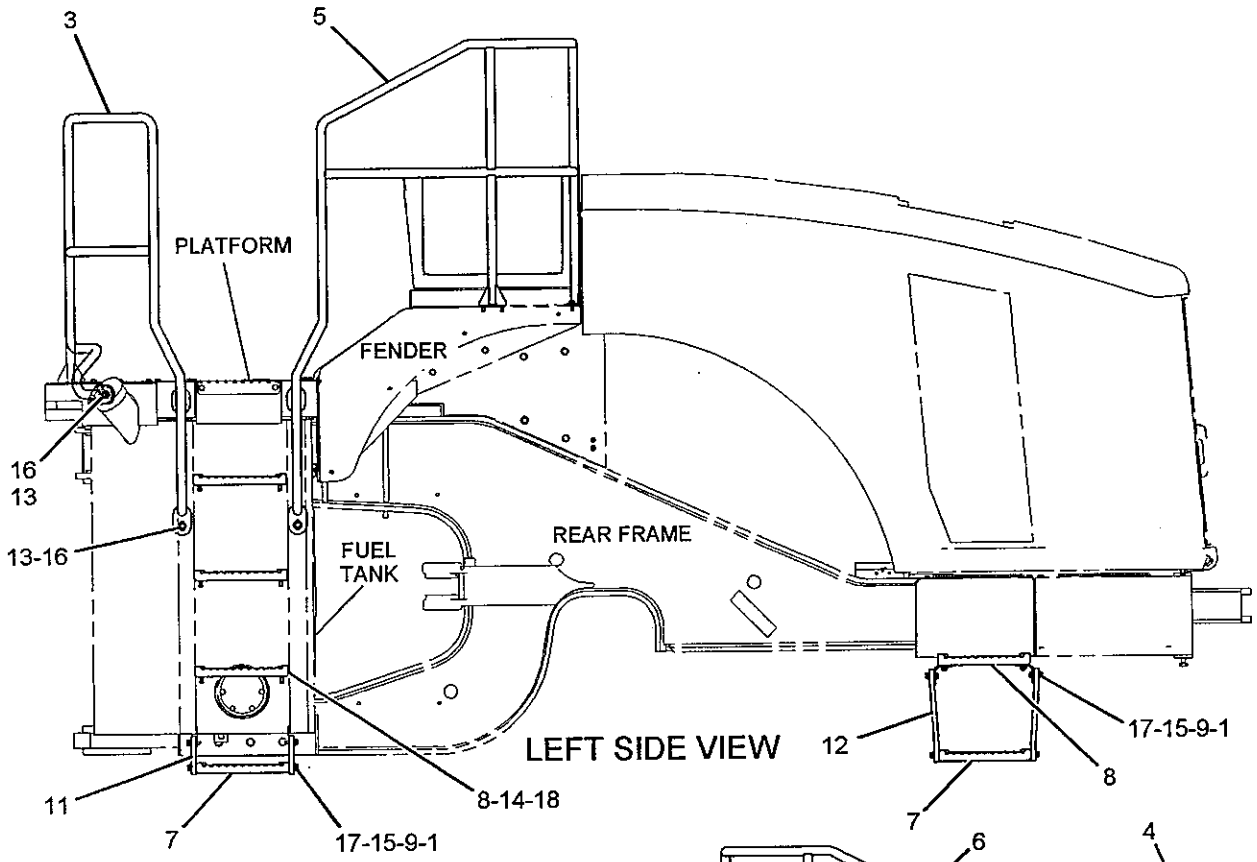


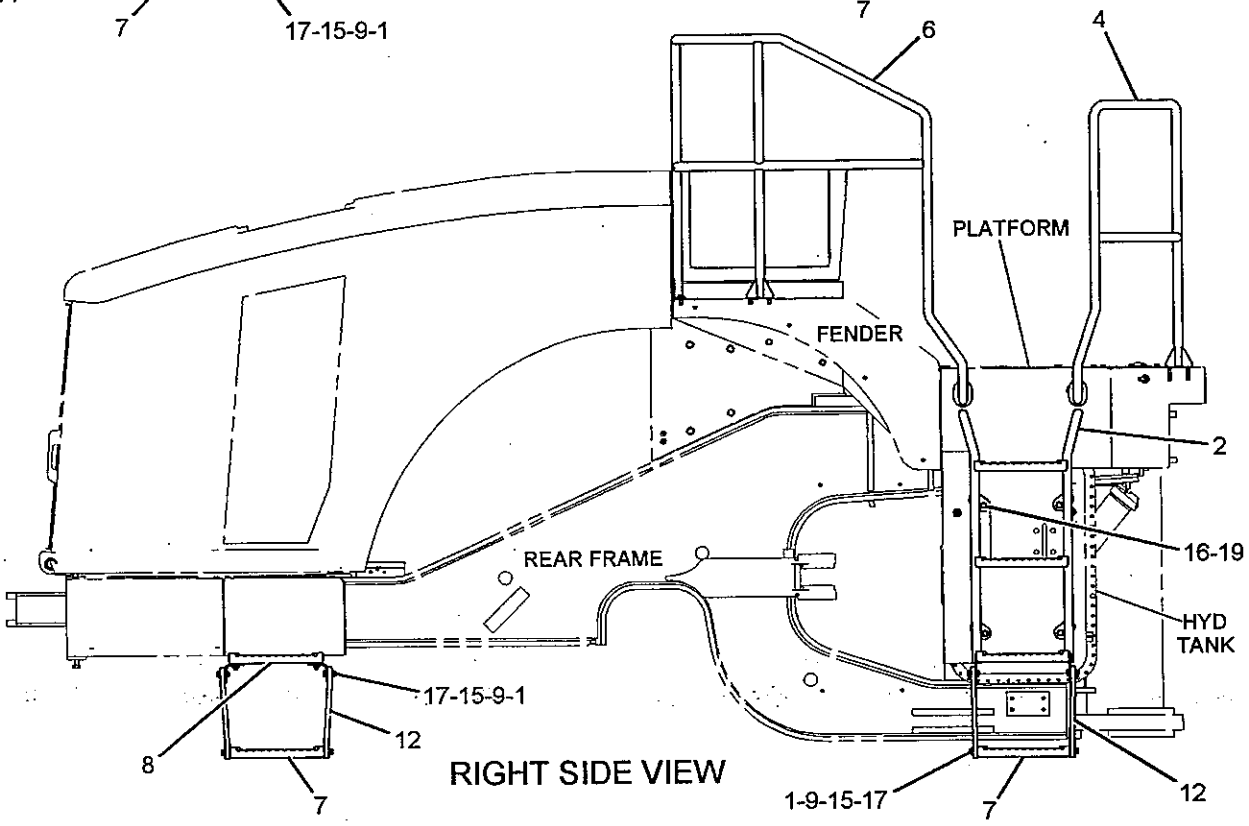


GRAPHIC #1

g01066217

231-3498 **LADDER GP** *(contd.)* i02290327

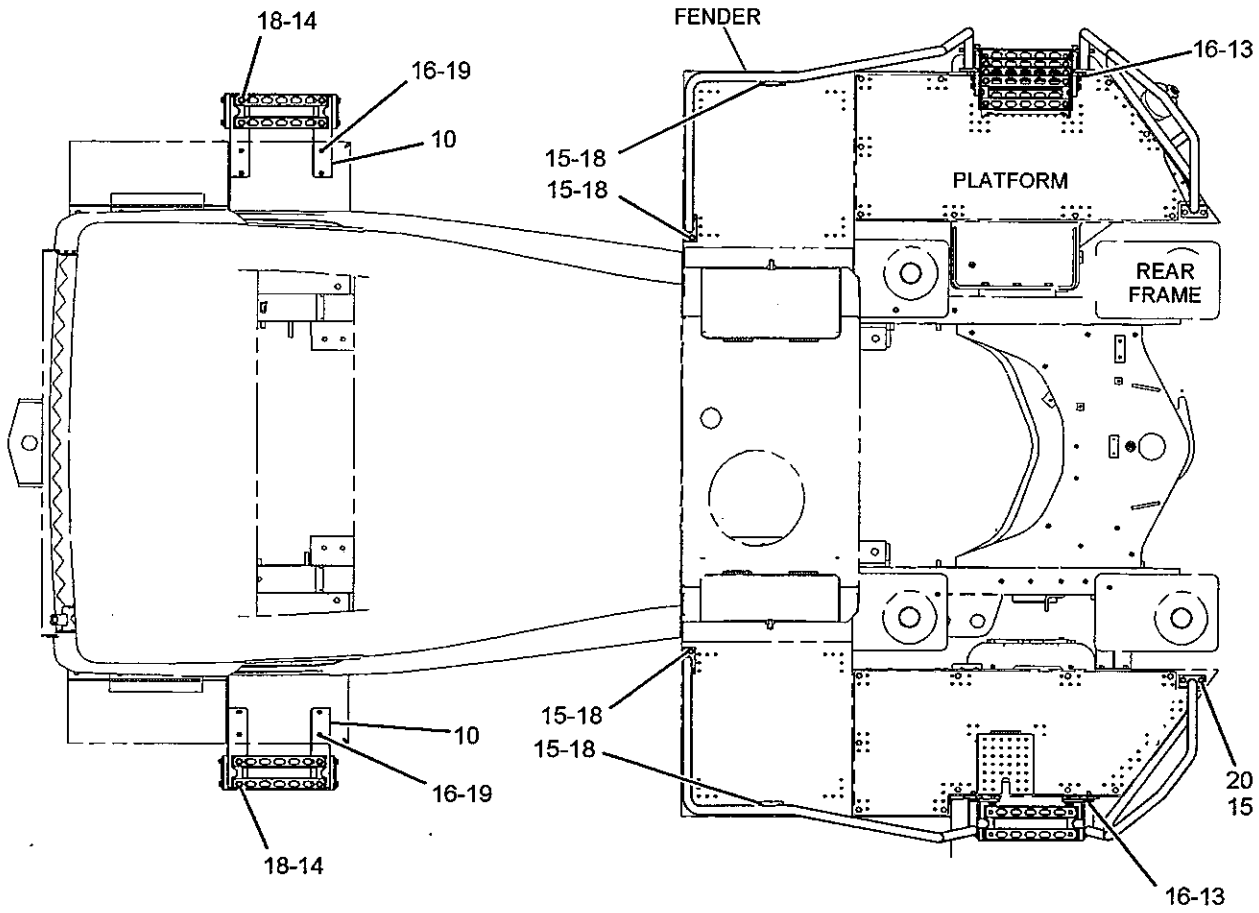


TOP VIEW

FWD

GRAPHIC #2 **<END>** g01066344

# 247-4348 LINES GP-AUTOMATIC LUBRICATION–REAR FRAME

S/N: JMS1-UP

PART OF 245-9432, 245-9433 LUBRICATION AR-AUTOMATIC AN ATTACHMENT

SMCS-7510, 7540

i02283976

| NOTE | REF NO | GRAPHIC REF | PART NUMBER | QTY | PART NAME 1 2 3 4 5 6 (PRODUCT LEVEL) | SEE PAGE |
|---|---|---|---|---|---|---|
| | 1 | 1 | **5K-9979** | 4 | CONNECTOR | |
| | 2 | 1 | **164-3523** | 1 | SUPPORT | |
| M | | 1 | **8T-3490** | 2 | NUT-WELD (M10X1.5-THD) | |
| M | | 1 | **8T-3612** | 4 | NUT-WELD (M8X1.25-THD) | |
| Y | 3 | 1 | **171-8823** | 1 | TANK GP-GREASE | 512 |
| Y | 4 | 1 | *249-8094* | 1 | LINES GP-LUBRICATION (LWR HITCH, STER CYL, TRUNNIONS) | 482 |
| | 5 | 1 | **250-0176** | 1 | COVER | |
| | 6 | 1 | **254-3761** | 1 | BRACKET | |
| M | 7 | 1 | **133-7810** | 1 | STUD-TAPERLOCK | |
| | 8 | 1 | **1S-0994** | 1 | CLIP | |
| | 9 | 1 | **4D-7794** | 2 | CLIP | |
| | 10 | 1 | **4M-8973** | 1 | ELBOW | |
| M | 11 | 1 | **5C-2890** | 2 | NUT (M6X1-THD) | |
| M | 12 | 1 | **5C-7261** | 3 | NUT (M8X1.25-THD) | |
| | 13 | 1 | **6V-3265** | 2 | CLIP | |
| | 14 | 1 | **7D-7233** | 1 | CLIP | |
| M | 15 | 1 | **7X-2534** | 2 | BOLT (M6X1X50-MM) | |
| M | 16 | 1 | **7X-2537** | 3 | BOLT (M8X1.25X35-MM) | |
| M | 17 | 1 | **7X-2552** | 1 | BOLT (M16X2X30-MM) | |
| | 18 | 1 | **8T-4121** | 13 | WASHER-HARD (11X21X2.5-MM THK) | |
| M | 19 | 1 | **8T-4133** | 3 | NUT (M10X1.5-THD) | |
| M | 20 | 1 | **8T-4136** | 6 | BOLT (M10X1.5X25-MM) | |
| M | 21 | 1 | **8T-4137** | 5 | BOLT (M10X1.5X20-MM) | |
| | 22 | 1 | **8T-4224** | 6 | WASHER-HARD (8.8X16X2-MM THK) | |
| | 23 | 1 | **9M-8406** | 2 | CLIP | |
| | 24 | 1 | **9X-8256** | 4 | WASHER (6.6X12X2-MM THK) | |
| | 25 | 1 | **9X-8257** | 1 | WASHER (17.5X30X3.5-MM THK) | |

M-METRIC PART
Y-SEPARATE ILLUSTRATION

## 247-4348 LINES GP-AUTOMATIC LUBRICATION (contd.) i02283976

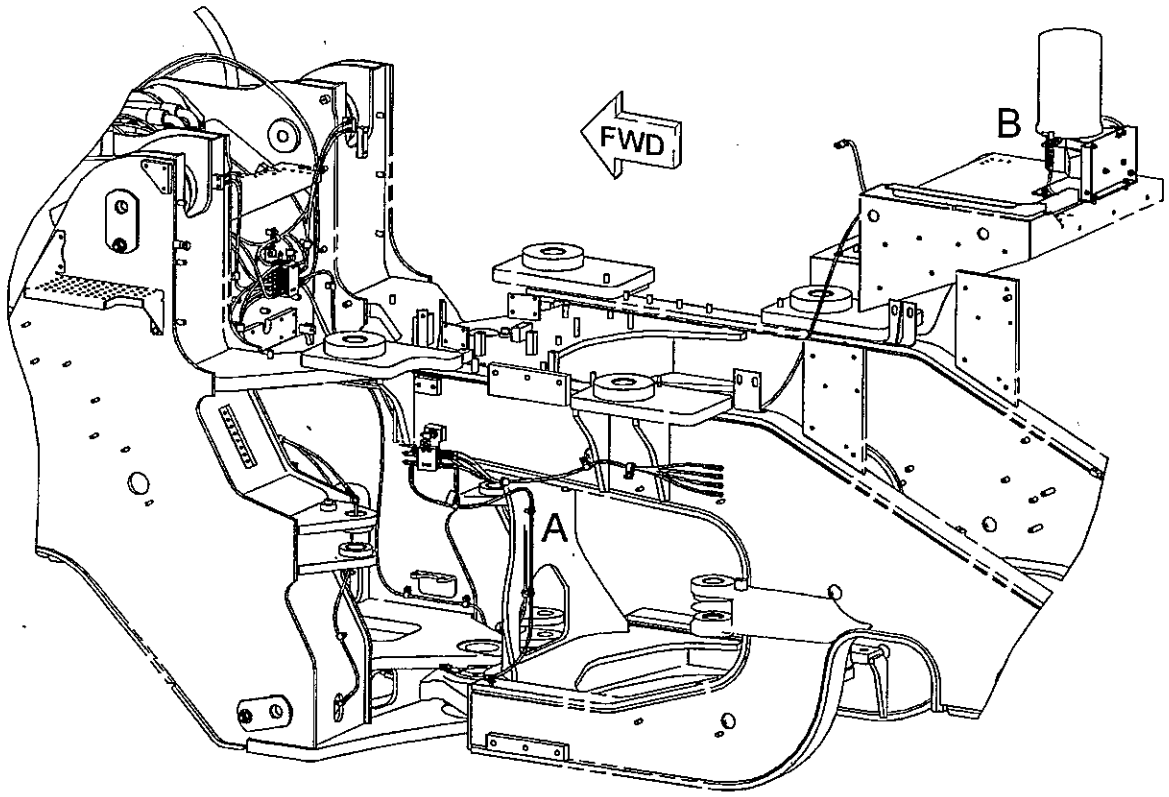


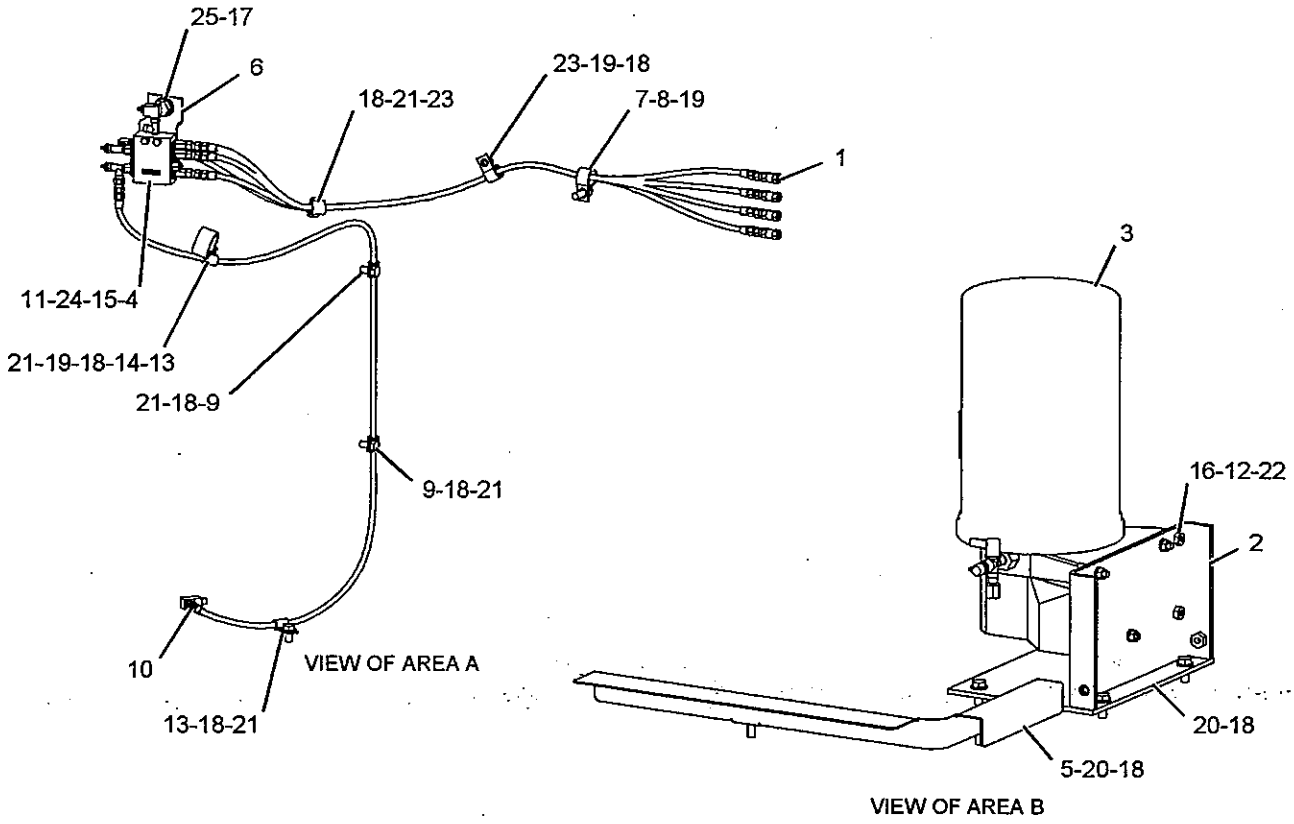


GRAPHIC #1 <END> g01143391

# 247-6740 LINES GP-AUTOMATIC LUBRICATION-

## LOADER FRAME

S/N: JMS1-UP

PART OF 245-9432 LUBRICATION AR-AUTOMATIC

AN ATTACHMENT

SMCS-7510, 7540

i02284017

| NOTE | REF NO | GRAPHIC REF | PART NUMBER | QTY | PART NAME 1 2 3 4 5 6 (PRODUCT LEVEL) | SEE PAGE |
|---|---|---|---|---|---|---|
| | 1 | 1 | 5K-9979 | 2 | CONNECTOR | |
| | 2 | 1 | 6L-3616 | 2 | CONNECTOR | |
| | 3 | 1 | 7K-1181 | 4 | STRAP-CABLE | |
| | 4 | 1,1 | 171-8861 | 2 | BRACKET | |
| | 5 | 1 | 177-3484 | 2 | BOLT | |
| | 6 | 1 | 186-1624 | 2 | GUARD | |
| | 7 | 1 | 207-3216 | 2 | BUSHING | |
| | 8 | 1 | 218-0618 | 2 | BRACKET | |
| Y | 9 | 1 | *247-6890* | 2 | LINES GP-LUBRICATION (BUCKET LINKS, TILT CYLINDER) | 481 |
| | 10 | 1 | 247-7277 | 2 | TUBE AS | |
| Y | 11 | 1 | *268-1654* | 1 | LINES GP-LUBRICATION (TILT LEVER) | 485 |
| | 12 | 1 | 268-4097 | 2 | COVER | |
| | 13 | 1 | 002-0639 | 2 | ADAPTER-PIPE | |
| | 14 | 1 | 130-8433 | 4 | GROMMET | |
| | 15 | 1 | 132-7551 | 10 | SPACER (11X19X6-MM THK) | |
| | 16 | 1 | 2B-2404 | 4 | CLIP | |
| | 17 | 1 | 2T-3019 | 4 | CLIP | |
| | 18 | 1 | 3B-6552 | 2 | ELBOW | |
| | 19 | 1 | 3B-7896 | 2 | ELBOW-STREET | |
| | 20 | 1 | 3B-8822 | 2 | ELBOW | |
| | 21 | 1 | 4D-7794 | 6 | CLIP | |
| | 22 | 1 | 4K-8864 | 2 | CLIP | |
| | 23 | 1 | 6K-6967 | 4 | ADAPTER-PIPE | |
| | 24 | 1 | 6V-4356 | 4 | CLIP (SLOT) | |
| | 25 | 1 | 6V-4357 | 4 | CLIP (TAB) | |
| M | 26 | 1 | 7X-2534 | 4 | BOLT (M6X1X50-MM) | |
| | 27 | 1 | 8L-5008 | 2 | ELBOW-PIPE | |
| | 28 | 1 | 8T-4121 | 20 | WASHER-HARD (11X21X2.5-MM THK) | |
| M | 29 | 1 | 8T-4133 | 16 | NUT (M10X1.5-THD) | |
| M | 30 | 1 | 8T-4136 | 2 | BOLT (M10X1.5X25-MM) | |
| M | 31 | 1 | 8T-4137 | 4 | BOLT (M10X1.5X20-MM) | |
| M | 32 | 1 | 8T-4186 | 2 | BOLT (M10X1.5X40-MM) | |
| M | 33 | 1 | 8T-4191 | 4 | BOLT (M10X1.5X16-MM) | |
| M | 34 | 1 | 8T-4196 | 2 | BOLT (M10X1.5X35-MM) | |
| | 35 | 1 | 9X-8582 | 4 | CLIP | |

M-METRIC PART
Y-SEPARATE ILLUSTRATION

## 247-6740 LINES GP-AUTOMATIC LUBRICATION *(contd.)* i02284017

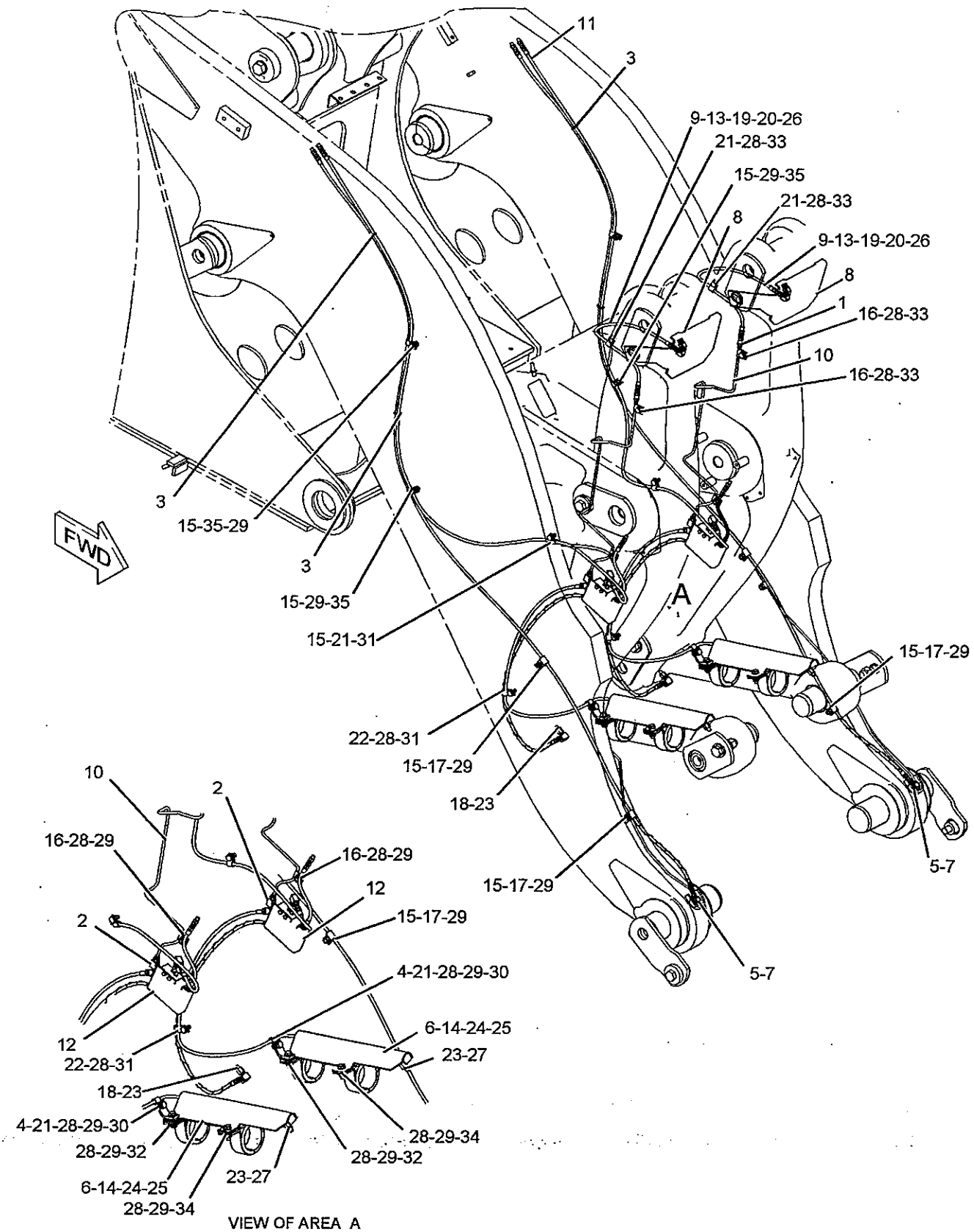


VIEW OF AREA A

GRAPHIC #1 **<END>** g01143297

# 247-9762 LINES GP-AUTOMATIC LUBRICATION-

LOADER FRAME
S/N: JMS1-UP
PART OF 245-9433 LUBRICATION AR-AUTOMATIC
AN ATTACHMENT

SMCS-7510, 7540

i02287332

| NOTE | REF NO | GRAPHIC REF | PART NUMBER | QTY | PART NAME 1 2 3 4 5 6 (PRODUCT LEVEL) | SEE PAGE |
|---|---|---|---|---|---|---|
| | 1 | 1 | **5K-9979** | 2 | CONNECTOR | |
| | 2 | 1 | **6L-3616** | 2 | CONNECTOR | |
| | 3 | 1 | **7K-1181** | 4 | STRAP-CABLE | |
| | 4 | 1 | **171-8861** | 2 | BRACKET | |
| | 5 | 1 | **177-3484** | 2 | BOLT | |
| | 6 | 1 | **186-1624** | 2 | GUARD | |
| | 7 | 1 | **207-3216** | 2 | BUSHING | |
| | 8 | 1 | **218-0618** | 2 | BRACKET | |
| Y | 9 | 1 | *247-6890* | 2 | LINES GP-LUBRICATION (BUCKET LINKS, TILT CYLINDER) | 481 |
| | 10 | 1 | **247-7277** | 2 | TUBE AS | |
| | 11 | 1 | **268-4097** | 2 | COVER | |
| Y | 12 | 1 | *268-8092* | 1 | LINES GP-LUBRICATION (BUCKET PINS, TILT LEVER) | 486 |
| | 13 | 1 | **002-0639** | 2 | ADAPTER-PIPE | |
| | 14 | 1 | **130-8433** | 4 | GROMMET | |
| | 15 | 1 | **132-7551** | 8 | SPACER (11X19X6-MM THK) | |
| | 16 | 1 | **2B-2404** | 4 | CLIP | |
| | 17 | 1 | **2T-3019** | 4 | CLIP | |
| | 18 | 1 | **3B-6552** | 2 | ELBOW | |
| | 19 | 1 | **3B-7896** | 2 | ELBOW-STREET | |
| | 20 | 1 | **3B-8822** | 2 | ELBOW | |
| | 21 | 1 | **4D-7794** | 6 | CLIP | |
| | 22 | 1 | **4K-8864** | 2 | CLIP | |
| | 23 | 1 | **6K-6967** | 4 | ADAPTER-PIPE | |
| | 24 | 1 | **6V-4356** | 4 | CLIP (SLOT) | |
| | 25 | 1 | **6V-4357** | 4 | CLIP (TAB) | |
| M | 26 | 1 | **7X-2534** | 4 | BOLT (M6X1X50-MM) | |
| | 27 | 1 | **8L-5008** | 2 | ELBOW-PIPE | |
| | 28 | 1 | **8T-4121** | 22 | WASHER-HARD (11X21X2.5-MM THK) | |
| M | 29 | 1 | **8T-4133** | 16 | NUT (M10X1.5-THD) | |
| M | 30 | 1 | **8T-4136** | 2 | BOLT (M10X1.5X25-MM) | |
| M | 31 | 1 | **8T-4137** | 4 | BOLT (M10X1.5X20-MM) | |
| M | 32 | 1 | **8T-4186** | 2 | BOLT (M10X1.5X40-MM) | |
| M | 33 | 1 | **8T-4191** | 4 | BOLT (M10X1.5X16-MM) | |
| M | 34 | 1 | **8T-4196** | 2 | BOLT (M10X1.5X35-MM) | |
| | 35 | 1 | **9X-8256** | 4 | WASHER (6.6X12X2-MM THK) | |
| | 36 | 1 | **9X-8582** | 4 | CLIP | |

M-METRIC PART
Y-SEPARATE ILLUSTRATION

## 247-9762 LINES GP-AUTOMATIC LUBRICATION *(contd.)* i02287332

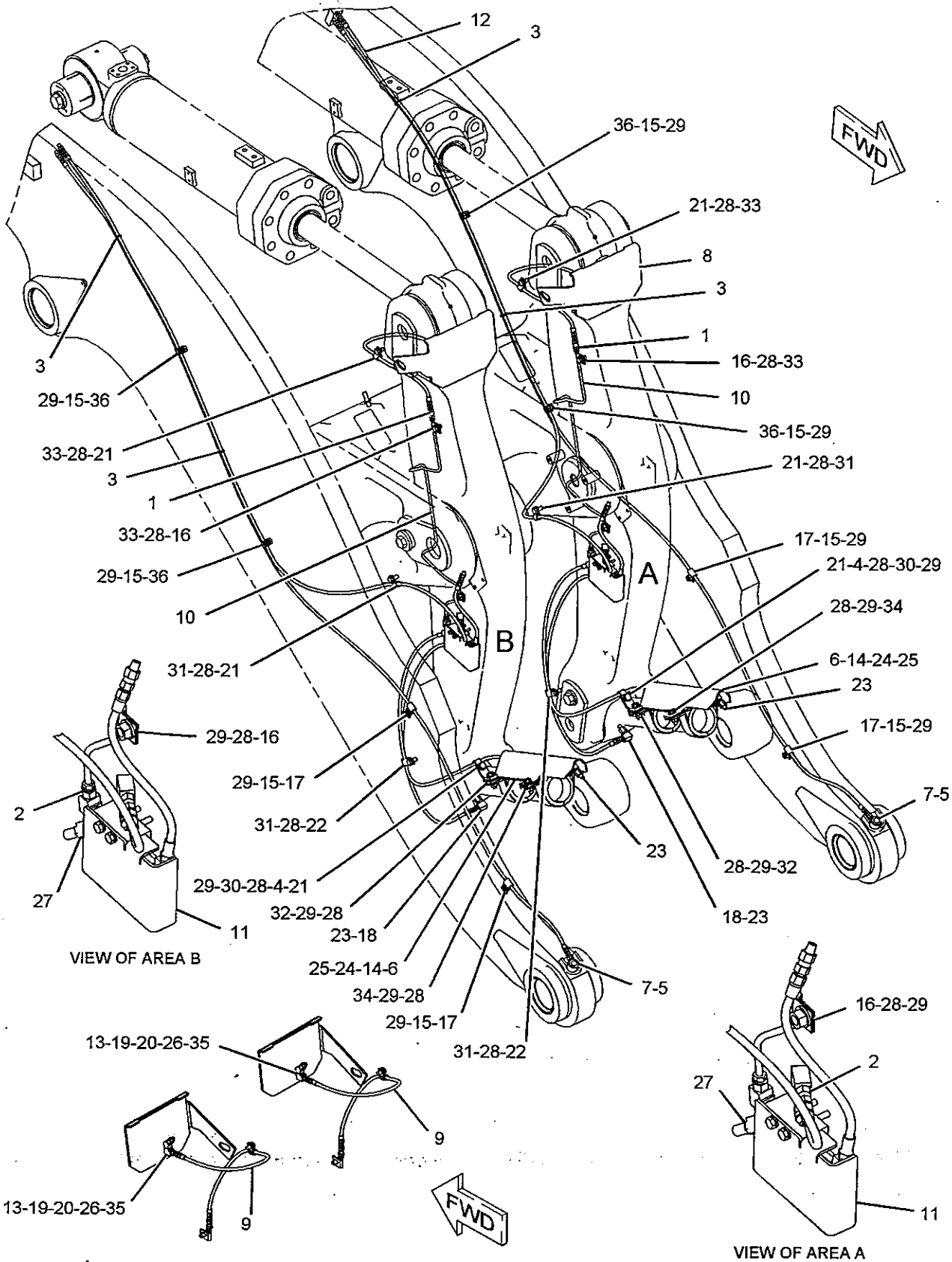


GRAPHIC #1

**<END>**

g01143201

# FRAME AND BODY

## *250-0177* LINES GP-AUTOMATIC LUBRICATION–CHASSIS

**S/N: JMS1-UP**

**PART OF 245-9432, 245-9433 LUBRICATION AR-AUTOMATIC AN ATTACHMENT**

**SMCS-7510, 7540** i02285338

| NOTE | REF NO | GRAPHIC REF | PART NUMBER | QTY | PART NAME 1 2 3 4 5 6 (PRODUCT LEVEL) | SEE PAGE |
|---|---|---|---|---|---|---|
| | 1 | 1 | **3S-2093** | 3 | STRAP-CABLE | |
| | 2 | 1 | **160-1744** | 1 | BRACKET | |
| Y | 3 | 1 | *247-4349* | 1 | LINES GP-LUBRICATION (B-PINS, TILT LEVERS) | 479 |
| Y | 4 | 1 | *249-8095* | 1 | LINES GP-LUBRICATION (LIFT, TILT, STEER CYL, HITCH) | 484 |
| | 5 | 1 | **4D-7794** | 8 | CLIP | |
| | 6 | 1 | **6V-3265** | 2 | CLIP | |
| | 7 | 1 | **8M-2773** | 2 | CLIP | |
| | 8 | 1 | **8T-4121** | 21 | WASHER-HARD (11X21X2.5-MM THK) | |
| M | 9 | 1 | **8T-4133** | 6 | NUT (M10X1.5-THD) | |
| M | 10 | 1 | **8T-4136** | 1 | BOLT (M10X1.5X25-MM) | |
| M | 11 | 1 | **8T-4137** | 14 | BOLT (M10X1.5X20-MM) | |
| M | 12 | 1 | **8T-6974** | 2 | BOLT (M6X1X80-MM) | |
| | 13 | 1 | **9M-8406** | 4 | CLIP | |
| | 14 | 1 | **9X-8256** | 2 | WASHER (6.6X12X2-MM THK) | |
| | 15 | 1 | **9X-8582** | 6 | CLIP | |

M-METRIC PART
Y-SEPARATE ILLUSTRATION

## 250-0177 LINES GP-AUTOMATIC LUBRICATION *(contd.)* i02285338

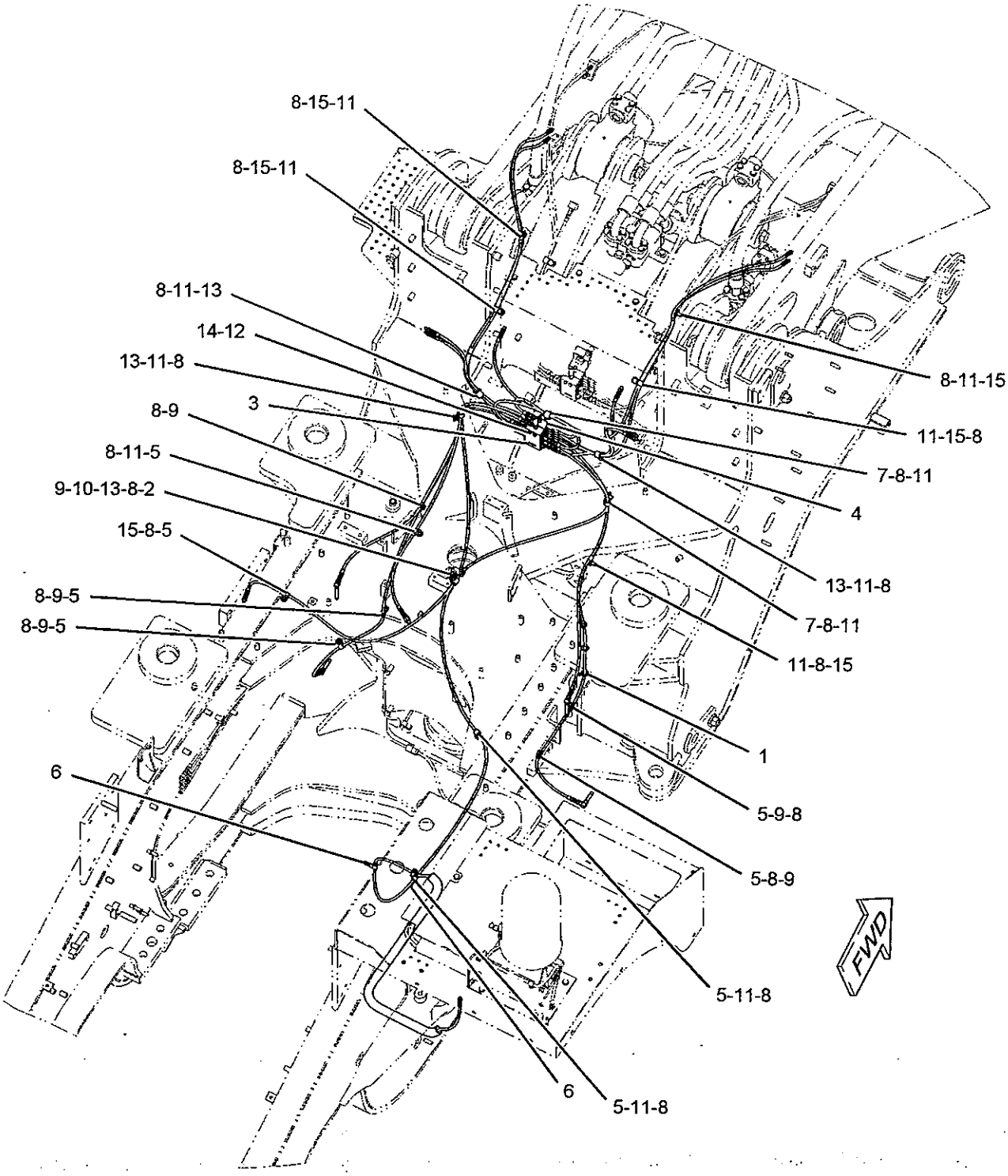


GRAPHIC #1 **<END>** g01144034

# FRAME AND BODY

## 247-7600 LINES GP-GREASE

S/N: JMS1-UP

PART OF 225-5538 CHASSIS AR

SMCS-7510

i02088654

| NOTE | REF NO | GRAPHIC REF | PART NUMBER | QTY | PART NAME 1 2 3 4 5 6 (PRODUCT LEVEL) | SEE PAGE |
|---|---|---|---|---|---|---|
| | 1 | 2 | 2V-0460 | 1 | HOSE AS | |
| | 2 | 1,2,4 | 3B-8489 | 13 | FITTING-GREASE | |
| | 3 | 1 | 4B-8756 | 1 | NUT-FLARED (7/16-24-THD) | |
| | 4 | 4 | 5K-9242 | 5 | UNION-FLARED | |
| | 5 | 1,4 | 5K-9243 | 8 | ELBOW-FLARED | |
| I | 6 | 2 | 6C-3029 | 4 | HOSE AS | |
| | 7 | 1,2,3,4 | 6L-3616 | 23 | CONNECTOR | |
| | 8 | 2 | 7I-3181 | 1 | TUBE AS | |
| | 9 | 2 | 7I-3183 | 1 | TUBE AS | |
| | 10 | 1,4 | 9S-7712 | 3 | ELBOW-FLARED | |
| | 11 | 2 | 116-7882 | 1 | TUBE AS | |
| | 12 | 2 | 116-7883 | 1 | TUBE AS | |
| | 13 | 4 | 124-9020 | 1 | TUBE AS | |
| | 14 | 2 | 196-9485 | 1 | TUBE AS | |
| | 15 | 3 | 196-9486 | 1 | TUBE AS | |
| | 16 | 1 | 196-9487 | 1 | TUBE AS | |
| | 17 | 1 | 196-9488 | 1 | TUBE AS | |
| | 18 | 1 | 196-9489 | 1 | TUBE AS | |
| | 19 | 1 | 196-9490 | 1 | TUBE AS | |
| | 20 | 3 | 196-9496 | 1 | TUBE AS | |
| | 21 | 3 | 196-9497 | 1 | TUBE AS | |
| | 22 | 3 | 196-9498 | 1 | TUBE AS | |
| | 23 | 3 | 196-9499 | 1 | TUBE AS | |
| | 24 | 3 | 196-9501 | 1 | TUBE AS | |
| | 25 | 1 | 226-7180 | 1 | TUBE AS | |
| | 26 | 1 | 226-7181 | 1 | TUBE AS | |
| | 27 | 1 | 226-7182 | 1 | TUBE AS | |
| | 28 | 1 | 226-7183 | 1 | TUBE AS | |
| | 29 | 2 | 239-3181 | 1 | HOSE AS | |
| | 30 | 2 | 239-3182 | 1 | TUBE AS | |
| | 31 | 2 | 247-7120 | 1 | TUBE AS | |
| | 32 | 2 | 247-7121 | 1 | HOSE AS | |
| | 33 | 2 | 0L-2072 | 2 | CLIP | |
| | 34 | 1,2,3,4 | 2B-2404 | 12 | CLIP | |
| | 35 | 2 | 3B-6493 | 1 | ELBOW-PIPE | |
| | 36 | 2 | 3B-7263 | 1 | NIPPLE-PIPE | |
| | 37 | 4 | 3B-7734 | 3 | NIPPLE-PIPE | |
| | 38 | 3,4 | 4M-8973 | 6 | ELBOW | |
| | 39 | 3,4 | 5K-2298 | 14 | CLIP | |
| | 40 | 1,2,3,4 | 8T-4121 | 22 | WASHER-HARD (11X21X2.5-MM THK) | |
| M | 41 | 1,2,4 | 8T-4133 | 10 | NUT (M10X1.5-THD) | |
| M | 42 | 2,3,4 | 8T-4137 | 12 | BOLT (M10X1.5X20-MM) | |

I-REFER TO HYDRAULIC INFORMATION SYSTEM
M-METRIC PART

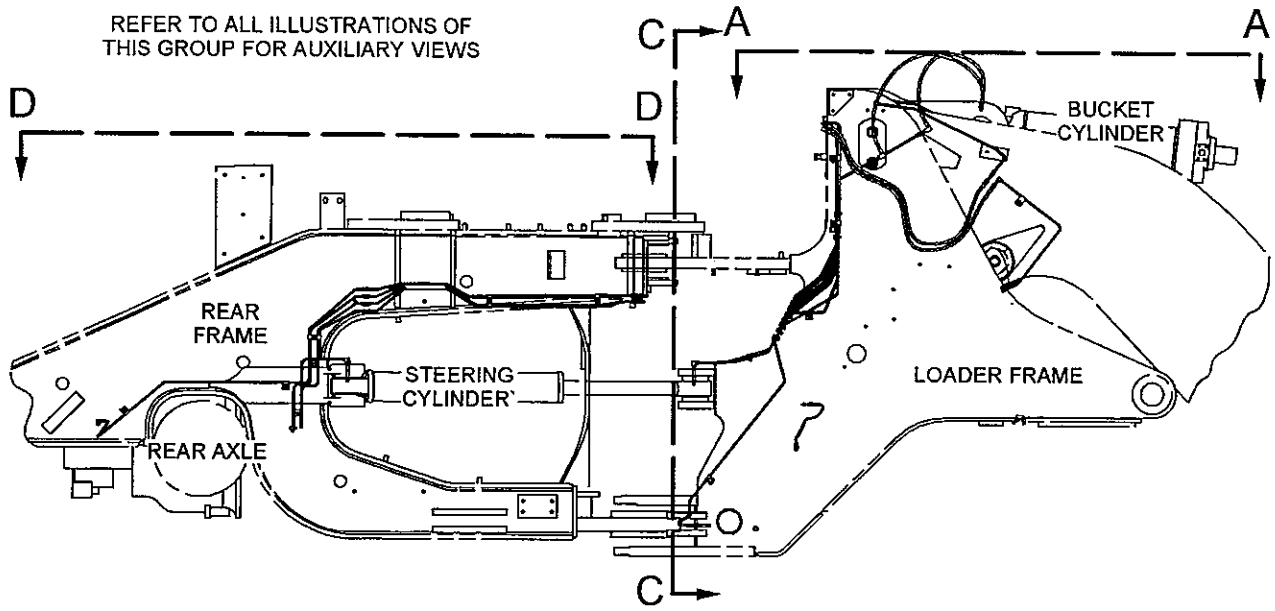


RIGHT SIDE VIEW

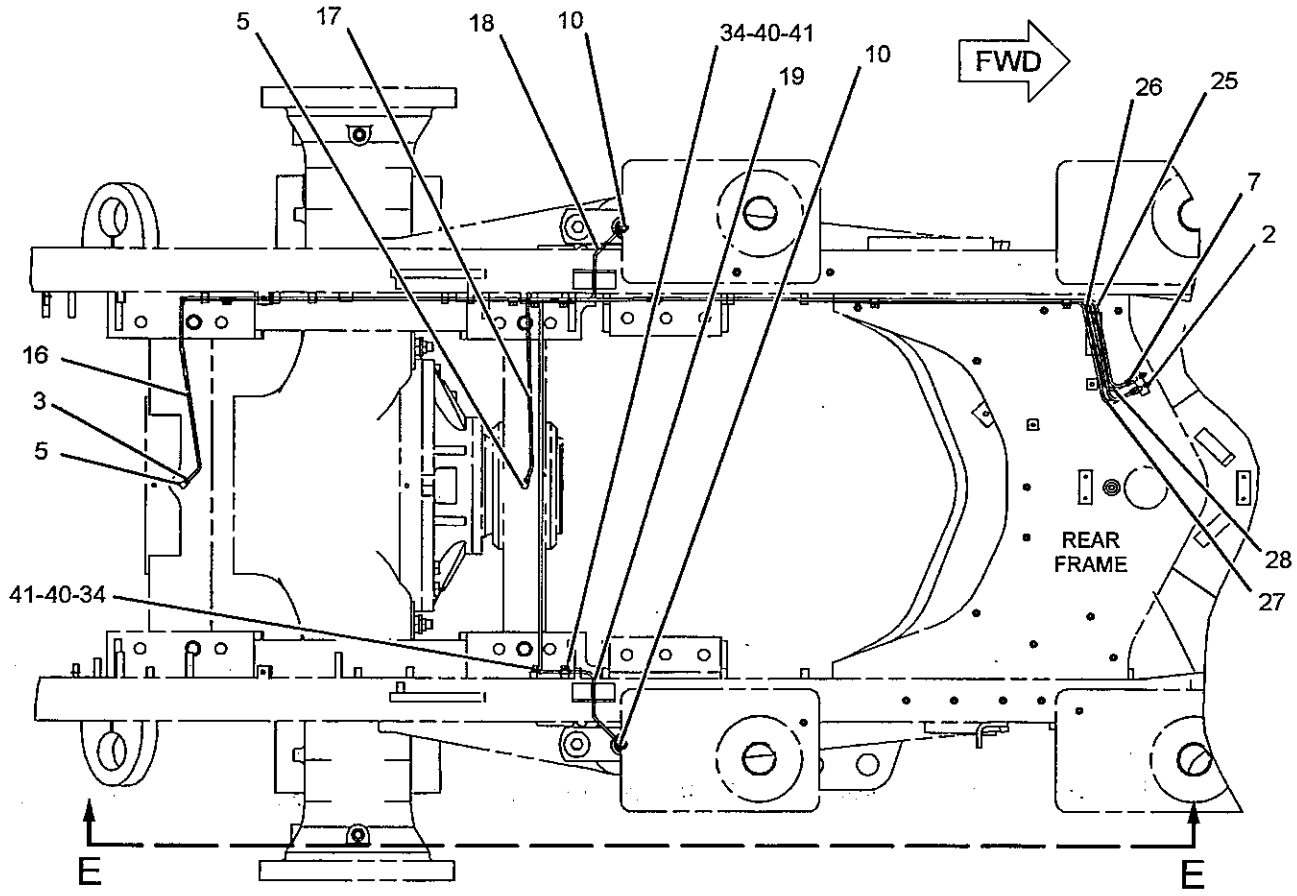


VIEW D-D

GRAPHIC #1

g01067286

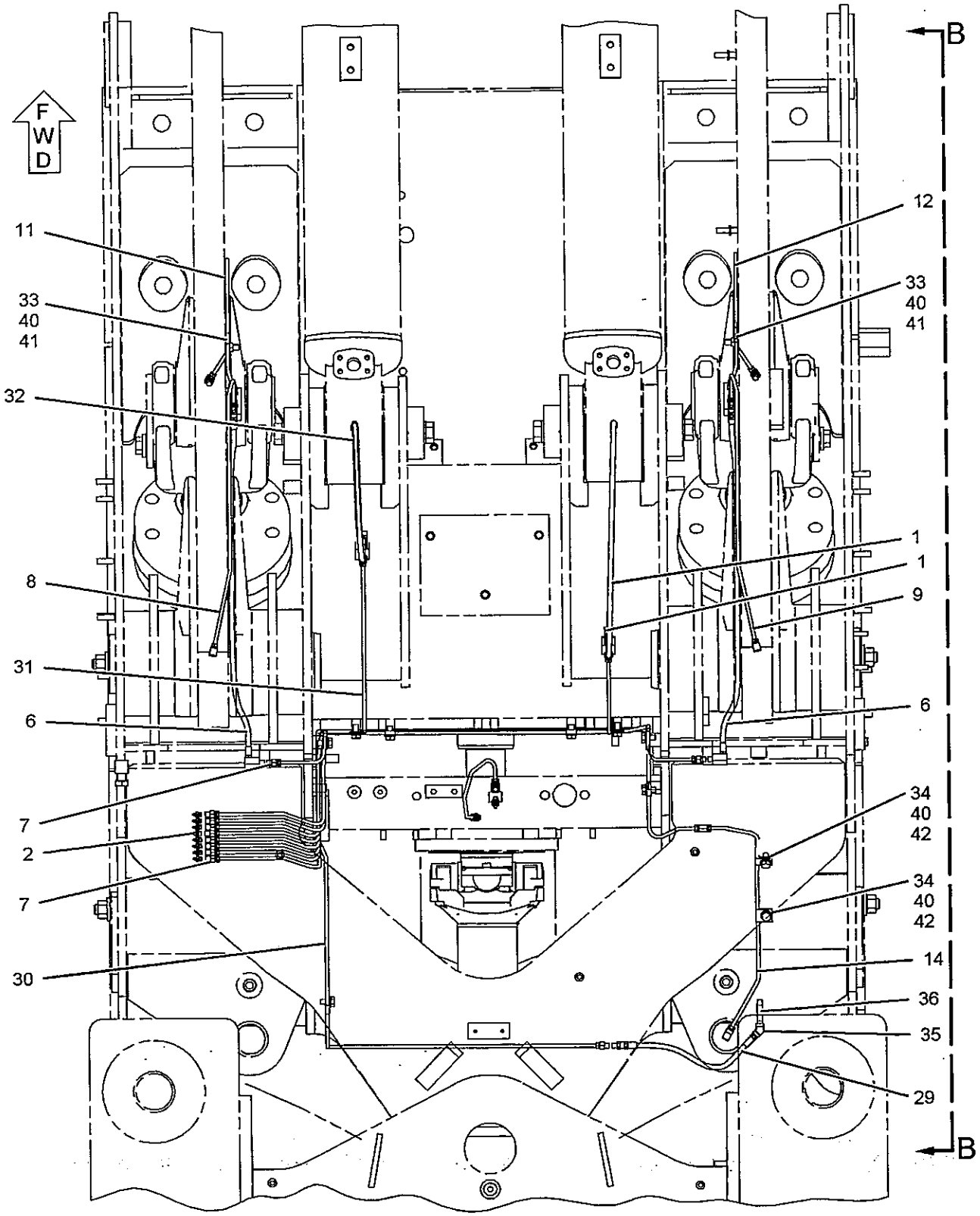


VIEW A-A

REFER TO ALL ILLUSTRATIONS OF THIS GROUP FOR AUXILIARY VIEWS

GRAPHIC #2

g01067288

## 247-7600 LINES GP-GREASE (contd.) i02088654

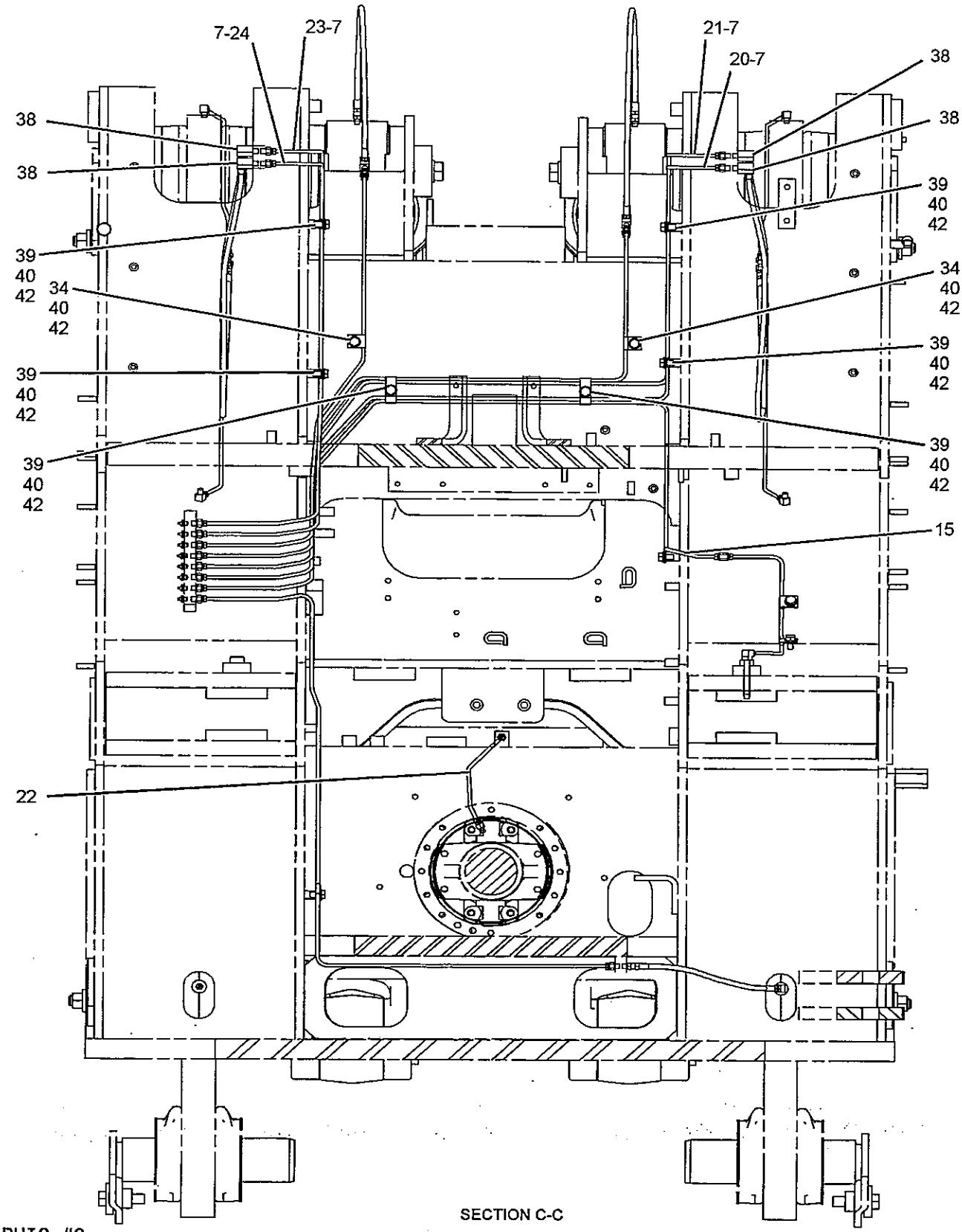


SECTION C-C

GRAPHIC #3

g01067290

## 247-7600 LINES GP-GREASE (contd.) i02088654

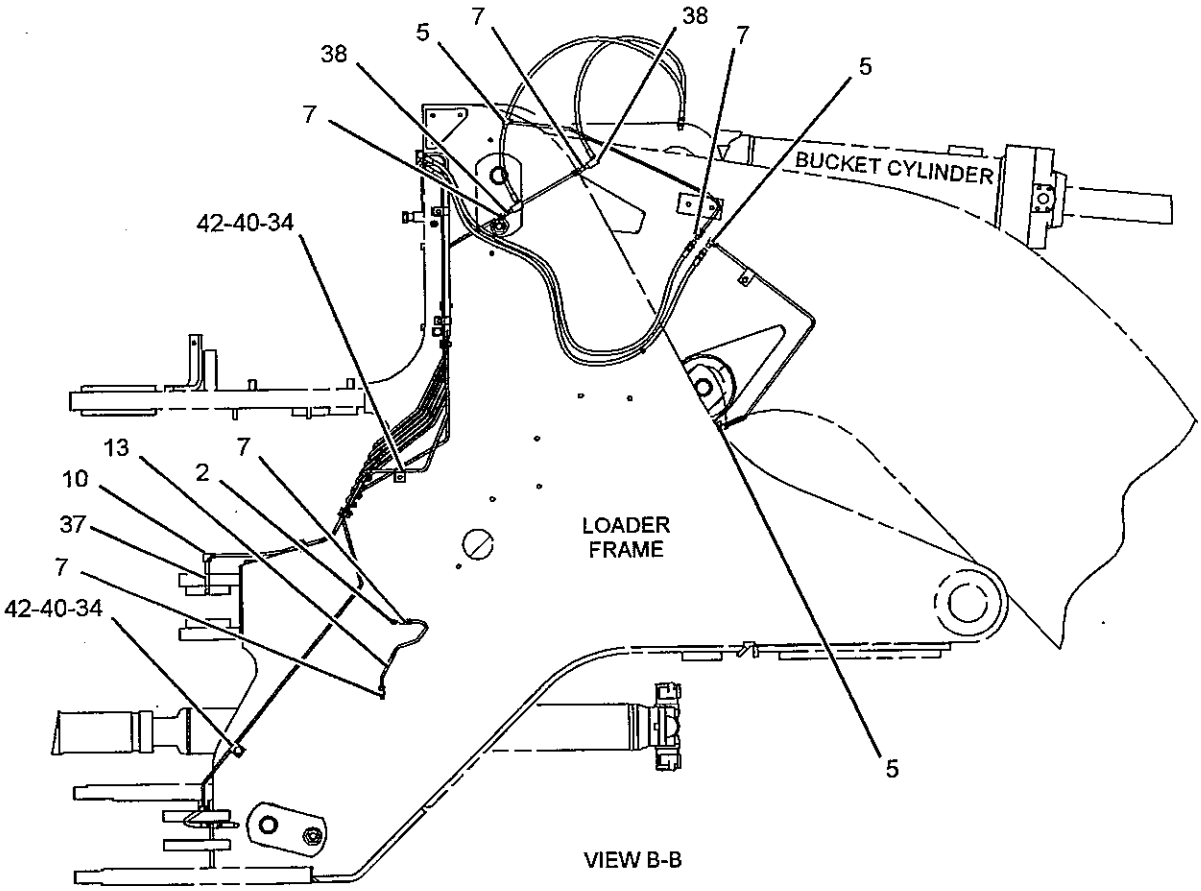


VIEW B-B

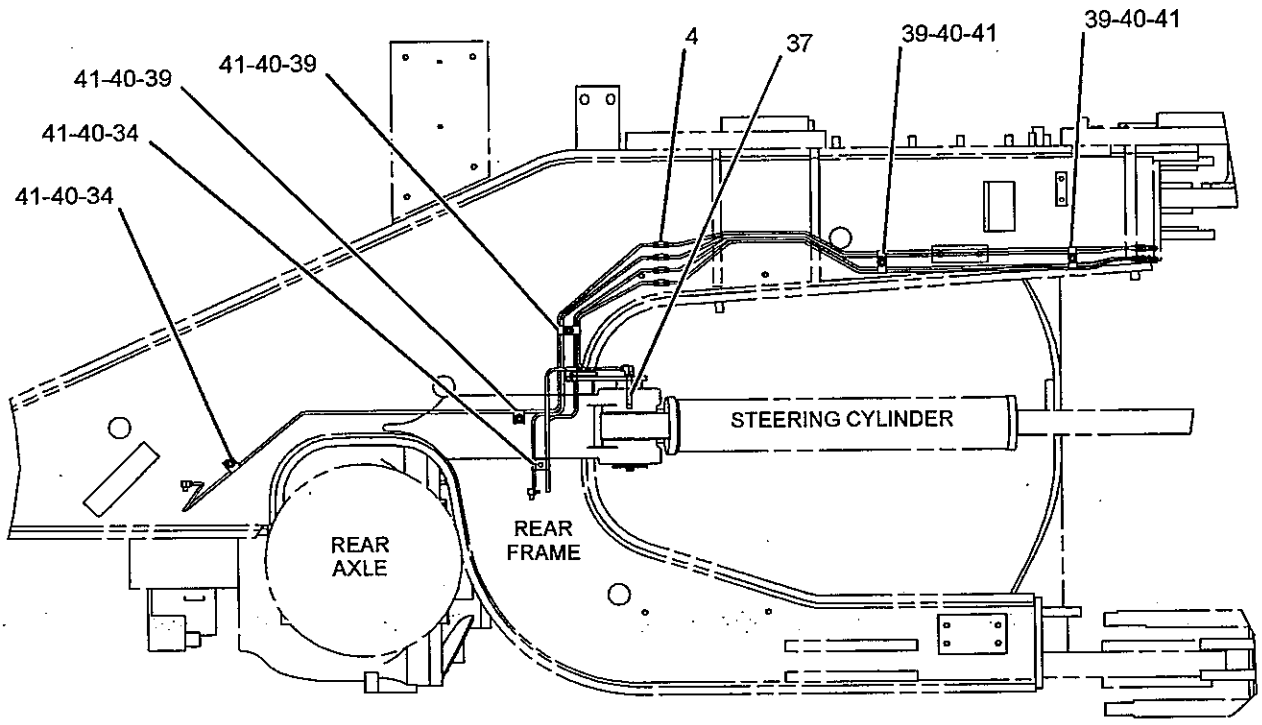


VIEW E-E

GRAPHIC #4

<END>

g01067291

# 247-4349 LINES GP-LUBRICATION–B-PINS, TILT LEVERS

S/N: JMS1-UP

PART OF 250-0177 LINES GP-AUTOMATIC LUBRICATION

AN ATTACHMENT

SMCS-7510, 7540

i02284006

| NOTE | REF NO | GRAPHIC REF | PART NUMBER | QTY | PART NAME 1 2 3 4 5 6 (PRODUCT LEVEL) | SEE PAGE |
|---|---|---|---|---|---|---|
| Y | 1 | 1 | *189-7002* | 1 | VALVE GP-LUBE DISTRIBUTION (6-INJECTOR) | 518 |
| | 2 | 1 | **247-1744** | 1 | HOSE AS | |
| | 3 | 1 | **249-8096** | 1 | HOSE AS | |
| | 4 | 1 | **249-8097** | 1 | HOSE AS | |
| | 5 | 1 | **249-8098** | 1 | HOSE AS | |
| | 6 | 1 | **249-8099** | 2 | HOSE AS | |
| | 7 | 1 | **253-7777** | 1 | GUARD-HOSE | |
| | 8 | 1 | **267-8633** | 1 | HOSE AS | |

Y-SEPARATE ILLUSTRATION

## 247-4349 LINES GP-LUBRICATION (contd.) i02284006

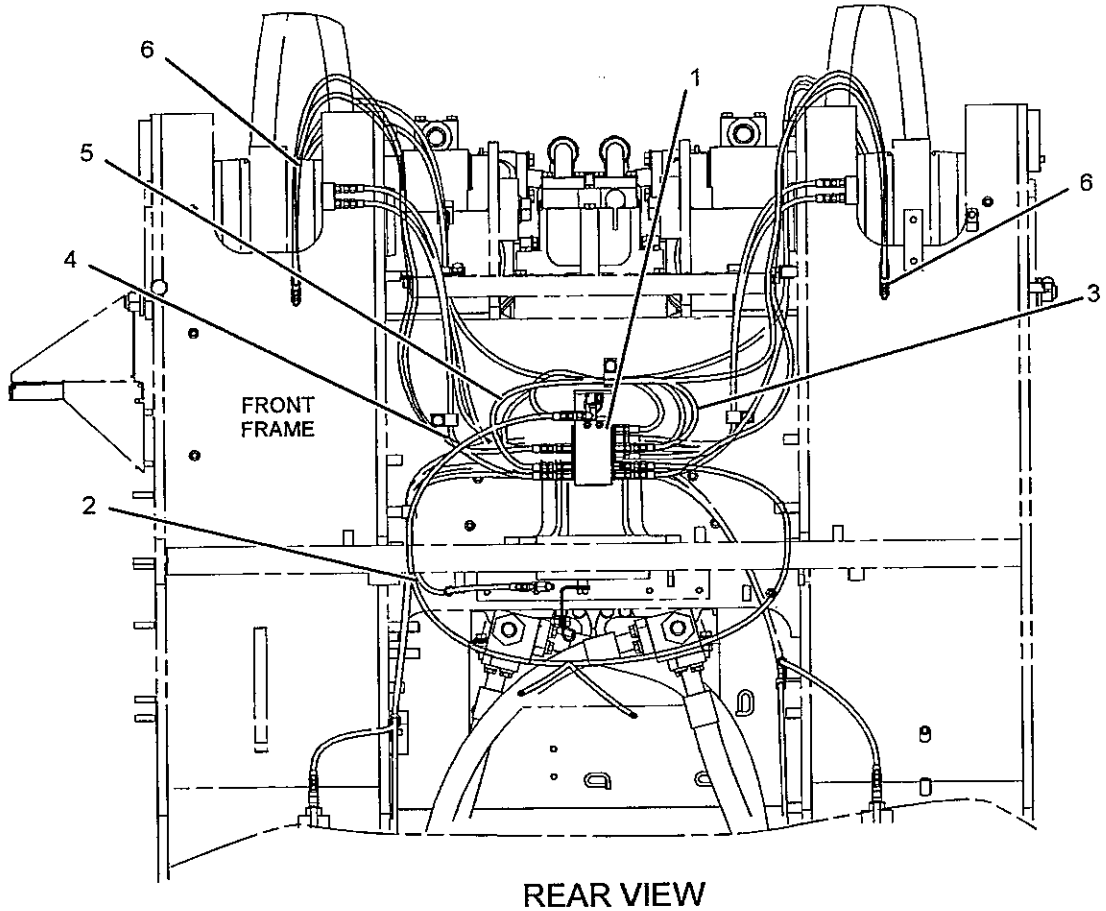


REAR VIEW

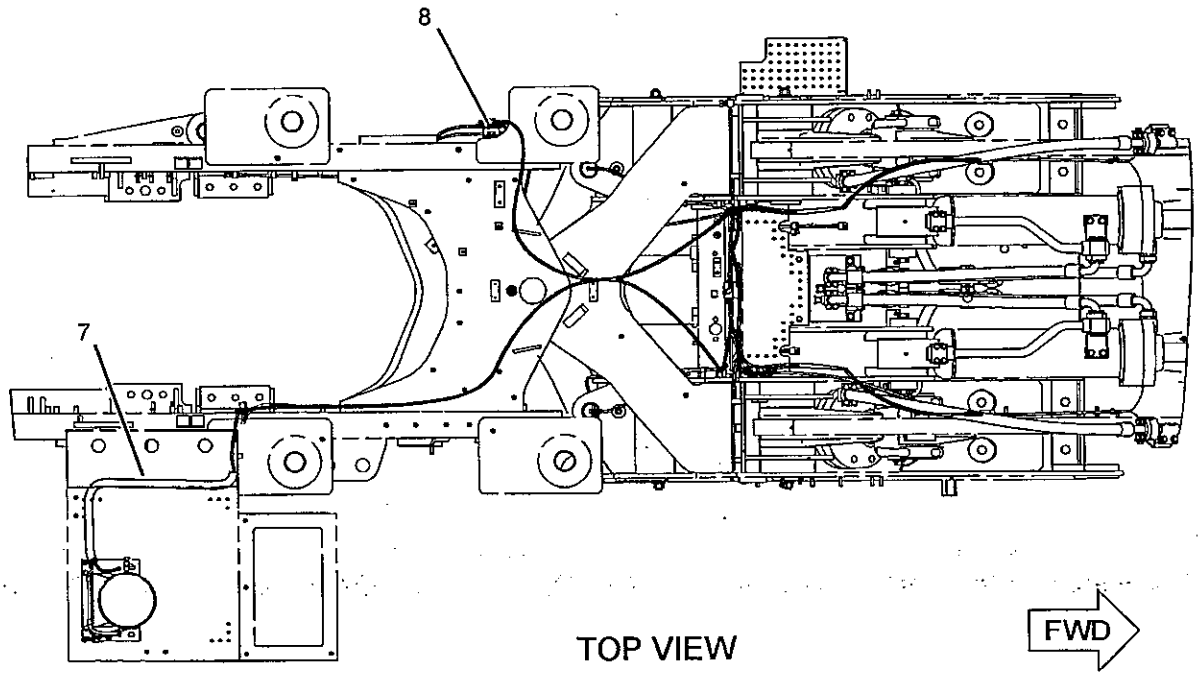


TOP VIEW

GRAPHIC #1 <END> g01143332

# 247-6890 LINES GP-LUBRICATION-
## BUCKET LINKS, TILT CYLINDER
S/N: JMS1-UP

PART OF 247-6740, 247-9762 LINES GP-AUTOMATIC LUBRICATION
AN ATTACHMENT

SMCS-7510, 7540

i02090761

| NOTE | REF NO | GRAPHIC REF | PART NUMBER | QTY | PART NAME 1 2 3 4 5 6 (PRODUCT LEVEL) | SEE PAGE |
|---|---|---|---|---|---|---|
| Y | 1 | 1 | 171-8873 | 1 | VALVE GP-LUBE DISTRIBUTION (4-INJECTOR) | 515 |
| | 2 | 1 | 172-0983 | 1 | HOSE AS | |
| | 3 | 1 | 172-0985 | 1 | HOSE AS | |
| | 4 | 1 | 189-8031 | 1 | HOSE AS | |
| | 5 | 1 | 247-6891 | 1 | HOSE AS | |
| | 6 | 1 | 3B-6552 | 4 | ELBOW | |
| | 7 | 1 | 8L-5008 | 1 | ELBOW-PIPE | |

Y-SEPARATE ILLUSTRATION

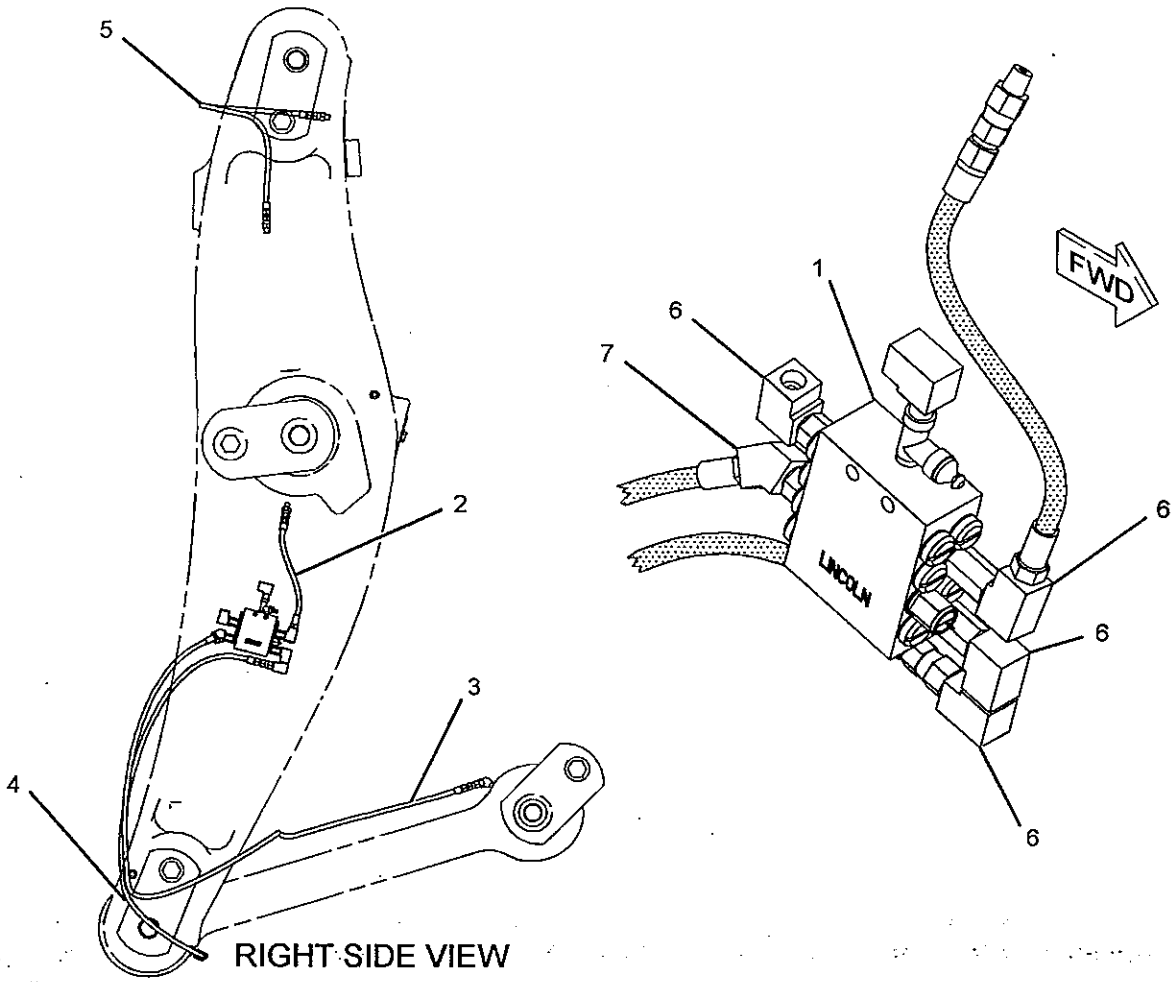


RIGHT SIDE VIEW

GRAPHIC #1

<END>

g01067101

# 249-8094 LINES GP-LUBRICATION–
## LOWER HITCH, STEERING CYLINDERS, TRUNNIONS

S/N: JMS1-UP

PART OF 247-4348 LINES GP-AUTOMATIC LUBRICATION

AN ATTACHMENT

SMCS-7510, 7540

i02091795

| NOTE | REF NO | GRAPHIC REF | PART NUMBER | QTY | PART NAME 1 2 3 4 5 6 (PRODUCT LEVEL) | SEE PAGE |
|---|---|---|---|---|---|---|
| Y | 1 | 1 | 171-8875 | 1 | VALVE GP-LUBE DISTRIBUTION (5-INJECTOR) | 516 |
| | 2 | 1 | 249-8097 | 1 | HOSE AS | |
| | 3 | 1 | 249-8100 | 1 | HOSE AS | |
| | 4 | 1 | 249-8101 | 3 | HOSE AS | |
| | 5 | 1 | 4M-8973 | 1 | ELBOW | |

Y-SEPARATE ILLUSTRATION

## 249-8094 LINES GP-LUBRICATION (contd.) i02091795

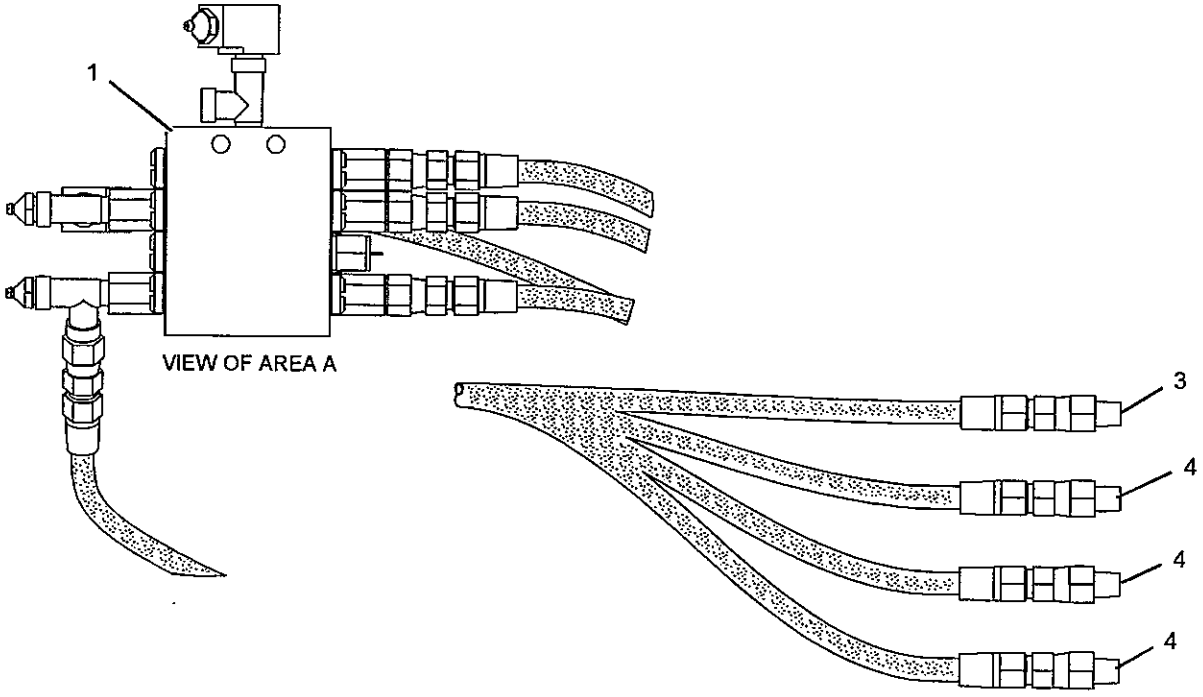


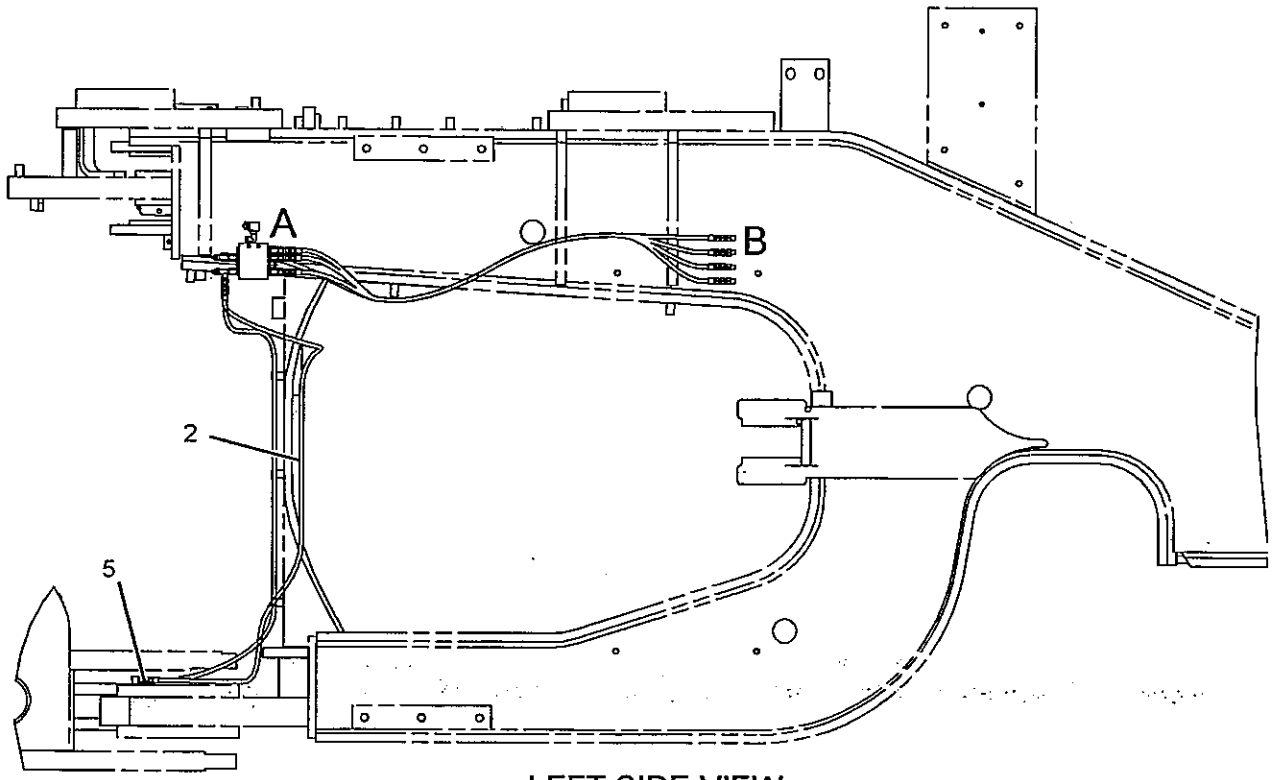


LEFT SIDE VIEW

GRAPHIC #1

<END>

g01067170

# 249-8095 LINES GP-LUBRICATION–
## LIFT, TILT, STEERING CYLINDERS, UPPER HITCH

S/N: JMS1-UP

PART OF 250-0177 LINES GP-AUTOMATIC LUBRICATION
AN ATTACHMENT

SMCS-7510, 7540

i02285333

| NOTE | REF NO | GRAPHIC REF | PART NUMBER | QTY | PART NAME 1 2 3 4 5 6 (PRODUCT LEVEL) | SEE PAGE |
|---|---|---|---|---|---|---|
| Y | 1 | 1 | 171-8896 | 1 | VALVE GP-LUBE DISTRIBUTION (11-INJECTOR) | 517 |
| | 2 | 1 | 172-1135 | 3 | HOSE AS | |
| | 3 | 1 | 172-1141 | 2 | HOSE AS | |
| | 4 | 1 | 172-2318 | 1 | HOSE AS | |
| | 5 | 1 | 267-8630 | 1 | HOSE AS. | |
| | 6 | 1 | 267-8631 | 2 | HOSE AS | |
| | 7 | 1 | 267-8632 | 1 | HOSE AS | |
| | 8 | 1 | 267-8633 | 1 | HOSE AS | |
| | 9 | 1 | 3B-6493 | 3 | ELBOW-PIPE | |
| | 10 | 1 | 3B-7263 | 2 | NIPPLE-PIPE | |
| | 11 | 1 | 3B-7734 | 2 | NIPPLE-PIPE | |
| | 12 | 1 | 6K-6967 | 1 | ADAPTER-PIPE | |
| | 13 | 1 | 8B-4884 | 1 | ELBOW | |

Y-SEPARATE ILLUSTRATION

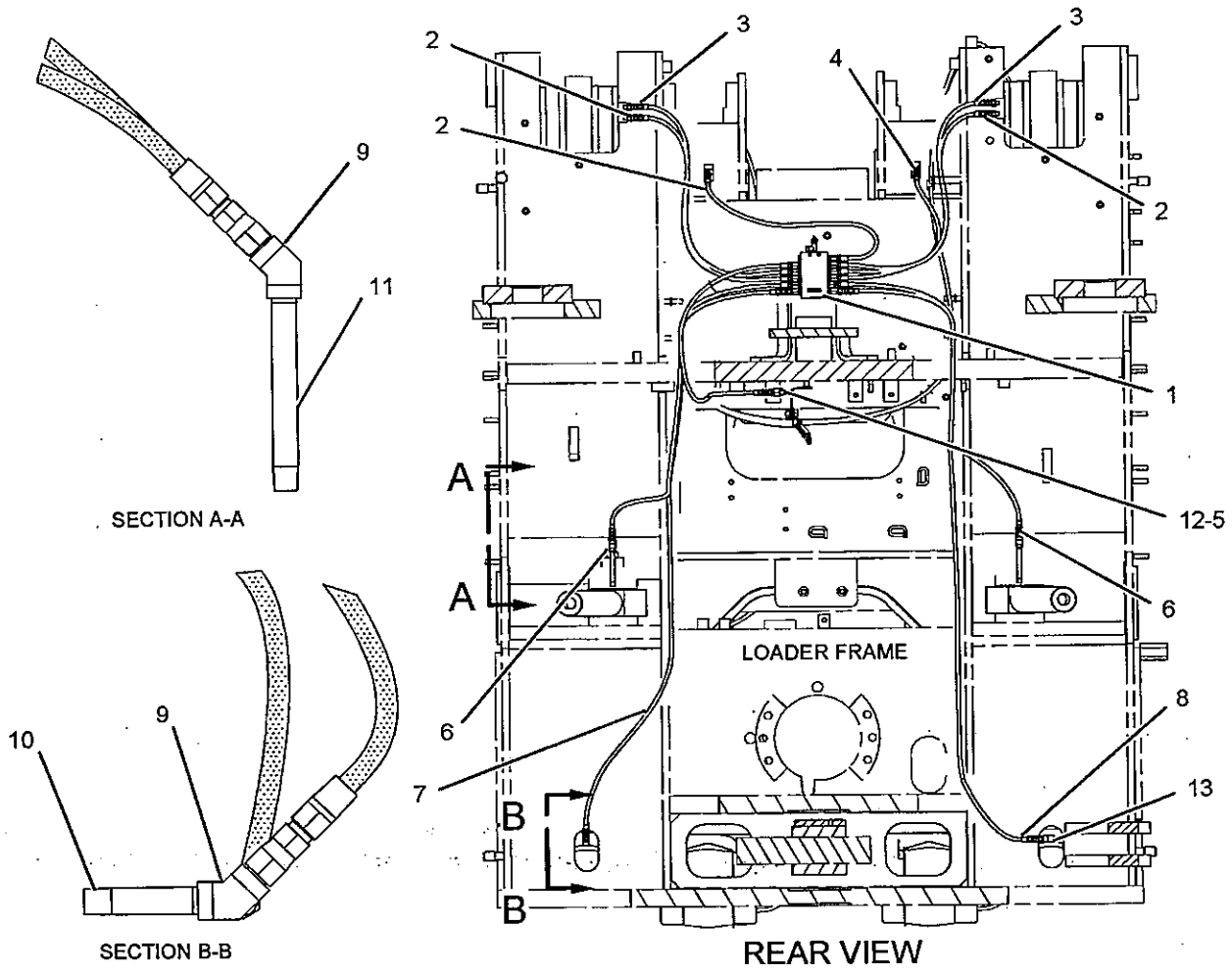


GRAPHIC #1

<END>

g01143764

# 268-1654 LINES GP-LUBRICATION–TILT LEVER

S/N: JMS1-UP

PART OF 247-6740 LINES GP-AUTOMATIC LUBRICATION

AN ATTACHMENT

SMCS-7510, 7540

i02283990

| NOTE | REF NO | GRAPHIC REF | PART NUMBER | QTY | PART NAME 1 2 3 4 5 6 (PRODUCT LEVEL) | SEE PAGE |
|---|---|---|---|---|---|---|
| | 1 | 1 | 7K-1181 | 4 | STRAP-CABLE | |
| | 2 | 1 | 268-1655 | 2 | HOSE AS | |
| | 3 | 1 | 268-1656 | 1 | HOSE AS | |
| | 4 | 1 | 268-1657 | 1 | HOSE AS | |

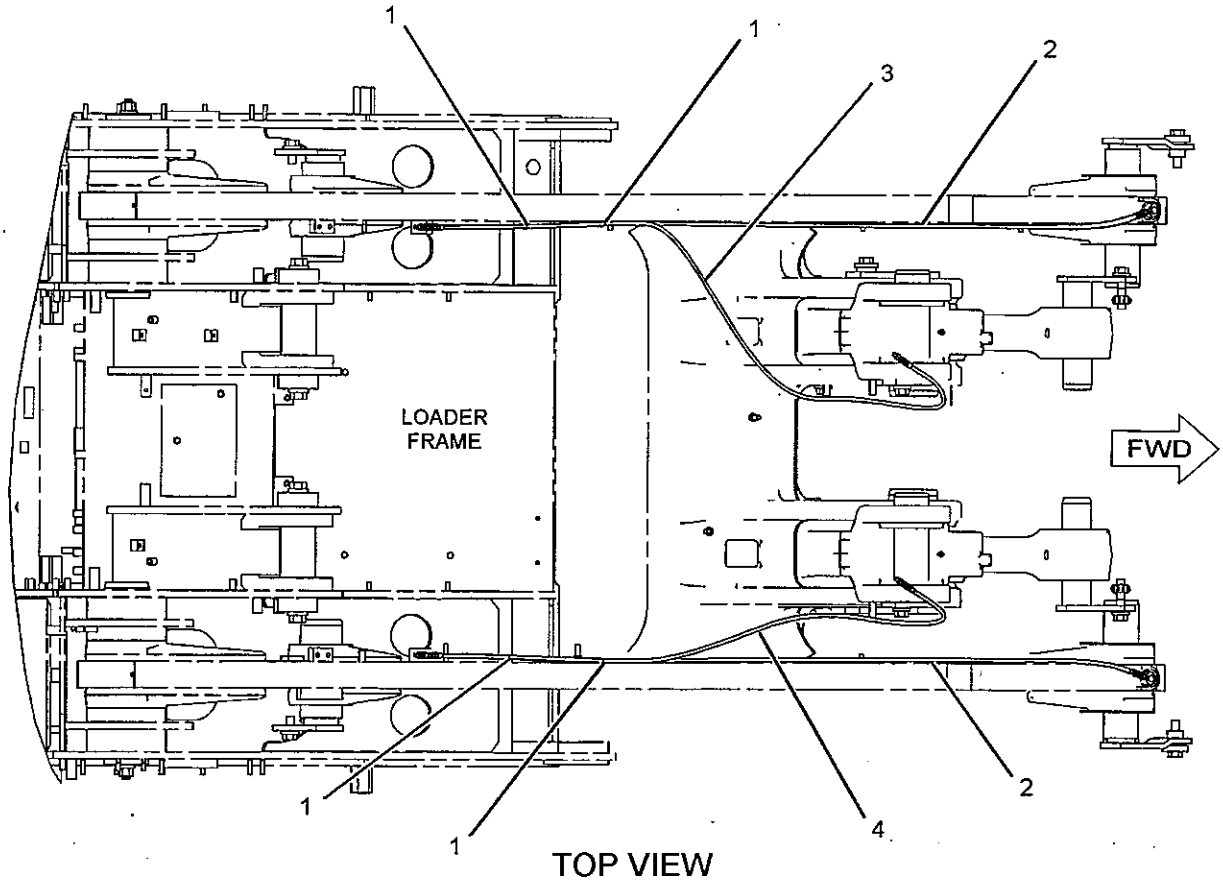


TOP VIEW

GRAPHIC #1

<END>

g01143530

# 268-8092 LINES GP-LUBRICATION–BUCKET PINS, TILT LEVER

S/N: JMS1-UP

PART OF 247-9762 LINES GP-AUTOMATIC LUBRICATION

AN ATTACHMENT

SMCS-7510, 7540

i02283991

| NOTE | REF NO | GRAPHIC REF | PART NUMBER | QTY | PART NAME 1 2 3 4 5 6 (PRODUCT LEVEL) | SEE PAGE |
|---|---|---|---|---|---|---|
| | 1 | 1 | 268-8093 | 2 | HOSE AS | |
| | 2 | 1 | 268-8094 | 1 | HOSE AS | |
| | 3 | 1 | 268-8095 | 1 | HOSE AS | |

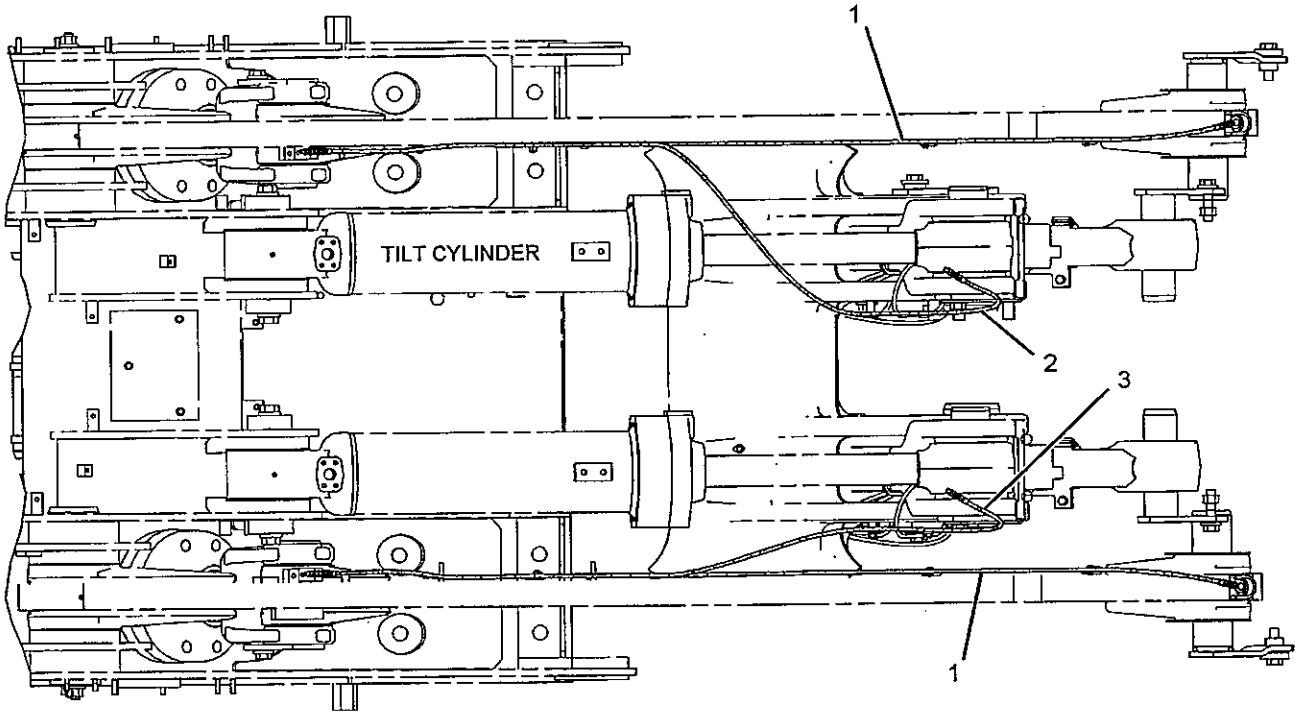


TOP VIEW

FWD

GRAPHIC #1

<END>

g01143981

# 115-4788 LINK GP-STEERING FRAME LOCK

S/N: JMS1-UP

PART OF 225-5538 CHASSIS AR

SMCS-7506

i01230869

| NOTE | REF NO | GRAPHIC REF | PART NUMBER | QTY | PART NAME 1 2 3 4 5 6 (PRODUCT LEVEL) | SEE PAGE |
|---|---|---|---|---|---|---|
| | 1 | 1 | 9K-5639 | 2 | PIN | |
| | 2 | 1 | 103-5796 | 2 | PIN-KEEPER | |
| | 3 | 1 | 115-5287 | 1 | LINK | |

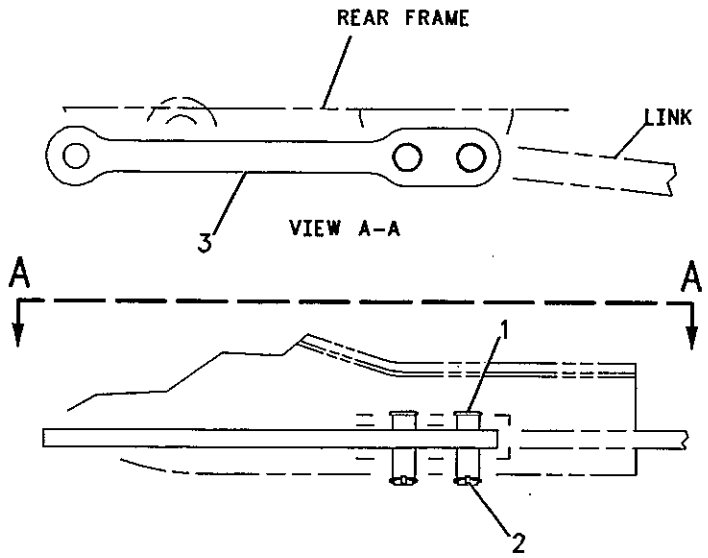


RIGHT SIDE VIEW

GRAPHIC #1

<END>

g00657967

## 245-9432 LUBRICATION AR-AUTOMATIC

S/N: JMS1-UP
PART OF 266-1620 MACHINE AR
AN ATTACHMENT

SMCS-7540 i02090142

| NOTE | PART NUMBER | QTY | PART NAME 1 2 3 4 5 6 (PRODUCT LEVEL) | SEE PAGE |
|---|---|---|---|---|
| Y | 249-1273 | 1 | HARDWARE GP-LIFT ARM (AUTOMATIC LUBRICATION SYSTEM) | 740 |
| Y | 249-1268 | 1 | HARDWARE GP-LOADER FRAME (AUTOMATIC LUBRICATION SYSTEM) | 446 |
| Y | 249-1264 | 1 | HARDWARE GP-REAR FRAME (AUTOMATIC LUBRICATION SYSTEM) | 449 |
| Y | 247-6741 | 2 | LEVER GP-TILT | 743 |
| Y | 250-0177 | 1 | LINES GP-AUTOMATIC LUBRICATION (CHASSIS) | 472 |
| Y | 247-6740 | 1 | LINES GP-AUTOMATIC LUBRICATION (LOADER FRAME) | 468 |
| Y | 247-4348 | 1 | LINES GP-AUTOMATIC LUBRICATION (REAR FRAME) | 466 |
| Y | 247-8469 | 1 | WIRING GP-AUTOLUBE CONTROL | 250 |

Y-SEPARATE ILLUSTRATION

<END>

## 245-9433 LUBRICATION AR-AUTOMATIC

S/N: JMS1-UP
AN ATTACHMENT

SMCS-7540 i02090143

| NOTE | PART NUMBER | QTY | PART NAME 1 2 3 4 5 6 (PRODUCT LEVEL) | SEE PAGE |
|---|---|---|---|---|
| Y | 249-1275 | 1 | HARDWARE GP-LIFT ARM (AUTOMATIC LUBRICATION SYSTEM) | 742 |
| Y | 249-1268 | 1 | HARDWARE GP-LOADER FRAME (AUTOMATIC LUBRICATION SYSTEM) | 446 |
| Y | 249-1264 | 1 | HARDWARE GP-REAR FRAME (AUTOMATIC LUBRICATION SYSTEM) | 449 |
| Y | 247-6741 | 2 | LEVER GP-TILT | 743 |
| Y | 247-4348 | 1 | LINES GP-AUTOMATIC LUBRICATION (REAR FRAME) | 466 |
| Y | 250-0177 | 1 | LINES GP-AUTOMATIC LUBRICATION (CHASSIS) | 472 |
| Y | 247-9762 | 1 | LINES GP-AUTOMATIC LUBRICATION (LOADER FRAME) | 470 |
| Y | 247-8469 | 1 | WIRING GP-AUTOLUBE CONTROL | 250 |

Y-SEPARATE ILLUSTRATION

<END>

# FRAME AND BODY

## *251-4870* PANEL GP-SIDE

**S/N: JMS1-UP**

**PART OF 225-5538 CHASSIS AR**

**SMCS-7267** **i02186342**

| NOTE | REF NO | GRAPHIC REF | PART NUMBER | QTY | PART NAME 1 2 3 4 5 6 (PRODUCT LEVEL) | SEE PAGE |
|---|---|---|---|---|---|---|
| | 1 | 1 | 5P-7958 | 4 | SLEEVE-CABLE SPLICE | |
| | 2 | 1 | 6V-7621 | 2 | LATCH-DOOR | |
| | 3 | 1 | 174-3086 | 2 | PIN AS | |
| | 4 | 1 | 236-4975 | 2 | HINGE AS | |
| | | | | | (EACH INCLUDES) | |
| M | | 1 | 8T-3597 | 2 | NUT-WELD (M12X1.75-THD) | |
| | 5 | 1 | 241-4311 | 1 | INSULATION | |
| | 6 | 1 | 251-4873 | 1 | PANEL | |
| | 7 | 1 | 251-4874 | 1 | PANEL | |
| | 8 | 1 | 251-4875 | 1 | SUPPORT AS | |
| M | | 1 | 8T-3490 | 2 | NUT-WELD (M10X1.5-THD) | |
| | 9 | 1 | 251-4876 | 1 | SUPPORT AS | |
| M | | 1 | 8T-3490 | 2 | NUT-WELD (M10X1.5-THD) | |
| | 10 | 1 | 252-9678 | 1 | PLATE AS | |
| | 11 | 1 | 252-9679 | 1 | PLATE AS | |
| M | 12 | 1 | 5C-2890 | 8 | NUT (M6X1-THD) | |
| | 13 | 1 | 5P-1076 | 4 | WASHER-HARD (13.5X30X4-MM THK) | |
| | 14 | 1 | 7X-7729 | 32 | WASHER (11X25X3-MM THK) | |
| M | 15 | 1 | 8C-8451 | 8 | BOLT (M6X1X40-MM) | |
| M | 16 | 1 | 8T-0389 | 14 | LOCKNUT (M10X1.5-THD) | |
| | 17 | 1 | 8T-4121 | 8 | WASHER-HARD (11X21X2.5-MM THK) | |
| M | 18 | 1 | 8T-4137 | 4 | BOLT (M10X1.5X20-MM) | |
| M | 19 | 1 | 8T-4139 | 4 | BOLT (M12X1.75X30-MM) | |
| M | 20 | 1 | 8T-4195 | 22 | BOLT (M10X1.5X30-MM) | |
| | 21 | 1 | 9X-8256 | 8 | WASHER (6.6X12X2-MM THK) | |
| | 22 | 1 | 254-5513 | 2 | LANYARD | |
| D | 23 | 1 | 5P-7211 | | SEAL (0.25-M) | |
| E | 24 | 1 | 246-0435 | | SEAL (306-CM) | |

D-ORDER BY THE METER
E-ORDER BY THE CENTIMETER
M-METRIC PART

## 251-4870 PANEL GP-SIDE (contd.)

i02186342

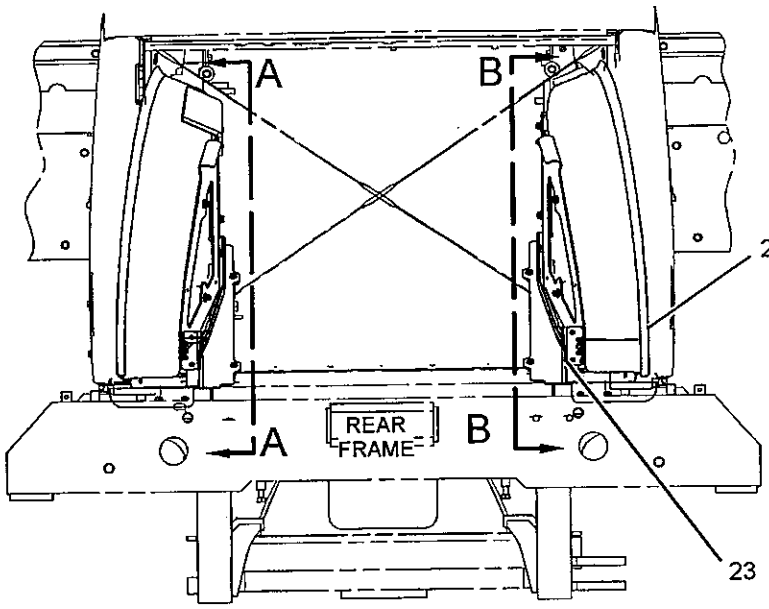


REAR VIEW

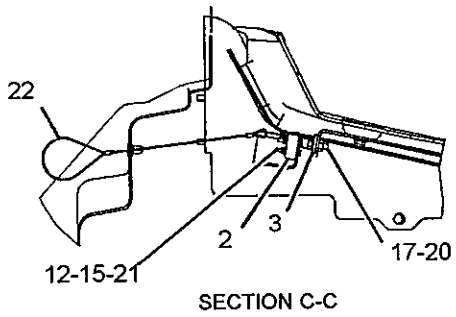


SECTION C-C

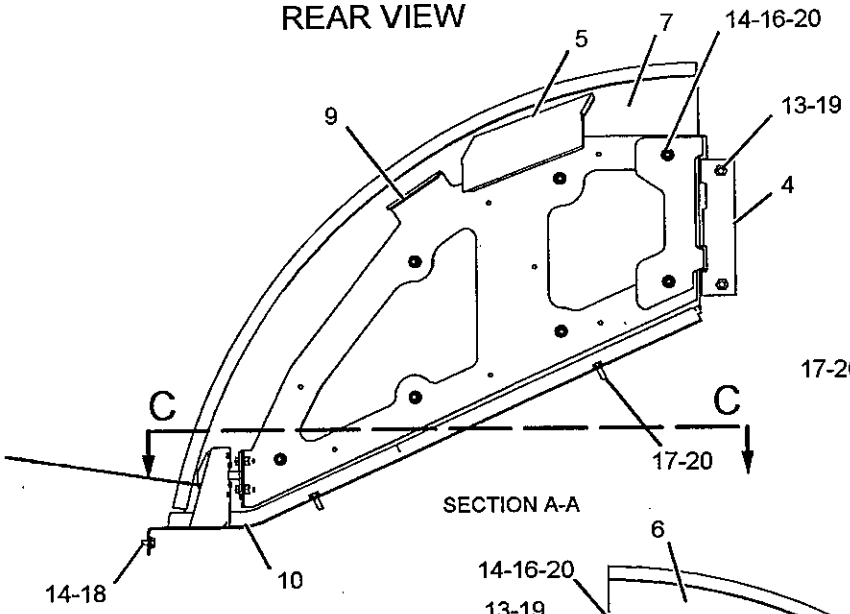


SECTION A-A

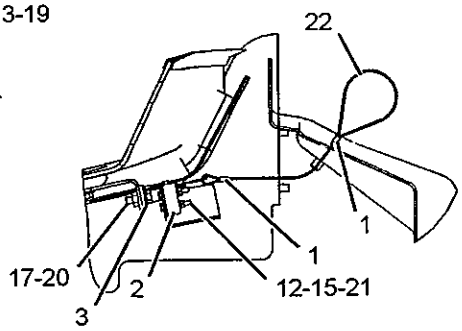


SECTION D-D

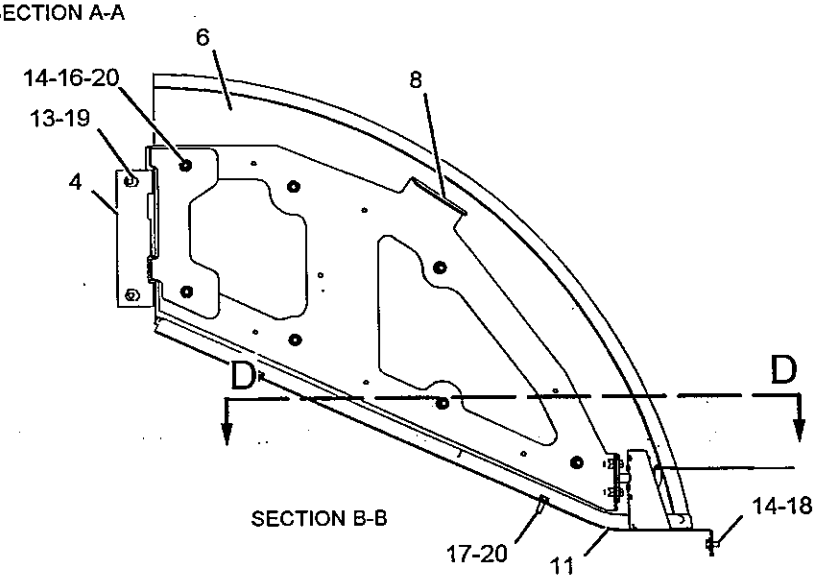


SECTION B-B

GRAPHIC #1

<END>

g01145775

# 234-9762 PANEL GP-SOUND SUPPRESSION-LH

**S/N: JMS1-UP**

**PART OF 234-9757 HOOD & GUARD GP**

**SMCS-7076, 7261** i02088659

| NOTE | REF NO | GRAPHIC REF | PART NUMBER | QTY | PART NAME 1 2 3 4 5 6 (PRODUCT LEVEL) | SEE PAGE |
|---|---|---|---|---|---|---|
| | 1 | 1 | 148-8240 | 8 | CLIP | |
| | 2 | 1 | 234-9763 | 1 | PANEL AS-SIDE (LH) | |
| | 3 | 1 | 236-2361 | 1 | INSULATION | |
| | 4 | 1 | 7X-0603 | 8 | WASHER-HARD (9.9X35X2.5-MM THK) | |

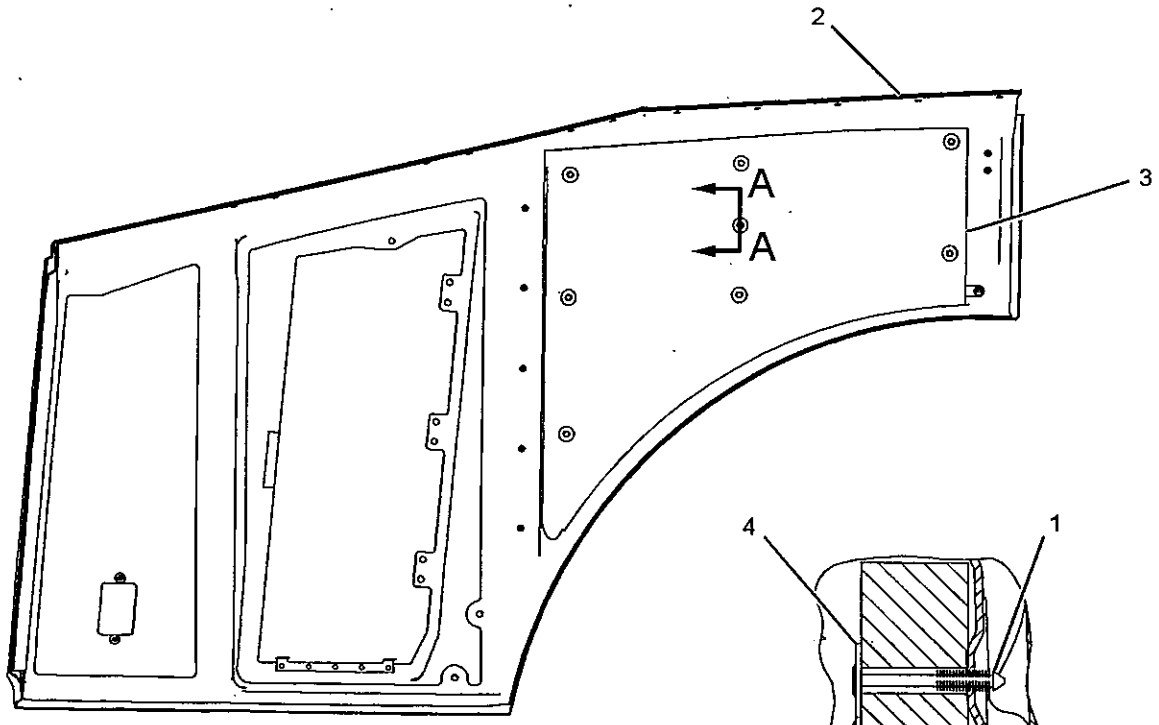


RIGHT SIDE VIEW

VIEW A-A

GRAPHIC #1 **<END>** g01068418

# FRAME AND BODY

## *234-9766* PANEL GP-SOUND SUPPRESSION–RH

**S/N: JMS1-UP**

**PART OF 234-9757 HOOD & GUARD GP**

**SMCS-7076, 7261**

**i02088660**

| NOTE | REF NO | GRAPHIC REF | PART NUMBER | QTY | PART NAME 1 2 3 4 5 6 (PRODUCT LEVEL) | SEE PAGE |
|---|---|---|---|---|---|---|
| | 1 | 1 | **148-8240** | 8 | CLIP | |
| | 2 | 1 | **234-9767** | 1 | PANEL AS-SIDE (RH) | |
| | 3 | 1 | **236-2362** | 1 | INSULATION | |
| | 4 | 1 | **7X-0603** | 8 | WASHER-HARD (9.9X35X2.5-MM THK) | |

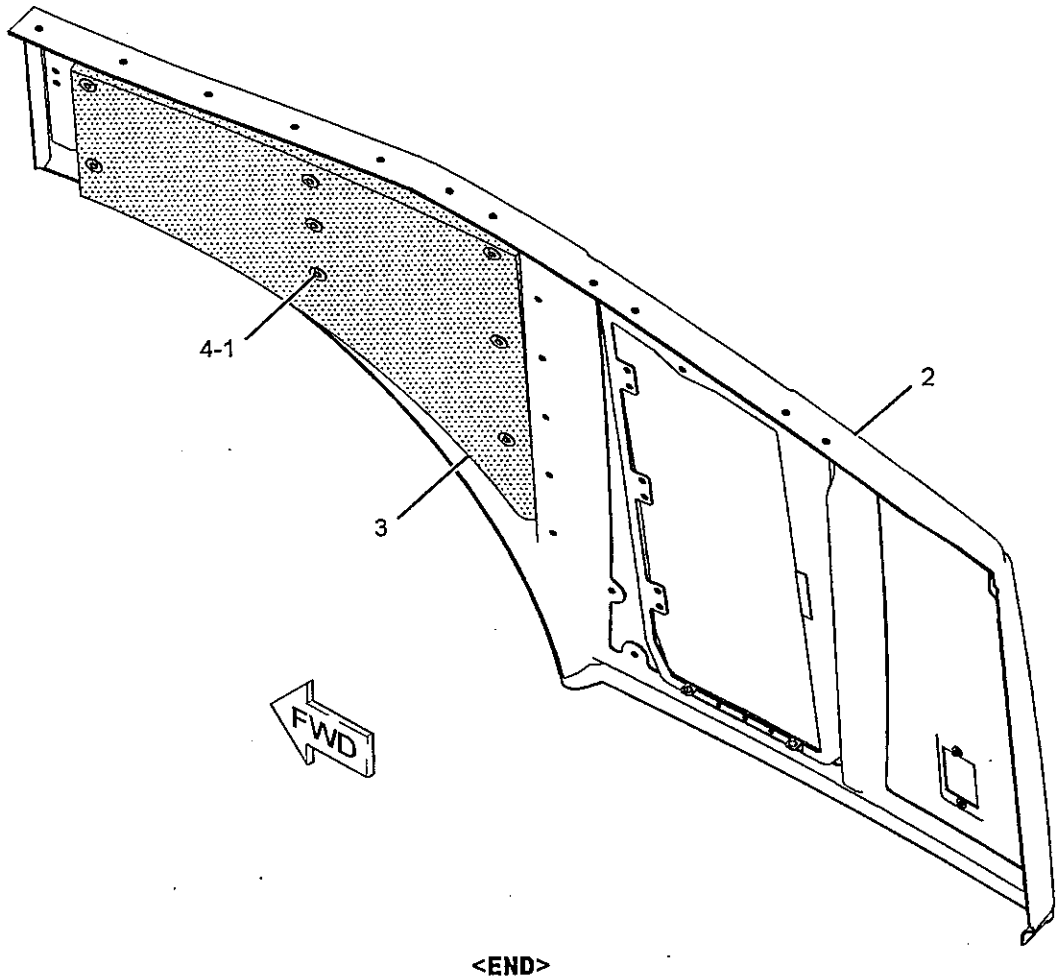


GRAPHIC #1

**<END>**

g01068225

# 247-0514 PANEL GP-SOUND SUPPRESSION–RH

S/N: JMS1-UP
PART OF 246-3564 LIGHTING AR-SIGNAL
AN ATTACHMENT

SMCS-7076, 7261

i02283982

| NOTE | REF NO | GRAPHIC REF | PART NUMBER | QTY | PART NAME 1 2 3 4 5 6 (PRODUCT LEVEL) | SEE PAGE |
|---|---|---|---|---|---|---|
| | 1 | 1 | 148-8240 | 8 | CLIP | |
| | 2 | 1 | 247-0515 | 1 | PANEL AS-SIDE (RH) | |
| | 3 | 1 | 236-2362 | 1 | INSULATION | |
| | 4 | 1 | 7X-0603 | 8 | WASHER-HARD (9.9X35X2.5-MM THK) | |

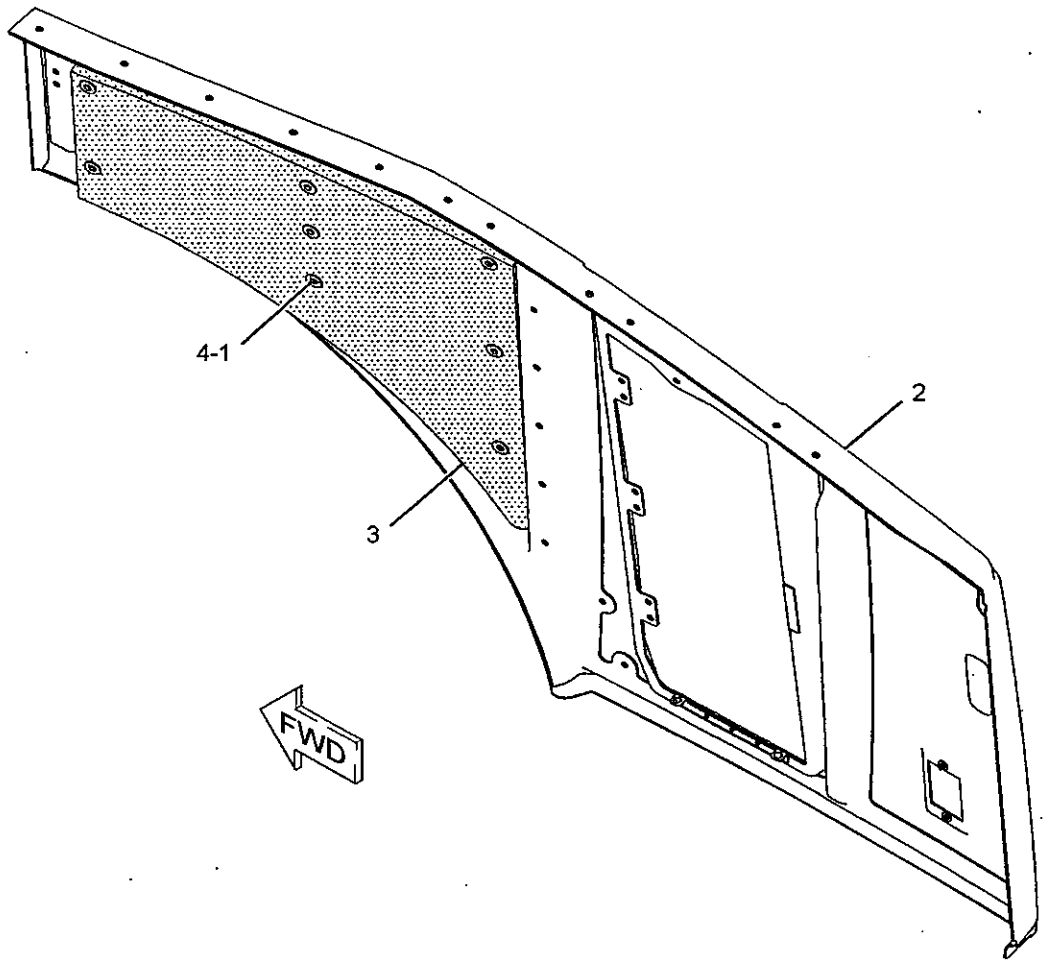


GRAPHIC #1

<END>

g01143671

# 247-0517 PANEL GP-SOUND SUPPRESSION–LH

S/N: JMS1-UP
PART OF 246-3564 LIGHTING AR-SIGNAL
AN ATTACHMENT

SMCS-7076, 7261

i02285551

| NOTE | REF NO | GRAPHIC REF | PART NUMBER | QTY | PART NAME 1 2 3 4 5 6 (PRODUCT LEVEL) | SEE PAGE |
|---|---|---|---|---|---|---|
| | 1 | 1 | 148-8240 | 8 | CLIP | |
| | 2 | 1 | 247-0518 | 1 | PANEL AS-SIDE (LH) | |
| | 3 | 1 | 236-2361 | 1 | INSULATION | |
| | 4 | 1 | 7X-0603 | 8 | WASHER-HARD (9.9X35X2.5-MM THK) | |

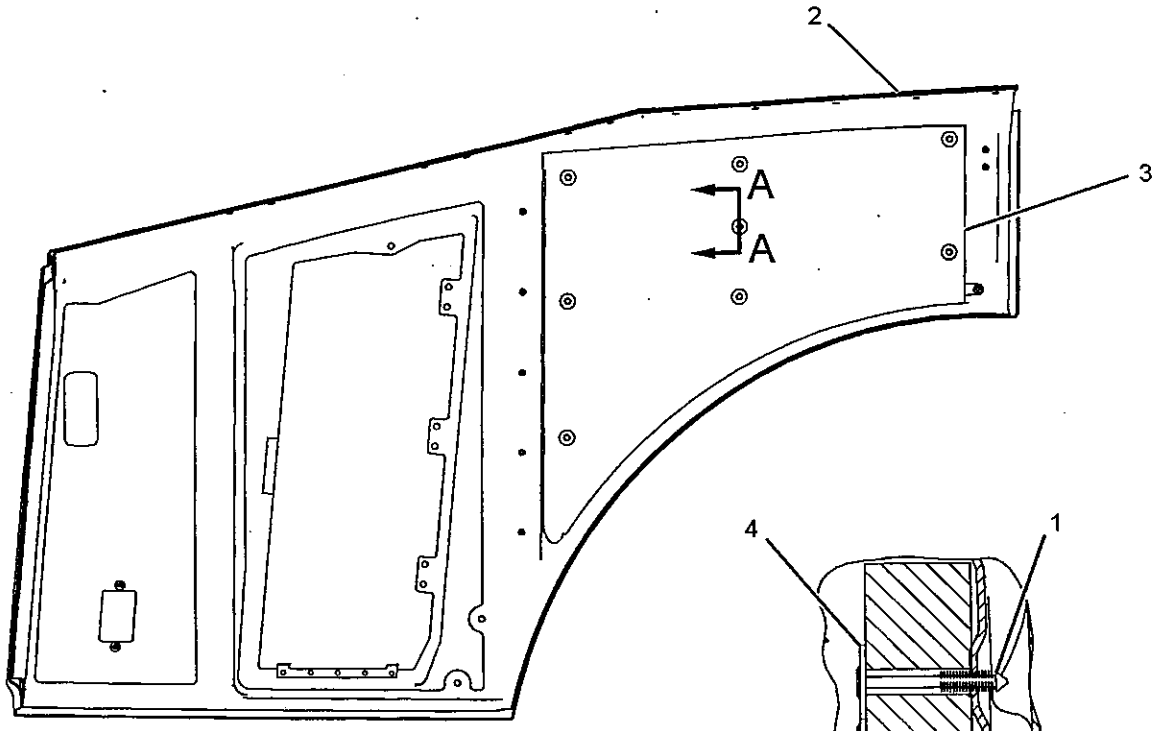


RIGHT SIDE VIEW

VIEW A-A

GRAPHIC #1

<END>

g01143781

# FRAME AND BODY

## 234-9758 PANEL GP-TOP–HOOD

**S/N: JMS1-UP**

**PART OF 234-9757 HOOD & GUARD GP**

**SMCS-7251** **i02088658**

| NOTE | REF NO | GRAPHIC REF | PART NUMBER | QTY | PART NAME 1 2 3 4 5 6 (PRODUCT LEVEL) | SEE PAGE |
|---|---|---|---|---|---|---|
| | 1 | 1 | 224-9392 | 16 | FASTENER | |
| | 2 | 1 | 234-9759 | 1 | PANEL AS-TOP (HOOD) | |
| M | | 1 | 8T-3490 | 16 | NUT-WELD (M10X1.5-THD) | |
| | 3 | 1 | 237-9765 | 1 | INSULATION AS-PANEL (FRONT HOOD TOP) | |
| | 3A | 1 | 124-6569 | 5 | FASTENER | |
| | 3B | 1 | 124-6570 | 5 | WASHER | |
| | 3C | 1 | 236-6249 | 1 | INSULATION-HOOD | |
| | 3D | 1 | 237-3801 | 1 | INSULATION-HOOD | |
| | 3E | 1 | 237-3802 | 1 | INSULATION-HOOD | |
| | 4 | 1 | 237-9766 | 1 | INSULATION AS-PANEL (REAR HOOD TOP) | |
| | 4A | 1 | 124-6569 | 4 | FASTENER | |
| | 4B | 1 | 124-6570 | 4 | WASHER | |
| | 4C | 1 | 236-6250 | 1 | INSULATION | |
| | 4D | 1 | 237-3803 | 1 | INSULATION-HOOD | |
| | 4E | 1 | 237-3804 | 1 | INSULATION-HOOD | |

M-METRIC PART

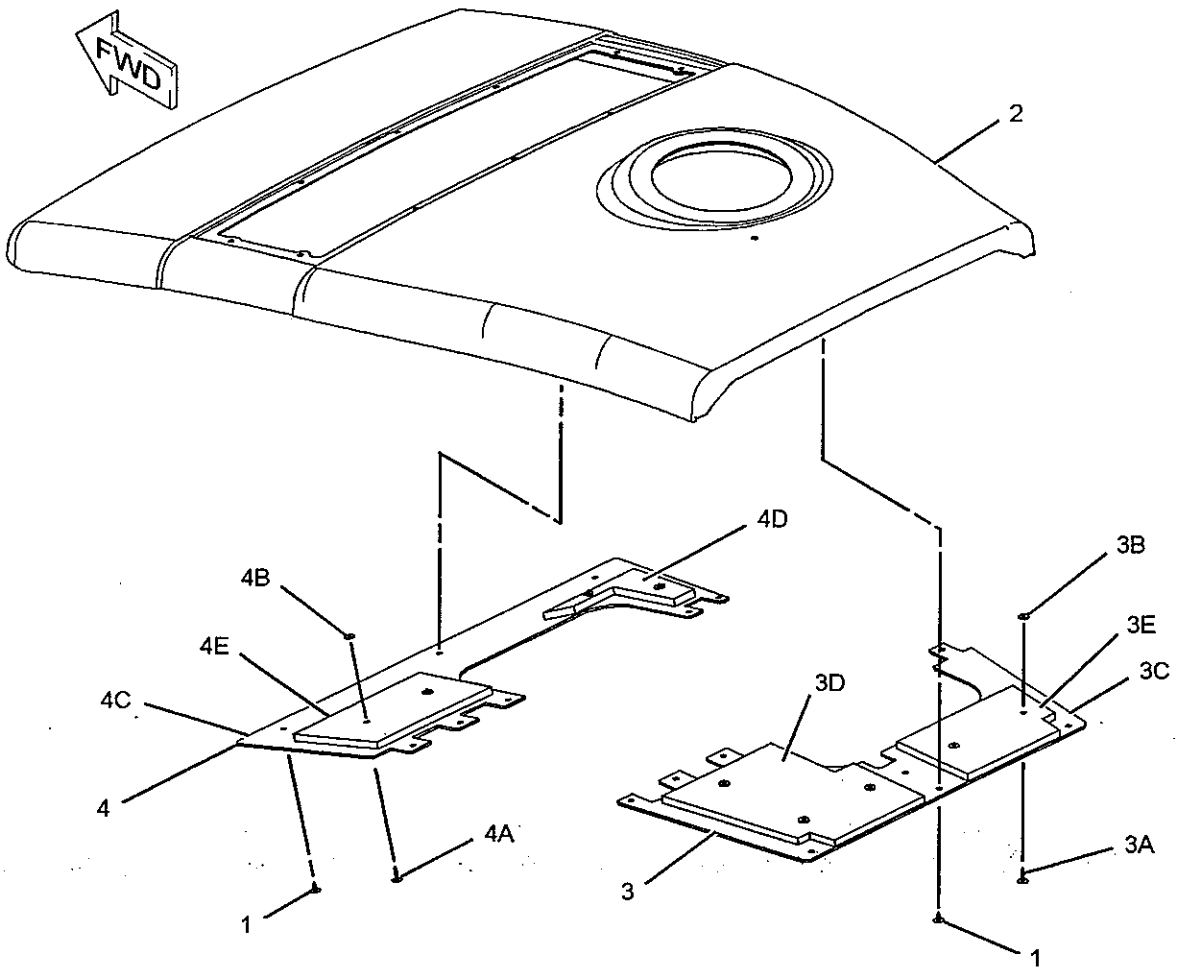


GRAPHIC #1

**<END>**

g01068408

# FRAME AND BODY

## 234-9563 SHIELD GP-ENGINE COMPARTMENT

**S/N: JMS1-UP**

**PART OF 225-5538 CHASSIS AR**

**SMCS-7154, 7263** **i02280974**

| NOTE | REF NO | GRAPHIC REF | PART NUMBER | QTY | PART NAME 1 2 3 4 5 6 (PRODUCT LEVEL) | SEE PAGE |
|---|---|---|---|---|---|---|
| | 1 | 1 | 8C-0538 | 1 | GROMMET | |
| | 2 | 1 | 134-5330 | 1 | GROMMET | |
| | 3 | 1 | 178-3129 | 1 | GROMMET | |
| | 4 | 1 | 234-9562 | 1 | SHIELD | |
| | 5 | 1 | 237-0855 | 1 | HANDHOLD AS | |
| | 6 | 1 | 237-0856 | 1 | HANDHOLD AS | |
| | 7 | 1 | 240-1708 | 1 | ANGLE AS | |
| M | | 1 | 8T-3490 | 4 | NUT-WELD (M10X1.5-THD) | |
| | 8 | 1 | 248-6266 | 1 | INSULATION AS | |
| | 9 | 1 | 256-4603 | 1 | STRIP | |
| | 10 | 1 | 264-8332 | 1 | COVER AS. | |
| M | | 1 | 8T-3490 | 2 | NUT-WELD (M10X1.5-THD) | |
| | 11 | 1 | 142-2624 | 1 | GROMMET | |
| | 12 | 1 | 5P-1076 | 8 | WASHER-HARD (13.5X30X4-MM THK) | |
| | 13 | 1 | 6P-0699 | 1 | GROMMET | |
| | 14 | 1 | 7X-7729 | 4 | WASHER (11X25X3-MM THK) | |
| | 15 | 1 | 7Y-3281 | 1 | GROMMET | |
| | 16 | 1 | 7Y-4528 | 1 | GROMMET | |
| M | 17 | 1 | 8T-4133 | 4 | NUT (M10X1.5-THD) | |
| M | 18 | 1 | 8T-4139 | 8 | BOLT (M12X1.75X30-MM) | |
| M | 19 | 1 | 8T-4195 | 13 | BOLT (M10X1.5X30-MM) | |
| | 20 | 1 | 8T-4226 | 9 | WASHER-PLATED (10.5X45X3-MM THK) | |
| | 21 | 1 | 112-9736 | | SEAL (394-CM) | |

M-METRIC PART

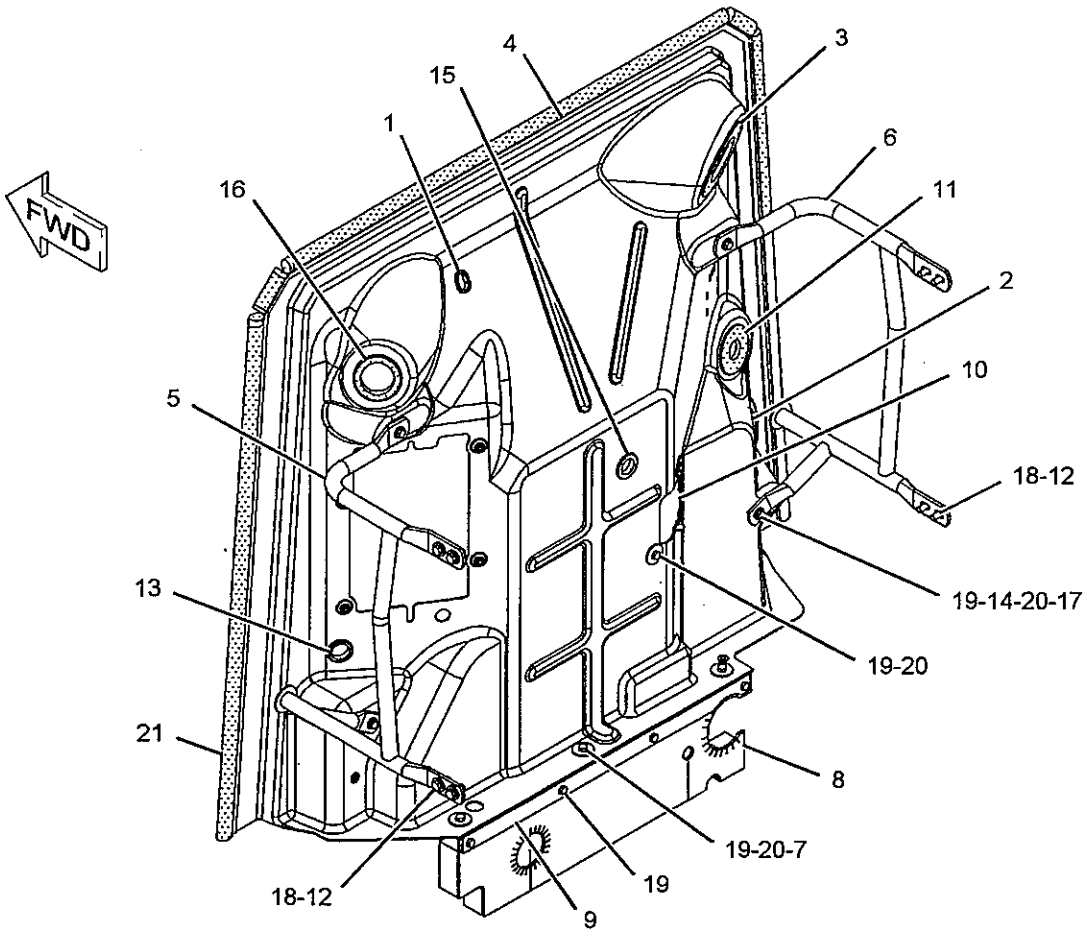


GRAPHIC #1 **<END>** g01141966

# 245-2886 STEP GP

S/N: JMS1-UP

PART OF 240-8591 GUARD GP-FUEL & HYDRAULIC TANK

AN ATTACHMENT

i02089933

SMCS-7254

| NOTE | REF NO | GRAPHIC REF | PART NUMBER | QTY | PART NAME 1 2 3 4 5 6 (PRODUCT LEVEL) | SEE PAGE |
|---|---|---|---|---|---|---|
| | 1 | 1 | 234-1531 | 1 | STEP | |
| | 2 | 1 | 245-2933 | 1 | CABLE AS | |
| | | 1 | 245-2934 | 1 | CABLE | |
| | | 1 | 245-2935 | 1 | BAR | |
| | | 1 | 245-2936 | 1 | PLATE | |
| | 3 | 1 | 245-2950 | 1 | CABLE AS | |
| | | 1 | 245-2934 | 1 | CABLE | |
| | | 1 | 245-2935 | 1 | BAR | |
| | | 1 | 245-2936 | 1 | PLATE | |
| | 4 | 1 | 8T-4121 | 4 | WASHER-HARD (11X21X2.5-MM THK) | |
| M | 5 | 1 | 8T-4196 | 4 | BOLT (M10X1.5X35-MM) | |
| | 6 | 1 | 8T-4223 | 4 | WASHER-HARD (13.5X25.5X3-MM THK) | |
| M | 7 | 1 | 8T-4956 | 4 | BOLT (M12X1.75X35-MM) | |

M-METRIC PART

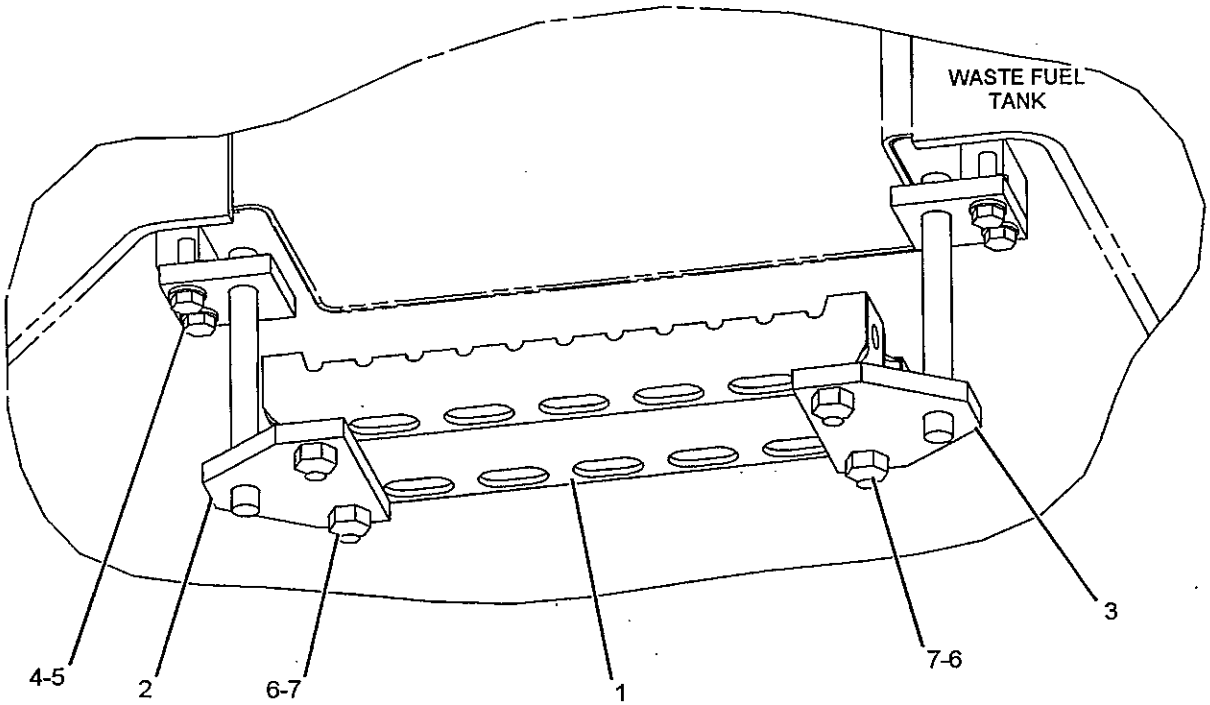


GRAPHIC #1

<END>

g01066519

# FRAME AND BODY

## 254-3311 STEP GP–REAR

**S/N: JMS1-UP**
**PART OF 243-2046 WASTE HANDLING AR**
**AN ATTACHMENT**

**SMCS-7254** **i02283503**

| NOTE | REF NO | GRAPHIC REF | PART NUMBER | QTY | PART NAME 1 2 3 4 5 6 (PRODUCT LEVEL) | SEE PAGE |
|---|---|---|---|---|---|---|
| | 1 | 1 | 234-1530 | 2 | STEP AS | |
| | | | | | (EACH INCLUDES) | |
| M | | 1 | 8T-3490 | 4 | NUT-WELD (M10X1.5-THD) | |
| | 2 | 1 | 247-1107 | 4 | CABLE AS | |
| | 3 | 1 | 247-5634 | 4 | CHANNEL AS | |
| | 4 | 1 | 247-5636 | 4 | PLATE AS | |
| | 5 | 1 | 260-4747 | 2 | CABLE AS | |
| | 6 | 1 | 7X-7729 | 36 | WASHER (11X25X3-MM THK) | |
| M | 7 | 1 | 8T-4139 | 8 | BOLT (M12X1.75X30-MM) | |
| M | 8 | 1 | 8T-4195 | 36 | BOLT (M10X1.5X30-MM) | |
| | 9 | 1 | 8T-4223 | 8 | WASHER-HARD (13.5X25.5X3-MM THK) | |

M-METRIC PART

254-3311 **STEP GP** *(contd.)* i02283503

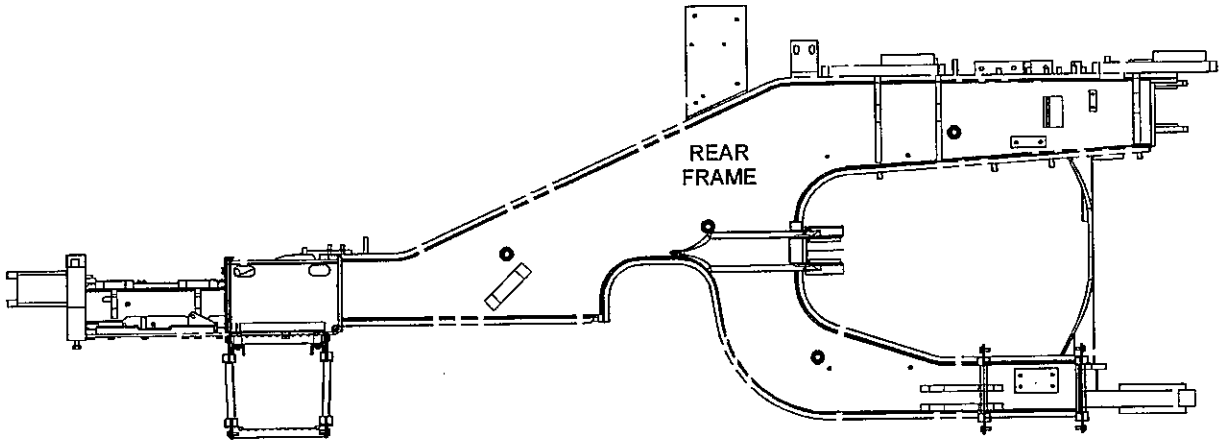


RIGHT SIDE VIEW

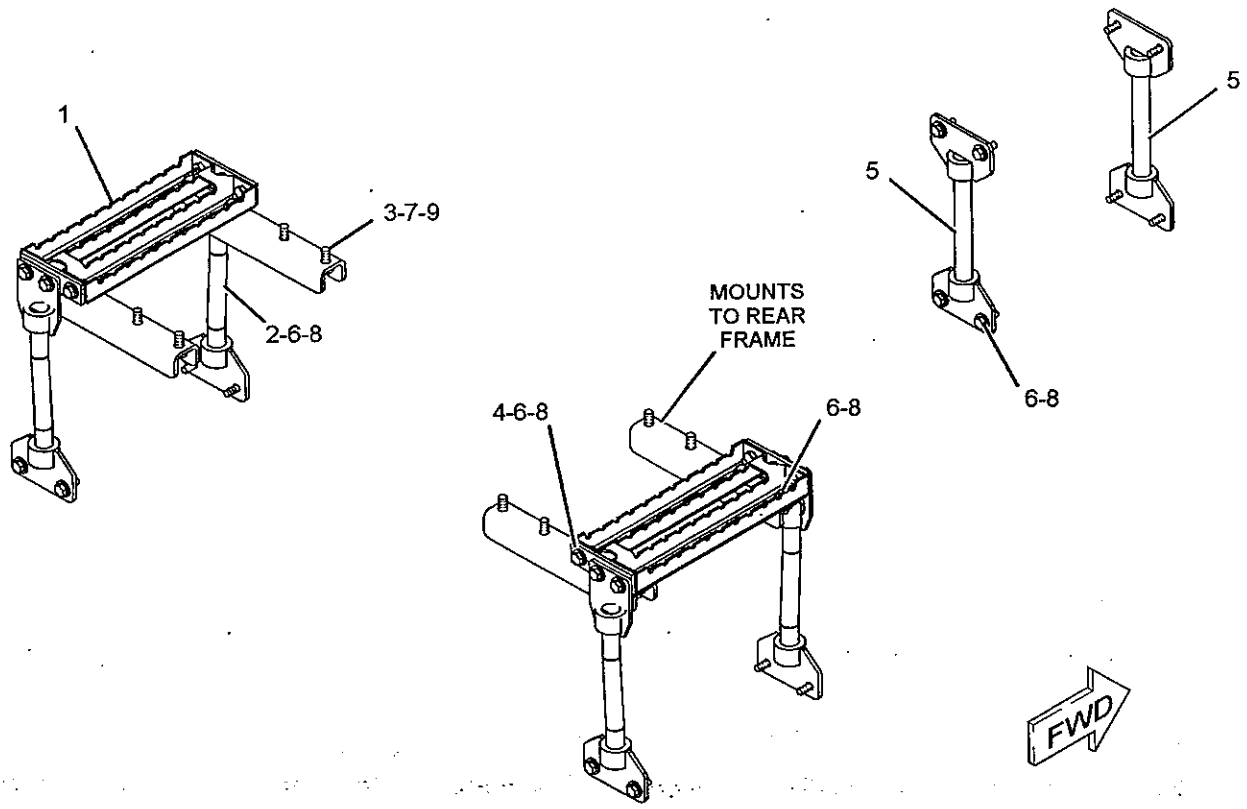


GRAPHIC #1 **<END>** g01144262

# FRAME AND BODY

## *234-9507* SUPPORT GP-AIR INLET

**S/N: JMS1-UP**

**PART OF 225-5538 CHASSIS AR**

**SMCS-1087** **i02280926**

| NOTE | REF NO | GRAPHIC REF | PART NUMBER | QTY | PART NAME 1 2 3 4 5 6 (PRODUCT LEVEL) | SEE PAGE |
|---|---|---|---|---|---|---|
| | 1 | 1 | **7X-2484** | 2 | LATCH-HANDLE | |
| | 2 | 1 | **209-2621** | 1 | SHEET | |
| | 3 | 1 | **231-2116** | 1 | SUPPORT AS | |
| Y | 4 | 1 | **236-2370** | 1 | SUPPORT GP-AIR INLET (ANGLED PLATE) | 504 |
| | 5 | 2 | **245-9131** | 1 | PLATE AS | |
| | 6 | 2 | **245-9784** | 1 | PLATE AS | |
| | 7 | 2 | **263-2116** | 2 | BRACKET | |
| | 8 | 2 | **096-3781** | 2 | PIN-CLEVIS | |
| | 9 | 1 | **2V-3726** | 2 | BUMPER | |
| | 10 | 2 | **3B-4615** | 2 | PIN-COTTER | |
| | 11 | 1 | **6V-2370** | 8 | RIVET-POP | |
| | 12 | 1,2 | **8T-4121** | 10 | WASHER-HARD (11X21X2.5-MM THK) | |
| M | 13 | 2 | **8T-4136** | 6 | BOLT (M10X1.5X25-MM) | |
| M | 14 | 1 | **8T-4137** | 2 | BOLT (M10X1.5X20-MM) | |
| M | 15 | 2 | **8T-4138** | 4 | BOLT (M6X1X20-MM) | |
| | 16 | 2 | **8T-4205** | 4 | WASHER-HARD (7.2X14.5X2-MM THK) | |
| | 17 | 2 | **9K-4939** | 4 | BUMPER-STEM | |
| D | 18 | 2 | **5P-7483** | 4 | SEAL (0.52-M EA) | |

D-ORDER BY THE METER
M-METRIC PART
Y-SEPARATE ILLUSTRATION

## 234-9507 SUPPORT GP-AIR INLET (contd.)

i02280926

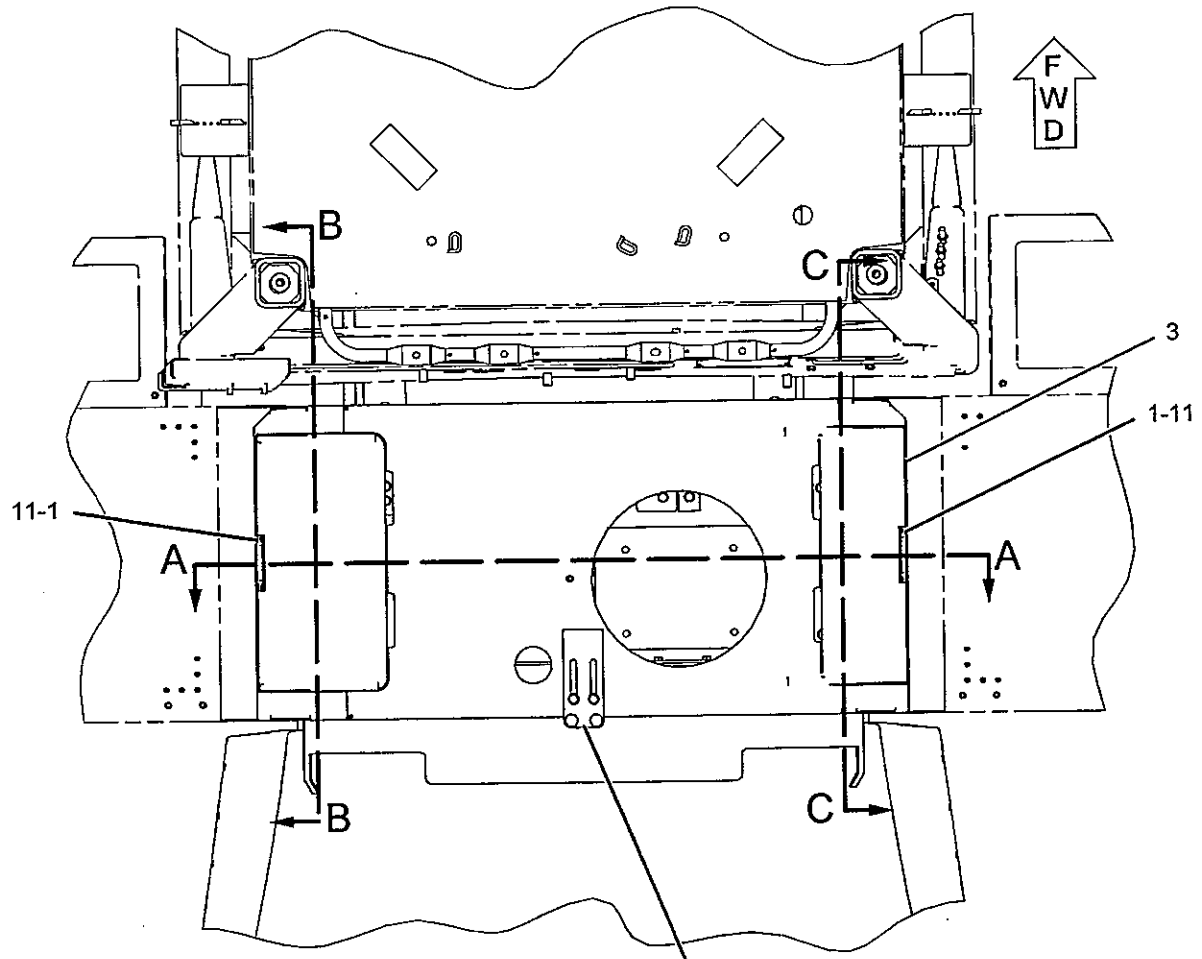


TOP VIEW

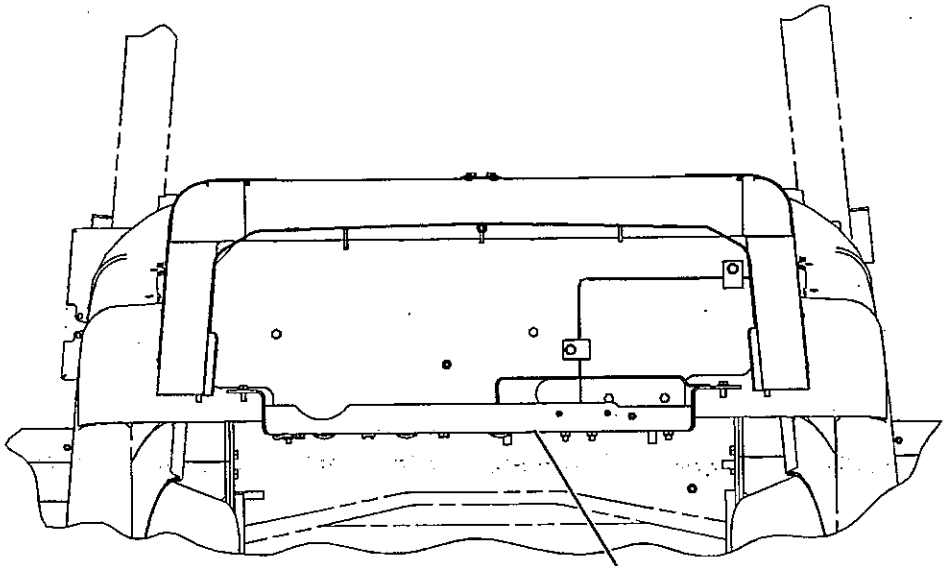


REAR VIEW

GRAPHIC #1

g01141584

## 234-9507 SUPPORT GP-AIR INLET *(contd.)* i02280926

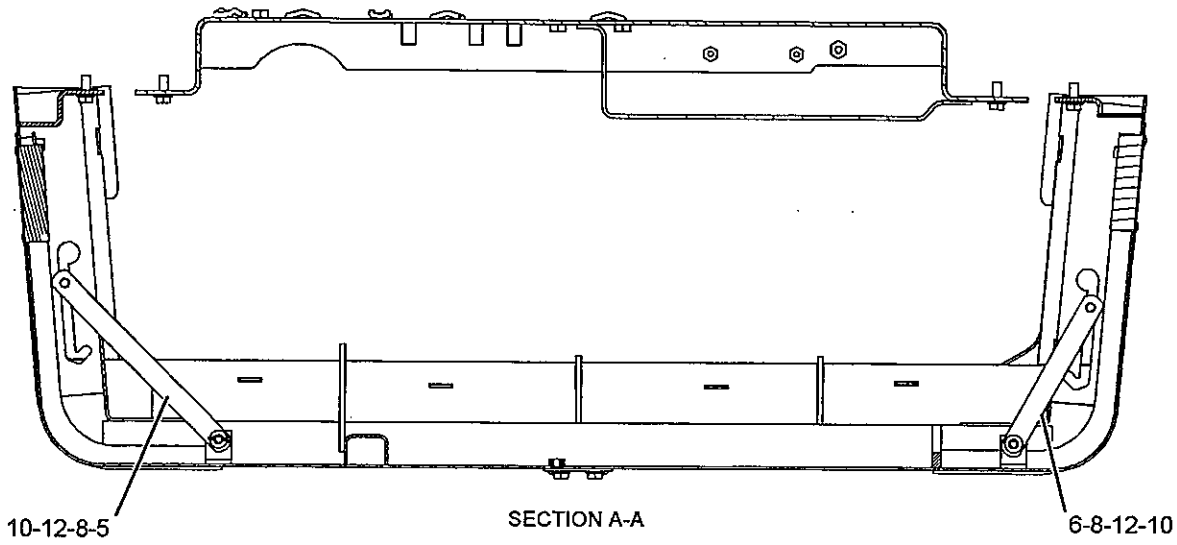


SECTION A-A

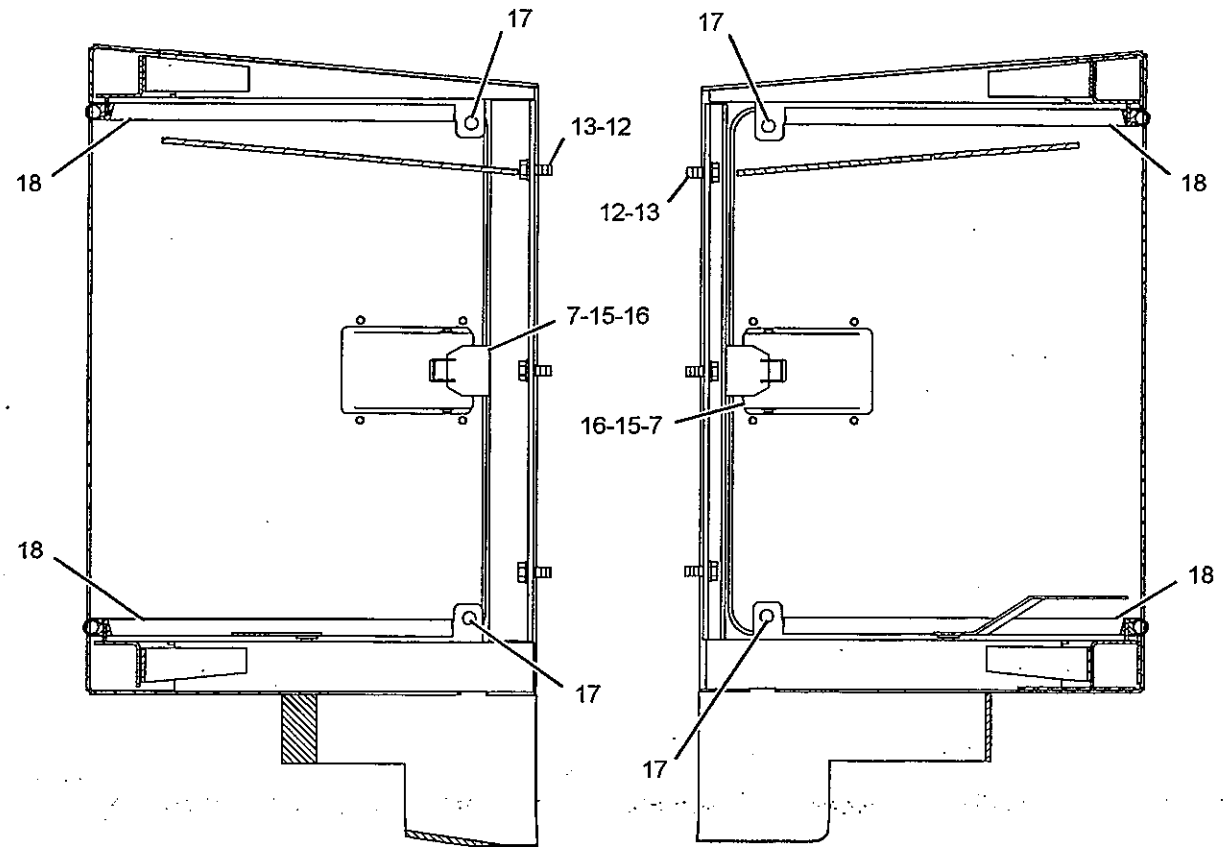


SECTION B-B

SECTION C-C

GRAPHIC #2 **<END>** g01141586

# 236-2370 SUPPORT GP-AIR INLET–ANGLED PLATE

S/N: JMS1-UP

PART OF 234-9507 SUPPORT GP-AIR INLET

SMCS-1087

i02281568

| NOTE | REF NO | GRAPHIC REF | PART NUMBER | QTY | PART NAME 1 2 3 4 5 6 (PRODUCT LEVEL) | SEE PAGE |
|---|---|---|---|---|---|---|
| | 1 | 1 | 237-2042 | 1 | PLATE AS | |
| M | | 1 | 8T-3490 | 2 | NUT-WELD (M10X1.5-THD) | |
| M | | 1 | 8T-3851 | 1 | BOSS-WELD (M10X1.5X17.5-MM) | |
| M | | 1 | 8T-5005 | 5 | BOLT (M10X1.5X70-MM) | |
| | 2 | 1 | 237-2043 | 1 | PLATE AS | |
| | | 1 | 7T-1099 | 5 | LINK | |
| M | | 1 | 8T-3490 | 14 | NUT-WELD (M10X1.5-THD) | |
| M | | 1 | 8T-3612 | 2 | NUT-WELD (M8X1.25-THD) | |
| M | | 1 | 8T-3851 | 6 | BOSS-WELD (M10X1.5X17.5-MM) | |
| | 3 | 1 | 246-8860 | 1 | PLATE AS | |
| M | | 1 | 8T-5005 | 2 | BOLT (M10X1.5X70-MM) | |
| E | 4 | 1 | 246-9291 | 1 | SEAL | |
| | 5 | 1 | 8T-4121 | 18 | WASHER-HARD (11X21X2.5-MM THK) | |
| M | 6 | 1 | 8T-4136 | 10 | BOLT (M10X1.5X25-MM) | |
| M | 7 | 1 | 8T-4195 | 8 | BOLT (M10X1.5X30-MM) | |
| E | 8 | 1 | 209-8315 | | SEAL (30-CM) | |

E-ORDER BY THE CENTIMETER
M-METRIC PART

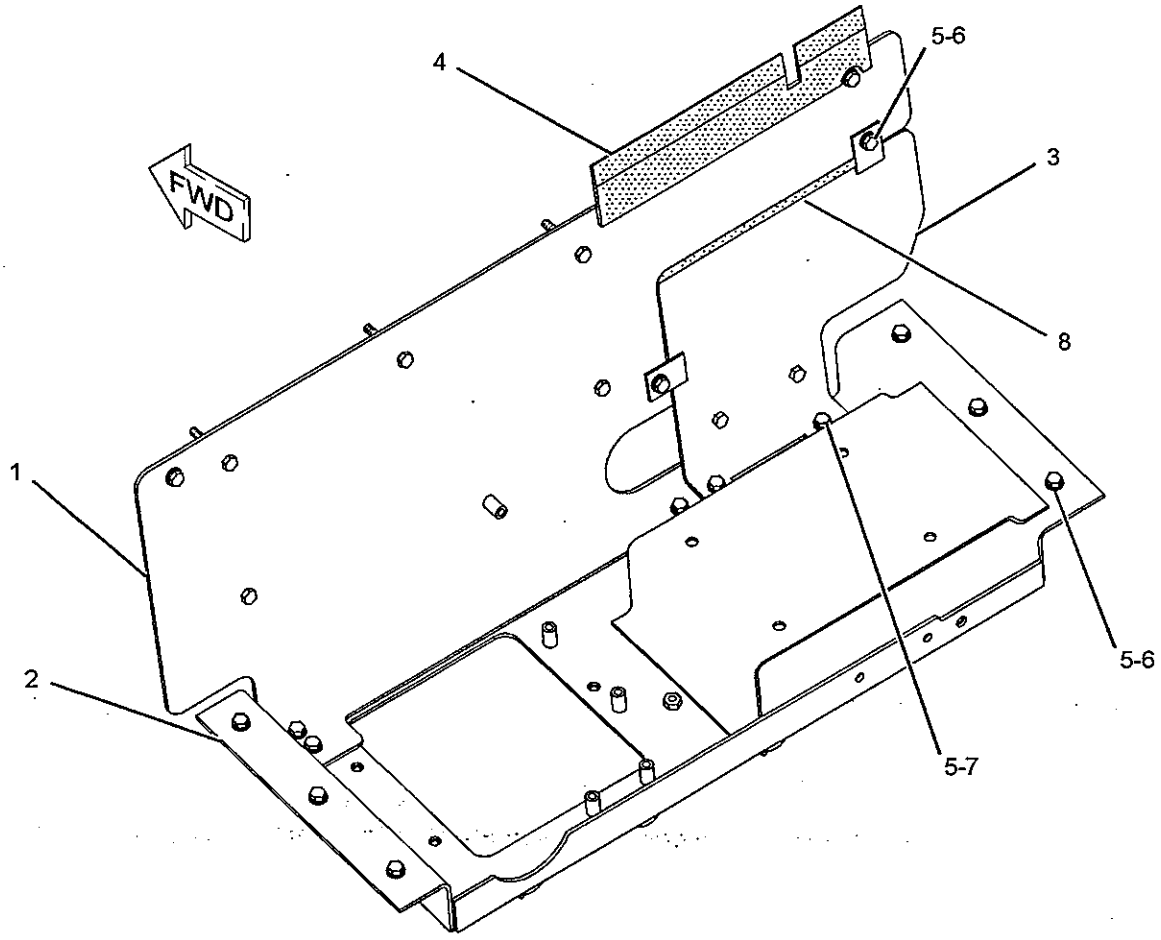


GRAPHIC #1

<END>

g01143002

## 263-7275 SUPPRESSION AR-SOUND

S/N: JMS1-UP
AN ATTACHMENT

SMCS-7261

i02284048

| NOTE | PART NUMBER | QTY | PART NAME 1 2 3 4 5 6 (PRODUCT LEVEL) | SEE PAGE |
|---|---|---|---|---|
| Y | *234-8946* | 1 | SUPPRESSION GP-SOUND | 506 |
| Y | *261-8608* | 1 | SUPPRESSION GP-CAB SOUND (ROOF) | 937 |

Y-SEPARATE ILLUSTRATION

<END>

## 263-7277 SUPPRESSION AR-SOUND

S/N: JMS1-UP
AN ATTACHMENT

SMCS-7261

i02284049

| NOTE | PART NUMBER | QTY | PART NAME 1 2 3 4 5 6 (PRODUCT LEVEL) | SEE PAGE |
|---|---|---|---|---|
| Y | *258-7063* | 1 | HARDWARE GP-REAR FRAME (WASTE HANDLER) | 454 |
| Y | *246-5231* | 1 | SUPPRESSION GP-CAB SOUND (CAB REAR, CAB ROOF) | 935 |
| Y | *240-8615* | 1 | SUPPRESSION GP-SOUND (REAR FRAME) | 510 |

Y-SEPARATE ILLUSTRATION

<END>

# FRAME AND BODY

## *234-8946* SUPPRESSION GP-SOUND

**S/N: JMS1-UP**

**PART OF 263-7275 SUPPRESSION AR-SOUND**

**AN ATTACHMENT**

**SMCS-7076, 7261**

i02284045

| NOTE | REF NO | GRAPHIC REF | PART NUMBER | QTY | PART NAME 1 2 3 4 5 6 (PRODUCT LEVEL) | SEE PAGE |
|---|---|---|---|---|---|---|
| | 1 | 1 | 113-6979 | 4 | INSULATION | |
| | 2 | 1 | 133-1644 | 14 | FASTENER | |
| | 3 | 2 | 179-8091 | 1 | INSULATION | |
| | 4 | 2 | 180-1441 | 1 | INSULATION | |
| | 5 | 2 | 180-1442 | 1 | INSULATION | |
| | 6 | 1 | 188-0604 | 2 | INSULATION | |
| | 7 | 2 | 188-0605 | 1 | INSULATION | |
| | 8 | 1 | 198-4362 | 1 | BRACKET AS | |
| | | 1 | 9R-2821 | 6 | BOSS (M10X15-MM) | |
| | 9 | 1 | 198-4363 | 1 | BRACKET AS | |
| | | 1 | 9R-2821 | 6 | BOSS (M10X15-MM) | |
| | 10 | 1 | 236-2353 | 1 | INSULATION | |
| | 11 | 1 | 236-2357 | 1 | INSULATION | |
| | 12 | 2 | 236-2359 | 1 | INSULATION | |
| | 13 | 2 | 236-2360 | 1 | INSULATION | |
| | 14 | 1 | 245-2952 | 1 | COVER AS | |
| | 15 | 2 | 245-2964 | 1 | INSULATION | |
| | 16 | 2 | 245-2965 | 1 | SHEET | |
| | 17 | 2 | 246-2811 | 1 | INSULATION | |
| | 18 | 2 | 246-9288 | 1 | INSULATION AS | |
| | 19 | 2 | 247-2977 | 1 | INSULATION AS | |
| | 20 | 1 | 253-3284 | 1 | INSULATION | |
| | 21 | 1 | 253-3285 | 1 | INSULATION | |
| | 22 | 1 | 253-3286 | 1 | INSULATION | |
| | 23 | 1 | 253-3287 | 1 | INSULATION | |
| | 24 | 2 | 253-8816 | 1 | BRACKET | |
| | 25 | 2 | 253-8817 | 1 | BRACKET | |
| | 26 | 2 | 263-0952 | 1 | COVER AS | |
| | 27 | 2 | 115-6433 | 12 | WASHER (11X50X6-MM THK) | |
| | 28 | 2 | 3H-5788 | 7 | SPACER (8-IN LG) | |
| | 29 | 1,2 | 5P-1076 | 8 | WASHER-HARD (13.5X30X4-MM THK) | |
| | 30 | 1 | 7X-0603 | 14 | WASHER-HARD (9.9X35X2.5-MM THK) | |
| | 31 | 2 | 7X-7729 | 4 | WASHER (11X25X3-MM THK) | |
| M | 32 | 2 | 8T-0389 | 7 | LOCKNUT (M10X1.5-THD) | |
| M | 33 | 2 | 8T-4136 | 12 | BOLT (M10X1.5X25-MM) | |
| M | 34 | 2 | 8T-4195 | 4 | BOLT (M10X1.5X30-MM) | |
| | 35 | 2 | 8T-4226 | 7 | WASHER-PLATED (10.5X45X3-MM THK) | |
| M | 36 | 1,2 | 8T-4244 | 8 | NUT (M12X1.75-THD) | |
| E | 37 | 2 | 145-0060 | 2 | SEAL (7.5-CM EACH) | |
| D | 38 | 2 | 5P-7211 | 2 | SEAL (3.7-M EACH) | |
| D | 38A | 2 | 5P-7211 | | SEAL (7.6-M) | |

D-ORDER BY THE METER
E-ORDER BY THE CENTIMETER
M-METRIC PART

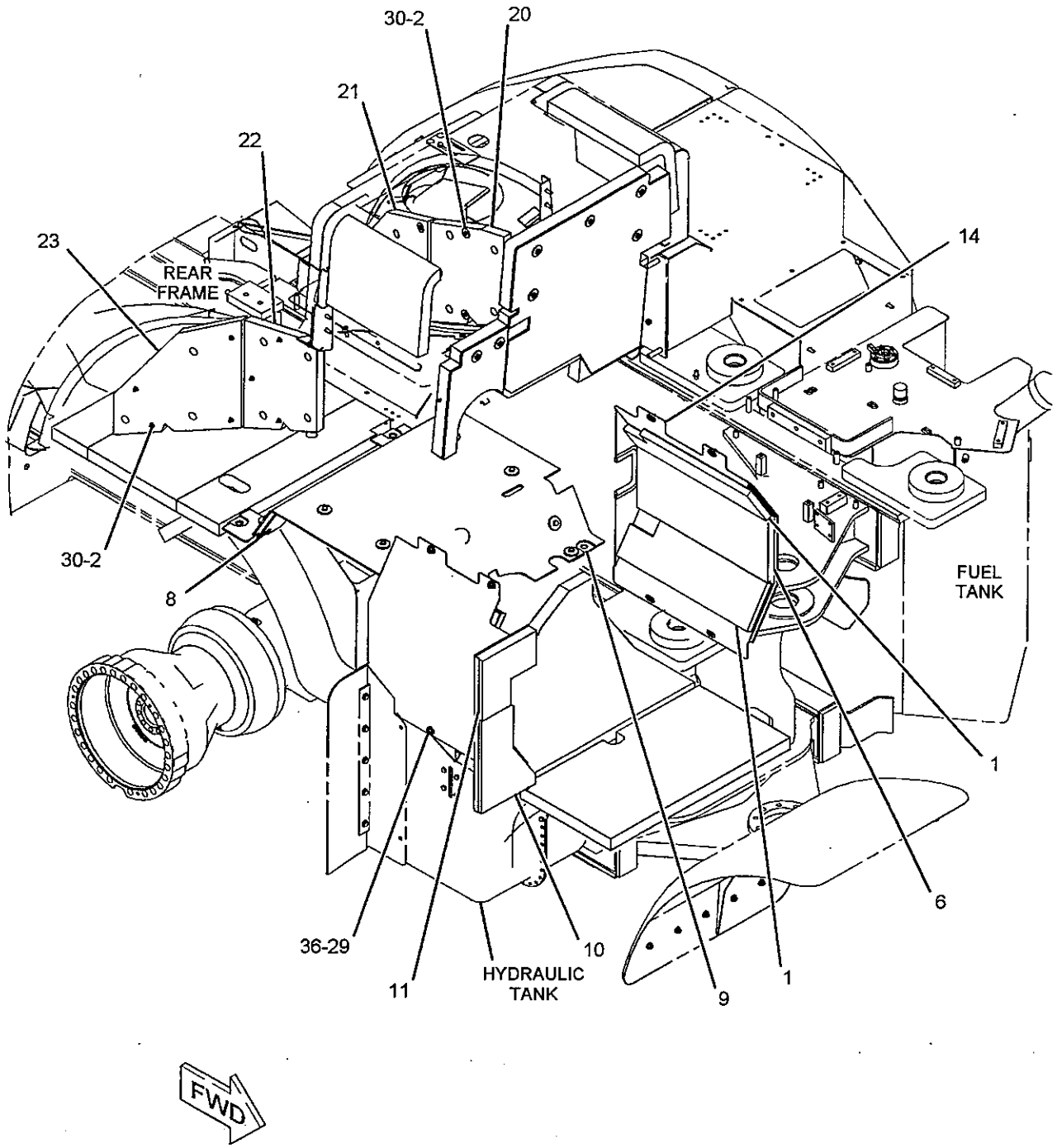


GRAPHIC #1

g01143848

## 234-8946 SUPPRESSION GP-SOUND (contd.)

i02284045

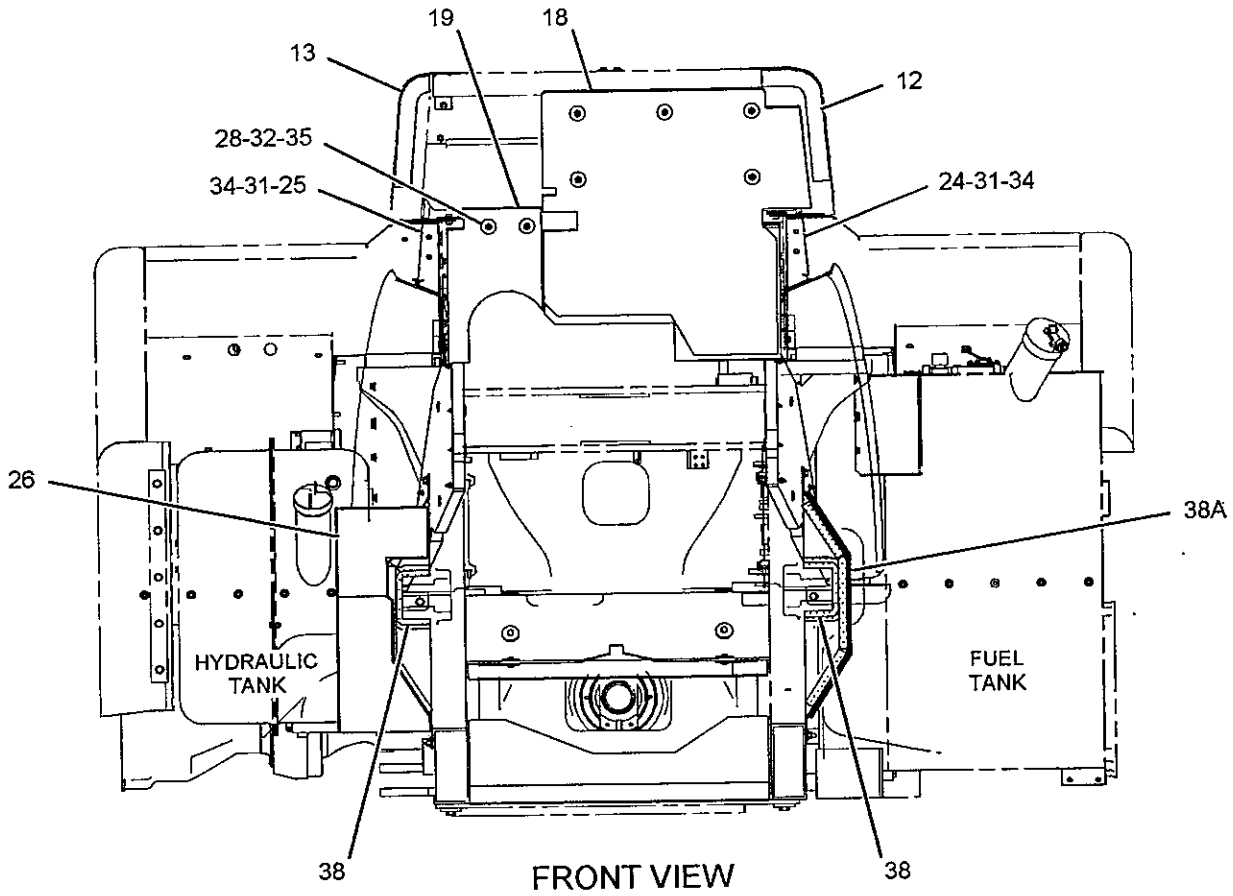


FRONT VIEW

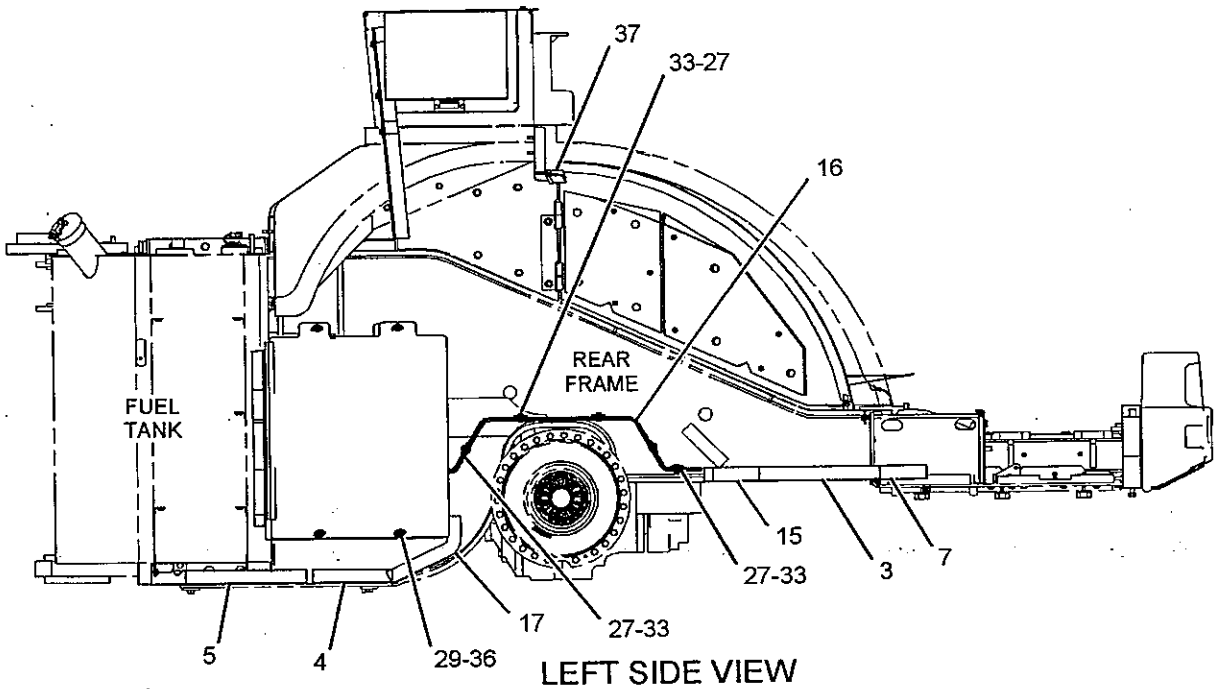


LEFT SIDE VIEW

GRAPHIC #2

<END>

g01143851

# FRAME AND BODY

## *240-8606* SUPPRESSION GP-SOUND

**S/N: JMS1-UP**

**AN ATTACHMENT**

**SMCS-7076, 7261** **i02266335**

| NOTE | REF NO | GRAPHIC REF | PART NUMBER | QTY | PART NAME 1 2 3 4 5 6 (PRODUCT LEVEL) | SEE PAGE |
|---|---|---|---|---|---|---|
| | 1 | 1 | 236-2359 | 1 | INSULATION | |
| | 2 | 1 | 236-2360 | 1 | INSULATION | |
| | 3 | 1 | 246-9288 | 1 | INSULATION AS | |
| | 4 | 1 | 247-2977 | 1 | INSULATION AS | |
| | 5 | 1 | 3H-5788 | 7 | SPACER (8-IN LG) | |
| M | 6 | 1 | 8T-0389 | 7 | LOCKNUT (M10X1.5-THD) | |
| | 7 | 1 | 8T-4226 | 7 | WASHER-PLATED (10.5X45X3-MM THK) | |

M-METRIC PART

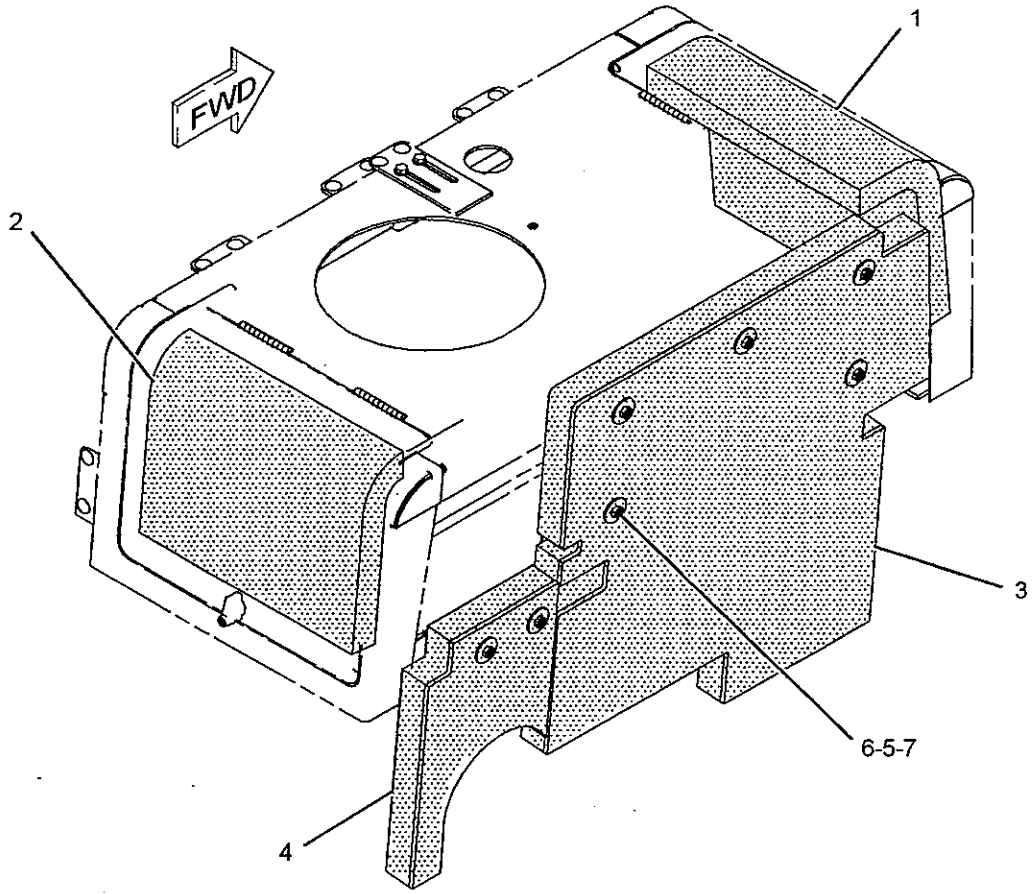


GRAPHIC #1 **<END>** g01067326

# FRAME AND BODY

## 240-8615 SUPPRESSION GP-SOUND–REAR FRAME

S/N: JMS1-UP

PART OF 263-7277 SUPPRESSION AR-SOUND

AN ATTACHMENT

SMCS-7076, 7261

i02284046

| NOTE | REF NO | GRAPHIC REF | PART NUMBER | QTY | PART NAME 1 2 3 4 5 6 (PRODUCT LEVEL) | SEE PAGE |
|---|---|---|---|---|---|---|
| | 1 | 1 | 2Q-7765 | 1 | BRACKET AS | |
| M | | 1 | 8T-3597 | 2 | NUT-WELD (M12X1.75-THD) | |
| | 2 | 1 | 236-2366 | 1 | INSULATION | |
| | 3 | 1 | 236-2367 | 1 | INSULATION | |
| | 4 | 1 | 236-2368 | 1 | INSULATION | |
| | 5 | 1 | 237-4254 | 1 | INSULATION | |
| | 6 | 1 | 237-4255 | 1 | INSULATION | |
| | 7 | 1 | 237-4256 | 1 | INSULATION | |
| | 8 | 1 | 249-0107 | 1 | INSULATION AS | |
| | | 1 | 249-0104 | 1 | INSULATION | |
| | | 1 | 249-0105 | 1 | INSULATION | |
| | 9 | 1 | 249-0108 | 1 | INSULATION | |
| | 10 | 1 | 258-7052 | 1 | PLATE | |
| | 11 | 1 | 258-7057 | 1 | GUARD AS | |
| | 12 | 1 | 258-7058 | 1 | GUARD AS | |
| | 13 | 1 | 258-7582 | 1 | INSULATION | |
| | 14 | 1 | 258-7583 | 1 | INSULATION | |
| | 15 | 1 | 258-7584 | 1 | INSULATION | |
| M | 16 | 1 | 8T-4192 | 12 | BOLT (M12X1.75X25-MM) | |
| | 17 | 1 | 8T-4223 | 12 | WASHER-HARD (13.5X25.5X3-MM THK) | |
| E | 18 | 1 | 3E-9556 | | SEAL (280-CM) | |
| E | 19 | 1 | 123-3827 | | SEAL (592-CM) | |

E-ORDER BY THE CENTIMETER
M-METRIC PART

## 240-8615 SUPPRESSION GP-SOUND *(contd.)* i02284046

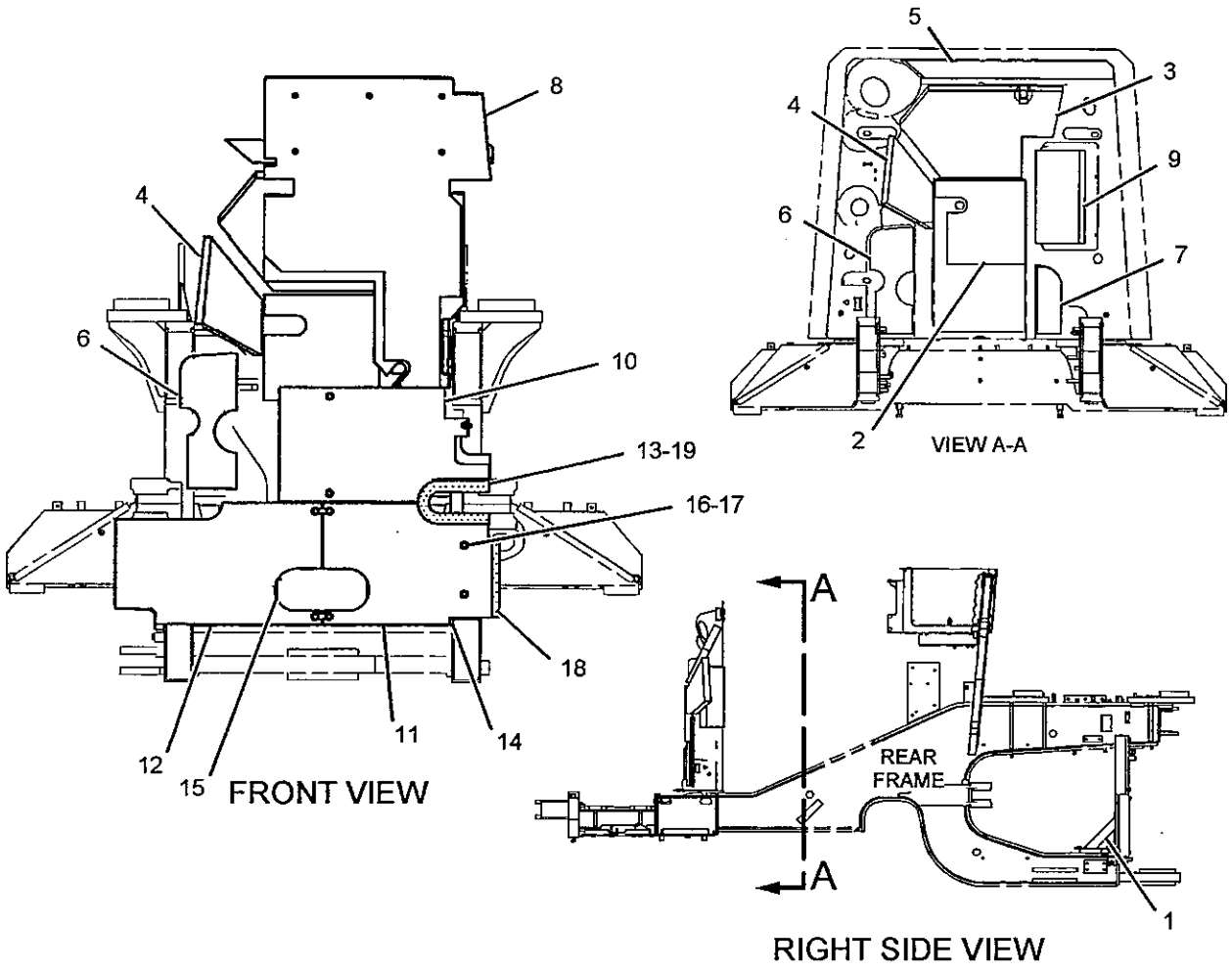


GRAPHIC #1 **<END>** g01144599

# FRAME AND BODY

## *171-8823* TANK GP-GREASE

**S/N: JMS1-UP**

**PART OF 247-4348 LINES GP-AUTOMATIC LUBRICATION AN ATTACHMENT**

**SMCS-7540** **i02283979**

| NOTE | REF NO | GRAPHIC REF | PART NUMBER | QTY | PART NAME 1 2 3 4 5 6 (PRODUCT LEVEL) | SEE PAGE |
|---|---|---|---|---|---|---|
| | 1 | 1 | **157-2017** | 1 | VALVE AS-RELIEF (GREASE PRESSURE) | |
| | 2 | 1 | **189-8069** | 1 | TANK GP-GREASE | |

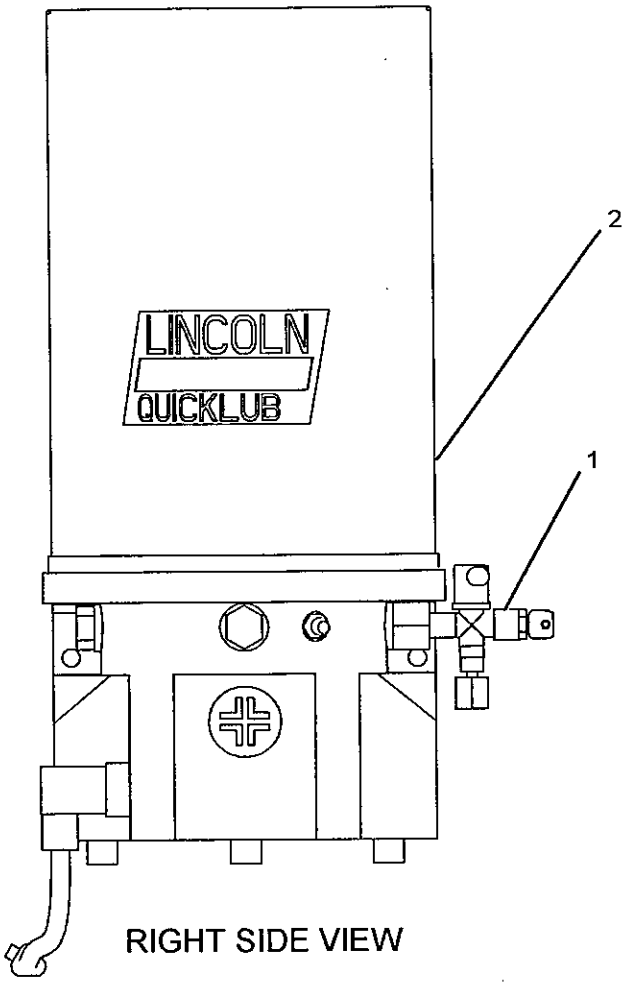


RIGHT SIDE VIEW

GRAPHIC #1 **<END>** g01144235

# FRAME AND BODY

## *235-5334* TILT GP-HOOD

**S/N: JMS1-UP**

**PART OF 225-5539 ELECTRICAL AR**

**SMCS-1427, 7251** **i02280882**

| NOTE | REF NO | GRAPHIC REF | PART NUMBER | QTY | PART NAME 1 2 3 4 5 6 (PRODUCT LEVEL) | SEE PAGE |
|---|---|---|---|---|---|---|
| | 1 | 1 | **6S-6646** | 4 | PIN-COTTER | |
| | 2 | 1 | **141-7984** | 4 | TUBE | |
| | 3 | 1 | **145-4489** | 1 | PIN | |
| | 4 | 1 | **167-1192** | 1 | CLIP | |
| | 5 | 1 | **176-1301** | 2 | PIN AS | |
| | 6 | 1 | **235-2020** | 2 | PIVOT AS | |
| Y | 7 | 1 | **235-5335** | 1 | PUMP & MOTOR GP-HOOD TILT | 664 |
| Y | 8 | 1 | *235-5336* | 1 | LINES GP-HOOD TILT | 643 |
| J | 9 | 1 | **235-5337** | 2 | CYLINDER GP-HOOD TILT | |
| | 10 | 1 | **236-7793** | 1 | SHEET | |
| | 11 | 1 | **236-8929** | 1 | HANDLE | |
| | 12 | 1 | **252-5834** | 1 | SUPPORT-HOOD | |
| | 13 | 1 | **252-5835** | 1 | BRACKET | |
| | 14 | 1 | **5P-9915** | 1 | RIVET-POP | |
| | 15 | 1 | **7V-9791** | 4 | PIN | |
| M | 16 | 1 | **7X-2565** | 4 | BOLT (M20X2.5X100-MM) | |
| | 17 | 1 | **8T-4121** | 8 | WASHER-HARD (11X21X2.5-MM THK) | |
| M | 18 | 1 | **8T-4136** | 4 | BOLT (M10X1.5X25-MM) | |
| M | 19 | 1 | **8T-4137** | 4 | BOLT (M10X1.5X20-MM) | |
| M | 20 | 1 | **8T-4138** | 2 | BOLT (M6X1X20-MM) | |
| | 21 | 1 | **8T-5439** | 4 | WASHER (21.5X45X6-MM THK) | |
| | 22 | 1 | **9X-8256** | 2 | WASHER (6.6X12X2-MM THK) | |
| | | | | | AVAILABLE REPAIR KIT(S): | |
| J | | | **236-8937** | 1 | KIT-SEAL | |

J-KIT MARKED J SERVICES PARTS MARKED J
M-METRIC PART
Y-SEPARATE ILLUSTRATION

## 235-5334 TILT GP-HOOD *(contd.)*

i02280882

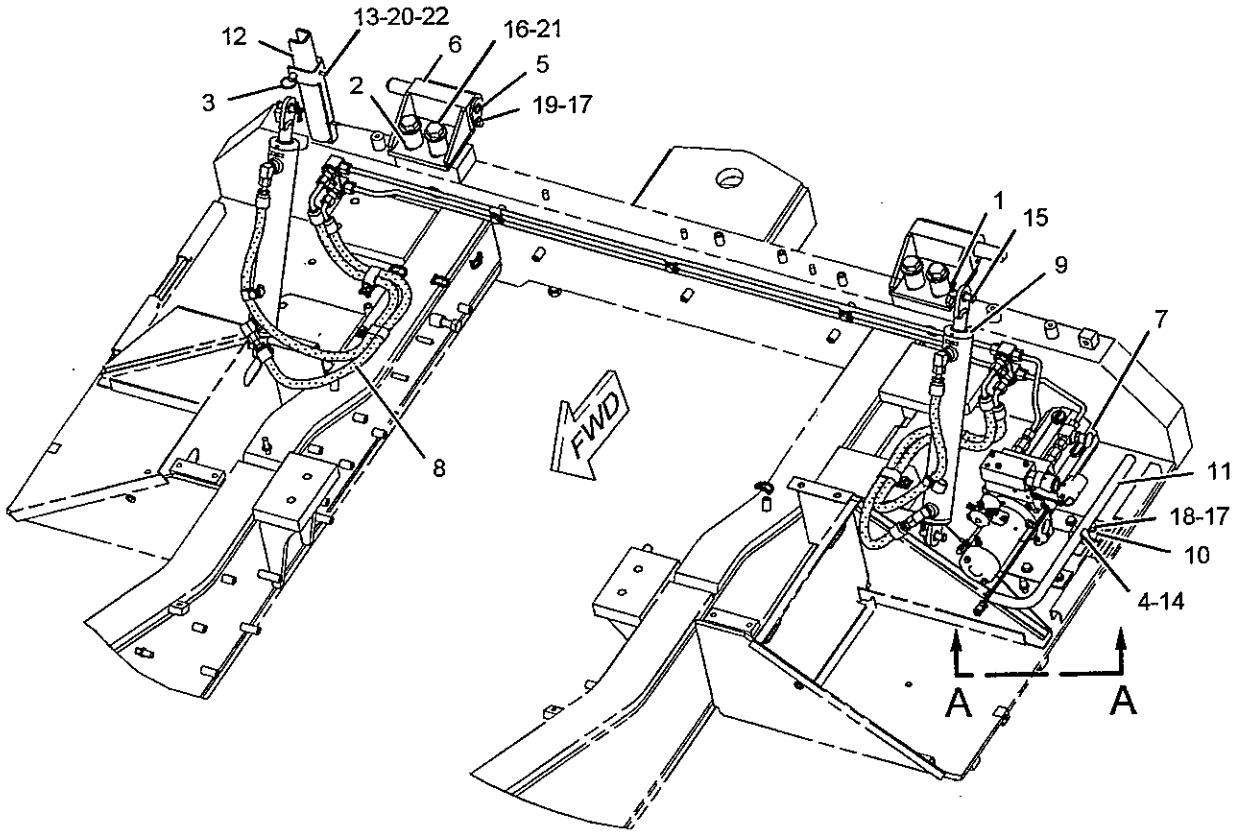


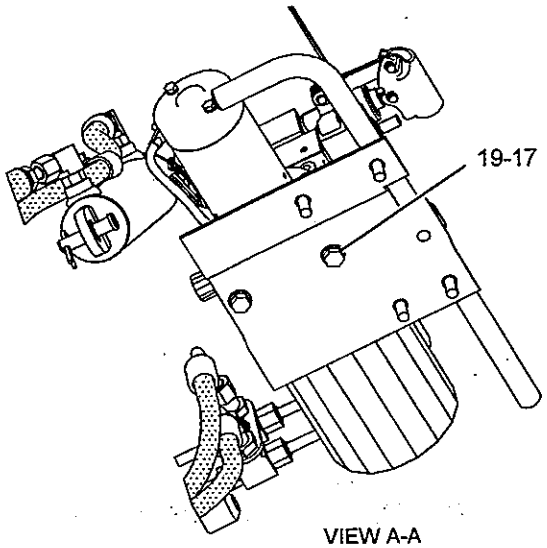


VIEW A-A

GRAPHIC #1

**<END>**

g01141512

# FRAME AND BODY

## 171-8873 VALVE GP-LUBE DISTRIBUTION–4-INJECTOR

S/N: JMS1-UP

PART OF 247-6890 LINES GP-LUBRICATION

AN ATTACHMENT

SMCS-7540

i01144289

| NOTE | REF NO | GRAPHIC REF | PART NUMBER | QTY | PART NAME 1 2 3 4 5 6 (PRODUCT LEVEL) | SEE PAGE |
|---|---|---|---|---|---|---|
| | 1 | 1 | 3B-8489 | 1 | FITTING-GREASE | |
| | 2 | 1 | 5P-3422 | 1 | TEE-PIPE | |
| | 3 | 1 | 171-8867 | 1 | VALVE AS-LUBE DISTRIBUTION | |
| | 4 | 1 | 171-8869 | 8 | GASKET | |
| | 5 | 1 | 171-8870 | 4 | PLUG | |
| | 6 | 1 | 171-8872 | 4 | ADAPTER | |

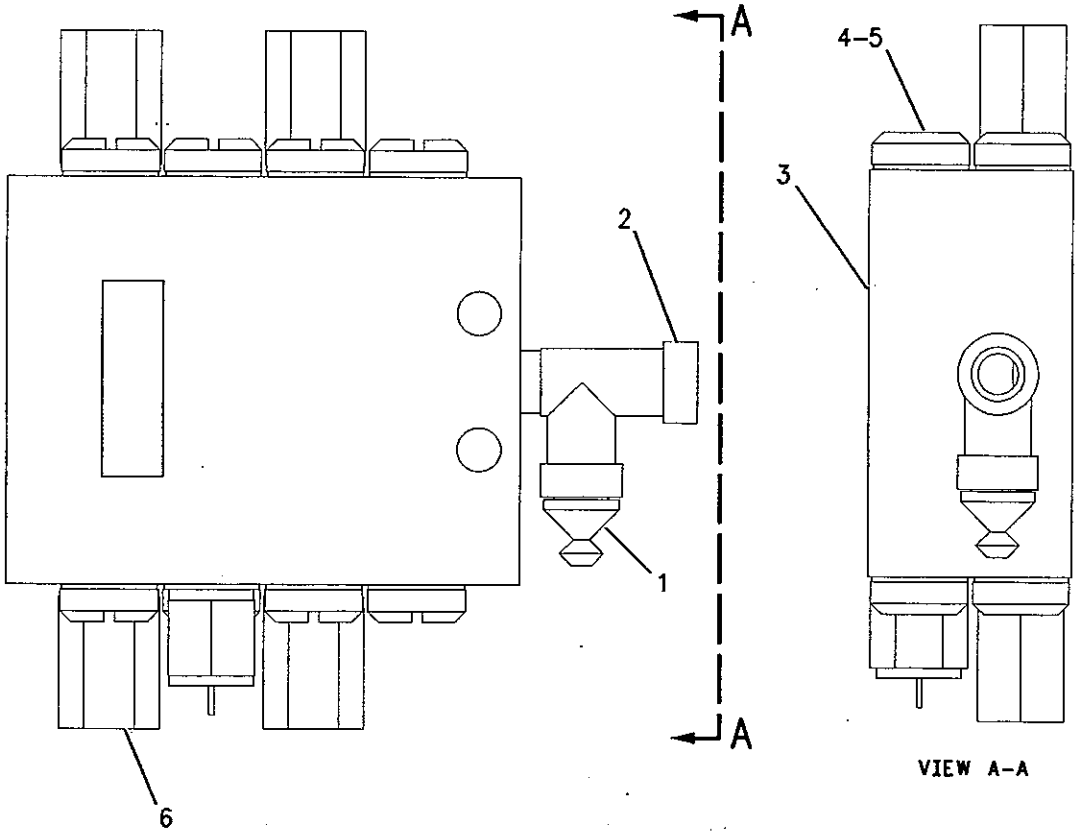


VIEW A-A

GRAPHIC #1

<END>

g00620153

# 171-8875 VALVE GP-LUBE DISTRIBUTION–5-INJECTOR

S/N: JMS1-UP
PART OF 249-8094 LINES GP-LUBRICATION
AN ATTACHMENT

SMCS-7540

i01566053

| NOTE | REF NO | GRAPHIC REF | PART NUMBER | QTY | PART NAME 1 2 3 4 5 6 (PRODUCT LEVEL) | SEE PAGE |
|---|---|---|---|---|---|---|
| | 1 | 1 | 3B-8489 | 3 | FITTING-GREASE | |
| | 2 | 1 | 5P-3422 | 3 | TEE-PIPE | |
| | 3 | 1 | 171-8867 | 1 | VALVE AS-LUBE DISTRIBUTION | |
| | 4 | 1 | 171-8869 | 8 | GASKET | |
| | 5 | 1 | 171-8870 | 3 | PLUG | |
| | 6 | 1 | 171-8872 | 5 | ADAPTER | |
| | 7 | 1 | 3B-6552 | 2 | ELBOW | |

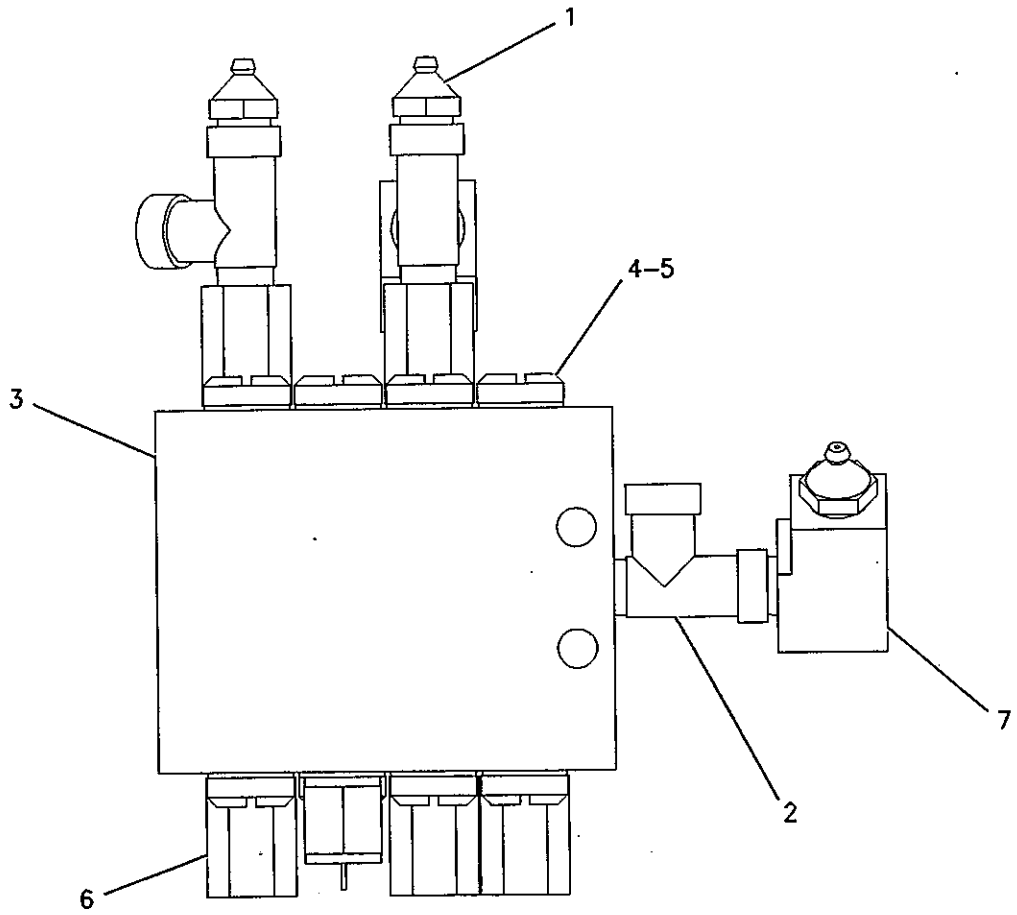


GRAPHIC #1

<END>

g00814359

# 171-8896 VALVE GP-LUBE DISTRIBUTION–11-INJECTOR

S/N: JMS1-UP

PART OF 249-8095 LINES GP-LUBRICATION

AN ATTACHMENT

SMCS-7540 i01144312

| NOTE | REF NO | GRAPHIC REF | PART NUMBER | QTY | PART NAME 1 2 3 4 5 6 (PRODUCT LEVEL) | SEE PAGE |
|---|---|---|---|---|---|---|
| | 1 | 1 | 3B-8489 | 1 | FITTING-GREASE | |
| | 2 | 1 | 5P-3422 | 1 | TEE-PIPE | |
| | 3 | 1 | 171-8868 | 1 | VALVE AS-LUBE DISTRIBUTION | |
| | 4 | 1 | 171-8869 | 12 | GASKET | |
| | 5 | 1 | 171-8870 | 1 | PLUG | |
| | 6 | 1 | 171-8872 | 11 | ADAPTER | |

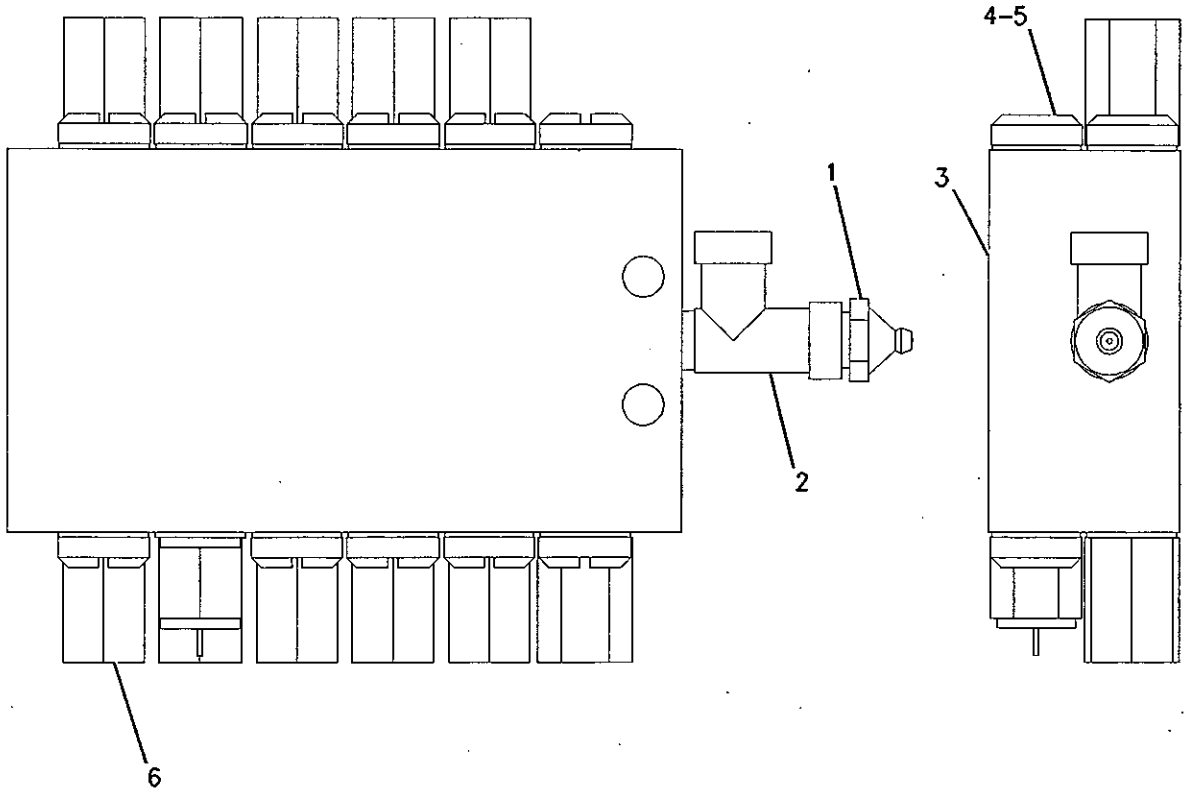


GRAPHIC #1 <END> g00620177

# 189-7002 VALVE GP-LUBE DISTRIBUTION–6-INJECTOR

S/N: JMS1-UP

PART OF 247-4349 LINES GP-LUBRICATION

AN ATTACHMENT

SMCS-7540

i01566209

| NOTE | REF NO | GRAPHIC REF | PART NUMBER | QTY | PART NAME 1 2 3 4 5 6 (PRODUCT LEVEL) | SEE PAGE |
|---|---|---|---|---|---|---|
| | 1 | 1 | 3B-8489 | 1 | FITTING-GREASE | |
| | 2 | 1 | 5P-3422 | 1 | TEE-PIPE | |
| | 3 | 1 | 171-8868 | 1 | VALVE AS-LUBE DISTRIBUTION | |
| | 4 | 1 | 171-8869 | 12 | GASKET | |
| | 5 | 1 | 171-8870 | 6 | PLUG | |
| | 6 | 1 | 171-8872 | 6 | ADAPTER | |
| | 7 | 1 | 3B-6552 | 1 | ELBOW | |

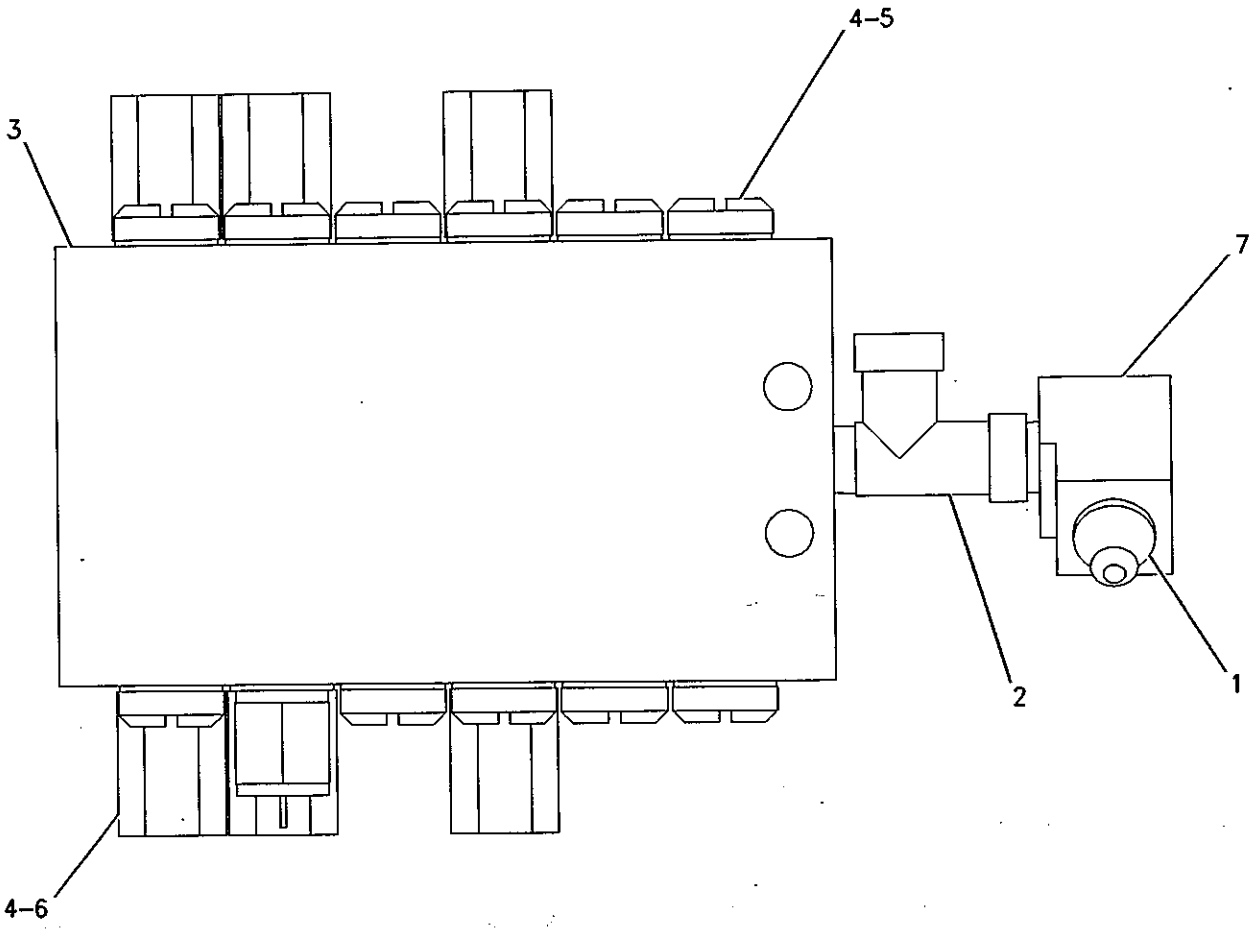


GRAPHIC #1

<END>

g00814360

# 111-9040 ACCUMULATOR GP-BRAKE

S/N: JMS1-UP
CHARGED
PART OF 191-1265 CONTROL GP-SERVICE BRAKE
FIELD REPLACEMENT ORDER 220-2720–PAGE 520

SMCS-4263

i01470590

| NOTE | REF NO | GRAPHIC REF | PART NUMBER | QTY | PART NAME 1 2 3 4 5 6 (PRODUCT LEVEL) | SEE PAGE |
|---|---|---|---|---|---|---|
| | 1 | 1 | 5M-3062 | 2 | BOLT (3/8-16X0.75 IN) | |
| | 2 | 1 | 1J-9671 | 1 | SEAL-O-RING | |
| | 3 | 1 | 069-2535 | 1 | VALVE-GAS (BRAKE ACCUMULATOR) | |
| | 4 | 1 | 111-9110 | 1 | PROTECTOR-GAS VALVE | |
| | 5 | 1 | 8R-2972 | 1 | KIT-SEAL (BRAKE ACCUMULATOR) | |
| | | | | | (INCLUDES O-RINGS, END SEAL, PISTON RING, BACKUP WASHER) | |
| | 6 | 1 | 135-7123 | 1 | PISTON | |

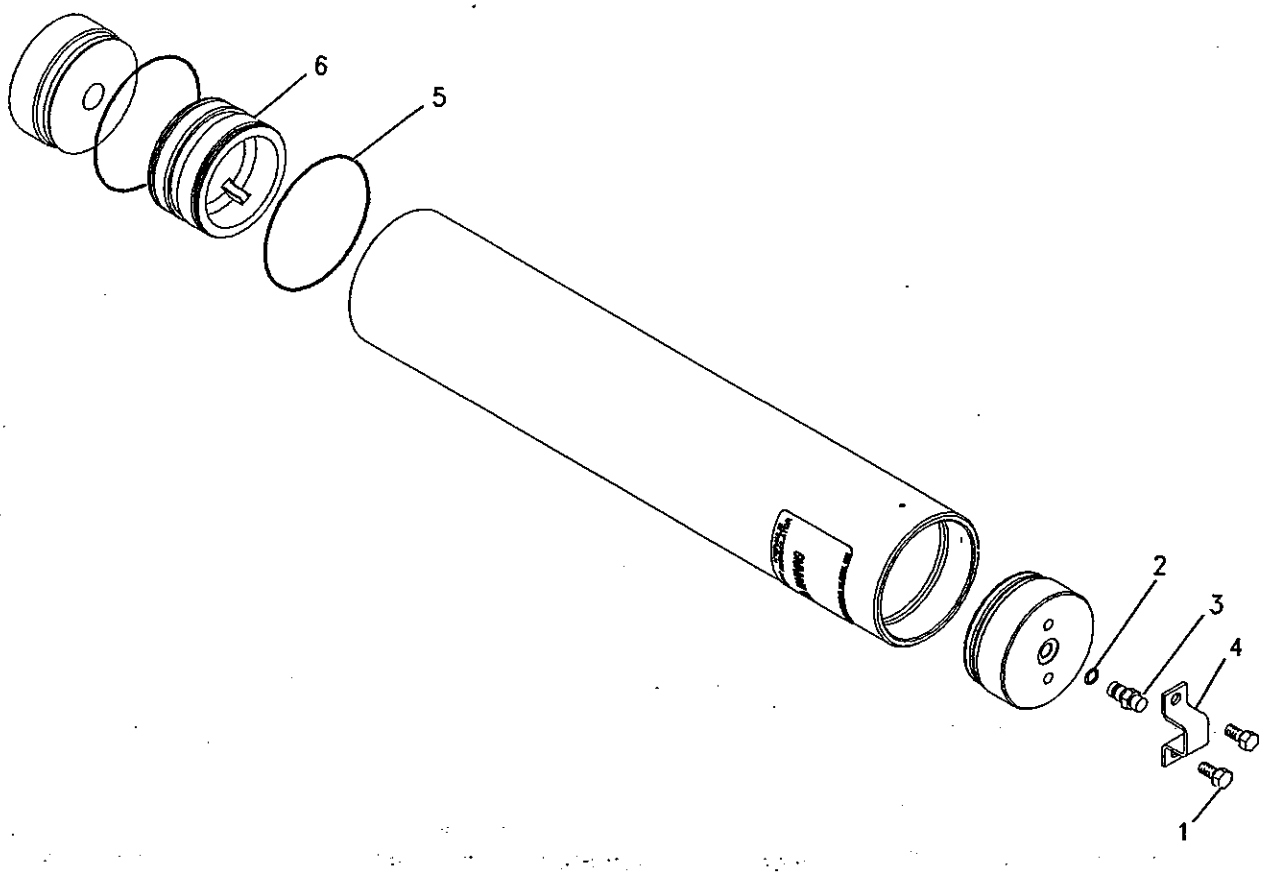


GRAPHIC #1

<END>

g00368845

# 220-2720 ACCUMULATOR GP-BRAKE–UNCHARGED

S/N: JMS1-UP

FIELD REPLACEMENT FOR 111-9040–PAGE 519

SMCS-4263

i01730988

| NOTE | REF NO | GRAPHIC REF | PART NUMBER | QTY | PART NAME 1 2 3 4 5 6 (PRODUCT LEVEL) | SEE PAGE |
|---|---|---|---|---|---|---|
| | 1 | 1 | 069-2535 | 1 | VALVE-GAS | |
| | 2 | 1 | 111-9110 | 1 | PROTECTOR-GAS VALVE | |
| | 3 | 1 | 135-7123 | 1 | PISTON | |
| | 4 | 1 | 1J-9671 | 1 | SEAL-O-RING | |
| | 5 | 1 | 5M-3062 | 2 | BOLT (3/8-16X0.75 IN) | |
| | 6 | 1 | 170-0493 | 1 | KIT-SEAL | |

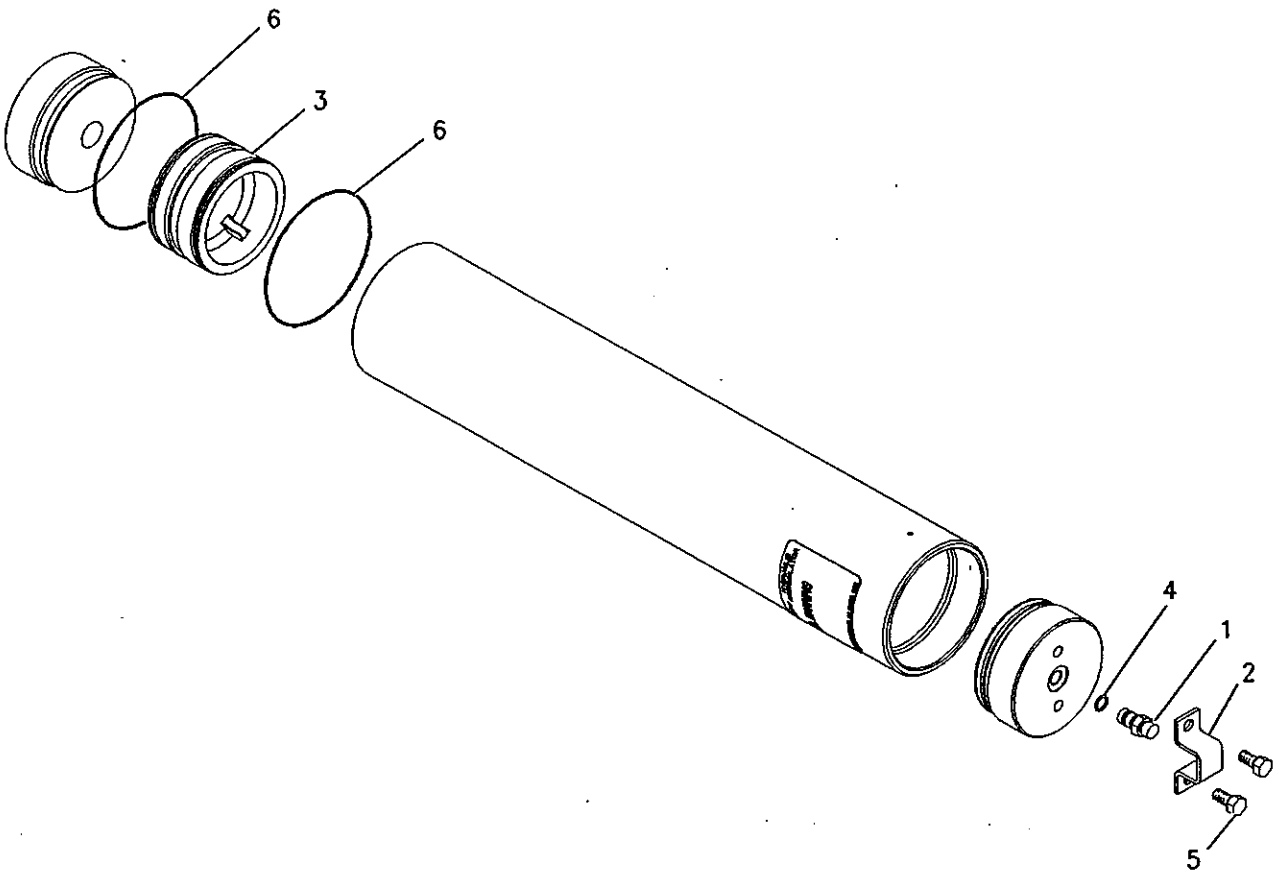


GRAPHIC #1

<END>

g00292284

# BRAKING SYSTEM

## *249-5550* ACCUMULATOR GP-BRAKE–UNCHARGED, COLD WEATHER

**S/N: JMS1-UP**

**FIELD INSTALLATION**

**SMCS-4263** **i02232077**

| NOTE | REF NO | GRAPHIC REF | PART NUMBER | QTY | PART NAME 1 2 3 4 5 6 (PRODUCT LEVEL) | SEE PAGE |
|---|---|---|---|---|---|---|
| | 1 | 1 | **069-2535** | 1 | VALVE-GAS | |
| | 2 | 1 | **111-9110** | 1 | PROTECTOR-GAS VALVE | |
| | 3 | 1 | **1J-9671** | 1 | SEAL-O-RING | |
| | 4 | 1 | **5M-3062** | 2 | BOLT (3/8-16X0.75-IN) | |
| | 5 | 1 | **259-0623** | 1 | KIT-SERVICE (ACCUMULATOR, COLD WEATHER) | |
| | | | | | (INCLUDES WEAR RING, V O'RING, BACKUP RINGS, AND O'RINGS) | |

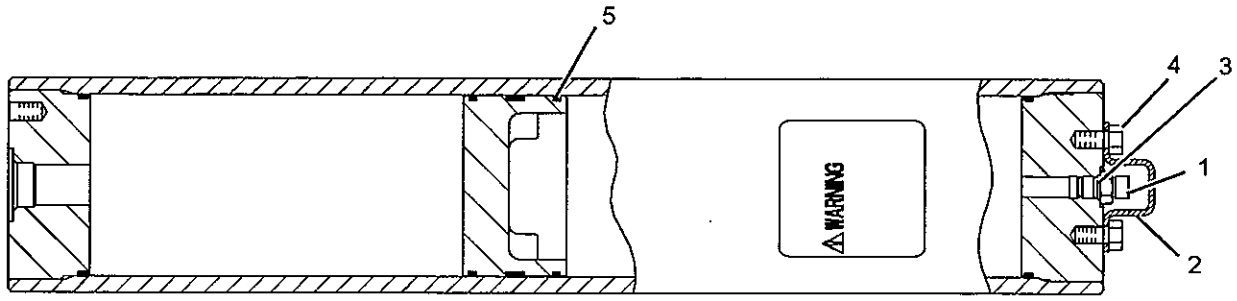


GRAPHIC #1 **<END>** g01126977

# 188-7497 BASE GP-FOOT BRAKE–PEDAL, RH

S/N: JMS1-UP

PART OF 193-1448 CONTROL GP-FOOT BRAKE

ALSO AN ATTACHMENT

SMCS-4269

i01770823

| NOTE | REF NO | GRAPHIC REF | PART NUMBER | QTY | PART NAME 1 2 3 4 5 6 (PRODUCT LEVEL) | SEE PAGE |
|---|---|---|---|---|---|---|
| | 1 | 1 | 4E-8958 | 1 | PIN | |
| | 2 | 1 | 4E-9664 | 1 | PIN | |
| | 3 | 1 | 8S-2225 | 1 | SEAL-LIP TYPE | |
| | 4 | 1 | 009-3101 | 4 | RING-RETAINING | |
| | 5 | 1 | 113-7752 | 1 | PEDAL-BRAKE (RIGHT) | |
| | 6 | 1 | 115-2247 | 1 | SPRING | |
| | 7 | 1 | 205-3582 | 1 | ROLLER | |

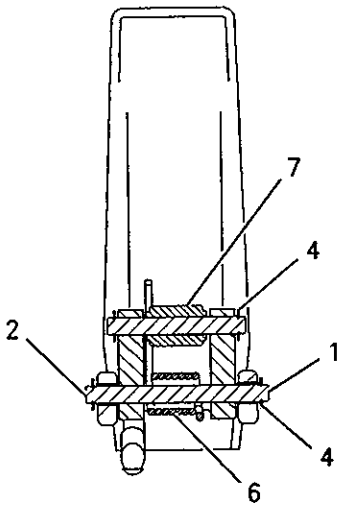


SECTION A-A

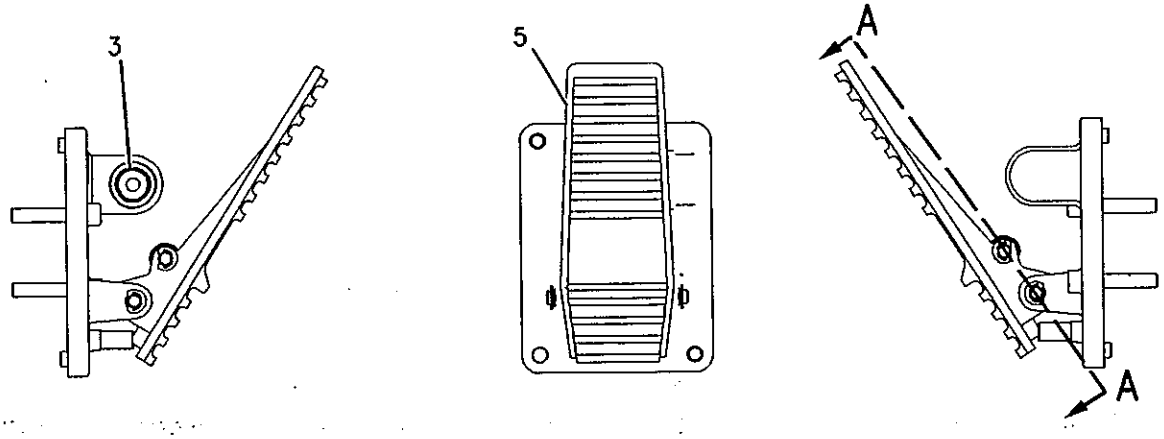


GRAPHIC #1

<END>

g00826585

# BRAKING SYSTEM

## 227-1107 BASE GP-FOOT BRAKE–PEDAL, LH

**S/N: JMS1-UP**

**PART OF 193-1448 CONTROL GP-FOOT BRAKE**

**ALSO AN ATTACHMENT**

**SMCS-4269** **i02015867**

| NOTE | REF NO | GRAPHIC REF | PART NUMBER | QTY | PART NAME 1 2 3 4 5 6 (PRODUCT LEVEL) | SEE PAGE |
|---|---|---|---|---|---|---|
| | 1 | 1 | **4E-9664** | 1 | PIN | |
| | 2 | 1 | **009-3101** | 3 | RING-RETAINING | |
| | 3 | 1 | **105-6117** | 1 | SWITCH AS-LIMIT (STOP LIGHT) | |
| | 4 | 1 | **113-7752** | 1 | PEDAL-BRAKE | |
| | 5 | 1 | **115-2247** | 1 | SPRING | |
| | 6 | 1 | **146-1892** | 1 | HARNESS AS-BRAKE (STOP LIGHT) | |
| | | 1 | **155-2269** | 1 | PLUG AS-CONNECTOR (2-PIN) | |
| M | 7 | 1 | **153-6273** | 1 | SETSCREW | |
| | 8 | 1 | **200-2217** | 1 | COVER | |
| | 9 | 1 | **200-2218** | 1 | SWITCH AS-ADJUSTABLE (STOP LIGHT LIMIT) | |
| | 10 | 1 | **200-2219** | 6 | BOLT | |
| | 11 | 1 | **200-2220** | 1 | SEAL | |
| | 12 | 1 | **200-2221** | 1 | PIN | |
| Y | 13 | 1 | **214-4863** | 1 | SENSOR GP-POSITION (ROTARY) (BRAKE PEDAL) | 207 |
| | 14 | 1 | **230-7640** | 1 | ROLLER | |
| M | 15 | 1 | **125-3295** | 2 | SCREW-PAN HEAD (M2.5X0.45X12-MM) | |
| M | 16 | 1 | **8T-2899** | 2 | SCREW-MACHINE (M2.5X0.45X6) | |

M-METRIC PART
Y-SEPARATE ILLUSTRATION

## 227-1107 BASE GP-FOOT BRAKE *(contd.)*

i02015867

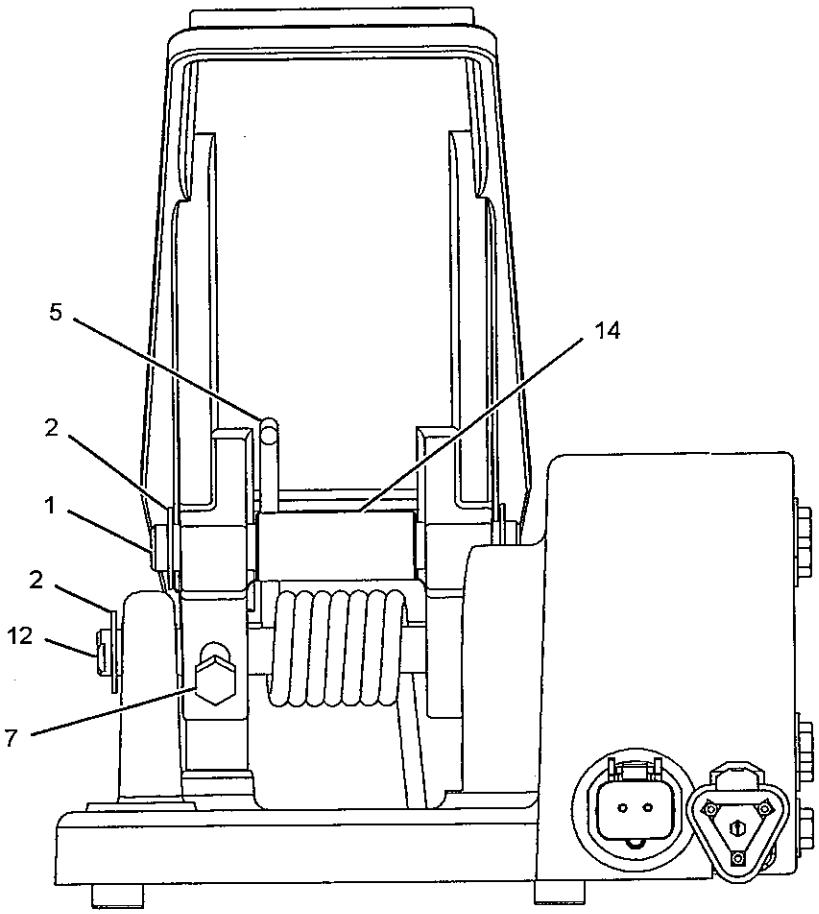


VIEW A-A

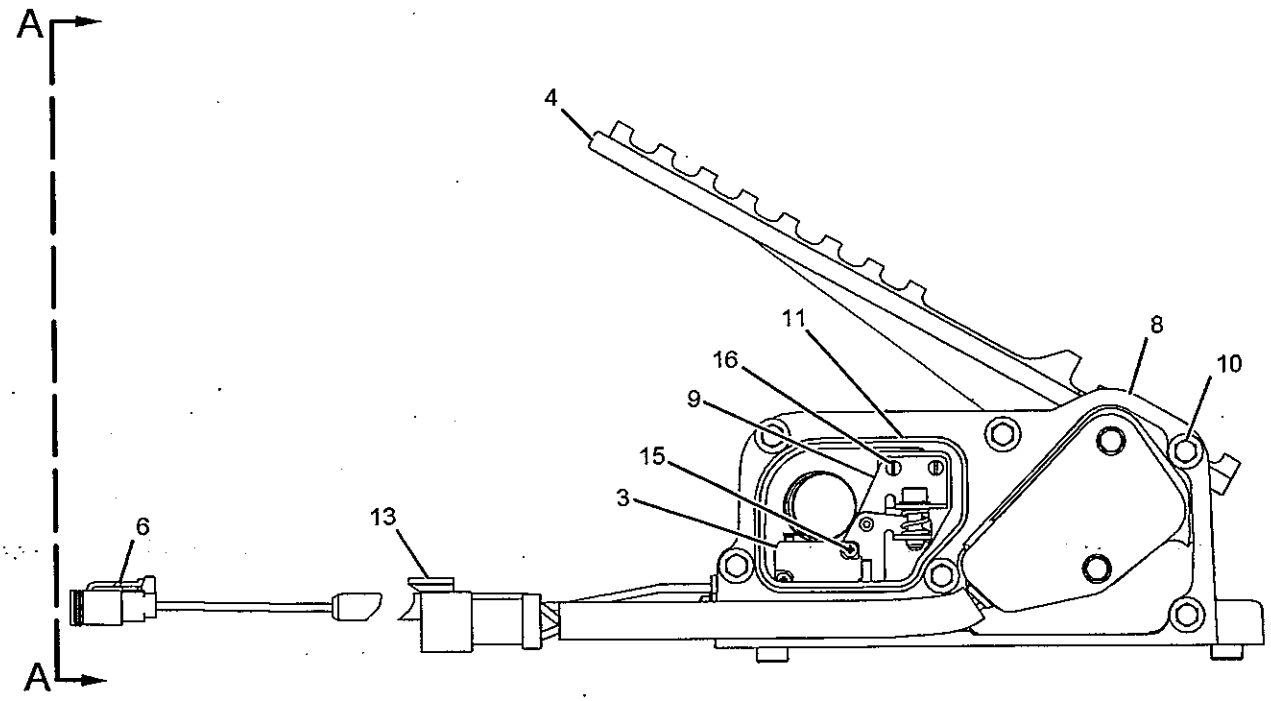


GRAPHIC #1

<END>

g01075644

# BRAKING SYSTEM

## *110-4774* BRAKE GP-PARKING

**S/N: JMS1-UP**

**PART OF 232-6585 POWER TRAIN AR**

**SMCS-4267** **i02140926**

| NOTE | REF NO | GRAPHIC REF | PART NUMBER | QTY | PART NAME 1 2 3 4 5 6 (PRODUCT LEVEL) | SEE PAGE |
|---|---|---|---|---|---|---|
| | 1 | 1 | **3B-4617** | 1 | PIN-COTTER | |
| | 2 | 1 | **4K-1540** | 1 | PIN-CLEVIS | |
| | 3 | 1 | **9X-8268** | 4 | WASHER (17.5X30X3.5-MM THK) | |
| CY | 4 | 1 | **200-1317** | 1 | BRAKE GP-PARKING | 526 |
| | 5 | 1 | **209-0499** | 1 | END-YOKE ROD | |
| | 6 | 1 | **111-7085** | 1 | DRUM-BRAKE | |
| | 7 | 1 | **206-0408** | 1 | ACTUATOR AS-PARKING BRAKE | |
| | | 1 | **206-0407** | 1 | BOOT | |
| | 8 | 1 | **121-6607** | 1 | LEVER | |
| M | 9 | 1 | **5P-8245** | 12 | WASHER-HARD (13.5X25.5X3-MM THK) | |
| M | 10 | 1 | **6V-4429** | 4 | BOLT (M16X2X40-MM) | |
| M | 11 | 1 | **6V-8197** | 12 | BOLT (M12X1.75X40-MM) | |
| M | 12 | 1 | **8T-4133** | 5 | NUT (M10X1.5-THD) | |
| M | 13 | 1 | **8T-4195** | 1 | BOLT (M10X1.5X30-MM) | |
| | 14 | 1 | **8T-4223** | 3 | WASHER-HARD (13.5X25.5X3-MM THK) | |
| M | 15 | 1 | **8T-4244** | 2 | NUT (M12X1.75-THD) | |
| | 16 | 1 | **242-4351** | 1 | GUARD AS | |
| | 17 | 1 | **9X-2027** | 4 | WASHER (11X18X2-MM THK) | |

C-CHANGE FROM PREVIOUS TYPE
M-METRIC PART
Y-SEPARATE ILLUSTRATION

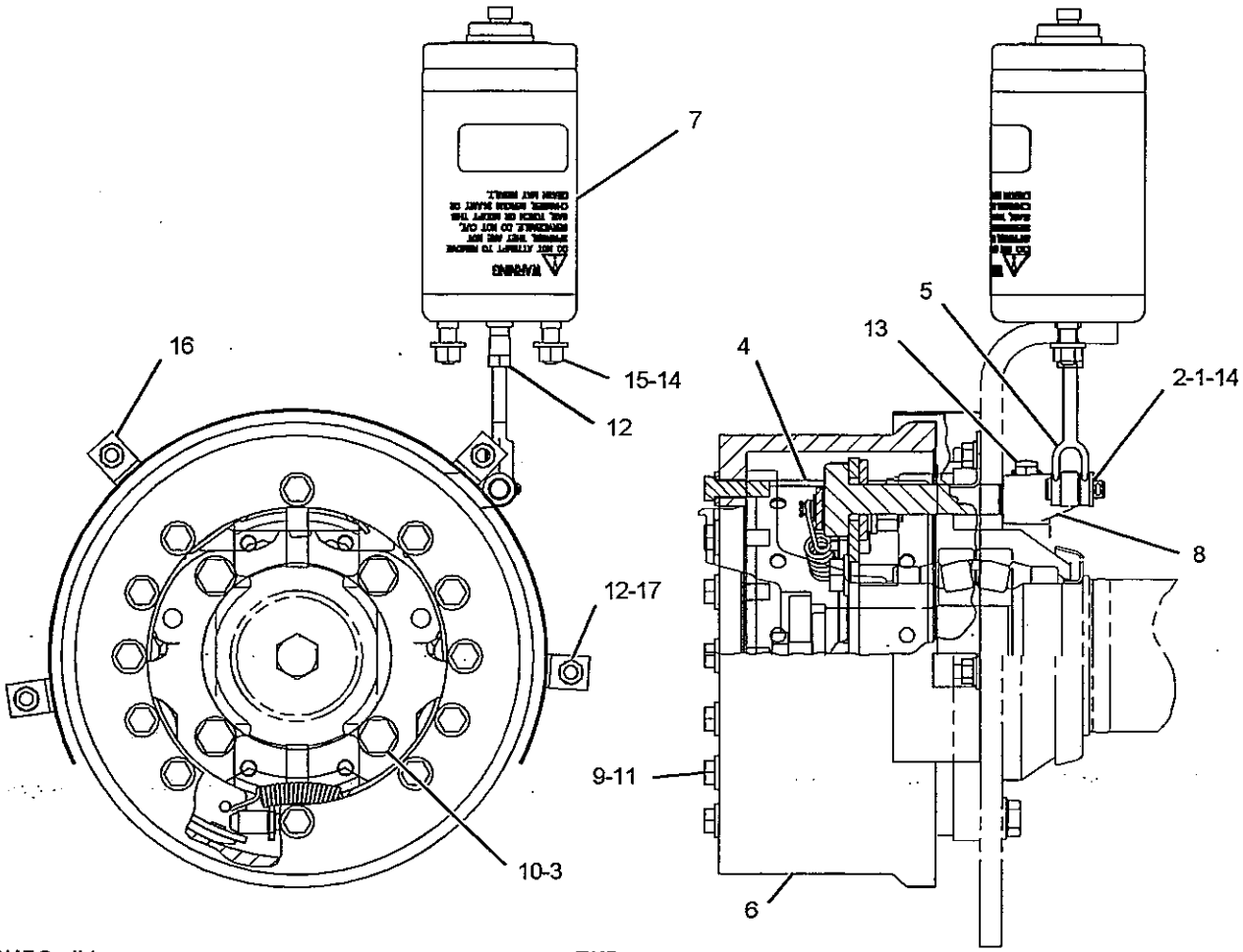


GRAPHIC #1 **<END>** g01087666

# 200-1317 BRAKE GP-PARKING

S/N: JMS1-UP

PART OF 110-4774 BRAKE GP-PARKING

SMCS-4267

i01498538

| NOTE | REF NO | GRAPHIC REF | PART NUMBER | QTY | PART NAME 1 2 3 4 5 6 (PRODUCT LEVEL) | SEE PAGE |
|---|---|---|---|---|---|---|
| | 1 | 1 | 9M-5139 | 2 | SPRING | |
| | 2 | 1 | 9M-5137 | 1 | BRACE-ANCHOR PIN | |
| | 3 | 1 | 9M-5140 | 1 | PLATE AS | |
| | 4 | 1 | 7F-9578 | 1 | SPRING | |
| | 5 | 1 | 7F-9572 | 1 | NUT | |
| | 6 | 1 | 7F-9571 | 1 | SCREW-ADJUSTMENT | |
| | 7 | 1 | 7F-9579 | 1 | SOCKET | |
| | 8 | 1 | 6W-7301 | 2 | RING-RETAINING | |
| | 9 | 1 | 6W-7297 | 2 | PIN | |
| | 10 | 1 | 200-1318 | 1 | CAMSHAFT | |
| | 11 | 1 | 6B-6682 | 2 | NUT-FULL (3/4-16 THD) | |
| | 12 | 1 | 5P-8248 | 4 | WASHER-HARD (20X36.5X3.5MM THK) | |
| | 13 | 1 | 9C-4305 | 1 | SHOE & LINING AS | |
| | 14 | 1 | 9C-4306 | 1 | SHOE & LINING AS | |
| | | | | | AVAILABLE REPAIR KIT(S): | |
| | | | 9C-9843 | 1 | KIT-BRAKE LINING | |
| | | | | | (INCLUDES RIVETS & LINING) | |

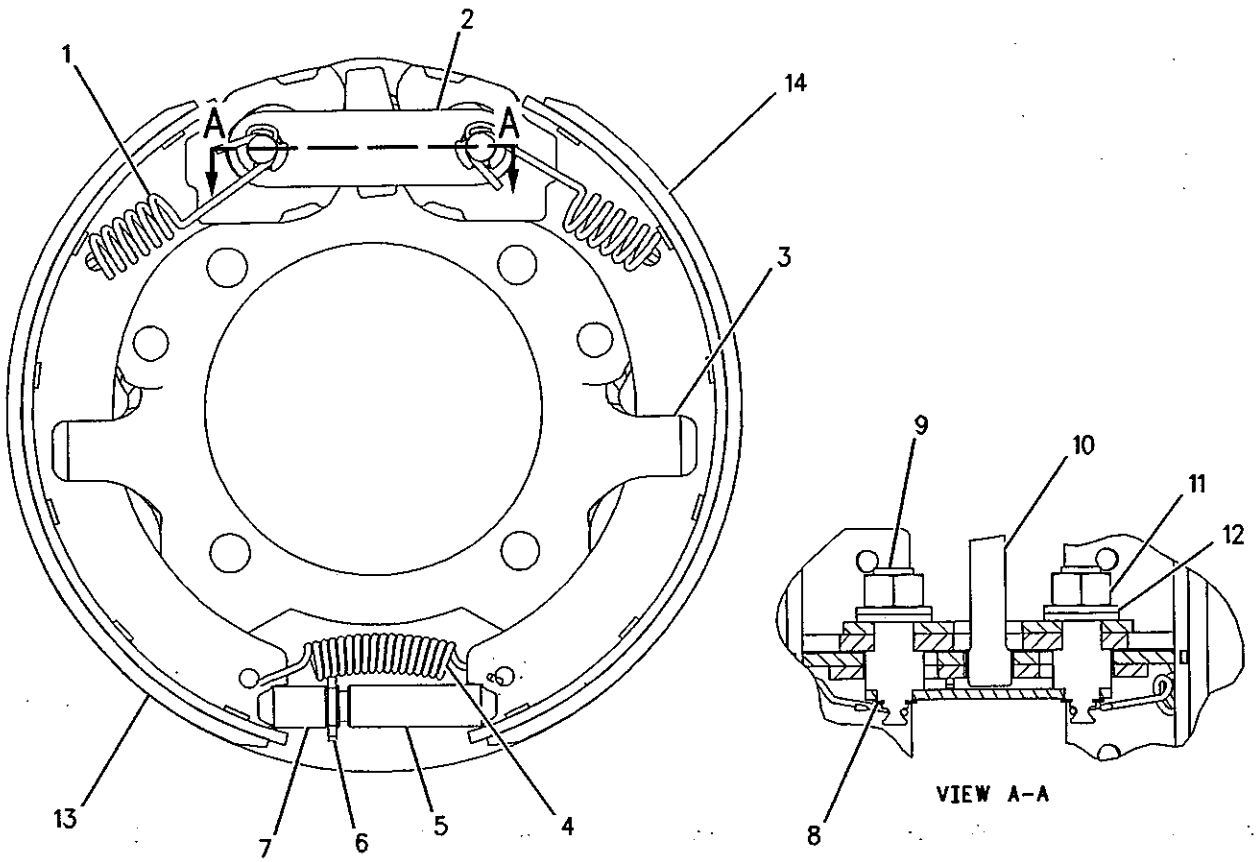


GRAPHIC #1

<END>

g00777930

# BRAKING SYSTEM

## 208-5972 BRAKE GP-SERVICE

**S/N: JMS1-UP**

**PART OF 232-7559, 232-7735 AXLE AR-FIXED, 232-7558, 232-7731, 232-7733 AXLE AR-OSCILLATING**

**ALSO AN ATTACHMENT**

**SMCS-4251** **i01620395**

| NOTE | REF NO | GRAPHIC REF | PART NUMBER | QTY | PART NAME 1 2 3 4 5 6 (PRODUCT LEVEL) | SEE PAGE |
|---|---|---|---|---|---|---|
| | 1 | 1 | 213-1152 | 1 | PISTON | |
| | 2 | 1 | 151-6251 | 1 | SEAL-D-RING | |
| | 3 | 1 | 5P-8119 | 1 | SEAL-O-RING | |
| | 4 | 1 | 9F-2167 | 1 | SCREW-PURGE | |
| | 5 | 1 | 110-2446 | 1 | ADAPTER | |
| | 6 | 1 | 3K-0360 | 1 | SEAL-O-RING | |
| | 7 | 1 | 151-6250 | 1 | SEAL-D-RING | |
| | 8 | 1 | 193-1152 | 1 | HOUSING | |
| | 9 | 1 | 6M-9155 | 4 | PIN | |
| | 10 | 1 | 7V-8346 | 4 | SPRING-GUIDE | |
| | 11 | 1 | 8V-3609 | 4 | SPRING-RETRACTOR | |
| | 12 | 1 | 118-6606 | 3 | PLATE-INNER | |
| | 13 | 1 | 105-8750 | 3 | DISC-FRICTION | |
| | 14 | 1 | 105-8724 | 1 | HUB | |
| M | 15 | 1 | 6V-8150 | 3 | BOLT (M12X1.75X60-MM) | |
| | 16 | 1 | 3H-7654 | 3 | WASHER-HARD (13.5X22.5X3-MM THK) | |
| | 17 | 1 | 9M-2076 | 1 | RING-SNAP | |
| | 18 | 1 | 167-1261 | 1 | PLATE-DAMPER | |
| | 19 | 1 | 195-3722 | 1 | PLATE-OUTER | |
| | 20 | 1 | 173-0554 | 1 | PIN (BRAKE DISC WEAR INDICATOR) | |
| | 21 | 1 | 173-0555 | 1 | DOWEL-HOLLOW | |
| | 22 | 1 | 8T-4224 | 1 | WASHER-HARD (8.8X16X2-MM THK) | |
| | 23 | 1 | 096-6901 | 1 | RING-RETAINING | |

M-METRIC PART

208-5972 **BRAKE GP-SERVICE** *(contd.)* i01620395

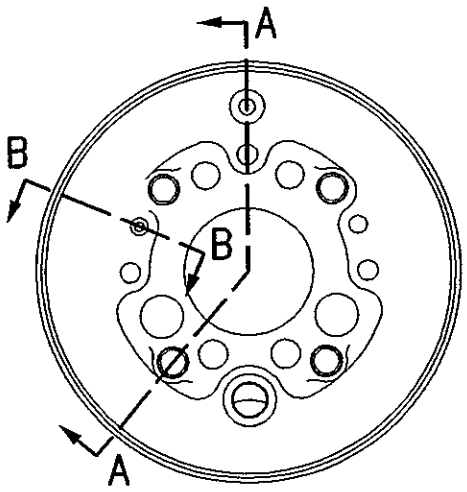


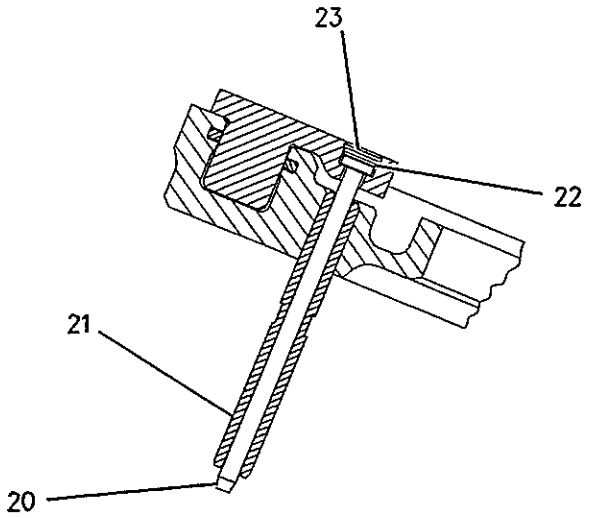


SECTION B-B

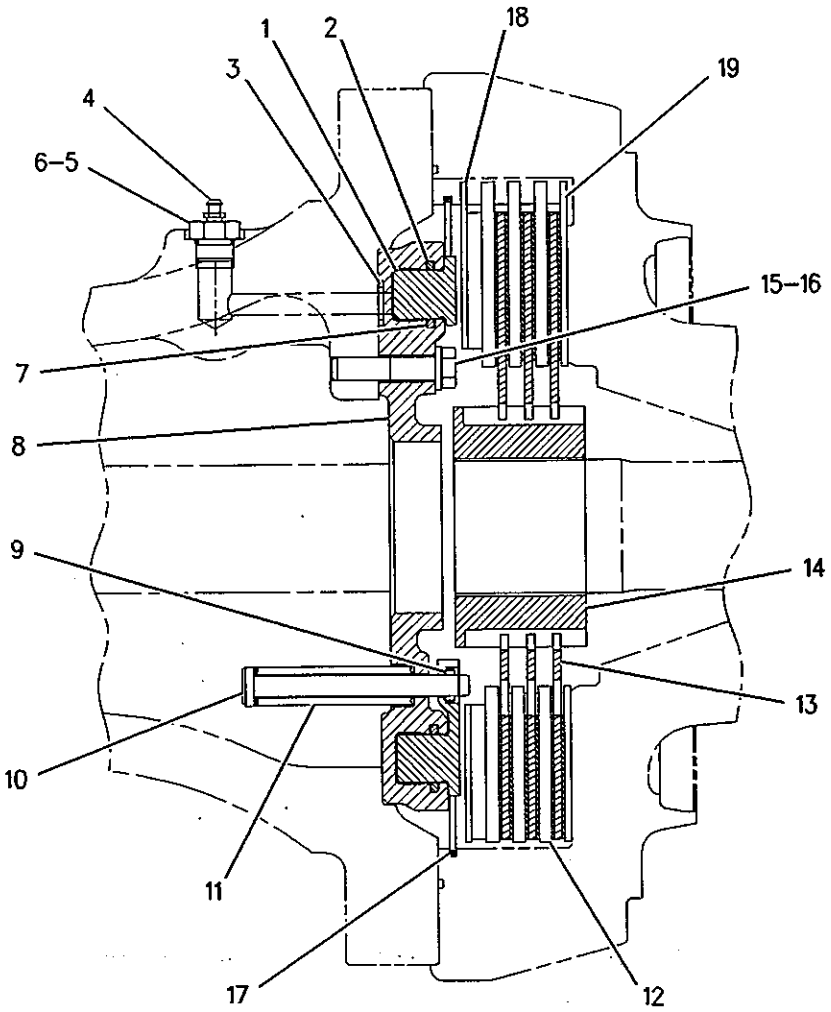


SECTION A-A

GRAPHIC #1 <END> g00838686

# BRAKING SYSTEM

## *208-5974* BRAKE GP-SERVICE

S/N: JMS1-UP

PART OF 232-7559, 232-7735 AXLE AR-FIXED, 232-7558, 232-7731, 232-7733 AXLE AR-OSCILLATING

ALSO AN ATTACHMENT

SMCS-4251

i01620468

| NOTE | REF NO | GRAPHIC REF | PART NUMBER | QTY | PART NAME 1 2 3 4 5 6 (PRODUCT LEVEL) | SEE PAGE |
|---|---|---|---|---|---|---|
| | 1 | 1 | **213-1152** | 1 | PISTON | |
| | 2 | 1 | **151-6251** | 1 | SEAL-D-RING | |
| | 3 | 1 | **5P-8119** | 1 | SEAL-O-RING | |
| | 4 | 1 | **9F-2167** | 1 | SCREW-PURGE | |
| | 5 | 1 | **110-2446** | 1 | ADAPTER | |
| | 6 | 1 | **3K-0360** | 1 | SEAL-O-RING | |
| | 7 | 1 | **151-6250** | 1 | SEAL-D-RING | |
| | 8 | 1 | **193-1152** | 1 | HOUSING | |
| | 9 | 1 | **6M-9155** | 4 | PIN | |
| | 10 | 1 | **7V-8346** | 4 | SPRING-GUIDE | |
| | 11 | 1 | **8V-3609** | 4 | SPRING-RETRACTOR | |
| | 12 | 1 | **118-6606** | 3 | PLATE-INNER | |
| | 13 | 1 | **105-8750** | 3 | DISC-FRICTION | |
| | 14 | 1 | **105-8724** | 1 | HUB | |
| M | 15 | 1 | **6V-8150** | 3 | BOLT (M12X1.75X60-MM) | |
| | 16 | 1 | **3H-7654** | 3 | WASHER-HARD (13.5X22.5X3-MM THK) | |
| | 17 | 1 | **9M-2076** | 1 | RING-SNAP | |
| | 18 | 1 | **167-1261** | 1 | PLATE-DAMPER | |
| | 19 | 1 | **195-3722** | 1 | PLATE-OUTER | |
| | 20 | 1 | **173-0554** | 1 | PIN (BRAKE DISC WEAR INDICATOR) | |
| | 21 | 1 | **173-0555** | 1 | DOWEL-HOLLOW | |
| | 22 | 1 | **8T-4224** | 1 | WASHER-HARD (8.8X16X2-MM THK) | |
| | 23 | 1 | **096-6901** | 1 | RING-RETAINING | |

M-METRIC PART

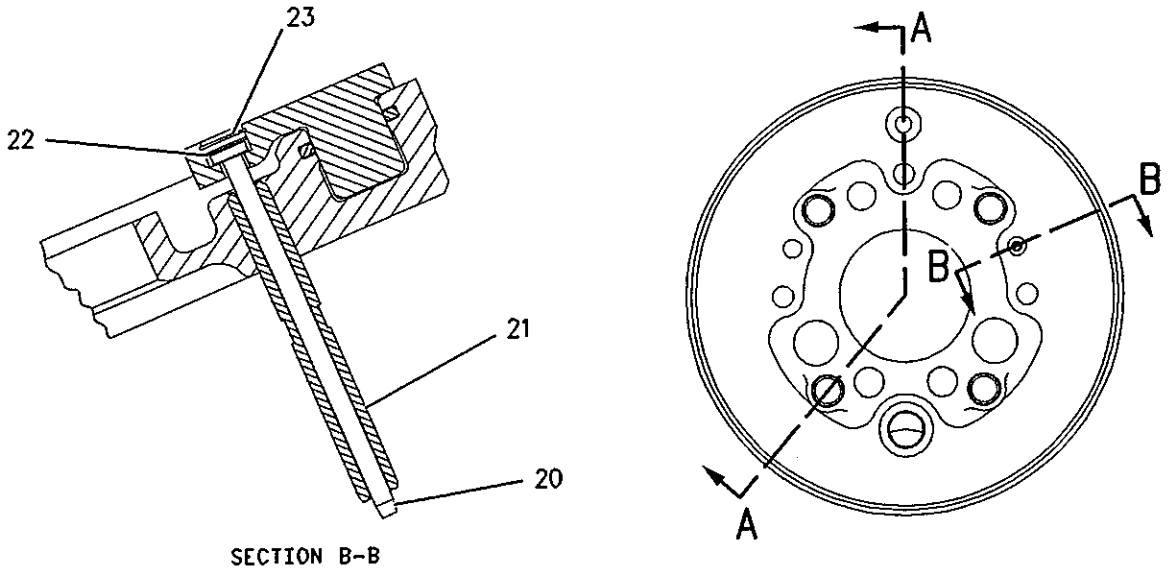


SECTION B-B

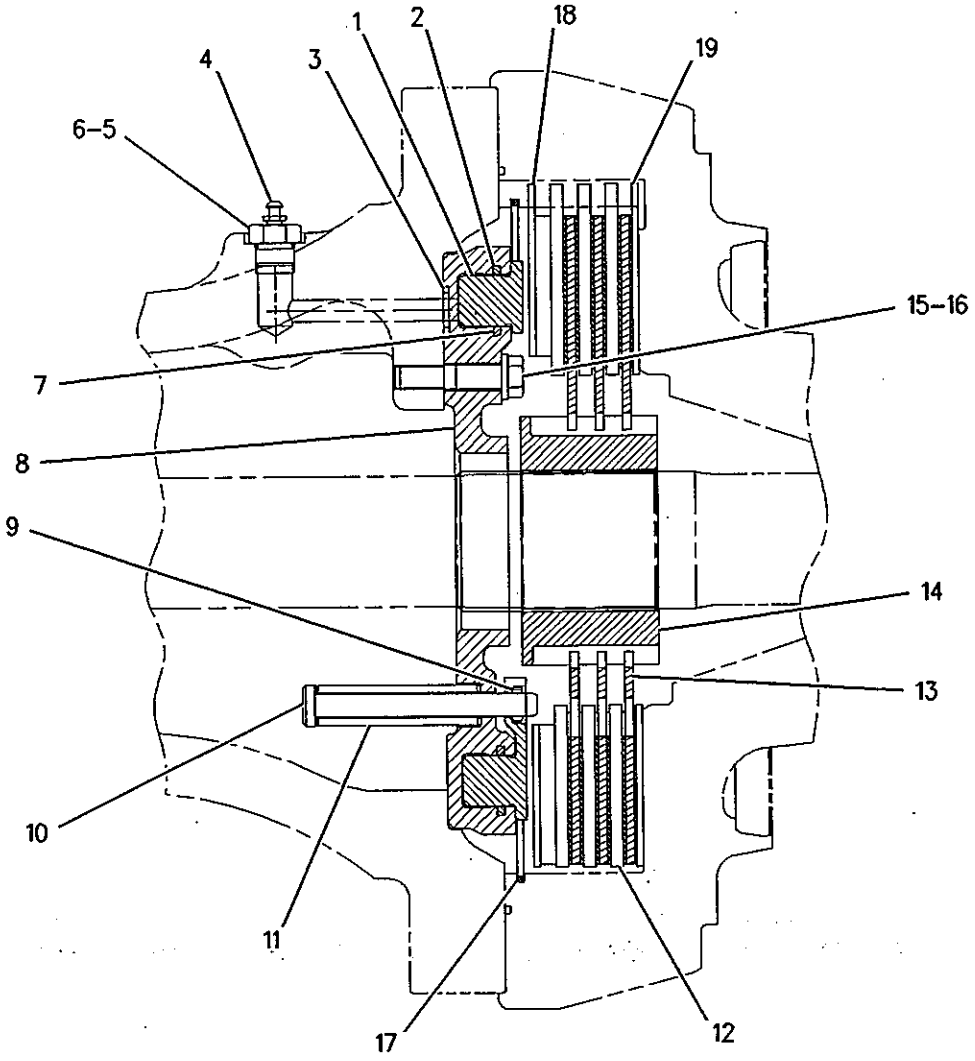


SECTION A-A

GRAPHIC #1 **<END>** g00838731

# 193-1448 CONTROL GP-FOOT BRAKE

S/N: JMS1-UP

PART OF 199-2831 CONTROL GP-FOOT BRAKE

ALSO AN ATTACHMENT

SMCS-4269

i02135336

| NOTE | REF NO | GRAPHIC REF | PART NUMBER | QTY | PART NAME 1 2 3 4 5 6 (PRODUCT LEVEL) | SEE PAGE |
|---|---|---|---|---|---|---|
| | 1 | 1 | 180-3994 | 1 | SHAFT AS | |
| | | 1 | 180-3995 | 1 | SHAFT | |
| | | 1 | 4E-9667 | 1 | ROLLER | |
| | | 1 | 4E-9668 | 1 | PIN | |
| | | 1 | 009-3101 | 2 | RING-RETAINING | |
| | | 1 | 114-9491 | 2 | WASHER | |
| Y | 2 | 1 | 188-7497 | 1 | BASE GP-FOOT BRAKE (PEDAL, RH) | 522 |
| Y | 3 | 1 | 227-1107 | 1 | BASE GP-FOOT BRAKE (PEDAL, LH) | 523 |

Y-SEPARATE ILLUSTRATION

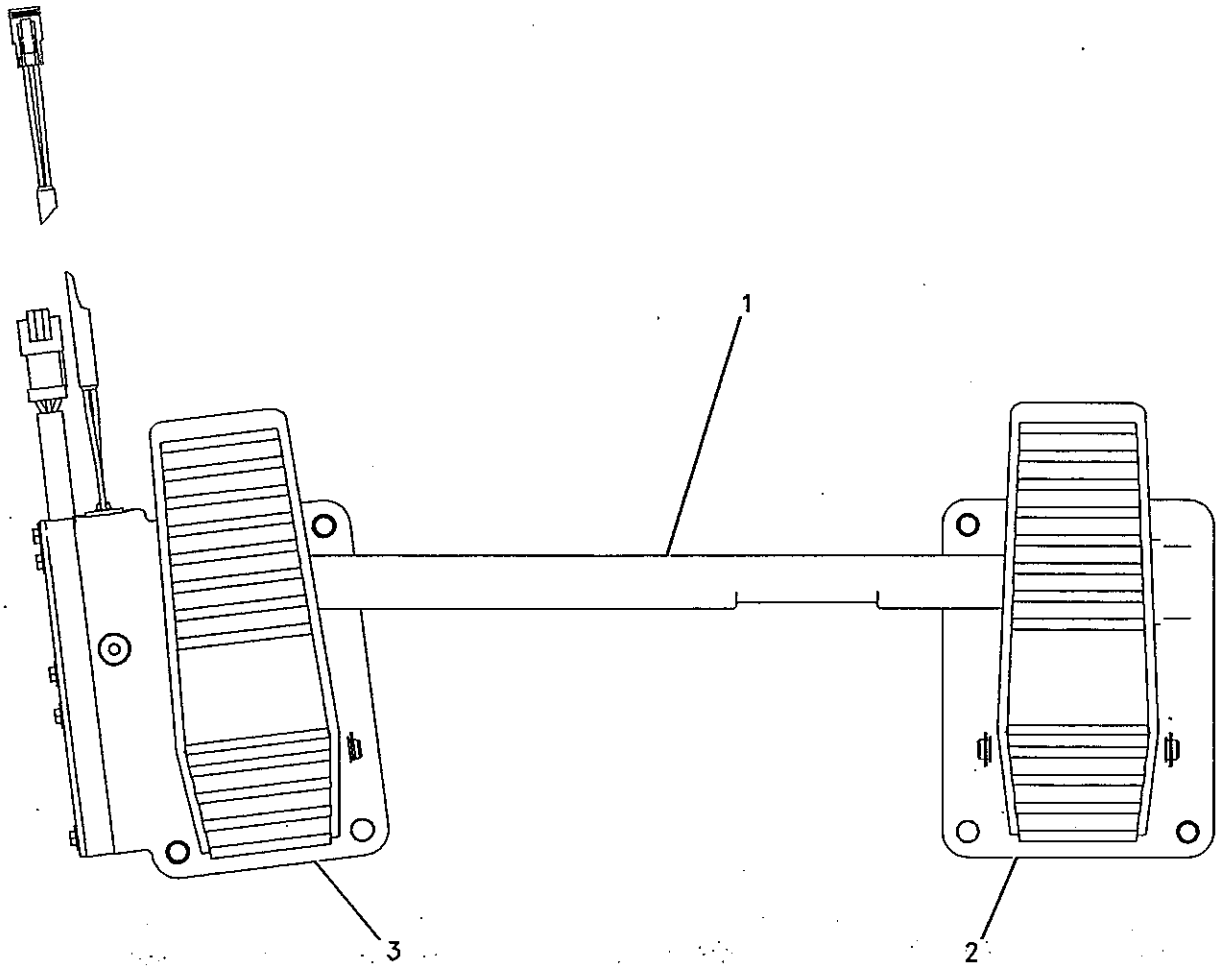


GRAPHIC #1

<END>

g00826101

# *199-2831* CONTROL GP-FOOT BRAKE

S/N: JMS1-UP

PART OF 232-1393 CAB AR-ENCLOSED ROPS, 203-9837, 258-1565 CANOPY AR-OPEN ROPS

ALSO AN ATTACHMENT

SMCS-4269

i01625464

| NOTE | REF NO | GRAPHIC REF | PART NUMBER | QTY | PART NAME 1 2 3 4 5 6 (PRODUCT LEVEL) | SEE PAGE |
|---|---|---|---|---|---|---|
| Y | 1 | 1 | **193-1448** | 1 | CONTROL GP-FOOT BRAKE | 531 |
| M | 2 | 1 | **099-3649** | 6 | BOLT (M8X1.25X40MM) | |
| | 3 | 1 | **8T-4224** | 6 | WASHER-HARD (8.8X16X2MM THK) | |

M-METRIC PART
Y-SEPARATE ILLUSTRATION

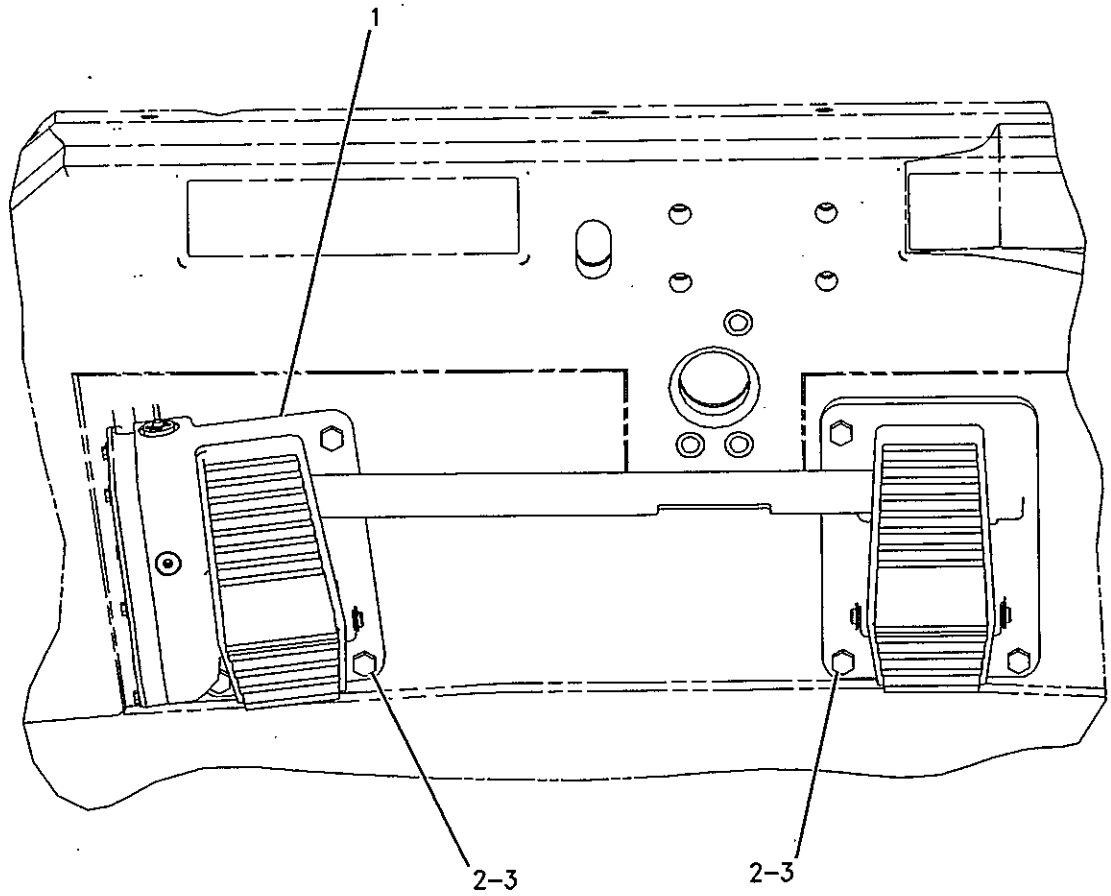


GRAPHIC #1

<END>

g00841427

# *191-8569* CONTROL GP-PARKING BRAKE

S/N: JMS1-UP

PART OF 232-1393 CAB AR-ENCLOSED ROPS, 203-9837, 258-1565 CANOPY AR-OPEN ROPS

ALSO AN ATTACHMENT

SMCS-4282, 4284

i02156611

| NOTE | REF NO | GRAPHIC REF | PART NUMBER | QTY | PART NAME 1 2 3 4 5 6 (PRODUCT LEVEL) | SEE PAGE |
|---|---|---|---|---|---|---|
| | 1 | 1 | 9C-9458 | 1 | BRACKET AS | |
| | 2 | 1 | 122-1671 | 1 | KNOB | |
| | 3 | 1 | 195-2187 | 1 | CABLE AS-PARKING BRAKE CONTROL | |
| | | 1 | 8T-4223 | 3 | WASHER-HARD (13.5X25.5X3-MM THK) | |
| M | | 1 | 8T-4244 | 4 | NUT (M12X1.75-THD) | |
| | | 1 | 9B-0453 | 2 | LOCKWASHER | |
| | 4 | 1 | 211-1167 | 1 | GROMMET | |
| M | 5 | 1 | 5C-2890 | 1 | NUT (M6X1-THD) | |
| | 6 | 1 | 6V-3265 | 1 | CLIP | |
| | 7 | 1 | 8T-4121 | 2 | WASHER-HARD (11X21X2.5-MM THK) | |
| M | 8 | 1 | 8T-4136 | 1 | BOLT (M10X1.5X25-MM) | |
| | 9 | 1 | 134-0165 | 1 | WASHER (13.8X45X3-MM THK) | |

M-METRIC PART

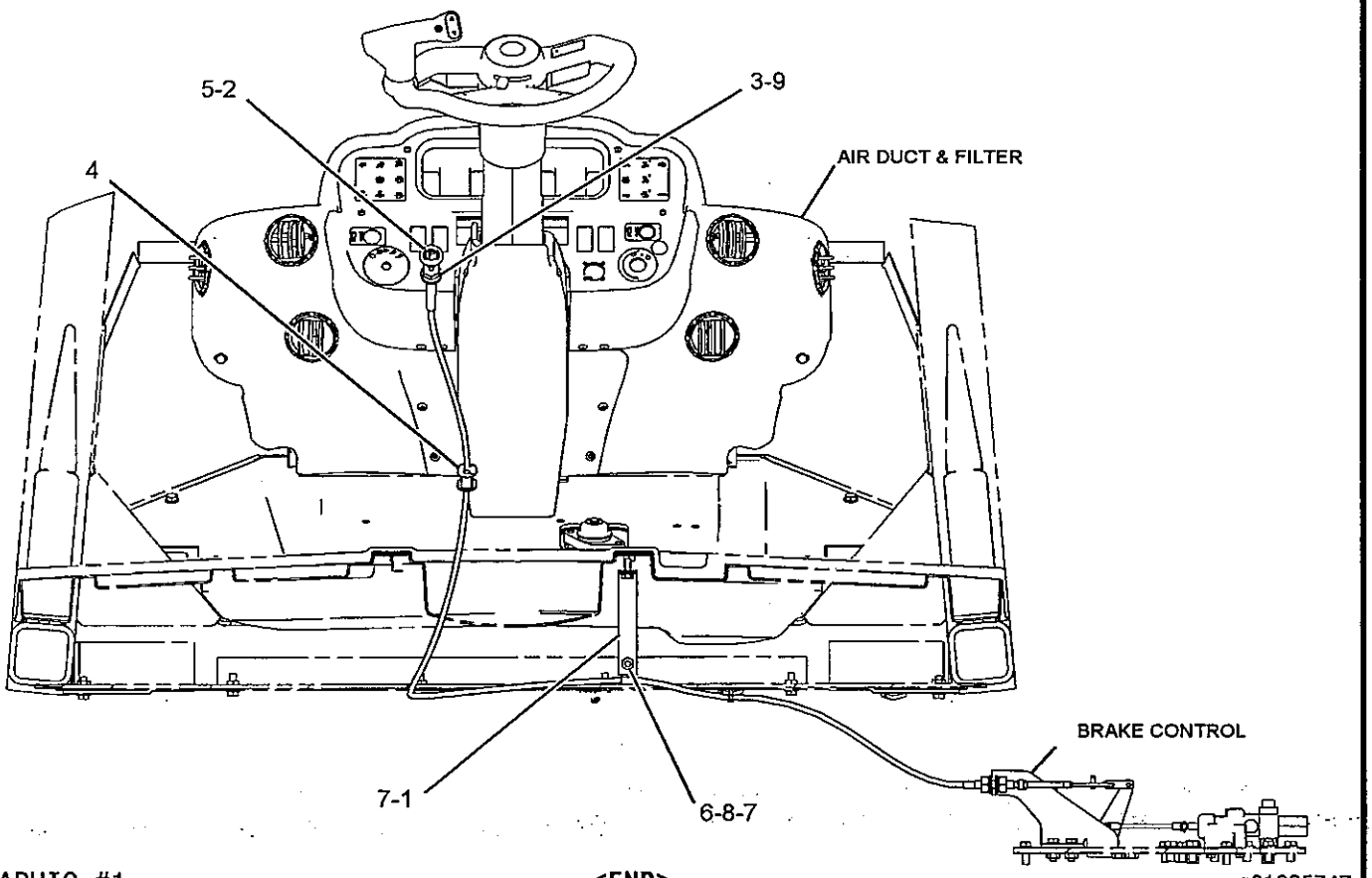


GRAPHIC #1

<END>

g01095747

# BRAKING SYSTEM

## *191-1265* CONTROL GP-SERVICE BRAKE

**S/N: JMS1-UP**

**PART OF 225-5538 CHASSIS AR**

**SMCS-4257, 4258, 4263, 4265, 4269, 4280** **i02267911**

| NOTE | REF NO | GRAPHIC REF | PART NUMBER | QTY | PART NAME 1 2 3 4 5 6 (PRODUCT LEVEL) | SEE PAGE |
|---|---|---|---|---|---|---|
| | 1 | 3 | **3B-4607** | 2 | PIN-COTTER | |
| | 2 | 1 | **5P-6724** | 1 | BEARING-ROLLER | |
| | 3 | 3 | *150-3065* | 1 | ADAPTER AS | |
| | | 3 | **3J-1907** | 1 | SEAL-O-RING | |
| | | 3 | **6V-0484** | 1 | ADAPTER-O-RING | |
| | 4 | 2,3 | **6V-0852** | 3 | CAP-DUST | |
| | 5 | 2,3 | *164-5567* | 3 | FITTING GP-COUPLING | |
| | | | | | (EACH INCLUDES) | |
| | | 2,3 | **6V-3965** | 1 | FITTING AS (QUICK DISCONNECT) | |
| | | 2,3 | **3J-1907** | 1 | SEAL-O-RING | |
| | 6 | 1 | **7I-4078** | 1 | LEVER AS | |
| | 7 | 3 | **7X-2618** | 2 | PIN | |
| | 8 | 1 | **8R-9137** | 1 | ANGLE | |
| | 9 | 1 | **8T-0741** | 2 | SEAL-LIP TYPE | |
| B | 10 | 1 | **091-1745** | 6 | WASHER (16.6X24X1.2-MM THK) | |
| | 11 | 2,3 | *171-6718* | 2 | TEE AS | |
| | | | | | (EACH INCLUDES) | |
| | | 2,3 | **105-7704** | 1 | TEE | |
| | | 2,3 | **3K-0360** | 1 | SEAL-O-RING | |
| Y | 12 | 3 | **106-1774** | 1 | VALVE GP-BRAKE CONTROL (PARKING) | 541 |
| Y | 13 | 2 | *111-9040* | 1 | ACCUMULATOR GP-BRAKE (CHARGED) | 519 |
| | 14 | 1 | **115-8426** | 2 | TUBE AS | |
| | 15 | 1 | **115-8433** | 1 | TUBE AS | |
| | 16 | 3 | **115-8434** | 1 | BRACKET AS | |
| | 17 | 1 | **115-8435** | 1 | TUBE AS | |
| | 18 | 2 | **210-0235** | 1 | BRACKET | |
| | 19 | 3 | **9V-6538** | 1 | CLAMP | |
| | 20 | 3 | *172-5761* | 2 | TEE AS | |
| | | | | | (EACH INCLUDES) | |
| | | 3 | **126-8306** | 1 | TEE-O-RING | |
| | | 3 | **3K-0360** | 1 | SEAL-O-RING | |
| | | 3 | **6V-8398** | 1 | SEAL-O-RING | |
| | 21 | 2 | **201-3200** | 1 | VALVE GP-BRAKE CONTROL (SERVICE) | |
| | | 2 | **117-7798** | 1 | BOOT | |
| | | 2 | **117-7799** | 1 | KIT-SEAL | |
| | | | | | (INCLUDES BOOT, CUP, QUAD RING AND O-RINGS) | |
| | 22 | 1 | **138-4409** | 2 | SPACER (35-MM LGX22 DIA) | |
| | 23 | 3 | **147-3712** | 1 | ROD-CONTROL | |
| | 24 | 1 | *171-6712* | 2 | TEE AS | |
| | | | | | (EACH INCLUDES) | |
| | | 1 | **156-6400** | 1 | TEE-ORFS SWIVEL | |
| | | 1 | **6V-8398** | 2 | SEAL-O-RING | |
| | 25 | 1 | **163-0922** | 1 | TUBE AS | |
| I | 26 | 1 | **169-0527** | 1 | HOSE AS | |
| I | 27 | 3 | **169-0528** | 1 | HOSE AS | |
| I | 28 | 2 | **169-0529** | 1 | HOSE AS | |
| I | 29 | 1 | **119-8966** | 1 | HOSE AS | |
| | 30 | 2 | **169-0531** | 1 | BRACKET AS | |
| M | | 2 | **8T-3490** | 2 | NUT-WELD (M10XT.5-THD) | |
| J | 31 | 3 | **172-6144** | 1 | VALVE GP-ACCUMULATOR CHARGING (BRAKE) | |
| C | 32 | 2 | **251-1093** | 1 | TUBE AS | |
| I | 33 | 2 | **171-5367** | 1 | HOSE AS | |
| I | 34 | 2 | **171-5368** | 1 | HOSE AS | |
| | 35 | 3 | **196-4905** | 1 | BRACKET AS | |
| I | 36 | 1 | **171-6671** | 1 | HOSE AS | |
| | 37 | 3 | **176-3890** | 1 | PLATE AS | |

## 191-1265 CONTROL GP-SERVICE BRAKE *(contd.)* i02267911

| NOTE | REF NO | GRAPHIC REF | PART NUMBER | QTY | PART NAME 1 2 3 4 5 6 (PRODUCT LEVEL) | SEE PAGE |
|---|---|---|---|---|---|---|
| M | | 3 | 8T-3490 | 10 | NUT-WELD (M10X1.5-THD) | |
| I | 38 | 3 | 196-5536 | 1 | HOSE AS | |
| I | 39 | 3 | 196-5537 | 1 | HOSE AS | |
| | 40 | 1,2 | 1S-0994 | 17 | CLIP | |
| | 41 | 2 | 3B-4640 | 1 | PIN-COTTER | |
| | 46 | 1 | *148-8307* | 1 | ADAPTER AS | |
| | | 1 | 5P-8874 | 1 | ADAPTER | |
| | | 1 | 3J-1907 | 1 | SEAL-O-RING | |
| | 47 | 1 | 5P-9299 | 2 | CLIP | |
| | 48 | 2 | 6D-1641 | 2 | CLIP | |
| | 49 | 3 | 6M-5062 | 1 | SEAL-O-RING | |
| | 51 | 1 | 6V-8398 | 4 | SEAL-O-RING | |
| | 52 | 2,3 | *148-8364* | 4 | ELBOW AS | |
| | | | | | (EACH INCLUDES) | |
| | | 2,3 | 6V-8625 | 1 | ELBOW | |
| | | 2,3 | 3K-0360 | 1 | SEAL-O-RING | |
| | | 2,3 | 6V-8398 | 1 | SEAL-O-RING | |
| | 53 | 2 | *148-8328* | 1 | CONNECTOR AS | |
| | | 2 | 6V-8633 | 1 | CONNECTOR | |
| | | 2 | 3D-2824 | 1 | SEAL-O-RING | |
| | | 2 | 6V-8398 | 1 | SEAL-O-RING | |
| | 54 | 3 | 196-6090 | 1 | TUBE AS | |
| | 55 | 2,3 | *148-8340* | 4 | CONNECTOR AS | |
| | | | | | (EACH INCLUDES) | |
| | | 2,3 | 6V-8639 | 1 | CONNECTOR | |
| | | 2,3 | 3K-0360 | 1 | SEAL-O-RING | |
| | | 2,3 | 6V-8398 | 1 | SEAL-O-RING | |
| | 56 | 1,3 | *148-8378* | 4 | ELBOW AS | |
| | | | | | (EACH INCLUDES) | |
| | | 1,3 | 6V-8724 | 1 | ELBOW | |
| | | 1,3 | 3J-1907 | 1 | SEAL-O-RING | |
| | | 1,3 | 6V-8397 | 1 | SEAL-O-RING | |
| | 57 | 1 | *148-8435* | 1 | TEE AS | |
| | | 1 | 6V-8781 | 1 | TEE-FACE SEAL | |
| | | 1 | 3J-1907 | 1 | SEAL-O-RING | |
| | | 1 | 6V-8397 | 2 | SEAL-O-RING | |
| I | 58 | 3 | 197-1311 | 1 | HOSE AS | |
| | 59 | 2,3 | *148-8444* | 3 | TEE AS-SWIVEL | |
| | | | | | (EACH INCLUDES) | |
| | | 2,3 | 6V-9837 | 1 | TEE-SWIVEL | |
| | | 2,3 | 6V-8398 | 2 | SEAL-O-RING | |
| | 60 | 1,3 | *148-8370* | 7 | ELBOW AS | |
| | | | | | (EACH INCLUDES) | |
| | | 1,3 | 6V-8398 | 1 | SEAL-O-RING | |
| | | 1,3 | 6V-9851 | 1 | ELBOW | |
| | 62 | 3 | *148-8371* | 1 | ELBOW AS | |
| | | 3 | 8C-8988 | 1 | ELBOW | |
| | | 3 | 6V-8397 | 1 | SEAL-O-RING | |
| | 63 | 3 | 8S-0948 | 1 | CLIP | |
| | 64 | 3 | *148-8346* | 2 | ELBOW AS | |
| | | | | | (EACH INCLUDES) | |
| | | 3 | 8T-1686 | 1 | ELBOW | |
| | | 3 | 3K-0360 | 1 | SEAL-O-RING | |
| | | 3 | 6V-8398 | 1 | SEAL-O-RING | |
| | 65 | 1,2,3 | 8T-4121 | 40 | WASHER-HARD (11X21X2.5-MM THK) | |
| M | 66 | 1,2 | 8T-4133 | 5 | NUT (M10X1.5-THD) | |
| M | 67 | 1,2,3 | 8T-4136 | 7 | BOLT (M10X1.5X25-MM) | |
| M | 68 | 1,2,3 | 8T-4137 | 20 | BOLT (M10X1.5X20-MM) | |
| M | 69 | 3 | 8T-4189 | 2 | BOLT (M8X1.25X20-MM) | |

## *191-1265* CONTROL GP-SERVICE BRAKE *(contd.)*

i02267911

| NOTE | REF NO | GRAPHIC REF | PART NUMBER | QTY | PART NAME 1 2 3 4 5 6 (PRODUCT LEVEL) | SEE PAGE |
|---|---|---|---|---|---|---|
| M | 70 | 2 | **8T-4192** | 6 | BOLT (M12X1.75X25-MM) | |
| M | 71 | 3 | **8T-4195** | 12 | BOLT (M10X1.5X30-MM) | |
| | 72 | 2 | **8T-4223** | 6 | WASHER-HARD (13.5X25.5X3-MM THK) | |
| | 73 | 3 | **8T-4224** | 2 | WASHER-HARD (8.8X16X2-MM THK) | |
| | 74 | 3 | *148-8365* | 1 | ELBOW AS | |
| | | 3 | **8T-6876** | 1 | ELBOW | |
| | | 3 | **3J-1907** | 1 | SEAL-O-RING | |
| | | 3 | **6V-8398** | 1 | SEAL-O-RING | |
| | 75 | 3 | **7X-7729** | 10 | WASHER (11X25X3-MM THK) | |
| | 76 | 2 | **9X-8250** | 7 | CLIP | |
| | 77 | 1 | **9X-8257** | 1 | WASHER (17.5X30X3.5-MM THK) | |
| | 79 | 3 | **9X-6578** | 1 | NUT-FACE SEAL (1-11/16-12-THD) | |
| | 80 | 3 | *185-0002* | 1 | REDUCER AS | |
| | | 3 | **6V-8947** | 1 | REDUCER | |
| | | 3 | **6V-9746** | 1 | SEAL-O-RING | |
| | 81 | 2 | *148-8353* | 1 | ELBOW AS | |
| | | 2 | **6V-9001** | 1 | ELBOW | |
| | | 2 | **3J-1907** | 1 | SEAL-O-RING | |
| | | 2 | **6V-8397** | 1 | SEAL-O-RING | |
| C | 82 | 2 | **6V-8400** | 1 | SEAL-O-RING | |
| | 83 | 2 | *148-8373* | 1 | ELBOW AS | |
| | | 2 | **8C-3364** | 1 | ELBOW | |
| | | 2 | **6V-8400** | 1 | SEAL-O-RING | |
| | | 2 | **7M-8485** | 1 | SEAL-O-RING | |
| M | 84 | 1 | **8T-6466** | 2 | BOLT (M10X1.5X60-MM) | |
| | | | | | AVAILABLE REPAIR KIT(S): | |
| J | | | **139-3285** | | KIT-BRAKE CHARGE VALVE | |
| | | | | | (INCLUDES O-RINGS, POPPETS, AND PLUG) | |

B-USE AS REQUIRED
C-CHANGE FROM PREVIOUS TYPE
I-REFER TO HYDRAULIC INFORMATION SYSTEM
J-KIT MARKED J SERVICES PARTS MARKED J
M-METRIC PART
Y-SEPARATE ILLUSTRATION

REFER TO ALL ILLUSTRATIONS OF
THIS GROUP FOR AUXILIARY VIEWS

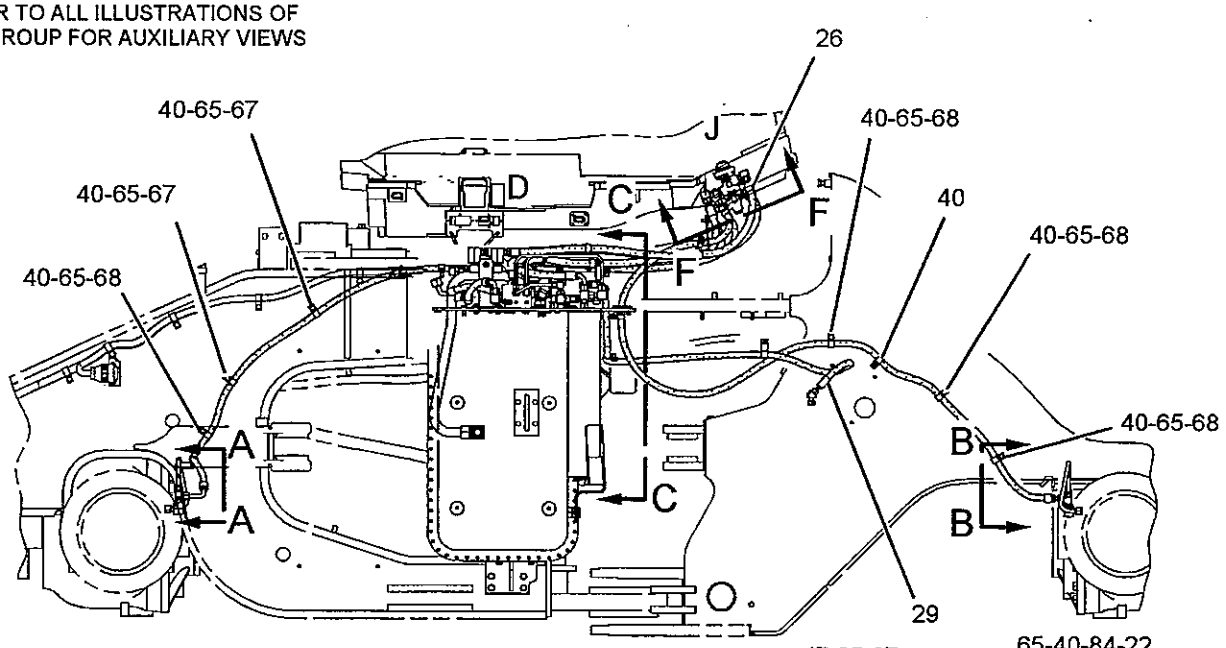


RIGHT SIDE VIEW

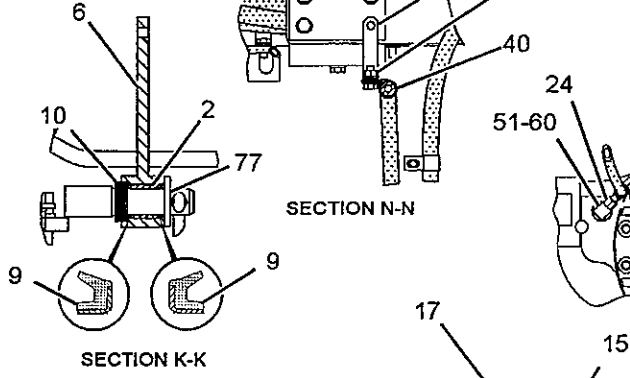


SECTION K-K




SECTION N-N

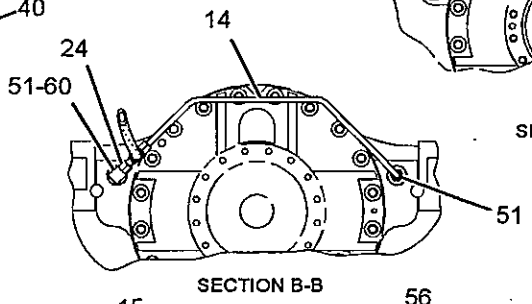


SECTION B-B

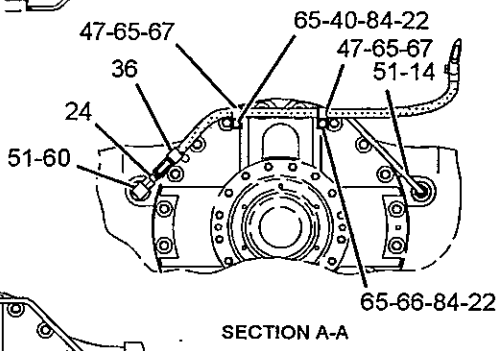


SECTION A-A

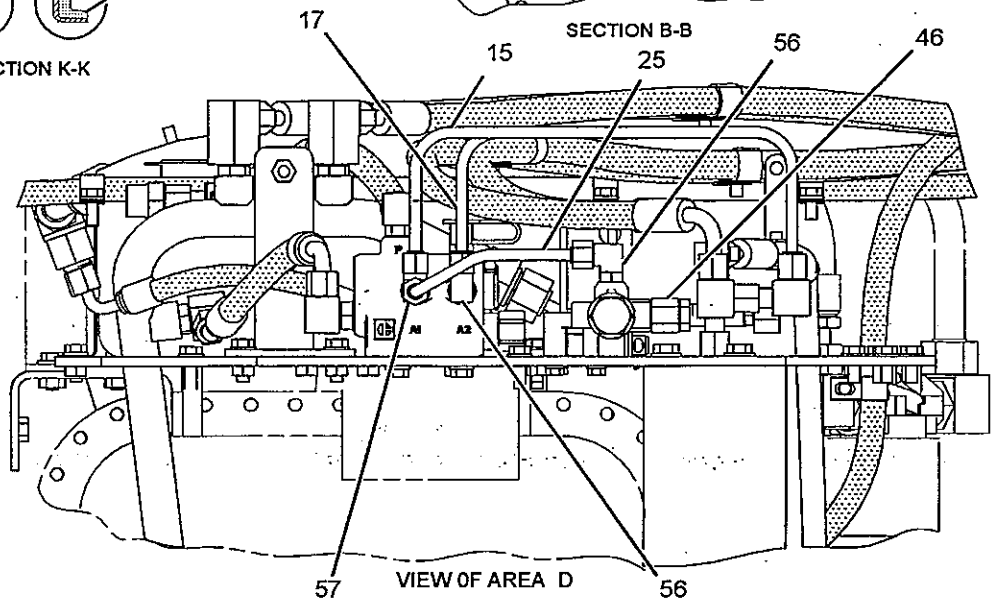


VIEW 0F AREA D

GRAPHIC #1

g01138240

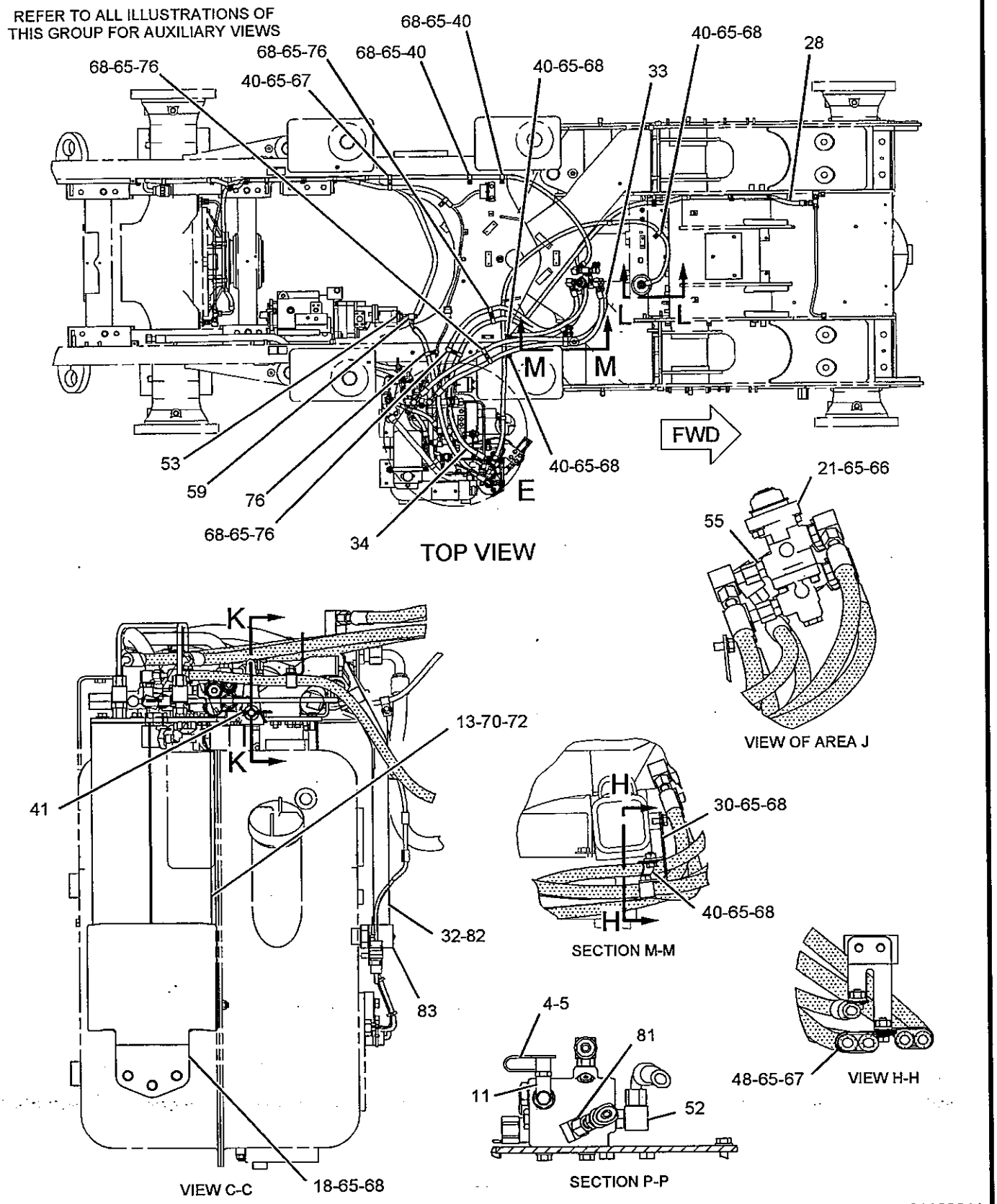


GRAPHIC #2

g01138241

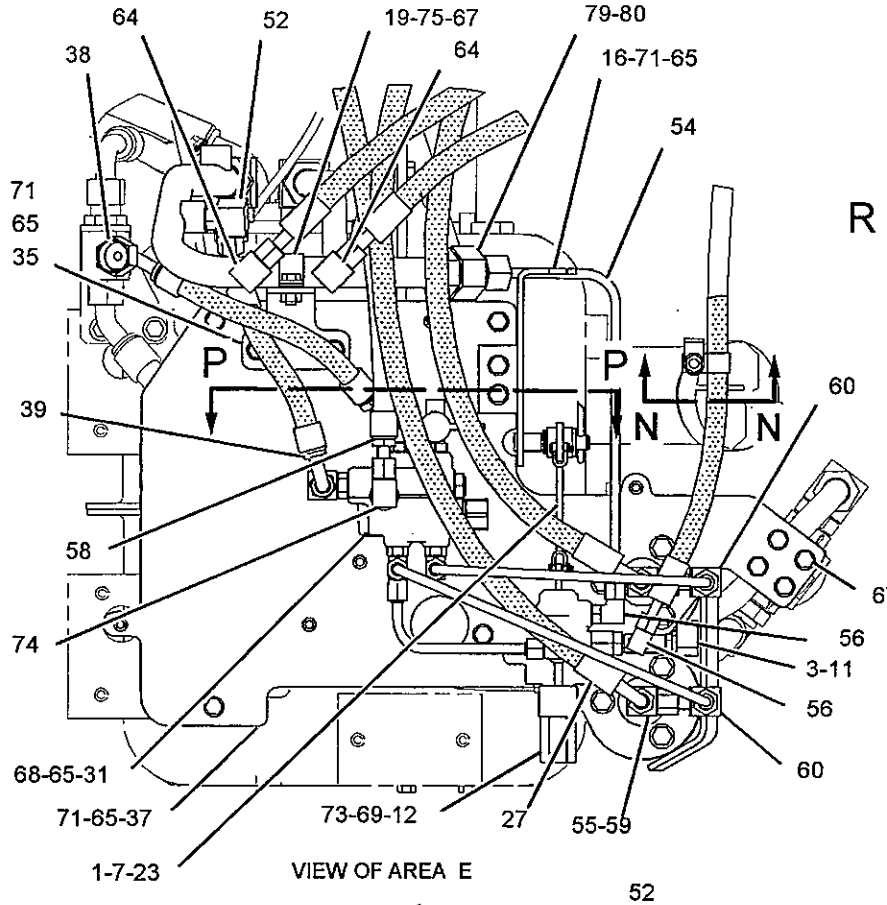


VIEW OF AREA E

REFER TO ALL ILLUSTRATIONS OF THIS GROUP FOR AUXILIARY VIEWS

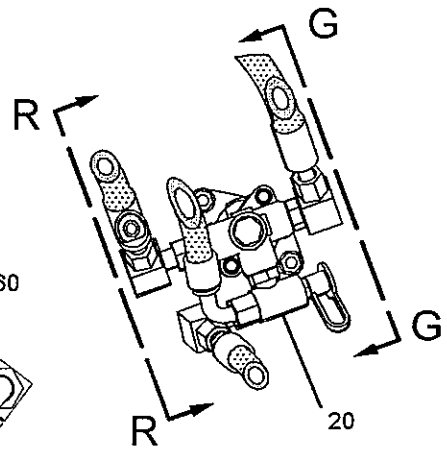


SECTION F-F

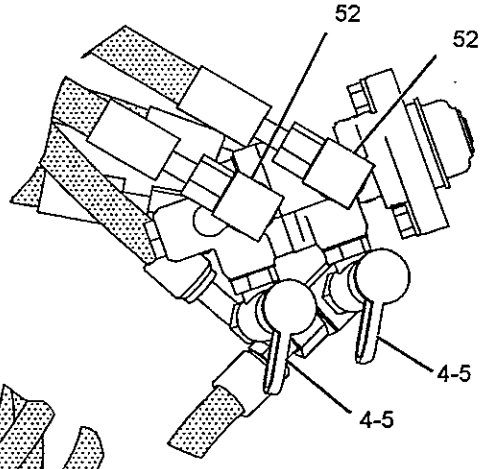


SECTION G-G

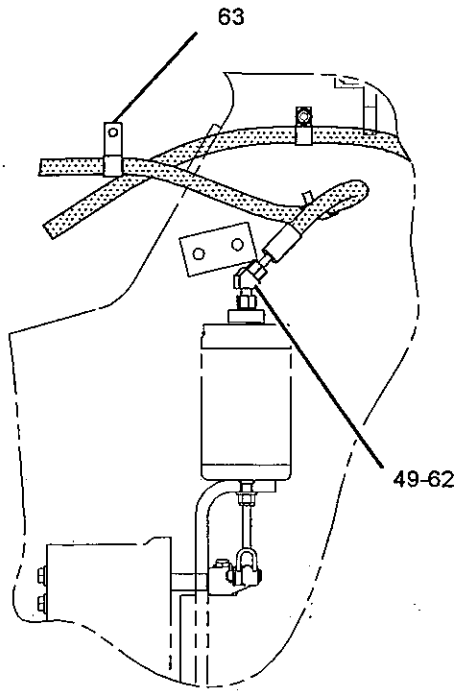


VIEW L-L

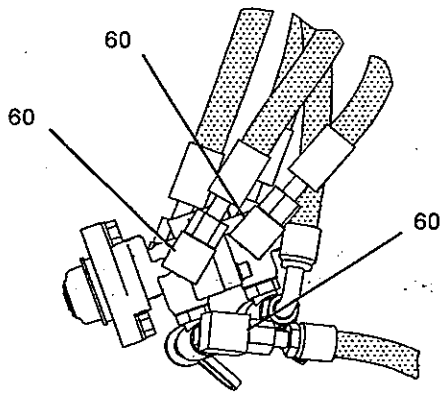


SECTION R-R

GRAPHIC #3

**<END>**

g01070216

# *124-3758* LINES GP-SERVICE BRAKE

S/N: JMS1-UP

PART OF 232-7559, 232-7735 AXLE AR-FIXED, 232-7558, 232-7731, 232-7733 AXLE AR-OSCILLATING

ALSO AN ATTACHMENT

SMCS-4257

i00174270

| NOTE | REF NO | GRAPHIC REF | PART NUMBER | QTY | PART NAME 1 2 3 4 5 6 (PRODUCT LEVEL) | SEE PAGE |
|---|---|---|---|---|---|---|
| | 1 | 1 | 125-0969 | 1 | TUBE AS | |
| | 2 | 1 | 5P-8119 | 2 | SEAL-O-RING | |
| | 3 | 1 | 125-0965 | 2 | RING-RETAINING | |
| | 4 | 1 | 125-0968 | 1 | TUBE AS | |
| | 5 | 1 | 7M-8485 | 2 | SEAL-O-RING | |
| | 6 | 1 | 1H-8171 | 2 | SEAL-O-RING | |
| | 7 | 1 | 6V-9169 | 2 | NUT-BULKHEAD (13/16-16-THD) | |
| | 8 | 1 | 8T-5439 | 2 | WASHER (21.5X45X6-MM THK) | |
| | 9 | 1 | 125-0966 | 2 | PLUG | |

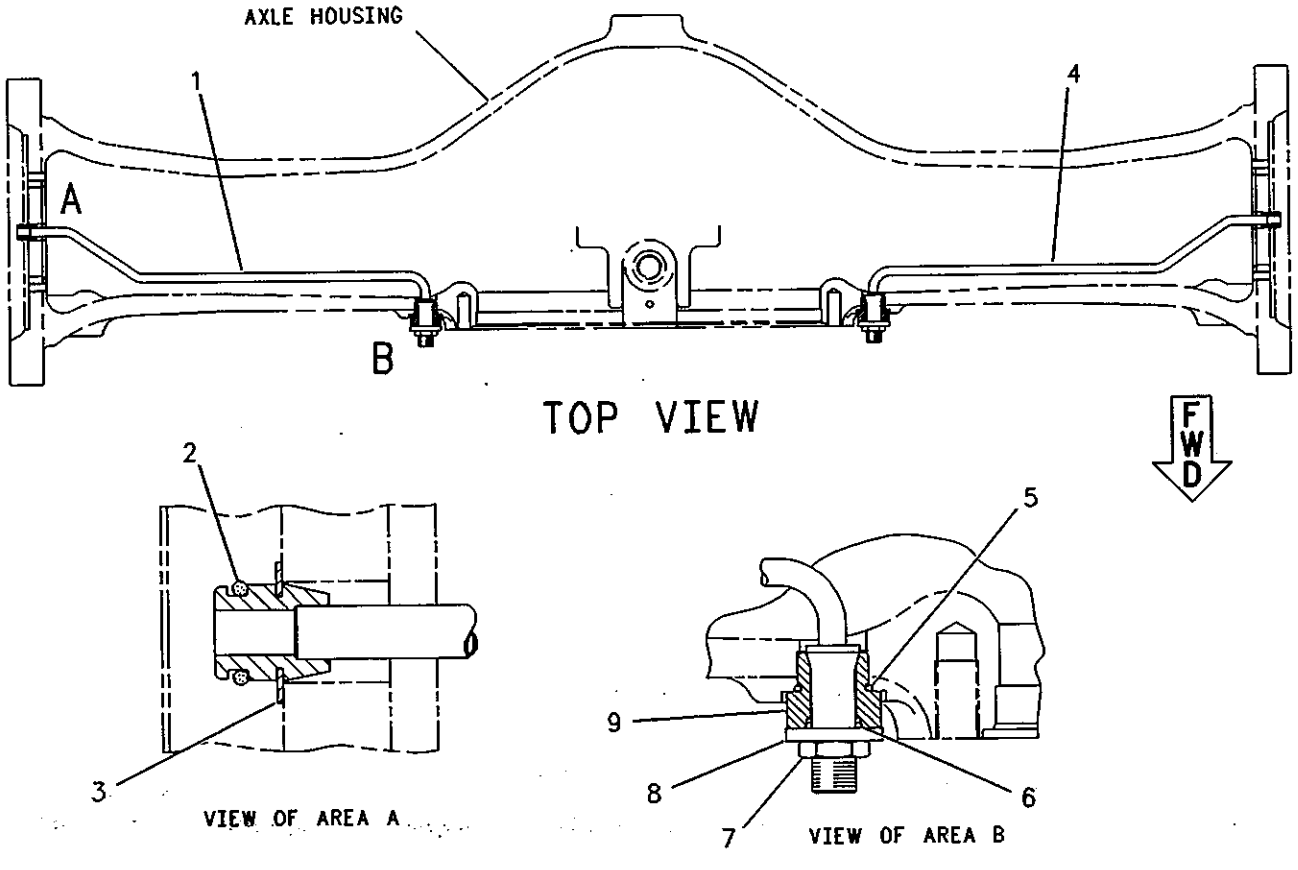


GRAPHIC #1

<END>

g00121051

# 106-1774 VALVE GP-BRAKE CONTROL–PARKING

**S/N: JMS1-UP**

**PART OF 191-1265 CONTROL GP-SERVICE BRAKE**

**SMCS-4265, 4282** i02216715

| NOTE | REF NO | GRAPHIC REF | PART NUMBER | QTY | PART NAME 1 2 3 4 5 6 (PRODUCT LEVEL) | SEE PAGE |
|---|---|---|---|---|---|---|
| | 1 | 1 | **4J-7533** | 2 | SEAL-O-RING | |
| | 2 | 1 | **9S-8001** | 2 | PLUG | |
| | 3 | 1 | **257-7676** | 1 | KIT-REPAIR | |
| | | | | | (INCLUDES BOOT, SEALS, RETAINING, DETENT BALLS AND SPRINGS) | |

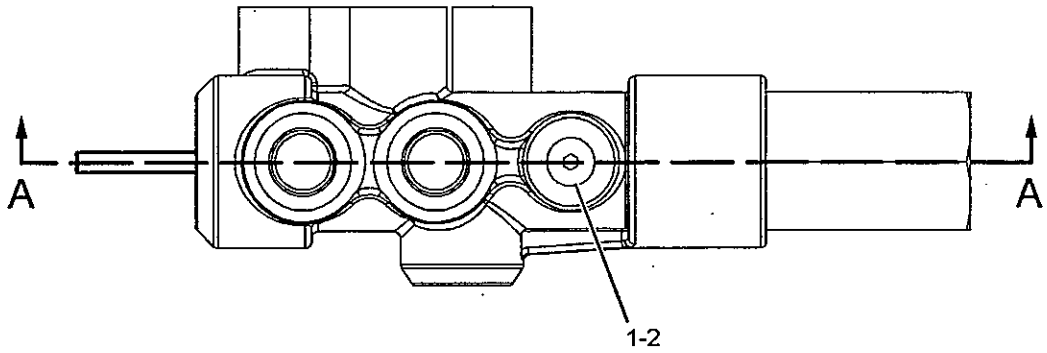


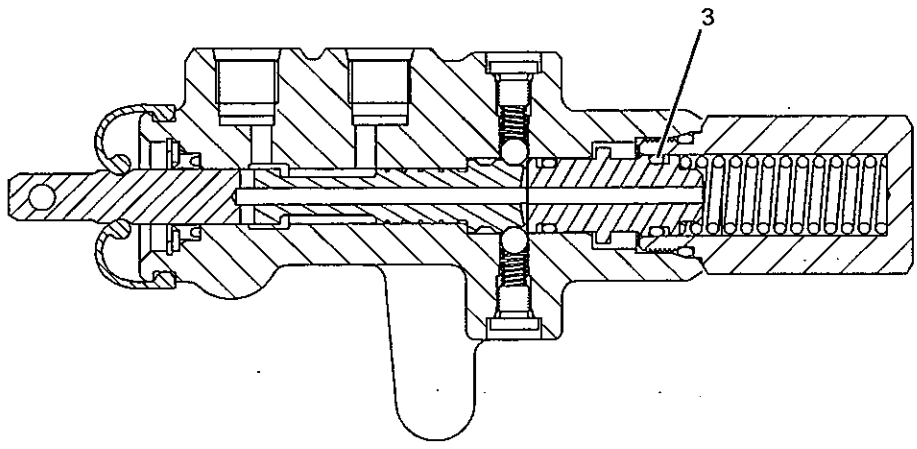


SECTION A-A

GRAPHIC #1 **<END>** g01118794

## 219-7619 CONTROL GP-STEERING–COMMAND CONTROL STEERING

S/N: JMS1-UP

PART OF 232-1393 CAB AR-ENCLOSED ROPS, 203-9837, 258-1565 CANOPY AR-OPEN ROPS

ALSO AN ATTACHMENT

SMCS-4304, 4309, 4310, 4338

i01899662

| NOTE | REF NO | GRAPHIC REF | PART NUMBER | QTY | PART NAME 1 2 3 4 5 6 (PRODUCT LEVEL) | SEE PAGE |
|---|---|---|---|---|---|---|
| | 1 | 1 | 1A-2812 | 1 | WASHER-VALVE PUSH (0.06-MM THK) | |
| | 2 | 1 | 1B-8705 | 1 | KEY-WOODRUFF | |
| | 3 | 1 | 2S-2160 | 1 | RING-RETAINING | |
| | 4 | 1 | 2V-7859 | 1 | BEARING | |
| | 5 | 1 | 6P-0593 | 2 | BEARING-ROLLER | |
| M | 6 | 1 | 105-3477 | 1 | BOLT-SOCKET HEAD (M10X1.5X45-MM) | |
| | 7 | 1 | 112-2014 | 1 | CLAMP | |
| | 8 | 1 | 112-9716 | 1 | LEVER | |
| | 9 | 1 | 114-5309 | 1 | COVER AS | |
| | 10 | 1 | 114-5312 | 1 | COVER AS | |
| | 11 | 1 | 115-2014 | 1 | SHAFT | |
| | 12 | 1 | 117-6056 | 1 | HOUSING AS | |
| | 13 | 1 | 118-8078 | 2 | CLIP | |
| | 14 | 1 | 123-6713 | 1 | WEDGE | |
| | 15 | 1 | 124-0065 | 1 | BLOCK | |
| | 16 | 1 | 155-6526 | 1 | SLEEVE | |
| Y | 17 | 1 | 156-0549 | 1 | STEERING COLUMN GP | 566 |
| Y | 18 | 1 | 218-0654 | 1 | STEERING WHEEL GP | 567 |
| M | 19 | 1 | 6V-5683 | 4 | BOLT (M6X1X16-MM) | |
| | 20 | 1 | 4D-9517 | 1 | CLIP | |
| M | 21 | 1 | 7X-2619 | 3 | BOLT (M6X1X20-MM) | |
| M | 22 | 1 | 8T-1159 | 4 | BOLT-SOCKET HEAD (M10X1.5X25-MM) | |
| | 23 | 1 | 8T-4121 | 5 | WASHER-HARD (11X21X2.5-MM THK) | |
| M | 24 | 1 | 8T-4185 | 2 | BOLT (M10X1.5X50-MM) | |
| M | 25 | 1 | 8T-4191 | 1 | BOLT (M10X1.5X16-MM) | |
| M | 26 | 1 | 8T-4195 | 5 | BOLT (M10X1.5X30-MM) | |
| | 27 | 1 | 8T-4205 | 3 | WASHER-HARD (7.2X14.5X2-MM THK) | |
| | 28 | 1 | 3S-2093 | 1 | STRAP-CABLE | |

M-METRIC PART
Y-SEPARATE ILLUSTRATION

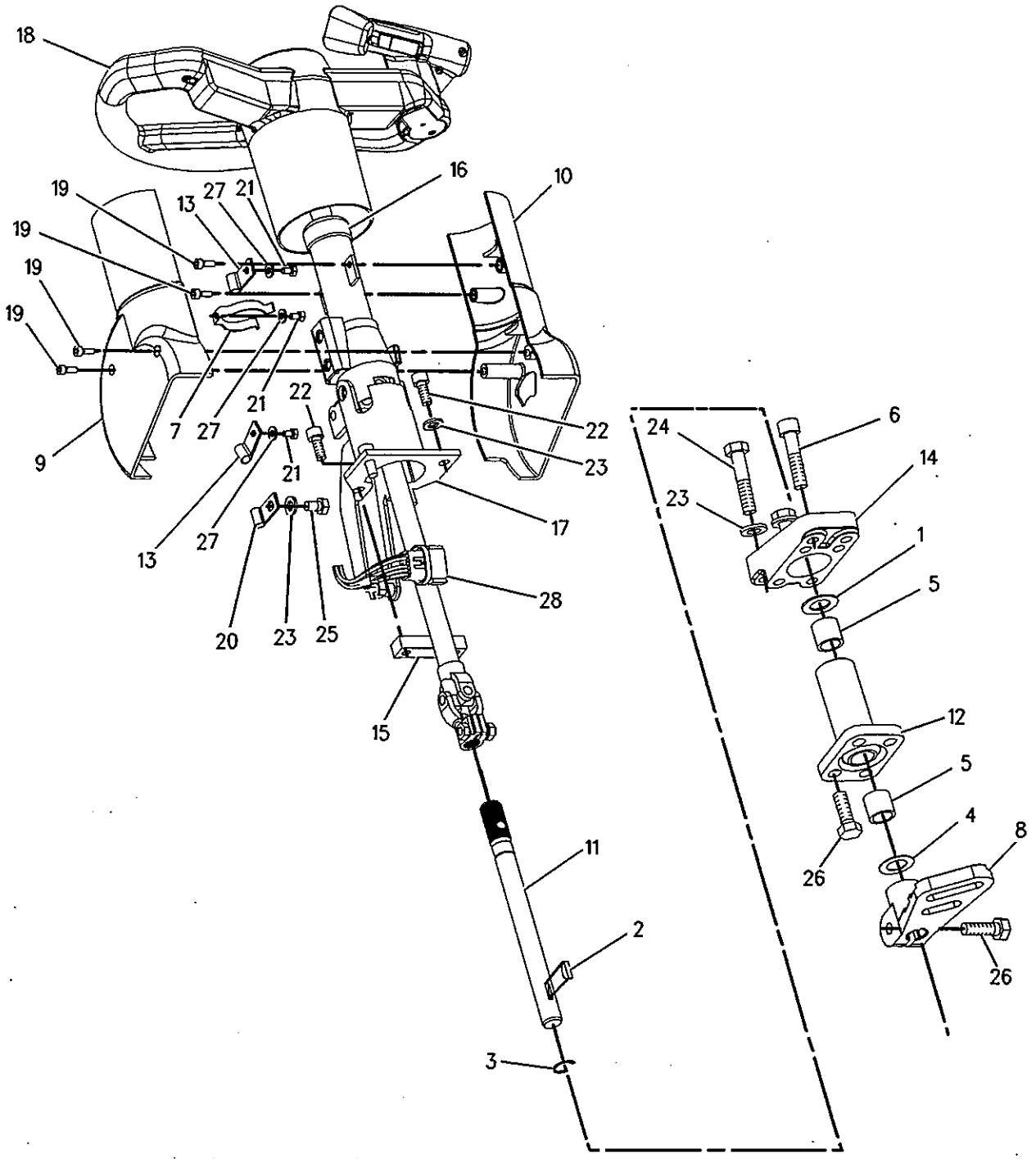


GRAPHIC #1 **<END>** g00845122

# STEERING SYSTEM

## *110-8118* CYLINDER & MTG GP-STEERING

**S/N: JMS1-UP**

**PART OF 225-5538 CHASSIS AR**

**SMCS-4303** **i01580216**

| NOTE | REF NO | GRAPHIC REF | PART NUMBER | QTY | PART NAME 1 2 3 4 5 6 (PRODUCT LEVEL) | SEE PAGE |
|---|---|---|---|---|---|---|
| | 1 | 1 | **3B-8491** | 2 | FITTING-GREASE | |
| | 2 | 1 | **4T-3658** | 2 | TUBE | |
| | 3 | 1 | **7D-0734** | 4 | WASHER (0.656X2.38X0.25-IN THK) | |
| Y | 5 | 1 | **115-1371** | 2 | CYLINDER GP-HYDRAULIC | 545 |
| M | 6 | 1 | **8T-4779** | 4 | BOLT (M16X2X35-MM) | |
| C | 7 | 1 | **8T-4224** | 2 | WASHER-HARD (8.8X16X2-MM THK) | |
| CM | 8 | 1 | **8T-4908** | 2 | BOLT (M8X1.25X25-MM) | |
| C | 9 | 1 | **9R-8760** | 2 | PLATE | |
| C | 10 | 1 | **139-1994** | 2 | SPACER (3.8-MM) | |
| C | 11 | 1 | **158-5633** | 4 | PIN AS | |

C-CHANGE FROM PREVIOUS TYPE
M-METRIC PART
Y-SEPARATE ILLUSTRATION

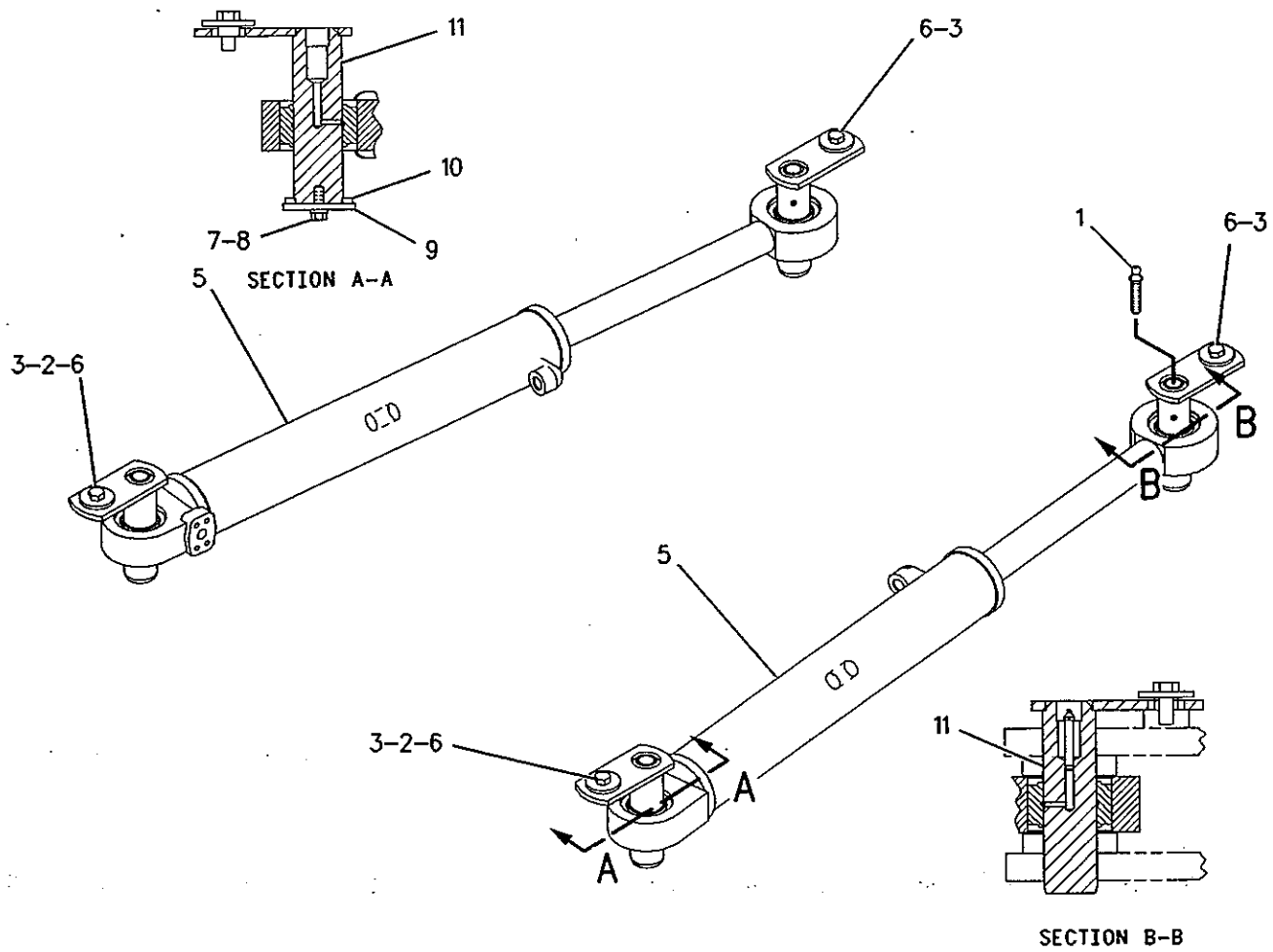


GRAPHIC #1 **<END>** g00394597

# *115-1371* CYLINDER GP-HYDRAULIC–STEERING

**S/N: JMS1-UP**
**101.6MM (4 IN.) BORE X 631MM (24.8 IN.) STROKE**
**PART OF 110-8118 CYLINDER & MTG GP-STEERING**

**SMCS-4303** **i02277935**

| NOTE | REF NO | GRAPHIC REF | PART NUMBER | QTY | PART NAME 1 2 3 4 5 6 (PRODUCT LEVEL) | SEE PAGE |
|---|---|---|---|---|---|---|
| R | 1 | 1 | **115-3595** | 1 | CYLINDER AS | |
| | | 1 | **3G-3321** | 2 | SEAL AS | |
| | | 1 | **5J-1446** | 1 | BEARING | |
| | | 1 | **6E-1497** | 1 | BOSS | |
| CM | 2 | 1 | **173-9683** | 1 | BOLT (M30X3.5X90-MM) | |
| | 3 | 1 | **9T-5927** | 1 | PISTON | |
| | 4 | 1 | **8T-4958** | 1 | RING-WEAR | |
| C | 5 | 1 | **167-2200** | 1 | SEAL AS | |
| C | 6 | 1 | **167-2307** | 1 | SEAL-U-CUP | |
| C | 7 | 1 | **231-3538** | 1 | SEAL-WIPER | |
| C | 8 | 1 | **175-7900** | 1 | SEAL-O-RING | |
| | 9 | 1 | **2K-6830** | 1 | RING-BACKUP | |
| | 10 | 1 | **6E-4977** | 1 | HEAD | |
| R | 11 | 1 | **115-1372** | 1 | ROD AS | |
| | | 1 | **3G-3321** | 2 | SEAL AS | |
| | | 1 | **5J-1446** | 1 | BEARING | |
| | 12 | 1 | **6J-2797** | 1 | RING-WEAR | |
| | 13 | 1 | **8C-9160** | 1 | SEAL AS | |
| | 14 | 1 | **9X-8399** | 1 | WASHER (33X56X6-MM THK) | |

C-CHANGE FROM PREVIOUS TYPE
M-METRIC PART
R-REMFG PART MAY BE AVAILABLE

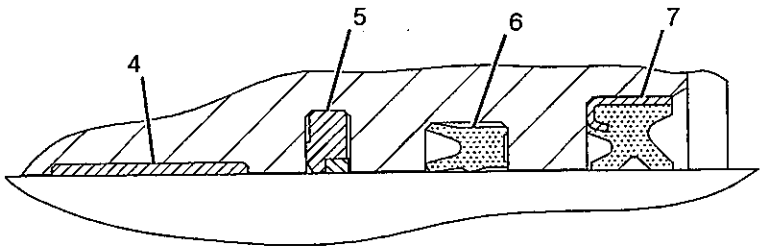


VIEW OF AREA A

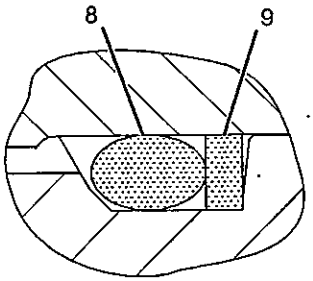


VIEW OF AREA B

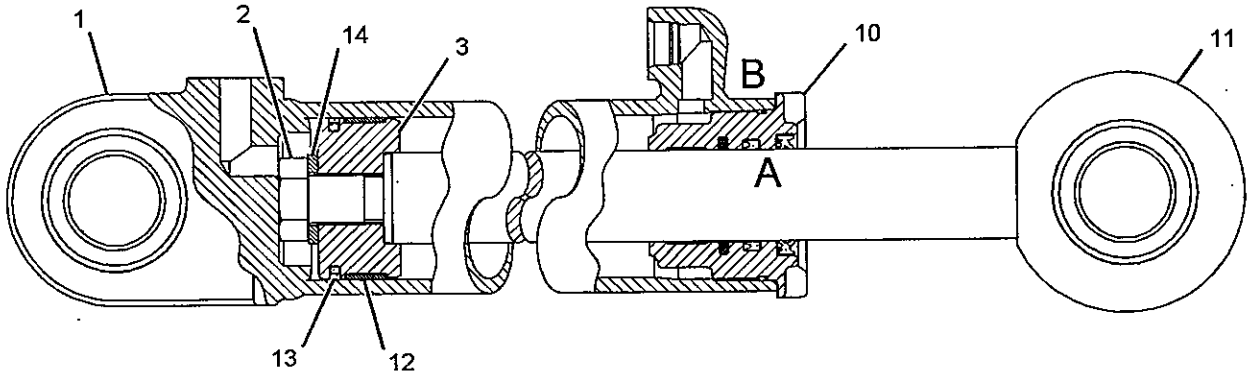


GRAPHIC #1 **<END>** g01140996

# STEERING SYSTEM

## *114-6044* LINES GP-SECONDARY STEERING

**S/N: JMS1-UP**
**PART OF 184-4740 STEERING AR-SECONDARY**
**AN ATTACHMENT**

**SMCS-4304** **i01513265**

| NOTE | REF NO | GRAPHIC REF | PART NUMBER | QTY | PART NAME 1 2 3 4 5 6 (PRODUCT LEVEL) | SEE PAGE |
|---|---|---|---|---|---|---|
| | 1 | 1 | **1P-3703** | 1 | SEAL-RECTANGULAR | |
| I | 2 | 1 | **4E-6864** | 1 | HOSE AS | |
| | 3 | 1 | **8T-6703** | 2 | CLAMP-HOSE | |
| BE | 4 | 1 | **5P-1291** | | HOSE | |
| Y | 5 | 1 | **144-5330** | 1 | VALVE GP-DIVERTER (SECONDARY STEERING) | 573 |
| I | 6 | 1 | **113-9864** | 1 | HOSE AS | |
| | 7 | 1 | **115-8506** | 1 | TUBE AS | |
| I | 8 | 1 | **115-9573** | 1 | HOSE AS | |
| I | 9 | 1 | **115-9577** | 1 | HOSE AS | |
| | 10 | 1 | **116-8726** | 1 | TUBE AS | |
| C | 11 | 1 | **177-4762** | 1 | TUBE AS | |
| | 12 | 1 | **125-9772** | 1 | BRACKET | |
| | 13 | 1 | **1P-4579** | 6 | FLANGE-HALF | |
| | 14 | 1 | **8T-4223** | 14 | WASHER-HARD (13.5X25.5X3-MM THK) | |
| | 15 | 1 | **4J-0520** | 6 | SEAL-O-RING | |
| | 16 | 1 | **4J-0524** | 3 | SEAL-O-RING | |
| | 17 | 1 | **6V-8397** | 2 | SEAL-O-RING | |
| M | 18 | 1 | **8T-4185** | 4 | BOLT (M10X1.5X50-MM) | |
| | 19 | 1 | **6V-9836** | 1 | TEE-SWIVEL | |
| | 20 | 1 | **7X-0325** | 2 | BOLT (1/2-13X2.5-IN) | |
| | 21 | 1 | **8C-3206** | 6 | FLANGE-HALF | |
| | 22 | 1 | **8T-4121** | 22 | WASHER-HARD (11X21X2.5-MM THK) | |
| M | 23 | 1 | **8T-4172** | 6 | BOLT (M10X1.5X80-MM) | |
| M | 24 | 1 | **8T-4184** | 12 | BOLT (M12X1.75X45-MM) | |
| M | 25 | 1 | **8T-4196** | 12 | BOLT (M10X1.5X35-MM) | |

B-USE AS REQUIRED
C-CHANGE FROM PREVIOUS TYPE
E-ORDER BY THE CENTIMETER
I-REFER TO HYDRAULIC INFORMATION SYSTEM
M-METRIC PART
Y-SEPARATE ILLUSTRATION

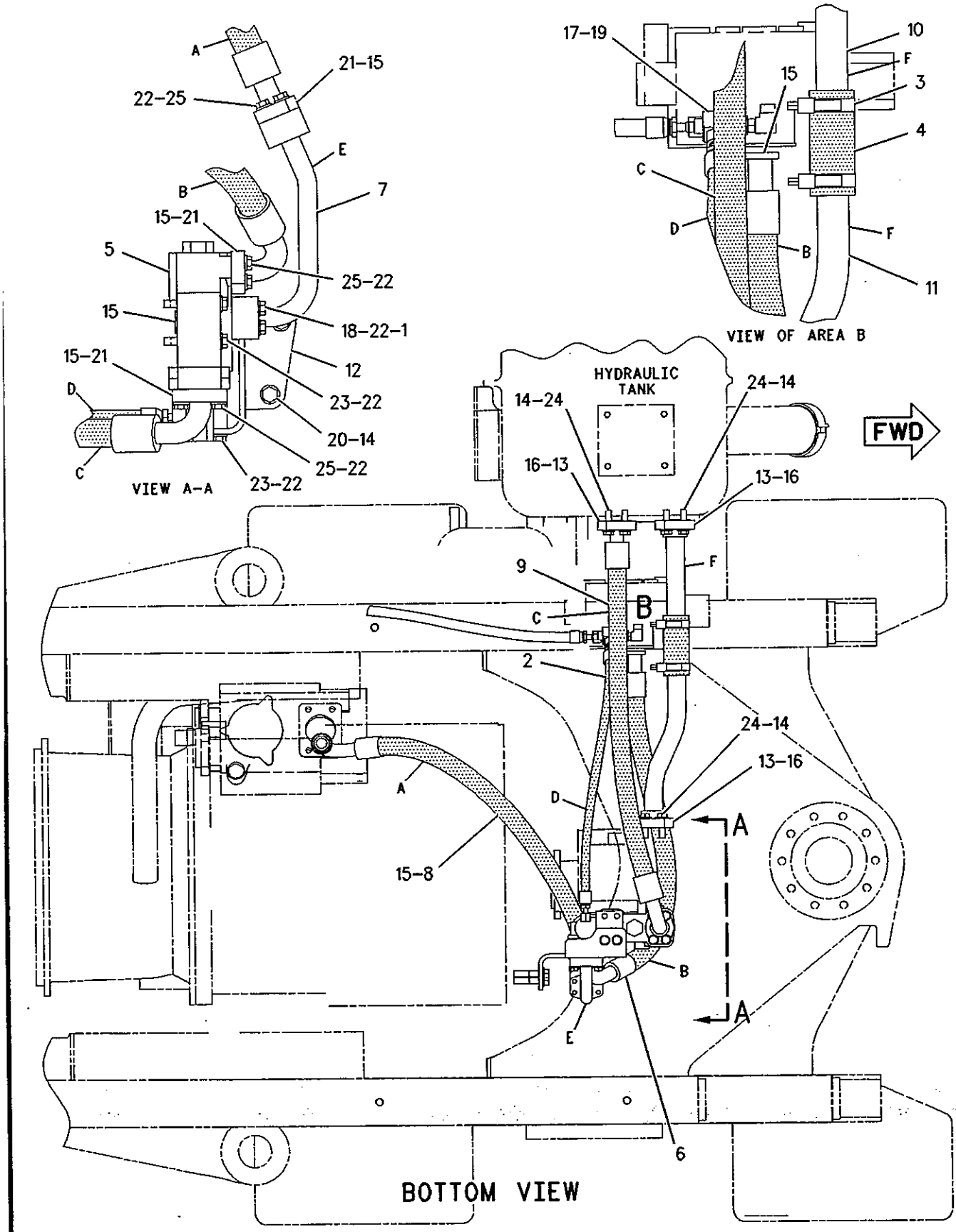


GRAPHIC #1

<END>

g00671640

# STEERING SYSTEM

## *171-4656* LINES GP-STEERING

**S/N: JMS1-UP**

**PART OF 225-5538 CHASSIS AR**

**SMCS-4304** **i02169259**

| NOTE | REF NO | GRAPHIC REF | PART NUMBER | QTY | PART NAME 1 2 3 4 5 6 (PRODUCT LEVEL) | SEE PAGE |
|---|---|---|---|---|---|---|
| E | 1 | 2 | **5P-6412** | | HOSE (12-CM) | |
| | 2 | 4 | **3E-2310** | 4 | TEE | |
| E | 3 | 2 | **5P-1295** | | HOSE (16-CM) | |
| | 4 | 4 | **4V-0611** | 2 | CLAMP | |
| | 5 | 4 | **4V-0612** | 1 | PLATE | |
| | 6 | 4 | **4V-0969** | 1 | PLATE AS | |
| | 7 | 4 | **4Y-5406** | 1 | HOSE | |
| | 8 | 2,4 | **5P-2230** | 4 | CLAMP-HOSE | |
| | 9 | 2,3,4 | **6V-0852** | 8 | CAP-DUST | |
| Y | 10 | 1 | **8J-1553** | 2 | VALVE GP-STEERING NEUTRALIZER | 587 |
| Y | 11 | 3 | **8J-6875** | 1 | VALVE GP-SHUTTLE | 582 |
| | 12 | 2 | **8T-4984** | 2 | CLAMP-HOSE | |
| | 13 | 2 | **8T-9107** | 2 | TEE | |
| | 14 | 1,3 | **8Y-8388** | 2 | PLATE | |
| | 15 | 3 | **9J-3866** | 1 | ADAPTER | |
| I | 16 | 2 | **100-7530** | 1 | HOSE AS | |
| I | 17 | 4 | **111-6923** | 1 | HOSE AS | |
| Y | 18 | 4 | **111-7775** | 1 | VALVE GP-CHECK (STEERING QUAD) | 570 |
| | 19 | 2 | **114-6049** | 1 | TUBE AS | |
| | 20 | 1 | **114-6051** | 1 | ELBOW | |
| | 21 | 1 | **114-6064** | 1 | BLOCK MANIFOLD | |
| | 22 | 2 | **116-9563** | 1 | BRACKET AS | |
| M | | 2 | **8T-3490** | 1 | NUT-WELD (M10X1.5-THD) | |
| I | 23 | 2 | **116-9575** | 1 | HOSE AS | |
| I | 24 | 3 | **116-9576** | 1 | HOSE AS | |
| I | 25 | 3 | **116-9577** | 1 | HOSE AS | |
| I | 26 | 1 | **116-9578** | 1 | HOSE AS | |
| I | 27 | 1 | **116-9579** | 1 | HOSE AS | |
| | 28 | 1,3 | **125-0151** | 4 | BLOCK | |
| I | 29 | 1 | **125-0154** | 1 | HOSE AS | |
| | 30 | 3 | **125-9774** | 1 | PLATE AS | |
| M | | 3 | **6V-9632** | 2 | NUT-WELD (M6X1-THD) | |
| | 31 | 3 | **126-6872** | 1 | TEE | |
| | 32 | 2 | **127-9323** | 2 | BRACKET AS (EACH INCLUDES) | |
| M | | 2 | **8T-3490** | 1 | NUT-WELD (M10X1.5-THD) | |
| I | 33 | 3 | **128-0486** | 1 | HOSE AS | |
| | 34 | 2 | **146-5776** | 1 | SHAFT AS-STEERING | |
| M | 35 | 2 | **146-6581** | 2 | BOLT-FLAT HEAD (M12-1.75X72-MM) | |
| | 36 | 3 | **149-0272** | 1 | MANIFOLD | |
| I | 37 | 1 | **150-8985** | 2 | HOSE AS | |
| Y | 38 | 2 | *154-2883* | 1 | SCREEN GP-CASE DRAIN (STEERING PILOT) | 564 |
| | 39 | 1 | **154-6524** | 1 | CHAIN | |
| I | 40 | 1 | **159-1583** | 1 | HOSE AS | |
| I | 41 | 1 | **164-8178** | 1 | HOSE AS | |
| I | 42 | 1 | **164-8180** | 1 | HOSE AS | |
| I | 43 | 4 | **164-8181** | 1 | HOSE AS | |
| | 44 | 1 | **164-8183** | 1 | TUBE AS | |
| I | 45 | 4 | **166-0362** | 1 | HOSE AS | |
| Y | 46 | 2 | **166-8495** | 1 | VALVE GP-STEERING | 585 |
| | 47 | 2 | **168-9207** | 1 | BRACKET AS | |
| M | | 2 | **8T-3490** | 2 | NUT-WELD (M10X1.5-THD) | |
| | | 2 | **9C-6809** | 1 | BLOCK | |
| I | 48 | 2 | **169-4961** | 1 | HOSE AS | |
| Y | 49 | 4 | **173-0439** | 1 | VALVE GP-PILOT (STEERING) | 575 |
| | 50 | 2 | **174-8813** | 1 | PLATE AS | |

# STEERING SYSTEM

## 171-4656 LINES GP-STEERING (contd.)

i02169259

| NOTE | REF NO | GRAPHIC REF | PART NUMBER | QTY | PART NAME 1 2 3 4 5 6 (PRODUCT LEVEL) | SEE PAGE |
|---|---|---|---|---|---|---|
| | 51 | 4 | **196-7340** | 1 | TUBE AS | |
| I | 52 | 2 | **197-1305** | 1 | HOSE AS | |
| I | 53 | 4 | **197-4061** | 1 | HOSE AS | |
| I | 54 | 4 | **197-4062** | 1 | HOSE AS | |
| I | 55 | 1 | **197-4640** | 1 | HOSE AS | |
| | 56 | 3 | **202-3148** | 1 | BRACKET AS | |
| I | 57 | 3 | **222-9065** | 1 | HOSE AS | |
| | 58 | 4 | **231-7890** | 1 | ANGLE AS | |
| C | 59 | 2 | **233-7419** | 1 | STRAINER (CASE DRAIN SCREEN) (FOR STEERING, IMPLEMENT & HYDRAULIC FAN PUMPS) | |
| CI | 60 | 2 | **235-0923** | 1 | HOSE AS | |
| | 61 | 2 | **236-7667** | 1 | TUBE AS | |
| | 62 | 2 | **236-7668** | 1 | TUBE AS | |
| I | 63 | 3 | **242-7155** | 1 | HOSE AS | |
| | 64 | 2 | **251-6206** | 1 | TUBE AS | |
| | 65 | 2 | **251-6793** | 1 | TUBE AS | |
| I | 66 | 2 | **251-6794** | 1 | HOSE AS | |
| I | 67 | 2 | **251-9560** | 1 | HOSE AS | |
| | 68 | 3 | *148-8335* | 1 | CONNECTOR AS | |
| | | 3 | **5K-9090** | 1 | SEAL-O-RING | |
| | | 3 | **6V-8635** | 1 | CONNECTOR | |
| | | 3 | **7M-8485** | 1 | SEAL-O-RING | |
| | 69 | 1 | *164-6872* | 1 | TEE AS | |
| | | 1 | **2M-9780** | 1 | SEAL-O-RING | |
| | | 1 | **6V-8398** | 2 | SEAL-O-RING | |
| | | 1 | **115-8634** | 1 | TEE-O-RING | |
| | 70 | 2 | **1B-8705** | 1 | KEY-WOODRUFF | |
| | 71 | 1 | **1J-9671** | 2 | SEAL-O-RING | |
| | 72 | 1,1 | **1P-3703** | 2 | SEAL-RECTANGULAR | |
| | 73 | 2 | **1P-3707** | 1 | SEAL-RECTANGULAR | |
| | 74 | 1,2,3 | **1S-0994** | 7 | CLIP | |
| | 75 | 1,3 | **3D-2824** | 3 | SEAL-O-RING | |
| C | 76 | 1,2,3, 4 | **3J-1907** | 31 | SEAL-O-RING | |
| | 77 | 3 | **3J-7354** | 1 | SEAL-O-RING | |
| | 78 | 2,3,4 | **3K-0360** | 7 | SEAL-O-RING | |
| | 79 | 1 | **4D-7733** | 2 | CLIP | |
| | 80 | 2,3,4 | **4J-0520** | 8 | SEAL-O-RING | |
| | 81 | 1,3 | **4J-5267** | 6 | SEAL-O-RING | |
| | 82 | 1 | **5P-4325** | 1 | CLIP | |
| | 83 | 4 | **6D-4247** | 1 | CLIP | |
| | 84 | 2 | **6J-2680** | 2 | SEAL-O-RING | |
| | 85 | 3 | **6V-0484** | 1 | ADAPTER-O-RING | |
| | 86 | 1 | **6V-1889** | 1 | CLIP | |
| | 87 | 2,3,4 | **6V-3965** | 8 | FITTING AS (QUICK DISCONNECT) | |
| C | 88 | 1,2,3, 4 | **6V-8397** | 40 | SEAL-O-RING | |
| | 89 | 2,3 | **6V-8398** | 4 | SEAL-O-RING | |
| | 90 | 2 | **6V-8400** | 1 | SEAL-O-RING | |
| C | 91 | 3,4 | **6V-8634** | 5 | CONNECTOR | |
| | 92 | 1,2,3 | **6V-8636** | 6 | CONNECTOR | |
| | 93 | 1,3 | **6V-8637** | 2 | CONNECTOR | |
| | 94 | 3 | **6V-8639** | 1 | CONNECTOR | |
| | 95 | 3,4 | **6V-8724** | 3 | ELBOW | |
| | 96 | 4 | **6V-8774** | 1 | TEE | |
| | 97 | 2,3 | **6V-9001** | 2 | ELBOW | |
| | 98 | 3 | **6V-9200** | 1 | ELBOW | |
| | 99 | 4 | **6V-9665** | 1 | BOLT | |
| C | 100 | 1,2,3 | **6V-9746** | 4 | SEAL-O-RING | |

# STEERING SYSTEM

## 171-4656 LINES GP-STEERING (contd.) i02169259

| NOTE | REF NO | GRAPHIC REF | PART NUMBER | QTY | PART NAME 1 2 3 4 5 6 (PRODUCT LEVEL) | SEE PAGE |
|---|---|---|---|---|---|---|
| C | 101 | 1,3 | 6V-9836 | 2 | TEE-SWIVEL | |
| | 102 | 1,4 | 6V-9850 | 3 | ELBOW | |
| | 103 | 2 | 7M-8485 | 1 | SEAL-O-RING | |
| | 104 | 2 | 7S-0530 | 1 | CLIP | |
| M | 105 | 4 | 7X-2543 | 1 | BOLT (M10X1.5X120-MM) | |
| | 106 | 3 | 7X-7729 | 2 | WASHER (11X25X3-MM THK) | |
| | 107 | 1,3 | 8C-3205 | 12 | FLANGE-HALF | |
| | 108 | 3 | 8C-3206 | 8 | FLANGE-HALF | |
| | 109 | 2 | 8C-3364 | 1 | ELBOW | |
| | 110 | 4 | 8C-8988 | 1 | ELBOW | |
| | 111 | 2 | 8C-8989 | 1 | ELBOW | |
| | 112 | 1,2 | 8M-2773 | 3 | CLIP | |
| | 113 | 3,4 | 8T-1905 | 2 | ELBOW | |
| | 114 | 1,2,3, 4 | 8T-4121 | 90 | WASHER-HARD (11X21X2.5-MM THK) | |
| M | 115 | 1,2 | 8T-4133 | 4 | NUT (M10X1.5-THD) | |
| M | 116 | 1,2,3, 4 | 8T-4137 | 14 | BOLT (M10X1.5X20-MM) | |
| M | 117 | 2 | 8T-4139 | 2 | BOLT (M12X1.75X30-MM) | |
| M | 118 | 3 | 8T-4172 | 4 | BOLT (M10X1.5X80-MM) | |
| M | 119 | 3,4 | 8T-4182 | 6 | BOLT (M10X1.5X45-MM) | |
| M | 120 | 2 | 8T-4183 | 4 | BOLT (M12X1.75X40-MM) | |
| M | 121 | 2 | 8T-4185 | 2 | BOLT (M10X1.5X50-MM) | |
| M | 122 | 3 | 8T-4186 | 4 | BOLT (M10X1.5X40-MM) | |
| M | 123 | 2,3 | 8T-4192 | 4 | BOLT (M12X1.75X25-MM) | |
| M | 124 | 2,3 | 8T-4194 | 12 | BOLT (M12X1.75X50-MM) | |
| M | 125 | 1,4 | 8T-4195 | 9 | BOLT (M10X1.5X30-MM) | |
| M | 126 | 1,2,3 | 8T-4196 | 34 | BOLT (M10X1.5X35-MM) | |
| | 127 | 2,3 | 8T-4223 | 24 | WASHER-HARD (13.5X25.5X3-MM THK) | |
| M | 128 | 2,3 | 8T-4244 | 2 | NUT (M12X1.75-THD) | |
| M | 129 | 1,3,4 | 8T-5005 | 12 | BOLT (M10X1.5X70-MM) | |
| | 130 | 1 | 8T-5043 | 2 | CONNECTOR | |
| M | 131 | 4 | 8T-5436 | 2 | BOLT (M10X1.5X130-MM) | |
| M | 132 | 1,3 | 8T-6466 | 8 | BOLT (M10X1.5X60-MM) | |
| | 133 | 2 | 8T-6696 | 1 | TEE-O-RING | |
| | 134 | 2 | 8T-8919 | 2 | BOLT (1/2-13X1.75-IN) | |
| | 135 | 2 | 9D-1829 | 1 | CLIP | |
| | 136 | 4 | 9M-1974 | 1 | WASHER-HARD (8.8X16X2-MM THK) | |
| C | 137 | 3 | 9S-4191 | 1 | PLUG | |
| | 138 | 3 | 9S-8008 | 1 | PLUG | |
| | 139 | 1 | 9X-2027 | 6 | WASHER (11X18X2-MM THK) | |
| M | 140 | 3 | 9X-2480 | 2 | BOLT (M6X1X45-MM) | |
| | 141 | 3 | 9X-8256 | 2 | WASHER (6.6X12X2-MM THK) | |

C-CHANGE FROM PREVIOUS TYPE
E-ORDER BY THE CENTIMETER
I-REFER TO HYDRAULIC INFORMATION SYSTEM
M-METRIC PART
Y-SEPARATE ILLUSTRATION

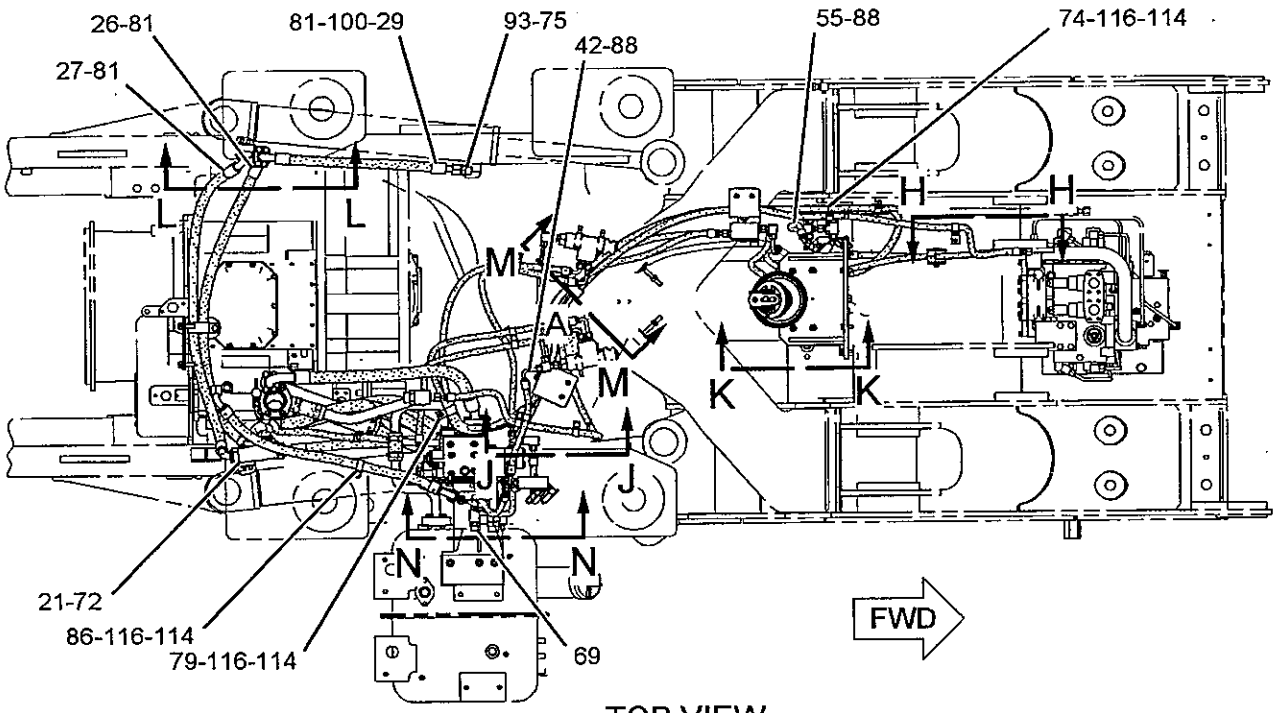


TOP VIEW

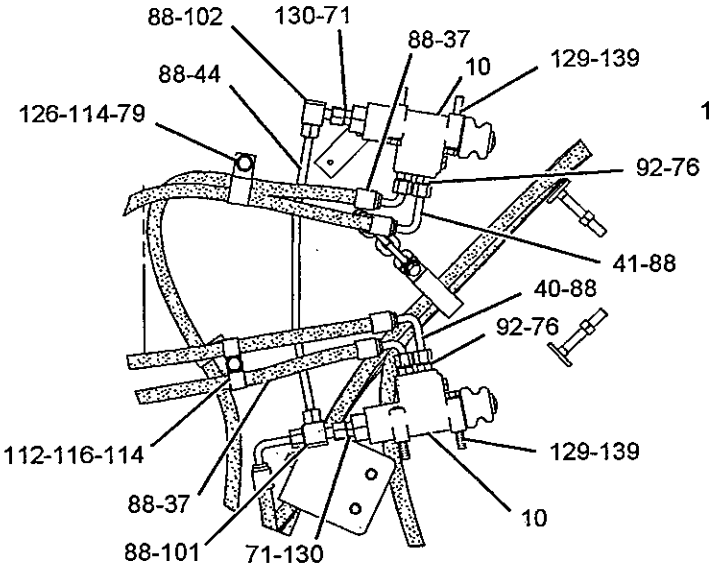


VIEW OF AREA A

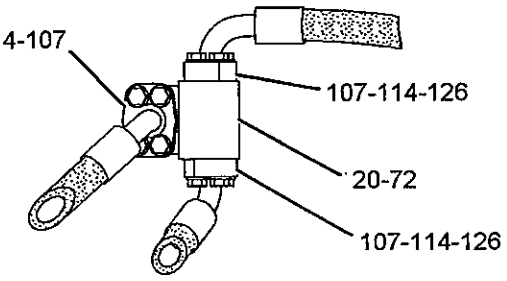


SECTION L-L

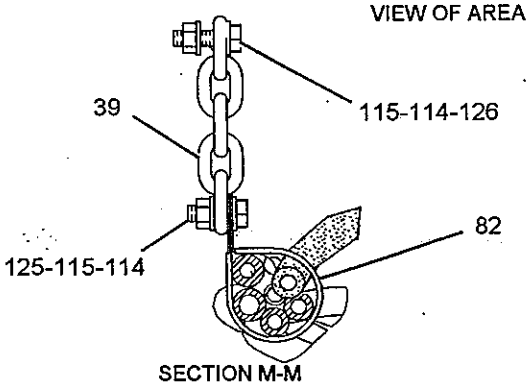


SECTION M-M

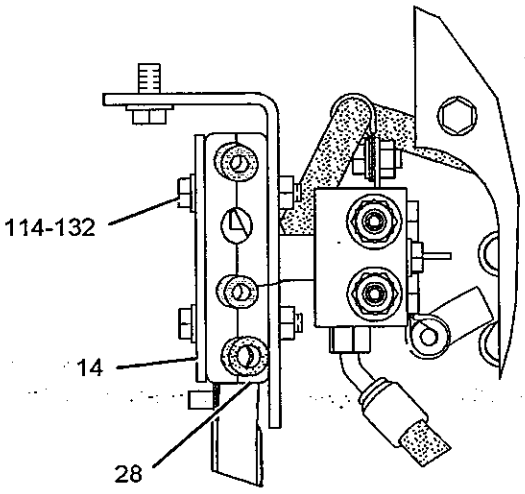


SECTION F-F

GRAPHIC #1 g01100923

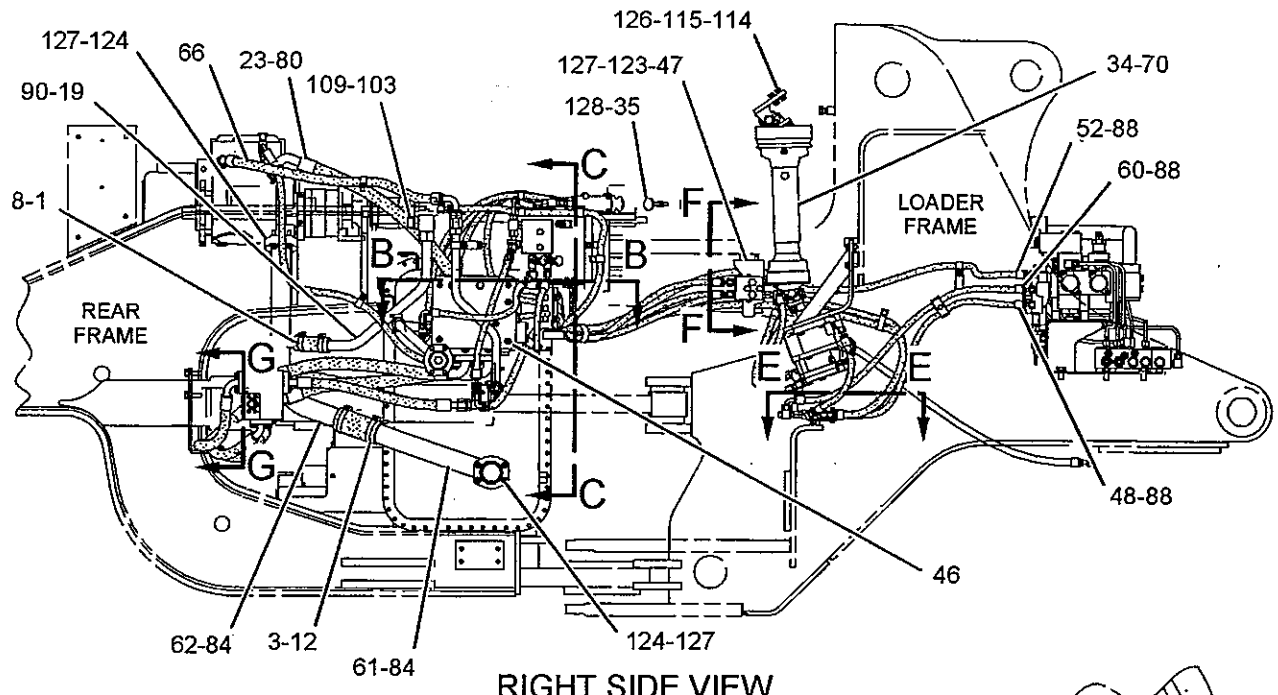


RIGHT SIDE VIEW

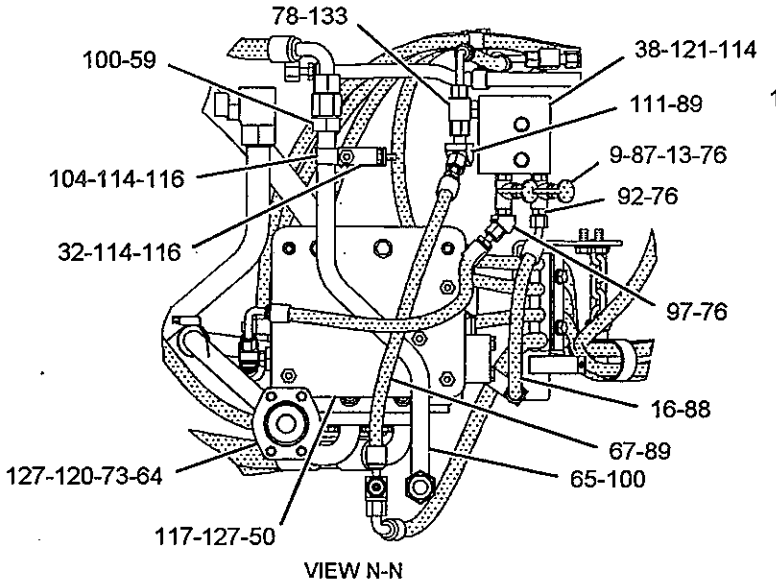


VIEW N-N

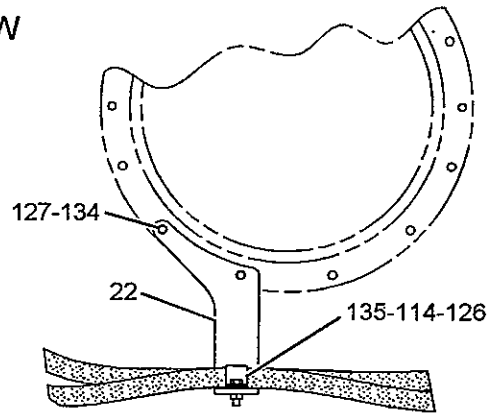


SECTION G-G

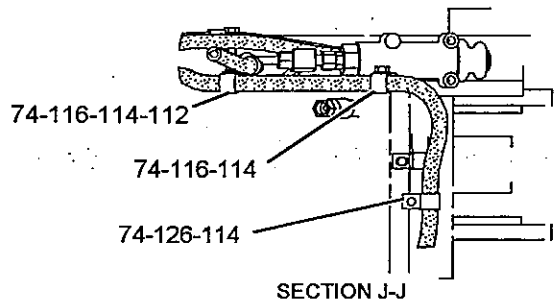


SECTION J-J

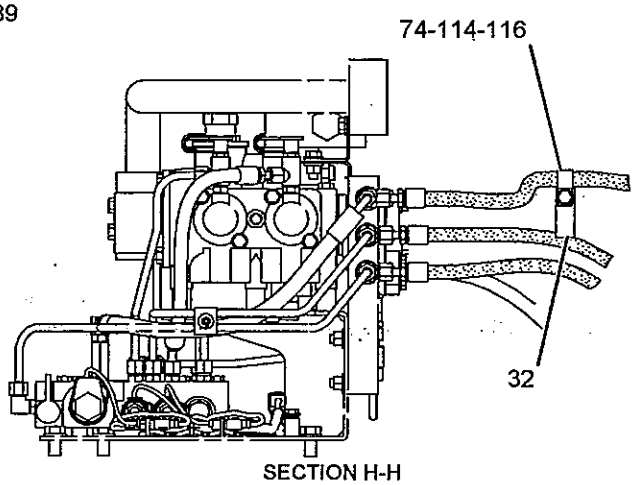


SECTION H-H

GRAPHIC #2

g01100927

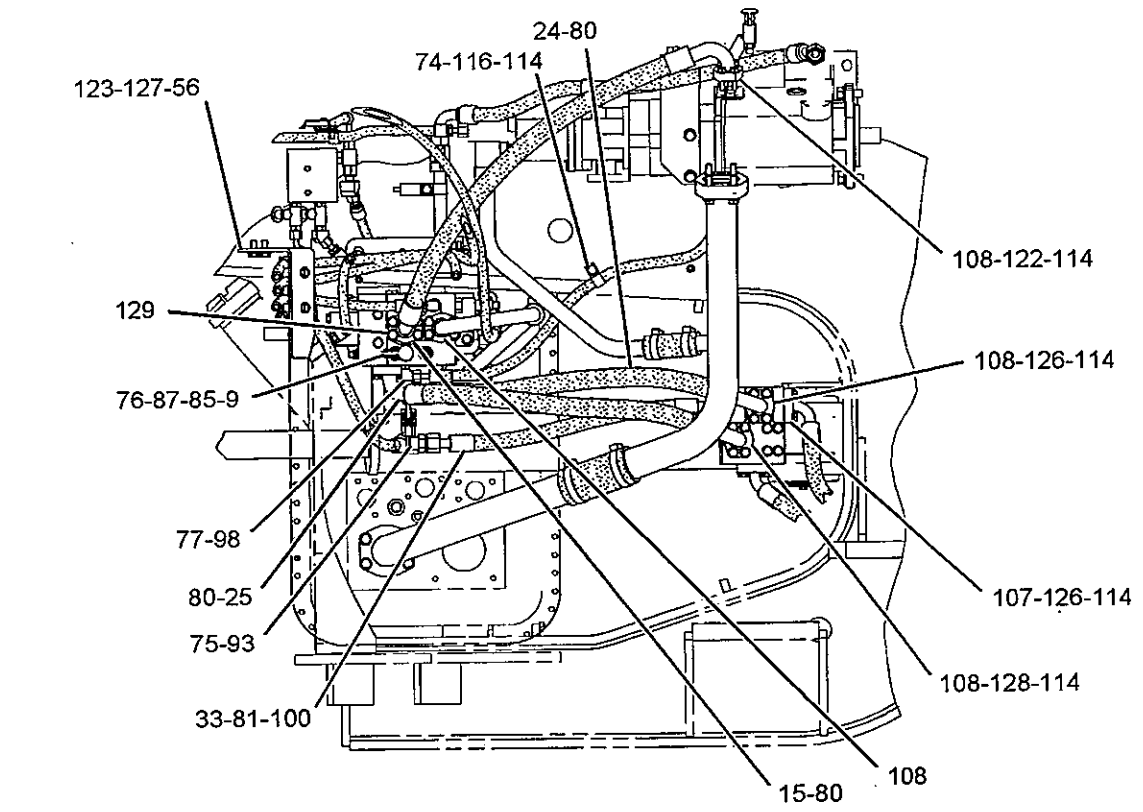


SECTION D-D

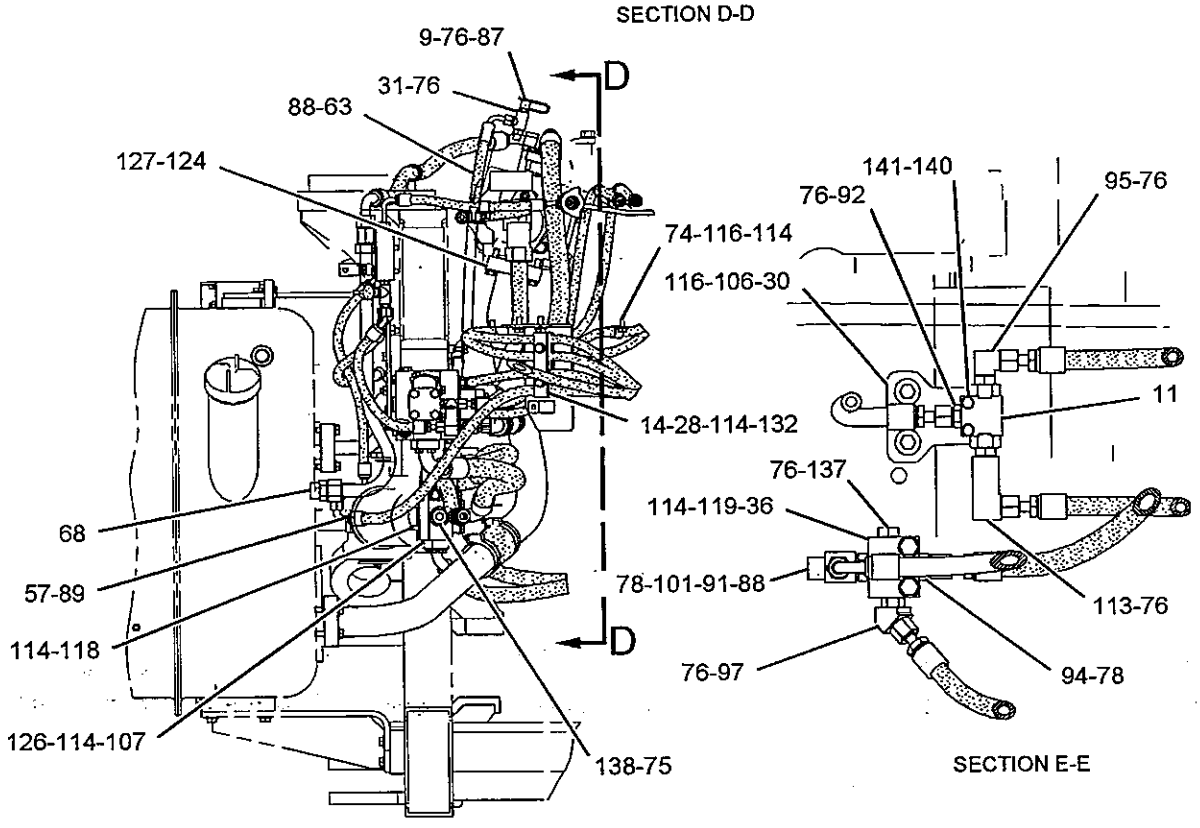


SECTION C-C

SECTION E-E

GRAPHIC #3

g01100928

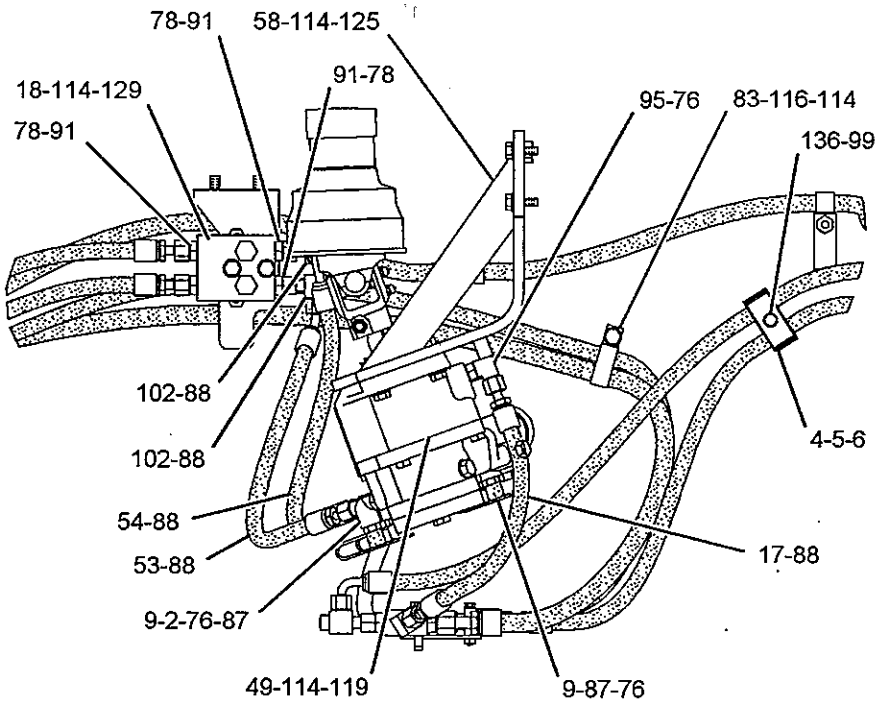


VIEW K-K

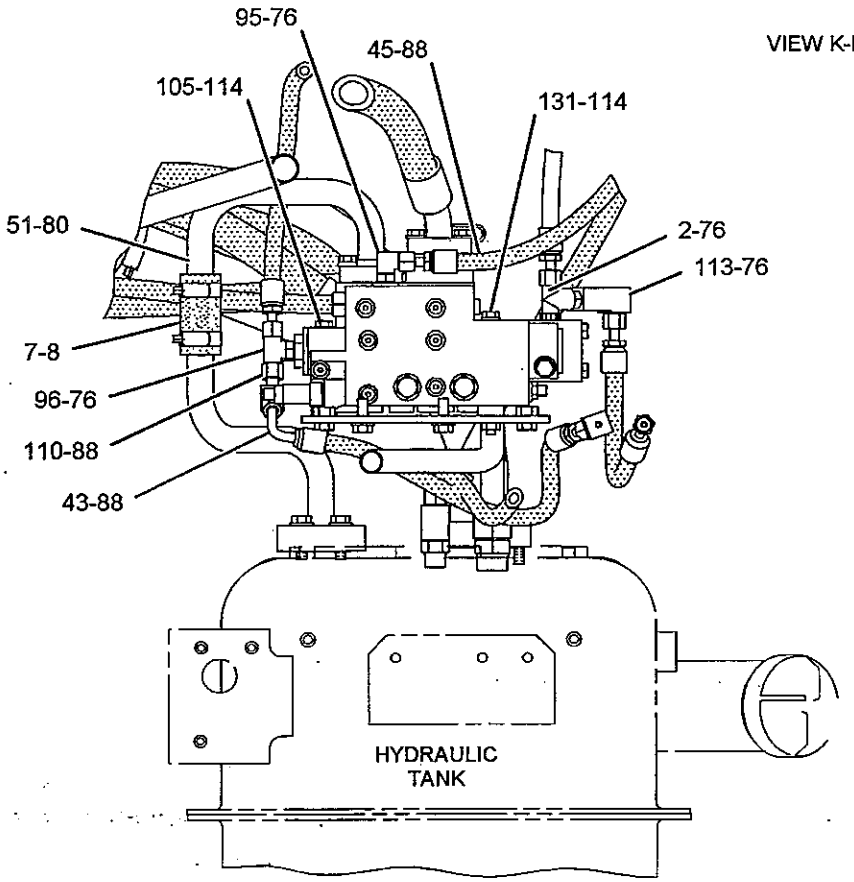


SECTION B-B

GRAPHIC #4 **<END>** g01100929

# 115-7669 PUMP & MTG GP-SECONDARY STEER

S/N: JMS1-UP

PART OF 184-4740 STEERING AR-SECONDARY

AN ATTACHMENT

SMCS-4324

i01648643

| NOTE | REF NO | GRAPHIC REF | PART NUMBER | QTY | PART NAME 1 2 3 4 5 6 (PRODUCT LEVEL) | SEE PAGE |
|---|---|---|---|---|---|---|
| | 1 | 1 | 6V-8188 | 4 | NUT (1/2-13-THD) | |
| Y | 2 | 1 | 150-7585 | 1 | PUMP GP-GEAR (SECONDARY STEERING) | 559 |
| | 3 | 1 | 5F-3106 | 1 | SEAL-O-RING | |
| | 4 | 1 | 3H-7654 | 4 | WASHER-HARD (13.5X22.5X3-MM THK) | |

Y-SEPARATE ILLUSTRATION

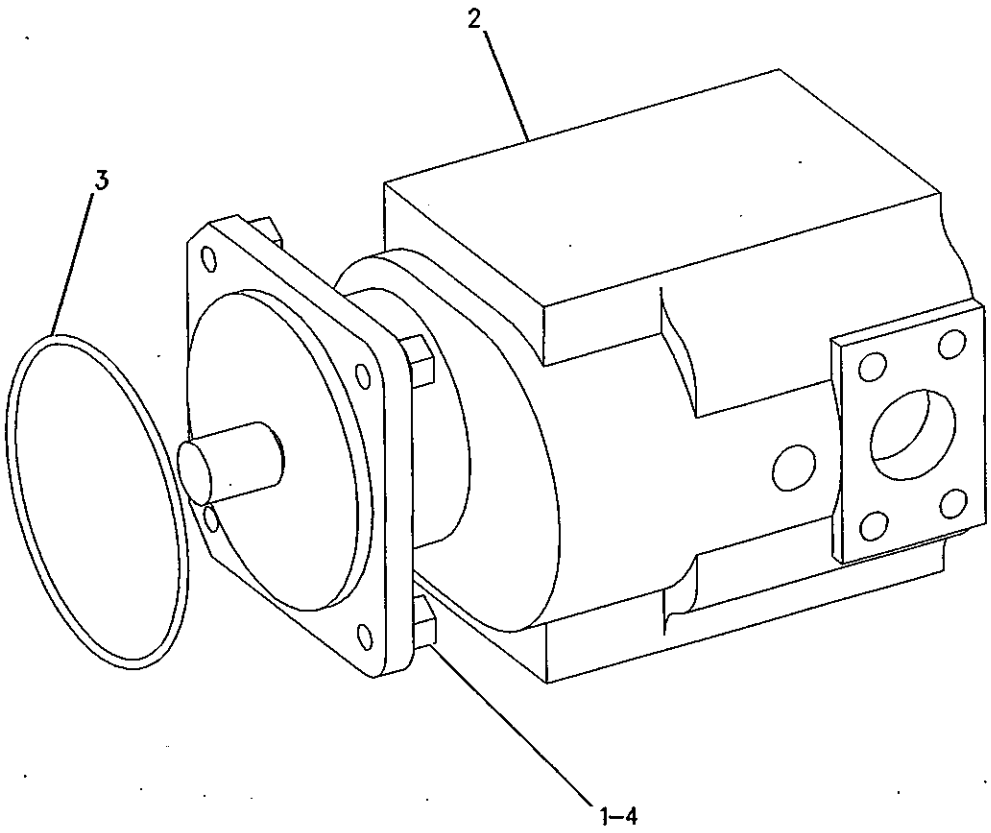


GRAPHIC #1

<END>

g00851691

# 235-5331 PUMP & MTG GP-STEERING & TMSN

S/N: JMS1-UP
INCLUDES PILOT, BRAKE PUMP
PART OF 235-1303 HYDRAULIC AR-2 VALVE

SMCS-3066, 4014, 4306 i02280922

| NOTE | REF NO | GRAPHIC REF | PART NUMBER | QTY | PART NAME 1 2 3 4 5 6 (PRODUCT LEVEL) | SEE PAGE |
|---|---|---|---|---|---|---|
| | 1 | 1 | 100-6241 | 1 | COUPLING-SHAFT | |
| YR | 2 | 1 | 105-3635 | 1 | PUMP GP-PISTON (STEERING) | 561 |
| Y | 3 | 1 | 235-6501 | 1 | PUMP GP-GEAR (PILOT, BRAKE) | 669 |
| | 4 | 1 | 114-9222 | 1 | COUPLING-SHAFT | |
| | 5 | 1 | 115-9890 | 1 | ADAPTER AS-PUMP | |
| | | 1 | 1H-0974 | 2 | DOWEL | |
| Y | 6 | 1 | 117-9611 | 1 | PUMP GP-TRANSMISSION | 371 |
| | 7 | 1 | 231-8629 | 1 | BRACKET | |
| M | 8 | 1 | 101-7404 | 2 | BOLT-SOCKET HEAD (M10X1.5X30-MM) | |
| | 9 | 1 | 3K-0715 | 1 | SEAL-O-RING | |
| | 10 | 1 | 5F-3106 | 1 | SEAL-O-RING | |
| | 11 | 1 | 6V-3834 | 1 | SEAL-O-RING | |
| M | 12 | 1 | 7X-2554 | 1 | BOLT (M16X2X70-MM) | |
| | 13 | 1 | 8M-4395 | 1 | SEAL-O-RING | |
| | 14 | 1 | 8T-4121 | 5 | WASHER-HARD (11X21X2.5-MM THK) | |
| | 15 | 1 | 8T-4122 | 2 | WASHER-HARD (17X32X3.5-MM THK) | |
| M | 16 | 1 | 8T-4139 | 6 | BOLT (M12X1.75X30-MM) | |
| M | 17 | 1 | 8T-4185 | 1 | BOLT (M10X1.5X50-MM) | |
| M | 18 | 1 | 8T-4195 | 2 | BOLT (M10X1.5X30-MM) | |
| | 19 | 1 | 8T-4223 | 6 | WASHER-HARD (13.5X25.5X3-MM THK) | |
| | 20 | 1 | 8T-9393 | 2 | BOLT (5/8-11X1.5-IN) | |
| | 21 | 1 | 9X-8257 | 1 | WASHER (17.5X30X3.5-MM THK) | |

M-METRIC PART
R-REMFG PART MAY BE AVAILABLE
Y-SEPARATE ILLUSTRATION

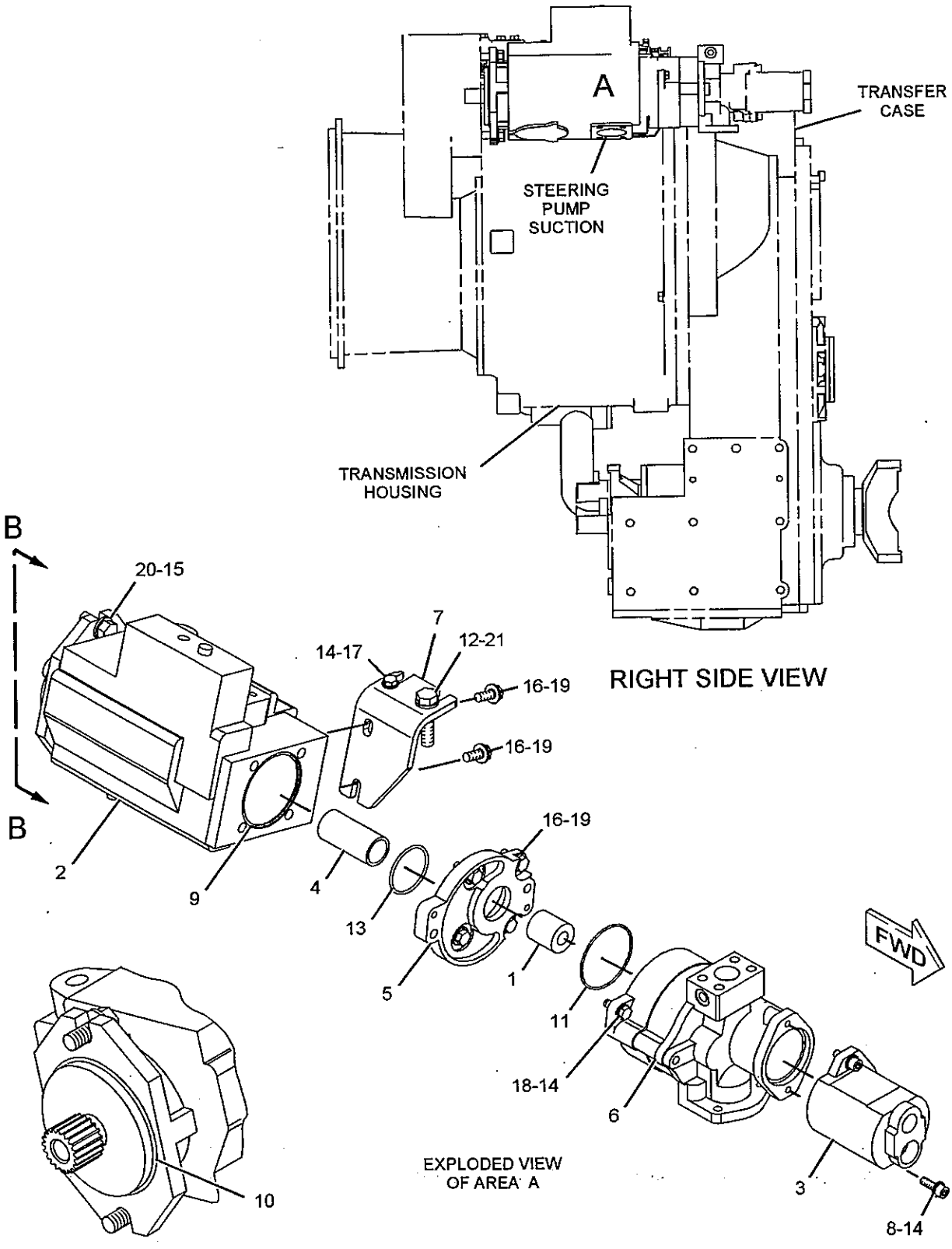


GRAPHIC #1

**<END>**

g01066211

# STEERING SYSTEM

## 150-7585 PUMP GP-GEAR–SECONDARY STEERING

**S/N: JMS1-UP**

**PART OF 115-7669 PUMP & MTG GP-SECONDARY STEER**

**AN ATTACHMENT**

**SMCS-4268, 4306, 5073** **i00799544**

| NOTE | REF NO | GRAPHIC REF | PART NUMBER | QTY | PART NAME 1 2 3 4 5 6 (PRODUCT LEVEL) | SEE PAGE |
|---|---|---|---|---|---|---|
| J | 1 | 1 | 139-3213 | 2 | SEAL | |
| J | 2 | 1 | 008-3214 | 1 | RING-RETAINING (INTERNAL) | |
| | 3 | 1 | 9T-1258 | 1 | SHAFT-DRIVE | |
| | 4 | 1 | 4T-9300 | 1 | BUSHING-TERMINAL | |
| | 5 | 1 | 4T-9301 | 1 | BUSHING-TERMINAL | |
| | 6 | 1 | 6J-2386 | 2 | DOWEL | |
| | 7 | 1 | 153-6480 | 1 | FLANGE AS | |
| | 8 | 1 | 107-2884 | 2 | PLATE-ISOLATION | |
| | 9 | 1 | 142-2133 | 1 | SPACER | |
| | 10 | 1 | 107-2886 | 2 | SPACER | |
| | 11 | 1 | 4T-8761 | 1 | GEAR-IDLER | |
| | 12 | 1 | 1B-2886 | 6 | BOLT (1/2-13X3.75-IN) | |
| | 13 | 1 | 142-2137 | 1 | PLUG | |
| J | 14 | 1 | 077-3790 | 4 | SEAL | |
| | 15 | 1 | 4T-9298 | 2 | BUSHING-TERMINAL | |
| | 16 | 1 | 077-4643 | 2 | PLATE-ISOLATION | |
| J | 17 | 1 | 6E-2943 | 1 | PLUG | |
| | 18 | 1 | 0S-1595 | 8 | BOLT (1/2-13X1.25-IN) | |
| J | 19 | 1 | 9X-7722 | 1 | SEAL-O-RING | |
| | 20 | 1 | 6R-3966 | 2 | PLATE-PRESSURE | |
| | 21 | 1 | 107-2891 | 2 | PISTON | |
| | 22 | 1 | 107-2893 | 2 | SPRING | |
| | 23 | 1 | 107-2887 | 2 | PISTON | |
| | 24 | 1 | 107-2888 | 2 | SPRING | |
| | 25 | 1 | 153-6479 | 1 | BODY AS | |
| | 26 | 1 | 107-2890 | 1 | BODY-VALVE | |
| | 27 | 1 | 9S-8005 | 1 | PLUG | |
| | 28 | 1 | 033-6042 | 1 | SEAL-O-RING | |
| | | | | | AVAILABLE REPAIR KIT(S): | |
| J | | | 153-6481 | 1 | KIT-SEAL | |

J-KIT MARKED J INCLUDES PART(S) MARKED J

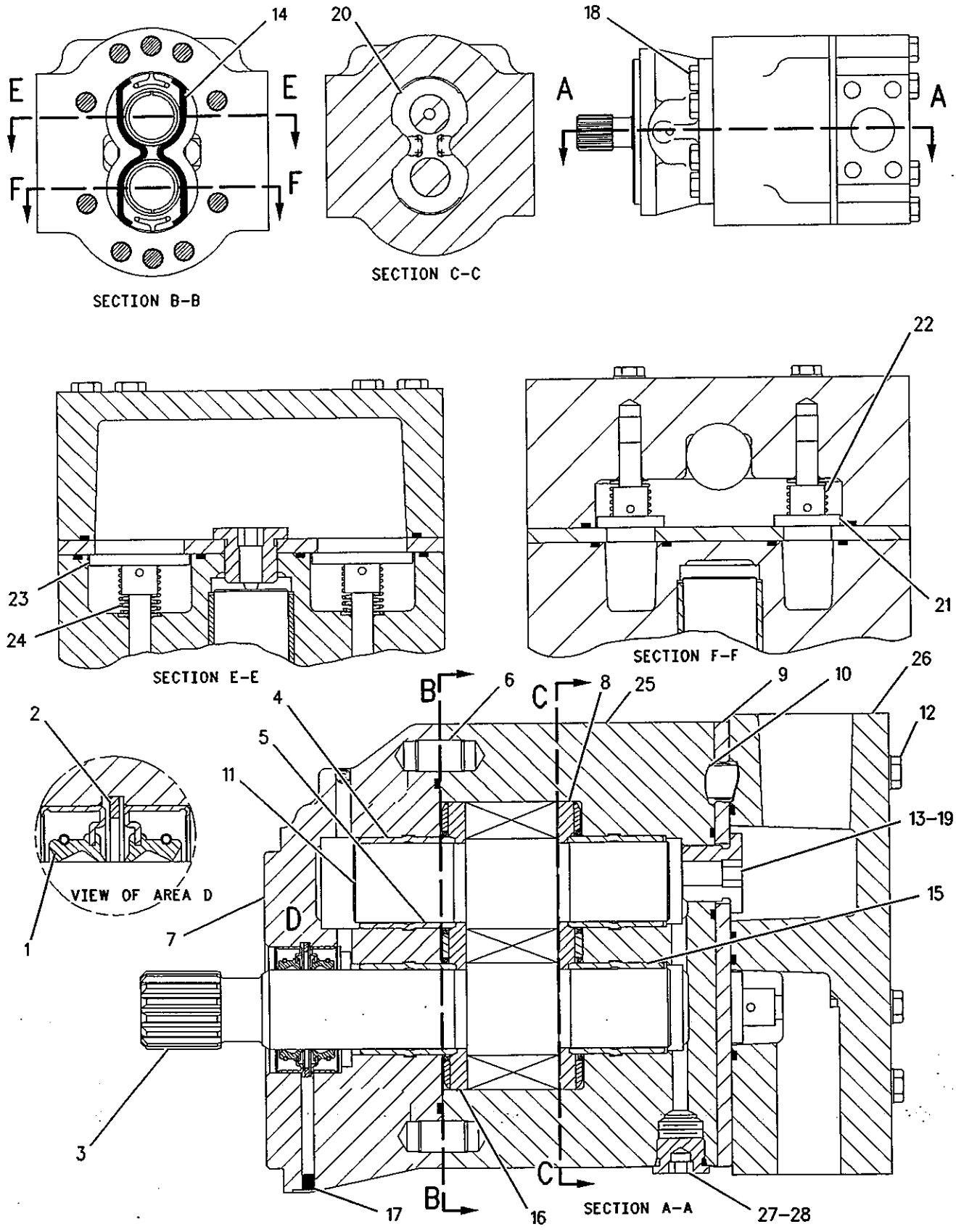


GRAPHIC #1

<END>

g00374794

# STEERING SYSTEM

## 105-3635 PUMP GP-PISTON–STEERING*R

**S/N: JMS1-UP**

**PART OF 235-5331 PUMP & MTG GP-STEERING & TMSN**

**SMCS-4268, 4306, 5070** **i02275067**

| NOTE | REF NO | GRAPHIC REF | PART NUMBER | QTY | PART NAME 1 2 3 4 5 6 (PRODUCT LEVEL) | SEE PAGE |
|---|---|---|---|---|---|---|
| | 1 | 1 | 6E-4224 | 1 | PLUG-SWASHPLATE | |
| | 2 | 1 | 033-6036 | 1 | SEAL-O-RING | |
| | 3 | 1 | 100-3402 | 1 | BEARING-SWASH | |
| | 4 | 1 | 100-3405 | 1 | BEARING-SWASH | |
| M | 5 | 1 | 6V-8837 | 3 | BOLT (M6X1X16-MM) | |
| | 6 | 1 | 4F-4097 | 1 | SEAL-O-RING | |
| M | 7 | 1 | 3E-4302 | 2 | SCREW-FLAT HEAD (M4X0.7X10-MM) | |
| | 8 | 1 | 100-3404 | 1 | COVER-TRUNNION | |
| | 9 | 1 | 9T-1636 | 1 | SEAT | |
| | 10 | 1 | 9T-1710 | 1 | POPPET | |
| | 11 | 1 | 9T-1699 | 1 | SPRING | |
| | 12 | 1 | 119-6224 | 1 | HEAD-PUMP | |
| B | 13 | 1 | 6E-1436 | 1 | KIT-SHIM (INCLUDES 17-SHIMS) | |
| | 14 | 1 | 6Y-4280 | 1 | CONE-BEARING | |
| | 15 | 1 | 7T-9755 | 1 | CUP-BEARING | |
| | 16 | 1 | 9T-9460 | 1 | PLATE-VALVE | |
| | 17 | 1 | 3E-7417 | 3 | PLUG | |
| | 18 | 1 | 8T-7876 | 3 | SEAL-O-RING | |
| | 19 | 1 | 7L-9061 | 2 | SEAL-O-RING | |
| | 20 | 1 | 100-3413 | 1 | GASKET | |
| Y | 21 | 1 | 100-3412 | 1 | ROTATING GP-PUMP | 563 |
| | 22 | 1 | 100-3409 | 1 | SPRING-BIAS | |
| | 23 | 1 | 100-3408 | 1 | KIT-BIAS PISTON | |
| | 24 | 1 | 002-1212 | 1 | CUP-BEARING | |
| | 25 | 1 | 2F-8509 | 1 | CONE-BEARING | |
| | 26 | 1 | 119-6237 | 1 | SHAFT-PUMP | |
| | 27 | 1 | 122-0563 | 1 | HOUSING-PUMP | |
| | 28 | 1 | 006-8663 | 2 | RING | |
| | 29 | 1 | 8T-4750 | 2 | SEAL-LIP TYPE | |
| Y | 30 | 1 | 100-3416 | 1 | SWASHPLATE GP | 569 |
| | 31 | 1 | 100-3415 | 1 | KIT-CONTROL PISTON | |
| | 32 | 1 | 9T-1652 | 1 | PIN | |
| M | 33 | 1 | 8T-0372 | 1 | BOLT (M12X1.75X90-MM) | |
| M | 34 | 1 | 8T-8441 | 2 | BOLT-SOCKET HEAD (M12X1.75X25-MM) | |
| M | 35 | 1 | 6V-8336 | 1 | BOLT (M12X1.75X70-MM) | |
| M | 36 | 1 | 6V-8337 | 4 | BOLT-SOCKET HEAD (M8X1.25X35-MM) | |
| Y | 37 | 1 | 119-6238 | 1 | VALVE GP-PUMP CONTROL (PRESSURE, FLOW COMPENSATOR) | 577 |
| | 38 | 1 | 9S-4190 | 1 | PLUG | |
| | 39 | 1 | 033-6027 | 1 | SEAL-O-RING | |
| | 40 | 1 | 095-0888 | 2 | PIN-SPRING | |
| | 41 | 1 | 8T-5039 | 3 | SEAL-O-RING | |
| M | 42 | 1 | 6V-7673 | 4 | BOLT (M12X1.75X50-MM) | |
| | 43 | 1 | 8C-3089 | 1 | SEAL-O-RING | |
| | 44 | 1 | 114-9110 | 1 | ADAPTER-DRIVE | |
| | 45 | 1 | 6E-2943 | 1 | PLUG | |

B-USE AS REQUIRED
M-METRIC PART
Y-SEPARATE ILLUSTRATION

## 105-3635 PUMP GP-PISTON *(contd.)*

i02275067

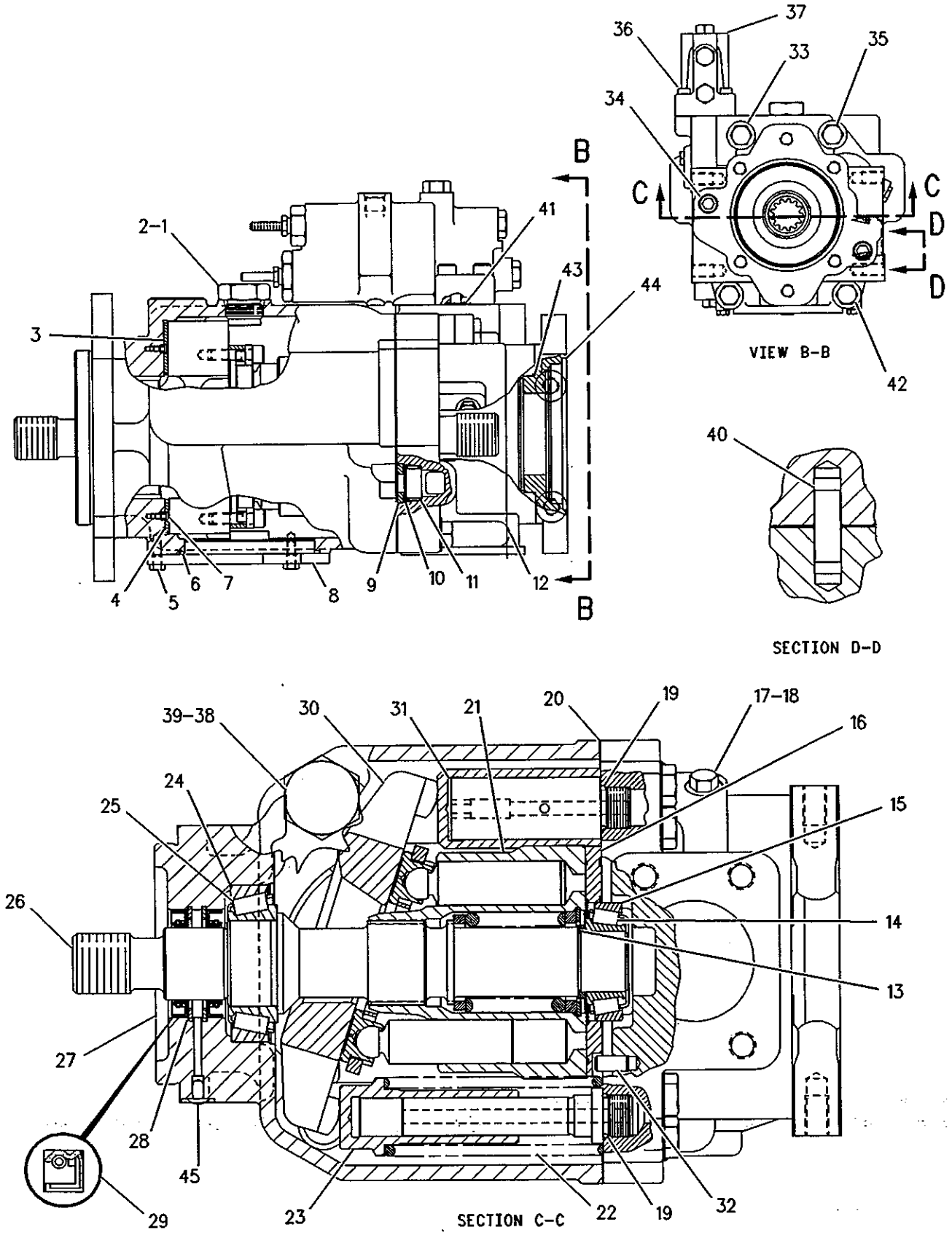


GRAPHIC #1

<END>

g00121744

# 100-3412 ROTATING GP-PUMP–STEERING

S/N: JMS1-UP

PART OF 105-3635 PUMP GP-PISTON

SMCS-5070

i00107545

| NOTE | REF NO | GRAPHIC REF | PART NUMBER | QTY | PART NAME 1 2 3 4 5 6 (PRODUCT LEVEL) | SEE PAGE |
|---|---|---|---|---|---|---|
| | 1 | 1 | 9T-7774 | 1 | BARREL | |
| | 2 | 1 | 3J-8500 | 1 | RING-RETAINING | |
| | 3 | 1 | 9T-7769 | 1 | GUIDE-OUTER | |
| M | 4 | 1 | 6V-5192 | 4 | BOLT-SOCKET HEAD (M8X1.25X30-MM) | |
| | 5 | 1 | 100-3410 | 2 | PLATE | |
| | 6 | 1 | 100-3411 | 2 | PLATE-SPACER | |
| | 7 | 1 | 9T-7765 | 9 | PISTON | |
| | 8 | 1 | 9T-7767 | 1 | PLATE-RETRACTION | |
| | 9 | 1 | 9T-7773 | 1 | GUIDE-INNER | |
| | 10 | 1 | 9T-7771 | 1 | SPRING | |

M-METRIC PART

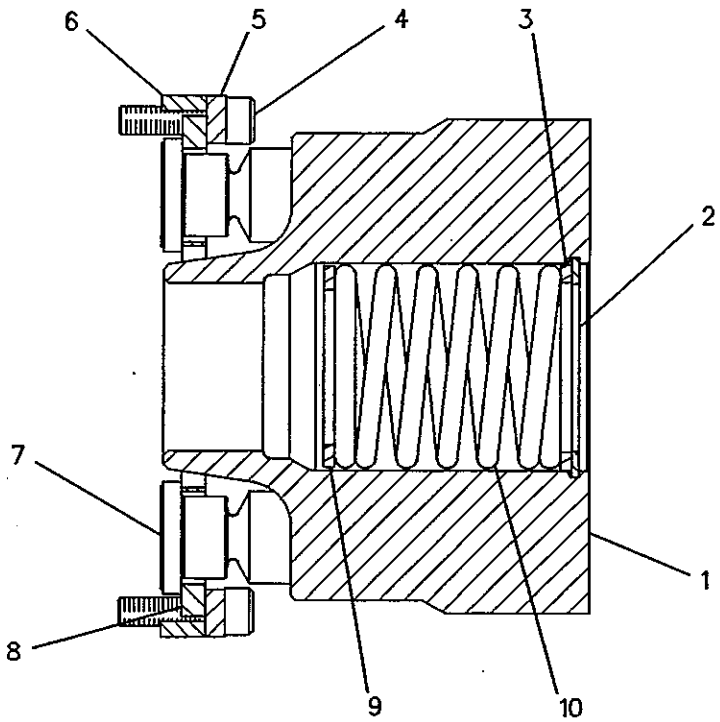


GRAPHIC #1

<END>

g00084780

# STEERING SYSTEM

## 154-2883 SCREEN GP-CASE DRAIN–STEERING PILOT

S/N: JMS1-UP

PART OF 171-4656 LINES GP-STEERING

SMCS-4304, 5057

i00846055

| NOTE | REF NO | GRAPHIC REF | PART NUMBER | QTY | PART NAME 1 2 3 4 5 6 (PRODUCT LEVEL) | SEE PAGE |
|---|---|---|---|---|---|---|
| | 1 | 1 | 1T-0936 | 2 | PLUG-PIPE | |
| | 2 | 1 | 6E-5066 | 2 | SCREEN | |
| | 3 | 1 | 157-3491 | 1 | BLOCK | |

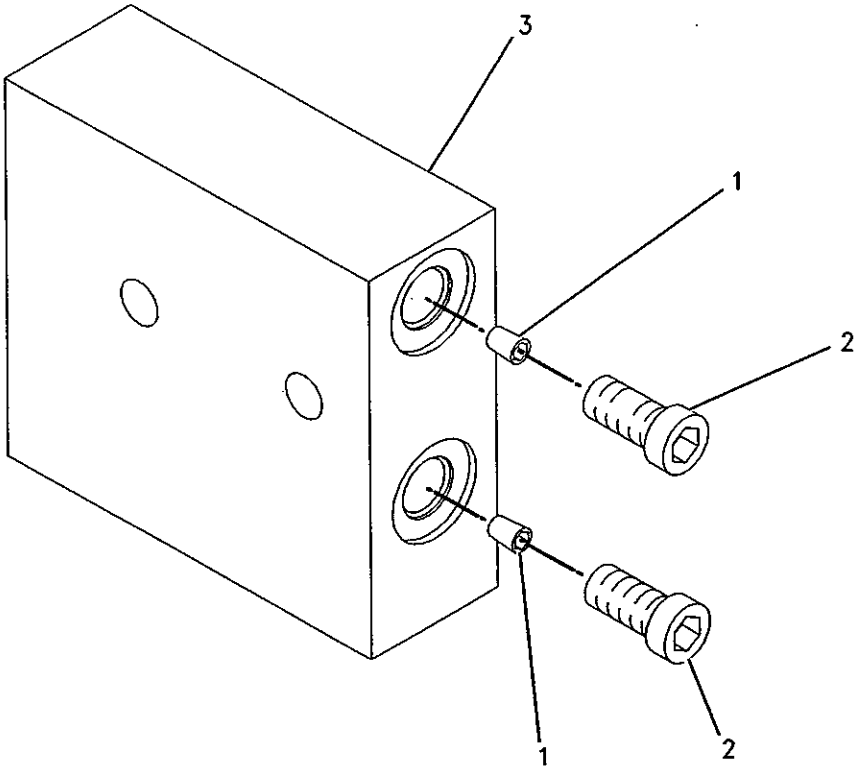


GRAPHIC #1

<END>

g00434425

# STEERING SYSTEM

## *184-4740* STEERING AR-SECONDARY

**S/N: JMS1-UP**

**AN ATTACHMENT**

**SMCS-4300** **i02290330**

| NOTE | PART NUMBER | QTY | PART NAME 1 2 3 4 5 6 (PRODUCT LEVEL) | SEE PAGE |
|---|---|---|---|---|
| Y | *114-6044* | 1 | LINES GP-SECONDARY STEERING | 547 |
| Y | *115-7669* | 1 | PUMP & MTG GP-SECONDARY STEER | 556 |
| Y | *183-9234* | 1 | WIRING GP-SECONDARY STEERING | 299 |

Y-SEPARATE ILLUSTRATION

**<END>**

# 156-0549 STEERING COLUMN GP

S/N: JMS1-UP

PART OF 219-7619 CONTROL GP-STEERING

ALSO AN ATTACHMENT

SMCS-4310

i02112653

| NOTE | REF NO | GRAPHIC REF | PART NUMBER | QTY | PART NAME 1 2 3 4 5 6 (PRODUCT LEVEL) | SEE PAGE |
|---|---|---|---|---|---|---|
| | 1 | 1 | 145-8867 | 1 | KIT-GAS ASSIST (STEERING COLUMN) | |
| | 2 | 1 | 149-2906 | 1 | KIT-NUT (STEERING COLUMN) | |
| | 3 | 1 | 149-2907 | 1 | KIT-TILT LEVER (STEERING COLUMN) | |
| | 4 | 1 | 156-4315 | 1 | KIT-SHAFT (STEERING COLUMN) | |
| | 5 | 1 | 149-0774 | 1 | KIT-HOUSING (STEERING COLUMN) | |
| | 6 | 1 | 254-1519 | 1 | COVER | |

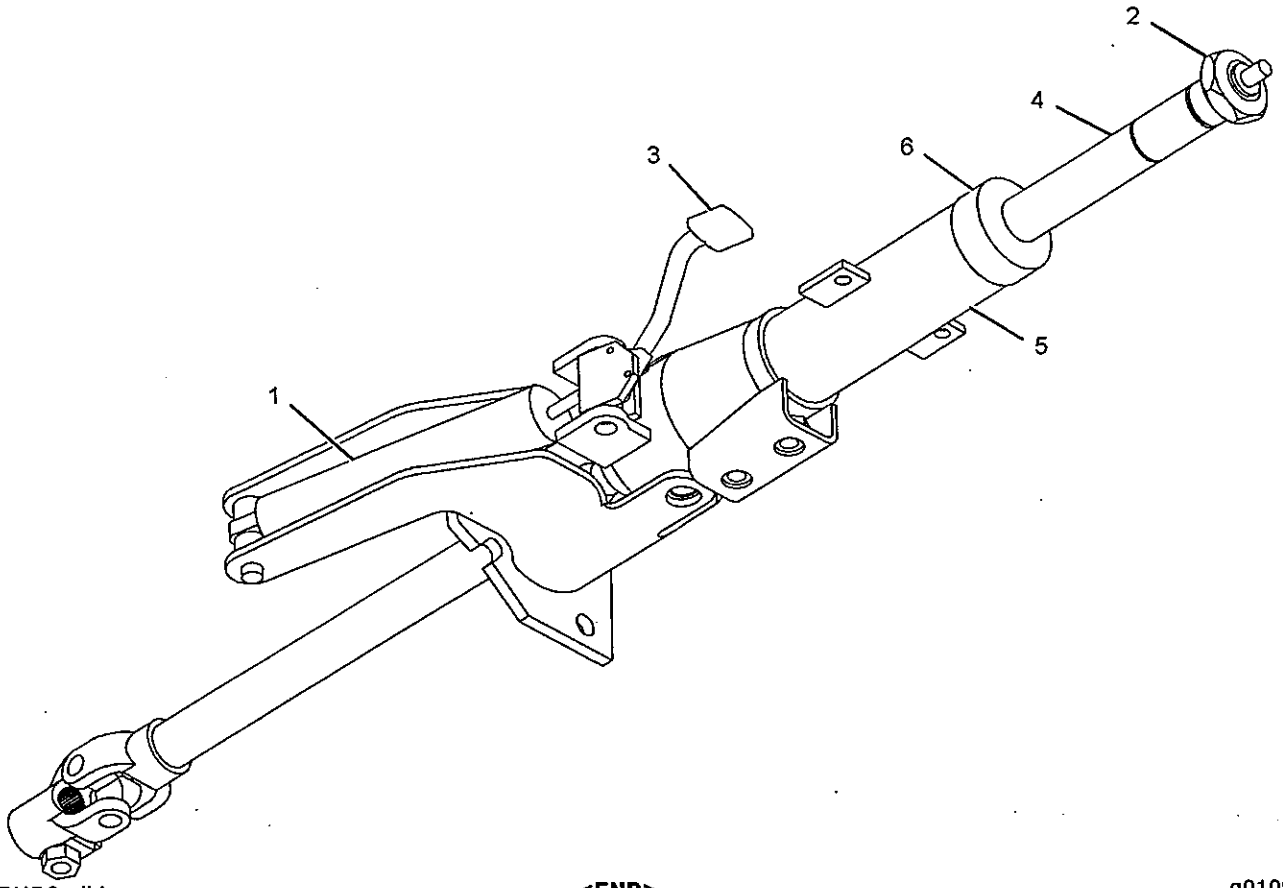


GRAPHIC #1

<END>

g01090390

# STEERING SYSTEM

## *218-0654* STEERING WHEEL GP

**S/N: JMS1-UP**
**PART OF 219-7619 CONTROL GP-STEERING**
**ALSO AN ATTACHMENT**

**SMCS-3171, 4309** **i02230670**

| NOTE | REF NO | GRAPHIC REF | PART NUMBER | QTY | PART NAME 1 2 3 4 5 6 (PRODUCT LEVEL) | SEE PAGE |
|---|---|---|---|---|---|---|
| | 1 | 1 | 2T-3360 | 1 | BUTTON AS-HORN | |
| | 2 | 1 | 112-9714 | 1 | INSERT-SPLINED | |
| | 3 | 1 | 112-9715 | 1 | LEVER | |
| | 4 | 1 | 124-0786 | 1 | COVER | |
| | 5 | 1 | 151-6980 | 1 | WHEEL | |
| | 6 | 1 | 151-6981 | 1 | SHROUD | |
| | 7 | 1 | 151-6982 | 1 | COVER | |
| | 8 | 1 | 151-6984 | 1 | COVER | |
| | 9 | 1 | 151-6985 | 1 | BEARING AS | |
| | 10 | 1 | 151-6986 | 1 | AXLE AS | |
| | 11 | 1 | 152-2788 | 1 | PIVOT | |
| | 12 | 1 | 152-2791 | 1 | ROCKER | |
| | 13 | 1 | 152-2794 | 1 | AXLE | |
| | 14 | 1 | 218-0652 | 1 | SWITCH AS-PUSH BUTTON (TRANSMISSION UPSHIFT) | |
| | 15 | 1 | 218-0653 | 1 | SWITCH AS-PUSH BUTTON (TRANSMISSION DOWNSHIFT) | |
| | 16 | 1 | 152-6432 | 1 | HARNESS AS-TRANSMISSION CONT (STEERING WHEEL) | |
| | | 1 | 102-8806 | 1 | KIT-RECEPTACLE (8-PIN) | |
| | | | | | (INCLUDES RECEPTACLE AS AND WEDGE) | |
| | | 1 | 171-1653 | 1 | PLUG AS (8-SOCKET) | |
| | 17 | 1 | 177-7582 | 1 | SWITCH AS-ROCKER (TRANSMISSION DIRECTION) | |
| | | 1 | 5S-4246 | 2 | LOCKWASHER | |
| | | 1 | 6V-9497 | 2 | WASHER-HARD (3.2X6X0.5-MM THK) | |
| | | 1 | 8T-8729 | 3 | PIN-CONNECTOR | |
| | | 1 | 9X-8917 | 2 | SCREW-MACHINE (4-40X9.52-MM) | |
| | 18 | 1 | 118-2943 | 1 | HARNESS AS-STEERING (COLUMN, WHEEL) | |
| | | 1 | 155-2265 | 1 | KIT-CONNECTING PLUG (8-PIN) | |
| | | | | | (INCLUDES PLUG AS AND WEDGE) | |
| | | 1 | 102-8801 | 1 | KIT-RECEPTACLE (12-PIN) | |
| | | 1 | 8T-8737 | 3 | PLUG-SEAL | |
| M | 19 | 1 | 107-3786 | 1 | BOLT (M4X0.7X12-MM) | |
| M | 20 | 1 | 153-3568 | 4 | BOLT-SOCKET HEAD (M5X0.8X10-MM) | |
| M | 21 | 1 | 153-8002 | 2 | BOLT-SOCKET HEAD (M4X0.7X25-MM) | |
| M | 22 | 1 | 153-8003 | 2 | BOLT-SOCKET HEAD (M4X0.7X30-MM) | |
| M | 23 | 1 | 153-8004 | 1 | BOLT-SOCKET HEAD (M4X0.7X35-MM) | |
| M | 24 | 1 | 153-9300 | 2 | BOLT-SOCKET HEAD (M3X0.5X12-MM) | |
| M | 25 | 1 | 153-9301 | 2 | BOLT-SOCKET HEAD (M4X0.7X10-MM) | |
| M | 26 | 1 | 5C-7261 | 1 | NUT (M8X1.25-THD) | |
| | 27 | 1 | 9X-8256 | 1 | WASHER (6.6X12X2-MM THK) | |
| | 28 | 1 | 189-8846 | 1 | RECEPTACLE AS | |
| | 29 | 1 | 189-9304 | 1 | WEDGE | |
| | 30 | 1 | 193-0042 | 2 | NUT | |
| | 31 | 1 | 195-5950 | 1 | SPRING | |
| | 32 | 1 | 195-5951 | 1 | BUSHING | |

M-METRIC PART

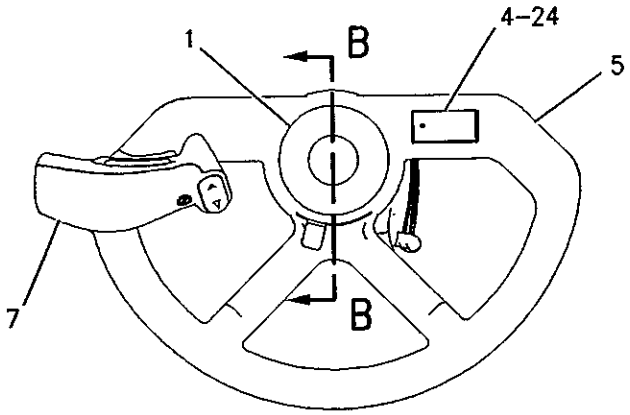


TOP VIEW

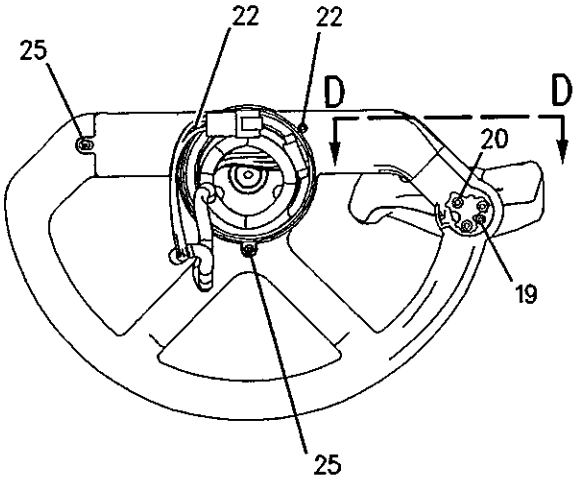


BOTTOM VIEW

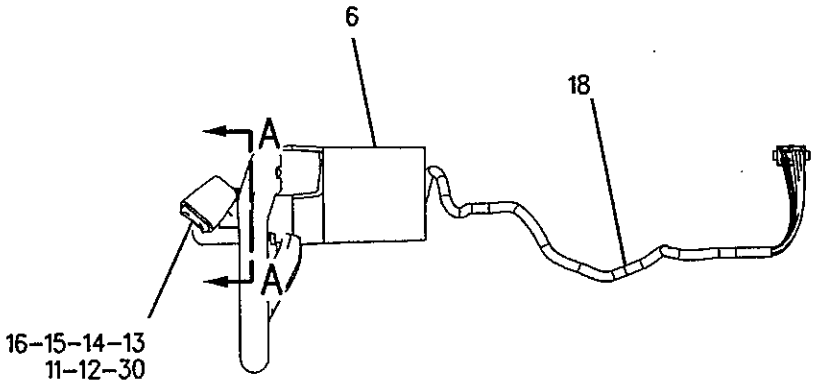


RIGHT SIDE VIEW

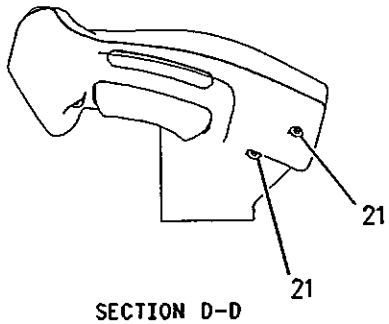


SECTION D-D

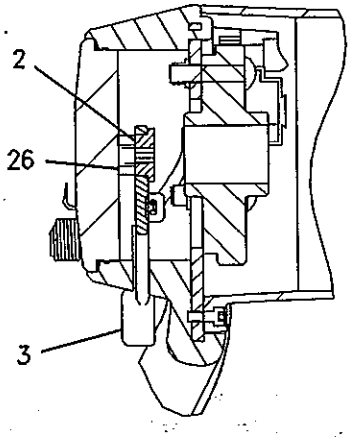


SECTION B-B

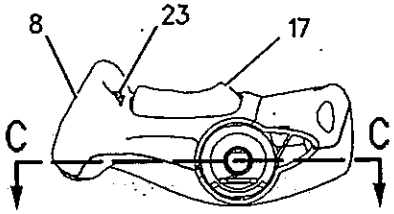


SECTION A-A

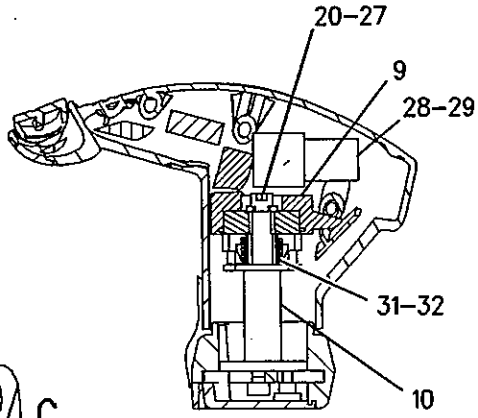


SECTION C-C

GRAPHIC #1 **<END>** g00910219

# STEERING SYSTEM

## 100-3416 SWASHPLATE GP

**S/N: JMS1-UP**

**PART OF 105-3635 PUMP GP-PISTON**

**SMCS-5070** **i00107546**

| NOTE | REF NO | GRAPHIC REF | PART NUMBER | QTY | PART NAME 1 2 3 4 5 6 (PRODUCT LEVEL) | SEE PAGE |
|---|---|---|---|---|---|---|
| | 1 | 1 | **139-0532** | 2 | BLOCK-STOP | |
| | 2 | 1 | **8F-7219** | 2 | SEAL-O-RING (4.47MM ID) | |

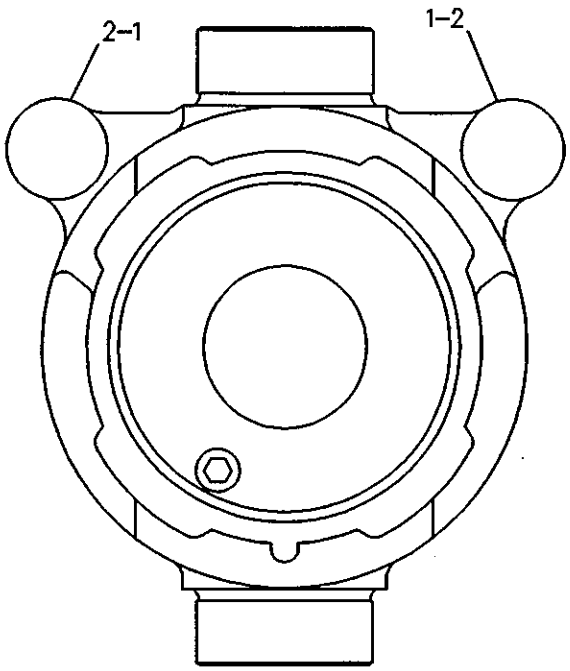


GRAPHIC #1 **<END>** g00088794

# STEERING SYSTEM

## 111-7775 VALVE GP-CHECK–STEERING QUAD

**S/N: JMS1-UP**

**PART OF 171-4656 LINES GP-STEERING**

**SMCS-4275, 5067** i01432551

| NOTE | REF NO | GRAPHIC REF | PART NUMBER | QTY | PART NAME 1 2 3 4 5 6 (PRODUCT LEVEL) | SEE PAGE |
|---|---|---|---|---|---|---|
| Y | 1 | 1 | **176-9369** | 2 | VALVE GP-CHECK (STEERING) | 571 |
| Y | 2 | 1 | **176-9371** | 2 | VALVE GP-CHECK (STEERING) | 572 |

Y-SEPARATE ILLUSTRATION

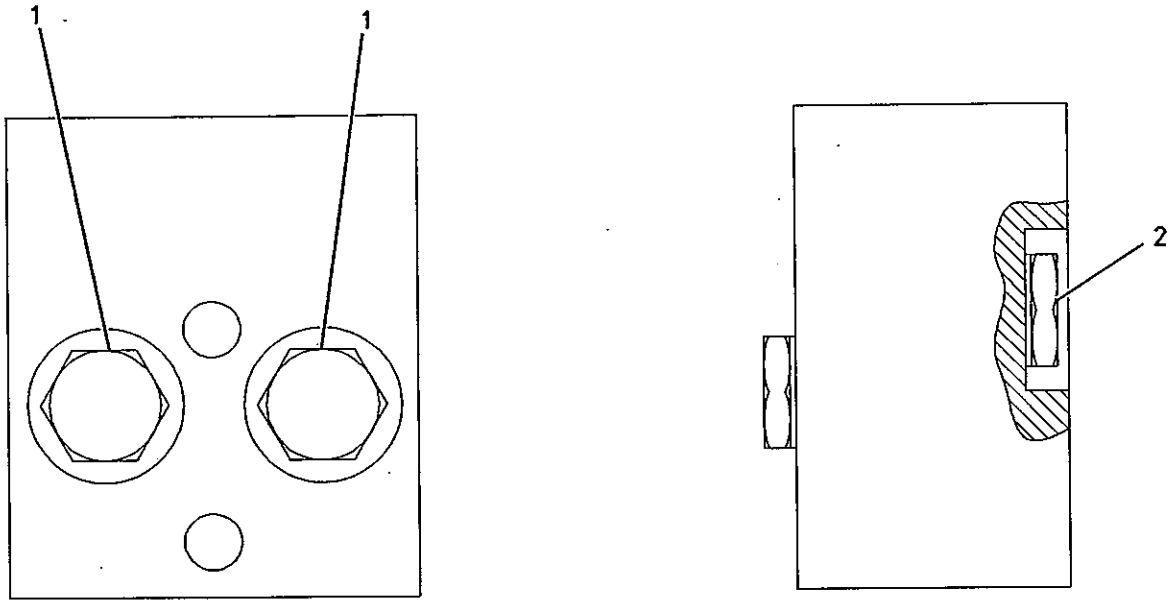


GRAPHIC #1 **<END>** g00707411

# 176-9369 VALVE GP-CHECK–STEERING

S/N: JMS1-UP

PART OF 111-7775 VALVE GP-CHECK

SMCS-4275, 5067

i01432567

| NOTE | REF NO | GRAPHIC REF | PART NUMBER | QTY | PART NAME 1 2 3 4 5 6 (PRODUCT LEVEL) | SEE PAGE |
|---|---|---|---|---|---|---|
| | 1 | 1 | 3K-0360 | 1 | SEAL-O-RING | |
| | 2 | 1 | 161-6154 | 1 | SEAL-O-RING | |
| | 3 | 1 | 6E-0381 | 1 | RING-BACKUP | |

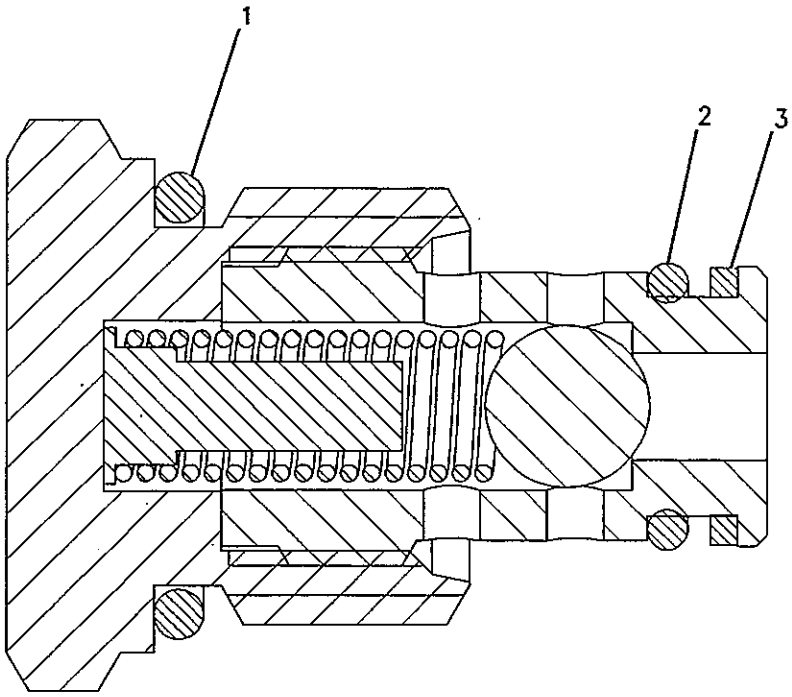


GRAPHIC #1

<END>

g00707403

# 176-9371 VALVE GP-CHECK–STEERING

S/N: JMS1-UP

PART OF 111-7775 VALVE GP-CHECK

SMCS-4275, 5067

i01432553

| NOTE | REF NO | GRAPHIC REF | PART NUMBER | QTY | PART NAME 1 2 3 4 5 6 (PRODUCT LEVEL) | SEE PAGE |
|---|---|---|---|---|---|---|
| | 1 | 1 | 3K-0360 | 1 | SEAL-O-RING | |
| | 2 | 1 | 161-6154 | 1 | SEAL-O-RING | |
| | 3 | 1 | 6E-0381 | 1 | RING-BACKUP | |

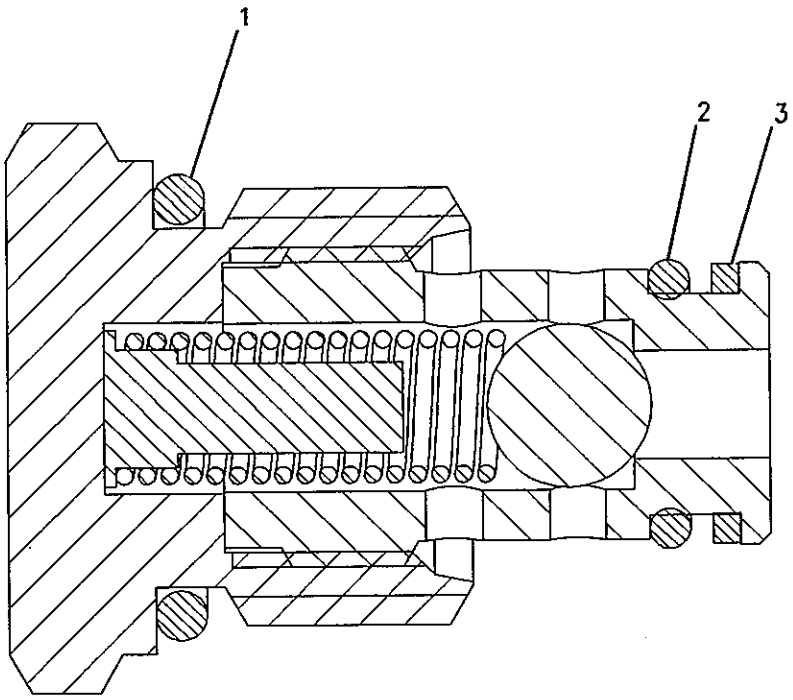


GRAPHIC #1

<END>

g00707403

# 144-5330 VALVE GP-DIVERTER–SECONDARY STEERING

S/N: JMS1-UP

PART OF 114-6044 LINES GP-SECONDARY STEERING

AN ATTACHMENT

SMCS-4339

i01231080

| NOTE | REF NO | GRAPHIC REF | PART NUMBER | QTY | PART NAME 1 2 3 4 5 6 (PRODUCT LEVEL) | SEE PAGE |
|---|---|---|---|---|---|---|
| | 1 | 1 | 6V-9829 | 1 | CAP AS | |
| | 2 | 1 | 6V-8724 | 1 | ELBOW | |
| | 3 | 1 | 114-6463 | 1 | HOUSING-SPRING | |
| | 4 | 1 | 9S-8004 | 2 | PLUG | |
| | 5 | 1 | 3J-1907 | 3 | SEAL-O-RING | |
| Y | 6 | 1 | 9T-9194 | 1 | VALVE GP-RELIEF (SECONDARY STEERING) | 580 |
| | 7 | 1 | 100-8010 | 2 | VALVE-CHECK | |
| | 8 | 1 | 100-8011 | 2 | PLUG | |
| | 9 | 1 | 7M-8485 | 3 | SEAL-O-RING | |
| | 10 | 1 | 2S-2596 | 2 | SPRING | |
| | 11 | 1 | 9S-9334 | 1 | PLUG | |
| Y | 12 | 1 | 114-1267 | 1 | VALVE GP-PRESSURE REDUCING | 716 |
| M | 13 | 1 | 8T-5005 | 2 | BOLT (M10X1.5X70-MM) | |
| | 14 | 1 | 4J-0520 | 1 | SEAL-O-RING | |
| | 15 | 1 | 6V-8397 | 1 | SEAL-O-RING | |
| | 16 | 1 | 114-5349 | 1 | SPRING (OUTER) | |
| B | 17 | 1 | 7J-6548 | 22 | SHIM (.010IN THK) | |
| | 18 | 1 | 114-6458 | 1 | SPRING (INNER) | |
| | 19 | 1 | 9S-8005 | 1 | PLUG | |
| | 20 | 1 | 3K-0360 | 1 | SEAL-O-RING | |
| M | 21 | 1 | 8T-4172 | 2 | BOLT (M10X1.5X80-MM) | |
| | 22 | 1 | 8T-4121 | 4 | WASHER-HARD (11X21X2.5-MM THK) | |

B-USE AS REQUIRED
M-METRIC PART
Y-SEPARATE ILLUSTRATION

## 144-5330 VALVE GP-DIVERTER *(contd.)*

i01231080

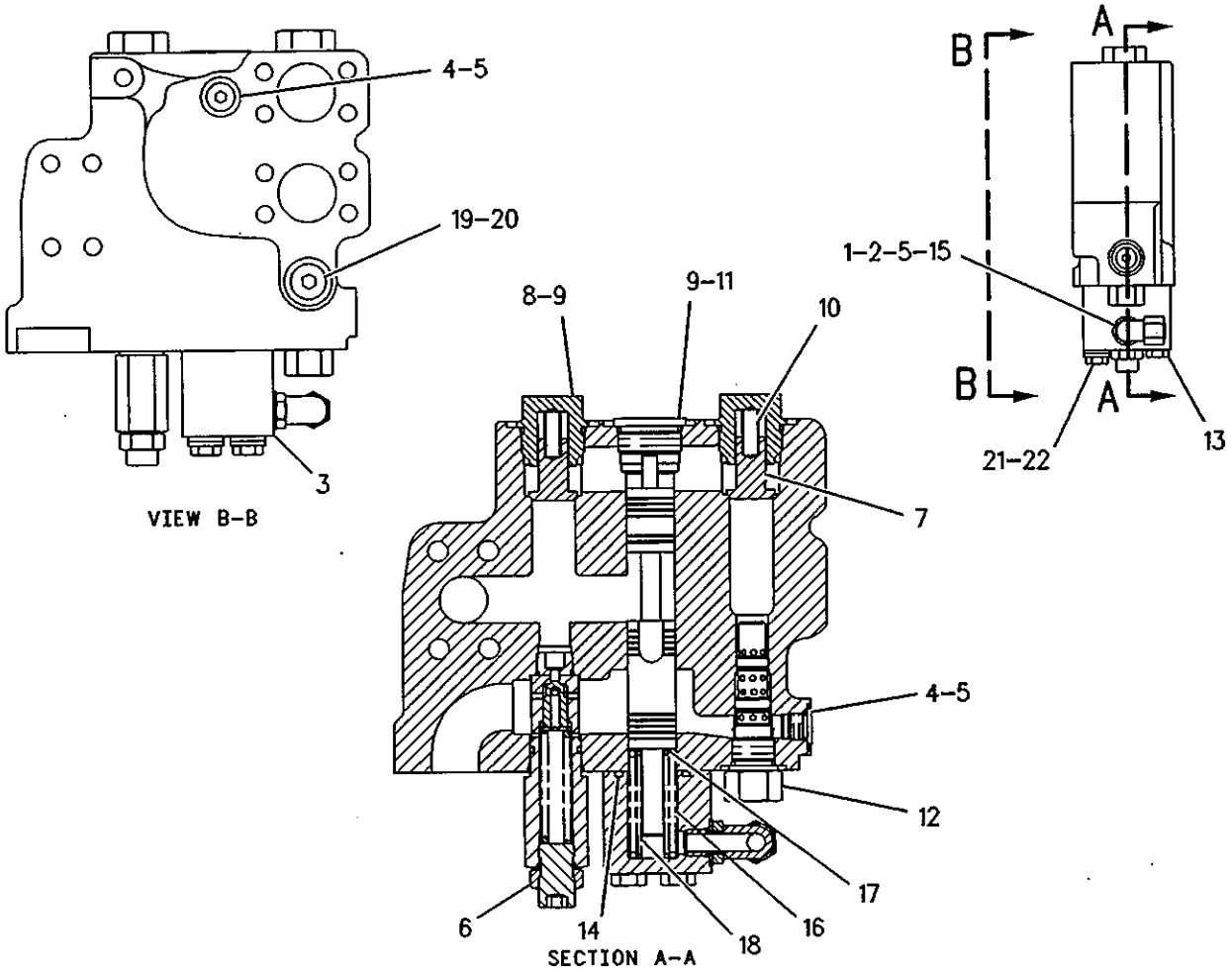


GRAPHIC #1

**<END>**

g00282231

# STEERING SYSTEM

## 173-0439 VALVE GP-PILOT–STEERING

**S/N: JMS1-UP**

**PART OF 171-4656 LINES GP-STEERING**

**SMCS-4342** **i02172199**

| NOTE | REF NO | GRAPHIC REF | PART NUMBER | QTY | PART NAME 1 2 3 4 5 6 (PRODUCT LEVEL) | SEE PAGE |
|---|---|---|---|---|---|---|
| | 1 | 1 | 135-7474 | 1 | RING | |
| | 2 | 1 | 135-7483 | 1 | PLUNGER | |
| | 3 | 1 | 1B-8702 | 1 | KEY-WOODRUFF | |
| | 4 | 1 | *148-8407* | 6 | PLUG AS | |
| | | | | | (EACH INCLUDES) | |
| | | 1 | 9S-4191 | 1 | PLUG | |
| | | 1 | 3J-1907 | 1 | SEAL-O-RING | |
| | 5 | 1 | 162-6560 | 1 | BODY | |
| | 6 | 1 | 135-7470 | 1 | SPRING | |
| | 7 | 1 | 135-7471 | 1 | PIN | |
| | 8 | 1 | 135-7475 | 1 | COVER | |
| | 9 | 1 | 135-7477 | 1 | BODY | |
| | 10 | 1 | 135-7478 | 1 | SLEEVE | |
| | 11 | 1 | 135-7479 | 1 | VALVE GP | |
| | 12 | 1 | 135-7482 | 1 | PLUG | |
| | 13 | 1 | 137-7581 | 1 | RETAINER | |
| | 14 | 1 | 143-8302 | 1 | SPRING | |
| | 15 | 1 | 176-7078 | 1 | SHAFT AS | |
| | 16 | 1 | 146-0719 | 1 | CAM | |
| | 17 | 1 | *148-8411* | 1 | PLUG AS | |
| | | 1 | 9S-4185 | 1 | PLUG | |
| | | 1 | 3K-0360 | 1 | SEAL-O-RING | |
| | 18 | 1 | 160-0089 | 1 | SEAL-LIP TYPE | |
| | 19 | 1 | 095-0919 | 1 | RING-RETAINING | |
| | 20 | 1 | 121-0628 | 1 | SLUG | |
| | 21 | 1 | 146-0720 | 1 | SPOOL | |
| M | 22 | 1 | 8T-4196 | 2 | BOLT (M10X1.5X35-MM) | |
| | 23 | 1 | 150-6255 | 1 | PLUNGER | |
| | 24 | 1 | 3G-3726 | 1 | NUT (3/8-40-THD) | |
| | 27 | 1 | 4J-5309 | 2 | SEAL-O-RING | |
| | 28 | 1 | 5F-3106 | 1 | SEAL-O-RING | |
| | 29 | 1 | 5L-4141 | 2 | BALL BEARING | |
| | 30 | 1 | 5P-2569 | 2 | SEAL-O-RING | |
| | 31 | 1 | 5P-8215 | 1 | SEAL-O-RING | |
| | 32 | 1 | 6E-0198 | 2 | PIN | |
| | 33 | 1 | 6J-3134 | 1 | SEAL-O-RING | |
| M | 34 | 1 | 6V-5843 | 2 | BOLT (M10X1.5X45-MM) | |
| | 35 | 1 | 6V-8116 | 1 | RING-RETAINING | |
| | 36 | 1 | 254-3250 | 1 | SPRING | |
| | 37 | 1 | 7M-8485 | 1 | SEAL-O-RING | |
| M | 38 | 1 | 8T-4185 | 2 | BOLT (M10X1.5X50-MM) | |
| M | 39 | 1 | 8T-4195 | 1 | BOLT (M10X1.5X30-MM) | |
| | 40 | 1 | 147-1788 | 1 | BODY | |

M-METRIC PART

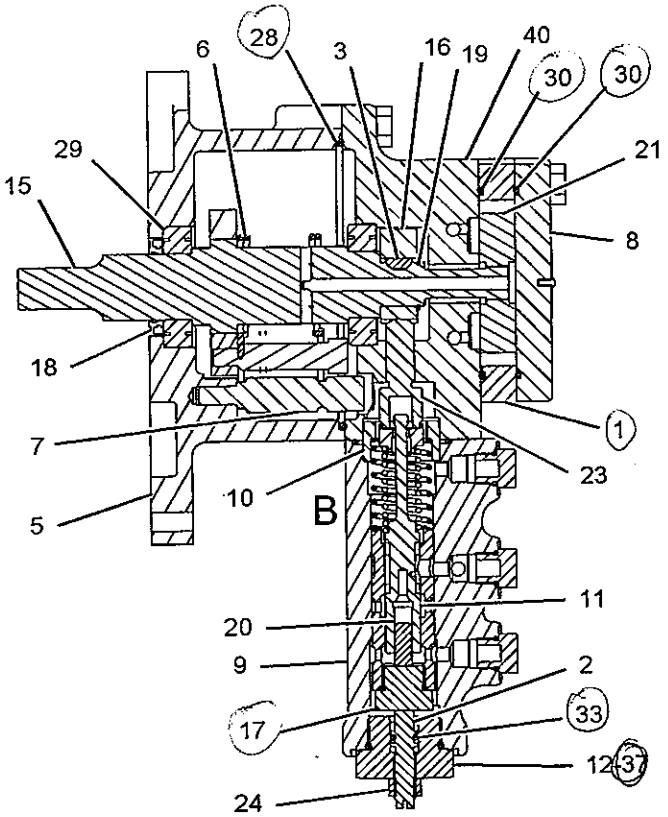


SECTION A-A

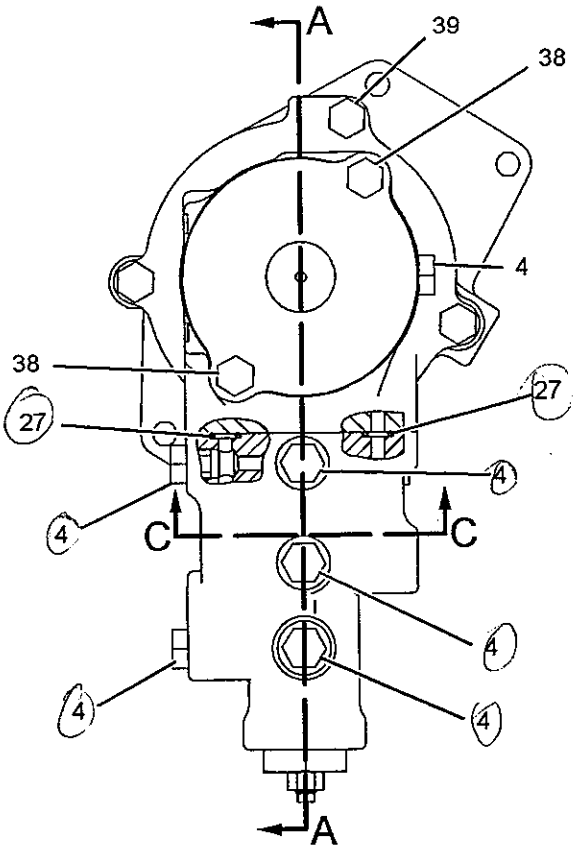


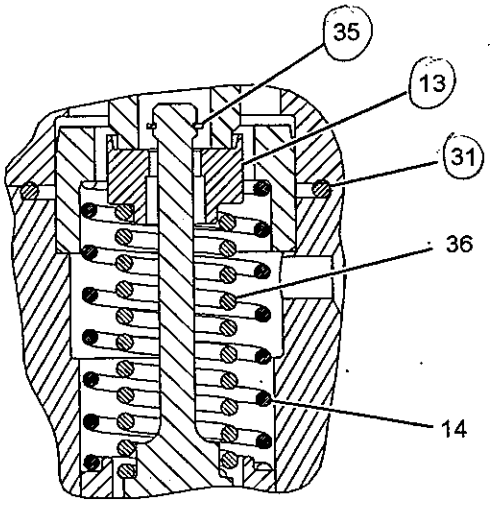


VIEW OF AREA B

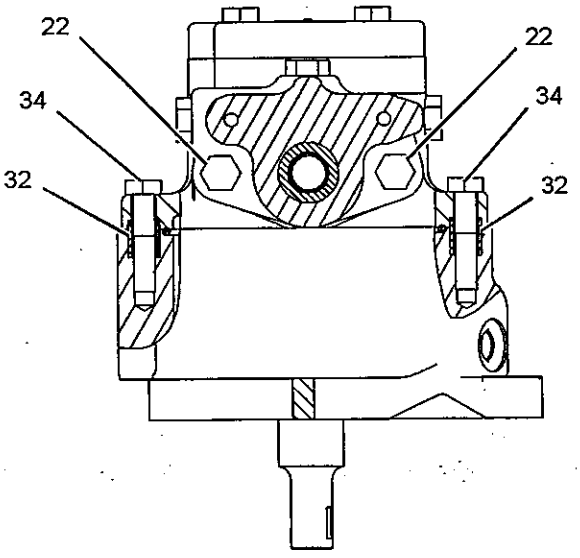


SECTION C-C

GRAPHIC #1

**<END>**

g01103318

# 119-6238 VALVE GP-PUMP CONTROL-
## PRESSURE, FLOW COMPENSATOR
### S/N: JMS1-UP
### PART OF 105-3635 PUMP GP-PISTON

SMCS-5455

i01432570

| NOTE | REF NO | GRAPHIC REF | PART NUMBER | QTY | PART NAME 1 2 3 4 5 6 (PRODUCT LEVEL) | SEE PAGE |
|---|---|---|---|---|---|---|
| | 1 | 1 | 9S-4191 | 1 | PLUG | |
| | 2 | 1 | 3J-1907 | 3 | SEAL-O-RING | |
| | 3 | 1 | 108-4815 | 1 | SPOOL-MARGIN | |
| | 4 | 1 | 9T-2186 | 2 | PLUG | |
| | 5 | 1 | 6E-4239 | 1 | SPOOL-CUTOFF | |
| | 6 | 1 | 6E-4230 | 2 | GUIDE-SPRING | |
| | 7 | 1 | 6E-4228 | 1 | SPRING | |
| | 8 | 1 | 6E-6140 | 1 | PLUG-COMPENSATOR | |
| | 9 | 1 | 033-6036 | 1 | SEAL-O-RING | |
| M | 10 | 1 | 9X-8914 | 2 | SETSCREW-SOCKET | |
| | 11 | 1 | 6E-6142 | 1 | PLUG-MARGIN | |
| | 12 | 1 | 033-6027 | 1 | SEAL-O-RING | |
| | 13 | 1 | 9T-7750 | 1 | SPRING | |
| | 14 | 1 | 9T-1857 | 2 | GUIDE | |
| | 15 | 1 | 6E-6141 | 2 | LOCKNUT-SEALING | |
| | 16 | 1 | 6E-4229 | 1 | BODY-COMPENSATOR | |
| | 17 | 1 | 108-4816 | 1 | PIN-SPRING STOP | |

M-METRIC PART

## 119-6238 VALVE GP-PUMP CONTROL *(contd.)*

i01432570

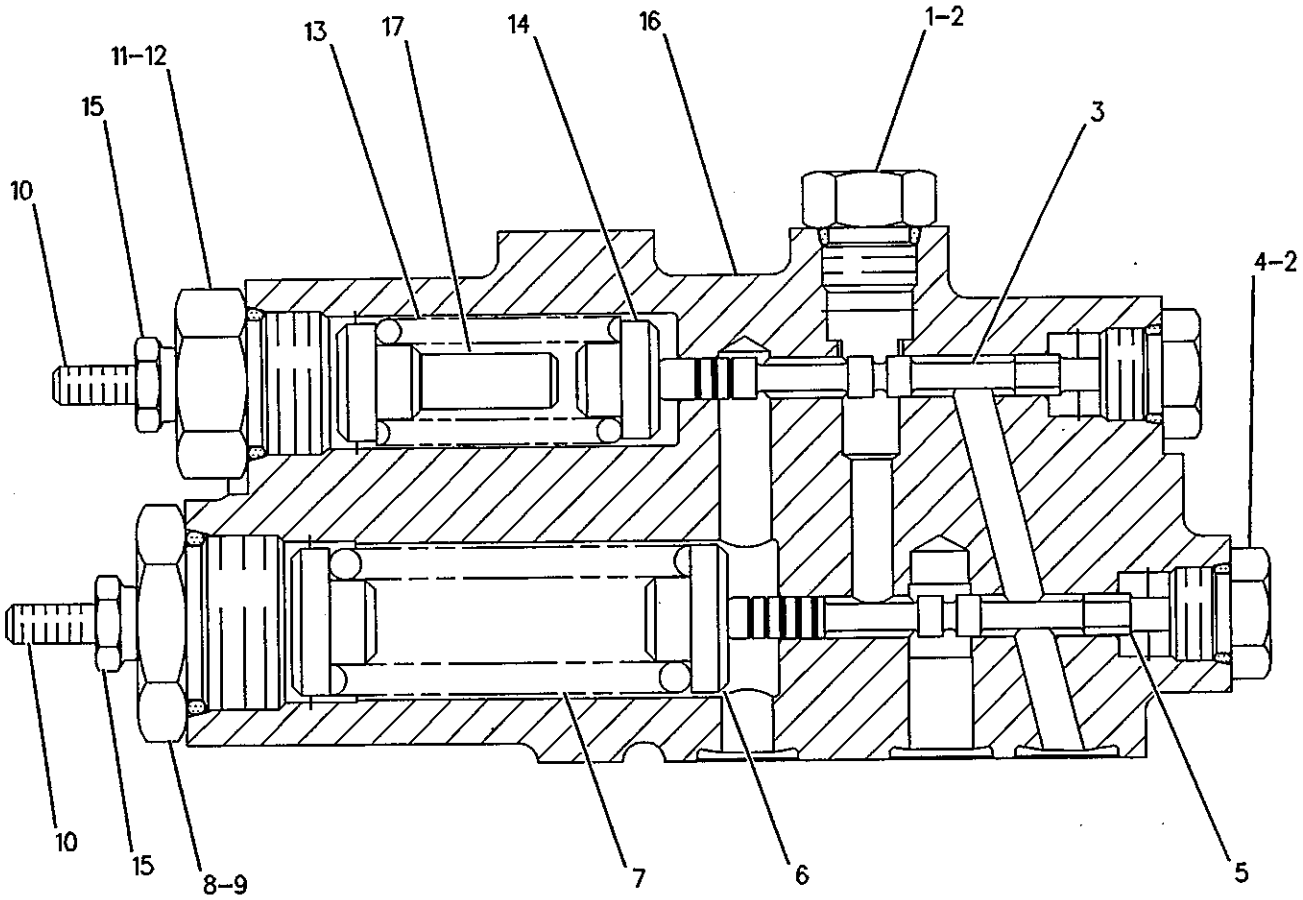


GRAPHIC #1

**<END>**

g00121054

# STEERING SYSTEM

## 9T-7418 VALVE GP-RELIEF–PUMP BACKUP

S/N: JMS1-UP

PART OF 166-8495 VALVE GP-STEERING

SMCS-4322, 5069, 7428 i00173440

| NOTE | REF NO | GRAPHIC REF | PART NUMBER | QTY | PART NAME 1 2 3 4 5 6 (PRODUCT LEVEL) | SEE PAGE |
|---|---|---|---|---|---|---|
| | 1 | 1 | 7X-4776 | 2 | RING-BACKUP | |
| | 2 | 1 | 8C-3097 | 1 | SEAL-O-RING | |
| | 3 | 1 | 3K-0360 | 1 | SEAL-O-RING | |

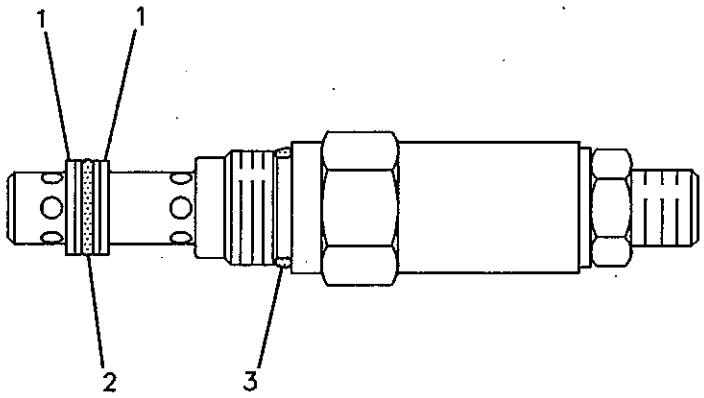


GRAPHIC #1 <END> g00120012

# 9T-9194 VALVE GP-RELIEF–SECONDARY STEERING

S/N: JMS1-UP

PART OF 144-5330 VALVE GP-DIVERTER

AN ATTACHMENT

SMCS-4322, 5069, 7428

i00173446

| NOTE | REF NO | GRAPHIC REF | PART NUMBER | QTY | PART NAME 1 2 3 4 5 6 (PRODUCT LEVEL) | SEE PAGE |
|---|---|---|---|---|---|---|
| | 1 | 1 | 6E-1835 | 1 | RETAINER AS | |
| | 2 | 1 | 9X-6395 | 1 | NUT (3/4-16-THD) | |
| | 3 | 1 | 3K-0360 | 2 | SEAL-O-RING | |
| | 4 | 1 | 6J-6439 | 1 | VALVE-POPPET | |
| | 5 | 1 | 4T-2741 | 1 | SPRING | |
| | 6 | 1 | 7J-9933 | 1 | SEAL-O-RING | |
| | 7 | 1 | 4T-7571 | 1 | PLATE | |

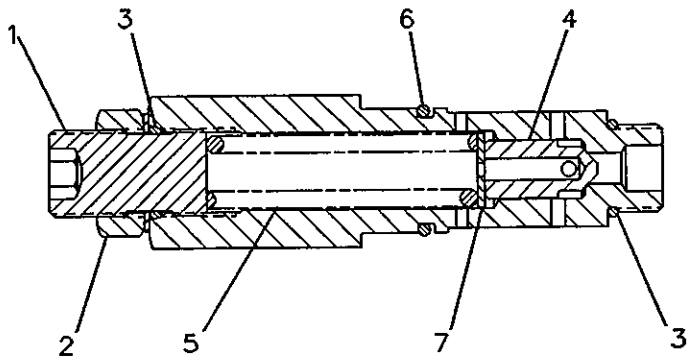


GRAPHIC #1

<END>

g00119276

# STEERING SYSTEM

## *4T-1860* VALVE GP-SHUTTLE

**S/N: JMS1-UP**

**PART OF 115-9328 VALVE GP-DIVERTER, 166-8495 VALVE GP-STEERING**

**ALSO AN ATTACHMENT**

**SMCS-4289, 5079** **i01624620**

| NOTE | REF NO | GRAPHIC REF | PART NUMBER | QTY | PART NAME 1 2 3 4 5 6 (PRODUCT LEVEL) | SEE PAGE |
|---|---|---|---|---|---|---|
| Z | 1 | 1 | | 1 | SEAT | |
| | 2 | 1 | 1M-6718 | 1 | BALL | |
| Z | 3 | 1 | | 1 | VALVE | |
| | 4 | 1 | 8C-3085 | 1 | SEAL-O-RING | |
| | 5 | 1 | 6V-5586 | 1 | SEAL-O-RING | |
| | 6 | 1 | 3J-1907 | 1 | SEAL-O-RING | |
| | 7 | 1 | 4T-5070 | 2 | RING-BACKUP | |
| | 8 | 1 | 4T-5071 | 2 | RING-BACKUP | |

Z-NOT SERVICED SEPARATELY

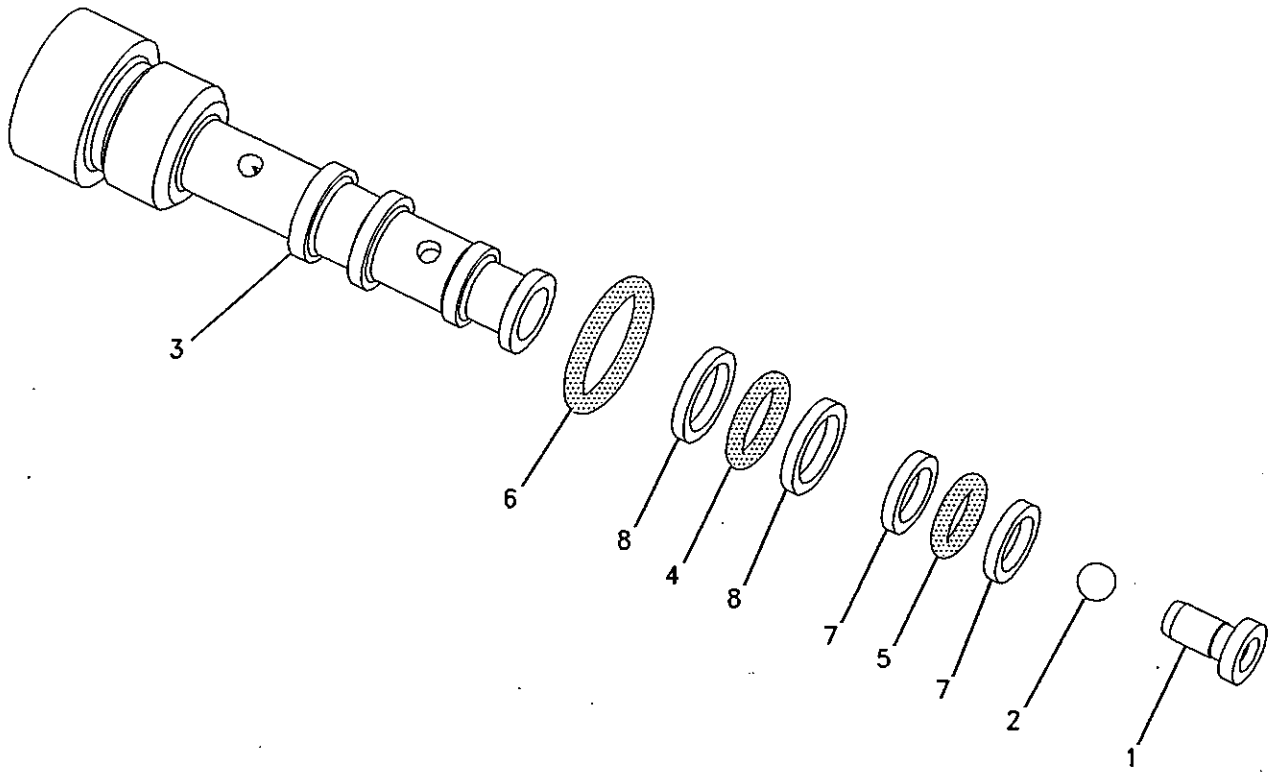


GRAPHIC #1 **<END>** g00775006

# STEERING SYSTEM

## *8J-6875* VALVE GP-SHUTTLE

**S/N: JMS1-UP**

**PART OF 171-4656 LINES GP-STEERING**

**SMCS-4289** **i02030104**

| NOTE | PART NUMBER | QTY | PART NAME 1 2 3 4 5 6 (PRODUCT LEVEL) | SEE PAGE |
|---|---|---|---|---|
| Y | *9T-6149* | 1 | VALVE GP-SHUTTLE (BALL RESOLVER) | 583 |
| | | | –OR– | |
| Y | *9T-6150* | 1 | VALVE GP-SHUTTLE (BALL RESOLVER) | 584 |

Y-SEPARATE ILLUSTRATION

**<END>**

# 9T-6149 VALVE GP-SHUTTLE–BALL RESOLVER

S/N: JMS1-UP

PART OF 8J-6875 VALVE GP-SHUTTLE

SMCS-4289 i02030107

| NOTE | REF NO | GRAPHIC REF | PART NUMBER | QTY | PART NAME 1 2 3 4 5 6 (PRODUCT LEVEL) | SEE PAGE |
|---|---|---|---|---|---|---|
| | 1 | 1 | 4T-9905 | 2 | ADAPTER | |
| | 2 | 1 | 2M-9780 | 1 | SEAL-O-RING | |
| Z | 3 | 1 | | 3 | BLOCK | |
| | 4 | 1 | 4B-9784 | 1 | BALL | |

Z-NOT SERVICED SEPARATELY

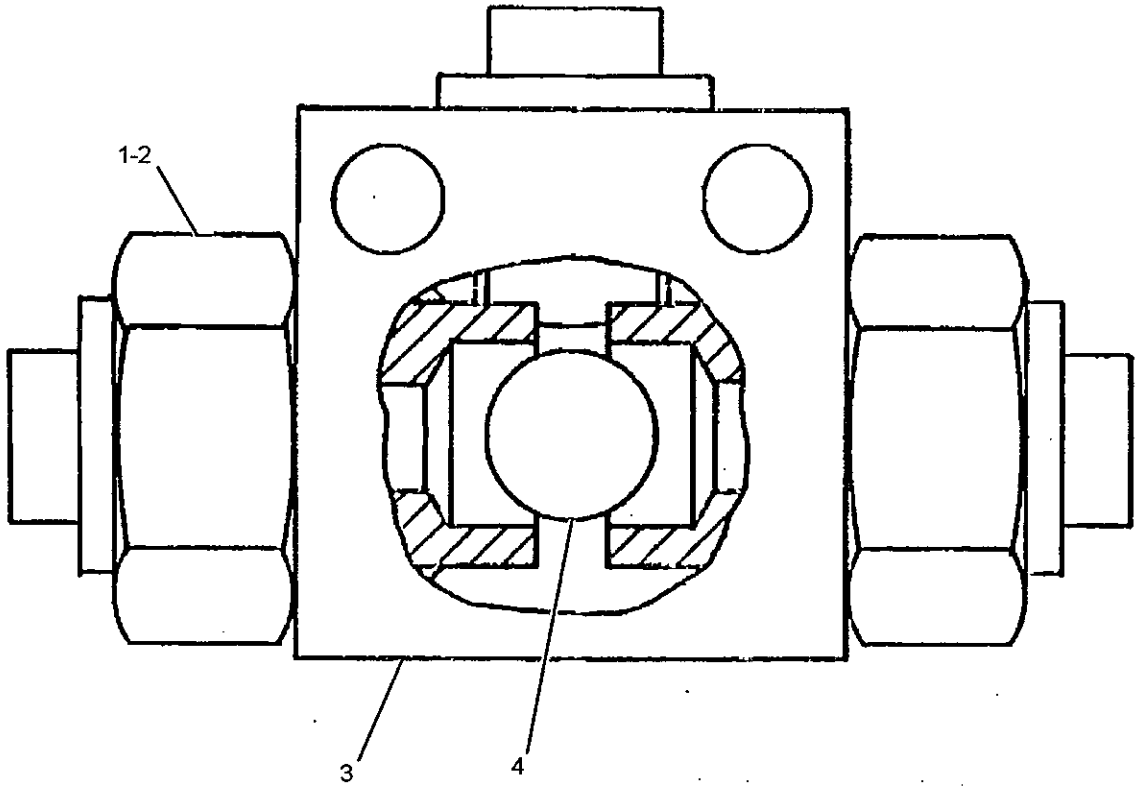


GRAPHIC #1 <END> g01047326

# STEERING SYSTEM

## 9T-6150 VALVE GP-SHUTTLE–BALL RESOLVER

S/N: JMS1-UP

PART OF 8J-6875 VALVE GP-SHUTTLE

SMCS-4289

i02034777

| NOTE | REF NO | GRAPHIC REF | PART NUMBER | QTY | PART NAME 1 2 3 4 5 6 (PRODUCT LEVEL) | SEE PAGE |
|---|---|---|---|---|---|---|
| | 1 | 1 | 4T-9905 | 2 | ADAPTER | |
| | 2 | 1 | 2M-9780 | 2 | SEAL-O-RING | |
| | 3 | 1 | 4B-9784 | 1 | BALL | |

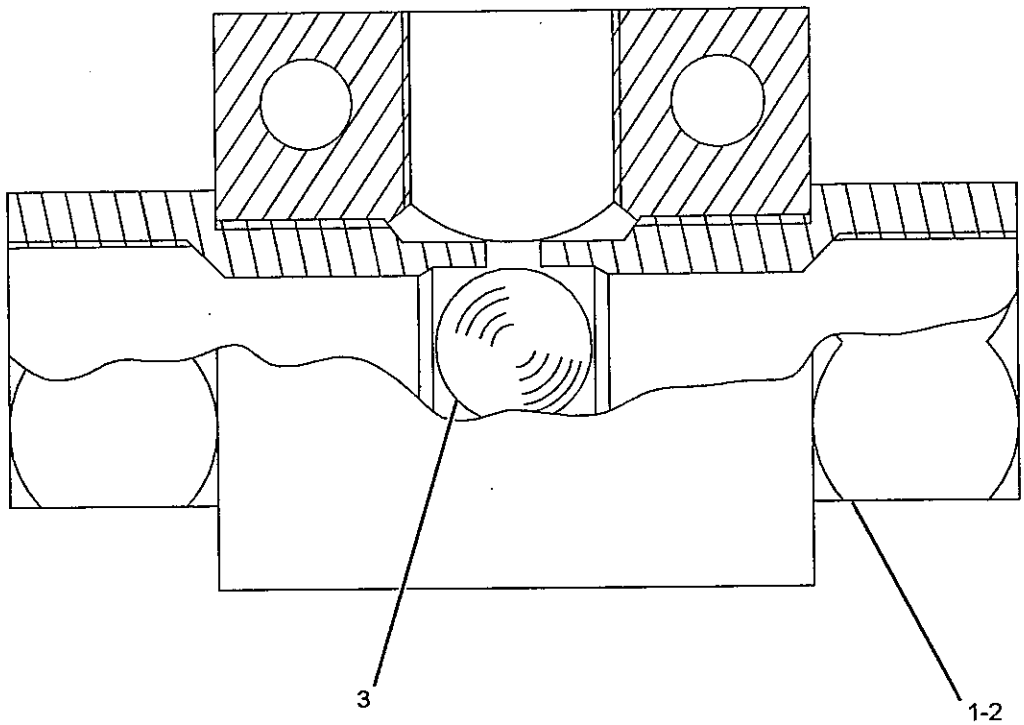


GRAPHIC #1

<END>

g01047576

# STEERING SYSTEM

## 166-8495 VALVE GP-STEERING

**S/N: JMS1-UP**

**PART OF 171-4656 LINES GP-STEERING**

**SMCS-4307** **i02290188**

| NOTE | REF NO | GRAPHIC REF | PART NUMBER | QTY | PART NAME 1 2 3 4 5 6 (PRODUCT LEVEL) | SEE PAGE |
|---|---|---|---|---|---|---|
| | 1 | 1 | 2S-2596 | 2 | SPRING | |
| | 5 | 1 | 107-0071 | 1 | RETAINER | |
| Y | 6 | 1 | 114-1267 | 1 | VALVE GP-PRESSURE REDUCING (STEERING) | 716 |
| | 8 | 1 | 115-6901 | 1 | COVER | |
| | 9 | 1 | 115-9976 | 1 | RETAINER | |
| | 10 | 1 | 115-9978 | 2 | PLUG AS | |
| | | | | | (EACH INCLUDES) | |
| | | 1 | 7M-5130 | 1 | PIN-SPRING | |
| | 11 | 1 | 126-5484 | 1 | SPRING | |
| | 12 | 1 | 2M-9780 | 1 | SEAL-O-RING | |
| | 13 | 1 | 2P-8421 | 1 | ADAPTER-O-RING | |
| | 14 | 1 | 3D-2824 | 1 | SEAL-O-RING | |
| | 15 | 1 | 3D-4603 | 2 | PLUG-PIPE | |
| | 16 | 1 | 3J-1907 | 4 | SEAL-O-RING | |
| | 17 | 1 | 3J-7354 | 17 | SEAL-O-RING | |
| | 18 | 1 | 3K-0360 | 2 | SEAL-O-RING | |
| | 19 | 1 | 4B-4280 | 1 | WASHER (13.5X27X2.5-MM THK) | |
| | 20 | 1 | 4B-9782 | 2 | BALL | |
| | 21 | 1 | 4F-7952 | 1 | SEAL-O-RING | |
| Y | 22 | 1 | 4T-1860 | 1 | VALVE GP-SHUTTLE (BALL RESOLVER) | 581 |
| B | 23 | 1 | 6J-6516 | 8 | SHIM (0.01-IN THK) | |
| M | 24 | 1 | 6V-5195 | 1 | BOLT-SOCKET HEAD (M8X1.25X50-MM) | |
| | 25 | 1 | 8C-3206 | 8 | FLANGE-HALF | |
| | 26 | 1 | 8F-9206 | 1 | SEAL-O-RING | |
| M | 27 | 1 | 8T-4186 | 16 | BOLT (M10X1.5X40-MM) | |
| | 28 | 1 | 8T-4224 | 1 | WASHER-HARD (8.8X16X2-MM THK) | |
| M | 29 | 1 | 8T-5005 | 4 | BOLT (M10X1.5X70-MM) | |
| | 30 | 1 | 8T-7934 | 16 | WASHER-HARD (11X21X5-MM THK) | |
| | 31 | 1 | 9J-9821 | 2 | SEAT | |
| | 32 | 1 | 9S-4182 | 1 | PLUG | |
| | 33 | 1 | 9S-4191 | 4 | PLUG | |
| | 34 | 1 | 9S-8002 | 16 | PLUG | |
| | 35 | 1 | 9S-8006 | 1 | PLUG | |
| Y | 36 | 1 | 9T-7418 | 1 | VALVE GP-RELIEF (PUMP BACKUP) | 579 |
| | 37 | 1 | 9T-7419 | 1 | VALVE GP-RELIEF (STEERING CYLINDER CROSSOVER) | |
| | | 1 | 2M-9780 | 1 | SEAL-O-RING | |
| | | 1 | 5P-2199 | 2 | RING-BACKUP | |
| | | 1 | 6E-0410 | 1 | SEAL-O-RING | |

B-USE AS REQUIRED
M-METRIC PART
Y-SEPARATE ILLUSTRATION

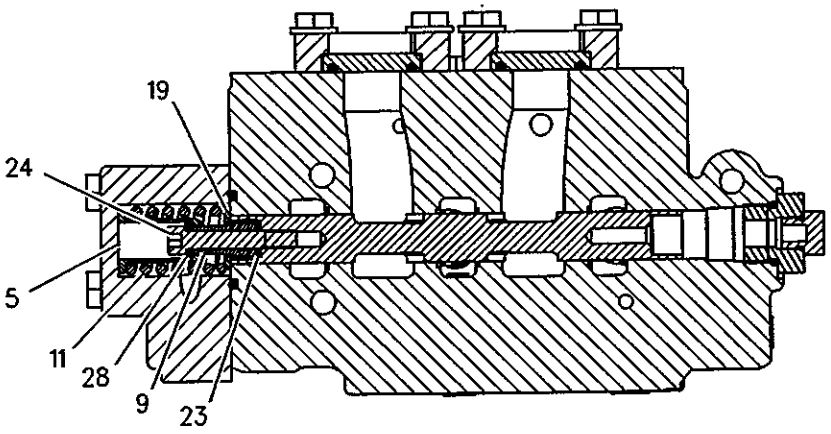


SECTION A-A

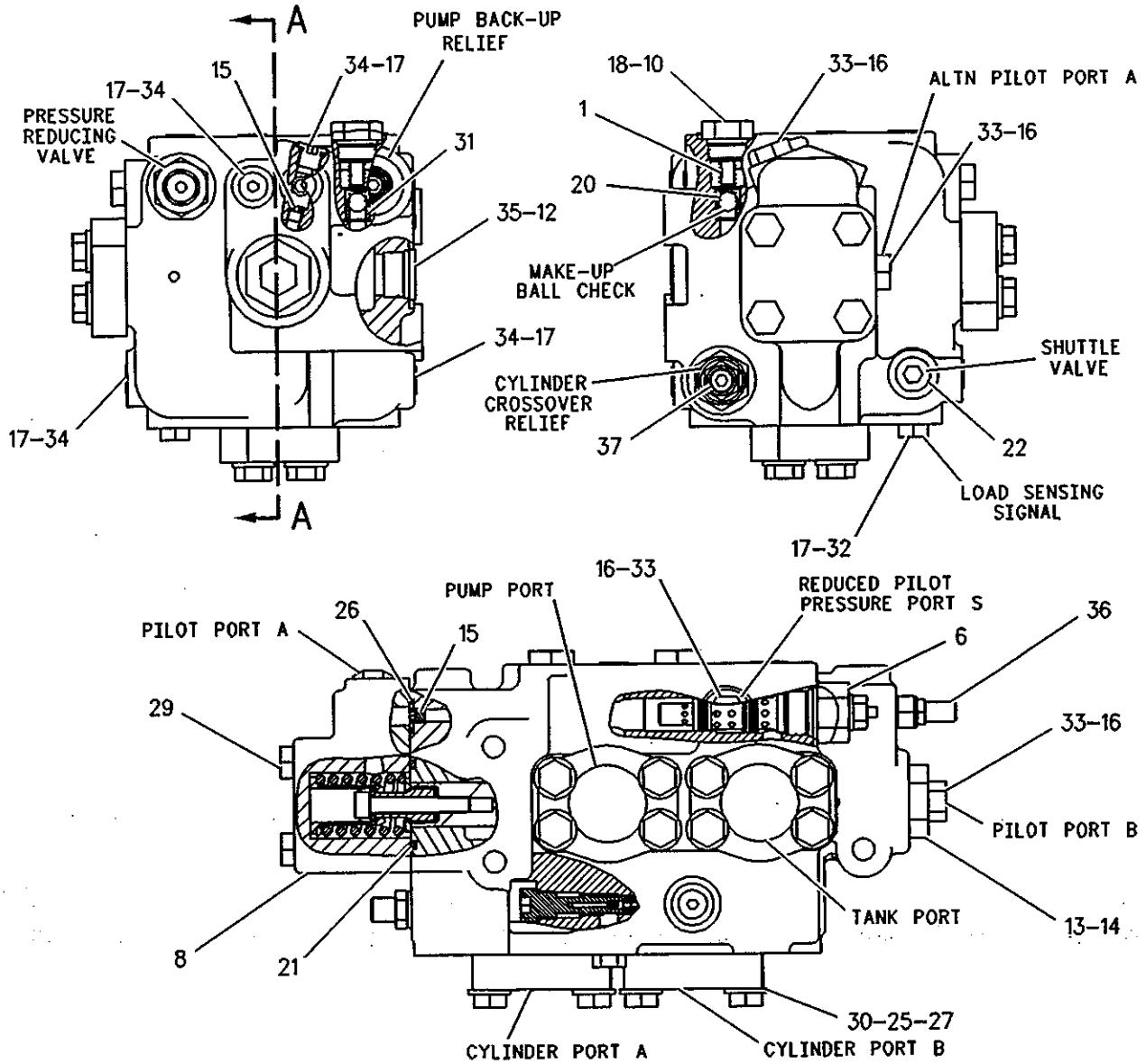


GRAPHIC #1 <END> g00627084

# 8J-1553 VALVE GP-STEERING NEUTRALIZER

S/N: JMS1-UP

PART OF 171-4656 LINES GP-STEERING

SMCS-4330

i01950086

| NOTE | REF NO | GRAPHIC REF | PART NUMBER | QTY | PART NAME 1 2 3 4 5 6 (PRODUCT LEVEL) | SEE PAGE |
|---|---|---|---|---|---|---|
| | 1 | 1 | 1U-3142 | 1 | BOOT | |
| | 2 | 1 | 1J-9671 | 2 | SEAL-O-RING | |
| | 3 | 1 | 9S-6155 | 1 | PLUG AS | |
| | 4 | 1 | 1A-8096 | 1 | SPRING-VALVE | |
| | 5 | 1 | 3J-1907 | 2 | SEAL-O-RING | |
| | 6 | 1 | 9S-4191 | 1 | PLUG | |
| | 7 | 1 | 4B-9782 | 1 | BALL | |
| | 8 | 1 | 9J-0477 | 1 | PLUG | |
| | 9 | 1 | 4K-1388 | 1 | SEAL-O-RING | |
| | 10 | 1 | 3K-8460 | 1 | PLUG | |
| | 11 | 1 | 7B-8194 | 1 | SPRING | |
| | 12 | 1 | 8J-1552 | 1 | VALVE GP-STEERING NEUTRALIZER | |
| | 12A | 1 | 3J-4407 | 1 | SEAL-LIP TYPE | |

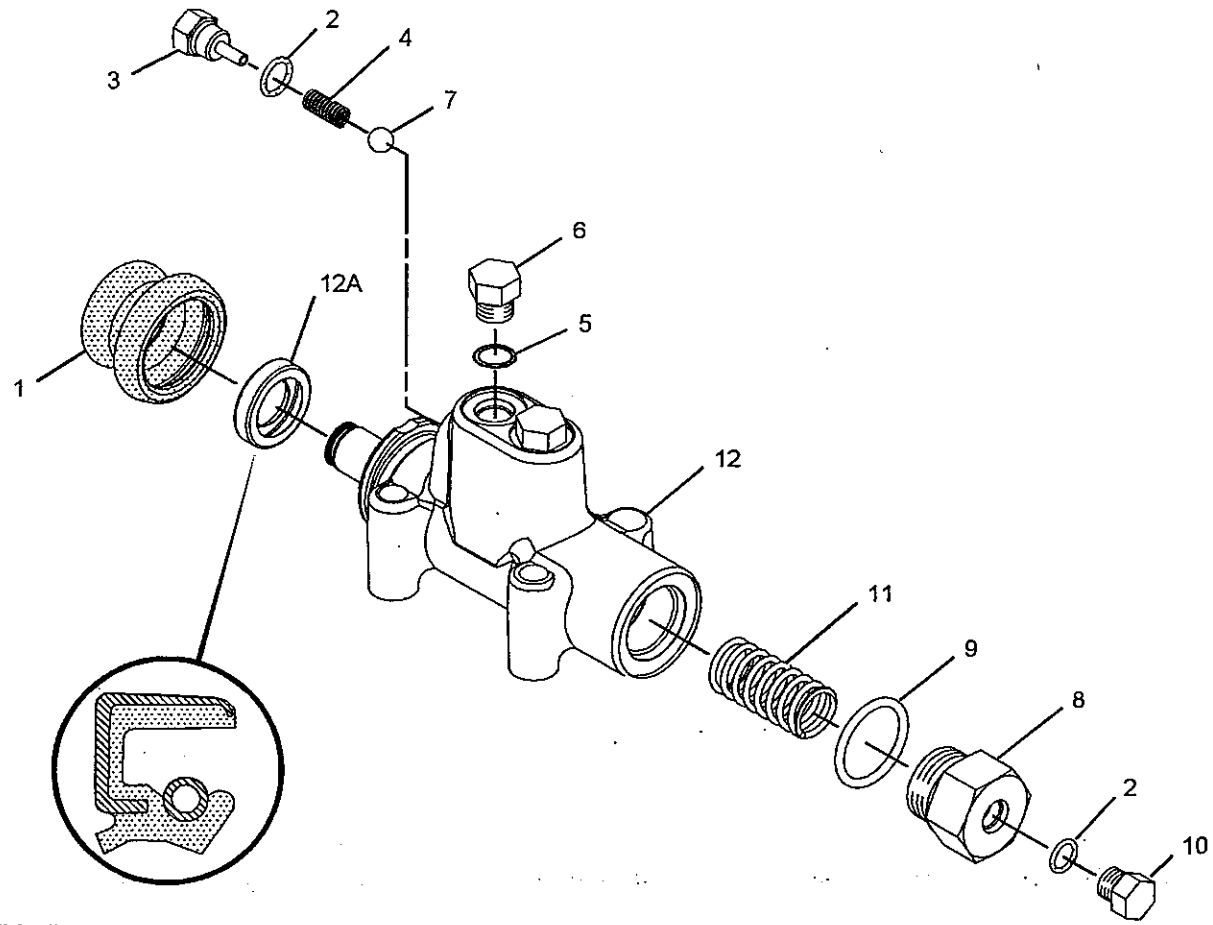


GRAPHIC #1

<END>

g01070377

# 138-1292 ACCUMULATOR AS-RIDE CONTROL–CHARGED

S/N: JMS1-UP
PART OF 144-5728 CONTROL & LINES GP-RIDE
FIELD REPLACEMENT ORDER 221-1763–PAGE 589
AN ATTACHMENT

SMCS-5077

i01064009

| NOTE | REF NO | GRAPHIC REF | PART NUMBER | QTY | PART NAME 1 2 3 4 5 6 (PRODUCT LEVEL) | SEE PAGE |
|---|---|---|---|---|---|---|
| | 1 | 1 | 9T-7347 | 1 | KIT-SEAL | |

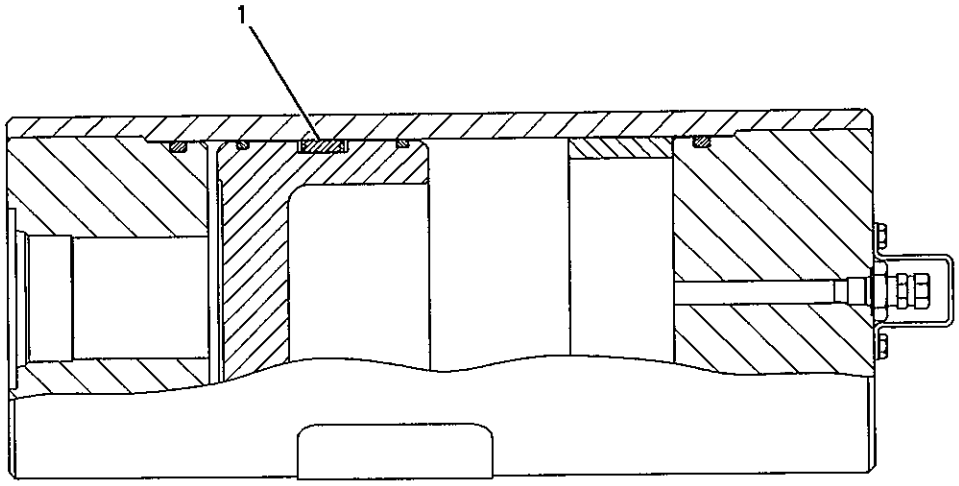


GRAPHIC #1

<END>

g00555707

# 221-1763 ACCUMULATOR GP-RIDE CONTROL–UNCHARGED

S/N: JMS1-UP

FIELD REPLACEMENT FOR 138-1292–PAGE 588

SMCS-5077

i02194551

| NOTE | REF NO | GRAPHIC REF | PART NUMBER | QTY | PART NAME 1 2 3 4 5 6 (PRODUCT LEVEL) | SEE PAGE |
|---|---|---|---|---|---|---|
| | 1 | 1 | 222-2367 | 1 | VALVE-GAS | |
| | | 1 | 190-3850 | 1 | CORE | |
| F | | 1 | 5P-3779 | 1 | TAG-NOTICE (CYLINDER PRESSURE) | |
| F | | 1 | 241-0037 | 1 | FILM (HYDRAULIC ACCUMULATOR) | |
| | | | | | AVAILABLE REPAIR KIT(S): | |
| | | | 170-0494 | 1 | KIT-SEAL | |

F-NOT SHOWN

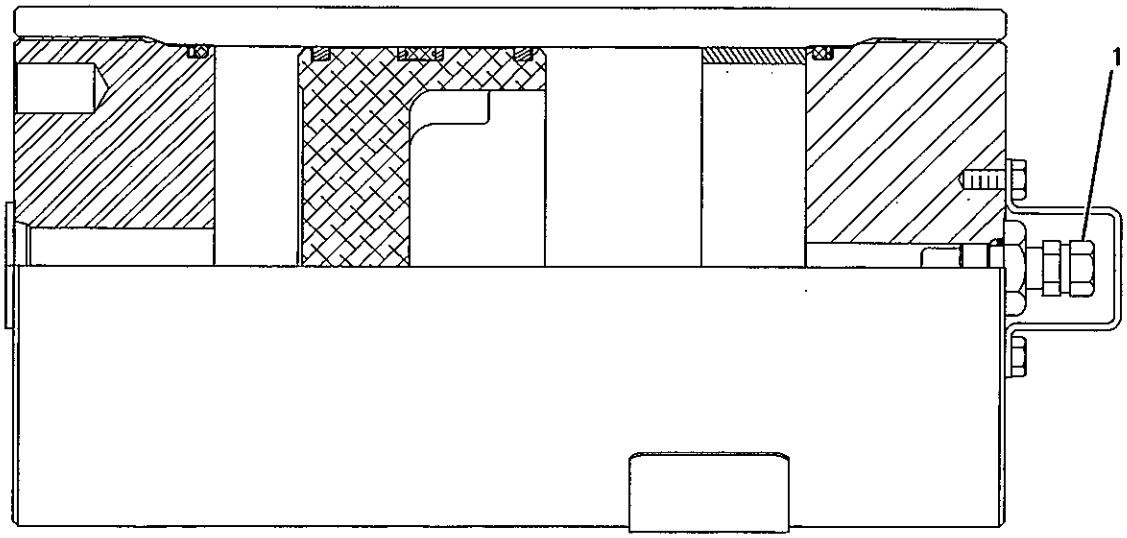


GRAPHIC #1

<END>

g00950129

# HYDRAULIC SYSTEM

## *144-5728* CONTROL & LINES GP-RIDE

**S/N: JMS1-UP**

**PART OF 196-8529, 196-8530, 267-3803, 267-3804 CONTROL AR-RIDE AN ATTACHMENT**

**SMCS-5004** **i02145900**

| NOTE | REF NO | GRAPHIC REF | PART NUMBER | QTY | PART NAME 1 2 3 4 5 6 (PRODUCT LEVEL) | SEE PAGE |
|---|---|---|---|---|---|---|
| I | 1 | 1 | **195-2586** | 1 | HOSE AS | |
| | 2 | 2 | **4E-3083** | 1 | TUBE AS | |
| | 3 | 1 | **7J-5311** | 1 | PLATE-WARNING (HIGH PRESSURE CYLINDER) | |
| | 4 | 2 | **7T-9745** | 1 | MANIFOLD-VALVE | |
| | 5 | 1 | **8C-3323** | 1 | CONNECTOR | |
| | 6 | 2 | **8T-5879** | 1 | ADAPTER | |
| | 7 | 2 | **9J-3866** | 1 | ADAPTER | |
| Y | 8 | 2 | **164-7474** | 1 | VALVE GP-CHECK | 697 |
| | 9 | 1 | **9U-3890** | 1 | PLATE | |
| | 10 | 2 | **207-1810** | 1 | VALVE GP-CHECK (RIDE CONTROL) | |
| Y | 11 | 2 | **152-8340** | 1 | VALVE GP-SOLENOID (24-VOLT) (RIDE CONTROL) | 733 |
| Y | 12 | 2 | **115-9328** | 1 | VALVE GP-DIVERTER (RIDE CONTROL) | 700 |
| I | 13 | 1 | **149-7089** | 1 | HOSE AS | |
| | 14 | 2 | **9X-8256** | 2 | WASHER (6.6X12X2-MM THK) | |
| CI | 15 | 2 | **244-5925** | 1 | HOSE AS | |
| I | 16 | 2 | **144-8155** | 1 | HOSE AS | |
| I | 17 | 2 | **124-4144** | 1 | HOSE AS | |
| | 18 | 2 | **124-4812** | 1 | BRACKET | |
| | 19 | 1 | **124-4814** | 1 | BRACKET AS | |
| | 20 | 2 | **128-2841** | 1 | COVER | |
| Y | 21 | 1 | *138-1292* | 1 | ACCUMULATOR AS-RIDE CONTROL (CHARGED) | 588 |
| Y | 22 | 2 | **141-1481** | 1 | VALVE GP-SHUTTLE | 732 |
| | 23 | 2 | **143-9100** | 1 | PLATE AS | |
| M | | 2 | **6V-9632** | 2 | NUT-WELD (M6X1-THD) | |
| M | | 2 | **8T-3612** | 2 | NUT-WELD (M8X1.25-THD) | |
| I | 24 | 1 | **164-7005** | 1 | HOSE AS | |
| | 25 | 2 | **143-9103** | 1 | TUBE AS | |
| | 26 | 2 | **143-9104** | 1 | TUBE AS | |
| | 27 | 2 | **143-9105** | 1 | TUBE AS | |
| I | 28 | 1 | **228-9003** | 1 | HOSE AS | |
| | 29 | 2 | **143-9107** | 1 | TUBE AS | |
| I | 30 | 2 | **164-7440** | 1 | HOSE AS | |
| | 33 | 2 | **3K-0360** | 1 | SEAL-O-RING | |
| | 34 | 2 | **4J-0520** | 4 | SEAL-O-RING | |
| | 36 | 1 | **5K-9090** | 1 | SEAL-O-RING | |
| | 38 | 1 | **6K-6307** | 1 | SEAL-O-RING | |
| | 39 | 2 | *164-5598* | 1 | PLUG AS | |
| | | 2 | **7M-8485** | 1 | SEAL-O-RING | |
| | | 2 | **8J-0426** | 1 | PLUG | |
| | 40 | 1,2 | **6V-8398** | 11 | SEAL-O-RING | |
| | 41 | 2 | **6V-8557** | 2 | NUT-FACE SEAL (1-7/16-12-THD) | |
| | 42 | 2 | *148-8364* | 1 | ELBOW AS | |
| | | 2 | **3K-0360** | 1 | SEAL-O-RING | |
| | | 2 | **6V-8398** | 1 | SEAL-O-RING | |
| | | 2 | **6V-8625** | 1 | ELBOW | |
| | 43 | 2 | *148-8368* | 3 | ELBOW AS | |
| | | | | | (EACH INCLUDES) | |
| | | 2 | **3J-1907** | 1 | SEAL-O-RING | |
| | | 2 | **4J-5477** | 1 | SEAL-O-RING | |
| | | 2 | **6V-8627** | 1 | ELBOW | |
| | 44 | 2 | *148-8369* | 1 | ELBOW AS | |
| | | 2 | **3J-7354** | 1 | SEAL-O-RING | |
| | | 2 | **4J-5477** | 1 | SEAL-O-RING | |
| | | 2 | **6V-8628** | 1 | ELBOW | |

# HYDRAULIC SYSTEM

## *144-5728* CONTROL & LINES GP-RIDE *(contd.)* i02145900

| NOTE | REF NO | GRAPHIC REF | PART NUMBER | QTY | PART NAME 1 2 3 4 5 6 (PRODUCT LEVEL) | SEE PAGE |
|---|---|---|---|---|---|---|
| | 45 | 2 | *148-8335* | 2 | CONNECTOR AS | |
| | | | | | (EACH INCLUDES) | |
| | | 2 | **5K-9090** | 1 | SEAL-O-RING | |
| | | 2 | **6V-8635** | 1 | CONNECTOR | |
| | | 2 | **7M-8485** | 1 | SEAL-O-RING | |
| | 46 | 2 | *148-8340* | 1 | CONNECTOR AS | |
| | | 2 | **3K-0360** | 1 | SEAL-O-RING | |
| | | 2 | **6V-8398** | 1 | SEAL-O-RING | |
| | | 2 | **6V-8639** | 1 | CONNECTOR | |
| | 47 | 2 | *148-8325* | 2 | CONNECTOR AS | |
| | | | | | (EACH INCLUDES) | |
| | | 2 | **3J-1907** | 1 | SEAL-O-RING | |
| | | 2 | **4J-5477** | 1 | SEAL-O-RING | |
| | | 2 | **6V-8641** | 1 | CONNECTOR | |
| | 48 | 2 | *148-8436* | 1 | TEE AS | |
| | | 2 | **3K-0360** | 1 | SEAL-O-RING | |
| | | 2 | **6V-8398** | 2 | SEAL-O-RING | |
| | | 2 | **6V-8775** | 1 | TEE-FACE SEAL | |
| | 49 | 2 | *148-8412* | 2 | REDUCER AS | |
| | | | | | (EACH INCLUDES) | |
| | | 2 | **6V-8398** | 1 | SEAL-O-RING | |
| | | 2 | **6V-8944** | 1 | REDUCER-O-RING | |
| C | 51 | 2 | **148-8355** | 3 | ELBOW AS | |
| | | | | | (EACH INCLUDES) | |
| | | 2 | **6V-9005** | 1 | ELBOW | |
| | | 2 | **5K-9090** | 1 | SEAL-O-RING | |
| | | 2 | **7M-8485** | 1 | SEAL-O-RING | |
| | 52 | 2 | *148-8361* | 1 | ELBOW AS | |
| | | 2 | **3J-7354** | 1 | SEAL-O-RING | |
| | | 2 | **6V-8397** | 1 | SEAL-O-RING | |
| | | 2 | **6V-9200** | 1 | ELBOW | |
| | 53 | 2 | *148-8433* | 1 | TEE AS | |
| | | 2 | **6V-8397** | 2 | SEAL-O-RING | |
| | | 2 | **6V-9836** | 1 | TEE-SWIVEL | |
| | 54 | 2 | *148-8444* | 1 | TEE AS-SWIVEL | |
| | | 2 | **6V-8398** | 2 | SEAL-O-RING | |
| | | 2 | **6V-9837** | 1 | TEE-SWIVEL | |
| | 55 | 2 | *148-8429* | 2 | TEE AS | |
| | | | | | (EACH INCLUDES) | |
| | | 2 | **5K-9090** | 2 | SEAL-O-RING | |
| | | 2 | **6V-9840** | 1 | TEE-SWIVEL | |
| | 56 | 2 | *148-8370* | 1 | ELBOW AS | |
| | | 2 | **6V-8398** | 1 | SEAL-O-RING | |
| | | 2 | **6V-9851** | 1 | ELBOW | |
| | 57 | 1 | **148-8352** | 1 | ELBOW GP | |
| | | 1 | **5K-9090** | 1 | SEAL-O-RING | |
| | | 1 | **6V-9854** | 1 | ELBOW (SWIVEL) | |
| | 59 | 2 | **7X-0507** | 4 | WASHER-HARD (12X22.5X5-MM THK) | |
| M | 60 | 2 | **7X-2535** | 2 | BOLT (M6X1X60-MM) | |
| | 61 | 1,2 | **7X-7729** | 4 | WASHER (11X25X3-MM THK) | |
| | 63 | 2 | **8M-2772** | 1 | CLIP | |
| | 64 | 1,2 | **8T-4121** | 6 | WASHER-HARD (11X21X2.5-MM THK) | |
| M | 65 | 1,2 | **8T-4133** | 4 | NUT (M10X1.5-THD) | |
| M | 66 | 1 | **8T-4136** | 2 | BOLT (M10X1.5X25-MM) | |
| M | 67 | 2 | **8T-4137** | 2 | BOLT (M10X1.5X20-MM) | |
| M | 68 | 2 | **8T-4182** | 1 | BOLT (M10X1.5X45-MM) | |
| | 69 | 2 | *148-8367* | 1 | ELBOW AS | |
| | | 2 | **6V-8397** | 1 | SEAL-O-RING | |
| | | 2 | **6V-9850** | 1 | ELBOW | |

## *144-5728* CONTROL & LINES GP-RIDE *(contd.)*

i02145900

| NOTE | REF NO | GRAPHIC REF | PART NUMBER | QTY | PART NAME 1 2 3 4 5 6 (PRODUCT LEVEL) | SEE PAGE |
|---|---|---|---|---|---|---|
| M | 70 | 1 | **8T-4192** | 2 | BOLT (M12X1.75X25-MM) | |
| | 71 | 1 | **8T-4223** | 2 | WASHER-HARD (13.5X25.5X3-MM THK) | |
| | 72 | 2 | **8T-4224** | 6 | WASHER-HARD (8.8X16X2-MM THK) | |
| M | 73 | 2 | **8T-5005** | 5 | BOLT (M10X1.5X70-MM) | |
| M | 74 | 2 | **8T-6466** | 4 | BOLT (M10X1.5X60-MM) | |
| M | 75 | 2 | **8T-6869** | 2 | BOLT (M8X1.25X60-MM) | |
| | 76 | 2 | *148-8407* | 1 | PLUG AS | |
| | | 2 | **3J-1907** | 1 | SEAL-O-RING | |
| | | 2 | **9S-4191** | 1 | PLUG | |
| | 77 | 2 | **148-8365** | 2 | ELBOW AS | |
| | | | | | (EACH INCLUDES) | |
| | | 2 | **3J-1907** | 1 | SEAL-O-RING | |
| | | 2 | **6V-8398** | 1 | SEAL-O-RING | |
| | | 2 | **8T-6876** | 1 | ELBOW | |
| CI | 78 | 2 | **244-5924** | 1 | HOSE AS | |

C-CHANGE FROM PREVIOUS TYPE
I-REFER TO HYDRAULIC INFORMATION SYSTEM
M-METRIC PART
Y-SEPARATE ILLUSTRATION

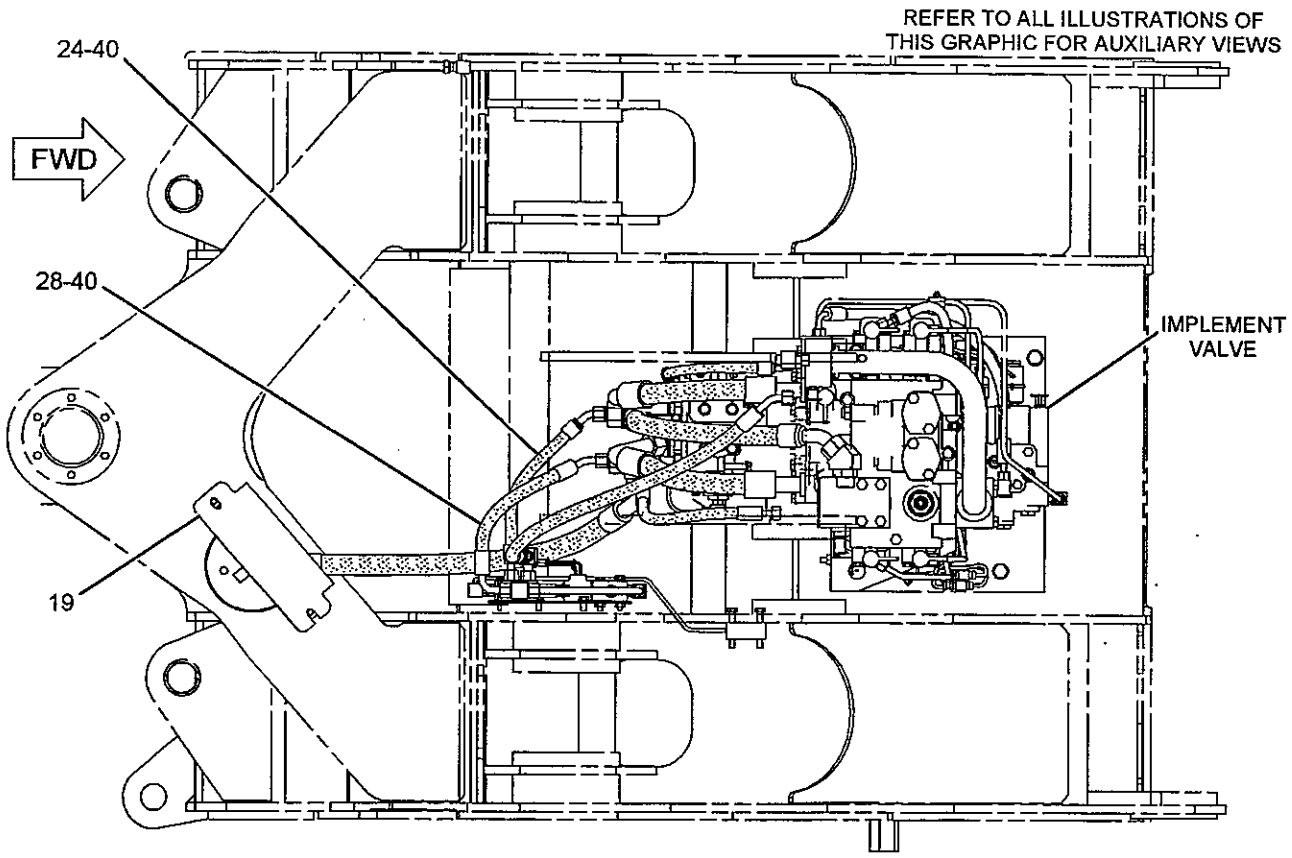


TOP VIEW

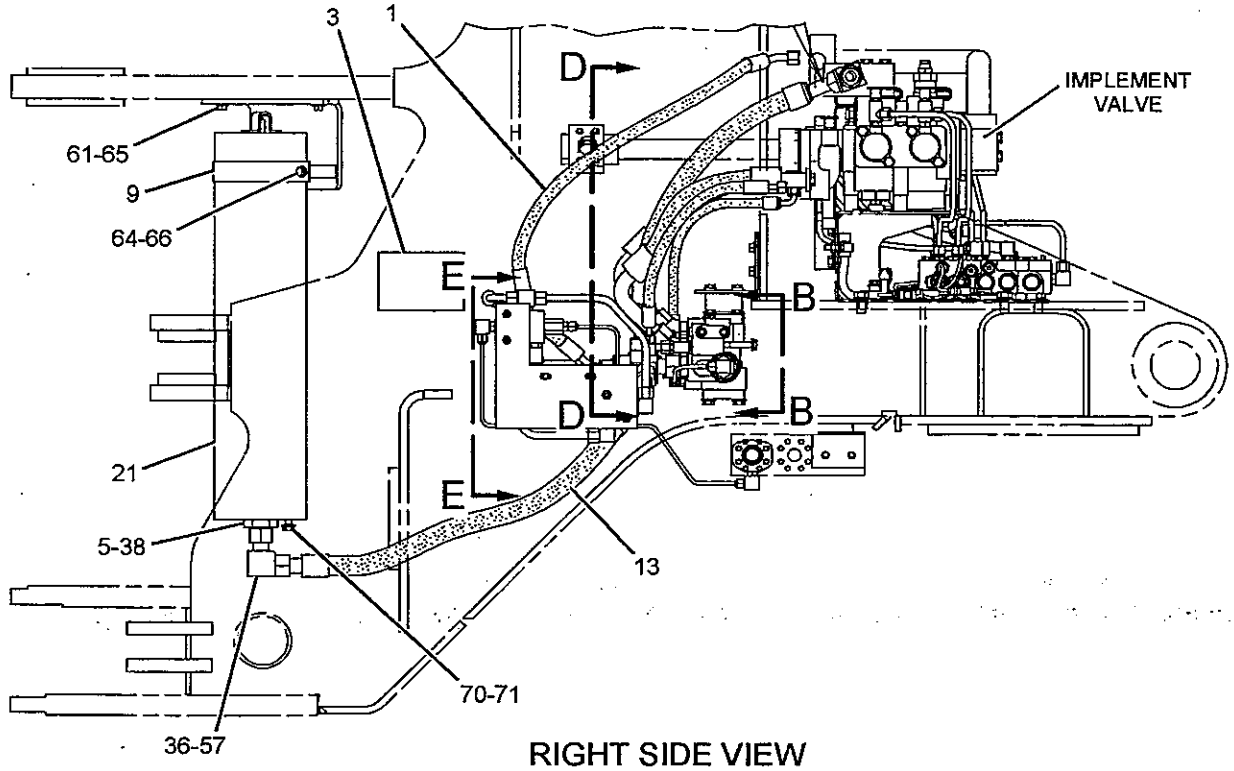


RIGHT SIDE VIEW

GRAPHIC #1 g01020761

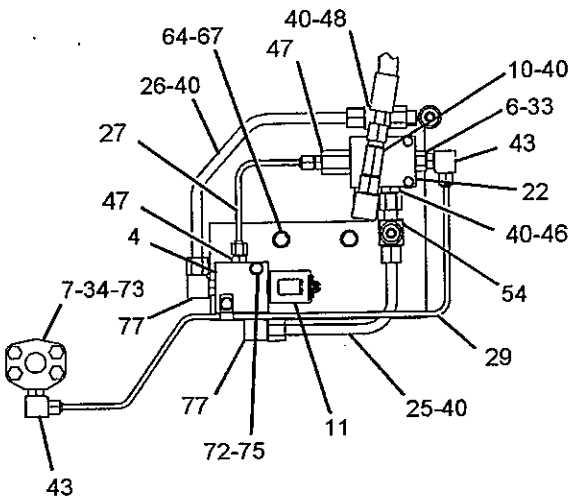


SECTION C-C

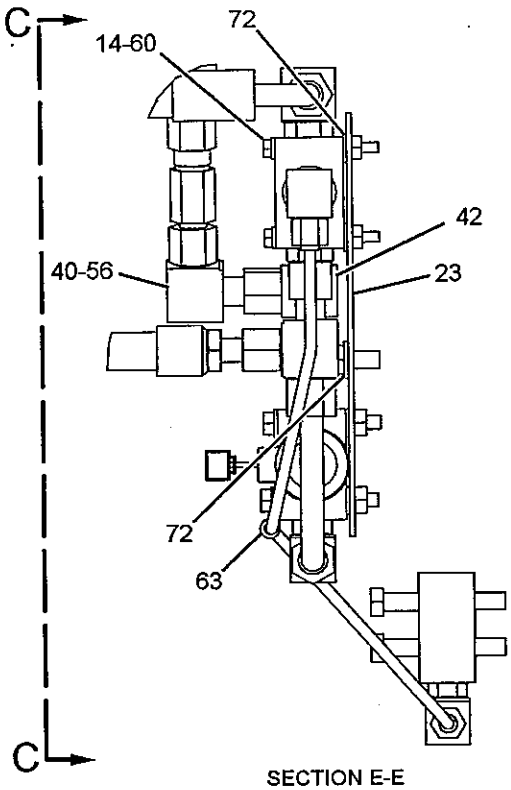


SECTION E-E

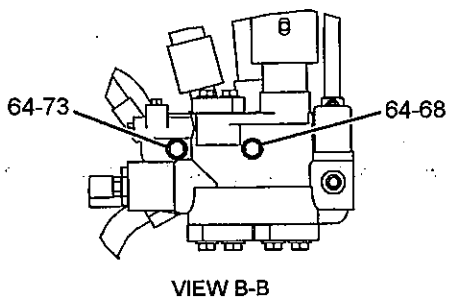


VIEW B-B

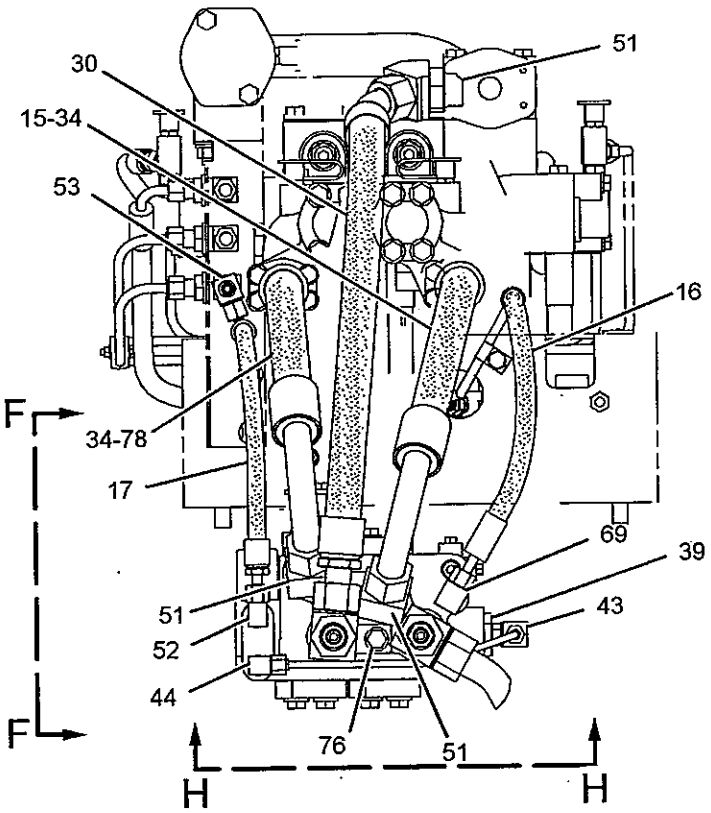


SECTION D-D

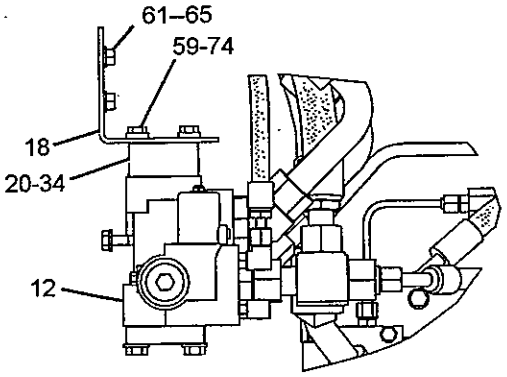


VIEW F-F

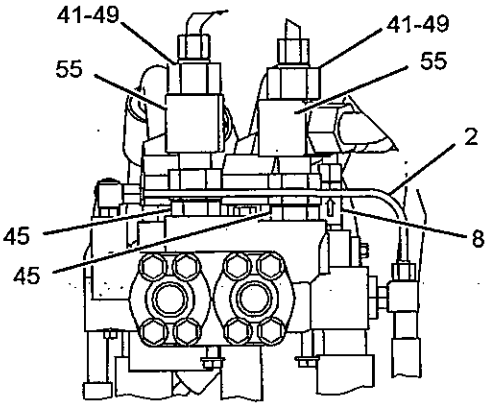


VIEW H-H

GRAPHIC #2 **<END>** g01142762

# HYDRAULIC SYSTEM

## *251-5801* CONTROL AR-FAN–AUTOMATIC REVERSING

**S/N: JMS1-UP**
**AN ATTACHMENT**

**SMCS-1386, 138R** **i02285340**

| NOTE | PART NUMBER | QTY | PART NAME 1 2 3 4 5 6 (PRODUCT LEVEL) | SEE PAGE |
|---|---|---|---|---|
| Y | *252-9550* | 1 | INSULATION GP-HEAT (MANIFOLD, MUFFLER, TURBO) | 104 |
| Y | *250-3381* | 1 | LINES GP-HYDRAULIC FAN (AUTOMATIC REVERSING) | 649 |
| Y | *251-9596* | 1 | SUPPORT GP-FAN ELECTRICAL (AUTOMATIC REVERSING) | 674 |
| Y | *262-9949* | 1 | SWITCH GP-REVERSING FAN | 239 |

Y-SEPARATE ILLUSTRATION

**<END>**

## *196-8529* CONTROL AR-RIDE

**S/N: JMS1-UP**
**2 VALVE**
**AN ATTACHMENT**

**SMCS-5004** **i02148320**

| NOTE | PART NUMBER | QTY | PART NAME 1 2 3 4 5 6 (PRODUCT LEVEL) | SEE PAGE |
|---|---|---|---|---|
| Y | *144-5728* | 1 | CONTROL & LINES GP-RIDE | 590 |
| Y | *197-4147* | 1 | SWITCH GP-RIDE CONTROL | 240 |
| Y | *206-9058* | 1 | VALVE & MTG GP-MAIN CONTROL (2-FUNCTION WITH RIDE CONTROL) | 686 |

Y-SEPARATE ILLUSTRATION

**<END>**

## *196-8530* CONTROL AR-RIDE

**S/N: JMS1-UP**
**3 VALVE**
**AN ATTACHMENT**

**SMCS-5004** **i02275116**

| NOTE | PART NUMBER | QTY | PART NAME 1 2 3 4 5 6 (PRODUCT LEVEL) | SEE PAGE |
|---|---|---|---|---|
| Y | *144-5728* | 1 | CONTROL & LINES GP-RIDE | 590 |
| Y | *197-4147* | 1 | SWITCH GP-RIDE CONTROL | 240 |
| Y | *206-9060* | 1 | VALVE & MTG GP-MAIN CONTROL (3-FUNCTION WITH RIDE CONTROL) | 693 |

Y-SEPARATE ILLUSTRATION

**<END>**

# HYDRAULIC SYSTEM

## *267-3803* CONTROL AR-RIDE–2-VALVE

**S/N: JMS1-UP**
**PART OF 266-1620 MACHINE AR**
**AN ATTACHMENT**

**SMCS-5004** **i02284058**

| NOTE | PART NUMBER | QTY | PART NAME 1 2 3 4 5 6 (PRODUCT LEVEL) | SEE PAGE |
|---|---|---|---|---|
| Y | *144-5728* | 1 | CONTROL & LINES GP-RIDE | 590 |
| Y | *252-5917* | 1 | SWITCH GP-RIDE CONTROL | 241 |
| Y | *206-9058* | 1 | VALVE & MTG GP-MAIN CONTROL (2-FUNCTION WITH RIDE CONTROL) | 686 |

Y-SEPARATE ILLUSTRATION

**<END>**

## *267-3804* CONTROL AR-RIDE–3-VALVE

**S/N: JMS1-UP**
**AN ATTACHMENT**

**SMCS-5004** **i02284059**

| NOTE | PART NUMBER | QTY | PART NAME 1 2 3 4 5 6 (PRODUCT LEVEL) | SEE PAGE |
|---|---|---|---|---|
| Y | *144-5728* | 1 | CONTROL & LINES GP-RIDE | 590 |
| Y | *252-5917* | 1 | SWITCH GP-RIDE CONTROL | 241 |
| Y | *206-9060* | 1 | VALVE & MTG GP-MAIN CONTROL (3-FUNCTION WITH RIDE CONTROL) | 693 |

Y-SEPARATE ILLUSTRATION

**<END>**

# HYDRAULIC SYSTEM

## 208-3915 CONTROL GP-ELECTROHYDRAULIC–2-FUNCTION

S/N: JMS1-UP

PART OF 232-1393 CAB AR-ENCLOSED ROPS, 203-9837, 258-1565 CANOPY AR-OPEN ROPS

ALSO AN ATTACHMENT

SMCS-5702

i02156918

| NOTE | REF NO | GRAPHIC REF | PART NUMBER | QTY | PART NAME 1 2 3 4 5 6 (PRODUCT LEVEL) | SEE PAGE |
|---|---|---|---|---|---|---|
| | 1 | 1 | 3E-3365 | 1 | WEDGE-RECEPTACLE LOCK (2-PIN) | |
| | 2 | 2 | 3E-3383 | 1 | WEDGE-RECEPTACLE LOCK (6-PIN) | |
| M | 3 | 2 | 5C-2874 | 4 | NUT (M5X0.8-THD) | |
| | 4 | 1 | 8R-3695 | 1 | GROMMET | |
| | 5 | 2 | 8T-0328 | 4 | WASHER-HARD (5.5X10X1-MM THK) | |
| | 6 | 1,2 | 9X-2026 | 9 | WASHER (6.5X17X1-MM THK) | |
| | 7 | 2 | 3S-2093 | 2 | STRAP-CABLE | |
| | 8 | 2 | 105-3372 | 1 | SPRING | |
| | 9 | 2 | 106-1582 | 1 | HOUSING | |
| | 10 | 2 | 106-1583 | 2 | ROD | |
| | 11 | 2 | 106-1584 | 2 | SPACER (6.22X9.52X85-MM THK) | |
| | 12 | 2 | 114-4247 | 4 | BRACKET AS | |
| | 13 | 2 | 139-1378 | 4 | BEARING | |
| | 14 | 1 | 140-5945 | 1 | FILM-IDENTIFICATION (HORN) | |
| | 15 | 1 | 149-3949 | 2 | LEVER-CONTROL | |
| CY | 16 | 2 | 214-4862 | 2 | SENSOR GP-POSITION (SPRINGLESS) (CONTROL LEVER) | 206 |
| | 17 | 2 | 163-8119 | 2 | SPRING | |
| | 18 | 1 | 170-1821 | 1 | SWITCH AS-PUSH BUTTON (HORN) | |
| | | 1 | 6F-0253 | 1 | LOCKWASHER | |
| | | 1 | 186-3735 | 2 | PIN-CONNECTOR (16-GA TO 18-GA) | |
| | | 1 | 172-3511 | 1 | NUT (5/8-24-THD) | |
| | 19 | 1 | 173-2125 | 1 | COVER | |
| | 20 | 1 | 173-2127 | 1 | COVER | |
| BD | 21 | 2 | 6V-9335 | | SEAL | |
| | 22 | 2 | 188-0955 | 3 | COIL AS-DETENT (CONTROL LEVER) | |
| | | | | | (EACH INCLUDES) | |
| | | 2 | 1S-9593 | 2 | STRAP-CABLE | |
| | | 2 | 186-3735 | 2 | PIN-CONNECTOR (16-GA TO 18-GA) | |
| | 23 | 1 | 189-2077 | 1 | FILM-CONTROL (LIFT, FLOAT, LOWER) | |
| | 24 | 1 | 189-2078 | 1 | FILM-CONTROL (DUMP, TILT BACK) | |
| | 25 | 1 | 189-2079 | 1 | FILM-INSTRUCTION (MAINTENANCE) | |
| | 26 | 2 | 207-7447 | 2 | PLATE | |
| | 27 | 2 | 208-3916 | 1 | BRACKET | |
| | 28 | 2 | 208-3917 | 1 | BRACKET | |
| | 29 | 1 | 208-3918 | 1 | PLATE | |
| | 30 | 1 | 208-8333 | 2 | COVER | |
| | 31 | 1 | 209-9250 | 1 | BRACKET AS | |
| M | | 1 | 6V-9632 | 5 | NUT-WELD (M6X1-THD) | |
| | 32 | 1 | 102-8802 | 1 | KIT-RECEPTACLE (2-PIN) | |
| | 33 | 2 | 102-8805 | 1 | KIT-RECEPTACLE (6-PIN) | |
| | | | | | (EACH INCLUDES RECEPTACLE AS AND WEDGE) | |
| M | 34 | 1 | 5C-2890 | 1 | NUT (M6X1-THD) | |
| | 35 | 1 | 5P-8523 | 1 | GROMMET | |
| | 36 | 1 | 5P-8524 | 1 | GROMMET | |
| M | 37 | 1 | 8T-4971 | 4 | BOLT (M6X1X30-MM) | |
| M | 38 | 2 | 6V-7743 | 4 | LOCKNUT (M6X1-THD) | |
| | 39 | 1 | 8M-2771 | 2 | CLIP | |
| | 40 | 1 | 8T-4205 | 2 | WASHER-HARD (7.2X14.5X2-MM THK) | |
| M | 41 | 1,2 | 8T-4970 | 10 | BOLT (M6X1X14-MM) | |
| M | 42 | 1 | 9X-2044 | 7 | SCREW-TRUSS HEAD (M6X1X16-MM) | |
| BD | 43 | 2 | 090-4808 | | SEAL | |
| BD | 44 | 2 | 5P-6120 | | TRIM-EDGE | |
| | 45 | 2 | 8L-8413 | 2 | STRAP-CABLE | |

## 208-3915 CONTROL GP-ELECTROHYDRAULIC *(contd.)*

i02156918

B-USE AS REQUIRED
C-CHANGE FROM PREVIOUS TYPE
D-ORDER BY THE METER
M-METRIC PART
Y-SEPARATE ILLUSTRATION

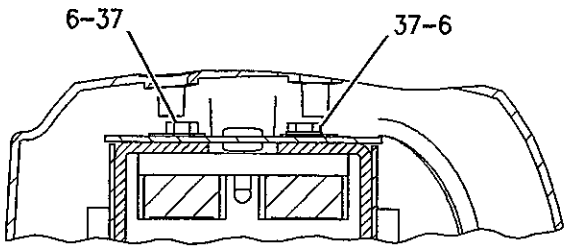


SECTION F-F

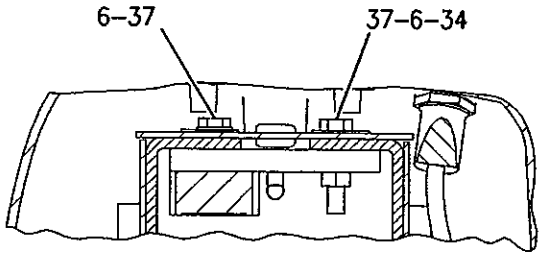


SECTION E-E

REFER TO ALL ILLUSTRATIONS OF THIS GROUP FOR AUXILIARY VIEWS

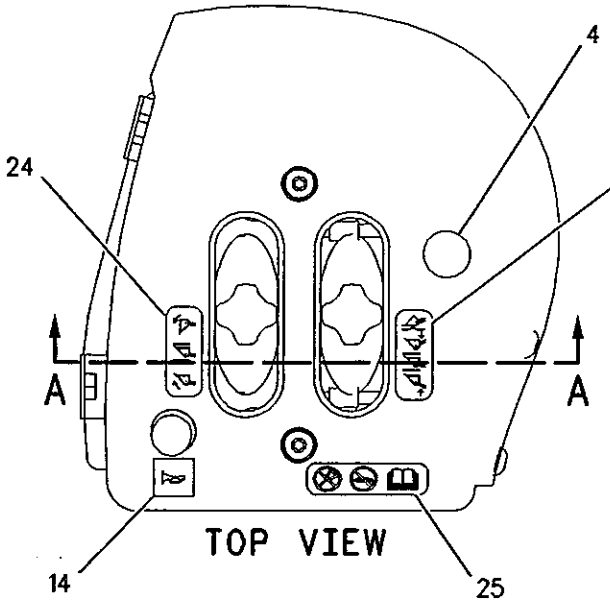


TOP VIEW

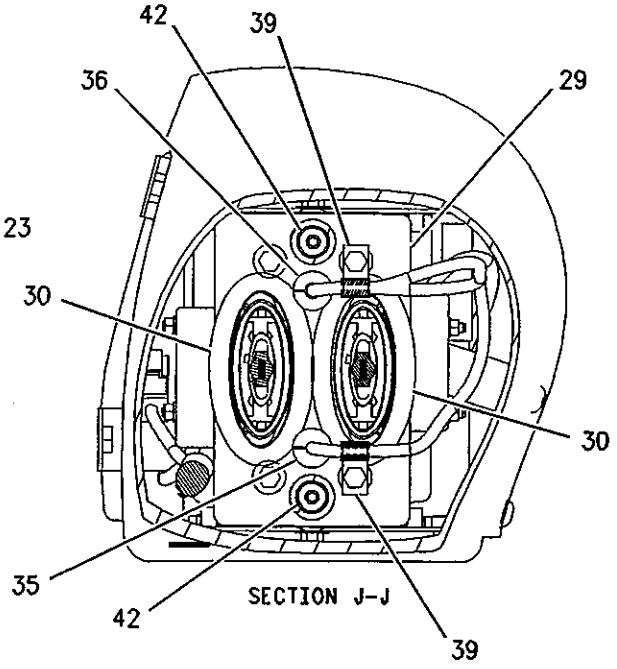


SECTION J-J

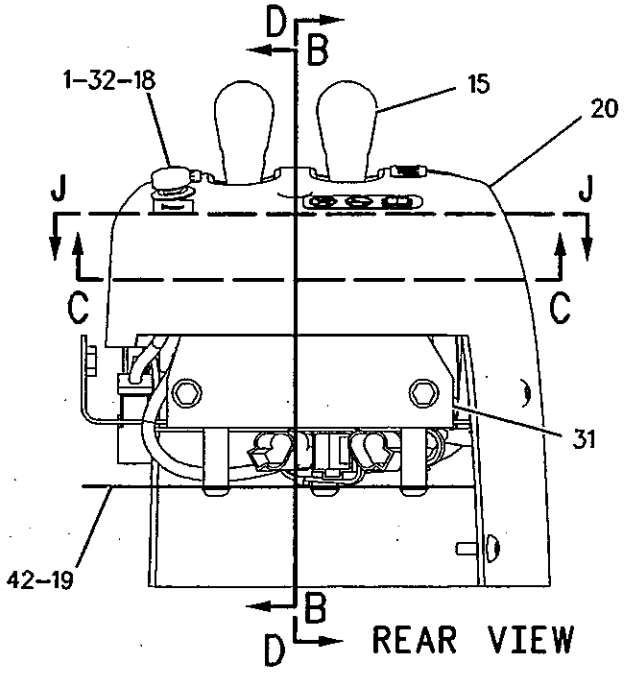


REAR VIEW

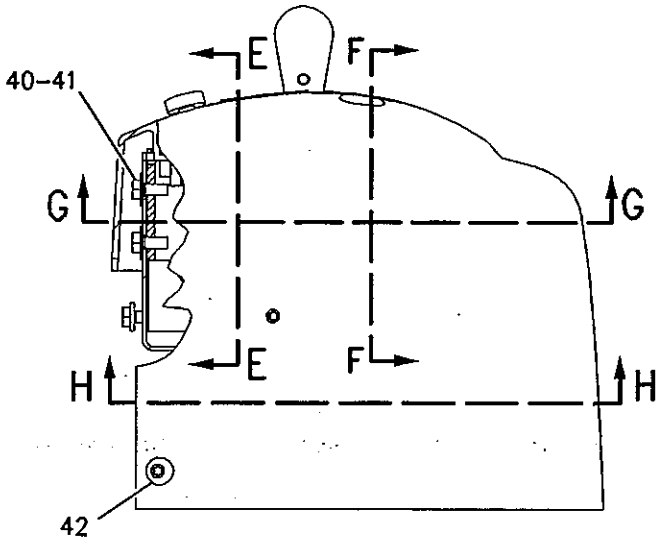


RIGHT SIDE VIEW

GRAPHIC #1

g00892033

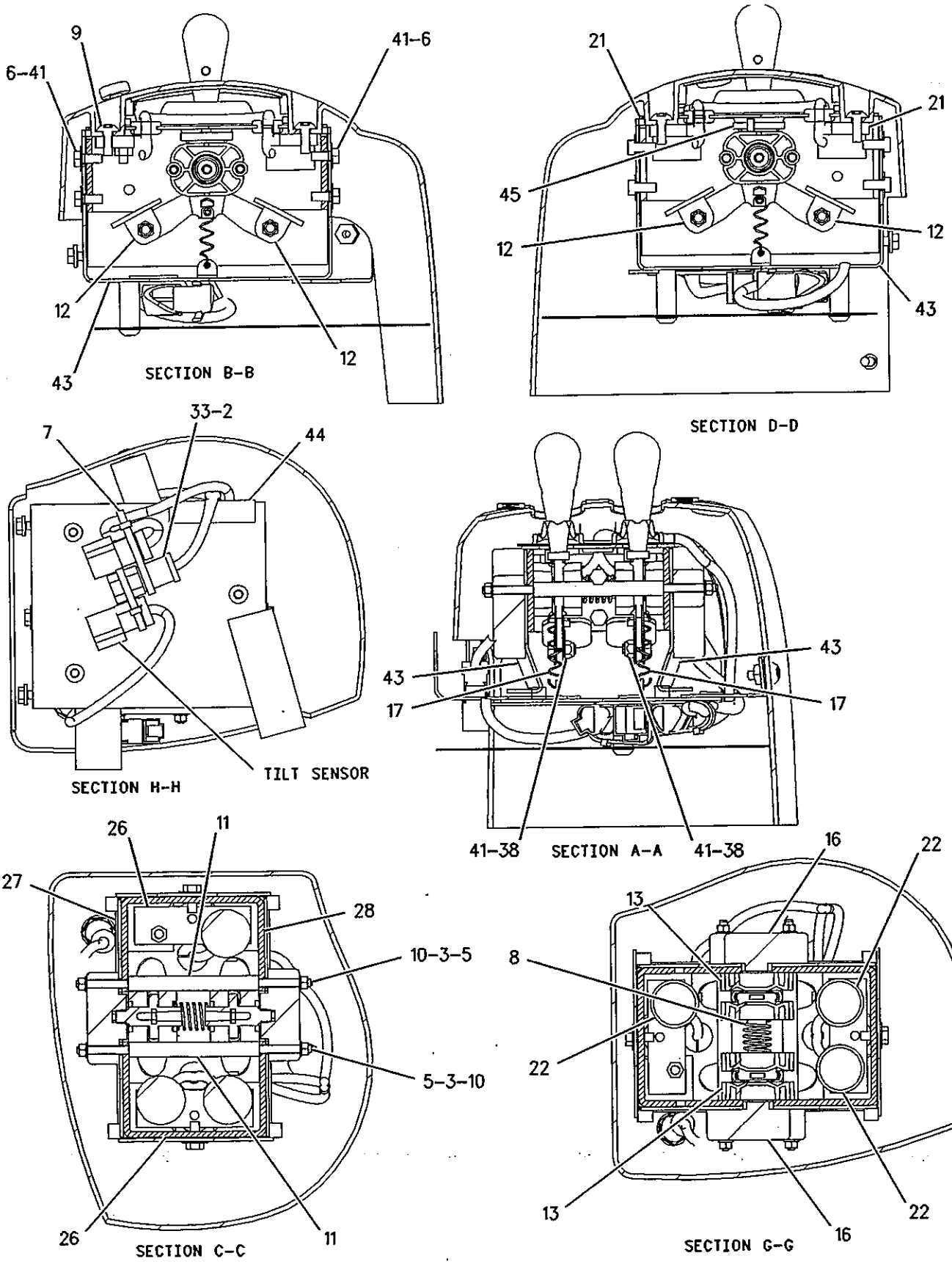


GRAPHIC #2 <END> g00892035

# HYDRAULIC SYSTEM

## 210-9583 CONTROL GP-ELECTROHYDRAULIC–3-FUNCTION

**S/N: JMS1-UP**

**PART OF 247-4867, 249-6704 HYDRAULIC AR-3 VALVE, 249-6705 LIFT AR AN ATTACHMENT**

**SMCS-5702** i02156893

| NOTE | REF NO | GRAPHIC REF | PART NUMBER | QTY | PART NAME 1 2 3 4 5 6 (PRODUCT LEVEL) | SEE PAGE |
|---|---|---|---|---|---|---|
| | 1 | 1 | 3E-3383 | 1 | WEDGE-RECEPTACLE LOCK (6-PIN) | |
| M | 2 | 2 | 5C-2874 | 4 | NUT (M5X0.8-THD) | |
| | 4 | 1 | 8R-3695 | 1 | GROMMET | |
| | 5 | 2 | 8T-0328 | 6 | WASHER-HARD (5.5X10X1-MM THK) | |
| | 6 | 2 | 9T-4735 | 1 | SPRING | |
| | 7 | 1,2 | 9X-2026 | 8 | WASHER (6.5X17X1-MM THK) | |
| | 8 | 2 | 105-2976 | 3 | FLANGE | |
| | 9 | 2 | 105-3372 | 1 | SPRING | |
| | 10 | 2 | 106-1582 | 1 | HOUSING | |
| | 11 | 2 | 106-1584 | 2 | SPACER (6.22X9.52X85-MM THK) | |
| | 12 | 2 | 114-4247 | 4 | BRACKET AS | |
| | 13 | 2 | 114-8165 | 2 | ROD | |
| | 14 | 2 | 139-1378 | 6 | BEARING | |
| | 15 | 1 | 140-5945 | 1 | FILM-IDENTIFICATION (HORN) | |
| | 16 | 1 | 149-3949 | 3 | LEVER-CONTROL | |
| | 17 | 2 | 150-6287 | 2 | SPACER | |
| Y | 18 | 2 | 214-4862 | 3 | SENSOR GP-POSITION (SPRINGLESS) (CONTROL LEVER) | 206 |
| | 19 | 2 | 163-8119 | 3 | SPRING | |
| | 20 | 1 | 170-1821 | 1 | SWITCH AS-PUSH BUTTON (HORN) | |
| | | 1 | 6F-0253 | 1 | LOCKWASHER | |
| | | 1 | 186-3735 | 2 | PIN-CONNECTOR (16-GA TO 18-GA) | |
| | | 1 | 172-3511 | 1 | NUT (5/8-24-THD) | |
| | 21 | 1 | 210-6782 | 1 | COVER | |
| C | 22 | 1 | 238-2771 | 1 | COVER | |
| | 23 | 2 | 188-0955 | 3 | COIL AS-DETENT (CONTROL LEVER) | |
| | | | | | (EACH INCLUDES) | |
| | | 2 | 1S-9593 | 2 | STRAP-CABLE | |
| | | 2 | 186-3735 | 2 | PIN-CONNECTOR (16-GA TO 18-GA) | |
| | 24 | 1 | 189-2077 | 1 | FILM-CONTROL (LIFT, FLOAT, LOWER) | |
| | 25 | 1 | 189-2078 | 1 | FILM-CONTROL (DUMP, TILT BACK) | |
| | 26 | 1 | 189-2079 | 1 | FILM-INSTRUCTION (MAINTENANCE) | |
| | 27 | 1 | 201-5563 | 1 | FILM-IDENTIFICATION (AUXILIARY HYDRAULIC) | |
| | 28 | 2 | 207-7447 | 2 | PLATE | |
| | 29 | 2 | 208-2479 | 2 | SPACER (10X13.1X5.5-MM THK) | |
| | 30 | 1 | 208-8333 | 3 | COVER | |
| C | 31 | 2 | 238-2772 | 1 | PLATE AS | |
| | 32 | 2 | 211-7710 | 1 | COVER AS | |
| M | | 2 | 6V-9632 | 5 | NUT-WELD (M6X1-THD) | |
| | 33 | 1 | 211-8285 | 1 | PLATE | |
| | 34 | 2 | 102-8802 | 1 | KIT-RECEPTACLE (2-PIN) | |
| | 35 | 1 | 102-8805 | 1 | KIT-RECEPTACLE (6-PIN) | |
| | | | | | (EACH INCLUDES RECEPTACLE AS AND WEDGE) | |
| M | 36 | 1 | 5C-2890 | 1 | NUT (M6X1-THD) | |
| | 37 | 1 | 5P-8523 | 1 | GROMMET | |
| | 38 | 1 | 5P-8524 | 1 | GROMMET | |
| M | 39 | 2 | 6V-7743 | 4 | LOCKNUT (M6X1-THD) | |
| M | 40 | 1 | 7X-2533 | 3 | BOLT (M6X1X35-MM) | |
| M | 41 | 2 | 7X-2619 | 1 | BOLT (M6X1X20-MM) | |
| M | 42 | 1 | 8C-8451 | 1 | BOLT (M6X1X40-MM) | |
| | 43 | 1 | 8M-2771 | 2 | CLIP | |
| | 44 | 1 | 8T-4205 | 2 | WASHER-HARD (7.2X14.5X2-MM THK) | |
| M | 45 | 1,2 | 8T-4970 | 10 | BOLT (M6X1X14-MM) | |
| M | 46 | 1 | 9X-2044 | 3 | SCREW-TRUSS HEAD (M6X1X16-MM) | |
| BD | 47 | 1,2 | 090-4808 | | SEAL | |

## 210-9583 CONTROL GP-ELECTROHYDRAULIC *(contd.)* i02156893

| NOTE | REF NO | GRAPHIC REF | PART NUMBER | QTY | PART NAME 1 2 3 4 5 6 (PRODUCT LEVEL) | SEE PAGE |
|---|---|---|---|---|---|---|
| BCD | 48 | 1 | **6V-9335** | | SEAL | |
| | 49 | 2 | **3E-3365** | 1 | WEDGE-RECEPTACLE LOCK (2-PIN) | |
| | 50 | 1 | **3S-2093** | 3 | STRAP-CABLE | |
| | 51 | 1 | **5F-9757** | 2 | GROMMET | |
| BD | 52 | 1 | **5P-6120** | | TRIM-EDGE | |
| | 53 | 2 | **8L-8413** | 3 | STRAP-CABLE | |
| CM | 54 | 1 | **9X-2043** | 3 | SCREW-TRUSS HEAD (M6X1X14-MM) | |

B-USE AS REQUIRED
C-CHANGE FROM PREVIOUS TYPE
D-ORDER BY THE METER
M-METRIC PART
Y-SEPARATE ILLUSTRATION

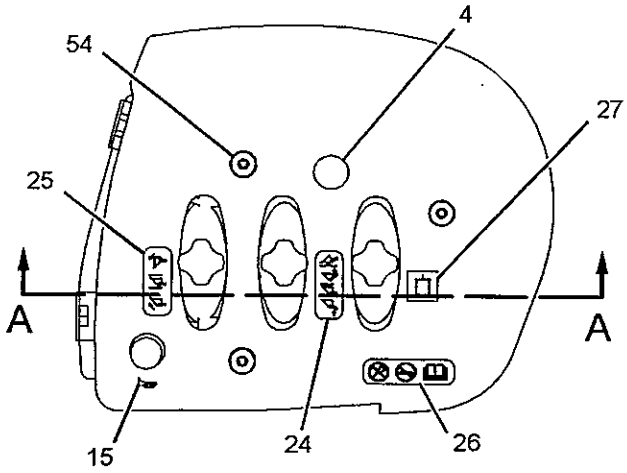


TOP VIEW

REFER TO ALL ILLUSTRATIONS OF THIS GROUP FOR AUXILIARY VIEWS

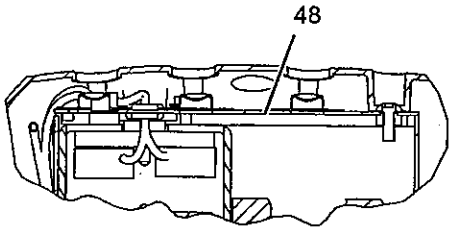


SECTION F-F

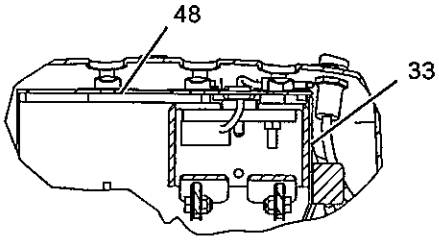


SECTION E-E

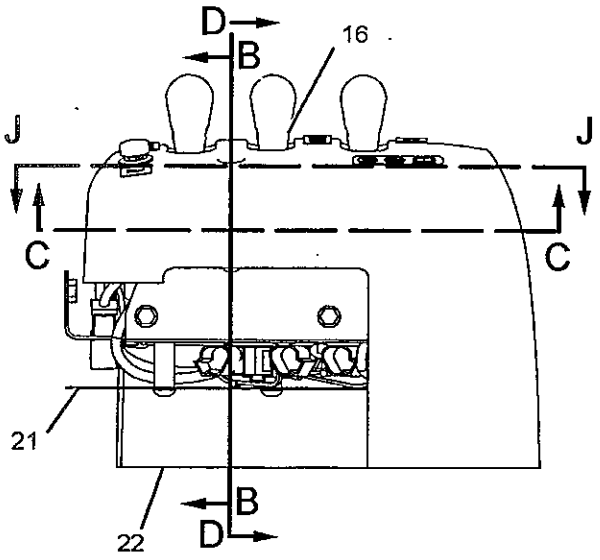


REAR VIEW

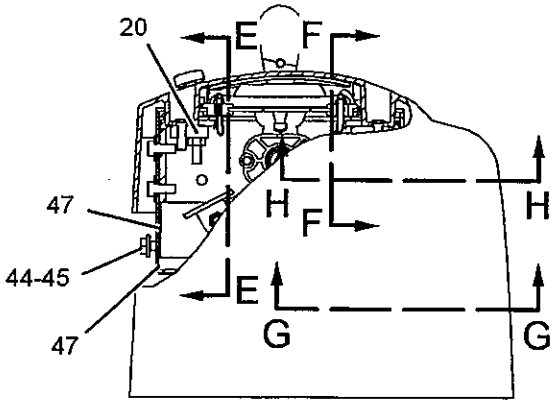


RIGHT SIDE VIEW

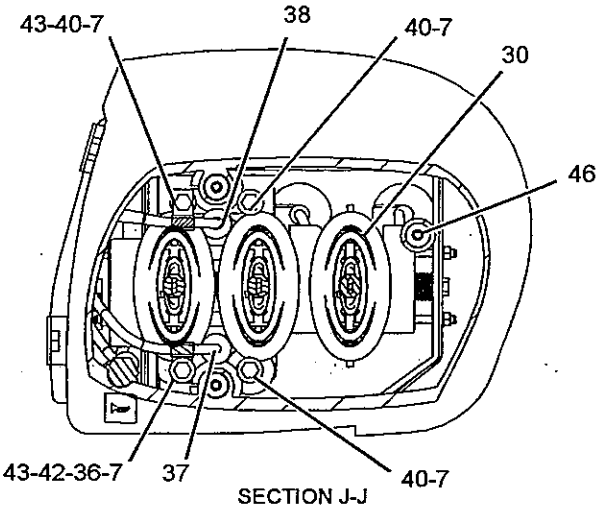


SECTION J-J

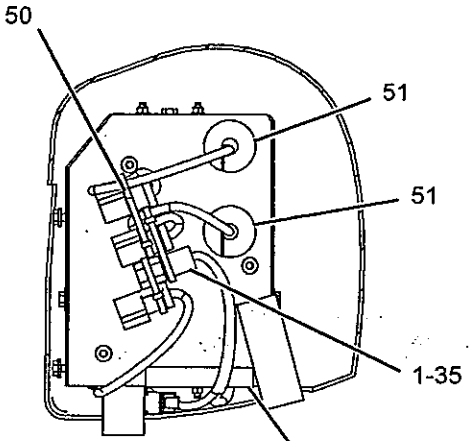


SECTION G-G

GRAPHIC #1

g01110970

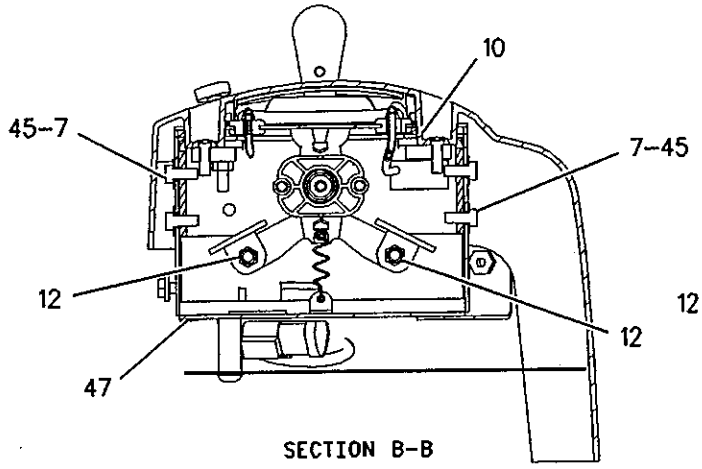


SECTION B-B

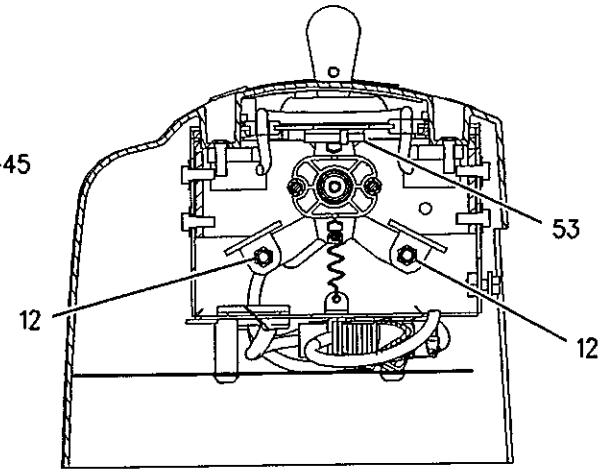


SECTION D-D

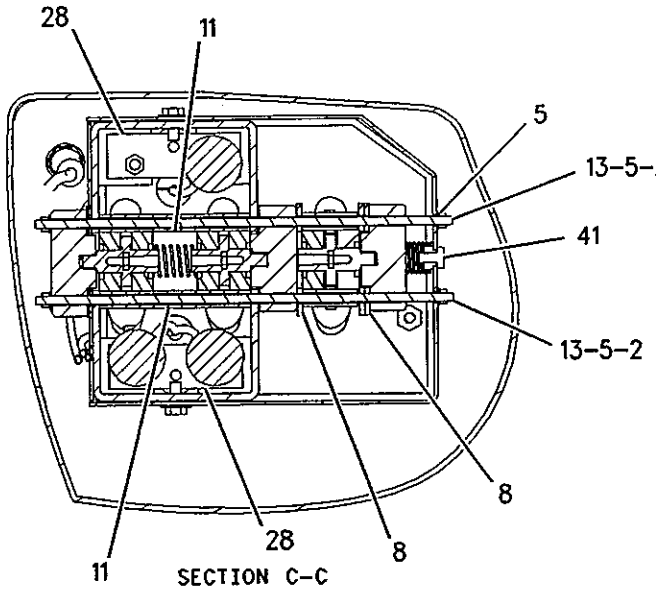


SECTION C-C

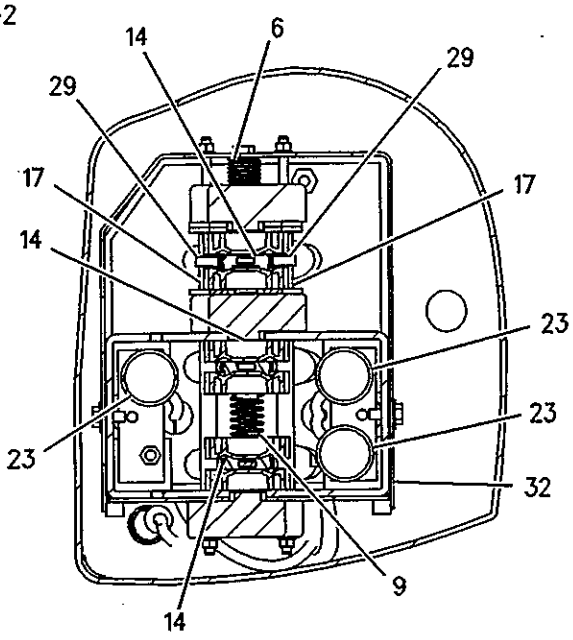


SECTION H-H

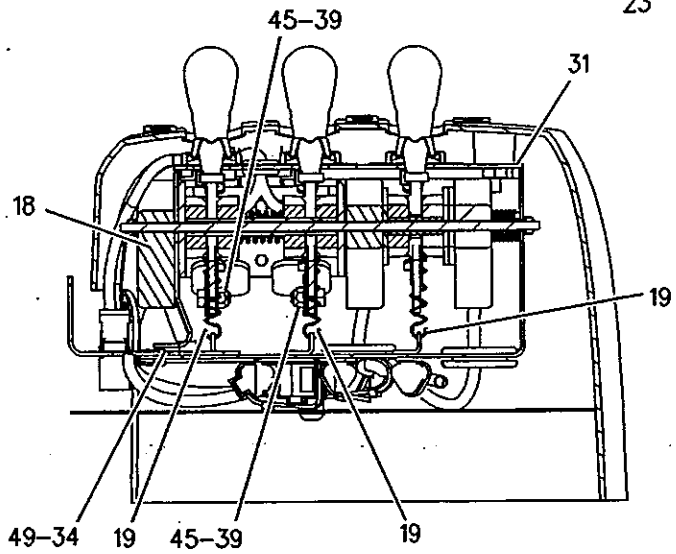


SECTION A-A

GRAPHIC #2 **<END>** g01041923

# HYDRAULIC SYSTEM

## 233-0208 CONTROL GP-ELECTROHYDRAULIC-JOYSTICK, 2-FUNCTION W/AUTODIG

S/N: JMS1-UP

AN ATTACHMENT

SMCS-5702

i02089876

| NOTE | REF NO | GRAPHIC REF | PART NUMBER | QTY | PART NAME 1 2 3 4 5 6 (PRODUCT LEVEL) | SEE PAGE |
|---|---|---|---|---|---|---|
| | 1 | 2 | 7K-1181 | 1 | STRAP-CABLE | |
| | 2 | 1 | 189-2079 | 1 | FILM-INSTRUCTION (MAINTENANCE) | |
| | 3 | 1 | 205-8210 | 1 | CUSHION AS | |
| | 4 | 2 | 205-8211 | 1 | PLATE | |
| | 5 | 2 | 205-8212 | 1 | CUSHION AS | |
| | 6 | 1 | 210-6783 | 1 | BRACKET AS | |
| M | | 1 | 6V-9632 | 2 | NUT-WELD (M6X1 THD) | |
| | 7 | 2 | 213-6016 | 1 | BRACKET AS | |
| M | | 2 | 6V-9632 | 18 | NUT-WELD (M6X1 THD) | |
| | | 2 | 188-9038 | 3 | BOSS | |
| | 8 | 1 | 213-6020 | 1 | COVER | |
| Y | 9 | 1 | 220-6102 | 1 | CONTROL GP-JOYSTICK (2-FUNCTION WITH AUTODIG) | 617 |
| | 10 | 1 | 233-6565 | 1 | FILM-CONTROL (JOYSTICK, 2-FUNCTION, AUTODIG) | |
| | 11 | 2 | 236-2526 | 1 | HARNESS AS-OPERATOR CONTROLS (JOYSTICK) | |
| | | 2 | 155-2255 | 1 | KIT-CONNECTING PLUG (12-PIN) | |
| | | 2 | 155-2270 | 1 | KIT-CONNECTING PLUG (2-PIN) | |
| | | 2 | 155-2274 | 1 | KIT-CONNECTING PLUG (6-PIN) | |
| | | | | | (EACH KIT-CONNECTING INCLUDES PLUG AND WEDGE) | |
| | | 2 | 180-0050 | 1 | KIT-CONNECTING PLUG (4-PIN) | |
| | | 2 | 218-4935 | 1 | SUPPRESSOR-ARC | |
| M | 12 | 1 | 5C-2890 | 2 | NUT (M6X1-THD) | |
| M | 13 | 2 | 6R-7653 | 2 | SCREW (M6X1X15-MM) | |
| | 14 | 2 | 8T-4121 | 4 | WASHER-HARD (11X21X2.5-MM THK) | |
| M | 15 | 2 | 8T-4133 | 4 | NUT (M10X1.5-THD) | |
| M | 16 | 1 | 8T-4138 | 2 | BOLT (M6X1X20-MM) | |
| M | 17 | 2 | 8T-4195 | 4 | BOLT (M10X1.5X30-MM) | |
| | 18 | 1,2 | 8T-4205 | 6 | WASHER-HARD (7.2X14.5X2-MM THK) | |
| M | 19 | 2 | 8T-4970 | 2 | BOLT (M6X1X14-MM) | |
| | 20 | 2 | 9X-2038 | 4 | WASHER (7X19X2-MM THK) | |
| M | 21 | 1,2 | 9X-2044 | 16 | SCREW-TRUSS HEAD (M6X1X16-MM) | |
| D | 22 | 2 | 5P-6120 | | TRIM-EDGE (.4-M) | |
| D | 22A | 2 | 5P-6120 | | TRIM-EDGE (.115-M) | |
| D | 22B | 2 | 5P-6120 | | TRIM-EDGE (.115-M) | |

D-ORDER BY THE METER
M-METRIC PART
Y-SEPARATE ILLUSTRATION

REFER TO ALL ILLUSTRATIONS OF THIS GROUP FOR AUXILIARY VIEWS

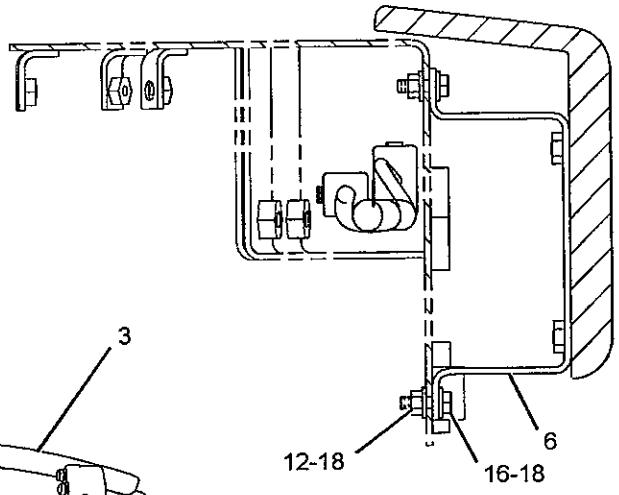


SECTION D-D

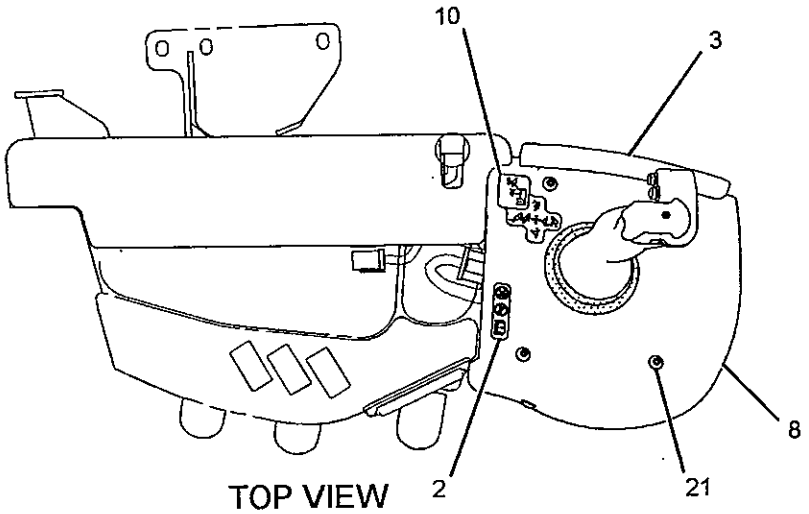


TOP VIEW

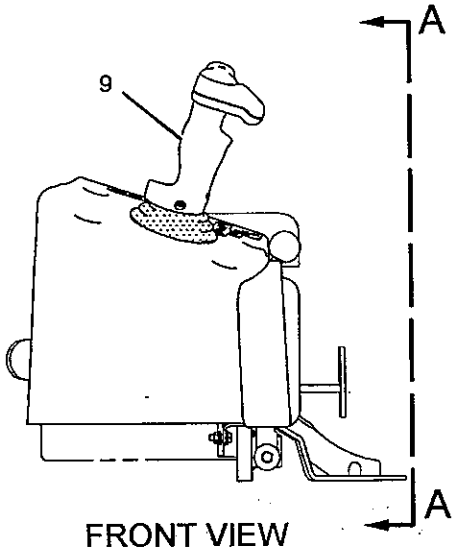


FRONT VIEW

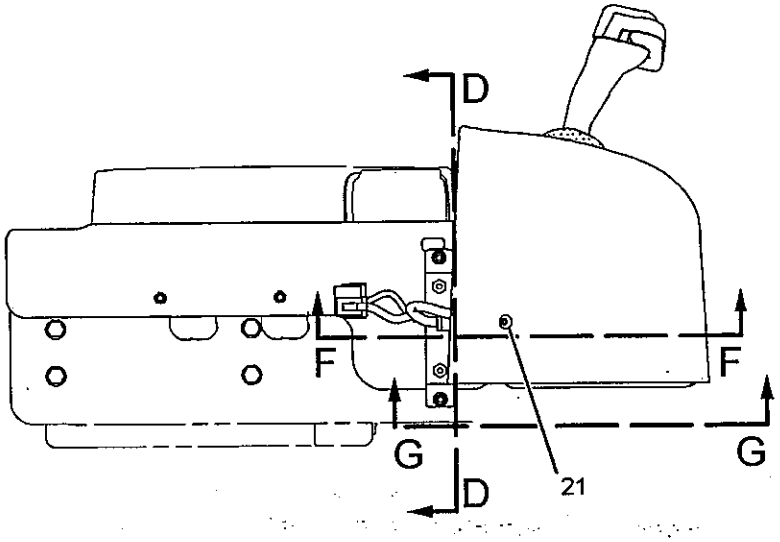


RIGHT SIDE VIEW

GRAPHIC #1 g01068477

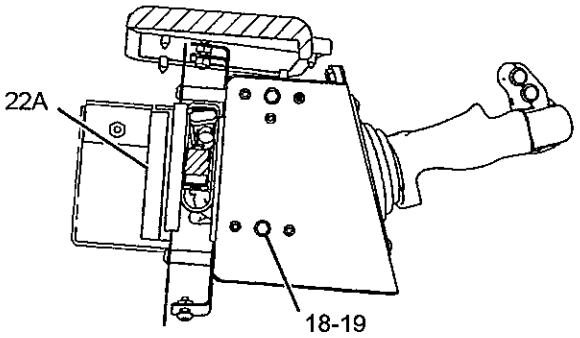


SECTION C-C

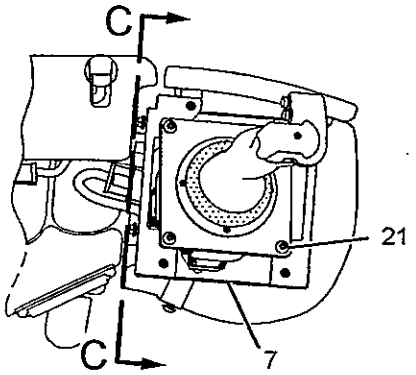


TOP VIEW
(COVER REMOVED)

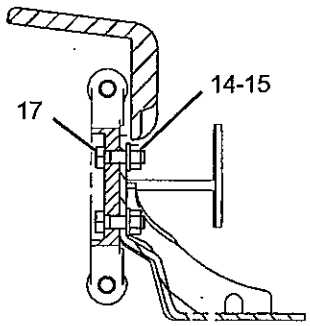


SECTION E-E

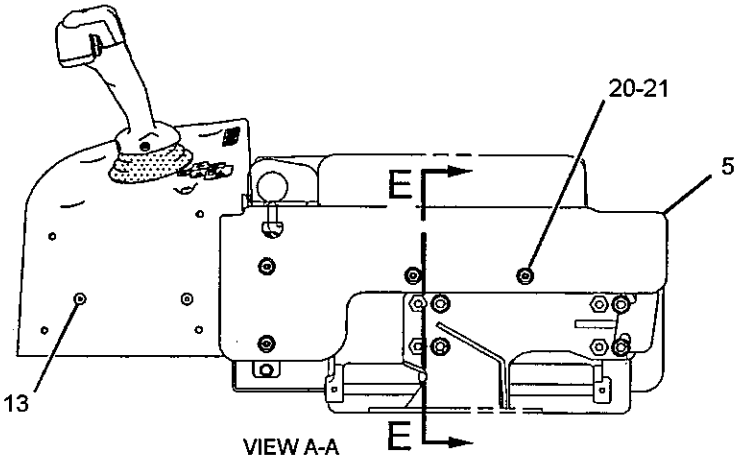


VIEW A-A

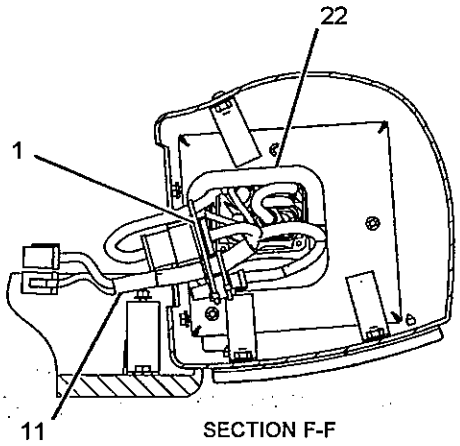


SECTION F-F

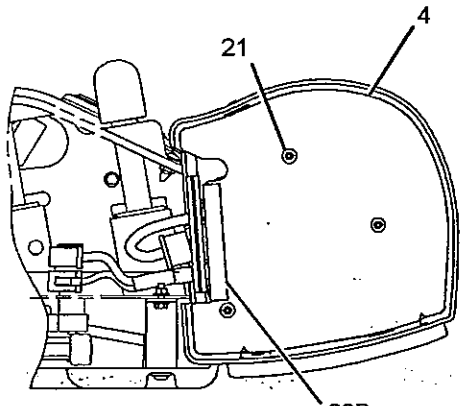


VIEW G-G

GRAPHIC #2 **<END>** g01068576

# HYDRAULIC SYSTEM

## 233-0209 CONTROL GP-ELECTROHYDRAULIC-
### JOYSTICK, 3-FUNCTION W/AUTODIG
S/N: JMS1-UP
AN ATTACHMENT

SMCS-5702

i02089885

| NOTE | REF NO | GRAPHIC REF | PART NUMBER | QTY | PART NAME 1 2 3 4 5 6 (PRODUCT LEVEL) | SEE PAGE |
|---|---|---|---|---|---|---|
| | 1 | 2 | 7K-1181 | 1 | STRAP-CABLE | |
| | 2 | 1 | 189-2079 | 1 | FILM-INSTRUCTION (MAINTENANCE) | |
| | 3 | 1 | 205-8210 | 1 | CUSHION AS | |
| | 4 | 2 | 205-8211 | 1 | PLATE | |
| | 5 | 2 | 205-8212 | 1 | CUSHION AS | |
| Y | 6 | 1 | 208-6060 | 1 | CONTROL GP-JOYSTICK (3-FUNCTION WITH AUTODIG) | 613 |
| | 7 | 1 | 210-6783 | 1 | BRACKET AS | |
| M | | 1 | 6V-9632 | 2 | NUT-WELD (M6X1 THD) | |
| | 8 | 2 | 213-6016 | 1 | BRACKET AS | |
| M | | 2 | 6V-9632 | 18 | NUT-WELD (M6X1 THD) | |
| | | 2 | 188-9038 | 3 | BOSS | |
| | 9 | 1 | 213-6020 | 1 | COVER | |
| | 10 | 1 | 233-6567 | 1 | FILM-CONTROL (JOYSTICK, 3-FUNCTION, AUTODIG) | |
| | 11 | 2 | 236-2526 | 1 | HARNESS AS-OPERATOR CONTROLS (JOYSTICK) | |
| | | 2 | 155-2255 | 1 | KIT-CONNECTING PLUG (12-PIN) | |
| | | 2 | 155-2270 | 1 | KIT-CONNECTING PLUG (2-PIN) | |
| | | 2 | 155-2274 | 1 | KIT-CONNECTING PLUG (6-PIN) | |
| | | 2 | 180-0050 | 1 | KIT-CONNECTING PLUG (4-PIN) | |
| | | 2 | 218-4935 | 1 | SUPPRESSOR-ARC | |
| M | 12 | 1 | 5C-2890 | 2 | NUT (M6X1-THD) | |
| M | 13 | 2 | 6R-7653 | 2 | SCREW (M6X1X15-MM) | |
| | 14 | 2 | 8T-4121 | 4 | WASHER-HARD (11X21X2.5-MM THK) | |
| M | 15 | 2 | 8T-4133 | 4 | NUT (M10X1.5-THD) | |
| M | 16 | 1 | 8T-4138 | 2 | BOLT (M6X1X20-MM) | |
| M | 17 | 2 | 8T-4195 | 4 | BOLT (M10X1.5X30-MM) | |
| | 18 | 1,2 | 8T-4205 | 6 | WASHER-HARD (7.2X14.5X2-MM THK) | |
| M | 19 | 2 | 8T-4970 | 2 | BOLT (M6X1X14-MM) | |
| | 20 | 2 | 9X-2038 | 4 | WASHER (7X19X2-MM THK) | |
| M | 21 | 1,2 | 9X-2044 | 16 | SCREW-TRUSS HEAD (M6X1X16-MM) | |
| D | 22 | 2 | 5P-6120 | | TRIM-EDGE (.4-M) | |
| D | 22A | 2 | 5P-6120 | | TRIM-EDGE (.115-M) | |
| D | 22B | 2 | 5P-6120 | | TRIM-EDGE (.115-M) | |

D-ORDER BY THE METER
M-METRIC PART
Y-SEPARATE ILLUSTRATION

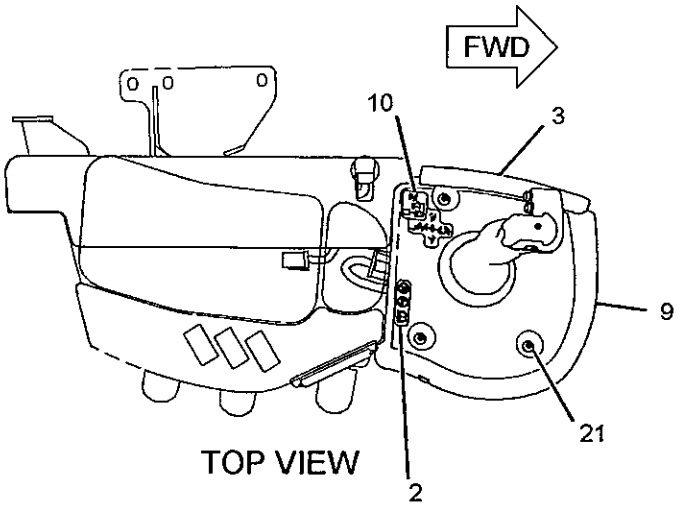


TOP VIEW

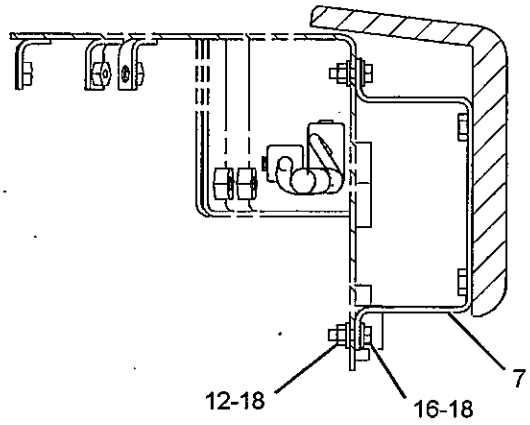


VIEW D-D

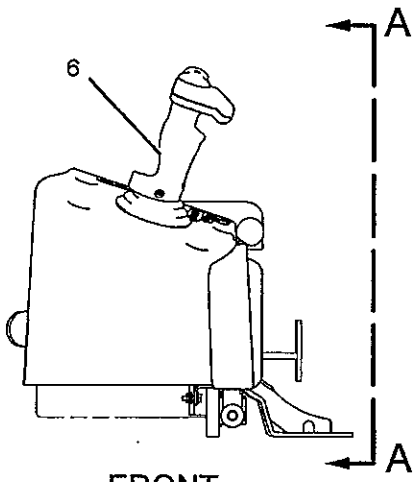


FRONT

REFER TO ALL ILLUSTRATIONS OF THIS GROUP FOR AUXILIARY VIEWS

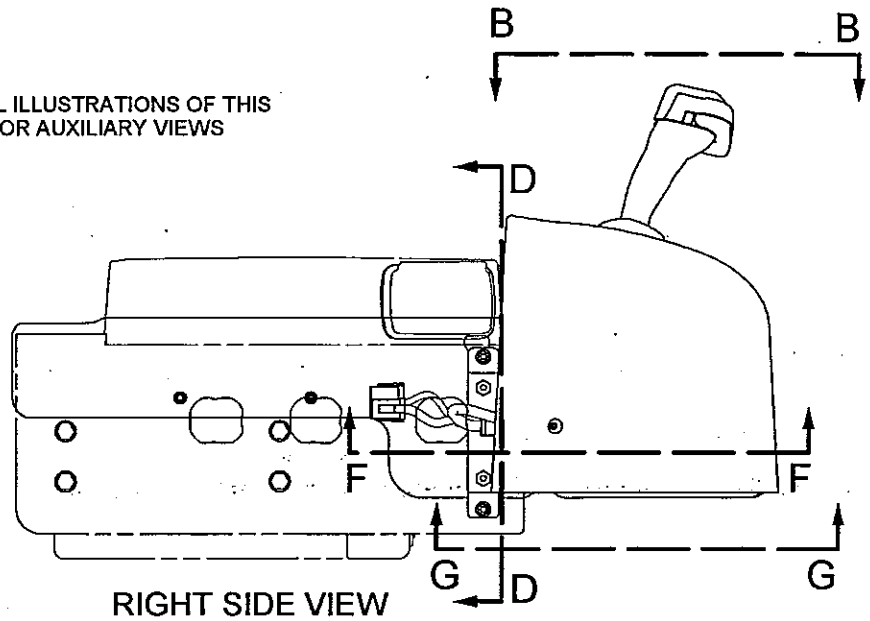


RIGHT SIDE VIEW

GRAPHIC #1

g01068151

## 233-0209 CONTROL GP-ELECTROHYDRAULIC *(contd.)* i02089885

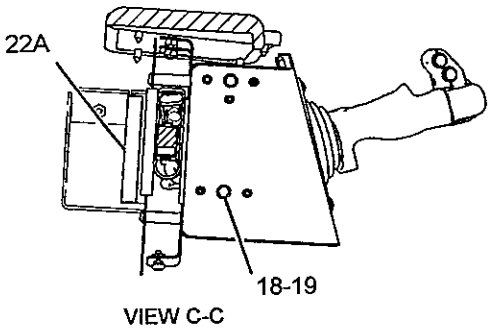


VIEW C-C

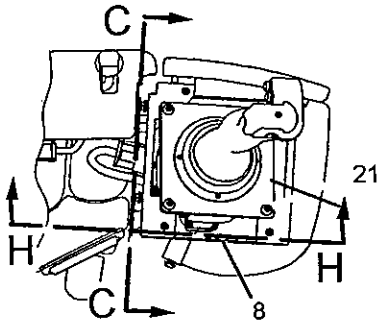


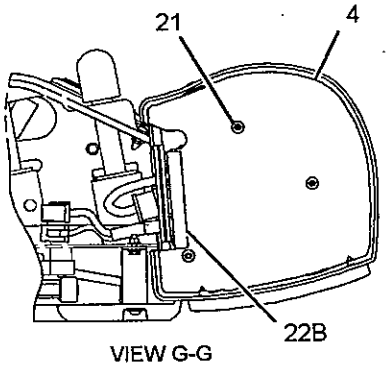


VIEW G-G

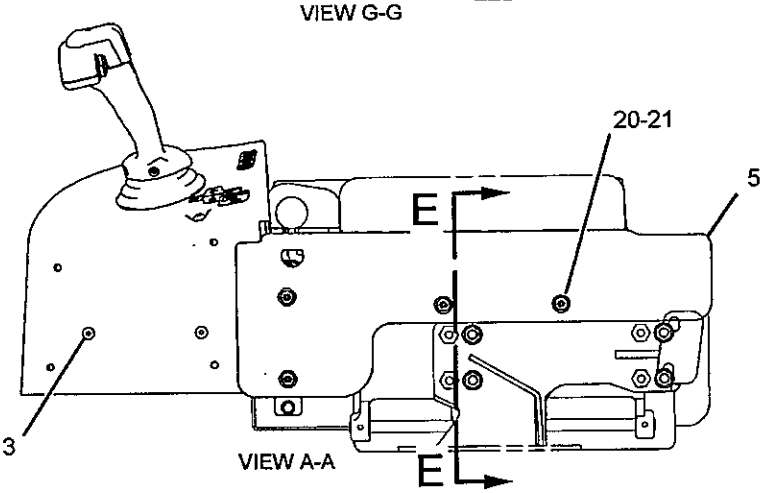


VIEW A-A

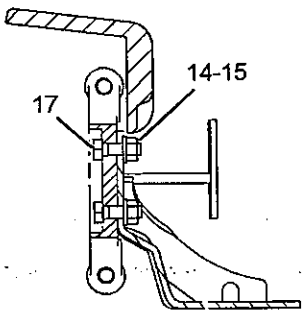


VIEW E-E

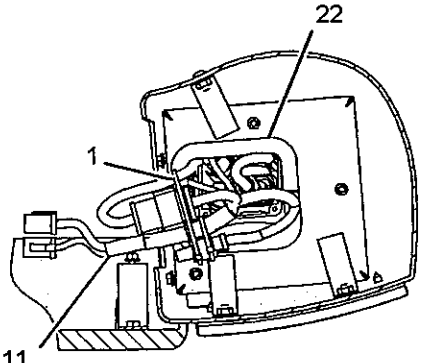


VIEW F-F

GRAPHIC #2 **<END>** g01068307

# *206-7419* CONTROL GP-HANDLE

**S/N: JMS1-UP**
**PART OF 220-6102 CONTROL GP-JOYSTICK**
**AN ATTACHMENT**

**SMCS-5063, 5705** **i02281871**

| NOTE | REF NO | GRAPHIC REF | PART NUMBER | QTY | PART NAME 1 2 3 4 5 6 (PRODUCT LEVEL) | SEE PAGE |
|---|---|---|---|---|---|---|
| | 1 | 1 | **175-4170** | 2 | SCREW-PAN HEAD (NO 6X1.625-IN) | |
| | 2 | 1 | **9B-1117** | 2 | LOCKWASHER | |
| | 3 | 1 | **6V-1668** | 1 | WASHER (6.5X29.1X3-MM THK) | |
| Z | 4 | 1 | | 1 | SWITCH AS (HORN) | |
| Z | 4A | 1 | | 1 | SWITCH AS (AUTODIG) | |
| | 5 | 1 | **144-0331** | 2 | CAP-PUSH BUTTON | |
| B | 6 | 1 | **218-7136** | | SLEEVE (36-CM) | |
| | 7 | 1 | **6V-1614** | 1 | TUBE-HEAT SHRINK | |
| | 8 | 1 | **208-6081** | 1 | SLEEVE | |

B-USE AS REQUIRED
Z-NOT SERVICED SEPARATELY

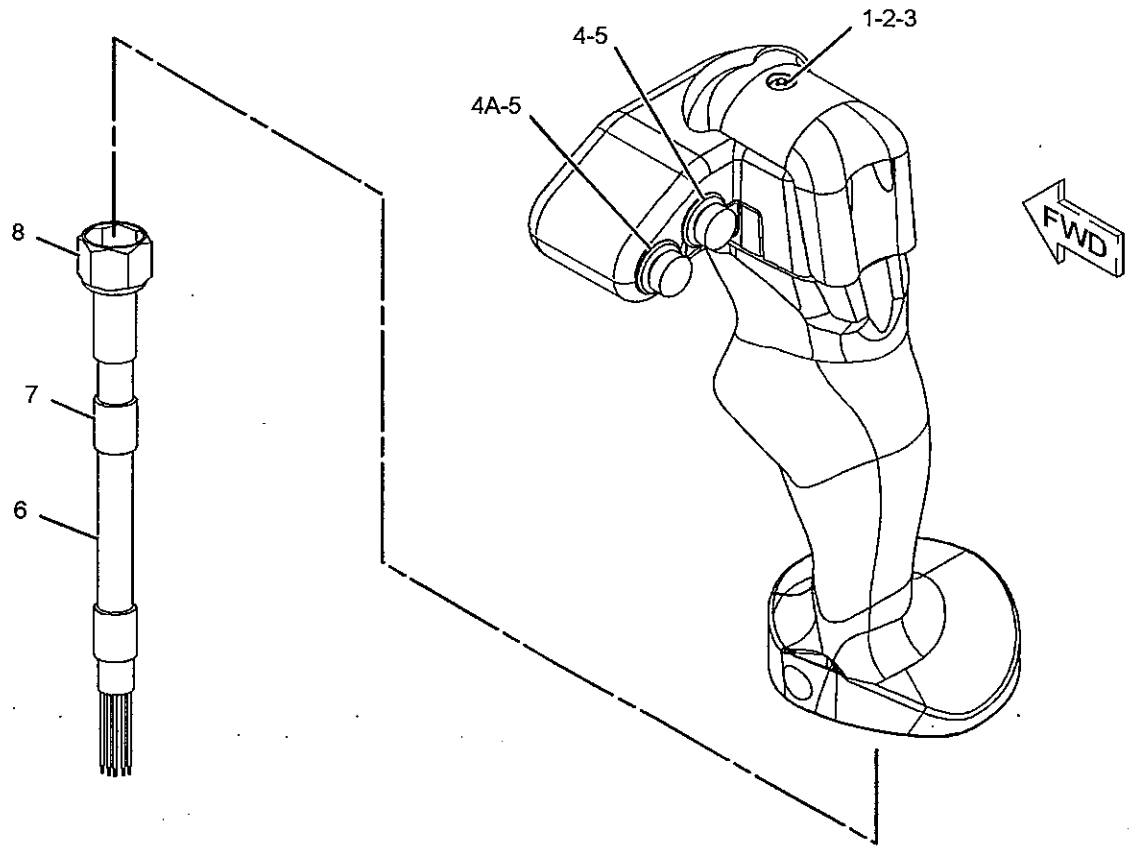


GRAPHIC #1 **<END>** g01142579

# HYDRAULIC SYSTEM

## 230-9072 CONTROL GP-HANDLE–JOYSTICK

**S/N: JMS1-UP**

**PART OF 208-6060 CONTROL GP-JOYSTICK**

**AN ATTACHMENT**

**SMCS-5063, 5705** **i02281947**

| NOTE | REF NO | GRAPHIC REF | PART NUMBER | QTY | PART NAME 1 2 3 4 5 6 (PRODUCT LEVEL) | SEE PAGE |
|---|---|---|---|---|---|---|
| Z | 1 | 1 | | 1 | HANDLE AS | |
| | 2 | 1 | **144-0331** | 2 | CAP-PUSH BUTTON | |
| | 3 | 1 | **232-3870** | 1 | HOUSING AS | |
| Z | 3A | 1 | | 1 | SWITCH AS-PUSH BUTTON (AUTODIG) | |
| Z | 3B | 1 | | 1 | SWITCH AS-PUSH BUTTON (HORN) | |
| | 4 | 1 | **9B-1117** | 2 | LOCKWASHER | |
| | 5 | 1 | **175-4170** | 2 | SCREW-PAN HEAD (NO 6X1.625-IN) | |
| | 6 | 1 | **208-6081** | 1 | SLEEVE | |
| | 7 | 1 | **218-7136** | | SLEEVE (36-CM) | |
| D | 8 | 1 | **6V-1614** | 2 | TUBE-HEAT SHRINK (0.015-M EACH) | |

D-ORDER BY THE METER
Z-NOT SERVICED SEPARATELY

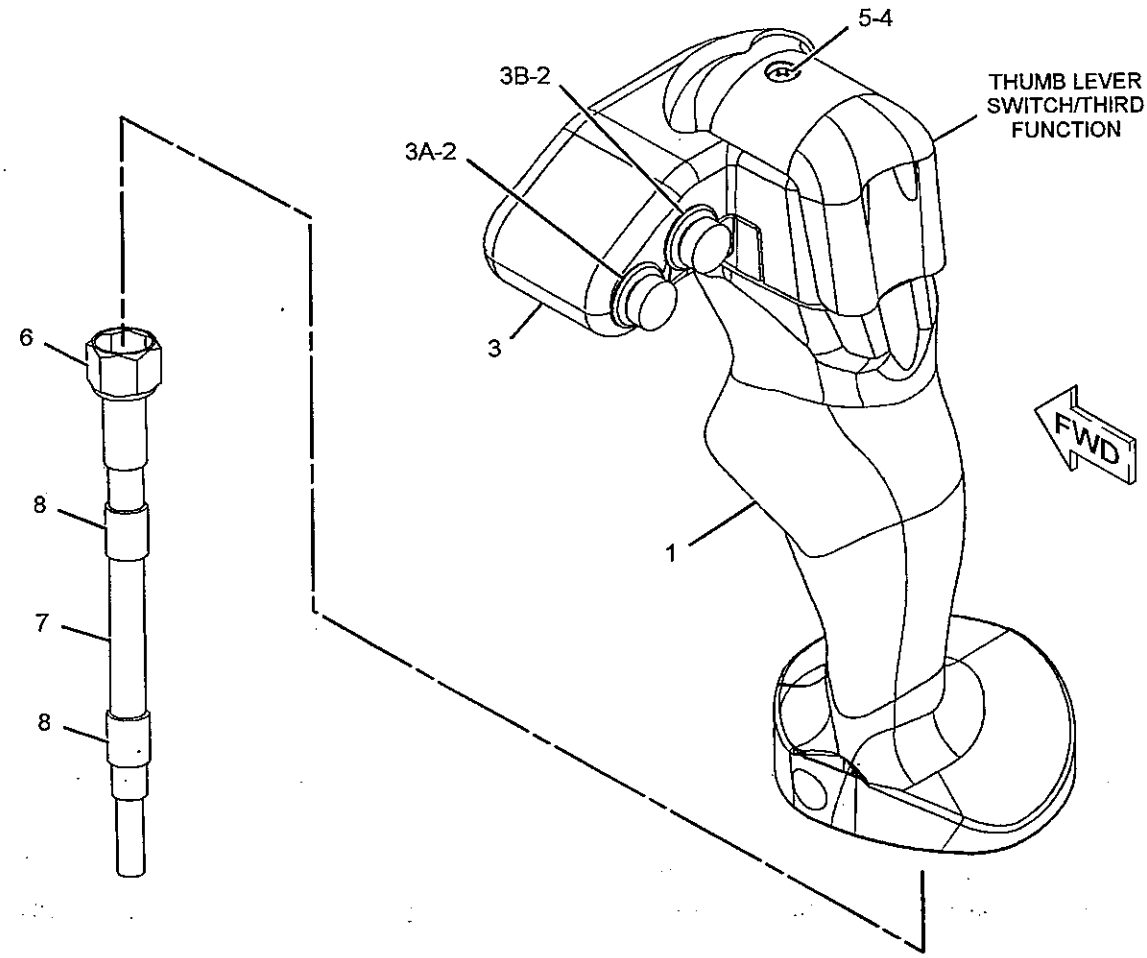


GRAPHIC #1 **<END>** g01142625

# 208-6060 CONTROL GP-JOYSTICK-3-FUNCTION WITH AUTODIG

S/N: JMS1-UP
PART OF 233-0209 CONTROL GP-ELECTROHYDRAULIC
AN ATTACHMENT
TYPE 1

SMCS-5063, 5705

i02200971

| NOTE | REF NO | GRAPHIC REF | PART NUMBER | QTY | PART NAME 1 2 3 4 5 6 (PRODUCT LEVEL) | SEE PAGE |
|---|---|---|---|---|---|---|
| M | 1 | 1 | 193-4476 | 8 | SCREW-PAN HEAD (M4X0.7X35-MM) | |
| | 3 | 1 | 228-0850 | 2 | DETENT GP-CONTROL (JOYSTICK, LIFT/TILT) | |
| | | | | | (EACH INCLUDES) | |
| | | 1 | 033-9139 | 1 | RING-RETAINING | |
| | | 1 | 107-1964 | 4 | SCREW-PAN HEAD (6-19X0.5-IN) | |
| Y | 4 | 1 | 230-9072 | 1 | CONTROL GP-HANDLE (JOYSTICK) | 612 |
| | 5 | 1 | 151-4977 | 12 | WASHER (4.445X9.525X1.092-MM THK) | |
| | 6 | 1 | 175-3265 | 1 | SCREW (8-16X0.63-IN) | |
| M | 7 | 1 | 192-4658 | 4 | SCREW-PAN HEAD (M4X0.7X20-MM) | |
| | 8 | 1 | 230-6268 | 1 | SENSOR GP-POSITION (LIFT) | |
| | 9 | 1 | 230-6269 | 1 | SENSOR GP-POSITION (TILT) | |
| | 10 | 1 | 2K-4898 | 1 | CLAMP-TUBE | |
| | 11 | 1 | 4B-9808 | 2 | SETSCREW (1/4-20X0.5-IN) | |
| | 12 | 1 | 186-3735 | 11 | PIN-CONNECTOR (16-GA TO 18-GA) | |
| | 13 | 1 | 8T-8737 | 1 | PLUG-SEAL | |
| | 14 | 1 | 3E-5180 | 1 | WEDGE-RECEPTACLE LOCK (12-PIN) | |
| | 15 | 1 | 174-3091 | 1 | KIT-RECEPTACLE (12-PIN) | |
| | | | | | (INCLUDES RECEPTACLE AS AND WEDGE) | |
| | 16 | 1 | 208-6081 | 1 | SLEEVE | |

M-METRIC PART
Y-SEPARATE ILLUSTRATION

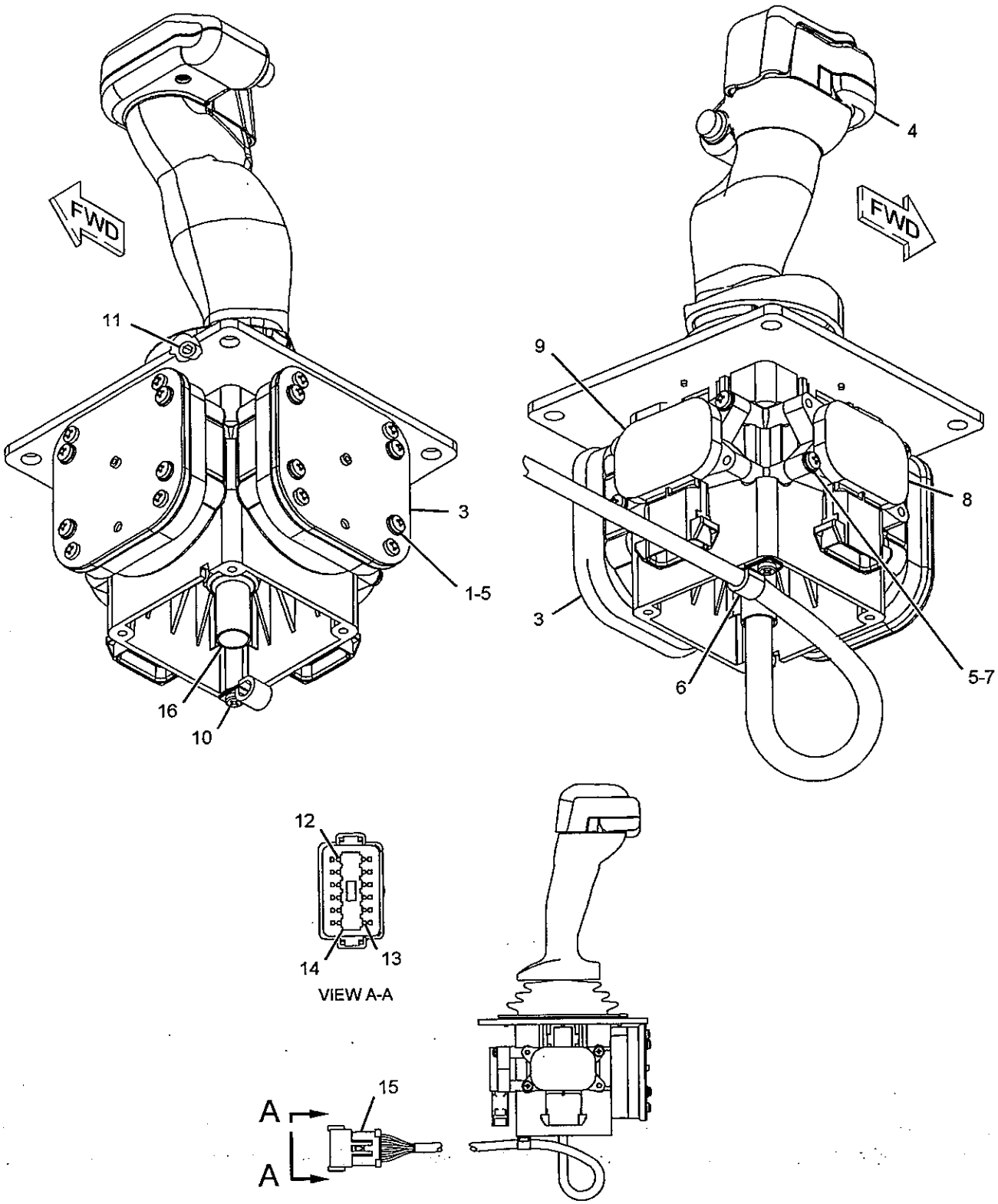


GRAPHIC #1

**<END>**

g01111692

# 208-6060 CONTROL GP-JOYSTICK-3-FUNCTION WITH AUTODIG

S/N: JMS1-UP
PART OF 233-0209 CONTROL GP-ELECTROHYDRAULIC
AN ATTACHMENT
TYPE 2

SMCS-5063, 5705

i02272746

| NOTE | REF NO | GRAPHIC REF | PART NUMBER | QTY | PART NAME 1 2 3 4 5 6 (PRODUCT LEVEL) | SEE PAGE |
|---|---|---|---|---|---|---|
| M | 1 | 1 | 193-4476 | 8 | SCREW-PAN HEAD (M4X0.7X35-MM) | |
| | 3 | 1 | 228-0850 | 2 | DETENT GP-CONTROL (JOYSTICK, LIFT/TILT) | |
| | | | | | (EACH INCLUDES) | |
| | | 1 | 033-9139 | 1 | RING-RETAINING | |
| | | 1 | 107-1964 | 4 | SCREW-PAN HEAD (6-19X0.5-IN) | |
| Y | 4 | 1 | 230-9072 | 1 | CONTROL GP-HANDLE (JOYSTICK) | 612 |
| | 5 | 1 | 151-4977 | 12 | WASHER (4.445X9.525X1.092-MM THK) | |
| | 6 | 1 | 175-3265 | 1 | SCREW (8-16X0.63-IN) | |
| M | 7 | 1 | 192-4658 | 4 | SCREW-PAN HEAD (M4X0.7X20-MM) | |
| C | 8 | 1 | 257-2531 | 1 | SENSOR AS-POSITION (LIFT) | |
| C | 9 | 1 | 257-2532 | 1 | SENSOR GP-POSITION (TILT) | |
| | 10 | 1 | 2K-4898 | 1 | CLAMP-TUBE | |
| | 11 | 1 | 4B-9808 | 2 | SETSCREW (1/4-20X0.5-IN) | |
| | 12 | 1 | 186-3735 | 11 | PIN-CONNECTOR (16-GA TO 18-GA) | |
| | 13 | 1 | 8T-8737 | 1 | PLUG-SEAL | |
| | 15 | 1 | 174-3091 | 1 | KIT-RECEPTACLE (12-PIN) | |
| | | | | | (INCLUDES RECEPTACLE AS AND WEDGE) | |
| | 16 | 1 | 208-6081 | 1 | SLEEVE | |

C-CHANGE FROM PREVIOUS TYPE
M-METRIC PART
Y-SEPARATE ILLUSTRATION

## 208-6060 CONTROL GP-JOYSTICK *(contd.)*

i02272746

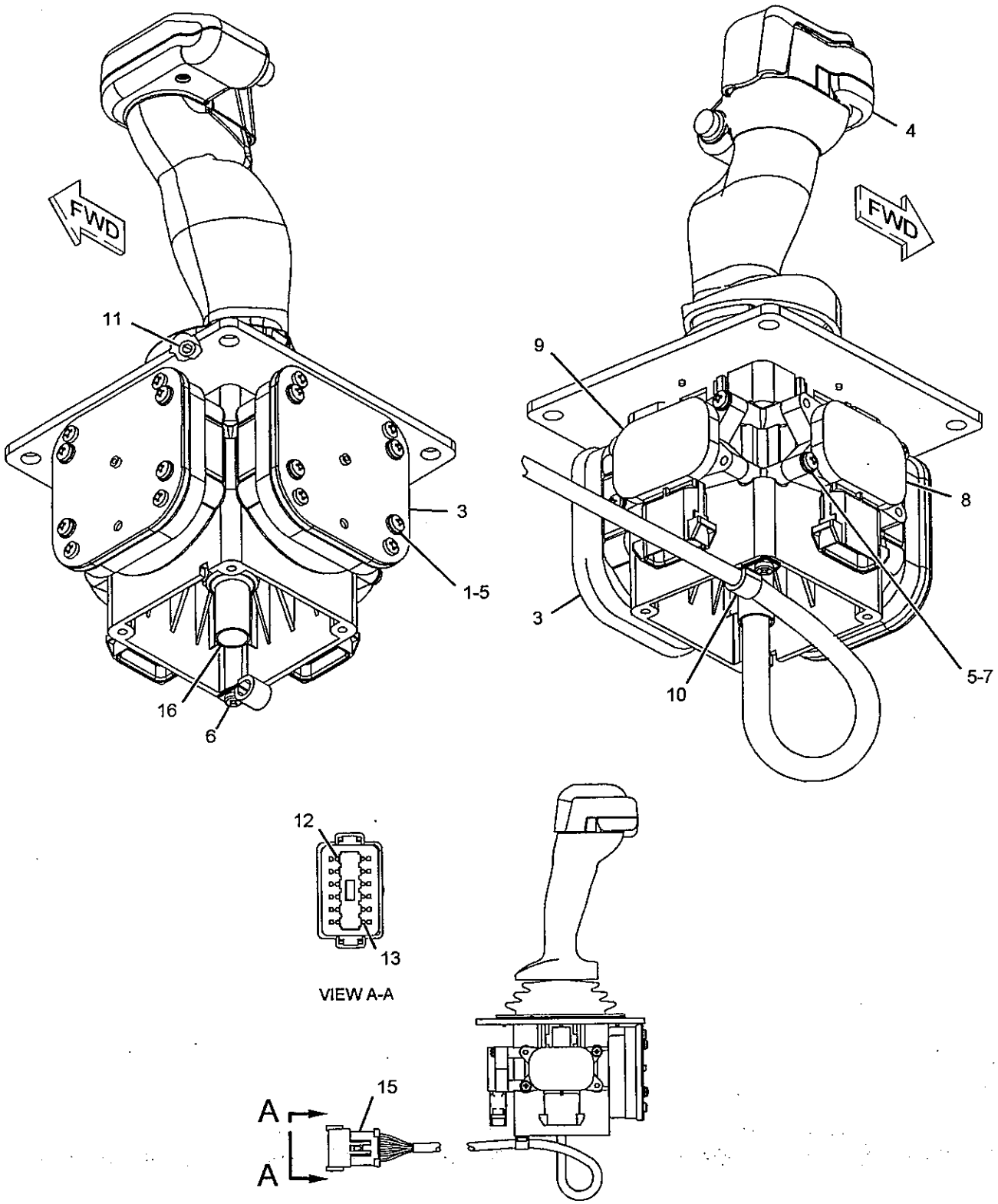


GRAPHIC #1

**<END>**

g01138305

# 220-6102 CONTROL GP-JOYSTICK-2-FUNCTION WITH AUTODIG

S/N: JMS1-UP

PART OF 233-0208 CONTROL GP-ELECTROHYDRAULIC

AN ATTACHMENT

SMCS-5063, 5705

i02282113

| NOTE | REF NO | GRAPHIC REF | PART NUMBER | QTY | PART NAME 1 2 3 4 5 6 (PRODUCT LEVEL) | SEE PAGE |
|---|---|---|---|---|---|---|
| M | 1 | 1 | 193-4476 | 8 | SCREW-PAN HEAD (M4X0.7X35-MM) | |
| | 2 | 1 | 175-1529 | 1 | BOOT | |
| | | | 178-5077 | 1 | PLATE | |
| | | | 205-2941 | 4 | SCREW-FLAT HEAD (M5X0.08X2.8-MM) | |
| Y | 3 | 1 | 206-7419 | 1 | CONTROL GP-HANDLE (JOYSTICK) | 611 |
| | 4 | 1 | 228-0850 | 2 | DETENT GP-CONTROL (JOYSTICK, LIFT/TILT) | |
| | 5 | 1 | 151-4977 | 12 | WASHER (4.445X9.525X1.092-MM THK) | |
| | 6 | 1 | 175-3265 | 1 | SCREW (8-16X0.63-IN) | |
| M | 7 | 1 | 192-4658 | 4 | SCREW-PAN HEAD (M4X0.7X20-MM) | |
| | 8 | 1 | 257-2531 | 1 | SENSOR AS-POSITION (LIFT) | |
| | 9 | 1 | 257-2532 | 1 | SENSOR GP-POSITION (TILT) | |
| | 10 | 1 | 2K-4898 | 1 | CLAMP-TUBE | |
| | 11 | 1 | 4B-9808 | 2 | SETSCREW (1/4-20X0.5-IN) | |
| | 12 | 1 | 186-3735 | 1 | PIN-CONNECTOR (16-GA TO 18-GA) | |
| | 13 | 1 | 8T-8737 | 1 | PLUG-SEAL | |
| | 15 | 1 | 174-3091 | 1 | KIT-RECEPTACLE (12-PIN) | |
| | | | | | (INCLUDES RECEPTACLE AS AND WEDGE) | |

M-METRIC PART
Y-SEPARATE ILLUSTRATION

## 220-6102 CONTROL GP-JOYSTICK *(contd.)*

i02282113

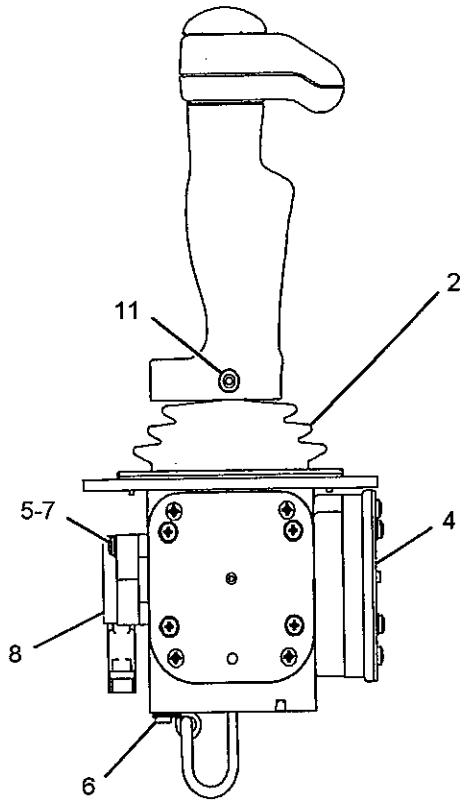


FRONT VIEW

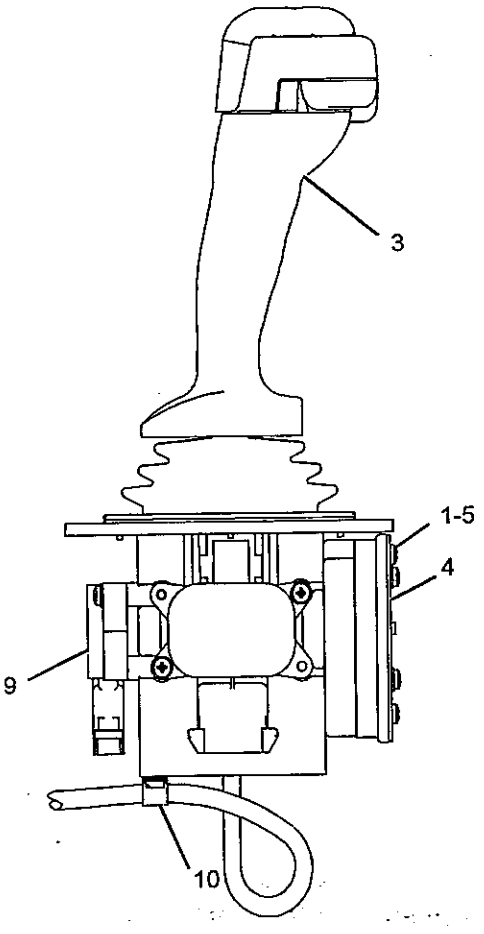


RIGHT SIDE VIEW

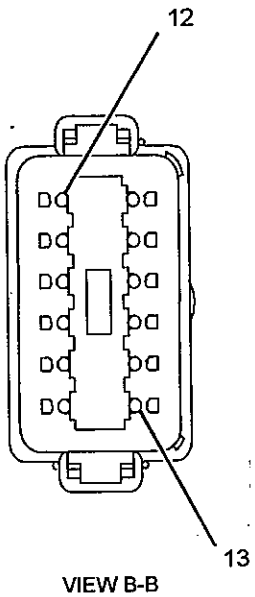


VIEW B-B

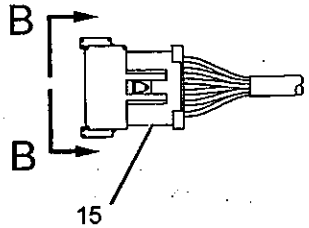


GRAPHIC #1

<END>

g01142089

# HYDRAULIC SYSTEM

## *235-5330* CYLINDER & SEAL GP-LIFT

**S/N: JMS1-UP**

**PART OF 235-1303 HYDRAULIC AR-2 VALVE**

**SMCS-5102** **i02088147**

| NOTE | REF NO | GRAPHIC REF | PART NUMBER | QTY | PART NAME 1 2 3 4 5 6 (PRODUCT LEVEL) | SEE PAGE |
|---|---|---|---|---|---|---|
| | 1 | 1 | 5P-3193 | 2 | SEAL-LIP TYPE | |
| Y | 2 | 1 | 111-8181 | 1 | CYLINDER GP-LIFT | 626 |

Y-SEPARATE ILLUSTRATION

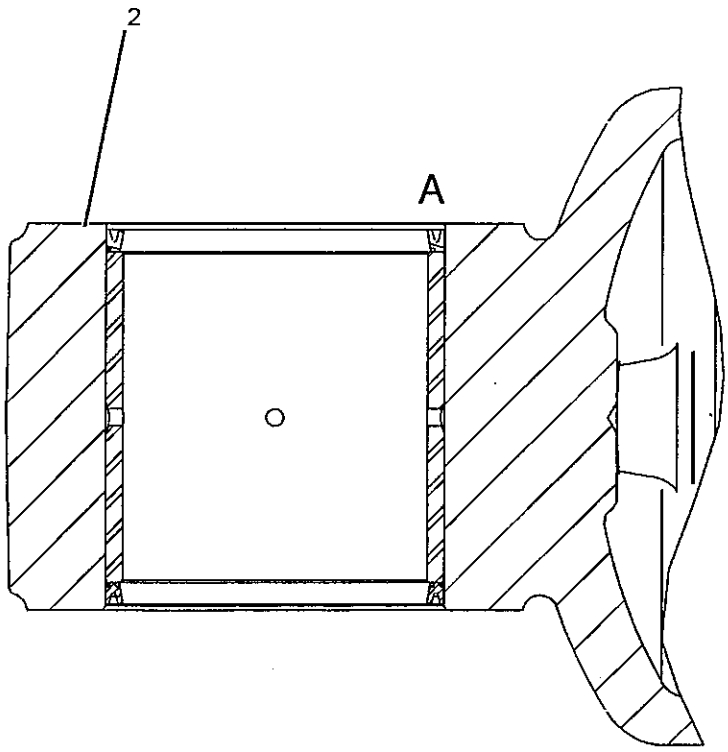


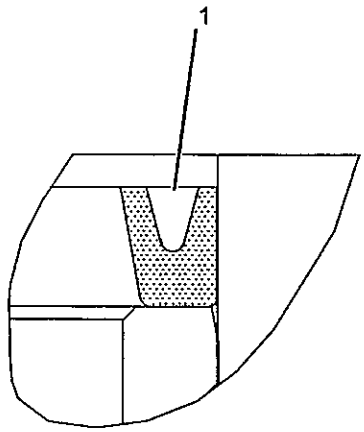


VIEW OF AREA A

GRAPHIC #1

**<END>**

g01067312

# HYDRAULIC SYSTEM

## *110-8475* CYLINDER & SEAL GP-TILT–RH

**S/N: JMS1-UP**

**PART OF 235-1303 HYDRAULIC AR-2 VALVE**

**SMCS-5104** i00191252

| NOTE | REF NO | GRAPHIC REF | PART NUMBER | QTY | PART NAME 1 2 3 4 5 6 (PRODUCT LEVEL) | SEE PAGE |
|---|---|---|---|---|---|---|
| Y | 1 | 1 | 112-5003 | 1 | CYLINDER GP-TILT | 628 |
| | 2 | 1 | 7K-9212 | 4 | SEAL-LIP (88.9MM ID) | |

Y-SEPARATE ILLUSTRATION

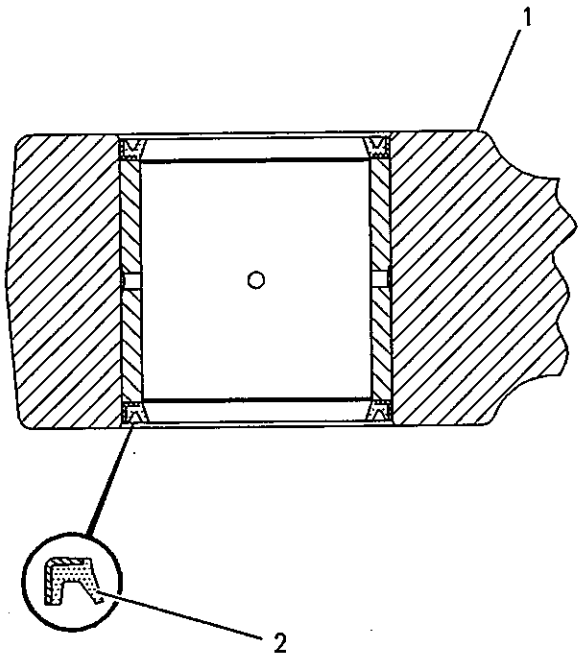


GRAPHIC #1

**<END>**

g00120988

# HYDRAULIC SYSTEM

## *110-8476* CYLINDER & SEAL GP-TILT–LH

**S/N: JMS1-UP**

**PART OF 235-1303 HYDRAULIC AR-2 VALVE**

**SMCS-5104** **i00191262**

| NOTE | REF NO | GRAPHIC REF | PART NUMBER | QTY | PART NAME 1 2 3 4 5 6 (PRODUCT LEVEL) | SEE PAGE |
|---|---|---|---|---|---|---|
| Y | 1 | 1 | **112-5004** | 1 | CYLINDER GP-TILT | 630 |
| | 2 | 1 | **7K-9212** | 4 | SEAL-LIP (88.9MM ID) | |

Y-SEPARATE ILLUSTRATION

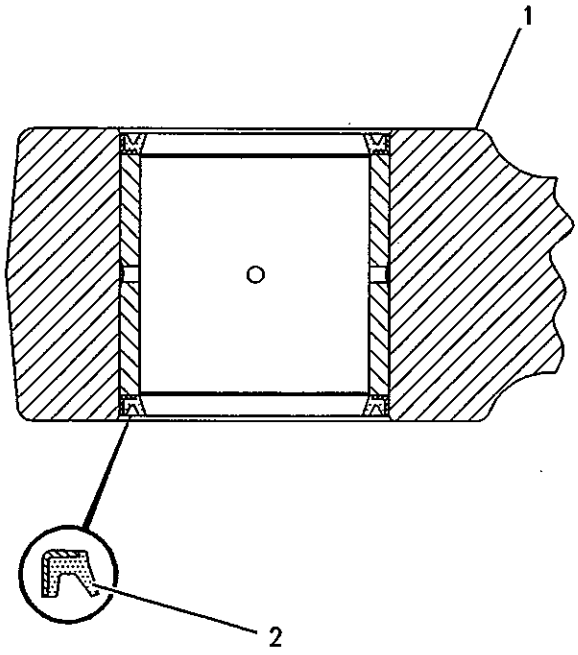


GRAPHIC #1 **<END>** g00120988

# HYDRAULIC SYSTEM

## 124-5526 CYLINDER & SEAL GP-TILT–RH

S/N: JMS1-UP
LOGGING MACHINES
PART OF 247-4867 HYDRAULIC AR-3 VALVE
AN ATTACHMENT

SMCS-5104 i00178105

| NOTE | REF NO | GRAPHIC REF | PART NUMBER | QTY | PART NAME 1 2 3 4 5 6 (PRODUCT LEVEL) | SEE PAGE |
|---|---|---|---|---|---|---|
| Y | 1 | 1 | 124-0616 | 1 | CYLINDER GP-TILT | 632 |
| | 2 | 1 | 7K-9212 | 4 | SEAL-LIP (88.9MM ID) | |

Y-SEPARATE ILLUSTRATION

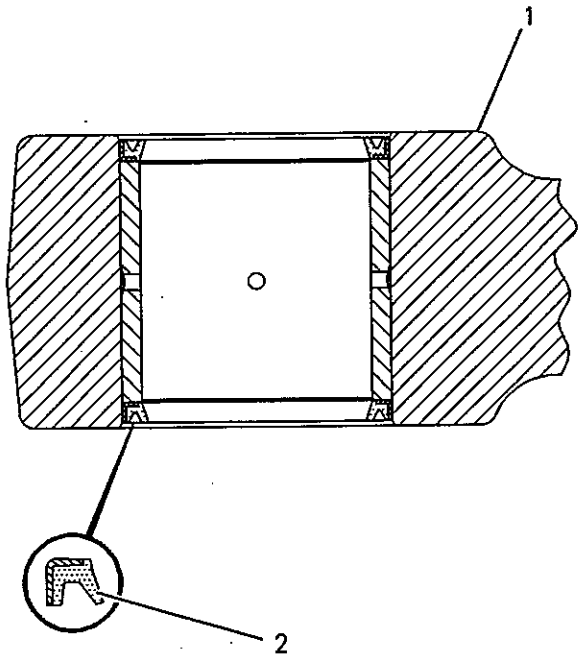


GRAPHIC #1 <END> g00120988

# HYDRAULIC SYSTEM

## 124-5527 CYLINDER & SEAL GP-TILT–LH

S/N: JMS1-UP

PART OF 247-4867 HYDRAULIC AR-3 VALVE

AN ATTACHMENT

SMCS-5104 i00178114

| NOTE | REF NO | GRAPHIC REF | PART NUMBER | QTY | PART NAME 1 2 3 4 5 6 (PRODUCT LEVEL) | SEE PAGE |
|---|---|---|---|---|---|---|
| Y | 1 | 1 | 124-0617 | 1 | CYLINDER GP-TILT | 633 |
| | 2 | 1 | 7K-9212 | 4 | SEAL-LIP (88.9MM ID) | |

Y-SEPARATE ILLUSTRATION

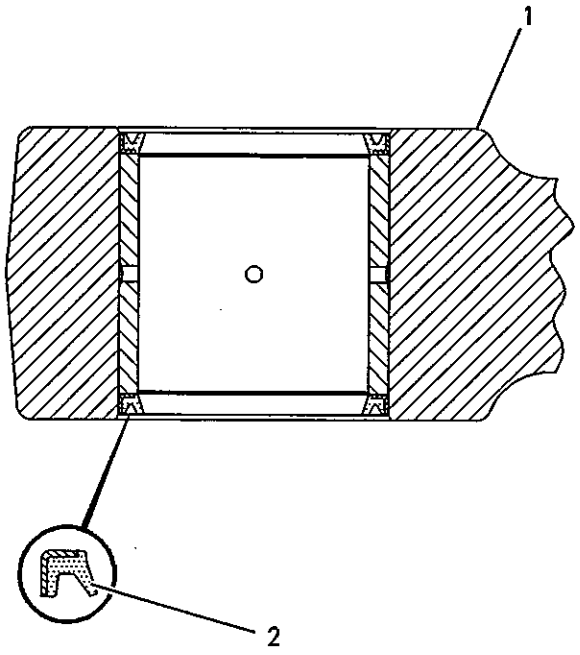


GRAPHIC #1 <END> g00120988

# HYDRAULIC SYSTEM

## *124-7096* CYLINDER & SEAL GP-TILT–LH

**S/N: JMS1-UP**
**HIGH LIFT**
**PART OF 175-4219, 249-6705, 266-3681 LIFT AR**
**AN ATTACHMENT**

**SMCS-5104** **i01352511**

| NOTE | REF NO | GRAPHIC REF | PART NUMBER | QTY | PART NAME 1 2 3 4 5 6 (PRODUCT LEVEL) | SEE PAGE |
|---|---|---|---|---|---|---|
| Y | 1 | 1 | 124-6227 | 1 | CYLINDER GP-TILT (HIGH LIFT MACHINES, LH) | 635 |
| | 2 | 1 | 7K-9212 | 4 | SEAL-LIP TYPE | |

Y-SEPARATE ILLUSTRATION

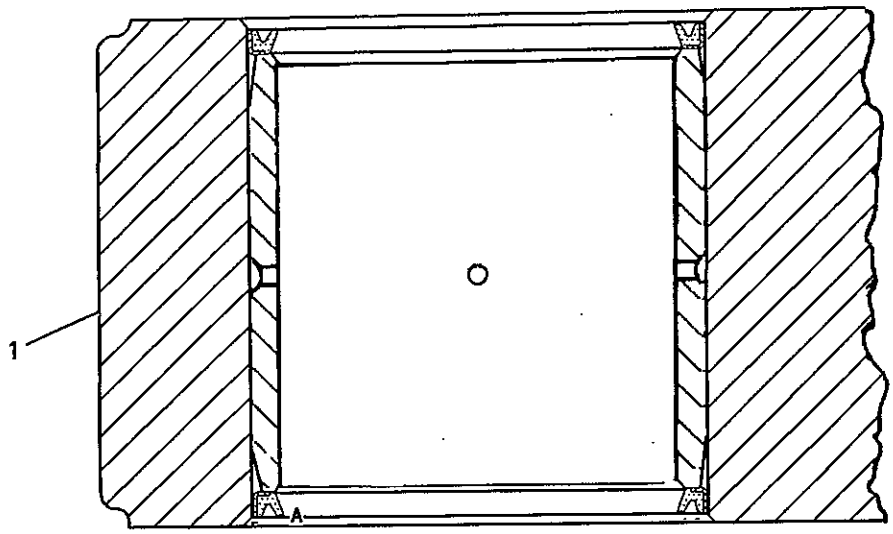





VIEW OF AREA A

GRAPHIC #1 **<END>** g00713747

# 124-7097 CYLINDER & SEAL GP-TILT-RH

S/N: JMS1-UP
HIGH LIFT
PART OF 175-4219, 249-6705, 266-3681 LIFT AR
AN ATTACHMENT

SMCS-5104

i01352658

| NOTE | REF NO | GRAPHIC REF | PART NUMBER | QTY | PART NAME 1 2 3 4 5 6 (PRODUCT LEVEL) | SEE PAGE |
|---|---|---|---|---|---|---|
| Y | 1 | 1 | 124-6228 | 1 | CYLINDER GP-TILT (HIGH LIFT MACHINES, RH) | 637 |
| | 2 | 1 | 7K-9212 | 4 | SEAL-LIP TYPE | |

Y-SEPARATE ILLUSTRATION

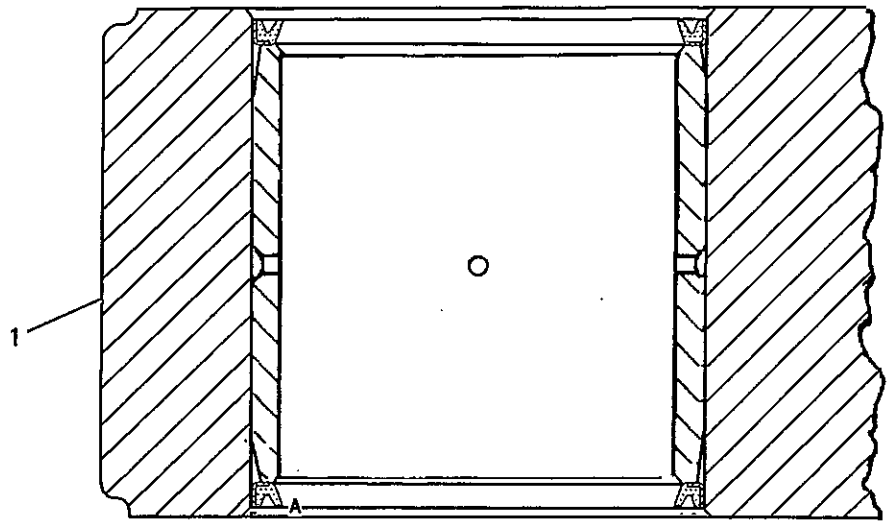


VIEW OF AREA A

GRAPHIC #1

<END>

g00713747

# HYDRAULIC SYSTEM

## 111-8181 CYLINDER GP-LIFT–2 REQUIRED

S/N: JMS1-UP

196.85MM (7.75 IN.) BORE X 864MM (34 IN.) STROKE

PART OF 235-5330 CYLINDER & SEAL GP-LIFT

SMCS-5102

i02024165

| NOTE | REF NO | GRAPHIC REF | PART NUMBER | QTY | PART NAME 1 2 3 4 5 6 (PRODUCT LEVEL) | SEE PAGE |
|---|---|---|---|---|---|---|
| R | 1 | 1 | 111-8182 | 1 | CYLINDER AS | |
| | 2 | 1 | 1V-8241 | 1 | BEARING-SLEEVE (108.300-MM ID) | |
| | 3 | 1 | 2J-7686 | 1 | LOCKNUT | |
| J | 4 | 1 | 8T-1792 | 1 | SEAL AS | |
| J | 5 | 1 | 9J-3624 | 1 | RING-WEAR | |
| | 6 | 1 | 9J-3625 | 1 | PISTON | |
| J | 7 | 1 | 8J-0548 | 1 | RING-BACKUP | |
| J | 8 | 1 | 5K-1787 | 1 | SEAL-O-RING | |
| | 9 | 1 | 111-8192 | 1 | HEAD | |
| | 11 | 1 | 6V-8237 | 8 | WASHER (26X44X4-MM THK) | |
| J | 12 | 1 | 225-3286 | 1 | SEAL-WIPER | |
| R | 13 | 1 | 111-8187 | 1 | ROD AS | |
| J | 14 | 1 | 167-2211 | 1 | SEAL AS-BUFFER | |
| J | 15 | 1 | 167-2324 | 1 | SEAL-U-CUP | |
| M | 16 | 1 | 8T-0666 | 8 | BOLT (M24X3.0X90-MM) | |
| J | 17 | 1 | 8T-6746 | 1 | RING-WEAR | |
| J | 18 | 1 | 8C-4892 | 1 | SEAL-HEAD | |
| | | | | | AVAILABLE REPAIR KIT(S): | |
| J | | | 228-1775 | | KIT-SEAL | |

J-KIT MARKED J SERVICES PARTS MARKED J
M-METRIC PART
R-REMFG PART MAY BE AVAILABLE

## 111-8181 CYLINDER GP-LIFT *(contd.)*

i02024165

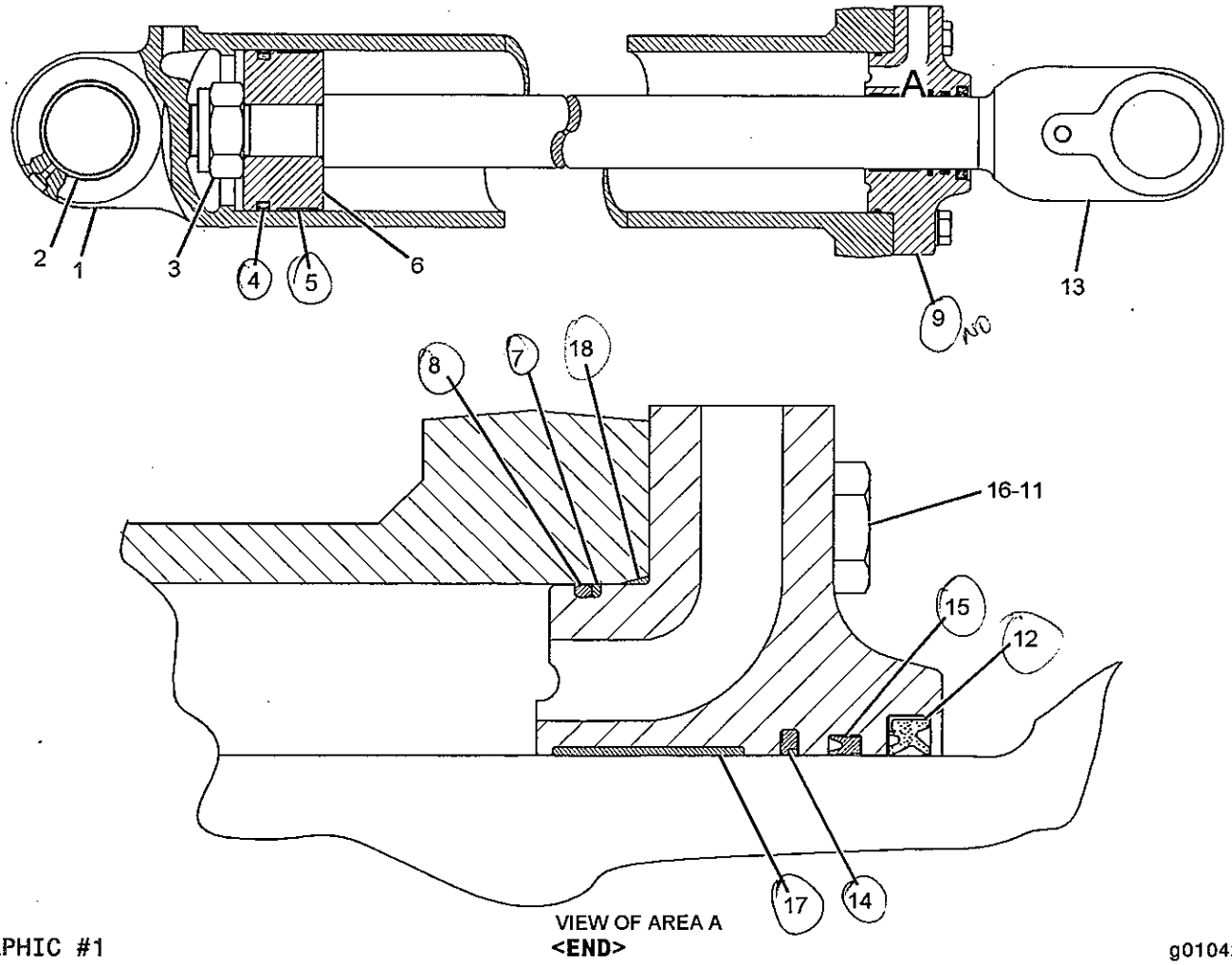


VIEW OF AREA A

**<END>**

GRAPHIC #1

g01042253

# *112-5003* CYLINDER GP-TILT–RH

**S/N: JMS1-UP**

**158.75MM (6.25 IN.) BORE X 582MM (22.9 IN.) STROKE**

**PART OF 110-8475 CYLINDER & SEAL GP-TILT**

**SMCS-5104** **i02281036**

| NOTE | REF NO | GRAPHIC REF | PART NUMBER | QTY | PART NAME 1 2 3 4 5 6 (PRODUCT LEVEL) | SEE PAGE |
|---|---|---|---|---|---|---|
| R | 1 | 1 | 123-9755 | 1 | CYLINDER AS | |
| | 2 | 1 | 1V-8242 | 1 | BEARING-SLEEVE | |
| | 3 | 1 | 5J-3488 | 1 | LOCKNUT (2-1/4-12-2B-THD) | |
| | 4 | 1 | 9J-5550 | 1 | RING-WEAR | |
| | 5 | 1 | 8T-1788 | 1 | SEAL AS | |
| C | 6 | 1 | 224-2235 | 1 | PISTON | |
| | 7 | 1 | 8F-8733 | 1 | SEAL-O-RING | |
| | 8 | 1 | 4J-9223 | 1 | RING | |
| | 9 | 1 | 112-5071 | 1 | HEAD | |
| M | 10 | 1 | 173-9779 | 4 | BOLT (M24X3X80-MM) | |
| | 11 | 1 | 6V-8237 | 8 | WASHER (26X44X4-MM THK) | |
| CR | 12 | 1 | 189-3041 | 1 | ROD AS | |
| | 13 | 1 | 1V-8242 | 1 | BEARING-SLEEVE | |
| M | 14 | 1 | 8T-0667 | 2 | BOLT (M24X3X100-MM) | |
| M | 15 | 1 | 8T-0668 | 2 | BOLT (M24X3X110-MM) | |
| C | 16 | 1 | 225-3283 | 1 | SEAL-WIPER | |
| C | 17 | 1 | 167-2317 | 1 | SEAL-U-CUP | |
| C | 18 | 1 | 167-2207 | 1 | SEAL AS-BUFFER | |
| | 19 | 1 | 8T-6743 | 1 | RING-WEAR | |
| | 20 | 1 | 224-2236 | 1 | WASHER | |

C-CHANGE FROM PREVIOUS TYPE
M-METRIC PART
R-REMFG PART MAY BE AVAILABLE

## *112-5003* CYLINDER GP-TILT *(contd.)*

i02281036

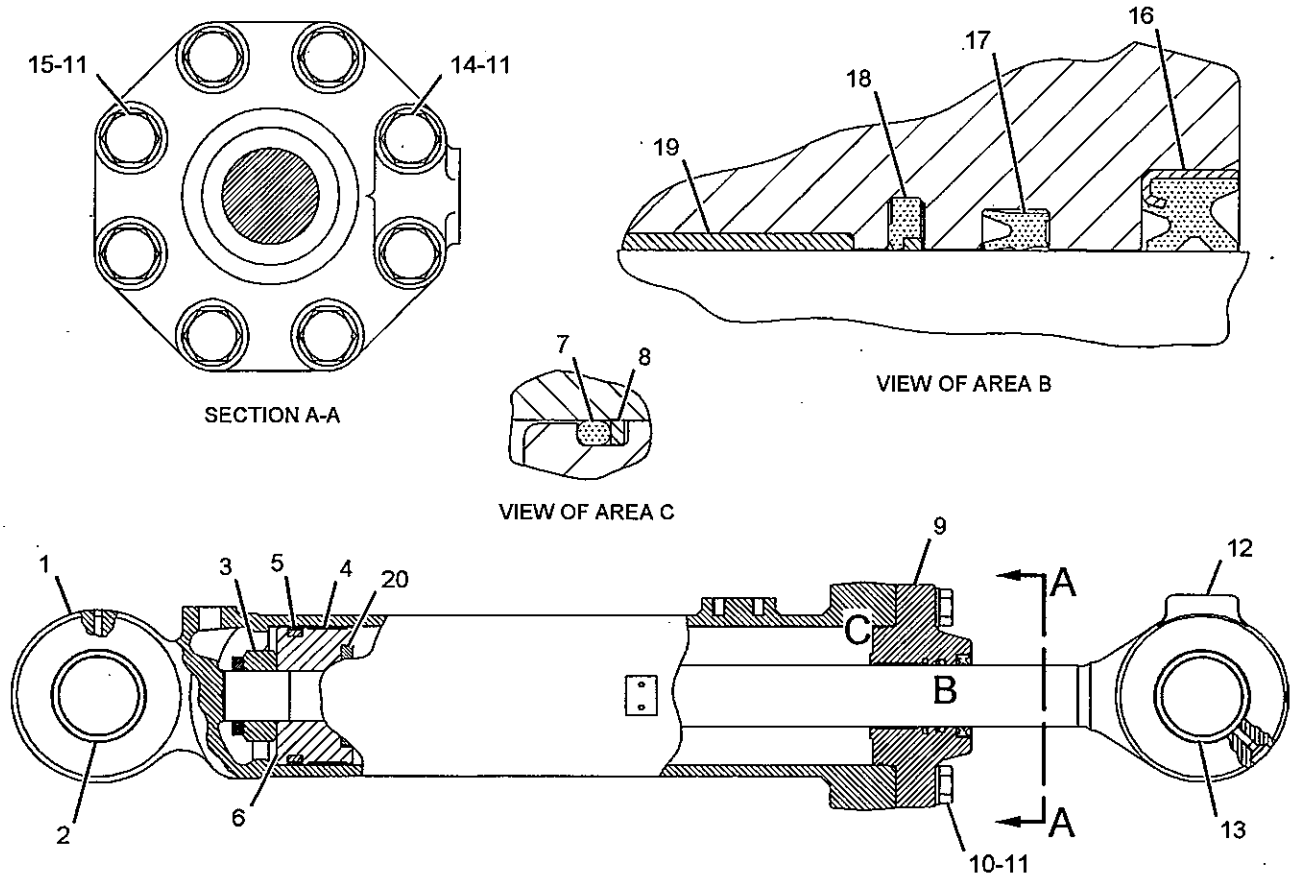


GRAPHIC #1

<END>

g01142040

# HYDRAULIC SYSTEM

## *112-5004* CYLINDER GP-TILT–LH

**S/N: JMS1-UP**

**158.75MM (6.25 IN) BORE X 582MM (22.9 IN.) STROKE**

**PART OF 110-8476 CYLINDER & SEAL GP-TILT**

**SMCS-5104** **i02281188**

| NOTE | REF NO | GRAPHIC REF | PART NUMBER | QTY | PART NAME 1 2 3 4 5 6 (PRODUCT LEVEL) | SEE PAGE |
|---|---|---|---|---|---|---|
| R | 1 | 1 | **112-5068** | 1 | CYLINDER AS | |
| | 1A | 1 | **1V-8242** | 1 | BEARING-SLEEVE | |
| | 2 | 1 | **5J-3488** | 1 | LOCKNUT (2-1/4-12-2B-THD) | |
| | 3 | 1 | **9J-5550** | 1 | RING-WEAR | |
| | 4 | 1 | **8T-1788** | 1 | SEAL AS | |
| | 5 | 1 | **224-2235** | 1 | PISTON | |
| | 6 | 1 | **8F-8733** | 1 | SEAL-O-RING | |
| | 7 | 1 | **4J-9223** | 1 | RING | |
| | 8 | 1 | **112-5071** | 1 | HEAD | |
| M | 9 | 1 | **173-9779** | 6 | BOLT (M24X3X80-MM) | |
| | 10 | 1 | **6V-8237** | 8 | WASHER (26X44X4-MM THK) | |
| R | 11 | 1 | **189-3041** | 1 | ROD AS | |
| | 11A | 1 | **1V-8242** | 1 | BEARING-SLEEVE | |
| M | 12 | 1 | **8T-0667** | 2 | BOLT (M24X3X100-MM) | |
| | 13 | 1 | **225-3283** | 1 | SEAL-WIPER | |
| | 14 | 1 | **167-2317** | 1 | SEAL-U-CUP | |
| | 15 | 1 | **167-2207** | 1 | SEAL AS-BUFFER | |
| | 16 | 1 | **8T-6743** | 1 | RING-WEAR | |
| | 17 | 1 | **224-2236** | 1 | WASHER | |

M-METRIC PART
R-REMFG PART MAY BE AVAILABLE

*112-5004* **CYLINDER GP-TILT** *(contd.)* **i02281188**

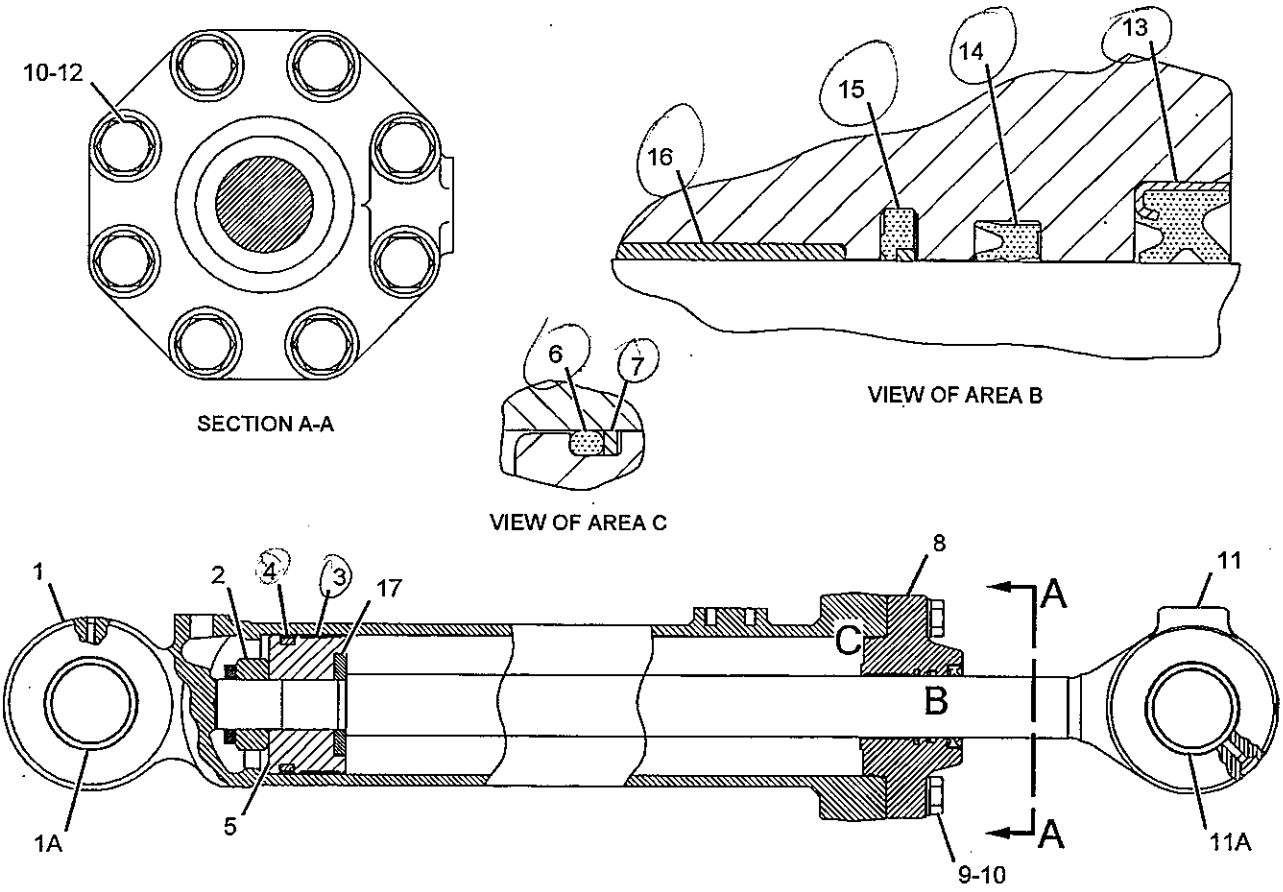


GRAPHIC #1 **<END>** g01142109

# HYDRAULIC SYSTEM

## 124-0616 CYLINDER GP-TILT–LOGGING MACHINES, RH

**S/N: JMS1-UP**
**177.8 MM (7 IN) BORE X 536 MM (21.1 IN) STROKE**
**PART OF 124-5526 CYLINDER & SEAL GP-TILT**
**AN ATTACHMENT**

**SMCS-5104** i01929031

| NOTE | REF NO | GRAPHIC REF | PART NUMBER | QTY | PART NAME 1 2 3 4 5 6 (PRODUCT LEVEL) | SEE PAGE |
|---|---|---|---|---|---|---|
| R | 1 | 1 | 124-0613 | 1 | CYLINDER AS-TILT-RH | |
| | 1A | 1 | 1V-8242 | 1 | BEARING-SLEEVE | |
| | 2 | 1 | 5J-3488 | 1 | LOCKNUT (2-1/4-12-2B-THD) | |
| | 3 | 1 | 3G-5098 | 1 | RING-WEAR | |
| | 4 | 1 | 8T-1789 | 1 | SEAL AS | |
| | 5 | 1 | 3G-5099 | 1 | PISTON | |
| | 6 | 1 | 8J-1665 | 1 | SEAL-O-RING | |
| | 7 | 1 | 9X-7273 | 1 | RING-BACKUP | |
| | 8 | 1 | 8T-8380 | 1 | SEAL-HEAD | |
| | 9 | 1 | 136-6965 | 1 | HEAD-HYDRAULIC CYLINDER | |
| R | 10 | 1 | 124-0615 | 1 | ROD AS | |
| | 10A | 1 | 1V-8242 | 1 | BEARING-SLEEVE | |
| C | 11 | 1 | 225-3284 | 1 | SEAL-WIPER | |
| C | 12 | 1 | 167-2319 | 1 | SEAL-U-CUP | |
| C | 13 | 1 | 167-2208 | 1 | SEAL AS-BUFFER | |
| | 14 | 1 | 9T-0094 | 1 | RING-WEAR | |
| M | 15 | 1 | 173-9779 | 4 | BOLT (M24X3X80-MM) | |
| | 16 | 1 | 6V-8237 | 6 | WASHER (26X44X4-MM THK) | |
| M | 17 | 1 | 8T-0666 | 2 | BOLT (M24X3X90-MM) | |

C-CHANGE FROM PREVIOUS TYPE
M-METRIC PART
R-REMFG PART MAY BE AVAILABLE

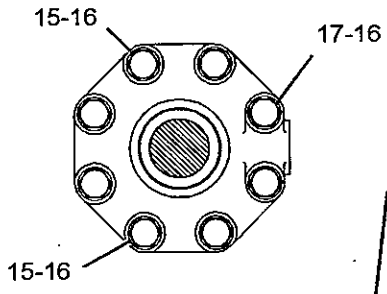

SECTION B-B

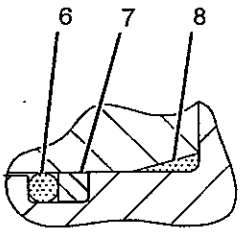

VIEW OF AREA C

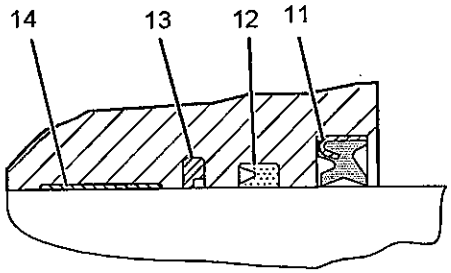

VIEW OF AREA A

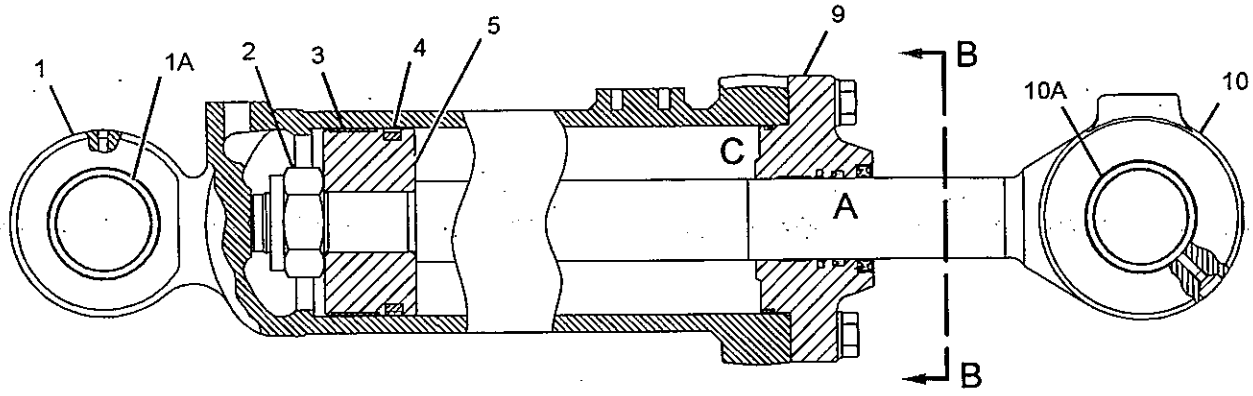


GRAPHIC #1 **<END>** g01063682

# 124-0617 CYLINDER GP-TILT–LOGGING MACHINES, LH

S/N: JMS1-UP
177.8 MM (7 IN) BORE X 536 MM (21.1 IN) STROKE
PART OF 124-5527 CYLINDER & SEAL GP-TILT
AN ATTACHMENT

SMCS-5104

i02053526

| NOTE | REF NO | GRAPHIC REF | PART NUMBER | QTY | PART NAME 1 2 3 4 5 6 (PRODUCT LEVEL) | SEE PAGE |
|---|---|---|---|---|---|---|
| R | 1 | 1 | 124-0614 | 1 | CYLINDER AS-TILT-LH | |
| | | 1 | 1V-8242 | 1 | BEARING-SLEEVE | |
| | 2 | 1 | 5J-3488 | 1 | LOCKNUT (2-1/4-12-2B-THD) | |
| | 3 | 1 | 3G-5098 | 1 | RING-WEAR | |
| | 4 | 1 | 8T-1789 | 1 | SEAL AS | |
| | 5 | 1 | 3G-5099 | 1 | PISTON | |
| | 6 | 1 | 8J-1665 | 1 | SEAL-O-RING | |
| | 7 | 1 | 9X-7273 | 1 | RING-BACKUP | |
| | 8 | 1 | 8T-8380 | 1 | SEAL-HEAD | |
| R | 9 | 1 | 124-0615 | 1 | ROD AS | |
| | 9A | 1 | 1V-8242 | 1 | BEARING-SLEEVE | |
| | 10 | 1 | 225-3284 | 1 | SEAL-WIPER | |
| | 11 | 1 | 167-2319 | 1 | SEAL-U-CUP | |
| | 12 | 1 | 167-2208 | 1 | SEAL AS-BUFFER | |
| | 13 | 1 | 9T-0094 | 1 | RING-WEAR | |
| M | 14 | 1 | 173-9779 | 6 | BOLT (M24X3X80-MM) | |
| | 15 | 1 | 6V-8237 | 8 | WASHER (26X44X4-MM THK) | |
| M | 16 | 1 | 8T-0666 | 2 | BOLT (M24X3X90-MM) | |
| | 17 | 1 | 136-6965 | 1 | HEAD-HYDRAULIC CYLINDER | |

M-METRIC PART
R-REMFG PART MAY BE AVAILABLE

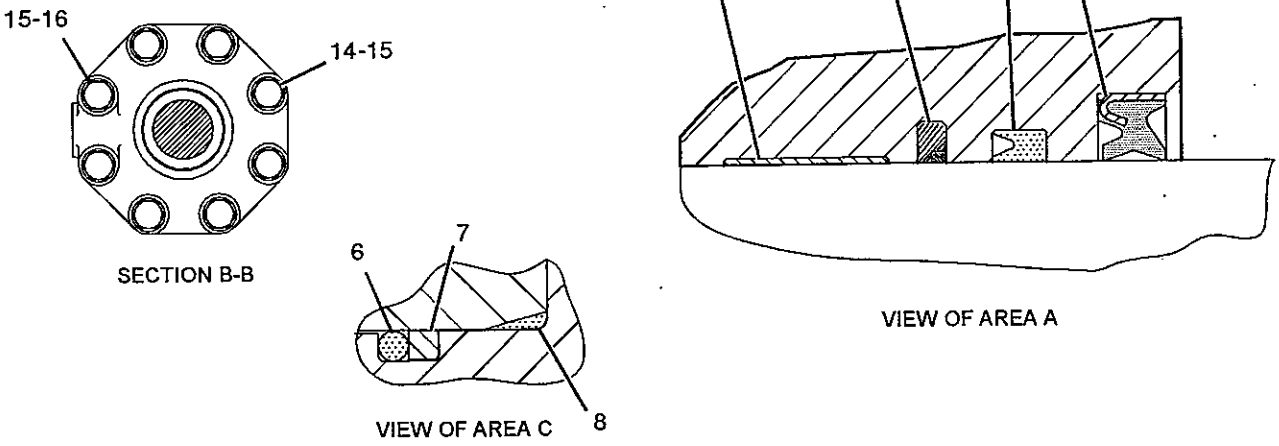


GRAPHIC #1

**<END>**

g01057500

# HYDRAULIC SYSTEM

## 124-6227 CYLINDER GP-TILT—HIGH LIFT MACHINES, LH

S/N: JMS1-UP
158.75MM(6.25 IN.) BORE X 577MM(22.717 IN.) STROKE
PART OF 124-7096 CYLINDER & SEAL GP-TILT
AN ATTACHMENT

SMCS-5104 i01929158

| NOTE | REF NO | GRAPHIC REF | PART NUMBER | QTY | PART NAME 1 2 3 4 5 6 (PRODUCT LEVEL) | SEE PAGE |
|---|---|---|---|---|---|---|
| R | 1 | 1 | 112-5068 | 1 | CYLINDER AS | |
| | 2 | 1 | 1V-8242 | 1 | BEARING-SLEEVE | |
| | 3 | 1 | 5J-3488 | 1 | LOCKNUT (2-1/4-12-2B-THD) | |
| | 4 | 1 | 9J-5550 | 1 | RING-WEAR | |
| | 5 | 1 | 8T-1788 | 1 | SEAL AS | |
| | 6 | 1 | 189-3042 | 1 | PISTON | |
| | 7 | 1 | 8F-8733 | 1 | SEAL-O-RING | |
| | 8 | 1 | 4J-9223 | 1 | RING | |
| | 9 | 1 | 124-6225 | 1 | HEAD | |
| M | 10 | 1 | 173-9779 | 6 | BOLT (M24X3X80-MM) | |
| | 11 | 1 | 6V-8237 | 8 | WASHER (26X44X4-MM THK) | |
| R | 12 | 1 | 9T-2420 | 1 | ROD AS | |
| | 13 | 1 | 1V-8242 | 1 | BEARING-SLEEVE | |
| M | 14 | 1 | 8T-0667 | 2 | BOLT (M24X3X100-MM) | |
| | 15 | 1 | 225-3284 | 1 | SEAL-WIPER | |
| | 16 | 1 | 167-2319 | 1 | SEAL-U-CUP | |
| | 17 | 1 | 167-2208 | 1 | SEAL AS-BUFFER | |
| | 18 | 1 | 8T-7584 | 1 | RING-WEAR | |

M-METRIC PART
R-REMFG PART MAY BE AVAILABLE

## 124-6227 CYLINDER GP-TILT *(contd.)*

i01929158

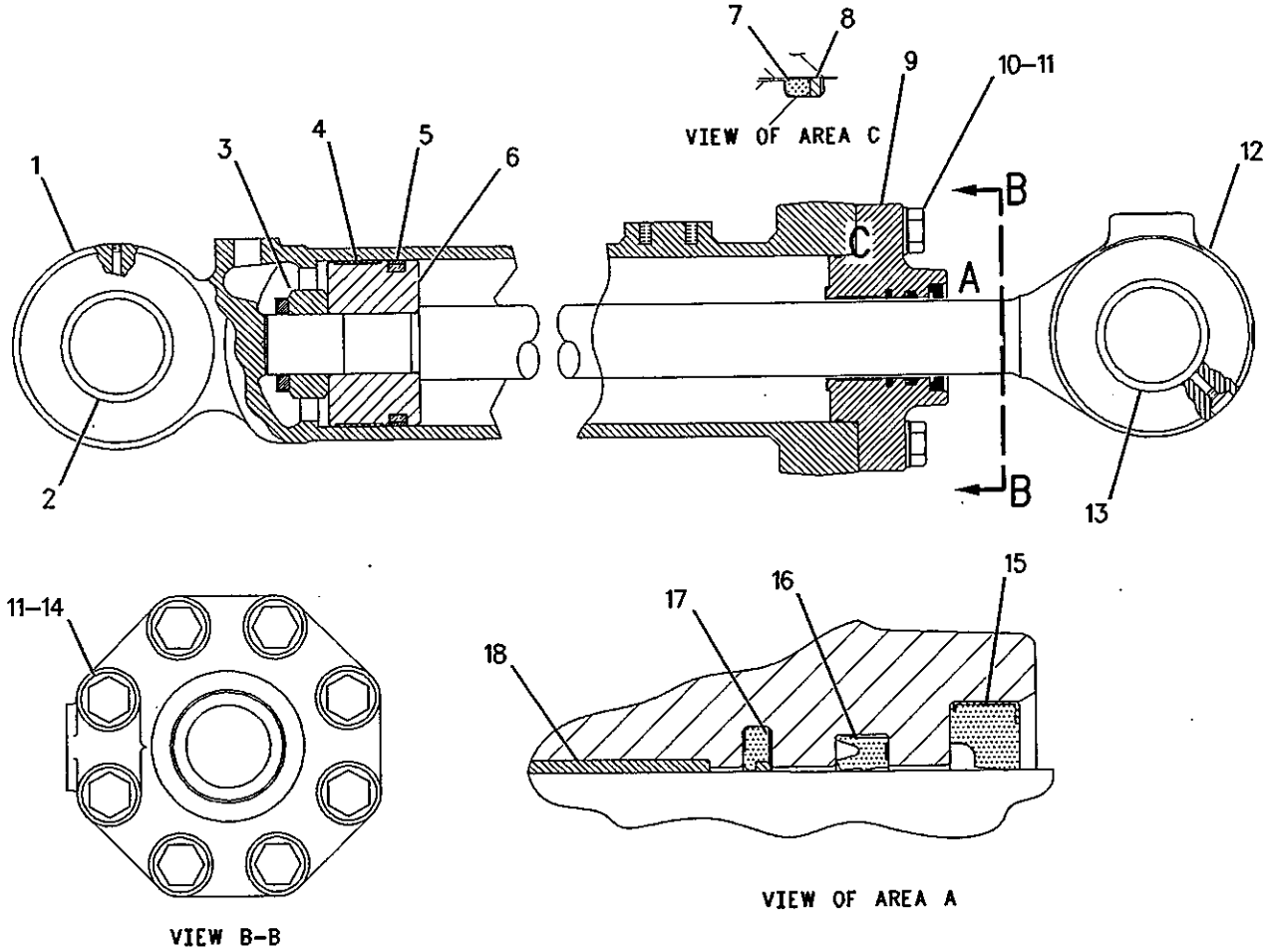


GRAPHIC #1

<END>

g00731406

# HYDRAULIC SYSTEM

## 124-6228 CYLINDER GP-TILT–HIGH LIFT MACHINES, RH

**S/N: JMS1-UP**
**158.75MM(6.25 IN.) BORE X 577MM(22.717 IN.) STROKE**
**PART OF 124-7097 CYLINDER & SEAL GP-TILT**
**AN ATTACHMENT**

**SMCS-5104** **i01881522**

| NOTE | REF NO | GRAPHIC REF | PART NUMBER | QTY | PART NAME 1 2 3 4 5 6 (PRODUCT LEVEL) | SEE PAGE |
|---|---|---|---|---|---|---|
| R | 1 | 1 | 123-9755 | 1 | CYLINDER AS | |
| | 2 | 1 | 1V-8242 | 1 | BEARING-SLEEVE | |
| | 3 | 1 | 5J-3488 | 1 | LOCKNUT (2-1/4-12-2B-THD) | |
| | 4 | 1 | 9J-5550 | 1 | RING-WEAR | |
| | 5 | 1 | 8T-1788 | 1 | SEAL AS | |
| | 6 | 1 | 189-3042 | 1 | PISTON | |
| | 7 | 1 | 8F-8733 | 1 | SEAL-O-RING | |
| | 8 | 1 | 4J-9223 | 1 | RING | |
| | 9 | 1 | 124-6225 | 1 | HEAD | |
| M | 10 | 1 | 173-9779 | 4 | BOLT (M24X3X80-MM) | |
| | 11 | 1 | 6V-8237 | 8 | WASHER (26X44X4-MM THK) | |
| R | 12 | 1 | 9T-2420 | 1 | ROD AS | |
| | 13 | 1 | 1V-8242 | 1 | BEARING-SLEEVE | |
| M | 14 | 1 | 8T-0667 | 2 | BOLT (M24X3X100-MM) | |
| M | 15 | 1 | 8T-0668 | 2 | BOLT (M24X3X110-MM) | |
| | 16 | 1 | 225-3284 | 1 | SEAL-WIPER | |
| | 17 | 1 | 167-2319 | 1 | SEAL-U-CUP | |
| | 18 | 1 | 167-2208 | 1 | SEAL AS-BUFFER | |
| | 19 | 1 | 8T-7584 | 1 | RING-WEAR | |

M-METRIC PART
R-REMFG PART MAY BE AVAILABLE

## 124-6228 CYLINDER GP-TILT *(contd.)*

i01881522

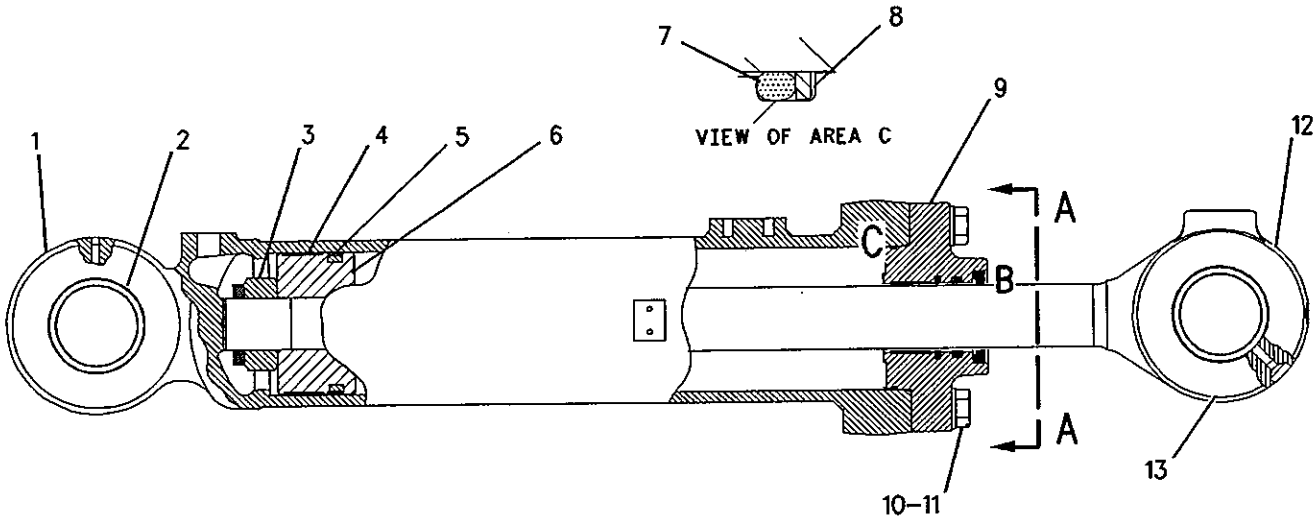


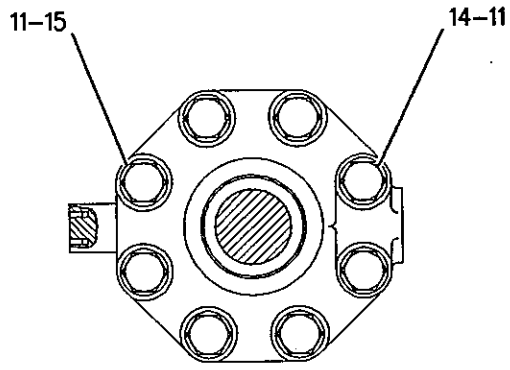


VIEW A-A

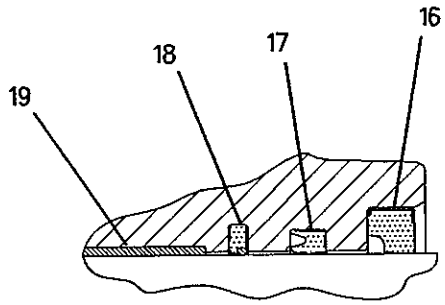


VIEW OF AREA B

GRAPHIC #1 **<END>** g00731181

# *174-6173* FILTER GP-OIL–HYDRAULIC

S/N: JMS1-UP
HIGH EFFICIENCY
PART OF 240-8591 GUARD GP-FUEL & HYDRAULIC TANK
AN ATTACHMENT

SMCS-5068, 5091, 5092

i02290332

| NOTE | REF NO | GRAPHIC REF | PART NUMBER | QTY | PART NAME 1 2 3 4 5 6 (PRODUCT LEVEL) | SEE PAGE |
|---|---|---|---|---|---|---|
| | 1 | 1 | 7X-8549 | 1 | SWITCH AS-PRESSURE (HYDRAULIC OIL COOLER BYPASS) | |
| | | 1 | 3J-1907 | 1 | SEAL-O-RING | |
| | 2 | 1 | 102-2828 | 1 | FILTER AS-OIL (HYDRAULIC) | |

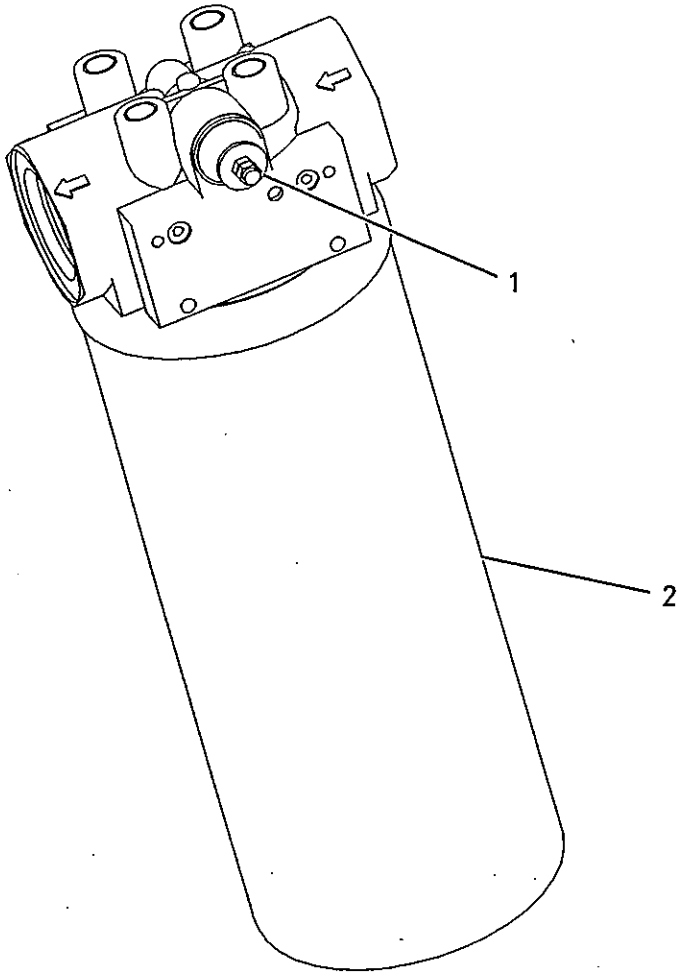


GRAPHIC #1

<END>

g00829278

# HYDRAULIC SYSTEM

## 259-1407 FILTER GP-OIL

**S/N: JMS1-UP**

**HIGH EFFICIENCY**

**PART OF 232-4929 LINES GP-HYDRAULIC OIL COOLER**

**SMCS-5068, 5091, 5092** i02154415

| NOTE | REF NO | GRAPHIC REF | PART NUMBER | QTY | PART NAME 1 2 3 4 5 6 (PRODUCT LEVEL) | SEE PAGE |
|---|---|---|---|---|---|---|
| | 1 | 1 | 7X-8549 | 1 | SWITCH AS-PRESSURE (HYDRAULIC OIL FILTER BYPASS) | |
| | | 1 | 3J-1907 | 1 | SEAL-O-RING | |
| | 2 | 1 | 126-1818 | 1 | FILTER AS-OIL (HYDRAULIC) | |

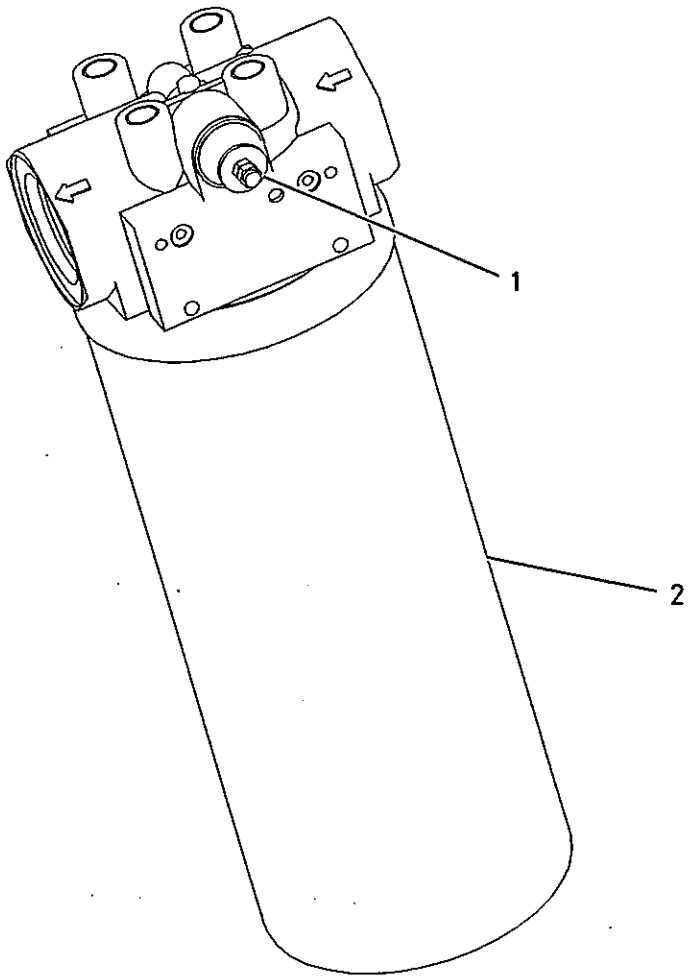


GRAPHIC #1 **<END>** g00829278

# HYDRAULIC SYSTEM

## *235-1303* HYDRAULIC AR-2 VALVE

**S/N: JMS1-UP**

**PART OF 225-5537 GENERAL AR**

**SMCS-5051** **i02279662**

| NOTE | PART NUMBER | QTY | PART NAME 1 2 3 4 5 6 (PRODUCT LEVEL) | SEE PAGE |
|---|---|---|---|---|
| Y | *235-5330* | 2 | CYLINDER & SEAL GP-LIFT | 619 |
| Y | *110-8476* | 1 | CYLINDER & SEAL GP-TILT (LH) | 621 |
| Y | *110-8475* | 1 | CYLINDER & SEAL GP-TILT (RH) | 620 |
| Y | *193-3980* | 1 | LINES GP-HYDRAULIC | 645 |
| Y | *110-8144* | 1 | LINES GP-LIFT CYLINDER | 656 |
| Y | *110-8141* | 1 | LINES GP-TILT CYLINDER | 658 |
| Y | *110-8145* | 1 | MOUNTING GP-HYDRAULIC TANK | 663 |
| Y | *235-5333* | 1 | PUMP & MTG GP-HYDRAULIC FAN | 665 |
| Y | *193-3981* | 1 | PUMP & MTG GP-IMPLEMENT | 666 |
| Y | *235-5331* | 1 | PUMP & MTG GP-STEERING & TMSN (INCLUDES PILOT, BRAKE PUMP) | 557 |
| Y | *234-8928* | 1 | TANK GP-HYDRAULIC | 677 |
| Y | *206-9057* | 1 | VALVE & MTG GP-MAIN CONTROL (2-FUNCTION) | 682 |
| Y | *154-4982* | 1 | VALVE GP-LOWERING CONTROL | 704 |

Y-SEPARATE ILLUSTRATION

**<END>**

## *247-4867* HYDRAULIC AR-3 VALVE–LOGGING

**S/N: JMS1-UP**

**PART OF 246-3121 LOGGING AR**

**AN ATTACHMENT**

**SMCS-5051** **i02090756**

| NOTE | PART NUMBER | QTY | PART NAME 1 2 3 4 5 6 (PRODUCT LEVEL) | SEE PAGE |
|---|---|---|---|---|
| Y | **210-9583** | 1 | CONTROL GP-ELECTROHYDRAULIC (3-FUNCTION) | 601 |
| Y | *124-5526* | 1 | CYLINDER & SEAL GP-TILT (LOGGING MACHINE-RH) | 622 |
| Y | *124-5527* | 1 | CYLINDER & SEAL GP-TILT (LOGGING MACHINE-LH) | 623 |
| Y | *116-7677* | 1 | LINES GP-FRONT | 642 |
| Y | *206-9059* | 1 | VALVE & MTG GP-MAIN CONTROL (3-FUNCTION) | 689 |

Y-SEPARATE ILLUSTRATION

**<END>**

## *249-6704* HYDRAULIC AR-3 VALVE

**S/N: JMS1-UP**

**AN ATTACHMENT**

**SMCS-5051** **i02091774**

| NOTE | PART NUMBER | QTY | PART NAME 1 2 3 4 5 6 (PRODUCT LEVEL) | SEE PAGE |
|---|---|---|---|---|
| Y | **210-9583** | 1 | CONTROL GP-ELECTROHYDRAULIC (3-FUNCTION) | 601 |
| Y | **249-1272** | 1 | HARDWARE GP-LOADER FRAME (3RD VALVE) | 448 |
| Y | *116-7677* | 1 | LINES GP-FRONT | 642 |
| Y | *206-9059* | 1 | VALVE & MTG GP-MAIN CONTROL (3-FUNCTION) | 689 |

Y-SEPARATE ILLUSTRATION

**<END>**

# HYDRAULIC SYSTEM

## *116-7677* LINES GP-FRONT

**S/N: JMS1-UP**

**PART OF 247-4867, 249-6704 HYDRAULIC AR-3 VALVE AN ATTACHMENT**

**SMCS-5057** **i01938570**

| NOTE | REF NO | GRAPHIC REF | PART NUMBER | QTY | PART NAME 1 2 3 4 5 6 (PRODUCT LEVEL) | SEE PAGE |
|---|---|---|---|---|---|---|
| | 1 | 1 | 8K-4691 | 4 | CLAMP-HALF | |
| | 2 | 1 | 8S-0023 | 6 | CLIP (SLOT) | |
| | 3 | 1 | 8S-0024 | 6 | CLIP (TAB) | |
| I | 4 | 1 | 116-8771 | 2 | HOSE AS | |
| | 5 | 1 | 116-8774 | 2 | TUBE AS | |
| I | 6 | 1 | 124-1847 | 1 | HOSE AS | |
| I | 7 | 1 | 124-1848 | 1 | HOSE AS | |
| | 8 | 1 | 125-2030 | 2 | BRACKET AS | |
| | 9 | 1 | 194-2605 | 1 | TUBE AS | |
| | 10 | 1 | 194-2609 | 1 | TUBE AS | |
| | 11 | 1 | 197-3295 | 20 | FLANGE-HALF | |
| | 12 | 1 | 4J-0522 | 10 | SEAL-O-RING | |
| | 13 | 1 | 5H-4020 | 2 | COVER | |
| | 14 | 1 | 7X-3392 | 40 | WASHER-HARD (13.5X22.5X3-MM THK) | |
| M | 15 | 1 | 8T-4139 | 14 | BOLT (M12X1.75X30-MM) | |
| M | 16 | 1 | 8T-4183 | 40 | BOLT (M12X1.75X40-MM) | |
| | 17 | 1 | 8T-4223 | 14 | WASHER-HARD (13.5X25.5X3-MM THK) | |

I-REFER TO HYDRAULIC INFORMATION SYSTEM
M-METRIC PART

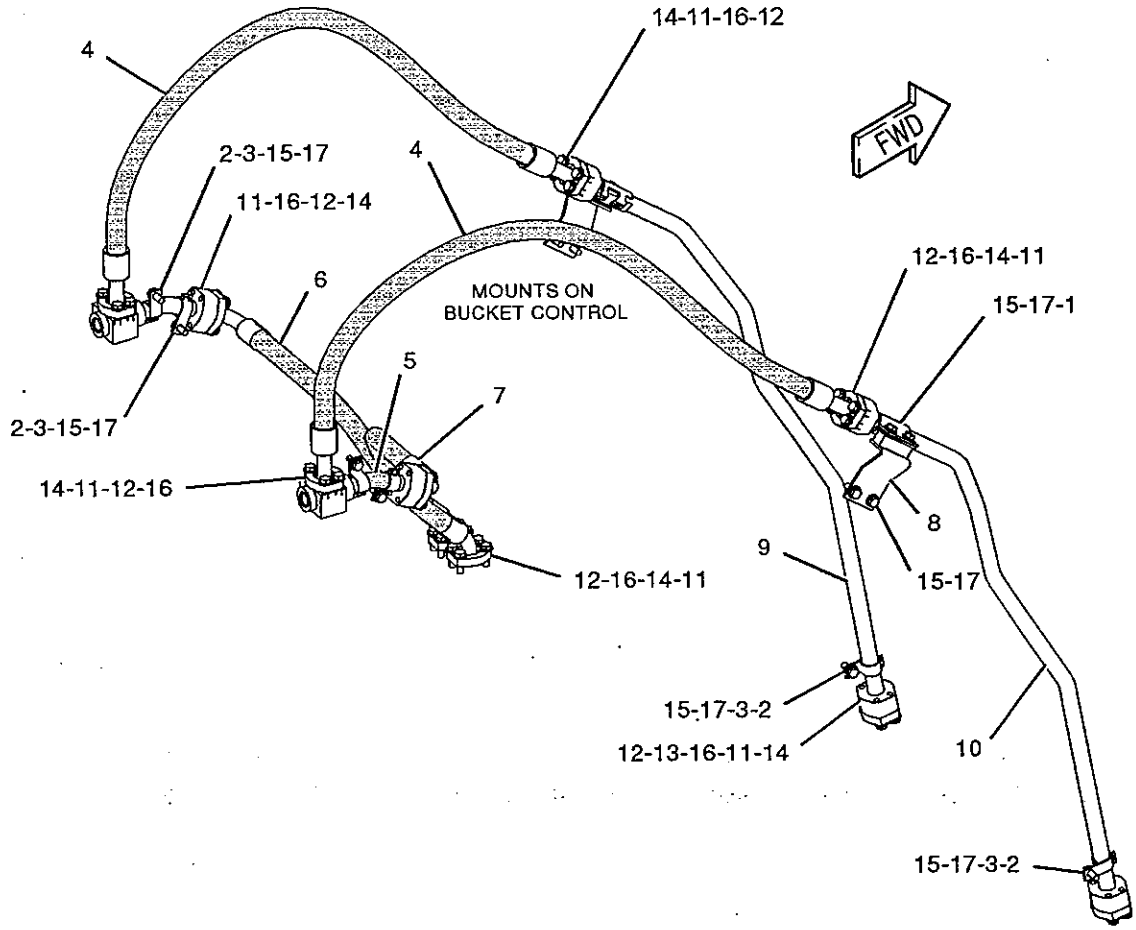


GRAPHIC #1 **<END>** g01008622

# HYDRAULIC SYSTEM

## *235-5336* LINES GP-HOOD TILT

**S/N: JMS1-UP**

**PART OF 235-5334 TILT GP-HOOD**

**SMCS-5057** **i02280857**

| NOTE | REF NO | GRAPHIC REF | PART NUMBER | QTY | PART NAME 1 2 3 4 5 6 (PRODUCT LEVEL) | SEE PAGE |
|---|---|---|---|---|---|---|
| | 1 | 1 | **6V-0852** | 1 | CAP-DUST | |
| | 2 | 1 | *148-8424* | 1 | TEE AS | |
| | | 1 | **6V-8397** | 1 | SEAL-O-RING | |
| | | 1 | **8T-8902** | 1 | TEE | |
| | 3 | 1 | **236-2250** | 1 | TUBE AS | |
| | 4 | 1 | **236-2251** | 1 | TUBE AS | |
| | 5 | 1 | **236-2252** | 1 | TUBE AS | |
| | 6 | 1 | **236-2253** | 1 | TUBE AS | |
| I | 7 | 1 | **236-2254** | 2 | HOSE AS | |
| I | 8 | 1 | **236-2255** | 2 | HOSE AS | |
| | 9 | 1 | **237-0263** | 2 | PLATE | |
| | 10 | 1 | *148-8377* | 2 | ELBOW AS | |
| | | | | | (EACH INCLUDES) | |
| | | 1 | **6V-8397** | 2 | SEAL-O-RING | |
| | | 1 | **6V-8980** | 1 | ELBOW | |
| | 11 | 1 | *148-8378* | 4 | ELBOW AS | |
| | | | | | (EACH INCLUDES) | |
| | | 1 | **3J-1907** | 1 | SEAL-O-RING | |
| | | 1 | **6V-8397** | 1 | SEAL-O-RING | |
| | | 1 | **6V-8724** | 1 | ELBOW | |
| | 12 | 1 | *150-4034* | 2 | TEE GP | |
| | | | | | (EACH INCLUDES) | |
| | | 1 | **6V-8397** | 3 | SEAL-O-RING | |
| | | 1 | **8T-0379** | 1 | TEE-BULKHEAD | |
| | 13 | 1 | *155-7327* | 2 | CONNECTOR AS | |
| | | | | | (EACH INCLUDES) | |
| | | 1 | **3J-1907** | 1 | SEAL-O-RING | |
| | | 1 | **5H-8853** | 1 | SEAL-O-RING | |
| | | 1 | **6V-8636** | 1 | CONNECTOR | |
| | 14 | 1 | *164-5567* | 1 | FITTING GP-COUPLING | |
| | | 1 | **3J-1907** | 1 | SEAL-O-RING | |
| | | 1 | **6V-3965** | 1 | FITTING AS (QUICK DISCONNECT) | |
| | 15 | 1 | **5K-5338** | 4 | CLIP | |
| | 16 | 1 | **6D-4246** | 2 | CLIP | |
| | 17 | 1 | **6V-9168** | 4 | NUT (11/16-16-THD) | |
| | 18 | 1 | **8T-4121** | 11 | WASHER-HARD (11X21X2.5-MM THK) | |
| M | 19 | 1 | **8T-4133** | 4 | NUT (M10X1.5-THD) | |
| M | 20 | 1 | **8T-4137** | 7 | BOLT (M10X1.5X20-MM) | |
| | 21 | 1 | **9S-1350** | 6 | CLIP | |

I-REFER TO HYDRAULIC INFORMATION SYSTEM
M-METRIC PART

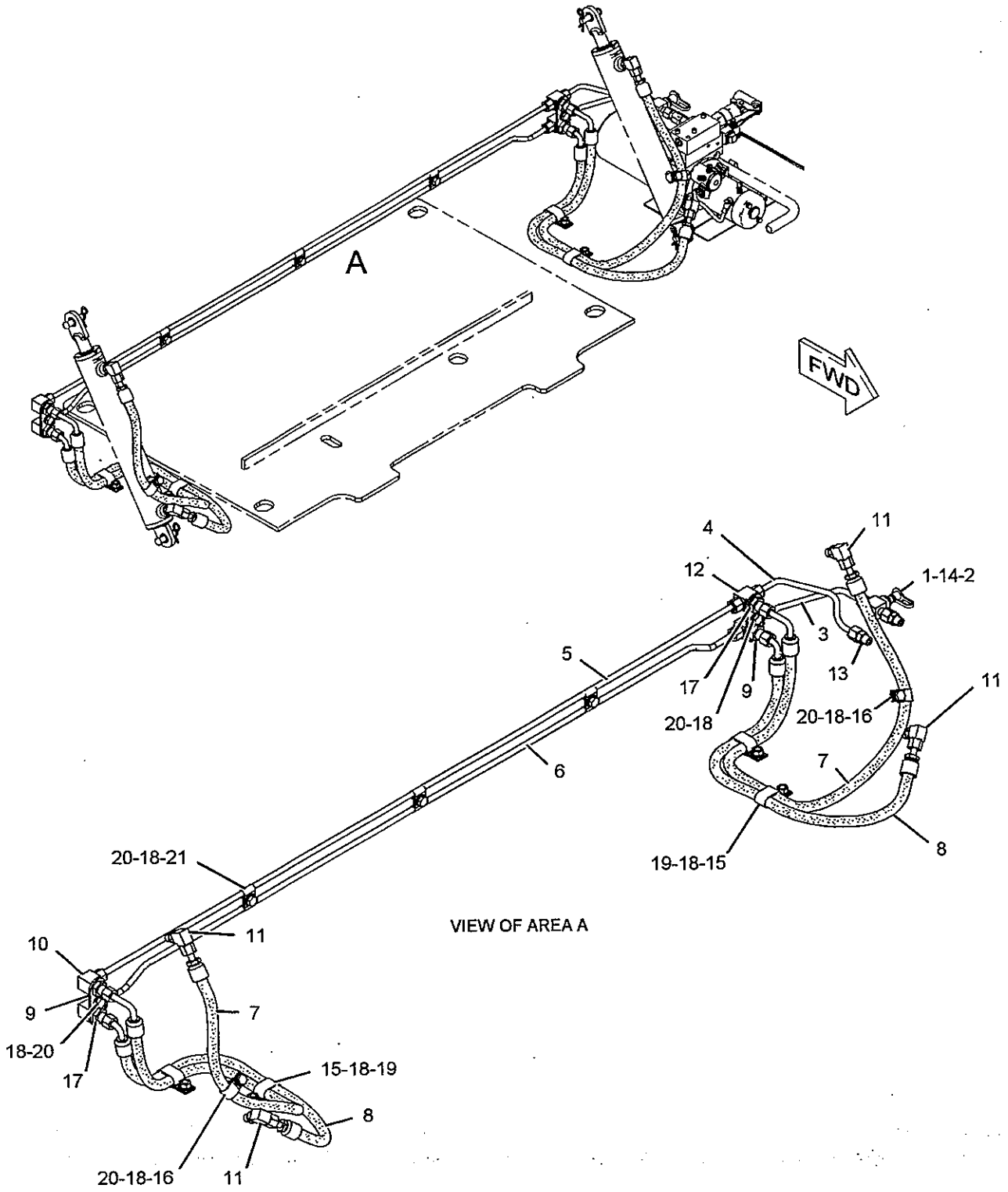


VIEW OF AREA A

GRAPHIC #1 **<END>** g01142328

# HYDRAULIC SYSTEM

## *193-3980* LINES GP-HYDRAULIC

**S/N: JMS1-UP**

**PART OF 235-1303 HYDRAULIC AR-2 VALVE**

**SMCS-5057** **i02193871**

| NOTE | REF NO | GRAPHIC REF | PART NUMBER | QTY | PART NAME 1 2 3 4 5 6 (PRODUCT LEVEL) | SEE PAGE |
|---|---|---|---|---|---|---|
| | 1 | 2 | **3V-3827** | 2 | BAR | |
| | 2 | 2 | **3V-3828** | 4 | CLAMP | |
| | 3 | 1 | **4E-8792** | 2 | CLAMP | |
| | 4 | 1 | **5P-1296** | 1 | HOSE | |
| | 5 | 1 | *164-5590* | 1 | VALVE GP-FLUID SAMPLING (HYDRAULIC OIL) | |
| | | 1 | **3J-7354** | 1 | SEAL-O-RING | |
| | | 1 | **8C-3446** | 1 | VALVE AS-FLUID SAMPLING | |
| | 6 | 1 | **8C-3451** | 1 | CAP-DUST | |
| | 7 | 1 | *167-1795* | 1 | ELBOW AS | |
| | | 1 | **3D-2824** | 1 | SEAL-O-RING | |
| | | 1 | **8T-3491** | 1 | ELBOW | |
| | 8 | 1 | **9X-2201** | 2 | CLAMP-HOSE | |
| I | 9 | 1 | **115-9569** | 1 | HOSE AS | |
| I | 10 | 1 | **115-9570** | 1 | HOSE AS | |
| | 11 | 1 | **125-0150** | 1 | TUBE AS | |
| M | 12 | 1 | **125-2208** | 2 | STUD-TAPERLOCK | |
| | 13 | 1 | **175-4223** | 1 | TUBE AS | |
| | 14 | 2 | **176-3898** | 1 | BLOCK | |
| | 15 | 2 | **188-0239** | 1 | BRACKET AS | |
| M | | 2 | **8T-3490** | 2 | NUT-WELD (M10X1.5-THD) | |
| | 16 | 1 | **193-3984** | 1 | TUBE AS | |
| | 17 | 1 | **220-0814** | 1 | VALVE-BREAKER RELIEF | |
| | 18 | 1 | **245-8226** | 1 | TUBE AS | |
| I | 19 | 1 | **245-8227** | 1 | HOSE AS | |
| | 20 | 1 | **245-8231** | 1 | BRACKET AS | |
| M | | 1 | **8T-3490** | 1 | NUT-WELD (M10X1.5-THD) | |
| | 21 | 2 | **252-9488** | 1 | BRACKET | |
| | 22 | 1 | **198-4777** | 2 | WASHER-HARD (11X25X10-MM THK) | |
| | 23 | 1 | **1P-3705** | 3 | SEAL-RECTANGULAR | |
| | 24 | 1 | **1P-3707** | 1 | SEAL-RECTANGULAR | |
| | 25 | 2 | **1P-3708** | 1 | SEAL-RECTANGULAR | |
| | 26 | 2 | **1P-4579** | 4 | FLANGE-HALF | |
| | 27 | 2 | **1P-4582** | 2 | FLANGE-HALF | |
| | 28 | 1 | **3D-2824** | 1 | SEAL-O-RING | |
| | 30 | 1 | **4J-0524** | 2 | SEAL-O-RING | |
| | 31 | 1 | **4J-0527** | 1 | SEAL-O-RING | |
| | 32 | 1 | **5P-7470** | 1 | CLIP (SLOT) | |
| | 33 | 1 | **5P-7471** | 1 | CLIP (TAB) | |
| | 34 | 1 | **5P-7703** | 1 | GROMMET | |
| | 35 | 1,2 | **5P-8077** | 6 | FLANGE-HALF | |
| | 36 | 1,2 | **7S-8920** | 2 | CLIP (SLOT) | |
| | 37 | 1,2 | **7S-8921** | 2 | CLIP (TAB) | |
| | 38 | 1,2 | **7X-0507** | 3 | WASHER-HARD (12X22.5X5-MM THK) | |
| M | 39 | 2 | **7X-2543** | 4 | BOLT (M10X1.5X120-MM) | |
| M | 40 | 2 | **7X-2549** | 4 | BOLT (M12X1.75X100-MM) | |
| M | 41 | 1 | **7X-2556** | 4 | BOLT (M16X2X100-MM) | |
| | 42 | 1,2 | **8T-4121** | 7 | WASHER-HARD (11X21X2.5-MM THK) | |
| M | 43 | 1 | **8T-4132** | 2 | NUT (M16X2-THD) | |
| M | 44 | 2 | **8T-4133** | 1 | NUT (M10X1.5-THD) | |
| M | 45 | 2 | **8T-4136** | 2 | BOLT (M10X1.5X25-MM) | |
| M | 46 | 1,2 | **8T-4140** | 12 | BOLT (M16X2X60-MM) | |
| M | 47 | 1,2 | **8T-4183** | 16 | BOLT (M12X1.75X40-MM) | |
| M | 48 | 1 | **8T-4193** | 4 | BOLT (M16X2X50-MM) | |
| M | 49 | 1,2 | **8T-4195** | 2 | BOLT (M10X1.5X30-MM) | |
| M | 50 | 1 | **8T-4196** | 1 | BOLT (M10X1.5X35-MM) | |
| | 51 | 1,2 | **8T-4223** | 22 | WASHER-HARD (13.5X25.5X3-MM THK) | |

# HYDRAULIC SYSTEM

## *193-3980* LINES GP-HYDRAULIC *(contd.)*

i02193871

| NOTE | REF NO | GRAPHIC REF | PART NUMBER | QTY | PART NAME 1 2 3 4 5 6 (PRODUCT LEVEL) | SEE PAGE |
|---|---|---|---|---|---|---|
| | 52 | 1 | **9M-2092** | 2 | SEAL-O-RING | |
| | 53 | 1,2 | **9X-8257** | 22 | WASHER (17.5X30X3.5-MM THK) | |

I-REFER TO HYDRAULIC INFORMATION SYSTEM
M-METRIC PART

REFER TO ALL ILLUSTRATIONS OF THIS GROUP FOR AUXILIARY VIEWS

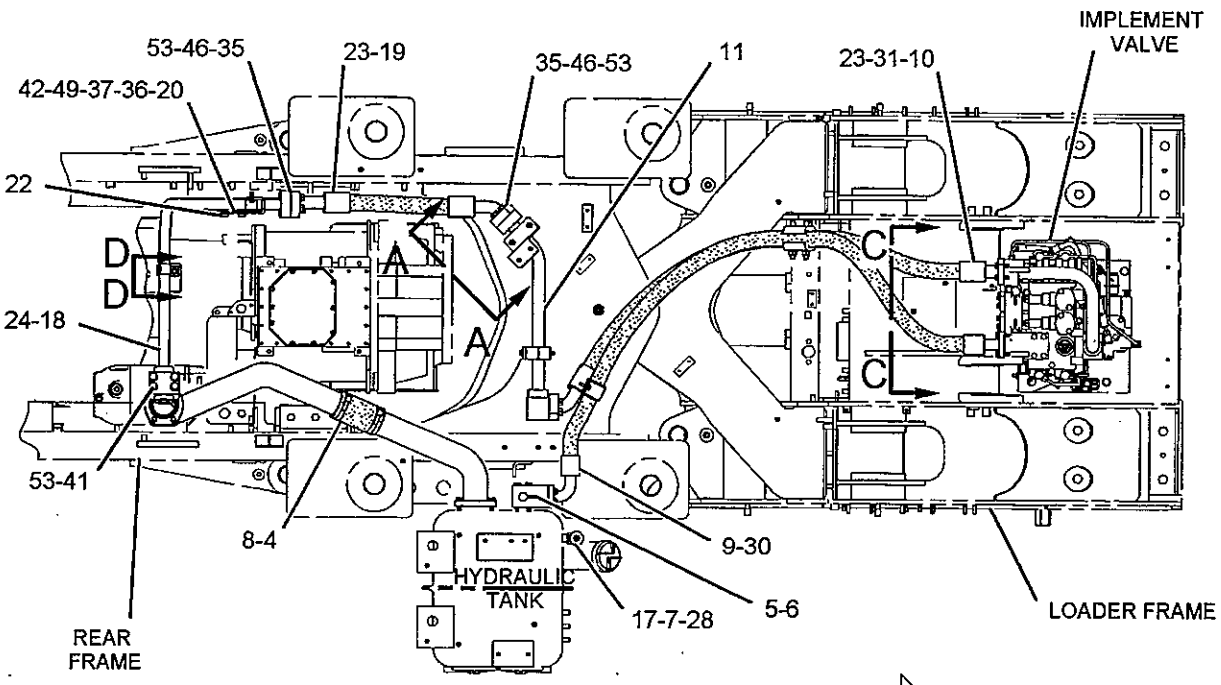


TOP VIEW FWD

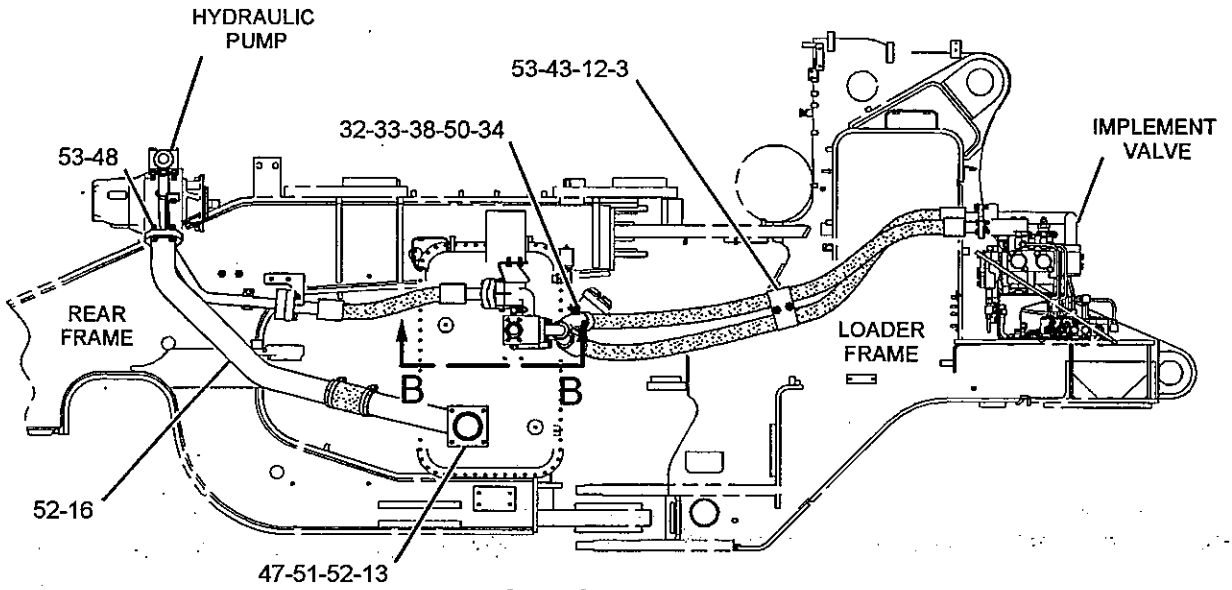


RIGHT SIDE VIEW

GRAPHIC #1 g01107704

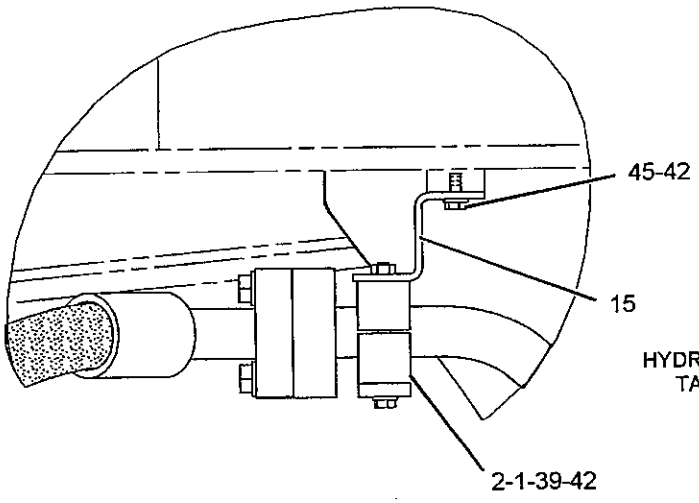


SECTION A-A

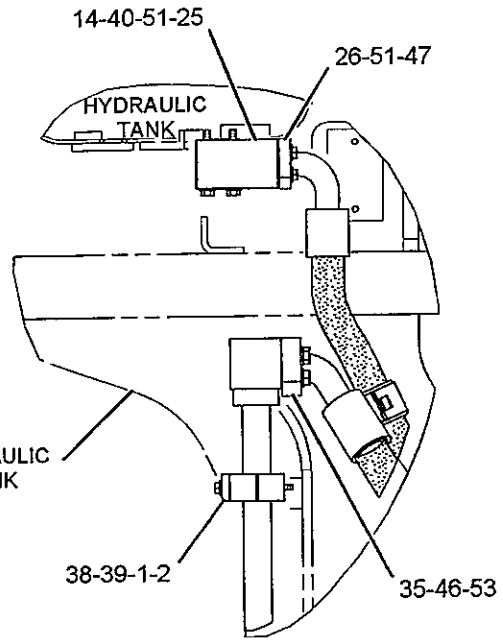


VIEW B-B

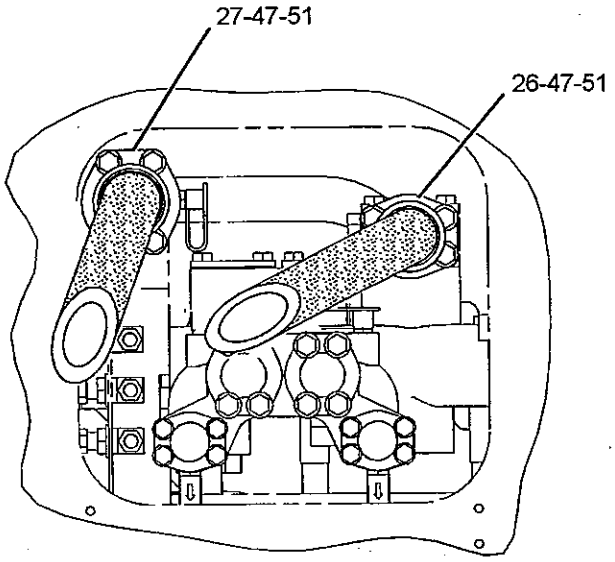


SECTION C-C

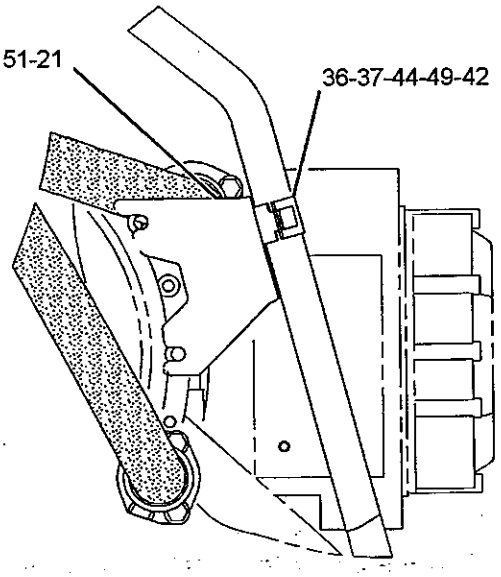


SECTION D-D

GRAPHIC #2

**<END>**

g01101198

# HYDRAULIC SYSTEM

## *250-3381* LINES GP-HYDRAULIC FAN–AUTOMATIC REVERSING

**S/N: JMS1-UP**

**PART OF 251-5801 CONTROL AR-FAN**

**AN ATTACHMENT**

**SMCS-1386, 1387, 5057** i02283984

| NOTE | REF NO | GRAPHIC REF | PART NUMBER | QTY | PART NAME 1 2 3 4 5 6 (PRODUCT LEVEL) | SEE PAGE |
|---|---|---|---|---|---|---|
| | 1 | 1 | **193-9131** | 2 | BRACKET AS | |
| M | | 1 | **8T-3490** | 1 | NUT-WELD (M10X1.5-THD) | |
| Y | 2 | 1 | **213-1040** | 1 | VALVE GP-FAN REVERSING | 702 |
| Y | 3 | 1 | **240-7732** | 1 | MOTOR GP-PISTON (HYDRAULIC FAN, AUTO REVERSING) | 660 |
| | 4 | 1 | **250-3379** | 1 | BRACKET AS | |
| M | | 1 | **8T-3490** | 2 | NUT-WELD (M10X1.5-THD) | |
| I | 5 | 1 | **250-3382** | 1 | HOSE AS | |
| I | 6 | 1 | **250-3383** | 1 | HOSE AS | |
| I | 7 | 1 | **250-3384** | 1 | HOSE AS | |
| I | 8 | 1 | **250-3385** | 1 | HOSE AS | |
| | 9 | 1 | *148-8327* | 2 | CONNECTOR AS | |
| | | | | | (EACH INCLUDES) | |
| | | 1 | **3D-2824** | 1 | SEAL-O-RING | |
| | | 1 | **6V-8637** | 1 | CONNECTOR | |
| | | 1 | **6V-9746** | 1 | SEAL-O-RING | |
| | 10 | 1 | *148-8344* | 2 | CONNECTOR GP | |
| | | | | | (EACH INCLUDES) | |
| | | 1 | **3D-2824** | 1 | SEAL-O-RING | |
| | | 1 | **6V-9162** | 1 | CONNECTOR | |
| | | 1 | **6V-9746** | 1 | SEAL-O-RING | |
| | 11 | 1 | **3P-2404** | 4 | CLIP | |
| | 12 | 1 | **4J-5267** | 2 | SEAL-O-RING | |
| | 13 | 1 | **6V-1889** | 1 | CLIP | |
| | 14 | 1 | **8T-4121** | 6 | WASHER-HARD (11X21X2.5-MM THK) | |
| M | 15 | 1 | **8T-4137** | 2 | BOLT (M10X1.5X20-MM) | |
| M | 16 | 1 | **8T-4195** | 4 | BOLT (M10X1.5X30-MM) | |

I-REFER TO HYDRAULIC INFORMATION SYSTEM
M-METRIC PART
Y-SEPARATE ILLUSTRATION

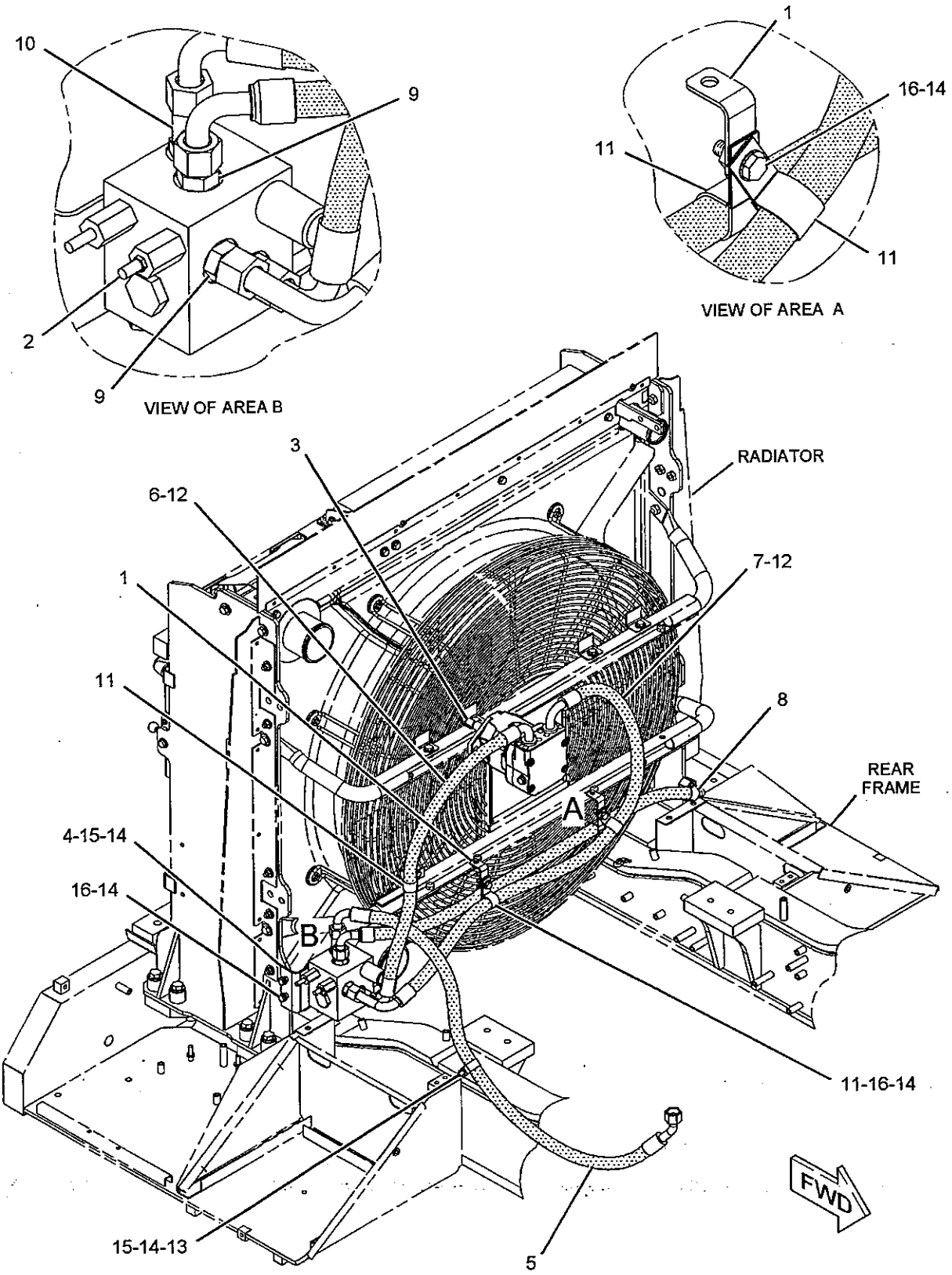


GRAPHIC #1 **<END>** g01143817

# HYDRAULIC SYSTEM

## 232-4929 LINES GP-HYDRAULIC OIL COOLER

**S/N: JMS1-UP**

**PART OF 225-5538 CHASSIS AR**

**SMCS-1374, 5057** **i02280232**

| NOTE | REF NO | GRAPHIC REF | PART NUMBER | QTY | PART NAME 1 2 3 4 5 6 (PRODUCT LEVEL) | SEE PAGE |
|---|---|---|---|---|---|---|
| | 1 | 2 | 3S-2093 | 2 | STRAP-CABLE | |
| | 2 | 1 | 4E-2289 | 1 | ANGLE AS | |
| M | | 1 | 8T-3490 | 1 | NUT-WELD (M10X1.5-THD) | |
| | 3 | 1 | 5P-5148 | 3 | STRAP-TIE | |
| | 4 | 1 | 6V-0852 | 1 | CAP-DUST | |
| | 5 | 2 | 116-4491 | 1 | BRACKET AS | |
| M | | 2 | 8T-3490 | 1 | NUT-WELD (M10X1.5-THD) | |
| | 6 | 2 | 138-1916 | 1 | TEE-BULKHEAD | |
| | 7 | 1,2 | 163-5382 | 2 | SPACER (10.5X25X0.25-MM THK) | |
| | 8 | 1 | *168-1968* | 1 | TEE AS | |
| | | 1 | 3J-1907 | 1 | SEAL-O-RING | |
| | | 1 | 6V-8397 | 1 | SEAL-O-RING | |
| | | 1 | 126-6872 | 1 | TEE | |
| I | 9 | 1 | 172-7815 | 1 | HOSE AS | |
| Y | 10 | 1 | 259-1407 | 1 | FILTER GP-OIL (HIGH EFFICIENCY) (HYDRAULIC) | 640 |
| | 11 | 1 | 176-7319 | 1 | BRACKET AS | |
| M | | 1 | 8T-3490 | 2 | NUT-WELD (M10X1.5-THD) | |
| I | 12 | 1 | 185-3035 | 1 | HOSE AS | |
| Y | 13 | 1 | 191-8735 | 1 | VALVE GP-DEMAND FAN | 699 |
| I | 14 | 1 | 138-6794 | 1 | HOSE AS | |
| | 15 | 1,2 | 193-9131 | 3 | BRACKET AS | |
| | | | | | (EACH INCLUDES) | |
| M | | 1,2 | 8T-3490 | 1 | NUT-WELD (M10X1.5-THD) | |
| | 16 | 2 | 196-4904 | 1 | BRACKET | |
| | 17 | 1,2 | 261-2284 | 1 | TUBE AS. | |
| | 18 | 2 | 207-2519 | 1 | TUBE AS | |
| | 19 | 2 | 207-2520 | 1 | TUBE AS | |
| | 20 | 2 | 207-2521 | 1 | PLATE AS | |
| M | | 2 | 8T-3490 | 4 | NUT-WELD (M10X1.5-THD) | |
| I | 21 | 1 | 207-2523 | 1 | HOSE AS | |
| I | 22 | 1 | 223-0532 | 1 | HOSE AS | |
| | 23 | 1 | 238-2865 | 1 | BRACKET | |
| I | 24 | 1 | 257-7313 | 1 | HOSE AS. | |
| | 25 | 2 | 239-9942 | 1 | BRACKET AS | |
| M | | 2 | 8T-3490 | 4 | NUT-WELD (M10X1.5-THD) | |
| | 26 | 2 | 240-0355 | 1 | VALVE AS-CHECK (HYDRAULIC OIL COOLER BYPASS) | |
| | | 2 | 6V-9746 | 4 | SEAL-O-RING | |
| I | 27 | 2 | 240-0712 | 1 | HOSE AS | |
| | 28 | 2 | 6K-5291 | 1 | CLIP (SLOT) | |
| I | 29 | 2 | 240-0713 | 2 | HOSE AS | |
| I | 30 | 2 | 243-1129 | 1 | HOSE AS | |
| I | 31 | 2 | 243-1130 | 1 | HOSE AS | |
| I | 32 | 2 | 243-1131 | 1 | HOSE AS | |
| I | 33 | 1 | 243-1133 | 1 | HOSE AS | |
| I | 34 | 1 | 243-3343 | 1 | HOSE AS | |
| | 35 | 2 | 246-0562 | 1 | TUBE AS | |
| | 36 | 2 | 118-9573 | 4 | BOLT-12 POINT HEAD (M10X1.5-THD) | |
| | 37 | 2 | *148-8327* | 1 | CONNECTOR AS | |
| | | 2 | 3D-2824 | 1 | SEAL-O-RING | |
| | | 2 | 6V-8637 | 1 | CONNECTOR | |
| | | 2 | 6V-9746 | 1 | SEAL-O-RING | |
| | 38 | 2 | *148-8347* | 1 | ELBOW AS | |
| | | 2 | 3D-2824 | 1 | SEAL-O-RING | |
| | | 2 | 6V-9007 | 1 | ELBOW | |
| | | 2 | 6V-9746 | 1 | SEAL-O-RING | |
| | 39 | 2 | *148-8376* | 1 | ELBOW AS | |

## 232-4929 LINES GP-HYDRAULIC OIL COOLER (contd.)

i02280232

| NOTE | REF NO | GRAPHIC REF | PART NUMBER | QTY | PART NAME 1 2 3 4 5 6 (PRODUCT LEVEL) | SEE PAGE |
|---|---|---|---|---|---|---|
| | | 2 | 6V-8983 | 1 | ELBOW | |
| | | 2 | 6V-9746 | 2 | SEAL-O-RING | |
| | 40 | 1 | 148-8315 | 1 | CONNECTOR AS | |
| | | 1 | 2M-9780 | 1 | SEAL-O-RING | |
| | | 1 | 6V-8642 | 1 | CONNECTOR | |
| | | 1 | 7J-9108 | 1 | SEAL-O-RING | |
| | 41 | 1 | 148-8418 | 1 | REDUCER GP | |
| | | 1 | 6V-8398 | 1 | SEAL-O-RING | |
| | | 1 | 6V-8942 | 1 | REDUCER-O-RING (FACE) | |
| | 42 | 1 | 164-5567 | 1 | FITTING GP-COUPLING | |
| | | 1 | 3J-1907 | 1 | SEAL-O-RING | |
| | | 1 | 6V-3965 | 1 | FITTING AS (QUICK DISCONNECT) | |
| | 43 | 1 | 164-6862 | 1 | TEE GP | |
| | | 1 | 6V-9160 | 1 | TEE-FACE SEAL | |
| | | 1 | 6V-9746 | 3 | SEAL-O-RING | |
| I | 44 | 1 | 189-8204 | 1 | HOSE AS | |
| | 45 | 1,2 | 1P-4579 | 6 | FLANGE-HALF | |
| | 46 | 1 | 2M-9780 | 2 | SEAL-O-RING | |
| | 47 | 1,2 | 2P-1293 | 3 | LOCKNUT (1-3/16-12-THD) | |
| | 48 | 2 | 261-2286 | 1 | BRACKET AS. | |
| M | | 2 | 8T-3490 | 1 | NUT-WELD (M10X1.5-THD) | |
| | 49 | 2 | 3J-7354 | 1 | SEAL-O-RING | |
| | 50 | 1 | 3K-0360 | 1 | SEAL-O-RING | |
| | 51 | 2 | 3P-2404 | 2 | CLIP | |
| | 52 | 2 | 4J-0520 | 1 | SEAL-O-RING | |
| | 53 | 1,2 | 4J-0524 | 3 | SEAL-O-RING | |
| | 54 | 2 | 4J-5267 | 2 | SEAL-O-RING | |
| | 55 | 1,2 | 4S-1962 | 4 | CLIP | |
| | 56 | 1,2 | 5K-9090 | 2 | SEAL-O-RING | |
| | 57 | 1 | 6V-0484 | 1 | ADAPTER-O-RING | |
| | 58 | 2 | 6V-1616 | 2 | CLAMP-HALF | |
| | 59 | 1 | 6V-1889 | 11 | CLIP | |
| | 60 | 1 | 6V-4356 | 1 | CLIP (SLOT) | |
| | 61 | 1 | 6V-4357 | 1 | CLIP (TAB) | |
| | 62 | 1,2 | 6V-8397 | 4 | SEAL-O-RING | |
| | 63 | 1 | 6V-8640 | 1 | CONNECTOR | |
| | 64 | 1 | 6V-8776 | 1 | TEE-FACE SEAL | |
| | 65 | 2 | 6V-8942 | 1 | REDUCER-O-RING (FACE) | |
| | 66 | 1 | 148-8353 | 2 | ELBOW AS | |
| | | | | | (EACH INCLUDES) | |
| | | 1 | 3J-1907 | 1 | SEAL-O-RING | |
| | | 1 | 6V-8397 | 1 | SEAL-O-RING | |
| | | 1 | 6V-9001 | 1 | ELBOW | |
| | 67 | 1 | 6V-9008 | 1 | ELBOW | |
| | 68 | 2 | 6V-9160 | 1 | TEE-FACE SEAL | |
| | 69 | 1 | 6V-9182 | 1 | ELBOW | |
| | 70 | 1,2 | 6V-9746 | 15 | SEAL-O-RING | |
| | 71 | 1 | 6V-9839 | 2 | TEE-SWIVEL | |
| | 72 | 1 | 6V-9853 | 1 | ELBOW | |
| | 73 | 2 | 6V-9872 | 1 | CONNECTOR | |
| | 74 | 1 | 6V-9877 | 1 | ELBOW | |
| | 75 | 1 | 7D-1553 | 2 | CLIP | |
| | 76 | 1 | 7J-9108 | 2 | SEAL-O-RING | |
| | 77 | 1 | 7M-8485 | 2 | SEAL-O-RING | |
| | 78 | 2 | 7S-8920 | 1 | CLIP (SLOT) | |
| | 79 | 2 | 7S-8921 | 1 | CLIP (TAB) | |
| | 80 | 1 | 7X-0288 | 2 | BOLT (3/8-16X1.625-IN) | |
| | 81 | 2 | 7X-7729 | 2 | WASHER (11X25X3-MM THK) | |
| | 82 | 2 | 8C-3205 | 4 | FLANGE-HALF | |

## 232-4929 LINES GP-HYDRAULIC OIL COOLER (contd.)

i02280232

| NOTE | REF NO | GRAPHIC REF | PART NUMBER | QTY | PART NAME 1 2 3 4 5 6 (PRODUCT LEVEL) | SEE PAGE |
|---|---|---|---|---|---|---|
| | 83 | 2 | 8C-3206 | 2 | FLANGE-HALF | |
| | 84 | 2 | 8C-8988 | 1 | ELBOW | |
| | 85 | 2 | 8K-2665 | 2 | CLAMP-HALF | |
| | 86 | 2 | 8T-1887 | 2 | CLIP (SLOT) | |
| | 87 | 2 | 8T-1888 | 2 | CLIP (TAB) | |
| | 88 | 1,2 | 8T-4121 | 53 | WASHER-HARD (11X21X2.5-MM THK) | |
| M | 89 | 1,2 | 8T-4133 | 4 | NUT (M10X1.5-THD) | |
| M | 90 | 1,2 | 8T-4136 | 22 | BOLT (M10X1.5X25-MM) | |
| M | 91 | 1,2 | 8T-4137 | 8 | BOLT (M10X1.5X20-MM) | |
| M | 92 | 1,2 | 8T-4182 | 1 | BOLT (M10X1.5X45-MM) | |
| M | 93 | 1,2 | 8T-4183 | 12 | BOLT (M12X1.75X40-MM) | |
| M | 94 | 2 | 8T-4186 | 1 | BOLT (M10X1.5X40-MM) | |
| M | 95 | 1,2 | 8T-4195 | 4 | BOLT (M10X1.5X30-MM) | |
| M | 96 | 2 | 8T-4196 | 8 | BOLT (M10X1.5X35-MM) | |
| | 97 | 1,2 | 8T-4223 | 12 | WASHER-HARD (13.5X25.5X3-MM THK) | |
| | 98 | 1,2 | 8T-4896 | 3 | WASHER-HARD (10.2X18.5X2.5-MM THK) | |
| M | 99 | 1 | 8T-5005 | 1 | BOLT (M10X1.5X70-MM) | |
| M | 100 | 2 | 8T-6466 | 2 | BOLT (M10X1.5X60-MM) | |
| | 101 | 2 | 8T-9377 | 1 | BOLT (3/8-16X2.25-IN) | |
| | 102 | 2 | 8X-4186 | 2 | WASHER (32X60X3-MM THK) | |
| | 103 | 1,2 | 9X-6580 | 2 | NUT (1-3/16-12-THD) | |
| | 104 | 1 | 9X-8250 | 2 | CLIP | |
| I | 105 | 1 | 261-2283 | 1 | HOSE AS. | |
| | 106 | 1 | 251-4204 | 1 | TUBE AS | |
| | 107 | 2 | 6K-5290 | 1 | CLIP (TAB) | |
| | 108 | 1 | 1P-3704 | 1 | SEAL-RECTANGULAR | |

I-REFER TO HYDRAULIC INFORMATION SYSTEM
M-METRIC PART
Y-SEPARATE ILLUSTRATION

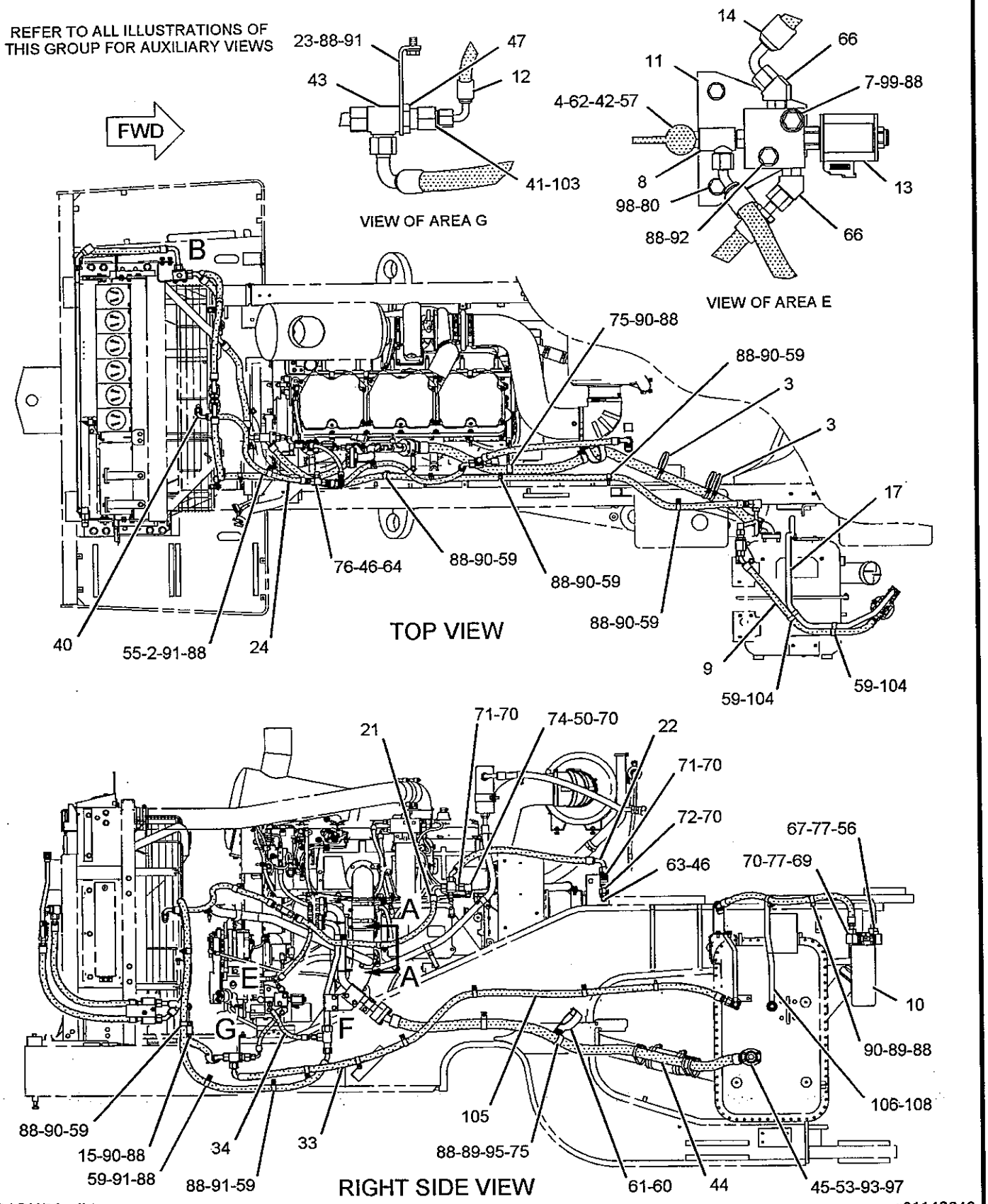


GRAPHIC #1

g01142648

## *232-4929* LINES GP-HYDRAULIC OIL COOLER *(contd.)*

i02280232

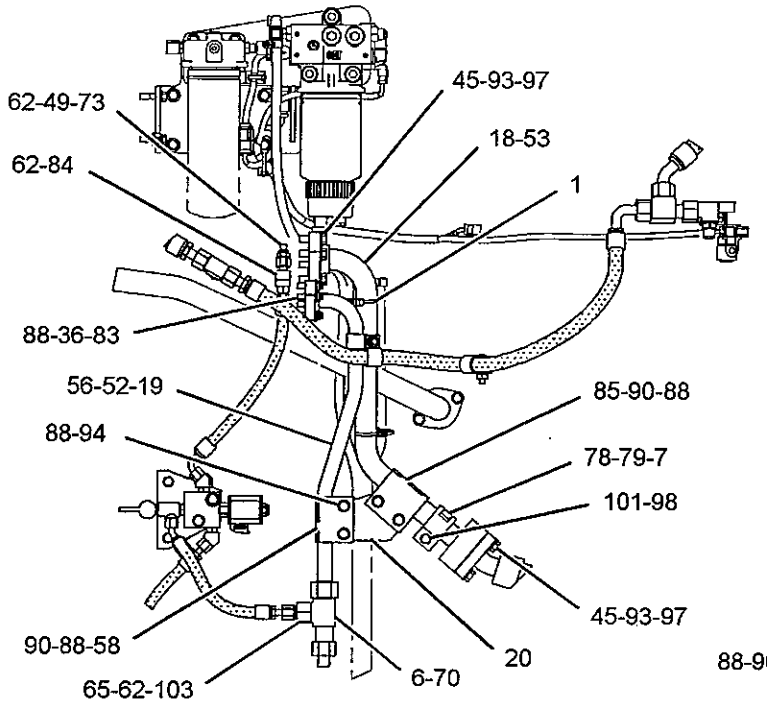


VIEW OF AREA F

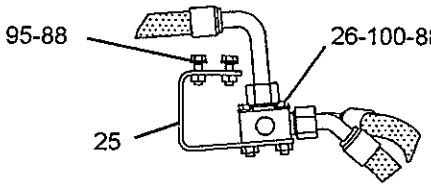


VIEW OF AREA B

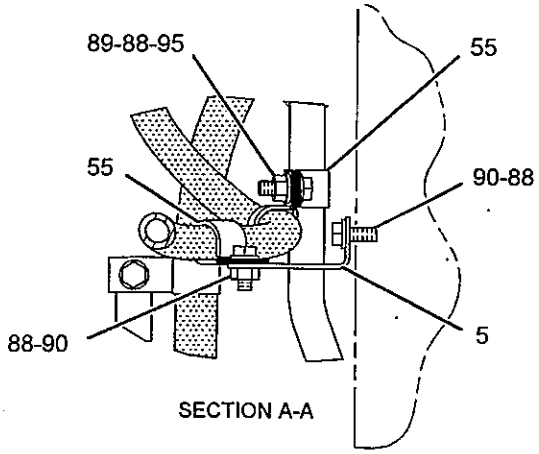


SECTION A-A

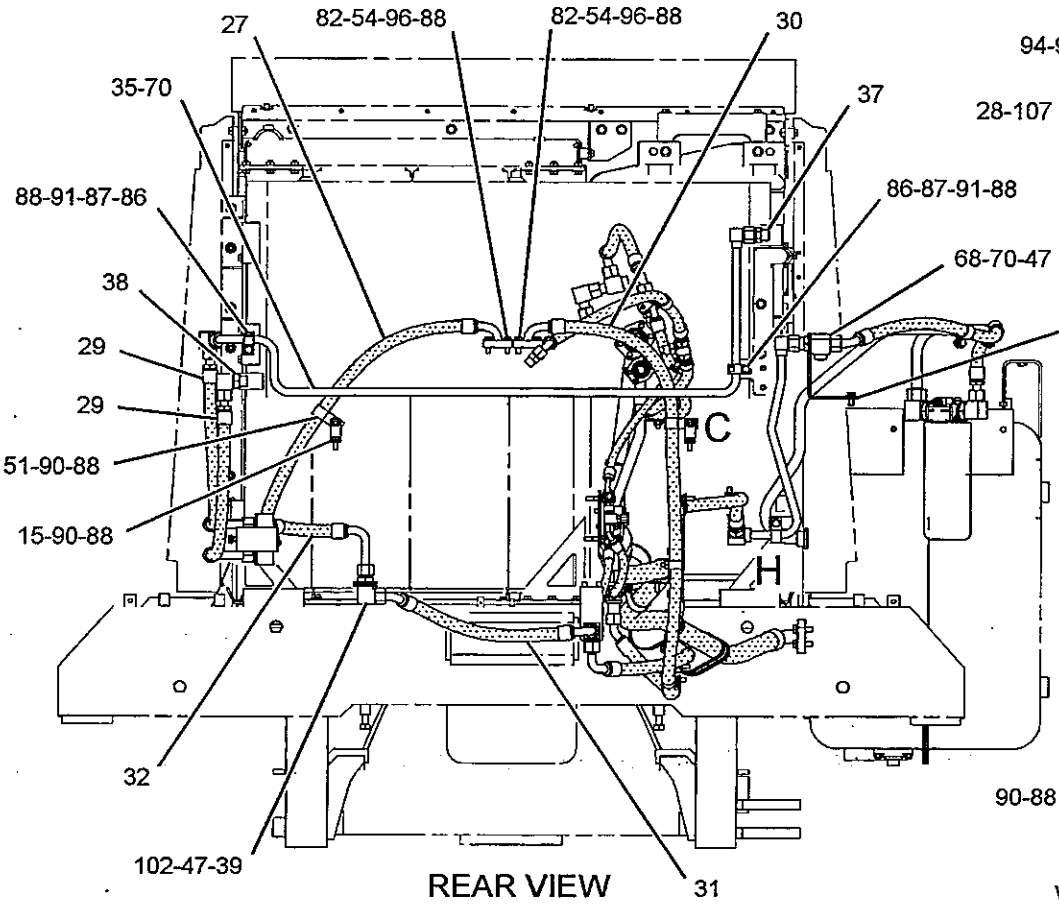


REAR VIEW

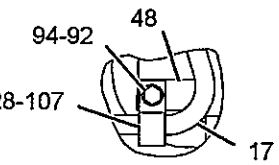


VIEW OF AREA H

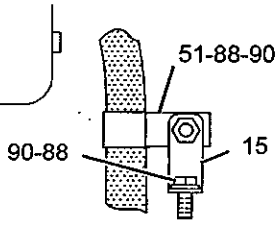


VIEW OF AREA C

GRAPHIC #2

**<END>**

g01142649

# HYDRAULIC SYSTEM

## *110-8144* LINES GP-LIFT CYLINDER

**S/N: JMS1-UP**

**PART OF 235-1303 HYDRAULIC AR-2 VALVE**

**SMCS-5057, 5102** **i02119483**

| NOTE | REF NO | GRAPHIC REF | PART NUMBER | QTY | PART NAME 1 2 3 4 5 6 (PRODUCT LEVEL) | SEE PAGE |
|---|---|---|---|---|---|---|
| | 1 | 1 | **1P-3704** | 2 | SEAL-RECTANGULAR | |
| | 2 | 1 | **1P-3705** | 2 | SEAL-RECTANGULAR | |
| I | 3 | 1 | **3V-7271** | 1 | HOSE AS | |
| I | 4 | 1 | **3V-7272** | 1 | HOSE AS | |
| I | 5 | 1 | **3V-7273** | 1 | HOSE AS | |
| I | 6 | 1 | **3V-7274** | 1 | HOSE AS | |
| | 7 | 1 | **3V-7279** | 2 | ANGLE | |
| | 8 | 1 | **4J-0520** | 14 | SEAL-O-RING | |
| | 9 | 1 | **4J-0522** | 2 | SEAL-O-RING | |
| | 10 | 1 | **6V-3240** | 2 | SEAL-RECTANGULAR | |
| | 11 | 1 | **7S-8920** | 2 | CLIP (SLOT) | |
| | 12 | 1 | **7S-8921** | 2 | CLIP (TAB) | |
| | 13 | 1 | **7X-7729** | 4 | WASHER (11X25X3-MM THK) | |
| | 14 | 1 | **7X-3392** | 8 | WASHER-HARD (13.5X22.5X3-MM THK) | |
| | 15 | 1 | **113-1720** | 1 | TUBE AS | |
| | 16 | 1 | **113-1721** | 1 | TUBE AS | |
| | 17 | 1 | **114-4831** | 2 | PLATE | |
| | 18 | 1 | **116-3363** | 2 | BRACKET | |
| C | 19 | 1 | **226-7659** | 1 | TUBE AS (RH) | |
| C | 20 | 1 | **226-7661** | 1 | TUBE AS (LH) | |
| I | 21 | 1 | **162-9742** | 2 | HOSE AS | |
| I | 22 | 1 | **162-9743** | 2 | HOSE AS | |
| | 23 | 1 | **171-5319** | 1 | BRACKET (RH) | |
| | 24 | 1 | **6V-0397** | 4 | FLANGE-HALF | |
| | 25 | 1 | **8C-3206** | 28 | FLANGE-HALF | |
| | 26 | 1 | **8T-4121** | 44 | WASHER-HARD (11X21X2.5-MM THK) | |
| M | 27 | 1 | **8T-4133** | 6 | NUT (M10X1.5-THD) | |
| M | 28 | 1 | **8T-4139** | 8 | BOLT (M12X1.75X30-MM) | |
| M | 29 | 1 | **8T-4182** | 8 | BOLT (M10X1.5X45-MM) | |
| M | 30 | 1 | **8T-4183** | 8 | BOLT (M12X1.75X40-MM) | |
| M | 31 | 1 | **8T-4196** | 50 | BOLT (M10X1.5X35-MM) | |
| | 32 | 1 | **8T-4223** | 20 | WASHER-HARD (13.5X25.5X3-MM THK) | |
| M | 33 | 1 | **8T-4956** | 4 | BOLT (M12X1.75X35-MM) | |
| M | 34 | 1 | **8T-5005** | 8 | BOLT (M10X1.5X70-MM) | |
| M | 35 | 1 | **8T-5041** | 8 | BOLT (M12X1.75X120-MM) | |
| | 36 | 1 | **171-5320** | 1 | BRACKET (LH) | |
| | 37 | 1 | **8T-7934** | 16 | WASHER-HARD (11X21X5-MM THK) | |

C-CHANGE FROM PREVIOUS TYPE
I-REFER TO HYDRAULIC INFORMATION SYSTEM
M-METRIC PART

## *110-8144* LINES GP-LIFT CYLINDER *(contd.)*

i02119483

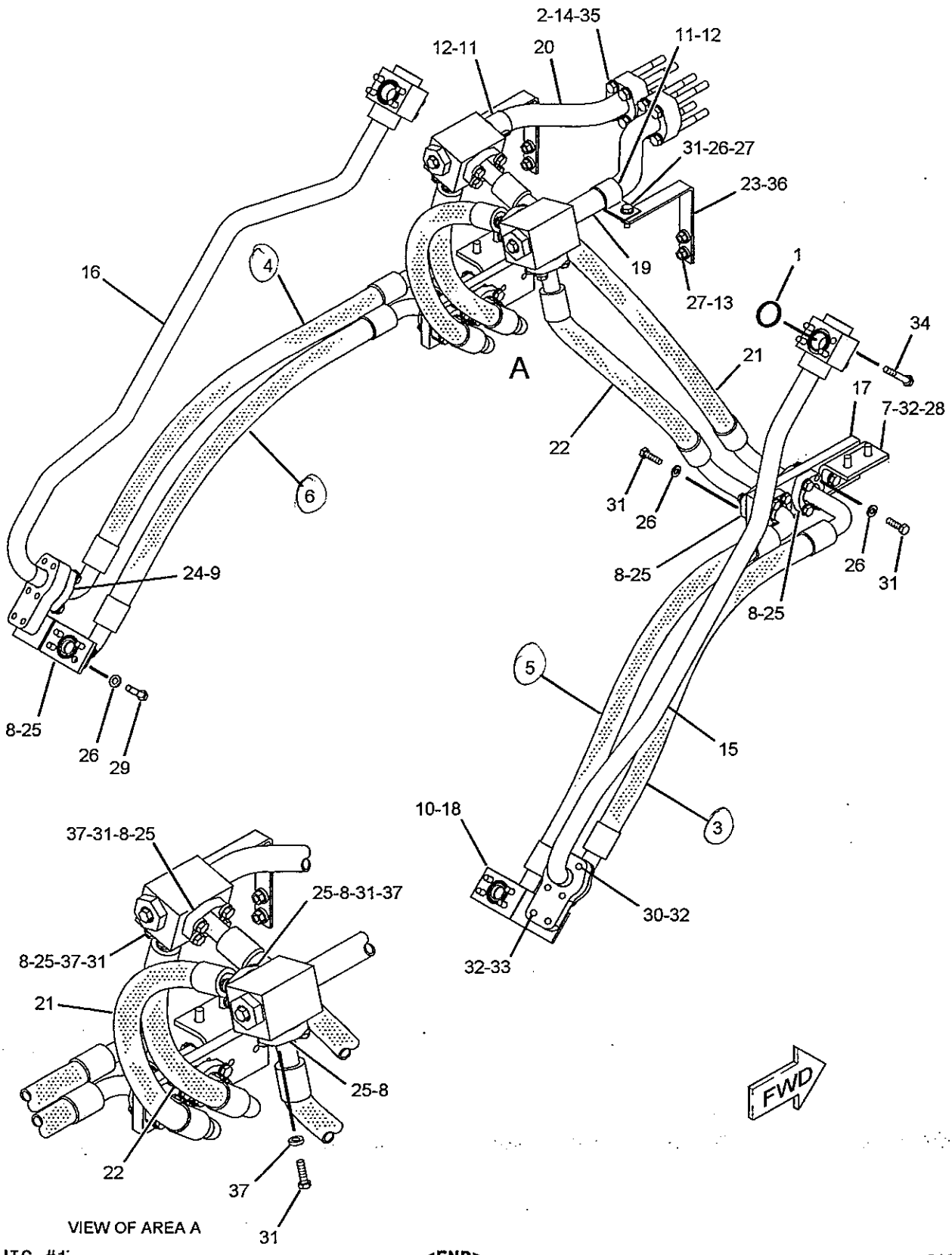


VIEW OF AREA A

GRAPHIC #1

<END>

g01070310

# HYDRAULIC SYSTEM

## *110-8141* LINES GP-TILT CYLINDER

**S/N: JMS1-UP**

**PART OF 235-1303 HYDRAULIC AR-2 VALVE**

**SMCS-5057, 5104** **i02204703**

| NOTE | REF NO | GRAPHIC REF | PART NUMBER | QTY | PART NAME 1 2 3 4 5 6 (PRODUCT LEVEL) | SEE PAGE |
|---|---|---|---|---|---|---|
| | 1 | 1 | **1P-3704** | 2 | SEAL-RECTANGULAR | |
| | 3 | 1 | **4J-0520** | 2 | SEAL-O-RING | |
| | 4 | 1 | **4J-0522** | 6 | SEAL-O-RING | |
| | 5 | 1 | **6V-0852** | 2 | CAP-DUST | |
| | 6 | 1 | *164-5567* | 2 | FITTING GP-COUPLING | |
| | | | | | (EACH INCLUDES) | |
| | | 1 | **3J-1907** | 1 | SEAL-O-RING | |
| | | 1 | **6V-3965** | 1 | FITTING AS | |
| | 7 | 1 | **116-2152** | 1 | TUBE AS | |
| | 8 | 1 | **116-2153** | 1 | TUBE AS | |
| | 9 | 1 | **116-2155** | 1 | MANIFOLD | |
| I | 10 | 1 | **122-9963** | 2 | HOSE AS | |
| I | 11 | 1 | **122-9964** | 1 | HOSE AS | |
| I | 12 | 1 | **122-9965** | 1 | HOSE AS | |
| | 13 | 1 | **123-0305** | 2 | BRACKET | |
| I | 14 | 1 | **203-0187** | 2 | HOSE AS | |
| | 15 | 1 | **6V-0397** | 12 | FLANGE-HALF | |
| | 16 | 1 | **8C-3206** | 12 | FLANGE-HALF | |
| | 17 | 1 | **8T-4121** | 32 | WASHER-HARD (11X21X2.5-MM THK) | |
| M | 18 | 1 | **8T-4183** | 24 | BOLT (M12X1.75X40-MM) | |
| M | 19 | 1 | **8T-4192** | 8 | BOLT (M12X1.75X25-MM) | |
| M | 20 | 1 | **8T-4196** | 24 | BOLT (M10X1.5X35-MM) | |
| | 21 | 1 | **8T-4223** | 32 | WASHER-HARD (13.5X25.5X3-MM THK) | |
| M | 22 | 1 | **8T-4910** | 2 | BOLT (M12X1.75X60-MM) | |
| M | 23 | 1 | **8T-5001** | 1 | BOLT (M12X1.75X130-MM) | |
| M | 24 | 1 | **8T-5005** | 8 | BOLT (M10X1.5X70-MM) | |

I-REFER TO HYDRAULIC INFORMATION SYSTEM
M-METRIC PART

## *110-8141* LINES GP-TILT CYLINDER *(contd.)* i02204703

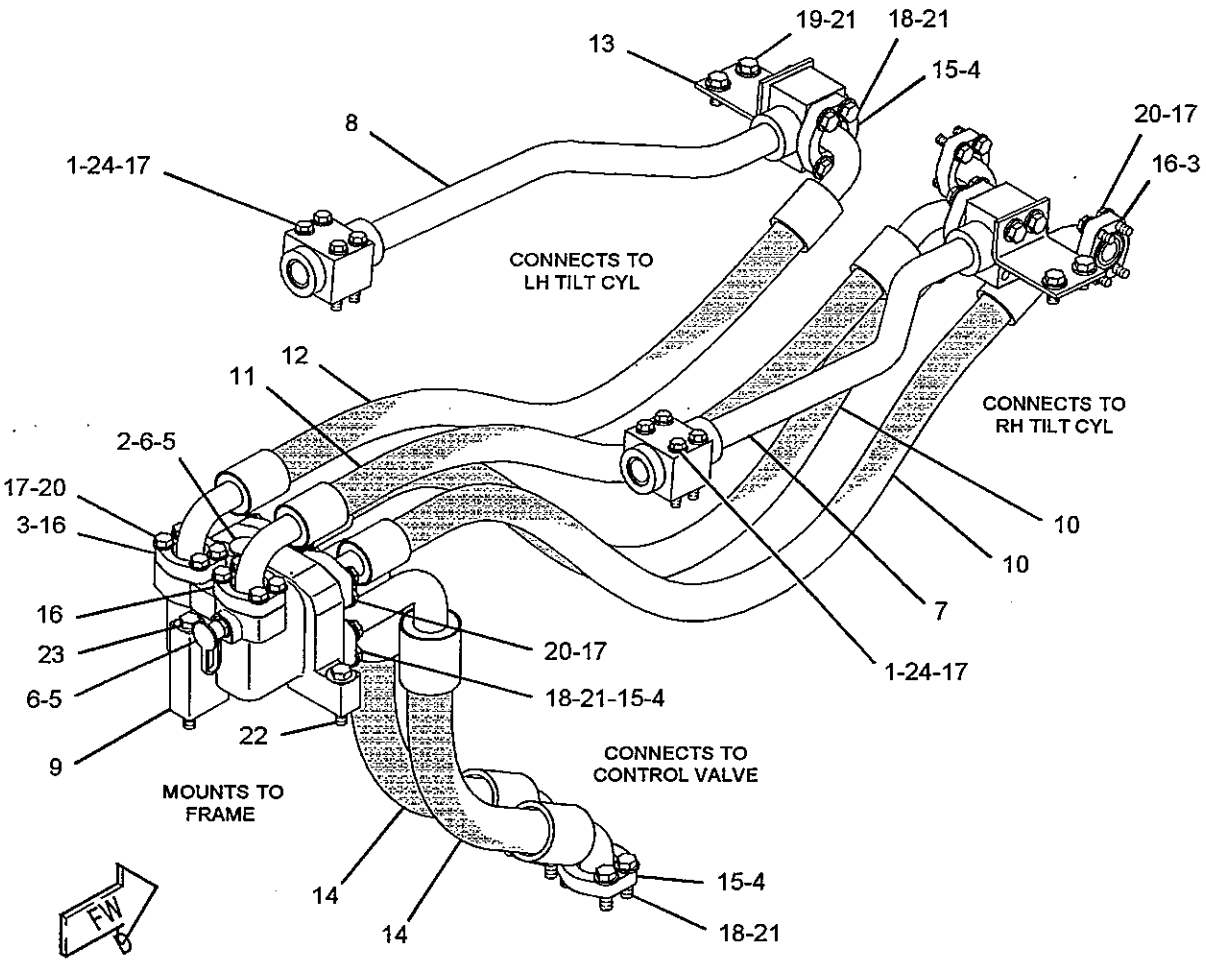


GRAPHIC #1 **<END>** g01127675

# 240-7732 MOTOR GP-PISTON–HYDRAULIC FAN, AUTO REVERSING

S/N: JMS1-UP

PART OF 250-3381 LINES GP-HYDRAULIC FAN

AN ATTACHMENT

SMCS-1386, 5058

i02283980

| NOTE | REF NO | GRAPHIC REF | PART NUMBER | QTY | PART NAME 1 2 3 4 5 6 (PRODUCT LEVEL) | SEE PAGE |
|---|---|---|---|---|---|---|
| | 1 | 1 | 185-0248 | 1 | SEAL-OIL | |
| | 2 | 1 | 9S-8006 | 1 | PLUG | |
| | 3 | 1 | 2M-9780 | 1 | SEAL-O-RING | |
| | 4 | 1 | 242-3373 | 1 | SWASHPLATE | |
| Y | 5 | 1 | 256-7858 | 1 | ROTATING GP-PUMP | 673 |
| | 6 | 1 | 127-9485 | 1 | SEAL-O-RING | |
| M | 7 | 1 | 095-0690 | 4 | BOLT-SOCKET HEAD (M14X2X60-MM) | |
| | 8 | 1 | 8C-3110 | 1 | RING-RETAINING | |
| | 9 | 1 | 204-2799 | 1 | DOWEL | |
| | 10 | 1 | 101-2862 | 2 | DOWEL | |
| | 11 | 1 | 185-0263 | 1 | BEARING | |
| | 12 | 1 | 185-0242 | 1 | PLATE | |
| | 13 | 1 | 242-3377 | 1 | SHAFT-DRIVE | |
| | 14 | 1 | 189-4717 | 1 | BEARING | |
| B | 15 | 1 | 127-9483 | 1 | SHIM (PRELOAD) | |

B-USE AS REQUIRED
M-METRIC PART
Y-SEPARATE ILLUSTRATION

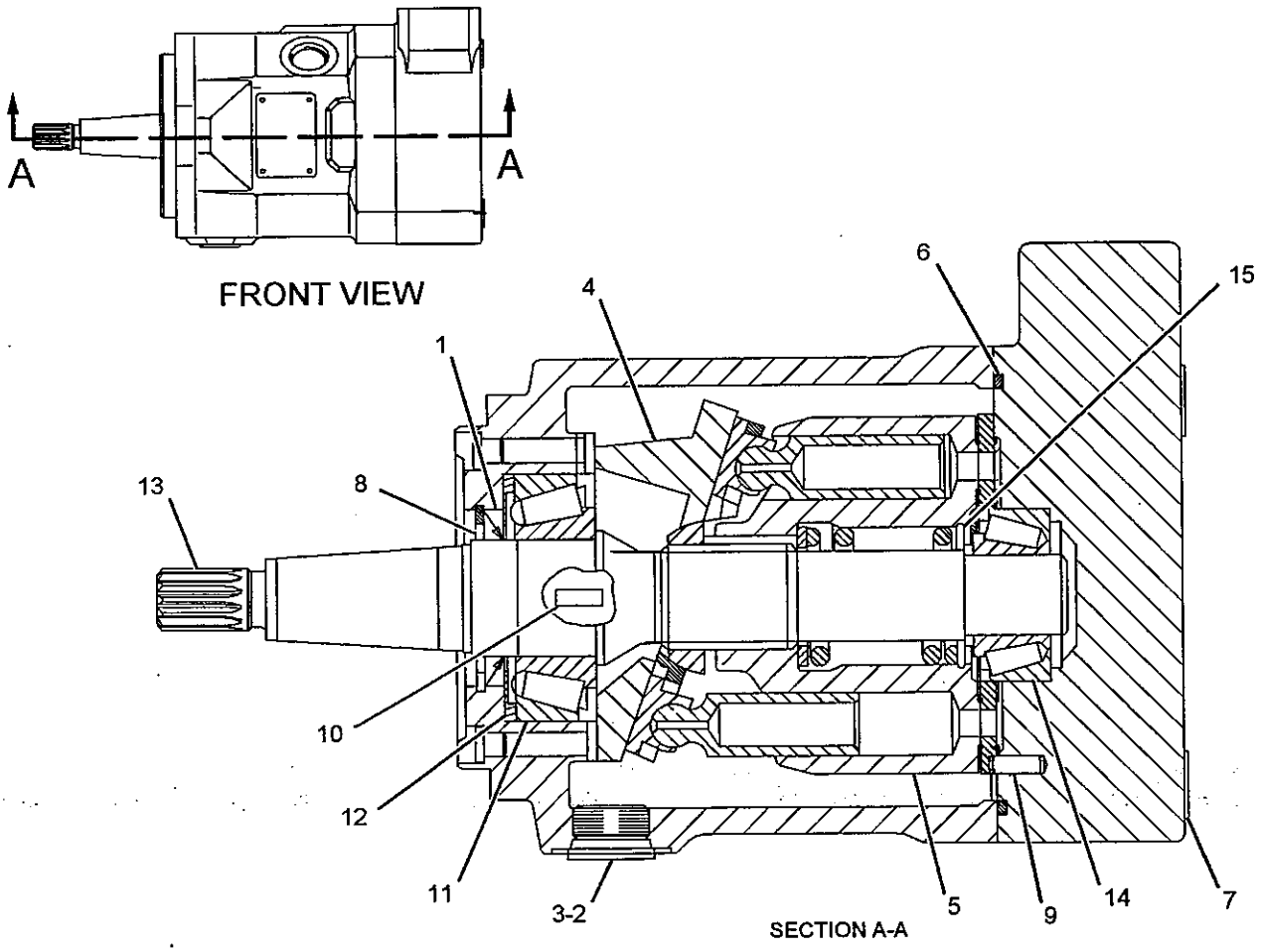


GRAPHIC #1

<END>

g01144270

# 255-6805 MOTOR GP-PISTON–HYDRAULIC FAN

S/N: JMS1-UP

PART OF 232-3321 RADIATOR & FAN GP

SMCS-1386, 5058

i02195293

| NOTE | REF NO | GRAPHIC REF | PART NUMBER | QTY | PART NAME 1 2 3 4 5 6 (PRODUCT LEVEL) | SEE PAGE |
|---|---|---|---|---|---|---|
| | 1 | 1 | 185-0248 | 1 | SEAL-OIL | |
| | 2 | 1 | 9S-8006 | 1 | PLUG | |
| | 3 | 1 | 2M-9780 | 1 | SEAL-O-RING | |
| | 4 | 1 | 242-3373 | 1 | SWASHPLATE | |
| Y | 5 | 1 | 256-7858 | 1 | ROTATING GP-PUMP | 673 |
| | 6 | 1 | 127-9485 | 1 | SEAL-O-RING | |
| M | 7 | 1 | 095-0690 | 4 | BOLT-SOCKET HEAD | |
| | 8 | 1 | 8C-3110 | 1 | RING-RETAINING | |
| | 9 | 1 | 204-2799 | 1 | DOWEL | |
| | 10 | 1 | 101-2862 | 2 | DOWEL | |
| | 11 | 1 | 185-0263 | 1 | BEARING | |
| | 12 | 1 | 185-0242 | 1 | PLATE | |
| | 13 | 1 | 242-3377 | 1 | SHAFT-DRIVE | |
| | 14 | 1 | 189-4717 | 1 | BEARING | |
| | | 1 | 105-3035 | 1 | CONE-BEARING | |
| | | 1 | 203-8609 | 1 | CUP-BEARING | |
| | 15 | 1 | 127-9483 | 1 | SHIM (PRELOAD) | |
| | 16 | 1 | 197-2471 | 1 | PLUG AS | |
| | | 1 | 197-2472 | 1 | SEAL | |
| | 17 | 1 | 197-2474 | 1 | VALVE AS | |
| | 18 | 1 | 242-3374 | 1 | SLEEVE | |

M-METRIC PART
Y-SEPARATE ILLUSTRATION

## 255-6805 MOTOR GP-PISTON *(contd.)*

i02195293

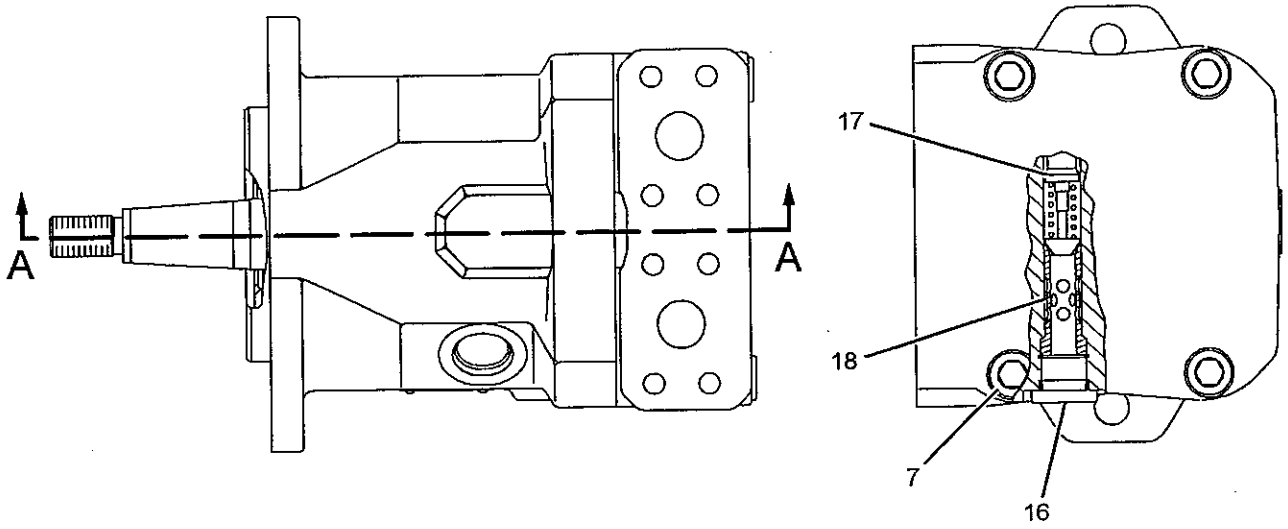


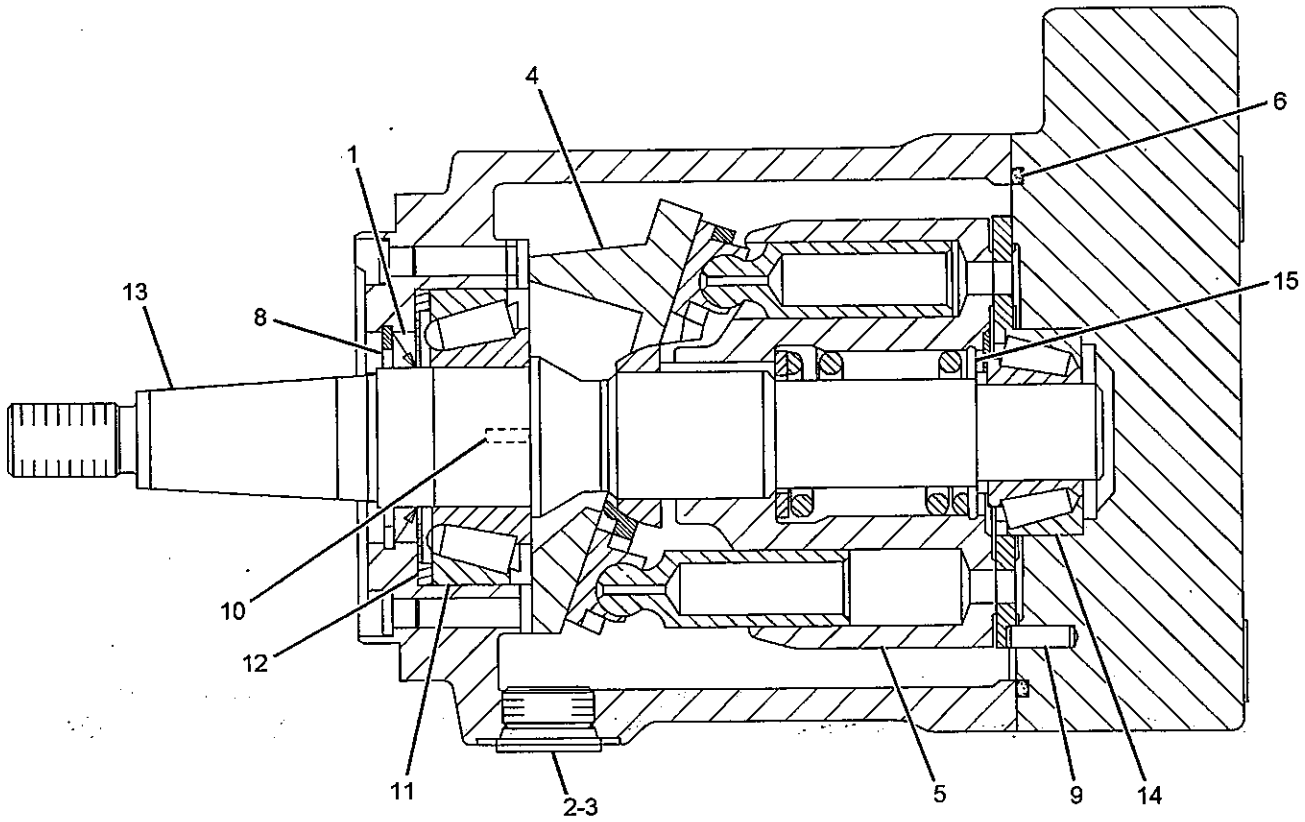


SECTION A-A

GRAPHIC #1

**<END>**

g01111088

# *110-8145* MOUNTING GP-HYDRAULIC TANK

**S/N: JMS1-UP**

**PART OF 235-1303 HYDRAULIC AR-2 VALVE**

**SMCS-5056** **i02148631**

| NOTE | REF NO | GRAPHIC REF | PART NUMBER | QTY | PART NAME 1 2 3 4 5 6 (PRODUCT LEVEL) | SEE PAGE |
|---|---|---|---|---|---|---|
| | 1 | 1 | 1K-4649 | 2 | SPACER (0.516X1X1-IN THK) | |
| | 2 | 1 | 114-6656 | 1 | BRACKET AS | |
| M | | 1 | 8T-3490 | 1 | NUT-WELD (M10X1.5-THD) | |
| M | | 1 | 8T-3597 | 2 | NUT-WELD (M12X1.75-THD) | |
| | 3 | 1 | 2Q-7979 | 1 | BRACKET AS | |
| M | 4 | 1 | 8T-4139 | 3 | BOLT (M12X1.75X30-MM) | |
| M | 5 | 1 | 8T-4183 | 8 | BOLT (M12X1.75X40-MM) | |
| | 6 | 1 | 8T-4223 | 13 | WASHER-HARD (13.5X25.5X3-MM THK) | |
| M | 7 | 1 | 8T-4648 | 1 | BOLT (M12X1.75X70-MM) | |
| M | 8 | 1 | 8T-6868 | 1 | BOLT (M12X1.75X80-MM) | |

M-METRIC PART

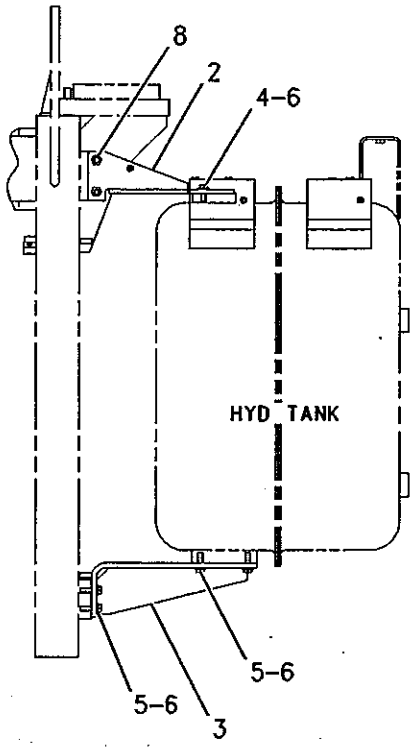


REAR VIEW

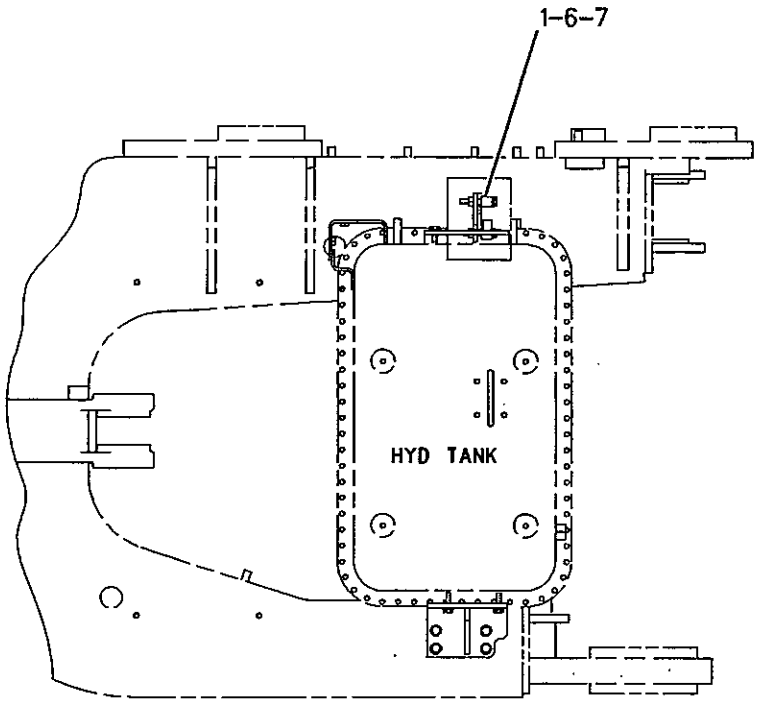


RIGHT SIDE VIEW

GRAPHIC #1 **<END>** g00986453

# HYDRAULIC SYSTEM

## *235-5335* PUMP & MOTOR GP-HOOD TILT

**S/N: JMS1-UP**

**PART OF 235-5334 TILT GP-HOOD**

**SMCS-5073, 5927**

**i02088882**

| NOTE | REF NO | GRAPHIC REF | PART NUMBER | QTY | PART NAME 1 2 3 4 5 6 (PRODUCT LEVEL) | SEE PAGE |
|---|---|---|---|---|---|---|
| | 1 | 1 | **209-2627** | 1 | SEAL KIT | |
| | 2 | 1 | **235-5338** | 1 | PUMP-HAND | |
| | 3 | 1 | **236-8931** | 1 | TANK & MTG GP-HYDRAULIC (HOOD TILT) | |
| | 4 | 1 | **236-8932** | 1 | SOLENOID | |
| | 5 | 1 | **236-8933** | 1 | SWITCH | |
| | 6 | 1 | **236-8935** | 1 | MOTOR | |
| | 7 | 1 | **236-8936** | 1 | PUMP | |
| | 8 | 1 | **236-8938** | 1 | VALVE GP-MANIFOLD | |
| | 9 | 1 | **265-3423** | 1 | FILLER GP-HYDRAULIC OIL | |

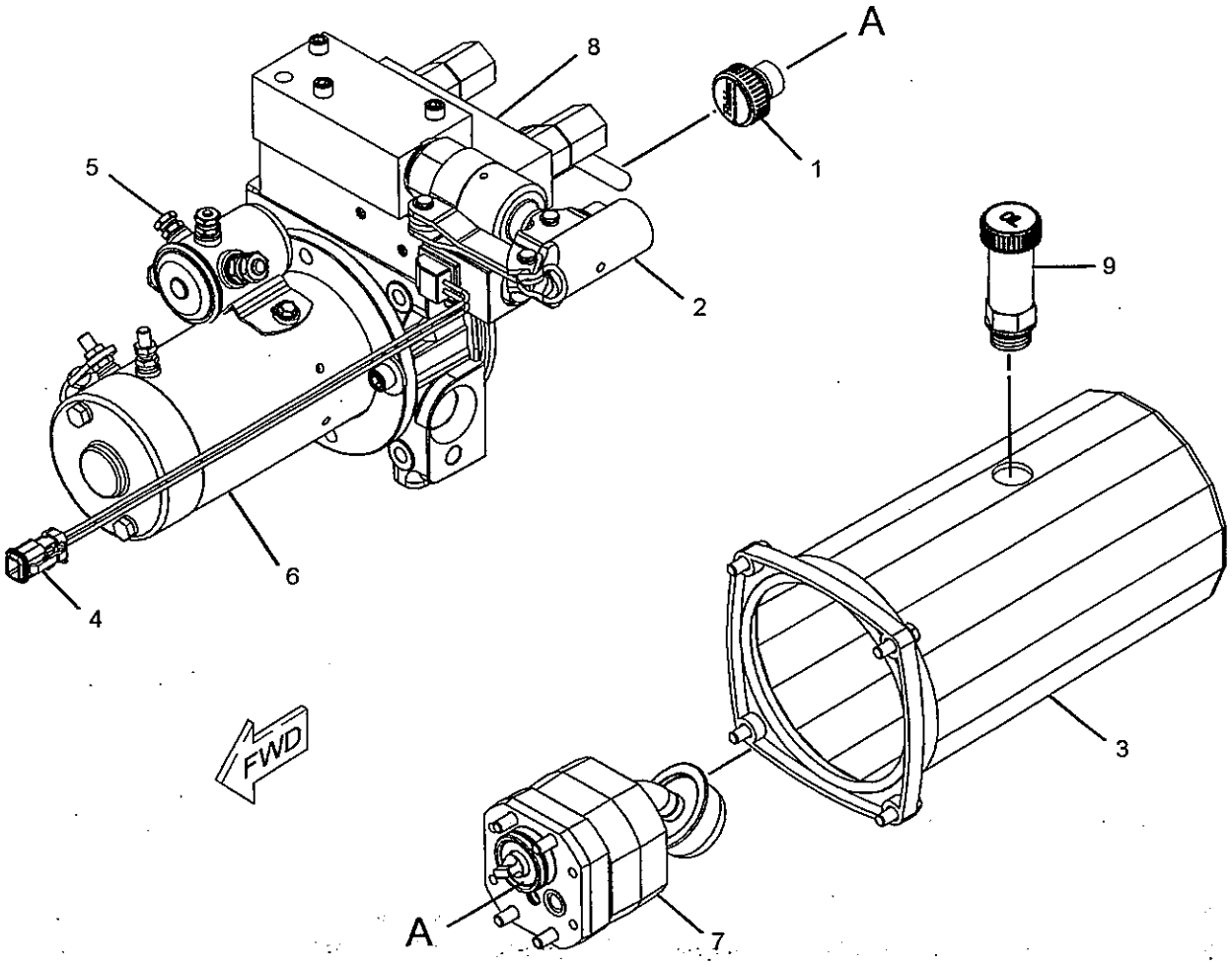


GRAPHIC #1

**<END>**

g01145631

# HYDRAULIC SYSTEM

## *235-5333* PUMP & MTG GP-HYDRAULIC FAN

**S/N: JMS1-UP**

**PART OF 235-1303 HYDRAULIC AR-2 VALVE**

**SMCS-1387** **i02275192**

| NOTE | REF NO | GRAPHIC REF | PART NUMBER | QTY | PART NAME 1 2 3 4 5 6 (PRODUCT LEVEL) | SEE PAGE |
|---|---|---|---|---|---|---|
| | 1 | 1 | 223-2102 | 1 | SEAL-INTEGRAL | |
| Y | 2 | 1 | 235-2716 | 1 | PUMP GP-PISTON (HYDRAULIC FAN) | 670 |
| | 3 | 1 | 5P-2566 | 2 | BOLT (1/2-13X1.5-IN) | |
| | 4 | 1 | 8T-4223 | 2 | WASHER-HARD (13.5X25.5X3-MM THK) | |

Y-SEPARATE ILLUSTRATION

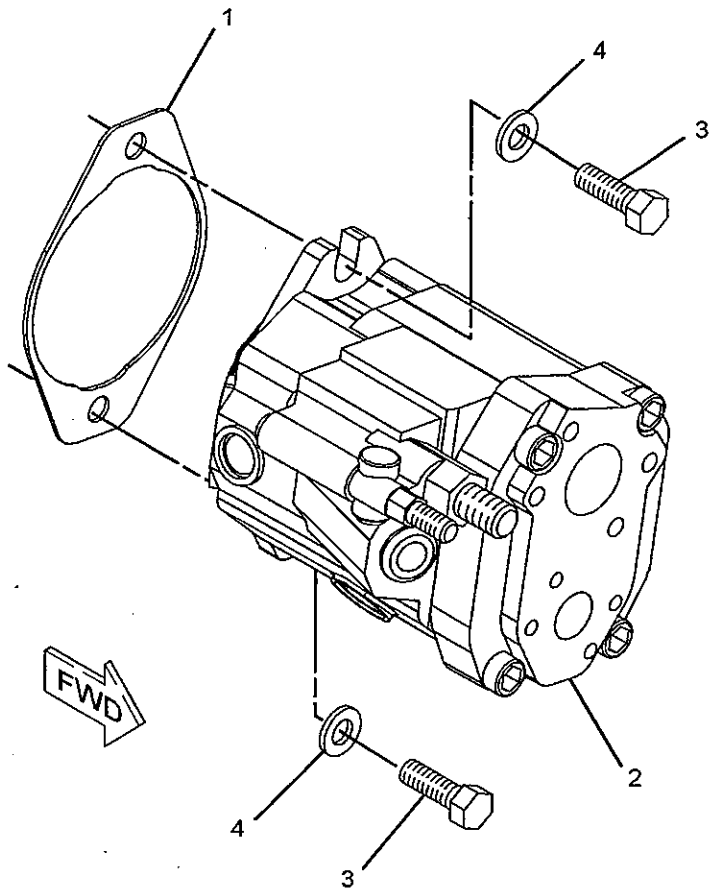


GRAPHIC #1

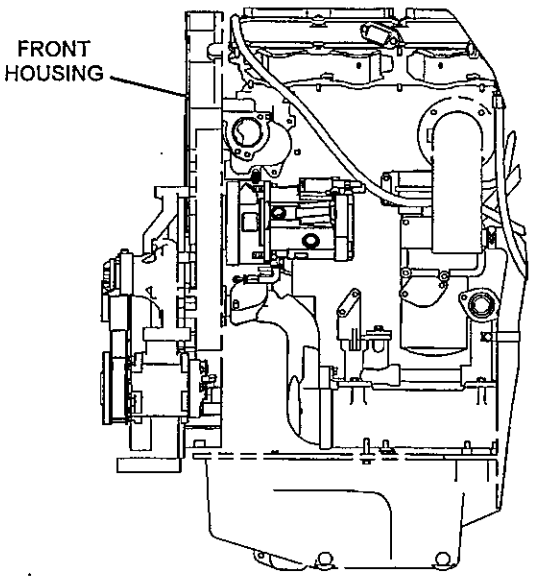


RIGHT SIDE VIEW

g01066054

**<END>**

# HYDRAULIC SYSTEM

## *193-3981* PUMP & MTG GP-IMPLEMENT

**S/N: JMS1-UP**

**PART OF 235-1303 HYDRAULIC AR-2 VALVE**

**SMCS-5084** **i01428349**

| NOTE | REF NO | GRAPHIC REF | PART NUMBER | QTY | PART NAME 1 2 3 4 5 6 (PRODUCT LEVEL) | SEE PAGE |
|---|---|---|---|---|---|---|
| Y | 1 | 1 | **191-0984** | 1 | PUMP GP-GEAR (IMPLEMENT) | 667 |
| | 2 | 1 | **5F-3106** | 1 | SEAL-O-RING (126.59MM ID) | |
| | 3 | 1 | **7X-0448** | 2 | NUT (5/8-11 THD) | |
| | 4 | 1 | **8T-4122** | 2 | WASHER-HARD (17X32X3.5MM THK) | |

Y-SEPARATE ILLUSTRATION

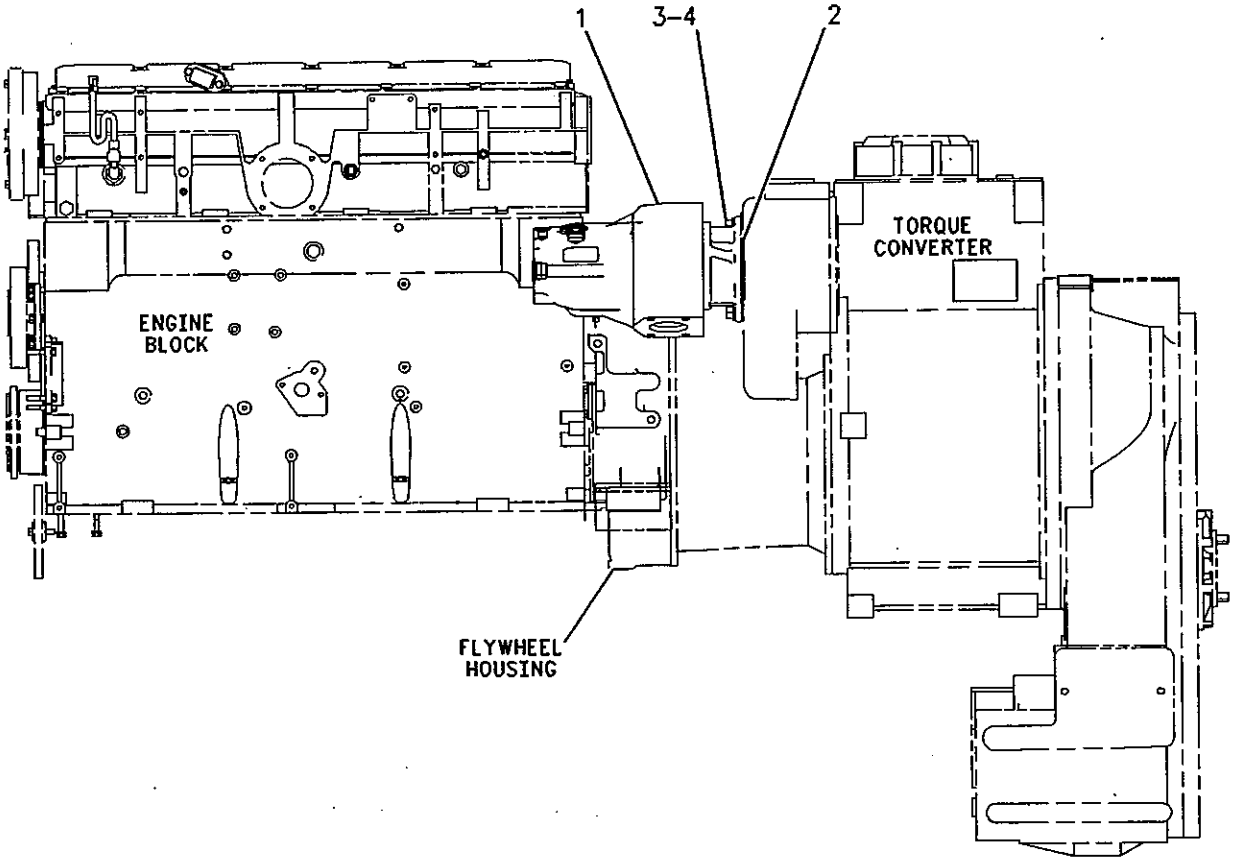


GRAPHIC #1 **<END>** g00750984

# HYDRAULIC SYSTEM

## 191-0984 PUMP GP-GEAR–IMPLEMENT

**S/N: JMS1-UP**

**PART OF 193-3981 PUMP & MTG GP-IMPLEMENT**

**SMCS-5073** **i02022121**

| NOTE | REF NO | GRAPHIC REF | PART NUMBER | QTY | PART NAME 1 2 3 4 5 6 (PRODUCT LEVEL) | SEE PAGE |
|---|---|---|---|---|---|---|
| N | 1 | 1 | **154-6000** | 1 | FLANGE AS | |
| | 2 | 1 | **195-0862** | 1 | GEAR (14-TEETH) | |
| J | 3 | 1 | **155-3167** | 2 | SEAL-LIP TYPE | |
| J | 4 | 1 | **2D-6648** | 1 | RING-RETAINING | |
| J | 5 | 1 | **6E-2943** | 1 | PLUG | |
| J | 6 | 1 | **6V-7351** | 1 | SEAL-O-RING | |
| N | 7 | 1 | **195-0855** | 1 | BODY AS | |
| N | 8 | 1 | **195-0873** | 8 | BUSHING | |
| | 9 | 1 | **165-8382** | 1 | COUPLING | |
| J | 10 | 1 | **9X-7725** | 1 | SEAL-O-RING | |
| N | 11 | 1 | **195-0861** | 1 | PLATE AS | |
| J | 12 | 1 | **119-7845** | 1 | SEAL-O-RING | |
| N | 13 | 1 | **195-0857** | 1 | BODY AS | |
| | 14 | 1 | **195-0863** | 1 | GEAR (13-TEETH) | |
| J | 15 | 1 | **5P-7701** | 1 | SEAL-O-RING | |
| | 16 | 1 | **6Y-4638** | 1 | PLUG-HEX SOCKET | |
| | 17 | 1 | **195-0864** | 2 | GEAR | |
| | 18 | 1 | **6J-2386** | 6 | DOWEL | |
| J | 19 | 1 | **107-3117** | 8 | SEAL-O-RING | |
| L | 20 | 1 | **224-4507** | 2 | PLATE-PRESSURE (TOP) | |
| L | 21 | 1 | **224-4508** | 2 | PLATE-PRESSURE (BOTTOM) | |
| | 22 | 1 | **5P-8247** | 8 | WASHER-HARD (17X32X3.5-MM THK) | |
| | 23 | 1 | **6B-6683** | 8 | NUT (5/8-18-THD) | |
| | 24 | 1 | **154-1579** | 8 | STUD-TAPERLOCK | |
| | | | | | AVAILABLE REPAIR KIT(S): | |
| J | | | **195-1899** | 1 | KIT-SEAL | |

J-KIT MARKED J SERVICES PARTS MARKED J
L-SEALS FOR PRESSURE PLATES ARE INCLUDED IN SEAL KIT
N-ASSEMBLIES MARKED N INCLUDES PART MARKED N

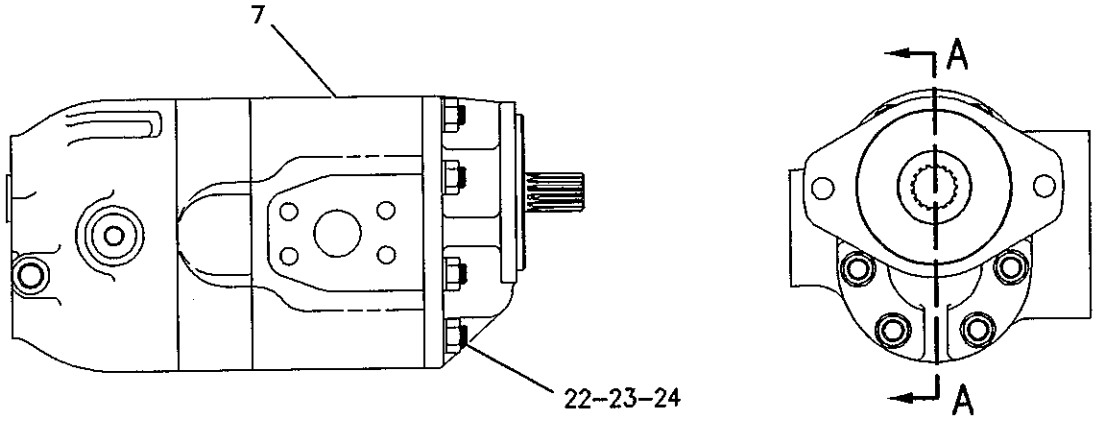


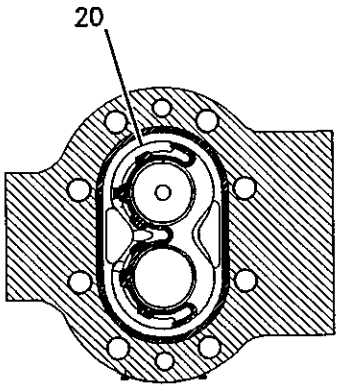


SECTION B–B

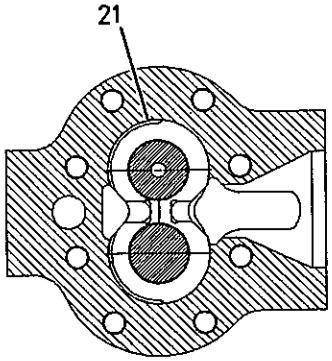


SECTION C–C

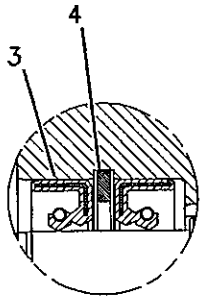


VIEW OF AREA E

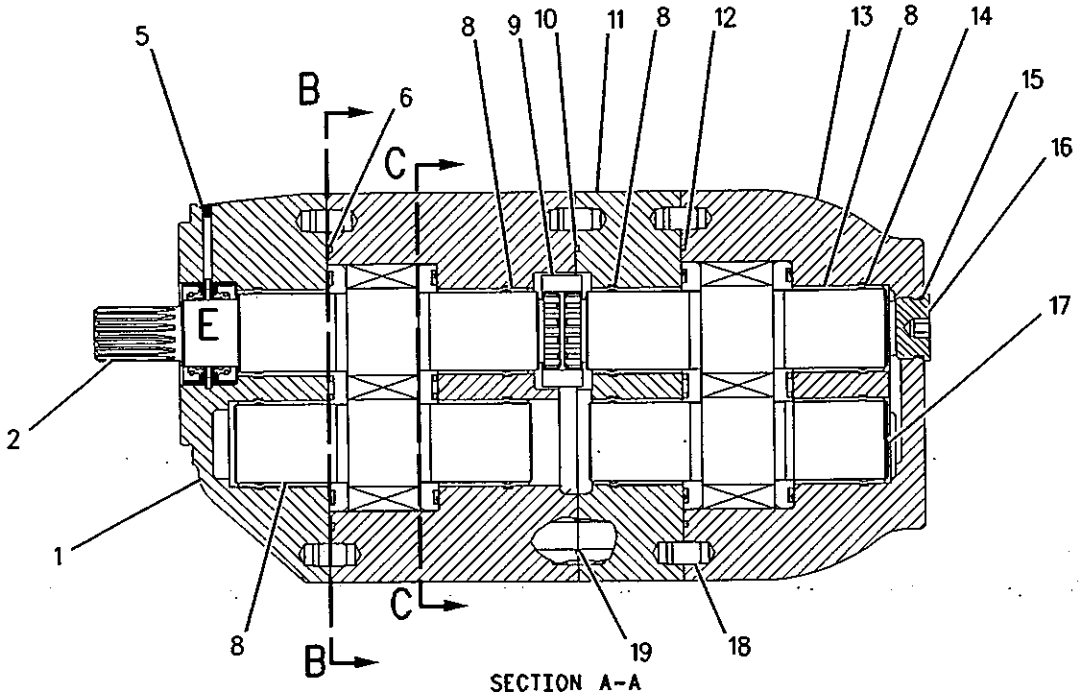


SECTION A–A

GRAPHIC #1 **<END>** g00795632

# 235-6501 PUMP GP-GEAR–PILOT, BRAKE

S/N: JMS1-UP

PART OF 235-5331 PUMP & MTG GP-STEERING & TMSN

SMCS-5073

i02279465

| NOTE | REF NO | GRAPHIC REF | PART NUMBER | QTY | PART NAME 1 2 3 4 5 6 (PRODUCT LEVEL) | SEE PAGE |
|---|---|---|---|---|---|---|
| J | 1 | 1 | 204-4148 | 1 | SEAL-SHAFT | |
| J | 2 | 1 | 131-0715 | 1 | SEAL-SHAFT | |
| | 3 | 1 | 241-6392 | 1 | FLANGE | |
| | 4 | 1 | 130-7758 | 1 | COVER-END | |
| M | 5 | 1 | 6V-1819 | 4 | BOLT (M10X1.5X100-MM) | |
| | 6 | 1 | 219-8899 | 1 | PLUG-SCREEN | |
| J | 7 | 1 | 8J-6273 | 1 | RING-RETAINING | |
| | | | | | AVAILABLE REPAIR KIT(S): | |
| J | | | 201-5238 | 1 | KIT-SEAL | |

J-PARTS MARKED J INCLUDED IN KIT MARKED J
M-METRIC PART

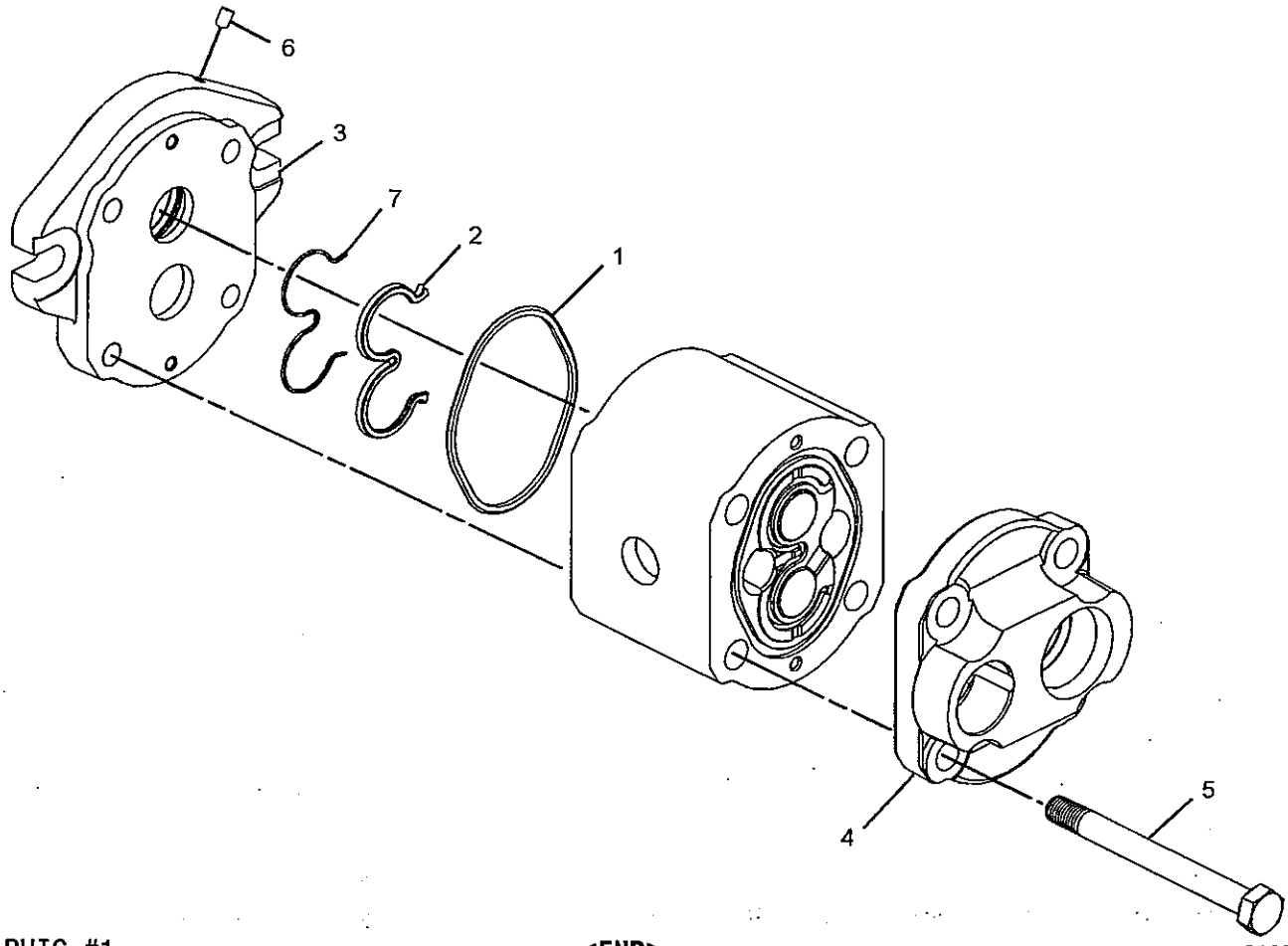


GRAPHIC #1

<END>

g01098351

# HYDRAULIC SYSTEM

## 235-2716 PUMP GP-PISTON–HYDRAULIC FAN

S/N: JMS1-UP

PART OF 235-5333 PUMP & MTG GP-HYDRAULIC FAN

SMCS-5070

i02088158

| NOTE | REF NO | GRAPHIC REF | PART NUMBER | QTY | PART NAME 1 2 3 4 5 6 (PRODUCT LEVEL) | SEE PAGE |
|---|---|---|---|---|---|---|
| Y | 1 | 1 | 168-7868 | 1 | ROTATING GP-PUMP | 672 |
| | 2 | 1 | 168-7861 | 1 | PISTON-ACTUATOR | |
| | 3 | 1 | 168-2198 | 1 | LINK-CONTROL | |
| | 4 | 1 | 175-6795 | 1 | SWASHPLATE | |
| | 5 | 1 | 205-2909 | 1 | SHAFT-PUMP | |
| | 6 | 1 | 175-6799 | 1 | PLUG-CONTROL | |
| | 7 | 1 | 127-9490 | 1 | SPRING (BIAS) | |
| | 8 | 1 | 127-9483 | 1 | SHIM | |
| | 9 | 1 | 185-0263 | 1 | BEARING | |
| | 10 | 1 | 185-0242 | 1 | PLATE | |
| | 11 | 1 | 189-4717 | 1 | BEARING | |
| | | | 105-3035 | 1 | CONE-BEARING | |
| | | | 203-8609 | 1 | CUP-BEARING | |
| | 12 | 1 | 168-7869 | 2 | BEARING-CRADLE | |
| | | | 237-4227 | 1 | BEARING-CRADLE | |
| | 13 | 1 | 166-0344 | 2 | SEAL-SHAFT | |
| | 14 | 1 | 127-9485 | 1 | SEAL-O-RING | |
| | 15 | 1 | 8T-7525 | 1 | SEAL-O-RING | |
| | 16 | 1 | 168-3504 | 1 | SEAL | |
| | 17 | 1 | 8C-3110 | 1 | RING-RETAINING | |
| M | 18 | 1 | 095-0670 | 4 | BOLT (M12X1.75X45-MM) | |
| | 19 | 1 | 9S-8006 | 1 | PLUG | |
| | 20 | 1 | 136-8423 | 1 | PLUG-BREAK OFF | |
| | 21 | 1 | 204-2799 | 1 | DOWEL | |
| | 22 | 1 | 2M-9780 | 1 | SEAL-O-RING | |
| Y | 23 | 1 | 207-0695 | 1 | VALVE GP-PUMP CONTROL (PRESSURE, FLOW COMPENSATOR) | 719 |
| | 24 | 1 | 9X-7680 | 3 | SEAL-O-RING | |
| M | 25 | 1 | 8T-8442 | 4 | BOLT-SOCKET HEAD (M6X1X30-MM) | |
| | 26 | 1 | 173-0641 | 1 | PLUG-FILTER | |
| | 27 | 1 | 9S-8002 | 1 | PLUG | |
| | 28 | 1 | 3J-7354 | 1 | SEAL-O-RING | |

M-METRIC PART
Y-SEPARATE ILLUSTRATION

## 235-2716 PUMP GP-PISTON *(contd.)*

i02088158

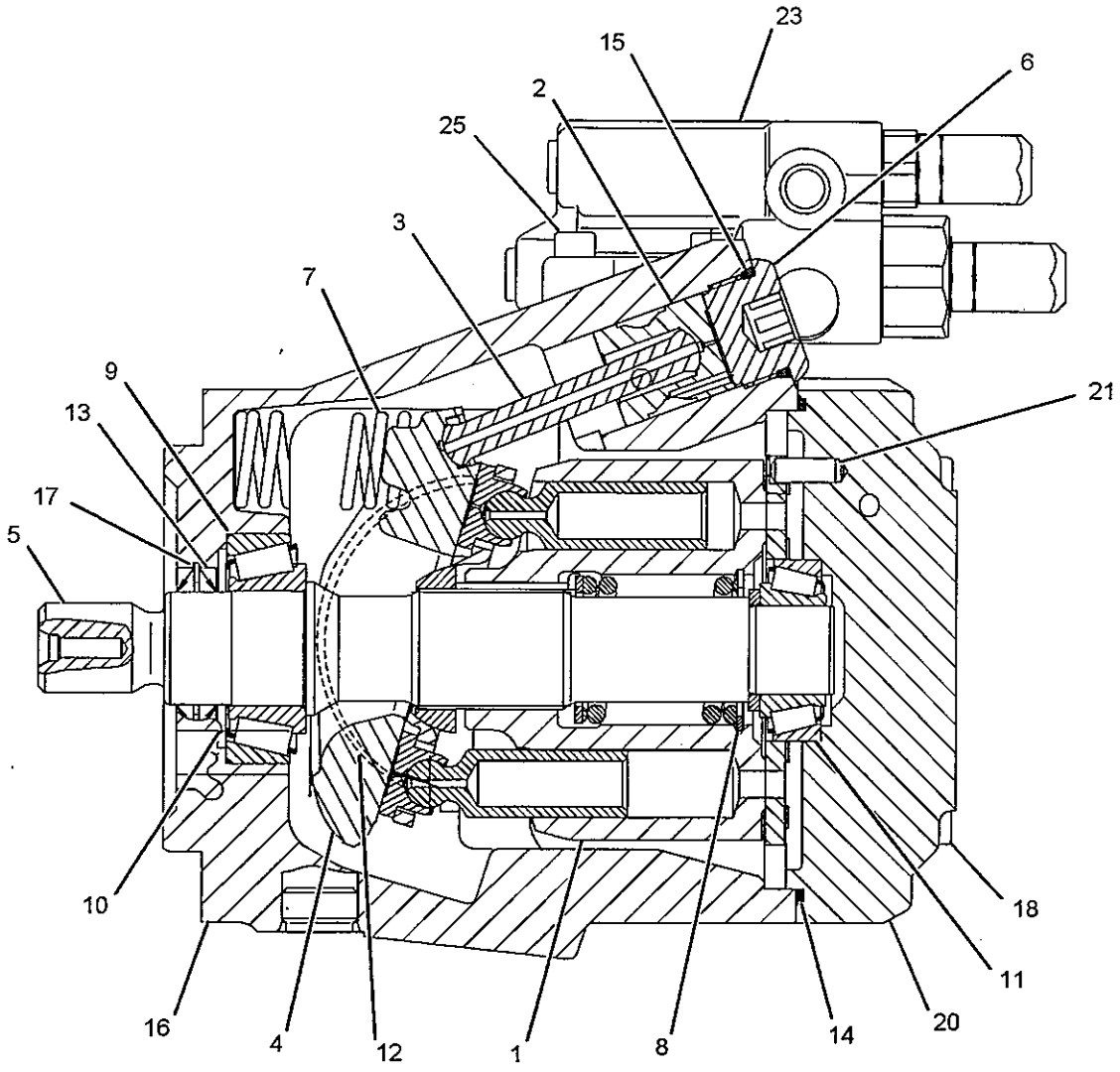


SECTION A-A

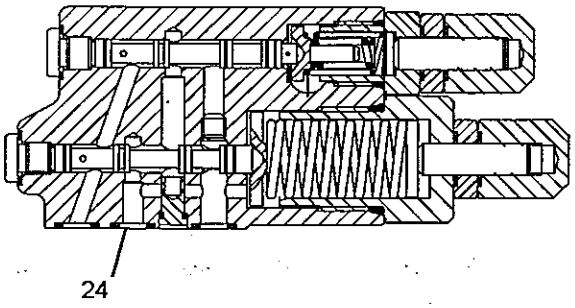


SECTION B-B

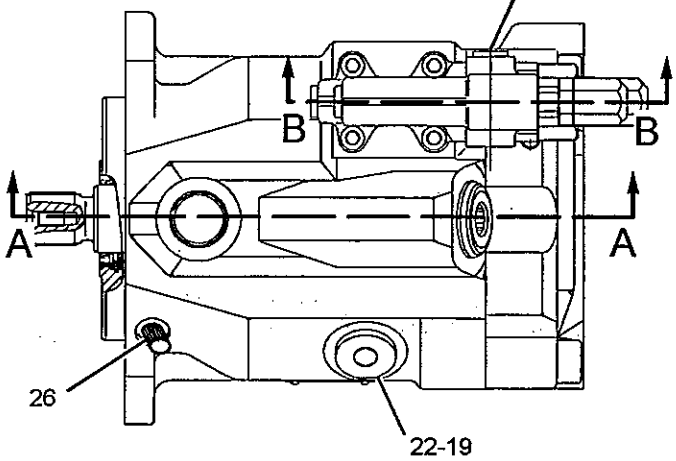


GRAPHIC #1

**<END>**

g01066176

# HYDRAULIC SYSTEM

## *168-7868* ROTATING GP-PUMP–HYDRAULIC FAN

**S/N: JMS1-UP**

**PART OF 235-2716 PUMP GP-PISTON**

**SMCS-1387, 5070, 5084** i02216714

| NOTE | REF NO | GRAPHIC REF | PART NUMBER | QTY | PART NAME 1 2 3 4 5 6 (PRODUCT LEVEL) | SEE PAGE |
|---|---|---|---|---|---|---|
| | 1 | 1 | **138-8175** | 1 | BEARING-SPHERICAL | |
| | 2 | 1 | **168-7940** | 3 | PIN | |
| | 3 | 1 | **096-0015** | 1 | RING-RETAINING | |
| | 4 | 1 | **233-0455** | 1 | BARREL | |
| | 5 | 1 | **168-7941** | 1 | SPRING | |
| | 6 | 1 | **168-7942** | 1 | WASHER | |
| | 7 | 1 | **168-7943** | 9 | PISTON AS | |
| | 8 | 1 | **168-7944** | 1 | PLATE-RETRACTION | |
| | 9 | 1 | **138-8173** | 1 | PLATE-VALVE | |

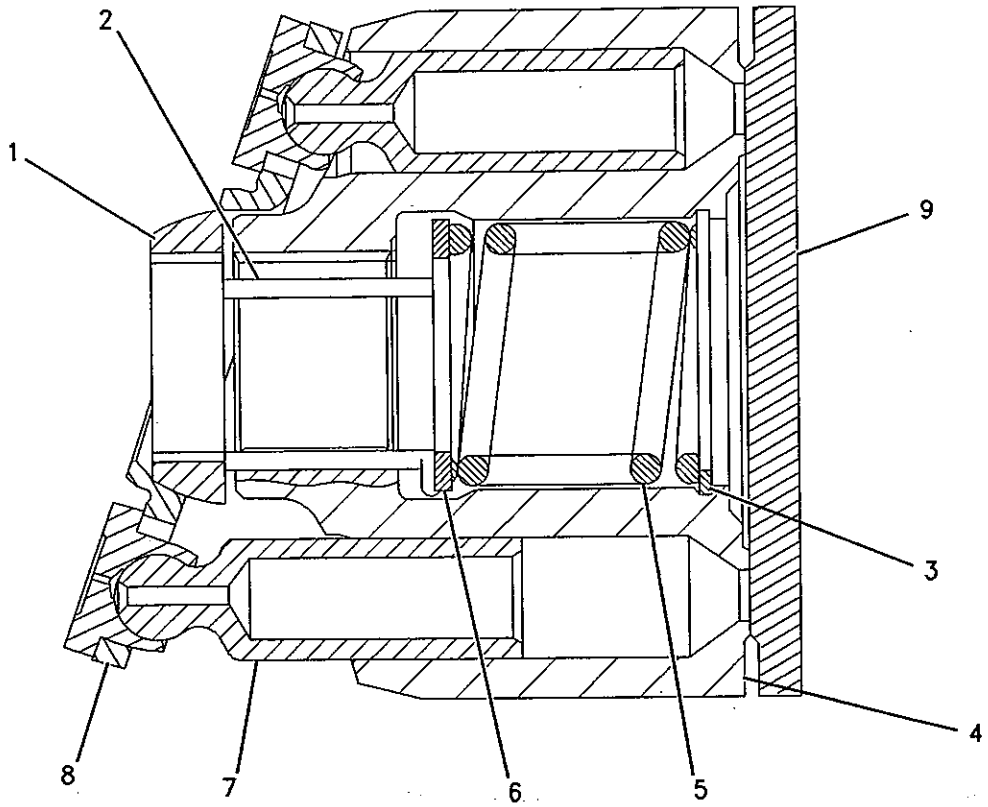


GRAPHIC #1 **<END>** g00760776

# 256-7858 ROTATING GP-PUMP–HYDRAULIC FAN

S/N: JMS1-UP

PART OF 240-7732, 255-6805 MOTOR GP-PISTON

ALSO AN ATTACHMENT

SMCS-1387, 5070, 5084

i02195299

| NOTE | REF NO | GRAPHIC REF | PART NUMBER | QTY | PART NAME 1 2 3 4 5 6 (PRODUCT LEVEL) | SEE PAGE |
|---|---|---|---|---|---|---|
| | 1 | 1 | 256-7874 | 1 | BEARING | |
| | 2 | 1 | 168-7940 | 3 | PIN | |
| | 3 | 1 | 096-0015 | 1 | RING-RETAINING | |
| | 4 | 1 | 233-0455 | 1 | BARREL | |
| | 5 | 1 | 168-7941 | 1 | SPRING | |
| | 6 | 1 | 168-7942 | 1 | WASHER | |
| | 7 | 1 | 168-7943 | 9 | PISTON AS | |
| | 8 | 1 | 256-7875 | 1 | PLATE | |
| | 9 | 1 | 138-8173 | 1 | PLATE-VALVE | |

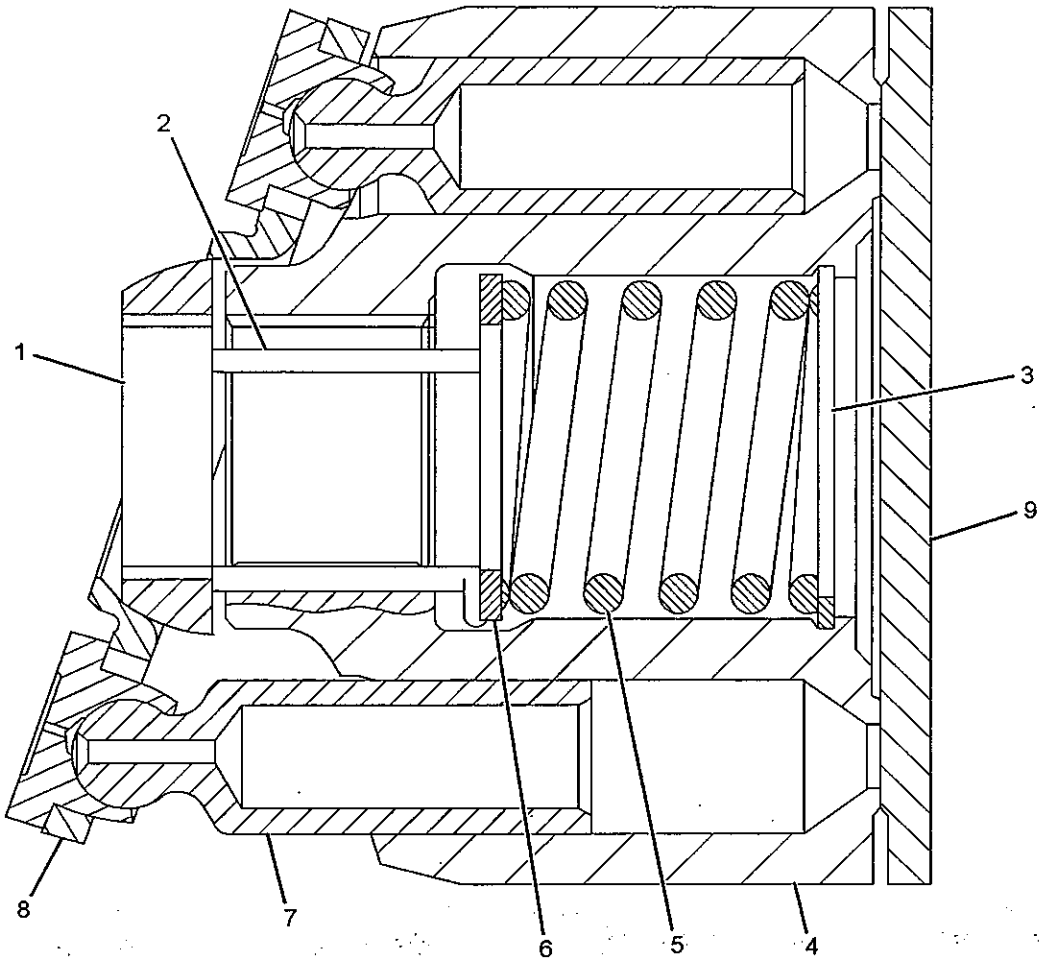


GRAPHIC #1

<END>

g01111094

# 251-9596 SUPPORT GP-FAN ELECTRICAL-

AUTOMATIC REVERSING

S/N: JMS1-UP

PART OF 251-5801 CONTROL AR-FAN

AN ATTACHMENT

SMCS-1386

i02283992

| NOTE | REF NO | GRAPHIC REF | PART NUMBER | QTY | PART NAME 1 2 3 4 5 6 (PRODUCT LEVEL) | SEE PAGE |
|---|---|---|---|---|---|---|
| | 1 | 1 | 251-1607 | 1 | PANEL | |
| | 2 | 1 | 252-0659 | 1 | PANEL AS | |
| M | | 1 | 8T-3612 | 4 | NUT-WELD (M8X1.25-THD) | |
| | 3 | 1 | 252-4531 | 1 | BRACKET | |

M-METRIC PART

*251-9596* **SUPPORT GP-FAN ELECTRICAL** *(contd.)* i02283992

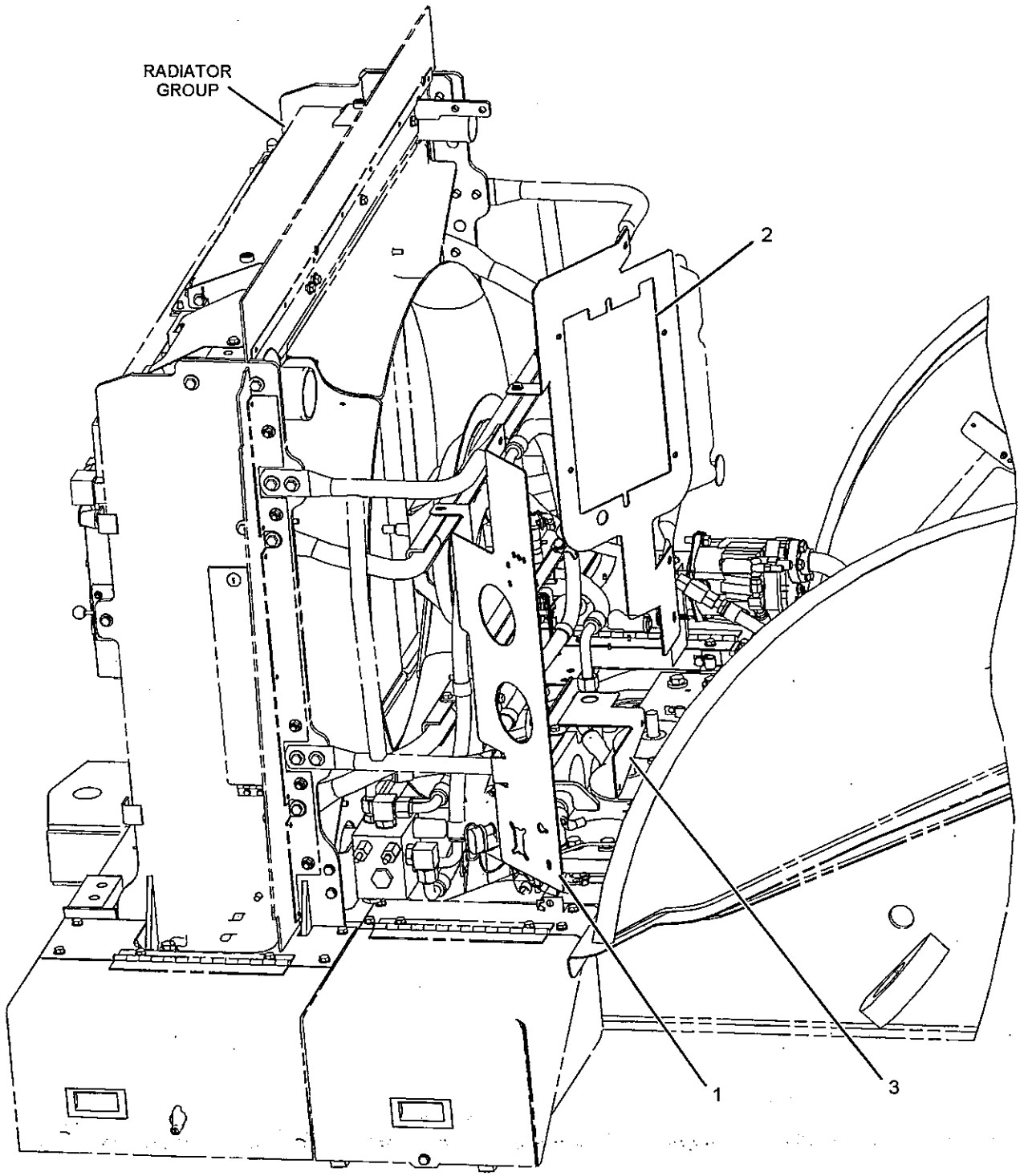


RIGHT SIDE VIEW

GRAPHIC #1 **<END>** g01144368

# HYDRAULIC SYSTEM

## *233-0701* TANK GP-EXPANSION–COOLANT

**S/N: JMS1-UP**

**PART OF 233-0699 LINES GP-WATER**

**SMCS-1354, 5505** i02088656

| NOTE | REF NO | GRAPHIC REF | PART NUMBER | QTY | PART NAME 1 2 3 4 5 6 (PRODUCT LEVEL) | SEE PAGE |
|---|---|---|---|---|---|---|
| | 1 | 1 | 031-1119 | 1 | CAP AS-RADIATOR | |
| | 2 | 1 | 243-0796 | 1 | TANK AS-WATER | |
| | | 1 | 3L-5893 | 1 | TUBE-OVERFLOW | |
| | | 1 | 8N-8846 | 1 | NECK-FILLER | |
| | | 1 | 9R-2821 | 4 | BOSS (M10X15-MM) | |

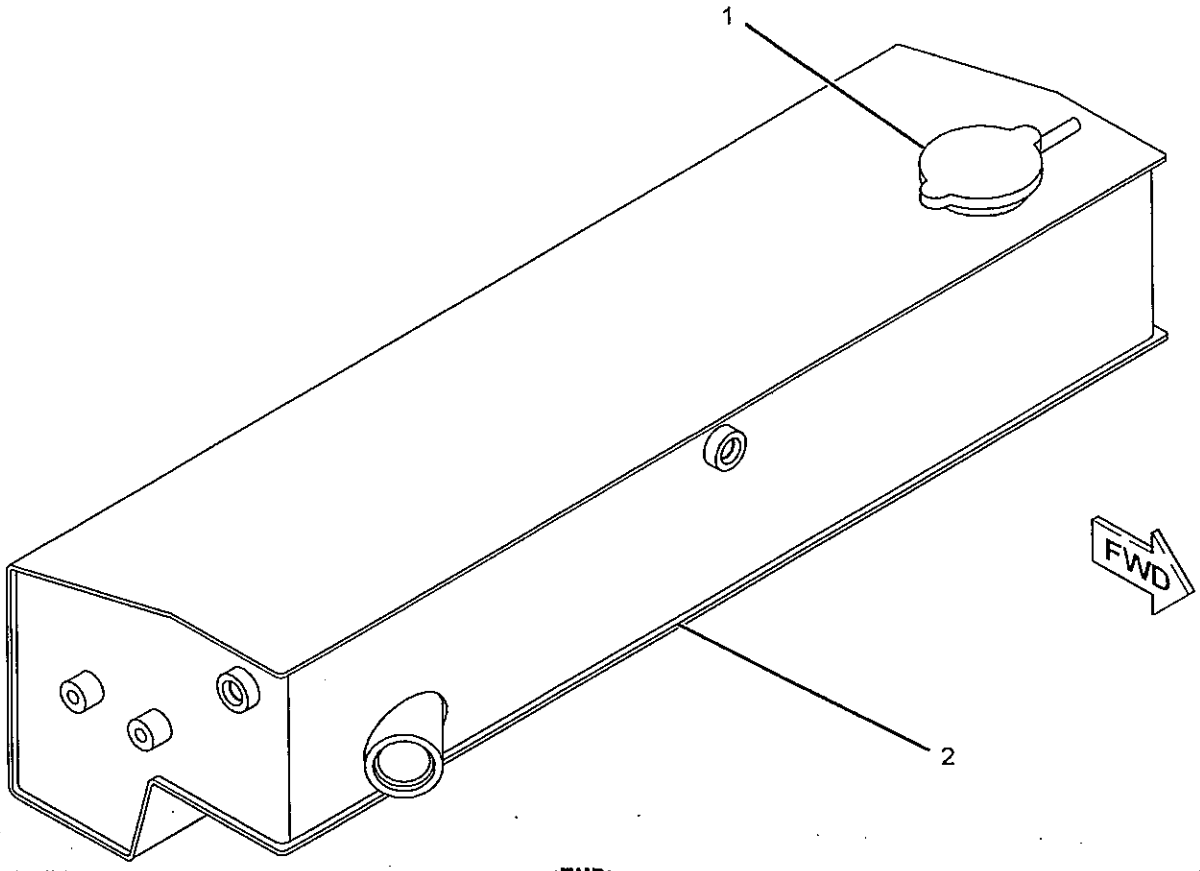


GRAPHIC #1 **<END>** g01066222

# HYDRAULIC SYSTEM

## *234-8928* TANK GP-HYDRAULIC

**S/N: JMS1-UP**

**PART OF 235-1303 HYDRAULIC AR-2 VALVE**

**SMCS-5056** **i02200190**

| NOTE | REF NO | GRAPHIC REF | PART NUMBER | QTY | PART NAME 1 2 3 4 5 6 (PRODUCT LEVEL) | SEE PAGE |
|---|---|---|---|---|---|---|
| | 1 | 1 | **1U-2827** | 1 | GUIDE-VALVE | |
| | 2 | 1 | **3G-6455** | 1 | PLATE | |
| | 3 | 1 | **5D-1911** | 1 | COVER-HYDRAULIC CAP | |
| | 4 | 1 | **6J-1080** | 1 | GROMMET | |
| | 5 | 1 | **6J-1081** | 1 | GLASS-SIGHT | |
| | 6 | 1 | **7B-3039** | 1 | SPRING | |
| | 7 | 1 | **7H-1447** | 1 | CAP-FILLER (HYDRAULIC TANK) | |
| | 8 | 1 | **8J-8782** | 1 | BODY-DRAIN VALVE | |
| | 9 | 1 | **8J-8783** | 1 | VALVE | |
| | 10 | 1 | **8T-3298** | 1 | SEAL-RECTANGULAR | |
| | 11 | 1 | **9J-3047** | 1 | STRAINER (FILLER) | |
| | 12 | 1 | **9J-7031** | 1 | PLUG-DRAIN | |
| | 13 | 1 | **9M-7394** | 1 | LEVER (COVER) | |
| | 14 | 1 | **9T-4105** | 1 | RETAINER | |
| | 15 | 1 | **9T-9226** | 2 | PLATE | |
| | 16 | 1 | **9T-9227** | 2 | SCREEN AS (HYDRAULIC TANK) | |
| | 17 | 1 | **234-8929** | 1 | COVER AS | |
| M | | 1 | **7X-0752** | 2 | BOSS-WELD (M10X1.5X65-MM OAL) | |
| M | | 1 | **8T-3851** | 3 | BOSS-WELD (M10X1.5X17.5-MM) | |
| M | | 1 | **8T-3490** | 2 | NUT-WELD (M10X1.5-THD) | |
| M | | 1 | **8T-3490** | 2 | NUT-WELD (M10X1.5-THD) | |
| | 18 | 1 | **238-1825** | 1 | GASKET | |
| | 19 | 1 | **243-5107** | 1 | TANK AS-HYDRAULIC | |
| | 20 | 1 | **164-4180** | 1 | PLUG AS | |
| | | 1 | **7M-8485** | 1 | SEAL-O-RING | |
| | | 1 | **9S-4181** | 1 | PLUG | |
| | 21 | 1 | **1L-5072** | 1 | DOWEL | |
| | 22 | 1 | **2D-4202** | 1 | PLATE | |
| | 23 | 1 | **2J-7761** | 1 | RING-RETAINING | |
| | 24 | 1 | **3G-0361** | 1 | GASKET | |
| | 25 | 1 | **5H-6005** | 4 | SEAL-O-RING | |
| | 26 | 1 | **5M-2057** | 1 | SEAL-O-RING | |
| M | 27 | 1 | **6V-4248** | 70 | BOLT (M10X1.5X25-MM) | |
| | 28 | 1 | **6V-5839** | 2 | WASHER (11X21X2.5-MM THK) | |
| M | 29 | 1 | **6V-7744** | 74 | LOCKNUT (M10X1.5-THD) | |
| M | 30 | 1 | **8T-0722** | 4 | BOLT-LOCKING (M10X1.5X30-MM) | |
| | 31 | 1 | **8T-2275** | 1 | BALL | |
| | 32 | 1 | **9H-6454** | 1 | GASKET | |

M-METRIC PART

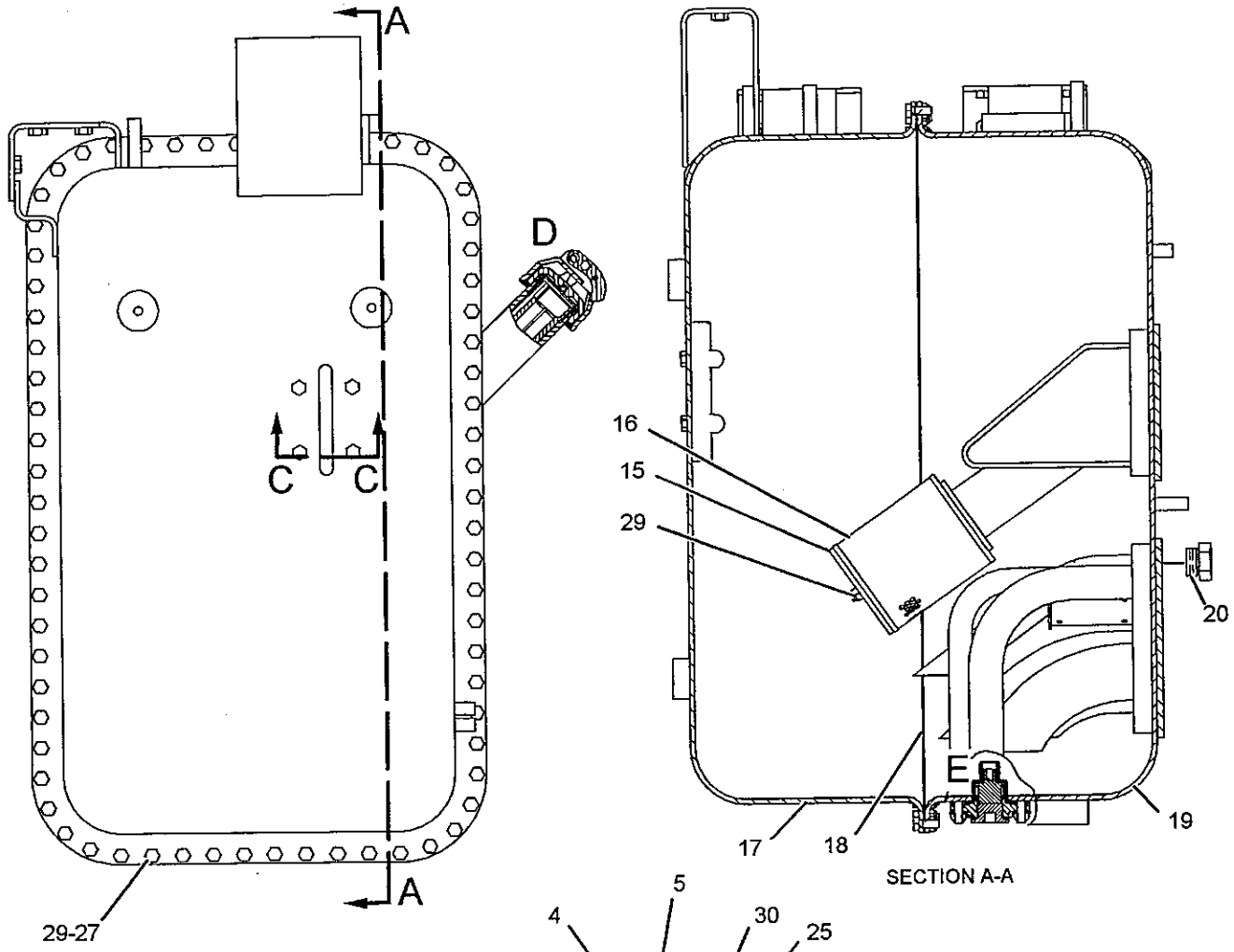


GRAPHIC #1

<END>

g01142499

# HYDRAULIC SYSTEM

## 240-8704 TANK GP-HYDRAULIC

S/N: JMS1-UP

PART OF 240-8591 GUARD GP-FUEL & HYDRAULIC TANK AN ATTACHMENT

SMCS-5056

i02283708

| NOTE | REF NO | GRAPHIC REF | PART NUMBER | QTY | PART NAME 1 2 3 4 5 6 (PRODUCT LEVEL) | SEE PAGE |
|---|---|---|---|---|---|---|
| | 1 | 2 | 1U-2827 | 1 | GUIDE-VALVE | |
| | 2 | 2 | 2D-4202 | 1 | PLATE | |
| | 3 | 1 | 3G-6455 | 1 | PLATE | |
| | 4 | 1 | 6J-1080 | 1 | GROMMET | |
| | 5 | 1 | 6J-1081 | 1 | GLASS-SIGHT | |
| | 6 | 1,2 | 7B-3039 | 1 | SPRING | |
| | 7 | 2 | 7H-1447 | 1 | CAP-FILLER (HYDRAULIC TANK) | |
| | 8 | 2 | 8J-8782 | 1 | BODY-DRAIN VALVE | |
| | 9 | 2 | 8J-8783 | 1 | VALVE | |
| | 10 | 2 | 8T-3298 | 1 | SEAL-RECTANGULAR | |
| | 11 | 2 | 9J-3047 | 1 | STRAINER (FILLER) | |
| | 12 | 2 | 9J-7031 | 1 | PLUG-DRAIN | |
| | 13 | 1 | 9T-4105 | 1 | RETAINER | |
| | 14 | 1 | 9T-9226 | 2 | PLATE | |
| | 15 | 1 | 9T-9227 | 2 | SCREEN AS (HYDRAULIC TANK) | |
| | 16 | 1 | 238-1825 | 2 | GASKET | |
| | 17 | 1 | 240-8705 | 1 | COVER AS | |
| M | | 1 | 7X-0752 | 2 | BOSS-WELD (M10X1.5X65-MM OAL) | |
| M | | 1 | 8T-3851 | 3 | BOSS-WELD (M10X1.5X17.5-MM) | |
| | 18 | 1 | 256-2418 | 1 | TANK AS-HYDRAULIC | |
| | 19 | 2 | *164-4180* | 1 | PLUG AS | |
| | | 2 | 7M-8485 | 1 | SEAL-O-RING | |
| | | 2 | 9S-4181 | 1 | PLUG | |
| | 20 | 2 | 3G-0361 | 1 | GASKET | |
| | 21 | 1 | 5H-6005 | 4 | SEAL-O-RING | |
| | 22 | 2 | 5M-2057 | 1 | SEAL-O-RING | |
| | 23 | 2 | 6D-0848 | 1 | COVER | |
| M | 24 | 1 | 6V-4248 | 70 | BOLT (M10X1.5X25-MM) | |
| | 25 | 2 | 6V-5839 | 2 | WASHER (11X21X2.5-MM THK) | |
| M | 26 | 1,2 | 6V-7744 | 74 | LOCKNUT (M10X1.5-THD) | |
| M | 27 | 1 | 8T-0722 | 4 | BOLT-LOCKING (M10X1.5X30-MM) | |
| | 28 | 2 | 8T-2275 | 1 | BALL | |
| M | 29 | 2 | 8T-7338 | 4 | BOLT (M16X2X45-MM) | |
| | 30 | 2 | 9H-6454 | 1 | GASKET | |
| | 31 | 2 | 9X-4611 | 1 | SEAL-O-RING | |
| | 32 | 2 | 9X-8257 | 4 | WASHER (17.5X30X3.5-MM THK) | |

M-METRIC PART

REFER TO ALL ILLUSTRATIONS OF
THIS GROUP FOR AUXILIARY VIEWS

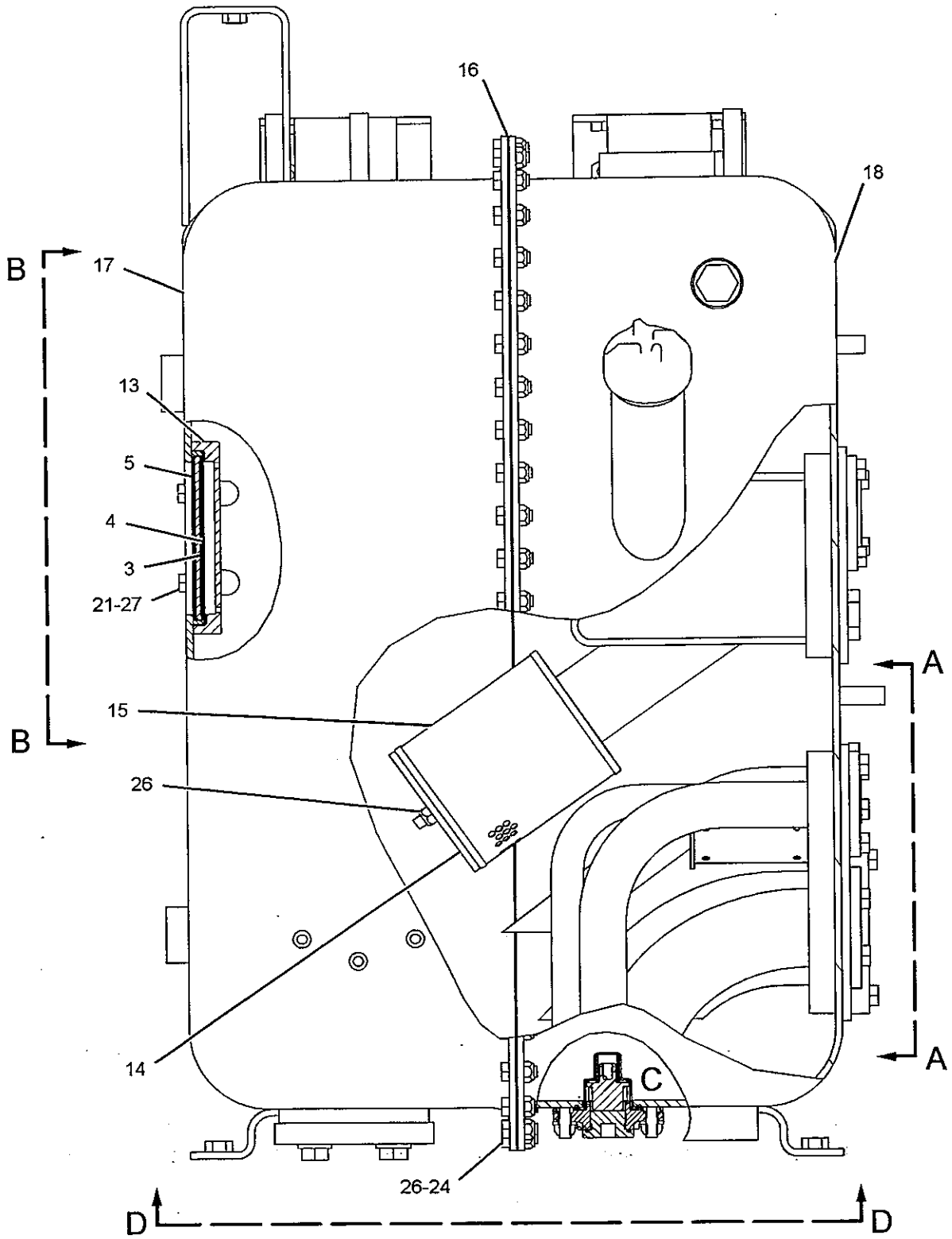


GRAPHIC #1 g01144303

## 240-8704 TANK GP-HYDRAULIC *(contd.)*

i02283708

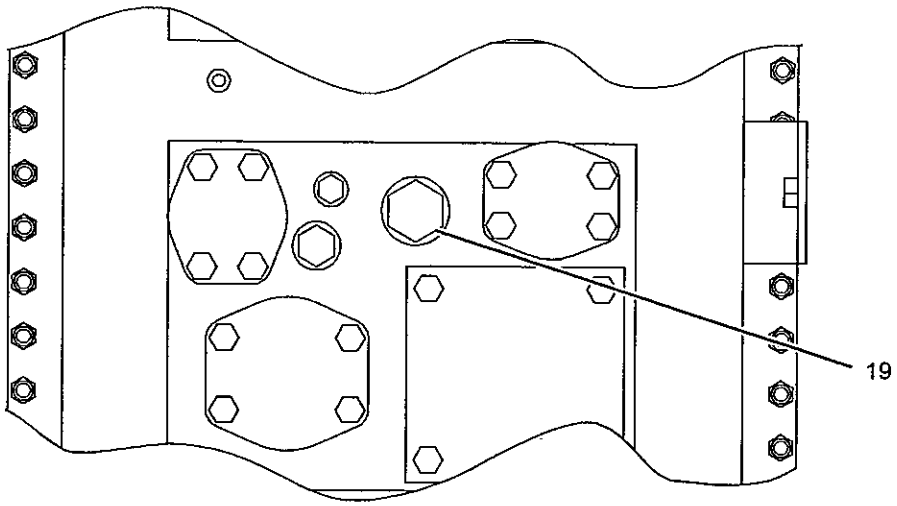


VIEW A-A

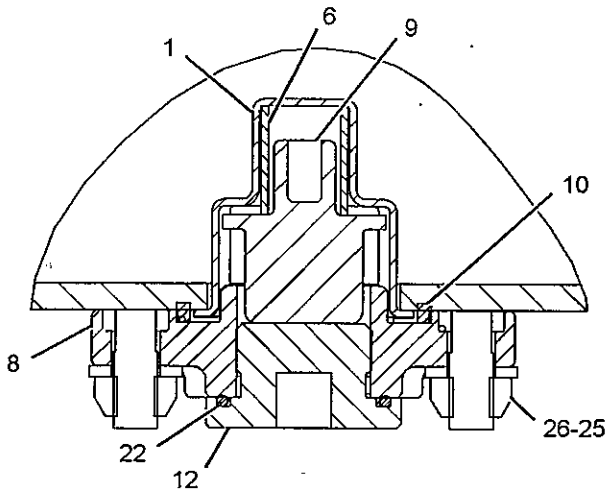


VIEW OF AREA C

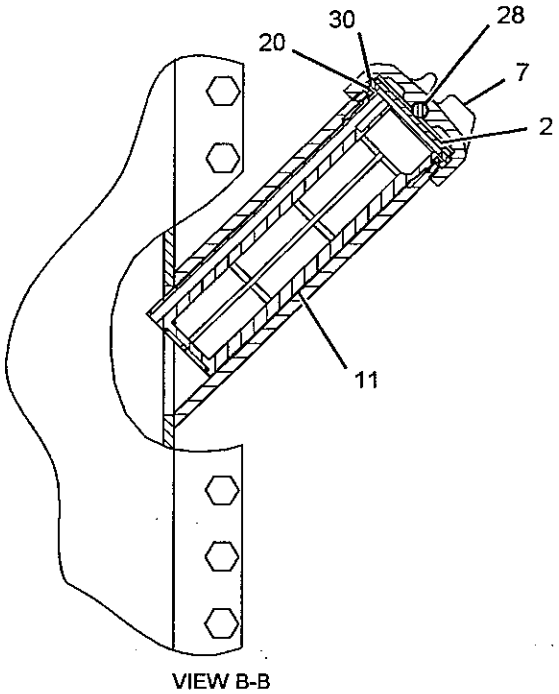


VIEW B-B

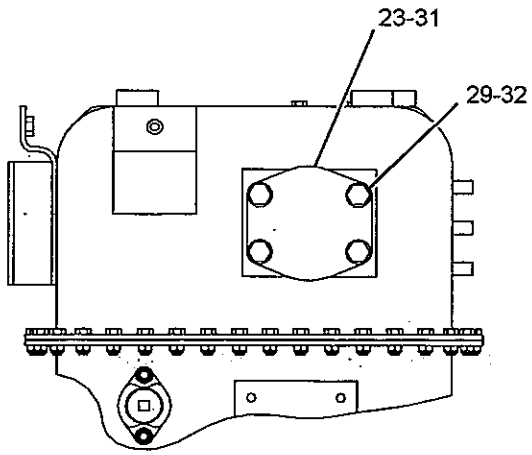


VIEW D-D

GRAPHIC #2

<END>

g01144404

# HYDRAULIC SYSTEM

## *206-9057* VALVE & MTG GP-MAIN CONTROL–2-FUNCTION

**S/N: JMS1-UP**

**PART OF 235-1303 HYDRAULIC AR-2 VALVE**

**SMCS-5051** i02275208

| NOTE | REF NO | GRAPHIC REF | PART NUMBER | QTY | PART NAME 1 2 3 4 5 6 (PRODUCT LEVEL) | SEE PAGE |
|---|---|---|---|---|---|---|
| | 1 | 1 | 2T-1397 | 2 | CLAMP | |
| | 2 | 2 | 9S-4181 | 1 | PLUG | |
| | 3 | 2 | 6V-0852 | 8 | CAP-DUST | |
| | 4 | 2 | 6V-3965 | 8 | FITTING AS (QUICK DISCONNECT) | |
| | 5 | 2 | 7X-0611 | 3 | WASHER-HARD (20X32X3-MM THK) | |
| | 6 | 1 | 8C-0564 | 1 | CONNECTOR | |
| I | 7 | 2 | 8W-6047 | 1 | HOSE AS | |
| I | 8 | 2 | 9R-2152 | 1 | HOSE AS | |
| Y | 9 | 2 | 164-7474 | 2 | VALVE GP-CHECK | 697 |
| Y | 10 | 1 | 206-5186 | 1 | VALVE GP-PILOT (OIL MANIFOLD, 2-FUNCTION) | 711 |
| Y | 11 | 2 | 114-2787 | 1 | VALVE GP-MAIN CONTROL (2-FUNCTION) | 706 |
| | 12 | 2 | 114-4835 | 1 | MANIFOLD | |
| | 13 | 2 | 123-0931 | 1 | TUBE AS | |
| | 14 | 2 | 123-0933 | 1 | TUBE AS | |
| | 15 | 2 | 123-0934 | 1 | TUBE AS | |
| | 16 | 2 | 123-0935 | 1 | TUBE AS | |
| | 17 | 2 | 123-0936 | 1 | TUBE AS | |
| | 18 | 1 | 201-8855 | 1 | TUBE AS | |
| | 19 | 2 | 123-0939 | 1 | TUBE AS | |
| | 20 | 1 | 123-0965 | 1 | TUBE AS | |
| | 21 | 1 | 206-9061 | 1 | BRACKET AS | |
| | 22 | 2 | 123-0967 | 1 | BRACKET | |
| | 23 | 2 | 123-0968 | 1 | BRACKET | |
| Y | 24 | 1 | *175-4207* | 1 | WIRING GP-ELECTROHYDRAULIC | 287 |
| | 25 | 2 | 123-7736 | 1 | BLOCK | |
| | 26 | 2 | 126-6872 | 4 | TEE | |
| | 27 | 1 | 128-7063 | 2 | CONNECTOR-ORIFICE (1.7-MM) | |
| | 28 | 2 | 138-8063 | 1 | TUBE AS | |
| | 29 | 2 | 9X-8257 | 4 | WASHER (17.5X30X3.5-MM THK) | |
| | 30 | 2 | 1P-3706 | 1 | SEAL-RECTANGULAR | |
| | 31 | 1 | 1P-3707 | 1 | SEAL-RECTANGULAR | |
| | 32 | 1,2 | 3J-1907 | 22 | SEAL-O-RING | |
| | 33 | 2 | 4J-0520 | 2 | SEAL-O-RING | |
| M | 34 | 1 | 129-3178 | 1 | LOCKNUT (M6X1-THD) | |
| | 35 | 2 | 5H-4019 | 2 | COVER | |
| | 36 | 2 | 6V-3241 | 2 | SEAL-RECTANGULAR | |
| | 37 | 1,2 | 6V-8397 | 21 | SEAL-O-RING | |
| | 38 | 1 | 6V-8636 | 3 | CONNECTOR | |
| | 39 | 1,2 | 6V-8724 | 4 | ELBOW | |
| | 40 | 2 | 6V-8980 | 3 | ELBOW | |
| | 41 | 2 | 6V-9168 | 3 | NUT (11/16-16-THD) | |
| | 42 | 2 | 6V-9836 | 1 | TEE-SWIVEL | |
| | 43 | 2 | 7M-8485 | 1 | SEAL-O-RING | |
| M | 44 | 2 | 7X-2553 | 4 | BOLT (M16X2X40-MM) | |
| | 45 | 2 | 8C-3206 | 4 | FLANGE-HALF | |
| | 46 | 2 | 8T-4121 | 8 | WASHER-HARD (11X21X2.5-MM THK) | |
| M | 47 | 2 | 8T-4139 | 4 | BOLT (M12X1.75X30-MM) | |
| M | 48 | 1 | 8T-4172 | 4 | BOLT (M10X1.5X80-MM) | |
| M | 49 | 2 | 8T-4176 | 4 | BOLT (M12X1.75X90-MM) | |
| M | 50 | 2 | 8T-4179 | 2 | BOLT (M12X1.75X20-MM) | |
| M | 51 | 2 | 8T-4196 | 8 | BOLT (M10X1.5X35-MM) | |
| | 52 | 1 | 8T-4205 | 2 | WASHER-HARD (7.2X14.5X2-MM THK) | |
| | 53 | 2 | 8T-4223 | 10 | WASHER-HARD (13.5X25.5X3-MM THK) | |
| M | 54 | 2 | 8T-4244 | 4 | NUT (M12X1.75-THD) | |
| M | 55 | 1 | 8T-4971 | 1 | BOLT (M6X1X30-MM) | |
| M | 56 | 1 | 8T-5001 | 1 | BOLT (M12X1.75X130-MM) | |

## 206-9057 VALVE & MTG GP-MAIN CONTROL (contd.)

i02275208

| NOTE | REF NO | GRAPHIC REF | PART NUMBER | QTY | PART NAME 1 2 3 4 5 6 (PRODUCT LEVEL) | SEE PAGE |
|---|---|---|---|---|---|---|
| M | 57 | 1 | 8T-5092 | 2 | BOLT (M12X1.75X150-MM) | |
| M | 58 | 2 | 8T-6868 | 4 | BOLT (M12X1.75X80-MM) | |
| | 59 | 1 | 200-5978 | 2 | STRAINER | |

I-REFER TO HYDRAULIC INFORMATION SYSTEM
M-METRIC PART
Y-SEPARATE ILLUSTRATION

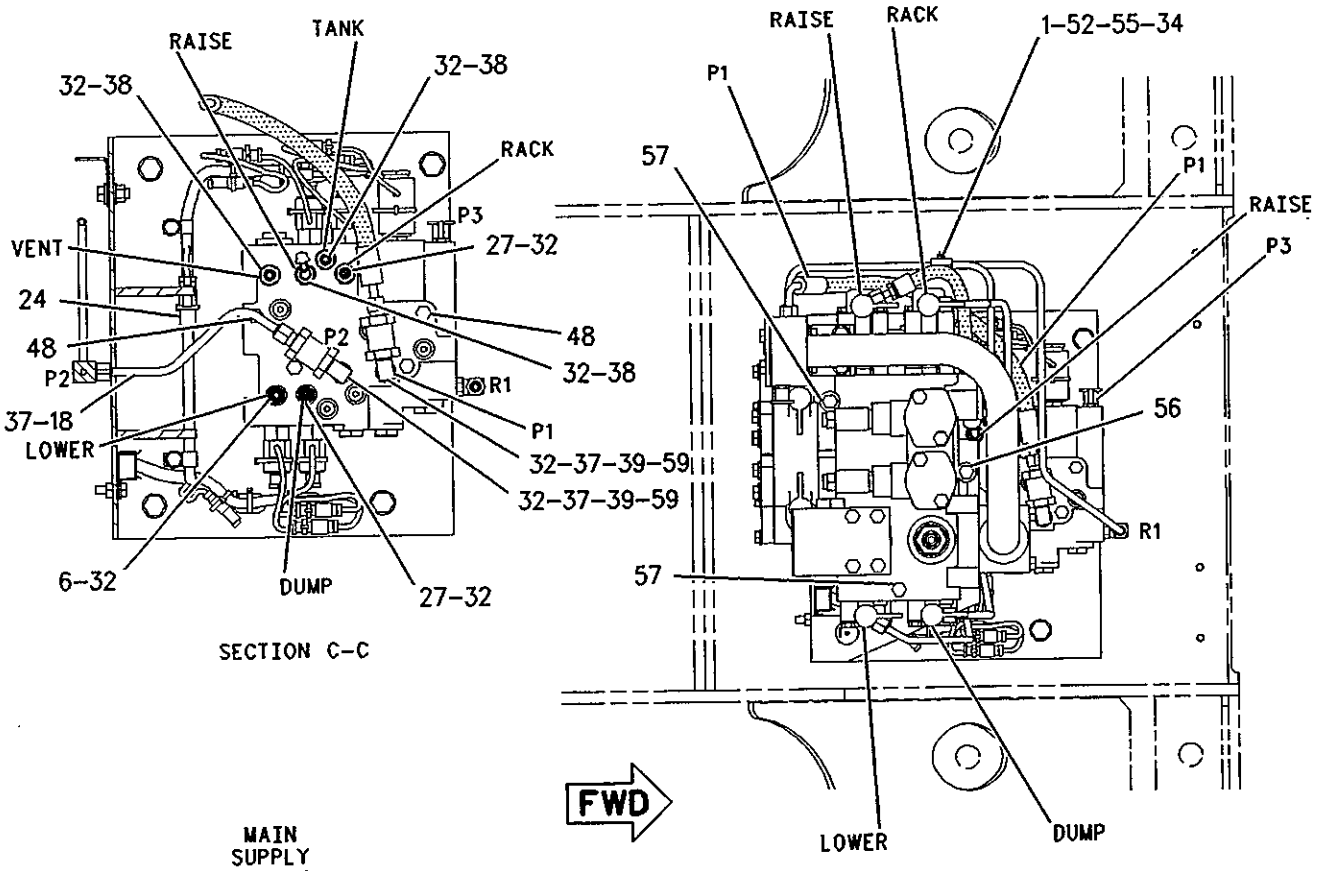


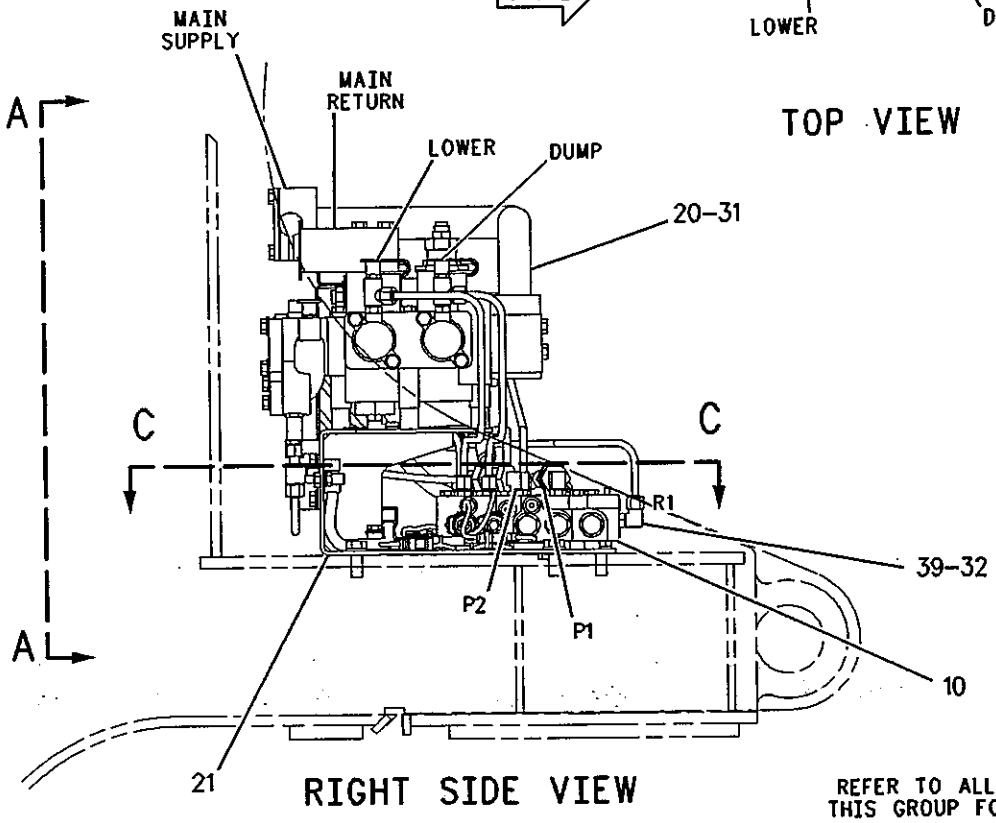


REFER TO ALL ILLUSTRATIONS OF THIS GROUP FOR AUXILIARY VIEWS

GRAPHIC #1 g00819675

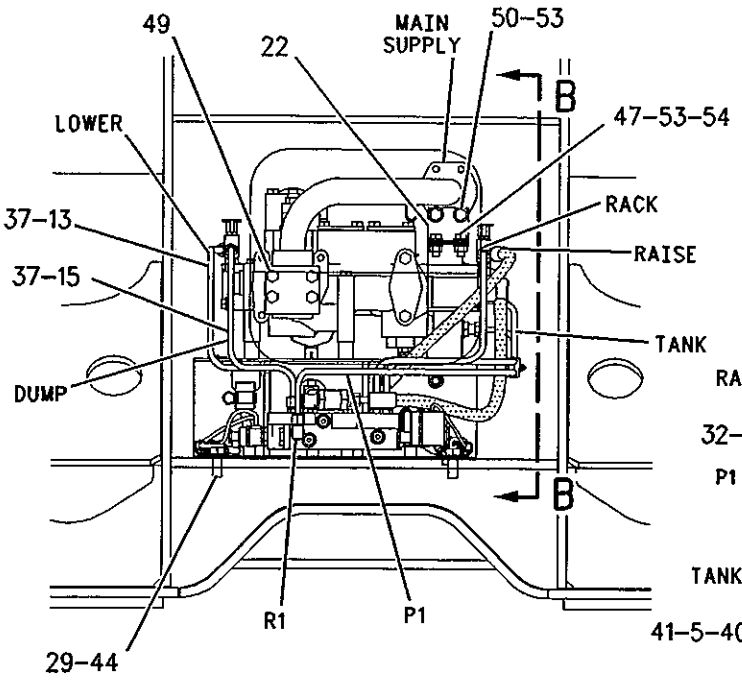


FRONT VIEW

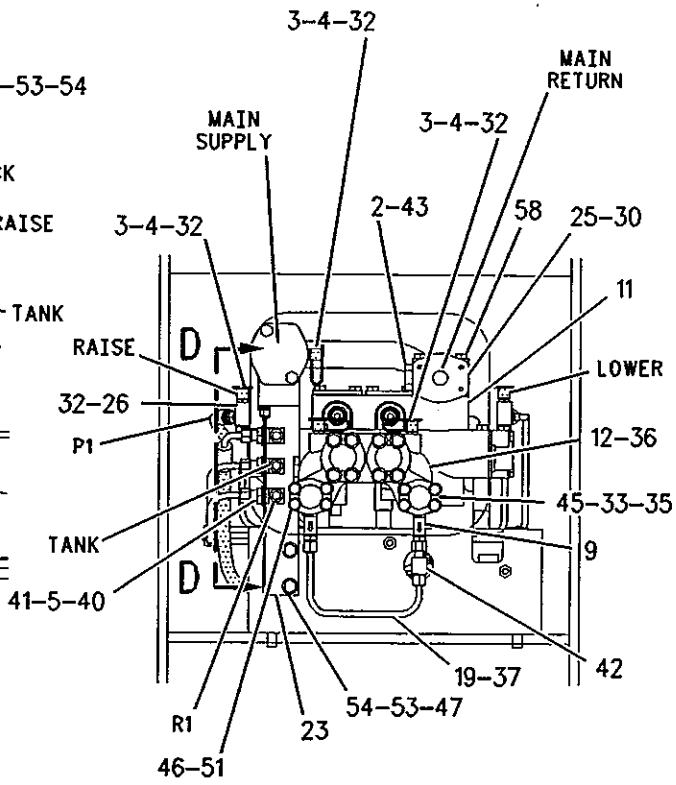


VIEW A-A

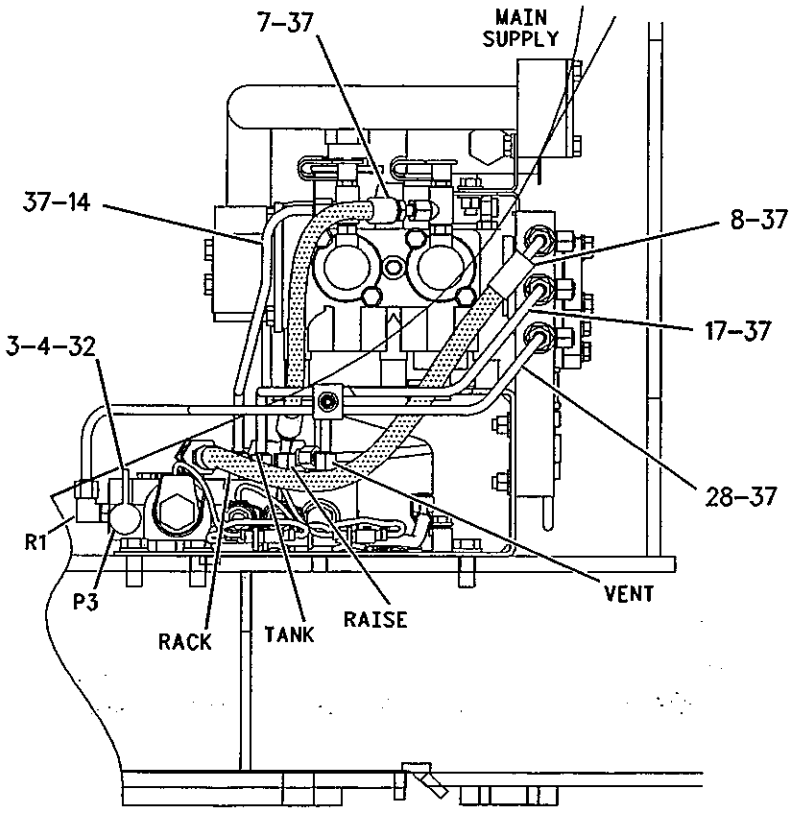


VIEW B-B

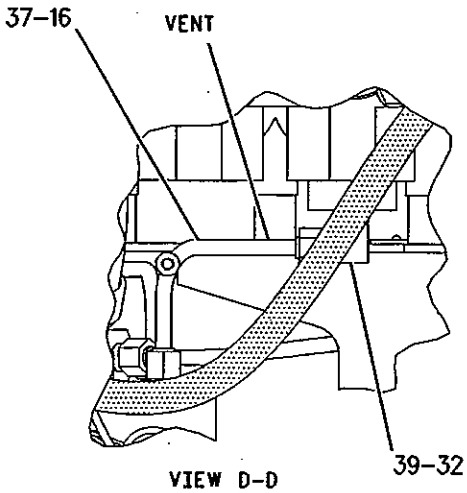


VIEW D-D

GRAPHIC #2 **<END>** g00819676

# HYDRAULIC SYSTEM

## *206-9058* VALVE & MTG GP-MAIN CONTROL-
### 2-FUNCTION WITH RIDE CONTROL
### S/N: JMS1-UP
### PART OF 196-8529, 267-3803 CONTROL AR-RIDE
### AN ATTACHMENT

SMCS-5051

i02275249

| NOTE | REF NO | GRAPHIC REF | PART NUMBER | QTY | PART NAME 1 2 3 4 5 6 (PRODUCT LEVEL) | SEE PAGE |
|---|---|---|---|---|---|---|
| | 1 | 1 | 1P-3706 | 1 | SEAL-RECTANGULAR | |
| | 2 | 1 | 1P-3707 | 1 | SEAL-RECTANGULAR | |
| | 3 | 1 | 2T-1397 | 2 | CLAMP | |
| | 4 | 1 | 3J-1907 | 26 | SEAL-O-RING | |
| | 5 | 1 | 9X-8257 | 4 | WASHER (17.5X30X3.5-MM THK) | |
| M | 6 | 1 | 8T-6868 | 4 | BOLT (M12X1.75X80-MM) | |
| M | 7 | 1 | 8T-5092 | 2 | BOLT (M12X1.75X150-MM) | |
| M | 8 | 1 | 8T-5001 | 1 | BOLT (M12X1.75X130-MM) | |
| | 9 | 1 | 6V-0852 | 8 | CAP-DUST | |
| | 10 | 1 | 6V-3241 | 2 | SEAL-RECTANGULAR | |
| | 11 | 1 | 6V-3965 | 8 | FITTING AS (QUICK DISCONNECT) | |
| | 12 | 1 | 6V-8397 | 19 | SEAL-O-RING | |
| | 13 | 1 | 6V-8980 | 3 | ELBOW | |
| | 14 | 1 | 7X-0611 | 3 | WASHER-HARD (20X32X3-MM THK) | |
| | 15 | 1 | 8C-0564 | 1 | CONNECTOR | |
| I | 16 | 1 | 9R-2152 | 1 | HOSE AS | |
| | 17 | 1 | 9S-8004 | 2 | PLUG | |
| | 18 | 1 | 9X-2027 | 1 | WASHER (11X18X2-MM THK) | |
| Y | 19 | 1 | 206-5186 | 1 | VALVE GP-PILOT (OIL MANIFOLD, 2-FUNCTION) | 711 |
| Y | 20 | 1 | 114-2787 | 1 | VALVE GP-MAIN CONTROL (2-FUNCTION) | 706 |
| | 21 | 1 | 114-4835 | 1 | MANIFOLD | |
| I | 22 | 1 | 8W-6047 | 1 | HOSE AS | |
| | 23 | 1 | 123-0931 | 1 | TUBE AS | |
| | 24 | 1 | 123-0933 | 1 | TUBE AS | |
| | 25 | 1 | 123-0934 | 1 | TUBE AS | |
| | 26 | 1 | 123-0935 | 1 | TUBE AS | |
| | 27 | 1 | 123-0936 | 1 | TUBE AS | |
| | 28 | 1 | 138-8063 | 1 | TUBE AS | |
| | 29 | 1 | 123-0965 | 1 | TUBE AS | |
| | 30 | 1 | 206-9061 | 1 | BRACKET AS | |
| | 31 | 1 | 123-0967 | 1 | BRACKET | |
| | 32 | 1 | 123-0968 | 1 | BRACKET | |
| | 33 | 1 | 123-7736 | 1 | BLOCK | |
| | 34 | 1 | 201-8986 | 1 | TUBE AS | |
| | 35 | 1 | 126-6872 | 4 | TEE | |
| | 36 | 1 | 128-7063 | 2 | CONNECTOR-ORIFICE (1.7-MM) | |
| | 37 | 1 | 1F-7567 | 1 | CLIP | |
| M | 38 | 1 | 129-3178 | 1 | LOCKNUT (M6X1-THD) | |
| M | 39 | 1 | 8T-4971 | 1 | BOLT (M6X1X30-MM) | |
| | 40 | 1 | 6V-8636 | 3 | CONNECTOR | |
| | 41 | 1 | 6V-8724 | 4 | ELBOW | |
| | 42 | 1 | 6V-9168 | 3 | NUT (11/16-16-THD) | |
| M | 43 | 1 | 8T-4244 | 4 | NUT (M12X1.75-THD) | |
| M | 44 | 1 | 7X-2553 | 4 | BOLT (M16X2X40-MM) | |
| | 45 | 1 | 8C-3206 | 4 | FLANGE-HALF | |
| | 46 | 1 | 8T-4121 | 8 | WASHER-HARD (11X21X2.5-MM THK) | |
| M | 47 | 1 | 8T-4137 | 1 | BOLT (M10X1.5X20-MM) | |
| M | 48 | 1 | 8T-4139 | 4 | BOLT (M12X1.75X30-MM) | |
| M | 49 | 1 | 8T-4172 | 4 | BOLT (M10X1.5X80-MM) | |
| M | 50 | 1 | 8T-4176 | 4 | BOLT (M12X1.75X90-MM) | |
| M | 51 | 1 | 8T-4179 | 2 | BOLT (M12X1.75X20-MM) | |
| M | 52 | 1 | 8T-4196 | 8 | BOLT (M10X1.5X35-MM) | |
| | 53 | 1 | 8T-4205 | 2 | WASHER-HARD (7.2X14.5X2-MM THK) | |
| | 54 | 1 | 8T-4223 | 10 | WASHER-HARD (13.5X25.5X3-MM THK) | |

## *206-9058* VALVE & MTG GP-MAIN CONTROL *(contd.)*

i02275249

| NOTE | REF NO | GRAPHIC REF | PART NUMBER | QTY | PART NAME 1 2 3 4 5 6 (PRODUCT LEVEL) | SEE PAGE |
|---|---|---|---|---|---|---|
| Y | 55 | 1 | *175-4207* | 1 | WIRING GP-ELECTROHYDRAULIC | 287 |
| | 56 | 1 | **3E-7410** | 1 | TEE-O-RING | |
| | 57 | 1 | **6V-8398** | 1 | SEAL-O-RING | |
| | 58 | 1 | **6V-9873** | 1 | CONNECTOR | |
| | 59 | 1 | **200-5978** | 2 | STRAINER | |

I-REFER TO HYDRAULIC INFORMATION SYSTEM
M-METRIC PART
Y-SEPARATE ILLUSTRATION

## 206-9058 VALVE & MTG GP-MAIN CONTROL *(contd.)* i02275249

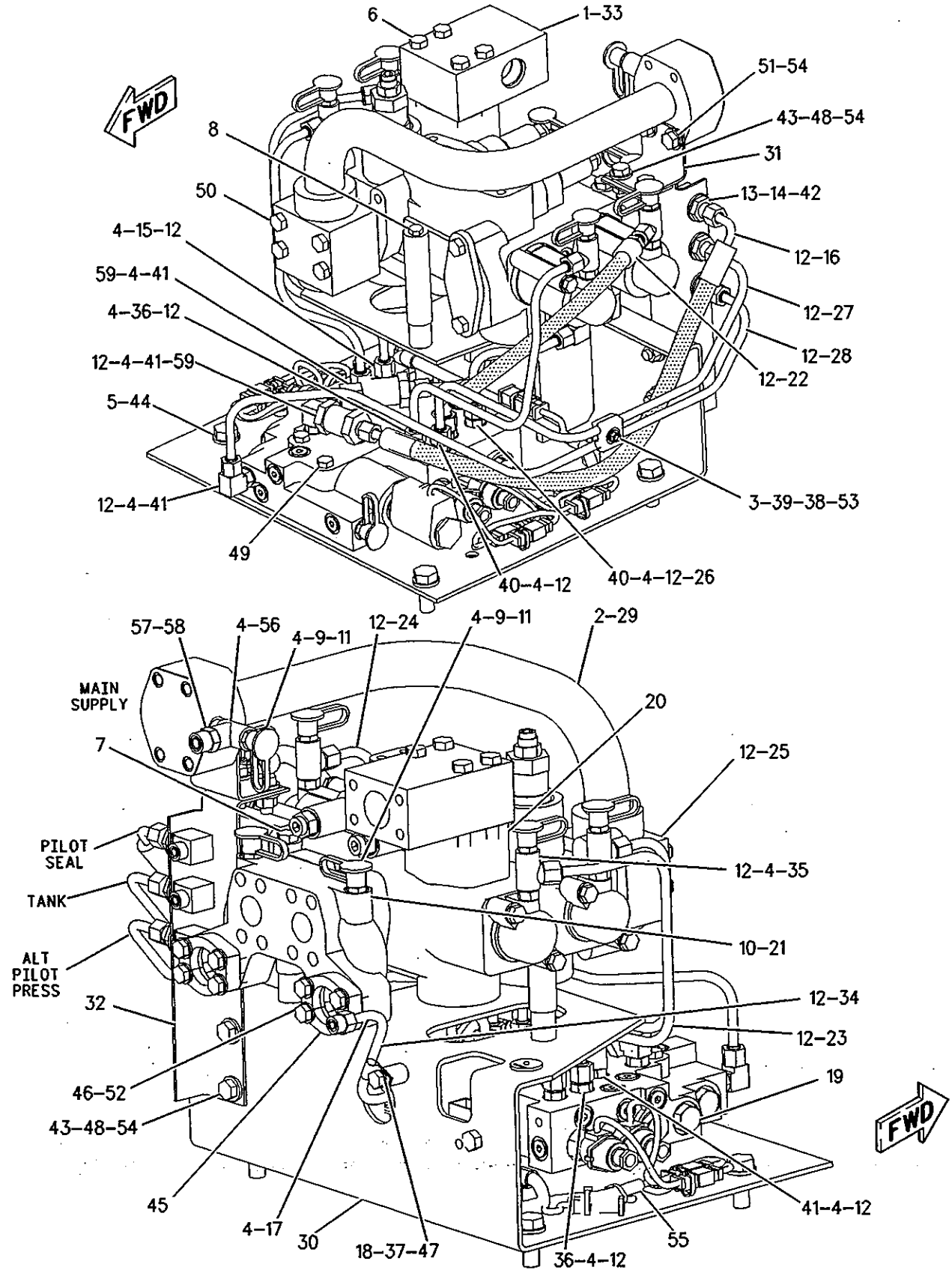


GRAPHIC #1 **<END>** g00841735

# HYDRAULIC SYSTEM

## 206-9059 VALVE & MTG GP-MAIN CONTROL–3-FUNCTION

**S/N: JMS1-UP**

**PART OF 247-4867, 249-6704 HYDRAULIC AR-3 VALVE, 249-6705 LIFT AR AN ATTACHMENT**

**SMCS-5051** i01935522

| NOTE | REF NO | GRAPHIC REF | PART NUMBER | QTY | PART NAME 1 2 3 4 5 6 (PRODUCT LEVEL) | SEE PAGE |
|---|---|---|---|---|---|---|
| | 1 | 1 | 1P-3706 | 1 | SEAL-RECTANGULAR | |
| | 2 | 1 | 1P-3707 | 1 | SEAL-RECTANGULAR | |
| | 3 | 1 | 2T-1397 | 2 | CLAMP | |
| | 4 | 1,2 | 3J-1907 | 29 | SEAL-O-RING | |
| | 5 | 2 | 6V-0852 | 10 | CAP-DUST | |
| | 6 | 2 | 6V-3241 | 2 | SEAL-RECTANGULAR | |
| | 7 | 2 | 6V-3965 | 10 | FITTING AS | |
| | 8 | 1,2 | 6V-8397 | 27 | SEAL-O-RING | |
| | 9 | 2 | 6V-8980 | 3 | ELBOW | |
| | 10 | 2 | 7M-8485 | 1 | SEAL-O-RING | |
| | 11 | 2 | 7X-0611 | 3 | WASHER-HARD (20X32X3-MM THK) | |
| | 12 | 1 | 8C-0564 | 1 | CONNECTOR | |
| I | 13 | 2 | 9R-2152 | 1 | HOSE AS | |
| | 14 | 2 | 9S-4181 | 1 | PLUG | |
| Y | 15 | 2 | 164-7474 | 2 | VALVE GP-CHECK | 697 |
| Y | 16 | 1 | 114-2788 | 1 | VALVE GP-MAIN CONTROL (3-FUNCTION) | 708 |
| Y | 17 | 1 | 206-5191 | 1 | VALVE GP-PILOT (OIL MANIFOLD, 3-FUNCTION) | 713 |
| | 18 | 2 | 114-4835 | 1 | MANIFOLD | |
| I | 19 | 2 | 8W-6047 | 1 | HOSE AS | |
| | 20 | 1 | 123-0931 | 1 | TUBE AS | |
| | 21 | 2 | 123-0933 | 1 | TUBE AS | |
| | 22 | 1 | 123-0934 | 1 | TUBE AS | |
| | 23 | 2 | 123-0935 | 1 | TUBE AS | |
| | 24 | 2 | 123-0936 | 1 | TUBE AS | |
| | 25 | 1 | 201-8855 | 1 | TUBE AS | |
| | 26 | 2 | 123-0939 | 1 | TUBE AS | |
| | 27 | 1 | 206-9061 | 1 | BRACKET AS | |
| | 28 | 1 | 123-0967 | 1 | BRACKET | |
| | 29 | 2 | 123-0968 | 1 | BRACKET | |
| | 30 | 1 | 123-2370 | 1 | TUBE AS | |
| | 31 | 1 | 123-2371 | 1 | TUBE AS | |
| | 32 | 1 | 123-2372 | 1 | TUBE AS | |
| | 33 | 1 | 9X-8257 | 4 | WASHER (17.5X30X3.5-MM THK) | |
| | 34 | 1 | 123-7736 | 1 | BLOCK | |
| | 35 | 2 | 126-6872 | 6 | TEE | |
| | 36 | 1 | 128-7063 | 2 | CONNECTOR-ORIFICE (1.7-MM) | |
| | 37 | 2 | 138-8063 | 1 | TUBE AS | |
| M | 38 | 1 | 129-3178 | 1 | LOCKNUT (M6X1-THD) | |
| | 39 | 1 | 6V-8636 | 3 | CONNECTOR | |
| | 40 | 1,2 | 6V-8724 | 7 | ELBOW | |
| | 41 | 2 | 6V-9168 | 3 | NUT (11/16-16-THD) | |
| | 42 | 2 | 6V-9836 | 1 | TEE-SWIVEL | |
| M | 43 | 1 | 7X-2553 | 4 | BOLT (M16X2X40-MM) | |
| | 44 | 1 | 8T-0075 | 1 | CONNECTOR | |
| I | 45 | 1 | 184-4496 | 1 | HOSE AS | |
| M | 46 | 1,2 | 8T-4139 | 4 | BOLT (M12X1.75X30-MM) | |
| M | 47 | 1 | 8T-4172 | 4 | BOLT (M10X1.5X80-MM) | |
| M | 48 | 1 | 8T-4179 | 2 | BOLT (M12X1.75X20-MM) | |
| M | 49 | 1 | 8T-4194 | 4 | BOLT (M12X1.75X50-MM) | |
| | 50 | 2 | 173-1437 | 4 | FLANGE-HALF | |
| | 51 | 1 | 8T-4205 | 2 | WASHER-HARD (7.2X14.5X2-MM THK) | |
| | 52 | 1,2 | 8T-4223 | 10 | WASHER-HARD (13.5X25.5X3-MM THK) | |
| M | 53 | 1,2 | 8T-4244 | 4 | NUT (M12X1.75-THD) | |
| M | 54 | 1 | 8T-4971 | 1 | BOLT (M6X1X30-MM) | |
| M | 55 | 1 | 8T-5001 | 1 | BOLT (M12X1.75X130-MM) | |

## *206-9059* VALVE & MTG GP-MAIN CONTROL *(contd.)*

i01935522

| NOTE | REF NO | GRAPHIC REF | PART NUMBER | QTY | PART NAME 1 2 3 4 5 6 (PRODUCT LEVEL) | SEE PAGE |
|---|---|---|---|---|---|---|
| M | 56 | 1 | **8T-5092** | 2 | BOLT (M12X1.75X150-MM) | |
| M | 57 | 1 | **8T-6868** | 4 | BOLT (M12X1.75X80-MM) | |
| Y | 58 | 1 | *175-4207* | 1 | WIRING GP-ELECTROHYDRAULIC | 287 |
| | 59 | 1 | **200-5978** | 2 | STRAINER | |

I-REFER TO HYDRAULIC INFORMATION SYSTEM
M-METRIC PART
Y-SEPARATE ILLUSTRATION

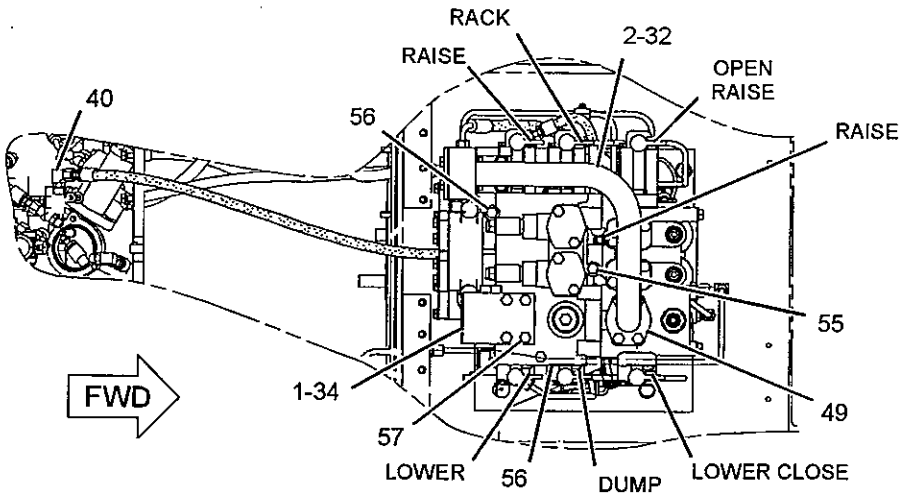


TOP VIEW

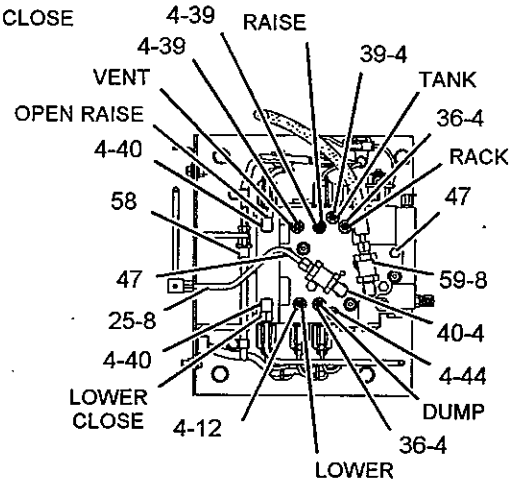


SECTION C-C

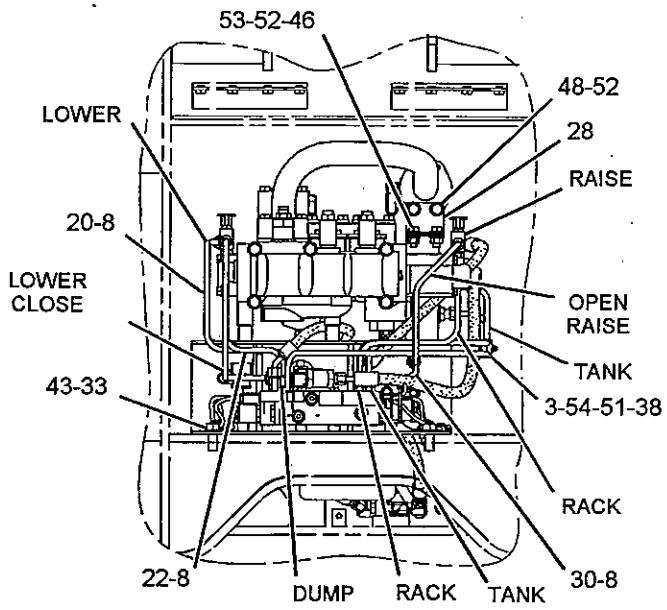


FRONT VIEW

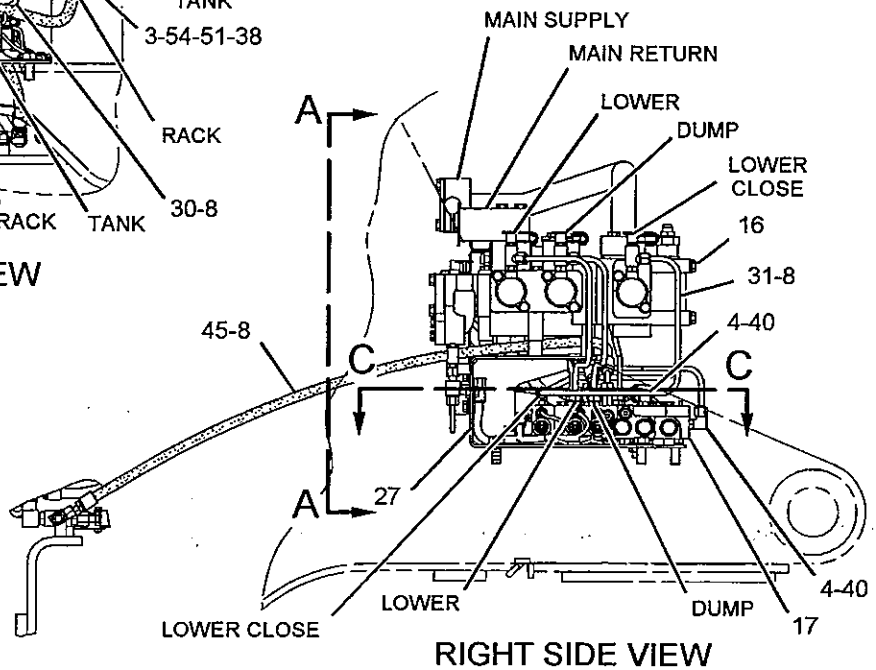


RIGHT SIDE VIEW

REFER TO ALL ILLUSTRATIONS OF THIS GROUP FOR AUXILIARY VIEWS

GRAPHIC #1

g01069753

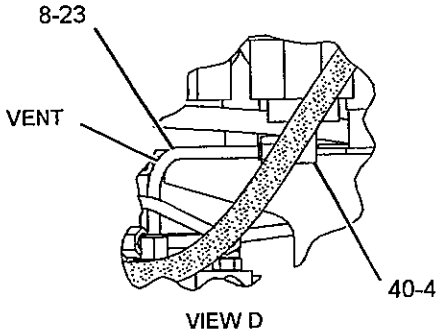


VIEW D

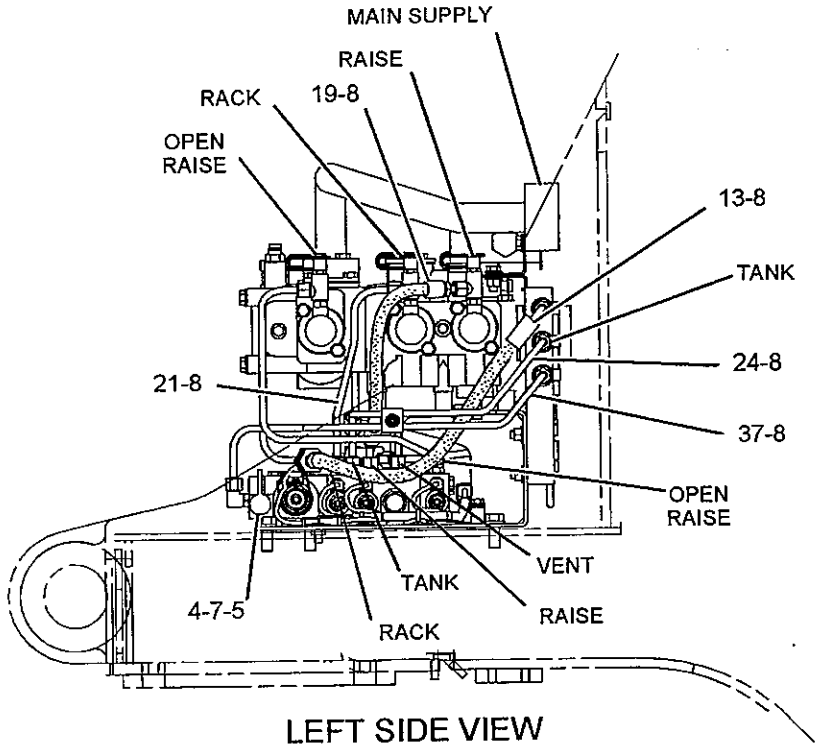


LEFT SIDE VIEW

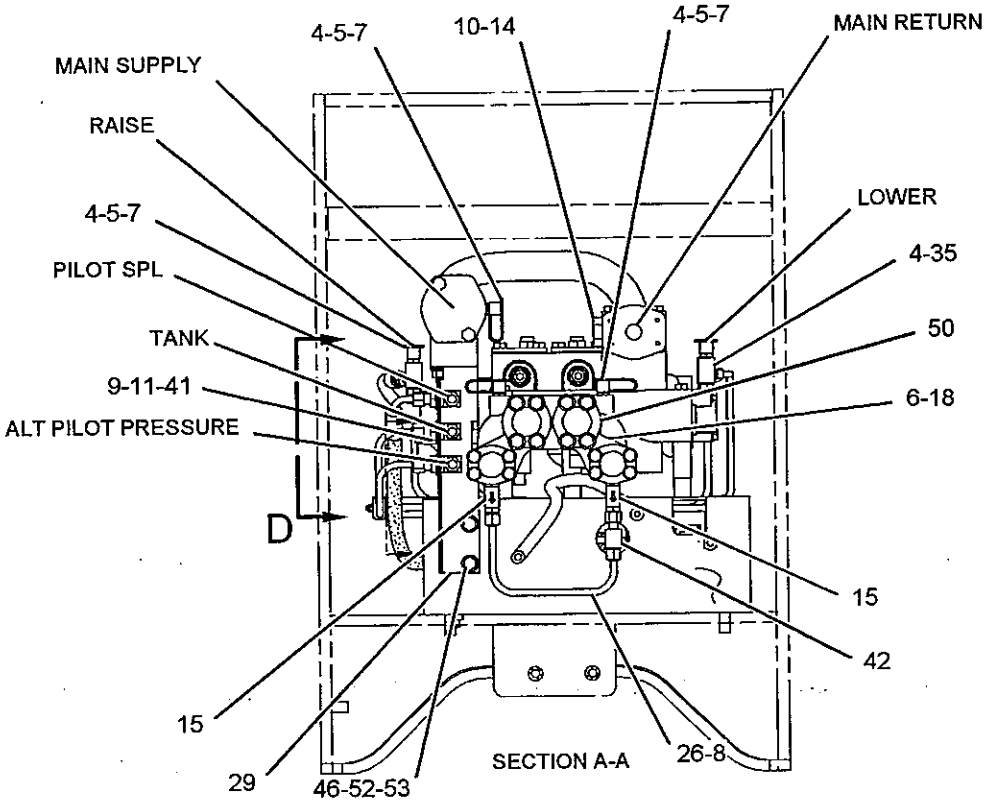


GRAPHIC #2

**<END>**

g01069754

# HYDRAULIC SYSTEM

## *206-9060* VALVE & MTG GP-MAIN CONTROL-
### 3-FUNCTION WITH RIDE CONTROL
S/N: JMS1-UP
PART OF 196-8530, 267-3804 CONTROL AR-RIDE
AN ATTACHMENT

SMCS-5051

i02089957

| NOTE | REF NO | GRAPHIC REF | PART NUMBER | QTY | PART NAME 1 2 3 4 5 6 (PRODUCT LEVEL) | SEE PAGE |
|---|---|---|---|---|---|---|
| | 1 | 1 | 2T-1397 | 2 | CLAMP | |
| | 2 | 2 | 3E-7410 | 1 | TEE-O-RING | |
| | 4 | 1 | 200-5978 | 2 | STRAINER | |
| | 5 | 1,2 | 6V-0852 | 10 | CAP-DUST | |
| | 6 | 1,2 | 6V-3965 | 10 | FITTING AS | |
| | 7 | 2 | 7X-0611 | 3 | WASHER-HARD (20X32X3-MM THK) | |
| | 8 | 1 | 8C-0564 | 1 | CONNECTOR | |
| I | 9 | 2 | 8W-6047 | 1 | HOSE AS | |
| I | 10 | 2 | 9R-2152 | 1 | HOSE AS | |
| Y | 11 | 1 | 114-2788 | 1 | VALVE GP-MAIN CONTROL (3-FUNCTION) | 708 |
| | 12 | 2 | 114-4835 | 1 | MANIFOLD | |
| | 13 | 1 | 123-0931 | 1 | TUBE AS | |
| | 14 | 2 | 123-0933 | 1 | TUBE AS | |
| | 15 | 1 | 123-0934 | 1 | TUBE AS | |
| | 16 | 2 | 123-0935 | 1 | TUBE AS | |
| | 17 | 2 | 123-0936 | 1 | TUBE AS | |
| | 18 | 1 | 206-9061 | 1 | BRACKET AS | |
| | 19 | 1 | 123-0967 | 1 | BRACKET | |
| | 20 | 2 | 123-0968 | 1 | BRACKET | |
| | 21 | 1 | 123-2370 | 1 | TUBE AS | |
| | 22 | 1 | 123-2371 | 1 | TUBE AS | |
| | 23 | 1 | 123-2372 | 1 | TUBE AS | |
| Y | 24 | 1 | *175-4207* | 1 | WIRING GP-ELECTROHYDRAULIC | 287 |
| | 25 | 1 | 123-7736 | 1 | BLOCK | |
| | 26 | 1 | 201-8986 | 1 | TUBE AS | |
| I | 27 | 1 | 184-4496 | 1 | HOSE AS | |
| | 28 | 2 | 126-6872 | 6 | TEE | |
| | 29 | 1 | 128-7063 | 2 | CONNECTOR-ORIFICE (1.7-MM) | |
| | 30 | 2 | 138-8063 | 1 | TUBE AS | |
| Y | 32 | 1 | 206-5191 | 1 | VALVE GP-PILOT (OIL MANIFOLD, 3-FUNCTION) | 713 |
| M | 33 | 1 | 129-3178 | 1 | LOCKNUT (M6X1-THD) | |
| | 34 | 2 | 1F-7567 | 1 | CLIP | |
| | 35 | 1 | 1P-3706 | 1 | SEAL-RECTANGULAR | |
| | 36 | 1 | 1P-3707 | 1 | SEAL-RECTANGULAR | |
| | 37 | 1,2 | 3J-1907 | 32 | SEAL-O-RING | |
| | 38 | 2 | 6V-3241 | 2 | SEAL-RECTANGULAR | |
| C | 39 | 1,2 | 6V-8397 | 24 | SEAL-O-RING | |
| | 41 | 1 | 6V-8636 | 3 | CONNECTOR | |
| C | 42 | 1,2 | 6V-8724 | 7 | ELBOW | |
| | 44 | 2 | 6V-8980 | 3 | ELBOW | |
| | 45 | 2 | 6V-9168 | 3 | NUT (11/16-16-THD) | |
| | 48 | 1 | 6V-9873 | 1 | CONNECTOR | |
| M | 49 | 1 | 7X-2553 | 4 | BOLT (M16X2X40-MM) | |
| | 50 | 1 | 8T-0075 | 1 | CONNECTOR | |
| M | 51 | 2 | 8T-4137 | 1 | BOLT (M10X1.5X20-MM) | |
| M | 52 | 1,2 | 8T-4139 | 4 | BOLT (M12X1.75X30-MM) | |
| M | 53 | 1 | 8T-4172 | 4 | BOLT (M10X1.5X80-MM) | |
| M | 54 | 1 | 8T-4179 | 2 | BOLT (M12X1.75X20-MM) | |
| M | 55 | 1 | 8T-4194 | 4 | BOLT (M12X1.75X50-MM) | |
| | 56 | 1 | 8T-4205 | 2 | WASHER-HARD (7.2X14.5X2-MM THK) | |
| | 57 | 1,2 | 8T-4223 | 10 | WASHER-HARD (13.5X25.5X3-MM THK) | |
| M | 58 | 1,2 | 8T-4244 | 4 | NUT (M12X1.75-THD) | |
| M | 59 | 1 | 8T-4971 | 1 | BOLT (M6X1X30-MM) | |
| M | 60 | 1 | 8T-5001 | 1 | BOLT (M12X1.75X130-MM) | |

## *206-9060* VALVE & MTG GP-MAIN CONTROL *(contd.)*

i02089957

| NOTE | REF NO | GRAPHIC REF | PART NUMBER | QTY | PART NAME 1 2 3 4 5 6 (PRODUCT LEVEL) | SEE PAGE |
|---|---|---|---|---|---|---|
| M | 61 | 1 | **8T-5092** | 2 | BOLT (M12X1.75X150-MM) | |
| M | 62 | 1 | **8T-6868** | 4 | BOLT (M12X1.75X80-MM) | |
| | 63 | 2 | **9S-8004** | 2 | PLUG | |
| | 64 | 2 | **9X-2027** | 1 | WASHER (11X18X2-MM THK) | |
| | 65 | 1 | **9X-8257** | 4 | WASHER (17.5X30X3.5-MM THK) | |

C-CHANGE FROM PREVIOUS TYPE
I-REFER TO HYDRAULIC INFORMATION SYSTEM
M-METRIC PART
Y-SEPARATE ILLUSTRATION

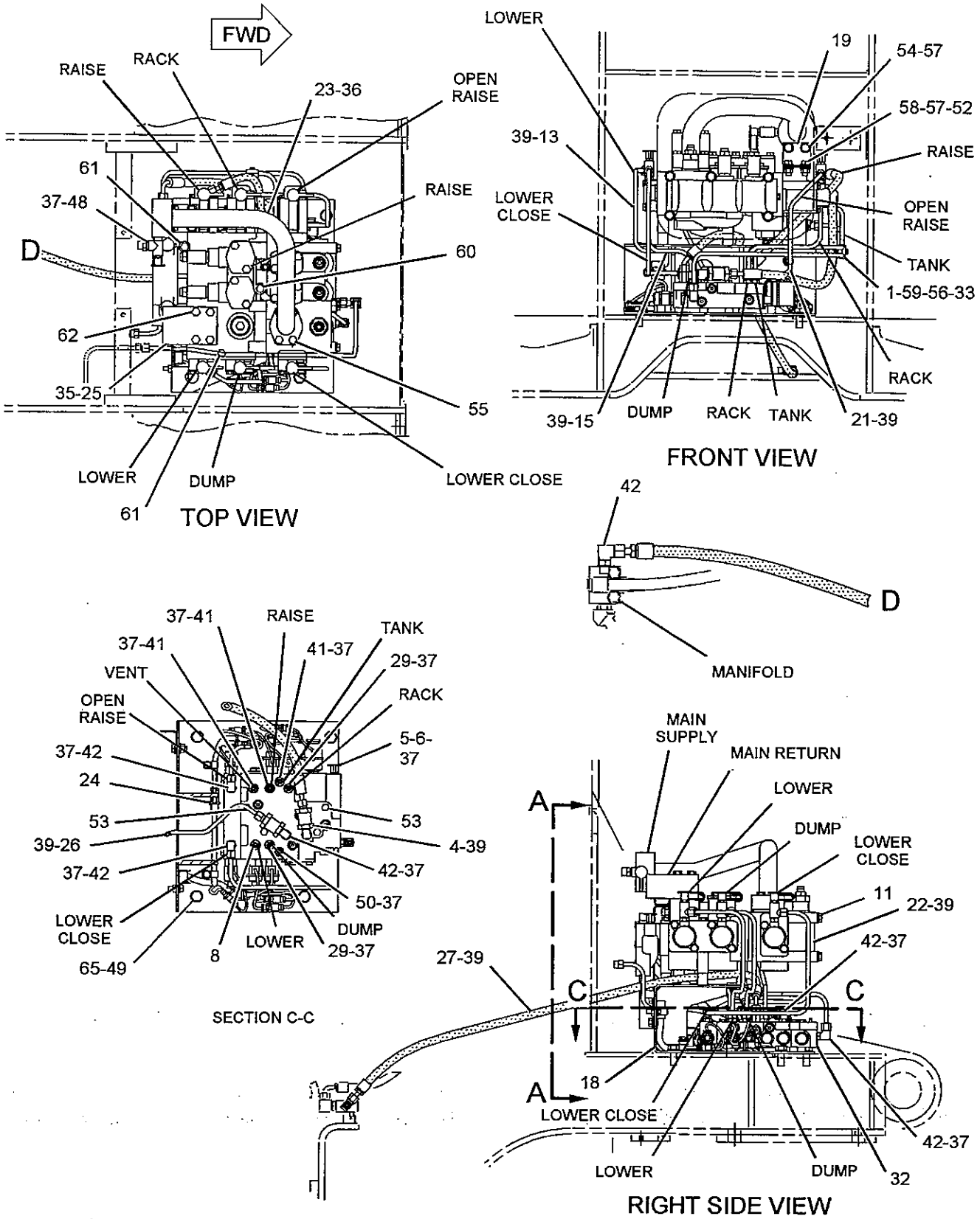


GRAPHIC #1

g01070260

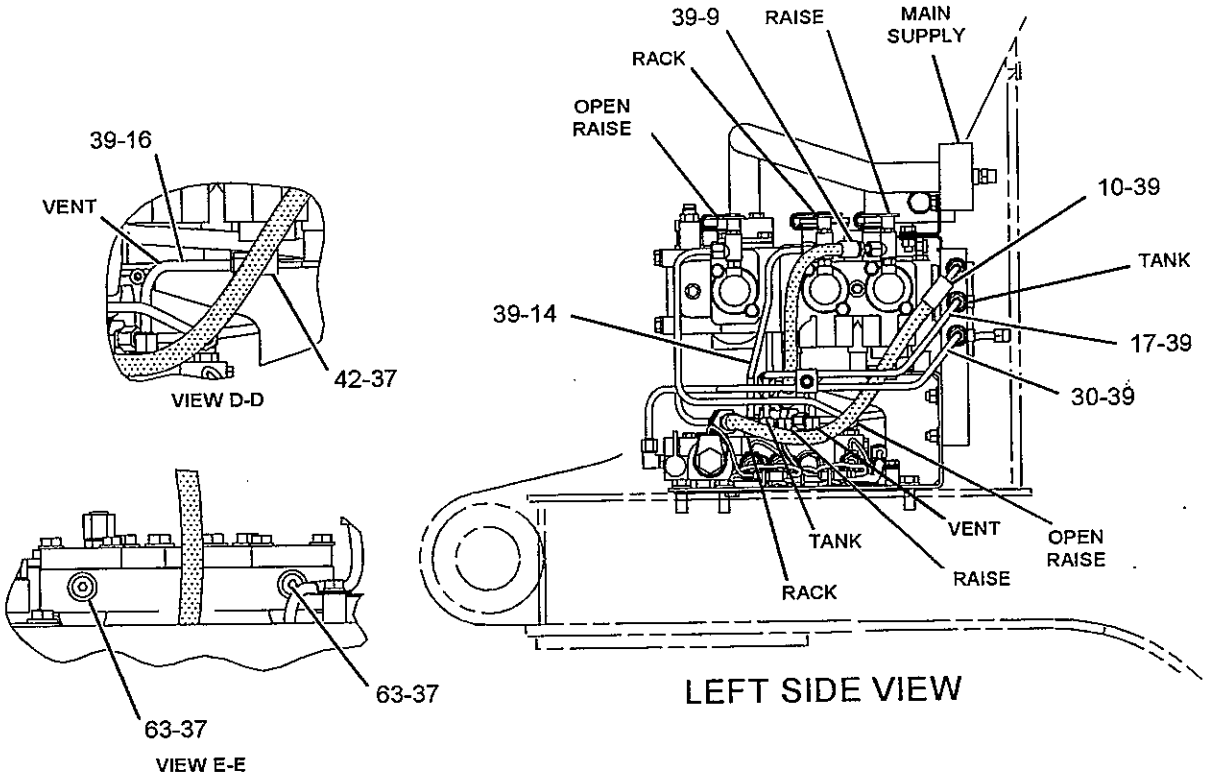


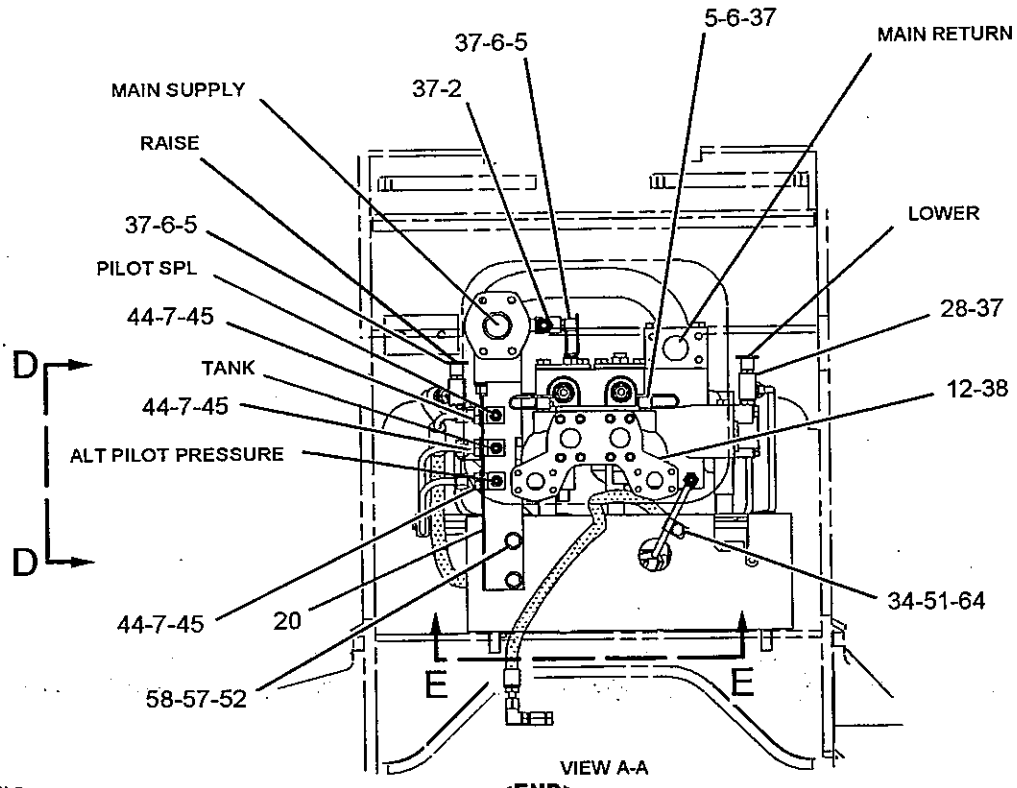


GRAPHIC #2

**<END>**

g01070261

## 128-2780 VALVE GP-CHECK

S/N: JMS1-UP
PART OF 213-1040 VALVE GP-FAN REVERSING
AN ATTACHMENT

SMCS-5067 i02272907

| NOTE | PART NUMBER | QTY | PART NAME 1 2 3 4 5 6 (PRODUCT LEVEL) | SEE PAGE |
|---|---|---|---|---|
| | 128-2779 | 2 | KIT-SEAL (CHECK VALVE) | |

<END>

## 164-7474 VALVE GP-CHECK

S/N: JMS1-UP
PART OF 144-5728 CONTROL & LINES GP-RIDE, 206-9057, 206-9059 VALVE & MTG GP-MAIN CONTROL
ALSO AN ATTACHMENT

SMCS-5067 i02172566

| NOTE | PART NUMBER | QTY | PART NAME 1 2 3 4 5 6 (PRODUCT LEVEL) | SEE PAGE |
|---|---|---|---|---|
| | 3J-1907 | 1 | SEAL-O-RING | |
| | 6V-8397 | 1 | SEAL-O-RING | |
| | 9T-3096 | 1 | VALVE GP-CHECK | |

<END>

# 118-5095 VALVE GP-CONTROL–AUXILIARY

S/N: JMS1-UP

PART OF 114-2788 VALVE GP-MAIN CONTROL

AN ATTACHMENT

SMCS-5051

i01895155

| NOTE | REF NO | GRAPHIC REF | PART NUMBER | QTY | PART NAME 1 2 3 4 5 6 (PRODUCT LEVEL) | SEE PAGE |
|---|---|---|---|---|---|---|
| | 3 | 1 | 162-9206 | 1 | SPRING (OUTER) | |
| | 4 | 1 | 4T-4267 | 2 | RETAINER | |
| M | 5 | 1 | 099-4691 | 1 | BOLT-LOCKING (M12X1.75X25-MM) | |
| | 6 | 1 | 8T-4223 | 1 | WASHER-HARD (13.5X25.5X3-MM THK) | |
| B | 7 | 1 | 8J-1898 | 8 | SHIM (0.01-IN THK) | |
| B | 8 | 1 | 1U-0470 | 2 | SHIM (0.178-MM THK) | |
| B | 9 | 1 | 1U-0471 | 5 | SHIM (0.25-MM THK) | |
| | 10 | 1 | 3G-8991 | 1 | SPRING (INNER) | |

B-USE AS REQUIRED
M-METRIC PART

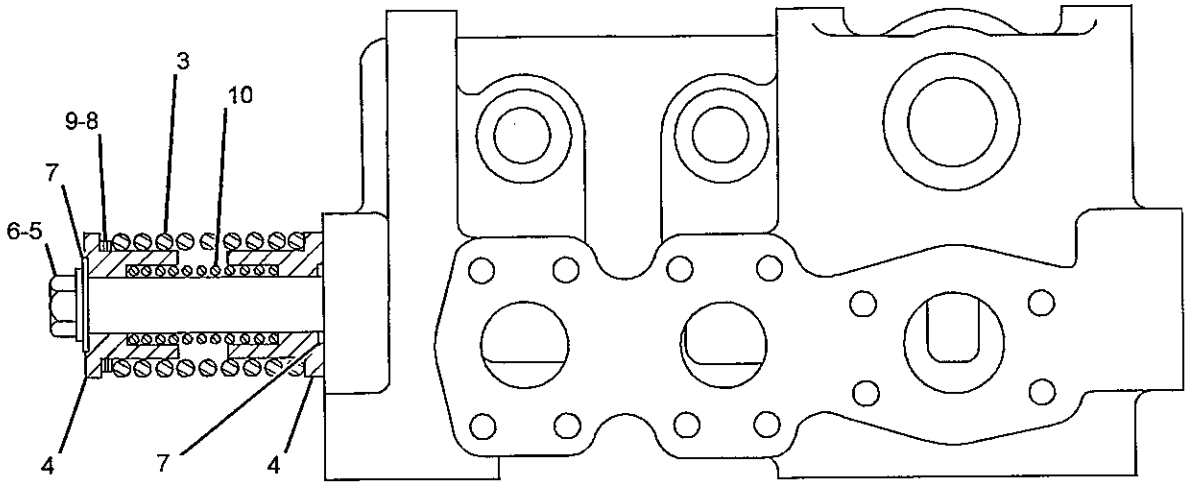


GRAPHIC #1

<END>

g01070316

# *191-8735* VALVE GP-DEMAND FAN

**S/N: JMS1-UP**

**PART OF 232-4929 LINES GP-HYDRAULIC OIL COOLER**

**SMCS-5264, 5479**

**i02215797**

| NOTE | REF NO | GRAPHIC REF | PART NUMBER | QTY | PART NAME 1 2 3 4 5 6 (PRODUCT LEVEL) | SEE PAGE |
|---|---|---|---|---|---|---|
| | 1 | 1 | 3E-3584 | 1 | MANIFOLD | |
| Y | 2 | 1 | 183-7595 | 1 | VALVE GP-SOLENOID (24-VOLT) (DEMAND FAN) | 735 |

Y-SEPARATE ILLUSTRATION

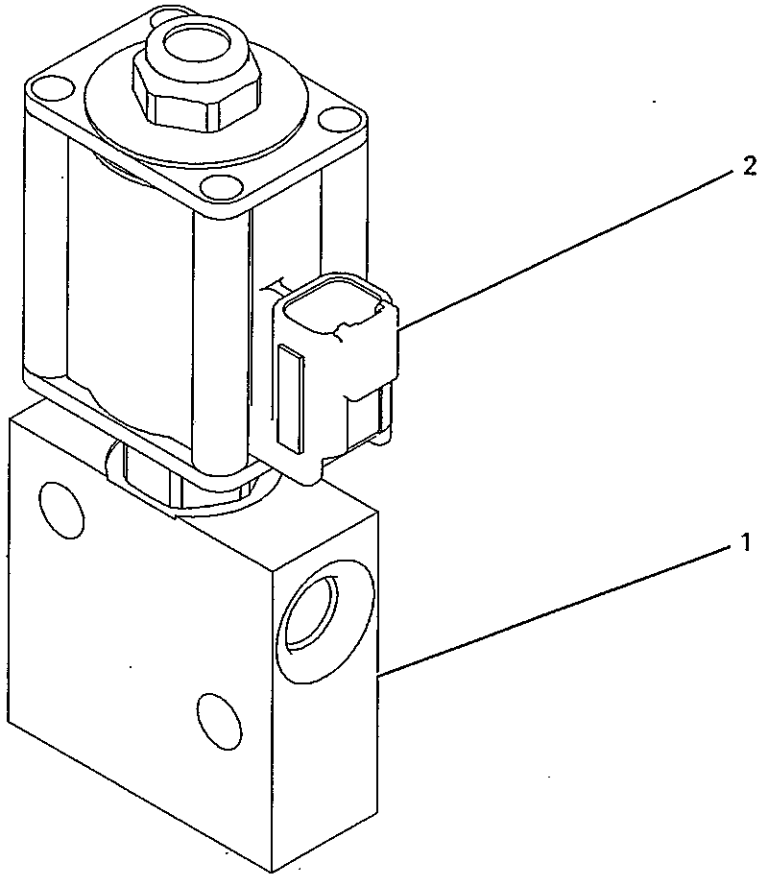


GRAPHIC #1

**<END>**

g00714048

# 115-9328 VALVE GP-DIVERTER–RIDE CONTROL

S/N: JMS1-UP

PART OF 144-5728 CONTROL & LINES GP-RIDE

AN ATTACHMENT

SMCS-5066

i01872323

| NOTE | REF NO | GRAPHIC REF | PART NUMBER | QTY | PART NAME 1 2 3 4 5 6 (PRODUCT LEVEL) | SEE PAGE |
|---|---|---|---|---|---|---|
| | 1 | 1 | 1S-1642 | 1 | SPRING | |
| Y | 2 | 1 | 152-8340 | 1 | VALVE GP-SOLENOID (24-VOLT) (RIDE CONTROL) | 733 |
| | 3 | 1 | 9S-9334 | 2 | PLUG (RIDE CONTROL) | |
| | 4 | 1 | 7M-8485 | 1 | SEAL-O-RING | |
| Y | 5 | 1 | 4T-1860 | 1 | VALVE GP-SHUTTLE | 581 |
| | 6 | 1 | 6T-6052 | 1 | PLUG-ORIFICE | |
| | 7 | 1 | 8J-0426 | 1 | PLUG | |
| | 8 | 1 | 197-3295 | 4 | FLANGE-HALF | |
| M | 9 | 1 | 8T-4183 | 8 | BOLT (M12X1.75X40-MM) | |
| | 10 | 1 | 9S-4180 | 4 | PLUG | |
| | 11 | 1 | 4J-7533 | 4 | SEAL-O-RING | |
| | 12 | 1 | 4J-0522 | 2 | SEAL-O-RING | |
| | 13 | 1 | 7X-3392 | 8 | WASHER-HARD (13.5X22.5X3-MM THK) | |
| | 14 | 1 | 5H-4020 | 2 | COVER | |
| | 15 | 1 | 8C-3206 | 4 | FLANGE-HALF | |
| M | 16 | 1 | 8T-4196 | 4 | BOLT (M10X1.5X35-MM) | |
| | 17 | 1 | 8T-4121 | 4 | WASHER-HARD (11X21X2.5-MM THK) | |
| | 18 | 1 | 5H-4019 | 2 | COVER | |
| | 19 | 1 | 4J-0520 | 2 | SEAL-O-RING | |

M-METRIC PART
Y-SEPARATE ILLUSTRATION

## 115-9328 VALVE GP-DIVERTER *(contd.)*

i01872323

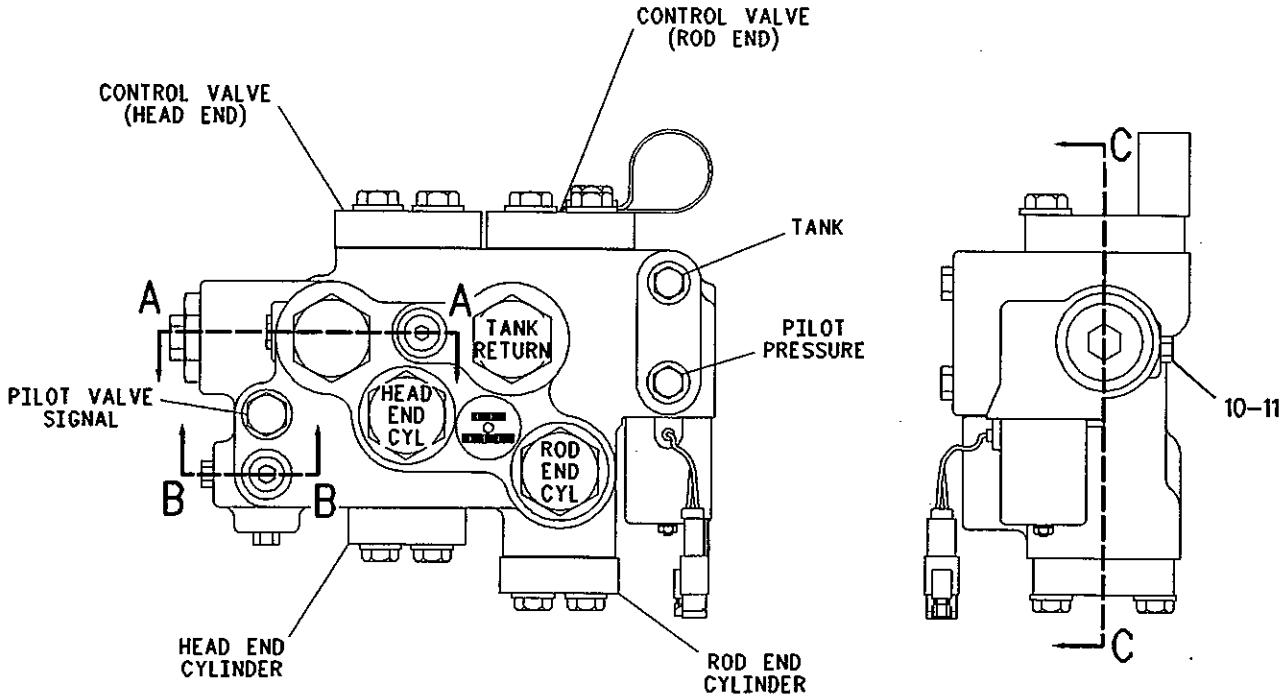


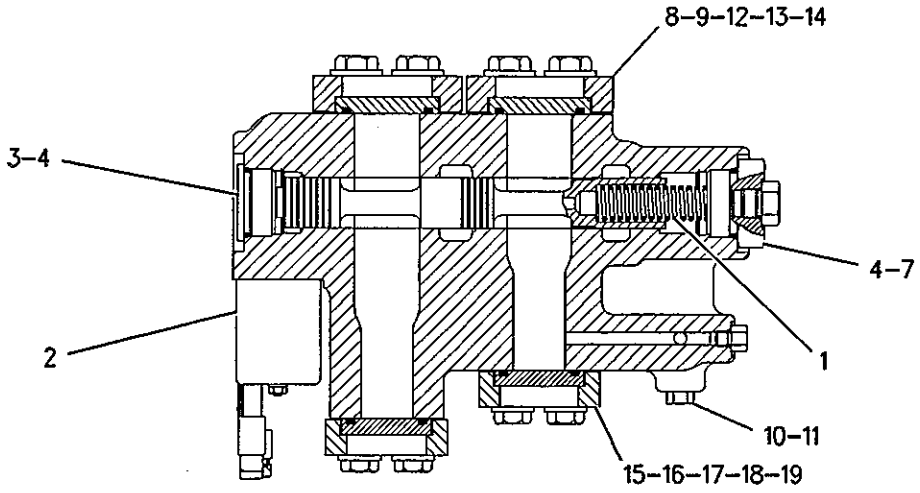


SECTION C-C

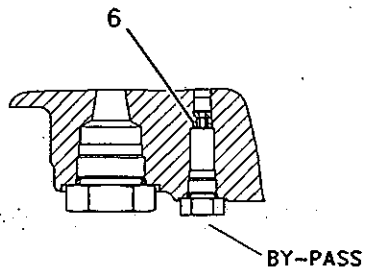


SECTION A-A

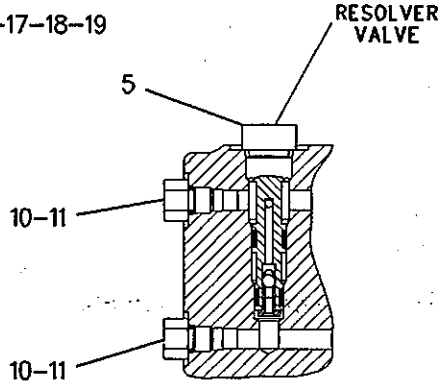


SECTION B-B

GRAPHIC #1

<END>

g00633674

# HYDRAULIC SYSTEM

## *213-1040* VALVE GP-FAN REVERSING

**S/N: JMS1-UP**

**PART OF 250-3381 LINES GP-HYDRAULIC FAN**

**AN ATTACHMENT**

**SMCS-138R** **i02283978**

| NOTE | REF NO | GRAPHIC REF | PART NUMBER | QTY | PART NAME 1 2 3 4 5 6 (PRODUCT LEVEL) | SEE PAGE |
|---|---|---|---|---|---|---|
| Y | 1 | 1 | **128-2780** | 2 | VALVE GP-CHECK (FAN REVERSING) | 697 |
| Y | 2 | 1 | **152-8340** | 1 | VALVE GP-SOLENOID (24-VOLT) (FAN REVERSING) | 733 |
| | 3 | 1 | **178-9037** | 2 | VALVE GP-DIVERTER (FAN REVERSING) | |
| | | | | | (EACH INCLUDES) | |
| | | 1 | **4K-1388** | 1 | SEAL-O-RING | |
| | | 1 | **188-6298** | 1 | KIT-SEAL (DIVERTER VALVE) | |
| | 4 | 1 | **3J-1907** | 6 | SEAL-O-RING | |
| | 6 | 1 | **3K-0360** | 2 | SEAL-O-RING | |
| | 7 | 1 | **4J-7533** | 11 | SEAL-O-RING | |
| | 8 | 1 | **9S-8001** | 11 | PLUG | |
| | 9 | 1 | **239-0617** | 1 | VALVE GP-CHECK | |
| J | 9A | 1 | **095-1513** | 1 | SEAL-O-RING | |
| J | 9B | 1 | **3H-0442** | 1 | SEAL-O-RING | |
| | 10 | 1 | **9S-8004** | 6 | PLUG | |
| | 11 | 1 | **9S-8005** | 2 | PLUG | |
| Y | 12 | 1 | **188-9899** | 3 | VALVE GP-RELIEF (FAN REVERSING) | 728 |
| | | | | | AVAILABLE REPAIR KIT(S): | |
| J | | | **239-5157** | 1 | KIT-SEAL (CHECK VALVE) | |
| | | | | | INCLUDES SEAL-O-RINGS, BACK-UP-RING | |

J-KIT MARKED J SERVICES PART MARKED J
Y-SEPARATE ILLUSTRATION

## *213-1040* VALVE GP-FAN REVERSING *(contd.)*

i02283978

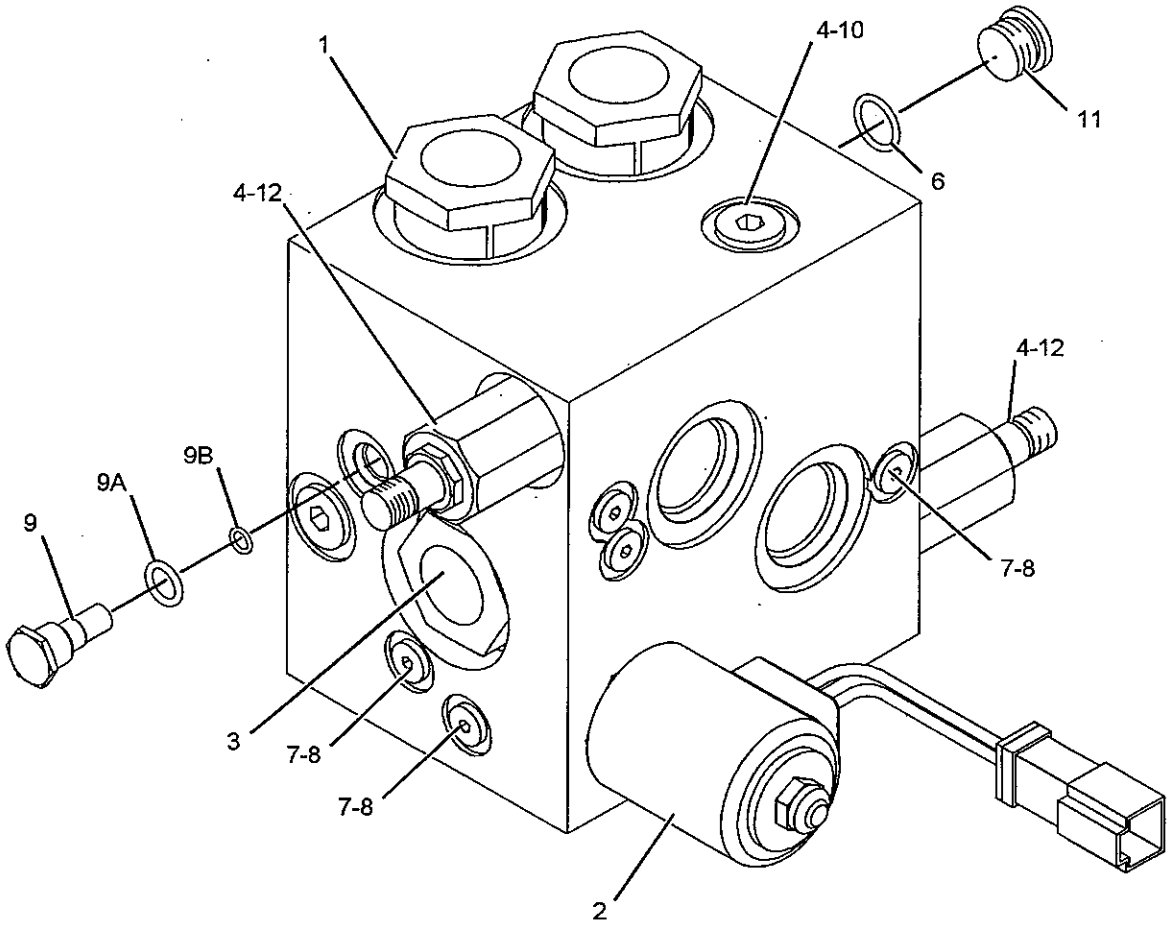


GRAPHIC #1

**<END>**

g01143444

# HYDRAULIC SYSTEM

## *154-4982* VALVE GP-LOWERING CONTROL

**S/N: JMS1-UP**

**DEAD BATTERY, LIFT ARM LOWER**

**PART OF 235-1303 HYDRAULIC AR-2 VALVE**

**SMCS-5147**

**i02199549**

| NOTE | REF NO | GRAPHIC REF | PART NUMBER | QTY | PART NAME 1 2 3 4 5 6 (PRODUCT LEVEL) | SEE PAGE |
|---|---|---|---|---|---|---|
| Y | 1 | 1 | **112-1817** | 1 | VALVE GP-MANUAL | 710 |
| | 2 | 1 | **122-6177** | 1 | PLATE | |
| I | 3 | 1 | **168-9197** | 1 | HOSE AS | |
| C | 4 | 1 | **187-6252** | 1 | TUBE AS | |
| C | 5 | 1 | **187-6257** | 1 | TUBE AS | |
| | 7 | 1 | **4B-4863** | 4 | WASHER (4.7X11X1.2-MM THK) | |
| | 8 | 1 | **6V-8397** | 1 | SEAL-O-RING | |
| | 9 | 1 | *155-7327* | 1 | CONNECTOR AS | |
| | | 1 | **3J-1907** | 1 | SEAL-O-RING | |
| | | 1 | **5H-8853** | 1 | SEAL-O-RING | |
| | | 1 | **6V-8636** | 1 | CONNECTOR | |
| | 10 | 1 | *148-8378* | 2 | ELBOW AS | |
| | | | | | (EACH INCLUDES) | |
| | | 1 | **3J-1907** | 1 | SEAL-O-RING | |
| | | 1 | **6V-8397** | 1 | SEAL-O-RING | |
| | | 1 | **6V-8724** | 1 | ELBOW | |
| | 11 | 1 | *148-8367* | 1 | ELBOW AS | |
| | | 1 | **6V-8397** | 1 | SEAL-O-RING | |
| | | 1 | **6V-9850** | 1 | ELBOW | |
| C | 12 | 1 | **7B-1597** | 2 | CLIP | |
| M | 13 | 1 | **7Y-3173** | 4 | SCREW-BUTTON HEAD (M4X0.7X12-MM) | |
| | 14 | 1 | **8T-4121** | 3 | WASHER-HARD (11X21X2.5-MM THK) | |
| M | 15 | 1 | **8T-4137** | 3 | BOLT (M10X1.5X20-MM) | |

C-CHANGE FROM PREVIOUS TYPE
I-REFER TO HYDRAULIC INFORMATION SYSTEM
M-METRIC PART
Y-SEPARATE ILLUSTRATION

## *154-4982* VALVE GP-LOWERING CONTROL *(contd.)*

i02199549

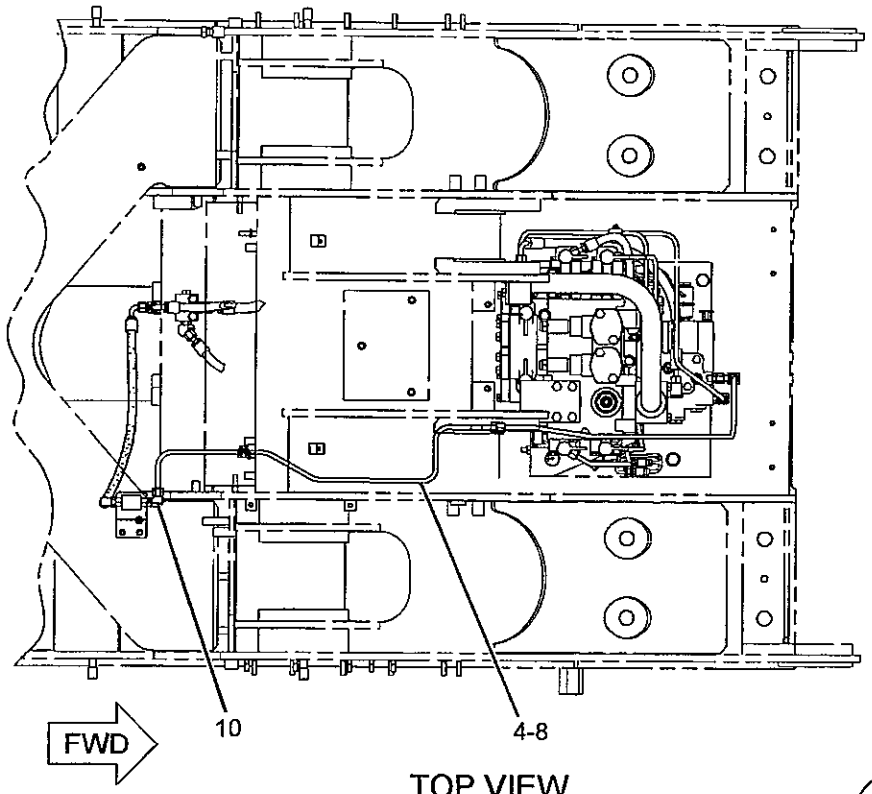


TOP VIEW

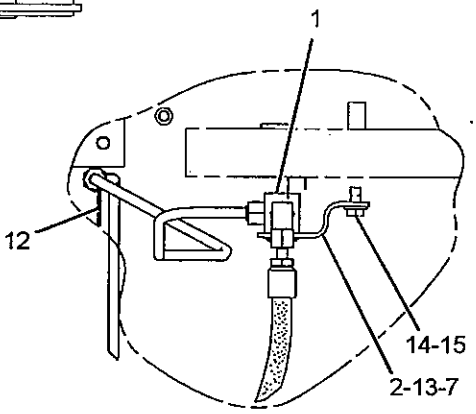


VIEW A-A

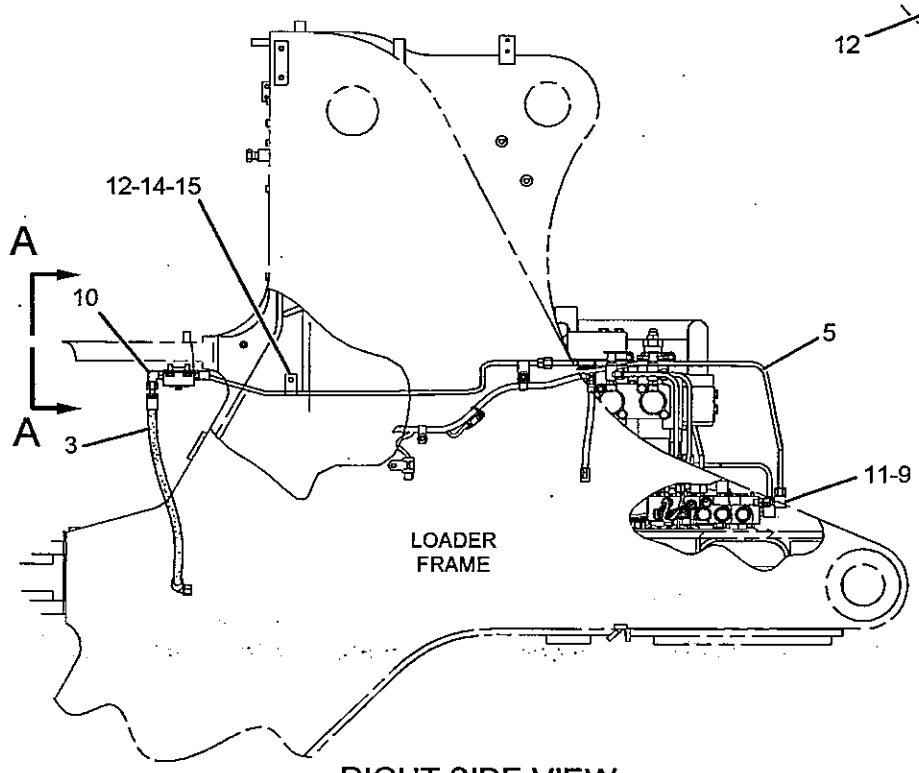


RIGHT SIDE VIEW

GRAPHIC #1

<END>

g01111278

# HYDRAULIC SYSTEM

## 114-2787 VALVE GP-MAIN CONTROL–2-FUNCTION

S/N: JMS1-UP

PART OF 206-9057, 206-9058 VALVE & MTG GP-MAIN CONTROL
ALSO AN ATTACHMENT

SMCS-5051

i02109800

| NOTE | REF NO | GRAPHIC REF | PART NUMBER | QTY | PART NAME 1 2 3 4 5 6 (PRODUCT LEVEL) | SEE PAGE |
|---|---|---|---|---|---|---|
| Y | 1 | 1 | 4T-4933 | 1 | VALVE GP-RELIEF (LINE, TILT CYL ROD END PORT) | 723 |
| | 2 | 1 | 4T-9311 | 2 | HOUSING | |
| Y | 3 | 1 | 4T-4932 | 1 | VALVE GP-RELIEF (LINE, TILT CYL HEAD END PORT) | 722 |
| | 4 | 1 | 1H-9696 | 2 | SEAL-O-RING | |
| M | 5 | 1 | 8T-4198 | 4 | BOLT (M10X1.5X100-MM) | |
| | 6 | 1 | 4T-9312 | 2 | HOUSING | |
| | 7 | 1 | 1U-1577 | 1 | PLUG | |
| | | 1 | 6K-6307 | 1 | SEAL-O-RING | |
| | 8 | 1 | 004-1963 | 2 | SEAL-O-RING | |
| | 9 | 1 | 4J-0522 | 1 | SEAL-O-RING | |
| | | 1 | 3G-4117 | 1 | COVER | |
| M | 10 | 1 | 8T-4192 | 2 | BOLT (M12X1.75X25-MM) | |
| M | 11 | 1 | 8T-4182 | 4 | BOLT (M10X1.5X45-MM) | |
| | 12 | 1 | 8T-4121 | 8 | WASHER-HARD (11X21X2.5-MM THK) | |
| | 13 | 1 | 3K-0360 | 1 | SEAL-O-RING | |
| | | 1 | 9S-8005 | 1 | PLUG | |
| | 14 | 1 | 1U-0323 | 3 | PLUG AS | |
| | | 1 | 7S-8491 | 3 | SPRING | |
| | | 1 | 2S-4078 | 3 | SEAL-O-RING | |
| | | 1 | 7J-7423 | 3 | VALVE (MAKEUP) | |
| | 15 | 1 | 7C-6467 | 3 | PLUG | |
| | 16 | 1 | 8T-4223 | 2 | WASHER-HARD (13.5X25.5X3-MM THK) | |
| | 17 | 1 | 1U-1578 | 1 | VALVE (VENTED MAKEUP) | |
| | 18 | 1 | 1J-8960 | 1 | SPRING | |
| Y | 19 | 1 | 114-2789 | 1 | VALVE GP-RELIEF (MAIN) | 727 |
| M | 20 | 1 | 099-4691 | 2 | BOLT-LOCKING (M12X1.75X25-MM) | |
| | 21 | 1 | 162-9206 | 2 | SPRING | |
| | 22 | 1 | 4T-4267 | 4 | RETAINER | |
| B | 23 | 1 | 8J-1898 | 16 | SHIM (0.01-IN THK) | |
| B | 24 | 1 | 1U-0471 | 10 | SHIM (0.25-MM THK) | |
| B | 25 | 1 | 1U-0470 | 4 | SHIM (0.178-MM THK) | |
| | 26 | 1 | 3G-8991 | 2 | SPRING | |

B-USE AS REQUIRED
M-METRIC PART
Y-SEPARATE ILLUSTRATION

## 114-2787 VALVE GP-MAIN CONTROL *(contd.)*

i02109800

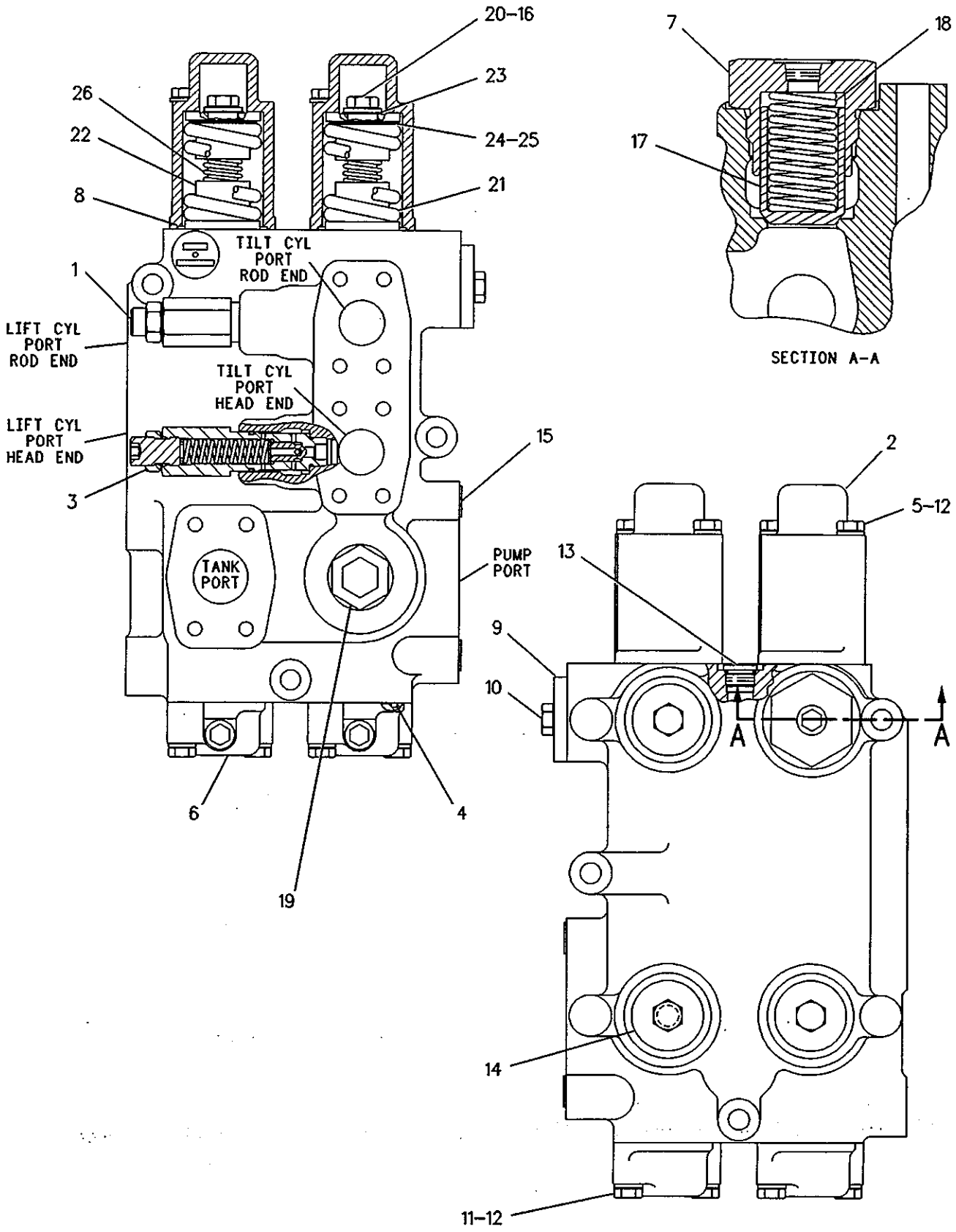


GRAPHIC #1

<END>

g00122425

# HYDRAULIC SYSTEM

## 114-2788 VALVE GP-MAIN CONTROL–3-FUNCTION

S/N: JMS1-UP

PART OF 206-9059, 206-9060 VALVE & MTG GP-MAIN CONTROL AN ATTACHMENT

SMCS-5051

i02109803

| NOTE | REF NO | GRAPHIC REF | PART NUMBER | QTY | PART NAME 1 2 3 4 5 6 (PRODUCT LEVEL) | SEE PAGE |
|---|---|---|---|---|---|---|
| Y | 1 | 1 | 114-2789 | 1 | VALVE GP-RELIEF (MAIN) | 727 |
| | 2 | 1 | 4B-4158 | 1 | SCREW-DRIVE (3/16X0.25-IN) | |
| | 3 | 1 | 4T-9311 | 3 | HOUSING | |
| | 4 | 1 | 4J-0522 | 2 | SEAL-O-RING | |
| Y | 5 | 1 | 4T-6103 | 1 | VALVE GP-RELIEF (LINE, TILT CYL ROD END PORT) | 726 |
| | 6 | 1 | 1H-9696 | 3 | SEAL-O-RING | |
| | 7 | 1 | 4J-0523 | 1 | SEAL-O-RING | |
| | 8 | 1 | 3G-4135 | 1 | PLUG | |
| | 9 | 1 | 7M-8485 | 1 | SEAL-O-RING | |
| Y | 10 | 1 | 118-5095 | 1 | VALVE GP-CONTROL (AUXILLARY) | 698 |
| | 11 | 1 | 9S-8005 | 1 | PLUG | |
| | 12 | 1 | 3K-0360 | 1 | SEAL-O-RING | |
| M | 13 | 1 | 7X-2551 | 5 | BOLT (M12X1.75X200-MM) | |
| | 14 | 1 | 8T-4121 | 12 | WASHER-HARD (11X21X2.5-MM THK) | |
| M | | 1 | 8T-4179 | 20 | BOLT (M12X1.75X20-MM) | |
| | 15 | 1 | 9S-4182 | 1 | PLUG | |
| | 16 | 1 | 3J-7354 | 1 | SEAL-O-RING | |
| | 17 | 1 | 1U-0323 | 4 | PLUG AS | |
| | | | | | (EACH INCLUDES) | |
| | | 1 | 1U-0322 | 1 | BEARING-SLEEVE | |
| | | 1 | 3G-2683 | 1 | PLUG | |
| | 18 | 1 | 2S-4078 | 4 | SEAL-O-RING | |
| | 19 | 1 | 7J-7423 | 4 | VALVE (MAKEUP) | |
| | 20 | 1 | 7S-8491 | 4 | SPRING | |
| M | 21 | 1 | 8T-4198 | 6 | BOLT (M10X1.5X100-MM) | |
| Y | 22 | 1 | 4T-4934 | 1 | VALVE GP-RELIEF (LINE, AUX CYL HEAD END PORT) | 724 |
| Y | 23 | 1 | 4T-4162 | 1 | VALVE GP-RELIEF (LINE, AUX CYL ROD END PORT) | 721 |
| | 24 | 1 | 004-1963 | 3 | SEAL-O-RING | |
| M | 25 | 1 | 8T-4182 | 6 | BOLT (M10X1.5X45-MM) | |
| | 26 | 1 | 4T-9312 | 3 | HOUSING | |
| | 27 | 1 | 1U-1577 | 1 | PLUG | |
| | 28 | 1 | 6K-6307 | 1 | SEAL-O-RING | |
| | 29 | 1 | 1J-8960 | 1 | SPRING | |
| | 30 | 1 | 1U-1578 | 1 | VALVE (VENTED, MAKEUP) | |
| Y | 31 | 1 | 4T-4935 | 1 | VALVE GP-RELIEF (LINE, TILT CYL HEAD END PORT) | 725 |
| | 32 | 1 | 130-2974 | 1 | BODY-VALVE | |
| | 33 | 1 | 3G-8991 | 2 | SPRING | |
| | 34 | 1 | 162-9206 | 2 | SPRING | |
| | 35 | 1 | 4T-4267 | 4 | RETAINER | |
| M | 36 | 1 | 099-4691 | 2 | BOLT-LOCKING (M12X1.75X25-MM) | |
| | 37 | 1 | 8T-4223 | 7 | WASHER-HARD (13.5X25.5X3-MM THK) | |
| B | 38 | 1 | 8J-1898 | 16 | SHIM (0.01-IN THK) | |
| B | 39 | 1 | 1U-0471 | 10 | SHIM (0.25-MM THK) | |
| B | 40 | 1 | 1U-0470 | 4 | SHIM (0.178-MM THK) | |

B-USE AS REQUIRED
M-METRIC PART
Y-SEPARATE ILLUSTRATION

## 114-2788 VALVE GP-MAIN CONTROL *(contd.)*

i02109803

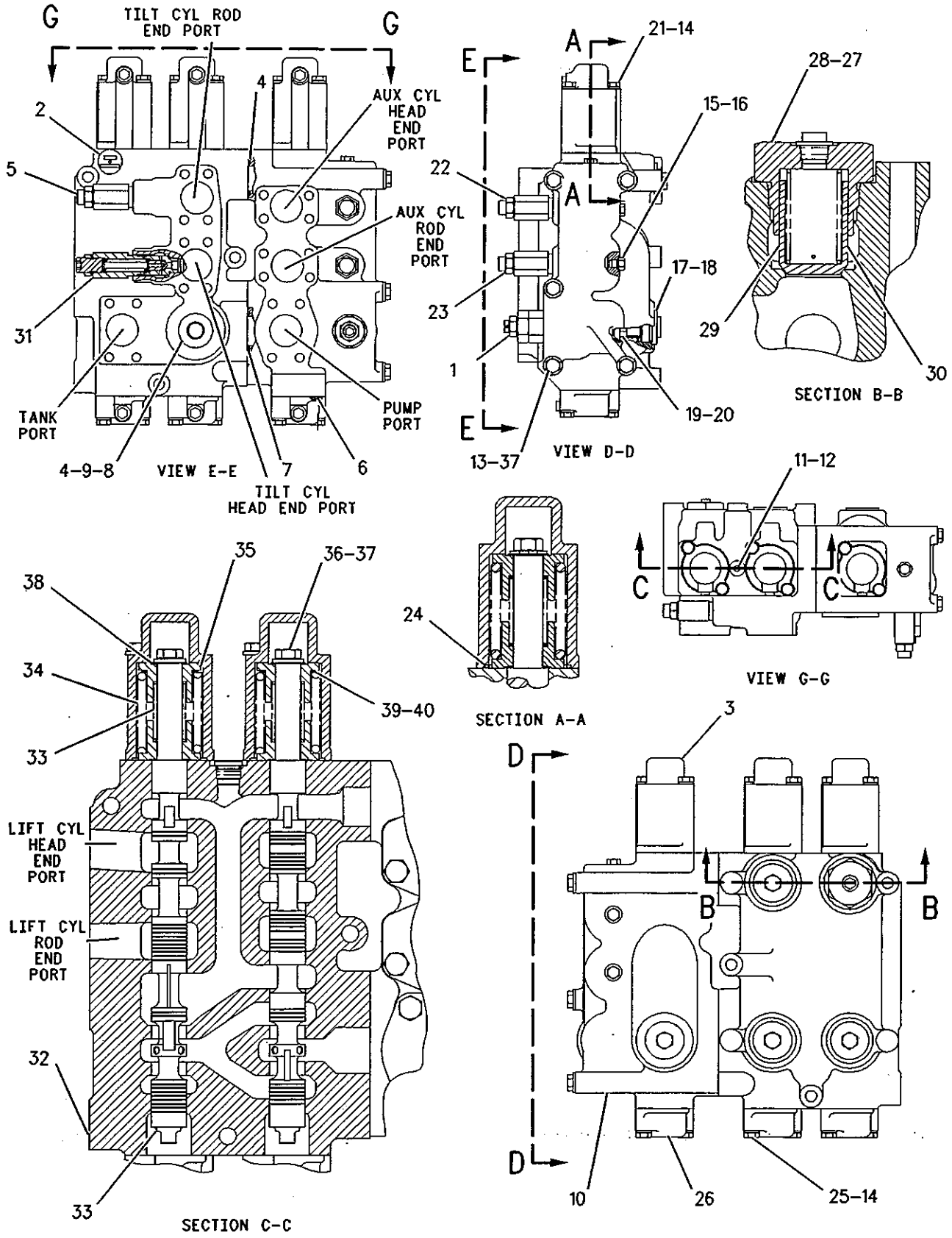


GRAPHIC #1

<END>

g00632475

# 112-1817 VALVE GP-MANUAL–LOWERING CONTROL

**S/N: JMS1-UP**

**PART OF 154-4982 VALVE GP-LOWERING CONTROL**

**SMCS-5001, 5130, 5147**

i02267714

| NOTE | PART NUMBER | QTY | PART NAME 1 2 3 4 5 6 (PRODUCT LEVEL) | SEE PAGE |
|---|---|---|---|---|
| J | *202-0671* | 1 | VALVE GP-MANUAL (MANUAL LOWERING CONTROL) | |
| | | | –OR– | |
| J | *202-0673* | 1 | VALVE GP-MANUAL (MANUAL LOWERING CONTROL) | |
| | | | –OR– | |
| J | *202-0674* | 1 | VALVE GP-MANUAL (MANUAL LOWERING CONTROL) | |
| | | | AVAILABLE REPAIR KIT(S): | |
| J | **112-9861** | 1 | KIT-SEAL (DEAD ENGINE LOWERING) | |
| | | | (INCLUDES SEALS, CONNECTORS & THRUST RING) | |

J-KIT MARKED J SERVICES PARTS MARKED J

**<END>**

# HYDRAULIC SYSTEM

## *206-5186* VALVE GP-PILOT–OIL MANIFOLD, 2-FUNCTION

**S/N: JMS1-UP**

**PART OF 206-9057, 206-9058 VALVE & MTG GP-MAIN CONTROL**
**ALSO AN ATTACHMENT**

**SMCS-5059** **i02279547**

| NOTE | REF NO | GRAPHIC REF | PART NUMBER | QTY | PART NAME 1 2 3 4 5 6 (PRODUCT LEVEL) | SEE PAGE |
|---|---|---|---|---|---|---|
| | 1 | 1 | *148-8407* | 10 | PLUG AS | |
| | | | | | (EACH INCLUDES) | |
| | | 1 | **3J-1907** | 1 | SEAL-O-RING | |
| | | 1 | **9S-4191** | 1 | PLUG | |
| Y | 2 | 1 | **114-1268** | 1 | VALVE GP-SEQUENCE (VENT) | 729 |
| Y | 3 | 1 | **203-4157** | 1 | VALVE GP-SOLENOID (24-VOLT) (HYDRAULIC LOCKOUT) | 736 |
| | 4 | 1 | *162-0177* | 15 | PLUG AS | |
| | | | | | (EACH INCLUDES) | |
| | | 1 | **3J-1907** | 1 | SEAL-O-RING | |
| | | 1 | **9S-8004** | 1 | PLUG | |
| | 5 | 1 | **113-0283** | 1 | BODY | |
| Y | 6 | 1 | **252-8038** | 1 | VALVE GP-PRESSURE REDUCING (PILOT) | 717 |
| Y | 7 | 1 | **252-8039** | 1 | VALVE GP-PRESSURE REDUCING (PILOT) | 718 |
| J | 8 | 1 | **174-4913** | 4 | VALVE GP-SOLENOID (24-VOLT) (PILOT PROPORTIONING) | |
| | | | | | (EACH INCLUDES) | |
| | | 1 | **145-1144** | 1 | COIL AS | |
| | | 1 | **164-2108** | 1 | WASHER (13.03X25.4X2.38-MM THK) | |
| | | 1 | **218-2373** | 1 | NUT (1/2-28-THD) | |
| Y | 10 | 1 | **6E-3373** | 1 | VALVE GP-SHUTTLE | 730 |
| | | | | | AVAILABLE REPAIR KIT(S): | |
| J | | | **108-2148** | 1 | KIT-SEAL (SOLENOID VALVE) (PILOT PROPORTIONING VALVE) | |

J-KIT MARKED J SERVICES PART MARKED J
Y-SEPARATE ILLUSTRATION

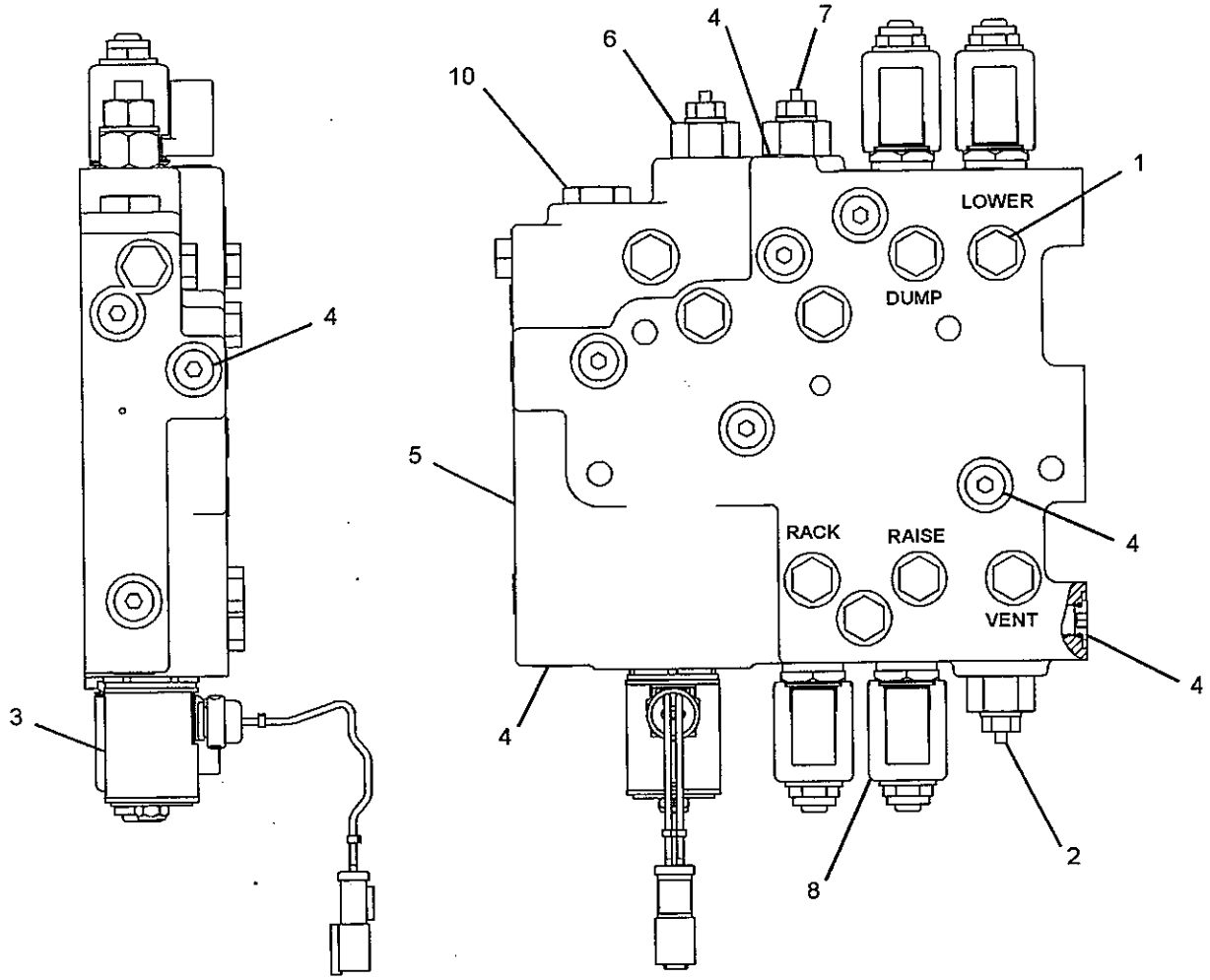


GRAPHIC #1

**<END>**

g01142279

# 206-5191 VALVE GP-PILOT–OIL MANIFOLD, 3-FUNCTION

S/N: JMS1-UP

PART OF 206-9059, 206-9060 VALVE & MTG GP-MAIN CONTROL

AN ATTACHMENT

SMCS-5059

i02113378

| NOTE | REF NO | GRAPHIC REF | PART NUMBER | QTY | PART NAME 1 2 3 4 5 6 (PRODUCT LEVEL) | SEE PAGE |
|---|---|---|---|---|---|---|
| | 1 | 1 | **9S-8004** | 12 | PLUG | |
| Y | 2 | 1 | **114-1268** | 1 | VALVE GP-SEQUENCE | 729 |
| Y | 3 | 1 | **203-4157** | 1 | VALVE GP-SOLENOID (24-VOLT) (HYUDRAULIC LOCKOUT) | 736 |
| | 4 | 1 | **9S-4191** | 12 | PLUG | |
| | 5 | 1 | **113-0283** | 1 | BODY | |
| Y | 6 | 1 | **114-1266** | 1 | VALVE GP-PRESSURE REDUCING (PILOT) | 715 |
| Y | 7 | 1 | **114-1267** | 1 | VALVE GP-PRESSURE REDUCING (PILOT) | 716 |
| | 8 | 1 | **114-9106** | 1 | BODY-VALVE | |
| J | 9 | 1 | **174-4913** | 6 | VALVE GP-SOLENOID (24-VOLT) (PILOT PROPORTIONING) | |
| | | | | | (EACH INCLUDES) | |
| | | 1 | **145-1144** | 1 | COIL AS | |
| | | 1 | **164-2108** | 1 | WASHER (13.03X25.4X2.38-MM THK) | |
| | | 1 | **218-2373** | 1 | NUT (1/2-28-THD) | |
| | 10 | 1 | **3J-1907** | 24 | SEAL-O-RING | |
| | 11 | 1 | **4M-8303** | 3 | SEAL-O-RING | |
| Y | 12 | 1 | **6E-3373** | 1 | VALVE GP-SHUTTLE | 730 |
| M | 13 | 1 | **8T-4121** | 3 | WASHER-HARD (11X21X2.5-MM THK) | |
| M | 14 | 1 | **8T-6466** | 3 | BOLT (M10X1.50X60-MM) | |
| | | | | | AVAILABLE REPAIR KIT(S): | |
| J | | | **108-2148** | 1 | KIT-SEAL (PILOT PROPORTIONING VALVE) | |

J-GROUP MARKED J INCLUDES KIT MARKED J
M-METRIC PART
Y-SEPARATE ILLUSTRATION

## 206-5191 VALVE GP-PILOT *(contd.)*

i02113378

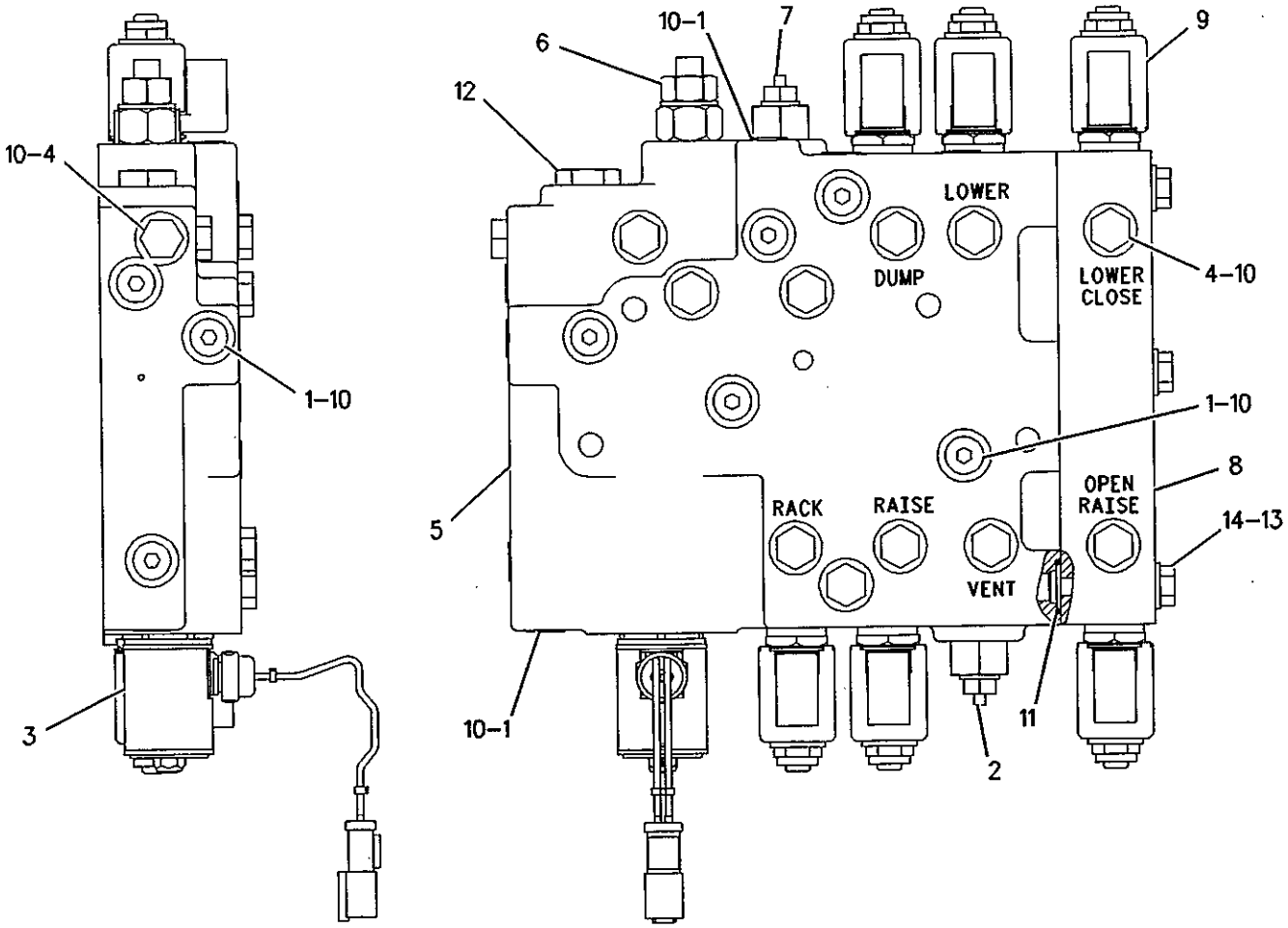


GRAPHIC #1

<END>

g00894765

# 114-1266 VALVE GP-PRESSURE REDUCING

S/N: JMS1-UP
PART OF 206-5191 VALVE GP-PILOT
FIELD REPLACEMENT ORDER 252-8038–PAGE 717
AN ATTACHMENT

SMCS-5117

i01464052

| NOTE | REF NO | GRAPHIC REF | PART NUMBER | QTY | PART NAME 1 2 3 4 5 6 (PRODUCT LEVEL) | SEE PAGE |
|---|---|---|---|---|---|---|
| | 1 | 1 | 2M-9780 | 1 | SEAL-O-RING | |
| | 2 | 1 | 6V-3505 | 1 | RING-BACKUP | |
| | 3 | 1 | 8C-3132 | 1 | SEAL-O-RING | |
| | 4 | 1 | 6E-0410 | 1 | SEAL-O-RING | |
| | 5 | 1 | 5P-2199 | 1 | RING-BACKUP | |

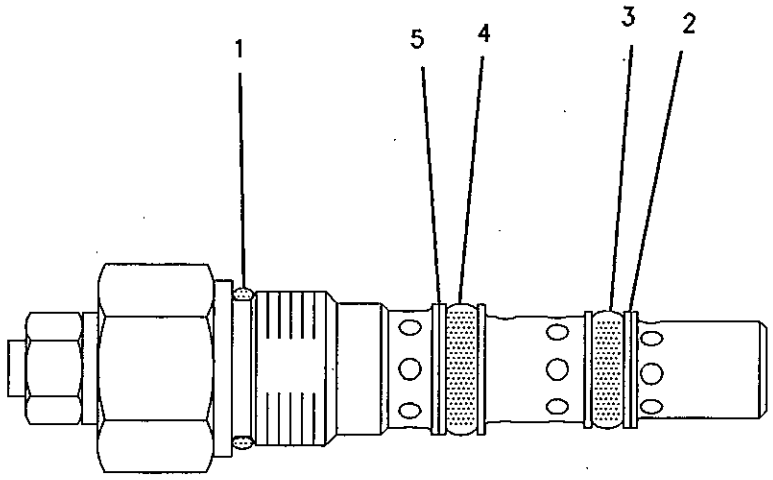


GRAPHIC #1

<END>

g00765123

# 114-1267 VALVE GP-PRESSURE REDUCING

S/N: JMS1-UP

PART OF 144-5330 VALVE GP-DIVERTER, 206-5191 VALVE GP-PILOT, 166-8495 VALVE GP-STEERING

FIELD REPLACEMENT ORDER 252-8039–PAGE 718

ALSO AN ATTACHMENT

SMCS-5117

i02116823

| NOTE | REF NO | GRAPHIC REF | PART NUMBER | QTY | PART NAME 1 2 3 4 5 6 (PRODUCT LEVEL) | SEE PAGE |
|---|---|---|---|---|---|---|
| | 1 | 1 | 2M-9780 | 1 | SEAL-O-RING | |
| | 2 | 1 | 6V-3505 | 1 | RING-BACKUP | |
| | 3 | 1 | 8C-3132 | 1 | SEAL-O-RING | |
| | 4 | 1 | 6E-0410 | 1 | SEAL-O-RING | |
| | 5 | 1 | 5P-2199 | 1 | RING-BACKUP | |

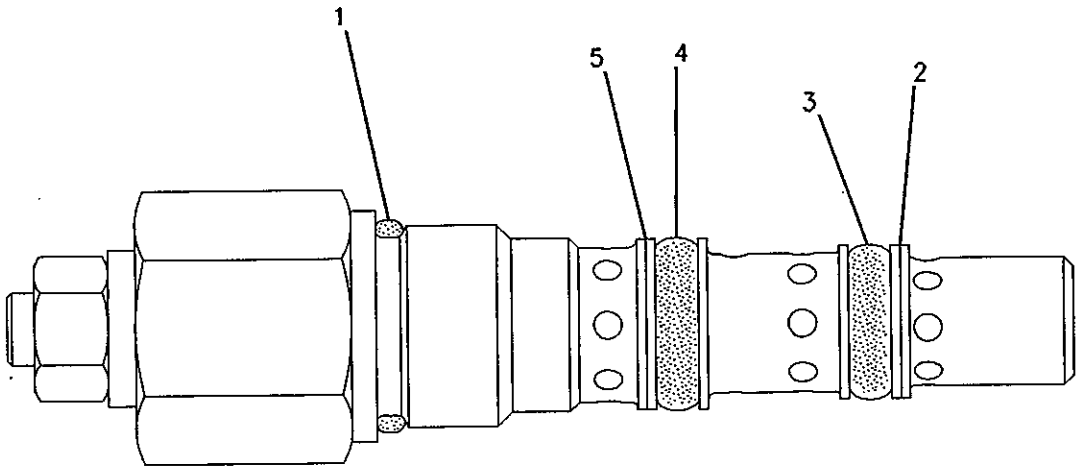


GRAPHIC #1

<END>

g00765132

# 252-8038 VALVE GP-PRESSURE REDUCING

S/N: JMS1-UP
PART OF 206-5186 VALVE GP-PILOT
FIELD REPLACEMENT FOR 114-1266–PAGE 715
ALSO AN ATTACHMENT

SMCS-5117

i02148309

| NOTE | REF NO | GRAPHIC REF | PART NUMBER | QTY | PART NAME 1 2 3 4 5 6 (PRODUCT LEVEL) | SEE PAGE |
|---|---|---|---|---|---|---|
| | 1 | 1 | 2M-9780 | 1 | SEAL-O-RING | |
| | 2 | 1 | 6V-3505 | 1 | RING-BACKUP | |
| | 3 | 1 | 8C-3132 | 1 | SEAL-O-RING | |
| | 4 | 1 | 6E-0410 | 1 | SEAL-O-RING | |
| | 5 | 1 | 5P-2199 | 1 | RING-BACKUP | |

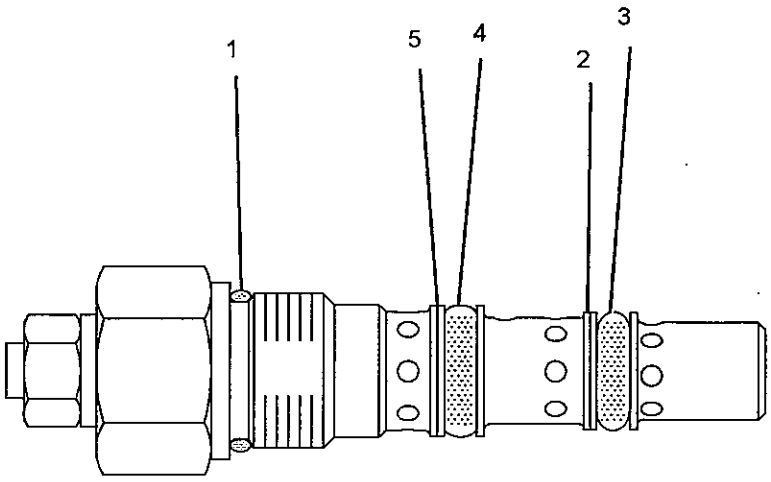


GRAPHIC #1

<END>

g01089904

# HYDRAULIC SYSTEM

## 252-8039 VALVE GP-PRESSURE REDUCING

S/N: JMS1-UP
PART OF 206-5186 VALVE GP-PILOT
FIELD REPLACEMENT FOR 114-1267–PAGE 716
ALSO AN ATTACHMENT

SMCS-5117

i02096589

| NOTE | REF NO | GRAPHIC REF | PART NUMBER | QTY | PART NAME 1 2 3 4 5 6 (PRODUCT LEVEL) | SEE PAGE |
|---|---|---|---|---|---|---|
| | 1 | 1 | 2M-9780 | 1 | SEAL-O-RING | |
| | 2 | 1 | 6V-3505 | 1 | RING-BACKUP | |
| | 3 | 1 | 8C-3132 | 1 | SEAL-O-RING | |
| | 4 | 1 | 6E-0410 | 1 | SEAL-O-RING | |
| | 5 | 1 | 5P-2199 | 1 | RING-BACKUP | |

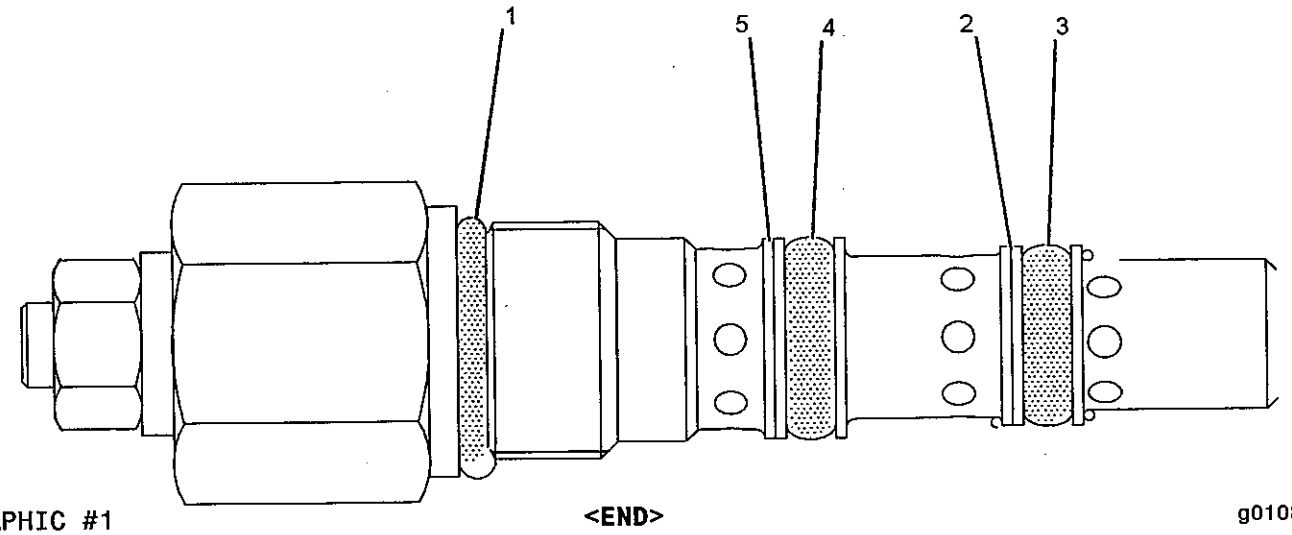


GRAPHIC #1

<END>

g01089464

# 207-0695 VALVE GP-PUMP CONTROL-
## PRESSURE, FLOW COMPENSATOR-HYDRAULIC FAN

S/N: JMS1-UP

PART OF 235-2716 PUMP GP-PISTON

SMCS-5455

i01571780

| NOTE | REF NO | GRAPHIC REF | PART NUMBER | QTY | PART NAME 1 2 3 4 5 6 (PRODUCT LEVEL) | SEE PAGE |
|---|---|---|---|---|---|---|
| | 1 | 1 | 6E-6528 | 6 | SEAL | |
| | 2 | 1 | 6E-6527 | 2 | PLUG | |
| | 3 | 1 | 193-3086 | 1 | RETAINER | |
| | 4 | 1 | 193-3087 | 1 | SPRING | |
| | 5 | 1 | 5P-9262 | 1 | SEAL-O-RING | |
| | 6 | 1 | 033-6043 | 1 | SEAL-O-RING | |
| | 7 | 1 | 6E-3272 | 1 | SEAT | |
| | 8 | 1 | 6E-6540 | 1 | PLUG | |
| | 9 | 1 | 6E-6538 | 2 | NUT-ADJUSTMENT (M8X1 THD) | |
| | 10 | 1 | 6E-6537 | 2 | SCREW-ADJUSTMENT (M8X1X28MM) | |
| | 11 | 1 | 6E-6539 | 2 | NUT-CAP (M8X1 THD) | |
| | 12 | 1 | 6E-3273 | 1 | SEAT | |
| | 13 | 1 | 6E-6536 | 1 | PLUG | |
| | 14 | 1 | 6V-8352 | 1 | SEAL-O-RING | |
| | 15 | 1 | 193-1036 | 1 | SPRING | |
| | 16 | 1 | 6E-3276 | 1 | SPRING | |
| | 17 | 1 | 6E-3269 | 1 | RETAINER-SPRING | |
| | 18 | 1 | 119-0959 | 1 | PLUG-ORIFICE | |
| | 19 | 1 | 105-2145 | 1 | VALVE-ORIFICE | |

## 207-0695 VALVE GP-PUMP CONTROL *(contd.)*

i01571780

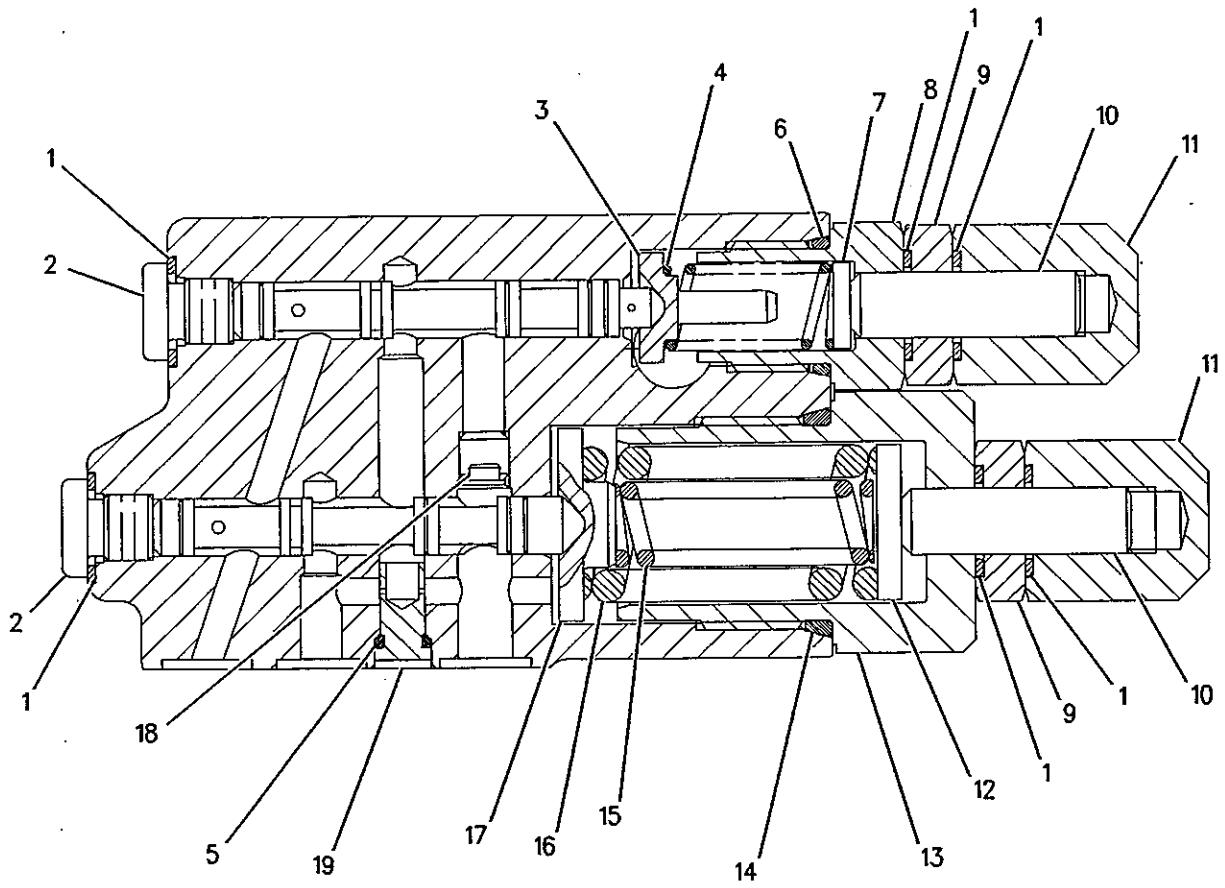


GRAPHIC #1

<END>

g00817754

# 4T-4162 VALVE GP-RELIEF-LINE

S/N: JMS1-UP
DIRECT OPERATED
PART OF 114-2788 VALVE GP-MAIN CONTROL
AN ATTACHMENT

SMCS-5069, 5117

i00174608

| NOTE | REF NO | GRAPHIC REF | PART NUMBER | QTY | PART NAME 1 2 3 4 5 6 (PRODUCT LEVEL) | SEE PAGE |
|---|---|---|---|---|---|---|
| | 1 | 1 | 6E-1835 | 1 | RETAINER AS | |
| | 2 | 1 | 9X-6395 | 1 | NUT (3/4-16-THD) | |
| | 3 | 1 | 3K-0360 | 2 | SEAL-O-RING | |
| | 4 | 1 | 4T-2741 | 1 | SPRING | |
| | 5 | 1 | 7J-9933 | 1 | SEAL-O-RING | |
| | 6 | 1 | 4T-7571 | 1 | PLATE | |
| | 7 | 1 | 6J-6439 | 1 | VALVE-POPPET | |
| | 8 | 1 | 9M-1974 | 1 | WASHER-HARD (8.8X16X2-MM THK) | |

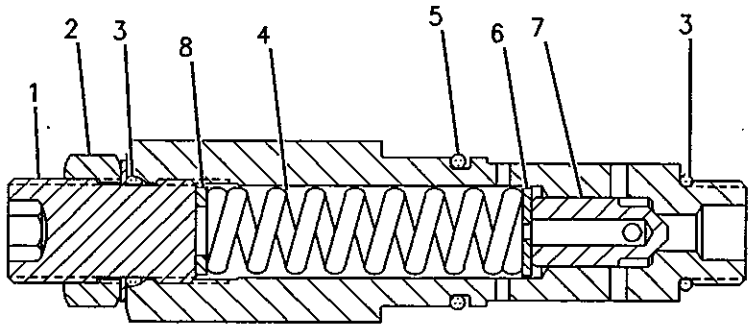


GRAPHIC #1

<END>

g00121933

# HYDRAULIC SYSTEM

## *4T-4932* VALVE GP-RELIEF–LINE

**S/N: JMS1-UP**
**DIRECT OPERATED**
**PART OF 114-2787 VALVE GP-MAIN CONTROL**
**ALSO AN ATTACHMENT**

**SMCS-5069, 5117**

**i00176783**

| NOTE | REF NO | GRAPHIC REF | PART NUMBER | QTY | PART NAME 1 2 3 4 5 6 (PRODUCT LEVEL) | SEE PAGE |
|---|---|---|---|---|---|---|
| | 1 | 1 | 6E-1835 | 1 | RETAINER AS | |
| | 2 | 1 | 9X-6395 | 1 | NUT (3/4-16-THD) | |
| | 3 | 1 | 4T-7571 | 1 | PLATE | |
| | 4 | 1 | 6J-6439 | 1 | VALVE-POPPET | |
| | 5 | 1 | 9M-1974 | 2 | WASHER-HARD (8.8X16X2-MM THK) | |
| | 6 | 1 | 3K-0360 | 2 | SEAL-O-RING | |
| | 7 | 1 | 4T-2741 | 1 | SPRING | |
| | 8 | 1 | 7J-9933 | 1 | SEAL-O-RING | |

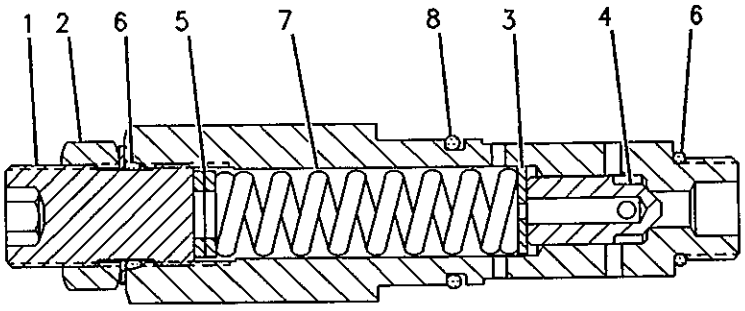


GRAPHIC #1

**<END>**

g00122264

# HYDRAULIC SYSTEM

## *4T-4933* VALVE GP-RELIEF–LINE

**S/N: JMS1-UP**
**DIRECT OPERATED**
**PART OF 114-2787 VALVE GP-MAIN CONTROL**
**ALSO AN ATTACHMENT**

**SMCS-5069, 5117** **i00177296**

| NOTE | REF NO | GRAPHIC REF | PART NUMBER | QTY | PART NAME 1 2 3 4 5 6 (PRODUCT LEVEL) | SEE PAGE |
|---|---|---|---|---|---|---|
| | 1 | 1 | **6E-1835** | 1 | RETAINER AS | |
| | 2 | 1 | **9X-6395** | 1 | NUT (3/4-16-THD) | |
| | 3 | 1 | **7J-9933** | 1 | SEAL-O-RING | |
| | 4 | 1 | **4T-7571** | 1 | PLATE | |
| | 5 | 1 | **6J-6439** | 1 | VALVE-POPPET | |
| | 6 | 1 | **3K-0360** | 2 | SEAL-O-RING | |
| | 7 | 1 | **4T-2741** | 1 | SPRING | |
| | 8 | 1 | **9M-1974** | 1 | WASHER-HARD (8.8X16X2-MM THK) | |

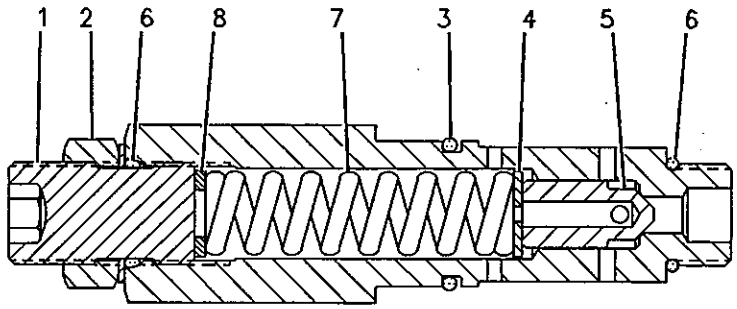


GRAPHIC #1 **<END>** g00122262

# HYDRAULIC SYSTEM

## 4T-4934 VALVE GP-RELIEF-LINE

S/N: JMS1-UP
DIRECT OPERATED
PART OF 114-2788 VALVE GP-MAIN CONTROL
AN ATTACHMENT

SMCS-5069, 5117

i00177307

| NOTE | REF NO | GRAPHIC REF | PART NUMBER | QTY | PART NAME 1 2 3 4 5 6 (PRODUCT LEVEL) | SEE PAGE |
|---|---|---|---|---|---|---|
| | 1 | 1 | 6E-1835 | 1 | RETAINER AS | |
| | 2 | 1 | 9X-6395 | 1 | NUT (3/4-16-THD) | |
| | 3 | 1 | 7J-9933 | 1 | SEAL-O-RING | |
| | 4 | 1 | 4T-7571 | 1 | PLATE | |
| | 5 | 1 | 6J-6439 | 1 | VALVE-POPPET | |
| | 6 | 1 | 3K-0360 | 2 | SEAL-O-RING | |
| | 7 | 1 | 4T-2741 | 1 | SPRING | |

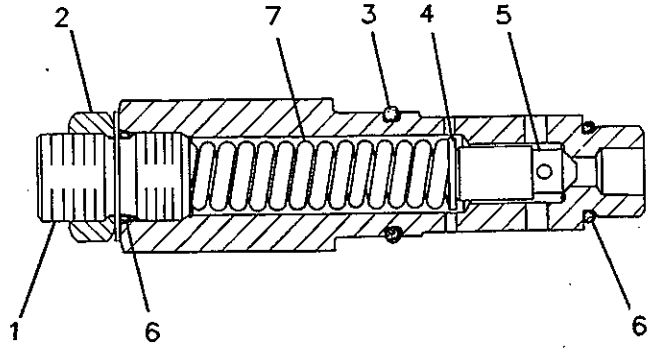


GRAPHIC #1

<END>

g00118895

# HYDRAULIC SYSTEM

## *4T-4935* VALVE GP-RELIEF–LINE

**S/N: JMS1-UP**
**DIRECT OPERATED**
**PART OF 114-2788 VALVE GP-MAIN CONTROL**
**AN ATTACHMENT**

**SMCS-5069, 5117** **i01896761**

| NOTE | REF NO | GRAPHIC REF | PART NUMBER | QTY | PART NAME 1 2 3 4 5 6 (PRODUCT LEVEL) | SEE PAGE |
|---|---|---|---|---|---|---|
| | 1 | 1 | **6E-1835** | 1 | RETAINER AS | |
| | 2 | 1 | **9X-6395** | 1 | NUT (3/4-16-THD) | |
| | 3 | 1 | **7J-9933** | 1 | SEAL-O-RING | |
| | 4 | 1 | **4T-7571** | 1 | PLATE | |
| | 5 | 1 | **6J-6439** | 1 | VALVE-POPPET | |
| | 6 | 1 | **3K-0360** | 2 | SEAL-O-RING | |
| | 7 | 1 | **4T-4942** | 1 | SPRING | |

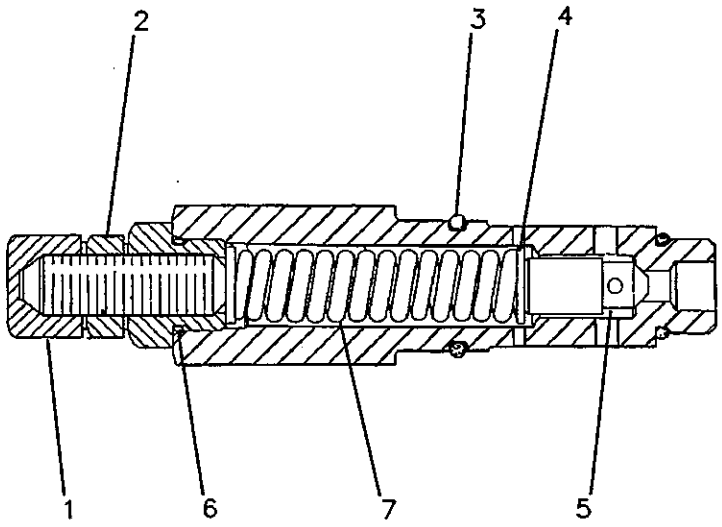


GRAPHIC #1 **<END>** g00082648

# HYDRAULIC SYSTEM

## 4T-6103 VALVE GP-RELIEF-LINE

S/N: JMS1-UP
DIRECT OPERATED
PART OF 114-2788 VALVE GP-MAIN CONTROL
AN ATTACHMENT

SMCS-5069, 5117

i00177437

| NOTE | REF NO | GRAPHIC REF | PART NUMBER | QTY | PART NAME 1 2 3 4 5 6 (PRODUCT LEVEL) | SEE PAGE |
|---|---|---|---|---|---|---|
| | 1 | 1 | 6E-1835 | 1 | RETAINER AS | |
| | 2 | 1 | 9X-6395 | 1 | NUT (3/4-16-THD) | |
| | 3 | 1 | 7J-9933 | 1 | SEAL-O-RING | |
| | 4 | 1 | 4T-7571 | 1 | PLATE | |
| | 5 | 1 | 6J-6439 | 1 | VALVE-POPPET | |
| | 6 | 1 | 3K-0360 | 2 | SEAL-O-RING | |
| | 7 | 1 | 4T-2741 | 1 | SPRING | |

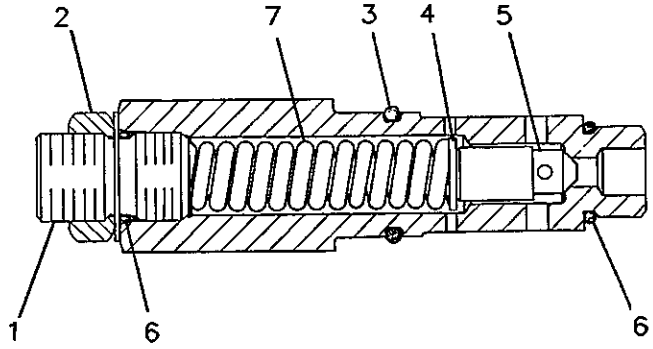


GRAPHIC #1

<END>

g00118895

# 114-2789 VALVE GP-RELIEF–MAIN

S/N: JMS1-UP
PILOT OPERATED
PART OF 114-2787, 114-2788 VALVE GP-MAIN CONTROL
ALSO AN ATTACHMENT

SMCS-5069, 5117

i01747006

| NOTE | REF NO | GRAPHIC REF | PART NUMBER | QTY | PART NAME 1 2 3 4 5 6 (PRODUCT LEVEL) | SEE PAGE |
|---|---|---|---|---|---|---|
| | 1 | 1 | 7M-8485 | 2 | SEAL-O-RING (29.74MM ID) | |
| | 2 | 1 | 4J-0522 | 1 | SEAL-O-RING (37.69MM ID) | |
| | 3 | 1 | 8J-0322 | 1 | SPRING | |
| | 4 | 1 | 3K-0360 | 1 | SEAL-O-RING | |
| | 5 | 1 | 4Y-5812 | 1 | PLATE | |
| | 6 | 1 | 6E-5510 | 1 | RETAINER AS | |
| | 7 | 1 | 9X-6395 | 1 | NUT (3/4-16-THD) | |
| | 8 | 1 | 6E-1127 | 1 | CAP | |
| | 9 | 1 | 8J-0331 | 1 | VALVE | |
| | 10 | 1 | 6E-6138 | 1 | VALVE GP-RELIEF | |
| | | 1 | 8H-3532 | 1 | SPRING-VALVE | |

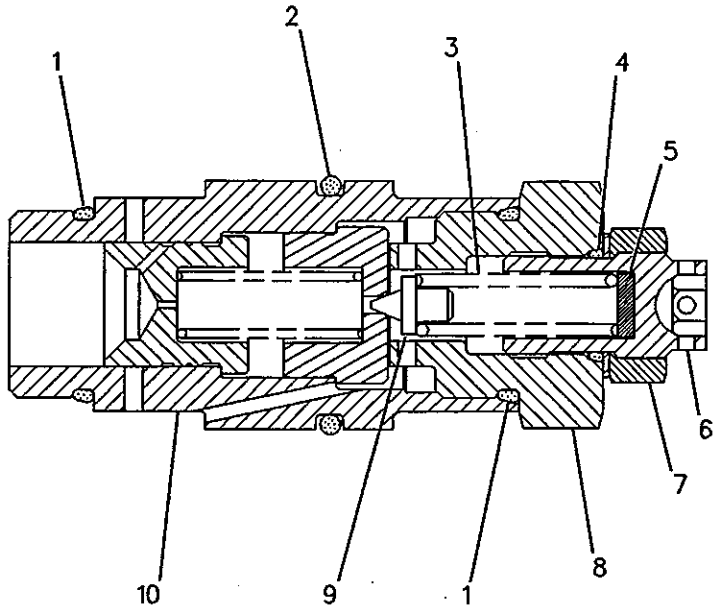


GRAPHIC #1

<END>

g00121035

# 188-9899 VALVE GP-RELIEF–REVERSING FAN

S/N: JMS1-UP

PART OF 213-1040 VALVE GP-FAN REVERSING

AN ATTACHMENT

SMCS-5069, 5117

i01917439

| NOTE | REF NO | GRAPHIC REF | PART NUMBER | QTY | PART NAME 1 2 3 4 5 6 (PRODUCT LEVEL) | SEE PAGE |
|---|---|---|---|---|---|---|
| J | 1 | 1 | 161-6149 | 1 | SEAL-O-RING | |
| J | 2 | 1 | 161-6161 | 2 | RING-BACKUP | |
| J | 3 | 1 | 2M-9780 | 1 | SEAL-O-RING | |
| | | | | | AVAILABLE REPAIR KIT(S): | |
| | | | 133-5545 | | KIT-SEAL (RELIEF VALVE) | |

J-KIT MARKED J INCLUDES PARTS MARKED J

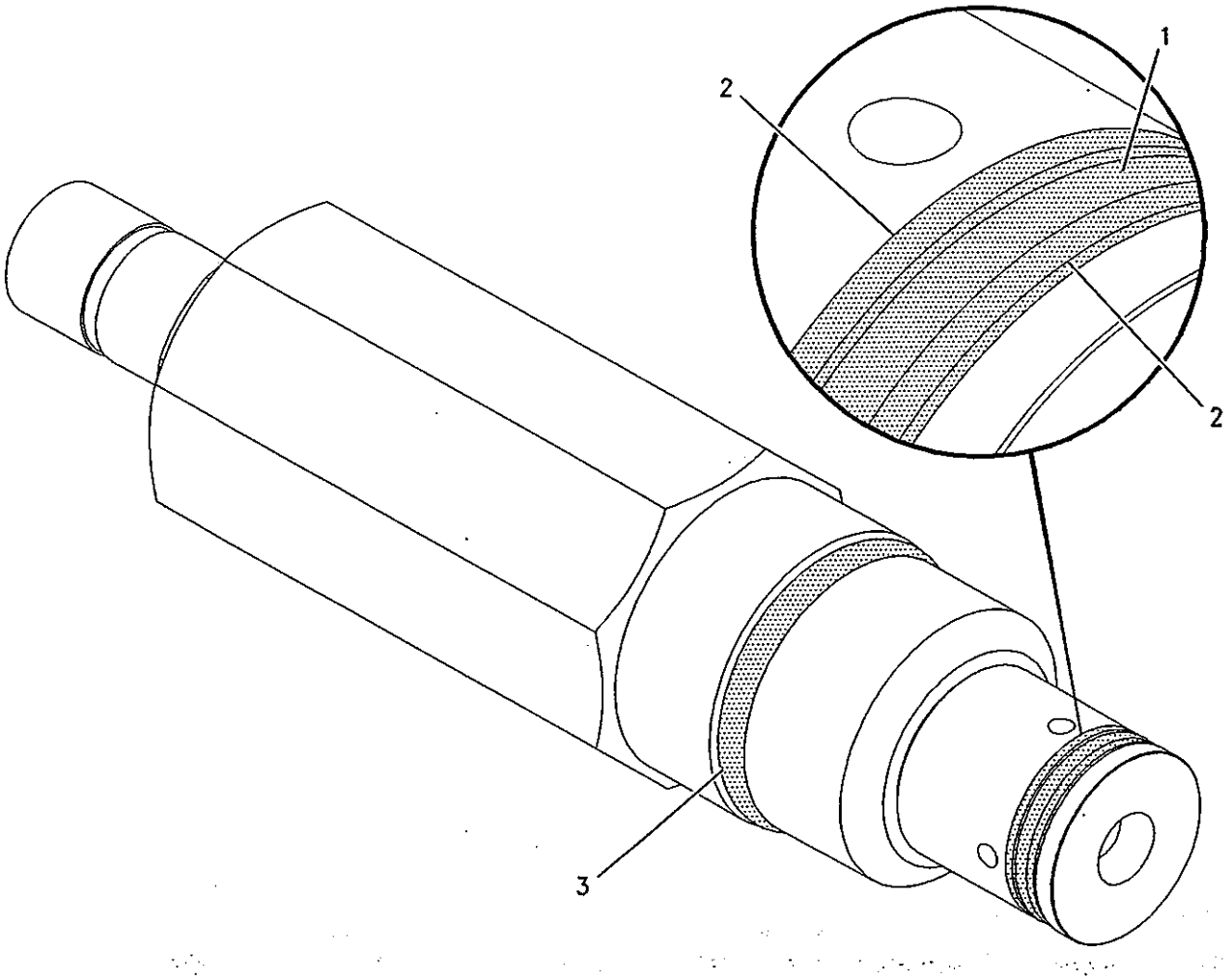


GRAPHIC #1

<END>

g00999067

# HYDRAULIC SYSTEM

## 114-1268 VALVE GP-SEQUENCE

**S/N: JMS1-UP**

**PART OF 206-5186, 206-5191 VALVE GP-PILOT**

**ALSO AN ATTACHMENT**

**SMCS-5051, 5059** i00187582

| NOTE | REF NO | GRAPHIC REF | PART NUMBER | QTY | PART NAME 1 2 3 4 5 6 (PRODUCT LEVEL) | SEE PAGE |
|---|---|---|---|---|---|---|
| | 1 | 1 | 2M-9780 | 1 | SEAL-O-RING (19.18MM ID) | |
| | 2 | 1 | 6V-3505 | 1 | RING-BACKUP | |
| | 3 | 1 | 8C-3132 | 1 | SEAL-O-RING (14MM ID) | |
| | 4 | 1 | 6E-0410 | 1 | SEAL-O-RING | |
| | 5 | 1 | 5P-2199 | 1 | RING-BACKUP | |

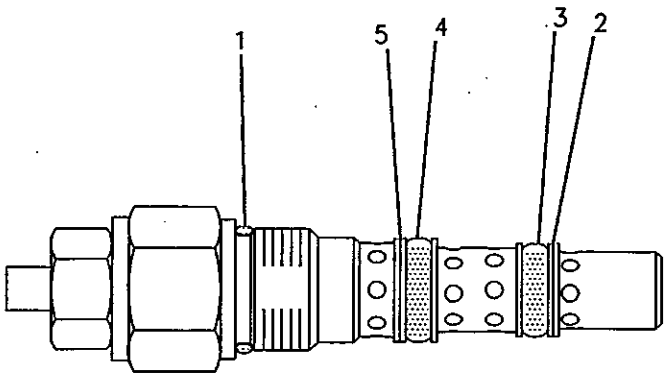


GRAPHIC #1 **<END>** g00122410

# HYDRAULIC SYSTEM

## *6E-3373* VALVE GP-SHUTTLE

**S/N: JMS1-UP**

**PART OF 206-5186, 206-5191 VALVE GP-PILOT**

**ALSO AN ATTACHMENT**

**SMCS-5079**

**i01747002**

| NOTE | REF NO | GRAPHIC REF | PART NUMBER | QTY | PART NAME 1 2 3 4 5 6 (PRODUCT LEVEL) | SEE PAGE |
|---|---|---|---|---|---|---|
| | 1 | 1 | 2M-9780 | 1 | SEAL-O-RING (19.18MM ID) | |
| | 2 | 1 | 6V-3505 | 1 | RING-BACKUP | |
| | 3 | 1 | 8C-3132 | 1 | SEAL-O-RING (14.13MM ID) | |
| | 4 | 1 | 6E-0410 | 1 | SEAL-O-RING (16.1MM ID) | |
| | 5 | 1 | 5P-2199 | 1 | RING-BACKUP | |

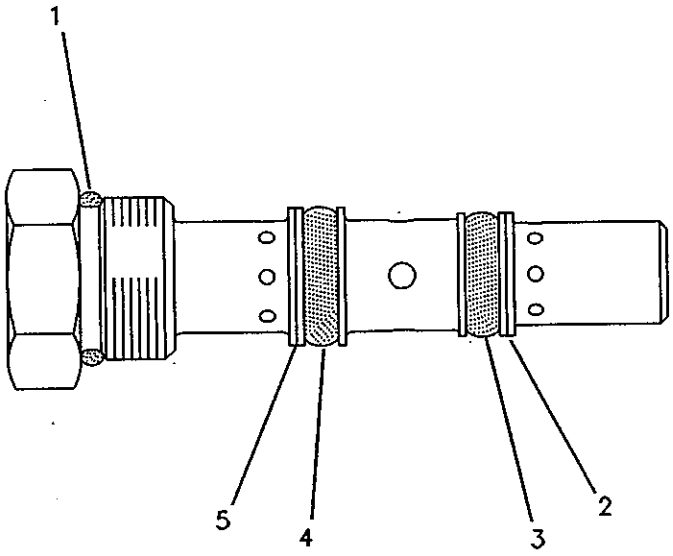


GRAPHIC #1

**<END>**

g00121060

# HYDRAULIC SYSTEM

## 125-3657 VALVE GP-SHUTTLE

**S/N: JMS1-UP**

**PART OF 141-1481 VALVE GP-SHUTTLE**

**AN ATTACHMENT**

**SMCS-5079** **i01747010**

| NOTE | REF NO | GRAPHIC REF | PART NUMBER | QTY | PART NAME 1 2 3 4 5 6 (PRODUCT LEVEL) | SEE PAGE |
|---|---|---|---|---|---|---|
| | 1 | 1 | **2M-9780** | 1 | SEAL-O-RING (19.18MM ID) | |
| | 2 | 1 | **6V-5142** | 1 | SEAL-O-RING (15.6MM ID) | |
| | 3 | 1 | **095-1751** | 1 | SEAL-O-RING (14.00MM ID) | |
| | 4 | 1 | **161-6149** | 1 | SEAL-O-RING (12.42MM ID) | |
| | 5 | 1 | **169-1617** | 2 | RING | |
| | 6 | 1 | **169-1616** | 2 | RING | |
| | 7 | 1 | **161-6161** | 2 | RING-BACKUP | |

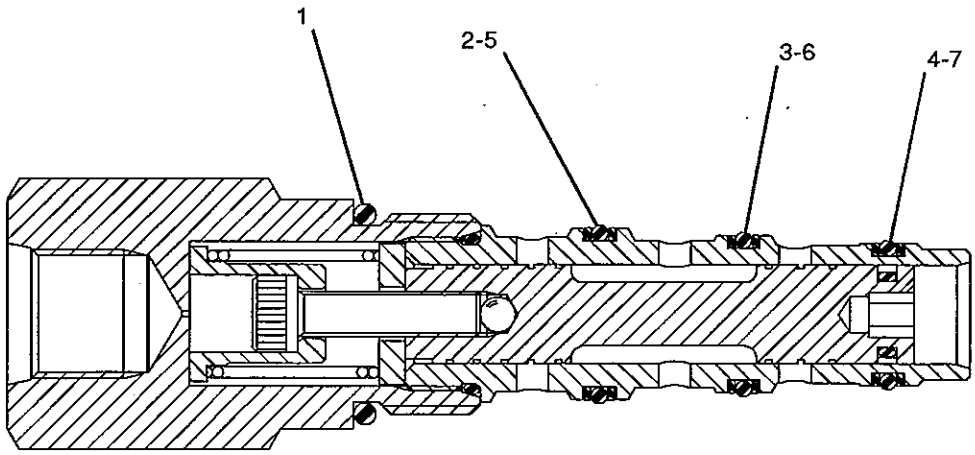


GRAPHIC #1 **<END>** g00764645

# HYDRAULIC SYSTEM

## *141-1481* VALVE GP-SHUTTLE

**S/N: JMS1-UP**

**PART OF 144-5728 CONTROL & LINES GP-RIDE**

**AN ATTACHMENT**

**SMCS-5079** **i01912777**

| NOTE | REF NO | GRAPHIC REF | PART NUMBER | QTY | PART NAME 1 2 3 4 5 6 (PRODUCT LEVEL) | SEE PAGE |
|---|---|---|---|---|---|---|
| Y | 1 | 1 | 125-3657 | 1 | VALVE GP-SHUTTLE | 731 |

Y-SEPARATE ILLUSTRATION

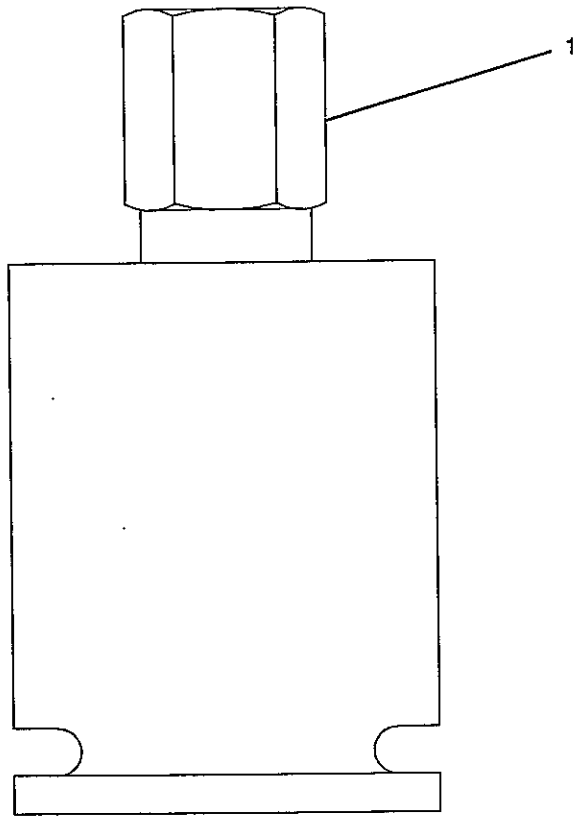


GRAPHIC #1 **<END>** g00996316

# HYDRAULIC SYSTEM

## *152-8340* VALVE GP-SOLENOID–REVERSING FAN, RIDE CONTROL

S/N: JMS1-UP
24-VOLT
PART OF 144-5728 CONTROL & LINES GP-RIDE, 115-9328 VALVE GP-DIVERTER, 213-1040 VALVE GP-FAN REVERSING
AN ATTACHMENT

SMCS-5132, 5479

i02277913

| NOTE | REF NO | GRAPHIC REF | PART NUMBER | QTY | PART NAME 1 2 3 4 5 6 (PRODUCT LEVEL) | SEE PAGE |
|---|---|---|---|---|---|---|
| | 1 | 1 | 8C-9987 | 1 | WASHER (8.3X28X2.5-MM THK) | |
| | 2 | 1 | 111-0343 | 1 | LOCKNUT (5/16-18-THD) | |
| | 3 | 1 | 152-8338 | 1 | CARTRIDGE AS | |
| | | 1 | 8C-9987 | 1 | WASHER (8.3X28X2.5-MM THK) | |
| | | 1 | 111-0343 | 1 | LOCKNUT (5/16-18-THD) | |
| | 4 | 1 | 189-0189 | 1 | COIL AS | |
| | | | | | –OR– | |
| | 5 | 1 | 227-4398 | 1 | COIL AS | |
| | | | | | (EACH COIL ASSEMBLY INCLUDES) | |
| | 5A | 1 | 186-3735 | 2 | PIN-CONNECTOR (16-GA TO 18-GA) | |
| | 5B | 1 | 3E-3365 | 1 | WEDGE-RECEPTACLE LOCK (2-PIN) | |
| | 5C | 1 | 102-8802 | 1 | KIT-RECEPTACLE (2-PIN) | |
| | | | | | (INCLUDES RECEPTACLE AS & WEDGE) | |
| | 5D | 1 | 1S-9593 | 2 | STRAP-CABLE | |
| | | | | | AVAILABLE REPAIR KIT(S): | |
| | | | 197-7701 | 1 | KIT-SEAL (SOLENOID VALVE) | |
| | | | | | (INCLUDES SEALS AND RINGS) | |

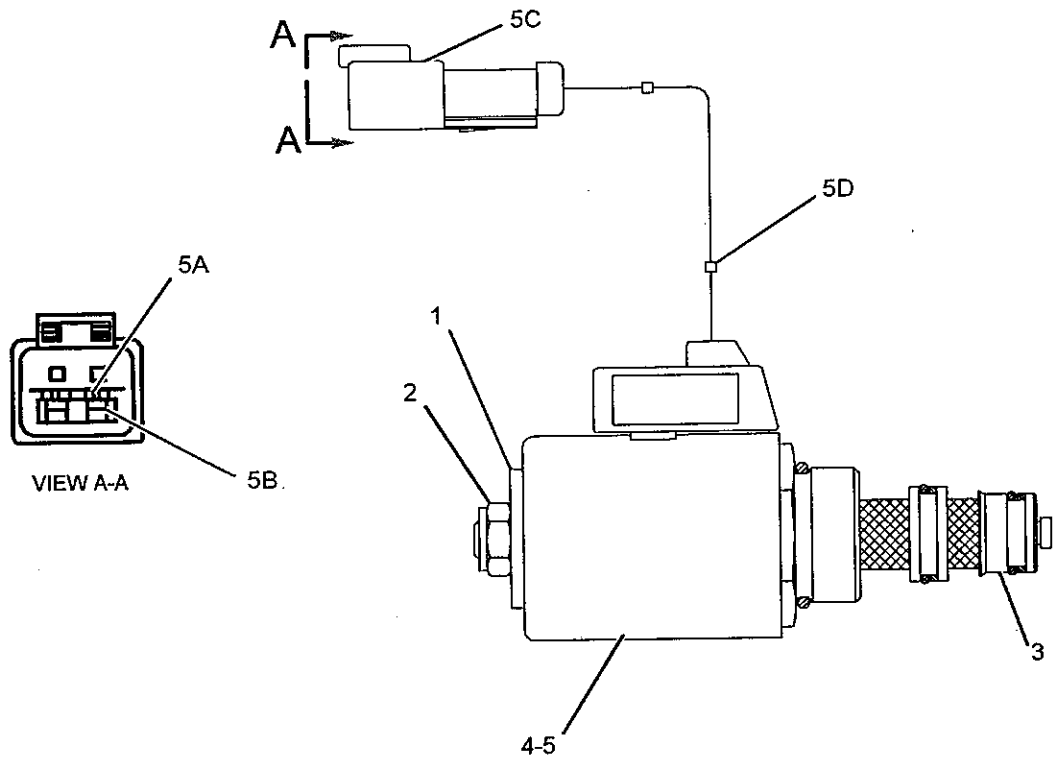


GRAPHIC #1 **<END>** g01140668

# 183-7595 VALVE GP-SOLENOID–DEMAND FAN

**S/N: JMS1-UP**

**PART OF 191-8735 VALVE GP-DEMAND FAN**

**SMCS-5132, 5479** i02279507

| NOTE | REF NO | GRAPHIC REF | PART NUMBER | QTY | PART NAME 1 2 3 4 5 6 (PRODUCT LEVEL) | SEE PAGE |
|---|---|---|---|---|---|---|
| | 1 | 1 | 146-3728 | 1 | WASHER-SPRING | |
| | 2 | 1 | 187-8191 | 1 | COIL AS | |
| Z | 3 | 1 | | 1 | CARTRIDGE AS | |
| Z | 4 | 1 | | 1 | ADAPTER AS | |

Z-NOT SERVICED SEPARATELY

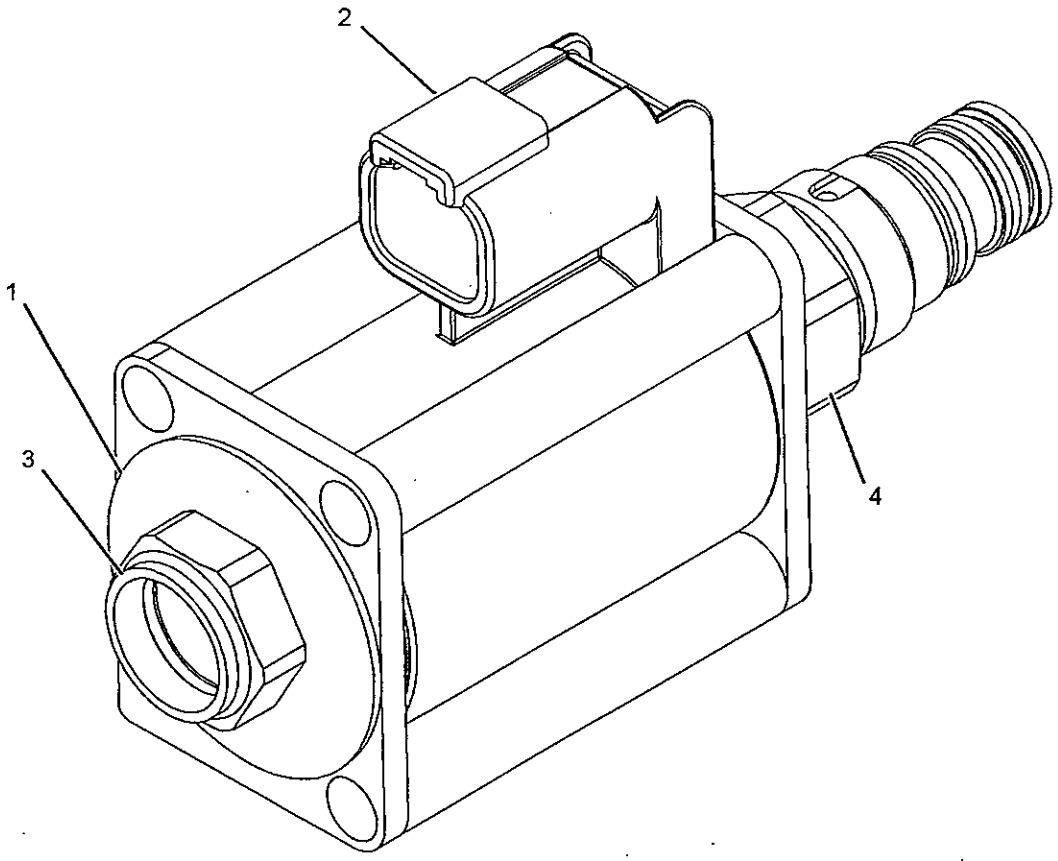


GRAPHIC #1 **<END>** g01141533

# HYDRAULIC SYSTEM

## 203-4157 VALVE GP-SOLENOID–HYDRAULIC LOCKOUT

**S/N: JMS1-UP**

**PART OF 206-5186, 206-5191 VALVE GP-PILOT**

**ALSO AN ATTACHMENT**

i01989020

SMCS-5132, 5479

| NOTE | REF NO | GRAPHIC REF | PART NUMBER | QTY | PART NAME 1 2 3 4 5 6 (PRODUCT LEVEL) | SEE PAGE |
|---|---|---|---|---|---|---|
| | 1 | 1 | 111-0343 | 1 | LOCKNUT (5/16-18-THD) | |
| | 2 | 1 | 8C-9987 | 1 | WASHER (8.3X28X2.5-MM THK) | |
| | 3 | 1 | 189-0189 | 1 | COIL AS | |
| | | 1 | 1S-9593 | 2 | STRAP-CABLE | |
| | | 1 | 102-8802 | 1 | KIT-RECEPTACLE (2-PIN) | |
| | | | | | (INCLUDES RECEPTACLE AS & WEDGE) | |
| | | 1 | 3E-3365 | 1 | WEDGE-RECEPTACLE LOCK (2-PIN) | |
| | | 1 | 186-3735 | 2 | PIN-CONNECTOR (16-GA TO 18-GA) | |
| | 4 | 1 | 152-6760 | 1 | CARTRIDGE AS | |
| | | 1 | 8C-9987 | 1 | WASHER (8.3X28X2.5-MM THK) | |
| | | 1 | 111-0343 | 1 | LOCKNUT (5/16-18-THD) | |
| | | | | | AVAILABLE REPAIR KIT(S): | |
| | | | 3G-8175 | 1 | KIT-SEAL (SOLENOID VALVE) | |
| | | | | | (INCLUDES SEAL-O-RINGS AND RING-BACKUP) | |

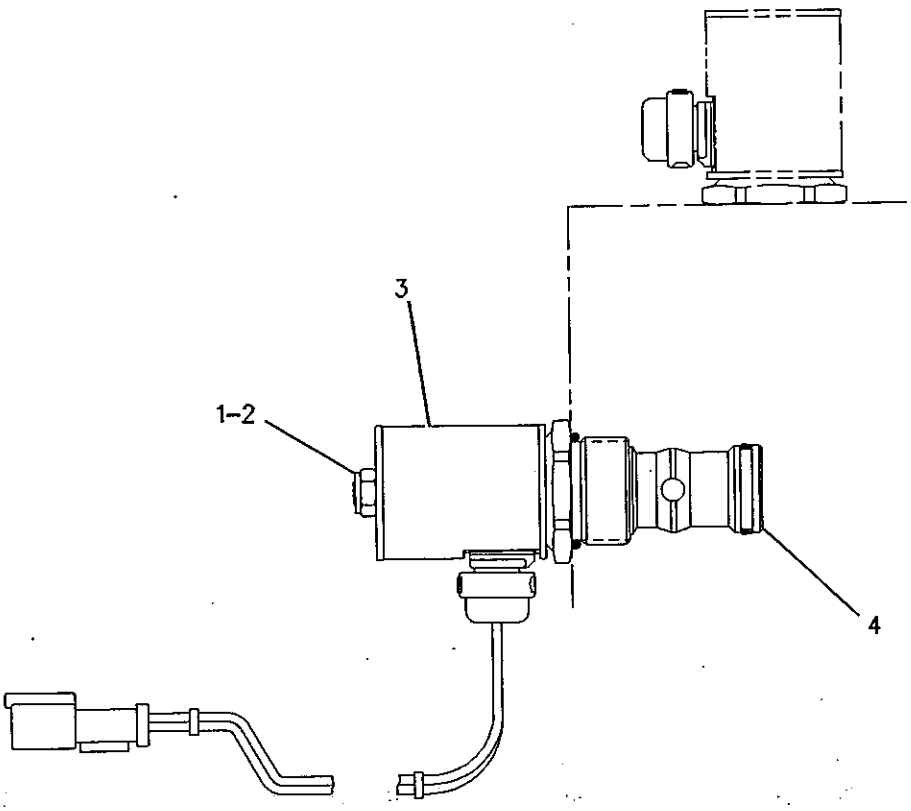


GRAPHIC #1

<END>

g00805789

# IMPLEMENTS

## 175-6353 ARM & BEARING AS

S/N: JMS1-UP

PART OF 175-4219, 249-6705, 266-3681 LIFT AR

AN ATTACHMENT

SMCS-6118, 6119, 7069 i02096463

| NOTE | REF NO | GRAPHIC REF | PART NUMBER | QTY | PART NAME 1 2 3 4 5 6 (PRODUCT LEVEL) | SEE PAGE |
|---|---|---|---|---|---|---|
| | 1 | 1 | **1V-8240** | 2 | BEARING-SLEEVE | |
| | 2 | 1 | **1V-8241** | 2 | BEARING-SLEEVE | |
| | 3 | 1 | *178-8622* | 1 | ARM AS-LIFT | |
| | | 1 | **3H-2599** | 2 | BLOCK-TUBE | |
| | | 1 | **9C-7863** | 1 | BLOCK | |
| M | | 1 | **110-2023** | 3 | STUD-WELD (M10X1.5X25-MM) | |
| | | 1 | **216-8208** | 1 | BOSS | |
| M | | 1 | **8T-4219** | 2 | STUD-WELD (M10X1.5X17.5-MM) | |
| | 4 | 1 | **185-7220** | 2 | BEARING-SLEEVE | |

M-METRIC PART

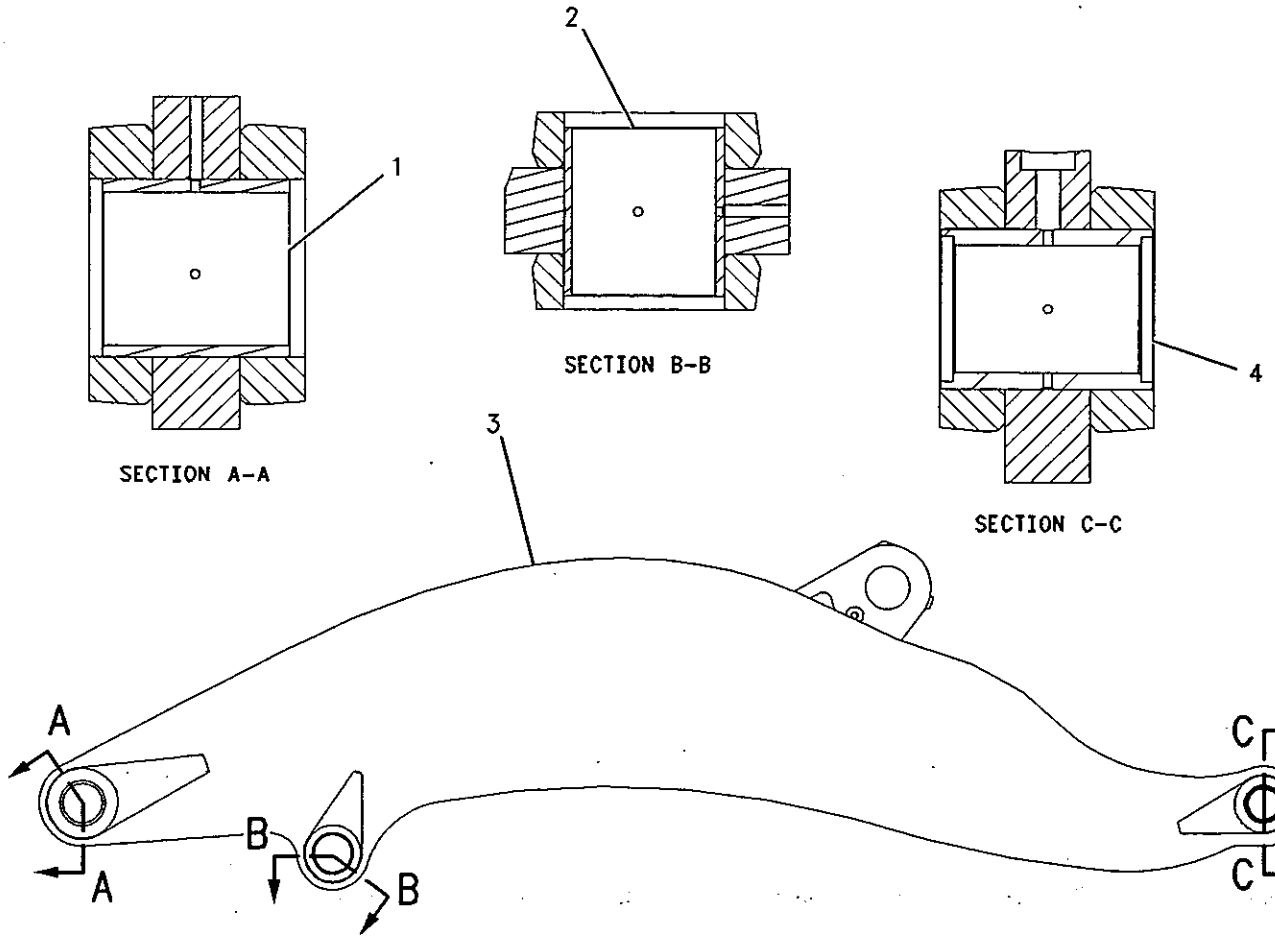


GRAPHIC #1 <END> g00685656

# IMPLEMENTS

## 175-4197 CONTROL GP-BUCKET

**S/N: JMS1-UP**

**PART OF 225-5538 CHASSIS AR**

**SMCS-6107** **i02198965**

| NOTE | REF NO | GRAPHIC REF | PART NUMBER | QTY | PART NAME 1 2 3 4 5 6 (PRODUCT LEVEL) | SEE PAGE |
|---|---|---|---|---|---|---|
| | 1 | 1 | 1V-8439 | 2 | PIN AS | |
| | 2 | 1 | 1V-8947 | 2 | PIN AS | |
| | 3 | 1 | 1V-8949 | 2 | PIN AS | |
| | 4 | 1 | 1V-8954 | 2 | PIN AS | |
| | 5 | 1 | 1V-8957 | 2 | PIN AS | |
| | 6 | 1 | 3B-8489 | 10 | FITTING-GREASE | |
| | 7 | 1 | 3B-8686 | 2 | FITTING-GREASE | |
| | 8 | 1 | 3V-6514 | 2 | LINK | |
| | | | 1V-9148 | 4 | BEARING-SLEEVE | |
| | 9 | 1 | 3V-7729 | 4 | SPACER | |
| M | 10 | 1 | 8T-4187 | 2 | BOLT (M20X2.5X80-MM) | |
| | 11 | 1 | 4V-7099 | 2 | PIN AS | |
| | 12 | 1 | 5P-3193 | 4 | SEAL-LIP TYPE | |
| | 13 | 1 | 7K-9209 | 8 | SEAL-LIP TYPE | |
| | 14 | 1 | 7K-9218 | 4 | SEAL-LIP TYPE | |
| | 15 | 1 | 7K-9220 | 4 | SEAL-LIP TYPE | |
| | 16 | 1 | 7X-7742 | 2 | WASHER-PULLEY | |
| M | 17 | 1 | 8T-5878 | 4 | BOLT (M24X3X80-MM) | |
| | 18 | 1 | 8R-3946 | 4 | COLLET | |
| M | 19 | 1 | 8T-4131 | 6 | NUT (M20X2.5-THD) | |
| | 20 | 1 | 8T-5439 | 12 | WASHER (21.5X45X6-MM THK) | |
| | 21 | 1 | 9K-9731 | 8 | SPACER (20.4X28.5X14.2-MM THK) | |
| M | 22 | 1 | 8T-5460 | 6 | BOLT (M20X2.5X40-MM) | |
| | 23 | 1 | 096-6467 | 2 | WASHER (22X60X8-MM THK) | |
| | 24 | 1 | 185-7219 | 2 | PIN AS | |
| M | 25 | 1 | 8T-4780 | 2 | BOLT (M20X2.5X30-MM) | |
| | 26 | 1 | 201-1161 | 2 | SPACER | |
| | 28 | 1 | 115-7048 | 2 | PIN | |
| | 29 | 1 | 130-2621 | 2 | PIN AS | |
| | 30 | 1 | 8T-1482 | 4 | WASHER-HARD (26X50X8-MM THK) | |
| | 31 | 1 | 7K-9211 | 4 | SEAL-LIP TYPE | |
| | 32 | 1 | 175-6352 | 1 | ARM & BEARING AS | |
| | 32A | 1 | 1V-8240 | 2 | BEARING-SLEEVE | |
| | 32B | 1 | 1V-8241 | 2 | BEARING-SLEEVE | |
| | 32C | 1 | 185-7220 | 2 | BEARING-SLEEVE | |
| | | 1 | 2Q-7058 | 2 | PLATE | |
| | 33 | 1 | 177-0706 | 2 | LEVER AS (FAR SIDE) | |
| | | | | | (EACH INCLUDES) | |
| | | 1 | 1V-9143 | 1 | BEARING-SLEEVE | |
| B | 34 | 1 | 186-6319 | 4 | WASHER | |
| B | 35 | 1 | 186-6320 | 2 | WASHER | |
| M | 36 | 1 | 8T-4141 | 2 | BOLT (M20X2.5X70-MM) | |

B-USE AS REQUIRED
M-METRIC PART

## 175-4197 CONTROL GP-BUCKET *(contd.)*

i02198965

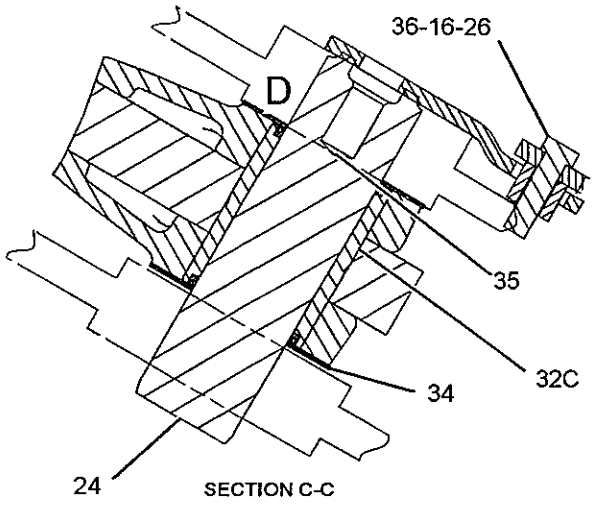


SECTION C-C

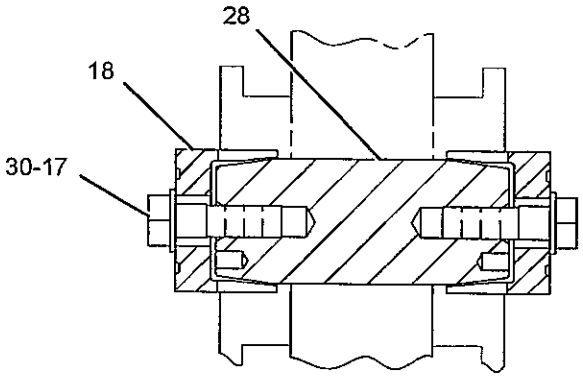


SECTION B-B

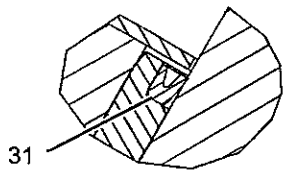


VIEW OF AREA D

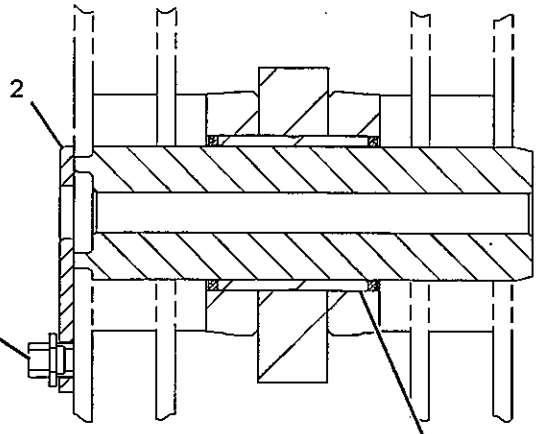


SECTION A-A

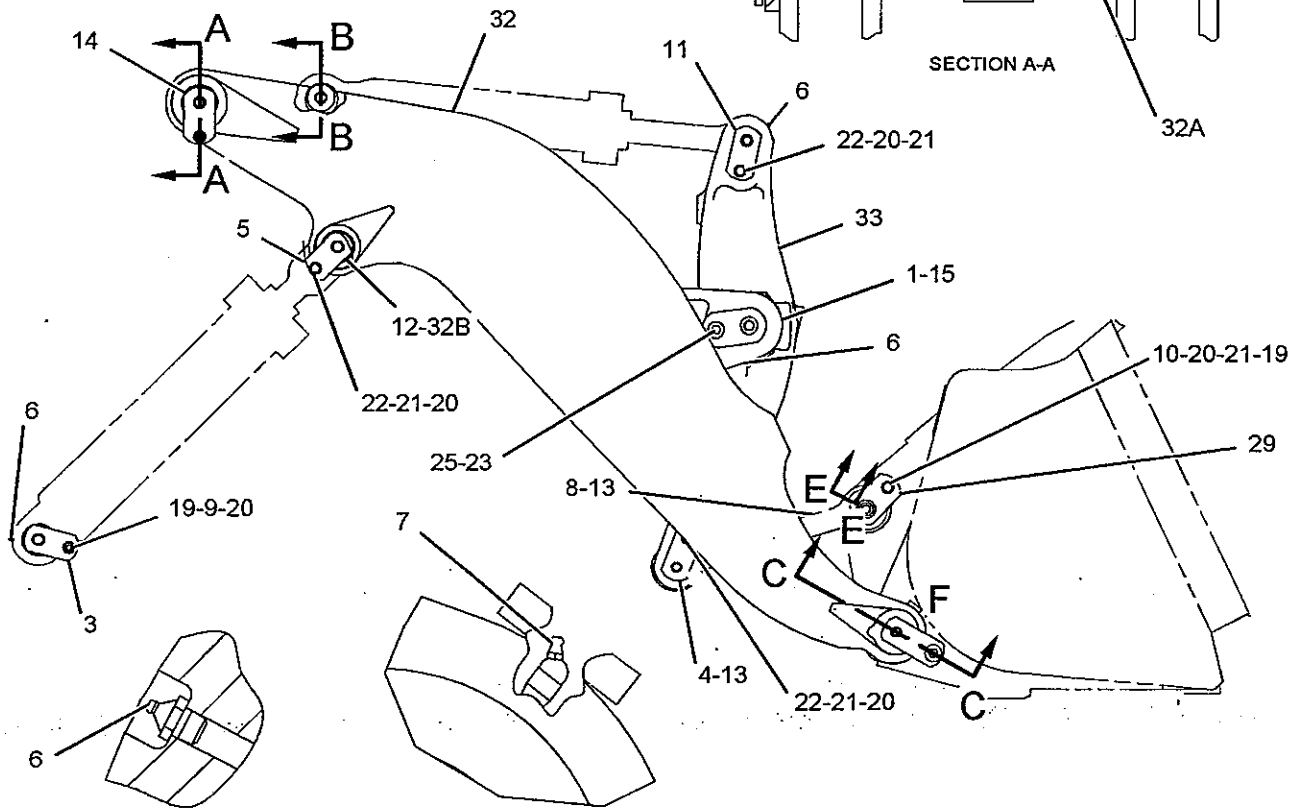


SECTION E-E

VIEW OF AREA F

GRAPHIC #1

<END>

g01141632

# 249-1273 HARDWARE GP-LIFT ARM-
## AUTOMATIC LUBRICATION SYSTEM
S/N: JMS1-UP
PART OF 245-9432 LUBRICATION AR-AUTOMATIC
AN ATTACHMENT

SMCS-6119 i02284130

| NOTE | REF NO | GRAPHIC REF | PART NUMBER | QTY | PART NAME 1 2 3 4 5 6 (PRODUCT LEVEL) | SEE PAGE |
|---|---|---|---|---|---|---|
| | 1 | 1 | 3H-2599 | 2 | BLOCK-TUBE | |
| M | 2 | 1 | 8T-3851 | 2 | BOSS-WELD (M10X1.5X17.5-MM) | |
| M | 3 | 1 | 8T-4967 | 8 | STUD-WELD (M10X1.5X23-MM OAL) | |

M-METRIC PART

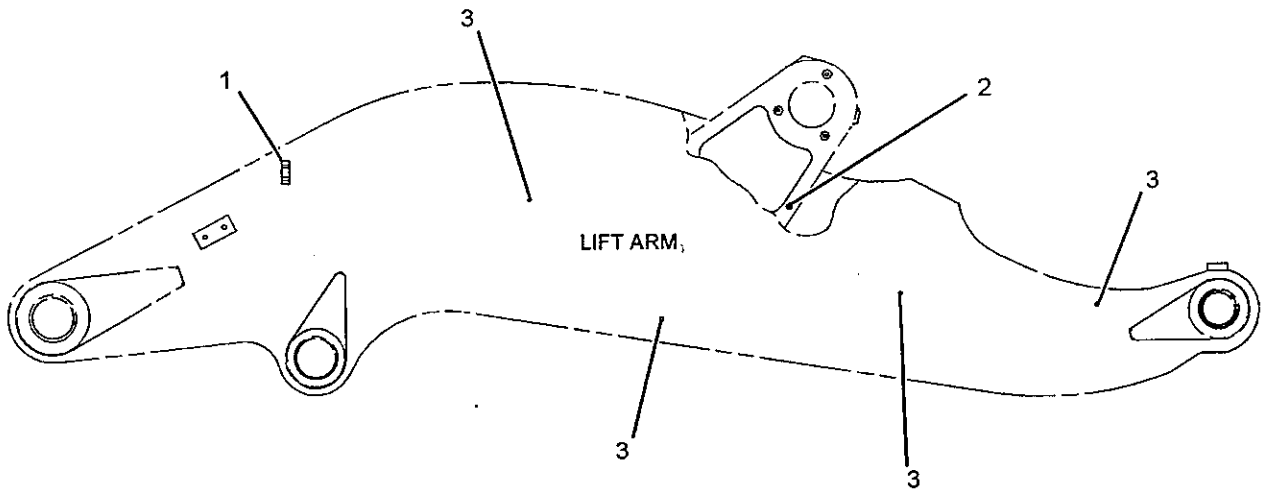


RIGHT SIDE VIEW

GRAPHIC #1 <END> g01144655

# 249-1274 HARDWARE GP-LIFT ARM

S/N: JMS1-UP
PART OF 249-6705 LIFT AR
AN ATTACHMENT

SMCS-6119

i02091756

| NOTE | REF NO | GRAPHIC REF | PART NUMBER | QTY | PART NAME 1 2 3 4 5 6 (PRODUCT LEVEL) | SEE PAGE |
|---|---|---|---|---|---|---|
| | 1 | 1 | 7Y-2522 | 2 | PLATE | |
| M | 2 | 1 | 9R-2640 | 2 | BOSS | |

M-METRIC PART

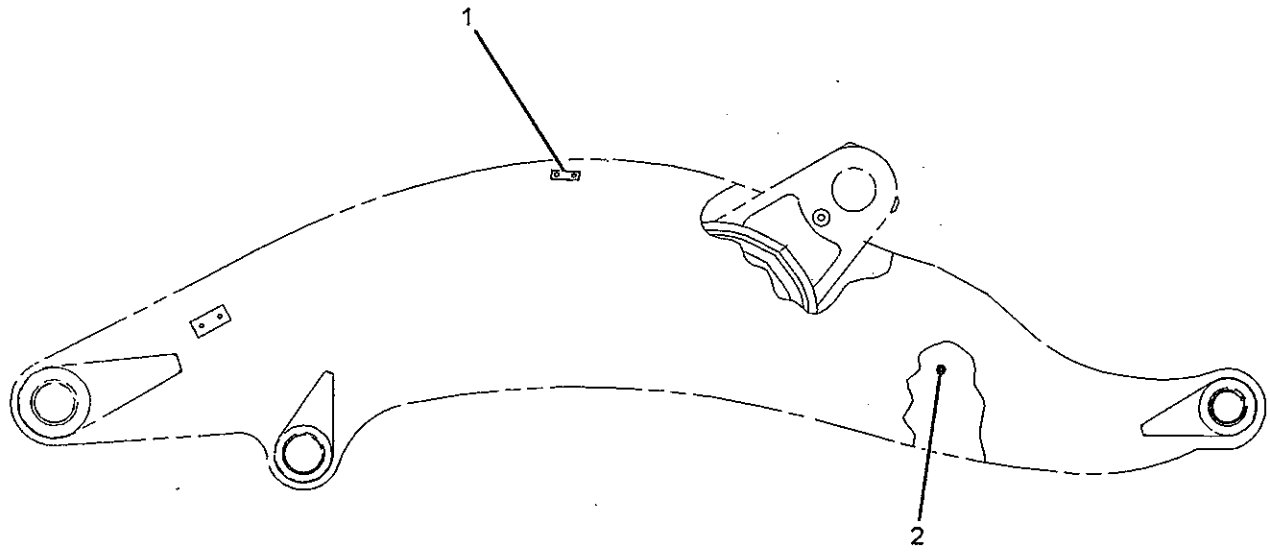


RIGHT SIDE VIEW

GRAPHIC #1

<END>

g01066785

# 249-1275 HARDWARE GP-LIFT ARM-
## AUTOMATIC LUBRICATION SYSTEM
S/N: JMS1-UP
PART OF 245-9433 LUBRICATION AR-AUTOMATIC
AN ATTACHMENT

SMCS-6119 i02284139

| NOTE | REF NO | GRAPHIC REF | PART NUMBER | QTY | PART NAME 1 2 3 4 5 6 (PRODUCT LEVEL) | SEE PAGE |
|---|---|---|---|---|---|---|
| | 1 | 1 | 3H-2599 | 2 | BLOCK-TUBE | |
| M | 2 | 1 | 8T-3851 | 2 | BOSS-WELD (M10X1.5X17.5-MM) | |
| M | 3 | 1 | 8T-4967 | 8 | STUD-WELD (M10X1.5X23-MM OAL) | |

M-METRIC PART

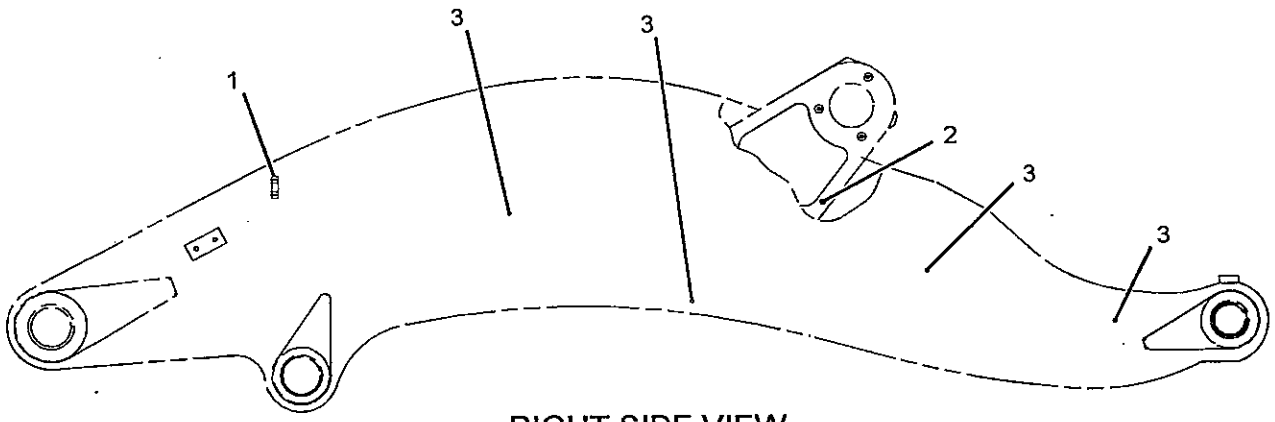


RIGHT SIDE VIEW

GRAPHIC #1 <END> g01144004

# IMPLEMENTS

## 247-6741 LEVER GP-TILT

S/N: JMS1-UP

PART OF 245-9432, 245-9433 LUBRICATION AR-AUTOMATIC

AN ATTACHMENT

SMCS-6116

i02091888

| NOTE | REF NO | GRAPHIC REF | PART NUMBER | QTY | PART NAME 1 2 3 4 5 6 (PRODUCT LEVEL) | SEE PAGE |
|---|---|---|---|---|---|---|
| | 1 | 1 | 177-0706 | 1 | LEVER AS | |
| | | 1 | 1V-9143 | 1 | BEARING-SLEEVE | |
| M | 2 | 1 | 110-2023 | 1 | STUD-WELD (M10X1.5X25-MM) | |
| M | 3 | 1 | 8T-3734 | 1 | BOSS-WELD | |
| M | 4 | 1 | 8T-6462 | 2 | BOSS-WELD | |

M-METRIC PART

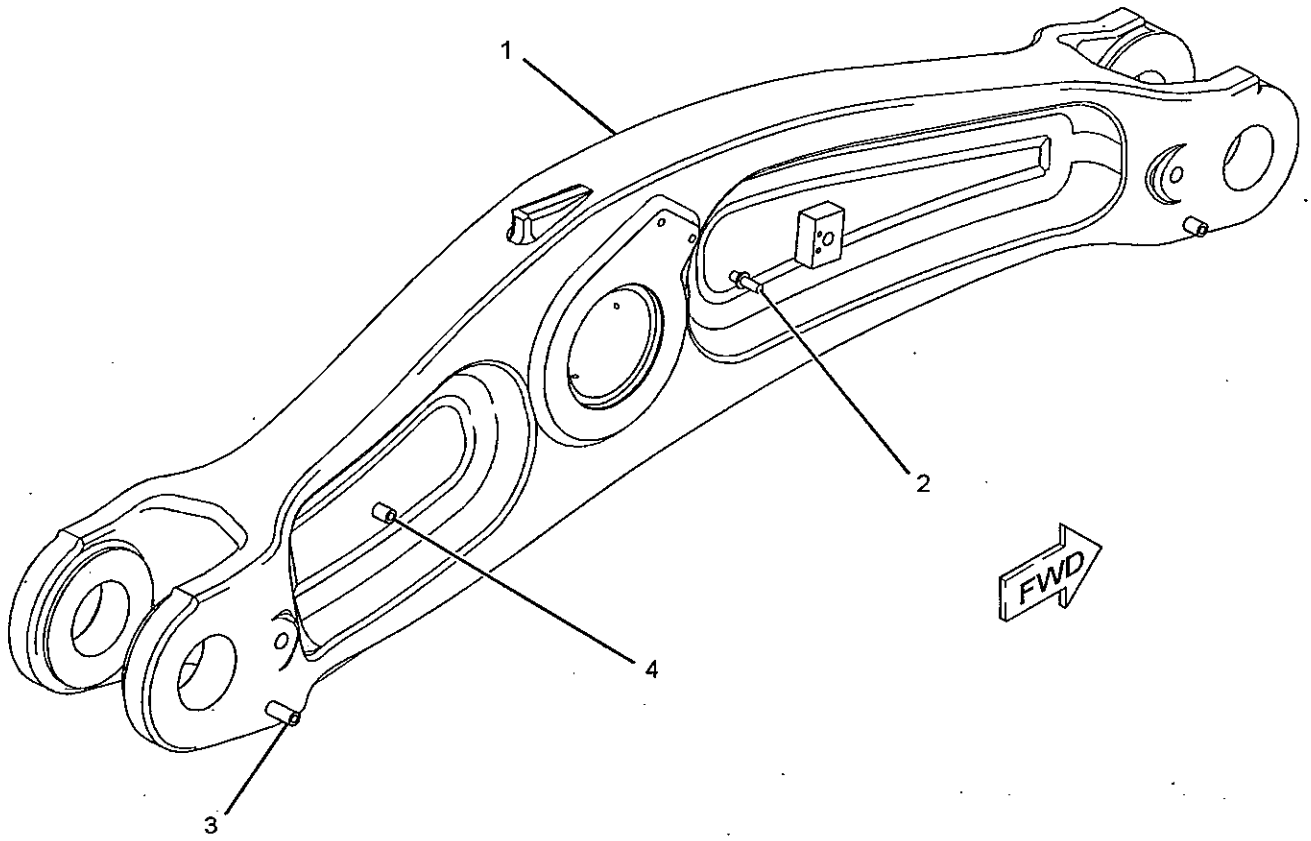


GRAPHIC #1

<END>

g01066886

# IMPLEMENTS

## 175-4219 LIFT AR

**S/N: JMS1-UP**
**AN ATTACHMENT**

**SMCS-6000** i02187005

| NOTE | PART NUMBER | QTY | PART NAME 1 2 3 4 5 6 (PRODUCT LEVEL) | SEE PAGE |
|---|---|---|---|---|
| Y | 175-6353 | 1 | ARM & BEARING AS | 737 |
| Y | *124-7096* | 1 | CYLINDER & SEAL GP-TILT (LH) | 624 |
| Y | *124-7097* | 1 | CYLINDER & SEAL GP-TILT (RH) | 625 |
| | 127-6477 | 1 | TUBE AS | |
| | 127-5647 | 1 | TUBE AS | |

Y-SEPARATE ILLUSTRATION

**<END>**

## 249-6705 LIFT AR—WITH 3RD VALVE

**S/N: JMS1-UP**
**AN ATTACHMENT**

**SMCS-6000** i02091791

| NOTE | PART NUMBER | QTY | PART NAME 1 2 3 4 5 6 (PRODUCT LEVEL) | SEE PAGE |
|---|---|---|---|---|
| Y | 175-6353 | 1 | ARM & BEARING AS | 737 |
| Y | 210-9583 | 1 | CONTROL GP-ELECTROHYDRAULIC (3-FUNCTION) | 601 |
| Y | *124-7096* | 1 | CYLINDER & SEAL GP-TILT (LH) | 624 |
| Y | *124-7097* | 1 | CYLINDER & SEAL GP-TILT (RH) | 625 |
| Y | 249-1274 | 1 | HARDWARE GP-LIFT ARM | 741 |
| Y | *206-9059* | 1 | VALVE & MTG GP-MAIN CONTROL (3-FUNCTION) | 689 |
| M | 8T-4139 | 14 | BOLT (M12X1.75X30-MM) | |
| M | 8T-4183 | 40 | BOLT (M12X1.75X40-MM) | |
| | 125-2030 | 2 | BRACKET AS | |
| | 8K-4691 | 4 | CLAMP-HALF | |
| | 8S-0023 | 6 | CLIP (SLOT) | |
| | 8S-0024 | 6 | CLIP (TAB) | |
| | 5H-4020 | 2 | COVER | |
| | 197-3295 | 20 | FLANGE-HALF | |
| I | 2Q-8272 | 2 | HOSE AS | |
| I | 124-1847 | 1 | HOSE AS | |
| I | 124-1848 | 1 | HOSE AS | |
| | 4J-0522 | 10 | SEAL-O-RING | |
| | 116-8774 | 2 | TUBE AS | |
| | 127-5647 | 1 | TUBE AS | |
| | 127-6477 | 1 | TUBE AS | |
| | 194-2605 | 1 | TUBE AS | |
| | 194-2609 | 1 | TUBE AS | |
| | 7X-3392 | 40 | WASHER-HARD (13.5X22.5X3-MM THK) | |
| | 8T-4223 | 14 | WASHER-HARD (13.5X25.5X3-MM THK) | |

I-REFER TO HYDRAULIC INFORMATION SYSTEM
M-METRIC PART
Y-SEPARATE ILLUSTRATION

**<END>**

# IMPLEMENTS

## *266-3681* LIFT AR

**S/N: JMS1-UP**
**AN ATTACHMENT**

**SMCS-6000** **i02284056**

| NOTE | PART NUMBER | QTY | PART NAME 1 2 3 4 5 6 (PRODUCT LEVEL) | SEE PAGE |
|---|---|---|---|---|
| Y | **175-6353** | 1 | ARM & BEARING AS | 737 |
| Y | *124-7096* | 1 | CYLINDER & SEAL GP-TILT (LH) | 624 |
| Y | *124-7097* | 1 | CYLINDER & SEAL GP-TILT (RH) | 625 |
| | **127-5647** | 1 | TUBE AS | |
| | **127-6477** | 1 | TUBE AS | |

Y-SEPARATE ILLUSTRATION

**<END>**

## *246-3121* LOGGING AR

**S/N: JMS1-UP**
**AN ATTACHMENT**

**SMCS-6113, 7077** **i02284080**

| NOTE | PART NUMBER | QTY | PART NAME 1 2 3 4 5 6 (PRODUCT LEVEL) | SEE PAGE |
|---|---|---|---|---|
| Y | *235-5988* | 1 | COUNTERWEIGHT GP | 408 |
| Y | *262-1379* | 1 | GUARD GP-LIGHTING | 442 |
| Y | *249-1272* | 1 | HARDWARE GP-LOADER FRAME (THIRD VALVE) | 448 |
| Y | *247-4867* | 1 | HYDRAULIC AR-3 VALVE (LOGGING) | 641 |
| Y | **230-6321** | 1 | TRANSMISSION AR (HEAVY-DUTY) | 395 |
| | **262-9898** | 1 | FILM-STRIPE (FOREST MACHINE, LH) | |
| | **262-9897** | 1 | FILM-STRIPE (FOREST MACHINE, RH) | |
| | *4V-5325* | 2 | LINK AS | |
| | | | (EACH INCLUDES) | |
| | **1V-9148** | 2 | BEARING-SLEEVE | |
| | **4V-5324** | 1 | LINK | |

Y-SEPARATE ILLUSTRATION

**<END>**

# WORK TOOLS

## *232-0167* ADAPTER GP-TIP

**S/N: JMS1-UP**
**K-110**
**AN ATTACHMENT**

**SMCS-6803** **i02283569**

| NOTE | REF NO | GRAPHIC REF | PART NUMBER | QTY | PART NAME 1 2 3 4 5 6 (PRODUCT LEVEL) | SEE PAGE |
|---|---|---|---|---|---|---|
| | 1 | 1 | **5P-8362** | 12 | NUT (1-1/4-7-THD) | |
| | 2 | 1 | **223-8117** | 6 | ADAPTER-TIP (CENTER) | |
| | 3 | 1 | **223-8118** | 1 | ADAPTER-TIP (RH) | |
| | 4 | 1 | **223-8119** | 1 | ADAPTER-TIP (LH) | |
| | 5 | 1 | **198-1092** | 14 | BOLT-PLOW (1-1/4-7X4.5-IN) | |
| | 6 | 1 | **3K-9770** | 4 | NUT-FULL (1-1/4-7-THD) | |
| | 7 | 1 | **5P-8823** | 2 | BOLT-PLOW (1-1/4-7X4.13-IN) | |

## 232-0167 ADAPTER GP-TIP *(contd.)*

i02283569

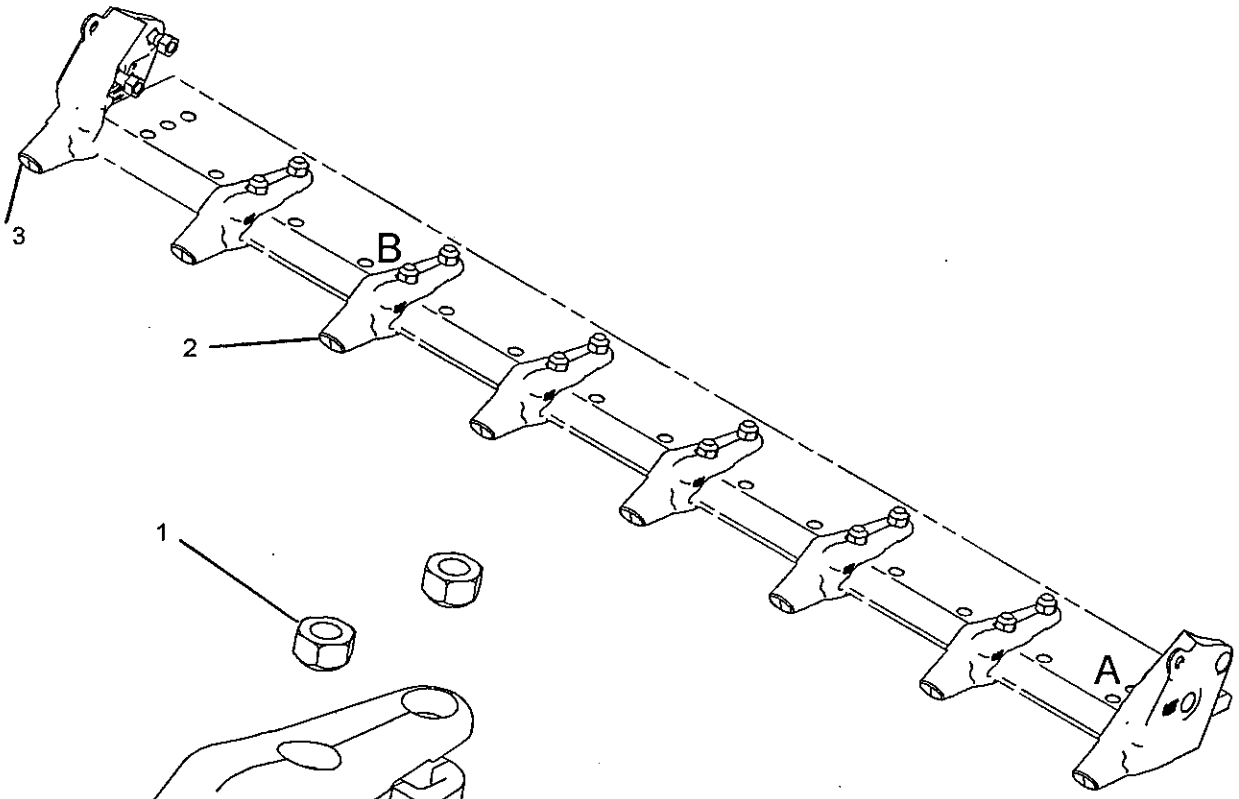


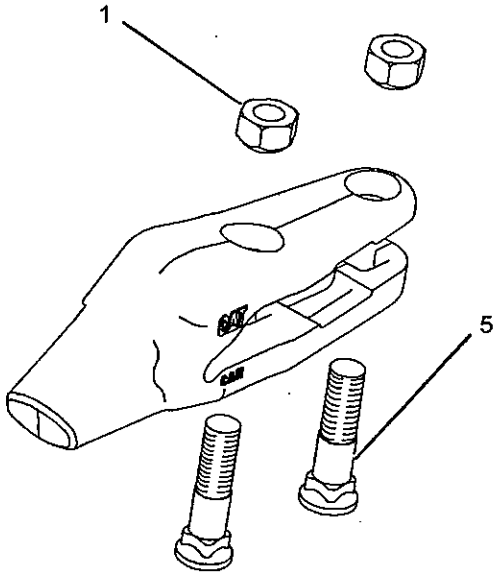


VIEW OF AREA B
(Exploded)

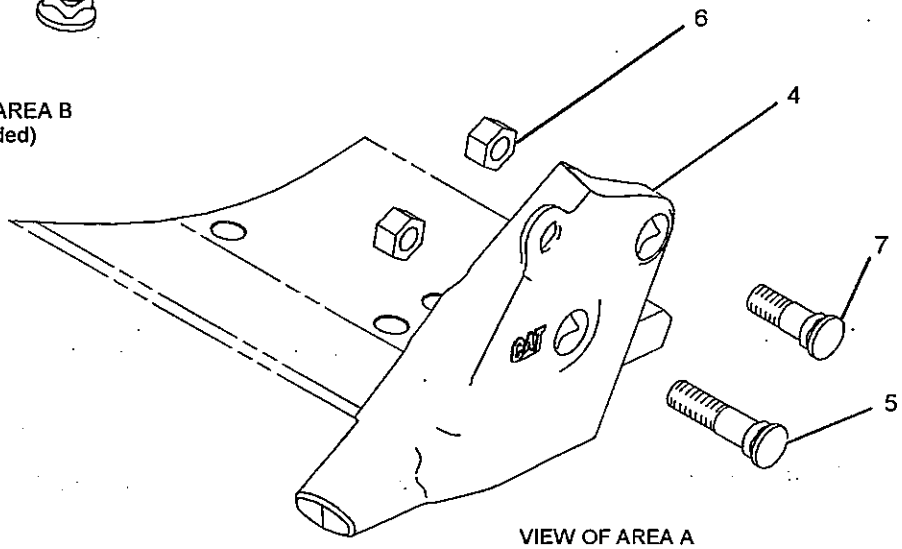


VIEW OF AREA A

GRAPHIC #1

**<END>**

g01144713

# WORK TOOLS

## *257-1770* ADAPTER GP-TIP

**S/N: JMS1-UP**
**K-100**
**AN ATTACHMENT**

**SMCS-6803** **i02283997**

| NOTE | PART NUMBER | QTY | PART NAME 1 2 3 4 5 6 (PRODUCT LEVEL) | SEE PAGE |
|---|---|---|---|---|
| | 223-8107 | 6 | ADAPTER-TIP (K-100, CENTER) | |
| | 223-8108 | 1 | ADAPTER-TIP (K-100, RH) | |
| | 223-8109 | 1 | ADAPTER-TIP (K-100, LH) | |
| | 5P-8361 | 14 | BOLT-PLOW (1-1/4-7X4.92-IN) | |
| | 6V-6535 | 2 | BOLT-PLOW (1-1/4X3.75-IN) | |
| | 5P-8362 | 12 | NUT (1-1/4-7-THD) | |
| | 3K-9770 | 4 | NUT-FULL (1-1/4-7-THD) | |

**<END>**

## *251-1099* BUCKET AR-GENERAL PURPOSE

**S/N: JMS1-UP**
**5.73 CU M (7.5 CU YD)**
**AN ATTACHMENT**

**SMCS-6101** **i02091818**

| NOTE | PART NUMBER | QTY | PART NAME 1 2 3 4 5 6 (PRODUCT LEVEL) | SEE PAGE |
|---|---|---|---|---|
| Y | 237-7240 | 1 | BUCKET GP-GENERAL PURPOSE | 763 |
| Y | *235-5987* | 1 | COUNTERWEIGHT GP | 407 |

Y-SEPARATE ILLUSTRATION

**<END>**

## *266-2302* BUCKET AR-GENERAL PURPOSE

**S/N: JMS1-UP**
**5.73-CU M(7.5-CU YD)**
**AN ATTACHMENT**

**SMCS-6101** **i02284063**

| NOTE | PART NUMBER | QTY | PART NAME 1 2 3 4 5 6 (PRODUCT LEVEL) | SEE PAGE |
|---|---|---|---|---|
| Y | 237-7240 | 1 | BUCKET GP-GENERAL PURPOSE | 763 |
| Y | *235-5987* | 1 | COUNTERWEIGHT GP | 407 |

Y-SEPARATE ILLUSTRATION

**<END>**

# WORK TOOLS

## *249-5036* BUCKET AS-GENERAL PURPOSE

**S/N: JMS1-UP**
**5.73 CU M (7.5 CU YD)**
**PART OF 237-7240 BUCKET GP-GENERAL PURPOSE**
**AN ATTACHMENT**

**SMCS-6101** **i02136525**

| NOTE | REF NO | GRAPHIC REF | PART NUMBER | QTY | PART NAME 1 2 3 4 5 6 (PRODUCT LEVEL) | SEE PAGE |
|---|---|---|---|---|---|---|
| | 1 | 1 | **6I-8249** | 1 | CORNER-RH | |
| | 2 | 1 | **6I-8250** | 1 | CORNER-LH | |
| | 3 | 1 | **6W-9305** | 2 | PLATE | |
| | 4 | 1 | **111-9770** | 1 | EDGE | |
| | 5 | 1 | **137-4234** | 1 | PLATE-IDENTIFICATION (WORK TOOL INFORMATION) | |
| | 6 | 1 | **185-7221** | 4 | SLEEVE | |
| | 7 | 1 | **235-0692** | 2 | PLATE-WEAR | |
| | 8 | 1 | **235-0695** | 4 | PLATE | |
| | 9 | 1 | **235-0700** | 2 | PLATE-STOP | |
| | 10 | 1 | *249-5038* | 1 | PLATE AS (RH) | |
| | | 1 | **235-0686** | 1 | PLATE | |
| | 11 | 1 | *249-5039* | 1 | PLATE AS (LH) | |
| | | 1 | **235-0686** | 1 | PLATE | |
| | 12 | 1 | **249-5040** | 2 | HINGE AS (TILT) | |
| | 13 | 1 | **249-5042** | 1 | HINGE AS (LIFT LH-OUTER) | |
| | 14 | 1 | **249-5043** | 1 | HINGE AS (LIFT-RH-OUTER) | |
| | 15 | 1 | **249-5044** | 1 | HINGE AS (LIFT-RH-INNER) | |
| | 16 | 1 | **249-5045** | 1 | HINGE AS (LIFT-LH-INNER) | |
| | 17 | 1 | **147-7633** | 2 | BOSS-TAPPED | |

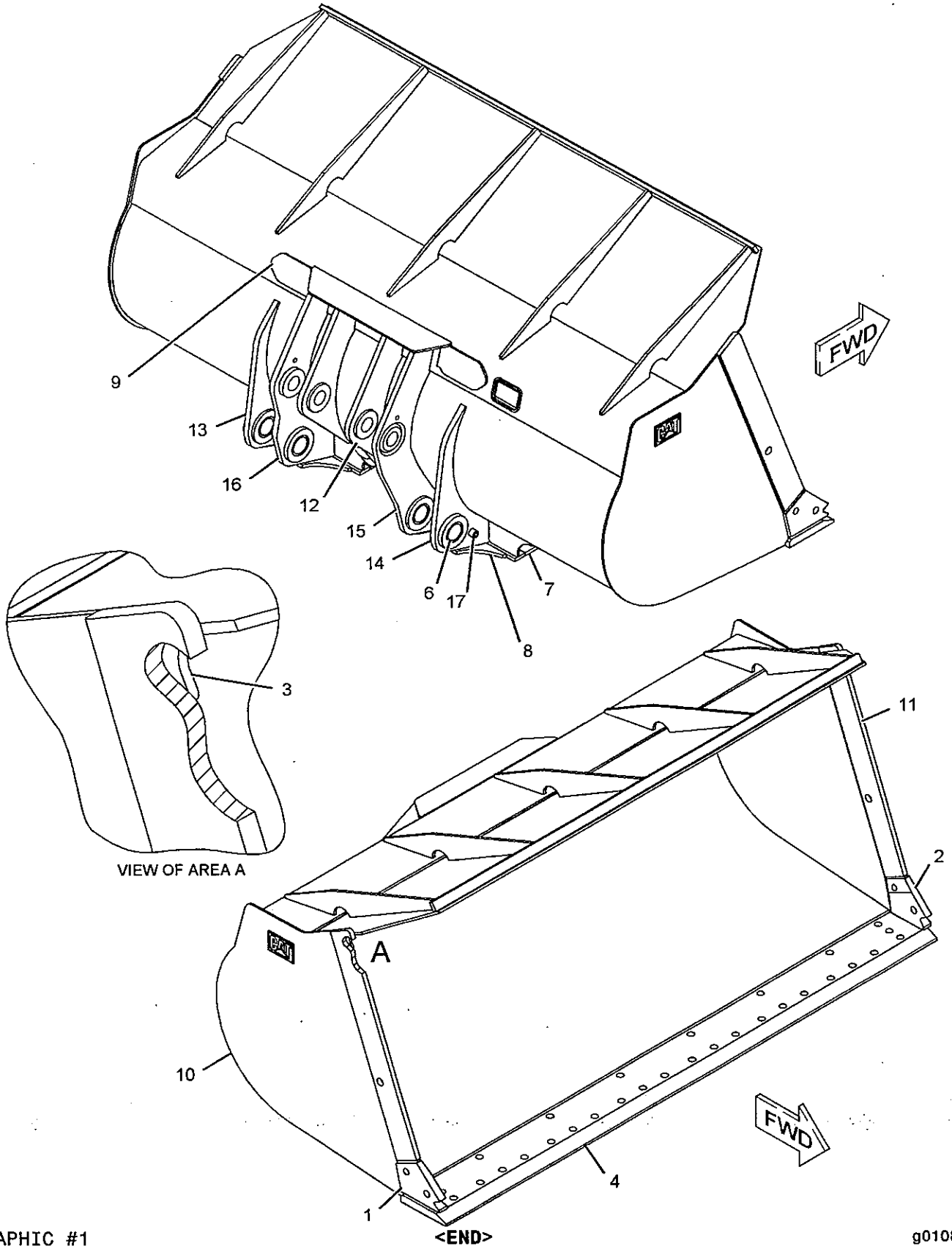


GRAPHIC #1 g01085595

# *261-8708* BUCKET AS-GENERAL PURPOSE

S/N: JMS1-UP
5.40-CU M (7.0-CU YD)
PART OF 261-8703 BUCKET GP-GENERAL PURPOSE
AN ATTACHMENT

SMCS-6101

i02287905

| NOTE | REF NO | GRAPHIC REF | PART NUMBER | QTY | PART NAME 1 2 3 4 5 6 (PRODUCT LEVEL) | SEE PAGE |
|---|---|---|---|---|---|---|
| | 1 | 1 | **187-4035** | 1 | HINGE AS (LIFT, OUTER, LH) | |
| | 2 | 1 | **187-4037** | 1 | HINGE AS (LIFT, INNER, LH) | |
| | 3 | 1 | **111-9755** | 2 | HINGE AS (TILT, RH, LH) | |
| | 4 | 1 | **187-4039** | 1 | HINGE AS (LIFT, INNER, LH) | |
| | 5 | 1 | **187-4034** | 1 | HINGE AS (LIFT, OUTER, RH) | |
| | 6 | 1 | **111-9741** | 1 | PLATE AS | |
| | 7 | 1 | **111-9761** | 4 | PLATE | |
| | 8 | 1 | **185-7221** | 4 | SLEEVE | |
| | 9 | 1 | *219-7860* | 1 | PLATE AS | |
| | | 1 | **124-8194** | 1 | PLATE | |
| | | 1 | **124-8197** | 1 | BAR | |
| | 10 | 1 | *219-7861* | 1 | PLATE AS | |
| | | 1 | **124-8194** | | PLATE | |
| | | 1 | **124-8197** | | BAR | |
| | 11 | 1 | **6W-9305** | 2 | PLATE | |
| | 12 | 1 | **261-8713** | 1 | EDGE AS-CUTTING (K-100) | |
| | 13 | 1 | **8P-9770** | 1 | PLATE | |
| | 14 | 1 | **136-0878** | 1 | EDGE-CUTTING | |
| | 15 | 1 | **229-7104** | 8 | ADAPTER-TIP (K-100, FLUSH MOUNT) | |

## *261-8708* BUCKET AS-GENERAL PURPOSE *(contd.)* i02287905

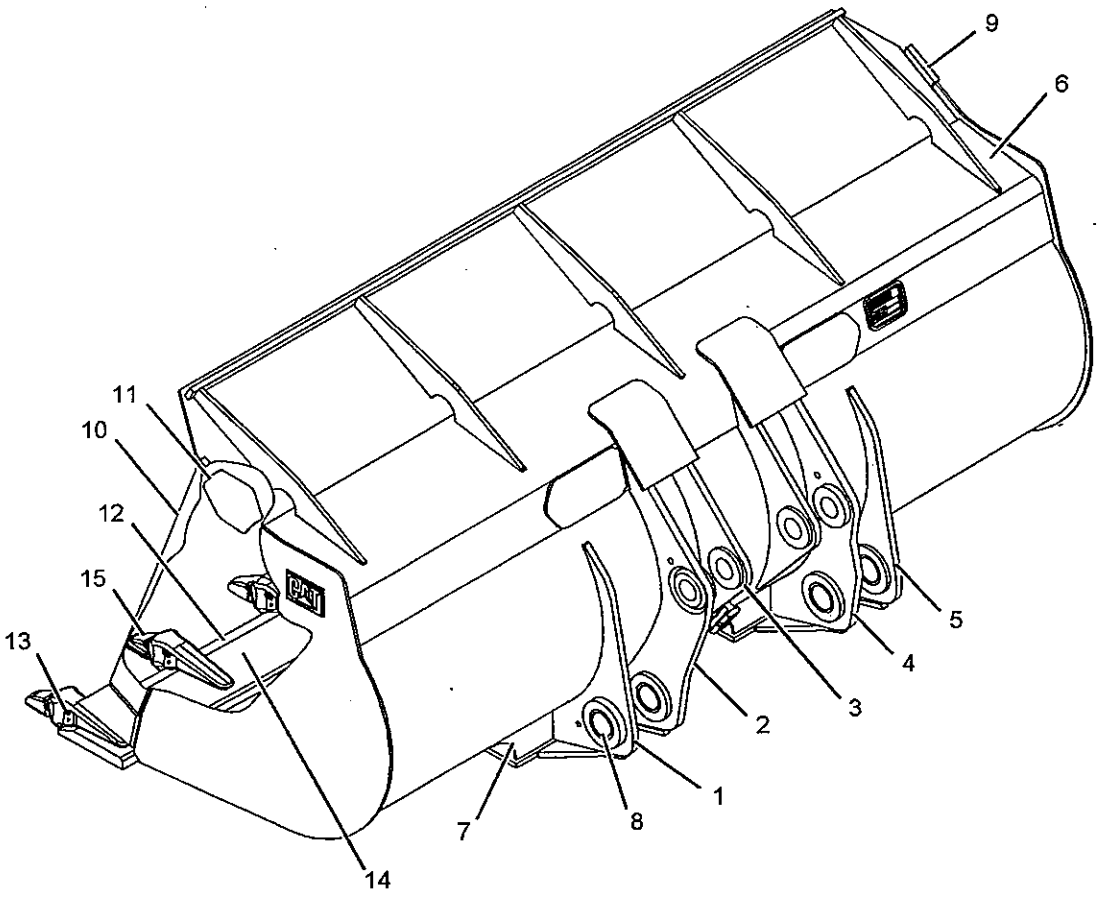


GRAPHIC #1 **<END>** g01144832

# WORK TOOLS

## *260-1386* BUCKET AS-ROCK

S/N: JMS1-UP
4.50-CU M (5.75-CU YD)
PART OF 260-1388 BUCKET GP-ROCK
AN ATTACHMENT

SMCS-6102

i02284038

| NOTE | REF NO | GRAPHIC REF | PART NUMBER | QTY | PART NAME 1 2 3 4 5 6 (PRODUCT LEVEL) | SEE PAGE |
|---|---|---|---|---|---|---|
| | 1 | 1 | **187-4043** | 1 | HINGE AS (LIFT, OUTER, LH) | |
| | 2 | 1 | **187-4047** | 1 | HINGE AS (LIFT, INNER, LH) | |
| | 3 | 1 | **113-3271** | 2 | HINGE AS (TILT) | |
| | 4 | 1 | **187-4049** | 1 | HINGE AS (LIFT, INNER, RH) | |
| | 5 | 1 | **187-4041** | 1 | HINGE AS (LIFT, OUTER, RH) | |
| | 6 | 1 | **134-1759** | 2 | PLATE | |
| | 7 | 1 | **4V-1616** | 2 | PLATE | |
| | 8 | 1 | **6W-9305** | 2 | PLATE | |
| | 9 | 1 | **113-9916** | 5 | PLATE | |
| | 10 | 1 | **113-9933** | 1 | PLATE | |
| | 11 | 1 | **134-1754** | 1 | PLATE | |
| | 12 | 1 | **134-1755** | 3 | PLATE | |
| | 13 | 1 | **134-1756** | 4 | PLATE | |
| | 14 | 1 | **134-1757** | 2 | PLATE | |
| | 15 | 1 | **134-1758** | 2 | PLATE | |
| | 16 | 1 | **185-7221** | 4 | SLEEVE | |
| | 17 | 1 | *219-7870* | 1 | PLATE AS | |
| | | 1 | **134-1752** | 1 | PLATE | |
| | | 1 | **134-1753** | 1 | BAR | |
| | 18 | 1 | *219-7871* | 1 | PLATE AS | |
| | | 1 | **134-1752** | 1 | PLATE | |
| | | 1 | **134-1753** | 1 | BAR | |
| | 19 | 1 | **260-1384** | 1 | EDGE AS (K110) | |
| | 20 | 1 | **229-7110** | 2 | ADAPTER-TIP (K-110, 2-STRAP, OUTER) | |
| | 21 | 1 | **232-2114** | 6 | ADAPTER-TIP (K-110, 2-STRAP, CENTER) | |

## 260-1386 BUCKET AS-ROCK (contd.)

i02284038

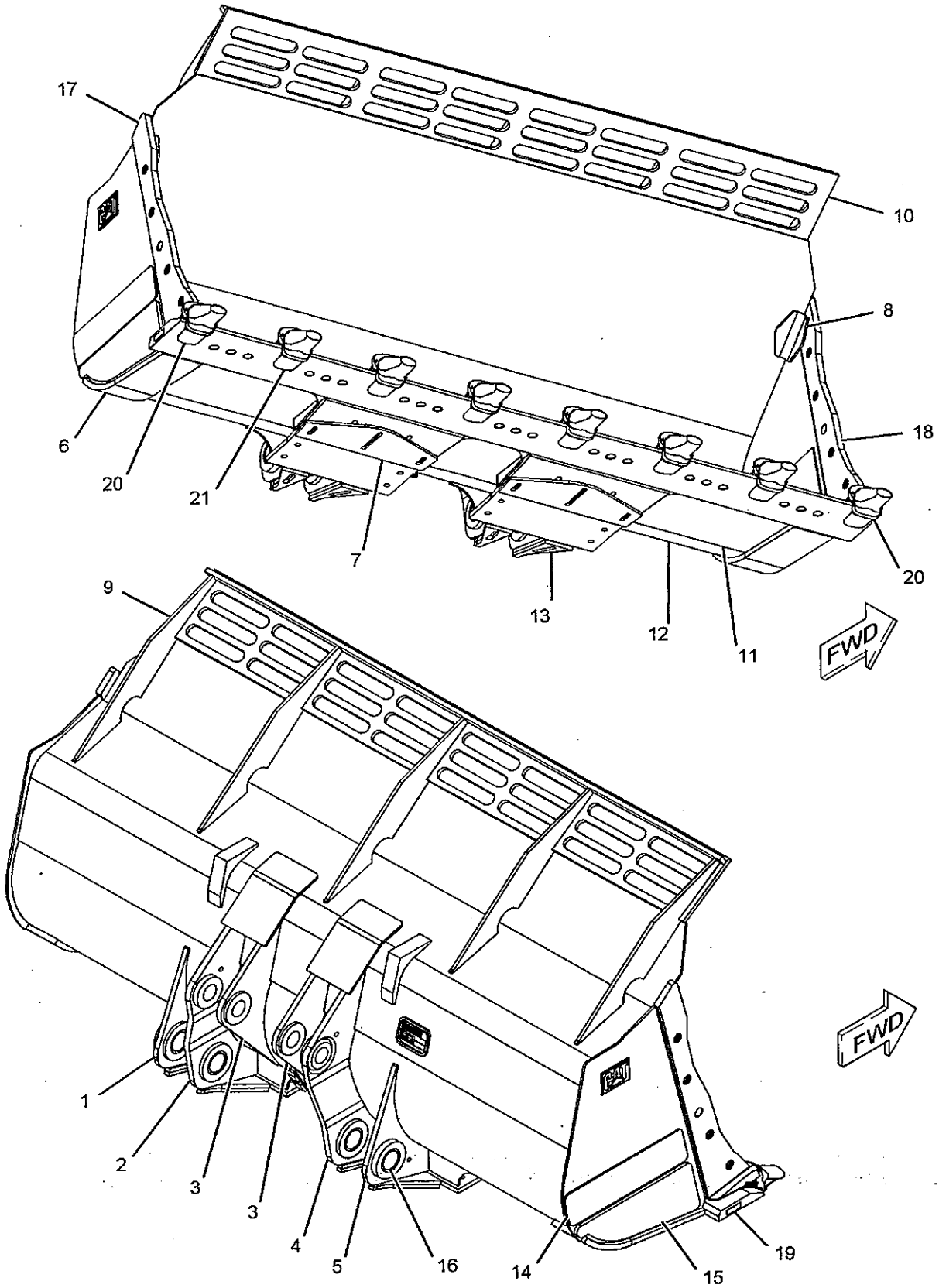


GRAPHIC #1

<END>

g01145030

# WORK TOOLS

## *260-1387* BUCKET AS-ROCK

S/N: JMS1-UP
4.50-CU M (5.75 CU YD)
PART OF 260-1389 BUCKET GP-ROCK
AN ATTACHMENT

SMCS-6102

i02284039

| NOTE | REF NO | GRAPHIC REF | PART NUMBER | QTY | PART NAME 1 2 3 4 5 6 (PRODUCT LEVEL) | SEE PAGE |
|---|---|---|---|---|---|---|
| | 1 | 1 | **187-4043** | 1 | HINGE AS (LIFT, OUTER, LH) | |
| | 2 | 1 | **187-4047** | 1 | HINGE AS (LIFT, INNER, LH) | |
| | 3 | 1 | **113-3271** | 2 | HINGE AS (TILT) | |
| | 4 | 1 | **187-4049** | 1 | HINGE AS (LIFT, INNER, RH) | |
| | 5 | 1 | **187-4041** | 1 | HINGE AS (LIFT, OUTER, RH) | |
| | 6 | 1 | **4V-1616** | 2 | PLATE | |
| | 7 | 1 | **6W-9305** | 2 | PLATE | |
| | 8 | 1 | **113-9916** | 5 | PLATE | |
| | 9 | 1 | **113-9933** | 1 | PLATE | |
| | 10 | 1 | **134-1754** | 1 | PLATE | |
| | 11 | 1 | **134-1755** | 3 | PLATE | |
| | 12 | 1 | **134-1756** | 4 | PLATE | |
| | 13 | 1 | **134-1757** | 2 | PLATE | |
| | 14 | 1 | **134-1758** | 2 | PLATE | |
| | 15 | 1 | **134-1759** | 2 | PLATE | |
| | 16 | 1 | **185-7221** | 4 | SLEEVE | |
| | 17 | 1 | *219-7870* | 1 | PLATE AS | |
| | | 1 | **134-1752** | 1 | PLATE | |
| | | 1 | **134-1753** | 1 | BAR | |
| | 18 | 1 | *219-7871* | 1 | PLATE AS | |
| | | 1 | **134-1752** | 1 | PLATE | |
| | | 1 | **134-1753** | 1 | BAR | |
| Y | 19 | 1 | **260-1385** | 1 | EDGE GP-CUTTING (K-110) | 771 |

Y-SEPARATE ILLUSTRATION

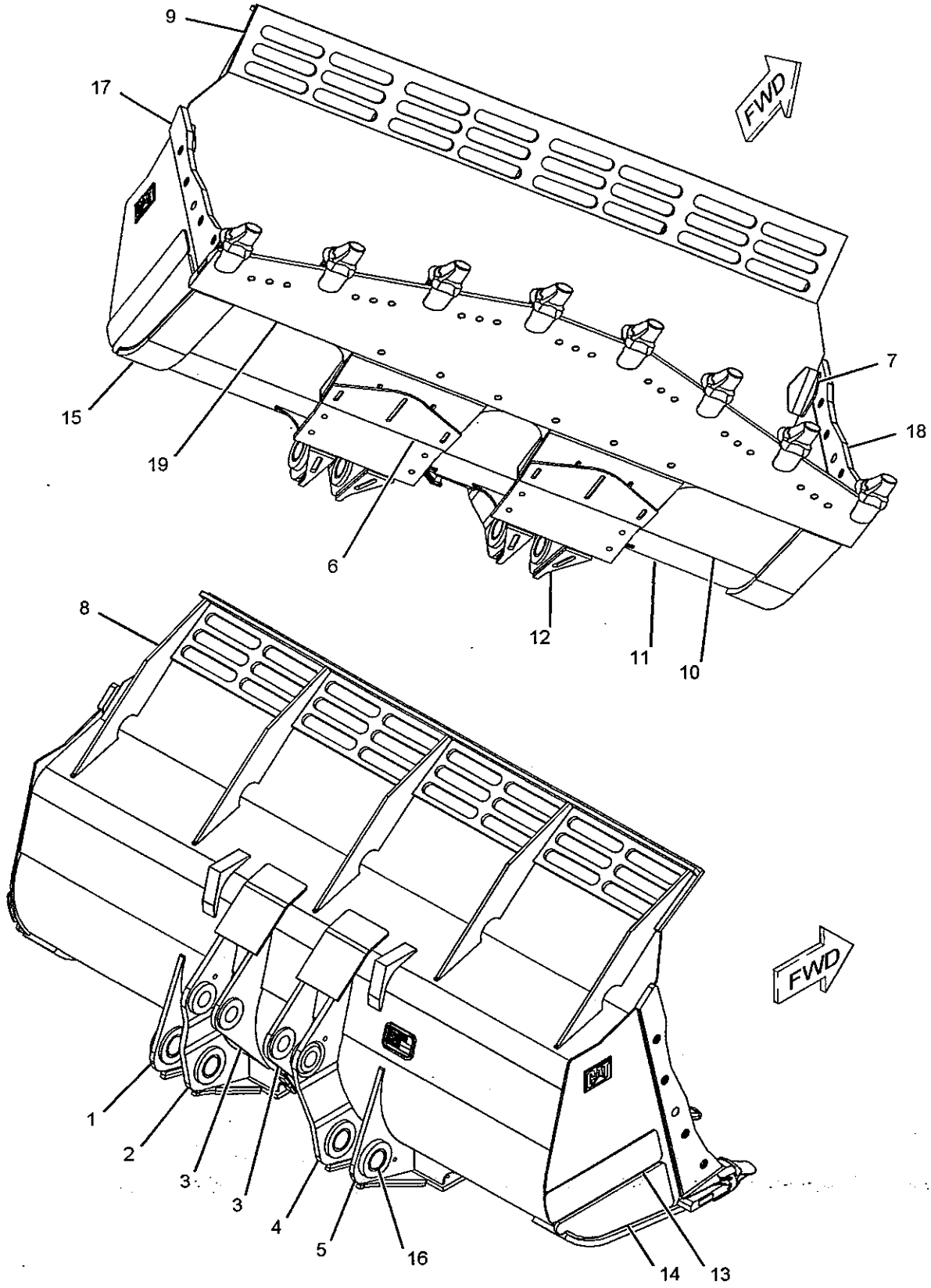


GRAPHIC #1 **<END>** g01145485

# WORK TOOLS

## *261-8709* BUCKET AS-ROCK

**S/N: JMS1-UP**
**4.2-CU M (5.50-CU YD)**
**PART OF 261-8704 BUCKET GP-ROCK**
**AN ATTACHMENT**

**SMCS-6102** **i02284064**

| NOTE | REF NO | GRAPHIC REF | PART NUMBER | QTY | PART NAME 1 2 3 4 5 6 (PRODUCT LEVEL) | SEE PAGE |
|---|---|---|---|---|---|---|
| | 1 | 1 | **187-4043** | 1 | HINGE AS (LIFT, OUTER, LH) | |
| | 2 | 1 | **187-4047** | 1 | HINGE AS (LIFT, INNER, LH) | |
| | 3 | 1 | **113-3271** | 2 | HINGE AS (TILT) | |
| | 4 | 1 | **187-4049** | 1 | HINGE AS (LIFT, INNER, RH) | |
| | 5 | 1 | **187-4041** | 1 | HINGE AS (LIFT, OUTER, RH) | |
| | 6 | 1 | **4V-1616** | 2 | PLATE | |
| | 7 | 1 | **6W-9305** | 2 | PLATE | |
| | 8 | 1 | **113-9916** | 5 | PLATE | |
| | 9 | 1 | **113-9933** | 1 | PLATE | |
| | 10 | 1 | **185-7221** | 4 | SLEEVE | |
| | 11 | 1 | *219-7864* | 1 | PLATE AS | |
| | | 1 | **113-9931** | 1 | BAR | |
| | | 1 | **113-9928** | 1 | PLATE | |
| | 12 | 1 | *219-7865* | 1 | PLATE AS | |
| | | 1 | **113-9931** | 1 | BAR | |
| | | 1 | **113-9928** | 1 | PLATE | |
| | 13 | 1 | *261-8714* | 1 | EDGE AS (K-100) | |
| | 14 | 1 | **8P-9770** | 1 | PLATE | |
| | 15 | 1 | **123-1396** | 1 | EDGE | |
| | 16 | 1 | **223-8104** | 2 | ADAPTER-TIP (K-100, 2-STRAP, CENTER) | |
| | 17 | 1 | **223-8105** | 3 | ADAPTER-TIP (K-100, 2-STRAP, RH) | |
| | 18 | 1 | **223-8106** | 3 | ADAPTER-TIP (K-100, 2-STRAP, LH) | |

## 261-8709 BUCKET AS-ROCK *(contd.)*

i02284064

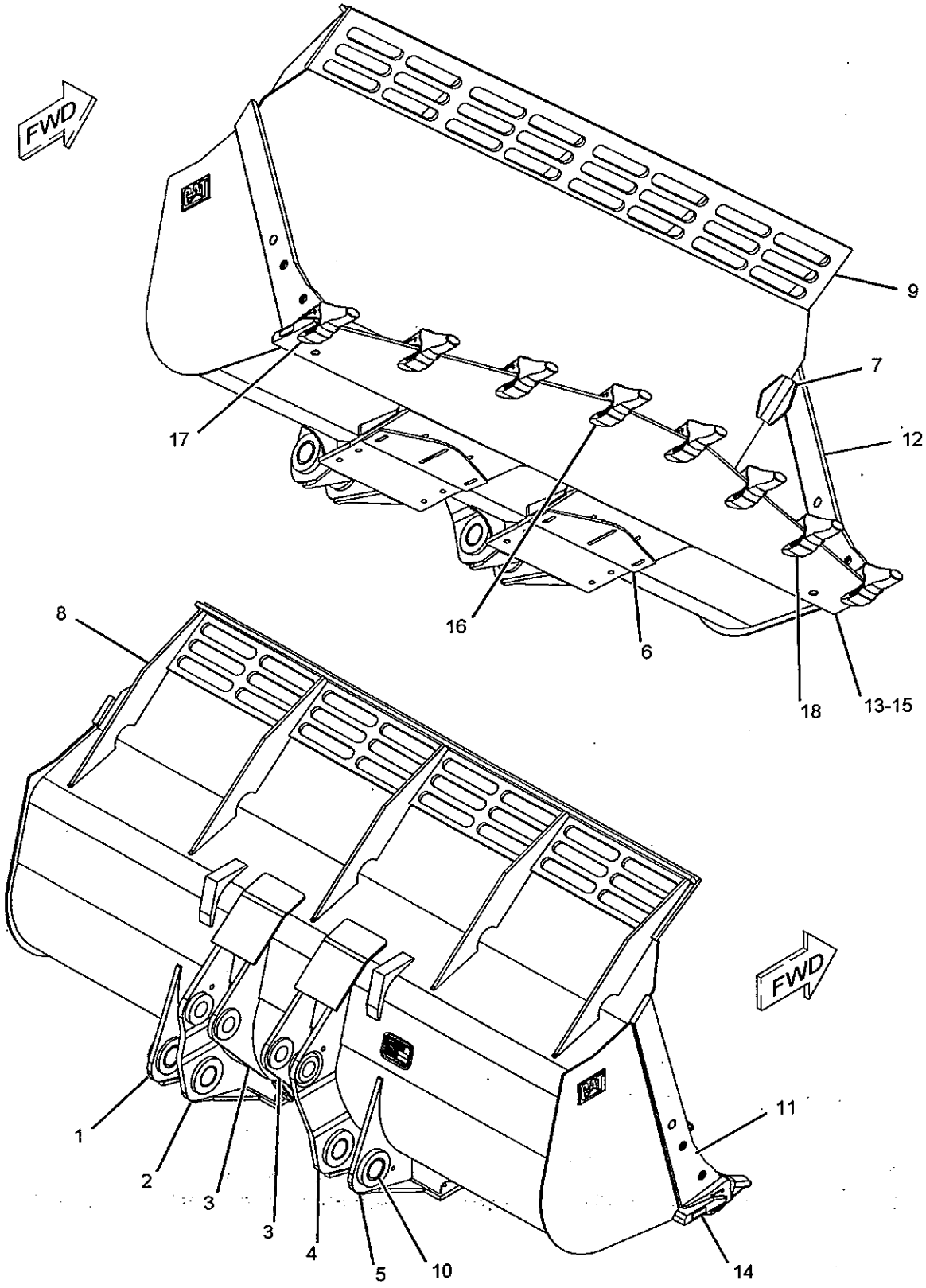


GRAPHIC #1

<END>

g01144800

# WORK TOOLS

## *261-8711* BUCKET AS-ROCK

**S/N: JMS1-UP**
**4.5-CU M (5.75-CU YD)**
**PART OF 261-8706 BUCKET GP-ROCK**
**AN ATTACHMENT**

**SMCS-6102** **i02284066**

| NOTE | REF NO | GRAPHIC REF | PART NUMBER | QTY | PART NAME 1 2 3 4 5 6 (PRODUCT LEVEL) | SEE PAGE |
|---|---|---|---|---|---|---|
| | 1 | 1 | **187-4043** | 1 | HINGE AS (LIFT, OUTER, LH) | |
| | 2 | 1 | **187-4047** | 1 | HINGE AS (LIFT, INNER, LH) | |
| | 3 | 1 | **113-3271** | 2 | HINGE AS (TILT) | |
| | 4 | 1 | **187-4049** | 1 | HINGE AS (LIFT, INNER, RH) | |
| | 5 | 1 | **187-4041** | 1 | HINGE AS (LIFT, OUTER, RH) | |
| | 6 | 1 | **4V-1616** | 2 | PLATE | |
| | 7 | 1 | **6W-9305** | 2 | PLATE | |
| | 8 | 1 | **113-9916** | 5 | PLATE | |
| | 9 | 1 | **113-9933** | 1 | PLATE | |
| | 10 | 1 | **185-7221** | 4 | SLEEVE | |
| | 11 | 1 | *219-7864* | 1 | PLATE AS | |
| | | 1 | **113-9928** | 1 | PLATE | |
| | | 1 | **113-9931** | 1 | BAR | |
| | 12 | 1 | *219-7865* | 1 | PLATE AS | |
| | | 1 | **113-9928** | 1 | PLATE | |
| | | 1 | **113-9931** | 1 | BAR | |
| | 13 | 1 | **261-8715** | 1 | EDGE AS-CUTTING (K-100) | |
| | 14 | 1 | **8P-9770** | 1 | PLATE | |
| | 15 | 1 | **113-9942** | 1 | EDGE | |
| | 16 | 1 | **223-8104** | 2 | ADAPTER-TIP (K-100, 2-STRAP, CENTER) | |
| | 17 | 1 | **223-8105** | 3 | ADAPTER-TIP (K-100, 2-STRAP, RH) | |
| | 18 | 1 | **223-8106** | 3 | ADAPTER-TIP (K-100, 2-STRAP, LH) | |

## *261-8711* **BUCKET AS-ROCK** *(contd.)*

i02284066

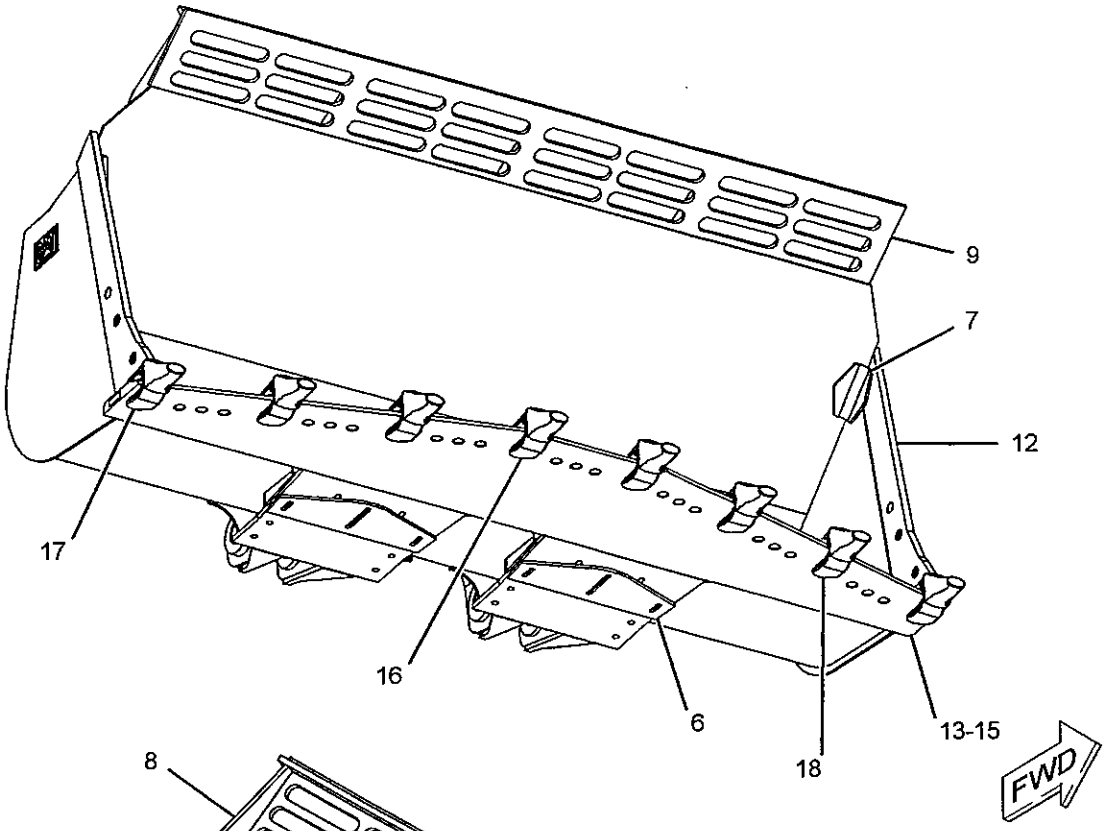


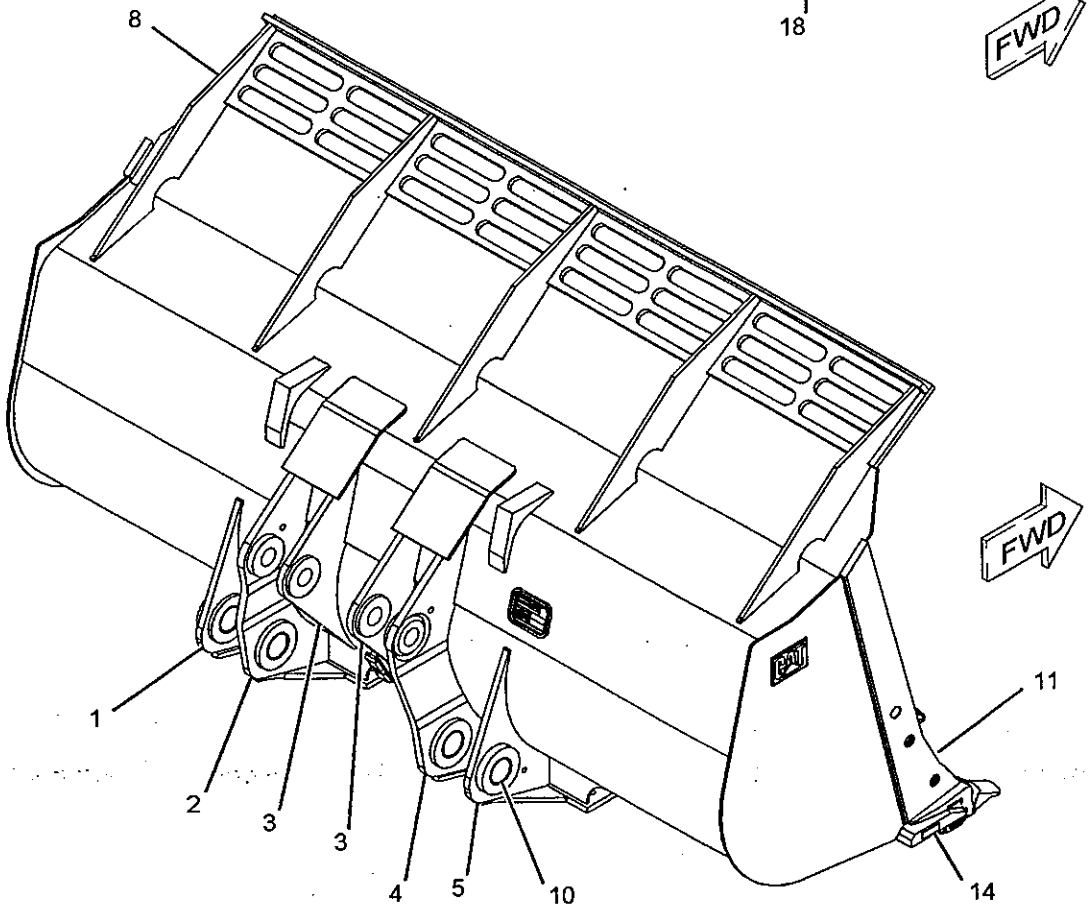


GRAPHIC #1

**<END>**

g01145009

# WORK TOOLS

## *261-8712* BUCKET AS-ROCK

**S/N: JMS1-UP**
**4.50-CU M (5.75-CU YD)**
**PART OF 261-8707 BUCKET GP-ROCK**
**AN ATTACHMENT**

**SMCS-6102** **i02284047**

| NOTE | REF NO | GRAPHIC REF | PART NUMBER | QTY | PART NAME 1 2 3 4 5 6 (PRODUCT LEVEL) | SEE PAGE |
|---|---|---|---|---|---|---|
| | 1 | 1 | **187-4043** | 1 | HINGE AS (LIFT, OUTER, LH) | |
| | 2 | 1 | **187-4047** | 1 | HINGE AS (LIFT, INNER, LH) | |
| | 3 | 1 | **113-3271** | 2 | HINGE AS (TILT) | |
| | 4 | 1 | **187-4049** | 1 | HINGE AS (LIFT, INNER, RH) | |
| | 5 | 1 | **187-4041** | 1 | HINGE AS (LIFT, OUTER, RH) | |
| | 6 | 1 | **4V-1616** | 2 | PLATE | |
| | 7 | 1 | **6W-9305** | 2 | PLATE | |
| | 8 | 1 | **113-9916** | 5 | PLATE | |
| | 9 | 1 | **113-9933** | 1 | PLATE | |
| | 10 | 1 | **138-0006** | 4 | RETAINER-G.E.T. | |
| | 11 | 1 | **138-0030** | 4 | BASE-WEAR PLATE | |
| | 12 | 1 | **138-0032** | 4 | PLATE-WEAR | |
| | 13 | 1 | **185-7221** | 4 | SLEEVE | |
| | 14 | 1 | *219-7864* | 1 | PLATE AS | |
| | | 1 | **113-9928** | 1 | PLATE | |
| | | 1 | **113-9931** | 1 | BAR | |
| | 15 | 1 | *219-7865* | 1 | PLATE AS | |
| | | 1 | **113-9928** | 1 | PLATE | |
| | | 1 | **113-9931** | 1 | BAR | |
| | 16 | 1 | *261-8715* | 1 | EDGE AS-CUTTING (K-100) | |
| | 17 | 1 | **8P-9770** | 1 | PLATE | |
| | 18 | 1 | **113-9942** | 1 | EDGE | |
| | 19 | 1 | **223-8104** | 2 | ADAPTER-TIP (K-100, 2-STRAP, CENTER) | |
| | 20 | 1 | **223-8105** | 3 | ADAPTER-TIP (K-100, 2-STRAP, RH) | |
| | 21 | 1 | **223-8106** | 3 | ADAPTER-TIP (K-100, 2-STRAP, LH) | |

## *261-8712* **BUCKET AS-ROCK** *(contd.)*

i02284047

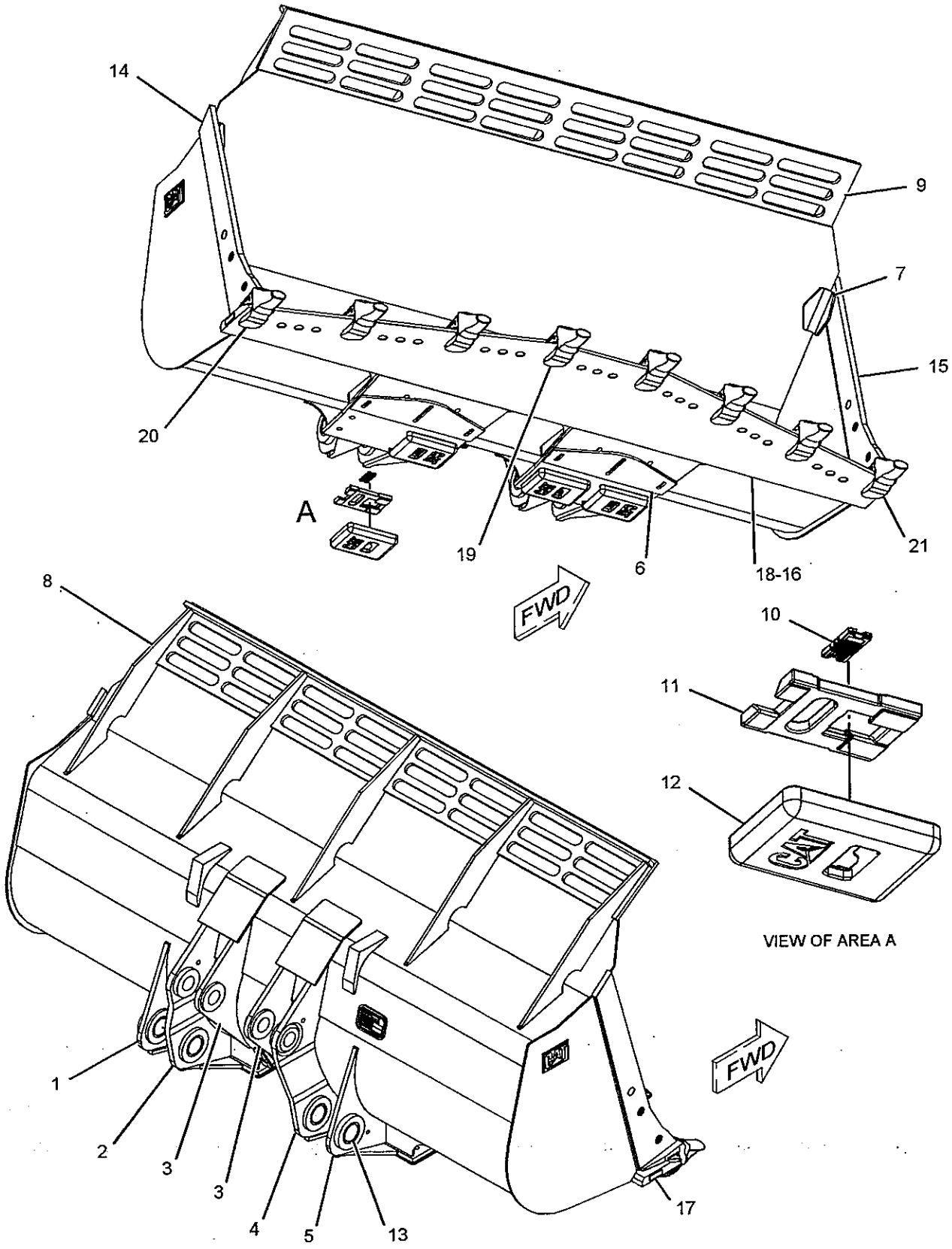


GRAPHIC #1

<END>

g01145862

# WORK TOOLS

## 237-7240 BUCKET GP-GENERAL PURPOSE

**S/N: JMS1-UP**

**PART OF 251-1099, 266-2302 BUCKET AR-GENERAL PURPOSE AN ATTACHMENT**

**SMCS-6101** **i02202679**

| NOTE | REF NO | GRAPHIC REF | PART NUMBER | QTY | PART NAME 1 2 3 4 5 6 (PRODUCT LEVEL) | SEE PAGE |
|---|---|---|---|---|---|---|
| | 1 | 1 | **109-9215** | 2 | PLATE-WEAR | |
| Y | 2 | 1 | *249-5036* | 1 | BUCKET AS-GENERAL PURPOSE | 749 |
| | 3 | 1 | **2J-3506** | 8 | NUT-FULL (3/4-10-THD) | |
| | 4 | 1 | **5J-4773** | 8 | BOLT-PLOW (3/4-10X2.5-IN) | |
| | 5 | 1 | **5P-8248** | 8 | WASHER-HARD (20X36.5X3.5-MM THK) | |

Y-SEPARATE ILLUSTRATION

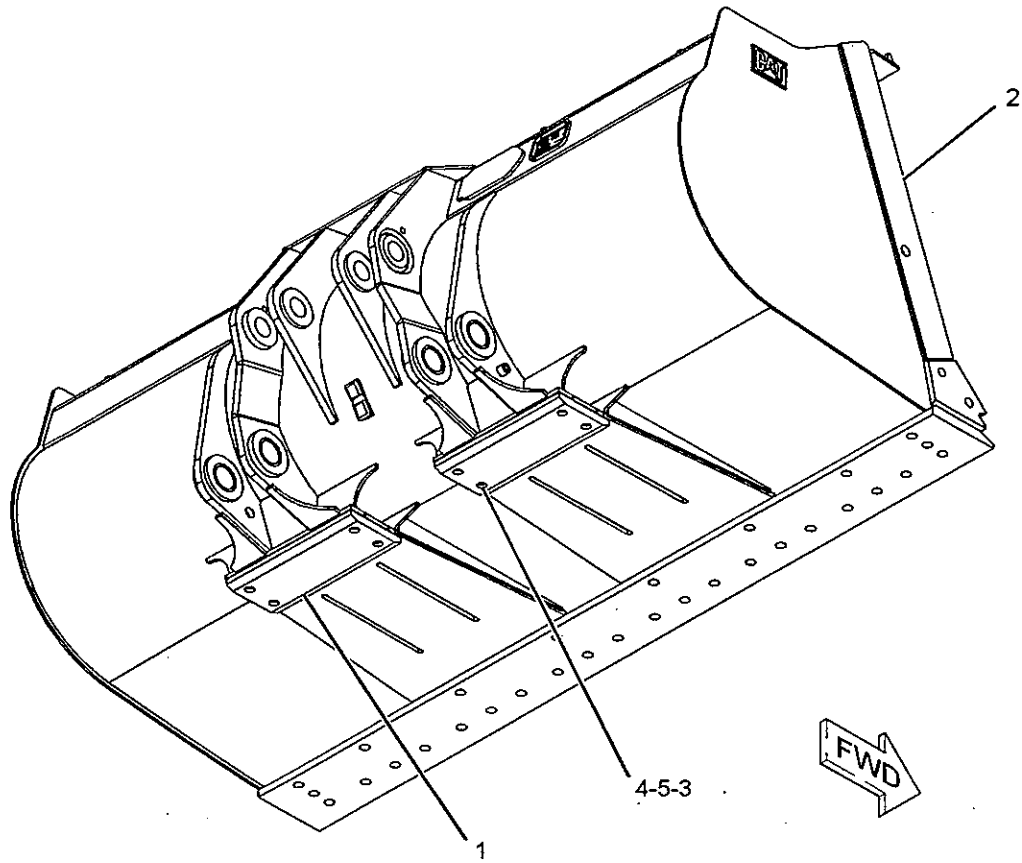


GRAPHIC #1 **<END>** g01112163

# WORK TOOLS

## *261-8703* BUCKET GP-GENERAL PURPOSE

**S/N: JMS1-UP**
**5.4-CU M (7.0-CU YD)**
**AN ATTACHMENT**

**SMCS-6101** **i02284060**

| NOTE | REF NO | GRAPHIC REF | PART NUMBER | QTY | PART NAME 1 2 3 4 5 6 (PRODUCT LEVEL) | SEE PAGE |
|---|---|---|---|---|---|---|
| | 1 | 1 | **109-9215** | 2 | PLATE-WEAR | |
| | 2 | 1 | **5P-8248** | 8 | WASHER-HARD (20X36.5X3.5-MM THK) | |
| Y | 3 | 1 | *261-8708* | 1 | BUCKET AS-GENERAL PURPOSE | 751 |
| | 4 | 1 | **2J-3506** | 8 | NUT-FULL (3/4-10-THD) | |
| | 5 | 1 | **5J-4773** | 8 | BOLT-PLOW (3/4-10X2.5-IN) | |

Y-SEPARATE ILLUSTRATION

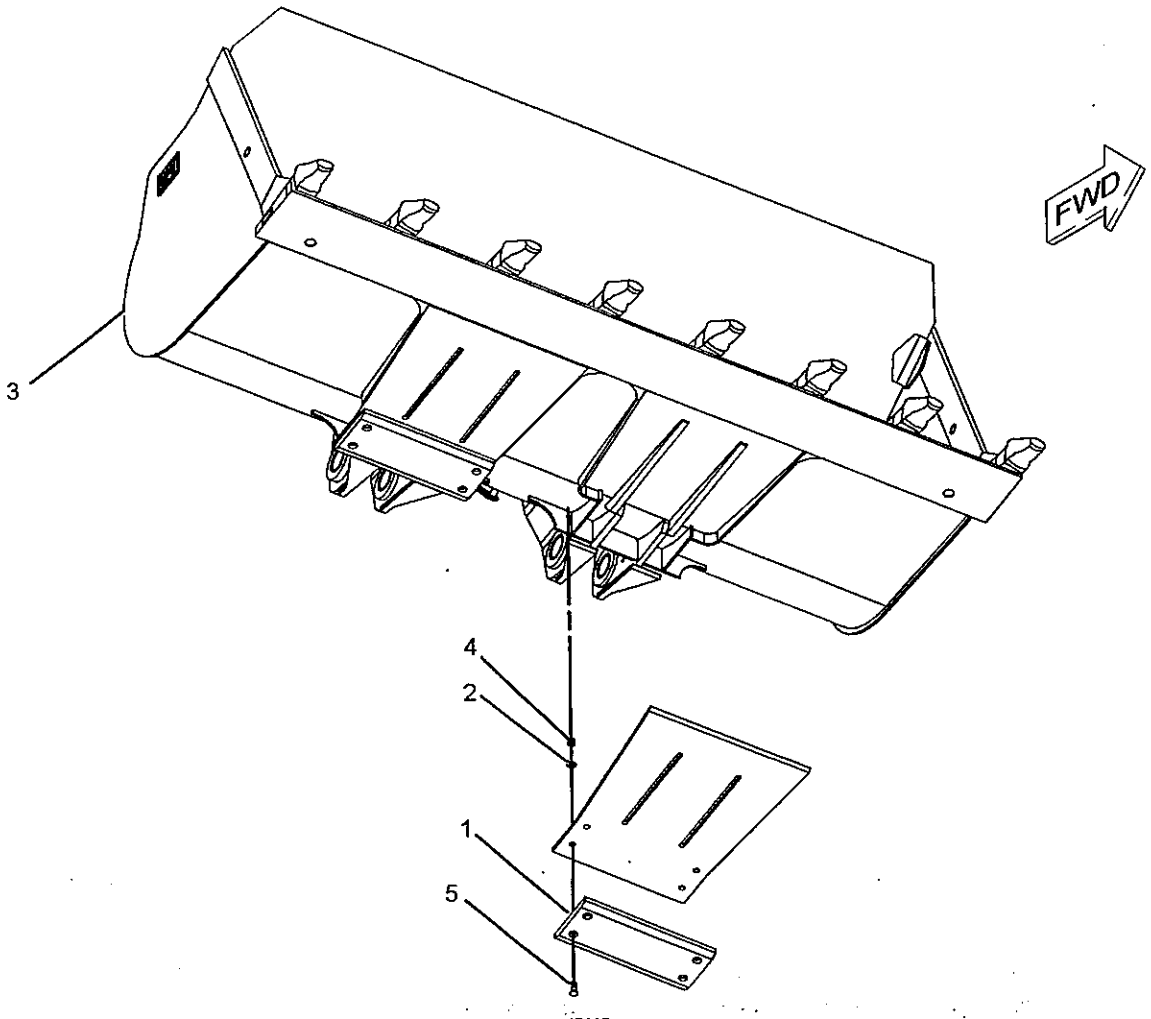


GRAPHIC #1

**<END>**

g01144870

# WORK TOOLS

## *260-1388* BUCKET GP-ROCK

**S/N: JMS1-UP**
**4.5-CU M (5.75-CU YD)**
**AN ATTACHMENT**

**SMCS-6102** **i02284061**

| NOTE | REF NO | GRAPHIC REF | PART NUMBER | QTY | PART NAME 1 2 3 4 5 6 (PRODUCT LEVEL) | SEE PAGE |
|---|---|---|---|---|---|---|
| | 1 | 1 | **109-9215** | 2 | PLATE-WEAR | |
| | 2 | 1 | **5P-8248** | 8 | WASHER-HARD (20X36.5X3.5-MM THK) | |
| Y | 3 | 1 | *260-1386* | 1 | BUCKET AS-ROCK | 753 |
| | 4 | 1 | **2J-3506** | 8 | NUT-FULL (3/4-10-THD) | |
| | 5 | 1 | **5J-4773** | 8 | BOLT-PLOW (3/4-10X2.5-IN) | |

Y-SEPARATE ILLUSTRATION

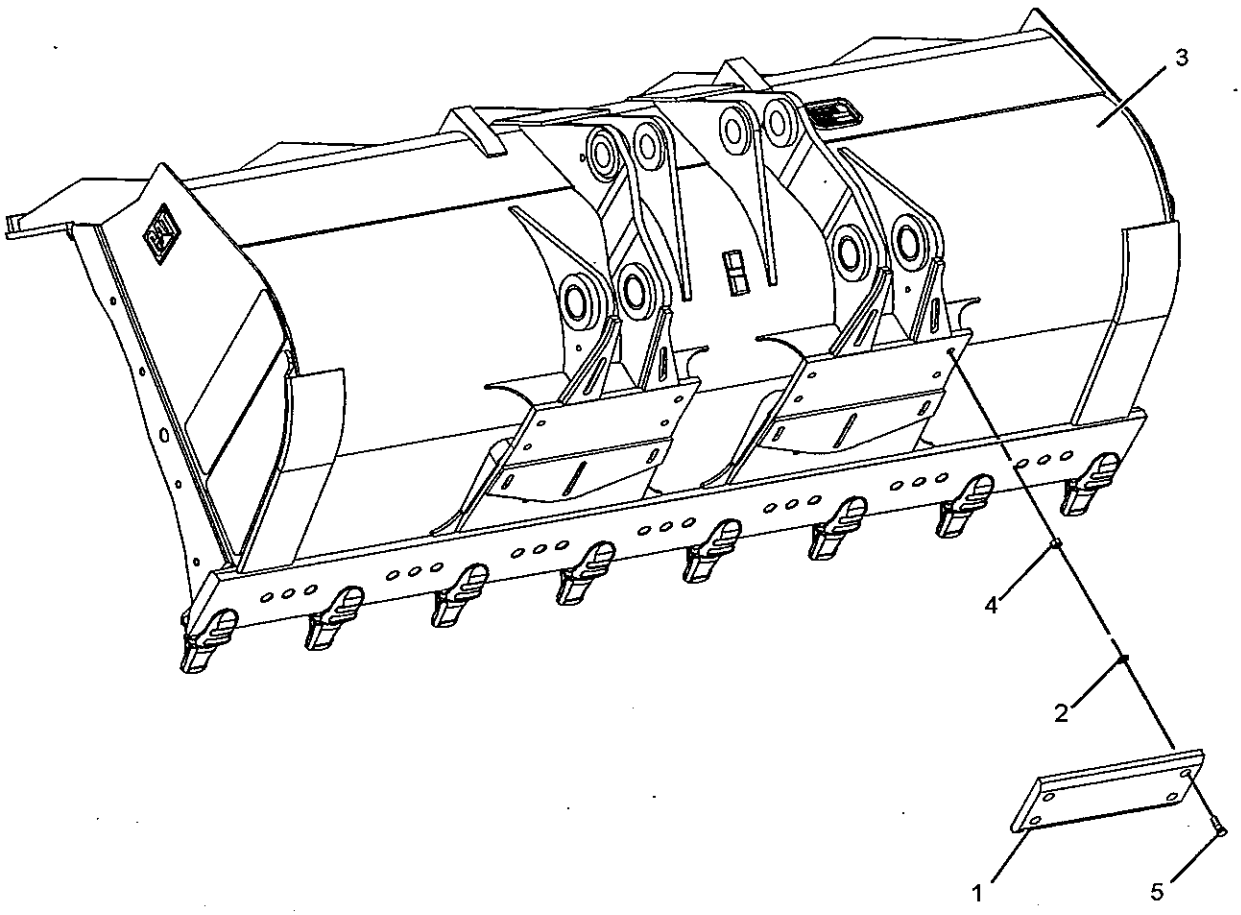


GRAPHIC #1 **<END>** g01144977

# WORK TOOLS

## *260-1389* BUCKET GP-ROCK

**S/N: JMS1-UP**
**4.5-CU M (5.75-CU YD)**
**AN ATTACHMENT**

**SMCS-6102** i02284040

| NOTE | REF NO | GRAPHIC REF | PART NUMBER | QTY | PART NAME 1 2 3 4 5 6 (PRODUCT LEVEL) | SEE PAGE |
|---|---|---|---|---|---|---|
| | 1 | 1 | **109-9215** | 2 | PLATE-WEAR | |
| | 2 | 1 | **5P-8248** | 8 | WASHER-HARD (20X36.5X3.5-MM THK) | |
| Y | 3 | 1 | *260-1387* | 1 | BUCKET AS-ROCK | 755 |
| | 4 | 1 | **2J-3506** | 8 | NUT-FULL (3/4-10-THD) | |
| | 5 | 1 | **5J-4773** | 8 | BOLT-PLOW (3/4-10X2.5-IN) | |

Y-SEPARATE ILLUSTRATION

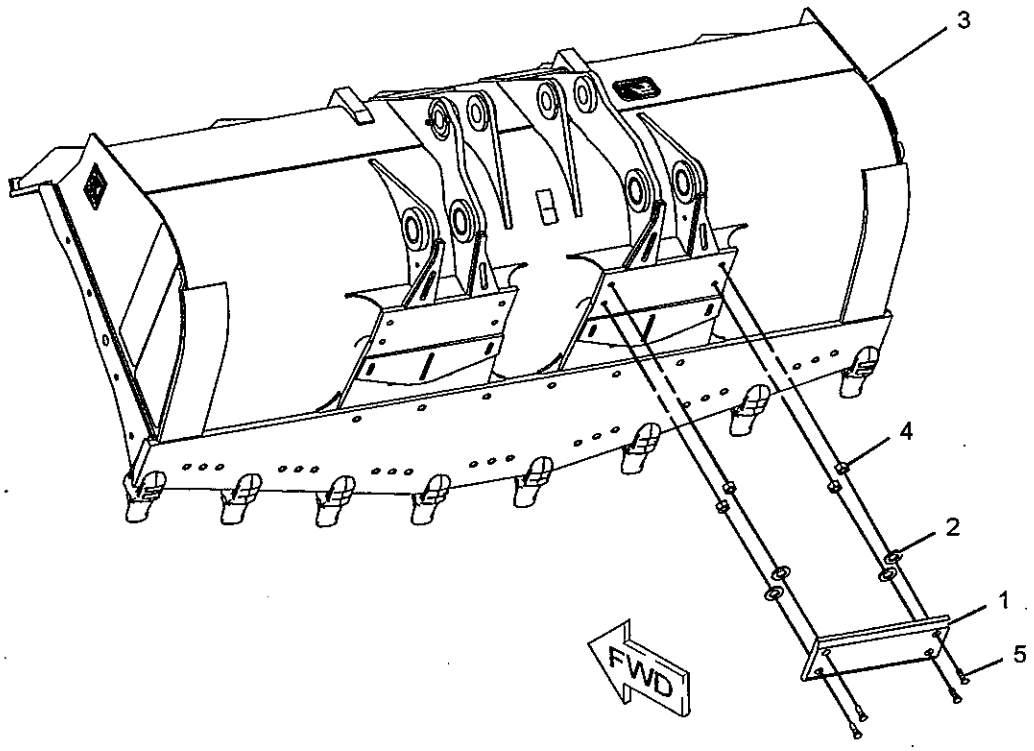


GRAPHIC #1 **<END>** g01145013

# WORK TOOLS

## *261-8704* BUCKET GP-ROCK

**S/N: JMS1-UP**
**4.2-CU M (5.5-CU YD)**
**AN ATTACHMENT**

**SMCS-6102** **i02284041**

| NOTE | REF NO | GRAPHIC REF | PART NUMBER | QTY | PART NAME 1 2 3 4 5 6 (PRODUCT LEVEL) | SEE PAGE |
|---|---|---|---|---|---|---|
| | 1 | 1 | **109-9215** | 2 | PLATE-WEAR | |
| | 2 | 1 | **5P-8248** | 8 | WASHER-HARD (20X36.5X3.5-MM THK) | |
| Y | 3 | 1 | *261-8709* | 1 | BUCKET AS-ROCK | 757 |
| | 4 | 1 | **2J-3506** | 8 | NUT-FULL (3/4-10-THD) | |
| | 5 | 1 | **5J-4773** | 8 | BOLT-PLOW (3/4-10X2.5-IN) | |

Y-SEPARATE ILLUSTRATION

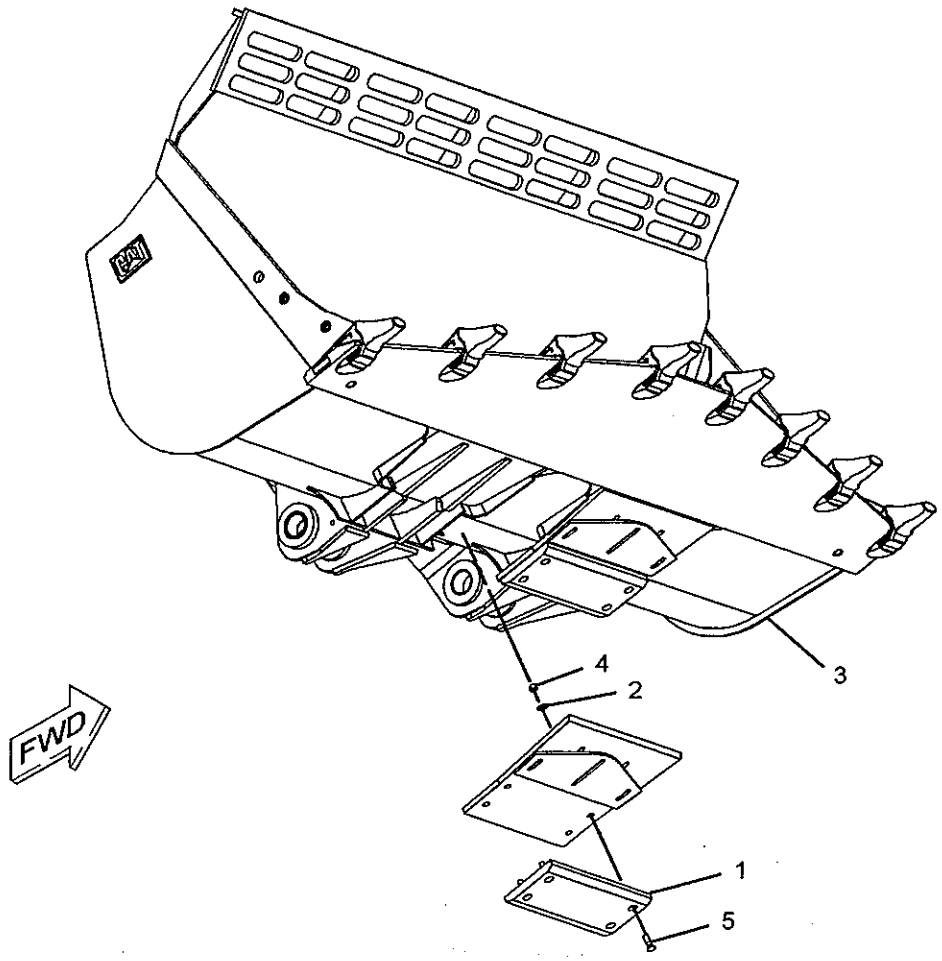


GRAPHIC #1 **<END>** g01144886

# WORK TOOLS

## *261-8706* BUCKET GP-ROCK

**S/N: JMS1-UP**
**4.50-CU M (5.75-CU YD)**
**AN ATTACHMENT**

**SMCS-6102** **i02284042**

| NOTE | REF NO | GRAPHIC REF | PART NUMBER | QTY | PART NAME 1 2 3 4 5 6 (PRODUCT LEVEL) | SEE PAGE |
|---|---|---|---|---|---|---|
| | 1 | 1 | **109-9215** | 2 | PLATE-WEAR | |
| | 2 | 1 | **5P-8248** | 8 | WASHER-HARD (20X36.5X3.5-MM THK) | |
| Y | 3 | 1 | *261-8711* | 1 | BUCKET AS-ROCK | 759 |
| | 4 | 1 | **2J-3506** | 8 | NUT-FULL (3/4-10-THD) | |
| | 5 | 1 | **5J-4773** | 8 | BOLT-PLOW (3/4-10X2.5-IN) | |

Y-SEPARATE ILLUSTRATION

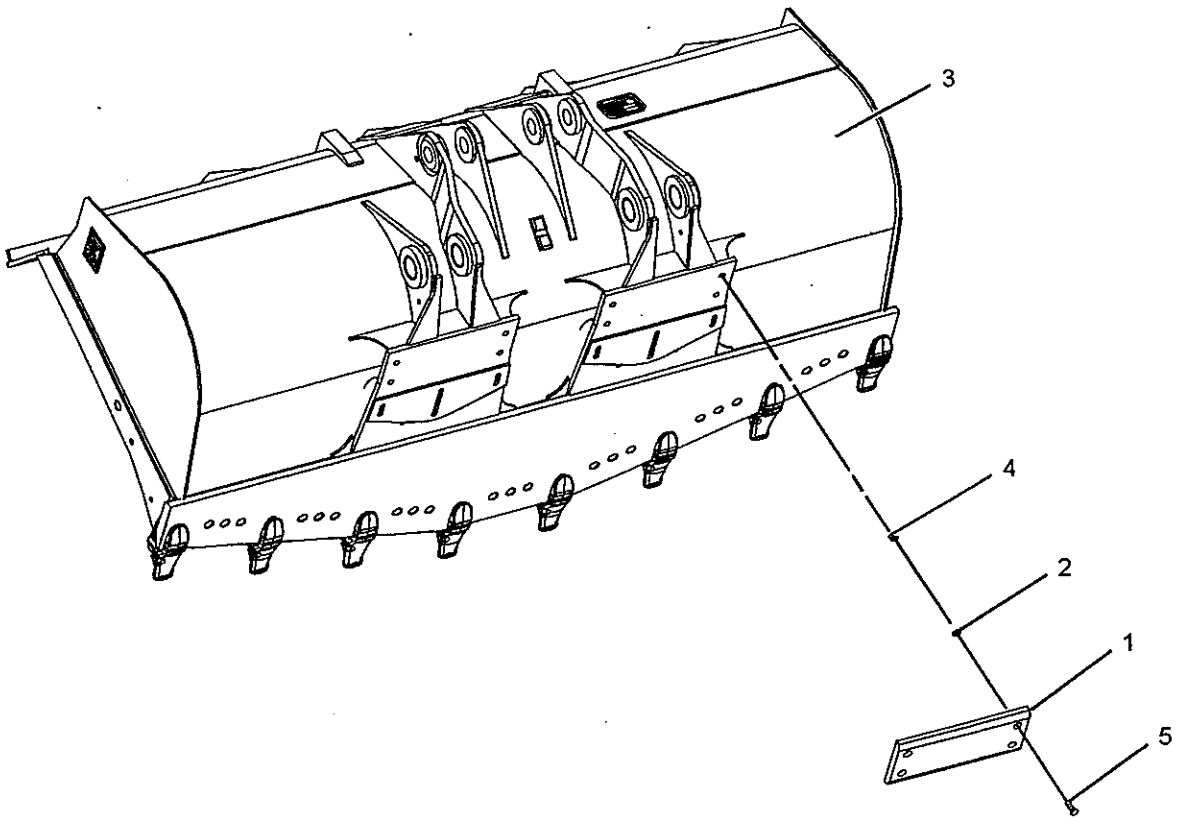


GRAPHIC #1 **<END>** g01144792

# WORK TOOLS

## *261-8707* BUCKET GP-ROCK

**S/N: JMS1-UP**
**4.50-CU M (5.75-CU YD)**
**AN ATTACHMENT**

**SMCS-6102** **i02284043**

| NOTE | REF NO | GRAPHIC REF | PART NUMBER | QTY | PART NAME 1 2 3 4 5 6 (PRODUCT LEVEL) | SEE PAGE |
|---|---|---|---|---|---|---|
| Y | 1 | 1 | *261-8712* | 1 | BUCKET AS-ROCK | 761 |

Y-SEPARATE ILLUSTRATION

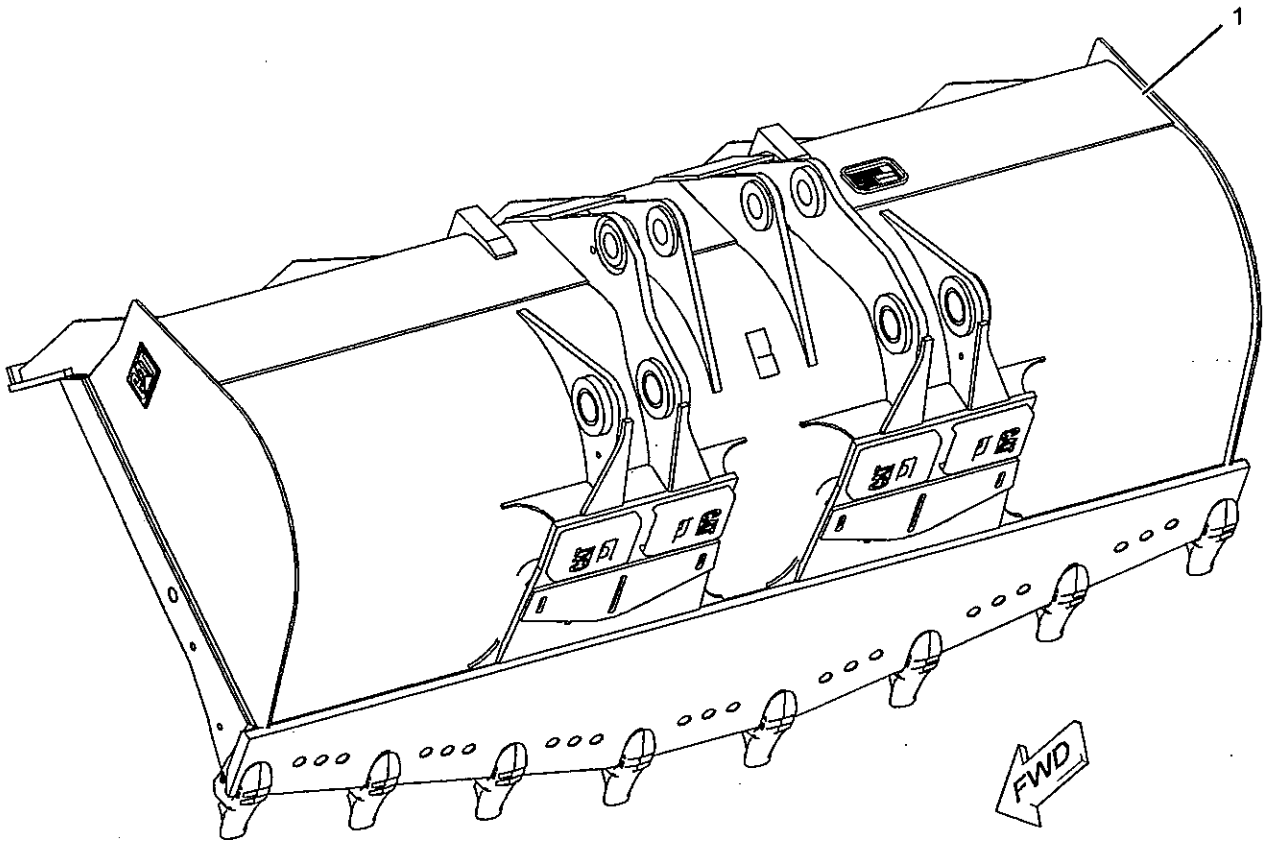


GRAPHIC #1 **<END>** g01144964

# WORK TOOLS

## 229-6959 EDGE GP-CUTTING

S/N: JMS1-UP

AN ATTACHMENT

SMCS-6801

i02283548

| NOTE | PART NUMBER | QTY | PART NAME 1 2 3 4 5 6 (PRODUCT LEVEL) | SEE PAGE |
|---|---|---|---|---|
| | 5P-8823 | 18 | BOLT-PLOW (1-1/4-7X4.13-IN) | |
| | 217-4727 | 3 | EDGE-CUTTING | |
| | 217-4726 | 2 | EDGE-END | |
| | 3K-9770 | 18 | NUT-FULL (1-1/4-7-THD) | |

<END>

# WORK TOOLS

## *260-1385* EDGE GP-CUTTING

**S/N: JMS1-UP**
**K-110**
**PART OF 260-1387 BUCKET AS-ROCK**
**AN ATTACHMENT**

**SMCS-6801** **i02286600**

| NOTE | REF NO | GRAPHIC REF | PART NUMBER | QTY | PART NAME 1 2 3 4 5 6 (PRODUCT LEVEL) | SEE PAGE |
|---|---|---|---|---|---|---|
| | 1 | 1 | **134-1748** | 1 | EDGE-CUTTING | |
| | 2 | 1 | **229-7111** | 1 | ADAPTER-TIP (K-110, 2-STRAP, RH) | |
| | 3 | 1 | **229-7112** | 1 | ADAPTER-TIP (K-110, 2-STRAP, LH) | |
| | 4 | 1 | **232-2114** | 2 | ADAPTER-TIP (K-110, 2-STRAP, CENTER) | |
| | 5 | 1 | **232-2115** | 2 | ADAPTER-TIP (K-110, 2-STRAP, RH) | |
| | 6 | 1 | **232-2116** | 2 | ADAPTER-TIP (K-110, 2-STRAP, LH) | |
| | 7 | 1 | **8P-9770** | 1 | PLATE | |

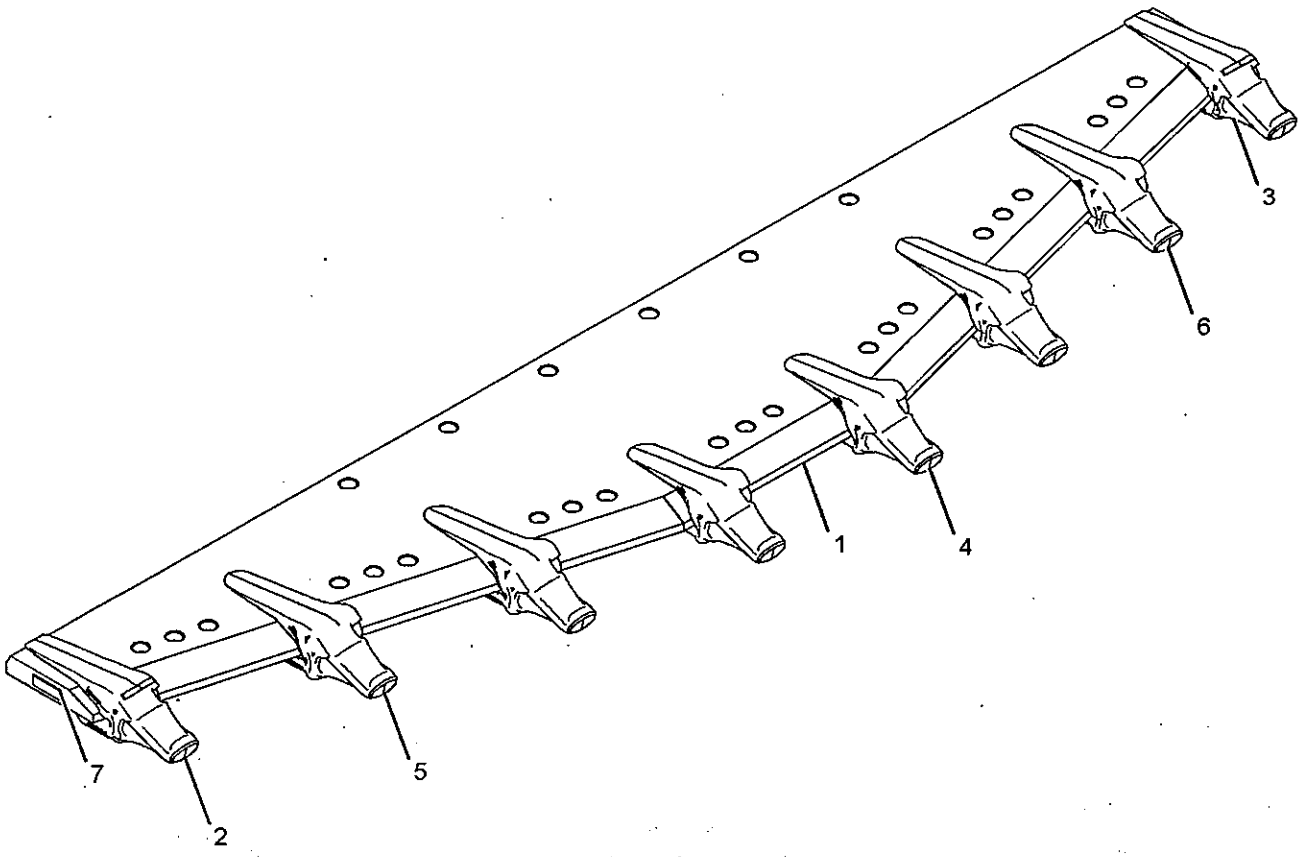


GRAPHIC #1 **<END>** g01145665

# WORK TOOLS

## *229-6980* TIP GP-ABRASION

**S/N: JMS1-UP**
**K-100**
**AN ATTACHMENT**

**SMCS-6805** **i02283571**

| NOTE | REF NO | GRAPHIC REF | PART NUMBER | QTY | PART NAME 1 2 3 4 5 6 (PRODUCT LEVEL) | SEE PAGE |
|---|---|---|---|---|---|---|
| | 1 | 1 | **220-9090** | 1 | RETAINER-G.E.T. (K-90) | |
| | 2 | 1 | **223-8102** | 1 | TIP-ABRASION (K-100) | |

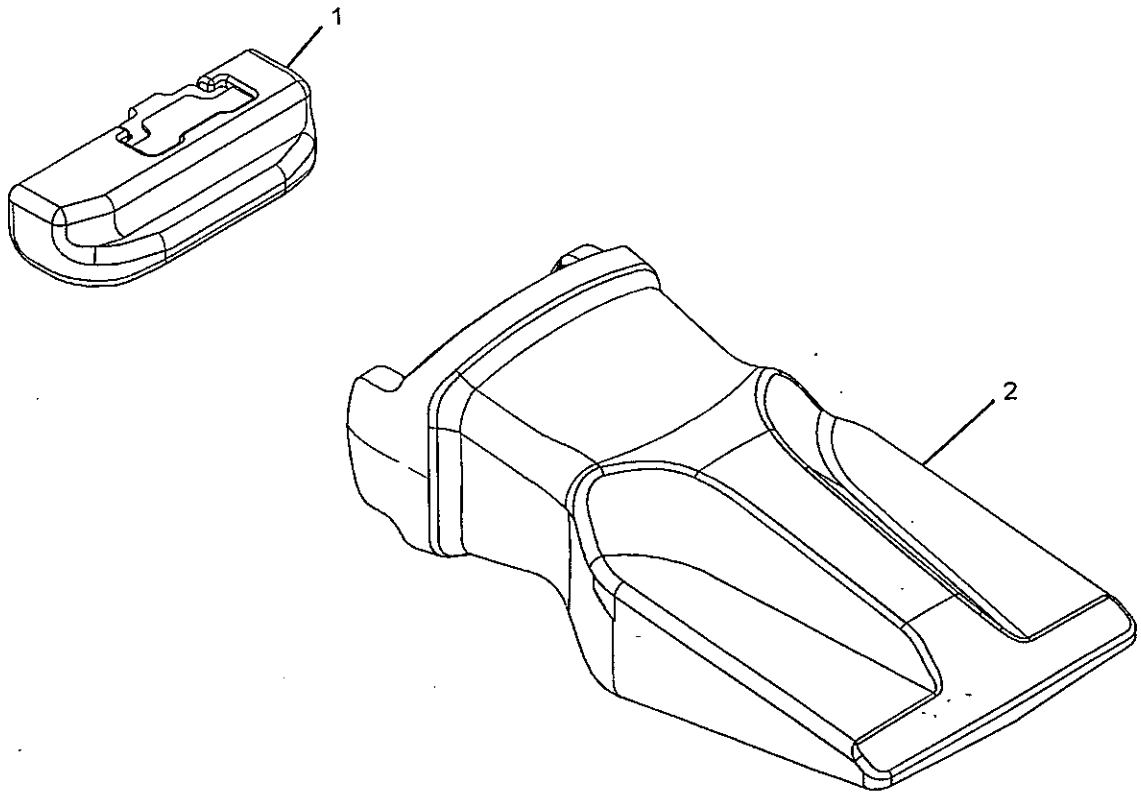


GRAPHIC #1 **<END>** g01143533

# WORK TOOLS

## *217-4898* TIP GP-EXTRA DUTY

**S/N: JMS1-UP**
**K-110**
**AN ATTACHMENT**

**SMCS-6805** **i02283534**

| NOTE | REF NO | GRAPHIC REF | PART NUMBER | QTY | PART NAME 1 2 3 4 5 6 (PRODUCT LEVEL) | SEE PAGE |
|---|---|---|---|---|---|---|
| | 1 | 1 | **220-9110** | 1 | RETAINER-G.E.T. (K-110) | |
| | 2 | 1 | **220-9111** | 1 | TIP-EXTRA DUTY (K-110) | |

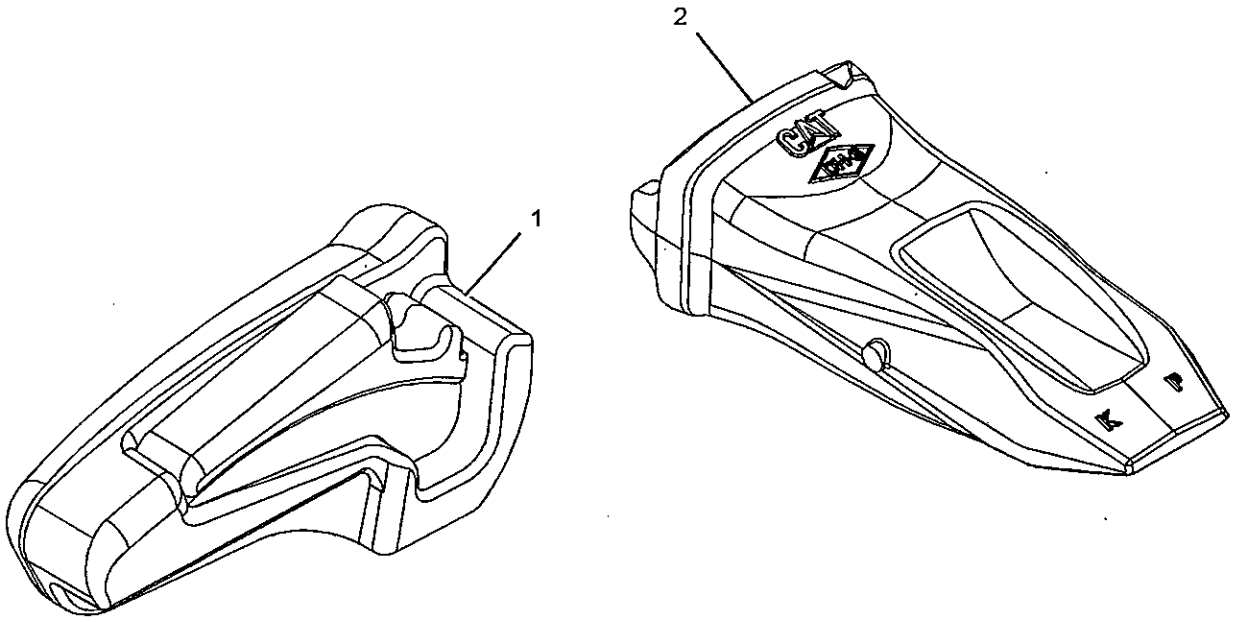


GRAPHIC #1 **<END>** g01143646

# WORK TOOLS

## 229-6973 TIP GP-EXTRA DUTY

S/N: JMS1-UP
K-100
AN ATTACHMENT

SMCS-6805

i02283577

| NOTE | REF NO | GRAPHIC REF | PART NUMBER | QTY | PART NAME 1 2 3 4 5 6 (PRODUCT LEVEL) | SEE PAGE |
|---|---|---|---|---|---|---|
| | 1 | 1 | 220-9090 | 1 | RETAINER-G.E.T. (K-90) | |
| | 2 | 1 | 220-9101 | 1 | TIP-EXTRA DUTY (K-100) | |

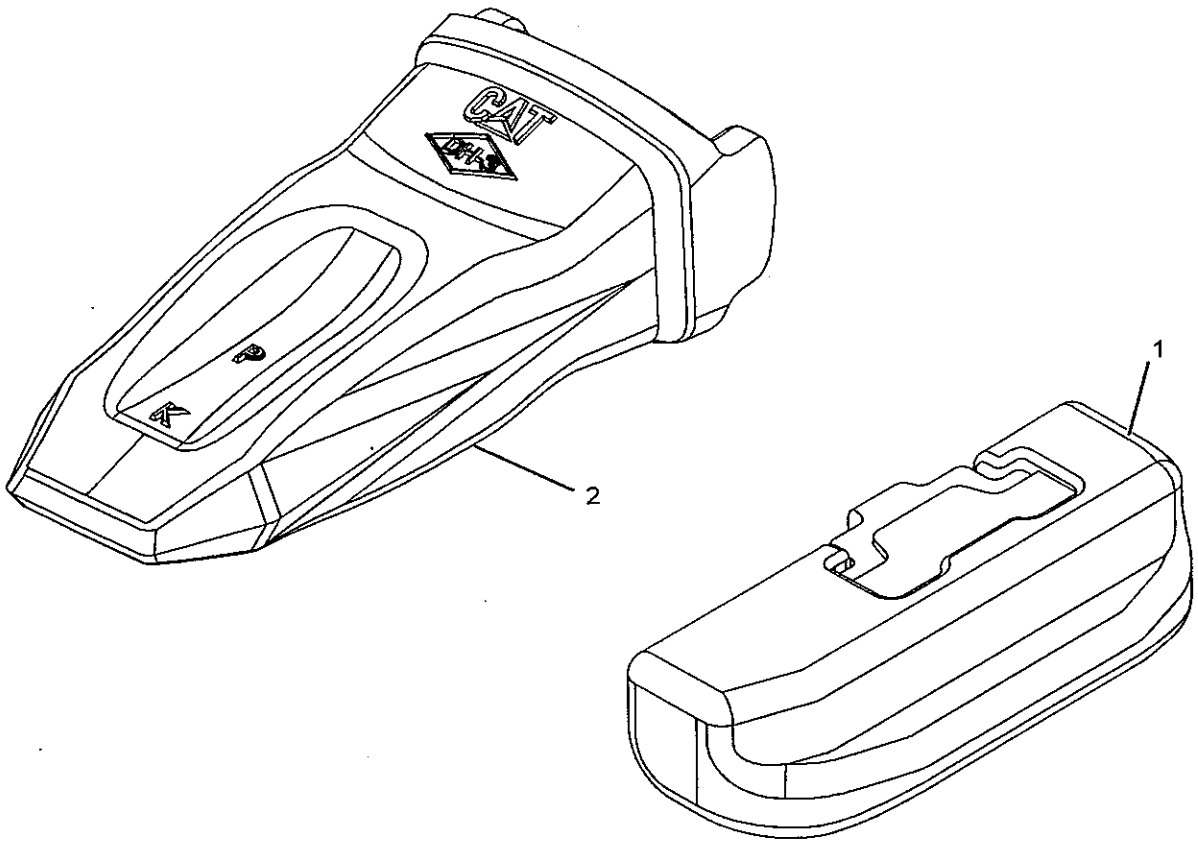


GRAPHIC #1

<END>

g01143666

# WORK TOOLS

## *217-4903* TIP GP-GENERAL PURPOSE

**S/N: JMS1-UP**
**K-110**
**AN ATTACHMENT**

**SMCS-6805** **i02283581**

| NOTE | REF NO | GRAPHIC REF | PART NUMBER | QTY | PART NAME 1 2 3 4 5 6 (PRODUCT LEVEL) | SEE PAGE |
|---|---|---|---|---|---|---|
| | 1 | 1 | **220-9110** | 1 | RETAINER-G.E.T. (K-110) | |
| | 2 | 1 | **220-9119** | 1 | TIP-GENERAL PURPOSE (K-110) | |

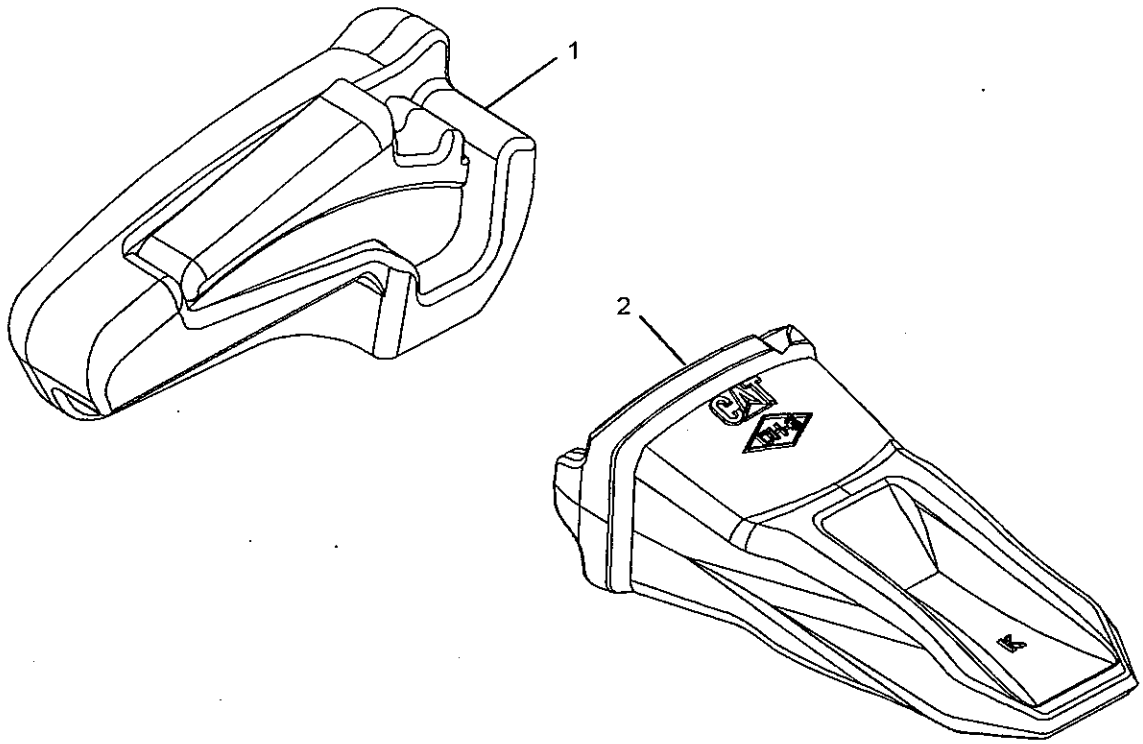


GRAPHIC #1 **<END>** g01143624

# WORK TOOLS

## 229-6978 TIP GP-GENERAL PURPOSE

S/N: JMS1-UP
K-100
AN ATTACHMENT

SMCS-6805

i02283573

| NOTE | REF NO | GRAPHIC REF | PART NUMBER | QTY | PART NAME 1 2 3 4 5 6 (PRODUCT LEVEL) | SEE PAGE |
|---|---|---|---|---|---|---|
| | 1 | 1 | 220-9090 | 1 | RETAINER-G.E.T. (K-90) | |
| | 2 | 1 | 220-9109 | 1 | TIP GP-GENERAL PURPOSE (K-100) | |

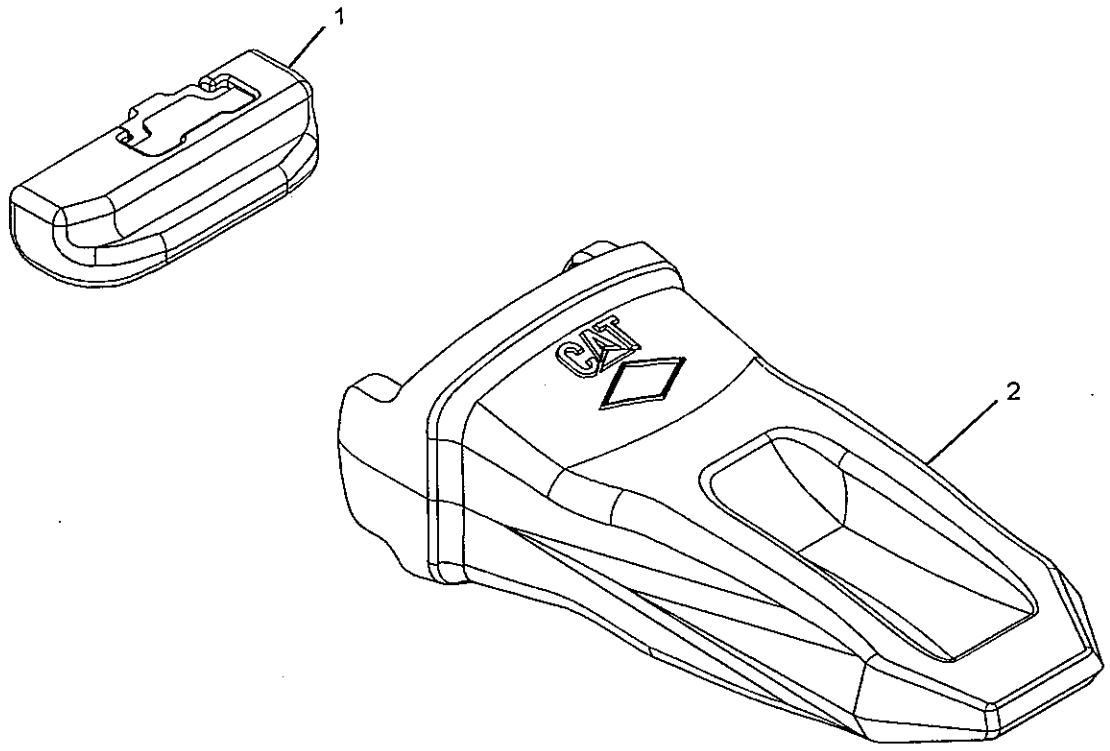


GRAPHIC #1

<END>

g01143522

# WORK TOOLS

## 229-6974 TIP GP-PENETRATION

S/N: JMS1-UP
K-100
AN ATTACHMENT

SMCS-6805 i02283574

| NOTE | REF NO | GRAPHIC REF | PART NUMBER | QTY | PART NAME 1 2 3 4 5 6 (PRODUCT LEVEL) | SEE PAGE |
|---|---|---|---|---|---|---|
| | 1 | 1 | 220-9090 | 1 | RETAINER-G.E.T. (K-90) | |
| | 2 | 1 | 220-9102 | 1 | TIP-PENETRATION (K-100) | |

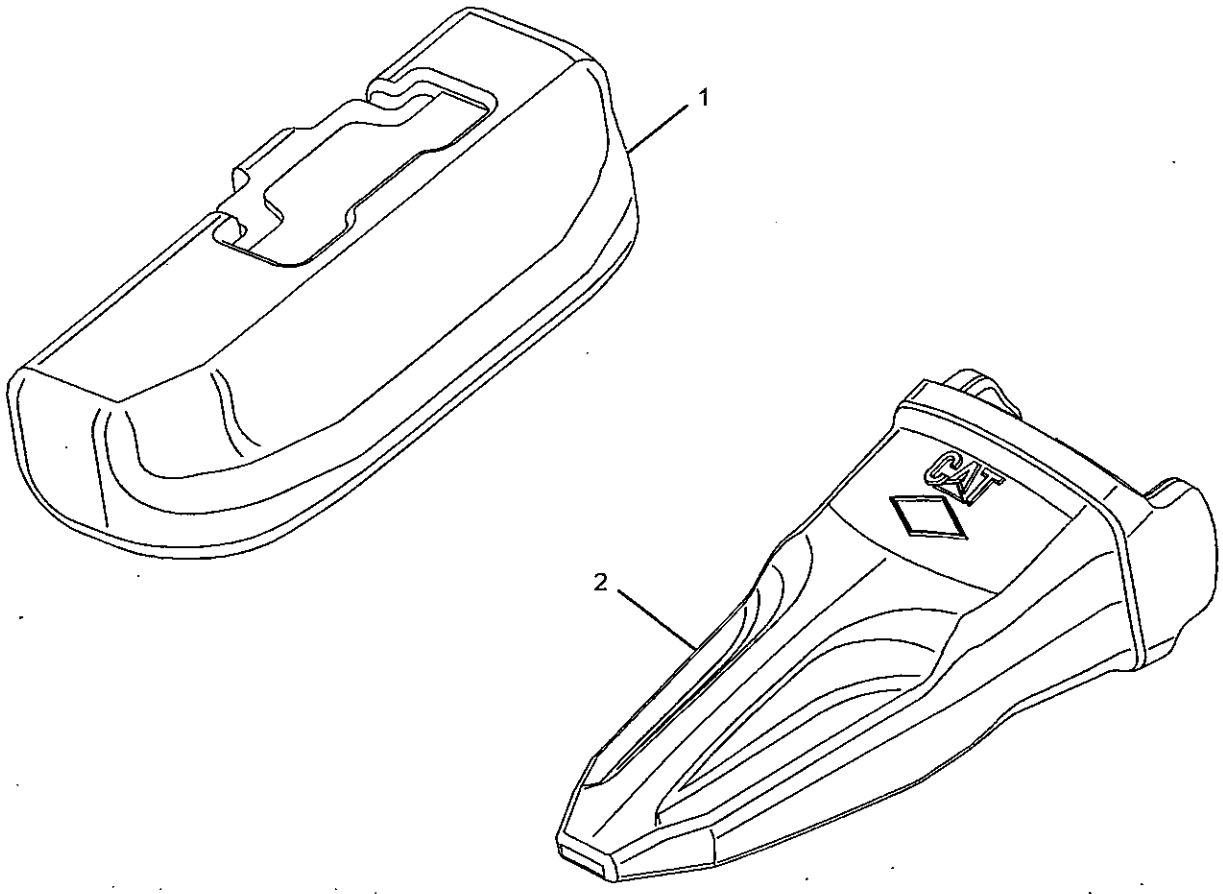


GRAPHIC #1 <END> g01144259

# WORK TOOLS

## 229-6979 TIP GP-PENETRATION

S/N: JMS1-UP
K-100
AN ATTACHMENT

SMCS-6805

i02272822

| NOTE | REF NO | GRAPHIC REF | PART NUMBER | QTY | PART NAME 1 2 3 4 5 6 (PRODUCT LEVEL) | SEE PAGE |
|---|---|---|---|---|---|---|
| | 1 | 1 | 220-9090 | 1 | RETAINER-G.E.T. (K-90) | |
| | 2 | 1 | 223-8101 | 1 | TIP GP-PENETRATION (K-100) | |

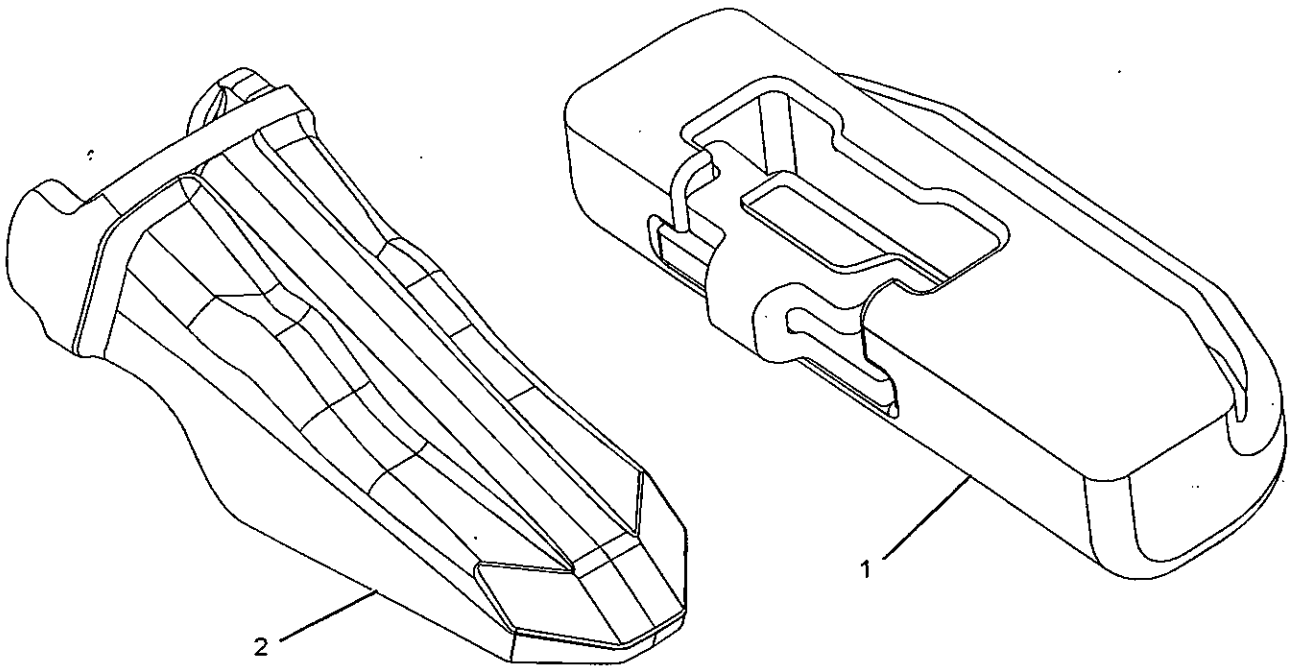


GRAPHIC #1

<END>

g01139470

# OPERATOR STATION

## *173-1028* ADJUSTER GP-SEAT

**S/N: JMS1-UP**

**PART OF 178-0603, 180-7304, 246-4302 SEAT GP**

**ALSO AN ATTACHMENT**

**SMCS-7321** **i02011756**

| NOTE | REF NO | GRAPHIC REF | PART NUMBER | QTY | PART NAME 1 2 3 4 5 6 (PRODUCT LEVEL) | SEE PAGE |
|---|---|---|---|---|---|---|
| | 1 | 1 | **4V-8256** | 4 | SPRING | |
| | 2 | 1 | **117-4492** | 1 | ROD | |
| | 3 | 1 | **136-1544** | 1 | LATCH AS-LH | |
| | 4 | 1 | **156-5545** | 1 | LATCH AS-RH | |
| | 5 | 1 | **164-4531** | 1 | ROD | |
| | 6 | 1 | **170-1112** | 1 | PLATE AS | |
| | 7 | 1 | **170-1114** | 1 | HANDLE (SLIDE ADJUSTMENT) | |
| | 8 | 1 | **170-1115** | 1 | HANDLE (TILT ADJUSTMENT) | |
| | 9 | 1 | **132-0338** | 2 | WASHER-PLASTIC (13X31.7X.8-MM THK) | |
| | 10 | 1 | **2K-4973** | 2 | LOCKNUT (3/8-16-THD) | |
| | 11 | 1 | **7X-0608** | 2 | WASHER-HARD (10.2X16X2-MM THK) | |

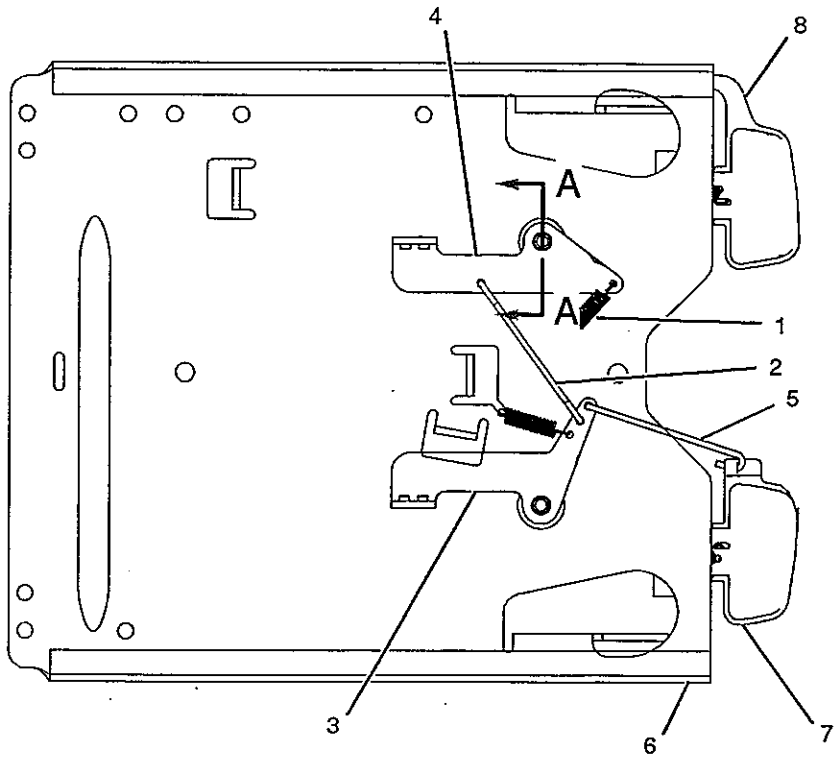


BOTTOM VIEW

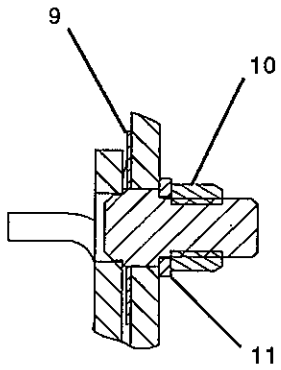


SECTION A-A

GRAPHIC #1

<END>

g01040300

# OPERATOR STATION

## *237-3970* AIR COMPRESSOR GP-SEAT

S/N: JMS1-UP

PART OF 191-2933, 256-8768 SUSPENSION GP-SEAT

ALSO AN ATTACHMENT

SMCS-731S, 7324

i02012095

| NOTE | REF NO | GRAPHIC REF | PART NUMBER | QTY | PART NAME 1 2 3 4 5 6 (PRODUCT LEVEL) | SEE PAGE |
|---|---|---|---|---|---|---|
| | | | | | (NO SERVICED PARTS) | |

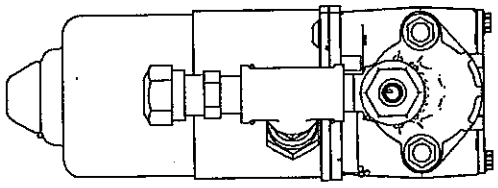

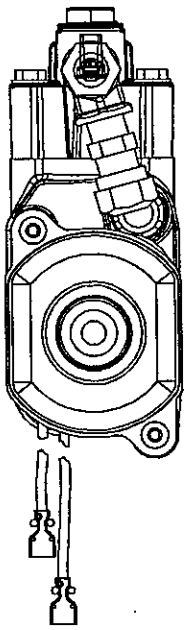

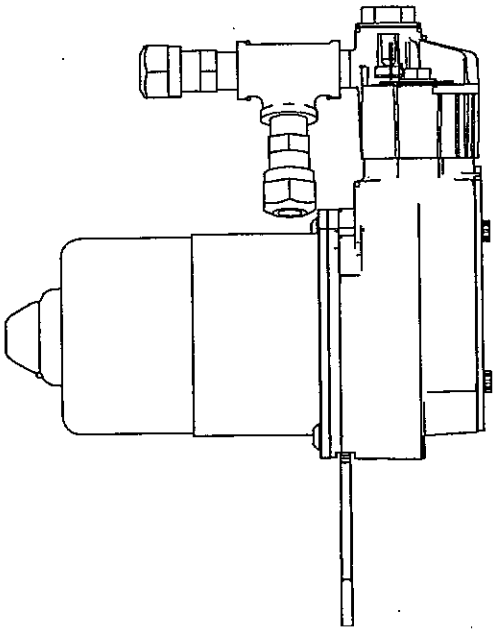

GRAPHIC #1

<END>

g01040576

# OPERATOR STATION

## *235-5315* AIR CONDITIONER AR

**S/N: JMS1-UP**

**AN ATTACHMENT**

**SMCS-7320** **i02284074**

| NOTE | PART NUMBER | QTY | PART NAME 1 2 3 4 5 6 (PRODUCT LEVEL) | SEE PAGE |
|---|---|---|---|---|
| Y | *190-1249* | 1 | AIR CONDITIONER GP | 785 |
| Y | *262-4948* | 1 | COMPRESSOR GP-REFRIGERANT | 792 |
| Y | *235-5332* | 1 | CONDENSER & MTG GP-REFRIGERANT | 793 |
| Y | *233-9449* | 1 | LINES GP-AIR CONDITIONER | 840 |
| Y | *246-3264* | 1 | WIRING GP-AIR CONDITIONER | 249 |
| | **110-6393** | 1 | PLATE-INSTRUCTION (AIR CONDITIONER) | |
| | | | INSIDE CAB ON THE RIGHT SIDE BEHIND DOOR BELOW WINDOW | |

Y-SEPARATE ILLUSTRATION

**<END>**

# OPERATOR STATION

## 183-9292 AIR CONDITIONER GP

S/N: JMS1-UP

PART OF 190-1249 AIR CONDITIONER GP

AN ATTACHMENT

SMCS-7320

i02270857

| NOTE | REF NO | GRAPHIC REF | PART NUMBER | QTY | PART NAME 1 2 3 4 5 6 (PRODUCT LEVEL) | SEE PAGE |
|---|---|---|---|---|---|---|
| | 1 | 1 | 3S-2093 | 1 | STRAP-CABLE | |
| | 2 | 1 | 6T-6708 | 2 | WASHER (7X28.6X4.1-MM THK) | |
| M | 3 | 1 | 8C-7581 | 1 | SCREW-MACHINE (M4X0.7X8-MM) | |
| | 4 | 1 | 9G-1950 | 1 | RESISTOR | |
| | 5 | 1 | 5P-4115 | 3 | WASHER-HARD (7.2X19X2-MM THK) | |
| | 6 | 1 | 133-9012 | 1 | FUSE (15-AMPERE) | |
| | 7 | 1 | 174-1497 | 1 | MOTOR AS-BLOWER (24-VOLT, A/C, HEATER) | |
| | | 1 | 102-8802 | 1 | KIT-RECEPTACLE (2-PIN) | |
| | | | | | (INCLUDES RECEPTACLE AS AND WEDGE) | |
| | | 1 | 3E-3365 | 1 | WEDGE-RECEPTACLE LOCK (2-PIN) | |
| | | 1 | 9W-0852 | 2 | PIN-CONNECTOR (14-GA) | |
| | 8 | 1 | 8T-4205 | 11 | WASHER-HARD (7.2X14.5X2-MM THK) | |
| | 9 | 1 | 9X-7373 | 1 | GROMMET | |
| M | 10 | 1 | 6V-7357 | 3 | BOLT (M6X1X25-MM) | |
| | 11 | 1 | 6V-1668 | 2 | WASHER (6.5X29.1X3-MM THK) | |
| | 12 | 1 | 177-6727 | 1 | ACTUATOR | |
| | 13 | 1 | 179-4682 | 2 | LEVER | |
| | 14 | 1 | 179-4683 | 1 | ROD | |
| | 15 | 1 | 185-4778 | 1 | HOUSING AS | |
| | 16 | 1 | 185-4780 | 1 | HOUSING | |
| | 17 | 1 | 185-4782 | 1 | HOUSING | |
| | 18 | 1 | 185-4783 | 1 | COVER | |
| | 19 | 1 | 185-4785 | 1 | DUCT AS | |
| M | 20 | 1 | 187-7719 | 24 | BOLT (M5X2.24X14-MM) | |
| | 21 | 1 | 188-7690 | 1 | SUPPORT | |
| | 22 | 1 | 189-4682 | 1 | COIL AS-HEATER | |
| | 23 | 1 | 192-2820 | 1 | PLATE | |
| | 24 | 1 | 192-2822 | 1 | GASKET | |
| | 25 | 1 | 192-2823 | 1 | HARNESS AS-HEATER & AIR COND | |
| | | 1 | 102-8801 | 1 | KIT-RECEPTACLE (12-PIN) | |
| | | | | | (INCLUDES RECEPTACLE AS AND WEDGE) | |
| | | 1 | 6T-6505 | 7 | HOUSING-RECEPTACLE (BLADE, POSITIVE LOCK) | |
| | | 1 | 9G-3695 | 3 | PLUG (GROMMET SEALING) | |
| | | 1 | 155-2270 | 1 | KIT-CONNECTING PLUG (2-PIN) | |
| | | | | | (INCLUDES PLUG AS AND WEDGE) | |
| | 26 | 1 | 193-0702 | 1 | GASKET | |
| | 27 | 1 | 177-6696 | 1 | GROMMET | |
| | 28 | 1 | 197-1397 | 1 | BRACKET | |
| | 29 | 1 | 197-1398 | 1 | BRACKET | |
| | 30 | 1 | 197-1399 | 1 | BRACKET | |
| | 31 | 1 | 197-1400 | 1 | BRACKET AS | |
| M | | 1 | 6V-9632 | 3 | NUT-WELD (M6X1-THD) | |
| | 32 | 1 | 199-7499 | 1 | GASKET | |
| | 33 | 1 | 202-1327 | 1 | GASKET | |
| M | 34 | 1 | 129-3178 | 7 | LOCKNUT (M6X1-THD) | |
| M | 35 | 1 | 141-9784 | 1 | BOLT (M6X1X190-MM) | |
| | 36 | 1 | 4B-4274 | 2 | WASHER (5.5X13X1.2-MM THK) | |
| M | 37 | 1 | 5C-9553 | 8 | BOLT (M6X1X16-MM) | |
| | 38 | 1 | 3B-4501 | 2 | LOCKWASHER | |
| | 39 | 1 | 3E-5464 | 1 | SWITCH AS-TEMPERATURE (REFRIGERANT) | |
| | 40 | 1 | 8T-6631 | 2 | SCREW-MACHINE (8-32X0.5-IN) | |
| | 41 | 1 | 189-4680 | 1 | COIL AS-EVAPORATOR | |
| | 42 | 1 | 212-7042 | 1 | BRACKET | |
| | 45 | 1 | 130-5300 | 1 | CLIP | |
| | 47 | 1 | 6V-4369 | 1 | CLIP | |

# OPERATOR STATION

## 183-9292 AIR CONDITIONER GP *(contd.)* i02270857

| NOTE | REF NO | GRAPHIC REF | PART NUMBER | QTY | PART NAME 1 2 3 4 5 6 (PRODUCT LEVEL) | SEE PAGE |
|---|---|---|---|---|---|---|
| | 48 | 1 | 177-6704 | 2 | GASKET | |
| | 49 | 1 | 177-6732 | 1 | DOOR AS | |
| | | 1 | 4K-9429 | 4 | RIVET-POP | |
| | 50 | 1 | 177-6716 | 1 | DOOR | |

M-METRIC PART

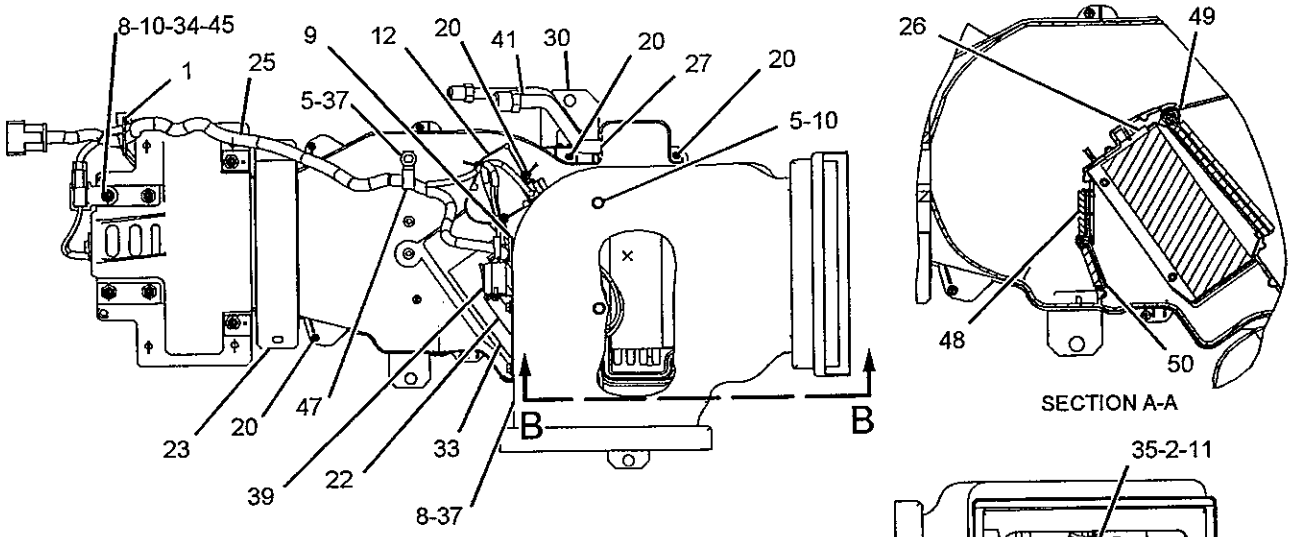


TOP VIEW




SECTION A-A

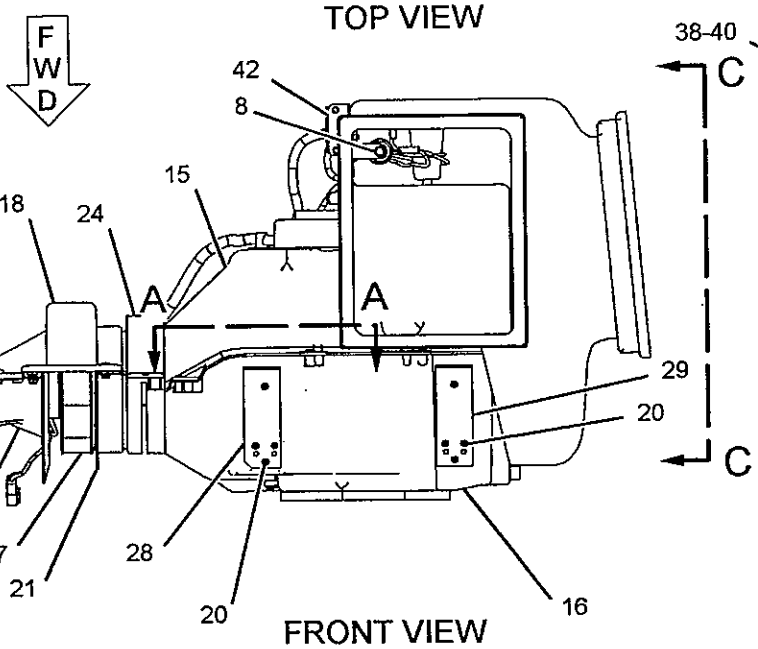


FRONT VIEW

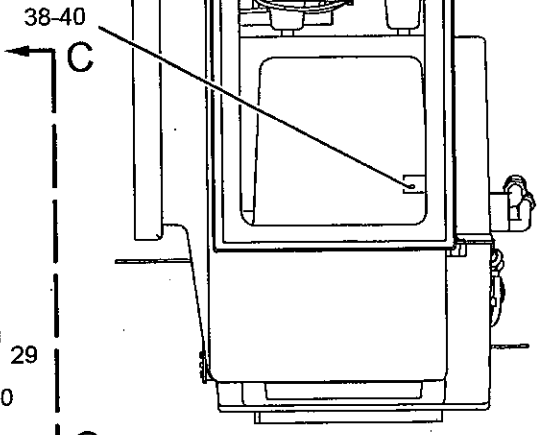


VIEW C-C

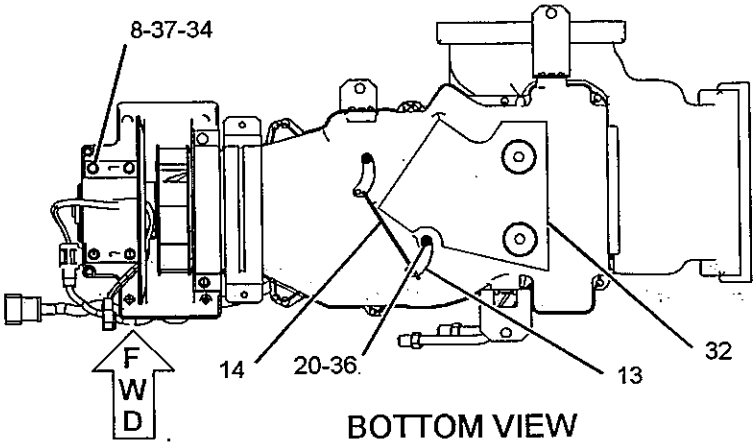


BOTTOM VIEW

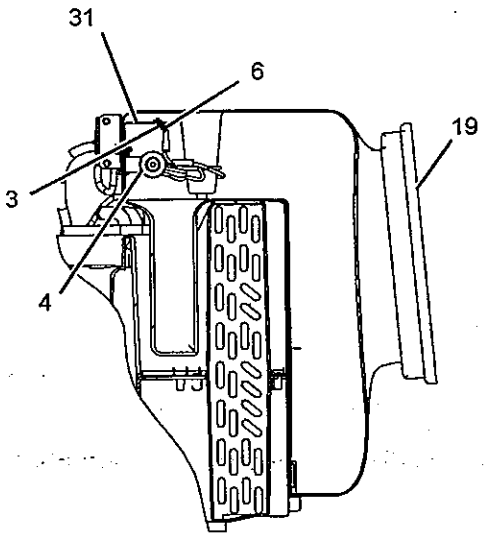


SECTION B-B

GRAPHIC #1

<END>

g01069694

# OPERATOR STATION

## *190-1249* AIR CONDITIONER GP

**S/N: JMS1-UP**

**PART OF 235-5315 AIR CONDITIONER AR**

**AN ATTACHMENT**

**SMCS-7320** **i02283623**

| NOTE | REF NO | GRAPHIC REF | PART NUMBER | QTY | PART NAME 1 2 3 4 5 6 (PRODUCT LEVEL) | SEE PAGE |
|---|---|---|---|---|---|---|
| Y | 1 | 1 | **183-9292** | 1 | AIR CONDITIONER GP | 782 |
| Y | 2 | 1 | *193-3121* | 1 | LINES GP-AIR CONDITIONER | 838 |
| | 3 | 1 | **9X-8116** | 2 | TUBE AS | |

Y-SEPARATE ILLUSTRATION

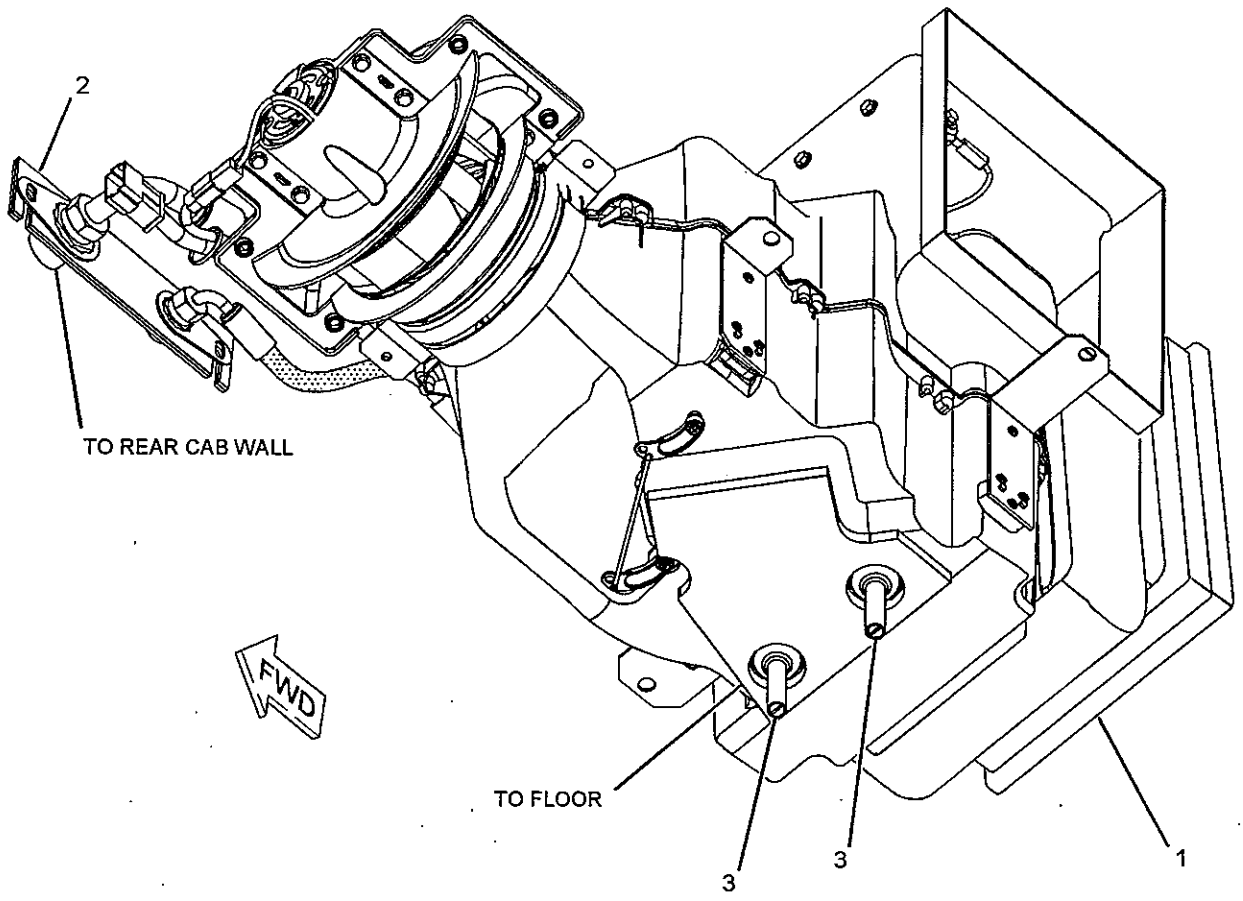


GRAPHIC #1 **<END>** g01143181

# OPERATOR STATION

## 214-7634 ARM GP-WINDOW WIPER–REAR

S/N: JMS1-UP

WET

PART OF 197-5579 WIPER GP-WINDOW

SMCS-7305

i02023663

| NOTE | REF NO | GRAPHIC REF | PART NUMBER | QTY | PART NAME 1 2 3 4 5 6 (PRODUCT LEVEL) | SEE PAGE |
|---|---|---|---|---|---|---|
| M | 1 | 1 | 191-8921 | 2 | BOLT-SOCKET HEAD (M6X1X25-MM) | |
| | 2 | 1 | 227-7392 | 2 | WASHER (6.3X10.3X0.4-MM THK) | |
| M | 3 | 1 | 6V-8225 | 2 | NUT (M6X1-THD) | |
| | 4 | 1 | 136-3195 | 1 | NOZZLE AS-WASHER | |
| | 5 | 1 | 136-3188 | 3 | CLIP | |

M-METRIC PART

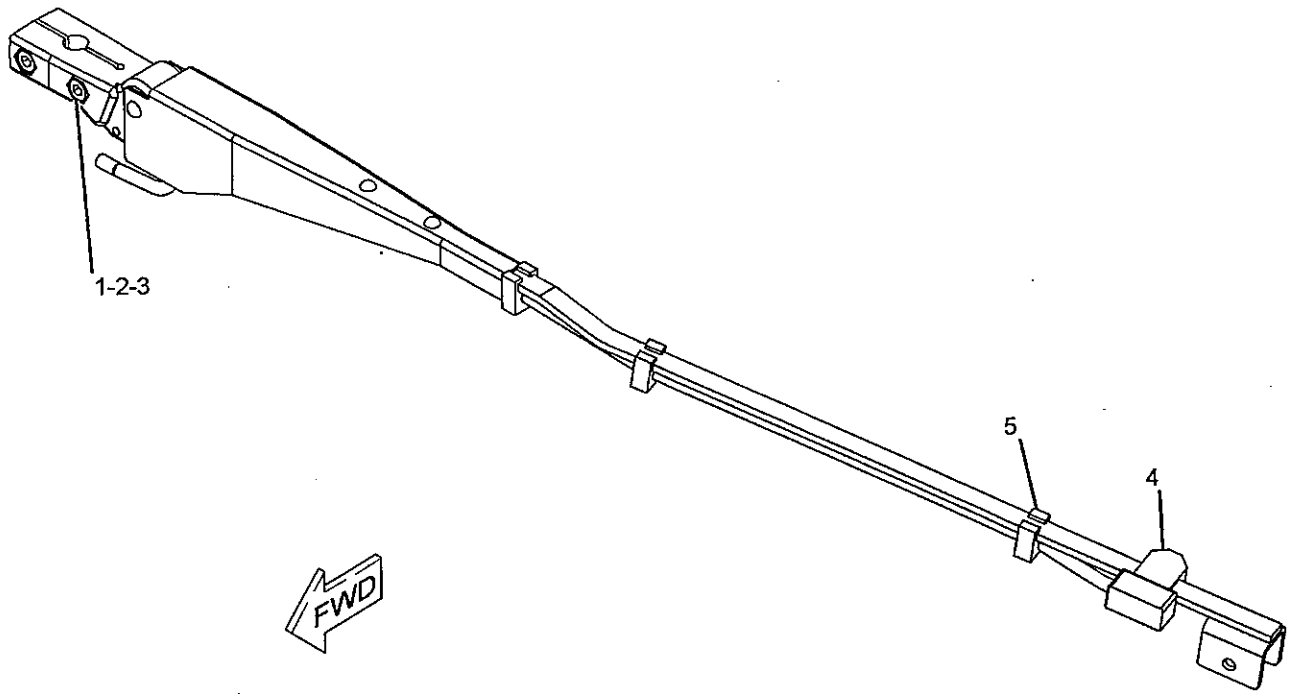


GRAPHIC #1

<END>

g01024688

# OPERATOR STATION

## 214-7635 ARM GP-WINDOW WIPER–FRONT

**S/N: JMS1-UP**

**PART OF 197-5579 WIPER GP-WINDOW**

**SMCS-7305** **i02023666**

| NOTE | REF NO | GRAPHIC REF | PART NUMBER | QTY | PART NAME 1 2 3 4 5 6 (PRODUCT LEVEL) | SEE PAGE |
|---|---|---|---|---|---|---|
| M | 1 | 1 | **191-8921** | 4 | BOLT-SOCKET HEAD (M6X1X25-MM) | |
| | 2 | 1 | **227-7392** | 4 | WASHER (6.3X10.3X0.4-MM THK) | |
| M | 3 | 1 | **6V-8225** | 4 | NUT (M6X1-THD) | |
| | 4 | 1 | **136-3190** | 1 | NOZZLE AS-WASHER | |
| | 5 | 1 | **136-3188** | 3 | CLIP | |

M-METRIC PART

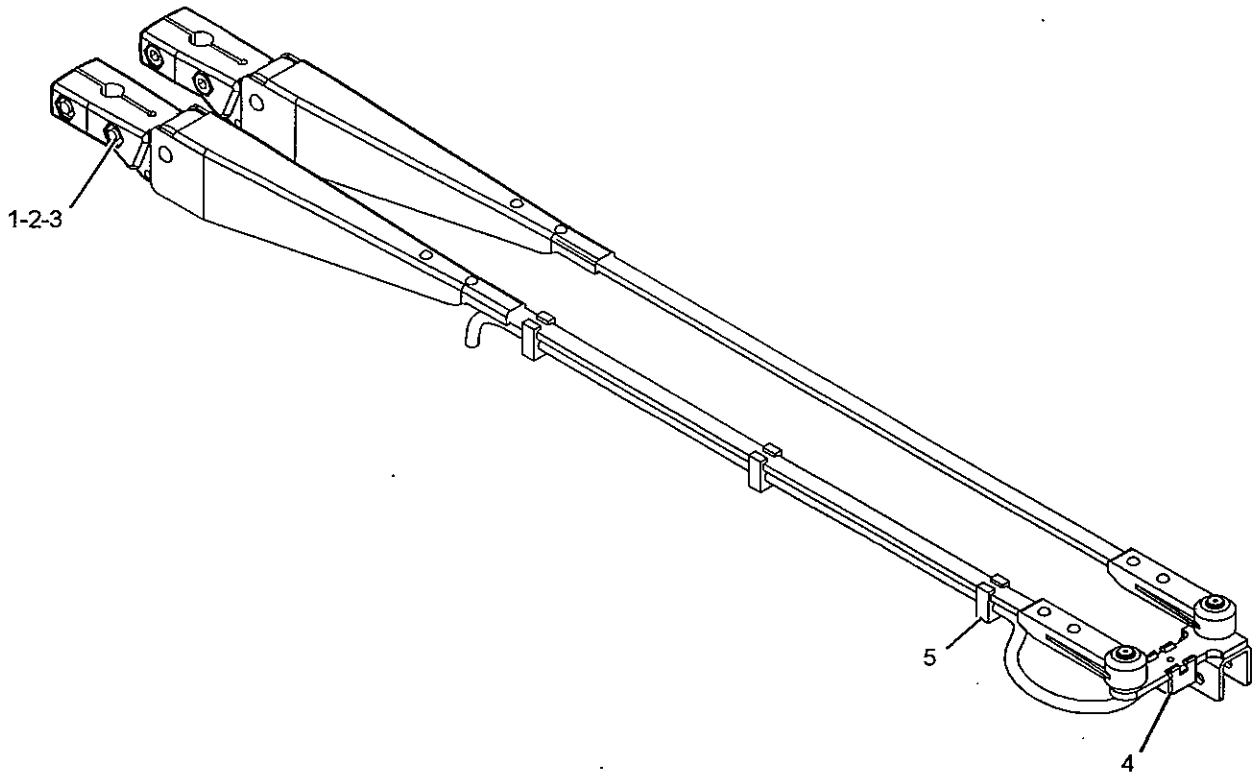


GRAPHIC #1 **<END>** g01021918

# OPERATOR STATION

## 188-9820 ARMREST GP-LH

S/N: JMS1-UP

PART OF 178-7913, 207-2804, 246-4447 SEAT GP

ALSO AN ATTACHMENT

SMCS-7307, 7312

i01562815

| NOTE | REF NO | GRAPHIC REF | PART NUMBER | QTY | PART NAME 1 2 3 4 5 6 (PRODUCT LEVEL) | SEE PAGE |
|---|---|---|---|---|---|---|
| | 1 | 1 | 173-2219 | 1 | CUSHION AS | |
| | 2 | 1 | 143-1288 | 1 | LOCKNUT-FLANGE | |
| | 3 | 1 | 163-1149 | 1 | BRACKET AS-LH | |
| | 4 | 1 | 1K-6872 | 1 | LOCKNUT (1/2-13 THD) | |
| | 5 | 1 | 2M-0849 | 1 | WASHER-HARD (13.5X25.5X5MM THK) | |
| | 6 | 1 | 3E-4312 | 1 | NUT-SQUARE | |
| | 7 | 1 | 4L-6454 | 1 | BOLT (3/8-16X1 IN) | |
| | 8 | 1 | 6V-2687 | 4 | SCREW-PAN HEAD (10-24X1IN) | |
| | 9 | 1 | 8S-7803 | 1 | RING-RETAINING | |
| | 10 | 1 | 8T-8641 | 1 | WASHER (M9.8X16.0X0.8MM THK) | |
| | 11 | 1 | 8Y-5910 | 1 | KNOB AS | |
| | 12 | 1 | 8Y-5913 | 1 | BASE-ARMREST | |
| | 13 | 1 | 8Y-5914 | 1 | SPRING | |
| | 14 | 1 | 9X-8873 | 1 | BOLT (1/2-13X2.25 IN) | |

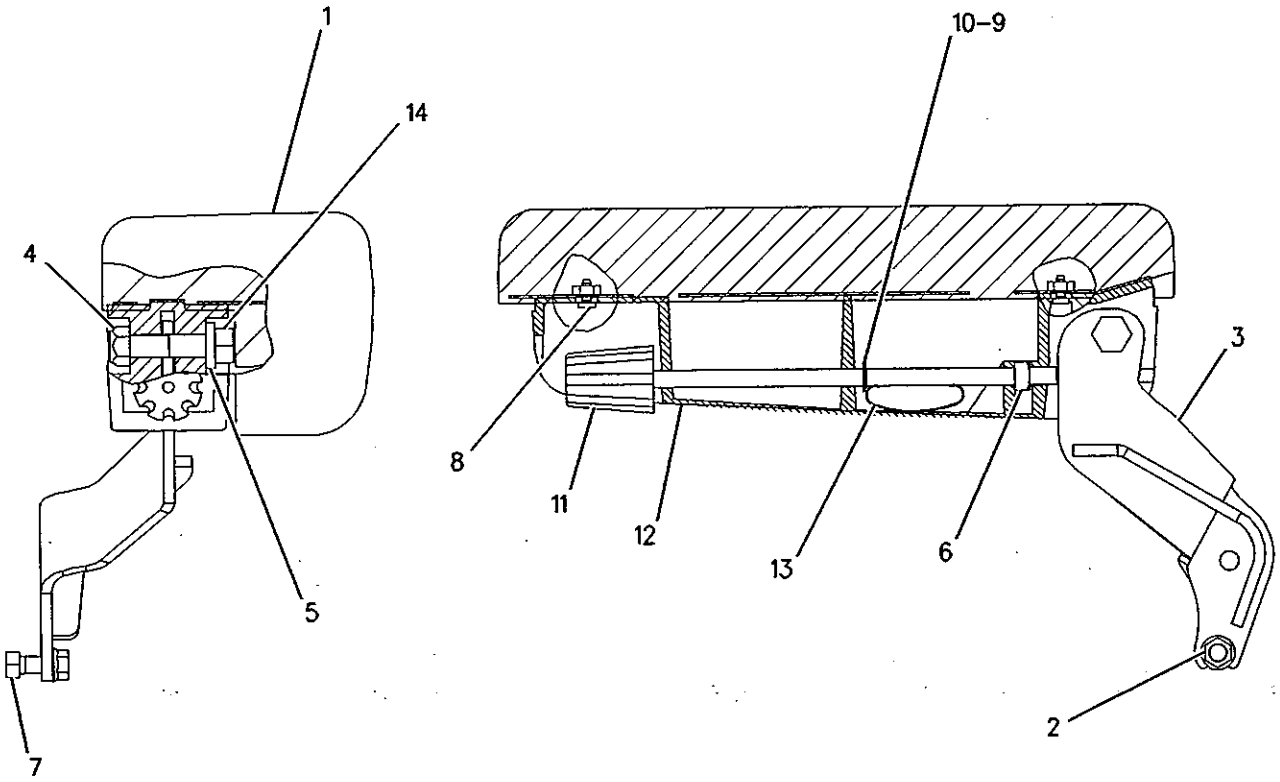


GRAPHIC #1

<END>

g00812871

# OPERATOR STATION

## 232-1393 CAB AR-ENCLOSED ROPS

**S/N: JMS1-UP**

**PART OF 232-1392 OPERATOR AR-ENCLOSED ROPS**

**SMCS-7301** **i02281409**

| NOTE | PART NUMBER | QTY | PART NAME 1 2 3 4 5 6 (PRODUCT LEVEL) | SEE PAGE |
|---|---|---|---|---|
| Y | **208-3915** | 1 | CONTROL GP-ELECTROHYDRAULIC (2-FUNCTION) | 597 |
| Y | *199-2831* | 1 | CONTROL GP-FOOT BRAKE | 532 |
| Y | *191-8569* | 1 | CONTROL GP-PARKING BRAKE | 533 |
| Y | *219-7619* | 1 | CONTROL GP-STEERING (COMMAND CONTROL STEERING) | 542 |
| Y | *171-8888* | 1 | DUCT & FILTER GP-AIR | 803 |
| Y | **232-1397** | 1 | FLOOR GP-SOUND SUPPRESSION | 808 |
| Y | *236-7813* | 1 | HEATER GP-CAB | 820 |
| Y | *257-2008* | 1 | INSTALLATION GP-RADIO | 828 |
| Y | *235-8559* | 1 | LIGHTING GP-FLOOD (4-LAMP, CAB) | 181 |
| Y | *232-1394* | 1 | LINER GP-CAB | 832 |
| Y | **190-3730** | 1 | MODULE GP-SPEEDOMETER & TACH | 865 |
| Y | *203-2782* | 1 | PANEL GP-INSTRUMENT (UPPER) | 878 |
| Y | *245-6458* | 1 | PANEL GP-INSTRUMENT (LOWER) | 884 |
| Y | *207-1759* | 1 | PEDAL GP-GOVERNOR | 888 |
| Y | **232-1395** | 1 | ROPS GP-ENCLOSED | 895 |
| Y | *117-1410* | 1 | SEALING GP-GLASS | 908 |
| Y | *174-3624* | 1 | SEAT GP-SUSPENSION | 918 |
| Y | *198-8771* | 1 | SUPPORT GP-HYDRAULIC CONTROL | 926 |
| Y | *234-9553* | 1 | SUPPRESSION GP-CAB SOUND (REAR) | 934 |
| Y | *232-1396* | 1 | SUPPRESSION GP-CAB SOUND (FRONT) | 929 |
| Y | *197-5579* | 1 | WIPER GP-WINDOW | 948 |
| Y | *235-5503* | 1 | WIRING GP-CAB | 266 |

Y-SEPARATE ILLUSTRATION

**<END>**

## 265-6753 CAB AR-ENCLOSED ROPS—WITH SEAL MOUNTED GLASS

**S/N: JMS1-UP**

**AN ATTACHMENT**

**SMCS-7301** **i02284051**

| NOTE | PART NUMBER | QTY | PART NAME 1 2 3 4 5 6 (PRODUCT LEVEL) | SEE PAGE |
|---|---|---|---|---|
| Y | **184-5093** | 1 | MOTOR GP-WINDOW WIPER (REAR) | 870 |
| Y | **265-6754** | 1 | ROPS GP-ENCLOSED | 900 |
| M | **7X-2554** | 4 | BOLT (M16X2X70-MM) | |
| J | **189-8125** | 1 | COVER | |
| | **212-0211** | 1 | MOTOR GP-WINDOW WIPER (FRONT) | |
| | **213-3385** | 1 | ROOF AS | |
| J | **119-5026** | 5 | SCREW-PAN HEAD (10-16X0.63-IN) | |
| J | **117-8929** | 5 | SPACER (6.6X22X2-MM THK) | |
| | **9X-8257** | 4 | WASHER (17.5X30X3.5-MM THK) | |

J-INSTALL BEHIND DASH TO COVER OPENINGS
M-METRIC PART
Y-SEPARATE ILLUSTRATION

**<END>**

# OPERATOR STATION

## 203-9837 CANOPY AR-OPEN ROPS

**S/N: JMS1-UP**

**PART OF 204-7243 OPERATOR AR-OPEN ROPS**

**AN ATTACHMENT**

**SMCS-7302, 7323** **i01980492**

| NOTE | PART NUMBER | QTY | PART NAME 1 2 3 4 5 6 (PRODUCT LEVEL) | SEE PAGE |
|---|---|---|---|---|
| Y | *208-3915* | 1 | CONTROL GP-ELECTROHYDRAULIC (2-FUNCTION) | 597 |
| Y | *199-2831* | 1 | CONTROL GP-FOOT BRAKE | 532 |
| Y | *191-8569* | 1 | CONTROL GP-PARKING BRAKE | 533 |
| Y | *219-7619* | 1 | CONTROL GP-STEERING (COMMAND CONTROL STEERING) | 542 |
| Y | *204-3664* | 1 | DUCT GP-AIR | 805 |
| Y | *204-4125* | 1 | GUARD GP-VANDALISM (INSTRUMENT PANEL) | 811 |
| Y | *232-7783* | 1 | LIGHTING GP-FLOOD (2-LAMP, CAB REAR) | 180 |
| Y | *204-3719* | 1 | LINER GP-CAB | 829 |
| Y | **190-3730** | 1 | MODULE GP-SPEEDOMETER & TACH | 865 |
| Y | **206-5145** | 1 | PANEL GP-INSTRUMENT (LOWER) | 880 |
| Y | **207-8274** | 1 | PANEL GP-INSTRUMENT (UPPER) | 882 |
| Y | *207-1759* | 1 | PEDAL GP-GOVERNOR | 888 |
| Y | **203-9840** | 1 | ROPS GP-OPEN | 905 |
| Y | *204-4492* | 1 | SEAT GP-SUSPENSION | 919 |
| Y | *198-8771* | 1 | SUPPORT GP-HYDRAULIC CONTROL | 926 |
| Y | *207-8617* | 1 | WIRING GP-CAB | 256 |

Y-SEPARATE ILLUSTRATION

**<END>**

## 258-1565 CANOPY AR-OPEN ROPS

**S/N: JMS1-UP**

**PART OF 258-1564 OPERATOR AR-OPEN ROPS**

**AN ATTACHMENT**

**SMCS-7302, 7323** **i02283908**

| NOTE | PART NUMBER | QTY | PART NAME 1 2 3 4 5 6 (PRODUCT LEVEL) | SEE PAGE |
|---|---|---|---|---|
| Y | **208-3915** | 1 | CONTROL GP-ELECTROHYDRAULIC (2-FUNCTION) | 597 |
| Y | *199-2831* | 1 | CONTROL GP-FOOT BRAKE | 532 |
| Y | *191-8569* | 1 | CONTROL GP-PARKING BRAKE | 533 |
| Y | *219-7619* | 1 | CONTROL GP-STEERING (COMMAND CONTROL STEERING) | 542 |
| Y | *204-3664* | 1 | DUCT GP-AIR | 805 |
| Y | *204-4125* | 1 | GUARD GP-VANDALISM (INSTRUMENT PANEL) | 811 |
| Y | *235-8559* | 1 | LIGHTING GP-FLOOD (4-LAMP, CAB) | 181 |
| Y | *263-0045* | 1 | LINER GP-CAB | 835 |
| Y | **190-3730** | 1 | MODULE GP-SPEEDOMETER & TACH | 865 |
| Y | *207-8274* | 1 | PANEL GP-INSTRUMENT (UPPER) | 882 |
| Y | *245-6458* | 1 | PANEL GP-INSTRUMENT (LOWER) | 884 |
| Y | *207-1759* | 1 | PEDAL GP-GOVERNOR | 888 |
| Y | **203-9840** | 1 | ROPS GP-OPEN | 905 |
| Y | *204-4492* | 1 | SEAT GP-SUSPENSION | 919 |
| Y | *198-8771* | 1 | SUPPORT GP-HYDRAULIC CONTROL | 926 |
| Y | *262-9950* | 1 | WIRING GP-CAB | 274 |
| | **121-3908** | 1 | ADHESIVE | |

Y-SEPARATE ILLUSTRATION

**<END>**

# OPERATOR STATION

## 218-0324 COMPRESSOR GP-REFRIGERANT

S/N: JMS1-UP

PART OF 262-4948 COMPRESSOR GP-REFRIGERANT

AN ATTACHMENT

SMCS-1802

i02108106

| NOTE | REF NO | GRAPHIC REF | PART NUMBER | QTY | PART NAME 1 2 3 4 5 6 (PRODUCT LEVEL) | SEE PAGE |
|---|---|---|---|---|---|---|
| | 1 | 1 | 102-8802 | 1 | KIT-RECEPTACLE (2-PIN) | |
| | | | | | (INCLUDES RECEPTACLE AS AND WEDGE) | |
| | 2 | 1 | 114-3469 | 1 | VALVE GP-RELIEF (REFRIGERANT) | |
| | | 1 | 9X-7378 | 1 | SEAL-O-RING | |
| | 3 | 1 | 7T-4532 | 1 | PLUG AS | |
| | 4 | 1 | 9X-7385 | 2 | SEAL-O-RING | |

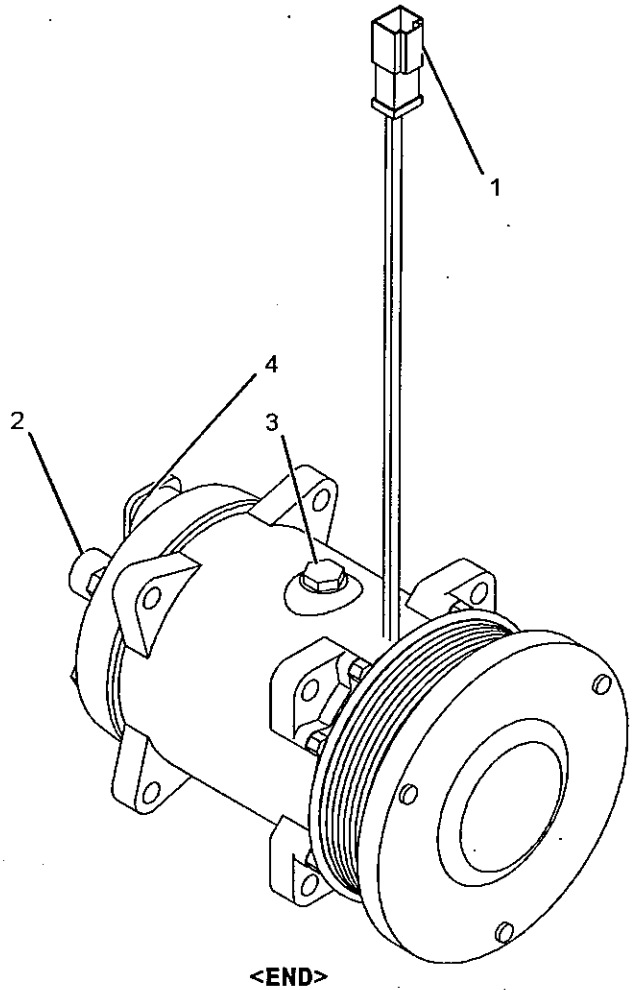


GRAPHIC #1

<END>

g01073367

# OPERATOR STATION

## 262-4948 COMPRESSOR GP-REFRIGERANT

S/N: JMS1-UP

PART OF 235-5315 AIR CONDITIONER AR

AN ATTACHMENT

SMCS-1802

i02216500

| NOTE | REF NO | GRAPHIC REF | PART NUMBER | QTY | PART NAME 1 2 3 4 5 6 (PRODUCT LEVEL) | SEE PAGE |
|---|---|---|---|---|---|---|
| Y | 1 | 1 | 218-0324 | 1 | COMPRESSOR GP-REFRIGERANT | 791 |
| | 2 | 1 | 8T-4121 | 2 | WASHER-HARD (11X21X2.5-MM THK) | |
| M | 3 | 1 | 8T-4133 | 2 | NUT (M10X1.5-THD) | |
| M | 4 | 1 | 8T-5436 | 2 | BOLT (M10X1.5X130-MM) | |
| | 5 | 1 | 8T-7934 | 2 | WASHER-HARD (11X21X5-MM THK) | |

M-METRIC PART
Y-SEPARATE ILLUSTRATION

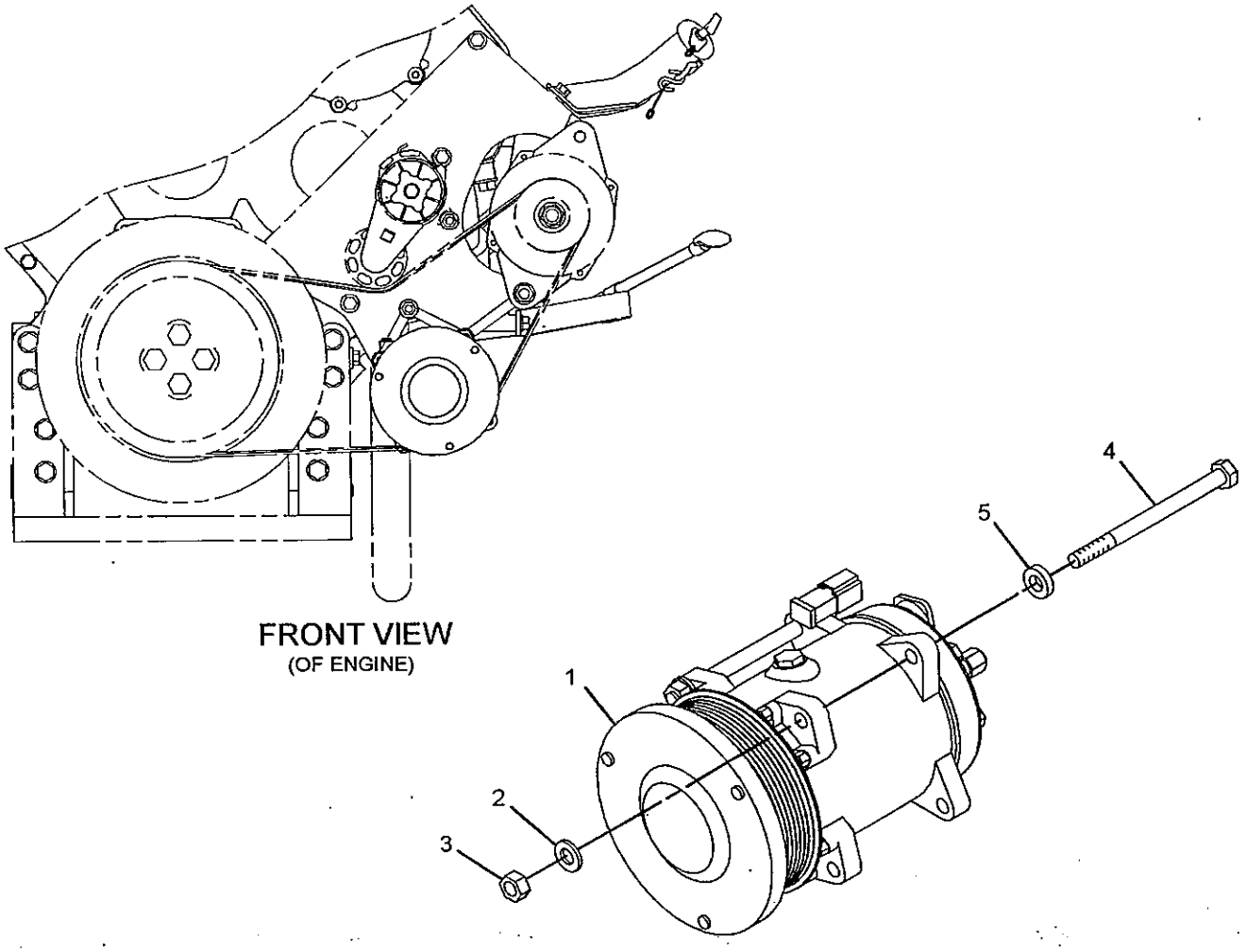


GRAPHIC #1

<END>

g01118745

# OPERATOR STATION

## 235-5332 CONDENSER & MTG GP-REFRIGERANT

S/N: JMS1-UP

PART OF 235-5315 AIR CONDITIONER AR

AN ATTACHMENT

SMCS-1805

i02089896

| NOTE | REF NO | GRAPHIC REF | PART NUMBER | QTY | PART NAME 1 2 3 4 5 6 (PRODUCT LEVEL) | SEE PAGE |
|---|---|---|---|---|---|---|
| | 1 | 1 | 4E-1384 | 1 | BUMPER-CONICAL | |
| | 2 | 1 | 235-3167 | 1 | CORE AS | |
| | 3 | 1 | 235-5935 | 1 | BRACKET | |
| M | 4 | 1 | 5C-7261 | 1 | NUT (M8X1.25-THD) | |
| | 5 | 1 | 7X-7729 | 2 | WASHER (11X25X3-MM THK) | |
| | 6 | 1 | 8T-4121 | 4 | WASHER-HARD (11X21X2.5-MM THK) | |
| M | 7 | 1 | 8T-4137 | 6 | BOLT (M10X1.5X20-MM) | |

M-METRIC PART

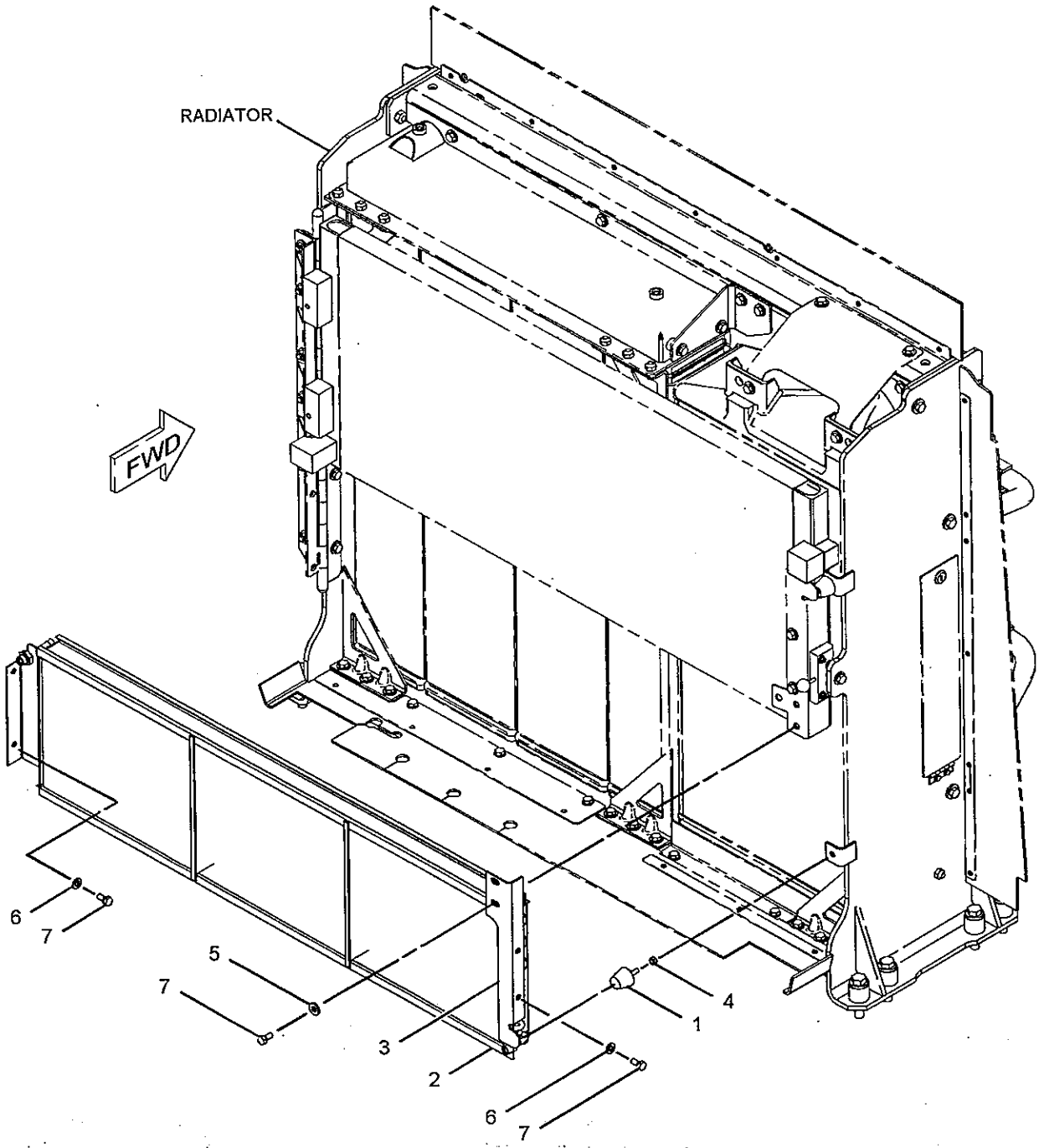


GRAPHIC #1

**<END>**

g01066537

# OPERATOR STATION

## *103-5526* CONTROL GP-MONITOR–DIMMER

**S/N: JMS1-UP**

**PART OF 207-8617, 235-5503, 262-9950 WIRING GP-CAB**

**ALSO AN ATTACHMENT**

**SMCS-7490, 7494, 7601** **i02271420**

| NOTE | REF NO | GRAPHIC REF | PART NUMBER | QTY | PART NAME 1 2 3 4 5 6 (PRODUCT LEVEL) | SEE PAGE |
|---|---|---|---|---|---|---|
| | 1 | 1 | 5P-9132 | 2 | SCREW-HEX FLANGE (6-32X0.187-IN) | |
| | 2 | 1 | 186-3735 | 6 | PIN-CONNECTOR (16-GA TO 18-GA) | |
| | | | | | AVAILABLE REPAIR KIT(S): | |
| | | | 102-8805 | 1 | KIT-RECEPTACLE (6-PIN) | |
| | | | | | (INCLUDES RECEPTACLE AS & WEDGE) | |

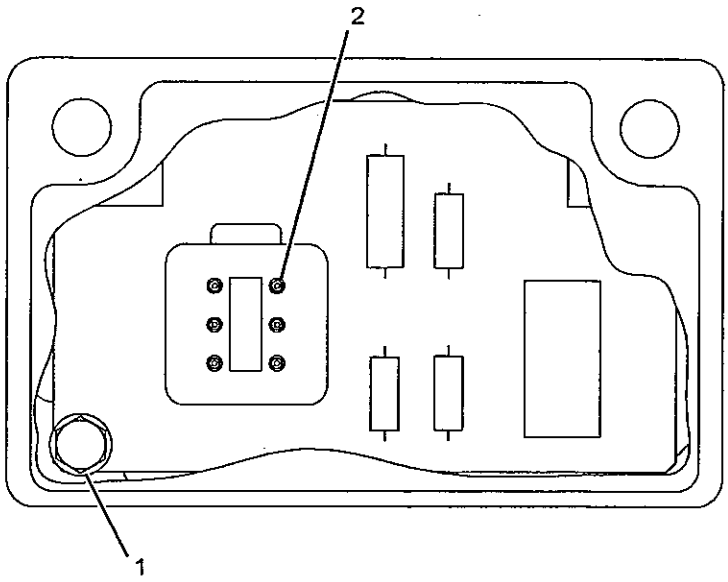


GRAPHIC #1 **<END>** g01126720

# OPERATOR STATION

## 228-4540 CONTROL GP-MONITOR–PAYLOAD

**S/N: JMS1-UP**

**AN ATTACHMENT**

**SMCS-7490, 7494, 7601** i02186003

| NOTE | REF NO | GRAPHIC REF | PART NUMBER | QTY | PART NAME 1 2 3 4 5 6 (PRODUCT LEVEL) | SEE PAGE |
|---|---|---|---|---|---|---|
| | 1 | 1 | 3E-5165 | 1 | CAP AS-PROTECTION | |
| | 2 | 1 | 3S-2093 | 1 | STRAP-CABLE | |
| | 3 | 1 | 6K-8180 | 2 | GROMMET | |
| | 4 | 1 | 7N-5876 | 1 | LAMP (24-VOLT) | |
| | 5 | 1 | 9X-8917 | 7 | SCREW-MACHINE (4-40X9.52-MM) | |
| | 6 | 1 | 149-3253 | 1 | MODULE GP-PAYLOAD KEYPAD | |
| | 7 | 1 | 188-1421 | 1 | HARNESS AS-MONITOR (PAYLOAD CONTROL) | |
| | | 1 | 3E-5136 | 1 | RECEPTACLE AS (5-PIN) | |
| | | 1 | 102-8801 | 1 | KIT-RECEPTACLE (12-PIN) | |
| | | | | | (INCLUDES RECETPACLE AS AND WEDGE) | |
| | | 1 | 3T-3278 | 1 | BOOT | |
| | | 1 | 7X-6222 | 1 | PLUG AS-CONNECTOR (24-PIN) | |
| | | 1 | 3E-4367 | 1 | RING-RETAINING | |
| M | | 1 | 3E-8558 | 1 | BOLT (M5X0.8X39.37-MM) | |
| | | 1 | 9X-3265 | 2 | SEAL-CONNECTOR (24-PIN) | |
| | | 1 | 8T-8737 | 13 | PLUG-SEAL | |
| | | 1 | 155-2260 | 1 | KIT-CONNECTING PLUG (3-PIN) | |
| | | | | | (INCLUDES PLUG AS AND WEDGE) | |
| | 8 | 1 | 195-0973 | 1 | BRACKET AS | |
| M | | 1 | 6V-9632 | 2 | NUT-WELD (M6X1-THD) | |
| | 9 | 1 | 195-0975 | 1 | BRACKET AS | |
| M | | 1 | 6V-9632 | 5 | NUT-WELD (M6X1-THD) | |
| M | | 1 | 8T-8874 | 4 | NUT-WELD (M5X0.8-THD) | |
| | 10 | 1 | 195-0976 | 1 | COVER-FRONT | |
| | 11 | 1 | 198-1941 | 2 | HINGE AS | |
| | 12 | 1 | 198-6588 | 1 | COVER-FRONT | |
| | 13 | 1 | 199-3417 | 1 | PLATE | |
| | 14 | 1 | 205-4933 | 1 | FILM-EXIT (SECONDARY) | |
| | 15 | 1 | 210-7016 | 1 | COVER | |
| | 16 | 1 | 210-7018 | 2 | LATCH AS | |
| | 17 | 1 | 224-9364 | 1 | BRACKET AS | |
| M | | 1 | 6V-9632 | 5 | NUT-WELD (M6X1-THD) | |
| | 18 | 1 | 224-9365 | 1 | BRACKET AS | |
| M | | 1 | 6V-9632 | 2 | NUT-WELD (M6X1-THD) | |
| | 19 | 1 | 224-9366 | 1 | BRACKET | |
| | 20 | 1 | 224-9367 | 1 | BRACKET AS | |
| M | | 1 | 6V-9632 | 3 | NUT-WELD (M6X1-THD) | |
| | 21 | 1 | 224-9368 | 1 | BRACKET AS | |
| M | | 1 | 6V-9632 | 4 | NUT-WELD (M6X1-THD) | |
| | 22 | 1 | 224-9369 | 1 | BRACKET | |
| | 23 | 1 | 228-7137 | 1 | COVER | |
| Y | 24 | 1 | 246-9197 | 1 | CONTROL GP-MONITOR (PAYLOAD) | 798 |
| M | 25 | 1 | 5C-9553 | 7 | BOLT (M6X1X16-MM) | |
| M | 26 | 1 | 6V-2313 | 4 | BOLT (M5X0.8X30-MM) | |
| M | 27 | 1 | 7Y-7256 | 4 | SCREW-TRUSS HEAD (M4X0.7-MM) | |
| | 28 | 1 | 8T-0328 | 4 | WASHER-HARD (5.5X10X1-MM THK) | |
| | 29 | 1 | 8T-9471 | 1 | GROMMET | |
| M | 30 | 1 | 9X-2040 | 8 | SCREW-TRUSS HEAD (M10X1.5X25-MM) | |
| M | 31 | 1 | 9X-2042 | 8 | SCREW-TRUSS HEAD (M6X1X12-MM) | |
| M | 32 | 1 | 9X-2045 | 6 | SCREW-TRUSS HEAD (M6X1X20-MM) | |
| | 33 | 1 | 9X-8256 | 7 | WASHER (6.6X12X2-MM THK) | |

M-METRIC PART
Y-SEPARATE ILLUSTRATION

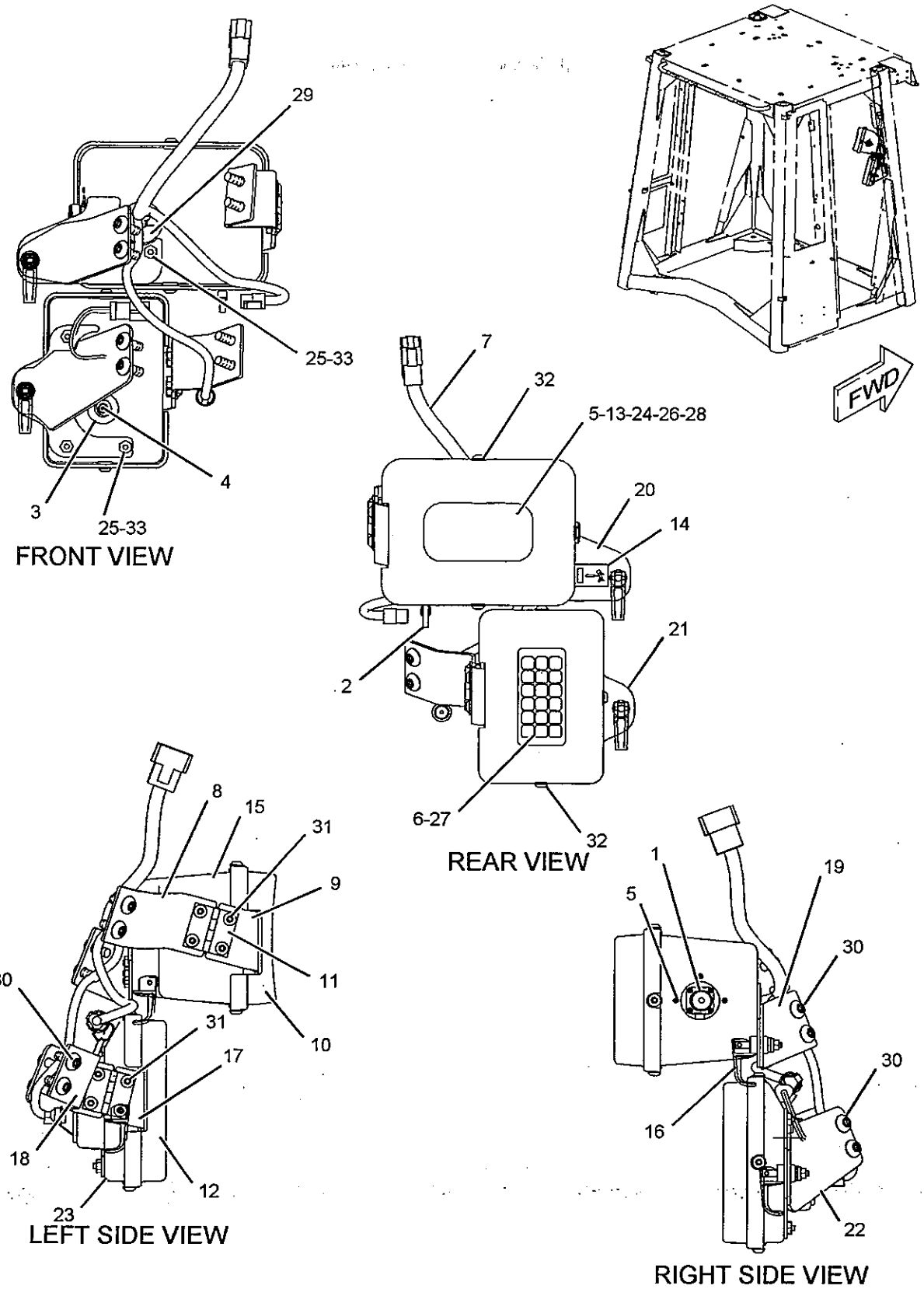


GRAPHIC #1 **<END>** g01111438

# OPERATOR STATION

## 246-9197 CONTROL GP-MONITOR–PAYLOAD

S/N: JMS1-UP

PART OF 228-4540 CONTROL GP-MONITOR, 241-6253 MONITOR GP-PAYLOAD AN ATTACHMENT

SMCS-7490, 7494, 7601

i02066253

| NOTE | REF NO | GRAPHIC REF | PART NUMBER | QTY | PART NAME 1 2 3 4 5 6 (PRODUCT LEVEL) | SEE PAGE |
|---|---|---|---|---|---|---|
| Z | 1 | 1 | | 1 | CONTROL AS-ELECTRONIC | |
| | 2 | 1 | 246-9196 | 1 | SOFTWARE GP-MONITOR (PAYLOAD CONTROL SYSTEM) | |
| | 3 | 1 | 8C-3078 | 1 | SEAL-O-RING | |
| | 4 | 1 | 129-9690 | 1 | COVER | |
| | 5 | 1 | 101-1785 | 1 | BATTERY (LITHIUM) | |

Z-NOT SERVICED SEPARATELY

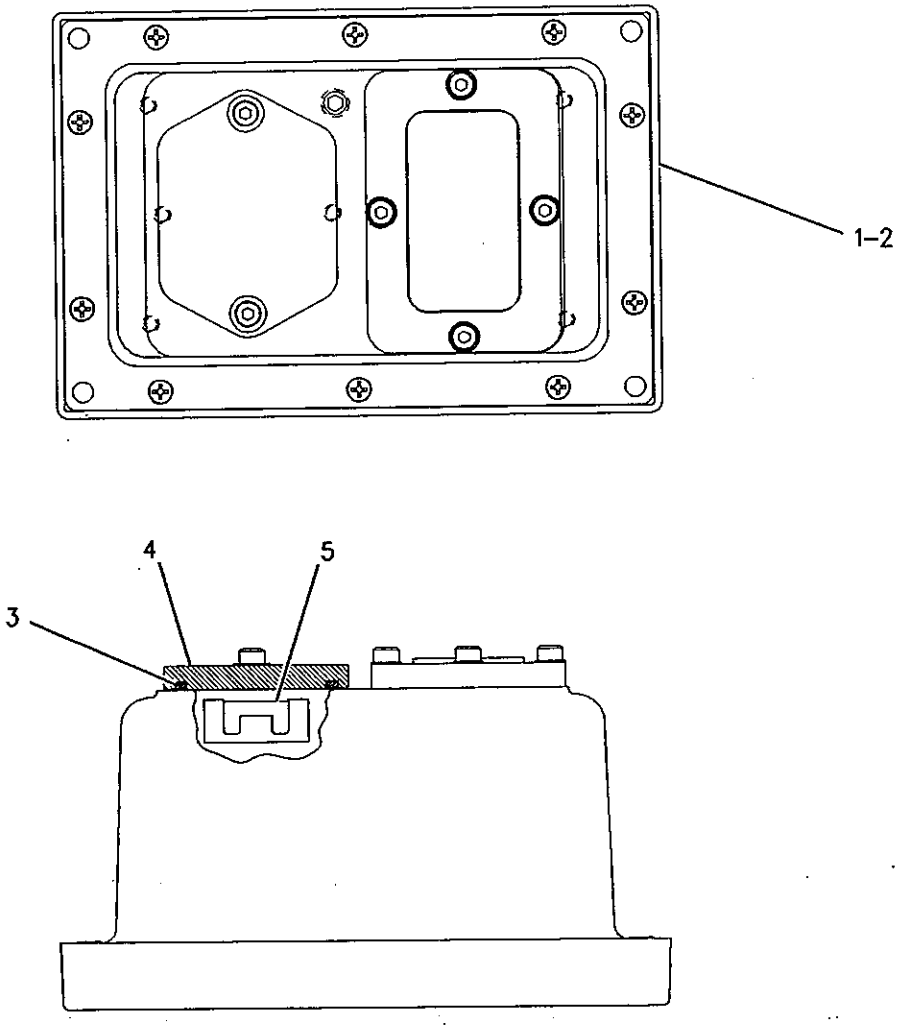


GRAPHIC #1

<END>

g00845134

# OPERATOR STATION

## *179-8267* DOOR GP-CAB–LH

**S/N: JMS1-UP**
**PART OF 203-2507 DOOR GP-CAB**
**ALSO AN ATTACHMENT**

**SMCS-7308** **i02225666**

| NOTE | REF NO | GRAPHIC REF | PART NUMBER | QTY | PART NAME 1 2 3 4 5 6 (PRODUCT LEVEL) | SEE PAGE |
|---|---|---|---|---|---|---|
| | 1 | 1 | **5P-7803** | 2 | PLUG-BUTTON | |
| | 2 | 1 | **6V-7636** | 2 | PIN AS-SPRING | |
| | 3 | 1 | **225-3755** | 1 | GASKET | |
| | 4 | 1 | **108-5471** | 1 | CLEVIS | |
| | 5 | 1 | **109-5008** | 1 | BUMPER-CONICAL | |
| | 6 | 1 | **170-7709** | 1 | HANDLE AS | |
| Y | 7 | 1 | *185-7523* | 1 | WINDOW GP-DOOR (LH) | 946 |
| | 8 | 1 | **204-7366** | 1 | BRACKET AS | |
| | 9 | 1 | **187-1461** | 1 | DOOR AS (LH) | |
| | 10 | 1 | **187-1466** | 1 | ROD | |
| | 11 | 1 | **187-1469** | 1 | GLASS | |
| | 12 | 1 | **187-1474** | 1 | BRACKET | |
| M | | 1 | **6V-9632** | 3 | NUT-WELD (M6X1-THD) | |
| | 13 | 1 | **252-5019** | 1 | LATCH AS | |
| M | 14 | 1 | **5C-7261** | 1 | NUT (M8X1.25-THD) | |
| | 15 | 1 | **8T-4224** | 2 | WASHER-HARD (8.8X16X2-MM THK) | |
| M | 16 | 1 | **8T-7547** | 2 | BOLT (M8X1.25X30-MM) | |
| M | 17 | 1 | **3E-4316** | 1 | SCREW-MACHINE | |
| M | 18 | 1 | **9X-6155** | 3 | BOLT-SOCKET HEAD (M6X1X16.7-MM) | |
| E | 19 | 1 | **3E-3805** | | SEAL (470-CM) | |
| | 20 | 1 | **6V-8185** | 1 | NUT (1/4-20-THD) | |
| | 21 | 1 | **214-9456** | 1 | PLATE | |
| B | 22 | 1 | **4E-2853** | 4 | WASHER | |

B-USE AS REQUIRED
E-ORDER BY THE CENTIMETER
M-METRIC PART
Y-SEPARATE ILLUSTRATION

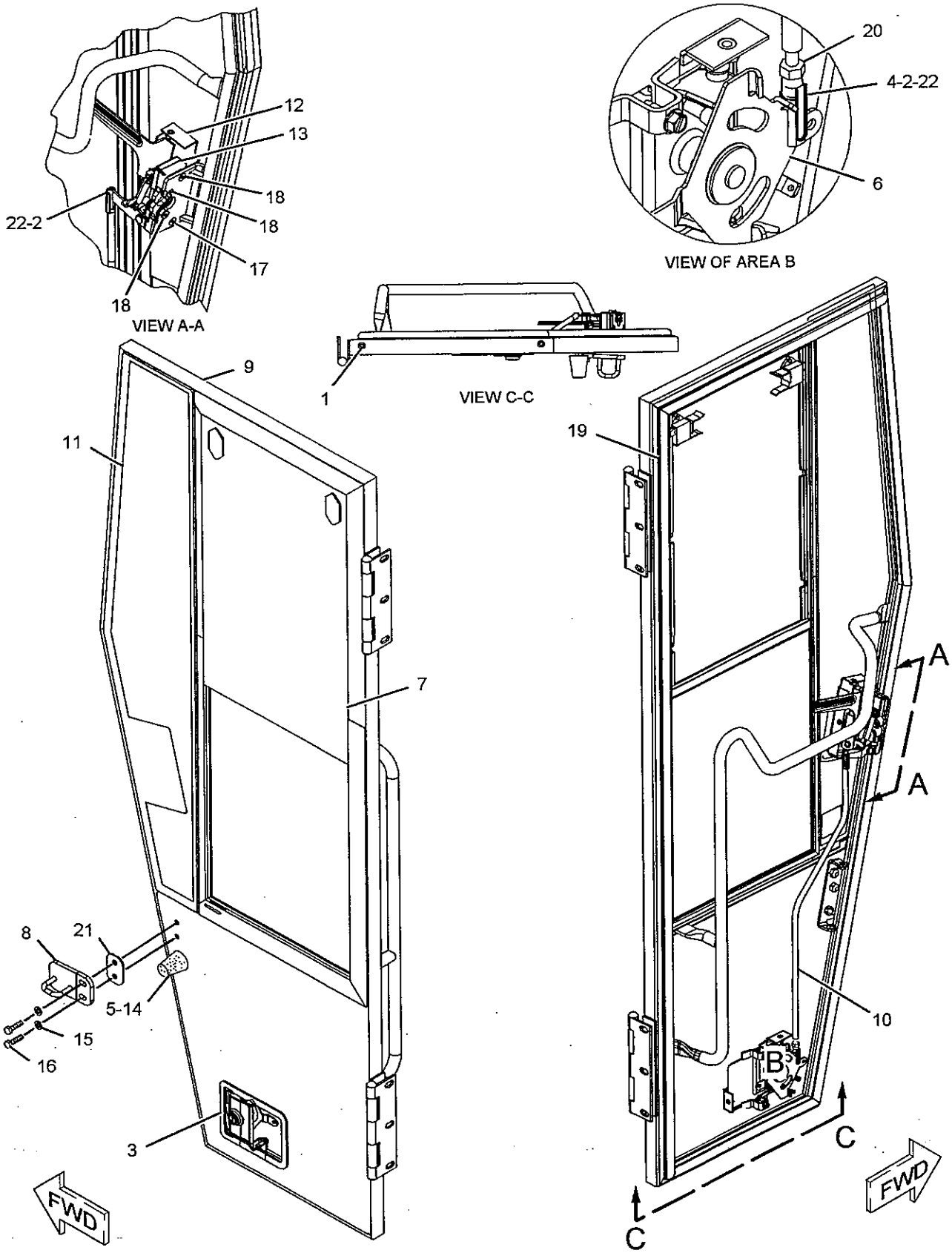


GRAPHIC #1 **<END>** g01064512

# OPERATOR STATION

## *185-7534* DOOR GP-CAB–SLIDING WINDOW, RH

**S/N: JMS1-UP**

**PART OF 203-2507 DOOR GP-CAB**

**ALSO AN ATTACHMENT**

**SMCS-7308** **i01575733**

| NOTE | REF NO | GRAPHIC REF | PART NUMBER | QTY | PART NAME 1 2 3 4 5 6 (PRODUCT LEVEL) | SEE PAGE |
|---|---|---|---|---|---|---|
| B | 1 | 1 | **5P-7803** | 2 | PLUG-BUTTON | |
| | 2 | 1 | **103-1122** | 1 | MOUNT-LATCH | |
| Y | 3 | 1 | *185-7522* | 1 | WINDOW GP-DOOR (RH) | 944 |
| | 4 | 1 | **185-7533** | 1 | GLASS-CAB (DOOR) | |
| | 5 | 1 | **185-7538** | 1 | DOOR AS (RH) | |
| | | 1 | **107-1161** | 2 | HINGE | |
| M | 6 | 1 | **9X-2041** | 1 | SCREW-TRUSS HEAD (M10X1.5X20-MM) | |
| E | 7 | 1 | **3E-3805** | | SEAL (470CM) | |

B-USE AS REQUIRED
E-ORDER BY THE CENTIMETER
M-METRIC PART
Y-SEPARATE ILLUSTRATION

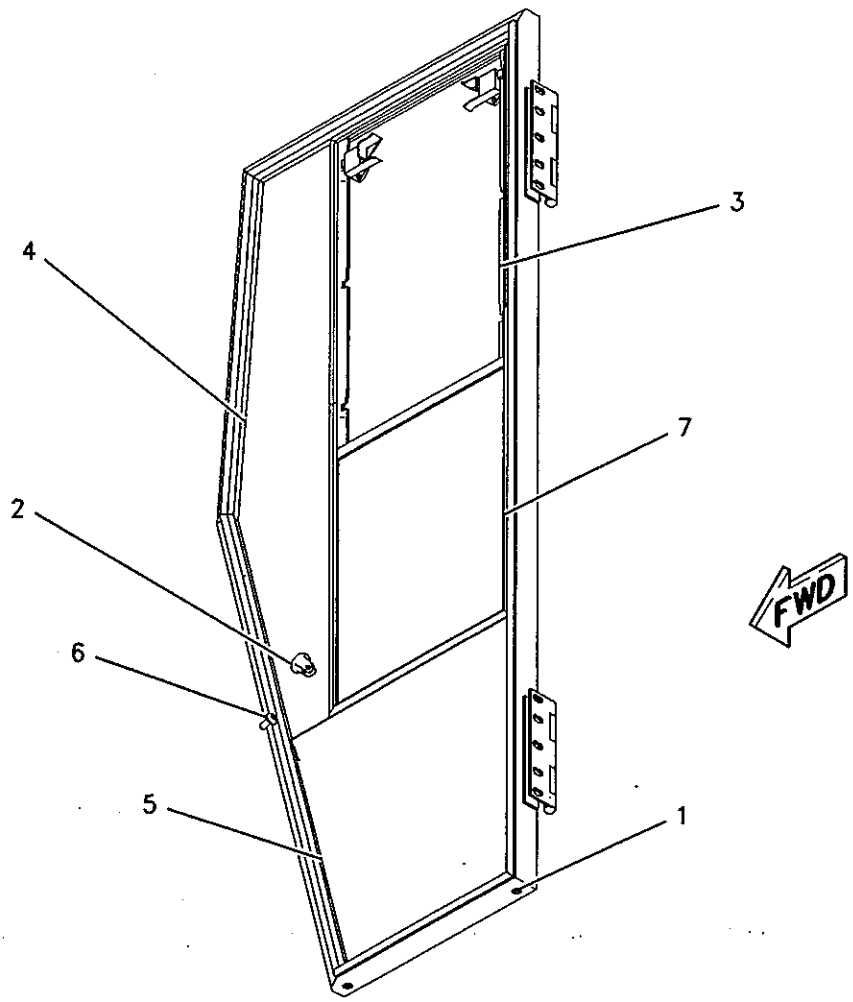


GRAPHIC #1 **<END>** g00819629

# OPERATOR STATION

## *203-2507* DOOR GP-CAB

**S/N: JMS1-UP**

**PART OF 232-1395, 265-6754 ROPS GP-ENCLOSED**

**ALSO AN ATTACHMENT**

**SMCS-7308** i01492717

| NOTE | PART NUMBER | QTY | PART NAME 1 2 3 4 5 6 (PRODUCT LEVEL) | SEE PAGE |
|---|---|---|---|---|
| Y | *179-8267* | 1 | DOOR GP-CAB (LH) | 799 |
| Y | *185-7534* | 1 | DOOR GP-CAB (SLIDING WINDOW, RH) | 801 |

Y-SEPARATE ILLUSTRATION

**<END>**

# OPERATOR STATION

## *171-8888* DUCT & FILTER GP-AIR

**S/N: JMS1-UP**

**PART OF 232-1393 CAB AR-ENCLOSED ROPS**

**SMCS-7337, 7342** **i02228201**

| NOTE | REF NO | GRAPHIC REF | PART NUMBER | QTY | PART NAME 1 2 3 4 5 6 (PRODUCT LEVEL) | SEE PAGE |
|---|---|---|---|---|---|---|
| | 1 | 1 | **3V-7476** | 1 | KEY-HANDLE | |
| | 2 | 1 | **7X-6041** | 2 | FILTER-CAB AIR | |
| | 3 | 1 | **8Y-6388** | 4 | LOUVER AS | |
| | 4 | 1 | **135-8280** | 2 | SEAL | |
| | 5 | 1 | **146-6371** | 6 | LOUVER AS | |
| | 6 | 1 | **151-5715** | 3 | LOUVER AS | |
| E | 7 | 1 | **8T-9005** | 2 | SEAL (60-CM EACH) | |
| | 8 | 1 | **196-0052** | 2 | DUCT AS (LH) | |
| | | | | | (EACH INCLUDES) | |
| | | 1 | **8M-7758** | 4 | RIVET-POP | |
| | | 1 | **096-5962** | 4 | WASHER-HARD (3.4X7X0.8-MM THK) | |
| | 9 | 1 | **177-4495** | 4 | BRACKET AS | |
| | 10 | 1 | **198-8772** | 1 | DUCT AS | |
| | 11 | 1 | **104-2091** | 4 | SCREW-FLAT HEAD (6-20X0.5-IN) | |
| | 12 | 1 | **148-3626** | 6 | SCREW-FLAT HEAD (NO 6X3/4-IN) | |
| | 13 | 1 | **5P-4116** | 4 | WASHER-HARD (8.8X20.5X2-MM THK) | |
| M | 14 | 1 | **7X-2537** | 4 | BOLT (M8X1.25X35-MM) | |
| M | 15 | 1 | **9X-1046** | 8 | SCREW (M4X0.7X18-MM) | |
| M | 16 | 1 | **9X-2043** | 6 | SCREW-TRUSS HEAD (M6X1X14-MM) | |
| E | 17 | 1 | **117-4473** | 2 | SEAL (5-CM EACH) | |
| M | 18 | 1 | **9X-2045** | 2 | SCREW-TRUSS HEAD (M6X1X20-MM) | |
| | 19 | 1 | **117-8929** | 2 | SPACER (6.6X22X2-MM THK) | |
| | 20 | 1 | **209-0746** | 2 | STRAP | |

E-ORDER BY THE CENTIMETER
M-METRIC PART

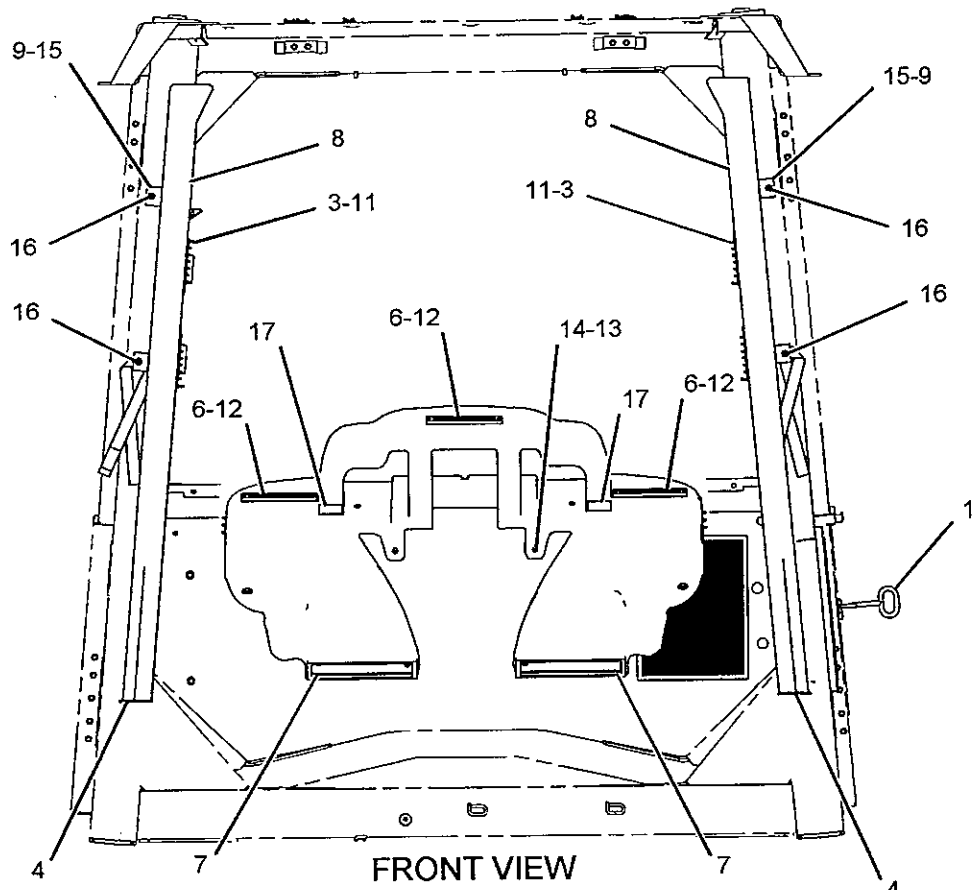


FRONT VIEW

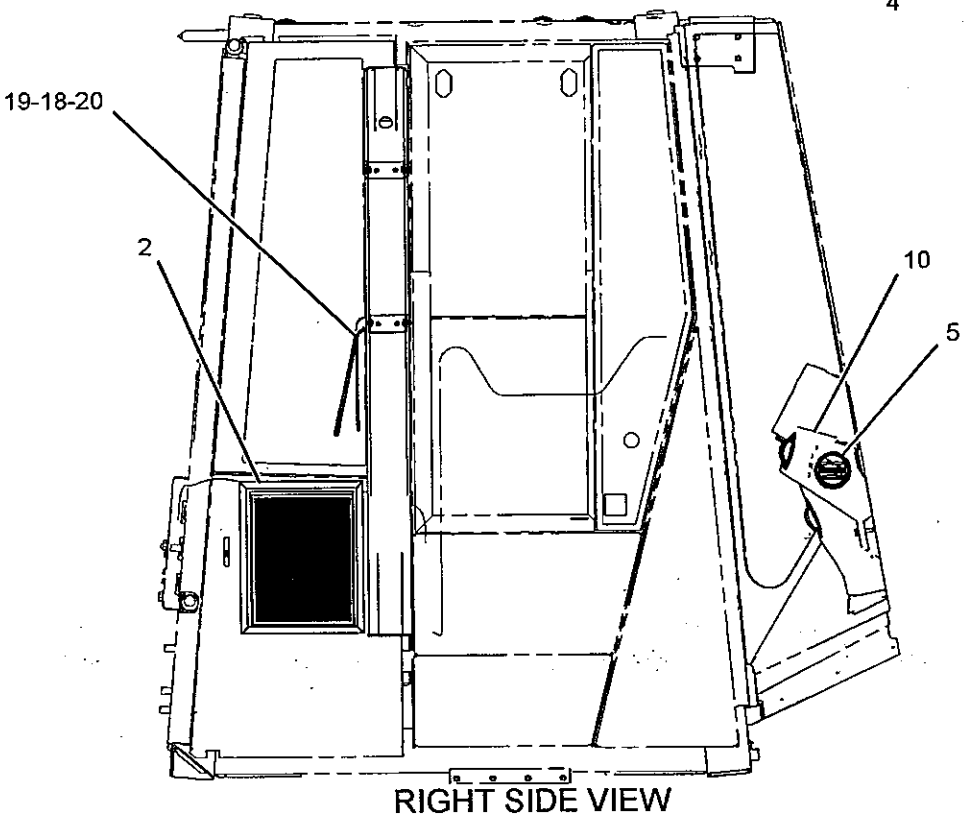


RIGHT SIDE VIEW

GRAPHIC #1

**<END>**

g01124139

# OPERATOR STATION

## *204-3664* DUCT GP-AIR

**S/N: JMS1-UP**

**PART OF 203-9837, 258-1565 CANOPY AR-OPEN ROPS**

**AN ATTACHMENT**

**SMCS-734D** **i01981348**

| NOTE | REF NO | GRAPHIC REF | PART NUMBER | QTY | PART NAME 1 2 3 4 5 6 (PRODUCT LEVEL) | SEE PAGE |
|---|---|---|---|---|---|---|
| | 1 | 1 | **135-8280** | 2 | SEAL | |
| | 2 | 1,2 | **177-4495** | 4 | BRACKET AS | |
| | 3 | 1 | **205-8650** | 1 | DUCT AS | |
| | 4 | 1 | **205-8651** | 2 | DUCT AS | |
| | 5 | 1 | **206-7562** | 1 | COVER | |
| | 6 | 1 | **209-0746** | 1 | STRAP | |
| | 7 | 1 | **117-8929** | 1 | SPACER (6.6X22X2-MM THK) | |
| | 8 | 1 | **5P-4116** | 4 | WASHER-HARD (8.8X20.5X2-MM THK) | |
| M | 9 | 1 | **7X-2537** | 4 | BOLT (M8X1.25X35-MM) | |
| CM | 11 | 1,2 | **9X-2044** | 13 | SCREW-TRUSS HEAD (M6X1X16-MM) | |
| | 12 | 1 | **9X-2038** | 5 | WASHER (7X19X2-MM THK) | |
| M | 13 | 1,2 | **9X-2043** | 7 | SCREW-TRUSS HEAD (M6X1X14-MM) | |
| M | 14 | 1 | **9X-2045** | 1 | SCREW-TRUSS HEAD (M6X1X20-MM) | |
| D | 15 | 1 | **8T-5372** | | SEAL (.8M) | |
| E | 16 | 1 | **8T-9005** | | SEAL (120CM) | |
| | 17 | 2 | **117-9966** | 6 | PLUG | |

C-CHANGE FROM PREVIOUS TYPE
D-ORDER BY THE METER
E-ORDER BY THE CENTIMETER
M-METRIC PART

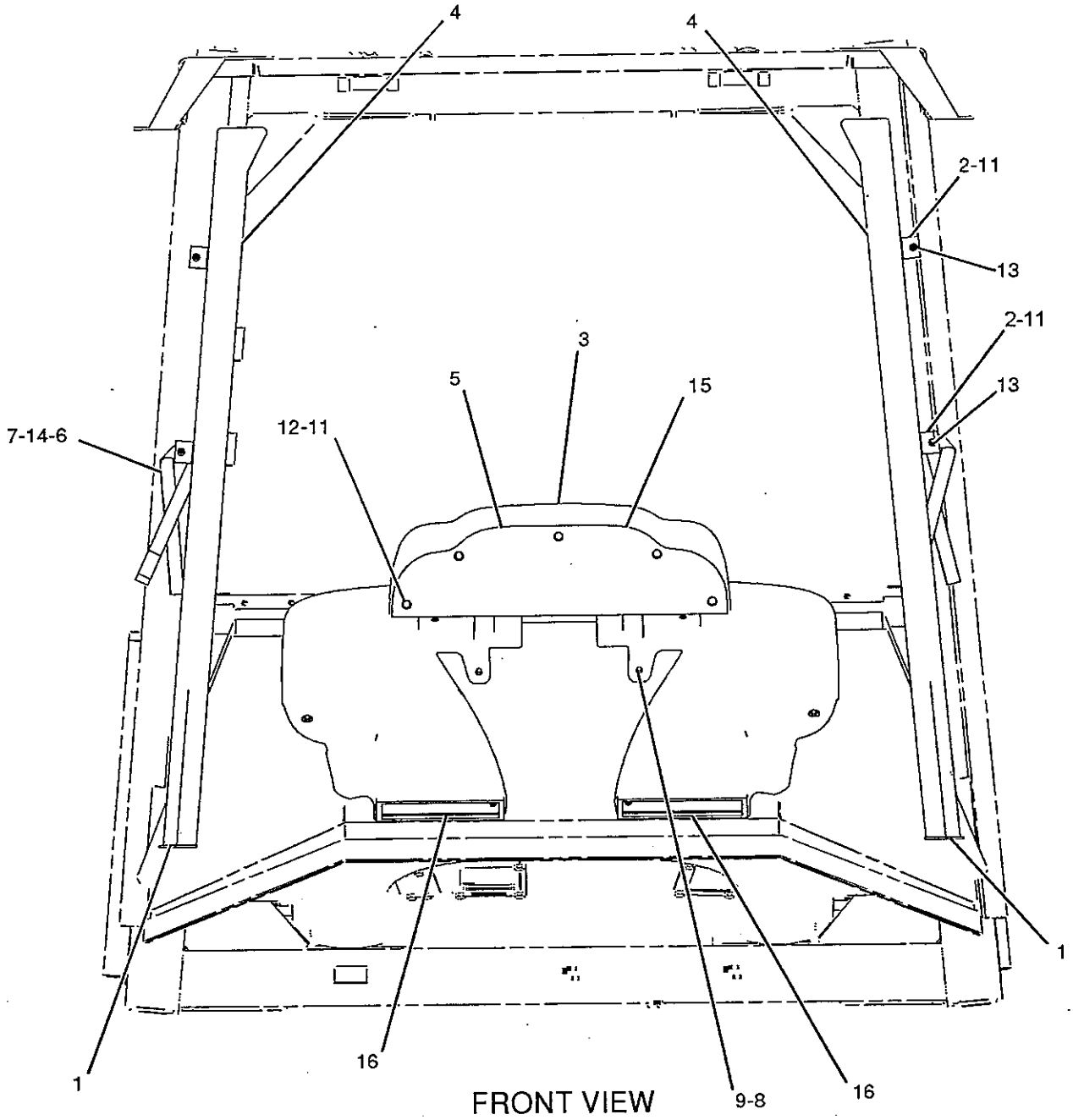


GRAPHIC #1 g01029360

*204-3664* **DUCT GP-AIR** *(contd.)* i01981348

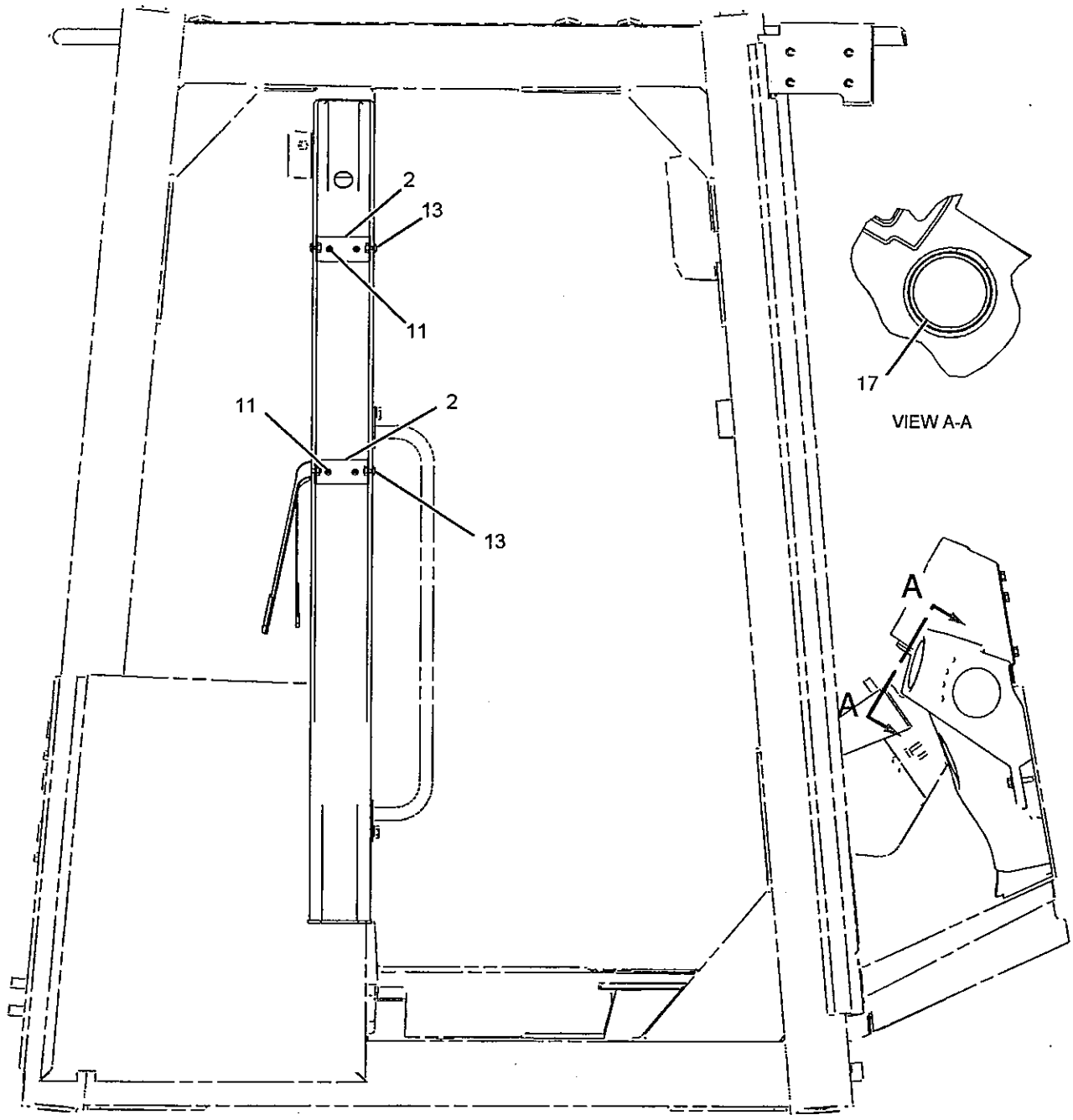


RIGHT SIDE VIEW

GRAPHIC #2

**<END>**

g01029358

# OPERATOR STATION

## 232-1397 FLOOR GP-SOUND SUPPRESSION

S/N: JMS1-UP

PART OF 232-1393 CAB AR-ENCLOSED ROPS

SMCS-7265, 7301

i02170953

| NOTE | REF NO | GRAPHIC REF | PART NUMBER | QTY | PART NAME 1 2 3 4 5 6 (PRODUCT LEVEL) | SEE PAGE |
|---|---|---|---|---|---|---|
| | 1 | 1 | 224-9392 | 8 | FASTENER-SINGLE HEAD | |
| | 2 | 1 | 225-9578 | 1 | INSULATION | |
| | 3 | 1 | 225-9579 | 1 | PANEL | |
| | 5 | 1 | 236-8896 | 1 | INSULATION | |
| | 6 | 1 | 2D-6416 | 2 | WASHER (7/16-1.25X0.12-IN THK) | |
| M | 7 | 1 | 8T-4137 | 2 | BOLT (M10X1.5X20-MM) | |

M-METRIC PART

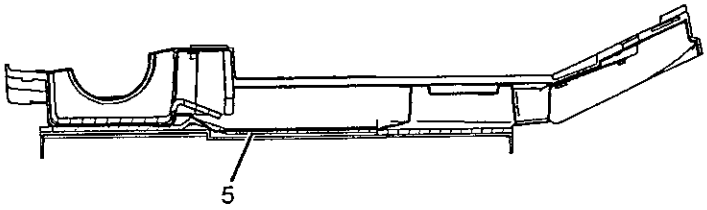


SECTION B-B

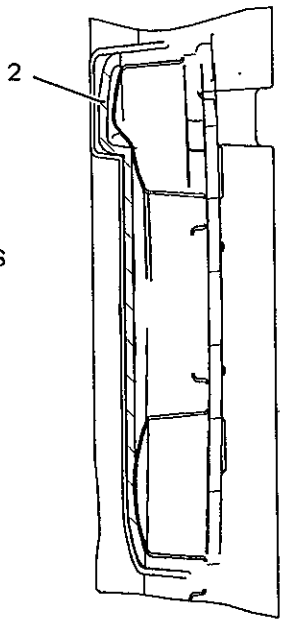


SECTION A-A

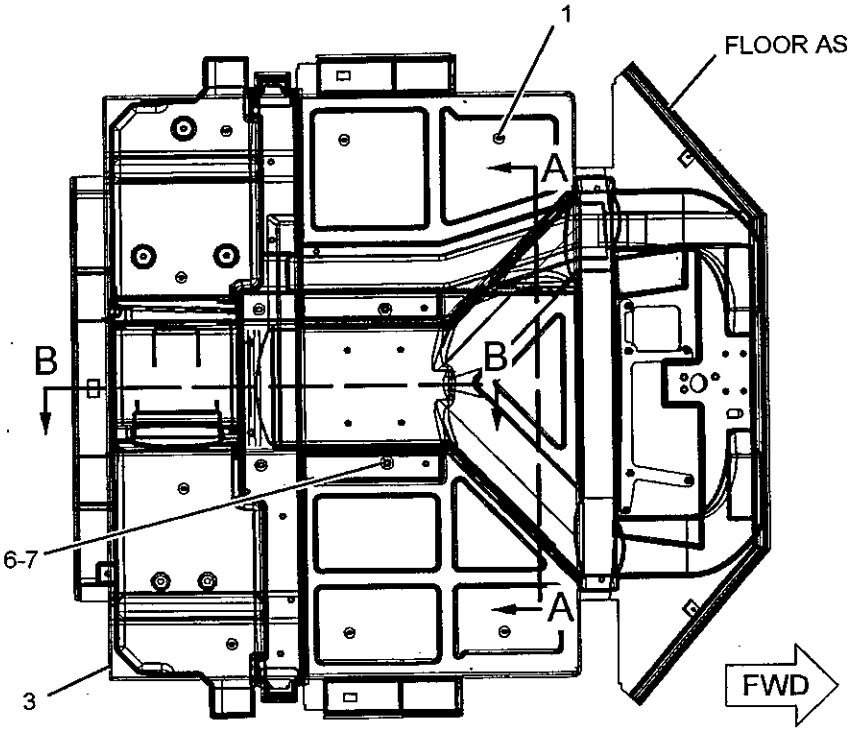


BOTTOM VIEW

GRAPHIC #1

<END>

g01100353

# OPERATOR STATION

## *232-2964* FLOOR GP-SOUND SUPPRESSION

**S/N: JMS1-UP**

**PART OF 232-1395, 265-6754 ROPS GP-ENCLOSED**

**ALSO AN ATTACHMENT**

**SMCS-7265, 7301** **i02204394**

| NOTE | REF NO | GRAPHIC REF | PART NUMBER | QTY | PART NAME 1 2 3 4 5 6 (PRODUCT LEVEL) | SEE PAGE |
|---|---|---|---|---|---|---|
| | 1 | 1 | **2M-6102** | 3 | PIPE | |
| | 2 | 1 | **6S-3859** | 2 | WASHER (0.562X1.75X0.063-IN THK) | |
| M | 3 | 1 | **9X-2042** | 4 | SCREW-TRUSS HEAD (M6X1X12-MM) | |
| | 4 | 1 | **213-8819** | 1 | INSULATION | |
| | 5 | 1 | *233-3346* | 1 | PLATE AS | |
| M | | 1 | **8T-3612** | 6 | NUT-WELD (M8X1.25-THD) | |

M-METRIC PART

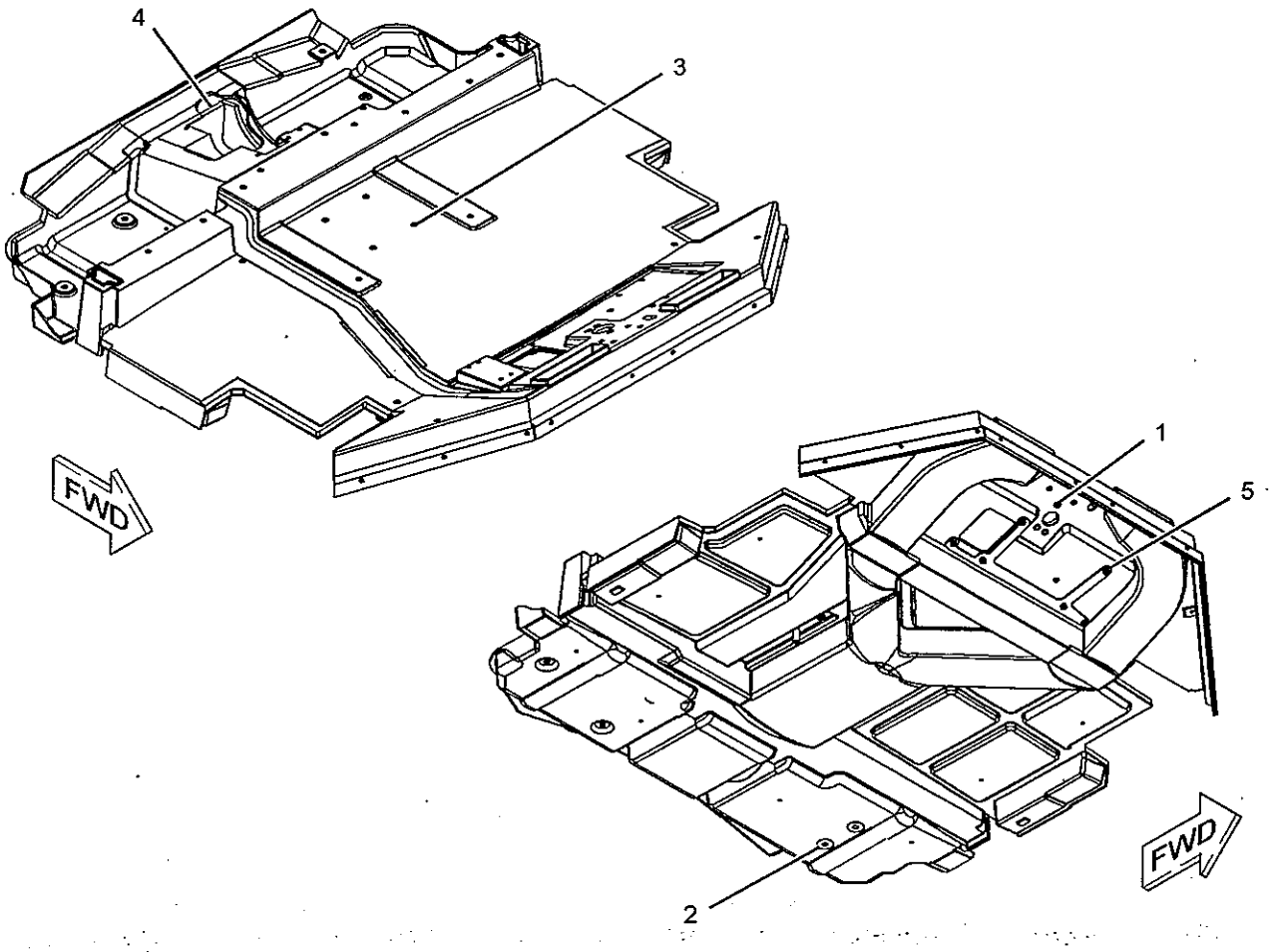


GRAPHIC #1 **<END>** g01114668

# OPERATOR STATION

## *248-7648* GUARD AR-WINDOW

**S/N: JMS1-UP**
**CANNOT BE USED WITH 246-5204–PAGE 889**
**AN ATTACHMENT**

**SMCS-7165, 7182, 7310** **i02091690**

| NOTE | PART NUMBER | QTY | PART NAME 1 2 3 4 5 6 (PRODUCT LEVEL) | SEE PAGE |
|---|---|---|---|---|
| Y | *241-8650* | 1 | GUARD GP-WINDOW | 814 |
| Y | *244-2736* | 1 | MIRROR GP-REAR VIEW | 852 |
| Y | *246-5206* | 1 | HANDHOLD GP | 817 |

Y-SEPARATE ILLUSTRATION

**<END>**

## *248-7649* GUARD AR-WINDOW

**S/N: JMS1-UP**
**CANNOT BE USED WITH 246-5204–PAGE 889**
**AN ATTACHMENT**

**SMCS-7165, 7182, 7310** **i02091691**

| NOTE | PART NUMBER | QTY | PART NAME 1 2 3 4 5 6 (PRODUCT LEVEL) | SEE PAGE |
|---|---|---|---|---|
| Y | *240-4542* | 1 | GUARD GP-WINDOW | 812 |
| Y | *244-2736* | 1 | MIRROR GP-REAR VIEW | 852 |
| Y | *246-5206* | 1 | HANDHOLD GP | 817 |

Y-SEPARATE ILLUSTRATION

**<END>**

# OPERATOR STATION

## 204-4125 GUARD GP-VANDALISM–INSTRUMENT PANEL

S/N: JMS1-UP

PART OF 203-9837, 258-1565 CANOPY AR-OPEN ROPS

AN ATTACHMENT

SMCS-7315

i01742936

| NOTE | REF NO | GRAPHIC REF | PART NUMBER | QTY | PART NAME 1 2 3 4 5 6 (PRODUCT LEVEL) | SEE PAGE |
|---|---|---|---|---|---|---|
| | 1 | 1 | 5P-8502 | 2 | PADLOCK GP | |
| | | | | | (EACH INCLUDES) | |
| | | 1 | 5P-8500 | 1 | KEY | |
| | | 1 | 8Y-6364 | 1 | SLEEVE | |
| | 2 | 1 | 8M-7758 | 4 | RIVET-POP | |
| | 3 | 1 | 206-5175 | 1 | BRACKET | |
| | 4 | 1 | 206-5176 | 1 | COVER AS | |
| | 5 | 1 | 207-8619 | 1 | BRACKET | |
| | 6 | 1 | 207-8620 | 1 | PLATE | |
| | 7 | 1 | 207-8621 | 1 | COVER | |
| M | 8 | 1 | 7Y-7256 | 2 | SCREW-TRUSS HEAD (M4X0.7-MM) | |

M-METRIC PART

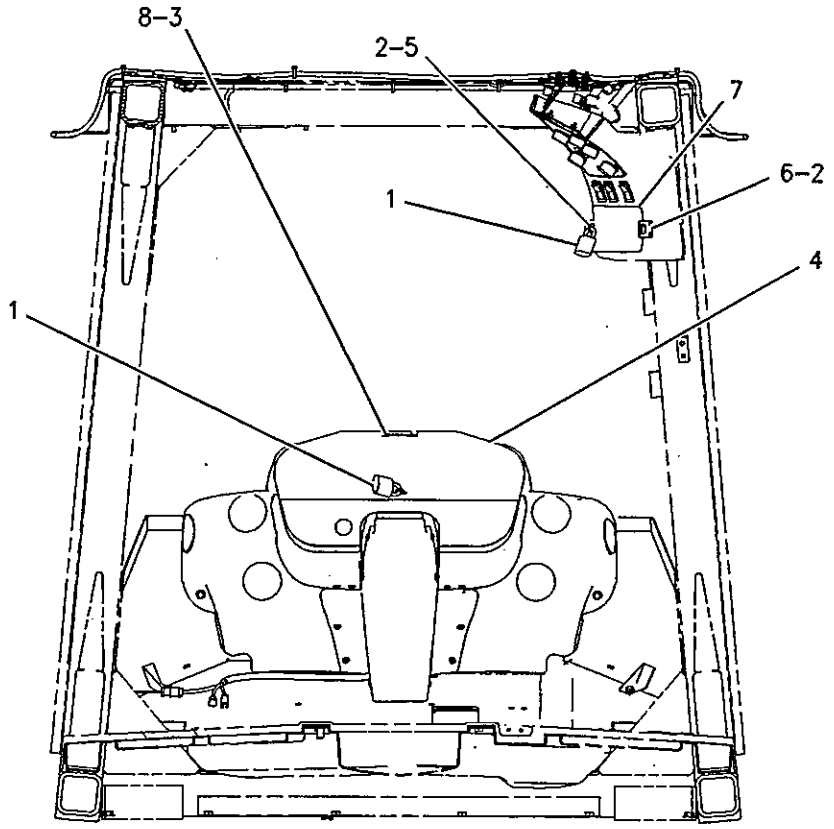


REAR VIEW

GRAPHIC #1

<END>

g00892419

# OPERATOR STATION

## 240-4542 GUARD GP-WINDOW–REAR

S/N: JMS1-UP
PART OF 248-7649 GUARD AR-WINDOW
AN ATTACHMENT

SMCS-7165, 7182, 7310

i02283499

| NOTE | REF NO | GRAPHIC REF | PART NUMBER | QTY | PART NAME 1 2 3 4 5 6 (PRODUCT LEVEL) | SEE PAGE |
|---|---|---|---|---|---|---|
| | 1 | 1 | 2G-9524 | 2 | LATCH | |
| | 2 | 1 | 6C-3678 | 4 | RIVET | |
| | 3 | 1 | 6C-3679 | 4 | RIVET-POP | |
| | 4 | 1 | 6S-6646 | 6 | PIN-COTTER | |
| | 5 | 1 | 7K-6536 | 2 | RIVET-POP | |
| | 6 | 1 | 8G-6035 | 2 | CLIP | |
| | 7 | 1 | 240-4548 | 1 | GRILL AS-FRONT | |
| | 8 | 1 | 240-4551 | 1 | GRILL AS-RH | |
| | 9 | 1 | 240-4552 | 1 | GRILL AS-LH | |
| | 10 | 1 | 240-4557 | 1 | TUBE | |
| | 11 | 1 | 240-4630 | 2 | PLATE | |
| | 12 | 1 | 241-6978 | 1 | TUBE | |
| | 13 | 1 | 241-8651 | 1 | TUBE AS | |
| | 14 | 1 | 241-8652 | 1 | TUBE AS | |
| | 15 | 1 | 244-2539 | 2 | ROD AS | |
| | | | | | (EACH INCLUDES) | |
| | | 1 | 6V-5839 | 2 | WASHER (11X21X2.5-MM THK) | |
| | 16 | 1 | 0S-0175 | 4 | PIN-CLEVIS | |
| | 17 | 1 | 4M-7470 | 4 | GROMMET | |
| | 18 | 1 | 5P-1076 | 12 | WASHER-HARD (13.5X30X4-MM THK) | |
| M | 19 | 1 | 7X-2555 | 6 | BOLT (M16X2X80-MM) | |
| | 20 | 1 | 8T-4121 | 2 | WASHER-HARD (11X21X2.5-MM THK) | |
| M | 21 | 1 | 8T-4139 | 12 | BOLT (M12X1.75X30-MM) | |
| | 22 | 1 | 9X-8257 | 6 | WASHER (17.5X30X3.5-MM THK) | |
| | 23 | 1 | 4E-1384 | 2 | BUMPER-CONICAL | |
| M | 24 | 1 | 5C-7261 | 2 | NUT (M8X1.25-THD) | |

M-METRIC PART

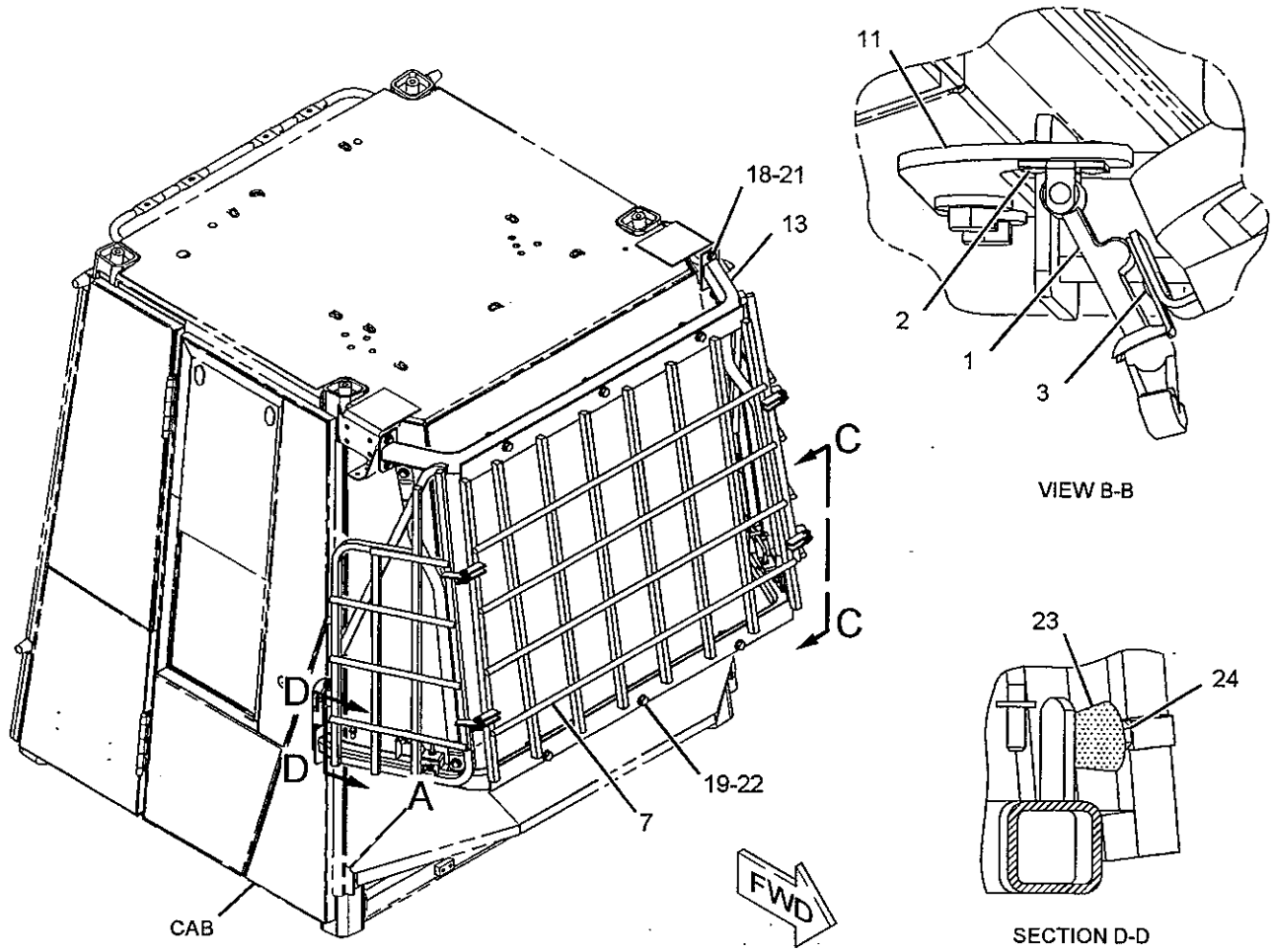


GRAPHIC #1

**<END>**

g01143326

# OPERATOR STATION

## *241-8650* GUARD GP-WINDOW–FRONT

S/N: JMS1-UP

PART OF 248-7648 GUARD AR-WINDOW

AN ATTACHMENT

SMCS-7165, 7182, 7310

i02283683

| NOTE | REF NO | GRAPHIC REF | PART NUMBER | QTY | PART NAME 1 2 3 4 5 6 (PRODUCT LEVEL) | SEE PAGE |
|---|---|---|---|---|---|---|
| | 1 | 1 | 2G-9524 | 2 | LATCH | |
| | 2 | 1 | 6C-3678 | 4 | RIVET | |
| | 3 | 1 | 6C-3679 | 4 | RIVET-POP | |
| | 4 | 1 | 6S-6646 | 6 | PIN-COTTER | |
| | 5 | 1 | 7K-6536 | 2 | RIVET-POP | |
| | 6 | 1 | 8G-6035 | 2 | CLIP | |
| | 7 | 1 | 240-4557 | 1 | TUBE | |
| | 8 | 1 | 240-4630 | 2 | PLATE | |
| | 9 | 1 | 241-6978 | 1 | TUBE | |
| | 10 | 1 | 241-8651 | 1 | TUBE AS | |
| | 11 | 1 | 241-8652 | 1 | TUBE AS | |
| | 12 | 1 | 242-0718 | 1 | GRILL AS (FRONT) | |
| | 13 | 1 | 242-0719 | 1 | GRILL AS (RH) | |
| | 14 | 1 | 242-0720 | 1 | GRILL AS (LH) | |
| | 15 | 1 | 244-2539 | 2 | ROD AS | |
| | 16 | 1 | 0S-0175 | 4 | PIN-CLEVIS | |
| | 17 | 1 | 4M-7470 | 4 | GROMMET | |
| | 18 | 1 | 5P-1076 | 12 | WASHER-HARD (13.5X30X4-MM THK) | |
| M | 19 | 1 | 7X-2555 | 6 | BOLT (M16X2X80-MM) | |
| | 20 | 1 | 8T-4121 | 2 | WASHER-HARD (11X21X2.5-MM THK) | |
| M | 21 | 1 | 8T-4139 | 12 | BOLT (M12X1.75X30-MM) | |
| | 22 | 1 | 9X-8257 | 6 | WASHER (17.5X30X3.5-MM THK) | |
| | 23 | 1 | 4E-1384 | 2 | BUMPER-CONICAL | |
| M | 24 | 1 | 5C-7261 | 2 | NUT (M8X1.25-THD) | |

M-METRIC PART

## *241-8650* **GUARD GP-WINDOW** *(contd.)*

**i02283683**

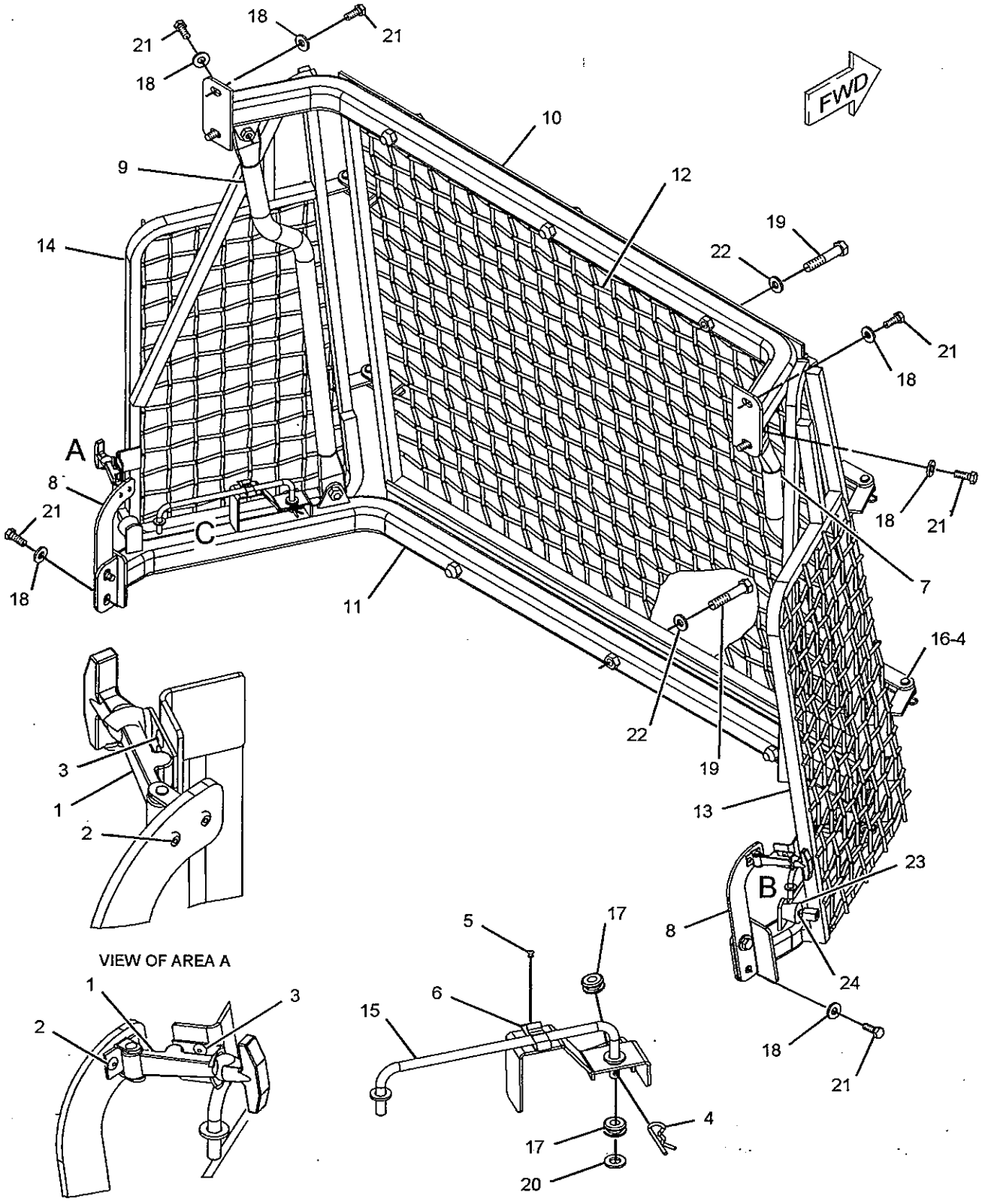


VIEW OF AREA A

VIEW OF AREA B

VIEW OF AREA C
(EXPLODED)

GRAPHIC #1

**<END>**

g01144342

# OPERATOR STATION

## *243-1944* HANDHOLD GP–CAB

**S/N: JMS1-UP**

**PART OF 246-5204, 246-5798, 246-6178 PLATFORM AR**

**AN ATTACHMENT**

**SMCS-7256** **i02206757**

| NOTE | REF NO | GRAPHIC REF | PART NUMBER | QTY | PART NAME 1 2 3 4 5 6 (PRODUCT LEVEL) | SEE PAGE |
|---|---|---|---|---|---|---|
| | 1 | 1 | 240-0363 | 1 | HANDHOLD AS | |
| | 2 | 1 | 240-0364 | 1 | HANDHOLD AS | |
| | 3 | 1 | 7X-0589 | 2 | WASHER-HARD (12X28.5X5-MM THK) | |
| M | 4 | 1 | 8T-4183 | 4 | BOLT (M12X1.75X40-MM) | |
| M | 5 | 1 | 8T-4192 | 4 | BOLT (M12X1.75X25-MM) | |
| M | 6 | 1 | 8T-4195 | 2 | BOLT (M10X1.5X30-MM) | |
| | 7 | 1 | 8T-4223 | 8 | WASHER-HARD (13.5X25.5X3-MM THK) | |

M-METRIC PART

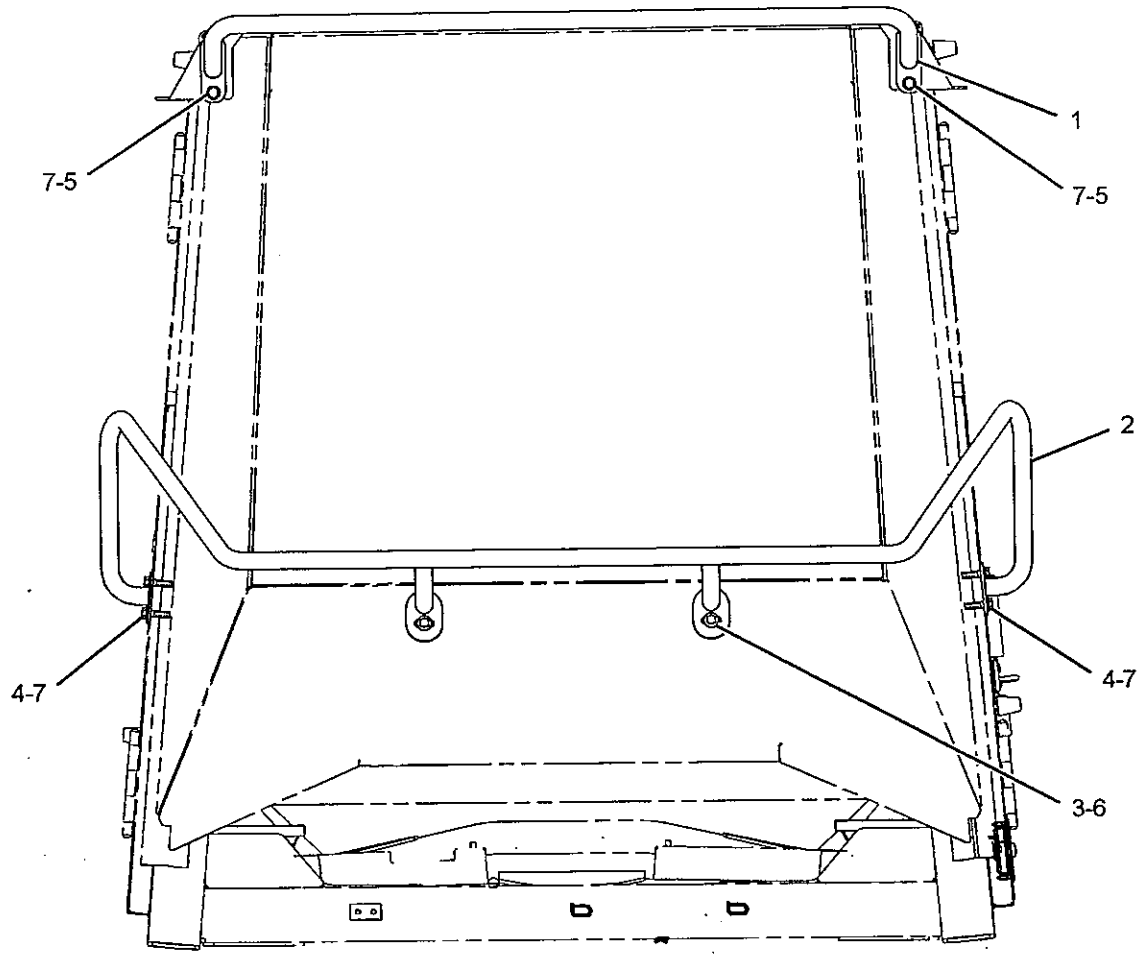


FRONT VIEW

**<END>**

GRAPHIC #1 g01066924

# OPERATOR STATION

## *246-5206* HANDHOLD GP–PLATFORM

S/N: JMS1-UP

PART OF 248-7648, 248-7649 GUARD AR-WINDOW, 246-5204, 246-5798, 246-6178 PLATFORM AR

AN ATTACHMENT

SMCS-7256

i02089940

| NOTE | REF NO | GRAPHIC REF | PART NUMBER | QTY | PART NAME 1 2 3 4 5 6 (PRODUCT LEVEL) | SEE PAGE |
|---|---|---|---|---|---|---|
| | 1 | 1 | 239-1339 | 1 | STEP AS | |
| | 2 | 1 | 239-8389 | 1 | HANDHOLD AS | |
| | 3 | 1 | 239-9663 | 1 | PLATE-TREAD | |
| | 4 | 1 | 8T-4121 | 6 | WASHER-HARD (11X21X2.5-MM THK) | |
| M | 5 | 1 | 8T-4137 | 6 | BOLT (M10X1.5X20-MM) | |

M-METRIC PART

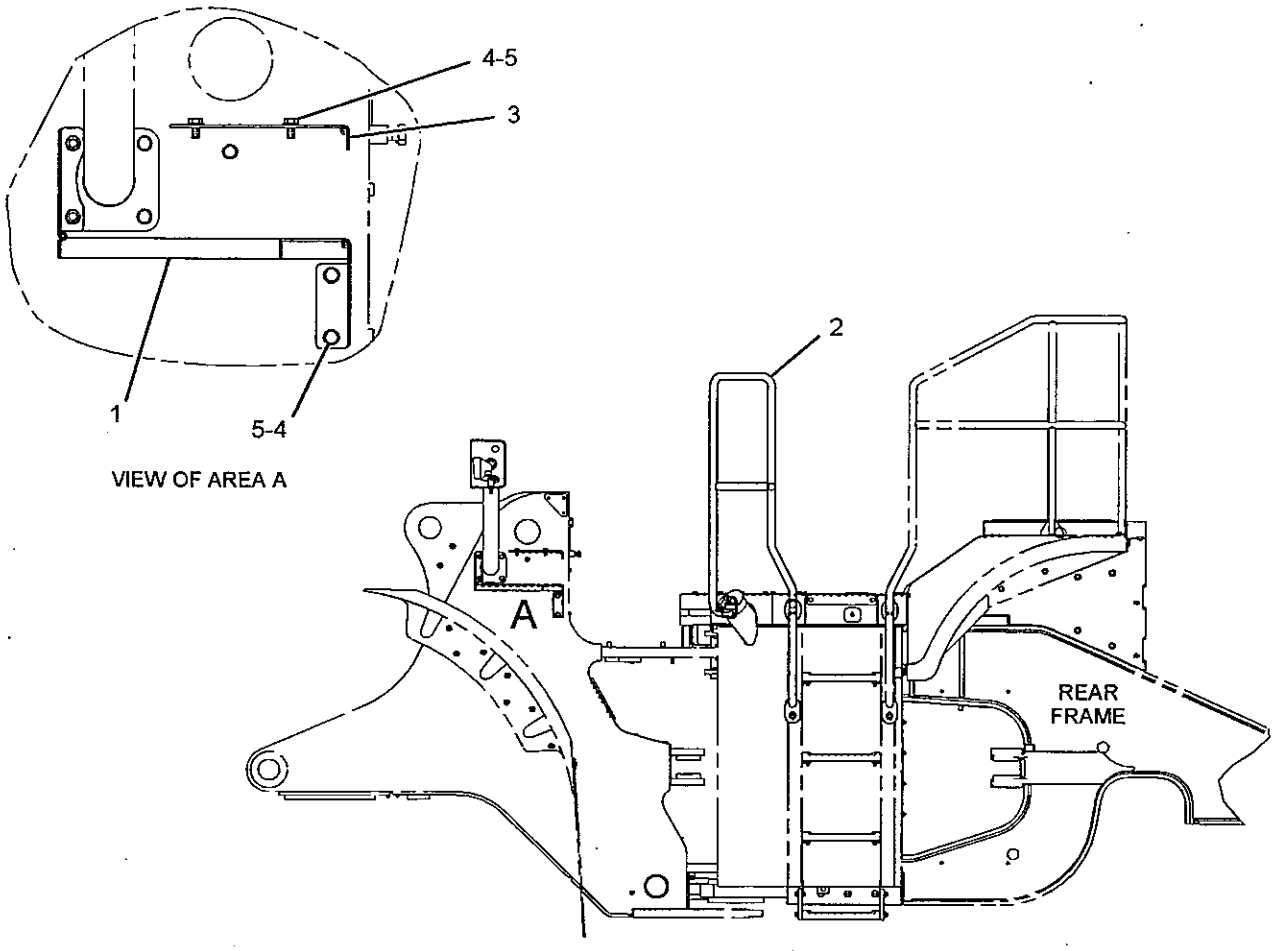


LEFT SIDE VIEW

GRAPHIC #1

<END>

g01066625

# OPERATOR STATION

## 183-9293 HEATER GP-CAB

**S/N: JMS1-UP**

**PART OF 236-7813 HEATER GP-CAB**

**SMCS-7304** i02089738

| NOTE | REF NO | GRAPHIC REF | PART NUMBER | QTY | PART NAME 1 2 3 4 5 6 (PRODUCT LEVEL) | SEE PAGE |
|---|---|---|---|---|---|---|
| | 1 | 1 | 3S-2093 | 1 | STRAP-CABLE | |
| | 2 | 1 | 6T-6708 | 2 | WASHER (7X28.6X4.1-MM THK) | |
| M | 3 | 1 | 8C-7581 | 1 | SCREW-MACHINE (M4X0.7X8-MM) | |
| | 4 | 1 | 9G-1950 | 1 | RESISTOR | |
| | 5 | 1 | 130-5300 | 1 | CLIP | |
| | 6 | 1 | 133-9012 | 1 | FUSE (15-AMPERE) | |
| | 7 | 1 | 174-1497 | 1 | MOTOR AS-BLOWER (24-VOLT, A/C, HEATER) | |
| | | 1 | 102-8802 | 1 | KIT-RECEPTACLE (2-PIN) | |
| | | | | | (INCLUDES RECEPTACLE AS AND WEDGE) | |
| | | 1 | 3E-3365 | 1 | WEDGE-RECEPTACLE LOCK (2-PIN) | |
| | | 1 | 9W-0852 | 2 | PIN-CONNECTOR (14-GA) | |
| | 8 | 1 | 8T-4205 | 11 | WASHER-HARD (7.2X14.5X2-MM THK) | |
| | 9 | 1 | 9X-7373 | 1 | GROMMET | |
| M | 10 | 1 | 6V-7357 | 3 | BOLT (M6X1X25-MM) | |
| | 11 | 1 | 6V-1668 | 2 | WASHER (6.5X29.1X3-MM THK) | |
| | 12 | 1 | 177-6727 | 1 | ACTUATOR | |
| | 13 | 1 | 179-4682 | 2 | LEVER | |
| | 14 | 1 | 179-4683 | 1 | ROD | |
| | 15 | 1 | 185-4778 | 1 | HOUSING AS | |
| | 16 | 1 | 185-4780 | 1 | HOUSING | |
| | 17 | 1 | 185-4782 | 1 | HOUSING | |
| | 18 | 1 | 185-4783 | 1 | COVER | |
| | 19 | 1 | 185-4785 | 1 | DUCT AS | |
| M | 20 | 1 | 187-7719 | 24 | BOLT (M5X2.24X14-MM) | |
| | 21 | 1 | 188-7690 | 1 | SUPPORT | |
| | 22 | 1 | 189-4682 | 1 | COIL AS-HEATER | |
| | 23 | 1 | 192-2820 | 1 | PLATE | |
| | 24 | 1 | 192-2822 | 1 | GASKET | |
| | 25 | 1 | 192-2823 | 1 | HARNESS AS-HEATER & AIR COND | |
| | | 1 | 102-8801 | 1 | KIT-RECEPTACLE (12-PIN) | |
| | | | | | (INCLUDES RECEPTACLE AS AND WEDGE) | |
| | | 1 | 6T-6505 | 7 | HOUSING-RECEPTACLE (BLADE, POSITIVE LOCK) | |
| | | 1 | 9G-3695 | 3 | PLUG (GROMMET SEALING) | |
| | | 1 | 155-2270 | 1 | KIT-CONNECTING PLUG (2-PIN) | |
| | | | | | (INCLUDES CONNECTING PLUG AS AND WEDGE) | |
| | 26 | 1 | 193-0702 | 1 | GASKET | |
| | 27 | 1 | 193-7307 | 1 | GROMMET | |
| | 28 | 1 | 197-1397 | 1 | BRACKET | |
| | 29 | 1 | 197-1398 | 1 | BRACKET | |
| | 30 | 1 | 197-1399 | 1 | BRACKET | |
| | 31 | 1 | 197-1400 | 1 | BRACKET AS | |
| | 32 | 1 | 199-7499 | 1 | GASKET | |
| | 33 | 1 | 202-1327 | 1 | GASKET | |
| M | 34 | 1 | 129-3178 | 7 | LOCKNUT (M6X1-THD) | |
| M | 35 | 1 | 141-9784 | 1 | BOLT (M6X1X190-MM) | |
| | 36 | 1 | 4B-4274 | 2 | WASHER (5.5X13X1.2-MM THK) | |
| M | 37 | 1 | 5C-9553 | 8 | BOLT (M6X1X16-MM) | |
| | 39 | 1 | 6V-4369 | 1 | CLIP | |
| | 40 | 1 | 5P-4115 | 3 | WASHER-HARD (7.2X19X2-MM THK) | |
| | 41 | 1 | 177-6704 | 2 | GASKET | |
| | 42 | 1 | 177-6732 | 1 | DOOR AS | |
| | 43 | 1 | 177-6716 | 1 | DOOR | |

M-METRIC PART

## 183-9293 HEATER GP-CAB *(contd.)*

i02089738

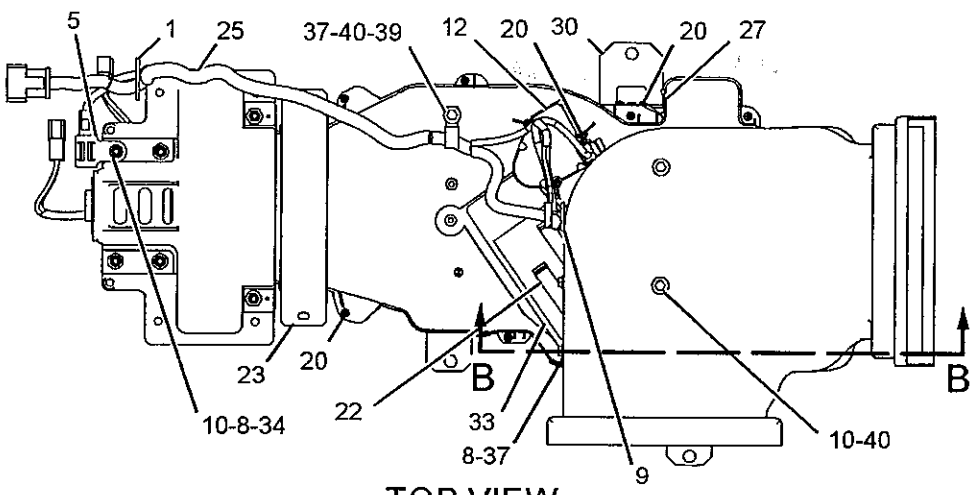


TOP VIEW

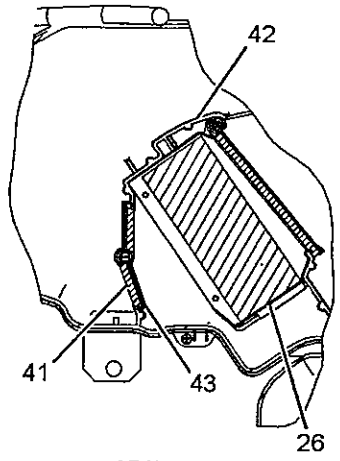


SECTION A-A

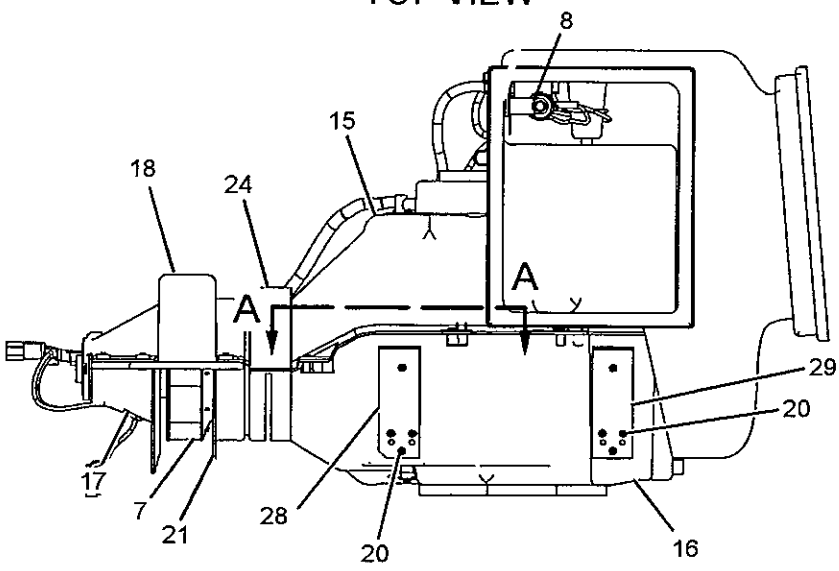


RIGHT SIDE VIEW

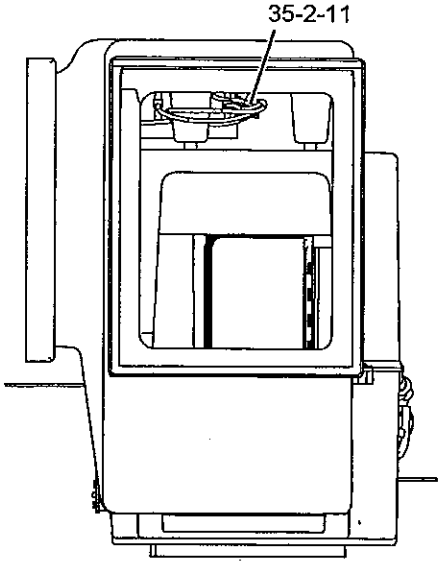


REAR VIEW

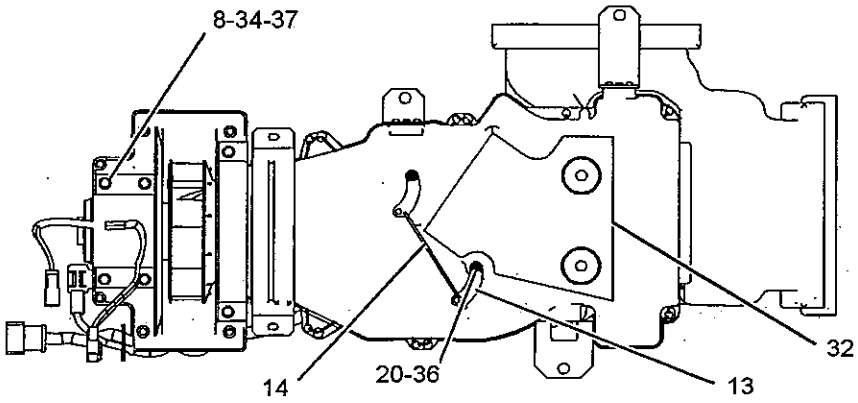


BOTTOM VIEW

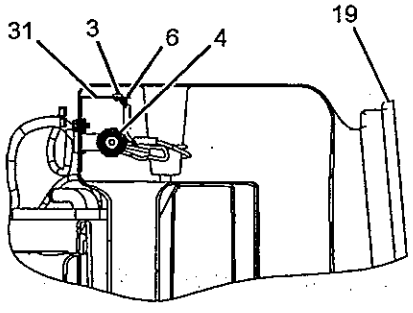


SECTION B-B

GRAPHIC #1

**<END>**

g01100659

# OPERATOR STATION

## *236-7813* HEATER GP-CAB

**S/N: JMS1-UP**

**PART OF 232-1393 CAB AR-ENCLOSED ROPS**

**SMCS-7304** i02088083

| NOTE | REF NO | GRAPHIC REF | PART NUMBER | QTY | PART NAME 1 2 3 4 5 6 (PRODUCT LEVEL) | SEE PAGE |
|---|---|---|---|---|---|---|
| | 1 | 1 | **9X-8117** | 2 | TUBE AS | |
| Y | 2 | 1 | **183-9293** | 1 | HEATER GP-CAB | 818 |
| | 3 | 1 | **192-2822** | 1 | GASKET | |
| Y | 4 | 1 | *192-3558* | 1 | LINES GP-CAB HEATER | 842 |
| | 5 | 1 | **229-2704** | 8 | WASHER-RUBBER | |
| M | 6 | 1 | **5C-9553** | 2 | BOLT (M6X1X16-MM) | |
| | 7 | 1 | **8T-4121** | 3 | WASHER-HARD (11X21X2.5-MM THK) | |
| M | 8 | 1 | **8T-4191** | 3 | BOLT (M10X1.5X16-MM) | |
| | 9 | 1 | **8T-4205** | 6 | WASHER-HARD (7.2X14.5X2-MM THK) | |
| M | 10 | 1 | **8T-4971** | 4 | BOLT (M6X1X30-MM) | |
| E | 11 | 1 | **123-3827** | 2 | SEAL (28-CM EACH) | |
| E | 11A | 1 | **123-3827** | 2 | SEAL (33-CM EACH) | |

E-ORDER BY THE CENTIMETER
M-METRIC PART
Y-SEPARATE ILLUSTRATION

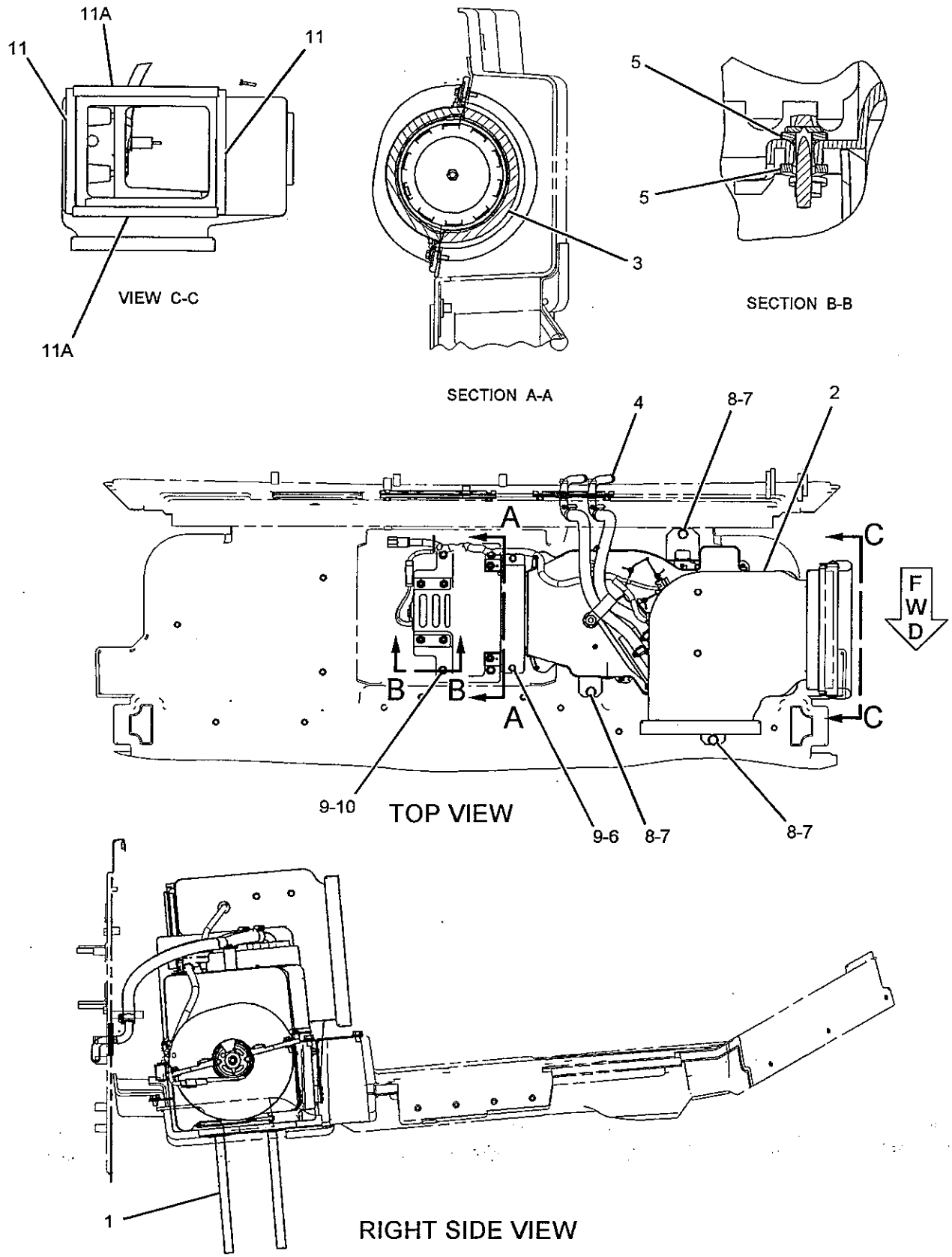


GRAPHIC #1

**<END>**

g01066140

# OPERATOR STATION

## 246-3292 HORN GP-ELECTRIC

S/N: JMS1-UP

PART OF 225-5539 ELECTRICAL AR

SMCS-7402

i02280386

| NOTE | REF NO | GRAPHIC REF | PART NUMBER | QTY | PART NAME 1 2 3 4 5 6 (PRODUCT LEVEL) | SEE PAGE |
|---|---|---|---|---|---|---|
| | 1 | 1 | 163-1201 | 1 | HORN AS (24-VOLT, LOW TONE) | |
| | 2 | 1 | 174-7875 | 1 | HORN AS (24-VOLT, HIGH TONE) | |
| | 3 | 1 | 8T-4121 | 2 | WASHER-HARD (11X21X2.5-MM THK) | |
| M | 4 | 1 | 8T-4137 | 2 | BOLT (M10X1.5X20-MM) | |

M-METRIC PART

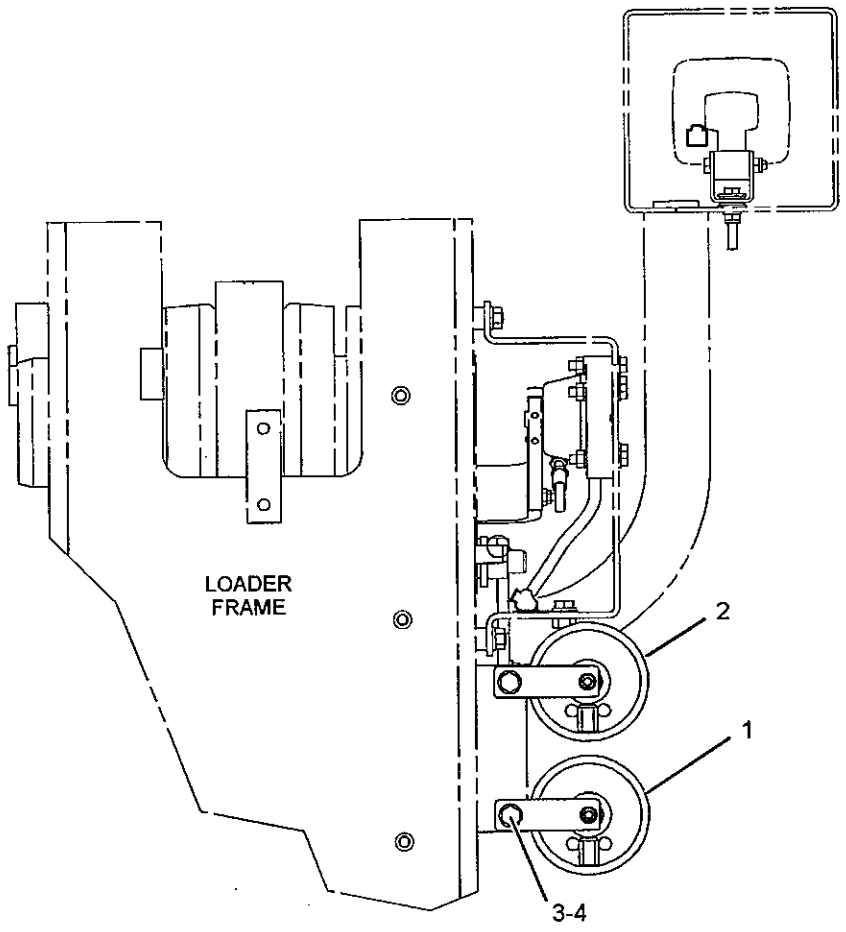


REAR VIEW

GRAPHIC #1

<END>

g01141471

# OPERATOR STATION

## *243-1094* INSTALLATION GP-CONTROLS

**S/N: JMS1-UP**

**PART OF 232-1392 OPERATOR AR-ENCLOSED ROPS, 258-1564 OPERATOR AR-OPEN ROPS ALSO AN ATTACHMENT**

**SMCS-1265, 4284** **i02088009**

| NOTE | REF NO | GRAPHIC REF | PART NUMBER | QTY | PART NAME 1 2 3 4 5 6 (PRODUCT LEVEL) | SEE PAGE |
|---|---|---|---|---|---|---|
| | 1 | 1 | 5B-9192 | 1 | PIN-COTTER | |
| M | 2 | 1 | 5C-2874 | 1 | NUT (M5X.8-THD) | |
| | 3 | 1 | 9U-0830 | 1 | END-YOKE ROD | |
| | 4 | 1 | 096-0067 | 1 | PIN-CLEVIS | |

M-METRIC PART

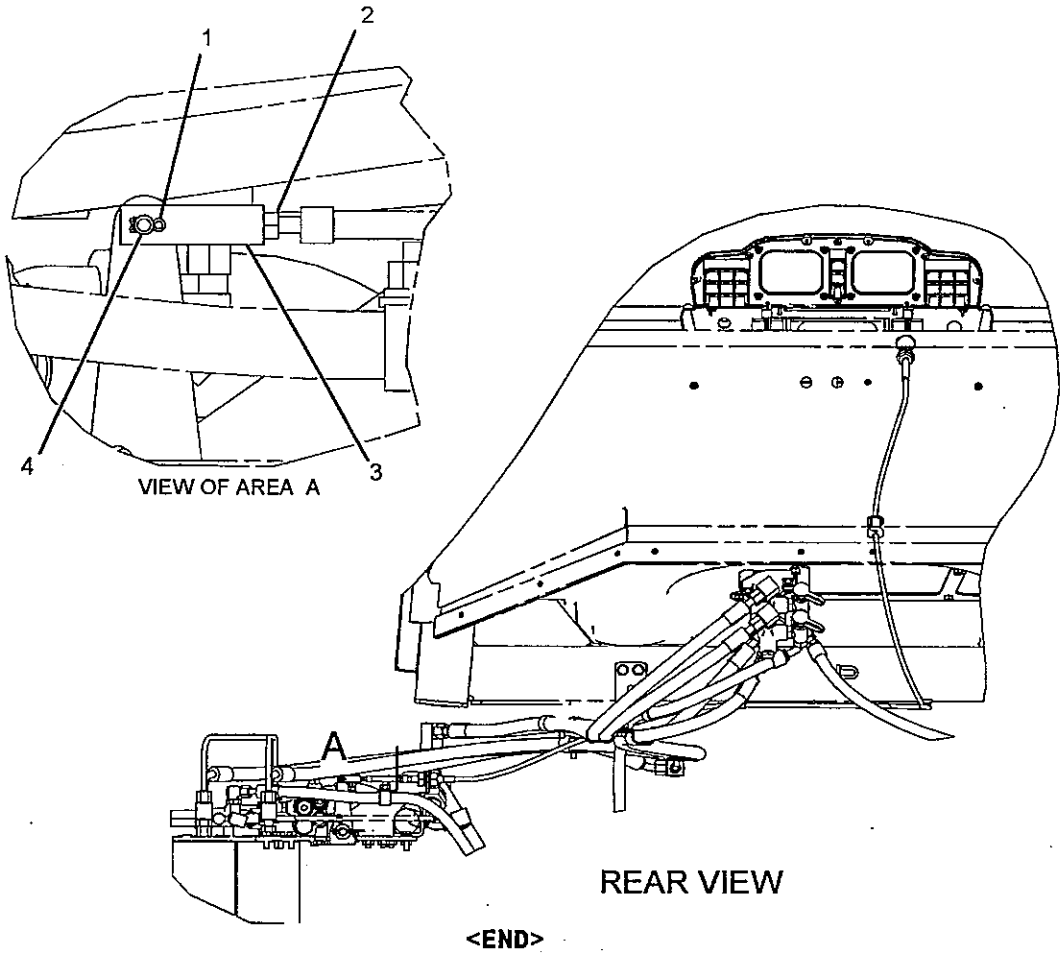


GRAPHIC #1 **<END>** g01065702

# OPERATOR STATION

## 245-7655 INSTALLATION GP-CONTROLS

S/N: JMS1-UP

PART OF 204-7243 OPERATOR AR-OPEN ROPS

AN ATTACHMENT

SMCS-1265, 4284

i02016332

| NOTE | REF NO | GRAPHIC REF | PART NUMBER | QTY | PART NAME 1 2 3 4 5 6 (PRODUCT LEVEL) | SEE PAGE |
|---|---|---|---|---|---|---|
| | 1 | 1 | 5B-9192 | 1 | PIN-COTTER | |
| M | 2 | 1 | 5C-2874 | 1 | NUT (M5X.8-THD) | |
| | 3 | 1 | 9U-0830 | 1 | END-YOKE ROD | |
| | 4 | 1 | 096-0067 | 1 | PIN-CLEVIS | |
| | 5 | 1 | 243-4860 | 1 | FLOOR MAT | |

M-METRIC PART

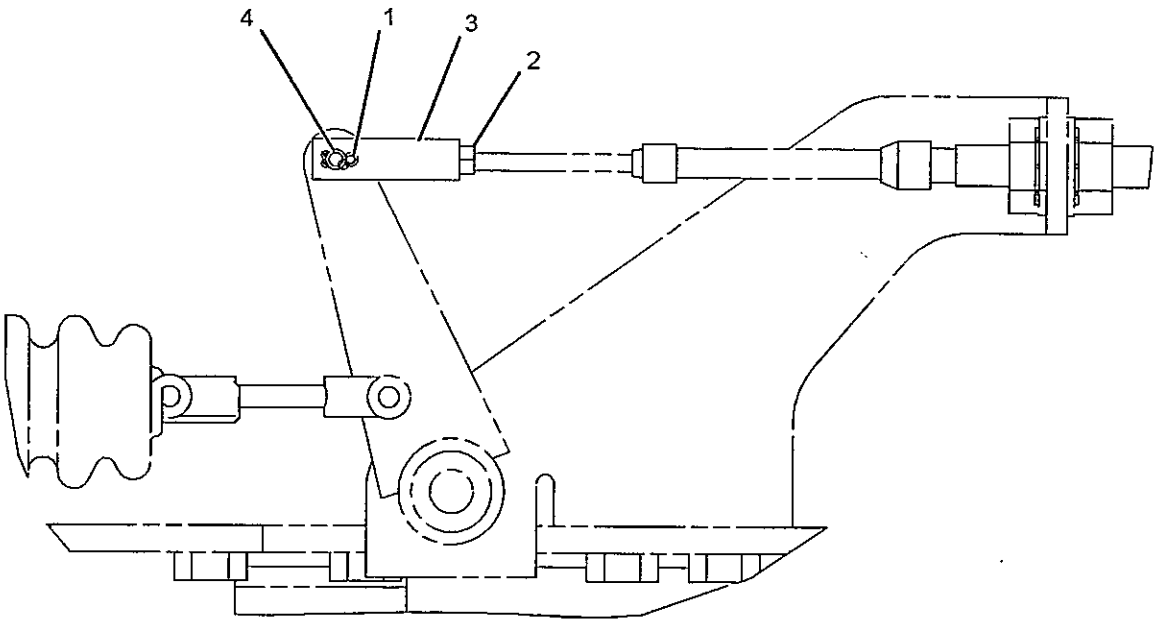


VIEW A-A

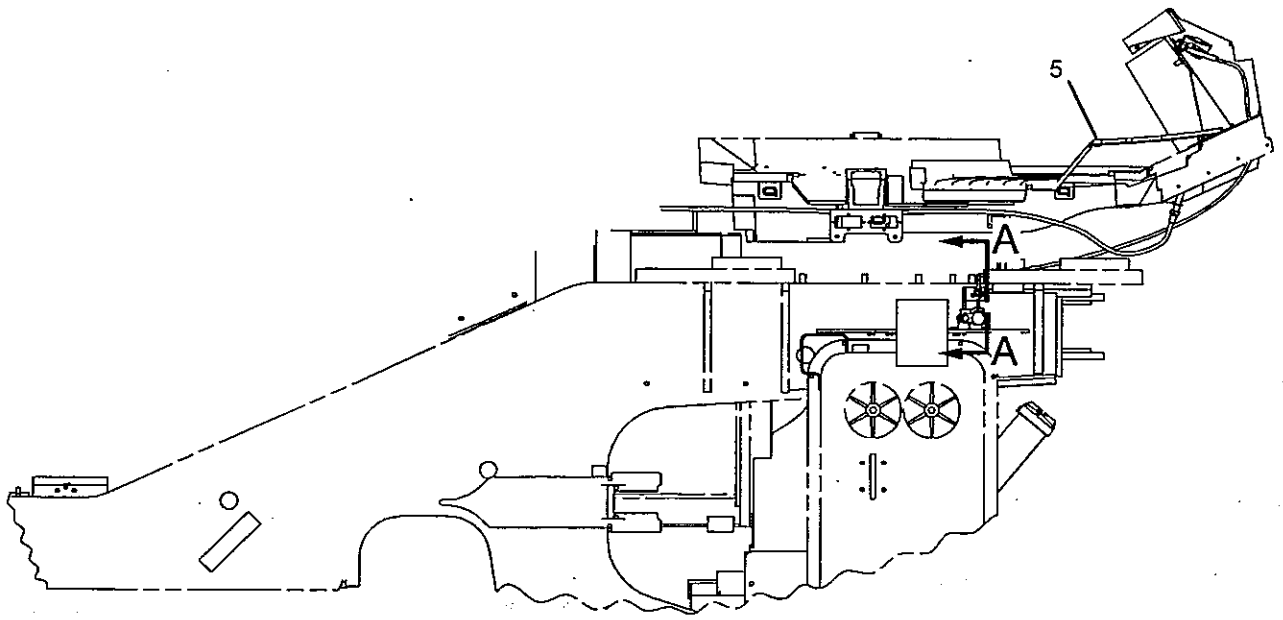


RIGHT SIDE VIEW

GRAPHIC #1

**<END>**

g01069655

# OPERATOR STATION

## *191-0154* INSTALLATION GP-RADIO–CB

S/N: JMS1-UP
PART OF 266-1620 MACHINE AR
AN ATTACHMENT

SMCS-7338

i01979426

| NOTE | REF NO | GRAPHIC REF | PART NUMBER | QTY | PART NAME 1 2 3 4 5 6 (PRODUCT LEVEL) | SEE PAGE |
|---|---|---|---|---|---|---|
| C | 1 | 1 | 3S-2093 | 7 | STRAP-CABLE | |
| | 2 | 1 | 7K-1181 | 1 | STRAP-CABLE | |
| | 3 | 1 | 9U-2332 | 2 | ANTENNA AS | |
| C | 4 | 1 | 9U-4431 | 2 | MOUNT-ANTENNA | |
| | 5 | 1 | 184-3579 | 1 | CONVERTER-POWER (20-AMPERE) | |
| | 6 | 1 | 187-5409 | 1 | HARNESS AS-RADIO | |
| | | 1 | 177-9645 | 1 | KIT-RECEPTACLE (2-PIN) | |
| | | 1 | 177-9656 | 1 | KIT-CONNECTING PLUG (4-PIN) | |
| | 7 | 1 | 191-5114 | 2 | CABLE AS | |
| | 8 | 1 | 208-3777 | 1 | BRACKET | |
| | 9 | 1 | 208-3778 | 1 | BRACKET | |
| | 10 | 1 | 208-3779 | 1 | BRACKET AS | |
| C | 11 | 1 | 220-5677 | 1 | BRACKET | |
| | 12 | 1 | 236-6253 | 2 | GROMMET | |
| M | 13 | 1 | 5C-9553 | 2 | BOLT (M6X1X16-MM) | |
| M | 14 | 1 | 6V-7357 | 4 | BOLT (M6X1X25-MM) | |
| M | 15 | 1 | 6V-9673 | 4 | SCREW-MACHINE (M5X0.8X12-MM) | |
| C | 16 | 1 | 8T-4121 | 4 | WASHER-HARD (11X21X2.5-MM THK) | |
| CM | 17 | 1 | 8T-4133 | 2 | NUT (M10X1.5-THD) | |
| CM | 18 | 1 | 8T-4195 | 2 | BOLT (M10X1.5X30-MM) | |
| | 19 | 1 | 9X-8256 | 6 | WASHER (6.6X12X2-MM THK) | |

C-CHANGE FROM PREVIOUS TYPE
M-METRIC PART

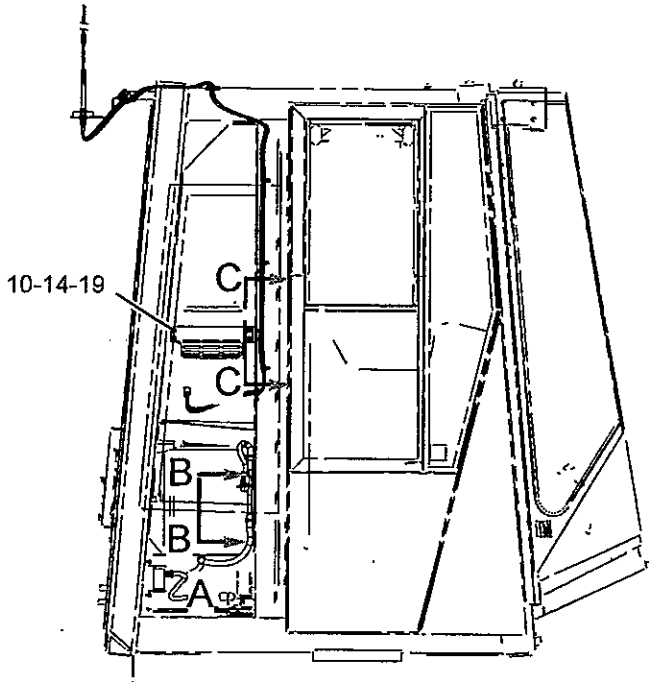


RIGHT SIDE VIEW

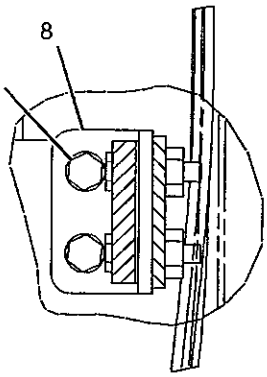


SECTION C-C

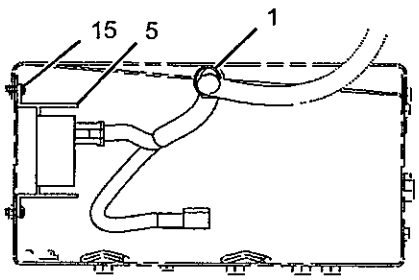


VIEW OF AREA A

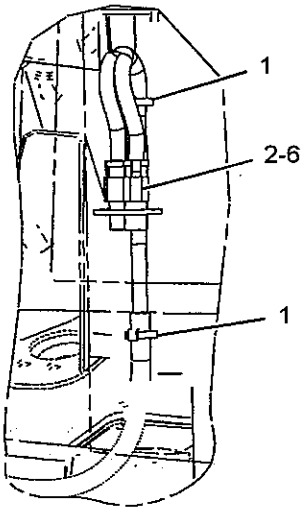


VIEW B-B

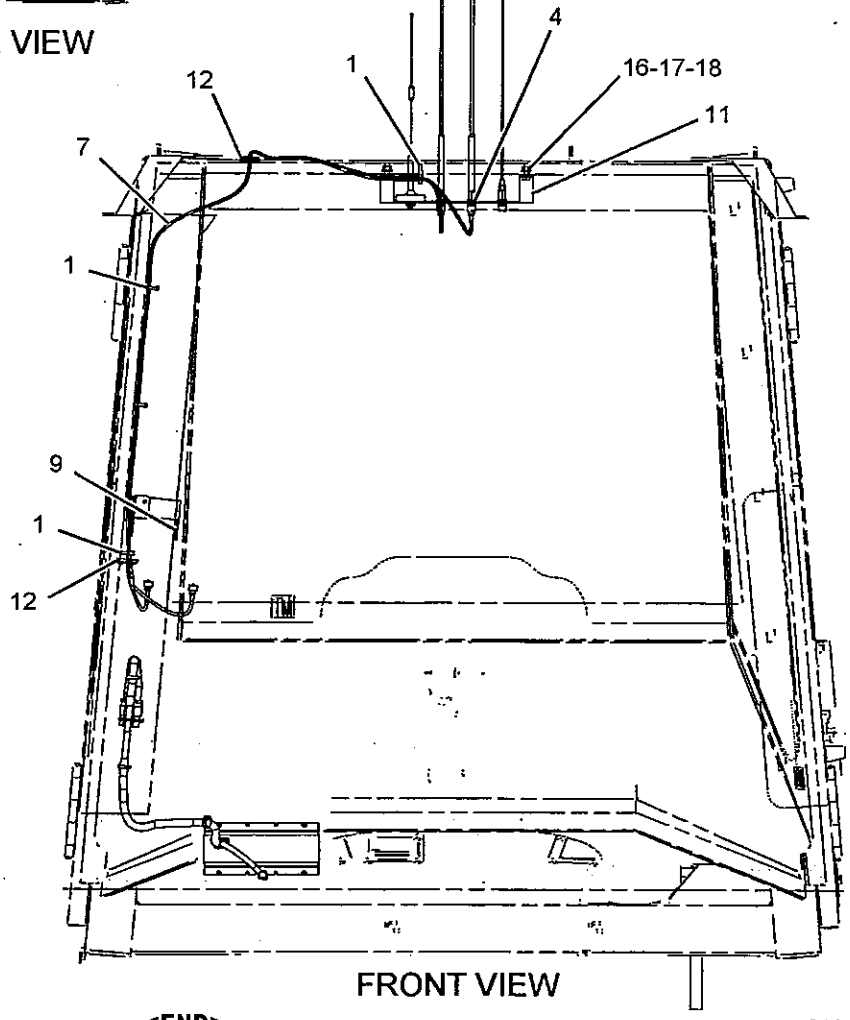


FRONT VIEW

GRAPHIC #1

<END>

g01076883

# OPERATOR STATION

## 257-2008 INSTALLATION GP-RADIO

**S/N: JMS1-UP**

**PART OF 232-1393 CAB AR-ENCLOSED ROPS**

**ALSO AN ATTACHMENT**

**SMCS-7338** **i02280981**

| NOTE | REF NO | GRAPHIC REF | PART NUMBER | QTY | PART NAME 1 2 3 4 5 6 (PRODUCT LEVEL) | SEE PAGE |
|---|---|---|---|---|---|---|
| | 1 | 1 | 3S-2093 | 10 | STRAP-CABLE | |
| | 2 | 1 | 9U-2331 | 1 | ANTENNA AS | |
| | 3 | 1 | 9U-4431 | 1 | MOUNT-ANTENNA | |
| | 4 | 1 | 9U-8263 | 1 | COVER | |
| | 5 | 1 | 168-8772 | 2 | SPEAKER AS-RADIO | |
| | 6 | 1 | 173-2200 | 1 | CABLE AS | |
| | 7 | 1 | 011-7960 | 1 | GROMMET | |
| | 8 | 1 | 8T-0328 | 8 | WASHER-HARD (5.5X10X1-MM THK) | |
| M | 9 | 1 | 8T-0337 | 8 | SCREW-MACHINE (M4X0.7X12-MM) | |
| D | 10 | 1 | 8T-2562 | | TRIM (0.06-M EACH) | |

D-ORDER BY THE METER
M-METRIC PART

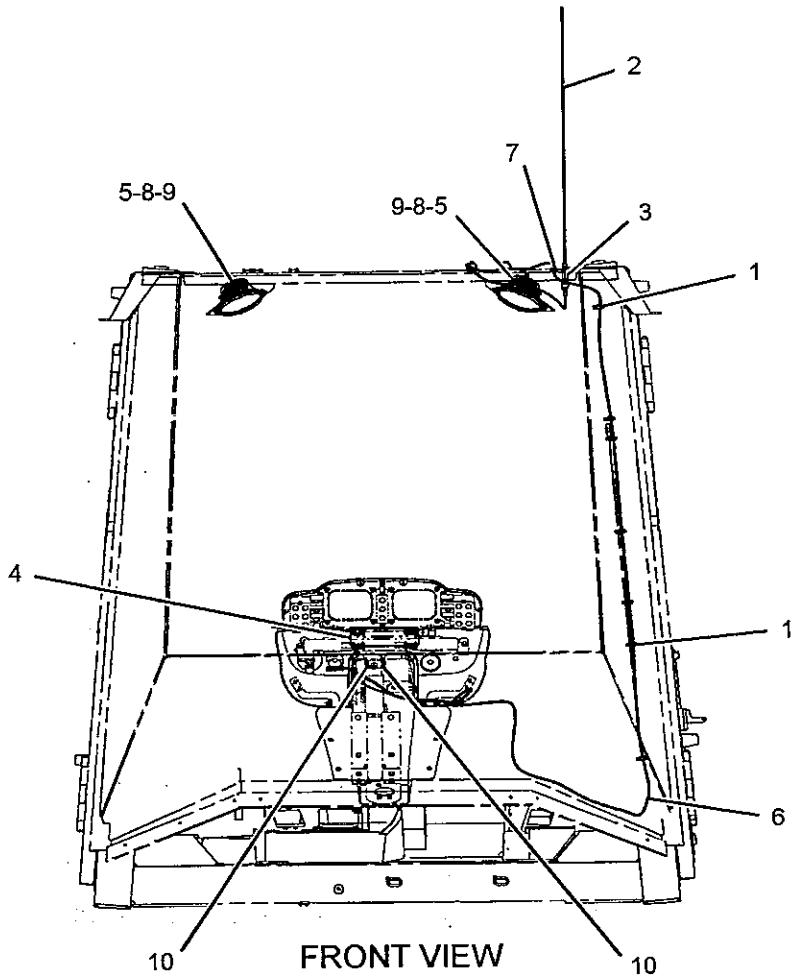


FRONT VIEW

GRAPHIC #1

**<END>**

g01141875

# OPERATOR STATION

## *204-3719* LINER GP-CAB

**S/N: JMS1-UP**

**PART OF 203-9837 CANOPY AR-OPEN ROPS**

**AN ATTACHMENT**

**SMCS-7329**

**i01979233**

| NOTE | REF NO | GRAPHIC REF | PART NUMBER | QTY | PART NAME 1 2 3 4 5 6 (PRODUCT LEVEL) | SEE PAGE |
|---|---|---|---|---|---|---|
| | 1 | 2 | **222-3686** | 1 | BRACKET (LH) | |
| | 2 | 2 | **222-3687** | 1 | BRACKET (RH) | |
| | 3 | 1 | **3T-4509** | 2 | PLATE | |
| C | 4 | 1 | **6V-8928** | 2 | HOOK-COAT | |
| | 5 | 1 | **161-3415** | 1 | STRAP | |
| | 6 | 1 | **173-2185** | 1 | LINER-CAB | |
| | 7 | 2 | **173-2187** | 1 | COVER AS | |
| C | 8 | 1 | **178-4323** | 9 | CAP | |
| | 9 | 1 | **197-2027** | 1 | BRACKET AS | |
| | 10 | 1 | **200-9006** | 1 | FILM (FUSE PANEL) | |
| | 11 | 2 | **206-0033** | 1 | COVER AS | |
| | 12 | 2 | **209-8310** | 1 | COVER | |
| | 13 | 2 | **209-8312** | 1 | PLATE | |
| C | 14 | 2 | **233-1643** | 1 | DOOR AS-ACCESS | |
| | | 2 | **233-1645** | 1 | HINGE AS | |
| C | 15 | 2 | **233-4463** | 1 | CAM | |
| C | 16 | 2 | **233-4466** | 1 | LATCH AS | |
| C | 17 | 1 | **233-5036** | 2 | ANGLE AS | |
| CM | 18 | 2 | **5C-7261** | 4 | NUT (M8X1.25-THD) | |
| | 19 | 1,2 | **8T-4121** | 6 | WASHER-HARD (11X21X2.5-MM THK) | |
| M | 20 | 2 | **8T-4191** | 2 | BOLT (M10X1.5X16-MM) | |
| M | 21 | 1 | **8T-4195** | 4 | BOLT (M10X1.5X30-MM) | |
| C | 22 | 2 | **8T-4224** | 4 | WASHER-HARD (8.8X16X2-MM THK) | |
| M | 23 | 2 | **9X-2040** | 6 | SCREW-TRUSS HEAD (M10X1.5X25-MM) | |
| M | 24 | 1 | **9X-2042** | 1 | SCREW-TRUSS HEAD (M6X1X12-MM) | |
| M | 25 | 2 | **9X-2044** | 2 | SCREW-TRUSS HEAD (M6X1X16-MM) | |
| CM | 26 | 1,2 | **9X-2045** | 13 | SCREW-TRUSS HEAD (M6X1X20-MM) | |
| | 27 | 2 | **9X-6165** | 1 | WASHER (6.5X22X2.5-MM THK) | |
| C | 28 | 1 | **9X-8256** | 6 | WASHER (6.6X12X2-MM THK) | |
| CD | 29 | 2 | **5P-5643** | | SEAL (1.1-M) | |
| E | 30 | 2 | **103-2543** | | SEAL (32-CM) | |
| CE | 31 | 2 | **209-8315** | | SEAL (70-CM) | |
| CE | 32 | 2 | **7X-7877** | | STRIP-EDGING (199-CM) | |
| E | 33 | 2 | **7X-7898** | | TRIM (120-CM) | |

C-CHANGE FROM PREVIOUS TYPE
D-ORDER BY THE METER
E-ORDER BY THE CENTIMETER
M-METRIC PART

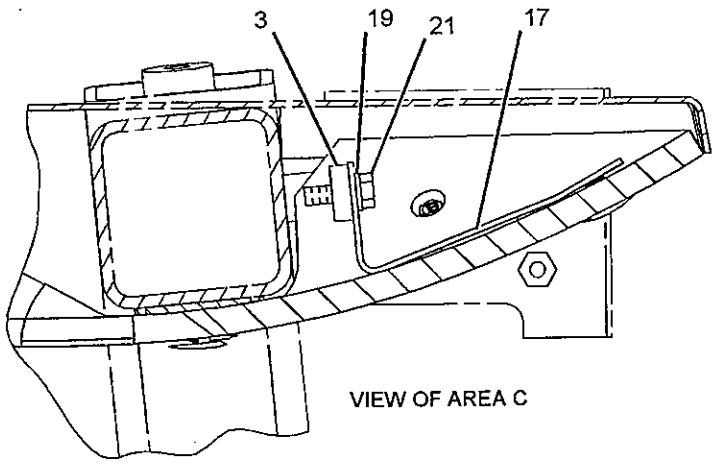


VIEW OF AREA C

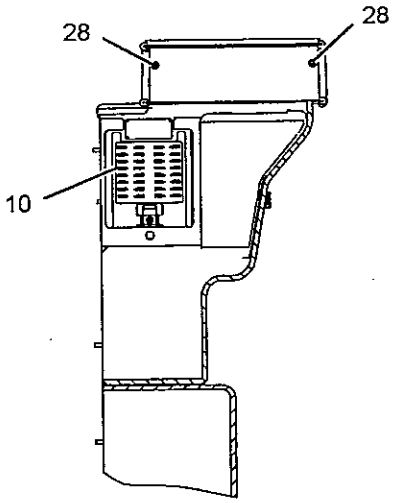


SECTION D-D

REFER TO ALL ILLUSTRATIONS OF THIS GROUP FOR AUXILIARY VIEWS

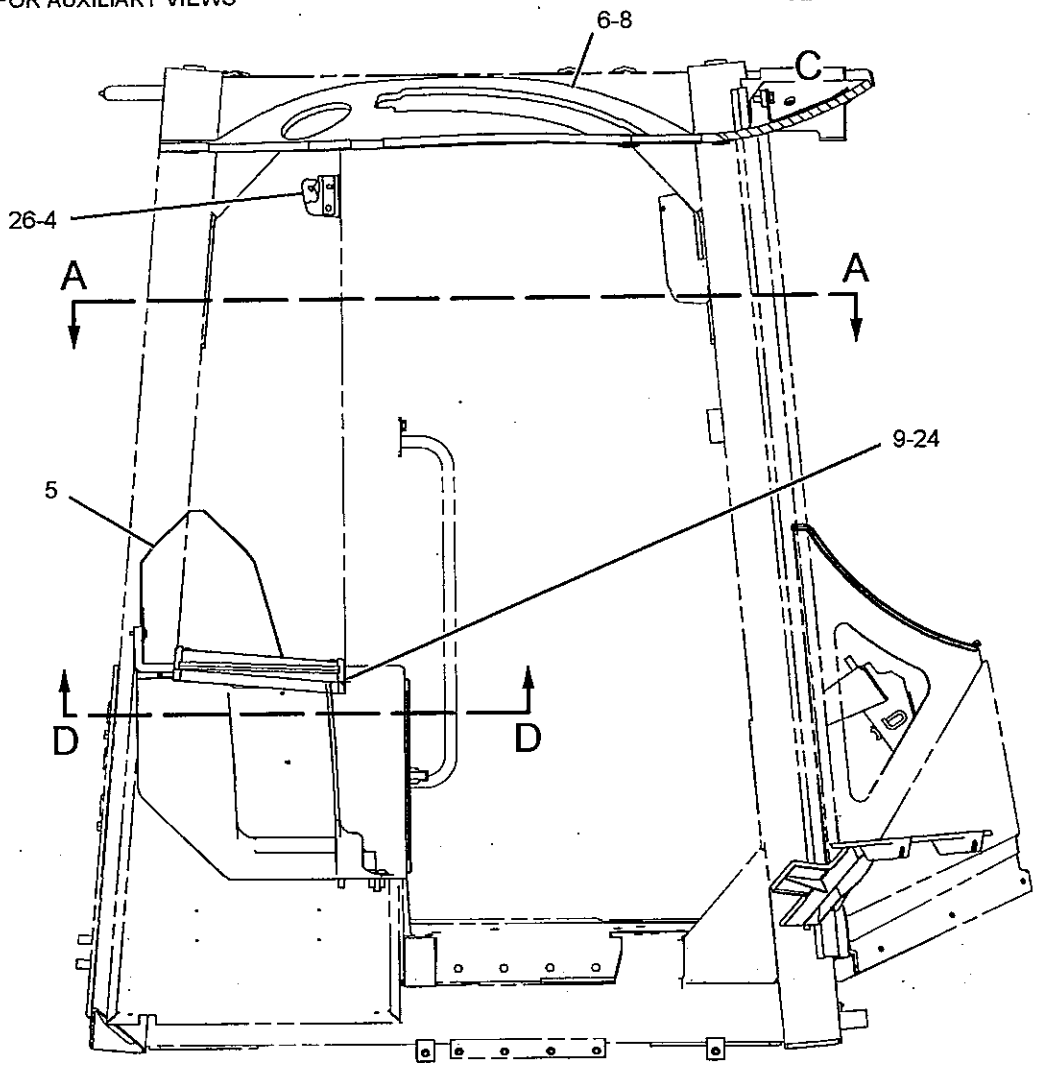


RIGHT SIDE VIEW

GRAPHIC #1 g01090101

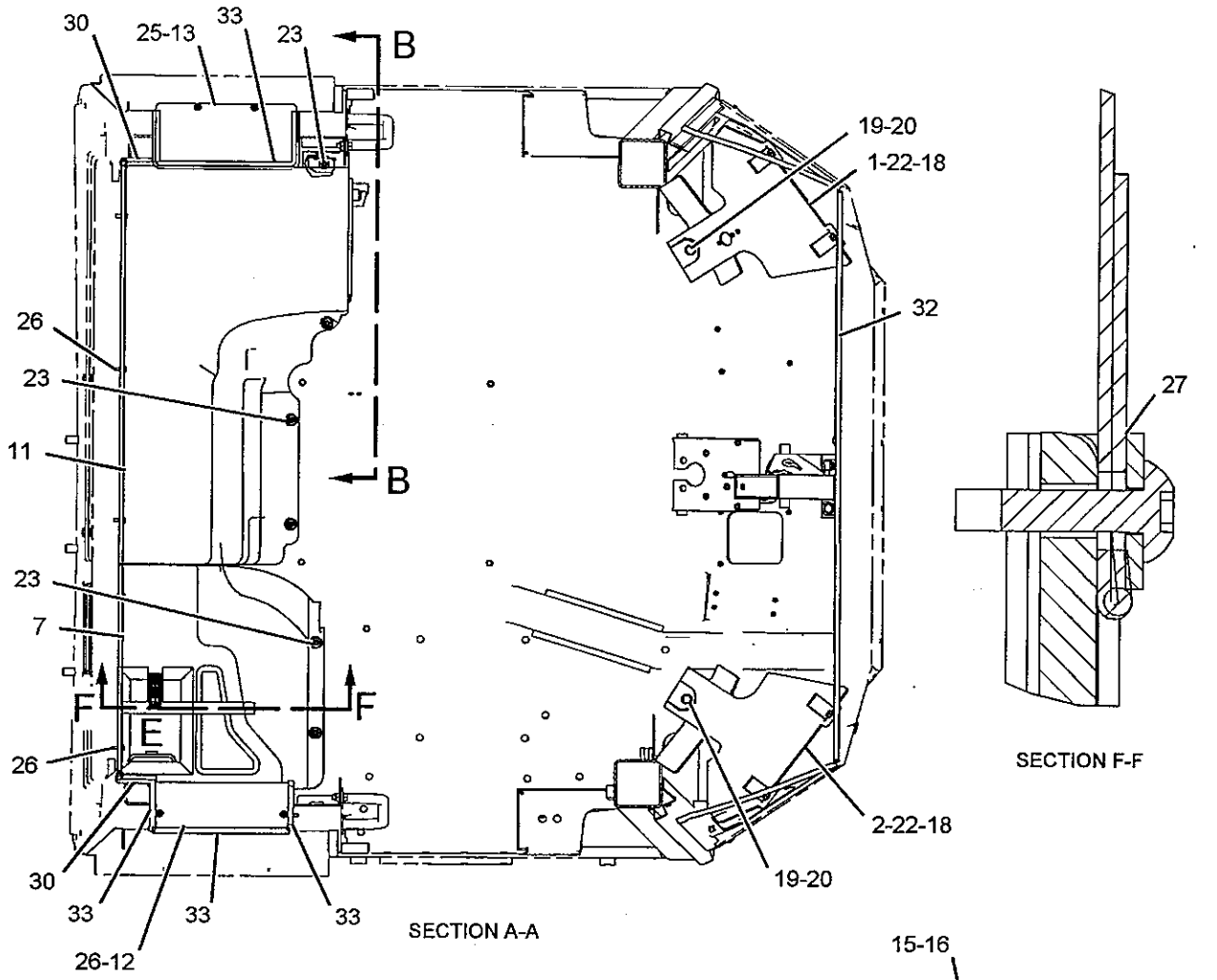


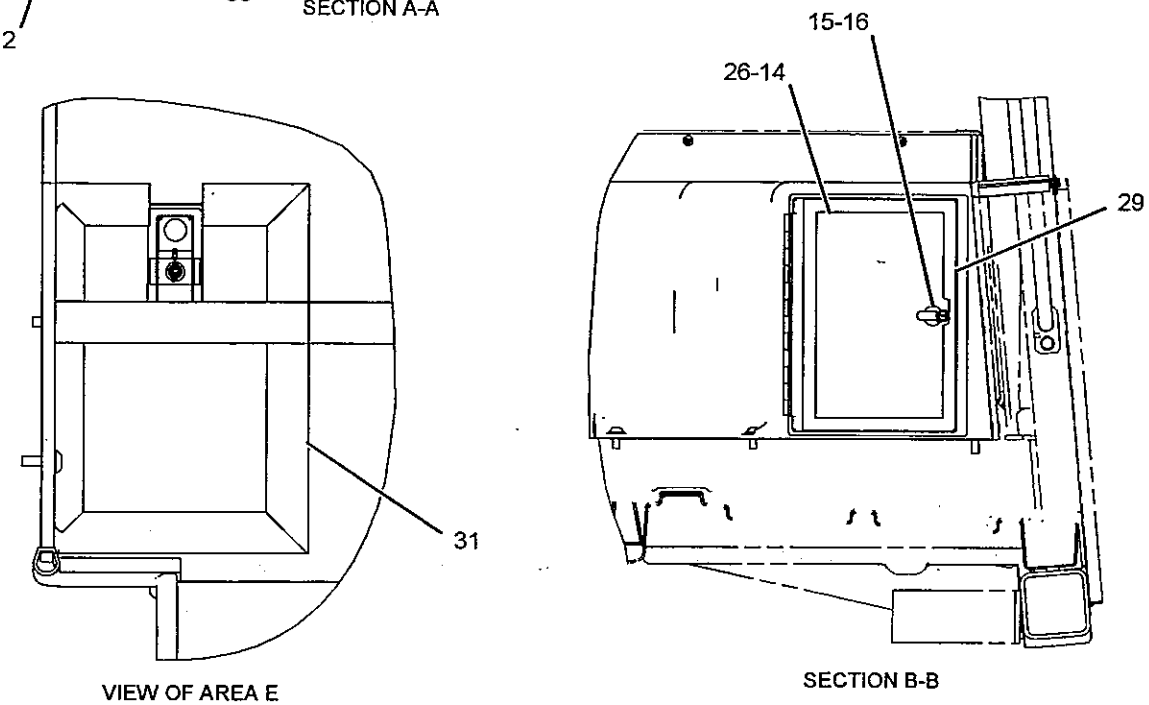


GRAPHIC #2 **<END>** g01090103

# OPERATOR STATION

## 232-1394 LINER GP-CAB

**S/N: JMS1-UP**

**PART OF 232-1393 CAB AR-ENCLOSED ROPS**

i02265601

**SMCS-7329**

| NOTE | REF NO | GRAPHIC REF | PART NUMBER | QTY | PART NAME 1 2 3 4 5 6 (PRODUCT LEVEL) | SEE PAGE |
|---|---|---|---|---|---|---|
| | 1 | 2 | 222-3686 | 1 | BRACKET (LH) | |
| | 2 | 2 | 222-3687 | 1 | BRACKET (RH) | |
| | 3 | 1 | 3T-4509 | 2 | PLATE | |
| | 4 | 2 | 5P-7958 | 1 | SLEEVE-CABLE SPLICE | |
| | 5 | 1 | 6V-8928 | 2 | HOOK-COAT | |
| | 6 | 2 | 8T-6842 | 1 | FILM-INSTRUCTION (ALTERNATE EXIT) | |
| | 7 | 2 | 160-9925 | 1 | LANYARD | |
| | 8 | 1 | 161-3415 | 1 | STRAP | |
| | 9 | 1 | 173-2115 | 1 | FLOOR MAT | |
| | 10 | 1 | 173-2185 | 1 | LINER-CAB | |
| | 11 | 2 | 173-2187 | 1 | COVER AS | |
| | 12 | 1 | 178-4323 | 9 | CAP | |
| | 13 | 1 | 180-3450 | 1 | COVER | |
| | 14 | 1 | 187-1472 | 1 | COVER | |
| | 15 | 1 | 187-1473 | 1 | COVER | |
| | 16 | 2 | 187-1475 | 1 | COVER | |
| | 17 | 2 | 190-5497 | 1 | COVER AS | |
| | | 2 | 2R-2376 | 2 | WASHER (7X16X0.8-MM THK) | |
| | | 2 | 134-0780 | 2 | THUMBSCREW | |
| | 18 | 2 | 197-2027 | 1 | BRACKET AS | |
| | 19 | 2 | 197-2072 | 1 | COVER | |
| | 20 | 2 | 259-6893 | 1 | FILM-FUSE PANEL | |
| | 21 | 2 | 205-6455 | 2 | SPACER | |
| | 22 | 2 | 210-5551 | 1 | TRAY | |
| | 23 | 2 | 211-0667 | 1 | COVER AS | |
| | 24 | 1 | 233-5036 | 2 | ANGLE AS | |
| M | 25 | 2 | 142-2304 | 2 | SCREW-BUTTON HEAD (M8X1.25X35-MM) | |
| M | 26 | 2 | 5C-7261 | 4 | NUT (M8X1.25-THD) | |
| | 27 | 1 | 8D-6542 | 2 | GROMMET | |
| | 28 | 1,2 | 8T-4121 | 6 | WASHER-HARD (11X21X2.5-MM THK) | |
| M | 29 | 2 | 8T-4191 | 2 | BOLT (M10X1.5X16-MM) | |
| M | 30 | 1 | 8T-4195 | 4 | BOLT (M10X1.5X30-MM) | |
| | 31 | 2 | 8T-4224 | 6 | WASHER-HARD (8.8X16X2-MM THK) | |
| M | 32 | 2 | 9X-2040 | 6 | SCREW-TRUSS HEAD (M10X1.5X25-MM) | |
| M | 33 | 1,2 | 9X-2042 | 10 | SCREW-TRUSS HEAD (M6X1X12-MM) | |
| M | 34 | 1,2 | 9X-2045 | 8 | SCREW-TRUSS HEAD (M6X1X20-MM) | |
| M | 35 | 2 | 9X-2046 | 4 | SCREW-TRUSS HEAD (M6X1X35-MM) | |
| | 36 | 2 | 9X-6165 | 1 | WASHER (6.5X22X2.5-MM THK) | |
| D | 37 | 2 | 5P-5927 | | SEAL (0.8-M) | |
| D | 38 | 2 | 128-2596 | | SEAL (0.9-M) | |
| E | 39 | 2 | 8T-9005 | | SEAL (46-CM) | |
| | 40 | 1 | 234-1360 | 1 | INSULATION | |
| | 41 | 1 | 243-3763 | 1 | INSULATION | |

D-ORDER BY THE METER
E-ORDER BY THE CENTIMETER
M-METRIC PART

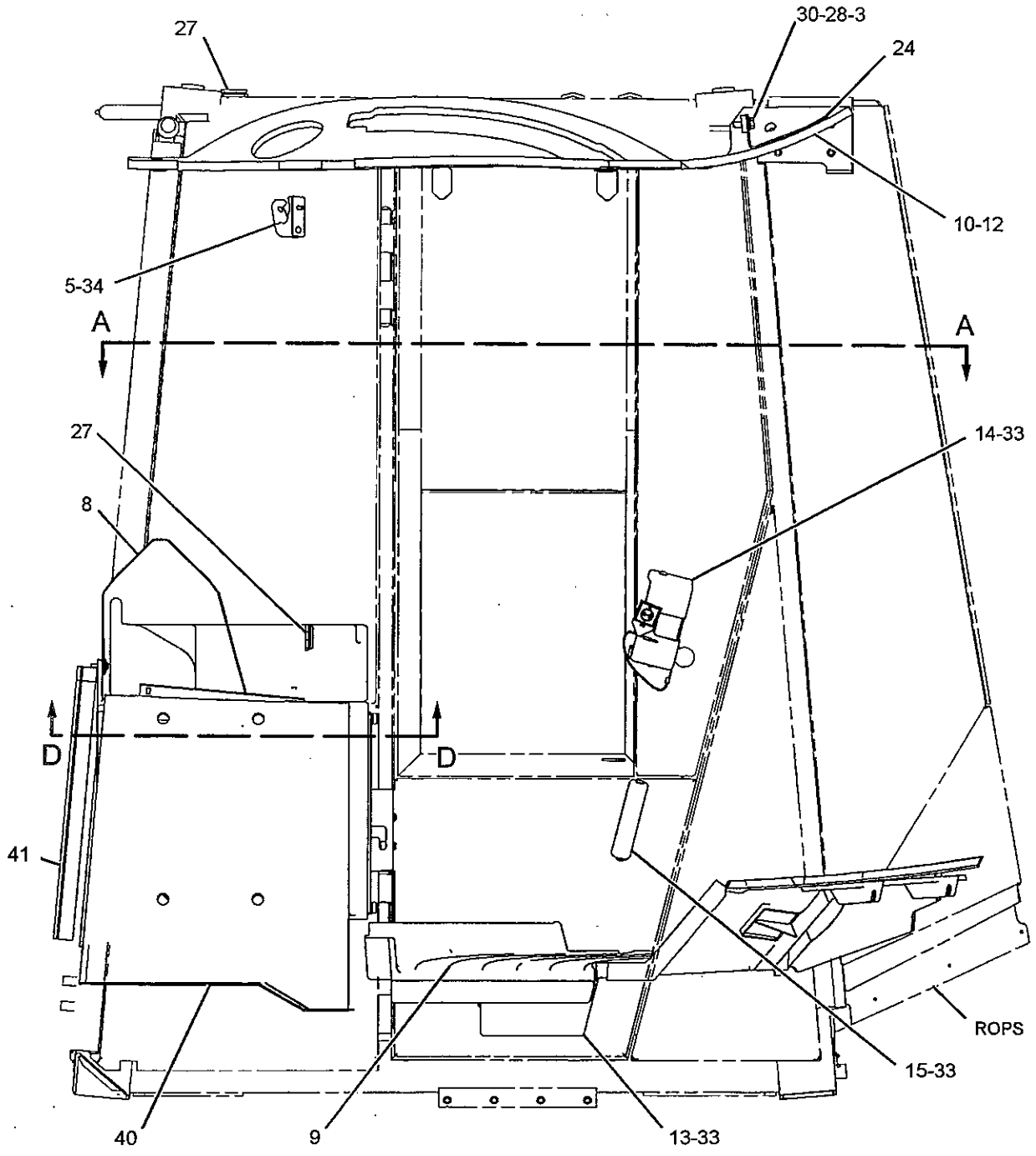


RIGHT SIDE VIEW

REFER TO ALL ILLUSTRATIONS OF
THIS GROUP FOR AUXILIARY VIEWS

GRAPHIC #1

g01114450

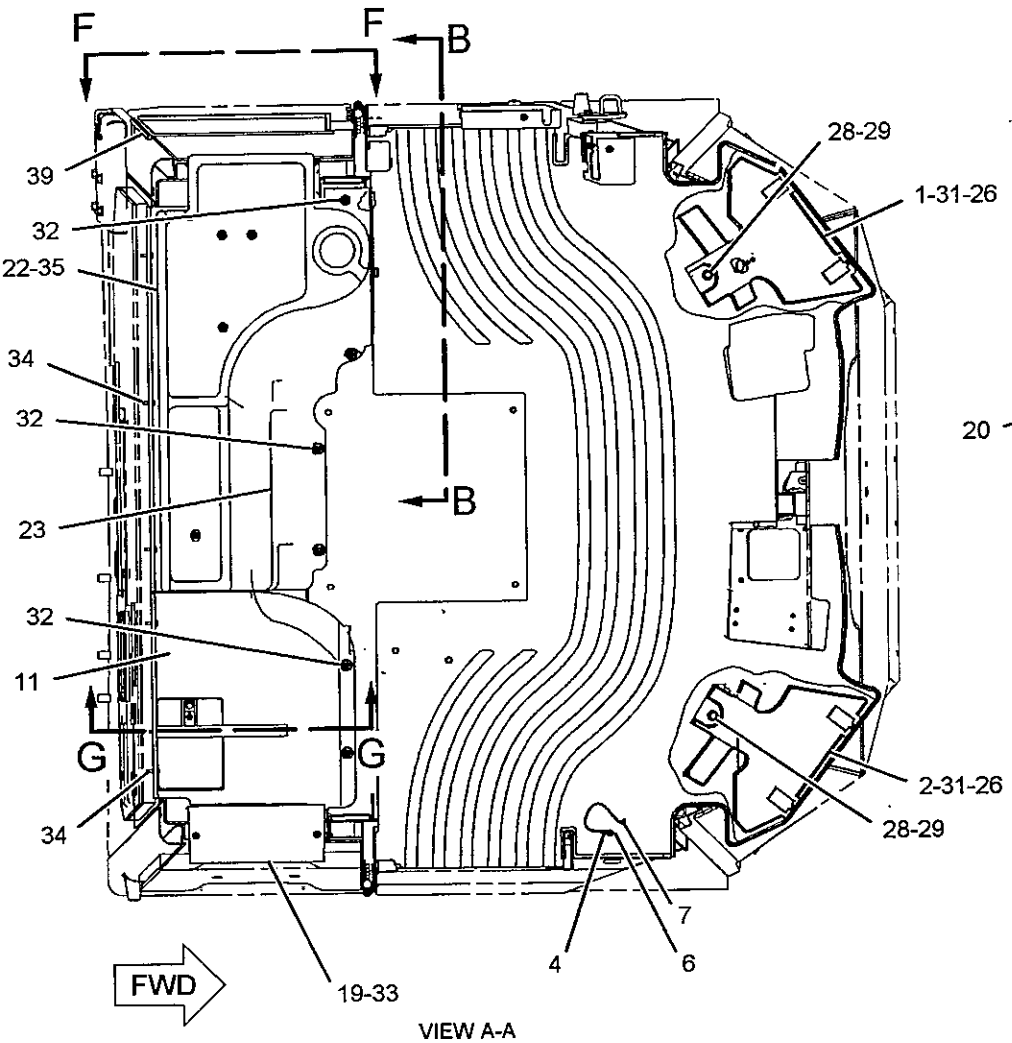


VIEW A-A

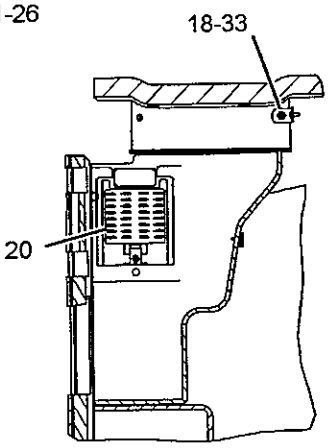


SECTION D-D

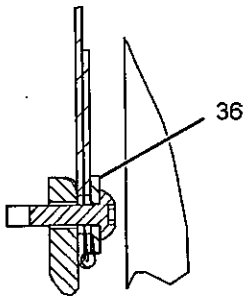


SECTION G-G

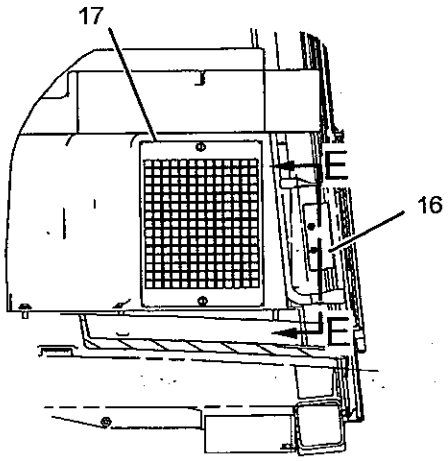


SECTION B-B

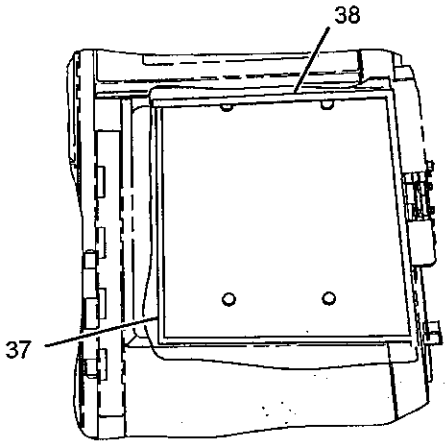


VIEW F-F

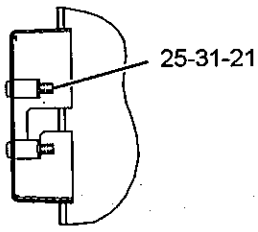


SECTION E-E

GRAPHIC #2 **<END>** g01114448

# OPERATOR STATION

## *263-0045* LINER GP-CAB

**S/N: JMS1-UP**

**PART OF 258-1565 CANOPY AR-OPEN ROPS**

**AN ATTACHMENT**

**SMCS-7329** **i02283987**

| NOTE | REF NO | GRAPHIC REF | PART NUMBER | QTY | PART NAME 1 2 3 4 5 6 (PRODUCT LEVEL) | SEE PAGE |
|---|---|---|---|---|---|---|
| | 1 | 2 | 222-3686 | 1 | BRACKET (LH) | |
| | 2 | 2 | 222-3687 | 1 | BRACKET (RH) | |
| | 3 | 1 | 3T-4509 | 2 | PLATE | |
| | 4 | 1 | 6V-8928 | 1 | HOOK-COAT | |
| | 5 | 1 | 161-3415 | 1 | STRAP | |
| | 6 | 1 | 173-2185 | 1 | LINER-CAB | |
| | 7 | 2 | 173-2187 | 1 | COVER AS | |
| | | 2 | 200-7939 | 1 | COVER AS | |
| | 8 | 1 | 178-4323 | 11 | CAP | |
| | 9 | 1 | 197-2027 | 1 | BRACKET AS | |
| M | | 1 | 6V-9632 | 1 | NUT-WELD (M6X1-THD) | |
| | 10 | 2 | 206-0033 | 1 | COVER AS | |
| | 11 | 2 | 209-8310 | 1 | COVER | |
| | 12 | 2 | 209-8312 | 1 | PLATE | |
| | 13 | 2 | 233-1643 | 1 | DOOR AS-ACCESS | |
| | | 2 | 233-1645 | 1 | HINGE AS | |
| | 14 | 2 | 233-4463 | 1 | CAM | |
| | 15 | 2 | 233-4466 | 1 | LATCH AS | |
| | 16 | 1 | 233-5036 | 2 | ANGLE AS | |
| | | | | | (EACH INCLUDES) | |
| | | 1 | 4E-3956 | 2 | BOSS | |
| | 17 | 1 | 243-4860 | 1 | FLOOR MAT | |
| | 18 | 1 | 259-6894 | 1 | FILM-FUSE PANEL | |
| M | 19 | 2 | 5C-7261 | 4 | NUT (M8X1.25-THD) | |
| | 20 | 1,2 | 8T-4121 | 6 | WASHER-HARD (11X21X2.5-MM THK) | |
| M | 21 | 2 | 8T-4191 | 2 | BOLT (M10X1.5X16-MM) | |
| M | 22 | 1 | 8T-4195 | 4 | BOLT (M10X1.5X30-MM) | |
| | 23 | 2 | 8T-4224 | 4 | WASHER-HARD (8.8X16X2-MM THK) | |
| M | 24 | 2 | 9X-2040 | 6 | SCREW-TRUSS HEAD (M10X1.5X25-MM) | |
| M | 25 | 1 | 9X-2042 | 1 | SCREW-TRUSS HEAD (M6X1X12-MM) | |
| M | 26 | 2 | 9X-2044 | 2 | SCREW-TRUSS HEAD (M6X1X16-MM) | |
| M | 27 | 1,2 | 9X-2045 | 13 | SCREW-TRUSS HEAD (M6X1X20-MM) | |
| | 28 | 2 | 9X-6165 | 1 | WASHER (6.5X22X2.5-MM THK) | |
| | 29 | 1 | 9X-8256 | 6 | WASHER (6.6X12X2-MM THK) | |
| D | 30 | 2 | 5P-5643 | | SEAL (1.1-M) | |
| E | 31 | 2 | 103-2543 | | SEAL (32-CM) | |
| E | 32 | 2 | 209-8315 | | SEAL (70-CM) | |
| E | 33 | 2 | 7X-7877 | | STRIP-EDGING (199-CM) | |
| E | 34 | 2 | 7X-7898 | | TRIM (120-CM) | |

D-ORDER BY THE METER
E-ORDER BY THE CENTIMETER
M-METRIC PART

REFER TO ALL ILLUSTRATIONS OF THIS GROUP FOR AUXILIARY VIEWS

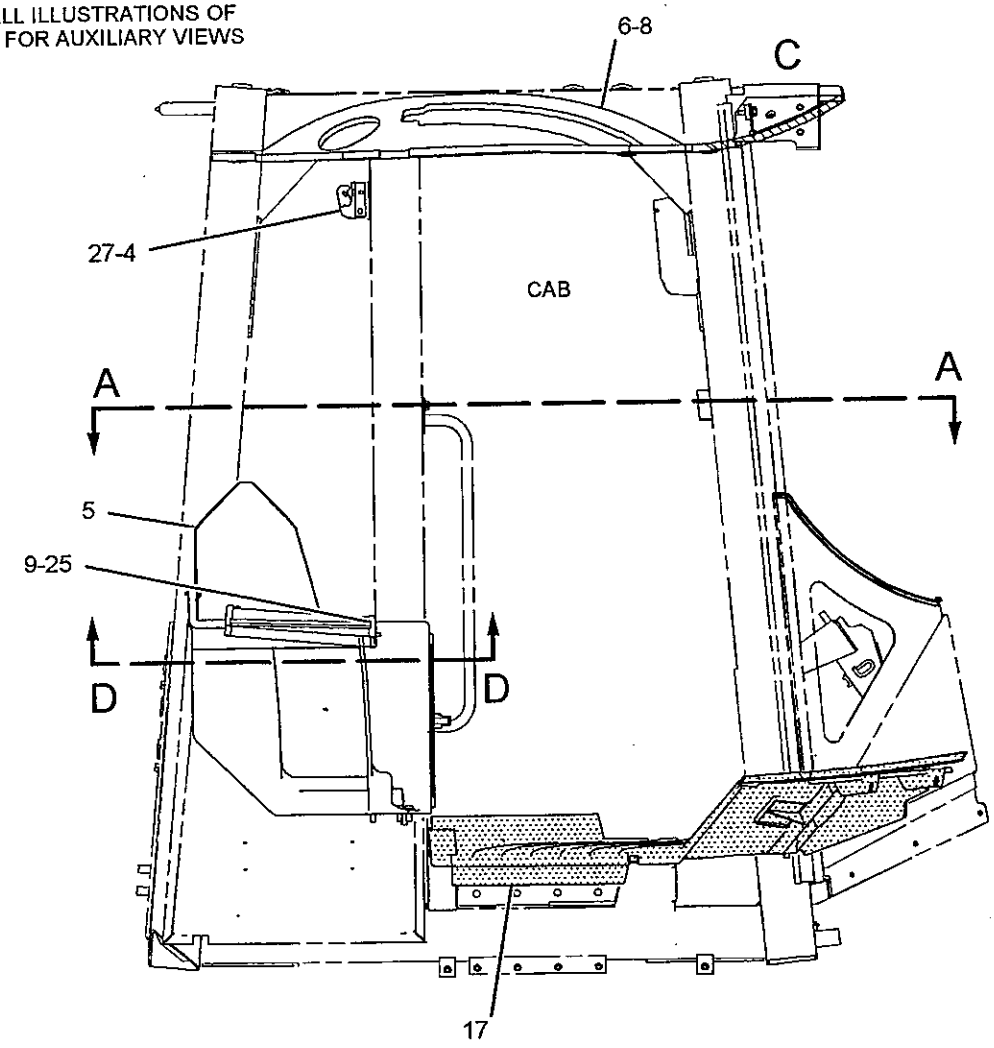


RIGHT SIDE VIEW

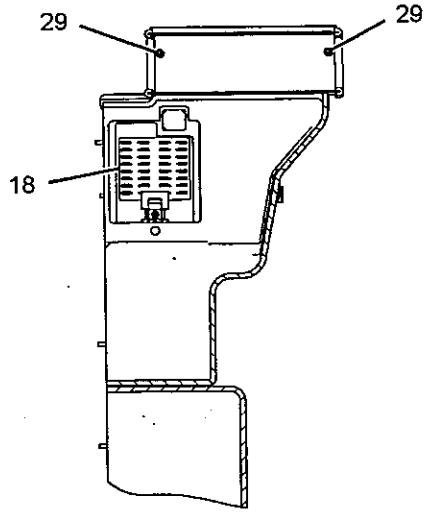


SECTION D-D

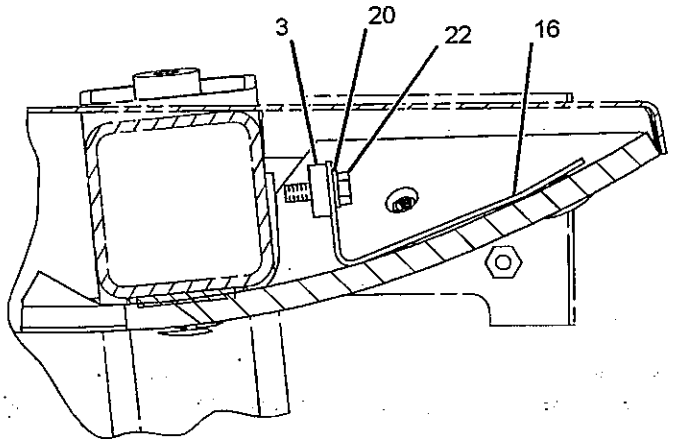


VIEW OF AREA C

GRAPHIC #1 g01145089

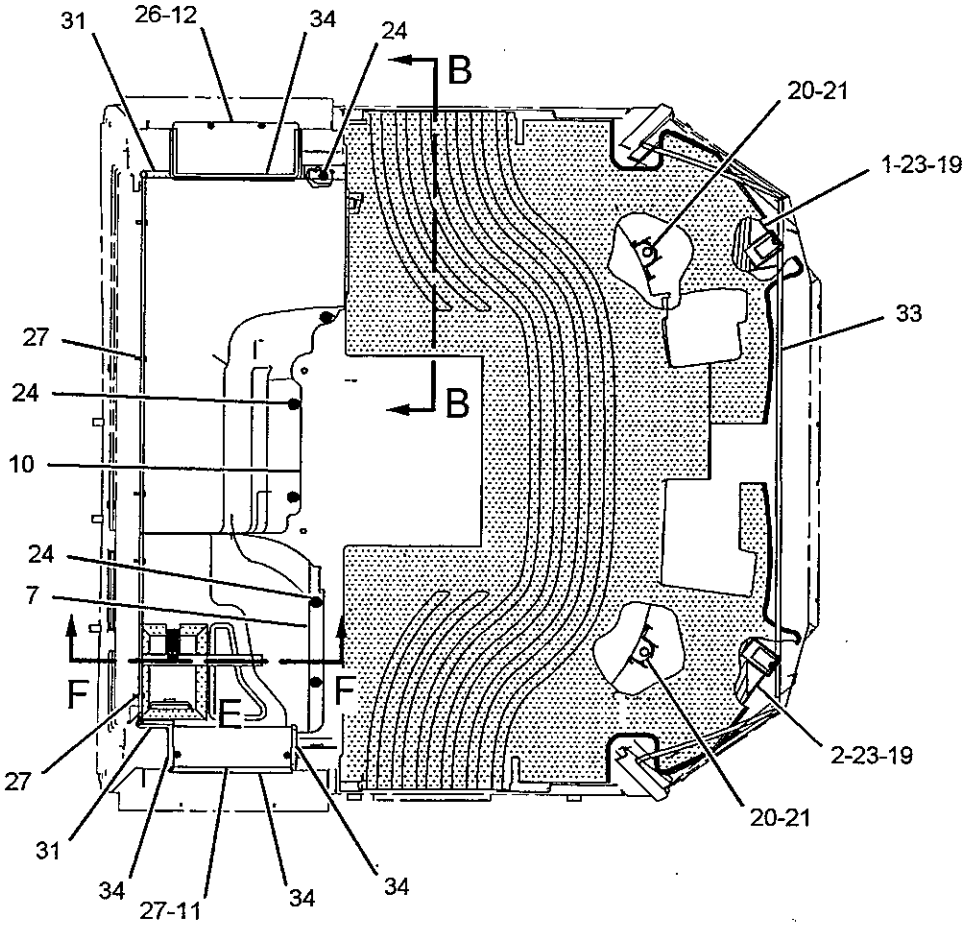


SECTION A-A

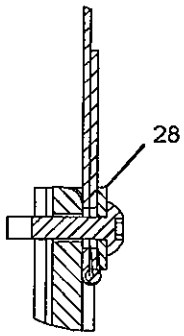


SECTION F-F

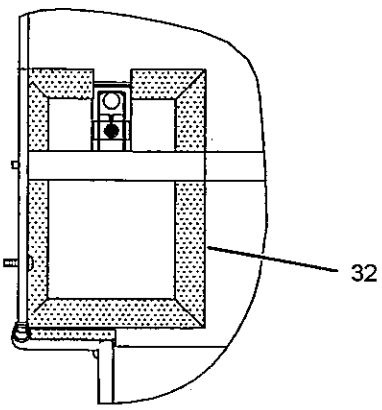


VIEW OF AREA E

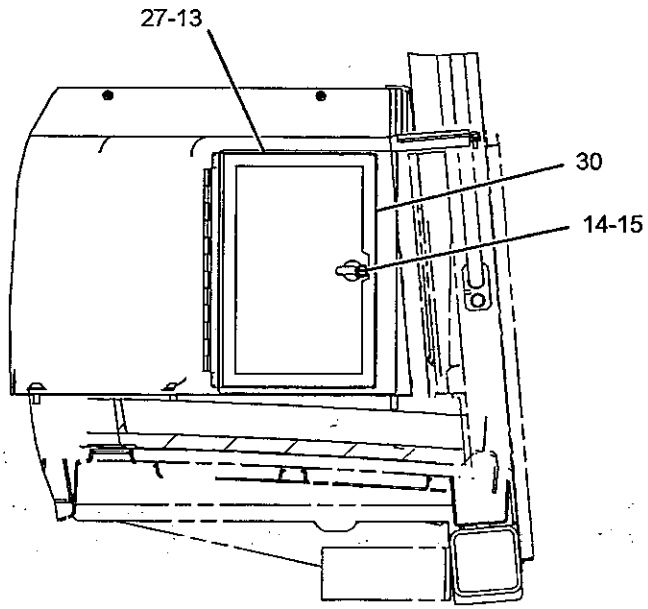


SECTION B-B

GRAPHIC #2 **<END>** g01145090

# OPERATOR STATION

## *193-3121* LINES GP-AIR CONDITIONER

S/N: JMS1-UP

PART OF 190-1249 AIR CONDITIONER GP

AN ATTACHMENT

i01758333

SMCS-1808

| NOTE | REF NO | GRAPHIC REF | PART NUMBER | QTY | PART NAME 1 2 3 4 5 6 (PRODUCT LEVEL) | SEE PAGE |
|---|---|---|---|---|---|---|
| | 1 | 1 | 5P-3928 | 1 | COUPLING AS-SEALING | |
| | | 1 | 107-4395 | 1 | VALVE AS | |
| | | 1 | 107-4396 | 1 | GASKET | |
| | 2 | 1 | 5P-4106 | 1 | NUT (1-7/16X16 THD) | |
| | 3 | 1 | 7K-3176 | 1 | COUPLING AS | |
| | | 1 | 107-4393 | 1 | VALVE AS | |
| | | 1 | 107-4394 | 1 | GASKET | |
| | 4 | 1 | 7K-3304 | 1 | NUT-JAM (1-20 THD) | |
| | 5 | 1 | 126-6008 | 1 | PLATE | |
| | 6 | 1 | 130-1887 | 1 | GASKET | |
| | 7 | 1 | 170-3447 | 1 | PLATE | |
| | 8 | 1 | 170-3448 | 1 | PLATE | |
| I | 9 | 1 | 197-3137 | 1 | HOSE AS | |
| I | 10 | 1 | 197-3298 | 1 | HOSE AS | |
| | 11 | 1 | 9X-7381 | 1 | SEAL-O-RING | |
| | 12 | 1 | 9X-7382 | 1 | SEAL-O-RING | |
| | 13 | 1 | 9X-7383 | 1 | SEAL-O-RING | |
| | 14 | 1 | 9X-7384 | 1 | SEAL-O-RING | |

I-SEE HOSE FABRICATION GUIDE

## *193-3121* LINES GP-AIR CONDITIONER *(contd.)*

i01758333

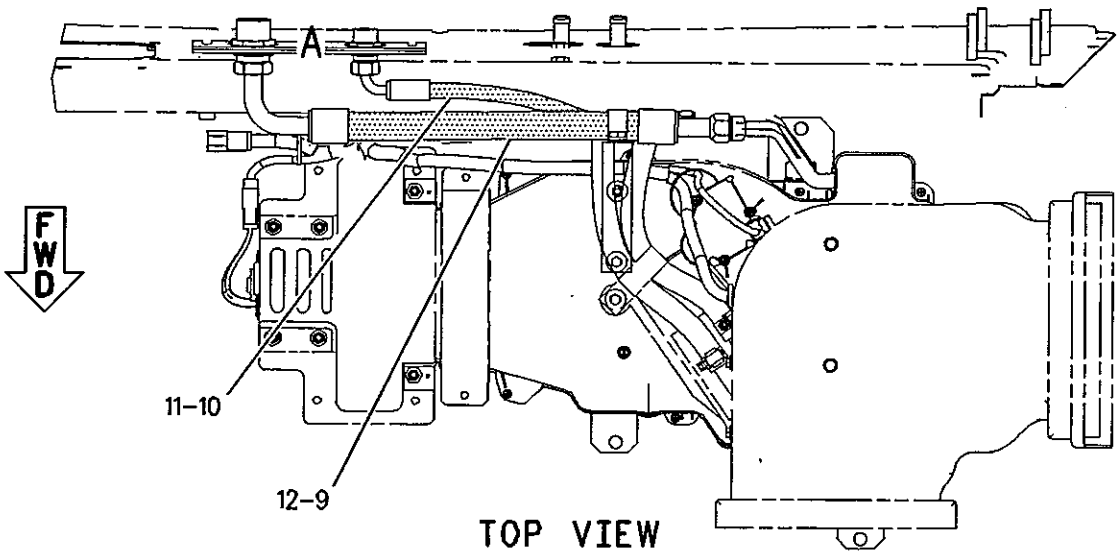


TOP VIEW

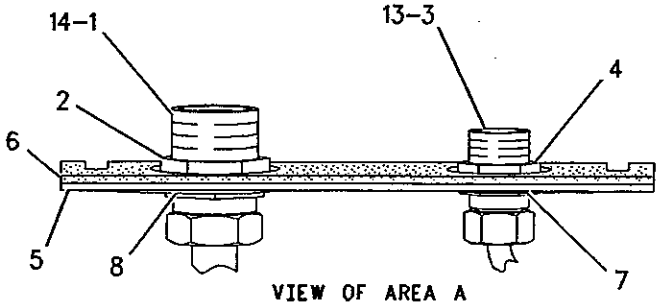


VIEW OF AREA A

GRAPHIC #1

<END>

g00899546

# OPERATOR STATION

## 233-9449 LINES GP-AIR CONDITIONER

S/N: JMS1-UP

PART OF 235-5315 AIR CONDITIONER AR

AN ATTACHMENT

SMCS-1808

i02283083

| NOTE | REF NO | GRAPHIC REF | PART NUMBER | QTY | PART NAME 1 2 3 4 5 6 (PRODUCT LEVEL) | SEE PAGE |
|---|---|---|---|---|---|---|
| | 1 | 1 | 175-7162 | 1 | RECEIVER-DRYER GP (AIR CONDITIONER) | |
| | 2 | 1 | 3S-2093 | 3 | STRAP-CABLE | |
| | 3 | 1 | 4E-2289 | 1 | ANGLE AS | |
| | | 1 | 7T-2035 | 1 | ANGLE | |
| M | | 1 | 8T-3490 | 1 | NUT-WELD (M10X1.5-THD) | |
| | 4 | 1 | 103-6100 | 2 | COUPLER AS-QUICK | |
| | | | | | (EACH INCLUDES) | |
| | | 1 | 9X-7382 | 2 | SEAL-O-RING | |
| | 5 | 1 | 105-9411 | 1 | SUPPORT | |
| | 6 | 1 | 116-6202 | 2 | BOOT | |
| | 7 | 1 | 186-6189 | 1 | ACCUMULATOR GP-REFRIGERANT | |
| I | 8 | 1 | 236-8735 | 1 | HOSE AS | |
| | 9 | 1 | 242-2445 | 1 | CLAMP AS | |
| I | 10 | 1 | 255-8120 | 1 | HOSE AS. | |
| | 11 | 1 | 255-8121 | 1 | HOSE AS. | |
| I | 12 | 1 | 260-0230 | 1 | HOSE AS. | |
| | 13 | 1 | 260-0231 | 1 | HOSE AS. | |
| | 14 | 1 | 149-7738 | 2 | CLIP | |
| | 15 | 1 | 5P-3929 | 1 | COUPLING AS-REFRIGERANT | |
| | | 1 | 8F-9206 | 1 | SEAL-O-RING | |
| | | 1 | 107-4397 | 1 | VALVE AS | |
| | 16 | 1 | 5P-3948 | 1 | COUPLING AS-REFRIGERANT | |
| | | 1 | 7F-8607 | 1 | SEAL-O-RING | |
| | | 1 | 107-4399 | 1 | VALVE AS | |
| | 17 | 1 | 6D-3479 | 8 | CLIP | |
| | 18 | 1 | 6D-4246 | 3 | CLIP | |
| | 19 | 1 | 6K-8178 | 6 | CLIP | |
| | 20 | 1 | 6V-4356 | 1 | CLIP (SLOT) | |
| | 21 | 1 | 6V-4357 | 1 | CLIP (TAB) | |
| | 22 | 1 | 8M-2773 | 8 | CLIP | |
| | 23 | 1 | 8T-4121 | 18 | WASHER-HARD (11X21X2.5-MM THK) | |
| M | 24 | 1 | 8T-4133 | 4 | NUT (M10X1.5-THD) | |
| M | 25 | 1 | 8T-4136 | 1 | BOLT (M10X1.5X25-MM) | |
| M | 26 | 1 | 8T-4137 | 12 | BOLT (M10X1.5X20-MM) | |
| M | 27 | 1 | 8T-4183 | 1 | BOLT (M12X1.75X40-MM) | |
| M | 28 | 1 | 8T-4195 | 1 | BOLT (M10X1.5X30-MM) | |
| | 29 | 1 | 8T-4223 | 1 | WASHER-HARD (13.5X25.5X3-MM THK) | |
| | 30 | 1 | 9X-7380 | 3 | SEAL-O-RING | |
| | 31 | 1 | 9X-7381 | 1 | SEAL-O-RING | |
| | 32 | 1 | 9X-7383 | 3 | SEAL-O-RING | |
| | 33 | 1 | 9X-7384 | 1 | SEAL-O-RING | |
| E | 34 | 1 | 8C-5064 | | CONDUIT-FLEXIBLE (55-CM) | |
| E | 34A | 1 | 8C-5064 | | CONDUIT-FLEXIBLE (90-CM) | |

E-ORDER BY THE CENTIMETER
I-REFER TO HYDRAULIC INFORMATION SYSTEM
M-METRIC PART

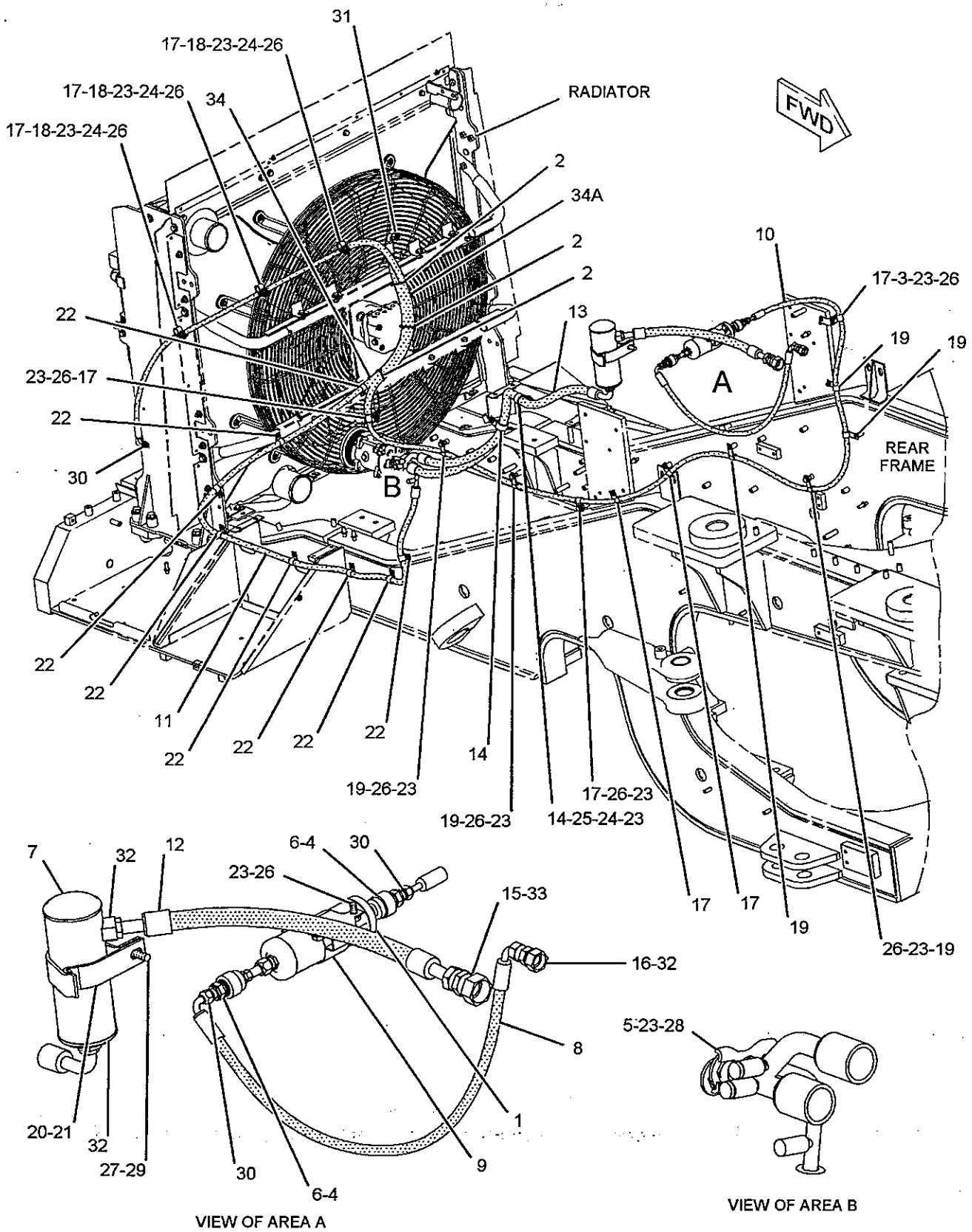


GRAPHIC #1 **<END>** g01144373

# OPERATOR STATION

## *192-3558* LINES GP-CAB HEATER

**S/N: JMS1-UP**

**PART OF 236-7813 HEATER GP-CAB**

**SMCS-7304** i01777286

| NOTE | REF NO | GRAPHIC REF | PART NUMBER | QTY | PART NAME 1 2 3 4 5 6 (PRODUCT LEVEL) | SEE PAGE |
|---|---|---|---|---|---|---|
| | 1 | 1 | **6D-1641** | 1 | CLIP | |
| | 2 | 1 | **9X-2488** | 4 | CLAMP-HOSE | |
| | 3 | 1 | **130-2541** | 1 | PLATE AS | |
| | 4 | 1 | **197-8981** | 1 | GASKET | |
| | 5 | 1 | **198-0320** | 1 | PLATE AS | |
| | 6 | 1 | **4I-7889** | 1 | SPACER (11X25X45-MM THK) | |
| M | 7 | 1 | **5C-7261** | 4 | NUT (M8X1.25-THD) | |
| M | 8 | 1 | **8T-3844** | 1 | BOLT (M6X1X70-MM) | |
| | 9 | 1 | **8T-4224** | 4 | WASHER-HARD (8.8X16X2-MM THK) | |
| | 10 | 1 | **9X-6165** | 1 | WASHER (6.5X22X2.5-MM THK) | |
| E | 11 | 1 | **136-1953** | | HOSE (42CM) | |
| E | 12 | 1 | **136-1953** | | HOSE (45CM) | |

E-ORDER BY THE CENTIMETER
M-METRIC PART

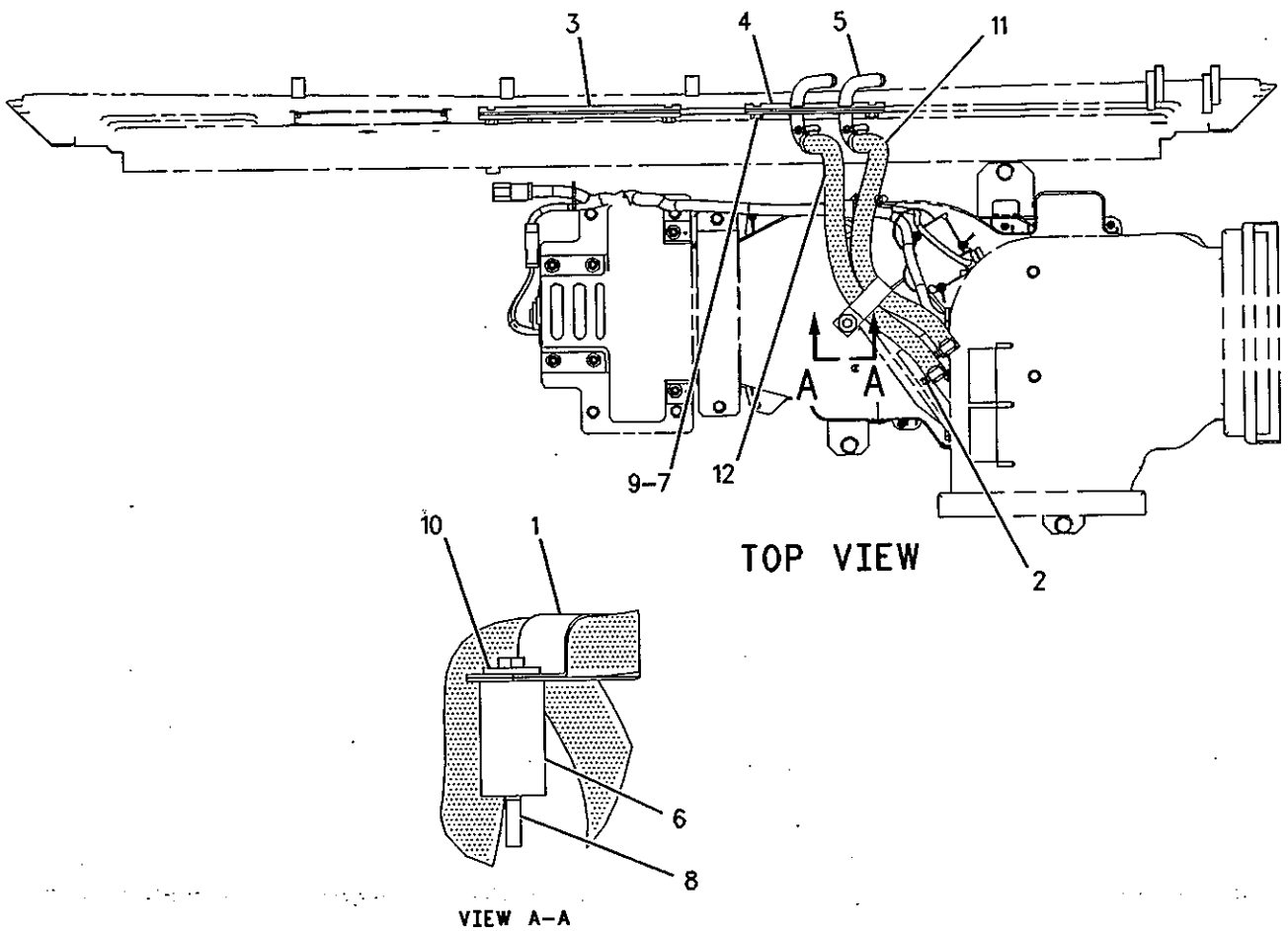


GRAPHIC #1 <END> g00909881

# OPERATOR STATION

## 235-5326 LINES GP-CAB HEATER

S/N: JMS1-UP

PART OF 225-5538 CHASSIS AR

SMCS-7304

i02279496

| NOTE | REF NO | GRAPHIC REF | PART NUMBER | QTY | PART NAME 1 2 3 4 5 6 (PRODUCT LEVEL) | SEE PAGE |
|---|---|---|---|---|---|---|
| | 1 | 1 | 6V-7238 | 2 | VALVE-SHUTOFF | |
| | 2 | 1 | 8C-6523 | 2 | ADAPTER (7/8-14) | |
| | 3 | 1 | 9X-2488 | 4 | CLAMP-HOSE | |
| | 6 | 1 | 003-9163 | 1 | ELBOW | |
| | 7 | 1 | 6D-1641 | 5 | CLIP | |
| | 8 | 1 | 6V-6609 | 2 | SEAL-O-RING | |
| | 9 | 1 | 8T-4121 | 4 | WASHER-HARD (11X21X2.5-MM THK) | |
| M | 10 | 1 | 8T-4137 | 4 | BOLT (M10X1.5X20-MM) | |
| E | 11 | 1 | 136-1953 | | HOSE (235-CM EACH) | |

E-ORDER BY THE CENTIMETER
M-METRIC PART

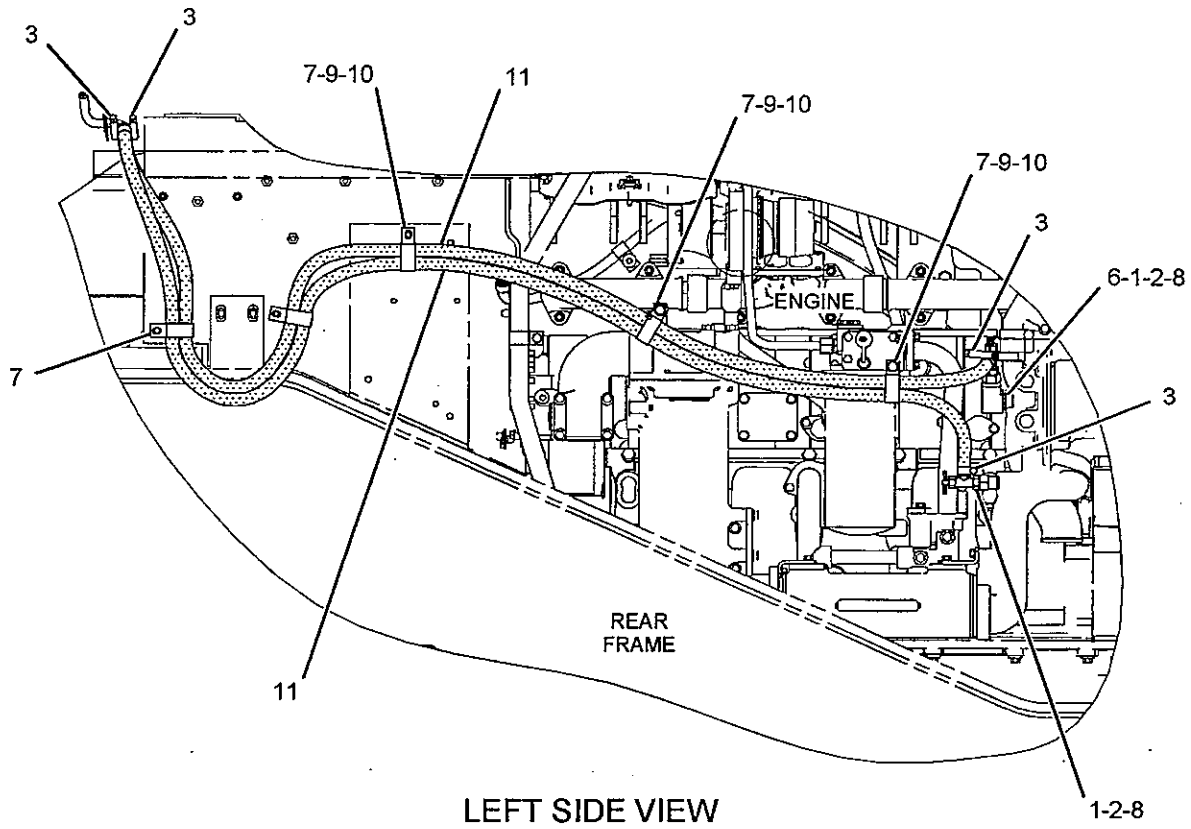


LEFT SIDE VIEW

GRAPHIC #1

<END>

g01142047

# OPERATOR STATION

## *109-8203* MIRROR GP-REAR VIEW

S/N: JMS1-UP

PART OF 266-1620 MACHINE AR, 246-8696, 246-8697 ROADING AR AN ATTACHMENT

SMCS-7319

i02288077

| NOTE | REF NO | GRAPHIC REF | PART NUMBER | QTY | PART NAME 1 2 3 4 5 6 (PRODUCT LEVEL) | SEE PAGE |
|---|---|---|---|---|---|---|
| | 1 | 1 | 1B-2578 | 2 | NUT (3/8-16-THD) | |
| | 2 | 1 | 3B-4506 | 2 | LOCKWASHER | |
| | 3 | 1 | 5P-6872 | 2 | MIRROR AS | |
| | | 1 | 3K-6060 | 1 | LOCKNUT (3/8-16-THD) | |
| | 4 | 1 | 115-2073 | 2 | BRACKET | |

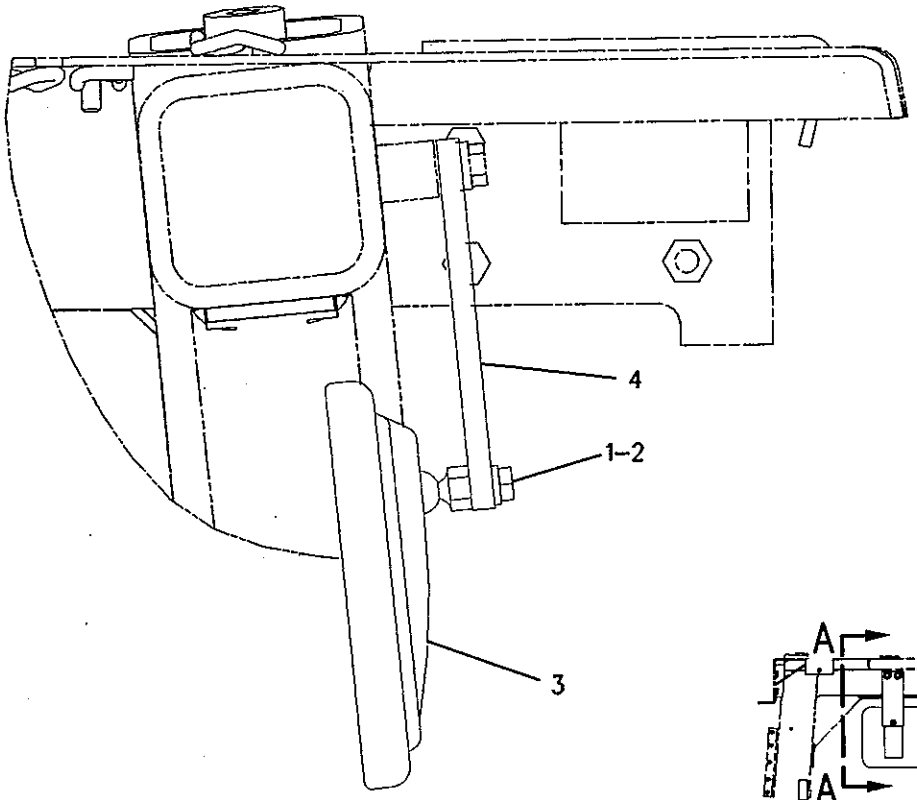


VIEW A-A

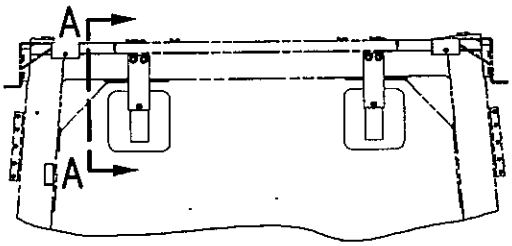


FRONT VIEW

GRAPHIC #1

<END>

g00889114

# OPERATOR STATION

## *197-6474* MIRROR GP-REAR VIEW

**S/N: JMS1-UP**

**AN ATTACHMENT**

**SMCS-7319**

**i01532292**

| NOTE | REF NO | GRAPHIC REF | PART NUMBER | QTY | PART NAME 1 2 3 4 5 6 (PRODUCT LEVEL) | SEE PAGE |
|---|---|---|---|---|---|---|
| Y | 1 | 1 | *200-8897* | 1 | MIRROR GP-REAR VIEW (RH) | 846 |
| Y | 2 | 1 | *200-8898* | 1 | MIRROR GP-REAR VIEW (LH) | 847 |

Y-SEPARATE ILLUSTRATION

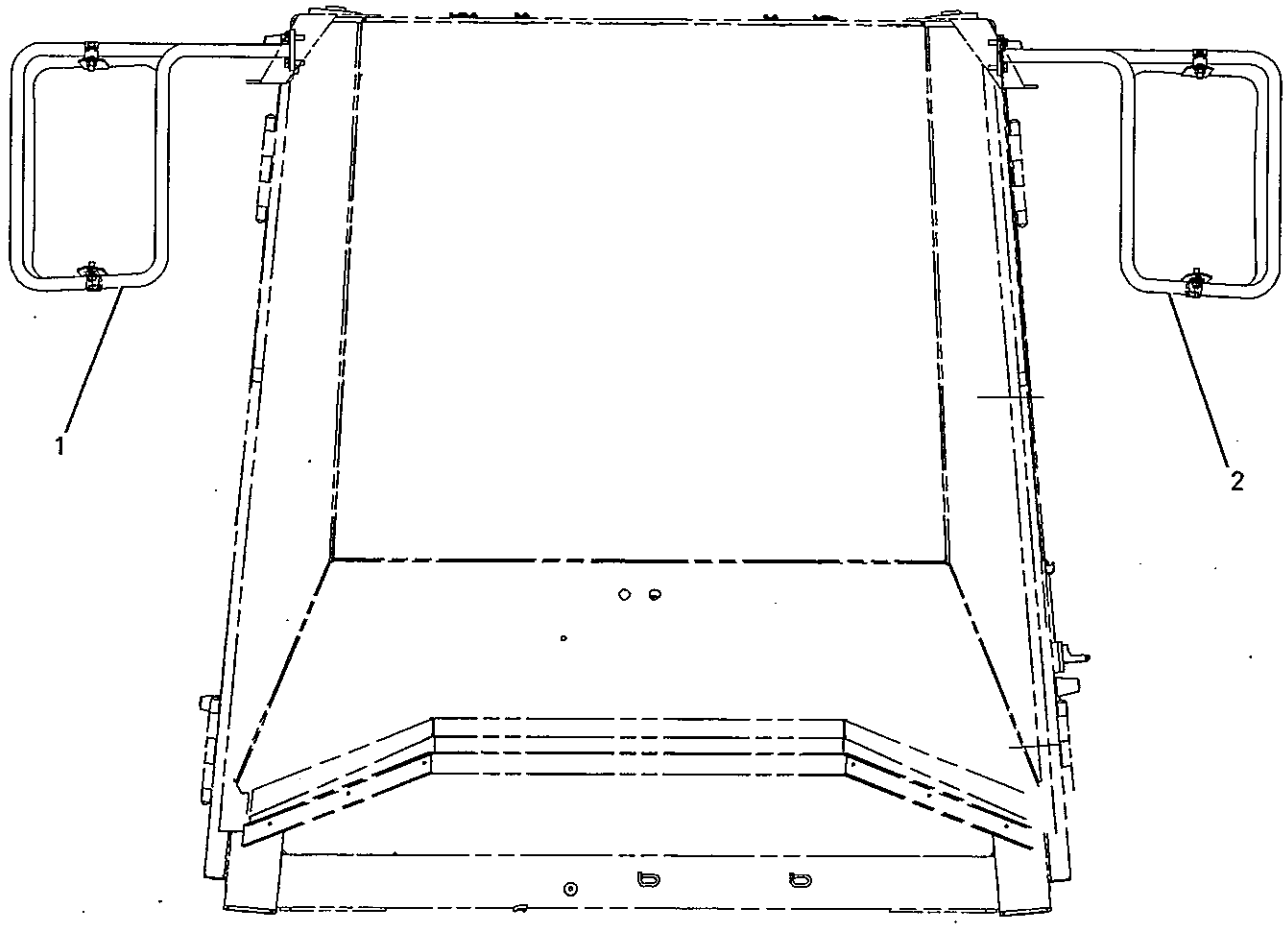


FRONT VIEW

GRAPHIC #1

**<END>**

g00795835

# OPERATOR STATION

## 200-8897 MIRROR GP-REAR VIEW—RH

S/N: JMS1-UP

PART OF 197-6474 MIRROR GP-REAR VIEW

AN ATTACHMENT

i01532359

SMCS-7319

| NOTE | REF NO | GRAPHIC REF | PART NUMBER | QTY | PART NAME 1 2 3 4 5 6 (PRODUCT LEVEL) | SEE PAGE |
|---|---|---|---|---|---|---|
| | 1 | 1 | 5P-6879 | 1 | MIRROR | |
| | 2 | 1 | 8T-1889 | 2 | CLIP (SLOT) | |
| | 3 | 1 | 8T-1890 | 2 | CLIP (TAB) | |
| | 4 | 1 | 200-8895 | 1 | BRACKET AS | |
| | 5 | 1 | 8T-4121 | 6 | WASHER-HARD (11X21X2.5-MM THK) | |
| M | 6 | 1 | 8T-4133 | 2 | NUT (M10X1.5-THD) | |
| M | 7 | 1 | 8T-4195 | 6 | BOLT (M10X1.5X30-MM) | |

M-METRIC PART

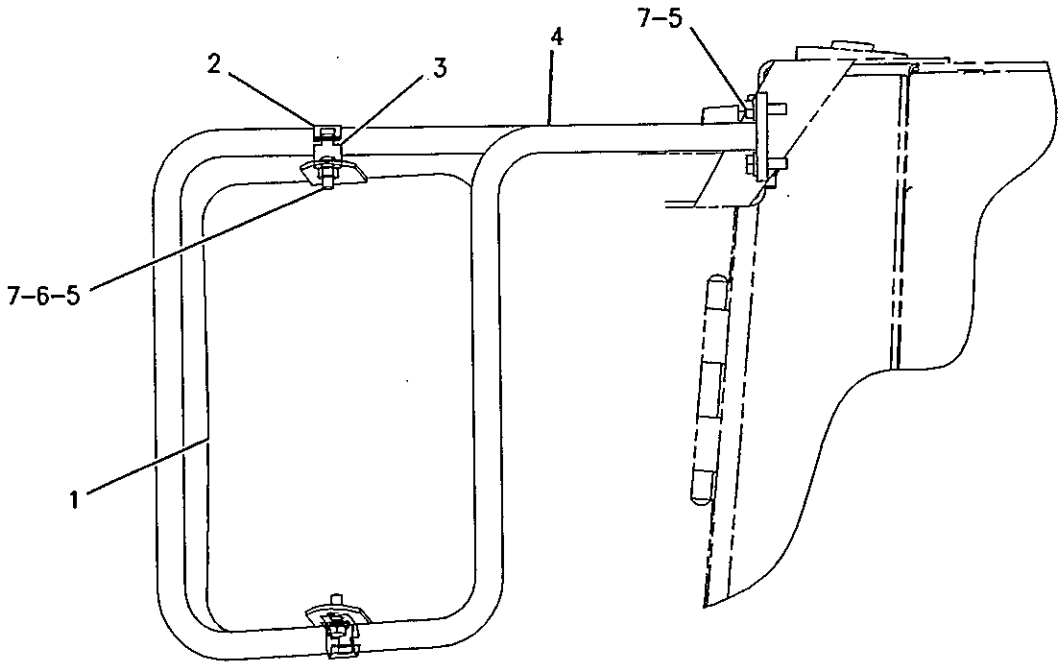


GRAPHIC #1

<END>

g00795838

# OPERATOR STATION

## *200-8898* MIRROR GP-REAR VIEW–LH

**S/N: JMS1-UP**

**PART OF 197-6474 MIRROR GP-REAR VIEW**

**AN ATTACHMENT**

**SMCS-7319** **i01532357**

| NOTE | REF NO | GRAPHIC REF | PART NUMBER | QTY | PART NAME 1 2 3 4 5 6 (PRODUCT LEVEL) | SEE PAGE |
|---|---|---|---|---|---|---|
| | 1 | 1 | **5P-6879** | 1 | MIRROR | |
| | 2 | 1 | **8T-1889** | 2 | CLIP (SLOT) | |
| | 3 | 1 | **8T-1890** | 2 | CLIP (TAB) | |
| | 4 | 1 | **200-8896** | 1 | BRACKET AS | |
| | 5 | 1 | **8T-4121** | 6 | WASHER-HARD (11X21X2.5-MM THK) | |
| M | 6 | 1 | **8T-4133** | 2 | NUT (M10X1.5-THD) | |
| M | 7 | 1 | **8T-4195** | 6 | BOLT (M10X1.5X30-MM) | |

M-METRIC PART

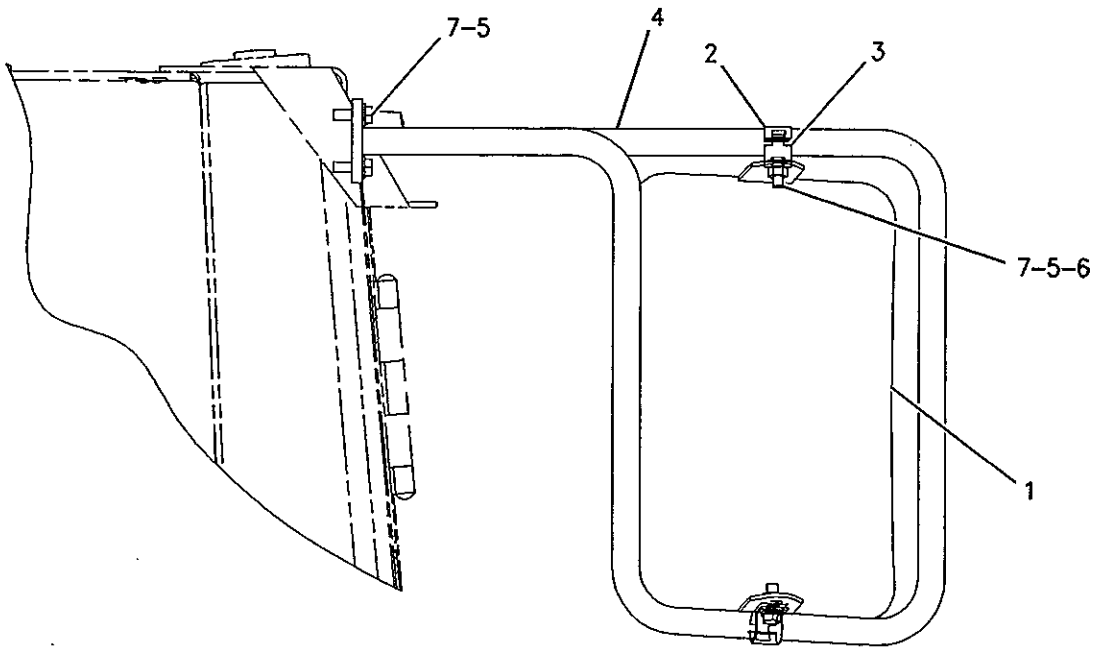


GRAPHIC #1 **<END>** g00795853

# OPERATOR STATION

## *236-4969* MIRROR GP-REAR VIEW–HEATED

**S/N: JMS1-UP**

**AN ATTACHMENT**

**SMCS-7319** **i02275325**

| NOTE | REF NO | GRAPHIC REF | PART NUMBER | QTY | PART NAME 1 2 3 4 5 6 (PRODUCT LEVEL) | SEE PAGE |
|---|---|---|---|---|---|---|
| | 1 | 1 | **3S-2093** | 1 | STRAP-CABLE | |
| | 2 | 1 | **173-7004** | 1 | RELAY AS (HEATED MIRRORS) | |
| Y | 3 | 1 | **236-4970** | 1 | MIRROR GP-REAR VIEW (HEATED, LH) | 850 |
| Y | 4 | 1 | **236-4971** | 1 | MIRROR GP-REAR VIEW (HEATED, RH) | 851 |
| | 5 | 1 | **236-6207** | 1 | HARNESS AS-CONTROL (HEATED MIRRORS) | |
| | | 1 | **155-2270** | 2 | KIT-CONNECTING PLUG (2-PIN) | |
| | | | | | (INCLUDES PLUG AS AND WEDGE) | |
| | 6 | 1 | **236-7774** | 1 | HARNESS AS-CONTROL (HEATED MIRROR TIMER RELAY) | |
| | | 1 | **102-8804** | 1 | KIT-RECEPTACLE (4-PIN) | |
| | | | | | (INCLUDES RECEPTACLE AS AND WEDGE) | |
| | 7 | 1 | **236-4630** | 1 | SWITCH AS-ROCKER (HEATED MIRRORS) | |
| M | 8 | 1 | **8T-4171** | 1 | BOLT (M6X1X12-MM) | |
| | 9 | 1 | **9X-8256** | 1 | WASHER (6.6X12X2-MM THK) | |

M-METRIC PART
Y-SEPARATE ILLUSTRATION

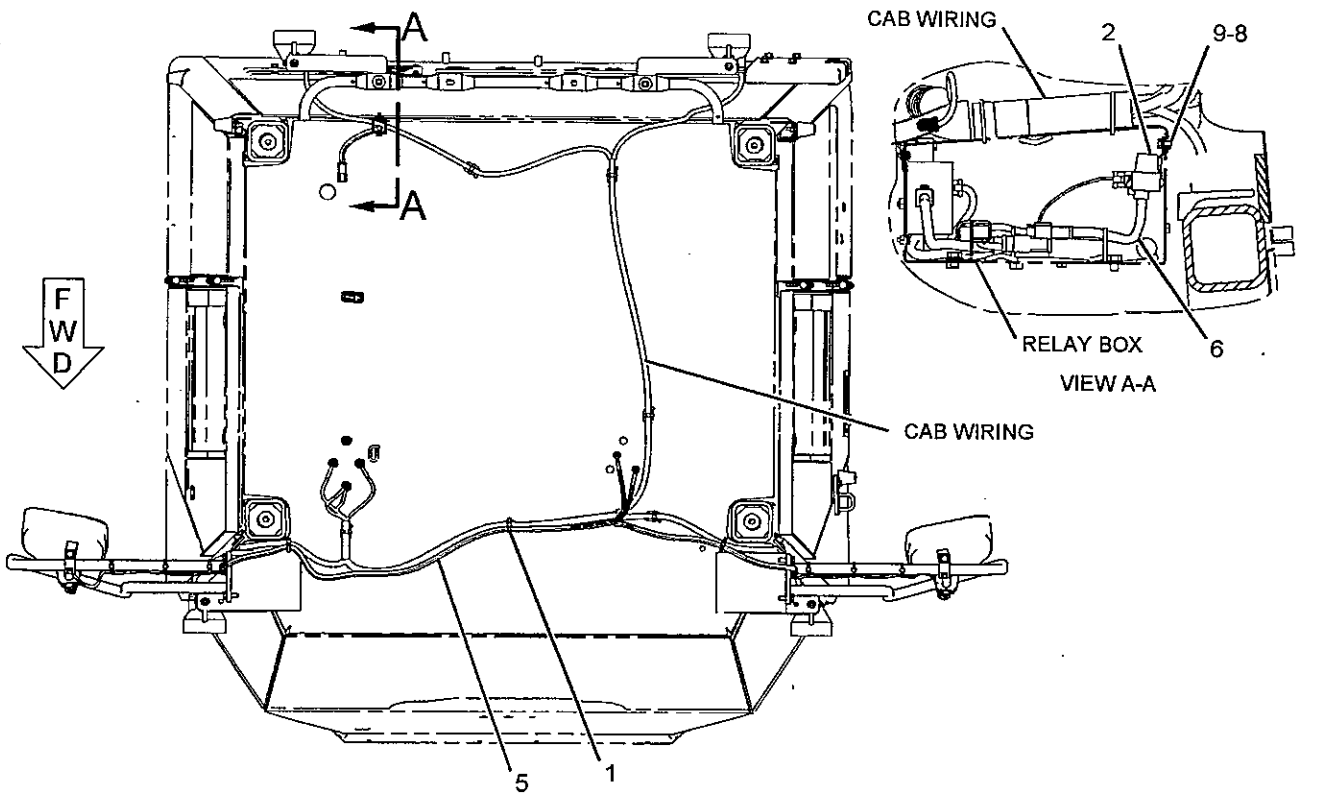


TOP VIEW

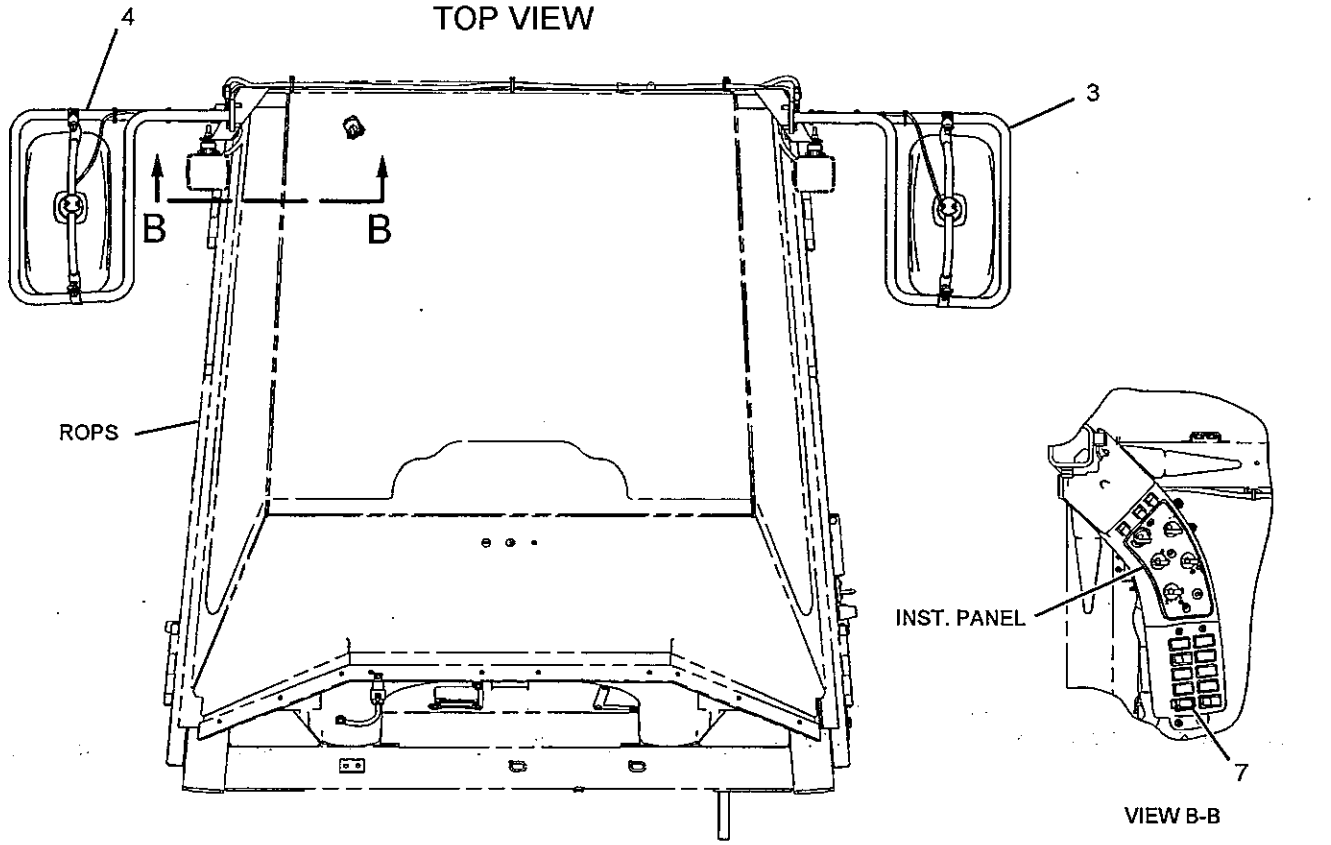


FRONT VIEW

GRAPHIC #1

<END>

g01066569

# OPERATOR STATION

## *236-4970* MIRROR GP-REAR VIEW—HEATED, LH

S/N: JMS1-UP

PART OF 236-4969, 259-1998 MIRROR GP-REAR VIEW

AN ATTACHMENT

SMCS-7319

i02089907

| NOTE | REF NO | GRAPHIC REF | PART NUMBER | QTY | PART NAME 1 2 3 4 5 6 (PRODUCT LEVEL) | SEE PAGE |
|---|---|---|---|---|---|---|
| | 1 | 1 | 3S-2093 | 4 | STRAP-CABLE | |
| | 2 | 1 | 200-8896 | 1 | BRACKET AS | |
| | 3 | 1 | 202-8649 | 1 | MIRROR AS (HEATED) | |
| | | 1 | 102-8802 | 1 | KIT-RECEPTACLE (2-PIN) | |
| | | | | | (INCLUDES RECEPTACLE AS AND WEDGE) | |
| | | 1 | 186-3735 | 2 | PIN-CONNECTOR (16-GA TO 18-GA) | |
| | | 1 | 200-1173 | 1 | MIRROR AS | |
| | 4 | 1 | 130-5300 | 1 | CLIP | |
| | 5 | 1 | 8T-1889 | 2 | CLIP (SLOT) | |
| | 6 | 1 | 8T-1890 | 2 | CLIP (TAB) | |
| | 7 | 1 | 8T-4121 | 8 | WASHER-HARD (11X21X2.5-MM THK) | |
| M | 8 | 1 | 8T-4133 | 2 | NUT (M10X1.5-THD) | |
| M | 9 | 1 | 8T-4195 | 6 | BOLT (M10X1.5X30-MM) | |

M-METRIC PART

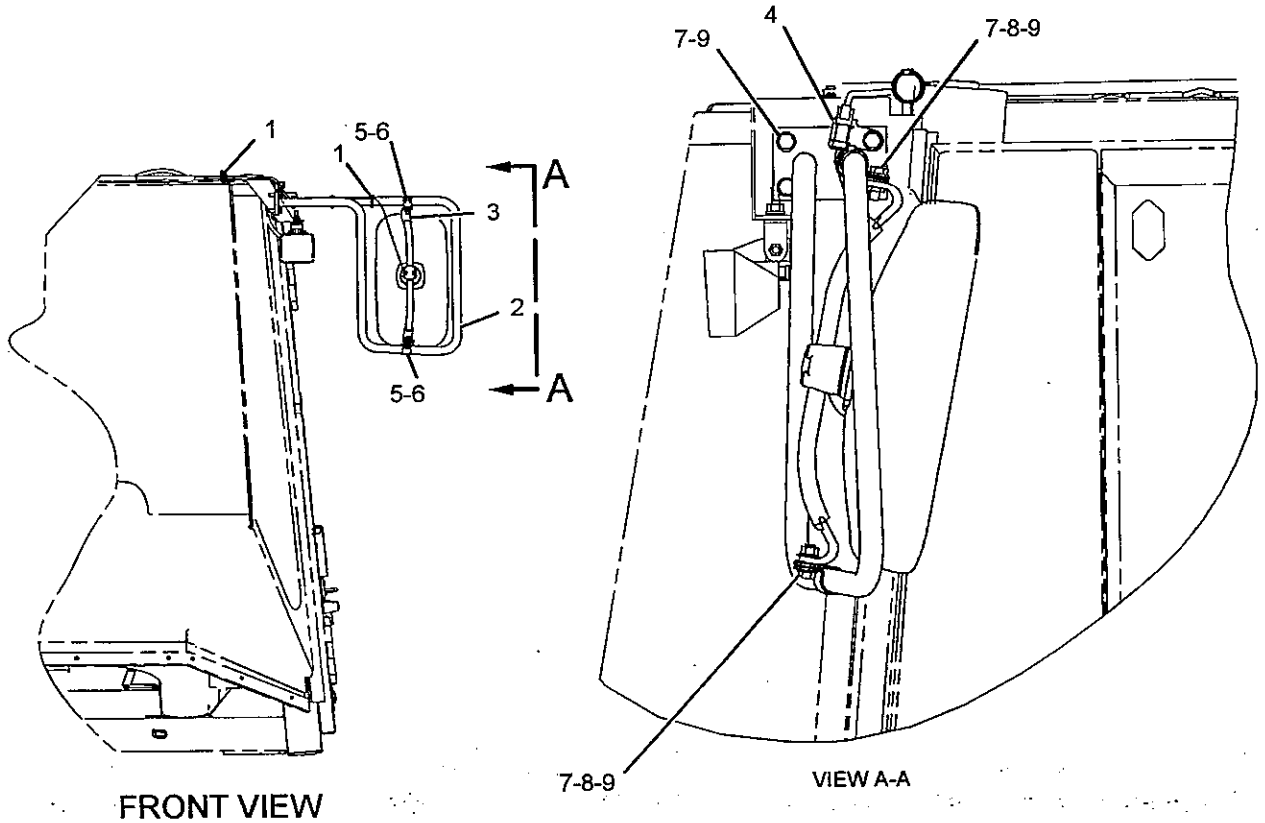


FRONT VIEW

VIEW A-A

GRAPHIC #1

<END>

g01066378

# OPERATOR STATION

## *236-4971* MIRROR GP-REAR VIEW—HEATED, RH

**S/N: JMS1-UP**

**PART OF 236-4969, 259-1998 MIRROR GP-REAR VIEW**

**AN ATTACHMENT**

**SMCS-7319** **i02089908**

| NOTE | REF NO | GRAPHIC REF | PART NUMBER | QTY | PART NAME 1 2 3 4 5 6 (PRODUCT LEVEL) | SEE PAGE |
|---|---|---|---|---|---|---|
| | 1 | 1 | **3S-2093** | 4 | STRAP-CABLE | |
| | 2 | 1 | **200-8895** | 1 | BRACKET AS | |
| | 3 | 1 | **202-8649** | 1 | MIRROR AS (HEATED) | |
| | | 1 | **102-8802** | 1 | KIT-RECEPTACLE (2-PIN) | |
| | | | | | (INCLUDES RECEPTACLE AS AND WEDGE) | |
| | | 1 | **186-3735** | 2 | PIN-CONNECTOR (16-GA TO 18-GA) | |
| | | 1 | **200-1173** | 1 | MIRROR AS | |
| | 4 | 1 | **130-5300** | 1 | CLIP | |
| | 5 | 1 | **8T-1889** | 2 | CLIP (SLOT) | |
| | 6 | 1 | **8T-1890** | 2 | CLIP (TAB) | |
| | 7 | 1 | **8T-4121** | 8 | WASHER-HARD (11X21X2.5-MM THK) | |
| M | 8 | 1 | **8T-4133** | 2 | NUT (M10X1.5-THD) | |
| M | 9 | 1 | **8T-4195** | 6 | BOLT (M10X1.5X30-MM) | |

M-METRIC PART

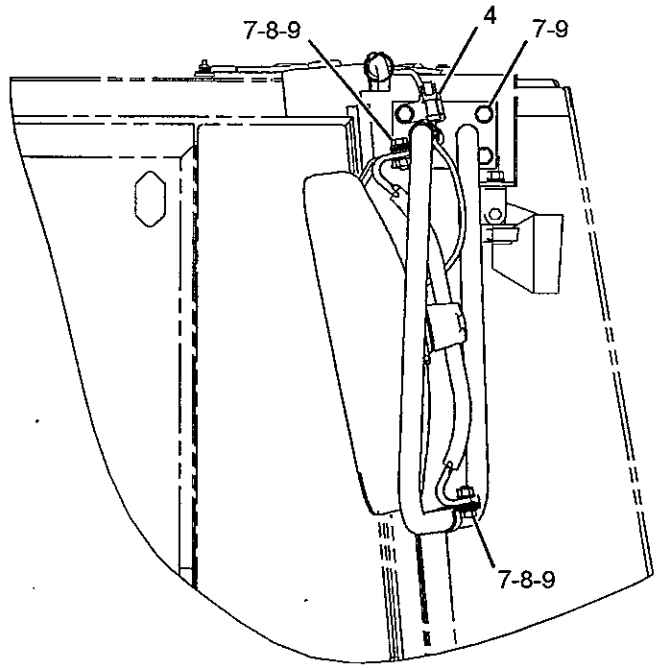


VIEW A-A

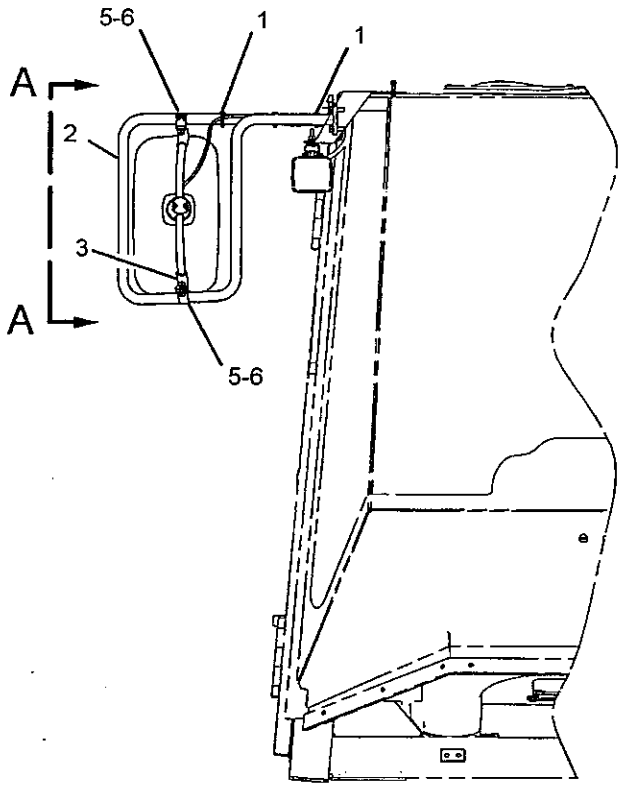


FRONT VIEW

GRAPHIC #1 **<END>** g01066435

# OPERATOR STATION

## *244-2736* MIRROR GP-REAR VIEW

**S/N: JMS1-UP**

**PART OF 248-7648, 248-7649 GUARD AR-WINDOW, 246-5204 PLATFORM AR**

**AN ATTACHMENT**

**SMCS-7319** **i02209616**

| NOTE | REF NO | GRAPHIC REF | PART NUMBER | QTY | PART NAME 1 2 3 4 5 6 (PRODUCT LEVEL) | SEE PAGE |
|---|---|---|---|---|---|---|
| Y | 1 | 1 | **244-8782** | 1 | MIRROR GP-REAR VIEW (LH) | 855 |
| Y | 2 | 1 | **244-8783** | 1 | MIRROR GP-REAR VIEW (RH) | 856 |

Y-SEPARATE ILLUSTRATION

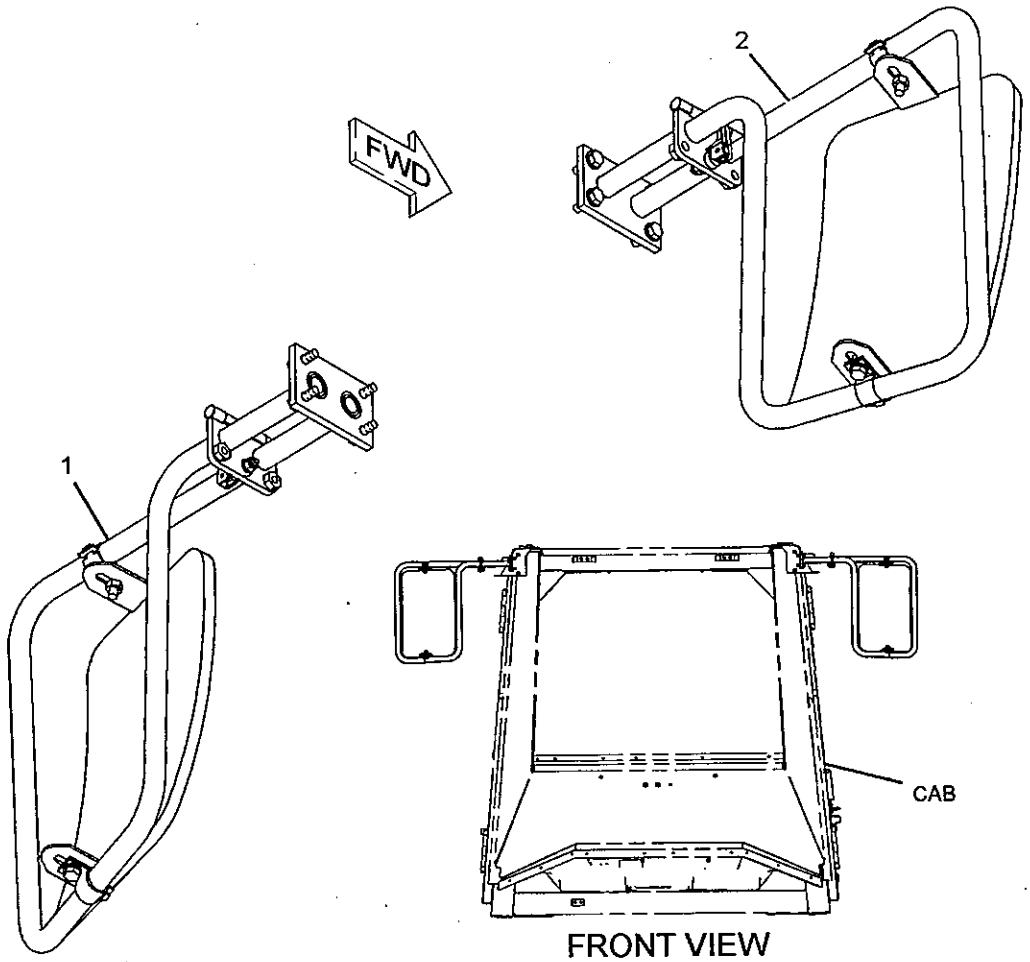


GRAPHIC #1

**<END>**

g01116599

# OPERATOR STATION

## *244-2737* MIRROR GP-REAR VIEW—HEATED

S/N: JMS1-UP

PART OF 246-5798 PLATFORM AR

AN ATTACHMENT

SMCS-7319

i02230747

| NOTE | REF NO | GRAPHIC REF | PART NUMBER | QTY | PART NAME 1 2 3 4 5 6 (PRODUCT LEVEL) | SEE PAGE |
|---|---|---|---|---|---|---|
| | 1 | 1 | **3S-2093** | 1 | STRAP-CABLE | |
| | 2 | 1 | **173-7004** | 1 | RELAY AS (HEATED MIRRORS) | |
| | 3 | 1 | **236-6207** | 1 | HARNESS AS-CONTROL (HEATED MIRRORS) | |
| | | 1 | **155-2270** | 2 | KIT-CONNECTING PLUG (2-PIN) | |
| | | | | | (EACH INCLUDES RECEPTACLE & WEDGE) | |
| | 4 | 1 | **236-7774** | 1 | HARNESS AS-CONTROL (HEATED MIRROR TIMER RELAY) | |
| | | 1 | **102-8804** | 1 | KIT-RECEPTACLE (4-PIN) | |
| | | | | | (INCLUDES RECEPTACLE & WEDGE) | |
| Y | 5 | 1 | **245-8818** | 1 | MIRROR GP-REAR VIEW (HEATED, RH) | 857 |
| Y | 6 | 1 | **245-8819** | 1 | MIRROR GP-REAR VIEW (HEATED, LH) | 858 |
| | 7 | 1 | **236-4630** | 1 | SWITCH AS-ROCKER (HEATED MIRRORS) | |
| M | 8 | 1 | **8T-4171** | 1 | BOLT (M6X1X12-MM) | |
| | 9 | 1 | **9X-8256** | 1 | WASHER (6.6X12X2-MM THK) | |

M-METRIC PART
Y-SEPARATE ILLUSTRATION

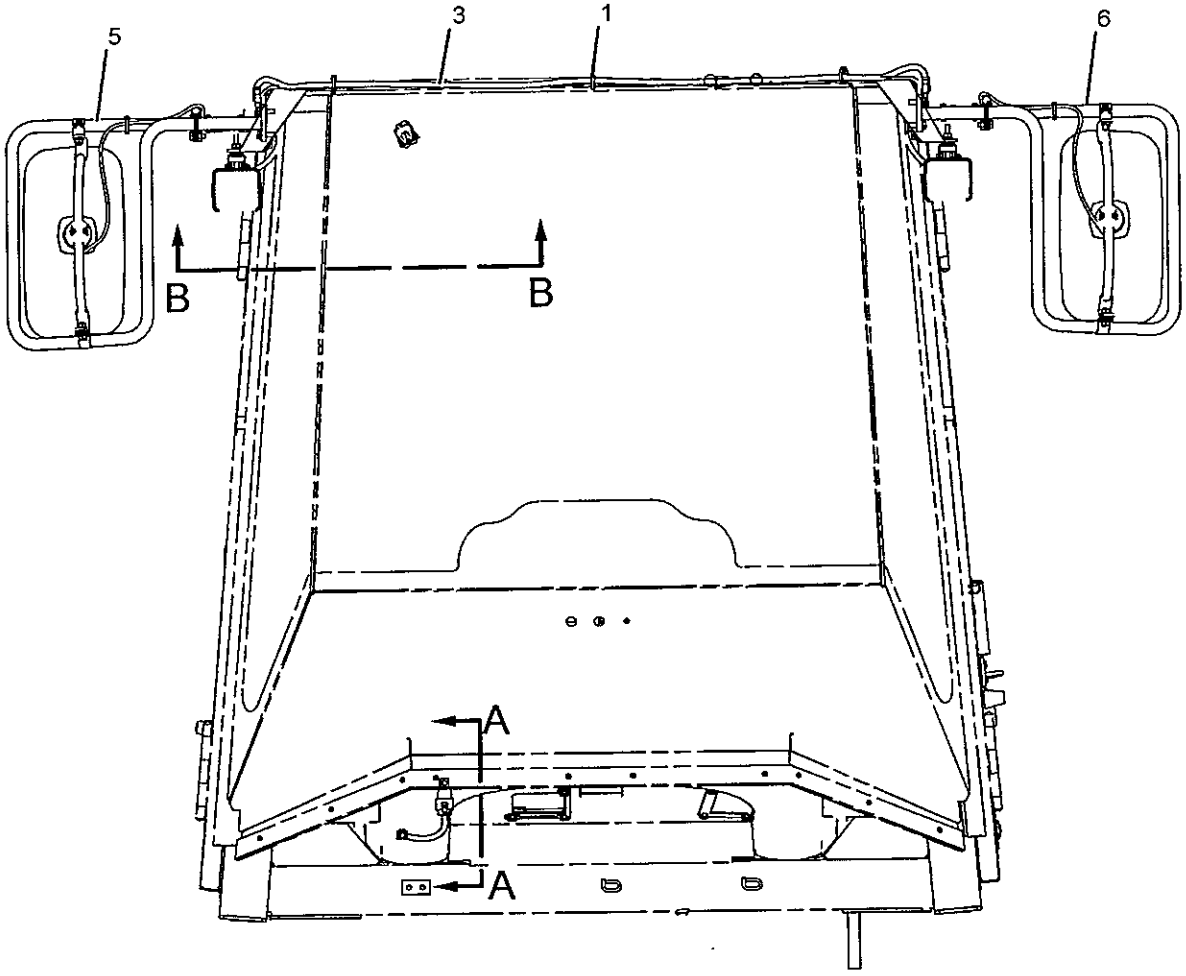


FRONT VIEW

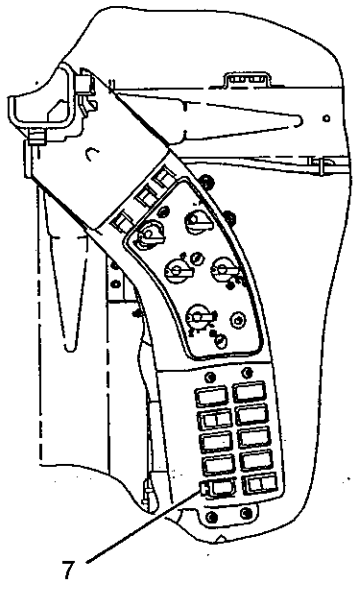


SECTION B-B

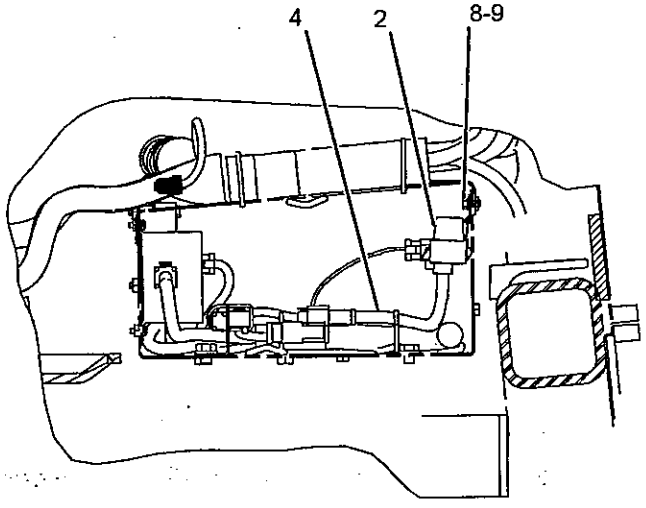


VIEW A-A

GRAPHIC #1 **<END>** g01066738

# OPERATOR STATION

## 244-8782 MIRROR GP-REAR VIEW

**S/N: JMS1-UP**
**PART OF 244-2736 MIRROR GP-REAR VIEW**
**AN ATTACHMENT**

**SMCS-7319** **i02209618**

| NOTE | REF NO | GRAPHIC REF | PART NUMBER | QTY | PART NAME 1 2 3 4 5 6 (PRODUCT LEVEL) | SEE PAGE |
|---|---|---|---|---|---|---|
| | 1 | 1 | 5P-6879 | 1 | MIRROR | |
| | 2 | 1 | 8T-1889 | 2 | CLIP (SLOT) | |
| | 3 | 1 | 8T-1890 | 2 | CLIP (TAB) | |
| | 4 | 1 | 244-8785 | 1 | TUBE AS | |
| | 5 | 1 | 8T-4121 | 6 | WASHER-HARD (11X21X2.5-MM THK) | |
| M | 6 | 1 | 8T-4133 | 2 | NUT (M10X1.5-THD) | |
| M | 8 | 1 | 8T-4195 | 6 | BOLT (M10X1.5X30-MM) | |
| | 9 | 1 | 258-7370 | 1 | LATCH AS | |

M-METRIC PART

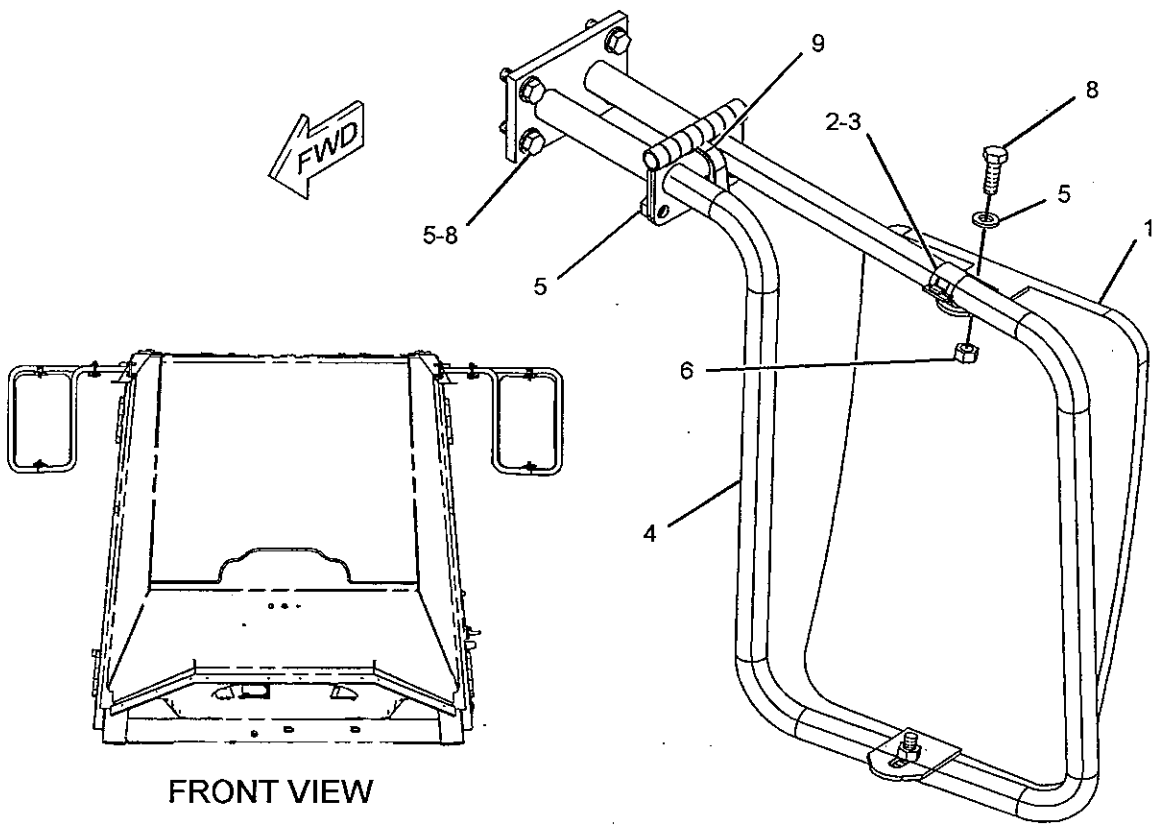


FRONT VIEW

GRAPHIC #1 **<END>** g01116803

# OPERATOR STATION

## 244-8783 MIRROR GP-REAR VIEW—RH

S/N: JMS1-UP

PART OF 244-2736 MIRROR GP-REAR VIEW

AN ATTACHMENT

SMCS-7319

i02209619

| NOTE | REF NO | GRAPHIC REF | PART NUMBER | QTY | PART NAME 1 2 3 4 5 6 (PRODUCT LEVEL) | SEE PAGE |
|---|---|---|---|---|---|---|
| | 1 | 1 | 5P-6879 | 1 | MIRROR | |
| | 2 | 1 | 8T-1889 | 2 | CLIP (SLOT) | |
| | 3 | 1 | 8T-1890 | 2 | CLIP (TAB) | |
| | 4 | 1 | 244-8786 | 1 | TUBE AS | |
| | 5 | 1 | 8T-4121 | 6 | WASHER-HARD (11X21X2.5-MM THK) | |
| M | 6 | 1 | 8T-4133 | 2 | NUT (M10X1.5-THD) | |
| M | 8 | 1 | 8T-4195 | 6 | BOLT (M10X1.5X30-MM) | |
| | 9 | 1 | 258-7370 | 1 | LATCH AS | |
| | | 1 | 3F-2617 | 1 | LOCKNUT (5/16-24-THD) | |
| | | 1 | 8T-4224 | 1 | WASHER-HARD (8.8X16X2-MM THK) | |

M-METRIC PART

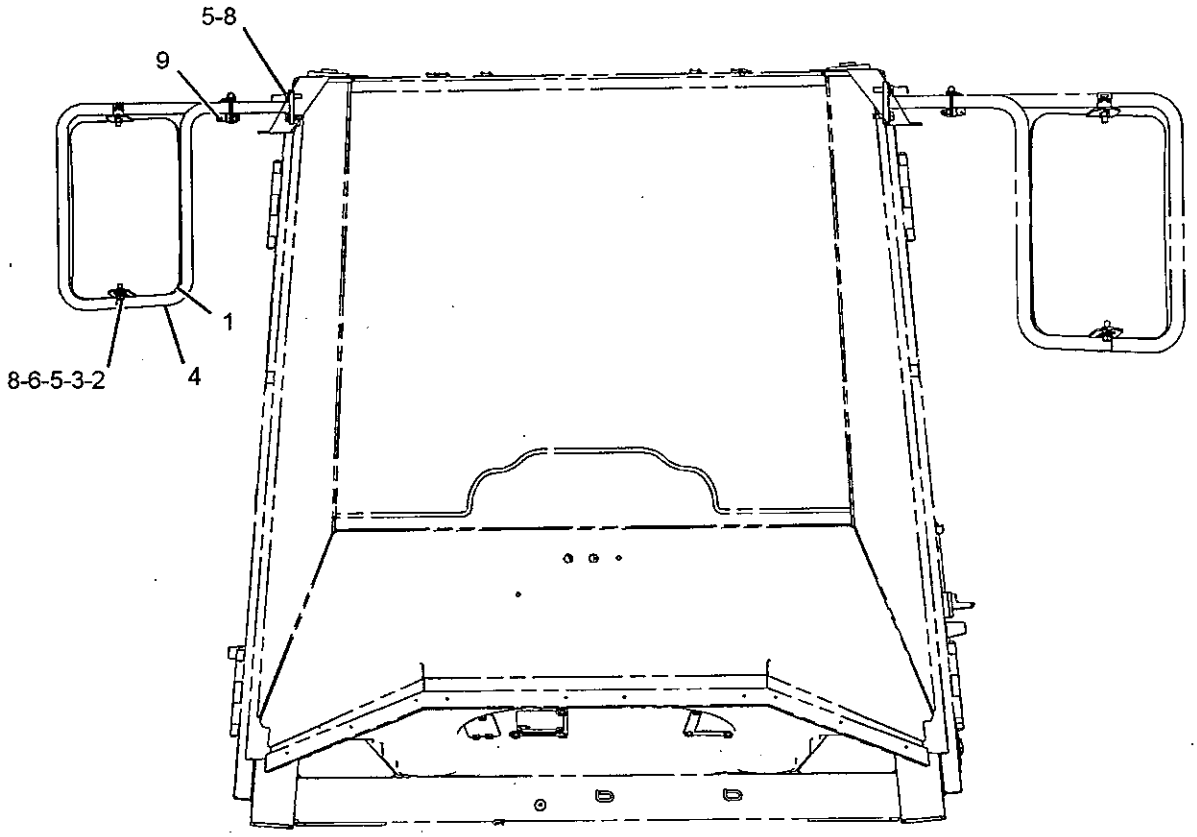


FRONT VIEW

GRAPHIC #1

<END>

g01116677

# OPERATOR STATION

## *245-8818* MIRROR GP-REAR VIEW–HEATED, RH

**S/N: JMS1-UP**

**PART OF 244-2737, 259-1999 MIRROR GP-REAR VIEW**

**AN ATTACHMENT**

**SMCS-7319** **i02206693**

| NOTE | REF NO | GRAPHIC REF | PART NUMBER | QTY | PART NAME 1 2 3 4 5 6 (PRODUCT LEVEL) | SEE PAGE |
|---|---|---|---|---|---|---|
| | 1 | 1 | **3S-2093** | 4 | STRAP-CABLE | |
| | 2 | 1 | **202-8649** | 1 | MIRROR AS (HEATED) | |
| | | 1 | **102-8802** | 1 | KIT-RECEPTACLE (2-PIN) | |
| | | | | | (INCLUDES RECEPTACLE AND WEDGE) | |
| | | 1 | **186-3735** | 2 | PIN-CONNECTOR (16-GA TO 18-GA) | |
| | | 1 | **200-1173** | 1 | MIRROR AS | |
| | 3 | 1 | **244-8786** | 1 | TUBE AS | |
| | 4 | 1 | **130-5300** | 1 | CLIP | |
| | 5 | 1 | **8T-1889** | 2 | CLIP (SLOT) | |
| | 6 | 1 | **8T-1890** | 2 | CLIP (TAB) | |
| | 7 | 1 | **8T-4121** | 8 | WASHER-HARD (11X21X2.5-MM THK) | |
| M | 8 | 1 | **8T-4133** | 2 | NUT (M10X1.5-THD) | |
| M | 10 | 1 | **8T-4195** | 6 | BOLT (M10X1.5X30-MM) | |
| | 11 | 1 | **258-7370** | 1 | LATCH AS | |
| | | 1 | **3F-2617** | 1 | LOCKNUT (5/16-24-THD) | |
| | | 1 | **8T-4224** | 1 | WASHER-HARD (8.8X16X2-MM THK) | |

M-METRIC PART

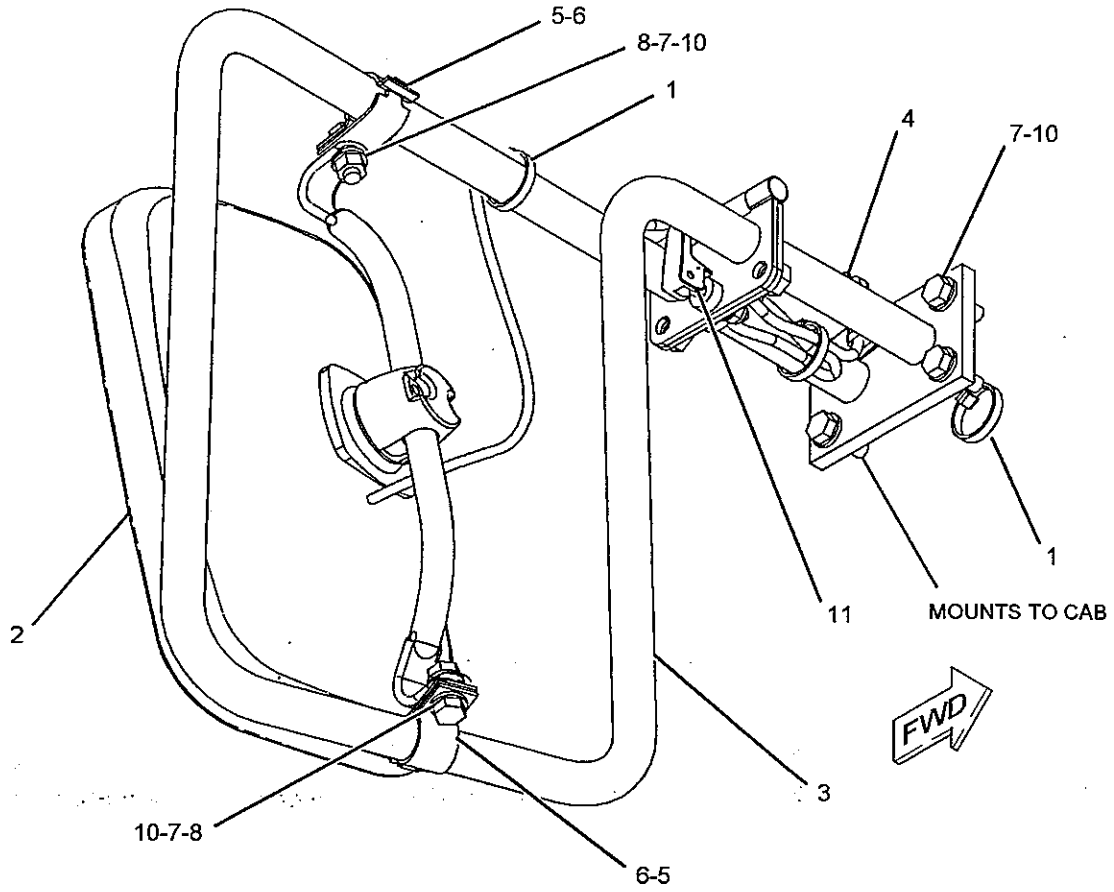


GRAPHIC #1 **<END>** g01115232

# OPERATOR STATION

## *245-8819* MIRROR GP-REAR VIEW–HEATED, LH

S/N: JMS1-UP

PART OF 244-2737, 259-1999 MIRROR GP-REAR VIEW

AN ATTACHMENT

i02206689

SMCS-7319

| NOTE | REF NO | GRAPHIC REF | PART NUMBER | QTY | PART NAME 1 2 3 4 5 6 (PRODUCT LEVEL) | SEE PAGE |
|---|---|---|---|---|---|---|
| | 1 | 1 | 3S-2093 | 4 | STRAP-CABLE | |
| | 2 | 1 | 202-8649 | 1 | MIRROR AS (HEATED) | |
| | | 1 | 102-8802 | 1 | KIT-RECEPTACLE (2-PIN) | |
| | | | | | (INCLUDES RECEPTACLE AND WEDGE) | |
| | | 1 | 186-3735 | 2 | PIN-CONNECTOR (16-GA TO 18-GA) | |
| | | 1 | 200-1173 | 1 | MIRROR AS | |
| | 3 | 1 | 244-8785 | 1 | TUBE AS | |
| | 4 | 1 | 130-5300 | 1 | CLIP | |
| | 5 | 1 | 8T-1889 | 2 | CLIP (SLOT) | |
| | 6 | 1 | 8T-1890 | 2 | CLIP (TAB) | |
| | 7 | 1 | 8T-4121 | 8 | WASHER-HARD (11X21X2.5-MM THK) | |
| M | 8 | 1 | 8T-4133 | 2 | NUT (M10X1.5-THD) | |
| M | 10 | 1 | 8T-4195 | 6 | BOLT (M10X1.5X30-MM) | |
| | 11 | 1 | 258-7370 | 1 | LATCH AS | |
| | | 1 | 3F-2617 | 1 | LOCKNUT (5/16-24-THD) | |
| | | 1 | 8T-4224 | 1 | WASHER-HARD (8.8X16X2-MM THK) | |

M-METRIC PART

## 245-8819 MIRROR GP-REAR VIEW (contd.) i02206689

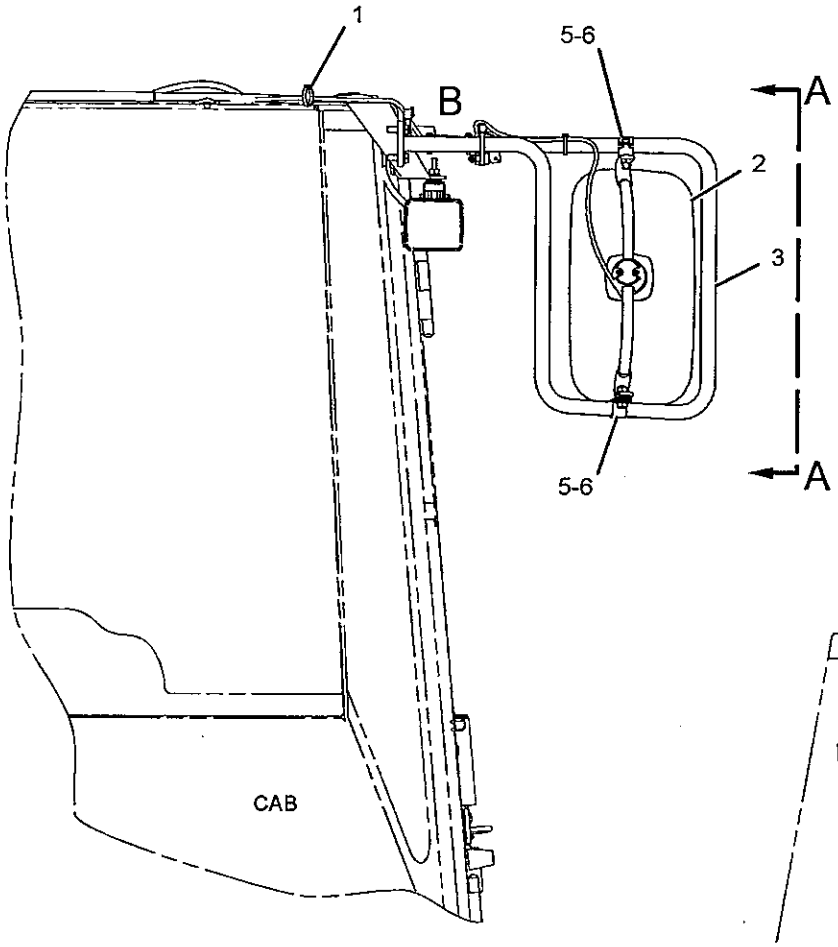


FRONT VIEW

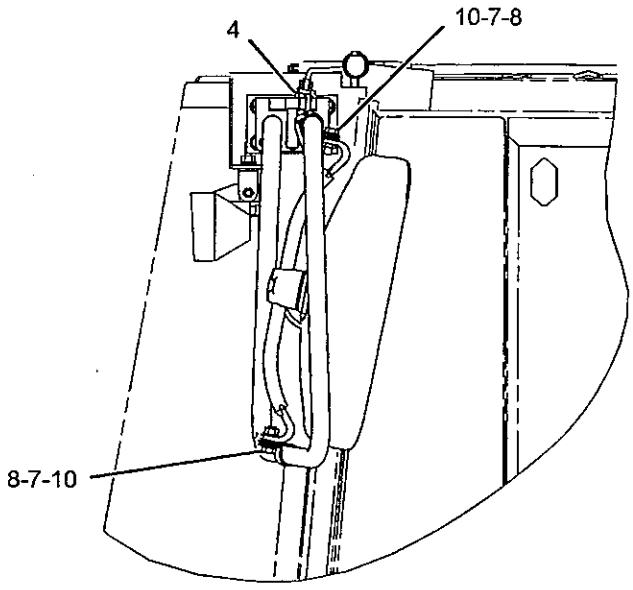


VIEW A-A

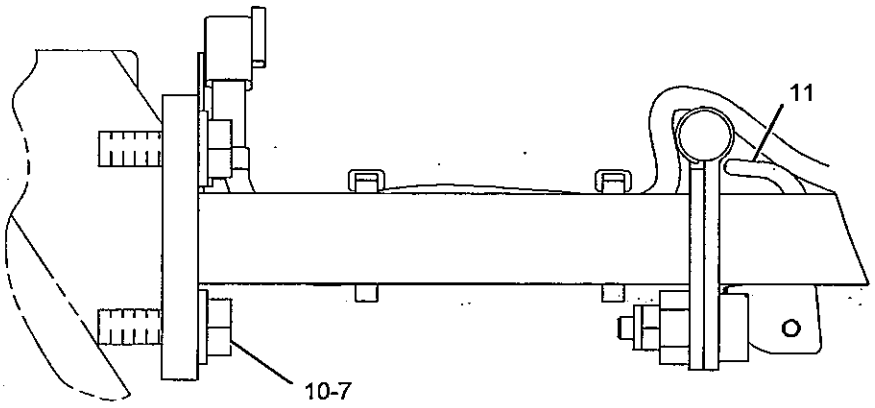


VIEW OF AREA B

GRAPHIC #1

**<END>**

g01115258

# OPERATOR STATION

## 259-1998 MIRROR GP-REAR VIEW

**S/N: JMS1-UP**

**AN ATTACHMENT**

**SMCS-7319** **i02230753**

| NOTE | REF NO | GRAPHIC REF | PART NUMBER | QTY | PART NAME 1 2 3 4 5 6 (PRODUCT LEVEL) | SEE PAGE |
|---|---|---|---|---|---|---|
| | 1 | 1 | **3E-5239** | 1 | RELAY AS (24-VOLT) (HEATED MIRRORS) | |
| | 2 | 1 | **3S-2093** | 1 | STRAP-CABLE | |
| | 3 | 1 | **236-4630** | 1 | SWITCH AS-ROCKER (HEATED MIRRORS) | |
| Y | 4 | 1 | *236-4970* | 1 | MIRROR GP-REAR VIEW (HEATED, LH) | 850 |
| Y | 5 | 1 | *236-4971* | 1 | MIRROR GP-REAR VIEW (HEATED, RH) | 851 |
| | 6 | 1 | **236-6207** | 1 | HARNESS AS-CONTROL (HEATED MIRRORS) | |
| | | 1 | **155-2270** | 1 | KIT-CONNECTING PLUG (2-PIN) | |
| | | | | | (INCLUDES PLUG AS AND WEDGE) | |
| M | 7 | 1 | **8T-4171** | 1 | BOLT (M6X1X12-MM) | |
| | 8 | 1 | **9X-8256** | 1 | WASHER (6.6X12X2-MM THK) | |

M-METRIC PART
Y-SEPARATE ILLUSTRATION

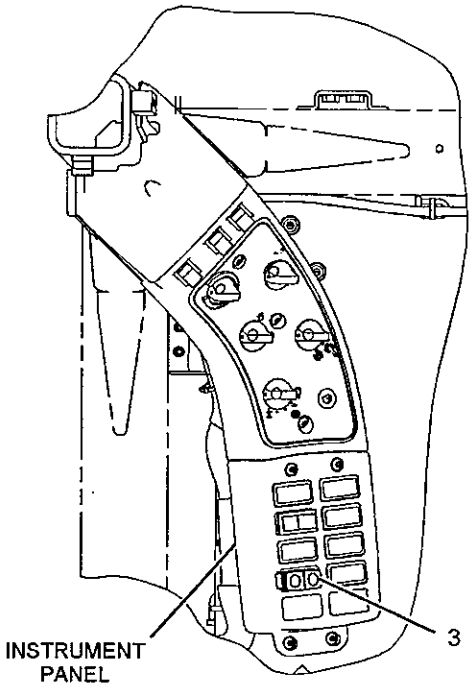


VIEW B-B

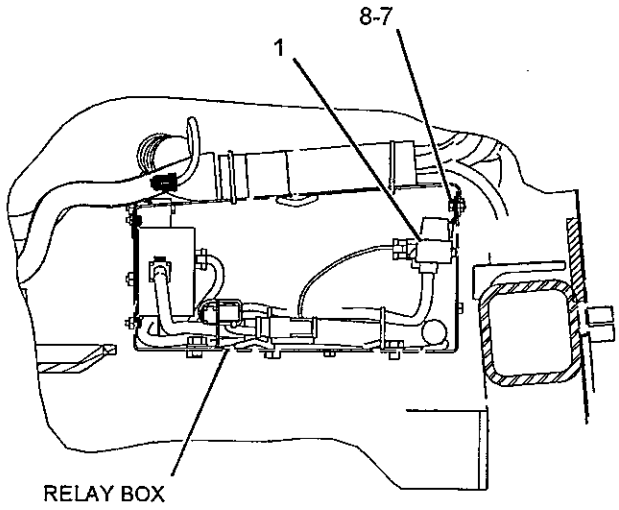


VIEW A-A

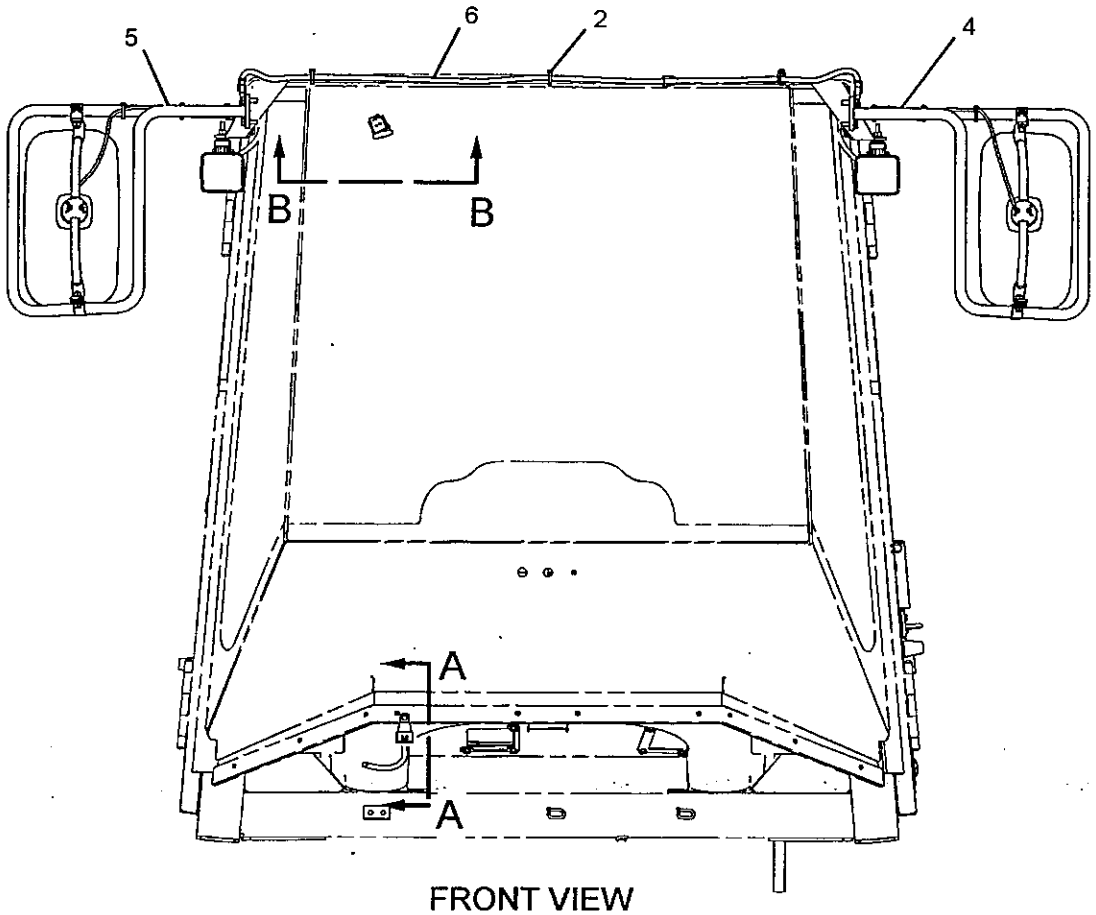


FRONT VIEW

GRAPHIC #1

**<END>**

g01115191

# OPERATOR STATION

## 259-1999 MIRROR GP-REAR VIEW

S/N: JMS1-UP

AN ATTACHMENT

i02230758

SMCS-7319

| NOTE | REF NO | GRAPHIC REF | PART NUMBER | QTY | PART NAME 1 2 3 4 5 6 (PRODUCT LEVEL) | SEE PAGE |
|---|---|---|---|---|---|---|
| | 1 | 1 | 3E-5239 | 1 | RELAY AS (24-VOLT) (HEATED MIRRORS) | |
| | 2 | 1 | 3S-2093 | 1 | STRAP-CABLE | |
| | 3 | 1 | 236-4630 | 1 | SWITCH AS-ROCKER (HEATED MIRRORS) | |
| | 4 | 1 | 236-6207 | 1 | HARNESS AS-CONTROL (HEATED MIRRORS) | |
| | | 1 | 155-2270 | 1 | KIT-CONNECTING PLUG (2-PIN) | |
| | | 1 | 155-2270 | 1 | KIT-CONNECTING PLUG (2-PIN) | |
| | | | | | (KITS INCLUDE PLUG AS AND WEDGE) | |
| Y | 5 | 1 | 245-8818 | 1 | MIRROR GP-REAR VIEW (HEATED, RH) | 857 |
| Y | 6 | 1 | 245-8819 | 1 | MIRROR GP-REAR VIEW (HEATED, LH) | 858 |
| M | 7 | 1 | 8T-4171 | 1 | BOLT (M6X1X12-MM) | |
| | 8 | 1 | 9X-8256 | 1 | WASHER (6.6X12X2-MM THK) | |

M-METRIC PART
Y-SEPARATE ILLUSTRATION

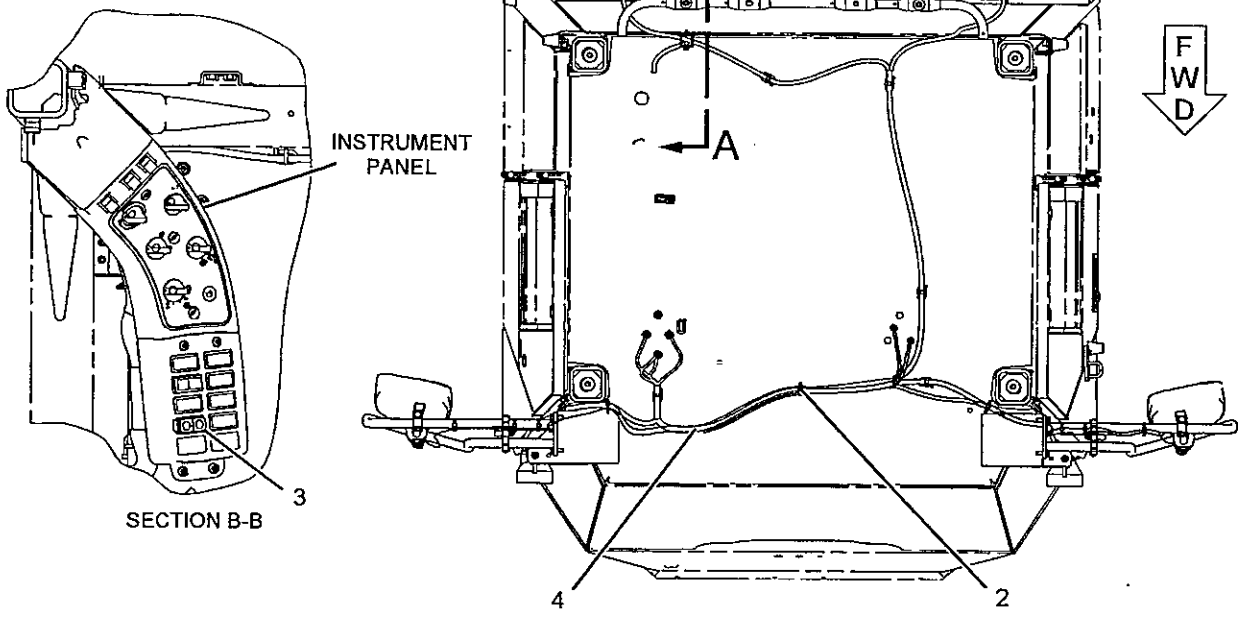


TOP VIEW

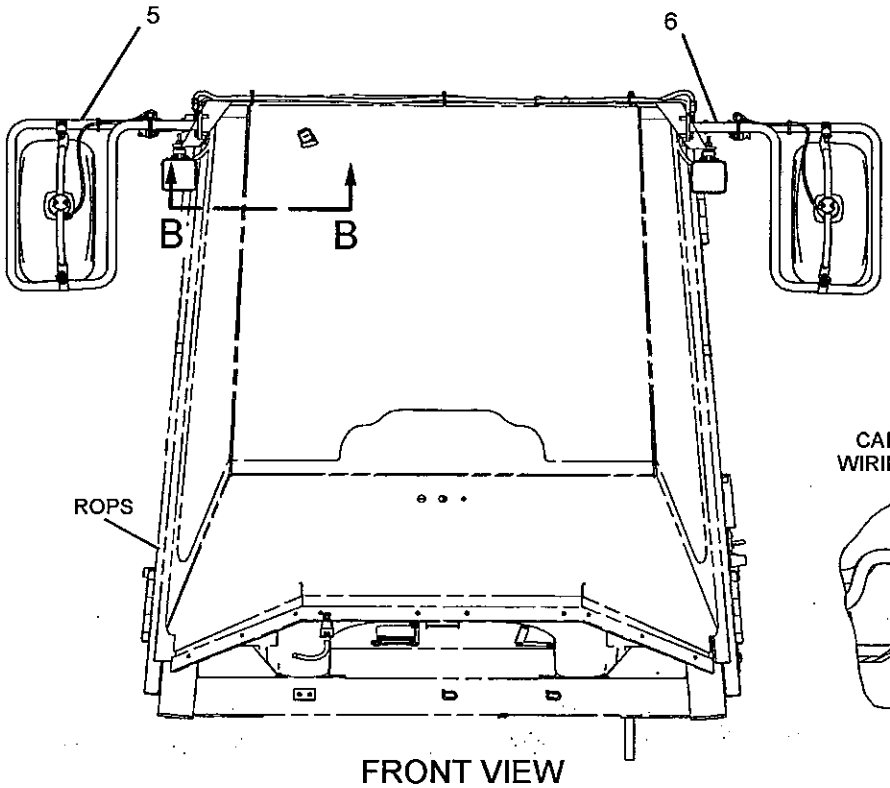


FRONT VIEW

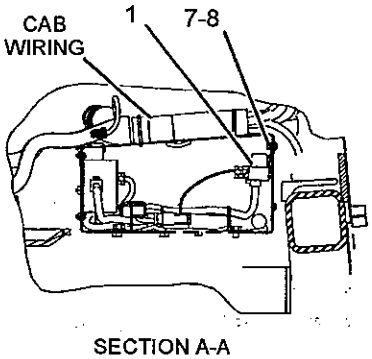


SECTION A-A

GRAPHIC #1 **<END>** g01114930

# OPERATOR STATION

## *166-6928* MODULE GP-QUAD GAUGE

S/N: JMS1-UP

PART OF 207-8617, 235-5503, 262-9950 WIRING GP-CAB

ALSO AN ATTACHMENT

SMCS-7450, 7451, 7490, 7601

i02023668

| NOTE | REF NO | GRAPHIC REF | PART NUMBER | QTY | PART NAME 1 2 3 4 5 6 (PRODUCT LEVEL) | SEE PAGE |
|---|---|---|---|---|---|---|
| | 1 | 1 | 102-8805 | 1 | KIT-RECEPTACLE (6-PIN) | |
| | | | | | (INCLUDES RECEPTACLE AS & WEDGE) | |
| | 2 | 1 | 8T-8729 | 6 | PIN-CONNECTOR | |

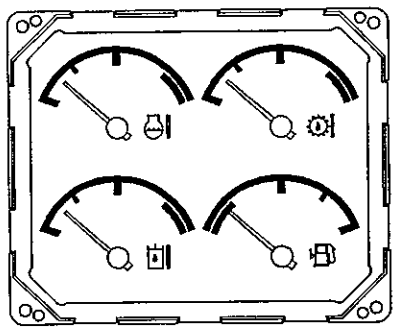

VIEW B-B

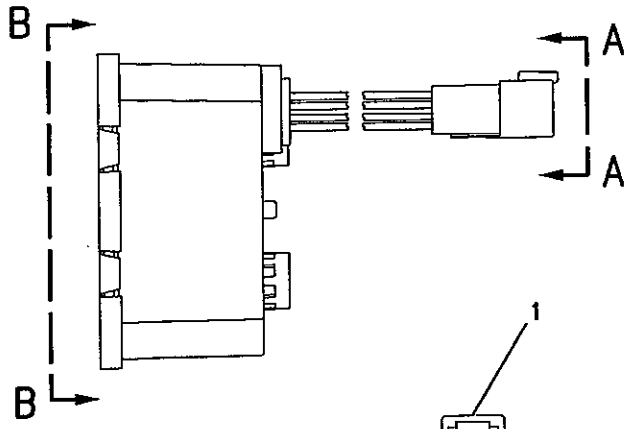


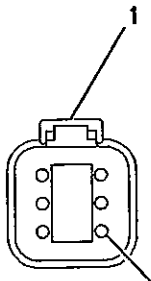


VIEW A-A

GRAPHIC #1

<END>

g00587276

# OPERATOR STATION

## 190-3730 MODULE GP-SPEEDOMETER & TACH

S/N: JMS1-UP

PART OF 232-1393 CAB AR-ENCLOSED ROPS, 203-9837, 258-1565 CANOPY AR-OPEN ROPS

ALSO AN ATTACHMENT

SMCS-7451, 7462, 7464, 7490, 7601

i01492712

| NOTE | REF NO | GRAPHIC REF | PART NUMBER | QTY | PART NAME 1 2 3 4 5 6 (PRODUCT LEVEL) | SEE PAGE |
|---|---|---|---|---|---|---|
| | 1 | 1 | 102-8805 | 1 | KIT-RECEPTACLE (6-PIN) | |
| | | | | | (INCLUDES RECEPTACLE AS & WEDGE) | |
| | 2 | 1 | 8T-8729 | 6 | PIN-CONNECTOR | |
| | 3 | 1 | 3E-3383 | 1 | WEDGE-RECEPTACLE LOCK (6-PIN) | |

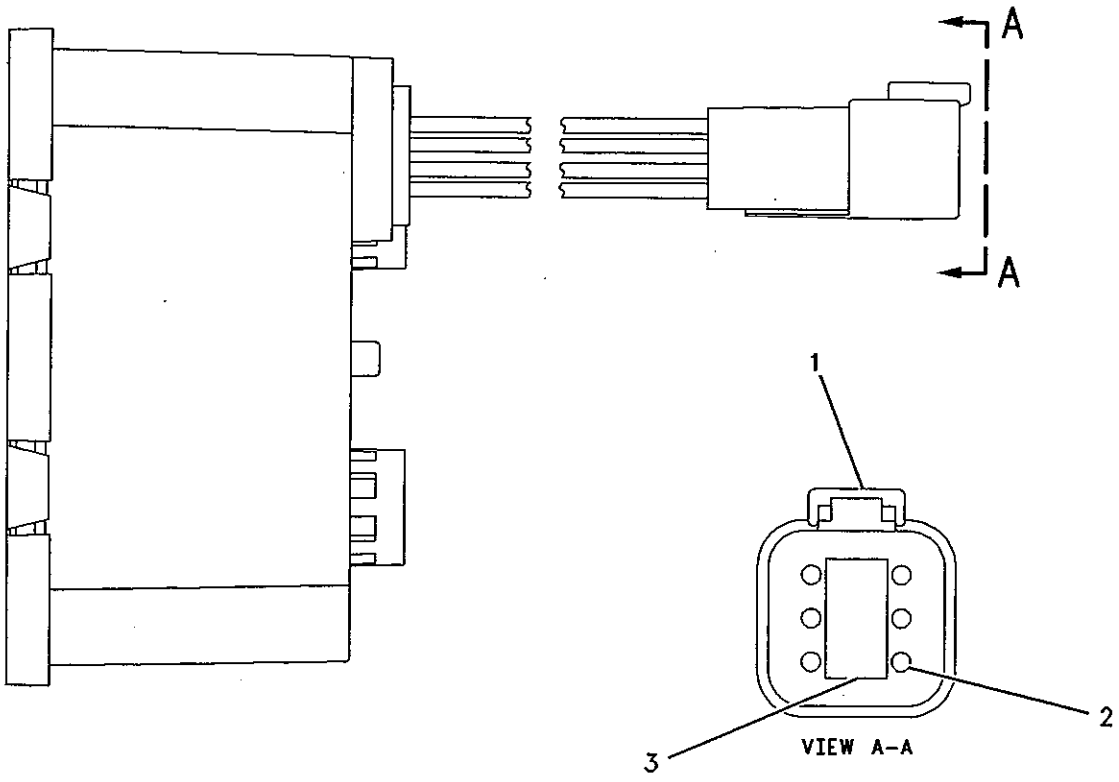


GRAPHIC #1

<END>

g00591354

# OPERATOR STATION

## *238-6681* MONITOR AR-PAYLOAD

S/N: JMS1-UP
PART OF 266-1620 MACHINE AR
AN ATTACHMENT

SMCS-7494

i02285651

| NOTE | PART NUMBER | QTY | PART NAME 1 2 3 4 5 6 (PRODUCT LEVEL) | SEE PAGE |
|---|---|---|---|---|
| Y | *241-6253* | 1 | MONITOR GP-PAYLOAD | 867 |
| Y | *149-0175* | 1 | MOUNTING GP-PRESSURE SENSOR (PAYLOAD) | 191 |
| Y | *263-4168* | 1 | WIRING GP-SENSOR (PAYLOAD MONITOR) | 302 |

Y-SEPARATE ILLUSTRATION

<END>

# OPERATOR STATION

## 241-6253 MONITOR GP-PAYLOAD

S/N: JMS1-UP
PART OF 238-6681 MONITOR AR-PAYLOAD
AN ATTACHMENT

SMCS-7494

i02065460

| NOTE | REF NO | GRAPHIC REF | PART NUMBER | QTY | PART NAME 1 2 3 4 5 6 (PRODUCT LEVEL) | SEE PAGE |
|---|---|---|---|---|---|---|
| | 1 | 1 | 3E-5165 | 1 | CAP AS-PROTECTION | |
| | 2 | 1 | 3S-2093 | 1 | STRAP-CABLE | |
| | 3 | 1 | 6K-8180 | 2 | GROMMET | |
| | 4 | 1 | 7N-5876 | 1 | LAMP (24-VOLT) | |
| | 5 | 1 | 9X-8917 | 7 | SCREW-MACHINE (4-40X9.52-MM) | |
| | 6 | 1 | 149-3253 | 1 | MODULE GP-PAYLOAD KEYPAD | |
| | | 1 | 102-8803 | 1 | KIT-RECEPTACLE (3-PIN) | |
| | 7 | 1 | 188-1421 | 1 | HARNESS AS-MONITOR (PAYLOAD CONTROL) | |
| | | 1 | 3E-5136 | 1 | RECEPTACLE AS (5-PIN) | |
| | | 1 | 102-8801 | 1 | KIT-RECEPTACLE (12-PIN) | |
| | | 1 | 7X-6222 | 1 | PLUG AS-CONNECTOR (24-PIN) | |
| | | 1 | 155-2260 | 1 | KIT-CONNECTING PLUG (3-PIN) | |
| | 8 | 1 | 195-0973 | 1 | BRACKET AS | |
| M | | 1 | 6V-9632 | 2 | NUT-WELD (M6X1-THD) | |
| | 9 | 1 | 195-0975 | 1 | BRACKET AS | |
| M | | 1 | 6V-9632 | 5 | NUT-WELD (M6X1-THD) | |
| M | | 1 | 8T-8874 | 4 | NUT-WELD (M5X0.8-THD) | |
| | 10 | 1 | 195-0976 | 1 | COVER-FRONT | |
| | 11 | 1 | 198-1941 | 2 | HINGE AS | |
| | 12 | 1 | 198-6588 | 1 | COVER-FRONT | |
| | 13 | 1 | 199-3417 | 1 | PLATE | |
| | 14 | 1 | 205-4933 | 1 | FILM-EXIT (SECONDARY) | |
| | 15 | 1 | 210-7016 | 1 | COVER | |
| | 16 | 1 | 210-7018 | 2 | LATCH AS | |
| | 17 | 1 | 224-9364 | 1 | BRACKET AS | |
| M | | 1 | 6V-9632 | 5 | NUT-WELD (M6X1-THD) | |
| | 18 | 1 | 224-9367 | 1 | BRACKET AS | |
| M | | 1 | 6V-9632 | 3 | NUT-WELD (M6X1-THD) | |
| | 19 | 1 | 224-9368 | 1 | BRACKET AS | |
| M | | 1 | 6V-9632 | 4 | NUT-WELD (M6X1-THD) | |
| | 20 | 1 | 228-7137 | 1 | COVER | |
| | 21 | 1 | 241-4227 | 1 | BRACKET | |
| | 22 | 1 | 241-6393 | 1 | BRACKET AS | |
| M | | 1 | 6V-9632 | 2 | NUT-WELD (M6X1-THD) | |
| Y | 23 | 1 | 246-9197 | 1 | CONTROL GP-MONITOR (PAYLOAD) | 798 |
| M | 24 | 1 | 5C-9553 | 7 | BOLT (M6X1X16-MM) | |
| M | 25 | 1 | 6V-2313 | 4 | BOLT (M5X0.8X30-MM) | |
| M | 26 | 1 | 7Y-7256 | 4 | SCREW-TRUSS HEAD (M4X0.7-MM) | |
| | 27 | 1 | 8T-0328 | 4 | WASHER-HARD (5.5X10X1-MM THK) | |
| | 28 | 1 | 8T-9471 | 1 | GROMMET | |
| M | 29 | 1 | 9X-2040 | 6 | SCREW-TRUSS HEAD (M10X1.5X25-MM) | |
| M | 30 | 1 | 9X-2042 | 8 | SCREW-TRUSS HEAD (M6X1X12-MM) | |
| M | 31 | 1 | 9X-2045 | 6 | SCREW-TRUSS HEAD (M6X1X20-MM) | |
| | 32 | 1 | 9X-8256 | 7 | WASHER (6.6X12X2-MM THK) | |

M-METRIC PART
Y-SEPARATE ILLUSTRATION

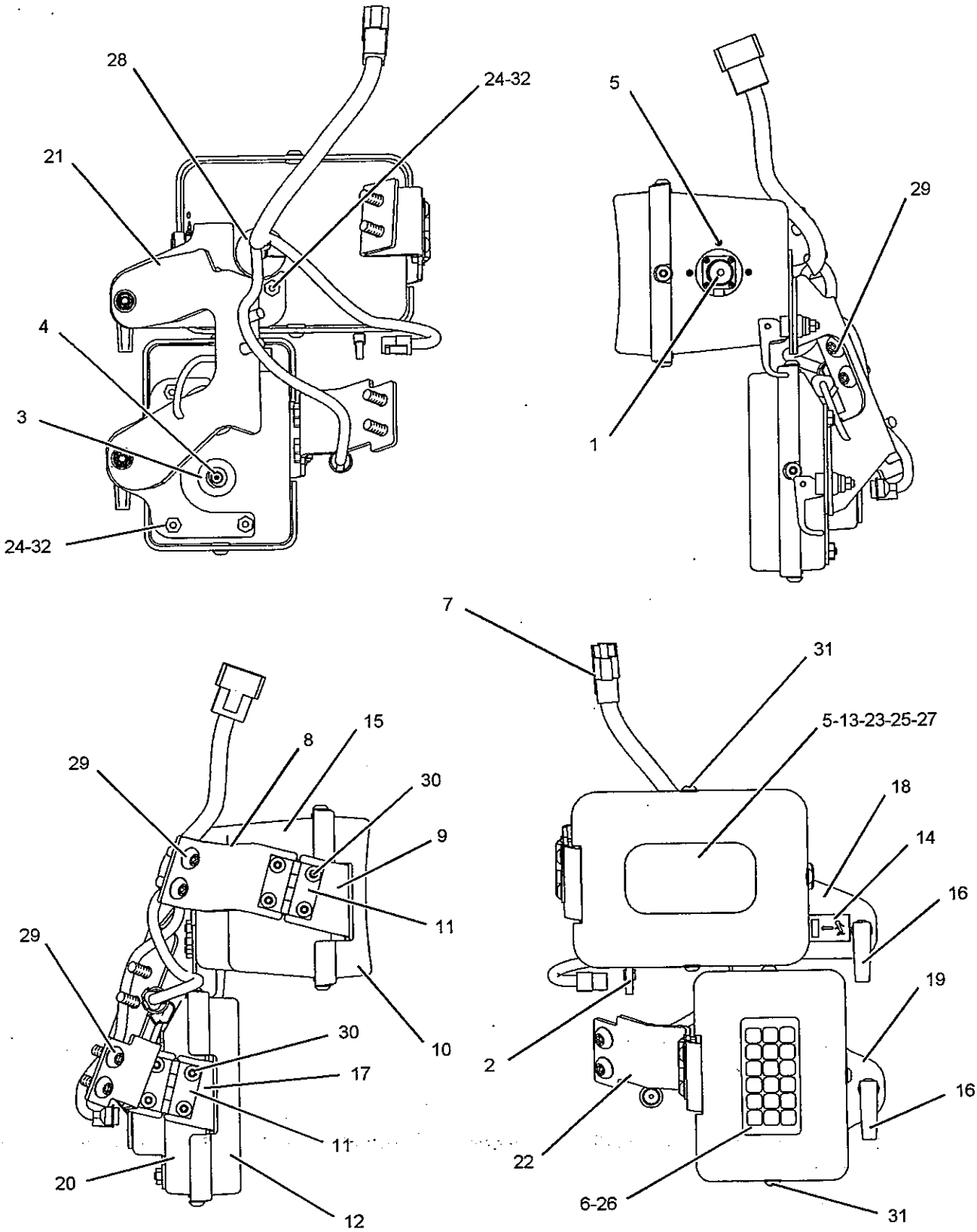


GRAPHIC #1

**<END>**

g01058762

# OPERATOR STATION

## 155-5789 MOTOR GP-WINDOW WIPER–REAR

S/N: JMS1-UP

PART OF 197-5579 WIPER GP-WINDOW

SMCS-7305

i01319134

| NOTE | REF NO | GRAPHIC REF | PART NUMBER | QTY | PART NAME 1 2 3 4 5 6 (PRODUCT LEVEL) | SEE PAGE |
|---|---|---|---|---|---|---|
| | 1 | 1 | 102-8805 | 1 | KIT-RECEPTACLE (6-PIN) | |
| | | | | | (INCLUDES RECEPTACLE AS AND WEDGE) | |
| | 2 | 1 | 8T-8737 | 1 | PLUG-SEAL | |
| | 3 | 1 | 8T-8729 | 5 | PIN-CONNECTOR | |

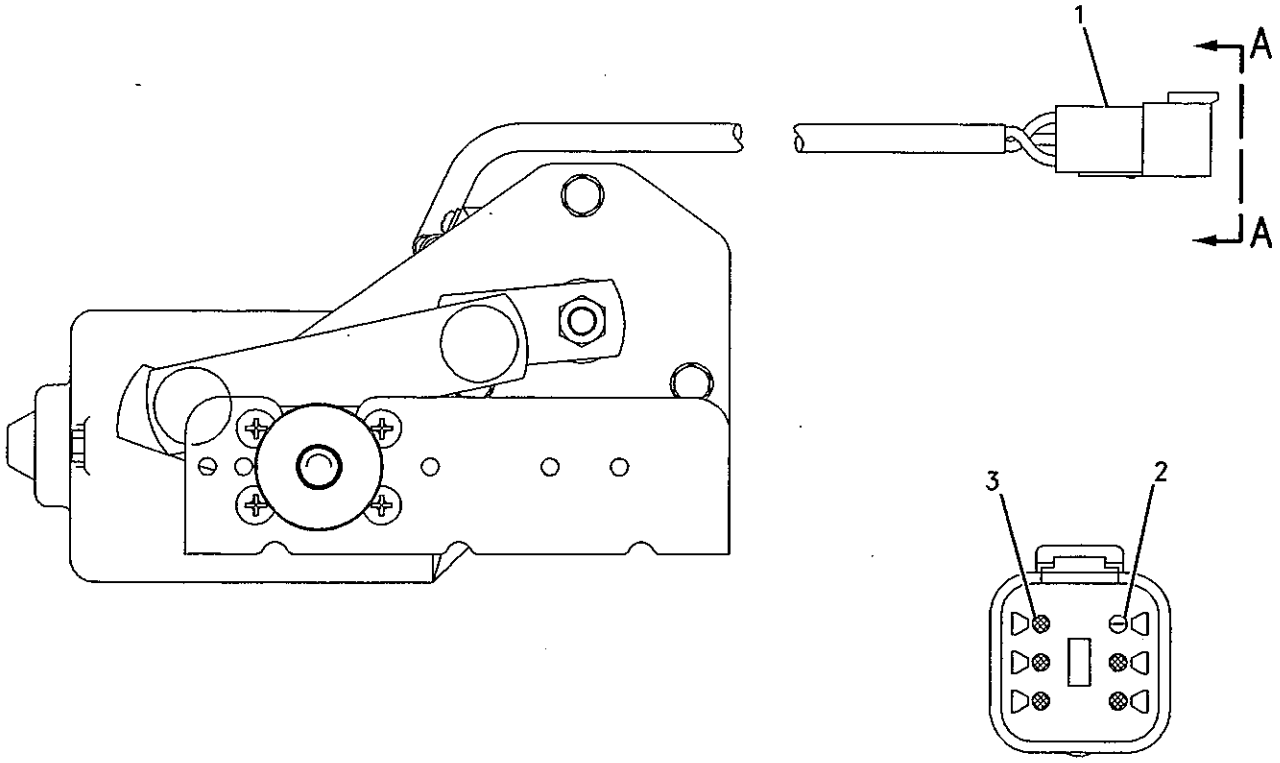


VIEW A-A

GRAPHIC #1

<END>

g00665801

# OPERATOR STATION

## 184-5093 MOTOR GP-WINDOW WIPER–REAR

S/N: JMS1-UP
PART OF 265-6753 CAB AR-ENCLOSED ROPS
AN ATTACHMENT

SMCS-7305

i01892838

| NOTE | REF NO | GRAPHIC REF | PART NUMBER | QTY | PART NAME 1 2 3 4 5 6 (PRODUCT LEVEL) | SEE PAGE |
|---|---|---|---|---|---|---|
| | 1 | 1 | 102-8805 | 1 | KIT-RECEPTACLE (6-PIN) | |
| | | | | | (INCLUDES RECEPTACLE AS AND WEDGE) | |
| | 2 | 1 | 8T-8737 | 1 | PLUG-SEAL | |
| | 3 | 1 | 186-3735 | 5 | PIN-CONNECTOR (16-GA TO 18-GA) | |

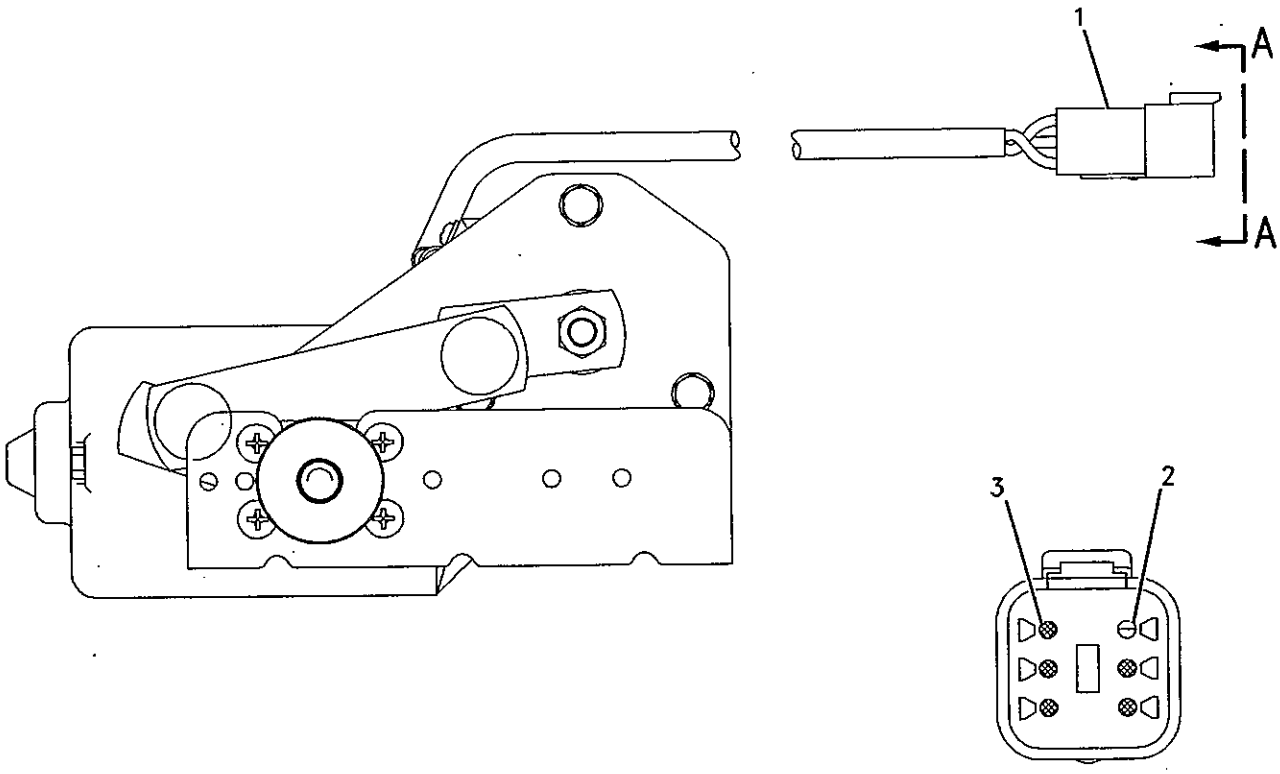


VIEW A-A

GRAPHIC #1

<END>

g00665801

# OPERATOR STATION

## *189-8622* MOTOR GP-WINDOW WIPER–FRONT

S/N: JMS1-UP

PART OF 197-5579 WIPER GP-WINDOW

SMCS-7305

i02267728

| NOTE | REF NO | GRAPHIC REF | PART NUMBER | QTY | PART NAME 1 2 3 4 5 6 (PRODUCT LEVEL) | SEE PAGE |
|---|---|---|---|---|---|---|
| | 1 | 1 | 102-8805 | 1 | KIT-RECEPTACLE (6-PIN) | |
| | | | | | (INCLUDES RECEPTACLE AS AND WEDGE) | |
| | 2 | 1 | 8T-8737 | 1 | PLUG-SEAL | |
| | 3 | 1 | 186-3735 | 5 | PIN-CONNECTOR (16-GA TO 18-GA) | |
| | 4 | 1 | 206-5823 | 2 | CAP (WIPER) | |

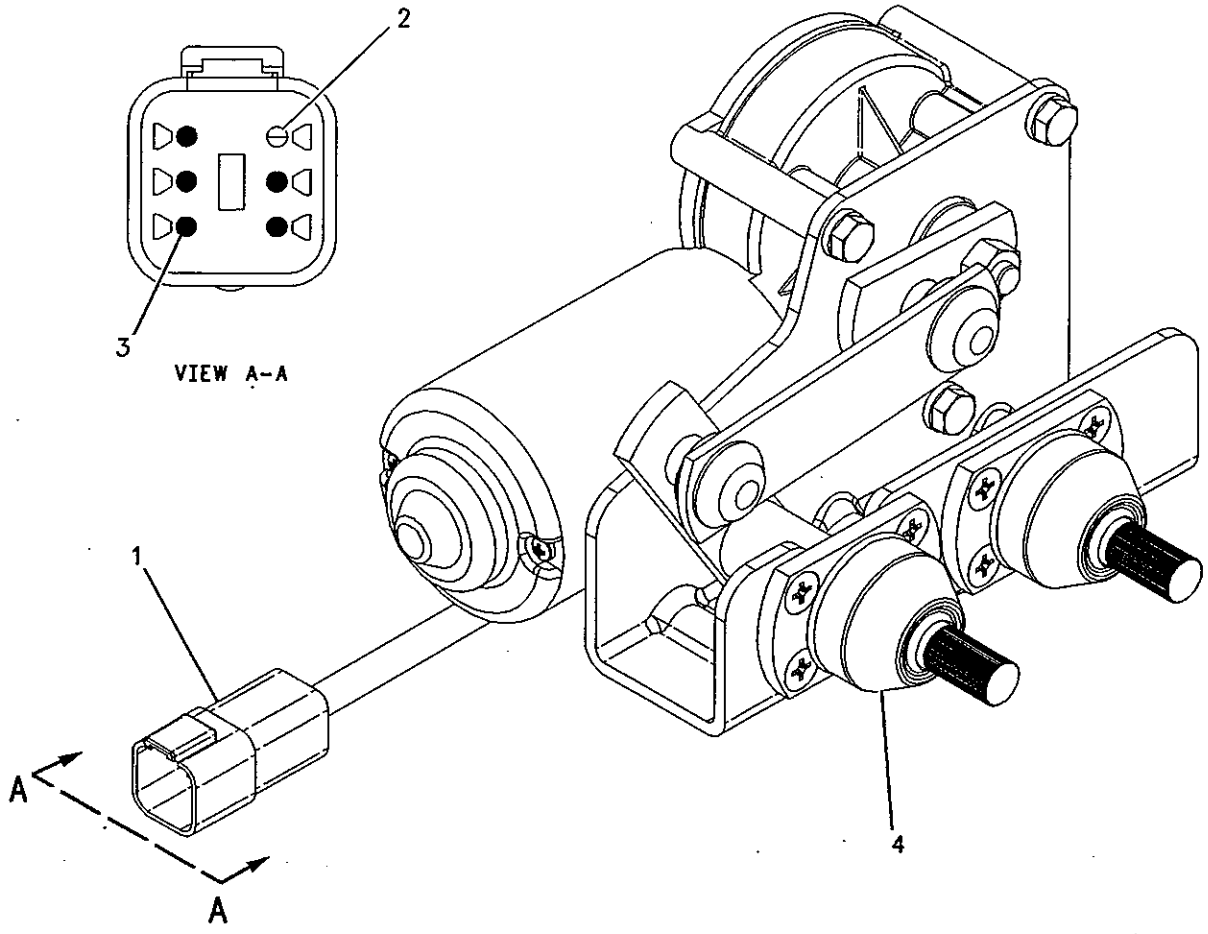


GRAPHIC #1

<END>

g00847619

# OPERATOR STATION

## *191-8567* MOUNTING GP-CAB

S/N: JMS1-UP

PART OF 232-1392 OPERATOR AR-ENCLOSED ROPS, 204-7243, 258-1564 OPERATOR AR-OPEN ROPS

ALSO AN ATTACHMENT

i02149151

SMCS-7301

| NOTE | REF NO | GRAPHIC REF | PART NUMBER | QTY | PART NAME 1 2 3 4 5 6 (PRODUCT LEVEL) | SEE PAGE |
|---|---|---|---|---|---|---|
| | 1 | 1 | 7X-0593 | 4 | WASHER-HARD (34X57X6-MM THK) | |
| | 2 | 1 | 9U-0512 | 8 | WASHER (32X144X12-MM THK) | |
| M | 3 | 1 | 9X-2045 | 10 | SCREW-TRUSS HEAD (M6X1X20-MM) | |
| | 4 | 1 | 107-3157 | 8 | WASHER (22X76.2X6-MM THK) | |
| | 5 | 1 | 117-8131 | 8 | MOUNT | |
| | 6 | 1 | 242-6098 | 8 | SLEEVE | |
| | 7 | 1 | 173-2118 | 1 | ROOF | |
| | 8 | 1 | 196-0436 | 4 | SPACER (25X40X12-MM THK) | |
| | 9 | 1 | 197-5470 | 4 | GROMMET | |
| | 10 | 1 | 216-4531 | 1 | SHROUD | |
| | 11 | 1 | 8T-4122 | 4 | WASHER-HARD (17X32X3.5-MM THK) | |
| M | 12 | 1 | 8T-4193 | 4 | BOLT (M16X2X50-MM) | |
| M | 13 | 1 | 8T-6624 | 4 | BOLT (M30X3.5X180-MM) | |

M-METRIC PART

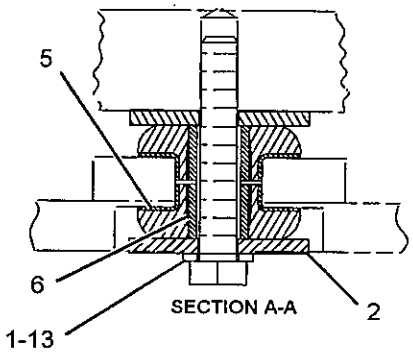


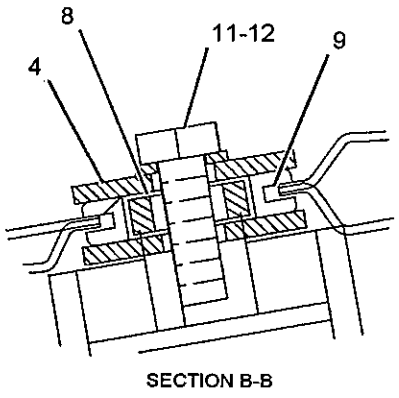


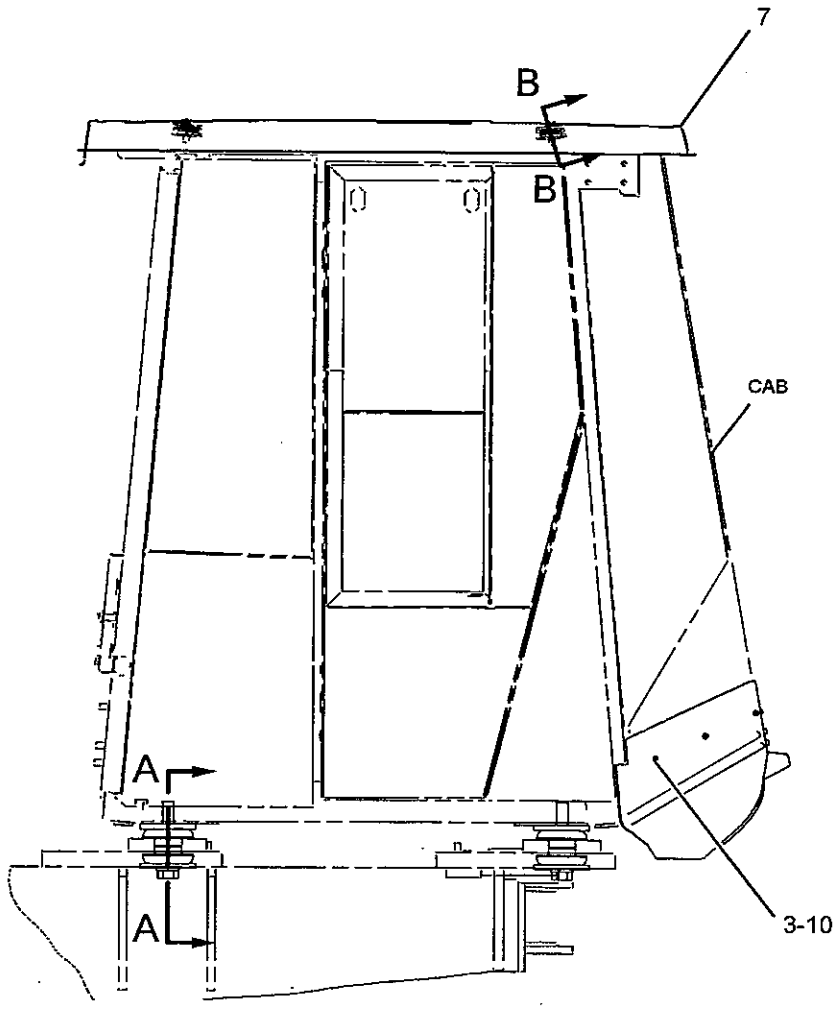


RIGHT SIDE VIEW

GRAPHIC #1

**<END>**

g01090447

# OPERATOR STATION

## *232-1392* OPERATOR AR-ENCLOSED ROPS

**S/N: JMS1-UP**
**PART OF 225-5537 GENERAL AR**

**SMCS-7301** **i02062577**

| NOTE | PART NUMBER | QTY | PART NAME 1 2 3 4 5 6 (PRODUCT LEVEL) | SEE PAGE |
|---|---|---|---|---|
| Y | *232-1393* | 1 | CAB AR-ENCLOSED ROPS | 789 |
| Y | *243-1094* | 1 | INSTALLATION GP-CONTROLS | 823 |
| Y | *191-8567* | 1 | MOUNTING GP-CAB | 872 |

Y-SEPARATE ILLUSTRATION

**<END>**

## *204-7243* OPERATOR AR-OPEN ROPS

**S/N: JMS1-UP**
**AN ATTACHMENT**

**SMCS-7323** **i02016331**

| NOTE | PART NUMBER | QTY | PART NAME 1 2 3 4 5 6 (PRODUCT LEVEL) | SEE PAGE |
|---|---|---|---|---|
| Y | *203-9837* | 1 | CANOPY AR-OPEN ROPS | 790 |
| Y | *245-7655* | 1 | INSTALLATION GP-CONTROLS | 824 |
| Y | *191-8567* | 1 | MOUNTING GP-CAB | 872 |

Y-SEPARATE ILLUSTRATION

**<END>**

## *258-1564* OPERATOR AR-OPEN ROPS

**S/N: JMS1-UP**
**AN ATTACHMENT**

**SMCS-7323** **i02283998**

| NOTE | PART NUMBER | QTY | PART NAME 1 2 3 4 5 6 (PRODUCT LEVEL) | SEE PAGE |
|---|---|---|---|---|
| Y | *258-1565* | 1 | CANOPY AR-OPEN ROPS | 790 |
| Y | *243-1094* | 1 | INSTALLATION GP-CONTROLS | 823 |
| Y | *191-8567* | 1 | MOUNTING GP-CAB | 872 |

Y-SEPARATE ILLUSTRATION

**<END>**

# OPERATOR STATION

## *178-0604* PAN GP-BACKREST–CLOTH

**S/N: JMS1-UP**

**PART OF 178-0603 SEAT GP**

**SMCS-7312**

**i02267748**

| NOTE | REF NO | GRAPHIC REF | PART NUMBER | QTY | PART NAME 1 2 3 4 5 6 (PRODUCT LEVEL) | SEE PAGE |
|---|---|---|---|---|---|---|
| | 1 | 1 | **164-4883** | 1 | KNOB-LUMBAR | |
| Y | 2 | 1 | *178-0605* | 1 | PAN GP-BACKREST (CLOTH) | 876 |
| | 3 | 1 | **233-6745** | 1 | CUSHION AS (CLOTH) | |
| | 4 | 1 | **250-4628** | 3 | PLUG | |
| | 5 | 1 | **8T-7566** | 1 | PIN-SPRING | |

Y-SEPARATE ILLUSTRATION

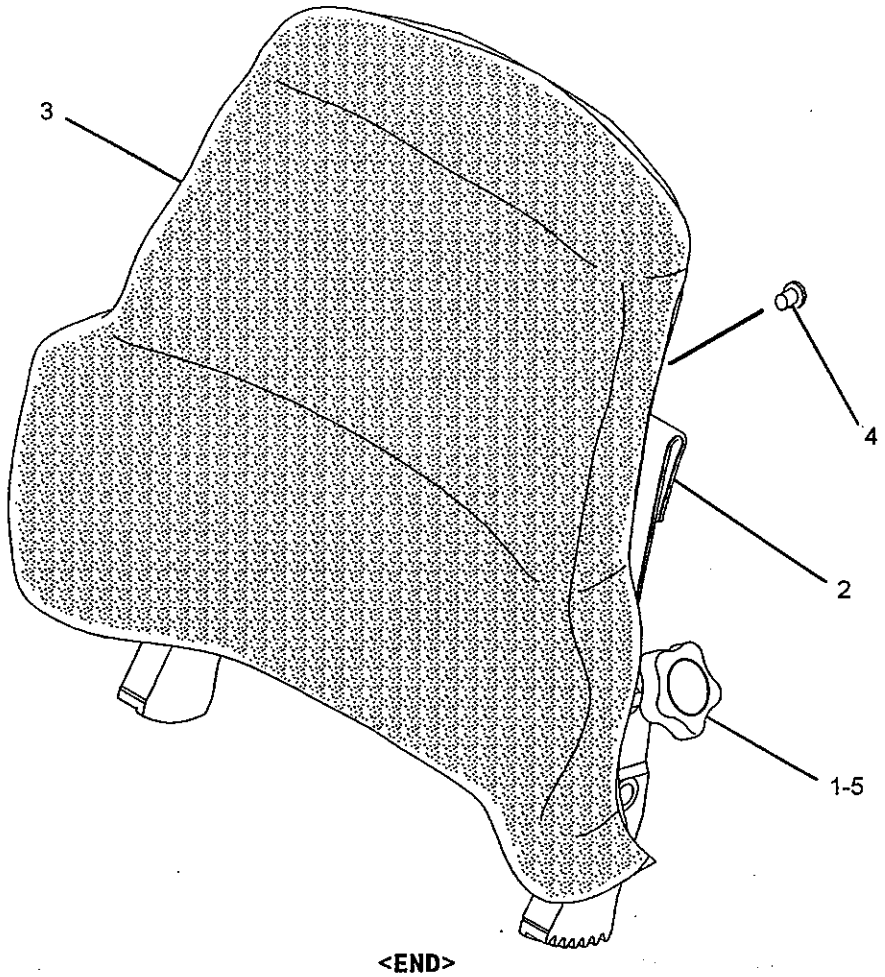


GRAPHIC #1

**<END>**

g01092296

# OPERATOR STATION

## *178-0605* PAN GP-BACKREST

**S/N: JMS1-UP**

**PART OF 178-0604, 180-7305 PAN GP-BACKREST**

**ALSO AN ATTACHMENT**

**SMCS-7312**

**i01508995**

| NOTE | REF NO | GRAPHIC REF | PART NUMBER | QTY | PART NAME 1 2 3 4 5 6 (PRODUCT LEVEL) | SEE PAGE |
|---|---|---|---|---|---|---|
| | 1 | 1 | 4K-9429 | 8 | RIVET-POP | |
| | 2 | 1 | 5P-7957 | 1 | LANYARD | |
| | 3 | 1 | 136-1543 | 1 | PLATE AS-LUMBAR | |
| | 4 | 1 | 173-2052 | 1 | RETAINER | |
| | 5 | 1 | 178-7907 | 1 | HOLDER | |
| | 6 | 1 | 177-4930 | 1 | PAN AS-BACK | |

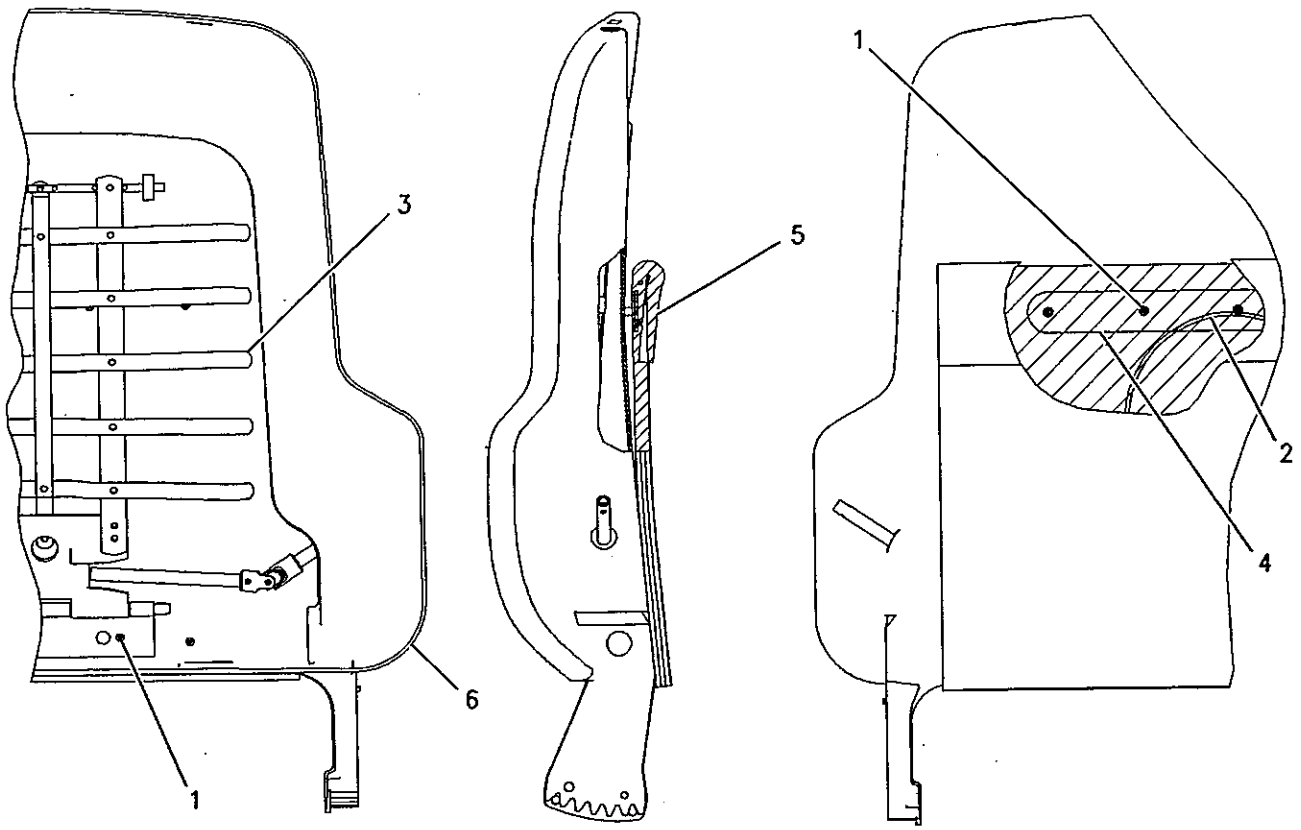


GRAPHIC #1

**<END>**

g00716497

# OPERATOR STATION

## *180-7305* PAN GP-BACKREST–VINYL

**S/N: JMS1-UP**
**PART OF 180-7304 SEAT GP**
**AN ATTACHMENT**

**SMCS-7312** **i02122312**

| NOTE | REF NO | GRAPHIC REF | PART NUMBER | QTY | PART NAME 1 2 3 4 5 6 (PRODUCT LEVEL) | SEE PAGE |
|---|---|---|---|---|---|---|
| | 1 | 1 | **164-4883** | 1 | KNOB-LUMBAR | |
| | 2 | 1 | **169-0697** | 1 | CUSHION AS | |
| Y | 3 | 1 | *178-0605* | 1 | PAN GP-BACKREST | 876 |
| | 4 | 1 | **250-4628** | 3 | PLUG | |
| | 5 | 1 | **8T-7566** | 1 | PIN-SPRING | |

Y-SEPARATE ILLUSTRATION

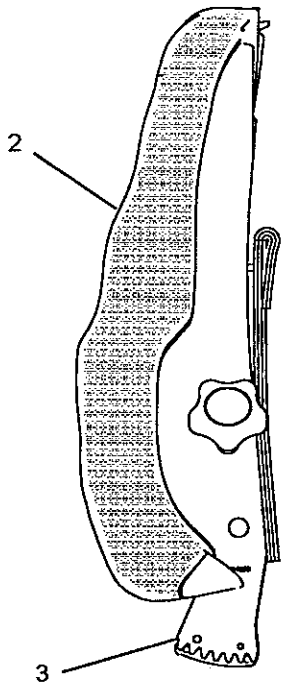


LEFT SIDE VIEW

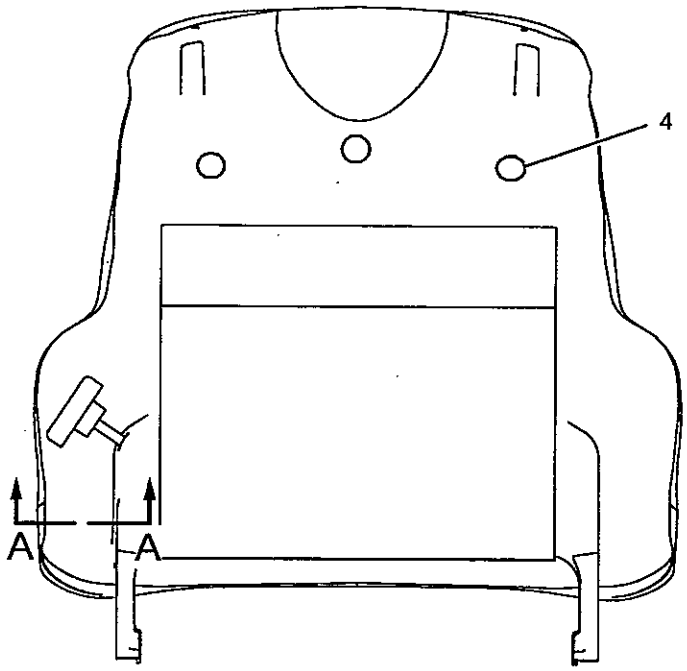


REAR VIEW

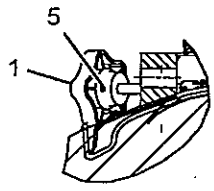


SECTION A-A

<END>

GRAPHIC #1 g01082619

# OPERATOR STATION

## 203-2782 PANEL GP-INSTRUMENT–UPPER

S/N: JMS1-UP

PART OF 232-1393 CAB AR-ENCLOSED ROPS

i01810218

SMCS-7451

| NOTE | REF NO | GRAPHIC REF | PART NUMBER | QTY | PART NAME 1 2 3 4 5 6 (PRODUCT LEVEL) | SEE PAGE |
|---|---|---|---|---|---|---|
| | 1 | 1 | 203-2742 | 1 | FILM-MONITOR | |
| | 2 | 1 | 173-2173 | 1 | FILM-PANEL | |
| | 3 | 1 | 216-7888 | 1 | PANEL-CONTROL | |
| | 4 | 1 | 211-2126 | 1 | COVER AS (UPPER) | |
| | 5 | 1 | 200-5951 | 1 | BRACKET AS | |
| | 6 | 1 | 200-5952 | 1 | BRACKET AS | |
| M | | 1 | 6V-9632 | 1 | NUT-WELD (M6X1 THD) | |
| | 7 | 1 | 216-8344 | 1 | BRACKET AS | |
| | 8 | 1 | 211-2109 | 1 | BRACKET AS | |
| | 9 | 1 | 200-6206 | 1 | COVER AS | |
| | 10 | 1 | 175-3265 | 4 | SCREW (8-16X0.63-IN) | |
| M | 11 | 1 | 5C-2890 | 8 | NUT (M6X1-THD) | |
| M | 12 | 1 | 9X-2044 | 2 | SCREW-TRUSS HEAD (M6X1X16-MM) | |
| M | 13 | 1 | 9X-2045 | 9 | SCREW-TRUSS HEAD (M6X1X20-MM) | |
| | 14 | 1 | 9X-8256 | 8 | WASHER (6.6X12X2-MM THK) | |
| E | 15 | 1 | 155-0755 | | SEAL (34CM) | |
| M | 16 | 1 | 9X-2046 | 1 | SCREW-TRUSS HEAD (M6X1X35-MM) | |
| E | 17 | 1 | 5P-8309 | | SEAL (57CM) | |
| | 18 | 1 | 9X-8267 | 4 | WASHER (6.6X12X2-MM THK) | |
| | 19 | 1 | 222-5774 | 1 | BRACKET AS | |
| M | | 1 | 6V-9632 | 2 | NUT-WELD (M6X1 THD) | |

E-ORDER BY THE CENTIMETER
M-METRIC PART

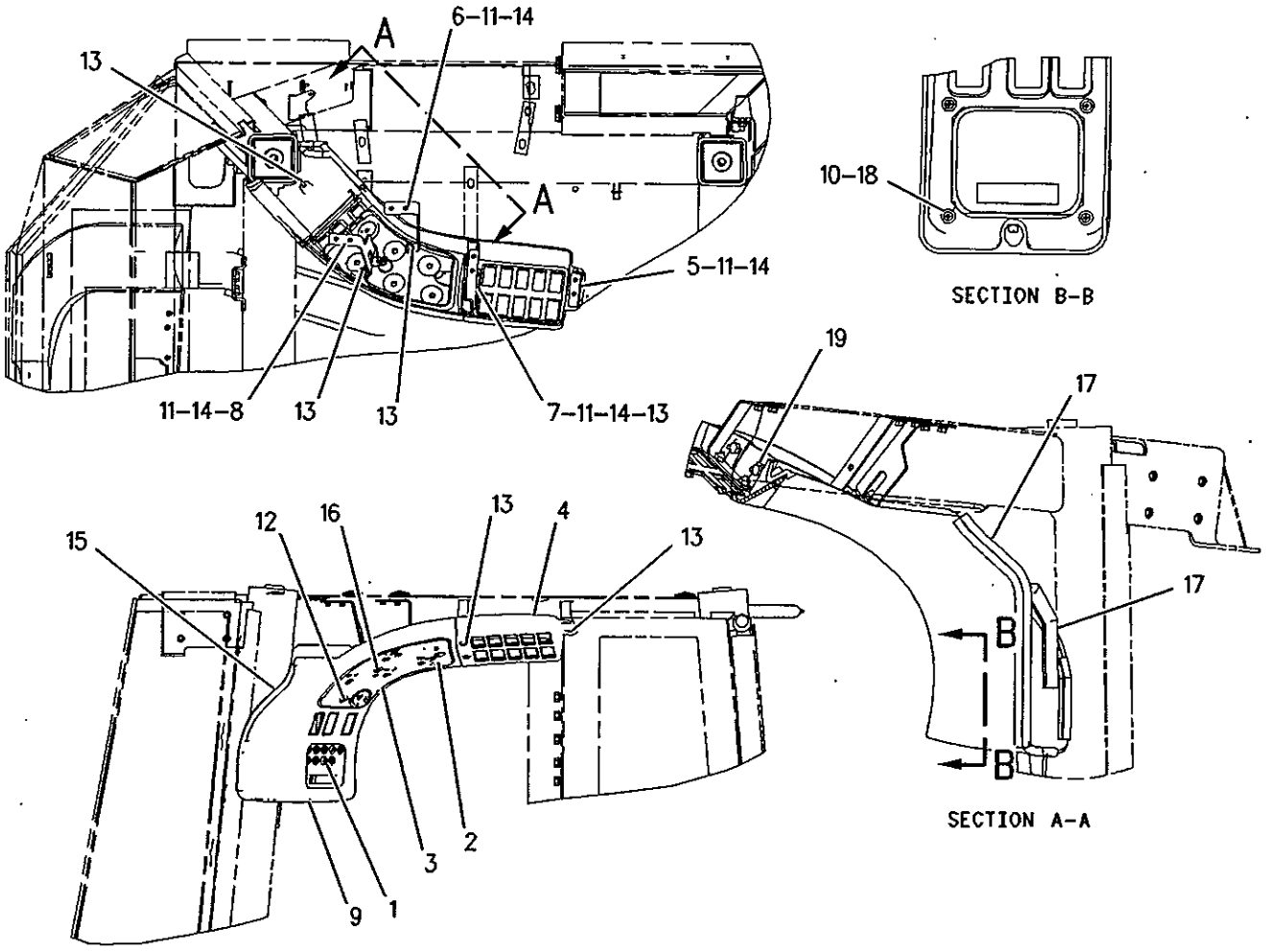


GRAPHIC #1 **<END>** g00929014

# OPERATOR STATION

## *206-5145* PANEL GP-INSTRUMENT–LOWER

S/N: JMS1-UP

PART OF 203-9837 CANOPY AR-OPEN ROPS

AN ATTACHMENT

SMCS-7451

i02216459

| NOTE | REF NO | GRAPHIC REF | PART NUMBER | QTY | PART NAME 1 2 3 4 5 6 (PRODUCT LEVEL) | SEE PAGE |
|---|---|---|---|---|---|---|
| | 1 | 1 | 4E-8722 | 4 | NUT | |
| | 2 | 1 | 200-8154 | 2 | FILM-IDENTIFICATION (12-VOLT) | |
| | 3 | 1 | 128-8617 | 1 | PLATE AS | |
| | 4 | 1 | 129-7184 | 1 | FILM-INSTRUCTION (ENGINE START) | |
| | 5 | 1 | 173-2205 | 1 | COVER | |
| | 6 | 1 | 173-2206 | 1 | COVER | |
| | 7 | 1 | 189-2076 | 1 | FILM-CONTROLS | |
| | 8 | 1 | 189-2512 | 1 | PLATE | |
| | 9 | 1 | 200-0727 | 1 | BEZEL | |
| | 10 | 1 | 198-8774 | 1 | BEZEL | |
| | 11 | 1 | 199-9641 | 1 | PANEL-CONTROL | |
| | 12 | 1 | 200-0731 | 1 | BRACKET AS | |
| | 13 | 1 | 209-1614 | 1 | FILM-PANEL (CENTER) | |
| | 14 | 1 | 206-5041 | 1 | FILM-PANEL (RH) | |
| | 15 | 1 | 206-5040 | 1 | FILM-PANEL (LH) | |
| M | 17 | 1 | 7Y-7256 | 2 | SCREW-TRUSS HEAD (M4X0.7-MM) | |
| | 18 | 1 | 200-8152 | 1 | BRACKET AS (LH) | |
| | 19 | 1 | 200-8153 | 1 | BRACKET AS (RH) | |
| | 21 | 1 | 201-2733 | 1 | FILM-INPUT/OUTPUT | |
| | 22 | 1 | 107-1964 | 12 | SCREW-PAN HEAD (6-19X0.5-IN) | |
| M | 23 | 1 | 155-4098 | 4 | SCREW-BUTTON HEAD | |
| | 24 | 1 | 2V-3726 | 1 | BUMPER | |
| M | 25 | 1 | 5C-2890 | 2 | NUT (M6X1-THD) | |
| | 27 | 1 | 8T-4205 | 2 | WASHER-HARD (7.2X14.5X2-MM THK) | |
| M | 29 | 1 | 9X-1046 | 18 | SCREW (M4X0.7X18-MM) | |
| M | 30 | 1 | 9X-2044 | 25 | SCREW-TRUSS HEAD (M6X1X16-MM) | |
| | 31 | 1 | 165-9104 | 2 | SPACER (6.5X9.5X10-MM THK) | |
| | 32 | 1 | 179-9392 | 1 | LANYARD | |
| | 33 | 1 | 5P-7958 | 1 | SLEEVE-CABLE SPLICE | |
| | 34 | 1 | 4I-3038 | 1 | WASHER (3.3X8X0.5-MM THK) | |

M-METRIC PART

## *206-5145* **PANEL GP-INSTRUMENT** *(contd.)* i02216459

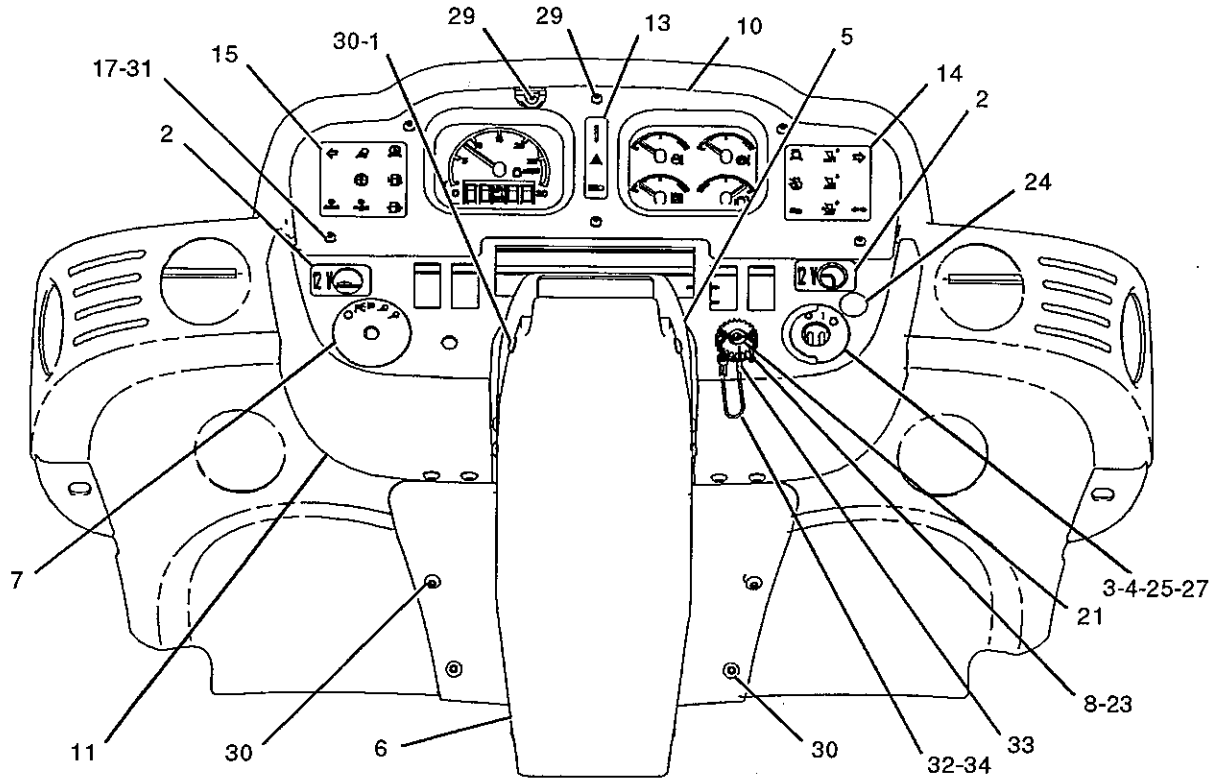


FRONT VIEW

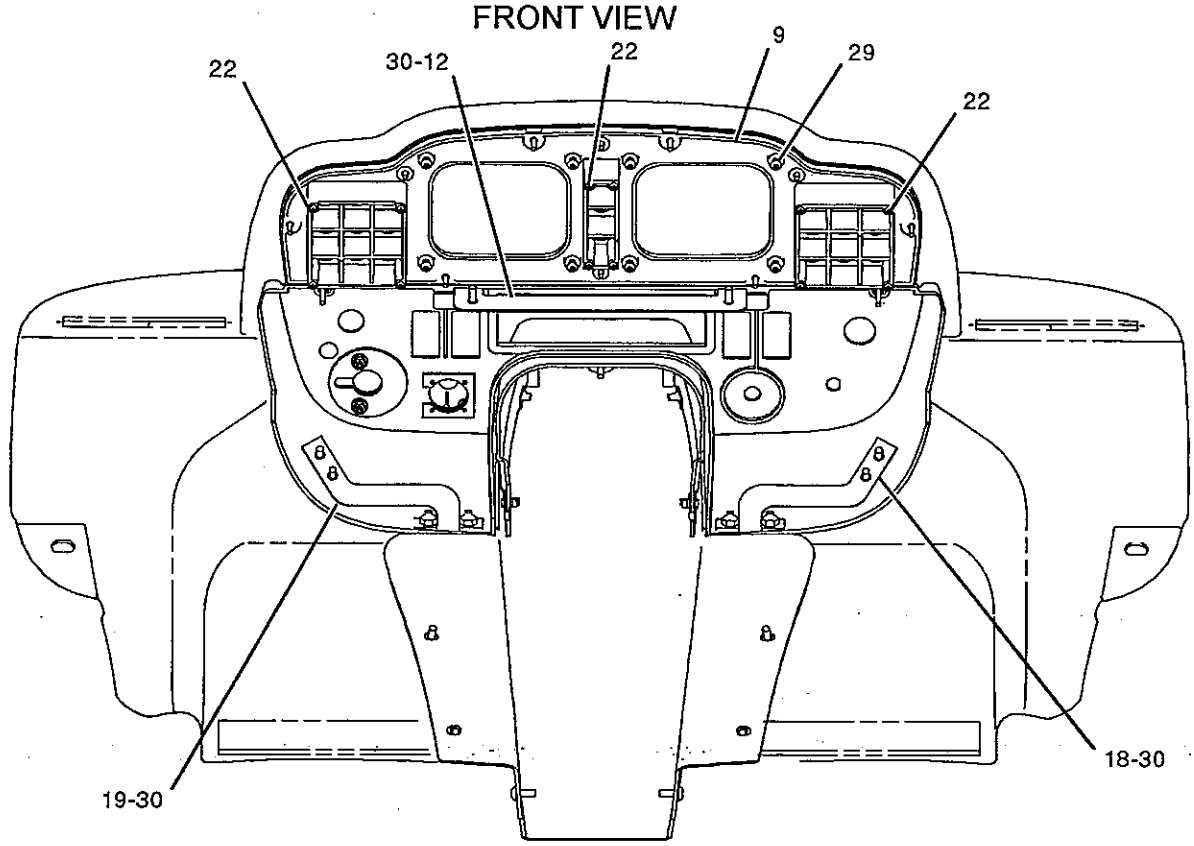


REAR VIEW

GRAPHIC #1

<END>

g01025955

# OPERATOR STATION

## *207-8274* PANEL GP-INSTRUMENT–UPPER

S/N: JMS1-UP

PART OF 203-9837, 258-1565 CANOPY AR-OPEN ROPS

AN ATTACHMENT

SMCS-7451

i01828490

| NOTE | REF NO | GRAPHIC REF | PART NUMBER | QTY | PART NAME 1 2 3 4 5 6 (PRODUCT LEVEL) | SEE PAGE |
|---|---|---|---|---|---|---|
| | 1 | 1 | 216-7888 | 1 | PANEL-CONTROL | |
| | 2 | 1 | 200-5951 | 1 | BRACKET AS | |
| | 3 | 1 | 200-5952 | 1 | BRACKET AS | |
| | 4 | 1 | 216-8344 | 1 | BRACKET AS | |
| | 5 | 1 | 203-2742 | 1 | FILM-MONITOR | |
| | 6 | 1 | 207-8292 | 1 | FILM | |
| | 7 | 1 | 209-0112 | 1 | COVER AS | |
| | 8 | 1 | 211-2109 | 1 | BRACKET AS | |
| | 9 | 1 | 211-2126 | 1 | COVER AS | |
| | 10 | 1 | 175-3265 | 4 | SCREW (8-16X0.63-IN) | |
| M | 11 | 1 | 5C-2890 | 8 | NUT (M6X1-THD) | |
| M | 12 | 1 | 9X-2044 | 2 | SCREW-TRUSS HEAD (M6X1X16-MM) | |
| M | 13 | 1 | 9X-2045 | 9 | SCREW-TRUSS HEAD (M6X1X20-MM) | |
| M | 14 | 1 | 9X-2046 | 1 | SCREW-TRUSS HEAD (M6X1X35-MM) | |
| | 15 | 1 | 9X-8256 | 8 | WASHER (6.6X12X2-MM THK) | |
| E | 16 | 1 | 155-0755 | | SEAL (34 CM) | |
| E | 17 | 1 | 5P-8309 | | SEAL (39 CM) | |
| E | 17A | 1 | 5P-8309 | | SEAL (16 CM) | |
| | 18 | 1 | 9X-8267 | 4 | WASHER (6.6X12X2-MM THK) | |
| | 19 | 1 | 222-5774 | 1 | BRACKET AS | |

E-ORDER BY THE CENTIMETER
M-METRIC PART

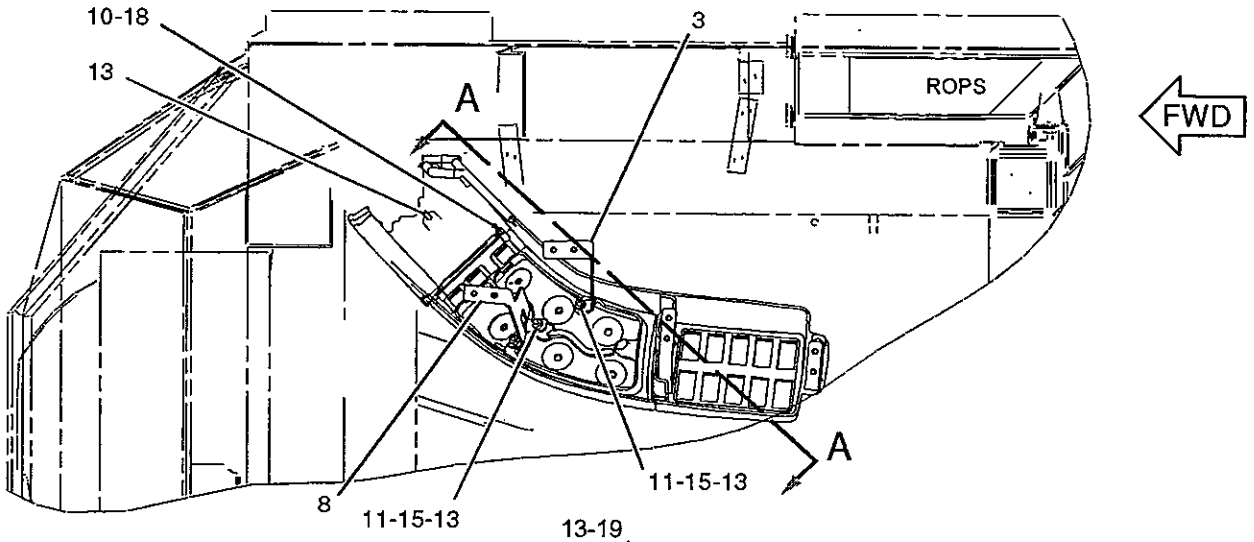


TOP VIEW

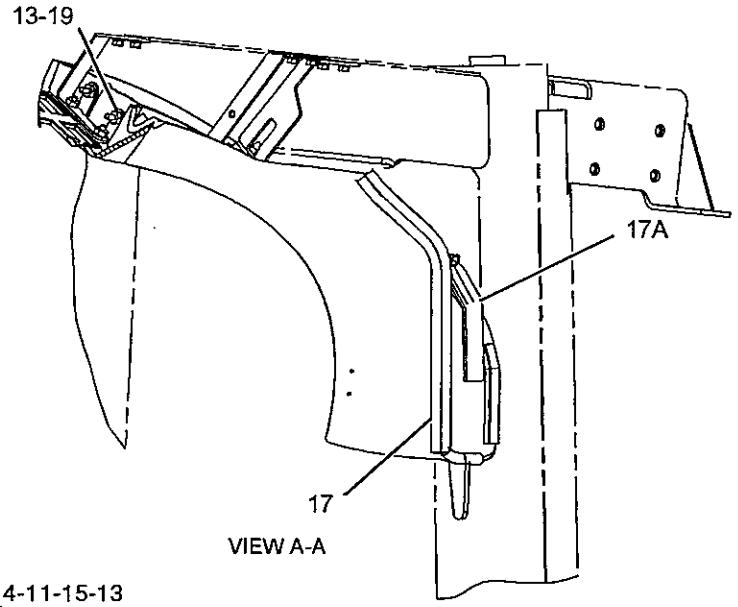


VIEW A-A

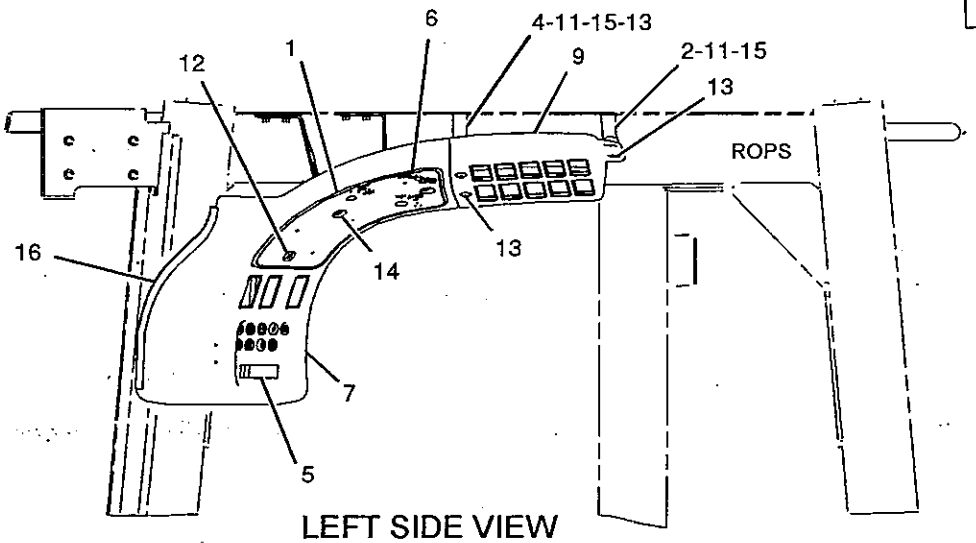


LEFT SIDE VIEW

GRAPHIC #1

**<END>**

g01051925

# OPERATOR STATION

## *245-6458* PANEL GP-INSTRUMENT—LOWER

**S/N: JMS1-UP**

**PART OF 232-1393 CAB AR-ENCLOSED ROPS, 258-1565 CANOPY AR-OPEN ROPS**
**ALSO AN ATTACHMENT**

i02280942

**SMCS-7451**

| NOTE | REF NO | GRAPHIC REF | PART NUMBER | QTY | PART NAME 1 2 3 4 5 6 (PRODUCT LEVEL) | SEE PAGE |
|---|---|---|---|---|---|---|
| | 1 | 2 | 4E-8722 | 4 | NUT | |
| | 2 | 1 | 4I-3038 | 1 | WASHER (3.3X8X0.5-MM THK) | |
| | 3 | 1 | 5P-7958 | 1 | SLEEVE-CABLE SPLICE | |
| | 4 | 1 | 128-8617 | 1 | PLATE AS | |
| | 5 | 1 | 129-7184 | 1 | FILM-INSTRUCTION (ENGINE START) | |
| | 6 | 1 | 165-9104 | 2 | SPACER (6.5X9.5X10-MM THK) | |
| | 7 | 2 | 173-2205 | 1 | COVER | |
| | 8 | 2 | 173-2206 | 1 | COVER | |
| | 9 | 1 | 179-9392 | 1 | LANYARD | |
| | 10 | 1 | 189-2076 | 1 | FILM-CONTROLS | |
| | 11 | 1 | 189-2512 | 1 | PLATE | |
| | 12 | 1 | 198-8774 | 1 | BEZEL | |
| | 13 | 1 | 199-9641 | 1 | PANEL-CONTROL | |
| | 14 | 1 | 200-0727 | 1 | BEZEL | |
| | 15 | 1 | 200-0731 | 1 | BRACKET AS | |
| | 16 | 1 | 200-8152 | 1 | BRACKET AS (LH) | |
| | 17 | 1 | 200-8153 | 1 | BRACKET AS (RH) | |
| | 18 | 1 | 200-8154 | 2 | FILM-IDENTIFICATION (12-VOLT) | |
| | 19 | 1 | 201-2733 | 1 | FILM-INPUT/OUTPUT | |
| | 20 | 1 | 251-4282 | 1 | FILM-PANEL (CENTER) | |
| | 21 | 1 | 251-4283 | 1 | FILM-PANEL (LH) | |
| | 22 | 1 | 251-4284 | 1 | FILM-PANEL (RH) | |
| | 23 | 1 | 107-1964 | 8 | SCREW-PAN HEAD (6-19X0.5-IN) | |
| M | 24 | 1 | 155-4098 | 4 | SCREW-BUTTON HEAD | |
| | 25 | 1 | 2V-3726 | 1 | BUMPER | |
| M | 26 | 1 | 5C-2890 | 2 | NUT (M6X1-THD) | |
| M | 27 | 1 | 7Y-7256 | 2 | SCREW-TRUSS HEAD (M4X0.7-MM) | |
| | 28 | 1 | 8T-4205 | 2 | WASHER-HARD (7.2X14.5X2-MM THK) | |
| M | 29 | 1 | 9X-1046 | 18 | SCREW (M4X0.7X18-MM) | |
| M | 30 | 1,2 | 9X-2044 | 25 | SCREW-TRUSS HEAD (M6X1X16-MM) | |

M-METRIC PART

REFER TO ALL ILLUSTRATIONS OF THIS GROUP FOR AUXILIARY VIEWS

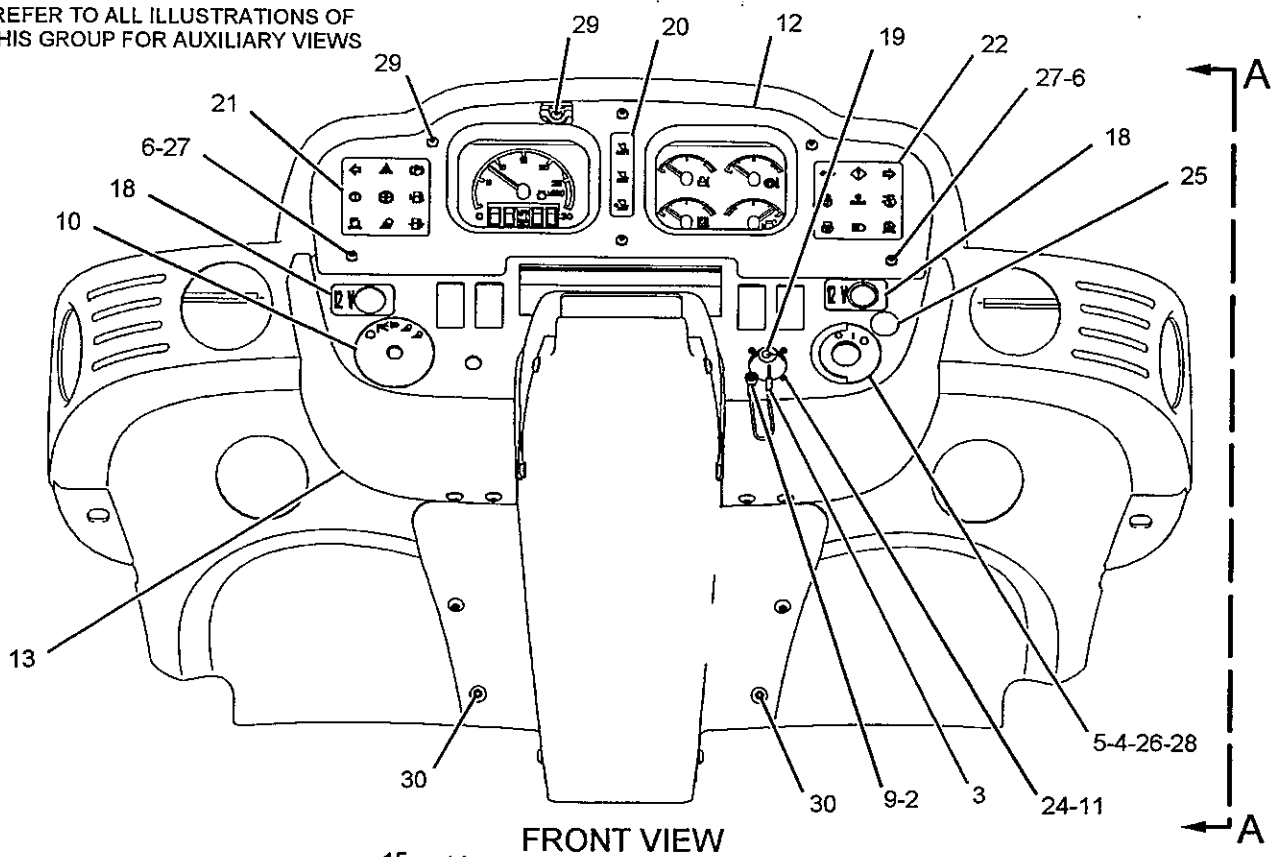


FRONT VIEW

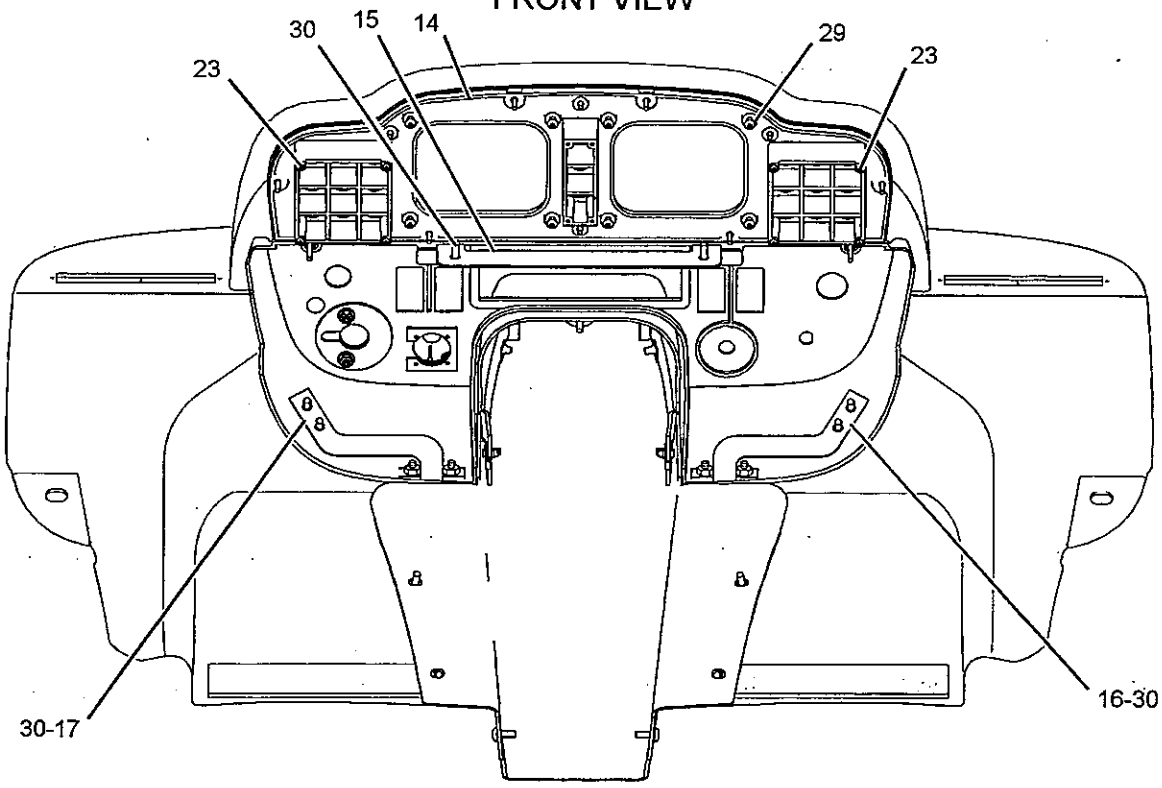


REAR VIEW

GRAPHIC #1

g01141513

## 245-6458 PANEL GP-INSTRUMENT *(contd.)*

i02280942

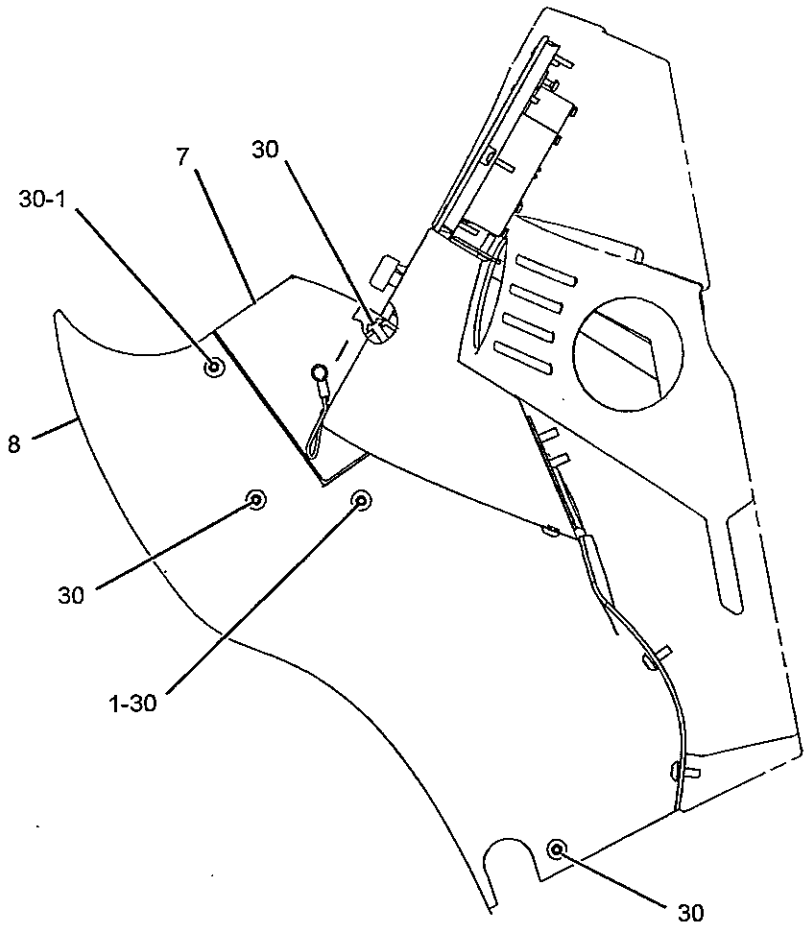


VIEW A-A

GRAPHIC #2

**<END>**

g01142232

# OPERATOR STATION

## *201-8616* PEDAL GP-GOVERNOR

**S/N: JMS1-UP**

**PART OF 207-1759 PEDAL GP-GOVERNOR**

**ALSO AN ATTACHMENT**

**SMCS-1276** **i02180810**

| NOTE | REF NO | GRAPHIC REF | PART NUMBER | QTY | PART NAME 1 2 3 4 5 6 (PRODUCT LEVEL) | SEE PAGE |
|---|---|---|---|---|---|---|
| | 1 | 1 | **123-9431** | 1 | COVER | |
| Y | 2 | 1 | **204-7949** | 1 | SENSOR GP-POSITION (ROTARY) (THROTTLE) | 205 |
| | 3 | 1 | **7G-7053** | 1 | GROMMET | |
| | 4 | 1 | **160-6365** | 2 | SCREW | |
| | 5 | 1 | **160-6366** | 2 | CLIP | |
| | 6 | 1 | **140-2961** | 1 | KIT-ROLLER | |
| | | | | | (INCLUDES ROLLLER AND ROLLER PIN | |
| | 7 | 1 | **140-2962** | 1 | KIT-TREADLE PIN | |
| | | | | | (INCLUDES 2 SNAP RINGS, 6 BUSHINGS, 2 TREADLE PINS, AND 4 SPRINGS) | |
| | 8 | 1 | **140-2963** | 2 | SCREW | |
| | 9 | 1 | **208-3703** | 1 | PLATE AS | |

Y-SEPARATE ILLUSTRATION

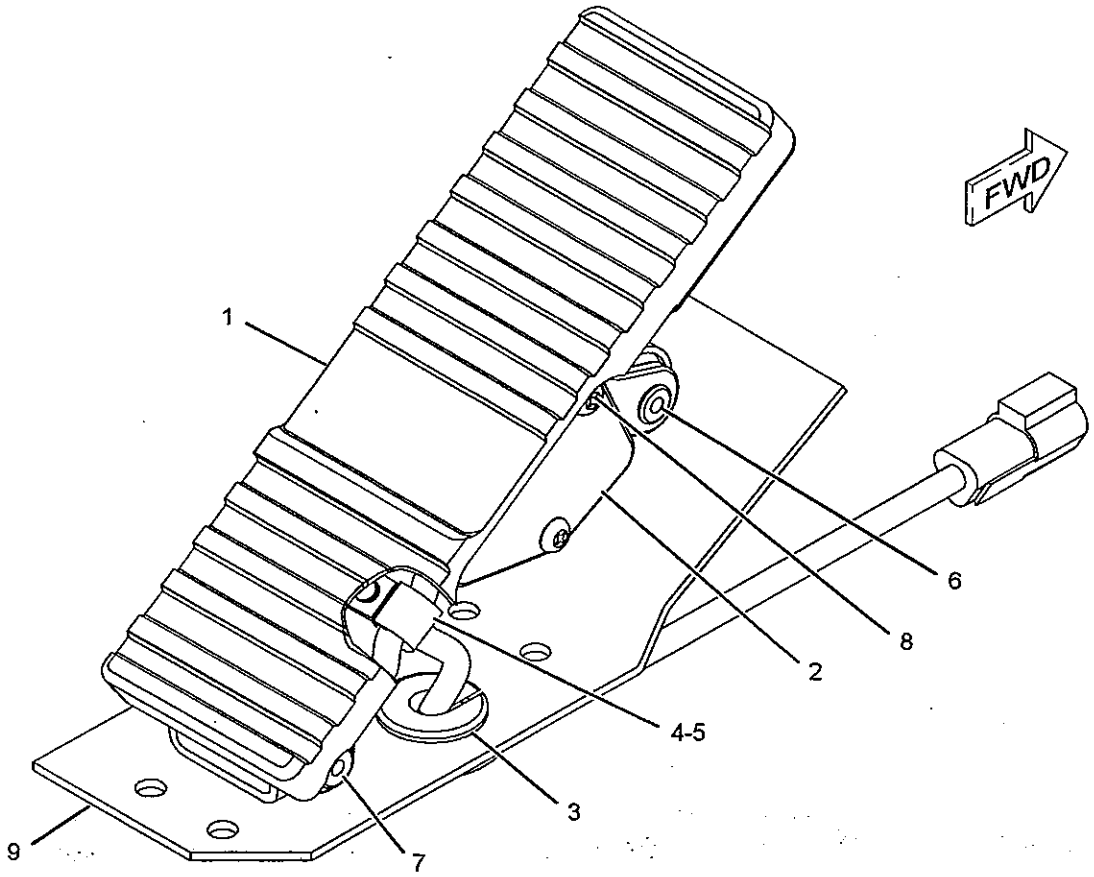


GRAPHIC #1 **<END>** g01020704

# OPERATOR STATION

## *207-1759* PEDAL GP-GOVERNOR

S/N: JMS1-UP

PART OF 232-1393 CAB AR-ENCLOSED ROPS, 203-9837, 258-1565 CANOPY AR-OPEN ROPS

ALSO AN ATTACHMENT

SMCS-1276

i02209482

| NOTE | REF NO | GRAPHIC REF | PART NUMBER | QTY | PART NAME 1 2 3 4 5 6 (PRODUCT LEVEL) | SEE PAGE |
|---|---|---|---|---|---|---|
| Y | 1 | 1 | **201-8616** | 1 | PEDAL GP-GOVERNOR | 887 |
| | 2 | 1 | **8T-4224** | 4 | WASHER-HARD (8.8X16X2-MM THK) | |
| M | 3 | 1 | **8T-4908** | 4 | BOLT (M8X1.25X25-MM) | |

M-METRIC PART
Y-SEPARATE ILLUSTRATION

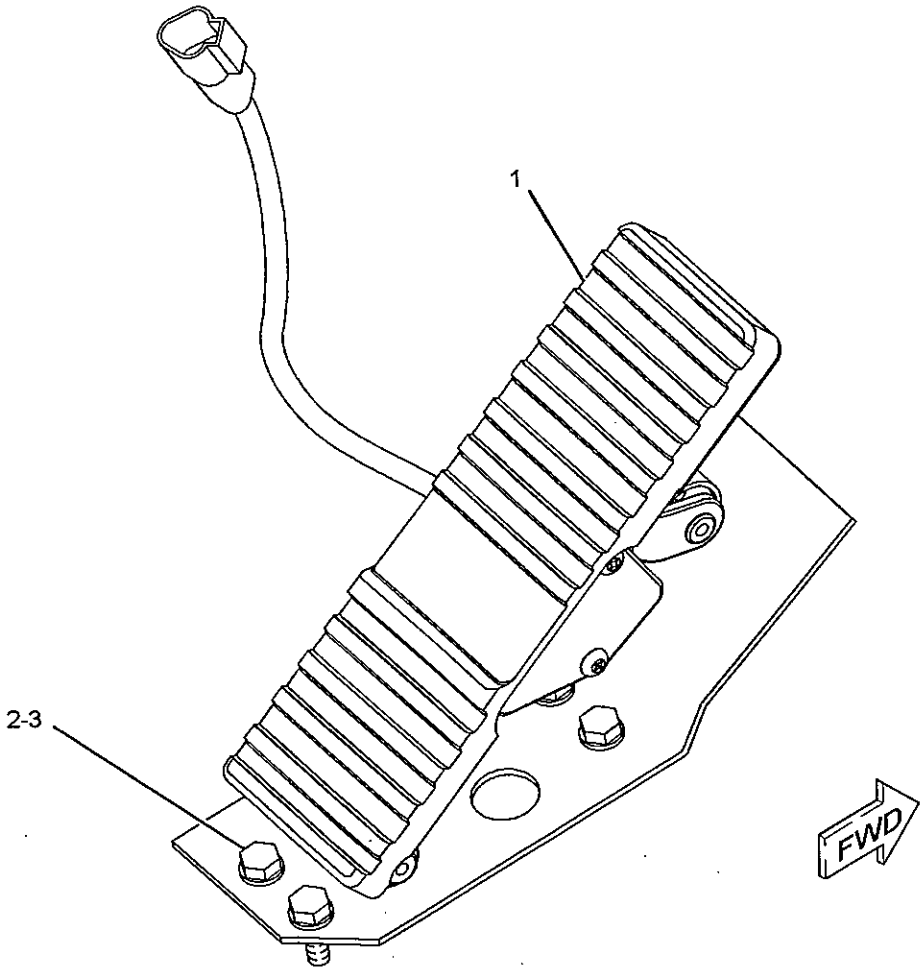


GRAPHIC #1

<END>

g01020217

# OPERATOR STATION

## *246-5204* PLATFORM AR

**S/N: JMS1-UP**
**AN ATTACHMENT**

**SMCS-7253** **i02089939**

| NOTE | PART NUMBER | QTY | PART NAME 1 2 3 4 5 6 (PRODUCT LEVEL) | SEE PAGE |
|---|---|---|---|---|
| Y | **243-1944** | 1 | HANDHOLD GP (CAB) | 816 |
| Y | **246-5206** | 1 | HANDHOLD GP (PLATFORM) | 817 |
| Y | **244-2736** | 1 | MIRROR GP-REAR VIEW | 852 |

Y-SEPARATE ILLUSTRATION

**<END>**

## *246-5798* PLATFORM AR

**S/N: JMS1-UP**
**HEATED MIRRORS**
**AN ATTACHMENT**

**SMCS-7253** **i02090740**

| NOTE | PART NUMBER | QTY | PART NAME 1 2 3 4 5 6 (PRODUCT LEVEL) | SEE PAGE |
|---|---|---|---|---|
| Y | *243-1944* | 1 | HANDHOLD GP | 816 |
| Y | *244-2737* | 1 | MIRROR GP-REAR VIEW (HEATED) | 853 |
| Y | *246-5206* | 1 | HANDHOLD GP | 817 |

Y-SEPARATE ILLUSTRATION

**<END>**

## *246-6178* PLATFORM AR

**S/N: JMS1-UP**
**AN ATTACHMENT**

**SMCS-7253** **i02290238**

| NOTE | PART NUMBER | QTY | PART NAME 1 2 3 4 5 6 (PRODUCT LEVEL) | SEE PAGE |
|---|---|---|---|---|
| Y | *243-1944* | 1 | HANDHOLD GP (CAB) | 816 |
| Y | *246-5206* | 1 | HANDHOLD GP (PLATFORM) | 817 |

Y-SEPARATE ILLUSTRATION

**<END>**

# OPERATOR STATION

## 231-3499 PLATFORM GP-OPERATOR

S/N: JMS1-UP

PART OF 225-5538 CHASSIS AR

SMCS-7253

i02280860

| NOTE | REF NO | GRAPHIC REF | PART NUMBER | QTY | PART NAME 1 2 3 4 5 6 (PRODUCT LEVEL) | SEE PAGE |
|---|---|---|---|---|---|---|
| | 1 | 1 | 1K-8850 | 1 | SPRING | |
| | 2 | 1 | 115-9507 | 1 | BRACKET AS | |
| M | | 1 | 8T-3490 | 4 | NUT-WELD (M10X1.5-THD) | |
| M | | 1 | 8T-3597 | 3 | NUT-WELD (M12X1.75-THD) | |
| | 3 | 1 | 232-1855 | 1 | PLATFORM AS (LH) | |
| M | | 1 | 8T-3490 | 15 | NUT-WELD (M10X1.5-THD) | |
| M | | 1 | 8T-3597 | 3 | NUT-WELD (M12X1.75-THD) | |
| | 4 | 1 | 232-1856 | 1 | PLATFORM AS (RH) | |
| M | | 1 | 8T-3490 | 15 | NUT-WELD (M10X1.5-THD) | |
| M | | 1 | 8T-3597 | 2 | NUT-WELD (M12X1.75-THD) | |
| | 5 | 1 | 232-1861 | 1 | PLATE AS (LH) | |
| | 6 | 1 | 232-1862 | 1 | PLATE AS (RH) | |
| | 6A | 1 | 3R-9322 | 1 | HINGE | |
| | 6B | 1 | 4K-8501 | 2 | CLIP | |
| | 7 | 1 | 233-7221 | 5 | BRACKET | |
| | 8 | 1 | 234-0312 | 1 | BRACKET AS | |
| M | | 1 | 8T-3490 | 2 | NUT-WELD (M10X1.5-THD) | |
| | 9 | 1 | 8T-4121 | 50 | WASHER-HARD (11X21X2.5-MM THK) | |
| M | 10 | 1 | 8T-4136 | 36 | BOLT (M10X1.5X25-MM) | |
| M | 11 | 1 | 8T-4185 | 14 | BOLT (M10X1.5X50-MM) | |

M-METRIC PART

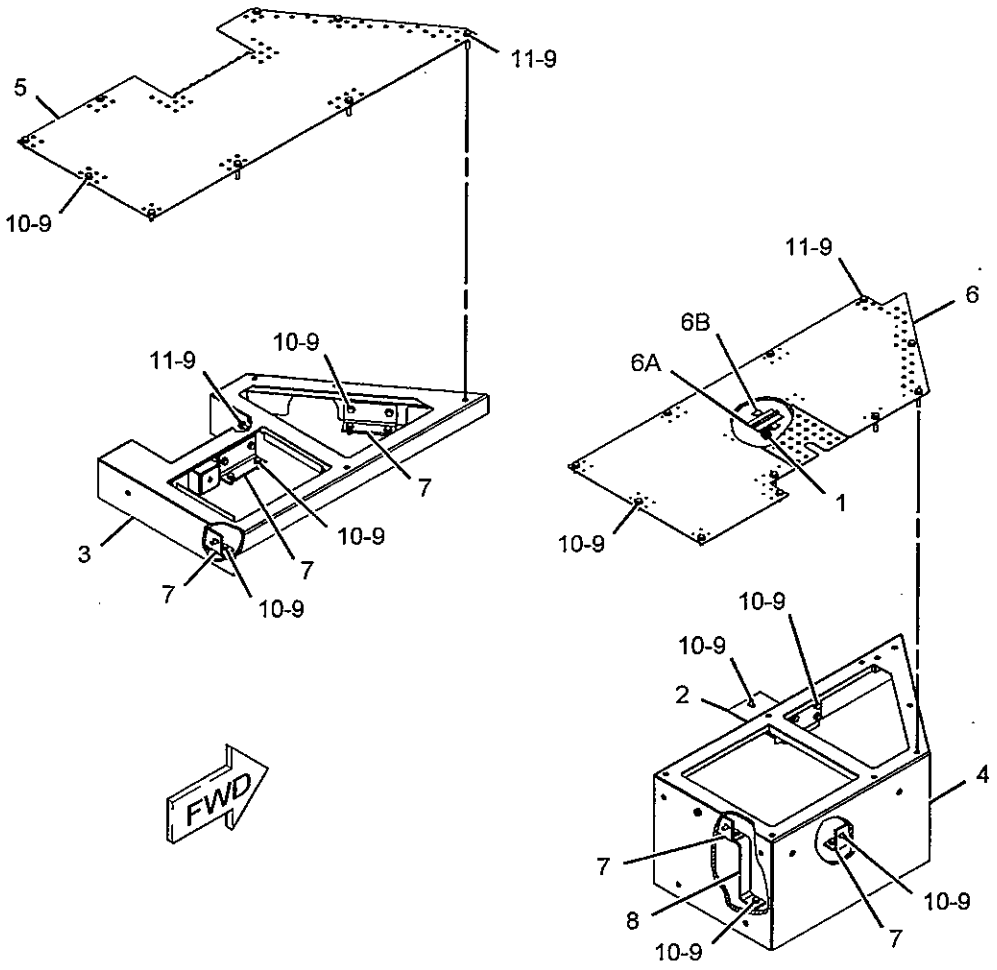


GRAPHIC #1

**<END>**

g01141080

# OPERATOR STATION

## 173-6532 RADIO GP–AM/FM CASSETTE

S/N: JMS1-UP
12-VOLT
PART OF 227-9981 RADIO GP
AN ATTACHMENT

SMCS-7338

i01967493

| NOTE | REF NO | GRAPHIC REF | PART NUMBER | QTY | PART NAME 1 2 3 4 5 6 (PRODUCT LEVEL) | SEE PAGE |
|---|---|---|---|---|---|---|
| | 1 | 1 | 102-8806 | 1 | KIT-RECEPTACLE (8-PIN) | |
| | | | | | (INCLUDES RECEPTACLE AS & WEDGE) | |
| | 2 | 1 | 186-3735 | 7 | PIN-CONNECTOR (16-GA TO 18-GA) | |
| | 3 | 1 | 8T-8737 | 1 | PLUG-SEAL | |
| | 4 | 1 | 3E-3389 | 1 | WEDGE-RECEPTACLE LOCK | |
| | 5 | 1 | 192-7054 | 1 | SLEEVE | |
| | 6 | 1 | 137-8165 | 1 | BUMPER | |
| | 7 | 1 | 186-2741 | 1 | HARNESS AS-RADIO (SPEAKER) | |
| | 8 | 1 | 175-3678 | 1 | KIT-KNOB (RADIO) | |
| | | | | | (INCLUDES KNOBS: FADER, TONE, VOLUME/SW) | |

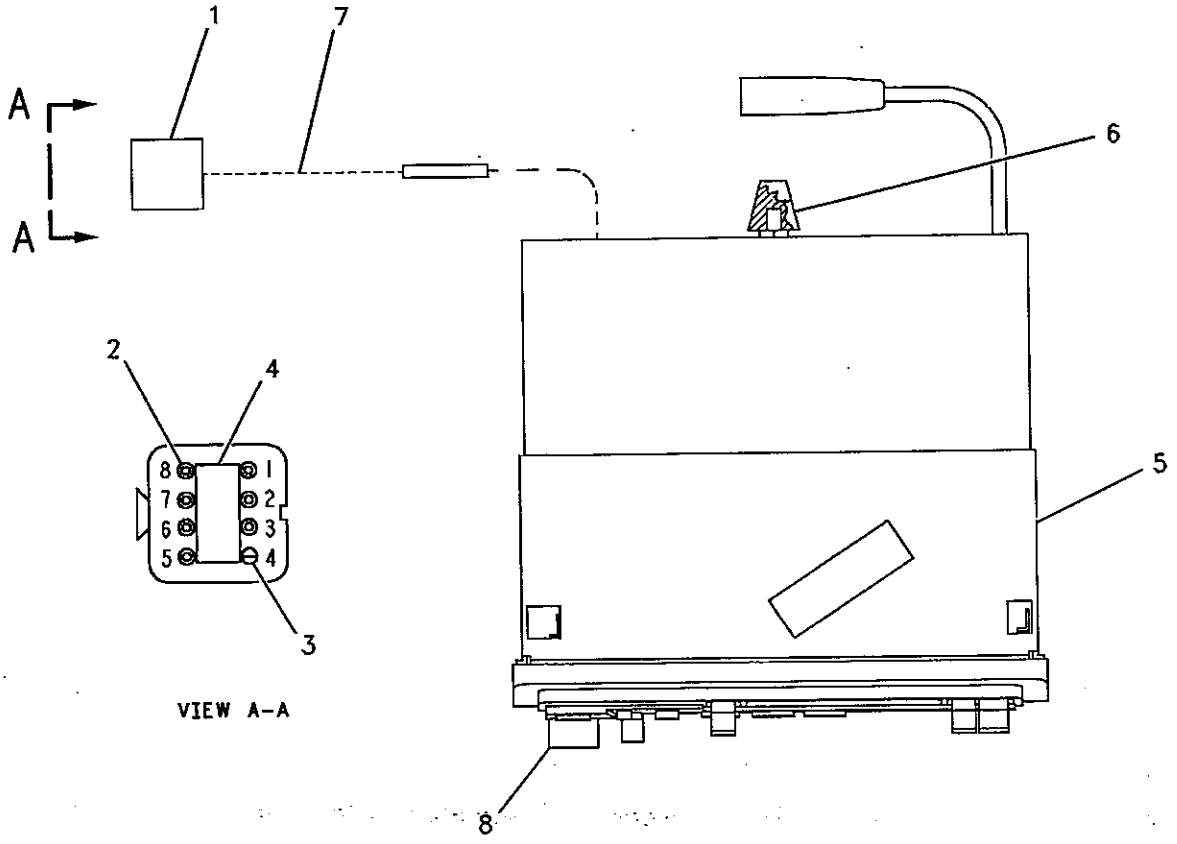


GRAPHIC #1

<END>

g00618667

# OPERATOR STATION

## 227-9981 RADIO GP–AM/FM CASSETTE

S/N: JMS1-UP

PART OF 266-1620 MACHINE AR, 246-8696, 246-8697 ROADING AR AN ATTACHMENT

SMCS-7338

i02275801

| NOTE | PART NUMBER | QTY | PART NAME 1 2 3 4 5 6 (PRODUCT LEVEL) | SEE PAGE |
|---|---|---|---|---|
| Y | 173-6532 | 1 | RADIO GP (AM/FM CASSETTE) | 892 |

Y-SEPARATE ILLUSTRATION

<END>

# OPERATOR STATION

## *210-2270* RECLINER GP-SEAT

**S/N: JMS1-UP**

**PART OF 178-0603, 180-7304 SEAT GP**

**ALSO AN ATTACHMENT**

**SMCS-7312**

**i02179368**

| NOTE | REF NO | GRAPHIC REF | PART NUMBER | QTY | PART NAME 1 2 3 4 5 6 (PRODUCT LEVEL) | SEE PAGE |
|---|---|---|---|---|---|---|
| | 1 | 1 | **177-1862** | 1 | BRACKET (SEAT BELT) | |
| | 2 | 1 | **210-2262** | 1 | BRACKET AS | |
| | 3 | 1 | **210-2263** | 1 | BRACKET AS | |
| | 4 | 1 | **210-2266** | 1 | GEAR (14 TEETH) | |
| | 5 | 1 | **210-2268** | 1 | SHAFT AS | |
| | 6 | 1 | **217-7933** | 1 | LATCH | |
| | 7 | 1 | **236-5197** | 1 | SPRING | |
| | 8 | 1 | **031-0214** | 1 | BOLT-LOCKING (1/4-20X0.5-IN) | |
| | 9 | 1 | **101-2867** | 1 | WASHER-HARD (7.2X25X2-MM THK) | |
| | 10 | 1 | **4M-6425** | 1 | BOLT (5/16-18X1-IN) | |
| | 11 | 1 | **5M-2894** | 1 | WASHER-HARD (10.2X18.5X2.5-MM THK) | |
| | 12 | 1 | **5S-7383** | 1 | BOLT (3/8-16X1.75-IN) | |
| | 13 | 1 | **8T-4224** | 1 | WASHER-HARD (8.8X16X2-MM THK) | |

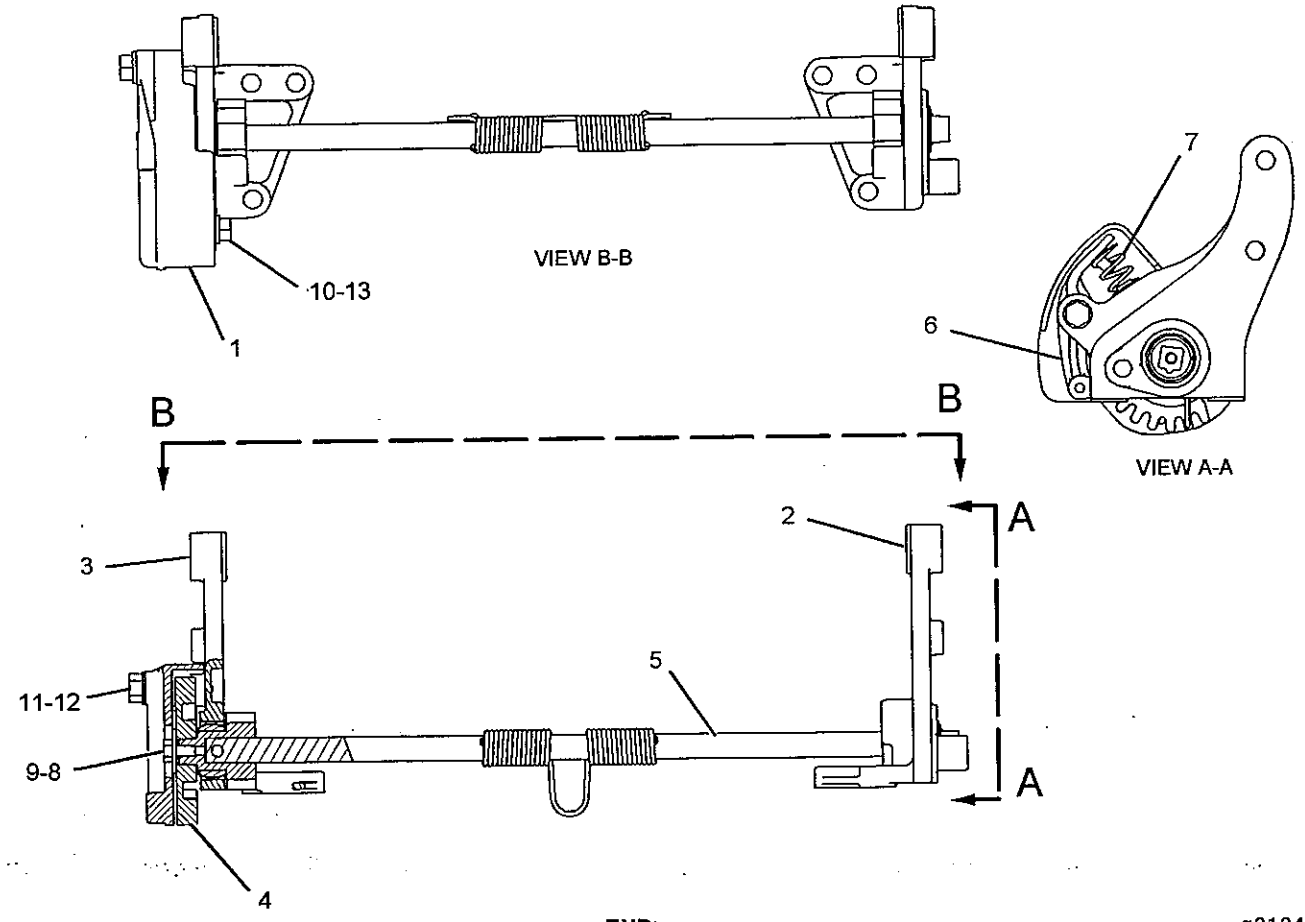


GRAPHIC #1

**<END>**

g01040293

# OPERATOR STATION

## 232-1395 ROPS GP-ENCLOSED

**S/N: JMS1-UP**

**PART OF 232-1393 CAB AR-ENCLOSED ROPS**

**SMCS-7301** **i02279526**

| NOTE | REF NO | GRAPHIC REF | PART NUMBER | QTY | PART NAME 1 2 3 4 5 6 (PRODUCT LEVEL) | SEE PAGE |
|---|---|---|---|---|---|---|
| B | 1 | 2 | 8T-0318 | 3 | SHIM (0.8-MM THK) | |
| M | 2 | 1 | 9X-2042 | 4 | SCREW-TRUSS HEAD (M6X1X12-MM) | |
| | 3 | 1 | 107-4600 | 1 | GLASS (RIGHT SIDE-REAR) | |
| | 4 | 1 | 107-4602 | 1 | GLASS (LEFT SIDE-REAR) | |
| | 5 | 2 | 109-5008 | 3 | BUMPER-CONICAL | |
| | 6 | 2 | 111-0687 | 1 | STRIKER AS | |
| | 7 | 2 | 114-9252 | 1 | BRACKET AS | |
| | 8 | 3 | 115-9345 | 1 | KNOB-CONTROL | |
| | 9 | 2 | 126-1052 | 1 | PIN | |
| | 10 | 2 | 128-1026 | 1 | SHIELD-STRIKER | |
| | 11 | 2 | 136-9351 | 1 | TRIM (RH) | |
| | 12 | 2 | 154-9508 | 1 | TRIM (LH) | |
| | 13 | 1 | 173-2142 | 1 | GLASS (FRONT) | |
| | 14 | 1 | 173-2143 | 1 | GLASS (RIGHT FRONT CORNER) | |
| | 15 | 1 | 173-2144 | 1 | GLASS (LEFT FRONT CORNER) | |
| | 16 | 2 | 173-2179 | 1 | LATCH AS | |
| | 17 | 1 | 177-3013 | 2 | DOOR AS-ACCESS | |
| | | | | | (EACH INCLUDES) | |
| | | 1 | 1V-6755 | 1 | LATCH AS | |
| | | 1 | 2N-2258 | 6 | RIVET-POP | |
| | | 1 | 111-1316 | 1 | HINGE | |
| | 18 | 3 | 187-4161 | 1 | SHEET AS | |
| | 19 | 3 | 188-5175 | 1 | CHANNEL AS (LH) | |
| | 20 | 3 | 188-5177 | 1 | BRACKET AS | |
| | 21 | 3 | 189-5630 | 1 | CABLE AS | |
| | | 3 | 6V-1626 | 1 | GROMMET | |
| | | 3 | 7S-9930 | 2 | RING-RETAINING | |
| | | 3 | 159-0052 | 2 | PIN-CLEVIS | |
| | 22 | 3 | 193-8113 | 1 | LEVER AS | |
| | | 3 | 154-1390 | 1 | SPRING | |
| Y | 23 | 1 | *203-2507* | 1 | DOOR GP-CAB | 802 |
| | 24 | 3 | 204-6132 | 1 | CHANNEL | |
| | 25 | 2 | 204-7367 | 1 | COVER AS | |
| | 26 | 3 | 205-6455 | 2 | SPACER | |
| | 27 | 2 | 209-5018 | 1 | LATCH AS | |
| | 28 | 3 | 210-1254 | 2 | INSULATION | |
| | 29 | 1 | 232-2181 | 1 | CAB AS | |
| Y | 30 | 1 | 232-2964 | 1 | FLOOR GP-SOUND SUPPRESSION | 809 |
| | 31 | 2 | 234-0200 | 1 | SHEET AS | |
| M | | 2 | 6V-9632 | 11 | NUT-WELD (M6X1-THD) | |
| M | | 2 | 8T-3612 | 8 | NUT-WELD (M8X1.25-THD) | |
| M | | 2 | 8T-3851 | 4 | BOSS-WELD (M10X1.5X17.5-MM) | |
| | 32 | 1 | 243-4369 | 1 | PLATE AS (RH) | |
| | 33 | 1 | 243-4371 | 1 | PLATE AS (LH) | |
| | 34 | 3 | 243-5553 | 1 | TRIM (RH) | |
| | 35 | 3 | 243-5554 | 1 | TRIM (RH) | |
| | 36 | 3 | 243-5555 | 1 | TRIM (LH) | |
| | 37 | 3 | 243-5556 | 1 | TRIM (LH) | |
| | 38 | 2 | 245-4333 | 1 | INSULATION | |
| | 39 | 1 | 253-9521 | 4 | SCREW-TRUSS HEAD (M12X1.75X20-MM) | |
| | 40 | 2 | 255-4367 | 1 | GLASS (REAR) | |
| | 41 | 3 | 258-7623 | 1 | TRIM-RH | |
| | 42 | 3 | 258-7624 | 1 | TRIM-LH | |
| M | 43 | 2 | 5C-7261 | 3 | NUT (M8X1.25-THD) | |
| M | 44 | 2 | 6V-7357 | 4 | BOLT (M6X1X25-MM) | |
| M | 45 | 3 | 7X-2533 | 2 | BOLT (M6X1X35-MM) | |

# OPERATOR STATION

## 232-1395 ROPS GP-ENCLOSED *(contd.)*

i02279526

| NOTE | REF NO | GRAPHIC REF | PART NUMBER | QTY | PART NAME 1 2 3 4 5 6 (PRODUCT LEVEL) | SEE PAGE |
|---|---|---|---|---|---|---|
| | 46 | 3 | 8D-6542 | 2 | GROMMET | |
| | 47 | 3 | 8R-3695 | 1 | GROMMET | |
| | 48 | 1,2,3 | 8T-4121 | 26 | WASHER-HARD (11X21X2.5-MM THK) | |
| M | 49 | 2,3 | 8T-4133 | 8 | NUT (M10X1.5-THD) | |
| M | 50 | 3 | 8T-4136 | 4 | BOLT (M10X1.5X25-MM) | |
| M | 51 | 1,3 | 8T-4137 | 14 | BOLT (M10X1.5X20-MM) | |
| | 52 | 3 | 8T-4224 | 2 | WASHER-HARD (8.8X16X2-MM THK) | |
| M | 53 | 1,3 | 9X-2041 | 4 | SCREW-TRUSS HEAD (M10X1.5X20-MM) | |
| M | 54 | 2 | 9X-2044 | 2 | SCREW-TRUSS HEAD (M6X1X16-MM) | |
| | 55 | 2 | 9X-7344 | 2 | GROMMET | |
| | 56 | 2 | 9X-8256 | 4 | WASHER (6.6X12X2-MM THK) | |
| BD | 57 | 3 | 5P-6120 | 1 | TRIM-EDGE (0.2-M) | |

B-USE AS REQUIRED
D-ORDER BY THE METER
M-METRIC PART
Y-SEPARATE ILLUSTRATION

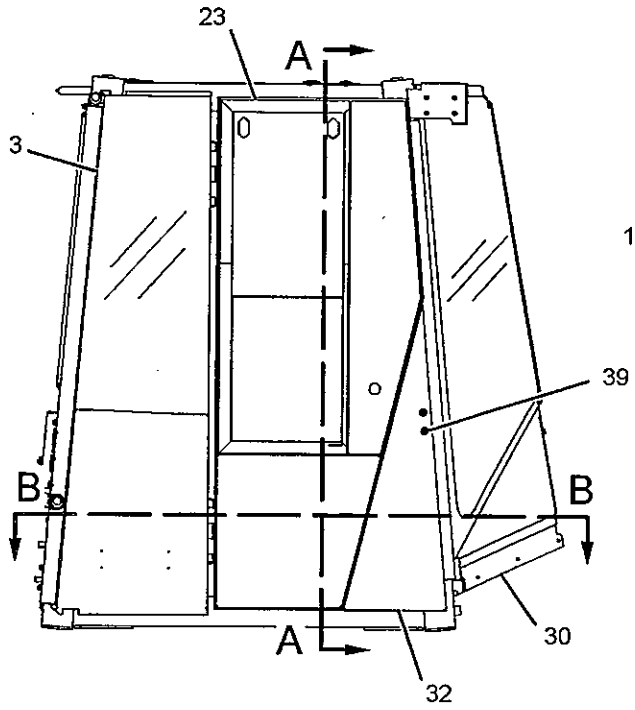


RIGHT SIDE VIEW

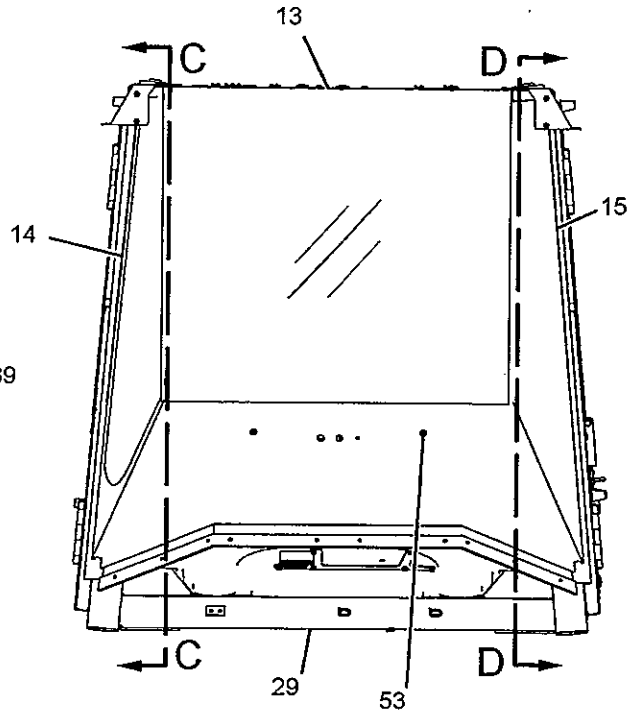


FRONT VIEW

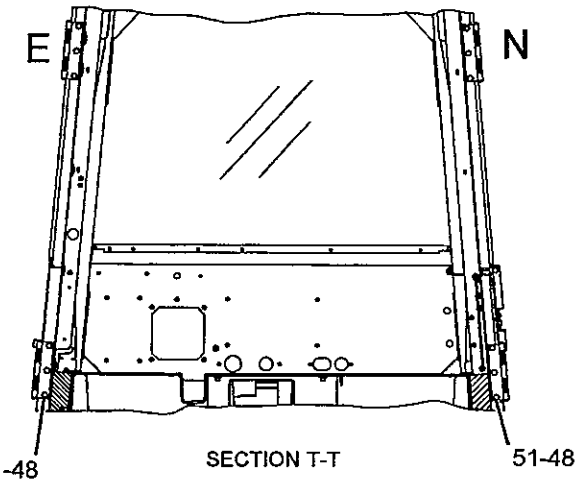


SECTION T-T

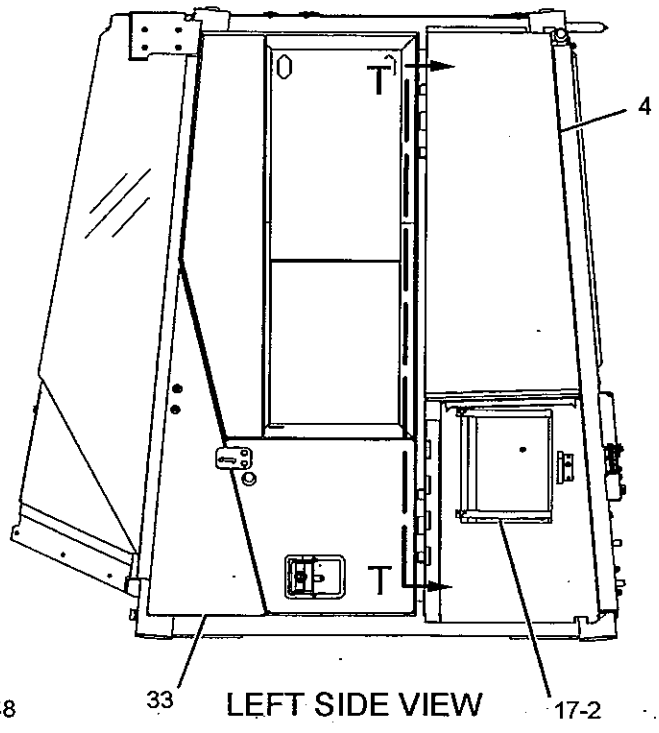


LEFT SIDE VIEW

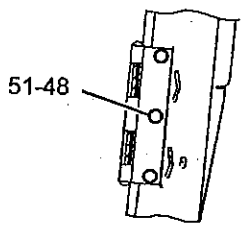


VIEW OF AREA E

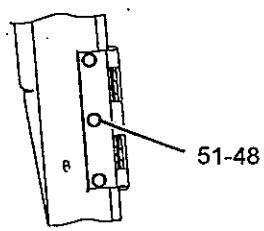


VIEW OF AREA N

REFER TO ALL ILLUSTRATIONS OF THIS GROUP FOR AUXILIARY VIEWS

GRAPHIC #1

g01145377

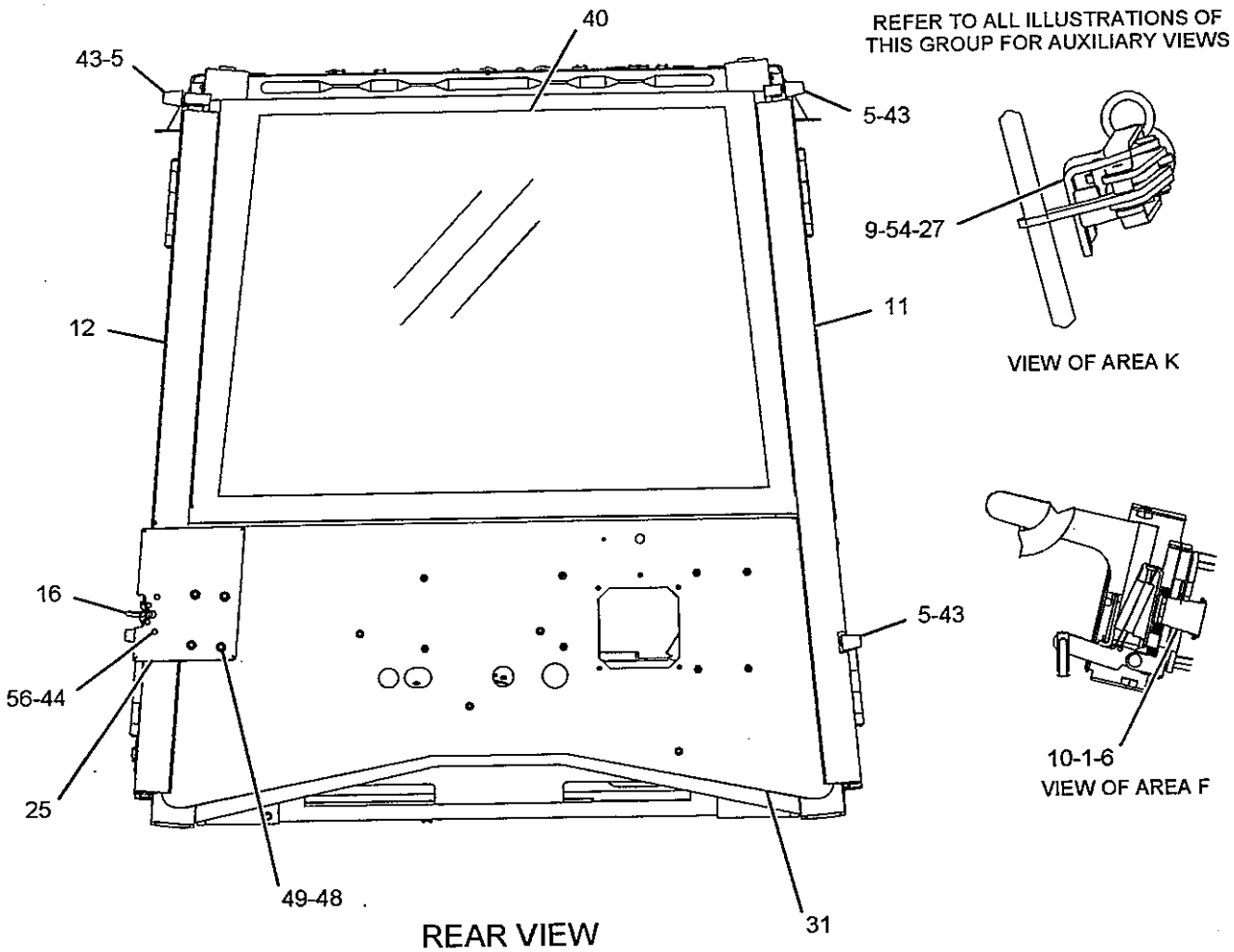


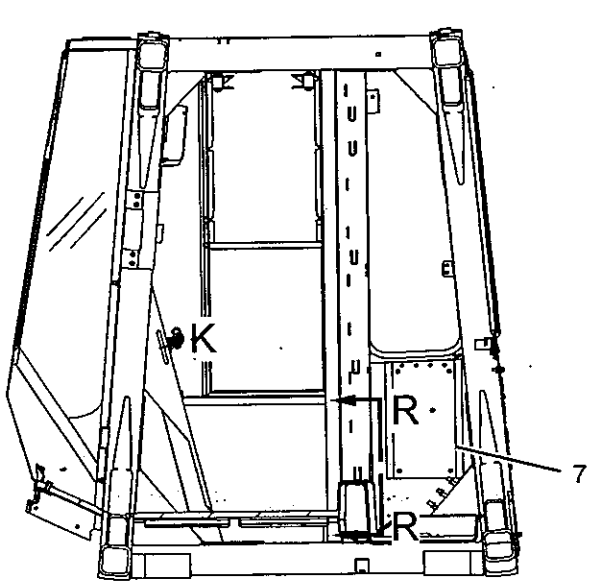


SECTION C-C

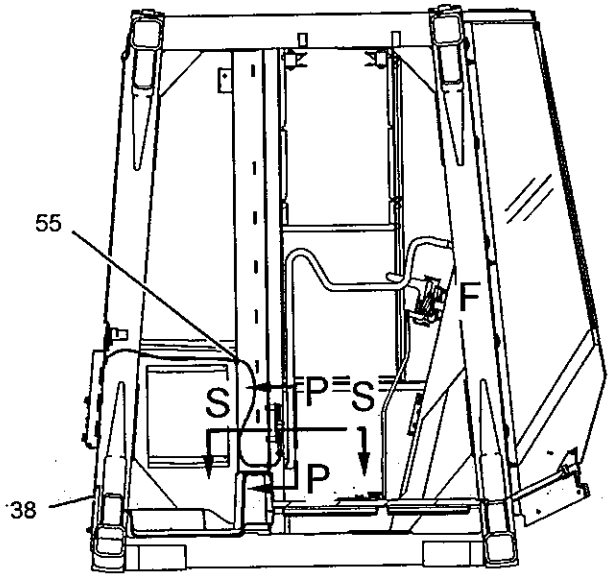


SECTION D-D

GRAPHIC #2 g01145378

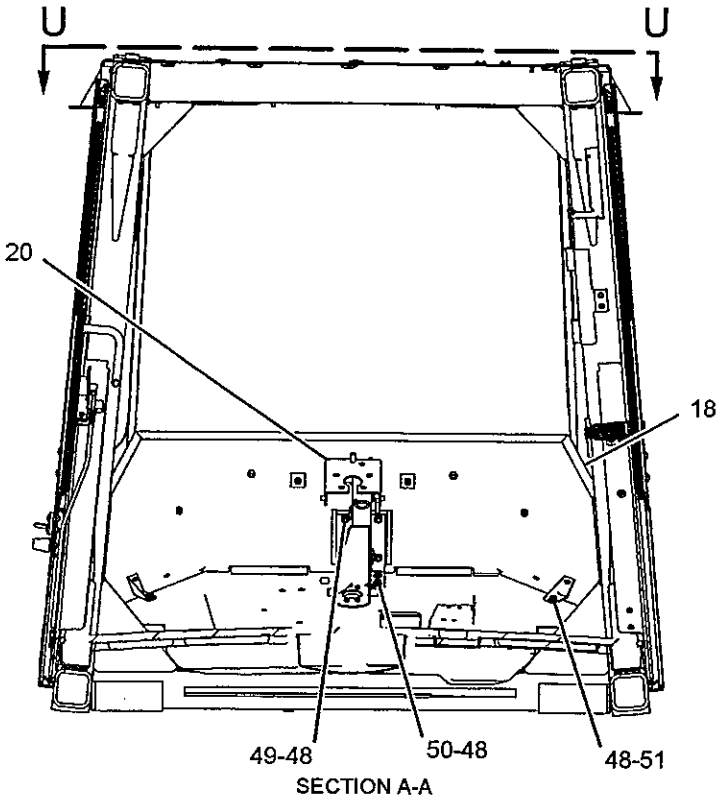


SECTION A-A

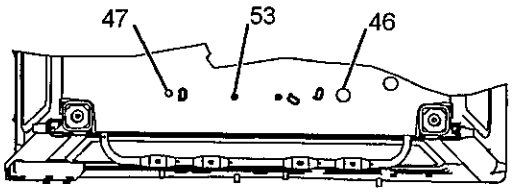


VIEW U-U

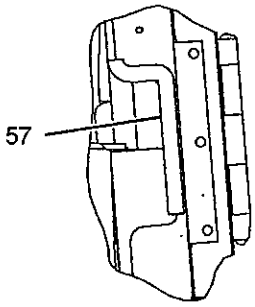


SECTION R-R

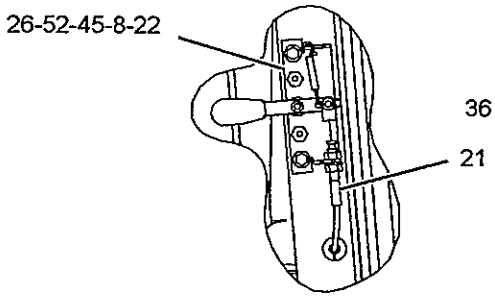


SECTION P-P

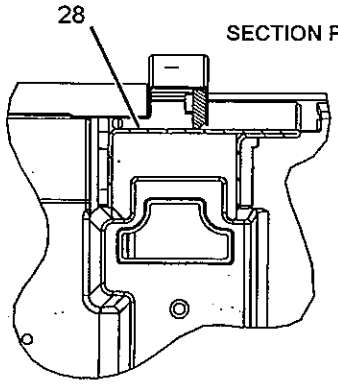


SECTION S-S

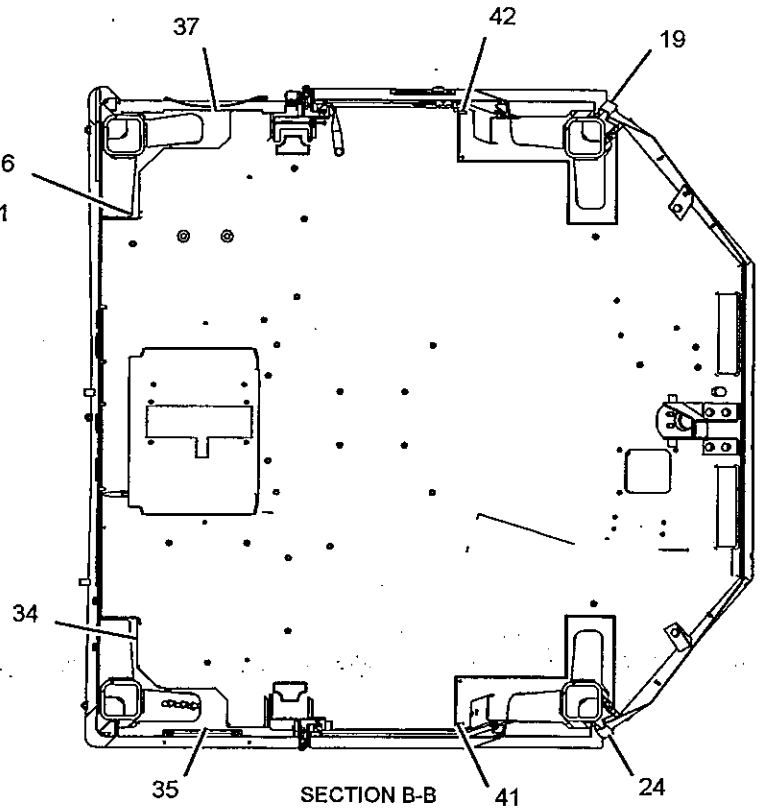


SECTION B-B

GRAPHIC #3

**<END>**

g01145379

# OPERATOR STATION

## *265-6754* ROPS GP-ENCLOSED

**S/N: JMS1-UP**

**PART OF 265-6753 CAB AR-ENCLOSED ROPS**

**AN ATTACHMENT**

**SMCS-7301** i02284052

| NOTE | REF NO | GRAPHIC REF | PART NUMBER | QTY | PART NAME 1 2 3 4 5 6 (PRODUCT LEVEL) | SEE PAGE |
|---|---|---|---|---|---|---|
| B | 1 | 2 | 8T-0318 | 3 | SHIM (0.8-MM THK) | |
| M | 2 | 1 | 9X-2042 | 2 | SCREW-TRUSS HEAD (M6X1X12-MM) | |
| | 3 | 2 | 109-5008 | 3 | BUMPER-CONICAL | |
| | 4 | 2 | 111-0687 | 1 | STRIKER AS | |
| | 5 | 3 | 115-9345 | 1 | KNOB-CONTROL | |
| | 6 | 2 | 126-1052 | 1 | PIN | |
| | 7 | 2 | 128-1026 | 1 | SHIELD-STRIKER | |
| | 8 | 2 | 136-9351 | 1 | TRIM (RH) | |
| | 9 | 2 | 154-9508 | 1 | TRIM (LH) | |
| | 10 | 1 | 165-4795 | 2 | GLASS-REAR SIDE | |
| | 11 | 2 | 165-4799 | 1 | GLASS (REAR) | |
| | 12 | 2 | 165-4801 | 1 | PANEL | |
| | 13 | 2 | 173-2179 | 1 | LATCH AS | |
| | 14 | 1 | 177-3013 | 1 | DOOR AS-ACCESS | |
| | | 1 | 1V-6755 | 1 | LATCH AS | |
| | | 1 | 2N-2258 | 6 | RIVET-POP | |
| | | 1 | 111-1316 | 1 | HINGE | |
| | 15 | 3 | 188-5177 | 1 | BRACKET AS | |
| | | 3 | 5G-8871 | 2 | BOSS (M6X1-6H THD) | |
| | | 3 | 7T-1099 | 5 | LINK | |
| M | | 3 | 8T-3490 | 3 | NUT-WELD (M10X1.5-THD) | |
| M | | 3 | 8T-3635 | 1 | STUD-WELD (M12X1.75X34.93-MM OAL) | |
| | 16 | 3 | 189-5630 | 1 | CABLE AS | |
| | | 3 | 6V-1626 | 1 | GROMMET | |
| | | 3 | 7S-9930 | 2 | RING-RETAINING | |
| | | 3 | 159-0052 | 2 | PIN-CLEVIS | |
| | 17 | 3 | 189-7999 | 2 | BRACKET | |
| | 18 | 2 | 189-8317 | 1 | BRACKET AS | |
| M | | 2 | 6V-9632 | 4 | NUT-WELD (M6X1-THD) | |
| M | | 2 | 8T-3612 | 1 | NUT-WELD (M8X1.25-THD) | |
| | 19 | 3 | 193-8113 | 1 | LEVER AS | |
| | | 3 | 154-1390 | 1 | SPRING | |
| Y | 20 | 1 | *203-2507* | 1 | DOOR GP-CAB | 802 |
| | 21 | 2 | 204-7367 | 1 | COVER AS | |
| | 22 | 3 | 205-6455 | 2 | SPACER | |
| | 23 | 2 | 209-5018 | 1 | LATCH AS | |
| | 24 | 3 | 210-1254 | 2 | INSULATION | |
| | 25 | 1 | 232-1344 | 2 | GLASS | |
| | 26 | 1 | 232-1345 | 1 | GLASS | |
| | 27 | 3 | 232-1366 | 1 | SHEET AS | |
| Y | 28 | 1 | 232-2964 | 1 | FLOOR GP-SOUND SUPPRESSION | 809 |
| | 29 | 1 | 243-4369 | 1 | PLATE AS (RH) | |
| | | 1 | 143-2229 | 1 | TRIM | |
| | 30 | 1 | 243-4371 | 1 | PLATE AS (LH) | |
| | | 1 | 143-2229 | 1 | TRIM | |
| | 31 | 3 | 243-5553 | 1 | TRIM (RH) | |
| | 32 | 3 | 243-5554 | 1 | TRIM (RH) | |
| | 33 | 3 | 243-5555 | 1 | TRIM (LH) | |
| | 34 | 3 | 243-5556 | 1 | TRIM (LH) | |
| | 35 | 1 | 253-9521 | 4 | SCREW-TRUSS HEAD (M12X1.75X20-MM) | |
| | 36 | 3 | 258-7623 | 1 | TRIM-RH | |
| | 37 | 3 | 258-7624 | 1 | TRIM-LH | |
| | 38 | 1 | 265-6756 | 1 | CAB AS (WITH RUBBER MOUNTED GLASS) | |
| | 39 | 2 | 265-6769 | 1 | SHEET AS | |
| M | | 2 | 6V-9632 | 11 | NUT-WELD (M6X1-THD) | |

# OPERATOR STATION

*265-6754* **ROPS GP-ENCLOSED** *(contd.)* i02284052

| NOTE | REF NO | GRAPHIC REF | PART NUMBER | QTY | PART NAME 1 2 3 4 5 6 (PRODUCT LEVEL) | SEE PAGE |
|---|---|---|---|---|---|---|
| M | | 2 | **8T-3490** | 3 | NUT-WELD (M10X1.5-THD) | |
| M | | 2 | **8T-3612** | 8 | NUT-WELD (M8X1.25-THD) | |
| M | | 2 | **8T-3851** | 4 | BOSS-WELD (M10X1.5X17.5-MM) | |
| | 40 | 2 | **267-1459** | 1 | INSULATION | |
| M | 41 | 3 | **5C-2890** | 2 | NUT (M6X1-THD) | |
| M | 42 | 2 | **5C-7261** | 3 | NUT (M8X1.25-THD) | |
| M | 43 | 2 | **6V-7357** | 4 | BOLT (M6X1X25-MM) | |
| M | 44 | 3 | **7X-2533** | 2 | BOLT (M6X1X35-MM) | |
| | 45 | 3 | **8D-6542** | 2 | GROMMET | |
| | 46 | 3 | **8R-3695** | 1 | GROMMET | |
| | 47 | 1,2,3 | **8T-4121** | 63 | WASHER-HARD (11X21X2.5-MM THK) | |
| M | 48 | 2,3 | **8T-4133** | 22 | NUT (M10X1.5-THD) | |
| M | 49 | 3 | **8T-4136** | 4 | BOLT (M10X1.5X25-MM) | |
| M | 50 | 1,2,3 | **8T-4137** | 17 | BOLT (M10X1.5X20-MM) | |
| | 51 | 3 | **8T-4224** | 2 | WASHER-HARD (8.8X16X2-MM THK) | |
| M | 52 | 1,3 | **9X-2041** | 4 | SCREW-TRUSS HEAD (M10X1.5X20-MM) | |
| M | 53 | 2 | **9X-2044** | 2 | SCREW-TRUSS HEAD (M6X1X16-MM) | |
| | 54 | 2 | **9X-7344** | 2 | GROMMET | |
| | 55 | 2 | **9X-8256** | 4 | WASHER (6.6X12X2-MM THK) | |
| | 56 | 3 | **5P-6120** | 1 | TRIM-EDGE | |
| D | 57 | 1,2 | **5P-5768** | 1 | SEAL (13-M) | |

B-USE AS REQUIRED
D-ORDER BY THE METER
M-METRIC PART
Y-SEPARATE ILLUSTRATION

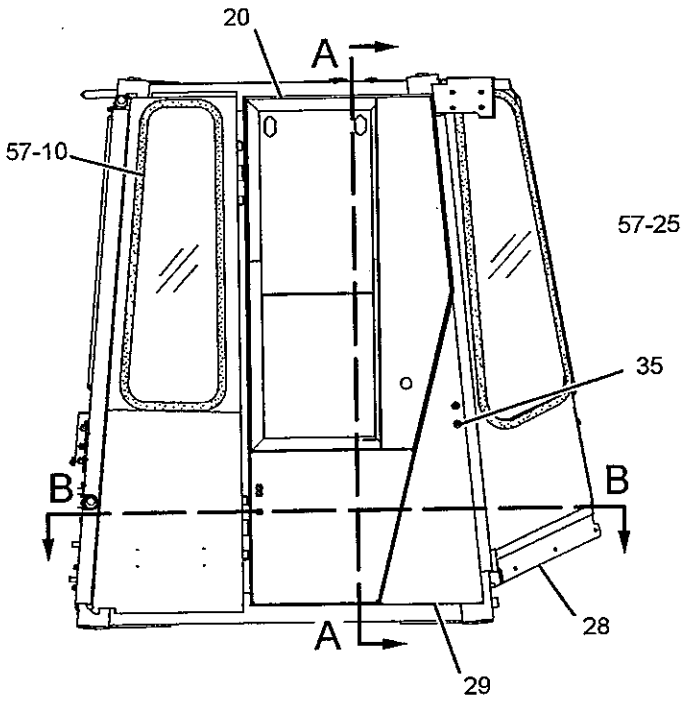


RIGHT SIDE VIEW

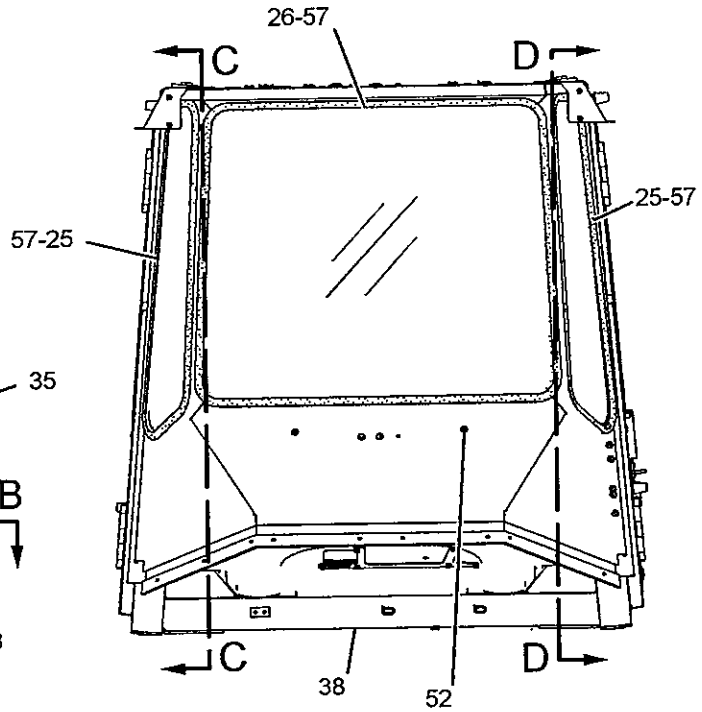


FRONT VIEW

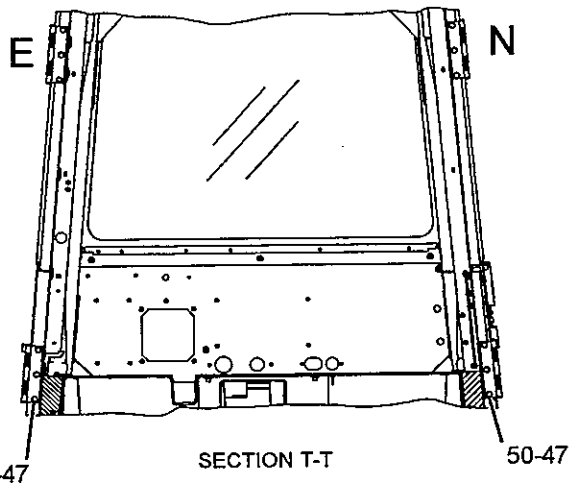


SECTION T-T

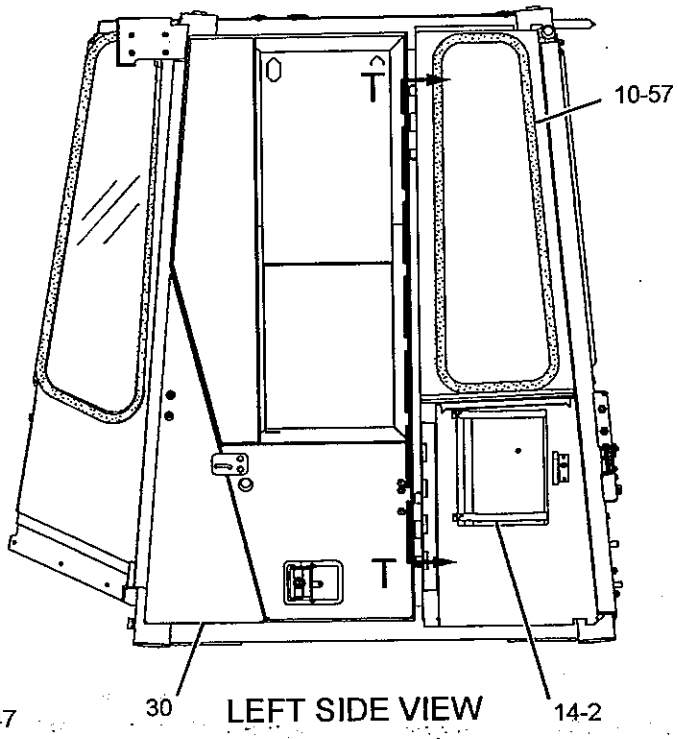


LEFT SIDE VIEW

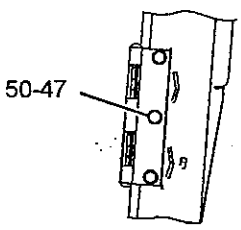


VIEW OF AREA E

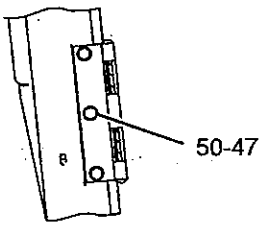


VIEW OF AREA N

REFER TO ALL ILLUSTRATIONS OF THIS GROUP FOR AUXILIARY VIEWS

GRAPHIC #1

g01145135

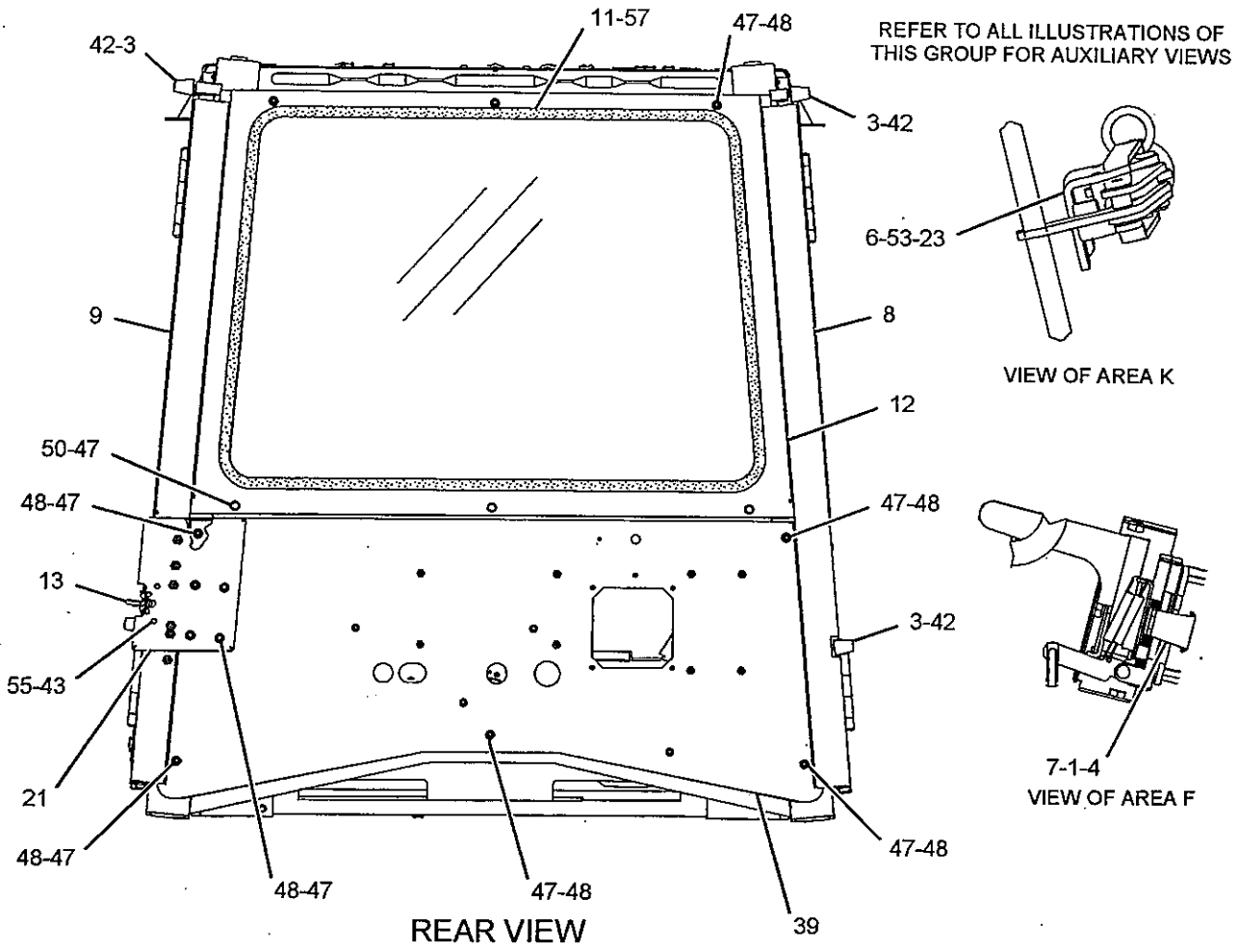


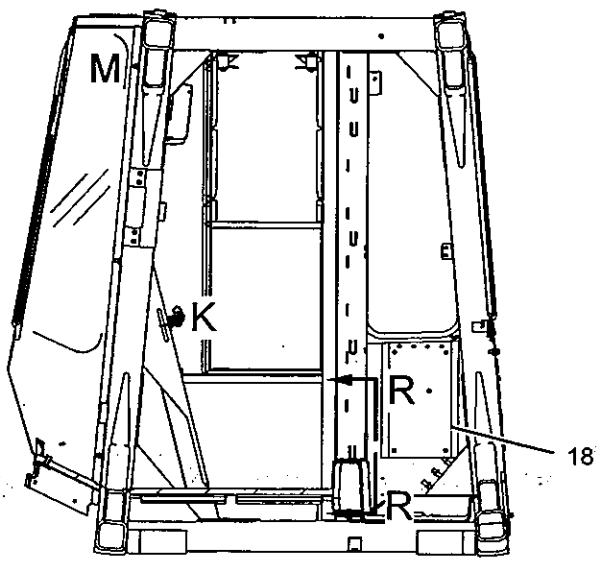


SECTION C-C

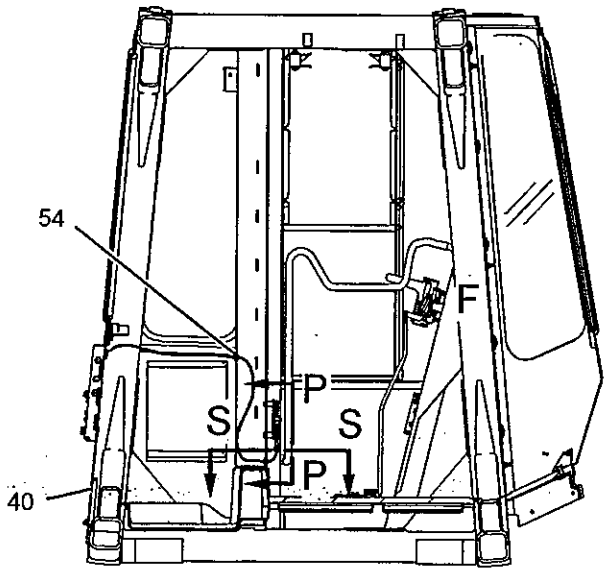


SECTION D-D

GRAPHIC #2

g01145136

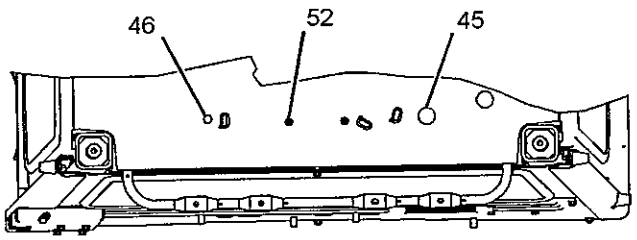


VIEW U-U

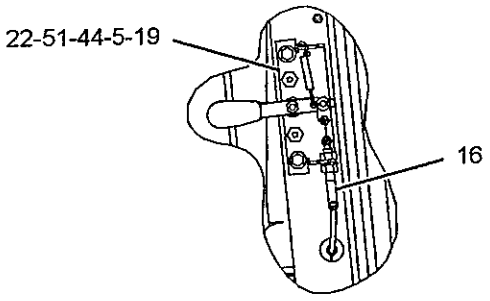


SECTION P-P

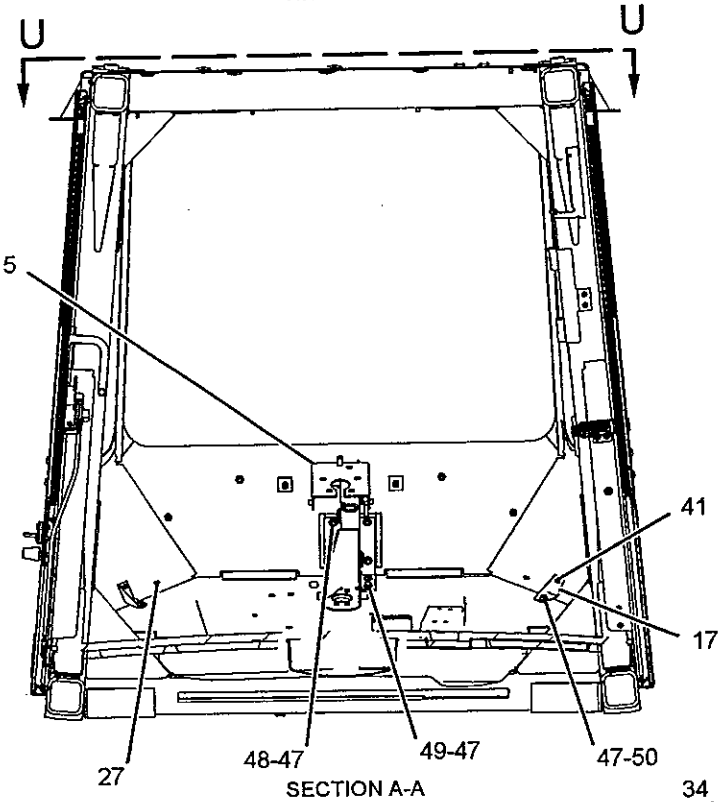


SECTION A-A

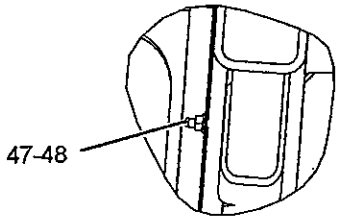


VIEW OF AREA M

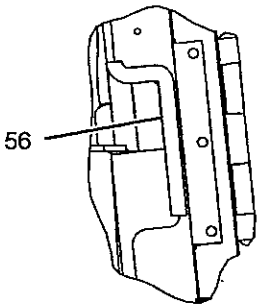


SECTION R-R

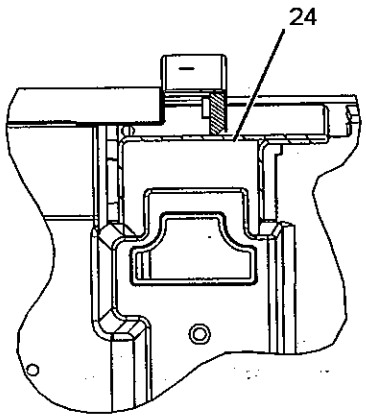


SECTION S-S

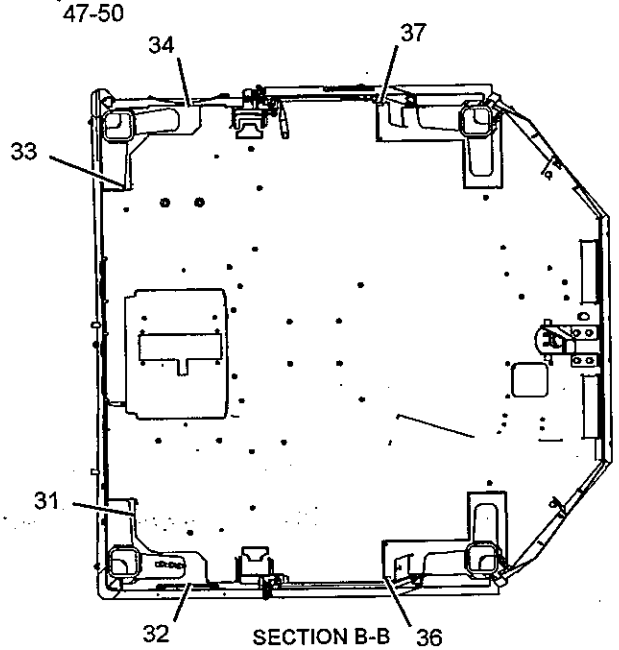


SECTION B-B

GRAPHIC #3 **<END>** g01145137

# OPERATOR STATION

## 203-9840 ROPS GP-OPEN

**S/N: JMS1-UP**

**PART OF 203-9837, 258-1565 CANOPY AR-OPEN ROPS**

**AN ATTACHMENT**

**SMCS-7323** i02156618

| NOTE | REF NO | GRAPHIC REF | PART NUMBER | QTY | PART NAME 1 2 3 4 5 6 (PRODUCT LEVEL) | SEE PAGE |
|---|---|---|---|---|---|---|
| | 1 | 2 | **114-9252** | 1 | BRACKET AS | |
| | 2 | 2 | **125-6510** | 1 | INSULATION | |
| | 3 | 1 | **133-8769** | 1 | TRIM (RH) | |
| | 4 | 1 | **133-8770** | 1 | TRIM (LH) | |
| | 5 | 2 | **161-9934** | 2 | HANDLE AS | |
| | 6 | 1 | **188-5177** | 1 | BRACKET AS | |
| | 7 | 1 | **197-5504** | 1 | TRIM (LH) | |
| | 8 | 1 | **197-5506** | 1 | TRIM (RH) | |
| | 9 | 1 | **197-5507** | 1 | TRIM (LH) | |
| | 10 | 1 | **198-7356** | 1 | TRIM (RH) | |
| | 11 | 1 | **204-0725** | 1 | SHEET AS | |
| | 12 | 1 | **204-0802** | 1 | CAB AS | |
| | 13 | 2 | **204-2607** | 1 | SHEET AS | |
| | 14 | 1 | **204-7572** | 1 | FLOOR AS | |
| M | 15 | 1 | **8T-4137** | 2 | BOLT (M10X1.5X20-MM) | |
| D | 16 | 1 | **5P-6120** | | TRIM-EDGE (0.2-M) | |
| | 17 | 1 | **214-9186** | 20 | BUTTON | |
| | 18 | 1 | **219-9579** | 2 | TRIM | |
| | 19 | 1 | **242-1543** | 2 | PLATE | |
| M | 20 | 2 | **8T-0389** | 4 | LOCKNUT (M10X1.5-THD) | |
| | 21 | 1,2 | **8T-4121** | 14 | WASHER-HARD (11X21X2.5-MM THK) | |
| M | 22 | 1 | **8T-4133** | 4 | NUT (M10X1.5-THD) | |
| M | 23 | 1,2 | **8T-4136** | 8 | BOLT (M10X1.5X25-MM) | |

D-ORDER BY THE METER
M-METRIC PART

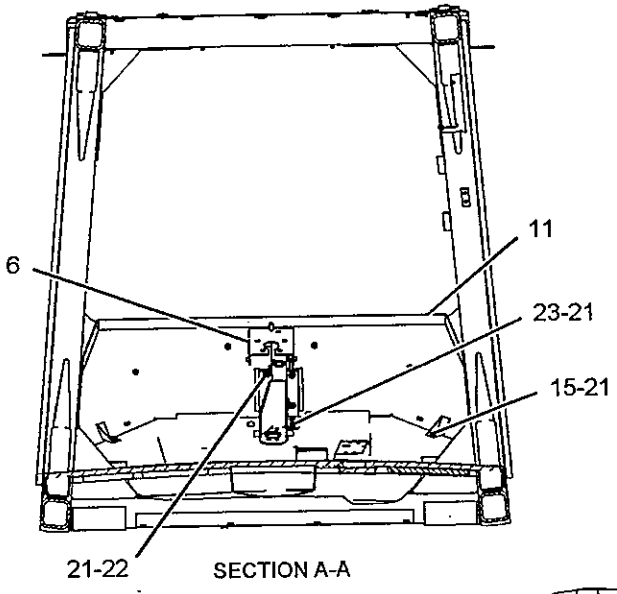


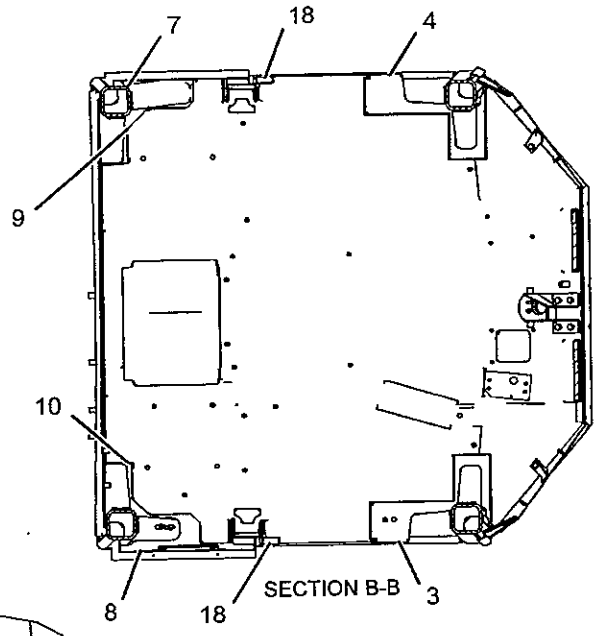


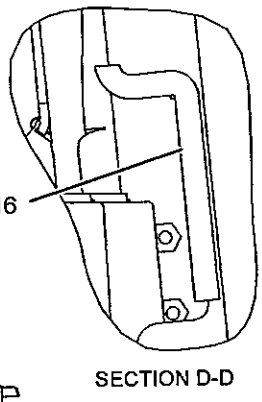


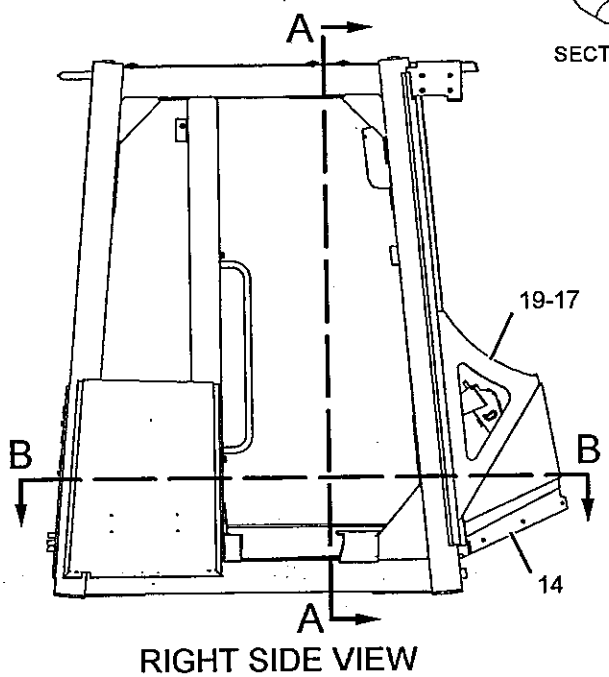


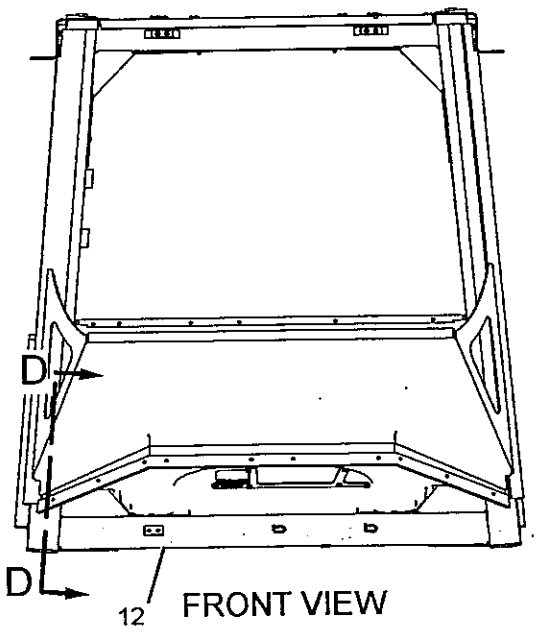


GRAPHIC #1 g01097918

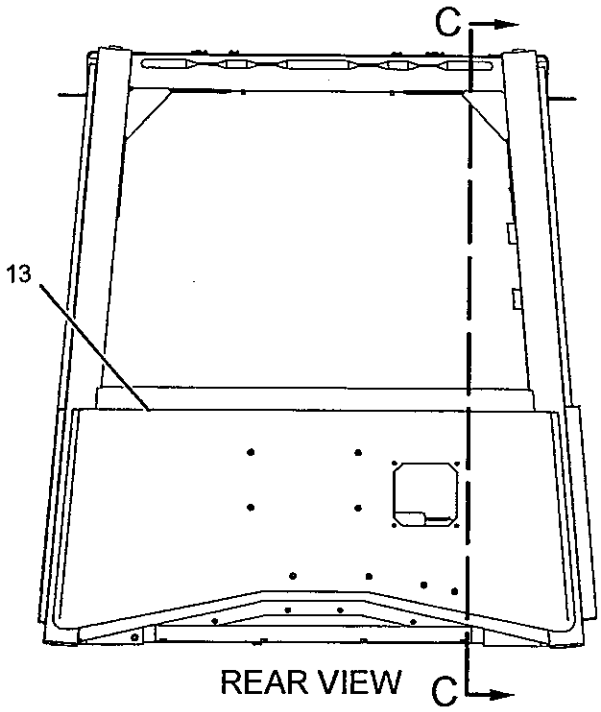


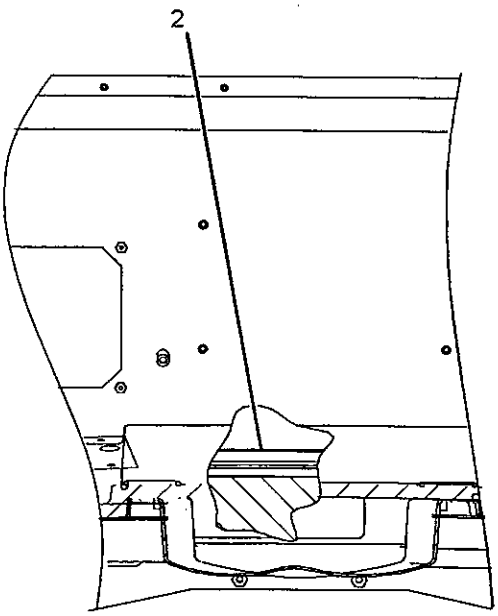


SECTION J-J

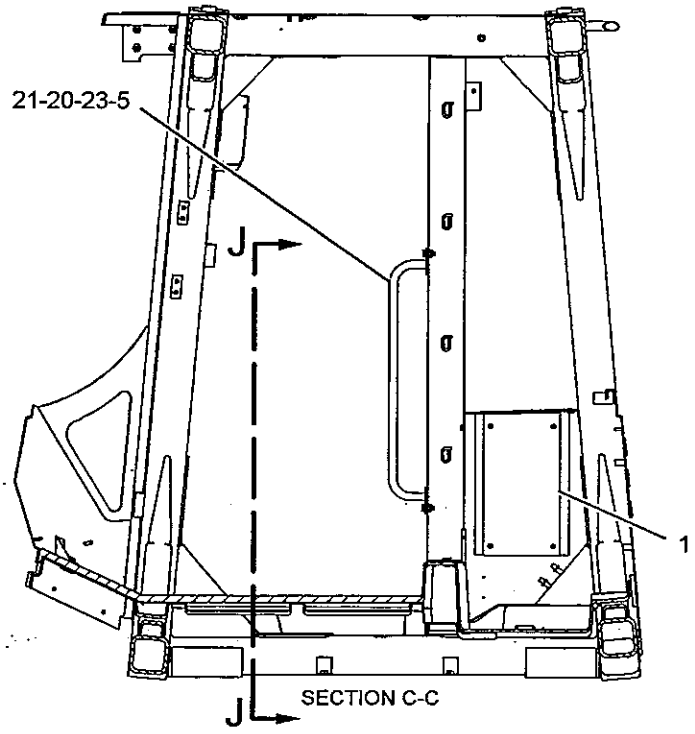


SECTION C-C

GRAPHIC #2 **<END>** g01097919

# OPERATOR STATION

## *117-1410* SEALING GP-GLASS

S/N: JMS1-UP

PART OF 232-1393 CAB AR-ENCLOSED ROPS

SMCS-7310, 7340

i01057779

| NOTE | PART NUMBER | QTY | PART NAME 1 2 3 4 5 6 (PRODUCT LEVEL) | SEE PAGE |
|---|---|---|---|---|
| | 119-0781 | 1 | ADHESIVE | |

<END>

# OPERATOR STATION

## *236-7019* SEAT BELT GP

**S/N: JMS1-UP**

**PART OF 174-3624, 204-4492 SEAT GP-SUSPENSION**

**ALSO AN ATTACHMENT**

**SMCS-7327**

**i02193450**

| NOTE | REF NO | GRAPHIC REF | PART NUMBER | QTY | PART NAME 1 2 3 4 5 6 (PRODUCT LEVEL) | SEE PAGE |
|---|---|---|---|---|---|---|
| | 1 | 1 | 0T-0244 | 1 | BOLT (7/16-20X1.25-IN) | |
| | 2 | 1 | 205-6388 | 1 | BOLT (7/16-20X44.45-MM) | |

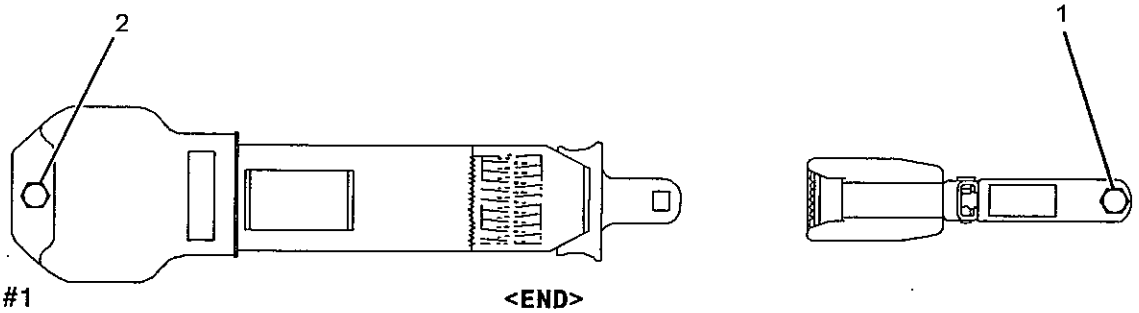


GRAPHIC #1

**<END>**

g01072526

# OPERATOR STATION

## *178-0603* SEAT GP–CLOTH

**S/N: JMS1-UP**

**PART OF 178-7913 SEAT GP**

**SMCS-7312** **i02011971**

| NOTE | REF NO | GRAPHIC REF | PART NUMBER | QTY | PART NAME 1 2 3 4 5 6 (PRODUCT LEVEL) | SEE PAGE |
|---|---|---|---|---|---|---|
| | 1 | 1 | **218-0861** | 1 | PAN AS | |
| | | 1 | **8T-9082** | 5 | RIVET-POP | |
| | | 1 | **217-9049** | 1 | CUSHION AS | |
| | 2 | 1 | **143-1288** | 8 | LOCKNUT-FLANGE (3/8-16-THD) | |
| | 3 | 1 | **171-1230** | 6 | SCREW-BUTTON HEAD (3/8-16X1-IN) | |
| | 4 | 1 | **171-6682** | 1 | BAR | |
| | 5 | 1 | **172-2416** | 2 | PIN | |
| Y | 6 | 1 | *173-1028* | 1 | ADJUSTER GP-SEAT | 779 |
| | 7 | 1 | **177-1863** | 2 | BOLT-PIVOT (3/8-16X2.89-IN) | |
| Y | 8 | 1 | *210-2270* | 1 | RECLINER GP-SEAT | 894 |
| Y | 9 | 1 | *178-0604* | 1 | PAN GP-BACKREST (CLOTH) | 875 |
| | 10 | 1 | **184-2298** | 1 | ROD | |
| | 11 | 1 | **184-2299** | 4 | WASHER (7X25.4X2.54-MM THK) | |
| | 12 | 1 | **095-0843** | 2 | PIN-COTTER | |
| | 13 | 1 | **5V-1496** | 2 | RETAINER | |
| | 14 | 1 | **6V-7646** | 2 | WASHER-HARD (7.2X25X2-MM THK) | |
| | 15 | 1 | **8T-0328** | 1 | WASHER-HARD (5.5X10X1-MM THK) | |
| | 16 | 1 | **8T-4205** | 1 | WASHER-HARD (7.2X14.5X2-MM THK) | |
| | 17 | 1 | **8Y-6277** | 2 | SPACER (10.5X28.6X10-MM THK) | |

Y-SEPARATE ILLUSTRATION

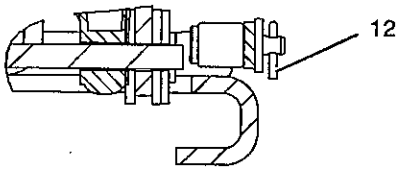


SECTION B-B

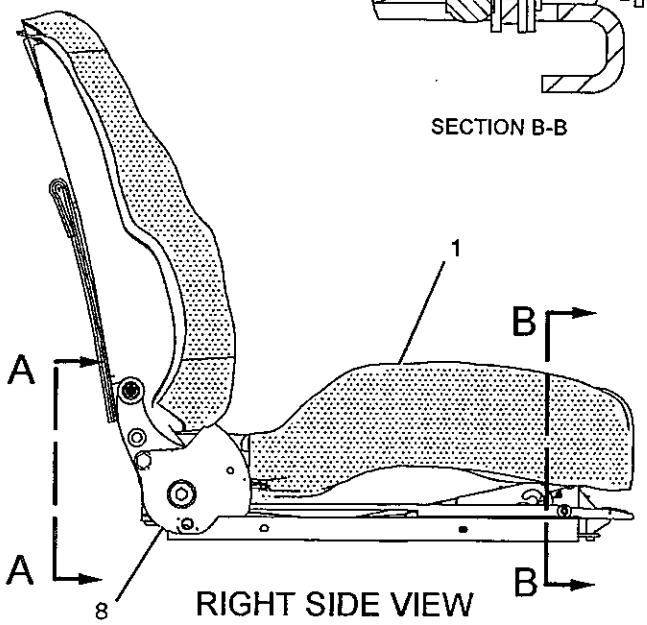


RIGHT SIDE VIEW

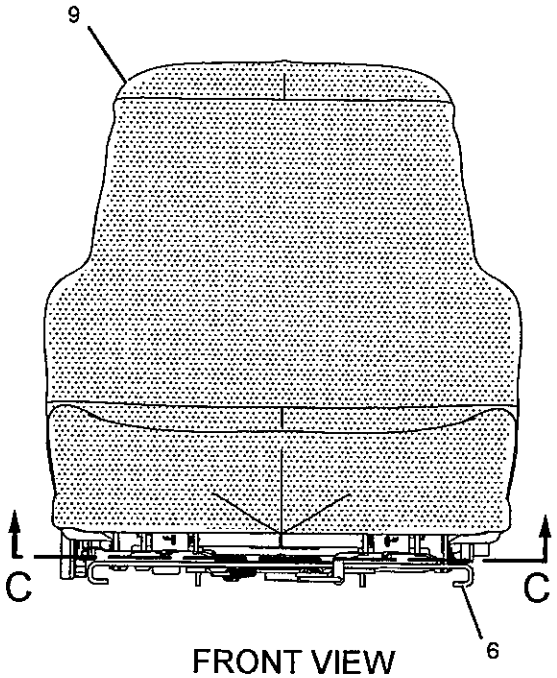


FRONT VIEW

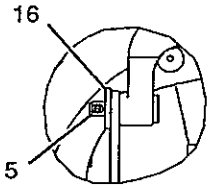


VIEW OF AREA E

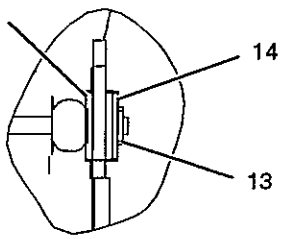


VIEW OF AREA D

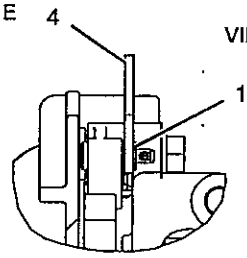


VIEW OF AREA F

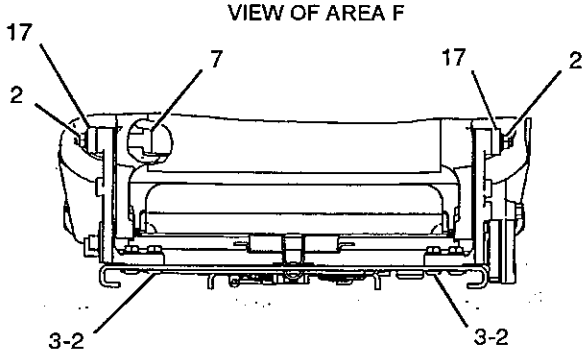


VIEW A-A

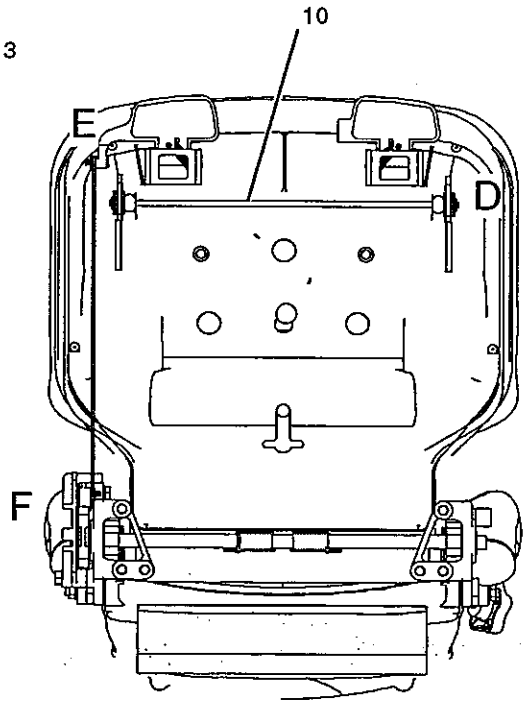


SECTION C-C

GRAPHIC #1

**<END>**

g01023456

# OPERATOR STATION

## *178-7913* SEAT GP

**S/N: JMS1-UP**

**PART OF 219-8094 SEAT GP-SUSPENSION**

**SMCS-7312** **i02219610**

| NOTE | REF NO | GRAPHIC REF | PART NUMBER | QTY | PART NAME 1 2 3 4 5 6 (PRODUCT LEVEL) | SEE PAGE |
|---|---|---|---|---|---|---|
| | 1 | 1 | **143-1288** | 4 | LOCKNUT-FLANGE (3/8-16-THD) | |
| | 2 | 1 | **171-1230** | 3 | SCREW-BUTTON HEAD (3/8-16X1-IN) | |
| | 3 | 1 | **229-1494** | 1 | EXTENSION GP-BACKREST (CLOTH) | |
| Y | 5 | 1 | **178-0603** | 1 | SEAT GP (CLOTH) | 910 |
| | 8 | 1 | **180-9617** | 1 | BRACKET AS | |
| Y | 10 | 1 | **188-9820** | 1 | ARMREST GP | 788 |
| | 11 | 1 | **4L-6454** | 1 | BOLT (3/8-16X1-IN) | |

Y-SEPARATE ILLUSTRATION

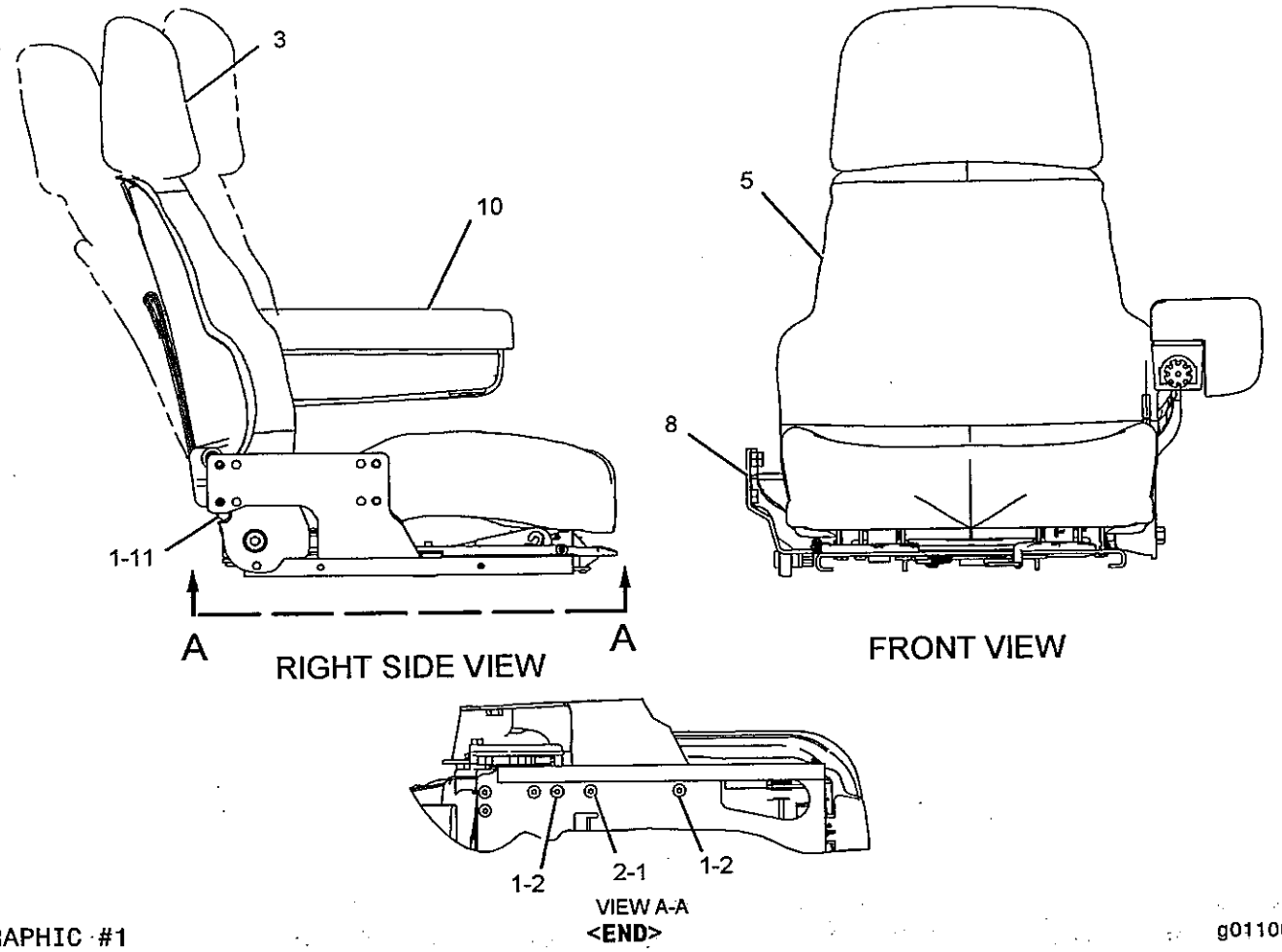


GRAPHIC #1

**<END>**

g01100228

# OPERATOR STATION

## *180-7304* SEAT GP–VINYL

**S/N: JMS1-UP**

**PART OF 207-2804 SEAT GP**

**AN ATTACHMENT**

**SMCS-7312**

**i02285701**

| NOTE | REF NO | GRAPHIC REF | PART NUMBER | QTY | PART NAME 1 2 3 4 5 6 (PRODUCT LEVEL) | SEE PAGE |
|---|---|---|---|---|---|---|
| | 1 | 1 | **143-1288** | 8 | LOCKNUT-FLANGE (3/8-16-THD) | |
| | 2 | 1 | **171-1230** | 6 | SCREW-BUTTON HEAD (3/8-16X1-IN) | |
| | 3 | 1 | **171-6682** | 1 | BAR | |
| | 4 | 1 | **172-2416** | 2 | PIN | |
| Y | 5 | 1 | *173-1028* | 1 | ADJUSTER GP-SEAT | 779 |
| | 6 | 1 | **173-3283** | 1 | PAN AS (VINYL) | |
| | | 1 | **169-1026** | 1 | CUSHION AS | |
| | | 1 | **6K-3273** | 5 | RIVET-POP | |
| | 7 | 1 | **177-1863** | 2 | BOLT-PIVOT (3/8-16X2.89-IN) | |
| Y | 8 | 1 | *180-7305* | 1 | PAN GP-BACKREST (VINYL) | 877 |
| | 9 | 1 | **184-2298** | 1 | ROD | |
| | 10 | 1 | **184-2299** | 4 | WASHER (7X25.4X2.54-MM THK) | |
| Y | 11 | 1 | *210-2270* | 1 | RECLINER GP-SEAT | 894 |
| | 12 | 1 | **095-0843** | 2 | PIN-COTTER | |
| | 13 | 1 | **5V-1496** | 2 | RETAINER | |
| | 14 | 1 | **6V-7646** | 2 | WASHER-HARD (7.2X25X2-MM THK) | |
| | 15 | 1 | **8T-0328** | 1 | WASHER-HARD (5.5X10X1-MM THK) | |
| | 16 | 1 | **8T-4205** | 1 | WASHER-HARD (7.2X14.5X2-MM THK) | |
| | 17 | 1 | **8Y-6277** | 2 | SPACER (10.5X28.6X10-MM THK) | |

Y-SEPARATE ILLUSTRATION

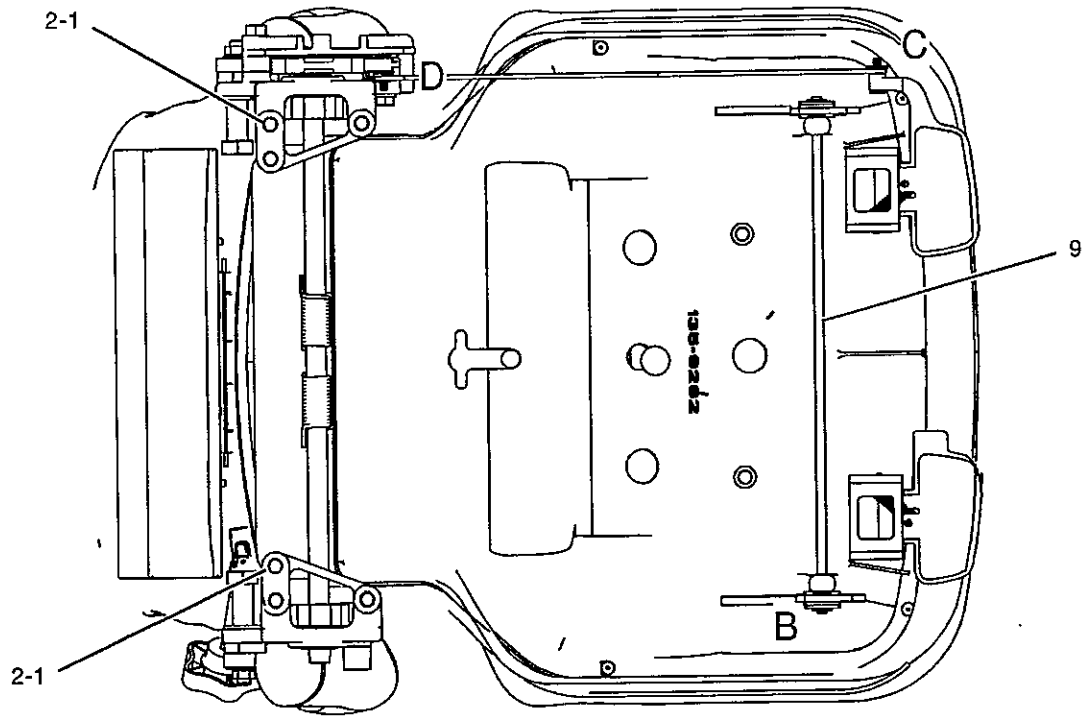


SECTION A-A

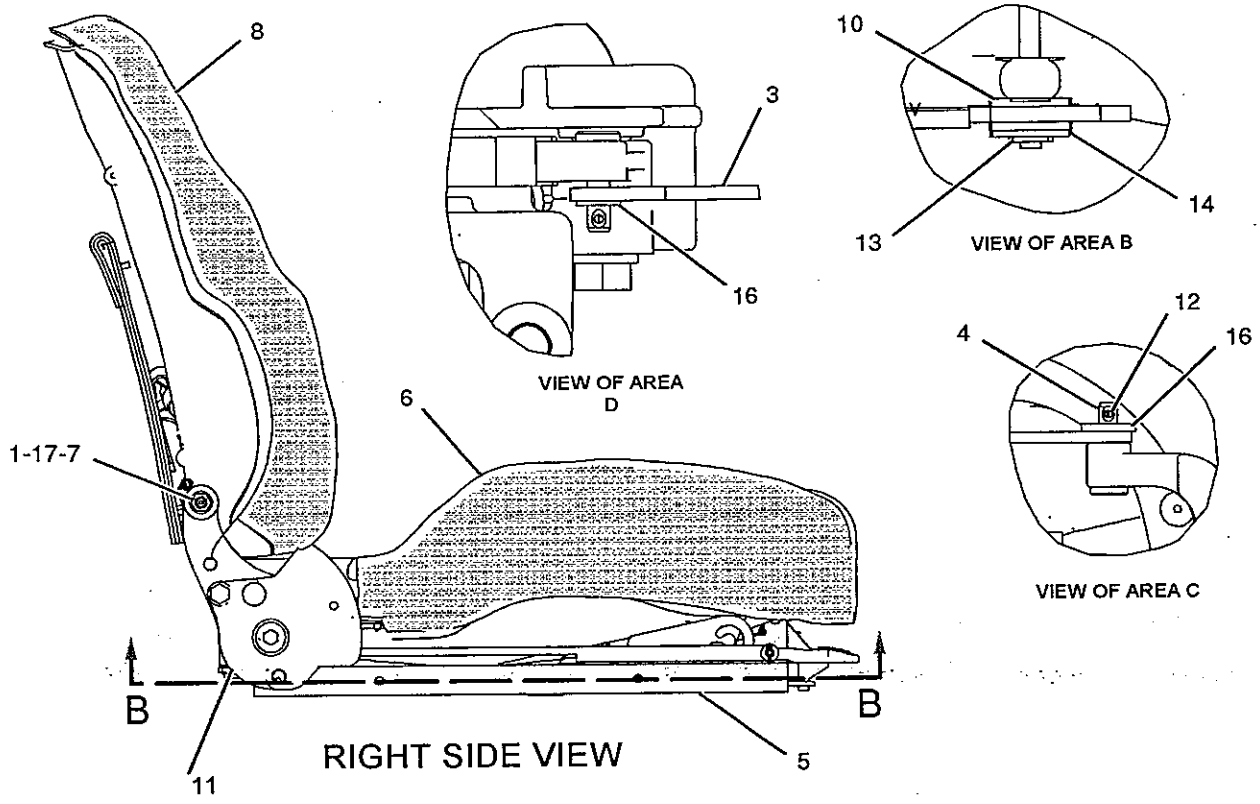


GRAPHIC #1

**<END>**

g01037175

# OPERATOR STATION

## 207-2804 SEAT GP–VINYL

**S/N: JMS1-UP**

**PART OF 219-8095 SEAT GP-SUSPENSION**

**AN ATTACHMENT**

**SMCS-7312** **i02166648**

| NOTE | REF NO | GRAPHIC REF | PART NUMBER | QTY | PART NAME 1 2 3 4 5 6 (PRODUCT LEVEL) | SEE PAGE |
|---|---|---|---|---|---|---|
| | 1 | 1 | **143-1288** | 4 | LOCKNUT-FLANGE (3/8-16-THD) | |
| | 2 | 1 | **171-1230** | 3 | SCREW-BUTTON HEAD (3/8-16X1-IN) | |
| | 3 | 1 | *173-3083* | 1 | EXTENSION GP-BACKREST | |
| Y | 5 | 1 | **180-7304** | 1 | SEAT GP (VINYL) | 913 |
| | 6 | 1 | **180-9617** | 1 | BRACKET AS | |
| Y | 7 | 1 | **188-9820** | 1 | ARMREST GP | 788 |
| | 11 | 1 | **4L-6454** | 1 | BOLT (3/8-16X1-IN) | |

Y-SEPARATE ILLUSTRATION

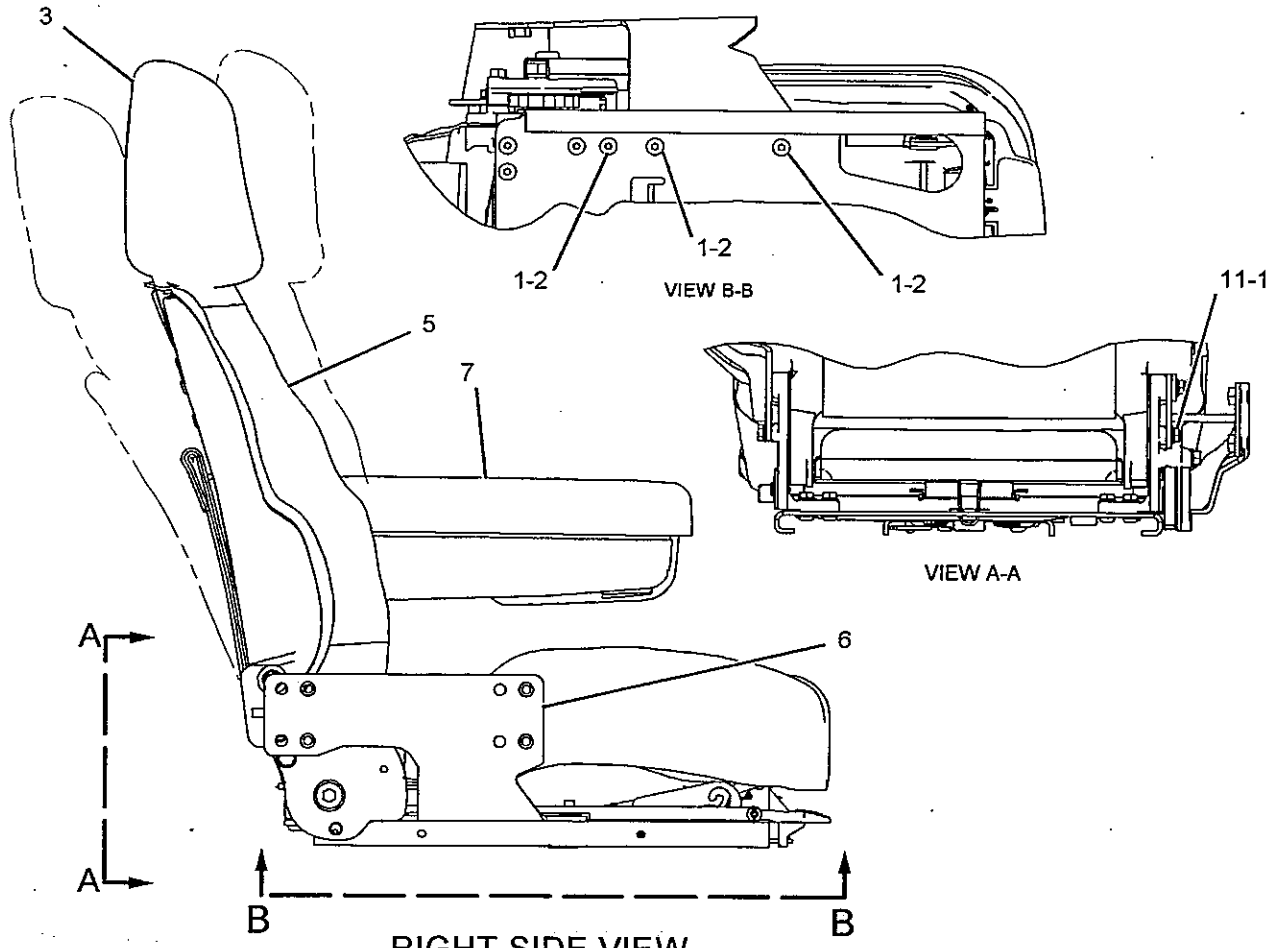


RIGHT SIDE VIEW

GRAPHIC #1

**<END>**

g01100310

# OPERATOR STATION

## *246-4302* SEAT GP–CLOTH, HEATED

S/N: JMS1-UP
24-VOLT
PART OF 246-4447 SEAT GP
AN ATTACHMENT

i02283515

SMCS-7312

| NOTE | PART NUMBER | QTY | PART NAME 1 2 3 4 5 6 (PRODUCT LEVEL) | SEE PAGE |
|---|---|---|---|---|
| Y | *173-1028* | 1 | ADJUSTER GP-SEAT | 779 |

Y-SEPARATE ILLUSTRATION

<END>

# OPERATOR STATION

## 246-4447 SEAT GP–HEATED, 24-VOLT

**S/N: JMS1-UP**

**PART OF 237-2069 SEAT GP-SUSPENSION**

**AN ATTACHMENT**

**SMCS-7312** **i02283514**

| NOTE | REF NO | GRAPHIC REF | PART NUMBER | QTY | PART NAME 1 2 3 4 5 6 (PRODUCT LEVEL) | SEE PAGE |
|---|---|---|---|---|---|---|
| | 1 | 1 | 143-1288 | 4 | LOCKNUT-FLANGE (3/8-16-THD) | |
| | 2 | 1 | 171-1230 | 3 | SCREW-BUTTON HEAD (3/8-16X1-IN) | |
| | 3 | 1 | 180-9617 | 1 | BRACKET AS | |
| Y | 4 | 1 | 188-9820 | 1 | ARMREST GP (LH) | 788 |
| | 5 | 1 | 229-1494 | 1 | EXTENSION GP-BACKREST (CLOTH) | |
| | | 1 | 117-4491 | 1 | ROD | |
| Y | 6 | 1 | 246-4302 | 1 | SEAT GP (CLOTH, HEATED) | 916 |
| | 7 | 1 | 4L-6454 | 1 | BOLT (3/8-16X1-IN) | |

Y-SEPARATE ILLUSTRATION

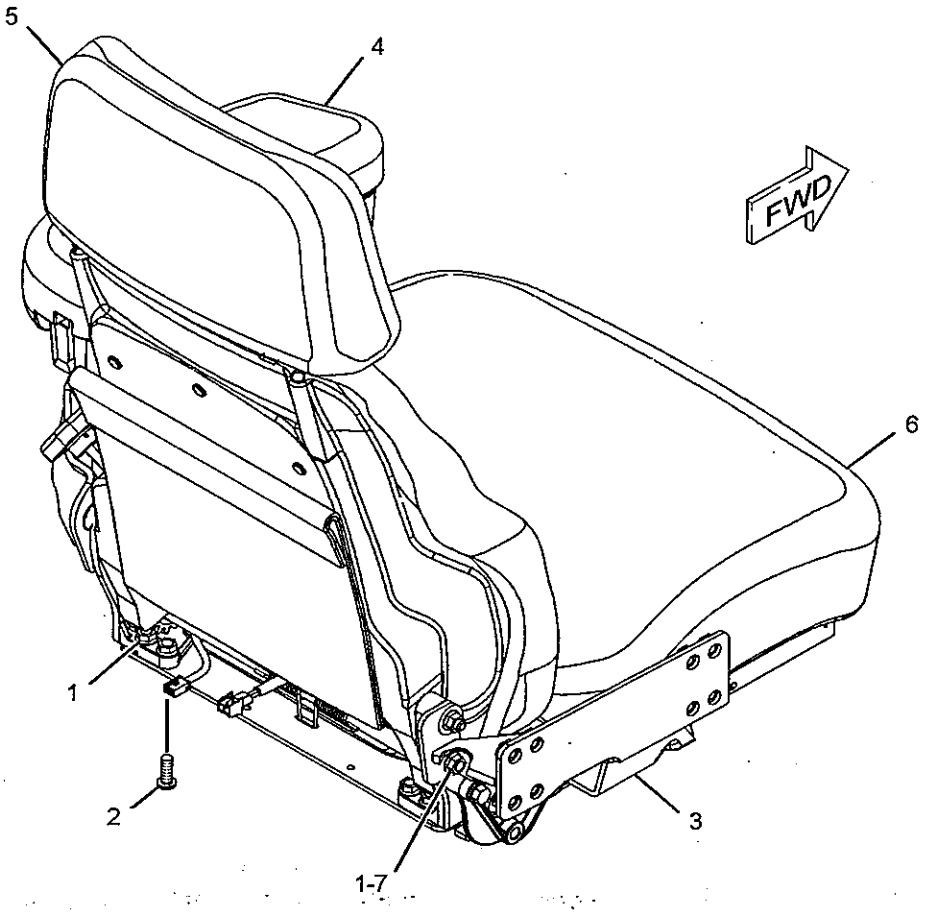


GRAPHIC #1 **<END>** g01143415

# OPERATOR STATION

## *174-3624* SEAT GP-SUSPENSION

**S/N: JMS1-UP**

**PART OF 232-1393 CAB AR-ENCLOSED ROPS**

**SMCS-7324, 7336**

**i02181299**

| NOTE | REF NO | GRAPHIC REF | PART NUMBER | QTY | PART NAME 1 2 3 4 5 6 (PRODUCT LEVEL) | SEE PAGE |
|---|---|---|---|---|---|---|
| | 1 | 1 | 192-2175 | 1 | PLATE AS | |
| | 2 | 1 | 209-3750 | 2 | BOLT (M10X1.5X75-MM) | |
| Y | 3 | 1 | 219-8094 | 1 | SEAT GP-SUSPENSION | 920 |
| M | 4 | 1 | 7X-2545 | 2 | BOLT (M10X1.5X150-MM) | |
| | 5 | 1 | 8T-4896 | 4 | WASHER-HARD (10.2X18.5X2.5-MM THK) | |
| Y | 6 | 1 | 236-7019 | 1 | SEAT BELT GP | 909 |
| | 7 | 1 | 205-6388 | 1 | BOLT (7/16-20X44.45-MM) | |
| | 8 | 1 | 177-4937 | 1 | SPACER (11.7X19.8X20.3-MM THK) | |
| | 9 | 1 | 0T-0244 | 1 | BOLT (7/16-20X1.25-IN) | |

M-METRIC PART
Y-SEPARATE ILLUSTRATION

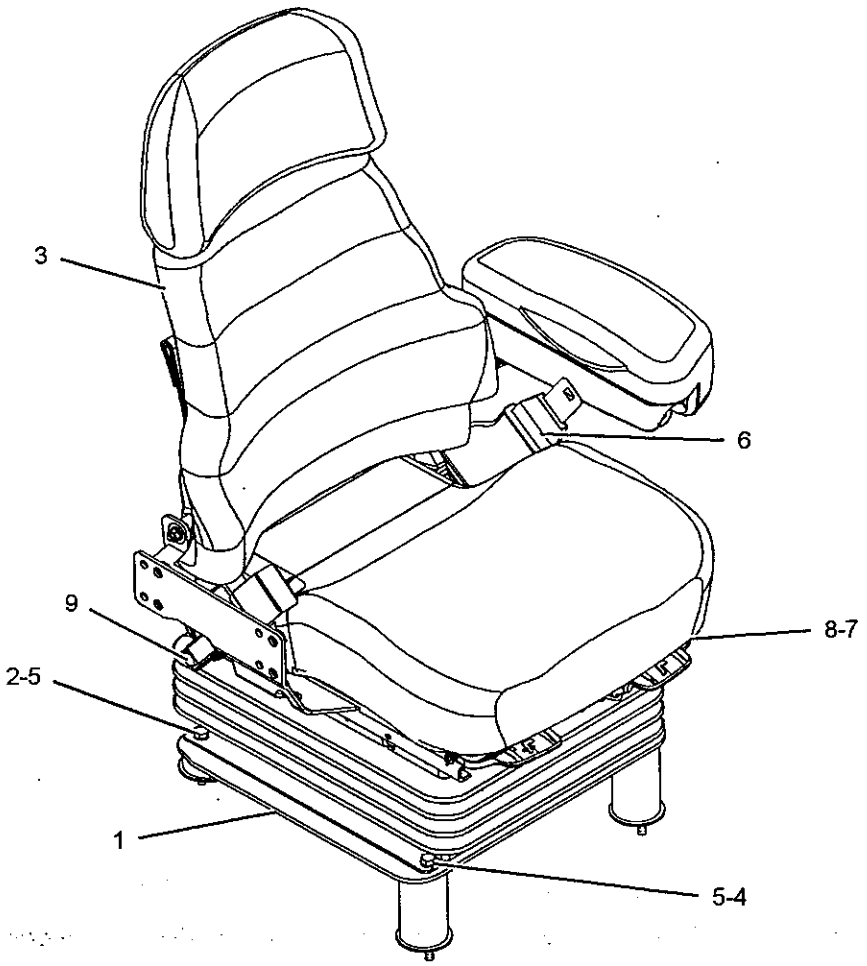


GRAPHIC #1

**<END>**

g01104707

# OPERATOR STATION

## *204-4492* SEAT GP-SUSPENSION

**S/N: JMS1-UP**

**PART OF 203-9837, 258-1565 CANOPY AR-OPEN ROPS**

**AN ATTACHMENT**

**SMCS-7324, 7336**

**i02193950**

| NOTE | REF NO | GRAPHIC REF | PART NUMBER | QTY | PART NAME 1 2 3 4 5 6 (PRODUCT LEVEL) | SEE PAGE |
|---|---|---|---|---|---|---|
| | 1 | 1 | **192-2175** | 1 | PLATE AS | |
| | 2 | 1 | **209-3750** | 1 | BOLT (M10X1.5X75-MM) | |
| CY | 3 | 1 | **219-8095** | 2 | SEAT GP-SUSPENSION | 921 |
| M | 4 | 1 | **7X-2545** | 2 | BOLT (M10X1.5X150-MM) | |
| | 5 | 1 | **8T-4896** | 4 | WASHER-HARD (10.2X18.5X2.5-MM THK) | |
| Y | 6 | 1 | **236-7019** | 1 | SEAT BELT GP | 909 |
| | 7 | 1 | **205-6388** | 1 | BOLT (7/16-20X44.45-MM) | |
| | 8 | 1 | **177-4937** | 1 | SPACER (11.7X19.8X20.3-MM THK) | |
| | 9 | 1 | **0T-0244** | 1 | BOLT (7/16-20X1.25-IN) | |

C-CHANGE FROM PREVIOUS TYPE
M-METRIC PART
Y-SEPARATE ILLUSTRATION

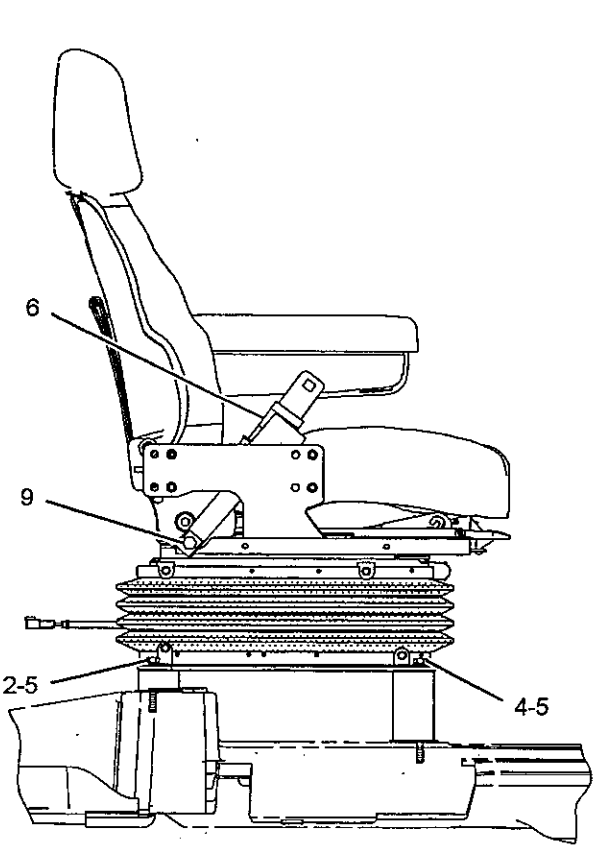


RIGHT SIDE VIEW

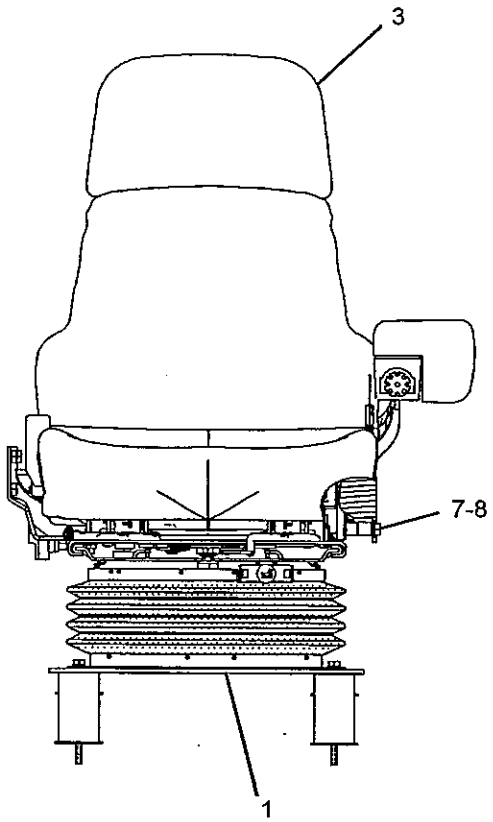


FRONT VIEW

GRAPHIC #1

**<END>**

g01109178

# OPERATOR STATION

## 219-8094 SEAT GP-SUSPENSION

**S/N: JMS1-UP**

**PART OF 174-3624 SEAT GP-SUSPENSION**

**SMCS-7324, 7336** **i02169882**

| NOTE | REF NO | GRAPHIC REF | PART NUMBER | QTY | PART NAME 1 2 3 4 5 6 (PRODUCT LEVEL) | SEE PAGE |
|---|---|---|---|---|---|---|
| JZ | 1 | 1 | | 4 | BLOCK-SLIDER | |
| J | 2 | 1 | 173-5787 | 4 | SETSCREW (1/4-20-THD) | |
| Y | 3 | 1 | 178-7913 | 1 | SEAT GP | 912 |
| Y | 4 | 1 | 191-2933 | 1 | SUSPENSION GP-SEAT (AIR) | 938 |
| J | 5 | 1 | 203-7703 | 2 | WASHER-HARD (10.2X22.22X2.38-MM THK) | |
| J | 6 | 1 | 4F-4879 | 1 | BOLT (3/8-16X0.5-IN) | |
| | | | | | AVAILABLE REPAIR KIT(S): | |
| J | | | 173-7035 | 1 | KIT-SLIDER BLOCK | |

J-KIT MARKED J SERVICES PARTS MARKED J
Y-SEPARATE ILLUSTRATION
Z-NOT SERVICED SEPARATELY

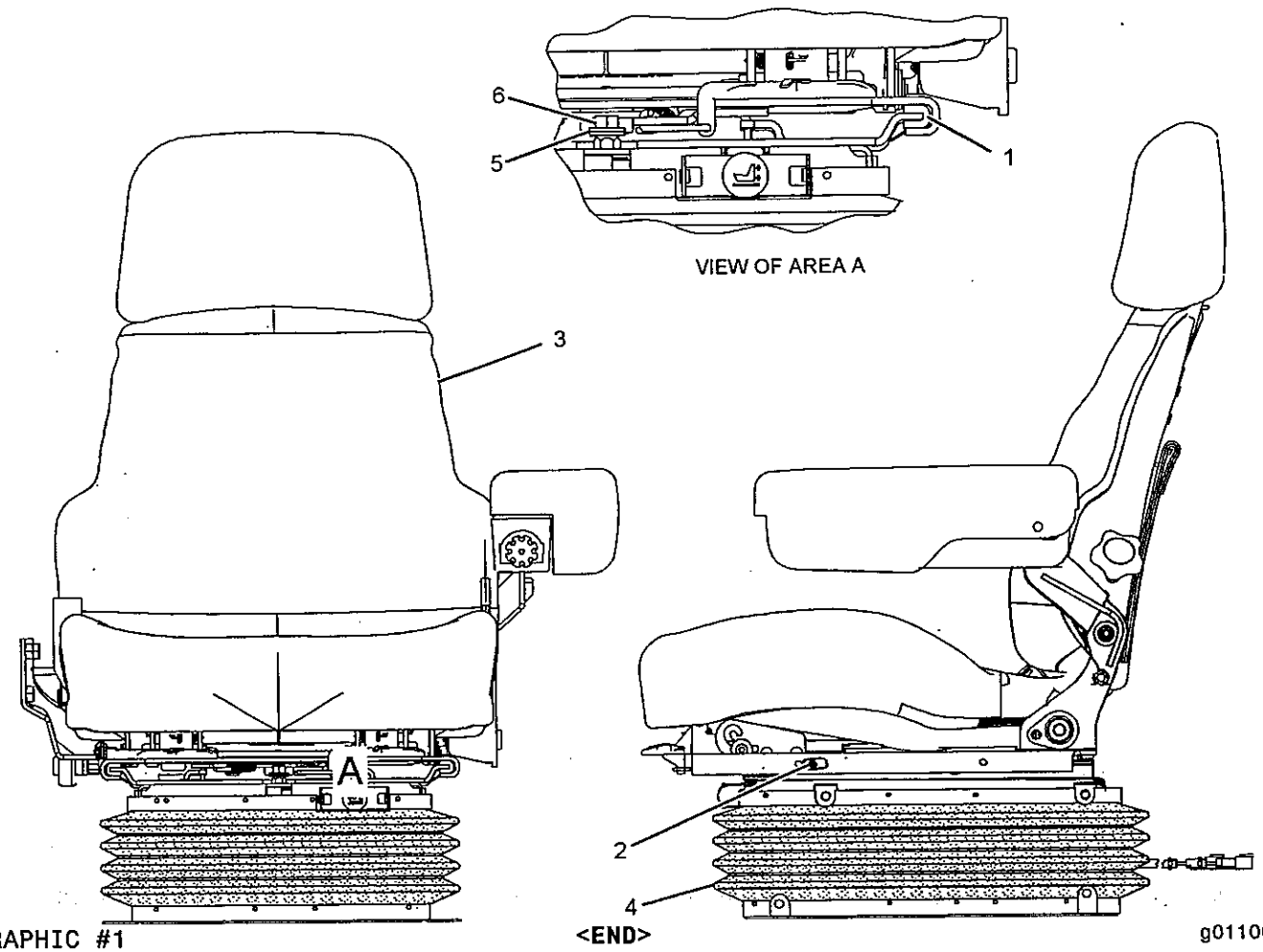


GRAPHIC #1

**<END>**

g01100900

# OPERATOR STATION

## 219-8095 SEAT GP-SUSPENSION

S/N: JMS1-UP
PART OF 204-4492 SEAT GP-SUSPENSION
AN ATTACHMENT

SMCS-7324, 7336

i02166729

| NOTE | REF NO | GRAPHIC REF | PART NUMBER | QTY | PART NAME 1 2 3 4 5 6 (PRODUCT LEVEL) | SEE PAGE |
|---|---|---|---|---|---|---|
| | 1 | 1 | 161-9289 | 4 | BLOCK-SLIDER | |
| | 2 | 1 | 173-5787 | 4 | SETSCREW (1/4-20-THD) | |
| Y | 3 | 1 | 191-2933 | 1 | SUSPENSION GP-SEAT (AIR) | 938 |
| | 4 | 1 | 203-7703 | 2 | WASHER-HARD (10.2X22.22X2.38-MM THK) | |
| Y | 5 | 1 | 207-2804 | 1 | SEAT GP (VINYL) | 915 |
| | 6 | 1 | 4F-4879 | 1 | BOLT (3/8-16X0.5-IN) | |
| | | | | | AVAILABLE REPAIR KIT(S): | |
| | | | 173-7035 | | KIT-SLIDER BLOCK | |
| | | | | | INCLUDES BOLT, WASHERS, SETSCREWS AND BLOCKS | |

Y-SEPARATE ILLUSTRATION

## 219-8095 SEAT GP-SUSPENSION *(contd.)*

i02166729

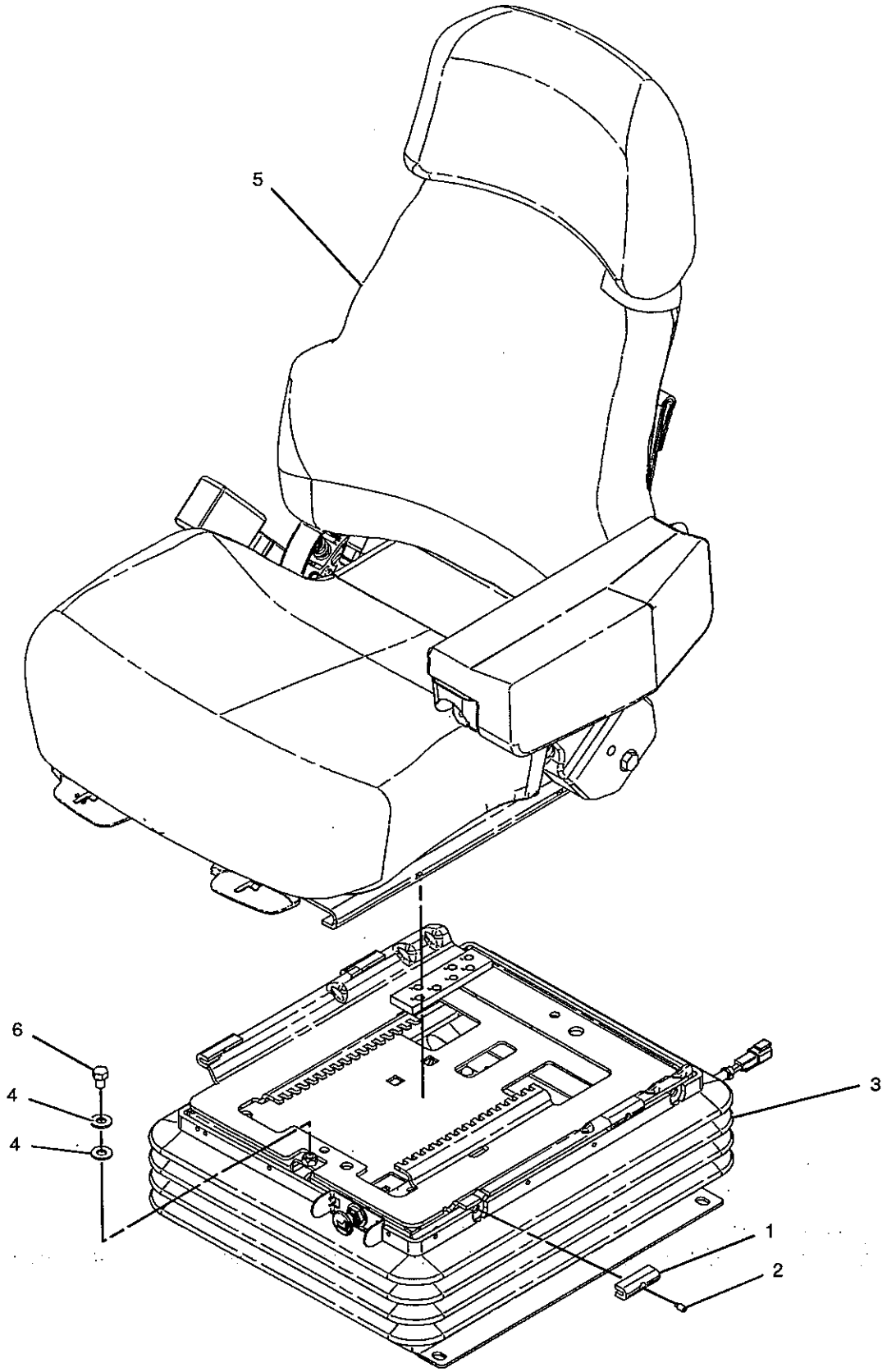


GRAPHIC #1

<END>

g01037768

# OPERATOR STATION

## 237-2069 SEAT GP-SUSPENSION–HEATED, 24-VOLT

**S/N: JMS1-UP**

**AN ATTACHMENT**

**SMCS-7324, 7336**

**i02283506**

| NOTE | REF NO | GRAPHIC REF | PART NUMBER | QTY | PART NAME 1 2 3 4 5 6 (PRODUCT LEVEL) | SEE PAGE |
|---|---|---|---|---|---|---|
| J | 1 | 1 | *161-9289* | 4 | BLOCK-SLIDER | |
| J | 2 | 1 | **173-5787** | 4 | SETSCREW (1/4-20-THD) | |
| Y | 3 | 1 | **191-2933** | 1 | SUSPENSION GP-SEAT (AIR) | 938 |
| J | 4 | 1 | **203-7703** | 2 | WASHER-HARD (10.2X22.22X2.38-MM THK) | |
| Y | 5 | 1 | **246-4447** | 1 | SEAT GP | 917 |
| J | 6 | 1 | **4F-4879** | 1 | BOLT (3/8-16X0.5-IN) | |
| | | | | | AVAILABLE REPAIR KIT(S): | |
| J | | | **173-7035** | 1 | KIT-SLIDER BLOCK | |

J-KITS MARKED J SERVICES PARTS MARKED J
Y-SEPARATE ILLUSTRATION

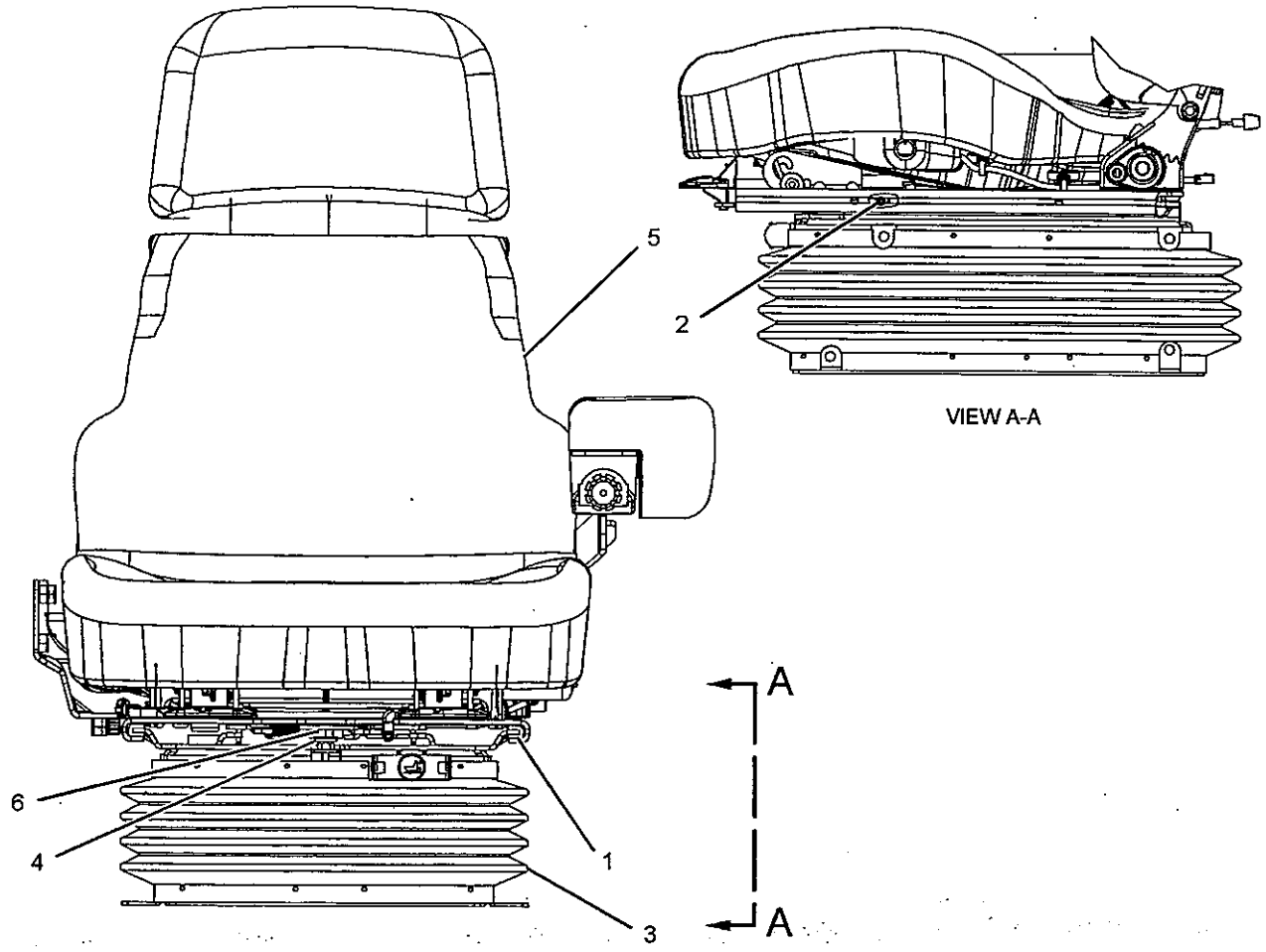


GRAPHIC #1

**<END>**

g01144380

# OPERATOR STATION

## 248-6193 SEAT GP-SUSPENSION–HEATED

S/N: JMS1-UP
24-VOLT
AN ATTACHMENT

SMCS-7324, 7336

i02197940

| NOTE | PART NUMBER | QTY | PART NAME 1 2 3 4 5 6 (PRODUCT LEVEL) | SEE PAGE |
|---|---|---|---|---|
| Y | 256-8768 | 1 | SUSPENSION GP-SEAT (AIR) | 940 |

Y-SEPARATE ILLUSTRATION

<END>

# OPERATOR STATION

## *189-8057* SHROUD GP-CAB

S/N: JMS1-UP
LOWER FRONT
PART OF 243-2046 WASTE HANDLING AR
AN ATTACHMENT

SMCS-7301

i01699891

| NOTE | REF NO | GRAPHIC REF | PART NUMBER | QTY | PART NAME 1 2 3 4 5 6 (PRODUCT LEVEL) | SEE PAGE |
|---|---|---|---|---|---|---|
| | 1 | 1 | 189-8098 | 1 | SHROUD AS-RH | |
| M | | 1 | 6V-9632 | 1 | NUT-WELD (M6X1 THD) | |
| | 2 | 1 | 189-8099 | 1 | COVER | |
| | 3 | 1 | 189-8100 | 1 | SHROUD AS-LH | |
| M | | 1 | 6V-9632 | 1 | NUT-WELD (M6X1 THD) | |
| M | 4 | 1 | 5C-9553 | 2 | BOLT (M6X1X16-MM) | |
| | 5 | 1 | 9X-8256 | 2 | WASHER (6.6X12X2-MM THK) | |

M-METRIC PART

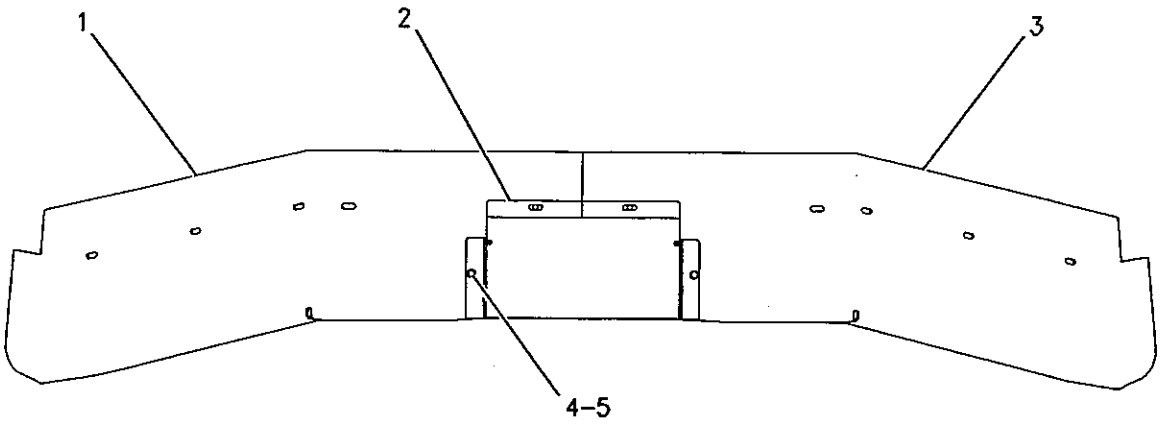


GRAPHIC #1

<END>

g00877976

# OPERATOR STATION

## 198-8771 SUPPORT GP-HYDRAULIC CONTROL

S/N: JMS1-UP

PART OF 232-1393 CAB AR-ENCLOSED ROPS, 203-9837, 258-1565 CANOPY AR-OPEN ROPS

ALSO AN ATTACHMENT

i02095213

SMCS-5258

| NOTE | REF NO | GRAPHIC REF | PART NUMBER | QTY | PART NAME 1 2 3 4 5 6 (PRODUCT LEVEL) | SEE PAGE |
|---|---|---|---|---|---|---|
| | 1 | 2 | 9X-2027 | 1 | WASHER (11X18X2-MM THK) | |
| | 2 | 2 | 4E-6523 | 1 | SUPPORT-SLIDE | |
| | 3 | 1,2 | 4E-8722 | 2 | NUT | |
| | 4 | 2 | 4E-9173 | 2 | SHAFT-CONTROL | |
| | 5 | 1 | 4E-9174 | 2 | BEARING | |
| | 6 | 2 | 7V-0445 | 1 | SPRING | |
| | 7 | 2 | 7X-3310 | 1 | KNOB-BALL | |
| | 8 | 2 | 9U-0952 | 1 | PIN | |
| | 9 | 2 | 9U-0953 | 1 | GUIDE | |
| | 10 | 2 | 9U-0954 | 1 | STUD | |
| | 11 | 2 | 9U-0955 | 1 | PIN | |
| | 12 | 2 | 9U-0958 | 1 | SLIDER | |
| | 13 | 1 | 9U-3925 | 4 | RING-RETAINING | |
| | 14 | 2 | 9U-3926 | 2 | STOP | |
| | 15 | 1 | 9U-3927 | 1 | BEARING | |
| B | 16 | 1 | 137-6841 | 2 | SHIM (0.2-MM THK) | |
| | 17 | 1 | 173-2217 | 1 | CUSHION AS | |
| | 18 | 1 | 198-8767 | 1 | CUSHION AS | |
| | 19 | 2 | 198-8768 | 1 | BRACKET AS | |
| | 20 | 2 | 200-0728 | 1 | BRACKET | |
| | 21 | 2 | 200-0729 | 1 | BRACKET | |
| | 22 | 1 | 198-8769 | 1 | CONSOLE AS | |
| | 23 | 1 | 198-8770 | 1 | COVER | |
| | 24 | 2 | 174-4301 | 1 | LEVER AS | |
| | 25 | 1 | 179-1235 | 1 | CUSHION AS | |
| | 26 | 1 | 203-9991 | 3 | KNOB AS | |
| M | 27 | 2 | 099-3649 | 4 | BOLT (M8X1.25X40-MM) | |
| | 28 | 2 | 3K-4897 | 1 | PIN-SPRING | |
| M | 29 | 2 | 5C-7261 | 4 | NUT (M8X1.25-THD) | |
| M | 30 | 1 | 6V-9327 | 4 | SETSCREW-SOCKET | |
| M | 31 | 2 | 8T-4136 | 4 | BOLT (M10X1.5X25-MM) | |
| M | 32 | 1 | 8T-4138 | 9 | BOLT (M6X1X20-MM) | |
| | 33 | 1 | 8T-4205 | 9 | WASHER-HARD (7.2X14.5X2-MM THK) | |
| | 34 | 1,2 | 8T-4224 | 9 | WASHER-HARD (8.8X16X2-MM THK) | |
| | 35 | 1,2 | 9X-2038 | 9 | WASHER (7X19X2-MM THK) | |
| M | 36 | 1,2 | 9X-2044 | 9 | SCREW-TRUSS HEAD | |
| M | 37 | 1 | 9X-2616 | 2 | SCREW-SOCKET (M8X1.25X16-MM) | |
| | 38 | 1 | 8Y-5746 | 1 | ASHTRAY | |
| | 39 | 1 | 8Y-6333 | 1 | GASKET | |
| | 40 | 2 | 203-0328 | 1 | SPACER (16X19X9-MM THK) | |

B-USE AS REQUIRED
M-METRIC PART

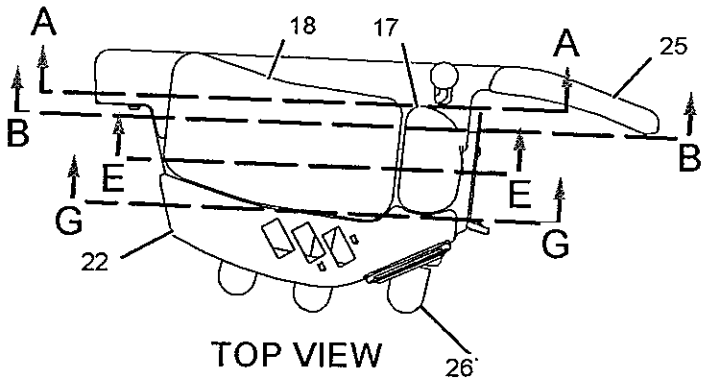


TOP VIEW

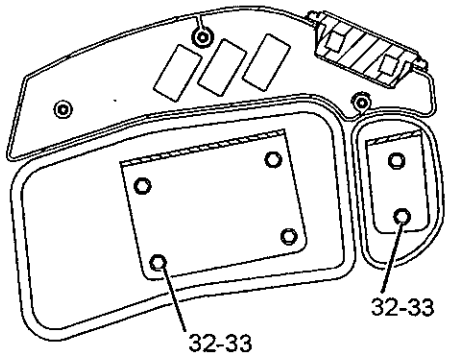


SECTION H-H

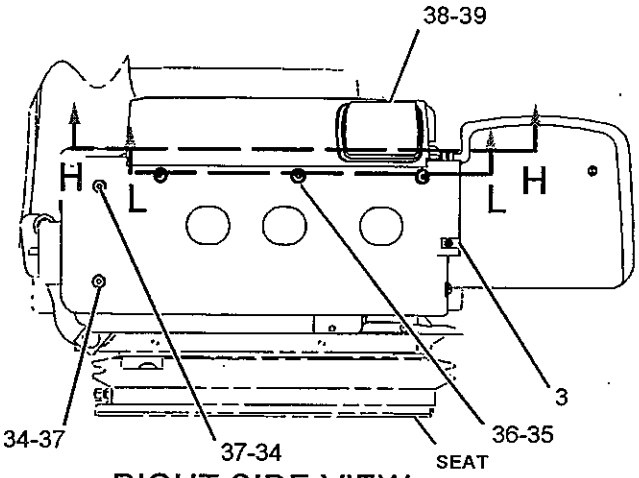


RIGHT SIDE VIEW

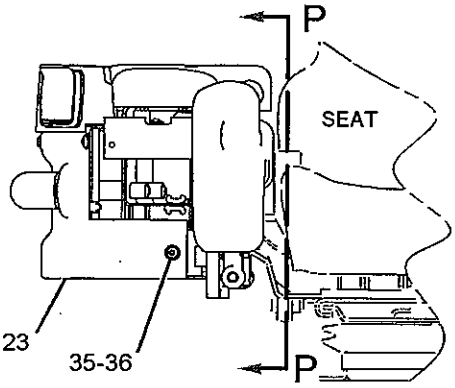


FRONT VIEW

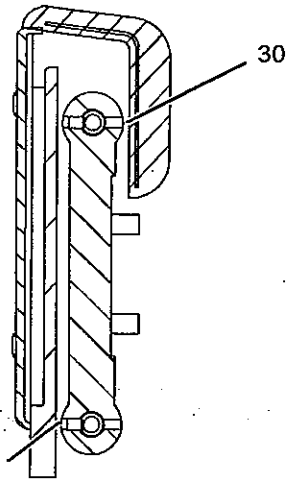


SECTION K-K

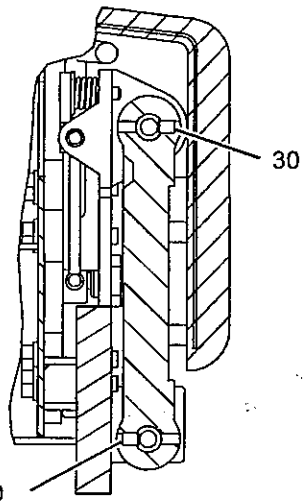


SECTION J-J

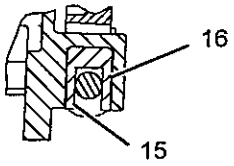


SECTION D-D

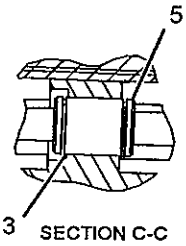


SECTION C-C

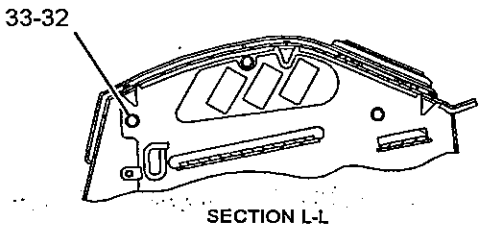


SECTION L-L

REFER TO ALL ILLUSTRATIONS OF
THIS GROUP FOR AUXILIARY VIEWS

g01069747

GRAPHIC #1

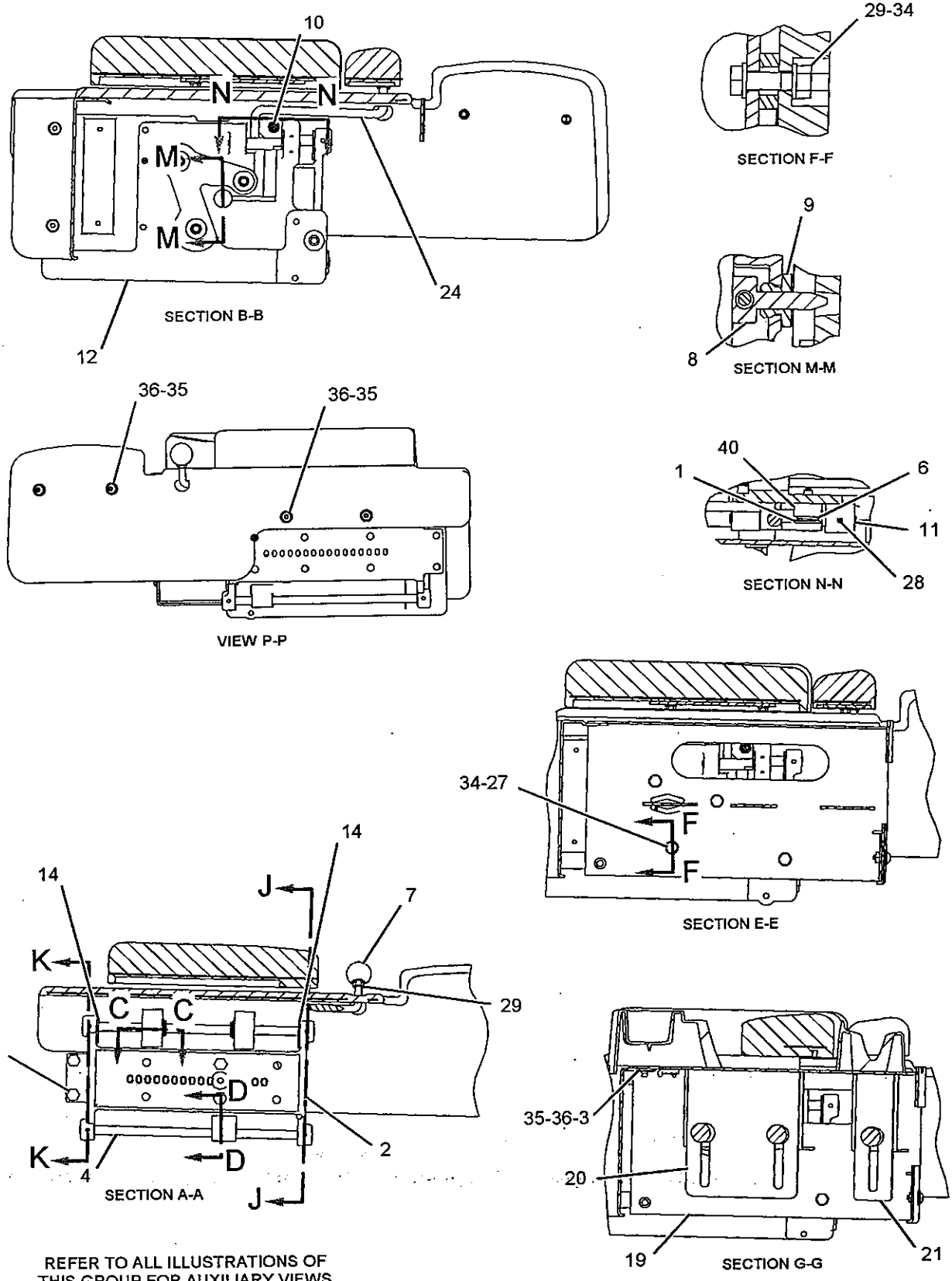


REFER TO ALL ILLUSTRATIONS OF THIS GROUP FOR AUXILIARY VIEWS

GRAPHIC #2

<END>

g01069748

# OPERATOR STATION

## *232-1396* SUPPRESSION GP-CAB SOUND–FRONT

S/N: JMS1-UP

PART OF 232-1393 CAB AR-ENCLOSED ROPS

SMCS-7329

i02088087

| NOTE | REF NO | GRAPHIC REF | PART NUMBER | QTY | PART NAME 1 2 3 4 5 6 (PRODUCT LEVEL) | SEE PAGE |
|---|---|---|---|---|---|---|
| | 1 | 1 | **232-1684** | 1 | INSULATION | |
| | 2 | 1 | **232-1685** | 1 | INSULATION | |
| | 3 | 1 | **232-1686** | 1 | INSULATION | |
| | 4 | 1 | **232-1687** | 1 | INSULATION | |
| | 5 | 1 | **232-1711** | 1 | INSULATION | |
| | 6 | 1 | **232-1712** | 1 | INSULATION | |
| | 7 | 1 | **233-0915** | 1 | INSULATION | |
| | 8 | 1 | **233-0916** | 1 | INSULATION | |

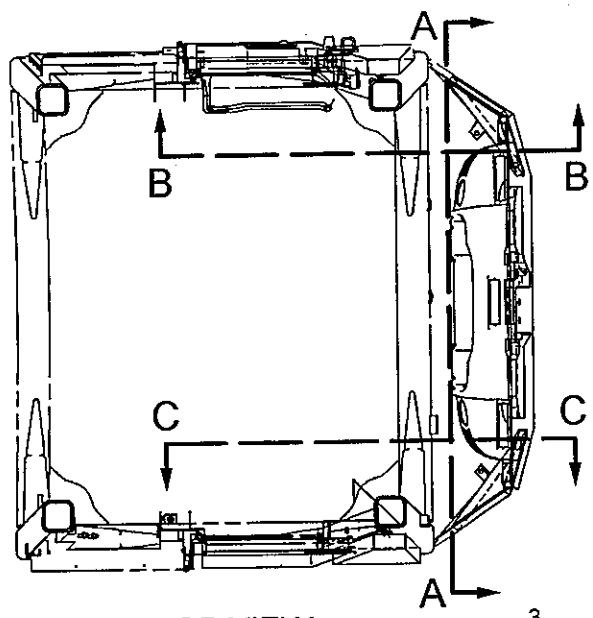


TOP VIEW

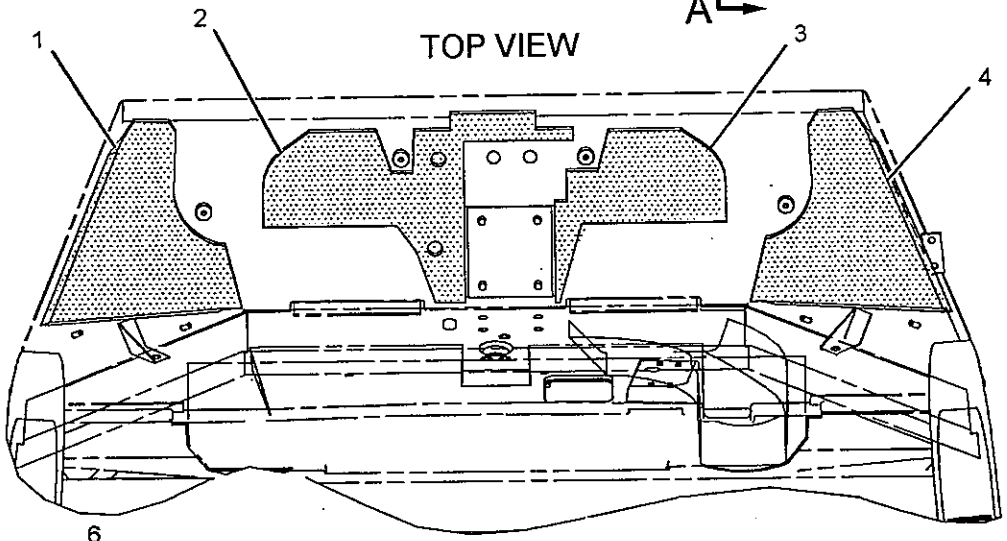


VIEW A-A

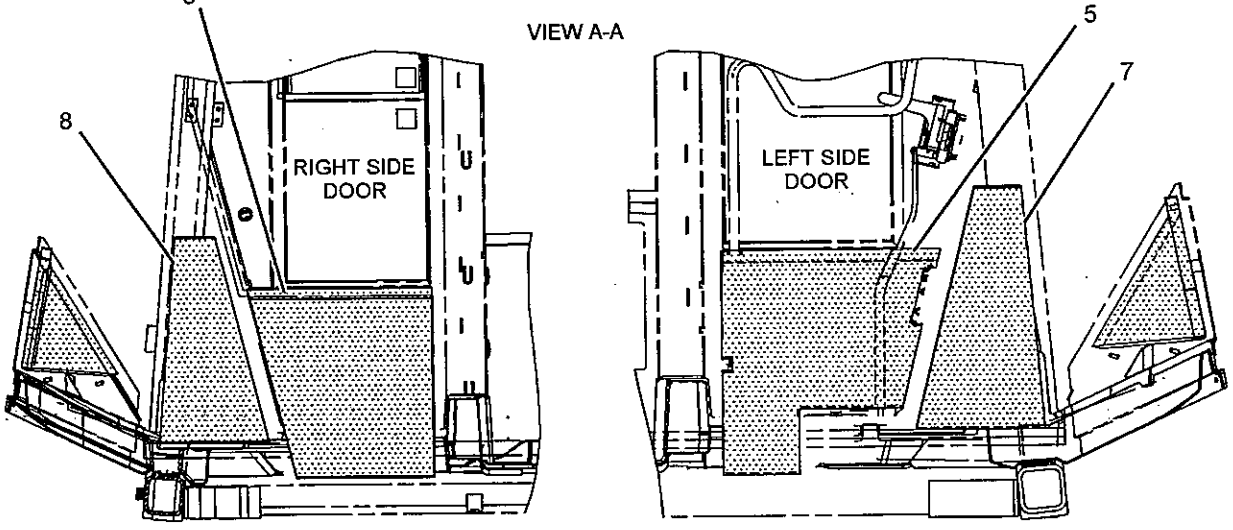


VIEW C-C VIEW B-B

GRAPHIC #1 **<END>** g01066148

# OPERATOR STATION

## 233-7676 SUPPRESSION GP-CAB SOUND–A/C, HEATER

S/N: JMS1-UP

PART OF 246-5231 SUPPRESSION GP-CAB SOUND

AN ATTACHMENT

SMCS-7329 i02232209

| NOTE | REF NO | GRAPHIC REF | PART NUMBER | QTY | PART NAME 1 2 3 4 5 6 (PRODUCT LEVEL) | SEE PAGE |
|---|---|---|---|---|---|---|
| | 1 | 1 | 232-1335 | 1 | INSULATION | |
| | 2 | 2 | 232-1336 | 1 | INSULATION | |
| | 3 | 1 | 232-1337 | 1 | INSULATION | |
| | 4 | 1 | 232-1338 | 1 | INSULATION | |
| | 5 | 2 | 232-1688 | 1 | INSULATION | |
| D | 6 | 1 | 5P-5637 | | SEAL (0.52-M) | |

D-ORDER BY THE METER

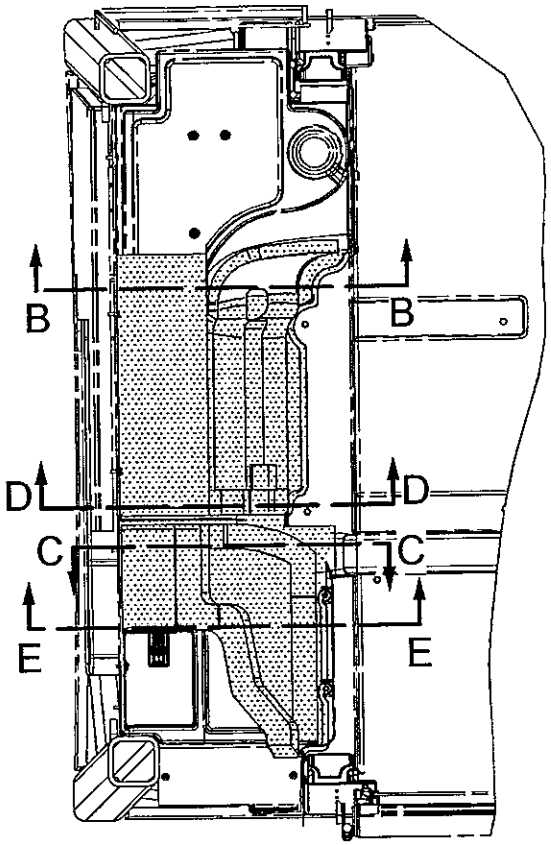


VIEW A-A

REFER TO ALL ILLUSTRATIONS OF
THIS GROUP FOR AUXILIARY VIEWS

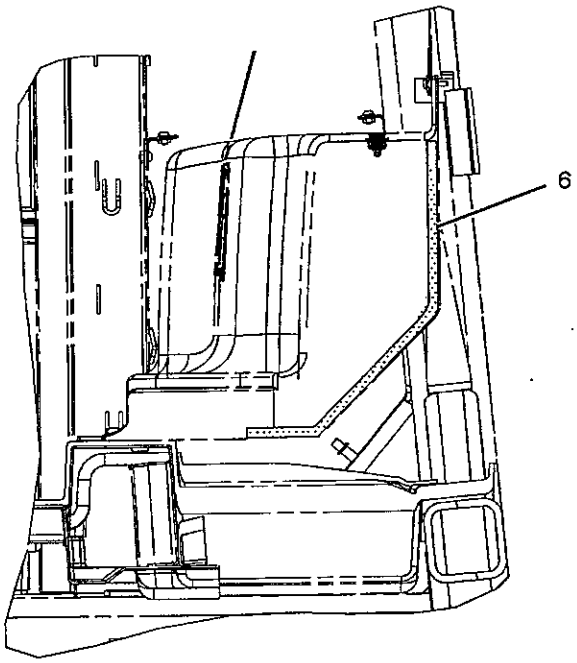


VIEW D-D

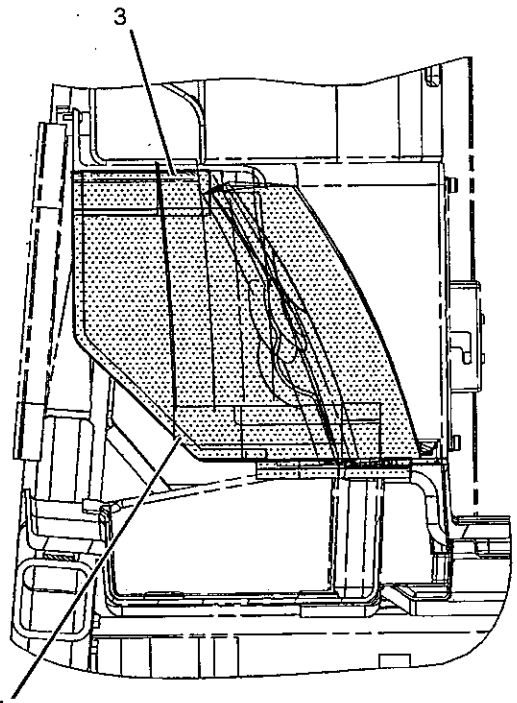


SECTION E-E

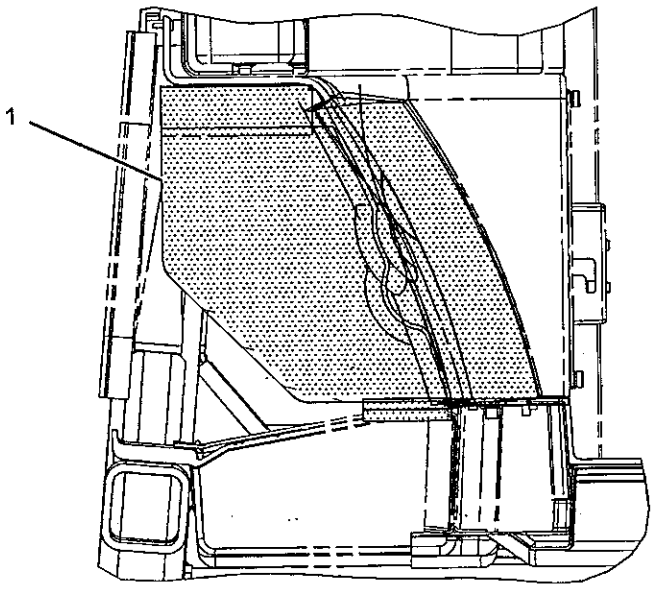


SECTION C-C

GRAPHIC #1

g01118187

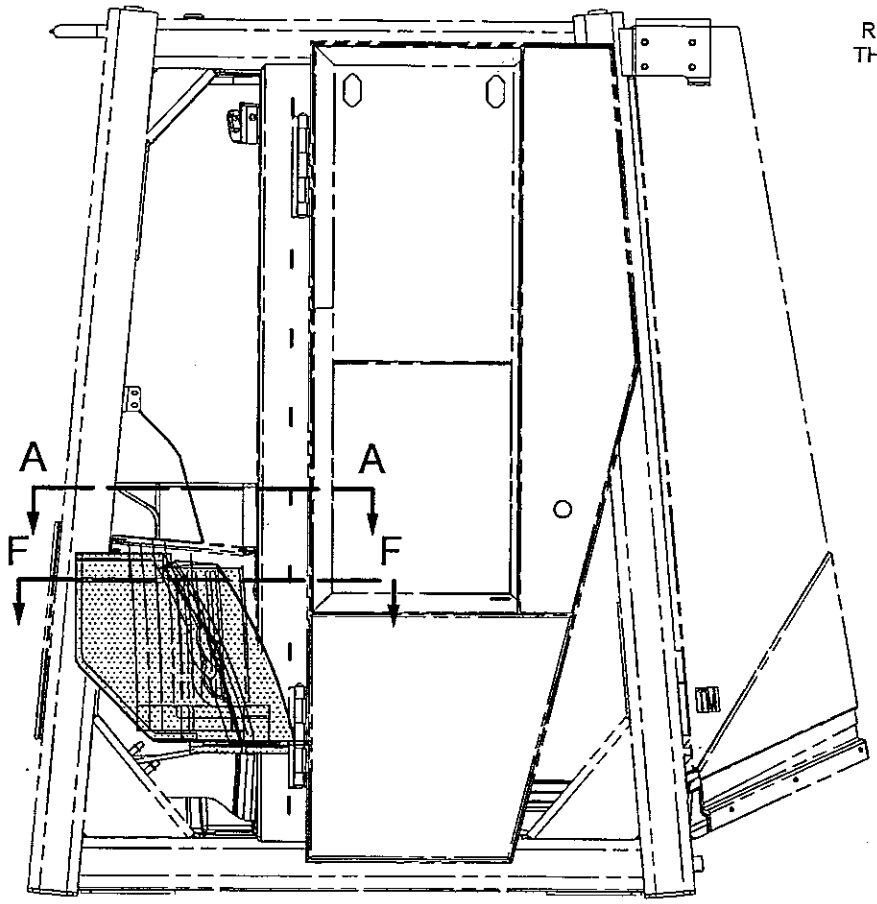


RIGHT SIDE VIEW

REFER TO ALL ILLUSTRATIONS OF THIS GROUP FOR AUXILIARY VIEWS

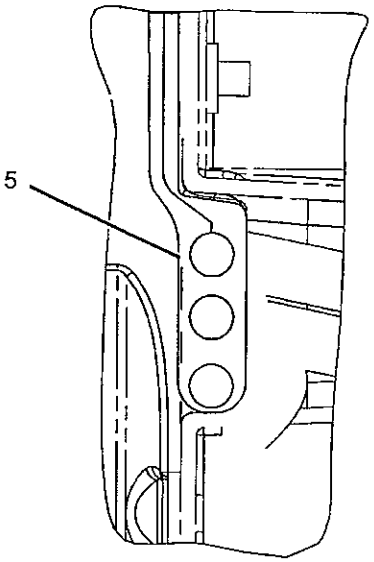


SECTION G-G

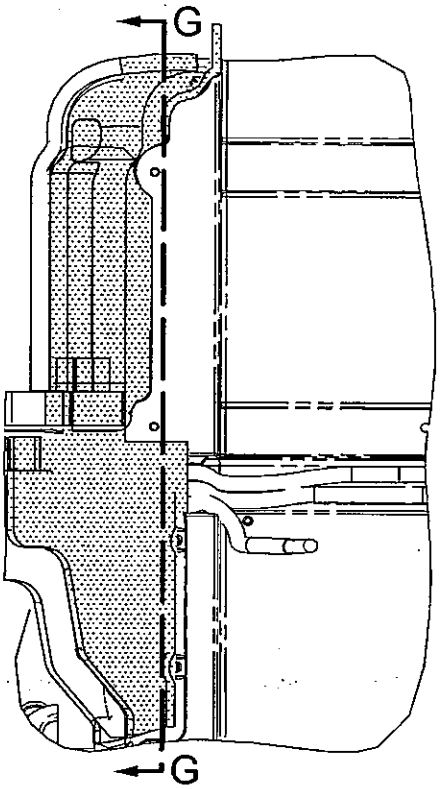


SECTION F-F

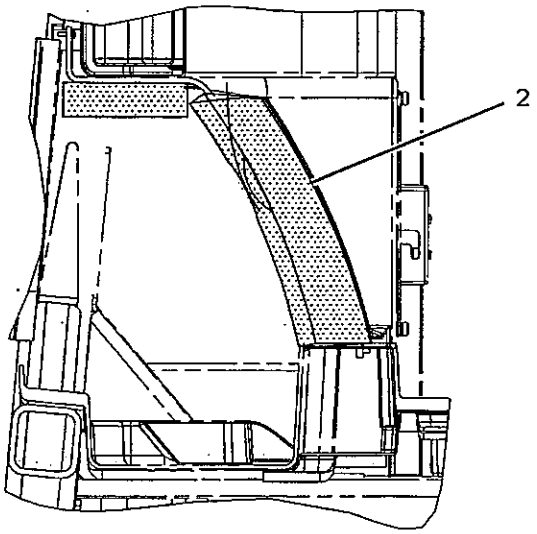


SECTION B-B

GRAPHIC #2

**<END>**

g01118188

# OPERATOR STATION

## 234-9553 SUPPRESSION GP-CAB SOUND–REAR

S/N: JMS1-UP

PART OF 232-1393 CAB AR-ENCLOSED ROPS

SMCS-7329

i02088086

| NOTE | REF NO | GRAPHIC REF | PART NUMBER | QTY | PART NAME 1 2 3 4 5 6 (PRODUCT LEVEL) | SEE PAGE |
|---|---|---|---|---|---|---|
| | 1 | 1 | 228-4428 | 1 | INSULATION | |
| | 2 | 1 | 234-9571 | 1 | INSULATION | |
| | 3 | 1 | 234-9572 | 2 | INSULATION | |

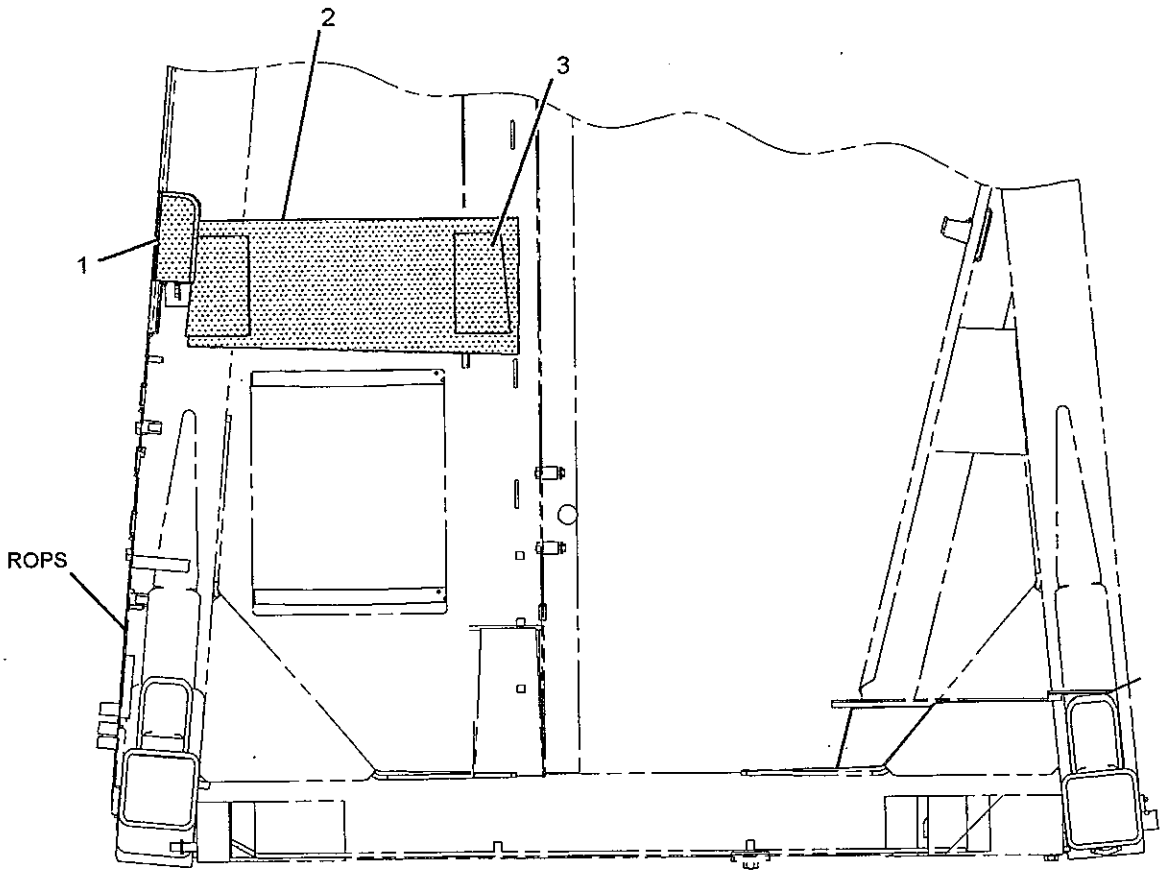


RIGHT SIDE VIEW

GRAPHIC #1

<END>

g01066019

# OPERATOR STATION

## *246-5231* SUPPRESSION GP-CAB SOUND–CAB REAR, CAB ROOF

**S/N: JMS1-UP**

**PART OF 263-7277 SUPPRESSION AR-SOUND**

**AN ATTACHMENT**

**SMCS-7329**

**i02209594**

| NOTE | REF NO | GRAPHIC REF | PART NUMBER | QTY | PART NAME 1 2 3 4 5 6 (PRODUCT LEVEL) | SEE PAGE |
|---|---|---|---|---|---|---|
| | 1 | 1 | **174-2407** | 1 | INSULATION | |
| Y | 2 | 1 | *233-7676* | 1 | SUPPRESSION GP-CAB SOUND (A/C, HEATER) | 931 |
| | 3 | 1 | **236-1068** | 1 | INSULATION | |
| | 4 | 1 | **236-1069** | 1 | INSULATION | |
| | 5 | 1 | **236-5898** | 1 | INSULATION | |
| | 6 | 1 | **248-5249** | 1 | INSULATION (LH) | |
| | 7 | 1 | **248-5250** | 1 | INSULATION (LH) | |
| | 8 | 1 | **248-6189** | 1 | INSULATION (RH) | |
| | 9 | 1 | **248-6190** | 1 | INSULATION (RH) | |

Y-SEPARATE ILLUSTRATION

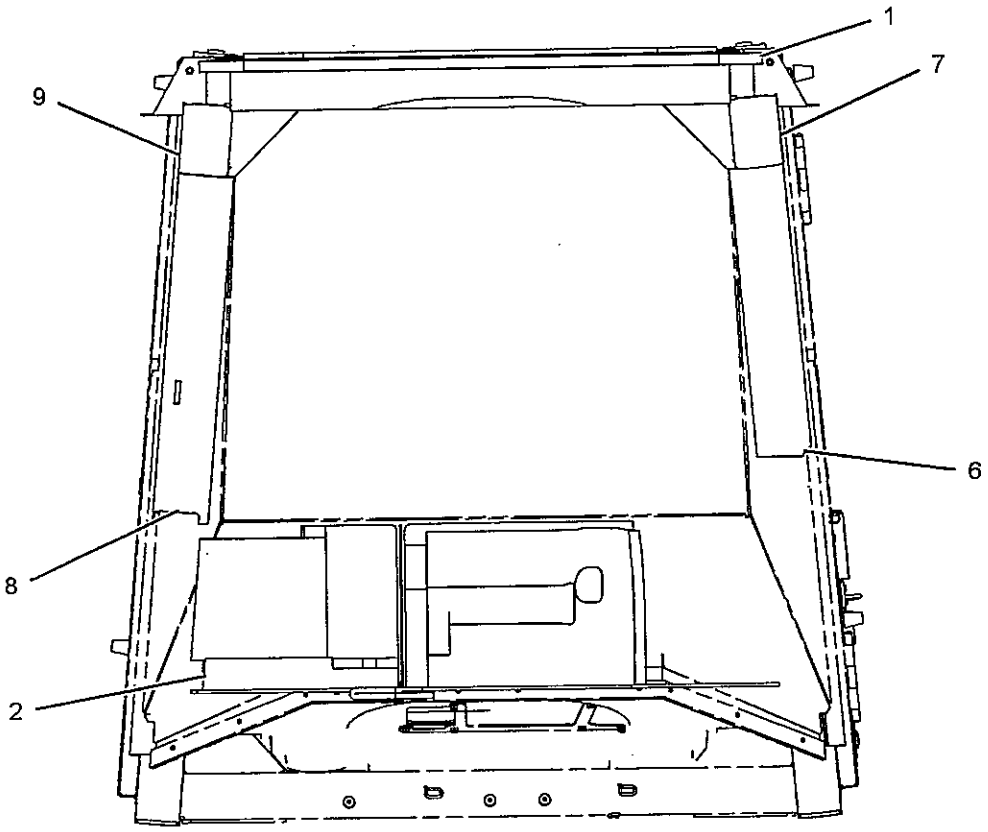


FRONT VIEW

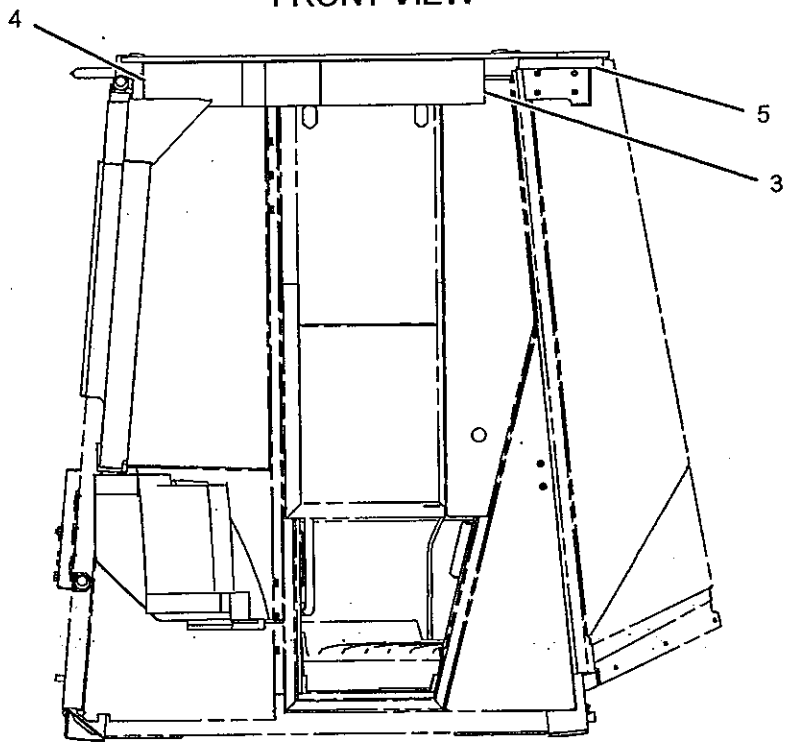


RIGHT SIDE VIEW

GRAPHIC #1

**<END>**

g01116935

# OPERATOR STATION

## *261-8608* SUPPRESSION GP-CAB SOUND–ROOF

S/N: JMS1-UP

PART OF 263-7275 SUPPRESSION AR-SOUND

AN ATTACHMENT

SMCS-7329 i02206626

| NOTE | REF NO | GRAPHIC REF | PART NUMBER | QTY | PART NAME 1 2 3 4 5 6 (PRODUCT LEVEL) | SEE PAGE |
|---|---|---|---|---|---|---|
| | 1 | 1 | 174-2407 | 1 | INSULATION | |
| | 2 | 1 | 236-1068 | 1 | INSULATION | |
| | 3 | 1 | 236-1069 | 1 | INSULATION | |
| | 4 | 1 | 236-5898 | 1 | INSULATION | |

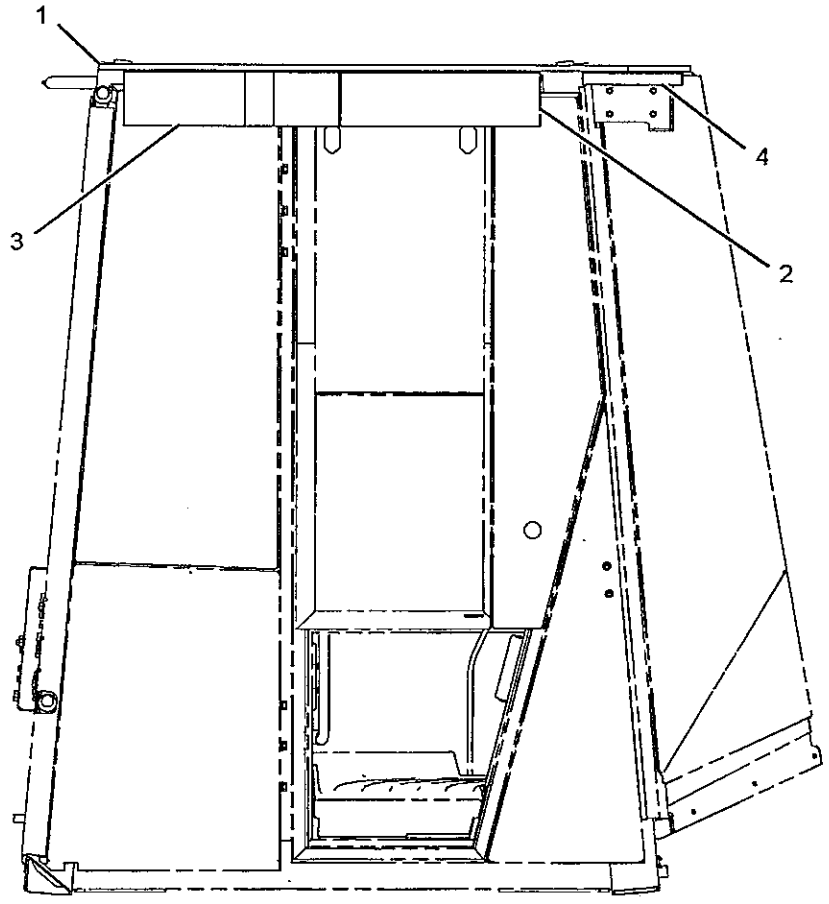


RIGHT SIDE VIEW

GRAPHIC #1 <END> g01116591

# OPERATOR STATION

## 191-2933 SUSPENSION GP-SEAT–AIR

S/N: JMS1-UP

PART OF 219-8094, 219-8095, 237-2069 SEAT GP-SUSPENSION
ALSO AN ATTACHMENT

SMCS-7324

i02043909

| NOTE | REF NO | GRAPHIC REF | PART NUMBER | QTY | PART NAME 1 2 3 4 5 6 (PRODUCT LEVEL) | SEE PAGE |
|---|---|---|---|---|---|---|
| | 1 | 1 | 3P-9900 | 5 | WASHER (10.5X30X3-MM THK) | |
| | 2 | 1 | 4B-4278 | 2 | WASHER (10.2X20.5X1.6-MM THK) | |
| | 3 | 1 | 4V-8577 | 12 | BEARING | |
| | 4 | 1 | 8L-8413 | 1 | STRAP-CABLE | |
| | 5 | 1 | 145-0326 | 1 | FILM-INSTRUCTION (SEAT ADJUSTMENT) | |
| | 6 | 1 | 164-1234 | 1 | PLATE | |
| | 7 | 1 | 101-0003 | 33 | FASTENER | |
| | 8 | 1 | 169-7380 | 1 | BOLT-SOCKET HEAD (3/8-16X0.375-IN) | |
| | 9 | 1 | 186-5107 | 2 | SCREW (NO 8X1.25-IN) | |
| | 10 | 1 | 192-7752 | 4 | SHAFT AS | |
| | 11 | 1 | 192-7755 | 1 | HOUSING AS | |
| | 12 | 1 | 192-7760 | 1 | SHAFT | |
| | 13 | 1 | 192-7767 | 1 | SCISSORS AS | |
| | 14 | 1 | 192-7783 | 1 | TOGGLE AS | |
| | 15 | 1 | 192-7787 | 1 | TOGGLE AS | |
| | 16 | 1 | 192-7790 | 1 | HOUSING AS | |
| | 17 | 1 | 192-7795 | 1 | BOOT | |
| | 18 | 1 | 192-7805 | 1 | HARNESS AS-VALVE (SEAT AIR COMPRESSOR) | |
| | | 1 | 102-8802 | 1 | KIT-RECEPTACLE (2-PIN) (INCLUDES RECEPTACLE AS & WEDGE) | |
| | 19 | 1 | 192-7810 | 1 | SPRING AS-AIR | |
| | | 1 | 5P-4423 | 1 | ELBOW | |
| | | 1 | 163-1135 | 1 | SPRING | |
| | 20 | 1 | 192-7812 | 1 | BOLT-SHOULDER | |
| | 21 | 1 | 192-7820 | 3 | BUMPER | |
| | 22 | 1 | 192-7822 | 1 | SHAFT | |
| | 23 | 1 | 237-3943 | 1 | BRACKET | |
| Y | 24 | 1 | 237-3970 | 1 | AIR COMPRESSOR GP-SEAT | 780 |
| | 25 | 1 | 1H-8296 | 1 | SCREW-MACHINE (3/8-16X0.52-IN) | |
| | 26 | 1 | 2K-4973 | 8 | LOCKNUT (3/8-16-THD) | |
| | 27 | 1 | 3J-4818 | 1 | LOCKWASHER | |
| M | 28 | 1 | 5C-2890 | 3 | NUT (M6X1-THD) | |
| | 29 | 1 | 8T-9371 | 1 | BOLT (3/8-16X0.5-IN) | |
| E | 30 | 1 | 211-5358 | | CONDUIT (100CM) | |
| BD | 31 | 1 | 5P-6010 | | TUBE | |
| | | | | | AVAILABLE REPAIR KIT(S): | |
| | | | 192-7799 | 1 | KIT-AIR VALVE (SUSPENSION SEAT) | |
| | | | | | (INCLUDES KNOB AS, NUT, VALVE, LOCKWASHER & FITTING) | |
| | | | 192-7848 | 1 | KIT-SHOCK ABSORBER (SUSPENSION SEAT) | |
| | | | | | (INCLUDES LOCKNUT, LOCKWASHER, SHOCK ABSORBER, BEARING, WASHER, & BOLTS) | |
| | | | 211-9294 | 1 | KIT-TETHER (SUSPENSION SEAT) | |

B-USE AS REQUIRED
D-ORDER BY THE METER
E-ORDER BY THE CENTIMETER
M-METRIC PART
Y-SEPARATE ILLUSTRATION

## 191-2933 SUSPENSION GP-SEAT *(contd.)*

i02043909

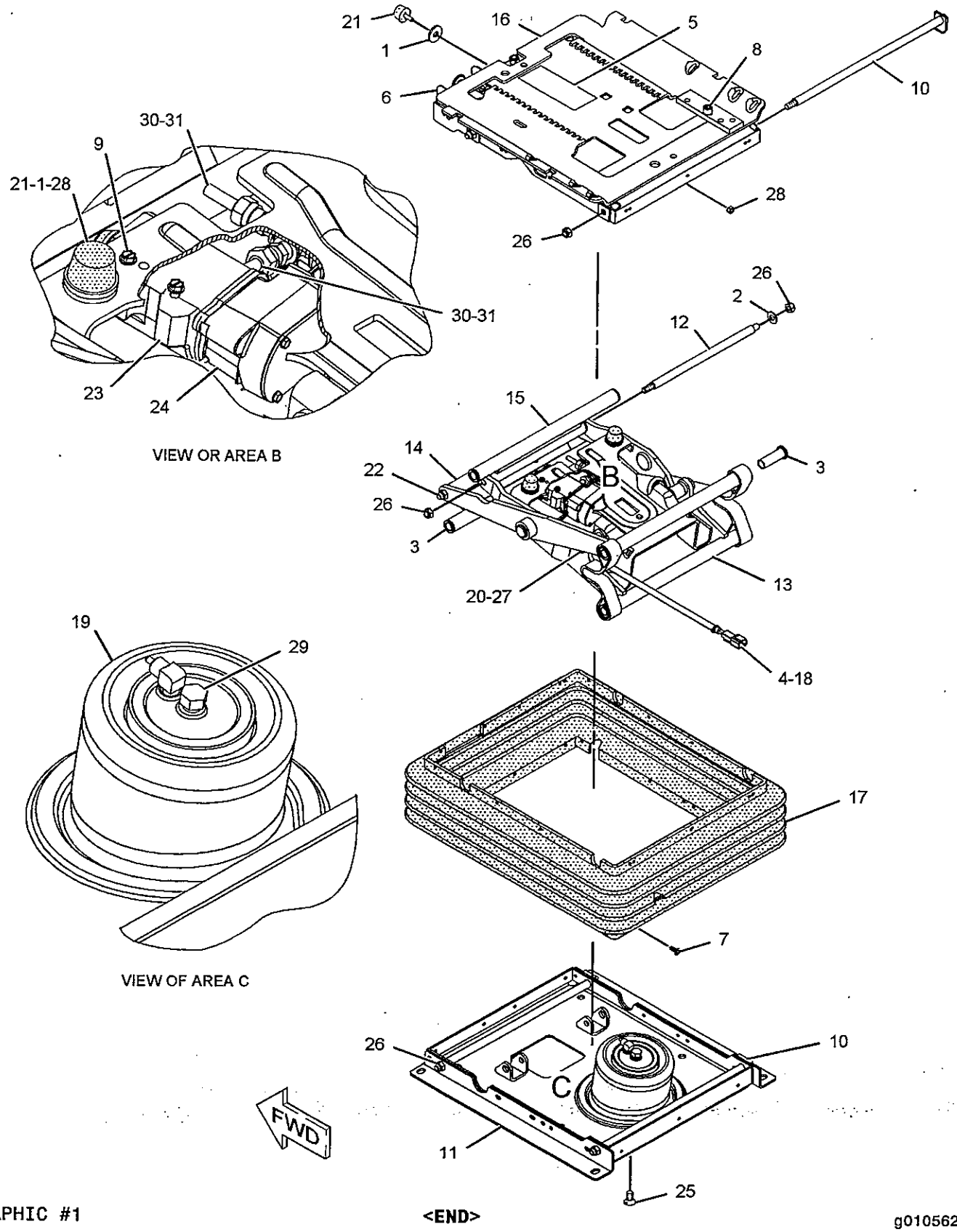


GRAPHIC #1

<END>

g01056291

# OPERATOR STATION

## 256-8768 SUSPENSION GP-SEAT–AIR

S/N: JMS1-UP
PART OF 248-6193 SEAT GP-SUSPENSION
AN ATTACHMENT

i02288084

SMCS-7324

| NOTE | REF NO | GRAPHIC REF | PART NUMBER | QTY | PART NAME 1 2 3 4 5 6 (PRODUCT LEVEL) | SEE PAGE |
|---|---|---|---|---|---|---|
| | 1 | 1 | 3P-9900 | 5 | WASHER (10.5X30X3-MM THK) | |
| | 2 | 1 | 4B-4278 | 2 | WASHER (10.2X20.5X1.6-MM THK) | |
| | 3 | 1 | 4V-8577 | 12 | BEARING | |
| | 4 | 1 | 8L-8413 | 1 | STRAP-CABLE | |
| | 5 | 1 | 101-0003 | 26 | FASTENER | |
| | 6 | 1 | 145-0326 | 1 | FILM-INSTRUCTION (SEAT ADJUSTMENT) | |
| | 7 | 1 | 164-1234 | 1 | PLATE | |
| | 8 | 1 | 169-7380 | 1 | BOLT-SOCKET HEAD (3/8-16X0.375-IN) | |
| | 9 | 1 | 186-5107 | 2 | SCREW (NO 8X1.25-IN) | |
| | 10 | 1 | 192-7752 | 4 | SHAFT AS | |
| | 11 | 1 | 192-7755 | 1 | HOUSING AS | |
| | 12 | 1 | 192-7760 | 1 | SHAFT | |
| | 13 | 1 | 192-7767 | 1 | SCISSORS AS | |
| | 14 | 1 | 192-7783 | 1 | TOGGLE AS | |
| | 15 | 1 | 192-7787 | 1 | TOGGLE AS | |
| | 16 | 1 | 192-7790 | 1 | HOUSING AS | |
| | | 1 | 2K-4973 | 1 | LOCKNUT (3/8-16-THD) | |
| | 17 | 1 | 192-7795 | 1 | BOOT | |
| | 18 | 1 | 192-7805 | 1 | HARNESS AS-VALVE (SEAT AIR COMPRESSOR) | |
| | | 1 | 102-8802 | 1 | KIT-RECEPTACLE (2-PIN) | |
| | | | | | (INCLUDES RECEPTACLE AS AND WEDGE) | |
| | | 1 | 102-8802 | 1 | KIT-RECEPTACLE (2-PIN) | |
| | | | | | (INCLUDES RECEPTACLE AS AND WEDGE) | |
| | 19 | 1 | 192-7810 | 1 | SPRING AS-AIR | |
| | | 1 | 5P-4423 | 1 | ELBOW | |
| | | 1 | 163-1135 | 1 | SPRING | |
| | 20 | 1 | 192-7812 | 1 | BOLT-SHOULDER | |
| | 21 | 1 | 192-7820 | 3 | BUMPER | |
| | 22 | 1 | 192-7822 | 1 | SHAFT | |
| | 23 | 1 | 237-3943 | 1 | BRACKET | |
| Y | 24 | 1 | 237-3970 | 1 | AIR COMPRESSOR GP-SEAT | 780 |
| | 25 | 1 | 1H-8296 | 1 | SCREW-MACHINE (3/8-16X0.52-IN) | |
| | 26 | 1 | 2K-4973 | 8 | LOCKNUT (3/8-16-THD) | |
| | 27 | 1 | 3J-4818 | 1 | LOCKWASHER | |
| M | 28 | 1 | 5C-2890 | 3 | NUT (M6X1-THD) | |
| | 29 | 1 | 5P-6010 | 1 | TUBE | |
| | 30 | 1 | 8T-9371 | 1 | BOLT (3/8-16X0.5-IN) | |
| | 31 | 1 | 211-5358 | 100 | CONDUIT | |
| | | | | | AVAILABLE REPAIR KIT(S): | |
| | | | 192-7799 | 1 | KIT-AIR VALVE | |
| | | | | | (INCLUDES KNOB ASSEMBLY) | |
| | | | 212-7779 | 1 | KIT-SHOCK ABSORBER | |
| | | | | | (INCLUDES, LOCKNUTS, BALL, LOCKWASHER, STRAP, SPRING, CLAMP, ADJUSTERS, BOLTS, BEARINGS, WASHERS, SHOCK ABSORBER, | |
| | | | | | BRACKETS, KIT, CABLE ASSEMBLY, AND KNOB) | |
| | | | 213-5170 | 1 | KIT-INDICATOR | |
| | | | | | (INCLUDES BOLTS, NUTS, ROD, ARM, AND HOUSING) | |
| | | | 211-9294 | 1 | KIT-TETHER | |
| | | | | | (INCLUDES TETHER) | |

M-METRIC PART
Y-SEPARATE ILLUSTRATION

## 256-8768 SUSPENSION GP-SEAT *(contd.)*

i02288084

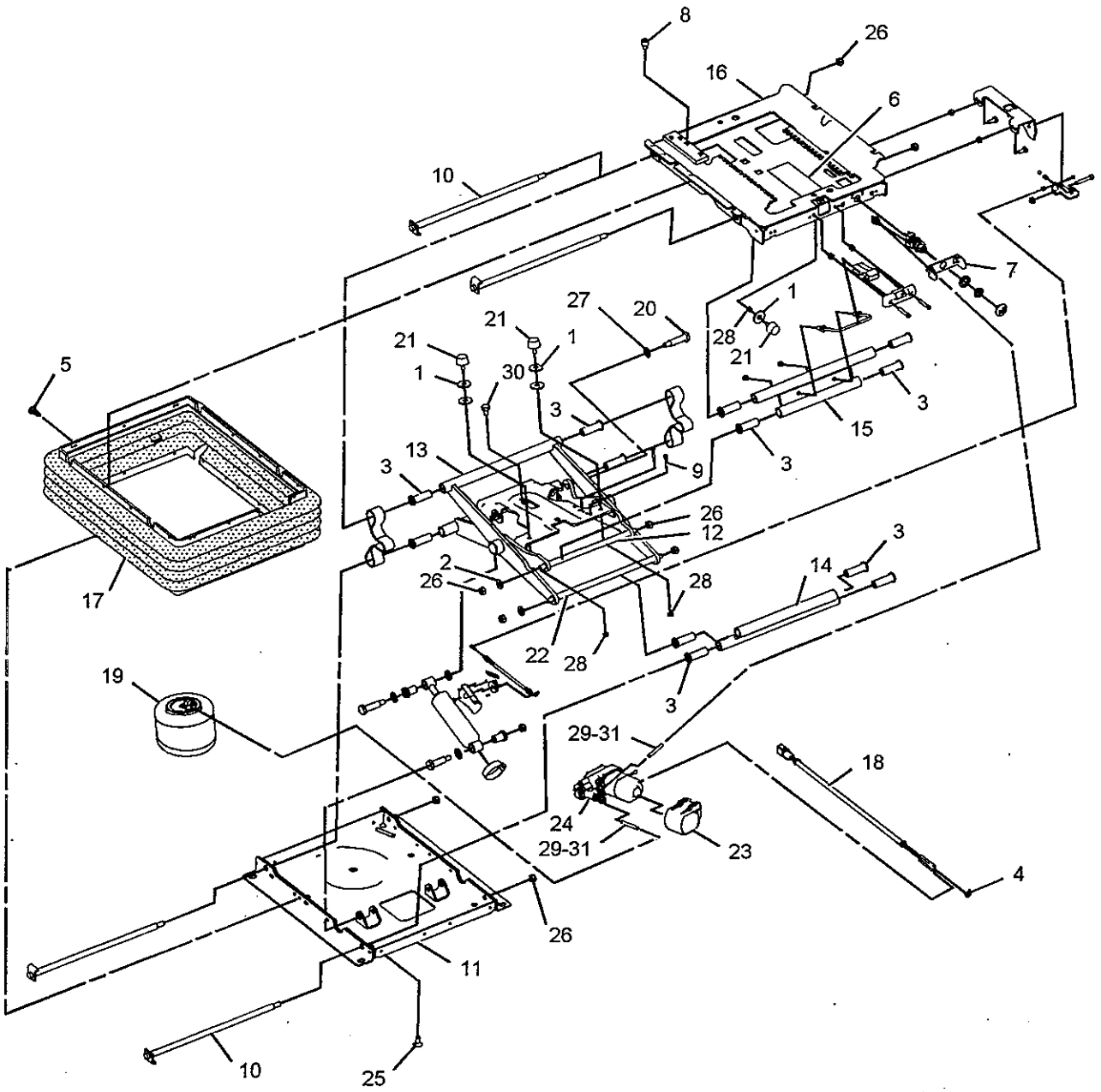


GRAPHIC #1

<END>

g01100128

# OPERATOR STATION

## *131-2633* VISOR GP-CAB

**S/N: JMS1-UP**

**PART OF 266-1620 MACHINE AR, 246-8696, 246-8697 ROADING AR**

**AN ATTACHMENT**

**SMCS-7301** **i00985271**

| NOTE | REF NO | GRAPHIC REF | PART NUMBER | QTY | PART NAME 1 2 3 4 5 6 (PRODUCT LEVEL) | SEE PAGE |
|---|---|---|---|---|---|---|
| M | 1 | 1 | 111-4627 | 4 | SCREW-MACHINE | |
| | 2 | 1 | 123-4371 | 1 | VISOR AS | |

M-METRIC PART

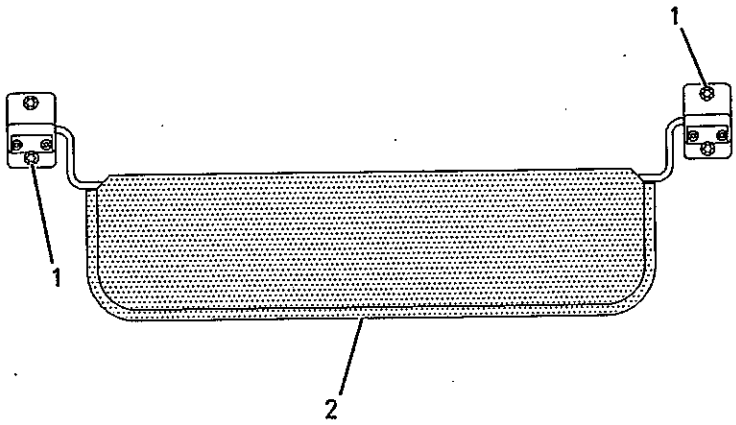


REAR VIEW

GRAPHIC #1 **<END>** g00501655

# OPERATOR STATION

## *119-5783* WASHER GP-WINDOW

**S/N: JMS1-UP**

**PART OF 225-5538 CHASSIS AR**

**SMCS-7306**

**i01926834**

| NOTE | REF NO | GRAPHIC REF | PART NUMBER | QTY | PART NAME 1 2 3 4 5 6 (PRODUCT LEVEL) | SEE PAGE |
|---|---|---|---|---|---|---|
| | 1 | 1 | **5G-7398** | 1 | TANK AS-WINDOW WASHER | |
| | 1A | 1 | **3W-6398** | 1 | CAP | |
| | 1B | 1 | **3W-6399** | 1 | PACKING | |
| | 1C | 1 | **7T-8890** | 2 | PUMP AS-WASHER | |
| | 1D | 1 | **8T-5913** | 2 | SCREEN-FILTER | |
| | 1E | 1 | **8T-5914** | 2 | GROMMET | |
| | 2 | 1 | **8G-6142** | 1 | STRIP | |
| C | 3 | 1 | **7S-4244** | 2 | CLIP | |
| | 4 | 1 | **8T-4121** | 3 | WASHER-HARD (11X21X2.5-MM THK) | |
| M | 5 | 1 | **8T-4136** | 2 | BOLT (M10X1.5X25-MM) | |
| D | 6 | 1 | **5P-5992** | | HOSE (.85M EA) | |
| BD | 7 | 1 | **6V-2496** | | SEAL (.35M) | |
| BD | 7A | 1 | **6V-2496** | | SEAL (.07M) | |
| BD | 7B | 1 | **6V-2496** | | SEAL (.08M) | |
| M | 8 | 1 | **8T-4195** | 1 | BOLT (M10X1.5X30-MM) | |

B-USE AS REQUIRED
C-CHANGE FROM PREVIOUS TYPE
D-ORDER BY THE METER
M-METRIC PART

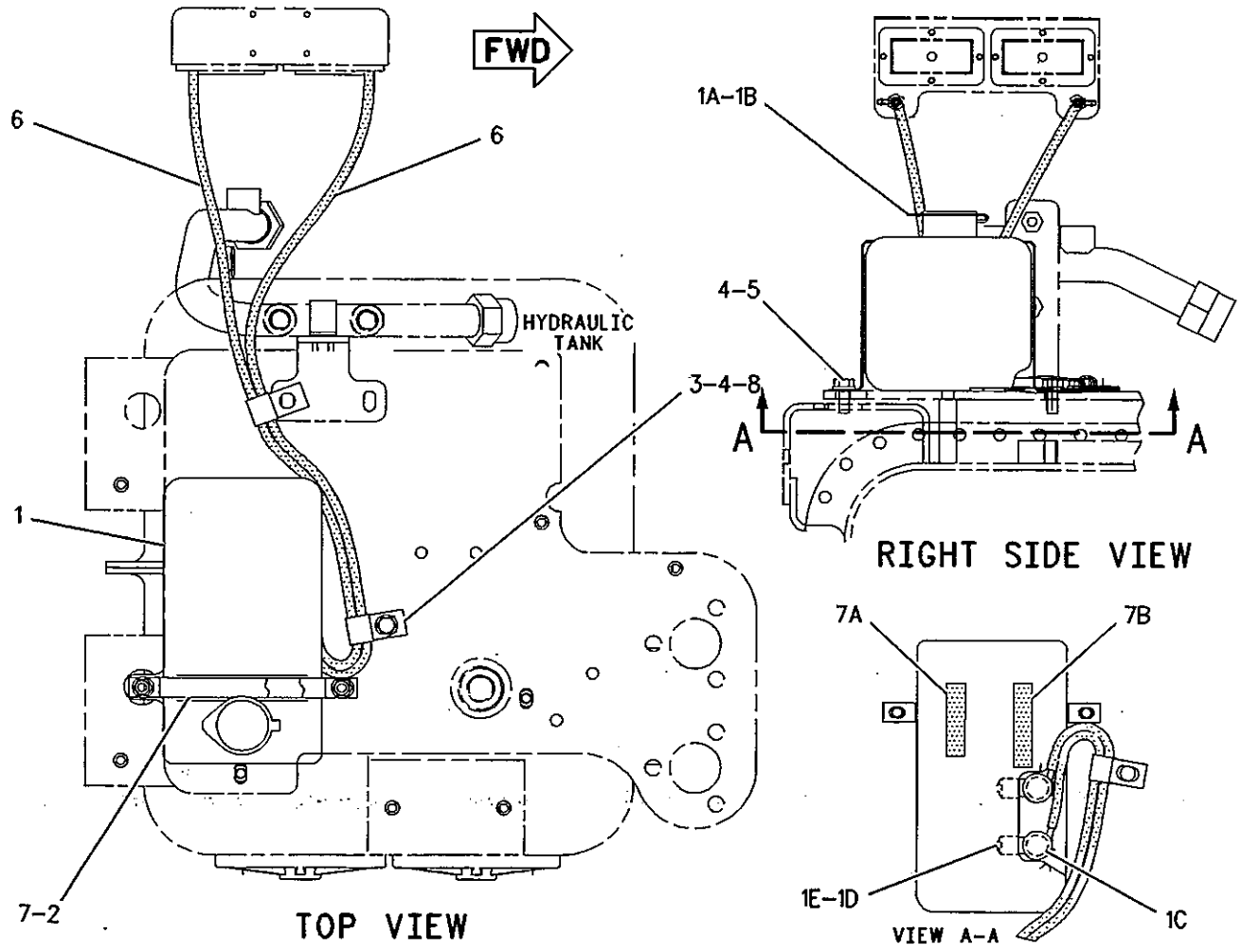


GRAPHIC #1

<END>

g01002593

# OPERATOR STATION

## 185-7522 WINDOW GP-DOOR-RH

S/N: JMS1-UP
PART OF 185-7534 DOOR GP-CAB
ALSO AN ATTACHMENT

SMCS-7310

i01625458

| NOTE | REF NO | GRAPHIC REF | PART NUMBER | QTY | PART NAME 1 2 3 4 5 6 (PRODUCT LEVEL) | SEE PAGE |
|---|---|---|---|---|---|---|
| | 1 | 1 | 8C-6738 | 2 | SCREW-PAN HEAD (6-20X1 IN) | |
| | 2 | 1 | 187-5128 | 1 | CATCH AS (RH) | |
| | 3 | 1 | 187-5127 | 1 | CATCH AS (LH) | |
| | | | | | (EACH CATCH AS INCLUDES) | |
| | | 1 | 150-8015 | 1 | GASKET | |
| | 4 | 1 | 211-9856 | 1 | STRIP AS | |
| | 5 | 1 | 185-7524 | 1 | GLASS-SLIDING | |
| | 6 | 1 | 185-7525 | 1 | GLASS-FIXED | |
| D | 7 | 1 | 9X-2532 | | SEAL (.36M) | |
| E | 8 | 1 | 208-5022 | | SEAL (135CM) | |
| | 9 | 1 | 185-7529 | 1 | FRAME AS-WINDOW (UPPER RH) | |
| E | 10 | 1 | 137-2170 | | SEAL (257CM) | |
| D | 11 | 1 | 9X-2533 | | STOP (.12M) | |

D-ORDER BY THE METER
E-ORDER BY THE CENTIMETER

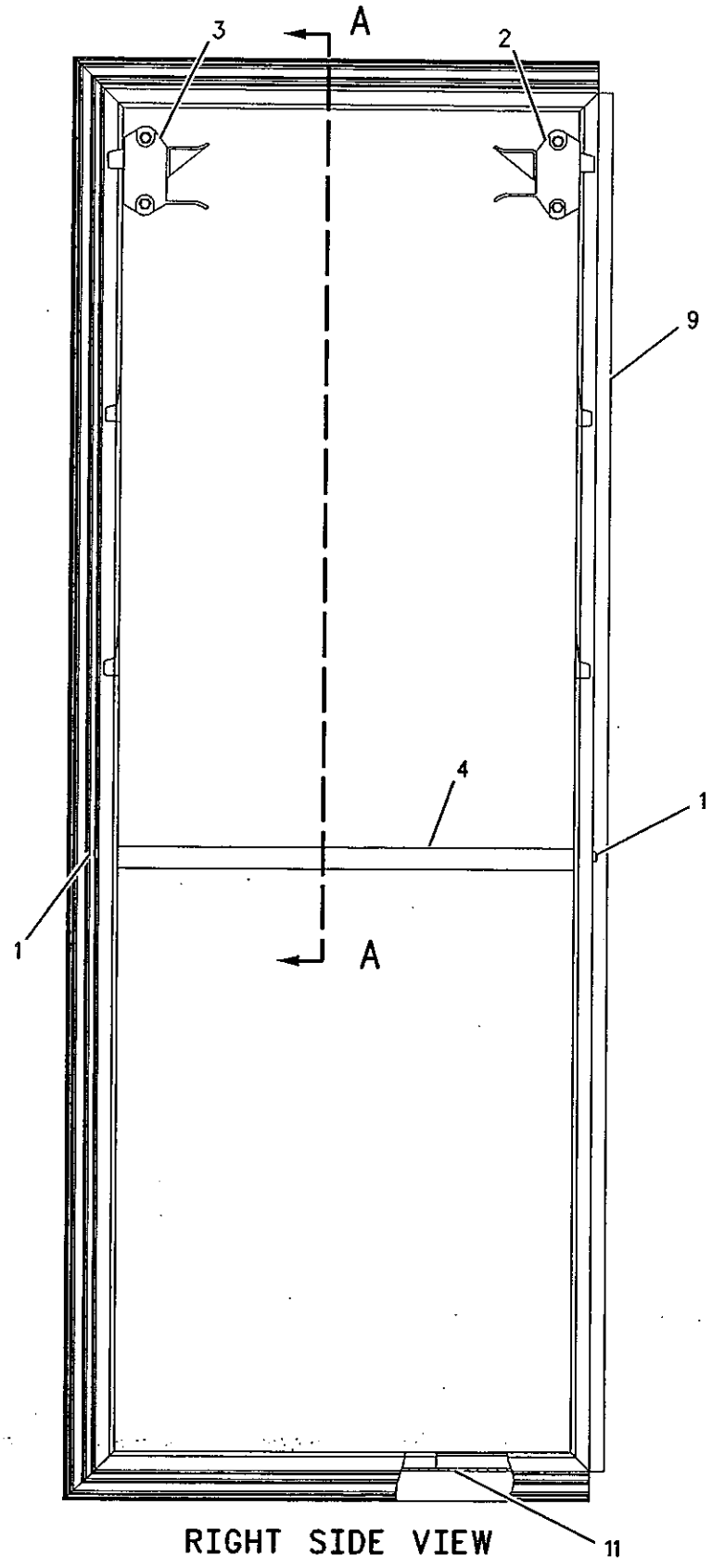


RIGHT SIDE VIEW

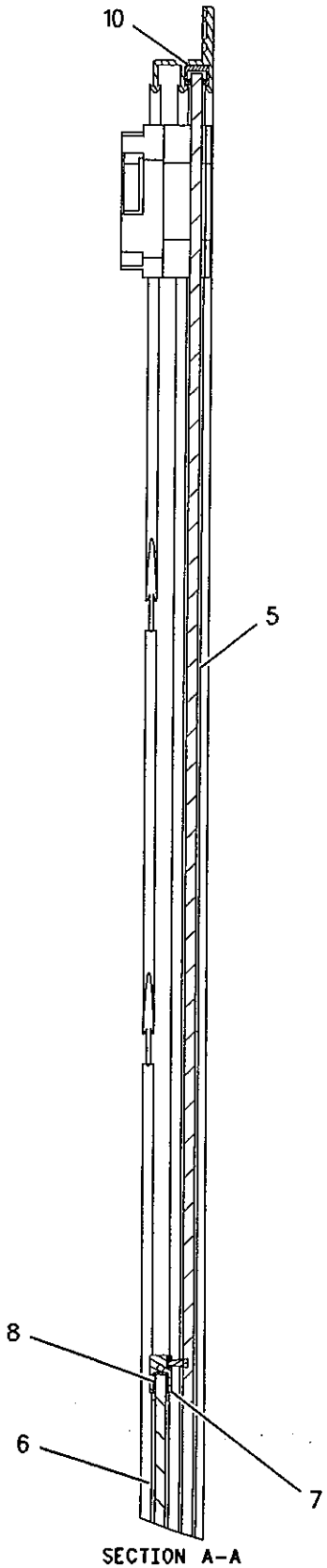


SECTION A-A

GRAPHIC #1

<END>

g00829150

# OPERATOR STATION

## *185-7523* WINDOW GP-DOOR–LH

**S/N: JMS1-UP**
**PART OF 179-8267 DOOR GP-CAB**
**ALSO AN ATTACHMENT**

**SMCS-7310** **i01593312**

| NOTE | REF NO | GRAPHIC REF | PART NUMBER | QTY | PART NAME 1 2 3 4 5 6 (PRODUCT LEVEL) | SEE PAGE |
|---|---|---|---|---|---|---|
| | 1 | 1 | 8C-6738 | 2 | SCREW-PAN HEAD (6-20X1 IN) | |
| | 2 | 1 | 187-5128 | 1 | CATCH AS (RH) | |
| | 3 | 1 | 187-5127 | 1 | CATCH AS (LH) | |
| | | | | | (EACH CATCH AS INCLUDES) | |
| | | 1 | 150-8015 | 1 | GASKET | |
| | 4 | 1 | 211-9856 | 1 | STRIP AS | |
| | 5 | 1 | 185-7524 | 1 | GLASS-SLIDING | |
| | 6 | 1 | 185-7525 | 1 | GLASS-FIXED | |
| D | 7 | 1 | 9X-2532 | | SEAL (.33M) | |
| E | 8 | 1 | 208-5022 | | SEAL (123CM) | |
| | 9 | 1 | 185-7531 | 1 | FRAME AS-WINDOW (UPPER LH) | |
| E | 10 | 1 | 137-2170 | | SEAL (257CM) | |
| D | 11 | 1 | 9X-2533 | | STOP (1M) | |

D-ORDER BY THE METER
E-ORDER BY THE CENTIMETER

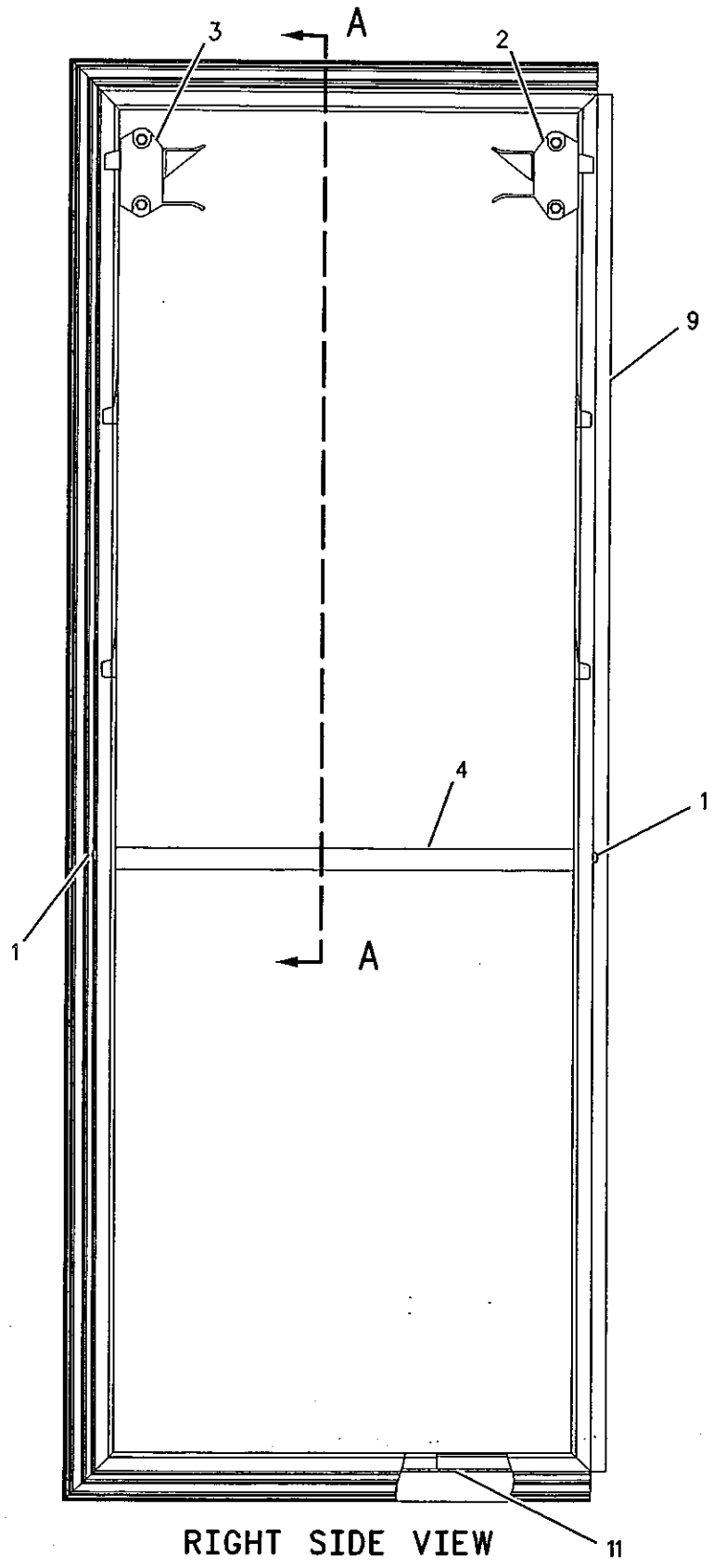


RIGHT SIDE VIEW

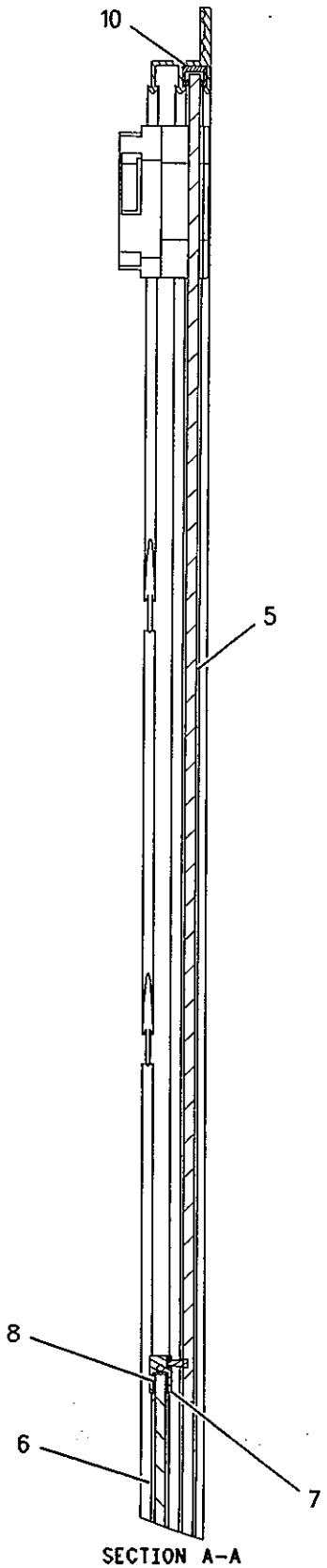


SECTION A-A

GRAPHIC #1

<END>

g00829150

# OPERATOR STATION

## 197-5579 WIPER GP-WINDOW

**S/N: JMS1-UP**

**PART OF 232-1393 CAB AR-ENCLOSED ROPS**

**SMCS-7305** **i02290262**

| NOTE | REF NO | GRAPHIC REF | PART NUMBER | QTY | PART NAME 1 2 3 4 5 6 (PRODUCT LEVEL) | SEE PAGE |
|---|---|---|---|---|---|---|
| | 1 | 2 | 3S-2093 | 1 | STRAP-CABLE | |
| | 2 | 2 | 3V-3263 | 1 | CONNECTOR | |
| | 3 | 1 | 6V-6210 | 1 | GASKET-SHAFT | |
| | 4 | 1,2 | 6V-7419 | 2 | BLADE AS-WIPER | |
| | 5 | 1 | 8T-5400 | 1 | CONNECTOR | |
| | 6 | 1 | 124-3637 | 1 | PLATE-WIPER | |
| CY | 7 | 1 | 214-7635 | 1 | ARM GP-WINDOW WIPER (FRONT) | 787 |
| CY | 8 | 2 | 214-7634 | 1 | ARM GP-WINDOW WIPER (REAR) | 786 |
| Y | 9 | 1 | 155-5789 | 1 | MOTOR GP-WINDOW WIPER (REAR) | 869 |
| Y | 10 | 1 | 189-8622 | 1 | MOTOR GP-WINDOW WIPER (FRONT) | 871 |
| | 11 | 2 | 2V-3216 | 1 | CLIP | |
| M | 12 | 2 | 5C-9553 | 1 | BOLT (M6X1X16-MM) | |
| | 13 | 2 | 6V-3265 | 6 | CLIP | |
| | 14 | 2 | 8T-4121 | 2 | WASHER-HARD (11X21X2.5-MM THK) | |
| M | 15 | 2 | 8T-4137 | 2 | BOLT (M10X1.5X20-MM) | |
| M | 16 | 2 | 8T-4138 | 1 | BOLT (M6X1X20-MM) | |
| | 17 | 2 | 8T-4205 | 2 | WASHER-HARD (7.2X14.5X2-MM THK) | |
| E | 18 | 2 | 144-0195 | | HOSE (290.5CM) | |
| E | 18A | 2 | 144-0195 | | HOSE (212.8CM) | |
| | 19 | 1 | 7K-1181 | 1 | STRAP-CABLE | |

C-CHANGE FROM PREVIOUS TYPE
E-ORDER BY THE CENTIMETER
M-METRIC PART
Y-SEPARATE ILLUSTRATION

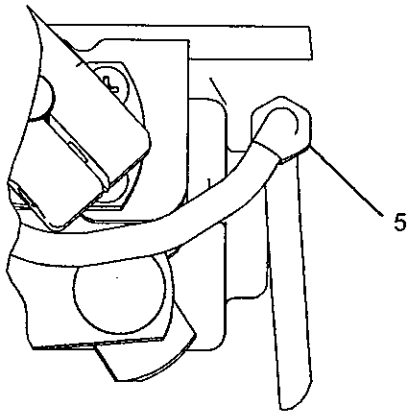


VIEW OF AREA B

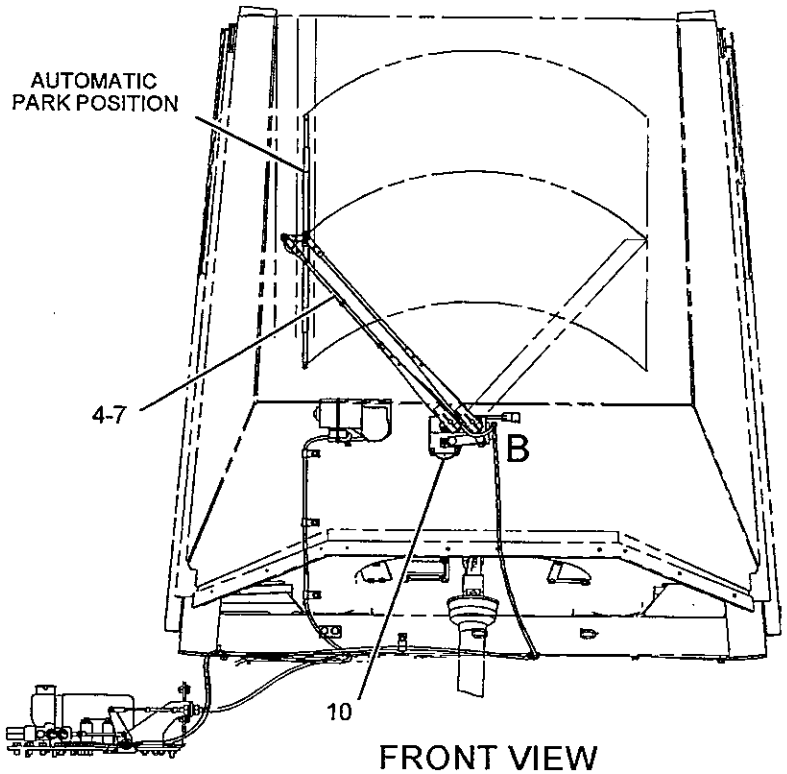


FRONT VIEW

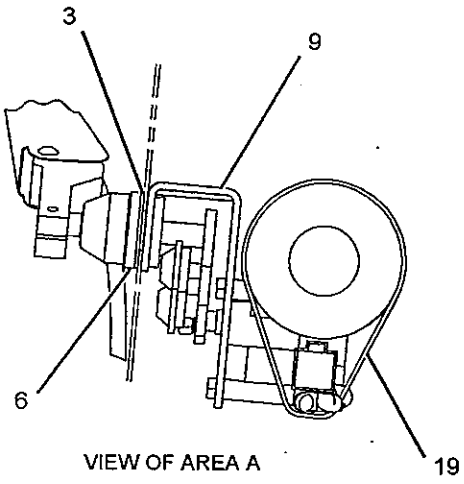


VIEW OF AREA A

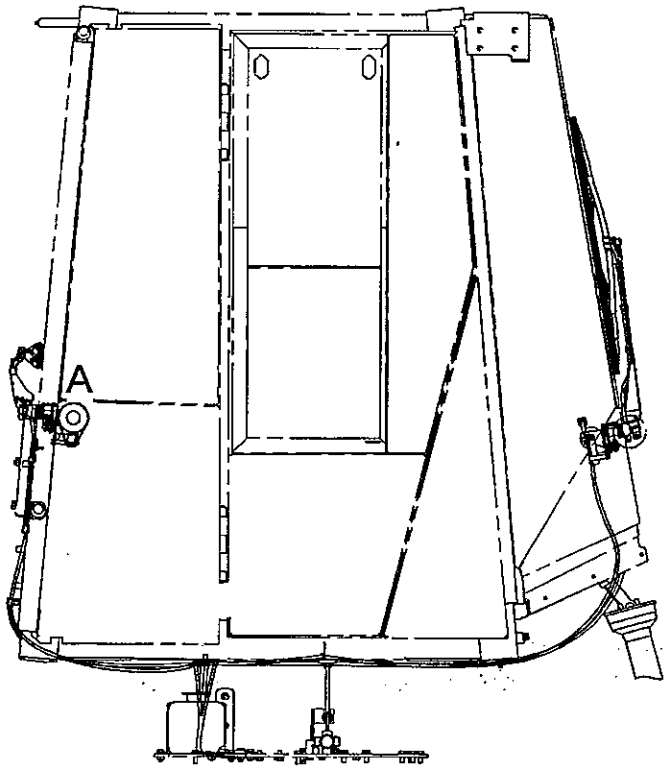


RIGHT SIDE VIEW

GRAPHIC #1

g01069589

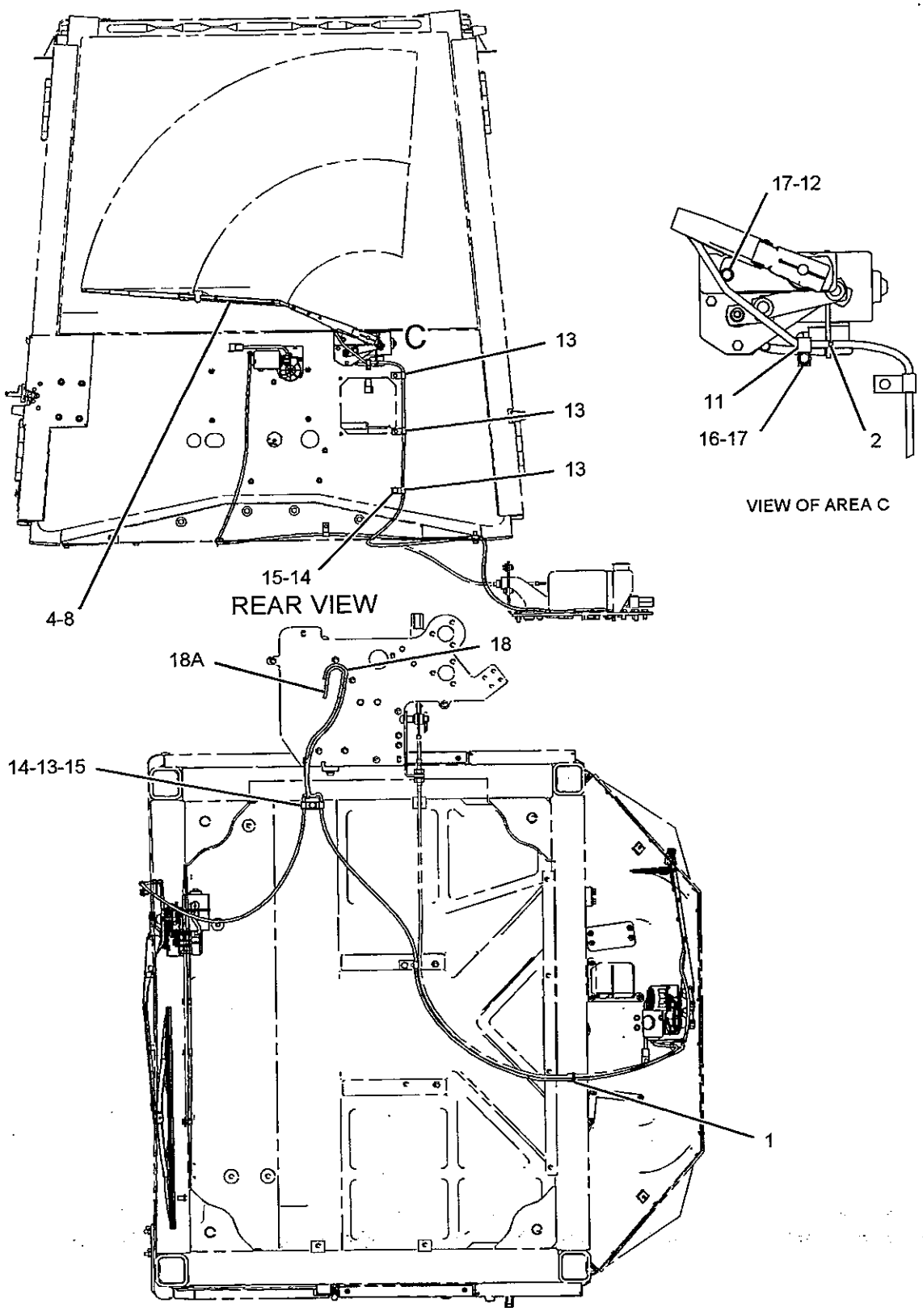


GRAPHIC #2

**<END>**

g01069588

# SERVICE EQUIPMENT AND SUPPLIES

## *246-5111* FILM GP

**S/N: JMS1-UP**

**PART OF 235-5835 PLATE & FILM GP**

**SMCS-7405, 7557**

**i02281511**

| NOTE | REF NO | GRAPHIC REF | PART NUMBER | QTY | PART NAME 1 2 3 4 5 6 (PRODUCT LEVEL) | SEE PAGE |
|---|---|---|---|---|---|---|
| | 1 | 1 | **253-9330** | 1 | FILM (980H, LH) | |
| | 2 | 1 | **253-0861** | 2 | FILM-INFORMATION (CAT POWER, ACERT TECHNOLOGY) | |
| | 3 | 1 | **246-6022** | 1 | FILM-STRIPE (RH) | |
| | 4 | 1 | **246-6023** | 1 | FILM-STRIPE (LH) | |
| | 5 | 1 | **197-4859** | 1 | FILM-CATERPILLAR (REAR CAB) | |
| | 6 | 1 | **253-9329** | 1 | FILM (980H, RH) | |
| | 7 | 1 | **206-6305** | | FILM (RED REFLECTIVE) (13.5-CM EACH) | |
| | 8 | 1 | **209-0516** | 1 | FILM-CATERPILLAR (WINDSHIELD) | |

*246-5111* **FILM GP** *(contd.)* i02281511

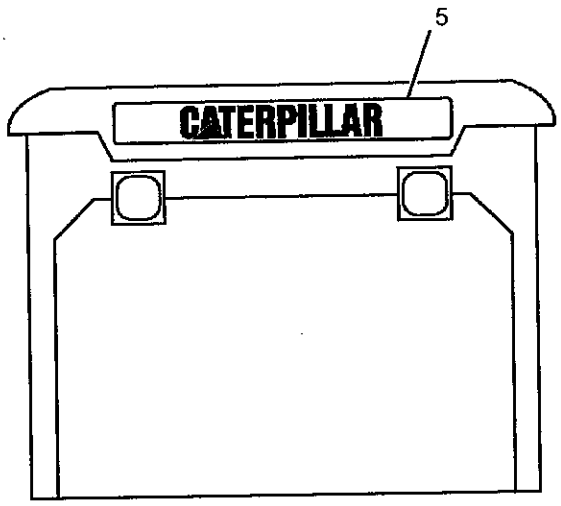


REAR VIEW
(CAB)

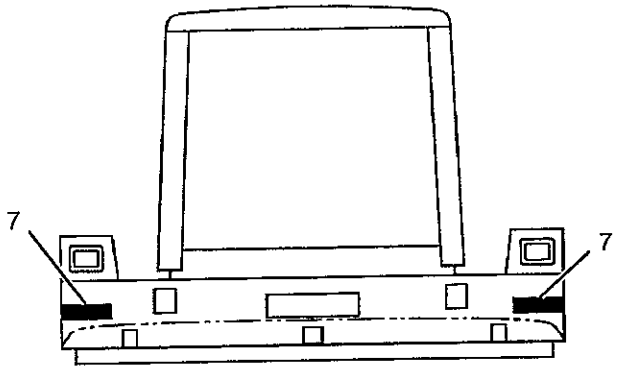


REAR VIEW

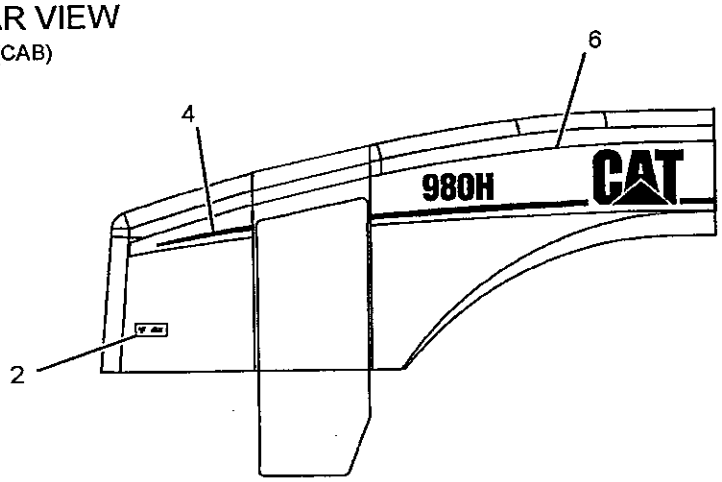


RIGHT SIDE VIEW

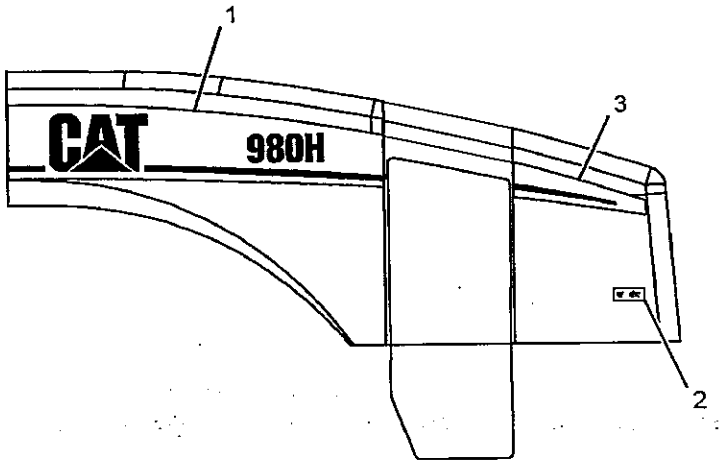


LEFT SIDE VIEW

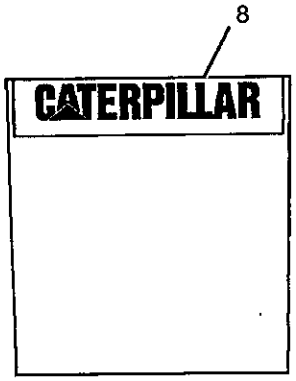


FRONT VIEW
(WINDSHIELD)

GRAPHIC #1 **<END>** g01143161

# SERVICE EQUIPMENT AND SUPPLIES

## 235-6269 LINES GP-DIAGNOSTIC–REMOTE PRESSURE TAPS

**S/N: JMS1-UP**

**AN ATTACHMENT**

**SMCS-7554**

**i02282851**

| NOTE | REF NO | GRAPHIC REF | PART NUMBER | QTY | PART NAME 1 2 3 4 5 6 (PRODUCT LEVEL) | SEE PAGE |
|---|---|---|---|---|---|---|
| | 1 | 1 | 3S-2093 | 8 | STRAP-CABLE | |
| | 2 | 2 | 4E-2289 | 1 | ANGLE AS | |
| M | | 2 | 8T-3490 | 1 | NUT-WELD (M10X1.5-THD) | |
| | 3 | 1,2 | 6V-0852 | 14 | CAP-DUST | |
| | 4 | 1 | 154-6626 | 3 | BRACKET AS | |
| | 5 | 1,2 | 185-6250 | 14 | FITTING AS | |
| | 7 | 2 | 237-1894 | 1 | BRACKET | |
| | 8 | 1 | 237-5222 | 1 | HOSE AS | |
| | 9 | 1 | 237-5223 | 1 | HOSE AS | |
| | 10 | 1 | 237-5224 | 1 | HOSE AS | |
| | 11 | 1 | 237-5225 | 1 | HOSE AS | |
| | 12 | 1 | 237-5226 | 1 | HOSE AS | |
| | 13 | 1 | 237-5227 | 1 | HOSE AS | |
| | 14 | 1 | 237-5228 | 1 | HOSE AS | |
| | 15 | 2 | 237-5229 | 1 | HOSE AS | |
| | 16 | 1 | 237-5230 | 1 | HOSE AS | |
| | 17 | 2 | 237-5231 | 1 | HOSE AS | |
| | 18 | 1 | 237-5232 | 1 | HOSE AS | |
| | 19 | 2 | 237-5234 | 1 | HOSE AS | |
| | 20 | 1 | 243-3259 | 1 | HOSE AS | |
| | 21 | 1 | 147-0385 | 2 | CLIP | |
| | 22 | 1,2 | 170-4735 | 14 | RING-RETAINING | |
| | 23 | 1 | 1S-0994 | 2 | CLIP | |
| | 24 | 1,2 | 3J-1907 | 14 | SEAL-O-RING | |
| | 25 | 1,2 | 4J-5477 | 28 | SEAL-O-RING | |
| | 26 | 1,2 | 6K-8179 | 8 | CLIP | |
| | 27 | 1 | 6V-8627 | 1 | ELBOW | |
| | 28 | 1,2 | 6V-8641 | 13 | CONNECTOR | |
| | 29 | 1,2 | 8T-4121 | 11 | WASHER-HARD (11X21X2.5-MM THK) | |
| M | 30 | 1 | 8T-4133 | 2 | NUT (M10X1.5-THD) | |
| M | 31 | 1,2 | 8T-4137 | 5 | BOLT (M10X1.5X20-MM) | |
| M | 33 | 1 | 8T-4195 | 4 | BOLT (M10X1.5X30-MM) | |
| | 35 | 1 | 9X-8250 | 3 | CLIP | |
| E | 36 | 1 | 225-5714 | | GUARD (44-CM) | |
| E | 36A | 1 | 225-5714 | | GUARD (34-CM) | |
| | 37 | 2 | 9X-8582 | 1 | CLIP | |
| | 38 | 2 | 2Y-3812 | 1 | CLIP | |
| | 39 | 2 | 265-9551 | 1 | HOSE AS. | |
| M | 40 | 1 | 8T-4244 | 1 | NUT (M12X1.75-THD) | |
| | 41 | 1 | 8T-4223 | 2 | WASHER-HARD (13.5X25.5X3-MM THK) | |
| M | 42 | 1 | 8T-4183 | 1 | BOLT (M12X1.75X40-MM) | |
| | 43 | 2 | 6V-2383 | 1 | CLIP | |
| | 44 | 2 | 5P-8444 | 1 | GROMMET | |
| | 45 | 2 | 5P-7469 | 1 | CLIP (TAB) | |
| | 46 | 2 | 5P-7468 | 1 | CLIP (SLOT) | |

E-ORDER BY THE CENTIMETER
M-METRIC PART

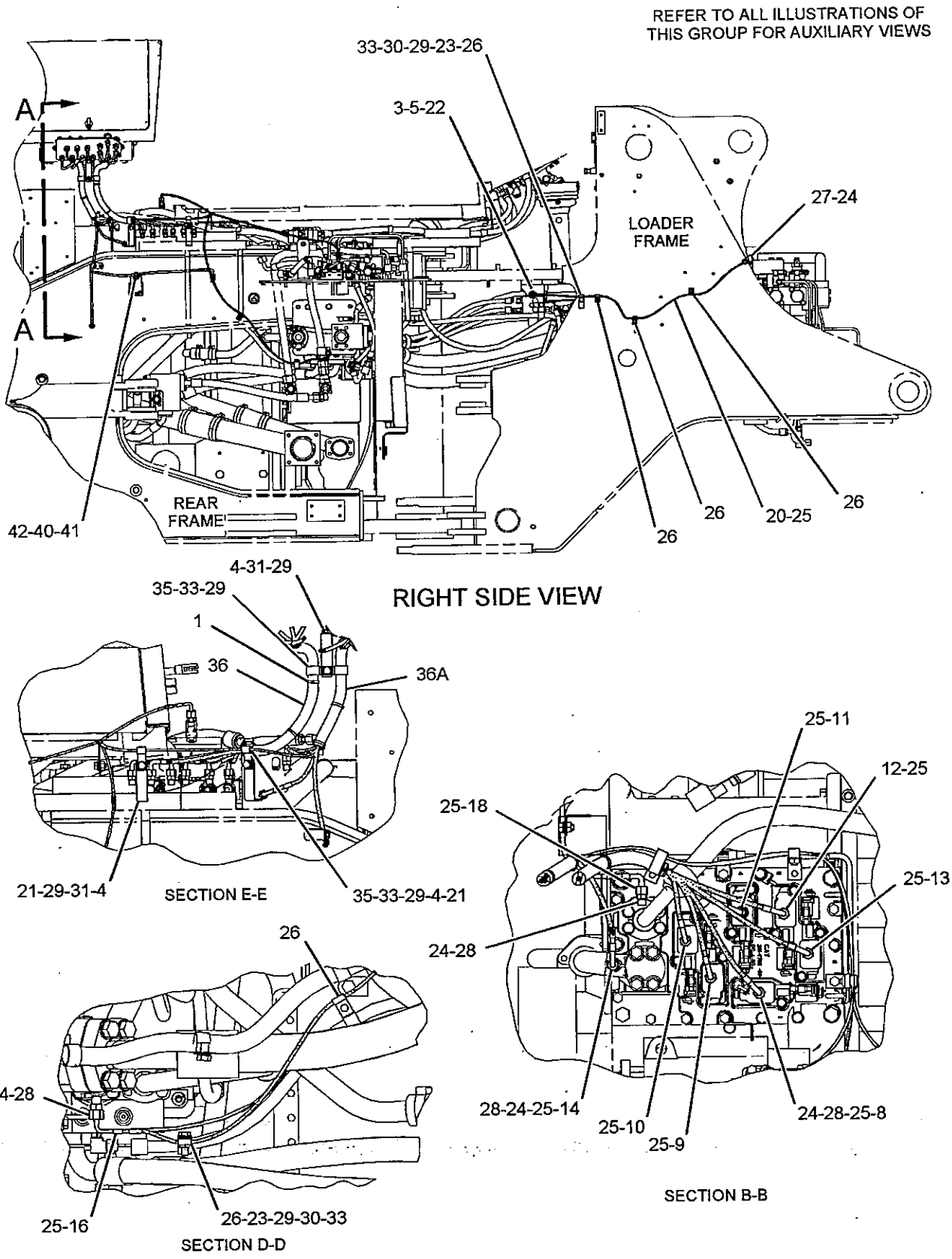


GRAPHIC #1 g01145119

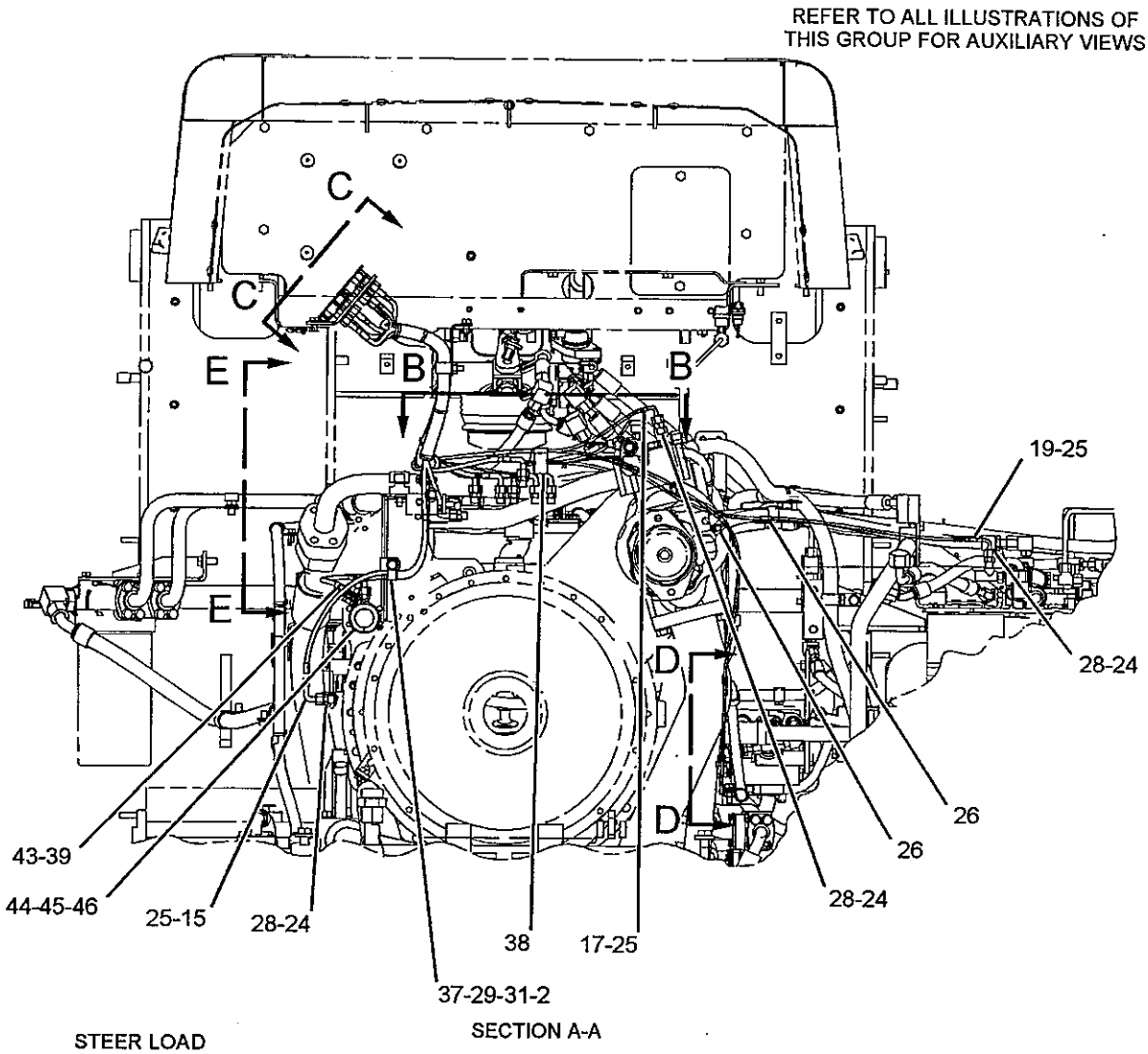


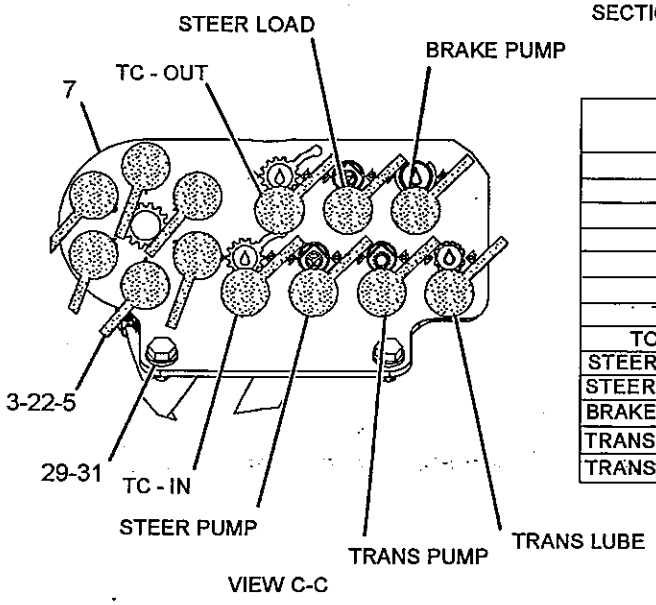


| REMOTE PRESSURE TAPS DESCRIPTION | |
|---|---|
| 1 | TRANSMISSION CLUTCH 1 REVERSE PRESSURE |
| 2 | TRANSMISSION CLUTCH 2 FORWARD PRESSURE |
| 3 | TRANSMISSION CLUTCH 3 4TH GEAR PRESSURE |
| 4 | TRANSMISSION CLUTCH 4 3RD GEAR PRESSURE |
| 5 | TRANSMISSION CLUTCH 5 2ND GEAR PRESSURE |
| 6 | TRANSMISSION CLUTCH 6 1ST GEAR PRESSURE |
| TC - IN | TORQUE CONVERTER INLET PRESSURE |
| TC - OUT | TORQUE CONVERTER OUTLET PRESSURE |
| STEER LOAD | STEERING LOAD SENSE PRESSURE |
| STEER PUMP | STEERING PUMP PRESSURE |
| BRAKE PUMP | BRAKE ACCUMULATOR PRESSURE |
| TRANS PUMP | TRANSMISSION PUMP PRESSURE |
| TRANS LUBE | TRANSMISSION LUBE PRESSURE |

GRAPHIC #2

**<END>**

g01145120

# SERVICE EQUIPMENT AND SUPPLIES

## *165-4104* MOUNTING GP-LUBRICATION CHART

S/N: JMS1-UP

PART OF 225-5538 CHASSIS AR

SMCS-7405, 7557

i01684724

| NOTE | PART NUMBER | QTY | PART NAME 1 2 3 4 5 6 (PRODUCT LEVEL) | SEE PAGE |
|---|---|---|---|---|
| | 099-3645 | 1 | CABLE-LANYARD | |
| | 196-4484 | 1 | SHEET | |
| | 5P-7958 | 2 | SLEEVE-CABLE SPLICE | |
| | | | <END> | |

## *235-5835* PLATE & FILM GP

S/N: JMS1-UP

PART OF 225-5538 CHASSIS AR

SMCS-7405, 7557

i02281556

| NOTE | PART NUMBER | QTY | PART NAME 1 2 3 4 5 6 (PRODUCT LEVEL) | SEE PAGE |
|---|---|---|---|---|
| Y | *246-5111* | 1 | FILM GP | 951 |
| BE | 206-6305 | | FILM (RED REFLECTIVE) (27-CM) | |
| | | | SEE FILM GP FOR LOCATION | |
| | 5P-1175 | 1 | FILM-IDENTIFICATION (ENGINE OIL FILL) | |
| | | | ATTACH TO TOP OF CRANKCASE OIL FILL CAP | |
| | 8C-5346 | 1 | FILM-IDENTIFICATION (HYDRAULIC OIL FILTER) | |
| | | | ON HYDRAULIC OIL FILTER | |
| | 8C-8902 | 1 | FILM-IDENTIFICATION (ENGINE OIL FILTER) | |
| | | | ON ENGINE OIL FILTER | |
| | 134-7258 | 1 | FILM-IDENTIFICATION (EXTENDED LIFE COOLANT) | |
| | | | NEXT TO RADIATOR FILL CAP | |
| | 146-6747 | 2 | FILM-INFORMATION (24-VOLT) | |
| | | | ON OUTSIDE OF THE BATTERY BOX COVER. 25-MM FROM LEFT EDGE AND 25-MM DOWN FROM TOP ON BOTH SIDES OF MACHINE | |
| | 188-8044 | 1 | FILM-INFORMATION (FUEL FILTER, WATER SEP IDENT) | |
| | | | CENTER ON FUEL/WATER SEPARATOR LOCATED ON ENGINE | |
| | 187-0661 | 1 | FILM-INSTRUCTION (ALTERNATE EXIT) | |
| | | | ON RH CAB WINDOW DIRECTLY ABOVE LATCH | |
| | 249-2742 | 1 | FILM-INSTRUCTION (HOOD TILT) | |
| | | | NEXT TO MANUAL HOOD ACTUATOR | |
| | 6V-2679 | 1 | FILM-INSTRUCTION (WIPER) | |
| | | | ON THE FRONT OF THE FILLER NECK OF THE WINDSHIELD WASHER BOTTLE LOCATED IN THE RH PLATFORM COMPARTMENT | |
| | 7X-3229 | 4 | FILM-INSTRUCTION (LIFT EYE, TIE-DOWN) | |
| | | | ONE EACH AT REAR AND FRONT LIFT AND TIEDOWN EYES | |
| | 124-2456 | 2 | FILM-INSTRUCTION (NO STEP) | |
| | | | ON TOP OF HOOD BEHIND CAB ON EACH SIDE | |
| | 158-7864 | 1 | FILM-INSTRUCTION (HYDRAULIC OIL) | |
| | | | DIRECTLY TO THE REAR OF HYDRAULIC TANK SIGHT GAUGE | |
| | 265-5801 | 1 | FILM-INSTRUCTION (READ MANUAL) | |
| | | | INSTALLED ON THE PROVIDED PLATE IN THE TOOL BOX | |
| | 265-6682 | 1 | FILM-INSTRUCTION (READ OMM) | |
| | | | IN FRONT OF GREASE FITTING BLOCK ON THE LEFT SIDE OF THE FRONT FRAME | |
| | 252-5876 | 1 | FILM-ROPS/FOPS | |
| | | | ON OUTSIDE OF CAB ON RIGHT SIDE ABOVE PLATFORM AND REARWARD OF DOOR | |

# SERVICE EQUIPMENT AND SUPPLIES

*235-5835* **PLATE & FILM GP** *(contd.)* i02281556

| NOTE | PART NUMBER | QTY | PART NAME 1 2 3 4 5 6 (PRODUCT LEVEL) | SEE PAGE |
|---|---|---|---|---|
| | **219-0305** | 1 | FILM-WARNING (NO WELD, NO DRILL) | |
| | | | ON OUTSIDE OF CAB ON RIGHT SIDE ABOVE PLATFORM AND REARWARD OF DOOR | |
| | **225-0312** | 2 | FILM-WARNING (JUMP START, READ OMM) | |
| | | | ON OUTSIDE OF THE BATTERY BOX COVER. 25-MM FROM LEFT EDGE AND 25-MM DOWN FROM TOP ON BOTH SIDES OF MACHINE | |
| | **225-4257** | 2 | FILM-WARNING (HOT FLUID UNDER PRESSURE) | |
| | | | ONE NEXT TO RADIATOR FILL CAP | |
| | | | ONE DIRECTLY NEXT TO VACUUM/BREAKER VALVE ON FORWARD FACE OF HYDRAULIC TANK ABOVE FILLER NECK | |
| | **226-1240** | 2 | FILM-WARNING (CRUSH HAZARD, STAY BACK) | |
| | | | ON SIDE FACE OF LOADER FRAME APPROX. 127-MM TO REAR OF BOTTOM CORNER OF FRONT FENDER, ON EACH SIDE | |
| | **226-1274** | 1 | FILM-WARNING (CRUSH HAZARD, READ MANUAL) | |
| | | | ON THE SIDE FACE OF THE LOADER FRAME APPROX. 127-MM TO THE REAR OF THE BOTTON CORNER OF THE FRONT FENDER ON THE SIDE | |
| | | | OF THE MACHINE WITH THE ARTICULATION LOCK | |
| | **227-7391** | 1 | FILM-WARNING (SEAT BELT) | |
| | | | ATTACHED TO THE RIGHT HAND CAB POST | |
| | **228-2616** | 1 | FILM-WARNING (UNIVERSAL) | |
| | | | INSIDE CAB ON INSIDE SURFACE OF FRONT LEFT HAND POST APPROX. 900-MM ABOVE CAB FLOOR | |
| | **237-6256** | 2 | FILM-WARNING (FAN) | |
| | | | ON RADIATOR ACCESS DOORS ON EACH SIDE OF RADIATOR SUPPORTS | |
| | **239-6986** | 1 | PLATE (PRODUCT IDENTIFICATION) | |
| | | | CENTER PLATE WITH TOP HITCH PLATE 40-MM FORWARD OF REAR EDGE OF SIDE PLATE ON LEFT SIDE OF LOADER FRAME | |
| A | **3N-3790** | 1 | PLATE-SERIAL NUMBER (ENGINE) | |
| | | | ON LOWER RH REAR CORNER OF CYL BLOCK APPROX. 53-MM FROM REAR FACE OF BLOCK TO LH SIDE OF PLATE AND 135-MM FROM BOTTOM | |
| | | | FACE OF BLOCK TO BOTTOM OF PLATE | |

A-NOT PART OF THIS GROUP
B-USE AS REQUIRED
E-ORDER BY THE CENTIMETER
Y-SEPARATE ILLUSTRATION

**<END>**

# SERVICE EQUIPMENT AND SUPPLIES

## *236-4440* PLATE & FILM GP

**S/N: JMS1-UP**
**AN ATTACHMENT**

**SMCS-7405, 7557** — **i02284244**

| NOTE | PART NUMBER | QTY | PART NAME 1 2 3 4 5 6 (PRODUCT LEVEL) | SEE PAGE |
|---|---|---|---|---|
| | **225-0313** | 3 | FILM-WARNING (JUMP START, READ OMM) | |
| | **225-4256** | 2 | FILM-WARNING (HOT FLUID UNDER PRESSURE) | |
| | **226-1242** | 2 | FILM-WARNING (CRUSH HAZARD, STAY BACK) | |
| | **226-1275** | 1 | FILM-WARNING (CRUSH HAZARD, READ MANUAL) | |
| | **227-7390** | 1 | FILM-WARNING (SEAT BELT) | |
| | **228-2615** | 1 | FILM-WARNING (UNIVERSAL) | |
| | **237-6257** | 1 | FILM-WARNING (FAN) | |

**<END>**

## *246-5480* PROTECTION GP-VANDALISM

**S/N: JMS1-UP**
**AN ATTACHMENT**

**SMCS-1273, 3005, 3030, 5056, 7315** — **i02282806**

| NOTE | PART NUMBER | QTY | PART NAME 1 2 3 4 5 6 (PRODUCT LEVEL) | SEE PAGE |
|---|---|---|---|---|
| Y | *7K-5636* | 1 | COVER GP-TMSN OIL FILLER CAP | 321 |
| | **246-2641** | 6 | PADLOCK GP | |
| | | | (EACH PADLOCK GP INCLUDES KEY) | |
| | | | 2-ON DOOR GP BATTERY | |
| | | | 2-ON SUPPORT GP | |
| | | | 1-ON FUEL TANK CAP | |
| | | | 1-ON HYDRAULIC TANK CAP | |

Y-SEPARATE ILLUSTRATION

**<END>**

# PART NUMBER INDEX


| Part | Page |
|---|---|
| **0** | |
| 0L-1143 | 69 |
| | 120 |
| 0L-1328 | 342 |
| 0L-1351 | 51 |
| | 73 |
| | 87 |
| 0L-2070 | 38 |
| | 46 |
| | 87 |
| | 391 |
| | 393 |
| 0L-2072 | 474 |
| 0R-4583 | 365 |
| 0S-0175 | 812 |
| | 814 |
| 0S-0509 | 290 |
| | 320 |
| 0S-0699 | 124 |
| 0S-1566 | 44 |
| 0S-1571 | 42 |
| | 77 |
| | 115 |
| 0S-1576 | 290 |
| 0S-1577 | 40 |
| 0S-1587 | 311 |
| | 341 |
| 0S-1588 | 16 |
| | 46 |
| | 52 |
| | 53 |
| | 71 |
| | 73 |
| | 75 |
| | 87 |
| | 120 |
| 0S-1590 | 35 |
| | 69 |
| | 71 |
| 0S-1591 | 51 |
| | 77 |
| | 81 |
| | 87 |
| | 90 |
| | 202 |
| 0S-1594 | 12 |
| | 13 |
| | 36 |
| | 44 |
| | 48 |
| | 51 |
| | 53 |
| | 71 |
| | 75 |
| | 101 |
| | 312 |
| | 341 |
| | 391 |
| | 393 |
| | 399 |
| 0S-1595 | 49 |
| | 559 |
| 0S-1608 | 50 |
| | 87 |
| 0S-1617 | 115 |
| | 365 |
| 0S-1618 | 391 |
| | 393 |
| 0S-1619 | 44 |
| 0T-0055 | 16 |
| | 46 |
| | 53 |
| 0T-0065 | 87 |
| | 365 |
| 0T-0244 | 909 |
| | 918 |
| | 919 |
| 0T-0573 | 50 |
| | 120 |
| | 320 |
| 0T-0768 | 391 |
| | 393 |
| **1** | |
| 1A-1135 | 90 |
| 1A-1460 | 341 |
| 1A-2029 | 77 |
| | 87 |
| 1A-2223 | 311 |
| | 360 |
| 1A-2812 | 542 |
| 1A-3203 | 32 |
| 1A-4273 | 290 |
| 1A-5183 | 16 |
| | 359 |
| 1A-5822 | 342 |
| 1A-5964 | 53 |
| | 120 |
| 1A-8096 | 587 |
| 1A-8651 | 342 |
| 1B-2578 | 844 |
| 1B-2790 | 87 |
| 1B-2886 | 559 |
| 1B-3867 | 7 |
| | 342 |
| 1B-4367 | 342 |
| 1B-7182 | 90 |
| 1B-8702 | 575 |
| 1B-8705 | 42 |
| | 542 |
| | 550 |
| 1C-2251 | 109 |
| 1D-4539 | 115 |
| 1D-4566 | 87 |
| 1D-5117 | 140 |
| 1F-0750 | 110 |
| | 111 |
| | 115 |
| 1F-7567 | 686 |
| | 693 |
| 1F-7958 | 37 |
| | 342 |
| 1H-0974 | 557 |
| 1H-1023 | 227 |
| 1H-2629 | 227 |
| 1H-3244 | 134 |
| | 136 |
| 1H-3338 | 235 |
| 1H-8128 | 113 |
| | 128 |
| | 129 |
| 1H-8134 | 378 |
| 1H-8171 | 345 |
| | 540 |
| 1H-8296 | 938 |
| | 940 |
| 1H-8306 | 126 |
| 1H-8647 | 7 |
| 1H-9696 | 387 |
| | 389 |
| | 706 |
| | 708 |
| 1J-2860 | 455 |
| 1J-4757 | 455 |
| 1J-8960 | 706 |
| | 708 |
| 1J-9671 | 75 |
| | 113 |
| | 519 |
| | 520 |
| | 521 |
| | 550 |
| | 587 |
| 1K-4649 | 347 |
| | 663 |
| 1K-6853 | 308 |
| | 377 |
| 1K-6872 | 788 |
| 1K-6932 | 406 |
| | 407 |
| | 408 |
| 1K-6979 | 364 |
| 1K-8850 | 890 |
| 1L-3162 | 399 |
| 1L-5072 | 321 |
| | 677 |
| 1L-7388 | 360 |
| 1L-7518 | 323 |
| | 325 |
| 1M-0644 | 78 |
| 1M-3937 | 359 |
| 1M-6119 | 140 |
| | 141 |
| 1M-6120 | 140 |
| | 141 |
| 1M-6718 | 581 |
| 1M-8657 | 359 |
| 1M-9011 | 308 |
| 1M-9968 | 228 |
| 1M-9971 | 227 |
| 1N-3743 | 369 |
| 1N-3974 | 34 |
| 1N-5410 | 360 |
| | 365 |
| 1N-5981 | 387 |
| | 389 |
| 1P-0014 | 365 |
| 1P-3703 | 547 |
| | 550 |
| 1P-3704 | 653 |
| | 656 |
| | 658 |
| 1P-3705 | 339 |
| | 355 |
| | 645 |
| | 656 |
| 1P-3706 | 682 |
| | 686 |
| | 689 |
| | 693 |
| 1P-3707 | 550 |
| | 645 |
| | 682 |
| | 686 |
| | 689 |
| | 693 |
| 1P-3708 | 353 |
| | 645 |
| 1P-3958 | 366 |
| 1P-4078 | 341 |
| 1P-4579 | 547 |
| | 645 |
| | 652 |
| 1P-4582 | 113 |
| | 645 |
| 1P-5762 | 355 |
| 1P-6886 | 103 |
| 1P-7346 | 42 |
| 1P-7834 | 342 |
| 1P-7835 | 342 |
| 1P-9261 | 365 |
| 1P-9269 | 341 |
| 1R-0716 | 71 |
| 1R-0762 | 115 |
| 1R-0770 | 119 |
| 1R-1809 | 340 |
| 1S-0994 | 120 |
| | 292 |
| | 466 |
| | 535 |
| | 550 |
| | 953 |
| 1S-1642 | 700 |
| 1S-3730 | 320 |
| 1S-3889 | 402 |
| 1S-4295 | 112 |
| 1S-6420 | 120 |
| 1S-6595 | 320 |
| 1S-7251 | 140 |
| | 141 |
| | 197 |
| | 226 |
| 1S-7252 | 140 |
| | 226 |
| 1S-7446 | 227 |
| 1S-9540 | 23 |
| 1S-9593 | 153 |
| | 257 |
| | 268 |
| | 276 |
| | 597 |
| | 601 |
| | 733 |
| | 736 |
| 1S-9989 | 360 |


► PRIMARY REFERENCE

# PART NUMBER INDEX


| Part | Page |
|---|---|
| | 365 |
| 1T-0279 | 393 |
| 1T-0577 | 391 |
| | 393 |
| 1T-0649 | 391 |
| | 393 |
| 1T-0651 | 391 |
| | 393 |
| 1T-0655 | 391 |
| | 393 |
| 1T-0657 | 393 |
| 1T-0679 | 393 |
| 1T-0680 | 393 |
| 1T-0681 | 393 |
| 1T-0686 | 391 |
| | 393 |
| 1T-0689 | 391 |
| | 393 |
| 1T-0720 | 13 |
| 1T-0738 | 360 |
| 1T-0762 | 391 |
| | 393 |
| 1T-0763 | 391 |
| 1T-0765 | 124 |
| 1T-0936 | 564 |
| 1T-1078 | 391 |
| | 393 |
| 1T-1339 | 391 |
| | 393 |
| 1T-1534 | 391 |
| | 393 |
| 1T-1639 | 387 |
| | 389 |
| 1U-0322 | 708 |
| 1U-0323 | 706 |
| | 708 |
| 1U-0470 | 698 |
| | 706 |
| | 708 |
| 1U-0471 | 698 |
| | 706 |
| | 708 |
| 1U-1577 | 706 |
| | 708 |
| 1U-1578 | 706 |
| | 708 |
| 1U-2827 | 677 |
| | 679 |
| 1U-3142 | 587 |
| 1U-8846 | 311 |
| | 402 |
| 1U-9053 | 275 |
| 1V-6341 | 341 |
| 1V-6755 | 895 |
| | 900 |
| 1V-8240 | 737 |
| | 738 |
| 1V-8241 | 626 |
| | 737 |
| | 738 |
| 1V-8242 | 628 |
| | 630 |
| | 632 |
| | 633 |
| | 635 |
| | 637 |
| 1V-8439 | 738 |
| 1V-8848 | 455 |
| 1V-8852 | 455 |
| 1V-8947 | 738 |
| 1V-8949 | 738 |
| 1V-8954 | 738 |
| 1V-8957 | 738 |
| 1V-9143 | 738 |
| | 743 |
| 1V-9148 | 738 |
| | 745 |
| 1W-0613 | 103 |
| 1W-3136 | 44 |
| 1W-6137 | 75 |
| 1W-6448 | 202 |
| 1W-7238 | 78 |
| 1W-7239 | 78 |
| **2** | |
| 2A-1162 | 44 |
| 2A-2677 | 259 |
| | 268 |
| | 276 |
| 2A-3798 | 312 |
| 2A-4429 | 30 |
| 2A-4639 | 342 |
| 2B-2404 | 468 |
| | 470 |
| | 474 |
| 2B-2694 | 150 |
| 2B-2695 | 14 |
| | 391 |
| | 393 |
| 2B-9373 | 371 |
| 2D-1523 | 391 |
| | 393 |
| 2D-2443 | 373 |
| 2D-2444 | 374 |
| 2D-4202 | 677 |
| | 679 |
| 2D-5238 | 387 |
| | 389 |
| 2D-5658 | 359 |
| | 366 |
| 2D-6392 | 227 |
| 2D-6416 | 808 |
| 2D-6511 | 402 |
| 2D-6533 | 308 |
| 2D-6642 | 364 |
| 2D-6648 | 667 |
| 2D-8009 | 371 |
| 2D-8363 | 360 |
| | 365 |
| 2D-9457 | 342 |
| 2F-6678 | 228 |
| 2F-8509 | 561 |
| 2G-4987 | 336 |
| 2G-9524 | 812 |
| | 814 |
| 2H-2665 | 342 |
| 2H-3429 | 227 |
| 2H-3755 | 202 |
| 2H-3920 | 153 |
| | 258 |
| | 266 |
| | 268 |
| | 276 |
| 2H-3922 | 233 |
| 2H-6489 | 342 |
| 2H-6490 | 342 |
| 2H-9247 | 387 |
| | 389 |
| 2J-3118 | 42 |
| 2J-3506 | 763 |
| | 764 |
| | 765 |
| | 766 |
| | 767 |
| | 768 |
| 2J-7686 | 626 |
| 2J-7761 | 321 |
| | 677 |
| 2J-8163 | 227 |
| 2K-4472 | 342 |
| 2K-4821 | 134 |
| | 136 |
| 2K-4898 | 613 |
| | 615 |
| | 617 |
| 2K-4973 | 51 |
| | 779 |
| | 938 |
| | 940 |
| 2K-6830 | 545 |
| 2L-3793 | 313 |
| 2L-6679 | 227 |
| 2L-8078 | 158 |
| 2M-0340 | 387 |
| | 389 |
| 2M-0849 | 65 |
| | 788 |
| 2M-6102 | 809 |
| 2M-9780 | 282 |
| | 307 |
| | 308 |
| | 347 |
| | 550 |
| | 583 |
| | 584 |
| | 585 |
| | 652 |
| | 660 |
| | 661 |
| | 670 |
| | 715 |
| | 716 |
| | 717 |
| | 718 |
| | 728 |
| | 729 |
| | 730 |
| | 731 |
| 2N-2258 | 895 |
| | 900 |
| 2N-2765 | 112 |
| 2N-2766 | 108 |
| | 112 |
| 2N-3350 | 75 |
| 2N-8109 | 73 |
| 2P-1293 | 348 |
| | 652 |
| 2P-1974 | 50 |
| 2P-2772 | 44 |
| 2P-2975 | 197 |
| 2P-3205 | 78 |
| 2P-3760 | 71 |
| | 75 |
| 2P-3761 | 71 |
| | 75 |
| 2P-4301 | 71 |
| 2P-4304 | 71 |
| 2P-4305 | 71 |
| 2P-4538 | 399 |
| 2P-5680 | 391 |
| | 393 |
| 2P-5715 | 393 |
| 2P-5755 | 364 |
| 2P-7214 | 120 |
| 2P-8353 | 402 |
| 2P-8421 | 585 |
| 2P-9183 | 391 |
| 2Q-0330 | 438 |
| 2Q-7058 | 738 |
| 2Q-7713 | 3 |
| | ▶436 |
| 2Q-7719 | 436 |
| 2Q-7720 | 436 |
| 2Q-7740 | 440 |
| 2Q-7765 | 440 |
| | 510 |
| 2Q-7766 | 452 |
| | 454 |
| 2Q-7979 | 663 |
| 2Q-8272 | 744 |
| 2R-1920 | 421 |
| | 424 |
| 2R-2376 | 832 |
| 2R-6806 | 313 |
| 2S-0679 | 387 |
| | 389 |
| 2S-0736 | 402 |
| 2S-0795 | 87 |
| 2S-2053 | 73 |
| 2S-2160 | 542 |
| 2S-2596 | 573 |
| | 585 |
| 2S-2760 | 78 |
| 2S-3625 | 13 |
| 2S-4078 | 310 |
| | 348 |
| | 353 |
| | 706 |
| | 708 |
| 2S-4460 | 102 |
| 2S-7905 | 78 |
| 2T-1397 | 682 |
| | 686 |
| | 689 |
| | 693 |
| 2T-2171 | 85 |
| 2T-3019 | 282 |
| | 299 |


▶ PRIMARY REFERENCE

# PART NUMBER INDEX


| Part | Page |
|---|---|
| | 468 |
| | 470 |
| 2T-3360 | 567 |
| 2V-0460 | 474 |
| 2V-3216 | 948 |
| 2V-3726 | 501 |
| | 880 |
| | 884 |
| 2V-6034 | 404 |
| 2V-7859 | 542 |
| 2Y-3812 | 953 |
| **3** | |
| 3A-3692 | 353 |
| 3B-0623 | 25 |
| | 27 |
| 3B-0645 | 25 |
| | 27 |
| 3B-1915 | 290 |
| 3B-1925 | 44 |
| 3B-4501 | 158 |
| | 782 |
| 3B-4506 | 844 |
| 3B-4607 | 534 |
| 3B-4611 | 457 |
| 3B-4615 | 429 |
| | 501 |
| 3B-4617 | 412 |
| | 525 |
| 3B-4628 | 404 |
| 3B-4640 | 431 |
| | 535 |
| 3B-6493 | 474 |
| | 484 |
| 3B-6552 | 468 |
| | 470 |
| | 481 |
| | 516 |
| | 518 |
| 3B-7263 | 474 |
| | 484 |
| 3B-7734 | 474 |
| | 484 |
| 3B-7896 | 468 |
| | 470 |
| 3B-8489 | 377 |
| | 455 |
| | 474 |
| | 515 |
| | 516 |
| | 517 |
| | 518 |
| | 738 |
| 3B-8491 | 544 |
| 3B-8686 | 738 |
| 3B-8822 | 468 |
| | 470 |
| 3D-0490 | 341 |
| 3D-2824 | 126 |
| | 231 |
| | 310 |
| | 317 |
| | 347 |
| 3D-4603 | 353 |
| 3D-5852 | 364 |
| 3D-8317 | 535 |
| 3E-0109 | 550 |
| 3E-2310 | 585 |
| 3E-3365 | 645 |
| | 649 |
| | 651 |
| | 585 |
| | 374 |
| | 400 |
| | 256 |
| | 549 |
| | 133 |
| | 179 |
| | 215 |
| | 231 |
| | 234 |
| | 238 |
| | 247 |
| | 248 |
| | 249 |
| | 404 |
| | 597 |
| | 602 |
| | 733 |
| | 736 |
| | 782 |
| | 818 |
| 3E-3368 | 209 |
| | 210 |
| 3E-3371 | 169 |
| | 171 |
| | 177 |
| | 204 |
| | 205 |
| | 206 |
| | 207 |
| | 208 |
| | 213 |
| | 219 |
| | 220 |
| | 246 |
| | 256 |
| | 281 |
| | 299 |
| 3E-3377 | 256 |
| | 281 |
| 3E-3383 | 243 |
| | 257 |
| | 303 |
| | 597 |
| | 601 |
| | 865 |
| 3E-3389 | 892 |
| 3E-3584 | 699 |
| 3E-3805 | 799 |
| | 801 |
| 3E-4302 | 561 |
| 3E-4312 | 788 |
| 3E-4316 | 799 |
| 3E-4352 | 87 |
| 3E-4353 | 109 |
| | 282 |
| 3E-4367 | 257 |
| | 275 |
| | 315 |
| | 796 |
| 3E-5136 | 796 |
| | 867 |
| 3E-5165 | 796 |
| | 867 |
| 3E-5169 | 281 |
| 3E-5180 | 257 |
| | 613 |
| 3E-5239 | 253 |
| | 256 |
| | 266 |
| | 274 |
| | 860 |
| | 862 |
| 3E-5464 | 782 |
| 3E-6328 | ▶133 |
| | 256 |
| | 266 |
| | 274 |
| 3E-6389 | ▶171 |
| | 256 |
| | 266 |
| | 274 |
| 3E-6466 | ▶176 |
| | 185 |
| | 187 |
| 3E-6772 | 31 |
| 3E-6790 | 75 |
| 3E-7410 | 687 |
| | 693 |
| 3E-7417 | 561 |
| 3E-7427 | 60 |
| 3E-7428 | 105 |
| 3E-7771 | 228 |
| 3E-7996 | 257 |
| 3E-8044 | 46 |
| 3E-8048 | 204 |
| 3E-8320 | 140 |
| 3E-8557 | 257 |
| | 275 |
| 3E-8558 | 315 |
| | 796 |
| 3E-9411 | 66 |
| 3E-9556 | 510 |
| 3F-0379 | 227 |
| 3F-2617 | 856 |
| | 857 |
| | 858 |
| 3F-3442 | 360 |
| | 364 |
| 3F-5792 | 342 |
| 3F-6156 | 70 |
| 3F-9194 | 374 |
| 3F-9556 | 134 |
| | 136 |
| 3G-0361 | 677 |
| | 679 |
| 3G-2683 | 708 |
| 3G-3321 | 545 |
| 3G-3726 | 575 |
| 3G-4117 | 706 |
| 3G-4135 | 708 |
| 3G-5098 | 632 |
| 3G-5099 | 633 |
| | 632 |
| | 633 |
| 3G-6455 | 677 |
| | 679 |
| 3G-8175 | 736 |
| 3G-8991 | 698 |
| | 706 |
| | 708 |
| 3H-0442 | 702 |
| 3H-1461 | 13 |
| 3H-2599 | 737 |
| | 740 |
| | 742 |
| 3H-5788 | 506 |
| | 509 |
| 3H-7654 | 527 |
| | 529 |
| | 556 |
| 3J-0634 | 375 |
| 3J-1907 | 71 |
| | 82 |
| | 191 |
| | 193 |
| | 282 |
| | 288 |
| | 313 |
| | 315 |
| | 340 |
| | 353 |
| | 361 |
| | 364 |
| | 366 |
| | 391 |
| | 393 |
| | 398 |
| | 399 |
| | 534 |
| | 535 |
| | 536 |
| | 550 |
| | 573 |
| | 575 |
| | 577 |
| | 581 |
| | 585 |
| | 587 |
| | 590 |
| | 591 |
| | 592 |
| | 639 |
| | 640 |
| | 643 |
| | 651 |
| | 652 |
| | 658 |
| | 682 |
| | 686 |
| | 689 |
| | 693 |
| | 697 |
| | 702 |
| | 704 |
| | 711 |
| | 713 |


▶ PRIMARY REFERENCE

# PART NUMBER INDEX


| Part | Page |
|---|---|
| | 953 |
| 3J-4407 | 587 |
| 3J-4818 | 938 |
| | 940 |
| 3J-7352 | 34 |
| 3J-7354 | 34 |
| | 71 |
| | 87 |
| | 340 |
| | 550 |
| | 585 |
| | 590 |
| | 591 |
| | 645 |
| | 652 |
| | 670 |
| | 708 |
| 3J-8500 | 563 |
| 3K-0360 | 82 |
| | 87 |
| | 115 |
| | 251 |
| | 299 |
| | 308 |
| | 355 |
| | 527 |
| | 529 |
| | 534 |
| | 535 |
| | 550 |
| | 571 |
| | 572 |
| | 573 |
| | 575 |
| | 579 |
| | 580 |
| | 585 |
| | 590 |
| | 591 |
| | 652 |
| | 702 |
| | 706 |
| | 708 |
| | 721 |
| | 722 |
| | 723 |
| | 724 |
| | 725 |
| | 726 |
| | 727 |
| 3K-0715 | 557 |
| 3K-2511 | 361 |
| 3K-4897 | 926 |
| 3K-6060 | 844 |
| 3K-6454 | 455 |
| 3K-8460 | 75 |
| | 587 |
| 3K-9770 | 746 |
| | 748 |
| | 770 |
| 3L-3380 | 227 |
| 3L-5893 | 676 |
| 3N-3763 | 228 |
| 3N-3790 | 957 |
| 3P-0650 | 75 |
| 3P-1155 | 202 |
| 3P-1932 | 87 |
| | 115 |
| 3P-2404 | 348 |
| | 649 |
| | 652 |
| 3P-2415 | 365 |
| 3P-2685 | 360 |
| | 364 |
| 3P-2761 | 365 |
| 3P-2768 | 365 |
| 3P-2791 | 364 |
| 3P-2792 | 365 |
| 3P-2793 | 359 |
| | 364 |
| 3P-2794 | 359 |
| | 364 |
| 3P-2983 | 366 |
| 3P-3059 | 364 |
| 3P-3060 | 360 |
| | 365 |
| 3P-3096 | 365 |
| 3P-3098 | 364 |
| 3P-3103 | 365 |
| 3P-3242 | 360 |
| | 365 |
| 3P-3246 | 366 |
| 3P-3304 | 364 |
| 3P-3321 | 364 |
| 3P-3418 | 366 |
| 3P-3635 | 364 |
| 3P-3735 | 365 |
| 3P-3743 | 365 |
| 3P-4050 | 365 |
| 3P-7489 | 365 |
| 3P-9366 | 364 |
| 3P-9900 | 938 |
| | 940 |
| 3R-8530 | 93 |
| 3R-8801 | 228 |
| 3R-9322 | 890 |
| 3S-0004 | 371 |
| 3S-1223 | 387 |
| 3S-2093 | 102 |
| | 114 |
| | 115 |
| | 140 |
| | 148 |
| | 182 |
| | 189 |
| | 232 |
| | 256 |
| | 266 |
| | 274 |
| | 288 |
| | 290 |
| | 299 |
| | 313 |
| | 315 |
| | 472 |
| | 542 |
| | 597 |
| | 602 |
| | 651 |
| | 782 |
| 3S-2708 | 796 |
| | 818 |
| | 826 |
| | 828 |
| | 840 |
| | 848 |
| | 850 |
| | 851 |
| | 853 |
| | 857 |
| | 858 |
| | 860 |
| | 862 |
| | 867 |
| | 948 |
| | 953 |
| | 359 |
| | 365 |
| 3S-6049 | 140 |
| | 141 |
| 3S-6050 | 140 |
| 3S-9643 | 87 |
| 3S-9880 | 341 |
| 3T-2662 | 195 |
| | 303 |
| 3T-3278 | 275 |
| | 796 |
| 3T-3418 | 227 |
| 3T-3422 | 227 |
| 3T-3423 | 227 |
| | 228 |
| 3T-3424 | 227 |
| | 228 |
| 3T-3434 | 227 |
| 3T-4363 | 387 |
| | 389 |
| 3T-4509 | 829 |
| | 832 |
| | 835 |
| 3T-4709 | 227 |
| 3T-4710 | 227 |
| 3T-9494 | 227 |
| | 228 |
| 3T-9524 | 228 |
| 3T-9525 | 227 |
| 3T-9549 | 310 |
| 3V-3263 | 948 |
| 3V-3827 | 645 |
| 3V-3828 | 645 |
| 3V-6514 | 738 |
| 3V-7271 | 656 |
| 3V-7272 | 656 |
| 3V-7273 | 656 |
| 3V-7274 | 656 |
| 3V-7279 | 656 |
| 3V-7476 | 803 |
| 3V-7729 | 738 |
| 3W-6398 | 943 |
| 3W-6399 | 943 |
| 3W-9225 | 404 |
| | 4 |
| 4B-0418 | 85 |
| 4B-2049 | 228 |
| | 258 |
| | 268 |
| | 276 |
| 4B-3388 | 150 |
| 4B-4158 | 708 |
| 4B-4274 | 782 |
| | 818 |
| 4B-4278 | 938 |
| | 940 |
| 4B-4280 | 585 |
| 4B-4863 | 704 |
| 4B-8756 | 474 |
| 4B-9782 | 63 |
| | 339 |
| | 387 |
| | 389 |
| | 585 |
| | 587 |
| 4B-9784 | 360 |
| | 583 |
| | 584 |
| 4B-9808 | 613 |
| | 615 |
| | 617 |
| 4B-9880 | 400 |
| 4D-0514 | 158 |
| 4D-3704 | 40 |
| 4D-6716 | 457 |
| 4D-7388 | 258 |
| | 268 |
| | 276 |
| | 282 |
| | 353 |
| 4D-7733 | 550 |
| 4D-7735 | 120 |
| 4D-7794 | 250 |
| | 282 |
| | 288 |
| | 466 |
| | 468 |
| | 470 |
| | 472 |
| 4D-8123 | 288 |
| 4D-9517 | 282 |
| | 287 |
| | 542 |
| 4E-1384 | 92 |
| | 457 |
| | 793 |
| | 812 |
| | 814 |
| 4E-2229 | 153 |
| 4E-2289 | 651 |
| | 840 |
| | 953 |
| 4E-2853 | 799 |
| 4E-3083 | 590 |
| 4E-3956 | 835 |
| 4E-6523 | 926 |
| 4E-6859 | 281 |
| 4E-6864 | 547 |
| 4E-8722 | 880 |
| | 884 |
| | 926 |

# PART NUMBER INDEX


| Part | Page |
|---|---|
| 4E-8792 | 645 |
| 4E-8958 | 522 |
| 4E-9173 | 926 |
| 4E-9174 | 926 |
| 4E-9664 | 522 |
| | 523 |
| 4E-9667 | 531 |
| 4E-9668 | 531 |
| 4F-0411 | 87 |
| 4F-2041 | 342 |
| 4F-2294 | 236 |
| | 237 |
| 4F-3508 | 115 |
| 4F-4097 | 561 |
| 4F-4879 | 920 |
| | 921 |
| | 923 |
| 4F-7390 | 73 |
| 4F-7952 | 585 |
| 4F-7957 | 7 |
| | 8 |
| 4H-1225 | 141 |
| 4I-3038 | 880 |
| | 884 |
| 4I-6289 | 427 |
| 4I-7889 | 842 |
| 4J-0520 | 353 |
| | 547 |
| | 550 |
| | 573 |
| | 590 |
| | 652 |
| | 656 |
| | 658 |
| | 682 |
| | 700 |
| 4J-0522 | 353 |
| | 642 |
| | 656 |
| | 658 |
| | 700 |
| | 706 |
| | 708 |
| | 727 |
| | 744 |
| 4J-0523 | 708 |
| 4J-0524 | 547 |
| | 645 |
| | 652 |
| 4J-0527 | 113 |
| | 353 |
| | 645 |
| 4J-5267 | 550 |
| | 649 |
| | 652 |
| 4J-5309 | 575 |
| 4J-5477 | 590 |
| | 591 |
| | 953 |
| 4J-5573 | 313 |
| | 315 |
| 4J-7533 | 541 |
| | 700 |
| | 702 |
| 4J-9223 | 628 |
| | 630 |
| | 635 |
| | 637 |
| 4K-0367 | 320 |
| 4K-1388 | 317 |
| | 587 |
| | 702 |
| 4K-1540 | 525 |
| 4K-8501 | 890 |
| 4K-8864 | 282 |
| | 288 |
| | 468 |
| | 470 |
| 4K-9097 | 115 |
| 4K-9429 | 783 |
| | 876 |
| 4L-2729 | 228 |
| 4L-6454 | 70 |
| | 85 |
| | 288 |
| | 387 |
| | 389 |
| | 788 |
| | 912 |
| | 915 |
| | 917 |
| 4M-0660 | 308 |
| 4M-1827 | 227 |
| 4M-1828 | 227 |
| 4M-1829 | 227 |
| 4M-1831 | 227 |
| 4M-1853 | 227 |
| 4M-1854 | 227 |
| 4M-1896 | 228 |
| 4M-2381 | 400 |
| 4M-5905 | 400 |
| 4M-6425 | 894 |
| 4M-7470 | 457 |
| | 812 |
| | 814 |
| 4M-8239 | 399 |
| 4M-8303 | 713 |
| 4M-8973 | 466 |
| | 474 |
| | 482 |
| 4M-9592 | 360 |
| 4N-0683 | 23 |
| 4N-0684 | 21 |
| 4N-0826 | 75 |
| 4N-0827 | 71 |
| 4N-0933 | 44 |
| 4N-1059 | 226 |
| 4N-1156 | 87 |
| 4N-1199 | 87 |
| 4N-1216 | 75 |
| 4N-1650 | 23 |
| 4N-2109 | 32 |
| 4N-2481 | 4 |
| | ▶69 |
| 4N-2514 | 40 |
| 4N-8150 | 71 |
| | 75 |
| 4P-2383 | 91 |
| 4P-4278 | 63 |
| 4P-4279 | 63 |
| 4P-5893 | 4 |
| | ▶32 |
| 4P-6817 | 4 |
| | ▶40 |
| 4P-6818 | 40 |
| 4P-6846 | 4 |
| | ▶36 |
| 4P-7371 | 63 |
| 4P-7373 | 51 |
| 4P-7428 | 292 |
| 4P-7429 | 282 |
| | 290 |
| | 342 |
| 4P-7581 | 109 |
| | 259 |
| | 268 |
| | 276 |
| | 282 |
| | 288 |
| | 290 |
| 4P-7582 | 290 |
| 4P-8134 | 109 |
| | 115 |
| | 290 |
| 4P-8525 | 266 |
| | 274 |
| 4S-1962 | 258 |
| | 268 |
| | 276 |
| | 282 |
| | 652 |
| 4S-4455 | 282 |
| 4S-8537 | 361 |
| | 364 |
| | 365 |
| | 366 |
| 4S-8598 | 341 |
| 4S-8603 | 341 |
| 4T-1860 | ▶581 |
| | 585 |
| | 700 |
| 4T-2741 | 580 |
| | 721 |
| | 722 |
| | 723 |
| | 724 |
| | 726 |
| 4T-3658 | 544 |
| 4T-4162 | 708 |
| | ▶721 |
| 4T-4267 | 698 |
| | 706 |
| | 708 |
| 4T-4932 | 706 |
| | ▶722 |
| 4T-4933 | 706 |
| | ▶723 |
| 4T-4934 | 708 |
| | ▶724 |
| 4T-4935 | 708 |
| | ▶725 |
| 4T-4942 | 725 |
| 4T-5070 | 581 |
| 4T-5071 | 581 |
| 4T-6103 | 708 |
| | ▶726 |
| 4T-7571 | 580 |
| | 721 |
| | 722 |
| | 723 |
| | 724 |
| | 725 |
| | 726 |
| 4T-8761 | 559 |
| 4T-9298 | 559 |
| 4T-9300 | 559 |
| 4T-9301 | 559 |
| 4T-9311 | 706 |
| | 708 |
| 4T-9312 | 706 |
| | 708 |
| 4T-9905 | 583 |
| | 584 |
| 4V-0368 | 452 |
| 4V-0611 | 549 |
| 4V-0612 | 549 |
| 4V-0969 | 549 |
| 4V-1616 | 753 |
| | 755 |
| | 757 |
| | 759 |
| | 761 |
| 4V-1901 | 455 |
| 4V-1939 | 251 |
| | 301 |
| 4V-2048 | 378 |
| 4V-2049 | 378 |
| 4V-2051 | 378 |
| 4V-2052 | 378 |
| 4V-2053 | 378 |
| 4V-2054 | 378 |
| 4V-2056 | 378 |
| 4V-2057 | 378 |
| 4V-4164 | 256 |
| | 266 |
| | 274 |
| 4V-4818 | 66 |
| | 378 |
| 4V-5324 | 745 |
| 4V-5325 | 745 |
| 4V-7099 | 738 |
| 4V-8256 | 779 |
| 4V-8577 | 938 |
| | 940 |
| 4V-9678 | 378 |
| 4V-9694 | 378 |
| 4V-9695 | 378 |
| 4V-9824 | 431 |
| 4W-5698 | 21 |
| 4W-5699 | 21 |
| 4W-5700 | 21 |
| 4W-5701 | 21 |
| 4W-9160 | 107 |
| 4Y-5406 | 549 |
| 4Y-5812 | 727 |
| 5B-2638 | 87 |


5

▶ PRIMARY REFERENCE

# PART NUMBER INDEX


| Part | Page |
|---|---|
| 5B-3180 | 400 |
| 5B-9192 | 823 |
| | 824 |
| 5B-9603 | 364 |
| 5C-2082 | 288 |
| 5C-2874 | 597 |
| | 601 |
| | 823 |
| | 824 |
| 5C-2890 | 93 |
| | 103 |
| | 184 |
| | 185 |
| | 187 |
| | 235 |
| | 369 |
| | 466 |
| | 489 |
| | 533 |
| | 597 |
| | 601 |
| | 605 |
| | 608 |
| | 878 |
| | 880 |
| | 882 |
| | 884 |
| | 901 |
| | 938 |
| | 940 |
| 5C-7261 | 93 |
| | 174 |
| | 175 |
| | 199 |
| | 200 |
| | 258 |
| | 268 |
| | 276 |
| | 457 |
| | 466 |
| | 567 |
| | 793 |
| | 799 |
| | 812 |
| | 814 |
| | 829 |
| | 832 |
| | 835 |
| | 842 |
| | 895 |
| | 901 |
| | 926 |
| 5C-8312 | 244 |
| | 258 |
| | 268 |
| | 276 |
| 5C-9553 | 148 |
| | 187 |
| | 195 |
| | 412 |
| | 782 |
| | 796 |
| | 818 |
| | 820 |
| | 826 |
| 5D-0302 | 867 |
| 5D-1026 | 925 |
| | 948 |
| 5D-1911 | 389 |
| 5D-2989 | 33 |
| 5E-8771 | 82 |
| 5F-0149 | 677 |
| 5F-0304 | 361 |
| 5F-1678 | 42 |
| 5F-2465 | 342 |
| 5F-3092 | 44 |
| 5F-3106 | 402 |
| | 402 |
| | 342 |
| | 320 |
| | 556 |
| | 557 |
| | 575 |
| | 666 |
| 5F-8000 | 342 |
| 5F-9757 | 602 |
| 5G-2003 | 148 |
| 5G-6505 | 141 |
| 5G-7398 | 943 |
| 5G-8871 | 900 |
| 5G-9603 | 120 |
| 5H-1504 | 31 |
| 5H-4019 | 682 |
| | 700 |
| 5H-4020 | 642 |
| | 700 |
| | 744 |
| 5H-6005 | 677 |
| | 679 |
| 5H-6202 | 359 |
| 5H-6734 | 113 |
| | 128 |
| | 129 |
| 5H-8853 | 191 |
| | 643 |
| | 704 |
| 5I-8304 | 140 |
| 5J-1086 | 342 |
| | 402 |
| 5J-1446 | 545 |
| 5J-3488 | 628 |
| | 630 |
| | 632 |
| | 633 |
| | 635 |
| | 637 |
| 5J-4773 | 763 |
| | 764 |
| | 765 |
| | 766 |
| | 767 |
| | 768 |
| 5J-5314 | 227 |
| 5J-5794 | 39 |
| | 365 |
| 5K-1568 | 339 |
| 5K-1787 | 626 |
| 5K-2298 | 474 |
| 5K-3489 | 455 |
| 5K-3490 | 455 |
| 5K-3491 | 455 |
| 5K-3492 | 455 |
| 5K-3501 | 455 |
| 5K-3661 | 323 |
| | 325 |
| | 327 |
| | 329 |
| | 331 |
| | 333 |
| 5K-4865 | 373 |
| 5K-5338 | 643 |
| 5K-9090 | 347 |
| | 348 |
| | 353 |
| | 550 |
| | 590 |
| | 591 |
| | 652 |
| 5K-9242 | 474 |
| 5K-9243 | 474 |
| 5K-9979 | 466 |
| | 468 |
| | 470 |
| 5L-3708 | 150 |
| 5L-4141 | 575 |
| 5L-4507 | 195 |
| | 303 |
| 5L-7200 | 244 |
| 5M-1152 | 320 |
| 5M-2054 | 360 |
| | 365 |
| 5M-2057 | 677 |
| | 679 |
| 5M-2894 | 12 |
| | 13 |
| | 16 |
| | 35 |
| | 36 |
| | 38 |
| | 44 |
| | 46 |
| | 48 |
| | 50 |
| | 51 |
| | 52 |
| | 53 |
| | 69 |
| | 71 |
| | 73 |
| | 75 |
| | 77 |
| | 78 |
| | 87 |
| | 101 |
| | 115 |
| | 120 |
| | 124 |
| | 202 |
| | 290 |
| | 312 |
| | 342 |
| | 365 |
| | 391 |
| | 393 |
| | 399 |
| 5M-3034 | 894 |
| 5M-3038 | 227 |
| | 359 |
| | 360 |
| | 361 |
| 5M-3062 | 288 |
| | 519 |
| | 520 |
| | 521 |
| 5M-3154 | 320 |
| 5M-3320 | 371 |
| 5M-6126 | 361 |
| | 365 |
| 5M-6187 | 364 |
| 5M-6668 | 195 |
| 5M-7925 | 366 |
| 5M-9548 | 399 |
| 5M-9622 | 399 |
| 5M-9623 | 399 |
| 5M-9624 | 399 |
| 5P-0403 | 365 |
| 5P-0537 | 8 |
| | 179 |
| | 342 |
| 5P-0597 | 102 |
| | 353 |
| 5P-0747 | 140 |
| | 226 |
| 5P-0761 | 140 |
| | 141 |
| 5P-0767 | 33 |
| | 82 |
| 5P-0840 | 23 |
| | 31 |
| 5P-1075 | 110 |
| | 111 |
| 5P-1076 | 93 |
| | 138 |
| | 139 |
| | 415 |
| | 440 |
| | 463 |
| | 489 |
| | 496 |
| | 506 |
| | 812 |
| | 814 |
| 5P-1175 | 956 |
| 5P-1251 | 82 |
| | 275 |
| 5P-1255 | 73 |
| 5P-1262 | 82 |
| 5P-1265 | 82 |
| 5P-1291 | 339 |
| | 547 |
| 5P-1293 | 353 |
| 5P-1295 | 549 |
| 5P-1296 | 645 |
| 5P-1442 | 82 |
| 5P-2199 | 585 |
| | 715 |
| | 716 |
| | 717 |
| | 718 |
| | 729 |

# PART NUMBER INDEX


| Part | Page |
|---|---|
| | 730 |
| 5P-2230 | 549 |
| 5P-2566 | 665 |
| 5P-2569 | 575 |
| 5P-2587 | 311 |
| | 342 |
| 5P-2618 | 113 |
| 5P-2817 | 102 |
| 5P-3193 | 619 |
| | 738 |
| 5P-3422 | 515 |
| | 516 |
| | 517 |
| | 518 |
| 5P-3779 | 589 |
| 5P-3867 | 391 |
| | 393 |
| 5P-3928 | 838 |
| 5P-3929 | 840 |
| 5P-3930 | 360 |
| 5P-3948 | 840 |
| 5P-4106 | 838 |
| 5P-4115 | 103 |
| | 782 |
| | 818 |
| 5P-4116 | 259 |
| | 268 |
| | 276 |
| | 803 |
| | 805 |
| 5P-4142 | 42 |
| 5P-4255 | 46 |
| 5P-4325 | 550 |
| 5P-4423 | 938 |
| | 940 |
| 5P-4428 | 103 |
| 5P-4483 | 307 |
| | 402 |
| 5P-4484 | 307 |
| | 308 |
| 5P-4924 | 82 |
| 5P-5045 | 360 |
| 5P-5148 | 651 |
| 5P-5296 | 359 |
| 5P-5297 | 360 |
| 5P-5624 | 256 |
| 5P-5637 | 931 |
| 5P-5643 | 829 |
| | 835 |
| 5P-5678 | 8 |
| 5P-5768 | 901 |
| 5P-5927 | 832 |
| 5P-5992 | 943 |
| 5P-6008 | 281 |
| 5P-6010 | 938 |
| | 940 |
| 5P-6011 | 103 |
| 5P-6120 | 597 |
| | 602 |
| | 605 |
| | 608 |
| | 896 |
| | 901 |
| | 905 |
| 5P-6298 | 227 |
| 5P-6313 | 224 |
| 5P-6314 | 224 |
| 5P-6412 | 549 |
| 5P-6604 | 307 |
| | 308 |
| 5P-6718 | 313 |
| | 315 |
| 5P-6724 | 534 |
| 5P-6872 | 844 |
| 5P-6879 | 846 |
| | 847 |
| | 855 |
| | 856 |
| 5P-7211 | 412 |
| | 440 |
| | 457 |
| | 489 |
| | 506 |
| 5P-7466 | 348 |
| 5P-7467 | 348 |
| 5P-7468 | 339 |
| | 348 |
| | 355 |
| | 953 |
| 5P-7469 | 339 |
| | 348 |
| | 355 |
| | 953 |
| 5P-7470 | 645 |
| 5P-7471 | 645 |
| 5P-7483 | 93 |
| | 501 |
| 5P-7684 | 307 |
| | 308 |
| 5P-7701 | 60 |
| | 667 |
| 5P-7703 | 645 |
| 5P-7803 | 799 |
| | 801 |
| 5P-7957 | 876 |
| 5P-7958 | 1 |
| | 489 |
| | 832 |
| | 880 |
| | 884 |
| | 956 |
| 5P-8068 | 75 |
| 5P-8077 | 645 |
| 5P-8112 | 348 |
| 5P-8119 | 527 |
| | 529 |
| | 540 |
| 5P-8194 | 359 |
| 5P-8215 | 575 |
| 5P-8244 | 391 |
| | 393 |
| 5P-8245 | 37 |
| | 44 |
| | 49 |
| | 311 |
| | 313 |
| | 315 |
| | 342 |
| | 359 |
| | 365 |
| | 387 |
| | 389 |
| | 402 |
| | 525 |
| 5P-8247 | 44 |
| | 134 |
| | 136 |
| | 145 |
| | 290 |
| | 322 |
| | 323 |
| | 325 |
| | 327 |
| | 329 |
| | 331 |
| | 333 |
| | 337 |
| | 342 |
| | 667 |
| 5P-8248 | 308 |
| | 319 |
| | 323 |
| | 325 |
| | 327 |
| | 329 |
| | 331 |
| | 333 |
| | 443 |
| | 526 |
| | 763 |
| | 764 |
| | 765 |
| | 766 |
| | 767 |
| | 768 |
| 5P-8309 | 878 |
| | 882 |
| 5P-8361 | 748 |
| 5P-8362 | 746 |
| | 748 |
| 5P-8432 | 375 |
| 5P-8444 | 339 |
| | 355 |
| | 953 |
| 5P-8500 | 1 |
| | 321 |
| | 811 |
| 5P-8502 | 321 |
| | 811 |
| 5P-8523 | 597 |
| | 601 |
| 5P-8524 | 597 |
| | 601 |
| 5P-8823 | 746 |
| | 770 |
| 5P-8874 | 535 |
| 5P-9085 | 251 |
| | 253 |
| 5P-9132 | 795 |
| 5P-9262 | 719 |
| 5P-9297 | 282 |
| | 292 |
| | 299 |
| | 300 |
| | 302 |
| | 303 |
| 5P-9299 | 74 |
| | 82 |
| | 348 |
| | 535 |
| 5P-9915 | 513 |
| 5R-4787 | 415 |
| 5S-0003 | 15 |
| 5S-0581 | 90 |
| 5S-4246 | 567 |
| 5S-7349 | 134 |
| | 136 |
| 5S-7383 | 894 |
| 5T-5682 | 373 |
| | 374 |
| 5V-1496 | 910 |
| | 913 |
| 5V-6152 | 292 |
| 5V-6153 | 292 |
| 5V-6439 | 251 |
| 5V-8780 | 92 |
| **6** | |
| 6A-5591 | 320 |
| 6B-4370 | 323 |
| | 325 |
| 6B-4594 | 92 |
| 6B-6682 | 526 |
| 6B-6683 | 667 |
| 6B-6863 | 359 |
| | 365 |
| 6C-3029 | 474 |
| 6C-3678 | 812 |
| | 814 |
| 6C-3679 | 812 |
| | 814 |
| 6C-3997 | 199 |
| 6D-0692 | 402 |
| 6D-0848 | 679 |
| 6D-1641 | 258 |
| | 268 |
| | 276 |
| | 535 |
| | 842 |
| | 843 |
| 6D-3479 | 840 |
| 6D-4244 | 122 |
| | 282 |
| | 288 |
| | 292 |
| 6D-4246 | 643 |
| | 840 |
| 6D-4247 | 550 |
| 6D-6146 | 258 |
| | 268 |
| | 276 |
| 6D-7128 | 85 |
| 6E-0198 | 575 |
| 6E-0381 | 571 |
| | 572 |
| 6E-0410 | 585 |
| | 715 |
| | 716 |


► **PRIMARY REFERENCE**

# PART NUMBER INDEX


| Part | Page |
|---|---|
| | 717 |
| | 718 |
| | 729 |
| | 730 |
| 6E-1127 | 727 |
| 6E-1436 | 561 |
| 6E-1497 | 545 |
| 6E-1835 | 580 |
| | 721 |
| | 722 |
| | 723 |
| | 724 |
| | 725 |
| | 726 |
| 6E-2943 | 559 |
| | 561 |
| | 667 |
| 6E-3269 | 719 |
| 6E-3272 | 719 |
| 6E-3273 | 719 |
| 6E-3276 | 719 |
| 6E-3373 | 711 |
| | 713 |
| | ▶730 |
| 6E-4224 | 561 |
| 6E-4228 | 577 |
| 6E-4229 | 577 |
| 6E-4230 | 577 |
| 6E-4239 | 577 |
| 6E-4977 | 545 |
| 6E-5066 | 564 |
| 6E-5510 | 727 |
| 6E-6138 | 727 |
| 6E-6140 | 577 |
| 6E-6141 | 577 |
| 6E-6142 | 577 |
| 6E-6527 | 719 |
| 6E-6528 | 719 |
| 6E-6536 | 719 |
| 6E-6537 | 719 |
| 6E-6538 | 719 |
| 6E-6539 | 719 |
| 6E-6540 | 719 |
| 6F-0156 | 359 |
| | 364 |
| 6F-0253 | 153 |
| | 597 |
| | 601 |
| 6F-0295 | 348 |
| 6F-5188 | 339 |
| 6F-5282 | 65 |
| 6F-7045 | 233 |
| 6H-1717 | 342 |
| 6H-3999 | 455 |
| 6H-5139 | 339 |
| 6H-6043 | 391 |
| | 393 |
| 6I-0213 | 125 |
| 6I-0901 | 63 |
| 6I-0928 | 30 |
| 6I-1055 | 23 |
| 6I-1418 | 150 |
| | 169 |
| | 256 |
| | 266 |
| | 274 |
| 6I-1458 | 68 |
| 6I-2509 | 100 |
| 6I-2510 | 100 |
| 6I-3623 | 42 |
| 6I-3624 | 42 |
| 6I-3625 | 42 |
| 6I-3638 | 4 |
| | ▶35 |
| 6I-4025 | 31 |
| 6I-4421 | 23 |
| 6I-4465 | 100 |
| 6I-4575 | 7 |
| 6I-8249 | 749 |
| 6I-8250 | 749 |
| 6I-8500 | 360 |
| 6I-9255 | 365 |
| 6J-1080 | 677 |
| | 679 |
| 6J-1081 | 677 |
| | 679 |
| 6J-2386 | 559 |
| | 667 |
| 6J-2419 | 341 |
| 6J-2680 | 550 |
| 6J-2797 | 545 |
| 6J-3134 | 575 |
| 6J-6439 | 580 |
| | 721 |
| | 722 |
| | 723 |
| | 724 |
| | 725 |
| | 726 |
| 6J-6516 | 585 |
| 6J-6721 | 365 |
| 6K-3273 | 913 |
| 6K-3607 | 115 |
| 6K-5290 | 653 |
| 6K-5291 | 651 |
| 6K-5528 | 323 |
| | 325 |
| | 327 |
| | 329 |
| | 331 |
| 6K-5529 | 333 |
| | 323 |
| | 325 |
| | 327 |
| | 329 |
| | 331 |
| | 333 |
| 6K-6307 | 307 |
| | 308 |
| | 590 |
| | 706 |
| | 708 |
| 6K-6967 | 468 |
| | 470 |
| | 484 |
| 6K-8178 | 840 |
| 6K-8179 | 369 |
| | 953 |
| 6K-8180 | 796 |
| | 867 |
| 6L-3616 | 468 |
| | 470 |
| | 474 |
| 6M-1622 | 307 |
| 6M-5062 | 535 |
| 6M-9155 | 527 |
| | 529 |
| 6N-1931 | 78 |
| 6N-3279 | 227 |
| 6N-3826 | 227 |
| 6P-0593 | 542 |
| 6P-0699 | 496 |
| 6P-3458 | 364 |
| 6P-4903 | 341 |
| 6P-4947 | 341 |
| 6P-5559 | 387 |
| | 389 |
| 6P-5724 | 365 |
| 6P-5725 | 365 |
| 6P-5751 | 364 |
| 6P-6325 | 387 |
| | 389 |
| 6P-6326 | 387 |
| | 389 |
| 6P-6556 | 391 |
| 6P-6739 | 365 |
| 6P-7379 | 365 |
| 6P-7704 | 359 |
| 6P-7705 | 365 |
| 6P-7767 | 387 |
| | 389 |
| 6R-3966 | 559 |
| 6R-7653 | 605 |
| | 608 |
| 6S-1753 | 365 |
| 6S-3859 | 809 |
| 6S-6646 | 513 |
| | 812 |
| | 814 |
| 6T-0363 | 227 |
| 6T-0371 | 227 |
| 6T-0372 | 227 |
| 6T-0465 | 140 |
| 6T-0470 | 387 |
| | 389 |
| 6T-3631 | 246 |
| | 281 |
| | 303 |
| 6T-3632 | 246 |
| | 281 |
| | 303 |
| 6T-3633 | 246 |
| | 281 |
| | 303 |
| 6T-3643 | 258 |
| 6T-3644 | 195 |
| 6T-3709 | 389 |
| 6T-3720 | 364 |
| 6T-5545 | 402 |
| 6T-6052 | 360 |
| | 365 |
| | 700 |
| 6T-6505 | 782 |
| | 818 |
| 6T-6708 | 782 |
| | 818 |
| 6V-0128 | 8 |
| 6V-0397 | 656 |
| | 658 |
| 6V-0423 | 355 |
| 6V-0473 | 359 |
| 6V-0484 | 120 |
| | 534 |
| | 550 |
| | 652 |
| 6V-0836 | 359 |
| | 364 |
| 6V-0852 | 115 |
| | 120 |
| | 191 |
| | 193 |
| | 340 |
| | 399 |
| | 534 |
| | 549 |
| | 643 |
| | 651 |
| | 658 |
| | 682 |
| | 686 |
| | 689 |
| | 693 |
| | 953 |
| 6V-1197 | 11 |
| 6V-1322 | 227 |
| 6V-1572 | 348 |
| 6V-1573 | 348 |
| 6V-1574 | 348 |
| 6V-1614 | 611 |
| | 612 |
| 6V-1616 | 652 |
| 6V-1626 | 895 |
| | 900 |
| 6V-1668 | 611 |
| | 782 |
| | 818 |
| 6V-1720 | 361 |
| | 366 |
| 6V-1819 | 669 |
| 6V-1820 | 109 |
| 6V-1889 | 258 |
| | 268 |
| | 276 |
| | 282 |
| | 348 |
| | 550 |
| | 649 |
| | 652 |
| 6V-1970 | 1 |
| 6V-2313 | 796 |
| | 867 |
| 6V-2317 | 400 |
| 6V-2370 | 412 |
| | 501 |
| 6V-2383 | 251 |
| | 953 |
| 6V-2478 | 359 |
| 6V-2496 | 943 |
| 6V-2610 | 103 |
| 6V-2679 | 956 |


▶ PRIMARY REFERENCE

# PART NUMBER INDEX


| Part | Page | Part | Page | Part | Page | Part | Page |
|---|---|---|---|---|---|---|---|
| 6V-2686 | 224 | 6V-4589 | 115 | 6V-6923 | 131 | | 632 |
| 6V-2687 | 258 | | 122 | 6V-7238 | 60 | | 633 |
| | 268 | | 130 | | 82 | | 635 |
| | 276 | | 238 | | 843 | | 637 |
| | 788 | 6V-4604 | 457 | 6V-7351 | 667 | 6V-8336 | 561 |
| 6V-2803 | 429 | 6V-5048 | 79 | 6V-7357 | 103 | 6V-8337 | 561 |
| 6V-3240 | 656 | | 106 | | 146 | 6V-8352 | 719 |
| 6V-3241 | 682 | | 120 | | 782 | 6V-8369 | 259 |
| | 686 | | 122 | | 818 | | 266 |
| | 689 | | 202 | | 826 | | 274 |
| | 693 | | 212 | | 895 | 6V-8376 | 195 |
| 6V-3251 | 59 | | 214 | | 901 | | 258 |
| 6V-3265 | 268 | 6V-5049 | 31 | 6V-7419 | 948 | | 303 |
| | 276 | | 59 | 6V-7621 | 489 | 6V-8397 | 82 |
| | 466 | | 120 | 6V-7636 | 799 | | 191 |
| | 472 | | 122 | 6V-7646 | 910 | | 193 |
| | 533 | | 202 | | 913 | | 353 |
| | 948 | | 211 | 6V-7673 | 561 | | 535 |
| 6V-3505 | 715 | 6V-5100 | 17 | 6V-7732 | 431 | | 536 |
| | 716 | 6V-5142 | 731 | 6V-7743 | 597 | | 547 |
| | 717 | 6V-5192 | 563 | | 601 | | 550 |
| | 718 | 6V-5195 | 585 | 6V-7744 | 141 | | 573 |
| | 729 | 6V-5386 | 348 | | 438 | | 591 |
| | 730 | 6V-5586 | 581 | | 677 | | 643 |
| 6V-3532 | 308 | 6V-5645 | 256 | | 679 | | 651 |
| 6V-3677 | 42 | | 268 | 6V-8097 | 402 | | 652 |
| 6V-3683 | 13 | | 276 | 6V-8116 | 575 | | 682 |
| 6V-3822 | 438 | 6V-5683 | 542 | 6V-8128 | 307 | | 686 |
| 6V-3823 | 313 | 6V-5686 | 323 | | 308 | | 689 |
| | 315 | | 325 | 6V-8132 | 323 | | 693 |
| 6V-3834 | 557 | | 327 | | 325 | | 697 |
| 6V-3938 | 244 | | 329 | | 327 | | 704 |
| 6V-3960 | 369 | | 331 | | 329 | 6V-8398 | 85 |
| 6V-3965 | 191 | | 333 | | 331 | | 345 |
| | 193 | 6V-5839 | 313 | | 333 | | 347 |
| | 340 | | 315 | | 358 | | 534 |
| | 398 | | 320 | 6V-8150 | 527 | | 535 |
| | 399 | | 457 | | 529 | | 536 |
| | 534 | | 677 | 6V-8185 | 275 | | 550 |
| | 550 | | 679 | | 799 | | 590 |
| | 643 | | 812 | 6V-8186 | 237 | | 591 |
| | 652 | 6V-5842 | 313 | 6V-8187 | 194 | | 592 |
| | 658 | | 315 | | 195 | | 652 |
| | 682 | 6V-5843 | 575 | 6V-8188 | 34 | | 687 |
| | 686 | 6V-5845 | 319 | | 141 | 6V-8400 | 536 |
| | 689 | | 323 | | 228 | | 550 |
| | 693 | | 325 | | 369 | 6V-8455 | 323 |
| 6V-4248 | 677 | | 327 | | 556 | | 325 |
| | 679 | | 329 | 6V-8189 | 134 | | 327 |
| 6V-4349 | 348 | | 331 | | 136 | | 329 |
| 6V-4356 | 468 | | 333 | 6V-8197 | 525 | | 331 |
| | 470 | | 443 | 6V-8225 | 179 | | 333 |
| | 652 | 6V-6210 | 948 | | 786 | 6V-8557 | 590 |
| | 840 | 6V-6535 | 748 | | 787 | 6V-8625 | 535 |
| 6V-4357 | 468 | 6V-6609 | 58 | 6V-8237 | 323 | | 590 |
| | 470 | | 59 | | 325 | 6V-8627 | 590 |
| | 652 | | 222 | | 327 | | 953 |
| | 840 | | 843 | | 329 | 6V-8628 | 590 |
| 6V-4365 | 387 | 6V-6640 | 308 | | 331 | 6V-8629 | 347 |
| | 389 | | 342 | | 333 | 6V-8633 | 535 |
| 6V-4369 | 782 | 6V-6703 | 159 | | 357 | 6V-8634 | 82 |
| | 818 | | 160 | | 358 | | 550 |
| 6V-4429 | 335 | | 166 | | 626 | 6V-8635 | 347 |
| | 525 | 6V-6716 | 281 | | 628 | | 550 |
| 6V-4432 | 353 | 6V-6718 | 158 | | 630 | | 591 |


► PRIMARY REFERENCE

# PART NUMBER INDEX


| Part | Page |
|---|---|
| 6V-8636 | 82 |
| | 122 |
| | 191 |
| | 193 |
| | 550 |
| | 643 |
| | 682 |
| | 686 |
| | 689 |
| | 693 |
| | 704 |
| 6V-8637 | 550 |
| | 649 |
| | 651 |
| 6V-8638 | 122 |
| 6V-8639 | 535 |
| | 550 |
| | 591 |
| 6V-8640 | 652 |
| 6V-8641 | 591 |
| | 953 |
| 6V-8642 | 652 |
| 6V-8676 | 70 |
| 6V-8724 | 191 |
| | 193 |
| | 353 |
| | 535 |
| | 550 |
| | 573 |
| | 643 |
| | 682 |
| | 686 |
| | 689 |
| | 693 |
| | 704 |
| 6V-8774 | 550 |
| 6V-8775 | 591 |
| 6V-8776 | 652 |
| 6V-8781 | 535 |
| 6V-8791 | 319 |
| | 347 |
| 6V-8801 | 145 |
| | 288 |
| 6V-8837 | 561 |
| 6V-8928 | 829 |
| | 832 |
| | 835 |
| 6V-8942 | 652 |
| 6V-8944 | 591 |
| 6V-8947 | 536 |
| 6V-8980 | 643 |
| | 682 |
| | 686 |
| | 689 |
| | 693 |
| 6V-8983 | 652 |
| 6V-8984 | 348 |
| 6V-8997 | 347 |
| 6V-9001 | 536 |
| | 550 |
| | 652 |
| 6V-9005 | 591 |
| 6V-9007 | 651 |
| 6V-9008 | 652 |
| 6V-9027 | 62 |
| 6V-9160 | 652 |
| 6V-9162 | 649 |
| 6V-9168 | 643 |
| | 682 |
| | 686 |
| | 689 |
| 6V-9169 | 345 |
| | 540 |
| 6V-9172 | 348 |
| 6V-9182 | 347 |
| | 652 |
| 6V-9189 | 172 |
| | 173 |
| 6V-9200 | 550 |
| | 591 |
| 6V-9327 | 926 |
| 6V-9335 | 597 |
| | 602 |
| 6V-9497 | 567 |
| 6V-9632 | 92 |
| | 148 |
| | 185 |
| | 187 |
| | 189 |
| | 194 |
| | 232 |
| | 274 |
| | 437 |
| | 442 |
| | 549 |
| | 590 |
| | 597 |
| | 601 |
| | 605 |
| 6V-9665 | 608 |
| 6V-9673 | 782 |
| | 796 |
| | 799 |
| | 835 |
| | 867 |
| | 878 |
| | 895 |
| | 900 |
| | 925 |
| 6V-9746 | 550 |
| | 258 |
| | 268 |
| | 276 |
| | 826 |
| | 317 |
| | 319 |
| | 347 |
| | 348 |
| | 536 |
| | 550 |
| | 649 |
| | 651 |
| | 652 |
| 6V-9829 | 573 |
| 6V-9830 | 345 |
| 6V-9832 | 319 |
| 6V-9836 | 547 |
| 6V-9837 | 535 |
| | 591 |
| | 652 |
| 6V-9839 | 591 |
| 6V-9840 | 551 |
| 6V-9850 | 591 |
| | 704 |
| 6V-9851 | 347 |
| | 535 |
| | 591 |
| 6V-9853 | 317 |
| | 347 |
| | 652 |
| 6V-9854 | 591 |
| 6V-9872 | 85 |
| | 652 |
| 6V-9873 | 687 |
| | 693 |
| 6V-9875 | 348 |
| | 353 |
| 6V-9877 | 652 |
| 6W-4749 | 323 |
| | 325 |
| | 327 |
| | 329 |
| | 331 |
| | 333 |
| 6W-4750 | 323 |
| | 325 |
| | 327 |
| | 329 |
| | 331 |
| | 333 |
| 6W-4795 | 375 |
| 6W-6005 | 140 |
| 6W-7297 | 526 |
| 6W-7301 | 526 |
| 6W-8943 | 382 |
| 6W-9305 | 749 |
| | 751 |
| | 753 |
| | 755 |
| | 757 |
| | 759 |
| | 761 |
| 6Y-1603 | 359 |
| 6Y-1616 | 366 |
| 6Y-2090 | 66 |
| 6Y-3484 | 359 |
| | 364 |
| 6Y-4280 | 561 |
| 6Y-4638 | 400 |
| | 667 |
| 6Y-4769 | 359 |
| 6Y-4771 | 359 |
| 6Y-5010 | 371 |
| 6Y-5793 | 365 |
| | 391 |
| | 393 |
| 6Y-5911 | 359 |
| 6Y-5912 | 360 |
| 6Y-6326 | 341 |
| 6Y-6327 | 341 |
| 6Y-6328 | 341 |
| 6Y-6329 | 341 |
| 6Y-8864 | 360 |
| | 365 |
| 6Y-9960 | 66 |
| 7B-1597 | 313 |
| | 315 |
| | 704 |
| 7B-3028 | 341 |
| 7B-3039 | 677 |
| | 679 |
| 7B-3235 | 342 |
| | 387 |
| | 389 |
| 7B-8194 | 587 |
| 7C-1445 | 14 |
| 7C-6467 | 706 |
| 7C-6514 | 17 |
| 7D-0734 | 544 |
| 7D-1553 | 652 |
| 7D-4092 | 348 |
| 7D-7233 | 82 |
| | 466 |
| 7D-7469 | 373 |
| 7D-8636 | 455 |
| 7D-8637 | 455 |
| 7E-3443 | 62 |
| 7E-6508 | 8 |
| 7E-8630 | 105 |
| 7E-9262 | 21 |
| 7F-0560 | 141 |
| 7F-2122 | 360 |
| | 365 |
| 7F-3400 | 1 |
| 7F-3488 | 227 |
| 7F-3491 | 227 |
| 7F-3525 | 227 |
| 7F-8607 | 840 |
| 7F-9090 | 71 |
| 7F-9571 | 526 |
| 7F-9572 | 526 |
| 7F-9578 | 526 |
| 7F-9579 | 526 |
| 7G-0283 | 360 |
| | 365 |
| 7G-0897 | 365 |
| 7G-2343 | 359 |
| 7G-2476 | 365 |
| 7G-2486 | 359 |
| | 365 |
| 7G-2516 | 360 |
| 7G-2830 | 359 |
| 7G-3355 | 364 |
| 7G-3356 | 364 |
| 7G-3457 | 365 |
| 7G-4998 | 310 |
| 7G-7053 | 887 |
| 7G-7218 | 359 |
| 7G-7724 | 359 |


7

► PRIMARY REFERENCE

# PART NUMBER INDEX


| Part | Page |
|---|---|
| 7G-7917 | 194 |
| | 257 |
| | 267 |
| 7G-7918 | 194 |
| | 267 |
| 7G-7919 | 194 |
| | 257 |
| | 267 |
| 7G-8211 | 364 |
| 7H-1447 | 677 |
| | 679 |
| 7H-7658 | 361 |
| 7I-3181 | 474 |
| 7I-3183 | 474 |
| 7I-4078 | 534 |
| 7I-8061 | 452 |
| | 454 |
| 7J-0402 | 320 |
| 7J-5311 | 590 |
| 7J-6525 | 364 |
| 7J-6548 | 573 |
| 7J-6580 | 360 |
| 7J-7423 | 706 |
| | 708 |
| 7J-8893 | 387 |
| | 389 |
| 7J-8894 | 387 |
| | 389 |
| 7J-9108 | 652 |
| 7J-9933 | 580 |
| | 721 |
| | 722 |
| | 723 |
| | 724 |
| | 725 |
| | 726 |
| 7K-1181 | 103 |
| | 146 |
| | 148 |
| | 169 |
| | 194 |
| | 248 |
| | 249 |
| | 253 |
| | 256 |
| | 266 |
| | 274 |
| | 281 |
| | 287 |
| | 288 |
| | 292 |
| | 300 |
| | 301 |
| | 302 |
| | 303 |
| | 404 |
| | 468 |
| | 470 |
| | 485 |
| | 605 |
| | 608 |
| | 826 |
| | 948 |
| 7K-1972 | 427 |
| 7K-3176 | 838 |
| 7K-3304 | 838 |
| 7K-5448 | 387 |
| | 389 |
| 7K-5449 | 387 |
| | 389 |
| 7K-5634 | 321 |
| 7K-5636 | ▶321 |
| | 958 |
| 7K-6058 | 44 |
| 7K-6536 | 812 |
| | 814 |
| 7K-9209 | 738 |
| 7K-9211 | 738 |
| 7K-9212 | 620 |
| | 621 |
| | 622 |
| | 623 |
| | 624 |
| | 625 |
| 7K-9218 | 738 |
| 7K-9220 | 738 |
| 7L-2181 | 342 |
| 7L-2894 | 227 |
| 7L-9061 | 238 |
| | 561 |
| 7M-0324 | 227 |
| 7M-0325 | 228 |
| 7M-0326 | 227 |
| 7M-0327 | 227 |
| 7M-1297 | 310 |
| 7M-5130 | 360 |
| | 585 |
| 7M-5334 | 402 |
| 7M-8479 | 364 |
| 7M-8480 | 360 |
| | 364 |
| | 365 |
| 7M-8485 | 82 |
| | 126 |
| | 307 |
| | 308 |
| | 317 |
| | 323 |
| | 325 |
| | 327 |
| | 329 |
| | 331 |
| | 333 |
| | 345 |
| | 347 |
| | 348 |
| | 400 |
| | 402 |
| | 536 |
| | 540 |
| | 550 |
| | 551 |
| | 573 |
| | 575 |
| | 590 |
| | 591 |
| | 652 |
| | 677 |
| | 679 |
| | 682 |
| 7M-8651 | 227 |
| 7N-0140 | 224 |
| 7N-0296 | 224 |
| 7N-0452 | 36 |
| 7N-0718 | 140 |
| | ▶233 |
| 7N-2043 | 54 |
| | 56 |
| 7N-2059 | 224 |
| 7N-2156 | 78 |
| 7N-3718 | 288 |
| 7N-5274 | 140 |
| 7N-5876 | 256 |
| | 266 |
| | 274 |
| | 796 |
| | 867 |
| 7N-7559 | 77 |
| 7N-7878 | 101 |
| 7N-8875 | 77 |
| 7N-9801 | 247 |
| 7N-9943 | 171 |
| 7P-3895 | 195 |
| 7S-0530 | 551 |
| 7S-2962 | 341 |
| 7S-4244 | 943 |
| 7S-5005 | 21 |
| 7S-8491 | 706 |
| | 708 |
| 7S-8920 | 645 |
| | 652 |
| | 656 |
| 7S-8921 | 645 |
| | 652 |
| | 656 |
| 7S-9930 | 895 |
| | 900 |
| 7T-0020 | 171 |
| 7T-1099 | 194 |
| | 412 |
| | 421 |
| | 424 |
| | 427 |
| | 452 |
| | 504 |
| | 900 |
| 7T-2035 | 840 |
| 7T-3974 | 227 |
| 7T-4532 | 791 |
| 7T-5947 | 455 |
| 7T-6799 | 256 |
| | 266 |
| | 274 |
| 7T-7370 | 158 |
| | 208 |
| 7T-7371 | 341 |
| 7T-8816 | 359 |
| 7T-8890 | 943 |
| 7T-9123 | 228 |
| 7T-9370 | 359 |
| 7T-9542 | 359 |
| 7T-9745 | 590 |
| 7T-9755 | 561 |
| 7V-0445 | 926 |
| 7V-5515 | 292 |
| 7V-8346 | 527 |
| | 529 |
| 7V-9791 | 513 |
| 7W-2033 | 107 |
| 7W-2034 | 107 |
| 7W-8106 | 463 |
| 7X-0274 | 141 |
| 7X-0288 | 652 |
| 7X-0290 | 387 |
| | 389 |
| 7X-0311 | 339 |
| 7X-0325 | 547 |
| 7X-0338 | 369 |
| 7X-0339 | 369 |
| 7X-0343 | 288 |
| 7X-0345 | 61 |
| | 369 |
| 7X-0349 | 288 |
| 7X-0368 | 378 |
| 7X-0369 | 378 |
| 7X-0371 | 378 |
| 7X-0448 | 666 |
| 7X-0507 | 591 |
| | 645 |
| 7X-0515 | 93 |
| 7X-0562 | 228 |
| 7X-0579 | 415 |
| | 420 |
| 7X-0583 | 431 |
| 7X-0589 | 355 |
| | 816 |
| 7X-0593 | 411 |
| | 431 |
| | 872 |
| 7X-0603 | 491 |
| | 492 |
| | 493 |
| | 494 |
| | 506 |
| 7X-0608 | 779 |
| 7X-0611 | 682 |
| | 686 |
| | 689 |
| | 693 |
| 7X-0613 | 115 |
| | 150 |
| 7X-0750 | 421 |
| | 424 |
| | 427 |
| 7X-0752 | 415 |
| | 427 |
| | 677 |
| | 679 |
| 7X-0772 | 248 |
| 7X-0818 | 199 |
| | 200 |
| 7X-0851 | 357 |
| 7X-1448 | 82 |
| 7X-2465 | 66 |
| 7X-2484 | 412 |
| | 501 |


▶ PRIMARY REFERENCE

# PART NUMBER INDEX


| Part | Page |
|---|---|
| 7X-2533 | 148 |
| | 601 |
| | 895 |
| | 901 |
| 7X-2534 | 251 |
| | 369 |
| | 466 |
| | 468 |
| | 470 |
| 7X-2535 | 369 |
| | 591 |
| 7X-2537 | 466 |
| | 803 |
| | 805 |
| 7X-2543 | 551 |
| | 645 |
| 7X-2544 | 62 |
| 7X-2545 | 918 |
| | 919 |
| 7X-2549 | 431 |
| | 455 |
| | 645 |
| 7X-2551 | 708 |
| 7X-2552 | 466 |
| 7X-2553 | 126 |
| | 682 |
| | 686 |
| | 689 |
| | 693 |
| 7X-2554 | 557 |
| | 789 |
| 7X-2555 | 93 |
| | 375 |
| | 812 |
| | 814 |
| 7X-2556 | 645 |
| 7X-2563 | 66 |
| 7X-2565 | 513 |
| 7X-2581 | 406 |
| 7X-2583 | 407 |
| | 410 |
| 7X-2584 | 410 |
| 7X-2618 | 534 |
| 7X-2619 | 542 |
| | 601 |
| 7X-2621 | 258 |
| 7X-3151 | 431 |
| | 444 |
| 7X-3179 | 378 |
| 7X-3229 | 956 |
| 7X-3310 | 926 |
| 7X-3373 | 227 |
| 7X-3392 | 353 |
| | 642 |
| | 656 |
| | 700 |
| | 744 |
| 7X-4776 | 579 |
| 7X-6041 | 803 |
| 7X-6222 | 146 |
| | 313 |
| | 315 |
| | 796 |
| | 867 |
| 7X-6315 | 148 |
| 7X-7662 | 158 |
| | 159 |
| | 160 |
| | 162 |
| | 166 |
| | 169 |
| | 223 |
| | 199 |
| | 200 |
| 7X-7729 | 93 |
| | 107 |
| | 200 |
| | 288 |
| | 339 |
| | 369 |
| | 415 |
| | 418 |
| | 419 |
| | 429 |
| | 431 |
| | 457 |
| | 463 |
| | 489 |
| | 496 |
| | 499 |
| | 506 |
| | 536 |
| | 551 |
| | 591 |
| | 652 |
| | 656 |
| | 793 |
| 7X-7731 | 44 |
| | 87 |
| 7X-7742 | 738 |
| 7X-7877 | 829 |
| | 835 |
| 7X-7898 | 829 |
| | 835 |
| 7X-7958 | 82 |
| 7X-8549 | 639 |
| | 640 |
| 7Y-1976 | 82 |
| 7Y-2522 | 448 |
| | 741 |
| 7Y-3173 | 704 |
| 7Y-3281 | 496 |
| 7Y-3948 | 140 |
| 7Y-4528 | 496 |
| 7Y-5231 | 357 |
| 7Y-5458 | 243 |
| 7Y-5464 | 243 |
| 7Y-7256 | 796 |
| | 811 |
| | 867 |
| | 880 |
| | 884 |
| 8B-1312 | 365 |
| 8B-4884 | 484 |
| 8B-7789 | 391 |
| | 393 |
| 8C-0538 | 496 |
| 8C-0564 | 682 |
| | 686 |
| | 689 |
| | 693 |
| 8C-0596 | 288 |
| 8C-3056 | 141 |
| 8C-3078 | 798 |
| 8C-3085 | 581 |
| 8C-3089 | 106 |
| | 227 |
| | 561 |
| 8C-3097 | 579 |
| 8C-3110 | 660 |
| | 661 |
| | 670 |
| 8C-3132 | 715 |
| | 716 |
| | 717 |
| | 718 |
| | 729 |
| | 730 |
| 8C-3205 | 551 |
| | 652 |
| 8C-3206 | 353 |
| | 547 |
| | 551 |
| | 585 |
| | 653 |
| | 656 |
| | 658 |
| | 682 |
| | 686 |
| | 700 |
| | 66 |
| 8C-3290 | 590 |
| 8C-3323 | 536 |
| 8C-3364 | 551 |
| | 71 |
| 8C-3445 | 71 |
| 8C-3446 | 79 |
| | 120 |
| | 340 |
| | 645 |
| 8C-3447 | 340 |
| 8C-3451 | 645 |
| 8C-4892 | 626 |
| 8C-5058 | 93 |
| 8C-5064 | 840 |
| 8C-5230 | 75 |
| 8C-5346 | 956 |
| 8C-5607 | 148 |
| 8C-5608 | 148 |
| 8C-6354 | 256 |
| | 266 |
| | 274 |
| 8C-6358 | 140 |
| 8C-6523 | 843 |
| 8C-6738 | 944 |
| | 946 |
| 8C-6761 | 359 |
| | 364 |
| 8C-6869 | 82 |
| 8C-6871 | 85 |
| 8C-6873 | 77 |
| 8C-6877 | 355 |
| 8C-6959 | 114 |
| 8C-7581 | 782 |
| | 818 |
| 8C-8422 | 126 |
| 8C-8451 | 301 |
| | 489 |
| | 601 |
| 8C-8722 | 357 |
| 8C-8723 | 431 |
| | 433 |
| | 434 |
| 8C-8902 | 956 |
| 8C-8988 | 535 |
| | 551 |
| | 653 |
| 8C-8989 | 551 |
| 8C-9160 | 545 |
| 8C-9660 | 227 |
| 8C-9987 | 733 |
| | 736 |
| 8D-6542 | 832 |
| | 896 |
| | 901 |
| 8D-9739 | 360 |
| 8E-2974 | 361 |
| 8E-2975 | 361 |
| 8E-4735 | 389 |
| | ▶391 |
| 8E-4850 | 391 |
| | 393 |
| 8E-6575 | 364 |
| 8E-7365 | 320 |
| 8E-7366 | 320 |
| 8E-7367 | 320 |
| 8E-7926 | 323 |
| | 325 |
| | 327 |
| | 329 |
| | 331 |
| | 333 |
| 8E-7927 | 323 |
| | 325 |
| | 327 |
| | 329 |
| | 331 |
| | 333 |
| 8E-8299 | 360 |
| 8E-8304 | 360 |
| | 365 |
| 8E-8305 | 361 |
| 8E-8316 | 366 |
| 8E-9571 | 402 |
| 8F-0212 | 341 |
| 8F-1434 | 228 |
| 8F-5900 | 323 |
| | 325 |
| | 327 |
| | 329 |
| | 331 |
| | 333 |
| 8F-7219 | 569 |
| 8F-8733 | 628 |
| | 630 |
| | 635 |


8

▶ PRIMARY REFERENCE

# PART NUMBER INDEX


| Part | Page |
|---|---|
| | 637 |
| 8F-9206 | 585 |
| | 840 |
| 8G-6035 | 812 |
| | 814 |
| 8G-6142 | 943 |
| 8H-3127 | 8 |
| 8H-3128 | 342 |
| 8H-3532 | 727 |
| 8H-3981 | 342 |
| 8H-5303 | 233 |
| 8H-5306 | 233 |
| 8H-8257 | 342 |
| 8J-0322 | 727 |
| 8J-0331 | 727 |
| 8J-0426 | 590 |
| | 700 |
| 8J-0548 | 626 |
| 8J-1552 | 587 |
| 8J-1553 | 549 |
| | ▶587 |
| 8J-1665 | 632 |
| | 633 |
| 8J-1898 | 698 |
| | 706 |
| | 708 |
| 8J-4351 | 13 |
| | 387 |
| | 389 |
| 8J-6273 | 669 |
| 8J-6875 | 549 |
| | ▶582 |
| 8J-8782 | 677 |
| | 679 |
| 8J-8783 | 677 |
| | 679 |
| 8K-0066 | 402 |
| 8K-0079 | 402 |
| 8K-0589 | 66 |
| 8K-2665 | 653 |
| 8K-2692 | 359 |
| | 364 |
| 8K-4691 | 642 |
| | 744 |
| 8K-4739 | 115 |
| 8L-2777 | 63 |
| 8L-2779 | 122 |
| 8L-2786 | 58 |
| | 59 |
| | 60 |
| | 120 |
| | 221 |
| 8L-5008 | 468 |
| | 470 |
| | 481 |
| 8L-8413 | 39 |
| | 597 |
| | 602 |
| | 938 |
| | 940 |
| 8M-0903 | 387 |
| | 389 |
| 8M-1013 | 400 |
| 8M-2537 | 399 |
| 8M-2770 | 141 |
| 8M-2771 | 814 |
| 8M-2772 | 8 |
| 8M-2773 | 727 |
| 8M-3837 | 626 |
| 8M-4390 | 587 |
| 8M-4395 | 549 |
| 8M-4986 | 632 |
| 8M-5255 | 706 |
| 8M-5661 | 708 |
| 8M-7160 | 669 |
| 8M-7758 | 549 |
| 8M-8489 | 677 |
| 8M-8627 | 677 |
| 8M-8659 | 679 |
| 8M-9024 | 402 |
| 8N-0869 | 402 |
| 8N-1532 | 653 |
| 8N-1533 | 364 |
| 8N-1535 | 642 |
| 8N-1536 | 63 |
| 8N-1725 | 122 |
| 8N-2622 | 59 |
| 8N-4617 | 60 |
| 8N-8846 | 120 |
| 8P-0420 | 221 |
| 8P-0769 | 468 |
| 8P-1892 | 470 |
| 8P-1916 | 481 |
| 8P-1919 | 39 |
| 8P-1948 | 597 |
| 8P-1964 | 602 |
| 8P-2019 | 938 |
| 8P-2022 | 940 |
| 8P-2023 | 387 |
| 8P-2051 | 389 |
| 8P-2053 | 400 |
| 8P-4617 | 399 |
| 8P-5777 | 141 |
| | 251 |
| | 282 |
| | 292 |
| | 297 |
| | 597 |
| | 601 |
| | 249 |
| | 591 |
| | 122 |
| | 282 |
| | 288 |
| | 292 |
| | 313 |
| | 315 |
| | 472 |
| | 551 |
| | 840 |
| | 402 |
| | 364 |
| | 366 |
| | 557 |
| | 387 |
| | 389 |
| | 399 |
| | 360 |
| | 360 |
| | 361 |
| | 364 |
| | 366 |
| | 341 |
| | 803 |
| | 811 |
| | 78 |
| | 371 |
| | 399 |
| | 312 |
| | 109 |
| | 140 |
| | 141 |
| | 267 |
| | 275 |
| | 194 |
| | 194 |
| | 267 |
| | 275 |
| | 275 |
| | 140 |
| | 141 |
| | 244 |
| | 100 |
| | 676 |
| | 427 |
| | 391 |
| | 360 |
| | 360 |
| | 361 |
| | 359 |
| | 359 |
| | 360 |
| | 360 |
| | 360 |
| | 359 |
| | 360 |
| | 364 |
| | 361 |
| 8P-5778 | 359 |
| 8P-8837 | 312 |
| 8P-9507 | 359 |
| 8P-9770 | 751 |
| | 757 |
| | 759 |
| | 761 |
| | 771 |
| 8R-1909 | 383 |
| 8R-2861 | 323 |
| | 325 |
| | 327 |
| | 329 |
| | 331 |
| | 333 |
| 8R-2972 | 519 |
| 8R-3695 | 597 |
| | 601 |
| | 896 |
| | 901 |
| 8R-3946 | 738 |
| 8R-7425 | 323 |
| | 325 |
| | 327 |
| | 329 |
| | 331 |
| | 333 |
| 8R-9137 | 534 |
| 8S-0023 | 642 |
| | 744 |
| 8S-0024 | 642 |
| | 744 |
| 8S-0768 | 313 |
| | 315 |
| | 387 |
| | 389 |
| 8S-0948 | 120 |
| | 301 |
| | 535 |
| 8S-2225 | 522 |
| 8S-2332 | 226 |
| 8S-2634 | 197 |
| 8S-4950 | 120 |
| 8S-6212 | 365 |
| 8S-6511 | 78 |
| 8S-6823 | 99 |
| 8S-6824 | 99 |
| 8S-7803 | 788 |
| 8S-9075 | 323 |
| | 325 |
| 8S-9076 | 323 |
| | 325 |
| 8S-9089 | 87 |
| 8S-9094 | 23 |
| 8S-9104 | 364 |
| 8S-9191 | 125 |
| 8T-0075 | 689 |
| | 693 |
| 8T-0207 | 322 |
| | 337 |
| 8T-0255 | 189 |
| 8T-0273 | 113 |
| 8T-0281 | 313 |
| | 315 |
| 8T-0288 | 244 |
| 8T-0318 | 895 |
| | 900 |
| 8T-0328 | 228 |
| | 244 |
| | 597 |
| | 601 |
| | 796 |
| | 828 |
| | 867 |
| | 910 |
| | 913 |
| 8T-0336 | 375 |
| 8T-0337 | 258 |
| | 268 |
| | 276 |
| | 828 |
| 8T-0362 | 375 |
| 8T-0364 | 357 |
| 8T-0370 | 323 |
| | 325 |
| | 327 |
| | 329 |
| | 331 |
| | 333 |
| 8T-0372 | 561 |
| 8T-0379 | 643 |
| 8T-0389 | 105 |
| | 141 |
| | 415 |
| | 418 |
| | 419 |
| | 489 |
| | 506 |
| | 509 |
| | 905 |
| 8T-0652 | 323 |
| | 325 |
| 8T-0666 | 307 |
| | 308 |
| | 626 |
| | 632 |
| | 633 |
| 8T-0667 | 628 |
| | 630 |
| | 635 |
| | 637 |
| 8T-0668 | 628 |
| | 637 |
| 8T-0722 | 677 |
| | 679 |
| 8T-0741 | 534 |
| 8T-1141 | 359 |
| | 364 |
| 8T-1159 | 542 |
| 8T-1482 | 738 |
| 8T-1685 | 317 |
| 8T-1686 | 535 |
| 8T-1788 | 628 |
| | 630 |
| | 635 |
| | 637 |
| 8T-1789 | 632 |
| | 633 |
| 8T-1792 | 626 |
| 8T-1887 | 653 |


▶ PRIMARY REFERENCE

# PART NUMBER INDEX


| Part | Page |
|---|---|
| 8T-1888 | 653 |
| 8T-1889 | 846 |
| | 847 |
| | 850 |
| | 851 |
| | 855 |
| | 856 |
| | 857 |
| | 858 |
| 8T-1890 | 846 |
| | 847 |
| | 850 |
| | 851 |
| | 855 |
| | 856 |
| | 857 |
| | 858 |
| 8T-1905 | 191 |
| | 551 |
| 8T-2275 | 677 |
| | 679 |
| 8T-2393 | 402 |
| 8T-2502 | 111 |
| | 387 |
| | 389 |
| 8T-2525 | 348 |
| 8T-2562 | 828 |
| 8T-2893 | 92 |
| 8T-2899 | 523 |
| 8T-3007 | 375 |
| 8T-3298 | 677 |
| | 679 |
| 8T-3490 | 66 |
| | 70 |
| | 85 |
| | 92 |
| | 93 |
| | 110 |
| | 122 |
| | 141 |
| | 189 |
| | 194 |
| | 274 |
| | 281 |
| | 288 |
| | 300 |
| | 302 |
| | 347 |
| | 353 |
| | 369 |
| | 412 |
| | 415 |
| | 421 |
| | 424 |
| | 431 |
| | 437 |
| | 457 |
| | 463 |
| | 466 |
| | 489 |
| | 495 |
| | 496 |
| | 499 |
| | 504 |
| | 534 |
| | 535 |
| | 549 |
| | 645 |
| | 649 |
| | 651 |
| | 652 |
| | 663 |
| | 677 |
| | 840 |
| | 890 |
| | 900 |
| | 901 |
| | 953 |
| 8T-3491 | 645 |
| 8T-3519 | 140 |
| 8T-3597 | 92 |
| | 319 |
| | 421 |
| | 424 |
| | 436 |
| | 443 |
| | 489 |
| | 510 |
| | 663 |
| | 890 |
| 8T-3601 | 360 |
| 8T-3612 | 92 |
| | 224 |
| | 466 |
| | 504 |
| | 590 |
| | 674 |
| | 809 |
| | 895 |
| | 900 |
| | 901 |
| 8T-3635 | 427 |
| | 900 |
| 8T-3734 | 427 |
| | 743 |
| 8T-3844 | 292 |
| | 842 |
| 8T-3851 | 66 |
| | 185 |
| | 187 |
| | 194 |
| | 412 |
| | 415 |
| | 421 |
| | 424 |
| | 427 |
| | 446 |
| | 449 |
| | 450 |
| | 504 |
| | 677 |
| | 679 |
| | 740 |
| | 742 |
| | 895 |
| | 901 |
| 8T-4121 | 10 |
| | 62 |
| | 70 |
| | 74 |
| | 82 |
| | 85 |
| | 93 |
| | 99 |
| | 105 |
| | 113 |
| | 122 |
| | 128 |
| | 129 |
| | 141 |
| | 148 |
| | 172 |
| | 173 |
| | 181 |
| | 182 |
| | 184 |
| | 185 |
| | 187 |
| | 189 |
| | 195 |
| | 197 |
| | 199 |
| | 200 |
| | 224 |
| | 244 |
| | 250 |
| | 251 |
| | 253 |
| | 258 |
| | 268 |
| | 276 |
| | 282 |
| | 287 |
| | 288 |
| | 292 |
| | 297 |
| | 300 |
| | 301 |
| | 302 |
| | 303 |
| | 317 |
| | 323 |
| | 325 |
| | 327 |
| | 329 |
| | 331 |
| | 333 |
| | 339 |
| | 341 |
| | 348 |
| | 353 |
| | 369 |
| | 375 |
| | 412 |
| | 418 |
| | 419 |
| | 429 |
| | 437 |
| 8T-4122 | 438 |
| | 445 |
| | 457 |
| | 463 |
| | 466 |
| 8T-4123 | 468 |
| 8T-4131 | 470 |
| | 472 |
| | 474 |
| | 489 |
| | 498 |
| | 501 |
| | 504 |
| | 513 |
| | 533 |
| | 535 |
| | 542 |
| | 547 |
| | 551 |
| | 557 |
| | 573 |
| | 591 |
| | 605 |
| | 608 |
| | 643 |
| | 645 |
| | 649 |
| | 653 |
| | 656 |
| | 658 |
| | 682 |
| | 686 |
| | 700 |
| | 704 |
| | 706 |
| | 708 |
| | 713 |
| | 792 |
| | 793 |
| | 812 |
| | 814 |
| | 817 |
| | 820 |
| | 822 |
| | 826 |
| | 829 |
| | 832 |
| | 835 |
| | 840 |
| | 843 |
| | 846 |
| | 847 |
| | 850 |
| | 851 |
| | 855 |
| | 856 |
| | 857 |
| | 858 |
| | 890 |
| | 896 |
| | 901 |
| | 905 |
| | 943 |
| | 948 |
| | 953 |
| | 189 |
| | 288 |
| | 557 |
| | 666 |
| | 872 |
| | 66 |
| | 738 |

# PART NUMBER INDEX


| Part | Page |
|---|---|
| 8T-4132 . . . . . | 93 |
| | 645 |
| 8T-4133 . . . . . | 62 |
| | 74 |
| | 82 |
| | 93 |
| | 141 |
| | 148 |
| | 181 |
| | 182 |
| | 189 |
| | 199 |
| | 224 |
| | 250 |
| | 258 |
| | 268 |
| | 276 |
| | 282 |
| | 288 |
| | 292 |
| | 297 |
| | 301 |
| | 317 |
| | 348 |
| | 415 |
| | 418 |
| | 419 |
| | 429 |
| | 437 |
| | 438 |
| | 457 |
| | 466 |
| | 468 |
| | 470 |
| | 472 |
| | 474 |
| | 496 |
| | 525 |
| | 535 |
| | 551 |
| | 591 |
| | 605 |
| | 608 |
| | 643 |
| | 645 |
| | 653 |
| | 656 |
| | 792 |
| | 826 |
| | 840 |
| | 846 |
| | 847 |
| | 850 |
| | 851 |
| | 855 |
| | 856 |
| | 857 |
| | 858 |
| | 896 |
| | 901 |
| | 905 |
| | 953 |
| 8T-4136 . . . . . | 70 |
| | 74 |
| | 93 |
| | 122 |
| | 128 |
| | 129 |
| | 141 |
| | 184 |
| | 185 |
| | 187 |
| | 200 |
| | 251 |
| | 253 |
| | 258 |
| | 282 |
| | 288 |
| | 300 |
| | 302 |
| | 317 |
| | 323 |
| | 325 |
| | 327 |
| | 329 |
| | 331 |
| | 333 |
| | 348 |
| | 353 |
| | 369 |
| | 412 |
| | 429 |
| | 437 |
| | 438 |
| | 445 |
| | 466 |
| | 468 |
| | 470 |
| | 472 |
| | 501 |
| | 504 |
| | 506 |
| | 513 |
| | 533 |
| | 535 |
| | 591 |
| | 645 |
| | 653 |
| | 840 |
| | 890 |
| | 896 |
| | 901 |
| | 905 |
| | 926 |
| | 943 |
| 8T-4137 . . . . . | 82 |
| | 85 |
| | 105 |
| | 141 |
| | 185 |
| | 187 |
| | 189 |
| | 195 |
| | 197 |
| | 199 |
| | 200 |
| | 224 |
| | 248 |
| | 250 |
| | 251 |
| | 258 |
| | 268 |
| | 276 |
| | 282 |
| | 287 |
| | 288 |
| | 292 |
| | 297 |
| | 301 |
| | 303 |
| | 339 |
| | 341 |
| | 348 |
| | 353 |
| | 412 |
| | 466 |
| | 468 |
| | 470 |
| | 472 |
| | 474 |
| | 489 |
| | 501 |
| | 513 |
| | 535 |
| | 551 |
| | 591 |
| | 643 |
| | 649 |
| | 653 |
| | 686 |
| | 693 |
| | 704 |
| | 793 |
| | 808 |
| | 817 |
| | 822 |
| | 840 |
| | 843 |
| | 896 |
| | 901 |
| | 905 |
| | 948 |
| | 953 |
| 8T-4138 . . . . . | 93 |
| | 126 |
| | 148 |
| | 185 |
| | 187 |
| | 258 |
| | 269 |
| | 276 |
| | 437 |
| | 442 |
| | 501 |
| | 513 |
| | 605 |
| | 608 |
| | 926 |
| | 948 |
| 8T-4139 . . . . . | 191 |
| | 193 |
| | 251 |
| | 348 |
| | 353 |
| | 415 |
| | 440 |
| | 443 |
| | 455 |
| | 463 |
| | 489 |
| | 496 |
| | 499 |
| | 551 |
| | 557 |
| | 642 |
| | 656 |
| | 663 |
| | 682 |
| | 686 |
| | 689 |
| | 693 |
| | 744 |
| | 812 |
| | 814 |
| 8T-4140 . . . . . | 66 |
| | 645 |
| 8T-4141 . . . . . | 66 |
| | 738 |
| 8T-4167 . . . . . | 66 |
| | 455 |
| 8T-4171 . . . . . | 269 |
| | 277 |
| | 848 |
| | 853 |
| | 860 |
| | 862 |
| 8T-4172 . . . . . | 348 |
| | 547 |
| | 551 |
| | 573 |
| | 682 |
| | 686 |
| | 689 |
| | 693 |
| 8T-4176 . . . . . | 682 |
| | 686 |
| 8T-4178 . . . . . | 10 |
| 8T-4179 . . . . . | 682 |
| | 686 |
| | 689 |
| | 693 |
| | 708 |
| 8T-4182 . . . . . | 99 |
| | 122 |
| | 551 |
| | 591 |
| | 653 |
| | 656 |
| | 706 |
| | 708 |
| 8T-4183 . . . . . | 348 |
| | 353 |
| | 355 |
| | 455 |
| | 551 |
| | 642 |
| | 645 |
| | 653 |
| | 656 |
| | 658 |


► **PRIMARY REFERENCE**

# PART NUMBER INDEX


| Part | Page |
|---|---|
| | 663 |
| | 700 |
| | 744 |
| | 816 |
| | 840 |
| | 953 |
| 8T-4184 . . . . . | 547 |
| 8T-4185 . . . . . | 348 |
| | 542 |
| | 547 |
| | 551 |
| | 557 |
| | 575 |
| | 890 |
| 8T-4186 . . . . . | 259 |
| | 269 |
| | 277 |
| | 353 |
| | 375 |
| | 415 |
| | 463 |
| | 468 |
| | 470 |
| | 551 |
| | 585 |
| | 653 |
| 8T-4187 . . . . . | 738 |
| 8T-4189 . . . . . | 172 |
| | 173 |
| | 535 |
| 8T-4191 . . . . . | 141 |
| | 258 |
| | 269 |
| | 277 |
| | 468 |
| | 470 |
| | 542 |
| | 820 |
| | 829 |
| | 832 |
| | 835 |
| 8T-4192 . . . . . | 436 |
| | 440 |
| | 510 |
| | 536 |
| | 551 |
| | 592 |
| | 658 |
| | 706 |
| | 816 |
| 8T-4193 . . . . . | 431 |
| | 444 |
| | 645 |
| | 872 |
| 8T-4194 . . . . . | 251 |
| | 355 |
| | 551 |
| | 689 |
| | 693 |
| 8T-4195 . . . . . | 70 |
| | 82 |
| | 93 |
| | 113 |
| | 122 |
| | 141 |
| | 181 |
| | 182 |
| | 200 |
| | 282 |
| | 287 |
| | 292 |
| | 317 |
| | 339 |
| | 369 |
| | 415 |
| | 431 |
| | 438 |
| | 457 |
| | 463 |
| | 489 |
| | 496 |
| | 499 |
| | 504 |
| | 506 |
| | 525 |
| | 536 |
| | 542 |
| | 551 |
| | 557 |
| | 575 |
| | 605 |
| | 608 |
| | 645 |
| | 649 |
| | 653 |
| | 816 |
| | 826 |
| | 829 |
| | 832 |
| | 835 |
| | 840 |
| | 846 |
| | 847 |
| | 850 |
| | 851 |
| | 855 |
| | 856 |
| | 857 |
| | 858 |
| | 943 |
| | 953 |
| 8T-4196 . . . . . | 93 |
| | 107 |
| | 348 |
| | 353 |
| | 457 |
| | 468 |
| | 470 |
| | 498 |
| | 547 |
| | 551 |
| | 575 |
| | 645 |
| | 653 |
| | 656 |
| | 658 |
| | 682 |
| | 686 |
| | 700 |
| 8T-4198 . . . . . | 706 |
| | 708 |
| 8T-4199 . . . . . | 258 |
| | 269 |
| | 277 |
| 8T-4200 . . . . . | 224 |
| | 342 |
| 8T-4205 . . . . . | 126 |
| | 134 |
| | 136 |
| | 185 |
| | 187 |
| | 194 |
| | 195 |
| | 227 |
| | 258 |
| | 269 |
| | 275 |
| | 277 |
| | 369 |
| | 442 |
| | 501 |
| | 542 |
| | 597 |
| | 601 |
| | 605 |
| | 608 |
| | 682 |
| | 686 |
| | 689 |
| | 693 |
| | 782 |
| | 818 |
| | 820 |
| | 880 |
| | 884 |
| | 910 |
| | 913 |
| | 926 |
| | 948 |
| 8T-4219 . . . . . | 421 |
| | 424 |
| | 737 |
| 8T-4222 . . . . . | 431 |
| 8T-4223 . . . . . | 34 |
| | 93 |
| | 138 |
| | 139 |
| | 141 |
| | 146 |
| | 189 |
| | 191 |
| | 193 |
| | 199 |
| | 251 |
| | 258 |
| | 269 |
| | 277 |
| | 282 |
| | 290 |
| | 348 |
| | 353 |
| | 355 |
| | 369 |
| | 431 |
| | 436 |
| | 438 |
| | 440 |
| | 443 |
| | 455 |
| | 463 |
| | 498 |
| | 499 |
| | 510 |
| | 525 |
| | 533 |
| | 536 |
| | 547 |
| | 551 |
| | 557 |
| | 592 |
| | 642 |
| | 645 |
| | 653 |
| | 656 |
| | 658 |
| | 663 |
| | 665 |
| | 682 |
| | 686 |
| | 689 |
| | 693 |
| | 698 |
| | 706 |
| | 708 |
| | 744 |
| | 816 |
| | 840 |
| | 953 |
| 8T-4224 . . . . . | 134 |
| | 136 |
| | 141 |
| | 174 |
| | 175 |
| | 197 |
| | 199 |
| | 200 |
| | 224 |
| | 258 |
| | 269 |
| | 277 |
| | 282 |
| | 342 |
| | 466 |
| | 527 |
| | 529 |
| | 532 |
| | 536 |
| | 544 |
| | 585 |
| | 592 |
| | 799 |
| | 829 |
| | 832 |
| | 835 |
| | 842 |
| | 856 |
| | 857 |
| | 858 |
| | 888 |
| | 894 |

# PART NUMBER INDEX


| Part | Page |
|---|---|
| | 896 |
| | 901 |
| | 926 |
| 8T-4226 | 93 |
| | 141 |
| | 496 |
| | 506 |
| | 509 |
| 8T-4244 | 138 |
| | 139 |
| | 141 |
| | 146 |
| | 258 |
| | 269 |
| | 277 |
| | 282 |
| | 348 |
| | 355 |
| | 415 |
| | 431 |
| | 436 |
| | 440 |
| | 506 |
| | 525 |
| | 533 |
| | 551 |
| | 682 |
| | 686 |
| | 689 |
| | 693 |
| | 953 |
| 8T-4648 | 122 |
| | 663 |
| 8T-4750 | 561 |
| 8T-4779 | 544 |
| 8T-4780 | 738 |
| 8T-4835 | 138 |
| | 139 |
| 8T-4896 | 70 |
| | 85 |
| | 105 |
| | 111 |
| | 145 |
| | 288 |
| | 387 |
| | 389 |
| | 653 |
| | 918 |
| | 919 |
| 8T-4908 | 197 |
| | 224 |
| | 420 |
| | 544 |
| | 888 |
| 8T-4910 | 110 |
| | 355 |
| | 658 |
| 8T-4935 | 184 |
| | 185 |
| | 187 |
| | 427 |
| 8T-4956 | 93 |
| | 146 |
| | 199 |
| | 498 |
| 8T-4958 | 545 |
| 8T-4967 | 421 |
| 8T-4970 | 258 |
| | 269 |
| | 277 |
| | 597 |
| | 601 |
| | 605 |
| | 608 |
| 8T-4971 | 199 |
| | 200 |
| | 597 |
| | 682 |
| | 686 |
| | 689 |
| | 693 |
| | 820 |
| 8T-4983 | 87 |
| 8T-4984 | 549 |
| 8T-4988 | 107 |
| 8T-4994 | 378 |
| 8T-5001 | 658 |
| | 682 |
| | 686 |
| | 689 |
| | 693 |
| 8T-5005 | 93 |
| | 504 |
| | 551 |
| | 573 |
| | 585 |
| | 592 |
| | 653 |
| | 656 |
| | 658 |
| 8T-5039 | 561 |
| 8T-5041 | 656 |
| 8T-5043 | 551 |
| 8T-5091 | 402 |
| 8T-5092 | 455 |
| | 683 |
| | 686 |
| | 690 |
| | 694 |
| 8T-5360 | 66 |
| | 339 |
| 8T-5372 | 805 |
| 8T-5400 | 948 |
| 8T-5413 | 93 |
| | 457 |
| 8T-5436 | 551 |
| | 792 |
| 8T-5439 | 345 |
| | 513 |
| | 540 |
| | 738 |
| 8T-5460 | 738 |
| 8T-5878 | 455 |
| | 738 |
| 8T-5879 | 590 |
| 8T-5913 | 943 |
| 8T-5914 | 943 |
| 8T-6462 | 743 |
| 8T-6466 | 463 |
| | 536 |
| | 551 |
| | 592 |
| | 653 |
| | 713 |
| 8T-6624 | 872 |
| 8T-6631 | 782 |
| 8T-6684 | 347 |
| 8T-6696 | 551 |
| 8T-6703 | 355 |
| | 547 |
| 8T-6743 | 628 |
| | 630 |
| 8T-6746 | 626 |
| 8T-6757 | 25 |
| | 27 |
| 8T-6761 | 87 |
| 8T-6765 | 44 |
| 8T-6767 | 87 |
| 8T-6842 | 832 |
| 8T-6868 | 355 |
| | 663 |
| | 683 |
| | 686 |
| | 690 |
| | 694 |
| 8T-6869 | 313 |
| | 315 |
| | 592 |
| 8T-6870 | 269 |
| | 277 |
| 8T-6876 | 536 |
| | 592 |
| 8T-6912 | 175 |
| 8T-6974 | 472 |
| 8T-7338 | 679 |
| 8T-7501 | 418 |
| | 421 |
| | 424 |
| | 427 |
| 8T-7525 | 670 |
| 8T-7546 | 122 |
| 8T-7547 | 282 |
| | 415 |
| | 799 |
| 8T-7566 | 875 |
| | 877 |
| 8T-7584 | 635 |
| | 637 |
| 8T-7876 | 561 |
| 8T-7930 | 138 |
| | 139 |
| 8T-7934 | 62 |
| | 585 |
| | 656 |
| | 792 |
| 8T-8380 | 632 |
| | 633 |
| 8T-8441 | 402 |
| | 561 |
| 8T-8442 | 670 |
| 8T-8641 | 788 |
| 8T-8729 | 171 |
| | 176 |
| | 215 |
| | 220 |
| | 249 |
| | 256 |
| | 303 |
| | 567 |
| | 864 |
| | 865 |
| | 869 |
| 8T-8737 | 115 |
| | 146 |
| | 148 |
| | 194 |
| | 243 |
| | 256 |
| | 257 |
| | 266 |
| | 267 |
| | 268 |
| | 274 |
| | 287 |
| | 290 |
| | 292 |
| | 295 |
| | 296 |
| | 297 |
| | 315 |
| | 567 |
| | 613 |
| | 615 |
| | 617 |
| | 796 |
| | 869 |
| | 870 |
| | 871 |
| | 892 |
| 8T-8827 | 141 |
| 8T-8874 | 412 |
| | 796 |
| | 867 |
| 8T-8898 | 348 |
| 8T-8902 | 191 |
| | 193 |
| | 643 |
| 8T-8916 | 66 |
| | 353 |
| 8T-8917 | 438 |
| 8T-8919 | 551 |
| 8T-9005 | 803 |
| | 805 |
| | 832 |
| 8T-9082 | 910 |
| 8T-9107 | 549 |
| 8T-9371 | 938 |
| | 940 |
| 8T-9374 | 450 |
| 8T-9377 | 110 |
| | 111 |
| | 653 |
| 8T-9382 | 66 |
| 8T-9393 | 557 |


► PRIMARY REFERENCE

# PART NUMBER INDEX


| Part | Page |
|---|---|
| 8T-9471 | 796 |
| | 867 |
| 8T-9527 | 35 |
| 8T-9655 | 115 |
| | 150 |
| | 169 |
| | 256 |
| | 266 |
| | 274 |
| 8T-9834 | 257 |
| | 258 |
| | 267 |
| | 275 |
| 8V-3609 | 527 |
| | 529 |
| 8V-5386 | 375 |
| 8W-5256 | 336 |
| 8W-6047 | 682 |
| | 686 |
| | 689 |
| | 693 |
| 8W-9597 | 374 |
| 8W-9602 | 373 |
| 8W-9912 | 377 |
| | 397 |
| 8X-4186 | 653 |
| 8X-5147 | 427 |
| 8X-5804 | 256 |
| | 266 |
| | 274 |
| 8X-6166 | 320 |
| 8X-7517 | 300 |
| | 302 |
| 8Y-5746 | 926 |
| 8Y-5910 | 788 |
| 8Y-5913 | 788 |
| 8Y-5914 | 788 |
| 8Y-6277 | 910 |
| | 913 |
| 8Y-6333 | 926 |
| 8Y-6364 | 321 |
| | 811 |
| 8Y-6388 | 803 |
| 8Y-8388 | 549 |
| 8Y-9603 | 226 |

## 9

| Part | Page |
|---|---|
| 9B-0453 | 533 |
| 9B-1117 | 611 |
| | 612 |
| 9B-7233 | 195 |
| | 244 |
| | 258 |
| | 303 |
| 9B-7237 | 105 |
| 9C-2175 | 431 |
| 9C-2538 | 317 |
| 9C-4305 | 526 |
| 9C-4306 | 526 |
| 9C-6809 | 421 |
| | 424 |
| | 549 |
| 9C-7863 | 421 |
| 9C-7929 | 424 |
| 9C-9458 | 447 |
| 9C-9843 | 737 |
| 9D-0630 | 427 |
| 9D-1829 | 533 |
| 9D-3767 | 526 |
| 9F-1399 | 113 |
| | 551 |
| | 195 |
| | 323 |
| | 325 |
| | 327 |
| | 329 |
| | 331 |
| | 333 |
| 9F-2167 | 527 |
| | 529 |
| 9F-3788 | 364 |
| 9F-5599 | 227 |
| 9F-5644 | 233 |
| 9F-8125 | 256 |
| | 266 |
| | 274 |
| 9G-0280 | 359 |
| 9G-0281 | 361 |
| 9G-0284 | 359 |
| 9G-0285 | 359 |
| 9G-0286 | 360 |
| 9G-0289 | 360 |
| 9G-0290 | 359 |
| 9G-1950 | 782 |
| | 818 |
| 9G-3695 | 281 |
| | 782 |
| | 818 |
| 9G-4101 | 227 |
| | 228 |
| 9G-5127 | 313 |
| | 315 |
| 9G-5319 | 402 |
| 9G-6743 | 360 |
| 9G-6744 | 360 |
| 9G-8020 | 359 |
| 9H-0846 | 323 |
| | 325 |
| | 327 |
| | 329 |
| | 331 |
| | 333 |
| | 387 |
| | 389 |
| 9H-1031 | 22 |
| 9H-3757 | 227 |
| 9H-5537 | 360 |
| | 365 |
| 9H-6454 | 677 |
| | 679 |
| 9J-0477 | 587 |
| 9J-3047 | 677 |
| | 679 |
| 9J-3624 | 626 |
| 9J-3625 | 626 |
| 9J-3866 | 549 |
| | 590 |
| 9J-5550 | 628 |
| 9J-7031 | 630 |
| | 635 |
| | 637 |
| | 677 |
| | 679 |
| 9J-9821 | 585 |
| 9K-4939 | 501 |
| 9K-5639 | 487 |
| 9K-9731 | 738 |
| 9L-5854 | 22 |
| 9L-6770 | 134 |
| | 136 |
| 9L-7712 | 63 |
| 9L-8925 | 8 |
| 9L-9132 | 38 |
| 9L-9653 | 44 |
| 9M-0853 | 71 |
| | 75 |
| 9M-1503 | 364 |
| 9M-1974 | 14 |
| | 115 |
| | 150 |
| | 202 |
| | 313 |
| | 315 |
| | 391 |
| | 393 |
| | 400 |
| | 551 |
| | 721 |
| | 722 |
| | 723 |
| 9M-2076 | 527 |
| | 529 |
| 9M-2092 | 646 |
| 9M-2095 | 364 |
| 9M-2904 | 73 |
| 9M-3786 | 91 |
| 9M-4107 | 377 |
| 9M-4313 | 399 |
| 9M-4355 | 359 |
| | 364 |
| 9M-5137 | 526 |
| 9M-5139 | 526 |
| 9M-5140 | 526 |
| 9M-5870 | 146 |
| | 258 |
| | 269 |
| | 277 |
| 9M-5884 | 415 |
| 9M-6527 | 90 |
| 9M-7394 | 321 |
| | 677 |
| 9M-7609 | 227 |
| 9M-7783 | 145 |
| 9M-8406 | 182 |
| | 244 |
| | 292 |
| | 301 |
| | 466 |
| | 472 |
| 9N-0869 | 115 |
| | 150 |
| | 169 |
| | 258 |
| | 269 |
| | 277 |
| 9P-7039 | 364 |
| 9P-7121 | 126 |
| 9P-7390 | 359 |
| 9P-7757 | 359 |
| 9P-8614 | 359 |
| 9P-8623 | 361 |
| 9P-8626 | 359 |
| 9P-9550 | 348 |
| 9R-2060 | 92 |
| | 421 |
| | 424 |
| 9R-2152 | 682 |
| | 686 |
| | 689 |
| | 693 |
| 9R-2613 | 457 |
| 9R-2640 | 448 |
| | 741 |
| 9R-2821 | 506 |
| | 676 |
| 9R-8760 | 544 |
| 9R-9866 | 427 |
| 9S-1302 | 431 |
| 9S-1343 | 360 |
| | 364 |
| 9S-1350 | 643 |
| 9S-2544 | 227 |
| 9S-4167 | 115 |
| 9S-4180 | 700 |
| 9S-4181 | 60 |
| | 307 |
| | 308 |
| | 323 |
| | 325 |
| | 327 |
| | 329 |
| | 331 |
| | 333 |
| | 677 |
| | 679 |
| | 682 |
| | 689 |
| 9S-4182 | 585 |
| | 708 |
| 9S-4183 | 353 |
| 9S-4185 | 308 |
| | 355 |
| | 575 |
| 9S-4190 | 307 |
| | 308 |
| | 561 |
| 9S-4191 | 361 |
| | 365 |
| | 366 |
| | 391 |
| | 393 |
| | 551 |
| | 575 |
| | 577 |
| | 585 |
| | 587 |
| | 592 |
| | 711 |


► PRIMARY REFERENCE

# PART NUMBER INDEX


| Part | Page |
|---|---|
| | 713 |
| 9S-5279 | 391 |
| | 393 |
| 9S-6155 | 587 |
| 9S-7712 | 474 |
| 9S-8001 | 541 |
| | 702 |
| 9S-8002 | 58 |
| | 87 |
| | 106 |
| | 120 |
| | 585 |
| | 670 |
| 9S-8004 | 31 |
| | 59 |
| | 71 |
| | 120 |
| | 340 |
| | 573 |
| | 686 |
| | 694 |
| | 702 |
| | 711 |
| | 713 |
| 9S-8005 | 58 |
| | 59 |
| | 87 |
| | 115 |
| | 120 |
| | 559 |
| | 573 |
| | 702 |
| | 706 |
| | 708 |
| 9S-8006 | 58 |
| | 59 |
| | 71 |
| | 585 |
| | 660 |
| | 661 |
| | 670 |
| 9S-8008 | 310 |
| | 365 |
| | 551 |
| 9S-8752 | 35 |
| | 38 |
| | 42 |
| | 46 |
| | 50 |
| | 53 |
| | 71 |
| | 73 |
| | 124 |
| | 320 |
| 9S-9334 | 126 |
| | 573 |
| | 700 |
| 9T-0094 | 632 |
| | 633 |
| 9T-1258 | 559 |
| 9T-1636 | 561 |
| 9T-1652 | 561 |
| 9T-1699 | 561 |
| 9T-1710 | 561 |
| 9T-1857 | 577 |
| 9T-2186 | 577 |
| 9T-2420 | 635 |
| | 637 |
| 9T-3096 | 697 |
| 9T-4105 | 677 |
| | 679 |
| 9T-4735 | 601 |
| 9T-5927 | 545 |
| 9T-6149 | 582 |
| | ▶583 |
| 9T-6150 | 582 |
| | ▶584 |
| 9T-6943 | 421 |
| | 424 |
| | 450 |
| 9T-7347 | 588 |
| 9T-7418 | ▶579 |
| | 585 |
| 9T-7419 | 585 |
| 9T-7750 | 577 |
| 9T-7765 | 563 |
| 9T-7767 | 563 |
| 9T-7769 | 563 |
| 9T-7771 | 563 |
| 9T-7773 | 563 |
| 9T-7774 | 563 |
| 9T-8556 | 189 |
| 9T-9194 | 573 |
| | ▶580 |
| 9T-9226 | 677 |
| | 679 |
| 9T-9227 | 677 |
| | 679 |
| 9T-9460 | 561 |
| 9U-0512 | 872 |
| 9U-0830 | 823 |
| | 824 |
| 9U-0853 | 421 |
| | 424 |
| | 427 |
| | 450 |
| 9U-0952 | 926 |
| 9U-0953 | 926 |
| 9U-0954 | 926 |
| 9U-0955 | 926 |
| 9U-0958 | 926 |
| 9U-2331 | 828 |
| 9U-2332 | 826 |
| 9U-2965 | 353 |
| 9U-3230 | 421 |
| | 424 |
| 9U-3888 | 421 |
| | 424 |
| 9U-3890 | 590 |
| 9U-3893 | 421 |
| | 424 |
| 9U-3925 | 926 |
| 9U-3926 | 926 |
| 9U-3927 | 926 |
| 9U-4431 | 826 |
| | 828 |
| 9U-8263 | 828 |
| 9V-1777 | 457 |
| 9V-1820 | 457 |
| 9V-6538 | 534 |
| 9W-0780 | 341 |
| 9W-0781 | 341 |
| 9W-0852 | 256 |
| | 257 |
| | 266 |
| | 267 |
| | 404 |
| | 782 |
| | 818 |
| 9W-1441 | 256 |
| | 266 |
| | 274 |
| 9W-1442 | 256 |
| | 266 |
| | 274 |
| 9W-1446 | 256 |
| | 266 |
| | 274 |
| 9W-1951 | 257 |
| 9W-2977 | 364 |
| 9W-3898 | 366 |
| 9W-4702 | 391 |
| | 393 |
| 9W-5278 | 391 |
| | 393 |
| 9W-5568 | 400 |
| 9W-6434 | 391 |
| | 393 |
| 9W-6435 | 391 |
| | 393 |
| 9W-7385 | 66 |
| 9W-7388 | 66 |
| 9W-8095 | 66 |
| 9W-8269 | 359 |
| 9W-8270 | 359 |
| 9W-8297 | 366 |
| 9W-8298 | 365 |
| 9W-8433 | 360 |
| 9W-8437 | 359 |
| 9W-9856 | 366 |
| 9X-0141 | 292 |
| 9X-0145 | 258 |
| | 267 |
| | 275 |
| 9X-0262 | 115 |
| | 202 |
| 9X-1046 | 259 |
| | 269 |
| | 277 |
| | 803 |
| | 880 |
| | 884 |
| 9X-1054 | 194 |
| | 258 |
| | 267 |
| | 275 |
| 9X-1343 | 194 |
| | 258 |
| 9X-1365 | 158 |
| 9X-1386 | 220 |
| | 249 |
| 9X-1813 | 204 |
| | 208 |
| | 209 |
| | 210 |
| | 213 |
| | 215 |
| | 219 |
| | 231 |
| | 235 |
| | 238 |
| | 248 |
| 9X-2026 | 597 |
| | 601 |
| 9X-2027 | 525 |
| | 551 |
| | 686 |
| | 694 |
| | 926 |
| 9X-2038 | 7 |
| | 605 |
| | 608 |
| | 805 |
| | 926 |
| 9X-2039 | 419 |
| 9X-2040 | 419 |
| | 429 |
| | 796 |
| | 829 |
| | 832 |
| | 835 |
| | 867 |
| 9X-2041 | 232 |
| | 801 |
| | 896 |
| | 901 |
| 9X-2042 | 796 |
| | 809 |
| | 829 |
| | 832 |
| | 835 |
| | 867 |
| | 895 |
| | 900 |
| 9X-2043 | 602 |
| | 803 |
| | 805 |
| 9X-2044 | 184 |
| | 185 |
| | 232 |
| | 457 |
| | 597 |
| | 601 |
| | 605 |
| | 608 |
| | 805 |
| | 829 |
| | 835 |
| | 878 |
| | 880 |
| | 882 |
| | 884 |
| | 896 |
| | 901 |
| | 926 |
| 9X-2045 | 429 |
| | 796 |
| | 803 |
| | 805 |
| | 829 |


▶ PRIMARY REFERENCE

# PART NUMBER INDEX


| Part | Page |
|---|---|
| | 832 |
| | 835 |
| | 867 |
| | 872 |
| | 878 |
| | 882 |
| 9X-2046 | 148 |
| | 832 |
| | 878 |
| | 882 |
| 9X-2085 | 122 |
| 9X-2201 | 645 |
| 9X-2480 | 259 |
| | 269 |
| | 277 |
| | 551 |
| 9X-2488 | 842 |
| | 843 |
| 9X-2532 | 944 |
| | 946 |
| 9X-2533 | 944 |
| | 946 |
| 9X-2616 | 926 |
| 9X-3066 | 176 |
| 9X-3132 | 257 |
| | 275 |
| 9X-3265 | 315 |
| | 796 |
| 9X-3401 | 204 |
| | 213 |
| 9X-3463 | 174 |
| | 175 |
| 9X-3977 | 402 |
| 9X-4244 | 174 |
| | 175 |
| 9X-4492 | 178 |
| 9X-4493 | 176 |
| | 178 |
| 9X-4609 | 400 |
| 9X-4611 | 679 |
| 9X-6155 | 799 |
| 9X-6165 | 146 |
| | 148 |
| | 259 |
| | 269 |
| | 277 |
| | 829 |
| | 832 |
| | 835 |
| | 842 |
| 9X-6257 | 158 |
| 9X-6385 | 408 |
| 9X-6395 | 580 |
| | 721 |
| | 722 |
| | 723 |
| | 724 |
| | 725 |
| | 726 |
| | 727 |
| 9X-6451 | 60 |
| 9X-6458 | 16 |
| | 42 |
| | 51 |
| | 53 |
| | 87 |
| | 115 |
| | 120 |
| 9X-6485 | 348 |
| 9X-6578 | 536 |
| 9X-6580 | 653 |
| 9X-6618 | 411 |
| 9X-6772 | 148 |
| | 194 |
| | 267 |
| | 275 |
| 9X-7148 | 258 |
| 9X-7273 | 632 |
| | 633 |
| 9X-7317 | 125 |
| 9X-7344 | 896 |
| | 901 |
| 9X-7373 | 782 |
| | 818 |
| 9X-7378 | 249 |
| | 791 |
| 9X-7380 | 840 |
| 9X-7381 | 838 |
| | 840 |
| 9X-7382 | 838 |
| | 840 |
| 9X-7383 | 838 |
| | 840 |
| 9X-7384 | 838 |
| | 840 |
| 9X-7385 | 791 |
| 9X-7430 | 25 |
| | 27 |
| 9X-7680 | 670 |
| 9X-7722 | 559 |
| 9X-7725 | 667 |
| 9X-7849 | 179 |
| 9X-8116 | 785 |
| 9X-8117 | 820 |
| 9X-8250 | 195 |
| | 536 |
| | 653 |
| | 953 |
| 9X-8256 | 93 |
| | 103 |
| | 148 |
| | 184 |
| | 185 |
| | 187 |
| | 195 |
| | 199 |
| | 200 |
| | 251 |
| | 257 |
| | 269 |
| | 277 |
| | 292 |
| | 301 |
| | 369 |
| | 412 |
| | 437 |
| | 466 |
| | 470 |
| | 472 |
| | 489 |
| | 513 |
| | 551 |
| | 567 |
| | 590 |
| | 796 |
| | 826 |
| | 829 |
| | 835 |
| | 848 |
| | 853 |
| | 860 |
| | 862 |
| | 867 |
| | 878 |
| | 882 |
| | 896 |
| | 901 |
| | 925 |
| 9X-8257 | 126 |
| | 375 |
| | 466 |
| | 536 |
| | 557 |
| | 646 |
| | 679 |
| | 682 |
| | 686 |
| | 689 |
| | 694 |
| | 789 |
| | 812 |
| | 814 |
| 9X-8258 | 357 |
| | 406 |
| | 407 |
| | 408 |
| | 410 |
| | 433 |
| | 434 |
| 9X-8267 | 878 |
| | 882 |
| 9X-8268 | 313 |
| | 315 |
| | 335 |
| | 342 |
| | 525 |
| 9X-8399 | 323 |
| | 325 |
| | 327 |
| | 329 |
| | 331 |
| | 333 |
| | 545 |
| 9X-8486 | 259 |
| 9X-8487 | 427 |
| 9X-8582 | 468 |
| | 470 |
| | 472 |
| | 953 |
| 9X-8872 | 41 |
| 9X-8873 | 87 |
| | 342 |
| | 387 |
| | 389 |
| | 788 |
| 9X-8874 | 342 |
| 9X-8875 | 342 |
| | 359 |
| 9X-8914 | 577 |
| 9X-8917 | 567 |
| | 796 |
| | 867 |
| 9X-9120 | 141 |
| 9X-9825 | 140 |
| | 141 |
| 9Y-1792 | 78 |
| 9Y-4104 | 87 |
| 9Y-6089 | 44 |
| 9Y-6102 | 107 |
| 9Y-9236 | 82 |
| **0** | |
| 000-7246 | 82 |
| 002-0639 | 468 |
| | 470 |
| 002-1212 | 561 |
| 003-9163 | 843 |
| 004-1963 | 706 |
| | 708 |
| 005-4362 | 115 |
| 006-8663 | 561 |
| 008-3214 | 559 |
| 009-3101 | 522 |
| | 523 |
| | 531 |
| 011-7960 | 828 |
| 012-0380 | 235 |
| 030-1712 | 141 |
| | 288 |
| 030-7946 | 34 |
| 030-7947 | 120 |
| | 313 |
| | 315 |
| 030-8188 | 115 |
| 031-0214 | 894 |
| 031-1119 | 676 |
| 031-3185 | 42 |
| 031-4630 | 360 |
| 032-9313 | 63 |
| 033-6027 | 561 |
| | 577 |
| 033-6033 | 122 |
| | 131 |
| 033-6036 | 561 |
| | 577 |
| 033-6042 | 120 |
| | 559 |
| 033-6043 | 719 |
| 033-8248 | 282 |
| | 288 |
| 033-9139 | 613 |
| | 615 |
| 034-3557 | 341 |
| 036-9821 | 227 |
| 036-9823 | 227 |
| 045-4065 | 228 |
| 053-2313 | 82 |
| 054-7915 | 93 |


► PRIMARY REFERENCE

# PART NUMBER INDEX


| Part | Page |
|---|---|
| 061-6711 | 359 |
| 061-8639 | 63 |
| 061-9455 | 14 |
| 061-9458 | 60 |
| 069-2535 | 519 |
| | 520 |
| | 521 |
| 077-3790 | 559 |
| 077-4643 | 559 |
| 087-5140 | 427 |
| 087-6059 | 421 |
| | 424 |
| 090-4808 | 597 |
| | 601 |
| 091-1735 | 447 |
| | 450 |
| 091-1745 | 534 |
| 091-9035 | 347 |
| 095-0658 | 371 |
| 095-0670 | 670 |
| 095-0690 | 660 |
| | 661 |
| 095-0735 | 412 |
| 095-0843 | 910 |
| | 913 |
| 095-0888 | 561 |
| 095-0919 | 575 |
| 095-1513 | 702 |
| 095-1751 | 731 |
| 096-0015 | 672 |
| | 673 |
| 096-0067 | 823 |
| | 824 |
| 096-3781 | 429 |
| | 501 |
| 096-5962 | 803 |
| 096-6166 | 244 |
| 096-6467 | 738 |
| 096-6901 | 527 |
| | 529 |
| 097-0832 | 140 |
| 098-8968 | 256 |
| | 266 |
| | 274 |
| 099-3645 | 956 |
| 099-3649 | 169 |
| | 258 |
| | 532 |
| | 926 |
| 099-4691 | 402 |
| | 698 |
| | 706 |
| | 708 |
| **1** | |
| 100-3098 | 16 |
| 100-3402 | 561 |
| 100-3404 | 561 |
| 100-3405 | 561 |
| 100-3408 | 561 |
| 100-3409 | 561 |
| 100-3410 | 563 |
| 100-3411 | 563 |
| 100-3412 | 561 |
| | ▶563 |
| 100-3413 | 561 |
| 100-3415 | 561 |
| 100-3416 | 561 |
| | ▶569 |
| 100-4995 | 99 |
| 100-5041 | 275 |
| 100-5072 | 125 |
| 100-5218 | 8 |
| 100-5219 | 8 |
| 100-6241 | 557 |
| 100-6674 | 232 |
| 100-7399 | 23 |
| 100-7530 | 549 |
| 100-8010 | 573 |
| 100-8011 | 573 |
| 101-0003 | 938 |
| | 940 |
| 101-0205 | 257 |
| 101-0852 | 159 |
| | 160 |
| | 166 |
| 101-1785 | 798 |
| 101-2862 | 660 |
| | 661 |
| 101-2867 | 894 |
| 101-3120 | 109 |
| | 115 |
| | 122 |
| 101-3125 | 105 |
| 101-6596 | 34 |
| 101-6603 | 145 |
| 101-7399 | 371 |
| 101-7404 | 557 |
| 101-8468 | 42 |
| 102-2828 | 639 |
| 102-5861 | 42 |
| 102-8801 | 148 |
| | 169 |
| | 194 |
| | 257 |
| | 258 |
| | 267 |
| | 268 |
| | 275 |
| | 276 |
| | 281 |
| | 287 |
| | 567 |
| | 782 |
| | 796 |
| | 818 |
| | 867 |
| 102-8802 | 115 |
| | 133 |
| | 176 |
| | 178 |
| | 179 |
| | 194 |
| | 215 |
| | 216 |
| | 231 |
| | 232 |
| | 234 |
| | 235 |
| | 238 |
| | 247 |
| | 248 |
| | 249 |
| | 253 |
| | 257 |
| | 258 |
| | 267 |
| | 275 |
| | 276 |
| | 287 |
| | 288 |
| | 290 |
| | 292 |
| | 297 |
| | 404 |
| | 597 |
| | 601 |
| | 733 |
| | 736 |
| | 782 |
| | 791 |
| | 818 |
| | 850 |
| | 851 |
| | 857 |
| | 858 |
| | 938 |
| | 940 |
| 102-8803 | 115 |
| | 153 |
| | 169 |
| | 171 |
| | 177 |
| | 178 |
| | 194 |
| | 204 |
| | 205 |
| | 206 |
| | 207 |
| | 208 |
| | 213 |
| | 219 |
| | 220 |
| | 246 |
| | 250 |
| | 256 |
| | 257 |
| | 258 |
| | 266 |
| | 267 |
| | 268 |
| | 274 |
| | 275 |
| | 276 |
| | 281 |
| | 290 |
| | 292 |
| | 297 |
| | 299 |
| | 302 |
| | 867 |
| 102-8804 | 194 |
| | 250 |
| 102-8805 | 243 |
| | 244 |
| | 257 |
| | 258 |
| | 267 |
| | 274 |
| | 275 |
| | 276 |
| | 281 |
| | 303 |
| | 597 |
| | 601 |
| | 795 |
| | 864 |
| | 865 |
| | 869 |
| | 870 |
| | 871 |
| 102-8806 | 115 |
| | 257 |
| | 258 |
| | 266 |
| | 267 |
| | 274 |
| | 275 |
| | 276 |
| | 567 |
| | 892 |
| 102-9089 | 11 |
| 103-0280 | 457 |
| 103-1122 | 801 |
| 103-2543 | 829 |
| | 835 |
| 103-4656 | 120 |
| 103-5526 | 256 |
| | 266 |
| | 274 |
| | ▶795 |
| 103-5796 | 406 |
| | 407 |
| | 408 |
| | 410 |
| | 487 |
| 103-6100 | 840 |
| 103-8134 | 8 |
| 104-2091 | 803 |
| 104-5013 | 387 |
| | 389 |
| | ▶399 |
| 104-5014 | 399 |
| 104-6202 | 290 |
| 104-6765 | 335 |
| 104-6766 | 335 |


▶ PRIMARY REFERENCE

# PART NUMBER INDEX


| Part | Page |
|---|---|
| 104-6767 | 335 |
| 104-7006 | 308 |
| 104-9270 | 63 |
| 105-0226 | 391 |
| | 393 |
| 105-0228 | 387 |
| | 389 |
| 105-2145 | 719 |
| 105-2485 | 341 |
| 105-2486 | 341 |
| 105-2487 | 341 |
| 105-2976 | 601 |
| 105-3035 | 661 |
| | 670 |
| 105-3372 | 597 |
| | 601 |
| 105-3477 | 542 |
| 105-3479 | 371 |
| 105-3484 | 113 |
| 105-3635 | 557 |
| | ▶561 |
| 105-6117 | 523 |
| 105-7704 | 534 |
| 105-8049 | 377 |
| 105-8702 | 308 |
| 105-8703 | 308 |
| 105-8704 | 308 |
| 105-8705 | 308 |
| 105-8719 | 323 |
| | 325 |
| | 327 |
| | 329 |
| | 331 |
| | 333 |
| 105-8724 | 527 |
| | 529 |
| 105-8727 | 307 |
| | 308 |
| 105-8730 | 323 |
| | 325 |
| | 327 |
| | 329 |
| | 331 |
| | 333 |
| 105-8731 | 323 |
| | 325 |
| | 327 |
| | 329 |
| | 331 |
| | 333 |
| 105-8735 | 322 |
| 105-8739 | 308 |
| 105-8743 | 402 |
| 105-8748 | 402 |
| 105-8750 | 527 |
| | 529 |
| 105-8753 | 308 |
| 105-8754 | 308 |
| 105-9411 | 840 |
| 106-0107 | 153 |
| | ▶243 |
| 106-0210 | 243 |
| 106-1582 | 597 |
| | 601 |
| 106-1583 | 597 |
| 106-1584 | 597 |
| | 601 |
| 106-1774 | 534 |
| | ▶541 |
| 106-1792 | 108 |
| 106-5673 | 31 |
| 106-6450 | 360 |
| 106-7798 | 364 |
| 106-9212 | 400 |
| 107-0071 | 585 |
| 107-0583 | 42 |
| 107-1161 | 801 |
| 107-1964 | 153 |
| | 613 |
| | 615 |
| | 880 |
| | 884 |
| 107-2884 | 559 |
| 107-2886 | 559 |
| 107-2887 | 559 |
| 107-2888 | 559 |
| 107-2890 | 559 |
| 107-2891 | 559 |
| 107-2893 | 559 |
| 107-3117 | 667 |
| 107-3157 | 872 |
| 107-3786 | 567 |
| 107-4393 | 838 |
| 107-4394 | 838 |
| 107-4395 | 838 |
| 107-4396 | 838 |
| 107-4397 | 840 |
| 107-4399 | 840 |
| 107-4600 | 895 |
| 107-4602 | 895 |
| 107-4681 | 384 |
| 107-4749 | 301 |
| 107-5001 | 368 |
| | ▶375 |
| 107-5002 | 375 |
| 107-5005 | 375 |
| | ▶396 |
| 107-5006 | 375 |
| | ▶397 |
| 107-5007 | 375 |
| | ▶377 |
| 107-5008 | 396 |
| 107-5009 | 377 |
| 107-5010 | 397 |
| 107-5610 | 375 |
| 107-5612 | 323 |
| | 325 |
| | 327 |
| | 329 |
| | 331 |
| | 333 |
| 107-5769 | 124 |
| 108-0058 | 323 |
| | 325 |
| | 327 |
| | 329 |
| | 331 |
| | 333 |
| 108-0350 | 402 |
| 108-2148 | 711 |
| 108-2227 | 713 |
| 108-2735 | 360 |
| 108-2736 | 364 |
| 108-2896 | 364 |
| 108-3320 | 360 |
| | 256 |
| | 266 |
| | 274 |
| 108-3322 | 359 |
| 108-3612 | 108 |
| 108-4758 | 44 |
| 108-4815 | 577 |
| 108-4816 | 577 |
| 108-5471 | 799 |
| 108-6966 | 421 |
| | 424 |
| 108-7930 | 90 |
| 108-7931 | 357 |
| 108-8369 | 323 |
| | 325 |
| | 327 |
| | 329 |
| | 331 |
| | 333 |
| 108-9382 | 4 |
| | ▶37 |
| 109-0072 | 51 |
| 109-0077 | 87 |
| | 91 |
| 109-0078 | 51 |
| 109-1145 | 82 |
| 109-1645 | 281 |
| 109-1657 | 5 |
| | ▶39 |
| 109-2373 | 4 |
| | ▶81 |
| 109-3202 | 308 |
| 109-3969 | 400 |
| 109-5008 | 799 |
| | 895 |
| | 900 |
| 109-7848 | 402 |
| 109-8203 | 2 |
| | 198 |
| | ▶844 |
| 109-9215 | 763 |
| | 764 |
| | 765 |
| | 766 |
| | 767 |
| | 768 |
| 109-9719 | 402 |
| 109-9985 | 48 |
| 110-0551 | 402 |
| 110-2023 | 412 |
| | 427 |
| | 450 |
| | 737 |
| | 743 |
| 110-2055 | 402 |
| 110-2220 | 22 |
| 110-2446 | 527 |
| | 529 |
| 110-3799 | ▶336 |
| | 337 |
| 110-4344 | 49 |
| 110-4603 | 372 |
| | ▶373 |
| 110-4604 | 373 |
| 110-4774 | 368 |
| | ▶525 |
| 110-4802 | 402 |
| 110-6109 | 153 |
| | 256 |
| | 266 |
| | 274 |
| 110-6393 | 781 |
| 110-6844 | 258 |
| | 275 |
| 110-6846 | 267 |
| | 275 |
| 110-6848 | 258 |
| | 267 |
| | 275 |
| 110-7886 | 266 |
| 110-7887 | 256 |
| | 266 |
| | 274 |
| 110-8050 | 1 |
| | ▶455 |
| 110-8117 | 410 |
| 110-8118 | 1 |
| | ▶544 |
| 110-8141 | 641 |
| | ▶658 |
| 110-8144 | 641 |
| | ▶656 |
| 110-8145 | 641 |
| | ▶663 |
| 110-8330 | 120 |
| 110-8475 | ▶620 |
| | 641 |
| 110-8476 | ▶621 |
| | 641 |
| 111-0343 | 733 |
| | 736 |
| 111-0687 | 895 |
| | 900 |
| 111-1316 | 895 |
| | 900 |
| 111-2088 | 4 |
| | ▶48 |
| 111-2355 | 4 |
| | ▶49 |
| 111-4013 | 184 |
| | 185 |
| | 187 |
| 111-4627 | 942 |
| 111-6923 | 549 |
| 111-7085 | 525 |
| 111-7775 | 549 |
| | ▶570 |
| 111-8181 | 619 |
| | ▶626 |
| 111-8182 | 626 |
| 111-8187 | 626 |
| 111-8192 | 626 |
| 111-9040 | ▶519 |
| | 534 |
| 111-9110 | 519 |


▶ PRIMARY REFERENCE

# PART NUMBER INDEX


| Part | Page |
|---|---|
| | 520 |
| | 521 |
| 111-9741 | 751 |
| 111-9755 | 751 |
| 111-9761 | 751 |
| 111-9770 | 749 |
| 112-1817 | 704 |
| | ▶710 |
| 112-2014 | 542 |
| 112-4511 | 360 |
| | 365 |
| 112-5003 | 620 |
| | ▶628 |
| 112-5004 | 621 |
| | ▶630 |
| 112-5068 | 630 |
| | 635 |
| 112-5071 | 628 |
| | 630 |
| 112-5344 | 92 |
| 112-5585 | 361 |
| 112-6174 | 266 |
| 112-7309 | 365 |
| 112-7522 | 335 |
| 112-7523 | 335 |
| 112-7524 | 335 |
| 112-8042 | 361 |
| 112-8119 | 336 |
| 112-8120 | 336 |
| 112-8990 | 336 |
| 112-9073 | 415 |
| | 427 |
| 112-9217 | 42 |
| 112-9714 | 567 |
| 112-9715 | 567 |
| 112-9716 | 542 |
| 112-9736 | 458 |
| | 496 |
| 112-9861 | 710 |
| 113-0283 | 711 |
| | 713 |
| 113-0580 | 194 |
| 113-1720 | 656 |
| 113-1721 | 656 |
| 113-3271 | 753 |
| | 755 |
| | 757 |
| | 759 |
| | 761 |
| 113-6979 | 506 |
| 113-7752 | 522 |
| | 523 |
| 113-9497 | 415 |
| 113-9864 | 547 |
| 113-9916 | 753 |
| | 755 |
| | 757 |
| | 759 |
| | 761 |
| 113-9928 | 757 |
| | 759 |
| | 761 |
| 113-9931 | 757 |
| | 759 |
| | 761 |
| 113-9933 | 753 |
| | 755 |
| | 757 |
| | 759 |
| | 761 |
| 113-9942 | 759 |
| | 761 |
| 114-1266 | 713 |
| | ▶715 |
| 114-1267 | 573 |
| | 585 |
| | 713 |
| | ▶716 |
| 114-1268 | 711 |
| | 713 |
| | ▶729 |
| 114-2430 | 66 |
| 114-2432 | 66 |
| 114-2435 | 66 |
| 114-2787 | 682 |
| | 686 |
| | ▶706 |
| 114-2788 | 689 |
| | 693 |
| | ▶708 |
| 114-2789 | 706 |
| | 708 |
| | ▶727 |
| 114-3469 | 791 |
| 114-4247 | 597 |
| | 601 |
| 114-4831 | 656 |
| 114-4835 | 682 |
| | 686 |
| | 689 |
| | 693 |
| 114-5214 | 73 |
| 114-5309 | 542 |
| 114-5312 | 542 |
| 114-5333 | 249 |
| 114-5349 | 573 |
| 114-5386 | 371 |
| 114-6044 | ▶547 |
| | 565 |
| 114-6049 | 549 |
| 114-6051 | 549 |
| 114-6064 | 549 |
| 114-6458 | 573 |
| 114-6463 | 573 |
| 114-6656 | 663 |
| 114-8165 | 601 |
| 114-8843 | 141 |
| 114-9106 | 713 |
| 114-9110 | 561 |
| 114-9222 | 557 |
| 114-9252 | 895 |
| | 905 |
| 114-9491 | 531 |
| 115-1371 | 544 |
| | ▶545 |
| 115-1372 | 545 |
| 115-1779 | ▶357 |
| | 368 |
| 115-2014 | 542 |
| 115-2073 | 844 |
| 115-2247 | 522 |
| | 523 |
| 115-2359 | 51 |
| 115-2365 | 51 |
| 115-2422 | 140 |
| 115-2955 | 455 |
| 115-2958 | 455 |
| 115-3183 | 455 |
| 115-3184 | 455 |
| 115-3185 | 455 |
| 115-3595 | 545 |
| 115-4788 | 1 |
| | ▶487 |
| 115-4968 | 457 |
| 115-5005 | ▶380 |
| 115-5006 | ▶380 |
| 115-5287 | 487 |
| 115-5669 | 406 |
| | 407 |
| | 408 |
| | 410 |
| 115-6433 | 506 |
| 115-6901 | 585 |
| 115-7048 | 738 |
| 115-7441 | 415 |
| 115-7669 | ▶556 |
| | 565 |
| 115-8426 | 534 |
| 115-8433 | 534 |
| 115-8434 | 534 |
| 115-8435 | 534 |
| 115-8506 | 547 |
| 115-8507 | 353 |
| 115-8634 | 550 |
| 115-9328 | 590 |
| | ▶700 |
| 115-9345 | 895 |
| | 900 |
| 115-9507 | 890 |
| 115-9569 | 645 |
| 115-9570 | 645 |
| 115-9573 | 547 |
| 115-9577 | 547 |
| 115-9890 | 557 |
| 115-9976 | 585 |
| 115-9978 | 585 |
| 116-0080 | 140 |
| 116-2152 | 658 |
| 116-2153 | 658 |
| 116-2155 | 658 |
| 116-3363 | 656 |
| 116-4491 | 651 |
| 116-6202 | 840 |
| 116-7677 | 641 |
| | ▶642 |
| 116-7882 | 474 |
| 116-7883 | 474 |
| 116-8247 | 281 |
| 116-8726 | 547 |
| 116-8771 | 642 |
| 116-8774 | 642 |
| | 744 |
| 116-9563 | 549 |
| 116-9575 | 549 |
| 116-9576 | 549 |
| 116-9577 | 549 |
| 116-9578 | 549 |
| 116-9579 | 549 |
| 117-1385 | 341 |
| 117-1410 | 789 |
| | ▶908 |
| 117-2311 | 256 |
| | 266 |
| | 274 |
| 117-2927 | 320 |
| 117-4473 | 803 |
| 117-4491 | 917 |
| 117-4492 | 779 |
| 117-6056 | 542 |
| 117-7798 | 534 |
| 117-7799 | 534 |
| 117-7826 | 360 |
| 117-8131 | 872 |
| 117-8801 | 42 |
| 117-8929 | 789 |
| | 803 |
| | 805 |
| 117-9369 | 427 |
| 117-9611 | ▶371 |
| | 557 |
| 117-9710 | 371 |
| 117-9711 | 371 |
| 117-9966 | 805 |
| 118-2019 | 51 |
| 118-2943 | 567 |
| 118-4728 | 120 |
| 118-5068 | 74 |
| 118-5095 | ▶698 |
| | 708 |
| 118-6365 | 281 |
| 118-6606 | 527 |
| | 529 |
| 118-6878 | 288 |
| 118-7226 | ▶219 |
| | 288 |
| | 313 |
| | 315 |
| 118-8078 | 542 |
| 118-9573 | 369 |
| | 651 |
| 119-0036 | 11 |
| 119-0281 | 457 |
| 119-0781 | 908 |
| 119-0959 | 719 |
| 119-1284 | 378 |
| 119-3662 | 204 |
| 119-5026 | 789 |
| 119-5783 | 1 |
| | ▶943 |
| 119-5864 | 378 |
| 119-5865 | 378 |
| 119-5866 | 378 |
| 119-6018 | 353 |
| 119-6224 | 561 |
| 119-6237 | 561 |
| 119-6238 | 561 |
| | ▶577 |
| 119-7845 | 667 |
| 119-7899 | 431 |
| 119-7902 | 452 |


▶ PRIMARY REFERENCE

# PART NUMBER INDEX


| Part | Page |
|---|---|
| 119-7904 | 431 |
| 119-7906 | 431 |
| 119-8966 | 534 |
| 120-5281 | 457 |
| 120-9027 | 172 |
| | 173 |
| 120-9243 | 46 |
| 120-9847 | 4 |
| | ▶14 |
| 121-0145 | 60 |
| 121-0628 | 575 |
| 121-3307 | 92 |
| 121-3908 | 790 |
| 121-6607 | 525 |
| 121-7848 | 197 |
| 121-8038 | 256 |
| | 266 |
| | 274 |
| 122-0447 | 27 |
| 122-0493 | 140 |
| 122-0563 | 561 |
| 122-1472 | 8 |
| 122-1671 | 533 |
| 122-2222 | 193 |
| 122-3536 | 378 |
| 122-3772 | 91 |
| 122-4026 | 110 |
| | 140 |
| | 251 |
| 122-6177 | 704 |
| 122-7375 | 25 |
| | 27 |
| 122-8352 | 341 |
| 122-8353 | 341 |
| 122-8612 | 27 |
| 122-8705 | 148 |
| | 181 |
| | 189 |
| 122-8905 | 85 |
| 122-9963 | 658 |
| 122-9964 | 658 |
| 122-9965 | 658 |
| 123-0305 | 658 |
| 123-0707 | 244 |
| 123-0713 | 421 |
| | 424 |
| 123-0791 | 138 |
| | 139 |
| 123-0931 | 682 |
| | 686 |
| | 689 |
| | 693 |
| 123-0933 | 682 |
| | 686 |
| | 689 |
| | 693 |
| 123-0934 | 682 |
| | 686 |
| | 689 |
| | 693 |
| 123-0935 | 682 |
| | 686 |
| | 689 |
| | 693 |
| 123-0936 | 682 |
| | 686 |
| | 689 |
| | 693 |
| 123-0939 | 682 |
| | 689 |
| 123-0965 | 682 |
| | 686 |
| 123-0967 | 682 |
| | 686 |
| | 689 |
| | 693 |
| 123-0968 | 682 |
| | 686 |
| | 689 |
| | 693 |
| 123-1373 | 140 |
| 123-1396 | 757 |
| 123-2370 | 689 |
| | 693 |
| 123-2371 | 689 |
| | 693 |
| 123-2372 | 689 |
| | 693 |
| 123-2896 | 266 |
| | 274 |
| 123-3202 | 8 |
| 123-3827 | 510 |
| | 820 |
| | 942 |
| 123-4371 | ▶372 |
| 123-5923 | 380 |
| | 381 |
| | 382 |
| | 383 |
| | 384 |
| | 385 |
| | 386 |
| 123-5925 | ▶358 |
| | 372 |
| 123-6319 | 126 |
| 123-6713 | 542 |
| 123-7736 | 682 |
| | 686 |
| | 689 |
| | 693 |
| 123-9431 | 887 |
| 123-9694 | 153 |
| 123-9755 | 628 |
| | 637 |
| 124-0065 | 542 |
| 124-0230 | 421 |
| | 424 |
| 124-0613 | 632 |
| 124-0614 | 633 |
| 124-0615 | 632 |
| | 633 |
| 124-0616 | 622 |
| | ▶632 |
| 124-0617 | 623 |
| | ▶633 |
| 124-0786 | 567 |
| 124-1479 | 141 |
| | 288 |
| 124-1847 | 642 |
| | 744 |
| 124-1848 | 642 |
| | 744 |
| 124-1854 | 31 |
| 124-1855 | 31 |
| 124-2456 | 956 |
| 124-3019 | 141 |
| | 288 |
| 124-3637 | 948 |
| 124-3758 | 305 |
| | 306 |
| | ▶540 |
| 124-4144 | 590 |
| 124-4672 | 191 |
| | 193 |
| | ▶208 |
| 124-4812 | 590 |
| 124-4813 | 421 |
| | 424 |
| 124-4814 | 590 |
| 124-5526 | ▶622 |
| | 641 |
| 124-5527 | ▶623 |
| | 641 |
| 124-6225 | 635 |
| | 637 |
| 124-6227 | 624 |
| | ▶635 |
| 124-6228 | 625 |
| | ▶637 |
| 124-6555 | 331 |
| | ▶337 |
| 124-6569 | 495 |
| 124-6570 | 495 |
| 124-7096 | ▶624 |
| | 744 |
| | 745 |
| 124-7097 | ▶625 |
| | 744 |
| | 745 |
| 124-7792 | 62 |
| 124-8194 | 751 |
| 124-8197 | 751 |
| 124-9020 | 474 |
| 124-9633 | 282 |
| 125-0150 | 645 |
| 125-0151 | 549 |
| 125-0154 | 549 |
| 125-0434 | 87 |
| 125-0965 | 540 |
| 125-0966 | 345 |
| | 540 |
| 125-0968 | 540 |
| 125-0969 | 540 |
| 125-1302 | 194 |
| | ▶235 |
| 125-2030 | 642 |
| | 744 |
| 125-2208 | 645 |
| 125-3295 | 523 |
| 125-3657 | ▶731 |
| | 732 |
| 125-6510 | 905 |
| 125-6535 | 228 |
| 125-6536 | 228 |
| 125-6537 | 228 |
| 125-7037 | 457 |
| 125-7876 | 141 |
| | 197 |
| 125-9772 | 547 |
| 125-9774 | 549 |
| 126-0081 | 4 |
| | ▶106 |
| 126-1052 | 895 |
| | 900 |
| 126-1756 | 42 |
| 126-1757 | 46 |
| 126-1818 | 640 |
| 126-4935 | 12 |
| | 87 |
| 126-5484 | 585 |
| 126-6008 | 838 |
| 126-6872 | 549 |
| | 651 |
| | 682 |
| | 686 |
| | 689 |
| | 693 |
| 126-7574 | 148 |
| | 162 |
| 126-7631 | 4 |
| | ▶145 |
| 126-8306 | 534 |
| 126-8449 | 145 |
| 127-0785 | 115 |
| 127-0929 | 106 |
| 127-1960 | 322 |
| 127-3495 | ▶380 |
| 127-4540 | 266 |
| 127-5485 | 194 |
| 127-5486 | 288 |
| 127-5647 | 744 |
| | 745 |
| 127-5680 | 437 |
| 127-6356 | 78 |
| 127-6477 | 744 |
| | 745 |
| 127-9323 | 549 |
| 127-9483 | 660 |
| | 661 |
| | 670 |
| 127-9485 | 660 |
| | 661 |
| | 670 |
| 127-9490 | 670 |
| 128-0317 | 90 |
| 128-0486 | 549 |
| 128-1026 | 895 |
| | 900 |
| 128-2596 | 832 |
| 128-2661 | 42 |
| 128-2779 | 697 |
| 128-2780 | ▶697 |
| | 702 |
| 128-2841 | 590 |
| 128-7063 | 682 |
| | 686 |
| | 689 |
| | 693 |
| 128-7351 | 371 |
| 128-8485 | ▶380 |


▶ PRIMARY REFERENCE

# PART NUMBER INDEX


| Part | Page |
|---|---|
| 128-8487 | ▶381 |
| 128-8488 | ▶381 |
| 128-8490 | ▶381 |
| 128-8617 | 880 |
| | 884 |
| 128-8678 | 99 |
| 129-0987 | 341 |
| 129-0988 | 341 |
| 129-3045 | 402 |
| 129-3046 | 402 |
| 129-3178 | 682 |
| | 686 |
| | 689 |
| | 693 |
| | 782 |
| | 818 |
| 129-3180 | 189 |
| 129-5427 | 46 |
| 129-5428 | 46 |
| 129-7184 | 880 |
| | 884 |
| 129-9690 | 798 |
| 129-9907 | 90 |
| 129-9959 | 292 |
| 130-0099 | 406 |
| | 407 |
| | 408 |
| 130-0229 | 340 |
| 130-1887 | 838 |
| 130-2541 | 842 |
| 130-2621 | 738 |
| 130-2974 | 708 |
| 130-4698 | 42 |
| 130-4701 | 42 |
| 130-5202 | 317 |
| 130-5300 | 115 |
| | 184 |
| | 185 |
| | 187 |
| | 189 |
| | 194 |
| | 199 |
| | 200 |
| | 224 |
| | 248 |
| | 250 |
| | 258 |
| | 268 |
| | 276 |
| | 282 |
| | 287 |
| | 288 |
| | 292 |
| | 297 |
| | 300 |
| | 302 |
| | 303 |
| | 313 |
| | 315 |
| | 369 |
| | 782 |
| | 818 |
| | 850 |
| | 851 |
| | 857 |
| 130-5301 | 249 |
| | 299 |
| | 341 |
| 130-7758 | 669 |
| 130-8433 | 468 |
| | 470 |
| 130-9811 | 221 |
| | 222 |
| | 251 |
| 131-0715 | 669 |
| 131-1586 | 457 |
| 131-2633 | 2 |
| | 198 |
| | ▶942 |
| 131-3540 | 415 |
| | 420 |
| 131-3987 | 256 |
| 131-4091 | 361 |
| 131-6096 | 455 |
| 132-0338 | 779 |
| 132-5528 | 357 |
| 132-5789 | 182 |
| | 258 |
| | 268 |
| | 276 |
| | 282 |
| | 288 |
| | 290 |
| | 313 |
| | 315 |
| | 341 |
| 132-6964 | 421 |
| | 424 |
| | 427 |
| 132-7191 | 357 |
| 132-7551 | 353 |
| | 468 |
| | 470 |
| 132-9770 | 202 |
| 133-0125 | 87 |
| 133-0261 | 216 |
| 133-1644 | 506 |
| 133-2198 | 310 |
| 133-3359 | 108 |
| 133-4292 | 323 |
| | 325 |
| | 327 |
| | 329 |
| | 331 |
| | 333 |
| | 341 |
| 133-5545 | 728 |
| 133-6567 | 400 |
| 133-7810 | 282 |
| | 466 |
| 133-8769 | 905 |
| 133-8770 | 905 |
| 133-9012 | 782 |
| | 818 |
| 133-9116 | 124 |
| 133-9906 | 7 |
| 133-9907 | ▶7 |
| | 35 |
| 134-0149 | ▶381 |
| 134-0165 | 533 |
| 134-0780 | 832 |
| 134-1748 | 771 |
| 134-1752 | 753 |
| | 755 |
| 134-1753 | 753 |
| | 755 |
| 134-1754 | 753 |
| | 755 |
| 134-1755 | 753 |
| | 755 |
| 134-1756 | 753 |
| | 755 |
| 134-1757 | 753 |
| | 755 |
| 134-1758 | 753 |
| | 755 |
| 134-1759 | 753 |
| | 755 |
| 134-2252 | ▶220 |
| | 281 |
| 134-2636 | 353 |
| 134-3379 | 163 |
| 134-4126 | 148 |
| | 159 |
| | 160 |
| | 162 |
| | 166 |
| | 169 |
| | 223 |
| 134-4127 | ▶382 |
| 134-4128 | ▶382 |
| 134-4129 | ▶382 |
| 134-4130 | 382 |
| 134-4131 | 382 |
| 134-5330 | 496 |
| 134-7258 | 956 |
| 134-8226 | 120 |
| 134-8341 | ▶382 |
| 134-9569 | 244 |
| 135-0197 | ▶383 |
| 135-0198 | 383 |
| 135-0426 | ▶177 |
| | 184 |
| 135-0731 | 382 |
| 135-4928 | 90 |
| 135-5577 | 87 |
| 135-7076 | 87 |
| 135-7123 | 519 |
| | 520 |
| 135-7273 | 371 |
| 135-7470 | 575 |
| 135-7471 | 575 |
| 135-7474 | 575 |
| 135-7475 | 575 |
| 135-7477 | 575 |
| 135-7478 | 575 |
| 135-7479 | 575 |
| 135-7482 | 575 |
| 135-7483 | 575 |
| 135-7742 | 402 |
| 135-8280 | 803 |
| | 805 |
| 136-0878 | 751 |
| 136-1107 | 90 |
| 136-1543 | 876 |
| 136-1544 | 779 |
| 136-1953 | 842 |
| | 843 |
| 136-3188 | 786 |
| | 787 |
| 136-3190 | 787 |
| 136-3195 | 786 |
| 136-3742 | 90 |
| 136-6965 | 632 |
| | 633 |
| 136-7226 | 77 |
| 136-7227 | 58 |
| | 71 |
| 136-8423 | 670 |
| 136-9351 | 895 |
| | 900 |
| 137-2170 | 944 |
| | 946 |
| 137-4234 | 749 |
| 137-6722 | 288 |
| 137-6841 | 926 |
| 137-7331 | 87 |
| 137-7581 | 575 |
| 137-8165 | 892 |
| 137-9830 | ▶383 |
| 138-0006 | 761 |
| 138-0030 | 761 |
| 138-0032 | 761 |
| 138-0444 | 126 |
| 138-1292 | ▶588 |
| | 590 |
| 138-1916 | 651 |
| 138-4409 | 534 |
| 138-6744 | 90 |
| 138-6794 | 651 |
| 138-8063 | 682 |
| | 686 |
| | 689 |
| | 693 |
| 138-8173 | 672 |
| | 673 |
| 138-8175 | 672 |
| 139-0532 | 569 |
| 139-1378 | 597 |
| | 601 |
| 139-1994 | 544 |
| 139-3213 | 559 |
| 139-3285 | 536 |
| 139-3550 | 87 |
| 139-4637 | 383 |
| 139-4640 | ▶383 |
| 140-2961 | 887 |
| 140-2962 | 887 |
| 140-2963 | 887 |
| 140-3646 | 383 |
| 140-3647 | ▶383 |
| 140-5945 | 597 |
| | 601 |
| 140-8188 | 452 |
| | 454 |
| 140-9746 | 4 |
| | ▶12 |
| 141-1480 | 110 |
| 141-1481 | 590 |


▶ PRIMARY REFERENCE

# PART NUMBER INDEX


| Part | Page |
|---|---|
| | ▶732 |
| 141-1667 | 339 |
| 141-7984 | 513 |
| 141-9784 | 782 |
| | 818 |
| 142-2133 | 559 |
| 142-2137 | 559 |
| 142-2304 | 832 |
| 142-2329 | 23 |
| 142-2624 | 496 |
| 142-5603 | 341 |
| 142-5867 | 21 |
| 142-5868 | 44 |
| 142-6217 | 22 |
| 142-7072 | 22 |
| 143-1288 | 788 |
| | 910 |
| | 912 |
| | 913 |
| | 915 |
| | 917 |
| 143-2229 | 900 |
| 143-4535 | 70 |
| 143-4536 | 70 |
| 143-4732 | ▶384 |
| 143-4733 | 384 |
| 143-8302 | 575 |
| 143-8971 | 34 |
| 143-9100 | 590 |
| 143-9103 | 590 |
| 143-9104 | 590 |
| 143-9105 | 590 |
| 143-9107 | 590 |
| 143-9393 | 87 |
| 143-9732 | 34 |
| 144-0195 | 948 |
| 144-0214 | 387 |
| | 389 |
| 144-0331 | 611 |
| | 612 |
| 144-1636 | 243 |
| 144-4284 | 359 |
| 144-5330 | 547 |
| | ▶573 |
| 144-5728 | ▶590 |
| | 595 |
| | 596 |
| 144-6142 | 34 |
| 144-8122 | 62 |
| 144-8123 | 62 |
| 144-8155 | 590 |
| 145-0060 | 506 |
| 145-0326 | 938 |
| | 940 |
| 145-1144 | 711 |
| | 713 |
| 145-2901 | 62 |
| 145-3849 | 12 |
| 145-4489 | 513 |
| 145-5027 | 437 |
| 145-5028 | 437 |
| 145-6928 | 437 |
| 145-6929 | ▶178 |
| | 185 |
| | 187 |
| 145-6930 | 437 |
| 145-8045 | 436 |
| 145-8867 | 566 |
| 146-0240 | 281 |
| 146-0719 | 575 |
| 146-0720 | 575 |
| 146-1892 | 523 |
| 146-3728 | 735 |
| 146-5776 | 549 |
| 146-6371 | 803 |
| 146-6581 | 549 |
| 146-6747 | 197 |
| | 956 |
| 146-6779 | 373 |
| | 374 |
| 147-0385 | 953 |
| 147-1788 | 575 |
| 147-3396 | 120 |
| 147-3712 | 534 |
| 147-7633 | 749 |
| 148-1507 | 341 |
| 148-1928 | 400 |
| 148-3626 | 803 |
| 148-7482 | 5 |
| | ▶68 |
| 148-8240 | 491 |
| | 492 |
| | 493 |
| | 494 |
| 148-8307 | 535 |
| 148-8315 | 652 |
| 148-8318 | 82 |
| 148-8323 | 348 |
| | 353 |
| 148-8325 | 591 |
| 148-8327 | 649 |
| | 651 |
| 148-8328 | 535 |
| 148-8335 | 347 |
| | 550 |
| | 591 |
| 148-8336 | 82 |
| 148-8340 | 535 |
| | 591 |
| 148-8344 | 649 |
| 148-8346 | 535 |
| 148-8347 | 651 |
| 148-8352 | 591 |
| 148-8353 | 536 |
| | 652 |
| 148-8355 | 591 |
| 148-8360 | 347 |
| 148-8361 | 591 |
| 148-8362 | 347 |
| 148-8364 | 535 |
| | 590 |
| 148-8365 | 536 |
| | 592 |
| 148-8367 | 591 |
| | 704 |
| 148-8368 | 590 |
| 148-8369 | 590 |
| 148-8370 | 347 |
| | 535 |
| | 591 |
| 148-8371 | 535 |
| 148-8373 | 536 |
| 148-8376 | 651 |
| 148-8377 | 643 |
| 148-8378 | 191 |
| | 353 |
| | 535 |
| | 643 |
| | 704 |
| 148-8388 | 347 |
| 148-8392 | 317 |
| | 347 |
| 148-8395 | 115 |
| 148-8407 | 575 |
| | 592 |
| | 711 |
| 148-8408 | 353 |
| 148-8411 | 575 |
| 148-8412 | 591 |
| 148-8418 | 652 |
| 148-8424 | 191 |
| | 643 |
| 148-8429 | 591 |
| 148-8433 | 591 |
| 148-8435 | 535 |
| 148-8436 | 591 |
| 148-8442 | 317 |
| 148-8444 | 535 |
| | 591 |
| 148-8451 | 319 |
| | 347 |
| 148-8455 | 347 |
| 149-0175 | ▶191 |
| | 866 |
| 149-0272 | 549 |
| 149-0774 | 566 |
| 149-2906 | 566 |
| 149-2907 | 566 |
| 149-2915 | 322 |
| 149-3253 | 796 |
| | 867 |
| 149-3949 | 597 |
| | 601 |
| 149-5268 | 37 |
| 149-7089 | 590 |
| 149-7738 | 224 |
| | 258 |
| | 268 |
| | 276 |
| | 840 |
| 149-8220 | 307 |
| | 308 |
| 149-9107 | 42 |
| 149-9110 | 42 |
| 150-0343 | 152 |
| | ▶300 |
| 150-1916 | 108 |
| 150-2515 | 371 |
| 150-3024 | 82 |
| 150-3030 | 82 |
| 150-3036 | 191 |
| 150-3065 | 534 |
| 150-4034 | 643 |
| 150-4279 | 4 |
| | ▶124 |
| 150-6255 | 575 |
| 150-6287 | 601 |
| 150-7585 | 556 |
| | ▶559 |
| 150-8015 | 944 |
| | 946 |
| 150-8985 | 549 |
| 151-0862 | 62 |
| 151-1398 | 275 |
| 151-4977 | 613 |
| | 615 |
| | 617 |
| 151-5715 | 803 |
| 151-5925 | 54 |
| | 56 |
| 151-5966 | 42 |
| 151-6250 | 527 |
| | 529 |
| 151-6251 | 527 |
| | 529 |
| 151-6980 | 567 |
| 151-6981 | 567 |
| 151-6982 | 567 |
| 151-6984 | 567 |
| 151-6985 | 567 |
| 151-6986 | 567 |
| 151-8754 | 172 |
| | 173 |
| 152-2788 | 567 |
| 152-2791 | 567 |
| 152-2794 | 567 |
| 152-6432 | 567 |
| 152-6760 | 736 |
| 152-7582 | 26 |
| 152-8338 | 733 |
| 152-8340 | 590 |
| | 700 |
| | 702 |
| | ▶733 |
| 153-1256 | 90 |
| 153-3568 | 567 |
| 153-3945 | 244 |
| 153-5741 | 369 |
| 153-6273 | 523 |
| 153-6479 | 559 |
| 153-6480 | 559 |
| 153-6481 | 559 |
| 153-7023 | 30 |
| 153-7024 | 30 |
| 153-8002 | 567 |
| 153-8003 | 567 |
| 153-8004 | 567 |
| 153-9023 | 90 |
| 153-9300 | 567 |
| 153-9301 | 567 |
| 154-1390 | 895 |
| | 900 |
| 154-1579 | 667 |
| 154-2883 | 549 |
| | ▶564 |
| 154-4563 | 244 |
| 154-4982 | 641 |
| | ▶704 |
| 154-5650 | 353 |
| 154-6000 | 667 |


▶ PRIMARY REFERENCE

# PART NUMBER INDEX


| Part | Page |
|---|---|
| 154-6524 | 549 |
| 154-6626 | 122 |
| | 953 |
| 154-7443 | ▶157 |
| | 256 |
| | 267 |
| | 274 |
| 154-9023 | 87 |
| 154-9508 | 895 |
| | 900 |
| 155-0696 | 150 |
| 155-0698 | 150 |
| 155-0755 | 878 |
| | 882 |
| 155-2027 | 348 |
| 155-2255 | 148 |
| | 194 |
| | 257 |
| | 258 |
| | 267 |
| | 268 |
| | 275 |
| | 276 |
| | 290 |
| | 292 |
| | 605 |
| | 608 |
| 155-2256 | 258 |
| | 267 |
| 155-2260 | 115 |
| | 194 |
| | 209 |
| | 210 |
| | 256 |
| | 258 |
| | 267 |
| | 268 |
| | 275 |
| | 276 |
| | 281 |
| | 282 |
| | 288 |
| | 290 |
| | 292 |
| | 297 |
| | 299 |
| | 300 |
| | 301 |
| | 313 |
| | 315 |
| | 796 |
| | 867 |
| 155-2265 | 146 |
| | 258 |
| | 267 |
| | 275 |
| | 290 |
| | 567 |
| 155-2269 | 523 |
| 155-2270 | 115 |
| | 182 |
| | 189 |
| | 194 |
| | 216 |
| | 236 |
| | 237 |
| | 251 |
| | 253 |
| | 256 |
| | 257 |
| | 258 |
| | 267 |
| | 268 |
| | 275 |
| | 276 |
| | 282 |
| | 287 |
| | 288 |
| | 290 |
| | 292 |
| | 295 |
| | 296 |
| | 297 |
| | 303 |
| | 313 |
| | 315 |
| | 605 |
| | 608 |
| | 782 |
| | 818 |
| | 848 |
| | 853 |
| | 860 |
| | 862 |
| 155-2271 | 194 |
| | 258 |
| | 267 |
| | 275 |
| | 292 |
| 155-2272 | 275 |
| 155-2274 | 256 |
| | 257 |
| | 258 |
| | 267 |
| | 268 |
| | 275 |
| | 276 |
| | 281 |
| | 282 |
| | 288 |
| | 290 |
| | 295 |
| | 296 |
| | 297 |
| | 303 |
| | 605 |
| | 608 |
| 155-3167 | 667 |
| 155-4098 | 880 |
| | 884 |
| 155-5619 | 44 |
| 155-5789 | ▶869 |
| | 948 |
| 155-6526 | 542 |
| 155-7327 | 191 |
| | 643 |
| | 704 |
| 155-9524 | 46 |
| 156-0549 | 542 |
| | ▶566 |
| 156-3640 | 323 |
| | 325 |
| | 327 |
| | 329 |
| | 331 |
| | 333 |
| 156-4308 | 323 |
| | 325 |
| | 327 |
| | 329 |
| | 331 |
| | 333 |
| 156-4315 | 566 |
| 156-5545 | 779 |
| 156-6155 | 169 |
| | 223 |
| 156-6175 | 148 |
| | 256 |
| | 268 |
| | 276 |
| 156-6400 | 534 |
| 157-0670 | 87 |
| 157-1364 | 303 |
| 157-2017 | 512 |
| 157-3491 | 564 |
| 158-3416 | 42 |
| 158-5633 | 544 |
| 158-6634 | 281 |
| 158-7864 | 956 |
| 158-8881 | 46 |
| 159-0052 | 895 |
| | 900 |
| 159-1533 | 42 |
| 159-1583 | 549 |
| 159-3945 | 375 |
| 159-5963 | 327 |
| | 329 |
| | ▶335 |
| 159-5964 | 335 |
| 159-5965 | 335 |
| 159-6159 | 4 |
| | ▶15 |
| 159-8049 | 197 |
| 159-8050 | 197 |
| 159-8169 | 402 |
| 159-8524 | 42 |
| 159-9322 | 148 |
| 160-0089 | 575 |
| 160-1744 | 472 |
| 160-2563 | 44 |
| 160-2612 | 4 |
| | ▶44 |
| 160-5120 | 21 |
| 160-6365 | 887 |
| 160-6366 | 887 |
| 160-7183 | 251 |
| | 319 |
| | 443 |
| 160-7271 | 15 |
| 160-7689 | 194 |
| | 288 |
| 160-7690 | 148 |
| 160-8500 | 199 |
| | 200 |
| 160-8510 | 323 |
| | 325 |
| | 327 |
| | 329 |
| 160-8708 | 122 |
| 160-9925 | 832 |
| 161-3415 | 829 |
| | 832 |
| | 835 |
| 161-3565 | 87 |
| 161-4113 | 4 |
| | ▶78 |
| 161-5718 | 90 |
| 161-5719 | ▶90 |
| | 91 |
| 161-6149 | 728 |
| | 731 |
| 161-6154 | 571 |
| | 572 |
| 161-6161 | 728 |
| | 731 |
| 161-8204 | ▶418 |
| 161-8213 | 418 |
| | 419 |
| 161-8216 | 418 |
| | 419 |
| 161-8287 | 418 |
| | 419 |
| 161-8289 | 418 |
| | 419 |
| 161-9289 | 921 |
| | 923 |
| 161-9918 | 375 |
| 161-9934 | 905 |
| 162-0177 | 711 |
| 162-2266 | 73 |
| 162-6560 | 575 |
| 162-8352 | 348 |
| 162-9206 | 698 |
| | 706 |
| | 708 |
| 162-9742 | 656 |
| 162-9743 | 656 |
| 163-0922 | 534 |
| 163-1135 | 938 |
| | 940 |
| 163-1149 | 788 |
| 163-1201 | 822 |
| 163-2478 | 30 |
| 163-4526 | 402 |
| 163-4527 | 402 |
| 163-4565 | 15 |
| 163-5382 | 651 |
| 163-7988 | 457 |
| 163-8119 | 597 |
| | 601 |
| 164-1234 | 938 |
| | 940 |
| 164-2108 | 398 |
| | 711 |
| | 713 |
| 164-3417 | 128 |
| | 129 |
| 164-3523 | 466 |
| 164-4180 | 677 |
| | 679 |
| 164-4187 | 56 |


▶ PRIMARY REFERENCE

# PART NUMBER INDEX


| Part | Page |
|---|---|
| 164-4531 | 779 |
| 164-4599 | 10 |
| 164-4883 | 875 |
| | 877 |
| 164-4891 | 364 |
| 164-5567 | 191 |
| | 534 |
| | 643 |
| | 652 |
| | 658 |
| 164-5577 | 348 |
| 164-5590 | 645 |
| 164-5598 | 590 |
| 164-6862 | 652 |
| 164-6871 | 191 |
| 164-6872 | 550 |
| 164-7005 | 590 |
| 164-7440 | 590 |
| 164-7474 | 590 |
| | 682 |
| | 689 |
| | ▶697 |
| 164-7556 | 174 |
| | 175 |
| 164-7577 | ▶231 |
| | 281 |
| | 310 |
| 164-8178 | 549 |
| 164-8180 | 549 |
| 164-8181 | 549 |
| 164-8183 | 549 |
| 165-2273 | 82 |
| 165-3929 | 44 |
| 165-3933 | 44 |
| 165-4065 | 412 |
| 165-4104 | 1 |
| | ▶956 |
| 165-4795 | 900 |
| 165-4799 | 900 |
| 165-4801 | 900 |
| 165-5655 | 169 |
| 165-5970 | 115 |
| | ▶246 |
| 165-6165 | 384 |
| 165-6170 | 13 |
| 165-6176 | ▶384 |
| 165-6177 | ▶384 |
| 165-8382 | 667 |
| 165-9104 | 880 |
| | 884 |
| 166-0344 | 670 |
| 166-0362 | 549 |
| 166-0599 | 199 |
| | 200 |
| 166-2903 | 25 |
| | 27 |
| 166-2904 | 25 |
| | 27 |
| 166-6928 | 256 |
| | 267 |
| | 274 |
| | ▶864 |
| 166-8495 | 549 |
| | ▶585 |
| 166-9144 | 46 |
| 167-0642 | 26 |
| 167-0643 | 26 |
| 167-1192 | 412 |
| | 513 |
| 167-1261 | 527 |
| | 529 |
| 167-1795 | 645 |
| 167-2200 | 545 |
| 167-2207 | 628 |
| | 630 |
| 167-2208 | 632 |
| | 633 |
| | 635 |
| | 637 |
| 167-2211 | 626 |
| 167-2307 | 545 |
| 167-2317 | 628 |
| | 630 |
| 167-2319 | 632 |
| | 633 |
| | 635 |
| | 637 |
| 167-2324 | 626 |
| 167-8081 | 22 |
| 167-8083 | 22 |
| 167-8126 | 32 |
| 167-9524 | 398 |
| 168-1968 | 651 |
| 168-2100 | 32 |
| 168-2198 | 670 |
| 168-3504 | 670 |
| 168-5248 | 51 |
| 168-6452 | 369 |
| 168-7314 | 155 |
| | ▶158 |
| 168-7861 | 670 |
| 168-7868 | 670 |
| | ▶672 |
| 168-7869 | 670 |
| 168-7940 | 672 |
| | 673 |
| 168-7941 | 672 |
| | 673 |
| 168-7942 | 672 |
| | 673 |
| 168-7943 | 672 |
| | 673 |
| 168-7944 | 672 |
| 168-8772 | 828 |
| 168-9197 | 704 |
| 168-9207 | 549 |
| 168-9208 | 421 |
| | 424 |
| 169-0417 | 199 |
| | 200 |
| | ▶204 |
| 169-0527 | 534 |
| 169-0528 | 534 |
| 169-0529 | 534 |
| 169-0531 | 534 |
| 169-0697 | 877 |
| 169-1026 | 913 |
| 169-1616 | 731 |
| 169-1617 | 731 |
| 169-4370 | 418 |
| 169-4961 | 419 |
| 169-5836 | 549 |
| 169-7077 | 82 |
| 169-7380 | 355 |
| | 938 |
| | 940 |
| 170-0493 | 520 |
| 170-0494 | 589 |
| 170-1112 | 779 |
| 170-1114 | 779 |
| 170-1115 | 779 |
| 170-1757 | 6 |
| | ▶61 |
| 170-1821 | 597 |
| | 601 |
| 170-3447 | 838 |
| 170-3448 | 838 |
| 170-4673 | 87 |
| 170-4735 | 953 |
| 170-4737 | 26 |
| 170-4738 | 26 |
| 170-7709 | 799 |
| 171-1230 | 910 |
| | 912 |
| | 913 |
| | 915 |
| | 917 |
| 171-1279 | 308 |
| 171-1653 | 567 |
| 171-2206 | 194 |
| 171-2208 | 194 |
| 171-2210 | 194 |
| 171-2212 | 194 |
| 171-3942 | 341 |
| 171-4656 | 1 |
| | ▶549 |
| 171-5319 | 656 |
| 171-5320 | 656 |
| 171-5349 | 215 |
| 171-5367 | 534 |
| 171-5368 | 534 |
| 171-6671 | 534 |
| 171-6682 | 910 |
| | 913 |
| 171-6712 | 534 |
| 171-6718 | 534 |
| 171-6874 | 307 |
| 171-8823 | 466 |
| | ▶512 |
| 171-8861 | 468 |
| | 470 |
| 171-8862 | 450 |
| 171-8867 | 515 |
| | 516 |
| 171-8868 | 517 |
| | 518 |
| 171-8869 | 515 |
| | 516 |
| | 517 |
| | 518 |
| 171-8870 | 515 |
| | 516 |
| | 517 |
| | 518 |
| 171-8872 | 515 |
| 171-8873 | 516 |
| | 517 |
| | 518 |
| | 481 |
| | ▶515 |
| 171-8875 | 482 |
| | ▶516 |
| 171-8888 | 789 |
| | ▶803 |
| 171-8896 | 484 |
| | ▶517 |
| 172-0983 | 481 |
| 172-0985 | 481 |
| 172-0988 | 6 |
| | ▶62 |
| 172-1135 | 484 |
| 172-1141 | 484 |
| 172-1482 | 204 |
| 172-2318 | 484 |
| 172-2416 | 910 |
| | 913 |
| 172-3511 | 153 |
| | 597 |
| | 601 |
| 172-4848 | 61 |
| 172-4871 | 281 |
| 172-5761 | 534 |
| 172-6144 | 534 |
| 172-7815 | 651 |
| 172-8660 | ▶234 |
| | 281 |
| 172-9200 | 244 |
| 172-9389 | ▶159 |
| | 256 |
| | 267 |
| | 274 |
| 172-9391 | ▶160 |
| | 256 |
| | 267 |
| | 274 |
| 173-0439 | 549 |
| | ▶575 |
| 173-0545 | 323 |
| | 325 |
| | 327 |
| | 329 |
| | 331 |
| | 333 |
| 173-0547 | 305 |
| | ▶307 |
| 173-0554 | 527 |
| | 529 |
| 173-0555 | 527 |
| | 529 |
| 173-0558 | ▶338 |
| 173-0562 | 338 |
| 173-0566 | 338 |
| 173-0641 | 670 |
| 173-0888 | 396 |
| 173-1026 | 355 |
| 173-1027 | 355 |
| 173-1028 | ▶779 |
| | 910 |
| | 913 |
| | 916 |


▶ PRIMARY REFERENCE

# PART NUMBER INDEX


| Part | Page |
|---|---|
| 173-1437 | 689 |
| 173-1957 | 52 |
| 173-2052 | 876 |
| 173-2115 | 832 |
| 173-2118 | 872 |
| 173-2125 | 597 |
| 173-2127 | 597 |
| 173-2142 | 895 |
| 173-2143 | 895 |
| 173-2144 | 895 |
| 173-2173 | 878 |
| 173-2179 | 895 |
| | 900 |
| 173-2185 | 829 |
| | 832 |
| | 835 |
| 173-2187 | 829 |
| | 832 |
| | 835 |
| 173-2200 | 828 |
| 173-2205 | 880 |
| | 884 |
| 173-2206 | 880 |
| | 884 |
| 173-2217 | 926 |
| 173-2219 | 788 |
| 173-2234 | 256 |
| | 267 |
| | 274 |
| 173-2235 | 256 |
| | 267 |
| | 274 |
| 173-2236 | 256 |
| 173-3083 | 915 |
| 173-3283 | 913 |
| 173-5787 | 920 |
| | 921 |
| | 923 |
| 173-6532 | ▶892 |
| | 893 |
| 173-7004 | 848 |
| | 853 |
| 173-7035 | 920 |
| | 921 |
| | 923 |
| 173-7126 | 119 |
| 173-8293 | 103 |
| 173-9683 | 545 |
| 173-9779 | 628 |
| | 630 |
| | 632 |
| | 633 |
| | 635 |
| | 637 |
| 174-1405 | 393 |
| 174-1406 | 393 |
| 174-1409 | 393 |
| 174-1410 | 393 |
| 174-1411 | 387 |
| | ▶393 |
| 174-1497 | 782 |
| | 818 |
| 174-1572 | 251 |
| 174-2407 | 935 |
| | 937 |
| 174-3085 | 429 |
| 174-3086 | 429 |
| | 489 |
| 174-3091 | 613 |
| | 615 |
| | 617 |
| 174-3405 | 341 |
| 174-3624 | 789 |
| | ▶918 |
| 174-3874 | 4 |
| | ▶52 |
| 174-4082 | 162 |
| | ▶199 |
| 174-4301 | 926 |
| 174-4312 | 281 |
| 174-4913 | 711 |
| | 713 |
| 174-4941 | 251 |
| 174-4942 | 251 |
| 174-5907 | 282 |
| | 287 |
| | 303 |
| 174-5986 | 4 |
| | ▶91 |
| 174-6173 | 438 |
| | ▶639 |
| 174-7462 | 15 |
| 174-7875 | 822 |
| 174-8813 | 549 |
| 174-9570 | ▶119 |
| | 132 |
| 175-1366 | 15 |
| 175-1367 | 15 |
| 175-1529 | 617 |
| 175-2209 | 153 |
| 175-3244 | 281 |
| 175-3265 | 613 |
| | 615 |
| | 617 |
| | 878 |
| | 882 |
| 175-3617 | 26 |
| 175-3678 | 892 |
| 175-4170 | 611 |
| | 612 |
| 175-4196 | ▶444 |
| 175-4197 | 1 |
| | ▶738 |
| 175-4201 | 1 |
| | ▶433 |
| 175-4207 | ▶287 |
| | 682 |
| | 687 |
| | 690 |
| | 693 |
| 175-4219 | ▶744 |
| 175-4223 | 645 |
| 175-4249 | 92 |
| 175-4291 | 174 |
| | 175 |
| 175-4292 | 174 |
| | 175 |
| 175-4863 | 62 |
| 175-6352 | 738 |
| 175-6353 | ▶737 |
| | 744 |
| | 745 |
| 175-6789 | 74 |
| 175-6795 | 670 |
| 175-6799 | 670 |
| 175-7162 | 840 |
| 175-7900 | 545 |
| 176-1301 | 513 |
| 176-3890 | 534 |
| 176-3898 | 645 |
| 176-5749 | 54 |
| 176-7078 | 575 |
| 176-7319 | 651 |
| 176-7337 | 433 |
| 176-9369 | 570 |
| | ▶571 |
| 176-9371 | 570 |
| | ▶572 |
| 177-0035 | 105 |
| 177-0063 | 105 |
| 177-0706 | 738 |
| | 743 |
| 177-1862 | 894 |
| 177-1863 | 910 |
| | 913 |
| 177-3013 | 895 |
| | 900 |
| 177-3187 | 256 |
| 177-3484 | 468 |
| | 470 |
| 177-4152 | 8 |
| 177-4495 | 803 |
| | 805 |
| 177-4762 | 547 |
| 177-4930 | 876 |
| 177-4937 | 918 |
| | 919 |
| 177-6696 | 782 |
| 177-6704 | 783 |
| | 818 |
| 177-6716 | 783 |
| | 818 |
| 177-6727 | 782 |
| | 818 |
| 177-6732 | 783 |
| | 818 |
| 177-7582 | 567 |
| 177-9645 | 826 |
| 177-9656 | 826 |
| 177-9953 | ▶134 |
| | 139 |
| 178-0603 | ▶910 |
| | 912 |
| 178-0604 | ▶875 |
| | 910 |
| 178-0605 | 875 |
| | ▶876 |
| | 877 |
| 178-2500 | 85 |
| 178-3129 | 92 |
| | 496 |
| 178-3339 | 158 |
| 178-4323 | 829 |
| | 832 |
| | 835 |
| 178-5077 | 617 |
| 178-7597 | 53 |
| 178-7907 | 876 |
| 178-7908 | 162 |
| | ▶200 |
| 178-7913 | ▶912 |
| | 920 |
| 178-7917 | 152 |
| | ▶193 |
| 178-8622 | 737 |
| 178-9037 | 702 |
| 179-1235 | 926 |
| 179-1453 | 415 |
| 179-1454 | 415 |
| 179-4682 | 782 |
| | 818 |
| 179-4683 | 782 |
| | 818 |
| 179-4876 | 199 |
| 179-8091 | 506 |
| 179-8267 | ▶799 |
| | 802 |
| 179-9392 | 880 |
| | 884 |
| 180-0050 | 605 |
| | 608 |
| 180-1441 | 506 |
| 180-1442 | 506 |
| 180-2435 | 6 |
| | ▶226 |
| 180-3450 | 832 |
| 180-3994 | 531 |
| 180-3995 | 531 |
| 180-7304 | ▶913 |
| | 915 |
| 180-7305 | ▶877 |
| | 913 |
| 180-7350 | 54 |
| | 56 |
| 180-9340 | 209 |
| 180-9617 | 912 |
| | 915 |
| | 917 |
| 183-3408 | 59 |
| 183-7595 | 699 |
| | ▶735 |
| 183-9234 | ▶299 |
| | 565 |
| 183-9292 | ▶782 |
| | 785 |
| 183-9293 | ▶818 |
| | 820 |
| 184-2298 | 910 |
| | 913 |
| 184-2299 | 910 |
| | 913 |
| 184-2472 | 169 |
| | 223 |
| 184-3579 | 826 |
| 184-4496 | 689 |
| | 693 |
| 184-4740 | ▶565 |
| 184-5093 | 789 |
| | ▶870 |
| 184-6636 | 281 |


▶ PRIMARY REFERENCE

# PART NUMBER INDEX


| Part | Page |
|---|---|
| 185-0002 | 536 |
| 185-0242 | 660 |
| | 661 |
| | 670 |
| 185-0248 | 660 |
| | 661 |
| 185-0263 | 660 |
| | 661 |
| | 670 |
| 185-1366 | 450 |
| 185-1572 | 6 |
| | ▶74 |
| 185-1861 | 267 |
| | 275 |
| 185-2172 | 256 |
| 185-2638 | 134 |
| | 136 |
| 185-2639 | 134 |
| | 136 |
| 185-2643 | 134 |
| 185-2644 | 134 |
| | 136 |
| 185-2645 | 134 |
| | 136 |
| 185-2647 | 134 |
| | 136 |
| 185-2648 | 134 |
| | 136 |
| 185-2650 | 134 |
| | 136 |
| 185-2651 | 134 |
| | 136 |
| 185-2653 | 134 |
| | 136 |
| 185-2654 | 134 |
| | 136 |
| 185-2655 | 134 |
| | 136 |
| 185-2658 | 134 |
| | 136 |
| 185-3035 | 651 |
| 185-4778 | 782 |
| | 818 |
| 185-4780 | 782 |
| | 818 |
| 185-4782 | 782 |
| | 818 |
| 185-4783 | 782 |
| | 818 |
| 185-4785 | 782 |
| | 818 |
| 185-6250 | 953 |
| 185-6335 | 257 |
| | 267 |
| | 274 |
| 185-7219 | 738 |
| 185-7220 | 737 |
| | 738 |
| 185-7221 | 749 |
| | 751 |
| | 753 |
| | 755 |
| | 757 |
| | 759 |
| | 761 |
| 185-7522 | 801 |
| | ▶944 |
| 185-7523 | 799 |
| | ▶946 |
| 185-7524 | 944 |
| | 946 |
| 185-7525 | 944 |
| | 946 |
| 185-7529 | 944 |
| 185-7531 | 946 |
| 185-7533 | 801 |
| 185-7534 | ▶801 |
| | 802 |
| 185-7538 | 801 |
| 185-7577 | 70 |
| 186-1624 | 468 |
| | 470 |
| 186-2001 | 30 |
| 186-2741 | 892 |
| 186-3735 | 133 |
| | 153 |
| | 177 |
| | 178 |
| | 179 |
| | 205 |
| | 206 |
| | 207 |
| | 208 |
| | 219 |
| | 231 |
| | 234 |
| | 235 |
| | 238 |
| | 246 |
| | 247 |
| | 248 |
| | 257 |
| | 266 |
| | 267 |
| | 268 |
| | 276 |
| | 281 |
| | 299 |
| | 597 |
| | 601 |
| | 613 |
| | 615 |
| | 617 |
| | 733 |
| | 736 |
| | 795 |
| | 850 |
| | 851 |
| | 857 |
| | 858 |
| | 870 |
| | 871 |
| | 892 |
| 186-3736 | 236 |
| | 237 |
| 186-5107 | 938 |
| | 940 |
| 186-6189 | 840 |
| 186-6319 | 738 |
| 186-6320 | 738 |
| 187-0661 | 956 |
| 187-1461 | 799 |
| 187-1466 | 799 |
| 187-1469 | 799 |
| 187-1472 | 832 |
| 187-1473 | 832 |
| 187-1474 | 799 |
| 187-1475 | 832 |
| 187-1679 | 128 |
| | 129 |
| 187-4034 | 751 |
| 187-4035 | 751 |
| 187-4037 | 751 |
| 187-4039 | 751 |
| 187-4041 | 753 |
| | 755 |
| | 757 |
| | 759 |
| | 761 |
| 187-4043 | 753 |
| | 755 |
| | 757 |
| | 759 |
| | 761 |
| 187-4047 | 753 |
| | 755 |
| | 757 |
| | 759 |
| | 761 |
| 187-4049 | 753 |
| | 755 |
| | 757 |
| | 759 |
| | 761 |
| 187-4161 | 895 |
| 187-5127 | 944 |
| | 946 |
| 187-5128 | 944 |
| | 946 |
| 187-5409 | 826 |
| 187-5420 | 46 |
| 187-6234 | 6 |
| | ▶70 |
| 187-6237 | 87 |
| 187-6252 | 704 |
| 187-6257 | 704 |
| 187-7719 | 782 |
| | 818 |
| 187-8191 | 735 |
| 188-0239 | 645 |
| 188-0604 | 506 |
| 188-0605 | 506 |
| 188-0955 | 597 |
| | 601 |
| 188-1421 | 796 |
| | 867 |
| 188-1754 | 4 |
| | ▶50 |
| 188-1755 | 50 |
| 188-5175 | 895 |
| 188-5177 | 895 |
| | 900 |
| | 905 |
| 188-6185 | 140 |
| 188-6253 | 267 |
| | 275 |
| 188-6254 | 275 |
| 188-6298 | 702 |
| 188-7497 | ▶522 |
| | 531 |
| 188-7690 | 782 |
| | 818 |
| 188-8044 | 956 |
| 188-8844 | 126 |
| 188-9038 | 605 |
| | 608 |
| 188-9820 | ▶788 |
| | 912 |
| | 915 |
| | 917 |
| 188-9899 | 702 |
| | ▶728 |
| 189-0189 | 733 |
| | 736 |
| 189-0852 | 216 |
| 189-2076 | 880 |
| | 884 |
| 189-2077 | 597 |
| | 601 |
| 189-2078 | 597 |
| | 601 |
| 189-2079 | 597 |
| | 601 |
| | 605 |
| | 608 |
| 189-2512 | 880 |
| | 884 |
| 189-3041 | 628 |
| | 630 |
| 189-3042 | 635 |
| | 637 |
| 189-3158 | 244 |
| | 282 |
| 189-4680 | 782 |
| 189-4682 | 782 |
| | 818 |
| 189-4717 | 660 |
| | 661 |
| | 670 |
| 189-5594 | 92 |
| 189-5630 | 895 |
| | 900 |
| 189-6123 | 397 |
| 189-7002 | 479 |
| | ▶518 |
| 189-7926 | 431 |
| 189-7927 | 431 |
| 189-7928 | 431 |
| 189-7999 | 900 |
| 189-8031 | 481 |
| 189-8057 | 3 |
| | ▶925 |
| 189-8069 | 512 |
| 189-8098 | 925 |
| 189-8099 | 925 |
| 189-8100 | 925 |
| 189-8125 | 789 |
| 189-8193 | 445 |
| 189-8196 | 445 |
| 189-8204 | 652 |


▶ PRIMARY REFERENCE

# PART NUMBER INDEX


| Part | Page |
|---|---|
| 189-8317 | 900 |
| 189-8622 | ▶871 |
| | 948 |
| 189-8846 | 567 |
| 189-9304 | 567 |
| 190-1249 | 781 |
| | ▶785 |
| 190-3443 | 124 |
| 190-3730 | 789 |
| | 790 |
| | ▶865 |
| 190-3769 | 360 |
| | 364 |
| 190-3850 | 589 |
| 190-5497 | 832 |
| 190-6562 | 6 |
| | ▶10 |
| 190-7614 | 257 |
| | 268 |
| 190-8970 | 132 |
| 190-8977 | 115 |
| | ▶132 |
| 191-0154 | 2 |
| | ▶826 |
| 191-0166 | 168 |
| | ▶169 |
| 191-0965 | 71 |
| 191-0984 | 666 |
| | ▶667 |
| 191-1265 | 1 |
| | ▶534 |
| 191-1782 | 115 |
| 191-2933 | 920 |
| | 921 |
| | 923 |
| | ▶938 |
| 191-3034 | 150 |
| 191-5000 | 341 |
| 191-5002 | 341 |
| 191-5006 | 341 |
| 191-5114 | 826 |
| 191-7805 | 120 |
| 191-8041 | 281 |
| 191-8303 | 217 |
| 191-8304 | 341 |
| 191-8567 | ▶872 |
| | 874 |
| 191-8569 | ▶533 |
| | 789 |
| | 790 |
| 191-8735 | 651 |
| | ▶699 |
| 191-8921 | 786 |
| | 787 |
| 192-2175 | 918 |
| | 919 |
| 192-2820 | 782 |
| | 818 |
| 192-2822 | 782 |
| | 818 |
| | 820 |
| 192-2823 | 782 |
| | 818 |
| 192-3558 | 820 |
| | ▶842 |
| 192-4151 | 63 |
| 192-4658 | 613 |
| | 615 |
| | 617 |
| 192-5017 | 288 |
| 192-7054 | 892 |
| 192-7356 | 92 |
| 192-7752 | 938 |
| | 940 |
| 192-7755 | 938 |
| | 940 |
| 192-7760 | 938 |
| | 940 |
| 192-7767 | 938 |
| | 940 |
| 192-7783 | 938 |
| | 940 |
| 192-7787 | 938 |
| | 940 |
| 192-7790 | 938 |
| | 940 |
| 192-7795 | 938 |
| | 940 |
| 192-7799 | 938 |
| | 940 |
| 192-7805 | 938 |
| | 940 |
| 192-7810 | 938 |
| | 940 |
| 192-7812 | 938 |
| | 940 |
| 192-7820 | 938 |
| | 940 |
| 192-7822 | 938 |
| | 940 |
| 192-7848 | 938 |
| 193-0042 | 567 |
| 193-0702 | 782 |
| | 818 |
| 193-1036 | 719 |
| 193-1152 | 527 |
| | 529 |
| 193-1448 | ▶531 |
| | 532 |
| 193-1730 | 140 |
| 193-2550 | ▶215 |
| | 341 |
| 193-3086 | 719 |
| 193-3087 | 719 |
| 193-3121 | 785 |
| | ▶838 |
| 193-3980 | 641 |
| | ▶645 |
| 193-3981 | 641 |
| | ▶666 |
| 193-3984 | 645 |
| 193-4476 | 613 |
| | 615 |
| | 617 |
| 193-5444 | 345 |
| 193-5445 | 345 |
| 193-5446 | 345 |
| 193-5447 | 345 |
| 193-7307 | 818 |
| 193-8113 | 895 |
| | 900 |
| 193-8606 | 345 |
| 193-9131 | 649 |
| | 651 |
| 194-2605 | 642 |
| | 744 |
| 194-2609 | 642 |
| | 744 |
| 194-5226 | 210 |
| 194-5278 | 92 |
| 194-6722 | ▶209 |
| | 211 |
| | 281 |
| 194-6725 | ▶210 |
| | 212 |
| 195-0855 | 667 |
| 195-0857 | 667 |
| 195-0861 | 667 |
| 195-0862 | 667 |
| 195-0863 | 667 |
| 195-0864 | 667 |
| 195-0873 | 667 |
| 195-0973 | 796 |
| | 867 |
| 195-0975 | 796 |
| | 867 |
| 195-0976 | 796 |
| | 867 |
| 195-1899 | 667 |
| 195-2187 | 533 |
| 195-2586 | 590 |
| 195-3187 | 31 |
| 195-3722 | 527 |
| | 529 |
| 195-5847 | 345 |
| 195-5950 | 567 |
| 195-5951 | 567 |
| 196-0052 | 803 |
| 196-0436 | 872 |
| 196-3858 | 347 |
| 196-4484 | 956 |
| 196-4904 | 651 |
| 196-4905 | 534 |
| 196-5069 | 63 |
| 196-5070 | 63 |
| 196-5536 | 535 |
| 196-5537 | 535 |
| 196-5763 | 6 |
| | ▶33 |
| 196-6090 | 535 |
| 196-7329 | 404 |
| 196-7340 | 550 |
| 196-8529 | ▶595 |
| 196-8530 | ▶595 |
| 196-9485 | 474 |
| 196-9486 | 474 |
| 196-9487 | 474 |
| 196-9488 | 474 |
| 196-9489 | 474 |
| 196-9490 | 474 |
| 196-9496 | 474 |
| 196-9497 | 474 |
| 196-9498 | 474 |
| 196-9499 | 474 |
| 196-9501 | 474 |
| 196-9829 | 347 |
| 196-9942 | 74 |
| 197-0035 | 74 |
| 197-1305 | 550 |
| 197-1311 | 535 |
| 197-1397 | 782 |
| | 818 |
| 197-1398 | 782 |
| | 818 |
| 197-1399 | 782 |
| | 818 |
| 197-1400 | 782 |
| | 818 |
| 197-2027 | 829 |
| | 832 |
| | 835 |
| 197-2072 | 832 |
| 197-2471 | 661 |
| 197-2472 | 661 |
| 197-2474 | 661 |
| 197-3137 | 838 |
| 197-3295 | 353 |
| | 642 |
| | 700 |
| | 744 |
| 197-3298 | 838 |
| 197-4061 | 550 |
| 197-4062 | 550 |
| 197-4147 | ▶240 |
| | 595 |
| 197-4640 | 550 |
| 197-4840 | 257 |
| 197-4845 | 257 |
| | 267 |
| | 274 |
| 197-4859 | 951 |
| 197-4971 | 42 |
| 197-5470 | 872 |
| 197-5504 | 905 |
| 197-5506 | 905 |
| 197-5507 | 905 |
| 197-5579 | 789 |
| | ▶948 |
| 197-6453 | 288 |
| 197-6474 | ▶845 |
| 197-7565 | 257 |
| | 267 |
| | 275 |
| 197-7701 | 733 |
| 197-7999 | 369 |
| 197-8000 | 369 |
| 197-8391 | 115 |
| | 202 |
| | ▶221 |
| 197-8392 | 202 |
| | ▶222 |
| 197-8820 | ▶136 |
| | 138 |
| 197-8981 | 842 |
| 197-9361 | 54 |
| | 56 |
| 198-0320 | 842 |
| 198-0326 | 347 |
| 198-0327 | 347 |
| 198-0328 | 347 |


▶ PRIMARY REFERENCE

# PART NUMBER INDEX


| Part | Page |
|---|---|
| 198-0335 | 347 |
| 198-1092 | 746 |
| 198-1941 | 796 |
| | 867 |
| 198-4362 | 506 |
| 198-4363 | 506 |
| 198-4777 | 645 |
| 198-5389 | 169 |
| 198-6570 | 257 |
| | 267 |
| | 274 |
| 198-6571 | 257 |
| 198-6588 | 796 |
| | 867 |
| 198-7356 | 905 |
| 198-8767 | 926 |
| 198-8768 | 926 |
| 198-8769 | 926 |
| 198-8770 | 926 |
| 198-8771 | 789 |
| | 790 |
| | ▶926 |
| 198-8772 | 803 |
| 198-8774 | 880 |
| | 884 |
| 198-9898 | ▶63 |
| | 68 |
| 199-0924 | 319 |
| | ▶345 |
| 199-2831 | ▶532 |
| | 789 |
| | 790 |
| 199-3417 | 796 |
| | 867 |
| 199-4064 | 199 |
| 199-5061 | 73 |
| 199-6592 | 275 |
| 199-7499 | 782 |
| | 818 |
| 199-7891 | 134 |
| | 136 |
| 199-8436 | 134 |
| | 136 |
| 199-9641 | 880 |
| | 884 |

## 2

| Part | Page |
|---|---|
| 200-0727 | 880 |
| | 884 |
| 200-0728 | 926 |
| 200-0729 | 926 |
| 200-0731 | 880 |
| | 884 |
| 200-1138 | 126 |
| 200-1173 | 850 |
| | 851 |
| | 857 |
| | 858 |
| 200-1317 | 525 |
| | ▶526 |
| 200-1318 | 526 |
| 200-2217 | 523 |
| 200-2218 | 523 |
| 200-2219 | 523 |
| 200-2220 | 523 |
| 200-2221 | 523 |
| 200-4169 | 317 |
| 200-5951 | 878 |
| | 882 |
| 200-5952 | 878 |
| | 882 |
| 200-5978 | 683 |
| | 687 |
| | 690 |
| | 693 |
| 200-6206 | 878 |
| 200-7939 | 835 |
| 200-8064 | 153 |
| 200-8152 | 880 |
| | 884 |
| 200-8153 | 880 |
| | 884 |
| 200-8154 | 880 |
| | 884 |
| 200-8627 | 365 |
| 200-8629 | 364 |
| 200-8789 | 275 |
| 200-8824 | 342 |
| 200-8895 | 846 |
| | 851 |
| 200-8896 | 847 |
| | 850 |
| 200-8897 | 845 |
| | ▶846 |
| 200-8898 | 845 |
| | ▶847 |
| 200-9006 | 829 |
| 201-1161 | 738 |
| 201-1531 | 153 |
| 201-2733 | 880 |
| | 884 |
| 201-3200 | 534 |
| 201-4340 | 115 |
| 201-5238 | 669 |
| 201-5555 | 244 |
| 201-5563 | 601 |
| 201-6617 | ▶216 |
| | 218 |
| 201-7952 | 257 |
| | 267 |
| | 274 |
| 201-8616 | ▶887 |
| | 888 |
| 201-8855 | 682 |
| | 689 |
| 201-8986 | 686 |
| | 693 |
| 201-9459 | 232 |
| 202-0671 | 710 |
| 202-0673 | 710 |
| 202-0674 | 710 |
| 202-1327 | 782 |
| | 818 |
| 202-3148 | 550 |
| 202-4901 | ▶384 |
| 202-6612 | 175 |
| 202-6614 | 174 |
| | 175 |
| 202-8649 | 850 |
| | 851 |
| | 857 |
| | 858 |
| 202-9803 | 257 |
| 202-9804 | 257 |
| 202-9805 | 257 |
| 203-0147 | 75 |
| 203-0187 | 658 |
| 203-0328 | 926 |
| 203-2059 | 82 |
| 203-2060 | 341 |
| 203-2507 | ▶802 |
| | 895 |
| | 900 |
| 203-2742 | 878 |
| | 882 |
| 203-2782 | 789 |
| | ▶878 |
| 203-3940 | 217 |
| 203-4157 | 711 |
| | 713 |
| | ▶736 |
| 203-4249 | 437 |
| 203-4250 | 437 |
| 203-7703 | 920 |
| | 921 |
| | 923 |
| 203-8105 | ▶317 |
| | 319 |
| 203-8609 | 661 |
| | 670 |
| 203-8657 | 317 |
| 203-8822 | 63 |
| 203-8824 | 63 |
| 203-9263 | 347 |
| 203-9837 | ▶790 |
| | 874 |
| 203-9840 | 790 |
| | ▶905 |
| 203-9991 | 926 |
| 204-0136 | 319 |
| | 369 |
| 204-0725 | 905 |
| 204-0775 | 232 |
| 204-0802 | 905 |
| 204-2607 | 905 |
| 204-2799 | 660 |
| | 661 |
| | 670 |
| | 790 |
| 204-3664 | ▶805 |
| | 790 |
| 204-3719 | ▶829 |
| | 790 |
| 204-4125 | ▶811 |
| | 669 |
| 204-4148 | 790 |
| 204-4492 | ▶919 |
| | 895 |
| 204-6132 | 93 |
| 204-6529 | ▶874 |
| 204-7243 | 799 |
| 204-7366 | 895 |
| 204-7367 | 900 |
| 204-7435 | 319 |
| | 347 |
| 204-7572 | 905 |
| 204-7806 | 319 |
| | 347 |
| 204-7949 | ▶205 |
| | 887 |
| 204-8744 | 317 |
| 204-9316 | ▶41 |
| | 42 |
| 205-0626 | 136 |
| 205-0825 | 169 |
| 205-0826 | 169 |
| 205-1632 | 319 |
| 205-2909 | 670 |
| 205-2941 | 617 |
| 205-3582 | 522 |
| 205-3611 | 347 |
| 205-4933 | 796 |
| | 867 |
| 205-6298 | 232 |
| 205-6388 | 909 |
| | 918 |
| | 919 |
| 205-6405 | 70 |
| 205-6455 | 832 |
| | 895 |
| | 900 |
| 205-7131 | 319 |
| | 347 |
| 205-7299 | 141 |
| | 197 |
| 205-8113 | 347 |
| 205-8210 | 605 |
| | 608 |
| 205-8211 | 605 |
| | 608 |
| 205-8212 | 605 |
| | 608 |
| 205-8650 | 805 |
| 205-8651 | 805 |
| 205-9293 | 87 |
| 205-9362 | 232 |
| 206-0033 | 829 |
| | 835 |
| 206-0065 | 369 |
| 206-0407 | 525 |
| 206-0408 | 525 |
| 206-2719 | 434 |
| 206-2758 | 319 |
| | ▶434 |
| 206-3143 | 347 |
| 206-4227 | 4 |
| | ▶34 |
| 206-5040 | 880 |
| 206-5041 | 880 |
| 206-5145 | 790 |
| | ▶880 |
| 206-5162 | 169 |
| | 223 |
| 206-5165 | 169 |
| | 223 |
| 206-5175 | 811 |
| 206-5176 | 811 |
| 206-5186 | 682 |


▶ PRIMARY REFERENCE

# PART NUMBER INDEX


| Part | Page |
|---|---|
| | 686 |
| | ▶711 |
| 206-5191 | 689 |
| | 693 |
| | ▶713 |
| 206-5208 | 169 |
| 206-5591 | 200 |
| 206-5595 | 200 |
| 206-5823 | 871 |
| 206-6305 | 951 |
| | 956 |
| 206-6968 | 347 |
| 206-7419 | ▶611 |
| | 617 |
| 206-7562 | 805 |
| 206-8611 | 437 |
| 206-9057 | 641 |
| | ▶682 |
| 206-9058 | 595 |
| | 596 |
| | ▶686 |
| 206-9059 | 641 |
| | ▶689 |
| | 744 |
| 206-9060 | 595 |
| | 596 |
| | ▶693 |
| 206-9061 | 682 |
| | 686 |
| | 689 |
| | 693 |
| 207-0695 | 670 |
| | ▶719 |
| 207-1759 | 789 |
| | 790 |
| | ▶888 |
| 207-1810 | 590 |
| 207-2519 | 651 |
| 207-2520 | 651 |
| 207-2521 | 651 |
| 207-2523 | 651 |
| 207-2804 | ▶915 |
| | 921 |
| 207-3216 | 468 |
| | 470 |
| 207-5248 | 63 |
| 207-5262 | 164 |
| | ▶223 |
| 207-6133 | 434 |
| 207-6796 | 146 |
| 207-7447 | 597 |
| | 601 |
| 207-8274 | 790 |
| | ▶882 |
| 207-8292 | 882 |
| 207-8617 | ▶256 |
| | 790 |
| 207-8619 | 811 |
| 207-8620 | 811 |
| 207-8621 | 811 |
| 208-2349 | 70 |
| 208-2479 | 601 |
| 208-3703 | 887 |
| 208-3777 | 826 |
| 208-3778 | 826 |
| 208-3779 | 826 |
| 208-3915 | ▶597 |
| | 789 |
| | 790 |
| 208-3916 | 597 |
| 208-3917 | 597 |
| 208-3918 | 597 |
| 208-5022 | 944 |
| | 946 |
| 208-5972 | 305 |
| | 306 |
| | ▶527 |
| 208-5974 | 305 |
| | 306 |
| | ▶529 |
| 208-6060 | 608 |
| | ▶613 |
| | ▶615 |
| 208-6081 | 611 |
| | 612 |
| | 613 |
| | 615 |
| 208-7448 | 105 |
| 208-7534 | 322 |
| | 337 |
| 208-7535 | 322 |
| 208-8333 | 597 |
| | 601 |
| 208-9490 | 5 |
| | ▶42 |
| 209-0112 | 882 |
| 209-0381 | 258 |
| | 267 |
| | 275 |
| 209-0499 | 525 |
| 209-0516 | 951 |
| 209-0746 | 803 |
| | 805 |
| 209-1614 | 880 |
| 209-2621 | 501 |
| 209-2627 | 664 |
| 209-3569 | 15 |
| 209-3750 | 918 |
| | 919 |
| 209-4573 | 82 |
| 209-4580 | 82 |
| 209-5018 | 895 |
| | 900 |
| 209-6638 | 172 |
| | 173 |
| 209-7659 | 115 |
| 209-8310 | 829 |
| | 835 |
| 209-8312 | 829 |
| | 835 |
| 209-8315 | 504 |
| | 829 |
| | 835 |
| 209-9250 | 597 |
| 210-0235 | 534 |
| 210-1254 | 895 |
| | 900 |
| 210-1759 | 1 |
| | ▶437 |
| 210-2262 | 894 |
| 210-2263 | 894 |
| 210-2266 | 894 |
| 210-2268 | 894 |
| 210-2270 | ▶894 |
| | 910 |
| | 913 |
| 210-5551 | 832 |
| 210-6782 | 601 |
| 210-6783 | 605 |
| | 608 |
| 210-7016 | 796 |
| | 867 |
| 210-7018 | 796 |
| | 867 |
| 210-8422 | ▶172 |
| | 182 |
| 210-8423 | ▶173 |
| | 182 |
| 210-9246 | 77 |
| 210-9583 | ▶601 |
| | 641 |
| | 744 |
| 211-0592 | 21 |
| 211-0667 | 832 |
| 211-1167 | 533 |
| 211-2109 | 878 |
| | 882 |
| 211-2126 | 878 |
| | 882 |
| 211-3122 | 30 |
| 211-3123 | 30 |
| 211-5358 | 938 |
| | 940 |
| 211-7710 | 601 |
| 211-8285 | 601 |
| 211-9294 | 938 |
| | 940 |
| 211-9856 | 944 |
| | 946 |
| 212-0211 | 789 |
| 212-3290 | 146 |
| 212-7042 | 782 |
| 212-7779 | 940 |
| 212-8810 | 200 |
| 213-1040 | 649 |
| | ▶702 |
| 213-1151 | ▶168 |
| 213-1152 | 527 |
| | 529 |
| 213-1198 | ▶164 |
| | 168 |
| 213-2323 | 169 |
| 213-2432 | 347 |
| 213-3217 | 54 |
| | 56 |
| 213-3385 | 789 |
| 213-5170 | 940 |
| 213-6016 | 605 |
| | 608 |
| 213-6020 | 605 |
| | 608 |
| 213-8819 | 809 |
| 213-9100 | 248 |
| 214-0113 | 152 |
| 214-2484 | 202 |
| | ▶217 |
| 214-3616 | 199 |
| | 200 |
| 214-3617 | 199 |
| | 200 |
| 214-4208 | 275 |
| 214-4862 | ▶206 |
| | 597 |
| | 601 |
| 214-4863 | ▶207 |
| | 523 |
| 214-7634 | ▶786 |
| | 948 |
| 214-7635 | ▶787 |
| | 948 |
| 214-9186 | 905 |
| 214-9453 | 244 |
| 214-9454 | 244 |
| 214-9456 | 799 |
| 215-3013 | 369 |
| 215-4248 | 303 |
| 215-6672 | 179 |
| 215-6673 | 179 |
| 215-6674 | 179 |
| 216-4531 | 872 |
| 216-5582 | 25 |
| | 27 |
| 216-7888 | 878 |
| | 882 |
| 216-8208 | 737 |
| 216-8344 | 878 |
| | 882 |
| 216-8508 | 200 |
| 217-0683 | 4 |
| | ▶38 |
| 217-0751 | 25 |
| | 27 |
| 217-0752 | 25 |
| | 27 |
| 217-1601 | 105 |
| 217-2610 | 77 |
| 217-3683 | 322 |
| 217-4726 | 770 |
| 217-4727 | 770 |
| 217-4898 | ▶773 |
| 217-4903 | ▶775 |
| 217-7933 | 894 |
| 217-8166 | 244 |
| 217-8938 | 10 |
| 217-8946 | 106 |
| 217-9049 | 910 |
| 218-0324 | ▶791 |
| | 792 |
| 218-0481 | 368 |
| 218-0618 | 468 |
| | 470 |
| 218-0652 | 567 |
| 218-0653 | 567 |
| 218-0654 | 542 |
| | ▶567 |
| 218-0861 | 910 |
| 218-2373 | 711 |
| | 713 |
| 218-4935 | 194 |
| | 249 |


▶ PRIMARY REFERENCE

# PART NUMBER INDEX


| Part | Page |
|---|---|
| | 605 |
| | 608 |
| 218-7136 | 611 |
| | 612 |
| 219-0305 | 957 |
| 219-0682 | 369 |
| 219-4443 | 4 |
| | ▶75 |
| 219-6314 | 169 |
| | 223 |
| 219-6485 | ▶174 |
| | 184 |
| | 185 |
| | 187 |
| 219-6487 | ▶175 |
| | 180 |
| | 181 |
| 219-7569 | 327 |
| | 329 |
| | 331 |
| | 333 |
| 219-7619 | ▶542 |
| | 789 |
| | 790 |
| 219-7860 | 751 |
| 219-7861 | 751 |
| 219-7864 | 757 |
| | 759 |
| | 761 |
| 219-7865 | 757 |
| | 759 |
| | 761 |
| 219-7870 | 753 |
| | 755 |
| 219-7871 | 753 |
| | 755 |
| 219-8094 | 918 |
| | ▶920 |
| 219-8095 | 919 |
| | ▶921 |
| 219-8899 | 669 |
| 219-9524 | 257 |
| 219-9526 | 242 |
| 219-9530 | 257 |
| 219-9531 | 240 |
| 219-9533 | 258 |
| 219-9535 | 242 |
| 219-9538 | 256 |
| 219-9579 | 905 |
| 220-0814 | 645 |
| 220-1600 | 385 |
| 220-1602 | ▶385 |
| 220-1603 | 385 |
| 220-1605 | ▶385 |
| 220-2720 | ▶520 |
| 220-5677 | 826 |
| 220-6102 | 605 |
| | ▶617 |
| 220-8358 | 258 |
| 220-8678 | 119 |
| 220-9090 | 772 |
| | 774 |
| | 776 |
| | 777 |
| | 778 |
| 220-9101 | 774 |
| 220-9102 | 777 |
| 220-9109 | 776 |
| 220-9110 | 773 |
| | 775 |
| 220-9111 | 773 |
| 220-9119 | 775 |
| 221-1763 | ▶589 |
| 221-6765 | 251 |
| 221-7693 | 113 |
| 221-9360 | 21 |
| 222-1976 | ▶22 |
| | 23 |
| 222-1980 | 113 |
| 222-1982 | 25 |
| 222-2367 | 589 |
| 222-3686 | 829 |
| | 832 |
| | 835 |
| 222-3687 | 829 |
| | 832 |
| | 835 |
| 222-5774 | 878 |
| | 882 |
| 222-9065 | 550 |
| 223-0532 | 651 |
| 223-2102 | 665 |
| 223-3913 | 169 |
| 223-5047 | 93 |
| 223-5060 | 93 |
| 223-5073 | 80 |
| 223-5086 | 80 |
| 223-5814 | 75 |
| 223-7263 | ▶25 |
| | 27 |
| 223-8101 | 778 |
| 223-8102 | 772 |
| 223-8104 | 757 |
| | 759 |
| | 761 |
| 223-8105 | 757 |
| | 759 |
| | 761 |
| 223-8106 | 757 |
| | 759 |
| | 761 |
| 223-8107 | 748 |
| 223-8108 | 748 |
| 223-8109 | 748 |
| 223-8117 | 746 |
| 223-8118 | 746 |
| 223-8119 | 746 |
| 223-9250 | ▶30 |
| | 31 |
| 223-9252 | 5 |
| | ▶23 |
| 223-9731 | 5 |
| | ▶21 |
| 224-2235 | 628 |
| | 630 |
| 224-2236 | 628 |
| | 630 |
| 224-3245 | 54 |
| | 56 |
| 224-3246 | 54 |
| 224-3983 | 56 |
| 224-4507 | 25 |
| 224-4508 | 667 |
| 224-5122 | 667 |
| 224-9046 | 31 |
| 224-9364 | 355 |
| | 796 |
| | 867 |
| 224-9365 | 796 |
| 224-9366 | 796 |
| 224-9367 | 796 |
| | 867 |
| 224-9368 | 796 |
| | 867 |
| 224-9369 | 796 |
| 224-9392 | 495 |
| | 808 |
| 225-0312 | 957 |
| 225-0313 | 197 |
| | 958 |
| 225-0992 | 2 |
| | ▶4 |
| 225-0998 | 4 |
| | ▶108 |
| 225-1144 | 18 |
| 225-1145 | 17 |
| 225-1147 | ▶17 |
| | 19 |
| 225-1148 | ▶18 |
| | 20 |
| 225-2600 | 194 |
| 225-3283 | 628 |
| | 630 |
| 225-3284 | 632 |
| | 633 |
| | 635 |
| | 637 |
| 225-3286 | 626 |
| 225-3755 | 799 |
| 225-4256 | 958 |
| 225-4257 | 957 |
| 225-5537 | ▶2 |
| 225-5538 | ▶1 |
| | 2 |
| 225-5539 | 2 |
| | ▶162 |
| 225-5714 | 953 |
| 225-5927 | 169 |
| 225-8512 | 313 |
| 225-9199 | 369 |
| 225-9578 | 808 |
| 225-9579 | 808 |
| 226-0291 | 92 |
| 226-0321 | 92 |
| 226-1240 | 957 |
| 226-1242 | 958 |
| 226-1274 | 957 |
| 226-1275 | 958 |
| 226-5561 | 25 |
| 226-6640 | 191 |
| | 193 |
| 226-7180 | 474 |
| 226-7181 | 474 |
| 226-7182 | 474 |
| 226-7183 | 474 |
| 226-7473 | 150 |
| | ▶156 |
| 226-7659 | 656 |
| 226-7661 | 656 |
| 226-8790 | 4 |
| 226-9622 | 398 |
| 226-9644 | 2 |
| | ▶6 |
| 226-9738 | 191 |
| | 193 |
| 227-1107 | ▶523 |
| | 531 |
| 227-1204 | 23 |
| 227-3004 | 51 |
| 227-3815 | 115 |
| 227-4002 | 290 |
| 227-4239 | 25 |
| | 27 |
| 227-4398 | 733 |
| 227-7390 | 958 |
| 227-7391 | 957 |
| 227-7392 | 786 |
| | 787 |
| 227-9980 | 4 |
| | ▶53 |
| 227-9981 | 2 |
| | 198 |
| | ▶893 |
| 228-0712 | 232 |
| 228-0850 | 613 |
| | 615 |
| | 617 |
| 228-0908 | 427 |
| 228-0909 | 1 |
| | ▶427 |
| 228-1775 | 626 |
| 228-2615 | 958 |
| 228-2616 | 957 |
| 228-2704 | 162 |
| | ▶301 |
| 228-4428 | 934 |
| 228-4540 | ▶796 |
| 228-4947 | 218 |
| 228-5075 | 300 |
| 228-6089 | 268 |
| | 276 |
| 228-6448 | 92 |
| 228-7082 | 13 |
| 228-7083 | 4 |
| | ▶13 |
| 228-7137 | 796 |
| | 867 |
| 228-7287 | 299 |
| 228-7290 | 253 |
| 228-9003 | 590 |
| 228-9768 | 232 |
| 229-1494 | 912 |
| | 917 |
| 229-2704 | 146 |
| | 820 |
| 229-2861 | 54 |
| 229-2863 | 5 |
| | ▶54 |
| | ▶56 |
| 229-6259 | 54 |


▶ PRIMARY REFERENCE

# PART NUMBER INDEX


| Part | Page |
|---|---|
| | 56 |
| 229-6959 | ▶770 |
| 229-6973 | ▶774 |
| 229-6974 | ▶777 |
| 229-6978 | ▶776 |
| 229-6979 | ▶778 |
| 229-6980 | ▶772 |
| 229-7104 | 751 |
| 229-7110 | 753 |
| 229-7111 | 771 |
| 229-7112 | 771 |
| 229-8335 | ▶320 |
| | 395 |
| 229-8568 | 22 |
| 229-9969 | 172 |
| | 173 |
| 229-9972 | 172 |
| | 173 |
| 229-9974 | 172 |
| | 173 |
| 230-0104 | 4 |
| | ▶16 |
| 230-1340 | 155 |
| | 167 |
| 230-1341 | 155 |
| | 167 |
| 230-1434 | 224 |
| 230-2569 | 54 |
| | 56 |
| 230-3728 | 125 |
| 230-3775 | 125 |
| 230-5378 | 4 |
| | ▶59 |
| 230-5379 | 4 |
| | ▶58 |
| 230-5771 | 299 |
| 230-6268 | 613 |
| 230-6269 | 613 |
| 230-6311 | 368 |
| | ▶395 |
| 230-6312 | ▶341 |
| | 395 |
| 230-6313 | ▶359 |
| | 395 |
| 230-6314 | ▶313 |
| | 395 |
| 230-6317 | ▶311 |
| | 395 |
| 230-6321 | ▶395 |
| | 745 |
| 230-6322 | ▶364 |
| | 395 |
| 230-7640 | 523 |
| 230-9072 | ▶612 |
| | 613 |
| | 615 |
| 231-0860 | 313 |
| | 315 |
| 231-1270 | 364 |
| 231-1403 | 155 |
| 231-1973 | 4 |
| | ▶202 |
| 231-2116 | 501 |
| 231-3498 | 1 |
| | ▶463 |
| 231-3499 | 1 |
| | ▶890 |
| 231-3500 | 1 |
| | ▶415 |
| 231-3538 | 545 |
| 231-3624 | 360 |
| 231-3625 | 360 |
| 231-4321 | 92 |
| 231-4476 | 141 |
| 231-4779 | 313 |
| | 315 |
| 231-4780 | 313 |
| | 315 |
| 231-4781 | 400 |
| 231-4782 | 400 |
| 231-5295 | 311 |
| 231-5904 | 105 |
| 231-5909 | 1 |
| | ▶105 |
| 231-7081 | 110 |
| 231-7086 | 115 |
| 231-7890 | 550 |
| 231-8629 | 557 |
| 231-8899 | 313 |
| 231-8900 | 315 |
| 231-9379 | 313 |
| | 315 |
| 232-0167 | ▶746 |
| 232-0253 | 63 |
| 232-0281 | 1 |
| | ▶66 |
| 232-0354 | 109 |
| 232-0356 | 6 |
| | ▶110 |
| 232-0357 | 6 |
| | ▶107 |
| 232-0358 | 6 |
| | ▶102 |
| 232-1293 | 313 |
| | 315 |
| 232-1335 | 931 |
| 232-1336 | 931 |
| 232-1337 | 931 |
| 232-1338 | 931 |
| 232-1344 | 900 |
| 232-1345 | 900 |
| 232-1366 | 900 |
| 232-1374 | 115 |
| 232-1376 | 115 |
| 232-1392 | 2 |
| | ▶874 |
| 232-1393 | ▶789 |
| | 874 |
| 232-1394 | 789 |
| | ▶832 |
| 232-1395 | 789 |
| | ▶895 |
| 232-1396 | 789 |
| | ▶929 |
| 232-1397 | 789 |
| | ▶808 |
| 232-1684 | 929 |
| 232-1685 | 929 |
| 232-1686 | 929 |
| 232-1687 | 929 |
| 232-1688 | 931 |
| 232-1711 | 929 |
| 232-1712 | 929 |
| 232-1736 | 92 |
| 232-1767 | 113 |
| 232-1768 | 65 |
| 232-1855 | 890 |
| 232-1856 | 890 |
| 232-1861 | 890 |
| 232-1862 | 890 |
| 232-2114 | 753 |
| | 771 |
| 232-2115 | 771 |
| 232-2116 | 771 |
| 232-2181 | 895 |
| 232-2582 | 360 |
| 232-2583 | 360 |
| 232-2964 | ▶809 |
| | 895 |
| | 900 |
| 232-3235 | 54 |
| | 56 |
| 232-3236 | 54 |
| | 56 |
| 232-3321 | 1 |
| | ▶92 |
| 232-3870 | 612 |
| 232-4520 | ▶140 |
| | 162 |
| 232-4521 | 162 |
| | ▶288 |
| 232-4522 | 162 |
| | ▶292 |
| 232-4555 | 162 |
| | ▶281 |
| 232-4557 | ▶197 |
| 232-4561 | 288 |
| 232-4562 | 292 |
| 232-4568 | ▶194 |
| | 281 |
| 232-4569 | 194 |
| 232-4570 | 281 |
| 232-4572 | 281 |
| 232-4638 | 415 |
| 232-4639 | 415 |
| 232-4648 | 4 |
| | ▶65 |
| 232-4685 | 364 |
| 232-4929 | 1 |
| | ▶651 |
| 232-6126 | 92 |
| 232-6128 | 92 |
| 232-6132 | 92 |
| 232-6174 | 303 |
| 232-6175 | 92 |
| 232-6403 | 1 |
| | ▶355 |
| 232-6405 | 355 |
| 232-6406 | ▶353 |
| | 368 |
| 232-6585 | 2 |
| | ▶368 |
| 232-7352 | 322 |
| 232-7553 | ▶322 |
| | 323 |
| | 325 |
| | 333 |
| 232-7554 | 305 |
| | 306 |
| | ▶402 |
| 232-7555 | 305 |
| | ▶323 |
| 232-7556 | ▶325 |
| 232-7557 | 305 |
| | 306 |
| | ▶308 |
| 232-7558 | ▶305 |
| | 368 |
| 232-7559 | ▶305 |
| | 368 |
| 232-7731 | ▶306 |
| 232-7733 | ▶306 |
| 232-7735 | ▶305 |
| 232-7783 | ▶180 |
| | 790 |
| 232-9737 | 223 |
| 233-0208 | ▶605 |
| 233-0209 | ▶608 |
| 233-0455 | 672 |
| | 673 |
| 233-0699 | 1 |
| | ▶82 |
| 233-0701 | 82 |
| | ▶676 |
| 233-0709 | 82 |
| 233-0710 | 82 |
| 233-0891 | 150 |
| 233-0915 | 929 |
| 233-0916 | 929 |
| 233-1507 | 85 |
| 233-1509 | 6 |
| | ▶85 |
| 233-1511 | ▶138 |
| 233-1643 | 829 |
| | 835 |
| 233-1645 | 829 |
| | 835 |
| 233-1759 | 313 |
| | 315 |
| | ▶400 |
| 233-1891 | 92 |
| 233-3346 | 809 |
| 233-4463 | 457 |
| | 829 |
| | 835 |
| 233-4466 | 457 |
| | 829 |
| | 835 |
| 233-5036 | 829 |
| | 832 |
| | 835 |
| 233-6073 | 128 |
| 233-6074 | 1 |
| | ▶126 |
| 233-6565 | 605 |
| 233-6567 | 608 |
| 233-6742 | 120 |
| | ▶130 |
| 233-6745 | 875 |
| 233-6755 | 322 |


▶ PRIMARY REFERENCE

# PART NUMBER INDEX


| Part | Page |
|---|---|
| 233-7056 | 415 |
| 233-7181 | 6 |
| | ▶99 |
| 233-7182 | 102 |
| 233-7186 | 85 |
| 233-7221 | 890 |
| 233-7419 | 550 |
| 233-7676 | ▶931 |
| | 935 |
| 233-8671 | 85 |
| 233-8672 | 6 |
| | ▶114 |
| 233-8673 | 4 |
| | ▶109 |
| 233-9449 | 781 |
| | ▶840 |
| 233-9688 | ▶395 |
| 233-9748 | 360 |
| | 365 |
| 233-9749 | ▶319 |
| 233-9750 | 2 |
| | ▶319 |
| 233-9781 | 2 |
| | ▶152 |
| 234-0200 | 895 |
| 234-0312 | 890 |
| 234-0385 | 463 |
| 234-0567 | 463 |
| 234-0568 | 463 |
| 234-0576 | 463 |
| 234-0577 | 463 |
| 234-0604 | ▶312 |
| | 341 |
| 234-0605 | 312 |
| 234-1360 | 832 |
| 234-1530 | 463 |
| | 499 |
| 234-1531 | 463 |
| | 498 |
| 234-2441 | 92 |
| 234-3032 | 80 |
| 234-3094 | 1 |
| | ▶406 |
| 234-3096 | 407 |
| 234-3097 | 410 |
| 234-3402 | 429 |
| 234-3475 | 92 |
| 234-3477 | 92 |
| 234-3545 | 463 |
| 234-3738 | ▶315 |
| | 395 |
| 234-4301 | 92 |
| 234-4302 | 92 |
| 234-4303 | 92 |
| 234-4304 | 92 |
| 234-4306 | 92 |
| 234-5002 | 8 |
| 234-5005 | 5 |
| | ▶8 |
| 234-5101 | 463 |
| 234-5104 | 415 |
| 234-5105 | 415 |
| 234-5106 | 463 |
| 234-5107 | 463 |
| 234-5108 | 415 |
| 234-5925 | 267 |
| | 275 |
| 234-6681 | 375 |
| | 377 |
| | 396 |
| 234-7900 | 11 |
| 234-7935 | 5 |
| | ▶11 |
| 234-8928 | 641 |
| | ▶677 |
| 234-8929 | 677 |
| 234-8946 | 505 |
| | ▶506 |
| 234-9507 | 1 |
| | ▶501 |
| 234-9553 | 789 |
| | ▶934 |
| 234-9562 | 496 |
| 234-9563 | 1 |
| | ▶496 |
| 234-9571 | 934 |
| 234-9572 | 934 |
| 234-9599 | ▶429 |
| | 457 |
| 234-9600 | 429 |
| 234-9757 | 1 |
| | ▶457 |
| 234-9758 | 457 |
| | ▶495 |
| 234-9759 | 495 |
| 234-9762 | 457 |
| | ▶491 |
| 234-9763 | 491 |
| 234-9766 | 457 |
| | ▶492 |
| 234-9767 | 492 |
| 234-9770 | 457 |
| 234-9771 | 457 |
| 234-9772 | 457 |
| 234-9787 | 82 |
| 235-0554 | 415 |
| 235-0555 | 415 |
| 235-0686 | 749 |
| 235-0692 | 749 |
| 235-0695 | 749 |
| 235-0700 | 749 |
| 235-0923 | 550 |
| 235-1045 | 415 |
| 235-1303 | 2 |
| | ▶641 |
| 235-1401 | 5 |
| | ▶125 |
| 235-1521 | 4 |
| | ▶150 |
| 235-1572 | 82 |
| 235-1587 | 78 |
| 235-2020 | 513 |
| 235-2301 | ▶385 |
| 235-2716 | 665 |
| | ▶670 |
| 235-2974 | 5 |
| | ▶31 |
| 235-3167 | 793 |
| 235-3169 | 80 |
| 235-3231 | 4 |
| | ▶120 |
| 235-3937 | ▶179 |
| | 189 |
| 235-4510 | 92 |
| 235-5275 | 162 |
| | ▶184 |
| 235-5277 | ▶248 |
| 235-5300 | 1 |
| | ▶122 |
| 235-5313 | ▶224 |
| 235-5315 | ▶781 |
| 235-5326 | 1 |
| | ▶843 |
| 235-5330 | ▶619 |
| | 641 |
| 235-5331 | ▶557 |
| | 641 |
| 235-5332 | 781 |
| | ▶793 |
| 235-5333 | 641 |
| | ▶665 |
| 235-5334 | 162 |
| | ▶513 |
| 235-5335 | 513 |
| | ▶664 |
| 235-5336 | 513 |
| | ▶643 |
| 235-5337 | 513 |
| 235-5338 | 664 |
| 235-5341 | 1 |
| | ▶412 |
| 235-5343 | 412 |
| 235-5344 | 412 |
| 235-5346 | 412 |
| 235-5347 | 412 |
| 235-5349 | 412 |
| 235-5503 | ▶266 |
| | 789 |
| 235-5504 | 267 |
| | 275 |
| 235-5506 | 267 |
| | 275 |
| 235-5688 | 162 |
| | ▶166 |
| 235-5689 | 162 |
| | ▶163 |
| 235-5690 | 162 |
| | ▶165 |
| 235-5817 | 1 |
| | ▶103 |
| 235-5835 | 1 |
| | ▶956 |
| 235-5933 | 92 |
| 235-5935 | 793 |
| 235-5987 | ▶407 |
| | 409 |
| | 748 |
| 235-5988 | ▶408 |
| | 745 |
| 235-6269 | ▶953 |
| 235-6501 | 557 |
| | ▶669 |
| 235-8159 | 87 |
| 235-8559 | ▶181 |
| | 789 |
| | 790 |
| 235-8560 | 2 |
| | ▶182 |
| | 198 |
| 236-1068 | 935 |
| | 937 |
| 236-1069 | 935 |
| | 937 |
| 236-1190 | ▶167 |
| 236-2193 | 412 |
| 236-2230 | ▶19 |
| | 20 |
| 236-2250 | 643 |
| 236-2251 | 643 |
| 236-2252 | 643 |
| 236-2253 | 643 |
| 236-2254 | 643 |
| 236-2255 | 643 |
| 236-2353 | 506 |
| 236-2357 | 506 |
| 236-2359 | 506 |
| | 509 |
| 236-2360 | 506 |
| | 509 |
| 236-2361 | 491 |
| | 494 |
| 236-2362 | 492 |
| | 493 |
| 236-2366 | 510 |
| 236-2367 | 510 |
| 236-2368 | 510 |
| 236-2370 | 501 |
| | ▶504 |
| 236-2525 | 268 |
| | 276 |
| 236-2526 | 605 |
| | 608 |
| 236-4281 | 122 |
| 236-4282 | 122 |
| 236-4440 | ▶958 |
| 236-4608 | 268 |
| | 276 |
| 236-4609 | 268 |
| | 276 |
| 236-4610 | 268 |
| 236-4611 | 268 |
| 236-4612 | 241 |
| 236-4616 | 244 |
| 236-4617 | 268 |
| 236-4619 | 268 |
| | 276 |
| 236-4620 | 153 |
| 236-4621 | 153 |
| 236-4622 | 268 |
| | 276 |
| 236-4623 | 239 |
| 236-4630 | 848 |
| | 853 |
| | 860 |
| | 862 |
| 236-4631 | 268 |
| | 276 |
| 236-4969 | ▶848 |
| 236-4970 | 848 |
| | ▶850 |


▶ PRIMARY REFERENCE

# PART NUMBER INDEX


| Part | Page |
|---|---|
| | 860 |
| 236-4971 | 848 |
| | ▶851 |
| | 860 |
| 236-4975 | 489 |
| 236-5197 | 894 |
| 236-5683 | 198 |
| | ▶420 |
| 236-5686 | 415 |
| 236-5687 | 415 |
| 236-5688 | 415 |
| 236-5689 | 415 |
| 236-5690 | 420 |
| 236-5691 | 420 |
| 236-5898 | 935 |
| | 937 |
| 236-6207 | 848 |
| | 853 |
| | 860 |
| | 862 |
| 236-6249 | 495 |
| 236-6250 | 495 |
| 236-6253 | 148 |
| | 826 |
| 236-6555 | 140 |
| 236-6556 | 140 |
| 236-6557 | 140 |
| 236-6558 | 140 |
| 236-6559 | 141 |
| 236-6560 | 288 |
| 236-6561 | 141 |
| 236-6563 | 141 |
| 236-6713 | 6 |
| | ▶139 |
| 236-6749 | 412 |
| 236-6751 | 412 |
| 236-6752 | 412 |
| 236-7019 | ▶909 |
| | 918 |
| | 919 |
| 236-7667 | 550 |
| 236-7668 | 550 |
| 236-7773 | 182 |
| 236-7774 | 848 |
| | 853 |
| 236-7775 | 189 |
| 236-7793 | 513 |
| 236-7813 | 789 |
| | ▶820 |
| 236-8722 | 267 |
| 236-8735 | 840 |
| 236-8896 | 808 |
| 236-8929 | 513 |
| 236-8931 | 664 |
| 236-8932 | 664 |
| 236-8933 | 664 |
| 236-8935 | 664 |
| 236-8936 | 664 |
| 236-8937 | 513 |
| 236-8938 | 664 |
| 236-8944 | 412 |
| 236-8945 | 412 |
| 236-9773 | 181 |
| 236-9774 | 181 |
| 236-9775 | 182 |
| 236-9776 | 182 |
| 236-9939 | 429 |
| 236-9993 | 268 |
| | 276 |
| 237-0194 | 54 |
| 237-0263 | 643 |
| 237-0855 | 496 |
| 237-0856 | 496 |
| 237-1879 | 194 |
| 237-1880 | 194 |
| 237-1894 | 953 |
| 237-1962 | 226 |
| | ▶227 |
| 237-1964 | 4 |
| | ▶101 |
| 237-1965 | 4 |
| | ▶73 |
| 237-2042 | 504 |
| 237-2043 | 504 |
| 237-2069 | ▶923 |
| 237-2313 | 107 |
| 237-3801 | 495 |
| 237-3802 | 495 |
| 237-3803 | 495 |
| 237-3804 | 495 |
| 237-3931 | 194 |
| 237-3932 | 194 |
| 237-3943 | 938 |
| | 940 |
| 237-3970 | ▶780 |
| | 938 |
| | 940 |
| 237-4227 | 670 |
| 237-4254 | 510 |
| 237-4255 | 510 |
| 237-4256 | 510 |
| 237-4821 | 319 |
| | ▶347 |
| 237-4830 | 347 |
| 237-4944 | 197 |
| 237-4986 | 457 |
| 237-4987 | 457 |
| 237-5222 | 953 |
| 237-5223 | 953 |
| 237-5224 | 953 |
| 237-5225 | 953 |
| 237-5226 | 953 |
| 237-5227 | 953 |
| 237-5228 | 953 |
| 237-5229 | 953 |
| 237-5230 | 953 |
| 237-5231 | 953 |
| 237-5232 | 953 |
| 237-5234 | 953 |
| 237-6256 | 957 |
| 237-6257 | 958 |
| 237-7240 | 748 |
| | ▶763 |
| 237-7262 | 189 |
| 237-8366 | 282 |
| 237-9308 | 115 |
| 237-9736 | 189 |
| 237-9765 | 495 |
| 237-9766 | 495 |
| 237-9848 | 341 |
| 237-9849 | 341 |
| 237-9876 | 194 |
| 238-0294 | 54 |
| | 56 |
| 238-0296 | 130 |
| | ▶131 |
| 238-1825 | 677 |
| | 679 |
| 238-1851 | 228 |
| 238-1867 | 360 |
| | 365 |
| 238-2700 | 22 |
| 238-2771 | 601 |
| 238-2772 | 601 |
| 238-2865 | 651 |
| 238-4664 | 38 |
| 238-5454 | 4 |
| | ▶71 |
| 238-5643 | 287 |
| 238-5649 | 412 |
| 238-6681 | 2 |
| | ▶866 |
| 238-7785 | 457 |
| 238-7786 | 457 |
| 238-7797 | 224 |
| 238-7830 | 457 |
| 238-9645 | 152 |
| | ▶153 |
| 239-0617 | 702 |
| 239-1134 | 224 |
| | ▶247 |
| 239-1339 | 817 |
| 239-2395 | 202 |
| | ▶211 |
| 239-2396 | 115 |
| | 202 |
| | ▶212 |
| 239-3181 | 474 |
| 239-3182 | 474 |
| 239-3478 | ▶213 |
| | 214 |
| 239-5157 | 702 |
| 239-5223 | 4 |
| | ▶20 |
| 239-5527 | 4 |
| | ▶51 |
| 239-5528 | 4 |
| | ▶60 |
| 239-5674 | 202 |
| | ▶214 |
| 239-5928 | 202 |
| | ▶218 |
| 239-5929 | 290 |
| 239-6304 | 87 |
| 239-6320 | 457 |
| 239-6986 | 957 |
| 239-8389 | 817 |
| 239-8410 | 457 |
| 239-9663 | 817 |
| 239-9942 | 651 |
| 239-9954 | 148 |
| 240-0355 | 651 |
| 240-0363 | 816 |
| 240-0364 | 816 |
| 240-0712 | 651 |
| 240-0713 | 651 |
| 240-1614 | 38 |
| 240-1708 | 496 |
| 240-4542 | 810 |
| | ▶812 |
| 240-4548 | 812 |
| 240-4551 | 812 |
| 240-4552 | 812 |
| 240-4557 | 812 |
| | 814 |
| 240-4630 | 812 |
| | 814 |
| 240-7313 | 92 |
| 240-7732 | 649 |
| | ▶660 |
| 240-8591 | 3 |
| | ▶438 |
| 240-8592 | 129 |
| 240-8606 | ▶509 |
| 240-8615 | 505 |
| | ▶510 |
| 240-8704 | 438 |
| | ▶679 |
| 240-8705 | 679 |
| 241-0037 | 589 |
| 241-0478 | 46 |
| 241-3283 | 101 |
| 241-3352 | 340 |
| 241-3483 | 85 |
| 241-3741 | 163 |
| 241-3748 | 166 |
| 241-3749 | 166 |
| 241-3802 | 165 |
| 241-3803 | 165 |
| 241-4227 | 867 |
| 241-4311 | 489 |
| 241-5929 | 4 |
| | ▶5 |
| 241-6186 | 202 |
| 241-6253 | 866 |
| | ▶867 |
| 241-6392 | 669 |
| 241-6393 | 867 |
| 241-6978 | 812 |
| | 814 |
| 241-8368 | 194 |
| | ▶236 |
| 241-8650 | 810 |
| | ▶814 |
| 241-8651 | 812 |
| | 814 |
| 241-8652 | 812 |
| | 814 |
| 242-0718 | 814 |
| 242-0719 | 814 |
| 242-0720 | 814 |
| 242-1543 | 905 |
| 242-1772 | 353 |
| 242-2445 | 840 |
| 242-3373 | 660 |
| | 661 |
| 242-3374 | 661 |
| 242-3377 | 660 |
| | 661 |
| 242-4351 | 525 |


▶ PRIMARY REFERENCE

SEBP4037-01

# PART NUMBER INDEX


| Part | Page |
|---|---|
| 242-6098 | 872 |
| 242-6099 | 259 |
| | 268 |
| | 276 |
| 242-7155 | 550 |
| 242-7205 | 146 |
| | ▶155 |
| 242-7376 | ▶339 |
| | 368 |
| 242-7377 | 339 |
| 242-7406 | 107 |
| 242-8511 | 77 |
| 242-9229 | 257 |
| 242-9242 | 339 |
| 242-9243 | 339 |
| 242-9537 | 18 |
| | 19 |
| 243-0796 | 676 |
| 243-0943 | ▶26 |
| | 27 |
| 243-1094 | ▶823 |
| | 874 |
| 243-1129 | 651 |
| 243-1130 | 651 |
| 243-1131 | 651 |
| 243-1132 | 347 |
| 243-1133 | 651 |
| 243-1159 | 18 |
| | 19 |
| 243-1547 | 4 |
| | ▶290 |
| 243-1944 | ▶816 |
| | 889 |
| 243-2016 | 3 |
| | ▶440 |
| 243-2045 | 3 |
| | ▶404 |
| 243-2046 | 2 |
| | ▶3 |
| 243-2048 | 3 |
| | ▶431 |
| 243-2746 | 355 |
| 243-3259 | 953 |
| 243-3343 | 651 |
| 243-3704 | 406 |
| | 407 |
| | 408 |
| 243-3763 | 832 |
| 243-4369 | 895 |
| | 900 |
| 243-4371 | 895 |
| | 900 |
| 243-4860 | 824 |
| | 835 |
| 243-5107 | 677 |
| 243-5553 | 895 |
| | 900 |
| 243-5554 | 895 |
| | 900 |
| 243-5555 | 895 |
| | 900 |
| 243-5556 | 895 |
| | 900 |
| 243-5786 | 4 |
| | ▶46 |
| 243-5821 | 347 |
| 243-6464 | 164 |
| 243-6741 | ▶27 |
| | 30 |
| 243-7160 | 347 |
| 244-2539 | 812 |
| | 814 |
| 244-2736 | 810 |
| | ▶852 |
| | 889 |
| 244-2737 | ▶853 |
| | 889 |
| 244-3114 | 313 |
| | 315 |
| | ▶398 |
| 244-5924 | 592 |
| 244-5925 | 590 |
| 244-8782 | 852 |
| | ▶855 |
| 244-8783 | 852 |
| | ▶856 |
| 244-8785 | 855 |
| | 858 |
| 244-8786 | 856 |
| | 857 |
| 244-8952 | 93 |
| 245-0173 | 347 |
| 245-2886 | 438 |
| | ▶498 |
| 245-2933 | 498 |
| 245-2934 | 498 |
| 245-2935 | 498 |
| 245-2936 | 498 |
| 245-2950 | 498 |
| 245-2952 | 506 |
| 245-2964 | 506 |
| 245-2965 | 506 |
| 245-3347 | 440 |
| 245-3370 | ▶409 |
| 245-4049 | 429 |
| 245-4062 | 429 |
| 245-4333 | 895 |
| 245-4757 | ▶80 |
| 245-4765 | ▶409 |
| 245-4769 | 409 |
| | ▶410 |
| 245-6458 | 789 |
| | 790 |
| | ▶884 |
| 245-7434 | 275 |
| 245-7477 | 1 |
| | ▶424 |
| 245-7610 | 374 |
| 245-7614 | 374 |
| 245-7655 | ▶824 |
| | 874 |
| 245-8226 | 645 |
| 245-8227 | 645 |
| 245-8231 | 645 |
| 245-8412 | 2 |
| | ▶128 |
| 245-8413 | 126 |
| 245-8416 | ▶113 |
| 245-8435 | ▶146 |
| | 167 |
| 245-8818 | 853 |
| | ▶857 |
| | 862 |
| 245-8819 | 853 |
| | ▶858 |
| | 862 |
| 245-9042 | 438 |
| 245-9043 | 438 |
| 245-9131 | 501 |
| 245-9432 | 2 |
| | ▶488 |
| 245-9433 | ▶488 |
| 245-9784 | 501 |
| 245-9934 | 3 |
| | ▶445 |
| 246-0435 | 457 |
| | 489 |
| 246-0562 | 651 |
| 246-1577 | ▶372 |
| | 385 |
| 246-1580 | 372 |
| | ▶374 |
| 246-1582 | 385 |
| 246-1586 | ▶385 |
| 246-2641 | 958 |
| 246-2811 | 506 |
| 246-3121 | ▶745 |
| 246-3264 | ▶249 |
| | 781 |
| 246-3290 | 184 |
| 246-3292 | 162 |
| | ▶822 |
| 246-3295 | 185 |
| 246-3400 | 146 |
| 246-3564 | ▶180 |
| 246-4302 | ▶916 |
| | 917 |
| 246-4447 | ▶917 |
| | 923 |
| 246-5111 | ▶951 |
| | 956 |
| 246-5204 | ▶889 |
| 246-5206 | 810 |
| | ▶817 |
| | 889 |
| 246-5208 | 440 |
| 246-5209 | 440 |
| 246-5231 | 505 |
| | ▶935 |
| 246-5459 | 268 |
| | 276 |
| 246-5480 | ▶958 |
| 246-5798 | ▶889 |
| 246-6022 | 951 |
| 246-6023 | 951 |
| 246-6036 | 77 |
| 246-6178 | ▶889 |
| 246-6280 | 93 |
| 246-7027 | 113 |
| 246-8119 | 3 |
| | ▶419 |
| 246-8216 | ▶129 |
| | 438 |
| 246-8696 | ▶198 |
| 246-8697 | ▶198 |
| 246-8860 | 504 |
| 246-9196 | 798 |
| 246-9197 | 796 |
| | ▶798 |
| | 867 |
| 246-9288 | 506 |
| | 509 |
| 246-9291 | 504 |
| 247-0514 | 180 |
| | ▶493 |
| 247-0515 | 493 |
| 247-0517 | 180 |
| | ▶494 |
| 247-0518 | 494 |
| 247-0731 | 224 |
| 247-0732 | 224 |
| 247-1107 | 499 |
| 247-1744 | 479 |
| 247-2977 | 506 |
| | 509 |
| 247-3027 | 3 |
| | ▶378 |
| 247-3774 | 224 |
| 247-4285 | 174 |
| 247-4348 | ▶466 |
| | 488 |
| 247-4349 | 472 |
| | ▶479 |
| 247-4867 | ▶641 |
| | 745 |
| 247-5547 | 457 |
| 247-5634 | 499 |
| 247-5636 | 499 |
| 247-5838 | 457 |
| 247-6123 | 56 |
| 247-6130 | 56 |
| 247-6740 | ▶468 |
| | 488 |
| 247-6741 | 488 |
| | ▶743 |
| 247-6890 | 468 |
| | 470 |
| | ▶481 |
| 247-6891 | 481 |
| 247-7120 | 474 |
| 247-7121 | 474 |
| 247-7277 | 468 |
| | 470 |
| 247-7600 | 1 |
| | ▶474 |
| 247-8202 | 107 |
| 247-8336 | ▶167 |
| 247-8469 | ▶250 |
| | 488 |
| 247-9762 | ▶470 |
| | 488 |
| 248-0423 | 187 |
| 248-0424 | 187 |
| 248-0426 | 187 |
| 248-1161 | 421 |
| | 424 |
| 248-2171 | 429 |
| 248-5081 | 242 |
| 248-5249 | 935 |
| 248-5250 | 935 |


▶ PRIMARY REFERENCE

# PART NUMBER INDEX


| Part | Page |
|---|---|
| 248-5513 | 87 |
| 248-5554 | ▶303 |
| | 404 |
| 248-5555 | 303 |
| 248-6189 | 935 |
| 248-6190 | 935 |
| 248-6193 | ▶924 |
| 248-6254 | 155 |
| 248-6266 | 496 |
| 248-6574 | ▶253 |
| | 319 |
| 248-7648 | ▶810 |
| 248-7649 | ▶810 |
| 249-0045 | 319 |
| | ▶369 |
| 249-0104 | 510 |
| 249-0105 | 510 |
| 249-0107 | 510 |
| 249-0108 | 510 |
| 249-1264 | ▶449 |
| | 488 |
| 249-1265 | 319 |
| | ▶450 |
| 249-1268 | ▶446 |
| | 488 |
| 249-1269 | 319 |
| | ▶447 |
| 249-1272 | ▶448 |
| | 641 |
| | 745 |
| 249-1273 | 488 |
| | ▶740 |
| 249-1274 | ▶741 |
| | 744 |
| 249-1275 | 488 |
| | ▶742 |
| 249-2742 | 956 |
| 249-2763 | 268 |
| | 276 |
| 249-2775 | 153 |
| 249-2802 | 99 |
| | ▶100 |
| 249-3199 | 3 |
| | ▶452 |
| 249-5036 | ▶749 |
| | 763 |
| 249-5038 | 749 |
| 249-5039 | 749 |
| 249-5040 | 749 |
| 249-5042 | 749 |
| 249-5043 | 749 |
| 249-5044 | 749 |
| 249-5045 | 749 |
| 249-5550 | ▶521 |
| 249-5602 | 242 |
| | 276 |
| 249-6704 | ▶641 |
| 249-6705 | ▶744 |
| 249-7734 | 71 |
| 249-7870 | 402 |
| 249-8094 | 466 |
| | ▶482 |
| 249-8095 | 472 |
| | ▶484 |
| 249-8096 | 479 |
| 249-8097 | 479 |
| | 482 |
| 249-8098 | 479 |
| 249-8099 | 479 |
| 249-8100 | 482 |
| 249-8101 | 482 |
| 249-8928 | 194 |
| 249-9173 | 162 |
| | ▶251 |
| 249-9174 | 251 |
| 249-9175 | 251 |
| 250-0176 | 466 |
| 250-0177 | ▶472 |
| | 488 |
| 250-0466 | 23 |
| 250-1122 | 194 |
| 250-1722 | 197 |
| 250-3337 | 93 |
| 250-3379 | 649 |
| 250-3381 | 595 |
| | ▶649 |
| 250-3382 | 649 |
| 250-3383 | 649 |
| 250-3384 | 649 |
| 250-3385 | 649 |
| 250-4628 | 875 |
| | 877 |
| 250-6890 | 250 |
| 250-9149 | 250 |
| 251-0059 | 82 |
| 251-1093 | 534 |
| 251-1099 | ▶748 |
| 251-1197 | 276 |
| 251-1607 | 674 |
| 251-4204 | 653 |
| 251-4282 | 884 |
| 251-4283 | 884 |
| 251-4284 | 884 |
| 251-4339 | 182 |
| 251-4371 | 457 |
| 251-4373 | 457 |
| 251-4870 | 1 |
| | ▶489 |
| 251-4873 | 489 |
| 251-4874 | 489 |
| 251-4875 | 489 |
| 251-4876 | 489 |
| 251-5801 | ▶595 |
| 251-6206 | 550 |
| 251-6313 | 457 |
| 251-6351 | 347 |
| 251-6482 | 327 |
| | 329 |
| | 331 |
| | 333 |
| 251-6483 | 327 |
| | 329 |
| | 331 |
| | 333 |
| 251-6793 | 550 |
| 251-6794 | 550 |
| 251-7117 | 415 |
| 251-7119 | 415 |
| 251-7687 | 305 |
| | ▶327 |
| 251-7688 | 306 |
| | ▶329 |
| 251-7689 | 306 |
| | ▶331 |
| 251-9560 | 550 |
| 251-9596 | 595 |
| | ▶674 |
| 251-9756 | 431 |
| 252-0659 | 674 |
| 252-4531 | 674 |
| 252-5019 | 799 |
| 252-5184 | 457 |
| 252-5185 | 457 |
| 252-5680 | 3 |
| | ▶421 |
| 252-5834 | 513 |
| 252-5835 | 513 |
| 252-5876 | 956 |
| 252-5917 | ▶241 |
| | 596 |
| 252-5920 | 180 |
| | ▶244 |
| 252-7848 | 305 |
| | ▶333 |
| 252-8038 | 711 |
| | ▶717 |
| 252-8039 | 711 |
| | ▶718 |
| 252-9488 | 645 |
| 252-9550 | ▶104 |
| | 595 |
| 252-9678 | 489 |
| 252-9679 | 489 |
| 253-0615 | 125 |
| 253-0861 | 951 |
| 253-2713 | 120 |
| 253-3284 | 506 |
| 253-3285 | 506 |
| 253-3286 | 506 |
| 253-3287 | 506 |
| 253-7777 | 479 |
| 253-8816 | 506 |
| 253-8817 | 506 |
| 253-9329 | 951 |
| 253-9330 | 951 |
| 253-9352 | 406 |
| 253-9521 | 895 |
| | 900 |
| 254-1519 | 566 |
| 254-2313 | 415 |
| 254-2314 | 415 |
| 254-3250 | 575 |
| 254-3311 | 3 |
| | ▶499 |
| 254-3761 | 466 |
| 254-3783 | ▶237 |
| 254-5513 | 489 |
| 254-5734 | 104 |
| 254-5735 | 104 |
| 254-5736 | 104 |
| 254-5738 | 104 |
| 254-5742 | 104 |
| 254-5745 | 104 |
| 254-5747 | 104 |
| 254-5754 | 104 |
| 254-5755 | 104 |
| 254-9115 | 155 |
| 255-0746 | 77 |
| 255-0751 | 77 |
| 255-0949 | 404 |
| 255-2753 | 4 |
| | ▶115 |
| 255-4367 | 895 |
| 255-4370 | 189 |
| 255-4371 | 189 |
| 255-4955 | 111 |
| 255-4956 | 111 |
| 255-4957 | 110 |
| 255-4958 | 6 |
| | ▶111 |
| 255-5284 | 156 |
| | ▶161 |
| 255-6805 | 92 |
| | ▶661 |
| 255-8120 | 840 |
| 255-8121 | 840 |
| 255-8850 | 364 |
| 255-9274 | 457 |
| 256-2418 | 679 |
| 256-3871 | 431 |
| 256-3874 | 431 |
| 256-4603 | 496 |
| 256-4728 | 3 |
| | ▶411 |
| 256-4729 | 411 |
| 256-5068 | ▶148 |
| | 167 |
| 256-6456 | ▶387 |
| | 395 |
| 256-6766 | ▶389 |
| | 395 |
| 256-7858 | 660 |
| | 661 |
| | ▶673 |
| 256-7874 | 673 |
| 256-7875 | 673 |
| 256-8768 | 924 |
| | ▶940 |
| 256-9812 | ▶189 |
| 257-1770 | ▶748 |
| 257-2008 | 789 |
| | ▶828 |
| 257-2531 | 615 |
| | 617 |
| 257-2532 | 615 |
| | 617 |
| 257-4154 | 120 |
| 257-4155 | 120 |
| 257-4156 | 120 |
| 257-5702 | 457 |
| 257-7193 | 92 |
| 257-7195 | 92 |
| 257-7313 | 651 |
| 257-7676 | 541 |
| 258-0883 | 115 |
| | ▶238 |
| 258-1564 | ▶874 |
| 258-1565 | ▶790 |
| | 874 |
| 258-7052 | 510 |


▶ PRIMARY REFERENCE

# PART NUMBER INDEX


| Part | Page |
|---|---|
| 258-7057 | 510 |
| 258-7058 | 510 |
| 258-7063 | ▶454 |
| | 505 |
| 258-7370 | 855 |
| | 856 |
| | 857 |
| | 858 |
| 258-7582 | 510 |
| 258-7583 | 510 |
| 258-7584 | 510 |
| 258-7623 | 895 |
| | 900 |
| 258-7624 | 895 |
| | 900 |
| 258-8600 | 92 |
| 258-8601 | 92 |
| 259-0623 | 521 |
| 259-1407 | ▶640 |
| | 651 |
| 259-1998 | ▶860 |
| 259-1999 | ▶862 |
| 259-6245 | 386 |
| 259-6246 | 386 |
| 259-6247 | ▶386 |
| 259-6248 | ▶386 |
| 259-6893 | 832 |
| 259-6894 | 835 |
| 260-0230 | 840 |
| 260-0231 | 840 |
| 260-1384 | 753 |
| 260-1385 | 755 |
| | ▶771 |
| 260-1386 | ▶753 |
| | 765 |
| 260-1387 | ▶755 |
| | 766 |
| 260-1388 | ▶765 |
| 260-1389 | ▶766 |
| 260-1579 | 85 |
| 260-4747 | 499 |
| 260-6563 | 408 |
| 261-2269 | 122 |
| 261-2283 | 653 |
| 261-2284 | 651 |
| 261-2286 | 652 |
| 261-2332 | 184 |
| 261-2333 | 184 |
| 261-4403 | 185 |
| | 187 |
| 261-4404 | 185 |
| | 187 |
| 261-4660 | 180 |
| | ▶185 |
| 261-4884 | 185 |
| | 187 |
| 261-8121 | ▶232 |
| 261-8275 | 232 |
| 261-8608 | 505 |
| | ▶937 |
| 261-8627 | 301 |
| 261-8673 | 180 |
| | ▶187 |
| 261-8703 | ▶764 |
| 261-8704 | ▶767 |
| 261-8706 | ▶768 |
| 261-8707 | ▶769 |
| 261-8708 | ▶751 |
| | 764 |
| 261-8709 | ▶757 |
| | 767 |
| 261-8711 | ▶759 |
| | 768 |
| 261-8712 | ▶761 |
| | 769 |
| 261-8713 | 751 |
| 261-8714 | 757 |
| 261-8715 | 759 |
| | 761 |
| 262-0795 | 353 |
| 262-0974 | 4 |
| | ▶112 |
| 262-1379 | 3 |
| | ▶442 |
| | 745 |
| 262-1380 | 442 |
| 262-1381 | 442 |
| 262-1383 | 442 |
| 262-1580 | 353 |
| 262-1581 | 353 |
| 262-1582 | 353 |
| 262-2043 | ▶162 |
| | 167 |
| 262-3932 | 440 |
| 262-4948 | 781 |
| | ▶792 |
| 262-6019 | 288 |
| 262-7096 | 112 |
| 262-9889 | 3 |
| 262-9890 | 3 |
| 262-9893 | 2 |
| 262-9894 | 2 |
| 262-9897 | 745 |
| 262-9898 | 745 |
| 262-9949 | ▶239 |
| | 595 |
| 262-9950 | ▶274 |
| | 790 |
| 262-9967 | 4 |
| | ▶77 |
| 263-0045 | 790 |
| | ▶835 |
| 263-0952 | 506 |
| 263-2116 | 501 |
| 263-3322 | ▶167 |
| 263-4133 | ▶242 |
| 263-4135 | 141 |
| 263-4163 | 295 |
| 263-4164 | 296 |
| | 297 |
| 263-4165 | 296 |
| | 297 |
| 263-4166 | 162 |
| | ▶295 |
| 263-4167 | 180 |
| | ▶296 |
| 263-4168 | ▶302 |
| | 866 |
| 263-4169 | 302 |
| 263-7275 | ▶505 |
| 263-7277 | ▶505 |
| 263-7280 | 92 |
| 263-7357 | 6 |
| | ▶79 |
| 263-8419 | 2 |
| | ▶180 |
| | 198 |
| 263-8948 | 148 |
| 263-9088 | 148 |
| 263-9091 | 4 |
| | ▶87 |
| 263-9161 | 180 |
| | ▶297 |
| 263-9184 | 297 |
| 263-9191 | 297 |
| 264-0476 | 105 |
| 264-0605 | 412 |
| 264-4872 | 148 |
| 264-7671 | 148 |
| 264-8332 | 496 |
| 265-0877 | 105 |
| 265-3423 | 664 |
| 265-5801 | 956 |
| 265-6682 | 956 |
| 265-6753 | ▶789 |
| 265-6754 | 789 |
| | ▶900 |
| 265-6756 | 900 |
| 265-6769 | 900 |
| 265-6982 | 66 |
| 265-9551 | 953 |
| 265-9642 | 162 |
| 265-9643 | 162 |
| 266-1620 | ▶2 |
| 266-2271 | ▶310 |
| | 340 |
| 266-2272 | ▶340 |
| | 353 |
| 266-2302 | ▶748 |
| 266-3681 | ▶745 |
| 266-4266 | 148 |
| 266-5821 | ▶2 |
| 266-9266 | 341 |
| 267-1459 | 901 |
| 267-2172 | 319 |
| | ▶443 |
| 267-2173 | 443 |
| 267-2174 | 443 |
| 267-2178 | 444 |
| 267-2809 | 178 |
| 267-3803 | 2 |
| | ▶596 |
| 267-3804 | ▶596 |
| 267-4603 | 148 |
| 267-8630 | 484 |
| 267-8631 | 484 |
| 267-8632 | 484 |
| 267-8633 | 479 |
| | 484 |
| 268-1654 | 468 |
| | ▶485 |
| 268-1655 | 485 |
| 268-1656 | 485 |
| 268-1657 | 485 |
| 268-4097 | 468 |
| | 470 |
| 268-8092 | 470 |
| | ▶486 |
| 268-8093 | 486 |
| 268-8094 | 486 |
| 268-8095 | 486 |
| 269-0089 | 348 |


▶ PRIMARY REFERENCE