CATERPILLAR®

SEBP3906-19
April 2007

VOLUME II
Pages 645-1514

RUTHZIL TRATOR COMERCIAL DE PEÇAS LTDA 11 97083-6812 ROLANDO

# Parts Manual

SIS

See “General Information” for New Parts Manual Features.

## 988H Wheel Loader

**BXY1-Up (Machine)**
**RHX1-Up (Engine)**
**DRT1-Up (Transmission)**
**SMA1900-Up (Transmission)**
**6AT1-Up (Torque Converter)**
**TCR1-Up (Torque Converter)**

**Powered By C18 Engine**
**This Parts Manual is also Available in .PDF Format on Compact Disc(CD-ROM)-Caterpillar Form No. SERP3906**

# Product and Dealer Information

Note: For product identification plate locations, see the section “Product Identification Information” in the Operation and Maintenance Manual.

**Delivery Date:** _____

## Product Information

Model: _____

Product Identification Number: _____

Engine Serial Number: _____

Transmission Serial Number: _____

Generator Serial Number: _____

Attachment Serial Numbers: _____

Attachment Information: _____

Customer Equipment Number: _____

Dealer Equipment Number: _____

## Dealer Information

Name: _____ Branch: _____

Address: _____

_____

_____

| | Dealer Contact | Phone Number | Hours |
|---|---|---|---|
| Sales: | _____ | _____ | _____ |
| Parts: | _____ | _____ | _____ |
| Service: | _____ | _____ | _____ |

# Informations produit et concessionnaire

Nota: Voir l'emplacement de la plaque signalétique du produit au chapitre "Informations produit" du guide d'utilisation et d'entretien.

**Date de livraison:** _____

## Informations produit

Modèle: _____

Numéro d'identification produit: _____

Numéro de série du moteur: _____

Numéro de série de la boîte de vitesses: _____

Numéro de série de l'alternateur: _____

Numéros de série d'équipement: _____

Informations sur l'équipement: _____

Numéro matériel client: _____

Numéro matériel concessionnaire: _____

## Informations concessionnaire

Nom: _____ Agence: _____

Adresse: _____

_____

_____

| | Contact concessionnaire | Numéro de téléphone | Heures |
|---|---|---|---|
| Ventes: | | | |
| Pièces: | | | |
| Service: | | | |

# Información del Producto/Distribuidor

Nota: Para saber la ubicación de las placas de identificación del producto, ver la sección “Información sobre identificación del producto” en el Manual de Operación y Mantenimiento.

**Fecha de entrega:** _____

## Información del producto

Modelo: _____

Número de identificación del producto: _____

Número de serie del motor: _____

Número de serie de la transmisión: _____

Número de serie del generador: _____

Números de serie de los accesorios: _____

Información sobre los accesorios: _____

Número del equipo del cliente: _____

Número del equipo del distribuidor: _____

## Información del distribuidor

Nombre: _____ Sucursal: _____

Dirección: _____

_____

_____

| Comunicación con el distribuidor | Número de teléfono | Horas |
|---|---|---|
| Ventas: _____ | _____ | _____ |
| Piezas: _____ | _____ | _____ |
| Servicio: _____ | _____ | _____ |

# Informações Sobre Produto e Revendedor

Nota: Para localizações da placa de identificação do produto, consulte a seção, “Informações Sobre Identificação do Produto” no Manual de Operação e Manutenção.

**Data de Entrega:** _____

## Informações Sobre o Produto

Modelo: _____

Número de Identificação do Produto: _____

Número de Série do Motor: _____

Número de Série da Transmissão: _____

Número de Série do Gerador: _____

Números de Série de Acessórios: _____

Informações Sobre Acessórios: _____

Número do Equipamento do Cliente: _____

Número do Equipamento do Revendedor: _____

## Informações Sobre o Revendedor

Nome: _____ Filial: _____

Endereço: _____

_____

_____

| | Contato do Revendedor | Telefone | Horas |
|---|---|---|---|
| Vendas: | _____ | _____ | _____ |
| Peças: | _____ | _____ | _____ |
| Serviço: | _____ | _____ | _____ |

# Produkt- und Händlerinformation

Anmerkung: Für die Lage der Produkt-Identnummer und Seriennummern siehe Abschnitt “Produkt-Identinformation” im Betriebs- und Wartungshandbuch.

**Lieferdatum:** _____

## Produkt-Identinformation

Modell: _____

Produkt-Identnummer: _____

Seriennummer des Motors: _____

Seriennummer des Getriebes: _____

Seriennummer des Generators: _____

Seriennummern der Arbeitsgeräte: _____

Arbeitsgeräteinformation: _____

Kundennummer: _____

Händlernummer: _____

## Händlerinformation

Name: _____ Niederlassung: _____

Adresse: _____

_____

_____

| | Kontaktperson beim Händler | Telefon | Dienststunden |
|---|---|---|---|
| Verkauf: | _____ | _____ | _____ |
| Ersatzteile: | _____ | _____ | _____ |
| Service: | _____ | _____ | _____ |

# MEMORANDA

# TABLE OF CONTENTS


| Name | Page |
|---|---|
| **GENERAL INFORMATION** | A29 |
| **REPAIR ALTERNATIVES** | A48 |
| **SUPPLEMENTAL COOLANT ADDITIVES** | A53 |
| **MAINTENANCE PARTS** | A58 |
| **INDEX** | A84 |
| **MACHINE ARRANGEMENT** | 1 |
| CHASSIS AR | 1 |
| COMMON AR | 2 |
| STEEL MILL AR | 3 |
| **ENGINE ARRANGEMENT** | 5 |
| ENGINE AR | 5 |
| ENGINE AR-COMPLETE | 6 |
| ENGINE AR-CORE | 10 |
| INSTALLATION AR-ENGINE | 13 |
| **BASIC ENGINE** | 14 |
| ACTUATOR GP-VALVE | 14 |
| ADAPTER GP-PUMP DRIVE | 15 |
| BASE GP-VALVE COVER & INJ HARN | 16 |
| BELT TENSIONER GP | 20 |
| CAMSHAFT GP | 21 |
| COVER GP-CYLINDER BLOCK | 22 |
| COVER GP-FRONT HOUSING | 24 |
| COVER GP-SOUND SUPPRESSION | 26 |
| COVER GP-VALVE MECHANISM | 27 |
| CRANKSHAFT GP | 30 |
| CYLINDER BLOCK AS | 31 |
| CYLINDER BLOCK GP | 35 |
| CYLINDER HEAD AS | 39 |
| CYLINDER HEAD GP | 45 |
| DAMPER GP | 52 |
| DRAIN GP-ENGINE OIL | 53 |
| DRIVE GP-ACCESSORY | 54 |
| DRIVE GP-PUMP | 55 |
| ENGINE BRAKE GP | 56 |
| FASTENER GP-FRONT HOUSING | 57 |
| FASTENER GP-VALVE MECHANISM | 59 |
| FLYWHEEL GP | 60 |
| GEAR GP-CAMSHAFT | 61 |
| GEAR GP-FRONT | 62 |
| HOUSING GP-FLYWHEEL | 65 |
| HOUSING GP-FRONT | 67 |
| LIFTING GP-ENGINE | 69 |
| MECHANISM GP-FUEL PUMP & VALVE | 71 |
| MOUNTING GP-ALTERNATOR & COMPR | 77 |
| PAN GP-OIL | 78 |
| PANEL GP-SOUND SUPPRESSION | 82 |
| PISTON & ROD GP | 85 |
| PLUG GP-CYLINDER BLOCK | 87 |
| PLUG GP-CYLINDER HEAD | 89 |
| PULLEY GP-CRANKSHAFT | 90 |
| ROCKER ARM GP | 91 |
| SUPPORT GP-ENGINE | 97 |
| **LUBRICATION SYSTEM** | 99 |
| EXTENSION GP-FUMES DISPOSAL | 99 |
| FASTENER GP-OIL PUMP MOUNTING | 100 |
| FILLER GP-ENGINE OIL | 101 |
| FILTER GP-ENGINE OIL | 102 |
| FUMES DISPOSAL GP | 108 |
| GAUGE GP-OIL LEVEL (DIPSTICK) | 109 |
| LINES GP-ENGINE OIL | 110 |
| LINES GP-TURBOCHARGER OIL | 115 |
| OIL CHANGE GP-HIGH SPEED | 117 |
| PUMP GP-ENGINE OIL | 118 |
| **COOLING SYSTEM** | 119 |
| COOLING AR | 119 |
| COOLING AR-HIGH AMBIENT TEMP | 119 |
| FAN & BAFFLE GP | 120 |
| FAN GP-SUCTION | 122 |
| FASTENER GP-WATER PUMP | 127 |
| LINES GP-WATER | 128 |
| PUMP GP-WATER | 138 |
| RADIATOR GP | 141 |
| VALVE GP-RADIATOR DRAIN | 145 |
| **AIR INLET AND EXHAUST SYSTEM** | 146 |
| AFTERCOOLER GP-AIR | 146 |
| AIR CLEANER GP | 148 |
| COVER GP-TURBOCHARGER | 150 |
| DUST EJECTOR GP | 151 |
| EXTENSION GP-EXHAUST | 152 |
| LINES GP-AIR | 154 |
| MANIFOLD GP-EXHAUST | 156 |
| MOUNTING GP-MUFFLER | 157 |
| MUFFLER GP | 158 |
| SHIELD GP-MANIFOLD | 159 |
| TURBOCHARGER GP | 160 |
| **FUEL SYSTEM** | 164 |
| ADAPTER GP-FAST FILL FUEL | 164 |
| FILTER GP-FUEL | 167 |
| FILTER GP-WATER SEP & FUEL | 171 |
| FUEL AR-FAST FILL | 172 |
| LINES GP-FUEL | 174 |
| LINES GP-FUEL HEATER | 184 |
| PLUG GP-FUEL FILTER BASE | 185 |
| PUMP & MTG GP-FUEL TRANSFER | 186 |
| PUMP GP-FUEL INJECTION | 188 |
| TANK & MTG GP-FUEL | 191 |
| TANK GP-FUEL | 192 |

# TABLE OF CONTENTS


| Name | Page |
|---|---|
| VALVE GP-CHECK | 195 |
| VALVE GP-PURGE | 199 |
| WATER SEP & FUEL PRM PUMP GP | 200 |
| **ELECTRICAL AND STARTING SYSTEM** | 201 |
| ALARM GP | 201 |
| ALTERNATOR GP-CHARGING | 202 |
| BATTERY & WIRING GP | 205 |
| CAMERA AR | 213 |
| CONNECTION GP-ELECTRICAL | 214 |
| CONTROL & MTG GP-COMMUNICATION | 215 |
| CONTROL & MTG GP-ENGINE ELEK | 217 |
| CONTROL GP-LIFT & TILT POS | 219 |
| CONTROL GP-UNPROGRAMMED | 221 |
| ELECTRICAL AR | 225 |
| ELECTRONICS GP-COMMUNICATION | 227 |
| ELECTRONICS GP-IMPLEMENT | 228 |
| ELECTRONICS GP-MONITOR | 229 |
| ELECTRONICS GP-POWER TRAIN | 230 |
| FASTENER GP-ELECTRONICS | 233 |
| HEATER AR-FUEL | 235 |
| HEATER GP-FUEL | 236 |
| HEATER GP-JACKET WATER | 238 |
| INSTALLATION AR-COMMUNICATION | 240 |
| LAMP GP-DOME | 241 |
| LAMP GP-FLOOD | 242 |
| LAMP GP-HEAD | 249 |
| LAMP GP-SIGNAL | 250 |
| LAMP GP-WARNING BEACON | 252 |
| LIGHTING AR-FLOOD & SIGNAL | 253 |
| LIGHTING AR-SIGNAL | 253 |
| LIGHTING AR-STOP & FLOOD | 254 |
| LIGHTING GP-FLOOD | 255 |
| LIGHTING GP-FLOOD & SIGNAL | 268 |
| LIGHTING GP-STOP | 280 |
| LIGHTING GP-STOP & TAIL | 282 |
| LIGHTING GP-WARNING BEACON | 284 |
| MOUNTING GP-SENSOR | 287 |
| SENSOR & MTG GP-LIFT POSITION | 289 |
| SENSOR & MTG GP-TILT POSITION | 290 |
| SENSOR GP-ENGINE | 291 |
| SENSOR GP-POSITION | 295 |
| SENSOR GP-PRESSURE | 299 |
| SENSOR GP-SPEED | 306 |
| SENSOR GP-TEMPERATURE | 310 |
| STARTING AID GP-ETHER | 318 |
| STARTING MOTOR GP-ELECTRIC | 320 |
| SWITCH GP-BYPASS | 324 |
| SWITCH GP-DISCONNECT | 325 |
| SWITCH GP-ENGINE BRAKE | 326 |
| SWITCH GP-MAGNETIC | 328 |
| SWITCH GP-PAYLOAD STORE | 330 |
| SWITCH GP-PRESSURE | 331 |
| SWITCH GP-RIDE CONTROL | 333 |
| SWITCH GP-ROCKER | 334 |
| SWITCH GP-SIGNAL | 335 |
| SWITCH GP-TOGGLE | 337 |
| SWITCH GP-WIPER | 338 |
| VALVE GP-ETHER STARTING | 339 |
| WARNING GP-BACKUP | 341 |
| WIRING GP-AUTOLUBE CONTROL | 342 |
| WIRING GP-BUMPER | 347 |
| WIRING GP-CAB | 350 |
| WIRING GP-CAMERA | 384 |
| WIRING GP-COMMUNICATION | 385 |
| WIRING GP-ELECTRONICS BAY | 386 |
| WIRING GP-ENGINE | 413 |
| WIRING GP-ENGINE ELECTRONIC | 423 |
| WIRING GP-FRONT | 427 |
| WIRING GP-HEATER | 434 |
| WIRING GP-MACHINE | 435 |
| WIRING GP-POWER TRAIN | 454 |
| WIRING GP-REAR | 465 |
| WIRING GP-SENSOR | 468 |
| WIRING GP-SHUTOFF | 477 |
| WIRING GP-TRANSMISSION | 481 |
| WIRING GP-UNIT INJECTOR | 483 |
| **POWER TRAIN** | 484 |
| AXLE AR-FIXED | 484 |
| AXLE AR-OSCILLATING | 484 |
| AXLE GP-FIXED | 485 |
| AXLE GP-OSCILLATING | 486 |
| CASE & PARTS GP-PLANETARY | 488 |
| CONTROL GP-TRANSMISSION HYD | 489 |
| COOLER & FAN GP-AXLE OIL | 493 |
| COOLER AR-AXLE OIL | 508 |
| COOLER GP-AXLE OIL | 509 |
| COVER GP-TRANSMISSION | 515 |
| DIFFERENTIAL & BEVEL GEAR GP | 517 |
| DIFFERENTIAL GP | 520 |
| DIFFERENTIAL GP-NOSPIN | 521 |
| FASTENER GP-AXLE MOUNTING | 523 |
| FILTER & MTG GP-POWER TRAIN | 524 |
| FILTER GP-OIL | 525 |
| GAUGE GP-OIL LEVEL (DIPSTICK) | 528 |
| GAUGE GP-SIGHT | 530 |
| GEAR GP-INPUT TRANSFER | 531 |
| GEAR GP-OUTPUT TRANSFER | 534 |
| LINES GP-AXLE OIL COOLER | 542 |
| LINES GP-AXLE OIL COOLER FAN | 564 |
| LINES GP-AXLE VENT | 572 |
| LINES GP-POWER TRAIN OIL | 574 |
| MOUNTING GP-RIM | 589 |
| MOUNTING GP-TORQUE CONVERTER | 589 |
| PLANETARY GP-TRANSMISSION | 590 |
| POWER TRAIN AR | 595 |

# TABLE OF CONTENTS


| Name | Page |
|---|---|
| PUMP GP-GEAR | 596 |
| PUMP GP-TRANSMISSION | 598 |
| RIM AR | 601 |
| RIM GP-DEMOUNTABLE | 602 |
| SHAFT GP-DRIVE | 605 |
| SHAFT GP-INPUT DRIVE | 607 |
| SLIP JOINT GP | 608 |
| SUPPORT GP-TRANSMISSION | 609 |
| TIRE & RIM AR | 611 |
| TORQUE CONVERTER & HOUSING GP | 617 |
| TORQUE CONVERTER AR | 621 |
| TORQUE CONVERTER AR-LOCKUP | 621 |
| TORQUE CONVERTER GP | 622 |
| TRANSMISSION AR | 629 |
| UNIVERSAL JOINT GP | 630 |
| VALVE & MTG GP-LOCKUP CLUTCH | 633 |
| VALVE GP-CHECK | 634 |
| VALVE GP-MODULATING | 635 |
| VALVE GP-RELIEF | 638 |
| VALVE GP-SOLENOID | 641 |
| WHEEL & FINAL DRIVE GP | 642 |
| **FRAME AND BODY** | 645 |
| BUMPER GP-REAR | 645 |
| COVER GP-BUMPER | 650 |
| COVER GP-ELECTRONICS BAY | 654 |
| DEFLECTOR GP-HOOD | 655 |
| DOOR GP-ACCESS | 656 |
| DRAWBAR GP | 659 |
| FENDER GP-FRONT | 660 |
| FENDER GP-REAR | 663 |
| FIREWALL GP | 665 |
| FRAME AS-LOADER | 666 |
| FRAME AS-REAR | 668 |
| GUARD GP-BOTTOM | 675 |
| GUARD GP-CRANKCASE | 679 |
| GUARD GP-FRONT | 680 |
| GUARD GP-HYDRAULIC TANK | 681 |
| GUARD GP-LINES | 682 |
| GUARD GP-POWER TRAIN | 683 |
| GUARD GP-RADIATOR | 684 |
| GUARD GP-REAR | 690 |
| GUARD GP-SENSOR | 694 |
| HARDWARE GP-LOADER FRAME | 695 |
| HARDWARE GP-REAR FRAME | 700 |
| HITCH GP-ARTICULATING | 704 |
| HOOD & GUARD GP | 706 |
| LADDER & FENDER AR | 715 |
| LADDER GP | 716 |
| LINES GP-AUTOMATIC LUBRICATION | 726 |
| LINES GP-GREASE | 842 |
| LINES GP-LUBRICATION | 848 |
| LINK GP-STEERING FRAME LOCK | 849 |
| LUBRICATION AR-AUTOMATIC | 850 |
| PANEL GP-SIDE | 856 |
| PUMP GP-LUBRICATION | 858 |
| SHIELD GP-ENGINE COMPARTMENT | 861 |
| STEP GP | 864 |
| SUPPRESSION AR-SOUND | 865 |
| SUPPRESSION GP-SOUND | 866 |
| TANK & PUMP GP-LUBRICATION | 872 |
| VALVE & LINES GP-LUBRICATION | 876 |
| VALVE GP-LUBE DISTRIBUTION | 949 |
| **BRAKING SYSTEM** | 957 |
| ACCUMULATOR GP-BRAKE | 957 |
| BASE GP-FOOT BRAKE | 960 |
| BRAKE GP-PARKING | 964 |
| BRAKE GP-SERVICE | 966 |
| CONTROL GP-FOOT BRAKE | 967 |
| CONTROL GP-PARKING BRAKE | 969 |
| CONTROL GP-SERVICE BRAKE | 975 |
| LINES GP-SERVICE BRAKE | 985 |
| PUMP GP-GEAR | 989 |
| VALVE & MTG GP-BRAKE CONTROL | 990 |
| VALVE GP-BRAKE CONTROL | 996 |
| VALVE GP-RELIEF | 997 |
| VALVE GP-SHUTTLE | 999 |
| **STEERING SYSTEM** | 1002 |
| CYLINDER & MTG GP-STEERING | 1002 |
| CYLINDER GP-STEERING | 1004 |
| GUARD GP-STEERING CYLINDER | 1007 |
| LINES GP-SECONDARY STEERING | 1008 |
| LINES GP-STEERING | 1012 |
| LINES GP-STEERING NEUTRALIZER | 1025 |
| PLUG GP-CONTROL VALVE | 1029 |
| PUMP GP-GEAR | 1030 |
| PUMP GP-PISTON | 1032 |
| ROTATING GP-PUMP | 1034 |
| STEERING AR | 1035 |
| VALVE GP-CHECK | 1036 |
| VALVE GP-PILOT | 1039 |
| VALVE GP-PILOT CARTRIDGE | 1040 |
| VALVE GP-PUMP CONTROL | 1042 |
| VALVE GP-RELIEF | 1043 |
| VALVE GP-SELECTOR & PRESS CONT | 1045 |
| VALVE GP-SHUTTLE | 1046 |
| VALVE GP-STEERING | 1047 |
| VALVE GP-STEERING NEUTRALIZER | 1055 |
| **HYDRAULIC SYSTEM** | 1056 |
| ACCUMULATOR GP-RIDE CONTROL | 1056 |
| ACTUATOR GP-PILOT CONTROL | 1058 |
| CONTROL & LINES GP-RIDE | 1062 |
| CONTROL AR-RIDE | 1067 |
| COOLER GP-HYDRAULIC OIL | 1068 |
| COVER GP-HYDRAULIC TANK CAP | 1070 |

# TABLE OF CONTENTS


| Name | Page |
|---|---|
| CYLINDER & SENSOR GP | 1071 |
| CYLINDER & SENSOR GP-LIFT | 1074 |
| CYLINDER & SENSOR GP-TILT | 1076 |
| CYLINDER GP-LIFT | 1078 |
| CYLINDER GP-TILT | 1080 |
| FILTER & LINES GP-CASE DRAIN | 1082 |
| FILTER GP-OIL | 1085 |
| HYDRAULIC AR | 1087 |
| LINES GP-FRONT | 1088 |
| LINES GP-HYDRAULIC | 1094 |
| LINES GP-HYDRAULIC FAN | 1102 |
| LINES GP-LIFT CYLINDER | 1115 |
| LINES GP-TILT CYLINDER | 1118 |
| MOTOR & MTG GP-HYDRAULIC FAN | 1128 |
| MOTOR GP-PISTON | 1129 |
| PUMP & MTG GP-HYDRAULIC FAN | 1130 |
| PUMP & MTG GP-IMPLEMENT | 1132 |
| PUMP GP-PISTON | 1133 |
| ROTATING GP-MOTOR | 1142 |
| ROTATING GP-PUMP | 1143 |
| TANK & MTG GP-HYDRAULIC | 1144 |
| TANK AR-EXPANSION | 1145 |
| TANK GP-EXPANSION | 1146 |
| TANK GP-HYDRAULIC | 1148 |
| VALVE & MTG GP-MAIN CONTROL | 1153 |
| VALVE GP-CHECK | 1159 |
| VALVE GP-DEMAND FAN | 1160 |
| VALVE GP-MAIN CONTROL | 1161 |
| VALVE GP-MANUAL | 1170 |
| VALVE GP-PUMP CONTROL | 1171 |
| VALVE GP-RELIEF | 1173 |
| VALVE GP-RIDE CONTROL | 1180 |
| VALVE GP-SHUTTLE | 1182 |
| VALVE GP-SOLENOID | 1184 |
| **IMPLEMENTS** | 1187 |
| BOOM & BEARING AS | 1187 |
| BOOM GP-LOADER | 1189 |
| CONTROL GP-BUCKET | 1191 |
| HARDWARE GP-BOOM | 1198 |
| LIFT AR | 1204 |
| LINKAGE GP-BUCKET | 1206 |
| PIN & SEAL GP-LINKAGE | 1208 |
| **WORK TOOLS** | 1211 |
| ADAPTER GP-TIP | 1211 |
| ADAPTER-TIP | 1213 |
| BUCKET AS-COAL | 1229 |
| BUCKET AS-GENERAL PURPOSE | 1231 |
| BUCKET AS-ROCK | 1235 |
| BUCKET GP-COAL | 1265 |
| BUCKET GP-GENERAL PURPOSE | 1266 |
| BUCKET GP-ROCK | 1267 |
| EDGE AS-BASE | 1275 |
| EDGE GP-BIT & CUTTING | 1278 |
| EDGE GP-CUTTING | 1278 |
| EDGE GP-SEGMENT | 1280 |
| EDGE-CUTTING | 1281 |
| EDGE-SEGMENT | 1300 |
| GUARD GP-BUCKET CORNER | 1309 |
| PROTECTOR GP-EDGE | 1310 |
| PROTECTOR GP-SIDE BAR | 1311 |
| TIP GP-ABRASION | 1312 |
| TIP GP-LONG | 1315 |
| TIP GP-PENETRATION | 1319 |
| TIP GP-SHORT | 1323 |
| TIP-HEAVY PENETRATION | 1325 |
| TIP-LONG | 1326 |
| **OPERATOR STATION** | 1327 |
| ADJUSTER GP-SEAT | 1327 |
| AIR COMPRESSOR GP-SEAT | 1328 |
| AIR CONDITIONER & MOUNTING GP | 1330 |
| AIR CONDITIONER GP | 1331 |
| ARM GP-WINDOW WIPER | 1334 |
| CAB AR | 1336 |
| COMPRESSOR GP-REFRIGERANT | 1339 |
| CONDENSER GP-REFRIGERANT | 1341 |
| CONTROL GP-ELECTROHYDRAULIC | 1342 |
| CONTROL GP-MONITOR | 1349 |
| CONTROL GP-STEERING | 1352 |
| CONTROL GP-STIC | 1355 |
| CONTROL GP-STIC LOCKOUT | 1358 |
| CONTROL GP-TMSN OVERRIDE | 1360 |
| CONTROL GP-UNPRGMED MONITOR | 1361 |
| COVER GP-DASH | 1362 |
| DISPLAY GP-CAMERA | 1363 |
| DOOR GP-CAB | 1364 |
| DOOR GP-STORAGE | 1373 |
| DUCT & FILTER GP-CAB AIR | 1374 |
| DUCT GP-CAB AIR | 1376 |
| HORN GP-ELECTRIC | 1378 |
| INSTALLATION GP-CONTROLS | 1379 |
| INSTALLATION GP-RADIO | 1381 |
| LINER GP-CAB | 1385 |
| LINES GP-AIR CONDITIONER | 1391 |
| LINES GP-CAB HEATER | 1400 |
| LITERATURE GP | 1403 |
| MIRROR GP-REAR VIEW | 1404 |
| MODULE GP-QUAD GAUGE | 1407 |
| MONITOR AR-PAYLOAD | 1408 |
| MONITOR GP-CAMERA | 1409 |
| MONITOR GP-PAYLOAD | 1411 |
| MOTOR GP-WINDOW WIPER | 1415 |
| MOUNTING GP-ANTENNA | 1418 |
| MOUNTING GP-CAB | 1420 |
| OPERATOR AR | 1424 |
| PAN GP-BACKREST | 1425 |
| PANEL GP-INSTRUMENT | 1429 |
| PEDAL GP-GOVERNOR | 1432 |

# TABLE OF CONTENTS


| Name | Page | Name | Page |
|---|---|---|---|
| PLATFORM GP | 1434 | | |
| PLATFORM GP-CAB | 1437 | | |
| PLATFORM GP-OPERATOR | 1439 | | |
| RADIO GP | 1446 | | |
| RECLINER GP-SEAT | 1450 | | |
| ROOF GP-CAB | 1451 | | |
| ROPS GP-ENCLOSED | 1455 | | |
| SEALING GP-GLASS | 1467 | | |
| SEAT GP | 1468 | | |
| SEAT GP-SUSPENSION | 1473 | | |
| SUPPORT GP-HYDRAULIC CONTROL | 1474 | | |
| SUPPORT GP-SEAT | 1478 | | |
| SUPPORT GP-STEERING CONTROL | 1479 | | |
| SUPPRESSION GP-CAB SOUND | 1482 | | |
| SUSPENSION GP-SEAT | 1483 | | |
| WASHER GP-WINDOW | 1485 | | |
| WINDOW GP-DOOR | 1486 | | |
| WIPER GP-WINDOW | 1488 | | |
| **SERVICE EQUIPMENT AND SUPPLIES** | 1496 | | |
| CERTIFICATION GP-MACHINE | 1496 | | |
| FILM GP | 1497 | | |
| LINES GP-DIAGNOSTIC | 1500 | | |
| PLATE & FILM GP | 1508 | | |
| PLATE GP-ENGINE IDENTIFICATION | 1510 | | |
| PROTECTION GP-VANDALISM | 1512 | | |
| TOOL GP-CONTROL SERVICE | 1514 | | |
| **PART NUMBER INDEX** | B1 | | |

# TABLE DES MATIÈRES


| Désignation | Page |
|---|---|
| **GÉNÉRALITÉS** | A32 |
| **OPTIONS DE RÉPARATION** | A49 |
| **ADDITIFS POUR LIQUIDE DE REFROIDISSEMENT** | A54 |
| **PIÈCES DE RECHANGE** | A62 |
| **INDEX** | A101 |
| **VERSION DE MACHINE** | 1 |
| VERSION DE CHASSIS | 1 |
| VERSION NORMALE | 2 |
| VERSION POUR ACIERIES | 3 |
| **MOTEUR (VERSION)** | 5 |
| MOTEUR (VERSION) | 5 |
| VERSION DE MOTEUR COMPLET | 6 |
| MOTEUR - PARTIE CENTRALE (VERSION) | 10 |
| MONTAGE DE MOTEUR (VERSION) | 13 |
| **MOTEUR STANDARD** | 14 |
| MÉCANISME DE COMMANDE DE SOUPAPE | 14 |
| ADAPTATEUR - ENTRAÎNEMENT DE POMPE (ASS) | 15 |
| SUPPORT DE CACHE-SOUPAPE ET FAISC. DE CABL. D'IN. | 16 |
| TENDEUR DE COURROIE (ASS) | 20 |
| ARBRE A CAMES (ASS) | 21 |
| BLOC-CYLINDRES - COUVERCLE (ASS) | 22 |
| COUVERCLE DE CARTER AV (ASS) | 24 |
| INSONORISATION - COUVERCLE (ASS) | 26 |
| CACHE-SOUPAPES (ASS) | 27 |
| VILEBREQUIN (ASS) | 30 |
| BLOC-CYLINDRES (ENS) | 31 |
| BLOC-CYLINDRES (ASS) | 35 |
| CULASSE (ENS) | 39 |
| CULASSE (ASS) | 45 |
| AMORTISSEUR DE VIBRATIONS (ASS) | 52 |
| VIDANGE-HUILE DE MOTEUR (ASS) | 53 |
| ENTRAÎNEMENT AUXILIAIRE (ASS) | 54 |
| ENTRAÎNEMENT DE POMPE (ASS) | 55 |
| FREIN MOTEUR (ASS) | 56 |
| BOULONNERIE DE CARTER AV (ASS) | 57 |
| CULBUTERIE - BOULONNERIE (ASS) | 59 |
| VOLANT MOTEUR (ASS) | 60 |
| PIGNONNERIE D'ARBRE À CAME | 61 |
| PIGNONNERIE AV (ASS) | 62 |
| CARTER DE VOLANT (ASS) | 65 |
| CARTER AV (ASS) | 67 |
| OEILLETONS DE LEVAGE MOTEUR (ASS) | 69 |
| CULBUTERIE ET POMPE A CARBURANT (ASS) | 71 |
| MONTAGE DE L'ALTERNATEUR ET COMPRESSEUR (ASS) | 77 |
| HUILE MOTEUR - CARTER (ASS) | 78 |
| PANNEAU D'INSONORISATION (ASS) | 82 |
| PISTON ET BIELLE (ASS) | 85 |
| BOUCHON DE BLOC-CYLINDRES (ASS) | 87 |
| BOUCHON - CULASSE (ASS) | 89 |
| VILEBREQUIN - POULIE (ASS) | 90 |
| AXE DE CULBUTEUR (ASS) | 91 |
| SUPPORT DE MOTEUR (ASS) | 97 |
| **CIRCUIT DE GRAISSAGE** | 99 |
| RALLONGE POUR ÉVACUATION DES GAZ (ASS) | 99 |
| BOULONNERIE DE MONTAGE DE LA POMPE A HUILE (ASS) | 100 |
| BOUCHON DE REMPLISSAGE D'HUILE MOTEUR (ASS) | 101 |
| FILTRE À HUILE MOTEUR (ASS) | 102 |
| DISPOSITIF D'EVACUATION DES VAPEURS DE CARTER | 108 |
| JAUGE D'HUILE MOTEUR (BAIONNETTE) (ASS) | 109 |
| CANALISATIONS D'HUILE MOTEUR (ASS) | 110 |
| CANALISATIONS D'HUILE DE TURBOCOMPRESSEUR (ASS) | 115 |
| DISPOSITIF DE VIDANGE RAPIDE D'HUILE (ASS) | 117 |
| POMPE A HUILE MOTEUR (ASS) | 118 |
| **CIRCUIT DE REFROIDISSEMENT** | 119 |
| REFROIDISSEMENT (VERSION) | 119 |
| REFROIDISSEMENT AUX TEMPÉRATURES ÉLEVÉES (VERSION) | 119 |
| VENTILATEUR ET DÉFLECTEUR (ASS) | 120 |
| VENTILATEUR ASPIRANT (ASS) | 122 |
| POMPE A EAU - BOULONNERIE | 127 |
| CANALISATIONS D'EAU (ASS) | 128 |
| POMPE A EAU (ASS) | 138 |
| RADIATEUR (ASS) | 141 |
| ROBINET DE VIDANGE DE RADIATEUR (ASS) | 145 |


* TRADUCTION NON DISPONIBLE AU MOMENT DE LA PUBLICATION

# TABLE DES MATIÈRES


| Désignation | Page |
|---|---|
| **CIRCUIT D'ADMISSION D'AIR ET D'ÉCHAPPEMENT** | 146 |
| REFROIDISSEUR D'ADMISSION D'AIR (ASS) | 146 |
| FILTRE A AIR (ASS) | 148 |
| COUVERCLE DE TURBOCOMPRESSEUR (ASS) | 150 |
| ÉJECTEUR AUTOMATIQUE DE POUSSIÈRE (ASS) | 151 |
| RALLONGE D'ÉCHAPPEMENT (ASS) | 152 |
| CANALISATIONS D'AIR (ASS) | 154 |
| COLLECTEUR D'ÉCHAPPEMENT (ASS) | 156 |
| MONTAGE DE SILENCIEUX (ASS) | 157 |
| SILENCIEUX (ASS) | 158 |
| ÉCRAN DE COLLECTEUR (ASS) | 159 |
| TURBOCOMPRESSEUR (ASS) | 160 |
| **CIRCUIT DE CARBURANT** | 164 |
| ADAPTATEUR DE REMPLIS. RAPIDE DE CARBURANT (ASS) | 164 |
| FILTRE A CARBURANT (ASS) | 167 |
| FILTRE DE SÉPARATEUR D'EAU ET DE CARBURANT (ASS) | 171 |
| REMPLISSAGE RAPIDE DE CARBURANT (VERSION) | 172 |
| CANALISATIONS DE CARBURANT (ASS) | 174 |
| CANALISATIONS DE RÉCHAUFFEUR DE CARBURANT (ASS) | 184 |
| BOUCHON DE SUPPORT DE FILTRE DE CARBURANT (ASS) | 185 |
| POMPE D'ALIMENTATION ET MONTAGE (ASS) | 186 |
| POMPE D'INJECTION DE CARBURANT (ASS) | 188 |
| RÉSERVOIR DE CARBURANT ET MONTAGE (ASS) | 191 |
| RÉSERVOIR DE CARBURANT (ASS) | 192 |
| CLAPET DE RETENUE (ENS) | 195 |
| SOUPAPE DE PURGE (ASS) | 199 |
| POMPE DE SÉPARATEUR D'EAU ET D'AMORÇAGE DE CARBURANT (ASS) | 200 |
| **CIRCUIT ELECTRIQUE ET DE DEMARRAGE** | 201 |
| AVERTISSEUR (ASS) | 201 |
| ALTERNATEUR DE CHARGE (ASS) | 202 |
| BATTERIE ET CÂBLAGE | 205 |
| VERSION DE CAMÉRA | 213 |
| BRANCHEMENT ÉLECTRIQUE (ASS) | 214 |
| COMMANDE ET MONTAGE-COMMUNICATION (ASS) | 215 |
| COMMANDE ET MONTAGE - MOTEUR | 217 |
| COMMANDE DE LEVAGE ET POSITION D'INCLINAISON (ASS) | 219 |
| COMMANDE NON PROGRAMMEE (ASS) | 221 |
| VERSION ÉLECTRIQUE | 225 |
| ÉLECTRONIQUE - COMMUNICATION (ASS) | 227 |
| COMMANDE ÉLECTRONIQUE D'ÉQUIPEMENT (ASS) | 228 |
| ÉLECTRONIQUE-MONITEUR (ASS) | 229 |
| ÉLECTRONIQUE DE TRANSMISSION (ASS) | 230 |
| BOULONNERIE - COMPOSANT ÉLECTRONIQUE (ASS) | 233 |
| RÉCHAUFFEUR DE CARBURANT (VERSION) | 235 |
| RECHAUFFEUR DE CARBURANT (ASS) | 236 |
| EAU DES CHEMISES - RECHAUFFEUR (ASS) | 238 |
| VERSION DE MONTAGE-COMMUNICATION | 240 |
| PLAFONNIER (ASS) | 241 |
| LAMPE - PHARE (ASS) | 242 |
| PHARE AV (ASS) | 249 |
| LAMPE - CLIGNOTANT DE DIRECTION (ASS) | 250 |
| LAMPE - GYROPHARE (ASS) | 252 |
| ÉCLAIRAGE (VERSION)-PROJECTEUR & SIGNAL | 253 |
| ÉCLAIRAGE - CLIGNOTANT (VERSION) | 253 |
| ECLAIRAGE - ARRÊT ET PROJECTEURS (VERSION) | 254 |
| ÉCLAIRAGE - PROJECTEURS (ASS) | 255 |
| ÉCLAIRAGE - PROJECTEURS ET CLIGNOTANTS (ASS) | 268 |
| ÉCLAIRAGE-FEUX D'ARRÊT (ASS) | 280 |
| ÉCLAIRAGE-FEUX DE STOP ET ARRIÈRE (ASS) | 282 |
| ÉCLAIRAGE - GYROPHARE (ASS) | 284 |
| MONTAGE - CAPTEUR (ASS) | 287 |
| CAPTEUR ET MONTAGE-POSITION DE LEVAGE (ASS) | 289 |
| CAPTEUR ET MONTAGE-POSITION D'INCLINAISON (ASS) | 290 |
| CAPTEUR - MOTEUR (ASS) | 291 |
| SONDE - CIRCUIT DE CARBURANT | 295 |
| CAPTEUR DE PRESSION (ASS) | 299 |
| CAPTEUR DE VITESSE (ASS) | 306 |


* TRADUCTION NON DISPONIBLE AU MOMENT DE LA PUBLICATION

# TABLE DES MATIÈRES


| Désignation | Page |
|---|---|
| CAPTEUR DE TEMPERATURE (ASS) | 310 |
| AUXILIAIRE DE DÉMARRAGE À L'ÉTHER | 318 |
| DÉMARREUR ÉLECTRIQUE (ASS) | 320 |
| INTERRUPTEUR - DÉRIVATION (ASS) | 324 |
| ROBINET DE BATTERIE (ASS) | 325 |
| CONTACTEUR DE FREIN MOTEUR (ASS) | 326 |
| CONTACTEUR MAGNETIQUE (ASS) | 328 |
| CONTACTEUR DE MÉMORISATION DES CHARGES UTILES | 330 |
| MANOCONTACT | 331 |
| CONTACTEUR DE COMMANDE DU SYSTÈME ANTITANGAGE (ASS) | 333 |
| INTERRUPTEUR À BASCULE (ASS) | 334 |
| INTERRUPTEUR - SIGNAL (ASS) | 335 |
| INTERRUPTEUR À BASCULE (ASS) | 337 |
| INTERRUPTEUR D'ESSUIE-GLACE (ASS) | 338 |
| SOUPAPE DE DÉMARRAGE À L'ÉTHER (ASS) | 339 |
| AVERTISSEUR DE RECUL (ASS) | 341 |
| CÂBLAGE DE COMMANDE DE GRAISSAGE AUTOMATIQUE (ASS) | 342 |
| CÂBLAGE D'AMORTISSEUR (ASS) | 347 |
| CABLAGE DE CABINE (ASS) | 350 |
| CÂBLAGE DE CAMÉRA (ASS) | 384 |
| CÂBLAGE DE COMMUNICATION (ASS) | 385 |
| CÂBLAGE DE NICHE ÉLECTRONIQUE (ASS) | 386 |
| CABLAGE DE MOTEUR (ASS) | 413 |
| CABLAGE - ELECTRONIQUE DU MOTEUR (ASS) | 423 |
| CABLAGE AV (ASS) | 427 |
| CABLAGE DU CHAUFFAGE DE CABINE (ASS) | 434 |
| CABLAGE DE LA MACHINE (ASS) | 435 |
| CABLAGE DE TRANSMISSION (ASS) | 454 |
| CABLAGE AR (ASS) | 465 |
| CABLAGE - CAPTEUR (ASS) | 468 |
| CABLAGE D'ARRET DE SECURITE | 477 |
| CABLAGE DE BOITE (ASS) | 481 |
| CABLAGE D'INJECTEUR | 483 |
| **TRANSMISSION** | 484 |
| ESSIEU FIXE (VERSION) | 484 |
| ESSIEU OSCILLANT (VERSION) | 484 |
| ESSIEU FIXE | 485 |
| ESSIEU OSCILLANT | 486 |
| TRAINS PLANÉTAIRES - CARTER ET PIÈCES | 488 |
| COMMANDE HYDRAULIQUE DE BOÎTE (ASS) | 489 |
| REFROIDISSEUR ET VENTILATEUR D'HUILE D'ESSIEU (ASS) | 493 |
| REFROIDISSEUR D'HUILE D'ESSIEU (VERSION) | 508 |
| REFROIDISSEUR D'HUILE D'ESSIEU (ASS) | 509 |
| COUVERCLE DE BOITE DE VITESSES (ASS) | 515 |
| COURONNE ET DIFFERENTIEL (ASS) | 517 |
| DIFFERENTIEL (ASS) | 520 |
| DIFFÉRENTIEL NOSPIN (ASS) | 521 |
| BOULONNERIE DE MONTAGE D'ESSIEU | 523 |
| FILTRE ET MONTAGE - TRANSMISSION (ASS) | 524 |
| FILTRE A HUILE (ASS) | 525 |
| JAUGE D'HUILE MOTEUR (BAIONNETTE) (ASS) | 528 |
| REGARD DE NIVEAU (ASS) | 530 |
| PIGNONNERIE D'ENTREE DE TRANSFERT (ASS) | 531 |
| ENGRENAGE DE TRANSFERT DE RENDEMENT (ASS) | 534 |
| CANALISATIONS DE REFROIDISSEUR D'HUILE D'ESSIEU (ASS) | 542 |
| CANALISATIONS DE VENTILATEUR DE REFROIDISSEUR D'HUILE D'ESSIEU (ASS) | 564 |
| CANALISATIONS D'ÉVENT D'ESSIEU (ASS) | 572 |
| CANALISATIONS D'HUILE DE TRANSMISSION (ASS) | 574 |
| MONTAGE DE JANTE (ASS) | 589 |
| CONVERTISSEUR DE COUPLE - MONTAGE (ASS) | 589 |
| BOÎTE PLANÉTAIRE (ASS) | 590 |
| TRANSMISSION (VERSION) | 595 |
| POMPE A ENGRENAGES (ASS) | 596 |
| POMPE DE BOÎTE DE VITESSES (ASS) | 598 |
| JANTE (VERSION) | 601 |
| JANTE DÉMONTABLE (ASS) | 602 |
| ARBRE D'ENTRAÎNEMENT (ASS) | 605 |
| ARBRE DE TRANSMISSION D'ENTRÉE (ASS) | 607 |
| CARDAN COULISSANT (ASS) | 608 |
| SUPPORT DE TRANSMISSION (ASS) | 609 |
| PNEU ET JANTE (VERSION) | 611 |
| CONVERTISSEUR DE COUPLE ET CARTER (ASS) | 617 |


* TRADUCTION NON DISPONIBLE AU MOMENT DE LA PUBLICATION

# TABLE DES MATIÈRES


| Désignation | Page |
|---|---|
| CONVERTISSEUR DE COUPLE (VERSION) | 621 |
| VERROUILLAGE DE CONVERTISSEUR DE COUPLE (VERSION) | 621 |
| CONVERTISSEUR DE COUPLE (ASS) | 622 |
| BOÎTE DE VITESSES (VERSION) | 629 |
| JOINT UNIVERSEL (ASS) | 630 |
| SOUPAPE ET MONTAGE - EMBRAYAGE DE VERROUILLAGE (ASS) | 633 |
| CLAPET DE RETENUE (ENS) | 634 |
| SOUPAPE DE MODULATION (ASS) | 635 |
| CLAPET DE DECHARGE (ASS) | 638 |
| SOUPAPE - SOLÉNOÏDE (ASS) | 641 |
| ROUE ET RÉDUCTEURS (ASS) | 642 |
| **CHÂSSIS ET BENNE** | 645 |
| PARE-CHOCS AR (ASS) | 645 |
| COUVERCLE-PARE-CHOCS (ASS) | 650 |
| COUVERCLE DE COFFRET ÉLECTRONIQUE (ASS) | 654 |
| DÉFLECTEUR - CAPOT (ASS) | 655 |
| PORTE DE VISITE (ASS) | 656 |
| BARRE D'ATTELAGE (ASS) | 659 |
| GARDE-BOUE AV (ASS) | 660 |
| GARDE-BOUE AR (ASS) | 663 |
| CLOISON PARE-FEU (ASS) | 665 |
| BÂTI - CHARGEUSE (ENS) | 666 |
| BÂTI AR (ENS) | 668 |
| BLINDAGE INFÉRIEUR (ASS) | 675 |
| CARTER - BLINDAGE (ASS) | 679 |
| PROTECTION AV (ASS) | 680 |
| BLINDAGE DU RÉSERVOIR HYDRAULIQUE (ASS) | 681 |
| PROTECTEUR DES CANALISATIONS (ASS) | 682 |
| BLINDAGE DE TRANSMISSION (ASS) | 683 |
| PROTÈGE-RADIATEUR (ASS) | 684 |
| BLINDAGE AR | 690 |
| PROTÈGE-CAPTEUR (ASS) | 694 |
| BOULONNERIE DE BÂTI DE CHARGEUSE (ASS) | 695 |
| BOULONNERIE DE BÂTI ARRIÈRE (ASS) | 700 |
| ATTELAGE D'ARTICULATION (ASS) | 704 |
| CAPOT ET PROTECTION (ASS) | 706 |
| ÉCHELLE ET GARDE-BOUE VERSION) | 715 |
| ECHELLE (ASS) | 716 |
| CANALISATIONS DE GRAISSAGE AUTOMATIQUE (ASS) | 726 |
| CANALISATIONS DE GRAISSAGE (ASS) | 842 |
| LIAISON - VERROUILLAGE DE CHÂSSIS DE DIRECTION (ASS) | 849 |
| GRAISSAGE AUTOMATIQUE (VERSION) | 850 |
| PANNEAU LATERAL (ASS) | 856 |
| POMPE DE GRAISSAGE (ASS) | 858 |
| ÉCRAN THERMIQUE DE COMPARTIMENT MOTEUR | 861 |
| MARCHEPIED (ASS) | 864 |
| INSONORISATION (VERSION) | 865 |
| INSONORISATION (ASS) | 866 |
| RÉSERVOIR ET POMPE DE GRAISSAGE (ASS) | 872 |
| SOUPAPE ET CONDUITES DE GRAISSAGE (ASS) | 876 |
| SOUPAPE DE DISTRIBUTION DE GRAISSAGE (ASS) | 949 |
| **CIRCUIT DE FREINS** | 957 |
| ACCUMULATEUR - FREIN | 957 |
| SUPPORT - PÉDALE DE FREIN (ASS) | 960 |
| FREIN DE STATIONNEMENT (ASS) | 964 |
| FREIN DE MANOEUVRE (ASS) | 966 |
| COMMANDE DE LA PÉDALE DE FREIN (ASS) | 967 |
| COMMANDE DE FREIN DE STATIONNEMENT (ASS) | 969 |
| FREIN DE MANOEUVRE - COMMANDE (ASS) | 975 |
| CANALISATIONS DU FREIN DE MANOEUVRE (ASS) | 985 |
| POMPE A ENGRENAGES (ASS) | 989 |
| SOUPAPE ET MONTAGE - COMMANDE DE FREIN (ASS) | 990 |
| DISTRIBUTEUR DE FREIN (ASS) | 996 |
| CLAPET DE DECHARGE (ASS) | 997 |
| VANNE PILOTE (ASS) | 999 |
| **CIRCUIT DE DIRECTION** | 1002 |
| VERIN DE DIRECTION ET MONTAGE (ASS) | 1002 |
| VERIN DE DIRECTION (ASS) | 1004 |
| PROTECTEUR DE VERIN DE DIRECTION (ASS) | 1007 |
| CANALISATION DE DIRECTION AUXILIAIRE | 1008 |
| CANALISATIONS DE DIRECTION (ASS) | 1012 |
| CANALISATIONS DE NEUTRALISATION DE DIRECTION (ASS) | 1025 |
| BOUCHON-DISTRIBUTEUR (ASS) | 1029 |
| POMPE A ENGRENAGES (ASS) | 1030 |
| POMPE A PISTONS (ASS) | 1032 |


* TRADUCTION NON DISPONIBLE AU MOMENT DE LA PUBLICATION

# TABLE DES MATIÈRES


| Désignation | Page |
|---|---|
| GROUPE DE ROTATION DE POMPE | 1034 |
| DIRECTION (ENS) | 1035 |
| CLAPET DE RETENUE (ENS) | 1036 |
| SOUPAPE PILOTE (ASS) | 1039 |
| SOUPAPE - CARTOUCHE PILOTE (ASS) | 1040 |
| DISTRIBUTEUR DE POMPE (ASS) | 1042 |
| CLAPET DE DECHARGE (ASS) | 1043 |
| SOUPAPE SELECTRICE ET REGULATRICE DE PRESSION | 1045 |
| VANNE PILOTE (ASS) | 1046 |
| SOUPAPE DE DIRECTION (ASS) | 1047 |
| SOUPAPE DE NEUTRALISATION DE DIRECTION (ASS) | 1055 |
| **CIRCUIT HYDRAULIQUE** | 1056 |
| ACCUMULATEUR - COMMANDE DE TRANSLATION (ASS) | 1056 |
| COMMANDE DE SYSTÈME PILOTE (ASS) | 1058 |
| COMMANDE ET CANALIS. - TRANSLATION (ASS) | 1062 |
| COMMANDE DE TRANSLATION (VERSION) | 1067 |
| REFROIDISSEUR D'HUILE HYDRAULIQUE (ASS) | 1068 |
| COUVERCLE DE RÉSERVOIR HYDRAULIQUE | 1070 |
| VÉRIN ET CAPTEUR (ASS) | 1071 |
| VÉRIN DE LEVAGE ET CAPTEUR (ASS) | 1074 |
| VÉRIN ET CAPTEUR D'INCLINAISON (ASS) | 1076 |
| VÉRIN DE LEVAGE (ASS) | 1078 |
| VÉRIN D'INCLINAISON (ASS) | 1080 |
| FILTRE ET CANALISATIONS - VIDANGE DE CARTER | 1082 |
| FILTRE A HUILE (ASS) | 1085 |
| VERSION HYDRAULIQUE | 1087 |
| CANALISATIONS AV | 1088 |
| CANALISATIONS HYDRAULIQUES (ASS) | 1094 |
| CANALISATIONS HYDRAULIQUES DE VENTILATEUR (ASS) | 1102 |
| CANALISATIONS DE VÉRIN DE LEVAGE (ASS) | 1115 |
| CANALISATIONS DU VÉRIN D'INCLINAISON (ASS) | 1118 |
| MOTEUR ET MONTAGE DE VENTILATEUR HYDRAULIQUE (ASS) | 1128 |
| GROUPE DE MOTEUR A PISTONS | 1129 |
| POMPE ET MONTAGE-VENTILATEUR HYDRAULIQUE | 1130 |
| POMPE D'EQUIPEMENT ET MONTAGE (ASS) | 1132 |
| POMPE A PISTONS (ASS) | 1133 |
| GROUPE DE ROTATION DE MOTEUR | 1142 |
| GROUPE DE ROTATION DE POMPE | 1143 |
| RÉSERVOIR HYDRAULIQUE ET MONTAGE (ASS) | 1144 |
| VERSION DE VASE D'EXPANSION | 1145 |
| RESERVOIR D'EXPANSION (ASS) | 1146 |
| RÉSERVOIR HYDRAULIQUE (ASS) | 1148 |
| COMMANDE PRINCIPALE DE SOUPAPE ET MONTAGE (ASS) | 1153 |
| CLAPET DE RETENUE (ENS) | 1159 |
| SOUPAPE DE VENTILATEUR À VITESSE VARIABLE (ASS) | 1160 |
| SOUPAPE DE COMMANDE PRINCIPALE (ASS) | 1161 |
| SOUPAPE A COMMANDE MANUELLE (ASS) | 1170 |
| DISTRIBUTEUR DE POMPE (ASS) | 1171 |
| CLAPET DE DECHARGE (ASS) | 1173 |
| DISTRIBUTEUR DE COMMANDE ANTI-TANGAGE | 1180 |
| VANNE PILOTE (ASS) | 1182 |
| SOUPAPE - SOLÉNOÏDE (ASS) | 1184 |
| **ÉQUIPEMENTS** | 1187 |
| FLÈCHE ET ROULEMENT (ENS) | 1187 |
| FLÈCHE-CHARGEUSE (ASS) | 1189 |
| COMMANDE DE GODET (ASS) | 1191 |
| BOULONNERIE DE FLÈCHE (ASS) | 1198 |
| LEVAGE (VERSION) | 1204 |
| TRINGLERIE DE GODET (ASS) | 1206 |
| AXE ET JOINT - TIMONERIE (ASS) | 1208 |
| **OUTILS DE TRAVAIL** | 1211 |
| PORTE-POINTE (ASS) | 1211 |
| PORTE-POINTE | 1213 |
| GODET POUR CHARBON (ENS) | 1229 |
| GODET NORMAL (ENS) | 1231 |
| GODET-ROCHE (ENS) | 1235 |
| GODET POUR CHARBON (ASS) | 1265 |
| GODET NORMAL (ASS) | 1266 |
| GODET-ROCHE (ASS) | 1267 |
| LAME DE BASE (ENS) | 1275 |
| EMBOUT ET LAME DE COUPE (ASS) | 1278 |
| LAME DE COUPE (ASS) | 1278 |
| SEGMENT DE LAME DE COUPE (ASS) | 1280 |
| LAME DE COUPE | 1281 |
| SEGMENT DE LAME | 1300 |
| PROTECTION DE COIN DE GODET (ASS) | 1309 |
| PROTECTEURS DE LAME (ASS) | 1310 |


* TRADUCTION NON DISPONIBLE AU MOMENT DE LA PUBLICATION

# TABLE DES MATIÈRES


| Désignation | Page |
|---|---|
| PROTECTEUR DE LONGERON (ASS) | 1311 |
| POINTE ABRASION (ASS) | 1312 |
| POINTE LONGUE (ASS) | 1315 |
| POINTE PENETRATION | 1319 |
| POINTE COURTE (ASS) | 1323 |
| POINTE DE PÉNÉTRATION EXTRA-ROBUSTE | 1325 |
| POINTE LONGUE | 1326 |
| **POSTE DE CONDUITE** | 1327 |
| REGLAGE DE SIEGE (ASS) | 1327 |
| SIÈGE - COMPRESSEUR D'AIR (ASS) | 1328 |
| CLIMATISEUR ET MONTAGE (ASS) | 1330 |
| CLIMATISEUR (ASS) | 1331 |
| BRAS D'ESSUIE-GLACE (ASS) | 1334 |
| CABINE (VERSION) | 1336 |
| COMPRESSEUR DE REFRIGERANT (ASS) | 1339 |
| CONDENSEUR DE RÉFRIGÉRANT | 1341 |
| COMMANDE ÉLECTROHYDRAULIQUE (ASS) | 1342 |
| GROUPE DE CONTROLE | 1349 |
| COMMANDE DE DIRECTION (ASS) | 1352 |
| COMMANDE DE BRAS (ASS) | 1355 |
| VERROUILLAGE DE COMMANDE STIC | 1358 |
| COMMANDE DE NEUTRALISATION DE BOÎTE DE VITESSES (ASS) | 1360 |
| COMMANDE DE MONITEUR NON PROGRAMMÉE (ASS) | 1361 |
| COUVRE-CONSOLE (ASS) | 1362 |
| AFFICHAGE DE LA CAMÉRA (ASS) | 1363 |
| PORTIÈRE DE CABINE (ASS) | 1364 |
| PORTIÈRE DU COFFRE DE RANGEMENT (ASS) | 1373 |
| CONDUIT ET FILTRE À AIR DE CABINE (ASS) | 1374 |
| GAINE D'AIR (ASS) | 1376 |
| KLAXON ÉLECTRIQUE (ASS) | 1378 |
| MONTAGE DES COMMANDES (ASS) | 1379 |
| MONTAGE DE RADIO (ASS) | 1381 |
| CABINE - REVÊTEMENT (ASS) | 1385 |
| CANALISATIONS DE CLIMATISEUR (ASS) | 1391 |
| CANALISATIONS DE CHAUFFAGE DE CABINE (ASS) | 1400 |
| LITTÉRATURE (ASS) | 1403 |
| RÉTROVISEUR (ASS) | 1404 |
| MODULE - QUATRE INSTRUMENTS (ASS) | 1407 |
| ELECTROMODULE DE CHARGE UTILE DE BENNE | 1408 |
| *MONITOR GP-CAMERA | 1409 |
| ÉLECTROMODULE DE CHARGE UTILE DE BENNE | 1411 |
| MOTEUR D'ESSUIE-GLACE (ASS) | 1415 |
| MONTAGE-ANTENNE (ASS) | 1418 |
| MONTAGE DE CABINE (ASS) | 1420 |
| POSTE DE CONDUITE (VERSION) | 1424 |
| COUVERCLE INFÉRIEUR-DOSSIER (ASS) | 1425 |
| TABLEAU DE BORD (ASS) | 1429 |
| RÉGULATEUR - PÉDALE (ASS) | 1432 |
| PLATE-FORME (ASS) | 1434 |
| PLATE-FORME - CABINE (ASS) | 1437 |
| PLATE-FORME DE CABINE | 1439 |
| RADIO (ASS) | 1446 |
| SIÈGE INCLINABLE (ASS) | 1450 |
| TOIT - CABINE (ASS) | 1451 |
| CABINE ROPS FERMÉE (ASS) | 1455 |
| ÉTANCHÉITÉ - GLACE (ASS) | 1467 |
| SIÈGE (ASS) | 1468 |
| SIÈGE AVEC SUSPENSION (ASS) | 1473 |
| SUPPORT DE COMMANDE HYDRAULIQUE (ASS) | 1474 |
| SUPPORT DE SIÈGE (ASS) | 1478 |
| SUPPORT DE COMMANDE DE DIRECTION (ASS) | 1479 |
| INSONORISATION DE CABINE (ASS) | 1482 |
| SIÈGE AVEC SUSPENSION (ASS) | 1483 |
| LAVE-GLACE - VITRE (ASS) | 1485 |
| GLACE DE PORTIÈRE (ASS) | 1486 |
| ESSUIE-GLACE (ASS) | 1488 |
| **MATÉRIEL ET FOURNITURES D'ENTRETIEN** | 1496 |
| CERTIFICATION - MACHINE (ASS) | 1496 |
| PLAQUE SIGNALÉTIQUE (ASS) | 1497 |
| CANALISATIONS DE DIAGNOSTIC (ASS) | 1500 |
| PLAQUES SIGNALETIQUES ET AUTOCOLLANTS (ASS) | 1508 |
| PLAQUE D'IDENTIFICATION MOTEUR (ASS) | 1510 |
| PROTECTION ANTIVANDALISME (ASS) | 1512 |
| OUTIL D'ENTRETIEN DE COMMANDE (ASS) | 1514 |
| **INDEX DE NUMÉROS DE PIÈCES** | B1 |


* TRADUCTION NON DISPONIBLE AU MOMENT DE LA PUBLICATION

# CONTENIDO


| Nombre | Página |
|---|---|
| **INFORMACIÓN GENERAL** | A36 |
| **ALTERNATIVAS DE REPARACIÓN** | A50 |
| **ADITIVOS DE REFRIGERANTE SUPLEMENTARIOS** | A55 |
| **PIEZAS DE MANTENIMIENTO** | A68 |
| **INDICE** | A120 |
| **CONFIGURACIÓN DE MÁQUINAS** | 1 |
| CHASIS (CONFIG) | 1 |
| CONFIGURACIÓN COMÚN | 2 |
| ACERÍA CONFIG | 3 |
| **CONFIGURACION DE MOTOR** | 5 |
| CONFIGURACIÓN DE MOTORES | 5 |
| CONFIGURACIÓN DE MOTOR COMPLETO | 6 |
| MOTOR - NÚCLEO (CONFIG) | 10 |
| CONFIGURACIÓN DE INSTALACIÓN DEL MOTOR | 13 |
| **MOTOR BÁSICO** | 14 |
| GRUPO ACCIONADOR, VALVULA | 14 |
| ADAPTADOR DEL MANDO DE LA BOMBA | 15 |
| BASE DE LA TAPA DE VÁLVULAS Y MAZO DE CABLES DE INYECTOR (GR) | 16 |
| TENSOR DE CORREA (GR) | 20 |
| ÁRBOL DE LEVAS (GR) | 21 |
| TAPA DEL BLOQUE MOTOR (GR) | 22 |
| TAPA DE LA CAJA DELANTERA (GR) | 24 |
| TAPA DEL INSONORIZADOR (GR) | 26 |
| TAPA DEL MECANISMO DE VÁLVULAS (GR) | 27 |
| CIGÜEÑAL (GR) | 30 |
| BLOQUE MOTOR (CONJ) | 31 |
| BLOQUE MOTOR (GR) | 35 |
| CULATA DE CILINDROS (CONJ) | 39 |
| CULATA DE CILINDROS (GR) | 45 |
| AMORTIGUADOR DE VIBRACIONES (GR) | 52 |
| DRENAJE DEL ACEITE DE MOTOR | 53 |
| ACCESORIOS - IMPULSOR DE (GR) | 54 |
| MANDO DE BOMBA (GR) | 55 |
| FRENO DEL MOTOR (GR) | 56 |
| CAJA DELANTERA - TORNILLERÍA DE LA (GR) | 57 |
| TORNILLERÍA DEL MECANISMO DE VÁLVULAS (GR) | 59 |
| VOLANTE (GR) | 60 |
| ENGRANAJE DE ARBOL DE LEVAS (GR) | 61 |
| ENGRANAJE DELANTERO (GR) | 62 |
| VOLANTE - CAJA DE (GR) | 65 |
| CAJA DELANTERA (GR) | 67 |
| CÁNCAMOS DE LEVANTAMIENTO DEL MOTOR (GR) | 69 |
| BOMBA DE COMBUSTIBLE Y MECANISMO DE VÁLVULAS (GR) | 71 |
| MONTAJE DE ALTERNADOR Y COMPRESOR (GR) | 77 |
| CÁRTER - COLECTOR DEL (GR) | 78 |
| PANEL DE INSONORIZACIÓN (GR) | 82 |
| PISTÓN Y BIELA (GR) | 85 |
| TAPÓN DEL BLOQUE MOTOR (GR) | 87 |
| TAPÓN DE CULATA (GR) | 89 |
| CIGÜEÑAL - POLEA DE (GR) | 90 |
| BALANCÍN (GR) | 91 |
| MOTOR - SOPORTE DEL (GR) | 97 |
| **SISTEMA DE LUBRICACIÓN** | 99 |
| EXTENSIÓN GR-ELIMINACIÓN DE VAPORES | 99 |
| TORNILLERÍA DE MONT. DE LA BOMBA DE ACEITE (GR) | 100 |
| TUBO DE LLENADO DE ACEITE (GR) | 101 |
| FILTRO DE ACEITE DEL MOTOR (GR) | 102 |
| ESCAPE DE GASES (GR) | 108 |
| INDICADOR DEL NIVEL DE ACEITE (VARILLA) (GR) | 109 |
| TUBERÍAS DE ACEITE DEL MOTOR (GR) | 110 |
| TURBOCOMPRESOR - TUBERÍAS DE ACEITE DEL (GR) | 115 |
| CAMBIO RÁPIDO DE ACEITE (GR) | 117 |
| BOMBA DE ACEITE DEL MOTOR (GR) | 118 |
| **SISTEMA DE ENFRIAMIENTO** | 119 |
| CONFIGURACIÓN DE ENFRIAMIENTO | 119 |
| ENFRIADOR PARA ALTA TEMPERATURA DE AMBIENTE (CONFIG) | 119 |
| VENTILADOR Y DEFLECTOR (GR) | 120 |
| SUCCIÓN - VENTILADOR DE (GR) | 122 |
| TORNILLERÍA DE LA BOMBA DE AGUA (GR) | 127 |
| TUBERÍAS DEL AGUA (GR) | 128 |
| BOMBA DE AGUA (GR) | 138 |
| RADIADOR (GR) | 141 |
| VÁLVULA DE DRENAJE DEL RADIADOR (GR) | 145 |


* NO HAY TRADUCCION DISPONIBLE EN EL MOMENTO DE LA IMPRESION

# CONTENIDO


| Nombre | Página |
|---|---|
| **SISTEMA DE AIRE DE ADMISIÓN Y ESCAPE** | 146 |
| POSENFRIADOR DE AIRE (GR) | 146 |
| FILTRO DE AIRE (GR) | 148 |
| TAPA DE TURBOCOMPRESOR (GR) | 150 |
| EXPULSOR DE POLVO (GR) | 151 |
| EXTENSIÓN DEL ESCAPE (GR) | 152 |
| AIRE - TUBERÍAS DE (GR) | 154 |
| MÚLTIPLE DE ESCAPE (GR) | 156 |
| MONTAJE DEL SILENCIADOR (GR) | 157 |
| SILENCIADOR (GR) | 158 |
| MULTIPLE - PROTECTOR DEL | 159 |
| TURBOCOMPRESOR (GR) | 160 |
| **SISTEMA DE COMBUSTIBLE** | 164 |
| ADAPTADOR DE LLENADO RÁPIDO DE COMBUSTIBLE (GR) | 164 |
| FILTRO DE COMBUSTIBLE (GR) | 167 |
| FILTRO DE COMBUSTIBLE Y SEPARADOR DE AGUA (GR) | 171 |
| LLENADO RÁPIDO DE COMBUSTIBLE (CONFIG) | 172 |
| TUBERÍAS DE COMBUSTIBLE (GR) | 174 |
| GRUPO DE TUBERÍAS DEL CALENTADOR DE COMBUSTIBLE | 184 |
| TAPON DE BASE DE FILTRO DE COMBUSTIBLE (GR) | 185 |
| BOMBA DE TRANSFERENCIA DE COMBUSTIBLE Y MONTAJE (GR) | 186 |
| BOMBA DE INYECCIÓN DE COMBUSTIBLE (GR) | 188 |
| TANQUE DE COMBUSTIBLE Y GRUPO DE MONTAJE | 191 |
| COMBUSTIBLE - TANQUE DE (GR) | 192 |
| VÁLVULA DE RETENCIÓN (GR) | 195 |
| VALVULA DE PURGA (GR) | 199 |
| SEPARADOR DE AGUA Y BOMBA DE CEBADO DE COMBUSTIBLE (GR) | 200 |
| **SISTEMA ELECTRICO Y DE ARRANQUE** | 201 |
| ALARMA (GR) | 201 |
| CARGA - ALTERNADOR DE (GR) | 202 |
| BATERÍA Y CABLES (GR) | 205 |
| CONFIGURACIÓN DE CÁMARA | 213 |
| CONEXIÓN ELÉCTRICA (GR) | 214 |
| CONTROL DE COMUNICACION Y MONTAJE (GR) | 215 |
| CONTROL ELECTRÓNICO DEL MOTOR Y MONTAJE | 217 |
| CONTROL DE LA POSICION DE LEVANTAMIENTO E INCLINACION (GR) | 219 |
| CONTROL NO PROGRAMADO (GR) | 221 |
| CONFIGURACIÓN ELÉCTRICA | 225 |
| GRUPO ELECTRONICO-COMUNICACION | 227 |
| IMPLEMENTOS (GR ELECTRÓNICO) | 228 |
| ELECTRONICA DE MONITOR (GR) | 229 |
| TREN DE FUERZA-GRUPO ELECTRÓNICO | 230 |
| TORNILLERÍA DEL SISTEMA ELECTRÓNICO (GR) | 233 |
| CALENTADOR DE COMBUSTIBLE | 235 |
| CALENTADOR DEL COMBUSTIBLE (GR) | 236 |
| AGUA DE LAS CAMISAS - CALENTADOR DEL (GR) | 238 |
| INSTALACION DE COMUNICATION (CONFIG) | 240 |
| LÁMPARA DEL TECHO (GR) | 241 |
| REFLECTOR (GR) | 242 |
| LÁMPARA DE FARO DELANTERO (GR) | 249 |
| LUZ DE SEÑAL DE GIRO (GR) | 250 |
| LÁMPARA DE BALIZA DE ADVERTENCIA (GR) | 252 |
| LUCES DE REFLECTOR Y SEÑAL (CONFIG) | 253 |
| SEÑAL DE LUCES (CONFIG) | 253 |
| LUCES DE PARADA Y REFLECTORES (CONFIG) | 254 |
| LUCES DE REFLECTOR (GR) | 255 |
| LUCES DE REFLECTOR Y CAMBIO DE DIRECCION (GR) | 268 |
| LUCES DE PARADA (GR) | 280 |
| LUCES DE PARADA Y DE COLA (GR) | 282 |
| LUZ DE BALIZA (GR) | 284 |
| MONTAJE DEL SENSOR (GR) | 287 |
| SENSOR DE LA POSICION DE LEVANTAMIENTO Y MONTAJE (GR) | 289 |
| SENSOR DE LA POSICION DE INCLINACION Y MONTAJE (GR) | 290 |
| SENSOR DEL MOTOR (GR) | 291 |
| DETECTOR DE POSICIÓN (SISTEMA DE COMBUST.) (GR) | 295 |
| SENSOR DE PRESIÓN (GR) | 299 |
| SENSOR DE VELOCIDAD (GR) | 306 |
| SENSOR DE TEMPERATURA (GR) | 310 |
| AUXILIAR DE ARRANQUE CON ÉTER (GR) | 318 |
| MOTOR DE ARRANQUE ELÉCTRICO (GR) | 320 |
| INTERRUPTOR DE DERIVACIÓN | 324 |
| DISYUNTOR (GR) | 325 |
| INTERRUPTOR DEL FRENO DE MOTOR (GR) | 326 |


* NO HAY TRADUCCION DISPONIBLE EN EL MOMENTO DE LA IMPRESION

# CONTENIDO


| Nombre | Página |
|---|---|
| INTERRUPTOR MAGNÉTICO (GR) | 328 |
| INTERRUPTOR DE ALMACENAMIENTO DE CARGA UTIL (GR) | 330 |
| INTERRUPTOR DE PRESIÓN (GR) | 331 |
| INTERRUPTOR DEL CONTROL DE AMORTIGUACIÓN (GR) | 333 |
| INTERRUPTOR DE VOLQUETE (GR) | 334 |
| INTERRUPTOR DEL SEÑALERO (GR) | 335 |
| INTERRUPTOR DE VOLQUETE (GR) | 337 |
| INTERRUPTOR DEL LIMPIADOR (GR) | 338 |
| GRUPO DE VÁLVULA-ARRANQUE CON ÉTER | 339 |
| RETROCESO - ALARMA DE (GR) | 341 |
| GRUPO DE CABLES-CONTROL DE AUTOLUBRICACIÓN | 342 |
| CABLES DEL PARAGOLPES (GR) | 347 |
| CABLES DE LA CABINA (GR) | 350 |
| GRUPO DE CABLES DE CÁMARA | 384 |
| ALAMBRADO DE COMUNICACION (GR) | 385 |
| *WIRING GP-ELECTRONICS BAY | 386 |
| CABLES DEL MOTOR (GR) | 413 |
| CABLES DEL SISTEMA ELECTRÓNICO DEL MOTOR (GR) | 423 |
| CABLES DELANTEROS (GR) | 427 |
| CABLES DE CALEFACCIÓN (GR) | 434 |
| CABLES DE LA MÁQUINA (GR) | 435 |
| CABLES DEL TREN DE FUERZA (GR) | 454 |
| CABLES POSTERIORES (GR) | 465 |
| CABLES DE SENSOR (GR) | 468 |
| CABLES DE PARADA DE EMERGENCIA (GR) | 477 |
| CABLES DE TRANSMISIÓN (GR) | 481 |
| CABLES DE INYECTOR (GR) | 483 |
| **TREN DE FUERZA** | 484 |
| EJE FIJO (CONFIG) | 484 |
| EJE OSCILANTE (CONFIG) | 484 |
| EJE FIJO (GR) | 485 |
| EJE OSCILANTE (GR) | 486 |
| CAJA Y PIEZAS DE LOS PLANETARIOS | 488 |
| CONTROL HIDRÁULICO DE LA TRANSMISIÓN (GR) | 489 |
| *COOLER & FAN GP-AXLE OIL | 493 |
| ENFRIADOR DEL ACEITE DEL EJE (CONFIG) | 508 |
| ENFRIADOR DE ACEITE DEL EJE (GR) | 509 |
| TAPA DE TRANSMISION (GR) | 515 |
| DIFERENCIAL Y CORONA (GR) | 517 |
| DIFERENCIAL (GR) | 520 |
| DIFERENCIAL NOSPIN (GR) | 521 |
| TORNILLERÍA DE MONTAJE DEL EJE (GR) | 523 |
| FILTRO Y MONTAJE DEL TREN DE FUERZA (GR) | 524 |
| FILTRO DE ACEITE (GR) | 525 |
| INDICADOR DEL NIVEL DE ACEITE (VARILLA) (GR) | 528 |
| MIRILLA DE MEDIDOR (GR) | 530 |
| ENGRANAJE DE TRANSFERENCIA DE ENTRADA (GR) | 531 |
| ENGRANAJE DE TRANSFERENCIA DE SALIDA | 534 |
| TUBERÍAS DEL ENFRIADOR DE ACEITE DEL EJE (GR) | 542 |
| *LINES GP-AXLE OIL COOLER FAN | 564 |
| TUBERÍAS DE VENTILACIÓN DEL EJE (GR) | 572 |
| TUBERÍAS DE ACEITE DEL TREN DE FUERZA (GR) | 574 |
| MONTAJE DE ARO | 589 |
| MONTAJE DEL CONVERTIDOR DE PAR (GR) | 589 |
| TRANSMISIÓN PLANETARIA (GR) | 590 |
| TREN DE FUERZA (CONFIG) | 595 |
| BOMBA DE ENGRANAJES (GR) | 596 |
| BOMBA DE LA TRANSMISIÓN (GR) | 598 |
| LLANTA (CONFIG) | 601 |
| ARO DESMONTABLE (GR) | 602 |
| EJE DE MANDO (GR) | 605 |
| EJE DE MANDO DE ENTRADA (GR) | 607 |
| JUNTA DESLIZANTE (GR) | 608 |
| SOPORTE DE LA TRANSMISIÓN (GR) | 609 |
| ARO Y RUEDA | 611 |
| CONVERTIDOR DE PAR Y CAJA (GR) | 617 |
| CONVERTIDOR DE PAR (CONFIG)) | 621 |
| CONVERTIDOR DE PAR CON DESCONEXIÓN (CONFIG) | 621 |
| CONVERTIDOR DE PAR (GR) | 622 |
| TRANSMISION (CONFIG) | 629 |
| JUNTA UNIVERSAL (GR) | 630 |
| VÁLVULA DEL EMBRAGUE DE DESCONEXIÓN Y MONTAJE (GR) | 633 |
| VÁLVULA DE RETENCIÓN (GR) | 634 |
| VÁLVULA DE MODULACIÓN (GR) | 635 |
| VÁLVULA DE ALIVIO (GR) | 638 |
| VÁLVULA DE SOLENOIDE (GR) | 641 |
| RUEDA Y MANDOS FINALES | 642 |
| **BASTIDOR Y CAJA** | 645 |
| PARAGOLPES TRASERO (GR) | 645 |
| TAPA DEL PARAGOLPES (GR) | 650 |
| *COVER GP-ELECTRONICS BAY | 654 |
| DEFLECTOR DE CAPÓ (GR) | 655 |


* NO HAY TRADUCCION DISPONIBLE EN EL MOMENTO DE LA IMPRESION

# CONTENIDO


| Nombre | Página |
|---|---|
| PUERTA DE ACCESO (GR) | 656 |
| BARRA DE TIRO (GR) | 659 |
| GUARDABARROS DELANTERO (GR) | 660 |
| GUARDABARROS TRASERO (GR) | 663 |
| MAMPARA ANTITÉRMICA (GR) | 665 |
| BASTIDOR DEL CARGADOR (CONJ) | 666 |
| BASTIDOR TRASERO (CONJ) | 668 |
| PROTECTOR INFERIOR (GR) | 675 |
| CÁRTER - PROTECTOR DEL (GR) | 679 |
| PROTECTOR DELANTERO (GR) | 680 |
| PROTECTOR DEL TANQUE HIDRÁULICO (GR) | 681 |
| PROTECTOR DE LAS TUBERÍAS (GR) | 682 |
| PROTECTOR DEL TREN DE FUERZA (GR) | 683 |
| PROTECTOR DEL RADIADOR (GR) | 684 |
| PROTECTOR POSTERIOR (GR) | 690 |
| PROTECTOR GR-SENSOR | 694 |
| TORNILLERIA GR-BASTIDOR CARGADOR | 695 |
| TORNILLERIA GR-BASTIDOR TRASERO | 700 |
| ENGANCHE ARTICULADO (GR) | 704 |
| CAPO Y PROTECTOR (GR) | 706 |
| ESCALERILLA Y GUARDABARROS (CONFIG) | 715 |
| ESCALERILLA (GR) | 716 |
| GRUPO DE TUBERIAS DE LUBRICACIÓN AUTOMÁTICA | 726 |
| TUBERÍAS DE ENGRASE (GR) | 842 |
| TUBERÍAS DE LUBRICACIÓN (GR) | 848 |
| TIRANTE DE TRABA DEL BASTIDOR DE DIRECCIÓN (GR) | 849 |
| LUBRICACION AUTOMATICA (CONFIG) | 850 |
| PANEL LATERAL (GR) | 856 |
| BOMBA DE LUBRICACIÓN (GR) | 858 |
| PROTECTOR TÉRMICO DEL COMPARTIMIENTO DEL MOTOR (GR) | 861 |
| ESTRIBO DEL OPERADOR (GR) | 864 |
| INSONORIZADOR (CONFIG) | 865 |
| INSONORIZADOR (GR) | 866 |
| *TANK & PUMP GP-LUBRICATION | 872 |
| VÁLVULAS Y TUBERIAS, LUBRICACIÓN | 876 |
| VÁLVULA DE DISTRIBUCIÓN DE LUBRICACIÓN (GR) | 949 |
| **SISTEMA DE FRENOS** | 957 |
| ACUMULADOR DEL FRENO (GR) | 957 |
| BASE DEL FRENO DE PIE (GR) | 960 |
| FRENO DE ESTACIONAMIENTO (GR) | 964 |
| FRENO DE SERVICIO (GR) | 966 |
| CONTROL DEL PEDAL DE FRENO (GR) | 967 |
| CONTROL DEL FRENO DE ESTACIONAMIENTO | 969 |
| FRENO DE SERVICIO - CONTROL (GR) | 975 |
| TUBERÍAS DEL FRENO DE SERVICIO (GR) | 985 |
| BOMBA DE ENGRANAJES (GR) | 989 |
| VÁLVULA Y MONTAJE DEL CONTROL DE FRENO (GR) | 990 |
| VÁLVULA DE CONTROL DEL FRENO (GR) | 996 |
| VÁLVULA DE ALIVIO (GR) | 997 |
| VÁLVULA DE LANZADERA (GR) | 999 |
| **SISTEMA DE DIRECCIÓN** | 1002 |
| CILINDRO DE DIRECCIÓN Y MONTAJE (GR) | 1002 |
| CILINDRO DE DIRECCIÓN (GR) | 1004 |
| *GUARD GP-STEERING CYLINDER | 1007 |
| TUBERÍAS DE LA DIRECCIÓN SECUNDARIA (GR) | 1008 |
| TUBERÍAS DE DIRECCIÓN (GR) | 1012 |
| TUBERÍAS DE NEUTRALIZACIÓN DE LA DIRECCIÓN (GR) | 1025 |
| TAPON DE VALVULA DE CONTROL (GR) | 1029 |
| BOMBA DE ENGRANAJES (GR) | 1030 |
| BOMBA DE PISTONES (GR) | 1032 |
| GRUPO GIRATORIO DE BOMBA | 1034 |
| DIRECCIÓN (CONFIG) | 1035 |
| VÁLVULA DE RETENCIÓN (GR) | 1036 |
| VÁLVULA PILOTO (GR) | 1039 |
| VALVULA PILOTO DE CARTUCHO (GR) | 1040 |
| VALVULA DE CONTROL DE LA BOMBA (GR) | 1042 |
| VÁLVULA DE ALIVIO (GR) | 1043 |
| VÁLVULA SELECTORA Y DE CONTROL DE PRESIÓN (GR) | 1045 |
| VÁLVULA DE LANZADERA (GR) | 1046 |
| VÁLVULAS DE LA DIRECCIÓN (GR) | 1047 |
| VÁLVULA NEUTRALIZADORA DE DIRECCIÓN (GR) | 1055 |
| **SISTEMA HIDRÁULICO** | 1056 |
| ACUMULADOR DE CONTROL DE AMORTIGUACION (GR) | 1056 |
| ACCIONADOR DE CONTROL PILOTO (GR) | 1058 |
| CONTROL DE DESPLAZAMIENTO Y TUBERÍAS (GR) | 1062 |


* NO HAY TRADUCCION DISPONIBLE EN EL MOMENTO DE LA IMPRESION

# CONTENIDO


| Nombre | Página |
|---|---|
| CONTROL DE AMORTIGUACIÓN (CONFIG) | 1067 |
| ENFRIADOR DEL ACEITE HIDRAULICO (GR) | 1068 |
| TAPA DEL TAPÓN DEL TANQUE HIDRÁULICO (GR) | 1070 |
| CILINDRO Y SENSOR GR | 1071 |
| SENSOR Y CILINDRO DE LEVANTAMIENTO (GR) | 1074 |
| CILINDRO Y SENSOR GR-INCLINACIÓN | 1076 |
| CILINDRO DE LEVANTAMIENTO (GR) | 1078 |
| INCLINACIÓN HORIZONTAL - CILINDRO DE (GR) | 1080 |
| FILTRO Y TUBERÍAS DE LA CAJA DE DRENAJE (GR) | 1082 |
| FILTRO DE ACEITE (GR) | 1085 |
| HIDRÁULICA (CONFIG) | 1087 |
| TUBERÍAS DELANTERAS (GR) | 1088 |
| TUBERÍAS HIDRÁULICAS (GR) | 1094 |
| TUBERÍAS HIDRÁULICAS DEL VENTILADOR (GR) | 1102 |
| CILINDRO DE LEVANTAMIENTO - TUBERÍAS DEL (GR) | 1115 |
| TUBERÍAS DEL CILINDRO DE INCLINACIÓN (GR) | 1118 |
| MOTOR Y MONTAJE DE VENTILADOR HIDRAULICO (GR) | 1128 |
| PISTONES DEL MOTOR (GR) | 1129 |
| BOMBA Y MONTAJE DE VENTILADOR HIDRAULICO (GR) | 1130 |
| BOMBA DE IMPLEMENTOS Y MONTAJE (GR) | 1132 |
| BOMBA DE PISTONES (GR) | 1133 |
| GRUPO DE ROTACIÓN DEL MOTOR (GR) | 1142 |
| GRUPO GIRATORIO DE BOMBA | 1143 |
| TANQUE HIDRÁULICO Y MONTAJE (GR) | 1144 |
| CONFIGURACIÓN DE TANQUE, EXPANSIÓN | 1145 |
| TANQUE DE EXPANSIÓN (GR) | 1146 |
| TANQUE HIDRÁULICO (GR) | 1148 |
| MONTAJE Y VALVULA DEL CONTROL PRINCIPAL (GR) | 1153 |
| VÁLVULA DE RETENCIÓN (GR) | 1159 |
| GRUPO DE VÁLVULA, VENTILADOR | 1160 |
| VÁLVULA DEL CONTROL PRINCIPAL (GR) | 1161 |
| VÁLVULA DE CONTROL MANUAL (GR) | 1170 |
| VALVULA DE CONTROL DE LA BOMBA (GR) | 1171 |
| VÁLVULA DE ALIVIO (GR) | 1173 |
| VÁLVULA DE CONTROL DE LA AMORTIGUACIÓN (GR) | 1180 |
| VÁLVULA DE LANZADERA (GR) | 1182 |
| VÁLVULA DE SOLENOIDE (GR) | 1184 |
| **IMPLEMENTOS** | 1187 |
| PLUMA Y COJINETE (CONJ) | 1187 |
| PLUMA DE CARGADOR (GR) | 1189 |
| CONTROL DEL CUCHARÓN (GR) | 1191 |
| TORNILLERIA GR-PLUMA | 1198 |
| LEVANTAMIENTO (CONFIG) | 1204 |
| VARILLAJE DEL CUCHARÓN (GR) | 1206 |
| PASADOR Y SELLO-VARILLAJE (GR) | 1208 |
| **HERRAMIENTAS** | 1211 |
| GRUPO DE PUNTA Y ADAPTADOR | 1211 |
| PUNTA ADAPTADORA | 1213 |
| CUCHARÓN PARA CARBÓN (CONJ) | 1229 |
| CUCHARÓN DE USO GENERAL (CONJ) | 1231 |
| CUCHARÓN PARA ROCA (CONJ) | 1235 |
| CUCHARÓN PARA CARBÓN (GR) | 1265 |
| CUCHARÓN DE USO GENERAL (GR) | 1266 |
| CUCHARÓN PARA ROCA (GR) | 1267 |
| CUCHILLA DE BASE (CONJ) | 1275 |
| GRUPO DE CANTONERA Y CUCHILLA | 1278 |
| CUCHILLA (GR) | 1278 |
| SEGMENTO DE CUCHILLA (GR) | 1280 |
| CUCHILLA | 1281 |
| SEGMENTO DE CUCHILLA | 1300 |
| PROTECTOR DE ESQUINA DE CUCHARON (GR) | 1309 |
| PROTECTOR DE LA CUCHILLA (GR) | 1310 |
| GRUPO DE PROTECTOR DE BARRA LATERAL | 1311 |
| PUNTA RESISTENTE A LA ABRASIÓN (GR) | 1312 |
| PUNTA LARGA (GR) | 1315 |
| PUNTA PARA PENETRACIÓN (GR) | 1319 |
| PUNTA CORTA (GR) | 1323 |
| *TIP-HEAVY PENETRATION | 1325 |
| PUNTA LARGA | 1326 |
| **PUESTO DEL OPERADOR** | 1327 |
| AJUSTADOR DEL ASIENTO (GR) | 1327 |
| COMPRESOR DE AIRE DEL ASIENTO (GR) | 1328 |
| ACONDICIONADOR DE AIRE Y MONTAJE (GR) | 1330 |
| ACONDICIONADOR DE AIRE (GR) | 1331 |
| BRAZO DE LIMPIAPARABRISAS (GR) | 1334 |


* NO HAY TRADUCCION DISPONIBLE EN EL MOMENTO DE LA IMPRESION

# CONTENIDO


| Nombre | Página |
|---|---|
| CABINA (CONFIG) | 1336 |
| COMPRESOR DE REFRIGERANTE (GR) | 1339 |
| CONDENSADOR DE REFRIGERANTE (GR) | 1341 |
| CONTROL ELECTROHIDRAULICO (GR) | 1342 |
| CONTROL DE MONITOR (GR) | 1349 |
| CONTROL DE DIRECCIÓN (GR) | 1352 |
| CONTROL DE LA PALANCA (GR) | 1355 |
| TRABA DE LA PALANCA DE CONTROL (GR) | 1358 |
| GRUPO DE CONTROL, ANULACIÓN DE TRANSMISION | 1360 |
| GRUPO DE CONTROL-MONITOR NO PROGRAMADO | 1361 |
| CUBIERTA DE LA CONSOLA (GR) | 1362 |
| *DISPLAY GP-CAMERA | 1363 |
| PUERTA DE CABINA | 1364 |
| PUERTECILLA DE ALMACENAMIENTO (GR) | 1373 |
| *DUCT & FILTER GP-CAB AIR | 1374 |
| CONDUCTO DE AIRE (GR) | 1376 |
| BOCINA ELÉCTRICA (GR) | 1378 |
| INSTALACIÓN DE CONTROLES (GR) | 1379 |
| INSTALACIÓN DE RADIO (GR) | 1381 |
| REVESTIMIENTO DE LA CABINA (GR) | 1385 |
| TUBERÍAS DE ACONDICIONADOR DE AIRE (GR) | 1391 |
| TUBERÍAS DE CALEFACCIÓN DE LA CABINA | 1400 |
| PUBLICACIONES (GR) | 1403 |
| RETROVISOR (GR) | 1404 |
| MODULO ELECTRÓNICO DE CUATRO INDICADORES (GR) | 1407 |
| MONITOR DE CARGA ÚTIL (CONFIG) | 1408 |
| *MONITOR GP-CAMERA | 1409 |
| MONITOR DE CARGA ÚTIL (GR) | 1411 |
| MOTOR-LIMPIAPARABRISAS (GR) | 1415 |
| MONTAJE DE ANTENA (GR) | 1418 |
| GRUPO DE MONTAJE DE LA CABINA | 1420 |
| COMPARTIMIENTO DEL OPERADOR (CONFIG) | 1424 |
| SOPORTE DEL RESPALDO (GR) | 1425 |
| TABLERO DE INSTRUMENTOS (GR) | 1429 |
| REGULADOR - PEDAL DEL (GR) | 1432 |
| PLATAFORMA (GR) | 1434 |
| PLATAFORMA DE LA CABINA (GR) | 1437 |
| PLATAFORMA DE LA CABINA | 1439 |
| RADIO (GR) | 1446 |
| RECLINACION DE ASIENTO (GR) | 1450 |
| TECHO DE LA CABINA (GR) | 1451 |
| CABINA ROPS CERRADA (GR) | 1455 |
| SELLADO DEL VIDRIO (GR) | 1467 |
| ASIENTO (GR) | 1468 |
| SUSPENSIÓN - ASIENTO CON (GR) | 1473 |
| SOPORTE DEL CONTROL HIDRÁULICO (GR) | 1474 |
| SOPORTE DEL ASIENTO (GR) | 1478 |
| SOPORTE DE CONTROL DE LA DIRECCIÓN (GR) | 1479 |
| INSONORIZACION DE CABINA (GR) | 1482 |
| ASIENTO CON SUSPENSIÓN (GR) | 1483 |
| LAVAPARABRISAS DE LA VENTANA (GR) | 1485 |
| VENTANA DE LA PUERTA (GR) | 1486 |
| LIMPIAPARABRISAS DE LA VENTANA (GR) | 1488 |
| **EQUIPO DE SERVICIO Y SUMINISTROS** | 1496 |
| CERTIFICACIÓN DE LA MÁQUINA (GR) | 1496 |
| ETIQUETA DE ADVERTENCIA (GR) | 1497 |
| GRUPO DE TUBERIAS DE DIAGNÓSTICO | 1500 |
| CALCOMANÍAS Y PLACAS DE IDENTIFICACIÓN (GR) | 1508 |
| PLACA DE IDENTIFICACIÓN DEL MOTOR (GR) | 1510 |
| GRUPO DE PROTECCIÓN CONTRA EL VANDALISMO | 1512 |
| HERRAMIENTA DE SERVICIO DE CONTROL (GR) | 1514 |
| **INDICE DE NUMEROS DE PIEZA** | B1 |


* NO HAY TRADUCCION DISPONIBLE EN EL MOMENTO DE LA IMPRESION

# ÍNDICE


| Designação | Página |
|---|---|
| **INFORMAÇÃO GERAL** | A40 |
| **ALTERNATIVAS DE REPARO** | A51 |
| **ADITIVOS SUPLEMENTARES DO LÍQUIDO ARREFECEDOR** | A56 |
| **PEÇAS DE MANUTENÇÃO** | A74 |
| **ÍNDICE** | A139 |
| **MÁQUINA - ARRANJO** | 1 |
| CHASSI | 1 |
| ARRANJO BÁSICO | 2 |
| ARRANJO SIDERÚRGICO | 3 |
| **MOTOR - ARRANJO** | 5 |
| MOTOR | 5 |
| MOTOR COMPLETO | 6 |
| MOTOR - NÚCLEO | 10 |
| GRUPO DE INSTALAÇÃO - MOTOR | 13 |
| **MOTOR BÁSICO** | 14 |
| ACIONADOR - VÁLVULA | 14 |
| ADAPTADOR DO COMANDO DA BOMBA | 15 |
| GR. BÁSICO - TAMPA DAS VÁLVULAS E CHICOTE DE INJEÇÃO | 16 |
| TENSOR DA CORREIA | 20 |
| EIXO-COMANDO DE VÁLVULA | 21 |
| TAMPA - BLOCO DO MOTOR | 22 |
| TAMPA - CAIXA DIANTEIRA | 24 |
| TAMPA - REDUÇÃO DE RUÍDOS | 26 |
| TAMPA - MECANISMO DAS VÁLVULAS | 27 |
| VIRABREQUIM | 30 |
| BLOCO DO MOTOR | 31 |
| CABEÇOTE DO MOTOR | 39 |
| AMORTECEDOR | 52 |
| DRENO - ÓLEO DO MOTOR | 53 |
| COMANDO DE ACESSÓRIOS | 54 |
| COMANDO DA BOMBA | 55 |
| FREIO - MOTOR | 56 |
| FIXADORES - CAIXA DIANTEIRA | 57 |
| FIXADORES - MECANISMO DAS VÁLVULAS | 59 |
| VOLANTE DO MOTOR | 60 |
| ENGRENAGEM - EIXO-COMANDO DE VÁLVULAS | 61 |
| ENGRENAGENS DE DISTRIBUIÇÃO | 62 |
| CAIXA DO VOLANTE DO MOTOR | 65 |
| CAIXA DIANTEIRA | 67 |
| LEVANTAMENTO DO MOTOR | 69 |
| MECANISMO DAS VÁLVULAS E BOMBA DE COMBUSTÍVEL | 71 |
| MONTAGEM - ALTERNADOR E COMPRESSOR | 77 |
| CÁRTER DO ÓLEO DO MOTOR | 78 |
| PAINEL- REDUÇÃO DE RUÍDO | 82 |
| PISTÃO E BIELA | 85 |
| BUJÃO DO BLOCO DO CILINDRO | 87 |
| BUJÃO - CABEÇA DO CILINDRO | 89 |
| POLIA DO VIRABREQUIM | 90 |
| BALANCIM | 91 |
| SUPORTE DO MOTOR | 97 |
| **SISTEMA DE LUBRIFICAÇÃO** | 99 |
| EXTENSAO - DESCARTE DE FUMACA | 99 |
| FIXADORES - BOMBA DE ÓLEO DO MOTOR | 100 |
| BOCAL DE ENCHIMENTO DE ÓLEO DO MOTOR | 101 |
| FILTRO - ÓLEO DO MOTOR | 102 |
| ELIMINAÇÃO DE VAPORES DO CÁRTER | 108 |
| INDICADOR - NÍVEL DO ÓLEO (VARETA) | 109 |
| TUBOS - ÓLEO DO MOTOR | 110 |
| TUBOS - ÓLEO DO TURBOALIMENTADOR | 115 |
| ÓLEO - ARRANJO PARA TROCA RÁPIDA | 117 |
| BOMBA DE ÓLEO - MOTOR | 118 |
| **SISTEMA DE ARREFECIMENTO** | 119 |
| ARREFECIMENTO | 119 |
| ARREFECIMENTO - TEMP. AMBIENTE ALTA | 119 |
| VENTILADOR E DEFLETOR | 120 |
| VENTILADOR DE SUCÇÃO | 122 |
| FIXADORES - BOMBA DE ÁGUA | 127 |
| TUBOS - ÁGUA | 128 |
| BOMBA DE ÁGUA | 138 |
| RADIADOR | 141 |
| VÁLVULA DE DRENAGEM DO RADIADOR | 145 |
| **SISTEMA DA ADMISSÃO DE AR E DE ESCAPE** | 146 |
| PÓS-ARREFECEDOR DA ADMISSÃO DE AR | 146 |
| PURIFICADOR DE AR | 148 |
| TAMPA - TURBOALIMENTADOR | 150 |
| EJETOR DE POEIRA | 151 |
| EXTENSÃO DO TUBO DE ESCAPE | 152 |
| TUBOS - AR | 154 |
| COLETOR DE ESCAPE | 156 |
| MONTAGEM - SILENCIADOR | 157 |
| SILENCIADOR | 158 |
| BLINDAGEM DO COLETOR | 159 |

# ÍNDICE


| Designação | Página |
|---|---|
| TURBOALIMENTADOR | 160 |
| **SISTEMA DE COMBUSTÍVEL** | 164 |
| ADAPTADOR - ABASTECIMENTO RÁPIDO DE COMBUSTÍVEL | 164 |
| FILTRO - COMBUSTÍVEL | 167 |
| FILTRO DE COMBUSTÍVEL E SEPARADOR DE ÁGUA | 171 |
| COMBUSTÍVEL - ABASTECIMENTO RÁPIDO | 172 |
| TUBOS - COMBUSTÍVEL | 174 |
| AQUECEDOR DE COMBUSTÍVEL - LINHAS GP | 184 |
| TAMPÃO -N BASE DE FILTRO DE COMBUSTÍVEL | 185 |
| BOMBA E MONTAGEM - TRANSFERÊNCIA DE COMBUSTÍVEL | 186 |
| BOMBA DE INJEÇÃO DO COMBUSTÍVEL | 188 |
| TANQUE DE COMBUSTÍVEL E MONTAGEM | 191 |
| TANQUE DE COMBUSTÍVEL | 192 |
| VÁLVULA DE RETENÇÃO | 195 |
| VÁLVULA DE PURIFICAÇÃO | 199 |
| SEPARADOR DE ÁGUA E BOMBA DE ESCORVA DE COMBUSTÍVEL | 200 |
| **SISTEMA ELÉTRICO E DE PARTIDA** | 201 |
| ALARME | 201 |
| ALTERNADOR DE CORRENTE | 202 |
| BATERIA E CABOS / FIOS ELÉTRICOS | 205 |
| CÂMERA | 213 |
| CONEXÃO - ELÉTRICA | 214 |
| CONTROLE & MONTAGEM-COMUNICAÇÃO | 215 |
| CONTROLE ELETRÔNICO E MONTAGEM - MOTOR | 217 |
| CONTROLE - POSIÇÃO DE INCLINAÇÃO E LEVANTAMENTO | 219 |
| CONTROLE - NÃO PROGRAMADO | 221 |
| SISTEMA ELÉTRICO | 225 |
| SISTEMA ELETRÔNICO-COMUNICAÇÃO | 227 |
| SIST. ELETRÔNICO - ACESSÓRIO | 228 |
| SISTEMA ELETRÔNICO - MONITOR | 229 |
| SISTEMA ELETRÔNICO - TREM DE FORÇA | 230 |
| FIXADOR DO SISTEMA ELETRÔNICO | 233 |
| AQUECEDOR - COMBUSTÍVEL | 235 |
| AQUECEDOR DO COMBUSTÍVEL | 236 |
| AQUECEDOR DA ÁGUA DO MOTOR | 238 |
| INSTALAÇÃO-COMUNICAÇÃO | 240 |
| LÂMPADA - TETO | 241 |
| LÂMPADA - FAROL | 242 |
| FAROL DIANTEIRO | 249 |
| LÂMPADA - SINALIZAÇÃO | 250 |
| LUZ GIRATÓRIA DE ALARME | 252 |
| ILUMINAÇÃO - FAROL E SINALIZAÇÃO | 253 |
| ILUMINAÇÃO - SINALIZAÇÃO | 253 |
| ILUMINAÇÃO - FREIOS E FARÓIS | 254 |
| SISTEMA DE ILUMINAÇÃO - FARÓIS | 255 |
| SISTEMA DE ILUMINAÇÃO - FARÓIS E SINAL | 268 |
| ILUMINAÇÃO - FREIOS | 280 |
| ILUMINAÇÃO - FREIO E MARCHA À RÉ | 282 |
| SIST. DE ILUMINAÇÃO - PISCA-PISCA GIRATÓRIO DE ADVERTÊNCIA | 284 |
| MONTAGEM - SENSOR | 287 |
| SENSOR - POSIÇÃO DE LEVANTAMENTO E MONTAGEM | 289 |
| SENSOR - POSIÇÃO DE INCLINAÇÃO E MONTAGEM | 290 |
| SENSOR DO MOTOR | 291 |
| EMISSOR - POSIÇÃO | 295 |
| SENSOR - PRESSÃO | 299 |
| SENSOR DE VELOCIDADE | 306 |
| SENSOR - TEMPERATURA | 310 |
| AUXILIAR DE PARTIDA A ÉTER | 318 |
| MOTOR ELÉTRICO DE PARTIDA | 320 |
| INTERRUPTOR DE DERIVAÇÃO | 324 |
| CHAVE GERAL | 325 |
| INTERRUPTOR DO FREIO - MOTOR | 326 |
| INTERRUPTOR - MAGNÉTICO | 328 |
| INTERRUPTOR - ARMAZENAMENTO DA CARGA ÚTIL | 330 |
| INTERRUPTOR - PRESSÃO | 331 |
| INTERRUPTOR - SISTEMA DE ABSORCAO DE IMPACTOS | 333 |
| INTERRUPTOR - BALANCIM | 334 |
| INTERRUPTOR DE SINALIZAÇÃO | 335 |
| INTERRUPTOR - BALANCIM | 337 |
| INTERRUPTOR - LIMPADOR DO PÁRA-BRISA | 338 |
| VALVULA - PARTIDA A ETER | 339 |
| ALARME DE MARCHA À RÉ | 341 |
| FIAÇÃO - CONTROLE DE LUBRIFICAÇÃO AUTOMÁTICA | 342 |
| CABOS E FIOS ELÉTRICOS - PÁRA-CHOQUE | 347 |
| CABOS/FIOS ELÉTRICOS - CABINE | 350 |
| FIAÇÃO-CÂMERA | 384 |
| CABO/FIOS ELÉTRICOS-COMUNICAÇÃO | 385 |
| FIAÇAO-SALIÊNCIA DO SISTEMA ELETRÔNICO | 386 |
| CABOS/FIOS ELÉTRICOS - MOTOR | 413 |
| CABOS/FIOS ELÉTRICOS - SISTEMA ELETRÔNICO | 423 |

# ÍNDICE


| Designação | Página |
|---|---|
| CABOS/FIOS ELÉTRICOS - DIANTEIROS | 427 |
| CABOS/FIOS ELÉTRICOS - AQUECEDOR | 434 |
| CABOS/FIOS ELÉTRICOS - MÁQUINA | 435 |
| CABOS/FIOS ELÉTRICOS - TREM DE FORÇA | 454 |
| CABOS/FIOS ELÉTRICOS - TRASEIROS | 465 |
| CABOS/FIOS ELÉTRICOS - SENSOR | 468 |
| CABOS/FIOS ELÉTRICOS - PARADA | 477 |
| CABOS/FIOS ELÉTRICOS - TRANSMISSÃO | 481 |
| CABOS/FIOS ELÉTRICOS - INJETOR | 483 |
| **TREM DE FORÇA** | 484 |
| EIXO FIXO | 484 |
| EIXO OSCILANTE | 484 |
| EIXO FIXO | 485 |
| EIXO OSCILANTE | 486 |
| CARCAÇA DAS ENGRENAGENS PLANETÁRIAS E COMPONENTES | 488 |
| CONTROLE HIDRÁULICO DA TRANSMISSÃO | 489 |
| ARREFECEDOR E VENTILADOR - ÓLEO DO EIXO | 493 |
| ARREFECEDOR DO ÓLEO DO EIXO | 508 |
| TAMPA - TRANSMISSÃO | 515 |
| DIFERENCIAL E COROA | 517 |
| DIFERENCIAL | 520 |
| DIFERENCIAL - NOSPIN | 521 |
| FIXADORES - MONTAGEM DO SEMI-EIXO | 523 |
| FILTRO DO TREM DE FORÇA E MONTAGEM | 524 |
| FILTRO - ÓLEO | 525 |
| INDICADOR - NÍVEL DO ÓLEO (VARETA) | 528 |
| VISOR DE NÍVEL | 530 |
| ENGRENAGEM - TRANSFERÊNCIA DE ENTRADA | 531 |
| ENGRENAGENS DE SAÍDA DE TRANSFERÊNCIA | 534 |
| TUBOS - ARREFECEDOR DE ÓLEO DO EIXO | 542 |
| TUBULAÇÕES - VENTILADOR DO ARREFECEDOR DO ÓLEO DO EIXO | 564 |
| TUBOS - VENTILADOR DO EIXO | 572 |
| TUBOS - ÓLEO DA TRANSMISSÃO | 574 |
| MONTAGEM - ARO | 589 |
| MONTAGEM - CONVERSOR DE TORQUE | 589 |
| ENGRENAGENS PLANETÁRIAS - TRANSMISSÃO | 590 |
| TREM DE FORÇA | 595 |
| BOMBA DE ENGRENAGENS | 596 |
| BOMBA DA TRANSMISSÃO | 598 |
| ARO | 601 |
| ARO DESMONTÁVEL | 602 |
| EIXO DE TRANSMISSÃO | 605 |
| EIXO DO COMANDO DE ENTRADA | 607 |
| JUNTA CORREDIÇA | 608 |
| SUPORTE - TRANSMISSÃO | 609 |
| PNEU E ARO | 611 |
| CONVERSOR DE TORQUE E CARCAÇA | 617 |
| CONVERSOR DE TORQUE | 621 |
| CONVERSOR DE TORQUE - TRAVA | 621 |
| CONVERSOR DE TORQUE | 622 |
| TRANSMISSÃO | 629 |
| JUNTA UNIVERSAL | 630 |
| VÁLVULA DA EMBREAGEM DE TRAVAMENTO E MONTAGEM | 633 |
| VÁLVULA DE RETENÇÃO | 634 |
| VÁLVULA DE MODULAÇÃO | 635 |
| VÁLVULA DE ALÍVIO | 638 |
| VÁLVULA SOLENÓIDE | 641 |
| RODA E COMANDO FINAL | 642 |
| **CHASSI E CARROCERIA** | 645 |
| PÁRA-CHOQUE TRASEIRO | 645 |
| TAMPA - PÁRA-CHOQUE | 650 |
| TAMPA - COMPARTIMENTO DO SISTEMA ELETRÔNICO | 654 |
| DEFLETOR - CAPÔ | 655 |
| PORTA DE ACESSO | 656 |
| BARRA DE TRAÇÃO | 659 |
| PÁRA-LAMA DIANTEIRO | 660 |
| PÁRA-LAMA TRASEIRO | 663 |
| PAINEL TRASEIRO DO MOTOR | 665 |
| CHASSI DIANTEIRO | 666 |
| CHASSI TRASEIRO | 668 |
| PROTETOR INFERIOR | 675 |
| PROTETOR - CÁRTER DO ÓLEO DO MOTOR | 679 |
| PROTETOR - DIANTEIRO | 680 |
| PROTETOR - TANQUE HIDRÁULICO | 681 |
| PROTETOR - TUBOS | 682 |
| PROTETOR - TREM DE FORÇA | 683 |
| PROTETOR - RADIADOR | 684 |
| PROTETOR - TRASEIRO | 690 |
| PROTETOR - SENSOR | 694 |
| FERRAGEM - CHASSI DA CARREGADEIRA | 695 |
| FERRAGEM - CHASSI TRASEIRO | 700 |
| ENGATE - ARTICULAÇÃO | 704 |
| CAPÔ E PROTETOR | 706 |
| ESCADA E PÁRA-LAMA | 715 |
| ESCADA | 716 |

# ÍNDICE


| Designação | Página |
|---|---|
| TUBULAÇÕES - LUBRIFICAÇÃO AUTOMÁTICA | 726 |
| TUBOS - GRAXA | 842 |
| TUBOS - LUBRIFICAÇÃO | 848 |
| ELO - TRAVA DA ARMAÇÃO DA DIREÇÃO | 849 |
| LUBRIFICAÇÃO - AUTOMÁTICA | 850 |
| PAINEL LATERAL | 856 |
| BOMBA DE LUBRIFICAÇÃO | 858 |
| BLINDAGEM DO COMPARTIMENTO DO MOTOR | 861 |
| DEGRAU | 864 |
| RUÍDO - ARRANJO PARA SUPRESSÃO | 865 |
| REDUÇÃO DE RUÍDO | 866 |
| TANQUE E BOMBA - LUBRIFICAÇÃO | 872 |
| VÁLVULA E TUBULAÇÕES - LUBRIFICAÇÃO | 876 |
| VÁLVULA DE LUBRIFICAÇÃO - DISTRIBUIÇÃO | 949 |
| **SISTEMA DE FREIO** | 957 |
| ACUMULADOR - FREIO | 957 |
| BASE DO FREIO - PEDAL | 960 |
| FREIO DE ESTACIONAMENTO | 964 |
| FREIO DE SERVIÇO | 966 |
| CONTROLE DO PEDAL DO FREIO | 967 |
| CONTROLE DO FREIO DE ESTACIONAMENTO | 969 |
| CONTROLE DO FREIO DE SERVIÇO | 975 |
| TUBOS - FREIO DE SERVIÇO | 985 |
| BOMBA DE ENGRENAGENS | 989 |
| VÁLVULA DE CONTROLE E MONTAGEM - FREIOS | 990 |
| VÁLVULA DE CONTROLE DOS FREIOS | 996 |
| VÁLVULA DE ALÍVIO | 997 |
| VÁLVULA DE SEPARAÇÃO | 999 |
| **SISTEMA DE DIREÇÃO** | 1002 |
| CILINDRO DE DIREÇÃO E MONTAGEM | 1002 |
| CILINDRO DA DIREÇÃO | 1004 |
| PROTETOR - CILINDRO DA DIREÇÃO | 1007 |
| TUBOS - DIREÇÃO SECUNDÁRIA | 1008 |
| TUBOS - DIREÇÃO | 1012 |
| TUBOS - NEUTRALIZADOR DA DIREÇÃO | 1025 |
| BUJÃO - VÁLVULA DE CONTROLE | 1029 |
| BOMBA DE ENGRENAGENS | 1030 |
| BOMBA DE PISTÃO | 1032 |
| GRUPO ROTATIVO DA BOMBA | 1034 |
| DIREÇÃO | 1035 |
| VÁLVULA DE RETENÇÃO | 1036 |
| VÁLVULA DE CONTROLE PILOTO | 1039 |
| VÁLVULA DO CARTUCHO PILOTO | 1040 |
| VÁLVULA DE CONTROLE DA BOMBA | 1042 |
| VÁLVULA DE ALÍVIO | 1043 |
| VÁLVULA SELETORA E CONTROLE DE PRESSÃO | 1045 |
| VÁLVULA DE SEPARAÇÃO | 1046 |
| VÁLVULA DA DIREÇÃO | 1047 |
| VÁLVULA - NEUTRALIZADOR DA DIREÇÃO | 1055 |
| **SISTEMA HIDRÁULICO** | 1056 |
| ACUMULADOR DO SISTEMA DE ABSORÇÃO DE IMPACTOS | 1056 |
| ACIONADOR DO CONTROLE PILOTO | 1058 |
| SISTEMA DE ABSORÇÃO DE IMPACTOS E TUBOS | 1062 |
| SISTEMA DE ABSORÇÃO DE IMPACTOS | 1067 |
| ARREFECEDOR DO ÓLEO HIDRÁULICO | 1068 |
| TAMPA - TANQUE HIDRÁULICO | 1070 |
| CILINDRO E SENSOR | 1071 |
| CILINDRO DE LEVANTAMENTO E SENSOR | 1074 |
| CILINDRO E SENSOR - INCLINACAO | 1076 |
| CILINDRO DE LEVANTAMENTO | 1078 |
| CILINDRO DE INCLINAÇÃO | 1080 |
| FILTROS E TUBOS - DRENAGEM DA CAIXA | 1082 |
| FILTRO - ÓLEO | 1085 |
| COMANDO HIDRÁULICO | 1087 |
| TUBOS - DIANTEIROS | 1088 |
| TUBOS - ÓLEO HIDRÁULICO | 1094 |
| TUBOS - VENTILADOR HIDRÁULICOS | 1102 |
| TUBOS - CILINDRO DE LEVANTAMENTO | 1115 |
| TUBOS - CILINDRO DE INCLINAÇÃO | 1118 |
| MOTOR E MONTAGEM - VENTILADOR HIDRÁULICO | 1128 |
| MOTOR - PISTÃO | 1129 |
| BOMBA DO VENTILADOR HIDRÁULICO E MONTAGEM | 1130 |
| BOMBA E MONTAGEM - ACESSÓRIO | 1132 |
| BOMBA DE PISTÃO | 1133 |
| MOTOR DO GRUPO ROTATIVO | 1142 |
| GRUPO ROTATIVO DA BOMBA | 1143 |
| TANQUE DE ÓLEO HIDRÁULICO E MONTAGEM | 1144 |
| TANQUE - EXPANSÃO | 1145 |
| TANQUE DE EXPANSÃO | 1146 |
| TANQUE HIDRÁULICO | 1148 |
| VÁLVULA DO CONTROLE PRINCIPAL E MONTAGEM | 1153 |
| VÁLVULA DE RETENÇÃO | 1159 |

# ÍNDICE


| Designação | Página |
|---|---|
| VÁLVULA - VENTILADOR POR DEMANDA | 1160 |
| VÁLVULA - CONTROLE PRINCIPAL | 1161 |
| VÁLVULA MANUAL | 1170 |
| VÁLVULA DE CONTROLE DA BOMBA | 1171 |
| VÁLVULA DE ALÍVIO | 1173 |
| VÁLVULA DE CONTROLE DE ABSORÇÃO DE IMPACTOS | 1180 |
| VÁLVULA DE SEPARAÇÃO | 1182 |
| VÁLVULA SOLENÓIDE | 1184 |
| **ACESSÓRIOS** | 1187 |
| LANÇA E MANCAL | 1187 |
| LANÇA - CARREGADEIRA | 1189 |
| CONTROLE DA CAÇAMBA | 1191 |
| HARDWARE - LANCA | 1198 |
| LEVANTAMENTO - ARRANJO | 1204 |
| ELOS DE ARTICULAÇÃO DA CAÇAMBA | 1206 |
| PINO E RETENTOR - ARTICULAÇÃO | 1208 |
| **FERRAMENTAS DE TRABALHO** | 1211 |
| ADAPTADOR DA PONTA | 1211 |
| CAÇAMBA PARA CARVÃO | 1229 |
| CAÇAMBA PARA APLICAÇÃO GERAL | 1231 |
| CAÇAMBA PARA ROCHAS | 1235 |
| CAÇAMBA PARA CARVÃO | 1265 |
| CAÇAMBA PARA APLICAÇÃO GERAL | 1266 |
| CAÇAMBA PARA ROCHAS | 1267 |
| BORDA CORTANTE BASE | 1275 |
| BEIRA - PONTA CORTANTE | 1278 |
| BORDA CORTANTE | 1278 |
| BORDA SEGMENTADA DA CAÇAMBA | 1280 |
| BORDA CORTANTE | 1281 |
| BORDA SEGMENTADA | 1300 |
| PROTETOR - CANTO DA CAÇAMBA | 1309 |
| PROTETOR DA BORDA CORTANTE | 1310 |
| PROTETOR - BARRA LATERAL | 1311 |
| PONTA - ABRASÃO | 1312 |
| PONTA LONGA | 1315 |
| PONTA - PENETRAÇÃO | 1319 |
| PONTA CURTA | 1323 |
| PONTA-PENETRAÇÃO PESADA | 1325 |
| PONTA - COMPRIDA | 1326 |
| **ESTAÇÃO DO OPERADOR** | 1327 |
| AJUSTADOR DO ASSENTO | 1327 |
| COMPRESSOR DE AR - ASSENTO | 1328 |
| CONDICIONADOR DE AR E MONTAGEM | 1330 |
| CONDICIONADOR DE AR | 1331 |
| BRACO DO LIMPADOR | 1334 |
| CABINE | 1336 |
| COMPRESSOR DE REFRIGERANTE | 1339 |
| CONDENSADOR DE REFRIGERANTE | 1341 |
| CONTROLE-ELETROIDRÁULICO | 1342 |
| CONTROLE DO PAINEL MONITOR | 1349 |
| CONTROLE DE DIREÇÃO | 1352 |
| CONTROLE INTEGRADO DA TRANSMISSÂO DA DIREÇÃO | 1355 |
| TRAVA - CONTROLE DO BRAÇO | 1358 |
| CONTROLE - NEUTRALIZADOR DA TRANSMISSÃO | 1360 |
| CONTROLE-MONITOR NÃO PROGRAMADO | 1361 |
| TAMPA - PAINEL DE INSTRUMENTOS | 1362 |
| VISOR-CÂMERA | 1363 |
| PORTA DA CABINE | 1364 |
| PORTA DO ARMÁRIO | 1373 |
| DUTO E FILTRO-AR DA CABINE | 1374 |
| DUCTO DE AR | 1376 |
| BUZINA ELÉTRICA | 1378 |
| INSTALAÇÃO DOS CONTROLES | 1379 |
| INSTALAÇÃO DO RÁDIO | 1381 |
| REVESTIMENTO DA CABINE | 1385 |
| TUBOS - AR CONDICIONADO | 1391 |
| TUBOS - AQUECEDOR DA CABINE | 1400 |
| PUBLICAÇÃO | 1403 |
| ESPELHO RETROVISOR | 1404 |
| MÓDULO ELETRÔNICO DE QUATRO INDICADORES | 1407 |
| PAINEL MONITOR DE CARGA ÚTIL | 1408 |
| MONITOR-CÂMERA | 1409 |
| PAINEL MONITOR DE CARGA ÚTIL | 1411 |
| MOTOR - LIMPADOR DO VIDRO | 1415 |
| MONTAGEM-ANTENA | 1418 |
| MONTAGEM - CABINE | 1420 |
| CABINE | 1424 |
| FUNDO - ENCOSTO | 1425 |
| PAINEL DE INSTRUMENTOS | 1429 |
| PEDAL DO GOVERNADOR | 1432 |
| PLATAFORMA | 1434 |
| PLATAFORMA DA CABINE | 1437 |
| PLATAFORMA DO OPERADOR | 1439 |
| RÁDIO | 1446 |
| RECLINAÇÃO - ASSENTO | 1450 |
| TETO - CABINE | 1451 |
| ROPS FECHADA | 1455 |
| RETENÇÃO - VIDRO | 1467 |
| ASSENTO | 1468 |
| ASSENTO COM SUSPENSÃO | 1473 |
| SUPORTE - CONTROLE HIDRÁULICO | 1474 |
| SUPORTE - ASSENTO | 1478 |
| SUPORTE - CONTRÔLE DA DIREÇÃO | 1479 |
| SUPRESSÃO DE RUÍDOS - CABINE | 1482 |
| SUSPENSÃO - ASSENTO | 1483 |
| LAVADOR DO VIDRO | 1485 |
| VIDRO DA PORTA | 1486 |
| LIMPADOR DO VIDRO | 1488 |

# ÍNDICE


| Designação | Página | Designação | Página |
|---|---|---|---|
| **EQUIPAMENTOS DE SERVIÇO E SUPRIMENTOS** | 1496 | | |
| CERTIFICADO - MÁQUINA | 1496 | | |
| DECALQUE | 1497 | | |
| TUBULAÇÕES DE DIAGNÓSTICO | 1500 | | |
| PLACA E DECALQUE | 1508 | | |
| PLACA - IDENTIFICAÇÃO DO MOTOR | 1510 | | |
| PROTEÇÃO CONTRA VANDALISMO | 1512 | | |
| FERRAMENTA - CONTROLE DE SERVIÇO | 1514 | | |
| **ÍNDICE DE NÚMERO DE PEÇA** | B1 | | |

# INHALTSVERZEICHNIS


| Bezeichnung | Seite |
|---|---|
| **ALLGEMEINE HINWEISE** | A44 |
| **REPARATURALTERNATIVEN** | A52 |
| **KÜHLMITTELZUSATZ** | A57 |
| **WARTUNGSTEILE** | A79 |
| **STICHWORTVERZEICHNIS** | A156 |
| **MASCHINE** | 1 |
| FAHRWERK | 1 |
| GRUNDAUSFÜHRUNG | 2 |
| STAHLWERKAUSFÜHRUNG | 3 |
| **MOTOR** | 5 |
| MOTORAUSFÜHRUNG | 5 |
| MOTOR, KOMPLETT | 6 |
| MOTORKÜHLERBLOCK | 10 |
| MOTOR-EINBAUSATZ | 13 |
| **MOTOR (GRUNDAUSFÜHRUNG)** | 14 |
| BETÄTIGUNGSVENTIL | 14 |
| PUMPENANTRIEBSADAPTER | 15 |
| SOCKEL FÜR VENTILDECKEL U. EINSPRITZKABELBAUM | 16 |
| RIEMENSPANNER | 20 |
| NOCKENWELLE | 21 |
| MOTORBLOCKDECKEL | 22 |
| STIRNRADGEHÄUSEDECKEL | 24 |
| SCHALLDÄMPFENDE VERKLEIDUNG | 26 |
| VENTILDECKEL | 27 |
| KURBELWELLE | 30 |
| MOTORBLOCK | 31 |
| ZYLINDERKOPF | 39 |
| DÄMPFER | 52 |
| MOTORÖLABLASS | 53 |
| NEBENANTRIEB | 54 |
| PUMPENANTRIEB | 55 |
| MOTORBREMSE | 56 |
| STIRNRADGEHÄUSE-HALTETEILE | 57 |
| VENTILMECHANISMUS-HALTETEILE | 59 |
| SCHWUNGRAD | 60 |
| NOCKENWELLENZAHNRAD | 61 |
| STIRNRAD | 62 |
| SCHWUNGRADGEHÄUSE | 65 |
| STIRNRADGEHÄUSE | 67 |
| MOTORHUBÖSE | 69 |
| KRAFTOFFPUMPE UND VENTILSTEUERUNG | 71 |
| DREHSTROMGENERATOR - UND KOMPRESSORAUFHAENGUNG | 77 |
| ÖLWANNE | 78 |
| SCHALLDÄMPFUNG | 82 |
| PLEUELSTANGE UND KOLBEN | 85 |
| ZYLINDERBLOCKSCHRAUBE | 87 |
| ZYLINDERKOPFSTOPFEN | 89 |
| KURBELWELLEN-RIEMENSCHEIBE | 90 |
| VENTILKIPPHEBEL | 91 |
| MOTORAUFHÄNGUNG | 97 |
| **SCHMIERSYSTEM** | 99 |
| VERLÄNGERUNG - ENTDUNSTUNG | 99 |
| ÖLPUMPEN-BEFESTIGUNGSTEILE | 100 |
| MOTORÖLEINFÜLLSTUTZEN | 101 |
| ÖLFILTER | 102 |
| ENTDUNSTER | 108 |
| ÖLMESSSTAB | 109 |
| MOTORÖLLEITUNGEN | 110 |
| TURBOLADERÖLLEITUNGEN | 115 |
| ÖLSCHNELLWECHSELANSCHLUSS | 117 |
| SCHMIERPUMPE | 118 |
| **KÜHLSYSTEM** | 119 |
| KÜHLSYSTEM | 119 |
| KÜHLSYSTEM - HOHE UMGEBUNGSTEMPERATUREN | 119 |
| LÜFTER U. LEITBLECH | 120 |
| SAUGLÜFTER | 122 |
| KÜHLWASSERPUMPE - HALTETEILE | 127 |
| KÜHLWASSERLEITUNGEN | 128 |
| KÜHLWASSERPUMPE | 138 |
| KÜHLER | 141 |
| KÜHLERABLASSVENTIL | 145 |
| **LUFTANSAUG- UND ABGASSYSTEM** | 146 |
| LADELUFTKÜHLER | 146 |
| LUFTREINIGER | 148 |
| TURBOLADERVERKLEIDUNG | 150 |
| STAUBAUSWERFER | 151 |
| AUSPUFFROHRVERLÄNGERUNG | 152 |
| DRUCKLUFTLEITUNGEN | 154 |
| AUSPUFFKRÜMMER | 156 |
| SCHALLDÄMPFERSTÜTZEN | 157 |
| SCHALLDÄMPFER | 158 |
| KRÜMMERSCHILD | 159 |
| TURBOLADER | 160 |
| **KRAFTSTOFFSYSTEM** | 164 |
| SCHNELLBETANKUNGSANSCHLUSS | 164 |
| KRAFTSTOFFILTER | 167 |
| WASSERABSCHEIDER- U. KRAFTSTOFFILTER | 171 |
| KRAFTSTOFFEINFÜLLVORRICHTUNG (SCHNELLFÜLLUNG) | 172 |
| KRAFTSTOFFLEITUNGEN | 174 |


* ÜBERSETZUNG ZUM ZEITPUNKT DER DRUCKLEGUNG NICHT VORHANDEN

# INHALTSVERZEICHNIS


| Bezeichnung | Seite |
|---|---|
| KRAFTSTOFFHEIZUNGSLEITUNGEN | 184 |
| KRAFTSTOFFFILTERSOCKELSCHRAUBE | 185 |
| KRAFTSTOFFÖRDERPUMPE UND BEFESTIGUNGSTEILE | 186 |
| KRAFTSTOFFEINSPRITZPUMPE | 188 |
| KRAFTSTOFFTANK U. BEFESTIGUNG | 191 |
| KRAFTSTOFFTANK | 192 |
| SPERRVENTIL | 195 |
| ENTLEERVENTIL | 199 |
| WASSERABSCHEIDER U. KRAFTSTOFFENTLÜFTUNGSPUMPE | 200 |
| **ELEKTRISCHE ANLAGE U. STARTSYSTEM** | 201 |
| WARNVORRICHTUNG | 201 |
| DREHSTROMGENERATOR | 202 |
| BATTERIE UND VERDRAHTUNG | 205 |
| KAMERA | 213 |
| ANSCHLUSS, ELEKTR. | 214 |
| ÜBERTRAGUNGSSTEUERUNG U. BEFESTIGUNG | 215 |
| STEUERUNGSEINHEIT, ELEKTRON. FÜR MOTOR UND BEFEST. | 217 |
| STEUERUNG - HUB- U. KIPPSTELLUNG | 219 |
| STEUERUNG - NICHT PROGRAMMIERT | 221 |
| ELEKTR. ANLAGE | 225 |
| ELEKTRONIK, KOMMUNIKATION | 227 |
| ARBEITSGERÄTEELEKTRONIK | 228 |
| ELEKTRONIK - MONITOR | 229 |
| KRAFTÜBERTRAGUNGSELEKTRONIK | 230 |
| ELEKTRONIKBEFESTIGUNG | 233 |
| KRAFTSTOFFHEIZUNG | 235 |
| UMLAUFKÜHLWASSERHEIZUNG | 238 |
| ÜBERTRAGUNGSEINBAUSATZ | 240 |
| FAHRERHAUSBELEUCHTUNG | 241 |
| ARBEITSLEUCHTEN | 242 |
| FRONTSCHEINWERFER | 249 |
| BLINKLEUCHTE | 250 |
| RUNDUM-KENNLEUCHTE | 252 |
| ARBEITS- U. SIGNALBELEUCHTUNG | 253 |
| BLINKERLEUCHTEN | 253 |
| BREMS- U. ARBEITSLEUCHTEN | 254 |
| ARBEITSLEUCHTEN | 255 |
| ARBEITS- U. SIGNALLEUCHTE | 268 |
| BREMSBELEUCHTUNG | 280 |
| BREMS- UND RÜCKLEUCHTEN | 282 |
| RUNDUM-KENNLEUCHTE | 284 |
| SENSORBEFESTIGUNG | 287 |
| HUBSTELLUNGSSENSOR U. BEFESTIGUNGSTEILE | 289 |
| KIPPSTELLUNGS-SENSOR U. BEFESTIGUNGSTEILE | 290 |
| MOTORSENSOR | 291 |
| STELLUNGSSENSOR | 295 |
| DRUCKSENSOR | 299 |
| DREHZAHLSENSOR | 306 |
| TEMPERATURSENSOR | 310 |
| ÄTHERSTARTHILFE | 318 |
| STARTERMOTOR | 320 |
| UMGEHUNGSSCHALTER | 324 |
| TRENNSCHALTER | 325 |
| MOTORBREMSENSCHALTER | 326 |
| MAGNETSCHALTER | 328 |
| NUTZLASTSPEICHERSCHALTER | 330 |
| DRUCKSCHALTER | 331 |
| SCHALTER FÜR HYDRAULISCHE SCHWINGUNGSDÄMPFUNG | 333 |
| KIPPSCHALTER | 334 |
| RICHTUNGSSIGNALSCHALTER | 335 |
| KIPPSCHALTER | 337 |
| SCHEIBENWISCHERSCHALTER | 338 |
| ÄTHERSTARTVENTIL | 339 |
| RÜCKFAHRWARNHORN | 341 |
| AUTOM. SCHMIERVORRICHTUNG - STEUERUNGSVERDRAHTUNG | 342 |
| STOSSSTANGENVERDRAHTUNG | 347 |
| FAHRERHAUSVERDRAHTUNG | 350 |
| KAMERA, VERDRAHTUNG | 384 |
| ÜBERTRAGUNGSVERDRAHTUNG | 385 |
| VERDRAHTUNG - ELEKTRONIK-BAY | 386 |
| MOTORVERDRAHTUNG | 413 |
| VERDRAHTUNG (ELEKTRONIKSYSTEM) | 423 |
| VERDRAHTUNG, VORNE | 427 |
| HEIZUNGSVERDRAHTUNG | 434 |
| MASCHINENVERDRAHTUNG | 435 |
| KRAFTÜBERTRAGUNGSVERDRAHTUNG | 454 |
| VERDRAHTUNG, HINTEN | 465 |
| SENSORVERDRAHTUNG | 468 |
| NOTABSCHALTERVERDRAHTUNG | 477 |
| GETRIEBEVERDRAHTUNG | 481 |
| VERDRAHTUNG (EINSPRITZEINHEIT) | 483 |
| **KRAFTÜBERTRAGUNG** | 484 |
| STARRACHSE | 484 |
| PENDELACHSE | 484 |
| STARRACHSE | 485 |
| PENDELACHSE | 486 |


* ÜBERSETZUNG ZUM ZEITPUNKT DER DRUCKLEGUNG NICHT VORHANDEN

# INHALTSVERZEICHNIS


| Bezeichnung | Seite |
|---|---|
| PLANETENANTRIEBSGEHÄUSE U. TEILE | 488 |
| GETRIEBEHYDRAULIK | 489 |
| ACHSÖLKÜHLER U. LÜFTER | 493 |
| ACHSÖLKÜHLER | 508 |
| GETRIEBEABDECKUNG | 515 |
| DIFFERENTIAL UND TELLERRAD | 517 |
| DIFFERENTIAL | 520 |
| NOSPIN-DIFFERENTIAL | 521 |
| ACHSENHALTETEILE | 523 |
| KRAFTÜBERTRAGUNG - FILTER U. BEFESTIGUNG | 524 |
| ÖLFILTER | 525 |
| ÖLMESSSTAB | 528 |
| SCHAUGLAS | 530 |
| VERTEILERGETRIEBEANTRIEB | 531 |
| ACHSENÖLKÜHLERLEITUNGEN | 542 |
| ACHSÖLKÜHLERLEITUNGEN | 564 |
| ACHSENTLÜFTERLEITUNGEN | 572 |
| ÖLLEITUNGEN - KRAFTÜBERTRAGUNG | 574 |
| FELGENAUFHÄNGUNG | 589 |
| DREHMOMENTWANDLERAUFHÄNGUNG | 589 |
| PLANETENGETRIEBE | 590 |
| KRAFTÜBERTRAGUNG | 595 |
| ZAHNRADPUMPE | 596 |
| GETRIEBEPUMPE | 598 |
| FELGE | 601 |
| FELGE (TEILBAR) | 602 |
| ANTRIEBSWELLE | 605 |
| ANTRIEBSWELLEN-KEILVERZAHNUNG | 608 |
| GETRIEBEAUFHÄNGUNG | 609 |
| REIFEN UND FELGE | 611 |
| DREHZAHLWANDLER U. GEHÄUSE | 617 |
| DREHMOMENTWANDLER | 621 |
| DREHMOMENTWANDLERSPERRE | 621 |
| DREHMOMENTWANDLER | 622 |
| GETRIEBE | 629 |
| KREUZGELENK | 630 |
| KUPPLUNGSSPERRENVENTIL U. BEFESTIGUNGSTEILE | 633 |
| SPERRVENTIL | 634 |
| MODULATORVENTIL | 635 |
| ÜBERDRUCKVENTIL | 638 |
| MAGNETVENTIL | 641 |
| SEITENANTRIEB UND RAD | 642 |
| **RAHMEN UND FAHRGESTELL** | 645 |
| HECKSTOSSSTANGE | 645 |
| STOSSSTANGENVERKLEIDUNG | 650 |
| ELEKTRON. BAY - ABDECKUNG | 654 |
| HAUBENABLENKBLECH | 655 |
| ZUGANGSKLAPPE | 656 |
| ZUGSTANGE | 659 |
| SCHUTZBLECHE, VORNE | 660 |
| SCHUTZBLECHE, HINTEN | 663 |
| FEUERSCHUTZWAND | 665 |
| LADERRAHMEN | 666 |
| HINTERRAHMEN | 668 |
| PANZERWANNE | 675 |
| VERKLEIDUNGEN, VORN | 680 |
| HYDRAULIKTANKVERKLEIDUNG | 681 |
| LEITUNGSVERKLEIDUNG | 682 |
| ANTRIEBSSCHUTZ | 683 |
| KÜHLERSCHUTZ | 684 |
| HECKVERKLEIDUNG | 690 |
| SENSORSCHUTZ | 694 |
| RAHMEN - BEFESTIGUNGSTEILE | 695 |
| HARDWARE, HINTERRAHMEN | 700 |
| KNICKGELENK-ANHÄNGUNG | 704 |
| MOTORHAUBE UND VERKLEIDUNG | 706 |
| LEITER U. SCHUTZBLECH | 715 |
| STEIGLEITER | 716 |
| AUTOMATISCHE SCHMIERLEITUNGEN | 726 |
| SCHMIERLEITUNGEN | 842 |
| KNICKGELENKSPERRE | 849 |
| SCHMIERSYSTEM, AUTOM. | 850 |
| SEITENVERKLEIDUNG | 856 |
| SCHMIERPUMPE | 858 |
| MOTORRAUM-SCHUTZVERKLEIDUNG | 861 |
| STEIGLEITER | 864 |
| SCHALLDÄMPFUNG | 865 |
| SCHMIERUNGSTANK U. PUMPE | 872 |
| SCHMIERVENTIL U. -LEITUNGEN | 876 |
| SCHMIERÖLVERTEILERVENTIL | 949 |
| **BREMSSYSTEM** | 957 |
| BREMSDRUCKSPEICHER | 957 |
| FUSSBREMSSOCKEL | 960 |
| FESTSTELLBREMSE | 964 |
| BETRIEBSBREMSE | 966 |
| FUSSBREMSGESTÄNGE | 967 |
| FESTSTELLBREMSGESTÄNGE | 969 |
| BREMSGESTÄNGE | 975 |
| BETRIEBSBREMSLEITUNGEN | 985 |
| ZAHNRADPUMPE | 989 |
| BREMSSTEUERVENTIL UND BEFESTIGUNGSTEILE | 990 |
| BREMSSTEUERVENTIL | 996 |
| ÜBERDRUCKVENTIL | 997 |
| PENDELVENTIL | 999 |


* ÜBERSETZUNG ZUM ZEITPUNKT DER DRUCKLEGUNG NICHT VORHANDEN

# INHALTSVERZEICHNIS


| Bezeichnung | Seite |
|---|---|
| **LENKSYSTEM** | 1002 |
| LENKZYLINDER UND AUFHÄNGUNG | 1002 |
| LENKZYLINDER | 1004 |
| LENKZYLINDERSCHUTZ | 1007 |
| NOTLENKUNGSLEITUNGEN | 1008 |
| LENKÖLLEITUNGEN | 1012 |
| LENKNEUTRALISIERLEITUNGEN | 1025 |
| STEUERVENTILSTOPFEN | 1029 |
| ZAHNRADPUMPE | 1030 |
| KOLBENPUMPE | 1032 |
| KOLBENPUMPENUMLAUFSATZ | 1034 |
| LENKUNG | 1035 |
| SPERRVENTIL | 1036 |
| VORSTEUERVENTIL | 1039 |
| EINBAUVORSTEUERVENTIL | 1040 |
| PUMPENSTEUERVENTIL | 1042 |
| ÜBERDRUCKVENTIL | 1043 |
| VENTIL - SCHALT- UND DRUCKSTEUERUNG | 1045 |
| PENDELVENTIL | 1046 |
| LENKVENTIL | 1047 |
| LENKNEUTRALISIERVENTIL | 1055 |
| **HYDRAULIKSYSTEM** | 1056 |
| DRUCKSPEICHER, HYDRAULISCHE SCHWINGUNGSDÄMPFUNG | 1056 |
| VORSTEUERSTELLANTRIEB | 1058 |
| SCHWINGUNGSDÄMPFUNG U. LEITUNGEN | 1062 |
| HYDRAULISCHE SCHWINGUNGSDÄMPFUNG | 1067 |
| HYDRAULIKÖLKÜHLER | 1068 |
| ZUGANGSKLAPPE - HYDRAULIKTANKKAPPE | 1070 |
| ZYLINDER U. SENSOR | 1071 |
| HUBZYLINDER UND SENSOR | 1074 |
| KIPPZYLINDER U. SENSOR | 1076 |
| HUBZYLINDER | 1078 |
| KIPPZYLINDER | 1080 |
| GEHÄUSEABLASSFILTER U. LEITUNGEN | 1082 |
| ÖLFILTER | 1085 |
| HYDRAULIKSYSTEM | 1087 |
| LEITUNGEN, VORNE | 1088 |
| HYDRAULIKLEITUNGEN | 1094 |
| HYDRAULIKLÜFTERLEITUNGEN | 1102 |
| HUBZYLINDERLEITUNGEN | 1115 |
| NEIGEZYLINDERLEITUNGEN | 1118 |
| HYDRAULIKKÜHLERMOTOR U. BEFESTIGUNG | 1128 |
| KOLBENMOTOR | 1129 |
| HYDRAULIKLÜFTERPUMPE U. BEFESTIGUNG | 1130 |
| ARBEITSGERÄTEPUMPE UND AUFHÄNGUNG | 1132 |
| KOLBENPUMPE | 1133 |
| MOTORDREHVORRICHTUNG | 1142 |
| KOLBENPUMPENUMLAUFSATZ | 1143 |
| HYDRAULIKTANK UND BEFESTIGUNGSTEILE | 1144 |
| AUSGLEICHSTANK | 1145 |
| AUSGLEICHSBEHÄLTER | 1146 |
| HYDRAULIKTANK | 1148 |
| VENTIL UND BEFESTIGUNGSTEILE - HAUPTSTEUERUNG | 1153 |
| SPERRVENTIL | 1159 |
| VENTIL - TEMPERATURGESTEUERTER LÜFTER | 1160 |
| HAUPTSTEUERVENTIL | 1161 |
| VENTIL, MECH. | 1170 |
| PUMPENSTEUERVENTIL | 1171 |
| ÜBERDRUCKVENTIL | 1173 |
| VENTIL - HYDRAULISCHE SCHWINGUNGSDÄMPFUNG | 1180 |
| PENDELVENTIL | 1182 |
| MAGNETVENTIL | 1184 |
| **ARBEITSGERÄTE** | 1187 |
| AUSLEGER U. LAGER | 1187 |
| LADERAUSLEGER | 1189 |
| SCHAUFELSTEUERUNG | 1191 |
| BEFESTIGUNG - AUSLEGER | 1198 |
| HUBVORRICHTUNG | 1204 |
| SCHAUFELGESTÄNGE | 1206 |
| GESTÄNGEBOLZEN UND DICHTUNG | 1208 |
| **ARBEITSGERÄTE** | 1211 |
| ZAHNHALTER | 1211 |
| KOHLESCHAUFEL | 1229 |
| UNIVERSALSCHAUFEL | 1231 |
| FELSSCHAUFEL | 1235 |
| KOHLESCHAUFEL | 1265 |
| UNEVERSALSCHAUFEL | 1266 |
| FELSSCHAUFEL | 1267 |
| SOCKELENDE | 1275 |
| SCHNEIDMESSER UND EINSATZSTÜCK | 1278 |
| SCHNEIDMESSER | 1278 |
| SCHNEIDMESSERSEGMENT | 1280 |
| SCHNEIDMESSER | 1281 |
| UNTERSCHRAUBSEGMENT | 1300 |
| SCHAUFELECKENSCHUTZ | 1309 |
| MESSERSCHUTZ | 1310 |
| SEITENSCHNEIDENSCHUTZ | 1311 |
| ZAHNSPITZE, VERSTÄRKT | 1312 |
| ZAHNSPITZE, LANG | 1315 |


* ÜBERSETZUNG ZUM ZEITPUNKT DER DRUCKLEGUNG NICHT VORHANDEN

# INHALTSVERZEICHNIS


| Bezeichnung | Seite |
|---|---|
| ZAHNSPITZE, SCHARF | 1319 |
| ZAHNSPITZE, KURZ | 1323 |
| SCHARFE HD-ZAHNSPITZE | 1325 |
| ZAHNSPITZE, LANG | 1326 |
| **FAHRERHAUS** | 1327 |
| FAHRERSITZVERSTELLER | 1327 |
| LUFTKOMPRESSORSITZ | 1328 |
| KLIMAANLAGE UND AUFHÄNGUNG | 1330 |
| KLIMAANLAGE | 1331 |
| SCHEIBENWISCHERARM | 1334 |
| FAHRERHAUS | 1336 |
| KÄLTEMITTELKOMPRESSOR | 1339 |
| KÄLTEMITTELKONDENSATOR | 1341 |
| ELEKTROHYDRAULISCHE STEUERUNG | 1342 |
| MONITORSTEUERUNG | 1349 |
| LENKBETÄTIGUNG | 1352 |
| STIC-KOMBIHEBEL | 1355 |
| STIC-KOMBIHEBEL - STEUERUNGSSPERRE | 1358 |
| GETRIEBEÜBERSTEUERUNG | 1360 |
| STEUERUNG, NICHT PROGRAMMIERTER MONITOR | 1361 |
| ARMATURENBRETTABDECKUNG | 1362 |
| ANZEIGE - KAMERA | 1363 |
| FAHRERHAUSTÜR | 1364 |
| WARTUNGSKLAPPE | 1373 |
| LUFTKANAL & LUFTFILTER - FAHRERHAUS | 1374 |
| LUFTKANAL | 1376 |
| WARNHORN, ELEKTR. | 1378 |
| BEDIENUNGSEINBAUSATZ | 1379 |
| RADIOEINBAUSATZ | 1381 |
| FAHRERHAUSAUSKLEIDUNG | 1385 |
| KLIMAANLAGENLEITUNGEN | 1391 |
| FAHRERHAUSHEIZUNGSLEITUNGEN | 1400 |
| DOKUMENTATION | 1403 |
| RÜCKSPIEGEL | 1404 |
| MODUL - VIER ELEKTRON. ANZEIGEN | 1407 |
| WÄGEEINRICHTUNG - MONITOR | 1408 |
| *MONITOR GP-CAMERA | 1409 |
| WÄGEEINRICHTUNG | 1411 |
| SCHEIBENWISCHERMOTOR | 1415 |
| ANTENNENBEFESTIGUNG | 1418 |
| FAHRERHAUSANBAUSATZ | 1420 |
| FAHRERHAUSAUSRÜSTUNG | 1424 |
| SCHALE - RÜCKENLEHNE | 1425 |
| INSTRUMENTENTAFEL | 1429 |
| GASPEDAL | 1432 |
| PLATTFORM | 1434 |
| FAHRERPLATTFORM | 1437 |
| RADIO | 1446 |
| VERSTELLBARER SITZ | 1450 |
| FAHRERHAUSDACH | 1451 |
| ÜBERROLL-SCHUTZKABINE | 1455 |
| GLASDICHTUNG | 1467 |
| FAHRERSITZ | 1468 |
| SCHWINGSITZ | 1473 |
| HYDRAULIKSTEUERAUFHÄNGUNG | 1474 |
| SITZUNTERBAU | 1478 |
| LENKBETÄTIGUNGSAUFHÄNGUNG | 1479 |
| FAHRERHAUSLÄRMDÄMPFUNG | 1482 |
| FAHRERSITZFEDERUNG | 1483 |
| SCHEIBENWASCHANLAGE | 1485 |
| TÜRFENSTER | 1486 |
| SCHEIBENWISCHER | 1488 |
| **WARTUNGSAUSRÜSTUNG UND -ZUBEHÖR** | 1496 |
| MASCHINENZULASSUNG | 1496 |
| AUFKLEBER | 1497 |
| DIAGNOSELEITUNGEN | 1500 |
| SCHILD UND AUFKLEBER | 1508 |
| MOTOR ID-SCHILD | 1510 |
| SCHUTZABDECKUNG | 1512 |
| STEUERUNGS- WARTUNGSWERKZEUG | 1514 |
| **ERSATZTEILNUMMERNINDEX** | B1 |


* ÜBERSETZUNG ZUM ZEITPUNKT DER DRUCKLEGUNG NICHT VORHANDEN

# *255-6961* BUMPER GP-REAR

**S/N: BXY1-UP**
**PART OF 255-0040, 255-0041 LIFT AR**
**AN ATTACHMENT**

**SMCS-7156** **i02339065**

| NOTE | REF NO | GRAPHIC REF | PART NUMBER | QTY | PART NAME 1 2 3 4 5 6 (PRODUCT LEVEL) | SEE PAGE |
|---|---|---|---|---|---|---|
| | 1 | 1 | **6M-1622** | 2 | DOWEL | |
| Y | 2 | 1 | *136-5049* | 1 | DRAWBAR GP | 659 |
| | 3 | 1 | **140-3129** | 1 | PLATE | |
| | 4 | 1 | **160-4357** | 1 | PLATE | |
| | 5 | 1 | **192-8848** | 1 | PLATE AS | |
| | | 1 | **6V-2370** | 13 | RIVET-POP | |
| | 6 | 1 | **255-6963** | 1 | BUMPER AS | |
| M | | 1 | **9R-2613** | 3 | BOSS-WELD (M10X1.5X25-MM OAL) | |
| | | 1 | **173-5986** | 1 | TREAD (RH) | |
| | | 1 | **173-5987** | 1 | TREAD (LH) | |
| | 7 | 1 | **5P-1076** | 11 | WASHER-HARD (13.5X30X4-MM THK) | |
| M | 8 | 1 | **8C-8723** | 18 | BOLT (M30X3.5X80-MM) | |
| M | 9 | 1 | **8T-4139** | 9 | BOLT (M12X1.75X30-MM) | |
| M | 10 | 1 | **8T-4183** | 2 | BOLT (M12X1.75X40-MM) | |
| | 11 | 1 | **9X-8258** | 18 | WASHER (33X56X6-MM THK) | |

M-METRIC PART
Y-SEPARATE ILLUSTRATION

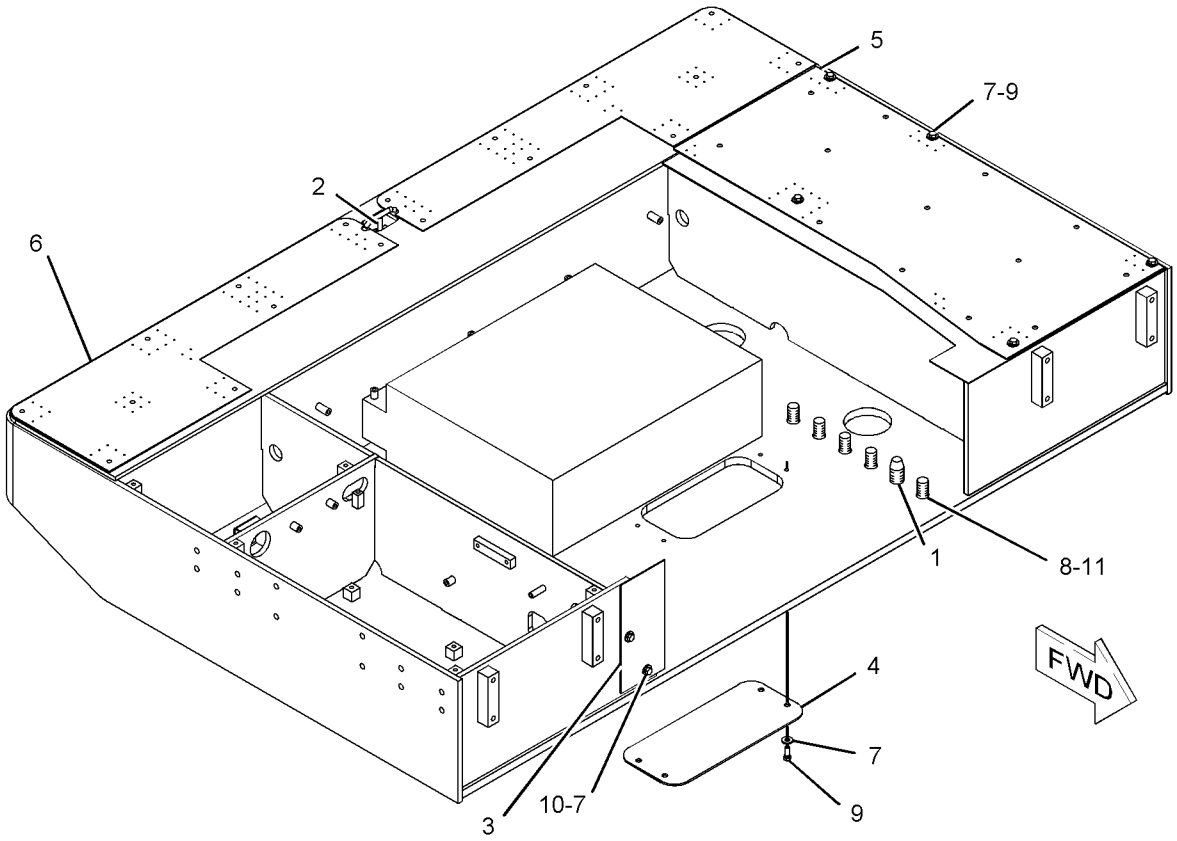


GRAPHIC #1 **<END>** g01128599

# FRAME AND BODY

## *260-1400* BUMPER GP-REAR

**S/N: BXY1-UP**
**PART OF 255-0042, 255-0043 LIFT AR**
**AN ATTACHMENT**

**SMCS-7156** **i02343042**

| NOTE | REF NO | GRAPHIC REF | PART NUMBER | QTY | PART NAME 1 2 3 4 5 6 (PRODUCT LEVEL) | SEE PAGE |
|---|---|---|---|---|---|---|
| | 1 | 1 | **6M-1622** | 2 | DOWEL | |
| Y | 2 | 1 | *136-5049* | 1 | DRAWBAR GP | 659 |
| | 3 | 1 | **140-3129** | 1 | PLATE | |
| | 4 | 1 | **160-4357** | 1 | PLATE | |
| | 5 | 1 | **192-8848** | 1 | PLATE AS | |
| | 6 | 1 | **260-1401** | 1 | BUMPER AS | |
| | | 1 | **173-5986** | 1 | TREAD (RH) | |
| | | 1 | **173-5987** | 1 | TREAD (LH) | |
| | 7 | 1 | **5P-1076** | 11 | WASHER-HARD (13.5X30X4-MM THK) | |
| M | 8 | 1 | **8C-8723** | 18 | BOLT (M30X3.5X80-MM) | |
| M | 9 | 1 | **8T-4139** | 9 | BOLT (M12X1.75X30-MM) | |
| M | 10 | 1 | **8T-4183** | 2 | BOLT (M12X1.75X40-MM) | |
| | 11 | 1 | **9X-8258** | 18 | WASHER (33X56X6-MM THK) | |

M-METRIC PART
Y-SEPARATE ILLUSTRATION

*260-1400* **BUMPER GP-REAR** *(contd.)* **i02343042**

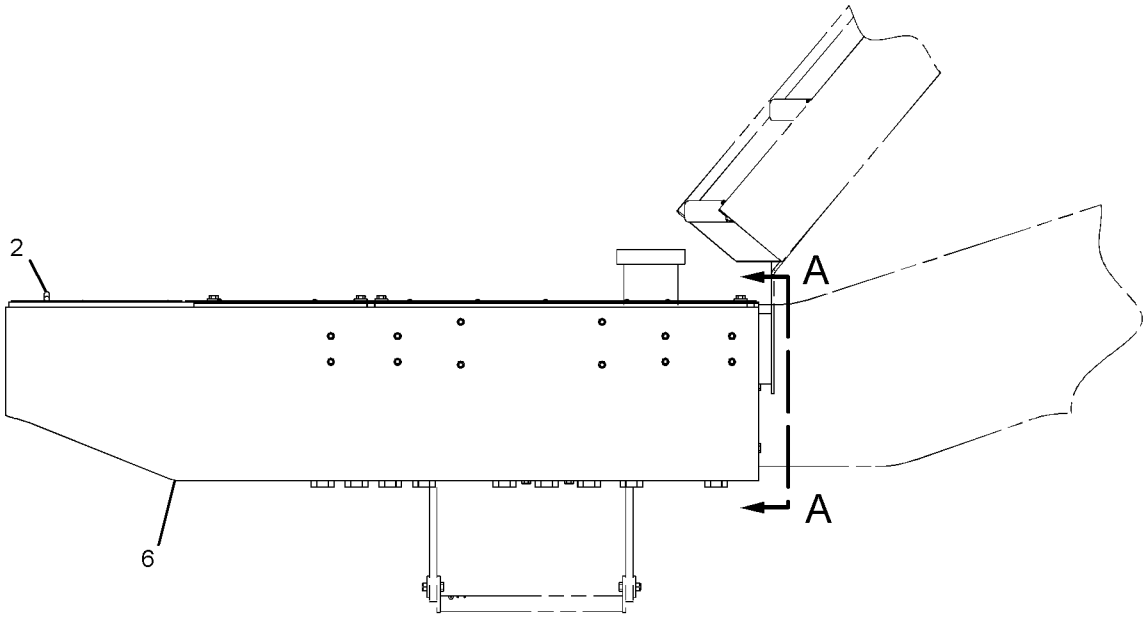


RIGHT SIDE VIEW

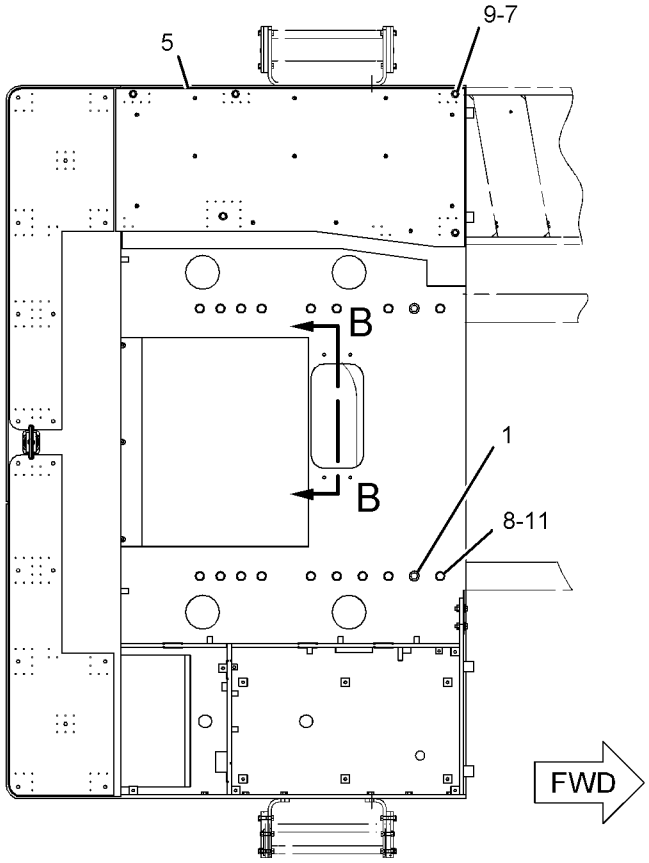


TOP VIEW

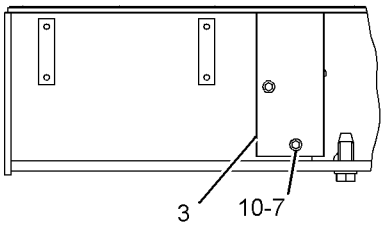


VIEW A-A

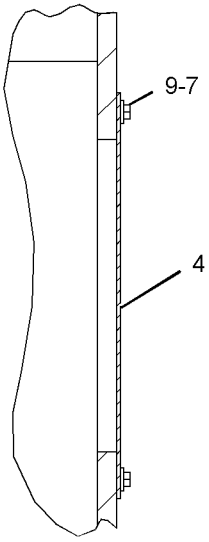


SECTION B-B

GRAPHIC #1 **<END>** g01127977

# FRAME AND BODY

## *308-2720* BUMPER GP-REAR

**S/N: BXY1900-UP**
**PART OF 2Q-8722, 2Q-8733 STEEL MILL AR**
**AN ATTACHMENT**

**SMCS-7156** **i02728628**

| NOTE | REF NO | GRAPHIC REF | PART NUMBER | QTY | PART NAME 1 2 3 4 5 6 (PRODUCT LEVEL) | SEE PAGE |
|---|---|---|---|---|---|---|
| | 1 | 1 | **6M-1622** | 2 | DOWEL | |
| Y | 2 | 1 | *136-5049* | 1 | DRAWBAR GP | 659 |
| | 3 | 1 | **140-3129** | 1 | PLATE | |
| | 4 | 1 | **160-4357** | 2 | PLATE | |
| | 5 | 1 | **192-8848** | 1 | PLATE AS | |
| | | 1 | **6V-2370** | 13 | RIVET-POP | |
| | 6 | 1 | **308-8496** | 1 | BUMPER AS | |
| | | 1 | **284-1570** | 1 | TREAD (LH) | |
| | | 1 | **284-1571** | 1 | TREAD (RH) | |
| | 7 | 1 | **5P-1076** | 15 | WASHER-HARD (13.5X30X4-MM THK) | |
| M | 8 | 1 | **8C-8723** | 18 | BOLT (M30X3.5X80-MM) | |
| M | 9 | 1 | **8T-4139** | 13 | BOLT (M12X1.75X30-MM) | |
| M | 10 | 1 | **8T-4183** | 2 | BOLT (M12X1.75X40-MM) | |
| | 11 | 1 | **9X-8258** | 18 | WASHER (33X56X6-MM THK) | |

M-METRIC PART
Y-SEPARATE ILLUSTRATION

*308 - 2720* **BUMPER GP - REAR** *(contd. )* **i02728628**

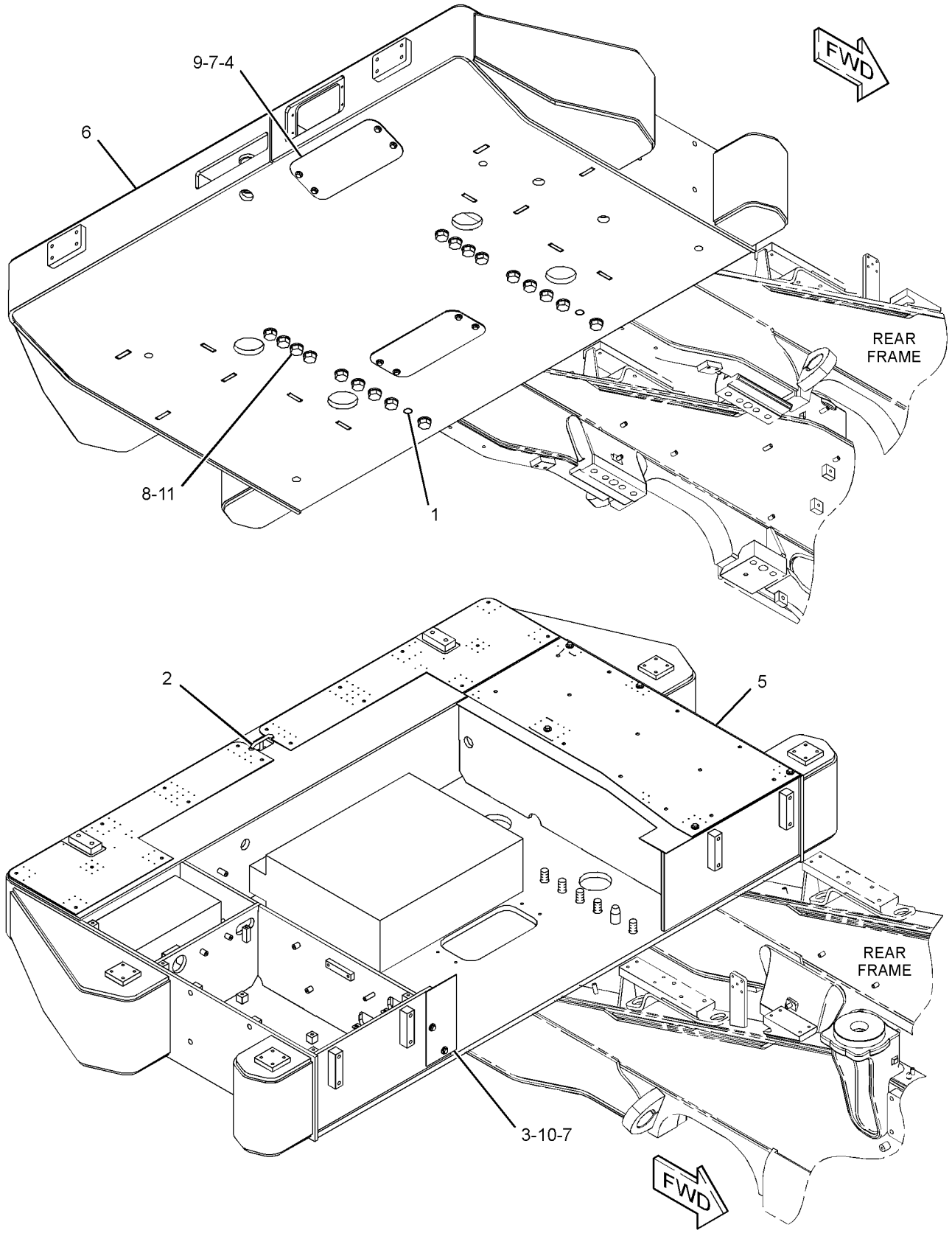


GRAPHIC #1 **<END>** g01369210

## *192-8851* COVER GP-BUMPER—BATTERY COMPARTMENT ACCESS, RH

**S/N: BXY1-UP**
**PART OF 153-7044 LADDER GP**
**AN ATTACHMENT**

**SMCS-7156** **i02564878**

| NOTE | REF NO | GRAPHIC REF | PART NUMBER | QTY | PART NAME 1 2 3 4 5 6 (PRODUCT LEVEL) | SEE PAGE |
|---|---|---|---|---|---|---|
| | 1 | 1 | **1B-9920** | 2 | SPRING | |
| | 2 | 1 | **1H-7365** | 2 | HANDLE-LATCH | |
| | 3 | 1 | **1H-7366** | 2 | ROD | |
| | 4 | 1 | **3B-4610** | 2 | PIN-COTTER | |
| | 5 | 1 | **3B-4617** | 4 | PIN-COTTER | |
| | 6 | 1 | **246-2641** | 2 | PADLOCK GP | |
| | | | | | (EACH INCLUDES KEY) | |
| M | 7 | 1 | **8T-4195** | 6 | BOLT (M10X1.5X30-MM) | |
| D | 8 | 1 | **6V-1392** | | SEAL (0.3-M EACH) | |
| D | 8A | 1 | **6V-1392** | | SEAL (0.5-M EACH) | |
| | 9 | 1 | **198-9403** | 1 | DOOR AS-ACCESS (DISC SWITCH, AUX RECEPTACLE) | |
| | 9A | 1 | **1H-7262** | 2 | LUG | |
| | 9B | 1 | **1H-7263** | 2 | LUG | |
| | 9C | 1 | **106-9010** | 1 | HINGE | |
| D | 10 | 1 | **6V-1392** | | SEAL (0.4-M EACH) | |
| D | 10A | 1 | **6V-1392** | | SEAL (0.9-M EACH) | |
| | 11 | 1 | **198-9406** | 1 | DOOR AS-ACCESS (BATTERY COMPARTMENT) | |
| | 11A | 1 | **1H-7262** | 2 | LUG | |
| | 11B | 1 | **1H-7263** | 2 | LUG | |
| | 11C | 1 | **106-9010** | 2 | HINGE | |
| | 12 | 1 | **149-8452** | 1 | ROD AS | |
| | 13 | 1 | **198-9397** | 1 | PLATE AS | |
| | 14 | 1 | **1B-0676** | 2 | PIN | |
| | 15 | 1 | **3B-8153** | 2 | PIN-CLEVIS | |
| | 16 | 1 | **8T-4121** | 8 | WASHER-HARD (11X21X2.5-MM THK) | |
| | 17 | 1 | **198-9407** | 1 | ROD AS | |
| | 18 | 1 | **8T-4223** | 2 | WASHER-HARD (13.5X25.5X3-MM THK) | |
| | 19 | 1 | **8T-4896** | 2 | WASHER-HARD (10.2X18.5X2.5-MM THK) | |

D-ORDER BY THE METER
M-METRIC PART

*192-8851* **COVER GP-BUMPER** *(contd.)* **i02564878**

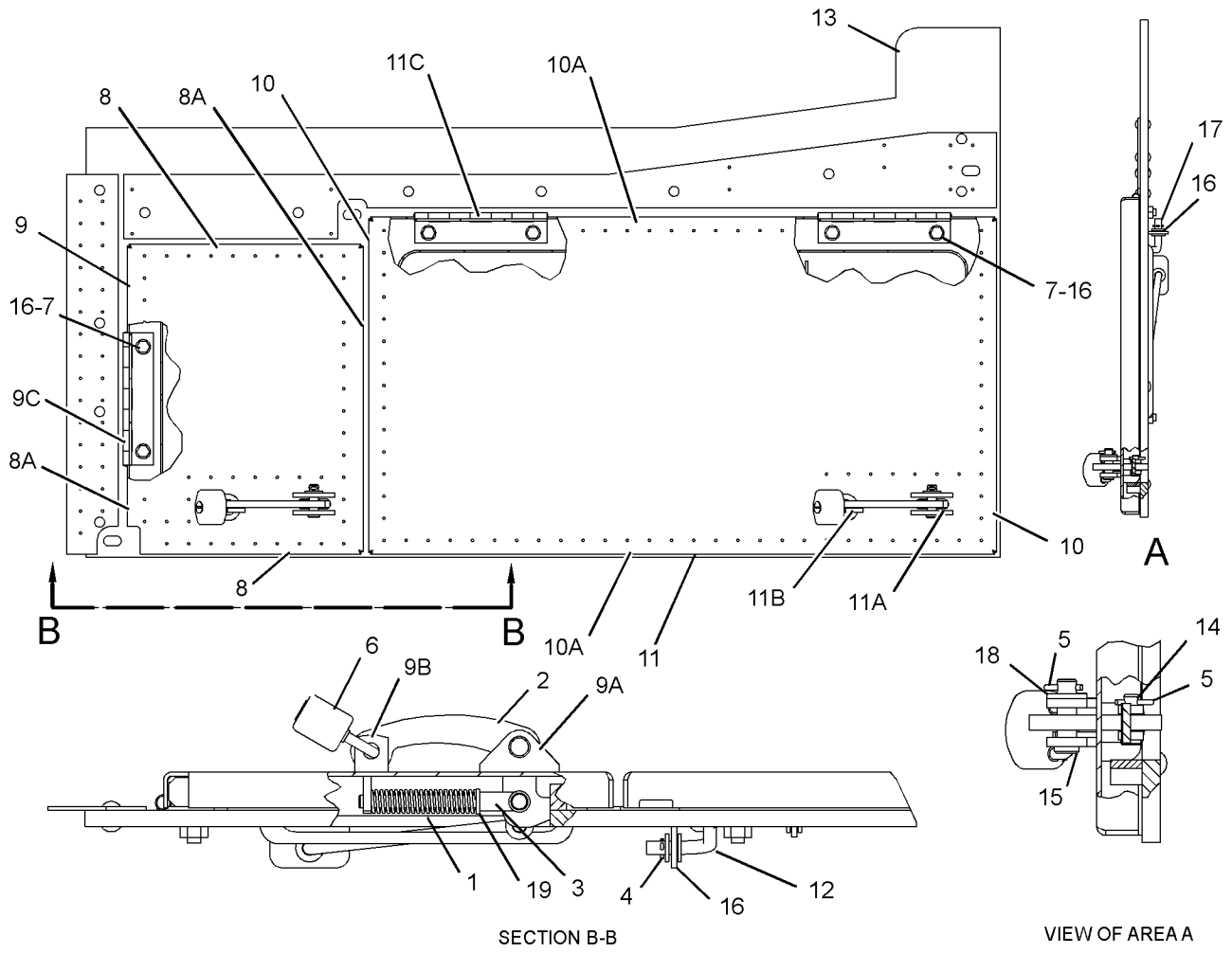


SECTION B-B

VIEW OF AREA A

GRAPHIC #1 **<END>** g01288034

## *192-8852* COVER GP-BUMPER—BATTERY COMPARTMENT ACCESS, RH

**S/N: BXY1-UP**
**PART OF 142-5799 LADDER GP**
**AN ATTACHMENT**

**SMCS-7156** **i02262641**

| NOTE | REF NO | GRAPHIC REF | PART NUMBER | QTY | PART NAME 1 2 3 4 5 6 (PRODUCT LEVEL) | SEE PAGE |
|---|---|---|---|---|---|---|
| | 1 | 1 | **1B-9920** | 2 | SPRING | |
| | 2 | 1 | **1H-7365** | 2 | HANDLE-LATCH | |
| | 3 | 1 | **1H-7366** | 2 | ROD | |
| | 4 | 1 | **3B-4610** | 2 | PIN-COTTER | |
| | 5 | 1 | **3B-4617** | 4 | PIN-COTTER | |
| | 6 | 1 | **246-2641** | 2 | PADLOCK GP | |
| | | | | | (EACH INCLUDES KEY) | |
| M | 7 | 1 | **8T-4195** | 6 | BOLT (M10X1.5X30-MM) | |
| | 8 | 1 | **198-9403** | 1 | DOOR AS-ACCESS (DISC SWITCH, AUX RECEPTACLE) | |
| | 9 | 1 | **198-9412** | 1 | DOOR AS-ACCESS (BATTERY COMPARTMENT) | |
| | | | | | (EACH DOOR ASSEMBLY INCLUDES) | |
| | | 1 | **1H-7262** | 2 | LUG | |
| | | 1 | **1H-7263** | 2 | LUG | |
| | | 1 | **106-9010** | 2 | HINGE | |
| | 10 | 1 | **149-8452** | 1 | ROD AS | |
| | 11 | 1 | **198-9408** | 1 | PLATE AS | |
| | 12 | 1 | **1B-0676** | 2 | PIN | |
| | 13 | 1 | **3B-8153** | 2 | PIN-CLEVIS | |
| | 14 | 1 | **8T-4121** | 8 | WASHER-HARD (11X21X2.5-MM THK) | |
| | 15 | 1 | **198-9407** | 1 | ROD AS | |
| | 16 | 1 | **8T-4223** | 2 | WASHER-HARD (13.5X25.5X3-MM THK) | |
| | 17 | 1 | **8T-4896** | 2 | WASHER-HARD (10.2X18.5X2.5-MM THK) | |

M-METRIC PART

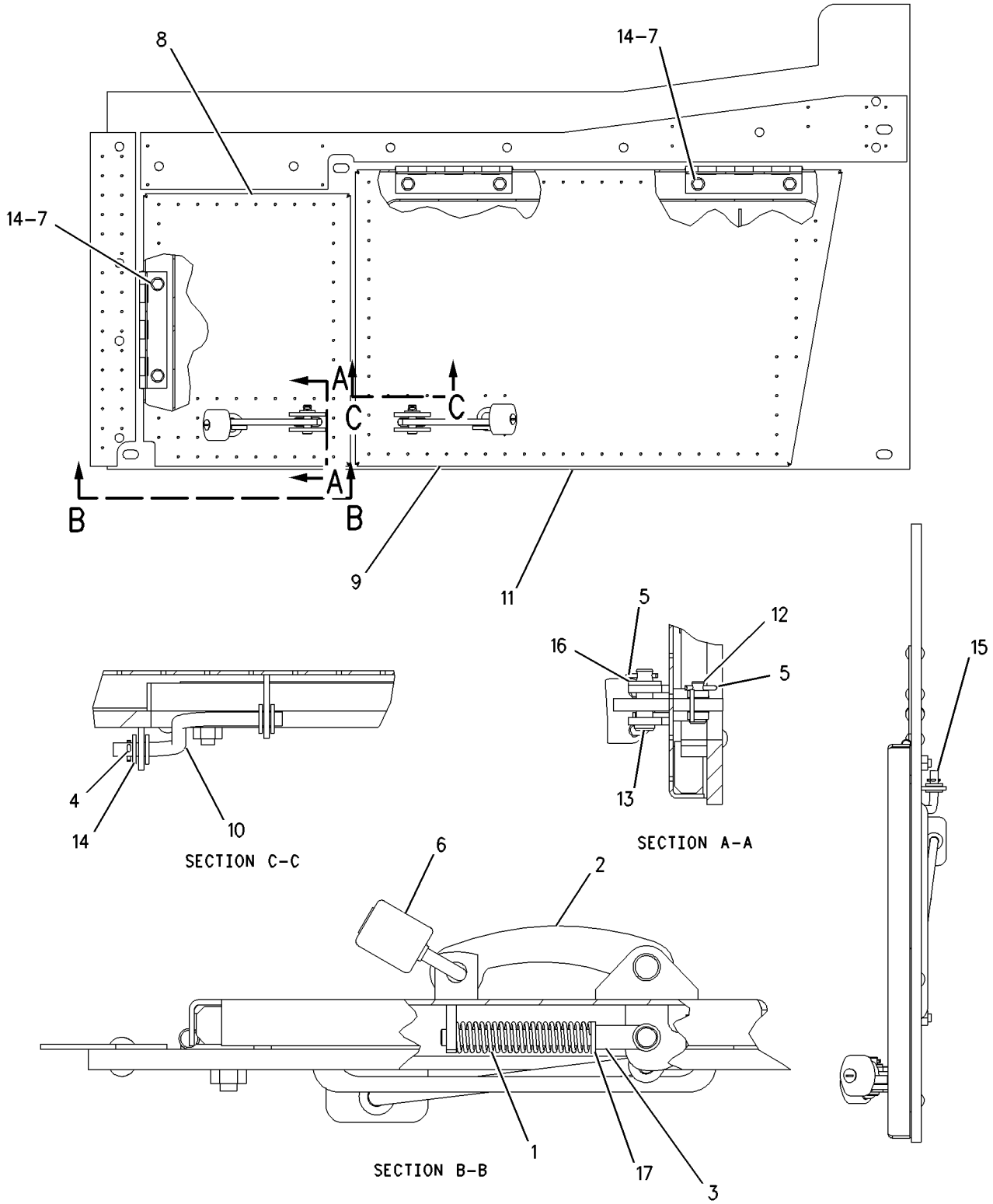


GRAPHIC #1 **<END>** g00770162

# *261-9434* COVER GP-ELECTRONICS BAY–REAR

**S/N: BXY1-UP**

**PART OF 257-0051, 280-4033, 292-8134, 308-2710 WIRING GP-ELECTRONICS BAY**

**ALSO AN ATTACHMENT**

**SMCS-5201, 7276** **i02218639**

| NOTE | REF NO | GRAPHIC REF | PART NUMBER | QTY | PART NAME 1 2 3 4 5 6 (PRODUCT LEVEL) | SEE PAGE |
|---|---|---|---|---|---|---|
| | 1 | 1 | **175-7419** | 2 | LOCK | |
| | 2 | 1 | **261-9424** | 1 | DOOR AS | |
| | 3 | 1 | **261-9433** | 1 | COVER AS | |
| E | 4 | 1 | **177-4122** | | SEAL (140-CM) | |

E-ORDER BY THE CENTIMETER

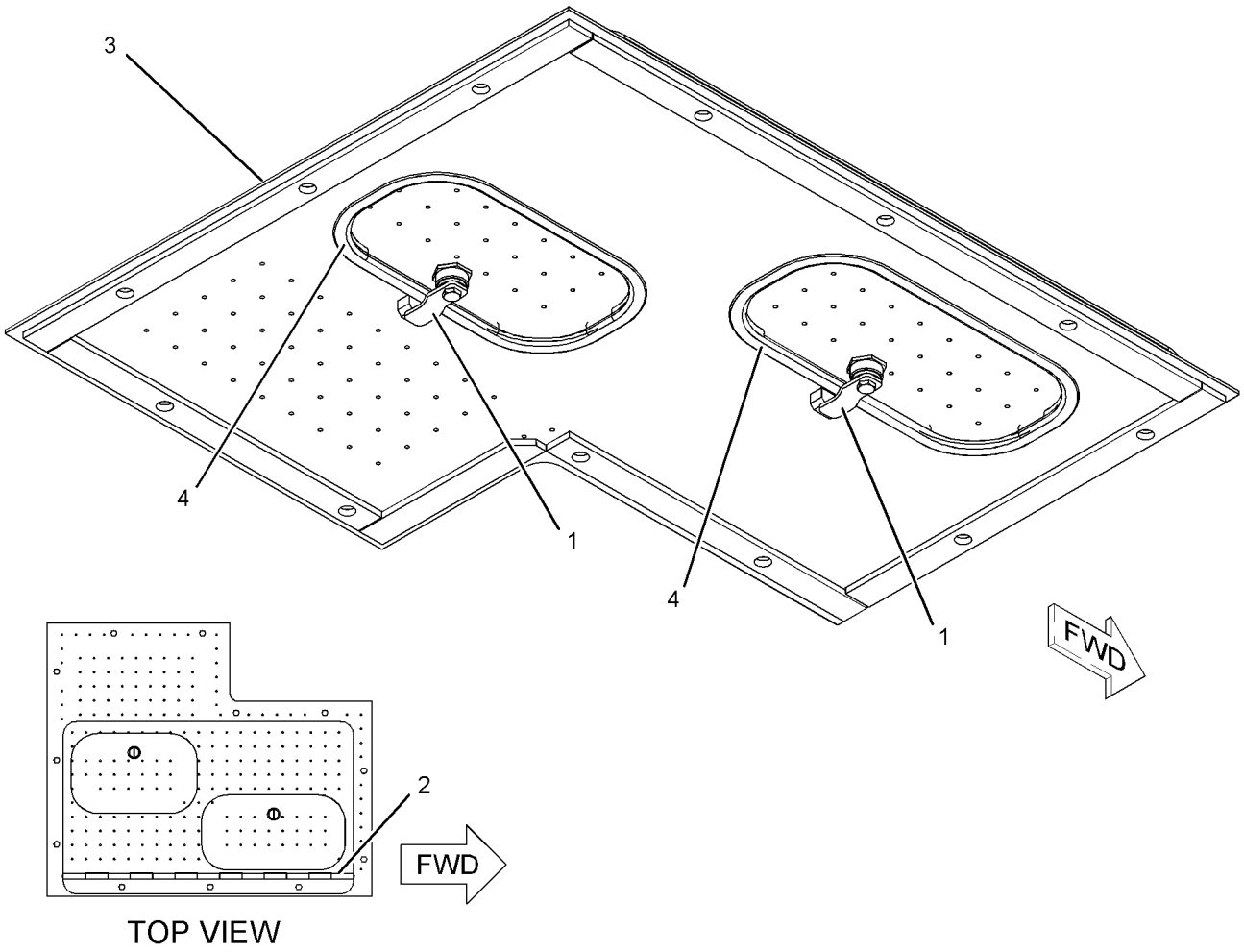


GRAPHIC #1 **<END>** g01121156

# *242-5177* DEFLECTOR GP-HOOD

**S/N: BXY1-UP**
**PART OF 226-1956 COOLING AR-HIGH AMBIENT TEMP**
**AN ATTACHMENT**

**SMCS-7251** **i02218139**

| NOTE | REF NO | GRAPHIC REF | PART NUMBER | QTY | PART NAME 1 2 3 4 5 6 (PRODUCT LEVEL) | SEE PAGE |
|---|---|---|---|---|---|---|
| | 1 | 1 | **239-7440** | 1 | SHEET AS | |
| M | | 1 | **8T-3490** | 2 | NUT-WELD (M10X1.5-THD) | |
| | 2 | 1 | **239-7441** | 1 | SHEET AS | |
| M | | 1 | **8T-3490** | 2 | NUT-WELD (M10X1.5-THD) | |
| | 3 | 1 | **242-5175** | 1 | SHEET | |
| | 4 | 1 | **242-5176** | 1 | SHEET | |
| | 5 | 1 | **7X-7729** | 13 | WASHER (11X25X3-MM THK) | |
| M | 6 | 1 | **8T-4137** | 13 | BOLT (M10X1.5X20-MM) | |

M-METRIC PART

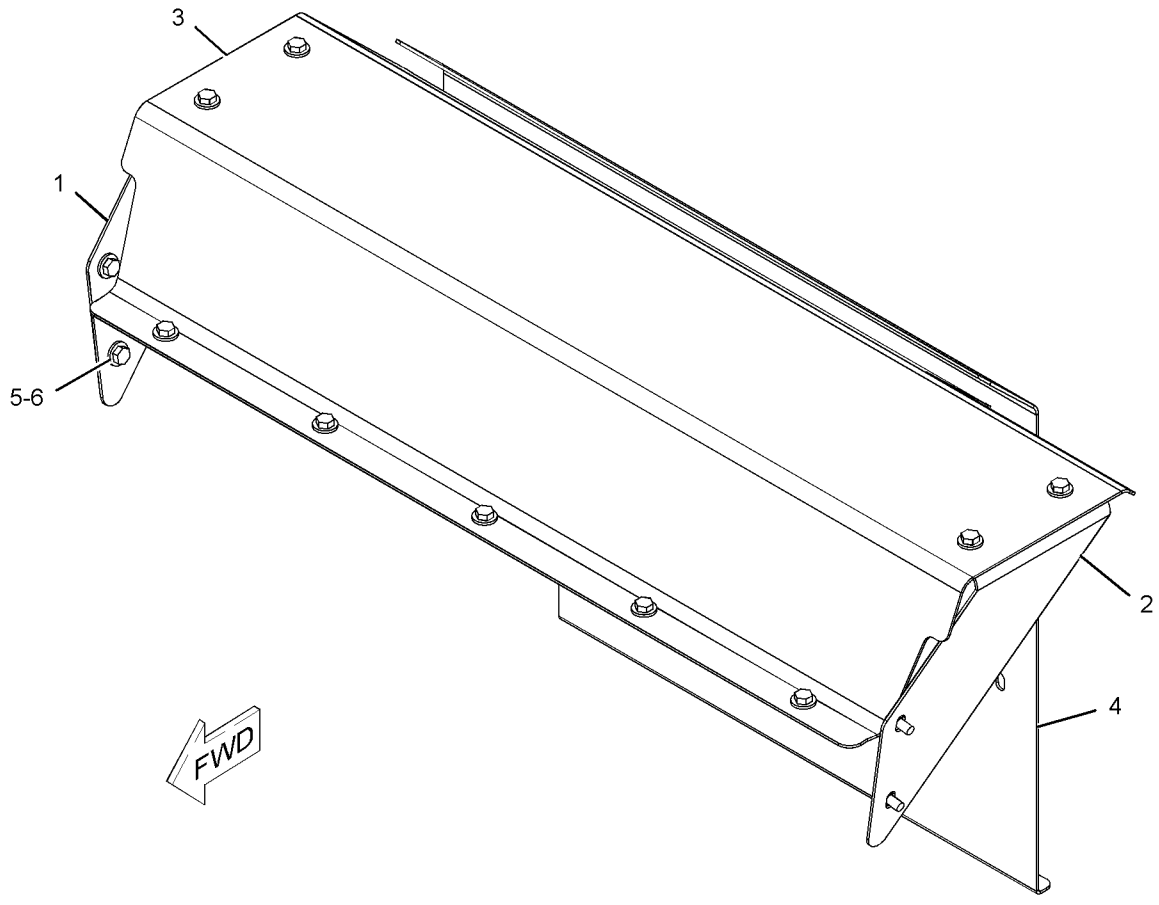


GRAPHIC #1 **<END>** g01121215

## *163-8033* DOOR GP-ACCESS—HOOD SIDE, REAR, RH

**S/N: BXY1-UP**

**PART OF 225-5235 HOOD & GUARD GP**

**SMCS-7273** **i01505338**

| NOTE | REF NO | GRAPHIC REF | PART NUMBER | QTY | PART NAME 1 2 3 4 5 6 (PRODUCT LEVEL) | SEE PAGE |
|---|---|---|---|---|---|---|
| | 1 | 1 | **6V-2370** | 12 | RIVET-POP | |
| M | 2 | 1 | **139-6366** | 4 | NUT (M14X2-THD) | |
| | 3 | 1 | **8T-1578** | 2 | PAWL | |
| | 4 | 1 | **9R-8538** | 2 | PLUNGER (LATCH) | |
| | 6 | 1 | **142-7008** | 1 | DOOR AS | |
| | 7 | 1 | **142-7009** | 1 | DOOR AS | |
| | 8 | 1 | **160-6328** | 2 | LATCH AS | |
| | | | | | (EACH INCLUDES) | |
| | | 1 | **7X-0766** | 1 | SPRING-LATCH | |
| | | 1 | **8Y-3999** | 1 | BRACKET-MOUNTING | |
| | | 1 | **8Y-3998** | 1 | HANDLE-LATCH | |
| | | 1 | **8Y-3966** | 1 | WASHER (14.7X35X1.57-MM THK) | |
| | | 1 | **8Y-8306** | 1 | SHAFT-LATCH | |
| | | 1 | **6H-3956** | 1 | PIN | |
| M | 9 | 1 | **5C-2890** | 2 | NUT (M6X1-THD) | |
| | 10 | 1 | **5P-4115** | 2 | WASHER-HARD (7.2X19X2-MM THK) | |
| M | 11 | 1 | **6V-7744** | 4 | LOCKNUT (M10X1.15-THD) | |
| | 12 | 1 | **7X-7729** | 4 | WASHER (11X25X3-MM THK) | |
| M | 13 | 1 | **8T-4195** | 4 | BOLT (M10X1.5X30-MM) | |
| M | 14 | 1 | **8T-4971** | 2 | BOLT (M6X1X30-MM) | |
| D | 15 | 1 | **5P-7483** | | SEAL (1.3M) | |

D-ORDER BY THE METER
M-METRIC PART

*163-8033* **DOOR GP-ACCESS** *(contd.)* **i01505338**

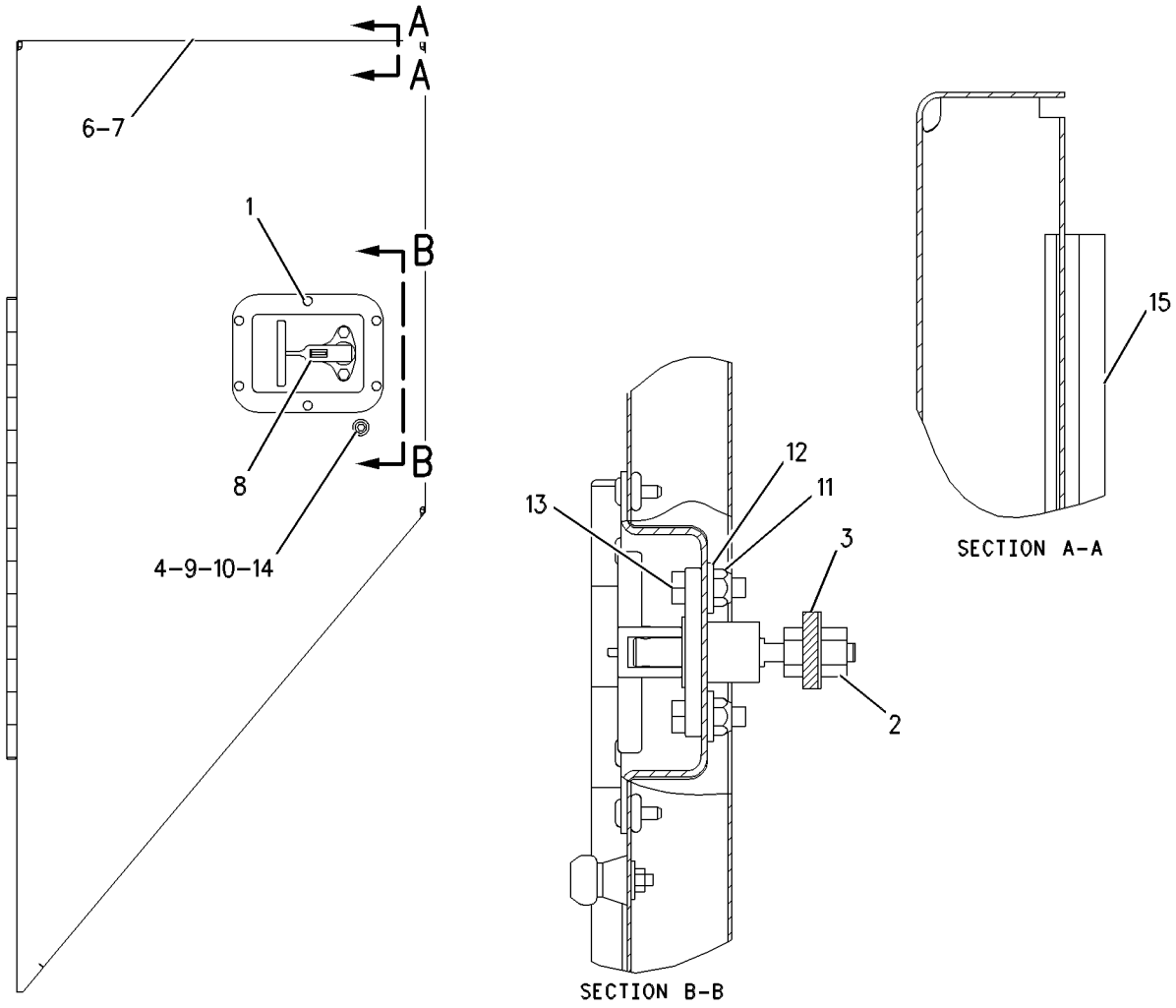


GRAPHIC #1 **<END>** g00554599

## *180-9272* DOOR GP-ACCESS–HOOD TOP

**S/N: BXY1-UP**

**PART OF 225-5235 HOOD & GUARD GP**

**SMCS-7273** **i01758993**

| NOTE | REF NO | GRAPHIC REF | PART NUMBER | QTY | PART NAME 1 2 3 4 5 6 (PRODUCT LEVEL) | SEE PAGE |
|---|---|---|---|---|---|---|
| J | 1 | 1 | **126-7168** | 1 | LOCK AS | |
| | | 1 | **7F-9223** | 1 | LOCKWASHER | |
| | | 1 | **8T-5004** | 2 | SCREW-MACHINE (1/4-28XO.375 IN) | |
| | 2 | 1 | **125-8176** | 1 | CAM-LATCH | |
| | 3 | 1 | **174-6381** | 1 | LATCH AS | |
| | 4 | 1 | **180-9270** | 1 | COVER AS | |
| | | 1 | **9V-3659** | 1 | HINGE | |

J-REQUIRES 5P8500 KEY

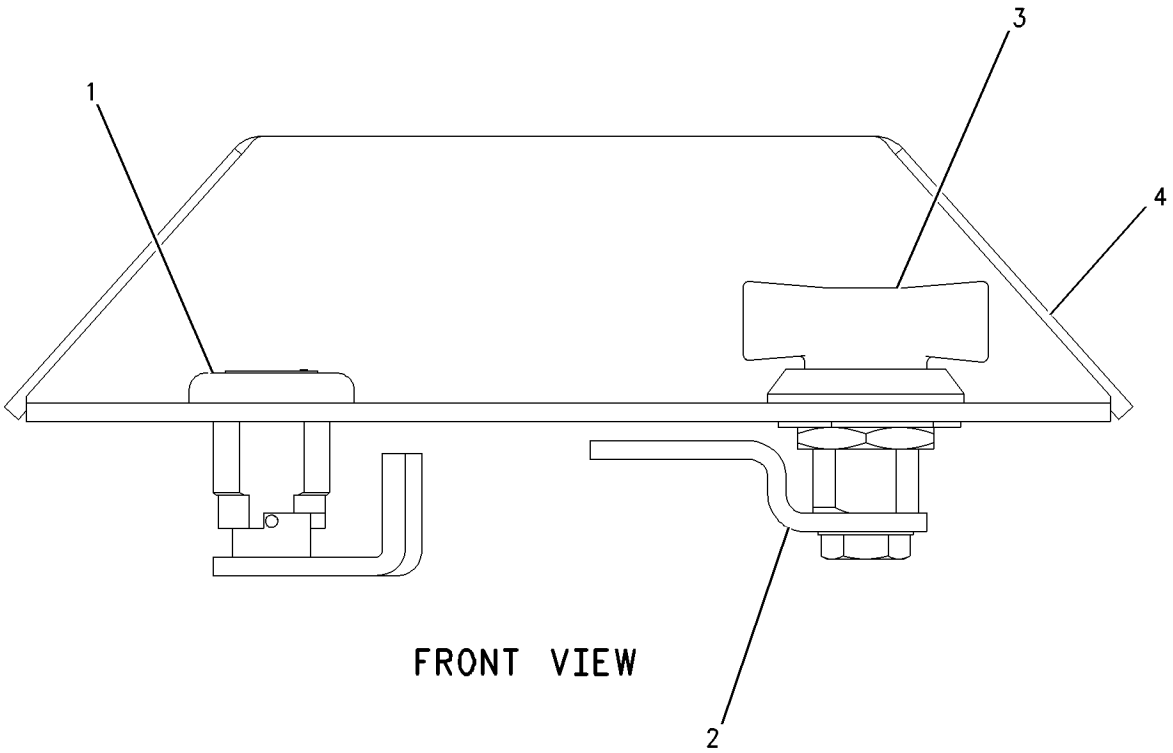


FRONT VIEW

GRAPHIC #1 **<END>** g00900170

# FRAME AND BODY

## *136-5049* DRAWBAR GP

**S/N: BXY1-UP**

**PART OF 255-6961, 260-1400, 308-2720 BUMPER GP-REAR**

**AN ATTACHMENT**

**SMCS-7105, 7119** **i00778711**

| NOTE | REF NO | GRAPHIC REF | PART NUMBER | QTY | PART NAME 1 2 3 4 5 6 (PRODUCT LEVEL) | SEE PAGE |
|---|---|---|---|---|---|---|
| | 1 | 1 | **1V-0134** | 1 | PIN | |
| | 2 | 1 | **6V-8188** | 1 | NUT (1/2-13-THD) | |
| | 3 | 1 | **4V-1074** | 1 | PLATE | |
| | 4 | 1 | **140-3673** | 1 | HANDLE AS | |
| | 5 | 1 | **8T-4223** | 1 | WASHER-HARD (13.5X25.5X3-MM THK) | |

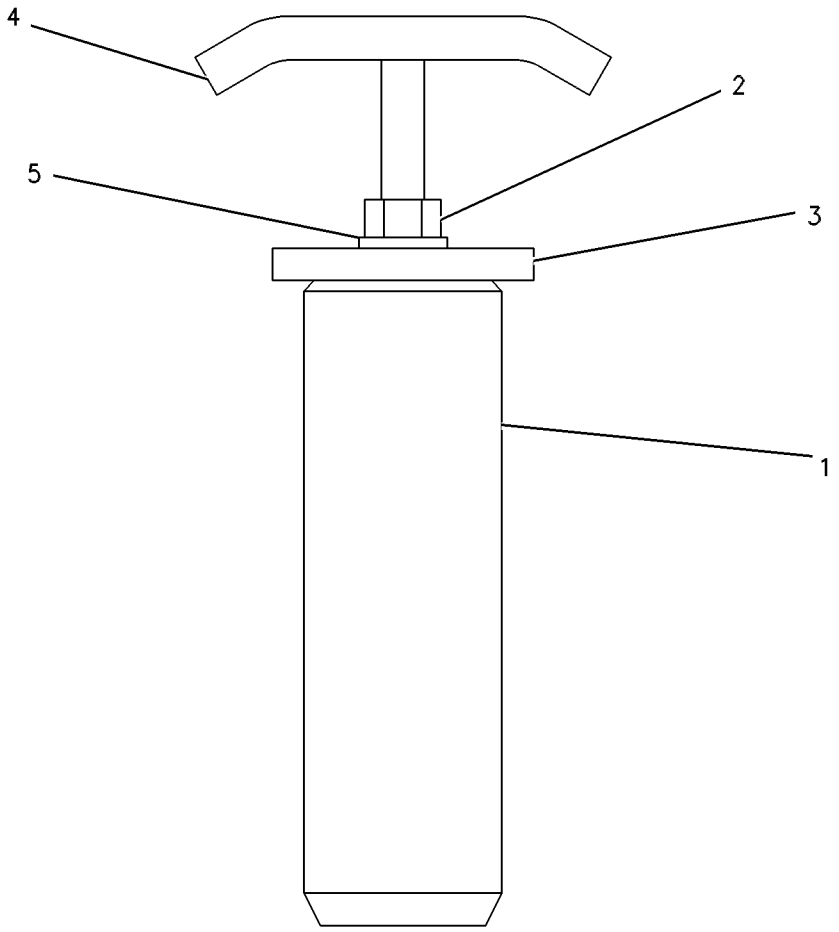


GRAPHIC #1 **<END>** g00296184

# FRAME AND BODY

## *114-5125* FENDER GP-FRONT

**S/N: BXY1-UP**

**PART OF 164-6084, 164-6085 LADDER & FENDER AR**

**AN ATTACHMENT**

**SMCS-7252** **i01771992**

| NOTE | REF NO | GRAPHIC REF | PART NUMBER | QTY | PART NAME 1 2 3 4 5 6 (PRODUCT LEVEL) | SEE PAGE |
|---|---|---|---|---|---|---|
| Y | 1 | 1 | **224-4229** | 1 | FENDER GP-FRONT | 662 |
| | 2 | 1 | **8T-4123** | 12 | WASHER (22X35X3.5-MM THK) | |
| M | 3 | 1 | **8T-6430** | 12 | BOLT (M20X2.5X50-MM) | |

M-METRIC PART
Y-SEPARATE ILLUSTRATION

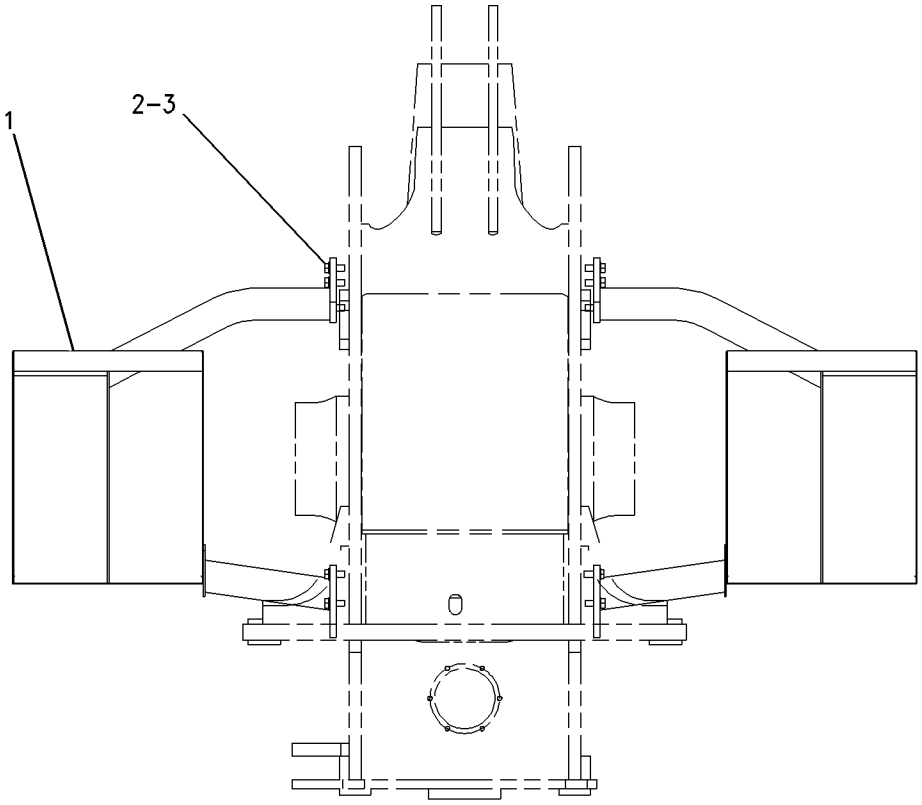


GRAPHIC #1 **<END>** g00906015

# *170-7339* FENDER GP-FRONT

**S/N: BXY1-UP**
**PART OF 170-7340 LADDER & FENDER AR**
**AN ATTACHMENT**

**SMCS-7252** **i01739774**

| NOTE | REF NO | GRAPHIC REF | PART NUMBER | QTY | PART NAME 1 2 3 4 5 6 (PRODUCT LEVEL) | SEE PAGE |
|---|---|---|---|---|---|---|
| | 1 | 1 | **8J-2962** | 2 | FLAP | |
| | 2 | 1 | **146-8349** | 2 | STRIP | |
| | 3 | 1 | **215-2425** | 1 | FENDER AS (RH) | |
| | | 1 | **211-0248** | 1 | PLATE | |
| | 4 | 1 | **215-2426** | 1 | FENDER AS (LH) | |
| | | 1 | **211-0248** | 1 | PLATE | |
| M | 5 | 1 | **6V-7687** | 10 | LOCKNUT (M12X1.75-THD) | |
| M | 6 | 1 | **8T-4956** | 10 | BOLT (M12X1.75X35-MM) | |
| | 7 | 1 | **8T-4123** | 12 | WASHER (22X35X3.5-MM THK) | |
| M | 8 | 1 | **8T-6430** | 12 | BOLT (M20X2.5X50-MM) | |
| | 9 | 1 | **8T-4223** | 10 | WASHER-HARD (13.5X25.5X3-MM THK) | |

M-METRIC PART

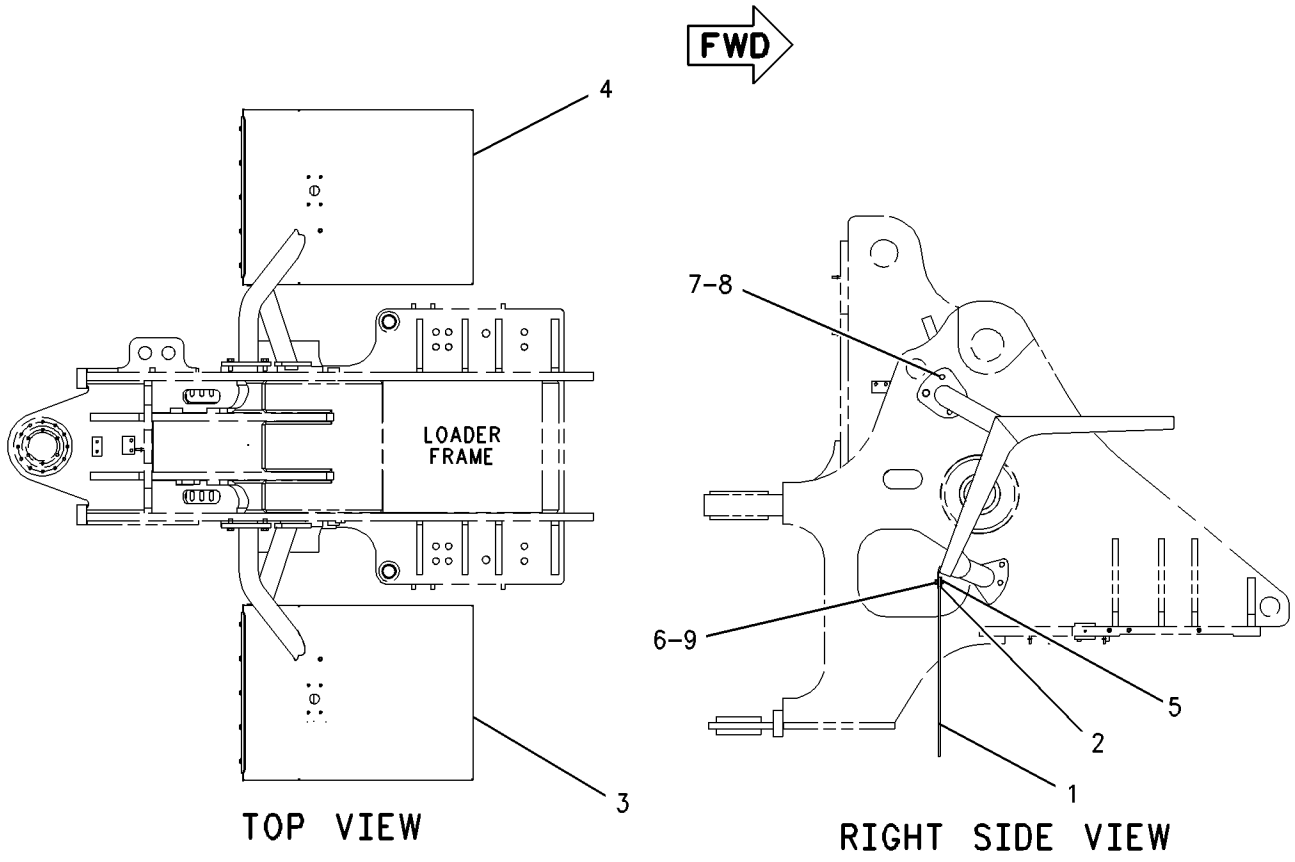


GRAPHIC #1 **<END>** g00889648

# *224-4229* FENDER GP-FRONT

**S/N: BXY1-UP**
**PART OF 114-5125 FENDER GP-FRONT**
**AN ATTACHMENT**

**SMCS-7252** **i02387623**

| NOTE | REF NO | GRAPHIC REF | PART NUMBER | QTY | PART NAME 1 2 3 4 5 6 (PRODUCT LEVEL) | SEE PAGE |
|---|---|---|---|---|---|---|
| | 1 | 1 | **215-2423** | 1 | FENDER AS-FRONT (RH) | |
| M | | 1 | **8T-3490** | 4 | NUT-WELD (M10X1.5-THD) | |
| | | 1 | **211-0248** | 1 | PLATE | |
| | 2 | 1 | **215-2424** | 1 | FENDER AS-FRONT (LH) | |
| M | | 1 | **8T-3490** | 4 | NUT-WELD (M10X1.5-THD) | |
| | | 1 | **211-0248** | 1 | PLATE | |

M-METRIC PART

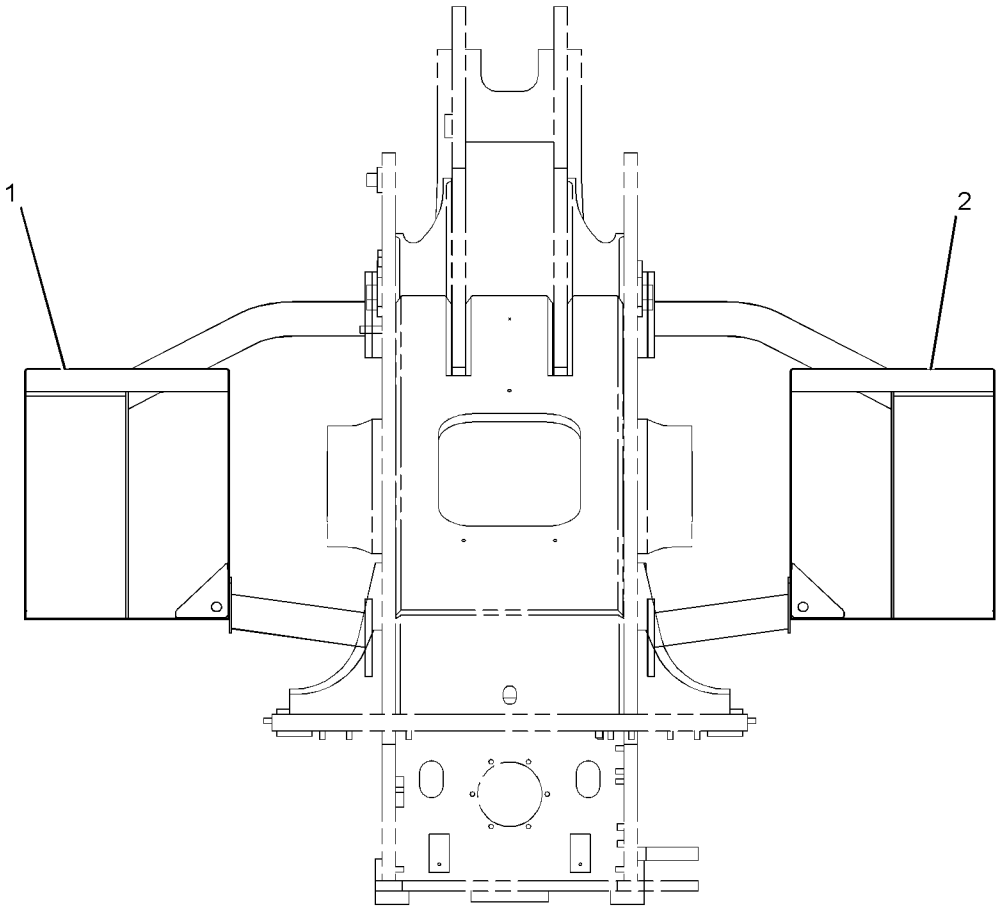


FRONT VIEW

GRAPHIC #1 **<END>** g01191973

# *142-5800* FENDER GP-REAR

**S/N: BXY1-UP**
**PART OF 170-7340 LADDER & FENDER AR**
**CANNOT BE USED WITH 142-5799—PAGE 718, 153-7044—PAGE 720**
**AN ATTACHMENT**

**SMCS-7252** **i02022476**

| NOTE | REF NO | GRAPHIC REF | PART NUMBER | QTY | PART NAME 1 2 3 4 5 6 (PRODUCT LEVEL) | SEE PAGE |
|---|---|---|---|---|---|---|
| | 1 | 1 | **142-5795** | 1 | SHEET AS-LH | |
| | | 1 | **6V-1635** | 4 | RIVET-POP | |
| | 2 | 1 | **142-5797** | 1 | SHEET AS-LH | |
| | | 1 | **6V-1635** | 4 | RIVET-POP | |
| | 3 | 1 | **142-5798** | 1 | PLATE AS (LH) | |
| Y | 4 | 1 | *142-5799* | 1 | LADDER GP (RH) | 718 |
| | 5 | 1 | **142-5804** | 2 | SHEET | |
| | 6 | 1 | **142-5805** | 1 | SHEET AS-RH | |
| | | 1 | **6V-1635** | 4 | RIVET-POP | |
| | 7 | 1 | **142-5807** | 1 | SHEET AS-RH | |
| | | 1 | **6V-1635** | 4 | RIVET-POP | |
| | 8 | 1 | **142-5808** | 1 | PLATE AS (RH) | |
| | 9 | 1 | **146-8351** | 1 | SHEET-LH | |
| | 10 | 1 | **146-8352** | 1 | SHEET-RH | |
| | 11 | 1 | **146-8353** | 1 | SHEET-LH | |
| | 12 | 1 | **146-8354** | 1 | SHEET-RH | |
| | 13 | 1 | **7X-7729** | 32 | WASHER (11X25X3-MM THK) | |
| M | 14 | 1 | **8T-4133** | 36 | NUT (M10X1.5-THD) | |
| M | 15 | 1 | **8T-4136** | 36 | BOLT (M10X1.5X25-MM) | |
| | 16 | 1 | **174-5807** | 16 | RIVET-POP | |
| | 17 | 1 | **142-5803** | 4 | STRIP | |
| | 18 | 1 | **142-5809** | 4 | FLAP | |

M-METRIC PART
Y-SEPARATE ILLUSTRATION

*142-5800* **FENDER GP-REAR** *(contd.)* **i02022476**

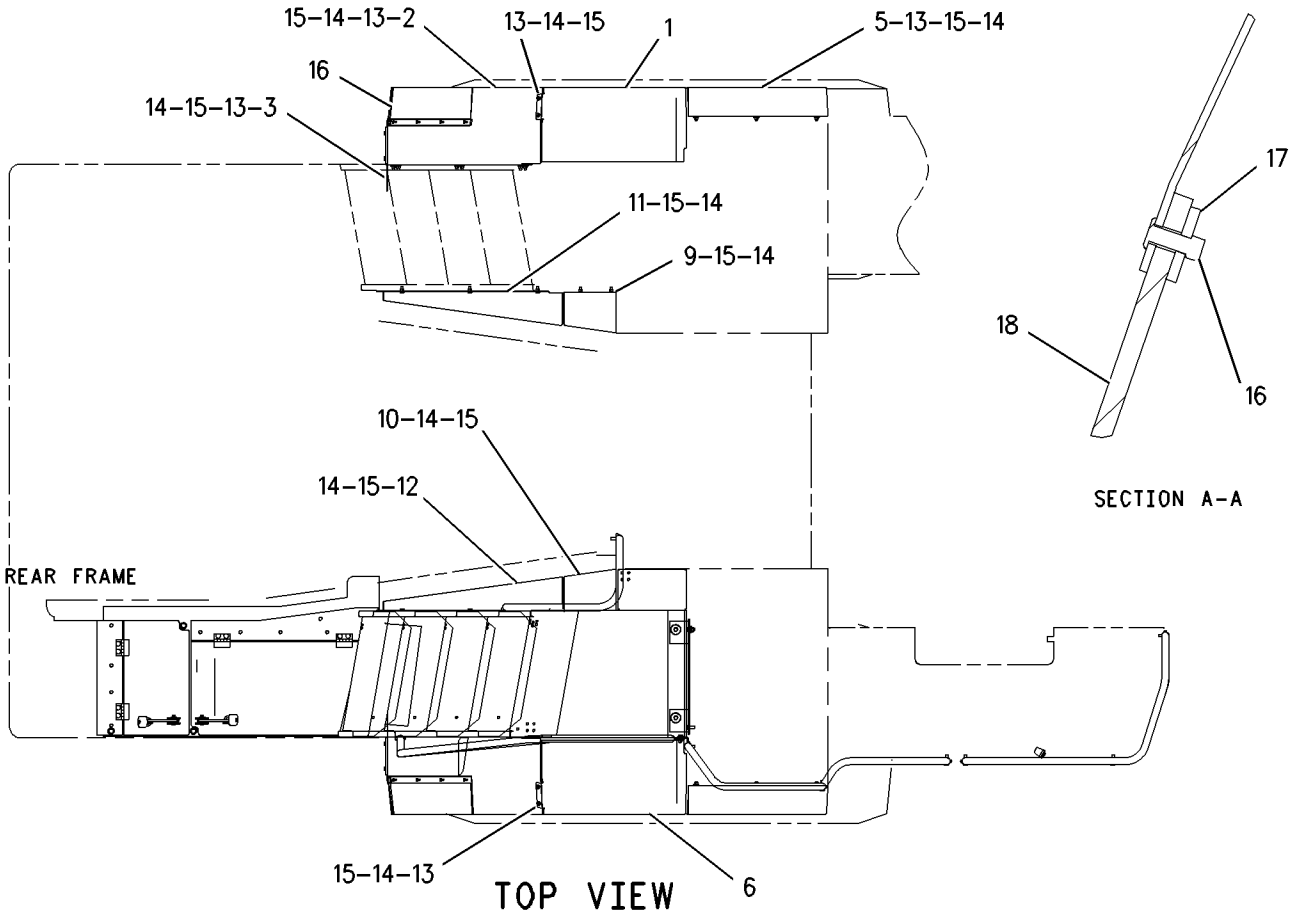


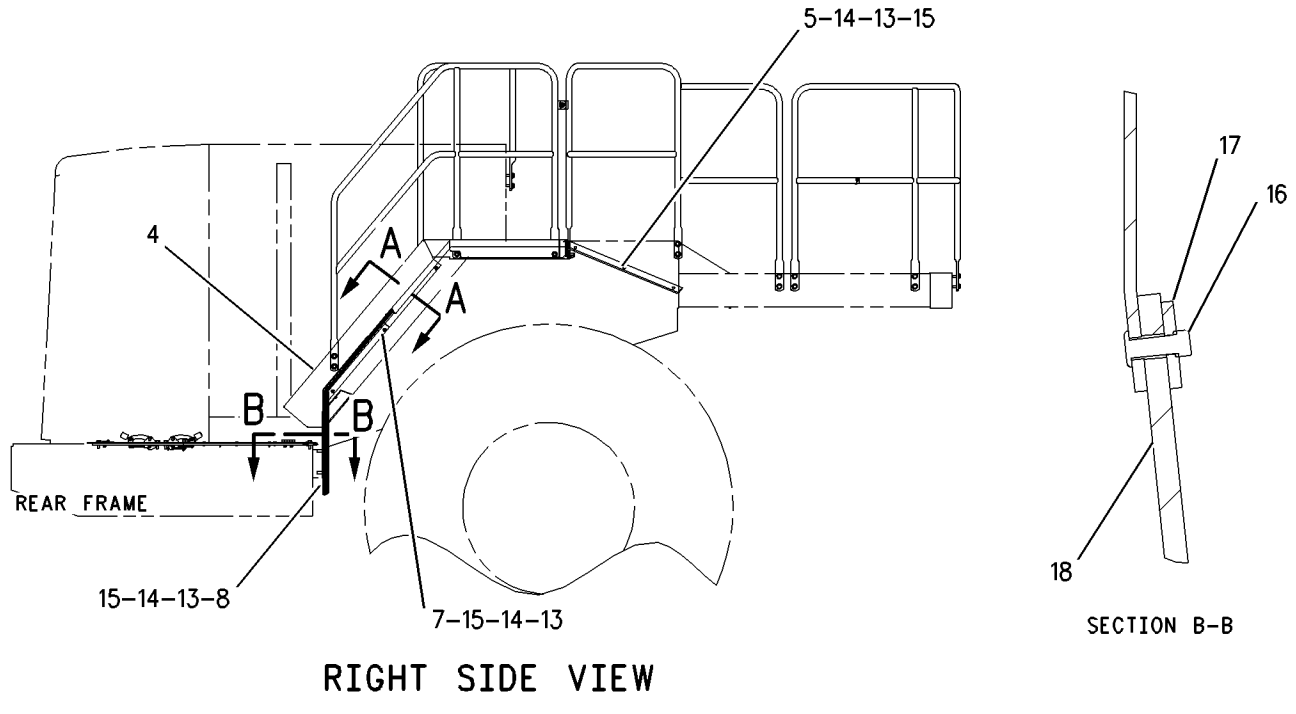


GRAPHIC #1 **<END>** g00826899

# FRAME AND BODY

## *114-5126* FIREWALL GP

**S/N: BXY1-UP**

**PART OF 225-5432, 284-2735 CHASSIS AR**

**SMCS-7262** **i01493701**

| NOTE | REF NO | GRAPHIC REF | PART NUMBER | QTY | PART NAME 1 2 3 4 5 6 (PRODUCT LEVEL) | SEE PAGE |
|---|---|---|---|---|---|---|
| | 1 | 1 | **180-4533** | 1 | PANEL AS | |
| | | 1 | **7T-1099** | 6 | LINK | |
| M | | 1 | **8T-3490** | 4 | NUT-WELD (M10X1.5-THD) | |
| | 2 | 1 | **142-5017** | 1 | SUPPORT AS | |
| M | | 1 | **8T-3597** | 4 | NUT-WELD (M12X1.75-THD) | |
| M | | 1 | **9R-2613** | 1 | BOSS-WELD (M10X1.5X25-MM OAL) | |
| | 3 | 1 | **144-9528** | 1 | SHEET AS | |
| | | 1 | **138-6108** | 2 | SPACER (8.7X20X45-MM THK) | |
| M | | 1 | **8T-3490** | 5 | NUT-WELD (M10X1.5-THD) | |
| | 4 | 1 | **144-9529** | 1 | SHEET AS | |
| | | 1 | **138-6108** | 2 | SPACER (8.7X20X45-MM THK) | |
| M | | 1 | **8T-3490** | 2 | NUT-WELD (M10X1.5-THD) | |
| | 5 | 1 | **144-9530** | 1 | SHEET AS | |
| | 6 | 1 | **144-9531** | 1 | SHEET | |
| | 7 | 1 | **8T-4121** | 10 | WASHER-HARD (11X21X2.5-MM THK) | |
| M | 8 | 1 | **8T-4139** | 10 | BOLT (M12X1.75X30-MM) | |
| M | 9 | 1 | **8T-4191** | 10 | BOLT (M10X1.5X16-MM) | |
| | 10 | 1 | **8T-4223** | 10 | WASHER-HARD (13.5X25.5X3-MM THK) | |

M-METRIC PART

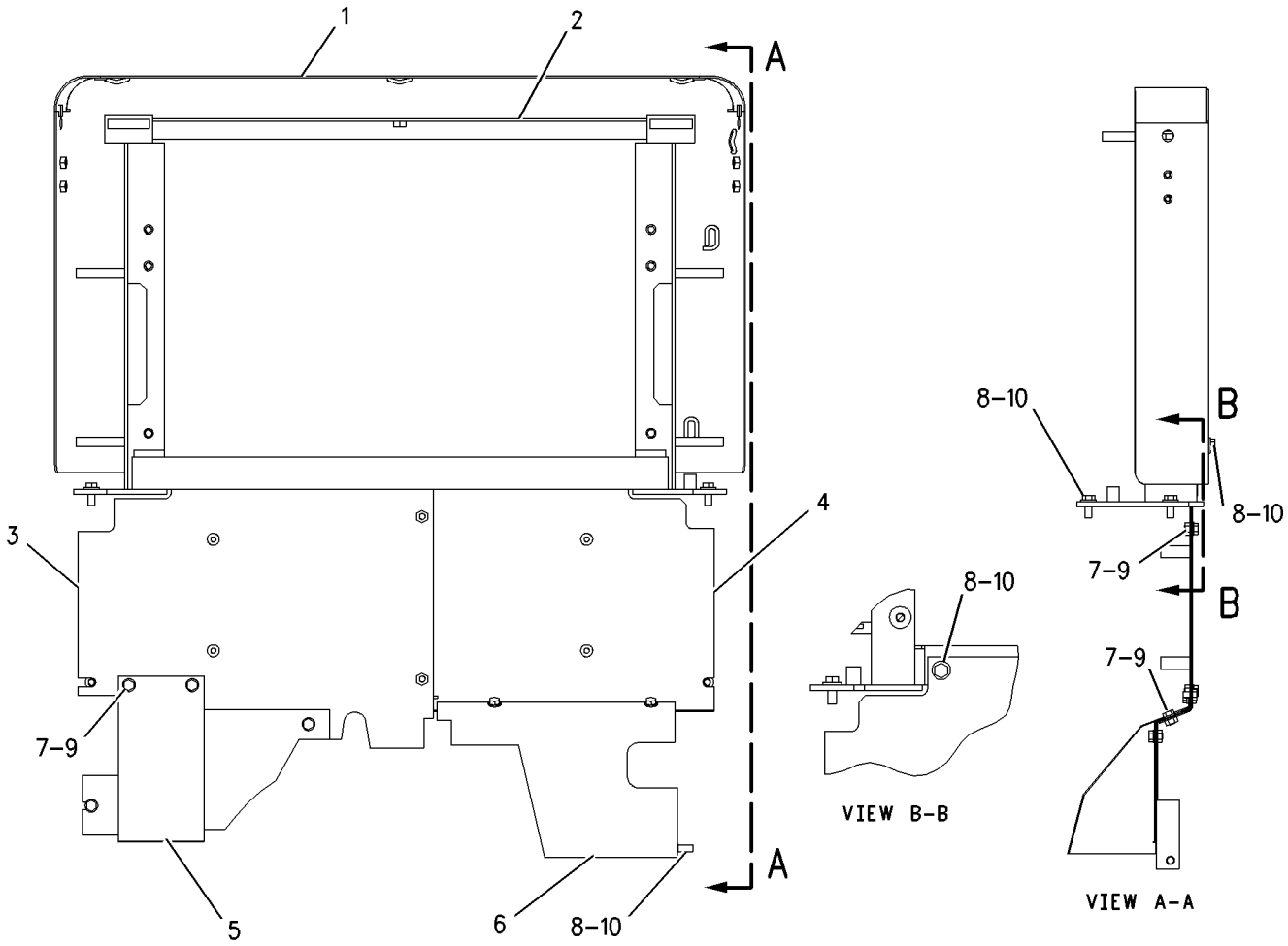


GRAPHIC #1 **<END>** g00775576

# FRAME AND BODY

## 257-2537 FRAME AS-LOADER

**S/N: BXY1-UP**

**PART OF 225-5432, 284-2735 CHASSIS AR**

**SMCS-7054** **i02419056**

| NOTE | REF NO | GRAPHIC REF | PART NUMBER | QTY | PART NAME 1 2 3 4 5 6 (PRODUCT LEVEL) | SEE PAGE |
|---|---|---|---|---|---|---|
| | 1 | 1 | **3K-8681** | 4 | ANGLE | |
| | 2 | 1 | **9C-7863** | 1 | BLOCK | |
| | 3 | 1 | **9U-0853** | 1 | BAR | |
| | 4 | 1 | **103-5350** | 12 | PLATE | |
| | 5 | 1 | **138-1873** | 2 | BEARING-SLEEVE | |
| | 6 | 1 | **152-3749** | 2 | BEARING | |
| | 7 | 1 | **152-3752** | 1 | SPACER | |
| | 8 | 1 | **156-1817** | 1 | BLOCK | |
| | 9 | 1 | *198-4266* | 1 | PLATE AS | |
| M | | 1 | **9R-2613** | 4 | BOSS-WELD (M10X1.5X25-MM OAL) | |
| | 10 | 1 | **211-0247** | 2 | PLATE | |
| | 11 | 1 | **164-4180** | 2 | PLUG AS | |
| | | | | | (EACH INCLUDES) | |
| | | 1 | **7M-8485** | 1 | SEAL-O-RING | |
| | | 1 | **9S-4181** | 1 | PLUG-O RING | |
| M | 12 | 1 | **7X-0750** | 3 | BOSS-WELD (M10X1.5X55-MM) | |
| M | 13 | 1 | **8T-3851** | 60 | BOSS-WELD (M10X1.5X17.5-MM) | |
| M | 14 | 1 | **9R-1733** | 2 | BOSS (M10X1.5X66.5-MM) | |
| M | 15 | 1 | **9R-2640** | 1 | BOSS (M12X1.75X25-MM) | |

M-METRIC PART

## 257-2537 FRAME AS-LOADER *(contd. )* i02419056

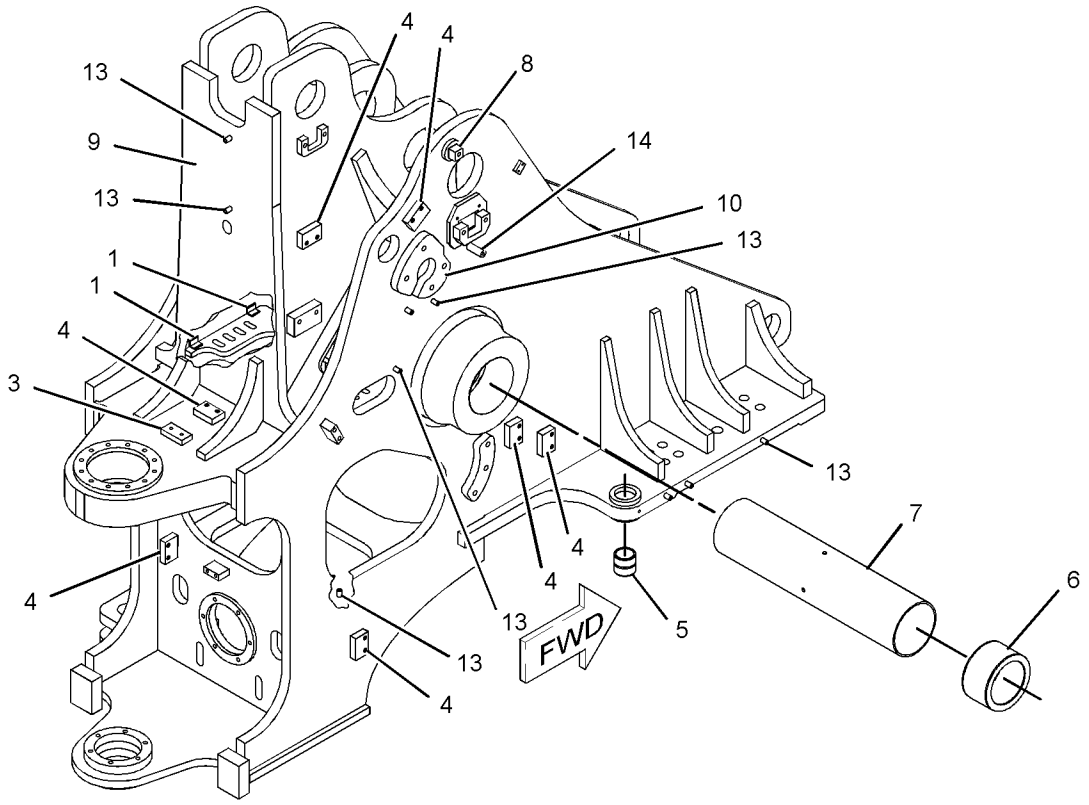


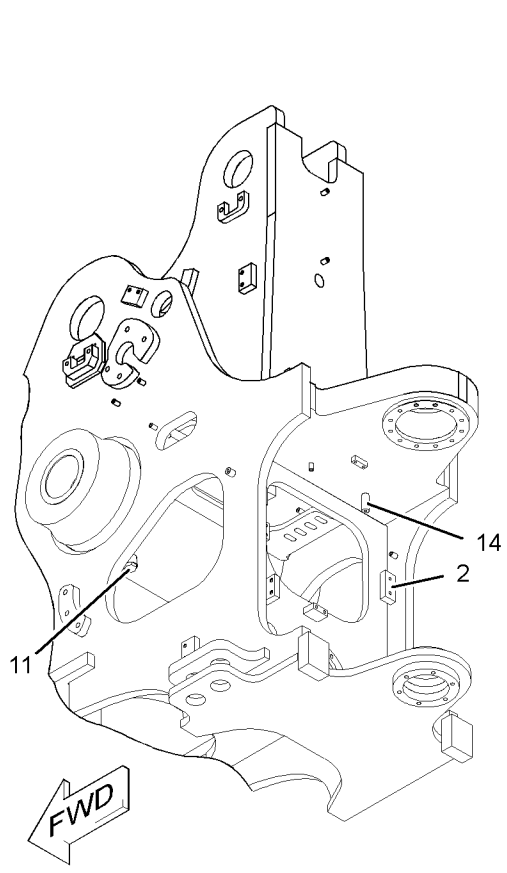


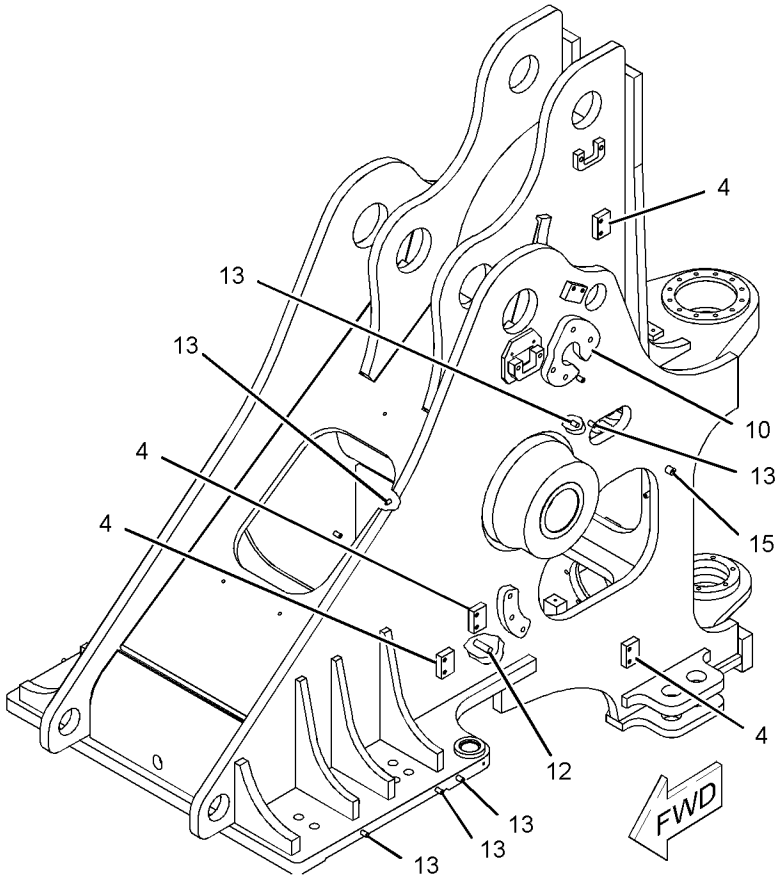


GRAPHIC #1 **<END>** g01211325

# 199-3066 FRAME AS-REAR–AXLE OSCILLATION

**S/N: BXY1-UP**
**FOR USE WITH 200-5161–PAGE 613**
**AN ATTACHMENT**

**SMCS-7051** **i01504205**

| NOTE | REF NO | GRAPHIC REF | PART NUMBER | QTY | PART NAME 1 2 3 4 5 6 (PRODUCT LEVEL) | SEE PAGE |
|---|---|---|---|---|---|---|
| | 1 | 1 | **204-1505** | 2 | STOP | |

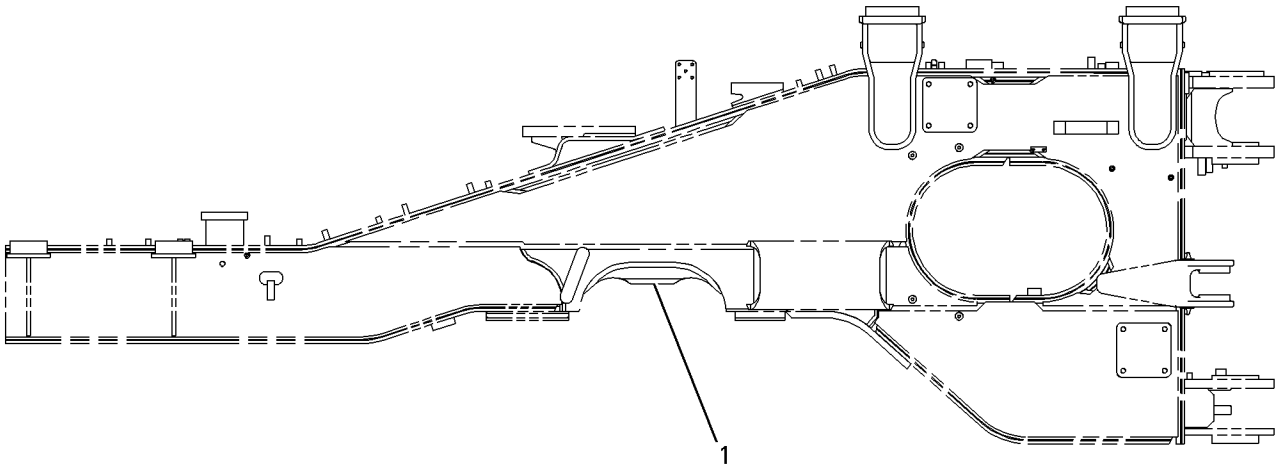


RIGHT SIDE VIEW

GRAPHIC #1 **<END>** g00781282

# 225-7922 FRAME AS-REAR

**S/N: BXY1-1899**

**PART OF 225-5432 CHASSIS AR**

**SMCS-7051** **i02580014**

| NOTE | REF NO | GRAPHIC REF | PART NUMBER | QTY | PART NAME 1 2 3 4 5 6 (PRODUCT LEVEL) | SEE PAGE |
|---|---|---|---|---|---|---|
| | 1 | 1 | **7K-1972** | 2 | EYE | |
| | 2 | 2 | **9C-4935** | 1 | PLATE | |
| | 3 | 2 | **9C-7863** | 2 | BLOCK | |
| | 4 | 1 | **103-5350** | 6 | PLATE | |
| | 5 | 1 | **131-6593** | 1 | BLOCK | |
| M | 6 | 1 | **110-2023** | 3 | STUD-WELD (M10X1.5X25-MM) | |
| | 7 | 1,2 | **4I-3398** | 2 | PLATE | |
| | 8 | 1,2 | **4I-6289** | 4 | PLATE | |
| | 9 | 2 | **4I-7077** | 1 | BOSS | |
| M | 10 | 2 | **7X-0751** | 4 | BOSS-WELD (M10X1.5-THD) | |
| | 11 | 1 | **7Y-2522** | 1 | PLATE | |
| M | 12 | 1,2 | **8T-3635** | 3 | STUD-WELD (M12X1.75X34.93-MM OAL) | |
| M | 13 | 1,2 | **8T-3851** | 44 | BOSS-WELD (M10X1.5X17.5-MM) | |
| M | 14 | 2 | **8T-4935** | 16 | BOSS-WELD (M10X1.5X45-MM) | |
| M | 15 | 1 | **8T-6911** | 1 | BOSS-WELD | |
| | 16 | 2 | **9C-6809** | 2 | BLOCK | |
| M | 17 | 1,2 | **9R-2613** | 5 | BOSS-WELD (M10X1.5X25-MM OAL) | |
| | 18 | 2 | **9T-6943** | 2 | BLOCK | |
| | 19 | 2 | **199-1293** | 2 | BLOCK | |
| | 20 | 1 | **203-6490** | 1 | BOSS | |
| | 21 | 2 | **3W-9117** | 4 | BAR | |
| | 22 | 2 | **9U-1793** | 6 | BLOCK | |
| | 23 | 2 | **121-1905** | 1 | PLATE | |
| | 32 | 1 | **183-2299** | 2 | BAR | |
| | 46 | 1 | *281-7608* | 2 | BRACKET AS | |
| | | | | | (EACH INCLUDES) | |
| | | 1 | **138-1875** | 2 | BEARING-SLEEVE | |
| | 51 | 1 | **4E-0019** | 5 | BOSS (M10X1.5-THD) | |
| | 63 | 1 | **9R-4595** | 7 | BOSS | |

M-METRIC PART

**225-7922 FRAME AS-REAR** *(contd.)* **i02580014**

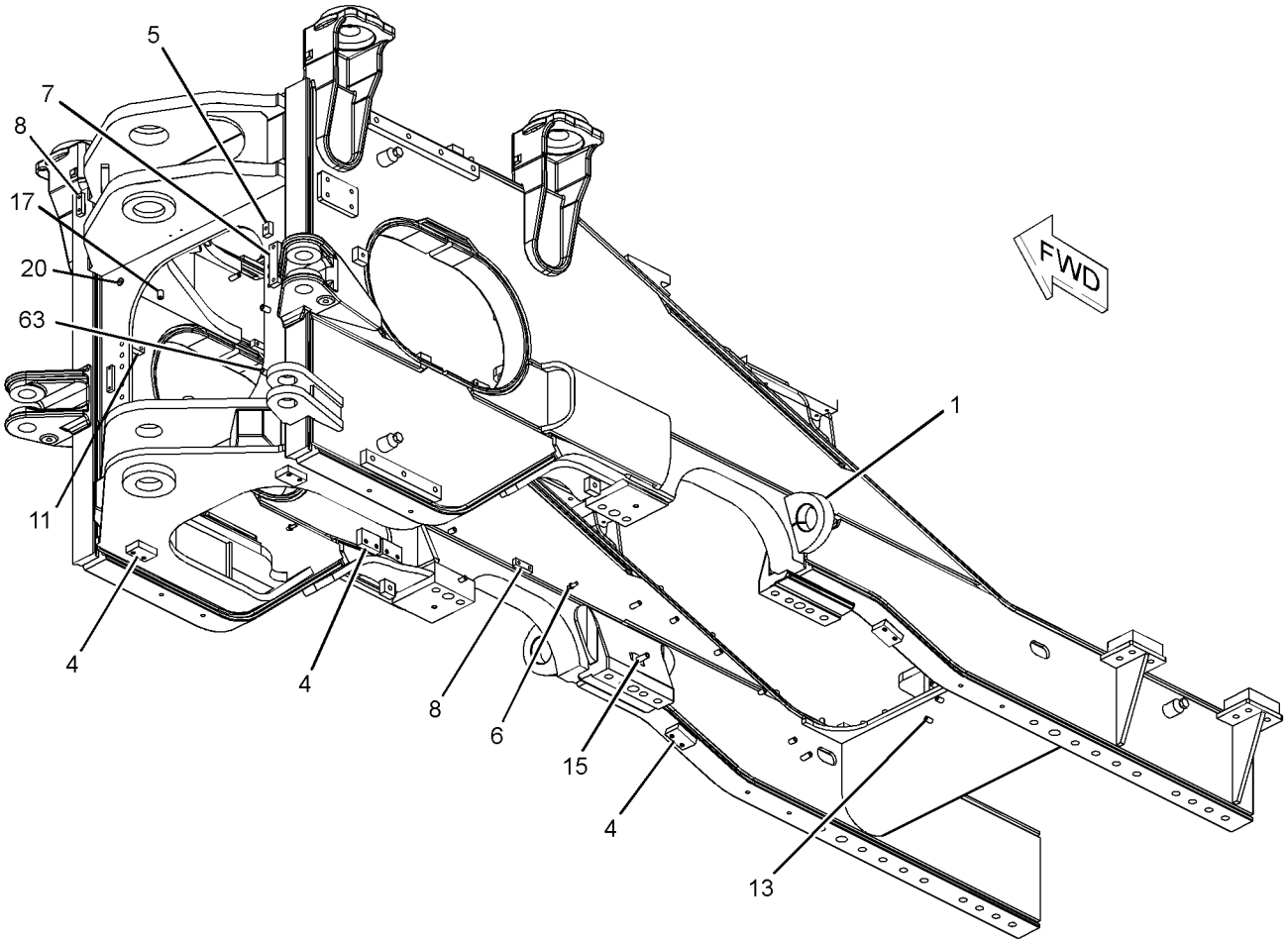


GRAPHIC #1 g01341423

**225-7922 FRAME AS-REAR** *(contd. )* **i02580014**

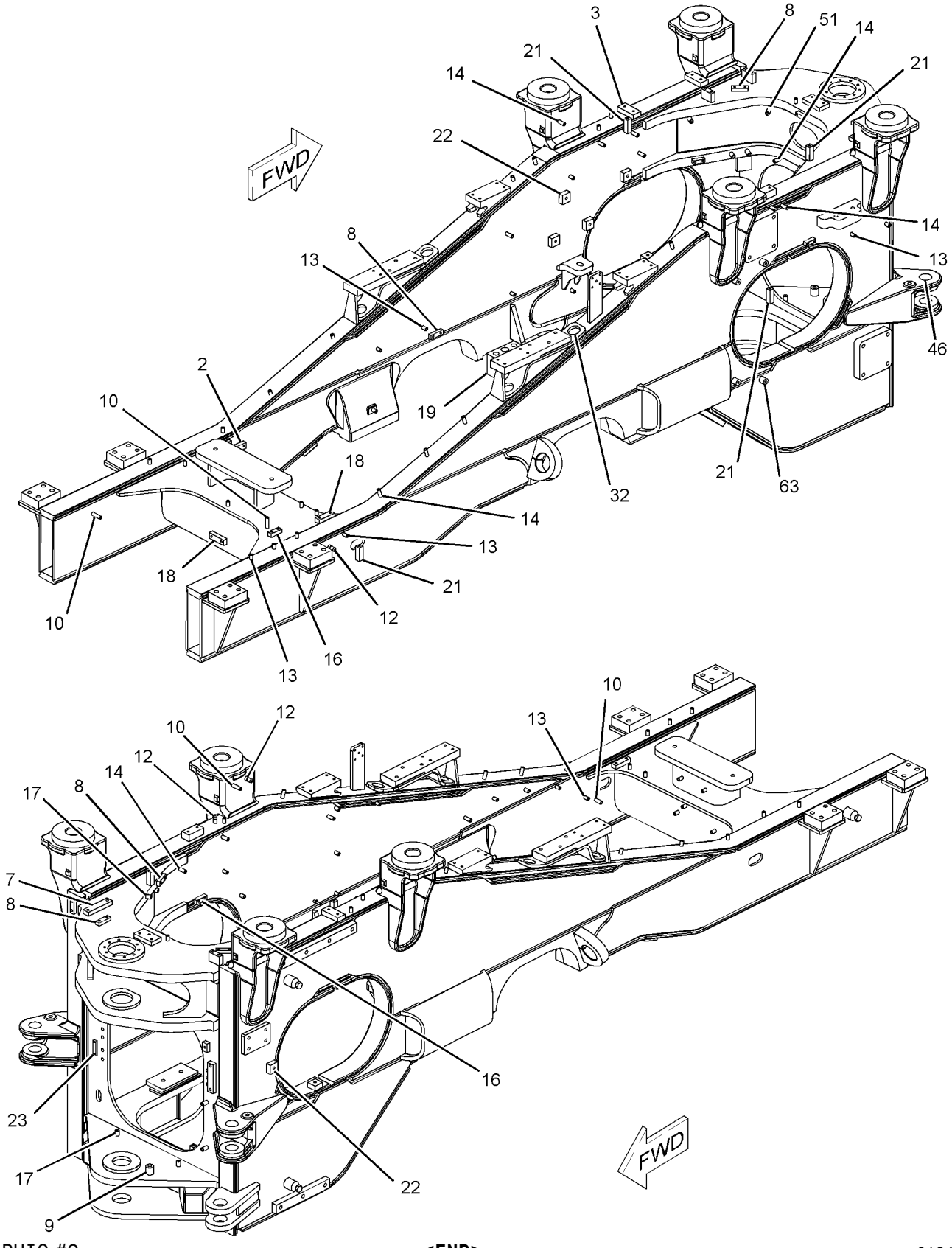


GRAPHIC #2 **<END>** g01341438

# FRAME AND BODY

## *225-7922* FRAME AS-REAR

**S/N: BXY1900-UP**

**PART OF 284-2735 CHASSIS AR**

**SMCS-7051** **i02696645**

| NOTE | REF NO | GRAPHIC REF | PART NUMBER | QTY | PART NAME 1 2 3 4 5 6 (PRODUCT LEVEL) | SEE PAGE |
|---|---|---|---|---|---|---|
| | 1 | 1 | **7K-1972** | 2 | EYE | |
| | 2 | 2 | **9C-4935** | 1 | PLATE | |
| | 3 | 2 | **9C-7863** | 2 | BLOCK | |
| | 4 | 1 | **103-5350** | 6 | PLATE | |
| | 5 | 1 | **131-6593** | 1 | BLOCK | |
| M | 6 | 1 | **110-2023** | 3 | STUD-WELD (M10X1.5X25-MM) | |
| | 7 | 1,2 | **4I-3398** | 2 | PLATE | |
| | 8 | 1,2 | **4I-6289** | 4 | PLATE | |
| | 9 | 2 | **4I-7077** | 1 | BOSS | |
| CM | 10 | 2 | **7X-0751** | 2 | BOSS-WELD (M10X1.5-THD) | |
| | 11 | 1 | **7Y-2522** | 1 | PLATE | |
| M | 12 | 1,2 | **8T-3635** | 3 | STUD-WELD (M12X1.75X34.93-MM OAL) | |
| M | 13 | 1,2 | **8T-3851** | 44 | BOSS-WELD (M10X1.5X17.5-MM) | |
| CM | 14 | 2 | **8T-4935** | 17 | BOSS-WELD (M10X1.5X45-MM) | |
| M | 15 | 1 | **8T-6911** | 1 | BOSS-WELD | |
| | 16 | 2 | **9C-6809** | 2 | BLOCK | |
| M | 17 | 1,2 | **9R-2613** | 5 | BOSS-WELD (M10X1.5X25-MM OAL) | |
| | 18 | 2 | **9T-6943** | 2 | BLOCK | |
| | 19 | 2 | **199-1293** | 2 | BLOCK | |
| | 20 | 1 | **203-6490** | 1 | BOSS | |
| | 21 | 2 | **3W-9117** | 4 | BAR | |
| | 22 | 2 | **9U-1793** | 6 | BLOCK | |
| | 23 | 2 | **121-1905** | 1 | PLATE | |
| | 32 | 1 | **183-2299** | 2 | BAR | |
| | 46 | 1 | *281-7608* | 2 | BRACKET AS | |
| | | | | | (EACH INCLUDES) | |
| | | 1 | **138-1875** | 2 | BEARING-SLEEVE | |
| | 51 | 1 | **4E-0019** | 5 | BOSS (M10X1.5-THD) | |
| | 63 | 1 | **9R-4595** | 7 | BOSS | |

C-CHANGE FROM PREVIOUS TYPE
M-METRIC PART

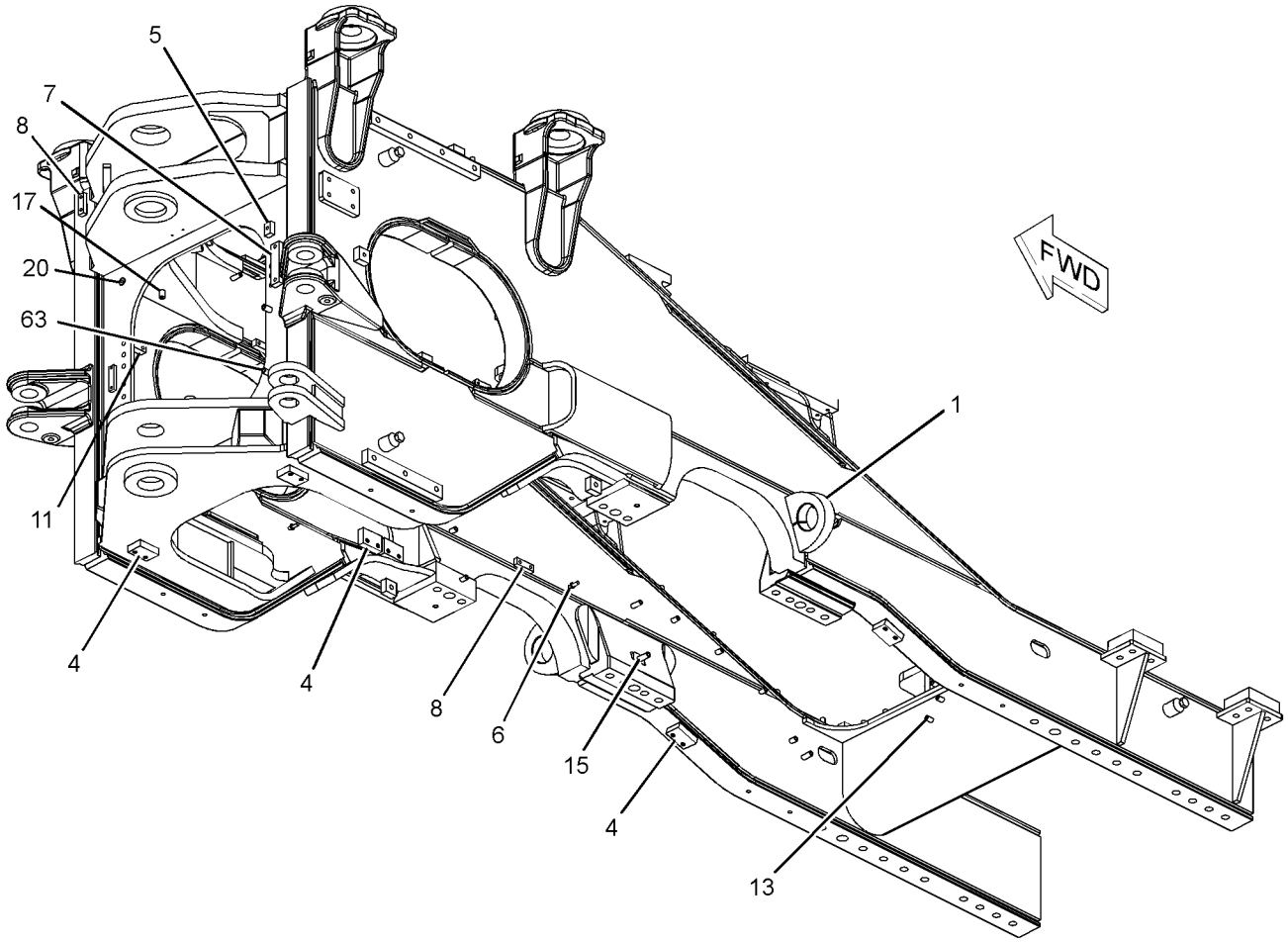


GRAPHIC #1 g01341423

*225-7922* **FRAME AS-REAR** *(contd.)* **i02696645**

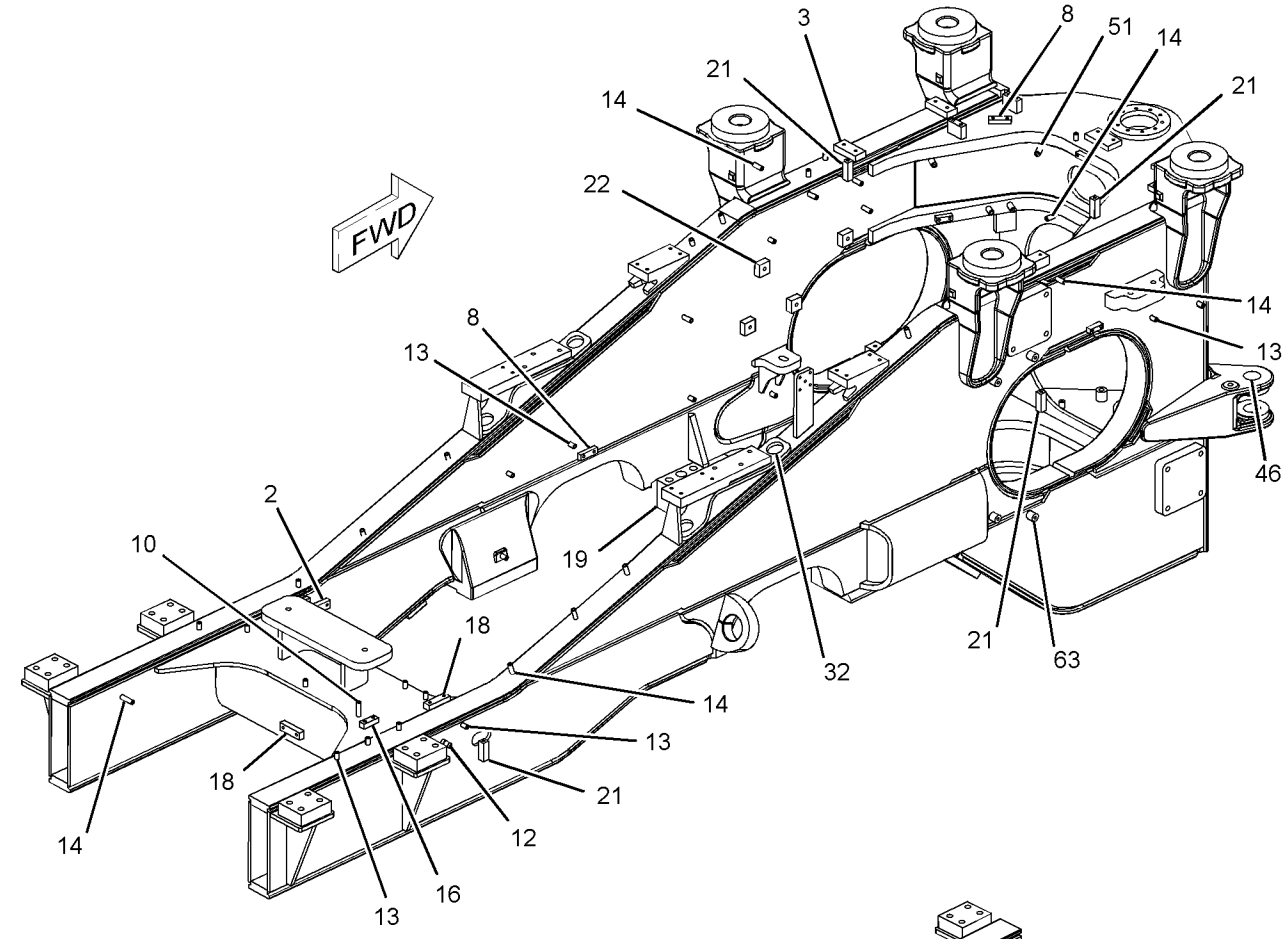


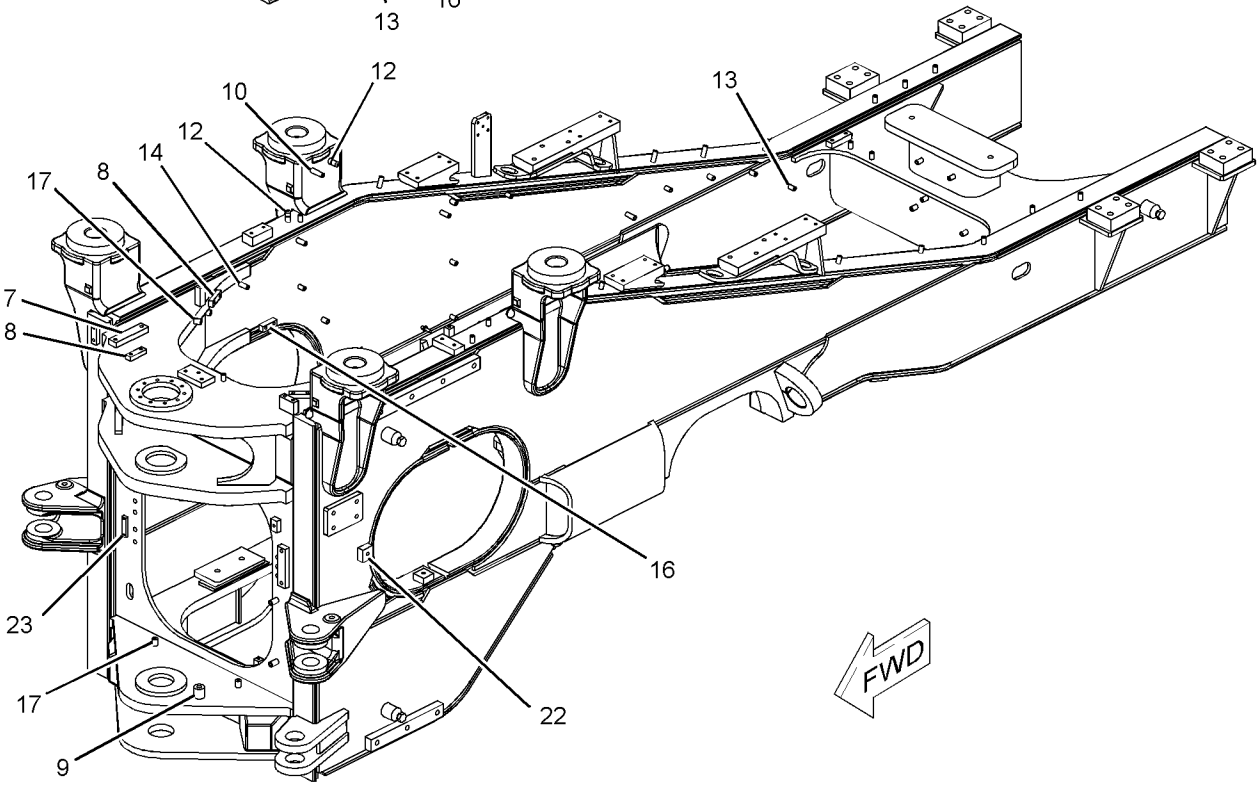


GRAPHIC #2 **<END>** g01354467

# *219-5031* GUARD GP-BOTTOM

**S/N: BXY1900-UP**
**CUSTOM**
**PART OF 2Q-8722, 2Q-8733 STEEL MILL AR**
**AN ATTACHMENT**

**SMCS-7153** **i02366779**

| NOTE | REF NO | GRAPHIC REF | PART NUMBER | QTY | PART NAME 1 2 3 4 5 6 (PRODUCT LEVEL) | SEE PAGE |
|---|---|---|---|---|---|---|
| | 1 | 1 | **185-9956** | 2 | PLATE | |
| | 2 | 1 | **219-5032** | 1 | GUARD AS | |
| | 3 | 1 | **219-5055** | 1 | GUARD | |
| | 4 | 1 | **8T-4122** | 1 | WASHER-HARD (17X32X3.5-MM THK) | |
| M | 5 | 1 | **8T-4193** | 4 | BOLT (M16X2X50-MM) | |
| | 6 | 1 | **8T-4223** | 4 | WASHER-HARD (13.5X25.5X3-MM THK) | |
| M | 7 | 1 | **8T-4779** | 7 | BOLT (M16X2X35-MM) | |
| M | 8 | 1 | **8T-4956** | 4 | BOLT (M12X1.75X35-MM) | |
| | | | | | *****ATTACHMENT REMOVAL***** | |
| J | | 1 | *219-5066* | 1 | GUARD GP-BOTTOM | |

J-PART OF ATTACHMENT CONTROL AR-RIDE
M-METRIC PART

*219-5031* **GUARD GP-BOTTOM** *(contd.)* **i02366779**

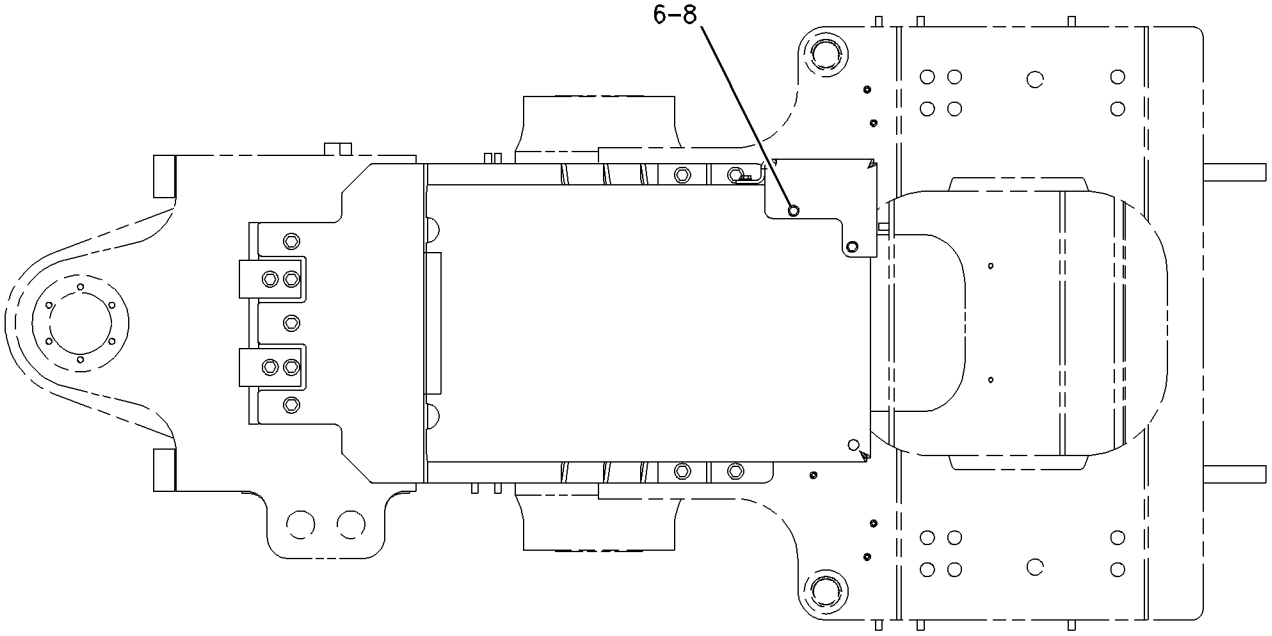


BOTTOM VIEW

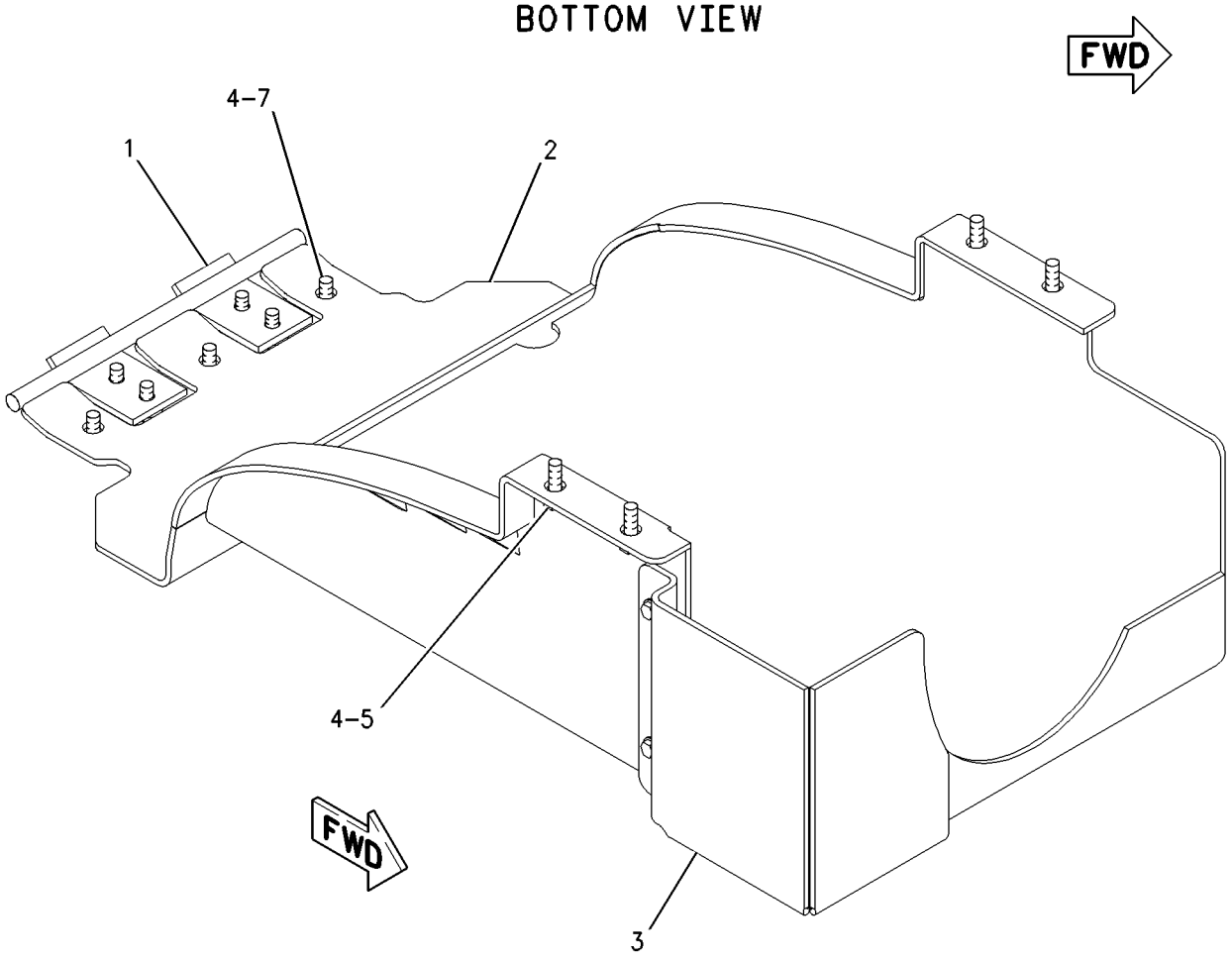


GRAPHIC #1 **<END>** g00989657

# *219-5066* GUARD GP-BOTTOM

**S/N: BXY1-UP**
**PART OF 254-6062 CONTROL AR-RIDE**
**AN ATTACHMENT**

**SMCS-7153** **i01951521**

| NOTE | REF NO | GRAPHIC REF | PART NUMBER | QTY | PART NAME 1 2 3 4 5 6 (PRODUCT LEVEL) | SEE PAGE |
|---|---|---|---|---|---|---|
| | 1 | 1 | **219-5053** | 1 | GUARD | |
| | 2 | 1 | **3E-9411** | 2 | WASHER-HARD (17.5X38X6-MM THK) | |
| M | 3 | 1 | **8T-7338** | 4 | BOLT (M16X2X45-MM) | |
| | 4 | 1 | **9X-8257** | 2 | WASHER (17.5X30X3.5-MM THK) | |

M-METRIC PART

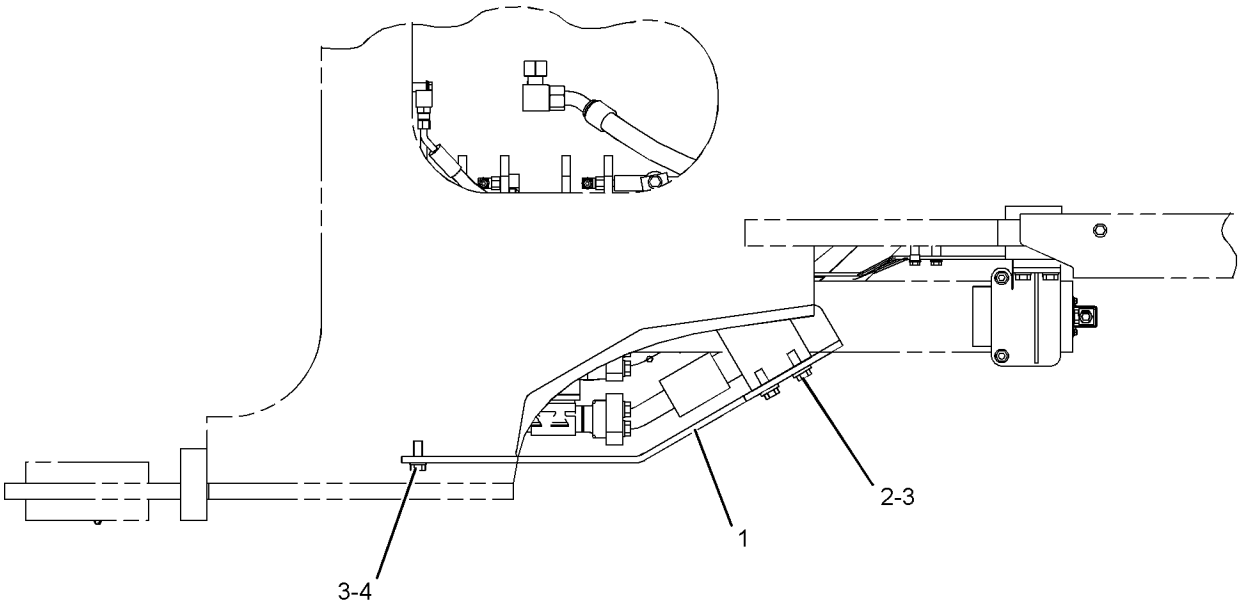


RIGHT SIDE VIEW

GRAPHIC #1 **<END>** g01051773

# *261-1510* GUARD GP-BOTTOM

**S/N: BXY1900-UP**
**CUSTOM**
**PART OF 2Q-8722, 2Q-8733 STEEL MILL AR**
**AN ATTACHMENT**

**SMCS-7153** **i02730845**

| NOTE | REF NO | GRAPHIC REF | PART NUMBER | QTY | PART NAME 1 2 3 4 5 6 (PRODUCT LEVEL) | SEE PAGE |
|---|---|---|---|---|---|---|
| C | 1 | 1 | **286-2486** | 1 | GUARD AS | |
| | | 1 | **138-6108** | 2 | SPACER (8.7X20X45-MM THK) | |
| | 2 | 1 | **7X-0515** | 8 | WASHER-HARD (17X35X5-MM THK) | |
| M | 3 | 1 | **7X-2553** | 8 | BOLT (M16X2X40-MM) | |

C-CHANGE FROM PREVIOUS TYPE
M-METRIC PART

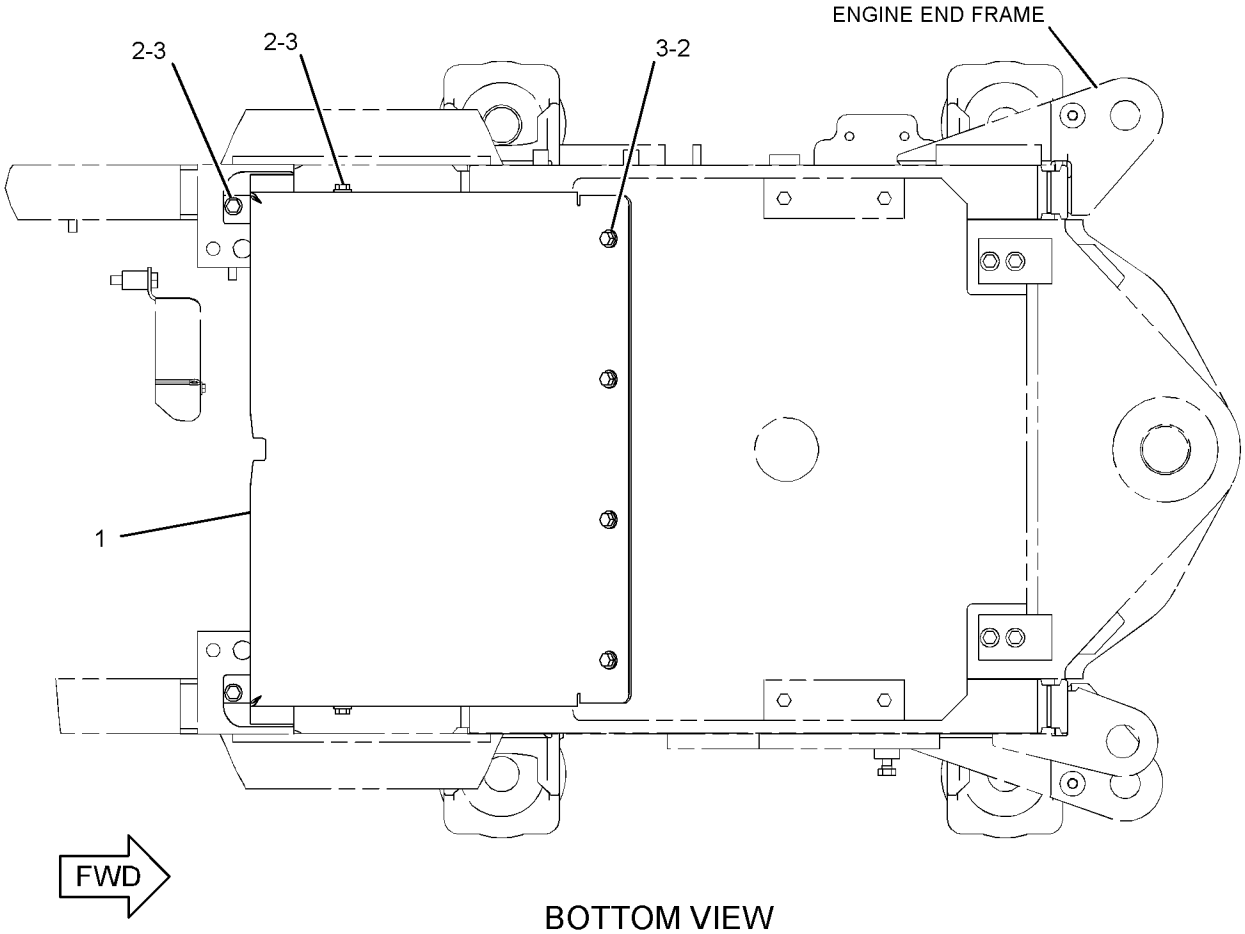


BOTTOM VIEW

GRAPHIC #1 **<END>** g01223763

# *150-1541* GUARD GP-CRANKCASE

**S/N: BXY1-UP**
**PART OF 225-8338 SUPPRESSION AR-SOUND**
**CANNOT BE USED WITH 225-8338—PAGE 865**
**AN ATTACHMENT**

**SMCS-7151** **i01323696**

| NOTE | REF NO | GRAPHIC REF | PART NUMBER | QTY | PART NAME 1 2 3 4 5 6 (PRODUCT LEVEL) | SEE PAGE |
|---|---|---|---|---|---|---|
| | 1 | 1 | **132-7487** | 1 | GUARD AS | |
| | 2 | 1 | **185-9956** | 2 | PLATE | |
| M | 3 | 1 | **100-3866** | 8 | BOLT-SELF LOCKING (M16X2X40MM) | |

M-METRIC PART

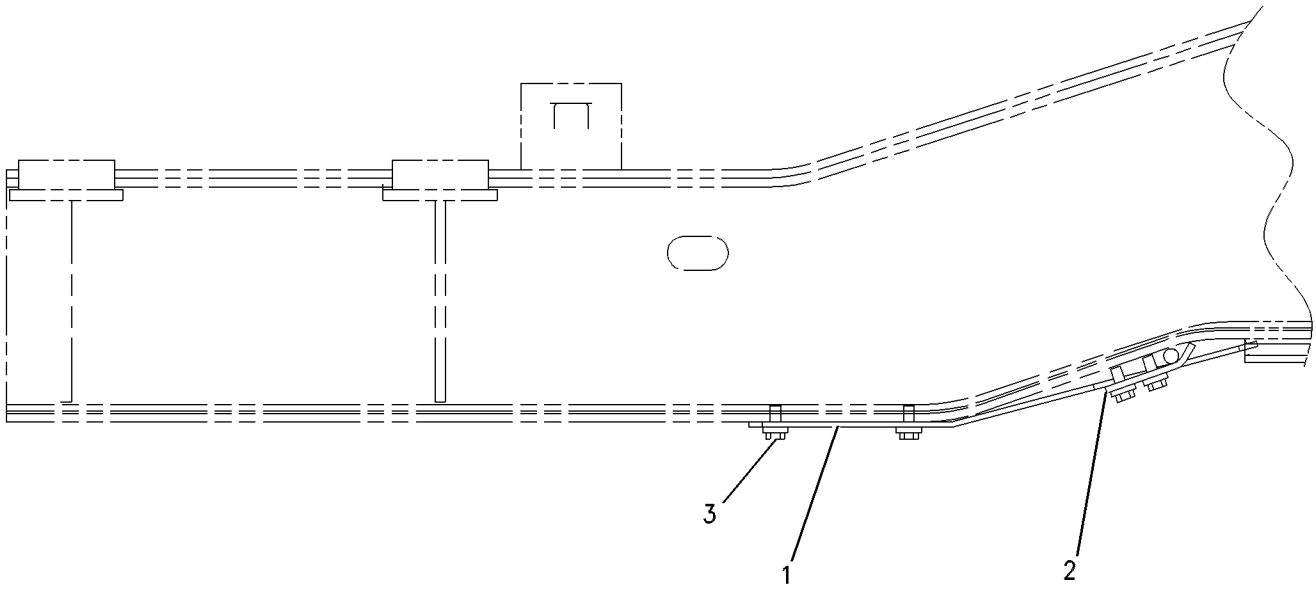


RIGHT SIDE VIEW

GRAPHIC #1 **<END>** g00510782

# FRAME AND BODY

## *198-9229* GUARD GP-FRONT

**S/N: BXY1-UP**

**PART OF 225-5432, 284-2735 CHASSIS AR**

**SMCS-7167** **i01437645**

| NOTE | REF NO | GRAPHIC REF | PART NUMBER | QTY | PART NAME 1 2 3 4 5 6 (PRODUCT LEVEL) | SEE PAGE |
|---|---|---|---|---|---|---|
| | 1 | 1 | **198-9230** | 1 | GUARD AS | |
| | 2 | 1 | **118-0275** | 3 | WASHER | |
| | 3 | 1 | **2S-1654** | 3 | WASHER ((13.5X44.5X6MM THK) | |
| M | 4 | 1 | **8T-4956** | 3 | BOLT (M12X1.75X35MM) | |

M-METRIC PART

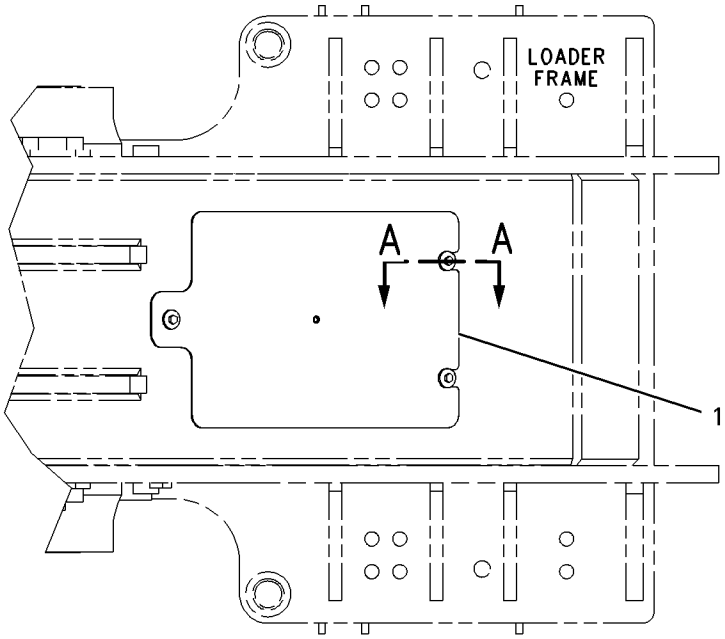


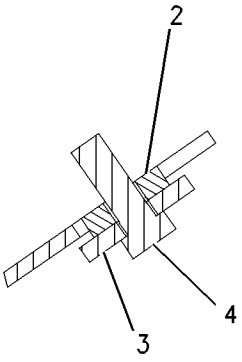


SECTION A-A

GRAPHIC #1 **<END>** g00754146

# *158-8785* GUARD GP-HYDRAULIC TANK

**S/N: BXY1-UP**

**PART OF 225-5432, 284-2735 CHASSIS AR**

**SMCS-5056** **i01157742**

| NOTE | REF NO | GRAPHIC REF | PART NUMBER | QTY | PART NAME 1 2 3 4 5 6 (PRODUCT LEVEL) | SEE PAGE |
|---|---|---|---|---|---|---|
| | 1 | 1 | **158-8032** | 1 | GUARD AS | |
| | | 1 | **6V-1635** | 8 | RIVET-POP | |
| | 2 | 1 | **168-0287** | 1 | GUARD | |
| | 3 | 1 | **8T-4223** | 4 | WASHER-HARD (13.5X25.5X3-MM THK) | |
| | 4 | 1 | **7X-7729** | 4 | WASHER (11X25X3-MM THK) | |
| M | 5 | 1 | **8T-4136** | 4 | BOLT (M10X1.5X25-MM) | |
| M | 6 | 1 | **8T-4192** | 4 | BOLT (M12X1.75X25-MM) | |

M-METRIC PART

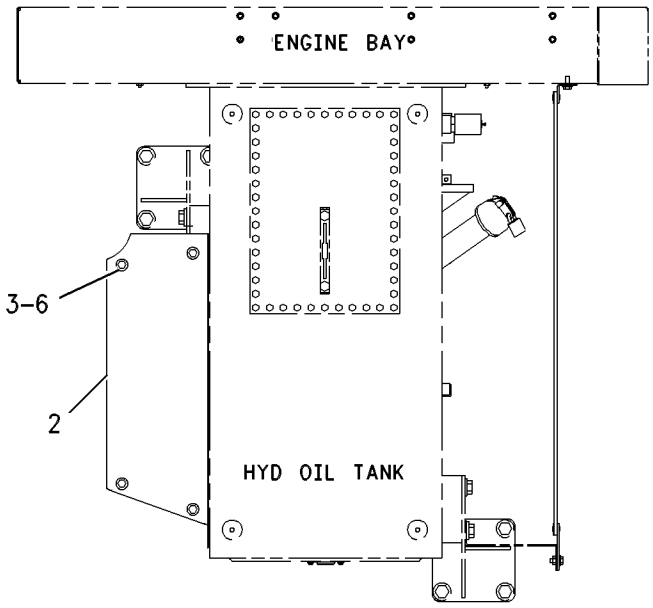


RIGHT SIDE VIEW

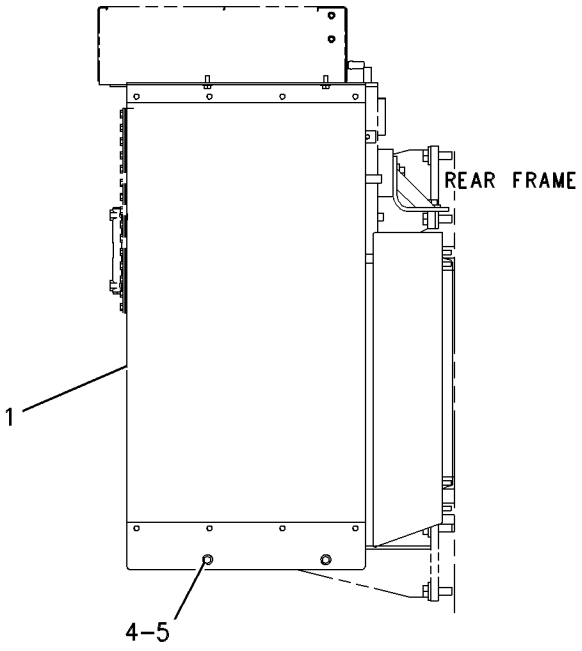


FRONT VIEW

GRAPHIC #1 **<END>** g00528094

# *227-3317* GUARD GP-LINES

**S/N: BXY1900-UP**
**CUSTOM**
**PART OF 2Q-8722, 2Q-8733 STEEL MILL AR**
**AN ATTACHMENT**

**SMCS-7167** **i01949732**

| NOTE | PART NUMBER | QTY | PART NAME 1 2 3 4 5 6 (PRODUCT LEVEL) | SEE PAGE |
|---|---|---|---|---|
| JY | *189-7253* | 1 | LINES GP-AXLE OIL COOLER | 542 |
| Y | *189-7250* | 1 | LINES GP-HYDRAULIC | 1094 |
| LY | *189-7259* | 1 | LINES GP-HYDRAULIC (MAIN CONTROL VALVE) | 1095 |
| Y | *189-7257* | 1 | LINES GP-LIFT CYLINDER | 1117 |
| Y | *189-7255* | 1 | LINES GP-POWER TRAIN OIL | 574 |
| Y | *189-7252* | 1 | LINES GP-SERVICE BRAKE | 988 |
| Y | *222-3756* | 1 | LINES GP-SERVICE BRAKE | 988 |
| Y | *189-7251* | 1 | LINES GP-STEERING | 1012 |
| Y | *219-5023* | 1 | LINES GP-STEERING NEUTRALIZER | 1028 |
| Y | *189-7254* | 1 | LINES GP-TILT CYLINDER | 1120 |

J-FOR USE WITH COOLER AR-AXLE OIL
L-FOR USE WITH HYDRAULIC AR-2 VALVE
Y-SEPARATE ILLUSTRATION

**<END>**

# *114-5137* GUARD GP-POWER TRAIN

**S/N: BXY1-UP**

**PART OF 225-5432, 284-2735 CHASSIS AR**

**SMCS-7153** **i01323450**

| NOTE | REF NO | GRAPHIC REF | PART NUMBER | QTY | PART NAME 1 2 3 4 5 6 (PRODUCT LEVEL) | SEE PAGE |
|---|---|---|---|---|---|---|
| | 1 | 1 | **7S-3998** | 2 | SPACER | |
| | 2 | 1 | **9D-6134** | 4 | SPACER (12.7MM THK) | |
| | 3 | 1 | **9R-8185** | 2 | SPACER (51MM THK) | |
| | 4 | 1 | **132-7486** | 2 | PLATE | |
| | 5 | 1 | **132-7488** | 1 | GUARD AS | |
| | 6 | 1 | **185-9956** | 2 | PLATE | |
| | 7 | 1 | **161-0114** | 2 | GUARD | |
| M | 8 | 1 | **100-3866** | 4 | BOLT-SELF LOCKING (M16X2X40MM) | |
| | 10 | 1 | **7X-7729** | 2 | WASHER (3MM THK) | |
| M | 11 | 1 | **8T-4178** | 2 | BOLT (M10X1.5X90MM) | |
| M | 12 | 1 | **8T-4187** | 2 | BOLT (M20X2.5X80MM) | |
| M | 13 | 1 | **8T-4193** | 4 | BOLT (M16X2.0X50MM) | |

M-METRIC PART

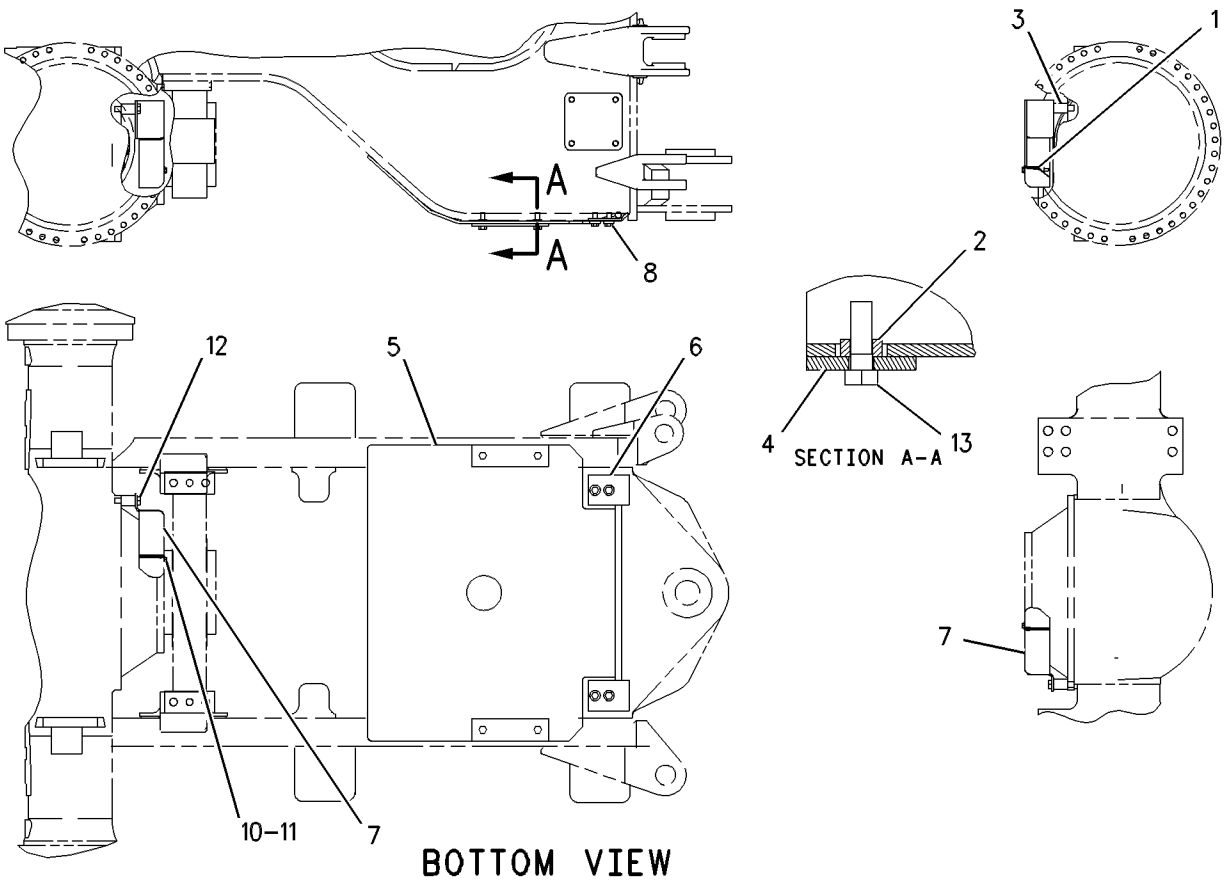


GRAPHIC #1 **<END>** g00508943

# FRAME AND BODY

## *225-6334* GUARD GP-RADIATOR

**S/N: BXY1-UP**

**PART OF 225-5432 CHASSIS AR**

**SMCS-7155** **i02216428**

| NOTE | REF NO | GRAPHIC REF | PART NUMBER | QTY | PART NAME 1 2 3 4 5 6 (PRODUCT LEVEL) | SEE PAGE |
|---|---|---|---|---|---|---|
| | 1 | 1 | **8Y-5743** | 2 | SOCKET-LATCH | |
| | 2 | 1 | **134-2782** | 4 | BRACKET AS | |
| M | | 1 | **8T-3597** | 2 | NUT-WELD (M12X1.75-THD) | |
| | 3 | 1 | **142-7022** | 1 | COVER AS | |
| | 4 | 1 | **153-1804** | 1 | GRILL AS-BOTTOM | |
| | 5 | 1 | **153-3570** | 1 | GRILL AS-TOP | |
| | 6 | 1 | **215-9554** | 4 | COVER | |
| | 7 | 1 | **217-1557** | 1 | GUARD AS | |
| M | | 1 | **8T-3490** | 24 | NUT-WELD (M10X1.5-THD) | |
| M | | 1 | **8T-3597** | 1 | NUT-WELD (M12X1.75-THD) | |
| M | 8 | 1 | **5C-9553** | 2 | BOLT (M6X1X16-MM) | |
| | 9 | 1 | **5P-1076** | 12 | WASHER-HARD (13.5X30X4-MM THK) | |
| | 10 | 1 | **5P-4115** | 2 | WASHER-HARD (7.2X19X2-MM THK) | |
| | 11 | 1 | **7X-0515** | 16 | WASHER-HARD (17X35X5-MM THK) | |
| M | 12 | 1 | **7X-2556** | 16 | BOLT (M16X2X100-MM) | |
| | 13 | 1 | **8T-4121** | 20 | WASHER-HARD (11X21X2.5-MM THK) | |
| M | 14 | 1 | **8T-4136** | 8 | BOLT (M10X1.5X25-MM) | |
| M | 15 | 1 | **8T-4183** | 12 | BOLT (M12X1.75X40-MM) | |
| M | 16 | 1 | **8T-4195** | 12 | BOLT (M10X1.5X30-MM) | |
| | 17 | 1 | **5P-7211** | | SEAL (1.4M) | |
| | 17A | 1 | **5P-7211** | | SEAL (1.16M) | |
| | 18 | 1 | **150-8993** | 1 | HANDLE AS | |
| M | 19 | 1 | **8T-4137** | 2 | BOLT (M10X1.5X20-MM) | |
| | 20 | 1 | **7X-7729** | 2 | WASHER (11X25X3-MM THK) | |

M-METRIC PART

*225-6334* **GUARD GP-RADIATOR** *(contd.)* **i02216428**

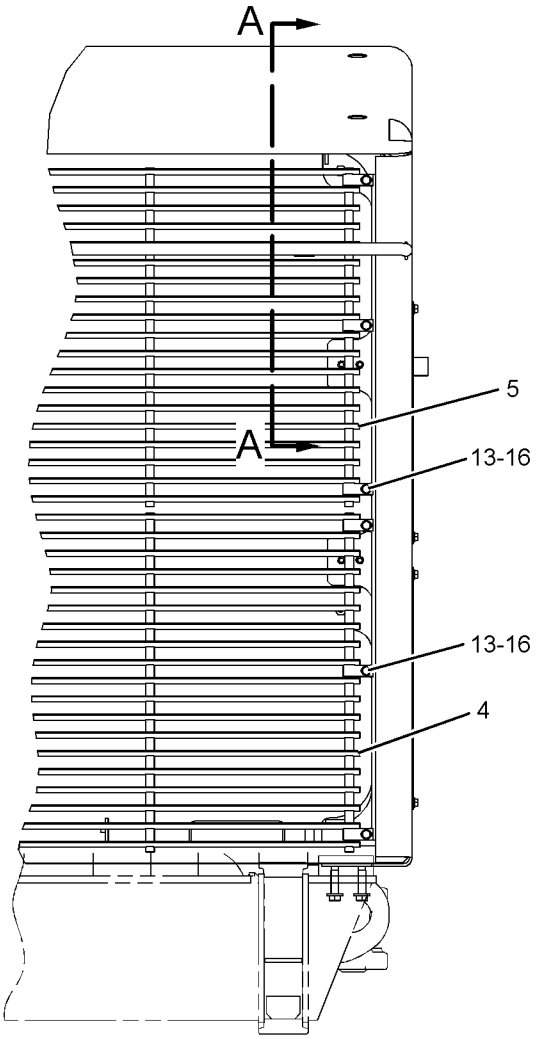


REAR VIEW

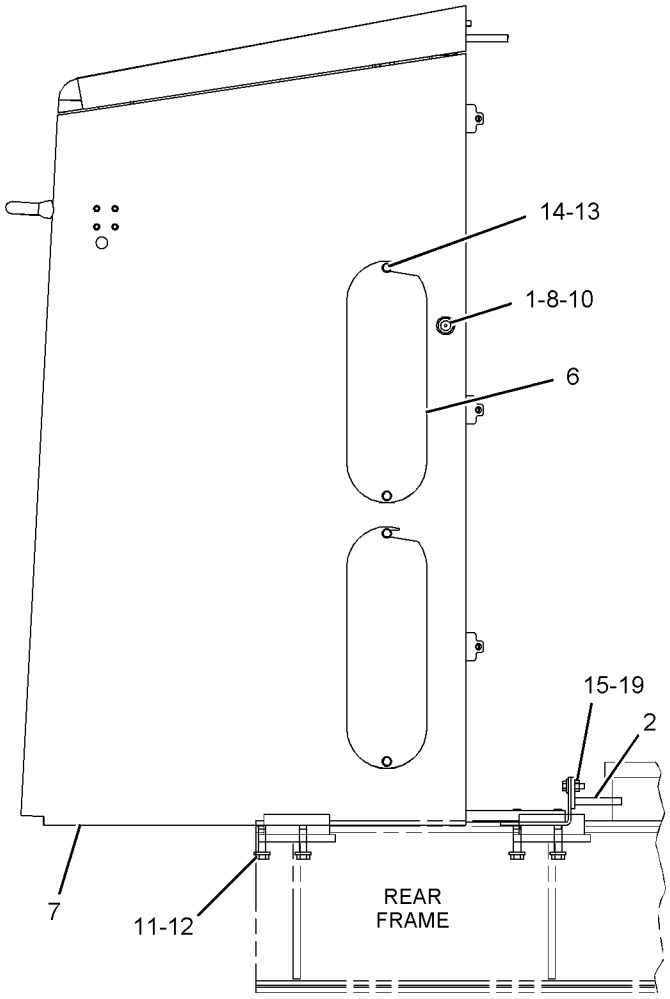


RIGHT SIDE VIEW

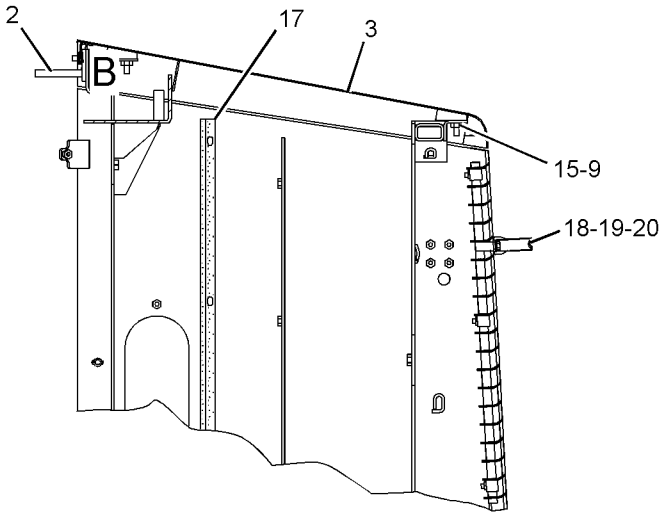


SECTION A-A

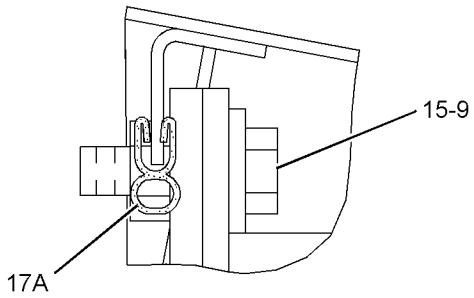


VIEW OF AREA B

GRAPHIC #1 **<END>** g01118738

# FRAME AND BODY

## *225-6334* GUARD GP-RADIATOR

**S/N: BXY1-1899**

**PART OF 225-5432 CHASSIS AR**

**SMCS-7155** **i02691244**

| NOTE | REF NO | GRAPHIC REF | PART NUMBER | QTY | PART NAME 1 2 3 4 5 6 (PRODUCT LEVEL) | SEE PAGE |
|---|---|---|---|---|---|---|
| | 1 | 1 | **8Y-5743** | 2 | SOCKET-LATCH | |
| | 2 | 1 | **150-8993** | 1 | HANDLE AS | |
| | 3 | 1 | **153-1804** | 1 | GRILL AS-BOTTOM | |
| | 4 | 1 | **153-3570** | 1 | GRILL AS-TOP | |
| C | 5 | 1 | **193-8912** | 2 | COVER | |
| C | 6 | 1 | **248-1130** | 1 | GUARD AS-RADIATOR | |
| C | 7 | 1 | **256-3839** | 1 | COVER AS | |
| C | 8 | 1 | **270-3561** | 2 | BRACKET AS | |
| M | 9 | 1 | **5C-9553** | 2 | BOLT (M6X1X16-MM) | |
| C | 10 | 1 | **5P-1076** | 4 | WASHER-HARD (13.5X30X4-MM THK) | |
| | 11 | 1 | **5P-4115** | 2 | WASHER-HARD (7.2X19X2-MM THK) | |
| | 12 | 1 | **7X-0515** | 16 | WASHER-HARD (17X35X5-MM THK) | |
| M | 13 | 1 | **7X-2556** | 16 | BOLT (M16X2X100-MM) | |
| C | 14 | 1 | **7X-7729** | 4 | WASHER (11X25X3-MM THK) | |
| C | 15 | 1 | **8T-2561** | 4 | WASHER-HARD (10.5X28.5X5-MM THK) | |
| C | 16 | 1 | **8T-4121** | 16 | WASHER-HARD (11X21X2.5-MM THK) | |
| M | 17 | 1 | **8T-4136** | 8 | BOLT (M10X1.5X25-MM) | |
| CM | 18 | 1 | **8T-4183** | 4 | BOLT (M12X1.75X40-MM) | |
| CM | 19 | 1 | **8T-4195** | 14 | BOLT (M10X1.5X30-MM) | |
| CD | 20 | 1 | **5P-7211** | | SEAL (1.5-M EACH) | |
| CD | 20A | 1 | **5P-7211** | | SEAL (1.16-M) | |

C-CHANGE FROM PREVIOUS TYPE
D-ORDER BY THE METER
M-METRIC PART

*225-6334* **GUARD GP-RADIATOR** *(contd.)* **i02691244**

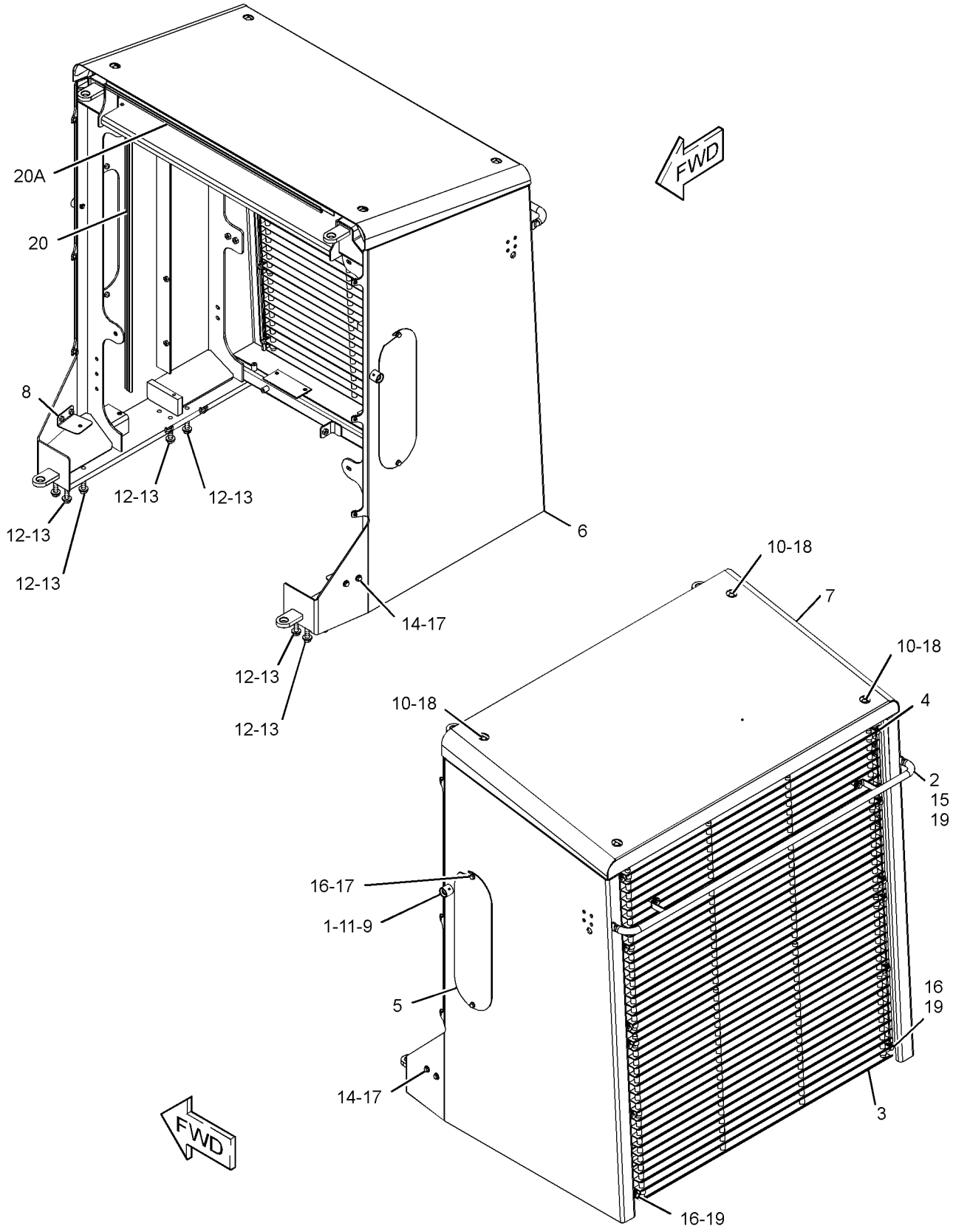


GRAPHIC #1 **<END>** g01190027

# FRAME AND BODY

## *225-6334* GUARD GP-RADIATOR

**S/N: BXY1900-UP**

**PART OF 284-2735 CHASSIS AR**

**SMCS-7155** **i02674560**

| NOTE | REF NO | GRAPHIC REF | PART NUMBER | QTY | PART NAME 1 2 3 4 5 6 (PRODUCT LEVEL) | SEE PAGE |
|---|---|---|---|---|---|---|
| | 1 | 1 | **8Y-5743** | 2 | SOCKET-LATCH | |
| | 2 | 1 | **150-8993** | 1 | HANDLE AS | |
| | 3 | 1 | **153-1804** | 1 | GRILL AS-BOTTOM | |
| | 4 | 1 | **153-3570** | 1 | GRILL AS-TOP | |
| | 5 | 1 | **193-8912** | 2 | COVER | |
| | 6 | 1 | **248-1130** | 1 | GUARD AS-RADIATOR | |
| | 7 | 1 | **256-3839** | 1 | COVER AS | |
| | 8 | 1 | **270-3561** | 2 | BRACKET AS | |
| C | 9 | 1 | **297-0831** | 2 | COVER | |
| M | 10 | 1 | **5C-9553** | 2 | BOLT (M6X1X16-MM) | |
| | 11 | 1 | **5P-1076** | 4 | WASHER-HARD (13.5X30X4-MM THK) | |
| | 12 | 1 | **5P-4115** | 2 | WASHER-HARD (7.2X19X2-MM THK) | |
| | 13 | 1 | **7X-0515** | 16 | WASHER-HARD (17X35X5-MM THK) | |
| M | 14 | 1 | **7X-2556** | 16 | BOLT (M16X2X100-MM) | |
| | 15 | 1 | **7X-7729** | 4 | WASHER (11X25X3-MM THK) | |
| | 16 | 1 | **8T-2561** | 4 | WASHER-HARD (10.5X28.5X5-MM THK) | |
| C | 17 | 1 | **8T-4121** | 24 | WASHER-HARD (11X21X2.5-MM THK) | |
| M | 18 | 1 | **8T-4136** | 8 | BOLT (M10X1.5X25-MM) | |
| CM | 19 | 1 | **8T-4137** | 8 | BOLT (M10X1.5X20-MM) | |
| M | 20 | 1 | **8T-4183** | 4 | BOLT (M12X1.75X40-MM) | |
| M | 21 | 1 | **8T-4195** | 14 | BOLT (M10X1.5X30-MM) | |
| D | 22 | 1 | **5P-7211** | | SEAL (1.5-M EACH) | |
| D | 22A | 1 | **5P-7211** | | SEAL (1.16-M) | |

C-CHANGE FROM PREVIOUS TYPE
D-ORDER BY THE METER
M-METRIC PART

*225-6334* **GUARD GP-RADIATOR** *(contd.)* **i02674560**

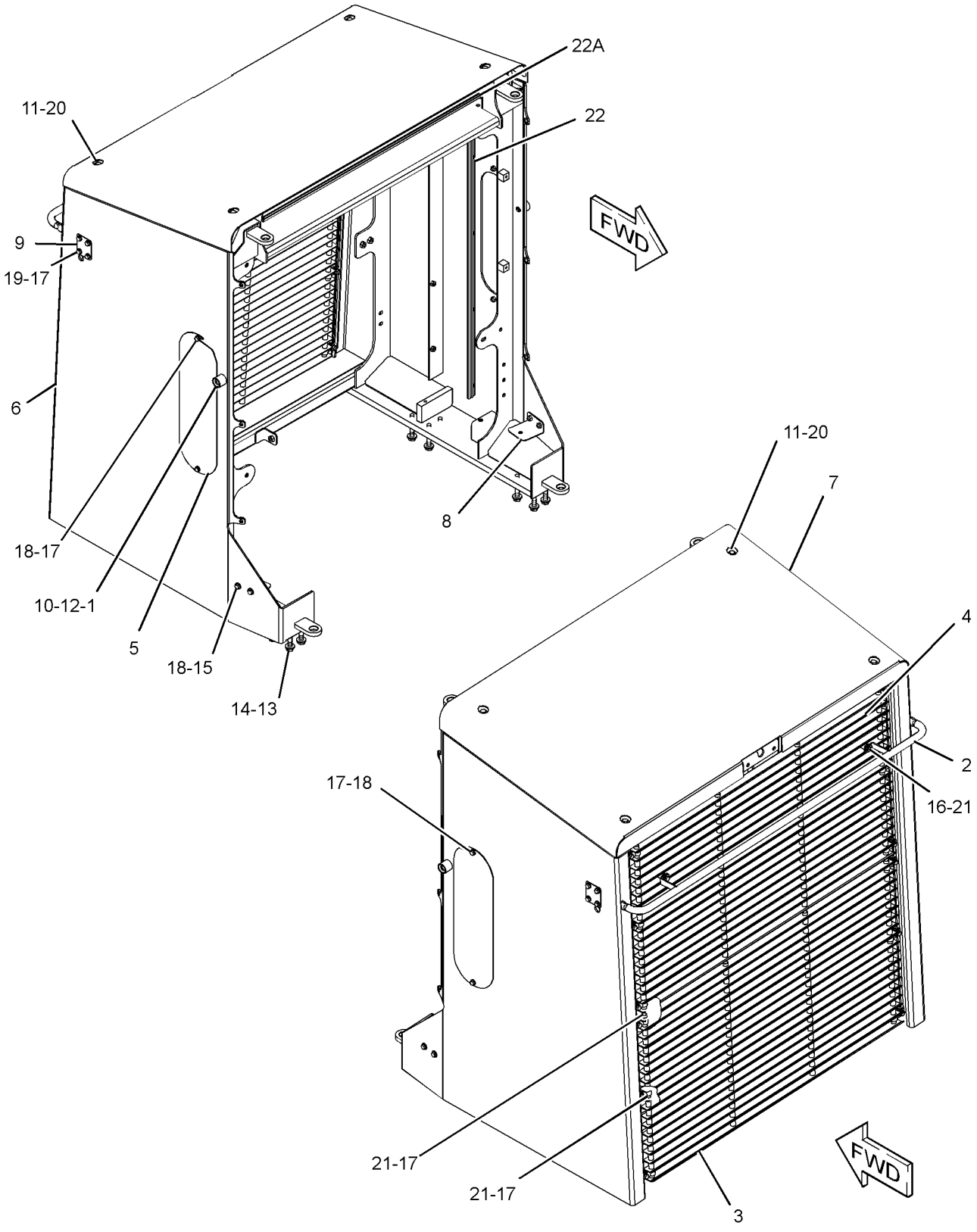


GRAPHIC #1 **<END>** g01350474

# 171-6786 GUARD GP-REAR

**S/N: BXY1-UP**
**PART OF 153-7044 LADDER GP**
**AN ATTACHMENT**

**SMCS-7187** **i01067637**

| NOTE | REF NO | GRAPHIC REF | PART NUMBER | QTY | PART NAME 1 2 3 4 5 6 (PRODUCT LEVEL) | SEE PAGE |
|---|---|---|---|---|---|---|
| | 1 | 1 | **2A-2677** | 6 | SPACER (0.75-IN THK) | |
| | 2 | 1 | **171-6021** | 1 | SHEET AS | |
| | 3 | 1 | **171-6022** | 1 | BAR | |
| | 4 | 1 | **171-6023** | 1 | BAR | |
| | 5 | 1 | **171-6024** | 1 | FLAP | |
| M | 6 | 1 | **8T-4133** | 6 | NUT (M10X1.5-THD) | |
| M | 7 | 1 | **8T-4186** | 6 | BOLT (M10X1.5X40-MM) | |

M-METRIC PART

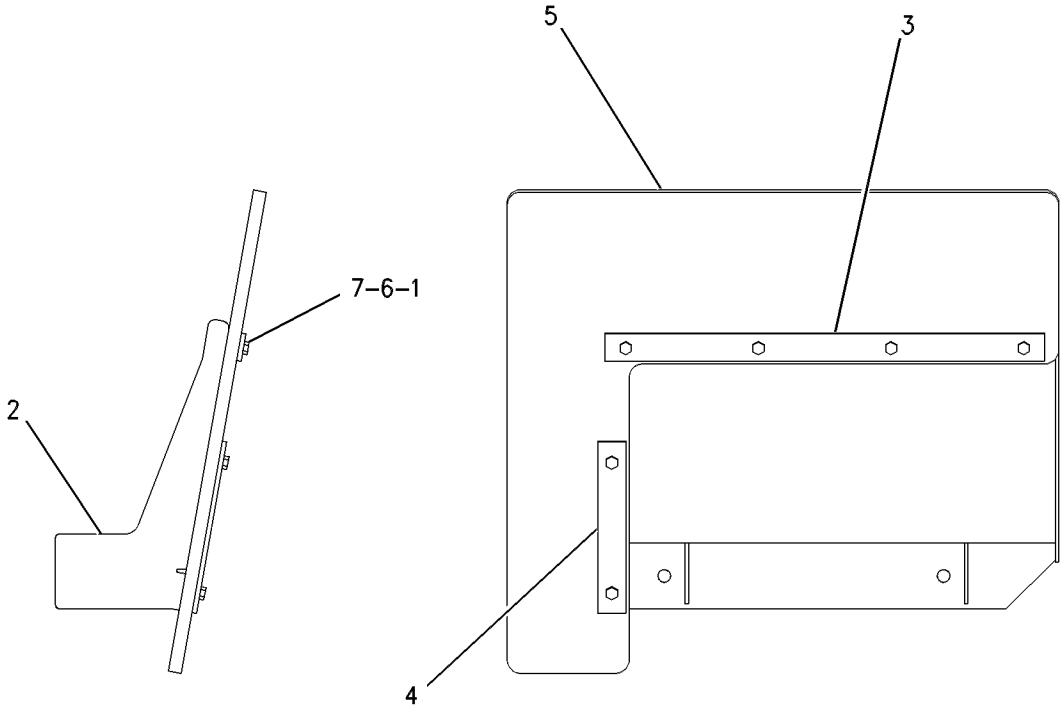


GRAPHIC #1 **<END>** g00560823

# *308-2730* GUARD GP-REAR

**S/N: BXY1900-UP**
**PART OF 2Q-8722, 2Q-8733 STEEL MILL AR**
**AN ATTACHMENT**

**SMCS-7187** **i02731191**

| NOTE | REF NO | GRAPHIC REF | PART NUMBER | QTY | PART NAME 1 2 3 4 5 6 (PRODUCT LEVEL) | SEE PAGE |
|---|---|---|---|---|---|---|
| | 1 | 2 | **6N-6984** | 2 | MOUNT-RUBBER | |
| Y | 2 | 2 | *9G-9288* | 1 | PROTECTION GP-VANDALISM | 1513 |
| | 3 | 2 | **9T-0818** | 1 | VALVE-BREAKER RELIEF | |
| | 4 | 1 | **189-7394** | 1 | BRACKET AS | |
| | 5 | 1 | **189-7412** | 1 | BRACKET AS | |
| M | | 1 | **8T-3597** | 2 | NUT-WELD (M12X1.75-THD) | |
| | 6 | 1 | **189-7413** | 1 | BRACKET AS | |
| M | | 1 | **8T-3597** | 5 | NUT-WELD (M12X1.75-THD) | |
| | 7 | 2 | **189-7467** | 1 | GUARD | |
| | 8 | 1 | **189-7617** | 1 | SUPPORT AS | |
| M | | 1 | **8T-3597** | 5 | NUT-WELD (M12X1.75-THD) | |
| | 9 | 2 | **189-7622** | 1 | BRACKET AS | |
| | 10 | 2 | **189-7623** | 1 | BRACKET AS | |
| | | 2 | **9C-7863** | 1 | BLOCK | |
| | 11 | 1 | **189-7700** | 1 | BRACKET AS | |
| | 12 | 1 | **189-7702** | 1 | PLATE AS | |
| | 13 | 1 | **189-7703** | 1 | PLATE AS | |
| | 14 | 1 | **189-7855** | 1 | GUARD | |
| Y | 15 | 2 | *204-6287* | 1 | TANK GP-HYDRAULIC | 1151 |
| Y | 16 | 1 | *275-5727* | 1 | TANK GP-FUEL | 194 |
| | 17 | 2 | **299-4132** | 1 | GUARD | |
| | 18 | 1 | **299-4136** | 1 | SHEET AS | |
| | | 1 | **299-4134** | 1 | GUARD | |
| | 19 | 2 | **307-9901** | 1 | CHANNEL AS | |
| | 20 | 2 | **131-5879** | 4 | WASHER (11X32X3-MM THK) | |
| | 21 | 2 | **3D-2824** | 1 | SEAL-O-RING | |
| | 22 | 1,2 | **5P-1076** | 8 | WASHER-HARD (13.5X30X4-MM THK) | |
| M | 23 | 1,2 | **7X-2563** | 22 | BOLT (M20X2.5X60-MM) | |
| | 24 | 2 | **8T-4121** | 8 | WASHER-HARD (11X21X2.5-MM THK) | |
| M | 25 | 1,2 | **8T-4139** | 12 | BOLT (M12X1.75X30-MM) | |
| M | 26 | 2 | **8T-4186** | 2 | BOLT (M10X1.5X40-MM) | |
| M | 27 | 1,2 | **8T-4192** | 8 | BOLT (M12X1.75X25-MM) | |
| M | 28 | 2 | **8T-4195** | 6 | BOLT (M10X1.5X30-MM) | |
| | 29 | 1,2 | **8T-4223** | 12 | WASHER-HARD (13.5X25.5X3-MM THK) | |
| | 30 | 1,2 | **8T-5439** | 22 | WASHER-HARD (21.5X45X6-MM THK) | |

M-METRIC PART
Y-SEPARATE ILLUSTRATION

REFER TO ALL ILLUSTRATIONS OF
THIS GROUP FOR AUXILIARY VIEWS

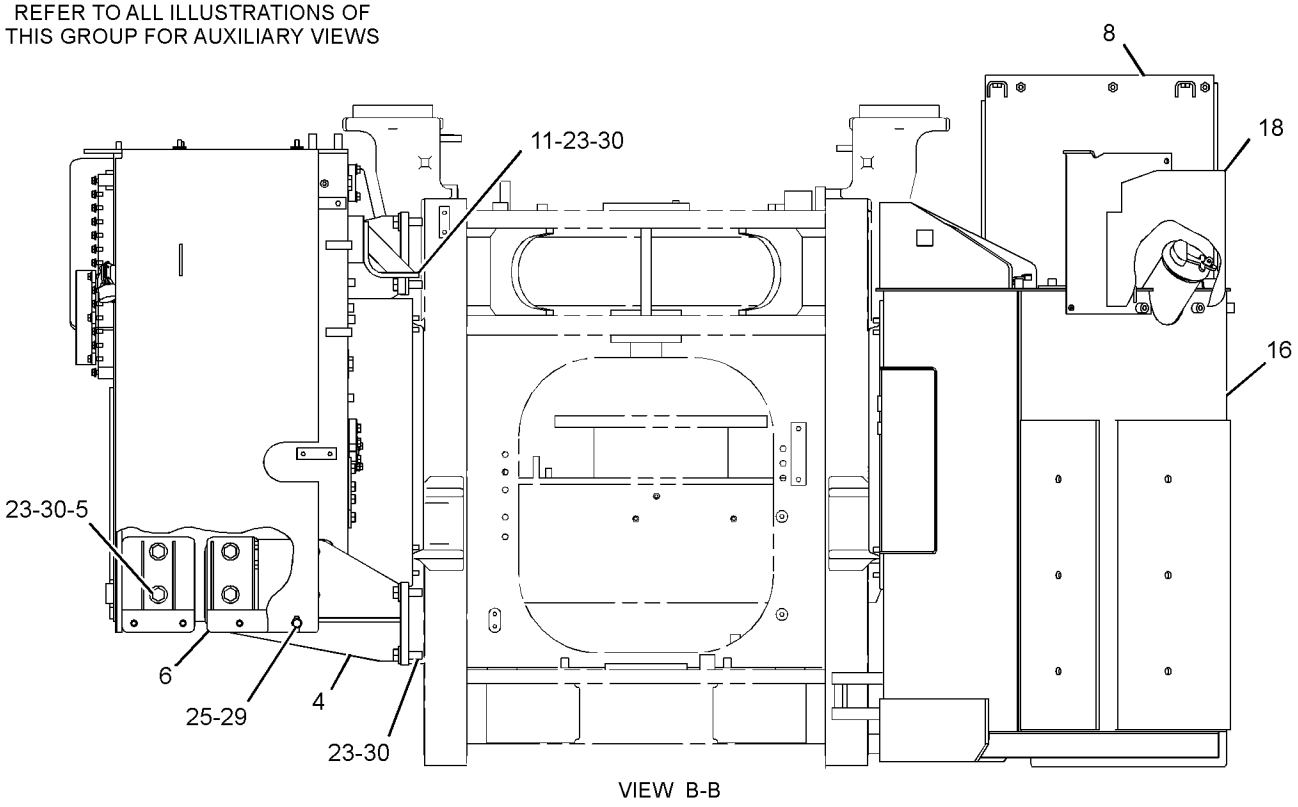


VIEW B-B

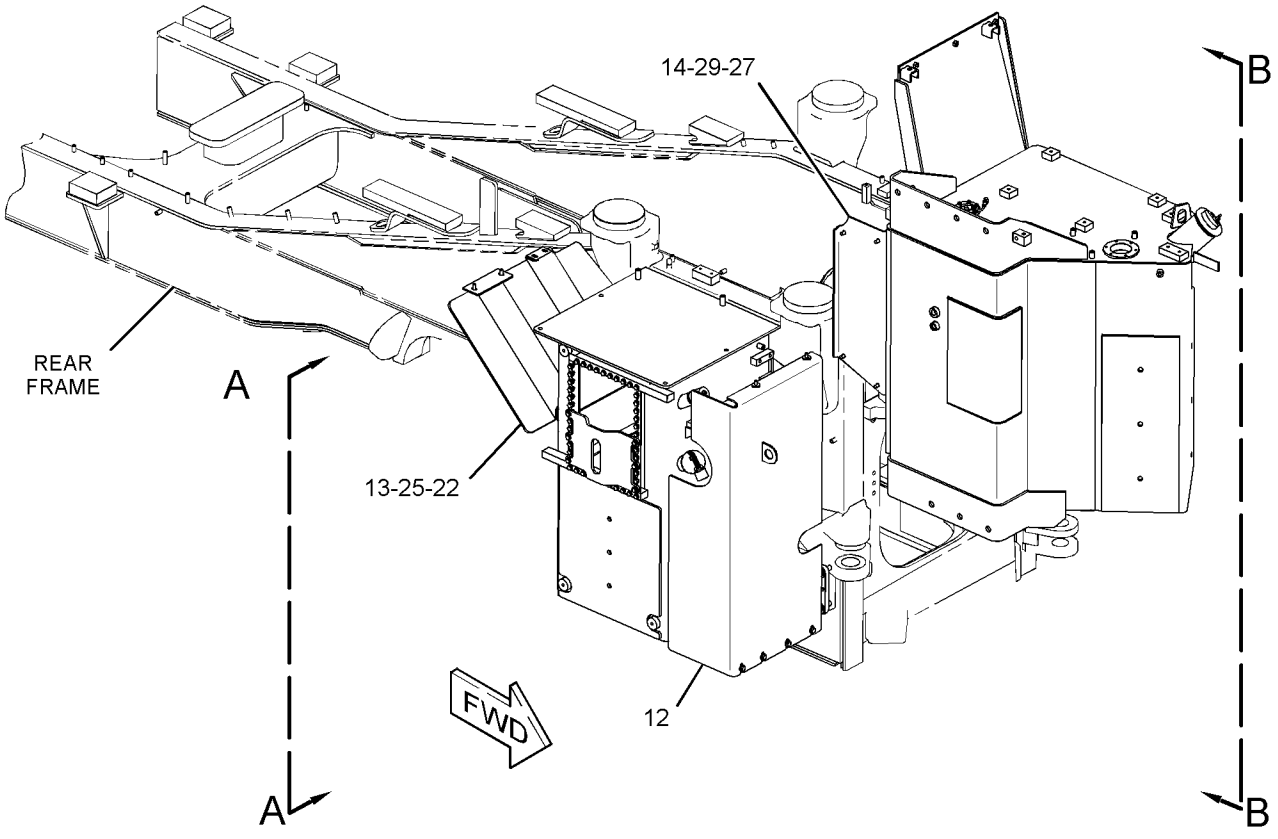


GRAPHIC #1

g01370742

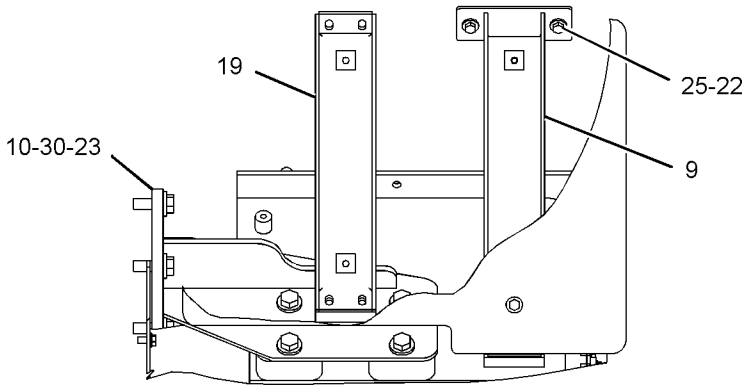


VIEW D-D

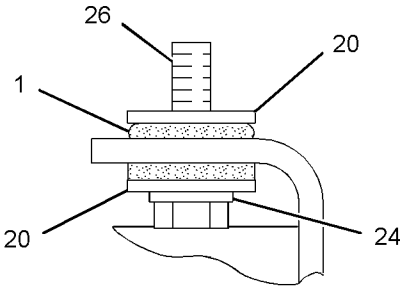


VIEW OF AREA C

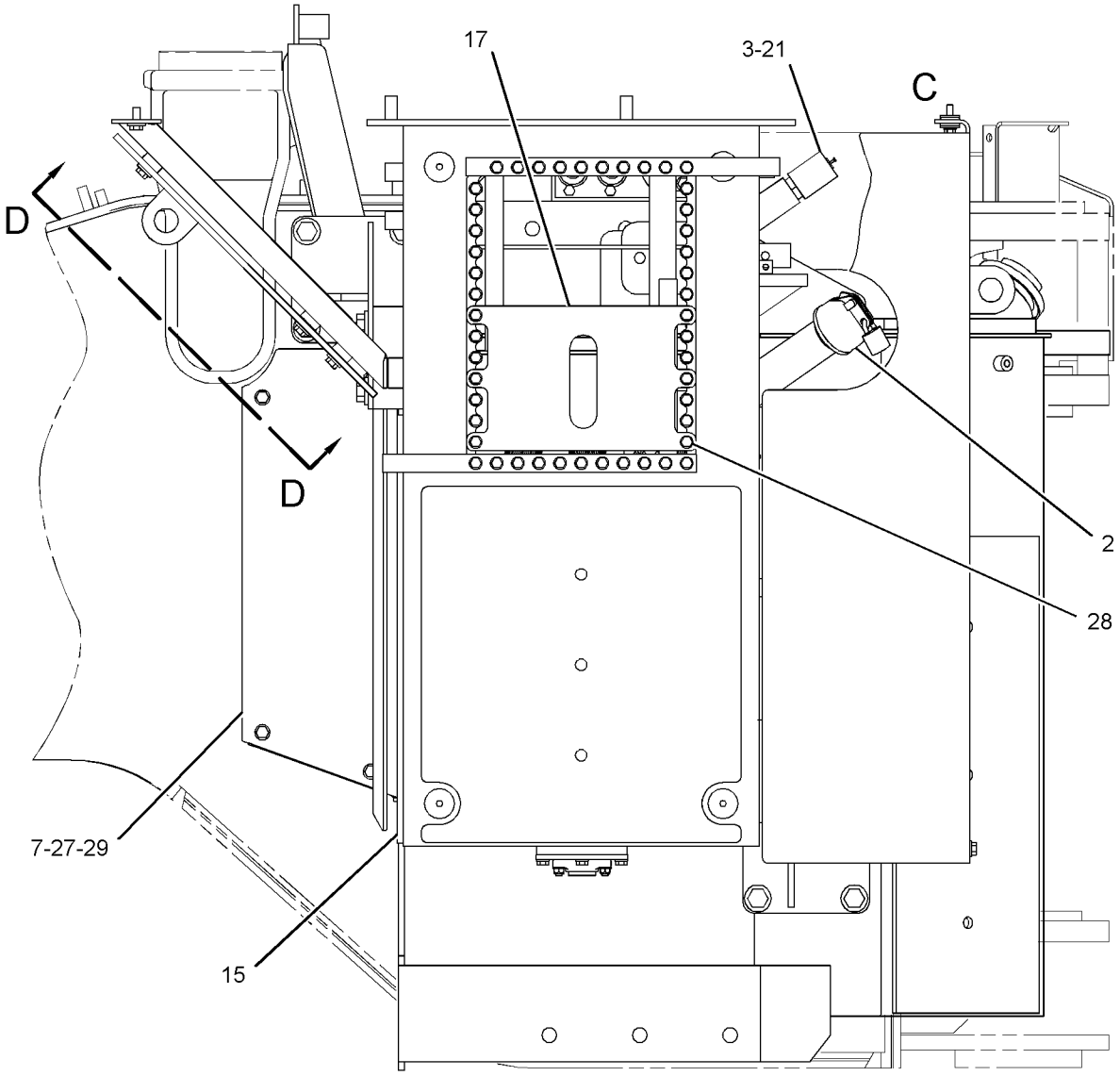


VIEW A-A

GRAPHIC #2 **<END>** g01370743

# FRAME AND BODY

## *287-3679* GUARD GP-SENSOR

**S/N: BXY1900-UP**
**PART OF 2Q-8722 STEEL MILL AR**
**AN ATTACHMENT**

**SMCS-301T, 4803, 5736, 7150** **i02728584**

| NOTE | REF NO | GRAPHIC REF | PART NUMBER | QTY | PART NAME 1 2 3 4 5 6 (PRODUCT LEVEL) | SEE PAGE |
|---|---|---|---|---|---|---|
| | 1 | 1 | **157-6210** | 1 | PLATE | |
| Y | 2 | 1 | **169-0417** | 1 | SENSOR GP-POSITION (TILT) | 295 |
| | 3 | 1 | **189-7337** | 1 | GUARD AS | |
| | 4 | 1 | **189-7338** | 1 | GUARD | |
| | 5 | 1 | **199-5670** | 1 | PLATE AS | |
| | 6 | 1 | **115-3069** | 1 | CLIP AS-CONNECTOR (3-PIN) | |
| M | 7 | 1 | **5C-7261** | 5 | NUT (M8X1.25-THD) | |
| M | 8 | 1 | **5C-9553** | 4 | BOLT (M6X1X16-MM) | |
| | 9 | 1 | **7X-4780** | 1 | GROMMET | |
| | 10 | 1 | **8T-4121** | 7 | WASHER-HARD (11X21X2.5-MM THK) | |
| M | 11 | 1 | **8T-4136** | 1 | BOLT (M10X1.5X25-MM) | |
| M | 12 | 1 | **8T-4195** | 6 | BOLT (M10X1.5X30-MM) | |
| | 13 | 1 | **8T-4224** | 11 | WASHER-HARD (8.8X16X2-MM THK) | |
| M | 14 | 1 | **8T-6912** | 5 | BOLT (M8X1.25X50-MM) | |
| M | 15 | 1 | **8T-7547** | 1 | BOLT (M8X1.25X30-MM) | |
| | 16 | 1 | **9X-8256** | 4 | WASHER (6.6X12X2-MM THK) | |

M-METRIC PART
Y-SEPARATE ILLUSTRATION

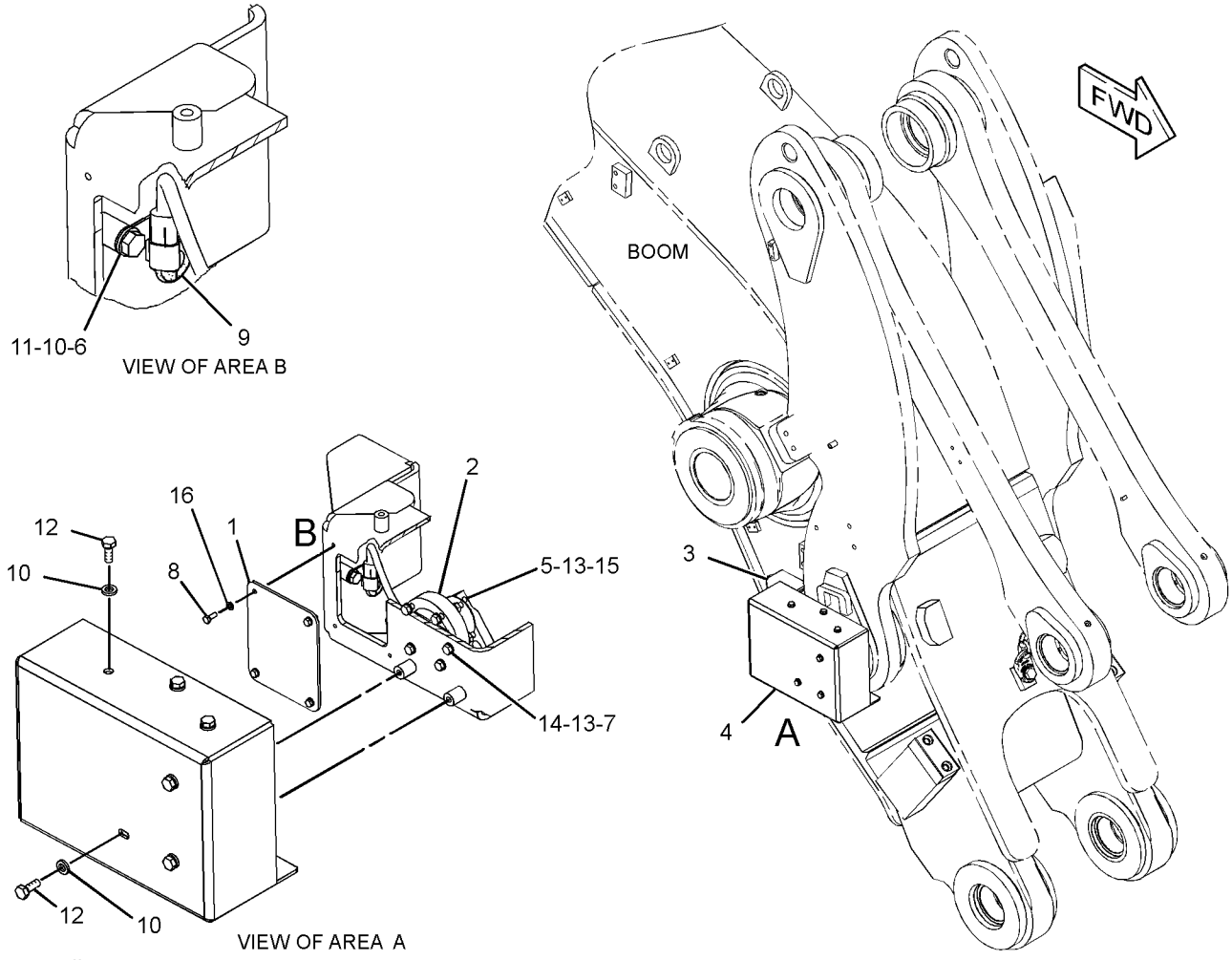


GRAPHIC #1 **<END>** g01369647

# *219-5029* HARDWARE GP-LOADER FRAME

**S/N: BXY1900-UP**
**CUSTOM**
**PART OF 2Q-8722, 2Q-8733 STEEL MILL AR**
**AN ATTACHMENT**

**SMCS-7054, 7553** **i02366775**

| NOTE | REF NO | GRAPHIC REF | PART NUMBER | QTY | PART NAME 1 2 3 4 5 6 (PRODUCT LEVEL) | SEE PAGE |
|---|---|---|---|---|---|---|
| | 1 | 1 | *189-7581* | 1 | BLOCK | |
| | 2 | 1 | *140-3094* | 2 | BAR | |
| M | 3 | 2 | **7X-0750** | 1 | BOSS-WELD (M10X1.5X55-MM) | |
| M | 4 | 2 | **8T-3851** | 4 | BOSS-WELD (M10X1.5X17.5-MM) | |
| | | | | | | |
| | | | | | *****CUSTOM REMOVAL***** | |
| J | | | **133-3630** | 1 | BLOCK | |
| J | | | **222-3584** | 1 | BLOCK | |

J-PART OF CUSTOM HARDWARE GP-FRONT FRAME
M-METRIC PART

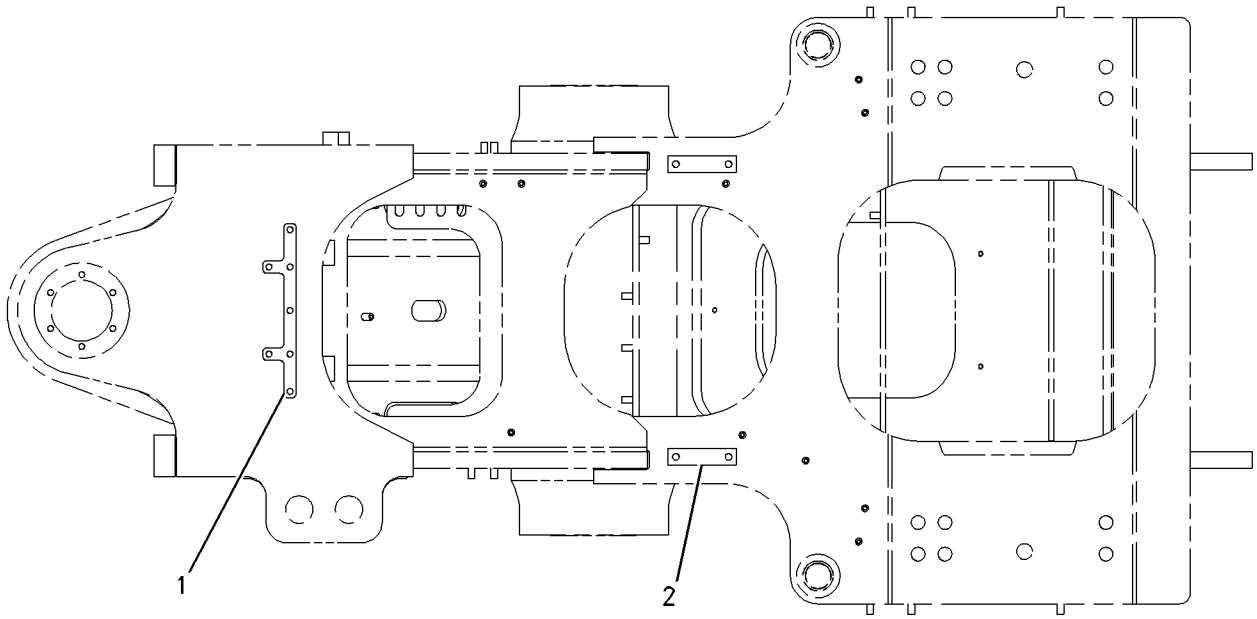


BOTTOM VIEW

FWD

GRAPHIC #1 g00989664

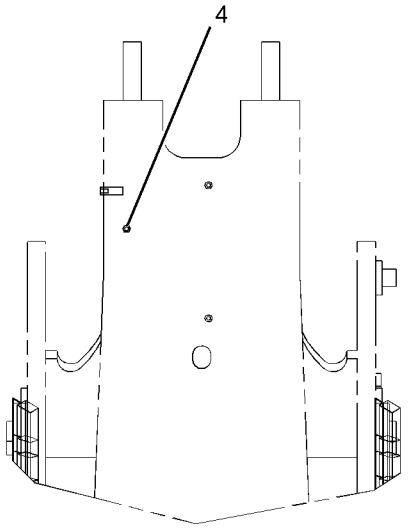


REAR VIEW

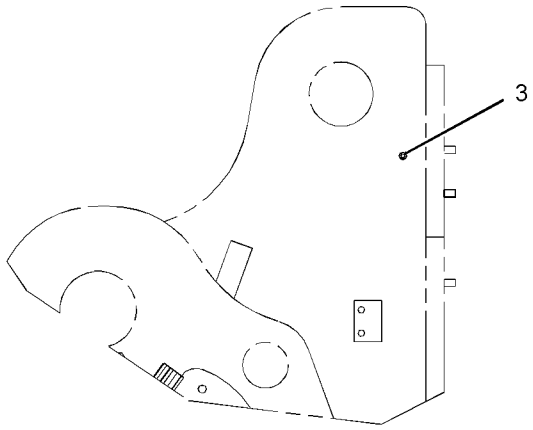


LEFT SIDE VIEW

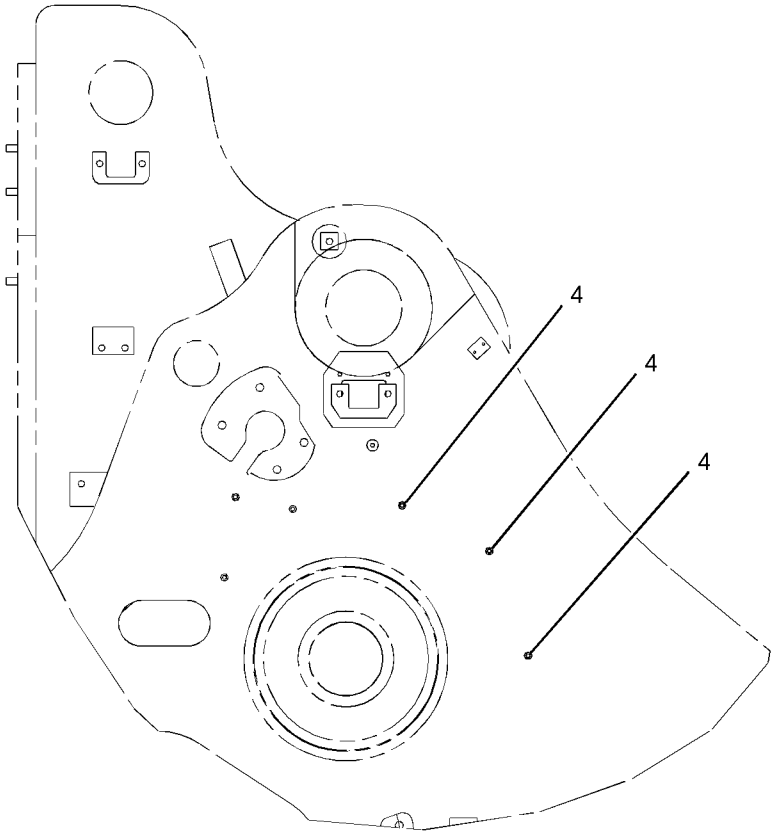


RIGHT SIDE VIEW

GRAPHIC #2

**<END>**

g01108361

# *224-4044* HARDWARE GP-LOADER FRAME

**S/N: BXY1-UP**

**PART OF 247-7033, 247-7034, 259-2405, 293-7303, 293-7305, 293-7307 LUBRICATION**

**AR-AUTOMATIC**

**AN ATTACHMENT**

**SMCS-7054, 7553** **i02224115**

| NOTE | REF NO | GRAPHIC REF | PART NUMBER | QTY | PART NAME 1 2 3 4 5 6 (PRODUCT LEVEL) | SEE PAGE |
|---|---|---|---|---|---|---|
| | 1 | 1 | **3H-2599** | 1 | BLOCK-TUBE | |
| M | 2 | 1 | **9R-1733** | 1 | BOSS (M10X1.5X66.5-MM) | |
| M | 3 | 1 | **8T-3851** | 10 | BOSS-WELD (M10X1.5X17.5-MM) | |
| | 4 | 1 | *153-4806* | 2 | BLOCK | |

M-METRIC PART

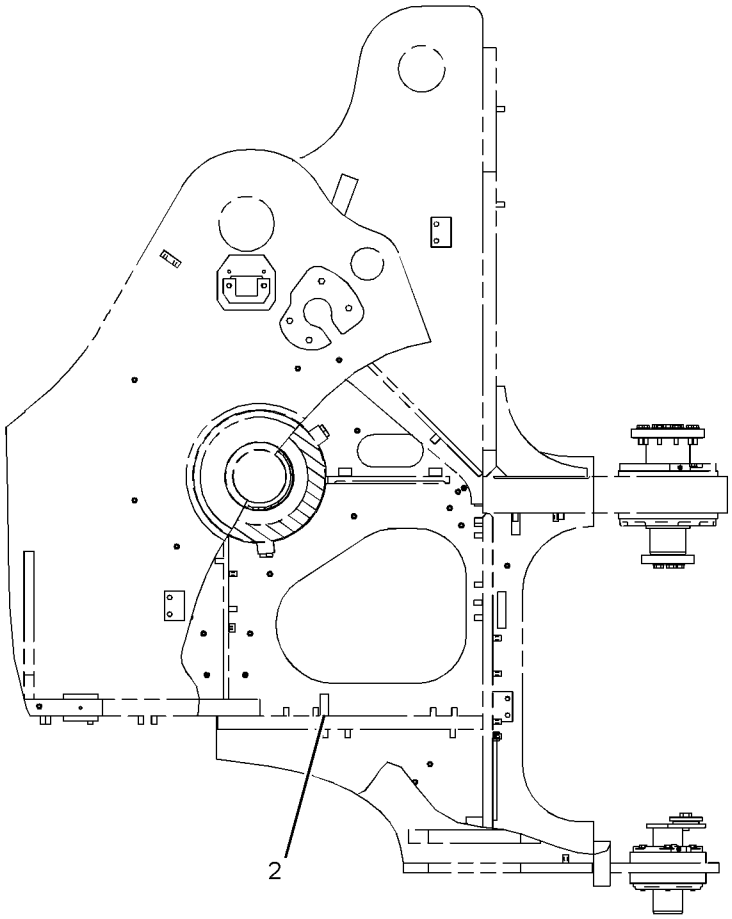


LEFT SIDE VIEW

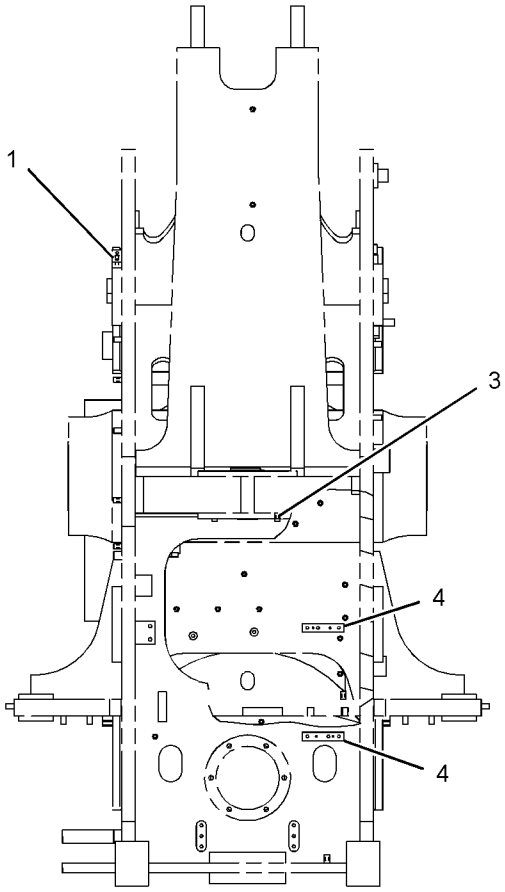


REAR VIEW

GRAPHIC #1 **<END>** g01122015

# *259-2452* HARDWARE GP-LOADER FRAME

**S/N: BXY1-UP**

**PART OF 259-2435, 259-2436, 259-2437, 293-7304, 293-7306, 293-7308 LUBRICATION**

**AR-AUTOMATIC**

**AN ATTACHMENT**

**SMCS-7054, 7553** **i02226015**

| NOTE | REF NO | GRAPHIC REF | PART NUMBER | QTY | PART NAME 1 2 3 4 5 6 (PRODUCT LEVEL) | SEE PAGE |
|---|---|---|---|---|---|---|
| M | 1 | 1 | **8T-3851** | 7 | BOSS-WELD (M10X1.5X17.5-MM) | |
| | 2 | 1 | **9C-6809** | 1 | BLOCK | |
| M | 3 | 1 | **9R-1733** | 1 | BOSS (M10X1.5X66.5-MM) | |
| | 4 | 1 | *153-4806* | 2 | BLOCK | |
| | 5 | 1 | *188-9657* | 1 | BLOCK | |

M-METRIC PART

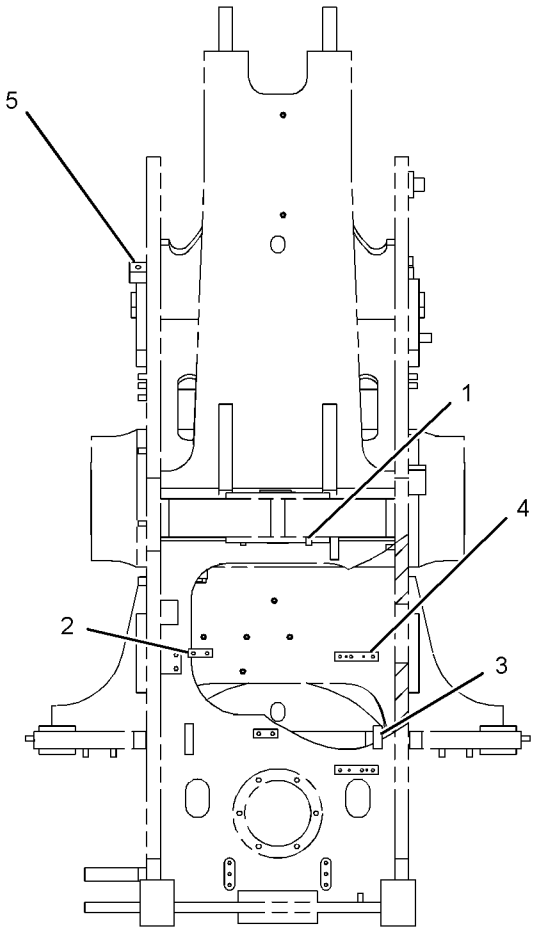


REAR VIEW

GRAPHIC #1 **<END>** g01124863

## *189-7441* HARDWARE GP-REAR FRAME

**S/N: BXY1-UP**

**PART OF 247-7033, 247-7034, 259-2405, 259-2435, 259-2436, 259-2437, 293-7303, 293-7304, 293-7305, 293-7306, 293-7307, 293-7308 LUBRICATION AR-AUTOMATIC AN ATTACHMENT**

**SMCS-7051, 7553** **i02260272**

| NOTE | REF NO | GRAPHIC REF | PART NUMBER | QTY | PART NAME 1 2 3 4 5 6 (PRODUCT LEVEL) | SEE PAGE |
|---|---|---|---|---|---|---|
| | 1 | 1 | **9C-6809** | 1 | BLOCK | |
| M | 2 | 1 | **8T-3851** | 3 | BOSS-WELD (M10X1.5X17.5-MM) | |
| | 3 | 1 | *153-4806* | 2 | BLOCK | |

M-METRIC PART

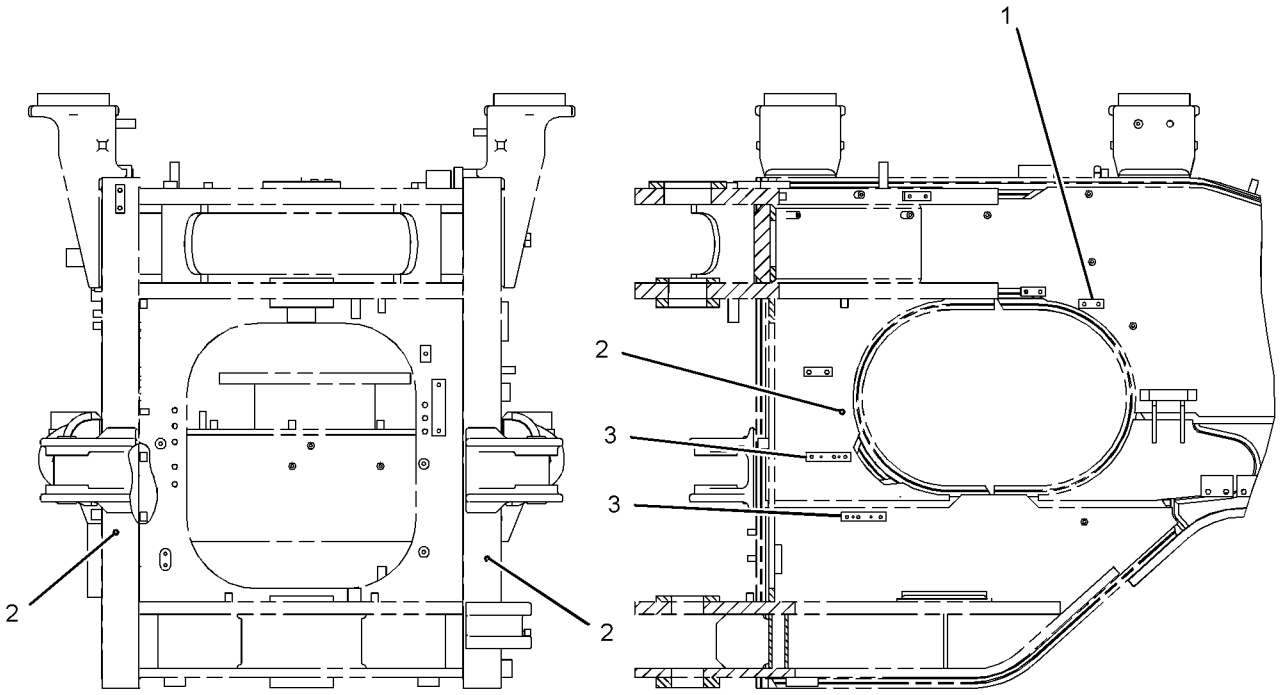


FRONT VIEW

LEFT SIDE VIEW

GRAPHIC #1

**<END>**

g01135984

# FRAME AND BODY

## *219-4977* HARDWARE GP-REAR FRAME

**S/N: BXY1-UP**
**PART OF 254-6062 CONTROL AR-RIDE**
**AN ATTACHMENT**

**SMCS-7051, 7553** **i02299817**

| NOTE | REF NO | GRAPHIC REF | PART NUMBER | QTY | PART NAME 1 2 3 4 5 6 (PRODUCT LEVEL) | SEE PAGE |
|---|---|---|---|---|---|---|
| | 1 | 2 | **167-0080** | 1 | BLOCK | |
| | 2 | 1 | **222-3584** | 1 | BLOCK | |
| | 3 | 1,2 | **103-5350** | 3 | PLATE | |
| M | 4 | 1,2 | **9R-2640** | 5 | BOSS (M12X1.75X25-MM) | |
| | 5 | 2 | **9C-7929** | 1 | BLOCK | |
| | 6 | 2 | **133-3630** | 1 | BLOCK | |
| | 7 | 1 | **156-0052** | 1 | PLATE | |

M-METRIC PART

REFER TO ALL ILLUSTRATIONS OF
THIS GROUP FOR AUXILIARY VIEWS

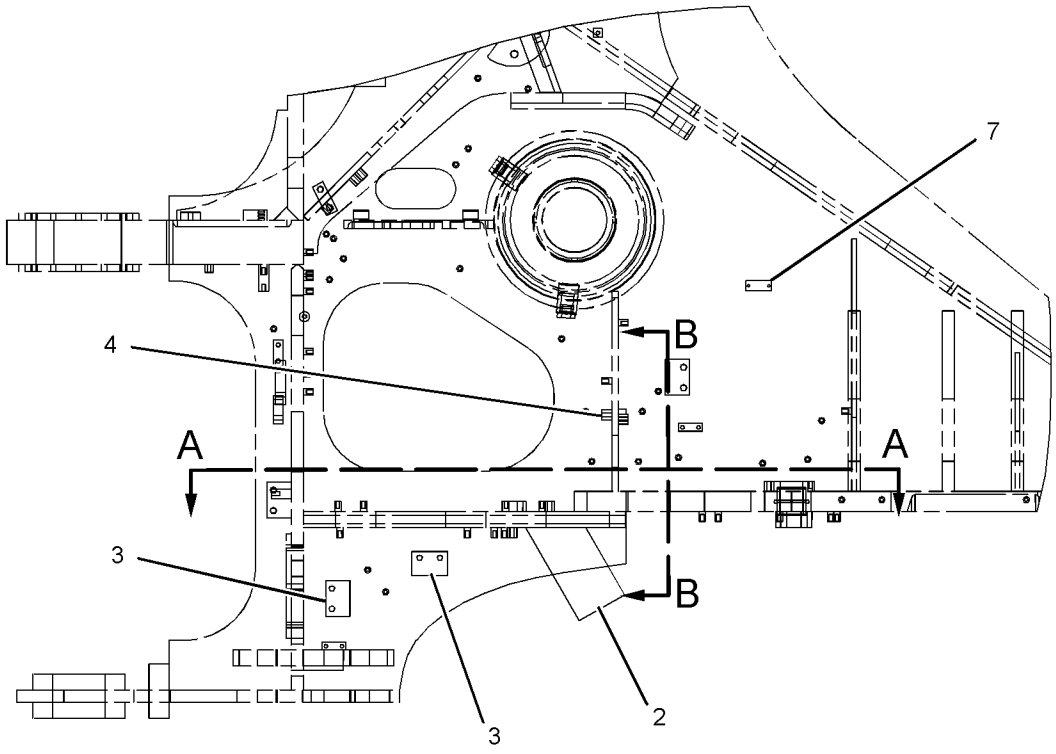


RIGHT SIDE VIEW

GRAPHIC #1 g01177726

*219-4977* **HARDWARE GP-REAR FRAME** ***(contd.)*** **i02299817**

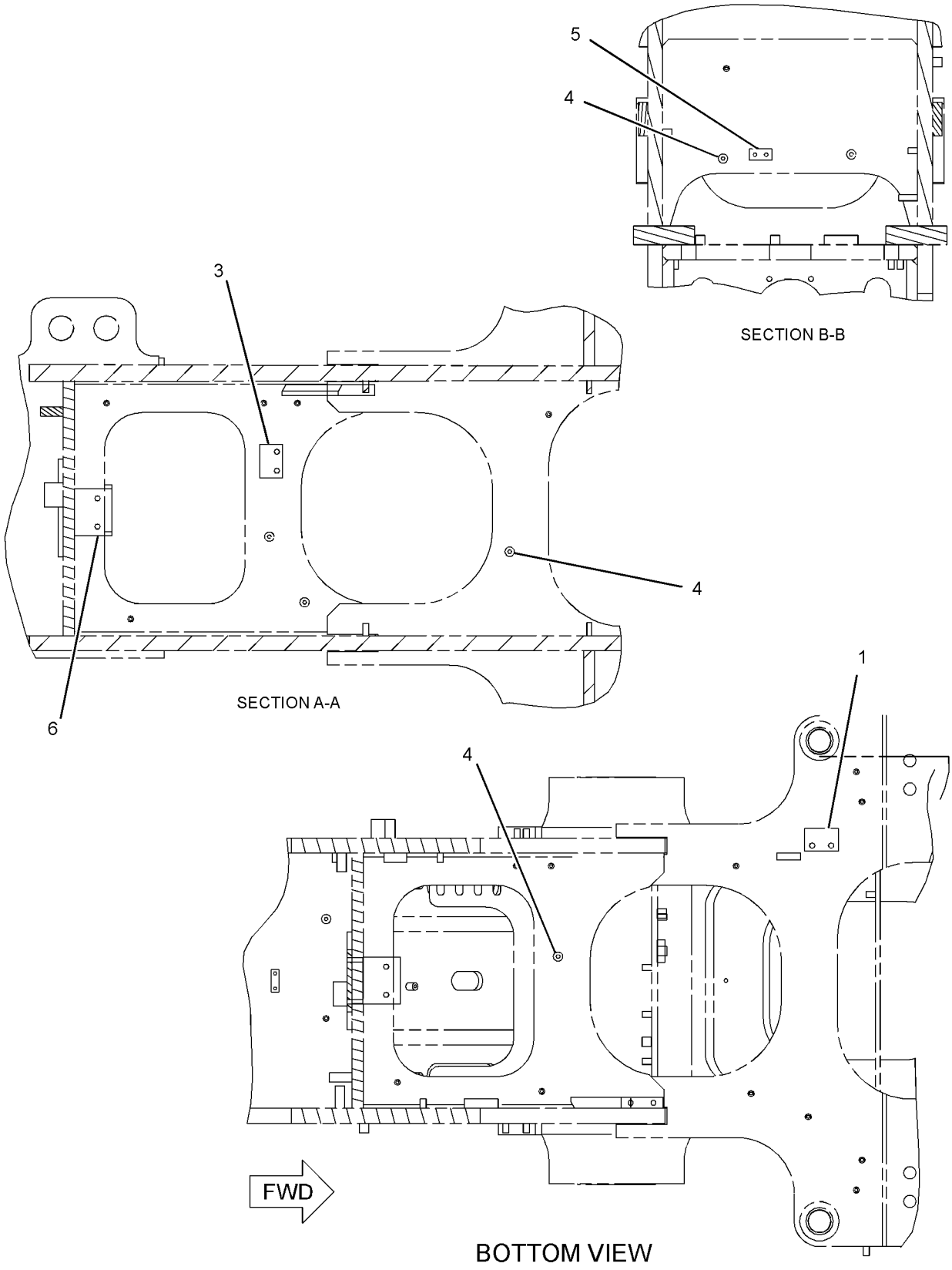


GRAPHIC #2

**<END>**

g01177728

# *308-2718* HARDWARE GP-REAR FRAME

**S/N: BXY1900-UP**
**PART OF 2Q-8722, 2Q-8733 STEEL MILL AR**
**AN ATTACHMENT**

**SMCS-7051, 7553** **i02728624**

| NOTE | REF NO | GRAPHIC REF | PART NUMBER | QTY | PART NAME 1 2 3 4 5 6 (PRODUCT LEVEL) | SEE PAGE |
|---|---|---|---|---|---|---|
| | 1 | 1 | **8X-5963** | 2 | BLOCK | |
| M | 2 | 1 | **9R-2613** | 3 | BOSS-WELD (M10X1.5X25-MM OAL) | |
| | 3 | 1 | **9R-4595** | 4 | BOSS | |

M-METRIC PART

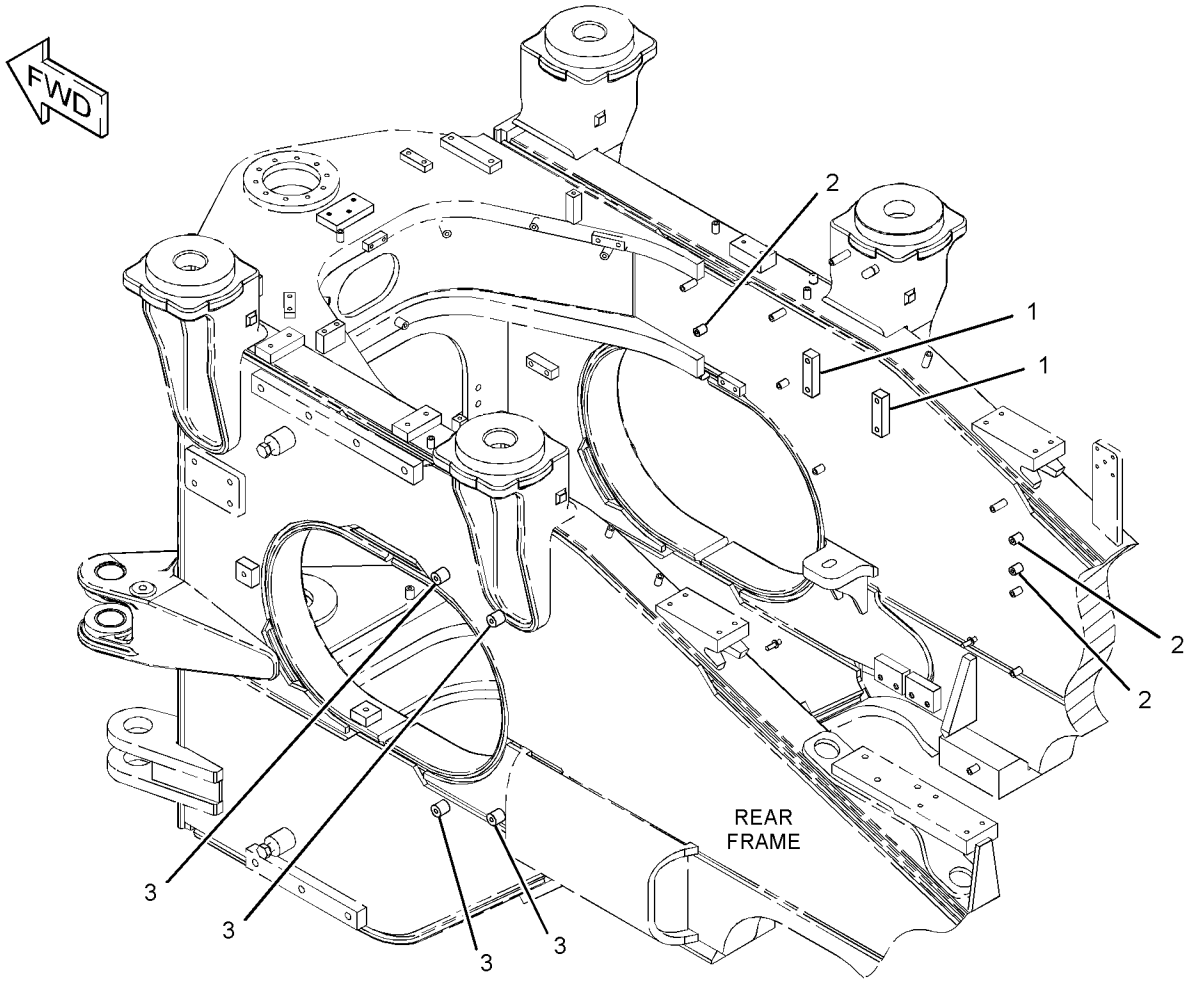


GRAPHIC #1 **<END>** g01369172

# FRAME AND BODY

## *255-8243* HITCH GP-ARTICULATING

**S/N: BXY1-UP**

**PART OF 225-5432, 284-2735 CHASSIS AR**

**SMCS-7057, 7100** **i02387041**

| NOTE | REF NO | GRAPHIC REF | PART NUMBER | QTY | PART NAME 1 2 3 4 5 6 (PRODUCT LEVEL) | SEE PAGE |
|---|---|---|---|---|---|---|
| | 1 | 1 | **2N-3253** | 2 | CUP-BEARING | |
| | 2 | 1 | **2N-3254** | 2 | CONE-BEARING | |
| B | 3 | 1 | **3K-6401** | 1 | SHIM PACK (INCLUDES 19-SHIMS) | |
| | 4 | 1 | **4B-4550** | 2 | FITTING-PRESSURE RELIEF | |
| | 5 | 1 | **5P-2525** | 2 | CUP-BEARING | |
| | 6 | 1 | **5P-2673** | 2 | SEAL-LIP TYPE | |
| | 7 | 1 | **5P-9769** | 2 | CONE-BEARING | |
| | 8 | 1 | **7X-7740** | 1 | WASHER (45X78X8-MM THK) | |
| | 9 | 1 | **9K-0803** | 1 | SPACER | |
| | 10 | 1 | **141-2150** | 1 | PIN | |
| | 11 | 1 | **141-2151** | 1 | PLATE | |
| B | 12 | 1 | **141-2155** | 1 | SHIM PACK (INCLUDES 26-SHIMS) | |
| B | 13 | 1 | **141-2156** | 1 | SHIM PACK (INCLUDES 26-SHIMS) | |
| | 14 | 1 | **142-6988** | 1 | CAP | |
| | 15 | 1 | **142-6989** | 1 | CAP | |
| | 16 | 1 | **255-8232** | 1 | PLATE | |
| | 17 | 1 | **255-8239** | 1 | PIN AS | |
| | 18 | 1 | **255-8244** | 1 | CAP | |
| | 19 | 1 | **255-8245** | 1 | CAP | |
| B | 20 | 1 | **255-8246** | 1 | SHIM PACK (INCLUDES 20-SHIMS) | |
| | 21 | 1 | **9X-4597** | 2 | SEAL-LIP TYPE | |
| M | 22 | 1 | **137-3300** | 10 | BOLT (M16X2X90-MM) | |
| | 23 | 1 | **5P-8245** | 12 | WASHER-HARD (13.5X25.5X3-MM THK) | |
| | 24 | 1 | **5P-8247** | 10 | WASHER-HARD (17X32X3.5-MM THK) | |
| M | 25 | 1 | **8T-4194** | 10 | BOLT (M12X1.75X50-MM) | |
| | 26 | 1 | **8T-4223** | 16 | WASHER-HARD (13.5X25.5X3-MM THK) | |
| M | 27 | 1 | **8T-5001** | 6 | BOLT (M12X1.75X130-MM) | |
| M | 28 | 1 | **8T-5460** | 1 | BOLT (M20X2.5X40-MM) | |
| M | 29 | 1 | **8T-6991** | 12 | BOLT (M12X1.75X180-MM) | |
| | 30 | 1 | **8X-0674** | 1 | WASHER (22X100X10-MM THK) | |

B-USE AS REQUIRED
M-METRIC PART

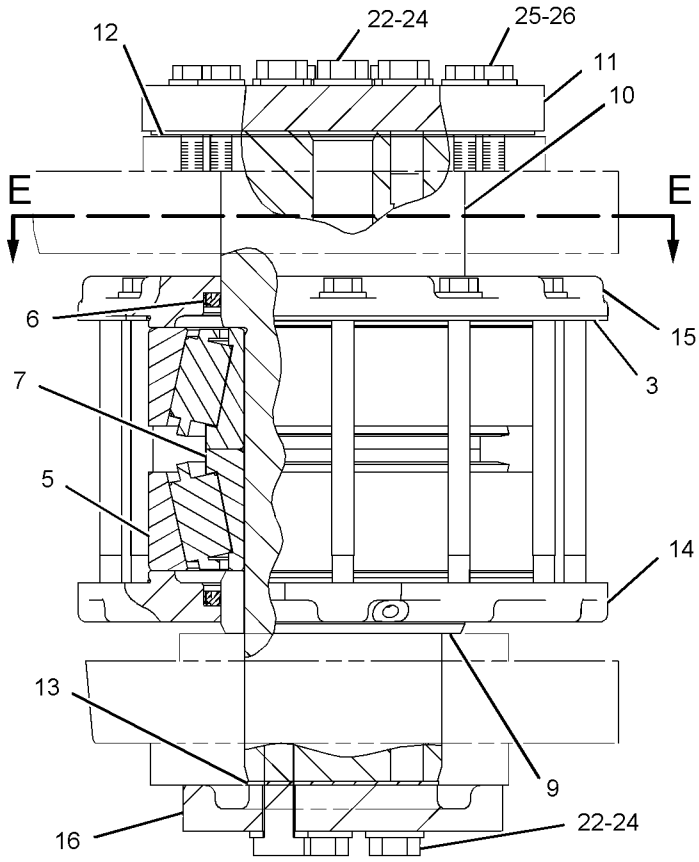


UPPER HITCH ASSEMBLY

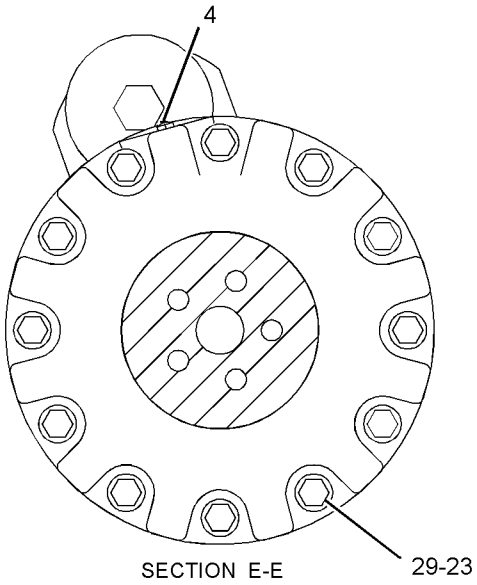


SECTION E-E

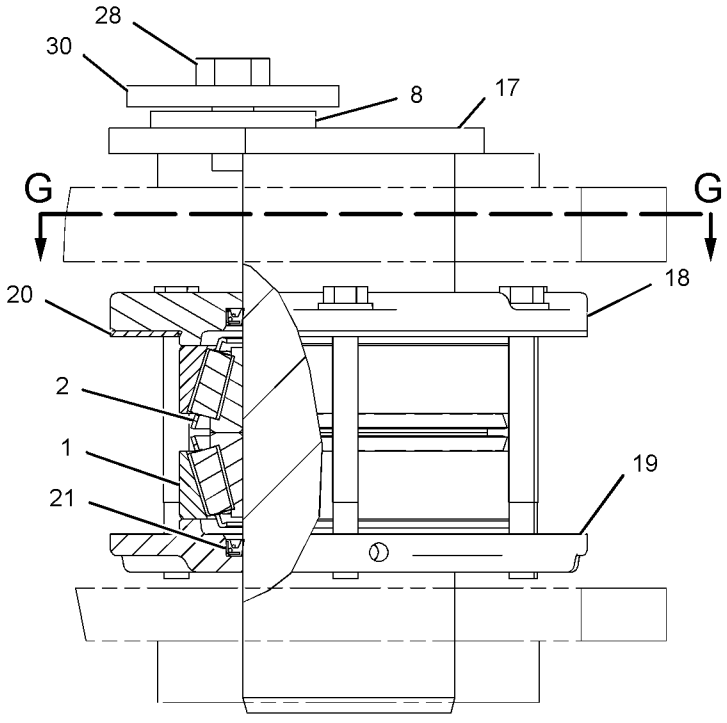


LOWER HITCH ASSEMBLY

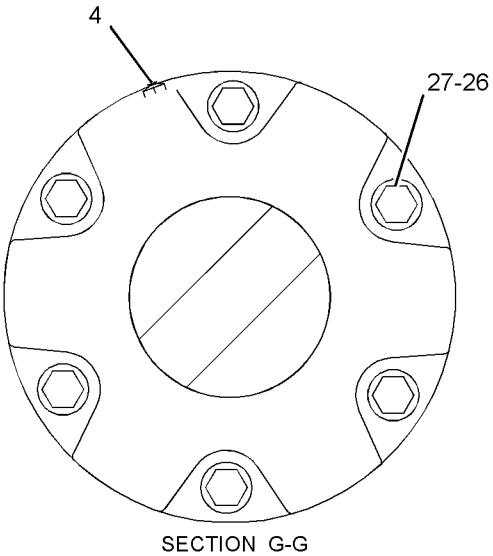


SECTION G-G

GRAPHIC #1 **<END>** g01118912

# FRAME AND BODY

## *225-5235* HOOD & GUARD GP

**S/N: BXY1-UP**

**PART OF 225-5432 CHASSIS AR**

**SMCS-7251** **i02318870**

| NOTE | REF NO | GRAPHIC REF | PART NUMBER | QTY | PART NAME 1 2 3 4 5 6 (PRODUCT LEVEL) | SEE PAGE |
|---|---|---|---|---|---|---|
| | 1 | 1 | **246-2641** | 2 | PADLOCK GP | |
| | | | | | (EACH INCLUDES KEY) | |
| | 2 | 2 | **5V-3854** | 16 | BUMPER | |
| | 3 | 2 | **6S-6251** | 8 | MOUNT | |
| | 4 | 2 | **7G-8839** | 6 | SPACER (13.5X57X6-MM THK) | |
| | 5 | 2 | **7T-8331** | 10 | MOUNT AS | |
| | 6 | 1 | **134-2778** | 1 | POST AS-RH | |
| | 7 | 1 | **134-2779** | 1 | POST AS-LH | |
| | 8 | 1 | **134-2780** | 1 | SUPPORT AS (RH) | |
| | 9 | 1 | **134-2781** | 1 | SUPPORT AS (LH) | |
| Y | 10 | 1 | **143-9361** | 1 | PANEL GP-SIDE (HOOD SIDE, FRONT, RH) | 856 |
| | 11 | 1 | **145-8130** | 1 | PANEL AS-FLOOR | |
| | 12 | 1 | **151-6008** | 1 | GRILL AS-TOP | |
| | 13 | 1 | **151-6009** | 2 | GRILL AS-SIDE | |
| | | | | | (EACH INCLUDES) | |
| | | 1 | **8R-7858** | 6 | CLAMP | |
| Y | 14 | 1 | *163-8033* | 1 | DOOR GP-ACCESS (HOOD SIDE, REAR, RH) | 656 |
| Y | 15 | 1 | *180-9272* | 1 | DOOR GP-ACCESS (HOOD TOP) | 658 |
| | 16 | 1 | **225-5237** | 1 | PANEL AS-HOOD (FRONT) | |
| | 17 | 1 | **253-8745** | 1 | PANEL AS | |
| M | | 1 | **8T-3612** | 2 | NUT-WELD (M8X1.25-THD) | |
| M | | 1 | **8T-3490** | 11 | NUT-WELD (M10X1.5-THD) | |
| | | 1 | **138-6108** | 5 | SPACER (8.7X20X45-MM THK) | |
| | 18 | 1 | **225-5239** | 1 | RAIL AS (LH) | |
| M | | 1 | **9R-2613** | 2 | BOSS-WELD (M10X1.5X25-MM OAL) | |
| M | | 1 | **8T-3490** | 8 | NUT-WELD (M10X1.5-THD) | |
| M | | 1 | **8T-3597** | 1 | NUT-WELD (M12X1.75-THD) | |
| | 19 | 1 | **225-5240** | 1 | RAIL AS (RH) | |
| M | | 1 | **9R-2613** | 2 | BOSS-WELD (M10X1.5X25-MM OAL) | |
| M | | 1 | **8T-3490** | 8 | NUT-WELD (M10X1.5-THD) | |
| M | | 1 | **8T-3597** | 1 | NUT-WELD (M12X1.75-THD) | |
| | 21 | 1,2 | **5P-1076** | 10 | WASHER-HARD (13.5X30X4-MM THK) | |
| | 22 | 1,2 | **6B-6205** | 8 | SPACER (0.438X0.875X1.281-IN THK) | |
| | 23 | 2 | **7X-0590** | 12 | WASHER-HARD (13.5X44.5X6-MM THK) | |
| | 24 | 1,2 | **7X-7729** | 38 | WASHER (11X25X3-MM THK) | |
| M | 25 | 2 | **8T-4139** | 4 | BOLT (M12X1.75X30-MM) | |
| M | 27 | 2 | **8T-4185** | 6 | BOLT (M10X1.5X50-MM) | |
| M | 28 | 1,2 | **8T-4195** | 30 | BOLT (M10X1.5X30-MM) | |
| | 29 | 2 | **8T-4222** | 6 | WASHER-PLATED (11X32X2.5-MM THK) | |
| | 30 | 2 | **8T-4223** | 4 | WASHER-HARD (13.5X25.5X3-MM THK) | |
| M | 31 | 2 | **8T-4244** | 10 | NUT (M12X1.75-THD) | |
| M | 32 | 2 | **8T-4648** | 10 | BOLT (M12X1.75X70-MM) | |
| M | 33 | 2 | **8T-4910** | 2 | BOLT (M12X1.75X60-MM) | |
| M | 34 | 1,2 | **8T-6466** | 8 | BOLT (M10X1.5X60-MM) | |

M-METRIC PART
Y-SEPARATE ILLUSTRATION

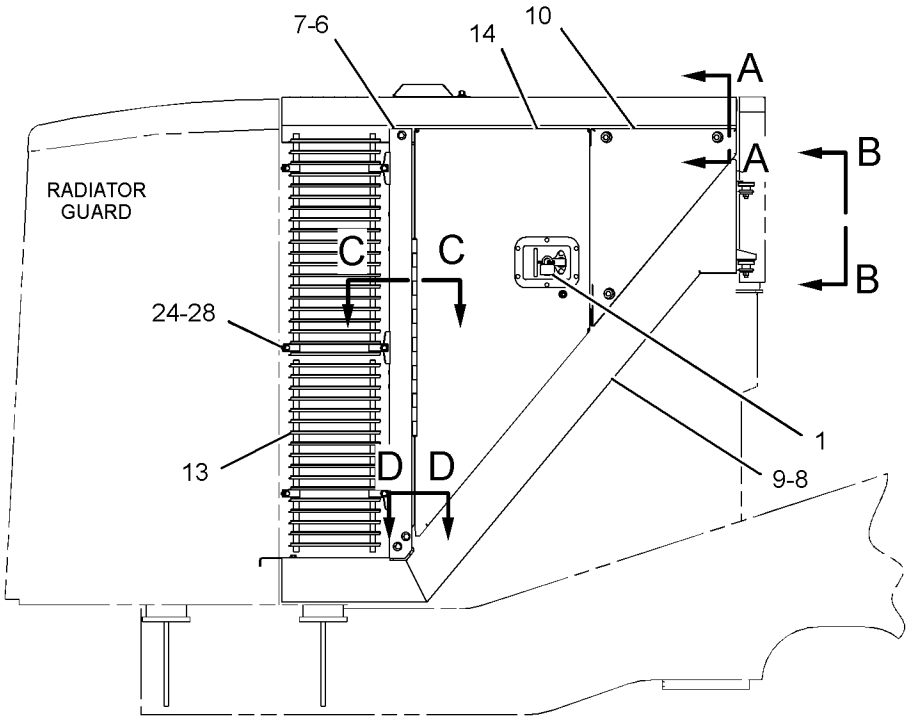


RIGHT SIDE VIEW

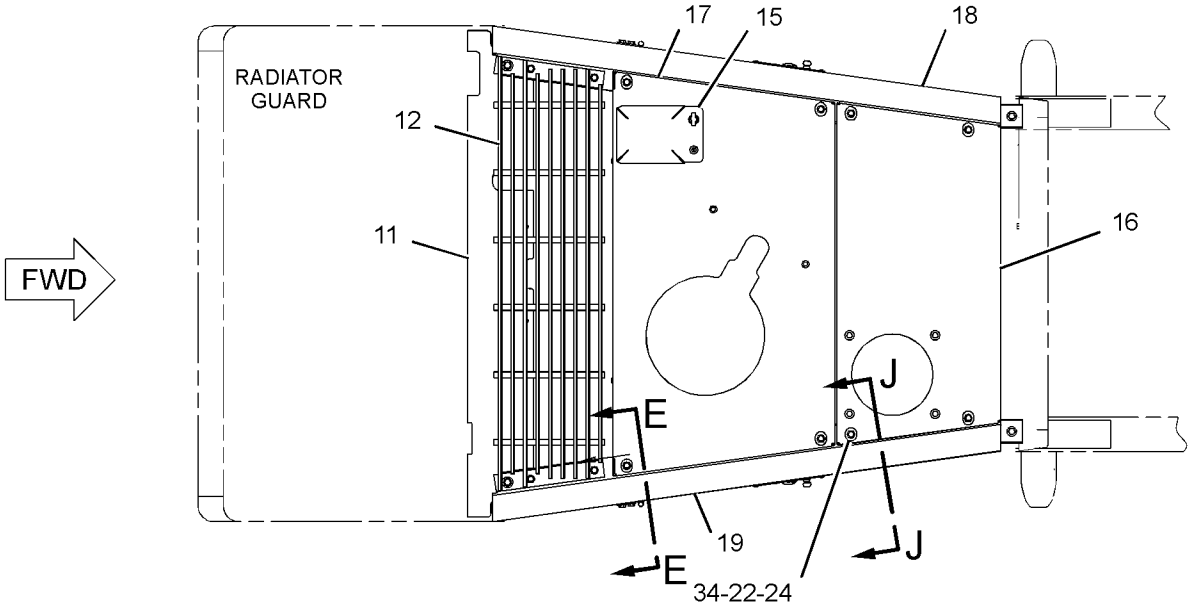


REFER TO ALL ILLUSTRATION OF THIS GROUP FOR AUXILIARY VIEWS

TOP VIEW

GRAPHIC #1

g01177090

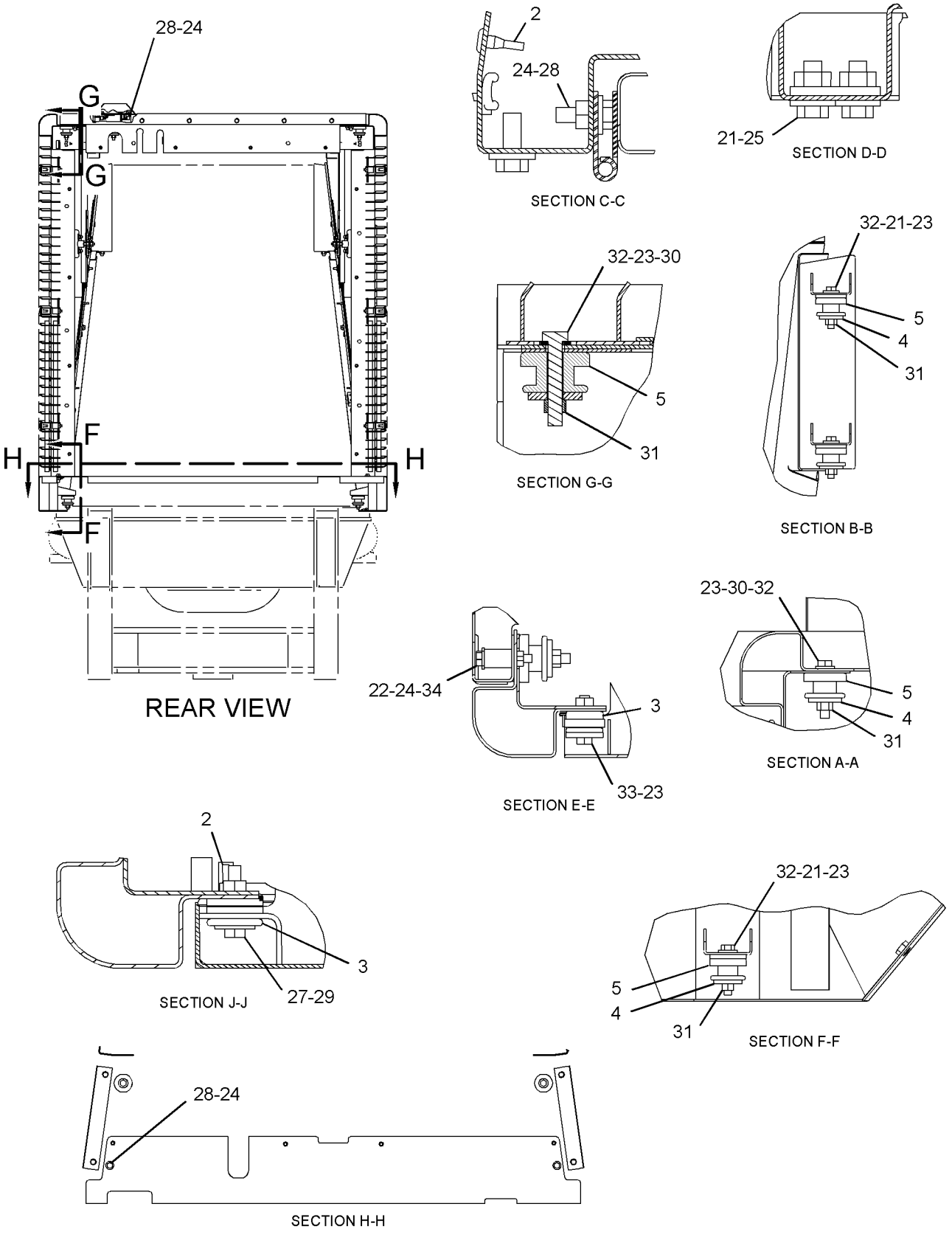


GRAPHIC #2 **<END>** g01177091

# FRAME AND BODY

## *225-5235* HOOD & GUARD GP

**S/N: BXY1-1899**

**PART OF 225-5432 CHASSIS AR**

**SMCS-7251** **i02369984**

| NOTE | REF NO | GRAPHIC REF | PART NUMBER | QTY | PART NAME 1 2 3 4 5 6 (PRODUCT LEVEL) | SEE PAGE |
|---|---|---|---|---|---|---|
| | 1 | 1 | **246-2641** | 2 | PADLOCK GP | |
| | | | | | (EACH INCLUDES KEY) | |
| | 2 | 2 | **5V-3854** | 16 | BUMPER | |
| | 3 | 2 | **6S-6251** | 8 | MOUNT | |
| | 4 | 2 | **7G-8839** | 6 | SPACER (13.5X57X6-MM THK) | |
| | 5 | 2 | **7T-8331** | 10 | MOUNT AS | |
| | 6 | 1 | **134-2778** | 1 | POST AS-RH | |
| | 7 | 1 | **134-2779** | 1 | POST AS-LH | |
| C | 8 | 1 | **274-1717** | 1 | SUPPORT AS (RH) | |
| | | 1 | **7T-1099** | 2 | LINK | |
| M | | 1 | **8T-3490** | 1 | NUT-WELD (M10X1.5-THD) | |
| M | | 1 | **8T-3597** | 5 | NUT-WELD (M12X1.75-THD) | |
| C | 9 | 1 | **274-1716** | 1 | SUPPORT AS (LH) | |
| M | | 1 | **8T-3490** | 1 | NUT-WELD (M10X1.5-THD) | |
| M | | 1 | **8T-3597** | 5 | NUT-WELD (M12X1.75-THD) | |
| | | 1 | **138-6108** | 3 | SPACER (8.7X20X45-MM THK) | |
| Y | 10 | 1 | **143-9361** | 1 | PANEL GP-SIDE (HOOD SIDE, FRONT, RH) | 856 |
| C | 11 | 1 | **274-1718** | 1 | PANEL AS-FLOOR | |
| M | | 1 | **8T-3490** | 4 | NUT-WELD (M10X1.5-THD) | |
| | 12 | 1 | **151-6008** | 1 | GRILL AS-TOP | |
| C | 13 | 1 | **273-1182** | 2 | GRILL AS | |
| | | | | | (EACH INCLUDES) | |
| | | 1 | **8R-7858** | 6 | CLAMP | |
| Y | 14 | 1 | *163-8033* | 1 | DOOR GP-ACCESS (HOOD SIDE, REAR, RH) | 656 |
| Y | 15 | 1 | *180-9272* | 1 | DOOR GP-ACCESS (HOOD TOP) | 658 |
| | 16 | 1 | **225-5237** | 1 | PANEL AS-HOOD (FRONT) | |
| | 17 | 1 | **253-8745** | 1 | PANEL AS | |
| M | | 1 | **8T-3612** | 2 | NUT-WELD (M8X1.25-THD) | |
| M | | 1 | **8T-3490** | 11 | NUT-WELD (M10X1.5-THD) | |
| | | 1 | **138-6108** | 5 | SPACER (8.7X20X45-MM THK) | |
| | 18 | 1 | **225-5239** | 1 | RAIL AS (LH) | |
| M | | 1 | **9R-2613** | 2 | BOSS-WELD (M10X1.5X25-MM OAL) | |
| M | | 1 | **8T-3490** | 8 | NUT-WELD (M10X1.5-THD) | |
| M | | 1 | **8T-3597** | 1 | NUT-WELD (M12X1.75-THD) | |
| | 19 | 1 | **225-5240** | 1 | RAIL AS (RH) | |
| M | | 1 | **9R-2613** | 2 | BOSS-WELD (M10X1.5X25-MM OAL) | |
| M | | 1 | **8T-3490** | 8 | NUT-WELD (M10X1.5-THD) | |
| M | | 1 | **8T-3597** | 1 | NUT-WELD (M12X1.75-THD) | |
| | 21 | 2 | **5P-1076** | 10 | WASHER-HARD (13.5X30X4-MM THK) | |
| | 22 | 1,2 | **6B-6205** | 8 | SPACER (0.438X0.875X1.281-IN THK) | |
| | 23 | 2 | **7X-0590** | 12 | WASHER-HARD (13.5X44.5X6-MM THK) | |
| | 24 | 1,2 | **7X-7729** | 38 | WASHER (11X25X3-MM THK) | |
| M | 25 | 2 | **8T-4139** | 4 | BOLT (M12X1.75X30-MM) | |
| M | 27 | 2 | **8T-4185** | 6 | BOLT (M10X1.5X50-MM) | |
| M | 28 | 1,2 | **8T-4195** | 30 | BOLT (M10X1.5X30-MM) | |
| | 29 | 2 | **8T-4222** | 6 | WASHER-PLATED (11X32X2.5-MM THK) | |
| | 30 | 2 | **8T-4223** | 4 | WASHER-HARD (13.5X25.5X3-MM THK) | |
| M | 31 | 2 | **8T-4244** | 10 | NUT (M12X1.75-THD) | |
| M | 32 | 2 | **8T-4648** | 10 | BOLT (M12X1.75X70-MM) | |
| M | 33 | 2 | **8T-4910** | 2 | BOLT (M12X1.75X60-MM) | |
| M | 34 | 1,2 | **8T-6466** | 8 | BOLT (M10X1.5X60-MM) | |
| C | 35 | 1 | **8R-7858** | 4 | CLAMP | |

C-CHANGE FROM PREVIOUS TYPE
M-METRIC PART
Y-SEPARATE ILLUSTRATION

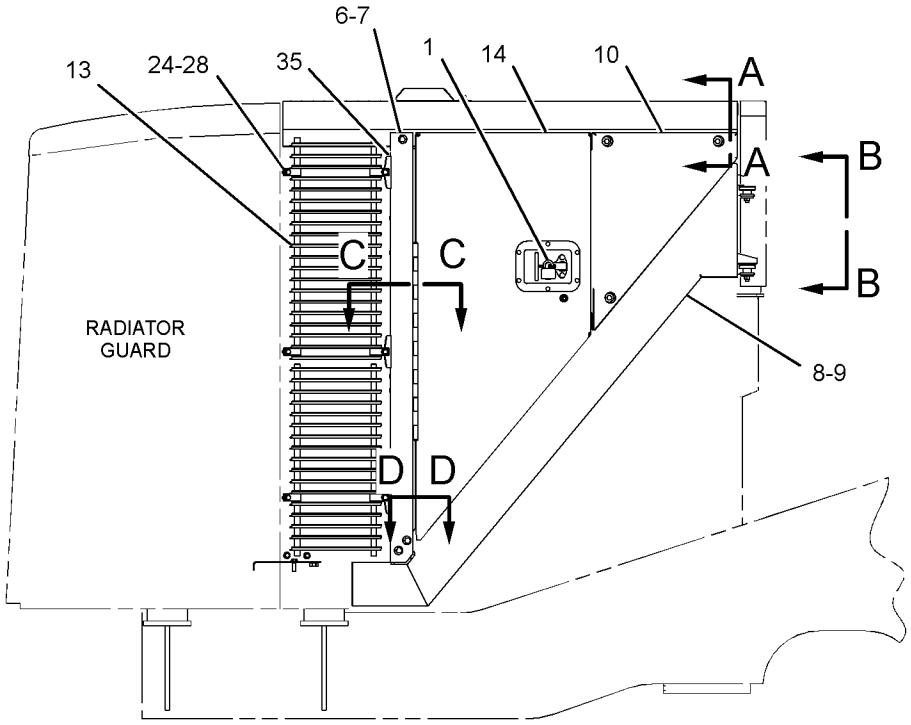


RIGHT SIDE VIEW

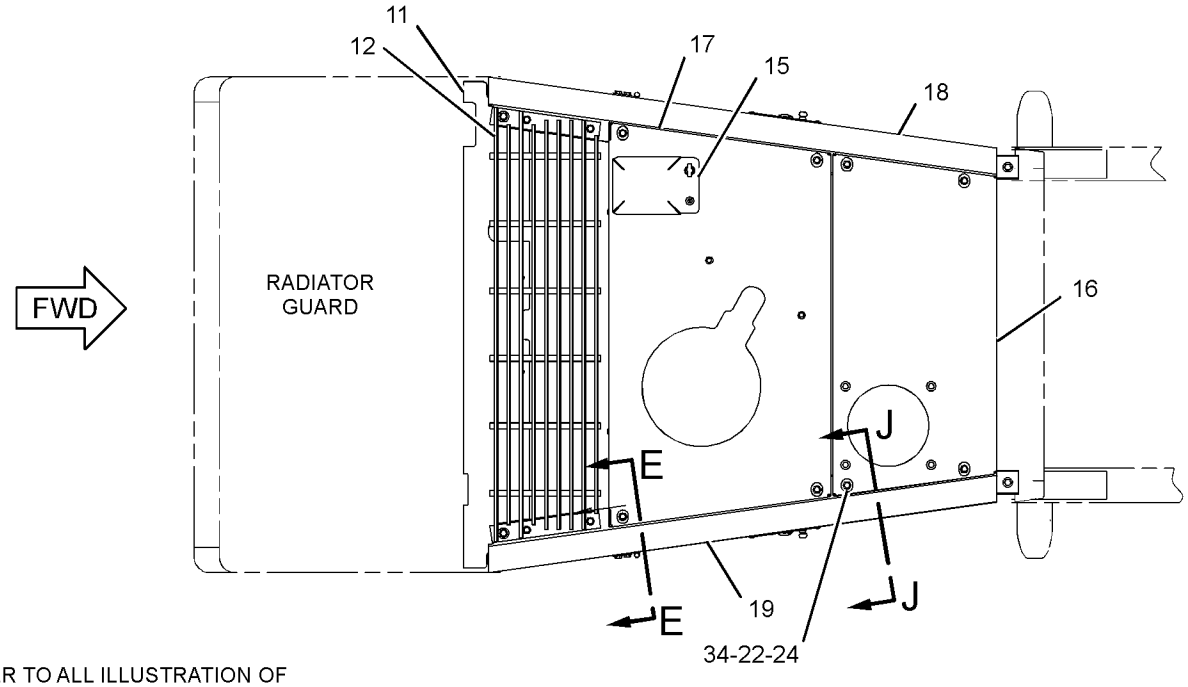


REFER TO ALL ILLUSTRATION OF
THIS GROUP FOR AUXILIARY VIEWS

TOP VIEW

GRAPHIC #1

g01182637

*225 - 5235* **HOOD & GUARD GP** *(contd. )* **i02369984**

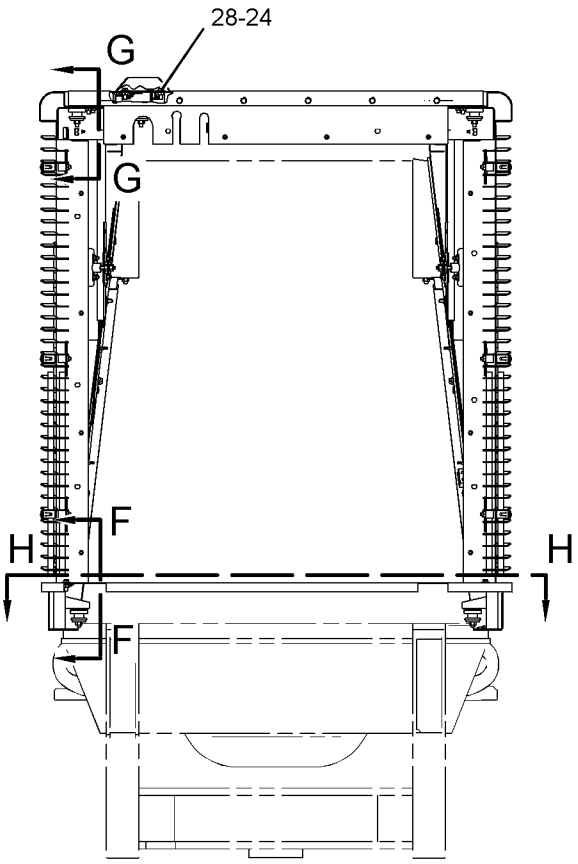


REAR VIEW

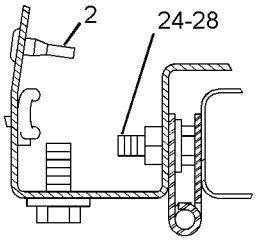


SECTION C-C

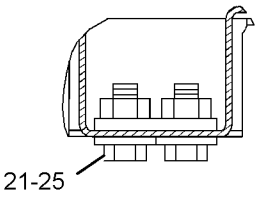


SECTION D-D

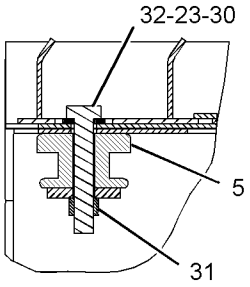


SECTION G-G

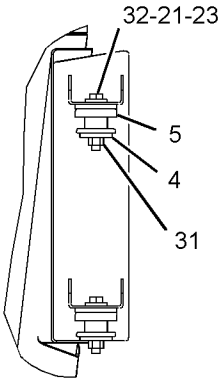


SECTION B-B

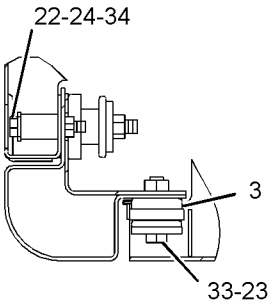


SECTION E-E

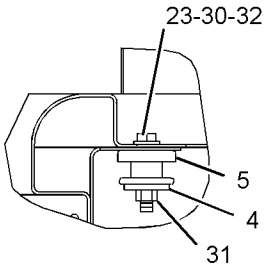


SECTION A-A

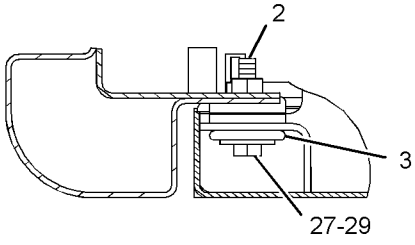


SECTION J-J

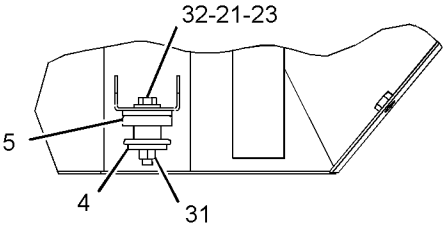


SECTION F-F

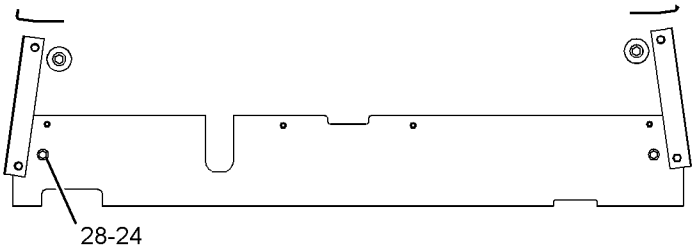


SECTION H-H

GRAPHIC #2 **<END>** g01184592

# FRAME AND BODY

## *225-5235* HOOD & GUARD GP

**S/N: BXY1900-UP**

**PART OF 284-2735 CHASSIS AR**

**SMCS-7251** **i02674570**

| NOTE | REF NO | GRAPHIC REF | PART NUMBER | QTY | PART NAME 1 2 3 4 5 6 (PRODUCT LEVEL) | SEE PAGE |
|---|---|---|---|---|---|---|
| | 1 | 1 | **246-2641** | 2 | PADLOCK GP | |
| | | | | | (EACH INCLUDES) | |
| | | 1 | **5P-8500** | 1 | KEY (CORPORATE) | |
| | 2 | 2 | **5V-3854** | 16 | BUMPER | |
| | 3 | 2 | **6S-6251** | 8 | MOUNT | |
| | 4 | 2 | **7G-8839** | 6 | SPACER (13.5X57X6-MM THK) | |
| | 5 | 2 | **7T-8331** | 10 | MOUNT AS | |
| | 6 | 1 | **134-2778** | 1 | POST AS-RH | |
| | 7 | 1 | **134-2779** | 1 | POST AS-LH | |
| | 8 | 1 | **274-1717** | 1 | SUPPORT AS (RH) | |
| | 9 | 1 | **274-1716** | 1 | SUPPORT AS (LH) | |
| Y | 10 | 1 | *143-9361* | 1 | PANEL GP-SIDE (HOOD SIDE, FRONT, RH) | 856 |
| | 11 | 1 | **274-1718** | 1 | PANEL AS-FLOOR | |
| M | | 1 | **8T-3490** | 4 | NUT-WELD (M10X1.5-THD) | |
| C | 12 | 1 | **301-7980** | 1 | GRILL AS-TOP | |
| C | 13 | 1 | **301-7981** | 2 | GRILL AS | |
| | | | | | (EACH INCLUDES) | |
| | | 1 | **8R-7858** | 4 | CLAMP | |
| Y | 14 | 1 | *163-8033* | 1 | DOOR GP-ACCESS (HOOD SIDE, REAR, RH) | 656 |
| Y | 15 | 1 | *180-9272* | 1 | DOOR GP-ACCESS (HOOD TOP) | 658 |
| | 16 | 1 | **225-5237** | 1 | PANEL AS-HOOD (FRONT) | |
| | 17 | 1 | **253-8745** | 1 | PANEL AS | |
| M | | 1 | **8T-3612** | 2 | NUT-WELD (M8X1.25-THD) | |
| M | | 1 | **8T-3490** | 11 | NUT-WELD (M10X1.5-THD) | |
| | | 1 | **138-6108** | 5 | SPACER (8.7X20X45-MM THK) | |
| | 18 | 1 | **225-5239** | 1 | RAIL AS (LH) | |
| M | | 1 | **9R-2613** | 2 | BOSS-WELD (M10X1.5X25-MM OAL) | |
| M | | 1 | **8T-3490** | 8 | NUT-WELD (M10X1.5-THD) | |
| M | | 1 | **8T-3597** | 1 | NUT-WELD (M12X1.75-THD) | |
| | 19 | 1 | **225-5240** | 1 | RAIL AS (RH) | |
| M | | 1 | **9R-2613** | 2 | BOSS-WELD (M10X1.5X25-MM OAL) | |
| M | | 1 | **8T-3490** | 8 | NUT-WELD (M10X1.5-THD) | |
| M | | 1 | **8T-3597** | 1 | NUT-WELD (M12X1.75-THD) | |
| | 21 | 2 | **5P-1076** | 10 | WASHER-HARD (13.5X30X4-MM THK) | |
| | 22 | 1,2 | **6B-6205** | 8 | SPACER (0.438X0.875X1.281-IN THK) | |
| | 23 | 2 | **7X-0590** | 12 | WASHER-HARD (13.5X44.5X6-MM THK) | |
| | 24 | 1,2 | **7X-7729** | 38 | WASHER (11X25X3-MM THK) | |
| M | 25 | 2 | **8T-4139** | 4 | BOLT (M12X1.75X30-MM) | |
| M | 27 | 2 | **8T-4185** | 6 | BOLT (M10X1.5X50-MM) | |
| M | 28 | 1,2 | **8T-4195** | 30 | BOLT (M10X1.5X30-MM) | |
| | 29 | 2 | **8T-4222** | 6 | WASHER-PLATED (11X32X2.5-MM THK) | |
| | 30 | 2 | **8T-4223** | 4 | WASHER-HARD (13.5X25.5X3-MM THK) | |
| M | 31 | 2 | **8T-4244** | 10 | NUT (M12X1.75-THD) | |
| M | 32 | 2 | **8T-4648** | 10 | BOLT (M12X1.75X70-MM) | |
| M | 33 | 2 | **8T-4910** | 2 | BOLT (M12X1.75X60-MM) | |
| M | 34 | 1,2 | **8T-6466** | 8 | BOLT (M10X1.5X60-MM) | |
| | 35 | 1 | **8R-7858** | 4 | CLAMP | |

C-CHANGE FROM PREVIOUS TYPE
M-METRIC PART
Y-SEPARATE ILLUSTRATION

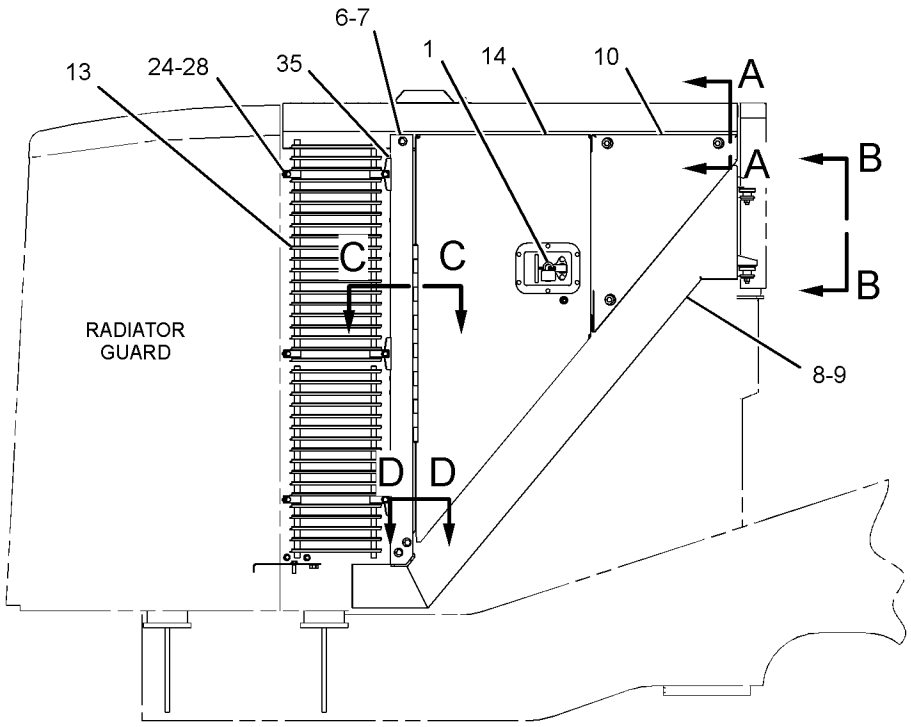


RIGHT SIDE VIEW

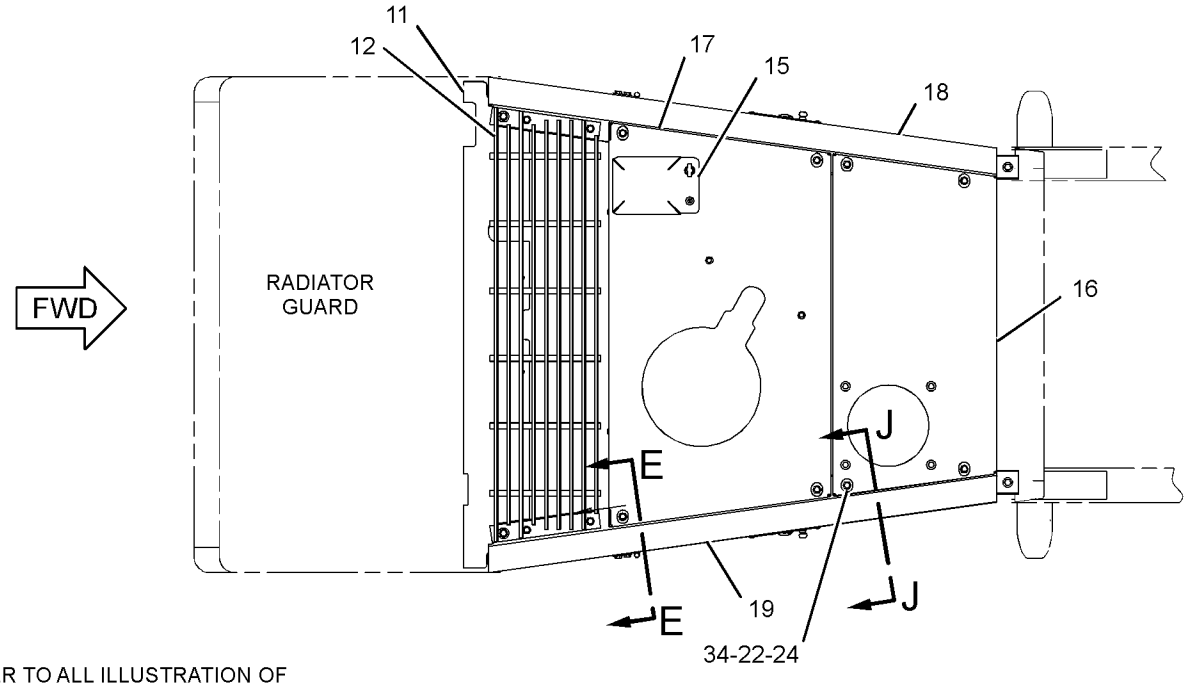


REFER TO ALL ILLUSTRATION OF THIS GROUP FOR AUXILIARY VIEWS

TOP VIEW

GRAPHIC #1

g01182637

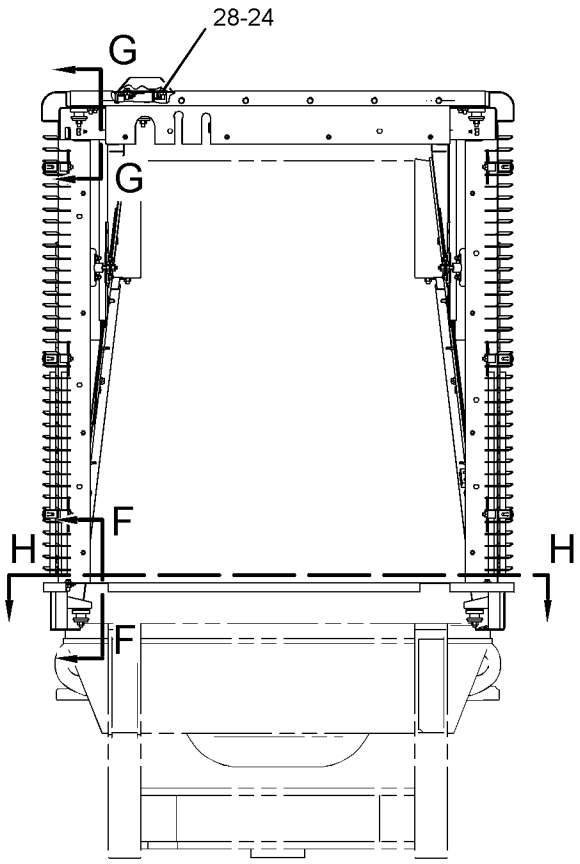


REAR VIEW

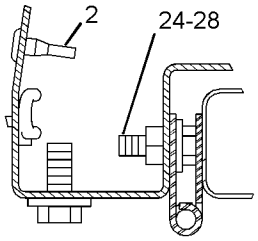


SECTION C-C

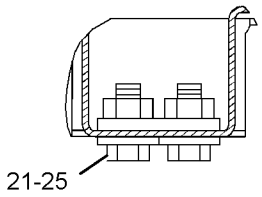


SECTION D-D

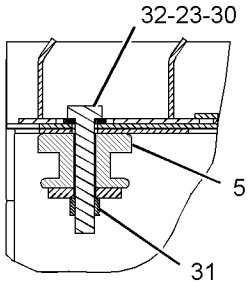


SECTION G-G

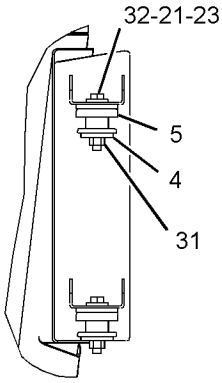


SECTION B-B

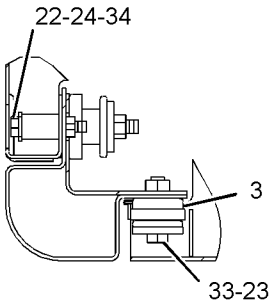


SECTION E-E

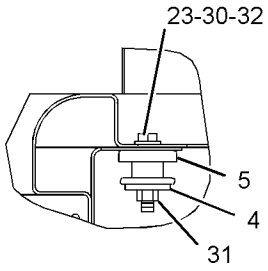


SECTION A-A

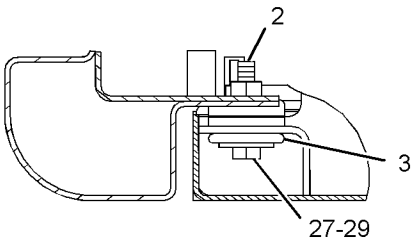


SECTION J-J

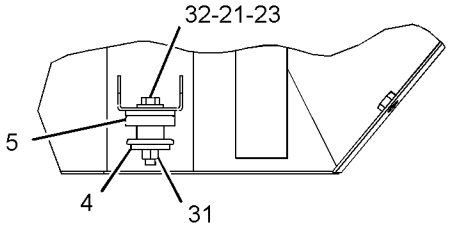


SECTION F-F

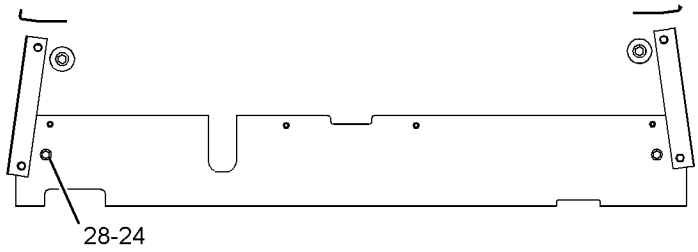


SECTION H-H

GRAPHIC #2 **<END>** g01184592

## *164-6084* LADDER & FENDER AR

**S/N: BXY1-UP**

**CANNOT BE USED WITH 164-6085 LADDER & FENDER AR, 142-5800 FENDER GP-REAR**

**AN ATTACHMENT**

**SMCS-7252, 7254** **i01048740**

| NOTE | PART NUMBER | QTY | PART NAME 1 2 3 4 5 6 (PRODUCT LEVEL) | SEE PAGE |
|---|---|---|---|---|
| Y | *114-5125* | 1 | FENDER GP-FRONT | 660 |
| Y | *153-7044* | 1 | LADDER GP (RH) | 720 |
| Y | *170-7314* | 1 | LADDER GP (ALTERNATE EXIT) | 724 |
| Y-SEPARATE ILLUSTRATION | | | | |

**<END>**

## *164-6085* LADDER & FENDER AR–RH STAIRS

**S/N: BXY1-UP**

**CANNOT BE USED WITH 142-5800 FENDER GP, 164-6084 LADDER & FENDER AR**

**AN ATTACHMENT**

**SMCS-7252, 7254** **i01001785**

| NOTE | PART NUMBER | QTY | PART NAME 1 2 3 4 5 6 (PRODUCT LEVEL) | SEE PAGE |
|---|---|---|---|---|
| Y | *114-5125* | 1 | FENDER GP-FRONT | 660 |
| Y | *142-5799* | 1 | LADDER GP (RH) | 718 |
| Y-SEPARATE ILLUSTRATION | | | | |

**<END>**

## *170-7340* LADDER & FENDER AR

**S/N: BXY1-UP**

**CANNOT BE USED WITH 164-6085 LADDER & FENDER AR, 164-6084 LADDER & FENDER AR**

**AN ATTACHMENT**

**SMCS-7252, 7254** **i01381639**

| NOTE | PART NUMBER | QTY | PART NAME 1 2 3 4 5 6 (PRODUCT LEVEL) | SEE PAGE |
|---|---|---|---|---|
| Y | *170-7339* | 1 | FENDER GP-FRONT | 661 |
| Y | *142-5800* | 1 | FENDER GP-REAR | 663 |
| Y-SEPARATE ILLUSTRATION | | | | |

**<END>**

# *114-5133* LADDER GP

**S/N: BXY1-UP**

**PART OF 225-5432, 284-2735 CHASSIS AR**

**SMCS-7254** **i02220790**

| NOTE | REF NO | GRAPHIC REF | PART NUMBER | QTY | PART NAME 1 2 3 4 5 6 (PRODUCT LEVEL) | SEE PAGE |
|---|---|---|---|---|---|---|
| | 1 | 1 | **7X-2393** | 1 | BUMPER-CONICAL | |
| | 2 | 1 | **136-9718** | 1 | HANDHOLD AS | |
| | 3 | 1 | **136-9719** | 1 | HANDHOLD AS | |
| CY | 4 | 1 | *170-7313* | 1 | LADDER GP | 722 |
| M | 5 | 1 | **5C-7261** | 1 | NUT (M8X1.25-THD) | |
| | 6 | 1 | **5P-1076** | 12 | WASHER-HARD (13.5X30X4-MM THK) | |
| | 7 | 1 | **7X-7729** | 2 | WASHER (11X25X3-MM THK) | |
| M | 8 | 1 | **8T-4133** | 1 | NUT (M10X1.5-THD) | |
| M | 9 | 1 | **8T-4183** | 12 | BOLT (M12X1.75X40-MM) | |
| M | 10 | 1 | **8T-4195** | 1 | BOLT (M10X1.5X30-MM) | |
| | 11 | 1 | **8T-4224** | 1 | WASHER-HARD (8.8X16X2-MM THK) | |

C-CHANGE FROM PREVIOUS TYPE
M-METRIC PART
Y-SEPARATE ILLUSTRATION

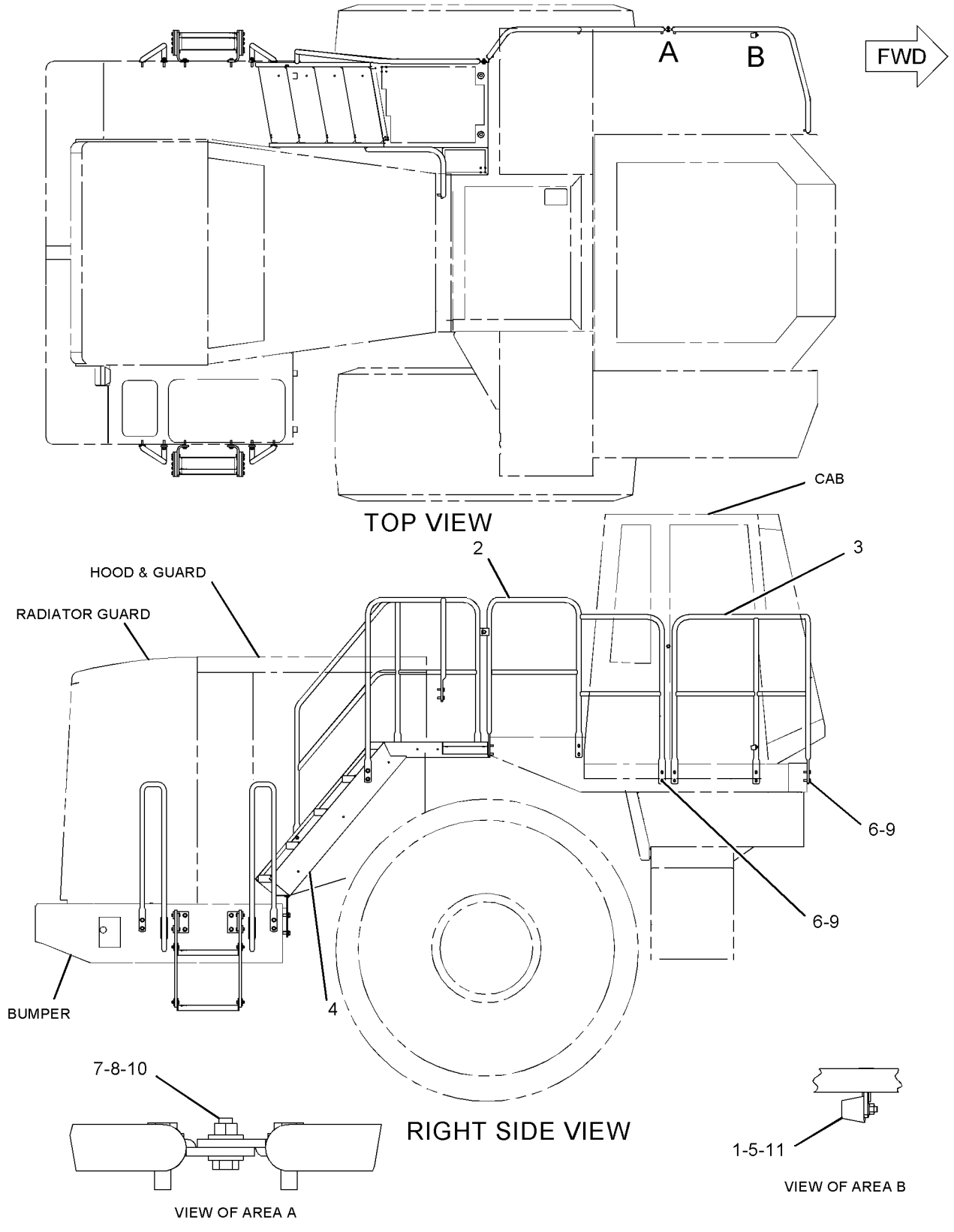


GRAPHIC #1 **<END>** g01122360

# *142-5799* LADDER GP

**S/N: BXY1-UP**
**PART OF 142-5800 FENDER GP-REAR, 164-6085 LADDER & FENDER AR**
**CANNOT BE USED WITH 142-5800—PAGE 663**
**AN ATTACHMENT**

**SMCS-7254** **i01493397**

| NOTE | REF NO | GRAPHIC REF | PART NUMBER | QTY | PART NAME 1 2 3 4 5 6 (PRODUCT LEVEL) | SEE PAGE |
|---|---|---|---|---|---|---|
| | 1 | 1 | **7T-8331** | 2 | MOUNT AS | |
| | 2 | 1 | **7X-2393** | 1 | BUMPER-CONICAL | |
| | 3 | 1 | **136-9466** | 1 | SHEET | |
| | 4 | 1 | **142-5801** | 1 | STAIR AS | |
| M | | 1 | **8T-3597** | 10 | NUT-WELD (M12X1.75-THD) | |
| | 5 | 1 | **142-5802** | 1 | HANDHOLD AS | |
| | 6 | 1 | **146-8350** | 1 | BRACKET AS | |
| M | | 1 | **8T-3597** | 2 | NUT-WELD (M12X1.75-THD) | |
| | 7 | 1 | **151-2766** | 1 | HANDHOLD AS | |
| | 8 | 1 | **151-2767** | 1 | HANDHOLD AS | |
| Y | 9 | 1 | *192-8852* | 1 | COVER GP-BUMPER (BATTERY COMPARTMENT ACCESS, RH) | 652 |
| | 10 | 1 | **155-2079** | 1 | HANDHOLD AS | |
| M | 11 | 1 | **5C-7261** | 1 | NUT (M8X1.25-THD) | |
| | 12 | 1 | **5P-1076** | 29 | WASHER-HARD (13.5X30X4-MM THK) | |
| | 13 | 1 | **7X-0515** | 4 | WASHER-HARD (17X35X5-MM THK) | |
| | 14 | 1 | **7X-0590** | 2 | WASHER-HARD (13.5X44.5X6-MM THK) | |
| M | 15 | 1 | **7X-2553** | 4 | BOLT (M16X2X40-MM) | |
| | 16 | 1 | **7X-7729** | 4 | WASHER (11X25X3-MM THK) | |
| M | 17 | 1 | **8T-4133** | 2 | NUT (M10X1.5-THD) | |
| M | 18 | 1 | **8T-4139** | 6 | BOLT (M12X1.75X30-MM) | |
| M | 19 | 1 | **8T-4183** | 27 | BOLT (M12X1.75X40-MM) | |
| M | 20 | 1 | **8T-4195** | 2 | BOLT (M10X1.5X30-MM) | |
| | 21 | 1 | **8T-4224** | 1 | WASHER-HARD (8.8X16X2-MM THK) | |
| M | 22 | 1 | **8T-4244** | 2 | NUT (M12X1.75-THD) | |
| M | 23 | 1 | **8T-4910** | 2 | BOLT (M12X1.75X60-MM) | |

M-METRIC PART
Y-SEPARATE ILLUSTRATION

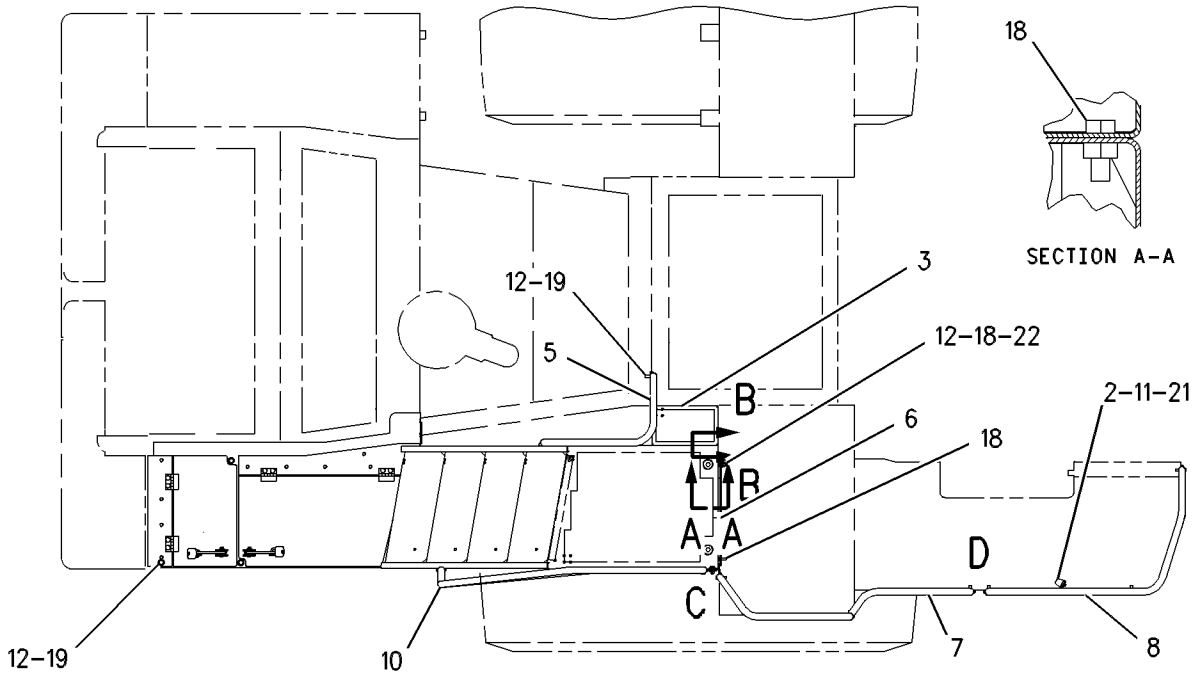


TOP VIEW

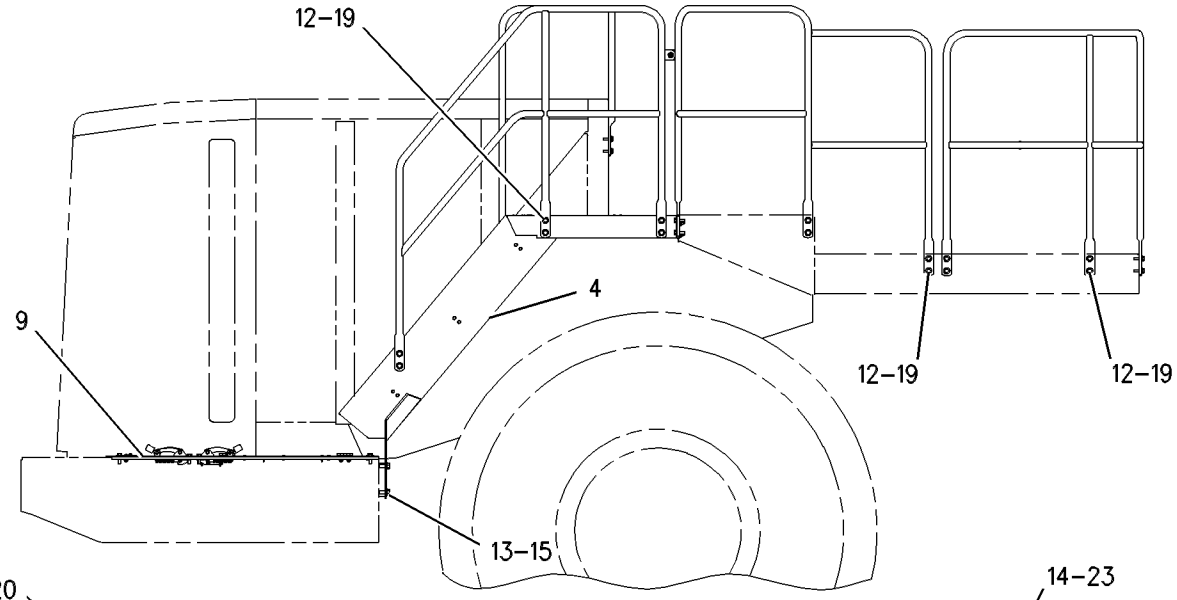


RIGHT SIDE VIEW

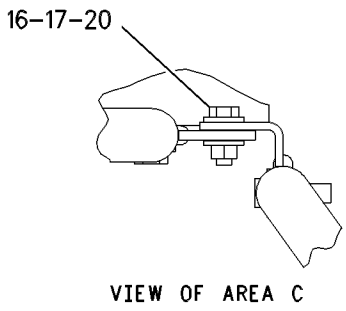


VIEW OF AREA C

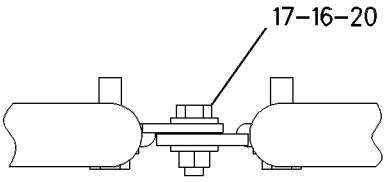


VIEW OF AREA D

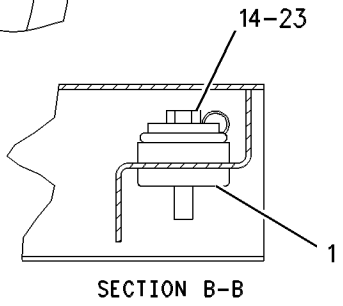


SECTION B-B

GRAPHIC #1 **<END>** g00545371

# FRAME AND BODY

## *153-7044* LADDER GP

**S/N: BXY1-UP**

**PART OF 164-6084 LADDER & FENDER AR**

**AN ATTACHMENT**

**SMCS-7254** **i02387750**

| NOTE | REF NO | GRAPHIC REF | PART NUMBER | QTY | PART NAME 1 2 3 4 5 6 (PRODUCT LEVEL) | SEE PAGE |
|---|---|---|---|---|---|---|
| | 1 | 1 | **7X-2393** | 1 | BUMPER-CONICAL | |
| | 2 | 1 | **136-9720** | 1 | HANDHOLD AS | |
| | 3 | 1 | **136-9721** | 1 | HANDHOLD AS | |
| | | 1 | **6B-8085** | 1 | SNAP-CHAIN | |
| | | 1 | **106-6434** | 1 | CHAIN | |
| | 4 | 1 | **136-9722** | 1 | HANDHOLD AS | |
| | 5 | 1 | **136-9759** | 1 | PANEL AS | |
| Y | 6 | 1 | *171-6786* | 1 | GUARD GP-REAR | 690 |
| Y | 7 | 1 | *192-8851* | 1 | COVER GP-BUMPER (BATTERY COMPARTMENT ACCESS, RH) | 650 |
| M | 9 | 1 | **5C-7261** | 1 | NUT (M8X1.25-THD) | |
| | 10 | 1 | **5P-1076** | 21 | WASHER-HARD (13.5X30X4-MM THK) | |
| | 11 | 1 | **7X-0515** | 2 | WASHER-HARD (17X35X5-MM THK) | |
| M | 12 | 1 | **7X-2553** | 2 | BOLT (M16X2X40-MM) | |
| | 13 | 1 | **7X-7729** | 2 | WASHER (11X25X3-MM THK) | |
| M | 14 | 1 | **8T-4133** | 1 | NUT (M10X1.5-THD) | |
| M | 16 | 1 | **8T-4179** | 2 | BOLT (M12X1.75X20-MM) | |
| M | 17 | 1 | **8T-4183** | 21 | BOLT (M12X1.75X40-MM) | |
| M | 18 | 1 | **8T-4195** | 1 | BOLT (M10X1.5X30-MM) | |
| | 19 | 1 | **8T-4223** | 2 | WASHER-HARD (13.5X25.5X3-MM THK) | |
| | 20 | 1 | **8T-4224** | 1 | WASHER-HARD (8.8X16X2-MM THK) | |

M-METRIC PART
Y-SEPARATE ILLUSTRATION

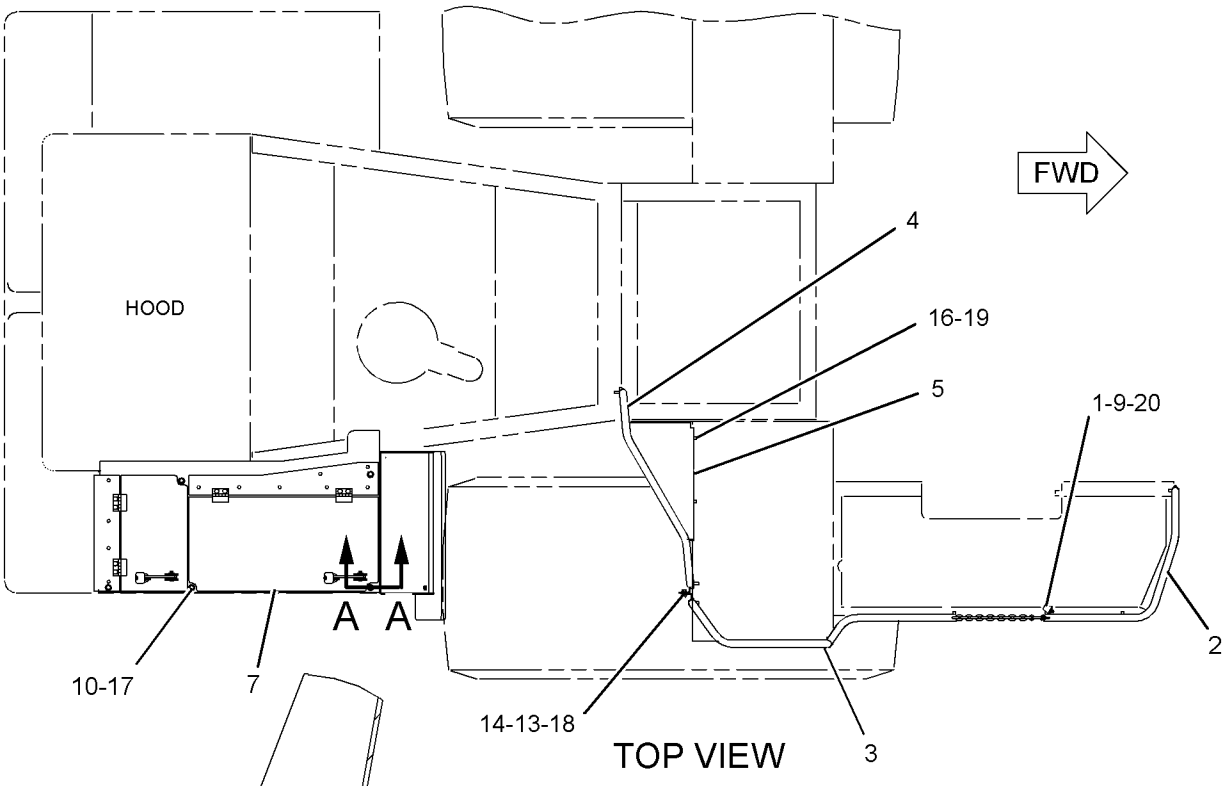


TOP VIEW

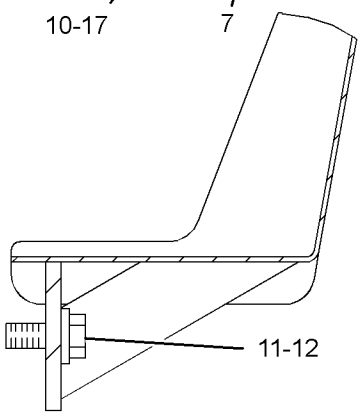


SECTION A-A

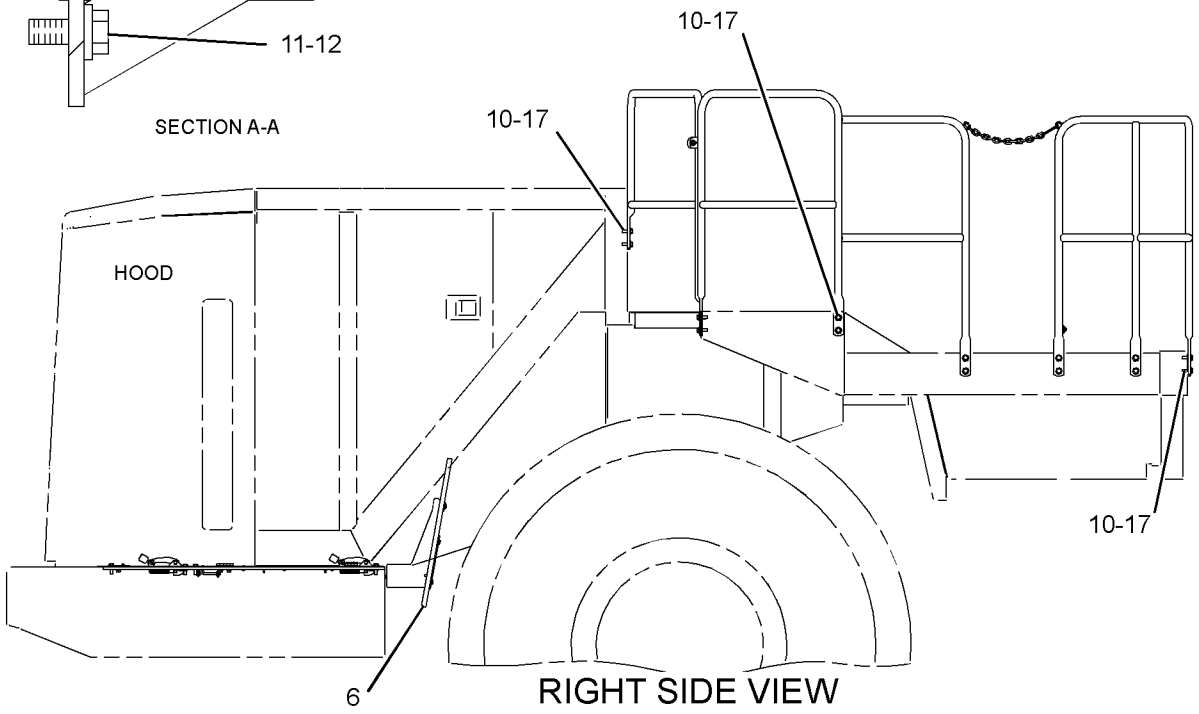


RIGHT SIDE VIEW

GRAPHIC #1

**<END>**

g01191946

# FRAME AND BODY

## *170-7313* LADDER GP

**S/N: BXY1-UP**

**PART OF 114-5133 LADDER GP**

**SMCS-7254** **i02387630**

| NOTE | REF NO | GRAPHIC REF | PART NUMBER | QTY | PART NAME 1 2 3 4 5 6 (PRODUCT LEVEL) | SEE PAGE |
|---|---|---|---|---|---|---|
| | 1 | 1 | **4E-8852** | 2 | HANDLE-RH | |
| | 2 | 1 | **4E-8892** | 2 | HANDLE-LH | |
| | 3 | 1 | **7T-8331** | 2 | MOUNT AS | |
| Y | 4 | 1 | *134-2554* | 2 | STEP GP | 864 |
| | 5 | 1 | **134-4821** | 1 | STAIR AS | |
| M | | 1 | **8T-3597** | 10 | NUT-WELD (M12X1.75-THD) | |
| | 6 | 1 | **135-6931** | 1 | HANDHOLD AS | |
| | 7 | 1 | **136-9466** | 1 | SHEET | |
| | 8 | 1 | **136-9723** | 1 | HANDHOLD AS | |
| | 10 | 1 | **5P-1076** | 34 | WASHER-HARD (13.5X30X4-MM THK) | |
| | 11 | 1 | **7X-0515** | 4 | WASHER-HARD (17X35X5-MM THK) | |
| | 12 | 1 | **7X-0590** | 2 | WASHER-HARD (13.5X44.5X6-MM THK) | |
| M | 13 | 1 | **7X-2553** | 4 | BOLT (M16X2X40-MM) | |
| | 14 | 1 | **7X-7729** | 2 | WASHER (11X25X3-MM THK) | |
| M | 15 | 1 | **8T-4133** | 1 | NUT (M10X1.5-THD) | |
| M | 17 | 1 | **8T-4139** | 2 | BOLT (M12X1.75X30-MM) | |
| M | 18 | 1 | **8T-4183** | 10 | BOLT (M12X1.75X40-MM) | |
| M | 19 | 1 | **8T-4194** | 24 | BOLT (M12X1.75X50-MM) | |
| M | 20 | 1 | **8T-4195** | 1 | BOLT (M10X1.5X30-MM) | |
| M | 21 | 1 | **8T-4910** | 2 | BOLT (M12X1.75X60-MM) | |

M-METRIC PART
Y-SEPARATE ILLUSTRATION

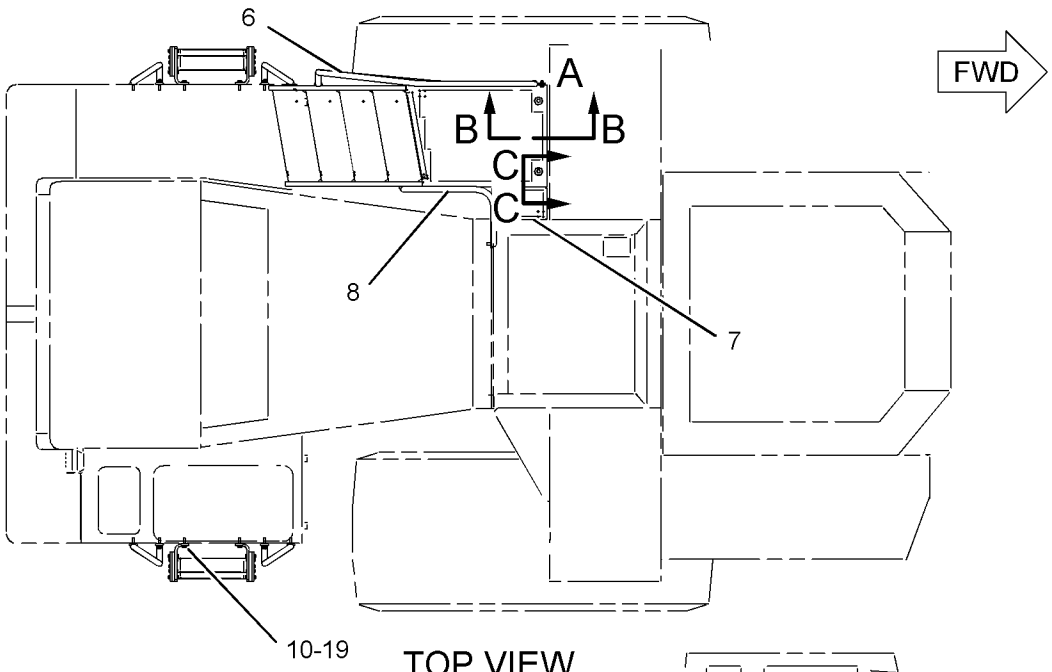


TOP VIEW

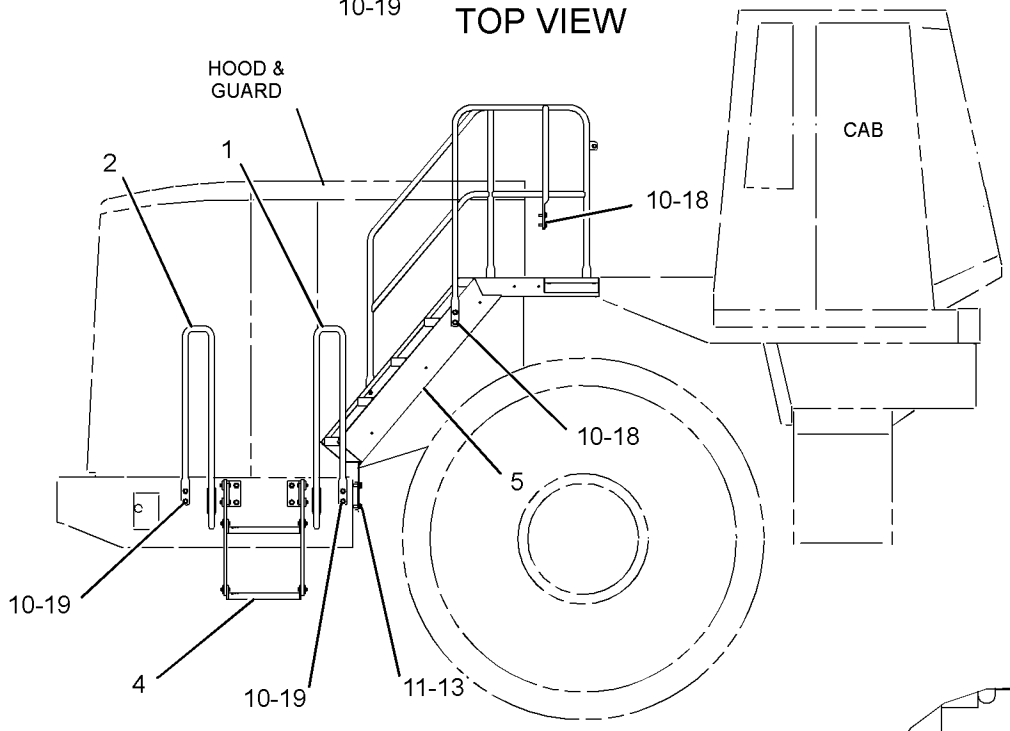


RIGHT SIDE VIEW

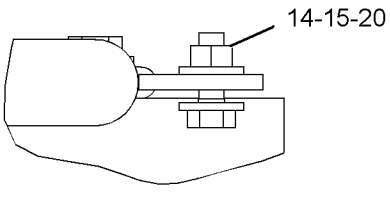


VIEW OF AREA A

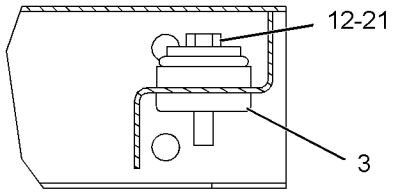


SECTION B-B

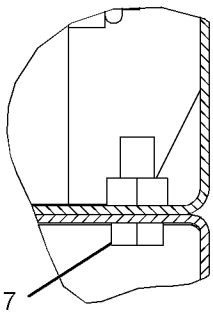


SECTION C-C

GRAPHIC #1 **<END>** g01191906

# FRAME AND BODY

## *170-7314* LADDER GP

**S/N: BXY1-UP**
**ALTERNATE EXIT**
**PART OF 164-6084 LADDER & FENDER AR**
**AN ATTACHMENT**

**SMCS-7254** **i01048821**

| NOTE | PART NUMBER | QTY | PART NAME 1 2 3 4 5 6 (PRODUCT LEVEL) | SEE PAGE |
|---|---|---|---|---|
| M | **8T-4139** | 4 | BOLT (M12X1.75X30-MM) | |
| | **138-1523** | 1 | LADDER AS | |
| | **5P-1076** | 4 | WASHER-HARD (13.5X30X4-MM THK) | |

M-METRIC PART

**<END>**

# FRAME AND BODY

## *308-2715* LADDER GP

**S/N: BXY1900-UP**
**PART OF 2Q-8722, 2Q-8733 STEEL MILL AR**
**AN ATTACHMENT**

**SMCS-7254** **i02728617**

| NOTE | REF NO | GRAPHIC REF | PART NUMBER | QTY | PART NAME 1 2 3 4 5 6 (PRODUCT LEVEL) | SEE PAGE |
|---|---|---|---|---|---|---|
| | 1 | 1 | **149-6378** | 2 | STEP AS | |
| | 2 | 1 | **308-8466** | 2 | HANDHOLD AS | |
| | 3 | 1 | **308-8470** | 2 | HANDHOLD AS | |
| | 4 | 1 | **5P-1076** | 16 | WASHER-HARD (13.5X30X4-MM THK) | |
| M | 5 | 1 | **8T-4183** | 16 | BOLT (M12X1.75X40-MM) | |
| M | 6 | 1 | **8T-4187** | 8 | BOLT (M20X2.5X80-MM) | |
| | 7 | 1 | **8T-5439** | 8 | WASHER-HARD (21.5X45X6-MM THK) | |

M-METRIC PART

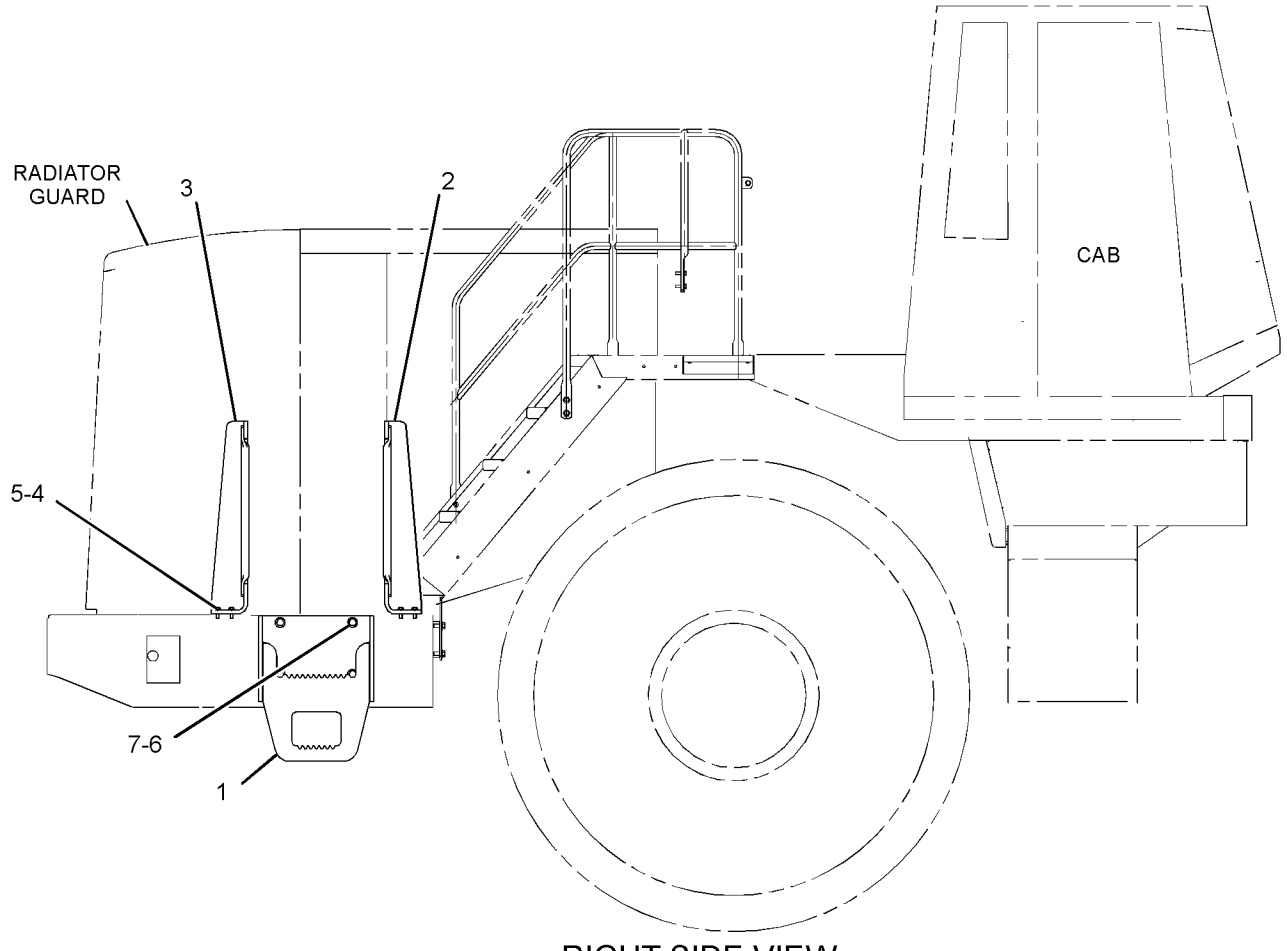


RIGHT SIDE VIEW

GRAPHIC #1

**<END>**

g01369632

## *224-3955* LINES GP-AUTOMATIC LUBRICATION–REAR FRAME

**S/N: BXY1-UP**

**PART OF 247-7033, 247-7034, 259-2405, 293-7303, 293-7305, 293-7307 LUBRICATION AR-AUTOMATIC AN ATTACHMENT**

**SMCS-7510, 7540** **i02457912**

| NOTE | REF NO | GRAPHIC REF | PART NUMBER | QTY | PART NAME 1 2 3 4 5 6 (PRODUCT LEVEL) | SEE PAGE |
|---|---|---|---|---|---|---|
| | 1 | 1 | **5K-9979** | 2 | CONNECTOR | |
| | 2 | 1 | **160-1744** | 2 | BRACKET | |
| | 3 | 1 | **224-3952** | 1 | PLATE | |
| | 4 | 2 | **224-3953** | 1 | PLATE | |
| Y | 5 | 1 | *224-3954* | 1 | VALVE & LINES GP-LUBRICATION (STEERING CYL, AXLE TRUNNIONS) | 876 |
| | 6 | 2 | **224-3958** | 1 | ROD | |
| Y | 7 | 1 | *224-4415* | 1 | PUMP GP-LUBRICATION (AUTOMATIC LUBRICATION SYSTEM) | 858 |
| | 8 | 1 | **130-5300** | 1 | CLIP | |
| | 9 | 1 | **3B-7733** | 2 | FITTING | |
| | 10 | 1,2 | **4D-7794** | 10 | CLIP | |
| M | 11 | 1 | **5C-2890** | 2 | NUT (M6X1-THD) | |
| M | 12 | 2 | **5C-7261** | 3 | NUT (M8X1.25-THD) | |
| M | 13 | 1 | **7X-2534** | 2 | BOLT (M6X1X50-MM) | |
| M | 14 | 2 | **7X-2537** | 3 | BOLT (M8X1.25X35-MM) | |
| | 15 | 1 | **8B-4884** | 2 | ELBOW | |
| | 16 | 1 | **8L-5008** | 2 | ELBOW-PIPE | |
| | 17 | 1,2 | **8T-4121** | 18 | WASHER-HARD (11X21X2.5-MM THK) | |
| M | 18 | 1,2 | **8T-4133** | 4 | NUT (M10X1.5-THD) | |
| M | 19 | 1 | **8T-4136** | 3 | BOLT (M10X1.5X25-MM) | |
| M | 20 | 1,2 | **8T-4137** | 11 | BOLT (M10X1.5X20-MM) | |
| | 21 | 2 | **8T-4224** | 6 | WASHER-HARD (8.8X16X2-MM THK) | |
| | 22 | 1 | **9X-8256** | 4 | WASHER (6.6X12X2-MM THK) | |
| | 23 | 1 | **6V-2383** | 1 | CLIP | |
| | 24 | 2 | **3B-8822** | 2 | ELBOW | |

M-METRIC PART
Y-SEPARATE ILLUSTRATION

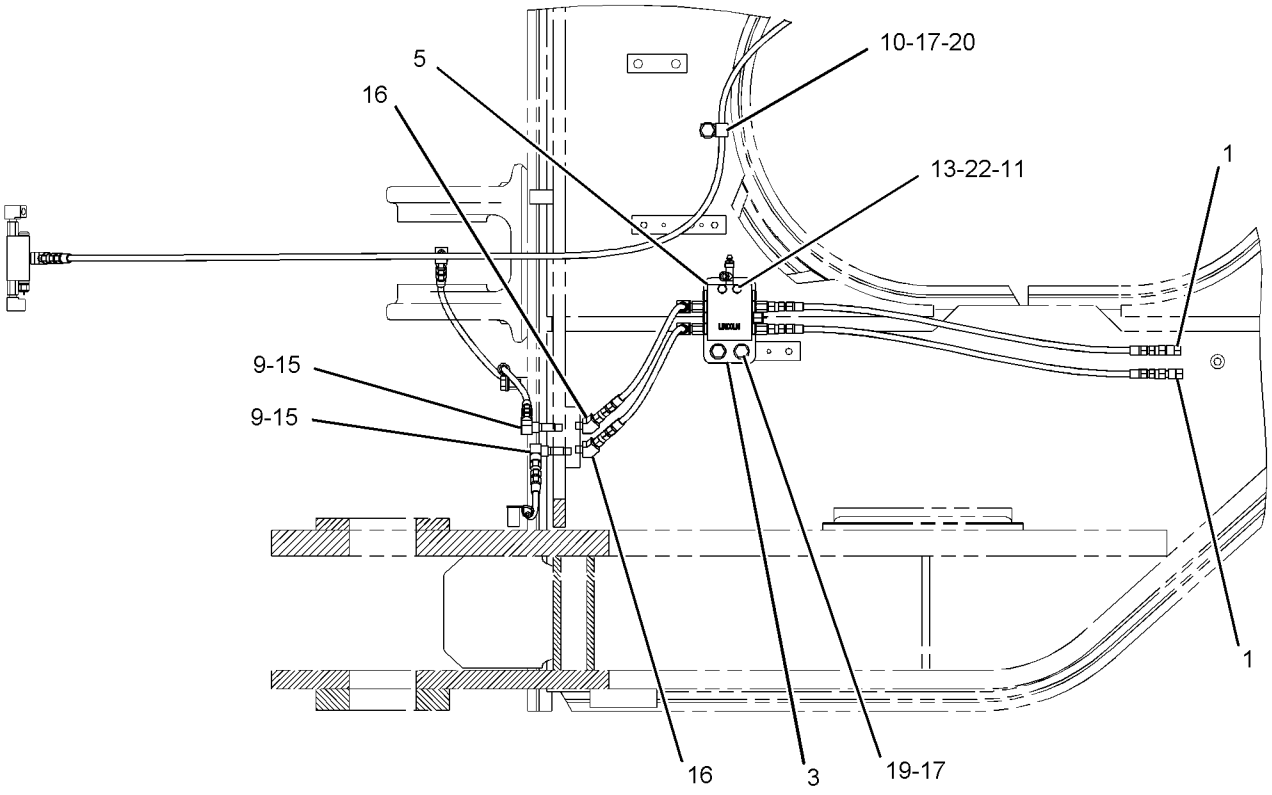


SECTION B-B

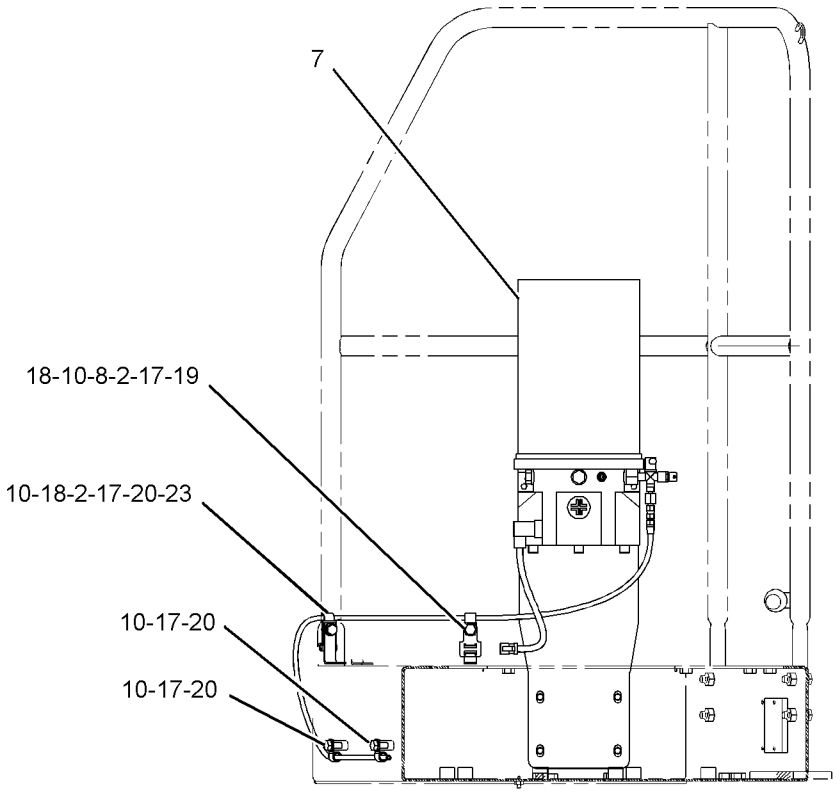


VIEW A-A

GRAPHIC #1 g01122625

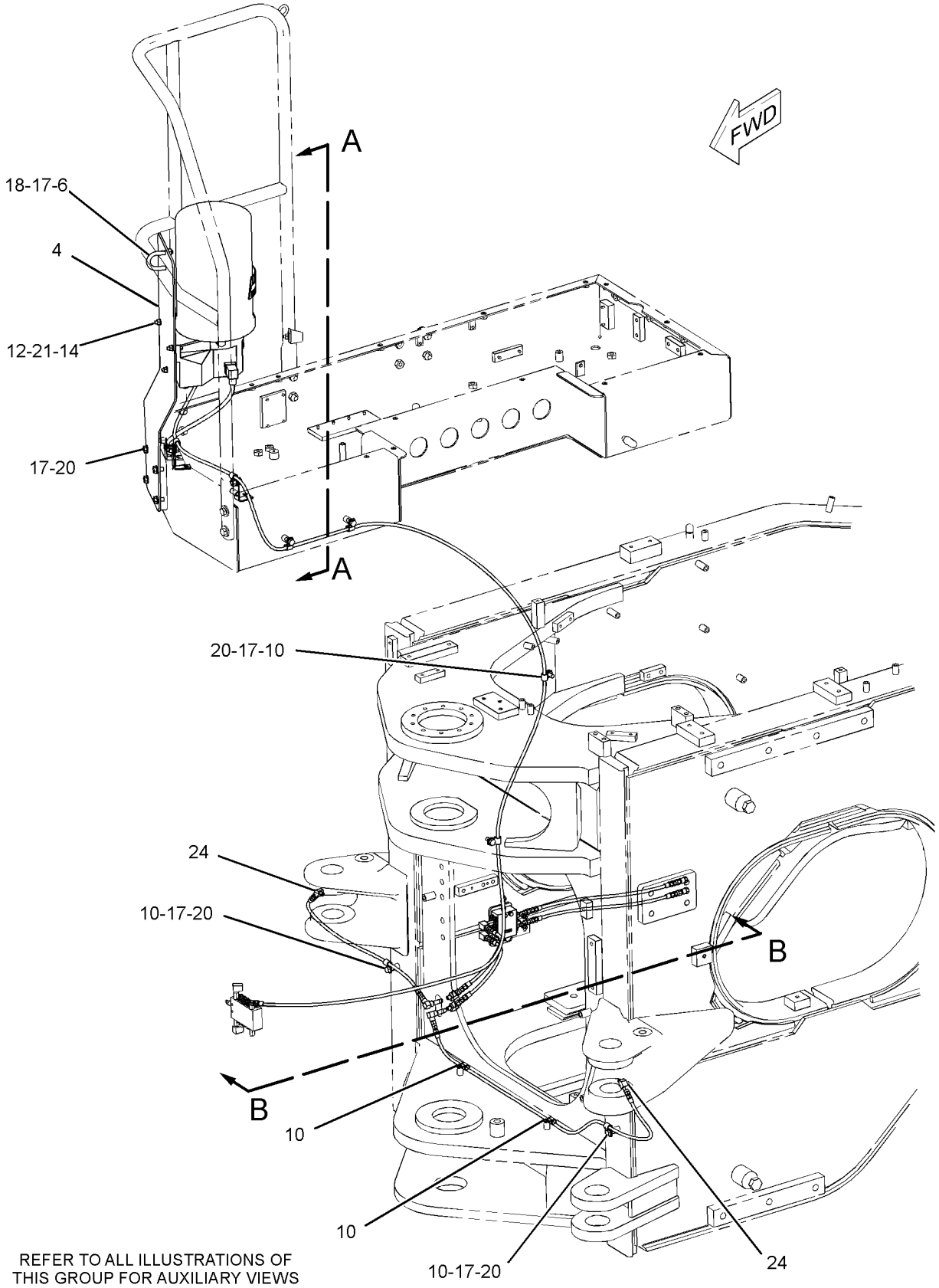


REFER TO ALL ILLUSTRATIONS OF THIS GROUP FOR AUXILIARY VIEWS

GRAPHIC #2

**<END>**

g01226750

## *224-4057* LINES GP-AUTOMATIC LUBRICATION—LOADER FRAME

**S/N: BXY1-643**

**PART OF 247-7033, 247-7034, 259-2405 LUBRICATION AR-AUTOMATIC AN ATTACHMENT**

**SMCS-7510, 7540** **i01944199**

| NOTE | REF NO | GRAPHIC REF | PART NUMBER | QTY | PART NAME 1 2 3 4 5 6 (PRODUCT LEVEL) | SEE PAGE |
|---|---|---|---|---|---|---|
| | 1 | 2 | **3B-8489** | 2 | FITTING-GREASE | |
| | 2 | 2 | **5K-9242** | 2 | UNION-FLARED | |
| | 3 | 1,2 | **5K-9243** | 4 | ELBOW-FLARED | |
| | 4 | 2 | **5K-9979** | 2 | CONNECTOR | |
| | 5 | 2 | **5P-3422** | 1 | TEE-PIPE | |
| | 6 | 1,2 | **6L-3616** | 2 | CONNECTOR | |
| | 7 | 1 | **9G-8140** | 2 | SPACER (10.5X25X15-MM THK) | |
| | 8 | 1 | **9S-7712** | 2 | ELBOW-FLARED | |
| | 9 | 2 | **224-4325** | 1 | PLATE | |
| Y | 10 | 2 | *224-4328* | 1 | VALVE & LINES GP-LUBRICATION (HITCH, TILT,STEERING CYLINDERS) | 877 |
| | | | **224-4329** | 1 | TUBE AS | |
| | 11 | 2 | **224-4330** | 1 | TUBE AS | |
| | 12 | 2 | **224-4331** | 1 | TUBE AS | |
| | 13 | 2 | **224-4332** | 1 | TUBE AS | |
| | 14 | 2 | **224-4333** | 1 | TUBE AS | |
| | 15 | 1 | **224-4334** | 1 | TUBE AS | |
| | 16 | 1 | **224-4335** | 1 | TUBE AS | |
| Y | 17 | 2 | *224-4338* | 1 | VALVE & LINES GP-LUBRICATION (GREASE SUPPLY) | 878 |
| | 18 | 1 | **227-3254** | 1 | TUBE AS | |
| | 19 | 2 | **3B-6493** | 1 | ELBOW-PIPE | |
| | 20 | 1,2 | **3B-7263** | 2 | NIPPLE-PIPE | |
| | 21 | 2 | **3B-7285** | 2 | NIPPLE-PIPE | |
| | 22 | 1 | **4D-7794** | 1 | CLIP | |
| M | 23 | 2 | **5C-2890** | 4 | NUT (M6X1-THD) | |
| | 24 | 1,2 | **5K-2298** | 4 | CLIP | |
| | 25 | 1 | **5P-7464** | 1 | CLIP (SLOT) | |
| | 26 | 1 | **5P-7465** | 1 | CLIP (TAB) | |
| | 27 | 1 | **6V-1249** | 1 | GROMMET | |
| M | 28 | 2 | **7X-2534** | 4 | BOLT (M6X1X50-MM) | |
| | 29 | 1 | **8L-5008** | 1 | ELBOW-PIPE | |
| | 30 | 1,2 | **8M-2772** | 8 | CLIP | |
| | 31 | 1,2 | **8T-4121** | 19 | WASHER-HARD (11X21X2.5-MM THK) | |
| M | 32 | 1 | **8T-4133** | 1 | NUT (M10X1.5-THD) | |
| M | 33 | 2 | **8T-4136** | 2 | BOLT (M10X1.5X25-MM) | |
| M | 34 | 1,2 | **8T-4137** | 13 | BOLT (M10X1.5X20-MM) | |
| M | 35 | 1 | **8T-4195** | 2 | BOLT (M10X1.5X30-MM) | |
| M | 36 | 1 | **8T-4196** | 1 | BOLT (M10X1.5X35-MM) | |
| | 37 | 2 | **9X-8256** | 8 | WASHER (6.6X12X2-MM THK) | |
| | 38 | 1 | **9X-8582** | 4 | CLIP | |

M-METRIC PART
Y-SEPARATE ILLUSTRATION

*224-4057* **LINES GP-AUTOMATIC LUBRICATION** *(contd.)* **i01944199**

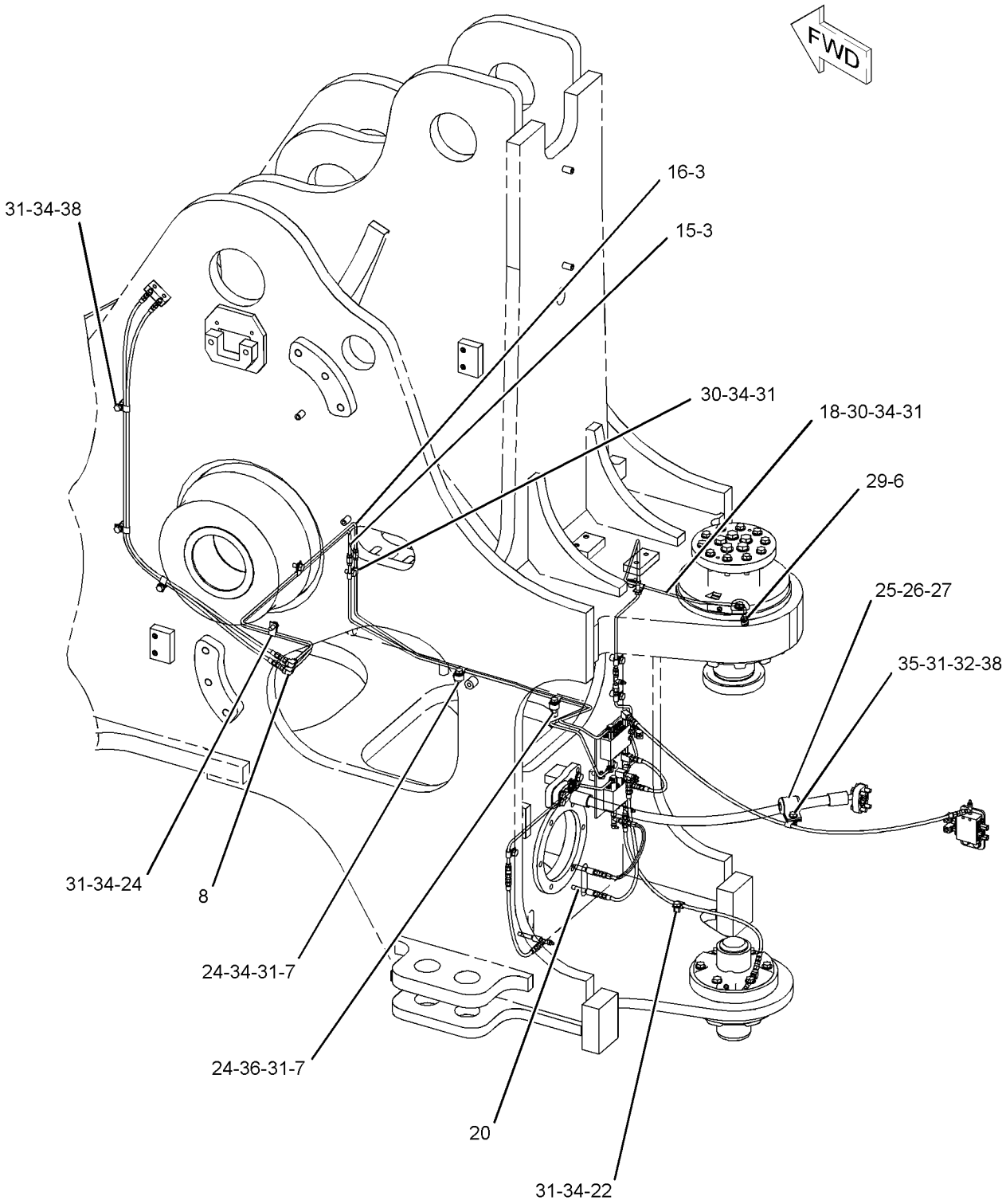


GRAPHIC #1

g01014519

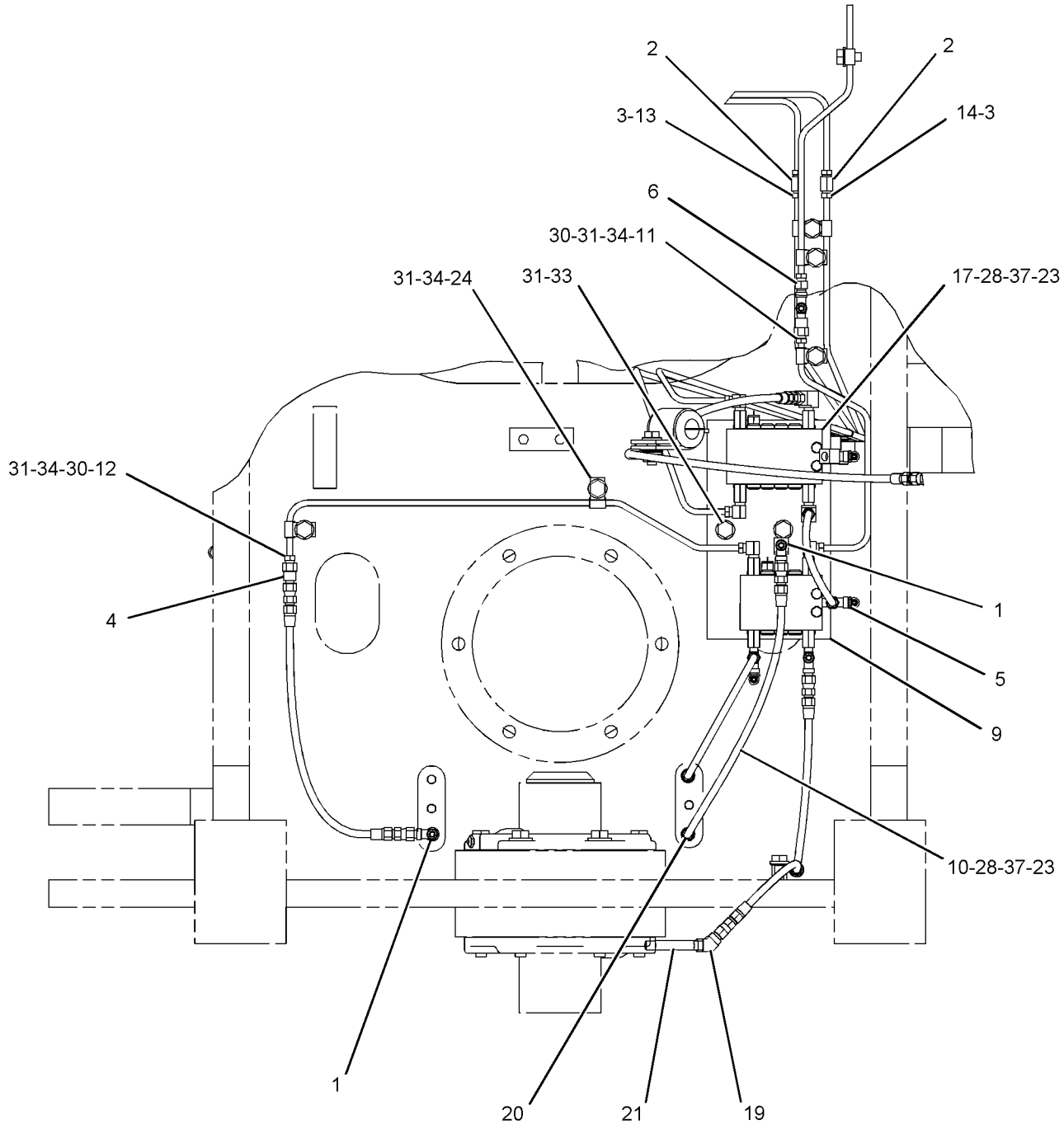


REAR VIEW

GRAPHIC #2

**<END>**

g01014520

## *224-4057* LINES GP-AUTOMATIC LUBRICATION–LOADER FRAME

**S/N: BXY644-UP**

**PART OF 247-7033, 247-7034, 259-2405, 293-7303, 293-7305, 293-7307 LUBRICATION AR-AUTOMATIC AN ATTACHMENT**

**SMCS-7510, 7540** **i02457374**

| NOTE | REF NO | GRAPHIC REF | PART NUMBER | QTY | PART NAME 1 2 3 4 5 6 (PRODUCT LEVEL) | SEE PAGE |
|---|---|---|---|---|---|---|
| | 1 | 2 | **3B-8489** | 2 | FITTING-GREASE | |
| | 2 | 2 | **5K-9242** | 2 | UNION-FLARED | |
| | 3 | 2 | **5K-9243** | 4 | ELBOW-FLARED | |
| | 4 | 2 | **5K-9979** | 2 | CONNECTOR | |
| | 5 | 2 | **5P-3422** | 1 | TEE-PIPE | |
| | 6 | 1,2 | **6L-3616** | 2 | CONNECTOR | |
| | 7 | 1 | **9G-8140** | 2 | SPACER (10.5X25X15-MM THK) | |
| | 8 | 2 | **9S-7712** | 2 | ELBOW-FLARED | |
| | 9 | 2 | **224-4325** | 1 | PLATE | |
| Y | 10 | 2 | *224-4328* | 1 | VALVE & LINES GP-LUBRICATION (HITCH, TILT,STEERING CYLINDERS) | 877 |
| | 11 | 2 | **224-4330** | 1 | TUBE AS | |
| | 12 | 2 | **224-4331** | 1 | TUBE AS | |
| | 13 | 2 | **224-4332** | 1 | TUBE AS | |
| | 14 | 2 | **224-4333** | 1 | TUBE AS | |
| | 15 | 2 | **224-4334** | 1 | TUBE AS | |
| | 16 | 2 | **224-4335** | 1 | TUBE AS | |
| Y | 17 | 2 | *224-4338* | 1 | VALVE & LINES GP-LUBRICATION (GREASE SUPPLY) | 878 |
| | 18 | 1 | **227-3254** | 1 | TUBE AS | |
| | 19 | 2 | **3B-6493** | 1 | ELBOW-PIPE | |
| | 20 | 1 | **3B-7263** | 2 | NIPPLE-PIPE | |
| | 21 | 2 | **3B-7285** | 2 | NIPPLE-PIPE | |
| | 22 | 1 | **4D-7794** | 1 | CLIP | |
| M | 23 | 2 | **5C-2890** | 4 | NUT (M6X1-THD) | |
| | 24 | 1,2 | **5K-2298** | 4 | CLIP | |
| C | 25 | 1 | **5P-7464** | 2 | CLIP (SLOT) | |
| C | 26 | 1 | **5P-7465** | 2 | CLIP (TAB) | |
| C | 27 | 1 | **6V-1249** | 2 | GROMMET | |
| M | 28 | 1,2 | **7X-2534** | 4 | BOLT (M6X1X50-MM) | |
| | 29 | 1 | **8L-5008** | 1 | ELBOW-PIPE | |
| | 30 | 1,2 | **8M-2772** | 8 | CLIP | |
| C | 31 | 1,2 | **8T-4121** | 21 | WASHER-HARD (11X21X2.5-MM THK) | |
| CM | 32 | 1 | **8T-4133** | 2 | NUT (M10X1.5-THD) | |
| M | 33 | 2 | **8T-4136** | 2 | BOLT (M10X1.5X25-MM) | |
| M | 34 | 1,2 | **8T-4137** | 13 | BOLT (M10X1.5X20-MM) | |
| CM | 35 | 1 | **8T-4195** | 3 | BOLT (M10X1.5X30-MM) | |
| M | 36 | 1 | **8T-4196** | 1 | BOLT (M10X1.5X35-MM) | |
| | 37 | 2 | **9X-8256** | 8 | WASHER (6.6X12X2-MM THK) | |
| C | 38 | 1 | **9X-8582** | 5 | CLIP | |

C-CHANGE FROM PREVIOUS TYPE
M-METRIC PART
Y-SEPARATE ILLUSTRATION

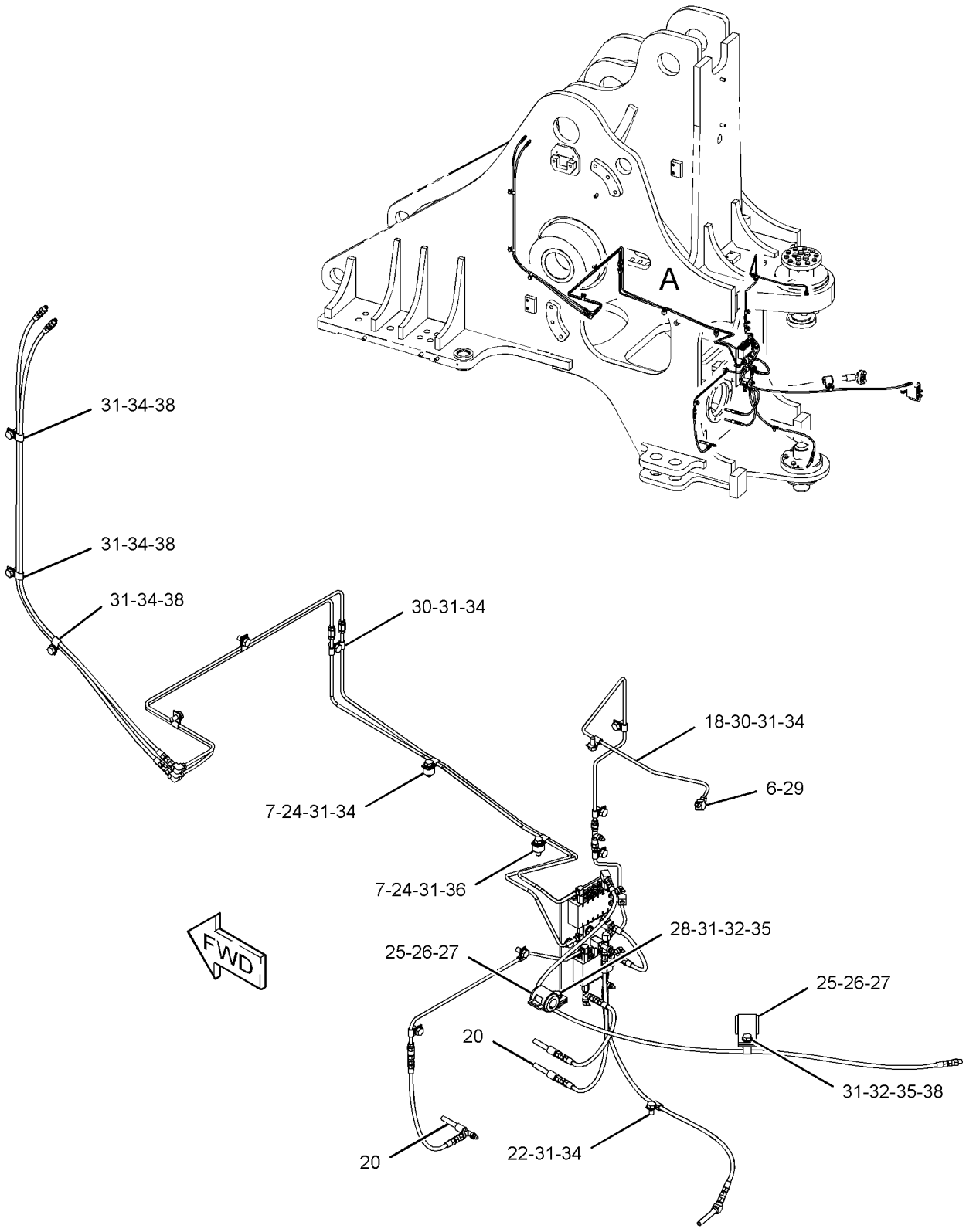


VIEW OF AREA A

GRAPHIC #1 g01229831

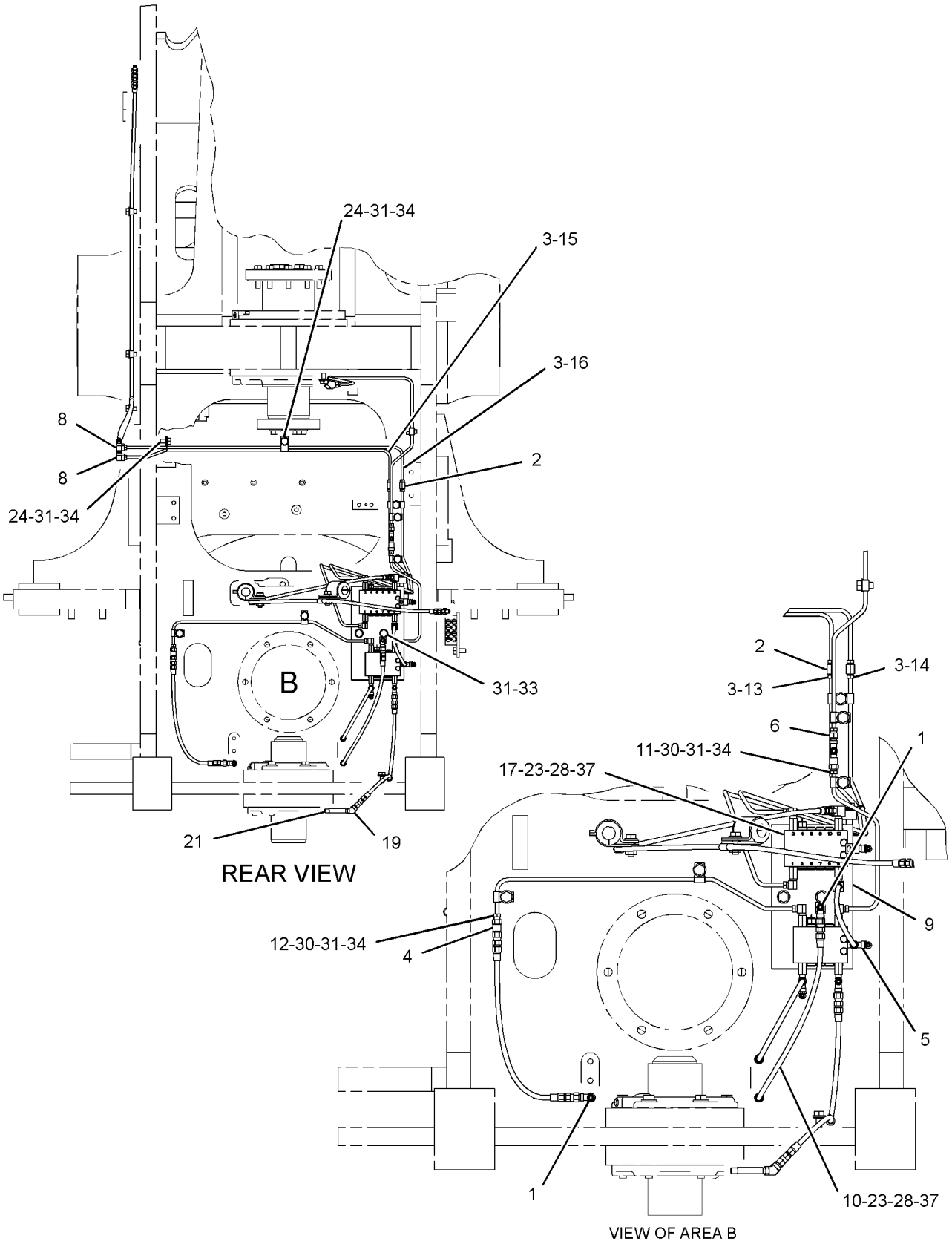


GRAPHIC #2

**<END>**

g01229833

# *243-5875* LINES GP-AUTOMATIC LUBRICATION–
## BOOM, TILT LINKS
**S/N: BXY1-UP**
**PART OF 247-7033 LUBRICATION AR-AUTOMATIC**
**AN ATTACHMENT**

**SMCS-7510, 7540** **i02330212**

| NOTE | REF NO | GRAPHIC REF | PART NUMBER | QTY | PART NAME 1 2 3 4 5 6 (PRODUCT LEVEL) | SEE PAGE |
|---|---|---|---|---|---|---|
| | 1 | 2,4 | **3B-8489** | 4 | FITTING-GREASE | |
| | 2 | 2 | **5K-9243** | 2 | ELBOW-FLARED | |
| | 3 | 2,4 | **5P-3422** | 4 | TEE-PIPE | |
| | 4 | 3,4 | **6L-3616** | 6 | CONNECTOR | |
| | 5 | 2 | **6S-4039** | 1 | GROMMET | |
| | 6 | 2 | **189-7514** | 1 | TUBE AS | |
| | 7 | 2 | **189-7515** | 1 | TUBE AS | |
| | 8 | 3 | **197-6660** | 2 | BRACKET AS | |
| | 9 | 3 | **197-7863** | 2 | BRACKET AS | |
| | 10 | 1,3 | **224-3952** | 2 | PLATE | |
| Y | 11 | 3 | *224-4410* | 1 | VALVE & LINES GP-LUBRICATION (C-PIN, LINK PINS, TILT CYL PIN) | 879 |
| | 12 | 2 | **224-4416** | 1 | BRACKET AS | |
| | 13 | 2 | **224-4417** | 1 | BRACKET AS | |
| | 14 | 1 | **259-2411** | 2 | GUARD AS | |
| | 15 | 4 | **225-2648** | 2 | TUBE AS | |
| Y | 16 | 1 | *240-9692* | 1 | VALVE & LINES GP-LUBRICATION (BUCKET PINS) | 889 |
| | 17 | 1 | **259-2467** | 1 | GUARD (AUTOMATIC LUBRICATION) | |
| | 18 | 1 | **243-5930** | 1 | GUARD | |
| | 19 | 1 | **243-5932** | 1 | PLATE AS | |
| | 20 | 1 | **243-5938** | 1 | GUARD | |
| | 21 | 1 | **255-0614** | 1 | PLATE AS | |
| M | | 1 | **8T-3490** | 1 | NUT-WELD (M10X1.5-THD) | |
| | 22 | 1 | **3B-6552** | 1 | ELBOW | |
| | 23 | 1,3 | **3B-7721** | 2 | BUSHING-REDUCER | |
| | 24 | 3 | **4D-7794** | 4 | CLIP | |
| | 25 | 2,3,4 | **4K-3026** | 7 | EXTENSION | |
| | 26 | 1,2,3,4 | **4M-8973** | 11 | ELBOW | |
| | 27 | 1 | **4S-1962** | 1 | CLIP | |
| M | 28 | 1,3 | **5C-2890** | 4 | NUT (M6X1-THD) | |
| | 29 | 1,3 | **5P-1076** | 22 | WASHER-HARD (13.5X30X4-MM THK) | |
| | 30 | 2 | **5P-9297** | 2 | CLIP | |
| M | 31 | 1,3 | **7X-2534** | 4 | BOLT (M6X1X50-MM) | |
| | 32 | 2 | **8L-5008** | 5 | ELBOW-PIPE | |
| | 33 | 2 | **8M-2772** | 2 | CLIP | |
| | 34 | 3 | **8M-2773** | 5 | CLIP | |
| | 35 | 1,2,3 | **8T-4121** | 24 | WASHER-HARD (11X21X2.5-MM THK) | |
| M | 36 | 2,3 | **8T-4133** | 3 | NUT (M10X1.5-THD) | |
| M | 37 | 1,2,3 | **8T-4136** | 9 | BOLT (M10X1.5X25-MM) | |
| M | 38 | 1,2,3 | **8T-4137** | 11 | BOLT (M10X1.5X20-MM) | |
| M | 39 | 1,3 | **8T-4139** | 16 | BOLT (M12X1.75X30-MM) | |
| M | 40 | 1 | **8T-4192** | 1 | BOLT (M12X1.75X25-MM) | |
| M | 41 | 3 | **8T-4195** | 1 | BOLT (M10X1.5X30-MM) | |
| | 42 | 1 | **8T-4223** | 1 | WASHER-HARD (13.5X25.5X3-MM THK) | |
| M | 43 | 1 | **8T-4956** | 6 | BOLT (M12X1.75X35-MM) | |
| | 44 | 1,3 | **9X-8256** | 8 | WASHER (6.6X12X2-MM THK) | |
| E | 45 | 1,2 | **7I-1024** | | GUARD (HOSE) (243-CM) | |
| | 46 | 2 | **6K-6967** | 2 | ADAPTER-PIPE | |

E-ORDER BY THE CENTIMETER
M-METRIC PART
Y-SEPARATE ILLUSTRATION

## *243-5875* LINES GP-AUTOMATIC LUBRICATION *(contd.)* i02330212

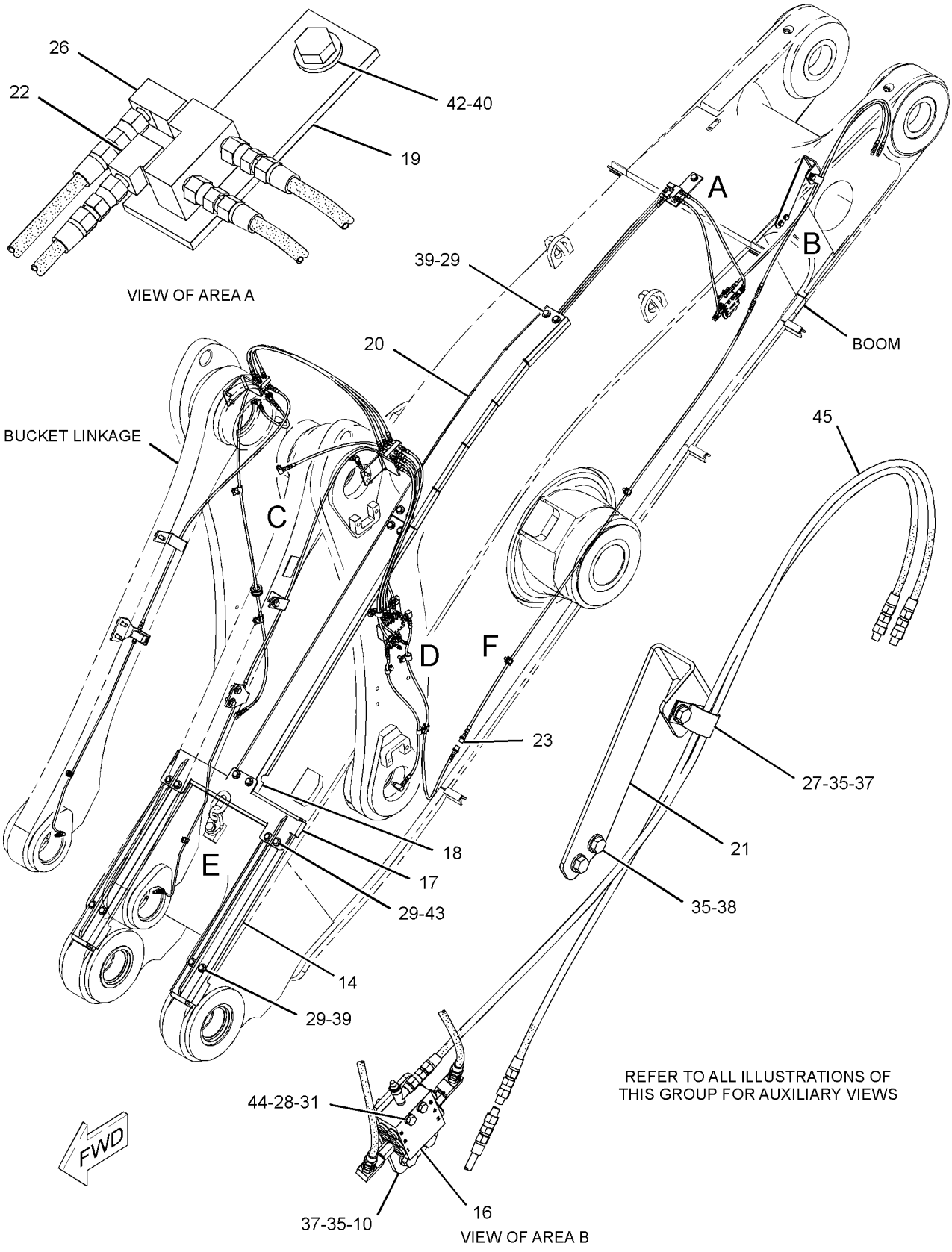


GRAPHIC #1 g01177508

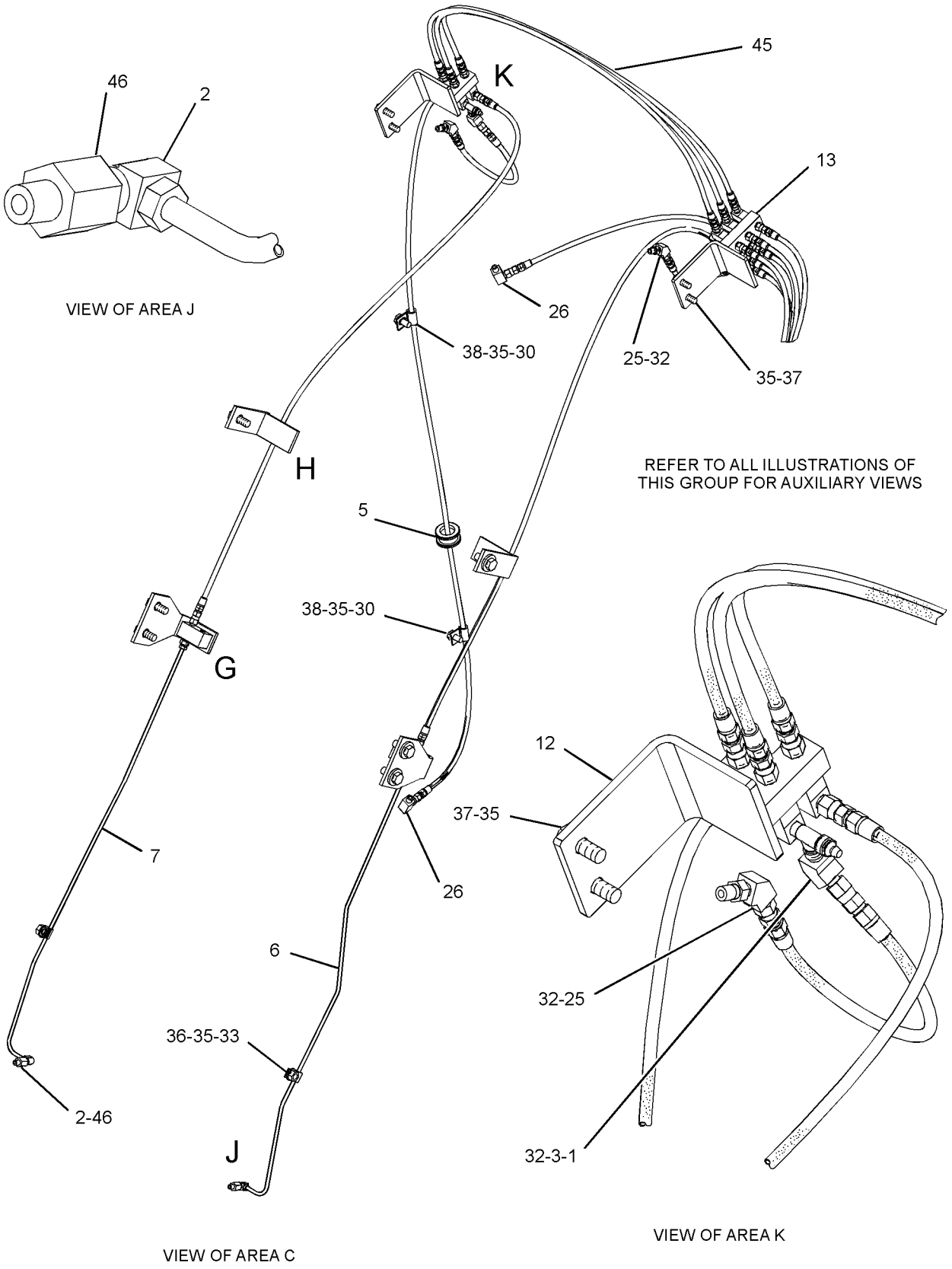


GRAPHIC #2

g01177455

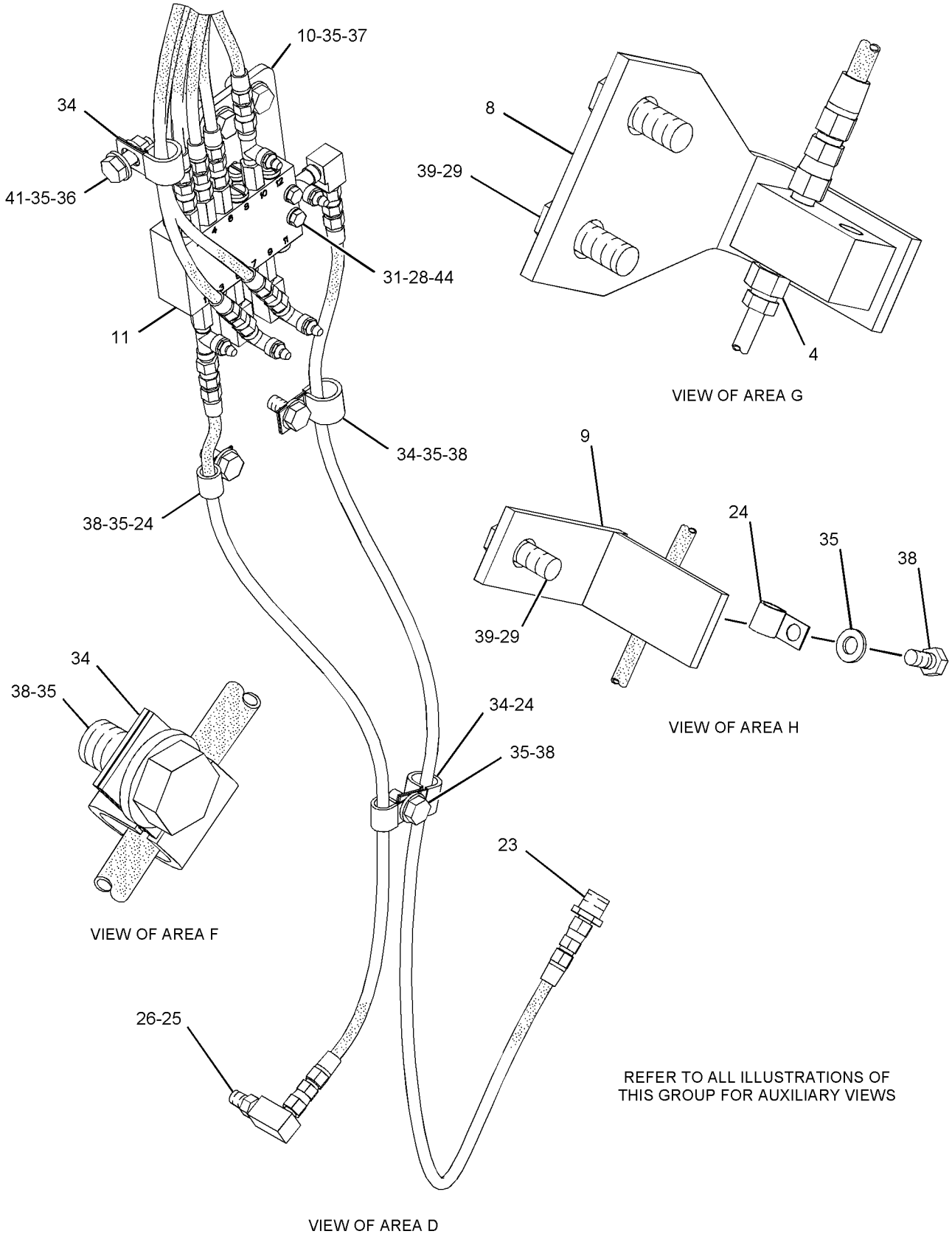


GRAPHIC #3 g01123190

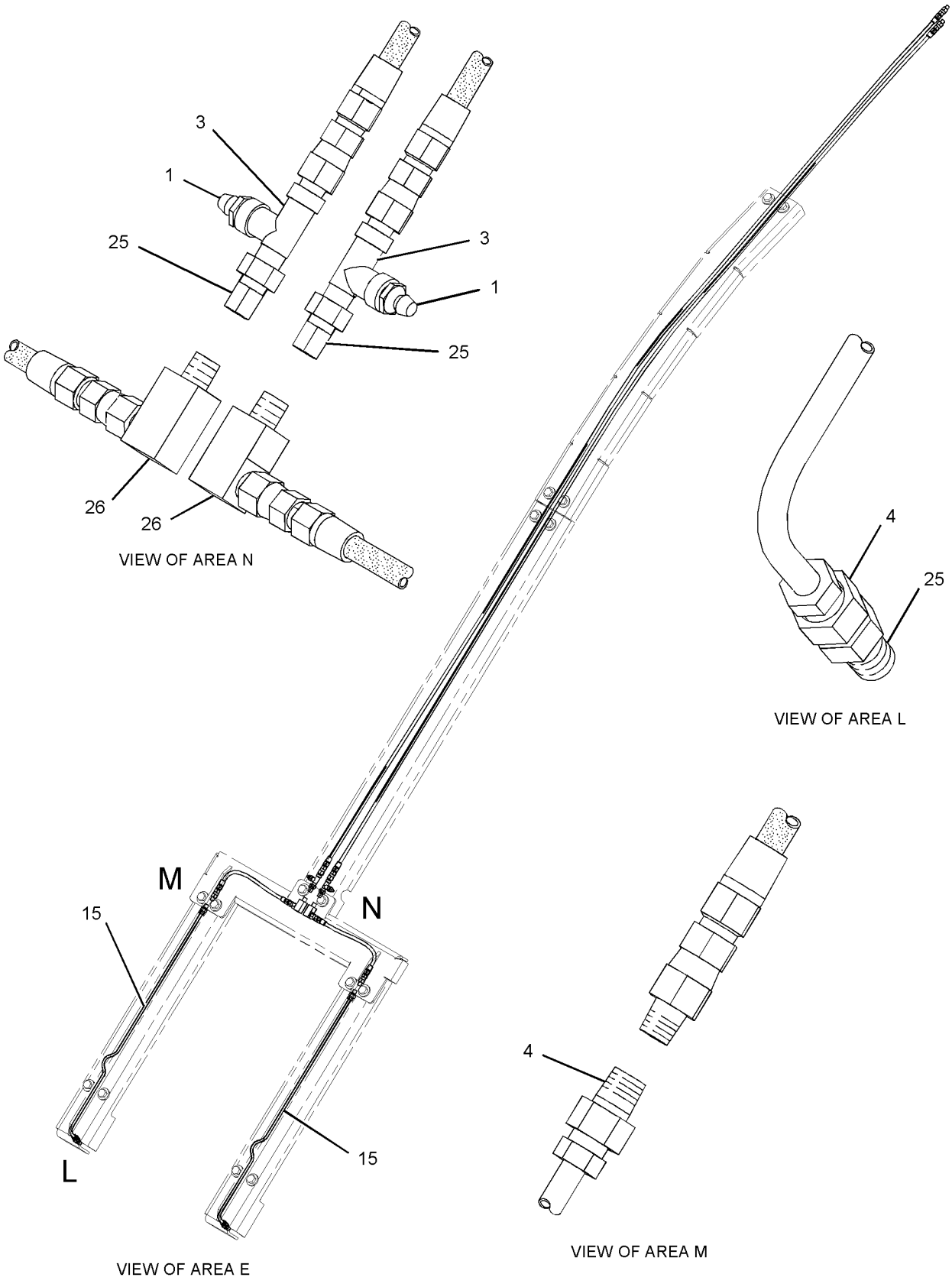


GRAPHIC #4 **<END>** g01123191

## *243-5875* LINES GP-AUTOMATIC LUBRICATION–
### BOOM, TILT LINKS
**S/N: BXY1-1899**
**PART OF 247-7033 LUBRICATION AR-AUTOMATIC**
**AN ATTACHMENT**

**SMCS-7510, 7540** **i02563088**

| NOTE | REF NO | GRAPHIC REF | PART NUMBER | QTY | PART NAME 1 2 3 4 5 6 (PRODUCT LEVEL) | SEE PAGE |
|---|---|---|---|---|---|---|
| | 1 | 1,2,3 | **3B-8489** | 6 | FITTING-GREASE | |
| | 2 | 1,2 | **5K-9243** | 2 | ELBOW-FLARED | |
| | 3 | 1,2,3 | **5P-3422** | 6 | TEE-PIPE | |
| | 4 | 1,2,3 | **6L-3616** | 6 | CONNECTOR | |
| | 5 | 2 | **6S-4039** | 1 | GROMMET | |
| | 6 | 1 | **189-7514** | 1 | TUBE AS | |
| | 7 | 2 | **189-7515** | 1 | TUBE AS | |
| | 8 | 1,2 | **197-6660** | 2 | BRACKET AS | |
| | 9 | 1,2 | **197-7863** | 2 | BRACKET AS | |
| | 10 | 1,3 | **224-3952** | 2 | PLATE | |
| Y | 11 | 1 | *224-4410* | 1 | VALVE & LINES GP-LUBRICATION (C-PIN, LINK PINS, TILT CYL PIN) | 879 |
| | 12 | 3 | **224-4416** | 1 | BRACKET AS | |
| | 13 | 3 | **224-4417** | 1 | BRACKET AS | |
| | 14 | 3 | **225-2648** | 2 | TUBE AS | |
| Y | 15 | 3 | *240-9692* | 1 | VALVE & LINES GP-LUBRICATION (BUCKET PINS) | 889 |
| | 16 | 2 | **243-5930** | 1 | GUARD | |
| | 17 | 1 | **243-5932** | 1 | PLATE AS | |
| | 18 | 1 | **243-5938** | 1 | GUARD | |
| | 19 | 1 | **255-0614** | 1 | PLATE AS | |
| M | | 1 | **8T-3490** | 1 | NUT-WELD (M10X1.5-THD) | |
| | 20 | 2 | **259-2411** | 2 | GUARD AS | |
| | 21 | 2 | **259-2467** | 1 | GUARD (AUTOMATIC LUBRICATION) | |
| | 22 | 1 | **3B-6552** | 1 | ELBOW | |
| | 23 | 1 | **3B-7721** | 2 | BUSHING-REDUCER | |
| C | 24 | 3 | **3B-7896** | 2 | ELBOW-STREET | |
| | 25 | 1,2 | **4D-7794** | 4 | CLIP | |
| | 26 | 1,2,3 | **4K-3026** | 7 | EXTENSION | |
| | 27 | 1,2,3 | **4M-8973** | 11 | ELBOW | |
| | 28 | 1 | **4S-1962** | 1 | CLIP | |
| M | 29 | 1,3 | **5C-2890** | 4 | NUT (M6X1-THD) | |
| | 30 | 1,2 | **5P-1076** | 22 | WASHER-HARD (13.5X30X4-MM THK) | |
| | 31 | 2 | **5P-9297** | 2 | CLIP | |
| | 32 | 1,2 | **6K-6967** | 2 | ADAPTER-PIPE | |
| M | 33 | 1,3 | **7X-2534** | 4 | BOLT (M6X1X50-MM) | |
| | 34 | 2 | **8L-5008** | 5 | ELBOW-PIPE | |
| | 35 | 1,2 | **8M-2772** | 2 | CLIP | |
| | 36 | 1 | **8M-2773** | 5 | CLIP | |
| | 37 | 1,2,3 | **8T-4121** | 24 | WASHER-HARD (11X21X2.5-MM THK) | |
| M | 38 | 1,2 | **8T-4133** | 3 | NUT (M10X1.5-THD) | |
| M | 39 | 1,3 | **8T-4136** | 9 | BOLT (M10X1.5X25-MM) | |
| M | 40 | 1,2 | **8T-4137** | 11 | BOLT (M10X1.5X20-MM) | |
| M | 41 | 1,2 | **8T-4139** | 16 | BOLT (M12X1.75X30-MM) | |
| M | 42 | 1 | **8T-4192** | 1 | BOLT (M12X1.75X25-MM) | |
| M | 43 | 1 | **8T-4195** | 1 | BOLT (M10X1.5X30-MM) | |
| | 44 | 1 | **8T-4223** | 1 | WASHER-HARD (13.5X25.5X3-MM THK) | |
| M | 45 | 2 | **8T-4956** | 6 | BOLT (M12X1.75X35-MM) | |
| | 46 | 1,3 | **9X-8256** | 8 | WASHER (6.6X12X2-MM THK) | |
| E | 47 | 1,2 | **7I-1024** | | GUARD (HOSE) (49.5-CM) | |
| E | 47A | 1 | **7I-1024** | | GUARD (HOSE) (96.5-CM EACH) | |

C-CHANGE FROM PREVIOUS TYPE
E-ORDER BY THE CENTIMETER
M-METRIC PART
Y-SEPARATE ILLUSTRATION

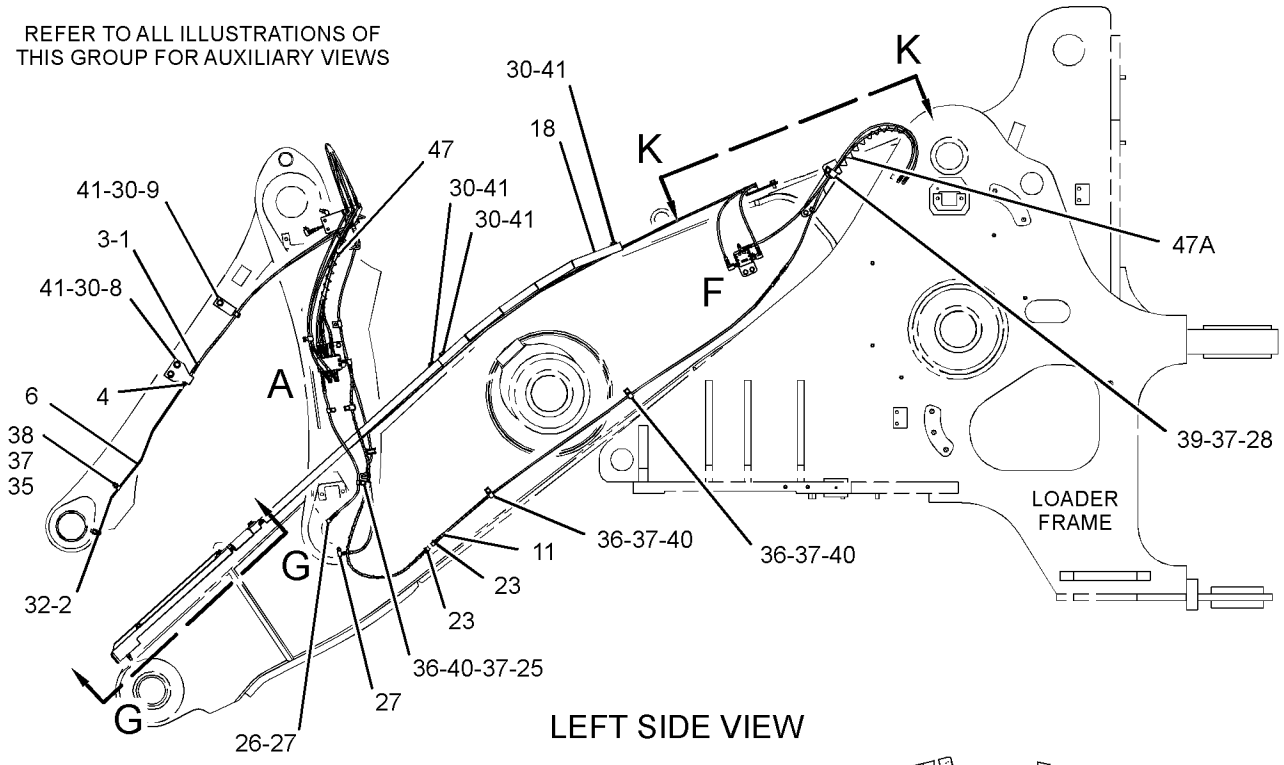


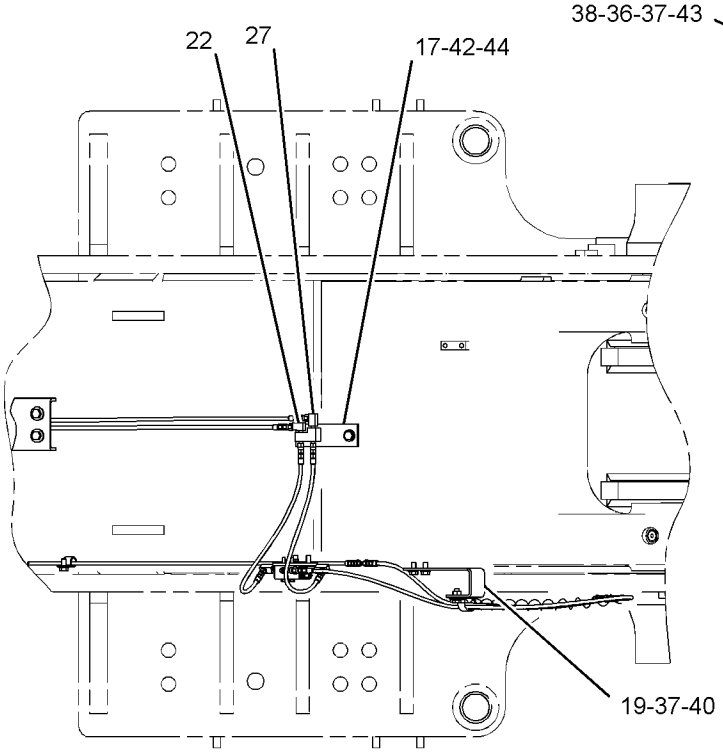


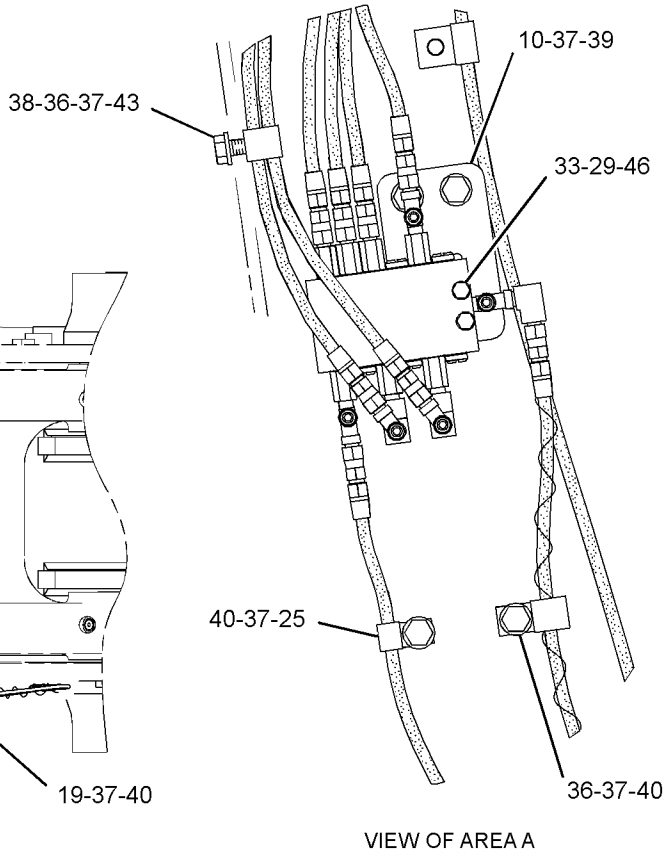


GRAPHIC #1 g01285118

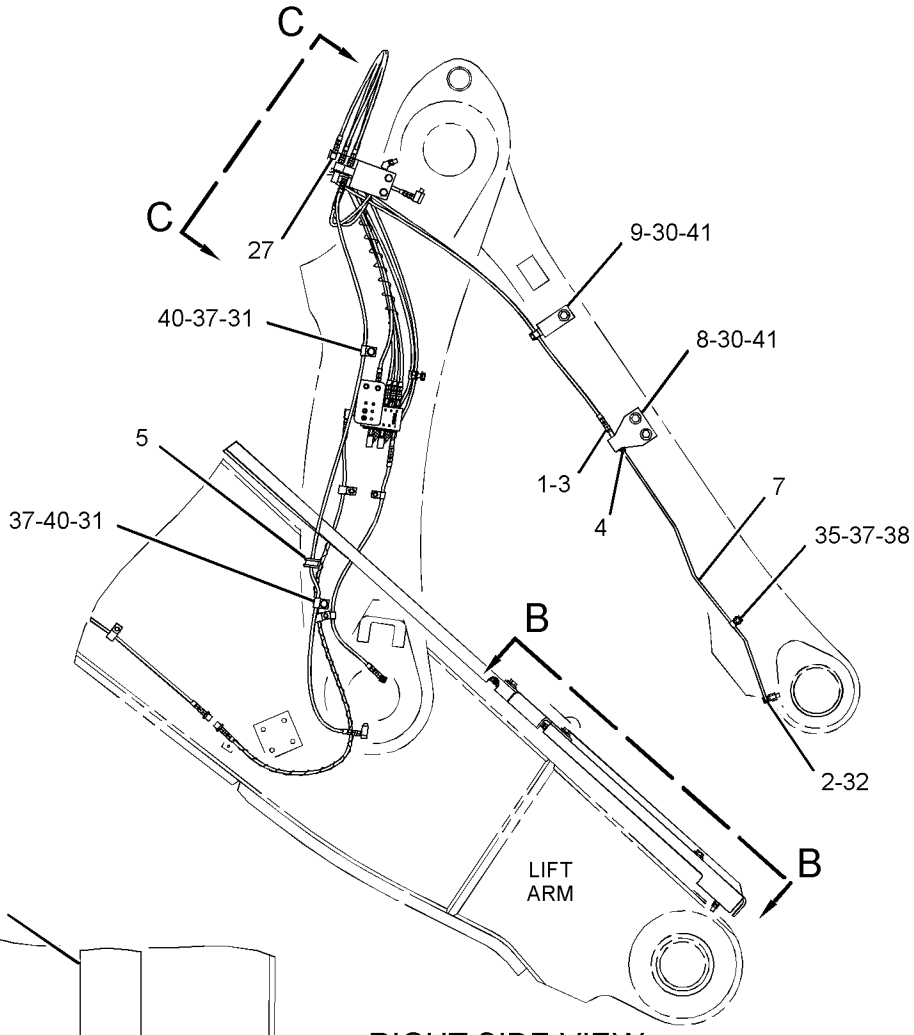


RIGHT SIDE VIEW

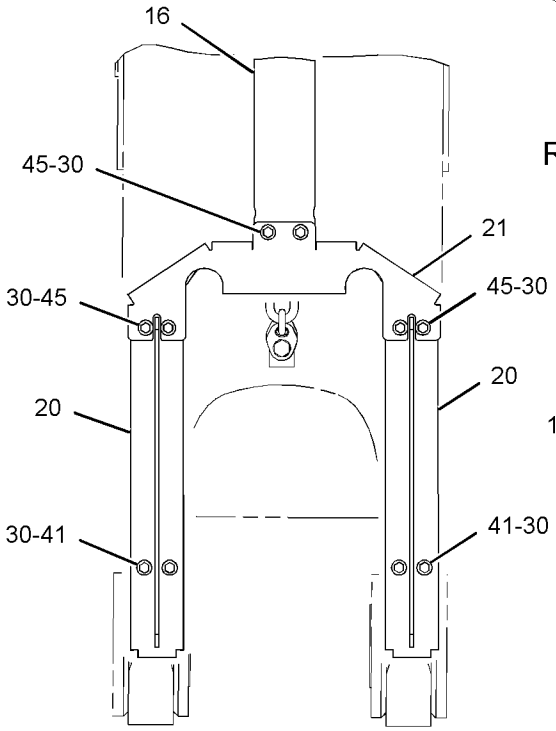


VIEW B-B

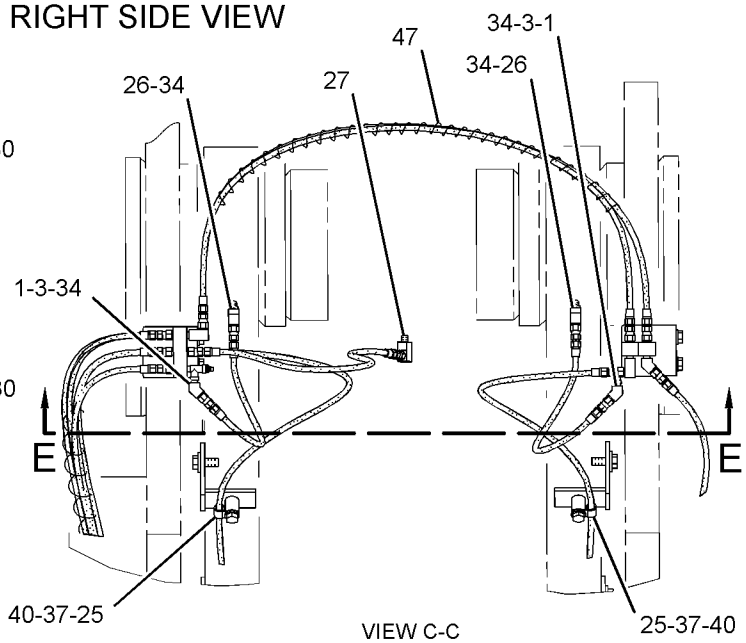


VIEW C-C

GRAPHIC #2

g01285119

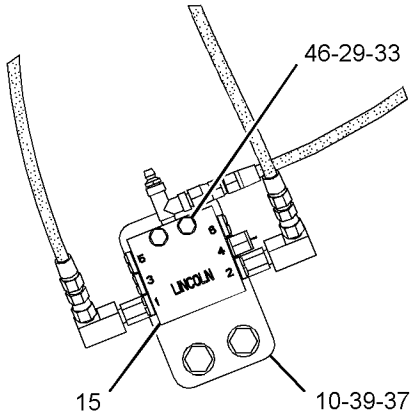


VIEW OF AREA F

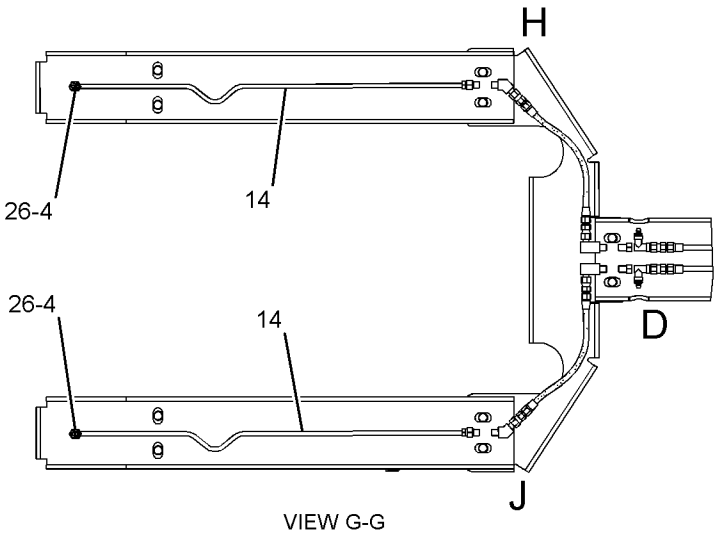


VIEW G-G

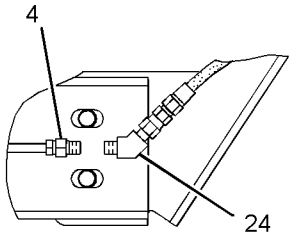


VIEW OF AREA J

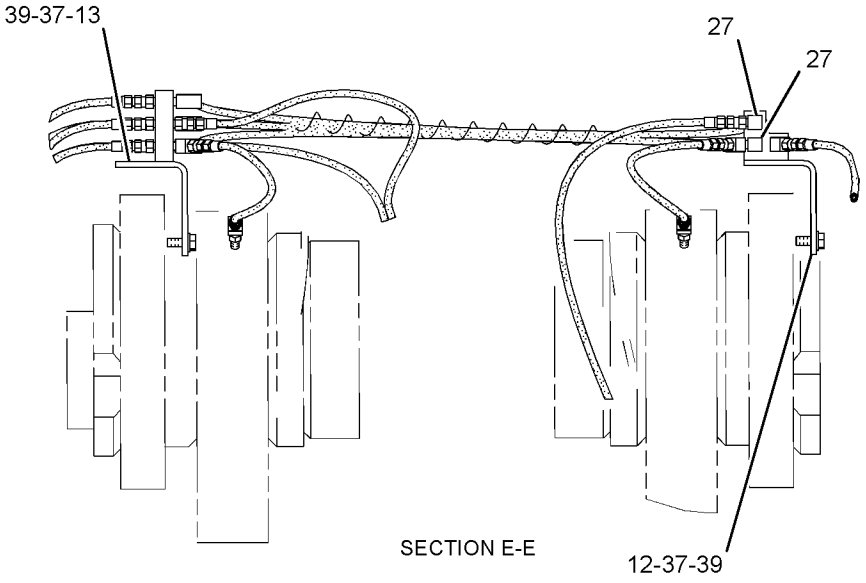


SECTION E-E

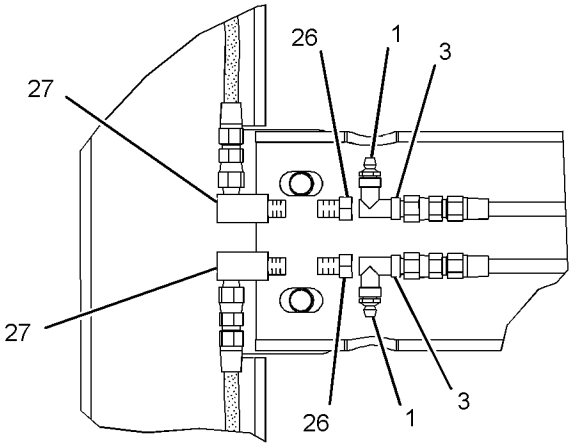


VIEW OF AREA D

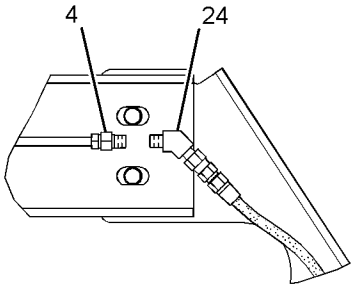


VIEW OF AREA H

GRAPHIC #3 **<END>** g01285120

# *259-2406* LINES GP-AUTOMATIC LUBRICATION–
## BOOM, TILT LINKS
### S/N: BXY1-342
### PART OF 259-2405 LUBRICATION AR-AUTOMATIC
### AN ATTACHMENT

**SMCS-7510, 7540** **i02225024**

| NOTE | REF NO | GRAPHIC REF | PART NUMBER | QTY | PART NAME 1 2 3 4 5 6 (PRODUCT LEVEL) | SEE PAGE |
|---|---|---|---|---|---|---|
| | 1 | 2,3 | **3B-8489** | 4 | FITTING-GREASE | |
| | 2 | 1,3 | **5K-9243** | 2 | ELBOW-FLARED | |
| | 3 | 2,3 | **5P-3422** | 4 | TEE-PIPE | |
| | 4 | 1,2,3 | **6L-3616** | 6 | CONNECTOR | |
| | 5 | 3 | **6S-4039** | 1 | GROMMET | |
| | 6 | 1,3 | **197-6660** | 2 | BRACKET AS | |
| | | 1,3 | **157-8957** | 1 | BLOCK | |
| | 7 | 1,3 | **197-7863** | 2 | BRACKET AS | |
| M | | 1,3 | **9R-2613** | 1 | BOSS-WELD (M10X1.5X25-MM OAL) | |
| | 8 | 3 | **224-3952** | 2 | PLATE | |
| | 9 | 3 | **224-4416** | 1 | BRACKET AS | |
| | 10 | 3 | **224-4417** | 1 | BRACKET AS | |
| | 11 | 3 | **243-5929** | 1 | GUARD AS | |
| | 12 | 2 | **243-5932** | 1 | PLATE AS | |
| | 13 | 1 | **255-0614** | 1 | PLATE AS | |
| M | | 1 | **8T-3490** | 1 | NUT-WELD (M10X1.5-THD) | |
| Y | 14 | 3 | *259-2407* | 1 | VALVE & LINES GP-LUBRICATION (C-PIN, LINK PINS, TILT CYL PIN) | 893 |
| Y | 15 | 3 | *259-2408* | 1 | VALVE & LINES GP-LUBRICATION (BUCKET PINS) | 897 |
| | 16 | 2 | **259-2409** | 1 | GUARD | |
| | 17 | 3 | **259-2410** | 1 | GUARD | |
| | 18 | 3 | **259-2411** | 2 | GUARD AS | |
| | 19 | 2 | **259-2415** | 2 | TUBE AS | |
| | 20 | 3 | **259-2416** | 1 | TUBE AS | |
| | 21 | 1 | **259-2417** | 1 | TUBE AS | |
| | 22 | 2 | **3B-6552** | 1 | ELBOW | |
| | 23 | 1 | **3B-7721** | 2 | BUSHING-REDUCER | |
| | 24 | 1,3 | **4D-7794** | 4 | CLIP | |
| | 25 | 1,2,3 | **4K-3026** | 11 | EXTENSION | |
| | 26 | 1,2,3 | **4M-8973** | 11 | ELBOW | |
| | 27 | 1 | **4S-1962** | 1 | CLIP | |
| M | 28 | 3 | **5C-2890** | 2 | NUT (M6X1-THD) | |
| | 29 | 1,2,3 | **5P-1076** | 24 | WASHER-HARD (13.5X30X4-MM THK) | |
| | 30 | 3 | **5P-9297** | 1 | CLIP | |
| M | 31 | 3 | **7X-2534** | 4 | BOLT (M6X1X50-MM) | |
| | 32 | 3 | **8L-5008** | 5 | ELBOW-PIPE | |
| | 33 | 1,3 | **8M-2772** | 2 | CLIP | |
| | 34 | 1,3 | **8M-2773** | 5 | CLIP | |
| | 35 | 1,3 | **8T-4121** | 23 | WASHER-HARD (11X21X2.5-MM THK) | |
| M | 36 | 3 | **8T-4133** | 1 | NUT (M10X1.5-THD) | |
| M | 37 | 1,3 | **8T-4136** | 9 | BOLT (M10X1.5X25-MM) | |
| M | 38 | 1,3 | **8T-4137** | 12 | BOLT (M10X1.5X20-MM) | |
| M | 39 | 1,2,3 | **8T-4139** | 18 | BOLT (M12X1.75X30-MM) | |
| M | 40 | 2 | **8T-4192** | 1 | BOLT (M12X1.75X25-MM) | |
| M | 41 | 3 | **8T-4195** | 1 | BOLT (M10X1.5X30-MM) | |
| | 42 | 2 | **8T-4223** | 1 | WASHER-HARD (13.5X25.5X3-MM THK) | |
| M | 43 | 3 | **8T-4956** | 6 | BOLT (M12X1.75X35-MM) | |
| | 44 | 3 | **9X-8256** | 6 | WASHER (6.6X12X2-MM THK) | |
| | 45 | 1,3 | **7I-1024** | 243 | GUARD (HOSE) | |

M-METRIC PART
Y-SEPARATE ILLUSTRATION

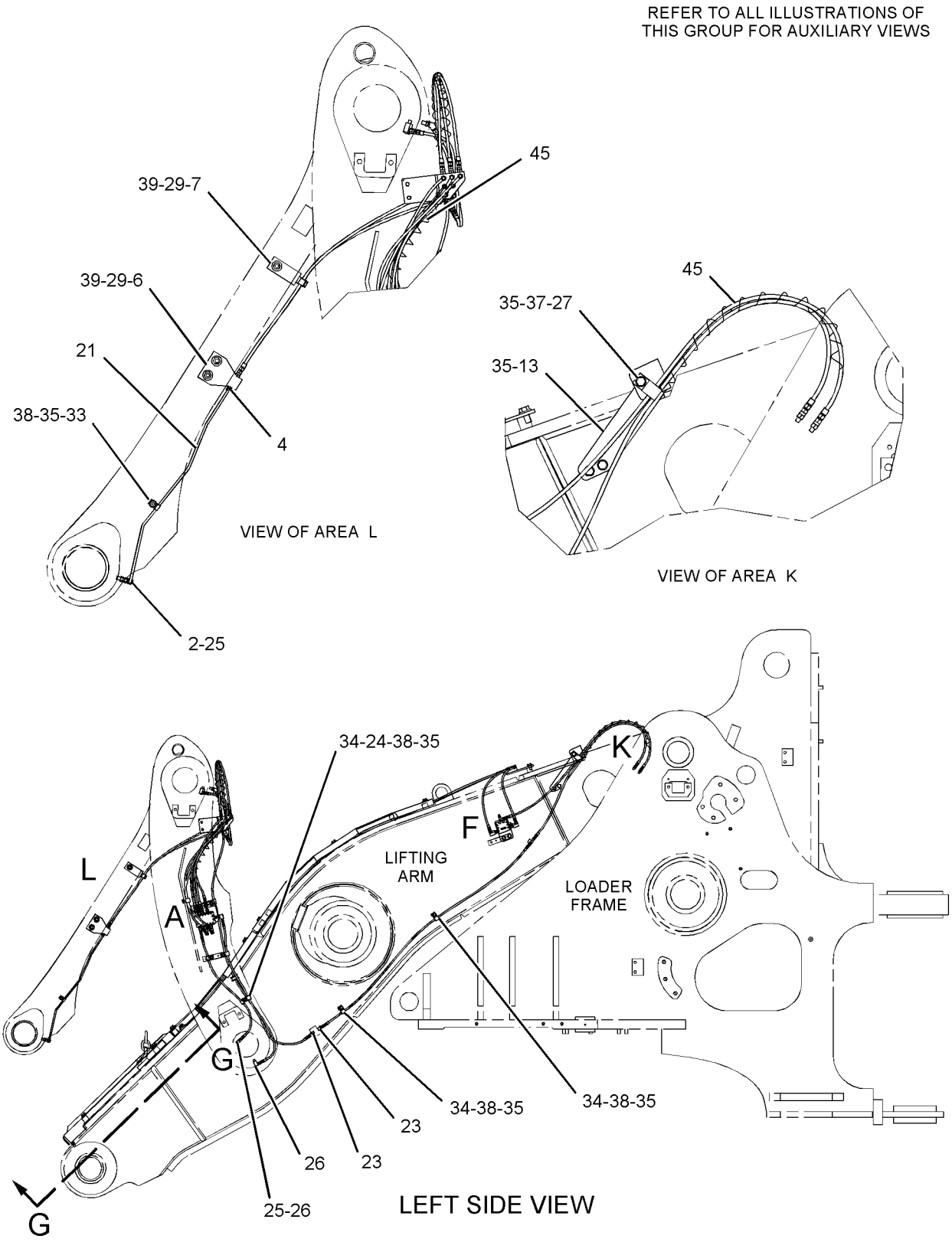


GRAPHIC #1 g01128500

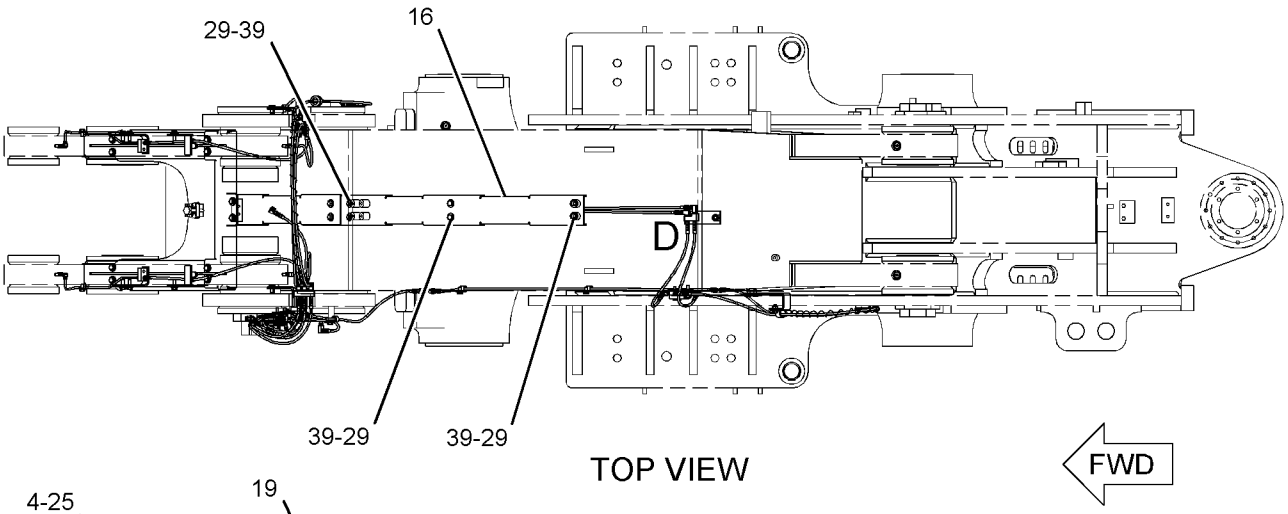


TOP VIEW




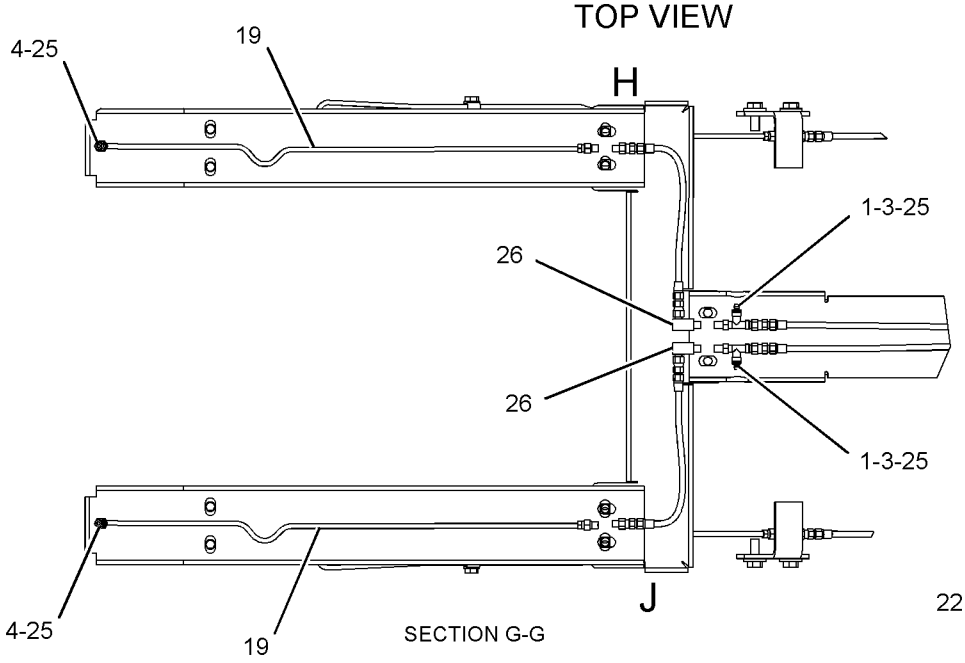


SECTION G-G

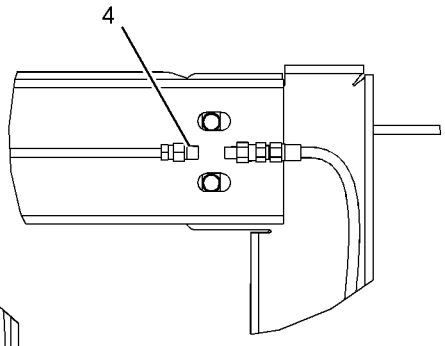


VIEW OF AREA H

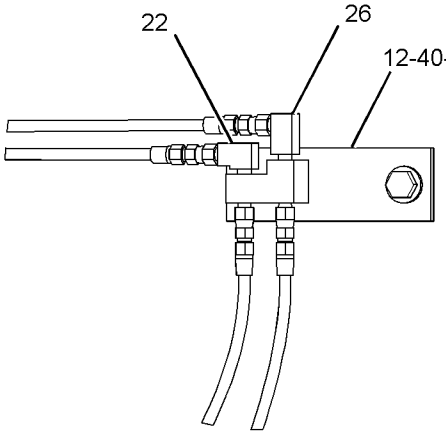


VIEW OF AREA D

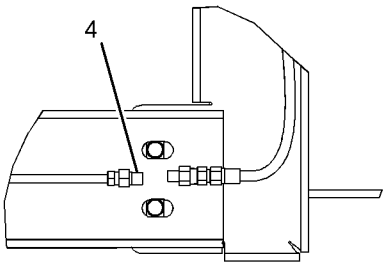


VIEW OF AREA J

GRAPHIC #2

g01128502

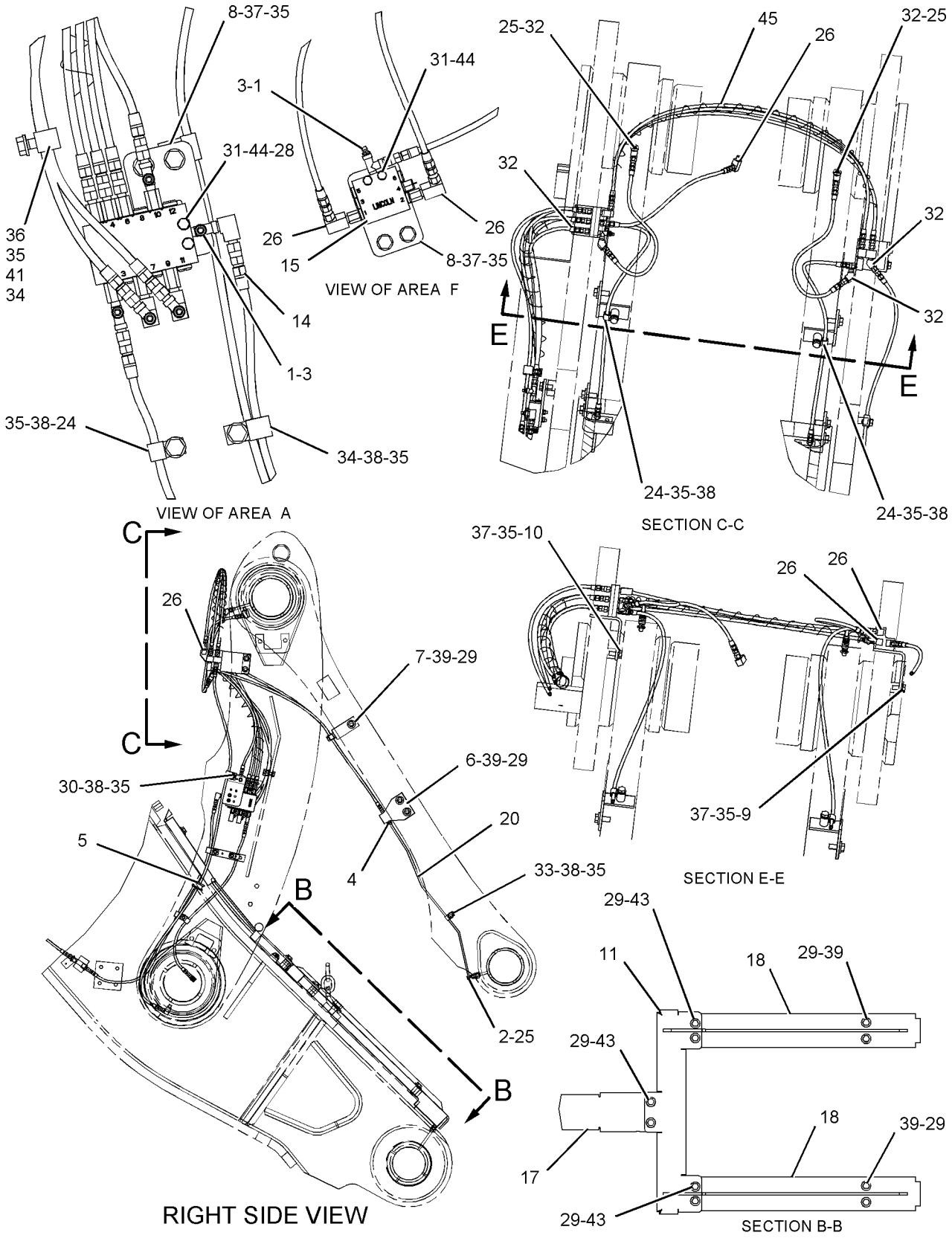


GRAPHIC #3 **<END>** g01128503

## *259-2406* LINES GP-AUTOMATIC LUBRICATION–
### BOOM, TILT LINKS
**S/N: BXY343-UP**
**PART OF 259-2405 LUBRICATION AR-AUTOMATIC**
**AN ATTACHMENT**

**SMCS-7510, 7540** **i02330915**

| NOTE | REF NO | GRAPHIC REF | PART NUMBER | QTY | PART NAME 1 2 3 4 5 6 (PRODUCT LEVEL) | SEE PAGE |
|---|---|---|---|---|---|---|
| | 1 | 2,3 | **3B-8489** | 4 | FITTING-GREASE | |
| | 2 | 1,3 | **5K-9243** | 2 | ELBOW-FLARED | |
| | 3 | 2,3 | **5P-3422** | 4 | TEE-PIPE | |
| | 4 | 1,2,3 | **6L-3616** | 6 | CONNECTOR | |
| | 5 | 3 | **6S-4039** | 1 | GROMMET | |
| | 6 | 1,3 | **197-6660** | 2 | BRACKET AS | |
| | | 1,3 | **157-8957** | 1 | BLOCK | |
| | 7 | 1,3 | **197-7863** | 2 | BRACKET AS | |
| M | | 1,3 | **9R-2613** | 1 | BOSS-WELD (M10X1.5X25-MM OAL) | |
| | 8 | 3 | **224-3952** | 2 | PLATE | |
| | 9 | 3 | **224-4416** | 1 | BRACKET AS | |
| | 10 | 3 | **224-4417** | 1 | BRACKET AS | |
| | 11 | 2 | **243-5932** | 1 | PLATE AS | |
| | 12 | 1 | **255-0614** | 1 | PLATE AS | |
| M | | 1 | **8T-3490** | 1 | NUT-WELD (M10X1.5-THD) | |
| Y | 13 | 3 | *259-2407* | 1 | VALVE & LINES GP-LUBRICATION (C-PIN, LINK PINS, TILT CYL PIN) | 893 |
| Y | 14 | 3 | *259-2408* | 1 | VALVE & LINES GP-LUBRICATION (BUCKET PINS) | 897 |
| | 15 | 2 | **259-2409** | 1 | GUARD | |
| | 16 | 3 | **259-2410** | 1 | GUARD | |
| | 17 | 3 | **259-2411** | 2 | GUARD AS | |
| | 18 | 2 | **259-2415** | 2 | TUBE AS | |
| | 19 | 3 | **259-2416** | 1 | TUBE AS | |
| | 20 | 1 | **259-2417** | 1 | TUBE AS | |
| C | 21 | 3 | **259-2467** | 1 | GUARD (AUTOMATIC LUBRICATION) | |
| | 22 | 2 | **3B-6552** | 1 | ELBOW | |
| | 23 | 1 | **3B-7721** | 2 | BUSHING-REDUCER | |
| | 24 | 1,3 | **4D-7794** | 4 | CLIP | |
| C | 25 | 1,2,3 | **4K-3026** | 7 | EXTENSION | |
| | 26 | 1,2,3 | **4M-8973** | 11 | ELBOW | |
| | 27 | 1 | **4S-1962** | 1 | CLIP | |
| M | 28 | 3 | **5C-2890** | 2 | NUT (M6X1-THD) | |
| | 29 | 1,2,3 | **5P-1076** | 24 | WASHER-HARD (13.5X30X4-MM THK) | |
| C | 30 | 3 | **5P-9297** | 2 | CLIP | |
| C | 31 | 1,3 | **6K-6967** | 2 | ADAPTER-PIPE | |
| M | 32 | 3 | **7X-2534** | 4 | BOLT (M6X1X50-MM) | |
| | 33 | 3 | **8L-5008** | 5 | ELBOW-PIPE | |
| | 34 | 1,3 | **8M-2772** | 2 | CLIP | |
| | 35 | 1,3 | **8M-2773** | 5 | CLIP | |
| C | 36 | 1,3 | **8T-4121** | 24 | WASHER-HARD (11X21X2.5-MM THK) | |
| M | 37 | 3 | **8T-4133** | 1 | NUT (M10X1.5-THD) | |
| M | 38 | 1,3 | **8T-4136** | 9 | BOLT (M10X1.5X25-MM) | |
| CM | 39 | 1,3 | **8T-4137** | 13 | BOLT (M10X1.5X20-MM) | |
| M | 40 | 1,2,3 | **8T-4139** | 18 | BOLT (M12X1.75X30-MM) | |
| M | 41 | 2 | **8T-4192** | 1 | BOLT (M12X1.75X25-MM) | |
| M | 42 | 3 | **8T-4195** | 1 | BOLT (M10X1.5X30-MM) | |
| | 43 | 2 | **8T-4223** | 1 | WASHER-HARD (13.5X25.5X3-MM THK) | |
| M | 44 | 3 | **8T-4956** | 6 | BOLT (M12X1.75X35-MM) | |
| | 45 | 3 | **9X-8256** | 6 | WASHER (6.6X12X2-MM THK) | |
| E | 46 | 1 | **7I-1024** | | GUARD (HOSE) (50-CM) | |
| E | 46A | 1 | **7I-1024** | | GUARD (HOSE) (97-CM) | |
| E | 46B | 3 | **7I-1024** | | GUARD (HOSE) (96-CM) | |

C-CHANGE FROM PREVIOUS TYPE
E-ORDER BY THE CENTIMETER
M-METRIC PART
Y-SEPARATE ILLUSTRATION

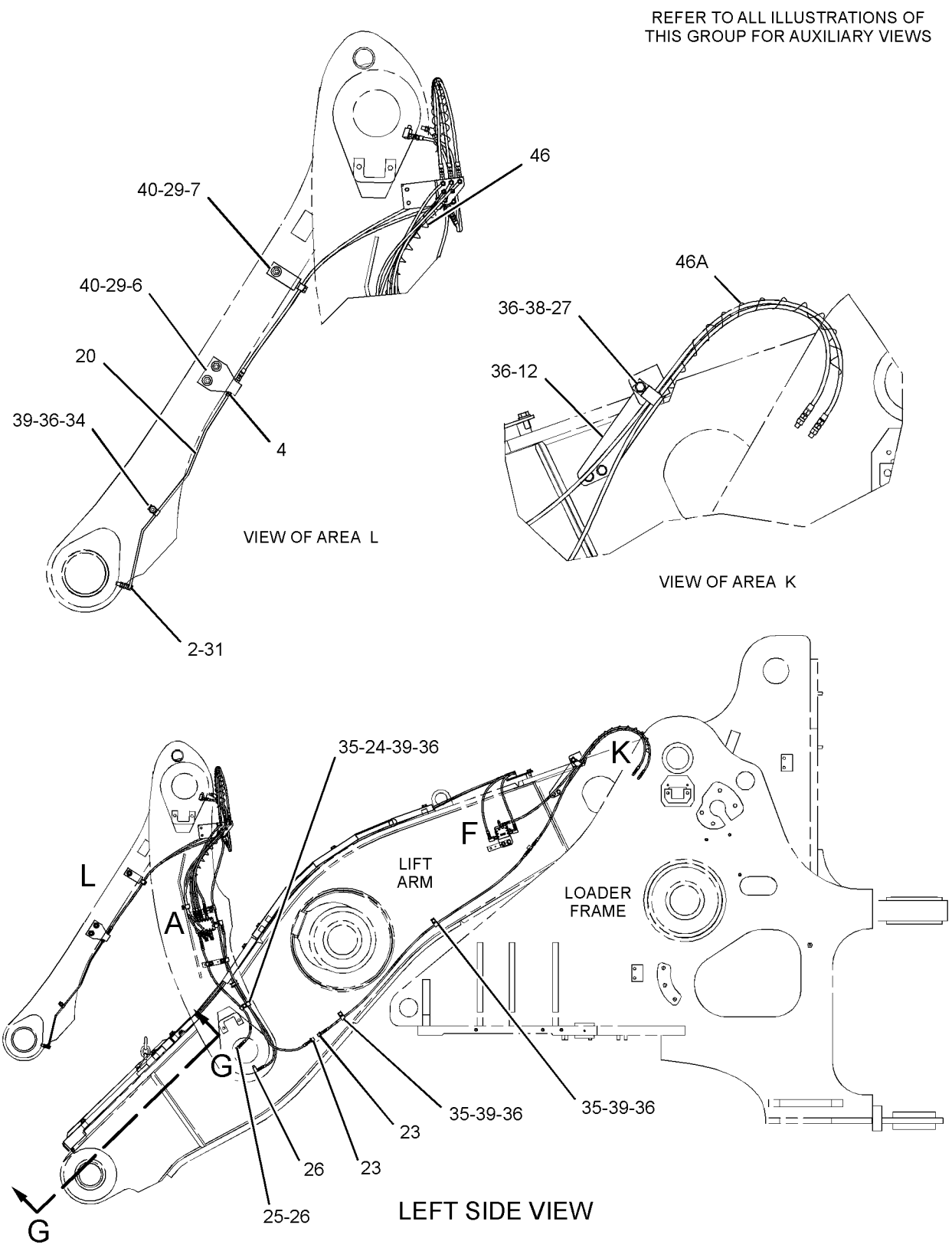


GRAPHIC #1

g01191096

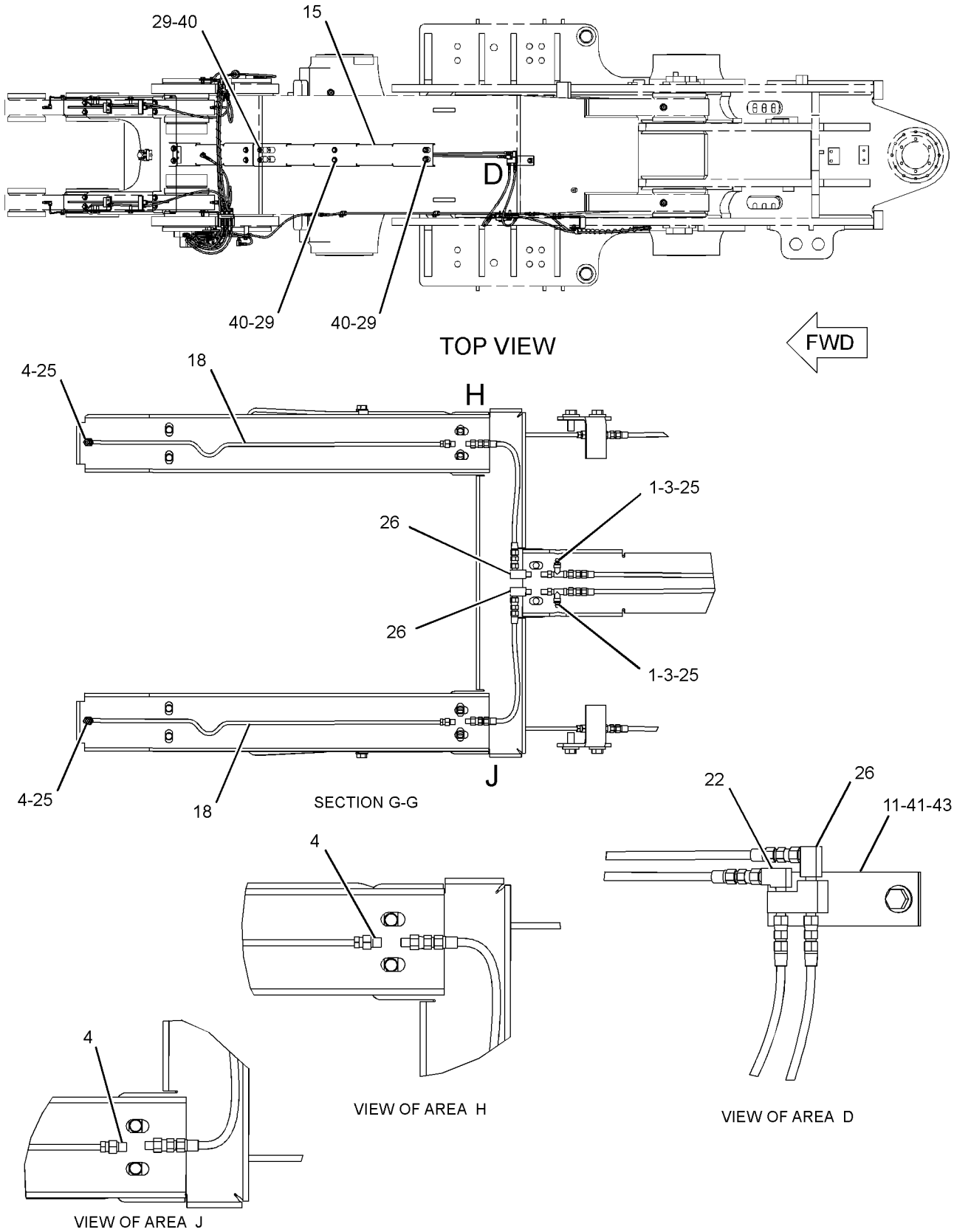


GRAPHIC #2

g01191097

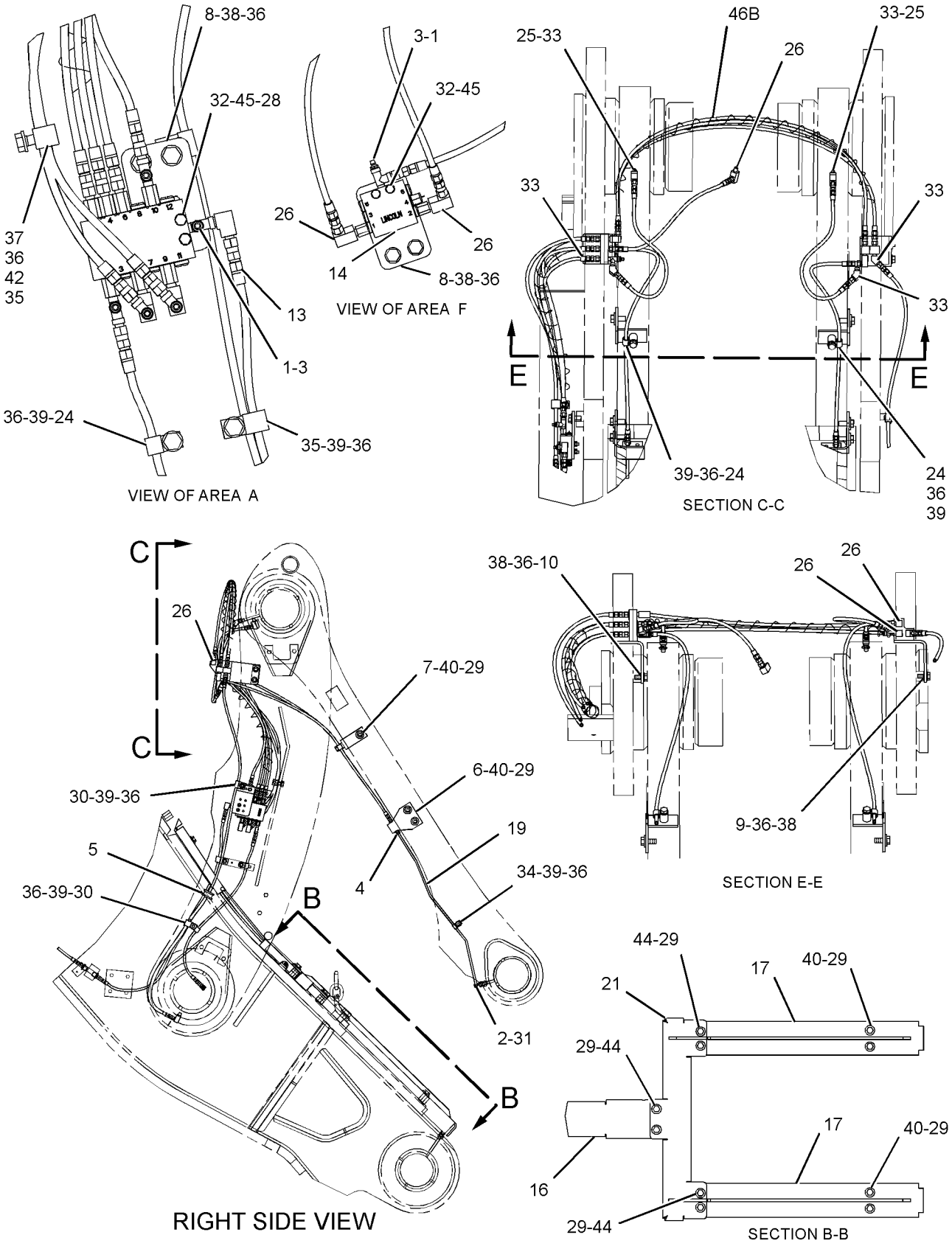


GRAPHIC #3 **<END>** g01191098

# *259-2406* LINES GP-AUTOMATIC LUBRICATION–
## BOOM, TILT LINKS
**S/N: BXY343-1200**
**PART OF 259-2405 LUBRICATION AR-AUTOMATIC**
**AN ATTACHMENT**

**SMCS-7510, 7540** **i02457418**

| NOTE | REF NO | GRAPHIC REF | PART NUMBER | QTY | PART NAME 1 2 3 4 5 6 (PRODUCT LEVEL) | SEE PAGE |
|---|---|---|---|---|---|---|
| | 1 | 2 | **3B-8489** | 4 | FITTING-GREASE | |
| | 2 | 1,3 | **5K-9243** | 2 | ELBOW-FLARED | |
| | 3 | 2 | **5P-3422** | 4 | TEE-PIPE | |
| | 4 | 1,2,3 | **6L-3616** | 6 | CONNECTOR | |
| | 5 | 1 | **6S-4039** | 1 | GROMMET | |
| | 6 | 1,3 | **197-6660** | 2 | BRACKET AS | |
| | 7 | 1,3 | **197-7863** | 2 | BRACKET AS | |
| | 8 | 2 | **224-3952** | 2 | PLATE | |
| | 9 | 3 | **224-4416** | 1 | BRACKET AS | |
| | 10 | 3 | **224-4417** | 1 | BRACKET AS | |
| | 11 | 1 | **243-5932** | 1 | PLATE AS | |
| | 12 | 2 | **255-0614** | 1 | PLATE AS | |
| M | | 2 | **8T-3490** | 1 | NUT-WELD (M10X1.5-THD) | |
| Y | 13 | 2 | *259-2407* | 1 | VALVE & LINES GP-LUBRICATION (C-PIN, LINK PINS, TILT CYL PIN) | 893 |
| Y | 14 | 2 | *259-2408* | 1 | VALVE & LINES GP-LUBRICATION (BUCKET PINS) | 897 |
| | 15 | 1 | **259-2409** | 1 | GUARD | |
| | 16 | 1 | **259-2410** | 1 | GUARD | |
| | 17 | 1 | **259-2411** | 2 | GUARD AS | |
| | 18 | 2 | **259-2415** | 2 | TUBE AS | |
| | 19 | 1 | **259-2416** | 1 | TUBE AS | |
| | 20 | 3 | **259-2417** | 1 | TUBE AS | |
| | 21 | 1 | **259-2467** | 1 | GUARD (AUTOMATIC LUBRICATION) | |
| | 22 | 1 | **3B-6552** | 1 | ELBOW | |
| | 23 | 2 | **3B-7721** | 2 | BUSHING-REDUCER | |
| C | 24 | 2 | **3B-7896** | 2 | ELBOW-STREET | |
| | 25 | 2,3 | **4D-7794** | 4 | CLIP | |
| | 26 | 2,3 | **4K-3026** | 7 | EXTENSION | |
| | 27 | 1,2,3 | **4M-8973** | 11 | ELBOW | |
| | 28 | 2 | **4S-1962** | 1 | CLIP | |
| M | 29 | 2 | **5C-2890** | 2 | NUT (M6X1-THD) | |
| | 30 | 1,3 | **5P-1076** | 24 | WASHER-HARD (13.5X30X4-MM THK) | |
| | 31 | 1 | **5P-9297** | 2 | CLIP | |
| | 32 | 1,3 | **6K-6967** | 2 | ADAPTER-PIPE | |
| M | 33 | 2 | **7X-2534** | 4 | BOLT (M6X1X50-MM) | |
| | 34 | 3 | **8L-5008** | 5 | ELBOW-PIPE | |
| | 35 | 1,3 | **8M-2772** | 2 | CLIP | |
| | 36 | 2 | **8M-2773** | 5 | CLIP | |
| | 37 | 1,2,3 | **8T-4121** | 24 | WASHER-HARD (11X21X2.5-MM THK) | |
| M | 38 | 2 | **8T-4133** | 1 | NUT (M10X1.5-THD) | |
| M | 39 | 2,3 | **8T-4136** | 9 | BOLT (M10X1.5X25-MM) | |
| M | 40 | 1,2,3 | **8T-4137** | 13 | BOLT (M10X1.5X20-MM) | |
| M | 41 | 1,3 | **8T-4139** | 18 | BOLT (M12X1.75X30-MM) | |
| M | 42 | 1 | **8T-4192** | 1 | BOLT (M12X1.75X25-MM) | |
| M | 43 | 2 | **8T-4195** | 1 | BOLT (M10X1.5X30-MM) | |
| | 44 | 1 | **8T-4223** | 1 | WASHER-HARD (13.5X25.5X3-MM THK) | |
| M | 45 | 1 | **8T-4956** | 6 | BOLT (M12X1.75X35-MM) | |
| | 46 | 2 | **9X-8256** | 6 | WASHER (6.6X12X2-MM THK) | |
| E | 47 | 2 | **7I-1024** | | GUARD (HOSE) (49.5-CM) | |
| E | 47A | 2,3 | **7I-1024** | | GUARD (HOSE) (96.5-CM EACH) | |

C-CHANGE FROM PREVIOUS TYPE
E-ORDER BY THE CENTIMETER
M-METRIC PART
Y-SEPARATE ILLUSTRATION

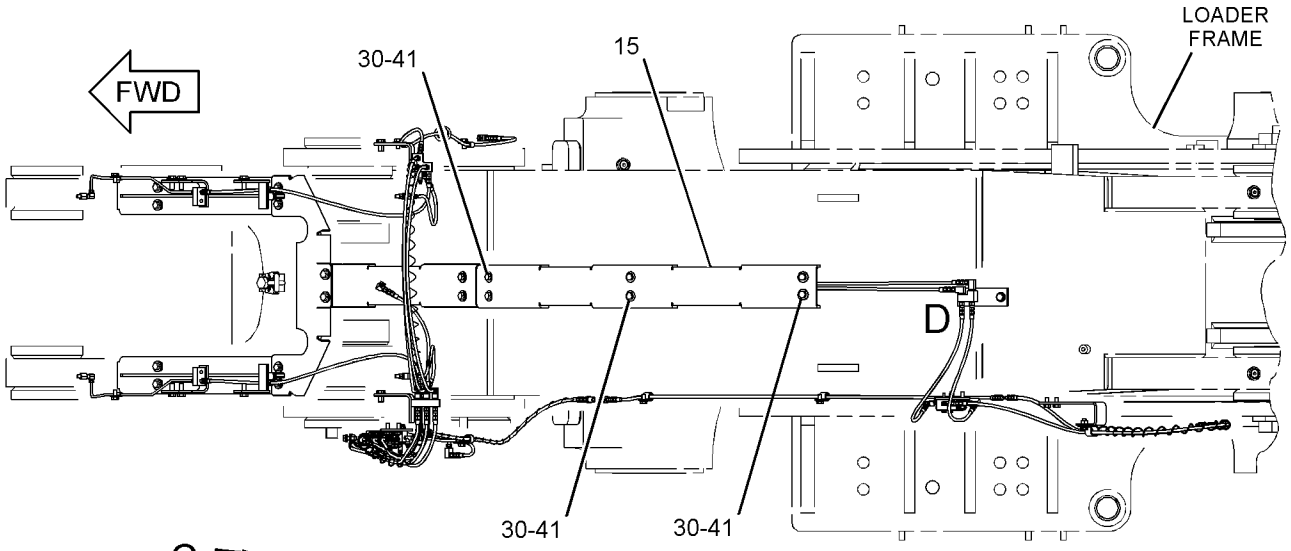


TOP VIEW

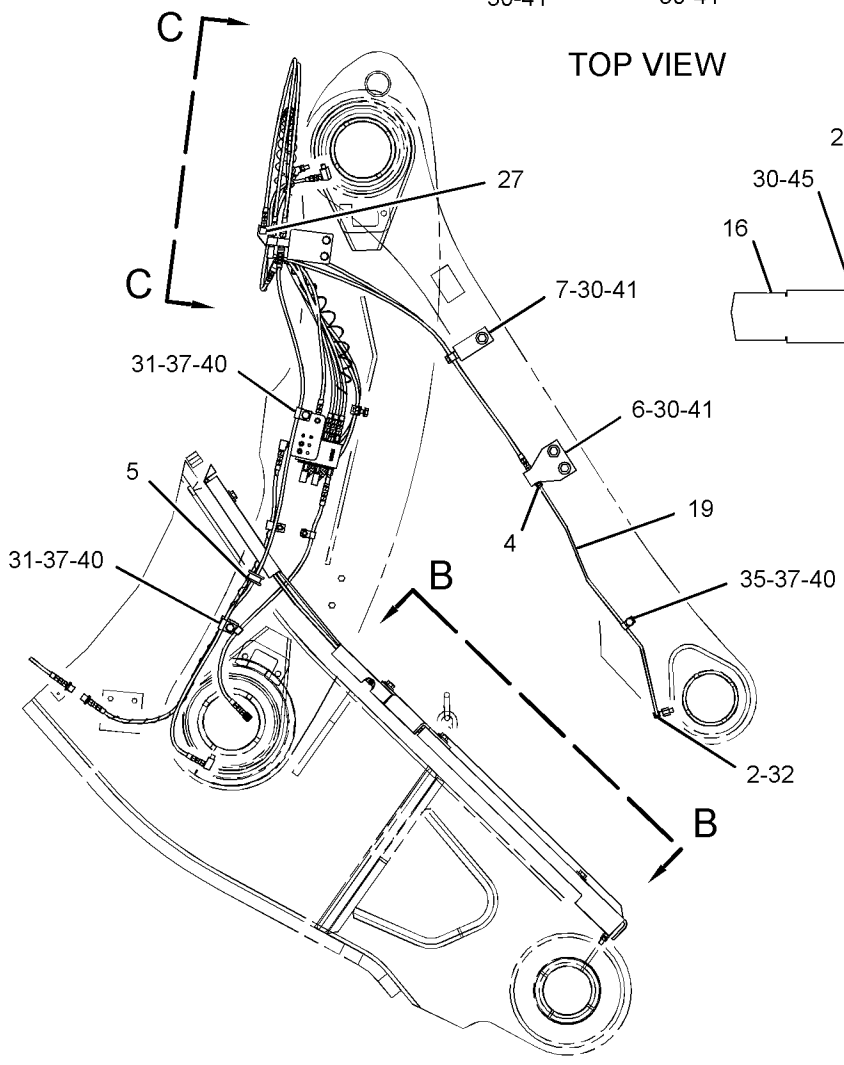


RIGHT SIDE VIEW

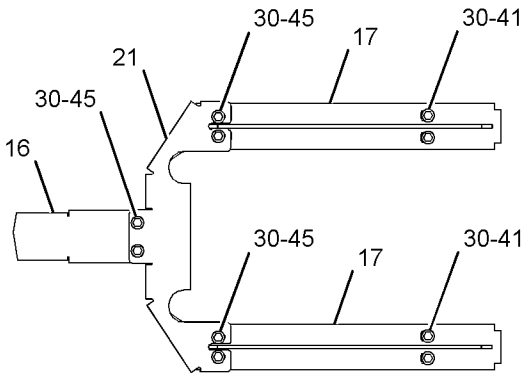


SECTION B-B

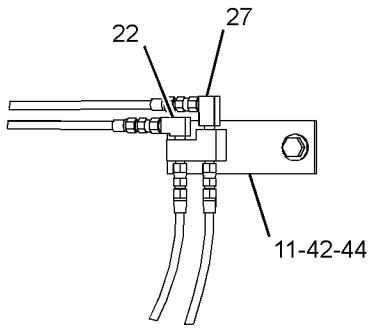


VIEW OF AREA D

REFER TO ALL ILLUSTRATIONS OF THIS GROUP FOR AUXILIARY VIEWS

GRAPHIC #1

g01231262

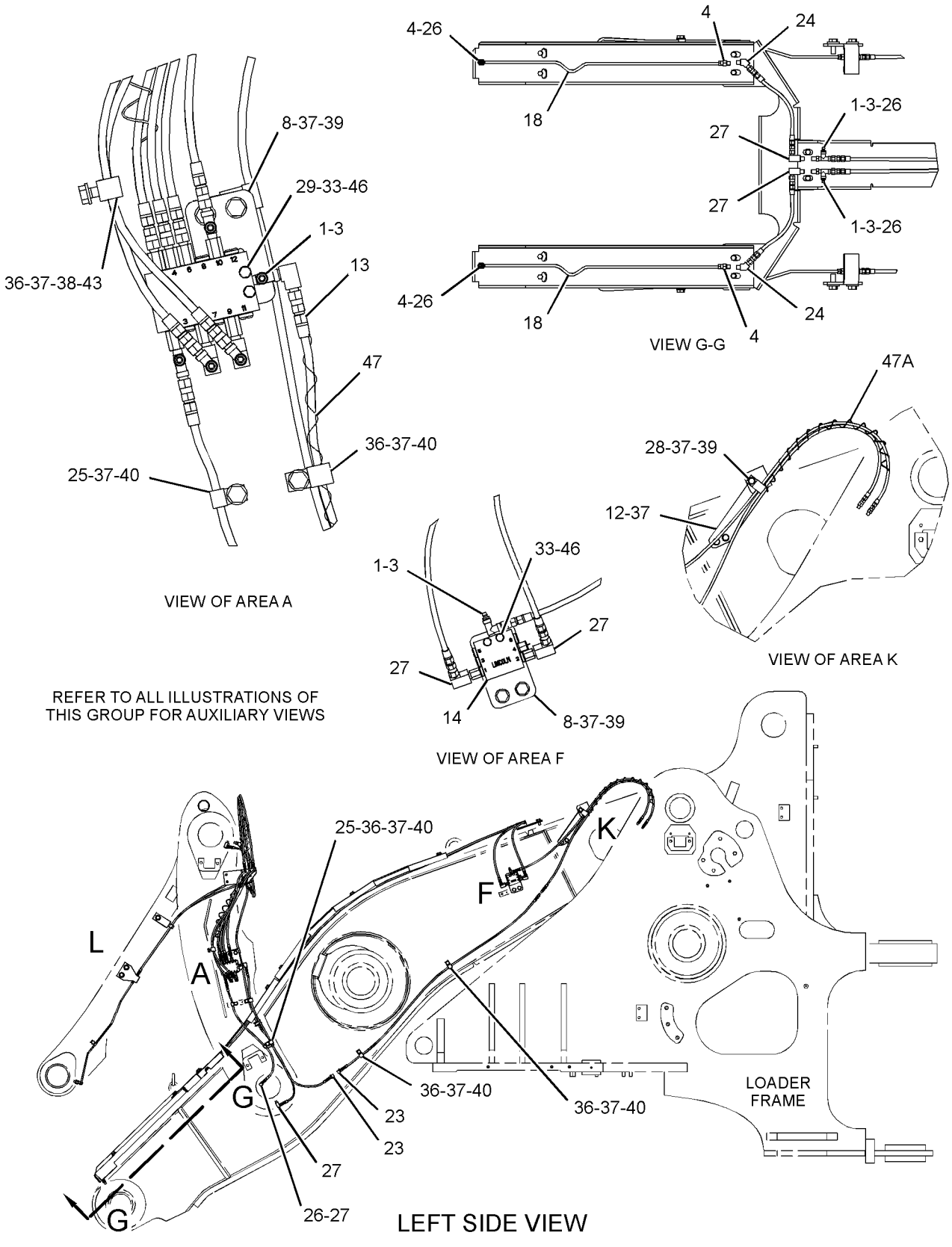


GRAPHIC #2

g01231263

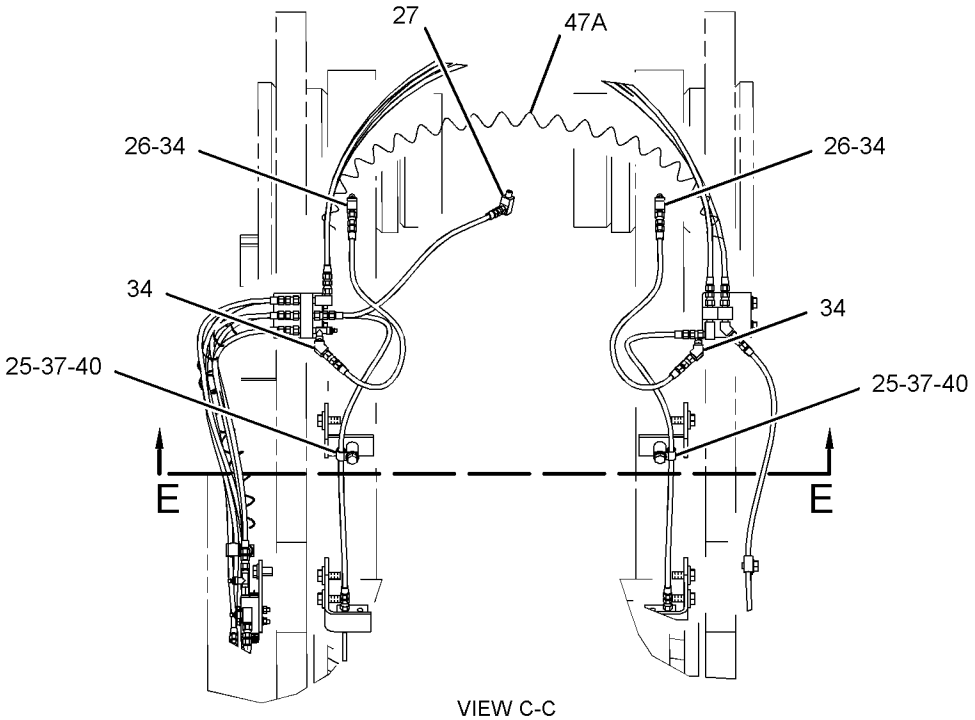


VIEW C-C

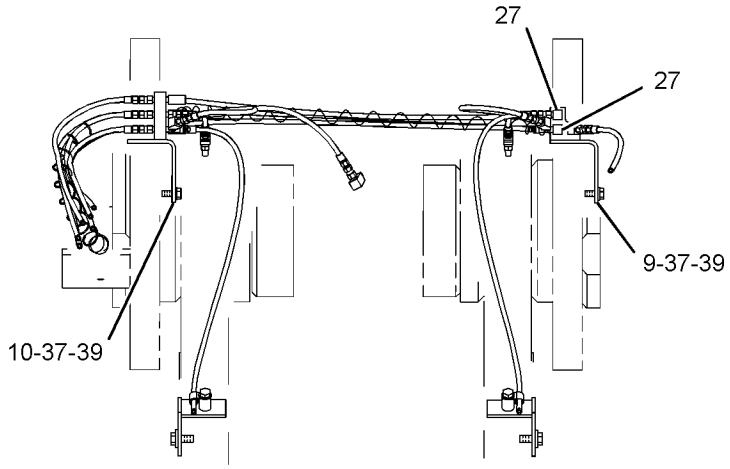


SECTION E-E

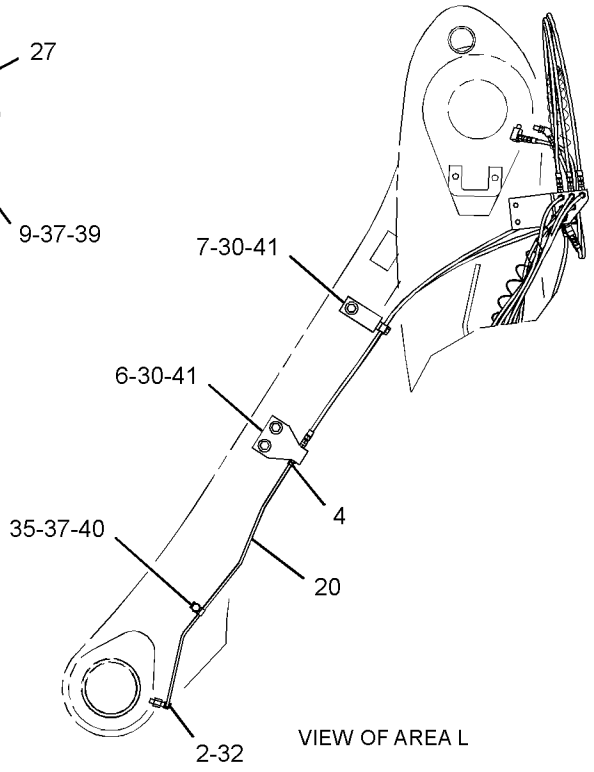


VIEW OF AREA L

GRAPHIC #3 **<END>** g01231264

# *259-2406* LINES GP-AUTOMATIC LUBRICATION–
## BOOM, TILT LINKS
**S/N: BXY1201-1899**
**PART OF 259-2405 LUBRICATION AR-AUTOMATIC**
**AN ATTACHMENT**

**SMCS-7510, 7540** **i02652477**

| NOTE | REF NO | GRAPHIC REF | PART NUMBER | QTY | PART NAME 1 2 3 4 5 6 (PRODUCT LEVEL) | SEE PAGE |
|---|---|---|---|---|---|---|
| C | 1 | 2,3 | **3B-8489** | 6 | FITTING-GREASE | |
| | 2 | 1,2 | **5K-9243** | 2 | ELBOW-FLARED | |
| C | 3 | 2,3 | **5P-3422** | 6 | TEE-PIPE | |
| | 4 | 1,2,3 | **6L-3616** | 6 | CONNECTOR | |
| | 5 | 1 | **6S-4039** | 1 | GROMMET | |
| | 6 | 1,2 | **197-6660** | 2 | BRACKET AS | |
| | 7 | 1,2 | **197-7863** | 2 | BRACKET AS | |
| | 8 | 3 | **224-3952** | 2 | PLATE | |
| | 9 | 3 | **224-4416** | 1 | BRACKET AS | |
| | 10 | 3 | **224-4417** | 1 | BRACKET AS | |
| | 11 | 1 | **243-5932** | 1 | PLATE AS | |
| | 12 | 2 | **255-0614** | 1 | PLATE AS | |
| M | | 2 | **8T-3490** | 1 | NUT-WELD (M10X1.5-THD) | |
| Y | 13 | 3 | *259-2407* | 1 | VALVE & LINES GP-LUBRICATION (C-PIN, LINK PINS, TILT CYL PIN) | 893 |
| Y | 14 | 3 | *259-2408* | 1 | VALVE & LINES GP-LUBRICATION (BUCKET PINS) | 897 |
| | 15 | 1 | **259-2409** | 1 | GUARD | |
| | 16 | 1 | **259-2410** | 1 | GUARD | |
| | 17 | 1 | **259-2411** | 2 | GUARD AS | |
| | 18 | 3 | **259-2415** | 2 | TUBE AS | |
| | 19 | 1 | **259-2416** | 1 | TUBE AS | |
| | 20 | 2 | **259-2417** | 1 | TUBE AS | |
| | 21 | 1 | **259-2467** | 1 | GUARD (AUTOMATIC LUBRICATION) | |
| | 22 | 1 | **3B-6552** | 1 | ELBOW | |
| | 23 | 2 | **3B-7721** | 2 | BUSHING-REDUCER | |
| | 24 | 3 | **3B-7896** | 2 | ELBOW-STREET | |
| | 25 | 2,3 | **4D-7794** | 4 | CLIP | |
| | 26 | 2,3 | **4K-3026** | 7 | EXTENSION | |
| | 27 | 1,2,3 | **4M-8973** | 11 | ELBOW | |
| | 28 | 2 | **4S-1962** | 1 | CLIP | |
| M | 29 | 3 | **5C-2890** | 2 | NUT (M6X1-THD) | |
| | 30 | 1,2 | **5P-1076** | 24 | WASHER-HARD (13.5X30X4-MM THK) | |
| | 31 | 1 | **5P-9297** | 2 | CLIP | |
| | 32 | 1,2 | **6K-6967** | 2 | ADAPTER-PIPE | |
| M | 33 | 3 | **7X-2534** | 4 | BOLT (M6X1X50-MM) | |
| CM | 34 | 1 | **7X-2621** | 1 | BOLT (M10X1.5X12-MM) | |
| C | 35 | 2 | **8L-5008** | 6 | ELBOW-PIPE | |
| | 36 | 1,2 | **8M-2772** | 2 | CLIP | |
| | 37 | 2,3 | **8M-2773** | 5 | CLIP | |
| | 38 | 1,2,3 | **8T-4121** | 24 | WASHER-HARD (11X21X2.5-MM THK) | |
| M | 39 | 3 | **8T-4133** | 1 | NUT (M10X1.5-THD) | |
| M | 40 | 2,3 | **8T-4136** | 9 | BOLT (M10X1.5X25-MM) | |
| CM | 41 | 1,2,3 | **8T-4137** | 12 | BOLT (M10X1.5X20-MM) | |
| M | 42 | 1,2 | **8T-4139** | 18 | BOLT (M12X1.75X30-MM) | |
| M | 43 | 1 | **8T-4192** | 1 | BOLT (M12X1.75X25-MM) | |
| M | 44 | 3 | **8T-4195** | 1 | BOLT (M10X1.5X30-MM) | |
| | 45 | 1 | **8T-4223** | 1 | WASHER-HARD (13.5X25.5X3-MM THK) | |
| M | 46 | 1 | **8T-4956** | 6 | BOLT (M12X1.75X35-MM) | |
| | 47 | 3 | **9X-8256** | 6 | WASHER (6.6X12X2-MM THK) | |
| E | 48 | 2 | **7I-1024** | | GUARD (HOSE) (49.5-CM) | |
| E | 48A | 2 | **7I-1024** | | GUARD (HOSE) (96.5-CM EACH) | |

C-CHANGE FROM PREVIOUS TYPE
E-ORDER BY THE CENTIMETER
M-METRIC PART
Y-SEPARATE ILLUSTRATION

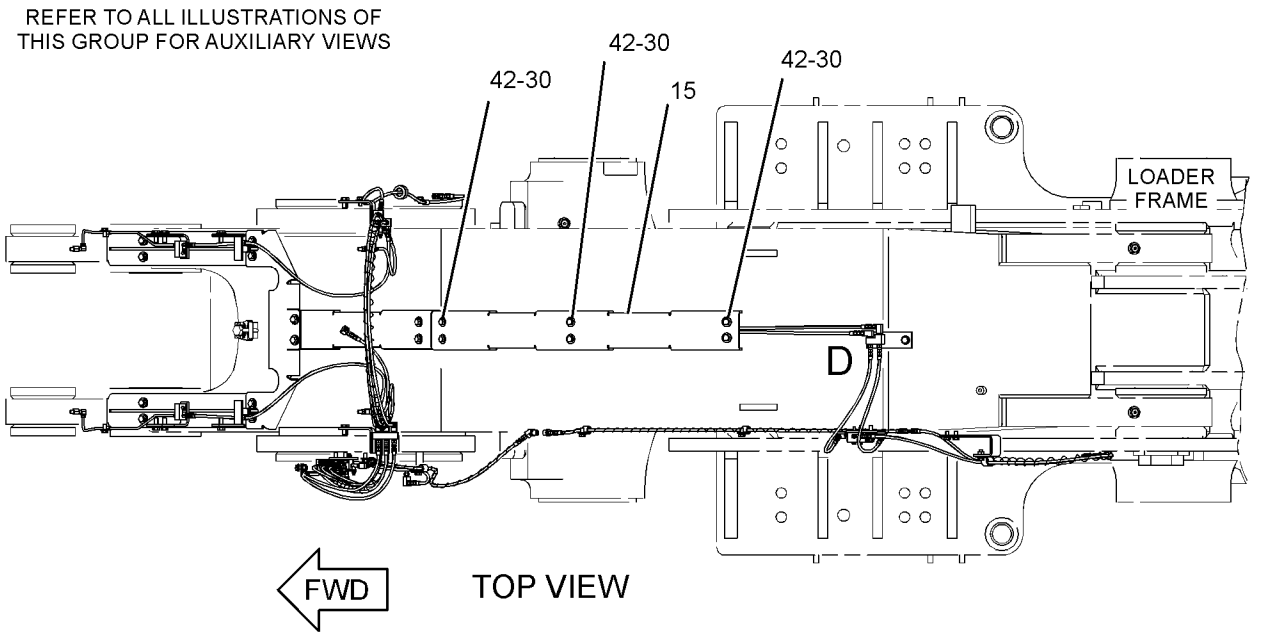


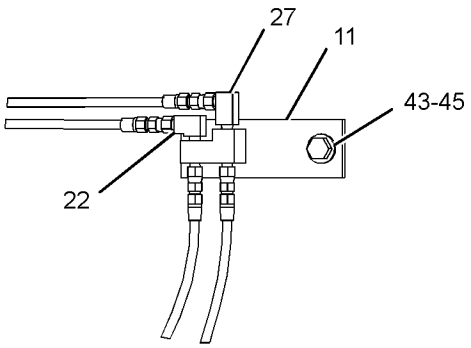


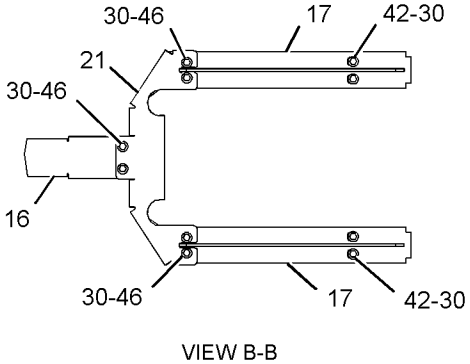


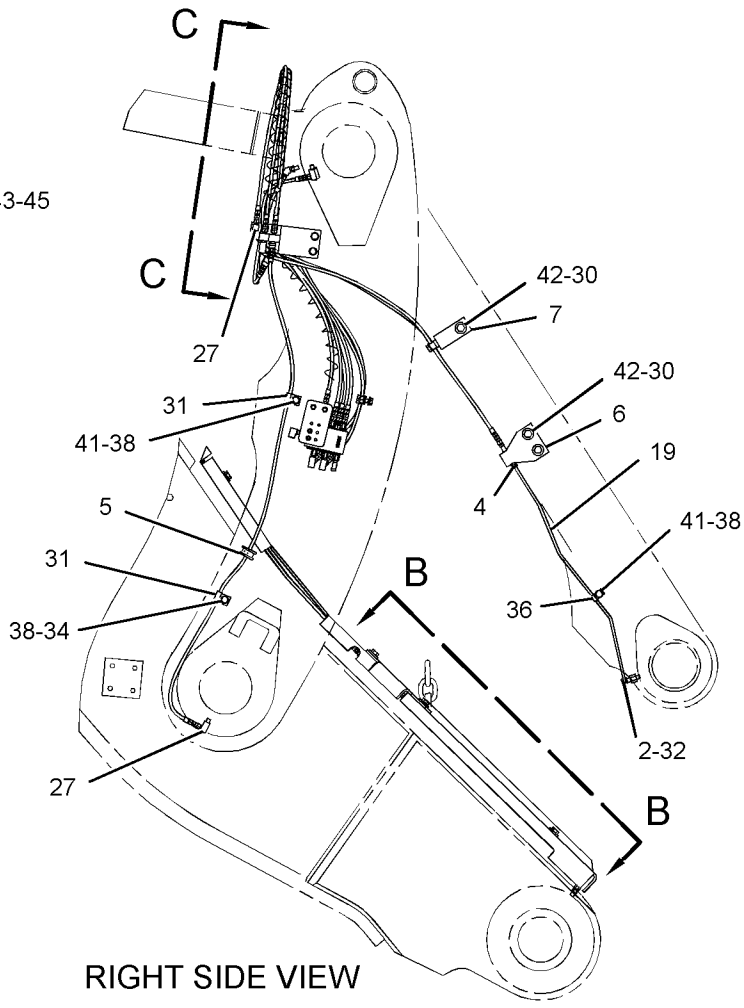


GRAPHIC #1 g01336720

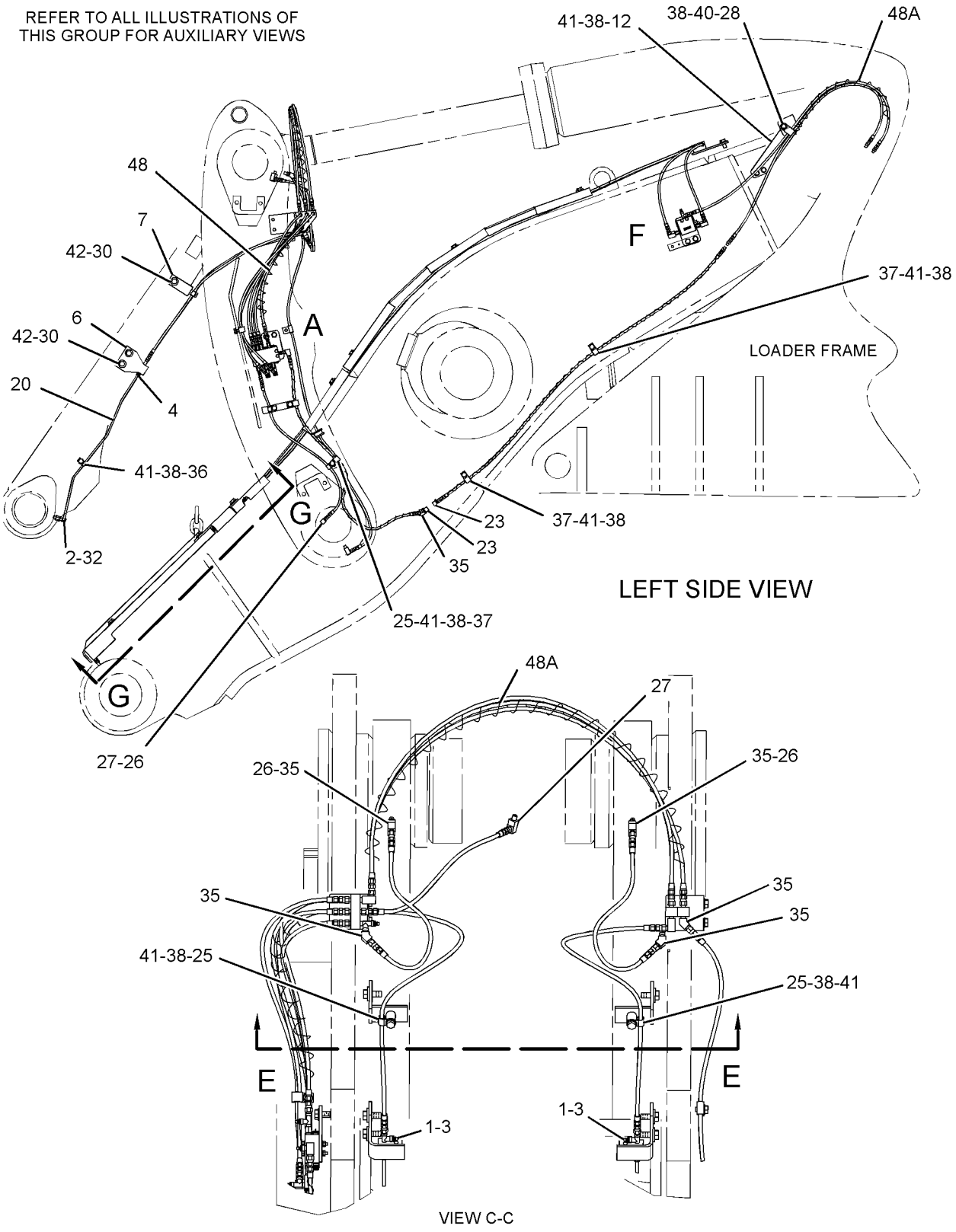


GRAPHIC #2

g01336724

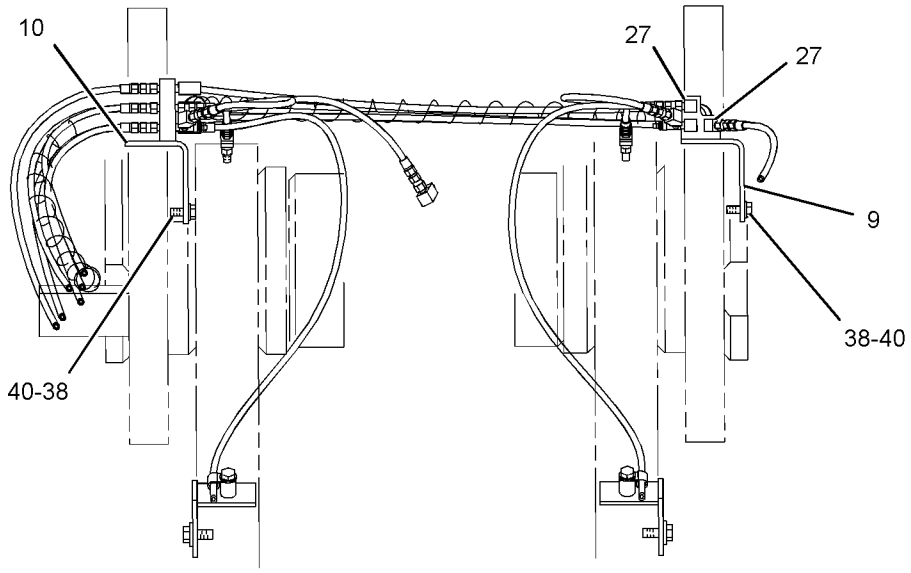


SECTION E-E

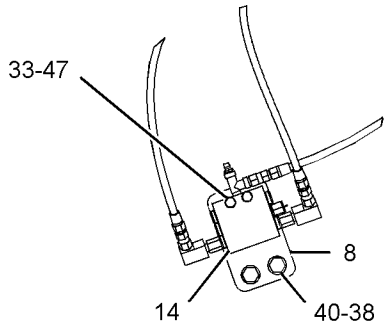


VIEW OF AREA F

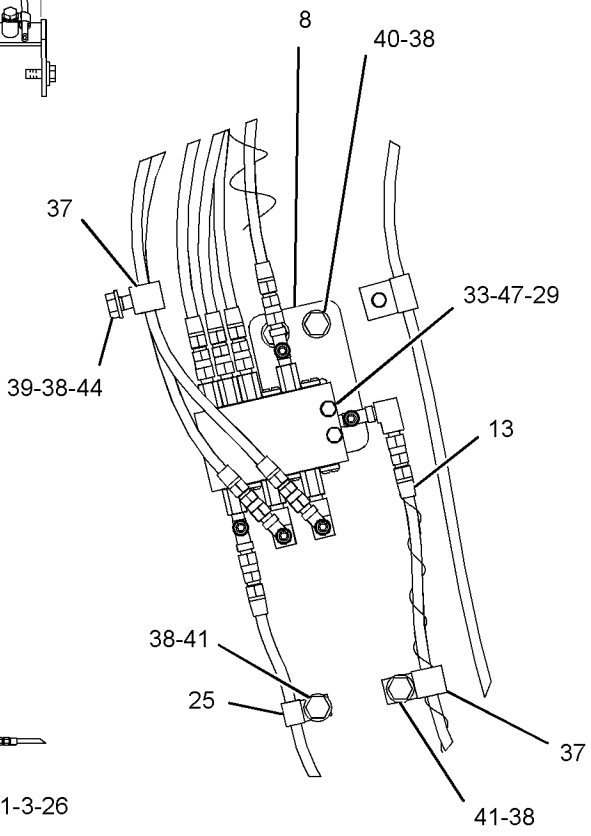


VIEW OF AREA A

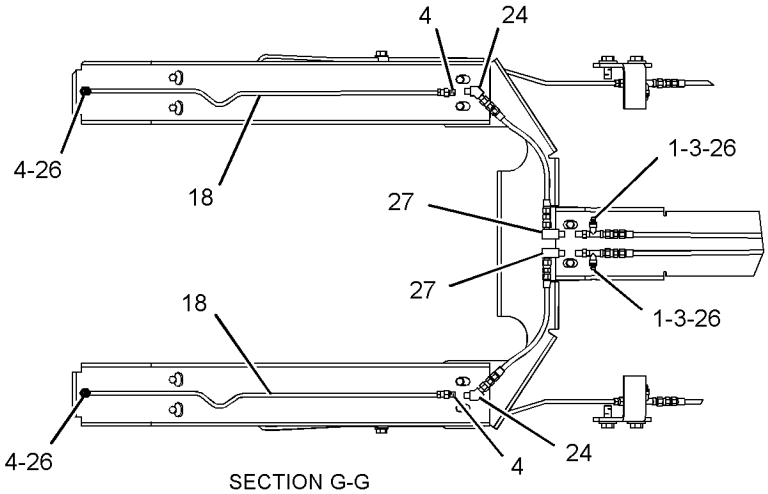


SECTION G-G

GRAPHIC #3 **<END>** g01336725

## *259-2433* LINES GP-AUTOMATIC LUBRICATION–
### BOOM, TILT LINKS
**S/N: BXY1-UP**
**PART OF 259-2435 LUBRICATION AR-AUTOMATIC**
**AN ATTACHMENT**

**SMCS-7510, 7540** **i02742813**

| NOTE | REF NO | GRAPHIC REF | PART NUMBER | QTY | PART NAME 1 2 3 4 5 6 (PRODUCT LEVEL) | SEE PAGE |
|---|---|---|---|---|---|---|
| | 1 | 1 | **3B-8489** | 2 | FITTING-GREASE | |
| | 2 | 1,2 | **5K-9243** | 2 | ELBOW-FLARED | |
| | 3 | 1 | **5P-3422** | 2 | TEE-PIPE | |
| | 4 | 1 | **6L-3616** | 6 | CONNECTOR | |
| | 5 | 2 | **6S-4039** | 1 | GROMMET | |
| I | 6 | 1 | **189-7497** | 1 | HOSE AS | |
| I | 7 | 1 | **189-7498** | 1 | HOSE AS | |
| I | 8 | 1 | **189-7499** | 1 | HOSE AS | |
| I | 9 | 1 | **189-7500** | 1 | HOSE AS | |
| | 10 | 1 | **189-7514** | 1 | TUBE AS | |
| | 11 | 2 | **189-7515** | 1 | TUBE AS | |
| | 12 | 1,2 | **197-6660** | 2 | BRACKET AS | |
| | 13 | 1,2 | **197-7863** | 2 | BRACKET AS | |
| | 14 | 2 | **224-4416** | 1 | BRACKET AS | |
| | 15 | 2 | **224-4417** | 1 | BRACKET AS | |
| | 16 | 1 | **225-2648** | 2 | TUBE AS | |
| Y | 17 | 1 | *227-3047* | 1 | VALVE & LINES GP-LUBRICATION (LH, RH LINK PINS, RH C-PIN) | 884 |
| Y | 18 | 1 | *227-3048* | 1 | VALVE & LINES GP-LUBRICATION (LH C-PIN, LH TILT LINK PIN) | 886 |
| | 19 | 2 | **243-5930** | 1 | GUARD | |
| | 20 | 2 | **243-5932** | 1 | PLATE AS | |
| | 21 | 2 | **243-5938** | 1 | GUARD | |
| | 22 | 1 | **255-0614** | 1 | PLATE AS | |
| M | | 1 | **8T-3490** | 1 | NUT-WELD (M10X1.5-THD) | |
| | 23 | 1 | **259-2411** | 2 | GUARD AS | |
| Y | 24 | 2 | *259-2414* | 1 | VALVE & LINES GP-LUBRICATION (BOOM, TILT LINKS) | 901 |
| | 25 | 1 | **259-2467** | 1 | GUARD (AUTOMATIC LUBRICATION) | |
| | 26 | 2 | **3B-6552** | 1 | ELBOW | |
| | 27 | 1,2 | **4D-7794** | 2 | CLIP | |
| | 28 | 1 | **4K-3026** | 4 | EXTENSION | |
| | 29 | 1,2 | **4M-8973** | 8 | ELBOW | |
| | 30 | 1,2 | **5P-1076** | 22 | WASHER-HARD (13.5X30X4-MM THK) | |
| | 31 | 2 | **5P-9297** | 2 | CLIP | |
| | 32 | 1,2 | **6K-6967** | 2 | ADAPTER-PIPE | |
| | 33 | 1 | **6V-8397** | 3 | SEAL-O-RING | |
| | 34 | 1 | **8C-6869** | 3 | CONNECTOR | |
| | 35 | 2 | **8L-5008** | 3 | ELBOW-PIPE | |
| | 36 | 1,2 | **8M-2772** | 2 | CLIP | |
| | 37 | 1 | **8S-0948** | 4 | CLIP | |
| | 38 | 1,2 | **8T-4121** | 23 | WASHER-HARD (11X21X2.5-MM THK) | |
| M | 39 | 1,2 | **8T-4133** | 3 | NUT (M10X1.5-THD) | |
| M | 40 | 1,2 | **8T-4136** | 5 | BOLT (M10X1.5X25-MM) | |
| M | 41 | 1,2 | **8T-4137** | 9 | BOLT (M10X1.5X20-MM) | |
| M | 42 | 1,2 | **8T-4139** | 16 | BOLT (M12X1.75X30-MM) | |
| M | 43 | 1,2 | **8T-4185** | 5 | BOLT (M10X1.5X50-MM) | |
| M | 44 | 2 | **8T-4192** | 1 | BOLT (M12X1.75X25-MM) | |
| M | 45 | 1 | **8T-4195** | 1 | BOLT (M10X1.5X30-MM) | |
| | 46 | 2 | **8T-4223** | 1 | WASHER-HARD (13.5X25.5X3-MM THK) | |
| M | 47 | 2 | **8T-4956** | 6 | BOLT (M12X1.75X35-MM) | |
| | 48 | 1 | **9M-8406** | 1 | CLIP | |
| E | 49 | 1 | **7I-1024** | | GUARD (HOSE) (51-CM) | |
| E | 49A | 1 | **7I-1024** | | GUARD (HOSE) (35-CM) | |
| E | 49B | 2 | **7I-1024** | | GUARD (HOSE) (96.5-CM) | |

E-ORDER BY THE CENTIMETER
I-REFER TO HYDRAULIC INFORMATION SYSTEM
M-METRIC PART
Y-SEPARATE ILLUSTRATION

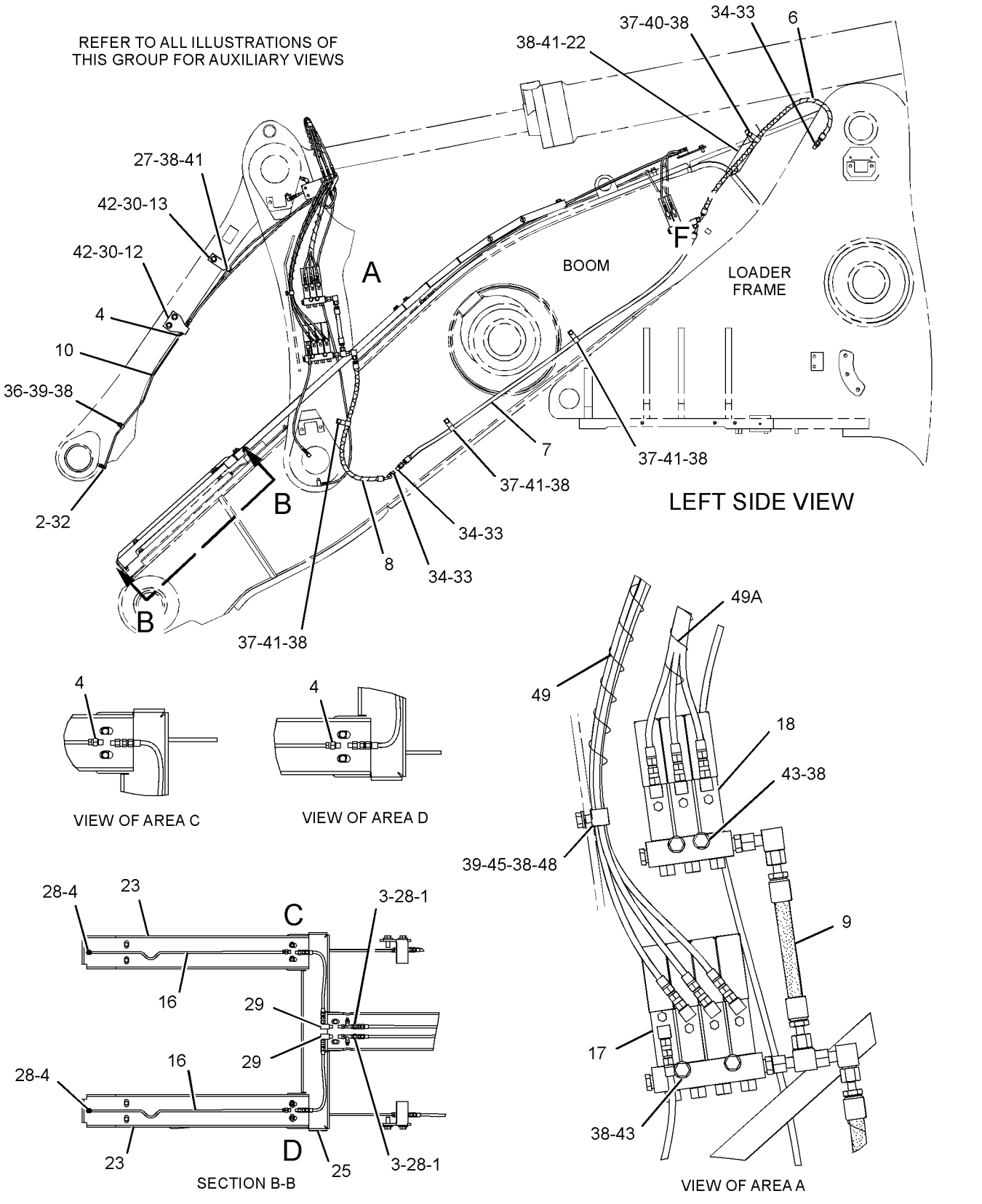


GRAPHIC #1

g01178235

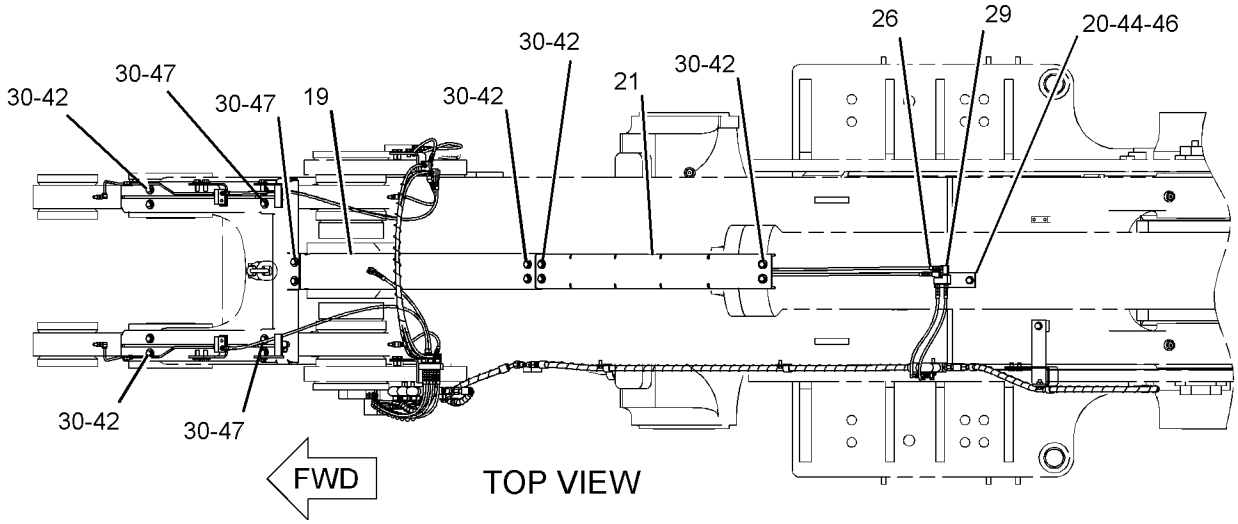


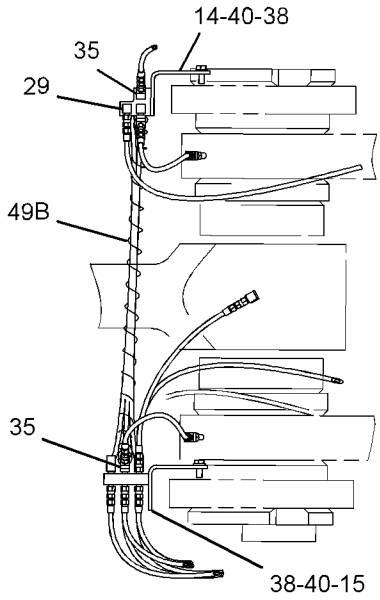


SECTION E-E

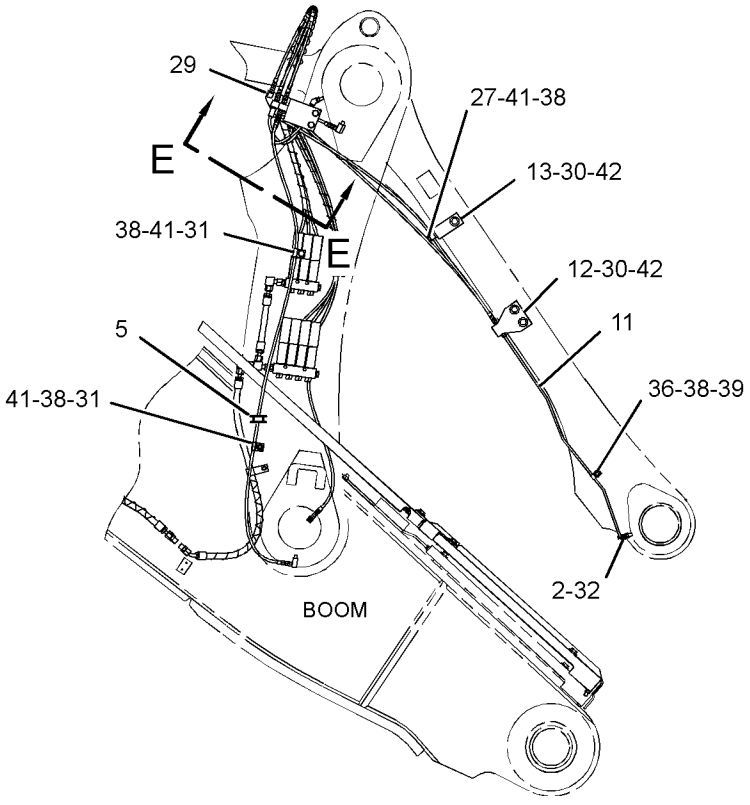


RIGHT SIDE VIEW

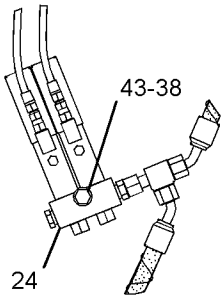


VIEW OF AREA F

GRAPHIC #2 **<END>** g01178234

## *259-2433* LINES GP-AUTOMATIC LUBRICATION–
### BOOM, TILT LINKS
**S/N: BXY1-1142**
**PART OF 259-2435 LUBRICATION AR-AUTOMATIC**
**AN ATTACHMENT**

**SMCS-7510, 7540** **i02742814**

| NOTE | REF NO | GRAPHIC REF | PART NUMBER | QTY | PART NAME 1 2 3 4 5 6 (PRODUCT LEVEL) | SEE PAGE |
|---|---|---|---|---|---|---|
| | 1 | 1 | **3B-8489** | 2 | FITTING-GREASE | |
| | 2 | 1,2 | **5K-9243** | 2 | ELBOW-FLARED | |
| | 3 | 1 | **5P-3422** | 2 | TEE-PIPE | |
| | 4 | 1 | **6L-3616** | 6 | CONNECTOR | |
| | 5 | 2 | **6S-4039** | 1 | GROMMET | |
| I | 6 | 1 | **189-7497** | 1 | HOSE AS | |
| I | 7 | 1 | **189-7498** | 1 | HOSE AS | |
| I | 8 | 1 | **189-7499** | 1 | HOSE AS | |
| I | 9 | 1 | **189-7500** | 1 | HOSE AS | |
| | 10 | 1 | **189-7514** | 1 | TUBE AS | |
| | 11 | 2 | **189-7515** | 1 | TUBE AS | |
| | 12 | 1,2 | **197-6660** | 2 | BRACKET AS | |
| | 13 | 1,2 | **197-7863** | 2 | BRACKET AS | |
| | 14 | 2 | **224-4416** | 1 | BRACKET AS | |
| | 15 | 2 | **224-4417** | 1 | BRACKET AS | |
| | 16 | 1 | **225-2648** | 2 | TUBE AS | |
| Y | 17 | 1 | *227-3047* | 1 | VALVE & LINES GP-LUBRICATION (LH, RH LINK PINS, RH C-PIN) | 884 |
| Y | 18 | 1 | *227-3048* | 1 | VALVE & LINES GP-LUBRICATION (LH C-PIN, LH TILT LINK PIN) | 886 |
| | 19 | 2 | **243-5930** | 1 | GUARD | |
| | 20 | 2 | **243-5932** | 1 | PLATE AS | |
| | 21 | 2 | **243-5938** | 1 | GUARD | |
| | 22 | 1 | **255-0614** | 1 | PLATE AS | |
| M | | 1 | **8T-3490** | 1 | NUT-WELD (M10X1.5-THD) | |
| | 23 | 1 | **259-2411** | 2 | GUARD AS | |
| Y | 24 | 2 | *259-2414* | 1 | VALVE & LINES GP-LUBRICATION (BOOM, TILT LINKS) | 901 |
| | 25 | 1 | **259-2467** | 1 | GUARD (AUTOMATIC LUBRICATION) | |
| | 26 | 2 | **3B-6552** | 1 | ELBOW | |
| C | 27 | 1 | **3B-7896** | 2 | ELBOW-STREET | |
| | 28 | 1,2 | **4D-7794** | 2 | CLIP | |
| | 29 | 1 | **4K-3026** | 4 | EXTENSION | |
| | 30 | 1,2 | **4M-8973** | 8 | ELBOW | |
| | 31 | 1,2 | **5P-1076** | 22 | WASHER-HARD (13.5X30X4-MM THK) | |
| | 32 | 2 | **5P-9297** | 2 | CLIP | |
| | 33 | 1,2 | **6K-6967** | 2 | ADAPTER-PIPE | |
| | 34 | 1 | **6V-8397** | 3 | SEAL-O-RING | |
| | 35 | 1 | **8C-6869** | 3 | CONNECTOR | |
| | 36 | 2 | **8L-5008** | 3 | ELBOW-PIPE | |
| | 37 | 1,2 | **8M-2772** | 2 | CLIP | |
| | 38 | 1 | **8S-0948** | 4 | CLIP | |
| | 39 | 1,2 | **8T-4121** | 23 | WASHER-HARD (11X21X2.5-MM THK) | |
| M | 40 | 1,2 | **8T-4133** | 3 | NUT (M10X1.5-THD) | |
| M | 41 | 1,2 | **8T-4136** | 5 | BOLT (M10X1.5X25-MM) | |
| M | 42 | 1,2 | **8T-4137** | 9 | BOLT (M10X1.5X20-MM) | |
| M | 43 | 1,2 | **8T-4139** | 16 | BOLT (M12X1.75X30-MM) | |
| M | 44 | 1,2 | **8T-4185** | 5 | BOLT (M10X1.5X50-MM) | |
| M | 45 | 2 | **8T-4192** | 1 | BOLT (M12X1.75X25-MM) | |
| M | 46 | 1 | **8T-4195** | 1 | BOLT (M10X1.5X30-MM) | |
| | 47 | 2 | **8T-4223** | 1 | WASHER-HARD (13.5X25.5X3-MM THK) | |
| M | 48 | 1,2 | **8T-4956** | 6 | BOLT (M12X1.75X35-MM) | |
| | 49 | 1 | **9M-8406** | 1 | CLIP | |
| E | 50 | 1 | **7I-1024** | | GUARD (HOSE) (51-CM) | |
| E | 50A | 1 | **7I-1024** | | GUARD (HOSE) (35-CM) | |
| E | 50B | 2 | **7I-1024** | | GUARD (HOSE) (96.5-CM) | |

C-CHANGE FROM PREVIOUS TYPE
E-ORDER BY THE CENTIMETER
I-REFER TO HYDRAULIC INFORMATION SYSTEM
M-METRIC PART
Y-SEPARATE ILLUSTRATION

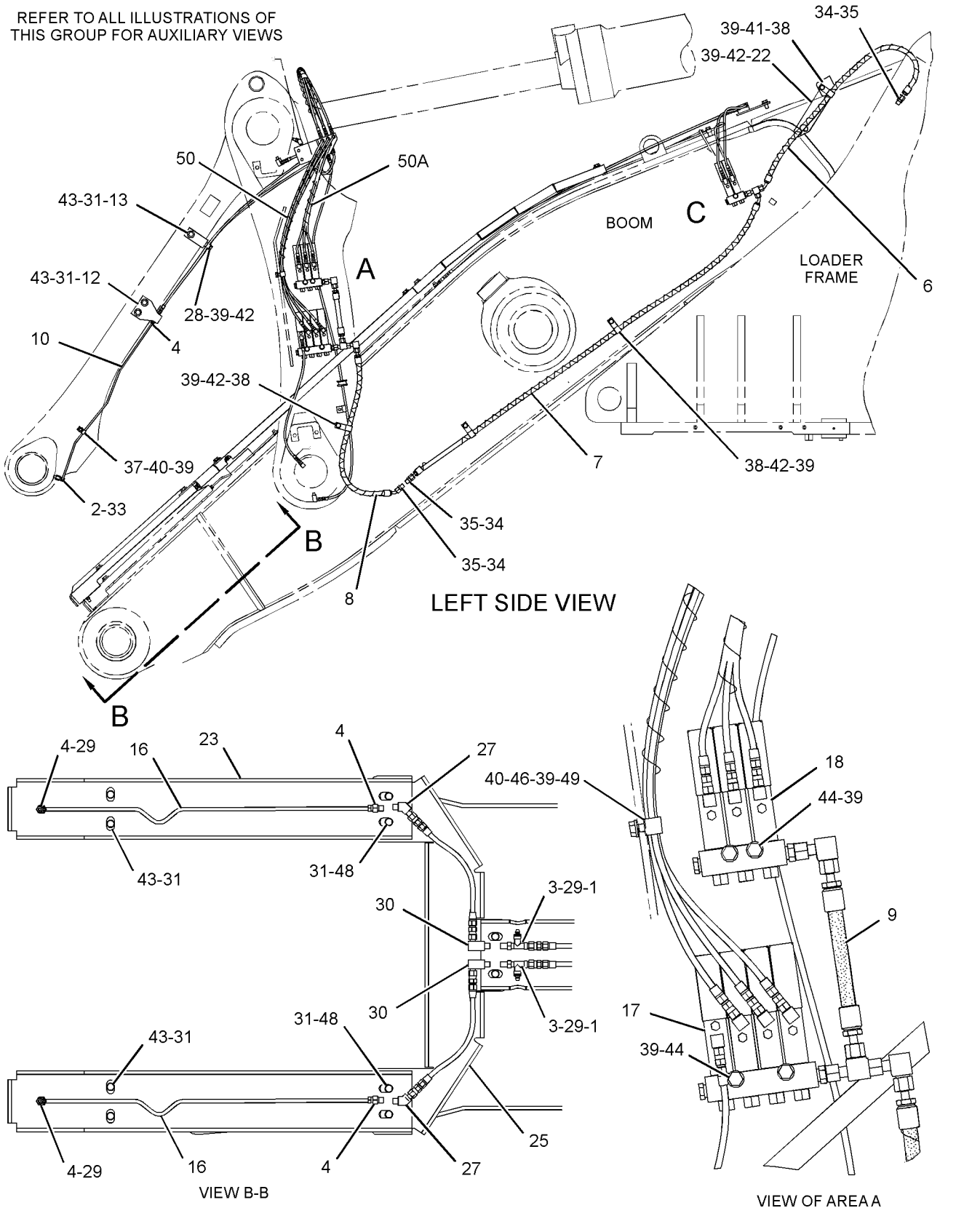


GRAPHIC #1

g01229688

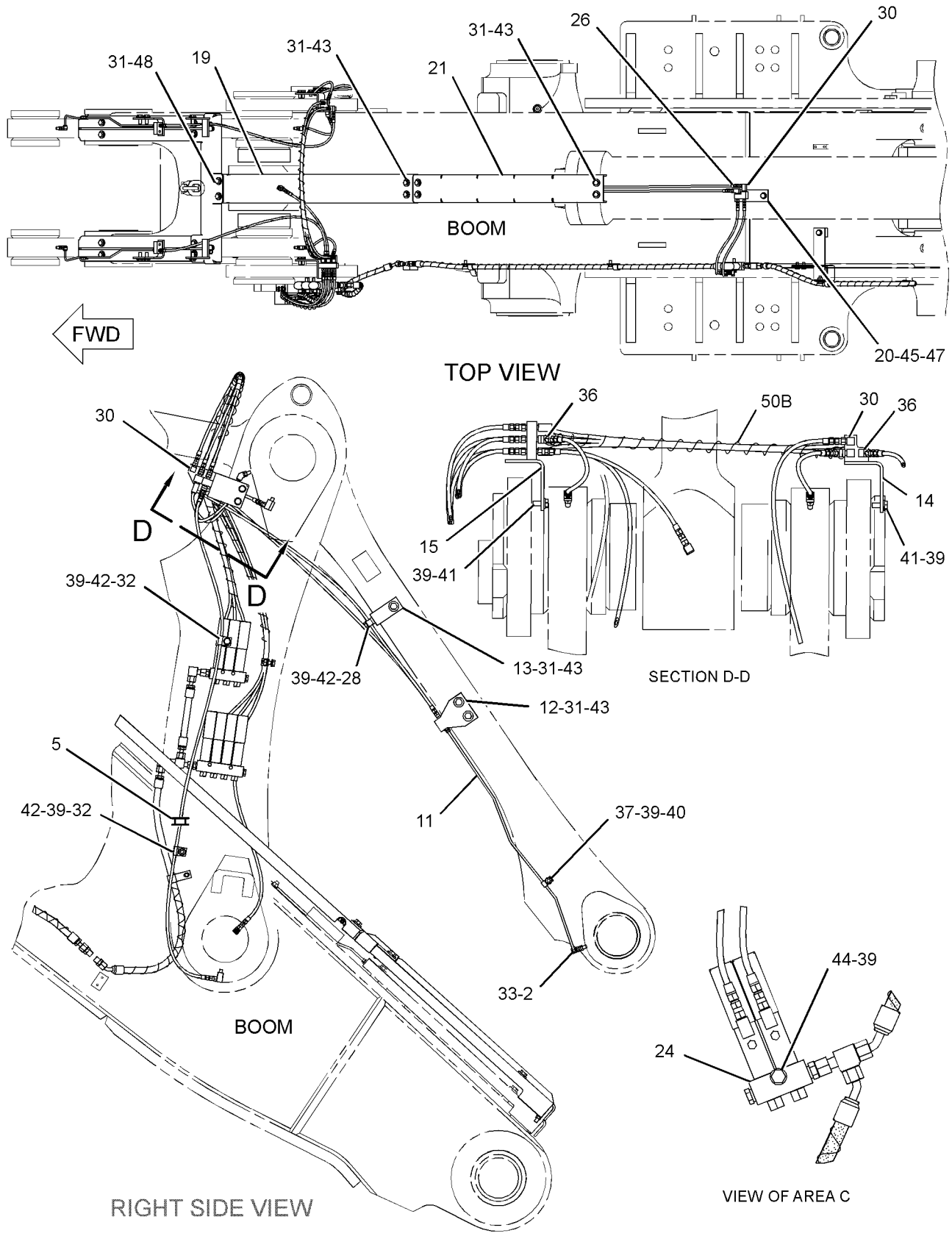


GRAPHIC #2 **<END>** g01229689

## *259-2433* LINES GP-AUTOMATIC LUBRICATION–
### BOOM, TILT LINKS
**S/N: BXY1143-1899**
**PART OF 259-2435 LUBRICATION AR-AUTOMATIC**
**AN ATTACHMENT**

**SMCS-7510, 7540** **i02742812**

| NOTE | REF NO | GRAPHIC REF | PART NUMBER | QTY | PART NAME 1 2 3 4 5 6 (PRODUCT LEVEL) | SEE PAGE |
|---|---|---|---|---|---|---|
| C | 1 | 1,2 | **3B-8489** | 4 | FITTING-GREASE | |
| | 2 | 1,2 | **5K-9243** | 2 | ELBOW-FLARED | |
| C | 3 | 1,2 | **5P-3422** | 4 | TEE-PIPE | |
| | 4 | 1,2 | **6L-3616** | 6 | CONNECTOR | |
| | 5 | 2 | **6S-4039** | 1 | GROMMET | |
| I | 6 | 1 | **189-7497** | 1 | HOSE AS | |
| I | 7 | 1 | **189-7498** | 1 | HOSE AS | |
| CI | 8 | 1 | **285-7286** | 1 | HOSE AS | |
| I | 9 | 1 | **189-7500** | 1 | HOSE AS | |
| | 10 | 1 | **189-7514** | 1 | TUBE AS | |
| | 11 | 2 | **189-7515** | 1 | TUBE AS | |
| | 12 | 1,2 | **197-6660** | 2 | BRACKET AS | |
| | 13 | 1,2 | **197-7863** | 2 | BRACKET AS | |
| | 14 | 2 | **224-4416** | 1 | BRACKET AS | |
| | 15 | 2 | **224-4417** | 1 | BRACKET AS | |
| | 16 | 1 | **225-2648** | 2 | TUBE AS | |
| Y | 17 | 1 | *227-3047* | 1 | VALVE & LINES GP-LUBRICATION (LH, RH LINK PINS, RH C-PIN) | 884 |
| Y | 18 | 1 | *227-3048* | 1 | VALVE & LINES GP-LUBRICATION (LH C-PIN, LH TILT LINK PIN) | 886 |
| | 19 | 2 | **243-5930** | 1 | GUARD | |
| | 20 | 2 | **243-5932** | 1 | PLATE AS | |
| | 21 | 2 | **243-5938** | 1 | GUARD | |
| | 22 | 1 | **255-0614** | 1 | PLATE AS | |
| M | | 1 | **8T-3490** | 1 | NUT-WELD (M10X1.5-THD) | |
| | 23 | 1 | **259-2411** | 2 | GUARD AS | |
| Y | 24 | 2 | *259-2414* | 1 | VALVE & LINES GP-LUBRICATION (BOOM, TILT LINKS) | 901 |
| | 25 | 1 | **259-2467** | 1 | GUARD (AUTOMATIC LUBRICATION) | |
| | 26 | 2 | **3B-6552** | 1 | ELBOW | |
| | 27 | 1 | **3B-7896** | 2 | ELBOW-STREET | |
| C | 28 | 1,2 | **4D-7794** | 3 | CLIP | |
| | 29 | 1 | **4K-3026** | 4 | EXTENSION | |
| | 30 | 1,2 | **4M-8973** | 8 | ELBOW | |
| | 31 | 1,2 | **5P-1076** | 22 | WASHER-HARD (13.5X30X4-MM THK) | |
| | 32 | 2 | **5P-9297** | 2 | CLIP | |
| | 33 | 1,2 | **6K-6967** | 2 | ADAPTER-PIPE | |
| | 34 | 1 | **6V-8397** | 3 | SEAL-O-RING | |
| | 35 | 1 | **8C-6869** | 3 | CONNECTOR | |
| | 36 | 2 | **8L-5008** | 3 | ELBOW-PIPE | |
| | 37 | 1,2 | **8M-2772** | 2 | CLIP | |
| | 38 | 1 | **8S-0948** | 4 | CLIP | |
| | 39 | 1,2 | **8T-4121** | 23 | WASHER-HARD (11X21X2.5-MM THK) | |
| M | 40 | 1,2 | **8T-4133** | 3 | NUT (M10X1.5-THD) | |
| M | 41 | 1,2 | **8T-4136** | 5 | BOLT (M10X1.5X25-MM) | |
| M | 42 | 1,2 | **8T-4137** | 9 | BOLT (M10X1.5X20-MM) | |
| M | 43 | 1,2 | **8T-4139** | 16 | BOLT (M12X1.75X30-MM) | |
| M | 44 | 1,2 | **8T-4185** | 5 | BOLT (M10X1.5X50-MM) | |
| M | 45 | 2 | **8T-4192** | 1 | BOLT (M12X1.75X25-MM) | |
| M | 46 | 1 | **8T-4195** | 1 | BOLT (M10X1.5X30-MM) | |
| | 47 | 2 | **8T-4223** | 1 | WASHER-HARD (13.5X25.5X3-MM THK) | |
| M | 48 | 1,2 | **8T-4956** | 6 | BOLT (M12X1.75X35-MM) | |
| | 49 | 1 | **9M-8406** | 1 | CLIP | |
| E | 50 | 1 | **7I-1024** | | GUARD (HOSE) (51-CM) | |
| E | 50A | 1 | **7I-1024** | | GUARD (HOSE) (35-CM) | |
| E | 50B | 2 | **7I-1024** | | GUARD (HOSE) (96.5-CM) | |

C-CHANGE FROM PREVIOUS TYPE
E-ORDER BY THE CENTIMETER
I-REFER TO HYDRAULIC INFORMATION SYSTEM
M-METRIC PART
Y-SEPARATE ILLUSTRATION

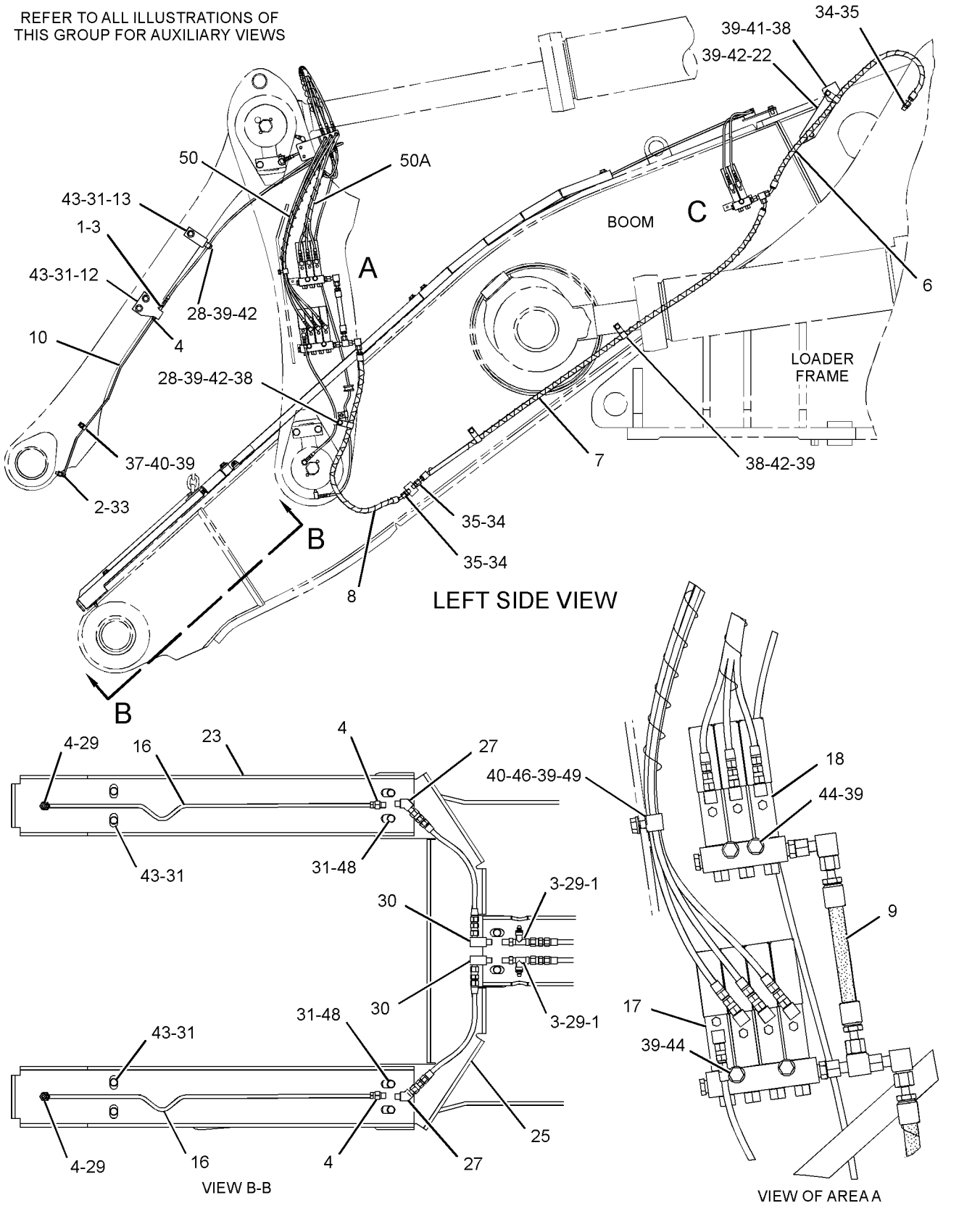


GRAPHIC #1

g01321462

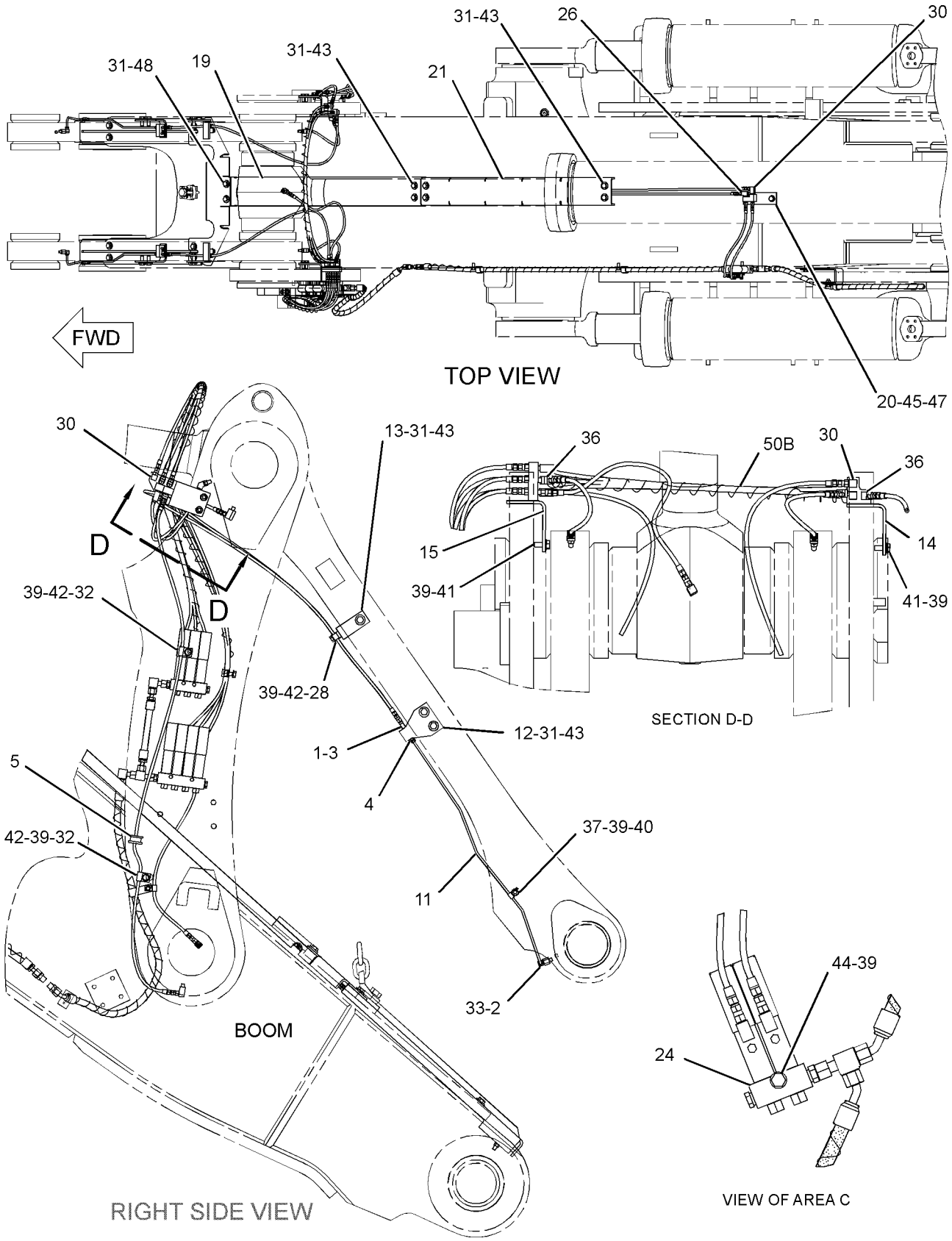


GRAPHIC #2 **<END>** g01321465

## *259-2434* LINES GP-AUTOMATIC LUBRICATION–
### BOOM, TILT LINKS
**S/N: BXY1-UP**
**PART OF 259-2436 LUBRICATION AR-AUTOMATIC**
**AN ATTACHMENT**

**SMCS-7510, 7540** **i02330969**

| NOTE | REF NO | GRAPHIC REF | PART NUMBER | QTY | PART NAME 1 2 3 4 5 6 (PRODUCT LEVEL) | SEE PAGE |
|---|---|---|---|---|---|---|
| | 1 | 2 | **3B-8489** | 2 | FITTING-GREASE | |
| | 2 | 1,2 | **5K-9243** | 2 | ELBOW-FLARED | |
| | 3 | 2 | **5P-3422** | 2 | TEE-PIPE | |
| | 4 | 1,2 | **6L-3616** | 6 | CONNECTOR | |
| | 5 | 2 | **6S-4039** | 1 | GROMMET | |
| I | 6 | 2 | **189-7500** | 1 | HOSE AS | |
| | 7 | 1,2 | **197-6660** | 2 | BRACKET AS | |
| | 8 | 1,2 | **197-7863** | 2 | BRACKET AS | |
| | 9 | 2 | **224-4416** | 1 | BRACKET AS | |
| | 10 | 2 | **224-4417** | 1 | BRACKET AS | |
| | 11 | 1 | **243-5932** | 1 | PLATE AS | |
| | 12 | 1 | **255-0614** | 1 | PLATE AS | |
| M | | 1 | **8T-3490** | 1 | NUT-WELD (M10X1.5-THD) | |
| | 13 | 1 | **259-2409** | 1 | GUARD | |
| | 14 | 2 | **259-2410** | 1 | GUARD | |
| | 15 | 1 | **259-2411** | 2 | GUARD AS | |
| | 16 | 1 | **259-2415** | 2 | TUBE AS | |
| | 17 | 2 | **259-2416** | 1 | TUBE AS | |
| | 18 | 1 | **259-2417** | 1 | TUBE AS | |
| Y | 19 | 1 | *259-2422* | 1 | VALVE & LINES GP-LUBRICATION (B-PIN, RH, LH) | 905 |
| Y | 20 | 2 | *259-2431* | 1 | VALVE & LINES GP-LUBRICATION (C-PIN, LINK PINS, TILT CYL PIN) | 909 |
| Y | 21 | 2 | *259-2432* | 1 | VALVE & LINES GP-LUBRICATION (LH C-PIN, LH TILT LINK PIN) | 913 |
| I | 22 | 1 | **259-2438** | 1 | HOSE AS | |
| I | 23 | 1 | **259-2439** | 1 | HOSE AS | |
| I | 24 | 1 | **259-2440** | 1 | HOSE AS | |
| | 25 | 2 | **259-2467** | 1 | GUARD (AUTOMATIC LUBRICATION) | |
| | 26 | 1 | **1S-0994** | 1 | CLIP | |
| | 27 | 1 | **3B-6552** | 1 | ELBOW | |
| | 28 | 1,2 | **4D-7794** | 3 | CLIP | |
| | 29 | 1,2 | **4K-3026** | 5 | EXTENSION | |
| | 30 | 1,2 | **4M-8973** | 9 | ELBOW | |
| | 31 | 1,2 | **5P-1076** | 24 | WASHER-HARD (13.5X30X4-MM THK) | |
| | 32 | 2 | **5P-9297** | 2 | CLIP | |
| | 33 | 1,2 | **6K-6967** | 2 | ADAPTER-PIPE | |
| | 34 | 1 | **6V-8397** | 1 | SEAL-O-RING | |
| | 35 | 1 | **8C-6869** | 3 | CONNECTOR | |
| | 36 | 2 | **8L-5008** | 3 | ELBOW-PIPE | |
| | 37 | 1,2 | **8M-2772** | 2 | CLIP | |
| | 38 | 2 | **8M-2773** | 1 | CLIP | |
| | 39 | 1 | **8S-0948** | 3 | CLIP | |
| | 40 | 1,2 | **8T-4121** | 23 | WASHER-HARD (11X21X2.5-MM THK) | |
| M | 41 | 2 | **8T-4133** | 1 | NUT (M10X1.5-THD) | |
| M | 42 | 1,2 | **8T-4136** | 5 | BOLT (M10X1.5X25-MM) | |
| M | 43 | 1,2 | **8T-4137** | 11 | BOLT (M10X1.5X20-MM) | |
| M | 44 | 1,2 | **8T-4139** | 18 | BOLT (M12X1.75X30-MM) | |
| M | 45 | 1,2 | **8T-4185** | 5 | BOLT (M10X1.5X50-MM) | |
| M | 46 | 1 | **8T-4192** | 1 | BOLT (M12X1.75X25-MM) | |
| M | 47 | 2 | **8T-4195** | 1 | BOLT (M10X1.5X30-MM) | |
| | 48 | 1 | **8T-4223** | 1 | WASHER-HARD (13.5X25.5X3-MM THK) | |
| M | 49 | 2 | **8T-4956** | 6 | BOLT (M12X1.75X35-MM) | |
| E | 50 | 1 | **7I-1024** | | GUARD (HOSE) (40-CM) | |
| E | 50A | 1 | **7I-1024** | | GUARD (HOSE) (25-CM) | |
| E | 50B | 2 | **7I-1024** | | GUARD (HOSE) (114-CM) | |

E-ORDER BY THE CENTIMETER
I-REFER TO HYDRAULIC INFORMATION SYSTEM
M-METRIC PART
Y-SEPARATE ILLUSTRATION

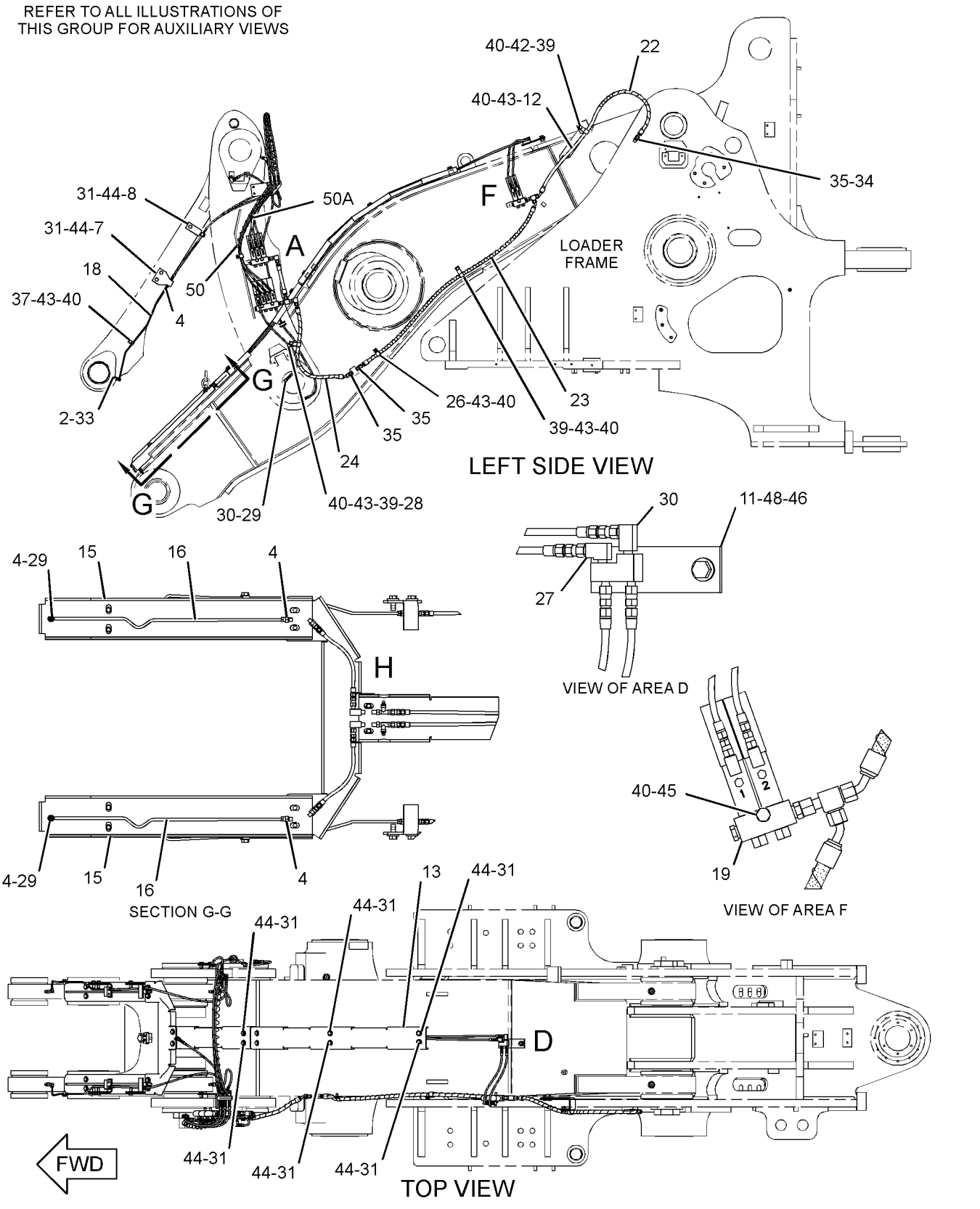


GRAPHIC #1

g01164027

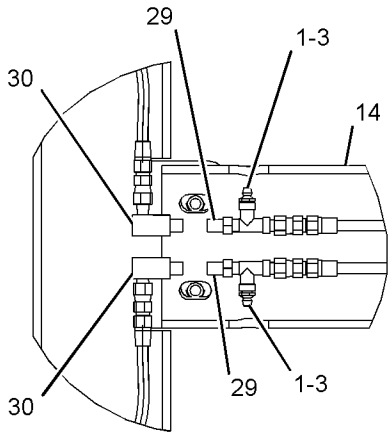


VIEW OF AREA H

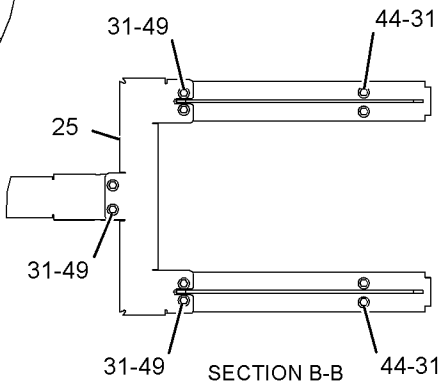


SECTION B-B

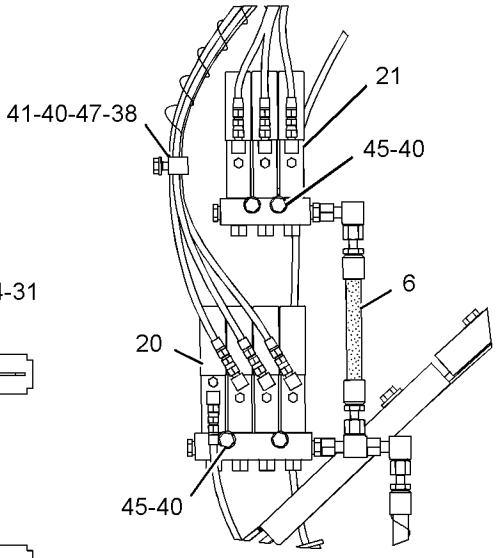


VIEW OF AREA A

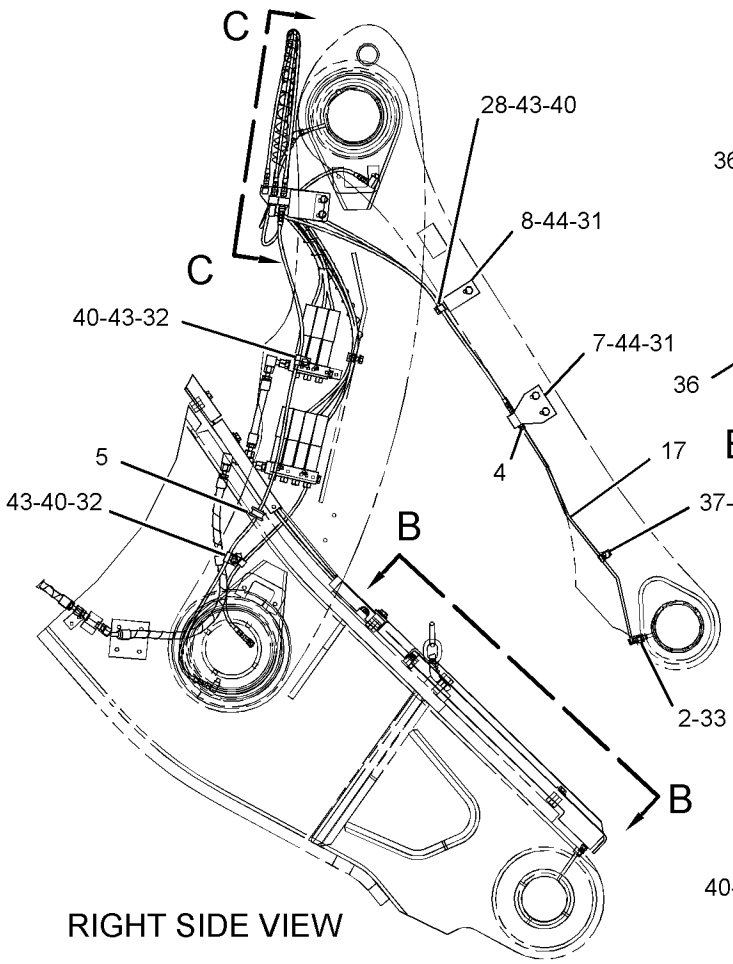


RIGHT SIDE VIEW

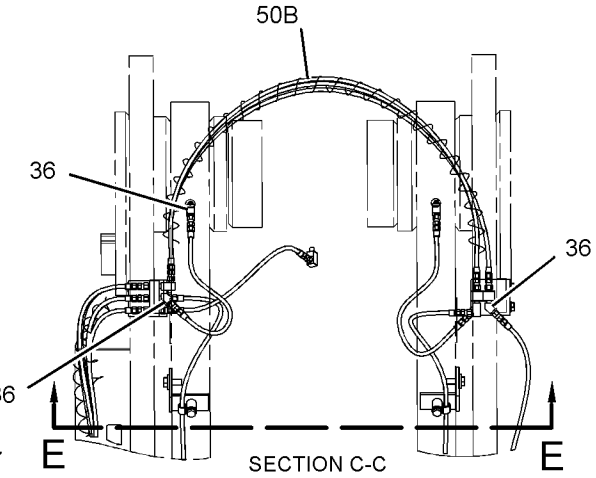


SECTION C-C

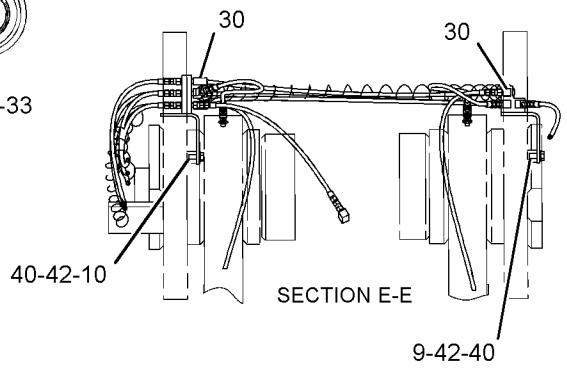


SECTION E-E

GRAPHIC #2 **<END>** g01164028

## *259-2434* LINES GP-AUTOMATIC LUBRICATION–
### BOOM, TILT LINKS
**S/N: BXY1-1200**
**PART OF 259-2436 LUBRICATION AR-AUTOMATIC**
**AN ATTACHMENT**

**SMCS-7510, 7540** **i02456943**

| NOTE | REF NO | GRAPHIC REF | PART NUMBER | QTY | PART NAME 1 2 3 4 5 6 (PRODUCT LEVEL) | SEE PAGE |
|---|---|---|---|---|---|---|
| | 1 | 1 | **3B-8489** | 2 | FITTING-GREASE | |
| | 2 | 2,3 | **5K-9243** | 2 | ELBOW-FLARED | |
| | 3 | 1 | **5P-3422** | 2 | TEE-PIPE | |
| | 4 | 1,2,3 | **6L-3616** | 6 | CONNECTOR | |
| | 5 | 3 | **6S-4039** | 1 | GROMMET | |
| I | 6 | 2 | **189-7500** | 1 | HOSE AS | |
| | 7 | 2,3 | **197-6660** | 2 | BRACKET AS | |
| | 8 | 2,3 | **197-7863** | 2 | BRACKET AS | |
| | 9 | 4 | **224-4416** | 1 | BRACKET AS | |
| | 10 | 4 | **224-4417** | 1 | BRACKET AS | |
| | 11 | 1 | **243-5932** | 1 | PLATE AS | |
| | 12 | 2 | **255-0614** | 1 | PLATE AS | |
| M | | 2 | **8T-3490** | 1 | NUT-WELD (M10X1.5-THD) | |
| | 13 | 1 | **259-2409** | 1 | GUARD | |
| | 14 | 1 | **259-2410** | 1 | GUARD | |
| | 15 | 1 | **259-2411** | 2 | GUARD AS | |
| | 16 | 1 | **259-2415** | 2 | TUBE AS | |
| | 17 | 3 | **259-2416** | 1 | TUBE AS | |
| | 18 | 2 | **259-2417** | 1 | TUBE AS | |
| Y | 19 | 1 | *259-2422* | 1 | VALVE & LINES GP-LUBRICATION (B-PIN, RH, LH) | 905 |
| Y | 20 | 2 | *259-2431* | 1 | VALVE & LINES GP-LUBRICATION (C-PIN, LINK PINS, TILT CYL PIN) | 909 |
| Y | 21 | 2 | *259-2432* | 1 | VALVE & LINES GP-LUBRICATION (LH C-PIN, LH TILT LINK PIN) | 913 |
| I | 22 | 2 | **259-2438** | 1 | HOSE AS | |
| I | 23 | 2 | **259-2439** | 1 | HOSE AS | |
| I | 24 | 2 | **259-2440** | 1 | HOSE AS | |
| | 25 | 3 | **259-2467** | 1 | GUARD (AUTOMATIC LUBRICATION) | |
| | 26 | 2 | **1S-0994** | 1 | CLIP | |
| | 27 | 1 | **3B-6552** | 1 | ELBOW | |
| C | 28 | 1 | **3B-7896** | 2 | ELBOW-STREET | |
| | 29 | 2,3 | **4D-7794** | 3 | CLIP | |
| | 30 | 1,2 | **4K-3026** | 5 | EXTENSION | |
| | 31 | 1,2,4 | **4M-8973** | 9 | ELBOW | |
| | 32 | 1,2,3,4 | **5P-1076** | 24 | WASHER-HARD (13.5X30X4-MM THK) | |
| | 33 | 3 | **5P-9297** | 2 | CLIP | |
| | 34 | 2,3 | **6K-6967** | 2 | ADAPTER-PIPE | |
| | 35 | 2 | **6V-8397** | 1 | SEAL-O-RING | |
| | 36 | 2 | **8C-6869** | 3 | CONNECTOR | |
| | 37 | 4 | **8L-5008** | 3 | ELBOW-PIPE | |
| | 38 | 2,3 | **8M-2772** | 2 | CLIP | |
| | 39 | 2 | **8M-2773** | 1 | CLIP | |
| | 40 | 2 | **8S-0948** | 3 | CLIP | |
| | 41 | 1,2,3,4 | **8T-4121** | 23 | WASHER-HARD (11X21X2.5-MM THK) | |
| M | 42 | 2 | **8T-4133** | 1 | NUT (M10X1.5-THD) | |
| M | 43 | 2,4 | **8T-4136** | 5 | BOLT (M10X1.5X25-MM) | |
| M | 44 | 2,3 | **8T-4137** | 11 | BOLT (M10X1.5X20-MM) | |
| M | 45 | 1,2,3 | **8T-4139** | 18 | BOLT (M12X1.75X30-MM) | |
| M | 46 | 1,2 | **8T-4185** | 5 | BOLT (M10X1.5X50-MM) | |
| M | 47 | 1 | **8T-4192** | 1 | BOLT (M12X1.75X25-MM) | |
| M | 48 | 2 | **8T-4195** | 1 | BOLT (M10X1.5X30-MM) | |
| | 49 | 1 | **8T-4223** | 1 | WASHER-HARD (13.5X25.5X3-MM THK) | |
| M | 50 | 3 | **8T-4956** | 6 | BOLT (M12X1.75X35-MM) | |
| E | 51 | 2 | **7I-1024** | | GUARD (HOSE) (40-CM) | |

## *259-2434* LINES GP-AUTOMATIC LUBRICATION *(contd.)* i02456943

| NOTE | REF NO | GRAPHIC REF | PART NUMBER | QTY | PART NAME 1 2 3 4 5 6 (PRODUCT LEVEL) | SEE PAGE |
|---|---|---|---|---|---|---|
| E | 51A | 2 | **7I-1024** | | GUARD (HOSE) (25-CM) | |
| E | 51B | 4 | **7I-1024** | | GUARD (HOSE) (114-CM) | |

C-CHANGE FROM PREVIOUS TYPE
E-ORDER BY THE CENTIMETER
I-REFER TO HYDRAULIC INFORMATION SYSTEM
M-METRIC PART
Y-SEPARATE ILLUSTRATION

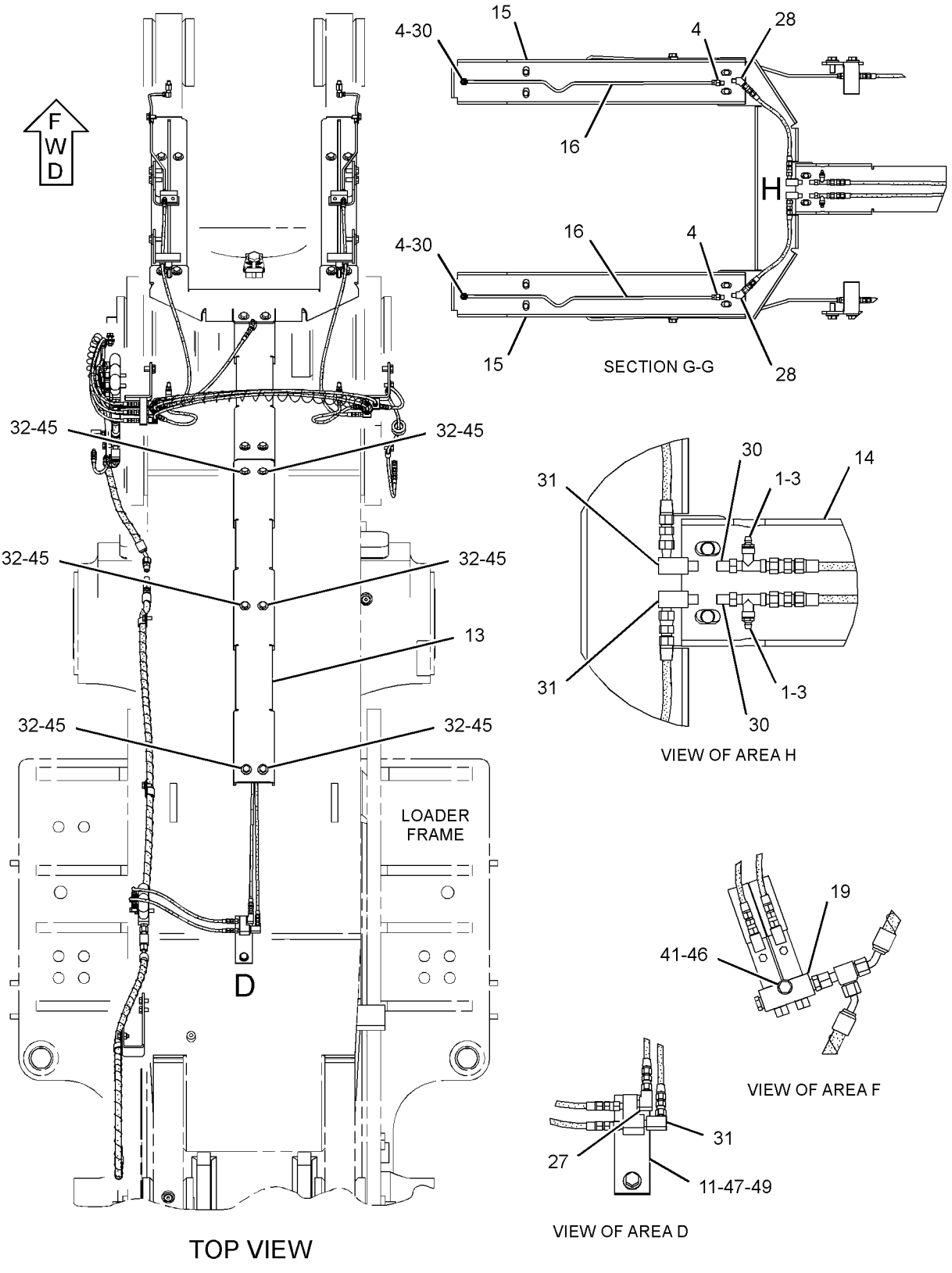


GRAPHIC #1

g01230575

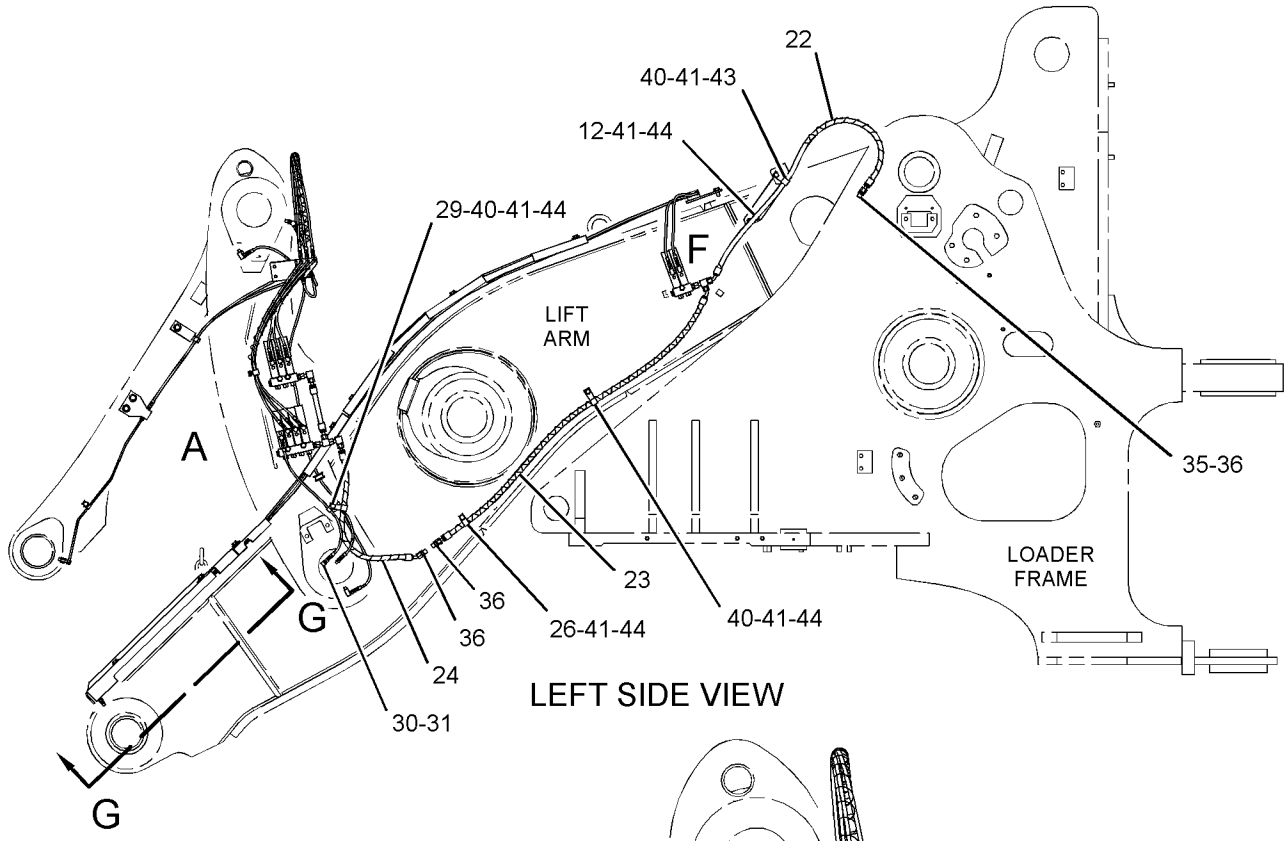


LEFT SIDE VIEW

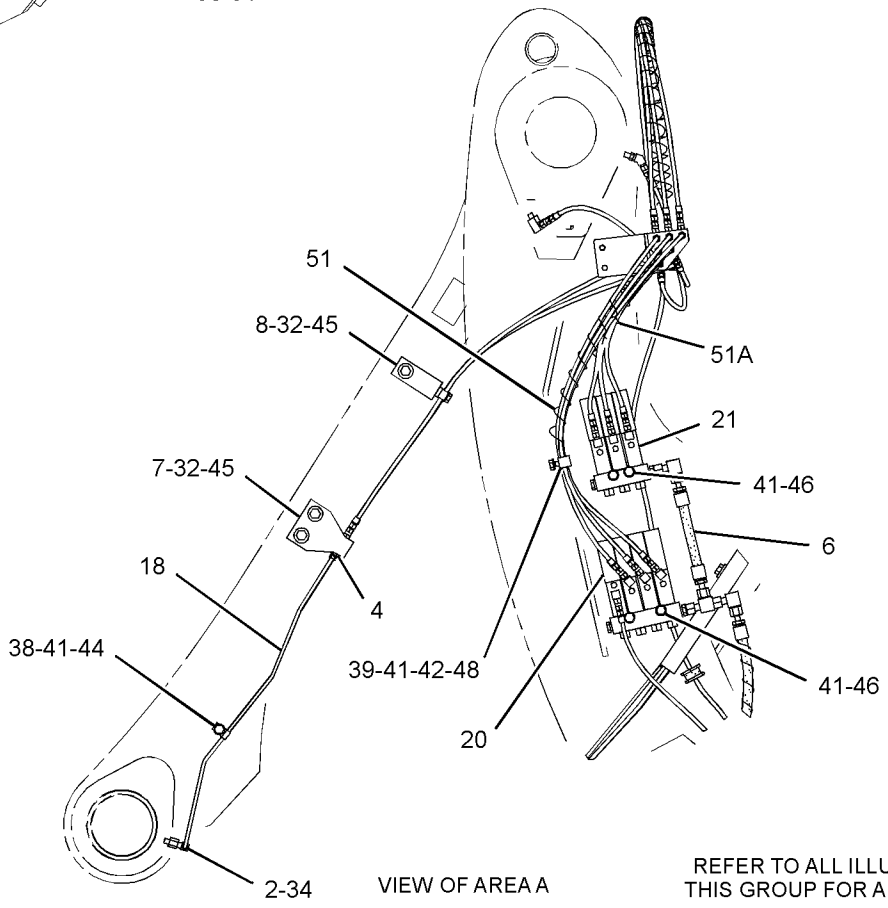


VIEW OF AREA A

REFER TO ALL ILLUSTRATIONS OF THIS GROUP FOR AUXILIARY VIEWS

GRAPHIC #2

g01230576

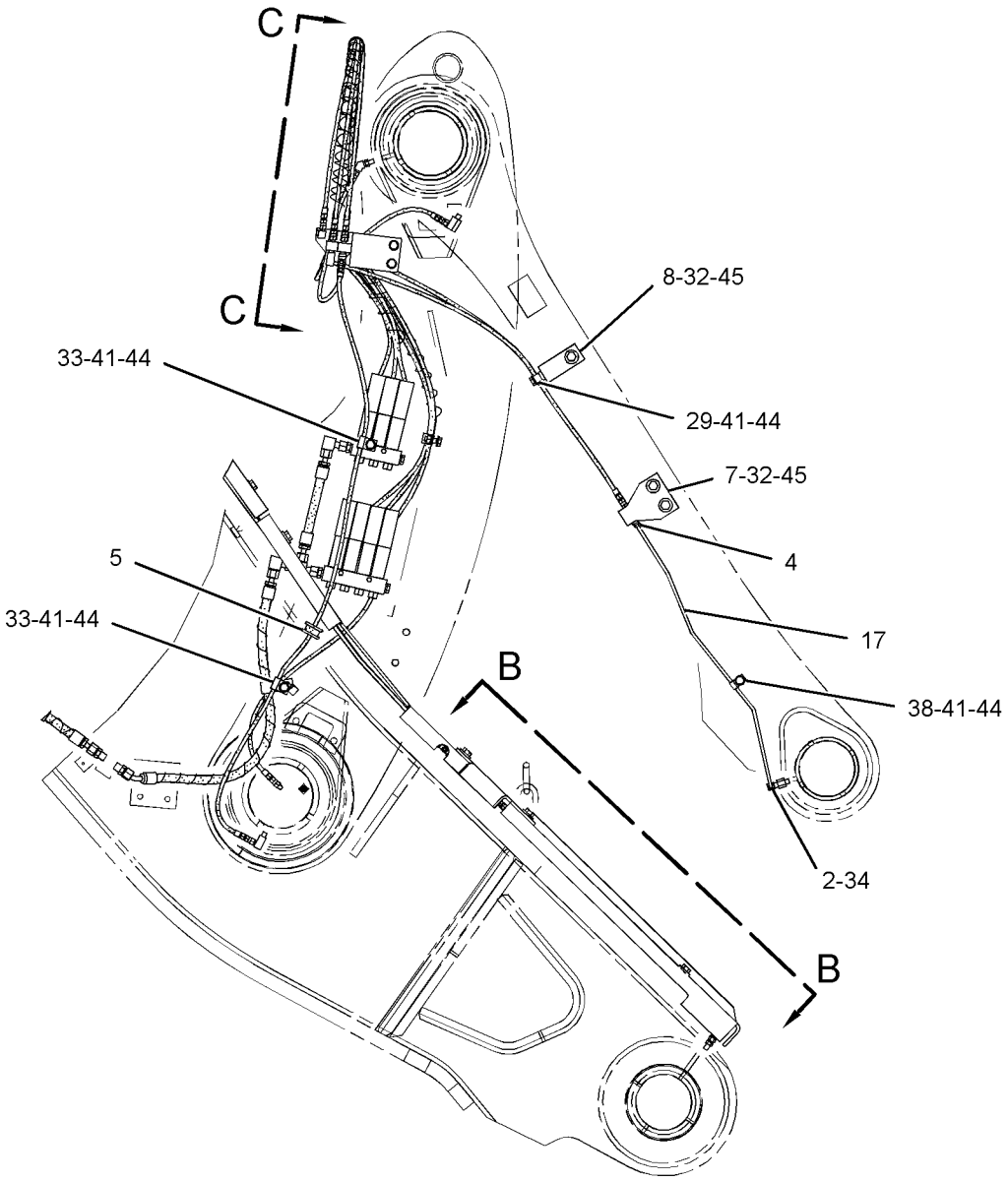


RIGHT SIDE VIEW

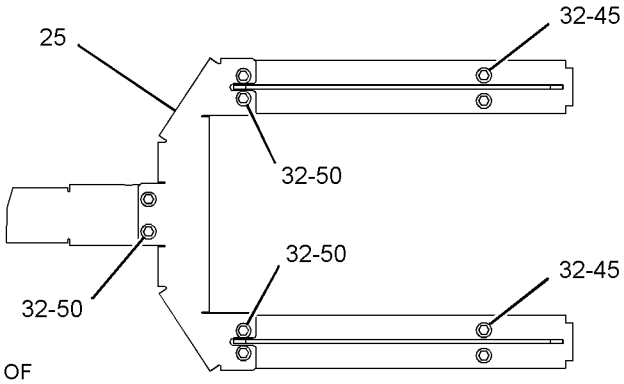


VIEW B-B

REFER TO ALL ILLUSTRATIONS OF THIS GROUP FOR AUXILIARY VIEWS

GRAPHIC #3

g01230577

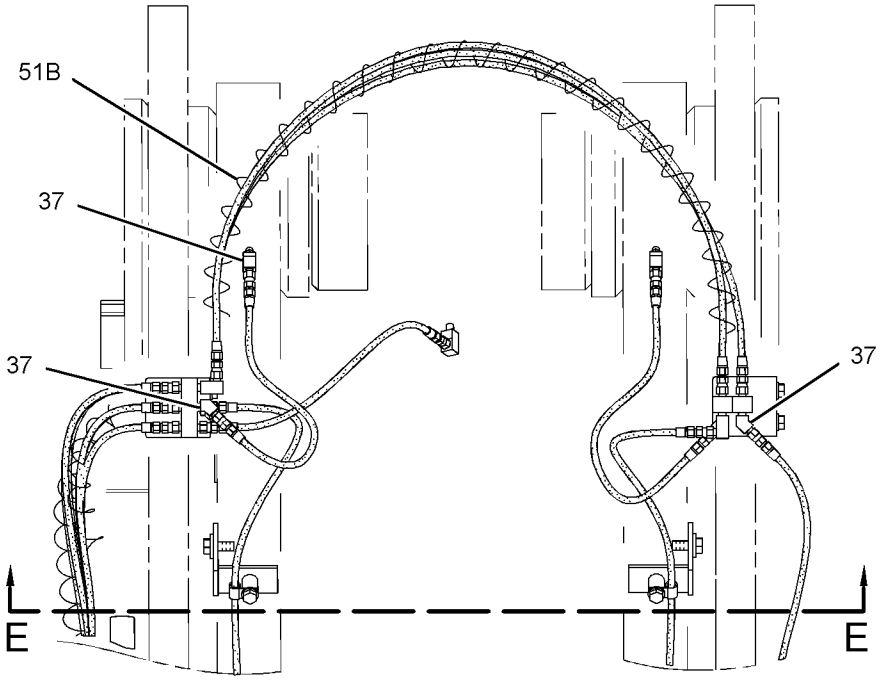


VIEW C-C

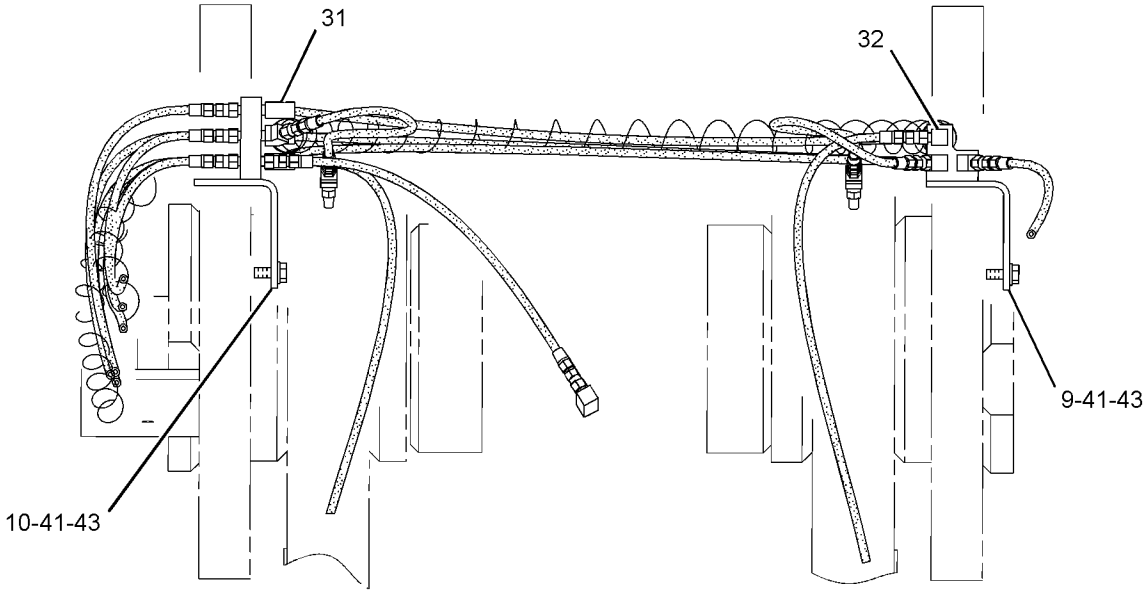


SECTION E-E

GRAPHIC #4 **<END>** g01230578

## *259-2434* LINES GP-AUTOMATIC LUBRICATION–
### BOOM, TILT LINKS
**S/N: BXY1201-1899**
**PART OF 259-2436 LUBRICATION AR-AUTOMATIC**
**AN ATTACHMENT**

**SMCS-7510, 7540** **i02675899**

| NOTE | REF NO | GRAPHIC REF | PART NUMBER | QTY | PART NAME 1 2 3 4 5 6 (PRODUCT LEVEL) | SEE PAGE |
|---|---|---|---|---|---|---|
| C | 1 | 1,2,3,4 | **3B-8489** | 6 | FITTING-GREASE | |
| | 2 | 1,2 | **5K-9243** | 2 | ELBOW-FLARED | |
| C | 3 | 1,2,3,4 | **5P-3422** | 6 | TEE-PIPE | |
| | 4 | 1,2,4 | **6L-3616** | 6 | CONNECTOR | |
| | 5 | 2 | **6S-4039** | 1 | GROMMET | |
| I | 6 | 1 | **189-7500** | 1 | HOSE AS | |
| | 7 | 1,2 | **197-6660** | 2 | BRACKET AS | |
| | 8 | 1,2 | **197-7863** | 2 | BRACKET AS | |
| | 9 | 3 | **224-4416** | 1 | BRACKET AS | |
| | 10 | 3 | **224-4417** | 1 | BRACKET AS | |
| | 11 | 4 | **243-5932** | 1 | PLATE AS | |
| | 12 | 1 | **255-0614** | 1 | PLATE AS | |
| M | | 1 | **8T-3490** | 1 | NUT-WELD (M10X1.5-THD) | |
| | 13 | 4 | **259-2409** | 1 | GUARD | |
| | 14 | 4 | **259-2410** | 1 | GUARD | |
| | 15 | 4 | **259-2411** | 2 | GUARD AS | |
| | 16 | 4 | **259-2415** | 2 | TUBE AS | |
| | 17 | 2 | **259-2416** | 1 | TUBE AS | |
| | 18 | 1 | **259-2417** | 1 | TUBE AS | |
| Y | 19 | 4 | *259-2422* | 1 | VALVE & LINES GP-LUBRICATION (B-PIN, RH, LH) | 905 |
| Y | 20 | 1 | *259-2431* | 1 | VALVE & LINES GP-LUBRICATION (C-PIN, LINK PINS, TILT CYL PIN) | 909 |
| Y | 21 | 1 | *259-2432* | 1 | VALVE & LINES GP-LUBRICATION (LH C-PIN, LH TILT LINK PIN) | 913 |
| I | 22 | 1 | **259-2438** | 1 | HOSE AS | |
| CI | 23 | 1 | **259-2439** | 1 | HOSE AS | |
| CI | 24 | 1 | **285-7302** | 1 | HOSE AS | |
| | 25 | 2 | **259-2467** | 1 | GUARD (AUTOMATIC LUBRICATION) | |
| | 26 | 1 | **1S-0994** | 1 | CLIP | |
| | 27 | 4 | **3B-6552** | 1 | ELBOW | |
| | 28 | 4 | **3B-7896** | 2 | ELBOW-STREET | |
| | 29 | 1,3 | **4D-7794** | 3 | CLIP | |
| | 30 | 1,4 | **4K-3026** | 5 | EXTENSION | |
| C | 31 | 1,2,3,4 | **4M-8973** | 10 | ELBOW | |
| | 32 | 1,2,4 | **5P-1076** | 24 | WASHER-HARD (13.5X30X4-MM THK) | |
| | 33 | 2 | **5P-9297** | 2 | CLIP | |
| | 34 | 1,2 | **6K-6967** | 2 | ADAPTER-PIPE | |
| | 35 | 1 | **6V-8397** | 1 | SEAL-O-RING | |
| | 36 | 1 | **8C-6869** | 3 | CONNECTOR | |
| | 37 | 3 | **8L-5008** | 3 | ELBOW-PIPE | |
| | 38 | 1,2 | **8M-2772** | 2 | CLIP | |
| | 39 | 1 | **8M-2773** | 1 | CLIP | |
| | 40 | 1 | **8S-0948** | 3 | CLIP | |
| | 41 | 1,2,3,4 | **8T-4121** | 23 | WASHER-HARD (11X21X2.5-MM THK) | |
| M | 42 | 1 | **8T-4133** | 1 | NUT (M10X1.5-THD) | |
| M | 43 | 1,3 | **8T-4136** | 5 | BOLT (M10X1.5X25-MM) | |
| CM | 44 | 1,2,3 | **8T-4137** | 10 | BOLT (M10X1.5X20-MM) | |
| M | 45 | 1,2,4 | **8T-4139** | 18 | BOLT (M12X1.75X30-MM) | |
| M | 46 | 1,4 | **8T-4185** | 5 | BOLT (M10X1.5X50-MM) | |
| M | 47 | 4 | **8T-4192** | 1 | BOLT (M12X1.75X25-MM) | |
| M | 48 | 1 | **8T-4195** | 1 | BOLT (M10X1.5X30-MM) | |
| | 49 | 4 | **8T-4223** | 1 | WASHER-HARD (13.5X25.5X3-MM THK) | |
| M | 50 | 2 | **8T-4956** | 6 | BOLT (M12X1.75X35-MM) | |
| E | 51 | 1 | **7I-1024** | | GUARD (HOSE) (40-CM) | |

## *259-2434* LINES GP-AUTOMATIC LUBRICATION *(contd.)* i02675899

| NOTE | REF NO | GRAPHIC REF | PART NUMBER | QTY | PART NAME 1 2 3 4 5 6 (PRODUCT LEVEL) | SEE PAGE |
|---|---|---|---|---|---|---|
| E | 51A | 1 | **7I-1024** | | GUARD (HOSE) (25-CM) | |
| E | 51B | 3 | **7I-1024** | | GUARD (HOSE) (114-CM) | |
| CM | 52 | 2 | **7X-2621** | 1 | BOLT (M10X1.5X12-MM) | |

C-CHANGE FROM PREVIOUS TYPE
E-ORDER BY THE CENTIMETER
I-REFER TO HYDRAULIC INFORMATION SYSTEM
M-METRIC PART
Y-SEPARATE ILLUSTRATION

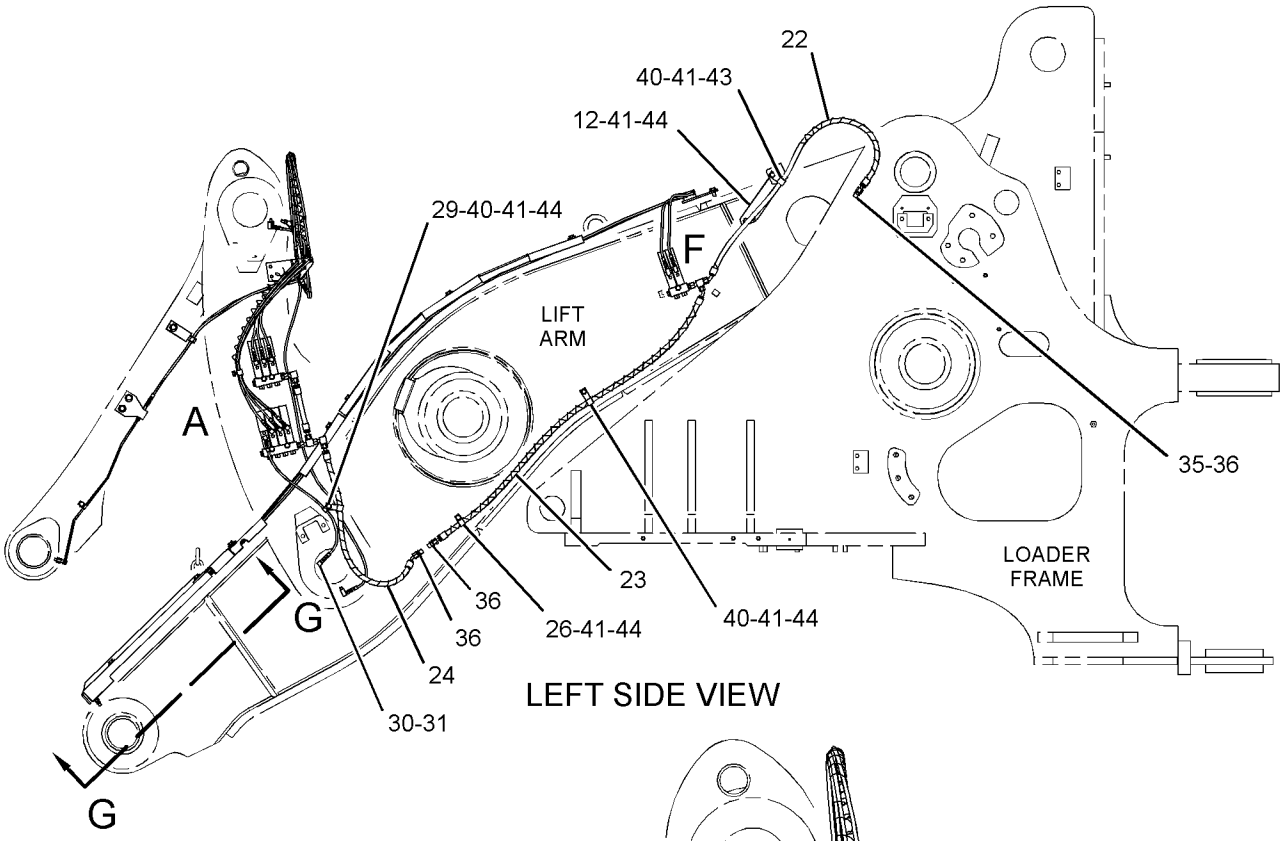


LEFT SIDE VIEW

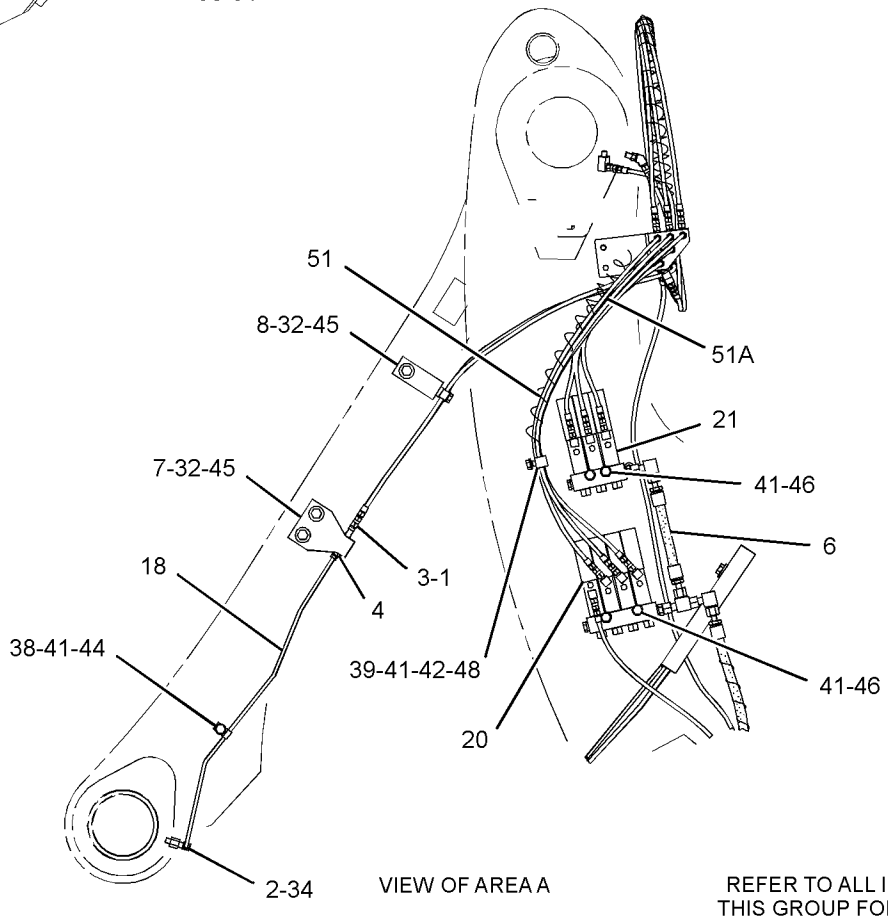


VIEW OF AREA A

REFER TO ALL ILLUSTRATIONS OF THIS GROUP FOR AUXILIARY VIEWS

GRAPHIC #1

g01341004

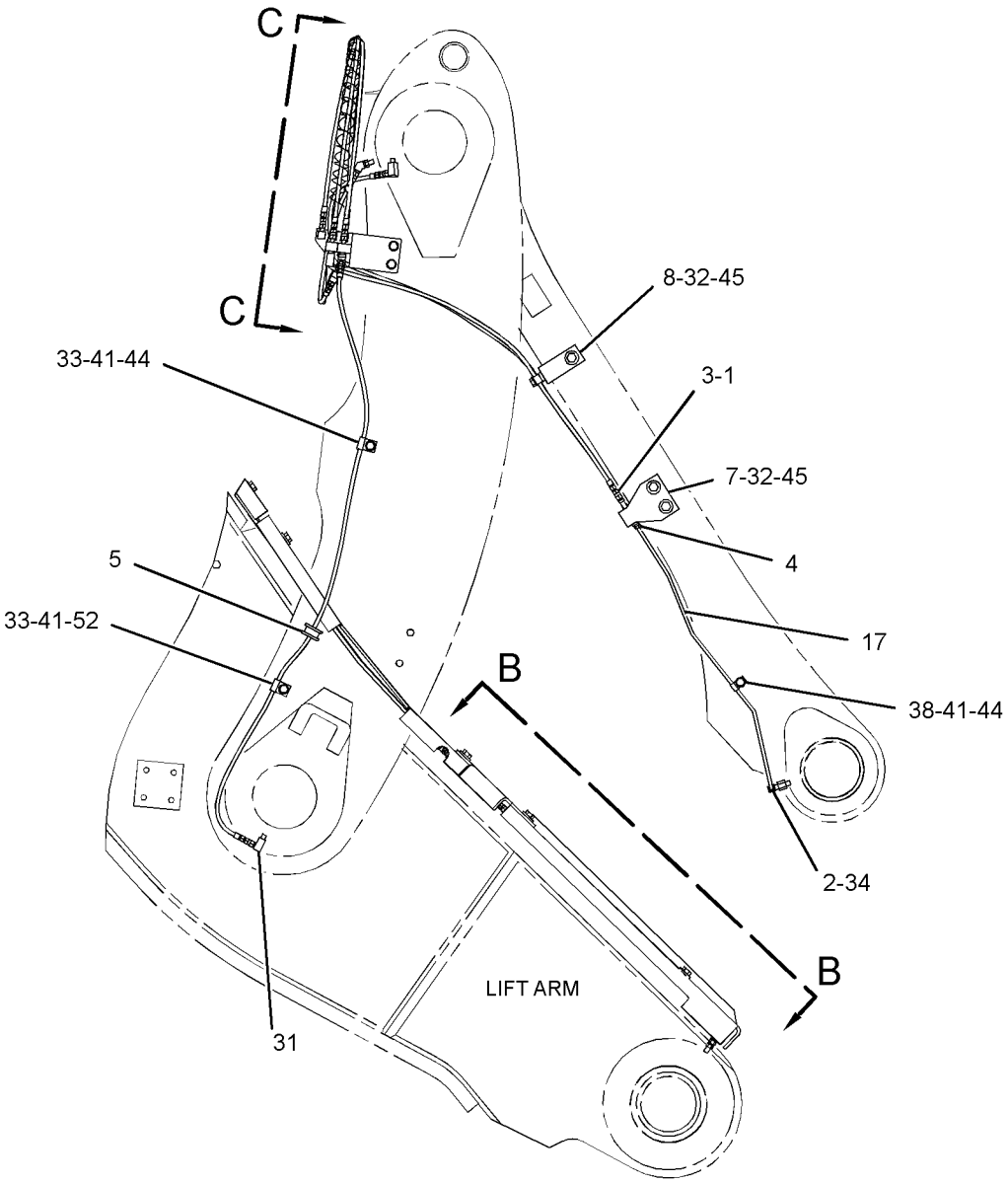


RIGHT SIDE VIEW

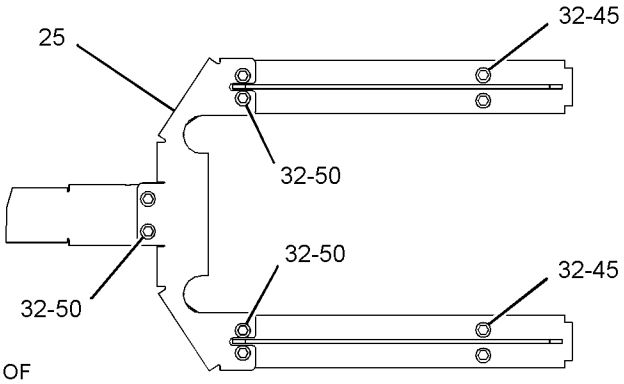


VIEW B-B

REFER TO ALL ILLUSTRATIONS OF THIS GROUP FOR AUXILIARY VIEWS

GRAPHIC #2

g01330696

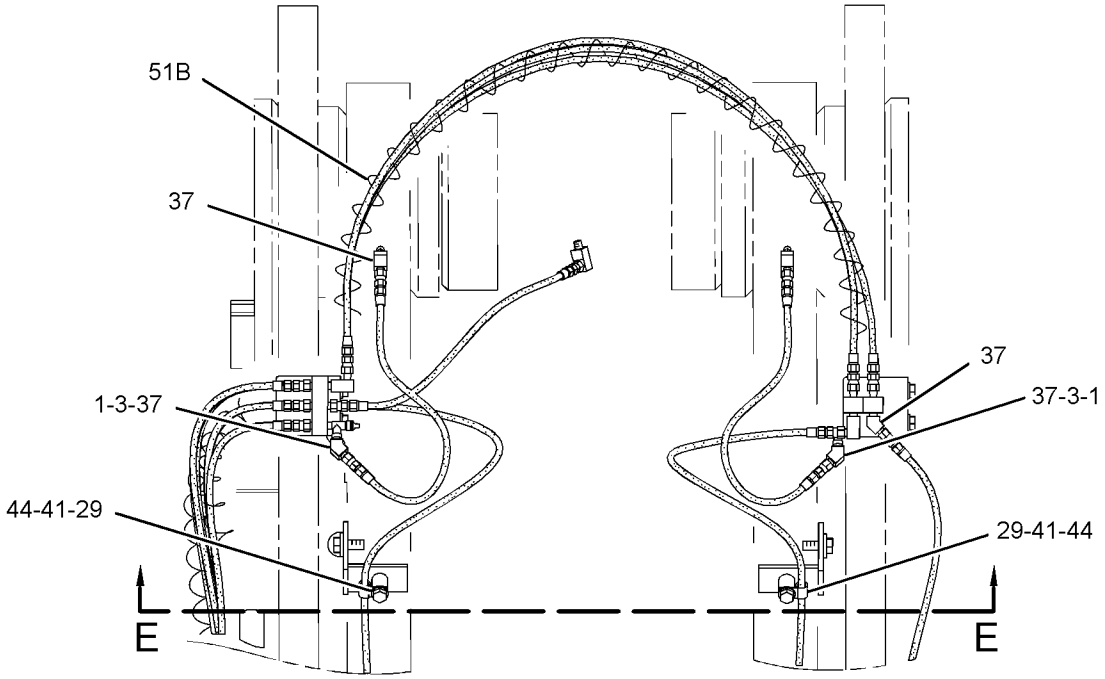


VIEW C-C

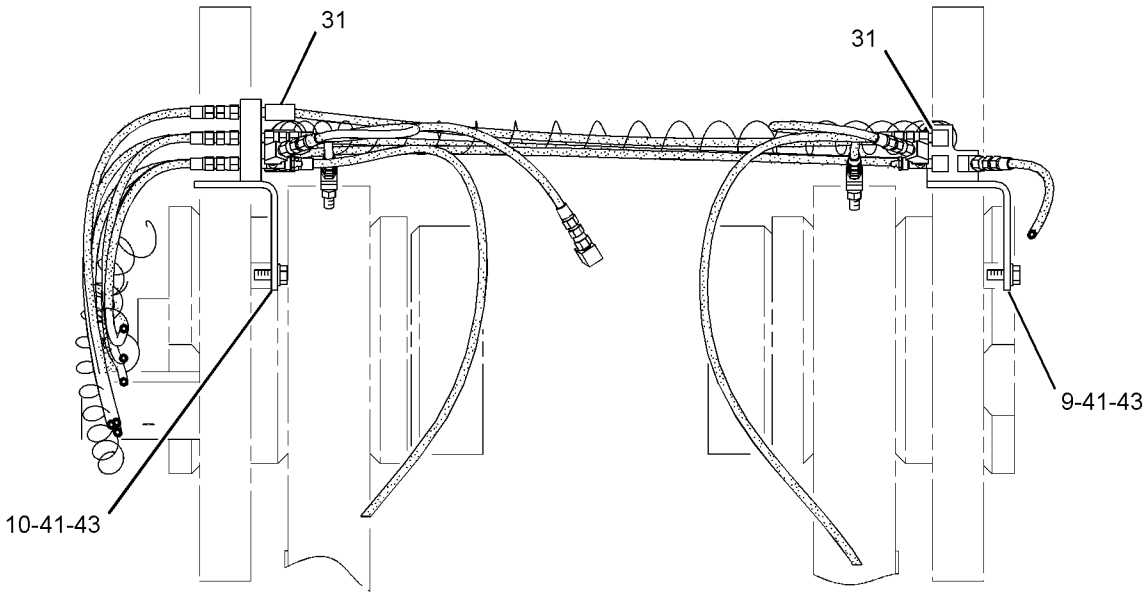


SECTION E-E

GRAPHIC #3

g01330697

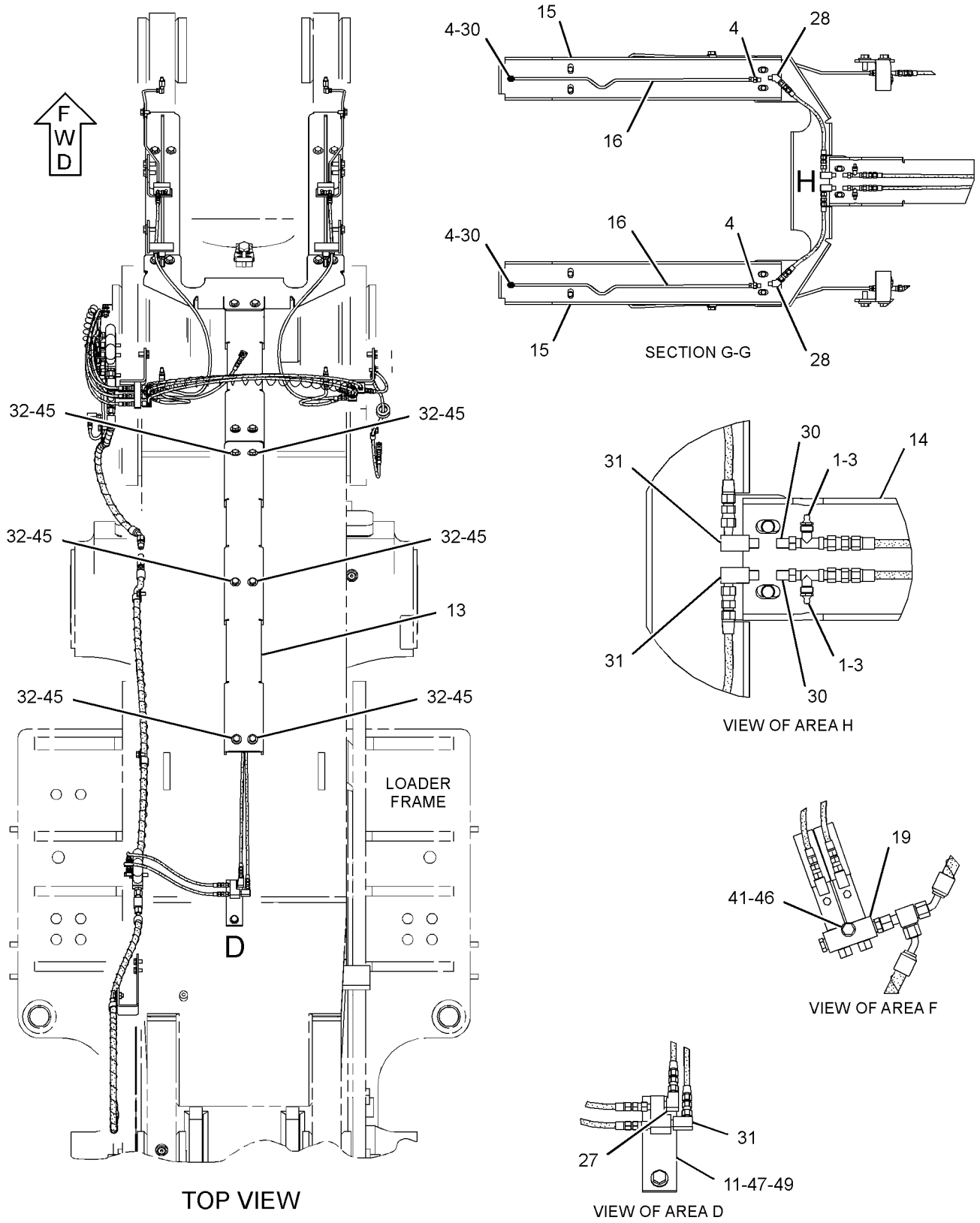


GRAPHIC #4 **<END>** g01330694

## *259-2441* LINES GP-AUTOMATIC LUBRICATION–REAR FRAME

**S/N: BXY1-696**

**PART OF 259-2435, 259-2436, 259-2437 LUBRICATION AR-AUTOMATIC**

**AN ATTACHMENT**

**SMCS-7510, 7540** **i02226004**

| NOTE | REF NO | GRAPHIC REF | PART NUMBER | QTY | PART NAME 1 2 3 4 5 6 (PRODUCT LEVEL) | SEE PAGE |
|---|---|---|---|---|---|---|
| | 1 | 1 | **3E-2345** | 1 | TEE-O-RING | |
| B | 2 | 1 | **3S-2093** | 1 | STRAP-CABLE | |
| | 3 | 1 | **5K-9979** | 2 | CONNECTOR | |
| | 4 | 1 | **6B-6205** | 1 | SPACER (0.438X0.875X1.281-IN THK) | |
| | 5 | 1 | **160-1744** | 2 | BRACKET | |
| | 6 | 1 | **189-1858** | 1 | COUPLER AS | |
| | 7 | 1 | **189-7038** | 1 | GUARD | |
| | 8 | 1 | **189-7482** | 1 | SHEET AS | |
| M | | 1 | **8T-4219** | 1 | STUD-WELD (M10X1.5X17.5-MM) | |
| | 9 | 1 | **189-7483** | 1 | SHEET AS | |
| M | | 1 | **8T-3490** | 1 | NUT-WELD (M10X1.5-THD) | |
| | 10 | 1 | **189-7488** | 1 | BRACKET | |
| I | 11 | 1 | **189-7501** | 1 | HOSE AS | |
| I | 12 | 1 | **189-7502** | 1 | HOSE AS | |
| Y | 13 | 1 | **238-1006** | 1 | TANK & PUMP GP-LUBRICATION | 872 |
| Y | 14 | 1 | *259-2442* | 1 | LINES GP-LUBRICATION (PUMP) | 848 |
| Y | 15 | 1 | *259-2447* | 1 | VALVE & LINES GP-LUBRICATION (STEERING CYLINDERS, TRUNNIONS) | 922 |
| | 16 | 1 | **093-2065** | 2 | GROMMET | |
| | 17 | 1 | *148-8366* | 1 | ELBOW AS | |
| | | 1 | **6V-8397** | 2 | SEAL-O-RING | |
| | | 1 | **6V-8987** | 1 | ELBOW | |
| | 18 | 1 | *148-8371* | 1 | ELBOW AS | |
| | | 1 | **6V-8397** | 1 | SEAL-O-RING | |
| | | 1 | **8C-8988** | 1 | ELBOW | |
| | 19 | 1 | *148-8380* | 1 | ELBOW AS | |
| | | 1 | **6V-8398** | 2 | SEAL-O-RING | |
| | | 1 | **6V-8988** | 1 | ELBOW (45-DEG) | |
| | 20 | 1 | *153-6241* | 1 | ELBOW AS | |
| | | 1 | **6V-8398** | 1 | SEAL-O-RING | |
| | | 1 | **8C-8989** | 1 | ELBOW | |
| | 21 | 1 | *169-4279* | 1 | CONNECTOR GP | |
| | | 1 | **6V-8398** | 1 | SEAL-O-RING | |
| | | 1 | **8C-6872** | 1 | CONNECTOR | |
| | 22 | 1 | **1S-0994** | 1 | CLIP | |
| | 23 | 1 | **2S-1647** | 1 | GROMMET | |
| | 24 | 1 | **3D-2824** | 1 | SEAL-O-RING | |
| | 25 | 1 | **3J-5389** | 1 | PLUG (PIPE) | |
| | 26 | 1 | **4D-7794** | 4 | CLIP | |
| | 27 | 1 | **4S-1962** | 1 | CLIP | |
| | 28 | 1 | **5P-7464** | 1 | CLIP (SLOT) | |
| | 29 | 1 | **5P-7465** | 1 | CLIP (TAB) | |
| | 30 | 1 | **5P-7468** | 1 | CLIP (SLOT) | |
| | 31 | 1 | **5P-7469** | 1 | CLIP (TAB) | |
| | 32 | 1 | **6D-1641** | 3 | CLIP | |
| | 33 | 1 | **6V-1249** | 1 | GROMMET | |
| | 34 | 1 | **6V-2235** | 2 | CLIP | |
| | 35 | 1 | **6V-4349** | 1 | GROMMET | |
| | 36 | 1 | **6V-9168** | 1 | NUT (11/16-16-THD) | |
| | 37 | 1 | **6V-9169** | 1 | NUT-BULKHEAD (13/16-16-THD) | |
| | 38 | 1 | **6V-9746** | 1 | SEAL-O-RING | |
| | 39 | 1 | **8S-0948** | 1 | CLIP | |
| | 40 | 1 | **8T-4121** | 28 | WASHER-HARD (11X21X2.5-MM THK) | |
| M | 41 | 1 | **8T-4133** | 5 | NUT (M10X1.5-THD) | |
| M | 42 | 1 | **8T-4136** | 11 | BOLT (M10X1.5X25-MM) | |

## *259-2441* **LINES GP-AUTOMATIC LUBRICATION** *(contd.)* **i02226004**

| NOTE | REF NO | GRAPHIC REF | PART NUMBER | QTY | PART NAME 1 2 3 4 5 6 (PRODUCT LEVEL) | SEE PAGE |
|---|---|---|---|---|---|---|
| M | 43 | 1 | **8T-4137** | 3 | BOLT (M10X1.5X20-MM) | |
| M | 44 | 1 | **8T-4185** | 9 | BOLT (M10X1.5X50-MM) | |

B-USE AS REQUIRED
I-REFER TO HYDRAULIC INFORMATION SYSTEM
M-METRIC PART
Y-SEPARATE ILLUSTRATION

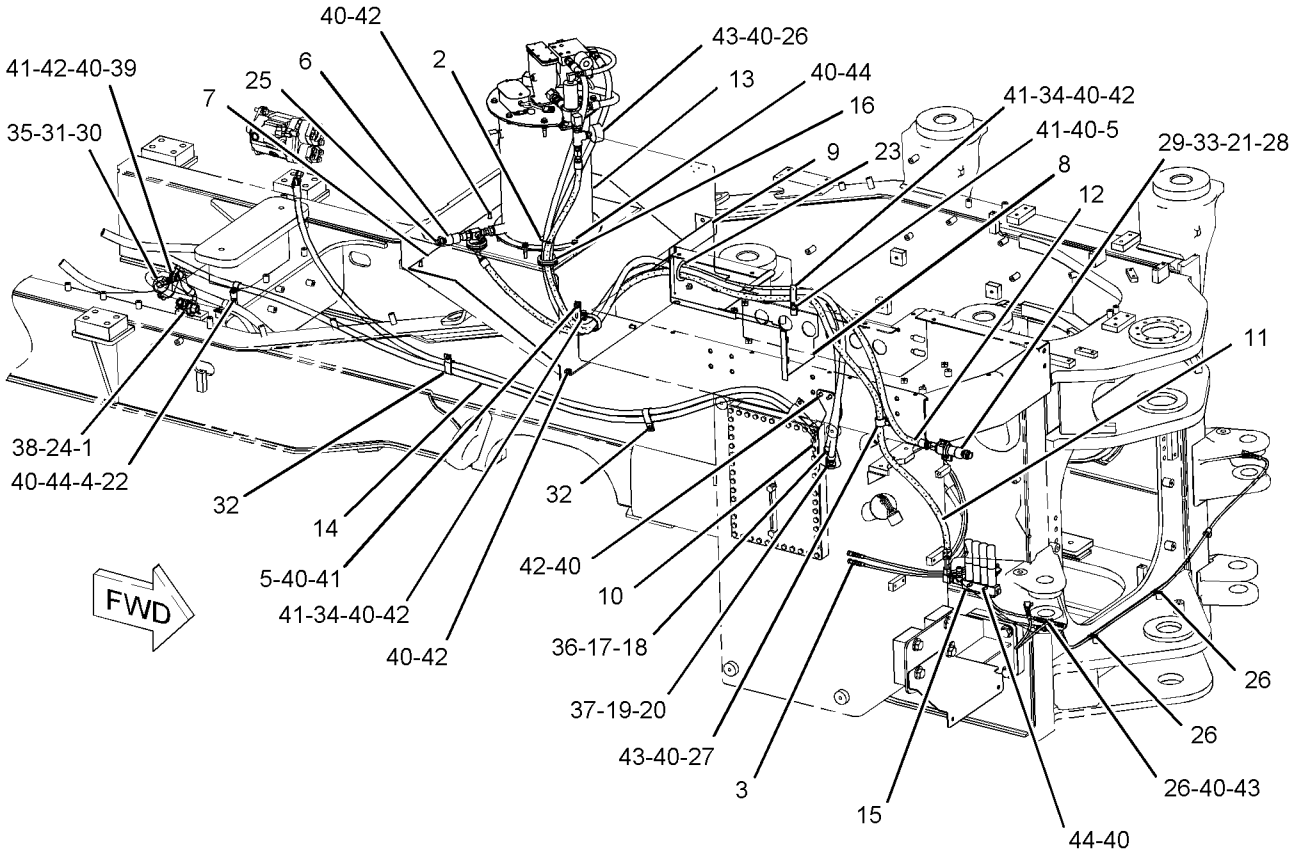


GRAPHIC #1 **<END>** g01128754

## *259-2441* LINES GP-AUTOMATIC LUBRICATION–REAR FRAME

**S/N: BXY697-1200**

**PART OF 259-2435, 259-2436, 259-2437 LUBRICATION AR-AUTOMATIC**

**AN ATTACHMENT**

**SMCS-7510, 7540** **i02457428**

| NOTE | REF NO | GRAPHIC REF | PART NUMBER | QTY | PART NAME 1 2 3 4 5 6 (PRODUCT LEVEL) | SEE PAGE |
|---|---|---|---|---|---|---|
| | 1 | 1 | **3E-2345** | 1 | TEE-O-RING | |
| B | 2 | 1 | **3S-2093** | 1 | STRAP-CABLE | |
| | 3 | 1 | **5K-9979** | 2 | CONNECTOR | |
| | 4 | 1 | **6B-6205** | 1 | SPACER (0.438X0.875X1.281-IN THK) | |
| | 5 | 1 | **160-1744** | 3 | BRACKET | |
| | 6 | 1 | **189-1858** | 1 | COUPLER AS | |
| | 7 | 1 | **189-7038** | 1 | GUARD | |
| | 8 | 1 | **189-7482** | 1 | SHEET AS | |
| M | | 1 | **8T-4219** | 1 | STUD-WELD (M10X1.5X17.5-MM) | |
| | 9 | 1 | **189-7483** | 1 | SHEET AS | |
| M | | 1 | **8T-3490** | 1 | NUT-WELD (M10X1.5-THD) | |
| | 10 | 1 | **189-7488** | 1 | BRACKET | |
| I | 11 | 1 | **189-7501** | 1 | HOSE AS | |
| I | 12 | 1 | **189-7502** | 1 | HOSE AS | |
| Y | 13 | 1 | **238-1006** | 1 | TANK & PUMP GP-LUBRICATION | 872 |
| Y | 14 | 1 | *259-2442* | 1 | LINES GP-LUBRICATION (PUMP) | 848 |
| Y | 15 | 1 | *259-2447* | 1 | VALVE & LINES GP-LUBRICATION (STEERING CYLINDERS, TRUNNIONS) | 922 |
| | 16 | 1 | **093-2065** | 2 | GROMMET | |
| | 17 | 1 | *148-8366* | 1 | ELBOW AS | |
| | | 1 | **6V-8397** | 2 | SEAL-O-RING | |
| | | 1 | **6V-8987** | 1 | ELBOW | |
| | 18 | 1 | *148-8371* | 1 | ELBOW AS | |
| | | 1 | **6V-8397** | 1 | SEAL-O-RING | |
| | | 1 | **8C-8988** | 1 | ELBOW | |
| | 19 | 1 | *148-8380* | 1 | ELBOW AS | |
| | | 1 | **6V-8398** | 2 | SEAL-O-RING | |
| | | 1 | **6V-8988** | 1 | ELBOW (45-DEG) | |
| | 20 | 1 | *153-6241* | 1 | ELBOW AS | |
| | | 1 | **6V-8398** | 1 | SEAL-O-RING | |
| | | 1 | **8C-8989** | 1 | ELBOW | |
| | 21 | 1 | *169-4279* | 1 | CONNECTOR GP | |
| | | 1 | **6V-8398** | 1 | SEAL-O-RING | |
| | | 1 | **8C-6872** | 1 | CONNECTOR | |
| | 22 | 1 | **1S-0994** | 2 | CLIP | |
| | 23 | 1 | **2S-1647** | 1 | GROMMET | |
| | 24 | 1 | **3D-2824** | 1 | SEAL-O-RING | |
| | 25 | 1 | **3J-5389** | 1 | PLUG (PIPE) | |
| | 26 | 1 | **4D-7794** | 4 | CLIP | |
| | 27 | 1 | **4S-1962** | 1 | CLIP | |
| | 28 | 1 | **5P-7464** | 1 | CLIP (SLOT) | |
| | 29 | 1 | **5P-7465** | 1 | CLIP (TAB) | |
| | 30 | 1 | **5P-7468** | 1 | CLIP (SLOT) | |
| | 31 | 1 | **5P-7469** | 1 | CLIP (TAB) | |
| | 32 | 1 | **6D-1641** | 3 | CLIP | |
| | 33 | 1 | **6V-1249** | 1 | GROMMET | |
| | 34 | 1 | **6V-2235** | 3 | CLIP | |
| | 35 | 1 | **6V-4349** | 1 | GROMMET | |
| | 36 | 1 | **6V-9168** | 1 | NUT (11/16-16-THD) | |
| | 37 | 1 | **6V-9169** | 1 | NUT-BULKHEAD (13/16-16-THD) | |
| | 38 | 1 | **6V-9746** | 1 | SEAL-O-RING | |
| | 39 | 1 | **8S-0948** | 1 | CLIP | |
| | 40 | 1 | **8T-4121** | 30 | WASHER-HARD (11X21X2.5-MM THK) | |
| M | 41 | 1 | **8T-4133** | 6 | NUT (M10X1.5-THD) | |
| M | 42 | 1 | **8T-4136** | 12 | BOLT (M10X1.5X25-MM) | |

## *259-2441* LINES GP-AUTOMATIC LUBRICATION *(contd.)* i02457428

| NOTE | REF NO | GRAPHIC REF | PART NUMBER | QTY | PART NAME 1 2 3 4 5 6 (PRODUCT LEVEL) | SEE PAGE |
|---|---|---|---|---|---|---|
| M | 43 | 1 | **8T-4137** | 3 | BOLT (M10X1.5X20-MM) | |
| M | 44 | 1 | **8T-4185** | 9 | BOLT (M10X1.5X50-MM) | |

B-USE AS REQUIRED
I-REFER TO HYDRAULIC INFORMATION SYSTEM
M-METRIC PART
Y-SEPARATE ILLUSTRATION

## *259-2441* **LINES GP-AUTOMATIC LUBRICATION** *(contd.)* **i02457428**

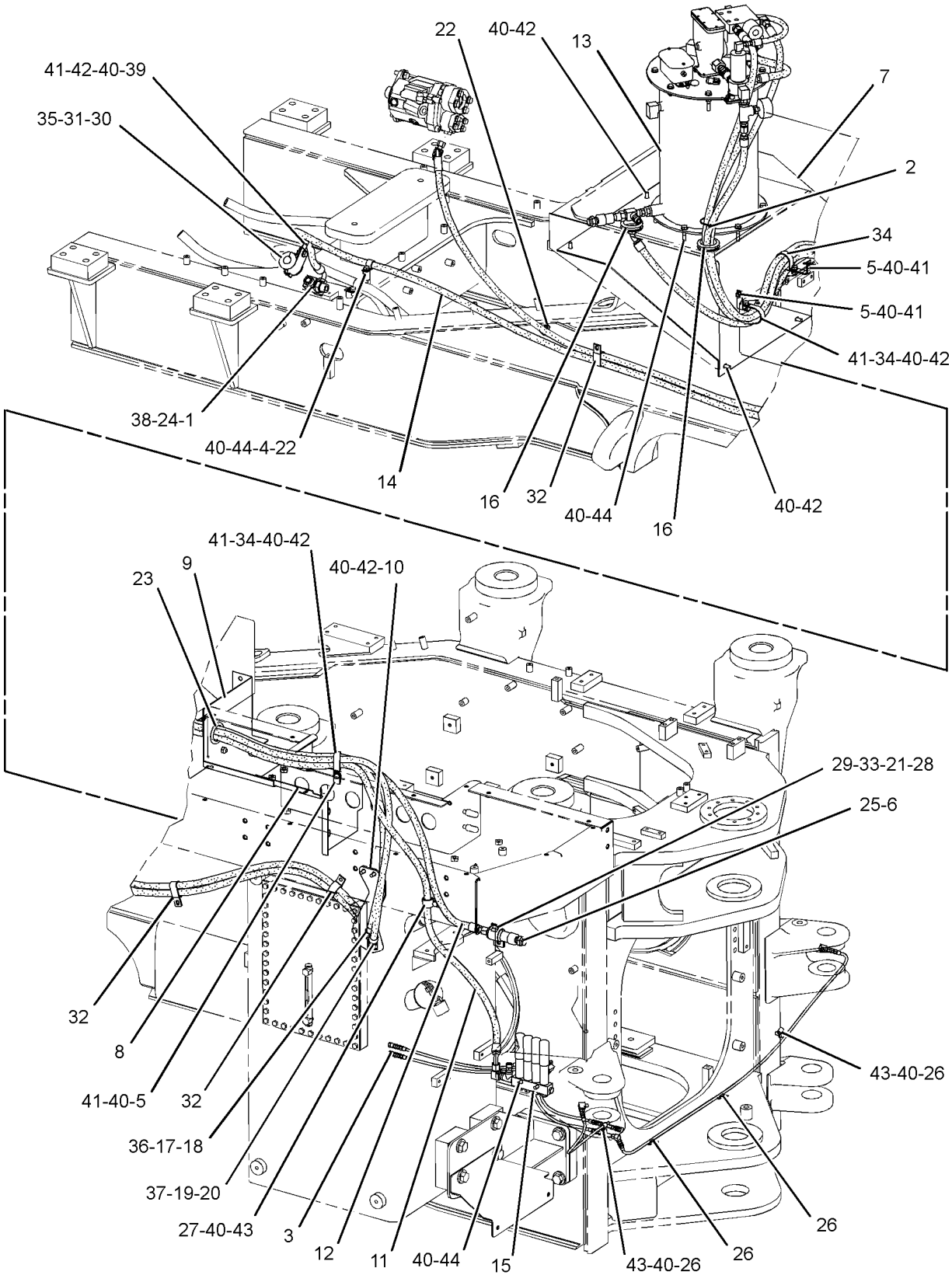


GRAPHIC #1

**<END>**

g01286577

## *259-2441* LINES GP-AUTOMATIC LUBRICATION–REAR FRAME

**S/N: BXY1201-1899**

**PART OF 259-2435, 259-2436, 259-2437 LUBRICATION AR-AUTOMATIC**

**AN ATTACHMENT**

**SMCS-7510, 7540** **i02636695**

| NOTE | REF NO | GRAPHIC REF | PART NUMBER | QTY | PART NAME 1 2 3 4 5 6 (PRODUCT LEVEL) | SEE PAGE |
|---|---|---|---|---|---|---|
| | 1 | 1 | **3E-2345** | 1 | TEE-O-RING | |
| B | 2 | 1 | **3S-2093** | 1 | STRAP-CABLE | |
| | 3 | 1 | **5K-9979** | 2 | CONNECTOR | |
| | 4 | 1 | **6B-6205** | 1 | SPACER (0.438X0.875X1.281-IN THK) | |
| | 5 | 1 | **160-1744** | 2 | BRACKET | |
| | 6 | 1 | **189-1858** | 1 | COUPLER AS | |
| | 7 | 1 | **189-7038** | 1 | GUARD | |
| | 8 | 1 | **189-7482** | 1 | SHEET AS | |
| M | | 1 | **8T-4219** | 1 | STUD-WELD (M10X1.5X17.5-MM) | |
| | 9 | 1 | **189-7483** | 1 | SHEET AS | |
| M | | 1 | **8T-3490** | 1 | NUT-WELD (M10X1.5-THD) | |
| | 10 | 1 | **189-7488** | 1 | BRACKET | |
| I | 11 | 1 | **189-7501** | 1 | HOSE AS | |
| I | 12 | 1 | **189-7502** | 1 | HOSE AS | |
| Y | 13 | 1 | **238-1006** | 1 | TANK & PUMP GP-LUBRICATION | 872 |
| Y | 14 | 1 | *259-2442* | 1 | LINES GP-LUBRICATION (PUMP) | 848 |
| Y | 15 | 1 | *259-2447* | 1 | VALVE & LINES GP-LUBRICATION (STEERING CYLINDERS, TRUNNIONS) | 922 |
| | 16 | 1 | **093-2065** | 2 | GROMMET | |
| | 17 | 1 | *148-8366* | 1 | ELBOW AS | |
| | | 1 | **6V-8397** | 2 | SEAL-O-RING | |
| | | 1 | **6V-8987** | 1 | ELBOW | |
| | 18 | 1 | *148-8371* | 1 | ELBOW AS | |
| | | 1 | **6V-8397** | 1 | SEAL-O-RING | |
| | | 1 | **8C-8988** | 1 | ELBOW | |
| | 19 | 1 | *148-8380* | 1 | ELBOW AS | |
| | | 1 | **6V-8398** | 2 | SEAL-O-RING | |
| | | 1 | **6V-8988** | 1 | ELBOW (45-DEG) | |
| | 20 | 1 | *153-6241* | 1 | ELBOW AS | |
| | | 1 | **6V-8398** | 1 | SEAL-O-RING | |
| | | 1 | **8C-8989** | 1 | ELBOW | |
| | 21 | 1 | *169-4279* | 1 | CONNECTOR GP | |
| | | 1 | **6V-8398** | 1 | SEAL-O-RING | |
| | | 1 | **8C-6872** | 1 | CONNECTOR | |
| | 22 | 1 | **1S-0994** | 2 | CLIP | |
| | 23 | 1 | **2S-1647** | 1 | GROMMET | |
| | 24 | 1 | **3D-2824** | 1 | SEAL-O-RING | |
| | 25 | 1 | **3J-5389** | 1 | PLUG (PIPE) | |
| | 26 | 1 | **4D-7794** | 4 | CLIP | |
| | 27 | 1 | **4S-1962** | 1 | CLIP | |
| | 28 | 1 | **5P-7464** | 1 | CLIP (SLOT) | |
| | 29 | 1 | **5P-7465** | 1 | CLIP (TAB) | |
| | 30 | 1 | **5P-7468** | 1 | CLIP (SLOT) | |
| | 31 | 1 | **5P-7469** | 1 | CLIP (TAB) | |
| | 32 | 1 | **6D-1641** | 3 | CLIP | |
| | 33 | 1 | **6V-1249** | 1 | GROMMET | |
| | 34 | 1 | **6V-2235** | 3 | CLIP | |
| | 35 | 1 | **6V-4349** | 1 | GROMMET | |
| | 36 | 1 | **6V-9168** | 1 | NUT (11/16-16-THD) | |
| | 37 | 1 | **6V-9169** | 1 | NUT-BULKHEAD (13/16-16-THD) | |
| | 38 | 1 | **6V-9746** | 1 | SEAL-O-RING | |
| | 39 | 1 | **8S-0948** | 1 | CLIP | |
| | 40 | 1 | **8T-4121** | 30 | WASHER-HARD (11X21X2.5-MM THK) | |
| M | 41 | 1 | **8T-4133** | 6 | NUT (M10X1.5-THD) | |
| M | 42 | 1 | **8T-4136** | 12 | BOLT (M10X1.5X25-MM) | |

## *259-2441* LINES GP-AUTOMATIC LUBRICATION *(contd.)* i02636695

| NOTE | REF NO | GRAPHIC REF | PART NUMBER | QTY | PART NAME 1 2 3 4 5 6 (PRODUCT LEVEL) | SEE PAGE |
|---|---|---|---|---|---|---|
| M | 43 | 1 | **8T-4137** | 3 | BOLT (M10X1.5X20-MM) | |
| M | 44 | 1 | **8T-4185** | 9 | BOLT (M10X1.5X50-MM) | |
| | 45 | 1 | **179-2805** | 1 | BRACKET | |

B-USE AS REQUIRED
I-REFER TO HYDRAULIC INFORMATION SYSTEM
M-METRIC PART
Y-SEPARATE ILLUSTRATION

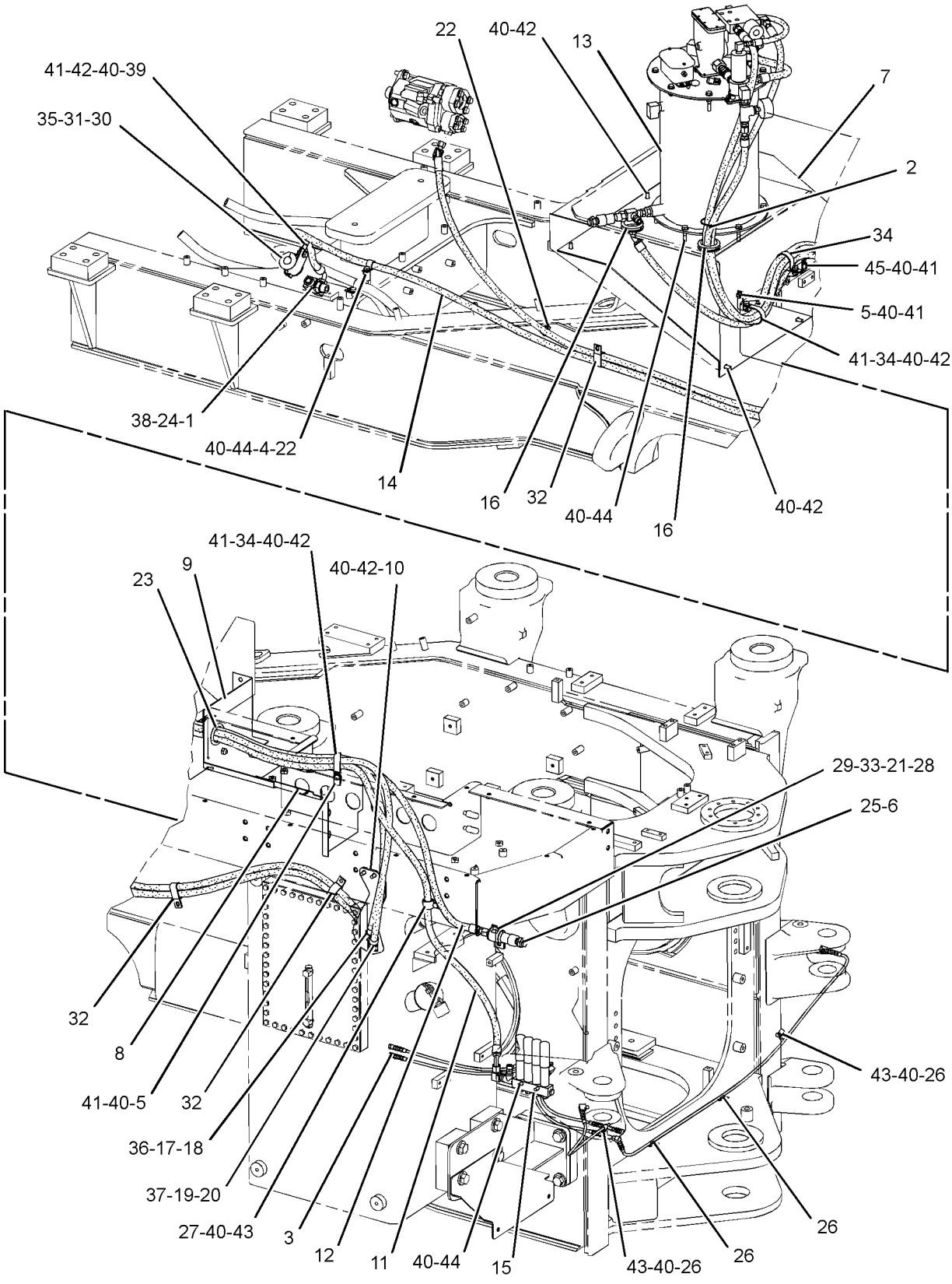


GRAPHIC #1 **<END>** g01346037

# *259-2444* LINES GP-AUTOMATIC LUBRICATION–
## BOOM, TILT LINKS
### S/N: BXY1-1200
### PART OF 259-2437 LUBRICATION AR-AUTOMATIC
### AN ATTACHMENT

**SMCS-7510, 7540** **i02226472**

| NOTE | REF NO | GRAPHIC REF | PART NUMBER | QTY | PART NAME 1 2 3 4 5 6 (PRODUCT LEVEL) | SEE PAGE |
|---|---|---|---|---|---|---|
| | 1 | 2 | **3B-8489** | 2 | FITTING-GREASE | |
| | 2 | 2 | **5K-9979** | 2 | CONNECTOR | |
| | 3 | 2 | **5P-3422** | 2 | TEE-PIPE | |
| | 4 | 1,2 | **6L-3616** | 6 | CONNECTOR | |
| I | 5 | 1 | **189-7497** | 1 | HOSE AS | |
| I | 6 | 1 | **189-7499** | 1 | HOSE AS | |
| I | 7 | 1 | **189-7500** | 1 | HOSE AS | |
| I | 8 | 1 | **189-7609** | 1 | HOSE AS | |
| | 9 | 2 | **219-5073** | 2 | TUBE AS | |
| | 10 | 1 | **219-5074** | 2 | TUBE AS | |
| | 11 | 3 | **224-4416** | 1 | BRACKET AS | |
| | 12 | 3 | **224-4417** | 1 | BRACKET AS | |
| | 13 | 1 | **227-3250** | 2 | GUARD AS | |
| Y | 14 | 1 | *229-2622* | 1 | VALVE & LINES GP-LUBRICATION (B-PIN, RH, LH) | 887 |
| | 15 | 2 | **255-0614** | 1 | PLATE AS | |
| M | | 2 | **8T-3490** | 1 | NUT-WELD (M10X1.5-THD) | |
| Y | 16 | 1 | *259-2445* | 1 | VALVE & LINES GP-LUBRICATION (LH C-PIN, LH TILT LINK PIN) | 918 |
| Y | 17 | 1 | *259-2446* | 1 | VALVE & LINES GP-LUBRICATION (C-PIN, LINK PINS, TILT CYL PIN) | 920 |
| | 18 | 1,2 | **4D-7794** | 6 | CLIP | |
| | 19 | 2 | **4D-8123** | 2 | CLIP | |
| | 20 | 1,3 | **4K-3026** | 4 | EXTENSION | |
| | 21 | 1,2,3 | **4M-8973** | 12 | ELBOW | |
| | 22 | 2 | **5P-1076** | 8 | WASHER-HARD (13.5X30X4-MM THK) | |
| | 23 | 1 | **5P-9297** | 1 | CLIP | |
| | 24 | 1 | **6V-8397** | 3 | SEAL-O-RING | |
| | 25 | 1 | **8C-6869** | 3 | CONNECTOR | |
| | 26 | 3 | **8L-5008** | 5 | ELBOW-PIPE | |
| | 27 | 1,2 | **8M-2772** | 4 | CLIP | |
| | 28 | 1 | **8S-0948** | 4 | CLIP | |
| | 29 | 1,2,3 | **8T-4121** | 27 | WASHER-HARD (11X21X2.5-MM THK) | |
| M | 30 | 1 | **8T-4133** | 1 | NUT (M10X1.5-THD) | |
| M | 31 | 1,3 | **8T-4136** | 5 | BOLT (M10X1.5X25-MM) | |
| M | 32 | 1,2 | **8T-4137** | 16 | BOLT (M10X1.5X20-MM) | |
| M | 33 | 2 | **8T-4139** | 8 | BOLT (M12X1.75X30-MM) | |
| M | 34 | 1 | **8T-4185** | 5 | BOLT (M10X1.5X50-MM) | |
| M | 35 | 1 | **8T-4195** | 1 | BOLT (M10X1.5X30-MM) | |
| | 36 | 1 | **9M-8406** | 1 | CLIP | |
| E | 37 | 1,3 | **7I-1024** | | GUARD (HOSE) (198-CM) | |

E-ORDER BY THE CENTIMETER
I-REFER TO HYDRAULIC INFORMATION SYSTEM
M-METRIC PART
Y-SEPARATE ILLUSTRATION

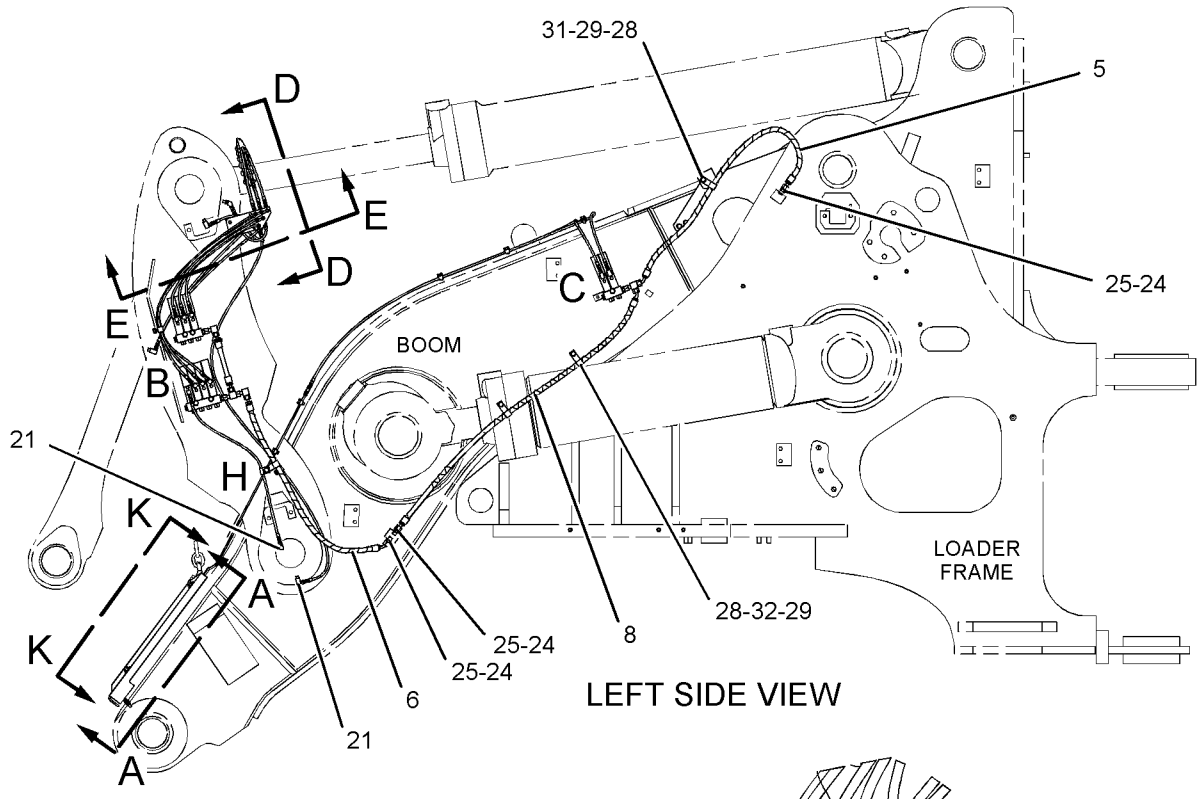


LEFT SIDE VIEW

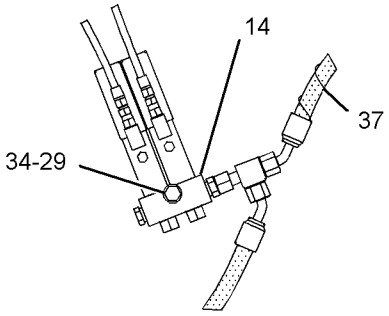


VIEW OF AREA C

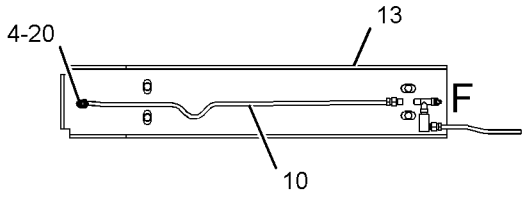


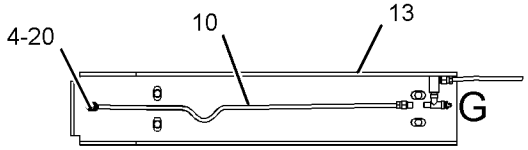


VIEW A-A

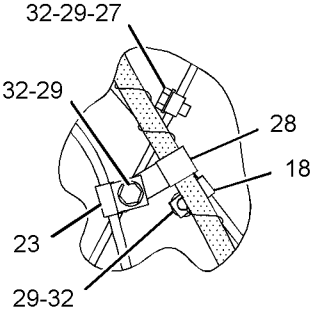


VIEW OF AREA H




VIEW OF AREA B

REFER TO ALL ILLUSTRATIONS OF THIS GROUP FOR AUXILIARY VIEWS

GRAPHIC #1

g01124508

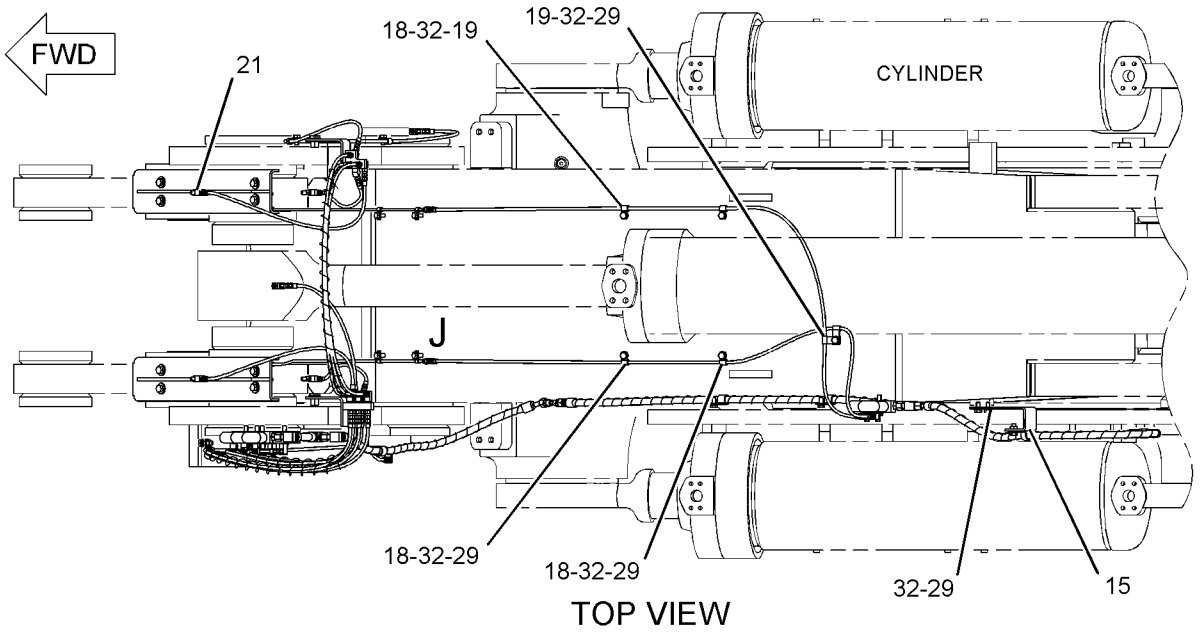


TOP VIEW

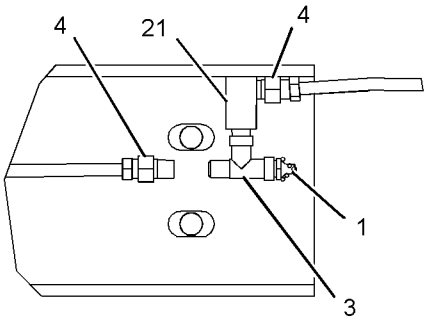


VIEW OF AREA G

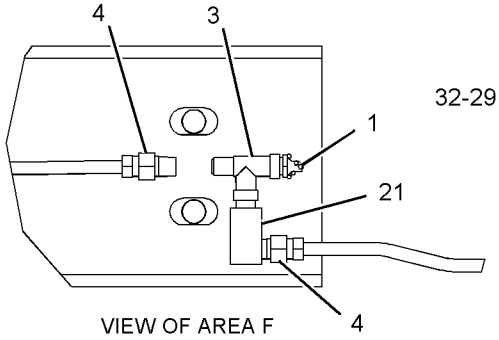


VIEW OF AREA F

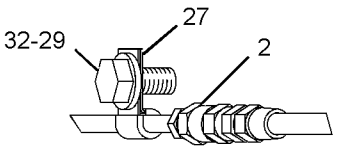


VIEW OF AREA J

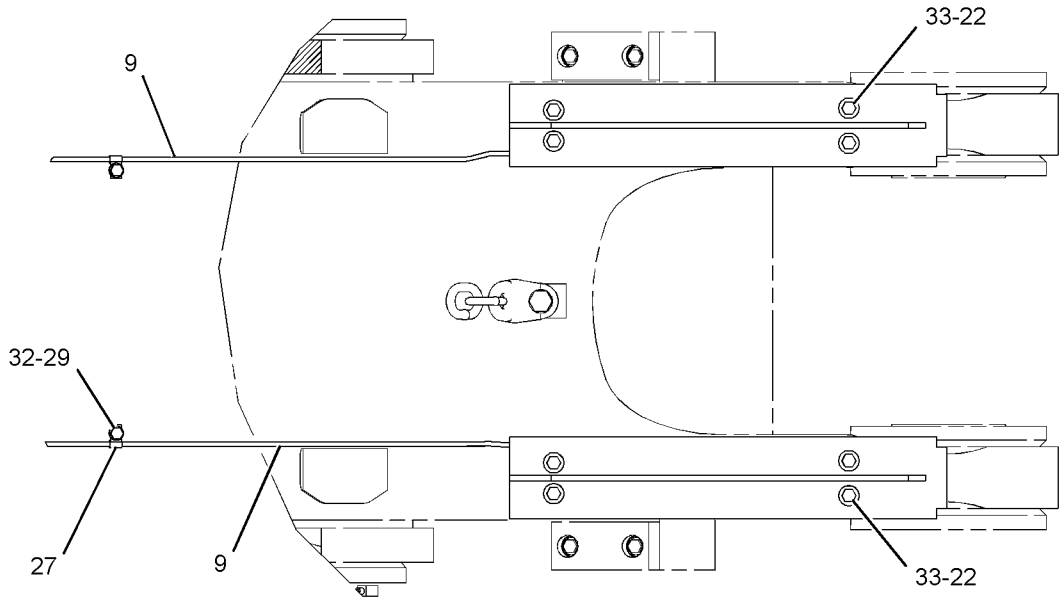


VIEW K-K

GRAPHIC #2

g01124509

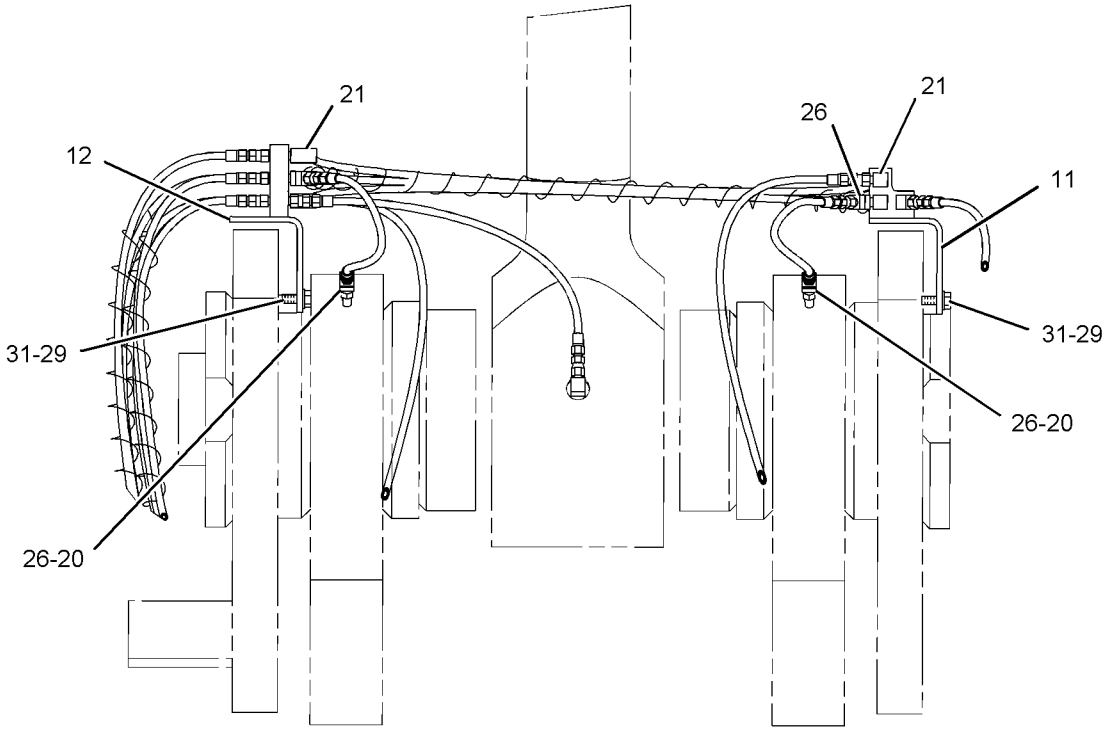


SECTION E-E

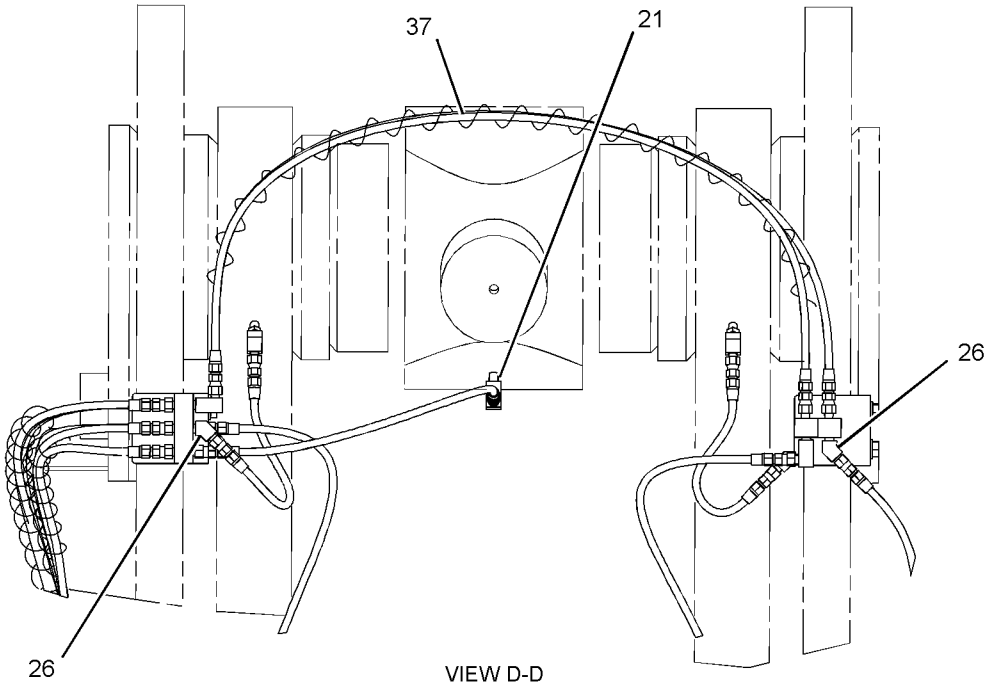


VIEW D-D

GRAPHIC #3 **<END>** g01124520

# *259-2444* LINES GP-AUTOMATIC LUBRICATION–
## BOOM, TILT LINKS
### S/N: BXY1201-1899
### PART OF 259-2437 LUBRICATION AR-AUTOMATIC
### AN ATTACHMENT

**SMCS-7510, 7540** **i02672936**

| NOTE | REF NO | GRAPHIC REF | PART NUMBER | QTY | PART NAME 1 2 3 4 5 6 (PRODUCT LEVEL) | SEE PAGE |
|---|---|---|---|---|---|---|
| C | 1 | 2,3 | **3B-8489** | 4 | FITTING-GREASE | |
| | 2 | 2 | **5K-9979** | 2 | CONNECTOR | |
| C | 3 | 2,3 | **5P-3422** | 4 | TEE-PIPE | |
| | 4 | 1,2 | **6L-3616** | 6 | CONNECTOR | |
| I | 5 | 1 | **189-7497** | 1 | HOSE AS | |
| I | 6 | 1 | **189-7500** | 1 | HOSE AS | |
| I | 7 | 1 | **285-7309** | 1 | HOSE AS | |
| | 8 | 2 | **219-5073** | 2 | TUBE AS | |
| | 9 | 1 | **219-5074** | 2 | TUBE AS | |
| | 10 | 3 | **224-4416** | 1 | BRACKET AS | |
| | 11 | 3 | **224-4417** | 1 | BRACKET AS | |
| | 12 | 1 | **227-3250** | 2 | GUARD AS | |
| Y | 13 | 2 | *229-2622* | 1 | VALVE & LINES GP-LUBRICATION (B-PIN, RH, LH) | 887 |
| | 14 | 2 | **255-0614** | 1 | PLATE AS | |
| M | | 2 | **8T-3490** | 1 | NUT-WELD (M10X1.5-THD) | |
| Y | 15 | 1 | *259-2445* | 1 | VALVE & LINES GP-LUBRICATION (LH C-PIN, LH TILT LINK PIN) | 918 |
| Y | 16 | 1 | *259-2446* | 1 | VALVE & LINES GP-LUBRICATION (C-PIN, LINK PINS, TILT CYL PIN) | 920 |
| CI | 17 | 1 | **272-5100** | 1 | HOSE AS | |
| | 18 | 1,2 | **4D-7794** | 6 | CLIP | |
| | 19 | 2 | **4D-8123** | 2 | CLIP | |
| | 20 | 1,3 | **4K-3026** | 4 | EXTENSION | |
| | 21 | 1,2,3 | **4M-8973** | 12 | ELBOW | |
| | 22 | 2 | **5P-1076** | 8 | WASHER-HARD (13.5X30X4-MM THK) | |
| | 23 | 1 | **5P-9297** | 1 | CLIP | |
| | 24 | 1 | **6V-8397** | 3 | SEAL-O-RING | |
| | 25 | 1 | **8C-6869** | 3 | CONNECTOR | |
| | 26 | 3 | **8L-5008** | 5 | ELBOW-PIPE | |
| | 27 | 1,2 | **8M-2772** | 4 | CLIP | |
| | 28 | 1 | **8S-0948** | 4 | CLIP | |
| | 29 | 1,2,3 | **8T-4121** | 27 | WASHER-HARD (11X21X2.5-MM THK) | |
| M | 30 | 1 | **8T-4133** | 1 | NUT (M10X1.5-THD) | |
| M | 31 | 1,3 | **8T-4136** | 5 | BOLT (M10X1.5X25-MM) | |
| M | 32 | 1,2 | **8T-4137** | 16 | BOLT (M10X1.5X20-MM) | |
| M | 33 | 2 | **8T-4139** | 8 | BOLT (M12X1.75X30-MM) | |
| M | 34 | 1,2 | **8T-4185** | 5 | BOLT (M10X1.5X50-MM) | |
| M | 35 | 1 | **8T-4195** | 1 | BOLT (M10X1.5X30-MM) | |
| | 36 | 1 | **9M-8406** | 1 | CLIP | |
| E | 37 | 1 | **7I-1024** | | GUARD (HOSE) (61-CM) | |
| E | 37A | 3 | **7I-1024** | | GUARD (HOSE) (40-CM) | |
| E | 37B | 3 | **7I-1024** | | GUARD (HOSE) (97-CM) | |

C-CHANGE FROM PREVIOUS TYPE
E-ORDER BY THE CENTIMETER
I-REFER TO HYDRAULIC INFORMATION SYSTEM
M-METRIC PART
Y-SEPARATE ILLUSTRATION

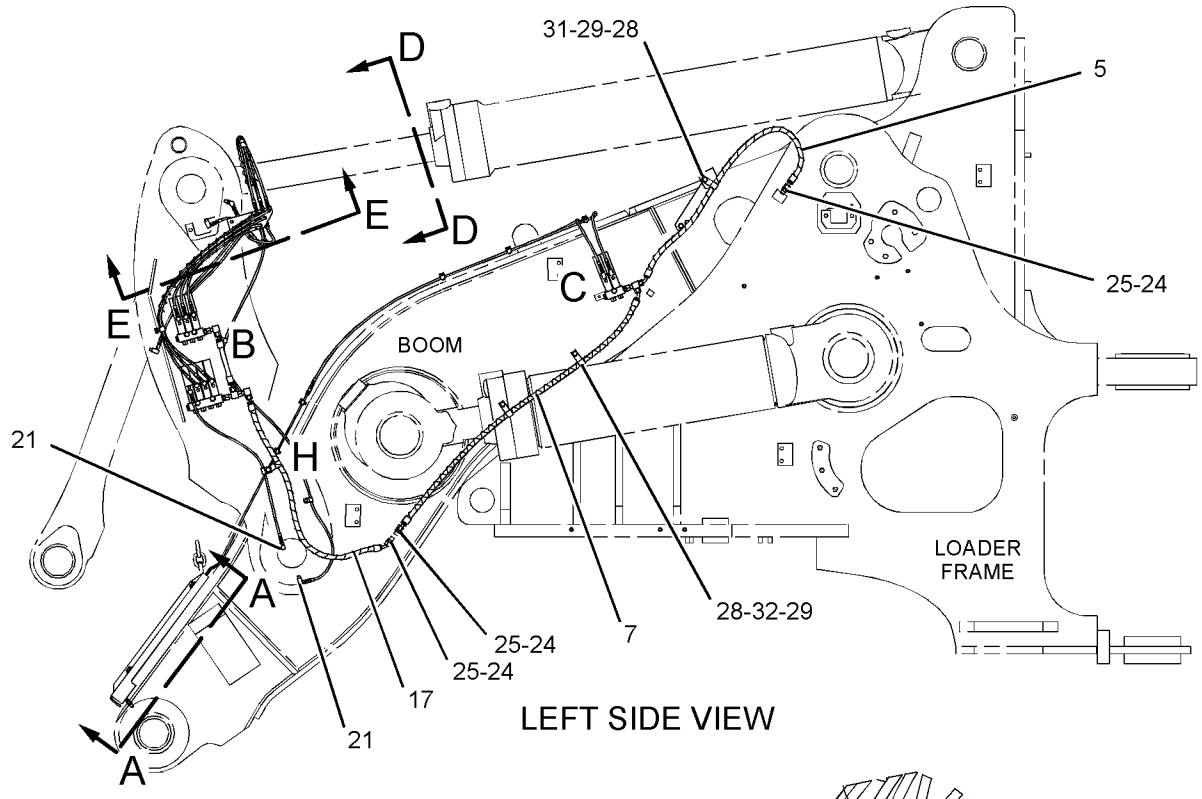


LEFT SIDE VIEW

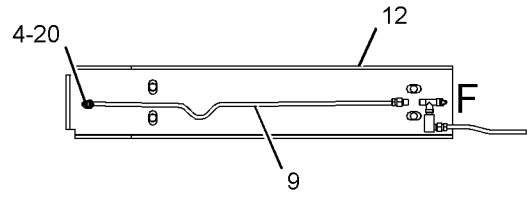


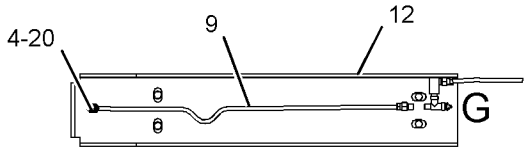


VIEW A-A

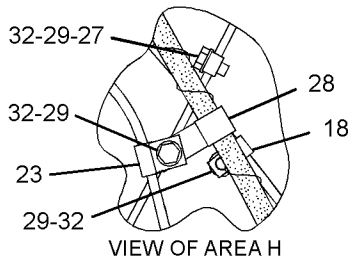


VIEW OF AREA H

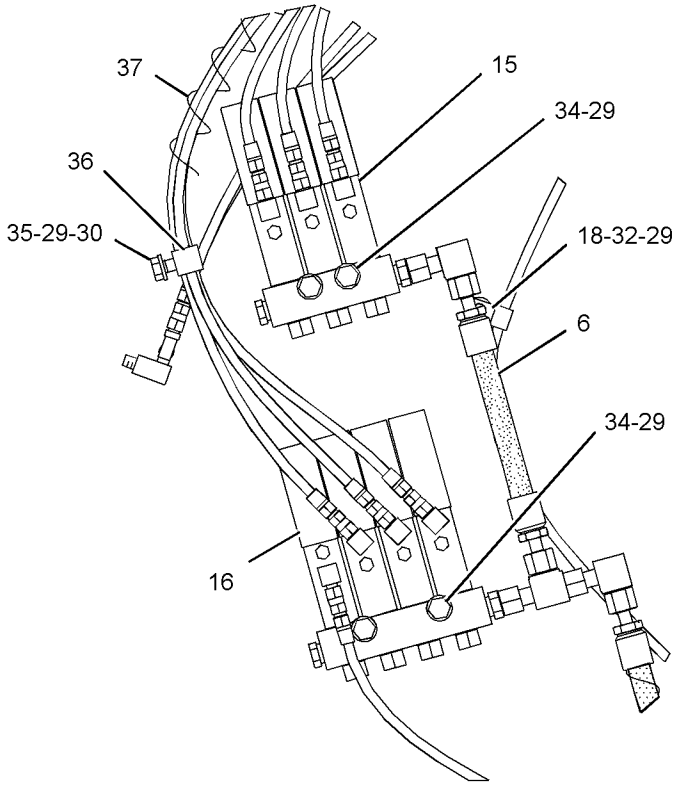


VIEW OF AREA B

REFER TO ALL ILLUSTRATIONS OF
THIS GROUP FOR AUXILIARY VIEWS

GRAPHIC #1

g01331586

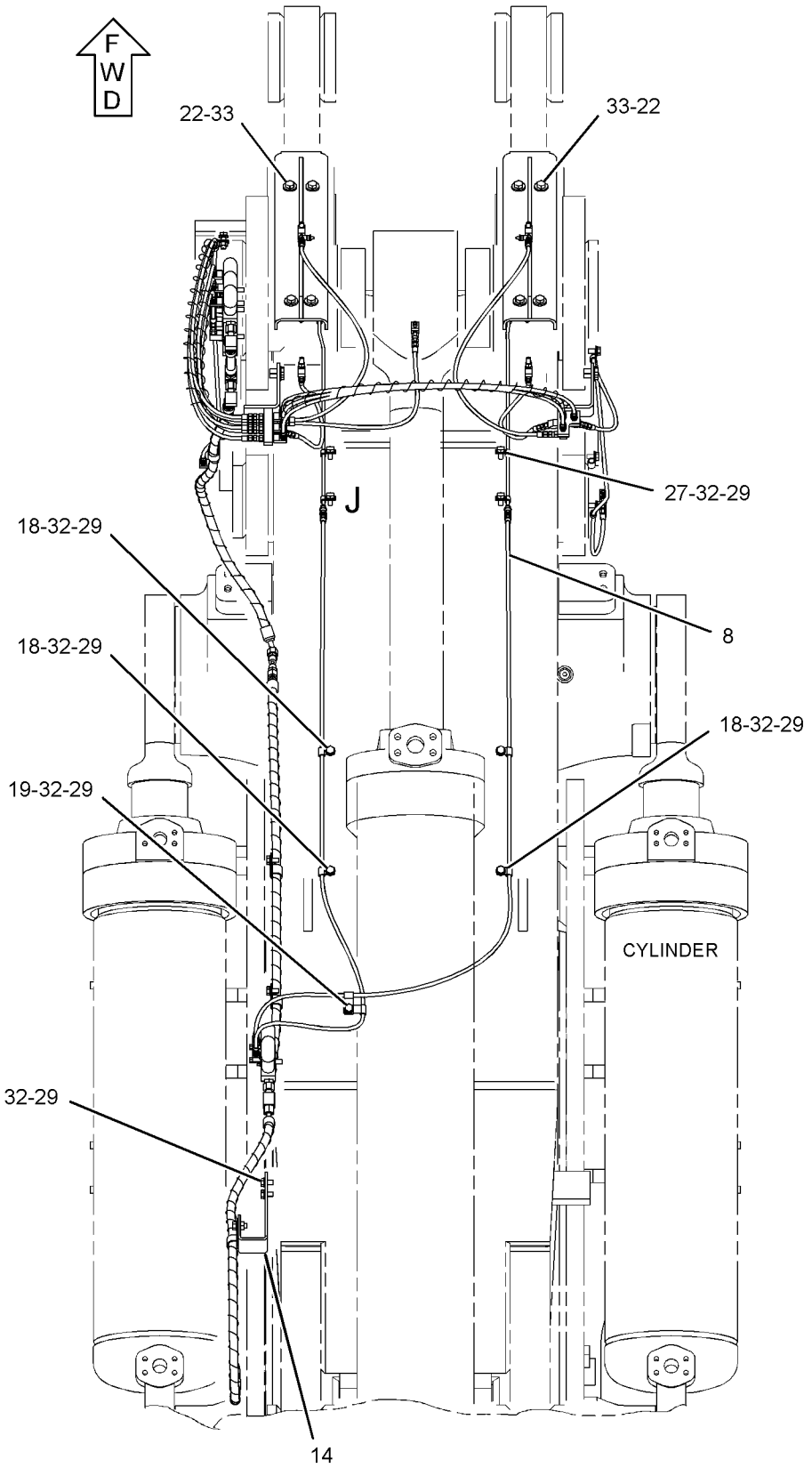


TOP VIEW

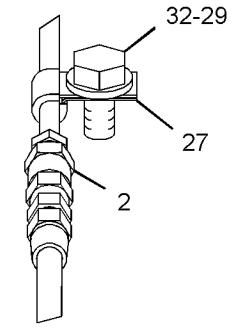


VIEW OF AREA J

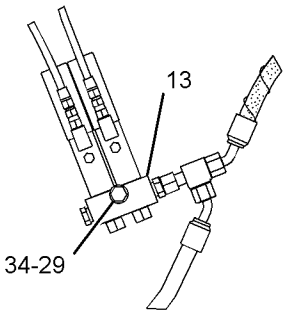


VIEW OF AREA C

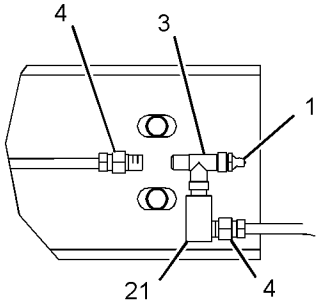


VIEW OF AREA F

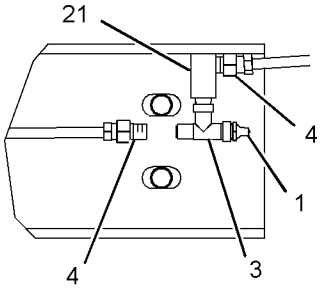


VIEW OF AREA G

GRAPHIC #2

g01331584

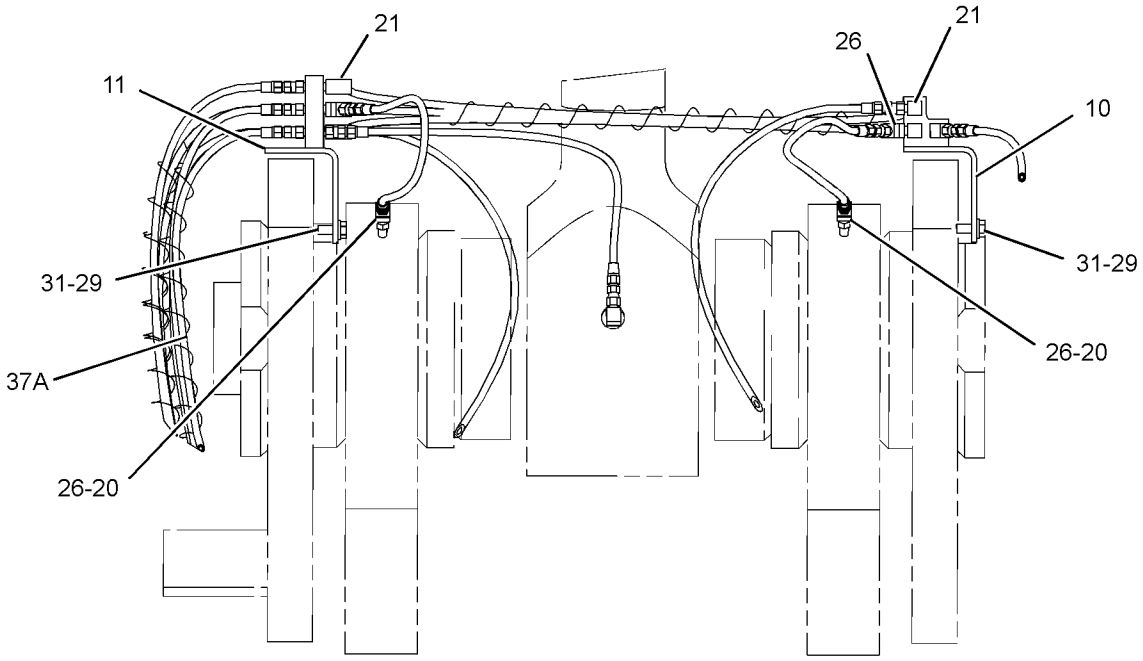


SECTION E-E

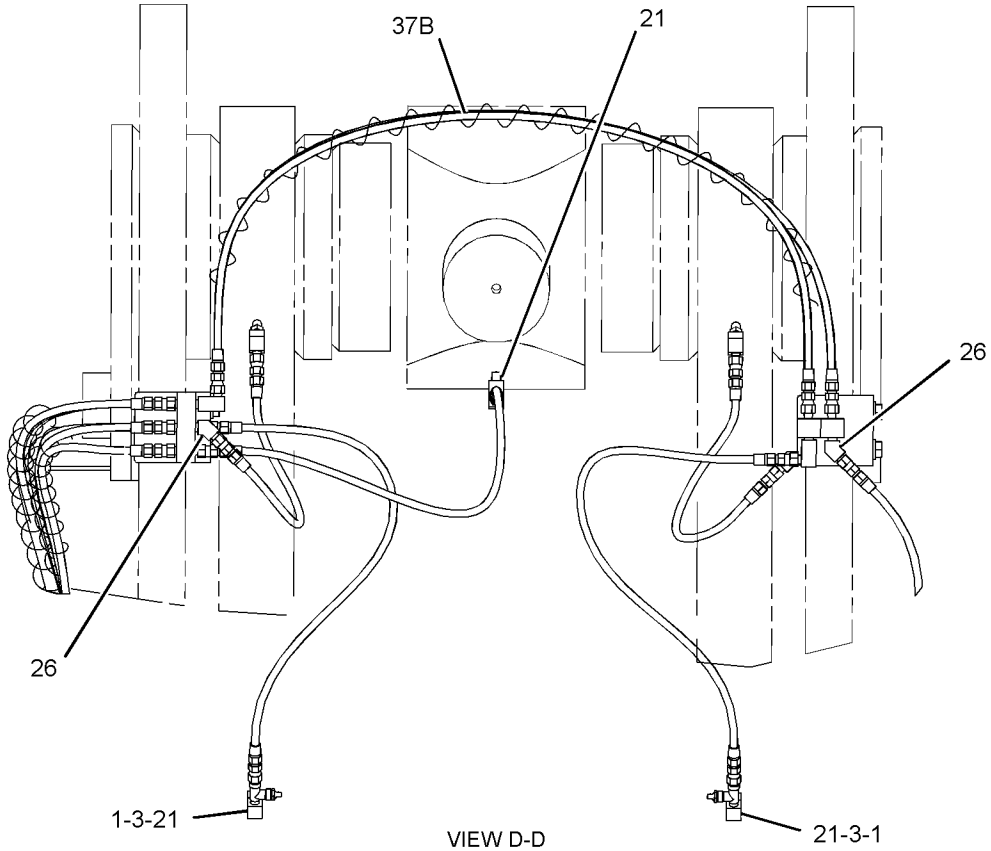


VIEW D-D

GRAPHIC #3 **<END>** g01364096

# *259-2449* LINES GP-AUTOMATIC LUBRICATION–
## BOOM, TILT LINKS
**S/N: BXY1-1899**
**PART OF 247-7034 LUBRICATION AR-AUTOMATIC**
**AN ATTACHMENT**

**SMCS-7510, 7540** **i02649322**

| NOTE | REF NO | GRAPHIC REF | PART NUMBER | QTY | PART NAME 1 2 3 4 5 6 (PRODUCT LEVEL) | SEE PAGE |
|---|---|---|---|---|---|---|
| | 1 | 1 | **3B-8489** | 6 | FITTING-GREASE | |
| | 2 | 1 | **5K-9979** | 2 | CONNECTOR | |
| | 3 | 1 | **5P-3422** | 6 | TEE-PIPE | |
| | 4 | 1 | **6L-3616** | 6 | CONNECTOR | |
| | 5 | 1 | **219-5073** | 2 | TUBE AS | |
| | 6 | 1 | **219-5074** | 2 | TUBE AS | |
| | 7 | 1 | **224-3952** | 2 | PLATE | |
| Y | 8 | 1 | *224-4411* | 1 | VALVE & LINES GP-LUBRICATION (RIGHT, LEFT BOOM PINS) | 883 |
| | 9 | 1 | **224-4416** | 1 | BRACKET AS | |
| | 10 | 1 | **224-4417** | 1 | BRACKET AS | |
| | 11 | 1 | **227-3250** | 2 | GUARD AS | |
| | 12 | 1 | **255-0614** | 1 | PLATE AS | |
| M | | 1 | **8T-3490** | 1 | NUT-WELD (M10X1.5-THD) | |
| Y | 13 | 1 | *259-2448* | 1 | VALVE & LINES GP-LUBRICATION (E, F, K-PINS) | 923 |
| | 14 | 1 | **3B-7721** | 2 | BUSHING-REDUCER | |
| | 15 | 1 | **4D-7794** | 8 | CLIP | |
| | 16 | 1 | **4D-8123** | 2 | CLIP | |
| | 17 | 1 | **4K-3026** | 4 | EXTENSION | |
| | 18 | 1 | **4M-8973** | 12 | ELBOW | |
| | 19 | 1 | **4S-1962** | 1 | CLIP | |
| M | 20 | 1 | **5C-2890** | 2 | NUT (M6X1-THD) | |
| | 21 | 1 | **5P-1076** | 8 | WASHER-HARD (13.5X30X4-MM THK) | |
| M | 22 | 1 | **7X-2534** | 4 | BOLT (M6X1X50-MM) | |
| | 23 | 1 | **8L-5008** | 5 | ELBOW-PIPE | |
| | 24 | 1 | **8M-2772** | 2 | CLIP | |
| | 25 | 1 | **8M-2773** | 5 | CLIP | |
| | 26 | 1 | **8T-4121** | 27 | WASHER-HARD (11X21X2.5-MM THK) | |
| M | 27 | 1 | **8T-4133** | 1 | NUT (M10X1.5-THD) | |
| M | 28 | 1 | **8T-4136** | 8 | BOLT (M10X1.5X25-MM) | |
| M | 29 | 1 | **8T-4137** | 16 | BOLT (M10X1.5X20-MM) | |
| M | 30 | 1 | **8T-4139** | 8 | BOLT (M12X1.75X30-MM) | |
| M | 31 | 1 | **8T-4195** | 2 | BOLT (M10X1.5X30-MM) | |
| | 32 | 1 | **9X-8256** | 4 | WASHER (6.6X12X2-MM THK) | |
| E | 33 | 1 | **7I-1024** | | GUARD (HOSE) (243-CM) | |

E-ORDER BY THE CENTIMETER
M-METRIC PART
Y-SEPARATE ILLUSTRATION

## *259 - 2449* **LINES GP-AUTOMATIC LUBRICATION** *(contd. )* **i02649322**

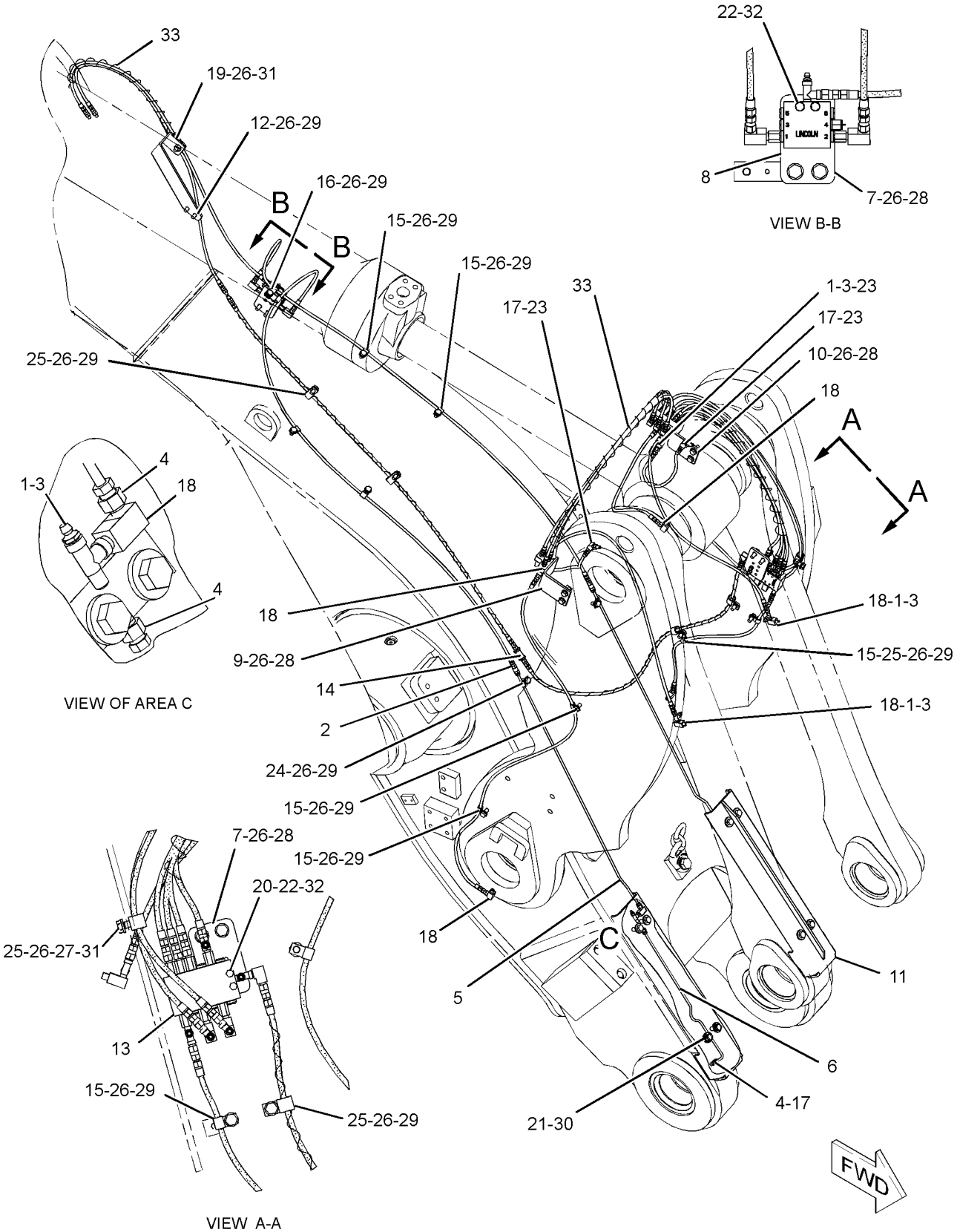


GRAPHIC #1 **<END>** g01335407

## *259-2450* LINES GP-AUTOMATIC LUBRICATION–LOADER FRAME

**S/N: BXY1-1200**

**PART OF 259-2435, 259-2436, 259-2437 LUBRICATION AR-AUTOMATIC**

**AN ATTACHMENT**

**SMCS-7510, 7540** **i02318849**

| NOTE | REF NO | GRAPHIC REF | PART NUMBER | QTY | PART NAME 1 2 3 4 5 6 (PRODUCT LEVEL) | SEE PAGE |
|---|---|---|---|---|---|---|
| | 1 | 1 | **3S-2093** | 1 | STRAP-CABLE | |
| | 2 | 1 | **5K-9243** | 1 | ELBOW-FLARED | |
| | 3 | 1 | **6L-3616** | 3 | CONNECTOR | |
| | 4 | 1 | **7W-8106** | 1 | SPACER (11.13X19.05X0.25-MM THK) | |
| | 5 | 1 | **7X-0732** | 1 | WASHER-HARD (10X22.5X8-MM THK) | |
| | 6 | 1 | **8T-9358** | 1 | CONNECTOR | |
| I | 7 | 1 | **189-7494** | 1 | HOSE AS | |
| I | 8 | 1 | **189-7495** | 1 | HOSE AS | |
| I | 9 | 1 | **189-7496** | 1 | HOSE AS | |
| | 10 | 1 | **189-7503** | 1 | TUBE AS | |
| | 11 | 1 | **189-7508** | 1 | TUBE AS | |
| | 12 | 1 | **189-7509** | 1 | TUBE AS | |
| | 13 | 1 | **221-3404** | 1 | SENSOR GP-PRESSURE (AUTOMATIC LUBRICATION) | |
| | | 1 | **155-2260** | 2 | KIT-CONNECTING PLUG (3-PIN) | |
| | | | | | (EACH KIT INCLUDES PLUG AS AND WEDGE) | |
| | | 1 | **180-9340** | 3 | SOCKET-CONNECTOR | |
| | 14 | 1 | **235-0368** | 1 | BRACKET | |
| I | 15 | 1 | **125-0971** | 1 | HOSE AS | |
| Y | 16 | 1 | *259-2451* | 1 | VALVE & LINES GP-LUBRICATION (LWR HITCH, RH STEER, TILT CYL) | 925 |
| Y | 17 | 1 | *259-2453* | 1 | VALVE & LINES GP-LUBRICATION (LH STEERING CYL, UPPER HITCH) | 927 |
| | 18 | 1 | **259-2454** | 1 | TUBE AS | |
| | 19 | 1 | *148-8367* | 1 | ELBOW AS | |
| | | 1 | **6V-8397** | 1 | SEAL-O-RING | |
| | | 1 | **6V-9850** | 1 | ELBOW | |
| | 20 | 1 | *148-8458* | 2 | UNION GP | |
| | | | | | (EACH INCLUDES) | |
| | | 1 | **6V-8397** | 2 | SEAL-O-RING | |
| | | 1 | **6V-9807** | 1 | UNION | |
| | 21 | 1 | **3J-1907** | 1 | SEAL-O-RING | |
| | 22 | 1 | **4D-7735** | 3 | CLIP | |
| | 23 | 1 | **4D-7794** | 4 | CLIP | |
| | 24 | 1 | **5P-7464** | 1 | CLIP (SLOT) | |
| | 25 | 1 | **5P-7465** | 1 | CLIP (TAB) | |
| | 26 | 1 | **6V-1249** | 1 | GROMMET | |
| | 27 | 1 | **6V-8397** | 2 | SEAL-O-RING | |
| | 28 | 1 | **6V-9168** | 1 | NUT (11/16-16-THD) | |
| | 29 | 1 | **8C-6869** | 1 | CONNECTOR | |
| | 30 | 1 | **8L-5008** | 1 | ELBOW-PIPE | |
| | 31 | 1 | **8M-2772** | 5 | CLIP | |
| | 32 | 1 | **8T-4121** | 18 | WASHER-HARD (11X21X2.5-MM THK) | |
| M | 33 | 1 | **8T-4133** | 1 | NUT (M10X1.5-THD) | |
| M | 34 | 1 | **8T-4137** | 12 | BOLT (M10X1.5X20-MM) | |
| M | 35 | 1 | **8T-4185** | 4 | BOLT (M10X1.5X50-MM) | |
| M | 36 | 1 | **8T-4195** | 1 | BOLT (M10X1.5X30-MM) | |
| M | 37 | 1 | **8T-4196** | 1 | BOLT (M10X1.5X35-MM) | |

I-REFER TO HYDRAULIC INFORMATION SYSTEM
M-METRIC PART
Y-SEPARATE ILLUSTRATION

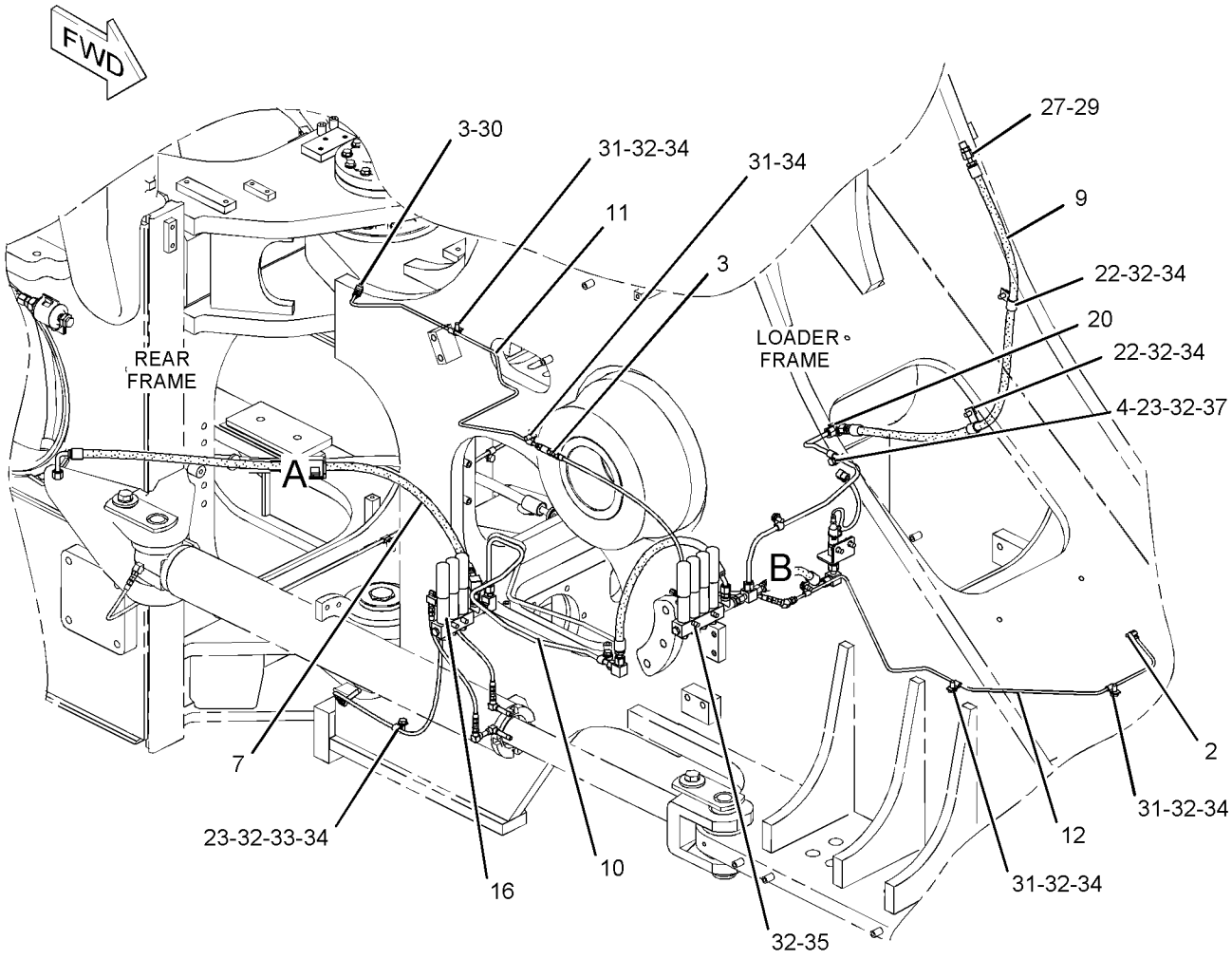


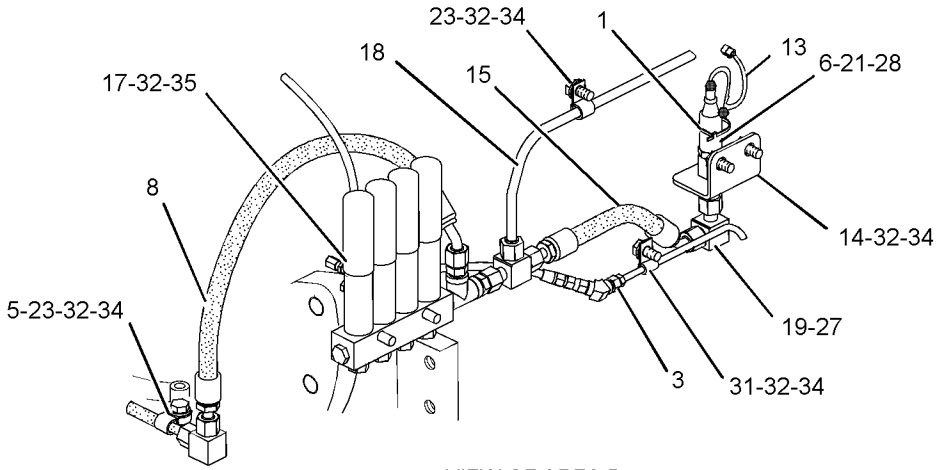


VIEW OF AREA B

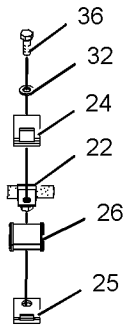


VIEW OF AREA A (EXPLODED)

GRAPHIC #1 **<END>** g01128750

## *259-2450* LINES GP-AUTOMATIC LUBRICATION–LOADER FRAME

**S/N: BXY1201-1899**

**PART OF 259-2435, 259-2436, 259-2437 LUBRICATION AR-AUTOMATIC**

**AN ATTACHMENT**

**SMCS-7510, 7540** **i02636697**

| NOTE | REF NO | GRAPHIC REF | PART NUMBER | QTY | PART NAME 1 2 3 4 5 6 (PRODUCT LEVEL) | SEE PAGE |
|---|---|---|---|---|---|---|
| | 1 | 1 | **3S-2093** | 1 | STRAP-CABLE | |
| | 2 | 1 | **5K-9243** | 1 | ELBOW-FLARED | |
| | 3 | 1 | **6L-3616** | 3 | CONNECTOR | |
| | 4 | 1 | **7W-8106** | 1 | SPACER (11.13X19.05X0.25-MM THK) | |
| | 5 | 1 | **7X-0732** | 1 | WASHER-HARD (10X22.5X8-MM THK) | |
| | 6 | 1 | **8T-9358** | 1 | CONNECTOR | |
| CI | 7 | 1 | **8X-9227** | 1 | HOSE AS | |
| I | 8 | 1 | **125-0971** | 1 | HOSE AS | |
| I | 9 | 1 | **189-7495** | 1 | HOSE AS | |
| I | 10 | 1 | **189-7496** | 1 | HOSE AS | |
| | 11 | 1 | **189-7503** | 1 | TUBE AS | |
| | 12 | 1 | **189-7508** | 1 | TUBE AS | |
| | 13 | 1 | **189-7509** | 1 | TUBE AS | |
| | 14 | 1 | **221-3404** | 1 | SENSOR GP-PRESSURE (AUTOMATIC LUBRICATION) | |
| | | 1 | **155-2260** | 2 | KIT-CONNECTING PLUG (3-PIN) | |
| | | | | | (EACH KIT INCLUDES PLUG AS AND WEDGE) | |
| | | 1 | **180-9340** | 3 | SOCKET-CONNECTOR | |
| | 15 | 1 | **235-0368** | 1 | BRACKET | |
| Y | 16 | 1 | *259-2451* | 1 | VALVE & LINES GP-LUBRICATION (LWR HITCH, RH STEER, TILT CYL) | 925 |
| Y | 17 | 1 | *259-2453* | 1 | VALVE & LINES GP-LUBRICATION (LH STEERING CYL, UPPER HITCH) | 927 |
| | 18 | 1 | **259-2454** | 1 | TUBE AS | |
| | 19 | 1 | *148-8367* | 1 | ELBOW AS | |
| | | 1 | **6V-8397** | 1 | SEAL-O-RING | |
| | | 1 | **6V-9850** | 1 | ELBOW | |
| | 20 | 1 | *148-8458* | 2 | UNION GP | |
| | | | | | (EACH INCLUDES) | |
| | | 1 | **6V-8397** | 2 | SEAL-O-RING | |
| | | 1 | **6V-9807** | 1 | UNION | |
| | 21 | 1 | **3J-1907** | 1 | SEAL-O-RING | |
| | 22 | 1 | **4D-7735** | 3 | CLIP | |
| | 23 | 1 | **4D-7794** | 4 | CLIP | |
| | 24 | 1 | **5P-7464** | 1 | CLIP (SLOT) | |
| | 25 | 1 | **5P-7465** | 1 | CLIP (TAB) | |
| | 26 | 1 | **6V-1249** | 1 | GROMMET | |
| | 27 | 1 | **6V-8397** | 2 | SEAL-O-RING | |
| | 28 | 1 | **6V-9168** | 1 | NUT (11/16-16-THD) | |
| | 29 | 1 | **8C-6869** | 1 | CONNECTOR | |
| | 30 | 1 | **8L-5008** | 1 | ELBOW-PIPE | |
| | 31 | 1 | **8M-2772** | 5 | CLIP | |
| | 32 | 1 | **8T-4121** | 18 | WASHER-HARD (11X21X2.5-MM THK) | |
| M | 33 | 1 | **8T-4133** | 1 | NUT (M10X1.5-THD) | |
| M | 34 | 1 | **8T-4137** | 12 | BOLT (M10X1.5X20-MM) | |
| M | 35 | 1 | **8T-4185** | 4 | BOLT (M10X1.5X50-MM) | |
| M | 36 | 1 | **8T-4195** | 1 | BOLT (M10X1.5X30-MM) | |
| M | 37 | 1 | **8T-4196** | 1 | BOLT (M10X1.5X35-MM) | |

C-CHANGE FROM PREVIOUS TYPE
I-REFER TO HYDRAULIC INFORMATION SYSTEM
M-METRIC PART
Y-SEPARATE ILLUSTRATION

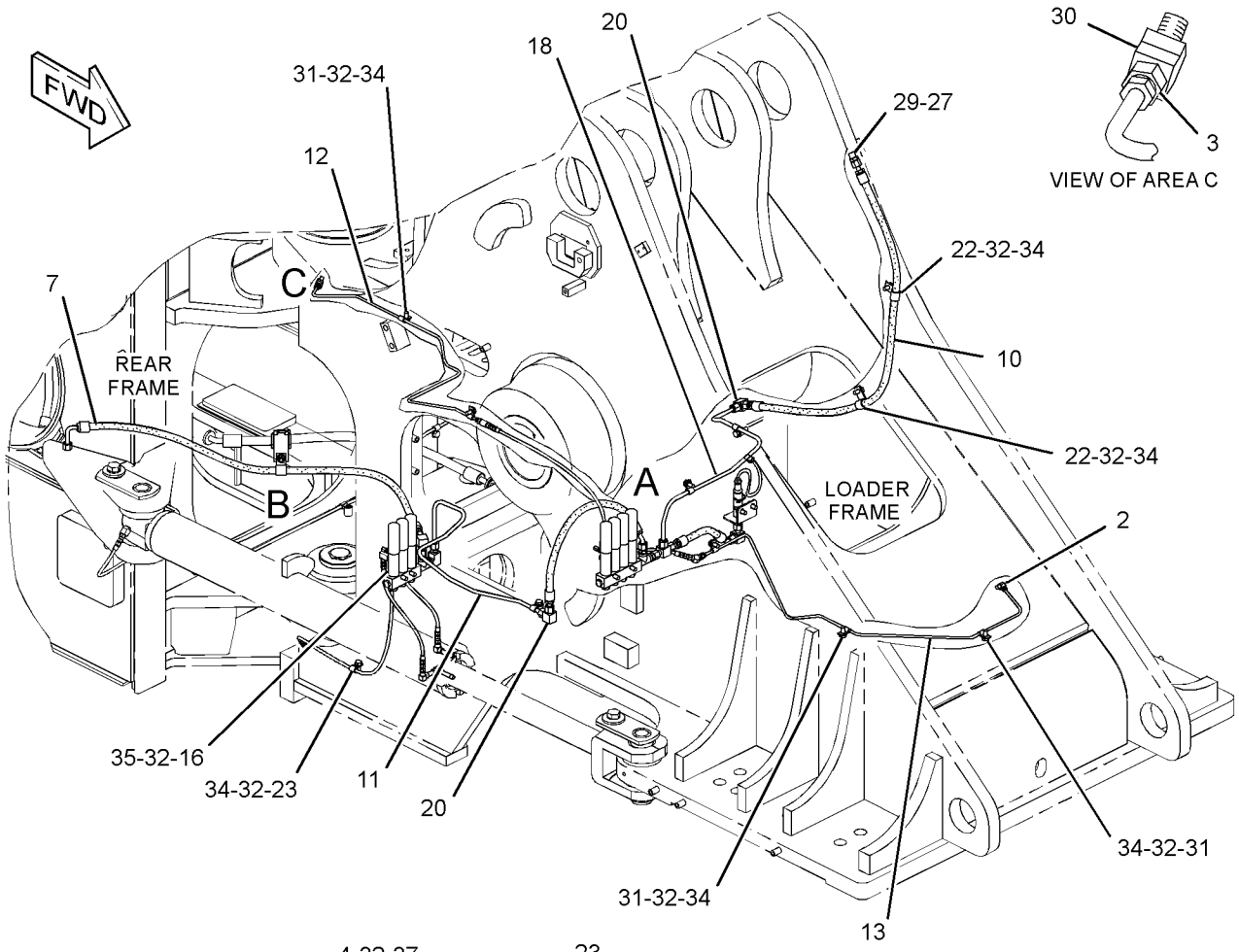


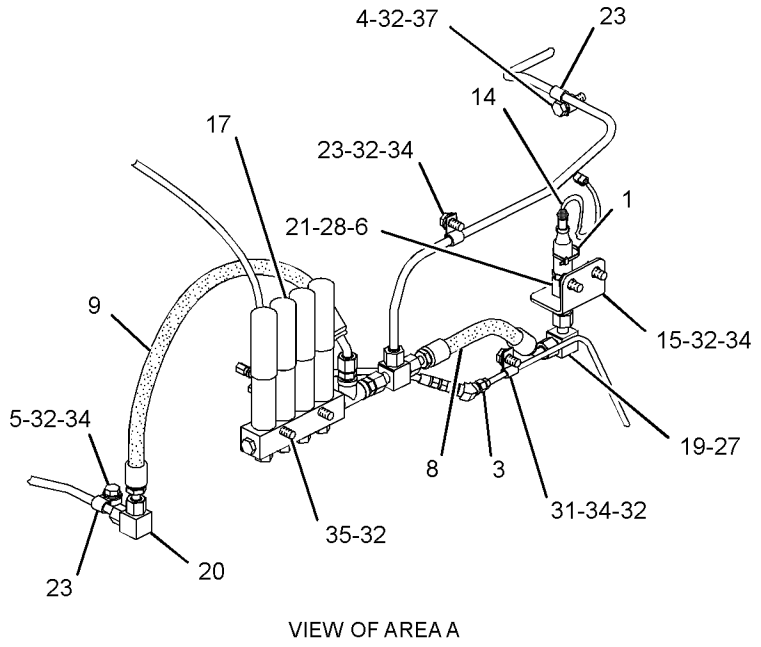


VIEW OF AREA A

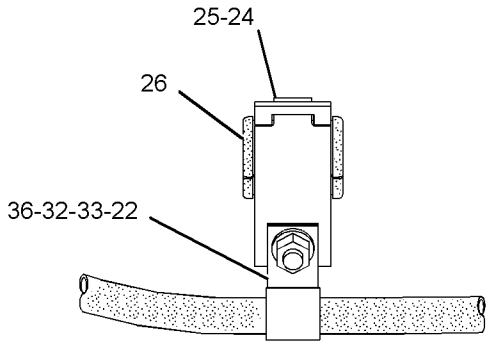


VIEW OF AREA B

GRAPHIC #1 **<END>** g01353827

## *272-5090* LINES GP-AUTOMATIC LUBRICATION–REAR FRAME

**S/N: BXY1900-UP**

**PART OF 293-7304, 293-7306, 293-7308 LUBRICATION AR-AUTOMATIC**

**AN ATTACHMENT**

**SMCS-7510, 7540** **i02742906**

| NOTE | REF NO | GRAPHIC REF | PART NUMBER | QTY | PART NAME 1 2 3 4 5 6 (PRODUCT LEVEL) | SEE PAGE |
|---|---|---|---|---|---|---|
| | 1 | 1 | **3E-2345** | 1 | TEE-O-RING | |
| B | 2 | 2 | **3S-2093** | 1 | STRAP-CABLE | |
| | 3 | 1 | **5K-9979** | 2 | CONNECTOR | |
| | 4 | 1 | **6B-6205** | 1 | SPACER (0.438X0.875X1.281-IN THK) | |
| | 5 | 2 | **8T-9358** | 1 | CONNECTOR | |
| | 6 | 2 | **160-1744** | 1 | BRACKET | |
| | 7 | 2 | **179-2805** | 1 | BRACKET | |
| | 8 | 2 | **189-1858** | 1 | COUPLER AS | |
| | 9 | 2 | **189-7038** | 1 | GUARD | |
| | 10 | 2 | **189-7482** | 1 | SHEET AS | |
| M | | 2 | **8T-4219** | 1 | STUD-WELD (M10X1.5X17.5-MM) | |
| | | 2 | **195-3162** | 1 | SHEET AS | |
| | 11 | 2 | **189-7483** | 1 | SHEET AS | |
| M | | 2 | **8T-3490** | 1 | NUT-WELD (M10X1.5-THD) | |
| | 12 | 1 | **189-7488** | 1 | BRACKET | |
| I | 13 | 1 | **189-7501** | 1 | HOSE AS | |
| I | 14 | 2 | **189-7502** | 1 | HOSE AS | |
| I | 15 | 2 | **216-3011** | 1 | HOSE AS | |
| | 16 | 2 | **221-3404** | 1 | SENSOR GP-PRESSURE (AUTOMATIC LUBRICATION) | |
| | | 2 | **180-9340** | 3 | SOCKET-CONNECTOR | |
| | | 2 | **155-2260** | 1 | KIT-CONNECTING PLUG (3-PIN) | |
| | | | | | (KIT INCLUDES PLUG AS AND WEDGE) | |
| Y | 17 | 2 | **238-1006** | 1 | TANK & PUMP GP-LUBRICATION | 872 |
| Y | 18 | 1 | *259-2442* | 1 | LINES GP-LUBRICATION (PUMP) | 848 |
| Y | 19 | 1 | *272-5091* | 1 | VALVE & LINES GP-LUBRICATION (STEERING CYLINDERS, TRUNNIONS) | 929 |
| | 20 | 2 | **285-7307** | 1 | BRACKET | |
| | 21 | 1,2 | **093-2065** | 2 | GROMMET | |
| | 22 | 1 | *148-8366* | 1 | ELBOW AS | |
| | | 1 | **6V-8397** | 2 | SEAL-O-RING | |
| | | 1 | **6V-8987** | 1 | ELBOW | |
| | 23 | 1 | *148-8371* | 1 | ELBOW AS | |
| | | 1 | **6V-8397** | 1 | SEAL-O-RING | |
| | | 1 | **8C-8988** | 1 | ELBOW | |
| | 24 | 1 | *148-8380* | 1 | ELBOW AS | |
| | | 1 | **6V-8398** | 2 | SEAL-O-RING | |
| | | 1 | **6V-8988** | 1 | ELBOW (45-DEG) | |
| | 25 | 2 | *148-8444* | 1 | TEE AS-SWIVEL | |
| | | 2 | **6V-8398** | 2 | SEAL-O-RING | |
| | | 2 | **6V-9837** | 1 | TEE-SWIVEL | |
| | 26 | 1 | *153-6241* | 1 | ELBOW AS | |
| | | 1 | **6V-8398** | 1 | SEAL-O-RING | |
| | | 1 | **8C-8989** | 1 | ELBOW | |
| | 27 | 2 | *164-5544* | 1 | ELBOW AS | |
| | | 2 | **3E-2333** | 1 | ELBOW | |
| | | 2 | **6V-8398** | 1 | SEAL-O-RING | |
| | 28 | 2 | *169-4279* | 1 | CONNECTOR GP | |
| | | 2 | **6V-8398** | 1 | SEAL-O-RING | |
| | | 2 | **8C-6872** | 1 | CONNECTOR | |
| | 29 | 1 | **1S-0994** | 2 | CLIP | |
| | 30 | 2 | **2S-1647** | 1 | GROMMET | |
| | 31 | 1 | **3D-2824** | 1 | SEAL-O-RING | |
| | 32 | 2 | **3J-1907** | 1 | SEAL-O-RING | |
| | 33 | 2 | **3J-5389** | 1 | PLUG (PIPE) | |
| | 34 | 1 | **4D-7794** | 4 | CLIP | |

## *272-5090* LINES GP-AUTOMATIC LUBRICATION *(contd.)* i02742906

| NOTE | REF NO | GRAPHIC REF | PART NUMBER | QTY | PART NAME 1 2 3 4 5 6 (PRODUCT LEVEL) | SEE PAGE |
|---|---|---|---|---|---|---|
| | 35 | 2 | **5P-7464** | 1 | CLIP (SLOT) | |
| | 36 | 2 | **5P-7465** | 1 | CLIP (TAB) | |
| | 37 | 1 | **5P-7468** | 1 | CLIP (SLOT) | |
| | 38 | 1 | **5P-7469** | 1 | CLIP (TAB) | |
| | 39 | 1 | **6D-1641** | 3 | CLIP | |
| | 40 | 2 | **6D-4247** | 3 | CLIP | |
| | 41 | 2 | **6V-1249** | 1 | GROMMET | |
| | 42 | 2 | **6V-2235** | 2 | CLIP | |
| | 43 | 1 | **6V-4349** | 1 | GROMMET | |
| | 44 | 2 | **6V-8397** | 1 | SEAL-O-RING | |
| | 45 | 1,2 | **6V-9168** | 2 | NUT (11/16-16-THD) | |
| | 46 | 1 | **6V-9169** | 1 | NUT-BULKHEAD (13/16-16-THD) | |
| | 47 | 1 | **6V-9746** | 1 | SEAL-O-RING | |
| | 48 | 1 | **8S-0948** | 1 | CLIP | |
| | 49 | 1,2 | **8T-4121** | 28 | WASHER-HARD (11X21X2.5-MM THK) | |
| M | 50 | 1,2 | **8T-4133** | 5 | NUT (M10X1.5-THD) | |
| M | 51 | 1,2 | **8T-4136** | 11 | BOLT (M10X1.5X25-MM) | |
| M | 52 | 1,2 | **8T-4137** | 3 | BOLT (M10X1.5X20-MM) | |
| M | 53 | 1,2 | **8T-4185** | 9 | BOLT (M10X1.5X50-MM) | |

B-USE AS REQUIRED
I-REFER TO HYDRAULIC INFORMATION SYSTEM
M-METRIC PART
Y-SEPARATE ILLUSTRATION

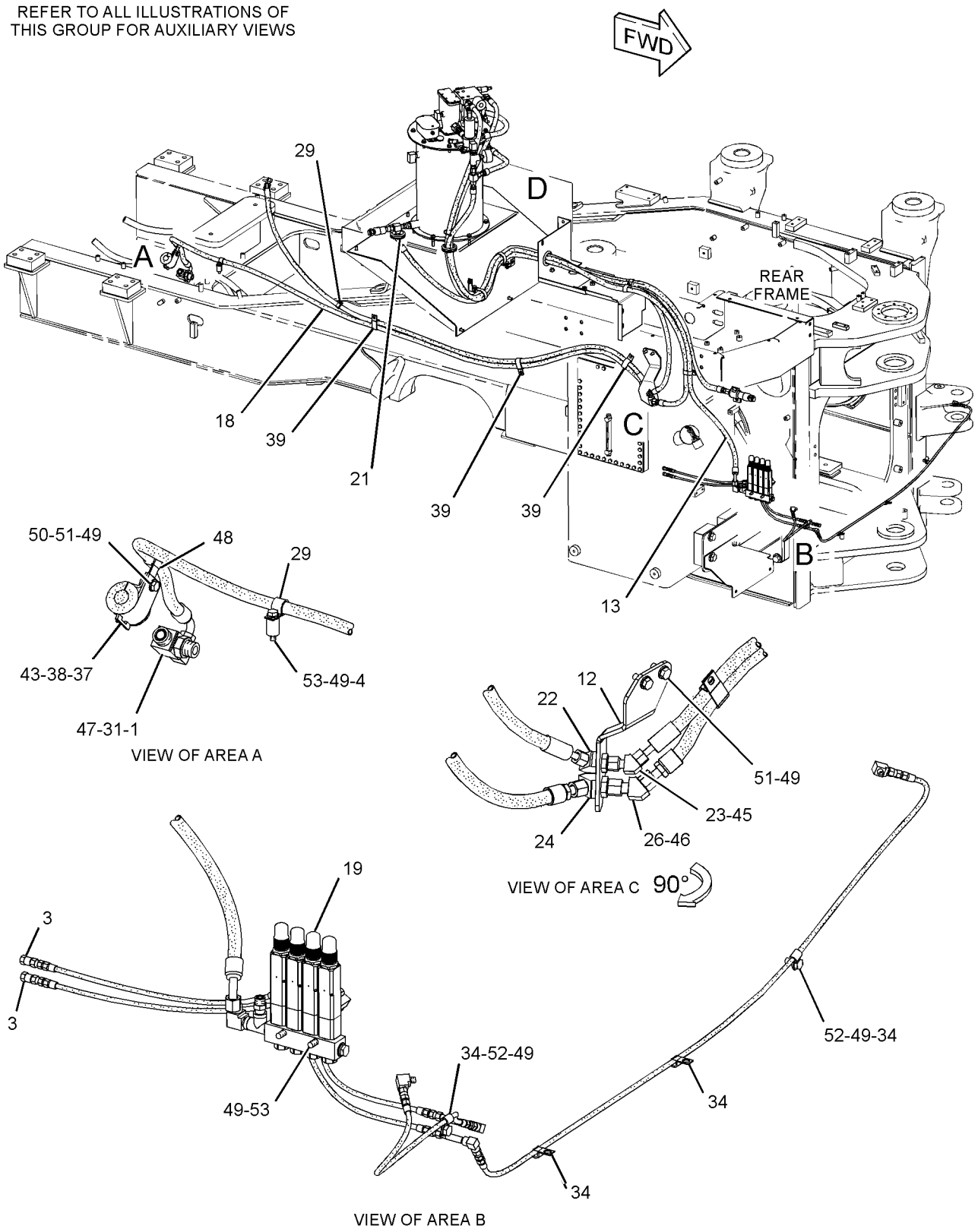


GRAPHIC #1 g01355073

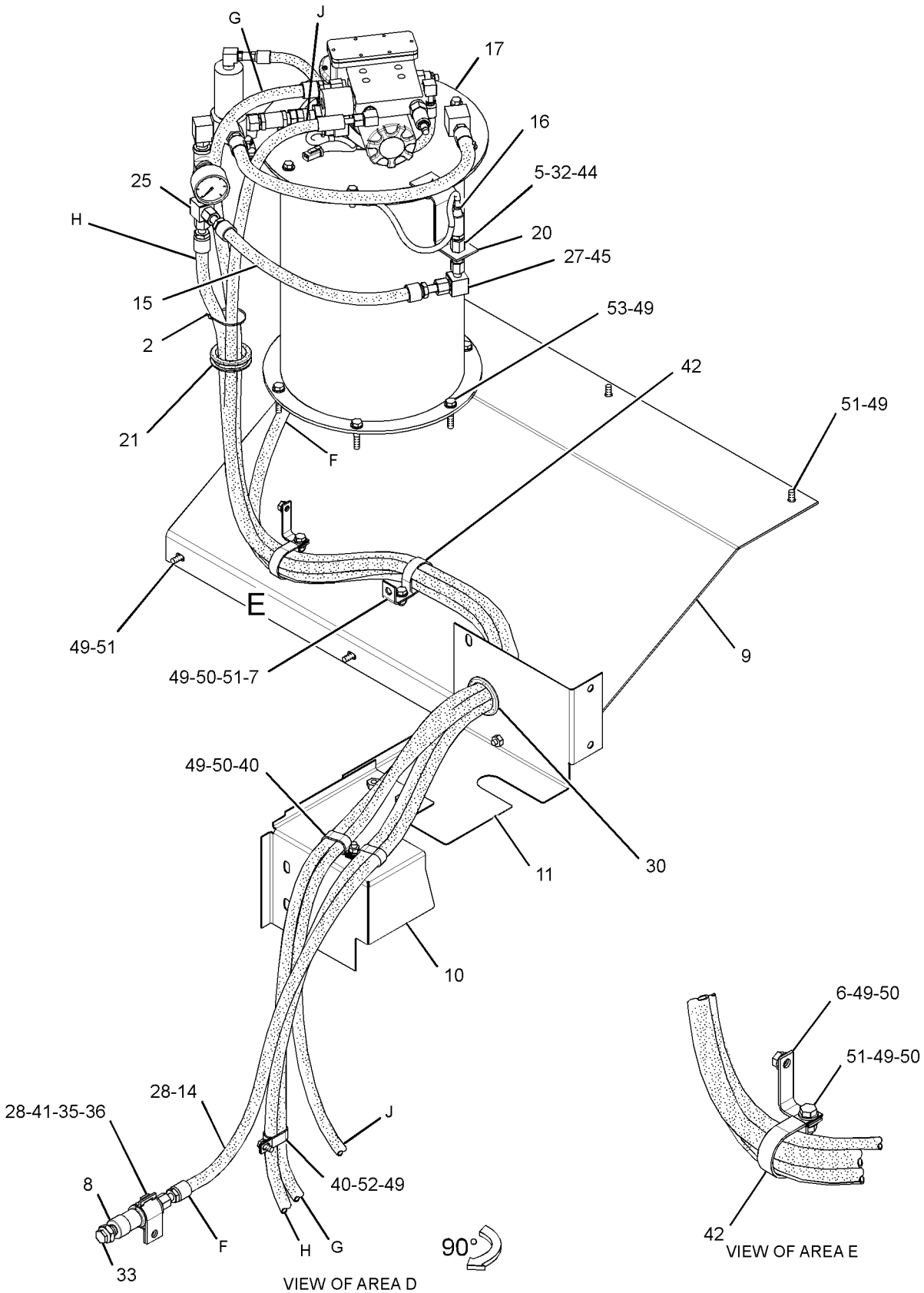


GRAPHIC #2 **<END>** g01355074

## *272-5092* LINES GP-AUTOMATIC LUBRICATION–LOADER FRAME

**S/N: BXY1900-UP**

**PART OF 293-7304, 293-7306, 293-7308 LUBRICATION AR-AUTOMATIC**

**AN ATTACHMENT**

**SMCS-7510, 7540** **i02742907**

| NOTE | REF NO | GRAPHIC REF | PART NUMBER | QTY | PART NAME 1 2 3 4 5 6 (PRODUCT LEVEL) | SEE PAGE |
|---|---|---|---|---|---|---|
| | 1 | 1 | **3S-2093** | 1 | STRAP-CABLE | |
| | 2 | 1 | **5K-9243** | 1 | ELBOW-FLARED | |
| | 3 | 1 | **6L-3616** | 3 | CONNECTOR | |
| | 4 | 1 | **7W-8106** | 1 | SPACER (11.13X19.05X0.25-MM THK) | |
| | 5 | 1 | **7X-0732** | 1 | WASHER-HARD (10X22.5X8-MM THK) | |
| | 6 | 1 | **8T-9358** | 1 | CONNECTOR | |
| I | 7 | 1 | **8X-9227** | 1 | HOSE AS | |
| I | 8 | 1 | **125-0971** | 1 | HOSE AS | |
| I | 9 | 1 | **189-7495** | 1 | HOSE AS | |
| I | 10 | 1 | **189-7496** | 1 | HOSE AS | |
| | 11 | 1 | **189-7503** | 1 | TUBE AS | |
| | 12 | 1 | **189-7508** | 1 | TUBE AS | |
| | 13 | 1 | **189-7509** | 1 | TUBE AS | |
| | 14 | 1 | **221-3404** | 1 | SENSOR GP-PRESSURE (AUTOMATIC LUBRICATION) | |
| | | 1 | **155-2260** | 1 | KIT-CONNECTING PLUG (3-PIN) | |
| | | | | | (INCLUDES PLUG AS AND WEDGE) | |
| | | 1 | **180-9340** | 3 | SOCKET-CONNECTOR | |
| | 15 | 1 | **235-0368** | 1 | BRACKET | |
| | 16 | 1 | **259-2454** | 1 | TUBE AS | |
| Y | 17 | 1 | *272-5093* | 1 | VALVE & LINES GP-LUBRICATION (LWR HITCH, RH STEER, TILT CYL) | 930 |
| Y | 18 | 1 | *272-5094* | 1 | VALVE & LINES GP-LUBRICATION (LH STEERING CYL, UPPER HITCH) | 931 |
| | 19 | 1 | *148-8367* | 1 | ELBOW AS | |
| | | 1 | **6V-8397** | 1 | SEAL-O-RING | |
| | | 1 | **6V-9850** | 1 | ELBOW | |
| | 20 | 1 | *148-8458* | 2 | UNION GP | |
| | | | | | (EACH INCLUDES) | |
| | | 1 | **6V-8397** | 2 | SEAL-O-RING | |
| | | 1 | **6V-9807** | 1 | UNION | |
| | 21 | 1 | **3J-1907** | 1 | SEAL-O-RING | |
| | 22 | 1 | **4D-7735** | 3 | CLIP | |
| | 23 | 1 | **4D-7794** | 4 | CLIP | |
| | 24 | 1 | **5P-7464** | 1 | CLIP (SLOT) | |
| | 25 | 1 | **5P-7465** | 1 | CLIP (TAB) | |
| | 26 | 1 | **6V-1249** | 1 | GROMMET | |
| | 27 | 1 | **6V-8397** | 2 | SEAL-O-RING | |
| | 28 | 1 | **6V-9168** | 1 | NUT (11/16-16-THD) | |
| | 29 | 1 | **8C-6869** | 1 | CONNECTOR | |
| | 30 | 1 | **8L-5008** | 1 | ELBOW-PIPE | |
| | 31 | 1 | **8M-2772** | 5 | CLIP | |
| | 32 | 1 | **8T-4121** | 18 | WASHER-HARD (11X21X2.5-MM THK) | |
| M | 33 | 1 | **8T-4133** | 1 | NUT (M10X1.5-THD) | |
| M | 34 | 1 | **8T-4137** | 12 | BOLT (M10X1.5X20-MM) | |
| M | 35 | 1 | **8T-4185** | 4 | BOLT (M10X1.5X50-MM) | |
| M | 36 | 1 | **8T-4195** | 1 | BOLT (M10X1.5X30-MM) | |
| M | 37 | 1 | **8T-4196** | 1 | BOLT (M10X1.5X35-MM) | |

I-REFER TO HYDRAULIC INFORMATION SYSTEM
M-METRIC PART
Y-SEPARATE ILLUSTRATION

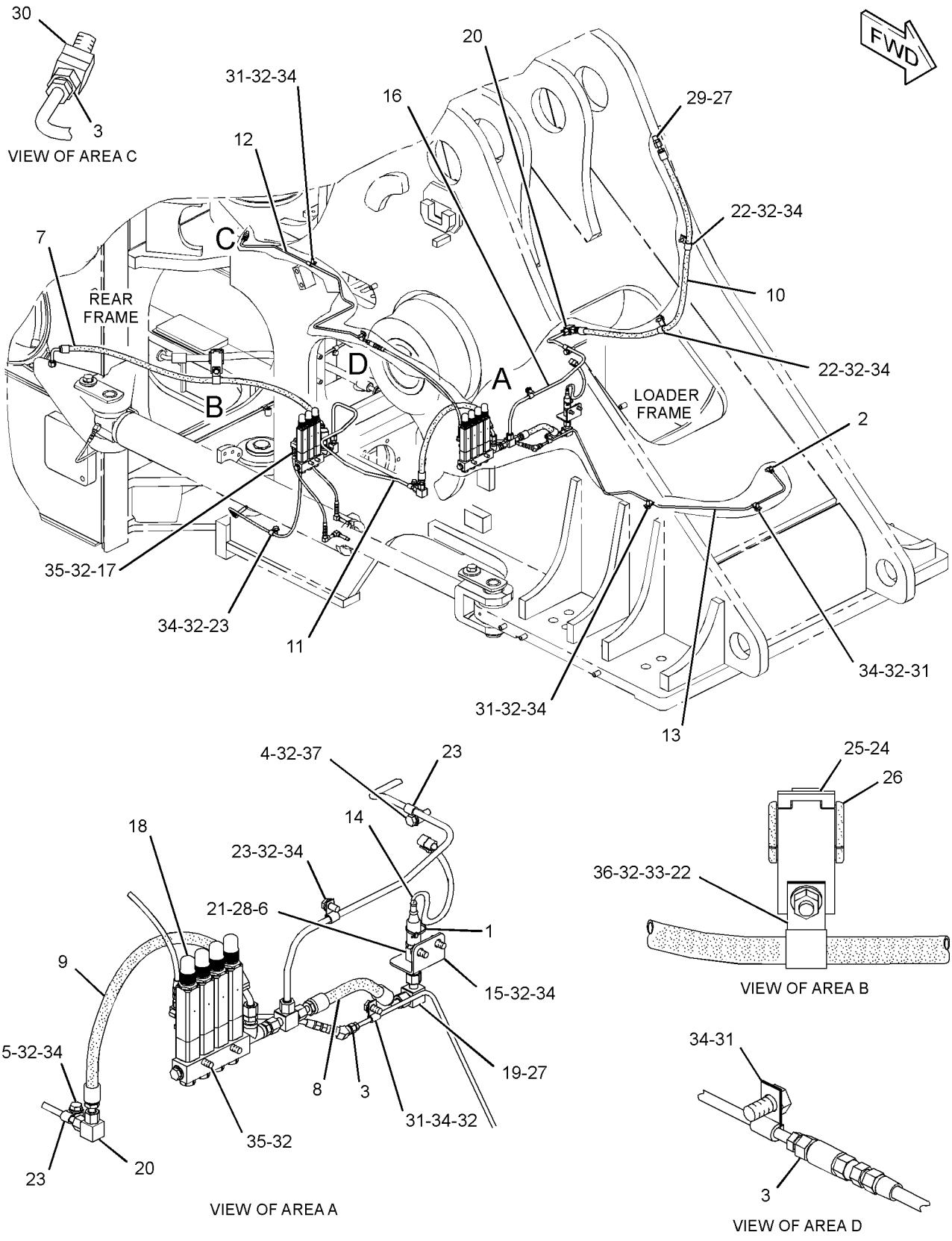


GRAPHIC #1 **<END>** g01354216

# FRAME AND BODY

## *285-7275* LINES GP-AUTOMATIC LUBRICATION–
### BOOM, TILT LINKS
**S/N: BXY1900-UP**
**PART OF 293-7304 LUBRICATION AR-AUTOMATIC**
**AN ATTACHMENT**

**SMCS-7510, 7540** **i02742908**

| NOTE | REF NO | GRAPHIC REF | PART NUMBER | QTY | PART NAME 1 2 3 4 5 6 (PRODUCT LEVEL) | SEE PAGE |
|---|---|---|---|---|---|---|
| | 1 | 2 | **3B-8489** | 4 | FITTING-GREASE | |
| | 2 | 2 | **5P-3422** | 4 | TEE-PIPE | |
| | 3 | 2 | **6S-4039** | 1 | GROMMET | |
| | 4 | 1 | **160-0564** | 1 | BRACKET AS | |
| M | | 1 | **8T-3490** | 1 | NUT-WELD (M10X1.5-THD) | |
| I | 5 | 3 | **189-7500** | 1 | HOSE AS | |
| | 6 | 2 | **189-7536** | 2 | HOSE AS | |
| | 7 | 2 | **197-6660** | 2 | BRACKET AS | |
| | 8 | 2 | **197-7863** | 2 | BRACKET AS | |
| | 9 | 2 | **224-4416** | 1 | BRACKET AS | |
| | 10 | 2 | **224-4417** | 1 | BRACKET AS | |
| | 11 | 1 | **255-0614** | 1 | PLATE AS | |
| I | 12 | 3 | **259-2438** | 1 | HOSE AS | |
| I | 13 | 3 | **259-2439** | 1 | HOSE AS | |
| Y | 14 | 3 | *285-7284* | 1 | VALVE & LINES GP-LUBRICATION (RIGHT, LEFT BOOM PINS) | 932 |
| | 15 | 1 | **285-7290** | 2 | GUARD AS | |
| | 16 | 1,3 | **285-7293** | 2 | TUBE AS | |
| | 17 | 1 | **285-7294** | 1 | TUBE AS | |
| | 18 | 2 | **285-7295** | 1 | TUBE AS | |
| I | 19 | 3 | **285-7302** | 1 | HOSE AS | |
| Y | 20 | 3 | *285-7310* | 1 | VALVE & LINES GP-LUBRICATION (LINK PINS, RH C-PIN, RH TILT) | 940 |
| Y | 21 | 3 | *285-7311* | 1 | VALVE & LINES GP-LUBRICATION (LH C-PIN, LH TILT LINK PIN) | 942 |
| | 22 | 3 | *148-8389* | 2 | ELBOW AS | |
| | | | | | (EACH INCLUDES) | |
| | | 3 | **4J-5477** | 1 | SEAL-O-RING | |
| | | 3 | **7X-0492** | 1 | ELBOW | |
| | 23 | 1,3 | *171-6727* | 2 | ADAPTER AS | |
| | | | | | (EACH INCLUDES) | |
| | | 1,3 | **4J-5477** | 1 | SEAL-O-RING | |
| | | 1,3 | **8T-4128** | 1 | ADAPTER | |
| | 24 | 3 | **1S-0994** | 1 | CLIP | |
| | 25 | 2,3 | **4D-7794** | 3 | CLIP | |
| | 26 | 3 | **4K-3026** | 5 | EXTENSION | |
| | 27 | 1,2,3 | **4M-8973** | 7 | ELBOW | |
| | 28 | 1,2 | **5P-1076** | 14 | WASHER-HARD (13.5X30X4-MM THK) | |
| | 29 | 2 | **5P-9297** | 2 | CLIP | |
| | 30 | 2 | **6K-6967** | 2 | ADAPTER-PIPE | |
| | 31 | 3 | **6V-8397** | 3 | SEAL-O-RING | |
| | 32 | 1,2,3 | **7D-1728** | 8 | CLIP | |
| M | 33 | 1,2,3 | **7X-2621** | 9 | BOLT (M10X1.5X12-MM) | |
| | 34 | 3 | **8C-6869** | 3 | CONNECTOR | |
| | 35 | 2 | **8L-5008** | 5 | ELBOW-PIPE | |
| | 36 | 1,3 | **8M-2773** | 3 | CLIP | |
| | 37 | 3 | **8S-0948** | 3 | CLIP | |
| | 38 | 1,2,3 | **8T-4121** | 30 | WASHER-HARD (11X21X2.5-MM THK) | |
| M | 39 | 3 | **8T-4133** | 1 | NUT (M10X1.5-THD) | |
| M | 40 | 2,3 | **8T-4136** | 5 | BOLT (M10X1.5X25-MM) | |
| M | 41 | 1,2,3 | **8T-4137** | 9 | BOLT (M10X1.5X20-MM) | |
| M | 42 | 1,2 | **8T-4139** | 14 | BOLT (M12X1.75X30-MM) | |
| M | 43 | 3 | **8T-4185** | 5 | BOLT (M10X1.5X50-MM) | |
| M | 44 | 3 | **8T-4195** | 1 | BOLT (M10X1.5X30-MM) | |

## *285-7275* LINES GP-AUTOMATIC LUBRICATION *(contd.)* i02742908

| NOTE | REF NO | GRAPHIC REF | PART NUMBER | QTY | PART NAME 1 2 3 4 5 6 (PRODUCT LEVEL) | SEE PAGE |
|---|---|---|---|---|---|---|
| E | 45 | 2 | **7I-1024** | | GUARD (HOSE) (114-CM) | |
| E | 45A | 3 | **7I-1024** | | GUARD (HOSE) (25-CM) | |
| E | 45B | 3 | **7I-1024** | | GUARD (HOSE) (40-CM) | |

E-ORDER BY THE CENTIMETER
I-REFER TO HYDRAULIC INFORMATION SYSTEM
M-METRIC PART
Y-SEPARATE ILLUSTRATION

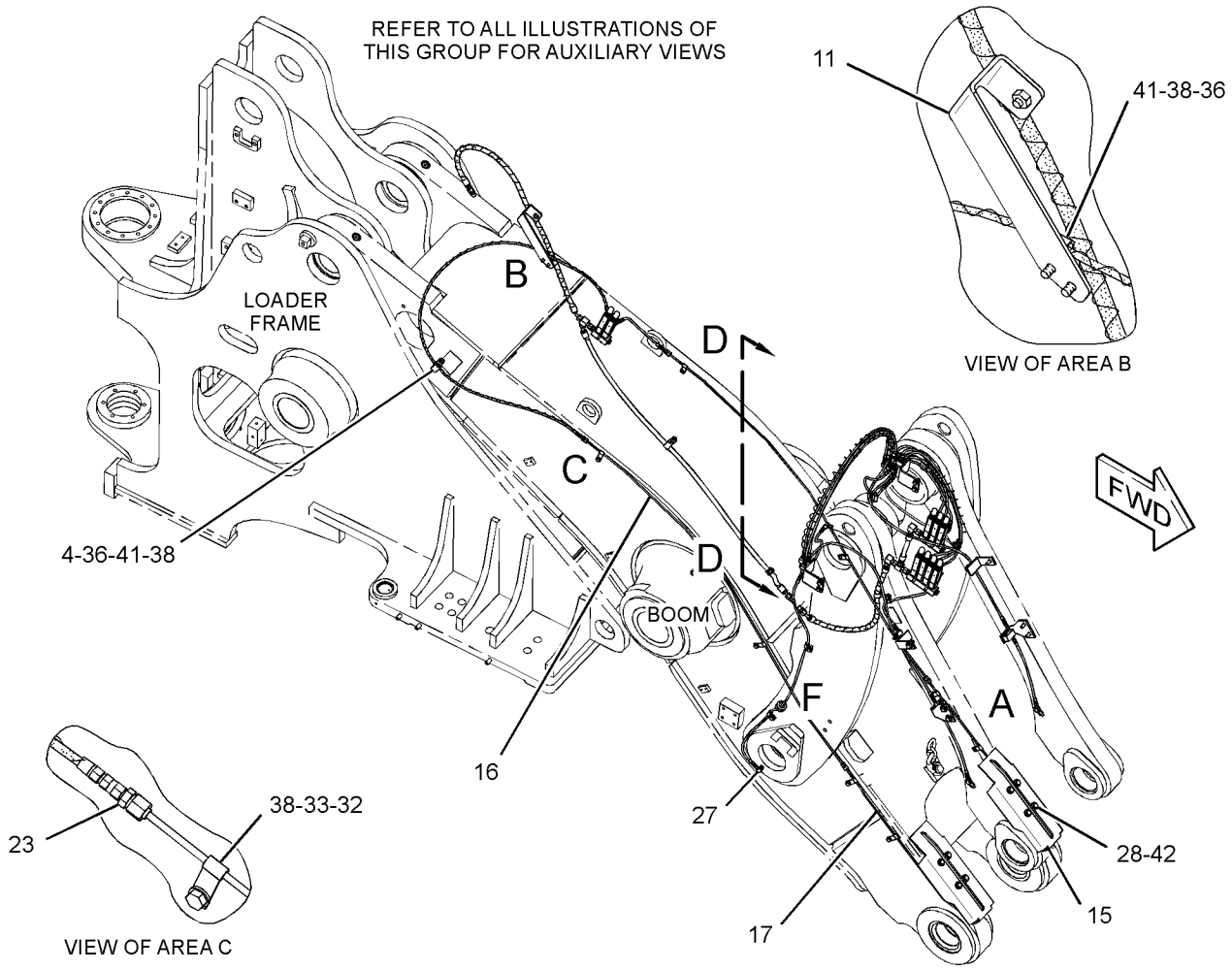


GRAPHIC #1 g01351999

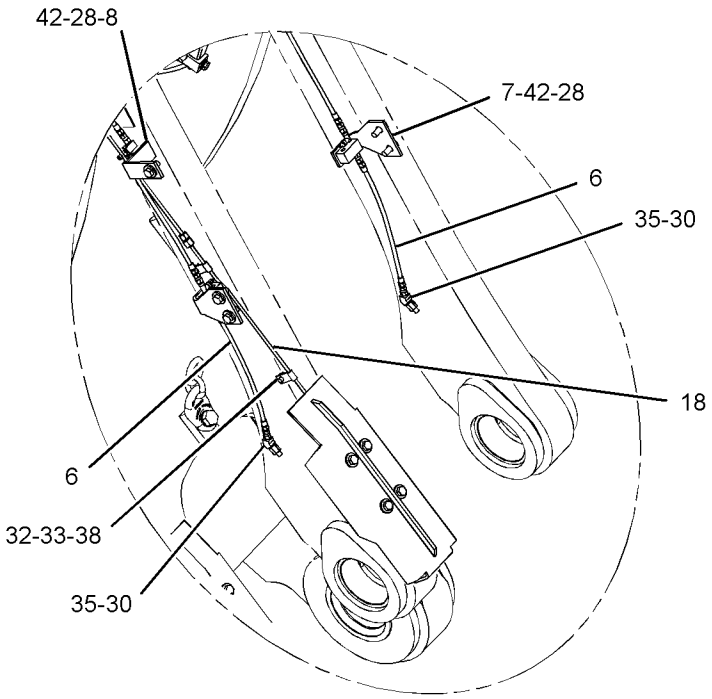


VIEW OF AREA A

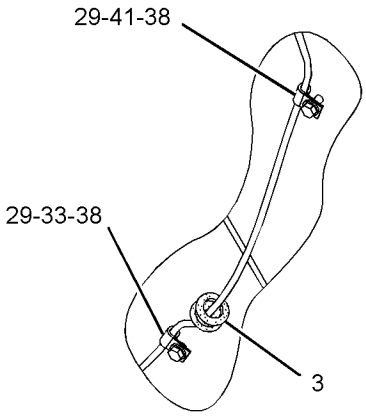


VIEW OF AREA F

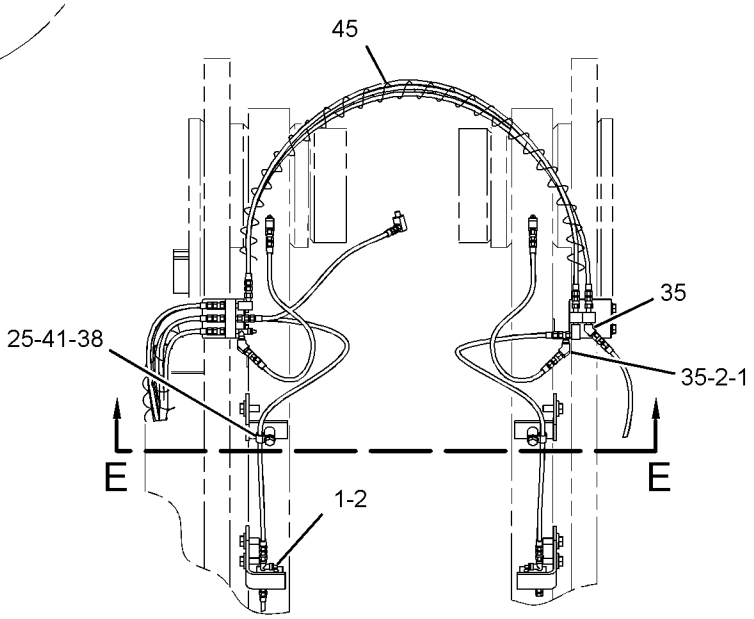


SECTION D-D

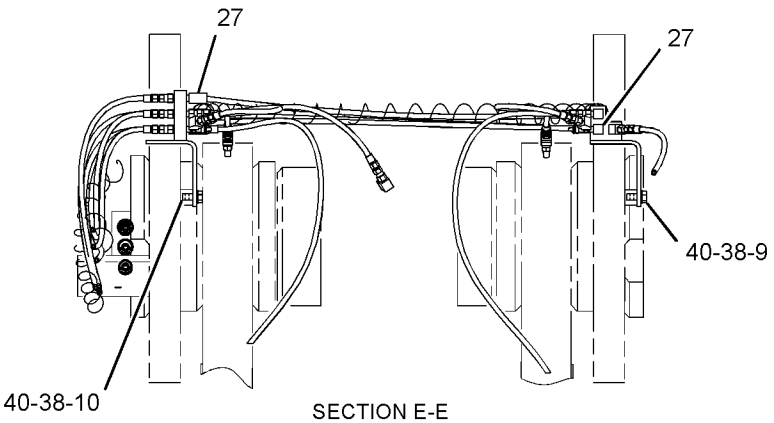


SECTION E-E

GRAPHIC #2

g01352000

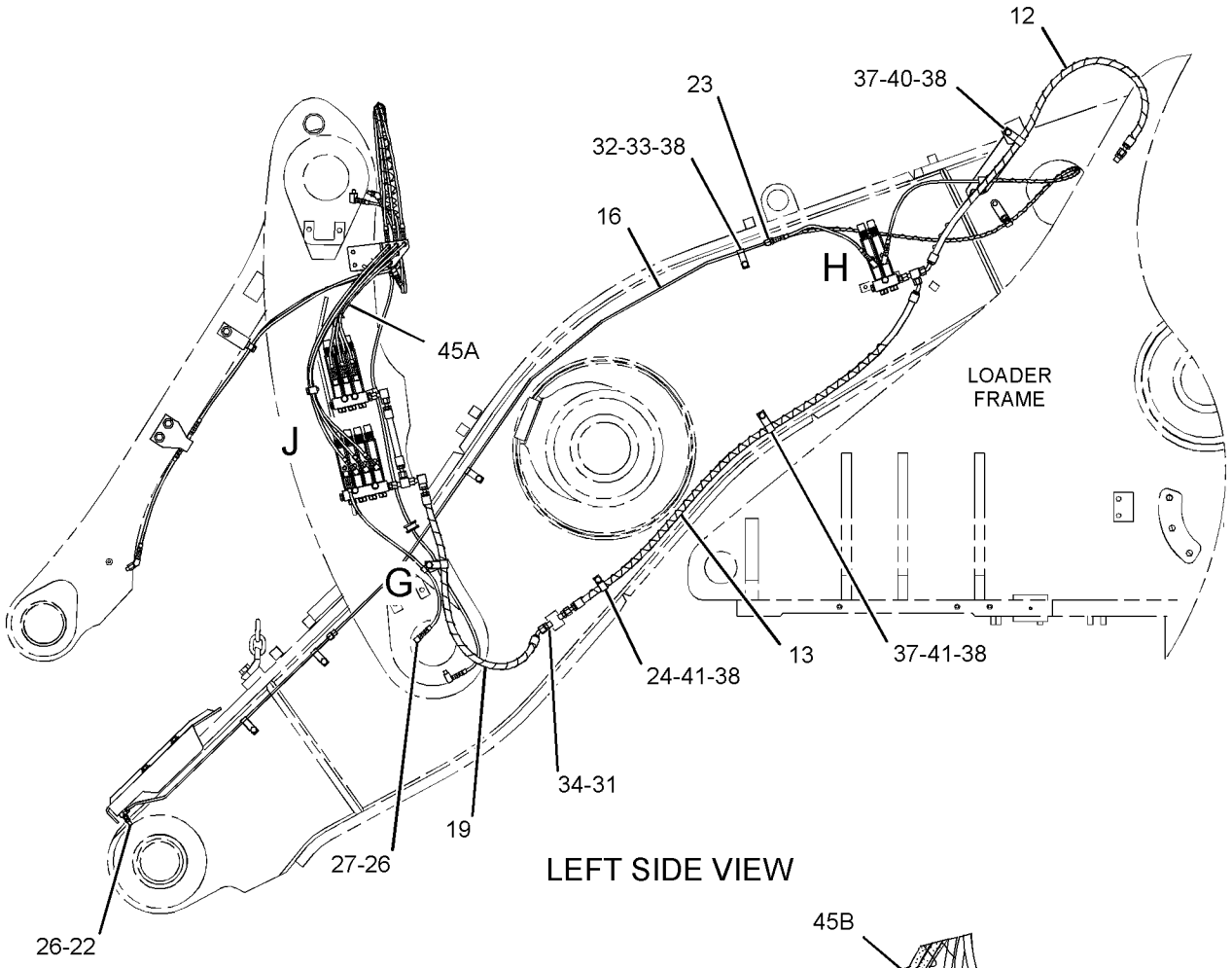


LEFT SIDE VIEW

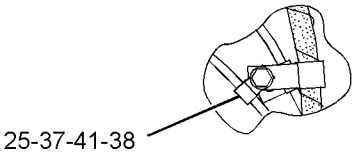


VIEW OF AREA G

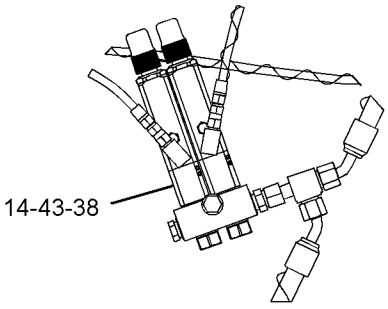


VIEW OF AREA H

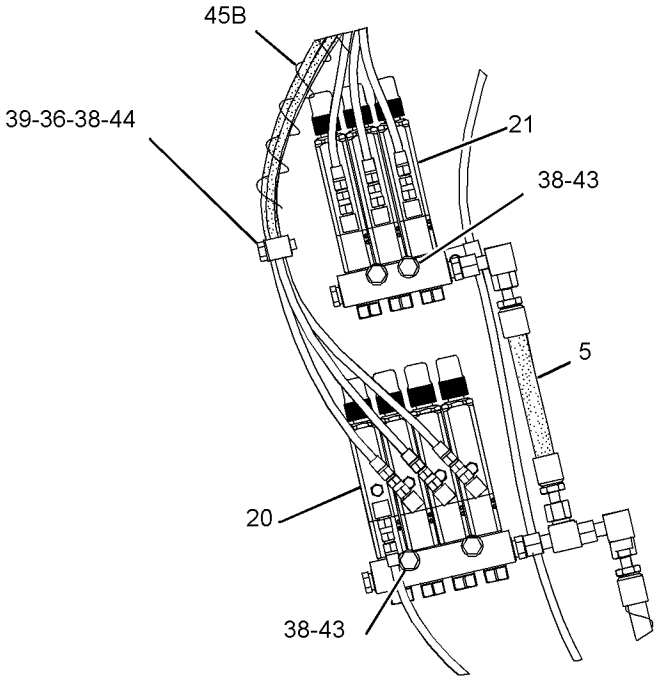


VIEW OF AREA J

GRAPHIC #3 **<END>** g01352931

## *285-7276* LINES GP-AUTOMATIC LUBRICATION–
### BOOM, TILT LINKS
**S/N: BXY1900-UP**
**PART OF 293-7303 LUBRICATION AR-AUTOMATIC**
**AN ATTACHMENT**

**SMCS-7510, 7540** **i02675716**

| NOTE | REF NO | GRAPHIC REF | PART NUMBER | QTY | PART NAME 1 2 3 4 5 6 (PRODUCT LEVEL) | SEE PAGE |
|---|---|---|---|---|---|---|
| | 1 | 1,2 | **3B-8489** | 4 | FITTING-GREASE | |
| | 2 | 1,2 | **5P-3422** | 4 | TEE-PIPE | |
| | 3 | 1 | **6S-4039** | 1 | GROMMET | |
| | 4 | 1 | **160-0564** | 1 | BRACKET AS | |
| | 5 | 1 | **189-7536** | 2 | HOSE AS | |
| | 6 | 1 | **197-6660** | 2 | BRACKET AS | |
| | 7 | 1 | **197-7863** | 2 | BRACKET AS | |
| | 8 | 2 | **224-3952** | 2 | PLATE | |
| | 9 | 2 | **224-4416** | 1 | BRACKET AS | |
| | 10 | 2 | **224-4417** | 1 | BRACKET AS | |
| | 11 | 2 | **255-0614** | 1 | PLATE AS | |
| M | | 2 | **8T-3490** | 1 | NUT-WELD (M10X1.5-THD) | |
| Y | 12 | 1 | *259-2407* | 1 | VALVE & LINES GP-LUBRICATION (C-PIN, LINK PINS, TILT CYL PIN) | 893 |
| Y | 13 | 2 | *285-7285* | 1 | VALVE & LINES GP-LUBRICATION (BUCKET PINS) | 934 |
| | 14 | 1 | **285-7290** | 2 | GUARD AS | |
| | 15 | 1 | **285-7293** | 2 | TUBE AS | |
| | 16 | 1 | **285-7294** | 1 | TUBE AS | |
| | 17 | 1 | **285-7295** | 1 | TUBE AS | |
| | 18 | 1 | *148-8389* | 2 | ELBOW AS | |
| | | | | | (EACH INCLUDES) | |
| | | 1 | **4J-5477** | 1 | SEAL-O-RING | |
| | | 1 | **7X-0492** | 1 | ELBOW | |
| | 19 | 1 | *171-6727* | 2 | ADAPTER AS | |
| | | | | | (EACH INCLUDES) | |
| | | 1 | **4J-5477** | 1 | SEAL-O-RING | |
| | | 1 | **8T-4128** | 1 | ADAPTER | |
| | 20 | 1 | **3B-7721** | 2 | BUSHING-REDUCER | |
| | 21 | 1,2 | **4D-7794** | 4 | CLIP | |
| | 22 | 1,2 | **4K-3026** | 7 | EXTENSION | |
| | 23 | 1,2 | **4M-8973** | 8 | ELBOW | |
| | 24 | 2 | **4S-1962** | 1 | CLIP | |
| M | 25 | 2 | **5C-2890** | 4 | NUT (M6X1-THD) | |
| | 26 | 1 | **5P-1076** | 14 | WASHER-HARD (13.5X30X4-MM THK) | |
| | 27 | 1 | **5P-9297** | 2 | CLIP | |
| | 28 | 1 | **6K-6967** | 2 | ADAPTER-PIPE | |
| | 29 | 1 | **7D-1728** | 8 | CLIP | |
| M | 30 | 2 | **7X-2534** | 4 | BOLT (M6X1X50-MM) | |
| M | 31 | 1 | **7X-2621** | 9 | BOLT (M10X1.5X12-MM) | |
| | 32 | 1,2 | **8L-5008** | 8 | ELBOW-PIPE | |
| | 33 | 1,2 | **8M-2773** | 7 | CLIP | |
| | 34 | 1,2 | **8T-4121** | 31 | WASHER-HARD (11X21X2.5-MM THK) | |
| M | 35 | 2 | **8T-4133** | 1 | NUT (M10X1.5-THD) | |
| M | 36 | 2 | **8T-4136** | 9 | BOLT (M10X1.5X25-MM) | |
| M | 37 | 1,2 | **8T-4137** | 11 | BOLT (M10X1.5X20-MM) | |
| M | 38 | 1 | **8T-4139** | 14 | BOLT (M12X1.75X30-MM) | |
| M | 39 | 2 | **8T-4195** | 1 | BOLT (M10X1.5X30-MM) | |
| | 40 | 2 | **9X-8256** | 8 | WASHER (6.6X12X2-MM THK) | |
| E | 41 | 1 | **7I-1024** | | GUARD (HOSE) (49.5-CM) | |
| E | 41A | 1,2 | **7I-1024** | | GUARD (HOSE) (96.5-CM EACH) | |

E-ORDER BY THE CENTIMETER
M-METRIC PART
Y-SEPARATE ILLUSTRATION

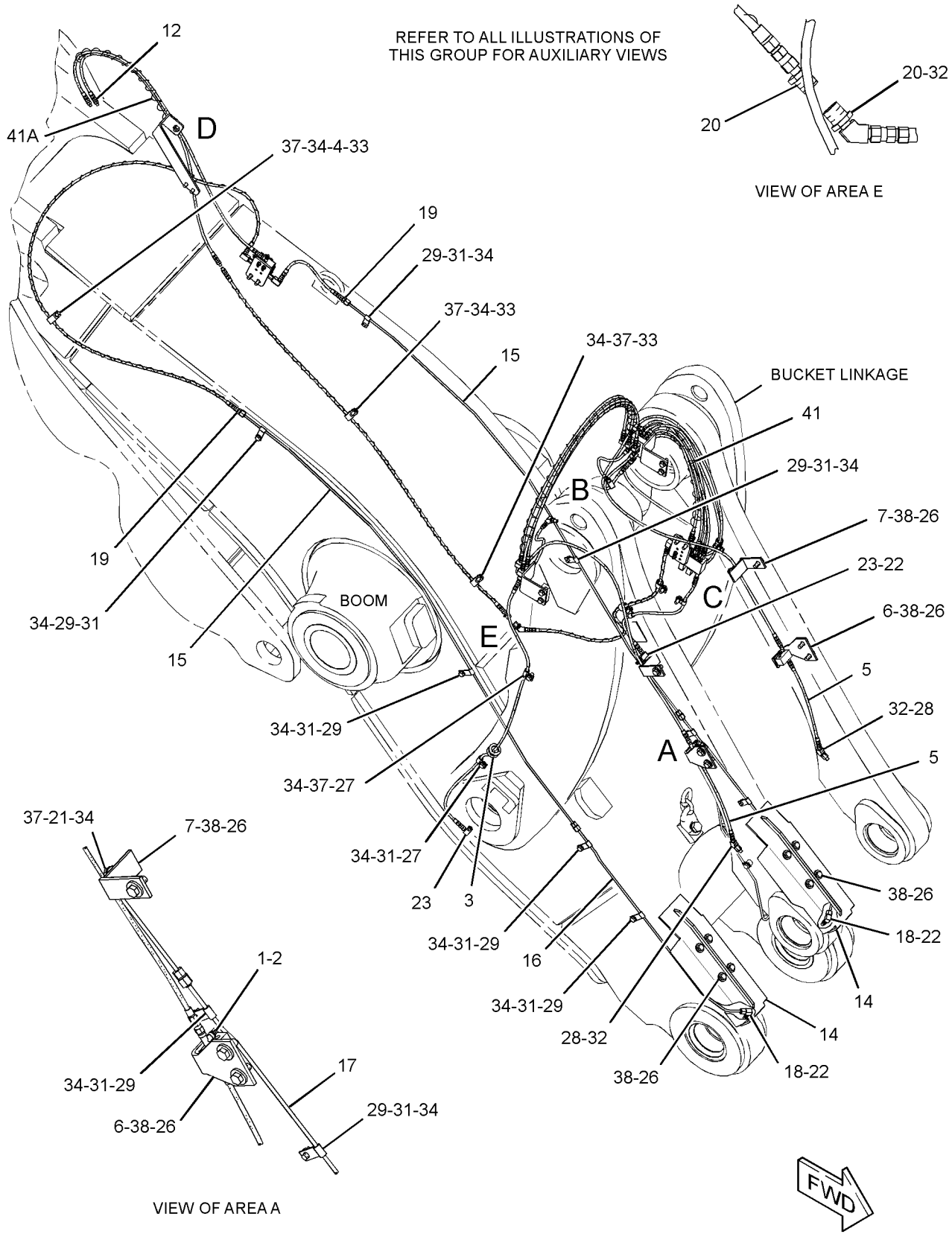


GRAPHIC #1

g01355567

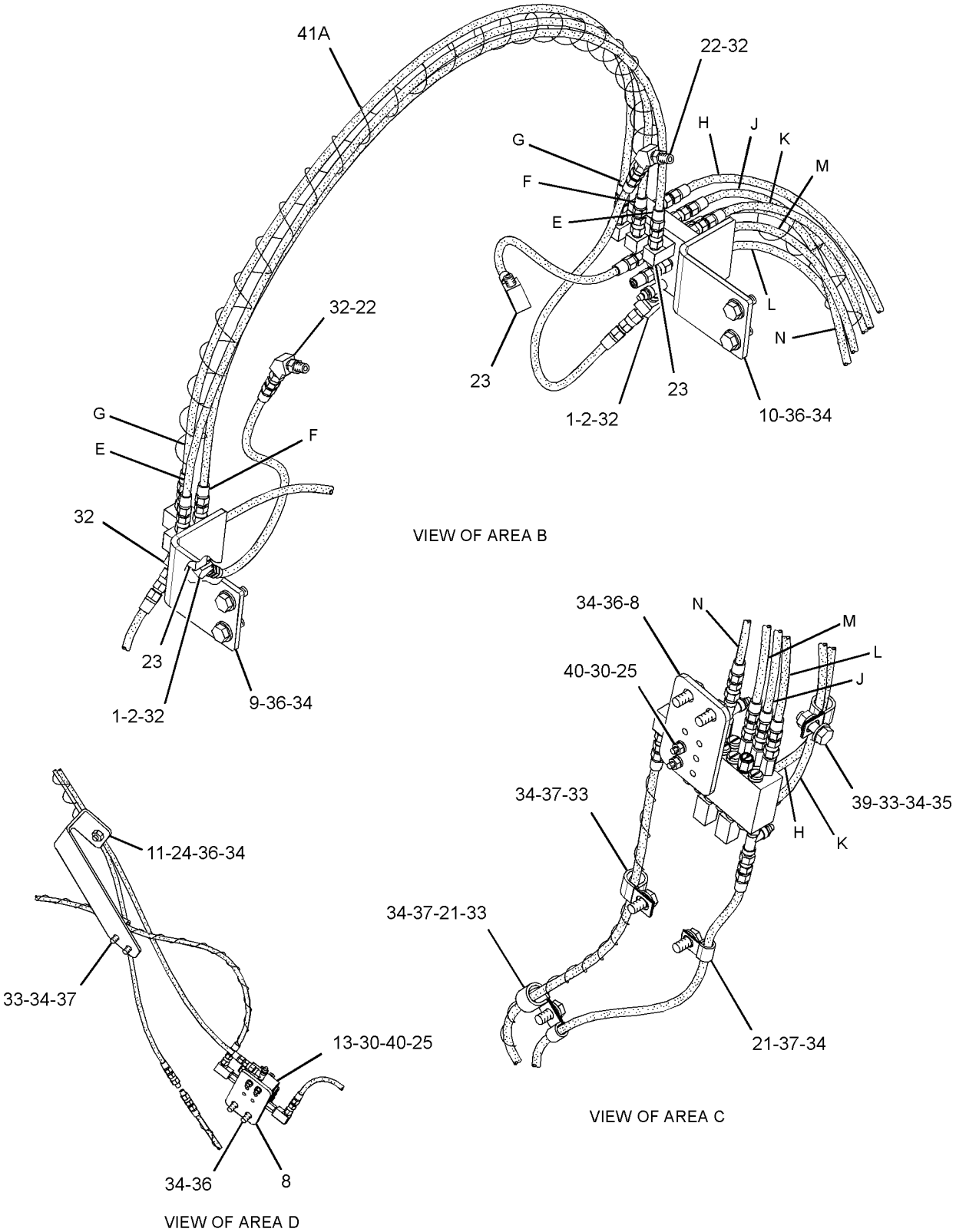


GRAPHIC #2 **<END>** g01367724

# *285-7277* LINES GP-AUTOMATIC LUBRICATION–
## BOOM, TILT LINKS
**S/N: BXY1900-UP**
**PART OF 293-7306 LUBRICATION AR-AUTOMATIC**
**AN ATTACHMENT**

**SMCS-7510, 7540** **i02675873**

| NOTE | REF NO | GRAPHIC REF | PART NUMBER | QTY | PART NAME 1 2 3 4 5 6 (PRODUCT LEVEL) | SEE PAGE |
|---|---|---|---|---|---|---|
| | 1 | 3 | **3B-8489** | 2 | FITTING-GREASE | |
| | 2 | 3 | **5P-3422** | 2 | TEE-PIPE | |
| | 3 | 2 | **6S-4039** | 1 | GROMMET | |
| | 4 | 2 | **160-0564** | 1 | BRACKET AS | |
| M | | 2 | **8T-3490** | 1 | NUT-WELD (M10X1.5-THD) | |
| I | 5 | 1 | **189-7497** | 1 | HOSE AS | |
| I | 6 | 1 | **189-7498** | 1 | HOSE AS | |
| I | 7 | 1 | **189-7500** | 1 | HOSE AS | |
| | 8 | 1,2 | **189-7531** | 2 | HOSE AS | |
| | 9 | 1,2 | **197-6660** | 2 | BRACKET AS | |
| | 10 | 1,2 | **197-7863** | 2 | BRACKET AS | |
| | 11 | 3 | **224-4416** | 1 | BRACKET AS | |
| | 12 | 3 | **224-4417** | 1 | BRACKET AS | |
| | 13 | 1 | **255-0614** | 1 | PLATE AS | |
| I | 14 | 1 | **285-7286** | 1 | HOSE AS | |
| | 15 | 2 | **285-7290** | 2 | GUARD AS | |
| | 16 | 1,2 | **285-7296** | 2 | TUBE AS | |
| | 17 | 2 | **285-7297** | 1 | TUBE AS | |
| | 18 | 1 | **285-7298** | 1 | TUBE AS | |
| Y | 19 | 1 | *285-7304* | 1 | VALVE & LINES GP-LUBRICATION (RIGHT, LEFT BOOM PINS) | 938 |
| Y | 20 | 1 | *285-7312* | 1 | VALVE & LINES GP-LUBRICATION (LINK PINS, RH C-PIN, RH TILT) | 943 |
| Y | 21 | 1 | *285-7313* | 1 | VALVE & LINES GP-LUBRICATION (LH C-PIN, LH TILT LINK PIN) | 944 |
| | 22 | 1,2 | *171-6727* | 2 | ADAPTER AS | |
| | | | | | (EACH INCLUDES) | |
| | | 1,2 | **4J-5477** | 1 | SEAL-O-RING | |
| | | 1,2 | **8T-4128** | 1 | ADAPTER | |
| | 23 | 1,3 | **4D-7794** | 4 | CLIP | |
| | 24 | 1,2,3 | **4K-3026** | 7 | EXTENSION | |
| | 25 | 1,2,3 | **4M-8973** | 8 | ELBOW | |
| | 26 | 1,2 | **5P-1076** | 14 | WASHER-HARD (13.5X30X4-MM THK) | |
| | 27 | 2 | **5P-9297** | 2 | CLIP | |
| | 28 | 1,2 | **6K-6967** | 2 | ADAPTER-PIPE | |
| | 29 | 1 | **6V-8397** | 3 | SEAL-O-RING | |
| | 30 | 1,2 | **7D-1728** | 8 | CLIP | |
| | 31 | 1,2 | **7X-0492** | 2 | ELBOW | |
| M | 32 | 1,2 | **7X-2621** | 9 | BOLT (M10X1.5X12-MM) | |
| | 33 | 1 | **8C-6869** | 3 | CONNECTOR | |
| | 34 | 1,2,3 | **8L-5008** | 7 | ELBOW-PIPE | |
| | 35 | 2 | **8M-2773** | 1 | CLIP | |
| | 36 | 1 | **8S-0948** | 4 | CLIP | |
| | 37 | 1,2,3 | **8T-4121** | 30 | WASHER-HARD (11X21X2.5-MM THK) | |
| M | 38 | 1,3 | **8T-4133** | 1 | NUT (M10X1.5-THD) | |
| M | 39 | 3 | **8T-4136** | 5 | BOLT (M10X1.5X25-MM) | |
| M | 40 | 1,2,3 | **8T-4137** | 9 | BOLT (M10X1.5X20-MM) | |
| M | 41 | 1,2 | **8T-4139** | 14 | BOLT (M12X1.75X30-MM) | |
| M | 42 | 1 | **8T-4185** | 5 | BOLT (M10X1.5X50-MM) | |
| M | 43 | 1 | **8T-4195** | 1 | BOLT (M10X1.5X30-MM) | |
| | 44 | 1 | **9M-8406** | 1 | CLIP | |
| E | 45 | 3 | **7I-1024** | | GUARD (HOSE) (96.5-CM) | |
| E | 45A | 1 | **7I-1024** | | GUARD (HOSE) (35-CM) | |
| E | 45B | 1 | **7I-1024** | | GUARD (HOSE) (51-CM) | |

E-ORDER BY THE CENTIMETER
I-REFER TO HYDRAULIC INFORMATION SYSTEM
M-METRIC PART
Y-SEPARATE ILLUSTRATION

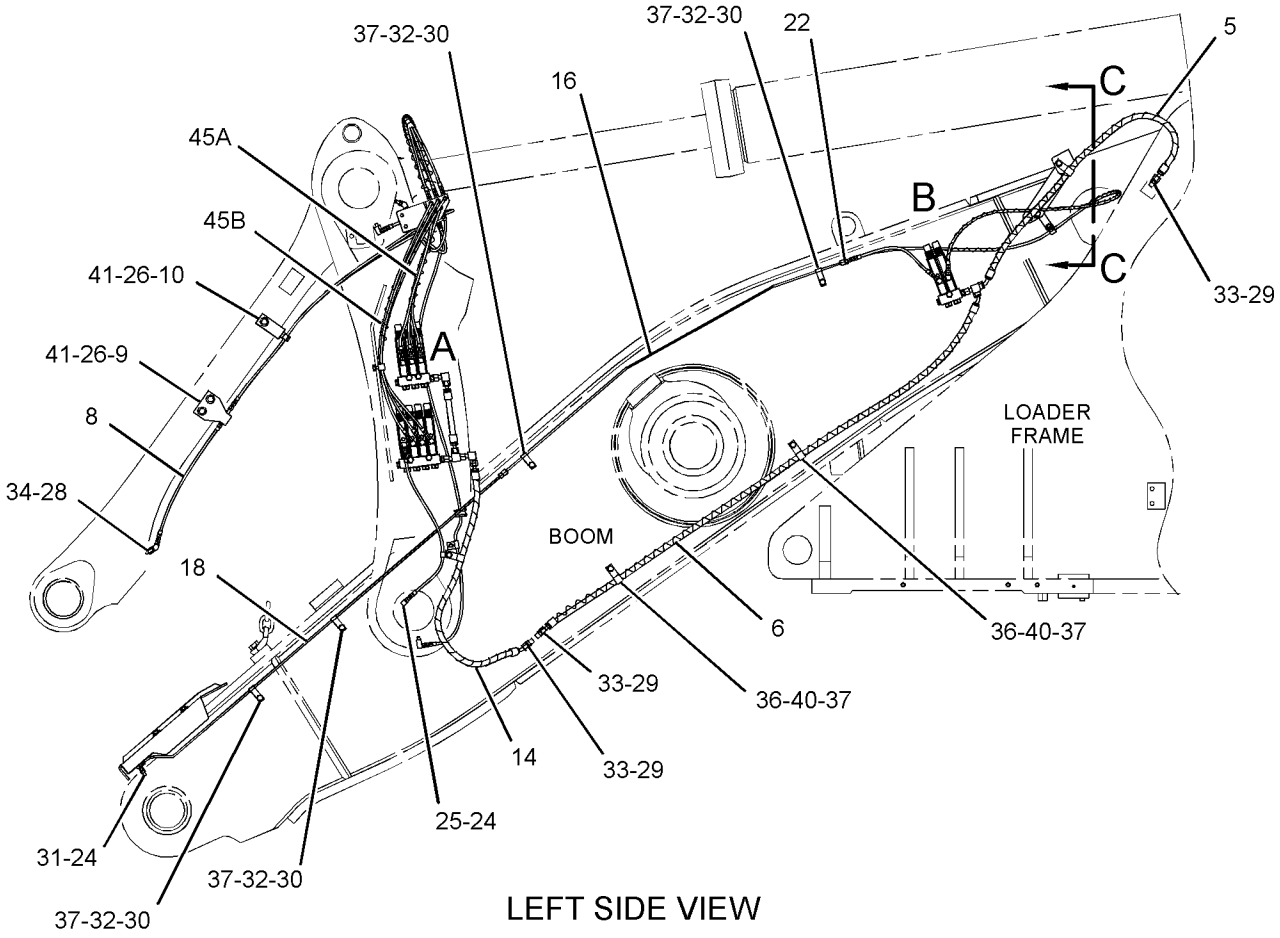


LEFT SIDE VIEW

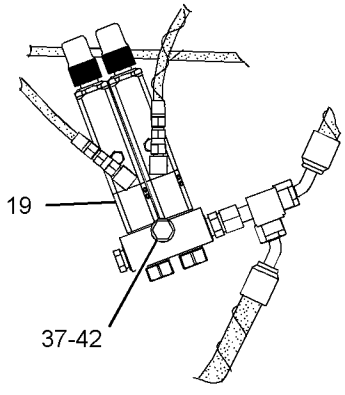


VIEW OF AREA B

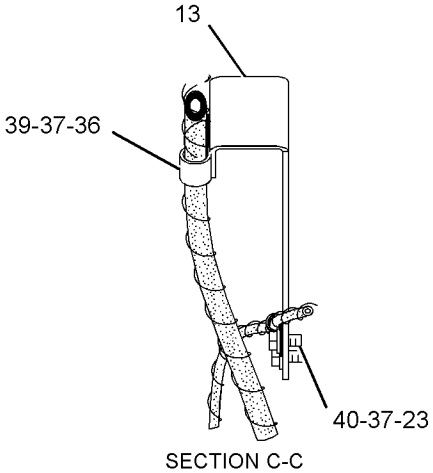


SECTION C-C

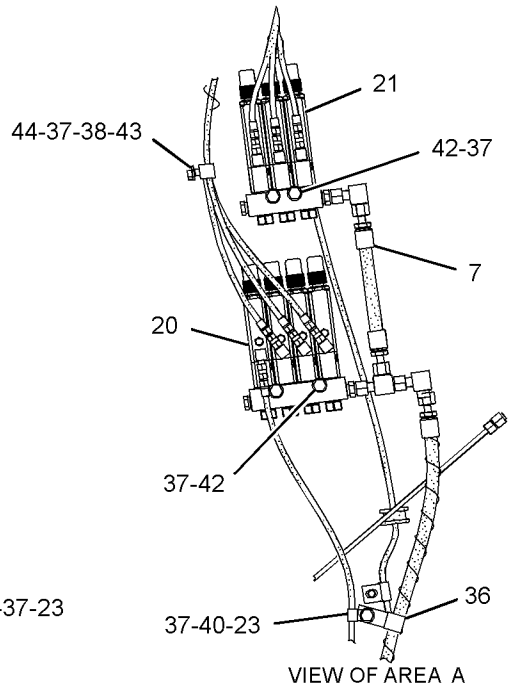


VIEW OF AREA A

GRAPHIC #1

g01351868

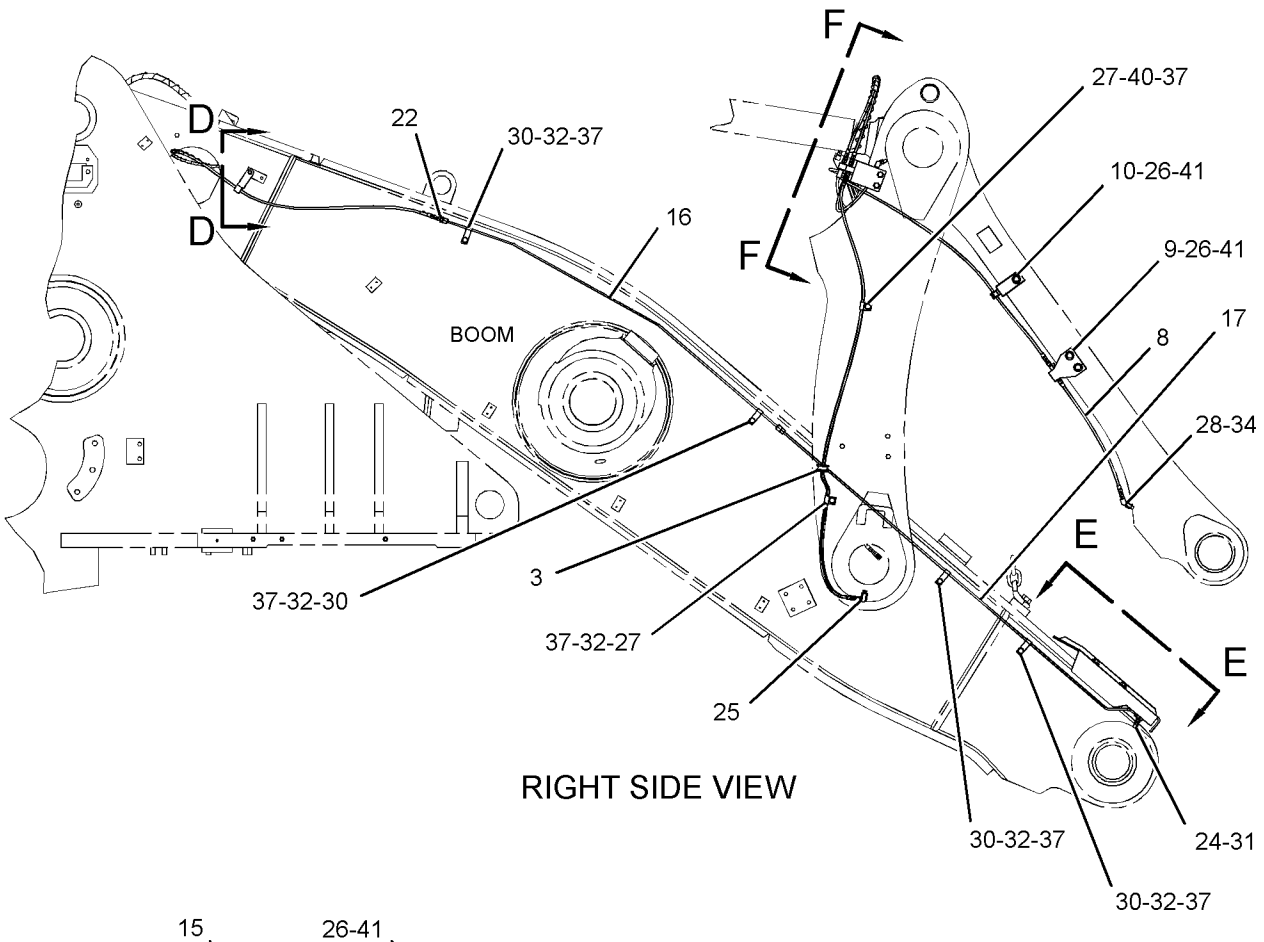


RIGHT SIDE VIEW

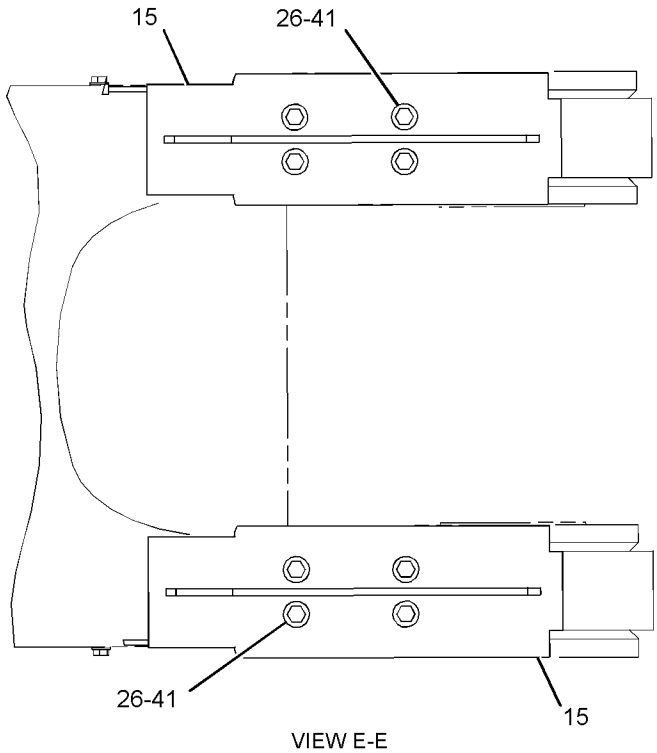


VIEW E-E

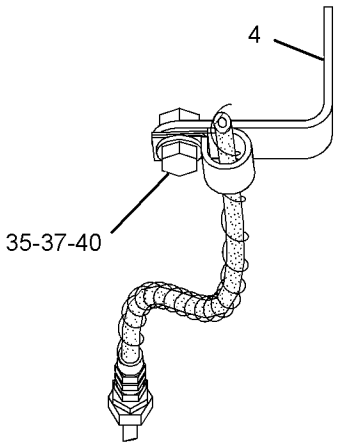


SECTION D-D

REFER TO ALL ILLUSTRATIONS OF THIS GROUP FOR AUXILIARY VIEWS

GRAPHIC #2

g01351925

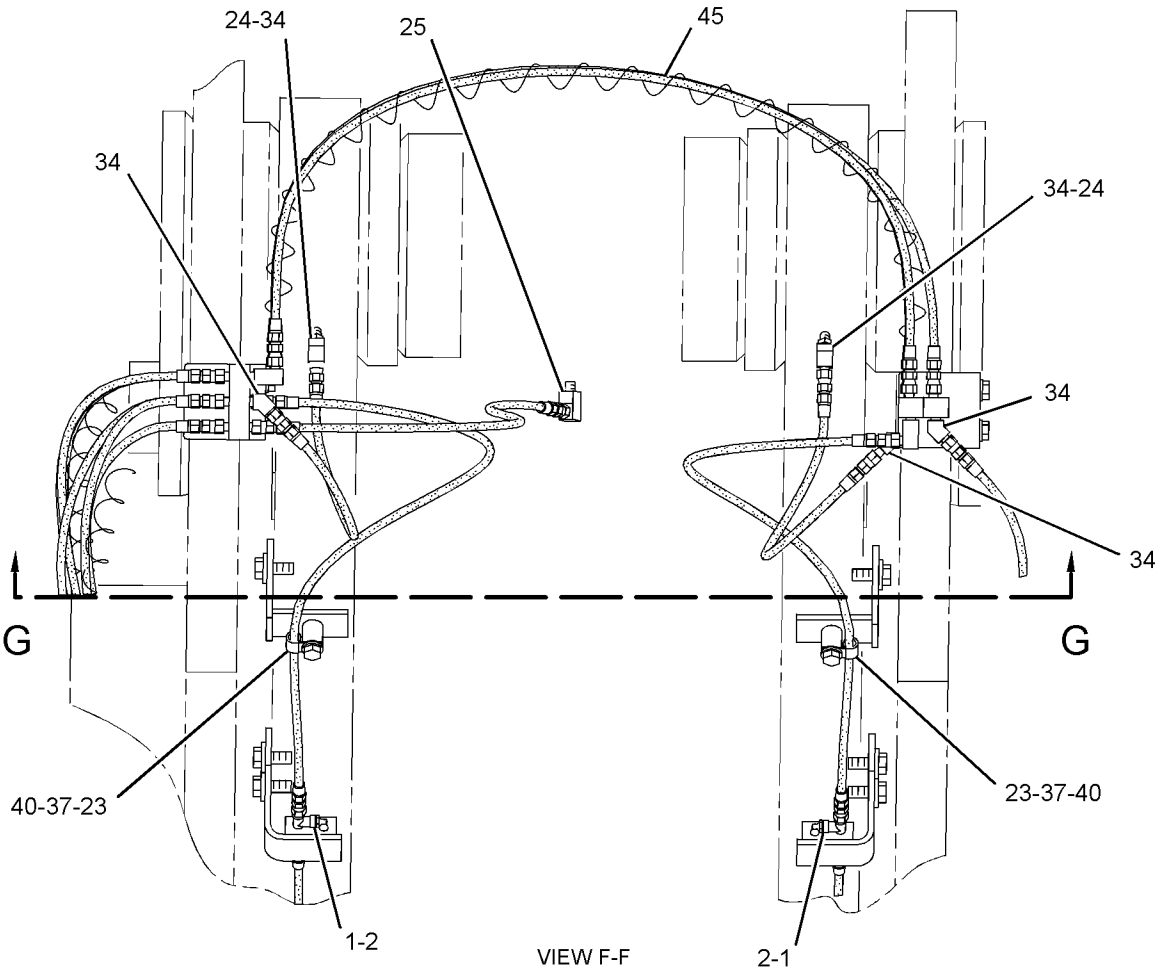


VIEW F-F

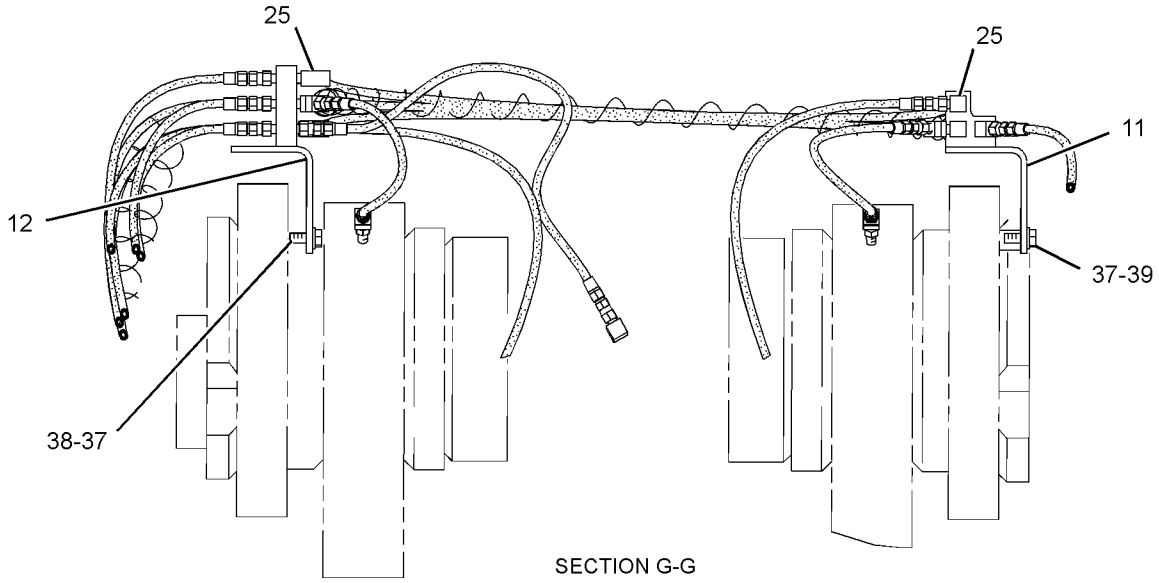


SECTION G-G

GRAPHIC #3 **<END>** g01352006

# *285-7278* LINES GP-AUTOMATIC LUBRICATION–
## BOOM, TILT LINKS
**S/N: BXY1900-UP**
**PART OF 293-7305 LUBRICATION AR-AUTOMATIC**
**AN ATTACHMENT**

**SMCS-7510, 7540** **i02675864**

| NOTE | REF NO | GRAPHIC REF | PART NUMBER | QTY | PART NAME 1 2 3 4 5 6 (PRODUCT LEVEL) | SEE PAGE |
|---|---|---|---|---|---|---|
| | 1 | 2 | **3B-8489** | 4 | FITTING-GREASE | |
| | 2 | 2 | **5P-3422** | 4 | TEE-PIPE | |
| | 3 | 2 | **6S-4039** | 1 | GROMMET | |
| | 4 | 2 | **160-0564** | 1 | BRACKET AS | |
| M | | 2 | **8T-3490** | 1 | NUT-WELD (M10X1.5-THD) | |
| | 5 | 1,2 | **189-7531** | 2 | HOSE AS | |
| | 6 | 1,2 | **197-6660** | 2 | BRACKET AS | |
| | | 1,2 | **157-8957** | 1 | BLOCK | |
| | 7 | 1,2 | **197-7863** | 2 | BRACKET AS | |
| M | | 1,2 | **9R-2613** | 1 | BOSS-WELD (M10X1.5X25-MM OAL) | |
| | 8 | 1 | **224-3952** | 2 | PLATE | |
| Y | 9 | 1 | *224-4410* | 1 | VALVE & LINES GP-LUBRICATION (C-PIN, LINK PINS, TILT CYL PIN) | 879 |
| | 10 | 2 | **224-4416** | 1 | BRACKET AS | |
| | 11 | 1 | **224-4417** | 1 | BRACKET AS | |
| | 12 | 1 | **255-0614** | 1 | PLATE AS | |
| M | | 1 | **8T-3490** | 1 | NUT-WELD (M10X1.5-THD) | |
| Y | 13 | 1 | *285-7287* | 1 | VALVE & LINES GP-LUBRICATION (B-PIN, RH, LH) | 935 |
| | 14 | 1 | **285-7290** | 2 | GUARD AS | |
| | 15 | 1,2 | **285-7296** | 2 | TUBE AS | |
| | 16 | 2 | **285-7297** | 1 | TUBE AS | |
| | 17 | 1 | **285-7298** | 1 | TUBE AS | |
| | 18 | 1,2 | *171-6727* | 2 | ADAPTER AS | |
| | | 1,2 | **4J-5477** | 1 | SEAL-O-RING | |
| | | 1,2 | **8T-4128** | 1 | ADAPTER | |
| | 19 | 1 | **3B-7721** | 2 | BUSHING-REDUCER | |
| | 20 | 1,2 | **4D-7794** | 4 | CLIP | |
| | 21 | 1,2 | **4K-3026** | 7 | EXTENSION | |
| | 22 | 1,2 | **4M-8973** | 8 | ELBOW | |
| | 23 | 1 | **4S-1962** | 1 | CLIP | |
| M | 24 | 1 | **5C-2890** | 4 | NUT (M6X1-THD) | |
| | 25 | 1,2 | **5P-1076** | 14 | WASHER-HARD (13.5X30X4-MM THK) | |
| | 26 | 2 | **5P-9297** | 2 | CLIP | |
| | 27 | 1,2 | **6K-6967** | 2 | ADAPTER-PIPE | |
| | 28 | 1,2 | **7D-1728** | 8 | CLIP | |
| | 29 | 1,2 | **7X-0492** | 2 | ELBOW | |
| M | 30 | 1 | **7X-2534** | 4 | BOLT (M6X1X50-MM) | |
| M | 31 | 1,2 | **7X-2621** | 9 | BOLT (M10X1.5X12-MM) | |
| | 32 | 1,2 | **8L-5008** | 7 | ELBOW-PIPE | |
| | 33 | 1,2 | **8M-2773** | 7 | CLIP | |
| | 34 | 1,2 | **8T-4121** | 31 | WASHER-HARD (11X21X2.5-MM THK) | |
| M | 35 | 1 | **8T-4133** | 1 | NUT (M10X1.5-THD) | |
| M | 36 | 1,2 | **8T-4136** | 9 | BOLT (M10X1.5X25-MM) | |
| M | 37 | 1,2 | **8T-4137** | 11 | BOLT (M10X1.5X20-MM) | |
| M | 38 | 1,2 | **8T-4139** | 14 | BOLT (M12X1.75X30-MM) | |
| M | 39 | 1 | **8T-4195** | 1 | BOLT (M10X1.5X30-MM) | |
| | 40 | 1 | **9X-8256** | 8 | WASHER (6.6X12X2-MM THK) | |
| E | 41 | 1,2 | **7I-1024** | | GUARD (HOSE) (96.5-CM EACH) | |
| E | 41A | 1 | **7I-1024** | | GUARD (HOSE) (49.5-CM) | |

E-ORDER BY THE CENTIMETER
M-METRIC PART
Y-SEPARATE ILLUSTRATION

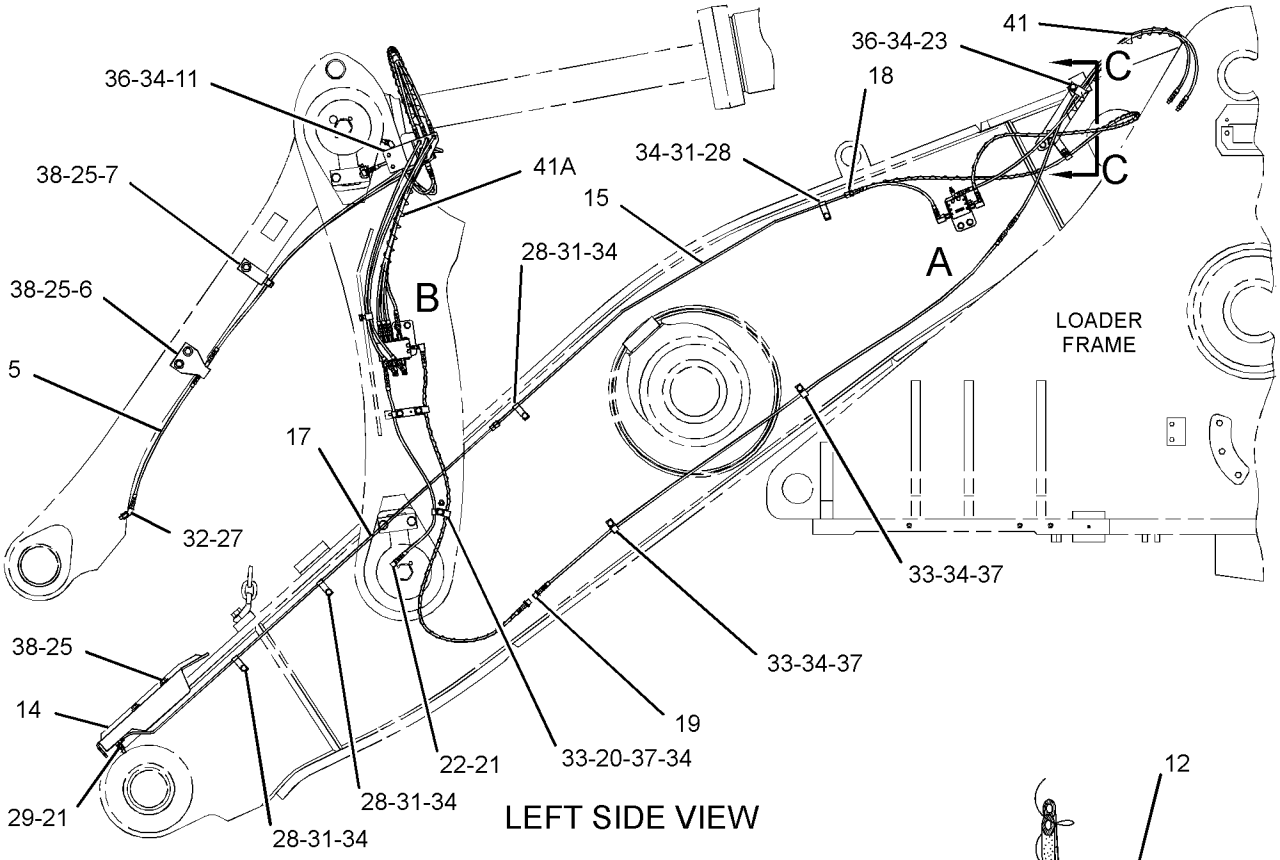


LEFT SIDE VIEW

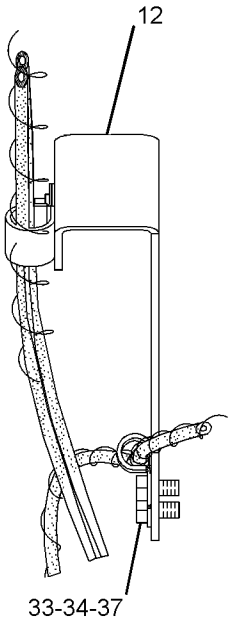


SECTION C-C

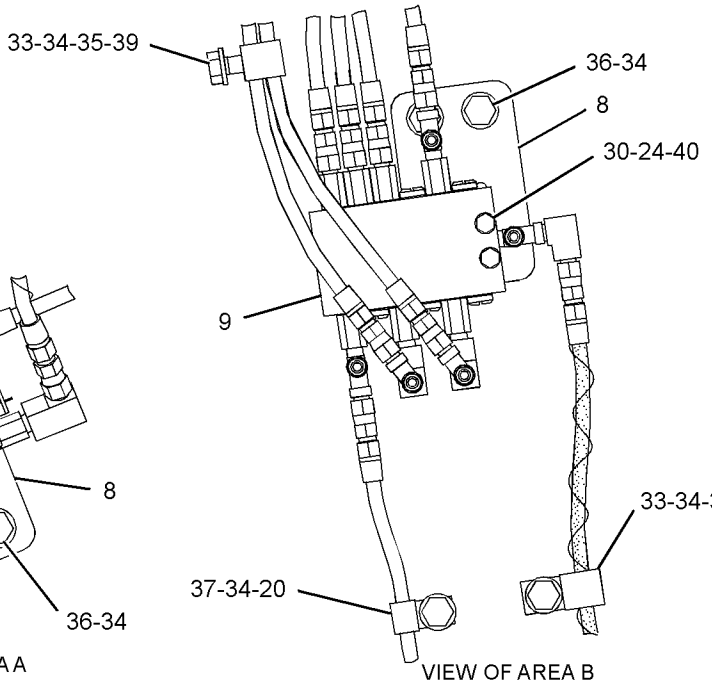


VIEW OF AREA B

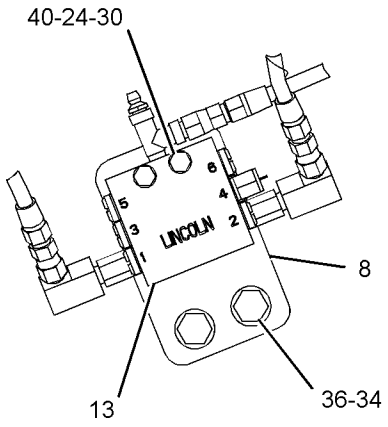


VIEW OF AREA A

GRAPHIC #1

g01368076

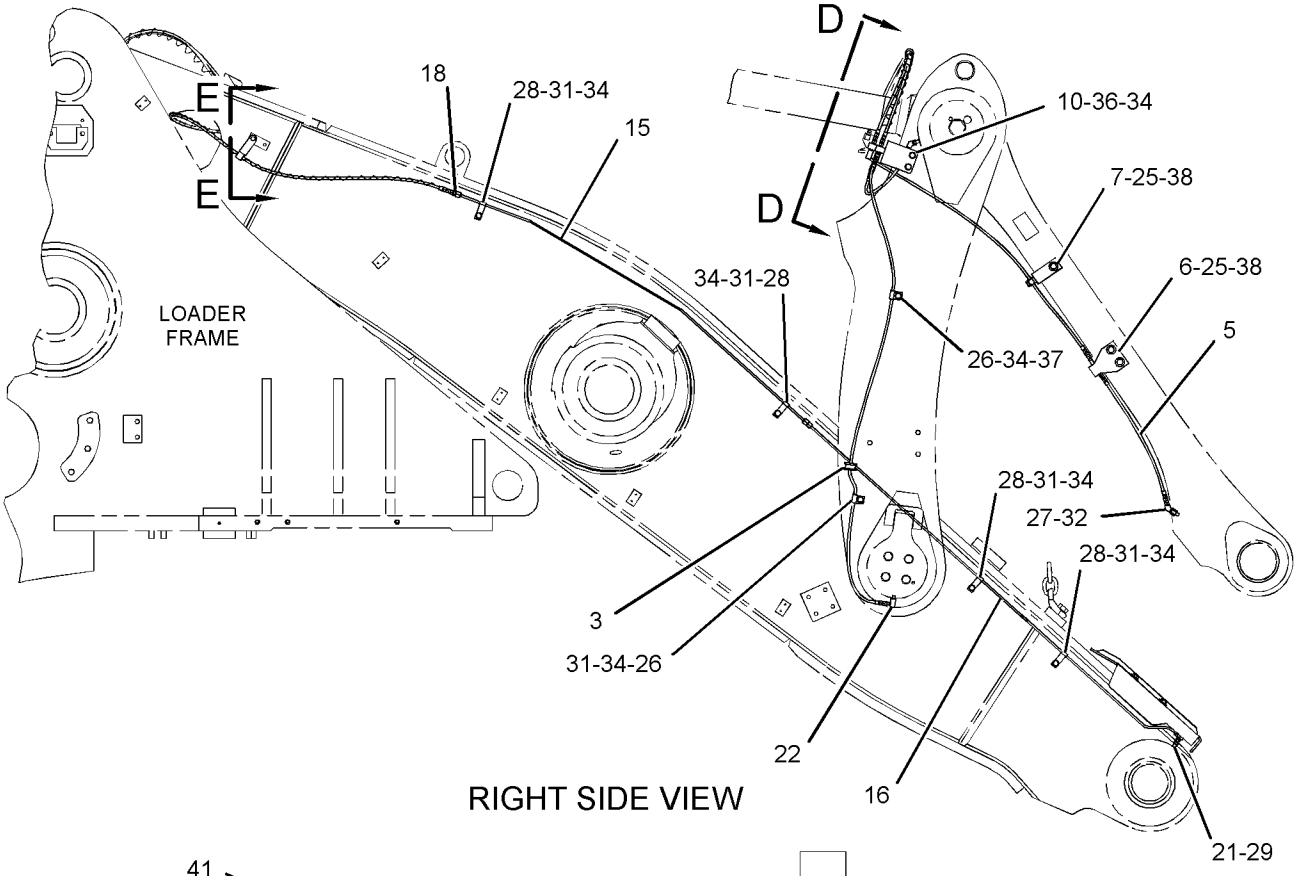


RIGHT SIDE VIEW

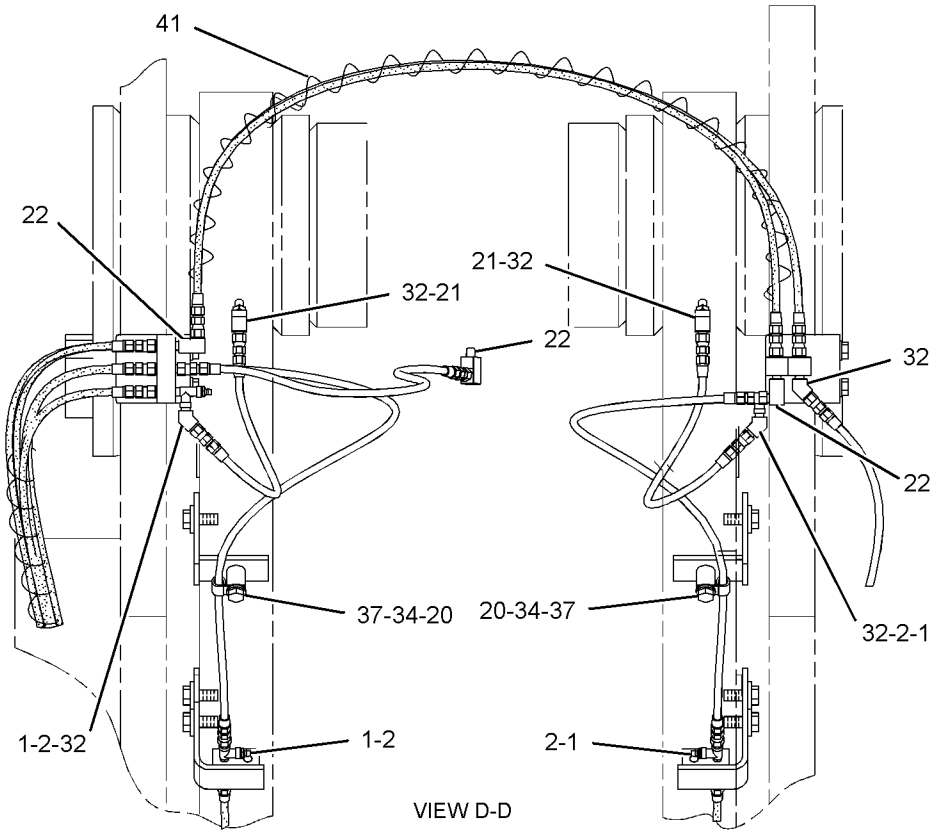


VIEW D-D

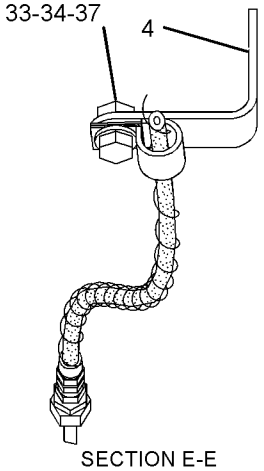


SECTION E-E

GRAPHIC #2 **<END>** g01354587

# *285-7279* LINES GP-AUTOMATIC LUBRICATION–
## BOOM, TILT LINKS
**S/N: BXY1900-UP**
**PART OF 293-7307 LUBRICATION AR-AUTOMATIC**
**AN ATTACHMENT**

**SMCS-7510, 7540** **i02742910**

| NOTE | REF NO | GRAPHIC REF | PART NUMBER | QTY | PART NAME 1 2 3 4 5 6 (PRODUCT LEVEL) | SEE PAGE |
|---|---|---|---|---|---|---|
| | 1 | 3 | **3B-8489** | 4 | FITTING-GREASE | |
| | 2 | 3 | **5P-3422** | 4 | TEE-PIPE | |
| | 3 | 1 | **6S-4039** | 1 | GROMMET | |
| | 4 | 2 | **160-0564** | 1 | BRACKET AS | |
| M | | 2 | **8T-3490** | 1 | NUT-WELD (M10X1.5-THD) | |
| | 5 | 3 | **224-3952** | 2 | PLATE | |
| | 6 | 3 | **224-4416** | 1 | BRACKET AS | |
| | 7 | 3 | **224-4417** | 1 | BRACKET AS | |
| | 8 | 2 | **255-0614** | 1 | PLATE AS | |
| M | | 2 | **8T-3490** | 1 | NUT-WELD (M10X1.5-THD) | |
| Y | 9 | 3 | *259-2448* | 1 | VALVE & LINES GP-LUBRICATION (E, F, K-PINS) | 923 |
| Y | 10 | 3 | *285-7289* | 1 | VALVE & LINES GP-LUBRICATION (RIGHT, LEFT BOOM PINS) | 937 |
| | 11 | 1 | **285-7290** | 2 | GUARD AS | |
| | 12 | 1 | **285-7299** | 2 | TUBE AS | |
| | 13 | 1 | **285-7300** | 1 | TUBE AS | |
| | 14 | 2 | **285-7301** | 1 | TUBE AS | |
| | 15 | 2 | *148-8389* | 2 | ELBOW AS | |
| | | | | | (EACH INCLUDES) | |
| | | 2 | **4J-5477** | 1 | SEAL-O-RING | |
| | | 2 | **7X-0492** | 1 | ELBOW | |
| | 16 | 1,2 | *171-6727* | 2 | ADAPTER AS | |
| | | | | | (EACH INCLUDES) | |
| | | 1,2 | **4J-5477** | 1 | SEAL-O-RING | |
| | | 1,2 | **8T-4128** | 1 | ADAPTER | |
| | 17 | 2 | **3B-7721** | 2 | BUSHING-REDUCER | |
| | 18 | 1,2,3 | **4D-7794** | 4 | CLIP | |
| | 19 | 2,3 | **4K-3026** | 6 | EXTENSION | |
| | 20 | 1,2,3 | **4M-8973** | 10 | ELBOW | |
| | 21 | 2 | **4S-1962** | 1 | CLIP | |
| M | 22 | 3 | **5C-2890** | 4 | NUT (M6X1-THD) | |
| | 23 | 1 | **5P-1076** | 8 | WASHER-HARD (13.5X30X4-MM THK) | |
| | 24 | 1,2 | **7D-1728** | 8 | CLIP | |
| M | 25 | 3 | **7X-2534** | 4 | BOLT (M6X1X50-MM) | |
| M | 26 | 1,2 | **7X-2621** | 12 | BOLT (M10X1.5X12-MM) | |
| | 27 | 3 | **8L-5008** | 5 | ELBOW-PIPE | |
| | 28 | 1 | **8M-2772** | 2 | CLIP | |
| | 29 | 1,2,3 | **8M-2773** | 8 | CLIP | |
| | 30 | 1,2,3 | **8T-4121** | 32 | WASHER-HARD (11X21X2.5-MM THK) | |
| M | 31 | 3 | **8T-4133** | 1 | NUT (M10X1.5-THD) | |
| M | 32 | 2,3 | **8T-4136** | 8 | BOLT (M10X1.5X25-MM) | |
| M | 33 | 1,2,3 | **8T-4137** | 9 | BOLT (M10X1.5X20-MM) | |
| M | 34 | 1 | **8T-4139** | 8 | BOLT (M12X1.75X30-MM) | |
| M | 35 | 2,3 | **8T-4195** | 2 | BOLT (M10X1.5X30-MM) | |
| | 36 | 3 | **9X-8256** | 8 | WASHER (6.6X12X2-MM THK) | |
| E | 37 | 3 | **7I-1024** | | GUARD (HOSE) (97-CM EACH) | |
| E | 37A | 2 | **7I-1024** | | GUARD (HOSE) (50-CM) | |

E-ORDER BY THE CENTIMETER
M-METRIC PART
Y-SEPARATE ILLUSTRATION

REFER TO ALL ILLUSTRATIONS OF
THIS GROUP FOR AUXILIARY VIEWS

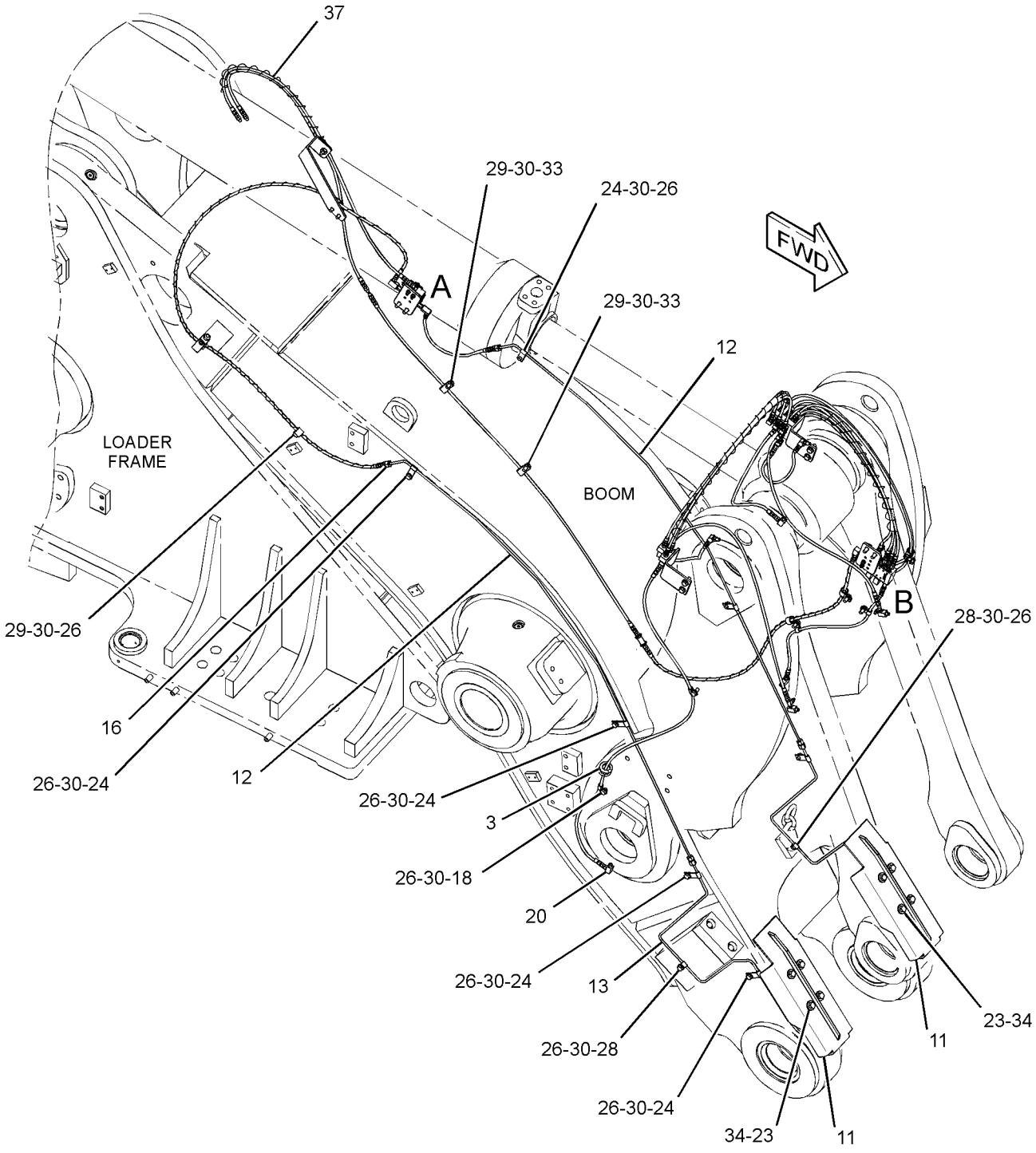


GRAPHIC #1

g01361819

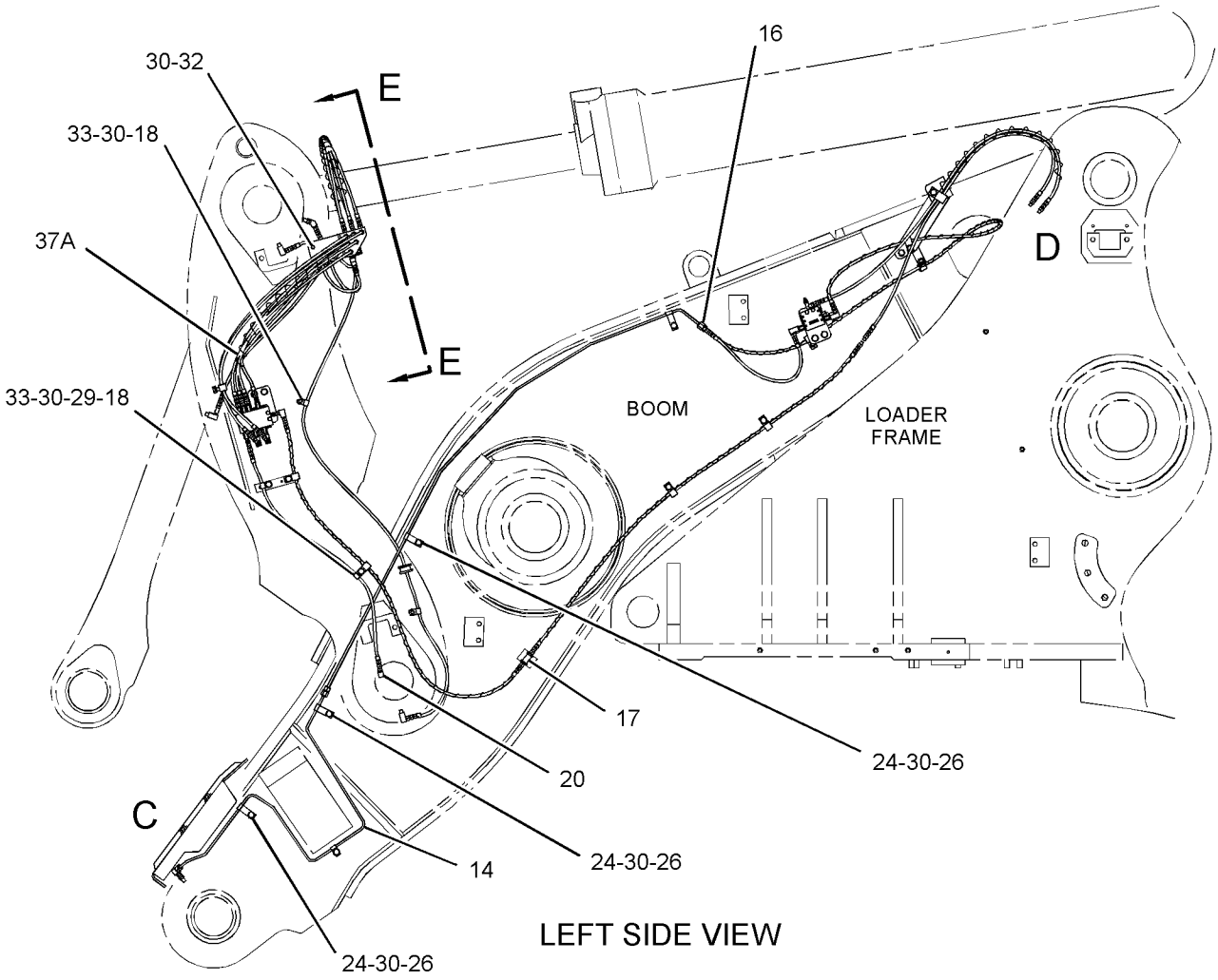


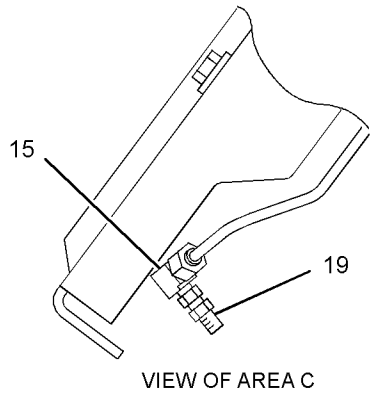


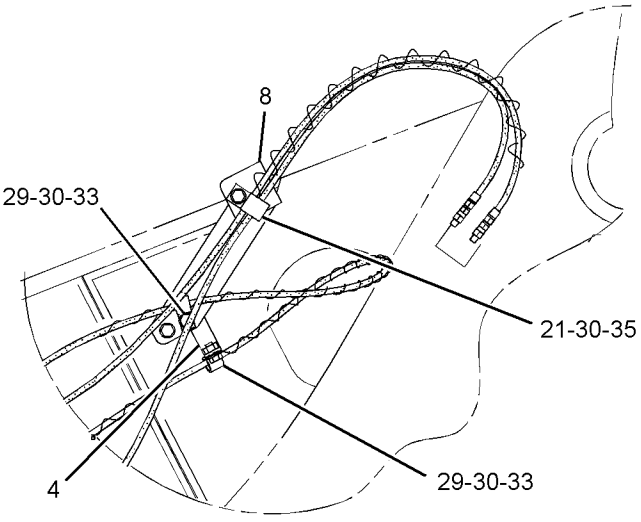


REFER TO ALL ILLUSTRATIONS OF
THIS GROUP FOR AUXILIARY VIEWS

GRAPHIC #2

g01359031

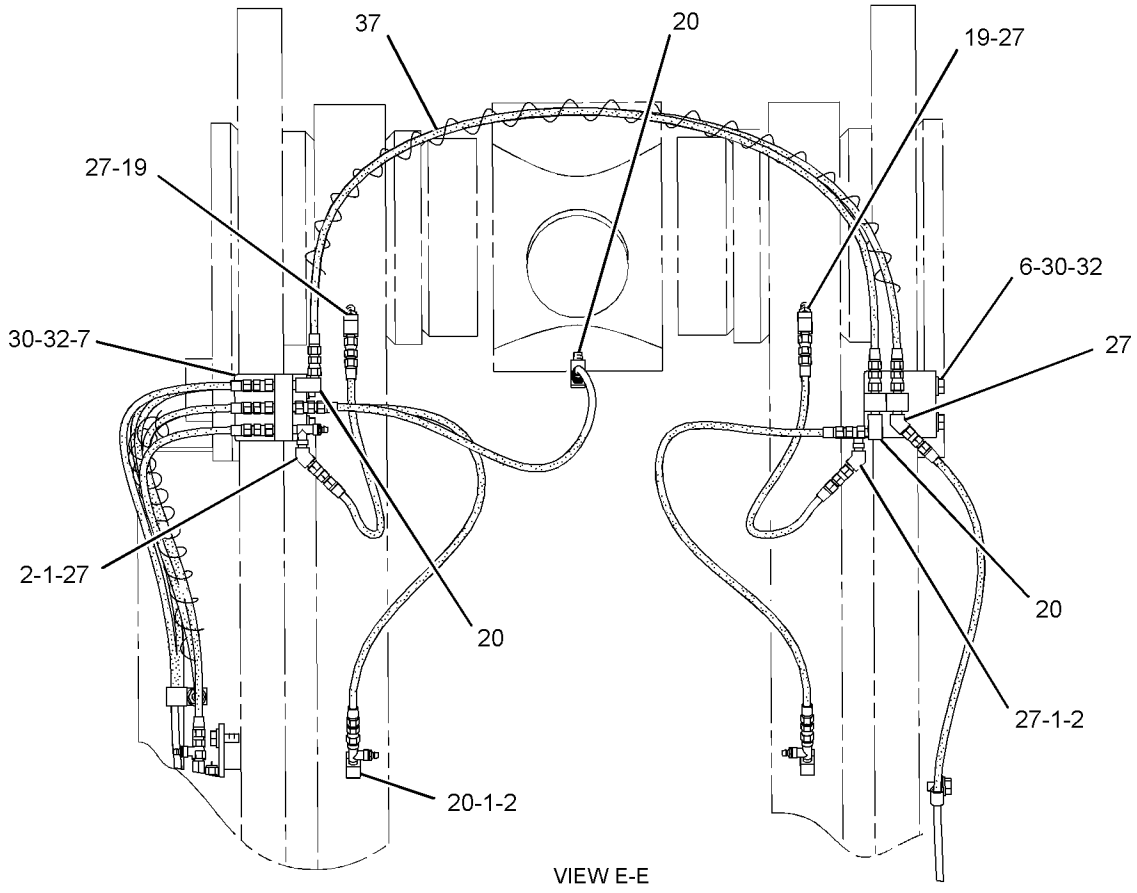


VIEW E-E

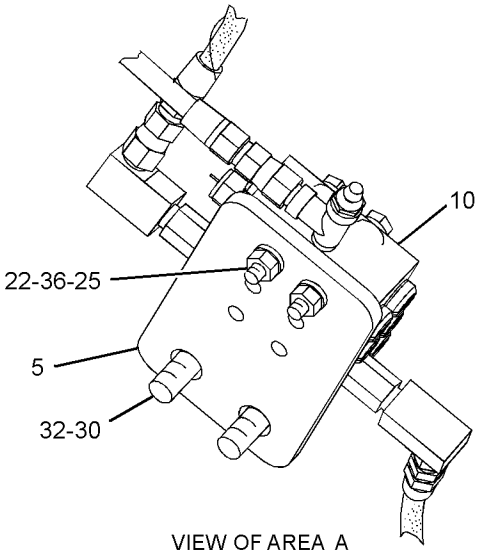


VIEW OF AREA A

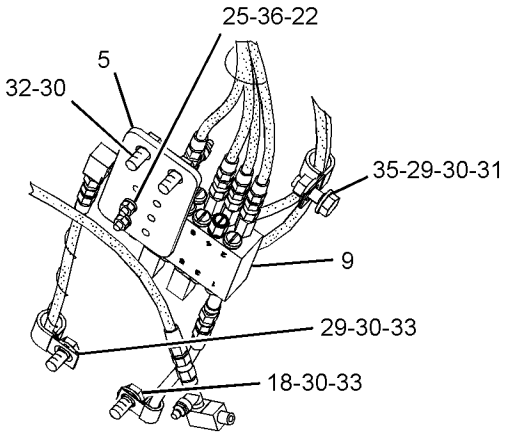


VIEW OF AREA B

GRAPHIC #3 **<END>** g01359161

# *285-7280* LINES GP-AUTOMATIC LUBRICATION–
## BOOM, TILT LINKS
**S/N: BXY1900-UP**
**PART OF 293-7308 LUBRICATION AR-AUTOMATIC**
**AN ATTACHMENT**

**SMCS-7510, 7540** **i02675888**

| NOTE | REF NO | GRAPHIC REF | PART NUMBER | QTY | PART NAME 1 2 3 4 5 6 (PRODUCT LEVEL) | SEE PAGE |
|---|---|---|---|---|---|---|
| | 1 | 3 | **3B-8489** | 2 | FITTING-GREASE | |
| | 2 | 3 | **5P-3422** | 2 | TEE-PIPE | |
| | 3 | 2 | **6S-4039** | 1 | GROMMET | |
| | 4 | 2 | **160-0564** | 1 | BRACKET AS | |
| M | | 2 | **8T-3490** | 1 | NUT-WELD (M10X1.5-THD) | |
| I | 5 | 1 | **189-7497** | 1 | HOSE AS | |
| I | 6 | 1 | **189-7500** | 1 | HOSE AS | |
| | 7 | 3 | **224-4416** | 1 | BRACKET AS | |
| | 8 | 3 | **224-4417** | 1 | BRACKET AS | |
| | 9 | 2 | **255-0614** | 1 | PLATE AS | |
| M | | 2 | **8T-3490** | 1 | NUT-WELD (M10X1.5-THD) | |
| I | 10 | 1 | **272-5100** | 1 | HOSE AS | |
| Y | 11 | 1 | *285-7288* | 1 | VALVE & LINES GP-LUBRICATION (B-PIN, RH, LH) | 936 |
| | 12 | 2 | **285-7290** | 2 | GUARD AS | |
| | 13 | 1,2 | **285-7299** | 2 | TUBE AS | |
| | 14 | 2 | **285-7300** | 1 | TUBE AS | |
| | 15 | 1 | **285-7301** | 1 | TUBE AS | |
| I | 16 | 1 | **285-7309** | 1 | HOSE AS | |
| Y | 17 | 1 | *285-7314* | 1 | VALVE & LINES GP-LUBRICATION (LH C-PIN, LH TILT LINK PIN) | 945 |
| Y | 18 | 1 | *285-7315* | 1 | VALVE & LINES GP-LUBRICATION (C-PIN, LINK PINS, TILT CYL PIN) | 947 |
| | 19 | 1,2 | *148-8389* | 2 | ELBOW AS | |
| | | | | | (EACH INCLUDES) | |
| | | 1,2 | **4J-5477** | 1 | SEAL-O-RING | |
| | | 1,2 | **7X-0492** | 1 | ELBOW | |
| | 20 | 1,2 | *171-6727* | 2 | ADAPTER AS | |
| | | | | | (EACH INCLUDES) | |
| | | 1,2 | **4J-5477** | 1 | SEAL-O-RING | |
| | | 1,2 | **8T-4128** | 1 | ADAPTER | |
| | 21 | 2 | **4D-7794** | 2 | CLIP | |
| | 22 | 1,2,3 | **4K-3026** | 6 | EXTENSION | |
| | 23 | 1,2,3 | **4M-8973** | 10 | ELBOW | |
| | 24 | 2 | **5P-1076** | 8 | WASHER-HARD (13.5X30X4-MM THK) | |
| | 25 | 1 | **5P-9297** | 1 | CLIP | |
| | 26 | 1 | **6V-8397** | 3 | SEAL-O-RING | |
| | 27 | 1,2 | **7D-1728** | 8 | CLIP | |
| M | 28 | 1,2 | **7X-2621** | 12 | BOLT (M10X1.5X12-MM) | |
| | 29 | 1 | **8C-6869** | 3 | CONNECTOR | |
| | 30 | 3 | **8L-5008** | 5 | ELBOW-PIPE | |
| | 31 | 1,2 | **8M-2772** | 2 | CLIP | |
| | 32 | 2 | **8M-2773** | 3 | CLIP | |
| | 33 | 1,2 | **8S-0948** | 4 | CLIP | |
| | 34 | 1,2,3 | **8T-4121** | 30 | WASHER-HARD (11X21X2.5-MM THK) | |
| M | 35 | 1 | **8T-4133** | 1 | NUT (M10X1.5-THD) | |
| M | 36 | 2,3 | **8T-4136** | 5 | BOLT (M10X1.5X25-MM) | |
| M | 37 | 1,2 | **8T-4137** | 7 | BOLT (M10X1.5X20-MM) | |
| M | 38 | 2 | **8T-4139** | 8 | BOLT (M12X1.75X30-MM) | |
| M | 39 | 1 | **8T-4185** | 5 | BOLT (M10X1.5X50-MM) | |
| M | 40 | 1 | **8T-4195** | 1 | BOLT (M10X1.5X30-MM) | |
| | 41 | 1 | **9M-8406** | 1 | CLIP | |
| E | 42 | 3 | **7I-1024** | | GUARD (HOSE) (96.5-CM) | |
| E | 42A | 1 | **7I-1024** | | GUARD (HOSE) (61-CM) | |
| E | 42B | 1 | **7I-1024** | | GUARD (HOSE) (40-CM) | |

E-ORDER BY THE CENTIMETER
I-REFER TO HYDRAULIC INFORMATION SYSTEM
M-METRIC PART
Y-SEPARATE ILLUSTRATION

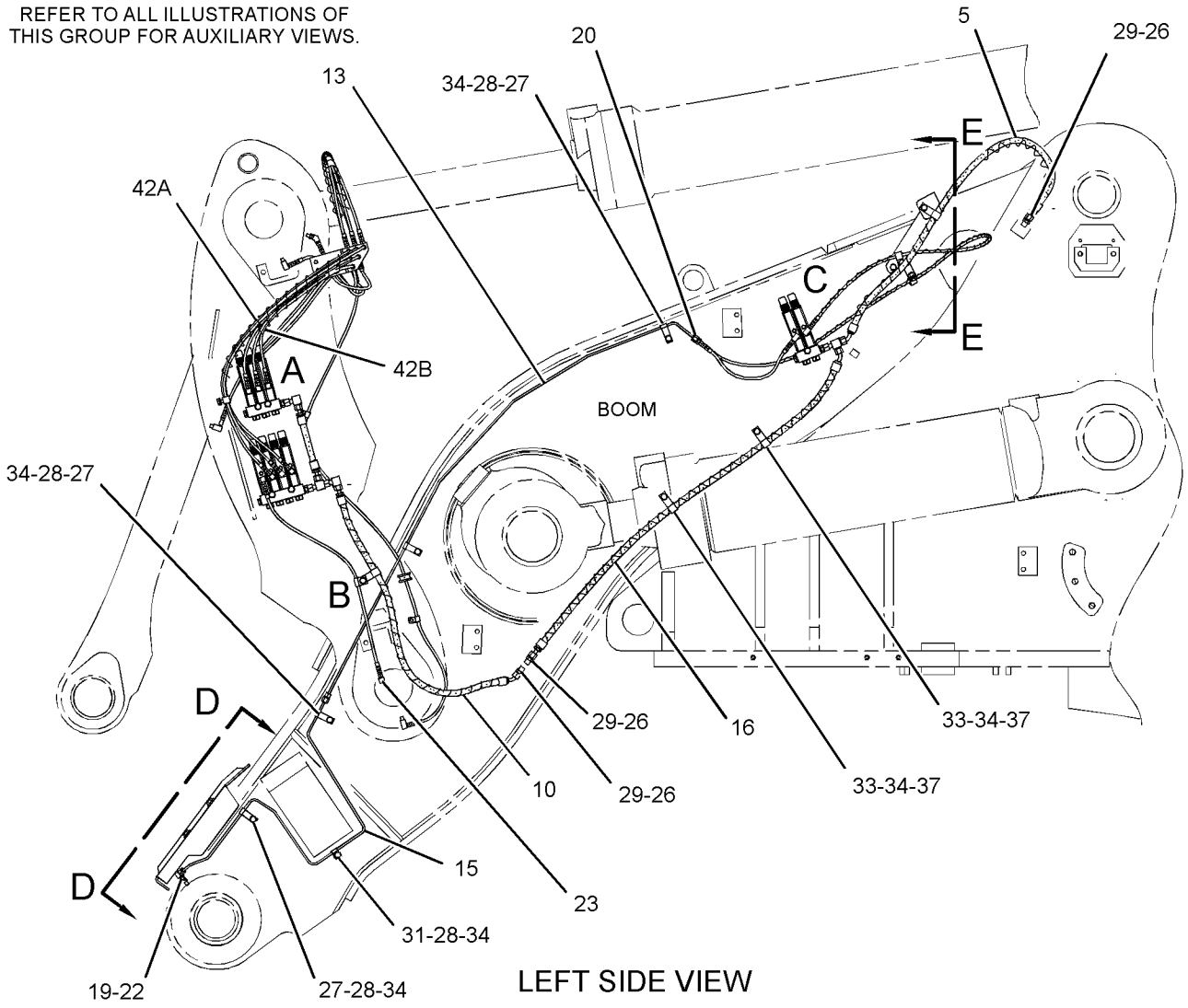


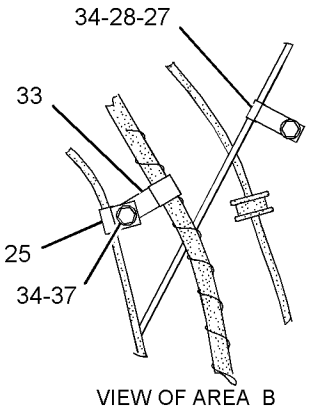


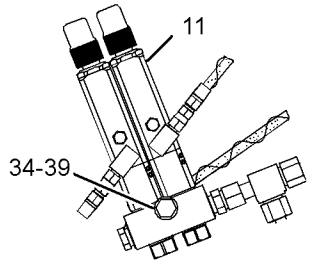


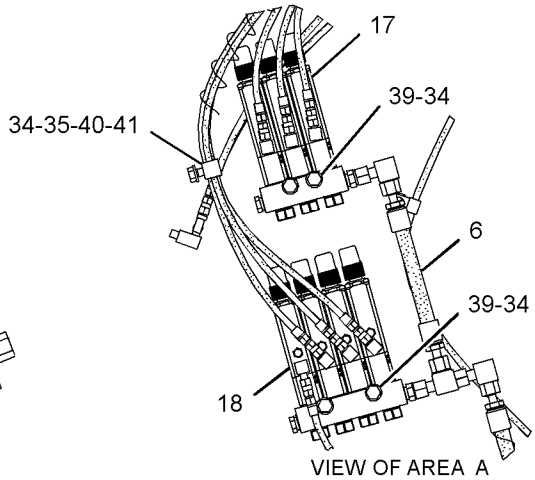


GRAPHIC #1

g01352404

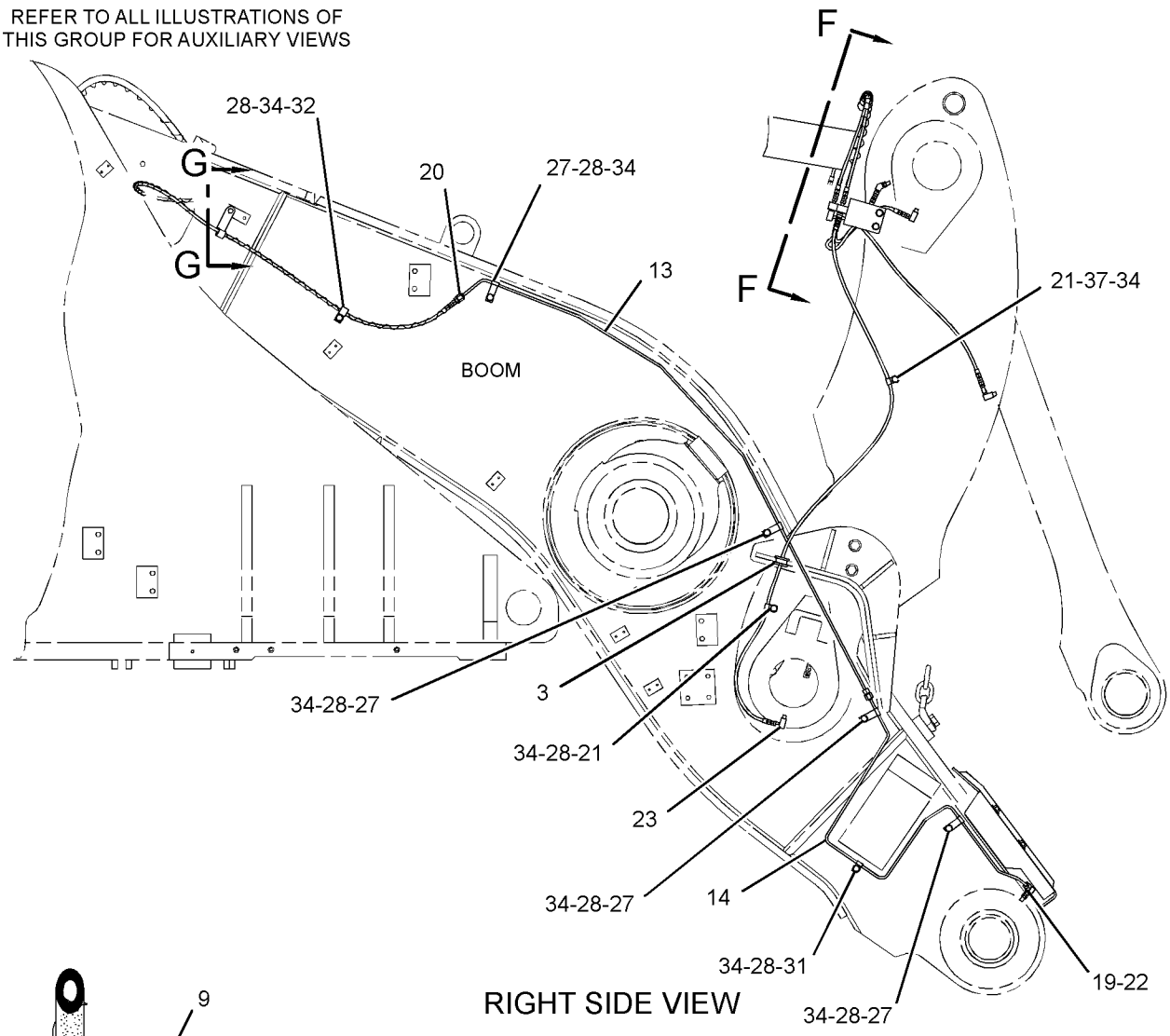


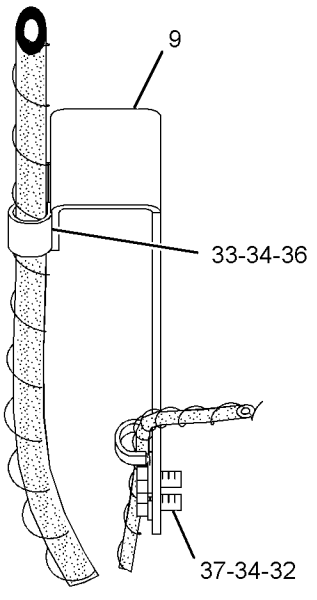


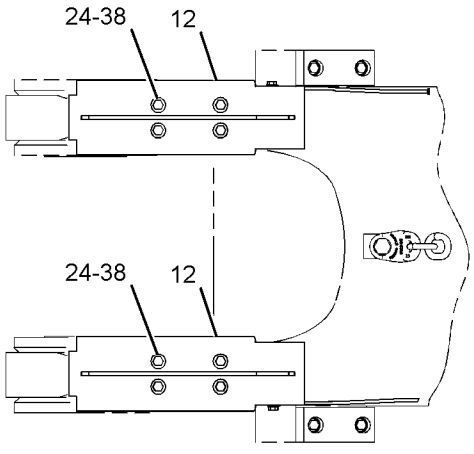


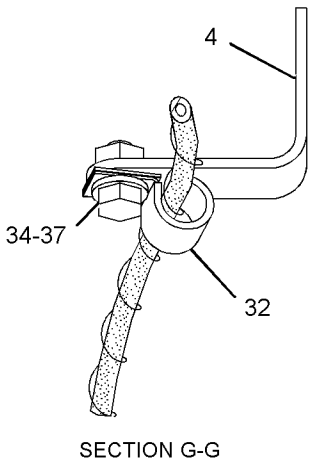


GRAPHIC #2

g01352321

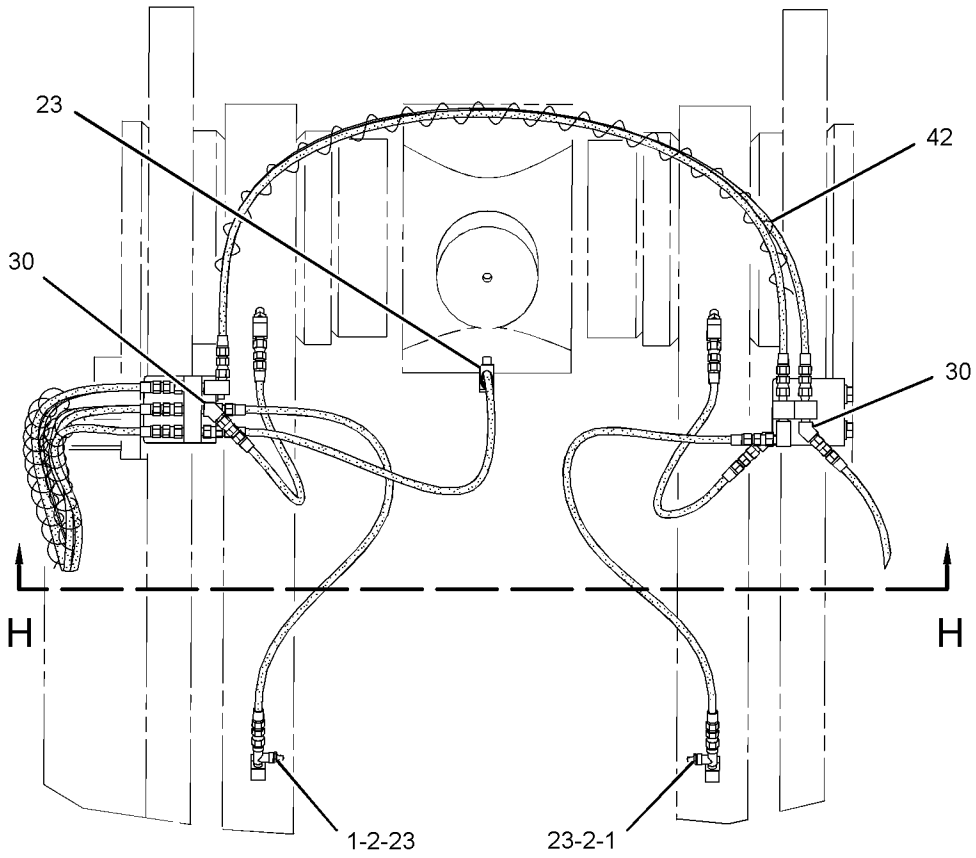


VIEW F-F

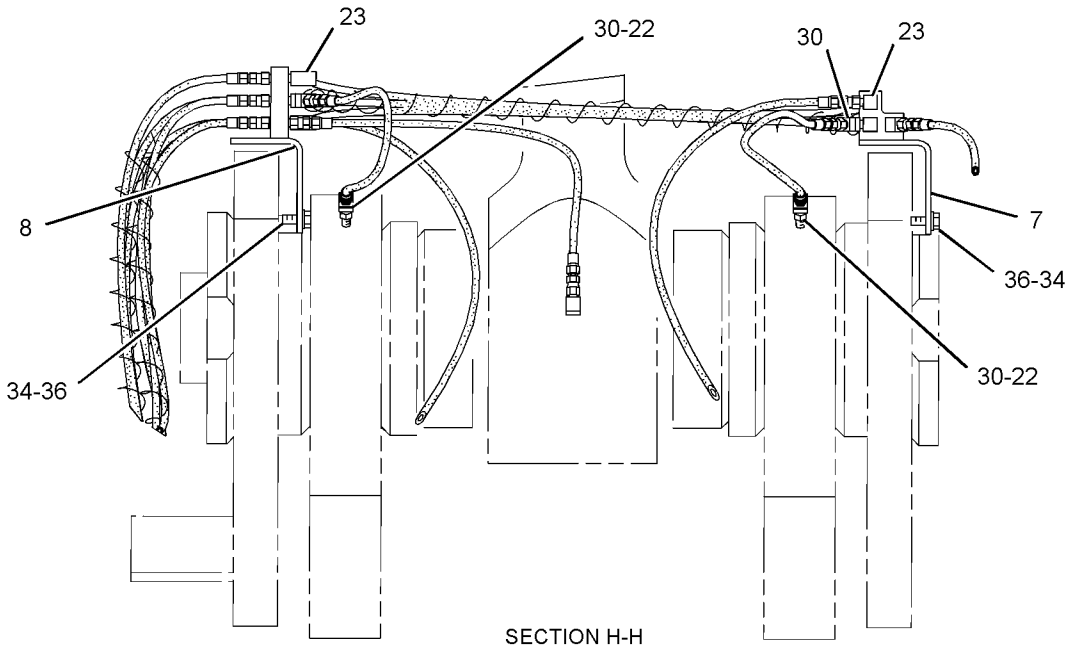


SECTION H-H

GRAPHIC #3 **<END>** g01352510

## *158-6185* LINES GP-GREASE–TILT LINK PINS

**S/N: BXY1-UP**
**PART OF 259-2420 LINES GP-GREASE**
**AN ATTACHMENT**

**SMCS-7510** **i01496427**

| NOTE | REF NO | GRAPHIC REF | PART NUMBER | QTY | PART NAME 1 2 3 4 5 6 (PRODUCT LEVEL) | SEE PAGE |
|---|---|---|---|---|---|---|
| | 1 | 1 | **5V-5476** | 1 | HOSE AS | |
| | 2 | 1 | **3B-8489** | 7 | FITTING-GREASE | |
| | 3 | 1 | **5K-9243** | 2 | ELBOW-FLARED | |
| | 4 | 1 | **6L-3616** | 4 | CONNECTOR | |
| | 5 | 1 | **157-8954** | 2 | TUBE AS | |
| | 6 | 1 | **157-8955** | 1 | TUBE AS | |
| | 7 | 1 | **3B-6493** | 1 | ELBOW-PIPE | |
| | 8 | 1 | **8M-2772** | 3 | CLIP | |
| | 9 | 1 | **8T-4121** | 2 | WASHER-HARD (11X21X2.5-MM THK) | |
| M | 10 | 1 | **8T-4137** | 2 | BOLT (M10X1.5X20-MM) | |
| | 11 | 1 | **197-7863** | 2 | BRACKET AS | |
| | 12 | 1 | **197-6660** | 2 | BRACKET AS | |
| | 13 | 1 | **4K-3026** | 1 | EXTENSION | |
| M | 15 | 1 | **8T-4139** | 6 | BOLT (M12X1.75X30-MM) | |
| | 16 | 1 | **5P-1076** | 6 | WASHER-HARD (13.5X30X4-MM THK) | |

M-METRIC PART

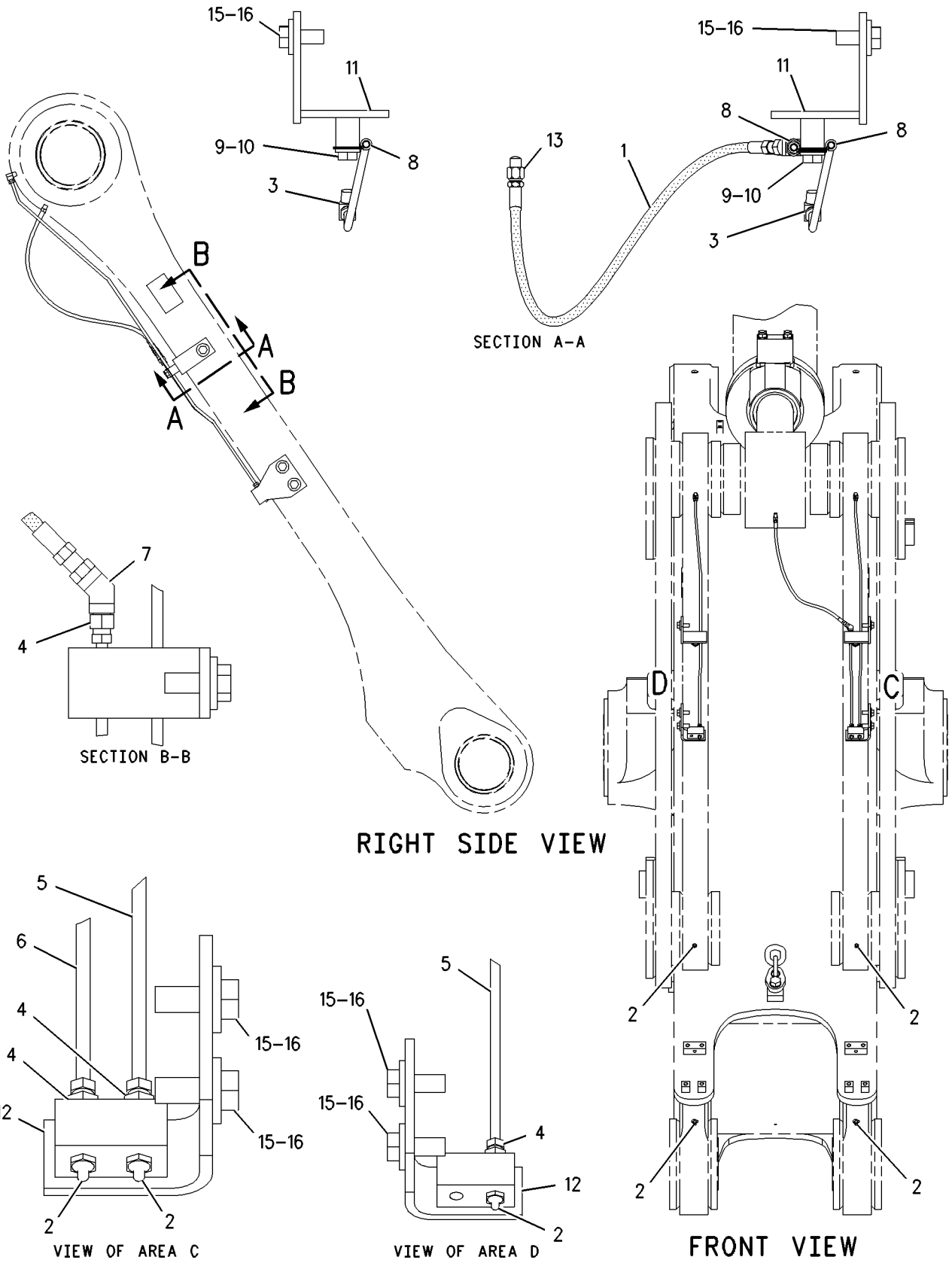


GRAPHIC #1 **<END>** g00776787

## *259-2401* LINES GP-GREASE—AXLE TRUNNIONS, LIFT CYLINDER

**S/N: BXY1-UP**

**PART OF 225-5432, 284-2735 CHASSIS AR**

**SMCS-7510** **i02220574**

| NOTE | REF NO | GRAPHIC REF | PART NUMBER | QTY | PART NAME 1 2 3 4 5 6 (PRODUCT LEVEL) | SEE PAGE |
|---|---|---|---|---|---|---|
| | 1 | 1 | **5K-9242** | 2 | UNION-FLARED | |
| | 2 | 1 | **5K-9243** | 2 | ELBOW-FLARED | |
| | 3 | 1 | **5V-5476** | 1 | HOSE AS | |
| | 4 | 1 | **142-6994** | 1 | TUBE AS | |
| | 5 | 1 | **142-6995** | 1 | TUBE AS | |
| | 6 | 1 | **142-6996** | 1 | TUBE AS | |
| | 7 | 1 | **145-4922** | 1 | TUBE AS | |
| | 8 | 1 | **159-8612** | 1 | PLATE AS | |
| M | | 1 | **8T-3490** | 2 | NUT-WELD (M10X1.5-THD) | |
| | 9 | 1 | **159-8613** | 1 | PLATE AS | |
| M | | 1 | **8T-3490** | 2 | NUT-WELD (M10X1.5-THD) | |
| | 10 | 1 | **220-3444** | 1 | TUBE AS | |
| | 11 | 1 | **220-3445** | 1 | TUBE AS | |
| | 12 | 1 | **220-3446** | 1 | TUBE AS | |
| | 13 | 1 | **222-2029** | 1 | TUBE AS | |
| | 14 | 1 | **222-2030** | 1 | TUBE AS | |
| | 15 | 1 | *148-8389* | 5 | ELBOW AS | |
| | | | | | (EACH INCLUDES) | |
| | | 1 | **4J-5477** | 1 | SEAL-O-RING | |
| | | 1 | **7X-0492** | 1 | ELBOW | |
| | 16 | 1 | **4J-5477** | 3 | SEAL-O-RING | |
| | 17 | 1 | **4K-3026** | 1 | EXTENSION | |
| | 18 | 1 | **7X-7729** | 4 | WASHER (11X25X3-MM THK) | |
| | 19 | 1 | **8M-2772** | 22 | CLIP | |
| | 20 | 1 | **8T-4121** | 19 | WASHER-HARD (11X21X2.5-MM THK) | |
| | 21 | 1 | **8T-4128** | 1 | ADAPTER | |
| M | 22 | 1 | **8T-4133** | 3 | NUT (M10X1.5-THD) | |
| M | 23 | 1 | **8T-4137** | 20 | BOLT (M10X1.5X20-MM) | |
| | 24 | 1 | **8T-7934** | 1 | WASHER-HARD (11X21X5-MM THK) | |

M-METRIC PART

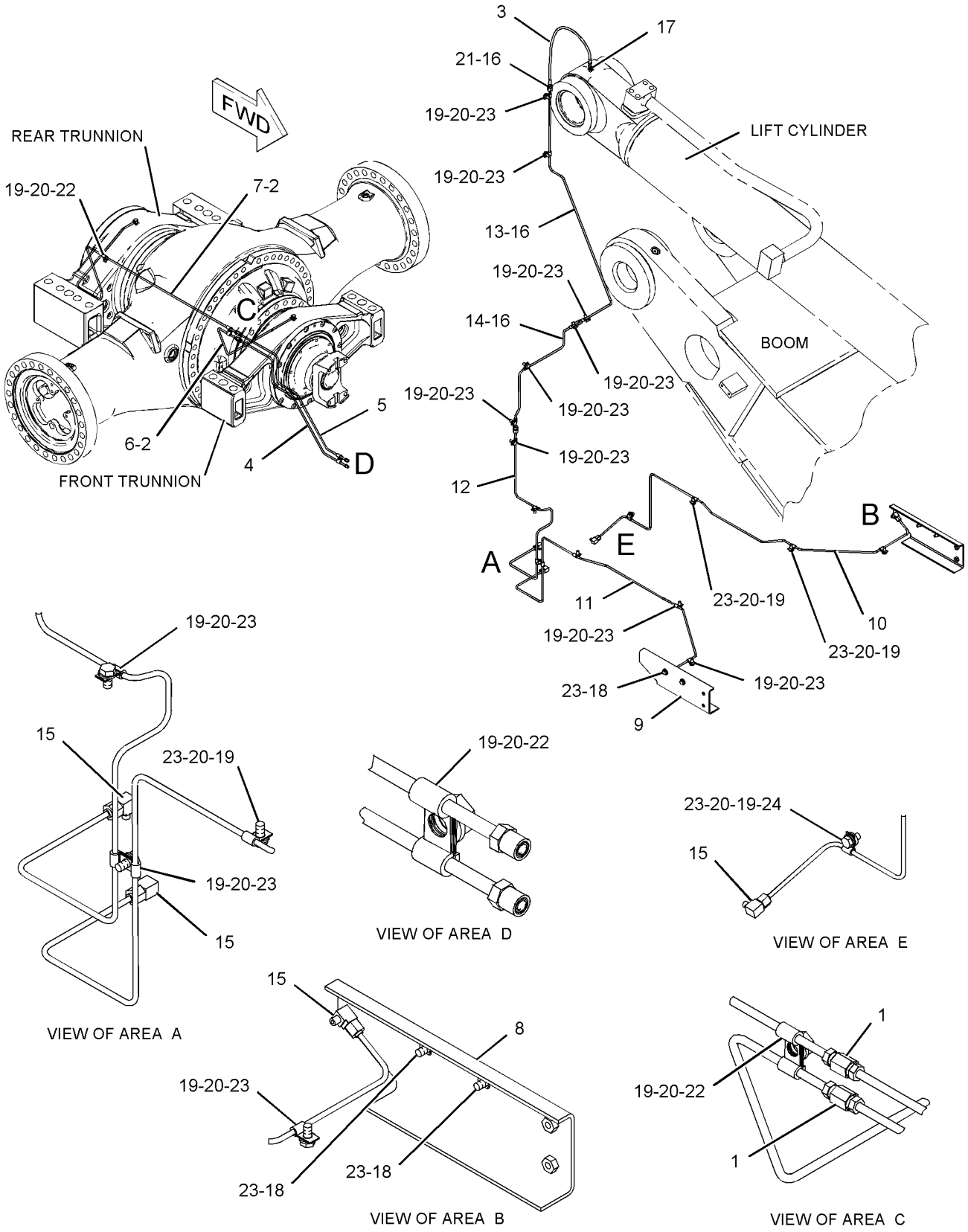


GRAPHIC #1 **<END>** g01123032

## *259-2402* LINES GP-GREASE–ARTICULATED HITCH BEARINGS

**S/N: BXY1-UP**
**PART OF 259-2420 LINES GP-GREASE**
**AN ATTACHMENT**

**SMCS-7510** **i02225681**

| NOTE | REF NO | GRAPHIC REF | PART NUMBER | QTY | PART NAME 1 2 3 4 5 6 (PRODUCT LEVEL) | SEE PAGE |
|---|---|---|---|---|---|---|
| | 1 | 1 | **3B-8489** | 3 | FITTING-GREASE | |
| | 2 | 1 | **3B-8686** | 1 | FITTING-GREASE | |
| | 3 | 1 | **4B-8440** | 2 | FITTING-GREASE | |
| | 4 | 1 | **5B-0651** | 3 | FITTING-STRAIGHT | |
| | 5 | 1 | **5K-9242** | 2 | UNION-FLARED | |
| | 6 | 1 | **6L-3616** | 2 | CONNECTOR | |
| | 7 | 1 | **259-2403** | 1 | TUBE AS | |
| | 8 | 1 | **259-2404** | 1 | TUBE AS | |

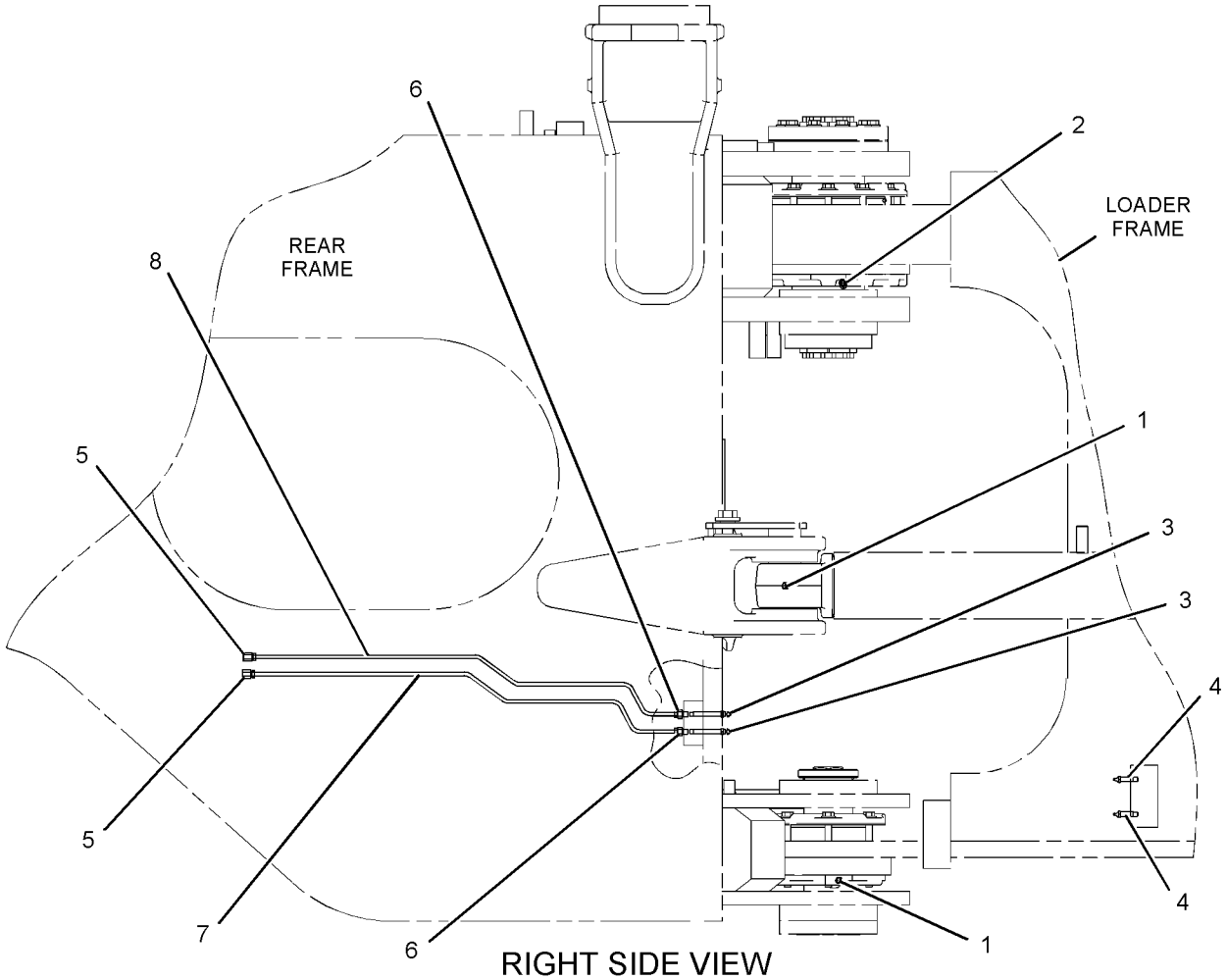


RIGHT SIDE VIEW

GRAPHIC #1 **<END>** g01125283

# FRAME AND BODY

## *259-2420* LINES GP-GREASE

**S/N: BXY1-UP**

**CANNOT BE USED WITH 247-7033–PAGE 850, 259-2435–PAGE 851, 259-2405–PAGE 851, 259-2436–PAGE 852, 247-7034–PAGE 850, 259-2437–PAGE 852**

**AN ATTACHMENT**

**SMCS-7510** **i02225994**

| NOTE | PART NUMBER | QTY | PART NAME 1 2 3 4 5 6 (PRODUCT LEVEL) | SEE PAGE |
|---|---|---|---|---|
| Y | *158-6185* | 1 | LINES GP-GREASE (TILT LINK PINS) | 842 |
| Y | *259-2402* | 1 | LINES GP-GREASE (ARTICULATED HITCH BEARINGS) | 846 |

Y-SEPARATE ILLUSTRATION

**<END>**

# *259-2442* LINES GP-LUBRICATION—PUMP

**S/N: BXY1-UP**

**PART OF 259-2441, 272-5090 LINES GP-AUTOMATIC LUBRICATION AN ATTACHMENT**

**SMCS-7510, 7540** **i02226023**

| NOTE | REF NO | GRAPHIC REF | PART NUMBER | QTY | PART NAME 1 2 3 4 5 6 (PRODUCT LEVEL) | SEE PAGE |
|---|---|---|---|---|---|---|
| I | 1 | 1 | **189-7490** | 1 | HOSE AS | |
| I | 2 | 1 | **189-7492** | 1 | HOSE AS | |
| I | 3 | 1 | **189-7493** | 1 | HOSE AS | |
| I | 4 | 1 | **259-2443** | 1 | HOSE AS | |
| | 5 | 1 | *148-8365* | 1 | ELBOW AS | |
| | | 1 | **3J-1907** | 1 | SEAL-O-RING | |
| | | 1 | **6V-8398** | 1 | SEAL-O-RING | |
| | | 1 | **8T-6876** | 1 | ELBOW | |
| | 6 | 1 | *148-8433* | 1 | TEE AS | |
| | | 1 | **6V-8397** | 2 | SEAL-O-RING | |
| | | 1 | **6V-9836** | 1 | TEE-SWIVEL | |

I-REFER TO HYDRAULIC INFORMATION SYSTEM

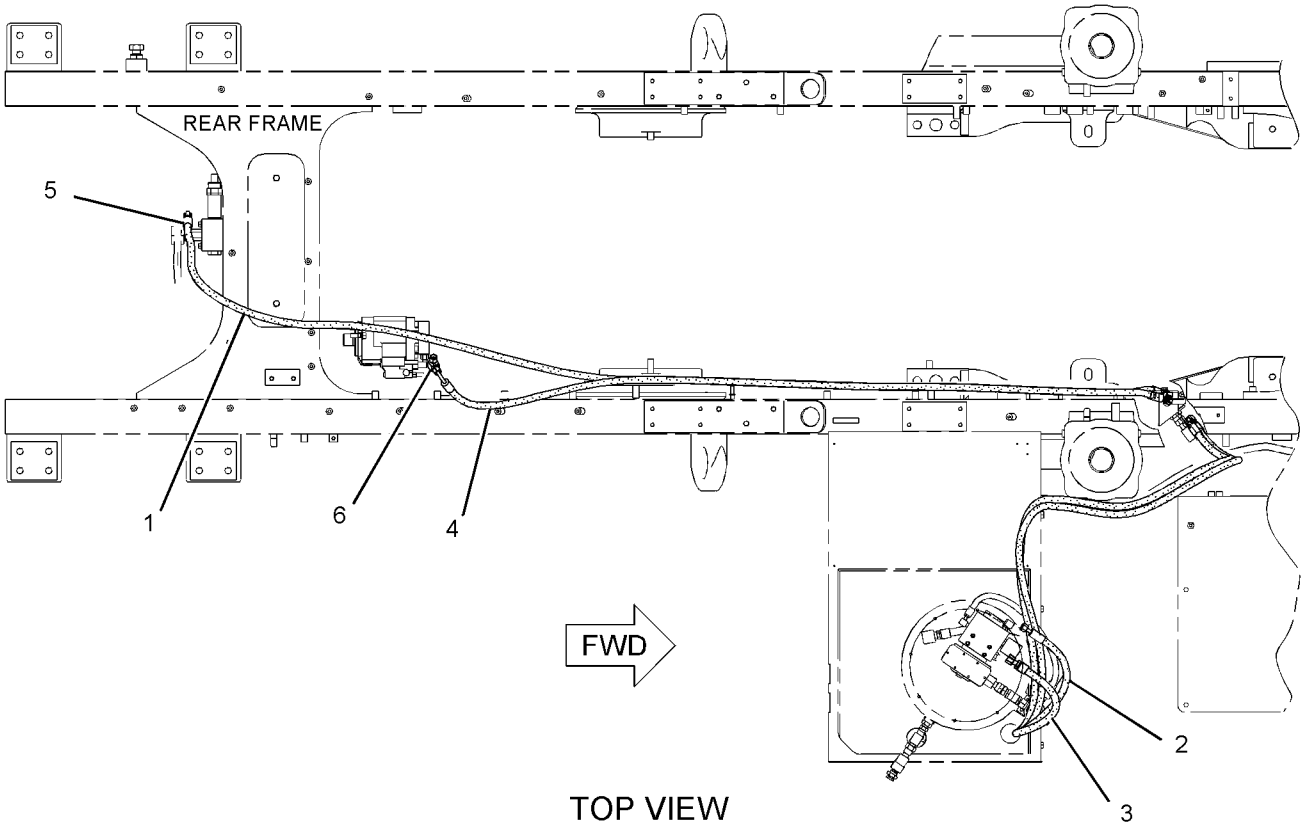


GRAPHIC #1 **<END>** g01125531

# *114-5121* LINK GP-STEERING FRAME LOCK

**S/N: BXY1-UP**

**PART OF 225-5432, 284-2735 CHASSIS AR**

**SMCS-7506** **i01044404**

| NOTE | REF NO | GRAPHIC REF | PART NUMBER | QTY | PART NAME 1 2 3 4 5 6 (PRODUCT LEVEL) | SEE PAGE |
|---|---|---|---|---|---|---|
| | 1 | 1 | **1J-2919** | 2 | COTTER | |
| | 2 | 1 | **4E-6015** | 2 | PIN | |
| | 3 | 1 | **141-2158** | 1 | LINK | |

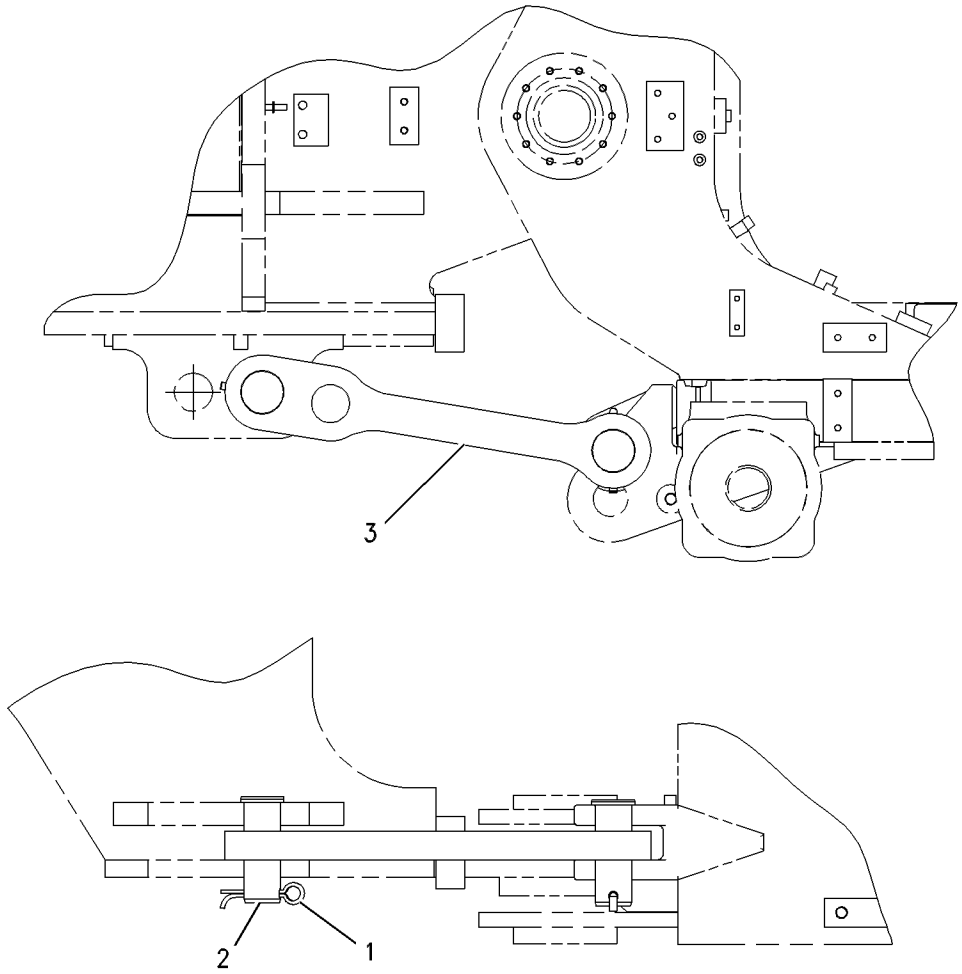


GRAPHIC #1 **<END>** g00542678

## *247-7033* LUBRICATION AR-AUTOMATIC—ELECTRIC

**S/N: BXY1-1899**
**4.25-M BOOM**
**FOR USE WITH 231-8177—PAGE 1187. CANNOT BE USED WITH 259-2420—PAGE 847, 247-7034—PAGE 850, 259-2437—PAGE 852, 259-2405—PAGE 851, 259-2436—PAGE 852, 259-2435—PAGE 851**
**AN ATTACHMENT**

**SMCS-7540** **i02224398**

| NOTE | PART NUMBER | QTY | PART NAME 1 2 3 4 5 6 (PRODUCT LEVEL) | SEE PAGE |
|---|---|---|---|---|
| Y | *243-5885* | 1 | HARDWARE GP-BOOM | 1199 |
| Y | *224-4044* | 1 | HARDWARE GP-LOADER FRAME | 697 |
| Y | *189-7441* | 1 | HARDWARE GP-REAR FRAME | 700 |
| Y | *224-3955* | 1 | LINES GP-AUTOMATIC LUBRICATION (REAR FRAME) | 726 |
| Y | *224-4057* | 1 | LINES GP-AUTOMATIC LUBRICATION (LOADER FRAME) | 729 |
| Y | *243-5875* | 1 | LINES GP-AUTOMATIC LUBRICATION (BOOM, TILT LINKS) | 735 |
| Y | *189-7638* | 1 | LINKAGE GP-BUCKET | 1206 |
| Y | *260-0081* | 1 | WIRING GP-AUTOLUBE CONTROL | 342 |

Y-SEPARATE ILLUSTRATION

**<END>**

## *247-7034* LUBRICATION AR-AUTOMATIC—ELECTRIC

**S/N: BXY1-1899**
**3.6-M BOOM**
**AN ATTACHMENT**

**SMCS-7540** **i02224548**

| NOTE | PART NUMBER | QTY | PART NAME 1 2 3 4 5 6 (PRODUCT LEVEL) | SEE PAGE |
|---|---|---|---|---|
| Y | *189-7589* | 1 | HARDWARE GP-BOOM | 1198 |
| Y | *224-4044* | 1 | HARDWARE GP-LOADER FRAME | 697 |
| Y | *189-7441* | 1 | HARDWARE GP-REAR FRAME | 700 |
| Y | *224-3955* | 1 | LINES GP-AUTOMATIC LUBRICATION (REAR FRAME) | 726 |
| Y | *224-4057* | 1 | LINES GP-AUTOMATIC LUBRICATION (LOADER FRAME) | 729 |
| Y | *259-2449* | 1 | LINES GP-AUTOMATIC LUBRICATION (BOOM, TILT LINKS) | 806 |
| Y | *260-0081* | 1 | WIRING GP-AUTOLUBE CONTROL | 342 |

Y-SEPARATE ILLUSTRATION

**<END>**

## *259-2405* LUBRICATION AR-AUTOMATIC—ELECTRIC

**S/N: BXY1-1899**
**3.88-M**
**FOR USE WITH 248-6340—PAGE 1188. CANNOT BE USED WITH 259-2420—PAGE 847, 259-2437—PAGE 852, 259-2436—PAGE 852, 247-7033—PAGE 850, 259-2435—PAGE 851 AN ATTACHMENT**

**SMCS-7540** **i02225034**

| NOTE | PART NUMBER | QTY | PART NAME 1 2 3 4 5 6 (PRODUCT LEVEL) | SEE PAGE |
|---|---|---|---|---|
| Y | *259-2425* | 1 | CONTROL GP-BUCKET | 1193 |
| Y | *259-2430* | 1 | HARDWARE GP-BOOM | 1200 |
| Y | *224-4044* | 1 | HARDWARE GP-LOADER FRAME | 697 |
| Y | *189-7441* | 1 | HARDWARE GP-REAR FRAME | 700 |
| Y | *224-3955* | 1 | LINES GP-AUTOMATIC LUBRICATION (REAR FRAME) | 726 |
| Y | *224-4057* | 1 | LINES GP-AUTOMATIC LUBRICATION (LOADER FRAME) | 729 |
| Y | *259-2406* | 1 | LINES GP-AUTOMATIC LUBRICATION (BOOM, TILT LINKS) | 744 |
| Y | *260-0081* | 1 | WIRING GP-AUTOLUBE CONTROL | 342 |

Y-SEPARATE ILLUSTRATION

**<END>**

## *259-2435* LUBRICATION AR-AUTOMATIC—HYDRAULIC

**S/N: BXY1-1899**
**4.25-M BOOM**
**FOR USE WITH 231-8177—PAGE 1187. CANNOT BE USED WITH 259-2420—PAGE 847, 259-2437—PAGE 852, 259-2405—PAGE 851, 259-2436—PAGE 852, 247-7033—PAGE 850 AN ATTACHMENT**

**SMCS-7540** **i02616604**

| NOTE | PART NUMBER | QTY | PART NAME 1 2 3 4 5 6 (PRODUCT LEVEL) | SEE PAGE |
|---|---|---|---|---|
| Y | *243-5885* | 1 | HARDWARE GP-BOOM | 1199 |
| Y | *259-2452* | 1 | HARDWARE GP-LOADER FRAME | 699 |
| Y | *189-7441* | 1 | HARDWARE GP-REAR FRAME | 700 |
| Y | *259-2433* | 1 | LINES GP-AUTOMATIC LUBRICATION (BOOM, TILT LINKS) | 762 |
| Y | *259-2441* | 1 | LINES GP-AUTOMATIC LUBRICATION (REAR FRAME) | 790 |
| Y | *259-2450* | 1 | LINES GP-AUTOMATIC LUBRICATION (LOADER FRAME) | 808 |
| Y | *189-7638* | 1 | LINKAGE GP-BUCKET | 1206 |
| Y | *262-0558* | 1 | WIRING GP-AUTOLUBE CONTROL | 343 |
| | **110-2079** | 1 | LAMP (24-VOLT) | |
| | **189-7288** | 1 | PLATFORM AS (RH) | |
| | **233-6046** | 1 | SWITCH AS-ROCKER (AUTOMATIC LUBRICATION CONTROL) | |

Y-SEPARATE ILLUSTRATION

**<END>**

## *259-2436* LUBRICATION AR-AUTOMATIC—HYDRAULIC

**S/N: BXY1-1899**
**3.88-M BOOM**
**FOR USE WITH 248-6340—PAGE 1188. CANNOT BE USED WITH 259-2420—PAGE 847, 259-2437—PAGE 852, 259-2405—PAGE 851, 247-7033—PAGE 850, 259-2435—PAGE 851 AN ATTACHMENT**

**SMCS-7540** **i02616603**

| NOTE | PART NUMBER | QTY | PART NAME 1 2 3 4 5 6 (PRODUCT LEVEL) | SEE PAGE |
|---|---|---|---|---|
| Y | *259-2425* | 1 | CONTROL GP-BUCKET | 1193 |
| Y | *259-2430* | 1 | HARDWARE GP-BOOM | 1200 |
| Y | *259-2452* | 1 | HARDWARE GP-LOADER FRAME | 699 |
| Y | *189-7441* | 1 | HARDWARE GP-REAR FRAME | 700 |
| Y | *259-2434* | 1 | LINES GP-AUTOMATIC LUBRICATION (BOOM, TILT LINKS) | 774 |
| Y | *259-2441* | 1 | LINES GP-AUTOMATIC LUBRICATION (REAR FRAME) | 790 |
| Y | *259-2450* | 1 | LINES GP-AUTOMATIC LUBRICATION (LOADER FRAME) | 808 |
| Y | *262-0558* | 1 | WIRING GP-AUTOLUBE CONTROL | 343 |
| | **110-2079** | 1 | LAMP (24-VOLT) | |
| | **189-7288** | 1 | PLATFORM AS (RH) | |
| | **233-6046** | 1 | SWITCH AS-ROCKER (AUTOMATIC LUBRICATION CONTROL) | |

Y-SEPARATE ILLUSTRATION

**<END>**

## *259-2437* LUBRICATION AR-AUTOMATIC—HYDRAULIC

**S/N: BXY1-1899**
**3.6-M BOOM**
**FOR USE WITH 248-6340—PAGE 1188. CANNOT BE USED WITH 259-2420—PAGE 847, 259-2436—PAGE 852, 259-2405—PAGE 851, 247-7033—PAGE 850, 259-2435—PAGE 851 AN ATTACHMENT**

**SMCS-7540** **i02616602**

| NOTE | PART NUMBER | QTY | PART NAME 1 2 3 4 5 6 (PRODUCT LEVEL) | SEE PAGE |
|---|---|---|---|---|
| Y | *189-7589* | 1 | HARDWARE GP-BOOM | 1198 |
| Y | *259-2452* | 1 | HARDWARE GP-LOADER FRAME | 699 |
| Y | *189-7441* | 1 | HARDWARE GP-REAR FRAME | 700 |
| Y | *259-2441* | 1 | LINES GP-AUTOMATIC LUBRICATION (REAR FRAME) | 790 |
| Y | *259-2444* | 1 | LINES GP-AUTOMATIC LUBRICATION (BOOM, TILT LINKS) | 798 |
| Y | *259-2450* | 1 | LINES GP-AUTOMATIC LUBRICATION (LOADER FRAME) | 808 |
| Y | *262-0558* | 1 | WIRING GP-AUTOLUBE CONTROL | 343 |
| | **110-2079** | 1 | LAMP (24-VOLT) | |
| | **189-7288** | 1 | PLATFORM AS (RH) | |
| | **233-6046** | 1 | SWITCH AS-ROCKER (AUTOMATIC LUBRICATION CONTROL) | |

Y-SEPARATE ILLUSTRATION

**<END>**

## *293-7303* LUBRICATION AR-AUTOMATIC—ELECTRIC

**S/N: BXY1900-UP**

**FOR USE WITH 248-6340—PAGE 1188. CANNOT BE USED WITH 259-2420—PAGE 847, 293-7304—PAGE 853, 293-7305—PAGE 854, 293-7306—PAGE 854, 293-7307—PAGE 855, 293-7308—PAGE 855**

**AN ATTACHMENT**

**SMCS-7540** **i02675706**

| NOTE | PART NUMBER | QTY | PART NAME 1 2 3 4 5 6 (PRODUCT LEVEL) | SEE PAGE |
|---|---|---|---|---|
| Y | *293-7309* | 1 | CONTROL GP-BUCKET | 1195 |
| Y | *285-7281* | 1 | HARDWARE GP-BOOM | 1201 |
| Y | *224-4044* | 1 | HARDWARE GP-LOADER FRAME | 697 |
| Y | *189-7441* | 1 | HARDWARE GP-REAR FRAME | 700 |
| Y | *224-3955* | 1 | LINES GP-AUTOMATIC LUBRICATION (REAR FRAME) | 726 |
| Y | *224-4057* | 1 | LINES GP-AUTOMATIC LUBRICATION (LOADER FRAME) | 729 |
| Y | *285-7276* | 1 | LINES GP-AUTOMATIC LUBRICATION (BOOM, TILT LINKS) | 822 |
| Y | *260-0081* | 1 | WIRING GP-AUTOLUBE CONTROL | 342 |

Y-SEPARATE ILLUSTRATION

**<END>**

## *293-7304* LUBRICATION AR-AUTOMATIC—HYDRAULIC

**S/N: BXY1900-UP**

**FOR USE WITH 248-6340—PAGE 1188, 3.88-M LIFT AR. CANNOT BE USED WITH 259-2420—PAGE 847, 293-7303—PAGE 853, 293-7305—PAGE 854, 293-7306—PAGE 854, 293-7307—PAGE 855, 293-7308—PAGE 855**

**AN ATTACHMENT**

**SMCS-7540** **i02726376**

| NOTE | PART NUMBER | QTY | PART NAME 1 2 3 4 5 6 (PRODUCT LEVEL) | SEE PAGE |
|---|---|---|---|---|
| Y | *293-7309* | 1 | CONTROL GP-BUCKET | 1195 |
| Y | *285-7281* | 1 | HARDWARE GP-BOOM | 1201 |
| Y | *259-2452* | 1 | HARDWARE GP-LOADER FRAME | 699 |
| Y | *189-7441* | 1 | HARDWARE GP-REAR FRAME | 700 |
| Y | *272-5090* | 1 | LINES GP-AUTOMATIC LUBRICATION (REAR FRAME) | 812 |
| Y | *272-5092* | 1 | LINES GP-AUTOMATIC LUBRICATION (LOADER FRAME) | 816 |
| Y | *285-7275* | 1 | LINES GP-AUTOMATIC LUBRICATION (BOOM, TILT LINKS) | 818 |
| Y | *288-1772* | 1 | WIRING GP-AUTOLUBE CONTROL | 345 |
| | **110-2079** | 1 | LAMP (24-VOLT) | |
| | **189-7288** | 1 | PLATFORM AS (RH) | |
| | **233-6046** | 1 | SWITCH AS-ROCKER (AUTOMATIC LUBRICATION CONTROL) | |

Y-SEPARATE ILLUSTRATION

**<END>**

## *293-7305* LUBRICATION AR-AUTOMATIC—ELECTRIC

**S/N: BXY1900-UP**

**FOR USE WITH 231-8177—PAGE 1187, 4.25-M LIFT AR. CANNOT BE USED WITH 259-2420—PAGE 847, 293-7307—PAGE 855, 293-7308—PAGE 855, 293-7303—PAGE 853, 293-7304—PAGE 853, 293-7306—PAGE 854 AN ATTACHMENT**

**SMCS-7540** **i02726375**

| NOTE | PART NUMBER | QTY | PART NAME 1 2 3 4 5 6 (PRODUCT LEVEL) | SEE PAGE |
|---|---|---|---|---|
| Y | *293-7310* | 1 | CONTROL GP-BUCKET | 1197 |
| Y | *285-7282* | 1 | HARDWARE GP-BOOM | 1202 |
| Y | *224-4044* | 1 | HARDWARE GP-LOADER FRAME | 697 |
| Y | *189-7441* | 1 | HARDWARE GP-REAR FRAME | 700 |
| Y | *224-3955* | 1 | LINES GP-AUTOMATIC LUBRICATION (REAR FRAME) | 726 |
| Y | *224-4057* | 1 | LINES GP-AUTOMATIC LUBRICATION (LOADER FRAME) | 729 |
| Y | *285-7278* | 1 | LINES GP-AUTOMATIC LUBRICATION (BOOM, TILT LINKS) | 830 |
| Y | *260-0081* | 1 | WIRING GP-AUTOLUBE CONTROL | 342 |

Y-SEPARATE ILLUSTRATION

**<END>**

## *293-7306* LUBRICATION AR-AUTOMATIC—HYDRAULIC

**S/N: BXY1900-UP**

**FOR USE WITH 231-8177—PAGE 1187, 4.25-M LIFT AR. CANNOT BE USED WITH 259-2420—PAGE 847, 293-7307—PAGE 855, 293-7308—PAGE 855, 293-7303—PAGE 853, 293-7304—PAGE 853, 293-7305—PAGE 854 AN ATTACHMENT**

**SMCS-7540** **i02675872**

| NOTE | PART NUMBER | QTY | PART NAME 1 2 3 4 5 6 (PRODUCT LEVEL) | SEE PAGE |
|---|---|---|---|---|
| Y | *293-7310* | 1 | CONTROL GP-BUCKET | 1197 |
| Y | *285-7282* | 1 | HARDWARE GP-BOOM | 1202 |
| Y | *259-2452* | 1 | HARDWARE GP-LOADER FRAME | 699 |
| Y | *189-7441* | 1 | HARDWARE GP-REAR FRAME | 700 |
| Y | *272-5090* | 1 | LINES GP-AUTOMATIC LUBRICATION (REAR FRAME) | 812 |
| Y | *272-5092* | 1 | LINES GP-AUTOMATIC LUBRICATION (LOADER FRAME) | 816 |
| Y | *285-7277* | 1 | LINES GP-AUTOMATIC LUBRICATION (BOOM, TILT LINKS) | 825 |
| Y | *288-1772* | 1 | WIRING GP-AUTOLUBE CONTROL | 345 |
| | **110-2079** | 1 | LAMP (24-VOLT) | |
| | **189-7288** | 1 | PLATFORM AS (RH) | |
| | **233-6046** | 1 | SWITCH AS-ROCKER (AUTOMATIC LUBRICATION CONTROL) | |

Y-SEPARATE ILLUSTRATION

**<END>**

## *293-7307* LUBRICATION AR-AUTOMATIC—ELECTRIC

**S/N: BXY1900-UP**

**FOR USE WITH 3.6-M LIFT AR. CANNOT BE USED WITH 259-2420—PAGE 847, 293-7308—PAGE 855, 293-7303—PAGE 853, 293-7304—PAGE 853, 293-7305—PAGE 854, 293-7306—PAGE 854**

**AN ATTACHMENT**

**SMCS-7540** **i02675879**

| NOTE | PART NUMBER | QTY | PART NAME 1 2 3 4 5 6 (PRODUCT LEVEL) | SEE PAGE |
|---|---|---|---|---|
| Y | *285-7283* | 1 | HARDWARE GP-BOOM | 1203 |
| Y | *224-4044* | 1 | HARDWARE GP-LOADER FRAME | 697 |
| Y | *189-7441* | 1 | HARDWARE GP-REAR FRAME | 700 |
| Y | *224-3955* | 1 | LINES GP-AUTOMATIC LUBRICATION (REAR FRAME) | 726 |
| Y | *224-4057* | 1 | LINES GP-AUTOMATIC LUBRICATION (LOADER FRAME) | 729 |
| Y | *285-7279* | 1 | LINES GP-AUTOMATIC LUBRICATION (BOOM, TILT LINKS) | 833 |
| Y | *260-0081* | 1 | WIRING GP-AUTOLUBE CONTROL | 342 |

Y-SEPARATE ILLUSTRATION

**<END>**

## *293-7308* LUBRICATION AR-AUTOMATIC—HYDRAULIC

**S/N: BXY1900-UP**

**FOR USE WITH 3.6-M LIFT AR. CANNOT BE USED WITH 259-2420—PAGE 847, 293-7307—PAGE 855, 293-7303—PAGE 853, 293-7304—PAGE 853, 293-7305—PAGE 854, 293-7306—PAGE 854**

**AN ATTACHMENT**

**SMCS-7540** **i02675887**

| NOTE | PART NUMBER | QTY | PART NAME 1 2 3 4 5 6 (PRODUCT LEVEL) | SEE PAGE |
|---|---|---|---|---|
| Y | *285-7283* | 1 | HARDWARE GP-BOOM | 1203 |
| Y | *259-2452* | 1 | HARDWARE GP-LOADER FRAME | 699 |
| Y | *189-7441* | 1 | HARDWARE GP-REAR FRAME | 700 |
| Y | *272-5090* | 1 | LINES GP-AUTOMATIC LUBRICATION (REAR FRAME) | 812 |
| Y | *272-5092* | 1 | LINES GP-AUTOMATIC LUBRICATION (LOADER FRAME) | 816 |
| Y | *285-7280* | 1 | LINES GP-AUTOMATIC LUBRICATION (BOOM, TILT LINKS) | 837 |
| Y | *288-1772* | 1 | WIRING GP-AUTOLUBE CONTROL | 345 |
| | **110-2079** | 1 | LAMP (24-VOLT) | |
| | **189-7288** | 1 | PLATFORM AS (RH) | |
| | **233-6046** | 1 | SWITCH AS-ROCKER (AUTOMATIC LUBRICATION CONTROL) | |

Y-SEPARATE ILLUSTRATION

**<END>**

## *143-9361* PANEL GP-SIDE—HOOD SIDE, FRONT, RH

**S/N: BXY1-UP**

**PART OF 225-5235 HOOD & GUARD GP**

**SMCS-7267** **i01505357**

| NOTE | REF NO | GRAPHIC REF | PART NUMBER | QTY | PART NAME 1 2 3 4 5 6 (PRODUCT LEVEL) | SEE PAGE |
|---|---|---|---|---|---|---|
| | 1 | 1 | **142-7010** | 1 | PANEL AS-RH | |
| M | | 1 | **8T-5413** | 2 | STUD-WELD (M10X1.5X25-MM OAL) | |
| | 2 | 1 | **142-7011** | 1 | PANEL AS-LH | |
| M | | 1 | **8T-5413** | 2 | STUD-WELD (M10X1.5X25-MM OAL) | |
| | 3 | 1 | **164-0327** | 2 | PLATE | |
| | 4 | 1 | **7X-7729** | 4 | WASHER (11X25X3-MM THK) | |
| M | 5 | 1 | **8T-4133** | 4 | NUT (M10X1.5-THD) | |

M-METRIC PART

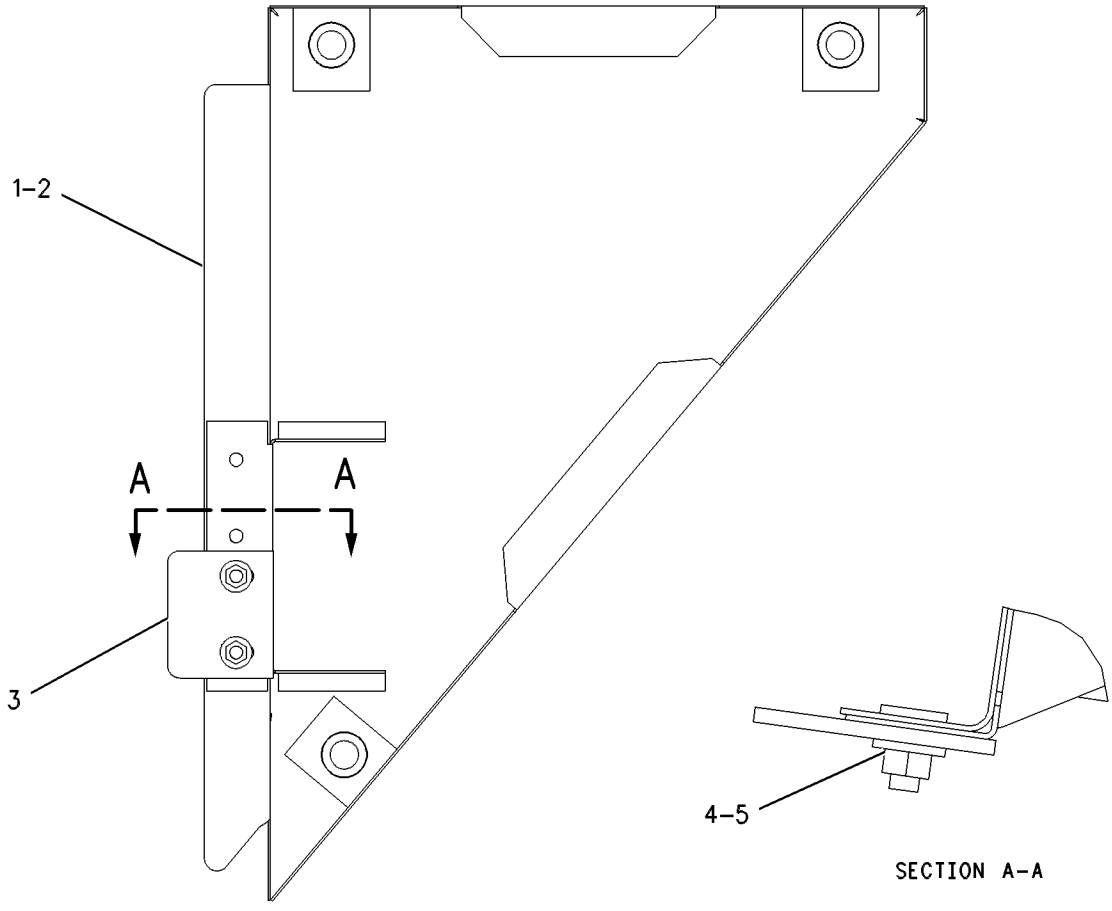


GRAPHIC #1 **<END>** g00506980

# FRAME AND BODY

## *230-4182* PANEL GP-SIDE

**S/N: BXY1-UP**

**PART OF 225-5432, 284-2735 CHASSIS AR**

**SMCS-7267** **i02136480**

| NOTE | REF NO | GRAPHIC REF | PART NUMBER | QTY | PART NAME 1 2 3 4 5 6 (PRODUCT LEVEL) | SEE PAGE |
|---|---|---|---|---|---|---|
| | 1 | 1 | **230-4183** | 1 | PANEL AS-RH | |
| | | 1 | **1V-8732** | 1 | HANDLE | |
| | | 1 | **138-6108** | 3 | SPACER (8.7X20X45-MM THK) | |
| | 2 | 1 | **230-4186** | 1 | PANEL AS-LH | |
| | | 1 | **1V-8732** | 1 | HANDLE | |
| | | 1 | **138-6108** | 3 | SPACER (8.7X20X45-MM THK) | |
| | 3 | 1 | **5P-1076** | 10 | WASHER-HARD (13.5X30X4-MM THK) | |
| M | 4 | 1 | **8T-4139** | 10 | BOLT (M12X1.75X30-MM) | |
| D | 5 | 1 | **5P-7483** | | SEAL (2.2M) | |

D-ORDER BY THE METER
M-METRIC PART

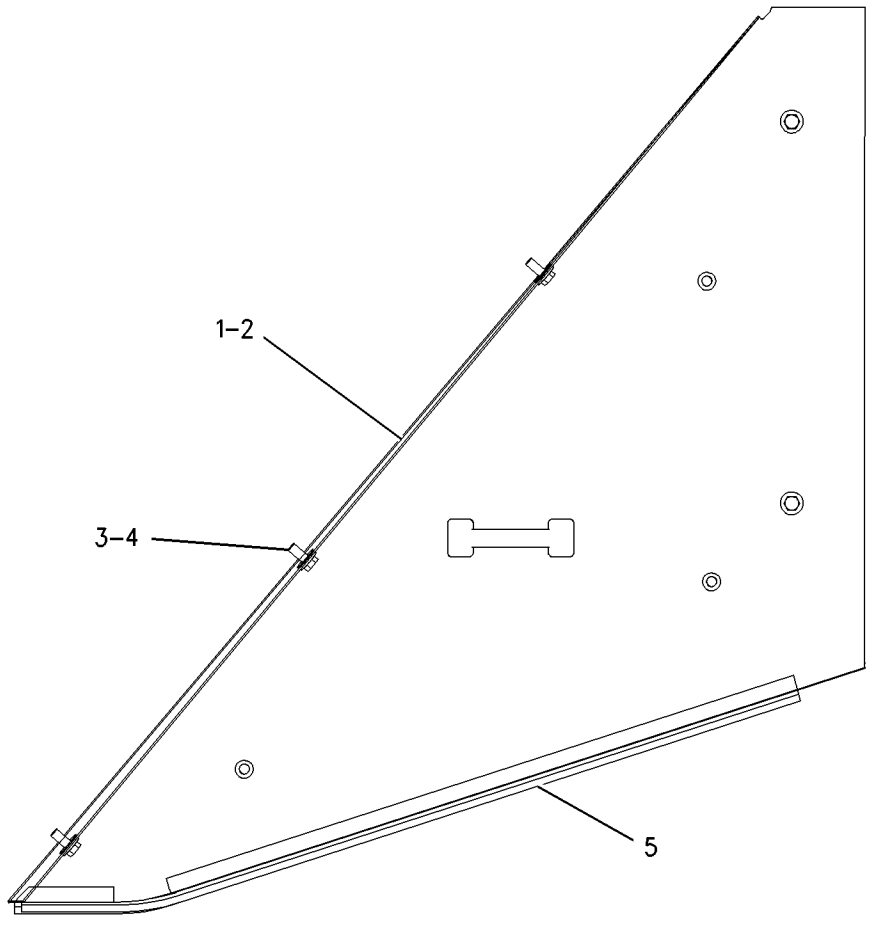


GRAPHIC #1 **<END>** g00998005

# *224-4415* PUMP GP-LUBRICATION–
## AUTOMATIC LUBRICATION SYSTEM
**S/N: BXY1-UP**
**PART OF 224-3955 LINES GP-AUTOMATIC LUBRICATION**
**AN ATTACHMENT**

**SMCS-7516, 7540** **i02224151**

| NOTE | REF NO | GRAPHIC REF | PART NUMBER | QTY | PART NAME 1 2 3 4 5 6 (PRODUCT LEVEL) | SEE PAGE |
|---|---|---|---|---|---|---|
| | 1 | 1 | **157-2017** | 1 | VALVE AS-RELIEF (GREASE PRESSURE) | |
| | 2 | 1 | **189-8069** | 1 | TANK GP-GREASE | |
| | 3 | 1 | **155-2260** | 1 | KIT-CONNECTING PLUG (3-PIN) | |

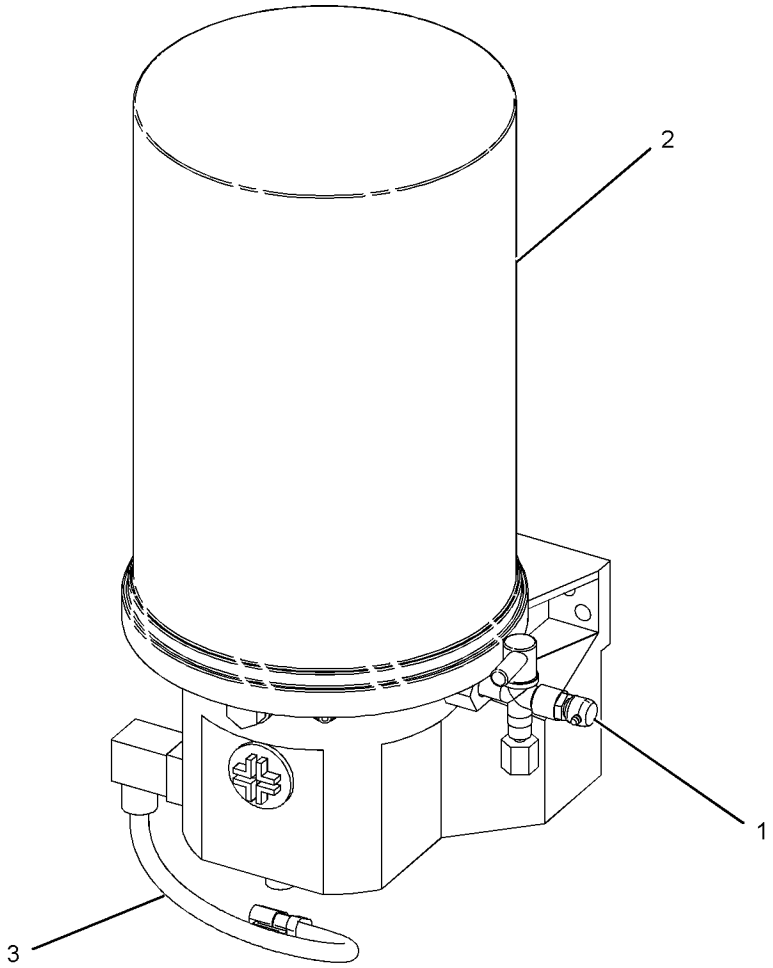


GRAPHIC #1 **<END>** g01014171

# *275-0702* PUMP GP-LUBRICATION–

**AUTOMATIC LUBRICATION SYSTEM**

**S/N: BXY1-UP**

**PART OF 238-1006 TANK & PUMP GP-LUBRICATION**

**AN ATTACHMENT**

**SMCS-7516, 7540** **i02564877**

| NOTE | REF NO | GRAPHIC REF | PART NUMBER | QTY | PART NAME 1 2 3 4 5 6 (PRODUCT LEVEL) | SEE PAGE |
|---|---|---|---|---|---|---|
| | 1 | 1 | **189-4383** | 1 | HOUSING-PUMP | |
| | 2 | 1 | **189-4384** | 1 | GASKET | |
| | 3 | 1 | **189-4387** | 1 | MANIFOLD | |
| | 4 | 1 | **189-4388** | 1 | GASKET | |
| | 5 | 1 | **189-4390** | 1 | COVER | |
| | 6 | 1 | **189-4391** | 1 | TUBE | |
| | 7 | 1 | **241-8538** | 1 | SOLENOID AS | |
| | | 1 | **155-2270** | 1 | KIT-CONNECTING PLUG (2-PIN) | |
| | | | | | (INCLUDES PLUG AS AND WEDGE) | |
| | 8 | 1 | **275-0701** | 1 | MOTOR-HYDRAULIC | |
| | 9 | 1 | **290-2693** | 1 | VALVE-PRESSURE | |
| | 10 | 1 | **290-2694** | 1 | VALVE-FLOW CONTROL | |
| | 11 | 1 | **2M-9780** | 2 | SEAL-O-RING | |
| | | | | | AVAILABLE REPAIR KIT(S): | |
| | | | **217-3549** | 1 | KIT-PUMP REPAIR | |
| | | | | | KIT INCLUDES GASKET,O-RINGS,U-CUPS,WASHER-BACKUPS,RING-BACKUP,COVER GASKET,MOTOR GASKET | |
| | | | **235-8631** | 1 | KIT-REPAIR (MOTOR) | |
| | | | | | KIT INCLUDES COUNTER WEIGHT,SCREW,RETAINING RING,CRANK ROD,CRANK ECCENTRIC,BALL BEARING,OUTLET PIN, PLUNGER TUBE | |
| | | | | | WRIST PIN BUSHING,WRIST PIN ANCHOR,RETAINING RING,O-RING,AND O-RING(NITRILE) | |

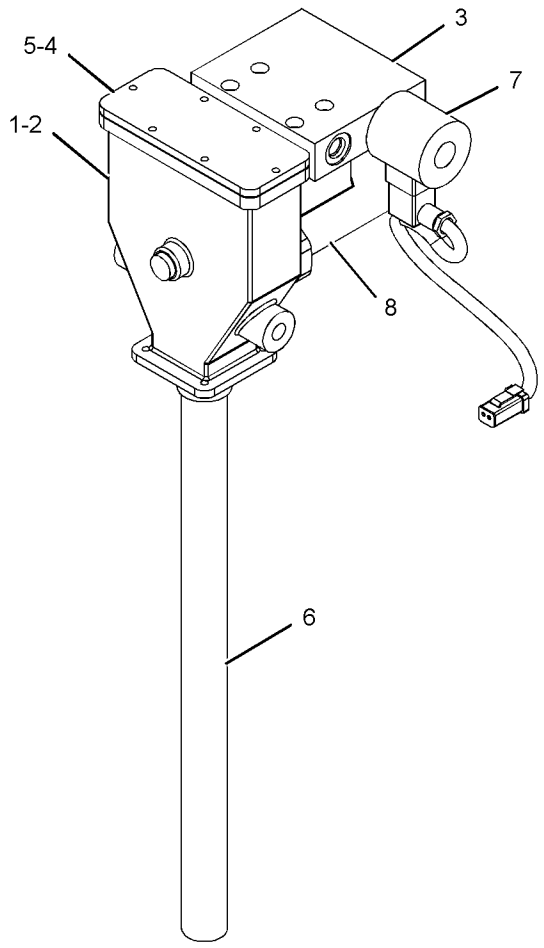


GRAPHIC #1 **<END>** g01198587

# *164-4865* SHIELD GP-ENGINE COMPARTMENT

**S/N: BXY1-UP**

**PART OF 225-8337 SUPPRESSION AR-SOUND**

**AN ATTACHMENT**

**SMCS-7154, 7263** **i02387047**

| NOTE | REF NO | GRAPHIC REF | PART NUMBER | QTY | PART NAME 1 2 3 4 5 6 (PRODUCT LEVEL) | SEE PAGE |
|---|---|---|---|---|---|---|
| | 1 | 1 | **4H-1225** | 15 | WASHER (11X22X6-MM THK) | |
| | 2 | 1 | **131-7810** | 1 | SHIELD AS (RH) | |
| | 3 | 1 | **131-7811** | 1 | SHIELD AS (LH) | |
| M | | 1 | **9R-2613** | 1 | BOSS-WELD (M10X1.5X25-MM OAL) | |
| M | 4 | 1 | **8T-4195** | 18 | BOLT (M10X1.5X30-MM) | |
| | 5 | 1 | **8T-4226** | 18 | WASHER-PLATED (10.5X45X3-MM THK) | |

M-METRIC PART

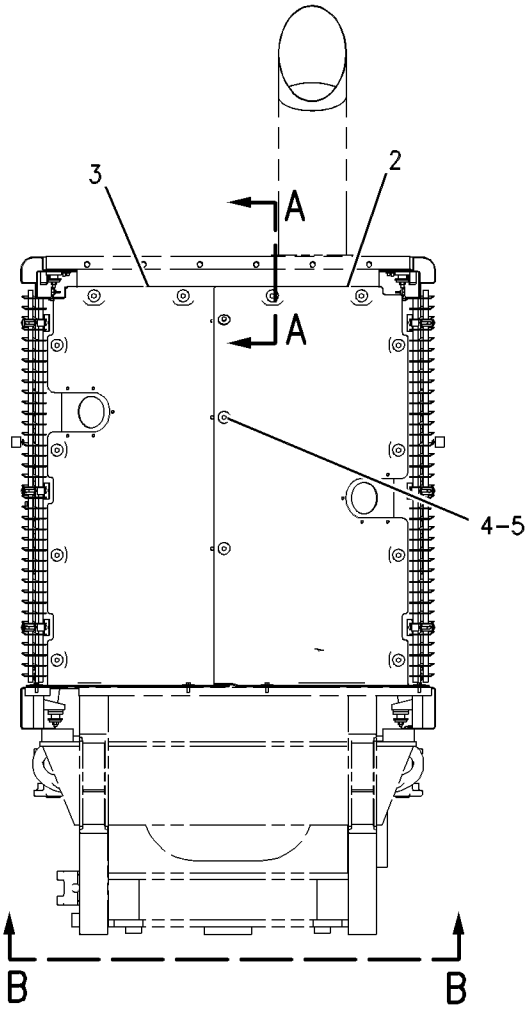


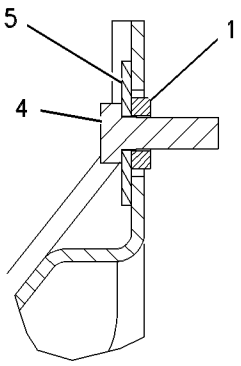


SECTION A-A

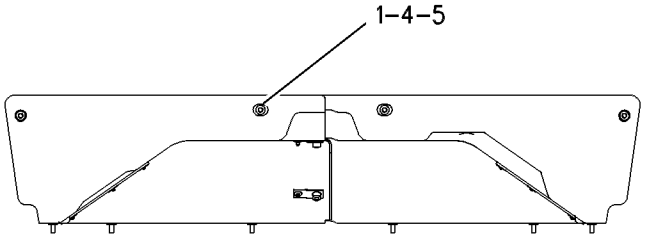


VIEW B-B

GRAPHIC #1 **<END>** g00509542

# *164-4866* SHIELD GP-ENGINE COMPARTMENT

**S/N: BXY1-UP**

**PART OF 225-8338 SUPPRESSION AR-SOUND**

**AN ATTACHMENT**

**SMCS-7154, 7263** **i01575001**

| NOTE | REF NO | GRAPHIC REF | PART NUMBER | QTY | PART NAME 1 2 3 4 5 6 (PRODUCT LEVEL) | SEE PAGE |
|---|---|---|---|---|---|---|
| | 1 | 1 | **4H-1225** | 16 | WASHER (11X22X6-MM THK) | |
| | 2 | 1 | **164-4817** | 1 | SHIELD AS | |
| | | 1 | **7X-0603** | 10 | WASHER-HARD (9.9X35X2.5-MM THK) | |
| | | 1 | **133-1643** | 20 | SPACER (8.1X13X22.2-MM THK) | |
| | | 1 | **148-8240** | 10 | CLIP | |
| | | 1 | **133-1645** | 10 | WASHER | |
| | | 1 | **183-7228** | 1 | INSULATION | |
| | | 1 | **164-4769** | 2 | INSULATION | |
| | 3 | 1 | **164-4831** | 1 | SHIELD AS | |
| | | 1 | **7X-0603** | 11 | WASHER-HARD (9.9X35X2.5-MM THK) | |
| M | | 1 | **9R-2613** | 1 | BOSS-WELD (M10X1.5X25-MM OAL) | |
| | | 1 | **133-1643** | 22 | SPACER (8.1X13X22.2-MM THK) | |
| | | 1 | **148-8240** | 11 | CLIP | |
| | | 1 | **133-1645** | 11 | WASHER | |
| | | 1 | **164-4767** | 1 | INSULATION | |
| | | 1 | **164-4769** | 1 | INSULATION | |
| | | 1 | **183-7228** | 1 | INSULATION | |
| M | 4 | 1 | **8T-4195** | 19 | BOLT (M10X1.5X30-MM) | |
| | 5 | 1 | **8T-4226** | 19 | WASHER-PLATED (10.5X45X3-MM THK) | |

M-METRIC PART

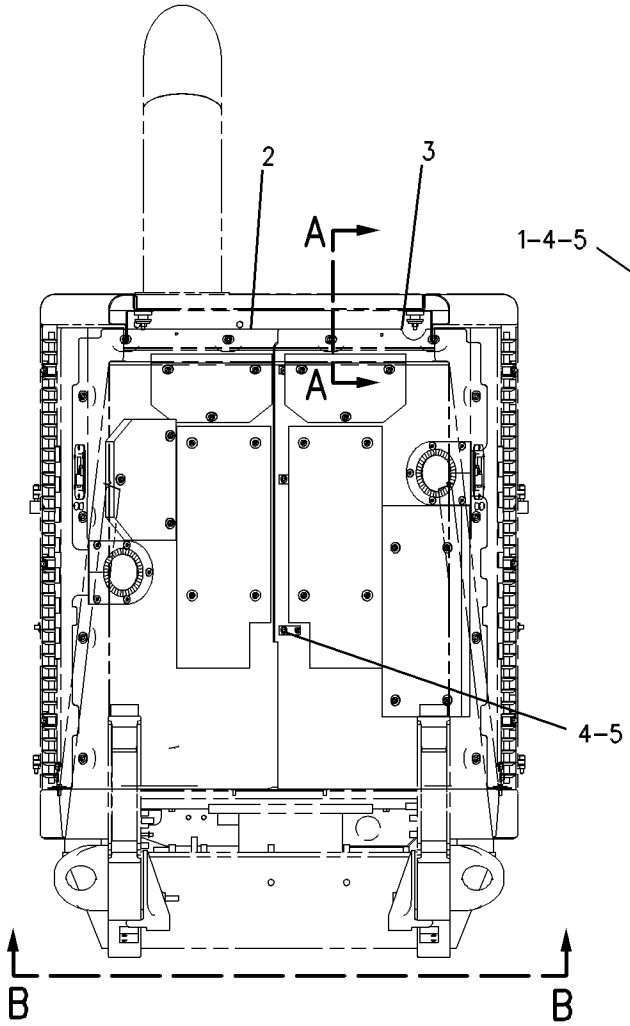


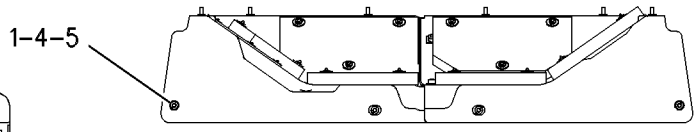


VIEW B-B

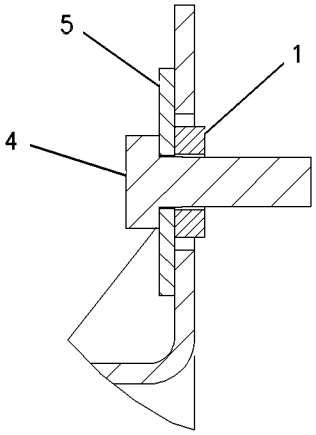


SECTION A-A

GRAPHIC #1 **<END>** g00659875

# FRAME AND BODY

## *134-2554* STEP GP

**S/N: BXY1-UP**

**PART OF 170-7313 LADDER GP**

**SMCS-7254** **i01065145**

| NOTE | REF NO | GRAPHIC REF | PART NUMBER | QTY | PART NAME 1 2 3 4 5 6 (PRODUCT LEVEL) | SEE PAGE |
|---|---|---|---|---|---|---|
| | 1 | 1 | **4V-9803** | 4 | PLATE | |
| | 2 | 1 | **112-4558** | 4 | PLATE | |
| | 3 | 1 | **134-2552** | 2 | STEP AS | |
| | 4 | 1 | **135-5154** | 2 | BRACKET | |
| | 5 | 1 | **135-5155** | 2 | SUPPORT-STEP (RUBBER) | |
| M | 6 | 1 | **6V-7687** | 16 | LOCKNUT (M12X1.75-THD) | |
| M | 7 | 1 | **8T-4184** | 8 | BOLT (M12X1.75X45-MM) | |
| M | 8 | 1 | **8T-4194** | 8 | BOLT (M12X1.75X50-MM) | |

M-METRIC PART

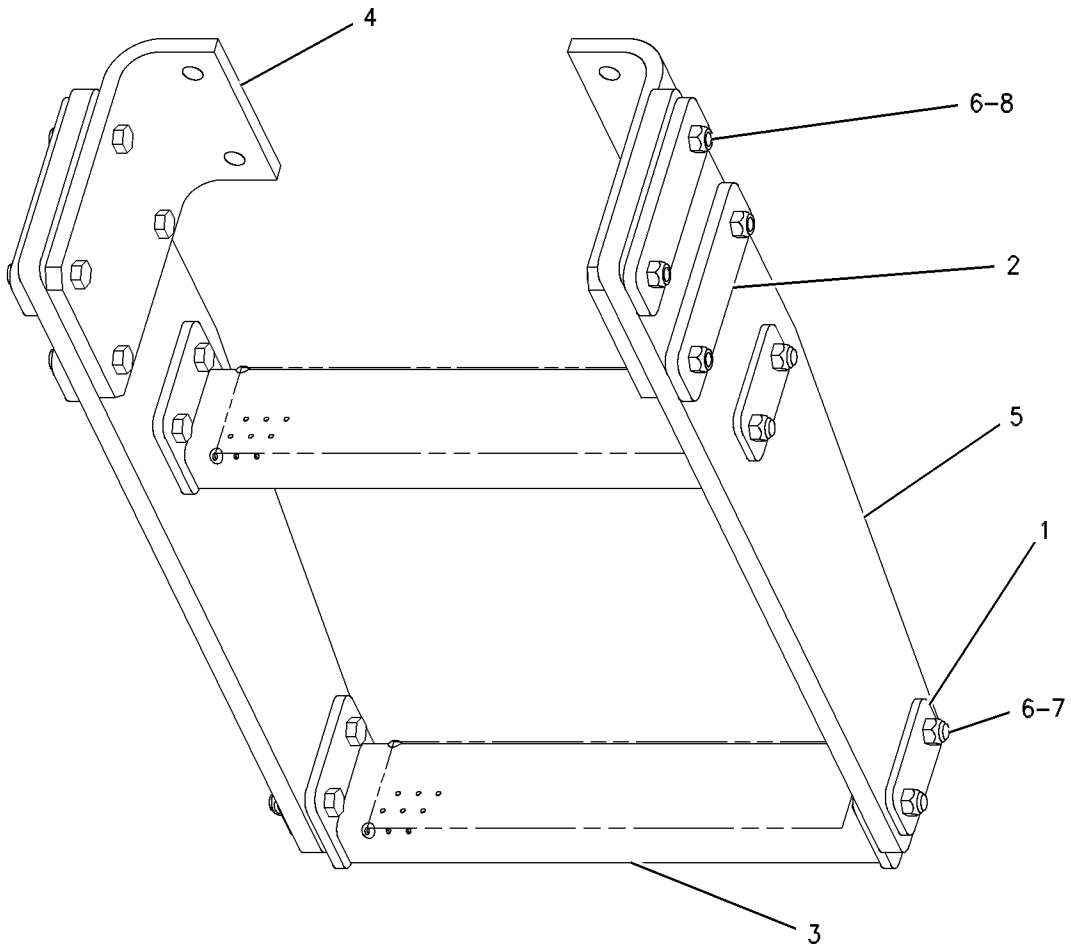


GRAPHIC #1 **<END>** g00554668

## *225-8337* SUPPRESSION AR-SOUND

**S/N: BXY1-UP**
**CANNOT BE USED WITH 225-8338—PAGE 865**
**AN ATTACHMENT**

**SMCS-7261** **i02249329**

| NOTE | PART NUMBER | QTY | PART NAME 1 2 3 4 5 6 (PRODUCT LEVEL) | SEE PAGE |
|---|---|---|---|---|
| Y | *164-4865* | 1 | SHIELD GP-ENGINE COMPARTMENT | 861 |
| Y-SEPARATE ILLUSTRATION | | | | |

**<END>**

## *225-8338* SUPPRESSION AR-SOUND

**S/N: BXY1-UP**
**CANNOT BE USED WITH 225-8337—PAGE 865, 150-1541—PAGE 679**
**AN ATTACHMENT**

**SMCS-7261** **i02387632**

| NOTE | PART NUMBER | QTY | PART NAME 1 2 3 4 5 6 (PRODUCT LEVEL) | SEE PAGE |
|---|---|---|---|---|
| Y | *150-1541* | 1 | GUARD GP-CRANKCASE | 679 |
| Y | *185-1933* | 1 | PANEL GP-SOUND SUPPRESSION (ENGINE OIL PAN) | 83 |
| Y | *164-4866* | 1 | SHIELD GP-ENGINE COMPARTMENT | 862 |
| Y | *226-9798* | 1 | SUPPRESSION GP-SOUND (HOOD) | 866 |
| Y | *231-2036* | 1 | SUPPRESSION GP-SOUND (BOTTOM GUARDS) | 869 |
| Y-SEPARATE ILLUSTRATION | | | | |

**<END>**

# FRAME AND BODY

## *226-9798* SUPPRESSION GP-SOUND—HOOD

**S/N: BXY1-UP**

**PART OF 225-8338 SUPPRESSION AR-SOUND**

**AN ATTACHMENT**

**SMCS-7076, 7261** **i02220550**

| NOTE | REF NO | GRAPHIC REF | PART NUMBER | QTY | PART NAME 1 2 3 4 5 6 (PRODUCT LEVEL) | SEE PAGE |
|---|---|---|---|---|---|---|
| | 1 | 1 | **2Q-3691** | 4 | SPACER (12.44X22X48.2-MM THK) | |
| | 2 | 1 | **163-4797** | 1 | INSULATION-RH | |
| | 3 | 1 | **163-4798** | 1 | INSULATION-LH | |
| | 4 | 1 | **163-7902** | 1 | INSULATION-RH | |
| | 5 | 1 | **163-7903** | 1 | INSULATION-LH | |
| | 6 | 1 | **163-7908** | 1 | INSULATION | |
| | 7 | 1 | **183-7535** | 1 | INSULATION | |
| | 8 | 1 | **183-7536** | 1 | INSULATION | |
| | 9 | 1 | **183-7537** | 1 | INSULATION | |
| | 10 | 1 | **183-7538** | 1 | INSULATION | |
| | 11 | 1 | **183-7539** | 1 | INSULATION | |
| | 12 | 1 | **183-7540** | 2 | BRACKET | |
| | 13 | 1 | **183-9409** | 1 | INSULATION | |
| | 14 | 1 | **183-9411** | 1 | INSULATION | |
| | 15 | 1 | **183-9412** | 1 | INSULATION | |
| | 16 | 1 | **183-9413** | 1 | INSULATION | |
| | 17 | 1 | **183-9414** | 1 | INSULATION | |
| | 18 | 2 | **226-9799** | 1 | INSULATION | |
| | 19 | 2 | **226-9800** | 1 | INSULATION | |
| | 20 | 2 | **226-9801** | 1 | INSULATION | |
| | 21 | 2 | **226-9802** | 1 | INSULATION | |
| | 22 | 2 | **227-0091** | 1 | BAFFLE | |
| M | 23 | 1 | **8T-4137** | 30 | BOLT (M10X1.5X20-MM) | |
| | 24 | 1 | **8T-4222** | 34 | WASHER-PLATED (11X32X2.5-MM THK) | |
| M | 25 | 1 | **8T-5005** | 4 | BOLT (M10X1.5X70-MM) | |
| | 26 | 2 | **251-6192** | 1 | STRIP | |
| M | 27 | 2 | **8T-4908** | 2 | BOLT (M8X1.25X25-MM) | |
| | 28 | 2 | **8T-4224** | 2 | WASHER-HARD (8.8X16X2-MM THK) | |

M-METRIC PART

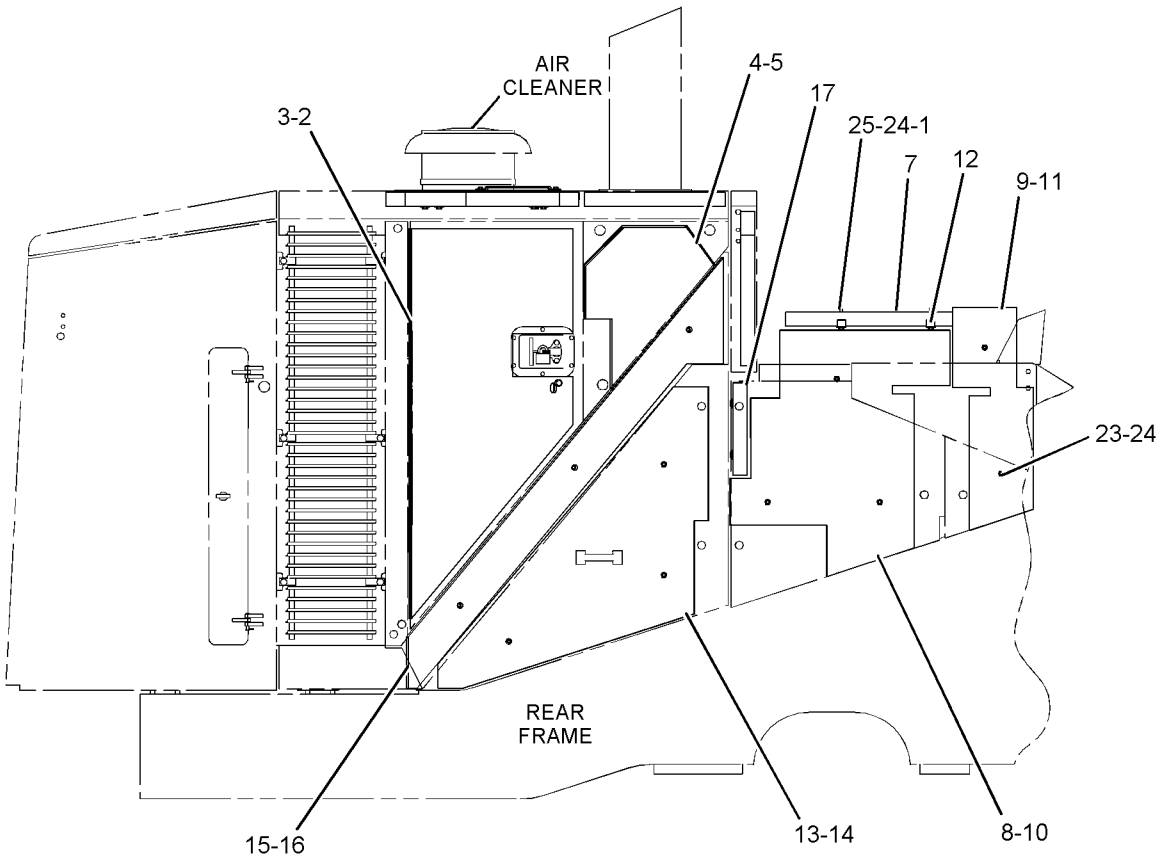


RIGHT SIDE VIEW

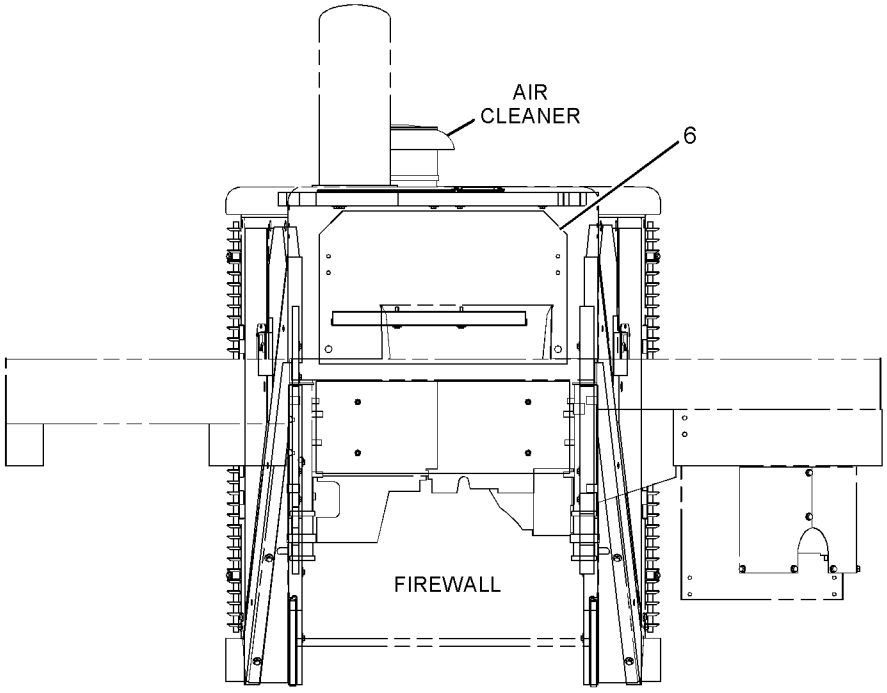


FRONT VIEW

GRAPHIC #1

g01121037

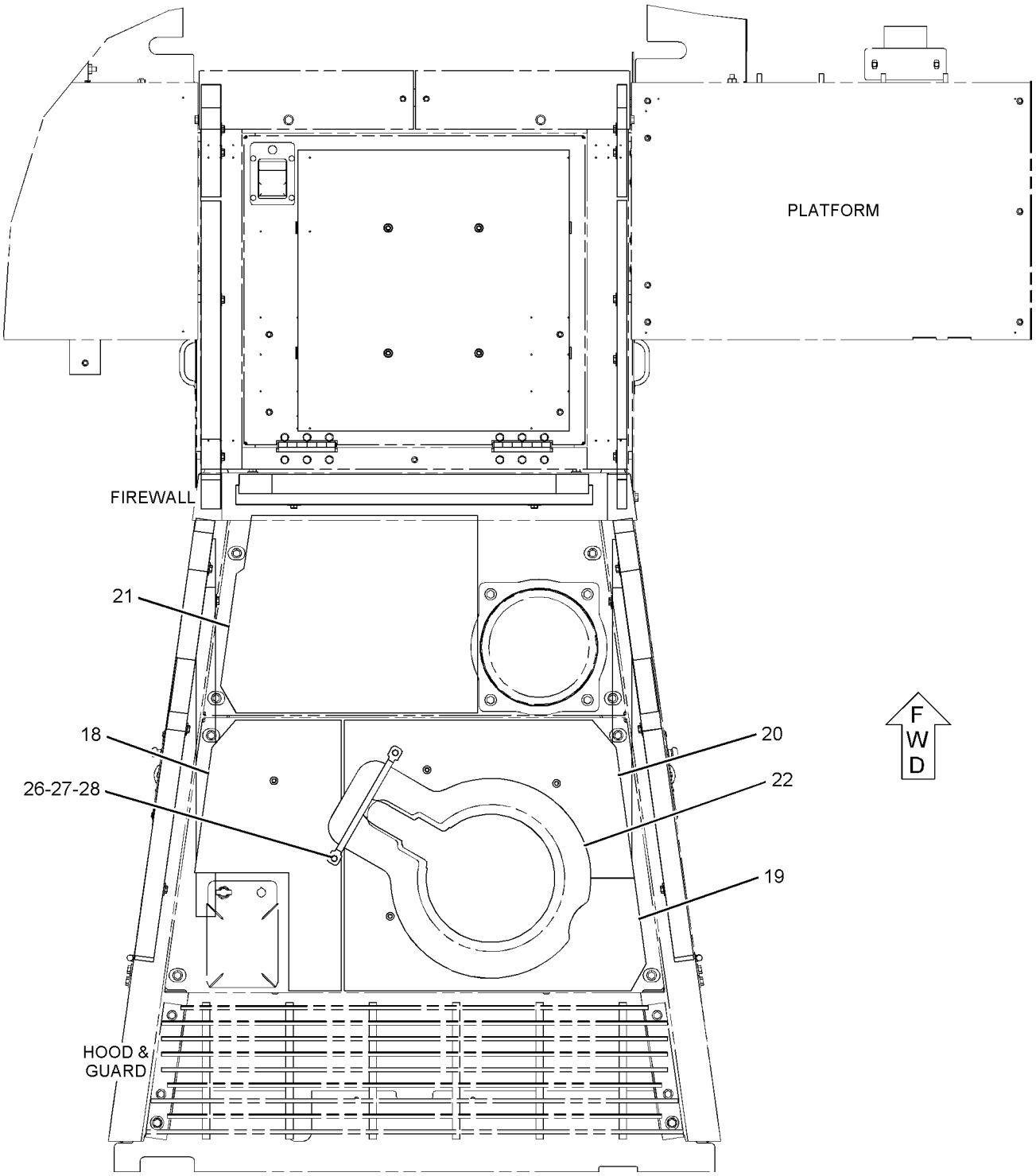


TOP VIEW

GRAPHIC #2

**<END>**

g01120727

# *231-2036* SUPPRESSION GP-SOUND–BOTTOM GUARDS

**S/N: BXY1-771**
**PART OF 225-8338 SUPPRESSION AR-SOUND**
**AN ATTACHMENT**

**SMCS-7076, 7261** **i02136591**

| NOTE | REF NO | GRAPHIC REF | PART NUMBER | QTY | PART NAME 1 2 3 4 5 6 (PRODUCT LEVEL) | SEE PAGE |
|---|---|---|---|---|---|---|
| | 1 | 1 | **183-9415** | 1 | INSULATION | |
| | 2 | 1 | **183-9416** | 1 | INSULATION | |
| | 3 | 1 | **208-7948** | 2 | INSULATION | |
| | 4 | 1 | **231-2037** | 1 | GUARD AS | |
| | 5 | 1 | **7X-0515** | 8 | WASHER-HARD (17X35X5-MM THK) | |
| M | 6 | 1 | **7X-2553** | 8 | BOLT (M16X2X40-MM) | |
| M | 7 | 1 | **8T-4137** | 4 | BOLT (M10X1.5X20-MM) | |
| | 8 | 1 | **8T-4222** | 4 | WASHER-PLATED (11X32X2.5-MM THK) | |

M-METRIC PART

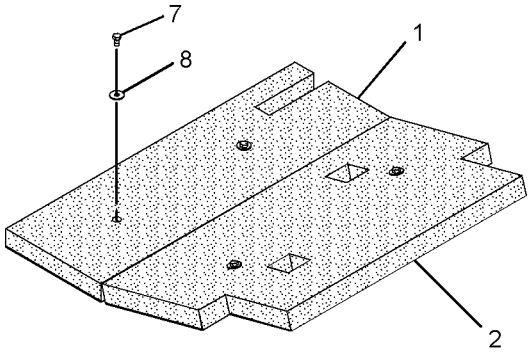


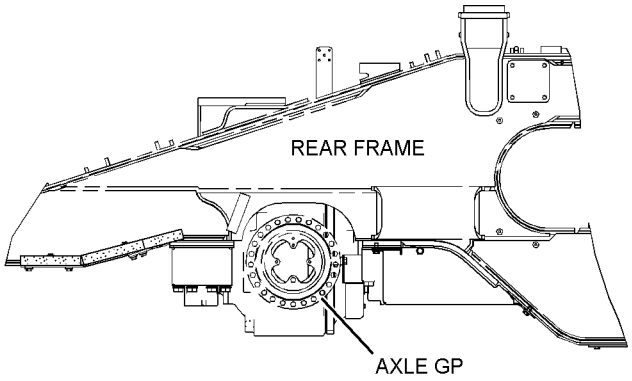


RIGHT SIDE VIEW

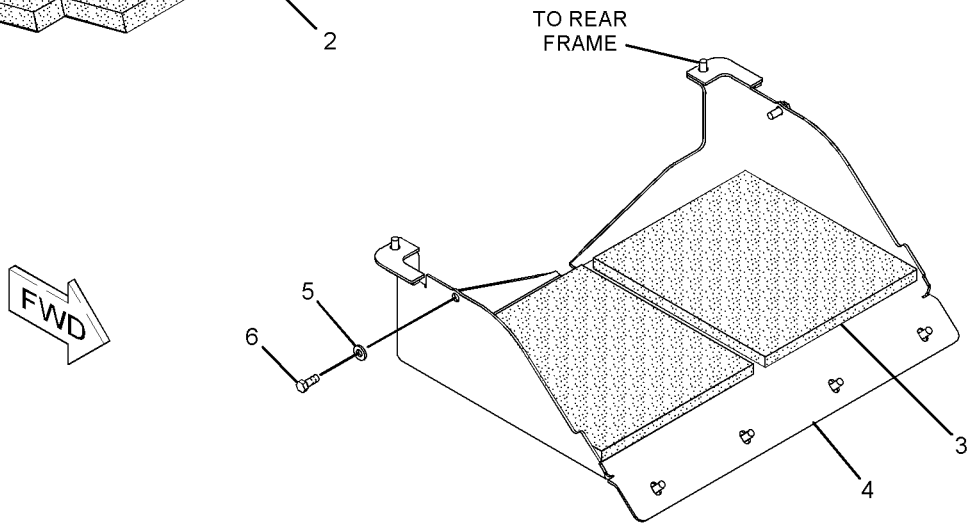


GRAPHIC #1 **<END>** g01086121

# FRAME AND BODY

## *231-2036* SUPPRESSION GP-SOUND—BOTTOM GUARDS

**S/N: BXY772-UP**

**PART OF 225-8338 SUPPRESSION AR-SOUND**

**AN ATTACHMENT**

**SMCS-7076, 7261** **i02741365**

| NOTE | REF NO | GRAPHIC REF | PART NUMBER | QTY | PART NAME 1 2 3 4 5 6 (PRODUCT LEVEL) | SEE PAGE |
|---|---|---|---|---|---|---|
| | 1 | 1 | **183-9415** | 1 | INSULATION | |
| | 2 | 1 | **183-9416** | 1 | INSULATION | |
| C | 3 | 1 | **286-1755** | 1 | INSULATION | |
| C | 4 | 1 | **286-2486** | 1 | GUARD AS | |
| | 5 | 1 | **7X-0515** | 8 | WASHER-HARD (17X35X5-MM THK) | |
| M | 6 | 1 | **7X-2553** | 8 | BOLT (M16X2X40-MM) | |
| CM | 7 | 1 | **8T-4137** | 6 | BOLT (M10X1.5X20-MM) | |
| C | 8 | 1 | **8T-4222** | 6 | WASHER-PLATED (11X32X2.5-MM THK) | |

C-CHANGE FROM PREVIOUS TYPE
M-METRIC PART

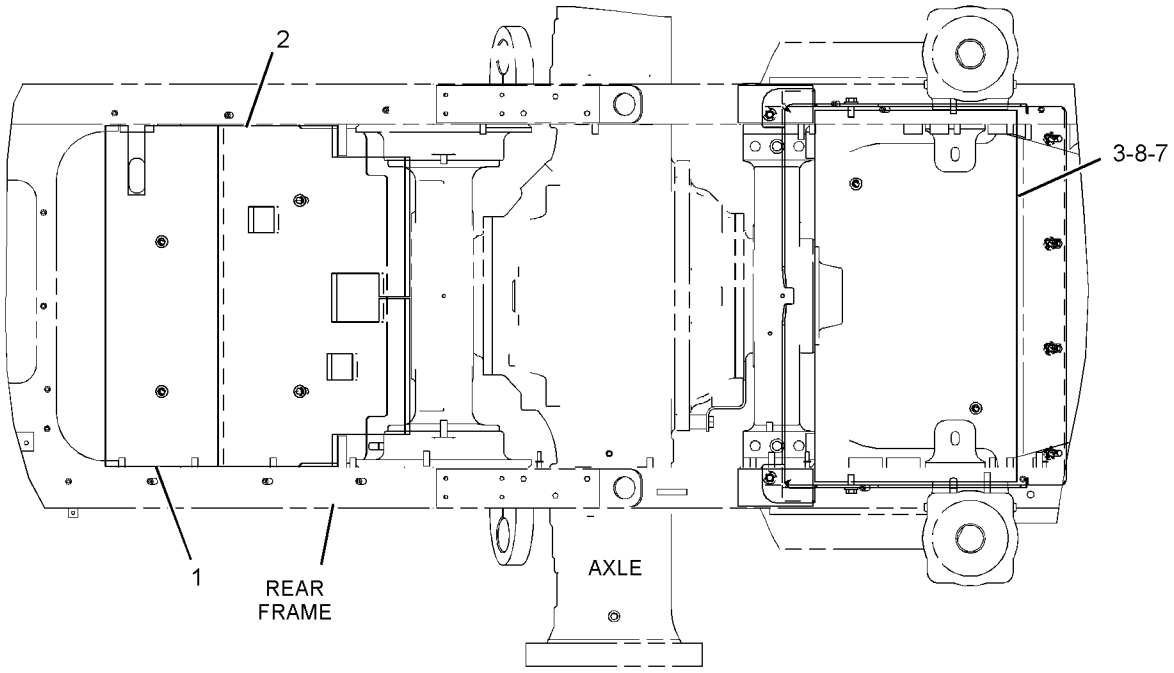


TOP VIEW

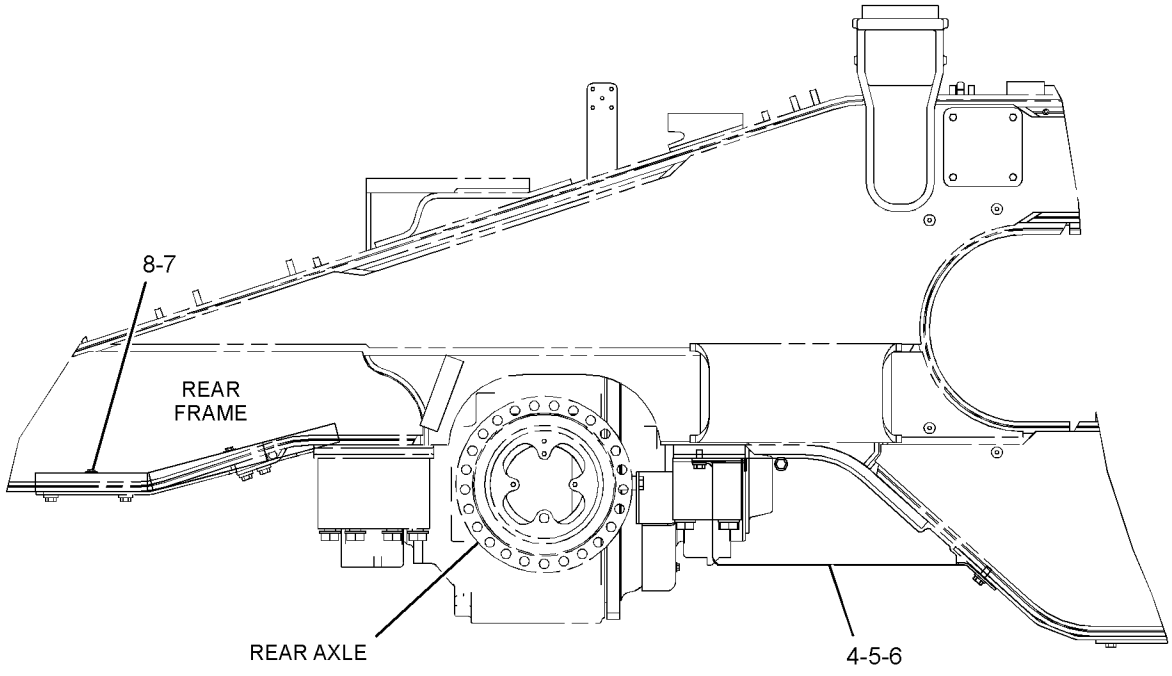


RIGHT SIDE VIEW

GRAPHIC #1 **<END>** g01230407

# FRAME AND BODY

## 238-1006 TANK & PUMP GP-LUBRICATION

**S/N: BXY1-UP**
**PART OF 259-2441 LINES GP-AUTOMATIC LUBRICATION**
**AN ATTACHMENT**
**TYPE 1**

**SMCS-7516, 7540** **i02395651**

| NOTE | REF NO | GRAPHIC REF | PART NUMBER | QTY | PART NAME 1 2 3 4 5 6 (PRODUCT LEVEL) | SEE PAGE |
|---|---|---|---|---|---|---|
| | 1 | 1 | **1Y-0413** | 1 | TEE | |
| | 2 | 1 | **5L-5502** | 1 | FITTING | |
| | 3 | 1 | **272-5068** | 1 | TANK | |
| | 4 | 1 | **189-1858** | 1 | COUPLER AS | |
| | 5 | 1 | **189-4393** | 1 | ADAPTER-UNION | |
| | 6 | 1 | **189-4394** | 1 | HOSE AS | |
| | 7 | 1 | **189-4395** | 1 | HOSE AS | |
| | 8 | 1 | **197-1563** | 1 | VALVE AS-VENT | |
| | 9 | 1 | **189-4398** | 1 | GASKET | |
| | 10 | 1 | **189-4401** | 1 | ELBOW | |
| | 11 | 1 | **189-4402** | 1 | ADAPTER-PIPE | |
| | 12 | 1 | **189-4404** | 1 | FITTING | |
| | 13 | 1 | **189-4407** | 1 | VALVE GP-CHECK (LUBRICATION PUMP) | |
| | 14 | 1 | **189-4408** | 1 | ADAPTER-PIPE | |
| | 15 | 1 | **189-4409** | 2 | BRACKET | |
| | 16 | 1 | **228-0755** | 1 | GAUGE-PRESSURE | |
| | 17 | 1 | **6G-4195** | 1 | SWITCH AS-LIMIT (GREASE LOW LEVEL) | |
| | | 1 | **3L-8187** | 3 | LOCKWASHER | |
| | | 1 | **6V-8373** | 3 | SCREW-MACHINE (6-32X0.187-IN) | |
| | 18 | 1 | **235-5316** | 1 | HOUSING AS | |
| | | 1 | **7K-3436** | 2 | SCREW-LOCK (8-32X0.5-IN) | |
| | 19 | 1 | **240-9687** | 1 | BREATHER (GREASE TANK) | |
| | 20 | 1 | **276-5726** | 1 | COVER | |
| | 21 | 1 | **240-9689** | 1 | GASKET | |
| | 22 | 1 | **240-9690** | 1 | GASKET | |
| Y | 23 | 1 | **275-0702** | 1 | PUMP GP-LUBRICATION (AUTOMATIC LUBRICATION SYSTEM) | 859 |
| | 24 | 1 | **002-6453** | 1 | ELBOW | |
| | 25 | 1 | **002-6454** | 2 | NIPPLE-PIPE | |
| | 26 | 1 | **032-3506** | 1 | ADAPTER-PIPE | |
| | 27 | 1 | **3J-1907** | 1 | SEAL-O-RING | |
| | 28 | 1 | **3J-5389** | 1 | PLUG (PIPE) | |
| | 29 | 1 | **3J-7354** | 1 | SEAL-O-RING | |
| | 30 | 1 | **6B-5072** | 1 | BUSHING-REDUCING | |
| | 31 | 1 | **6K-1972** | 1 | ELBOW-FLARED | |
| | 32 | 1 | **6V-8397** | 1 | SEAL-O-RING | |
| | 33 | 1 | **6V-8398** | 3 | SEAL-O-RING | |
| M | 34 | 1 | **6V-2316** | 2 | BOLT (M8X1.25X12-MM) | |
| | 35 | 1 | **6V-9200** | 1 | ELBOW | |
| | 36 | 1 | **6V-9873** | 1 | CONNECTOR | |
| | 37 | 1 | **7K-3436** | 4 | SCREW-LOCK (8-32X0.5-IN) | |
| | 38 | 1 | **7T-7388** | 4 | GUIDE | |
| | 39 | 1 | **8B-2664** | 1 | BUSHING-REDUCER | |
| | 40 | 1 | **8C-6872** | 2 | CONNECTOR | |
| | 41 | 1 | **8T-4121** | 12 | WASHER-HARD (11X21X2.5-MM THK) | |
| M | 42 | 1 | **8T-4133** | 12 | NUT (M10X1.5-THD) | |
| M | 43 | 1 | **8T-4137** | 4 | BOLT (M10X1.5X20-MM) | |
| M | 44 | 1 | **8T-4195** | 6 | BOLT (M10X1.5X30-MM) | |
| M | 45 | 1 | **8T-6466** | 2 | BOLT (M10X1.5X60-MM) | |
| | 46 | 1 | **8T-4224** | 2 | WASHER-HARD (8.8X16X2-MM THK) | |

M-METRIC PART
Y-SEPARATE ILLUSTRATION

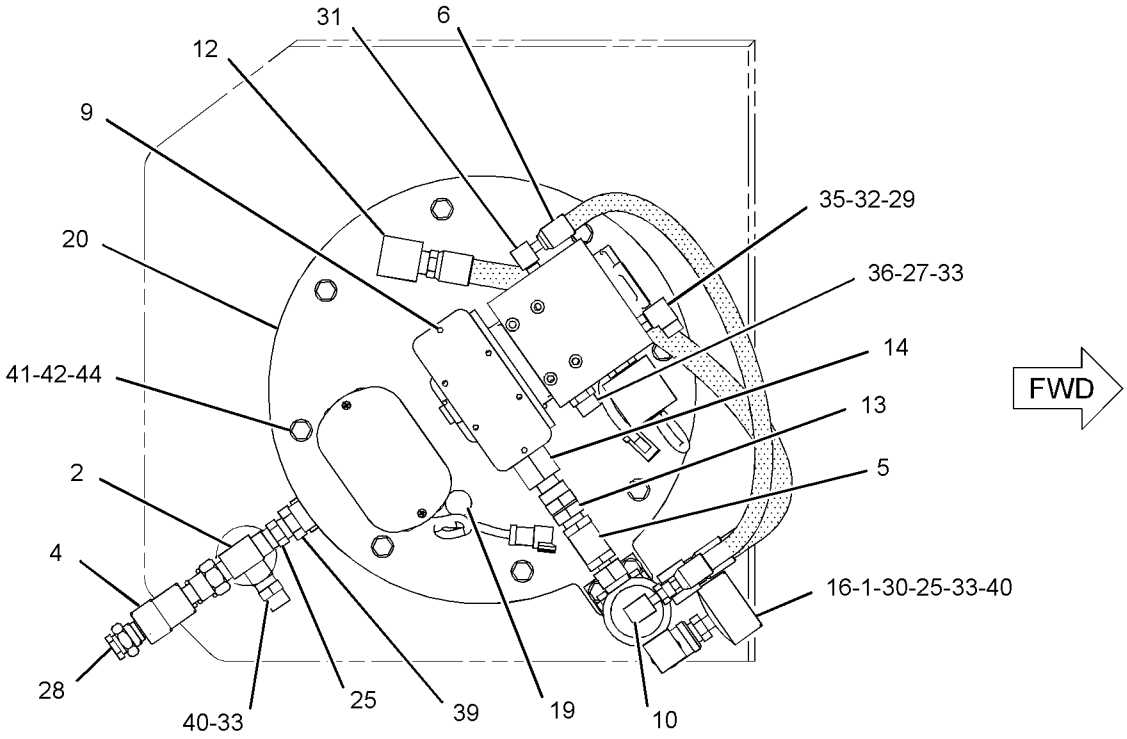


TOP VIEW

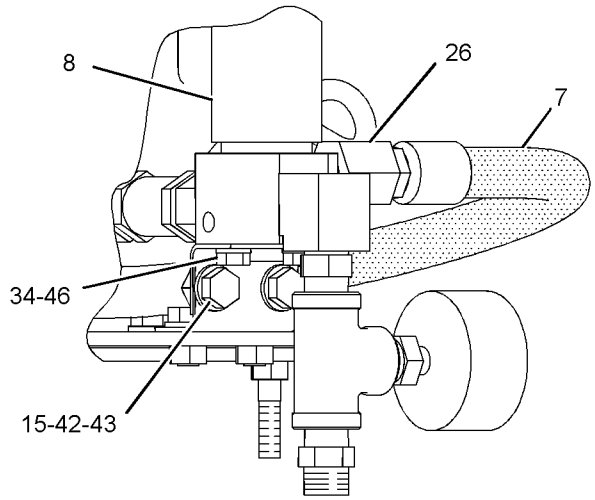


VIEW OF AREA B

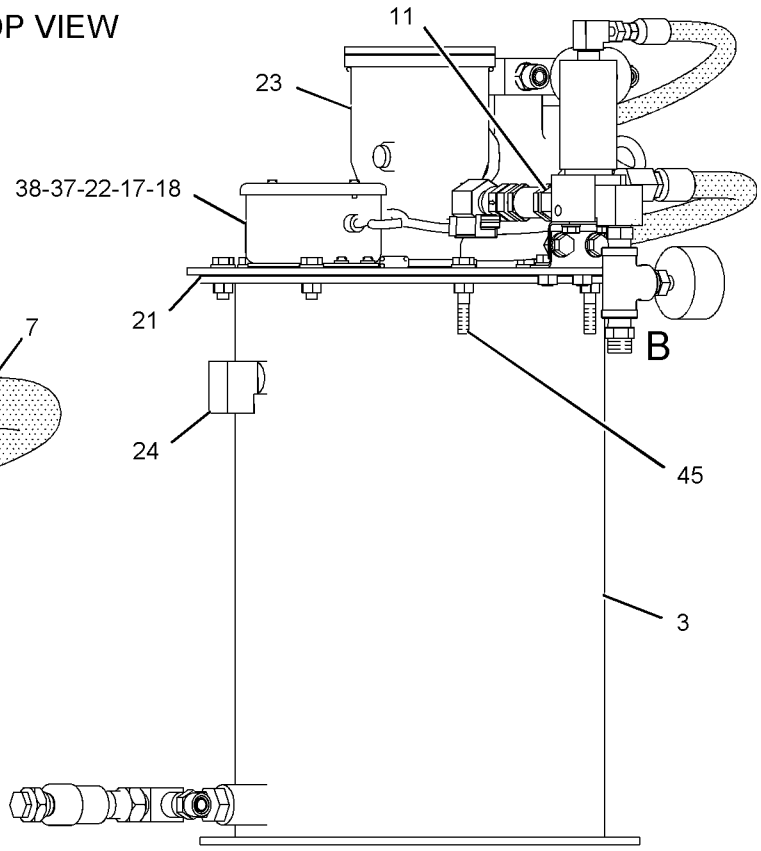


RIGHT SIDE VIEW

GRAPHIC #1 **<END>** g01088589

# FRAME AND BODY

## 238-1006 TANK & PUMP GP-LUBRICATION

**S/N: BXY1-UP**
**PART OF 259-2441, 272-5090 LINES GP-AUTOMATIC LUBRICATION**
**AN ATTACHMENT**
**TYPE 2**

**SMCS-7516, 7540** **i02717292**

| NOTE | REF NO | GRAPHIC REF | PART NUMBER | QTY | PART NAME 1 2 3 4 5 6 (PRODUCT LEVEL) | SEE PAGE |
|---|---|---|---|---|---|---|
| | 1 | 1 | **1Y-0413** | 1 | TEE | |
| | 2 | 1 | **5L-5502** | 1 | FITTING | |
| | 3 | 1 | **6G-4195** | 1 | SWITCH AS-LIMIT (GREASE LOW LEVEL) | |
| | | 1 | **3L-8187** | 3 | LOCKWASHER | |
| | | 1 | **6V-8373** | 3 | SCREW-MACHINE (6-32X0.187-IN) | |
| C | 4 | 1 | **8X-2323** | 1 | UNLOADER | |
| | 5 | 1 | **189-1858** | 1 | COUPLER AS | |
| | 6 | 1 | **189-4393** | 1 | ADAPTER-UNION | |
| | 7 | 1 | **189-4394** | 1 | HOSE AS | |
| | 8 | 1 | **189-4395** | 1 | HOSE AS | |
| | 9 | 1 | **189-4398** | 1 | GASKET | |
| | 10 | 1 | **189-4401** | 1 | ELBOW | |
| | 11 | 1 | **189-4402** | 1 | ADAPTER-PIPE | |
| | 12 | 1 | **189-4404** | 1 | FITTING | |
| | 13 | 1 | **189-4407** | 1 | VALVE GP-CHECK (LUBRICATION PUMP) | |
| | 14 | 1 | **189-4408** | 1 | ADAPTER-PIPE | |
| | 15 | 1 | **189-4409** | 2 | BRACKET | |
| | 16 | 1 | **197-1563** | 1 | VALVE AS-VENT | |
| | 17 | 1 | **228-0755** | 1 | GAUGE-PRESSURE | |
| | 18 | 1 | **235-5316** | 1 | HOUSING AS | |
| | | 1 | **7K-3436** | 2 | SCREW-LOCK (8-32X0.5-IN) | |
| | 19 | 1 | **240-9687** | 1 | BREATHER (GREASE TANK) | |
| | 20 | 1 | **240-9689** | 1 | GASKET | |
| | 21 | 1 | **240-9690** | 1 | GASKET | |
| | 22 | 1 | **272-5068** | 1 | TANK | |
| Y | 23 | 1 | **275-0702** | 1 | PUMP GP-LUBRICATION (AUTOMATIC LUBRICATION SYSTEM) | 859 |
| | 24 | 1 | **276-5726** | 1 | COVER | |
| C | 25 | 1 | **290-2682** | 1 | SEAL-WIPER | |
| C | 26 | 1 | **290-2685** | 1 | SEAL-O-RING | |
| C | 27 | 1 | **290-2688** | 1 | GASKET | |
| | 28 | 1 | **002-6453** | 1 | ELBOW | |
| | 29 | 1 | **002-6454** | 2 | NIPPLE-PIPE | |
| | 30 | 1 | **032-3506** | 1 | ADAPTER-PIPE | |
| C | 31 | 1 | **0S-1588** | 8 | BOLT (3/8-16X1.25-IN) | |
| | 32 | 1 | **3J-1907** | 1 | SEAL-O-RING | |
| | 33 | 1 | **3J-5389** | 1 | PLUG (PIPE) | |
| | 34 | 1 | **3J-7354** | 1 | SEAL-O-RING | |
| | 35 | 1 | **6B-5072** | 1 | BUSHING-REDUCING | |
| | 36 | 1 | **6K-1972** | 1 | ELBOW-FLARED | |
| M | 37 | 1 | **6V-2316** | 2 | BOLT (M8X1.25X12-MM) | |
| | 38 | 1 | **6V-8397** | 1 | SEAL-O-RING | |
| | 39 | 1 | **6V-8398** | 3 | SEAL-O-RING | |
| | 40 | 1 | **6V-9200** | 1 | ELBOW | |
| | 41 | 1 | **6V-9873** | 1 | CONNECTOR | |
| | 42 | 1 | **7K-3436** | 4 | SCREW-LOCK (8-32X0.5-IN) | |
| | 43 | 1 | **7T-7388** | 4 | GUIDE | |
| | 44 | 1 | **8B-2664** | 1 | BUSHING-REDUCER | |
| | 45 | 1 | **8C-6872** | 2 | CONNECTOR | |
| | 46 | 1 | **8T-4121** | 12 | WASHER-HARD (11X21X2.5-MM THK) | |
| CM | 47 | 1 | **8T-4133** | 4 | NUT (M10X1.5-THD) | |
| M | 48 | 1 | **8T-4137** | 4 | BOLT (M10X1.5X20-MM) | |
| | 49 | 1 | **8T-4224** | 2 | WASHER-HARD (8.8X16X2-MM THK) | |

## 238-1006 TANK & PUMP GP-LUBRICATION *(contd. )* i02717292

C-CHANGE FROM PREVIOUS TYPE
M-METRIC PART
Y-SEPARATE ILLUSTRATION

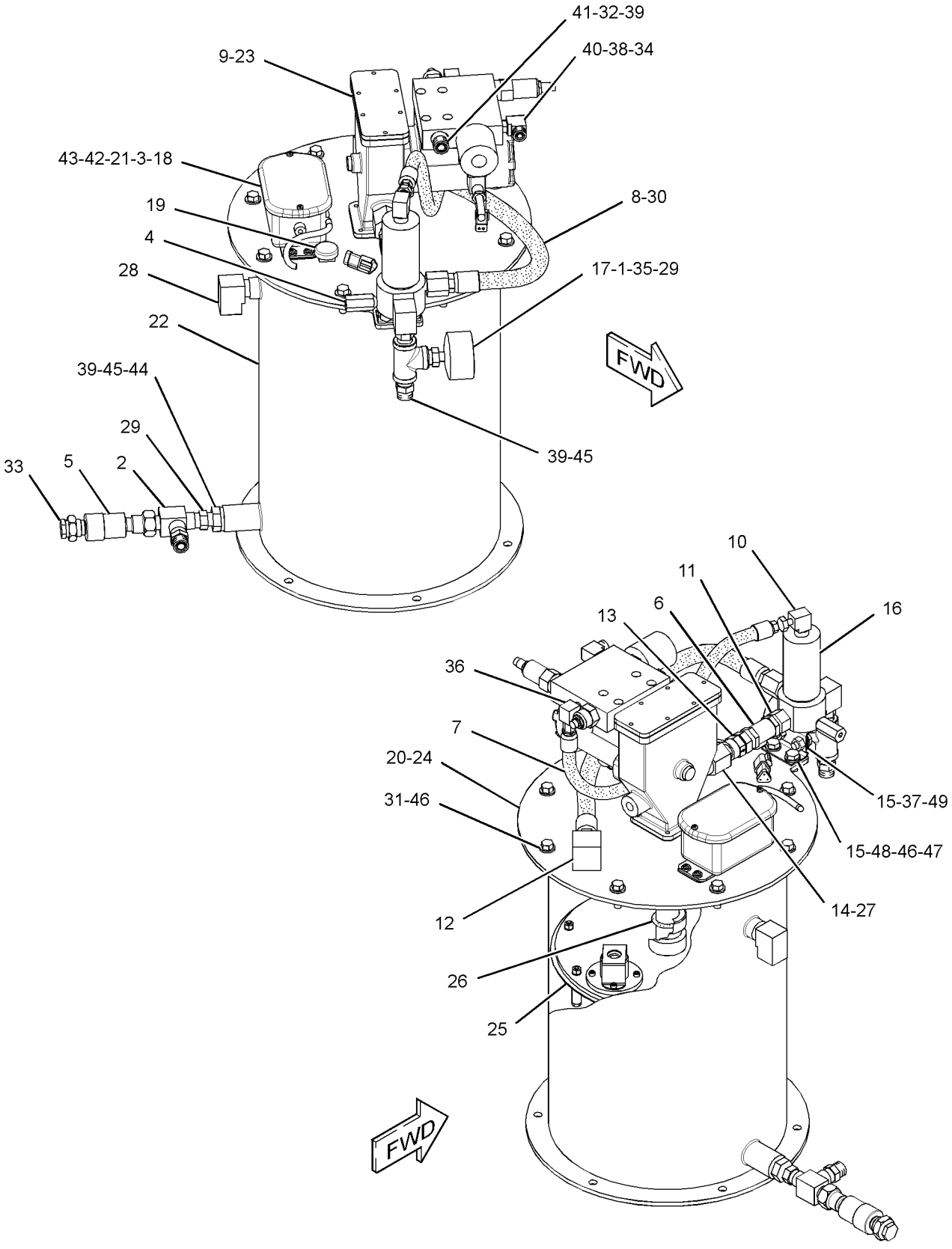


GRAPHIC #1 **<END>** g01353114

# *224-3954* VALVE & LINES GP-LUBRICATION–
## STEERING CYLINDERS, AXLE TRUNNIONS
**S/N: BXY1-UP**
**PART OF 224-3955 LINES GP-AUTOMATIC LUBRICATION**
**AN ATTACHMENT**

**SMCS-7540** **i02262713**

| NOTE | REF NO | GRAPHIC REF | PART NUMBER | QTY | PART NAME 1 2 3 4 5 6 (PRODUCT LEVEL) | SEE PAGE |
|---|---|---|---|---|---|---|
| | 1 | 1 | *189-7543* | 1 | HOSE AS | |
| | 2 | 1 | *189-7546* | 2 | HOSE AS | |
| | 3 | 1 | **189-7554** | 1 | HOSE AS | |
| Y | 4 | 1 | **224-3951** | 1 | VALVE GP-LUBE DISTRIBUTION (8-INJECTOR) | 952 |
| | 5 | 1 | **224-3956** | 1 | HOSE AS | |
| | 6 | 1 | **224-3957** | 2 | HOSE AS | |

Y-SEPARATE ILLUSTRATION

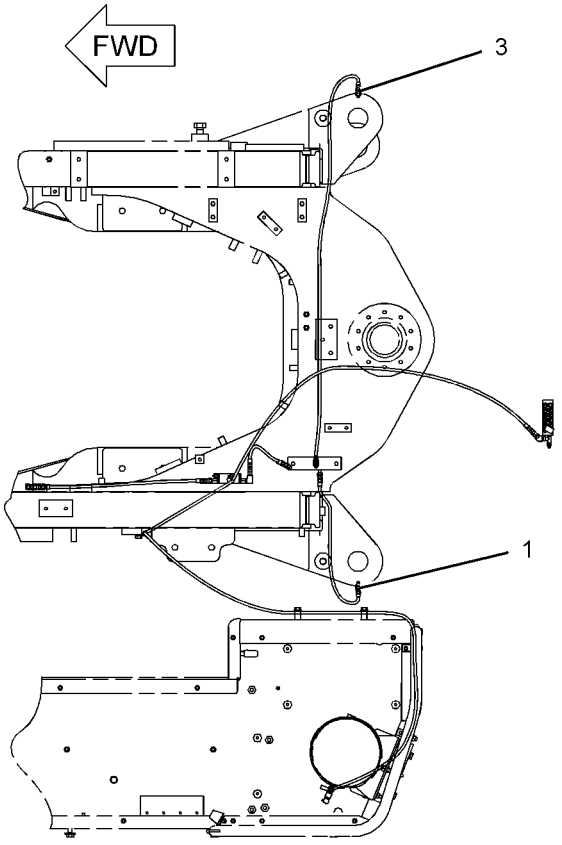


TOP VIEW

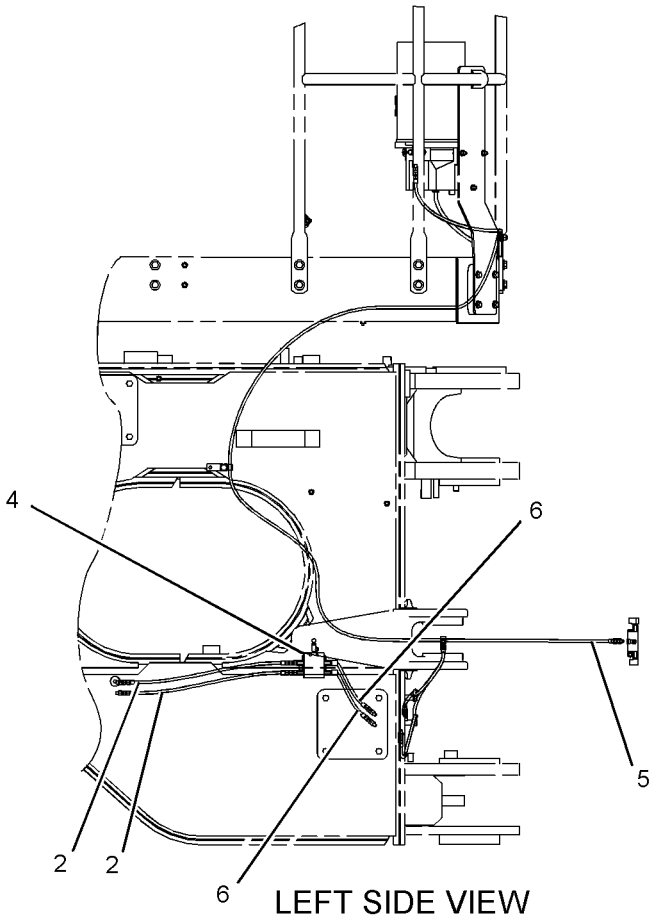


LEFT SIDE VIEW

GRAPHIC #1

**<END>**

g01014237

# *224-4328* VALVE & LINES GP-LUBRICATION–
## HITCH, TILT, STEERING CYLINDERS
**S/N: BXY1-UP**
**PART OF 224-4057 LINES GP-AUTOMATIC LUBRICATION**
**AN ATTACHMENT**

**SMCS-7540** **i02387655**

| NOTE | REF NO | GRAPHIC REF | PART NUMBER | QTY | PART NAME 1 2 3 4 5 6 (PRODUCT LEVEL) | SEE PAGE |
|---|---|---|---|---|---|---|
| | 1 | 1 | **5P-3422** | 1 | TEE-PIPE | |
| | 2 | 1 | *070-0617* | 2 | HOSE AS | |
| | 3 | 1 | *189-7981* | 1 | HOSE AS | |
| | 4 | 1 | *189-7982* | 2 | HOSE AS | |
| Y | 5 | 1 | **224-4327** | 1 | VALVE GP-LUBE DISTRIBUTION (10-INJECTOR) | 954 |
| | 6 | 1 | **227-3253** | 1 | HOSE AS | |
| | 7 | 1 | **3B-6487** | 3 | COUPLING | |

Y-SEPARATE ILLUSTRATION

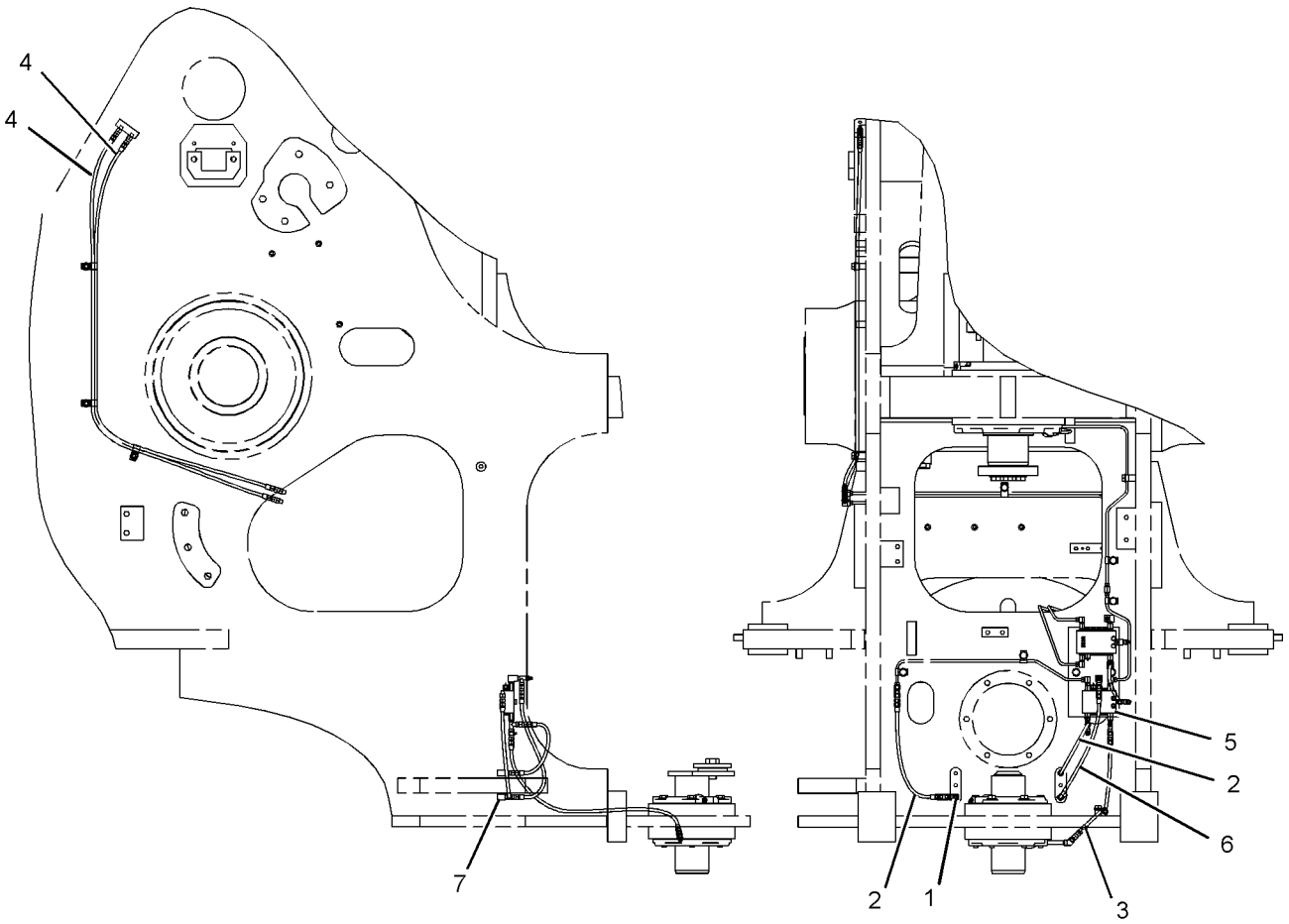


GRAPHIC #1 **<END>** g01014231

# *224-4338* VALVE & LINES GP-LUBRICATION–GREASE SUPPLY

**S/N: BXY1-UP**
**PART OF 224-4057 LINES GP-AUTOMATIC LUBRICATION**
**AN ATTACHMENT**

**SMCS-7540** **i02469040**

| NOTE | REF NO | GRAPHIC REF | PART NUMBER | QTY | PART NAME 1 2 3 4 5 6 (PRODUCT LEVEL) | SEE PAGE |
|---|---|---|---|---|---|---|
| | 1 | 1 | **189-7554** | 1 | HOSE AS | |
| | | 1 | **171-8964** | 2 | COUPLING | |
| E | | 1 | **171-9629** | | HOSE (136-CM) | |
| | 2 | 1 | **224-3957** | 1 | HOSE AS | |
| | | 1 | **171-8964** | 2 | COUPLING | |
| E | | 1 | **171-9629** | | HOSE (24-CM) | |
| Y | 3 | 1 | **224-4326** | 1 | VALVE GP-LUBE DISTRIBUTION (12-INJECTOR) | 953 |

E-ORDER BY THE CENTIMETER
Y-SEPARATE ILLUSTRATION

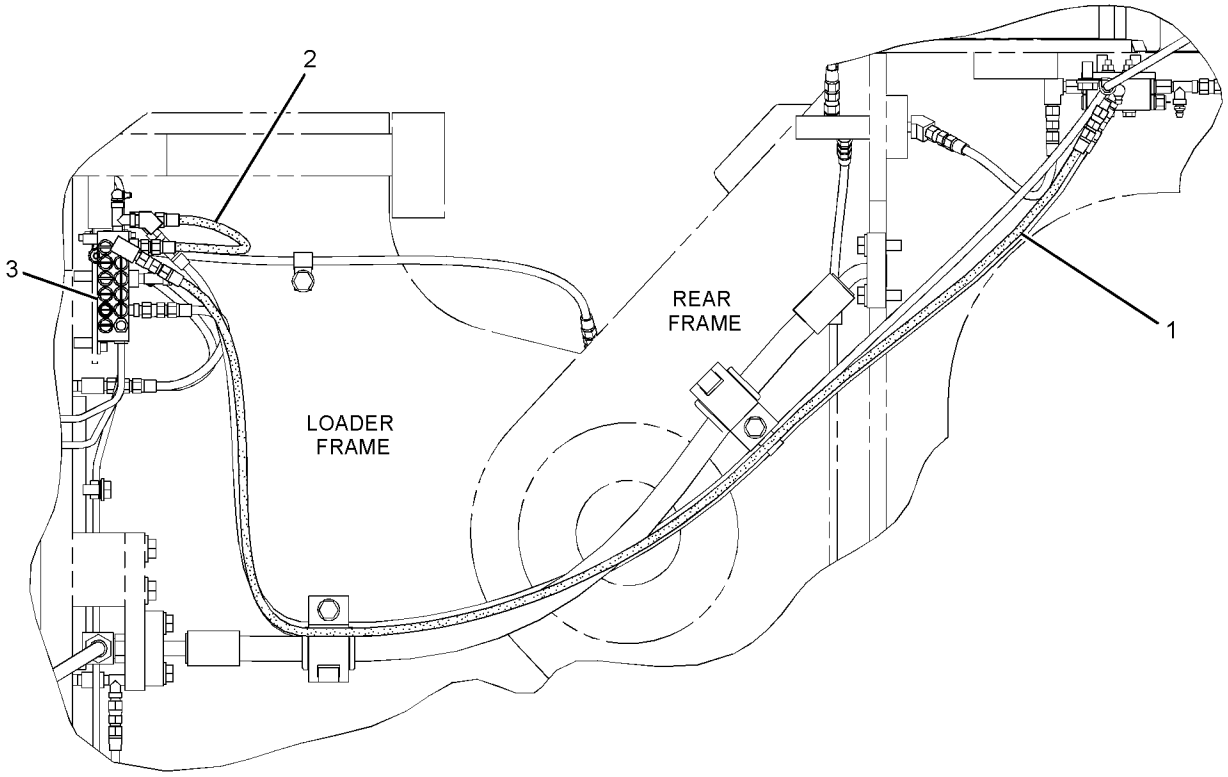


LEFT SIDE VIEW

GRAPHIC #1 **<END>** g01229524

# *224-4410* VALVE & LINES GP-LUBRICATION–
## C-PINS, LINK PINS, TILT CYLINDER PIN

**S/N: BXY1-UP**

**PART OF 243-5875 LINES GP-AUTOMATIC LUBRICATION**

**AN ATTACHMENT**

**TYPE 1**

**SMCS-7540** **i02224586**

| NOTE | REF NO | GRAPHIC REF | PART NUMBER | QTY | PART NAME 1 2 3 4 5 6 (PRODUCT LEVEL) | SEE PAGE |
|---|---|---|---|---|---|---|
| | 1 | 1 | *070-0617* | 2 | HOSE AS | |
| | 2 | 1 | *183-5384* | 1 | HOSE AS | |
| | 3 | 1 | *183-5512* | 1 | HOSE AS | |
| | 4 | 1 | *189-7031* | 1 | HOSE AS | |
| | 5 | 1 | *189-7531* | 1 | HOSE AS | |
| | 6 | 1 | *189-7540* | 3 | HOSE AS | |
| | 7 | 1 | *189-7548* | 1 | HOSE AS | |
| | 8 | 1 | *189-7534* | 2 | HOSE AS | |
| | 9 | 1 | **219-5038** | 4 | HOSE AS | |
| | 10 | 1 | *219-5039* | 1 | HOSE AS | |
| | 11 | 1 | **224-4404** | 1 | HOSE AS | |
| | 12 | 1 | **224-4405** | 1 | HOSE AS | |
| Y | 13 | 1 | **224-4420** | 1 | VALVE GP-LUBE DISTRIBUTION (12-INJECTOR) | 955 |

Y-SEPARATE ILLUSTRATION

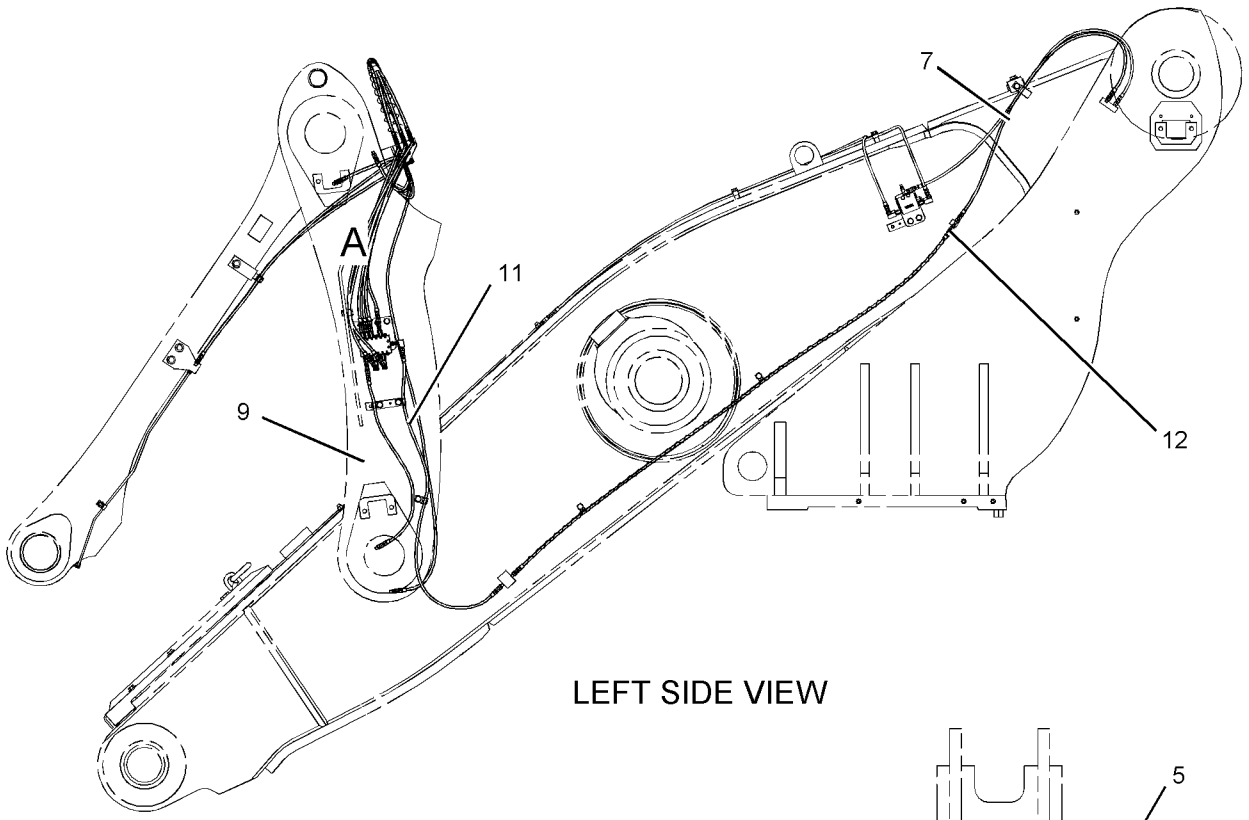


LEFT SIDE VIEW

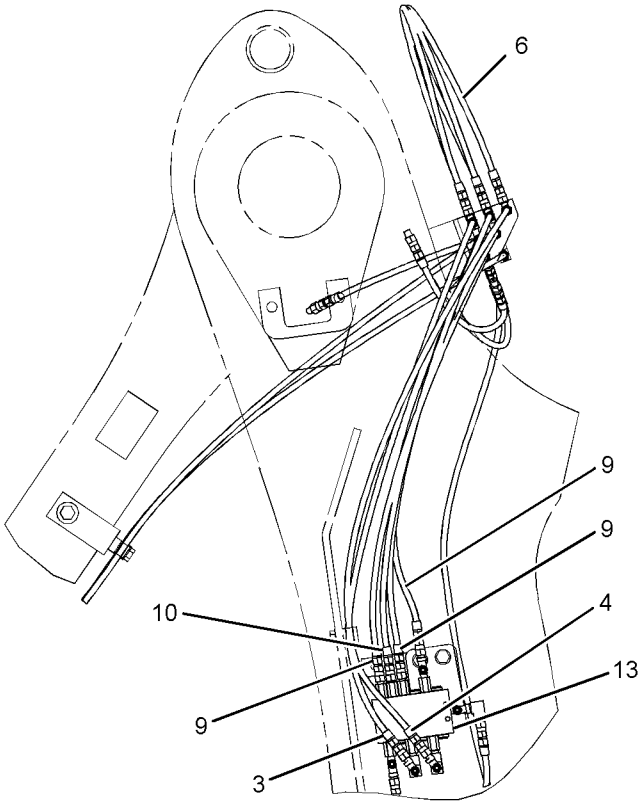


VIEW OF AREA A

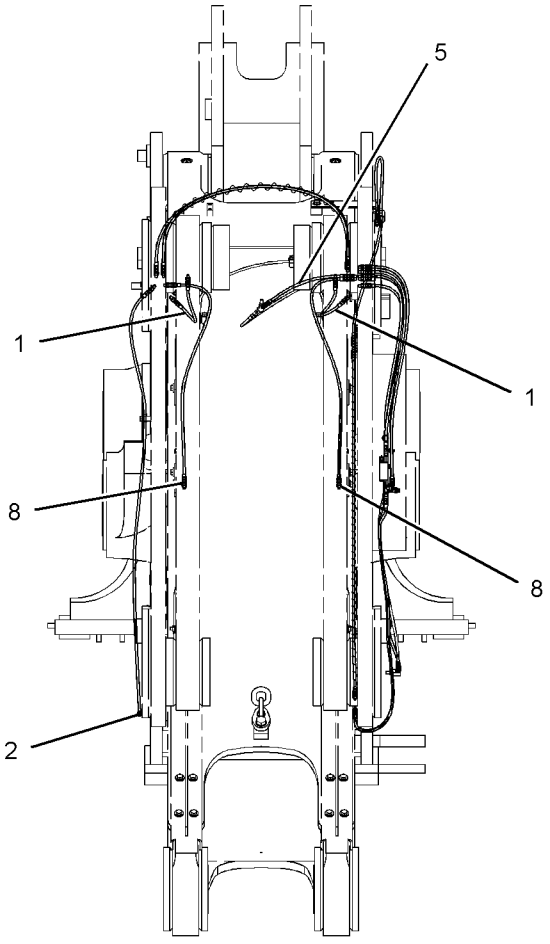


FRONT VIEW

GRAPHIC #1 **<END>** g01126086

# *224-4410* VALVE & LINES GP-LUBRICATION–
## C-PINS, LINK PINS, TILT CYLINDER PIN
**S/N: BXY1-UP**
**PART OF 243-5875, 285-7278 LINES GP-AUTOMATIC LUBRICATION**
**AN ATTACHMENT**
**TYPE 2**

**SMCS-7540** **i02668355**

| NOTE | REF NO | GRAPHIC REF | PART NUMBER | QTY | PART NAME 1 2 3 4 5 6 (PRODUCT LEVEL) | SEE PAGE |
|---|---|---|---|---|---|---|
| | 1 | 1 | **183-5384** | 1 | HOSE AS | |
| | 2 | 1 | **183-5512** | 1 | HOSE AS | |
| C | 3 | 1 | **183-5825** | 2 | HOSE AS | |
| | 4 | 1 | **189-7031** | 1 | HOSE AS | |
| C | 5 | 1 | **189-7546** | 1 | HOSE AS | |
| C | 6 | 1 | **189-7547** | 1 | HOSE AS | |
| | 7 | 1 | **189-7548** | 1 | HOSE AS | |
| C | 8 | 1 | **219-5038** | 3 | HOSE AS | |
| | 9 | 1 | **219-5039** | 1 | HOSE AS | |
| | 10 | 1 | **224-4405** | 1 | HOSE AS | |
| Y | 11 | 1 | **224-4420** | 1 | VALVE GP-LUBE DISTRIBUTION (12-INJECTOR) | 955 |
| C | 12 | 1 | **259-2421** | 2 | HOSE AS | |
| C | 13 | 1 | **272-5099** | 1 | HOSE AS | |
| | 14 | 1 | **189-7540** | 3 | HOSE AS | |

C-CHANGE FROM PREVIOUS TYPE
Y-SEPARATE ILLUSTRATION

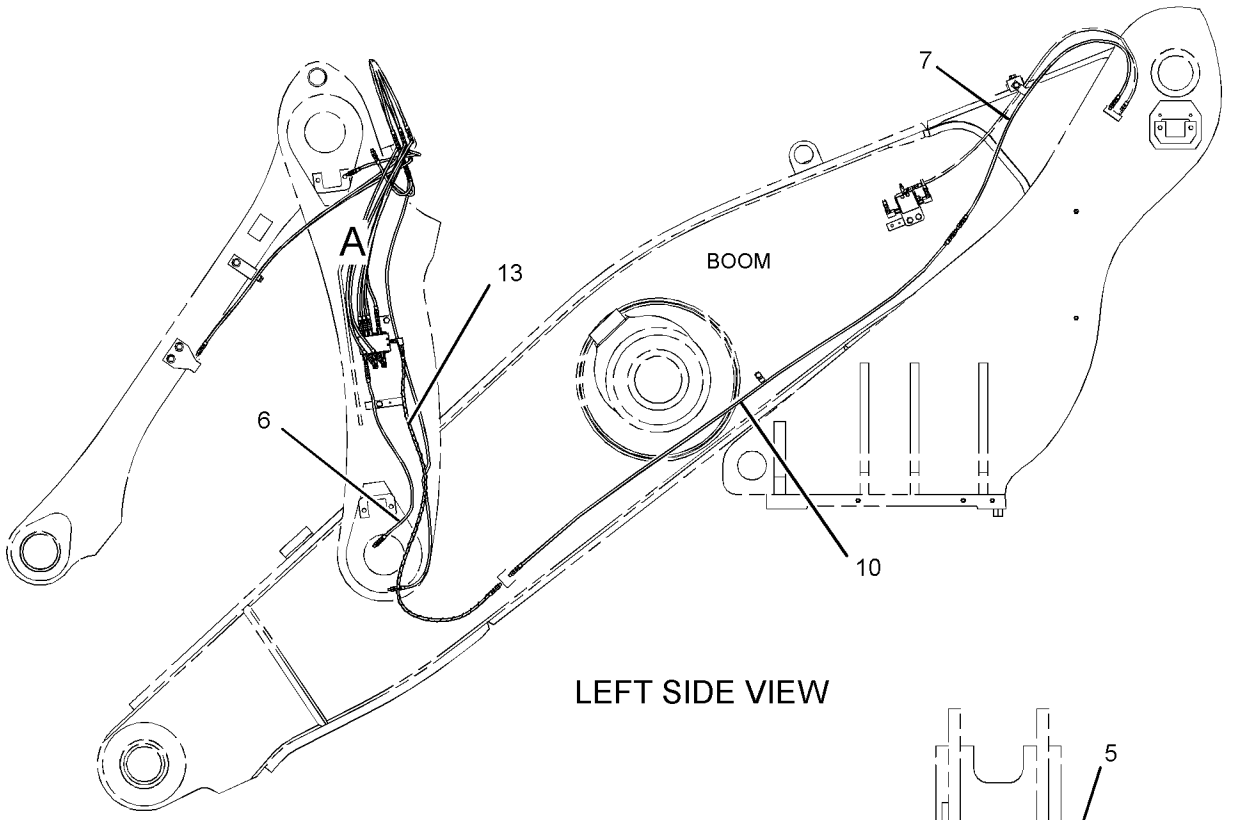


LEFT SIDE VIEW

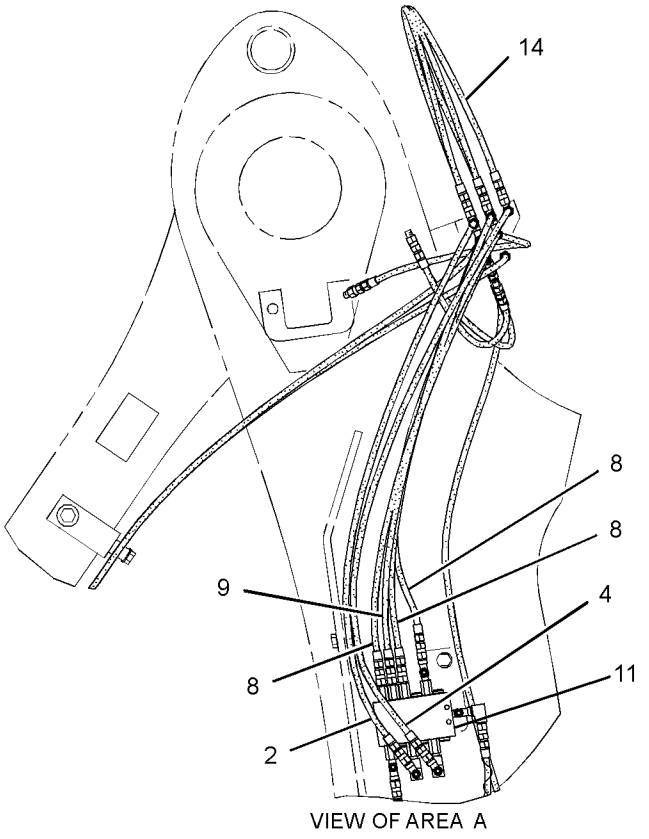


VIEW OF AREA A

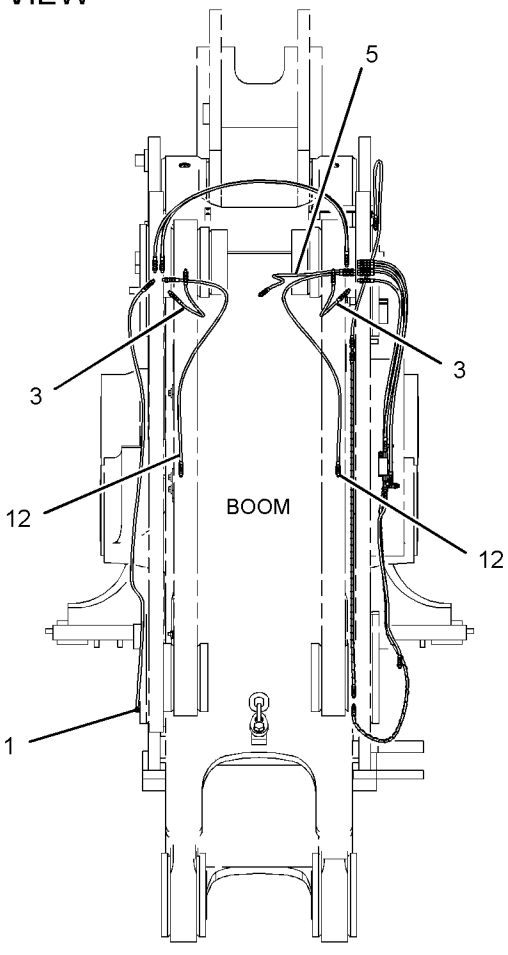


FRONT VIEW

GRAPHIC #1 **<END>** g01362664

# *224-4411* VALVE & LINES GP-LUBRICATION–
## RIGHT, LEFT BOOM PINS
**S/N: BXY1-1899**
**PART OF 259-2449 LINES GP-AUTOMATIC LUBRICATION**
**AN ATTACHMENT**

**SMCS-7540** **i02227489**

| NOTE | REF NO | GRAPHIC REF | PART NUMBER | QTY | PART NAME 1 2 3 4 5 6 (PRODUCT LEVEL) | SEE PAGE |
|---|---|---|---|---|---|---|
| | 1 | 1 | **183-5382** | 1 | HOSE AS | |
| | 2 | 1 | **189-7718** | 1 | HOSE AS | |
| | 3 | 1 | **189-8050** | 1 | HOSE AS | |
| Y | 4 | 1 | **224-4422** | 1 | VALVE GP-LUBE DISTRIBUTION (6-INJECTOR) | 956 |

Y-SEPARATE ILLUSTRATION

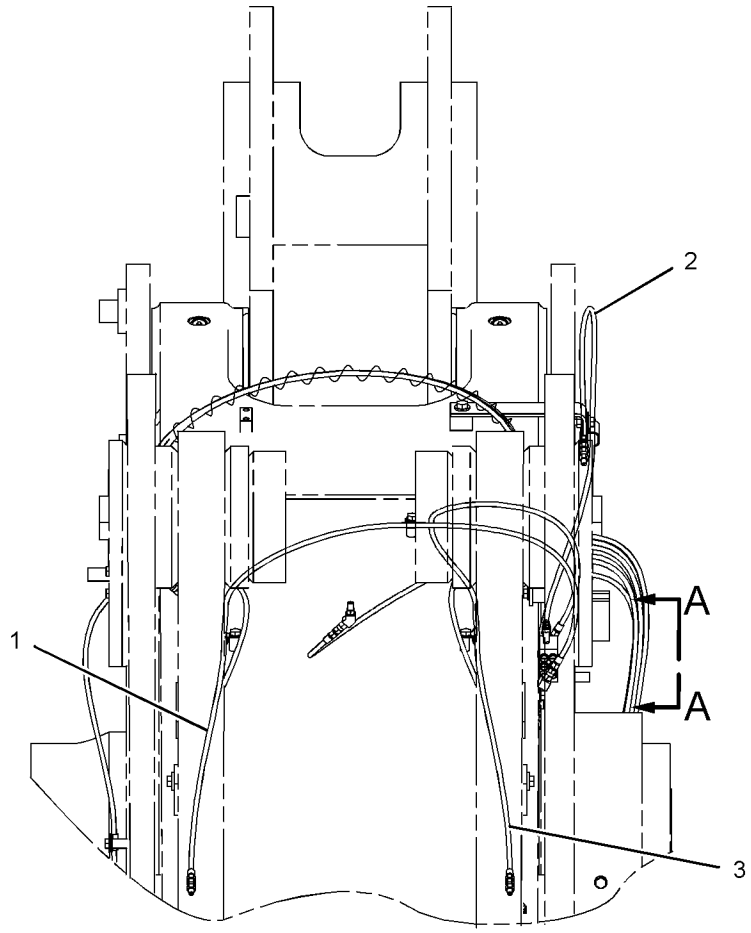


REAR VIEW

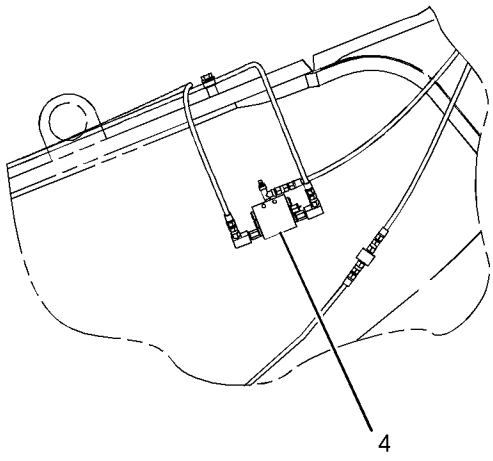


VIEW A-A

GRAPHIC #1 **<END>** g01124390

# *227-3047* VALVE & LINES GP-LUBRICATION–
## LH, RH LINK PINS, RH C-PIN, RH TILT PIN
**S/N: BXY1-1899**
**PART OF 259-2433 LINES GP-AUTOMATIC LUBRICATION**
**AN ATTACHMENT**

**SMCS-7540** **i02563089**

| NOTE | REF NO | GRAPHIC REF | PART NUMBER | QTY | PART NAME 1 2 3 4 5 6 (PRODUCT LEVEL) | SEE PAGE |
|---|---|---|---|---|---|---|
| | 1 | 1 | **5T-5012** | 4 | CAP-PROTECTION | |
| Y | 2 | 1 | **8W-2597** | 1 | VALVE GP-LUBE DISTRIBUTION (4-INJECTOR) | 950 |
| | 3 | 1 | **070-0618** | 2 | HOSE AS | |
| | 4 | 1 | **183-5384** | 1 | HOSE AS | |
| | 5 | 1 | **183-5825** | 1 | HOSE AS | |
| | 6 | 1 | **189-7540** | 4 | HOSE AS | |
| I | 7 | 1 | **185-7541** | 1 | HOSE AS | |
| | 8 | 1 | **259-2421** | 1 | HOSE AS | |
| | 9 | 1 | *148-8367* | 1 | ELBOW AS | |
| | | 1 | **6V-8397** | 1 | SEAL-O-RING | |
| | | 1 | **6V-9850** | 1 | ELBOW | |
| | 10 | 1 | *148-8433* | 1 | TEE AS | |
| | | 1 | **6V-8397** | 2 | SEAL-O-RING | |
| | | 1 | **6V-9836** | 1 | TEE-SWIVEL | |
| | 11 | 1 | **3J-5390** | 1 | PLUG | |
| | 12 | 1 | **4K-3026** | 2 | EXTENSION | |
| | 13 | 1 | **4M-8973** | 6 | ELBOW | |
| | 14 | 1 | **6V-8397** | 1 | SEAL-O-RING | |
| | 15 | 1 | **8C-6869** | 1 | CONNECTOR | |
| | 16 | 1 | **8L-5008** | 1 | ELBOW-PIPE | |

I-REFER TO HYDRAULIC INFORMATION SYSTEM
Y-SEPARATE ILLUSTRATION

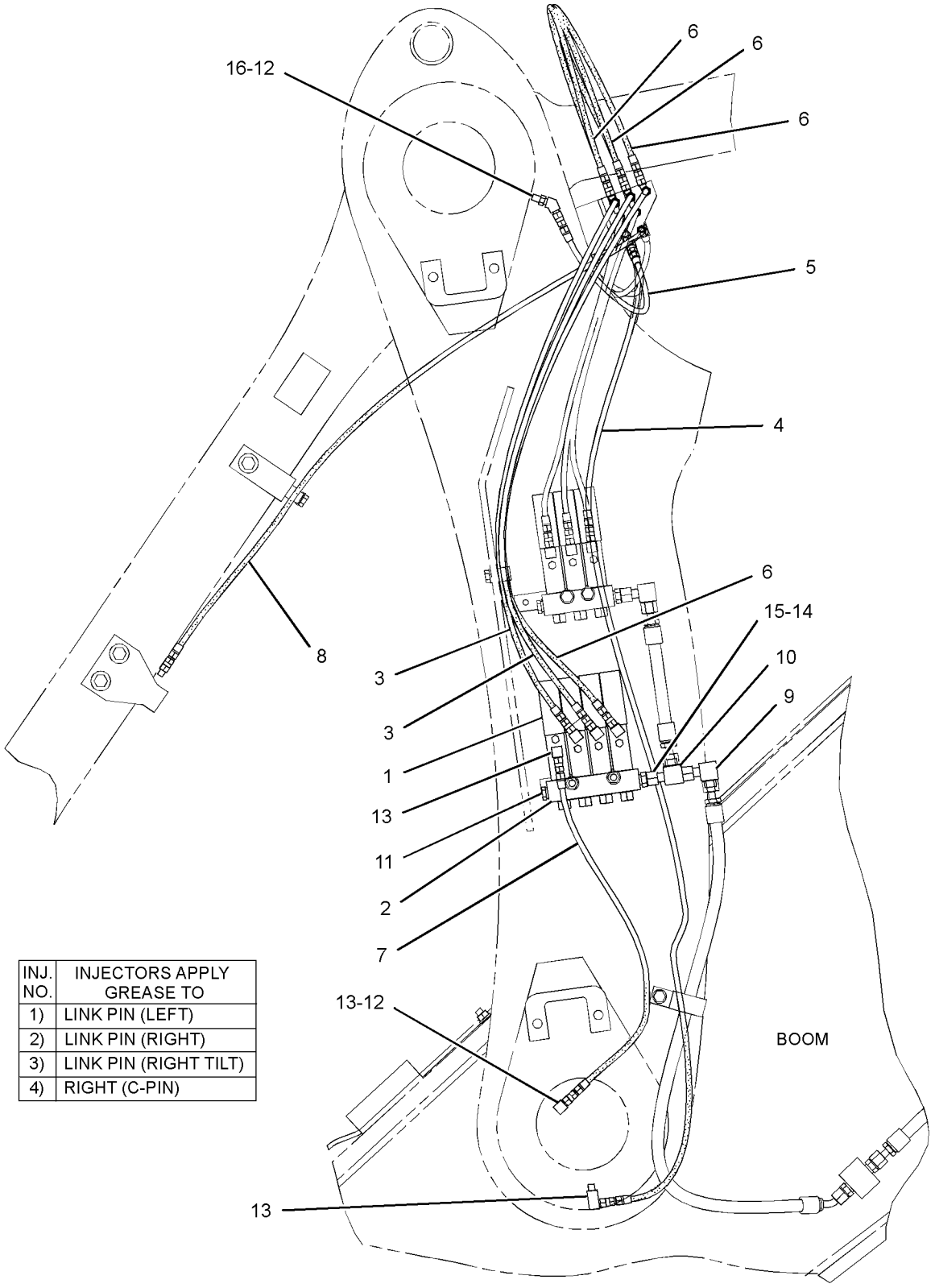


| INJ. NO. | INJECTORS APPLY GREASE TO |
|---|---|
| 1) | LINK PIN (LEFT) |
| 2) | LINK PIN (RIGHT) |
| 3) | LINK PIN (RIGHT TILT) |
| 4) | RIGHT (C-PIN) |

LEFT SIDE VIEW

GRAPHIC #1 **<END>** g01297314

# *227-3048* VALVE & LINES GP-LUBRICATION–
## LH C-PIN, LH TILT LINK PIN
**S/N: BXY1-1899**
**PART OF 259-2433 LINES GP-AUTOMATIC LUBRICATION**
**AN ATTACHMENT**

**SMCS-7540** **i02563086**

| NOTE | REF NO | GRAPHIC REF | PART NUMBER | QTY | PART NAME 1 2 3 4 5 6 (PRODUCT LEVEL) | SEE PAGE |
|---|---|---|---|---|---|---|
| Y | 1 | 1 | **5T-5009** | 1 | VALVE GP-LUBE DISTRIBUTION (3-INJECTOR) | 949 |
| | 2 | 1 | **5T-5012** | 3 | CAP-PROTECTION | |
| | 3 | 1 | **183-5825** | 1 | HOSE AS | |
| | 4 | 1 | **189-7543** | 3 | HOSE AS | |
| | 5 | 1 | **189-7546** | 1 | HOSE AS | |
| | 6 | 1 | **259-2421** | 1 | HOSE AS | |
| | 7 | 1 | *148-8367* | 1 | ELBOW AS | |
| | | 1 | **6V-8397** | 1 | SEAL-O-RING | |
| | | 1 | **6V-9850** | 1 | ELBOW | |
| | 8 | 1 | **3J-5390** | 1 | PLUG | |
| | 9 | 1 | **4K-3026** | 1 | EXTENSION | |
| | 10 | 1 | **4M-8973** | 4 | ELBOW | |
| | 11 | 1 | **6V-8397** | 1 | SEAL-O-RING | |
| | 12 | 1 | **8C-6869** | 1 | CONNECTOR | |
| | 13 | 1 | **8L-5008** | 1 | ELBOW-PIPE | |

Y-SEPARATE ILLUSTRATION

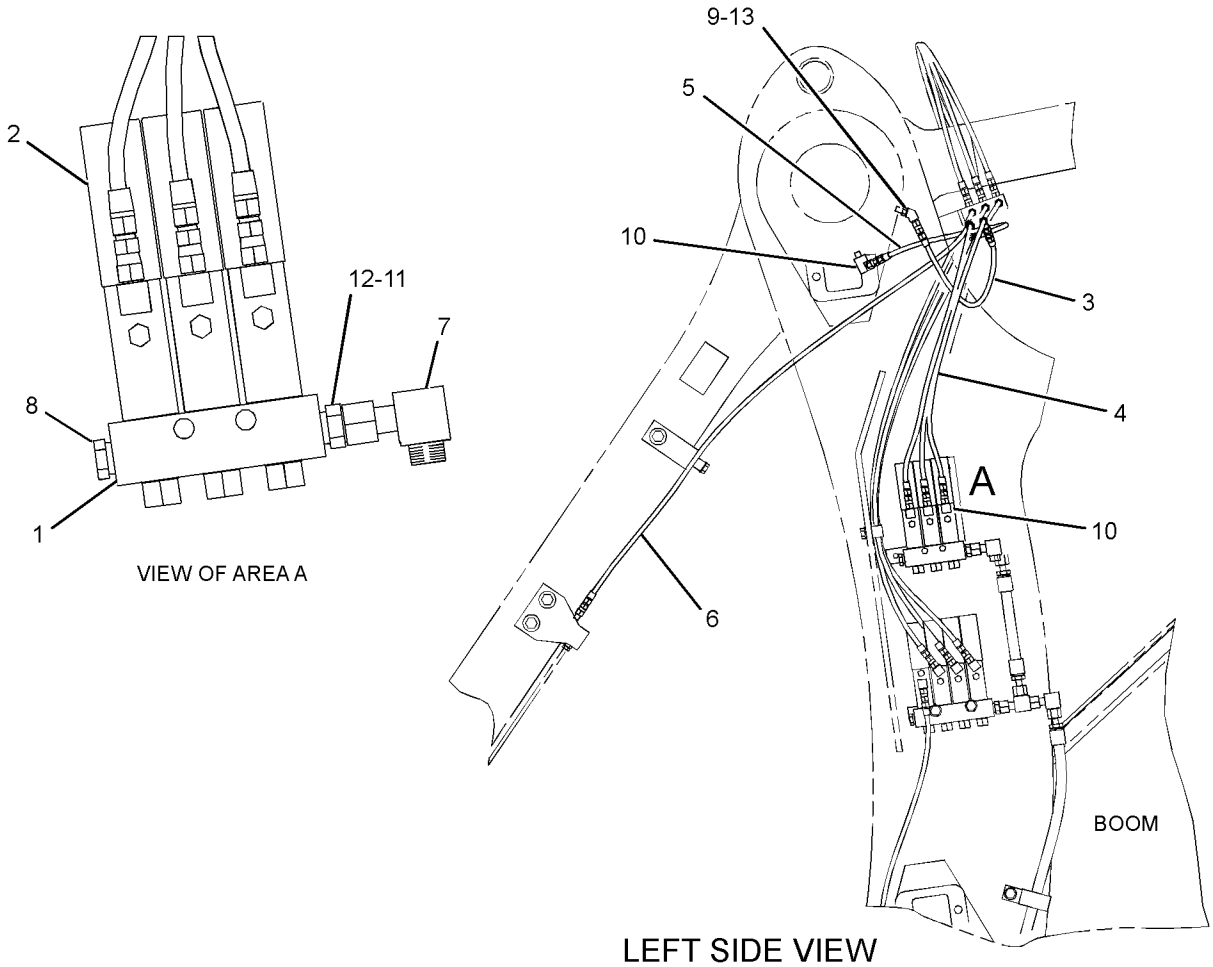


GRAPHIC #1 **<END>** g01285112

# *229-2622* VALVE & LINES GP-LUBRICATION—B-PIN, RH, LH

**S/N: BXY1-1899**

**PART OF 259-2444 LINES GP-AUTOMATIC LUBRICATION**

**AN ATTACHMENT**

**SMCS-7540** **i01952140**

| NOTE | REF NO | GRAPHIC REF | PART NUMBER | QTY | PART NAME 1 2 3 4 5 6 (PRODUCT LEVEL) | SEE PAGE |
|---|---|---|---|---|---|---|
| | 1 | 1 | **5T-5012** | 2 | CAP-PROTECTION | |
| Y | 2 | 1 | **141-2107** | 1 | VALVE GP-LUBE DISTRIBUTION (2-INJECTOR) | 951 |
| | 3 | 1 | *183-5382* | 1 | HOSE AS | |
| | 4 | 1 | *189-7553* | 1 | HOSE AS | |
| | 5 | 1 | *148-8433* | 1 | TEE AS | |
| | | 1 | **6V-8397** | 2 | SEAL-O-RING | |
| | | 1 | **6V-9836** | 1 | TEE-SWIVEL | |
| | 6 | 1 | **3B-6552** | 2 | ELBOW | |
| | 7 | 1 | **3J-5390** | 1 | PLUG | |
| | 8 | 1 | **6V-8397** | 1 | SEAL-O-RING | |
| | 9 | 1 | **8C-6869** | 1 | CONNECTOR | |

Y-SEPARATE ILLUSTRATION

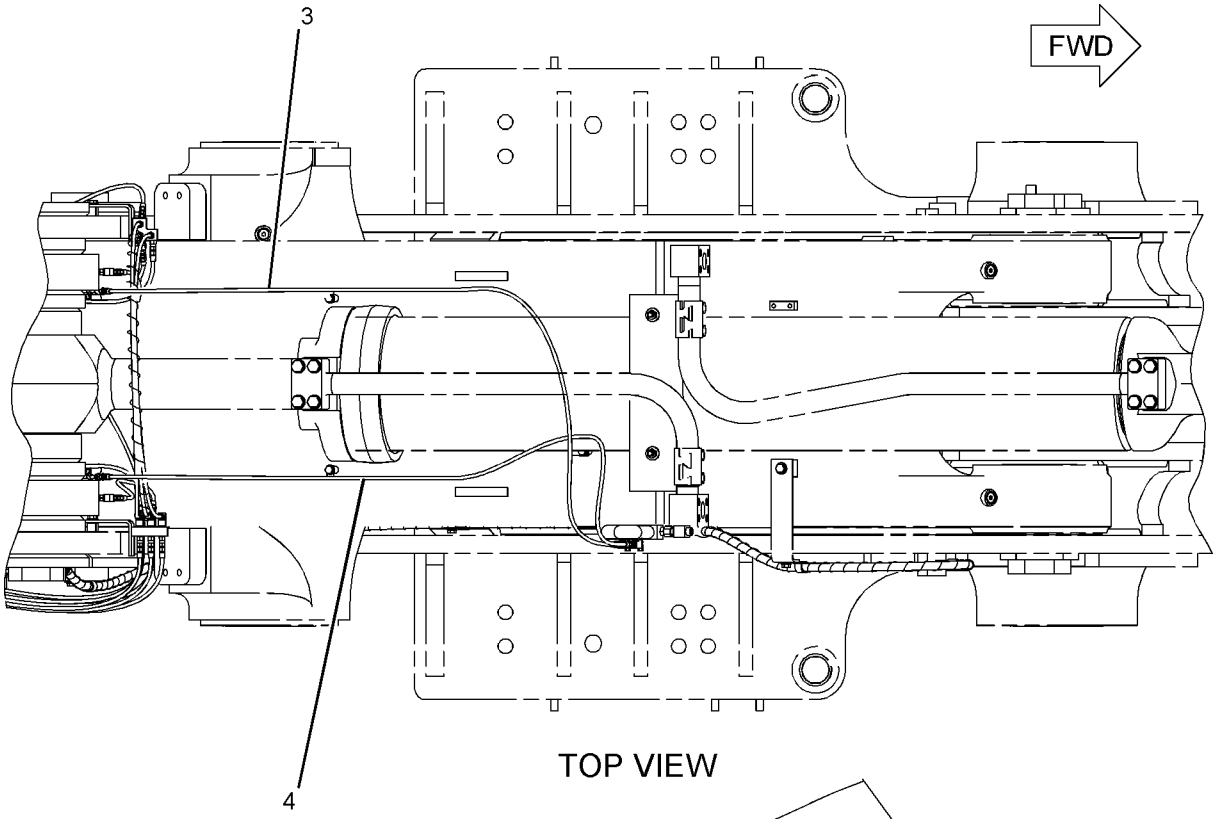


TOP VIEW

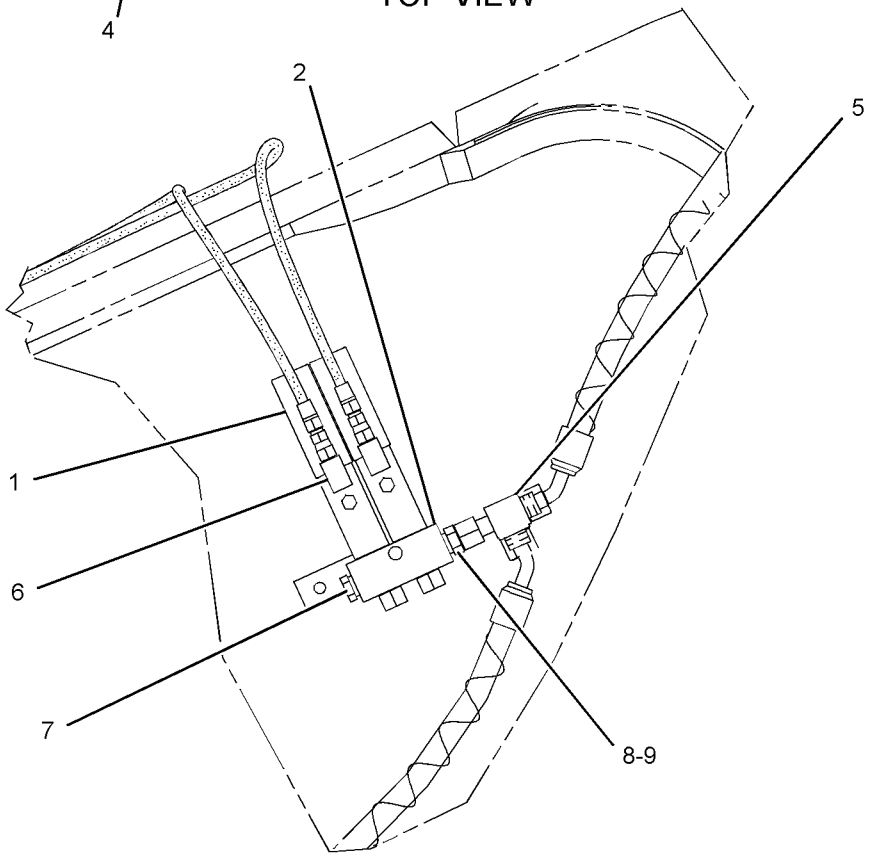


RIGHT SIDE VIEW

GRAPHIC #1

**<END>**

g01016244

# *240-9692* VALVE & LINES GP-LUBRICATION—BUCKET PINS

**S/N: BXY1-UP**

**PART OF 243-5875 LINES GP-AUTOMATIC LUBRICATION**

**AN ATTACHMENT**

**SMCS-7540** **i02476420**

| NOTE | REF NO | GRAPHIC REF | PART NUMBER | QTY | PART NAME 1 2 3 4 5 6 (PRODUCT LEVEL) | SEE PAGE |
|---|---|---|---|---|---|---|
| | 1 | 1 | *189-7541* | 1 | HOSE AS | |
| | | 1 | **171-8964** | 2 | COUPLING | |
| E | | 1 | **171-9629** | | HOSE (56-CM) | |
| | 2 | 1 | *189-7543* | 1 | HOSE AS | |
| | | 1 | **171-8964** | 2 | COUPLING | |
| E | | 1 | **171-9629** | | HOSE (53-CM) | |
| | 3 | 1 | *189-7718* | 1 | HOSE AS | |
| | | 1 | **171-8964** | 2 | COUPLING | |
| E | | 1 | **171-9629** | | HOSE (117-CM) | |
| | 4 | 1 | *189-8048* | 1 | HOSE AS | |
| | | 1 | **171-8964** | 2 | COUPLING | |
| E | | 1 | **171-9629** | | HOSE (257-CM) | |
| Y | 5 | 1 | **224-4422** | 1 | VALVE GP-LUBE DISTRIBUTION (6-INJECTOR) | 956 |
| | 6 | 1 | *183-5825* | 2 | HOSE AS | |
| | | | | | (EACH INCLUDES) | |
| | | 1 | **171-8964** | 2 | COUPLING | |
| E | | 1 | **171-9629** | | HOSE (30-CM) | |
| | 7 | 1 | *243-5942* | 1 | HOSE AS | |
| | | 1 | **171-8964** | 2 | COUPLING | |
| E | | 1 | **171-9629** | | HOSE (258-CM) | |

E-ORDER BY THE CENTIMETER
Y-SEPARATE ILLUSTRATION

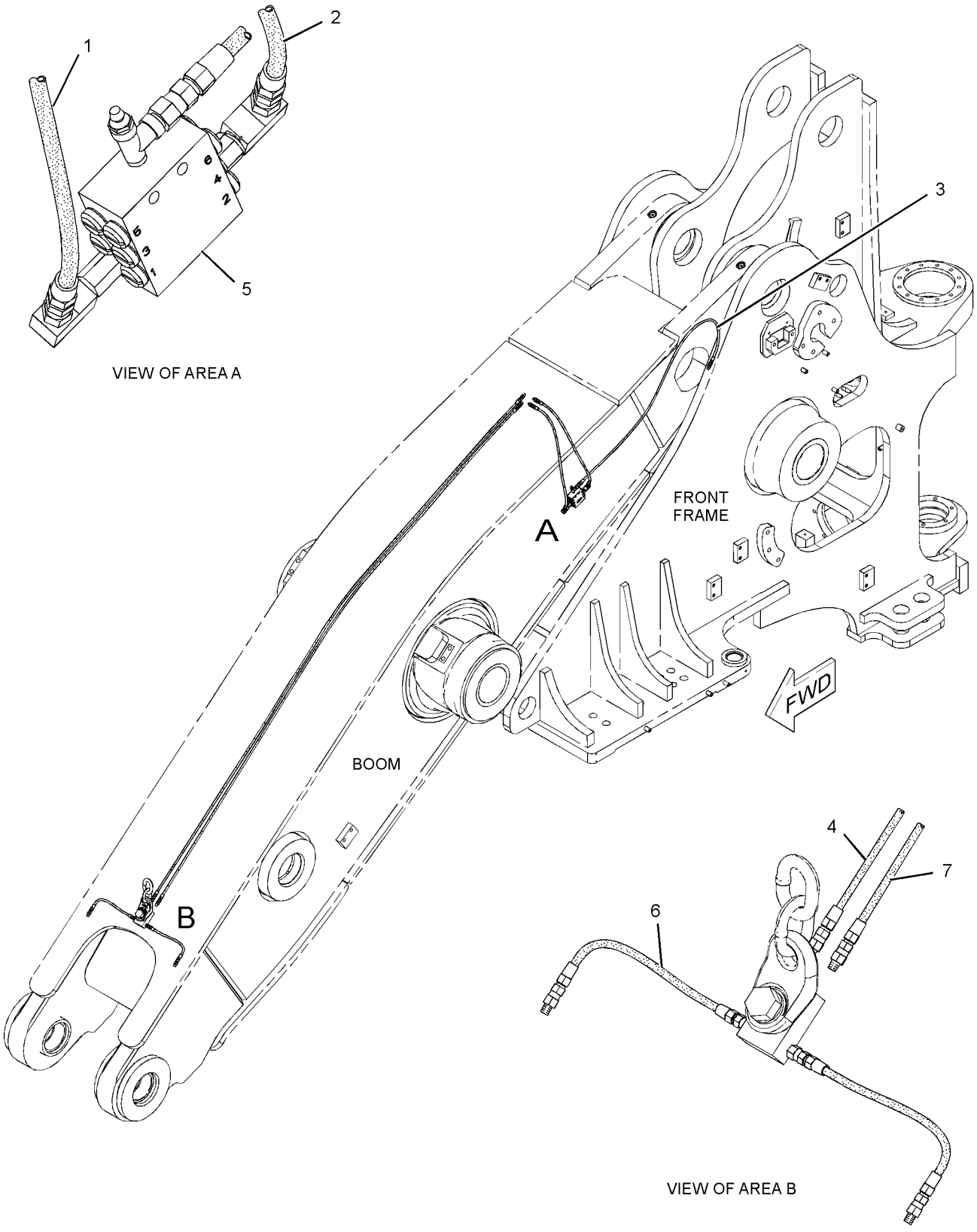


GRAPHIC #1 **<END>** g01172936

# *240-9692* VALVE & LINES GP-LUBRICATION—BUCKET PINS

**S/N: BXY1-1899**
**PART OF 243-5875 LINES GP-AUTOMATIC LUBRICATION**
**AN ATTACHMENT**

**SMCS-7540** **i02476418**

| NOTE | REF NO | GRAPHIC REF | PART NUMBER | QTY | PART NAME 1 2 3 4 5 6 (PRODUCT LEVEL) | SEE PAGE |
|---|---|---|---|---|---|---|
| | 1 | 1 | *189-7541* | 1 | HOSE AS | |
| | | 1 | **171-8964** | 2 | COUPLING | |
| E | | 1 | **171-9629** | | HOSE (56-CM) | |
| | 2 | 1 | *189-7543* | 1 | HOSE AS | |
| | | 1 | **171-8964** | 2 | COUPLING | |
| E | | 1 | **171-9629** | | HOSE (53-CM) | |
| | 3 | 1 | *189-7718* | 1 | HOSE AS | |
| | | 1 | **171-8964** | 2 | COUPLING | |
| E | | 1 | **171-9629** | | HOSE (117-CM) | |
| | 4 | 1 | *189-8048* | 1 | HOSE AS | |
| | | 1 | **171-8964** | 2 | COUPLING | |
| E | | 1 | **171-9629** | | HOSE (257-CM) | |
| Y | 5 | 1 | **224-4422** | 1 | VALVE GP-LUBE DISTRIBUTION (6-INJECTOR) | 956 |
| | 6 | 1 | *243-5942* | 1 | HOSE AS | |
| | | 1 | **171-8964** | 2 | COUPLING | |
| E | | 1 | **171-9629** | | HOSE (258-CM) | |
| C | 7 | 1 | *259-2458* | 2 | HOSE AS | |
| | | | | | (EACH INCLUDES) | |
| | | 1 | **171-8964** | 2 | COUPLING | |
| E | | 1 | **171-9629** | | HOSE (20-CM) | |

C-CHANGE FROM PREVIOUS TYPE
E-ORDER BY THE CENTIMETER
Y-SEPARATE ILLUSTRATION

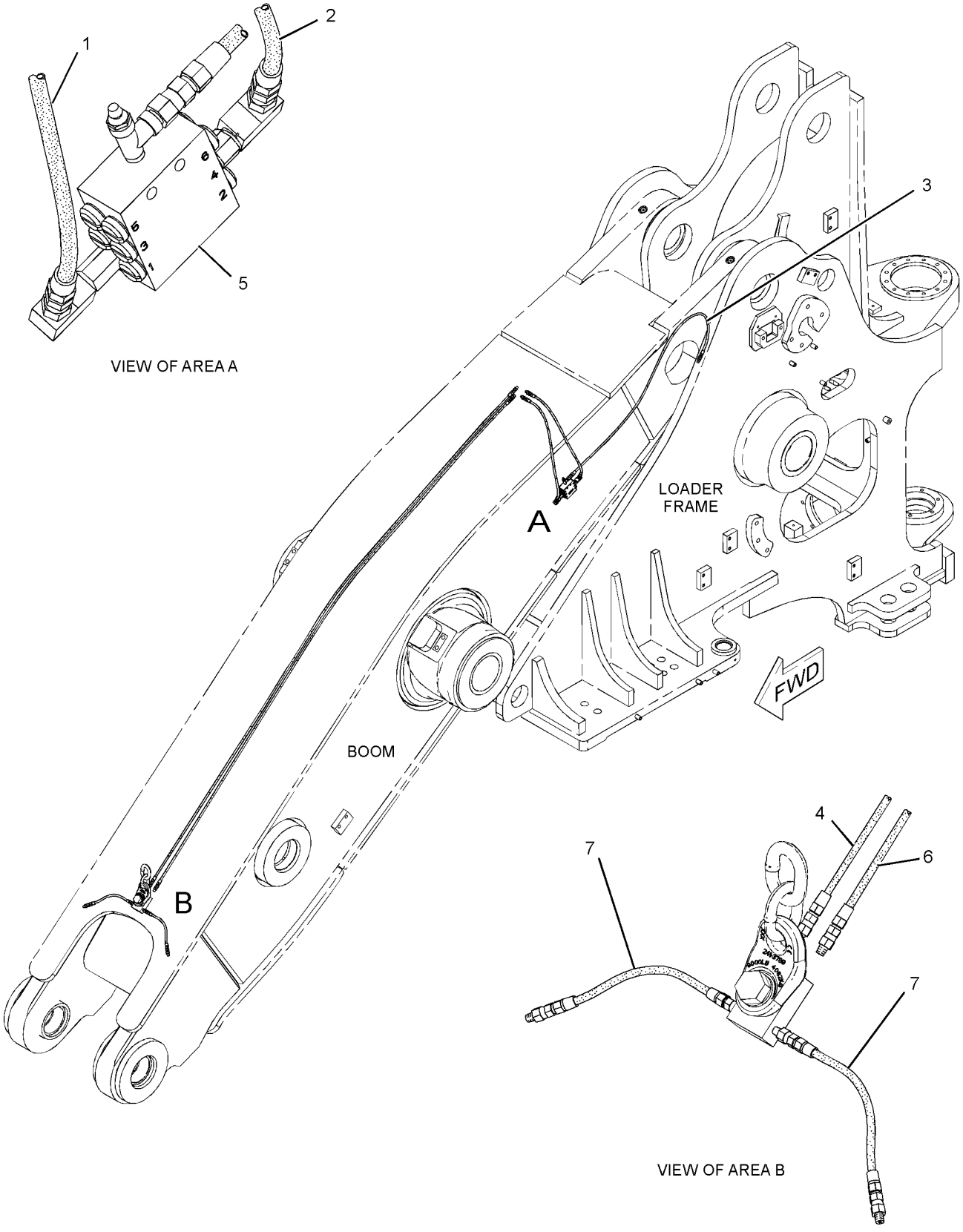


GRAPHIC #1 **<END>** g01241340

# *259-2407* VALVE & LINES GP-LUBRICATION–
## C-PIN, LINK PINS, TILT CYLINDER PIN
**S/N: BXY1-1200**
**PART OF 259-2406 LINES GP-AUTOMATIC LUBRICATION**
**AN ATTACHMENT**

**SMCS-7540** **i02346652**

| NOTE | REF NO | GRAPHIC REF | PART NUMBER | QTY | PART NAME 1 2 3 4 5 6 (PRODUCT LEVEL) | SEE PAGE |
|---|---|---|---|---|---|---|
| | 1 | 1 | **070-0618** | 2 | HOSE AS | |
| | 2 | 1 | **183-5509** | 1 | HOSE AS | |
| | 3 | 1 | **183-5512** | 1 | HOSE AS | |
| | 4 | 1 | **189-7531** | 2 | HOSE AS | |
| | 5 | 1 | **189-7541** | 1 | HOSE AS | |
| | 6 | 1 | *189-7543* | 1 | HOSE AS | |
| | 7 | 1 | **189-7554** | 1 | HOSE AS | |
| | 8 | 1 | **189-7981** | 2 | HOSE AS | |
| | 9 | 1 | **219-5038** | 2 | HOSE AS | |
| Y | 10 | 1 | **224-4420** | 1 | VALVE GP-LUBE DISTRIBUTION (12-INJECTOR) | 955 |
| | 11 | 1 | **259-2421** | 4 | HOSE AS | |
| | 12 | 1 | **259-2423** | 1 | HOSE AS | |
| | 13 | 1 | **259-2424** | 1 | HOSE AS | |

Y-SEPARATE ILLUSTRATION

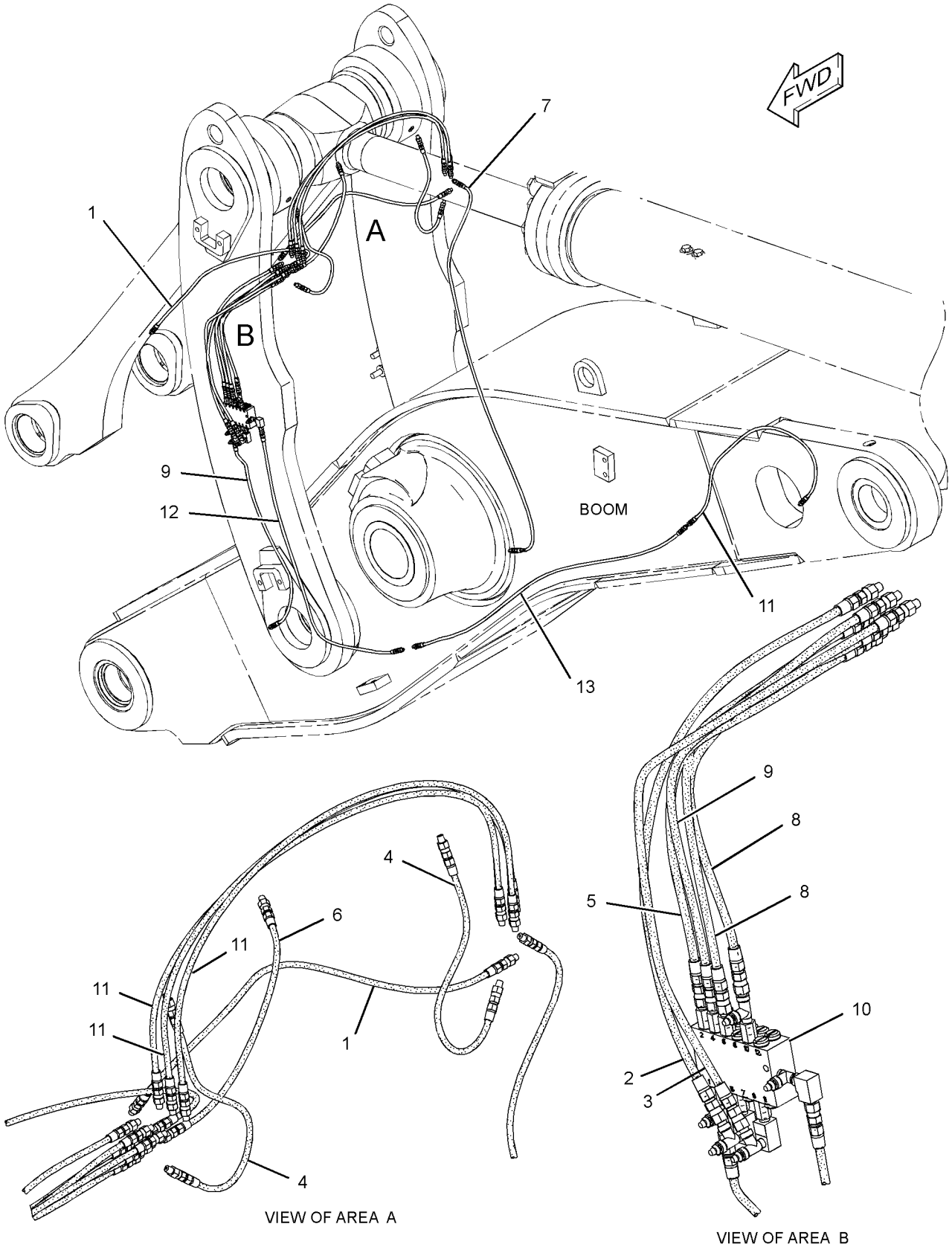


GRAPHIC #1 **<END>** g01175576

# *259-2407* VALVE & LINES GP-LUBRICATION–
## C-PIN, LINK PINS, TILT CYLINDER PIN
**S/N: BXY1201-UP**
**PART OF 259-2406, 285-7276 LINES GP-AUTOMATIC LUBRICATION**
**AN ATTACHMENT**

**SMCS-7540** **i02668337**

| NOTE | REF NO | GRAPHIC REF | PART NUMBER | QTY | PART NAME 1 2 3 4 5 6 (PRODUCT LEVEL) | SEE PAGE |
|---|---|---|---|---|---|---|
| | 1 | 2 | **183-5509** | 1 | HOSE AS | |
| | 2 | 2 | **183-5512** | 1 | HOSE AS | |
| | 3 | 2 | **189-7531** | 2 | HOSE AS | |
| | 4 | 2 | **189-7541** | 1 | HOSE AS | |
| | 5 | 2 | **189-7543** | 1 | HOSE AS | |
| C | 6 | 2 | **189-7548** | 2 | HOSE AS | |
| | 7 | 2 | **189-7554** | 1 | HOSE AS | |
| | 8 | 2 | **189-7981** | 2 | HOSE AS | |
| | 9 | 1,2 | **219-5038** | 2 | HOSE AS | |
| Y | 10 | 2 | **224-4420** | 1 | VALVE GP-LUBE DISTRIBUTION (12-INJECTOR) | 955 |
| | 11 | 1,2 | **259-2421** | 4 | HOSE AS | |
| | 12 | 1 | **259-2424** | 1 | HOSE AS | |
| C | 13 | 2 | **285-7306** | 1 | HOSE AS | |

C-CHANGE FROM PREVIOUS TYPE
Y-SEPARATE ILLUSTRATION

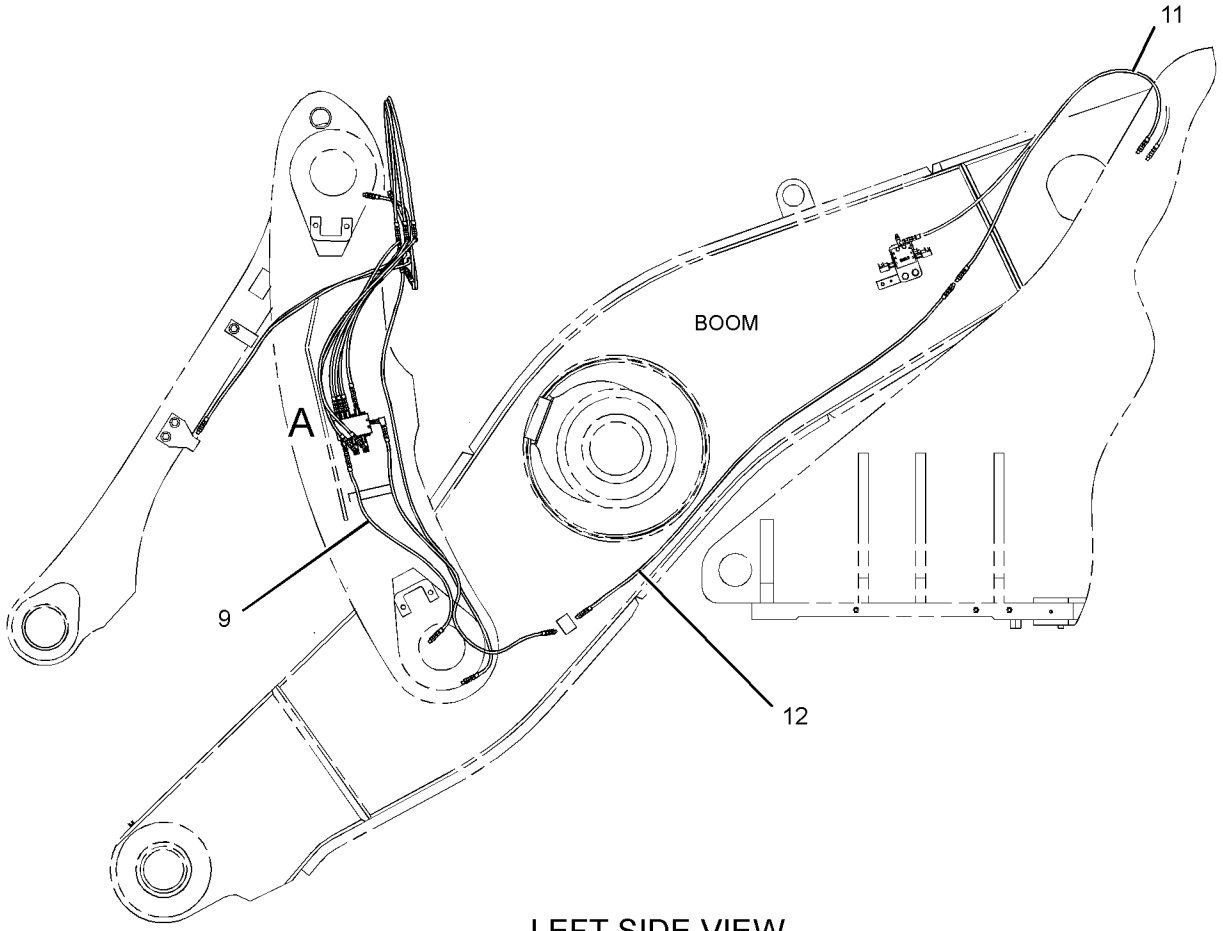


LEFT SIDE VIEW

REFER TO ALL ILLUSTRATIONS OF THIS GROUP FOR AUXILIARY VIEWS

GRAPHIC #1 g01345345

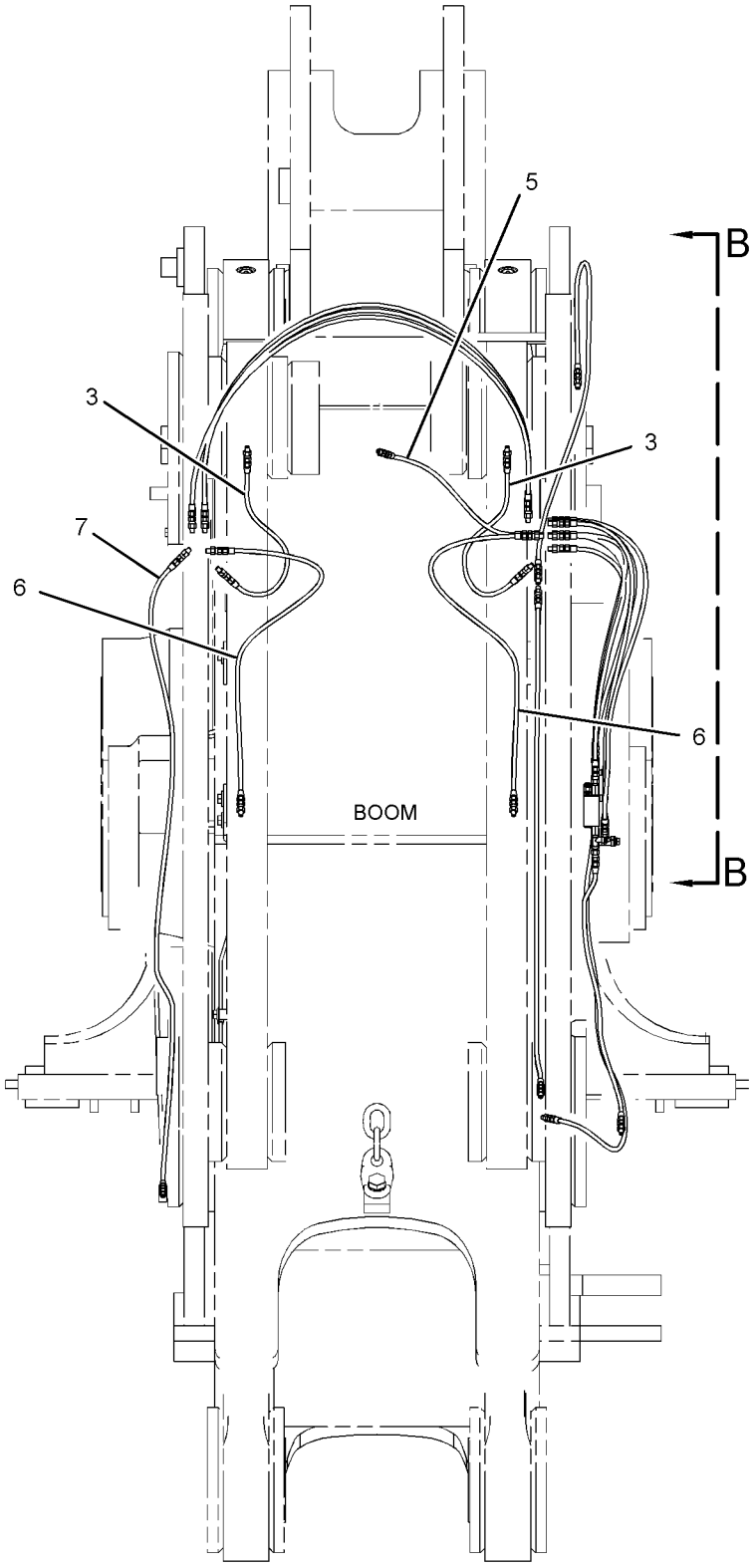


FRONT VIEW

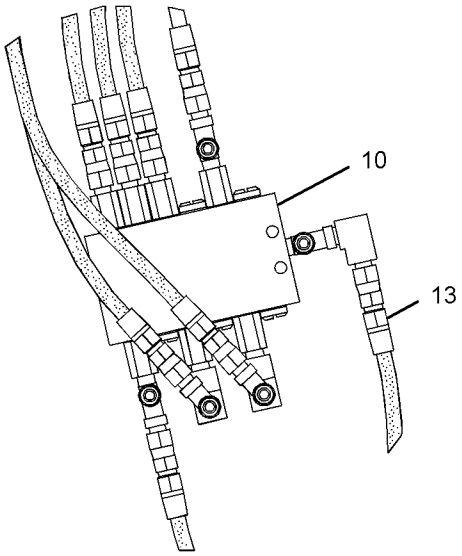


VIEW OF AREA A

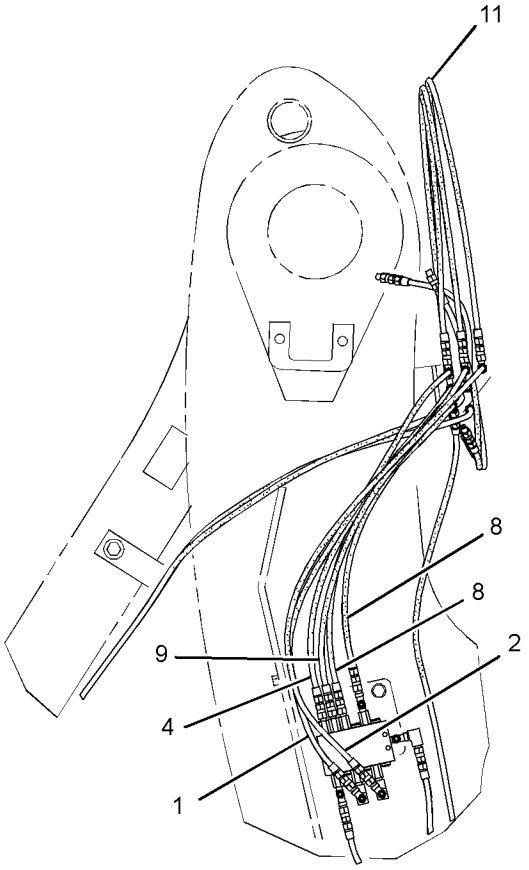


VIEW B-B

GRAPHIC #2 **<END>** g01345444

# *259-2408* VALVE & LINES GP-LUBRICATION–BUCKET PINS

**S/N: BXY1-UP**

**PART OF 259-2406 LINES GP-AUTOMATIC LUBRICATION**

**AN ATTACHMENT**

**SMCS-7540** **i02476416**

| NOTE | REF NO | GRAPHIC REF | PART NUMBER | QTY | PART NAME 1 2 3 4 5 6 (PRODUCT LEVEL) | SEE PAGE |
|---|---|---|---|---|---|---|
| | 1 | 1 | *189-7541* | 1 | HOSE AS | |
| | | 1 | **171-8964** | 2 | COUPLING | |
| E | | 1 | **171-9629** | | HOSE (56-CM) | |
| | 2 | 1 | *189-7543* | 1 | HOSE AS | |
| | | 1 | **171-8964** | 2 | COUPLING | |
| E | | 1 | **171-9629** | | HOSE (53-CM) | |
| | 3 | 1 | *189-7718* | 1 | HOSE AS | |
| | | 1 | **171-8964** | 2 | COUPLING | |
| E | | 1 | **171-9629** | | HOSE (117-CM) | |
| Y | 4 | 1 | **224-4422** | 1 | VALVE GP-LUBE DISTRIBUTION (6-INJECTOR) | 956 |
| | 5 | 1 | *183-5825* | 2 | HOSE AS | |
| | | | | | (EACH INCLUDES) | |
| | | 1 | **171-8964** | 2 | COUPLING | |
| E | | 1 | **171-9629** | | HOSE (30-CM) | |
| | 6 | 1 | *259-2418* | 1 | HOSE AS | |
| | | 1 | **171-8964** | 2 | COUPLING | |
| E | | 1 | **171-9629** | | HOSE (225-CM) | |
| | 7 | 1 | *259-2419* | 1 | HOSE AS | |
| | | 1 | **171-8964** | 2 | COUPLING | |
| E | | 1 | **171-9629** | | HOSE (223-CM) | |

E-ORDER BY THE CENTIMETER
Y-SEPARATE ILLUSTRATION

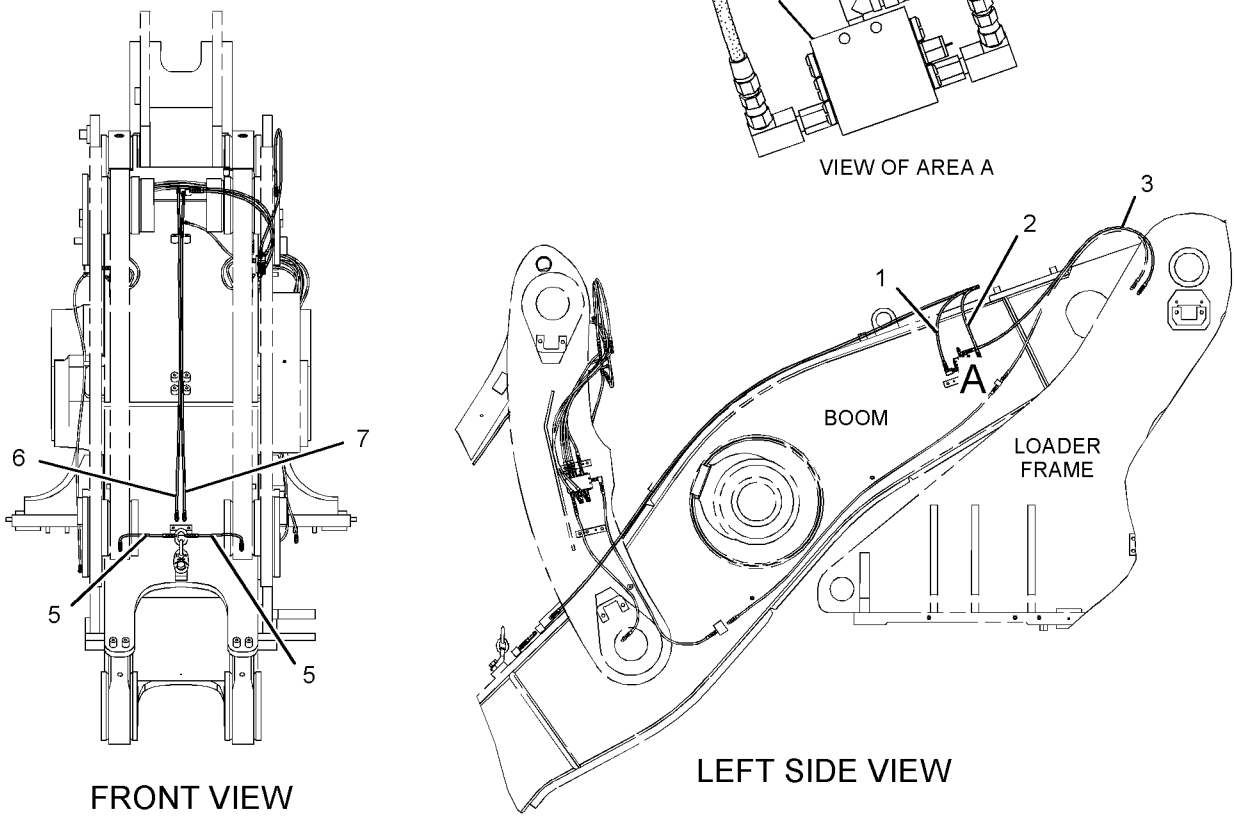


GRAPHIC #1 **<END>** g01128018

# *259-2408* VALVE & LINES GP-LUBRICATION—BUCKET PINS

**S/N: BXY1-1899**

**PART OF 259-2406 LINES GP-AUTOMATIC LUBRICATION**

**AN ATTACHMENT**

**SMCS-7540** **i02476415**

| NOTE | REF NO | GRAPHIC REF | PART NUMBER | QTY | PART NAME 1 2 3 4 5 6 (PRODUCT LEVEL) | SEE PAGE |
|---|---|---|---|---|---|---|
| | 1 | 1 | *189-7541* | 1 | HOSE AS | |
| | | 1 | **171-8964** | 2 | COUPLING | |
| E | | 1 | **171-9629** | | HOSE (56-CM) | |
| | 2 | 1 | *189-7543* | 1 | HOSE AS | |
| | | 1 | **171-8964** | 2 | COUPLING | |
| E | | 1 | **171-9629** | | HOSE (53-CM) | |
| | 3 | 1 | *189-7718* | 1 | HOSE AS | |
| | | 1 | **171-8964** | 2 | COUPLING | |
| E | | 1 | **171-9629** | | HOSE (117-CM) | |
| Y | 4 | 1 | **224-4422** | 1 | VALVE GP-LUBE DISTRIBUTION (6-INJECTOR) | 956 |
| | 5 | 1 | *259-2418* | 1 | HOSE AS | |
| | | 1 | **171-8964** | 2 | COUPLING | |
| E | | 1 | **171-9629** | | HOSE (225-CM) | |
| | 6 | 1 | *259-2419* | 1 | HOSE AS | |
| | | 1 | **171-8964** | 2 | COUPLING | |
| E | | 1 | **171-9629** | | HOSE (223-CM) | |
| C | 7 | 1 | *259-2458* | 2 | HOSE AS | |
| | | | | | (EACH INCLUDES) | |
| | | 1 | **171-8964** | 2 | COUPLING | |
| E | | 1 | **171-9629** | | HOSE (20-CM) | |

C-CHANGE FROM PREVIOUS TYPE
E-ORDER BY THE CENTIMETER
Y-SEPARATE ILLUSTRATION

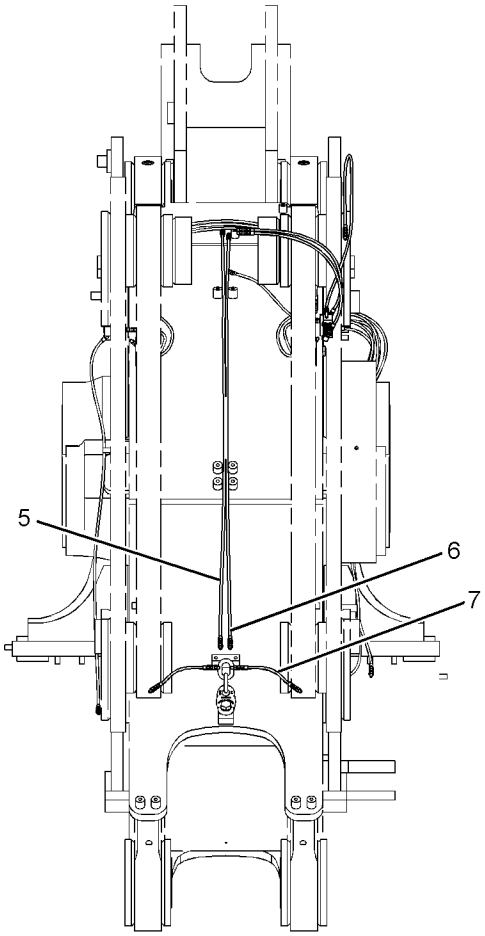


FRONT VIEW

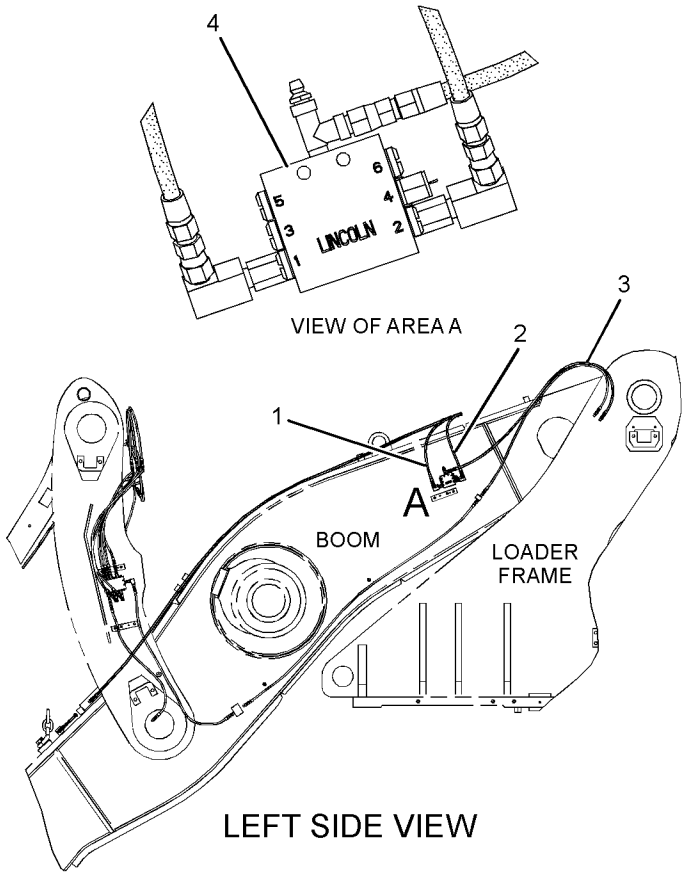


LEFT SIDE VIEW

GRAPHIC #1 **<END>** g01229477

# *259-2414* VALVE & LINES GP-LUBRICATION–BOOM, TILT LINKS

**S/N: BXY1-UP**

**PART OF 259-2433 LINES GP-AUTOMATIC LUBRICATION**

**AN ATTACHMENT**

**SMCS-7540** **i02476413**

| NOTE | REF NO | GRAPHIC REF | PART NUMBER | QTY | PART NAME 1 2 3 4 5 6 (PRODUCT LEVEL) | SEE PAGE |
|---|---|---|---|---|---|---|
| | 1 | 1 | **5T-5012** | 2 | CAP-PROTECTION | |
| Y | 2 | 1 | **141-2107** | 1 | VALVE GP-LUBE DISTRIBUTION (2-INJECTOR) | 951 |
| | 3 | 1 | *189-7543* | 2 | HOSE AS | |
| | | | | | (EACH INCLUDES) | |
| | | 1 | **171-8964** | 2 | COUPLING | |
| E | | 1 | **171-9629** | | HOSE (53-CM) | |
| | 4 | 1 | *189-8048* | 1 | HOSE AS | |
| | | 1 | **171-8964** | 2 | COUPLING | |
| E | | 1 | **171-9629** | | HOSE (257-CM) | |
| | 5 | 1 | *183-5825* | 2 | HOSE AS | |
| | | | | | (EACH INCLUDES) | |
| | | 1 | **171-8964** | 2 | COUPLING | |
| E | | 1 | **171-9629** | | HOSE (30-CM) | |
| | 6 | 1 | *243-5942* | 1 | HOSE AS | |
| | | 1 | **171-8964** | 2 | COUPLING | |
| E | | 1 | **171-9629** | | HOSE (258-CM) | |
| | 7 | 1 | *148-8433* | 1 | TEE AS | |
| | | 1 | **6V-8397** | 2 | SEAL-O-RING | |
| | | 1 | **6V-9836** | 1 | TEE-SWIVEL | |
| | 8 | 1 | **3B-6552** | 2 | ELBOW | |
| | 9 | 1 | **3J-5390** | 1 | PLUG | |
| | 10 | 1 | **6V-8397** | 1 | SEAL-O-RING | |
| | 11 | 1 | **8C-6869** | 1 | CONNECTOR | |

E-ORDER BY THE CENTIMETER
Y-SEPARATE ILLUSTRATION

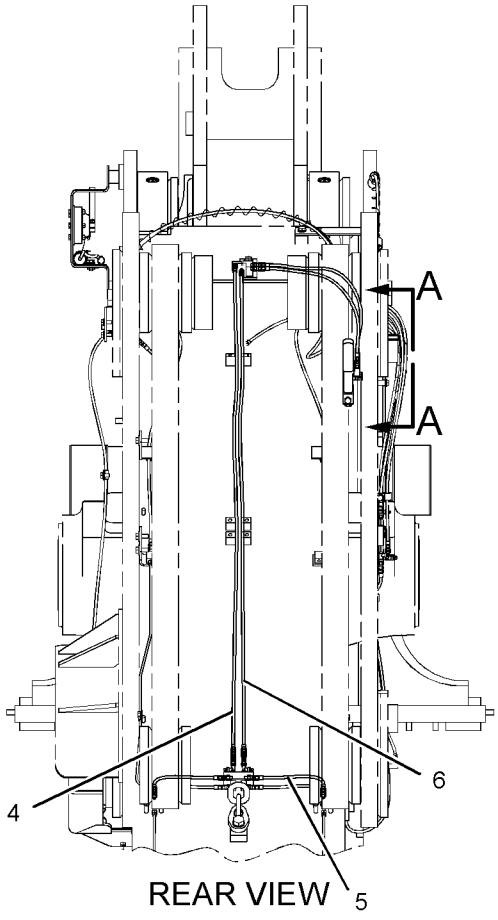


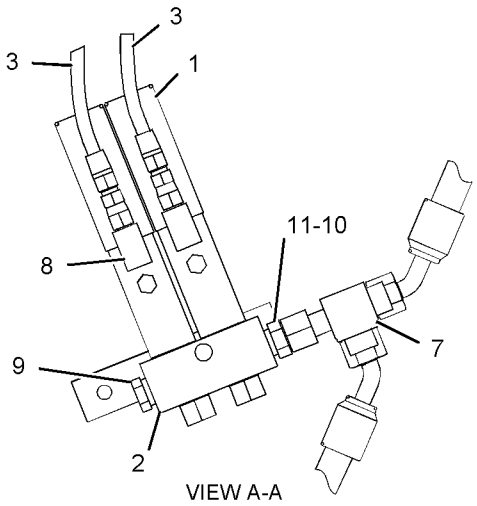


GRAPHIC #1 **<END>** g01128568

# *259-2414* VALVE & LINES GP-LUBRICATION–BOOM, TILT LINKS

**S/N: BXY1-1899**
**PART OF 259-2433 LINES GP-AUTOMATIC LUBRICATION**
**AN ATTACHMENT**

**SMCS-7540** **i02476412**

| NOTE | REF NO | GRAPHIC REF | PART NUMBER | QTY | PART NAME 1 2 3 4 5 6 (PRODUCT LEVEL) | SEE PAGE |
|---|---|---|---|---|---|---|
| | 1 | 1 | **5T-5012** | 2 | CAP-PROTECTION | |
| Y | 2 | 1 | **141-2107** | 1 | VALVE GP-LUBE DISTRIBUTION (2-INJECTOR) | 951 |
| | 3 | 1 | *189-7543* | 2 | HOSE AS | |
| | | | | | (EACH INCLUDES) | |
| | | 1 | **171-8964** | 2 | COUPLING | |
| E | | 1 | **171-9629** | | HOSE (53-CM) | |
| | 4 | 1 | *189-8048* | 1 | HOSE AS | |
| | | 1 | **171-8964** | 2 | COUPLING | |
| E | | 1 | **171-9629** | | HOSE (257-CM) | |
| | 5 | 1 | *243-5942* | 1 | HOSE AS | |
| | | 1 | **171-8964** | 2 | COUPLING | |
| E | | 1 | **171-9629** | | HOSE (258-CM) | |
| C | 6 | 1 | *259-2458* | 2 | HOSE AS | |
| | | | | | (EACH INCLUDES) | |
| | | 1 | **171-8964** | 2 | COUPLING | |
| E | | 1 | **171-9629** | | HOSE (20-CM) | |
| | 7 | 1 | *148-8433* | 1 | TEE AS | |
| | | 1 | **6V-8397** | 2 | SEAL-O-RING | |
| | | 1 | **6V-9836** | 1 | TEE-SWIVEL | |
| | 8 | 1 | **3B-6552** | 2 | ELBOW | |
| | 9 | 1 | **3J-5390** | 1 | PLUG | |
| | 10 | 1 | **6V-8397** | 1 | SEAL-O-RING | |
| | 11 | 1 | **8C-6869** | 1 | CONNECTOR | |

C-CHANGE FROM PREVIOUS TYPE
E-ORDER BY THE CENTIMETER
Y-SEPARATE ILLUSTRATION

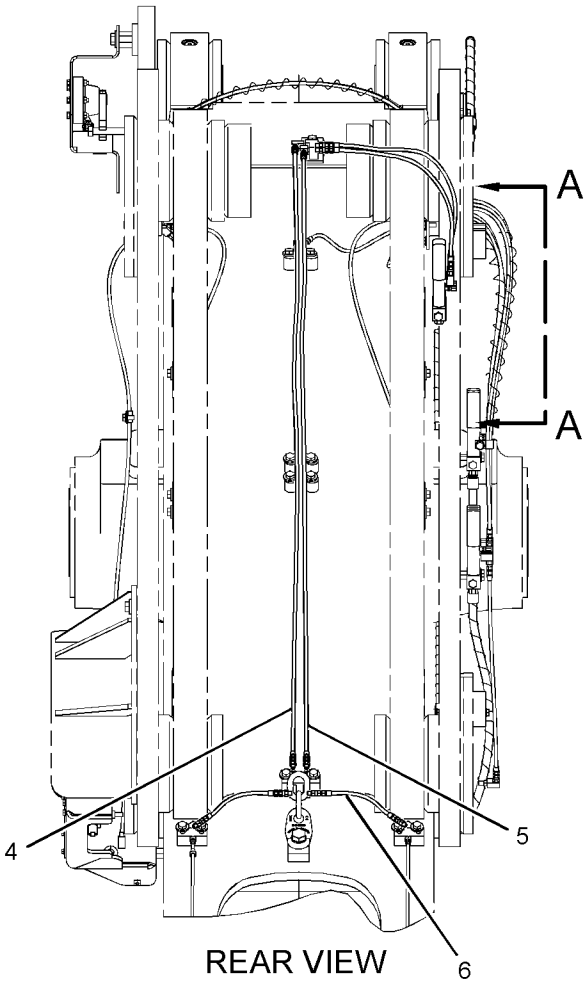


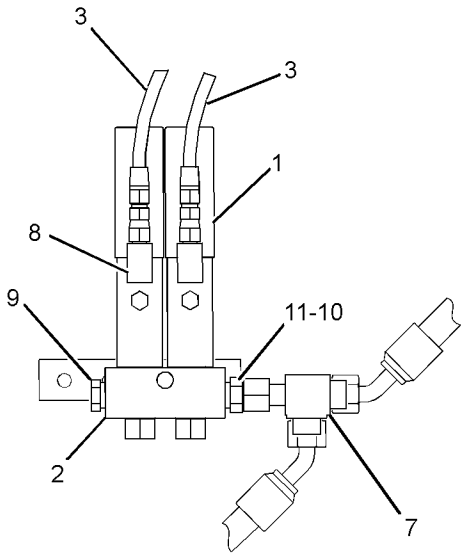


VIEW A-A

GRAPHIC #1 **<END>** g01229530

# *259-2422* VALVE & LINES GP-LUBRICATION—B-PIN, RH, LH

**S/N: BXY1-UP**
**PART OF 259-2434 LINES GP-AUTOMATIC LUBRICATION**
**AN ATTACHMENT**

**SMCS-7540** **i02476411**

| NOTE | REF NO | GRAPHIC REF | PART NUMBER | QTY | PART NAME 1 2 3 4 5 6 (PRODUCT LEVEL) | SEE PAGE |
|---|---|---|---|---|---|---|
| | 1 | 1 | **5T-5012** | 2 | CAP-PROTECTION | |
| Y | 2 | 1 | **141-2107** | 1 | VALVE GP-LUBE DISTRIBUTION (2-INJECTOR) | 951 |
| | 3 | 1 | *189-7543* | 2 | HOSE AS | |
| | | | | | (EACH INCLUDES) | |
| | | 1 | **171-8964** | 2 | COUPLING | |
| E | | 1 | **171-9629** | | HOSE (53-CM) | |
| | 4 | 1 | *183-5825* | 2 | HOSE AS | |
| | | | | | (EACH INCLUDES) | |
| | | 1 | **171-8964** | 2 | COUPLING | |
| E | | 1 | **171-9629** | | HOSE (30-CM) | |
| | 5 | 1 | *259-2418* | 1 | HOSE AS | |
| | | 1 | **171-8964** | 2 | COUPLING | |
| E | | 1 | **171-9629** | | HOSE (225-CM) | |
| | 6 | 1 | *259-2419* | 1 | HOSE AS | |
| | | 1 | **171-8964** | 2 | COUPLING | |
| E | | 1 | **171-9629** | | HOSE (223-CM) | |
| | 7 | 1 | *148-8433* | 1 | TEE AS | |
| | | 1 | **6V-8397** | 2 | SEAL-O-RING | |
| | | 1 | **6V-9836** | 1 | TEE-SWIVEL | |
| | 8 | 1 | **3B-6552** | 2 | ELBOW | |
| | 9 | 1 | **3J-5390** | 1 | PLUG | |
| | 10 | 1 | **6V-8397** | 1 | SEAL-O-RING | |
| | 11 | 1 | **8C-6869** | 1 | CONNECTOR | |

E-ORDER BY THE CENTIMETER
Y-SEPARATE ILLUSTRATION

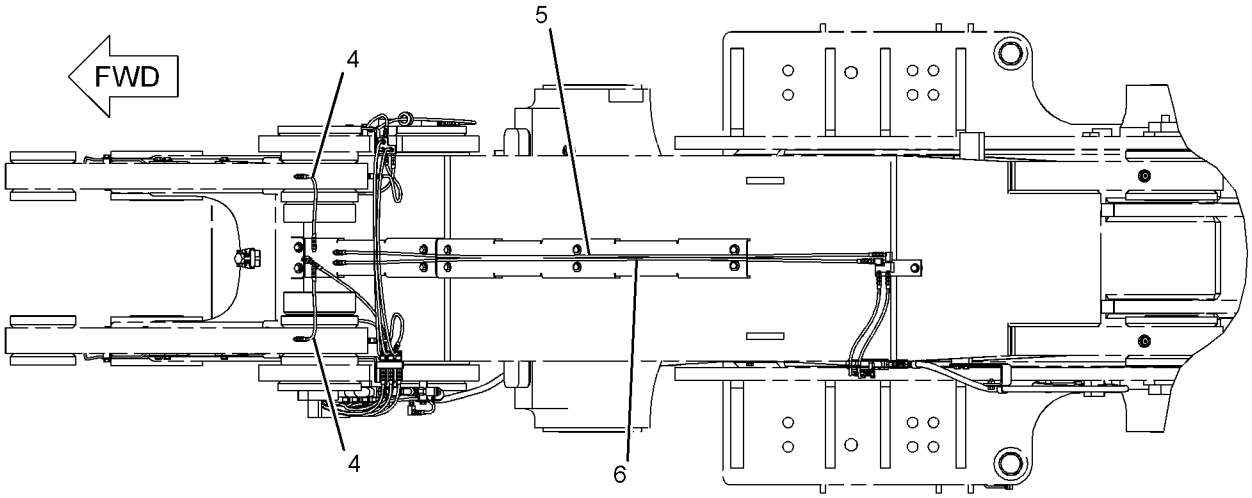


TOP VIEW

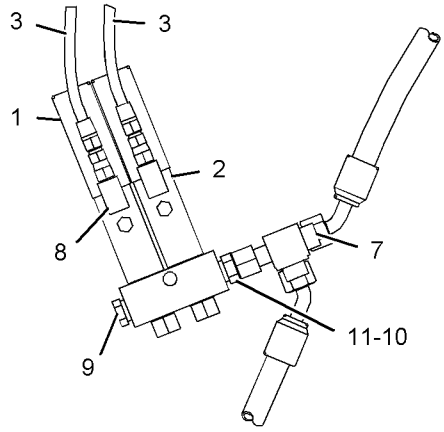


VIEW OF AREA A




LEFT SIDE VIEW

GRAPHIC #1 **<END>** g01124744

# *259-2422* VALVE & LINES GP-LUBRICATION—B-PIN, RH, LH

**S/N: BXY1-1899**
**PART OF 259-2434 LINES GP-AUTOMATIC LUBRICATION**
**AN ATTACHMENT**

**SMCS-7540** **i02457426**

| NOTE | REF NO | GRAPHIC REF | PART NUMBER | QTY | PART NAME 1 2 3 4 5 6 (PRODUCT LEVEL) | SEE PAGE |
|---|---|---|---|---|---|---|
| | 1 | 1 | **5T-5012** | 2 | CAP-PROTECTION | |
| Y | 2 | 1 | **141-2107** | 1 | VALVE GP-LUBE DISTRIBUTION (2-INJECTOR) | 951 |
| | 3 | 1 | *189-7543* | 2 | HOSE AS | |
| | | | | | (EACH INCLUDES) | |
| | | 1 | **171-8964** | 2 | COUPLING | |
| E | | 1 | **171-9629** | | HOSE (53-CM) | |
| | 4 | 1 | *259-2418* | 1 | HOSE AS | |
| | | 1 | **171-8964** | 2 | COUPLING | |
| E | | 1 | **171-9629** | | HOSE (225-CM) | |
| | 5 | 1 | *259-2419* | 1 | HOSE AS | |
| | | 1 | **171-8964** | 2 | COUPLING | |
| E | | 1 | **171-9629** | | HOSE (223-CM) | |
| | 6 | 1 | *259-2458* | 2 | HOSE AS | |
| | | | | | (EACH INCLUDES) | |
| | | 1 | **171-8964** | 2 | COUPLING | |
| E | | 1 | **171-9629** | | HOSE (20-CM) | |
| | 7 | 1 | *148-8433* | 1 | TEE AS | |
| | | 1 | **6V-8397** | 2 | SEAL-O-RING | |
| | | 1 | **6V-9836** | 1 | TEE-SWIVEL | |
| | 8 | 1 | **3B-6552** | 2 | ELBOW | |
| | 9 | 1 | **3J-5390** | 1 | PLUG | |
| | 10 | 1 | **6V-8397** | 1 | SEAL-O-RING | |
| | 11 | 1 | **8C-6869** | 1 | CONNECTOR | |

E-ORDER BY THE CENTIMETER
Y-SEPARATE ILLUSTRATION

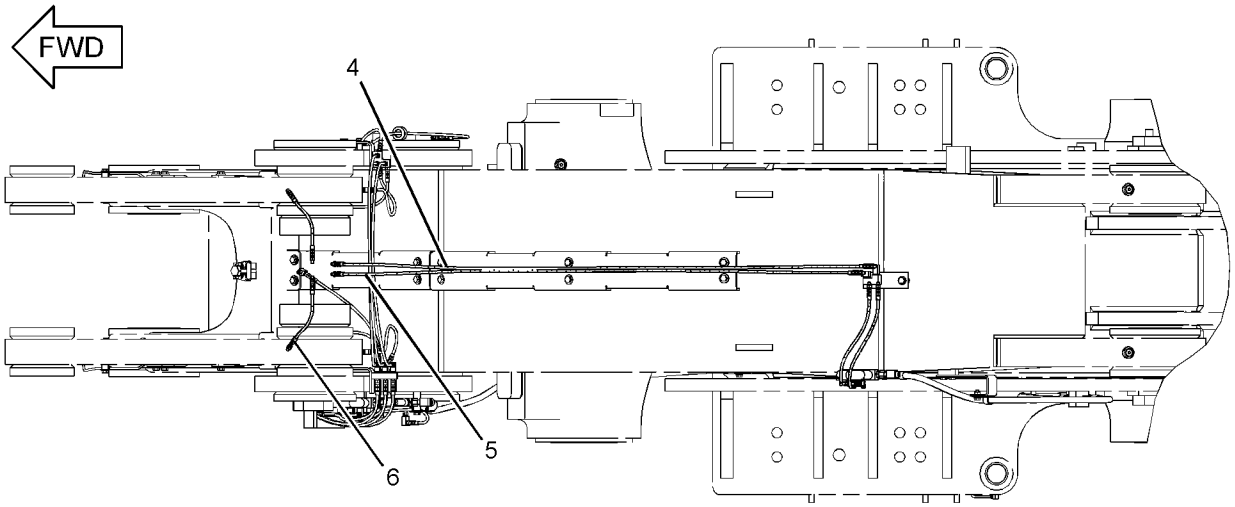


TOP VIEW

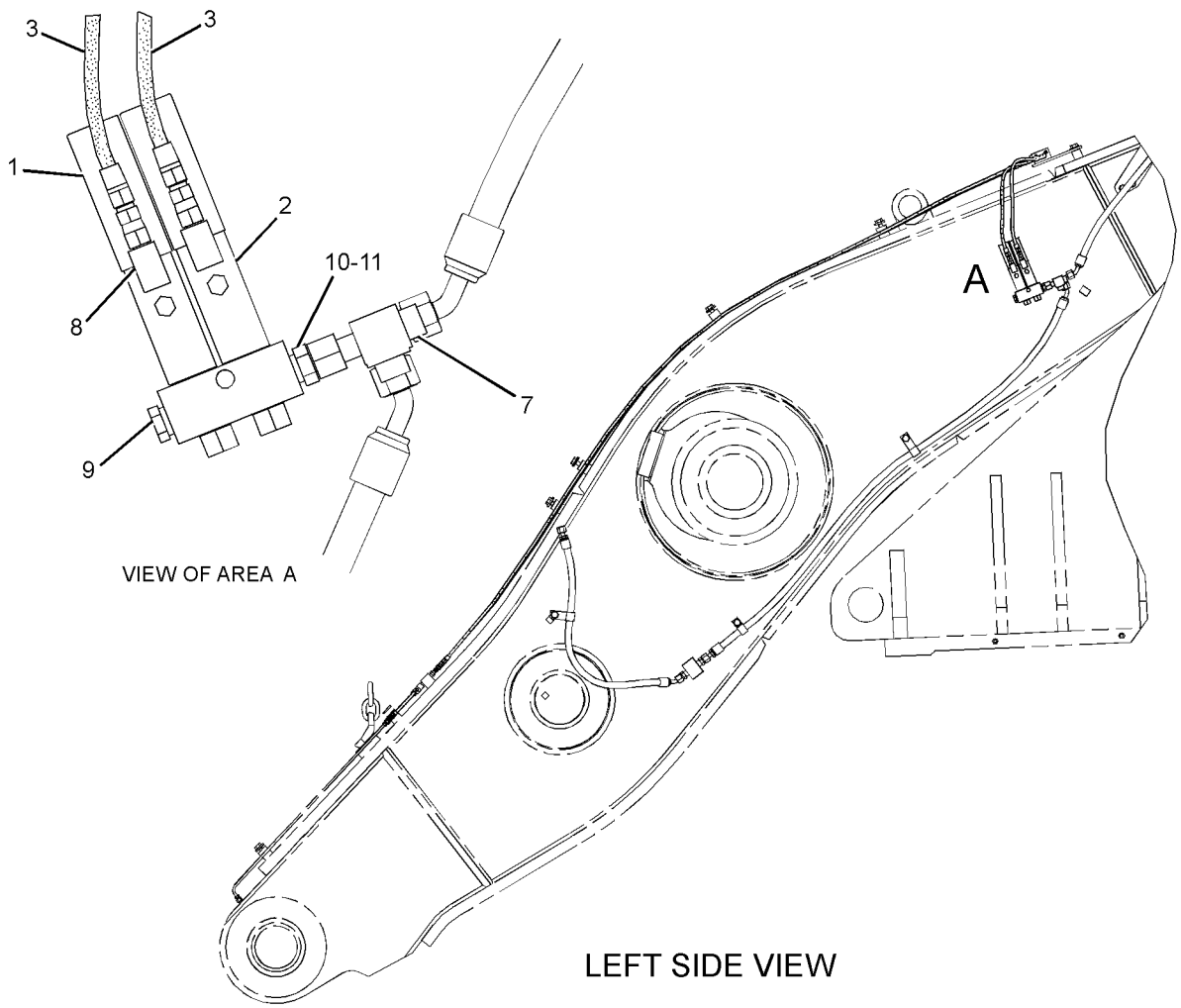


VIEW OF AREA A

LEFT SIDE VIEW

GRAPHIC #1 **<END>** g01230036

# *259-2431* VALVE & LINES GP-LUBRICATION–
## RH C-PIN, LINK PINS, RH TILT PIN
**S/N: BXY1-1200**
**PART OF 259-2434 LINES GP-AUTOMATIC LUBRICATION**
**AN ATTACHMENT**

**SMCS-7540** **i02387653**

| NOTE | REF NO | GRAPHIC REF | PART NUMBER | QTY | PART NAME 1 2 3 4 5 6 (PRODUCT LEVEL) | SEE PAGE |
|---|---|---|---|---|---|---|
| | 1 | 1 | **5T-5012** | 4 | CAP-PROTECTION | |
| Y | 2 | 1 | **8W-2597** | 1 | VALVE GP-LUBE DISTRIBUTION (4-INJECTOR) | 950 |
| | 3 | 1 | **070-0618** | 1 | HOSE AS | |
| | 4 | 1 | **183-5512** | 1 | HOSE AS | |
| | 5 | 1 | **189-7031** | 2 | HOSE AS | |
| | 6 | 1 | **259-2421** | 3 | HOSE AS | |
| | 7 | 1 | **189-7541** | 1 | HOSE AS | |
| | 8 | 1 | **189-7546** | 1 | HOSE AS | |
| | 9 | 1 | **189-7554** | 1 | HOSE AS | |
| | 10 | 1 | *148-8367* | 1 | ELBOW AS | |
| | | 1 | **6V-8397** | 1 | SEAL-O-RING | |
| | | 1 | **6V-9850** | 1 | ELBOW | |
| | 11 | 1 | *148-8433* | 1 | TEE AS | |
| | | 1 | **6V-8397** | 2 | SEAL-O-RING | |
| | | 1 | **6V-9836** | 1 | TEE-SWIVEL | |
| | 12 | 1 | **3J-5390** | 1 | PLUG | |
| | 13 | 1 | **4K-3026** | 1 | EXTENSION | |
| | 14 | 1 | **4M-8973** | 5 | ELBOW | |
| | 15 | 1 | **6V-8397** | 1 | SEAL-O-RING | |
| | 16 | 1 | **8C-6869** | 1 | CONNECTOR | |
| | 17 | 1 | **8L-5008** | 1 | ELBOW-PIPE | |

Y-SEPARATE ILLUSTRATION

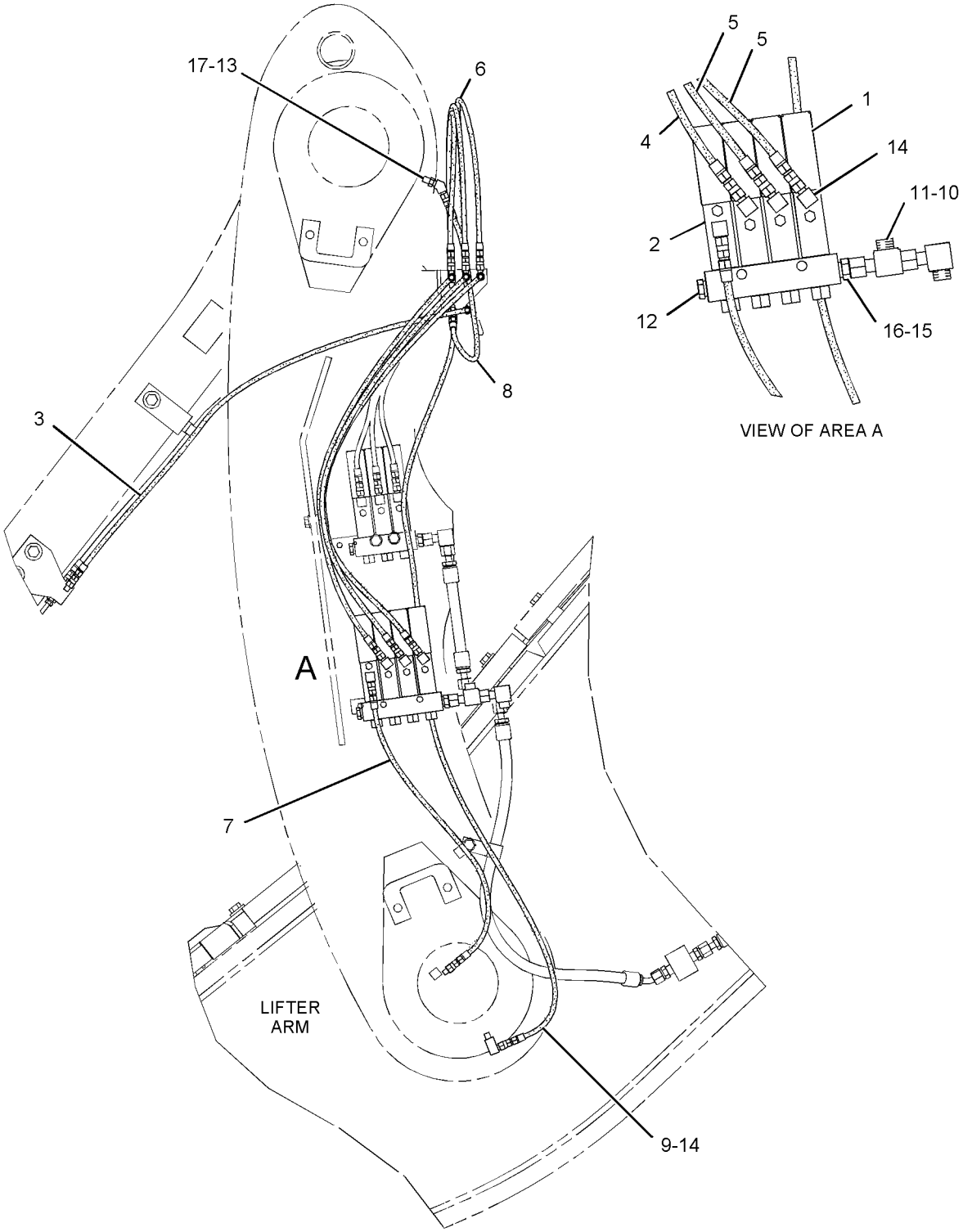


LEFT SIDE VIEW

GRAPHIC #1 **<END>** g01128224

# *259-2431* VALVE & LINES GP-LUBRICATION–
## RH C-PIN, LINK PINS, RH TILT PIN
### S/N: BXY1201-1899
### PART OF 259-2434 LINES GP-AUTOMATIC LUBRICATION
### AN ATTACHMENT

**SMCS-7540** **i02646236**

| NOTE | REF NO | GRAPHIC REF | PART NUMBER | QTY | PART NAME 1 2 3 4 5 6 (PRODUCT LEVEL) | SEE PAGE |
|---|---|---|---|---|---|---|
| | 1 | 1 | **5T-5012** | 4 | CAP-PROTECTION | |
| Y | 2 | 1 | **8W-2597** | 1 | VALVE GP-LUBE DISTRIBUTION (4-INJECTOR) | 950 |
| | 3 | 1 | **183-5512** | 1 | HOSE AS | |
| | 4 | 1 | **189-7031** | 2 | HOSE AS | |
| C | 5 | 1 | **189-7531** | 1 | HOSE AS | |
| | 6 | 1 | **189-7541** | 1 | HOSE AS | |
| C | 7 | 1 | **189-7548** | 1 | HOSE AS | |
| | 8 | 1 | **189-7554** | 1 | HOSE AS | |
| | 9 | 1 | **259-2421** | 3 | HOSE AS | |
| | 10 | 1 | *148-8367* | 1 | ELBOW AS | |
| | | 1 | **6V-8397** | 1 | SEAL-O-RING | |
| | | 1 | **6V-9850** | 1 | ELBOW | |
| | 11 | 1 | *148-8433* | 1 | TEE AS | |
| | | 1 | **6V-8397** | 2 | SEAL-O-RING | |
| | | 1 | **6V-9836** | 1 | TEE-SWIVEL | |
| | 12 | 1 | **3J-5390** | 1 | PLUG | |
| | 13 | 1 | **4K-3026** | 1 | EXTENSION | |
| C | 14 | 1 | **4M-8973** | 4 | ELBOW | |
| | 15 | 1 | **6V-8397** | 1 | SEAL-O-RING | |
| | 16 | 1 | **8C-6869** | 1 | CONNECTOR | |
| | 17 | 1 | **8L-5008** | 1 | ELBOW-PIPE | |

C-CHANGE FROM PREVIOUS TYPE
Y-SEPARATE ILLUSTRATION

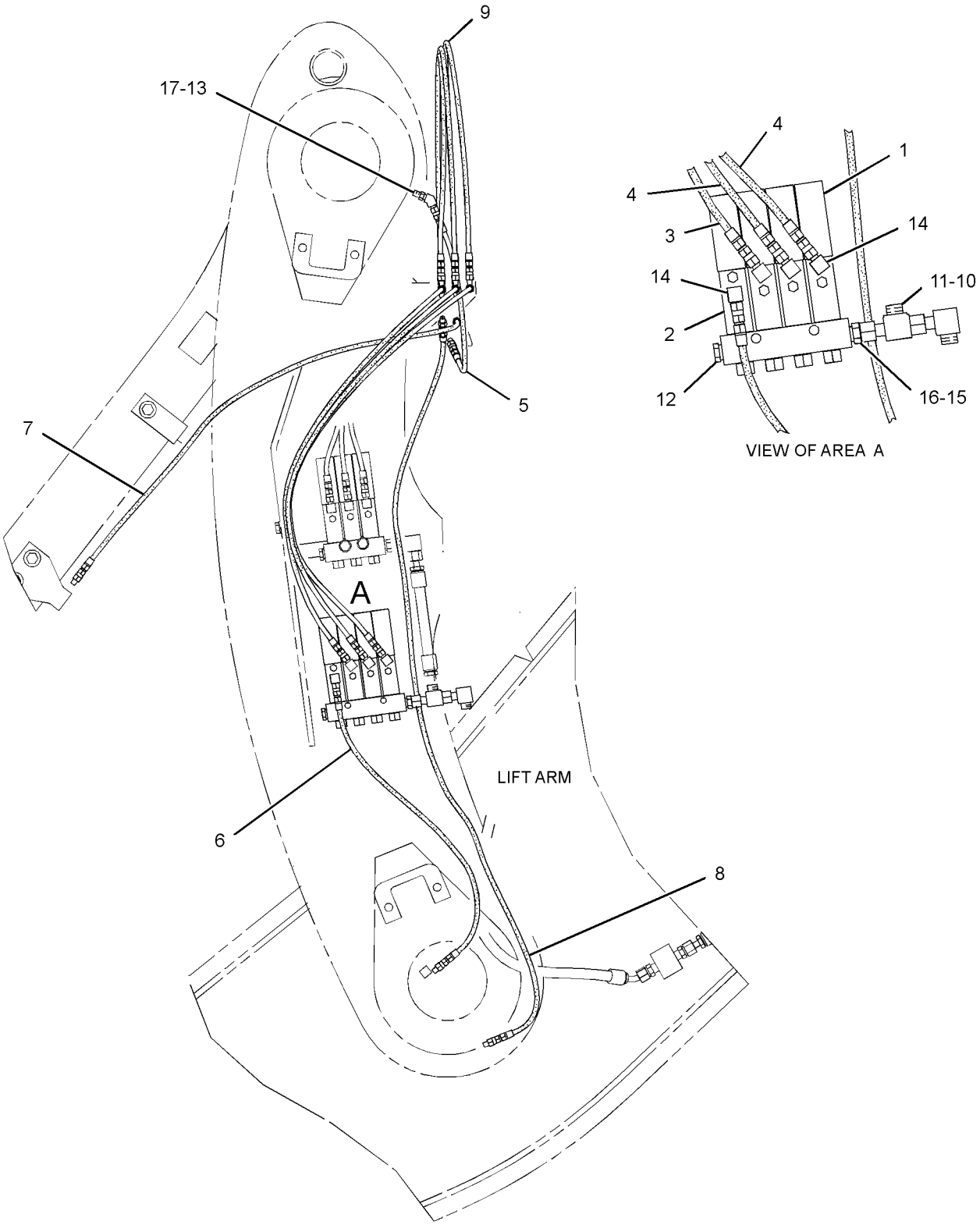


LEFT SIDE VIEW

GRAPHIC #1

**<END>**

g01330570

# *259-2432* VALVE & LINES GP-LUBRICATION–
## LH C-PIN, LH TILT LINK PIN
**S/N: BXY1-1200**
**PART OF 259-2434 LINES GP-AUTOMATIC LUBRICATION**
**AN ATTACHMENT**

**SMCS-7540** **i02329784**

| NOTE | REF NO | GRAPHIC REF | PART NUMBER | QTY | PART NAME 1 2 3 4 5 6 (PRODUCT LEVEL) | SEE PAGE |
|---|---|---|---|---|---|---|
| Y | 1 | 2 | **5T-5009** | 1 | VALVE GP-LUBE DISTRIBUTION (3-INJECTOR) | 949 |
| | 2 | 2 | **5T-5012** | 3 | CAP-PROTECTION | |
| | 3 | 1 | **070-0618** | 1 | HOSE AS | |
| | 4 | 2 | **189-7531** | 2 | HOSE AS | |
| | 5 | 2 | **189-7546** | 2 | HOSE AS | |
| | 6 | 2 | **227-3253** | 1 | HOSE AS | |
| | 7 | 2 | *148-8367* | 1 | ELBOW AS | |
| | | 2 | **6V-8397** | 1 | SEAL-O-RING | |
| | | 2 | **6V-9850** | 1 | ELBOW | |
| | 8 | 2 | **3J-5390** | 1 | PLUG | |
| | 9 | 2 | **4K-3026** | 1 | EXTENSION | |
| | 10 | 1,2 | **4M-8973** | 4 | ELBOW | |
| | 11 | 2 | **6V-8397** | 1 | SEAL-O-RING | |
| | 12 | 2 | **8C-6869** | 1 | CONNECTOR | |
| | 13 | 2 | **8L-5008** | 1 | ELBOW-PIPE | |
| | 14 | 1 | **189-7543** | 1 | HOSE AS | |

Y-SEPARATE ILLUSTRATION

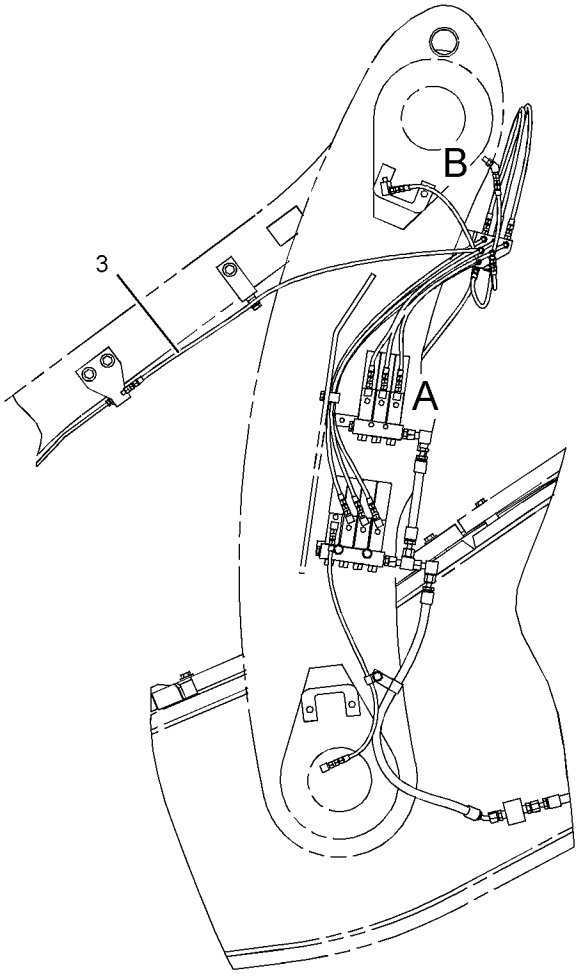


LEFT SIDE VIEW

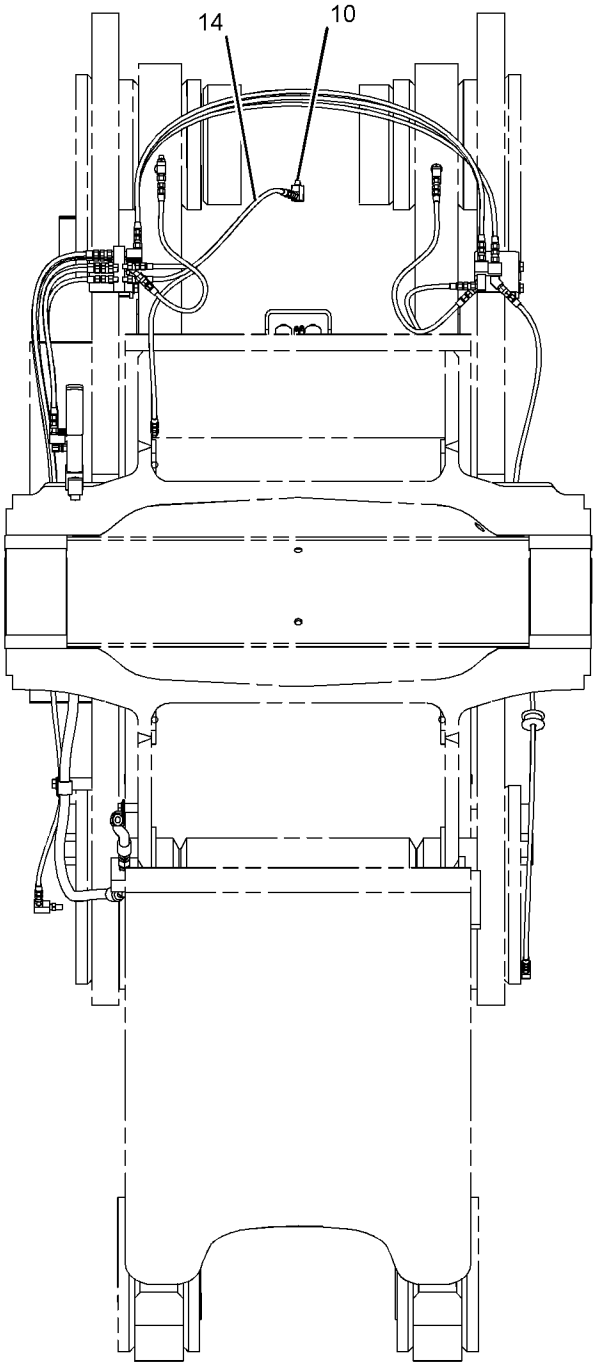


REAR VIEW

GRAPHIC #1

g01164531

*259-2432* **VALVE & LINES GP-LUBRICATION** *(contd.)* **i02329784**

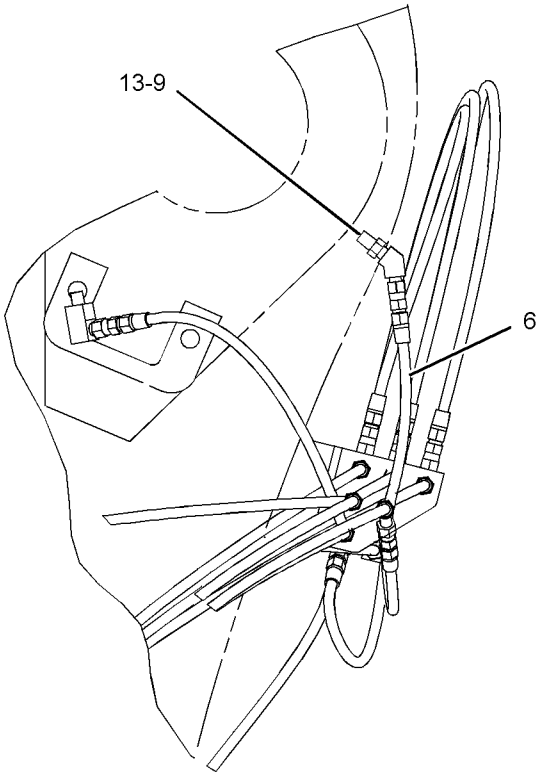


VIEW OF AREA B

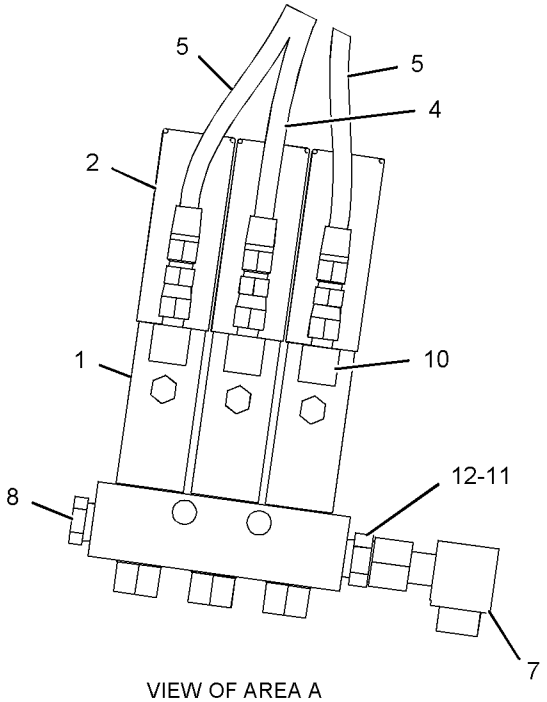


VIEW OF AREA A

GRAPHIC #2 **<END>** g01124651

# *259-2432* VALVE & LINES GP-LUBRICATION–
## LH C-PIN, LH TILT LINK PIN
**S/N: BXY1201-1899**
**PART OF 259-2434 LINES GP-AUTOMATIC LUBRICATION**
**AN ATTACHMENT**

**SMCS-7540** **i02668329**

| NOTE | REF NO | GRAPHIC REF | PART NUMBER | QTY | PART NAME 1 2 3 4 5 6 (PRODUCT LEVEL) | SEE PAGE |
|---|---|---|---|---|---|---|
| Y | 1 | 1 | **5T-5009** | 1 | VALVE GP-LUBE DISTRIBUTION (3-INJECTOR) | 949 |
| | 2 | 1 | **5T-5012** | 3 | CAP-PROTECTION | |
| C | 3 | 1,2 | **189-7531** | 2 | HOSE AS | |
| | 4 | 2 | **189-7543** | 1 | HOSE AS | |
| | 5 | 1 | **189-7546** | 2 | HOSE AS | |
| C | 6 | 1 | **189-7548** | 1 | HOSE AS | |
| | 7 | 1 | *148-8367* | 1 | ELBOW AS | |
| | | 1 | **6V-8397** | 1 | SEAL-O-RING | |
| | | 1 | **6V-9850** | 1 | ELBOW | |
| | 8 | 1 | **3J-5390** | 1 | PLUG | |
| | 9 | 2 | **4K-3026** | 1 | EXTENSION | |
| | 10 | 1,2 | **4M-8973** | 4 | ELBOW | |
| | 11 | 1 | **6V-8397** | 1 | SEAL-O-RING | |
| | 12 | 1 | **8C-6869** | 1 | CONNECTOR | |
| | 13 | 2 | **8L-5008** | 1 | ELBOW-PIPE | |

C-CHANGE FROM PREVIOUS TYPE
Y-SEPARATE ILLUSTRATION

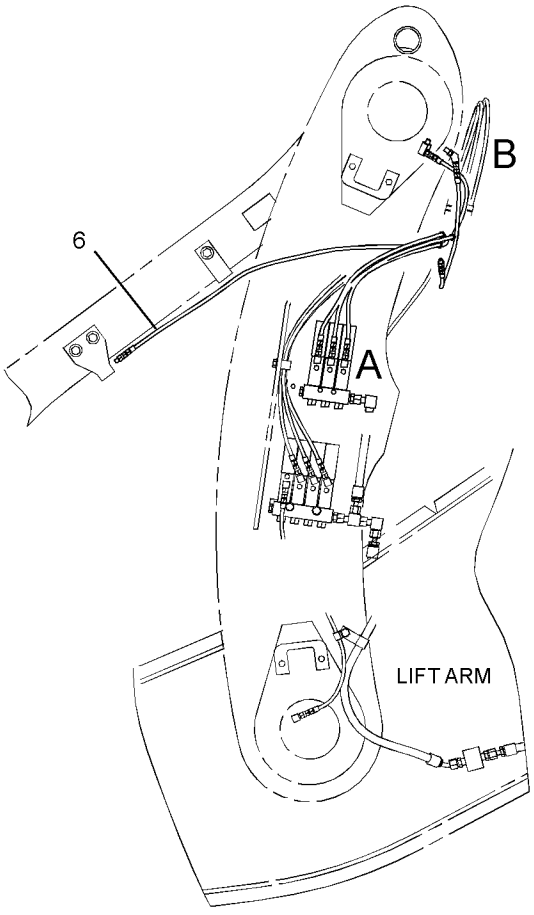


LEFT SIDE VIEW

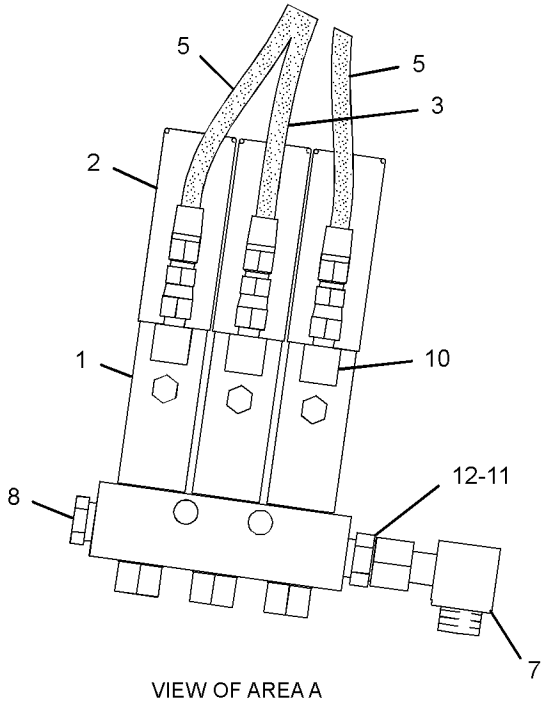


VIEW OF AREA A

REFER TO ALL ILLUSTRATIONS OF THIS GROUP FOR AUXILIARY VIEWS

GRAPHIC #1

g01330947

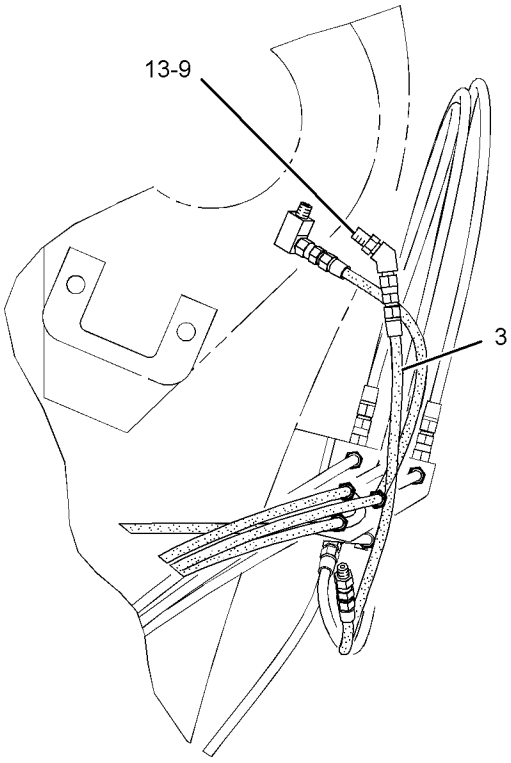


VIEW OF AREA B

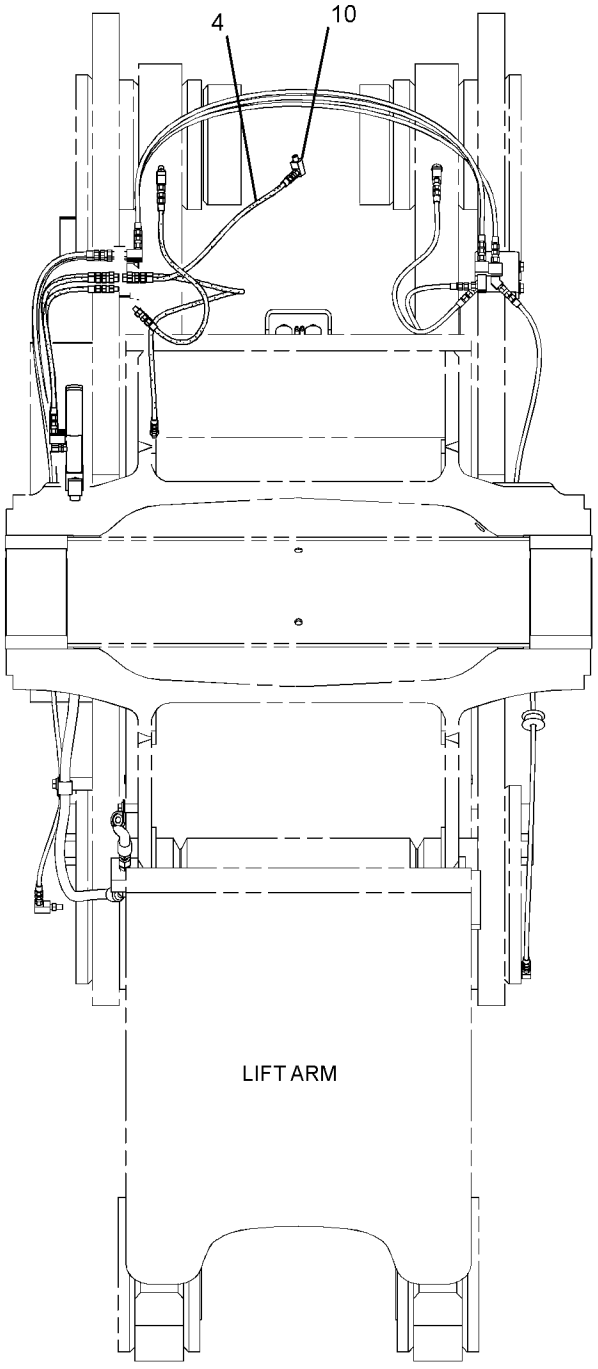


LIFT ARM

REAR VIEW

GRAPHIC #2 **<END>** g01330949

# *259-2445* VALVE & LINES GP-LUBRICATION–
## LH C-PIN, LH TILT LINK PIN
**S/N: BXY1-1899**
**PART OF 259-2444 LINES GP-AUTOMATIC LUBRICATION**
**AN ATTACHMENT**

**SMCS-7540** **i02636509**

| NOTE | REF NO | GRAPHIC REF | PART NUMBER | QTY | PART NAME 1 2 3 4 5 6 (PRODUCT LEVEL) | SEE PAGE |
|---|---|---|---|---|---|---|
| Y | 1 | 1 | **5T-5009** | 1 | VALVE GP-LUBE DISTRIBUTION (3-INJECTOR) | 949 |
| | 2 | 1 | **5T-5012** | 3 | CAP-PROTECTION | |
| | 3 | 1 | **183-5512** | 1 | HOSE AS | |
| | 4 | 1 | **183-5825** | 1 | HOSE AS | |
| | 5 | 1 | **189-7543** | 1 | HOSE AS | |
| | 6 | 1 | **189-7546** | 1 | HOSE AS | |
| | 7 | 1 | **189-7981** | 2 | HOSE AS | |
| | 8 | 1 | **148-8367** | 1 | ELBOW AS | |
| | | 1 | **6V-8397** | 1 | SEAL-O-RING | |
| | | 1 | **6V-9850** | 1 | ELBOW | |
| | 9 | 1 | **3J-5390** | 1 | PLUG | |
| | 10 | 1 | **4M-8973** | 3 | ELBOW | |
| | 11 | 1 | **6V-8397** | 1 | SEAL-O-RING | |
| | 12 | 1 | **8C-6869** | 1 | CONNECTOR | |

Y-SEPARATE ILLUSTRATION

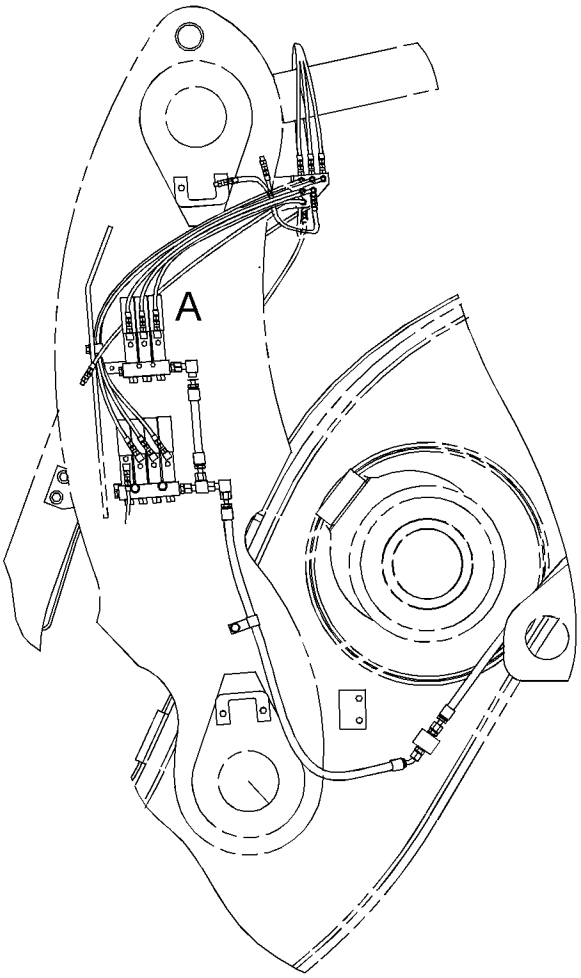


LEFT SIDE VIEW

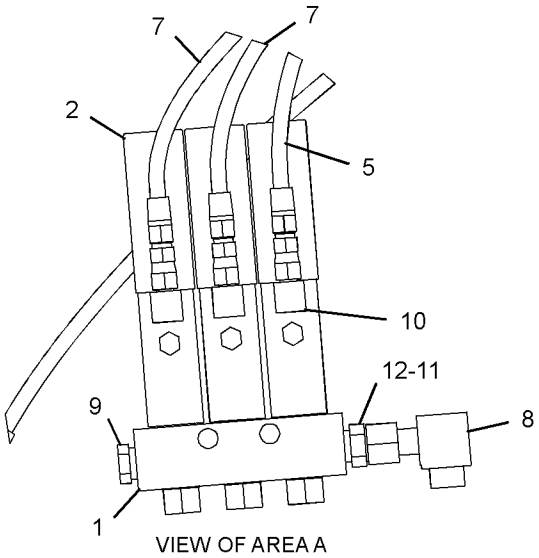


VIEW OF AREA A

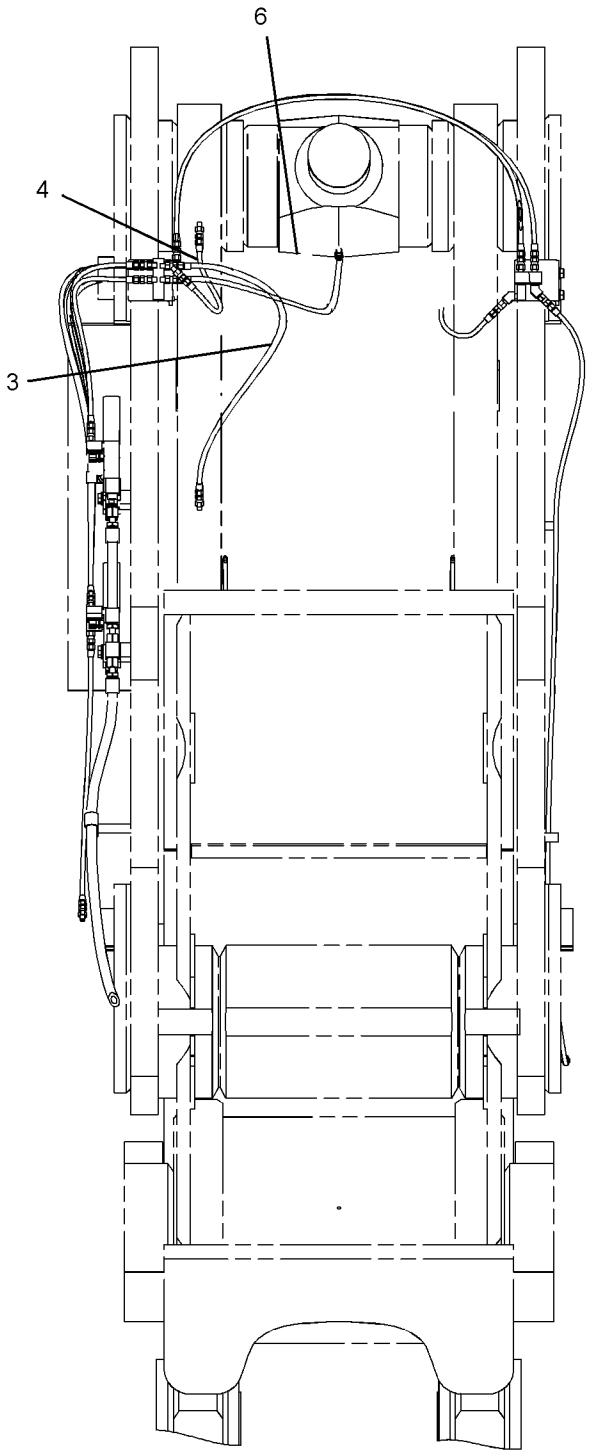


REAR VIEW

GRAPHIC #1 **<END>** g01329534

# *259-2446* VALVE & LINES GP-LUBRICATION–
## RH C-PIN, LINK PINS, RH TILT PIN
### S/N: BXY1-1899
### PART OF 259-2444 LINES GP-AUTOMATIC LUBRICATION
### AN ATTACHMENT

**SMCS-7540** **i02637573**

| NOTE | REF NO | GRAPHIC REF | PART NUMBER | QTY | PART NAME 1 2 3 4 5 6 (PRODUCT LEVEL) | SEE PAGE |
|---|---|---|---|---|---|---|
| | 1 | 1 | **5T-5012** | 4 | CAP-PROTECTION | |
| Y | 2 | 1 | **8W-2597** | 1 | VALVE GP-LUBE DISTRIBUTION (4-INJECTOR) | 950 |
| | 3 | 1 | **183-5512** | 1 | HOSE AS | |
| | 4 | 1 | **183-5825** | 1 | HOSE AS | |
| | 5 | 1 | **189-7540** | 5 | HOSE AS | |
| | 6 | 1 | **189-7547** | 1 | HOSE AS | |
| | 7 | 1 | **189-7548** | 1 | HOSE AS | |
| | 8 | 1 | **189-7553** | 1 | HOSE AS | |
| | 9 | 1 | *148-8367* | 1 | ELBOW AS | |
| | | 1 | **6V-8397** | 1 | SEAL-O-RING | |
| | | 1 | **6V-9850** | 1 | ELBOW | |
| | 10 | 1 | *148-8433* | 1 | TEE AS | |
| | | 1 | **6V-8397** | 2 | SEAL-O-RING | |
| | | 1 | **6V-9836** | 1 | TEE-SWIVEL | |
| | 11 | 1 | **3J-5390** | 1 | PLUG | |
| | 12 | 1 | **4M-8973** | 4 | ELBOW | |
| | 13 | 1 | **6V-8397** | 1 | SEAL-O-RING | |
| | 14 | 1 | **8C-6869** | 1 | CONNECTOR | |

Y-SEPARATE ILLUSTRATION

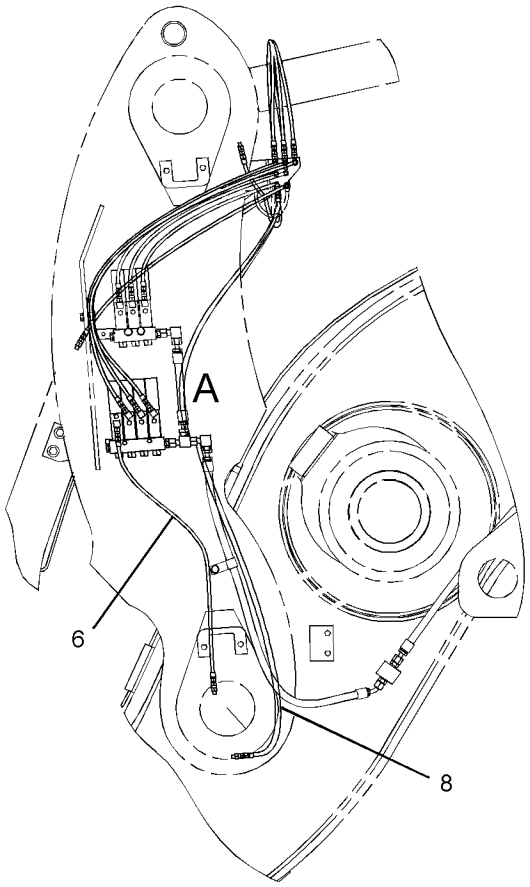


REAR VIEW

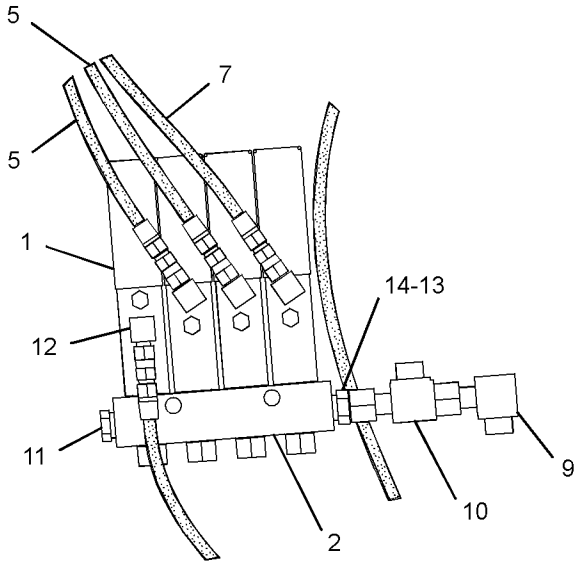


VIEW OF AREA A

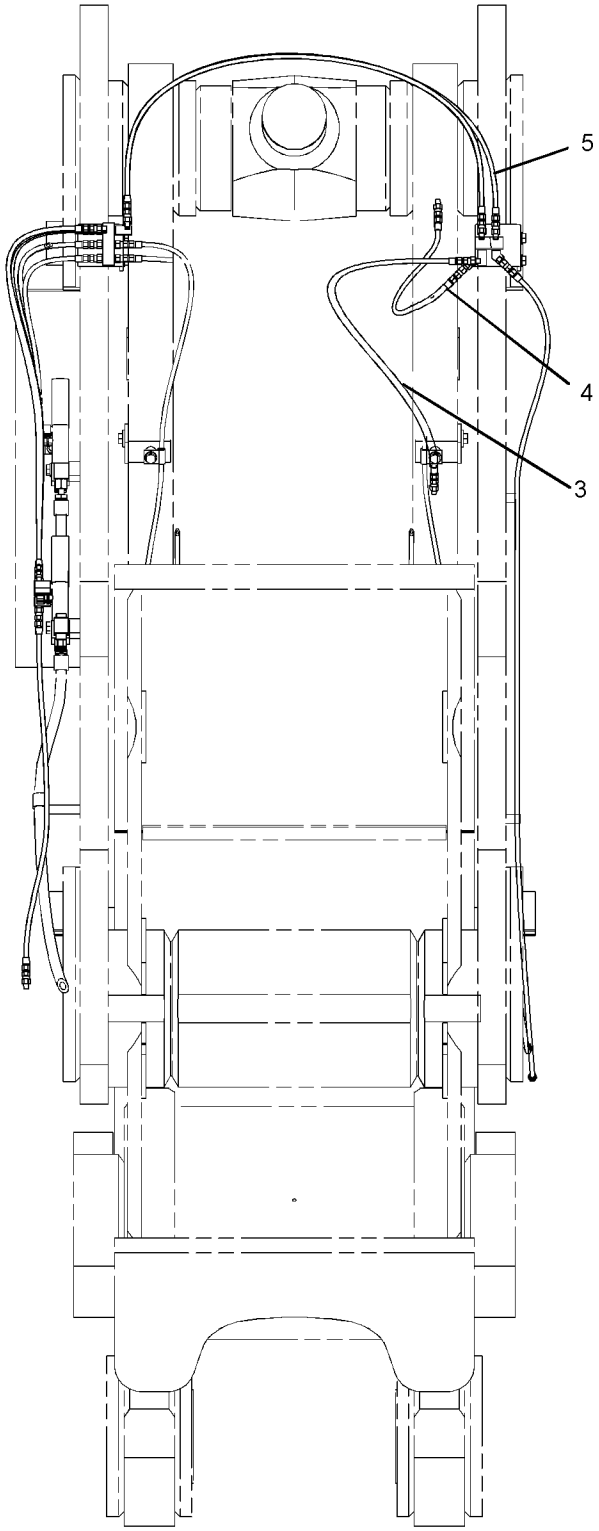


LEFT SIDE VIEW

GRAPHIC #1 **<END>** g01329846

# *259-2447* VALVE & LINES GP-LUBRICATION–
## STEERING CYLINDERS, TRUNNIONS
**S/N: BXY1-1899**
**PART OF 259-2441 LINES GP-AUTOMATIC LUBRICATION**
**AN ATTACHMENT**

**SMCS-7540** **i02458469**

| NOTE | REF NO | GRAPHIC REF | PART NUMBER | QTY | PART NAME 1 2 3 4 5 6 (PRODUCT LEVEL) | SEE PAGE |
|---|---|---|---|---|---|---|
| | 1 | 1 | **5T-5012** | 4 | CAP-PROTECTION | |
| | 2 | 1 | **8L-6005** | 1 | TEE-PIPE | |
| Y | 3 | 1 | **8W-2597** | 1 | VALVE GP-LUBE DISTRIBUTION (4-INJECTOR) | 950 |
| | 4 | 1 | **183-5825** | 1 | HOSE AS | |
| | 5 | 1 | **189-7531** | 1 | HOSE AS | |
| | 6 | 1 | **189-7543** | 1 | HOSE AS | |
| | 7 | 1 | **189-7546** | 1 | HOSE AS | |
| | 8 | 1 | **189-7552** | 1 | HOSE AS | |
| | 9 | 1 | **189-7554** | 1 | HOSE AS | |
| | 10 | 1 | **2T-2396** | 1 | ELBOW | |
| | 11 | 1 | **3B-7263** | 2 | NIPPLE-PIPE | |
| | 12 | 1 | **3B-8822** | 2 | ELBOW | |
| | 13 | 1 | **3J-5390** | 1 | PLUG | |
| | 14 | 1 | **4M-8973** | 4 | ELBOW | |
| | 15 | 1 | **6V-8397** | 1 | SEAL-O-RING | |
| | 16 | 1 | **6V-8398** | 1 | SEAL-O-RING | |
| | 17 | 1 | **8B-4884** | 2 | ELBOW | |
| | 18 | 1 | **8C-6869** | 1 | CONNECTOR | |

Y-SEPARATE ILLUSTRATION

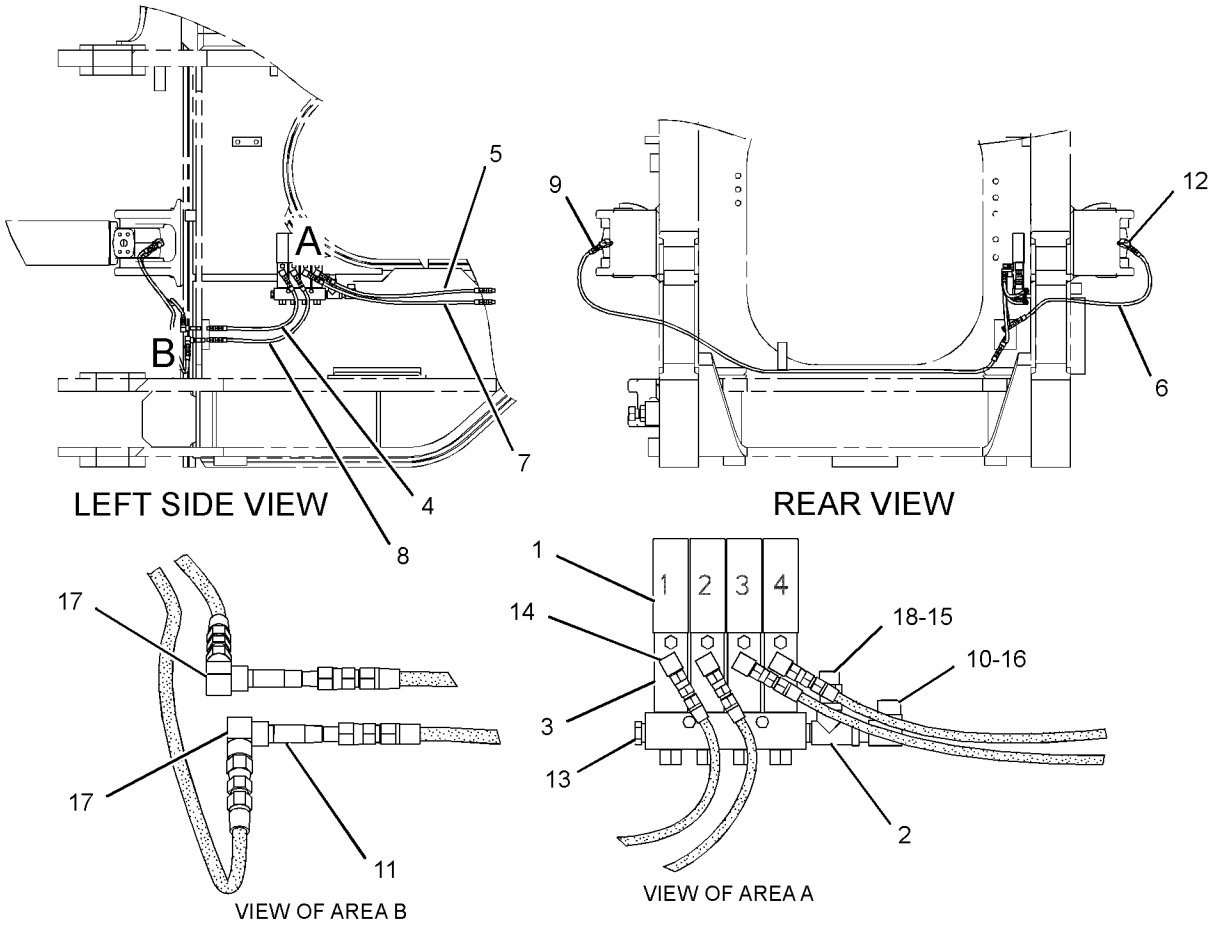


GRAPHIC #1 **<END>** g01227712

# *259-2448* VALVE & LINES GP-LUBRICATION–E, F, K-PINS

**S/N: BXY1-UP**

**PART OF 259-2449, 285-7279 LINES GP-AUTOMATIC LUBRICATION**

**AN ATTACHMENT**

**SMCS-7540** **i02640062**

| NOTE | REF NO | GRAPHIC REF | PART NUMBER | QTY | PART NAME 1 2 3 4 5 6 (PRODUCT LEVEL) | SEE PAGE |
|---|---|---|---|---|---|---|
| | 1 | 1 | **070-0618** | 1 | HOSE AS | |
| | 2 | 1 | **183-5509** | 1 | HOSE AS | |
| | 3 | 1 | **183-5512** | 2 | HOSE AS | |
| | 4 | 1 | **183-5825** | 2 | HOSE AS | |
| | 5 | 1 | **189-7031** | 1 | HOSE AS | |
| | 6 | 1 | **189-7540** | 3 | HOSE AS | |
| | 7 | 1 | **189-7546** | 1 | HOSE AS | |
| | 8 | 1 | **189-7547** | 3 | HOSE AS | |
| | 9 | 1 | **189-7548** | 1 | HOSE AS | |
| | 10 | 1 | **189-7553** | 1 | HOSE AS | |
| | 11 | 1 | **219-5039** | 1 | HOSE AS | |
| Y | 12 | 1 | **224-4420** | 1 | VALVE GP-LUBE DISTRIBUTION (12-INJECTOR) | 955 |
| | 13 | 1 | **227-3255** | 1 | HOSE AS | |
| | 14 | 1 | **259-2424** | 1 | HOSE AS | |

Y-SEPARATE ILLUSTRATION

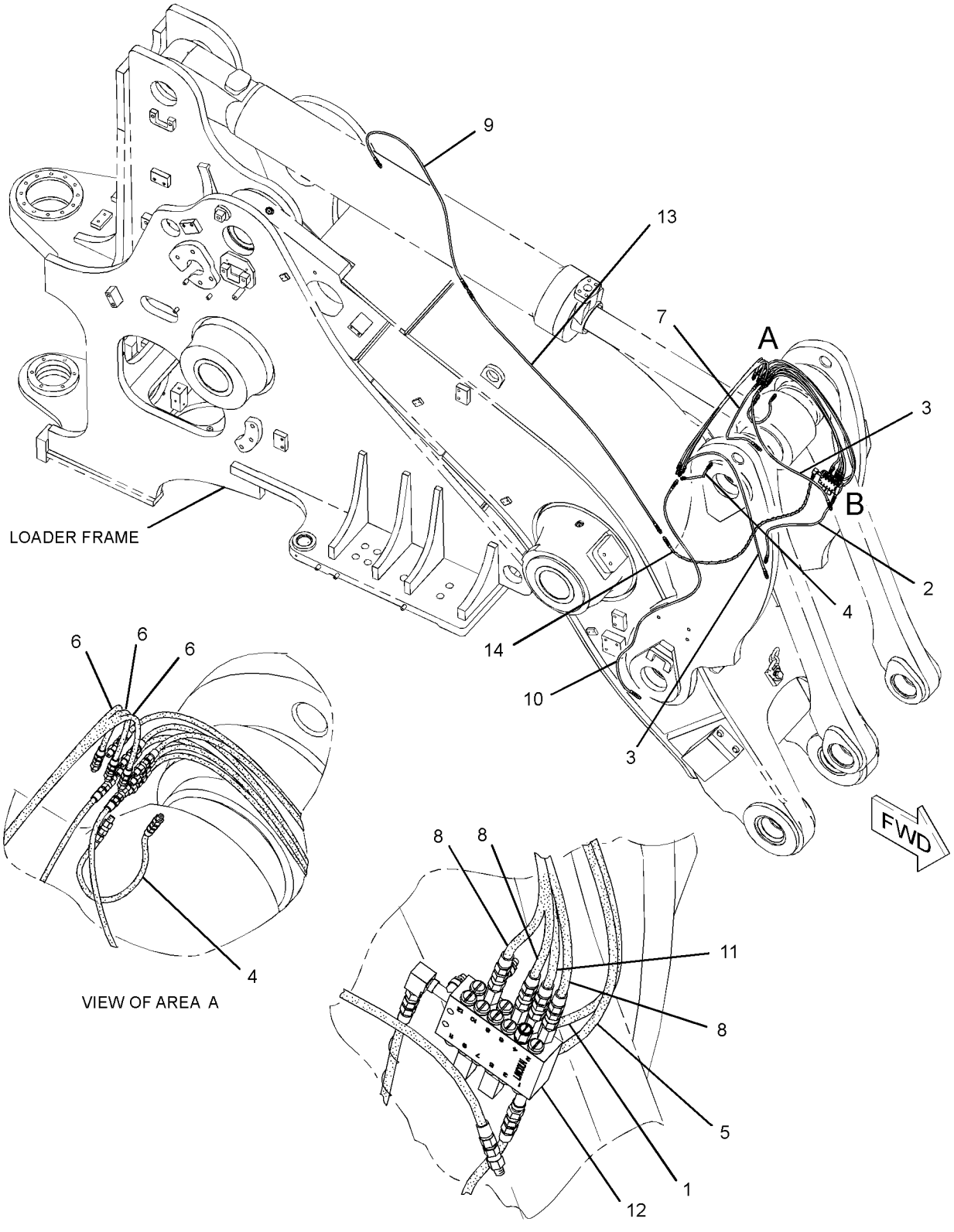


GRAPHIC #1

**<END>**

g01336524

# *259-2451* VALVE & LINES GP-LUBRICATION–
## LOWER HITCH, RH STEERING CYLINDER, TILT CYLINDER
**S/N: BXY1-1899**
**PART OF 259-2450 LINES GP-AUTOMATIC LUBRICATION**
**AN ATTACHMENT**

**SMCS-7540** **i02328220**

| NOTE | REF NO | GRAPHIC REF | PART NUMBER | QTY | PART NAME 1 2 3 4 5 6 (PRODUCT LEVEL) | SEE PAGE |
|---|---|---|---|---|---|---|
| Y | 1 | 1 | **5T-5009** | 1 | VALVE GP-LUBE DISTRIBUTION (3-INJECTOR) | 949 |
| | 2 | 1 | **5T-5012** | 3 | CAP-PROTECTION | |
| | 3 | 1 | **8L-6005** | 1 | TEE-PIPE | |
| | 4 | 1 | **070-0617** | 1 | HOSE AS | |
| | 5 | 1 | **189-7535** | 1 | HOSE AS | |
| | 6 | 1 | **189-7536** | 1 | HOSE AS | |
| | 7 | 1 | **003-2143** | 1 | ELBOW (PIPE) | |
| | 8 | 1 | *148-8367* | 1 | ELBOW AS | |
| | | 1 | **6V-8397** | 1 | SEAL-O-RING | |
| | | 1 | **6V-9850** | 1 | ELBOW | |
| | 9 | 1 | **3B-6493** | 1 | ELBOW-PIPE | |
| | 10 | 1 | **3B-7263** | 2 | NIPPLE-PIPE | |
| | 11 | 1 | **3B-7285** | 1 | NIPPLE-PIPE | |
| | 12 | 1 | **3B-7733** | 1 | FITTING | |
| | 13 | 1 | **3J-5390** | 1 | PLUG | |
| | 14 | 1 | **4M-8973** | 3 | ELBOW | |
| | 15 | 1 | **6V-8397** | 2 | SEAL-O-RING | |
| | 16 | 1 | **8B-4884** | 3 | ELBOW | |
| | 17 | 1 | **8C-6869** | 2 | CONNECTOR | |

Y-SEPARATE ILLUSTRATION

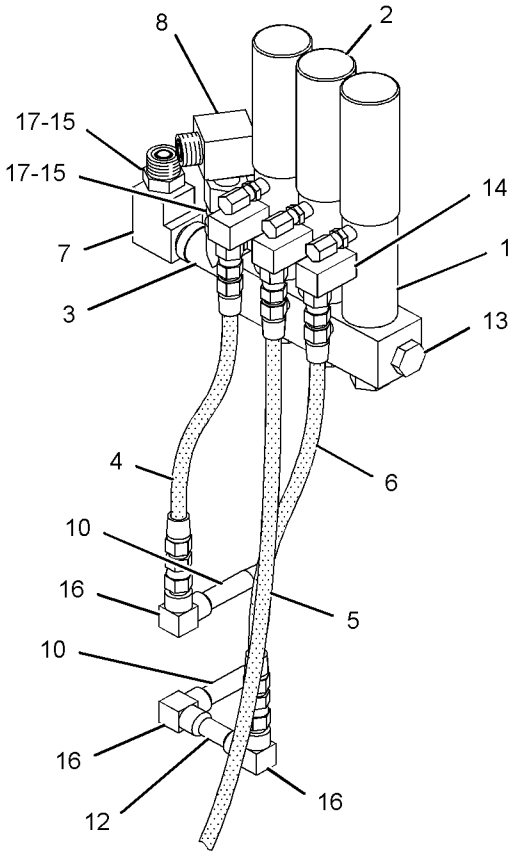


VIEW OF AREA A

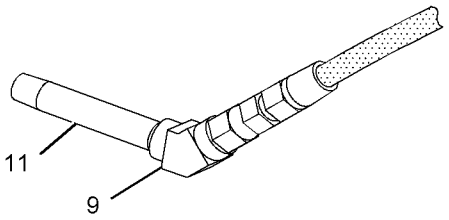


VIEW OF AREA B

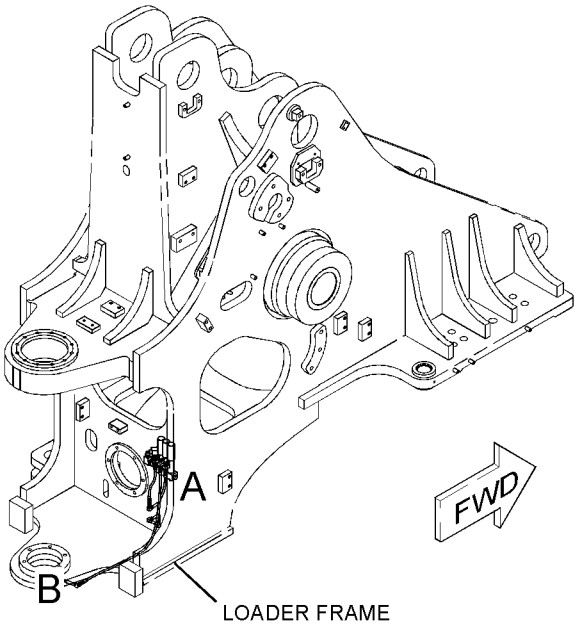


GRAPHIC #1 **<END>** g01125264

# *259-2453* VALVE & LINES GP-LUBRICATION–
## LH STEERING CYLINDER, UPPER HITCH
**S/N: BXY1-1899**
**PART OF 259-2450 LINES GP-AUTOMATIC LUBRICATION**
**AN ATTACHMENT**

**SMCS-7540** **i02225680**

| NOTE | REF NO | GRAPHIC REF | PART NUMBER | QTY | PART NAME 1 2 3 4 5 6 (PRODUCT LEVEL) | SEE PAGE |
|---|---|---|---|---|---|---|
| | 1 | 1 | **5T-5012** | 4 | CAP-PROTECTION | |
| | 2 | 1 | **8L-6005** | 1 | TEE-PIPE | |
| Y | 3 | 1 | **8W-2597** | 1 | VALVE GP-LUBE DISTRIBUTION (4-INJECTOR) | 950 |
| | 4 | 1 | **183-5825** | 1 | HOSE AS | |
| | 5 | 1 | **189-7546** | 1 | HOSE AS | |
| | 6 | 1 | *148-8433* | 1 | TEE AS | |
| | | 1 | **6V-8397** | 2 | SEAL-O-RING | |
| | | 1 | **6V-9836** | 1 | TEE-SWIVEL | |
| | 7 | 1 | **3B-6487** | 1 | COUPLING (PIPE) | |
| | 8 | 1 | **3B-6493** | 1 | ELBOW-PIPE | |
| | 9 | 1 | **3J-5390** | 1 | PLUG | |
| | 10 | 1 | **4M-8973** | 1 | ELBOW | |
| | 11 | 1 | **5M-6214** | 2 | PLUG-PIPE (1/8-27 NPTF-THD) | |
| | 12 | 1 | **6V-8397** | 2 | SEAL-O-RING | |
| | 13 | 1 | **8C-6869** | 2 | CONNECTOR | |
| | 14 | 1 | **8L-5008** | 1 | ELBOW-PIPE | |

Y-SEPARATE ILLUSTRATION

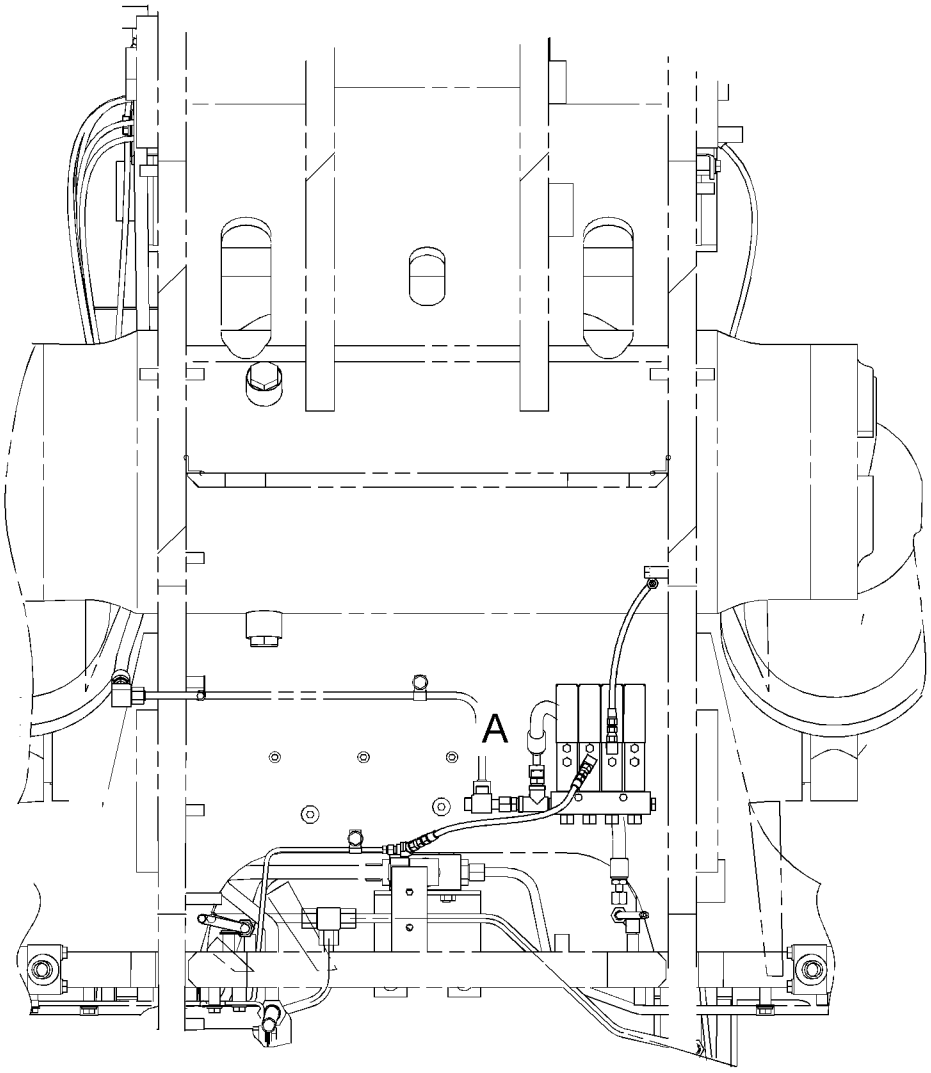


REAR VIEW

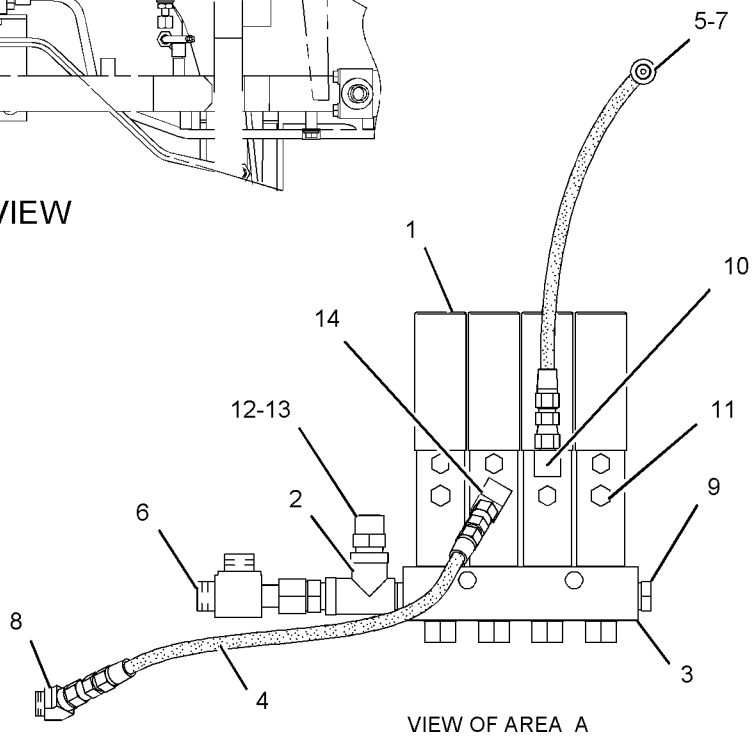


VIEW OF AREA A

GRAPHIC #1 **<END>** g01125050

# *272-5091* VALVE & LINES GP-LUBRICATION–

**STEERING CYLINDERS, TRUNNIONS**

**S/N: BXY1900-UP**

**PART OF 272-5090 LINES GP-AUTOMATIC LUBRICATION**

**AN ATTACHMENT**

**SMCS-7540** **i02675854**

| NOTE | REF NO | GRAPHIC REF | PART NUMBER | QTY | PART NAME 1 2 3 4 5 6 (PRODUCT LEVEL) | SEE PAGE |
|---|---|---|---|---|---|---|
| | 1 | 1 | **8L-6005** | 1 | TEE-PIPE | |
| | 2 | 1 | **183-5825** | 1 | HOSE AS | |
| | 3 | 1 | **189-7531** | 1 | HOSE AS | |
| | 4 | 1 | **189-7543** | 1 | HOSE AS | |
| | 5 | 1 | **189-7546** | 1 | HOSE AS | |
| | 6 | 1 | **189-7552** | 1 | HOSE AS | |
| | 7 | 1 | **189-7554** | 1 | HOSE AS | |
| | 8 | 1 | **269-5352** | 1 | INJECTOR AS | |
| | 9 | 1 | **2T-2396** | 1 | ELBOW | |
| | 10 | 1 | **3B-7263** | 2 | NIPPLE-PIPE | |
| | 11 | 1 | **3B-8822** | 2 | ELBOW | |
| | 12 | 1 | **3J-5390** | 1 | PLUG | |
| | 13 | 1 | **4M-8973** | 4 | ELBOW | |
| | 14 | 1 | **6V-8397** | 1 | SEAL-O-RING | |
| | 15 | 1 | **6V-8398** | 1 | SEAL-O-RING | |
| | 16 | 1 | **8B-4884** | 2 | ELBOW | |
| | 17 | 1 | **8C-6869** | 1 | CONNECTOR | |

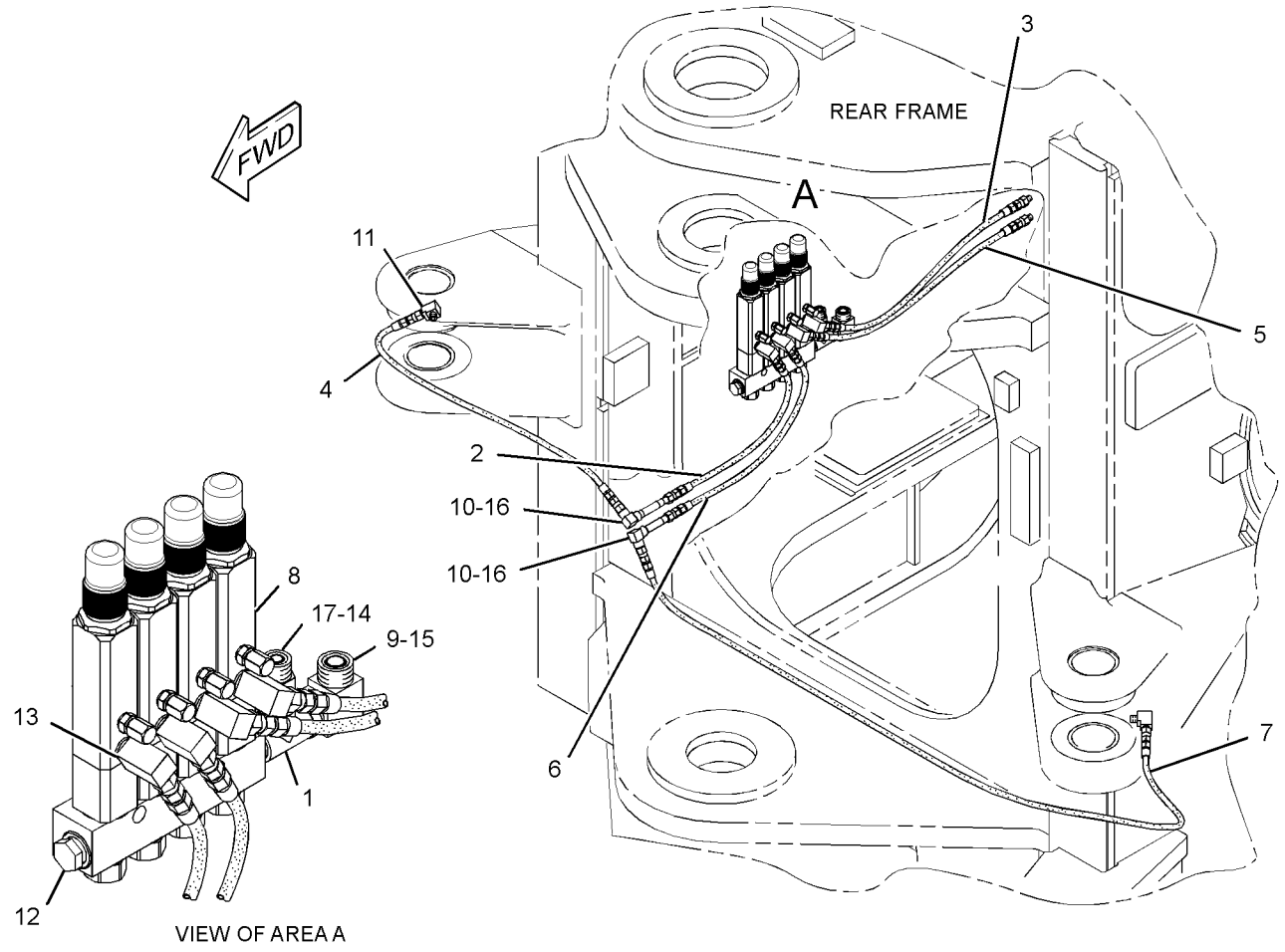


GRAPHIC #1 **<END>** g01350319

# *272-5093* VALVE & LINES GP-LUBRICATION–
## LOWER HITCH, RH STEERING CYLINDER, TILT CYLINDER
**S/N: BXY1900-UP**
**PART OF 272-5092 LINES GP-AUTOMATIC LUBRICATION**
**AN ATTACHMENT**

**SMCS-7540** **i02675738**

| NOTE | REF NO | GRAPHIC REF | PART NUMBER | QTY | PART NAME 1 2 3 4 5 6 (PRODUCT LEVEL) | SEE PAGE |
|---|---|---|---|---|---|---|
| | 1 | 1 | **8L-6005** | 1 | TEE-PIPE | |
| | 2 | 1 | **070-0617** | 1 | HOSE AS | |
| | 3 | 1 | **189-7535** | 1 | HOSE AS | |
| | 4 | 1 | **189-7536** | 1 | HOSE AS | |
| | 5 | 1 | **269-5348** | 1 | INJECTOR AS | |
| | 6 | 1 | **003-2143** | 1 | ELBOW (PIPE) | |
| | 7 | 1 | *148-8367* | 1 | ELBOW AS | |
| | | 1 | **6V-8397** | 1 | SEAL-O-RING | |
| | | 1 | **6V-9850** | 1 | ELBOW | |
| | 8 | 1 | **3B-6493** | 1 | ELBOW-PIPE | |
| | 9 | 1 | **3B-7263** | 2 | NIPPLE-PIPE | |
| | 10 | 1 | **3B-7285** | 1 | NIPPLE-PIPE | |
| | 11 | 1 | **3B-7733** | 1 | FITTING | |
| | 12 | 1 | **3J-5390** | 1 | PLUG | |
| | 13 | 1 | **4M-8973** | 3 | ELBOW | |
| | 14 | 1 | **6V-8397** | 2 | SEAL-O-RING | |
| | 15 | 1 | **8B-4884** | 3 | ELBOW | |
| | 16 | 1 | **8C-6869** | 2 | CONNECTOR | |

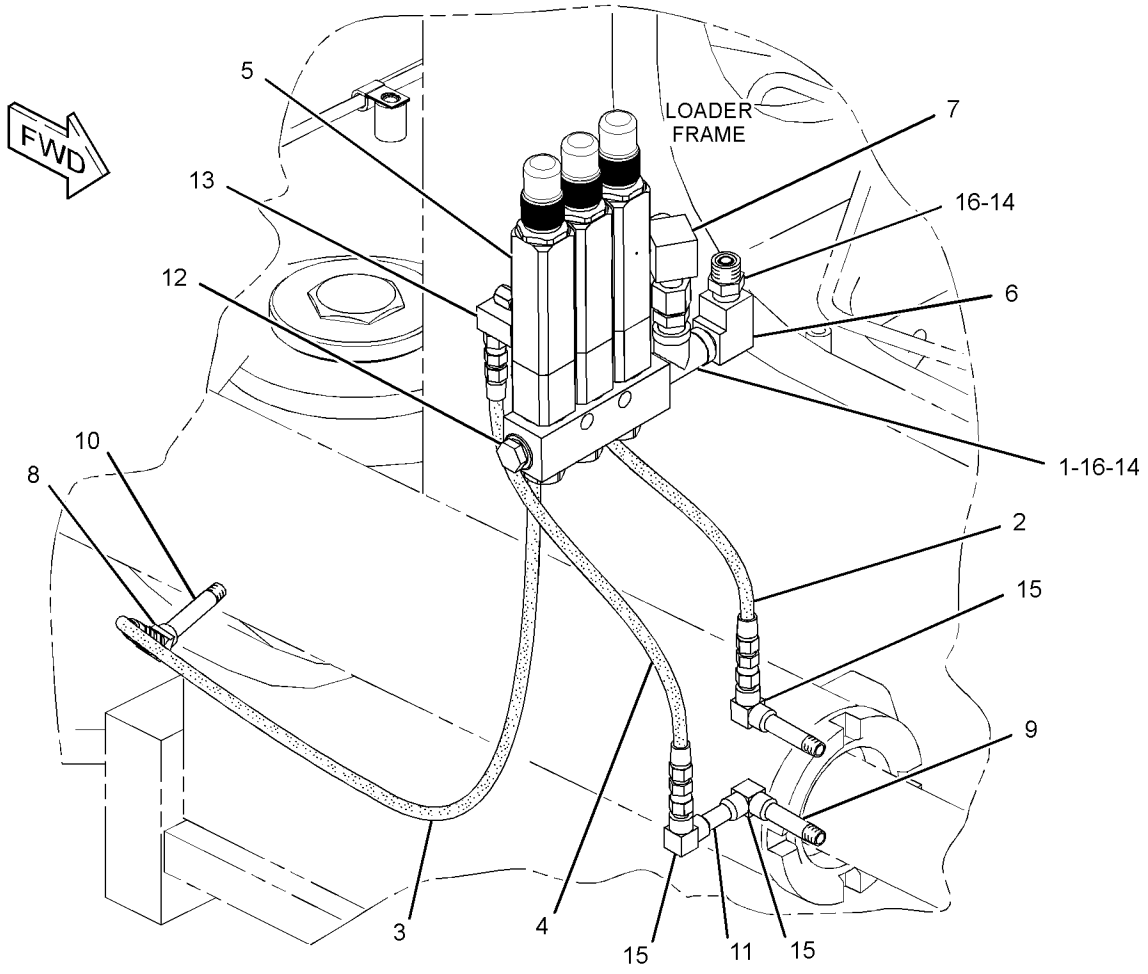


GRAPHIC #1 **<END>** g01350322

# *272-5094* VALVE & LINES GP-LUBRICATION–
## LH STEERING CYLINDER, UPPER HITCH
**S/N: BXY1900-UP**
**PART OF 272-5092 LINES GP-AUTOMATIC LUBRICATION**
**AN ATTACHMENT**

**SMCS-7540** **i02675741**

| NOTE | REF NO | GRAPHIC REF | PART NUMBER | QTY | PART NAME 1 2 3 4 5 6 (PRODUCT LEVEL) | SEE PAGE |
|---|---|---|---|---|---|---|
| | 1 | 1 | **8L-6005** | 1 | TEE-PIPE | |
| | 2 | 1 | **183-5825** | 1 | HOSE AS | |
| | 3 | 1 | **189-7546** | 1 | HOSE AS | |
| | 4 | 1 | **269-5352** | 1 | INJECTOR AS | |
| | 5 | 1 | **002-0639** | 1 | ADAPTER-PIPE | |
| | 6 | 1 | *148-8433* | 1 | TEE AS | |
| | | 1 | **6V-8397** | 2 | SEAL-O-RING | |
| | | 1 | **6V-9836** | 1 | TEE-SWIVEL | |
| | 7 | 1 | **3B-6487** | 1 | COUPLING (PIPE) | |
| | 8 | 1 | **3B-6493** | 1 | ELBOW-PIPE | |
| | 9 | 1 | **3J-5390** | 1 | PLUG | |
| | 10 | 1 | **4M-8973** | 1 | ELBOW | |
| | 11 | 1 | **5M-6214** | 2 | PLUG-PIPE (1/8-27 NPTF-THD) | |
| | 12 | 1 | **6V-8397** | 2 | SEAL-O-RING | |
| | 13 | 1 | **8C-6869** | 2 | CONNECTOR | |
| | 14 | 1 | **8L-5008** | 1 | ELBOW-PIPE | |

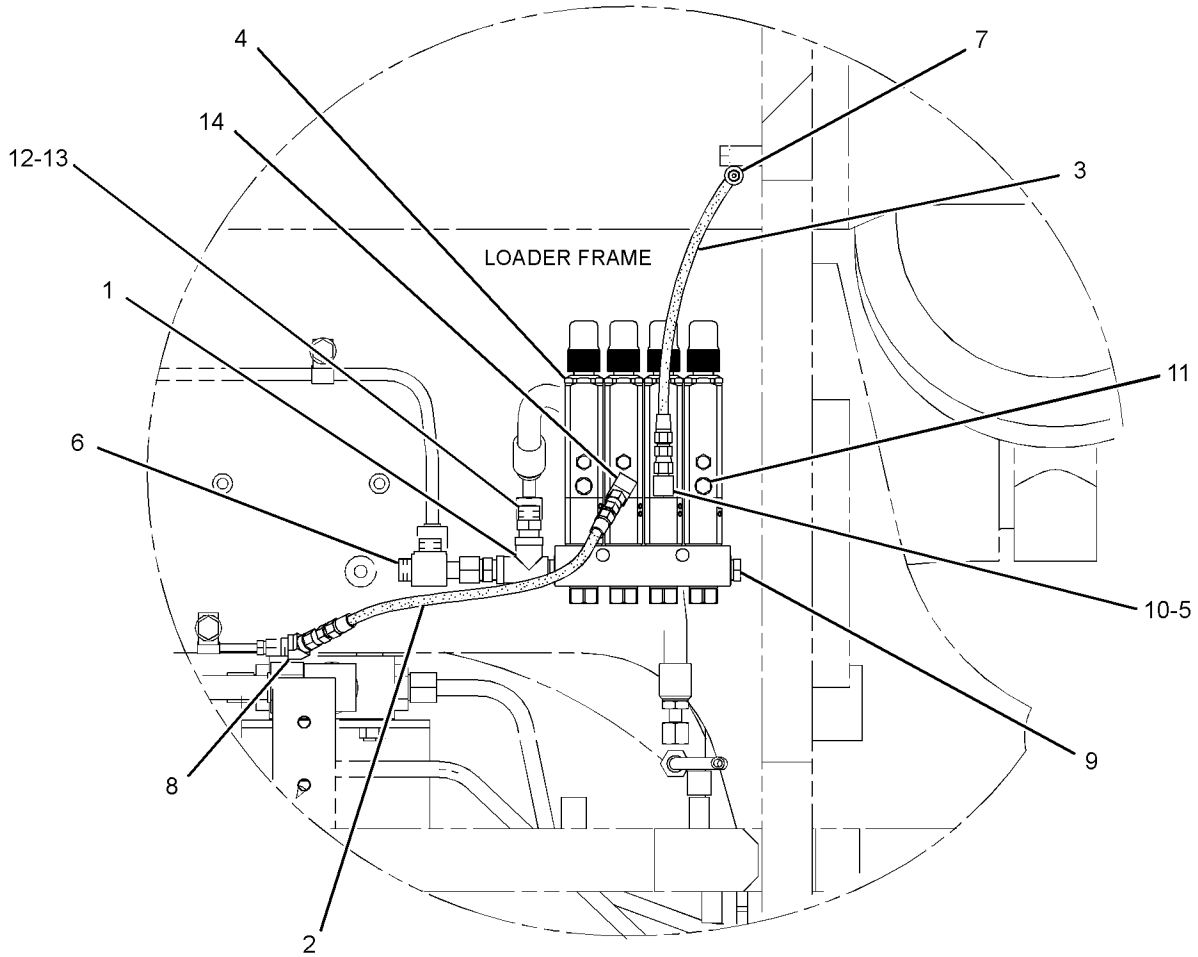


REAR VIEW

GRAPHIC #1 **<END>** g01346816

# *285-7284* VALVE & LINES GP-LUBRICATION–RIGHT, LEFT BOOM PINS

**S/N: BXY1900-UP**

**PART OF 285-7275 LINES GP-AUTOMATIC LUBRICATION**

**AN ATTACHMENT**

**SMCS-7540** **i02675860**

| NOTE | REF NO | GRAPHIC REF | PART NUMBER | QTY | PART NAME 1 2 3 4 5 6 (PRODUCT LEVEL) | SEE PAGE |
|---|---|---|---|---|---|---|
| | 1 | 1 | **269-5346** | 1 | INJECTOR AS | |
| | 2 | 1 | **285-7303** | 1 | HOSE AS | |
| | 3 | 1 | **285-7305** | 1 | HOSE AS | |
| | 4 | 1 | **002-0639** | 2 | ADAPTER-PIPE | |
| | 5 | 1 | *148-8433* | 1 | TEE AS | |
| | | 1 | **6V-8397** | 2 | SEAL-O-RING | |
| | | 1 | **6V-9836** | 1 | TEE-SWIVEL | |
| | 6 | 1 | **3B-6552** | 2 | ELBOW | |
| | 7 | 1 | **3J-5390** | 1 | PLUG | |
| | 8 | 1 | **6V-8397** | 1 | SEAL-O-RING | |
| | 9 | 1 | **8C-6869** | 1 | CONNECTOR | |

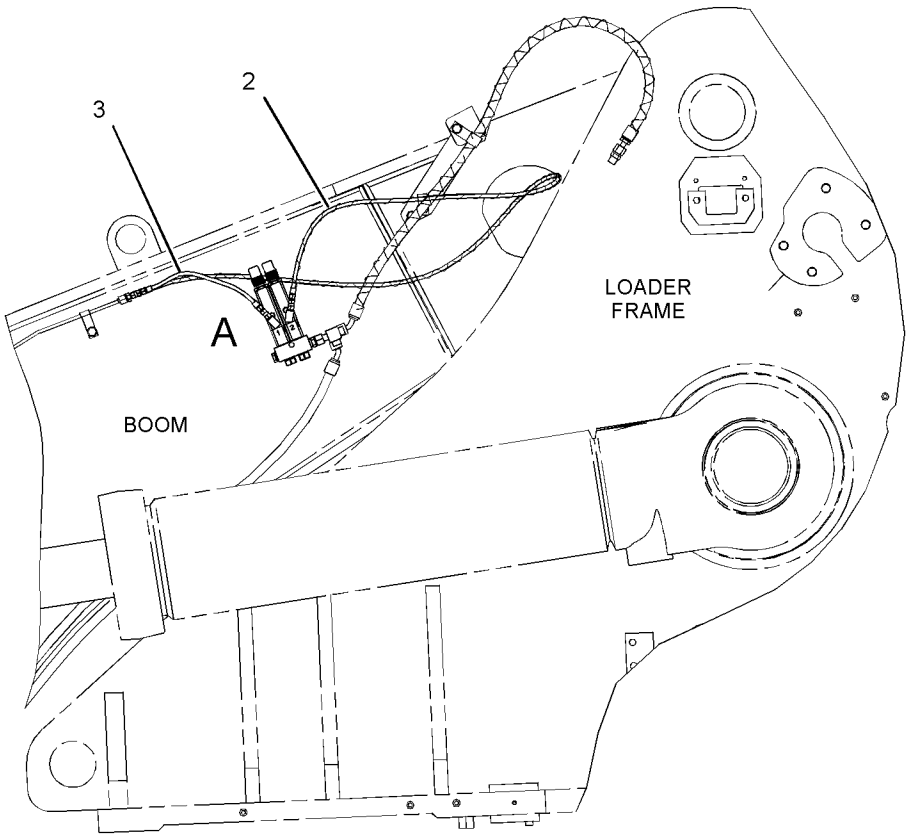


LEFT SIDE VIEW

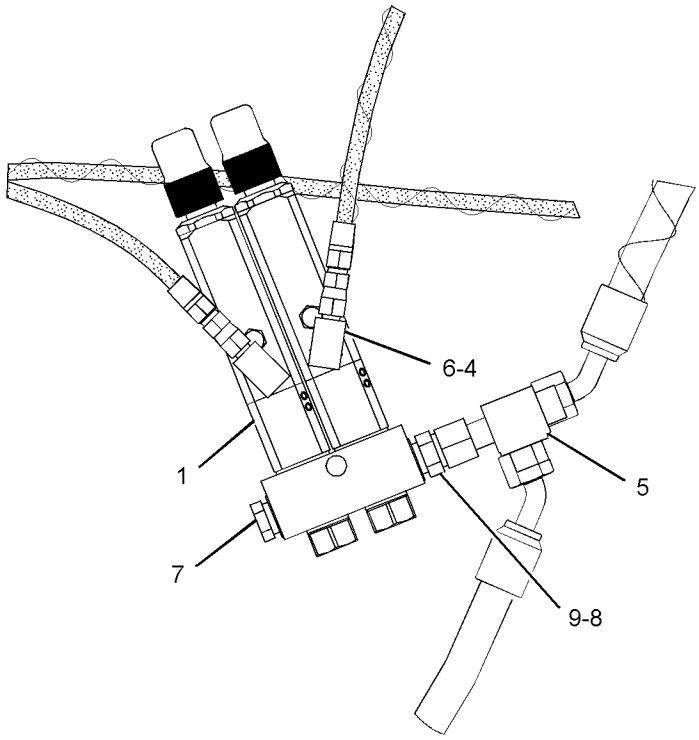


VIEW OF AREA A

GRAPHIC #1 **<END>** g01346770

# *285-7285* VALVE & LINES GP-LUBRICATION—BUCKET PINS

**S/N: BXY1900-UP**

**PART OF 285-7276 LINES GP-AUTOMATIC LUBRICATION**

**AN ATTACHMENT**

**SMCS-7540** **i02675718**

| NOTE | REF NO | GRAPHIC REF | PART NUMBER | QTY | PART NAME 1 2 3 4 5 6 (PRODUCT LEVEL) | SEE PAGE |
|---|---|---|---|---|---|---|
| | 1 | 1 | **189-7536** | 1 | HOSE AS | |
| | 2 | 1 | **189-7718** | 1 | HOSE AS | |
| Y | 3 | 1 | **224-4422** | 1 | VALVE GP-LUBE DISTRIBUTION (6-INJECTOR) | 956 |
| | 4 | 1 | **285-7303** | 1 | HOSE AS | |

Y-SEPARATE ILLUSTRATION

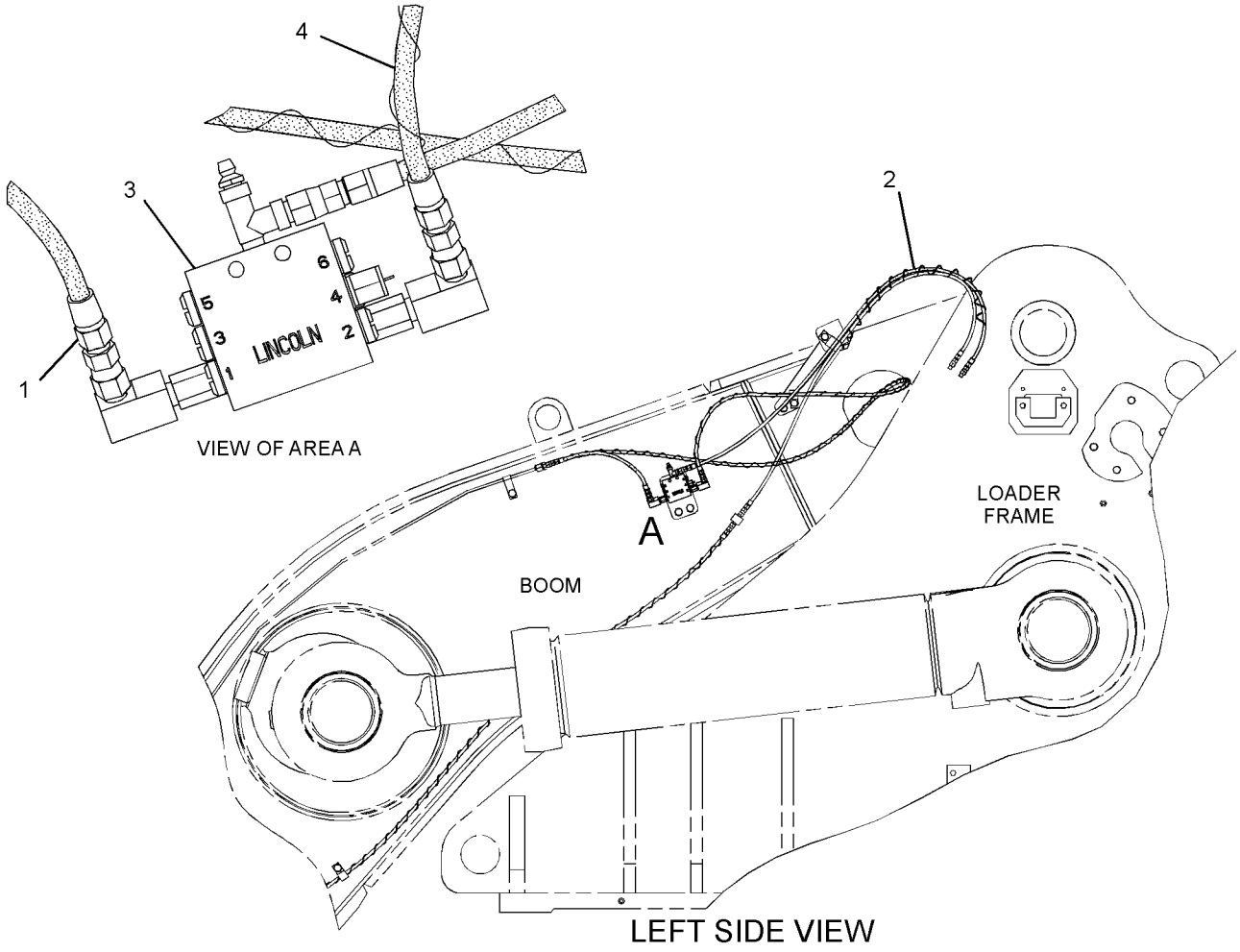


GRAPHIC #1 **<END>** g01348464

# *285-7287* VALVE & LINES GP-LUBRICATION–B-PIN, RH, LH

**S/N: BXY1900-UP**

**PART OF 285-7278 LINES GP-AUTOMATIC LUBRICATION**

**AN ATTACHMENT**

**SMCS-7540** **i02675870**

| NOTE | REF NO | GRAPHIC REF | PART NUMBER | QTY | PART NAME 1 2 3 4 5 6 (PRODUCT LEVEL) | SEE PAGE |
|---|---|---|---|---|---|---|
| | 1 | 1 | **183-5825** | 1 | HOSE AS | |
| | 2 | 1 | **189-7718** | 1 | HOSE AS | |
| Y | 3 | 1 | **224-4422** | 1 | VALVE GP-LUBE DISTRIBUTION (6-INJECTOR) | 956 |
| | 4 | 1 | **285-7303** | 1 | HOSE AS | |

Y-SEPARATE ILLUSTRATION

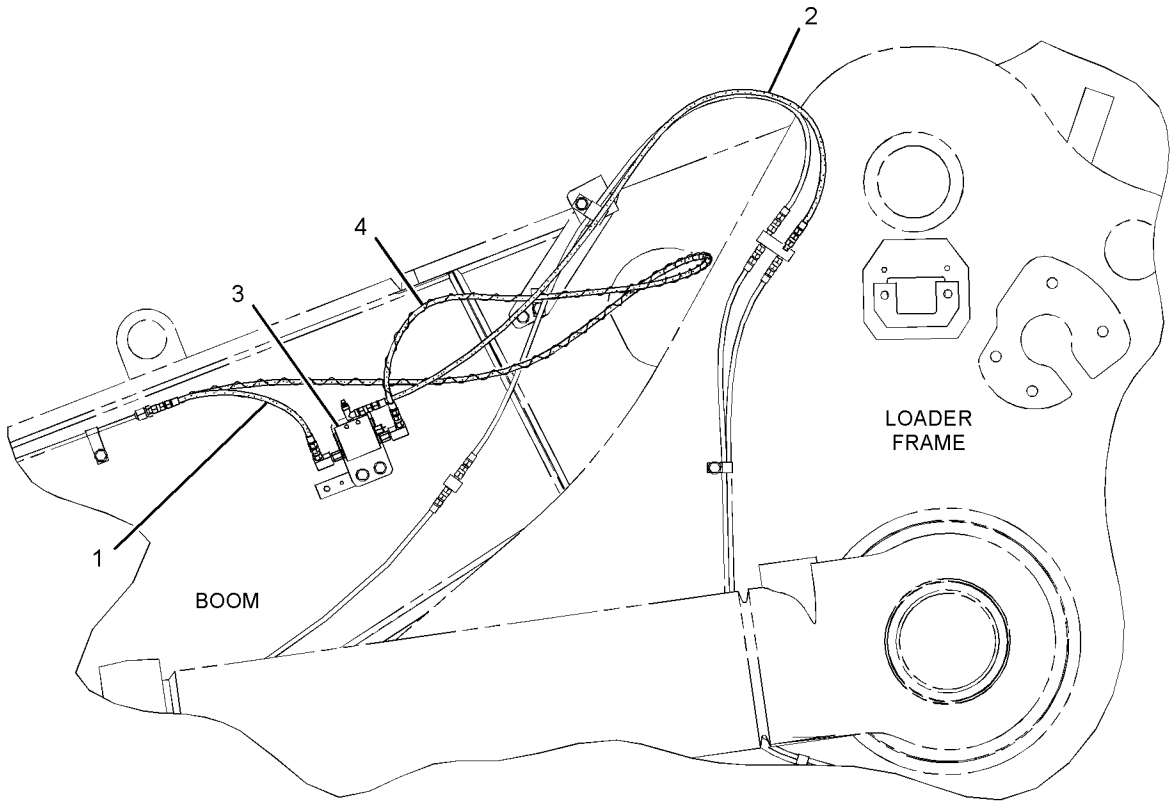


LEFT SIDE VIEW

GRAPHIC #1 **<END>** g01346675

# 285-7288 VALVE & LINES GP-LUBRICATION–B-PIN, RH, LH

**S/N: BXY1900-UP**

**PART OF 285-7280 LINES GP-AUTOMATIC LUBRICATION**

**AN ATTACHMENT**

**SMCS-7540** **i02675890**

| NOTE | REF NO | GRAPHIC REF | PART NUMBER | QTY | PART NAME 1 2 3 4 5 6 (PRODUCT LEVEL) | SEE PAGE |
|---|---|---|---|---|---|---|
| | 1 | 1 | **189-7552** | 1 | HOSE AS | |
| | 2 | 1 | **269-5346** | 1 | INJECTOR AS | |
| | 3 | 1 | **285-7303** | 1 | HOSE AS | |
| | 4 | 1 | *148-8433* | 1 | TEE AS | |
| | | 1 | **6V-8397** | 2 | SEAL-O-RING | |
| | | 1 | **6V-9836** | 1 | TEE-SWIVEL | |
| | 5 | 1 | **3B-6552** | 2 | ELBOW | |
| | 6 | 1 | **3J-5390** | 1 | PLUG | |
| | 7 | 1 | **6V-8397** | 1 | SEAL-O-RING | |
| | 8 | 1 | **8C-6869** | 1 | CONNECTOR | |

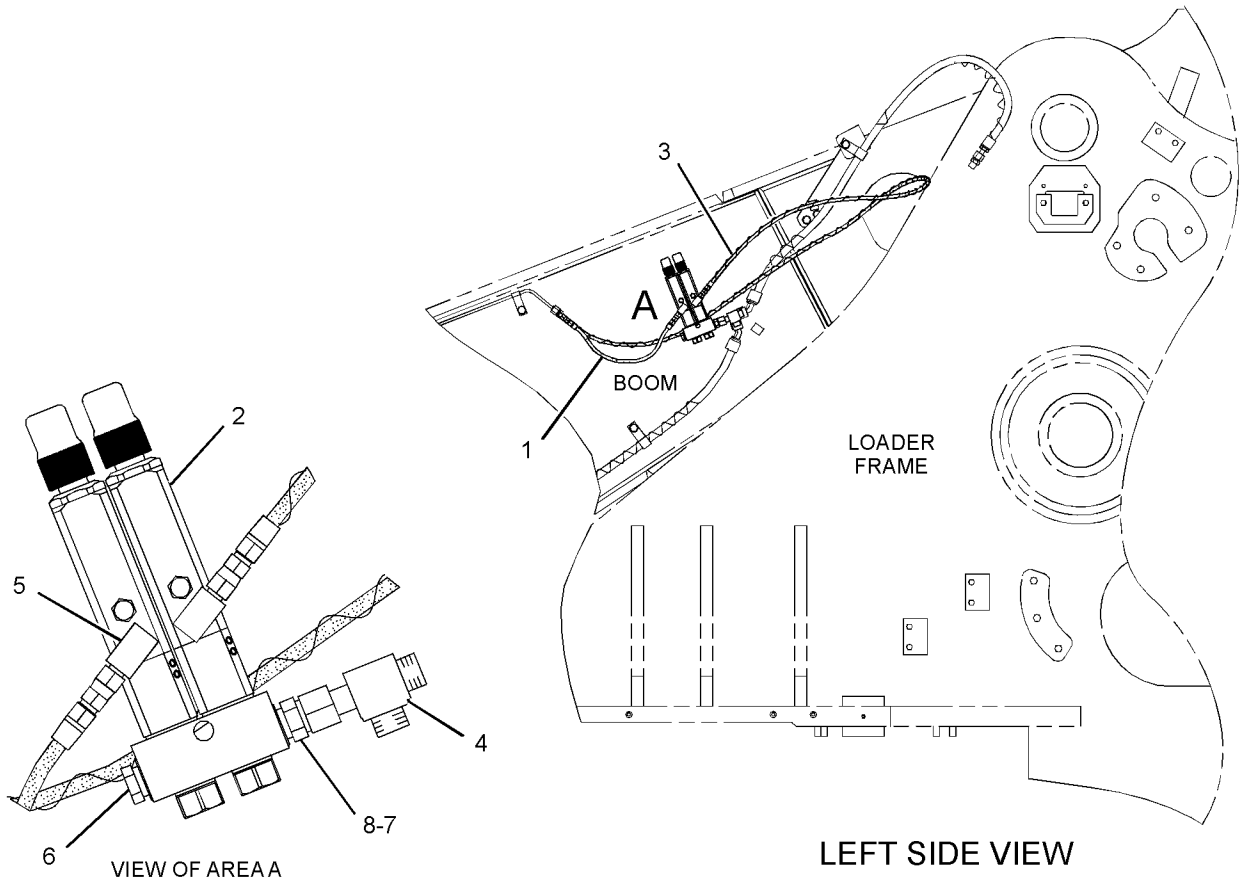


GRAPHIC #1 **<END>** g01347775

# *285-7289* VALVE & LINES GP-LUBRICATION–
## RIGHT, LEFT BOOM PINS
**S/N: BXY1900-UP**
**PART OF 285-7279 LINES GP-AUTOMATIC LUBRICATION**
**AN ATTACHMENT**

**SMCS-7540** **i02675884**

| NOTE | REF NO | GRAPHIC REF | PART NUMBER | QTY | PART NAME 1 2 3 4 5 6 (PRODUCT LEVEL) | SEE PAGE |
|---|---|---|---|---|---|---|
| | 1 | 1 | **189-7531** | 1 | HOSE AS | |
| | 2 | 1 | **189-7718** | 1 | HOSE AS | |
| Y | 3 | 1 | **224-4422** | 1 | VALVE GP-LUBE DISTRIBUTION (6-INJECTOR) | 956 |
| | 4 | 1 | **285-7303** | 1 | HOSE AS | |

Y-SEPARATE ILLUSTRATION

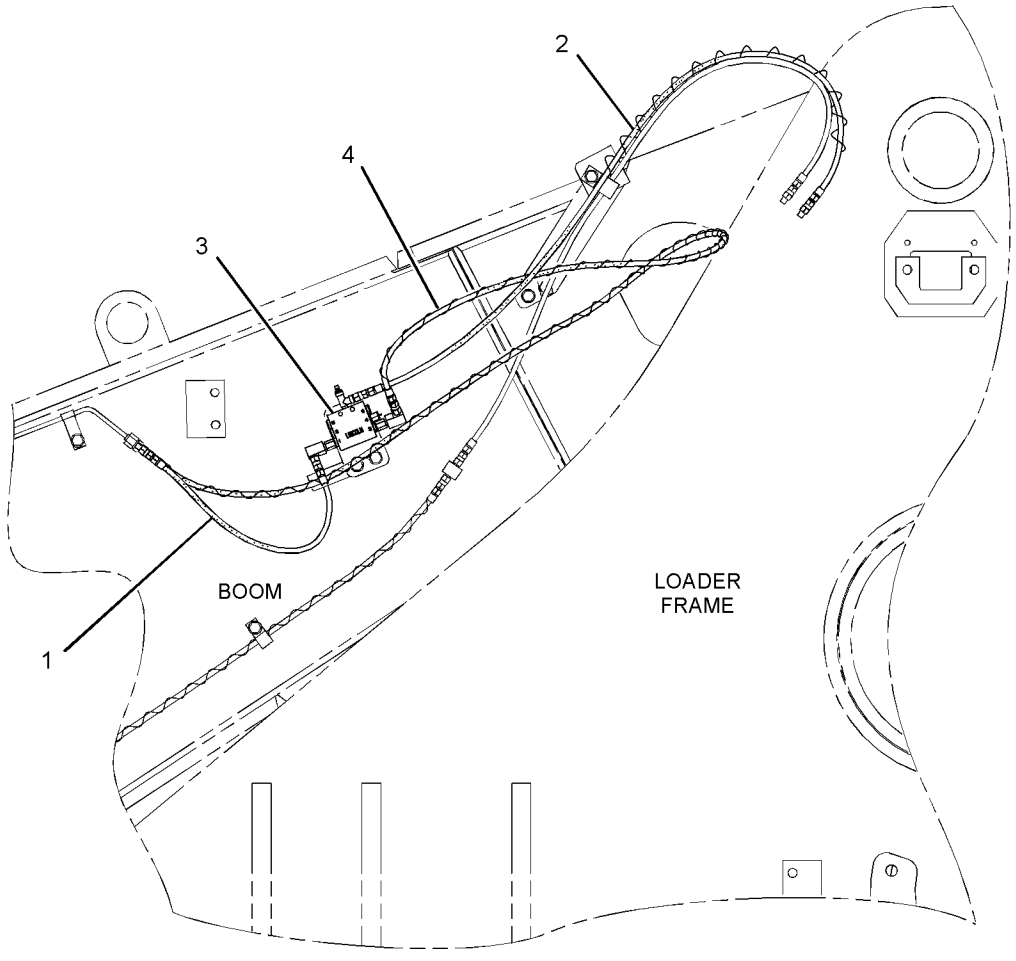


LEFT SIDE VIEW

GRAPHIC #1 **<END>** g01347892

# *285-7304* VALVE & LINES GP-LUBRICATION–

**RIGHT, LEFT BOOM PINS**

**S/N: BXY1900-UP**

**PART OF 285-7277 LINES GP-AUTOMATIC LUBRICATION**

**AN ATTACHMENT**

**SMCS-7540** **i02675874**

| NOTE | REF NO | GRAPHIC REF | PART NUMBER | QTY | PART NAME 1 2 3 4 5 6 (PRODUCT LEVEL) | SEE PAGE |
|---|---|---|---|---|---|---|
| | 1 | 1 | **269-5346** | 1 | INJECTOR AS | |
| | 2 | 1 | **285-7303** | 1 | HOSE AS | |
| | 3 | 1 | **285-7305** | 1 | HOSE AS | |
| | 4 | 1 | **002-0639** | 2 | ADAPTER-PIPE | |
| | 5 | 1 | *148-8433* | 1 | TEE AS | |
| | | 1 | **6V-8397** | 2 | SEAL-O-RING | |
| | | 1 | **6V-9836** | 1 | TEE-SWIVEL | |
| | 6 | 1 | **3J-5390** | 1 | PLUG | |
| | 7 | 1 | **4M-8973** | 2 | ELBOW | |
| | 8 | 1 | **6V-8397** | 1 | SEAL-O-RING | |
| | 9 | 1 | **8C-6869** | 1 | CONNECTOR | |

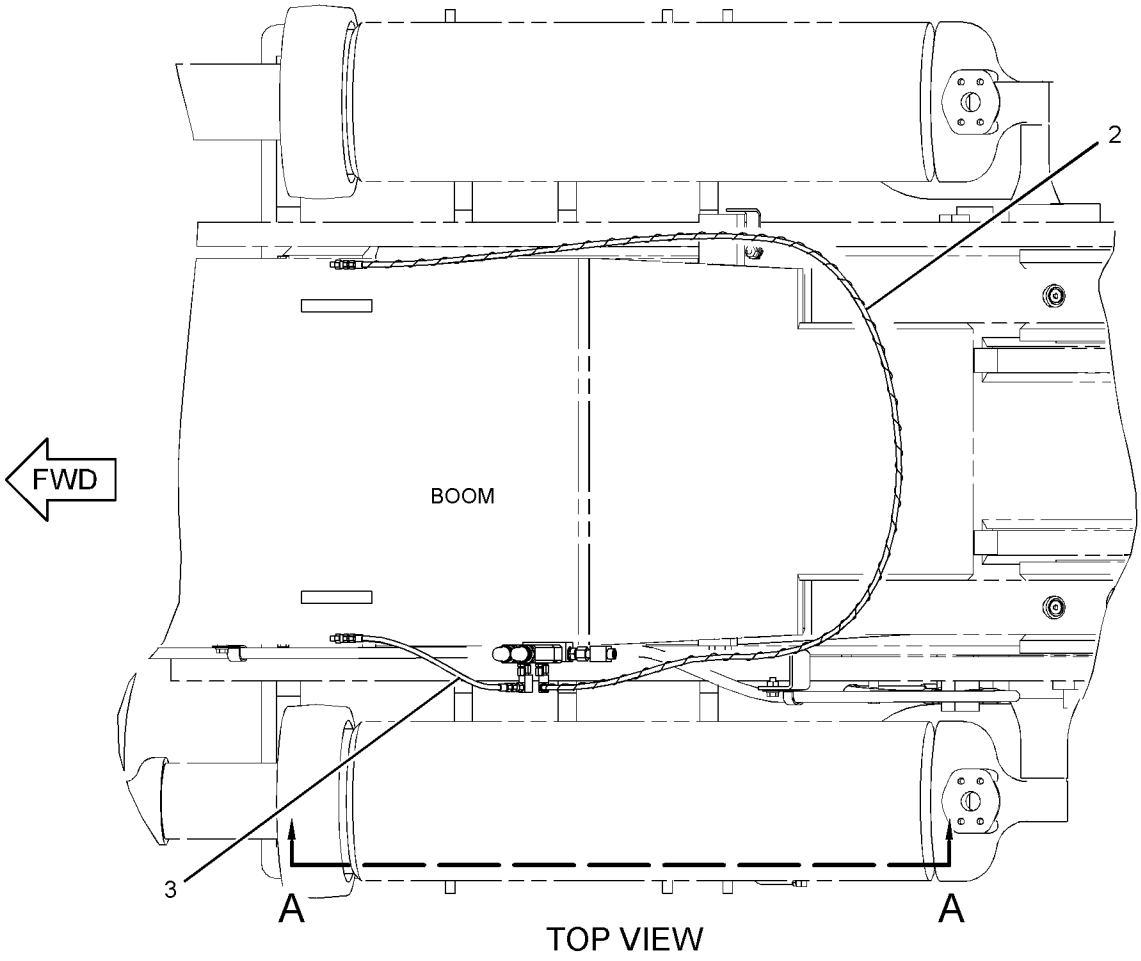


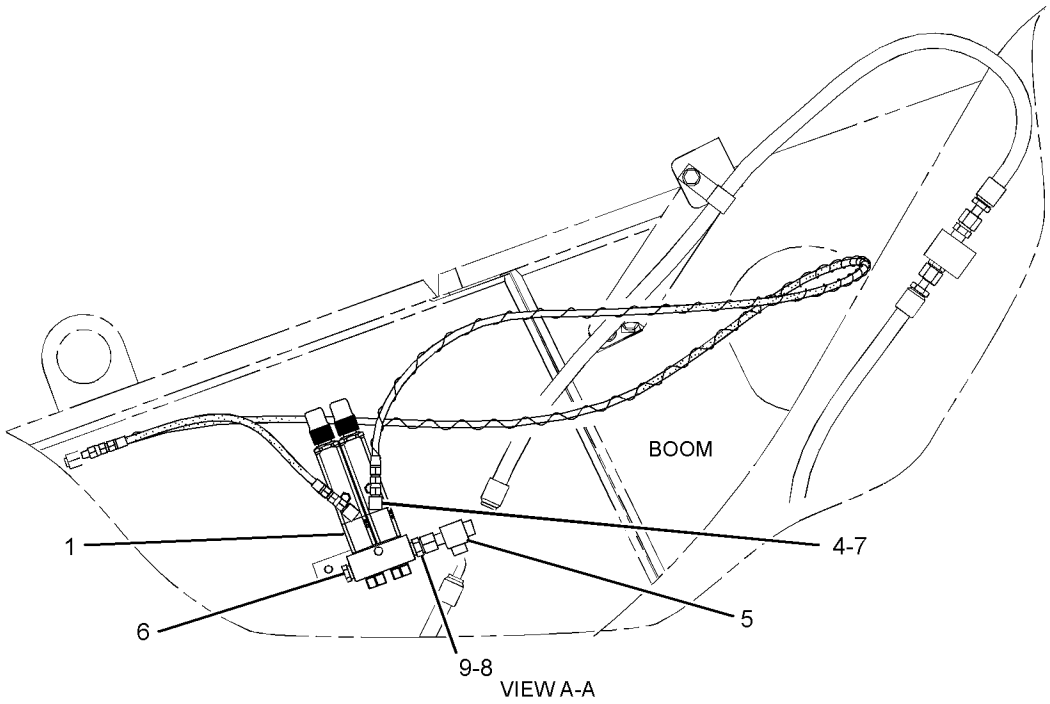


GRAPHIC #1

**<END>**

g01347015

# *285-7310* VALVE & LINES GP-LUBRICATION–
## LINK PINS, RH C-PIN, RH TILT
**S/N: BXY1900-UP**
**PART OF 285-7275 LINES GP-AUTOMATIC LUBRICATION**
**AN ATTACHMENT**

**SMCS-7540** **i02675861**

| NOTE | REF NO | GRAPHIC REF | PART NUMBER | QTY | PART NAME 1 2 3 4 5 6 (PRODUCT LEVEL) | SEE PAGE |
|---|---|---|---|---|---|---|
| | 1 | 1 | **183-5512** | 1 | HOSE AS | |
| | 2 | 1 | **189-7031** | 2 | HOSE AS | |
| | 3 | 1 | **189-7531** | 1 | HOSE AS | |
| | 4 | 1 | **189-7541** | 1 | HOSE AS | |
| | 5 | 1 | **189-7548** | 1 | HOSE AS | |
| | 6 | 1 | **189-7554** | 1 | HOSE AS | |
| | 7 | 1 | **259-2421** | 3 | HOSE AS | |
| | 8 | 1 | **269-5352** | 1 | INJECTOR AS | |
| | 9 | 1 | **002-0639** | 3 | ADAPTER-PIPE | |
| | 10 | 1 | *148-8367* | 1 | ELBOW AS | |
| | | 1 | **6V-8397** | 1 | SEAL-O-RING | |
| | | 1 | **6V-9850** | 1 | ELBOW | |
| | 11 | 1 | *148-8433* | 1 | TEE AS | |
| | | 1 | **6V-8397** | 2 | SEAL-O-RING | |
| | | 1 | **6V-9836** | 1 | TEE-SWIVEL | |
| | 12 | 1 | **3J-5390** | 1 | PLUG | |
| | 13 | 1 | **4K-3026** | 1 | EXTENSION | |
| | 14 | 1 | **4M-8973** | 4 | ELBOW | |
| | 15 | 1 | **6V-8397** | 1 | SEAL-O-RING | |
| | 16 | 1 | **8C-6869** | 1 | CONNECTOR | |
| | 17 | 1 | **8L-5008** | 1 | ELBOW-PIPE | |

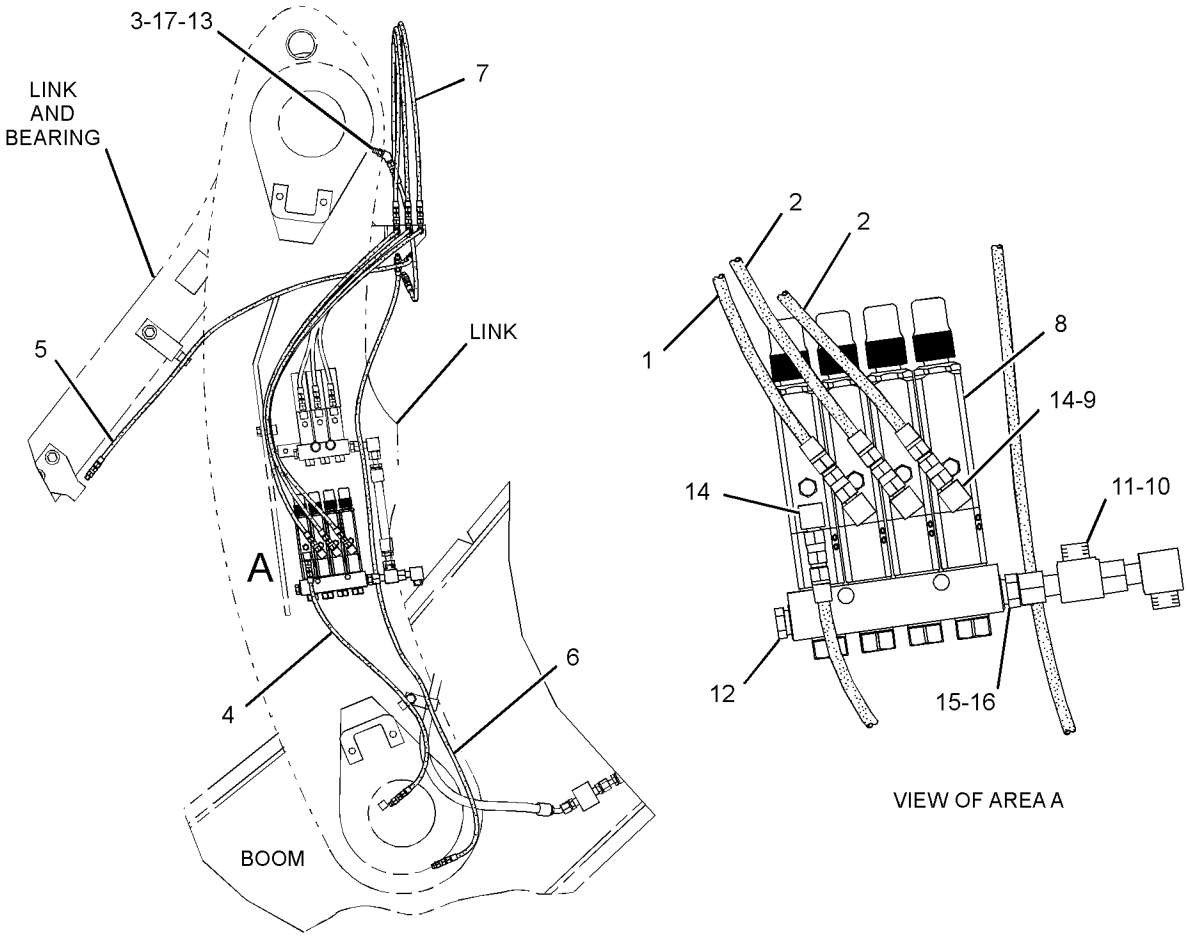


LEFT SIDE VIEW

GRAPHIC #1 **<END>** g01350964

# *285-7311* VALVE & LINES GP-LUBRICATION

**S/N: BXY1900-UP**

**PART OF 285-7275 LINES GP-AUTOMATIC LUBRICATION**

**AN ATTACHMENT**

**SMCS-7540** **i02675862**

| NOTE | REF NO | GRAPHIC REF | PART NUMBER | QTY | PART NAME 1 2 3 4 5 6 (PRODUCT LEVEL) | SEE PAGE |
|---|---|---|---|---|---|---|
| | 1 | 1 | **189-7531** | 2 | HOSE AS | |
| | 2 | 1 | **189-7543** | 1 | HOSE AS | |
| | 3 | 1 | **189-7546** | 2 | HOSE AS | |
| | 4 | 1 | **189-7548** | 1 | HOSE AS | |
| | 5 | 1 | **269-5348** | 1 | INJECTOR AS | |
| | 6 | 1 | **002-0639** | 3 | ADAPTER-PIPE | |
| | 7 | 1 | *148-8367* | 1 | ELBOW AS | |
| | | 1 | **6V-8397** | 1 | SEAL-O-RING | |
| | | 1 | **6V-9850** | 1 | ELBOW | |
| | 8 | 1 | **3J-5390** | 1 | PLUG | |
| | 9 | 1 | **4K-3026** | 1 | EXTENSION | |
| | 10 | 1 | **4M-8973** | 4 | ELBOW | |
| | 11 | 1 | **6V-8397** | 1 | SEAL-O-RING | |
| | 12 | 1 | **8C-6869** | 1 | CONNECTOR | |
| | 13 | 1 | **8L-5008** | 1 | ELBOW-PIPE | |

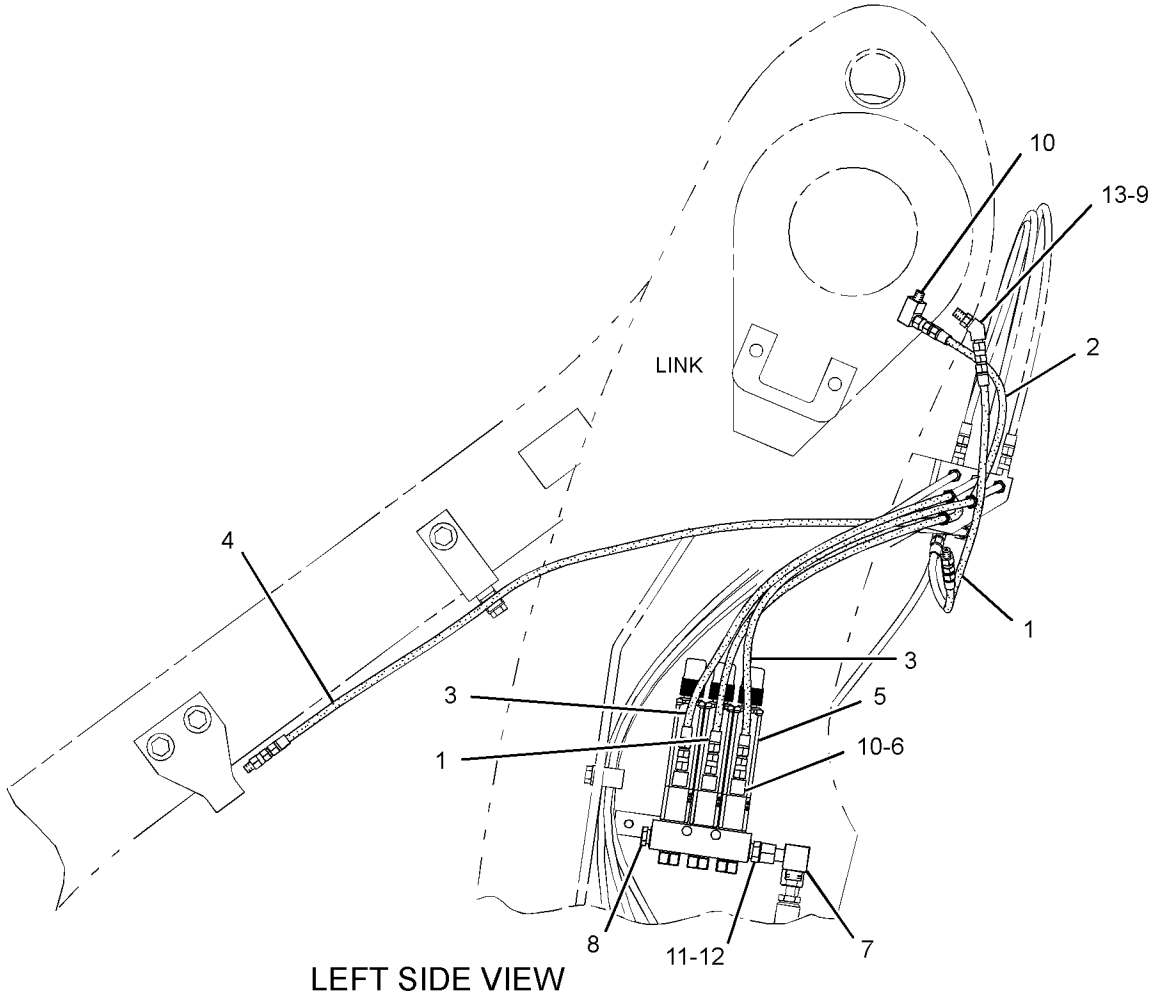


LEFT SIDE VIEW

GRAPHIC #1 **<END>** g01350963

# *285-7312* VALVE & LINES GP-LUBRICATION–
## LINK PINS, RH C-PIN, RH TILT
**S/N: BXY1900-UP**
**PART OF 285-7277 LINES GP-AUTOMATIC LUBRICATION**
**AN ATTACHMENT**

**SMCS-7540** **i02675875**

| NOTE | REF NO | GRAPHIC REF | PART NUMBER | QTY | PART NAME 1 2 3 4 5 6 (PRODUCT LEVEL) | SEE PAGE |
|---|---|---|---|---|---|---|
| | 1 | 1 | **070-0618** | 2 | HOSE AS | |
| | 2 | 1 | **183-5384** | 1 | HOSE AS | |
| | 3 | 1 | **183-5825** | 1 | HOSE AS | |
| | 4 | 1 | **189-7540** | 4 | HOSE AS | |
| | 5 | 1 | **189-7541** | 1 | HOSE AS | |
| | 6 | 1 | **259-2421** | 1 | HOSE AS | |
| | 7 | 1 | **269-5352** | 1 | INJECTOR AS | |
| | 8 | 1 | **002-0639** | 3 | ADAPTER-PIPE | |
| | 9 | 1 | *148-8367* | 1 | ELBOW AS | |
| | | 1 | **6V-8397** | 1 | SEAL-O-RING | |
| | | 1 | **6V-9850** | 1 | ELBOW | |
| | 10 | 1 | *148-8433* | 1 | TEE AS | |
| | | 1 | **6V-8397** | 2 | SEAL-O-RING | |
| | | 1 | **6V-9836** | 1 | TEE-SWIVEL | |
| | 11 | 1 | **3J-5390** | 1 | PLUG | |
| | 12 | 1 | **4M-8973** | 4 | ELBOW | |
| | 13 | 1 | **6V-8397** | 1 | SEAL-O-RING | |
| | 14 | 1 | **8C-6869** | 1 | CONNECTOR | |

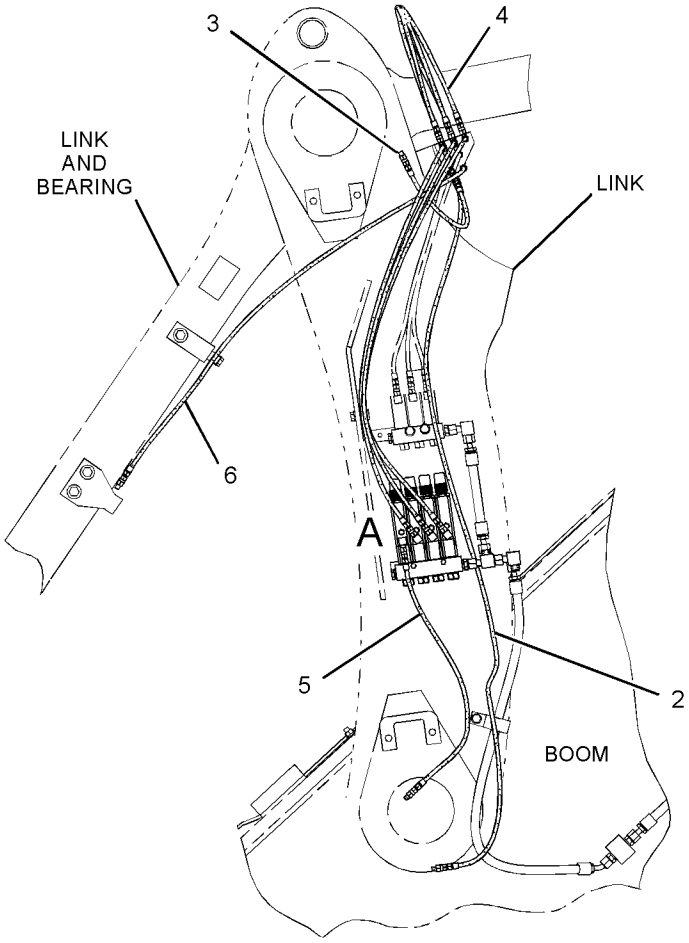


LEFT SIDE VIEW

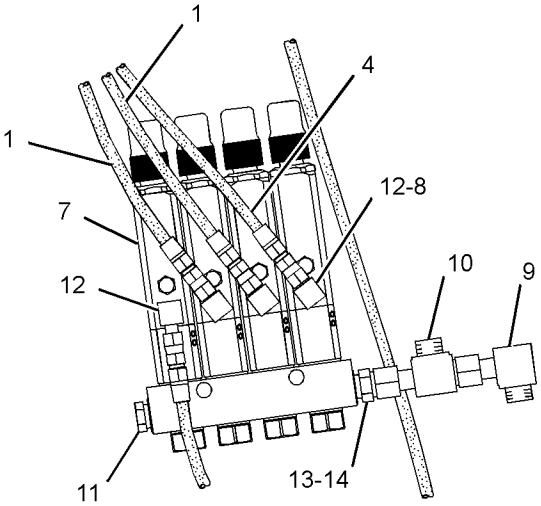


VIEW OF AREA A

GRAPHIC #1 **<END>** g01350961

# *285-7313* VALVE & LINES GP-LUBRICATION–
## LH C-PIN, LH TILT LINK PIN
**S/N: BXY1900-UP**
**PART OF 285-7277 LINES GP-AUTOMATIC LUBRICATION**
**AN ATTACHMENT**

**SMCS-7540** **i02675878**

| NOTE | REF NO | GRAPHIC REF | PART NUMBER | QTY | PART NAME 1 2 3 4 5 6 (PRODUCT LEVEL) | SEE PAGE |
|---|---|---|---|---|---|---|
| | 1 | 1 | **183-5825** | 1 | HOSE AS | |
| | 2 | 1 | **189-7543** | 3 | HOSE AS | |
| | 3 | 1 | **189-7546** | 1 | HOSE AS | |
| | 4 | 1 | **259-2421** | 1 | HOSE AS | |
| | 5 | 1 | **269-5348** | 1 | INJECTOR AS | |
| | 6 | 1 | **002-0639** | 3 | ADAPTER-PIPE | |
| | 7 | 1 | *148-8367* | 1 | ELBOW AS | |
| | | 1 | **6V-8397** | 1 | SEAL-O-RING | |
| | | 1 | **6V-9850** | 1 | ELBOW | |
| | 8 | 1 | **3J-5390** | 1 | PLUG | |
| | 9 | 1 | **4M-8973** | 3 | ELBOW | |
| | 10 | 1 | **6V-8397** | 1 | SEAL-O-RING | |
| | 11 | 1 | **8C-6869** | 1 | CONNECTOR | |

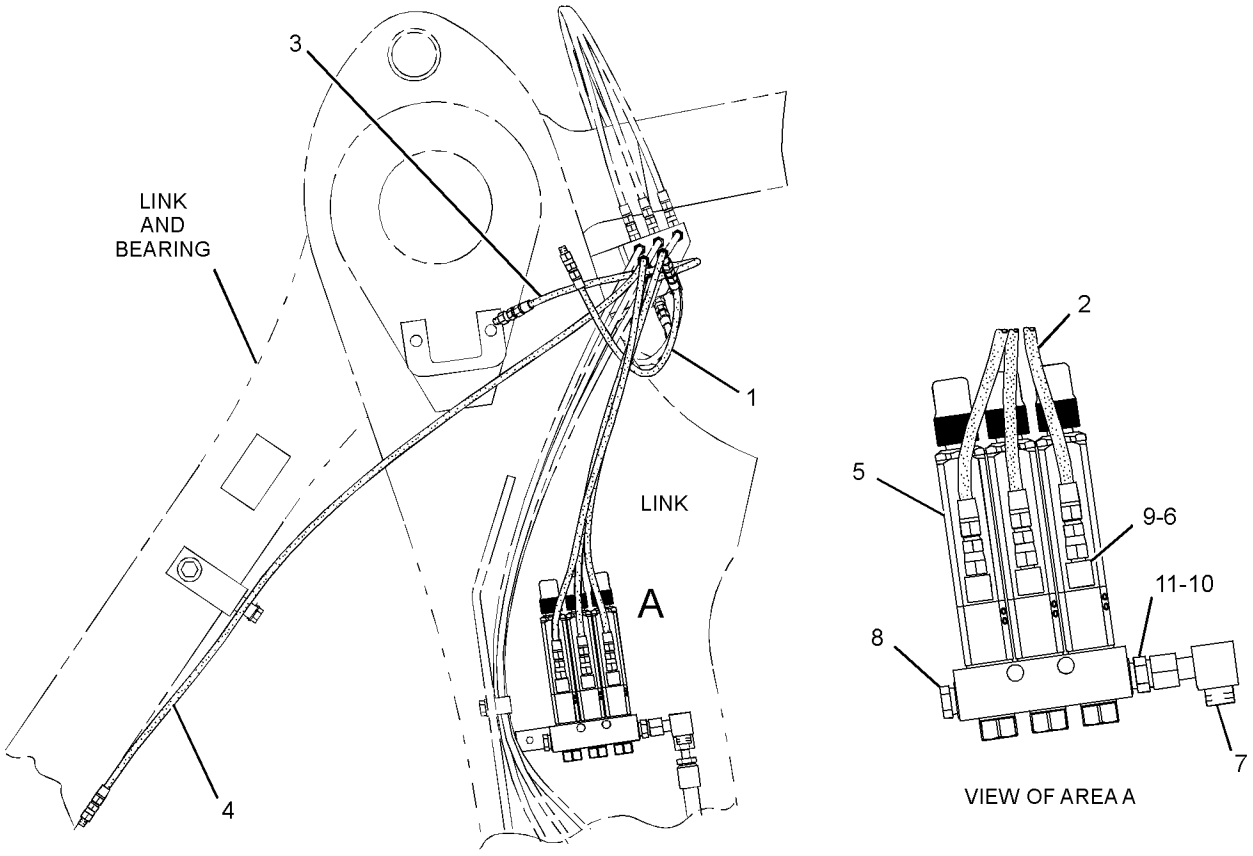


LEFT SIDE VIEW

GRAPHIC #1 **<END>** g01350962

# *285-7314* VALVE & LINES GP-LUBRICATION–

**LH C-PIN, LH TILT LINK PIN**

**S/N: BXY1900-UP**

**PART OF 285-7280 LINES GP-AUTOMATIC LUBRICATION**

**AN ATTACHMENT**

**SMCS-7540** **i02675892**

| NOTE | REF NO | GRAPHIC REF | PART NUMBER | QTY | PART NAME 1 2 3 4 5 6 (PRODUCT LEVEL) | SEE PAGE |
|---|---|---|---|---|---|---|
| | 1 | 1 | **183-5512** | 1 | HOSE AS | |
| | 2 | 1 | **183-5825** | 1 | HOSE AS | |
| | 3 | 1 | **189-7543** | 1 | HOSE AS | |
| | 4 | 1 | **189-7546** | 1 | HOSE AS | |
| | 5 | 1 | **189-7981** | 2 | HOSE AS | |
| | 6 | 1 | **269-5348** | 1 | INJECTOR AS | |
| | 7 | 1 | **002-0639** | 3 | ADAPTER-PIPE | |
| | 8 | 1 | *148-8367* | 1 | ELBOW AS | |
| | | 1 | **6V-8397** | 1 | SEAL-O-RING | |
| | | 1 | **6V-9850** | 1 | ELBOW | |
| | 9 | 1 | **3J-5390** | 1 | PLUG | |
| | 10 | 1 | **4M-8973** | 3 | ELBOW | |
| | 11 | 1 | **6V-8397** | 1 | SEAL-O-RING | |
| | 12 | 1 | **8C-6869** | 1 | CONNECTOR | |

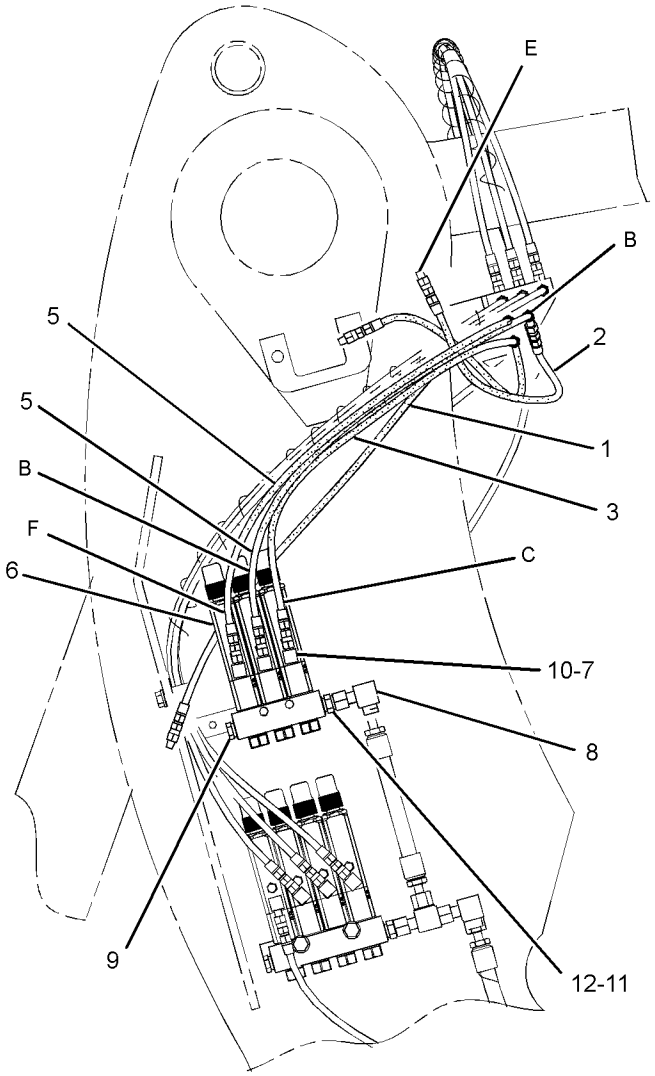


VIEW A-A

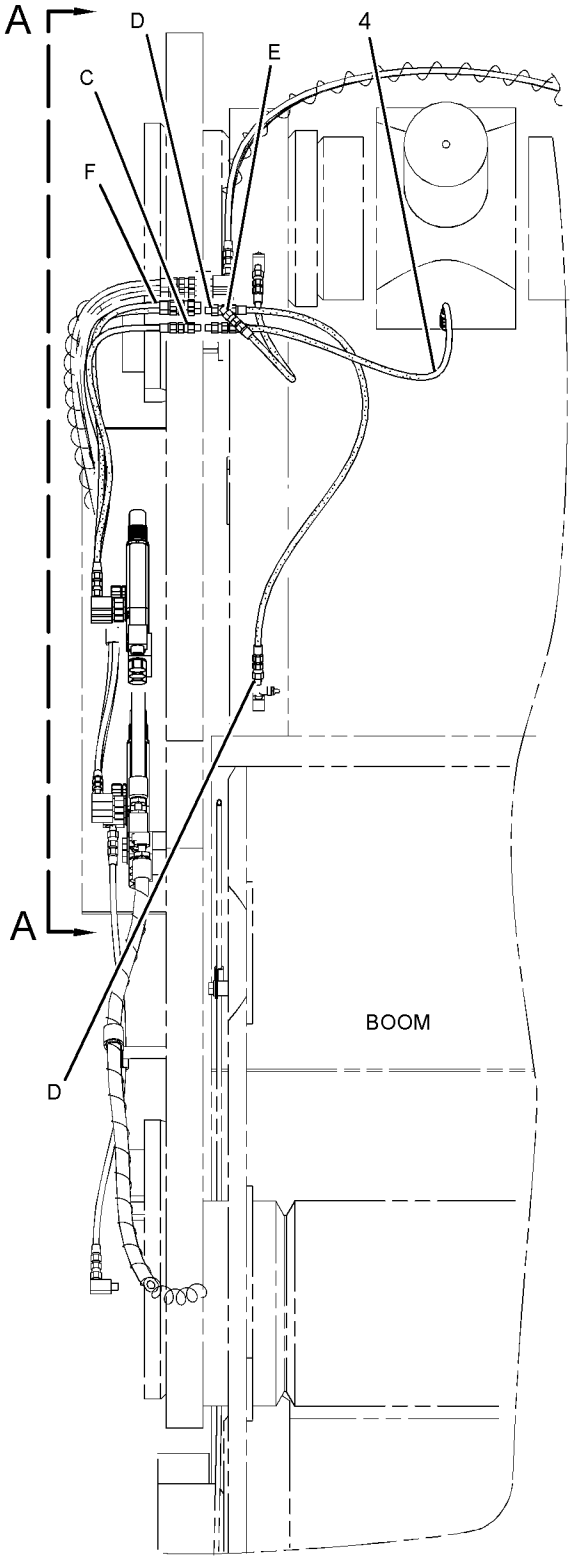


REAR VIEW

GRAPHIC #1 **<END>** g01347037

# *285-7315* VALVE & LINES GP-LUBRICATION–C-PIN, LINK PINS, TILT CYLINDER PIN

**S/N: BXY1900-UP**

**PART OF 285-7280 LINES GP-AUTOMATIC LUBRICATION AN ATTACHMENT**

**SMCS-7540** **i02675893**

| NOTE | REF NO | GRAPHIC REF | PART NUMBER | QTY | PART NAME 1 2 3 4 5 6 (PRODUCT LEVEL) | SEE PAGE |
|---|---|---|---|---|---|---|
| | 1 | 1 | **183-5512** | 1 | HOSE AS | |
| | 2 | 1 | **183-5825** | 1 | HOSE AS | |
| | 3 | 1 | **189-7540** | 5 | HOSE AS | |
| | 4 | 1 | **189-7547** | 1 | HOSE AS | |
| | 5 | 1 | **189-7548** | 1 | HOSE AS | |
| | 6 | 1 | **189-7553** | 1 | HOSE AS | |
| | 7 | 1 | **269-5352** | 1 | INJECTOR AS | |
| | 8 | 1 | **002-0639** | 3 | ADAPTER-PIPE | |
| | 9 | 1 | *148-8367* | 1 | ELBOW AS | |
| | | 1 | **6V-8397** | 1 | SEAL-O-RING | |
| | | 1 | **6V-9850** | 1 | ELBOW | |
| | 10 | 1 | *148-8433* | 1 | TEE AS | |
| | | 1 | **6V-8397** | 2 | SEAL-O-RING | |
| | | 1 | **6V-9836** | 1 | TEE-SWIVEL | |
| | 11 | 1 | **3J-5390** | 1 | PLUG | |
| | 12 | 1 | **4M-8973** | 4 | ELBOW | |
| | 13 | 1 | **6V-8397** | 1 | SEAL-O-RING | |
| | 14 | 1 | **8C-6869** | 1 | CONNECTOR | |

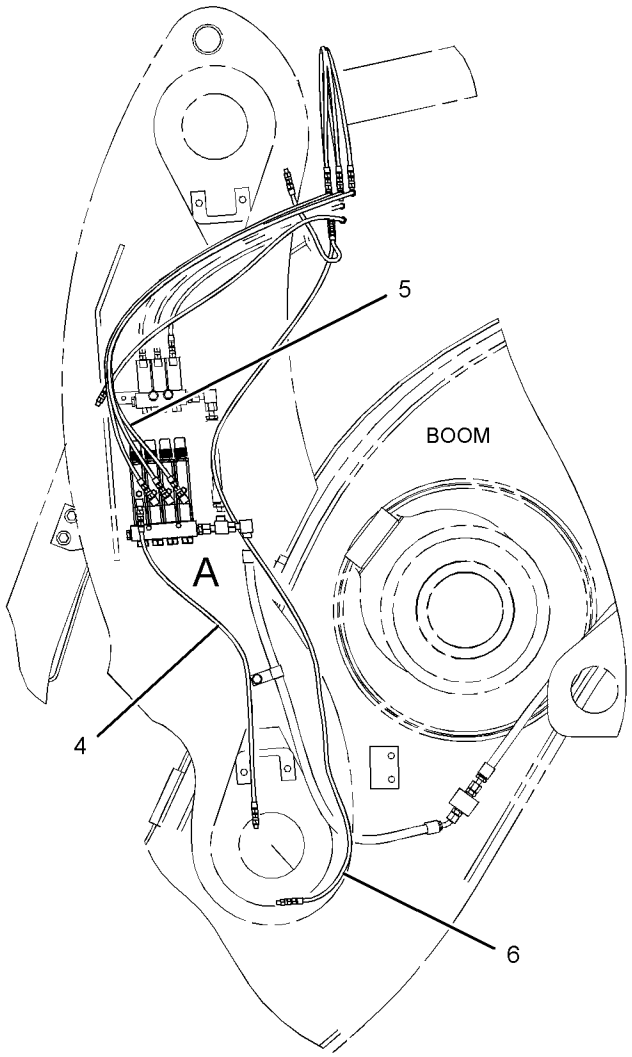


LEFT SIDE VIEW

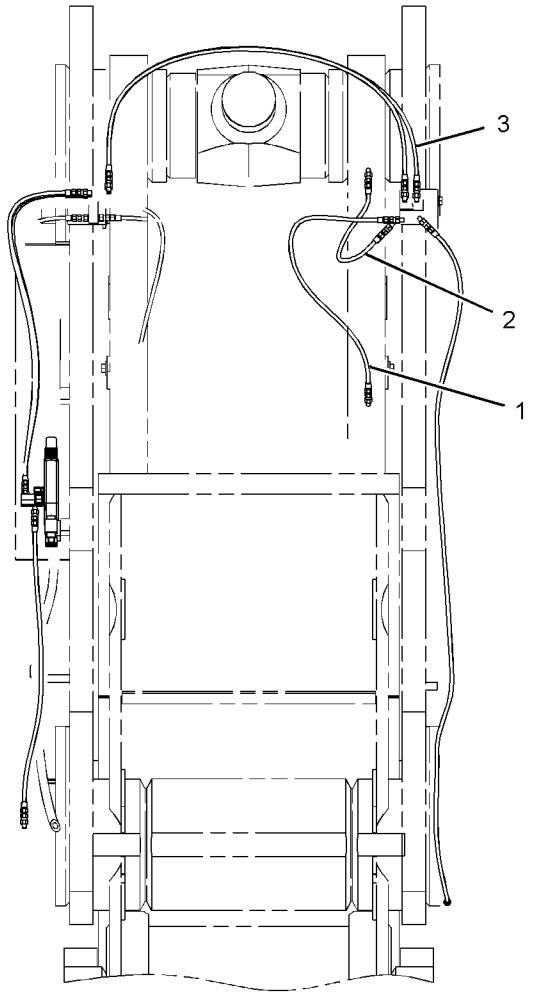


REAR VIEW

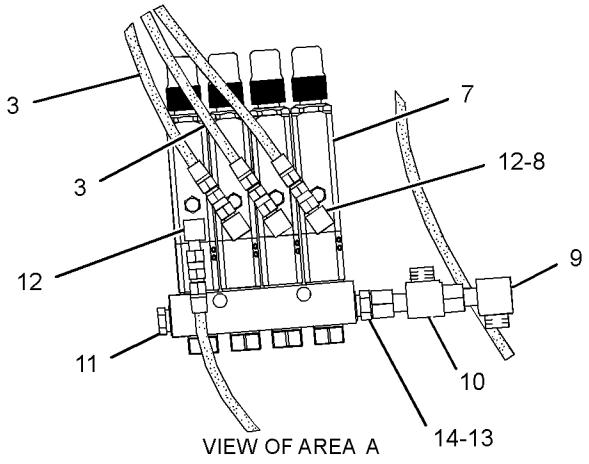


VIEW OF AREA A

GRAPHIC #1

**<END>**

g01346872

# 5T-5009 VALVE GP-LUBE DISTRIBUTION–3-INJECTOR

**S/N: BXY1-1899**

**PART OF 227-3048, 259-2432, 259-2445, 259-2451 VALVE & LINES GP-LUBRICATION AN ATTACHMENT**

**SMCS-7540** **i02113022**

| NOTE | REF NO | GRAPHIC REF | PART NUMBER | QTY | PART NAME 1 2 3 4 5 6 (PRODUCT LEVEL) | SEE PAGE |
|---|---|---|---|---|---|---|
| J | 1 | 1 | **5T-5045** | 3 | INJECTOR GP-LUBRICATION | |
| | | | | | (EACH INCLUDES) | |
| | 2 | 1 | **8X-1106** | 1 | FITTING AS-GREASE (1/8-27-THD) | |
| | 3 | 1 | **191-0554** | 1 | PACKING | |
| | | | | | AVAILABLE REPAIR KIT(S): | |
| J | | | **8W-2555** | 1 | KIT-INJECTOR (LUBE) | |
| | | | | | (INCLUDES PLUNGER, PISTON ROD, SPRING, & PACKING) | |

J-KIT MARKED J SERVICES PART MARKED J

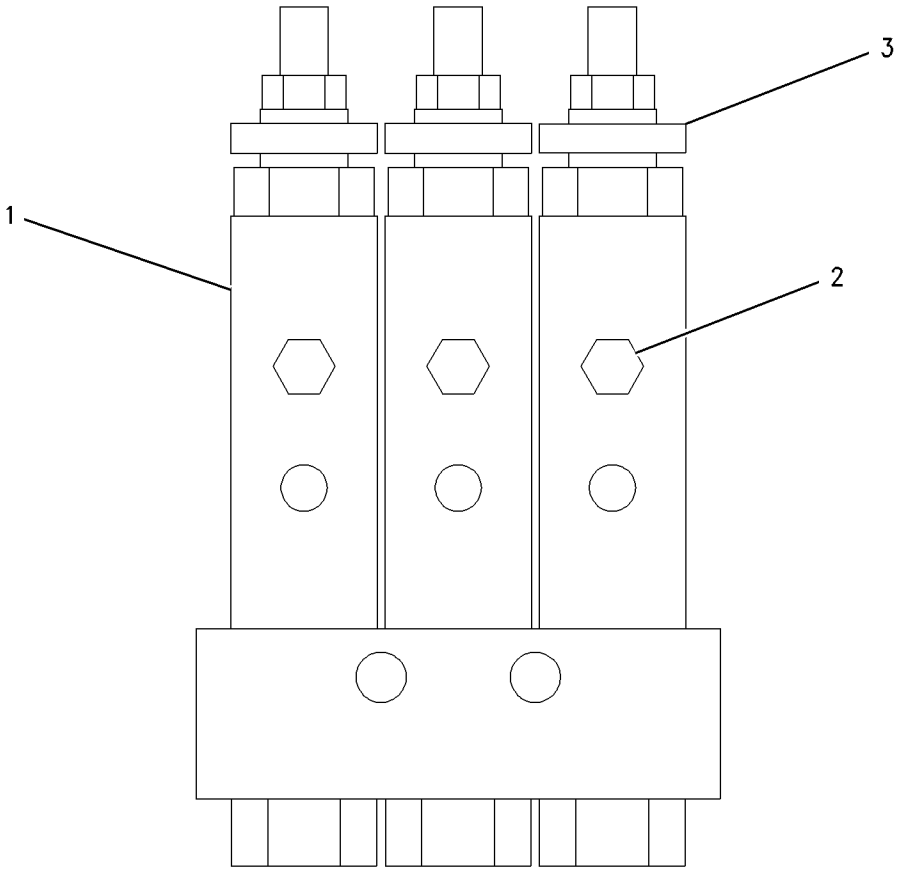


GRAPHIC #1 **<END>** g00752550

# *8W-2597* VALVE GP-LUBE DISTRIBUTION–4-INJECTOR

**S/N: BXY1-1899**

**PART OF 227-3047, 259-2431, 259-2446, 259-2447, 259-2453 VALVE & LINES GP-LUBRICATION AN ATTACHMENT**

**SMCS-7540** **i02113084**

| NOTE | REF NO | GRAPHIC REF | PART NUMBER | QTY | PART NAME 1 2 3 4 5 6 (PRODUCT LEVEL) | SEE PAGE |
|---|---|---|---|---|---|---|
| J | 1 | 1 | **5T-5045** | 4 | INJECTOR GP-LUBRICATION | |
| | | | | | (EACH INCLUDES) | |
| | 1A | 1 | **8X-1106** | 1 | FITTING AS-GREASE (1/8-27-THD) | |
| | 2 | 1 | **191-0554** | 4 | PACKING | |
| | | | | | AVAILABLE REPAIR KIT(S): | |
| J | | | **8W-2555** | 1 | KIT-INJECTOR (LUBE) | |
| | | | | | (INCLUDES PLUNGER, PISTON ROD, SPRING & PACKING) | |

J-KIT MARKED J SERVICES PART MARKED J

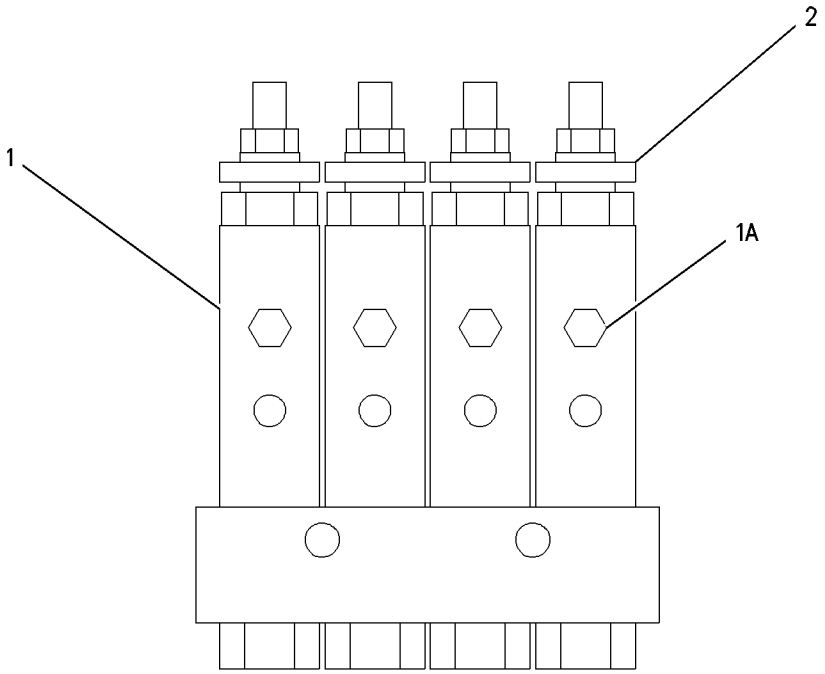


GRAPHIC #1 **<END>** g00752264

# 141-2107 VALVE GP-LUBE DISTRIBUTION–2-INJECTOR–REAR BANKS

**S/N: BXY1-1899**

**PART OF 229-2622, 259-2414, 259-2422 VALVE & LINES GP-LUBRICATION AN ATTACHMENT**

**SMCS-7540** **i02113124**

| NOTE | REF NO | GRAPHIC REF | PART NUMBER | QTY | PART NAME 1 2 3 4 5 6 (PRODUCT LEVEL) | SEE PAGE |
|---|---|---|---|---|---|---|
| J | 1 | 1 | **5T-5045** | 2 | INJECTOR GP-LUBRICATION | |
| | | | | | (EACH INCLUDES) | |
| | 2 | 1 | **8X-1106** | 1 | FITTING AS-GREASE (1/8-27-THD) | |
| | 3 | 1 | **191-0554** | 2 | PACKING | |
| | | | | | AVAILABLE REPAIR KIT(S): | |
| J | | | **8W-2555** | 1 | KIT-INJECTOR (LUBE) | |
| | | | | | (INCLUDES PLUNGER, PISTON, ROD, SPRING & PACKING) | |

J-KIT MARKED J SERVICES PART MARKED J

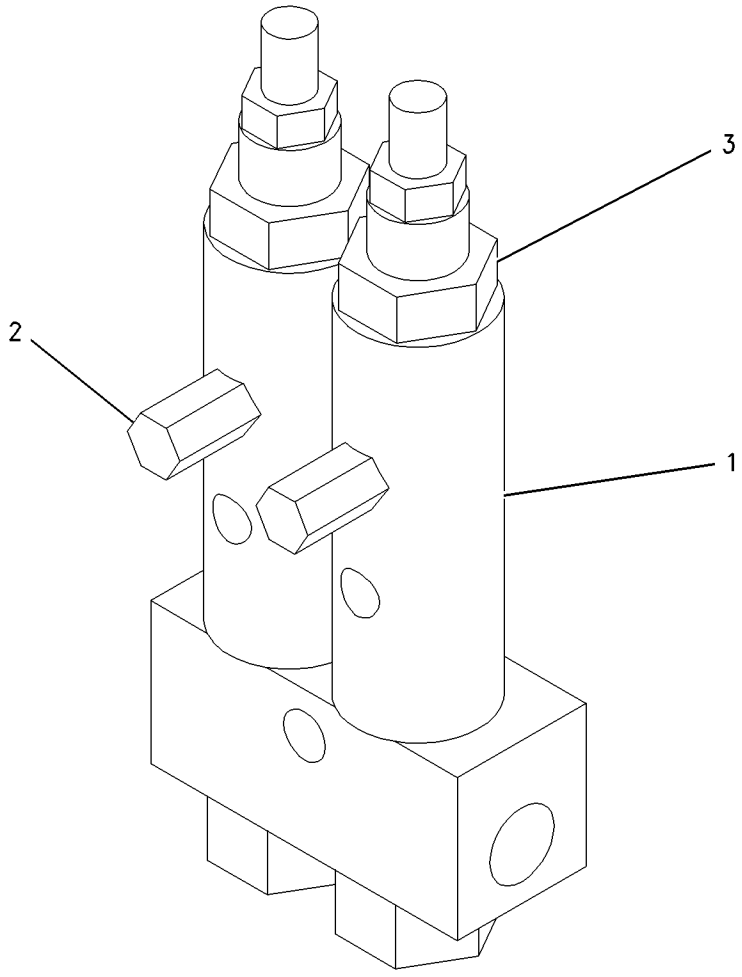


GRAPHIC #1 **<END>** g00804476

# 224-3951 VALVE GP-LUBE DISTRIBUTION–8-INJECTOR

**S/N: BXY1-1899**

**PART OF 224-3954 VALVE & LINES GP-LUBRICATION**

**AN ATTACHMENT**

**SMCS-7540** **i01944184**

| NOTE | REF NO | GRAPHIC REF | PART NUMBER | QTY | PART NAME 1 2 3 4 5 6 (PRODUCT LEVEL) | SEE PAGE |
|---|---|---|---|---|---|---|
| | 1 | 1 | **3B-8488** | 1 | FITTING-GREASE | |
| | 2 | 1 | **5P-3422** | 1 | TEE-PIPE | |
| | 3 | 1 | **171-8867** | 1 | VALVE AS-LUBE DISTRIBUTION | |
| | 4 | 1 | **171-8869** | 4 | GASKET | |
| | 5 | 1 | **171-8870** | 4 | PLUG | |
| | 6 | 1 | **155-2478** | 4 | ADAPTER | |
| | 7 | 1 | **3B-6552** | 2 | ELBOW | |

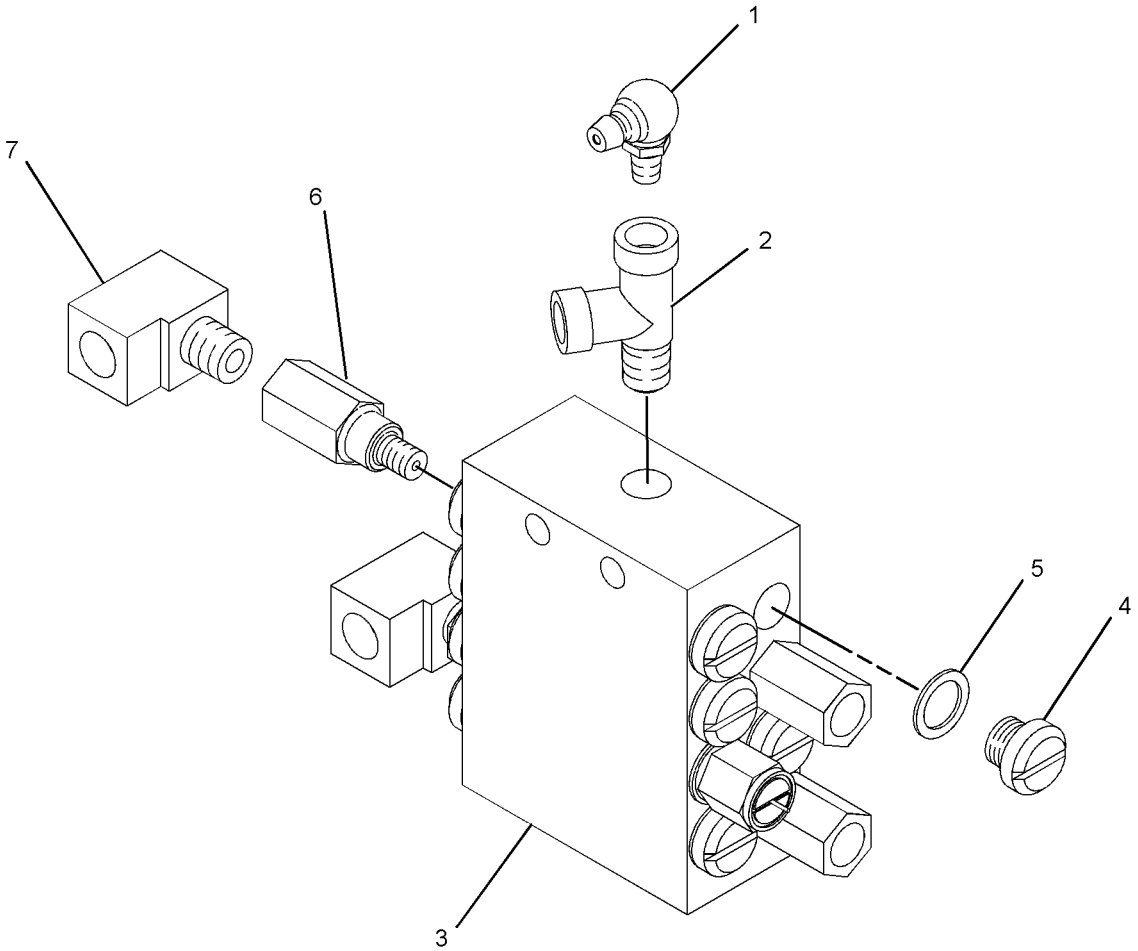


GRAPHIC #1 **<END>** g01014047

# 224-4326 VALVE GP-LUBE DISTRIBUTION–12-INJECTOR

**S/N: BXY1-1899**
**PART OF 224-4338 VALVE & LINES GP-LUBRICATION**
**AN ATTACHMENT**

**SMCS-7540** **i01944911**

| NOTE | REF NO | GRAPHIC REF | PART NUMBER | QTY | PART NAME 1 2 3 4 5 6 (PRODUCT LEVEL) | SEE PAGE |
|---|---|---|---|---|---|---|
| | 1 | 1 | **3B-8488** | 1 | FITTING-GREASE | |
| | 2 | 1 | **5P-3422** | 1 | TEE-PIPE | |
| | 3 | 1 | **171-8868** | 1 | VALVE AS-LUBE DISTRIBUTION | |
| | 4 | 1 | **171-8869** | 8 | GASKET | |
| | 5 | 1 | **171-8870** | 8 | PLUG | |
| | 6 | 1 | **155-2478** | 4 | ADAPTER | |
| | 7 | 1 | **3B-6552** | 2 | ELBOW | |
| | 8 | 1 | **8L-5008** | 1 | ELBOW-PIPE | |

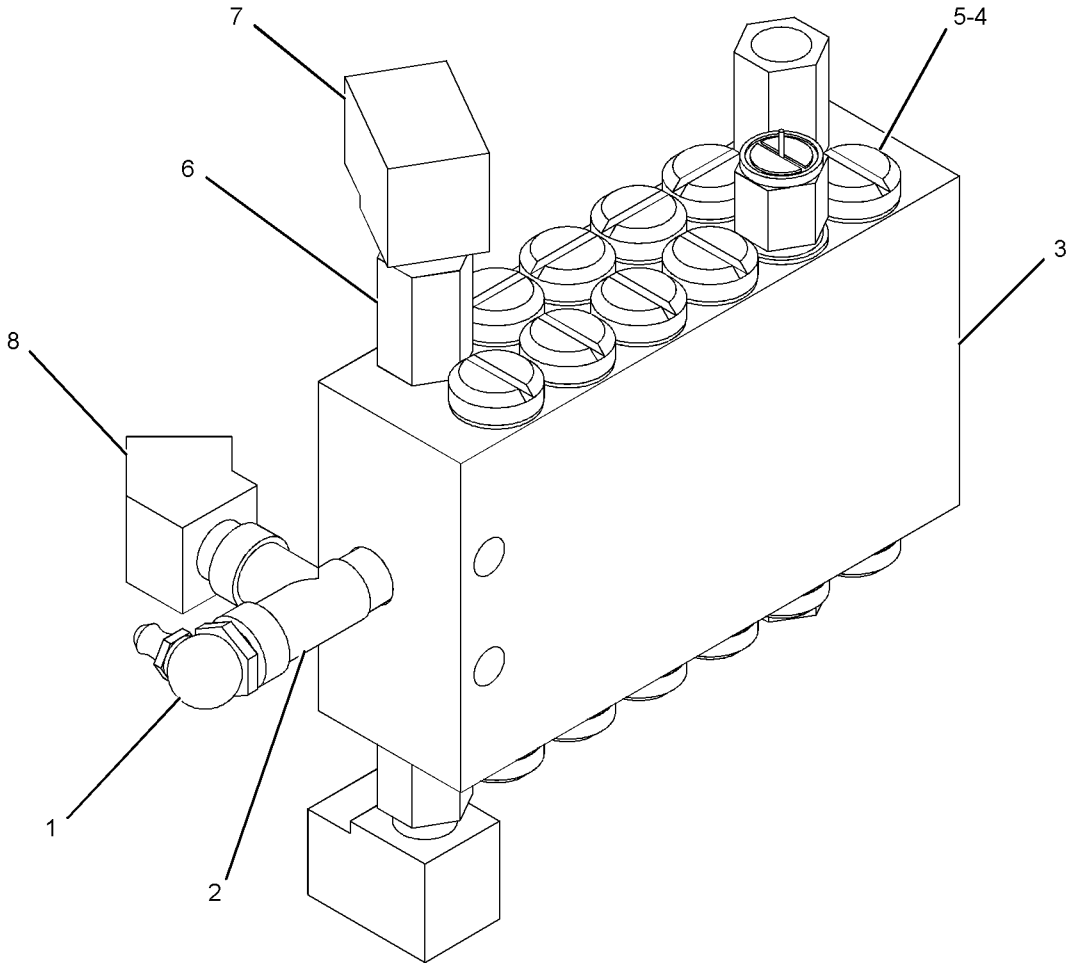


GRAPHIC #1 **<END>** g01013912

# 224-4327 VALVE GP-LUBE DISTRIBUTION–10-INJECTOR

**S/N: BXY1-1899**

**PART OF 224-4328 VALVE & LINES GP-LUBRICATION**

**AN ATTACHMENT**

**SMCS-7540** **i01944233**

| NOTE | REF NO | GRAPHIC REF | PART NUMBER | QTY | PART NAME 1 2 3 4 5 6 (PRODUCT LEVEL) | SEE PAGE |
|---|---|---|---|---|---|---|
| | 1 | 1 | **3B-8488** | 2 | FITTING-GREASE | |
| | 2 | 1 | **3B-8489** | 2 | FITTING-GREASE | |
| | 3 | 1 | **5P-3422** | 4 | TEE-PIPE | |
| | 4 | 1 | **171-8869** | 5 | GASKET | |
| | 5 | 1 | **171-8870** | 5 | PLUG | |
| | 6 | 1 | **155-2478** | 5 | ADAPTER | |
| | 7 | 1 | **177-4687** | 1 | VALVE AS-LUBE DISTRIBUTION | |
| | 8 | 1 | **3B-6552** | 1 | ELBOW | |

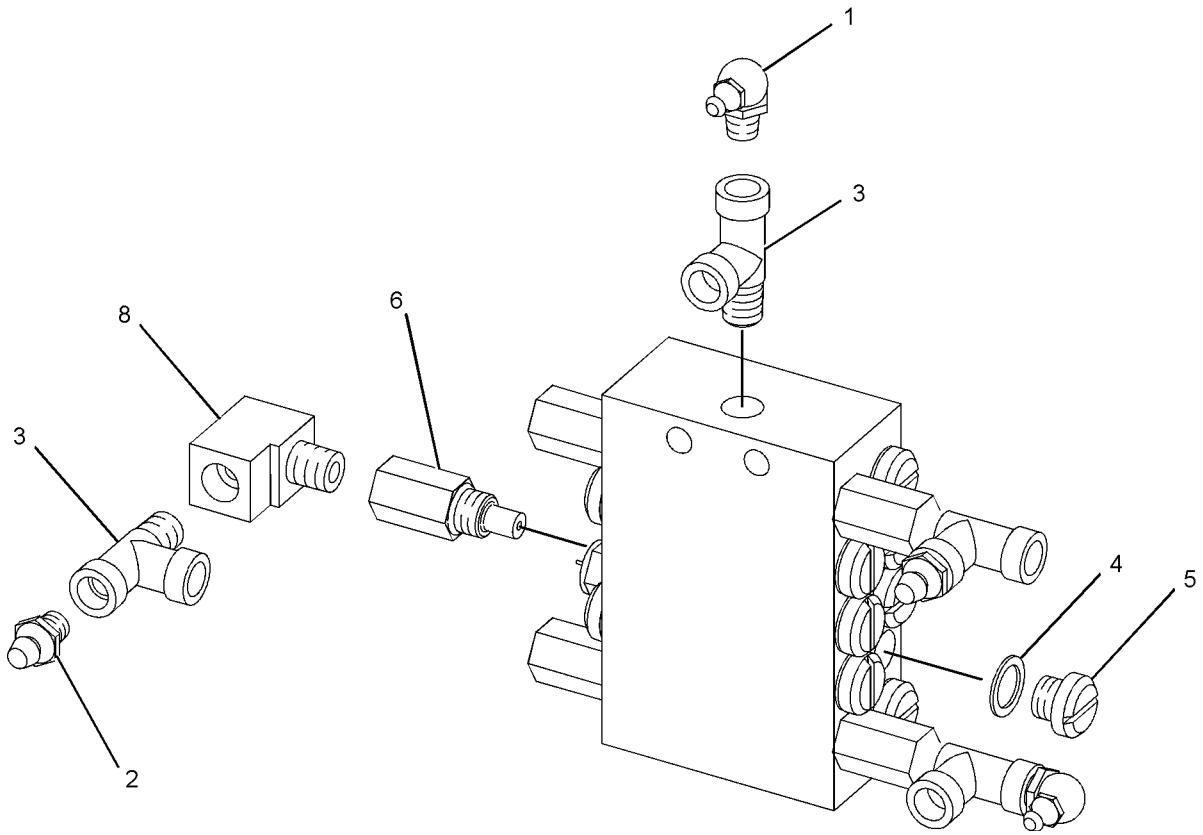


GRAPHIC #1 **<END>** g01014151

# 224-4420 VALVE GP-LUBE DISTRIBUTION–12-INJECTOR

**S/N: BXY1-UP**

**PART OF 224-4410, 259-2407, 259-2448 VALVE & LINES GP-LUBRICATION**

**AN ATTACHMENT**

**SMCS-7540** **i01944124**

| NOTE | REF NO | GRAPHIC REF | PART NUMBER | QTY | PART NAME 1 2 3 4 5 6 (PRODUCT LEVEL) | SEE PAGE |
|---|---|---|---|---|---|---|
| | 1 | 1 | **3B-8489** | 5 | FITTING-GREASE | |
| | 2 | 1 | **5P-3422** | 5 | TEE-PIPE | |
| | 3 | 1 | **171-8868** | 1 | VALVE AS-LUBE DISTRIBUTION | |
| | 4 | 1 | **171-8869** | 5 | GASKET | |
| | 5 | 1 | **171-8870** | 5 | PLUG | |
| | 6 | 1 | **155-2478** | 7 | ADAPTER | |
| | 7 | 1 | **3B-6552** | 1 | ELBOW | |
| | 8 | 1 | **4M-8973** | 2 | ELBOW | |

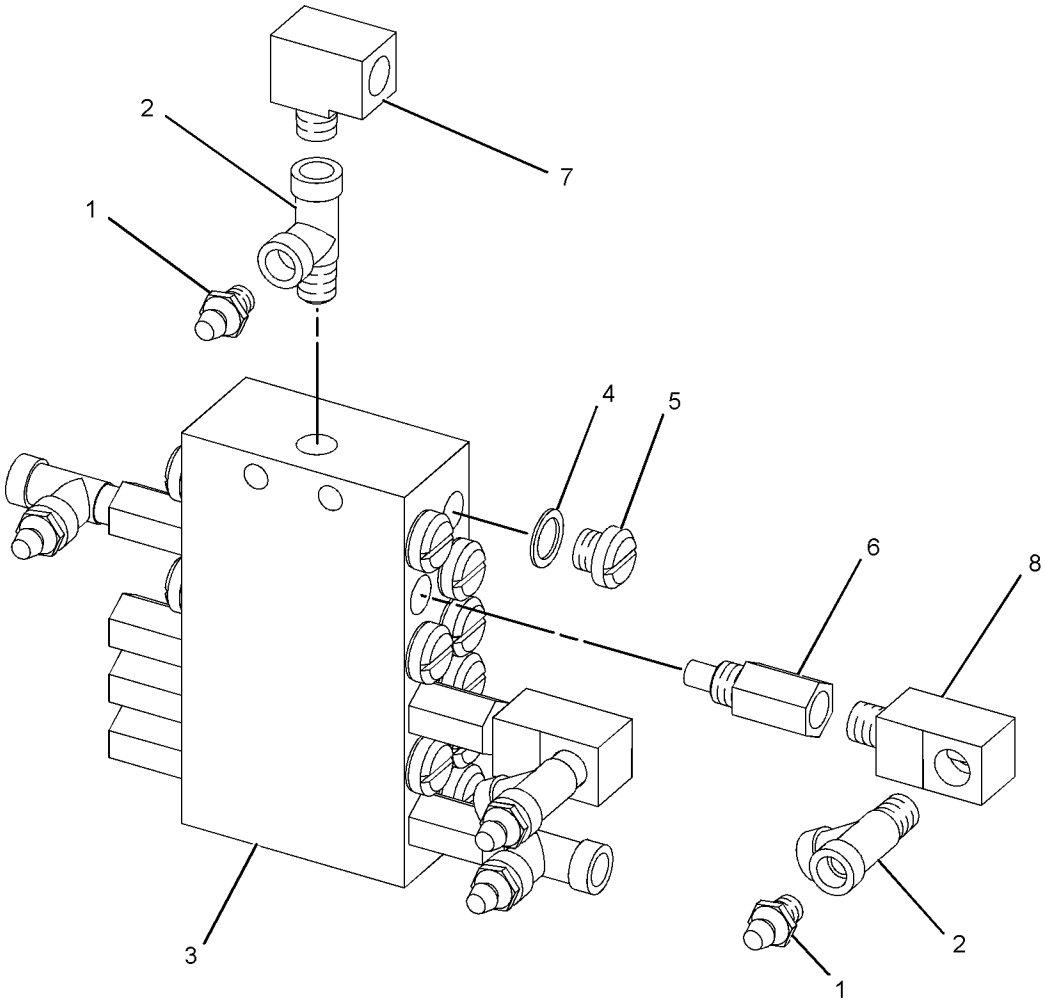


GRAPHIC #1 **<END>** g01014076

# 224-4422 VALVE GP-LUBE DISTRIBUTION–6-INJECTOR

**S/N: BXY1-UP**

**PART OF 224-4411, 240-9692, 259-2408, 285-7285, 285-7287, 285-7289 VALVE & LINES GP-LUBRICATION AN ATTACHMENT**

**SMCS-7540** **i01943952**

| NOTE | REF NO | GRAPHIC REF | PART NUMBER | QTY | PART NAME 1 2 3 4 5 6 (PRODUCT LEVEL) | SEE PAGE |
|---|---|---|---|---|---|---|
| | 1 | 1 | **3B-8489** | 1 | FITTING-GREASE | |
| | 2 | 1 | **5P-3422** | 1 | TEE-PIPE | |
| | 3 | 1 | **171-8869** | 4 | GASKET | |
| | 4 | 1 | **171-8870** | 4 | PLUG | |
| | 5 | 1 | **155-2478** | 2 | ADAPTER | |
| | 6 | 1 | **177-4686** | 1 | VALVE AS-LUBE DISTRIBUTION | |
| | 7 | 1 | **4M-8973** | 2 | ELBOW | |

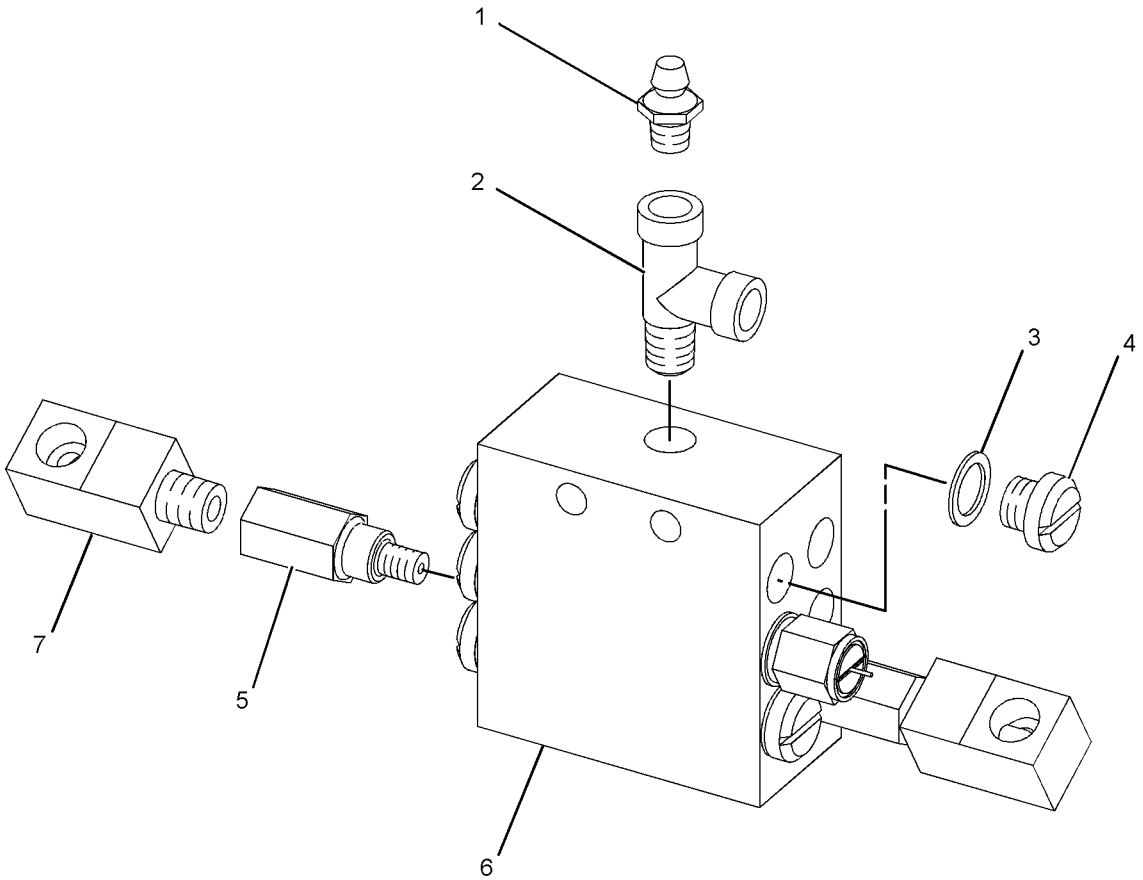


GRAPHIC #1 **<END>** g01014100

# *220-1432* ACCUMULATOR GP-BRAKE–CHARGED

**S/N: BXY1-UP**

**PART OF 308-2724 CONTROL GP-PARKING BRAKE, 230-2407 CONTROL GP-SERVICE BRAKE**

**FIELD REPLACEMENT ORDER 220-2720–PAGE 958**

**ALSO AN ATTACHMENT**

**SMCS-4263** **i02373178**

| NOTE | REF NO | GRAPHIC REF | PART NUMBER | QTY | PART NAME 1 2 3 4 5 6 (PRODUCT LEVEL) | SEE PAGE |
|---|---|---|---|---|---|---|
| | | | | | (NO SERVICED PARTS) | |

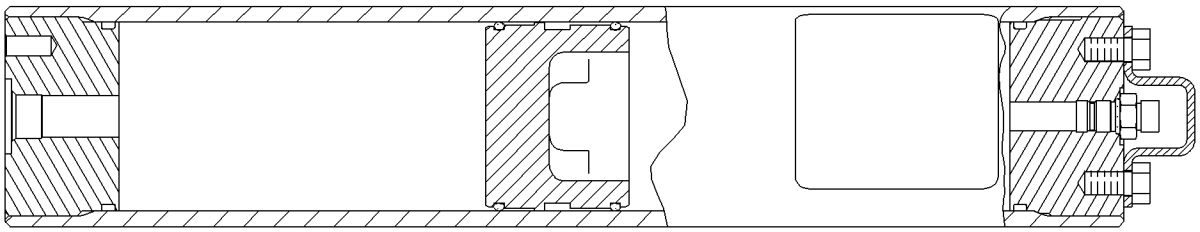

GRAPHIC #1 **<END>** g00983855

# 220-2720 ACCUMULATOR GP-BRAKE—UNCHARGED

**S/N: BXY1-UP**

**FIELD REPLACEMENT ORDER 283-1137—PAGE 959. FIELD REPLACEMENT FOR 220-1432—PAGE 957**

**SMCS-4263** **i02741367**

| NOTE | REF NO | GRAPHIC REF | PART NUMBER | QTY | PART NAME 1 2 3 4 5 6 (PRODUCT LEVEL) | SEE PAGE |
|---|---|---|---|---|---|---|
| | 1 | 1 | **069-2535** | 1 | VALVE-GAS | |
| | 2 | 1 | **111-9110** | 1 | PROTECTOR-GAS VALVE | |
| | 3 | 1 | **135-7123** | 1 | PISTON | |
| | 4 | 1 | **1J-9671** | 1 | SEAL-O-RING | |
| | 5 | 1 | **5M-3062** | 2 | BOLT (3/8-16X0.75-IN) | |
| | 6 | 1 | **170-0493** | 1 | KIT-SEAL (HYDRAULIC ACCUMULATOR) | |

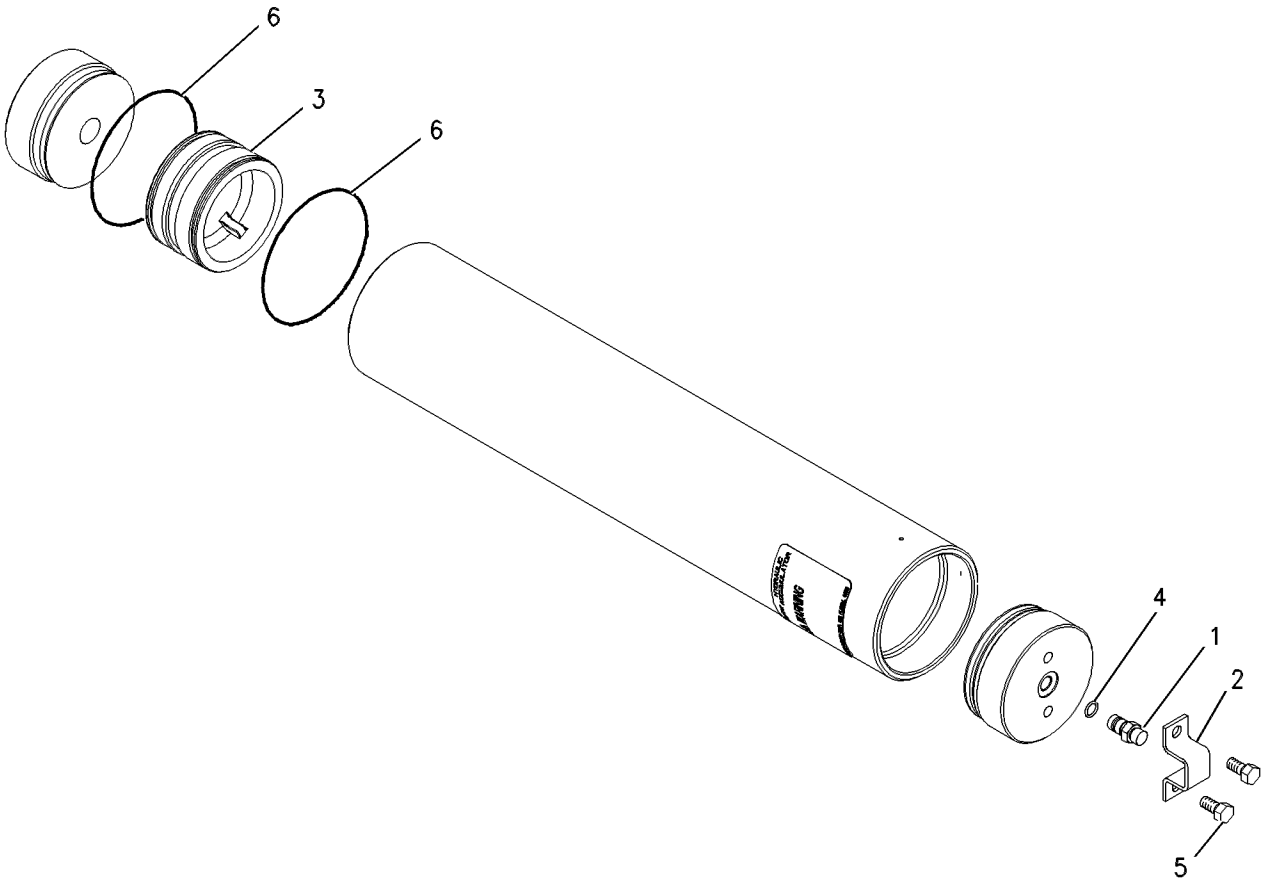


GRAPHIC #1 **<END>** g00292284

# 283-1137 ACCUMULATOR GP-BRAKE—UNCHARGED

**S/N: BXY1-UP**

**FIELD REPLACEMENT FOR 220-2720—PAGE 958**

**SMCS-4263** **i02518326**

| NOTE | REF NO | GRAPHIC REF | PART NUMBER | QTY | PART NAME 1 2 3 4 5 6 (PRODUCT LEVEL) | SEE PAGE |
|---|---|---|---|---|---|---|
| | 1 | 1 | **069-2535** | 1 | VALVE-GAS | |
| | 2 | 1 | **111-9110** | 1 | PROTECTOR-GAS VALVE | |
| | 3 | 1 | **135-7123** | 1 | PISTON | |
| | 4 | 1 | **1J-9671** | 1 | SEAL-O-RING | |
| | 5 | 1 | **5M-3062** | 2 | BOLT (3/8-16X0.75-IN) | |
| | 6 | 1 | **170-0493** | 1 | KIT-SEAL (HYDRAULIC ACCUMULATOR) | |
| | | | | | (KIT INCLUDES SEALS,WASHERS,AND PISTON) | |

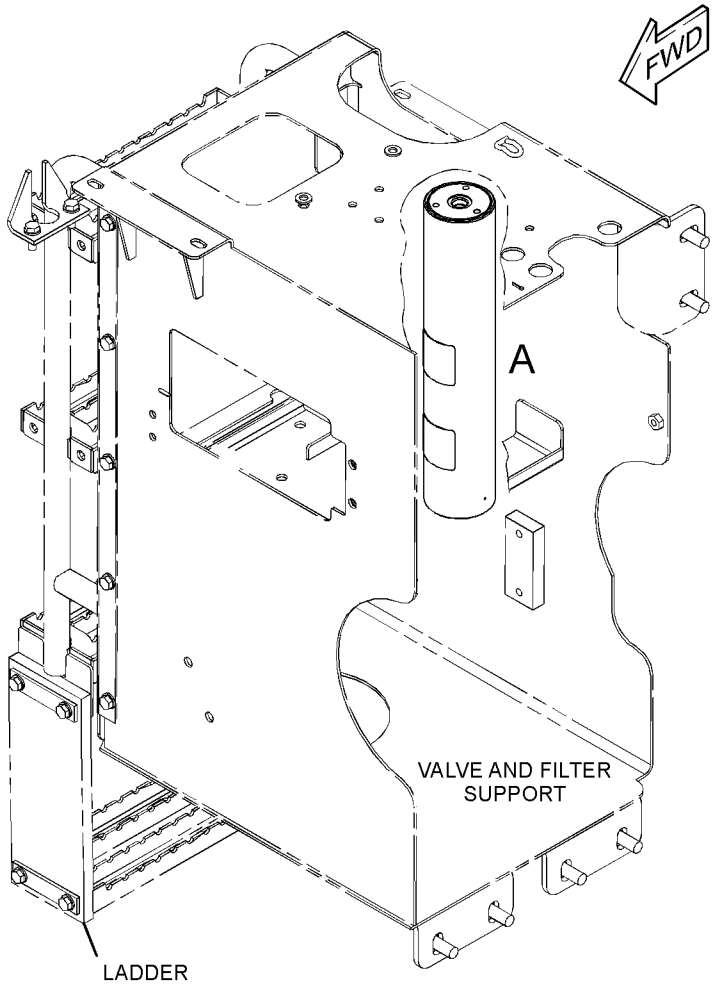


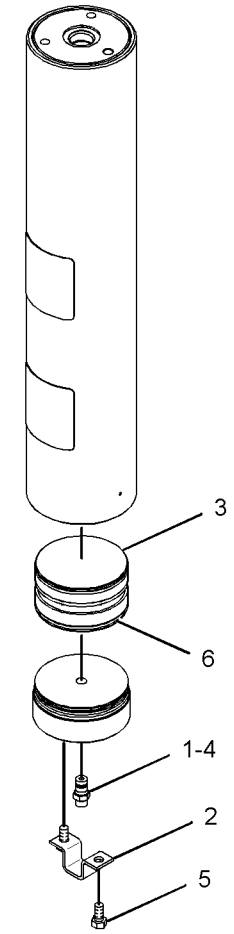


VIEW OF AREA A (EXPLODED)

GRAPHIC #1

**<END>**

g01331047

# 180-4000 BASE GP-FOOT BRAKE–PEDAL, RH

**S/N: BXY1-UP**

**PART OF 180-3999 CONTROL GP-FOOT BRAKE**

**ALSO AN ATTACHMENT**

**SMCS-4269** **i02022874**

| NOTE | REF NO | GRAPHIC REF | PART NUMBER | QTY | PART NAME 1 2 3 4 5 6 (PRODUCT LEVEL) | SEE PAGE |
|---|---|---|---|---|---|---|
| | 1 | 1 | **4E-9664** | 1 | PIN | |
| | 2 | 1 | **009-3101** | 3 | RING-RETAINING | |
| | 3 | 1 | **112-2276** | 1 | HARNESS AS-BRAKE (RIGHT FT BRAKE BASE) | |
| | | 1 | **155-2260** | 1 | KIT-CONNECTING PLUG (3-PIN) | |
| | | | | | (INCLUDES RECEPTACLE AS AND WEDGE) | |
| | | 1 | **124-5811** | 1 | GROMMET AS | |
| | | 1 | **7S-1201** | 1 | SCREW-MACHINE (8-32X0.375-IN) | |
| | | 1 | **127-4988** | 1 | SWITCH AS-LIMIT (SINGLE POLE) (THROTTLE LOCK DEACTIVATION) | |
| | | | | | (RIGHT & BRAKE PEDAL) | |
| | 4 | 1 | **113-7752** | 1 | PEDAL-BRAKE | |
| | 5 | 1 | **115-2247** | 1 | SPRING | |
| M | 6 | 1 | **125-3295** | 2 | SCREW-PAN HEAD (M2.5X0.45X12-MM) | |
| | 7 | 1 | **146-1891** | 1 | SHAFT AS | |
| | | 1 | **1H-4393** | 1 | LOCKWASHER | |
| | | 1 | **009-3101** | 1 | RING-RETAINING | |
| | | 1 | **6V-6718** | 1 | SCREW-SELF-TAPPING (M8X32X6.35-MM) | |
| | | 1 | **146-1890** | 1 | PIN | |
| | 8 | 1 | **148-5581** | 1 | INSULATOR | |
| M | 9 | 1 | **153-6273** | 1 | SETSCREW | |
| | 10 | 1 | **163-3926** | 1 | ROLLER | |
| | 11 | 1 | **5M-6755** | 3 | SCREW-MACHINE (NO 10X0.562-IN) | |
| | 12 | 1 | **8S-2225** | 1 | SEAL-LIP TYPE | |
| | 13 | 1 | **128-0606** | 1 | COVER | |
| | 14 | 1 | **128-0607** | 1 | SEAL | |

M-METRIC PART

**180-4000 BASE GP-F00T BRAKE** *(contd. )* **i02022874**

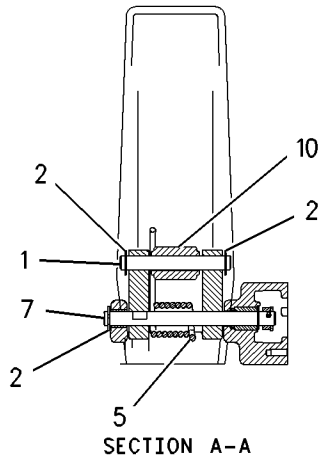

SECTION A-A

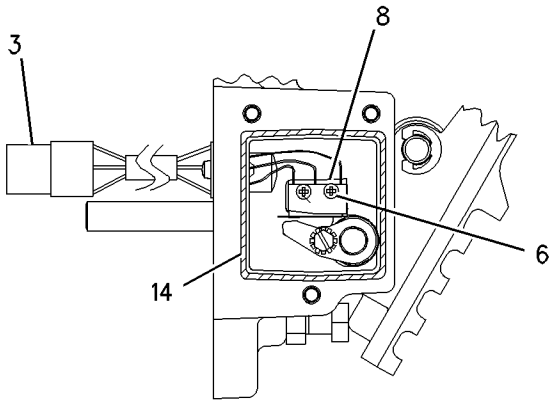

VIEW OF AREA B

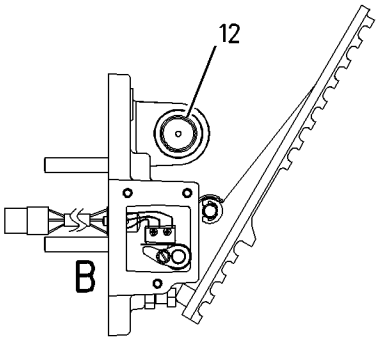


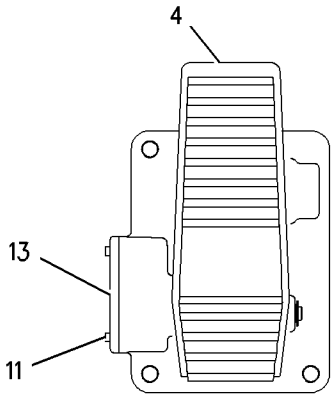


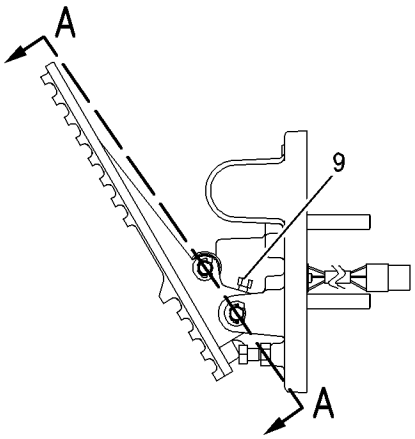


GRAPHIC #1 **<END>** g00765563

# 180-4001 BASE GP-FOOT BRAKE—PEDAL, LH

**S/N: BXY1-UP**

**PART OF 180-3999 CONTROL GP-FOOT BRAKE**

**ALSO AN ATTACHMENT**

**SMCS-4269** **i01816809**

| NOTE | REF NO | GRAPHIC REF | PART NUMBER | QTY | PART NAME 1 2 3 4 5 6 (PRODUCT LEVEL) | SEE PAGE |
|---|---|---|---|---|---|---|
| | 1 | 1 | **3J-7354** | 1 | SEAL-O-RING | |
| | 2 | 1 | **4E-9664** | 1 | PIN | |
| | 3 | 1 | **5M-6755** | 6 | SCREW-MACHINE (NO 10X0.562-IN) | |
| M | 4 | 1 | **6V-2313** | 2 | BOLT (M5X0.8X30-MM) | |
| | 5 | 1 | **8S-2225** | 1 | SEAL-LIP TYPE | |
| M | 6 | 1 | **8T-2899** | 2 | SCREW-MACHINE (M2.5X0.45X6) | |
| | 7 | 1 | **009-3101** | 3 | RING-RETAINING | |
| | 8 | 1 | **105-6117** | 1 | SWITCH AS-LIMIT (STOP LIGHT) | |
| | 9 | 1 | **113-7752** | 1 | PEDAL-BRAKE | |
| | 10 | 1 | **115-2247** | 1 | SPRING | |
| M | 11 | 1 | **125-3295** | 2 | SCREW-PAN HEAD (M2.5X0.45X12-MM) | |
| | 12 | 1 | **205-3583** | 1 | PIN | |
| | 13 | 1 | **146-1892** | 1 | HARNESS AS-BRAKE (STOP LIGHT) (LEFT FOOT BRAKE BASE) | |
| | | 1 | **155-2270** | 1 | KIT-CONNECTING PLUG (2-PIN) | |
| | 14 | 1 | **146-1893** | 1 | COVER | |
| | 15 | 1 | **146-2598** | 1 | SEAL | |
| Y | 16 | 1 | **214-4863** | 1 | SENSOR GP-POSITION (ROTARY) (TC IMPELLER CLUTCH) | 298 |
| | | | | | (LEFT BRAKE PEDAL) | |
| | 17 | 1 | **149-4925** | 1 | ROLLER | |
| M | 18 | 1 | **153-6273** | 1 | SETSCREW | |
| | 19 | 1 | **161-0022** | 1 | SWITCH AS-ADJUSTABLE (STOP LIGHT LIMIT) | |
| | 20 | 1 | **187-2108** | 1 | TERMINAL | |
| | 21 | 1 | **4B-4274** | 2 | WASHER (5.5X13X1.2-MM THK) | |
| | 22 | 1 | **9S-8002** | 1 | PLUG-O-RING | |

M-METRIC PART
Y-SEPARATE ILLUSTRATION

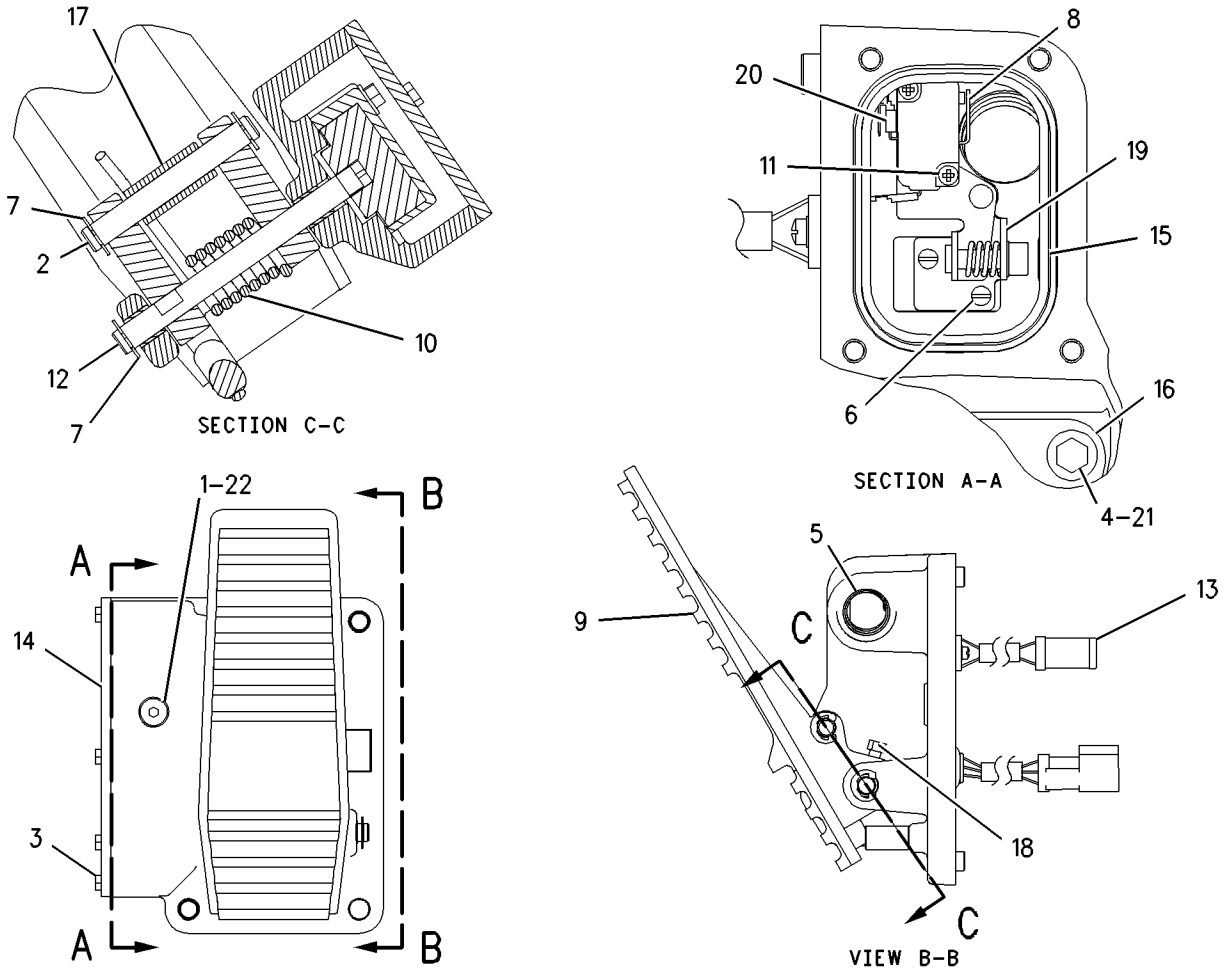


GRAPHIC #1 **<END>** g00764677

# BRAKING SYSTEM

## *174-1552* BRAKE GP-PARKING

**S/N: BXY1-UP**

**PART OF 225-5455 POWER TRAIN AR**

**SMCS-4267** **i01369547**

| NOTE | REF NO | GRAPHIC REF | PART NUMBER | QTY | PART NAME 1 2 3 4 5 6 (PRODUCT LEVEL) | SEE PAGE |
|---|---|---|---|---|---|---|
| | 1 | 1 | **1P-4085** | 1 | HUB | |
| | 2 | 1 | **1V-8279** | 4 | DISC AS-BRAKE | |
| | 3 | 1 | **3P-3505** | 1 | SHAFT-BRAKE | |
| | 4 | 1 | **3S-1262** | 1 | RETAINER | |
| | 5 | 1 | **4B-4158** | 4 | SCREW-DRIVE (3/16X0.25-IN) | |
| | 6 | 1 | **4E-8583** | 3 | PISTON | |
| | 7 | 1 | **7K-4942** | 1 | SCREW-PURGE | |
| | 8 | 1 | **7S-3996** | 1 | PLATE-RETAINING | |
| | 9 | 1 | **7S-3997** | 9 | SPRING | |
| | 10 | 1 | **7S-4002** | 1 | PLATE-WARNING (BRAKE) | |
| | 11 | 1 | **170-6712** | 3 | RING-BACKUP | |
| | 12 | 1 | **171-1391** | 3 | SEAL | |
| | 13 | 1 | **174-1550** | 1 | HOUSING-BRAKE | |
| | 14 | 1 | **177-1483** | 1 | SEAL-LIP TYPE | |
| | 15 | 1 | **184-3675** | 1 | PLATE-PRESSURE | |
| | 16 | 1 | **184-3677** | 3 | PLATE-REACTION | |
| | 17 | 1 | **184-4617** | 1 | CAGE AS | |
| | 18 | 1 | **188-0960** | 6 | SPACER (13.88X21.34X63-MM THK) | |
| | 19 | 1 | **0L-1558** | 1 | BOLT (1/2-20X3.25-IN) | |
| | 20 | 1 | **0S-1595** | 2 | BOLT (1/2-13X1.25-IN) | |
| | 21 | 1 | **0S-1621** | 3 | BOLT (1/2-13X1-IN) | |
| | 22 | 1 | **1A-5822** | 7 | BOLT (1/2-13X2.75-IN) | |
| | 23 | 1 | **1D-4569** | 6 | BOLT (1/2-13X4.25-IN) | |
| | 24 | 1 | **2A-1531** | 6 | BOLT (1/2-13X6.5-IN) | |
| | 25 | 1 | **2H-2665** | 1 | SEAL-O-RING | |
| | 26 | 1 | **2M-0849** | 24 | WASHER-HARD (13.5X25.5X5-MM THK) | |
| | 27 | 1 | **3J-1907** | 3 | SEAL-O-RING | |
| | 28 | 1 | **3K-2518** | 1 | BALL BEARING | |
| | 29 | 1 | **3K-2556** | 1 | RING-RETAINING | |
| | 30 | 1 | **7K-9204** | 3 | SEAL-LIP TYPE | |
| | 31 | 1 | **8H-8257** | 1 | SEAL-O-RING | |
| | 32 | 1 | **9S-4191** | 3 | PLUG-O RING | |

*174-1552* **BRAKE GP-PARKING** *(contd.)* **i01369547**

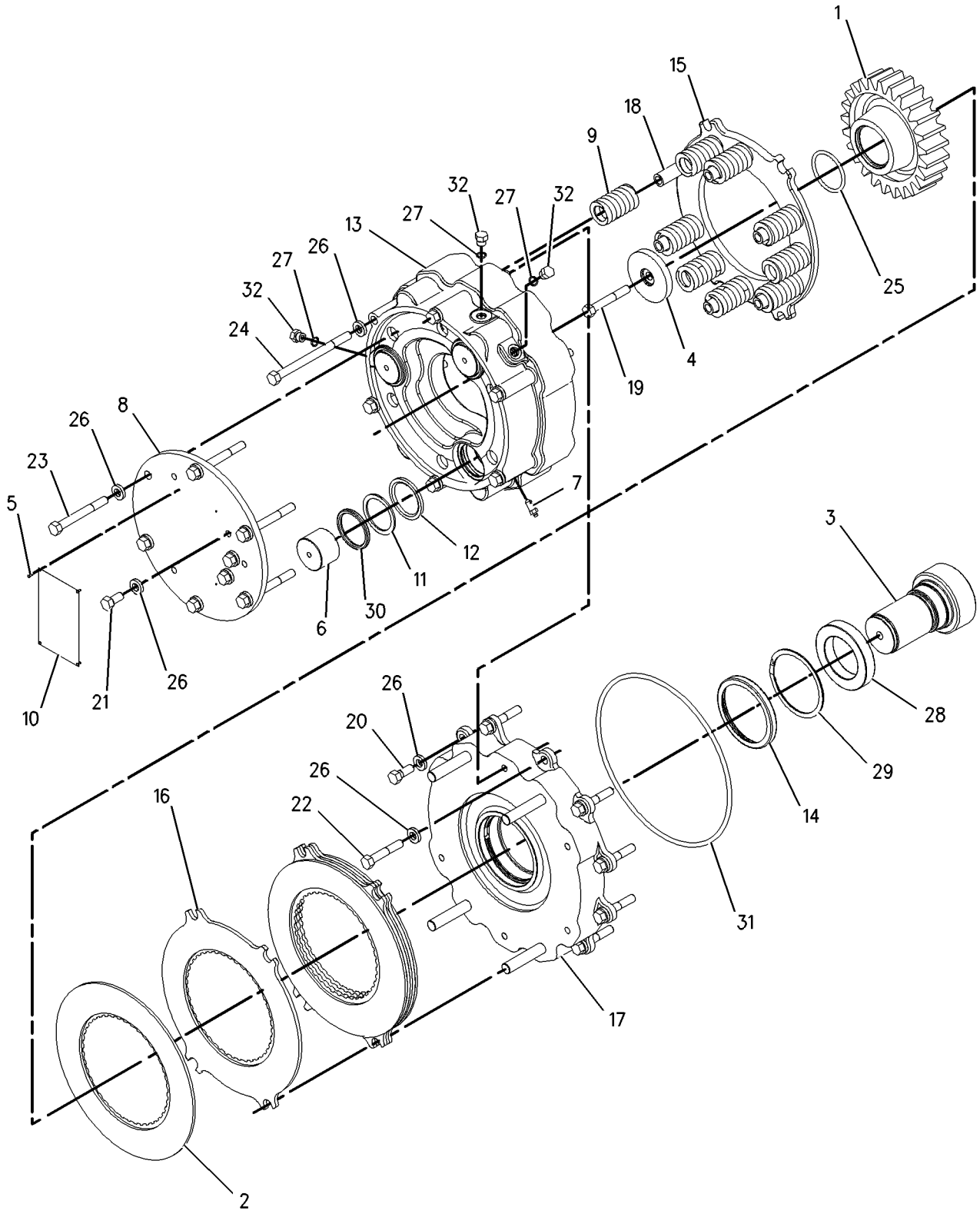


GRAPHIC #1 **<END>** g00725988

# BRAKING SYSTEM

## 161-9275 BRAKE GP-SERVICE

**S/N: BXY1-UP**

**PART OF 137-8833 AXLE AR-FIXED, 137-8832 AXLE AR-OSCILLATING**

**SMCS-4251** **i01222704**

| NOTE | REF NO | GRAPHIC REF | PART NUMBER | QTY | PART NAME 1 2 3 4 5 6 (PRODUCT LEVEL) | SEE PAGE |
|---|---|---|---|---|---|---|
| | 1 | 1 | **107-9172** | 1 | PISTON | |
| | 2 | 1 | **151-6251** | 1 | SEAL-D-RING | |
| | 3 | 1 | **5P-8119** | 1 | SEAL-O-RING | |
| | 4 | 1 | **9F-2167** | 1 | SCREW-PURGE (3/8-24-THD) | |
| | 5 | 1 | **110-2446** | 1 | ADAPTER | |
| | 6 | 1 | **3K-0360** | 1 | SEAL-O-RING | |
| | 7 | 1 | **151-6250** | 1 | SEAL-D-RING | |
| | 8 | 1 | **134-0039** | 1 | HOUSING | |
| | 9 | 1 | **6M-9155** | 4 | PIN | |
| | 10 | 1 | **7V-8346** | 4 | SPRING-GUIDE | |
| | 11 | 1 | **8V-3609** | 4 | SPRING-RETRACTOR | |
| | 12 | 1 | **118-6606** | 5 | PLATE-OUTER | |
| | 13 | 1 | **105-8750** | 4 | DISC-FRICTION | |
| | 14 | 1 | **134-0037** | 1 | HUB | |
| M | 15 | 1 | **6V-8150** | 3 | BOLT (M12X1.75X60-MM) | |
| | 16 | 1 | **3H-7654** | 3 | WASHER-HARD (13.5X22.5X3-MM THK) | |
| | 17 | 1 | **9M-2076** | 1 | RING-SNAP | |
| | 18 | 1 | **8T-1141** | 1 | RING-RETAINING | |

M-METRIC PART

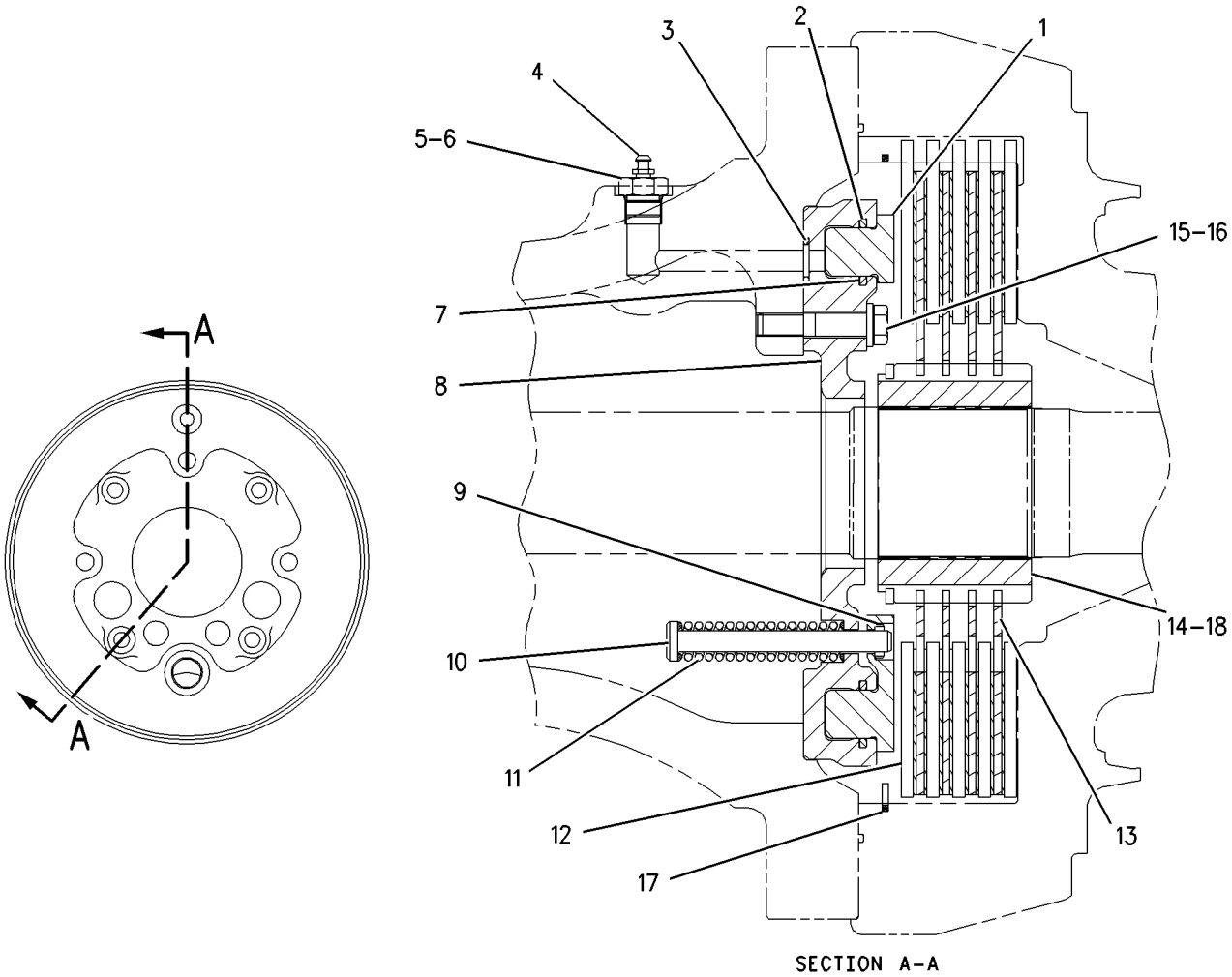


SECTION A-A

GRAPHIC #1 **<END>** g00653361

# *169-8258* CONTROL GP-FOOT BRAKE

**S/N: BXY1-UP**
**PART OF 227-3190, 292-6110, 308-2727 CAB AR**
**ALSO AN ATTACHMENT**

**SMCS-4269** **i02614696**

| NOTE | REF NO | GRAPHIC REF | PART NUMBER | QTY | PART NAME 1 2 3 4 5 6 (PRODUCT LEVEL) | SEE PAGE |
|---|---|---|---|---|---|---|
| Y | 1 | 1 | *180-3999* | 1 | CONTROL GP-FOOT BRAKE | 968 |
| M | 2 | 1 | **099-3649** | 6 | BOLT (M8X1.25X40-MM) | |
| | 3 | 1 | **8T-4121** | 4 | WASHER-HARD (11X21X2.5-MM THK) | |
| M | 4 | 1 | **8T-4133** | 4 | NUT (M10X1.5-THD) | |

M-METRIC PART
Y-SEPARATE ILLUSTRATION

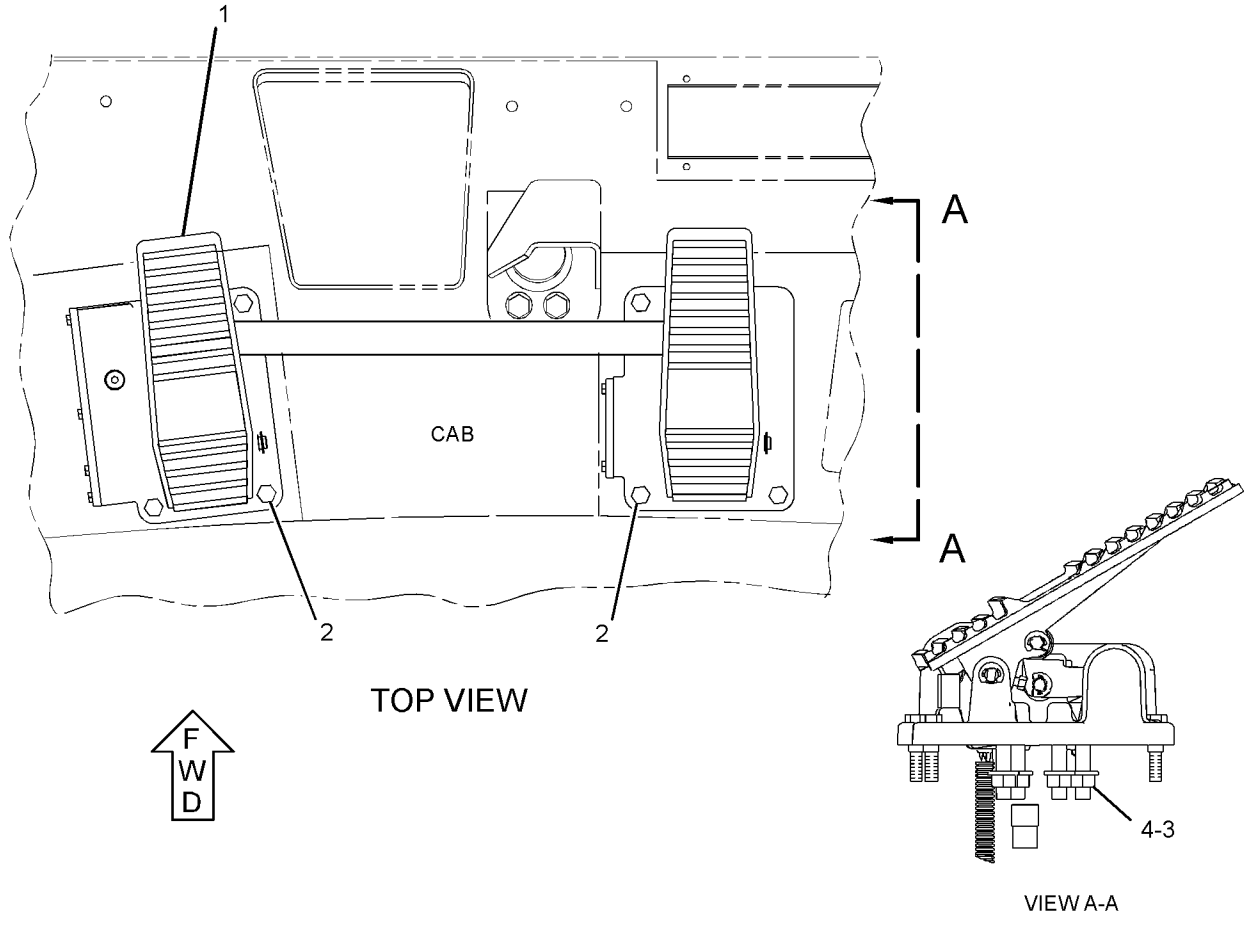


GRAPHIC #1 **<END>** g01311768

# *180-3999* CONTROL GP-FOOT BRAKE

**S/N: BXY1-UP**

**PART OF 169-8258 CONTROL GP-FOOT BRAKE**

**ALSO AN ATTACHMENT**

**SMCS-4269** **i01465414**

| NOTE | REF NO | GRAPHIC REF | PART NUMBER | QTY | PART NAME 1 2 3 4 5 6 (PRODUCT LEVEL) | SEE PAGE |
|---|---|---|---|---|---|---|
| Y | 1 | 1 | **180-4000** | 1 | BASE GP-FOOT BRAKE (RH PEDAL) | 960 |
| Y | 2 | 1 | **180-4001** | 1 | BASE GP-FOOT BRAKE (LH PEDAL) | 962 |
| | 3 | 1 | **180-3994** | 1 | SHAFT AS | |
| | 3A | 1 | **4E-9667** | 2 | ROLLER | |
| | 3B | 1 | **4E-9668** | 4 | PIN | |
| | 3C | 1 | **009-3101** | 4 | RING-RETAINING | |
| | 3D | 1 | **114-9491** | 4 | WASHER | |

Y-SEPARATE ILLUSTRATION

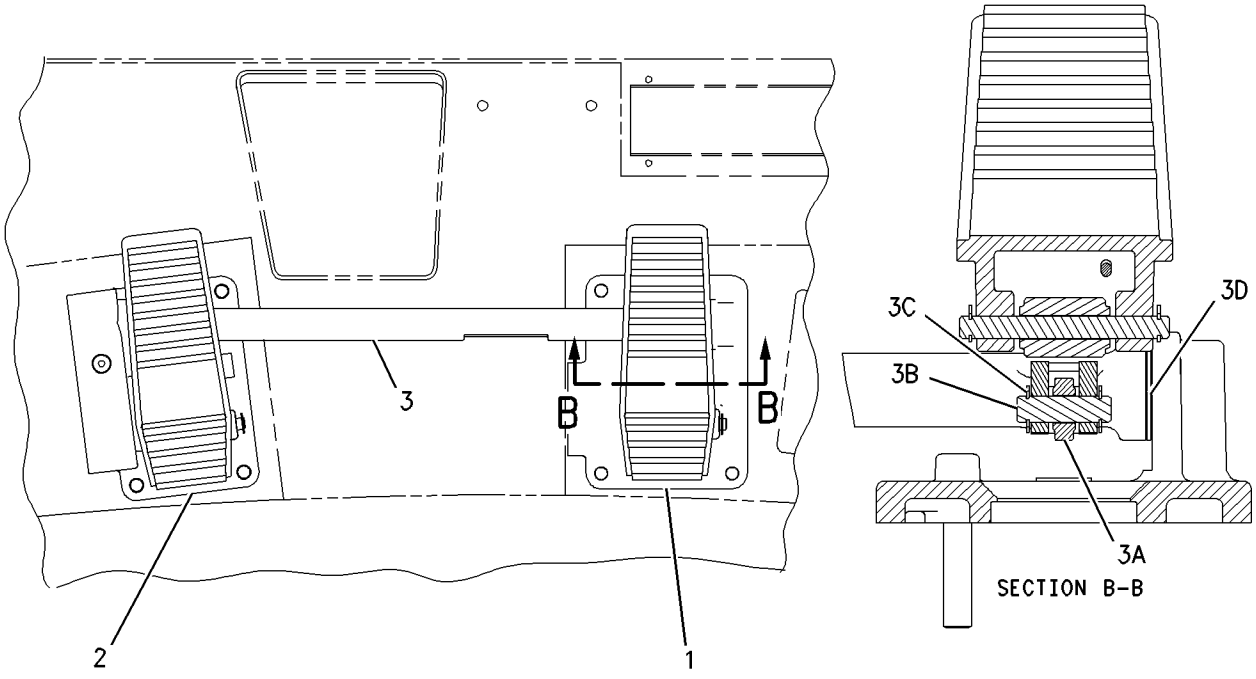


GRAPHIC #1 **<END>** g00765500

# *141-4644* CONTROL GP-PARKING BRAKE

**S/N: BXY1-UP**
**PART OF 227-3190, 292-6110, 308-2727 CAB AR**
**ALSO AN ATTACHMENT**

**SMCS-4282, 4284** **i01368085**

| NOTE | REF NO | GRAPHIC REF | PART NUMBER | QTY | PART NAME 1 2 3 4 5 6 (PRODUCT LEVEL) | SEE PAGE |
|---|---|---|---|---|---|---|
| | 1 | 1 | **113-4659** | 1 | GROMMET | |
| | 2 | 1 | **153-6224** | 1 | CABLE AS-PARKING BRAKE CONTROL | |
| | 3 | 1 | **122-1671** | 1 | KNOB | |
| M | 4 | 1 | **5C-2890** | 1 | NUT (M6X1-THD) | |

M-METRIC PART

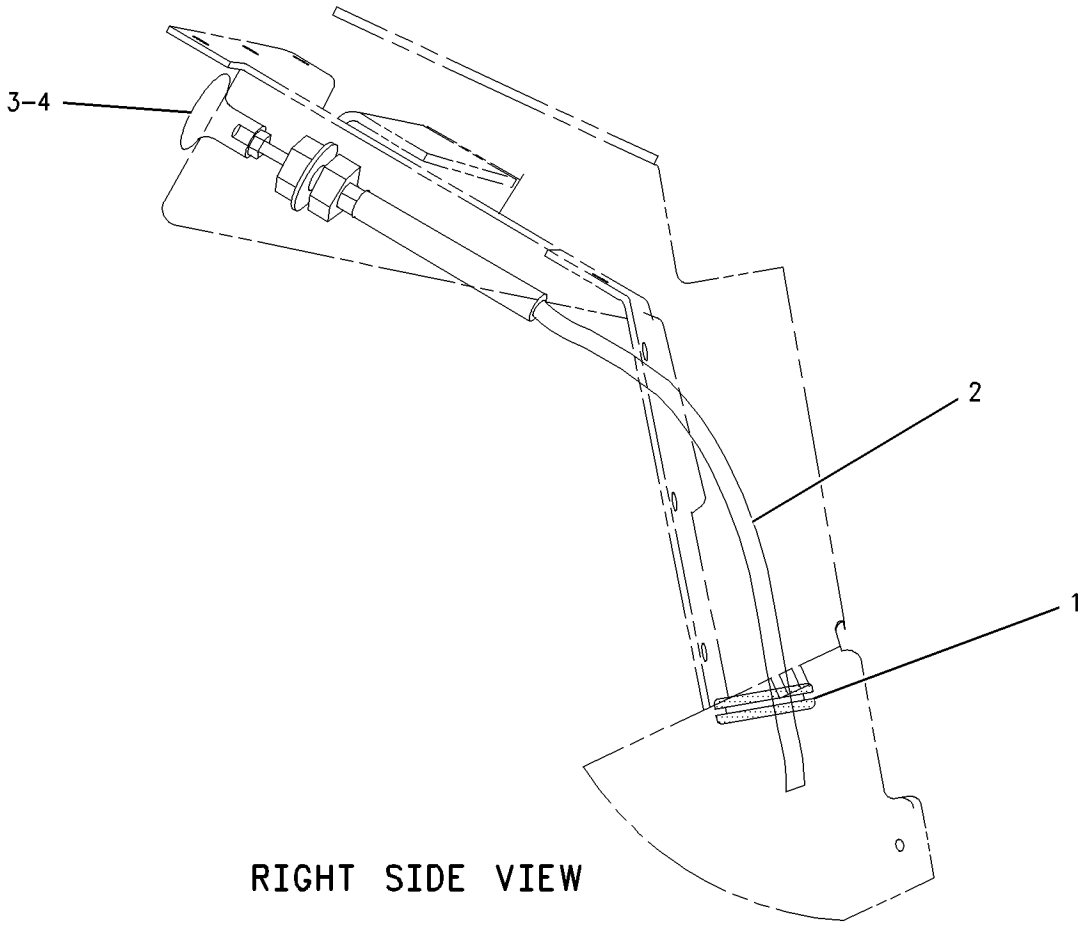


RIGHT SIDE VIEW

GRAPHIC #1 **<END>** g00702290

# *308-2724* CONTROL GP-PARKING BRAKE–AUXILIARY CONTROL

**S/N: BXY1900-UP**
**PART OF 2Q-8722, 2Q-8733 STEEL MILL AR**
**AN ATTACHMENT**

**SMCS-4282, 4284** **i02728633**

| NOTE | REF NO | GRAPHIC REF | PART NUMBER | QTY | PART NAME 1 2 3 4 5 6 (PRODUCT LEVEL) | SEE PAGE |
|---|---|---|---|---|---|---|
| | 1 | 2 | **3B-4607** | 1 | PIN-COTTER | |
| I | 2 | 1 | **5T-9813** | 1 | HOSE AS | |
| | 3 | 2 | **6E-5444** | 1 | VALVE GP-CHECK (BRAKE MANIFOLD) | |
| | 4 | 2 | **6V-0852** | 1 | CAP-DUST | |
| Y | 5 | 2 | **8J-6875** | 1 | VALVE GP-SHUTTLE | 999 |
| | 6 | 1 | **103-0010** | 1 | BRACKET AS | |
| M | | 1 | **8T-3490** | 1 | NUT-WELD (M10X1.5-THD) | |
| | 7 | 2 | **104-7108** | 1 | VALVE GP-CHECK (BRAKE ACCUMULATOR) | |
| | 8 | 1 | **122-1671** | 1 | KNOB | |
| | 9 | 1 | **140-0206** | 1 | PLATE | |
| I | 10 | 2 | **144-7033** | 1 | HOSE AS | |
| | 11 | 1 | *150-4027* | 1 | TEE AS | |
| | | 1 | **3E-2310** | 1 | TEE | |
| | | 1 | **3J-1907** | 1 | SEAL-O-RING | |
| | | 1 | **6V-8397** | 1 | SEAL-O-RING | |
| | 12 | 2 | **174-4312** | 1 | SWITCH AS-PRESSURE (PARKING BRAKE OIL) | |
| | | 2 | **102-8803** | 1 | KIT-RECEPTACLE (3-PIN) | |
| | | | | | (INCLUDES RECEPTACLE AS AND WEDGE) | |
| | | 2 | **3E-3371** | 1 | WEDGE-RECEPTACLE LOCK (3-PIN) | |
| | | 2 | **5P-6008** | 2 | TUBE (6.35-MM DIA) | |
| | | 2 | **186-3735** | 3 | PIN-CONNECTOR (16-GA TO 18-GA) | |
| M | 13 | 2 | **179-4324** | 1 | LOCKNUT (M5X0.8-THD) | |
| | 14 | 1 | **189-7370** | 1 | CLAMP AS | |
| | 15 | 1 | **189-7372** | 2 | PLATE | |
| | 16 | 1 | **189-7373** | 1 | PLATE | |
| I | 17 | 2 | **189-7421** | 1 | HOSE AS | |
| | 18 | 2 | **189-7422** | 1 | BRACKET AS | |
| | 19 | 2 | **189-7423** | 1 | BRACKET | |
| I | 20 | 2 | **189-7425** | 1 | HOSE AS | |
| | 21 | 2 | **189-7428** | 1 | TUBE AS | |
| | 22 | 1 | **189-7429** | 1 | TUBE AS | |
| | 23 | 2 | **189-7470** | 1 | BRACKET AS | |
| M | | 2 | **8T-3612** | 3 | NUT-WELD (M8X1.25-THD) | |
| I | 24 | 2 | **194-2147** | 1 | HOSE AS | |
| Y | 25 | 1 | **200-5962** | 1 | VALVE GP-RELIEF (BRAKE ACCUMULATOR PRESSURE) | 998 |
| | 26 | 2 | **204-6050** | 1 | CABLE AS | |
| | | 2 | **8T-4223** | 3 | WASHER-HARD (13.5X25.5X3-MM THK) | |
| M | | 2 | **8T-4244** | 4 | NUT (M12X1.75-THD) | |
| | | 2 | **9B-0453** | 2 | LOCKWASHER | |
| I | 27 | 2 | **219-4960** | 1 | HOSE AS | |
| Y | 28 | 2 | **219-5155** | 1 | VALVE & MTG GP-BRAKE CONTROL (PARKING) | 992 |
| Y | 29 | 2 | *220-1432* | 1 | ACCUMULATOR GP-BRAKE (CHARGED) | 957 |
| I | 30 | 2 | **227-3213** | 1 | HOSE AS | |
| | 31 | 1 | *250-1440* | 1 | ADAPTER AS | |
| | | 1 | **3K-0360** | 2 | SEAL-O-RING | |
| | | 1 | **7X-3164** | 2 | ADAPTER-SWIVEL | |
| I | 32 | 2 | **251-9991** | 1 | HOSE AS | |
| I | 33 | 1 | **253-7135** | 1 | HOSE AS | |
| Y | 34 | 1 | **308-2714** | 1 | VALVE & MTG GP-BRAKE CONTROL (PARKING) | 994 |
| Y | 35 | 2 | *308-2722* | 1 | WIRING GP-SHUTOFF | 479 |
| I | 36 | 1 | **310-4785** | 1 | HOSE AS | |
| | 37 | 1,2 | **033-8248** | 5 | CLIP | |
| | 38 | 2 | **115-3069** | 1 | CLIP AS-CONNECTOR (3-PIN) | |
| M | 39 | 1 | **129-3178** | 1 | LOCKNUT (M6X1-THD) | |
| | 40 | 1 | **147-0385** | 2 | CLIP | |

## *308-2724* CONTROL GP-PARKING BRAKE *(contd.)* i02728633

| NOTE | REF NO | GRAPHIC REF | PART NUMBER | QTY | PART NAME 1 2 3 4 5 6 (PRODUCT LEVEL) | SEE PAGE |
|---|---|---|---|---|---|---|
| | 41 | 2 | *148-8336* | 1 | CONNECTOR AS | |
| | | 2 | **3J-1907** | 1 | SEAL-O-RING | |
| | | 2 | **6V-8397** | 1 | SEAL-O-RING | |
| | | 2 | **6V-8636** | 1 | CONNECTOR | |
| | 42 | 2 | *148-8375* | 1 | ELBOW AS | |
| | | 2 | **6V-8398** | 2 | SEAL-O-RING | |
| | | 2 | **6V-8981** | 1 | ELBOW | |
| | 43 | 2 | *148-8378* | 1 | ELBOW AS | |
| | | 2 | **3J-1907** | 1 | SEAL-O-RING | |
| | | 2 | **6V-8397** | 1 | SEAL-O-RING | |
| | | 2 | **6V-8724** | 1 | ELBOW | |
| | 44 | 2 | *148-8415* | 2 | REDUCER AS | |
| | | | | | (EACH INCLUDES) | |
| | | 2 | **6V-8397** | 1 | SEAL-O-RING | |
| | | 2 | **6V-8936** | 1 | REDUCER | |
| | 45 | 1 | *148-8444* | 1 | TEE AS-SWIVEL | |
| | | 1 | **6V-8398** | 2 | SEAL-O-RING | |
| | | 1 | **6V-9837** | 1 | TEE-SWIVEL | |
| | 46 | 1,2 | *148-8457* | 3 | UNION AS | |
| | | | | | (EACH INCLUDES) | |
| | | 1,2 | **6V-8398** | 2 | SEAL-O-RING | |
| | | 1,2 | **6V-8995** | 1 | UNION | |
| | 47 | 2 | *150-4037* | 3 | TEE AS | |
| | | | | | (EACH INCLUDES) | |
| | | 2 | **6V-8398** | 2 | SEAL-O-RING | |
| | | 2 | **6V-9844** | 1 | TEE-SWIVEL | |
| | 48 | 2 | *153-6241* | 1 | ELBOW AS | |
| | | 2 | **6V-8398** | 1 | SEAL-O-RING | |
| | | 2 | **8C-8989** | 1 | ELBOW | |
| | 49 | 2 | *153-6252* | 2 | CONNECTOR AS | |
| | | | | | (EACH INCLUDES) | |
| | | 2 | **6V-8398** | 1 | SEAL-O-RING | |
| | | 2 | **7M-8485** | 1 | SEAL-O-RING | |
| | | 2 | **9X-8408** | 1 | CONNECTOR | |
| | 50 | 2 | *164-5567* | 1 | FITTING AS (QUICK DISCONNECT, MALE) | |
| | | 2 | **3J-1907** | 1 | SEAL-O-RING | |
| | | 2 | **6V-3965** | 1 | FITTING-COUPLER | |
| | 51 | 2 | *164-5586* | 1 | TEE AS | |
| | | 2 | **6V-8398** | 1 | SEAL-O-RING | |
| | | 2 | **7X-0871** | 1 | TEE | |
| | 52 | 1,2 | **1S-0994** | 2 | CLIP | |
| | 53 | 2 | **219-4961** | 1 | HOSE AS | |
| | 54 | 2 | **2M-4036** | 1 | ROD END | |
| | 55 | 2 | **3J-1907** | 1 | SEAL-O-RING | |
| | 56 | 2 | **5P-2675** | 2 | BOLT (1/4-20X1.75-IN) | |
| | 57 | 2 | **5P-9085** | 1 | CLIP | |
| | 58 | 2 | **6V-8398** | 3 | SEAL-O-RING | |
| | 59 | 1,2 | **6V-9169** | 4 | NUT-BULKHEAD (13/16-16-THD) | |
| | 60 | 2 | **7X-2618** | 1 | PIN | |
| M | 61 | 2 | **8T-3647** | 3 | BOLT (M8X1.25X80-MM) | |
| | 62 | 1,2 | **8T-4121** | 9 | WASHER-HARD (11X21X2.5-MM THK) | |
| M | 63 | 1,2 | **8T-4137** | 4 | BOLT (M10X1.5X20-MM) | |
| M | 64 | 1,2 | **8T-4139** | 8 | BOLT (M12X1.75X30-MM) | |
| M | 65 | 1 | **8T-4183** | 1 | BOLT (M12X1.75X40-MM) | |
| M | 66 | 1 | **8T-4195** | 4 | BOLT (M10X1.5X30-MM) | |
| | 67 | 2 | **8T-4205** | 2 | WASHER-HARD (7.2X14.5X2-MM THK) | |
| | 68 | 1,2 | **8T-4223** | 15 | WASHER-HARD (13.5X25.5X3-MM THK) | |
| | 69 | 2 | **8T-4224** | 3 | WASHER-HARD (8.8X16X2-MM THK) | |
| M | 70 | 1 | **8T-4244** | 1 | NUT (M12X1.75-THD) | |
| M | 71 | 1 | **8T-4956** | 5 | BOLT (M12X1.75X35-MM) | |

I-REFER TO HYDRAULIC INFORMATION SYSTEM
M-METRIC PART
Y-SEPARATE ILLUSTRATION

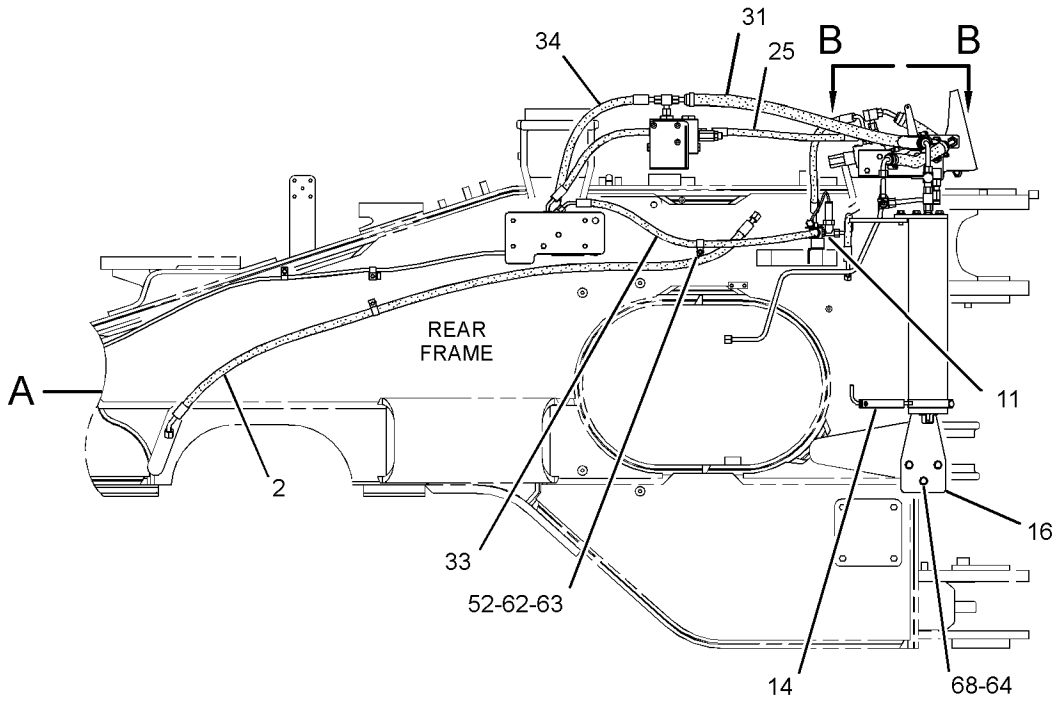


RIGHT SIDE VIEW

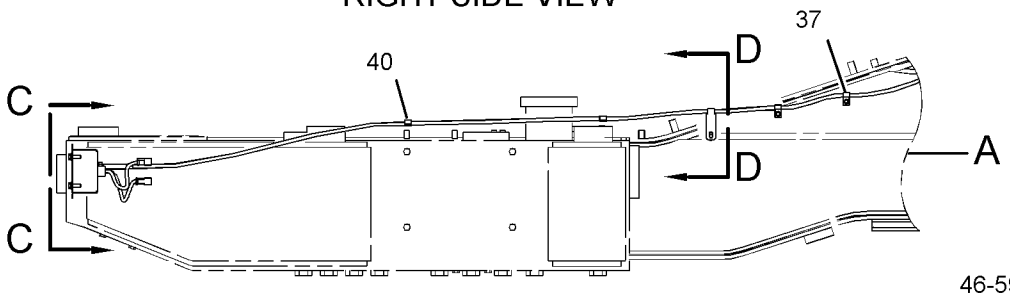


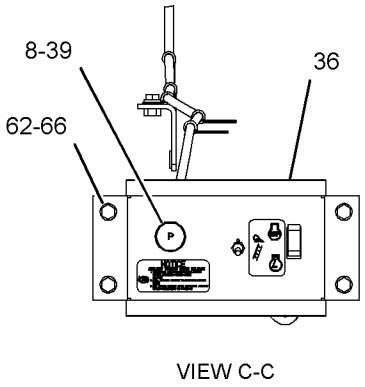


VIEW C-C

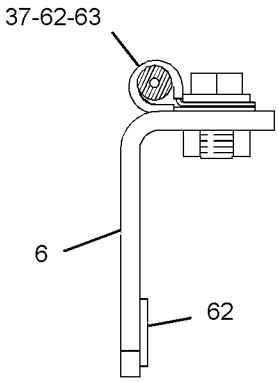


SECTION D-D

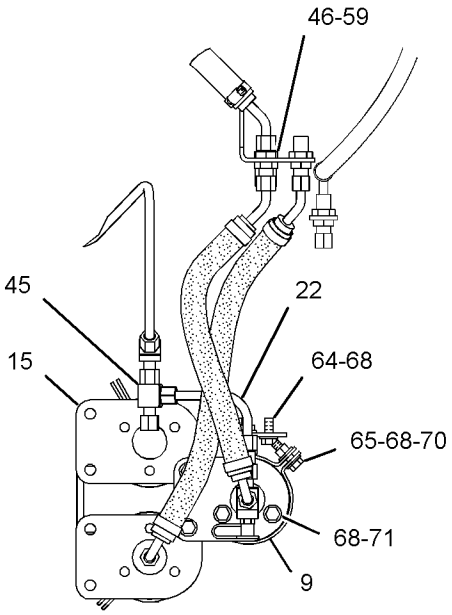


VIEW B-B

GRAPHIC #1

g01370233

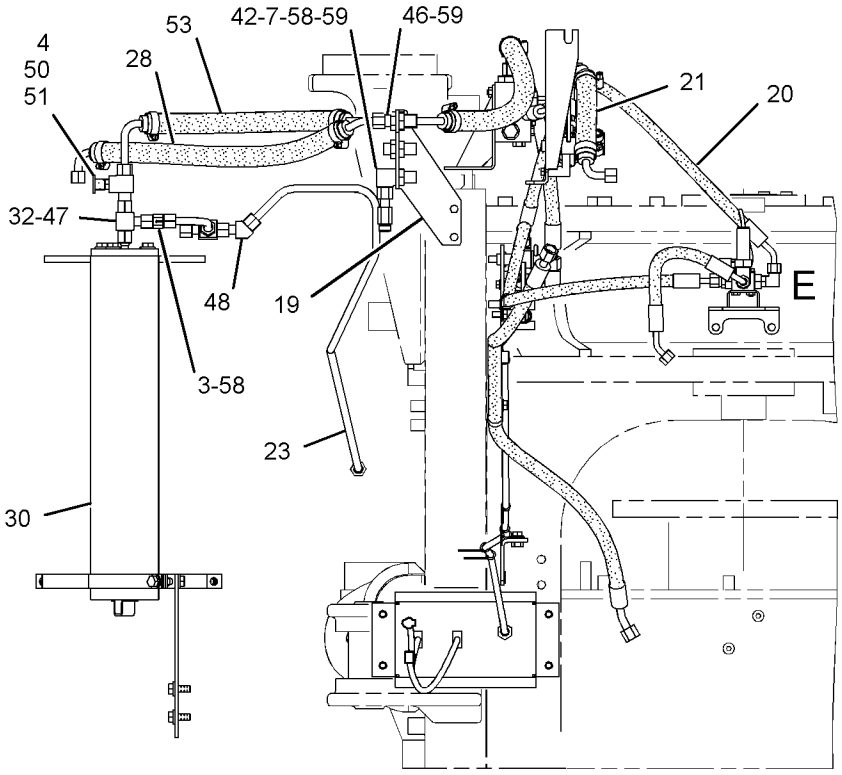


FRONT VIEW

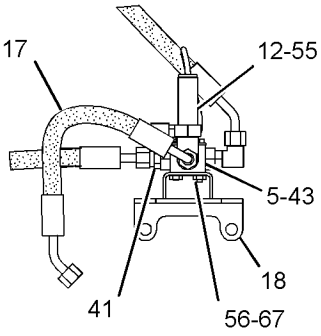


VIEW OF AREA E

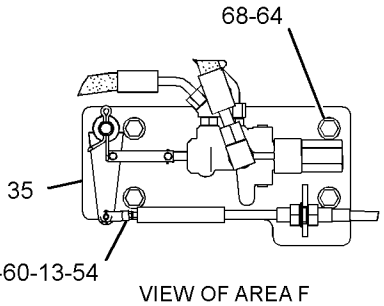


VIEW OF AREA F

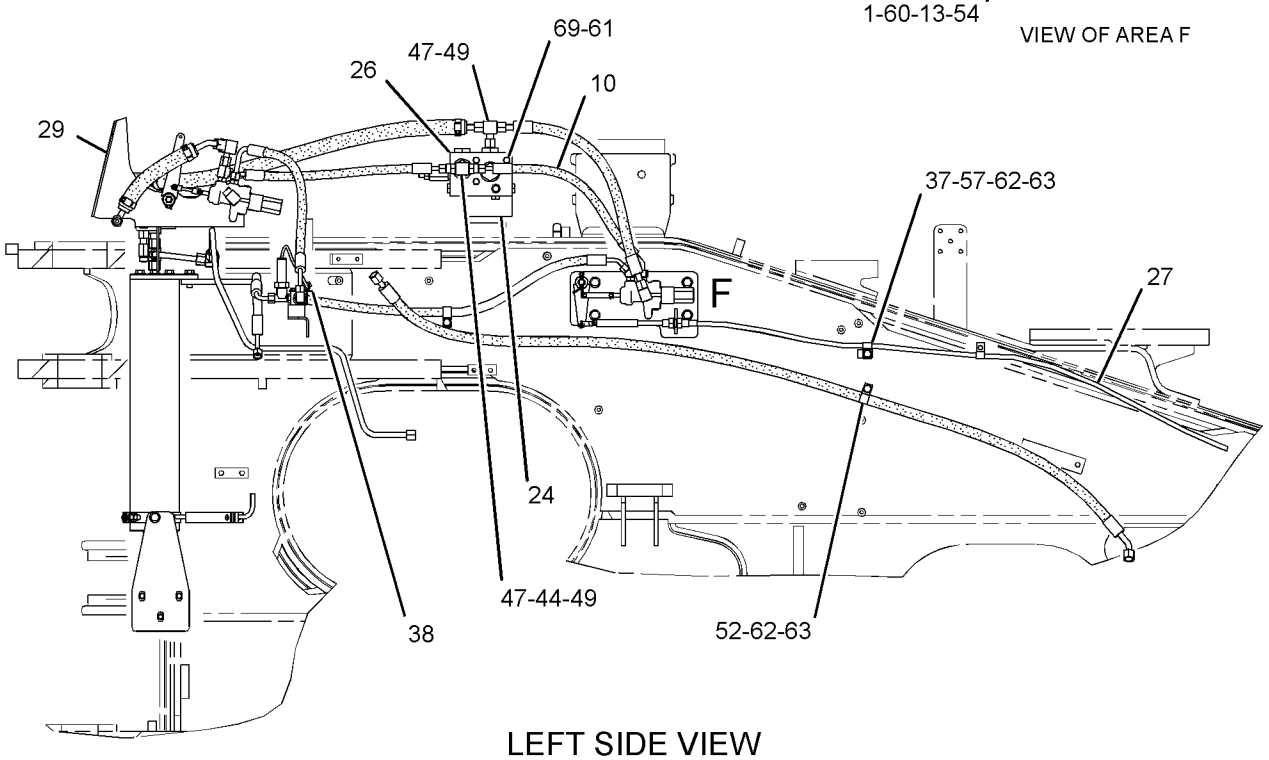


LEFT SIDE VIEW

GRAPHIC #2 **<END>** g01370234

# *217-7850* CONTROL GP-SERVICE BRAKE–FRONT

**S/N: BXY1-UP**

**PART OF 225-5449, 298-2038 HYDRAULIC AR**

**SMCS-4257, 4258, 4263, 4265, 4269, 4280** **i01767458**

| NOTE | REF NO | GRAPHIC REF | PART NUMBER | QTY | PART NAME 1 2 3 4 5 6 (PRODUCT LEVEL) | SEE PAGE |
|---|---|---|---|---|---|---|
| | 1 | 1 | **3E-6909** | 4 | CLIP | |
| | 2 | 1 | **136-0012** | 1 | TUBE AS | |
| | 3 | 1 | **136-0013** | 1 | TUBE AS | |
| | 4 | 1 | **160-2425** | 1 | BRACKET AS | |
| M | | 1 | **8T-3490** | 3 | NUT-WELD (M10X1.5-THD) | |
| I | 5 | 1 | **195-0462** | 1 | HOSE AS | |
| | 6 | 1 | **198-6439** | 1 | PLATE | |
| | 7 | 1 | **220-3447** | 1 | TUBE AS | |
| | 8 | 1 | **220-3448** | 1 | TUBE AS | |
| | 9 | 1 | *148-8364* | 1 | ELBOW AS | |
| | | 1 | **3K-0360** | 1 | SEAL-O-RING | |
| | | 1 | **6V-8398** | 1 | SEAL-O-RING | |
| | | 1 | **6V-8625** | 1 | ELBOW | |
| | 10 | 1 | *148-8454* | 1 | TEE AS | |
| | | 1 | **6V-8398** | 3 | SEAL-O-RING | |
| | | 1 | **6V-8789** | 1 | TEE | |
| | 11 | 1 | **4J-5267** | 2 | SEAL-O-RING | |
| | 12 | 1 | **6V-8398** | 3 | SEAL-O-RING | |
| | 13 | 1 | **8C-3205** | 4 | FLANGE-HALF | |
| | 14 | 1 | **8T-4121** | 12 | WASHER-HARD (11X21X2.5-MM THK) | |
| M | 15 | 1 | **8T-4137** | 4 | BOLT (M10X1.5X20-MM) | |
| M | 16 | 1 | **8T-4183** | 2 | BOLT (M12X1.75X40-MM) | |
| M | 17 | 1 | **8T-4196** | 8 | BOLT (M10X1.5X35-MM) | |
| | 18 | 1 | **8T-4223** | 2 | WASHER-HARD (13.5X25.5X3-MM THK) | |

I-REFER TO HYDRAULIC INFORMATION SYSTEM
M-METRIC PART

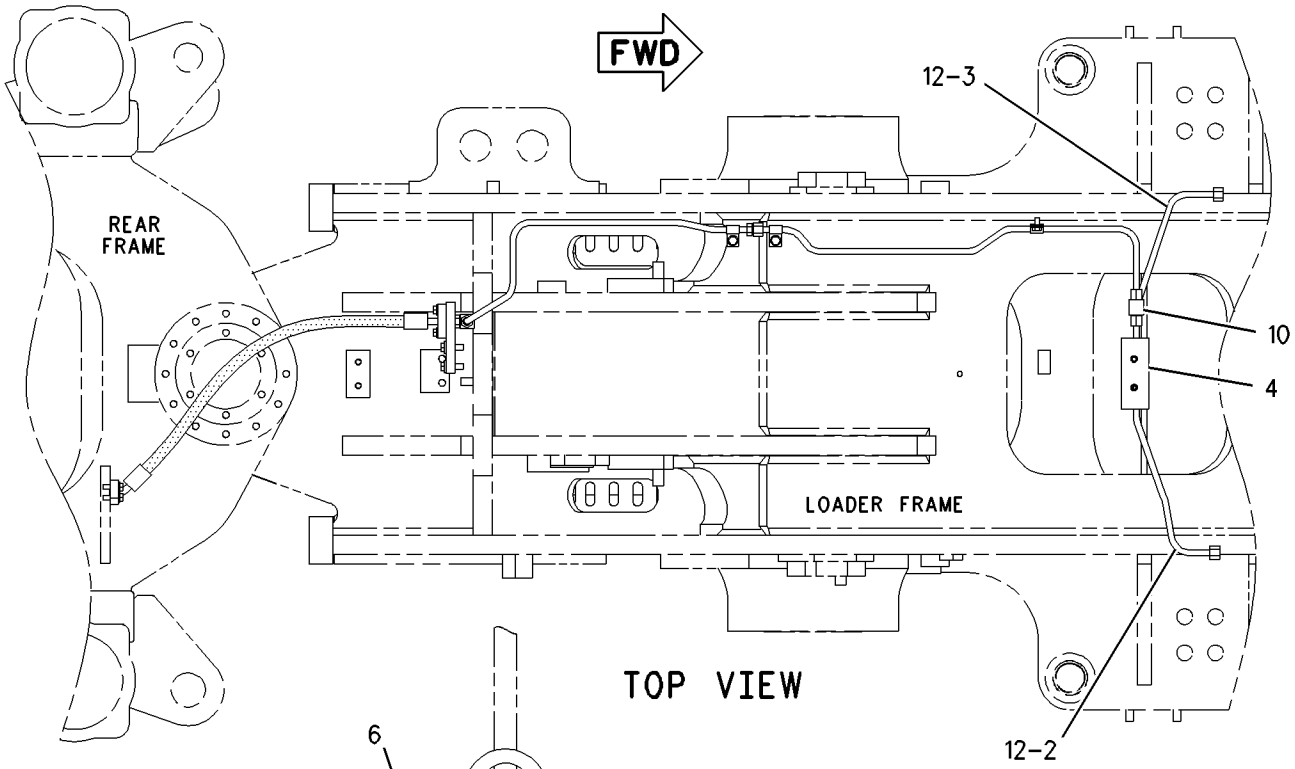


TOP VIEW

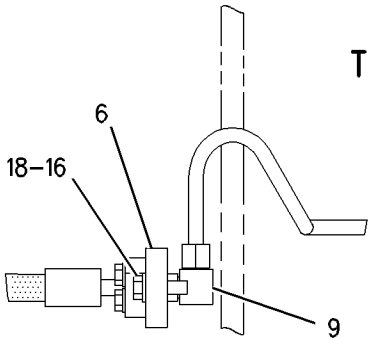


VIEW OF AREA A

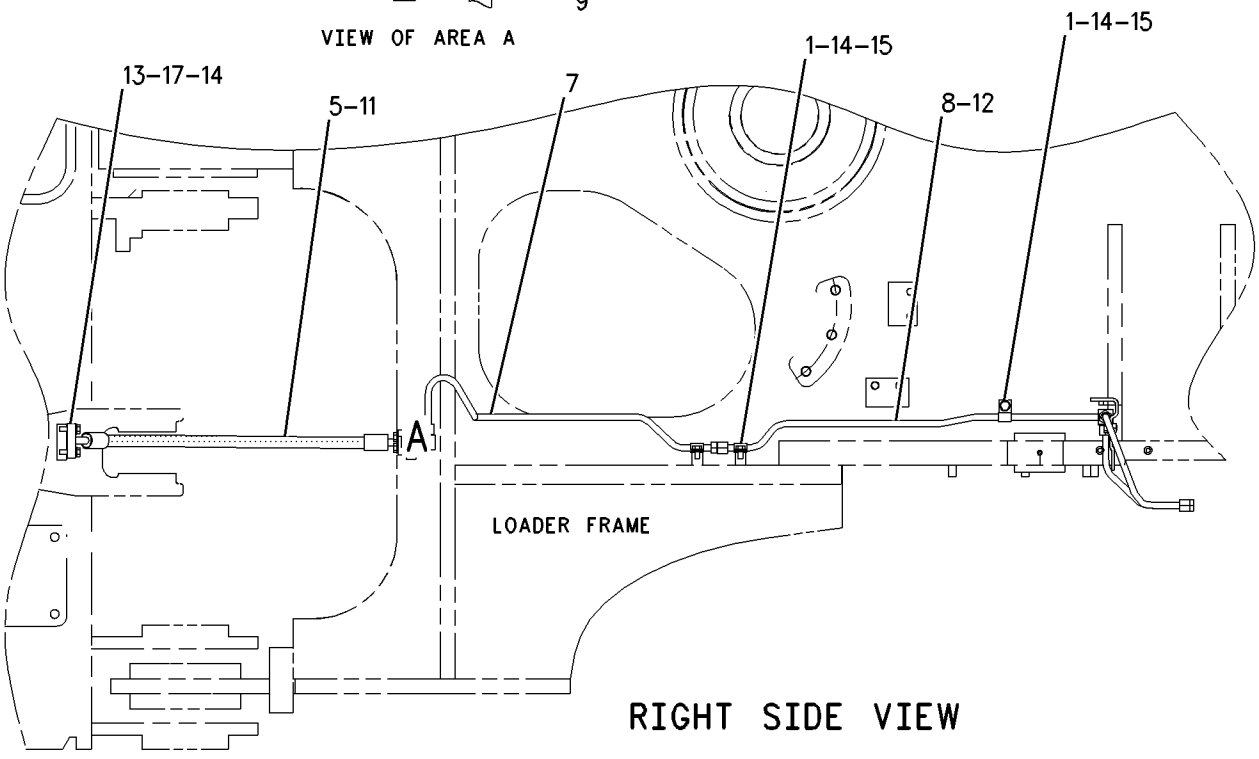


RIGHT SIDE VIEW

GRAPHIC #1 **<END>** g00911750

## *230-2407* CONTROL GP-SERVICE BRAKE–REAR

**S/N: BXY1-UP**

**PART OF 225-5449, 298-2038 HYDRAULIC AR**

**SMCS-4257, 4258, 4263, 4265, 4269, 4280** **i02614390**

| NOTE | REF NO | GRAPHIC REF | PART NUMBER | QTY | PART NAME 1 2 3 4 5 6 (PRODUCT LEVEL) | SEE PAGE |
|---|---|---|---|---|---|---|
| | 1 | 2 | **3G-8607** | 1 | VALVE GP-CHECK (AIR PURGE) | |
| | 2 | 4 | **6H-7062** | 2 | SPACER (13.5X25X19-MM THK) | |
| | 3 | 1 | **6K-5290** | 2 | CLIP (TAB) | |
| | 4 | 2 | **6V-0852** | 5 | CAP-DUST | |
| | 5 | 2 | **7K-4942** | 1 | SCREW-PURGE | |
| | 6 | 2 | **9J-3866** | 1 | ADAPTER | |
| | 7 | 4 | **116-4798** | 1 | ANGLE AS | |
| | 8 | 4 | **116-9331** | 1 | JUNCTION BLOCK | |
| | 9 | 2 | **136-0007** | 1 | TUBE AS | |
| | 10 | 2 | **136-0008** | 1 | TUBE AS | |
| | 11 | 4 | **136-0019** | 1 | TUBE AS | |
| I | 12 | 2 | **294-0321** | 1 | HOSE AS | |
| | 13 | 4 | **136-9698** | 1 | BRACKET AS | |
| | 14 | 4 | **138-4048** | 1 | BRACKET AS | |
| | 15 | 4 | **140-0205** | 1 | CLAMP AS | |
| | 16 | 1 | **140-0206** | 2 | PLATE | |
| | 17 | 1 | **141-7909** | 1 | TUBE AS | |
| | 18 | 3 | **141-7913** | 1 | TUBE AS | |
| Y | 19 | 4 | **146-3725** | 1 | VALVE & MTG GP-BRAKE CONTROL (PARKING) | 990 |
| I | 20 | 3 | **147-3324** | 1 | HOSE AS | |
| | 21 | 2 | *148-8430* | 1 | TEE AS | |
| | | 2 | **6V-9746** | 1 | SEAL-O-RING | |
| | | 2 | **7X-0873** | 1 | TEE | |
| I | 22 | 3 | **153-7655** | 1 | HOSE AS | |
| I | 23 | 1 | **153-7656** | 1 | HOSE AS | |
| | 24 | 3 | **153-7738** | 1 | BRACKET | |
| I | 25 | 2 | **153-8921** | 1 | HOSE AS | |
| I | 26 | 2 | **153-8922** | 1 | HOSE AS | |
| | 27 | 2 | **155-1838** | 1 | BRACKET | |
| I | 28 | 3 | **159-0250** | 1 | HOSE AS | |
| | 29 | 2 | *164-5567* | 5 | FITTING AS (QUICK DISCONNECT, MALE) | |
| | | | | | (EACH INCLUDES) | |
| | | 2 | **3J-1907** | 1 | SEAL-O-RING | |
| | | 2 | **6V-3965** | 1 | FITTING-COUPLER | |
| | 30 | 2 | *164-5586* | 4 | TEE AS | |
| | | | | | (EACH INCLUDES) | |
| | | 2 | **6V-8398** | 1 | SEAL-O-RING | |
| | | 2 | **7X-0871** | 1 | TEE | |
| I | 31 | 1 | **131-7035** | 2 | HOSE AS | |
| I | 32 | 2 | **175-1372** | 1 | HOSE AS | |
| I | 33 | 2 | **175-1373** | 1 | HOSE AS | |
| I | 34 | 2 | **175-1374** | 1 | HOSE AS | |
| I | 35 | 3 | **175-1375** | 1 | HOSE AS | |
| I | 36 | 3 | **175-1376** | 1 | HOSE AS | |
| Y | 37 | 2 | **177-8924** | 1 | PUMP GP-GEAR (PILOT, BRAKE) | 989 |
| | 38 | 3 | *187-0682* | 1 | CONNECTOR AS | |
| | | 3 | **3J-7354** | 1 | SEAL-O-RING | |
| | | 3 | **6V-8397** | 1 | SEAL-O-RING | |
| | | 3 | **187-0681** | 1 | CONNECTOR | |
| | 39 | 2 | *189-5719* | 1 | ADAPTER AS | |
| | | 2 | **3K-0360** | 2 | SEAL-O-RING | |
| | | 2 | **6V-0467** | 1 | CONNECTOR | |
| | 40 | 2 | **197-3295** | 2 | FLANGE-HALF | |
| | 41 | 2 | **200-0866** | 1 | VALVE GP-BRAKE CONTROL (SERVICE) | |
| | | 2 | **4E-5542** | 1 | BOOT | |
| | | 2 | **8T-4121** | 2 | WASHER-HARD (11X21X2.5-MM THK) | |

## *230-2407* CONTROL GP-SERVICE BRAKE *(contd.)* i02614390

| NOTE | REF NO | GRAPHIC REF | PART NUMBER | QTY | PART NAME 1 2 3 4 5 6 (PRODUCT LEVEL) | SEE PAGE |
|---|---|---|---|---|---|---|
| M | | 2 | **8T-4178** | 2 | BOLT (M10X1.5X90-MM) | |
| I | 42 | 4 | **202-8038** | 1 | HOSE AS | |
| I | 43 | 3 | **203-5870** | 1 | HOSE AS | |
| | 44 | 3 | **203-5871** | 1 | TUBE AS | |
| | 45 | 1 | **210-8620** | 1 | TUBE AS | |
| Y | 46 | 2 | *220-1432* | 2 | ACCUMULATOR GP-BRAKE (CHARGED) | 957 |
| I | 47 | 2 | **230-9501** | 1 | HOSE AS | |
| J | 48 | 4 | **235-0251** | 1 | VALVE GP-ACCUMULATOR CHARGING | |
| I | 49 | 2 | **250-5634** | 1 | HOSE AS | |
| | 50 | 3 | **254-7018** | 1 | PLATE | |
| | 51 | 2 | **272-7990** | 1 | TUBE AS | |
| I | 52 | 2 | **138-9651** | 1 | HOSE AS | |
| | 53 | 2 | **146-2274** | 1 | COLLAR | |
| | 54 | 3 | *148-8306* | 2 | ADAPTER AS | |
| | | | | | (EACH INCLUDES) | |
| | | 3 | **5P-5777** | 1 | ADAPTER-O-RING | |
| | | 3 | **7M-8485** | 1 | SEAL-O-RING | |
| | 55 | 2 | *148-8307* | 1 | ADAPTER AS | |
| | | 2 | **3J-1907** | 1 | SEAL-O-RING | |
| | | 2 | **5P-8874** | 1 | ADAPTER | |
| | 56 | 2 | *148-8318* | 1 | CONNECTOR AS | |
| | | 2 | **3K-0360** | 1 | SEAL-O-RING | |
| | | 2 | **6V-8397** | 1 | SEAL-O-RING | |
| | | 2 | **6V-8634** | 1 | CONNECTOR | |
| | 57 | 4 | *148-8327* | 1 | CONNECTOR AS | |
| | | 4 | **3D-2824** | 1 | SEAL-O-RING | |
| | | 4 | **6V-8637** | 1 | CONNECTOR | |
| | | 4 | **6V-9746** | 1 | SEAL-O-RING | |
| | 58 | 3 | *148-8336* | 1 | CONNECTOR AS | |
| | | 3 | **3J-1907** | 1 | SEAL-O-RING | |
| | | 3 | **6V-8397** | 1 | SEAL-O-RING | |
| | | 3 | **6V-8636** | 1 | CONNECTOR | |
| | 59 | 2,4 | *148-8340* | 6 | CONNECTOR AS | |
| | | | | | (EACH INCLUDES) | |
| | | 2,4 | **3K-0360** | 1 | SEAL-O-RING | |
| | | 2,4 | **6V-8398** | 1 | SEAL-O-RING | |
| | | 2,4 | **6V-8639** | 1 | CONNECTOR | |
| | 60 | 3 | *148-8364* | 4 | ELBOW AS | |
| | | | | | (EACH INCLUDES) | |
| | | 3 | **3K-0360** | 1 | SEAL-O-RING | |
| | | 3 | **6V-8398** | 1 | SEAL-O-RING | |
| | | 3 | **6V-8625** | 1 | ELBOW | |
| | 61 | 2,3,4 | *148-8370* | 5 | ELBOW AS | |
| | | | | | (EACH INCLUDES) | |
| | | 2,3,4 | **6V-8398** | 1 | SEAL-O-RING | |
| | | 2,3,4 | **6V-9851** | 1 | ELBOW | |
| | 62 | 1 | *148-8375* | 2 | ELBOW AS | |
| | | | | | (EACH INCLUDES) | |
| | | 1 | **6V-8398** | 2 | SEAL-O-RING | |
| | | 1 | **6V-8981** | 1 | ELBOW | |
| | 63 | 2 | *148-8378* | 1 | ELBOW AS | |
| | | 2 | **3J-1907** | 1 | SEAL-O-RING | |
| | | 2 | **6V-8397** | 1 | SEAL-O-RING | |
| | | 2 | **6V-8724** | 1 | ELBOW | |
| | 64 | 4 | *148-8392* | 1 | ELBOW AS | |
| | | 4 | **6V-9853** | 1 | ELBOW | |
| | | 4 | **6V-9746** | 1 | SEAL-O-RING | |
| | 65 | 3 | *148-8428* | 1 | TEE AS | |
| | | 3 | **3K-0360** | 1 | SEAL-O-RING | |

## *230-2407* CONTROL GP-SERVICE BRAKE *(contd.)* i02614390

| NOTE | REF NO | GRAPHIC REF | PART NUMBER | QTY | PART NAME 1 2 3 4 5 6 (PRODUCT LEVEL) | SEE PAGE |
|---|---|---|---|---|---|---|
| | | 3 | **6V-8398** | 2 | SEAL-O-RING | |
| | | 3 | **6V-8782** | 1 | TEE | |
| | 66 | 2,4 | *148-8444* | 4 | TEE AS-SWIVEL | |
| | | | | | (EACH INCLUDES) | |
| | | 2,4 | **6V-8398** | 2 | SEAL-O-RING | |
| | | 2,4 | **6V-9837** | 1 | TEE-SWIVEL | |
| | 67 | 2 | *148-8457* | 2 | UNION AS | |
| | | | | | (EACH INCLUDES) | |
| | | 2 | **6V-8398** | 2 | SEAL-O-RING | |
| | | 2 | **6V-8995** | 1 | UNION | |
| | 68 | 2,3 | *153-6241* | 2 | ELBOW AS | |
| | | | | | (EACH INCLUDES) | |
| | | 2,3 | **6V-8398** | 1 | SEAL-O-RING | |
| | | 2,3 | **8C-8989** | 1 | ELBOW | |
| | 69 | 2 | *153-6252* | 4 | CONNECTOR AS | |
| | | | | | (EACH INCLUDES) | |
| | | 2 | **6V-8398** | 1 | SEAL-O-RING | |
| | | 2 | **7M-8485** | 1 | SEAL-O-RING | |
| | | 2 | **9X-8408** | 1 | CONNECTOR | |
| | 70 | 2 | *171-6723* | 1 | ELBOW AS | |
| | | 2 | **6V-9746** | 1 | SEAL-O-RING | |
| | | 2 | **8T-8899** | 1 | ELBOW | |
| | 71 | 2 | **1H-6227** | 1 | SEAL-O-RING | |
| | 72 | 1 | **1P-4578** | 2 | FLANGE-HALF | |
| | 73 | 1 | **3P-2404** | 1 | CLIP | |
| | 74 | 2 | **4J-0520** | 2 | SEAL-O-RING | |
| | 75 | 1 | **4J-0522** | 2 | SEAL-O-RING | |
| | 76 | 2 | **5P-7470** | 1 | CLIP (SLOT) | |
| | 77 | 2 | **5P-7471** | 1 | CLIP (TAB) | |
| | 78 | 2 | **5P-8182** | 1 | GROMMET | |
| | 79 | 1,2 | **6D-4636** | 3 | CLIP | |
| | 80 | 1 | **6K-5291** | 2 | CLIP (SLOT) | |
| | 81 | 3 | **6V-3265** | 1 | CLIP | |
| | 82 | 3 | **6V-8397** | 2 | SEAL-O-RING | |
| | 83 | 1,3,4 | **6V-8398** | 4 | SEAL-O-RING | |
| | 84 | 1,2 | **6V-9169** | 4 | NUT-BULKHEAD (13/16-16-THD) | |
| | 85 | 2 | **6V-9746** | 2 | SEAL-O-RING | |
| | 86 | 2 | **7X-3392** | 4 | WASHER-HARD (13.5X22.5X3-MM THK) | |
| | 87 | 4 | **7X-7729** | 2 | WASHER (11X25X3-MM THK) | |
| | 88 | 2 | **8C-3206** | 2 | FLANGE-HALF | |
| | 89 | 1,2,4 | **8T-1885** | 6 | CLIP (SLOT) | |
| | 90 | 1,2,4 | **8T-1886** | 6 | CLIP (TAB) | |
| | 91 | 1,2,3,4 | **8T-4121** | 27 | WASHER-HARD (11X21X2.5-MM THK) | |
| M | 92 | 4 | **8T-4133** | 1 | NUT (M10X1.5-THD) | |
| M | 93 | 1,2,4 | **8T-4136** | 8 | BOLT (M10X1.5X25-MM) | |
| M | 94 | 1,2,3,4 | **8T-4137** | 9 | BOLT (M10X1.5X20-MM) | |
| M | 95 | 1 | **8T-4139** | 2 | BOLT (M12X1.75X30-MM) | |
| M | 96 | 2 | **8T-4179** | 2 | BOLT (M12X1.75X20-MM) | |
| M | 97 | 4 | **8T-4182** | 2 | BOLT (M10X1.5X45-MM) | |
| M | 98 | 1,2,4 | **8T-4183** | 7 | BOLT (M12X1.75X40-MM) | |
| M | 99 | 1 | **8T-4192** | 6 | BOLT (M12X1.75X25-MM) | |
| M | 100 | 4 | **8T-4196** | 1 | BOLT (M10X1.5X35-MM) | |
| | 101 | 1,2,4 | **8T-4223** | 29 | WASHER-HARD (13.5X25.5X3-MM THK) | |
| M | 102 | 1 | **8T-4244** | 2 | NUT (M12X1.75-THD) | |
| M | 103 | 1,2,4 | **8T-4956** | 14 | BOLT (M12X1.75X35-MM) | |
| M | 104 | 2 | **8T-5005** | 4 | BOLT (M10X1.5X70-MM) | |
| M | 105 | 2,4 | **8T-6466** | 3 | BOLT (M10X1.5X60-MM) | |
| | | | | | AVAILABLE REPAIR KIT(S): | |
| J | | | **143-9148** | 1 | KIT-REPAIR | |

## *230-2407* **CONTROL GP-SERVICE BRAKE** *(contd.)* **i02614390**

I-REFER TO HYDRAULIC INFORMATION SYSTEM
J-KIT MARKED J SERVICES PART MARKED J
M-METRIC PART
Y-SEPARATE ILLUSTRATION

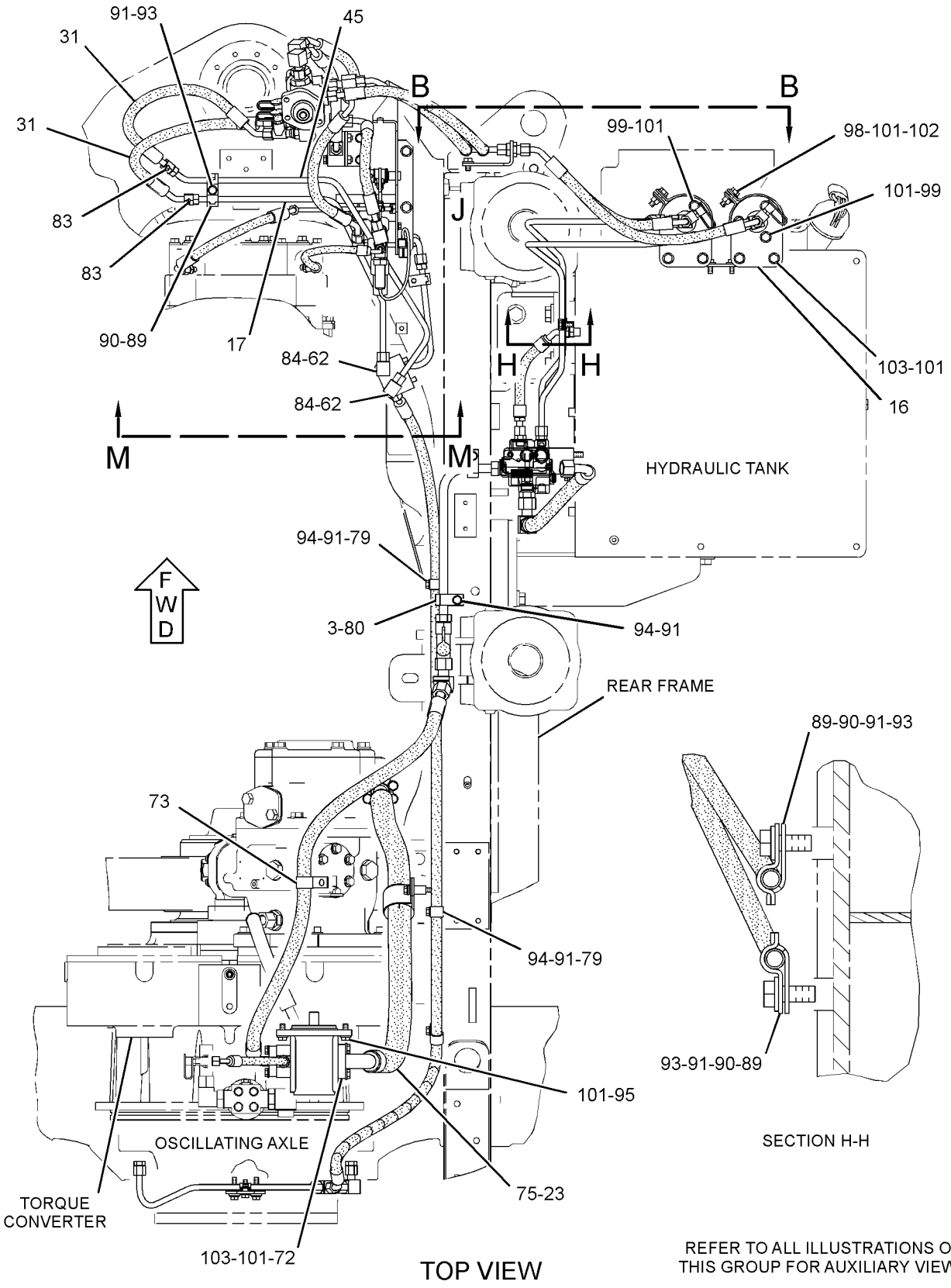


GRAPHIC #1

g01316440

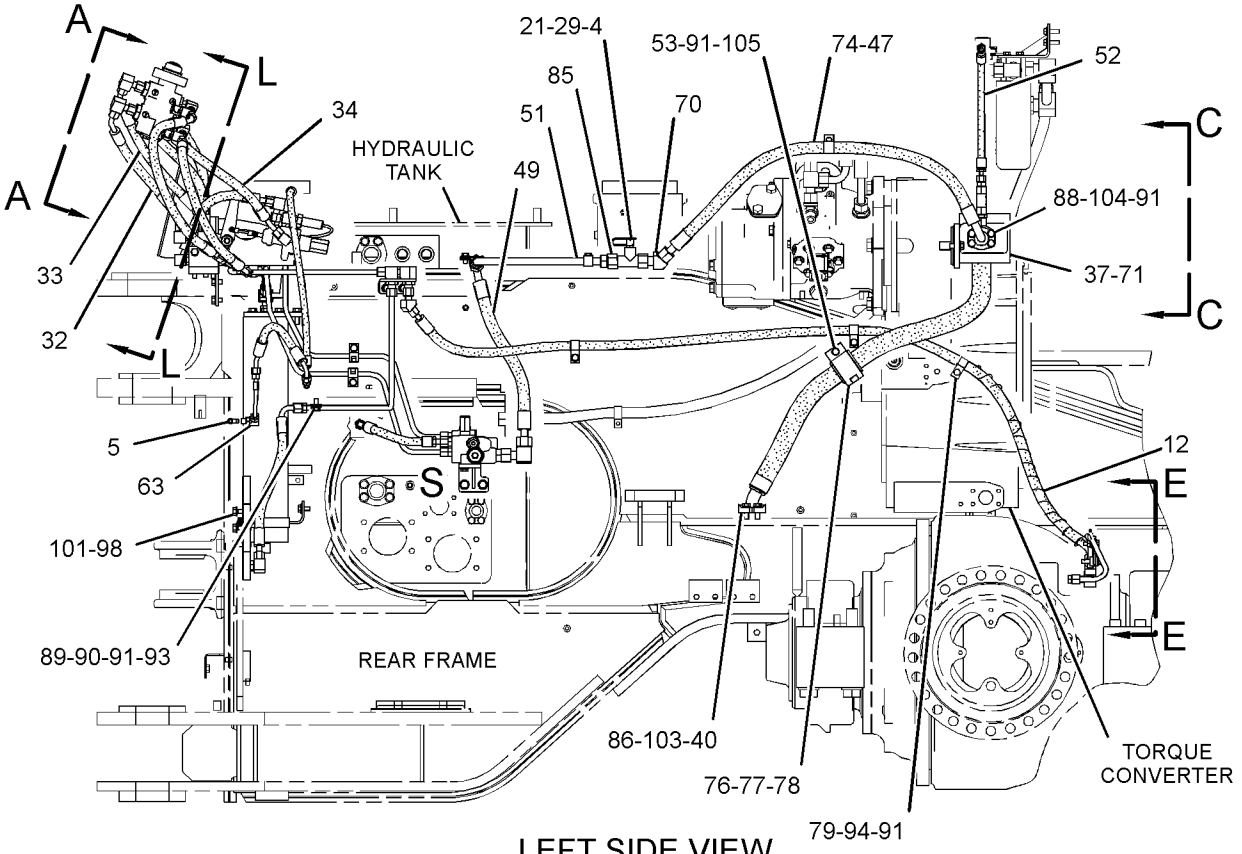


LEFT SIDE VIEW

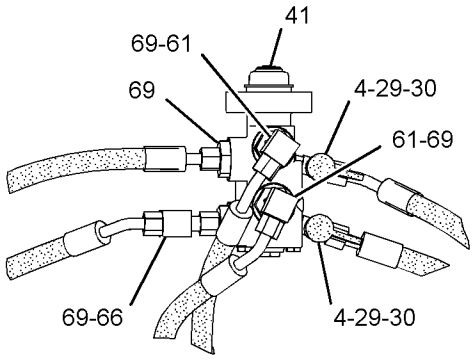


VIEW A-A

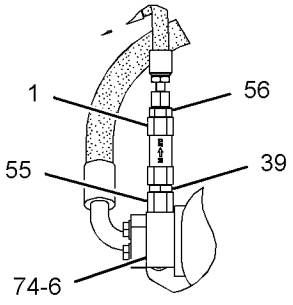


VIEW C-C

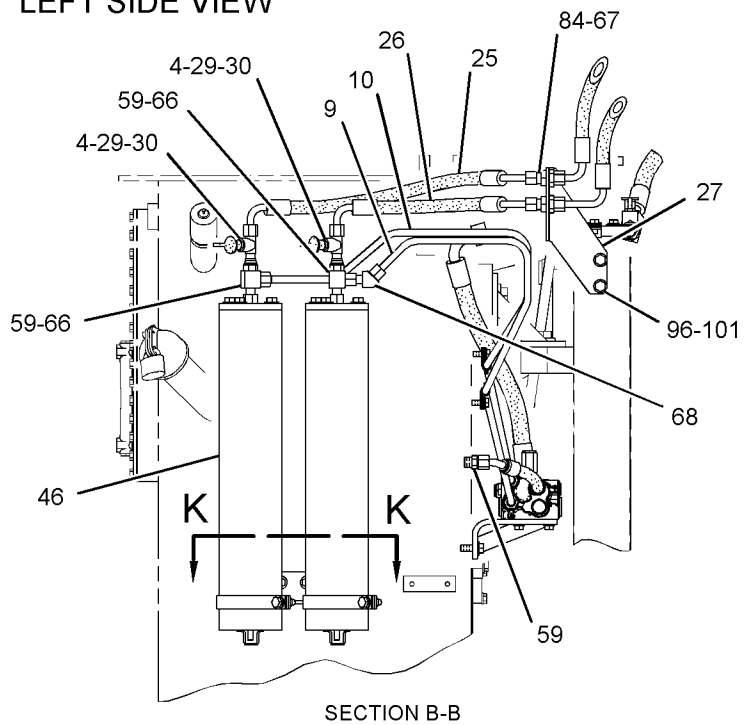


SECTION B-B

REFER TO ALL ILLUSTRATIONS OF THIS GROUP FOR AUXILIARY VIEWS

GRAPHIC #2

g01315721

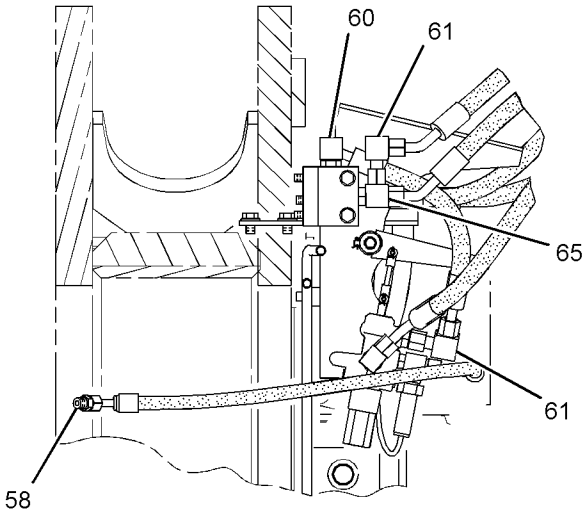


SECTION G-G

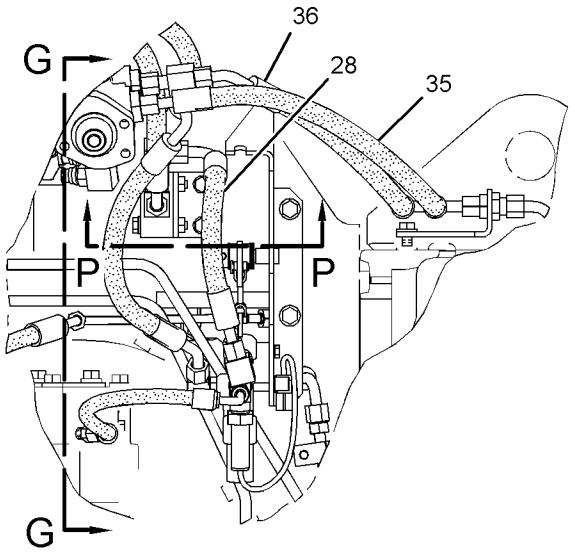


VIEW OF AREA J

REFER TO ALL ILLUSTRATIONS OF THIS GROUP FOR AUXILIARY VIEWS

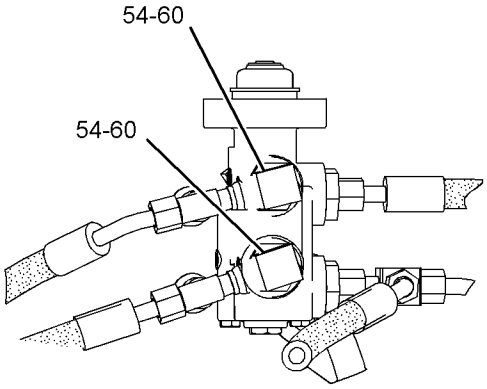


SECTION L-L

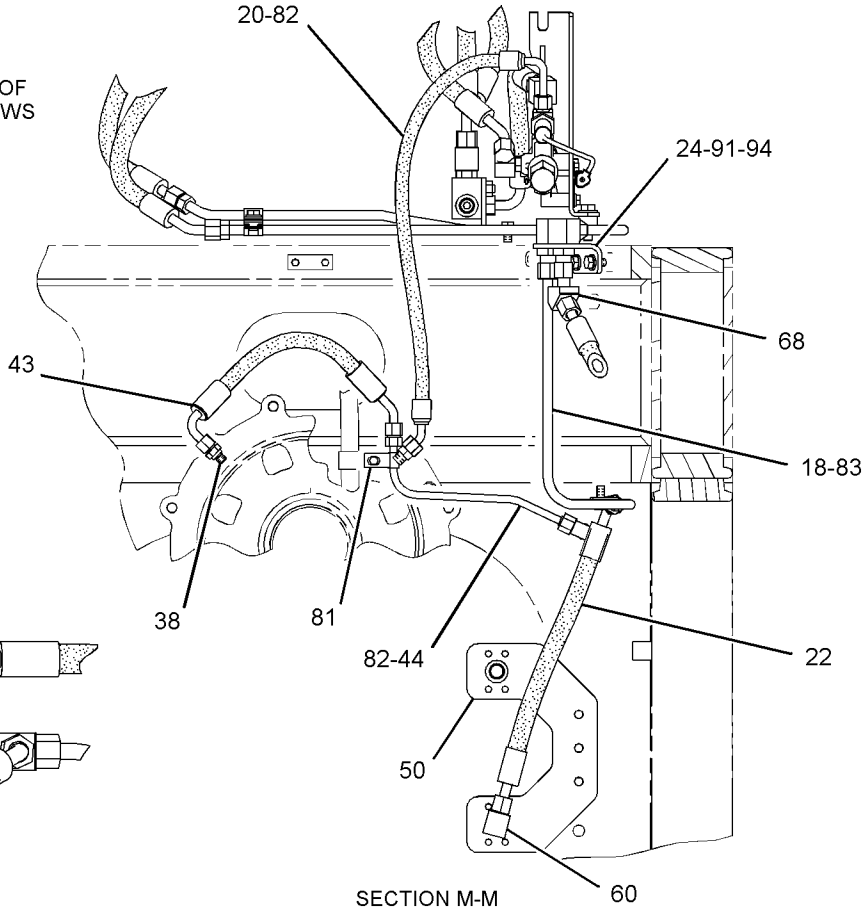


SECTION M-M

GRAPHIC #3

g01267467

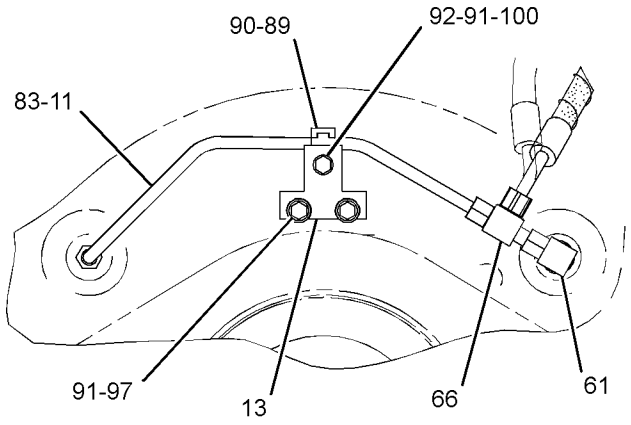


VIEW E-E

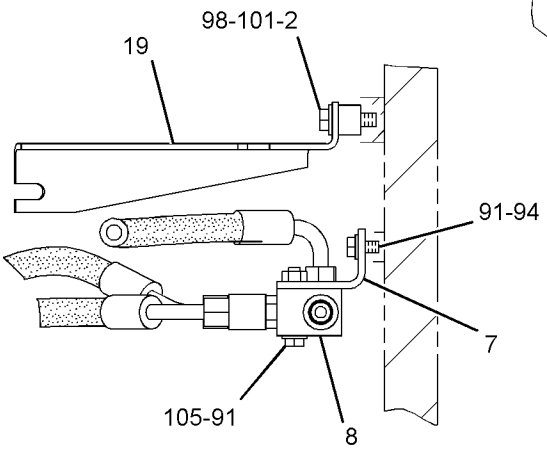


SECTION P-P

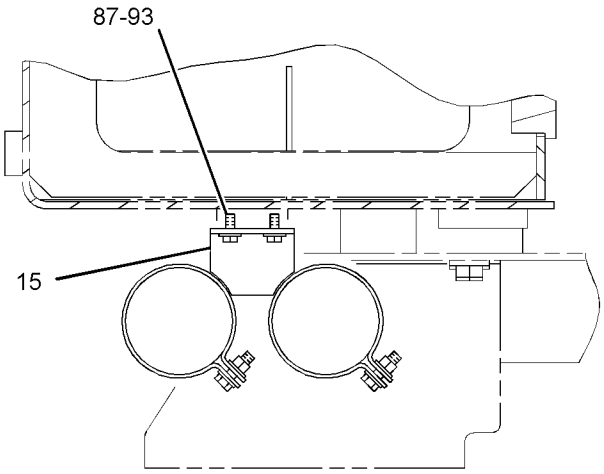


SECTION K-K

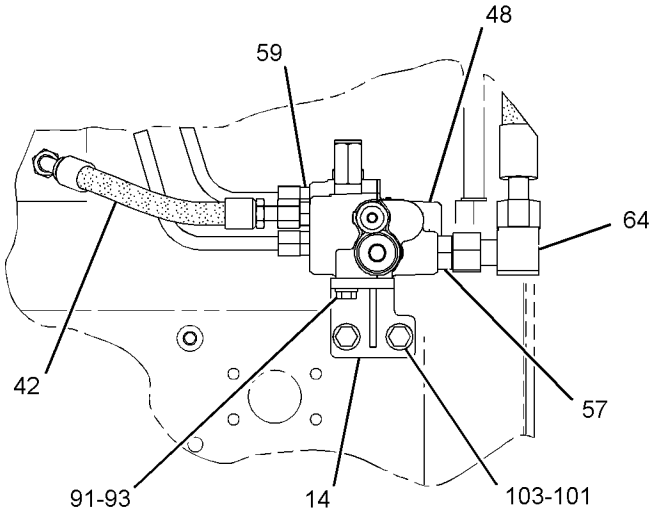


VIEW OF AREA S

GRAPHIC #4 **<END>** g01315753

# *125-1355* LINES GP-SERVICE BRAKE–REAR AXLE

**S/N: BXY1-UP**

**PART OF 137-8832 AXLE AR-OSCILLATING**

**SMCS-4257** **i02253508**

| NOTE | REF NO | GRAPHIC REF | PART NUMBER | QTY | PART NAME 1 2 3 4 5 6 (PRODUCT LEVEL) | SEE PAGE |
|---|---|---|---|---|---|---|
| | 1 | 1 | **6V-9169** | 2 | NUT-BULKHEAD (13/16-16-THD) | |
| | 2 | 1 | **8T-5439** | 2 | WASHER-HARD (21.5X45X6-MM THK) | |
| | 3 | 1 | **125-0966** | 2 | PLUG | |
| | 4 | 1 | **7M-8485** | 2 | SEAL-O-RING | |
| | 5 | 1 | **1H-8171** | 2 | SEAL-O-RING | |
| | 6 | 1 | **125-1357** | 1 | TUBE AS | |
| | 7 | 1 | **125-1356** | 1 | TUBE AS | |
| | 8 | 1 | **5P-8119** | 2 | SEAL-O-RING | |
| | 9 | 1 | **125-0965** | 2 | RING-RETAINING | |

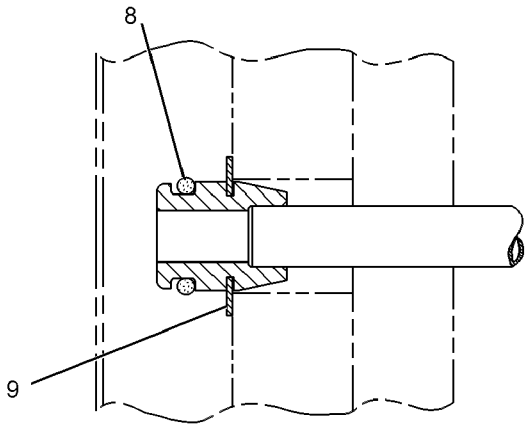


VIEW OF AREA B

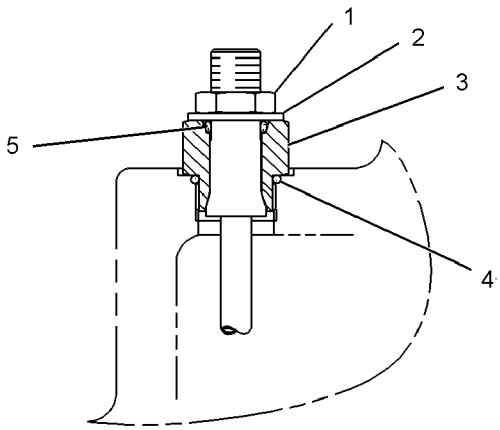


VIEW OF AREA A

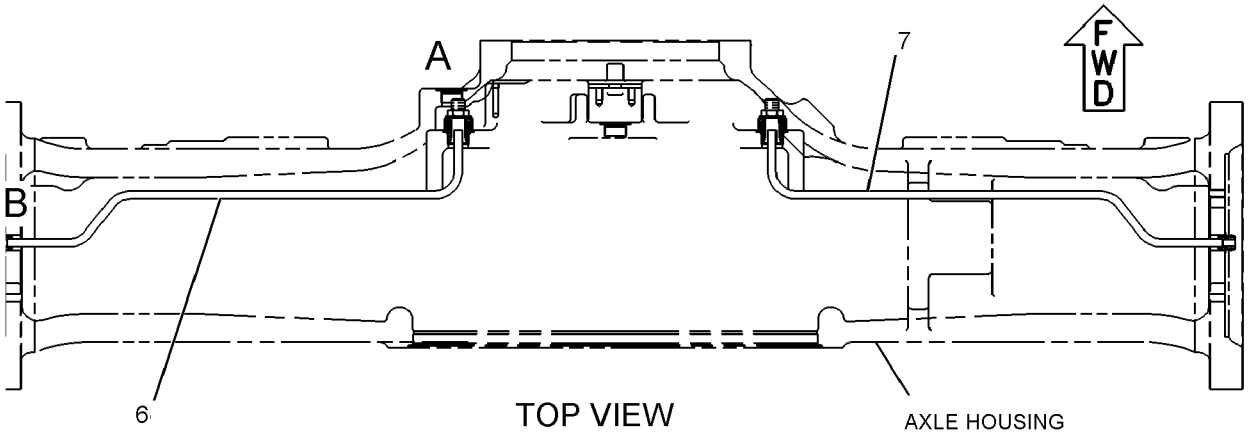


TOP VIEW

AXLE HOUSING

GRAPHIC #1 **<END>** g01134903

# BRAKING SYSTEM

## *125-1358* LINES GP-SERVICE BRAKE–FRONT AXLE

**S/N: BXY1-UP**

**PART OF 137-8833 AXLE AR-FIXED**

**SMCS-4257** **i01674223**

| NOTE | REF NO | GRAPHIC REF | PART NUMBER | QTY | PART NAME 1 2 3 4 5 6 (PRODUCT LEVEL) | SEE PAGE |
|---|---|---|---|---|---|---|
| | 1 | 1 | **5P-8119** | 2 | SEAL-O-RING | |
| | 2 | 1 | **125-0965** | 2 | RING-RETAINING | |
| | 3 | 1 | **125-1360** | 1 | TUBE AS | |
| | 4 | 1 | **125-1359** | 1 | TUBE AS | |
| | 5 | 1 | **125-0966** | 2 | PLUG | |
| | 6 | 1 | **8T-5439** | 2 | WASHER-HARD (21.5X45X6-MM THK) | |
| | 7 | 1 | **6V-9169** | 2 | NUT-BULKHEAD (13/16-16-THD) | |
| | 8 | 1 | **1H-8171** | 2 | SEAL-O-RING | |
| | 9 | 1 | **7M-8485** | 2 | SEAL-O-RING | |

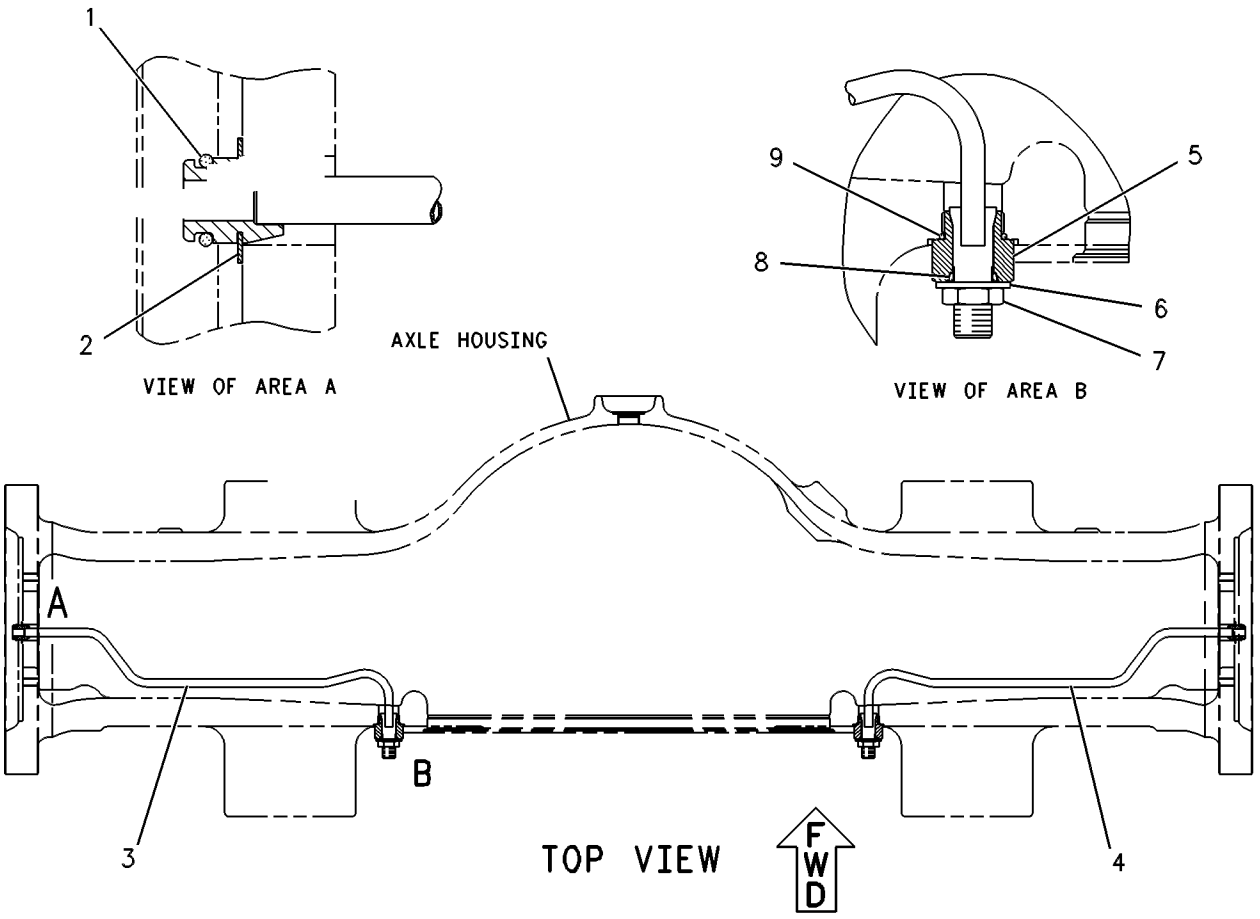


GRAPHIC #1 **<END>** g00864810

## *189-7252* LINES GP-SERVICE BRAKE

**S/N: BXY1900-UP**
**PART OF 227-3317 GUARD GP-LINES**
**AN ATTACHMENT**

**SMCS-4257** **i01913109**

| NOTE | PART NUMBER | QTY | PART NAME 1 2 3 4 5 6 (PRODUCT LEVEL) | SEE PAGE |
|---|---|---|---|---|
| | **189-7151** | 1 | HOSE AS | |
| | | | *****STANDARD REMOVAL***** | |
| JI | **195-0462** | 1 | HOSE AS | |

I-SEE HOSE FABRICATION GUIDE
J-PART OF STANDARD LINES GP-SERVICE BRAKE

**<END>**

## *222-3756* LINES GP-SERVICE BRAKE

**S/N: BXY1900-UP**
**PART OF 227-3317 GUARD GP-LINES**
**AN ATTACHMENT**

**SMCS-4257** **i01913120**

| NOTE | PART NUMBER | QTY | PART NAME 1 2 3 4 5 6 (PRODUCT LEVEL) | SEE PAGE |
|---|---|---|---|---|
| J | **222-2402** | 1 | HOSE AS | |
| J | **222-2403** | 1 | HOSE AS | |
| J | **222-2404** | 1 | HOSE AS | |
| | | | *****STANDARD REMOVAL***** | |
| I | **153-8922** | 1 | HOSE AS | |
| I | **175-1375** | 1 | HOSE AS | |
| I | **175-1376** | 1 | HOSE AS | |

I-SEE HOSE FABRICATION GUIDE
J-PART OF STANDARD CONTROL GP-SERVICE BRAKE

**<END>**

# 177-8924 PUMP GP-GEAR–PILOT, BRAKE

**S/N: BXY1-UP**

**PART OF 230-2407 CONTROL GP-SERVICE BRAKE**

**SMCS-4268, 4306, 5073** **i01220010**

| NOTE | REF NO | GRAPHIC REF | PART NUMBER | QTY | PART NAME 1 2 3 4 5 6 (PRODUCT LEVEL) | SEE PAGE |
|---|---|---|---|---|---|---|
| | 1 | 1 | **109-1641** | 1 | RING-SNAP | |
| | 2 | 1 | **099-3095** | 2 | DOWEL | |
| | 3 | 1 | **135-3490** | 1 | COVER | |
| M | 4 | 1 | **8T-5001** | 4 | BOLT (M12X1.75X130-MM) | |
| L | 5 | 1 | **135-3573** | 1 | SEAL-LIP TYPE | |
| L | 6 | 1 | **135-3489** | 1 | KIT-SEAL | |
| | 7 | 1 | **136-3842** | 1 | FLANGE | |

L-KIT MARKED L INCLUDES PART MARKED L
M-METRIC PART

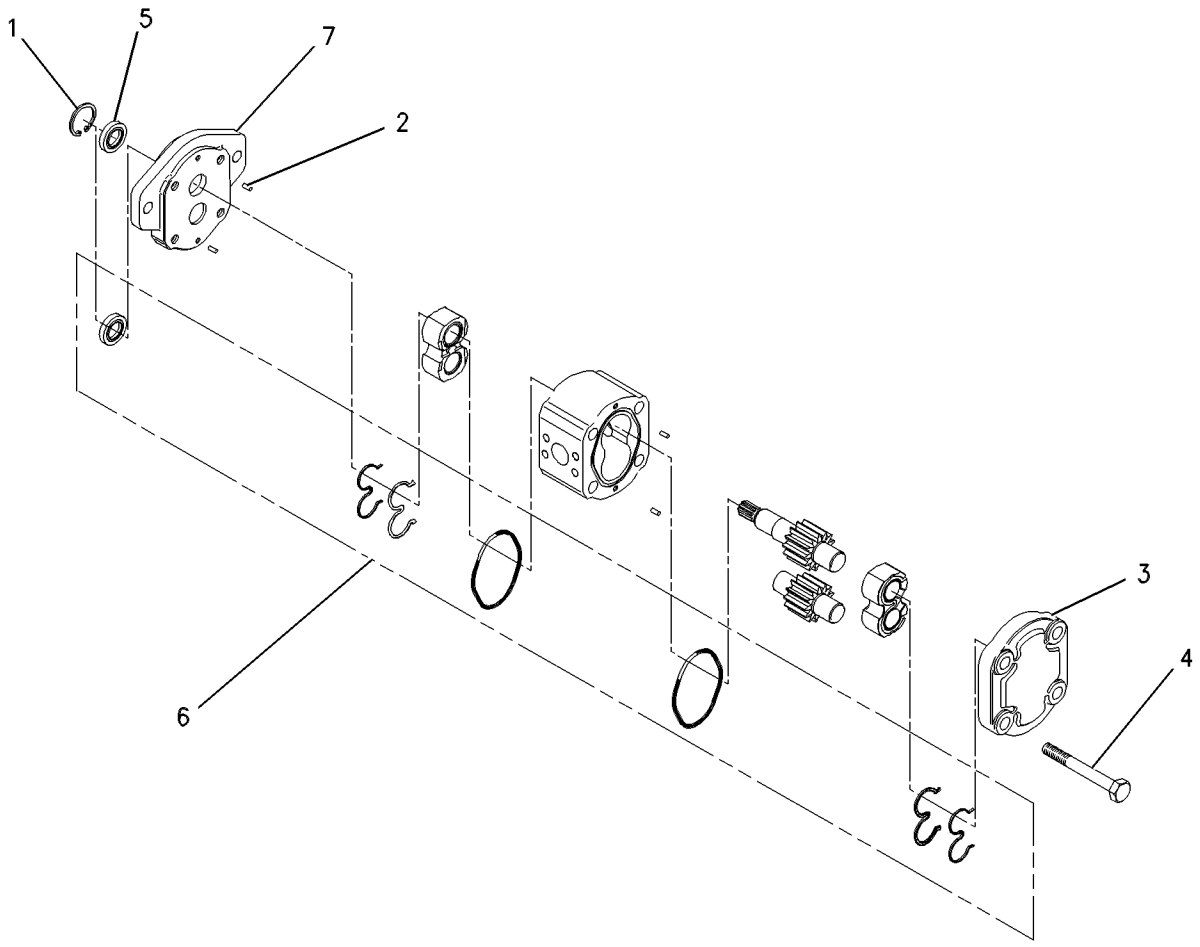


GRAPHIC #1 **<END>** g00606857

## 146-3725 VALVE & MTG GP-BRAKE CONTROL—PARKING

**S/N: BXY1-UP**

**PART OF 230-2407 CONTROL GP-SERVICE BRAKE**

**SMCS-4265, 4282** **i02328401**

| NOTE | REF NO | GRAPHIC REF | PART NUMBER | QTY | PART NAME 1 2 3 4 5 6 (PRODUCT LEVEL) | SEE PAGE |
|---|---|---|---|---|---|---|
| | 1 | 1 | **1A-4790** | 4 | WASHER (16.7X31.8X1.6-MM THK) | |
| | 2 | 1 | **3B-4607** | 3 | PIN-COTTER | |
| | 3 | 1 | *150-4027* | 1 | TEE AS | |
| | 3A | 1 | **3E-2310** | 1 | TEE | |
| | 3B | 1 | **3J-1907** | 1 | SEAL-O-RING | |
| | 3C | 1 | **6V-8397** | 1 | SEAL-O-RING | |
| | 4 | 1 | **174-4312** | 1 | SWITCH AS-PRESSURE (PARKING BRAKE OIL) | |
| | 4A | 1 | **102-8803** | 1 | KIT-RECEPTACLE (3-PIN) | |
| | | | | | (INCLUDES RECEPTACLE AS & WEDGE) | |
| | 4B | 1 | **3E-3371** | 1 | WEDGE-RECEPTACLE LOCK (3-PIN) | |
| | 4C | 1 | **8T-8729** | 3 | PIN-CONNECTOR | |
| | 5 | 1 | **4B-2913** | 1 | PIN-CLEVIS | |
| | 6 | 1 | **4V-1541** | 1 | COLLAR | |
| | 7 | 1 | **5P-6724** | 1 | BEARING-ROLLER | |
| | 8 | 1 | **7X-2618** | 2 | PIN | |
| | 9 | 1 | **8T-0741** | 2 | SEAL-LIP TYPE | |
| | 10 | 1 | **101-3846** | 1 | ROD-CONTROL | |
| Y | 11 | 1 | **106-1774** | 1 | VALVE GP-BRAKE CONTROL (PARKING) | 996 |
| | 12 | 1 | **146-9408** | 1 | BRACKET AS | |
| | 13 | 1 | **160-0222** | 1 | LEVER AS | |
| | 14 | 1 | **115-3069** | 1 | CLIP AS-CONNECTOR (3-PIN) | |
| | 16 | 1 | *150-4043* | 1 | CONNECTOR AS | |
| | 16A | 1 | **3J-1907** | 1 | SEAL-O-RING | |
| | 16B | 1 | **6V-8398** | 1 | SEAL-O-RING | |
| | 16C | 1 | **6V-9873** | 1 | CONNECTOR | |
| M | 17 | 1 | **8T-4189** | 2 | BOLT (M8X1.25X20-MM) | |
| | 18 | 1 | **8T-4224** | 2 | WASHER-HARD (8.8X16X2-MM THK) | |
| | 19 | 1 | *148-8365* | 1 | ELBOW AS | |
| | 19A | 1 | **8T-6876** | 1 | ELBOW | |
| | 19B | 1 | **6V-8397** | 1 | SEAL-O-RING | |
| | 19C | 1 | **3J-1907** | 1 | SEAL-O-RING | |

M-METRIC PART
Y-SEPARATE ILLUSTRATION

## 146-3725 VALVE & MTG GP-BRAKE CONTROL *(contd. )* i02328401

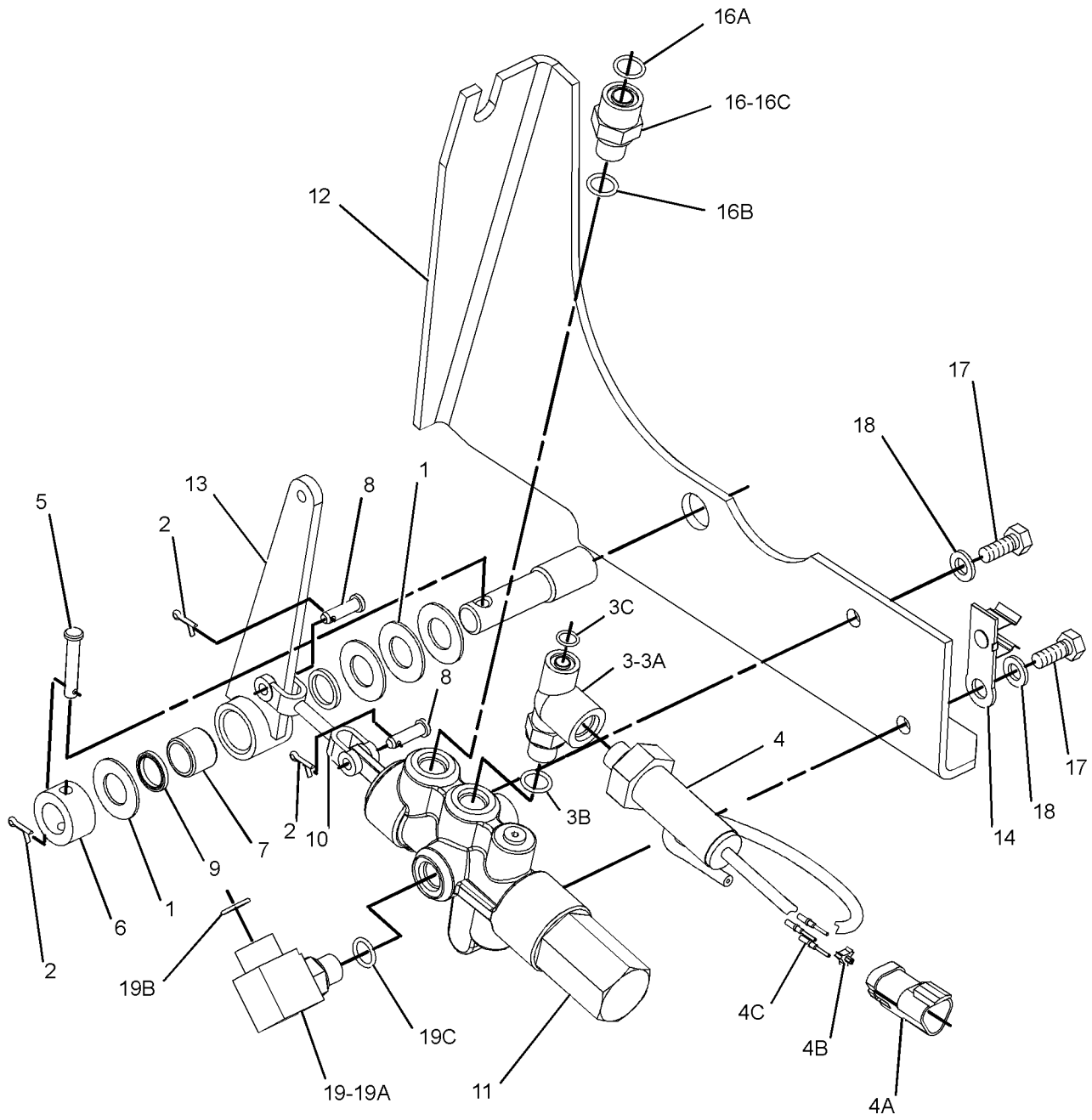


GRAPHIC #1 **<END>** g01178638

# 219-5155 VALVE & MTG GP-BRAKE CONTROL—PARKING

**S/N: BXY1900-UP**

**PART OF 308-2724 CONTROL GP-PARKING BRAKE**

**AN ATTACHMENT**

**SMCS-4265, 4282** **i01908116**

| NOTE | REF NO | GRAPHIC REF | PART NUMBER | QTY | PART NAME 1 2 3 4 5 6 (PRODUCT LEVEL) | SEE PAGE |
|---|---|---|---|---|---|---|
| | 1 | 1 | **1A-4790** | 4 | WASHER (16.7X31.8X1.6-MM THK) | |
| | 2 | 1 | **3B-4607** | 3 | PIN-COTTER | |
| | 3 | 1 | **4B-2913** | 1 | PIN-CLEVIS | |
| | 4 | 1 | **4V-1541** | 1 | COLLAR | |
| | 5 | 1 | **5P-6724** | 1 | BEARING-ROLLER | |
| | 6 | 1 | **7X-2618** | 2 | PIN | |
| | 7 | 1 | **8T-0741** | 2 | SEAL-LIP TYPE | |
| | 8 | 1 | **101-3846** | 1 | ROD-CONTROL | |
| Y | 9 | 1 | **106-1774** | 1 | VALVE GP-BRAKE CONTROL (PARKING) | 996 |
| | 10 | 1 | **146-9408** | 1 | BRACKET AS | |
| | | 1 | *8V-6879* | 1 | SHAFT | |
| | 11 | 1 | **160-0222** | 1 | LEVER AS | |
| | 12 | 1 | *148-8336* | 1 | CONNECTOR AS | |
| | | 1 | **3J-1907** | 1 | SEAL-O-RING | |
| | | 1 | **6V-8397** | 1 | SEAL-O-RING | |
| | | 1 | **6V-8636** | 1 | CONNECTOR | |
| | 13 | 1 | *148-8365* | 1 | ELBOW AS | |
| | | 1 | **3J-1907** | 1 | SEAL-O-RING | |
| | | 1 | **6V-8398** | 1 | SEAL-O-RING | |
| | | 1 | **8T-6876** | 1 | ELBOW | |
| | 14 | 1 | *148-8435* | 1 | TEE AS | |
| | | 1 | **3J-1907** | 1 | SEAL-O-RING | |
| | | 1 | **6V-8397** | 2 | SEAL-O-RING | |
| | | 1 | **6V-8781** | 1 | TEE-FACE SEAL | |
| | 15 | 1 | *164-5544* | 1 | ELBOW AS | |
| | | 1 | **3E-2333** | 1 | ELBOW | |
| | | 1 | **6V-8398** | 1 | SEAL-O-RING | |
| M | 16 | 1 | **8T-4189** | 2 | BOLT (M8X1.25X20-MM) | |
| | 17 | 1 | **8T-4224** | 2 | WASHER-HARD (8.8X16X2-MM THK) | |

M-METRIC PART
Y-SEPARATE ILLUSTRATION

## 219-5155 VALVE & MTG GP-BRAKE CONTROL *(contd. )* i01908116

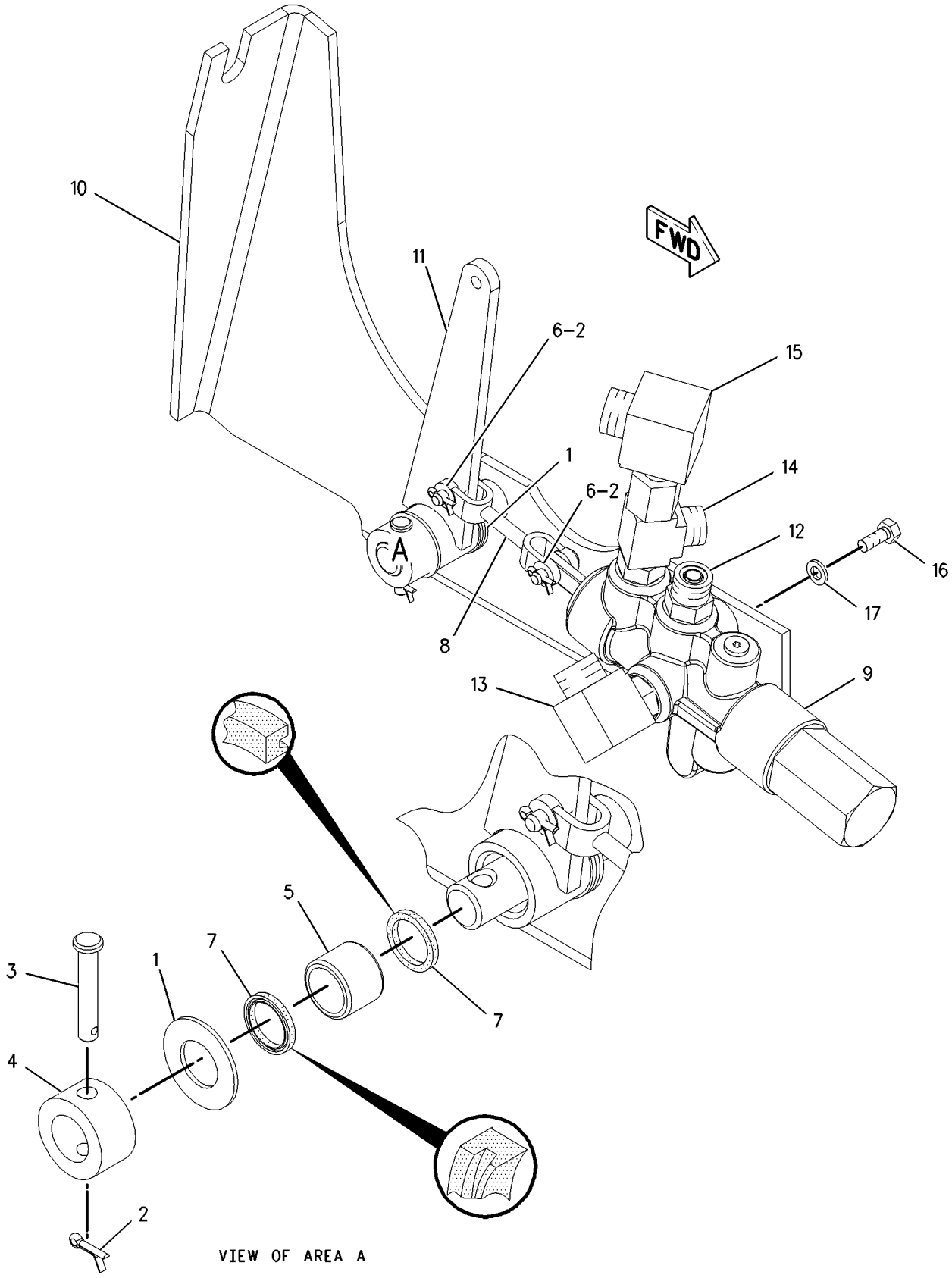


GRAPHIC #1 **<END>** g00996420

# BRAKING SYSTEM

## *308-2714* VALVE & MTG GP-BRAKE CONTROL—PARKING

**S/N: BXY1900-UP**

**PART OF 308-2724 CONTROL GP-PARKING BRAKE**

**AN ATTACHMENT**

**SMCS-4265, 4282** **i02728675**

| NOTE | REF NO | GRAPHIC REF | PART NUMBER | QTY | PART NAME 1 2 3 4 5 6 (PRODUCT LEVEL) | SEE PAGE |
|---|---|---|---|---|---|---|
| | 1 | 1 | **3B-4607** | 2 | PIN-COTTER | |
| | 2 | 1 | **5P-6724** | 1 | BEARING-ROLLER | |
| | 3 | 1 | **7I-4078** | 1 | LEVER AS | |
| | 4 | 1 | **091-1745** | 2 | WASHER (16.6X24X1.2-MM THK) | |
| | 5 | 1 | **104-5888** | 2 | STRIP | |
| Y | 6 | 1 | **106-1774** | 1 | VALVE GP-BRAKE CONTROL (PARKING) | 996 |
| | 7 | 1 | **308-2716** | 1 | PLATE AS | |
| | 8 | 1 | *148-8336* | 1 | CONNECTOR AS | |
| | | 1 | **3J-1907** | 1 | SEAL-O-RING | |
| | | 1 | **6V-8397** | 1 | SEAL-O-RING | |
| | | 1 | **6V-8636** | 1 | CONNECTOR | |
| | 9 | 1 | *148-8353* | 1 | ELBOW AS | |
| | | 1 | **3J-1907** | 1 | SEAL-O-RING | |
| | | 1 | **6V-8397** | 1 | SEAL-O-RING | |
| | | 1 | **6V-9001** | 1 | ELBOW | |
| | 10 | 1 | *148-8365* | 1 | ELBOW AS | |
| | | 1 | **3J-1907** | 1 | SEAL-O-RING | |
| | | 1 | **6V-8398** | 1 | SEAL-O-RING | |
| | | 1 | **8T-6876** | 1 | ELBOW | |
| | 11 | 1 | **3B-4640** | 1 | PIN-COTTER | |
| | 12 | 1 | **7X-2618** | 2 | PIN | |
| | 13 | 1 | **8T-0741** | 2 | SEAL-LIP TYPE | |
| M | 14 | 1 | **8T-4189** | 2 | BOLT (M8X1.25X20-MM) | |
| | 15 | 1 | **8T-4224** | 2 | WASHER-HARD (8.8X16X2-MM THK) | |
| | 16 | 1 | **9X-8257** | 1 | WASHER (17.5X30X3.5-MM THK) | |
| | | | | | | |
| | | | | | PARTS SHOWN IN GRAPHIC(S) WITHOUT A REFERENCE NUMBER ARE NOT SERVICED SEPARATELY | |

M-METRIC PART
Y-SEPARATE ILLUSTRATION

*308-2714* **VALVE & MTG GP-BRAKE CONTROL** *(contd.)* **i02728675**

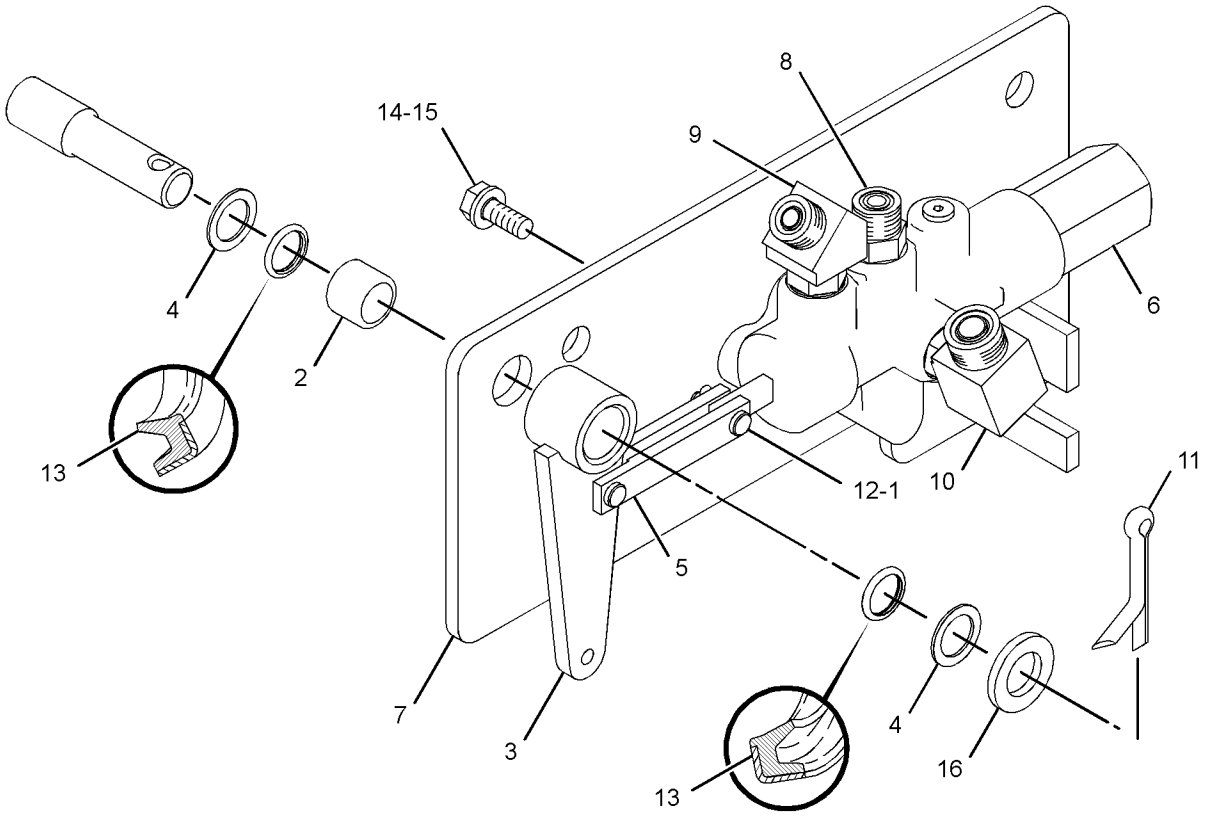


GRAPHIC #1 **<END>** g01369847

# 106-1774 VALVE GP-BRAKE CONTROL–PARKING

**S/N: BXY1-UP**

**PART OF 146-3725, 219-5155, 308-2714 VALVE & MTG GP-BRAKE CONTROL**

**ALSO AN ATTACHMENT**

**SMCS-4265, 4282** **i02216715**

| NOTE | REF NO | GRAPHIC REF | PART NUMBER | QTY | PART NAME 1 2 3 4 5 6 (PRODUCT LEVEL) | SEE PAGE |
|---|---|---|---|---|---|---|
| | 1 | 1 | **4J-7533** | 2 | SEAL-O-RING | |
| | 2 | 1 | **9S-8001** | 2 | PLUG | |
| | 3 | 1 | **257-7676** | 1 | KIT-REPAIR | |
| | | | | | (INCLUDES BOOT, SEALS, RETAINING, DETENT BALLS AND SPRINGS) | |

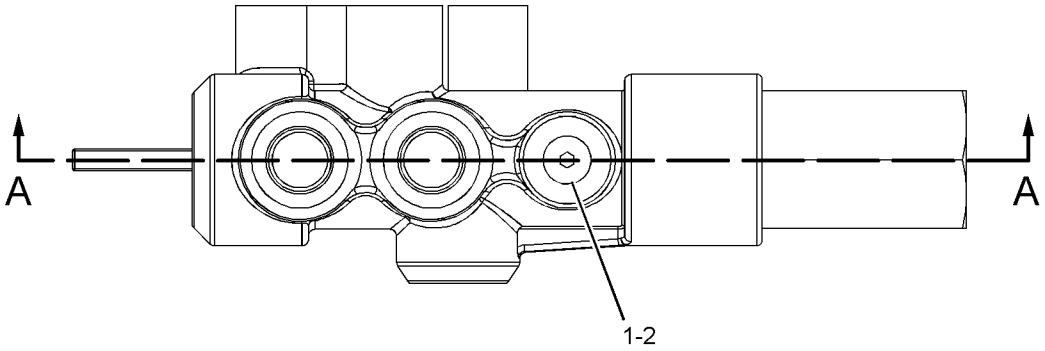


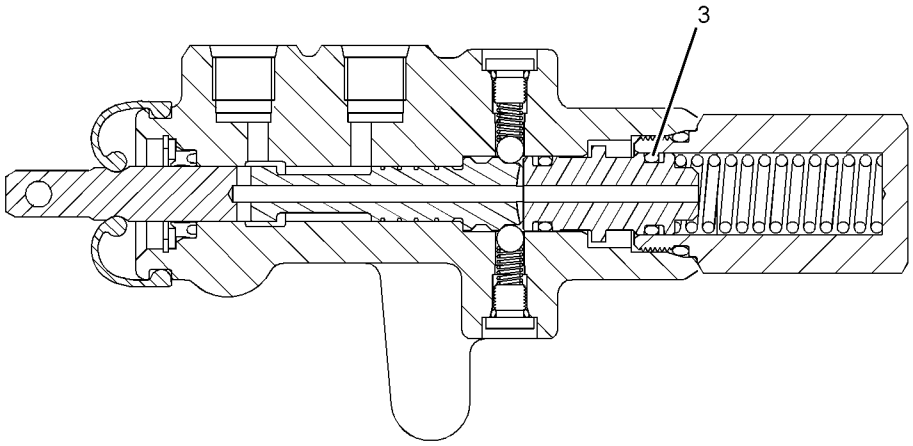


SECTION A-A

GRAPHIC #1 **<END>** g01118794

# 4T-4934 VALVE GP-RELIEF–BRAKE ACCUMULATOR PRESSURE

**S/N: BXY1900-UP**
**DIRECT OPERATED**
**PART OF 200-5962 VALVE GP-RELIEF**
**AN ATTACHMENT**

**SMCS-4322, 5069, 7428** **i00177307**

| NOTE | REF NO | GRAPHIC REF | PART NUMBER | QTY | PART NAME 1 2 3 4 5 6 (PRODUCT LEVEL) | SEE PAGE |
|---|---|---|---|---|---|---|
| | 1 | 1 | **6E-1835** | 1 | RETAINER AS | |
| | 2 | 1 | **9X-6395** | 1 | NUT (3/4-16-THD) | |
| | 3 | 1 | **7J-9933** | 1 | SEAL-O-RING | |
| | 4 | 1 | **4T-7571** | 1 | PLATE | |
| | 5 | 1 | **6J-6439** | 1 | VALVE-POPPET | |
| | 6 | 1 | **3K-0360** | 2 | SEAL-O-RING | |
| | 7 | 1 | **4T-2741** | 1 | SPRING | |

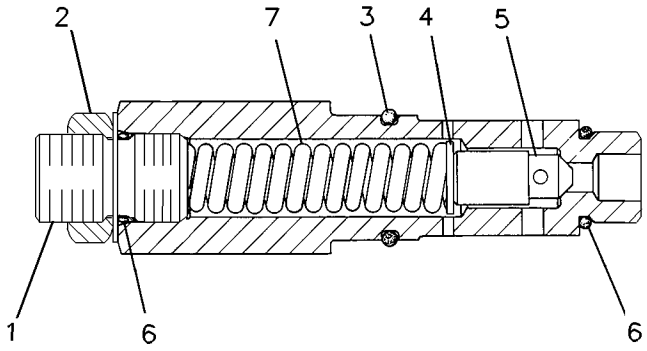


GRAPHIC #1 **<END>** g00118895

# *200-5962* VALVE GP-RELIEF–BRAKE ACCUMULATOR PRESSURE

**S/N: BXY1900-UP**

**PART OF 308-2724 CONTROL GP-PARKING BRAKE**

**AN ATTACHMENT**

**SMCS-4322, 5069, 7428** **i01908109**

| NOTE | REF NO | GRAPHIC REF | PART NUMBER | QTY | PART NAME 1 2 3 4 5 6 (PRODUCT LEVEL) | SEE PAGE |
|---|---|---|---|---|---|---|
| | 1 | 1 | **4Z-6480** | 1 | BODY-VALVE | |
| | 2 | 1 | **9S-4181** | 2 | PLUG-O RING | |
| | 3 | 1 | **7M-8485** | 2 | SEAL-O-RING | |
| Y | 4 | 1 | **4T-4934** | 1 | VALVE GP-RELIEF (BRAKE ACCUMULATOR PRESSURE) | 997 |

Y-SEPARATE ILLUSTRATION

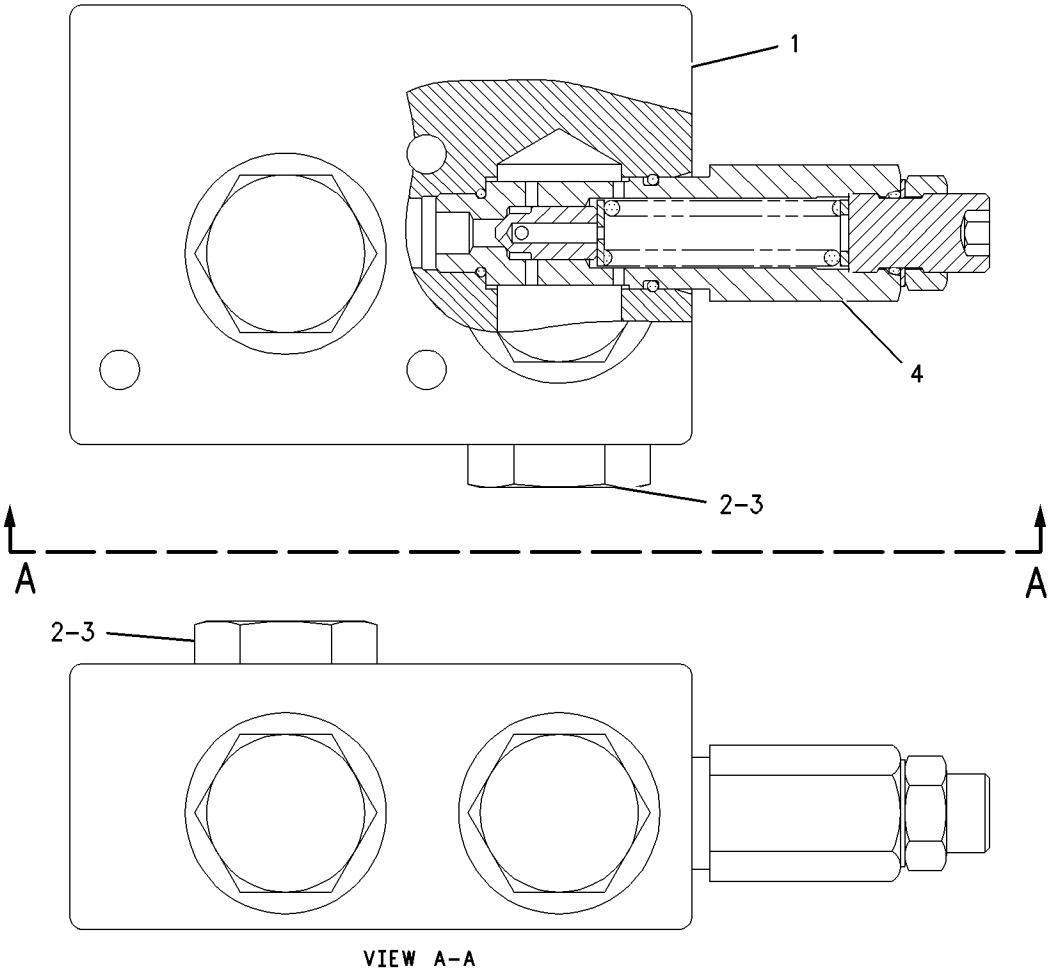


VIEW A-A

GRAPHIC #1 **<END>** g00996352

# *8J-6875* VALVE GP-SHUTTLE

**S/N: BXY1900-UP**

**PART OF 308-2724 CONTROL GP-PARKING BRAKE**

**AN ATTACHMENT**

**SMCS-4289** **i02030104**

| NOTE | PART NUMBER | QTY | PART NAME 1 2 3 4 5 6 (PRODUCT LEVEL) | SEE PAGE |
|---|---|---|---|---|
| Y | *9T-6149* | 1 | VALVE GP-SHUTTLE (BALL RESOLVER) | 1000 |
| | | | —OR— | |
| Y | *9T-6150* | 1 | VALVE GP-SHUTTLE (BALL RESOLVER) | 1001 |

Y-SEPARATE ILLUSTRATION

**<END>**

# BRAKING SYSTEM

## *9T-6149* VALVE GP-SHUTTLE–BALL RESOLVER

**S/N: BXY1900-UP**

**PART OF 8J-6875 VALVE GP-SHUTTLE**

**AN ATTACHMENT**

**SMCS-4289** **i02030107**

| NOTE | REF NO | GRAPHIC REF | PART NUMBER | QTY | PART NAME 1 2 3 4 5 6 (PRODUCT LEVEL) | SEE PAGE |
|---|---|---|---|---|---|---|
| | 1 | 1 | **4T-9905** | 2 | ADAPTER | |
| | 2 | 1 | **2M-9780** | 1 | SEAL-O-RING | |
| Z | 3 | 1 | | 3 | BLOCK | |
| | 4 | 1 | **4B-9784** | 1 | BALL | |

Z-NOT SERVICED SEPARATELY

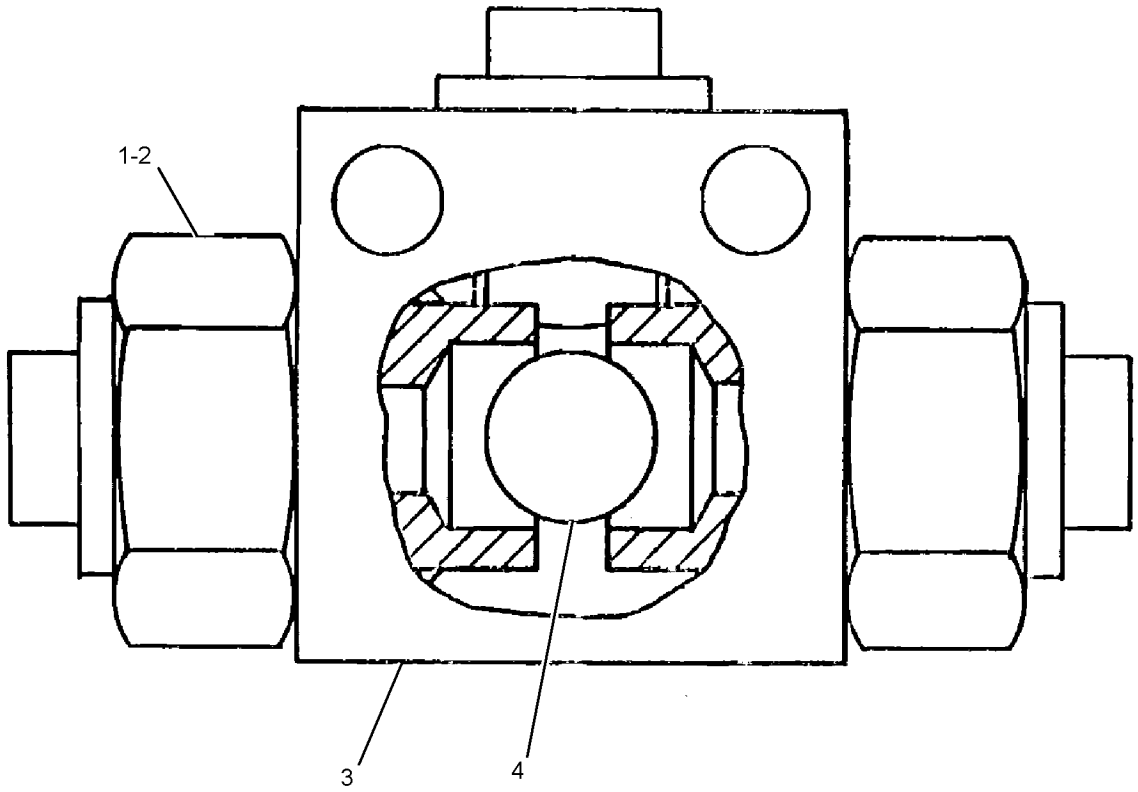


GRAPHIC #1

**<END>**

g01047326

# *9T-6150* VALVE GP-SHUTTLE–BALL RESOLVER

**S/N: BXY1900-UP**
**PART OF 8J-6875 VALVE GP-SHUTTLE**
**AN ATTACHMENT**

**SMCS-4289** **i02034777**

| NOTE | REF NO | GRAPHIC REF | PART NUMBER | QTY | PART NAME 1 2 3 4 5 6 (PRODUCT LEVEL) | SEE PAGE |
|---|---|---|---|---|---|---|
| | 1 | 1 | **4T-9905** | 2 | ADAPTER | |
| | 2 | 1 | **2M-9780** | 2 | SEAL-O-RING | |
| | 3 | 1 | **4B-9784** | 1 | BALL | |

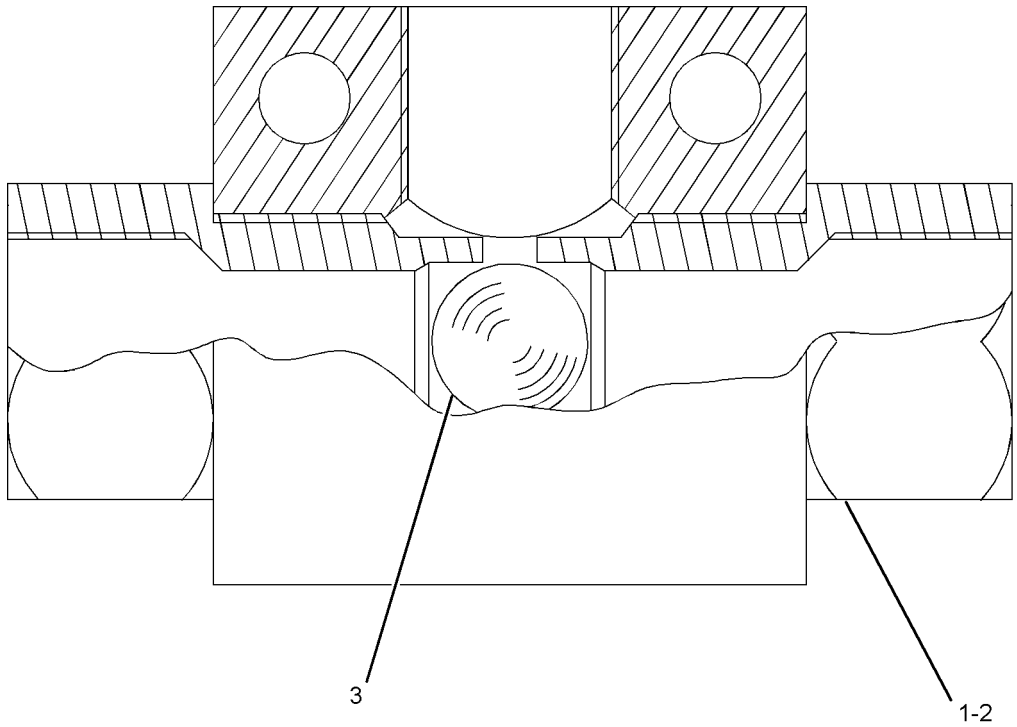


GRAPHIC #1 **<END>** g01047576

# STEERING SYSTEM

## *132-6140* CYLINDER & MTG GP-STEERING

**S/N: BXY1-1899**

**PART OF 225-5449 HYDRAULIC AR**

**SMCS-4303** **i02387624**

| NOTE | REF NO | GRAPHIC REF | PART NUMBER | QTY | PART NAME 1 2 3 4 5 6 (PRODUCT LEVEL) | SEE PAGE |
|---|---|---|---|---|---|---|
| | 1 | 1 | **8T-7535** | 8 | SEAL-LIP TYPE | |
| | 2 | 1 | **8T-4123** | 4 | WASHER (22X35X3.5-MM THK) | |
| Y | 3 | 1 | **259-4733** | 1 | CYLINDER GP-STEERING (LH) | 1004 |
| Y | 4 | 1 | **259-4737** | 1 | CYLINDER GP-STEERING (RH) | 1005 |
| | 5 | 1 | **138-1870** | 4 | PIN AS | |
| | 6 | 1 | **093-0349** | 4 | WASHER (22X60X6-MM THK) | |
| M | 7 | 1 | **8T-6430** | 4 | BOLT (M20X2.5X50-MM) | |
| | 8 | 1 | **4F-6568** | 4 | SPACER (0.813X1.5X0.625-IN THK) | |

M-METRIC PART
Y-SEPARATE ILLUSTRATION

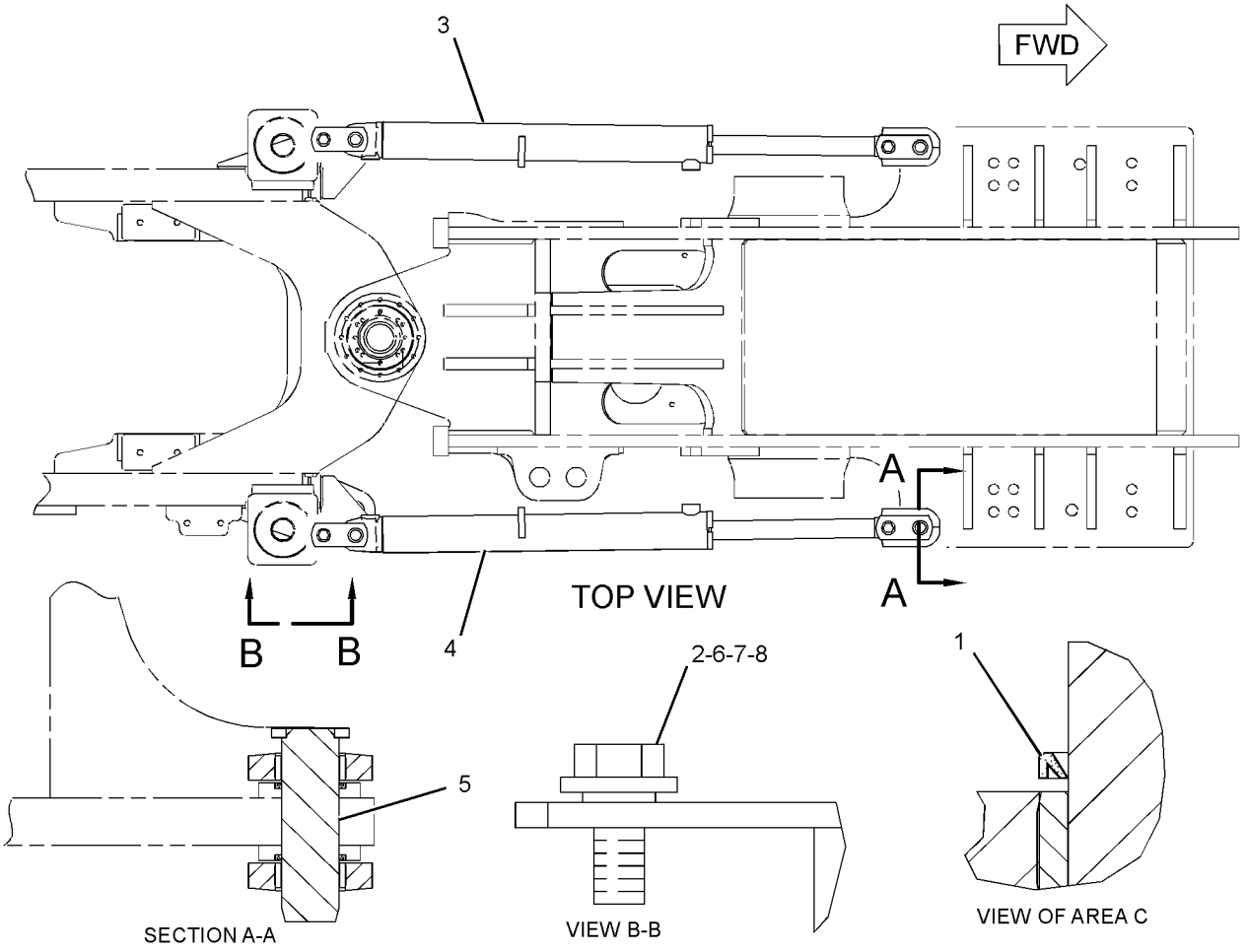


GRAPHIC #1 **<END>** g01191880

# STEERING SYSTEM

## *285-8674* CYLINDER & MTG GP-STEERING

**S/N: BXY1900-UP**

**PART OF 298-2038 HYDRAULIC AR**

**SMCS-4303** **i02672326**

| NOTE | REF NO | GRAPHIC REF | PART NUMBER | QTY | PART NAME 1 2 3 4 5 6 (PRODUCT LEVEL) | SEE PAGE |
|---|---|---|---|---|---|---|
| | 1 | 1 | **4F-6568** | 4 | SPACER (0.813X1.5X0.625-IN THK) | |
| | 2 | 1 | **8T-7535** | 8 | SEAL-LIP TYPE | |
| | 3 | 1 | **093-0349** | 4 | WASHER (22X60X6-MM THK) | |
| | 4 | 1 | **138-1870** | 4 | PIN AS | |
| Y | 5 | 1 | **288-0568** | 2 | CYLINDER GP-STEERING | 1006 |
| | 6 | 1 | **8T-4123** | 4 | WASHER (22X35X3.5-MM THK) | |
| M | 7 | 1 | **8T-6430** | 4 | BOLT (M20X2.5X50-MM) | |

M-METRIC PART
Y-SEPARATE ILLUSTRATION

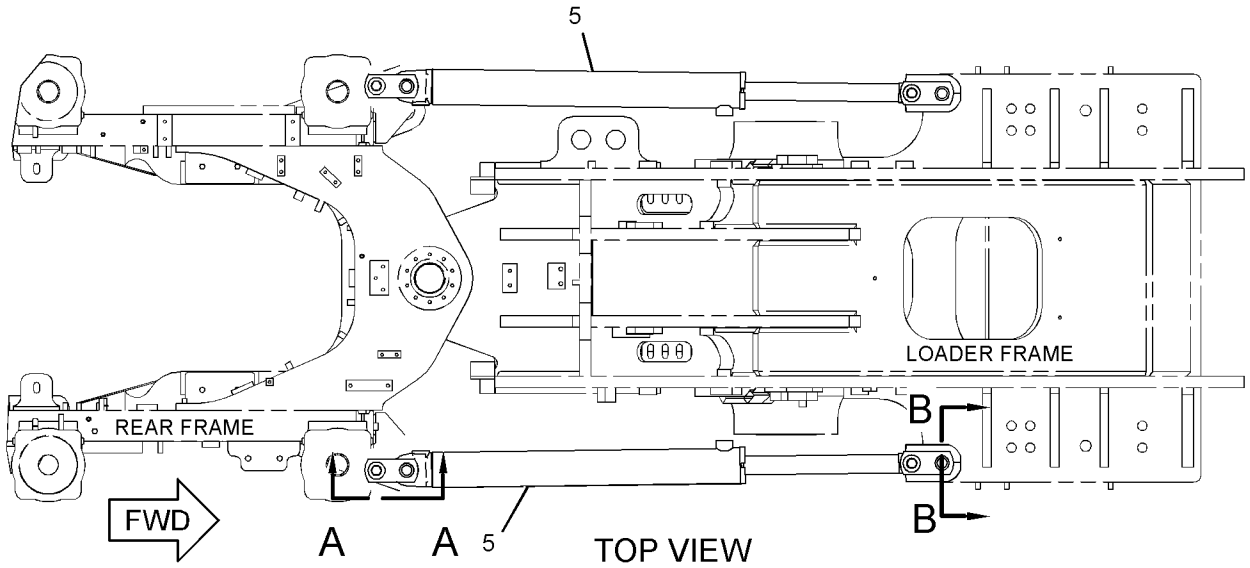


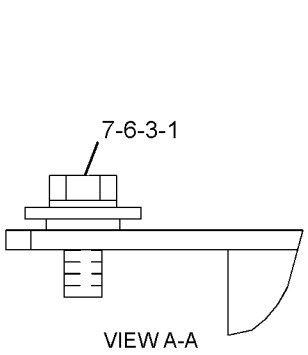


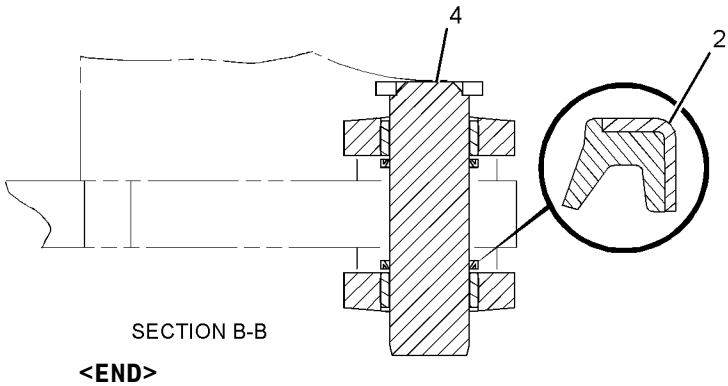


GRAPHIC #1 **<END>** g01355953

# STEERING SYSTEM

## 259-4733 CYLINDER GP-STEERING–LH

**S/N: BXY1-1899**
**101.6-MM BORE X 928-MM STROKE**
**PART OF 132-6140 CYLINDER & MTG GP-STEERING**

**SMCS-4303** **i02386840**

| NOTE | REF NO | GRAPHIC REF | PART NUMBER | QTY | PART NAME 1 2 3 4 5 6 (PRODUCT LEVEL) | SEE PAGE |
|---|---|---|---|---|---|---|
| | 1 | 1 | **259-4739** | 1 | CYLINDER AS | |
| | | 1 | **135-2572** | 1 | CAP | |
| | | 1 | **135-3161** | 2 | BEARING | |
| M | 2 | 1 | **173-9682** | 1 | BOLT (M36X4X100-MM) | |
| | 3 | 1 | **7D-5238** | 1 | WASHER (37.5X62X6-MM THK) | |
| | 4 | 1 | **6J-2797** | 1 | RING-WEAR | |
| | 5 | 1 | **8C-9160** | 1 | SEAL AS | |
| | 6 | 1 | **172-9981** | 1 | HEAD | |
| | 7 | 1 | **172-6409** | 1 | ROD AS | |
| | 8 | 1 | **2K-6830** | 1 | RING-BACKUP | |
| | 9 | 1 | **175-7900** | 1 | SEAL-O-RING | |
| | 10 | 1 | **117-7865** | 1 | PISTON | |
| | 11 | 1 | **8T-0785** | 1 | RING-WEAR | |
| | 12 | 1 | **167-2201** | 1 | SEAL AS-BUFFER | |
| | 13 | 1 | **167-2312** | 1 | SEAL-U-CUP | |
| | 14 | 1 | **225-3281** | 1 | SEAL-WIPER | |

M-METRIC PART

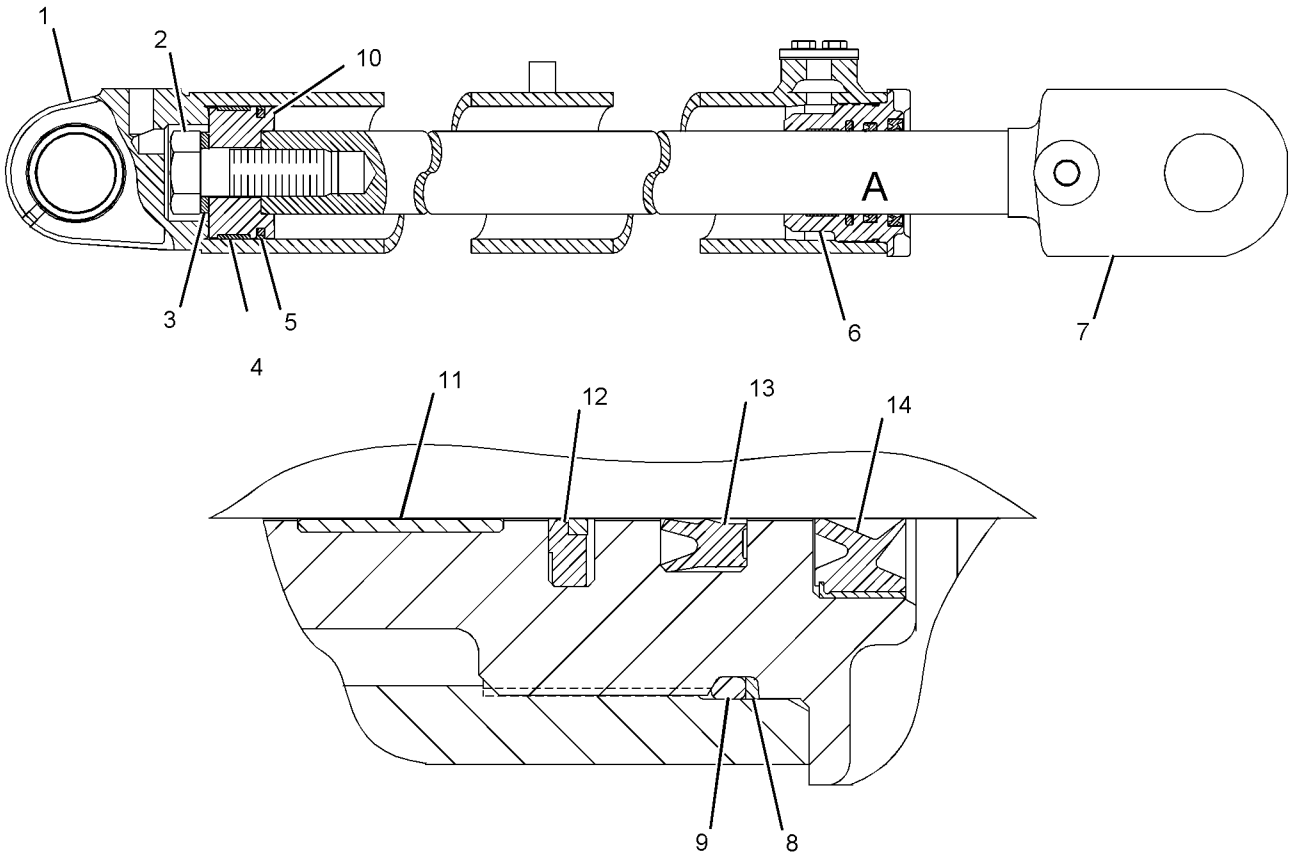


VIEW OF AREA A

GRAPHIC #1 **<END>** g01111065

## 259-4737 CYLINDER GP-STEERING—RH

**S/N: BXY1-1899**
**101.6-MM BORE X 928-MM STROKE**
**PART OF 132-6140 CYLINDER & MTG GP-STEERING**

**SMCS-4303** **i02187816**

| NOTE | REF NO | GRAPHIC REF | PART NUMBER | QTY | PART NAME 1 2 3 4 5 6 (PRODUCT LEVEL) | SEE PAGE |
|---|---|---|---|---|---|---|
| | 1 | 1 | **259-4738** | 1 | CYLINDER AS | |
| | | 1 | **135-2572** | 1 | CAP | |
| | | 1 | **135-3161** | 2 | BEARING | |
| M | 2 | 1 | **173-9682** | 1 | BOLT (M36X4X100-MM) | |
| | 3 | 1 | **7D-5238** | 1 | WASHER (37.5X62X6-MM THK) | |
| | 4 | 1 | **6J-2797** | 1 | RING-WEAR | |
| | 5 | 1 | **8C-9160** | 1 | SEAL AS | |
| | 6 | 1 | **172-9981** | 1 | HEAD | |
| | 7 | 1 | **172-6409** | 1 | ROD AS | |
| | 8 | 1 | **2K-6830** | 1 | RING-BACKUP | |
| | 9 | 1 | **175-7900** | 1 | SEAL-O-RING | |
| | 10 | 1 | **117-7865** | 1 | PISTON | |
| | 11 | 1 | **8T-0785** | 1 | RING-WEAR | |
| | 12 | 1 | **167-2201** | 1 | SEAL AS-BUFFER | |
| | 13 | 1 | **167-2312** | 1 | SEAL-U-CUP | |
| | 14 | 1 | **225-3281** | 1 | SEAL-WIPER | |

M-METRIC PART

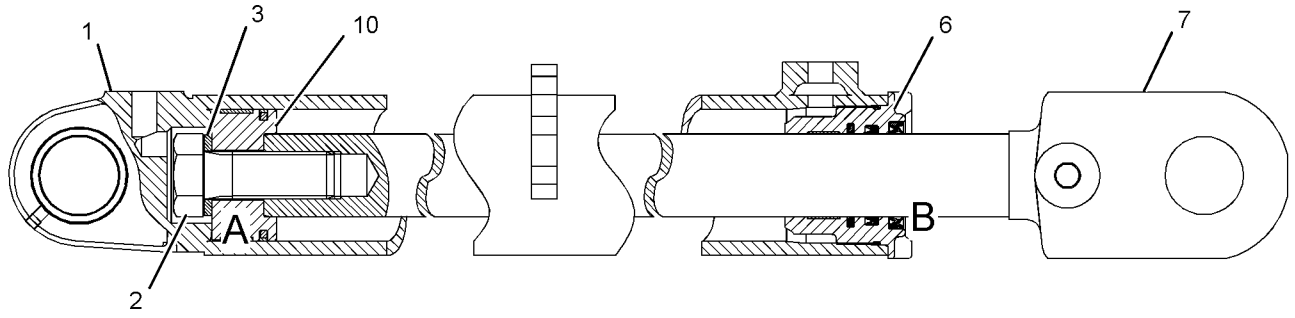


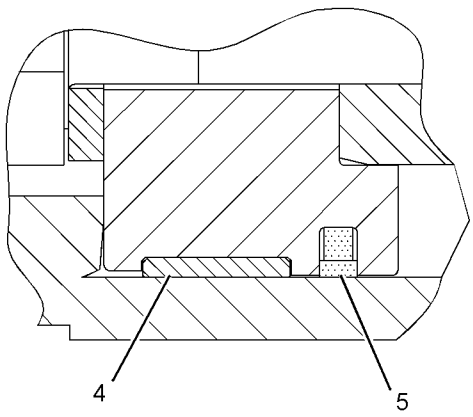


VIEW OF AREA A

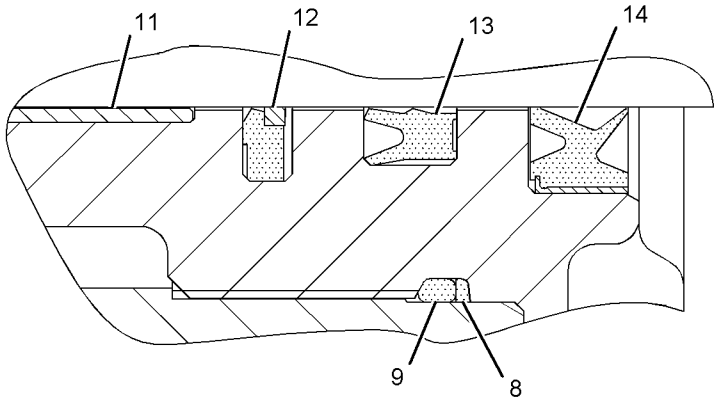


VIEW OF AREA B

GRAPHIC #1 **<END>** g01107103

# STEERING SYSTEM

## *288-0568* CYLINDER GP-STEERING

**S/N: BXY1900-UP**

**101.6-MM BORE X 928-MM STROKE**

**PART OF 285-8674 CYLINDER & MTG GP-STEERING**

**SMCS-4303** **i02672348**

| NOTE | REF NO | GRAPHIC REF | PART NUMBER | QTY | PART NAME 1 2 3 4 5 6 (PRODUCT LEVEL) | SEE PAGE |
|---|---|---|---|---|---|---|
| | 1 | 1 | **117-7865** | 1 | PISTON | |
| R | 2 | 1 | **172-6409** | 1 | ROD AS | |
| | 3 | 1 | **172-9981** | 1 | HEAD | |
| | 4 | 1 | **288-0569** | 1 | CYLINDER AS | |
| | | 1 | **135-3161** | 2 | BEARING | |
| | 5 | 1 | **167-2201** | 1 | SEAL AS-BUFFER | |
| | 6 | 1 | **167-2312** | 1 | SEAL-U-CUP | |
| M | 7 | 1 | **173-9682** | 1 | BOLT (M36X4X100-MM) | |
| | 8 | 1 | **175-7900** | 1 | SEAL-O-RING | |
| | 9 | 1 | **225-3281** | 1 | SEAL-WIPER | |
| | 10 | 1 | **2K-6830** | 1 | RING-BACKUP | |
| | 11 | 1 | **6J-2797** | 1 | RING-WEAR | |
| | 12 | 1 | **7D-5238** | 1 | WASHER (37.5X62X6-MM THK) | |
| | 13 | 1 | **8C-9160** | 1 | SEAL AS | |
| | 14 | 1 | **8T-0785** | 1 | RING-WEAR | |

M-METRIC PART
R-REMFG PART MAY BE AVAILABLE

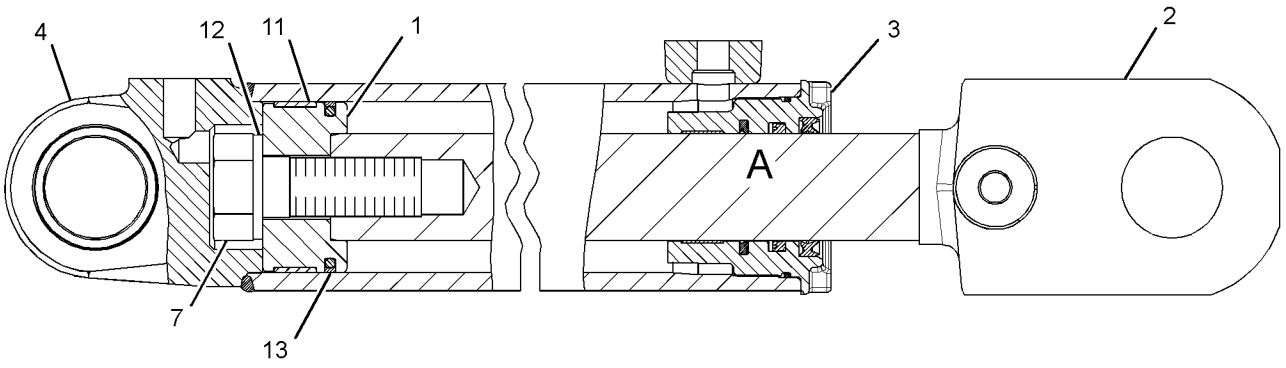


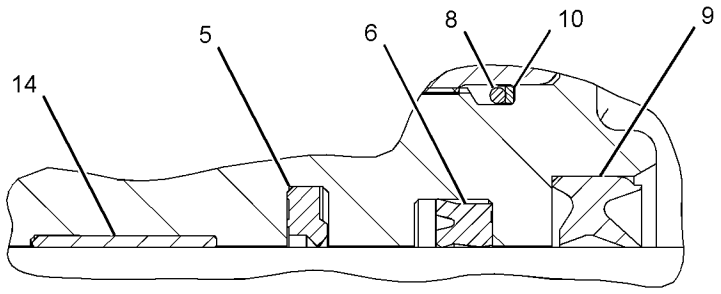


VIEW OF AREA A

GRAPHIC #1 **<END>** g01353110

# *167-4322* GUARD GP-STEERING CYLINDER

**S/N: BXY1-UP**
**PART OF 2Q-8722, 2Q-8733 STEEL MILL AR**
**AN ATTACHMENT**

**SMCS-4303, 7164** **i01767417**

| NOTE | REF NO | GRAPHIC REF | PART NUMBER | QTY | PART NAME 1 2 3 4 5 6 (PRODUCT LEVEL) | SEE PAGE |
|---|---|---|---|---|---|---|
| C | 1 | 1 | **223-9659** | 1 | GUARD AS | |
| C | 2 | 1 | **223-9660** | 1 | GUARD AS | |
| | 3 | 1 | **168-4658** | 2 | BRACKET AS | |
| | 4 | 1 | **168-4659** | 2 | BRACKET AS | |
| | 5 | 1 | **7X-0515** | 16 | WASHER-HARD (17X35X5MM THK) | |
| M | 6 | 1 | **8T-4779** | 16 | BOLT (M16X2X35MM) | |

C-CHANGE FROM PREVIOUS TYPE
M-METRIC PART

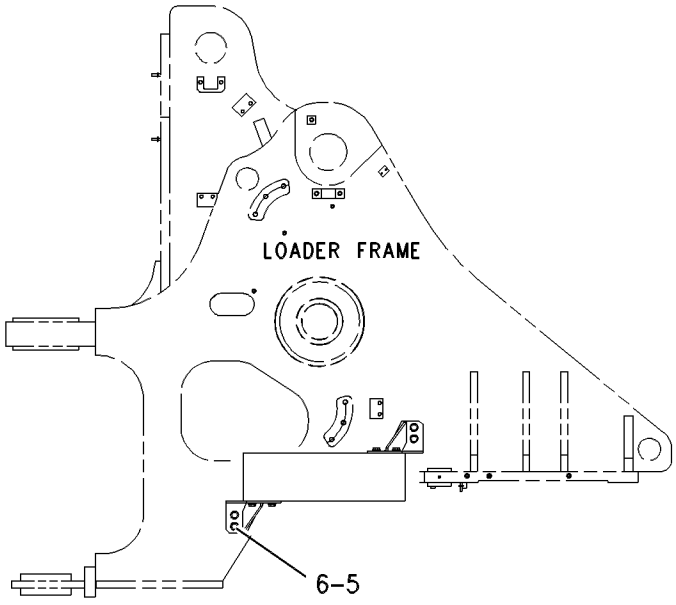


RIGHT SIDE VIEW

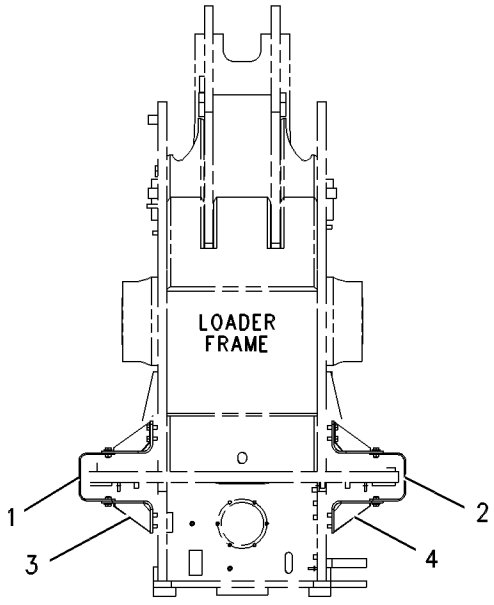


FRONT VIEW

GRAPHIC #1 **<END>** g00550192

# STEERING SYSTEM

## *132-6144* LINES GP-SECONDARY STEERING

**S/N: BXY1-UP**

**CANNOT BE USED WITH 151-2384—PAGE 1035**

**AN ATTACHMENT**

**SMCS-4304** **i02436044**

| NOTE | REF NO | GRAPHIC REF | PART NUMBER | QTY | PART NAME 1 2 3 4 5 6 (PRODUCT LEVEL) | SEE PAGE |
|---|---|---|---|---|---|---|
| C | 1 | 1 | *153-6249* | 1 | CONNECTOR AS | |
| | | 1 | **3J-1907** | | SEAL-O-RING | |
| | | 1 | **6V-8397** | 1 | SEAL-O-RING | |
| | | 1 | **8T-8887** | 1 | CONNECTOR | |
| | 2 | 2 | **230-5771** | 1 | SWITCH AS-PRESSURE (PRIMARY STEERING OIL) | |
| | | 2 | **102-8803** | 1 | KIT-RECEPTACLE (3-PIN) | |
| | | | | | INCLUDES RECEPTACLE AS AND WEDGE | |
| | | 2 | **3E-3371** | 1 | WEDGE-RECEPTACLE LOCK (3-PIN) | |
| | | 2 | **186-3735** | 3 | PIN-CONNECTOR (16-GA TO 18-GA) | |
| E | | 2 | **9X-1813** | | SLEEVE (30-CM) | |
| | 3 | 2 | **141-9666** | 1 | MANIFOLD | |
| | 4 | 2 | **154-6659** | 1 | TUBE AS | |
| I | 5 | 1 | **155-9457** | 1 | HOSE AS | |
| CI | 6 | 1 | **213-7465** | 1 | HOSE AS | |
| I | 7 | 2 | **179-3274** | 1 | HOSE AS | |
| | 8 | 1 | **5P-4295** | 1 | CLIP | |
| | 9 | 1 | **115-3069** | 1 | CLIP AS-CONNECTOR (3-PIN) | |
| Y | 10 | 2 | **133-8609** | 1 | VALVE GP-STEERING (WITH SECONDARY STEERING) | 1051 |
| Y | 11 | 2 | **150-7585** | 1 | PUMP GP-GEAR (SECONDARY STEERING) | 1030 |
| | 12 | 1,2 | **1P-4577** | 4 | FLANGE-HALF | |
| | 13 | 2 | **1P-4579** | 2 | FLANGE-HALF | |
| C | 14 | 1 | **213-7466** | 1 | BRACKET AS | |
| | 15 | 2 | **3K-0360** | 1 | SEAL-O-RING | |
| | 16 | 1 | *148-8367* | 1 | ELBOW AS | |
| | | 1 | **8C-8988** | 1 | ELBOW | |
| | | 1 | **6V-8397** | 1 | SEAL-O-RING | |
| | 17 | 1,2 | **4J-0520** | 2 | SEAL-O-RING | |
| | 18 | 2 | **4J-0521** | 1 | SEAL-O-RING | |
| | 19 | 1 | **4J-0524** | 2 | SEAL-O-RING | |
| | 20 | 2 | **5F-3106** | 1 | SEAL-O-RING | |
| | 21 | 1 | **5P-7468** | 1 | CLIP (SLOT) | |
| | 22 | 1 | **5P-7469** | 1 | CLIP (TAB) | |
| | 23 | 1 | **5P-8444** | 1 | GROMMET | |
| | 24 | 1 | *148-8354* | 1 | ELBOW AS | |
| | | 1 | **6V-9002** | | ELBOW (45-DEG) | |
| | | 1 | **3K-0360** | 1 | SEAL-O-RING | |
| | | 1 | **6V-8398** | 1 | SEAL-O-RING | |
| | 25 | 2 | *148-8365* | 1 | ELBOW AS | |
| | | 2 | **8T-6876** | 1 | ELBOW | |
| | | 2 | **3J-1907** | 1 | SEAL-O-RING | |
| | | 2 | **6V-8398** | 1 | SEAL-O-RING | |
| Y | 26 | 2 | **6E-5566** | 1 | VALVE GP-SELECTOR & PRESS CONT (SECONDARY STEERING) | 1045 |
| CM | 27 | 1 | **8T-4136** | 1 | BOLT (M10X1.5X25-MM) | |
| | 28 | 2 | *148-8307* | 1 | ADAPTER AS | |
| | | 2 | **5P-8874** | 1 | ADAPTER | |
| | | 2 | **3J-1907** | 1 | SEAL-O-RING | |
| | 29 | 1 | *148-8378* | 1 | ELBOW AS | |
| | | 1 | **6V-8724** | 1 | ELBOW | |
| | | 1 | **3J-1907** | 1 | SEAL-O-RING | |
| | | 1 | **6V-8397** | 1 | SEAL-O-RING | |
| C | 30 | 2 | **8T-4223** | 11 | WASHER-HARD (13.5X25.5X3-MM THK) | |
| M | 31 | 2 | **8T-5041** | 3 | BOLT (M12X1.75X120-MM) | |
| | 32 | 2 | **9X-6772** | 1 | STRAP-CABLE | |
| C | 33 | 1,2 | **8T-4121** | 16 | WASHER-HARD (11X21X2.5-MM THK) | |

## *132-6144* LINES GP-SECONDARY STEERING *(contd.)* i02436044

| NOTE | REF NO | GRAPHIC REF | PART NUMBER | QTY | PART NAME 1 2 3 4 5 6 (PRODUCT LEVEL) | SEE PAGE |
|---|---|---|---|---|---|---|
| | 34 | 2 | **6V-8188** | 4 | NUT (1/2-13-THD) | |
| | 35 | 2 | **163-1876** | 1 | LAMP (24-VOLT) | |
| M | 36 | 2 | **8T-4172** | 4 | BOLT (M10X1.5X80-MM) | |
| M | 37 | 2 | **8T-4184** | 4 | BOLT (M12X1.75X45-MM) | |
| M | 38 | 1 | **8T-4185** | 2 | BOLT (M10X1.5X50-MM) | |
| CM | 39 | 1,2 | **8T-4196** | 9 | BOLT (M10X1.5X35-MM) | |

C-CHANGE FROM PREVIOUS TYPE
E-ORDER BY THE CENTIMETER
I-REFER TO HYDRAULIC INFORMATION SYSTEM
M-METRIC PART
Y-SEPARATE ILLUSTRATION

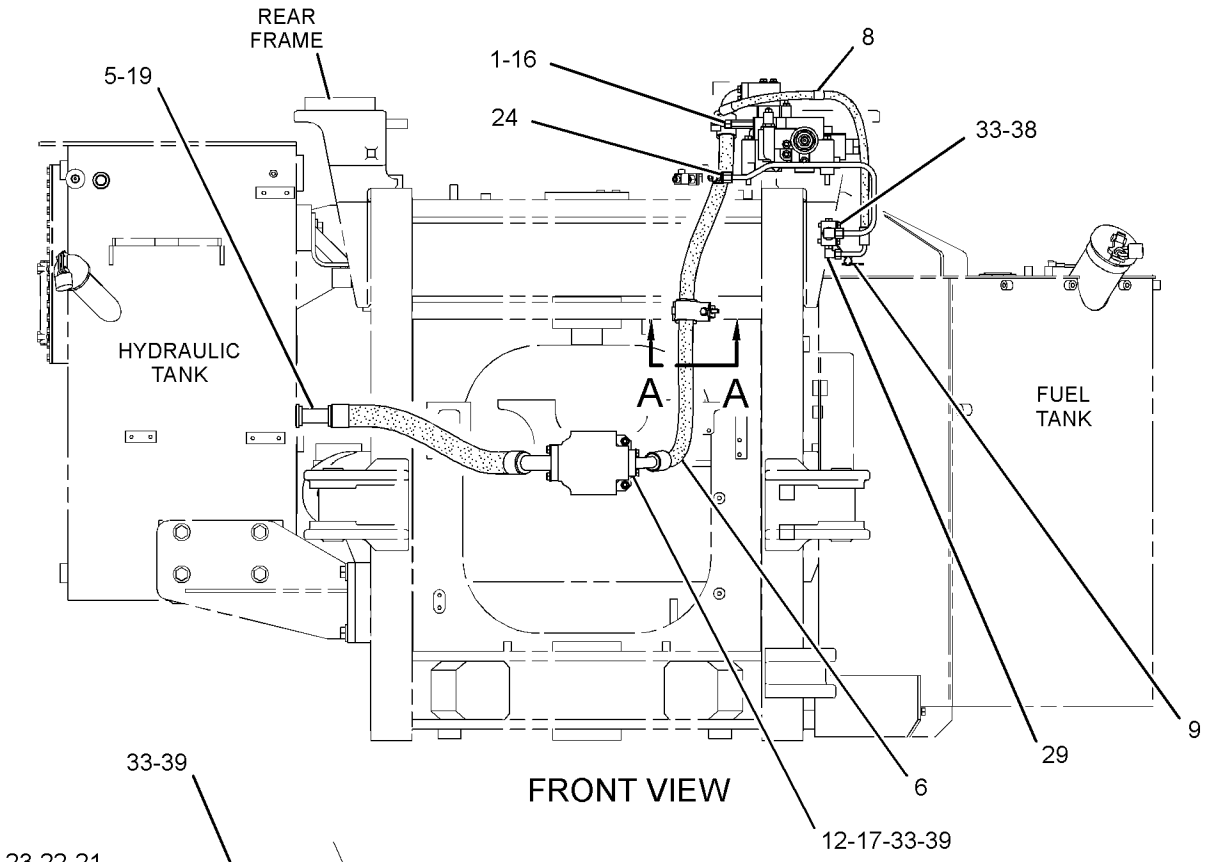


FRONT VIEW

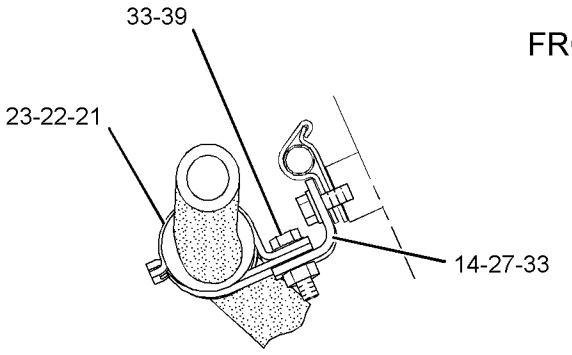


SECTION A-A

REFER TO ALL ILLUSTRATIONS OF THIS GROUP FOR AUXILIARY VIEWS

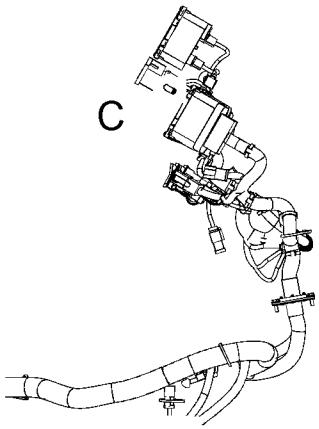


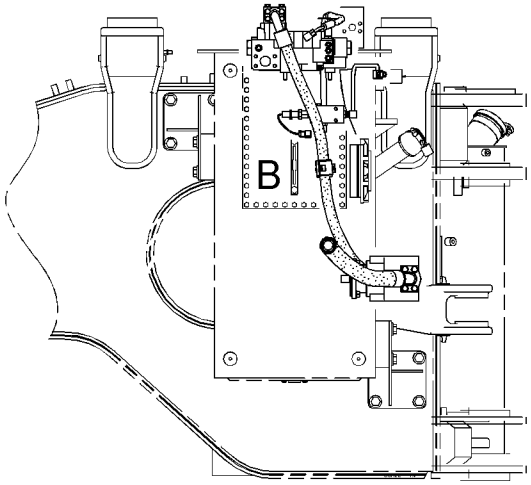


RIGHT SIDE VIEW

GRAPHIC #1

g01231970

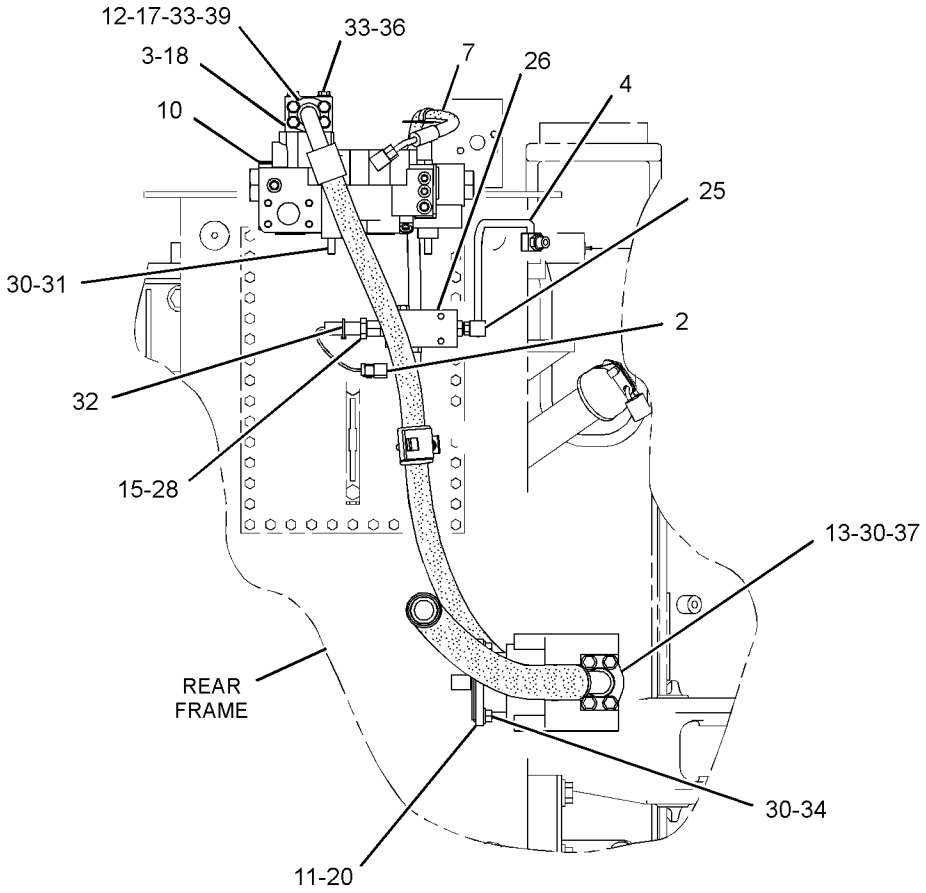


VIEW OF AREA B

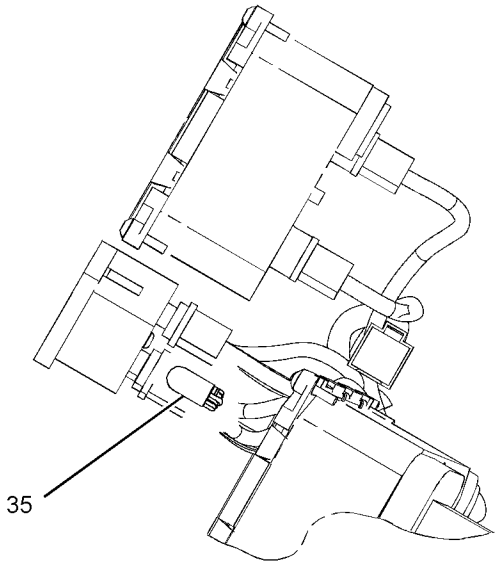


VIEW OF AREA C

GRAPHIC #2 **<END>** g01232136

# STEERING SYSTEM

## *189-7251* LINES GP-STEERING

**S/N: BXY1900-UP**
**PART OF 227-3317 GUARD GP-LINES**
**AN ATTACHMENT**

**SMCS-4304** **i02205087**

| NOTE | PART NUMBER | QTY | PART NAME 1 2 3 4 5 6 (PRODUCT LEVEL) | SEE PAGE |
|---|---|---|---|---|
| | **262-5019** | 1 | HOSE AS | |
| | **262-5020** | 1 | HOSE AS | |
| | **262-5021** | 1 | HOSE AS | |
| | **262-5022** | 1 | HOSE AS | |
| | | | | |
| | | | *****STANDARD REMOVAL***** | |
| JI | **247-8535** | 1 | HOSE AS | |
| JI | **247-8536** | 1 | HOSE AS | |
| JI | **247-8537** | 1 | HOSE AS | |
| JI | **247-8538** | 1 | HOSE AS | |

I-REFER TO HYDRAULIC INFORMATION SYSTEM
J-PART OF STANDARD LINES GP-STEERING

**<END>**

# STEERING SYSTEM

## *247-8540* LINES GP-STEERING

**S/N: BXY1-957**

**PART OF 225-5449 HYDRAULIC AR**

**SMCS-4304** **i02305490**

| NOTE | REF NO | GRAPHIC REF | PART NUMBER | QTY | PART NAME 1 2 3 4 5 6 (PRODUCT LEVEL) | SEE PAGE |
|---|---|---|---|---|---|---|
| | 1 | 1 | **0A-3721** | 4 | CLIP | |
| | 2 | 1 | **6V-0852** | 3 | CAP-DUST | |
| | 3 | 1 | **2B-0941** | 1 | SPACER (10.5X19X19-MM THK) | |
| | 4 | 1 | **108-7550** | 2 | CLIP | |
| | 5 | 1 | **116-4731** | 4 | ELBOW | |
| | 6 | 2 | **127-4667** | 1 | STRIP AS | |
| M | | 2 | **8T-3490** | 1 | NUT-WELD (M10X1.5-THD) | |
| | 7 | 2 | **134-8459** | 2 | PLATE | |
| I | 8 | 1 | **141-9520** | 1 | HOSE AS | |
| I | 9 | 1 | **141-9521** | 1 | HOSE AS | |
| | 10 | 2 | **143-4158** | 2 | CLIP | |
| | 11 | 2 | **151-2680** | 1 | PLATE AS | |
| M | | 2 | **8T-3597** | 3 | NUT-WELD (M12X1.75-THD) | |
| | 12 | 1 | **162-2127** | 1 | TUBE AS | |
| | 13 | 1 | **162-2128** | 1 | TUBE AS | |
| I | 14 | 1 | **162-8455** | 1 | HOSE AS | |
| | 15 | 1 | **163-5442** | 1 | BRACKET AS | |
| | 16 | 2 | **163-5596** | 1 | MANIFOLD | |
| | 17 | 1 | *165-4931* | 1 | ELBOW AS | |
| | | 1 | **3J-1907** | 1 | SEAL-O-RING | |
| | | 1 | **6V-8077** | 1 | ELBOW | |
| | 18 | 1,2 | **216-9195** | 2 | MANIFOLD | |
| I | 19 | 1 | **226-2045** | 1 | HOSE AS | |
| | 20 | 1 | *241-6215* | 2 | ELBOW AS | |
| | | | | | (EACH INCLUDES) | |
| | | 1 | **3J-1907** | 1 | SEAL-O-RING | |
| | | 1 | **6V-8076** | 1 | ELBOW | |
| | 21 | 1 | **247-8531** | 1 | TUBE AS | |
| | 22 | 1 | **247-8532** | 1 | TUBE AS | |
| I | 23 | 1 | **247-8536** | 1 | HOSE AS | |
| I | 24 | 1 | **247-8537** | 1 | HOSE AS | |
| I | 25 | 1 | **247-8538** | 1 | HOSE AS | |
| | 26 | 2 | **252-1285** | 1 | TUBE AS | |
| | 27 | 2 | **253-4280** | 2 | ELBOW | |
| | 28 | 2 | **257-7804** | 1 | TUBE AS | |
| | 29 | 2 | *148-8353* | 1 | ELBOW AS | |
| | | 2 | **3J-1907** | 1 | SEAL-O-RING | |
| | | 2 | **6V-8397** | 1 | SEAL-O-RING | |
| | | 2 | **6V-9001** | 1 | ELBOW | |
| | 30 | 1 | *148-8378* | 1 | ELBOW AS | |
| | | 1 | **3J-1907** | 1 | SEAL-O-RING | |
| | | 1 | **6V-8397** | 1 | SEAL-O-RING | |
| | | 1 | **6V-8724** | 1 | ELBOW | |
| | 31 | 2 | *148-8407* | 1 | PLUG AS | |
| | | 2 | **3J-1907** | 1 | SEAL-O-RING | |
| | | 2 | **9S-4191** | 1 | PLUG-O-RING | |
| | 32 | 1 | *153-6236* | 2 | REDUCER AS | |
| | | 1 | **6V-8946** | 1 | REDUCER | |
| | | 1 | **6V-9746** | 1 | SEAL-O-RING | |
| YR | 33 | 1 | **153-9624** | 1 | PUMP GP-PISTON (STEERING) | 1032 |
| | 34 | 1 | *164-5567* | 3 | FITTING AS (QUICK DISCONNECT, MALE) | |
| | | 1 | **3J-1907** | 1 | SEAL-O-RING | |
| | | 1 | **6V-3965** | 1 | FITTING-COUPLER | |
| | 35 | 1 | **247-8529** | 1 | TUBE AS | |
| | 36 | 1 | **247-8530** | 1 | TUBE AS | |
| I | 37 | 1 | **247-8535** | 1 | HOSE AS | |

## *247-8540* **LINES GP-STEERING** *(contd.)* **i02305490**

| NOTE | REF NO | GRAPHIC REF | PART NUMBER | QTY | PART NAME 1 2 3 4 5 6 (PRODUCT LEVEL) | SEE PAGE |
|---|---|---|---|---|---|---|
| | 38 | 1,2 | **1P-3702** | 6 | SEAL-RECTANGULAR | |
| | 39 | 2 | **1P-3703** | 2 | SEAL-RECTANGULAR | |
| | 40 | 1,2 | **1P-3704** | 6 | SEAL-RECTANGULAR | |
| | 41 | 1 | **1P-4579** | 4 | FLANGE-HALF | |
| | 42 | 1 | **1P-4584** | 4 | FLANGE-HALF | |
| | 43 | 1,2 | **1P-5767** | 4 | FLANGE-HALF | |
| | 44 | 2 | **1S-0994** | 1 | CLIP | |
| | 45 | 1 | **4J-0524** | 2 | SEAL-O-RING | |
| | 46 | 1,2 | **4J-5267** | 10 | SEAL-O-RING | |
| | 47 | 1 | **5F-3106** | 1 | SEAL-O-RING | |
| | 48 | 1,2 | **5K-9090** | 8 | SEAL-O-RING | |
| | 49 | 1 | **5P-7703** | 1 | GROMMET | |
| | 50 | 1 | **6J-2680** | 2 | SEAL-O-RING | |
| | 51 | 1 | **6V-1572** | 1 | CLIP (SLOT) | |
| | 52 | 1 | **6V-1573** | 1 | CLIP (TAB) | |
| | 53 | 1 | **6V-9746** | 5 | SEAL-O-RING | |
| | 54 | 2 | **7X-0584** | 8 | WASHER-HARD (13.5X20.5X2-MM THK) | |
| M | 55 | 1,2 | **7X-2549** | 8 | BOLT (M12X1.75X100-MM) | |
| | 56 | 1,2 | **7Y-3729** | 5 | FLANGE | |
| | 57 | 2 | **8C-3205** | 2 | FLANGE-HALF | |
| | 58 | 1,2 | **8T-4121** | 55 | WASHER-HARD (11X21X2.5-MM THK) | |
| M | 59 | 1 | **8T-4136** | 2 | BOLT (M10X1.5X25-MM) | |
| M | 60 | 2 | **8T-4139** | 4 | BOLT (M12X1.75X30-MM) | |
| M | 61 | 1,2 | **8T-4183** | 18 | BOLT (M12X1.75X40-MM) | |
| M | 62 | 1 | **8T-4184** | 8 | BOLT (M12X1.75X45-MM) | |
| M | 63 | 2 | **8T-4191** | 1 | BOLT (M10X1.5X16-MM) | |
| M | 64 | 1,2 | **8T-4194** | 8 | BOLT (M12X1.75X50-MM) | |
| M | 65 | 1,2 | **8T-4195** | 12 | BOLT (M10X1.5X30-MM) | |
| M | 66 | 1 | **8T-4196** | 16 | BOLT (M10X1.5X35-MM) | |
| | 67 | 1,2 | **8T-4223** | 56 | WASHER-HARD (13.5X25.5X3-MM THK) | |
| M | 68 | 2 | **8T-4648** | 8 | BOLT (M12X1.75X70-MM) | |
| M | 69 | 2 | **8T-4956** | 8 | BOLT (M12X1.75X35-MM) | |
| M | 70 | 1,2 | **8T-6466** | 24 | BOLT (M10X1.5X60-MM) | |
| M | 71 | 1 | **8T-7338** | 2 | BOLT (M16X2X45-MM) | |
| M | 72 | 2 | **9X-6032** | 16 | BOLT-SOCKET HEAD (M10X1.5X30-MM) | |
| | 73 | 1 | **9X-8257** | 2 | WASHER (17.5X30X3.5-MM THK) | |

I-REFER TO HYDRAULIC INFORMATION SYSTEM
M-METRIC PART
R-REMFG PART MAY BE AVAILABLE
Y-SEPARATE ILLUSTRATION

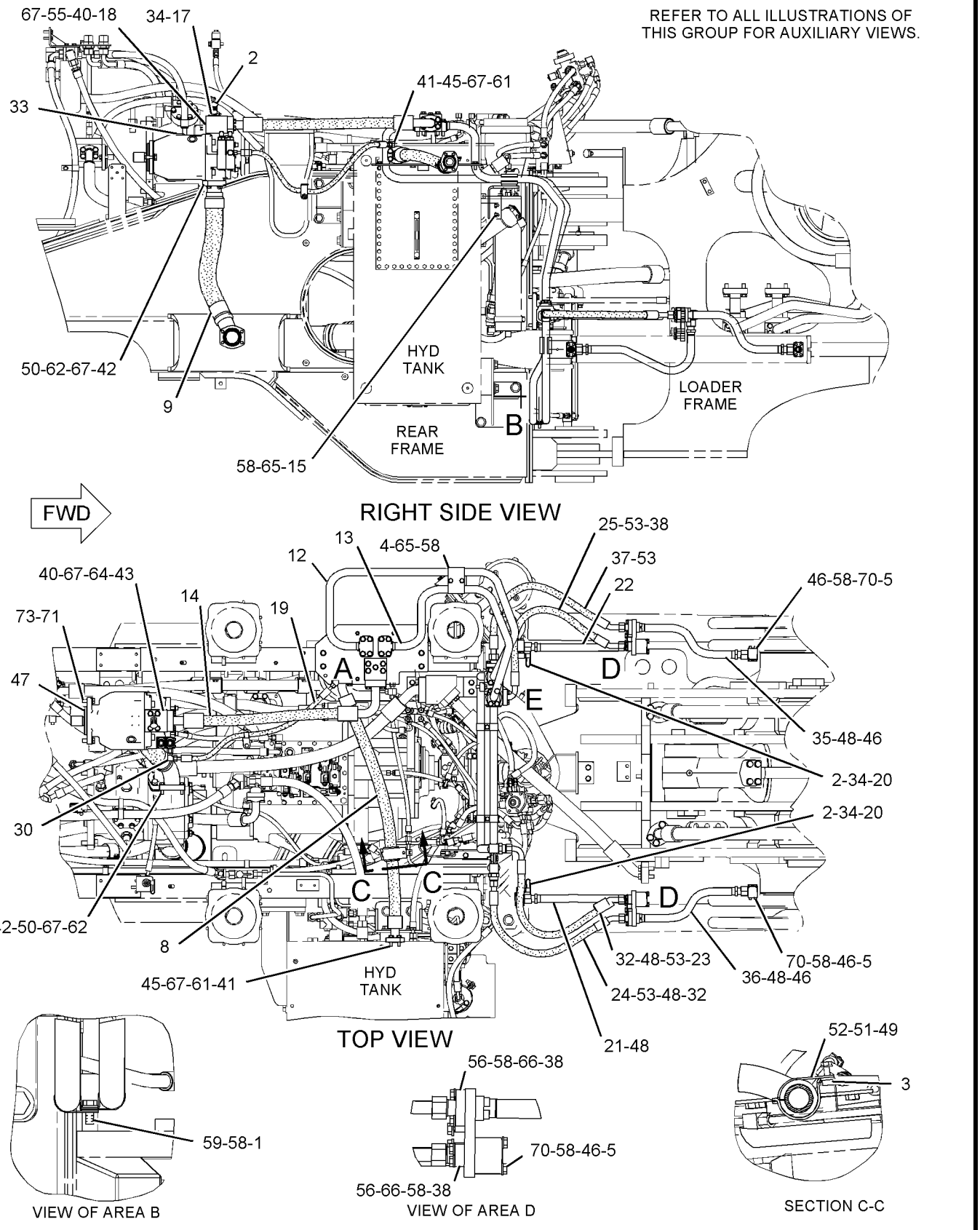


GRAPHIC #1 g01118861

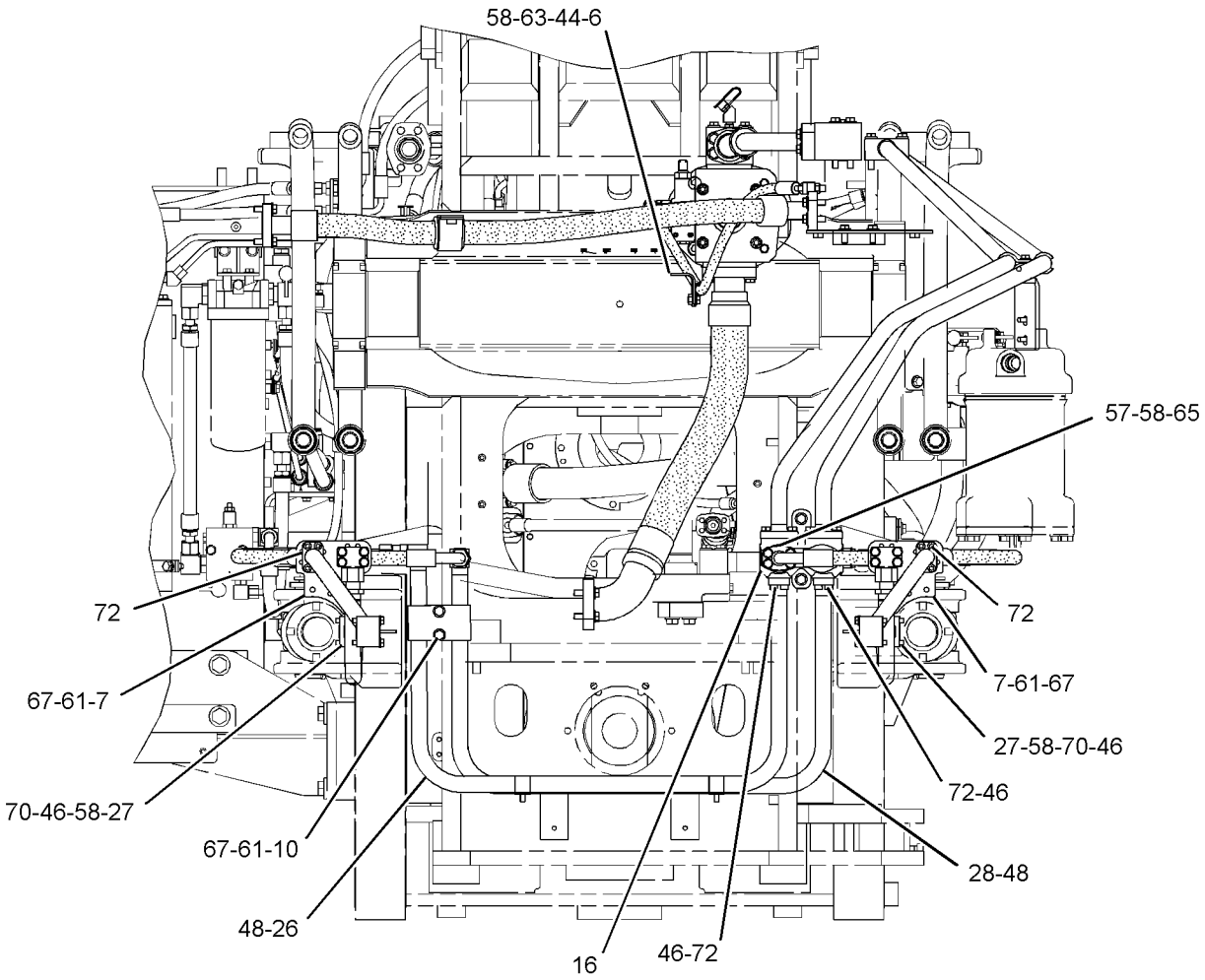


FRONT VIEW

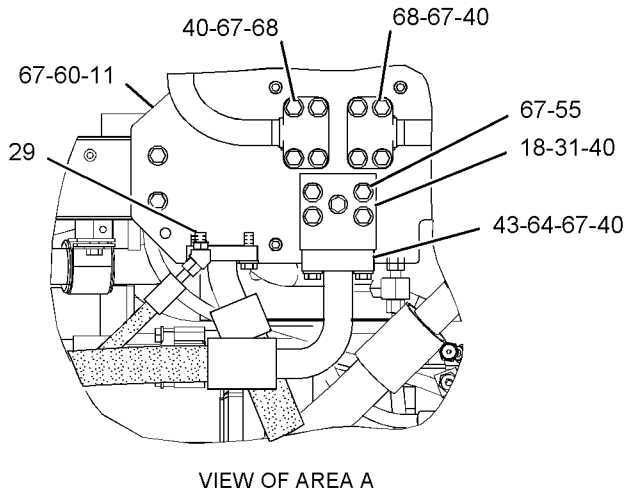


VIEW OF AREA A

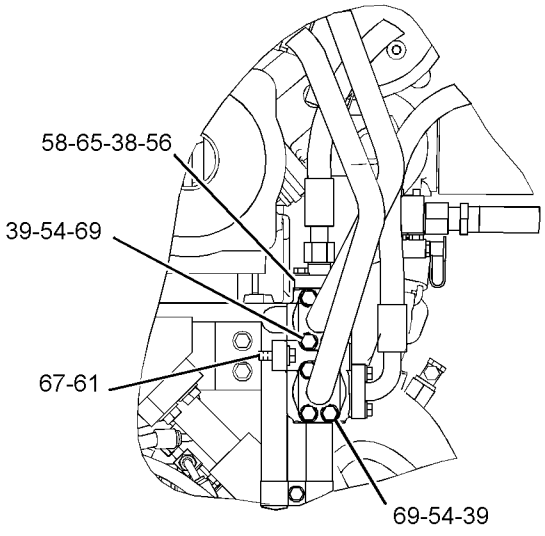


VIEW OF AREA E

GRAPHIC #2 **<END>** g01118862

# STEERING SYSTEM

## *247-8540* LINES GP-STEERING

**S/N: BXY958-1899**

**PART OF 225-5449 HYDRAULIC AR**

**SMCS-4304** **i02541258**

| NOTE | REF NO | GRAPHIC REF | PART NUMBER | QTY | PART NAME 1 2 3 4 5 6 (PRODUCT LEVEL) | SEE PAGE |
|---|---|---|---|---|---|---|
| | 1 | 2 | **0A-3721** | 4 | CLIP | |
| | 2 | 1 | **2B-0941** | 1 | SPACER (10.5X19X19-MM THK) | |
| | 3 | 1,2 | **6V-0852** | 3 | CAP-DUST | |
| | 4 | 1 | **108-7550** | 2 | CLIP | |
| C | 5 | 1 | **109-5816** | 2 | ELBOW | |
| | 6 | 2 | **127-4667** | 1 | STRIP AS | |
| | 7 | 2 | **134-8459** | 2 | PLATE | |
| I | 8 | 1 | **141-9520** | 1 | HOSE AS | |
| I | 9 | 2 | **141-9521** | 1 | HOSE AS | |
| | 10 | 2 | **143-4158** | 2 | CLIP | |
| | 11 | 1 | **151-2680** | 1 | PLATE AS | |
| M | | 1 | **8T-3597** | 3 | NUT-WELD (M12X1.75-THD) | |
| | 12 | 1 | **162-2127** | 1 | TUBE AS | |
| | 13 | 1 | **162-2128** | 1 | TUBE AS | |
| I | 14 | 1 | **162-8455** | 1 | HOSE AS | |
| | 15 | 2 | **163-5442** | 1 | BRACKET AS | |
| | 16 | 2 | **163-5596** | 1 | MANIFOLD | |
| | 17 | 2 | *165-4931* | 1 | ELBOW AS | |
| | | 2 | **3J-1907** | 1 | SEAL-O-RING | |
| | | 2 | **6V-8077** | 1 | ELBOW | |
| | 18 | 1,2 | **216-9195** | 2 | MANIFOLD | |
| I | 19 | 1 | **226-2045** | 1 | HOSE AS | |
| | 20 | 1 | *241-6215* | 2 | ELBOW AS | |
| | | | | | (EACH INCLUDES) | |
| | | 1 | **3J-1907** | 1 | SEAL-O-RING | |
| | | 1 | **6V-8076** | 1 | ELBOW | |
| I | 21 | 1 | **247-8536** | 1 | HOSE AS | |
| I | 22 | 1 | **247-8538** | 1 | HOSE AS | |
| | 23 | 2 | **252-1285** | 1 | TUBE AS | |
| | 24 | 2 | **253-4280** | 2 | ELBOW | |
| | 25 | 2 | **257-7804** | 1 | TUBE AS | |
| CI | 26 | 1 | **290-4821** | 2 | HOSE AS | |
| CI | 27 | 1 | **290-4822** | 2 | HOSE AS | |
| CI | 28 | 1 | **292-1312** | 2 | HOSE AS | |
| CM | 29 | 1 | **085-8091** | 8 | BOLT (M10X1.5X55-MM) | |
| | 30 | 1 | *148-8353* | 1 | ELBOW AS | |
| | | 1 | **3J-1907** | 1 | SEAL-O-RING | |
| | | 1 | **6V-8397** | 1 | SEAL-O-RING | |
| | | 1 | **6V-9001** | 1 | ELBOW | |
| | 31 | 1 | *148-8378* | 1 | ELBOW AS | |
| | | 1 | **3J-1907** | 1 | SEAL-O-RING | |
| | | 1 | **6V-8397** | 1 | SEAL-O-RING | |
| | | 1 | **6V-8724** | 1 | ELBOW | |
| | 32 | 1 | *148-8407* | 1 | PLUG AS | |
| | | 1 | **3J-1907** | 1 | SEAL-O-RING | |
| | | 1 | **9S-4191** | 1 | PLUG-O-RING | |
| C | 33 | 1 | *153-6236* | 4 | REDUCER AS | |
| | | | | | (EACH INCLUDES) | |
| | | 1 | **6V-8946** | 1 | REDUCER | |
| | | 1 | **6V-9746** | 1 | SEAL-O-RING | |
| YR | 34 | 2 | **153-9624** | 1 | PUMP GP-PISTON (STEERING) | 1032 |
| | 35 | 1,2 | *164-5567* | 3 | FITTING AS (QUICK DISCONNECT, MALE) | |
| | | | | | (EACH INCLUDES) | |
| | | 1,2 | **3J-1907** | 1 | SEAL-O-RING | |
| | | 1,2 | **6V-3965** | 1 | FITTING-COUPLER | |
| C | 36 | 1,2 | **1P-3702** | 8 | SEAL-RECTANGULAR | |

## *247-8540* **LINES GP-STEERING** *(contd.)* **i02541258**

| NOTE | REF NO | GRAPHIC REF | PART NUMBER | QTY | PART NAME 1 2 3 4 5 6 (PRODUCT LEVEL) | SEE PAGE |
|---|---|---|---|---|---|---|
| | 37 | 2 | **1P-3703** | 2 | SEAL-RECTANGULAR | |
| | 38 | 1,2 | **1P-3704** | 6 | SEAL-RECTANGULAR | |
| | 39 | 1,2 | **1P-4579** | 4 | FLANGE-HALF | |
| | 40 | 1,2 | **1P-4584** | 4 | FLANGE-HALF | |
| | 41 | 1 | **1P-5767** | 4 | FLANGE-HALF | |
| | 42 | 2 | **1S-0994** | 1 | CLIP | |
| | 43 | 1,2 | **4J-0524** | 2 | SEAL-O-RING | |
| C | 44 | 1,2 | **4J-5267** | 8 | SEAL-O-RING | |
| | 45 | 1 | **5F-3106** | 1 | SEAL-O-RING | |
| C | 46 | 1 | **5K-9090** | 4 | SEAL-O-RING | |
| | 47 | 1 | **5P-7703** | 1 | GROMMET | |
| | 48 | 1,2 | **6J-2680** | 2 | SEAL-O-RING | |
| | 49 | 1 | **6V-1572** | 1 | CLIP (SLOT) | |
| | 50 | 1 | **6V-1573** | 1 | CLIP (TAB) | |
| C | 51 | 1 | **6V-9746** | 9 | SEAL-O-RING | |
| | 52 | 2 | **7X-0584** | 8 | WASHER-HARD (13.5X20.5X2-MM THK) | |
| M | 53 | 1,2 | **7X-2549** | 8 | BOLT (M12X1.75X100-MM) | |
| C | 54 | 1,2 | **7Y-3729** | 7 | FLANGE | |
| C | 55 | 1,2 | **8C-3205** | 6 | FLANGE-HALF | |
| C | 56 | 1,2 | **8T-4121** | 63 | WASHER-HARD (11X21X2.5-MM THK) | |
| M | 57 | 2 | **8T-4136** | 2 | BOLT (M10X1.5X25-MM) | |
| M | 58 | 1 | **8T-4139** | 4 | BOLT (M12X1.75X30-MM) | |
| M | 59 | 1,2 | **8T-4183** | 18 | BOLT (M12X1.75X40-MM) | |
| M | 60 | 1,2 | **8T-4184** | 8 | BOLT (M12X1.75X45-MM) | |
| M | 61 | 2 | **8T-4191** | 1 | BOLT (M10X1.5X16-MM) | |
| M | 62 | 1 | **8T-4194** | 8 | BOLT (M12X1.75X50-MM) | |
| M | 63 | 1,2 | **8T-4195** | 12 | BOLT (M10X1.5X30-MM) | |
| CM | 64 | 1 | **8T-4196** | 32 | BOLT (M10X1.5X35-MM) | |
| | 65 | 1,2 | **8T-4223** | 56 | WASHER-HARD (13.5X25.5X3-MM THK) | |
| M | 66 | 1 | **8T-4648** | 8 | BOLT (M12X1.75X70-MM) | |
| M | 67 | 2 | **8T-4956** | 8 | BOLT (M12X1.75X35-MM) | |
| CM | 68 | 2 | **8T-6466** | 8 | BOLT (M10X1.5X60-MM) | |
| M | 69 | 1 | **8T-7338** | 2 | BOLT (M16X2X45-MM) | |
| CM | 70 | 2 | **9X-6032** | 8 | BOLT-SOCKET HEAD (M10X1.5X30-MM) | |
| | 71 | 1 | **9X-8257** | 2 | WASHER (17.5X30X3.5-MM THK) | |

C-CHANGE FROM PREVIOUS TYPE
I-REFER TO HYDRAULIC INFORMATION SYSTEM
M-METRIC PART
R-REMFG PART MAY BE AVAILABLE
Y-SEPARATE ILLUSTRATION

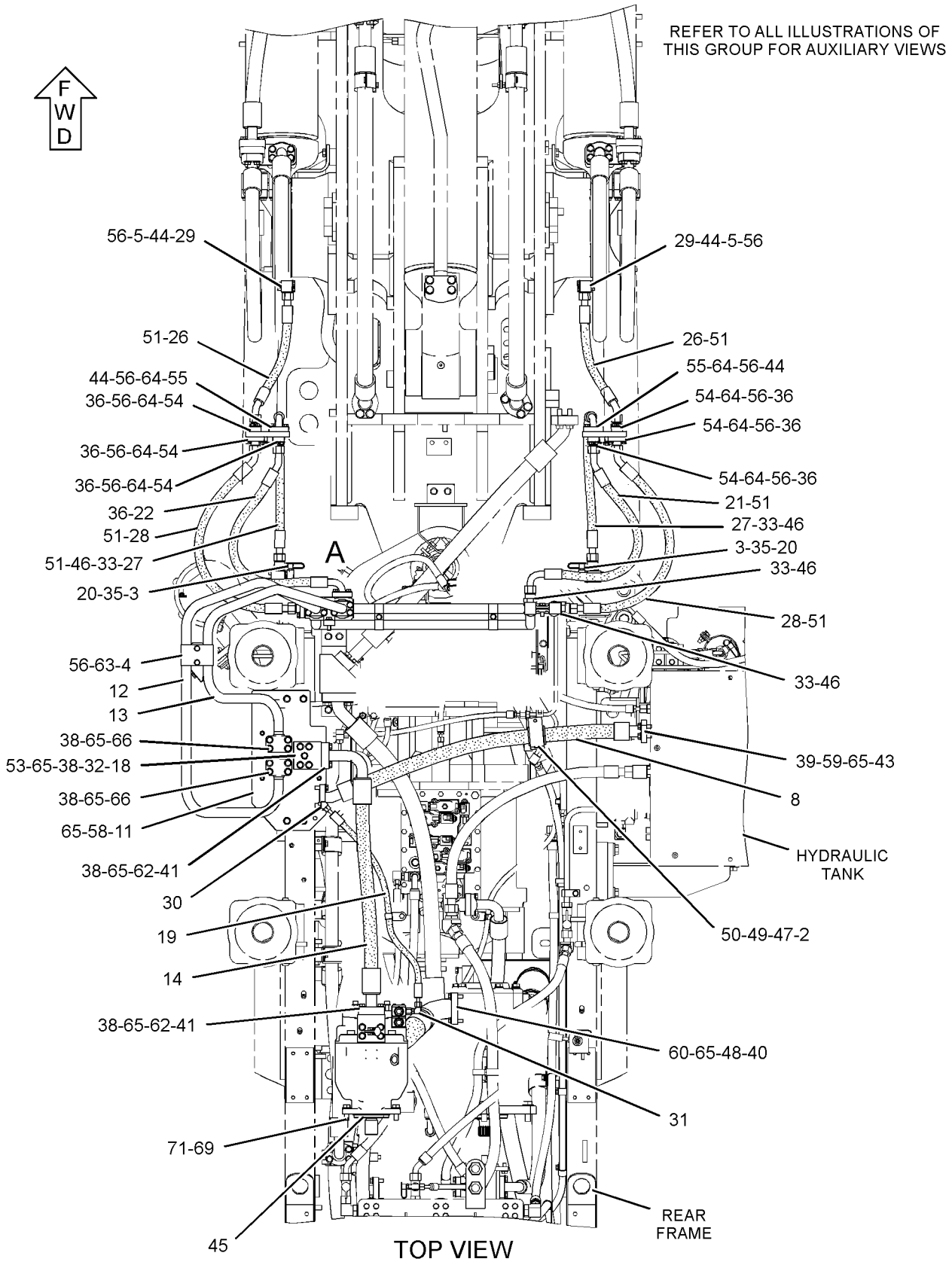


GRAPHIC #1 g01276043

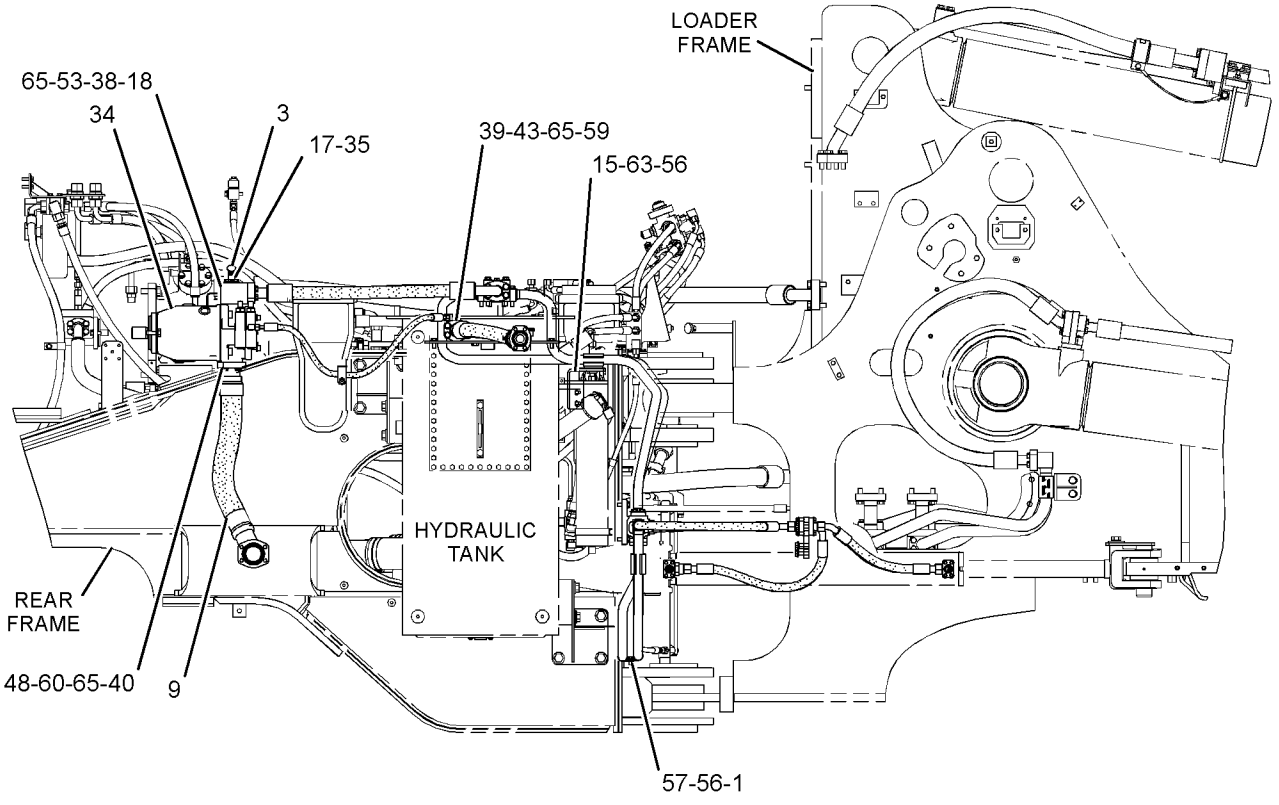


RIGHT SIDE VIEW

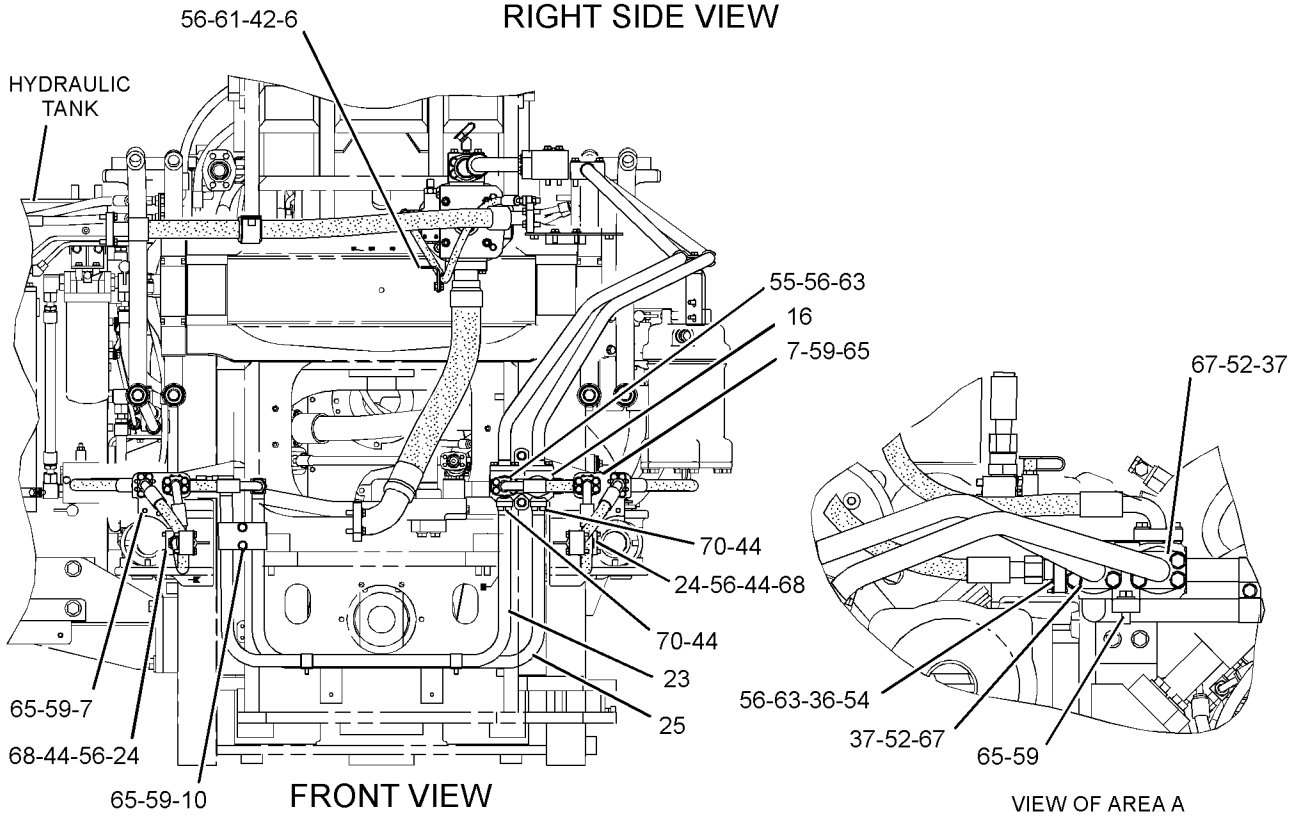


FRONT VIEW

VIEW OF AREA A

GRAPHIC #2 **<END>** g01276044

# STEERING SYSTEM

## *299-5838* LINES GP-STEERING

**S/N: BXY1900-UP**

**PART OF 298-2038 HYDRAULIC AR**

**SMCS-4304** **i02672329**

| NOTE | REF NO | GRAPHIC REF | PART NUMBER | QTY | PART NAME 1 2 3 4 5 6 (PRODUCT LEVEL) | SEE PAGE |
|---|---|---|---|---|---|---|
| | 1 | 1,2 | **0A-3721** | 4 | CLIP | |
| | 2 | 2 | **2B-0941** | 1 | SPACER (10.5X19X19-MM THK) | |
| | 3 | 1,2 | **6V-0852** | 3 | CAP-DUST | |
| | 4 | 1,2 | **8F-0492** | 8 | SPACER (0.531X1.125X0.625-IN THK) | |
| | 5 | 1 | **108-7550** | 2 | CLIP | |
| | 6 | 2 | **109-5816** | 2 | ELBOW | |
| | 7 | 1 | **127-4667** | 1 | STRIP AS | |
| M | | 1 | **8T-3490** | 1 | NUT-WELD (M10X1.5-THD) | |
| I | 8 | 2 | **141-9520** | 1 | HOSE AS | |
| I | 9 | 1 | **141-9521** | 1 | HOSE AS | |
| | 10 | 2 | **143-4158** | 2 | CLIP | |
| | 11 | 1 | **151-2680** | 1 | PLATE AS | |
| M | | 1 | **8T-3597** | 3 | NUT-WELD (M12X1.75-THD) | |
| YR | 12 | 1 | **153-9624** | 1 | PUMP GP-PISTON (STEERING) | 1032 |
| | 13 | 1 | **162-2127** | 1 | TUBE AS | |
| | 14 | 1 | **162-2128** | 1 | TUBE AS | |
| I | 15 | 1 | **162-8455** | 1 | HOSE AS | |
| | 16 | 1 | **163-5442** | 1 | BRACKET AS | |
| | 17 | 2 | **163-5596** | 1 | MANIFOLD | |
| | 18 | 1 | *165-4931* | 1 | ELBOW AS | |
| | | 1 | **3J-1907** | 1 | SEAL-O-RING | |
| | | 1 | **6V-8077** | 1 | ELBOW | |
| | 19 | 1 | **216-9195** | 2 | MANIFOLD | |
| I | 20 | 2 | **226-2045** | 1 | HOSE AS | |
| | 21 | 2 | *241-6215* | 2 | ELBOW AS | |
| | | | | | (EACH INCLUDES) | |
| | | 2 | **3J-1907** | 2 | SEAL-O-RING | |
| | | 2 | **6V-8076** | 2 | ELBOW | |
| | 22 | 1 | **252-1285** | 1 | TUBE AS | |
| | 23 | 2 | **253-4280** | 2 | ELBOW | |
| | 24 | 1 | **257-7804** | 1 | TUBE AS | |
| | 25 | 2 | **294-1153** | 2 | BRACKET AS | |
| I | 26 | 1 | **294-1154** | 2 | HOSE AS | |
| | 27 | 2 | **294-1155** | 1 | HOSE AS | |
| | 28 | 1 | **294-1156** | 1 | HOSE AS | |
| | 29 | 1,2 | **304-7716** | 4 | SUPPORT AS | |
| | | | | | (EACH INCLUDES) | |
| M | | 1,2 | **8T-3597** | 2 | NUT-WELD (M12X1.75-THD) | |
| M | 30 | 2 | **085-8091** | 8 | BOLT (M10X1.5X55-MM) | |
| | 31 | 2 | *148-8353* | 1 | ELBOW AS | |
| | | 2 | **3J-1907** | 1 | SEAL-O-RING | |
| | | 2 | **6V-8397** | 1 | SEAL-O-RING | |
| | | 2 | **6V-9001** | 1 | ELBOW | |
| | 32 | 2 | *148-8378* | 1 | ELBOW AS | |
| | | 2 | **3J-1907** | 1 | SEAL-O-RING | |
| | | 2 | **6V-8397** | 1 | SEAL-O-RING | |
| | | 2 | **6V-8724** | 1 | ELBOW | |
| | 33 | 1 | *148-8407* | 1 | PLUG AS | |
| | | 1 | **3J-1907** | 1 | SEAL-O-RING | |
| | | 1 | **9S-4191** | 1 | PLUG-O-RING | |
| | 34 | 2 | *153-6236* | 4 | REDUCER AS | |
| | | | | | (EACH INCLUDES) | |
| | | 2 | **6V-8946** | 1 | REDUCER | |
| | | 2 | **6V-9746** | 1 | SEAL-O-RING | |
| | 35 | 1,2 | *164-5567* | 3 | FITTING AS (QUICK DISCONNECT, MALE) | |
| | | | | | (EACH INCLUDES) | |

## *299-5838* **LINES GP-STEERING** *(contd.)* **i02672329**

| NOTE | REF NO | GRAPHIC REF | PART NUMBER | QTY | PART NAME 1 2 3 4 5 6 (PRODUCT LEVEL) | SEE PAGE |
|---|---|---|---|---|---|---|
| | | 1,2 | **3J-1907** | 1 | SEAL-O-RING | |
| | | 1,2 | **6V-3965** | 1 | FITTING-COUPLER | |
| | 36 | 2 | **1P-3702** | 2 | SEAL-RECTANGULAR | |
| | 37 | 2 | **1P-3703** | 2 | SEAL-RECTANGULAR | |
| | 38 | 1 | **1P-3704** | 6 | SEAL-RECTANGULAR | |
| | 39 | 2 | **1P-4579** | 4 | FLANGE-HALF | |
| | 40 | 1,2 | **1P-4584** | 4 | FLANGE-HALF | |
| | 41 | 1 | **1P-5767** | 4 | FLANGE-HALF | |
| | 42 | 1 | **1S-0994** | 1 | CLIP | |
| | 43 | 2 | **4J-0524** | 2 | SEAL-O-RING | |
| | 44 | 1,2 | **4J-5267** | 6 | SEAL-O-RING | |
| | 45 | 1 | **5F-3106** | 1 | SEAL-O-RING | |
| | 46 | 2 | **5K-9090** | 4 | SEAL-O-RING | |
| | 47 | 2 | **5P-7466** | 4 | CLIP (SLOT) | |
| | 48 | 2 | **5P-7467** | 4 | CLIP (TAB) | |
| | 49 | 2 | **5P-7703** | 1 | GROMMET | |
| | 50 | 2 | **5P-8112** | 4 | GROMMET | |
| | 51 | 1,2 | **6J-2680** | 2 | SEAL-O-RING | |
| | 52 | 2 | **6V-1572** | 1 | CLIP (SLOT) | |
| | 53 | 2 | **6V-1573** | 1 | CLIP (TAB) | |
| | 54 | 2 | **6V-9746** | 3 | SEAL-O-RING | |
| | 55 | 2 | **7X-0584** | 8 | WASHER-HARD (13.5X20.5X2-MM THK) | |
| M | 56 | 1 | **7X-2549** | 8 | BOLT (M12X1.75X100-MM) | |
| | 57 | 2 | **7Y-3729** | 1 | FLANGE | |
| | 58 | 2 | **8C-3205** | 2 | FLANGE-HALF | |
| | 59 | 1,2 | **8T-4121** | 31 | WASHER-HARD (11X21X2.5-MM THK) | |
| M | 60 | 1,2 | **8T-4136** | 2 | BOLT (M10X1.5X25-MM) | |
| M | 61 | 1 | **8T-4139** | 4 | BOLT (M12X1.75X30-MM) | |
| M | 62 | 2 | **8T-4183** | 14 | BOLT (M12X1.75X40-MM) | |
| M | 63 | 1,2 | **8T-4184** | 8 | BOLT (M12X1.75X45-MM) | |
| M | 64 | 1 | **8T-4191** | 1 | BOLT (M10X1.5X16-MM) | |
| M | 65 | 1,2 | **8T-4194** | 14 | BOLT (M12X1.75X50-MM) | |
| M | 66 | 1,2 | **8T-4195** | 12 | BOLT (M10X1.5X30-MM) | |
| | 67 | 1,2 | **8T-4223** | 60 | WASHER-HARD (13.5X25.5X3-MM THK) | |
| M | 68 | 1 | **8T-4648** | 8 | BOLT (M12X1.75X70-MM) | |
| M | 69 | 2 | **8T-4910** | 2 | BOLT (M12X1.75X60-MM) | |
| M | 70 | 2 | **8T-4956** | 8 | BOLT (M12X1.75X35-MM) | |
| M | 71 | 2 | **8T-6466** | 8 | BOLT (M10X1.5X60-MM) | |
| M | 72 | 1 | **8T-7338** | 2 | BOLT (M16X2X45-MM) | |
| M | 73 | 2 | **9X-6032** | 8 | BOLT-SOCKET HEAD (M10X1.5X30-MM) | |
| | 74 | 1 | **9X-8257** | 2 | WASHER (17.5X30X3.5-MM THK) | |

I-REFER TO HYDRAULIC INFORMATION SYSTEM
M-METRIC PART
R-REMFG PART MAY BE AVAILABLE
Y-SEPARATE ILLUSTRATION

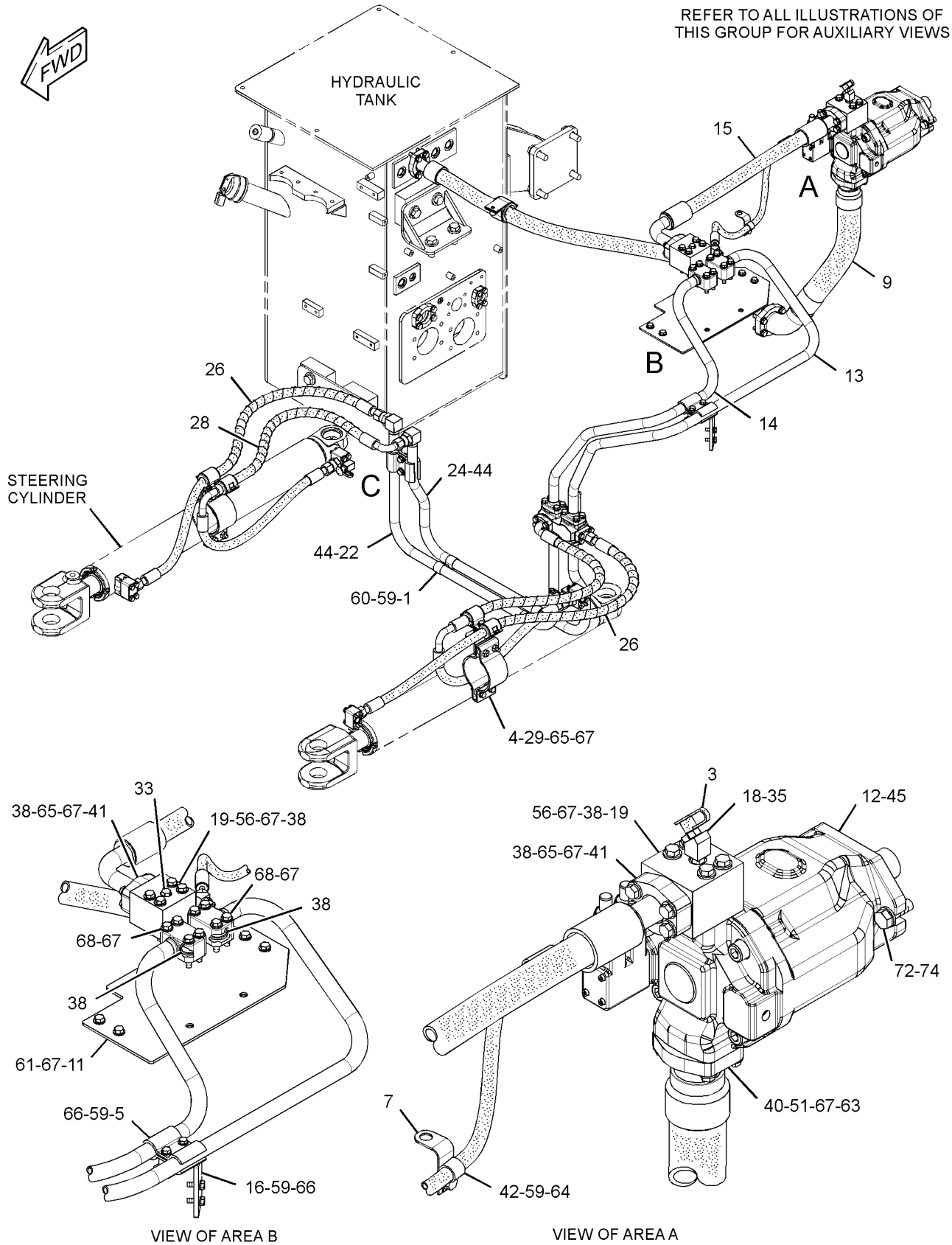


GRAPHIC #1

g01355548

*299-5838* **LINES GP-STEERING** *(contd. )* **i02672329**

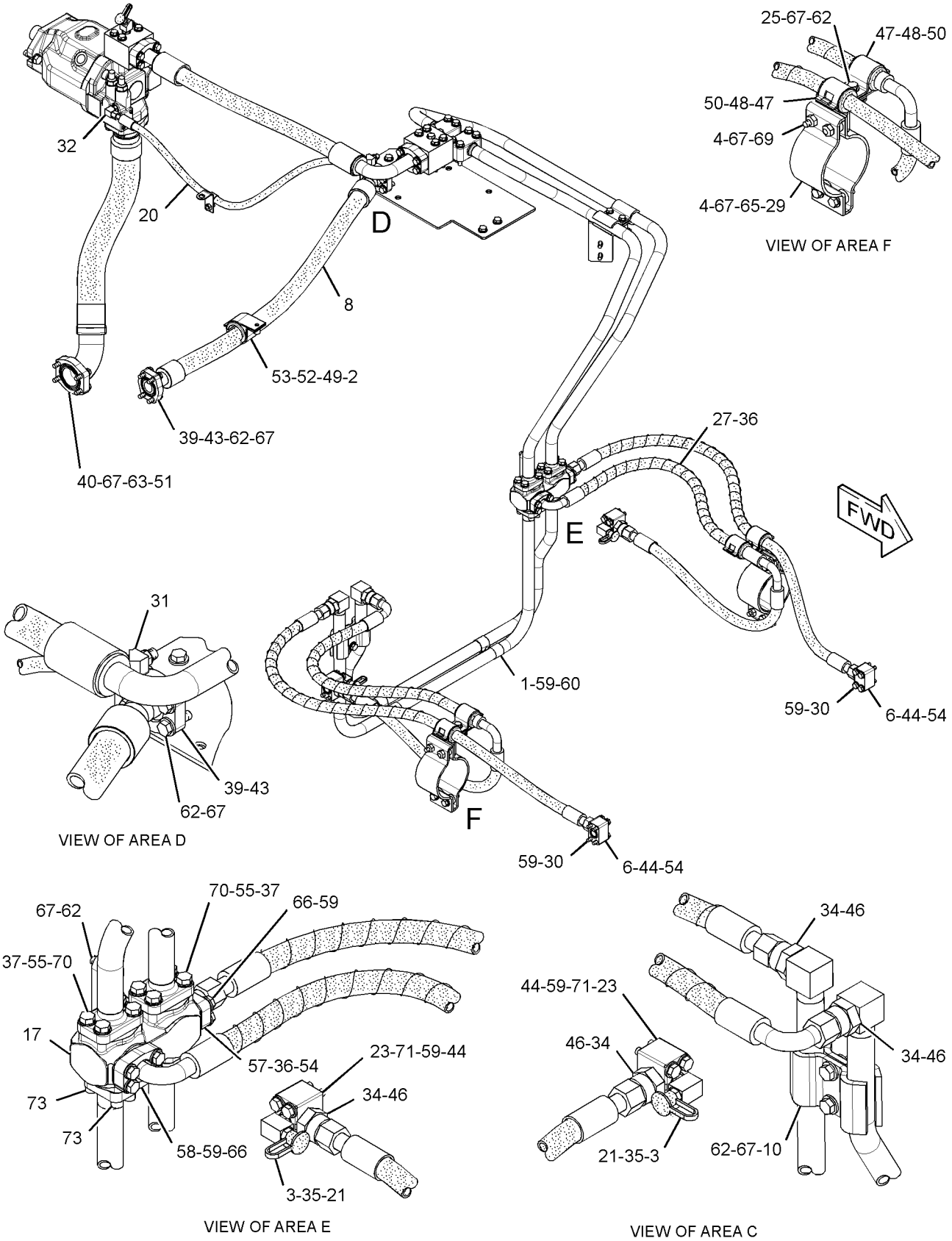


GRAPHIC #2 **<END>** g01355549

# STEERING SYSTEM

## *132-6142* LINES GP-STEERING NEUTRALIZER

**S/N: BXY1-UP**

**PART OF 225-5449, 298-2038 HYDRAULIC AR**

**SMCS-4304, 4330** **i02505255**

| NOTE | REF NO | GRAPHIC REF | PART NUMBER | QTY | PART NAME 1 2 3 4 5 6 (PRODUCT LEVEL) | SEE PAGE |
|---|---|---|---|---|---|---|
| Y | 1 | 1 | **9T-3096** | 1 | VALVE GP-CHECK (STEERING PILOT) | 1159 |
| | 2 | 1 | **104-7108** | 1 | VALVE GP-CHECK (STEERING PILOT) | |
| | 3 | 1 | **116-4798** | 1 | ANGLE AS | |
| M | | 1 | **8T-3490** | 2 | NUT-WELD (M10X1.5-THD) | |
| | 4 | 1 | **116-9331** | 1 | JUNCTION BLOCK | |
| Y | 5 | 1 | **146-7571** | 2 | VALVE GP-STEERING NEUTRALIZER | 1055 |
| Y | 6 | 1 | **149-4617** | 1 | VALVE GP-CHECK (STEERING QUAD) | 1036 |
| | 7 | 1 | **154-0351** | 1 | PLATE AS | |
| M | | 1 | **8T-3597** | 2 | NUT-WELD (M12X1.75-THD) | |
| M | | | **8T-4244** | 2 | NUT (M12X1.75-THD) | |
| | | | **8X-3467** | 2 | STUD AS | |
| | | | | | (EACH INCLUDES) | |
| | | | **2H-2722** | 1 | LUG | |
| | 8 | 1 | **154-0352** | 1 | BRACKET AS | |
| M | | 1 | **8T-3490** | 4 | NUT-WELD (M10X1.5-THD) | |
| I | 9 | 1 | **154-7532** | 1 | HOSE AS | |
| I | 10 | 1 | **155-3677** | 1 | HOSE AS | |
| I | 11 | 1 | **155-3678** | 1 | HOSE AS | |
| I | 12 | 1 | **155-3679** | 1 | HOSE AS | |
| | 13 | 1 | **155-3680** | 1 | TUBE AS | |
| I | 14 | 1 | **155-3681** | 1 | HOSE AS | |
| I | 15 | 1 | **155-3683** | 1 | HOSE AS | |
| | 16 | 1 | **155-4320** | 1 | ANGLE AS | |
| M | | 1 | **8T-3612** | 2 | NUT-WELD (M8X1.25-THD) | |
| I | 17 | 1 | **161-1382** | 1 | HOSE AS | |
| I | 18 | 1 | **161-1383** | 1 | HOSE AS | |
| I | 19 | 1 | **178-2999** | 1 | HOSE AS | |
| I | 20 | 1 | **178-3000** | 1 | HOSE AS | |
| I | 21 | 1 | **178-3001** | 1 | HOSE AS | |
| I | 22 | 1 | **178-3002** | 1 | HOSE AS | |
| I | 23 | 1 | **180-2624** | 1 | HOSE AS | |
| I | 24 | 1 | **180-2625** | 1 | HOSE AS | |
| | 25 | 1 | *148-8318* | 5 | CONNECTOR AS | |
| | | | | | (EACH INCLUDES) | |
| | | 1 | **6V-8634** | 1 | CONNECTOR | |
| | | 1 | **3K-0360** | 1 | SEAL-O-RING | |
| | | 1 | **6V-8397** | 1 | SEAL-O-RING | |
| | 26 | 1 | *148-8336* | 3 | CONNECTOR AS | |
| | | | | | (EACH INCLUDES) | |
| | | 1 | **6V-8636** | 1 | CONNECTOR | |
| | | 1 | **3J-1907** | 1 | SEAL-O-RING | |
| | | 1 | **6V-8397** | 1 | SEAL-O-RING | |
| | 27 | 1 | *148-8341* | 1 | CONNECTOR AS | |
| | | 1 | **6V-8713** | 1 | CONNECTOR | |
| | | 1 | **3D-2824** | 1 | SEAL-O-RING | |
| | | 1 | **7J-9108** | 1 | SEAL-O-RING | |
| | 28 | 1 | *148-8342* | 1 | CONNECTOR AS | |
| | | 1 | **6V-8632** | 1 | CONNECTOR | |
| | | 1 | **3K-0360** | 1 | SEAL-O-RING | |
| | | 1 | **7J-9108** | 1 | SEAL-O-RING | |
| | 29 | 1 | *148-8353* | 2 | ELBOW AS | |
| | | | | | (EACH INCLUDES) | |
| | | 1 | **6V-9001** | 1 | ELBOW | |
| | | 1 | **3J-1907** | 1 | SEAL-O-RING | |
| | | 1 | **6V-8397** | 1 | SEAL-O-RING | |
| | 30 | 1 | *148-8367* | 1 | ELBOW AS | |

## *132-6142* LINES GP-STEERING NEUTRALIZER *(contd.)* i02505255

| NOTE | REF NO | GRAPHIC REF | PART NUMBER | QTY | PART NAME 1 2 3 4 5 6 (PRODUCT LEVEL) | SEE PAGE |
|---|---|---|---|---|---|---|
| | | 1 | **6V-9850** | 1 | ELBOW | |
| | | 1 | **6V-8397** | 1 | SEAL-O-RING | |
| | 31 | 1 | *148-8370* | 1 | ELBOW AS | |
| | | 1 | **6V-8398** | 1 | SEAL-O-RING | |
| | | 1 | **6V-9851** | 1 | ELBOW | |
| | 32 | 1 | *148-8374* | 2 | ELBOW AS | |
| | | | | | (EACH INCLUDES) | |
| | | 1 | **6V-8723** | 1 | ELBOW (FACE SEAL) | |
| | | 1 | **3K-0360** | 1 | SEAL-O-RING | |
| | | 1 | **6V-8397** | 1 | SEAL-O-RING | |
| | 33 | 1 | *148-8375* | 1 | ELBOW AS | |
| | | 1 | **6V-8981** | 1 | ELBOW | |
| | | 1 | **6V-8398** | 2 | SEAL-O-RING | |
| | 34 | 1 | *148-8378* | 1 | ELBOW AS | |
| | | 1 | **6V-8724** | 1 | ELBOW | |
| | | 1 | **3J-1907** | 1 | SEAL-O-RING | |
| | | 1 | **6V-8397** | 1 | SEAL-O-RING | |
| | 35 | 1 | *148-8411* | 1 | PLUG AS | |
| | | 1 | **9S-4185** | 1 | PLUG-O-RING | |
| | | 1 | **3K-0360** | 1 | SEAL-O-RING | |
| | 36 | 1 | *148-8433* | 2 | TEE AS | |
| | | | | | (EACH INCLUDES) | |
| | | 1 | **6V-9836** | 1 | TEE-SWIVEL | |
| | | 1 | **6V-8397** | 2 | SEAL-O-RING | |
| | 37 | 1 | *148-8436* | 1 | TEE AS | |
| | | 1 | **3K-0360** | 1 | SEAL-O-RING | |
| | | 1 | **6V-8398** | 2 | SEAL-O-RING | |
| | | 1 | **6V-8775** | 1 | TEE-FACE SEAL | |
| | 38 | 1 | *148-8446* | 1 | TEE AS-SWIVEL | |
| | | 1 | **6V-9838** | 1 | TEE-SWIVEL | |
| | | 1 | **7J-9108** | 2 | SEAL-O-RING | |
| | 39 | 1 | *150-4043* | 1 | CONNECTOR AS | |
| | | 1 | **6V-9873** | 1 | CONNECTOR | |
| | | 1 | **3J-1907** | 1 | SEAL-O-RING | |
| | | 1 | **6V-8398** | 1 | SEAL-O-RING | |
| | 40 | 1 | **3J-1907** | 1 | SEAL-O-RING | |
| | 41 | 1 | **3S-8664** | 2 | CLIP | |
| | 42 | 1 | **6V-8397** | 1 | SEAL-O-RING | |
| | 43 | 1 | **6V-8398** | 2 | SEAL-O-RING | |
| | 44 | 1 | *153-6241* | 1 | ELBOW AS | |
| | | 1 | **6V-8398** | 1 | SEAL-O-RING | |
| | | 1 | **8C-8989** | 1 | ELBOW | |
| | 45 | 1 | **8T-1885** | 1 | CLIP (SLOT) | |
| | 46 | 1 | **8T-1886** | 1 | CLIP (TAB) | |
| | 47 | 1 | **8T-4121** | 13 | WASHER-HARD (11X21X2.5-MM THK) | |
| M | 48 | 1 | **8T-4137** | 4 | BOLT (M10X1.5X20-MM) | |
| M | 49 | 1 | **8T-4192** | 5 | BOLT (M12X1.75X25-MM) | |
| M | 50 | 1 | **8T-4195** | 1 | BOLT (M10X1.5X30-MM) | |
| | 51 | 1 | **8T-4223** | 5 | WASHER-HARD (13.5X25.5X3-MM THK) | |
| | 52 | 1 | **8T-4224** | 2 | WASHER-HARD (8.8X16X2-MM THK) | |
| M | 53 | 1 | **8T-6466** | 6 | BOLT (M10X1.5X60-MM) | |
| M | 54 | 1 | **8T-6870** | 2 | BOLT (M8X1.25X70-MM) | |
| M | 55 | 1 | **8T-4185** | 1 | BOLT (M10X1.5X50-MM) | |
| | 56 | 1 | **6V-9169** | 1 | NUT-BULKHEAD (13/16-16-THD) | |
| | 57 | 1 | **118-9901** | 1 | SPACER (12X20X10-MM THK) | |
| M | 58 | 1 | **8T-4186** | 1 | BOLT (M10X1.5X40-MM) | |

I-REFER TO HYDRAULIC INFORMATION SYSTEM
M-METRIC PART
Y-SEPARATE ILLUSTRATION

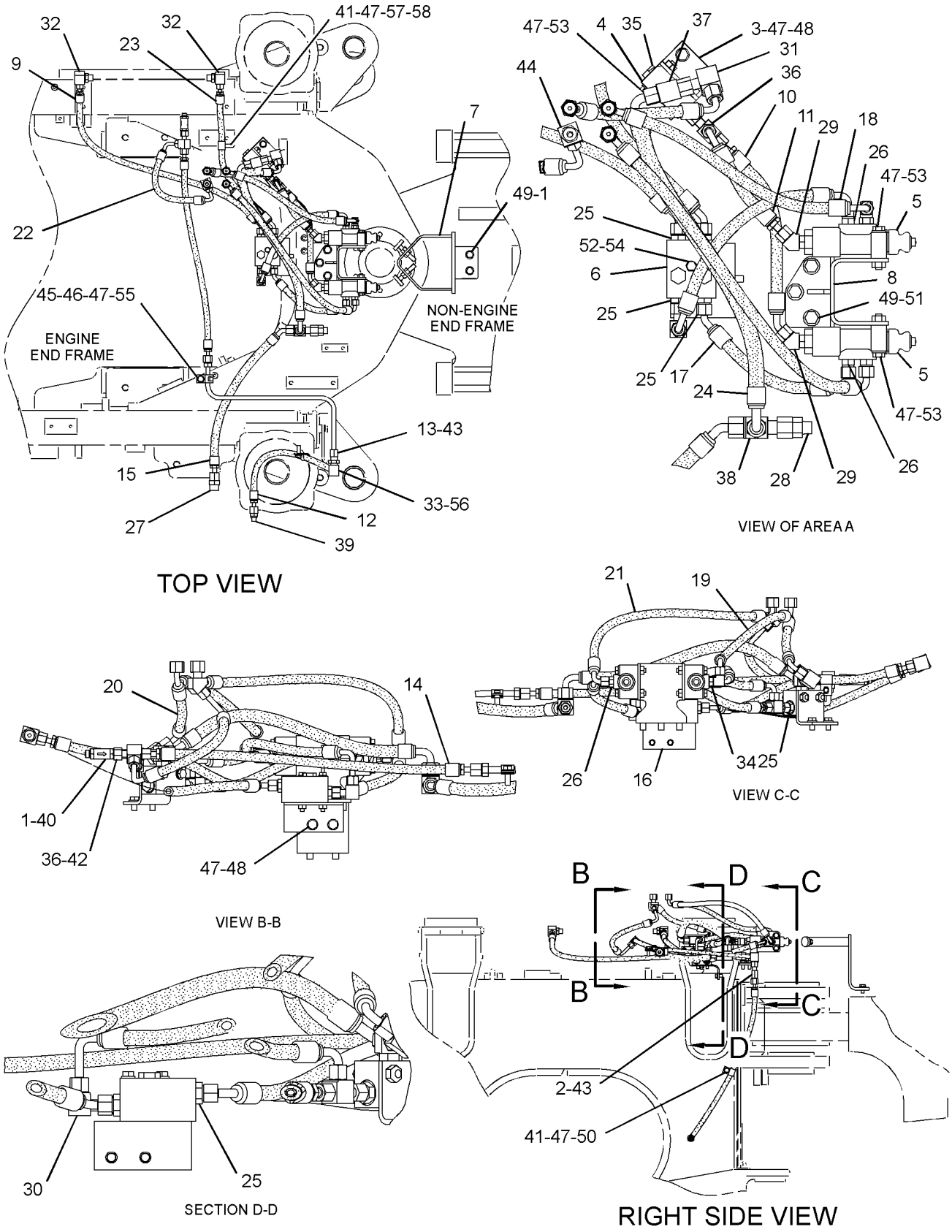


GRAPHIC #1 **<END>** g01254215

# STEERING SYSTEM

## *219-5023* LINES GP-STEERING NEUTRALIZER

**S/N: BXY1900-UP**
**PART OF 227-3317 GUARD GP-LINES**
**AN ATTACHMENT**

**SMCS-4304, 4330** **i01915873**

| NOTE | PART NUMBER | QTY | PART NAME 1 2 3 4 5 6 (PRODUCT LEVEL) | SEE PAGE |
|---|---|---|---|---|
| | **7S-0530** | 1 | CLIP | |
| | **219-5030** | 1 | HOSE AS | |
| | | | *****STANDARD REMOVAL***** | |
| J | **3S-8664** | 1 | CLIP | |
| JI | **155-3679** | 1 | HOSE AS | |

I-SEE HOSE FABRICATION GUIDE
J-PART OF STANDARD LINES GP-STEERING NEUTRALIZER

**<END>**

# *194-3286* PLUG GP-CONTROL VALVE–
## PRESSURE, FLOW COMPENSATOR–STEERING OIL PRESSURE
**S/N: BXY1-UP**
**PART OF 176-7520 VALVE GP-PUMP CONTROL**

**SMCS-5086, 5117** **i02385373**

| NOTE | REF NO | GRAPHIC REF | PART NUMBER | QTY | PART NAME 1 2 3 4 5 6 (PRODUCT LEVEL) | SEE PAGE |
|---|---|---|---|---|---|---|
| | 1 | 1 | **191-7599** | 1 | PLUG | |
| M | 2 | 1 | **5C-2873** | 1 | NUT | |
| | 3 | 1 | **195-3324** | 1 | CAP | |
| | 4 | 1 | **195-3325** | 1 | RING | |
| | 5 | 1 | **195-3326** | 1 | SCREW | |
| | 6 | 1 | **195-3327** | 1 | RETAINER | |
| | 7 | 1 | **194-4497** | 1 | DISC | |
| | 8 | 1 | **3E-6761** | 1 | SEAL-O-RING | |
| | 9 | 1 | **187-8567** | 1 | SEAL-O-RING | |
| | 10 | 1 | **194-6849** | 1 | DISC | |
| | 11 | 1 | **195-3328** | 1 | DISC | |

M-METRIC PART

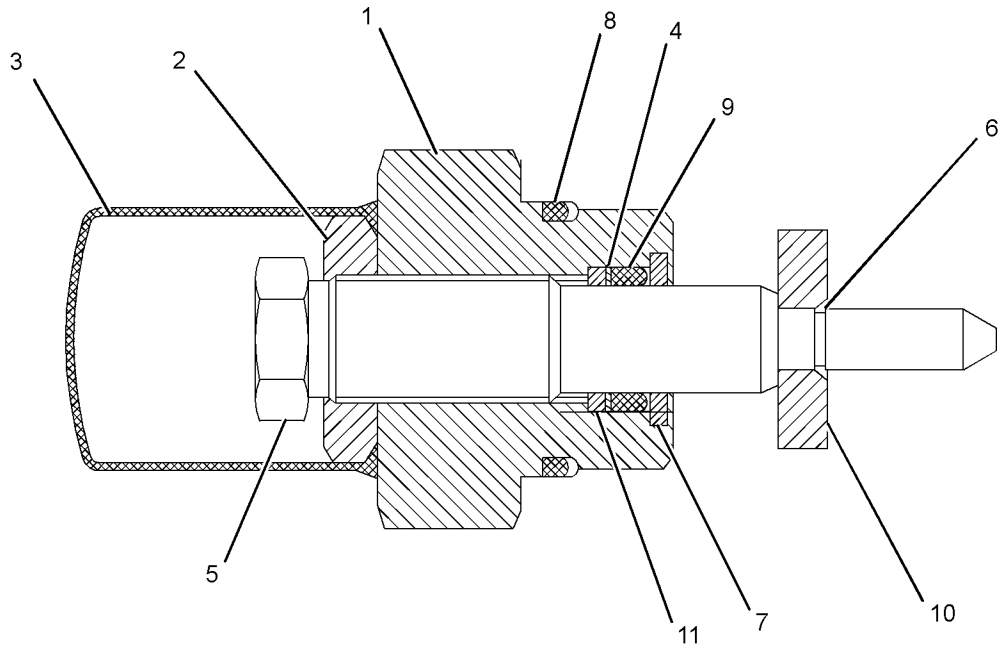


GRAPHIC #1 **<END>** g01191844

# STEERING SYSTEM

## 150-7585 PUMP GP-GEAR–SECONDARY STEERING

**S/N: BXY1-UP**

**PART OF 132-6144 LINES GP-SECONDARY STEERING**

**AN ATTACHMENT**

**SMCS-4268, 4306, 5073** **i00799544**

| NOTE | REF NO | GRAPHIC REF | PART NUMBER | QTY | PART NAME 1 2 3 4 5 6 (PRODUCT LEVEL) | SEE PAGE |
|---|---|---|---|---|---|---|
| J | 1 | 1 | **139-3213** | 2 | SEAL | |
| J | 2 | 1 | **008-3214** | 1 | RING-RETAINING (INTERNAL) | |
| | 3 | 1 | **9T-1258** | 1 | SHAFT-DRIVE | |
| | 4 | 1 | **4T-9300** | 1 | BUSHING-TERMINAL | |
| | 5 | 1 | **4T-9301** | 1 | BUSHING-TERMINAL | |
| | 6 | 1 | **6J-2386** | 2 | DOWEL | |
| | 7 | 1 | **153-6480** | 1 | FLANGE AS | |
| | 8 | 1 | **107-2884** | 2 | PLATE-ISOLATION | |
| | 9 | 1 | **142-2133** | 1 | SPACER | |
| | 10 | 1 | **107-2886** | 2 | SPACER | |
| | 11 | 1 | **4T-8761** | 1 | GEAR-IDLER | |
| | 12 | 1 | **1B-2886** | 6 | BOLT (1/2-13X3.75-IN) | |
| | 13 | 1 | **142-2137** | 1 | PLUG | |
| J | 14 | 1 | **077-3790** | 4 | SEAL | |
| | 15 | 1 | **4T-9298** | 2 | BUSHING-TERMINAL | |
| | 16 | 1 | **077-4643** | 2 | PLATE-ISOLATION | |
| J | 17 | 1 | **6E-2943** | 1 | PLUG | |
| | 18 | 1 | **0S-1595** | 8 | BOLT (1/2-13X1.25-IN) | |
| J | 19 | 1 | **9X-7722** | 1 | SEAL-O-RING | |
| | 20 | 1 | **6R-3966** | 2 | PLATE-PRESSURE | |
| | 21 | 1 | **107-2891** | 2 | PISTON | |
| | 22 | 1 | **107-2893** | 2 | SPRING | |
| | 23 | 1 | **107-2887** | 2 | PISTON | |
| | 24 | 1 | **107-2888** | 2 | SPRING | |
| | 25 | 1 | **153-6479** | 1 | BODY AS | |
| | 26 | 1 | **107-2890** | 1 | BODY-VALVE | |
| | 27 | 1 | **9S-8005** | 1 | PLUG-O RING | |
| | 28 | 1 | **033-6042** | 1 | SEAL-O-RING | |
| | | | | | AVAILABLE REPAIR KIT(S): | |
| J | | | **153-6481** | 1 | KIT-SEAL | |

J-KIT MARKED J INCLUDES PART(S) MARKED J

## 150-7585 PUMP GP-GEAR *(contd. )* i00799544

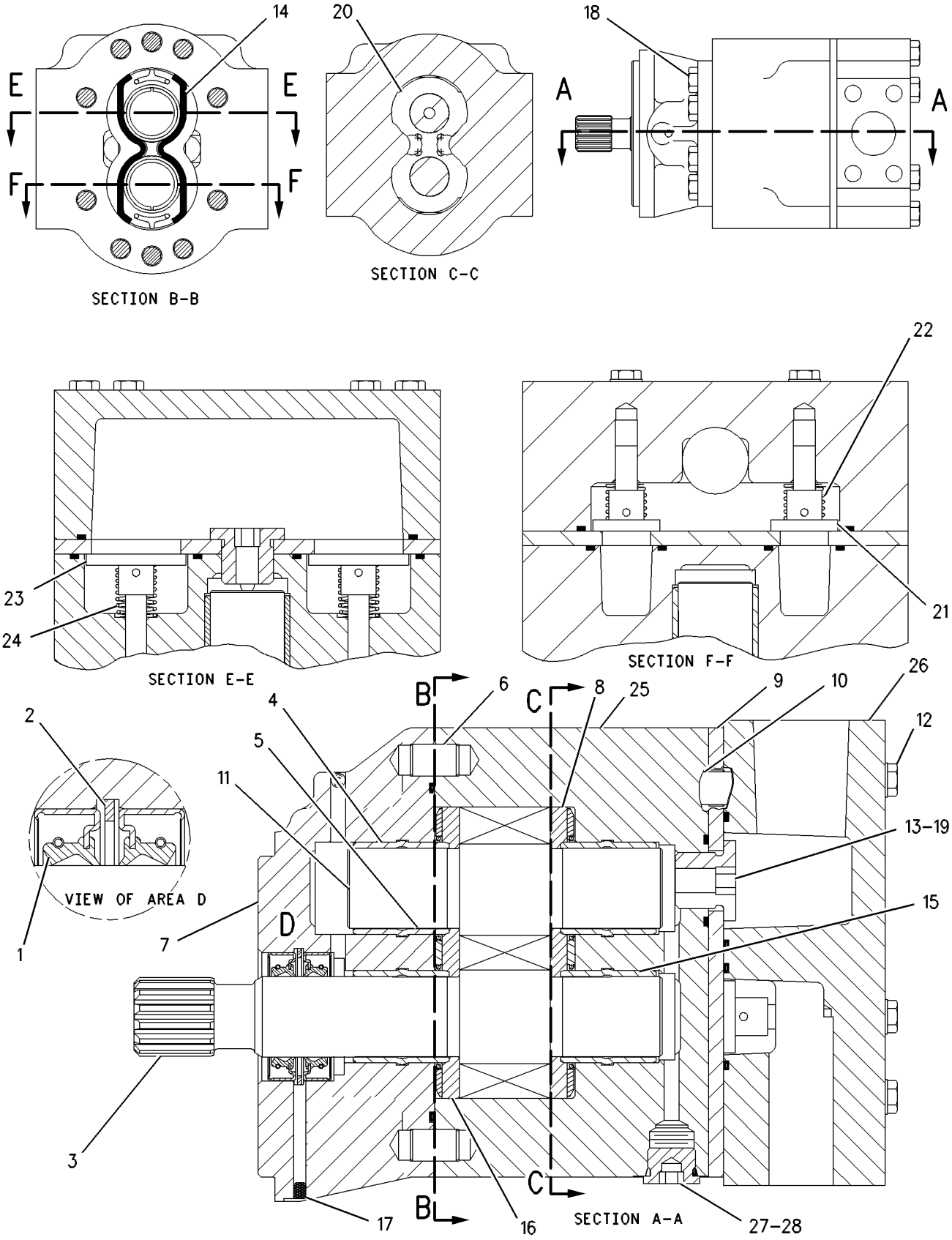


GRAPHIC #1 **<END>** g00374794

# STEERING SYSTEM

## 153-9624 PUMP GP-PISTON—STEERING*R

**S/N: BXY1-UP**

**PART OF 247-8540, 299-5838 LINES GP-STEERING**

**SMCS-4268, 4306, 5070** **i02022952**

| NOTE | REF NO | GRAPHIC REF | PART NUMBER | QTY | PART NAME 1 2 3 4 5 6 (PRODUCT LEVEL) | SEE PAGE |
|---|---|---|---|---|---|---|
| | 1 | 1 | **095-0942** | 1 | RING-RETAINING | |
| | 2 | 1 | **176-7507** | 2 | BEARING-CRADLE | |
| | 3 | 1 | **176-7508** | 1 | HOUSING-PUMP | |
| Y | 4 | 1 | **176-7509** | 1 | ROTATING GP-PUMP | 1034 |
| | 5 | 1 | **5P-9186** | 4 | SEAL-O-RING | |
| M | 6 | 1 | **7Y-0467** | 4 | BOLT-SOCKET HEAD (M18X2.5X55-MM) | |
| | 7 | 1 | **6Y-2736** | 1 | CONE-BEARING | |
| | 8 | 1 | **6Y-2737** | 1 | CUP-BEARING | |
| | 9 | 1 | **176-7510** | 1 | SPACER-BEARING | |
| | 10 | 1 | **107-3114** | 1 | SEAL-O-RING | |
| | 11 | 1 | **176-7511** | 1 | GUIDE-PLUNGER | |
| | 12 | 1 | **176-7512** | 1 | SPRING | |
| | 13 | 1 | **176-7513** | 1 | PLUNGER | |
| | 14 | 1 | **9S-8008** | 1 | PLUG-O RING | |
| | 15 | 1 | **3D-2824** | 1 | SEAL-O-RING | |
| | 16 | 1 | **176-7514** | 1 | SHAFT-PUMP | |
| | 17 | 1 | **1B-3908** | 1 | CONE-BEARING | |
| | 18 | 1 | **1B-3909** | 1 | CUP-BEARING | |
| | 19 | 1 | **203-1095** | 1 | SEAL | |
| | 20 | 1 | **176-7516** | 1 | SWASHPLATE AS | |
| | 21 | 1 | **176-7517** | 1 | PISTON-CONTROL | |
| | 22 | 1 | **176-7518** | 1 | GUIDE-PISTON | |
| | 23 | 1 | **136-8423** | 1 | PLUG-BREAK OFF | |
| | 24 | 1 | **7X-2438** | 1 | DOWEL | |
| | 25 | 1 | **176-7519** | 1 | HEAD-PUMP | |
| Y | 26 | 1 | **176-7520** | 1 | VALVE GP-PUMP CONTROL (PRESSURE COMPENSATOR) | 1042 |
| J | 27 | 1 | **176-7521** | 1 | VALVE GP-PUMP CONTROL (PRESSURE, FLOW COMPENSATOR) | |
| M | 28 | 1 | **127-4832** | 4 | BOLT-SOCKET HEAD (M5X0.8X90-MM) | |
| | 29 | 1 | **033-6039** | 5 | SEAL-O-RING | |
| | 30 | 1 | **176-7692** | 1 | SLEEVE-STOP | |
| | 31 | 1 | **176-7693** | 1 | RING-BEARING | |
| | | | | | AVAILABLE REPAIR KIT(S): | |
| J | | | **176-7696** | 1 | KIT-VALVE REPAIR | |

J-REPAIR KIT MARKED J SERVICES PART MARKED J
M-METRIC PART
Y-SEPARATE ILLUSTRATION

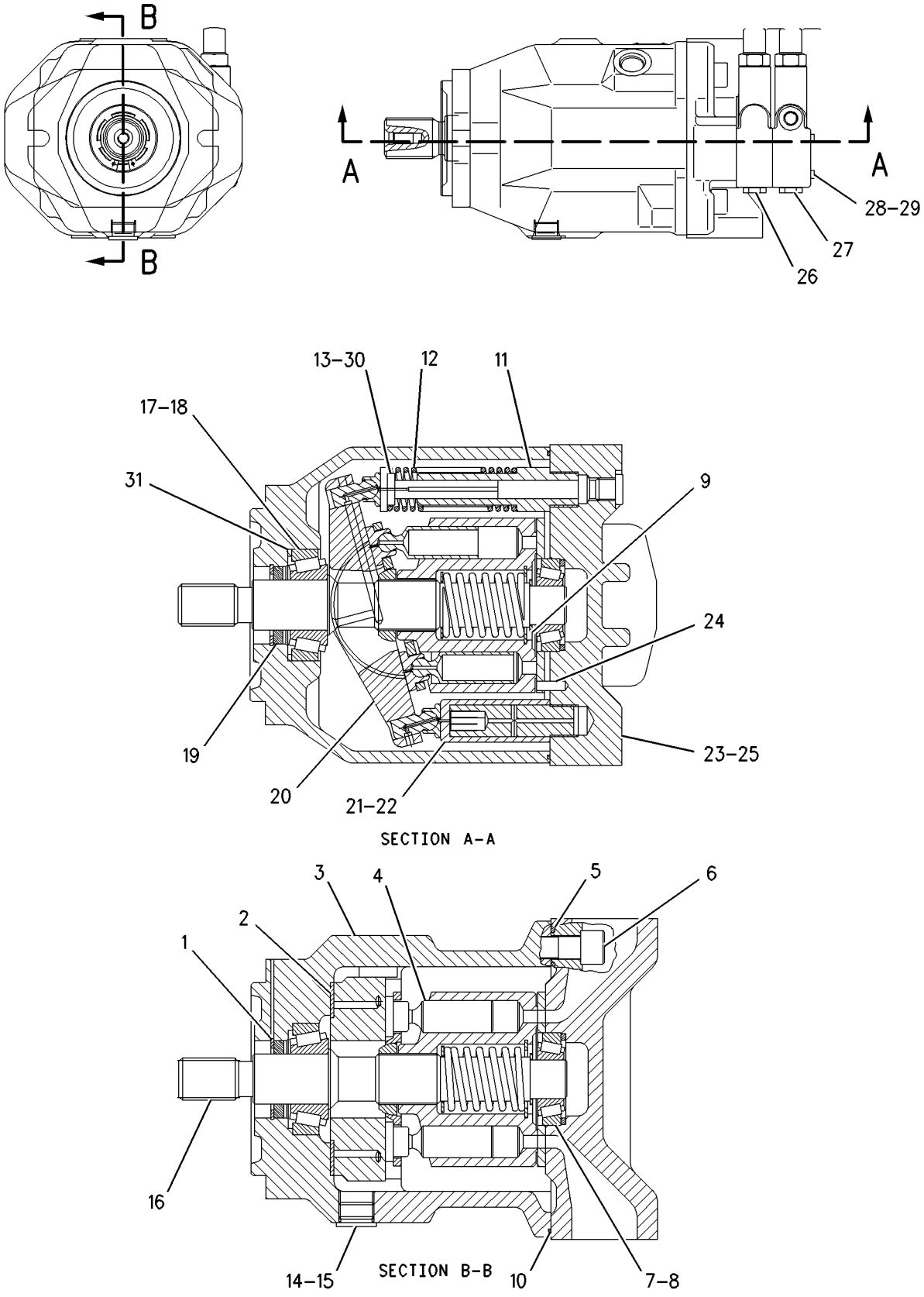


GRAPHIC #1 **<END>** g00840838

## 176-7509 ROTATING GP-PUMP–STEERING

**S/N: BXY1-UP**

**PART OF 153-9624 PUMP GP-PISTON**

**SMCS-5070** **i02651199**

| NOTE | REF NO | GRAPHIC REF | PART NUMBER | QTY | PART NAME 1 2 3 4 5 6 (PRODUCT LEVEL) | SEE PAGE |
|---|---|---|---|---|---|---|
| | 1 | 1 | **191-7587** | 9 | PISTON AS | |
| | 2 | 1 | **191-7589** | 1 | BARREL | |
| | 3 | 1 | **191-7585** | 1 | PLATE-DISTRIBUTOR | |
| | 4 | 1 | **191-7591** | 1 | PLATE-RETAINING | |
| | 5 | 1 | **290-0461** | 1 | BEARING | |
| | 6 | 1 | **191-7594** | 1 | SPRING | |
| | 7 | 1 | **191-7596** | 3 | PIN | |
| | 8 | 1 | **095-0939** | 1 | RING-RETAINING | |
| | 9 | 1 | **191-7597** | 1 | SPACER (55X3-MM THK) | |

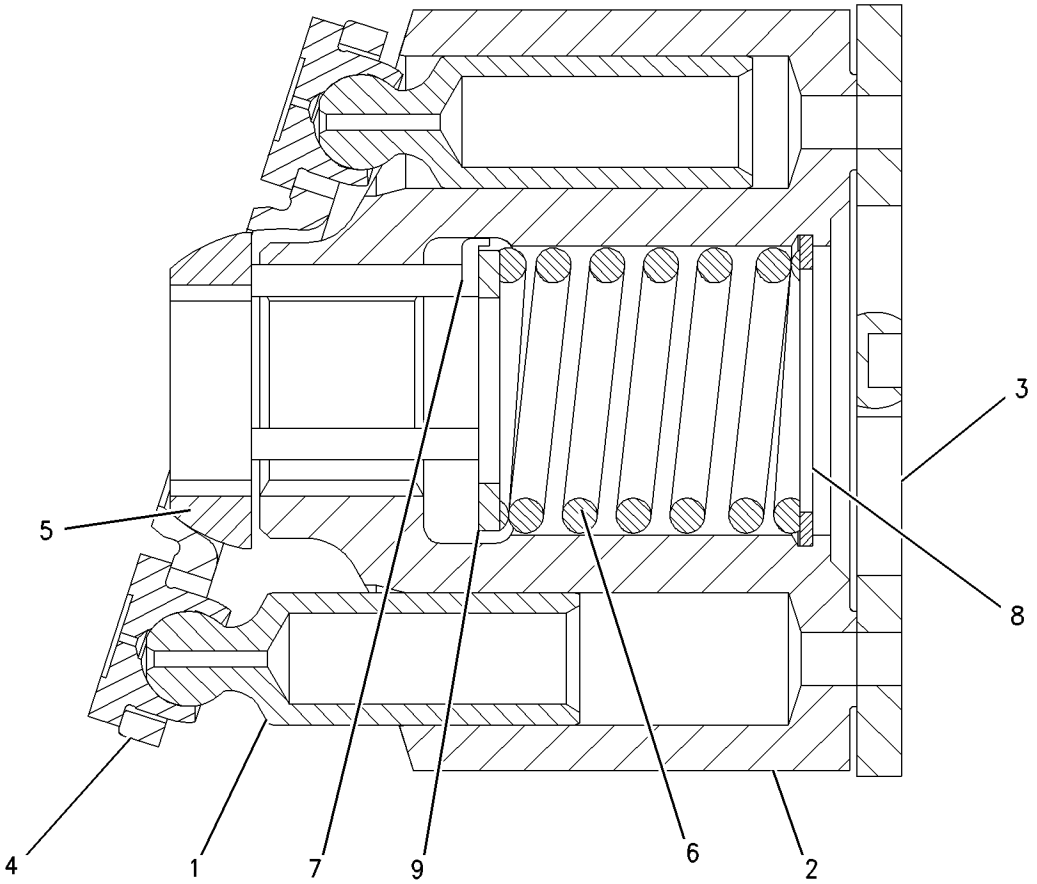


GRAPHIC #1 **<END>** g00745979

## *151-2384* STEERING AR

**S/N: BXY1-UP**

**CANNOT BE USED WITH 132-6144 LINES GP-SECONDARY STEERING**

**AN ATTACHMENT**

**SMCS-4300** **i02106312**

| NOTE | REF NO | GRAPHIC REF | PART NUMBER | QTY | PART NAME 1 2 3 4 5 6 (PRODUCT LEVEL) | SEE PAGE |
|---|---|---|---|---|---|---|
| | 1 | 1 | **6V-0852** | 1 | CAP-DUST | |
| | 2 | 1 | *164-5567* | 1 | FITTING AS (QUICK DISCONNECT, MALE) | |
| | | 1 | **6V-3965** | 1 | FITTING-COUPLER | |
| | | 1 | **3J-1907** | 1 | SEAL-O-RING | |
| Y | 3 | 1 | **133-8608** | 1 | VALVE GP-STEERING | 1047 |
| | 5 | 1 | **8T-4223** | 3 | WASHER-HARD (13.5X25.5X3-MM THK) | |
| M | 6 | 1 | **8T-5041** | 3 | BOLT (M12X1.75X120-MM) | |

M-METRIC PART
Y-SEPARATE ILLUSTRATION

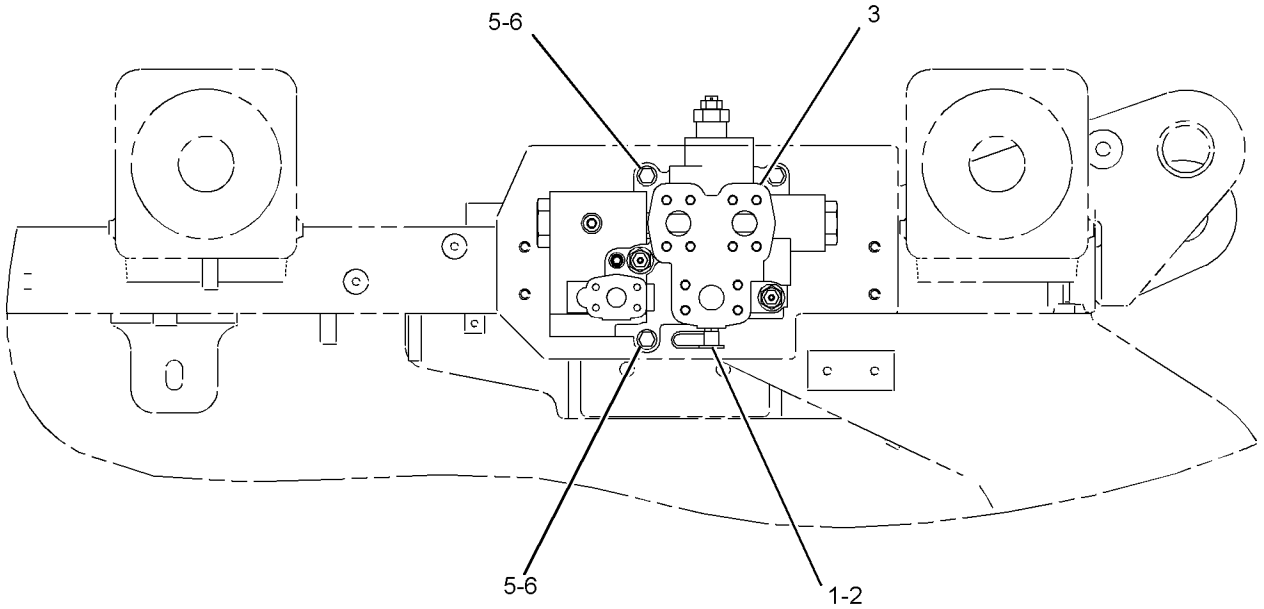


GRAPHIC #1 **<END>** g01072648

# 149-4617 VALVE GP-CHECK–STEERING QUAD

**S/N: BXY1-UP**

**PART OF 132-6142 LINES GP-STEERING NEUTRALIZER**

**SMCS-4275, 5067** **i02387055**

| NOTE | REF NO | GRAPHIC REF | PART NUMBER | QTY | PART NAME 1 2 3 4 5 6 (PRODUCT LEVEL) | SEE PAGE |
|---|---|---|---|---|---|---|
| Y | 1 | 1 | **176-9369** | 2 | VALVE GP-CHECK (STEERING) | 1037 |
| Y | 2 | 1 | **176-9370** | 2 | VALVE GP-CHECK (STEERING) | 1038 |

Y-SEPARATE ILLUSTRATION

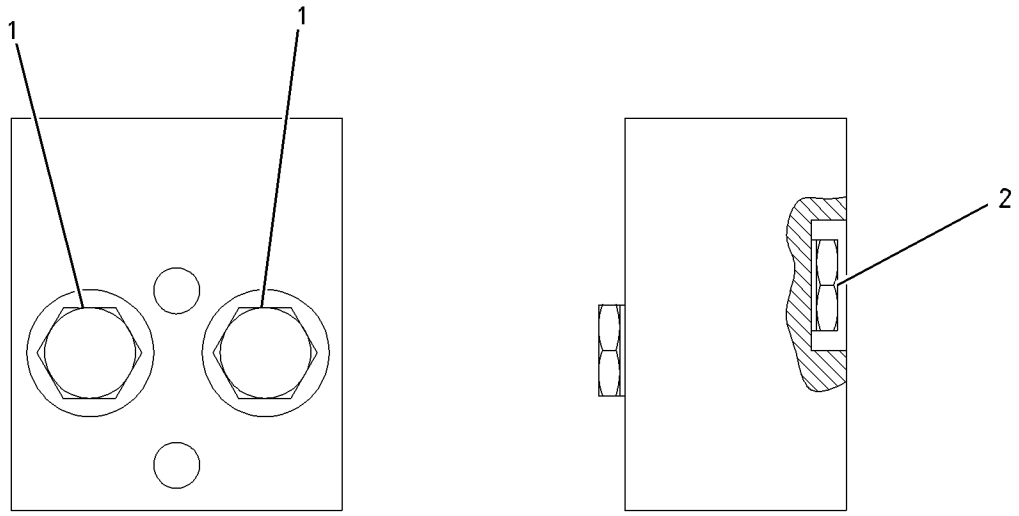


GRAPHIC #1 **<END>** g00696391

# *176-9369* VALVE GP-CHECK–STEERING

**S/N: BXY1-UP**

**PART OF 149-4617 VALVE GP-CHECK**

**SMCS-4275, 5067** **i01432567**

| NOTE | REF NO | GRAPHIC REF | PART NUMBER | QTY | PART NAME 1 2 3 4 5 6 (PRODUCT LEVEL) | SEE PAGE |
|---|---|---|---|---|---|---|
| | 1 | 1 | **3K-0360** | 1 | SEAL-O-RING | |
| | 2 | 1 | **161-6154** | 1 | SEAL-O-RING | |
| | 3 | 1 | **6E-0381** | 1 | RING-BACKUP | |

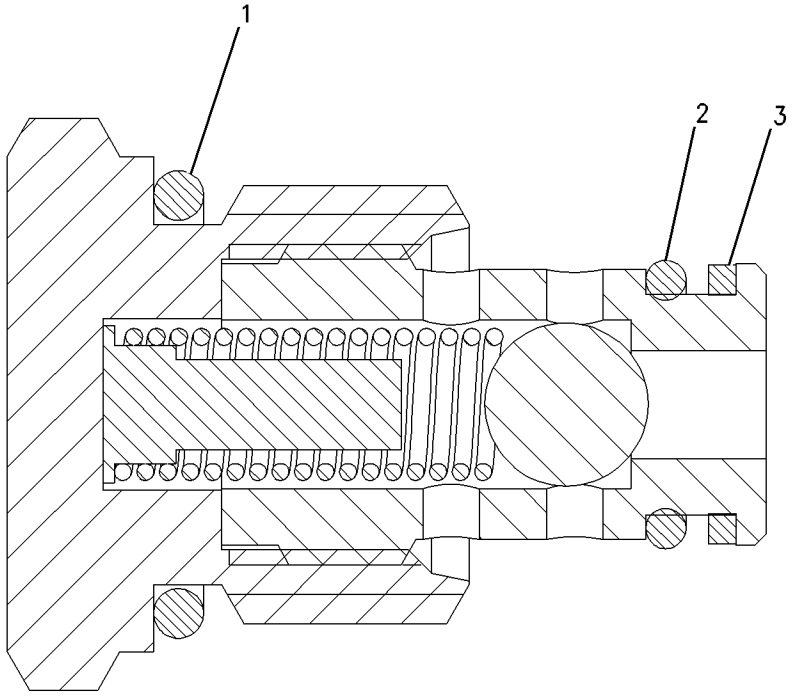


GRAPHIC #1 **<END>** g00707403

# STEERING SYSTEM

## 176-9370 VALVE GP-CHECK—STEERING

**S/N: BXY1-UP**

**PART OF 149-4617 VALVE GP-CHECK**

**SMCS-4275, 5067** **i01426282**

| NOTE | REF NO | GRAPHIC REF | PART NUMBER | QTY | PART NAME 1 2 3 4 5 6 (PRODUCT LEVEL) | SEE PAGE |
|---|---|---|---|---|---|---|
| | 1 | 1 | **3K-0360** | 1 | SEAL-O-RING | |
| | 2 | 1 | **161-6154** | 1 | SEAL-O-RING | |
| | 3 | 1 | **6E-0381** | 1 | RING-BACKUP | |

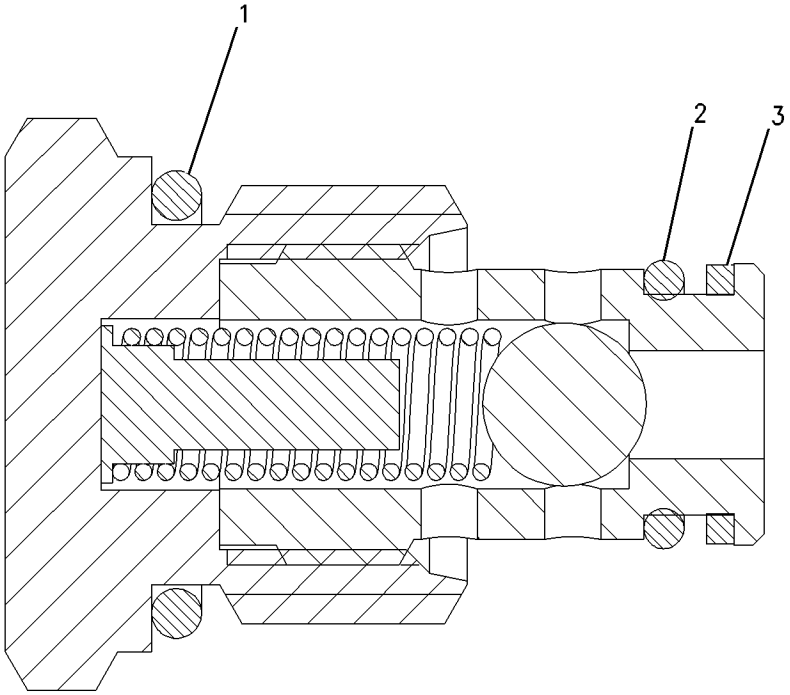


GRAPHIC #1 **<END>** g00707403

# 249-5615 VALVE GP-PILOT–STIC STEERING

**S/N: BXY1-UP**
**PART OF 141-4940 CONTROL GP-STEERING**
**ALSO AN ATTACHMENT**

**SMCS-4342** **i02155003**

| NOTE | REF NO | GRAPHIC REF | PART NUMBER | QTY | PART NAME 1 2 3 4 5 6 (PRODUCT LEVEL) | SEE PAGE |
|---|---|---|---|---|---|---|
| | 1 | 1 | **104-4272** | 1 | BOOT | |
| | 2 | 1 | **104-4273** | 1 | CLAMP | |
| | 3 | 1 | **104-4256** | 1 | BRACKET | |
| | 4 | 1 | **104-4255** | 1 | HANDLE | |
| | 5 | 1 | **104-4270** | 2 | LINK-CONNECTING | |
| | 6 | 1 | **9F-6641** | 1 | BOLT (5/16-18X1.25-IN) | |
| | 7 | 1 | **104-4274** | 1 | SPACER | |
| | 8 | 1 | **104-4271** | 1 | DOWEL | |
| | 9 | 1 | **8M-6802** | 2 | SCREW-HEX SOCKET (1/4-20X1-IN) | |
| Y | 10 | 1 | **147-1238** | 2 | VALVE GP-PILOT CARTRIDGE | 1041 |
| Y | 11 | 1 | **147-1237** | 2 | VALVE GP-PILOT CARTRIDGE | 1040 |
| | 12 | 1 | **249-5616** | 1 | BRACKET | |
| B | 13 | 1 | **103-6319** | 2 | SHIM (20.32-MM) | |

B-USE AS REQUIRED
Y-SEPARATE ILLUSTRATION

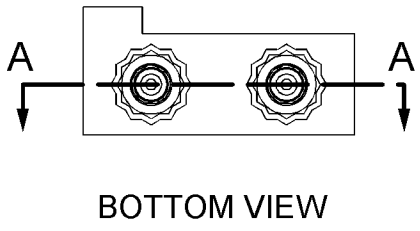


BOTTOM VIEW

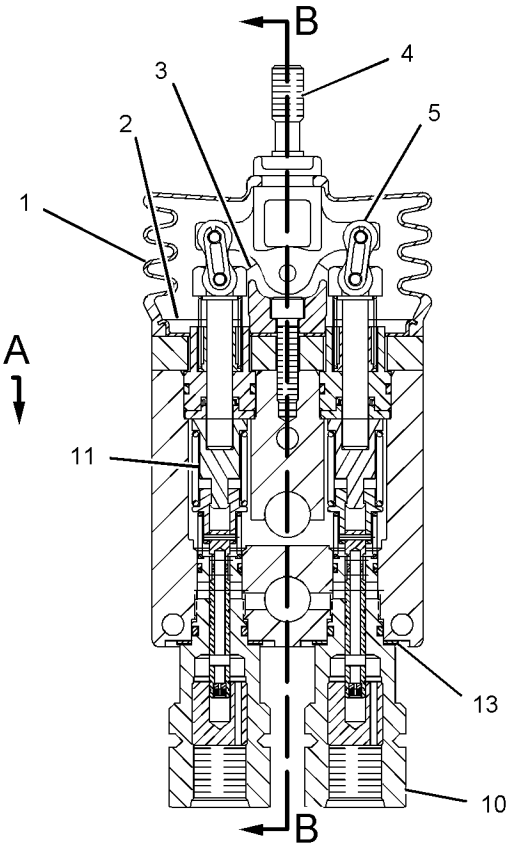


SECTION A-A

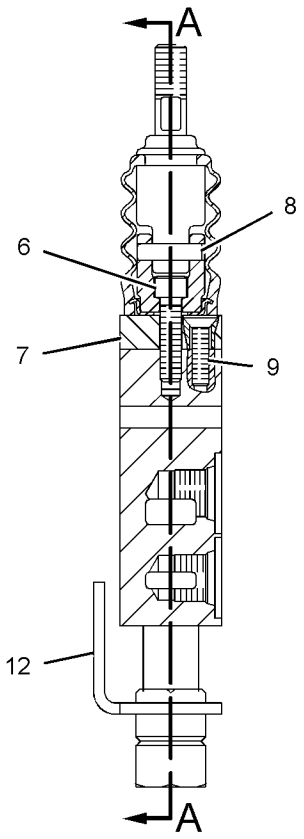


SECTION B-B

GRAPHIC #1

**<END>**

g01093767

# STEERING SYSTEM

## 147-1237 VALVE GP-PILOT CARTRIDGE

**S/N: BXY1-UP**
**PART OF 249-5615 VALVE GP-PILOT**
**ALSO AN ATTACHMENT**

**SMCS-4342** **i02741371**

| NOTE | REF NO | GRAPHIC REF | PART NUMBER | QTY | PART NAME 1 2 3 4 5 6 (PRODUCT LEVEL) | SEE PAGE |
|---|---|---|---|---|---|---|
| | 1 | 1 | **103-7410** | 1 | PLUNGER | |
| | 2 | 1 | **5P-8356** | 1 | SEAL-O-RING | |
| J | 3 | 1 | **147-3061** | 1 | SEAL-SPOOL | |
| | 4 | 1 | **6E-0763** | 1 | RETAINER | |
| | 5 | 1 | **103-7407** | 1 | SPRING | |
| | 6 | 1 | **6E-3769** | 1 | PIN | |
| | 7 | 1 | **6E-3767** | 1 | SPRING | |
| | | | | | AVAILABLE REPAIR KIT(S): | |
| J | | | **1G-5928** | 1 | KIT-PLUNGER SEAL | |
| | | | | | (INCLUDES SEAL-O-RING) | |

J-REPAIR KIT(S) MARKED J SERVICES PART(S) MARKED J

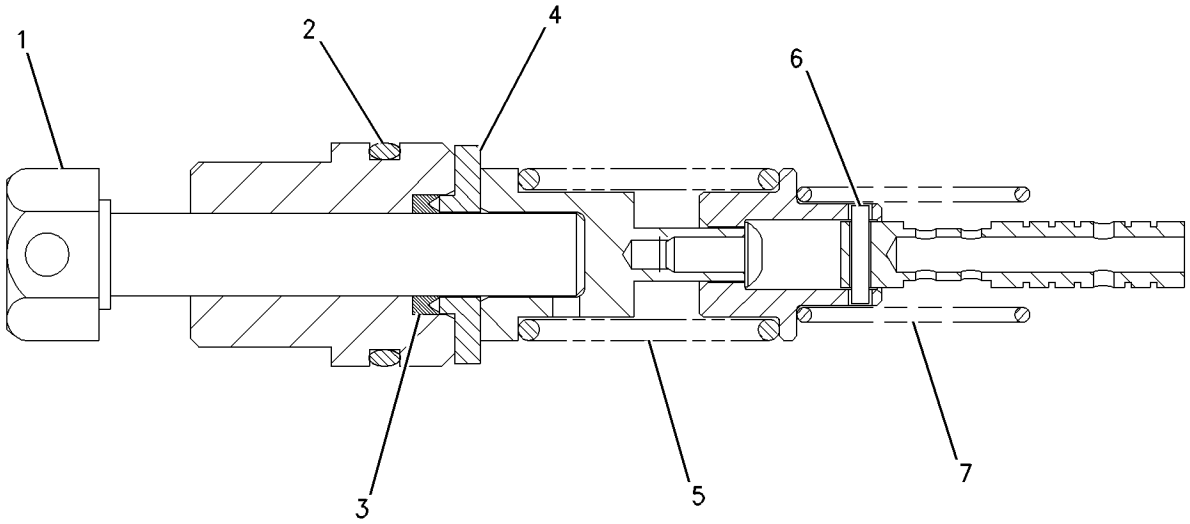


GRAPHIC #1 **<END>** g00751333

# 147-1238 VALVE GP-PILOT CARTRIDGE

**S/N: BXY1-UP**
**PART OF 249-5615 VALVE GP-PILOT**
**ALSO AN ATTACHMENT**

**SMCS-4342** **i02187502**

| NOTE | REF NO | GRAPHIC REF | PART NUMBER | QTY | PART NAME 1 2 3 4 5 6 (PRODUCT LEVEL) | SEE PAGE |
|---|---|---|---|---|---|---|
| B | 1 | 1 | **103-6318** | 1 | SHIM | |
| | 2 | 1 | **095-1519** | 1 | SEAL-O-RING | |
| | 3 | 1 | **6V-5758** | 1 | SEAL-O-RING | |
| | 4 | 1 | **6E-0770** | 1 | RING-BACKUP | |
| B | 5 | 1 | **103-6319** | 1 | SHIM | |

B-USE AS REQUIRED

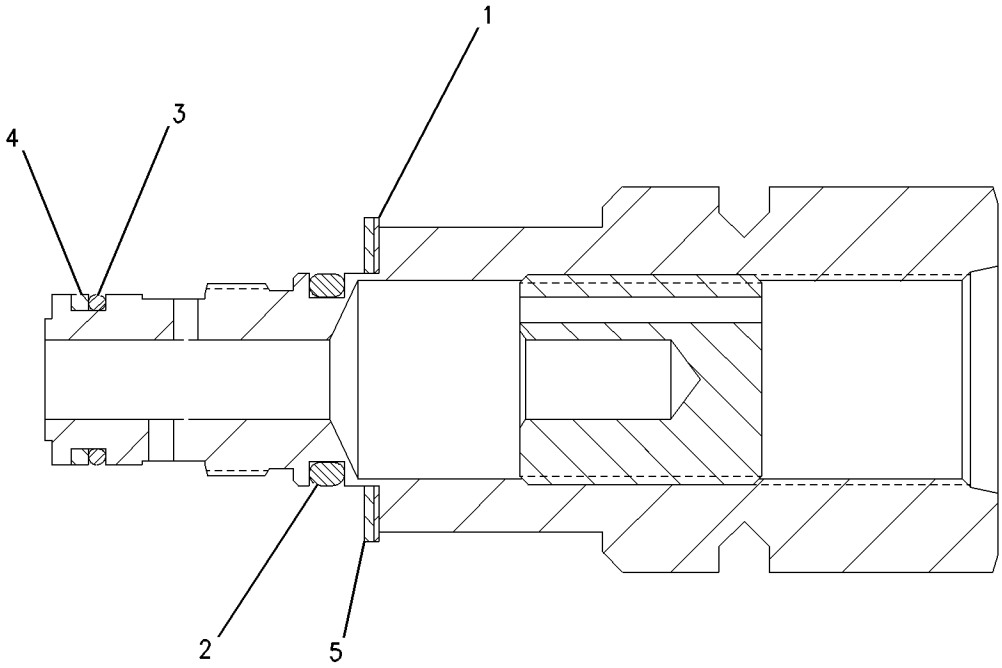


GRAPHIC #1 **<END>** g00751167

# *176-7520* VALVE GP-PUMP CONTROL–PRESSURE COMPENSATOR–STEERING

**S/N: BXY1-UP**

**PART OF 153-9624 PUMP GP-PISTON**

**SMCS-5455** **i02741372**

| NOTE | REF NO | GRAPHIC REF | PART NUMBER | QTY | PART NAME 1 2 3 4 5 6 (PRODUCT LEVEL) | SEE PAGE |
|---|---|---|---|---|---|---|
| JY | 1 | 1 | **194-3286** | 1 | PLUG GP-CONTROL VALVE (PRESSURE COMPENSATOR) | 1029 |
| | 2 | 1 | **194-3285** | 1 | RETAINER | |
| J | 3 | 1 | **194-3287** | 1 | PLUG | |
| | 4 | 1 | **194-3288** | 1 | SPRING | |
| | 5 | 1 | **194-3289** | 1 | SPRING | |
| J | 6 | 1 | **6V-5142** | 1 | SEAL-O-RING | |
| | | | | | AVAILABLE REPAIR KIT(S): | |
| J | | | **191-7607** | 1 | KIT-VALVE REPAIR (PRESSURE COMPENSATOR VALVE) | |
| | | | | | (INCLUDES PLUG ASSEMBLIES, SEAL-O-RINGS, RING-BACKUP, & PARTS MARKED J) | |

J-KIT MARKED J SERVICES PARTS MARKED J
Y-SEPARATE ILLUSTRATION

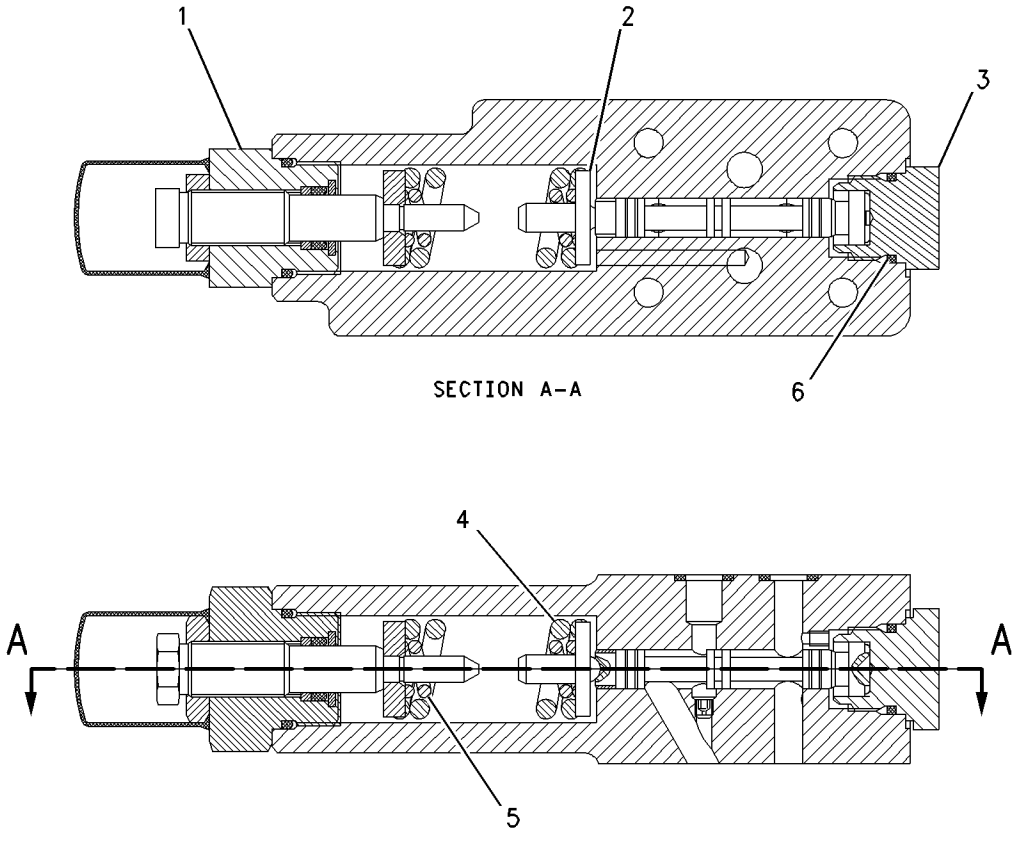


GRAPHIC #1 **<END>** g00751359

# 6E-3986 VALVE GP-RELIEF–SECONDARY STEERING

**S/N: BXY1-UP**

**PART OF 133-8609 VALVE GP-STEERING**

**AN ATTACHMENT**

**SMCS-4322, 5069, 7428** **i02741377**

| NOTE | REF NO | GRAPHIC REF | PART NUMBER | QTY | PART NAME 1 2 3 4 5 6 (PRODUCT LEVEL) | SEE PAGE |
|---|---|---|---|---|---|---|
| | 1 | 1 | **7X-4776** | 2 | RING-BACKUP | |
| | 2 | 1 | **8C-3097** | 1 | SEAL-O-RING | |
| | 3 | 1 | **3K-0360** | 1 | SEAL-O-RING | |
| | | | | | AVAILABLE REPAIR KIT(S): | |
| | | | **6E-4753** | 1 | KIT-SEAL | |

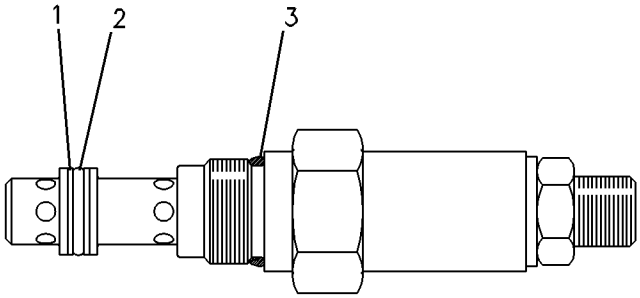


GRAPHIC #1 **<END>** g00119845

# 6E-6188 VALVE GP-RELIEF–PUMP BACKUP

**S/N: BXY1-UP**

**PART OF 133-8608, 133-8609 VALVE GP-STEERING**

**AN ATTACHMENT**

**SMCS-4322, 5069, 7428** **i02225228**

| NOTE | REF NO | GRAPHIC REF | PART NUMBER | QTY | PART NAME 1 2 3 4 5 6 (PRODUCT LEVEL) | SEE PAGE |
|---|---|---|---|---|---|---|
| | 1 | 1 | **7M-8485** | 2 | SEAL-O-RING | |
| | 2 | 1 | **4J-0522** | 1 | SEAL-O-RING | |
| | 3 | 1 | **4T-2770** | 1 | SPRING | |
| | 4 | 1 | **3K-0360** | 1 | SEAL-O-RING | |
| | 5 | 1 | **4Y-5812** | 1 | PLATE | |
| | 6 | 1 | **6E-5510** | 1 | RETAINER AS | |
| | 7 | 1 | **9X-6395** | 1 | NUT (3/4-16-THD) | |
| | 8 | 1 | **6E-1127** | 1 | CAP | |
| | 9 | 1 | **8J-0331** | 1 | VALVE | |
| | 10 | 1 | **6E-6138** | 1 | VALVE GP-RELIEF (MAIN) | |
| | | 1 | **8H-3532** | 1 | SPRING-VALVE | |
| | 11 | 1 | **7J-2546** | 1 | PISTON | |

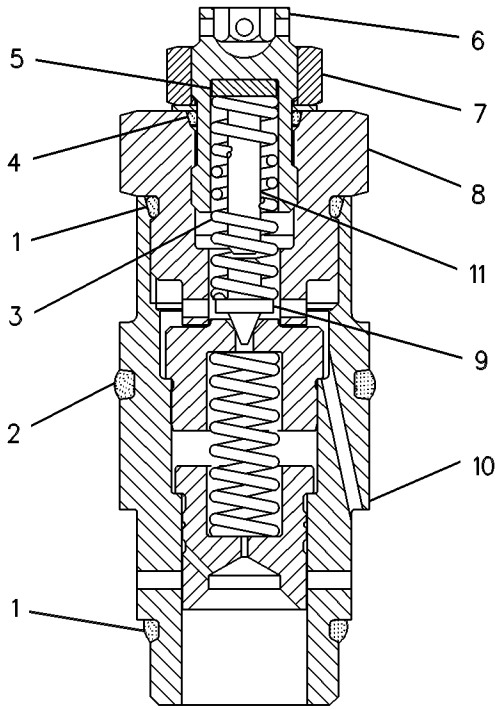


GRAPHIC #1 **<END>** g00120937

# 6E-5566 VALVE GP-SELECTOR & PRESS CONT–

**SECONDARY STEERING**

**S/N: BXY1-UP**

**PART OF 132-6144 LINES GP-SECONDARY STEERING**

**AN ATTACHMENT**

**SMCS-4349** **i01500291**

| NOTE | REF NO | GRAPHIC REF | PART NUMBER | QTY | PART NAME 1 2 3 4 5 6 (PRODUCT LEVEL) | SEE PAGE |
|---|---|---|---|---|---|---|
| | 1 | 1 | **5S-7018** | 3 | SPACER (7.54X14.15X0.25-MM THK) | |
| | 2 | 1 | **7S-8553** | 1 | SPRING | |
| | 3 | 1 | **5S-7001** | 3 | SPACER (7.54X14.15X0.9-MM THK) | |
| | 4 | 1 | **108-3866** | 2 | ADAPTER | |
| | | 1 | **2M-9780** | 2 | SEAL-O-RING | |

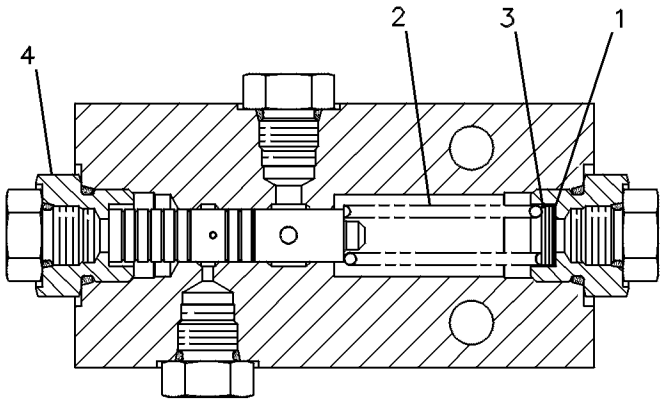


GRAPHIC #1 **<END>** g00120846

# STEERING SYSTEM

## 4T-1860 VALVE GP-SHUTTLE

**S/N: BXY1-UP**

**PART OF 212-8712, 212-8746 VALVE GP-MAIN CONTROL, 133-8608, 133-8609 VALVE GP-STEERING**

**AN ATTACHMENT**

**SMCS-4289, 5079** **i02441588**

| NOTE | REF NO | GRAPHIC REF | PART NUMBER | QTY | PART NAME 1 2 3 4 5 6 (PRODUCT LEVEL) | SEE PAGE |
|---|---|---|---|---|---|---|
| | 1 | 1 | **4T-0925** | 1 | SEAT | |
| | 2 | 1 | **1M-6718** | 1 | BALL | |
| Z | 3 | 1 | | 1 | VALVE | |
| | 4 | 1 | **6V-5324** | 1 | SEAL-O-RING | |
| | 5 | 1 | **147-6603** | 1 | SEAL-O-RING | |
| | 6 | 1 | **3J-1907** | 1 | SEAL-O-RING | |
| | 7 | 1 | **147-6604** | 2 | RING-BACKUP | |
| | 8 | 1 | **147-6605** | 2 | RING-BACKUP | |

Z-NOT SERVICED SEPARATELY

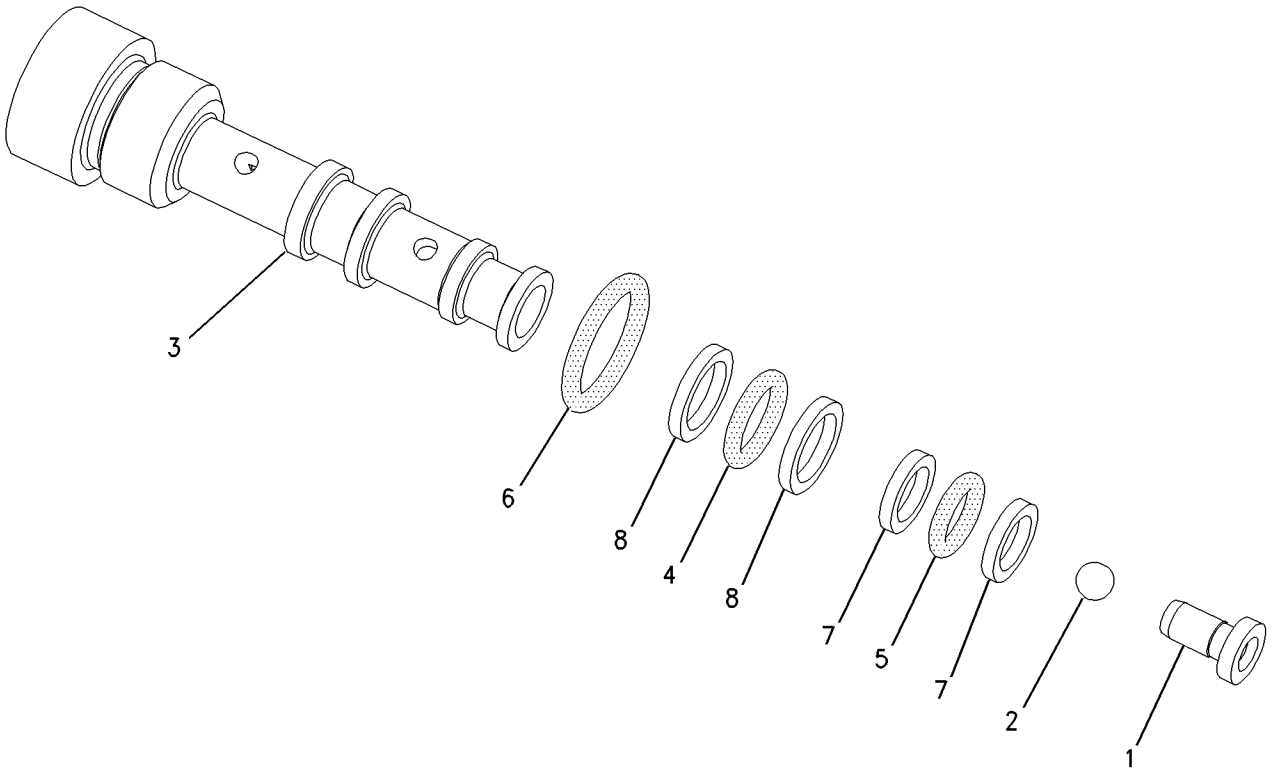


GRAPHIC #1 **<END>** g00775006

# STEERING SYSTEM

## 133-8608 VALVE GP-STEERING

**S/N: BXY1-UP**
**PART OF 151-2384 STEERING AR**
**AN ATTACHMENT**

**SMCS-4307** **i02458121**

| NOTE | REF NO | GRAPHIC REF | PART NUMBER | QTY | PART NAME 1 2 3 4 5 6 (PRODUCT LEVEL) | SEE PAGE |
|---|---|---|---|---|---|---|
| | 1 | 1,2 | **1T-0936** | 2 | PLUG-PIPE | |
| | 2 | 2 | **2S-2596** | 2 | SPRING | |
| Y | 4 | 2 | **4T-1860** | 1 | VALVE GP-SHUTTLE | 1046 |
| | 5 | 1 | **6E-3775** | 1 | RETAINER | |
| | 6 | 2 | *6E-3779* | 2 | PLUG AS | |
| | | | | | (EACH INCLUDES) | |
| | | 2 | **7J-1089** | 2 | PLUG | |
| | | 2 | **7M-5130** | 2 | PIN-SPRING | |
| | 7 | 1 | **6E-4513** | 1 | ADAPTER-O-RING | |
| | 8 | 1 | **6E-4514** | 1 | ADAPTER-O-RING | |
| Y | 9 | 1 | **6E-6188** | 1 | VALVE GP-RELIEF (PUMP BACKUP) | 1044 |
| | 10 | 1 | **7J-2927** | 1 | WASHER (16.66X39.37X3.96-MM THK) | |
| | 11 | 2 | **9T-7419** | 1 | VALVE GP-RELIEF (STEERING CYLINDER CROSSOVER) | |
| | | 2 | **2M-9780** | 1 | SEAL-O-RING | |
| | | 2 | **5P-2199** | 2 | RING-BACKUP | |
| | | 2 | **6E-0410** | 1 | SEAL-O-RING | |
| Z | 12 | 1 | | 1 | STEM | |
| C | 14 | 2 | **152-9152** | 1 | PLUG GP | |
| | | 2 | **2U-7354** | 1 | KIT-SEAL (DIVERTER VALVE) | |
| | | | | | (INCLUDES 5 SEAL-O RINGS & 8 RING-BACK UPS) | |
| Z | 15 | 1 | | 1 | BODY | |
| C | 16 | 1 | *148-8407* | 2 | PLUG AS | |
| | | | | | (EACH INCLUDES) | |
| | | 1 | **3J-1907** | 1 | SEAL-O-RING | |
| | | 1 | **9S-4191** | 1 | PLUG-O-RING | |
| C | 17 | 2 | *148-8409* | 3 | PLUG AS | |
| | | | | | (EACH INCLUDES) | |
| | | 2 | **3D-2824** | 1 | SEAL-O-RING | |
| | | 2 | **9S-8008** | 1 | PLUG-O-RING | |
| C | 18 | 1,2 | *155-3624* | 16 | PLUG AS | |
| | | | | | (EACH INCLUDES) | |
| | | 1,2 | **3J-7354** | 1 | SEAL-O-RING | |
| | | 1,2 | **9S-4182** | 1 | PLUG-O-RING | |
| C | 19 | 1 | *183-7262* | 2 | PLUG AS | |
| | | | | | (EACH INCLUDES) | |
| | | 1 | **2S-4078** | 1 | SEAL-O-RING | |
| | | 1 | **9S-8010** | 1 | PLUG (STRAIGHT THREAD O-RING) | |
| | 20 | 1 | **1P-4579** | 2 | FLANGE-HALF | |
| C | 21 | 1 | **2S-4078** | 1 | SEAL-O-RING | |
| C | 22 | 2 | **3J-1907** | 2 | SEAL-O-RING | |
| | 23 | 1 | **3K-6113** | 1 | WASHER-HARD (12X18.5X3-MM THK) | |
| | 24 | 2 | **4B-9782** | 2 | BALL | |
| B | 25 | 1 | **4J-8224** | 5 | SHIM (0.254-MM THK) | |
| | 26 | 1 | **4J-8634** | 1 | RETAINER-SPRING | |
| B | 27 | 1 | **5J-4776** | 1 | SHIM (0.127-MM THK) | |
| J | 28 | 1 | **6E-4286** | 1 | VALVE GP-PRESSURE REDUCING | |
| | 29 | 1 | **6E-4499** | 1 | SPRING | |
| | 30 | 1 | **6E-4500** | 1 | SPRING | |
| | 31 | 1 | **6K-6307** | 1 | SEAL-O-RING | |
| M | 32 | 1 | **8T-2223** | 1 | BOLT-SOCKET HEAD (M10X1.5X45-MM) | |
| M | 33 | 1 | **8T-4183** | 4 | BOLT (M12X1.75X40-MM) | |
| | 34 | 1,2 | **8T-4223** | 5 | WASHER-HARD (13.5X25.5X3-MM THK) | |
| | 35 | 2 | **9J-9821** | 2 | SEAT | |

## 133-8608 VALVE GP-STEERING *(contd. )* i02458121

| NOTE | REF NO | GRAPHIC REF | PART NUMBER | QTY | PART NAME 1 2 3 4 5 6 (PRODUCT LEVEL) | SEE PAGE |
|---|---|---|---|---|---|---|
| | | | | | AVAILABLE REPAIR KIT(S): | |
| J | | | **6E-4287** | | KIT-SEAL (PRESSURE REDUCING VALVE) | |
| | | | | | (INCLUDES 3 SEAL-O-RINGS AND 3 RING-BACKS) | |

B-USE AS REQUIRED
C-CHANGE FROM PREVIOUS TYPE
J-KIT MARKED J SERVICES PART MARKED J
M-METRIC PART
Y-SEPARATE ILLUSTRATION
Z-NOT SERVICED SEPARATELY

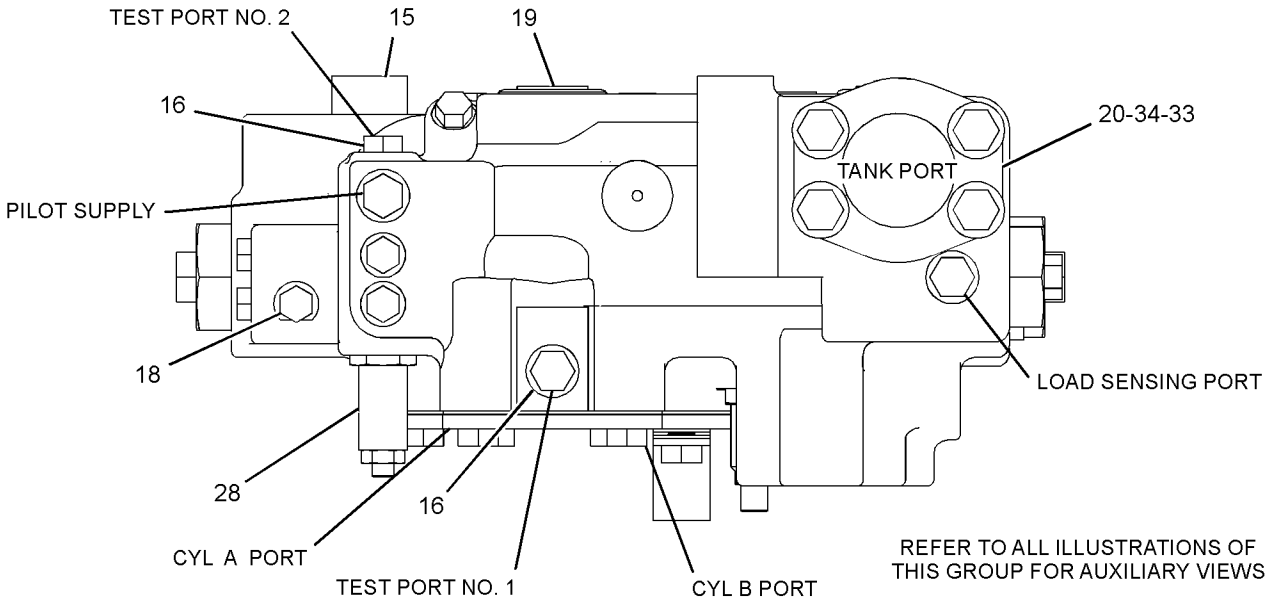


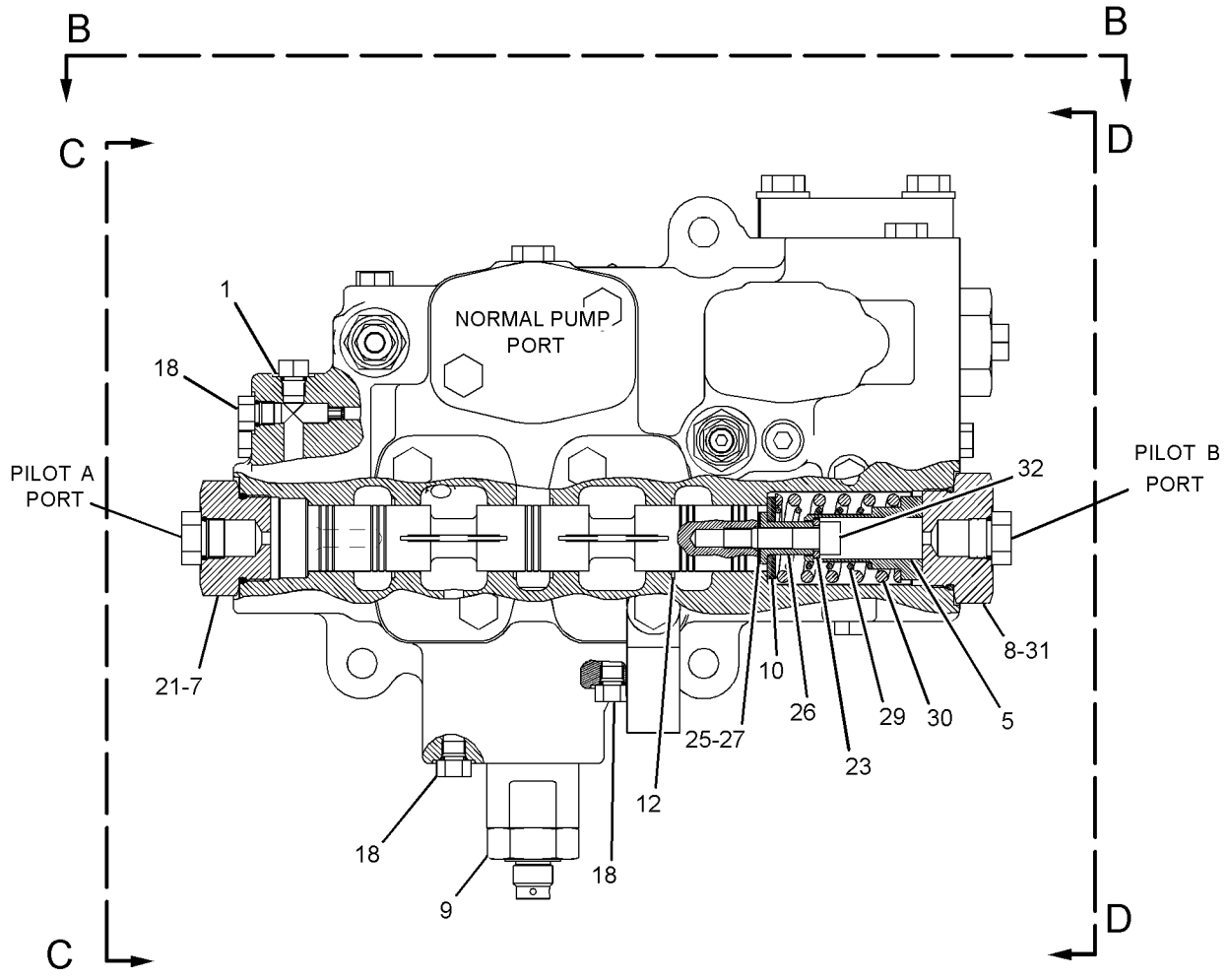


GRAPHIC #1

g01229842

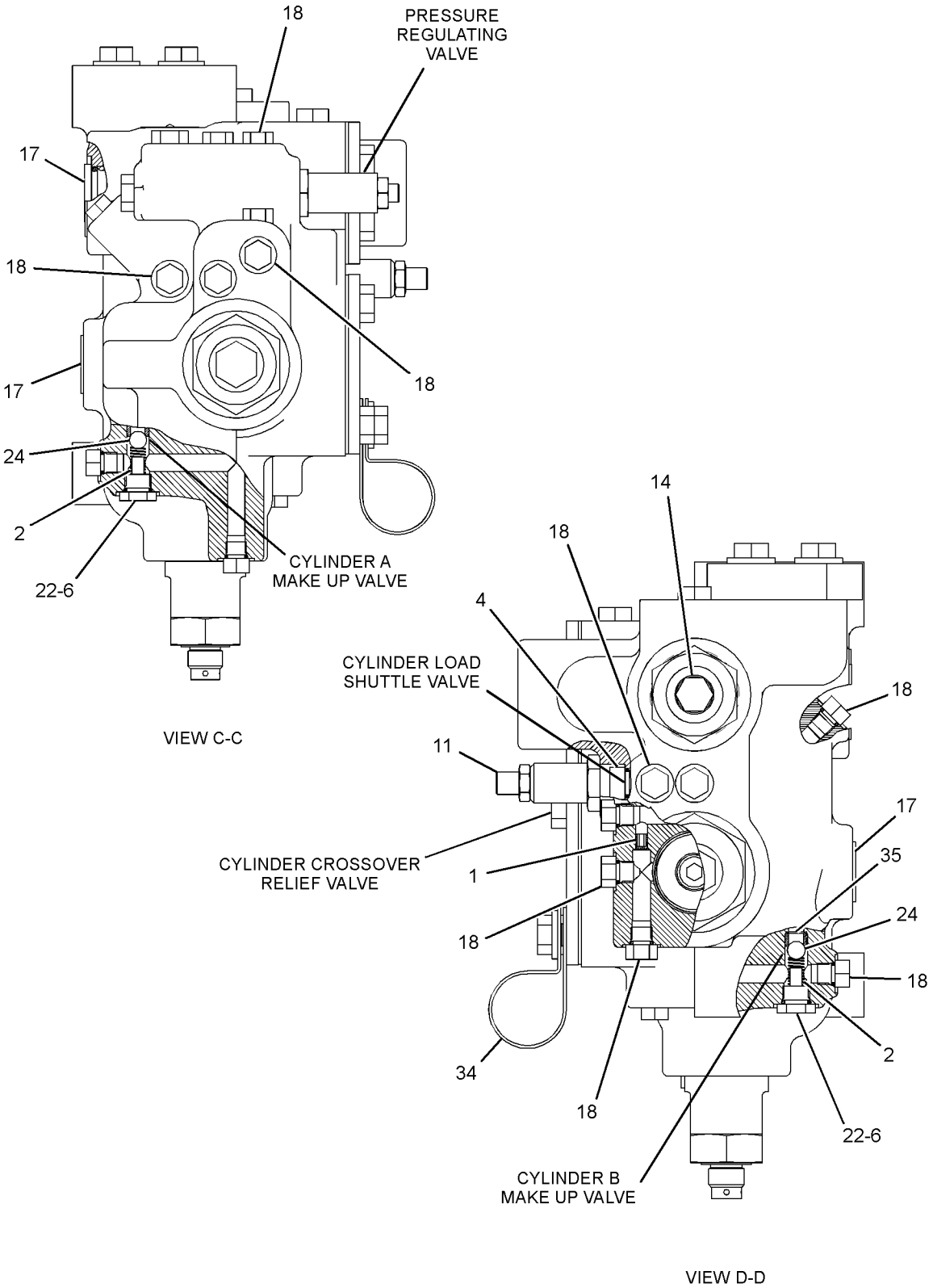


GRAPHIC #2 **<END>** g01229827

## 133-8609 VALVE GP-STEERING—WITH SECONDARY STEERING

**S/N: BXY1-UP**

**PART OF 132-6144 LINES GP-SECONDARY STEERING**

**AN ATTACHMENT**

**SMCS-4307** **i02580099**

| NOTE | REF NO | GRAPHIC REF | PART NUMBER | QTY | PART NAME 1 2 3 4 5 6 (PRODUCT LEVEL) | SEE PAGE |
|---|---|---|---|---|---|---|
| | 1 | 1,2 | **1T-0936** | 2 | PLUG-PIPE | |
| | 2 | 1 | **1U-0323** | 1 | PLUG AS | |
| | | 1 | **3G-2683** | 1 | PLUG | |
| | | 1 | **1U-0322** | 1 | BEARING-SLEEVE | |
| | 3 | 2 | **2S-2596** | 2 | SPRING | |
| J | 4 | 2 | **2U-7345** | 1 | VALVE-DIVERTER | |
| Y | 5 | 2 | **4T-1860** | 1 | VALVE GP-SHUTTLE | 1046 |
| | 6 | 1 | **6E-3775** | 1 | RETAINER | |
| | 7 | 2 | *6E-3779* | 2 | PLUG AS | |
| | | | | | (EACH INCLUDES) | |
| | | 2 | **7J-1089** | 1 | PLUG | |
| | | 2 | **7M-5130** | 1 | PIN-SPRING | |
| | 8 | 1 | **6E-3780** | 1 | VALVE | |
| | 9 | 1 | **6E-4513** | 1 | ADAPTER-O-RING | |
| | 10 | 1 | **6E-4514** | 1 | ADAPTER-O-RING | |
| Y | 11 | 1 | **6E-6188** | 1 | VALVE GP-RELIEF (PUMP BACKUP) | 1044 |
| | 12 | 1 | **7J-2927** | 1 | WASHER (16.66X39.37X3.96-MM THK) | |
| | 13 | 1 | **7J-7423** | 1 | VALVE | |
| | 14 | 1 | **7S-8491** | 1 | SPRING | |
| | 15 | 2 | **9T-7419** | 1 | VALVE GP-RELIEF (STEERING CYLINDER CROSSOVER) | |
| | | 2 | **2M-9780** | 1 | SEAL-O-RING | |
| | | 2 | **5P-2199** | 2 | RING-BACKUP | |
| | | 2 | **6E-0410** | 1 | SEAL-O-RING | |
| Z | 16 | 1 | | 1 | STEM | |
| Z | 17 | 1 | | 1 | BODY | |
| | 18 | 1 | *148-8407* | 3 | PLUG AS | |
| | | | | | (EACH INCLUDES) | |
| | | 1 | **3J-1907** | 1 | SEAL-O-RING | |
| | | 1 | **9S-4191** | 1 | PLUG-O-RING | |
| C | 19 | 2 | *148-8409* | 2 | PLUG AS | |
| | | | | | (EACH INCLUDES) | |
| | | 2 | **3D-2824** | 1 | SEAL-O-RING | |
| | | 2 | **9S-8008** | 1 | PLUG-O-RING | |
| C | 20 | 1,2 | *155-3624* | 16 | PLUG AS | |
| | | | | | (EACH INCLUDES) | |
| | | 1,2 | **3J-7354** | 1 | SEAL-O-RING | |
| | | 1,2 | **9S-4182** | 1 | PLUG-O-RING | |
| C | 21 | 1 | *183-7262* | 1 | PLUG AS | |
| | | 1 | **2S-4078** | 1 | SEAL-O-RING | |
| | | 1 | **9S-8010** | 1 | PLUG (STRAIGHT THREAD O-RING) | |
| C | 22 | 1 | *183-7263* | 1 | PLUG AS | |
| | | 1 | **3J-7354** | 1 | SEAL-O-RING | |
| | | 1 | **9S-8002** | 1 | PLUG-O-RING | |
| | 23 | 1 | **1P-4579** | 2 | FLANGE-HALF | |
| | 24 | 1 | **2S-4078** | 2 | SEAL-O-RING | |
| C | 25 | 2 | **3J-1907** | 2 | SEAL-O-RING | |
| | 26 | 1 | **3K-6113** | 1 | WASHER-HARD (12X18.5X3-MM THK) | |
| | 27 | 2 | **4B-9782** | 2 | BALL | |
| B | 28 | 1 | **4J-8224** | 5 | SHIM (0.254-MM THK) | |
| | 29 | 1 | **4J-8634** | 1 | RETAINER-SPRING | |
| | 30 | 1 | **5J-3419** | 1 | SPRING | |
| B | 31 | 1 | **5J-4776** | 1 | SHIM (0.127-MM THK) | |
| Y | 32 | 1 | **6E-3986** | 1 | VALVE GP-RELIEF (SECONDARY STEERING) | 1043 |
| L | 33 | 1 | **6E-4286** | 1 | VALVE GP-PRESSURE REDUCING | |
| | 34 | 1 | **6E-4499** | 1 | SPRING | |

## 133-8609 VALVE GP-STEERING *(contd. )* i02580099

| NOTE | REF NO | GRAPHIC REF | PART NUMBER | QTY | PART NAME 1 2 3 4 5 6 (PRODUCT LEVEL) | SEE PAGE |
|---|---|---|---|---|---|---|
| | 35 | 1 | **6E-4500** | 1 | SPRING | |
| | 36 | 1 | **6K-6307** | 1 | SEAL-O-RING | |
| | 37 | 1 | **8T-4223** | 5 | WASHER-HARD (13.5X25.5X3-MM THK) | |
| M | 38 | 1 | **8T-4183** | 4 | BOLT (M12X1.75X40-MM) | |
| M | 39 | 1,2 | **8T-2223** | 1 | BOLT-SOCKET HEAD (M10X1.5X45-MM) | |
| | 40 | 2 | **9J-9821** | 2 | SEAT (PUMP BACKUP) | |
| C | 41 | 2 | **9S-8008** | 1 | PLUG-O-RING | |
| | | | | | AVAILABLE REPAIR KIT(S): | |
| J | | | **2U-7354** | 1 | KIT-SEAL (DIVERTER VALVE) | |
| L | | | **6E-4287** | 1 | KIT-SEAL (PRESSURE REDUCING VALVE) | |
| | | | | | (EACH KIT INCLUDES SEALS AND RINGS) | |

B-USE AS REQUIRED
C-CHANGE FROM PREVIOUS TYPE
J-KIT MARKED J SERVICES PART MARKED J
L-KIT MARKED L SERVICES PART MARKED L
M-METRIC PART
Y-SEPARATE ILLUSTRATION
Z-NOT SERVICED SEPARATELY

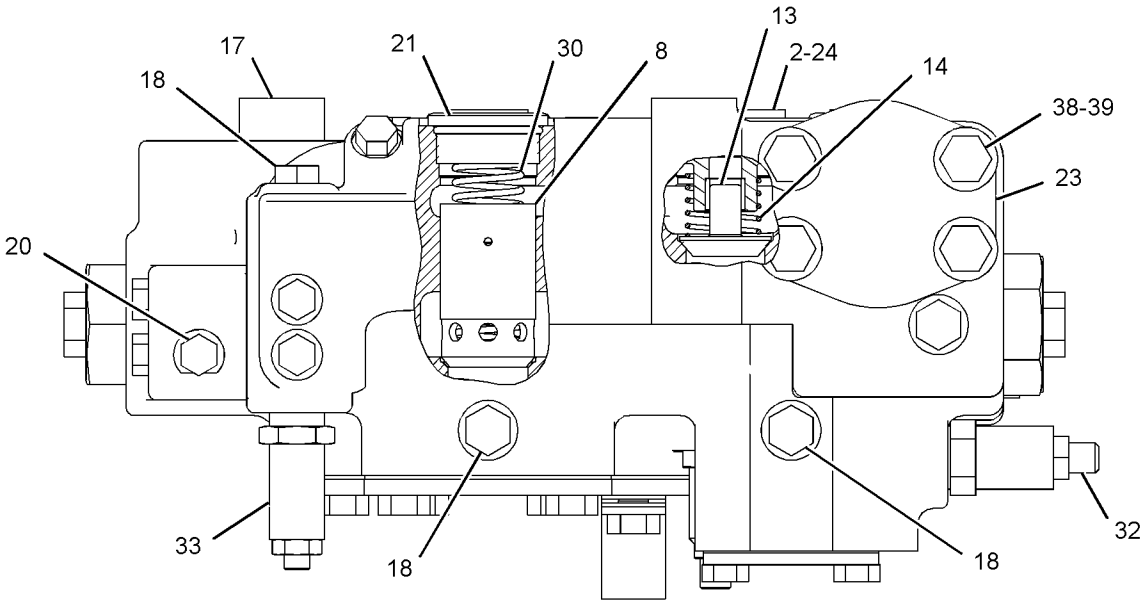


VIEW A-A

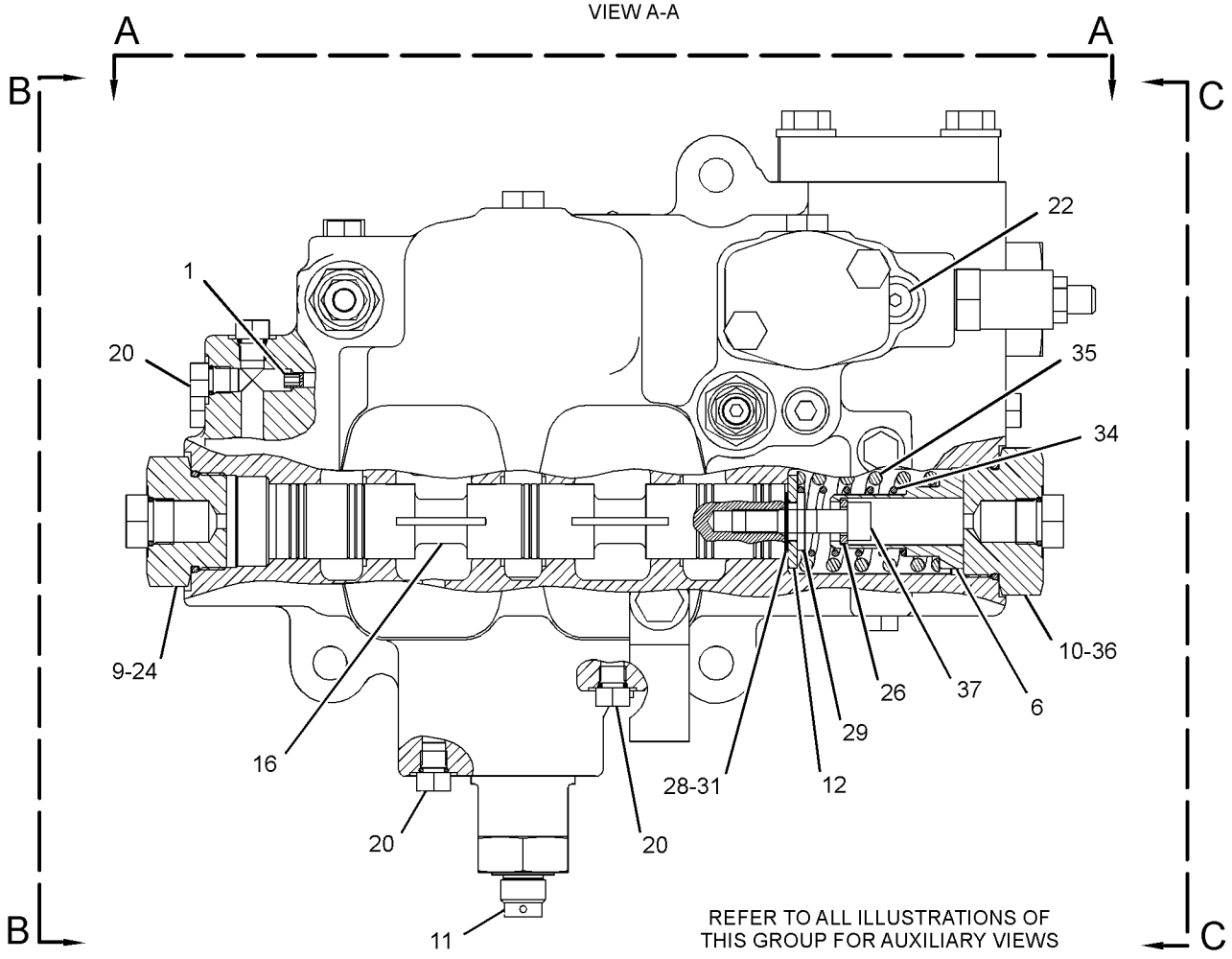


GRAPHIC #1

g01229439

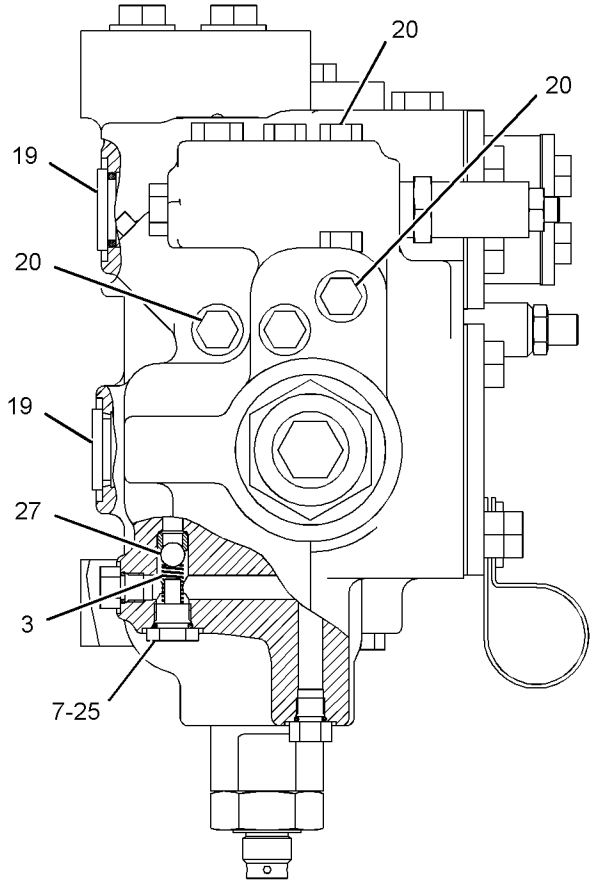


VIEW B-B

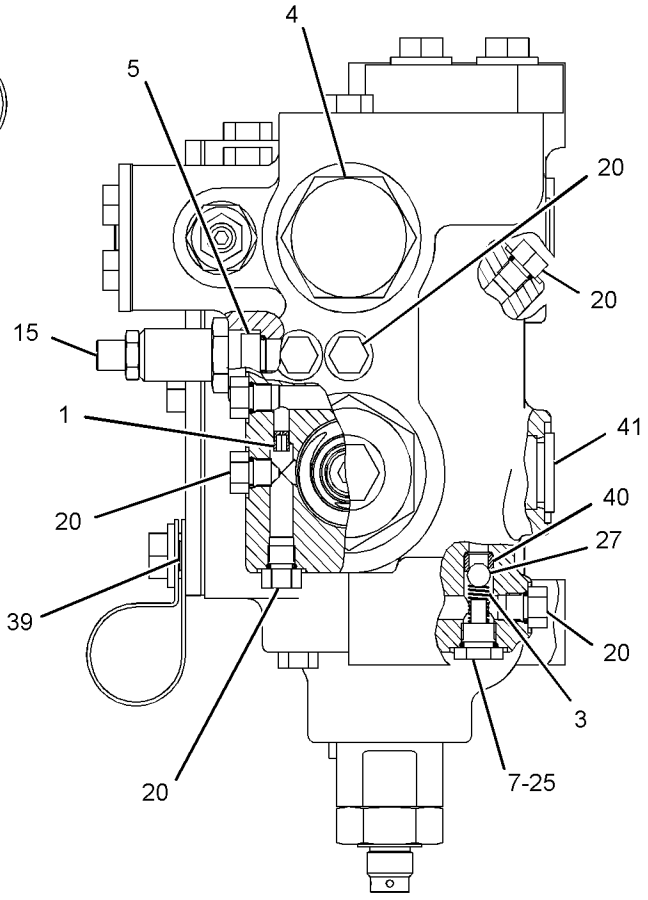


VIEW C-C

GRAPHIC #2 **<END>** g01229440

# 146-7571 VALVE GP-STEERING NEUTRALIZER

**S/N: BXY1-UP**

**PART OF 132-6142 LINES GP-STEERING NEUTRALIZER**

**SMCS-4330** **i02624467**

| NOTE | REF NO | GRAPHIC REF | PART NUMBER | QTY | PART NAME 1 2 3 4 5 6 (PRODUCT LEVEL) | SEE PAGE |
|---|---|---|---|---|---|---|
| | 1 | 1 | **6J-4568** | 1 | BOOT | |
| | 2 | 1 | **6V-1949** | 1 | SEAL-LIP TYPE | |
| | 3 | 1 | **3D-2824** | 1 | SEAL-O-RING | |
| | 4 | 1 | **5F-9035** | 1 | SPRING | |

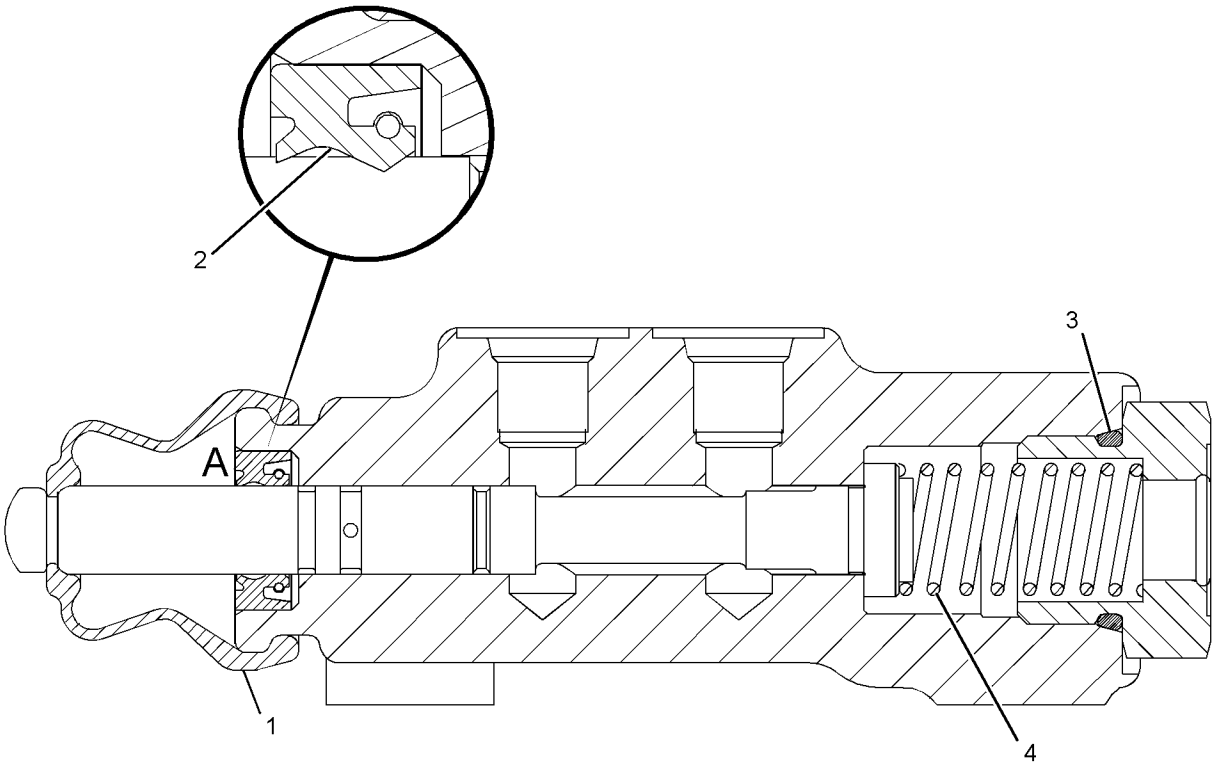


GRAPHIC #1 **<END>** g01317840

# *259-4694* ACCUMULATOR GP-RIDE CONTROL—CHARGED

**S/N: BXY1-UP**
**PART OF 254-6063 CONTROL & LINES GP-RIDE**
**FIELD REPLACEMENT ORDER 259-4695—PAGE 1057**
**AN ATTACHMENT**

**SMCS-5077** **i02224715**

| NOTE | REF NO | GRAPHIC REF | PART NUMBER | QTY | PART NAME 1 2 3 4 5 6 (PRODUCT LEVEL) | SEE PAGE |
|---|---|---|---|---|---|---|
| | 1 | 1 | **158-2336** | 1 | VALVE-GAS | |
| | 2 | 1 | **183-4063** | 1 | ELBOW (WITH VENT HOLE) | |
| | | | | | AVAILABLE REPAIR KIT(S): | |
| | | | **170-0493** | 1 | KIT-SEAL | |

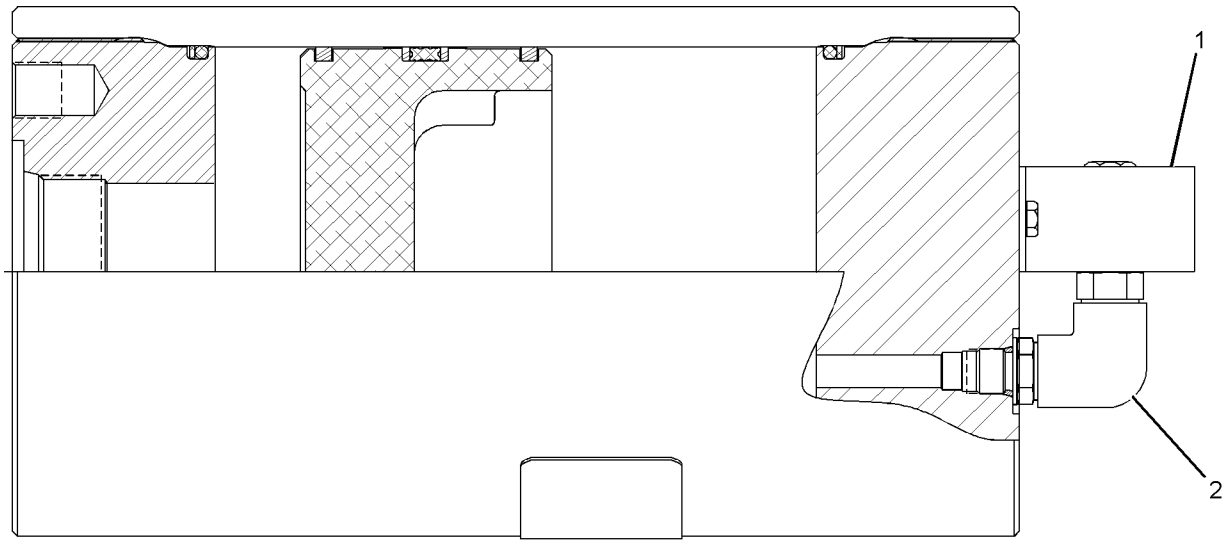


GRAPHIC #1 **<END>** g01025924

# *259-4695* ACCUMULATOR GP-RIDE CONTROL—UNCHARGED

**S/N: BXY1-UP**

**FIELD REPLACEMENT FOR 259-4694—PAGE 1056**

**SMCS-5077** **i02224718**

| NOTE | REF NO | GRAPHIC REF | PART NUMBER | QTY | PART NAME 1 2 3 4 5 6 (PRODUCT LEVEL) | SEE PAGE |
|---|---|---|---|---|---|---|
| | 1 | 1 | **158-2336** | 1 | VALVE-GAS | |
| | 2 | 1 | **183-4063** | 1 | ELBOW (WITH VENT HOLE) | |
| | | | | | AVAILABLE REPAIR KIT(S): | |
| | | | **170-0493** | 1 | KIT-SEAL | |

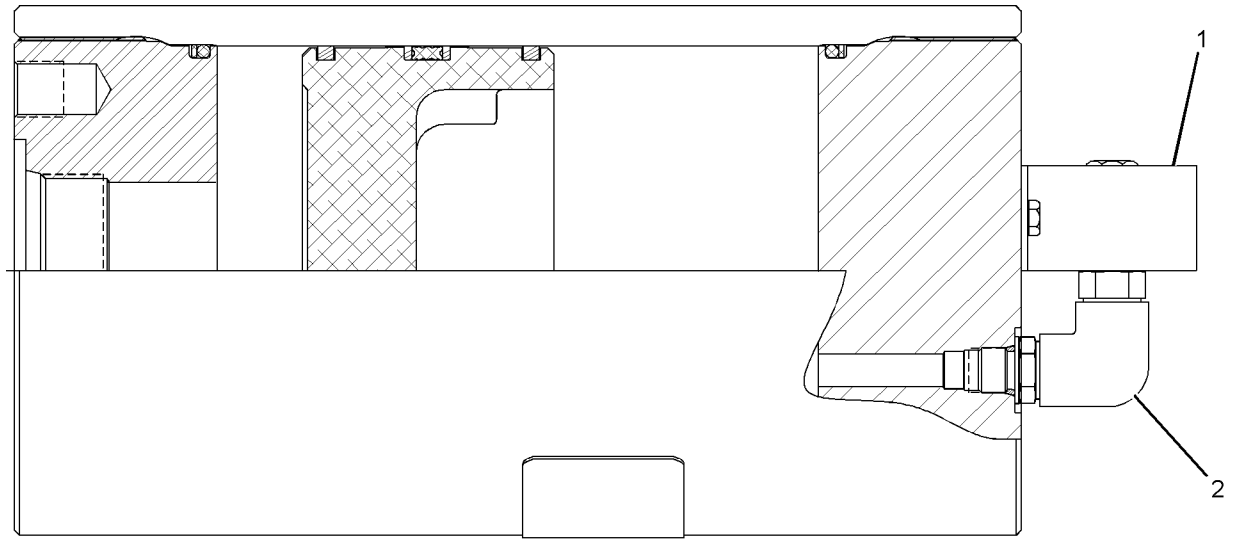


GRAPHIC #1 **<END>** g01025924

# 217-6719 ACTUATOR GP-PILOT CONTROL–
## PROPORTIONAL SOLENOID–REGENERATION VALVE
**S/N: BXY1-UP**
**PART OF 212-8712, 212-8746 VALVE GP-MAIN CONTROL**
**AN ATTACHMENT**

**SMCS-5078** **i02531192**

| NOTE | REF NO | GRAPHIC REF | PART NUMBER | QTY | PART NAME 1 2 3 4 5 6 (PRODUCT LEVEL) | SEE PAGE |
|---|---|---|---|---|---|---|
| | 1 | 1 | **118-5083** | 1 | HOUSING | |
| | 2 | 1 | **118-5085** | 1 | RETAINER | |
| | 3 | 1 | **118-5086** | 1 | SPRING | |
| | 4 | 1 | **118-5087** | 1 | SPRING | |
| | 5 | 1 | **148-2350** | 1 | COIL AS | |
| | 6 | 1 | **154-4133** | 1 | CARTRIDGE AS | |
| | 7 | 1 | **155-2251** | 1 | PLATE | |
| | 8 | 1 | **6V-3965** | 1 | FITTING-COUPLER | |
| | 9 | 1 | *162-0177* | 2 | PLUG AS | |
| | | | | | (EACH INCLUDES) | |
| | | 1 | **3J-1907** | 1 | SEAL-O-RING | |
| | | 1 | **9S-8004** | 1 | PLUG-O-RING | |
| | 10 | 1 | **030-4605** | 1 | SEAL-O-RING | |
| | 11 | 1 | **146-3728** | 1 | WASHER-SPRING | |
| | 12 | 1 | **121-2051** | 1 | SPRING | |
| | 13 | 1 | **177-1405** | 1 | SPRING | |
| | 14 | 1 | **1P-3709** | 1 | SEAL-RECTANGULAR | |
| | 15 | 1 | **2D-6648** | 1 | RING-RETAINING | |
| | 16 | 1 | **3C-8388** | 2 | PIN-ROLL | |
| | 17 | 1 | **6K-0806** | 1 | STRAP-CABLE | |
| | 18 | 1 | **5H-6005** | 2 | SEAL-O-RING | |
| M | 19 | 1 | **8T-3998** | 4 | BOLT (M4X0.7X12-MM) | |
| | 20 | 1 | **6V-0852** | 1 | CAP-DUST | |

M-METRIC PART

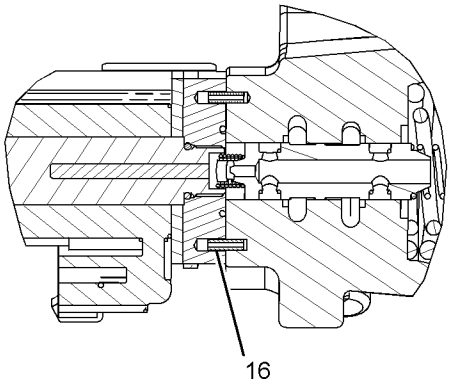


SECTION B-B

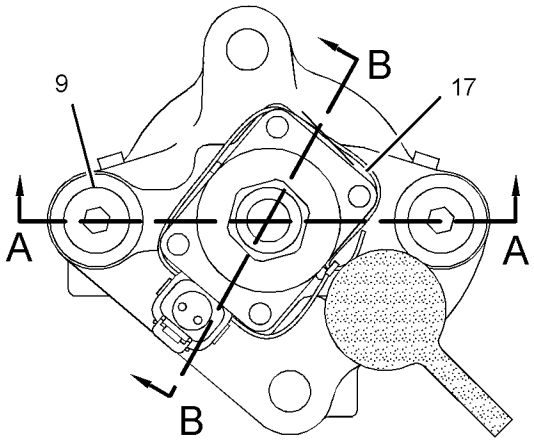


VIEW C-C

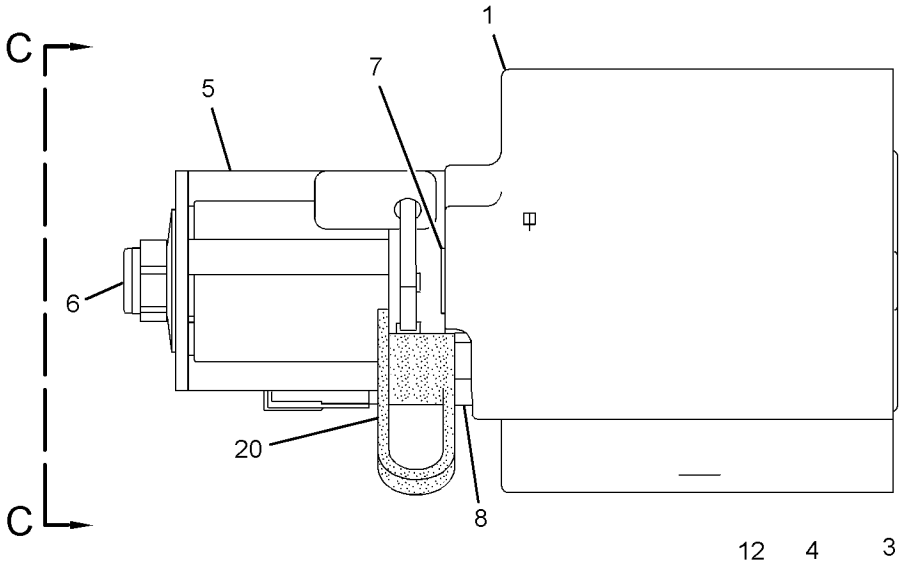


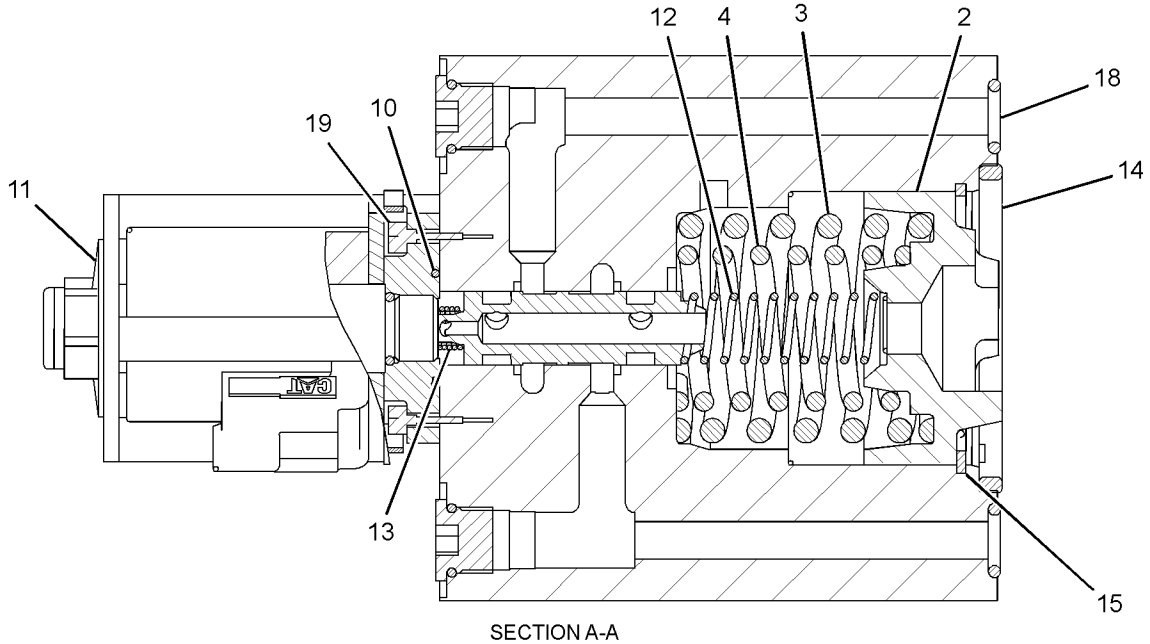


SECTION A-A

GRAPHIC #1 **<END>** g01275553

# *217-6720* ACTUATOR GP-PILOT CONTROL–
## PROPORTIONAL SOLENOID
**S/N: BXY1-UP**
**PART OF 212-8712, 212-8746 VALVE GP-MAIN CONTROL**
**AN ATTACHMENT**

**SMCS-5078** **i02530776**

| NOTE | REF NO | GRAPHIC REF | PART NUMBER | QTY | PART NAME 1 2 3 4 5 6 (PRODUCT LEVEL) | SEE PAGE |
|---|---|---|---|---|---|---|
| | 1 | 1 | **118-5083** | 1 | HOUSING | |
| | 2 | 1 | **118-5085** | 1 | RETAINER | |
| | 3 | 1 | **118-5086** | 1 | SPRING | |
| | 4 | 1 | **118-5087** | 1 | SPRING | |
| | 5 | 1 | **148-2350** | 1 | COIL AS | |
| | 6 | 1 | **154-4133** | 1 | CARTRIDGE AS | |
| | 7 | 1 | **155-2251** | 1 | PLATE | |
| | 8 | 1 | **6V-3965** | 1 | FITTING-COUPLER | |
| | 9 | 1 | **162-0177** | 2 | PLUG AS | |
| | | | | | (EACH INCLUDES) | |
| | | 1 | **9S-8004** | 1 | PLUG-O-RING | |
| | | 1 | **3J-1907** | 1 | SEAL-O-RING | |
| | 10 | 1 | **030-4605** | 1 | SEAL-O-RING | |
| | 11 | 1 | **146-3728** | 1 | WASHER-SPRING | |
| | 12 | 1 | **121-2051** | 1 | SPRING | |
| | 13 | 1 | **177-1405** | 1 | SPRING | |
| | 14 | 1 | **1P-3709** | 1 | SEAL-RECTANGULAR | |
| | 15 | 1 | **2D-6648** | 1 | RING-RETAINING | |
| | 16 | 1 | **3C-8388** | 2 | PIN-ROLL | |
| | 18 | 1 | **5H-6005** | 2 | SEAL-O-RING | |
| M | 19 | 1 | **8T-3998** | 4 | BOLT (M4X0.7X12-MM) | |
| | 20 | 1 | **6V-0852** | 1 | CAP-DUST | |
| | 21 | 1 | **6K-0806** | 1 | STRAP-CABLE | |

M-METRIC PART

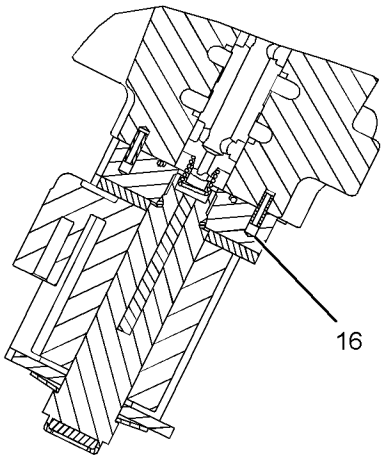


SECTION B-B

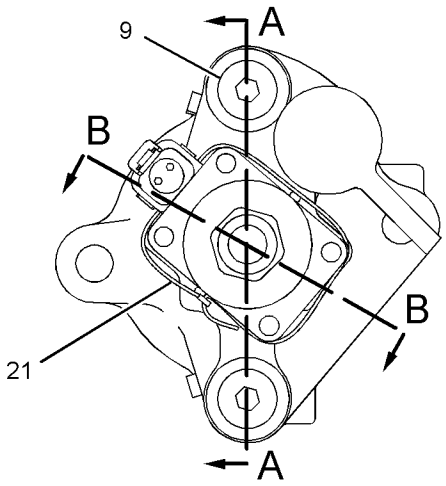


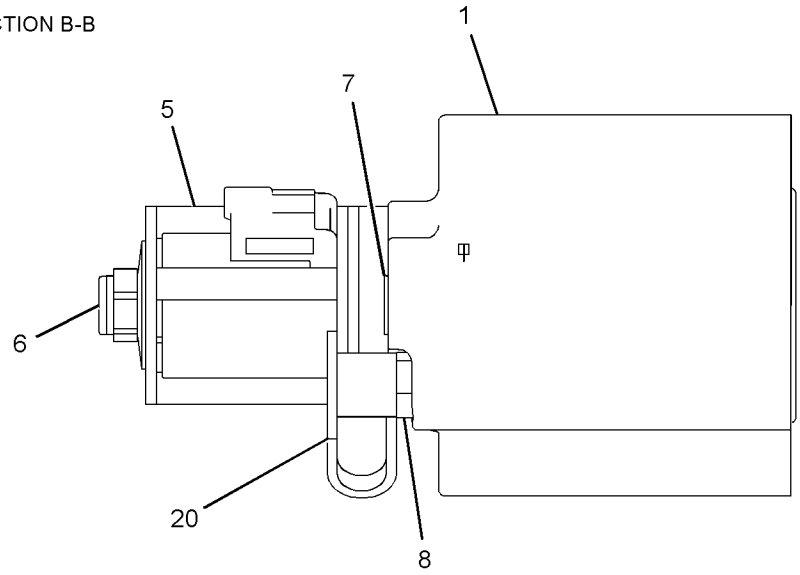


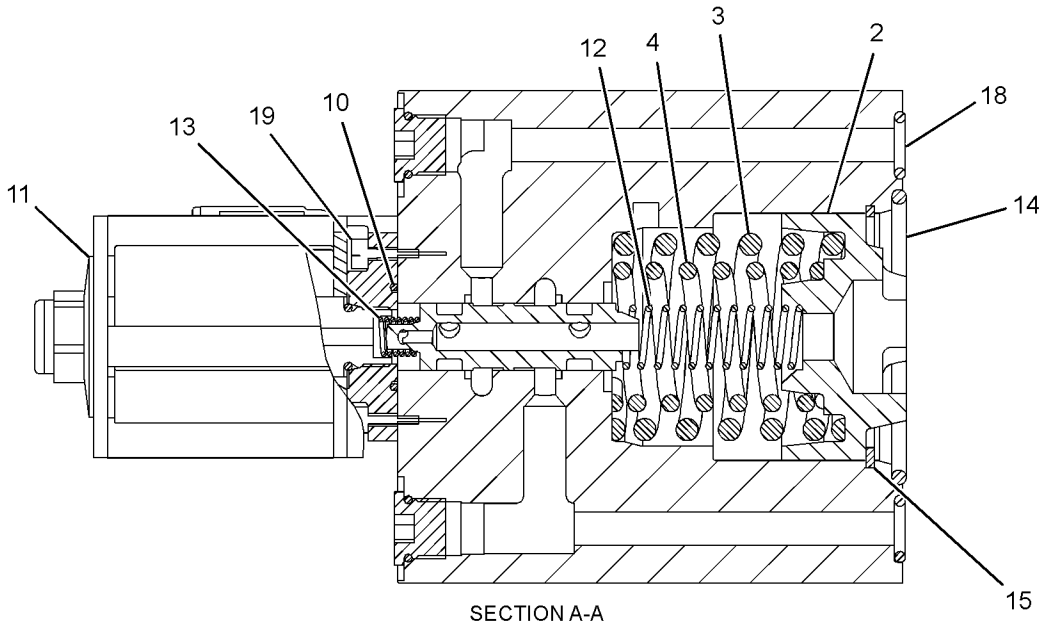


SECTION A-A

GRAPHIC #1 **<END>** g01260358

# HYDRAULIC SYSTEM

## *254-6063* CONTROL & LINES GP-RIDE

**S/N: BXY1-UP**
**PART OF 254-6062 CONTROL AR-RIDE**
**AN ATTACHMENT**

**SMCS-5004, 5057** **i02715941**

| NOTE | REF NO | GRAPHIC REF | PART NUMBER | QTY | PART NAME 1 2 3 4 5 6 (PRODUCT LEVEL) | SEE PAGE |
|---|---|---|---|---|---|---|
| | 1 | 2 | **9X-6772** | 1 | STRAP-CABLE | |
| | 2 | 2 | **124-1718** | 1 | SLEEVE | |
| | 3 | 2 | **130-5300** | 2 | CLIP | |
| Y | 4 | 2 | **141-1481** | 1 | VALVE GP-SHUTTLE | 1183 |
| I | 5 | 2 | **299-6993** | 1 | HOSE AS | |
| I | 6 | 2 | **112-6150** | 1 | HOSE AS | |
| | 7 | 2 | **189-7787** | 1 | MANIFOLD | |
| | 8 | 2 | **189-7788** | 1 | MANIFOLD | |
| | 9 | 1 | **276-3607** | 1 | TUBE AS | |
| | 10 | 1 | **189-7895** | 1 | BRACKET | |
| | 11 | 2 | **189-7897** | 1 | MANIFOLD | |
| | 12 | 1 | **198-8871** | 1 | TUBE AS | |
| | 14 | 2 | **207-1810** | 1 | VALVE GP-CHECK (RIDE CONTROL) | |
| I | 15 | 2 | **246-2828** | 1 | HOSE AS | |
| I | 16 | 2 | **219-5098** | 1 | HOSE AS | |
| I | 17 | 2 | **219-5120** | 1 | HOSE AS | |
| | 18 | 2 | **220-1645** | 1 | TUBE AS | |
| | 19 | 1 | **220-1646** | 1 | TUBE AS | |
| I | 20 | 2 | **220-1650** | 1 | HOSE AS | |
| | 21 | 2 | **220-1657** | 1 | BRACKET AS | |
| | 22 | 2 | **220-1659** | 1 | BRACKET AS | |
| | 23 | 2 | **221-0130** | 2 | BRACKET AS | |
| | | | | | (EACH INCLUDES) | |
| M | | 2 | **8T-3597** | 1 | NUT-WELD (M12X1.75-THD) | |
| I | 24 | 1 | **221-0134** | 1 | HOSE AS | |
| I | 25 | 2 | **221-0135** | 1 | HOSE AS | |
| | 26 | 2 | **221-5377** | 1 | HARNESS AS-RIDE CONTROL | |
| | | 2 | **102-8802** | 1 | KIT-RECEPTACLE (2-PIN) | |
| | | | | | (INCLUDES RECEPTACLE AS AND WEDGE) | |
| | | 2 | **155-2270** | 1 | KIT-CONNECTING PLUG (2-PIN) | |
| | | | | | (INCLUDES PLUG AS AND WEDGE) | |
| | 27 | 2 | **227-3275** | 1 | BRACKET AS | |
| M | | 2 | **8T-3597** | 1 | NUT-WELD (M12X1.75-THD) | |
| | 28 | 1 | **227-3276** | 1 | BRACKET AS | |
| I | 29 | 1 | **227-3281** | 1 | HOSE AS | |
| | 30 | 2 | **228-7024** | 2 | U-BOLT | |
| | 31 | 2 | **246-0561** | 1 | PLATE | |
| Y | 32 | 1 | *259-4694* | 2 | ACCUMULATOR GP-RIDE CONTROL (CHARGED) | 1056 |
| Y | 33 | 2 | **259-6275** | 1 | VALVE GP-RIDE CONTROL | 1180 |
| I | 34 | 2 | **259-7143** | 1 | HOSE AS | |
| | 35 | 2 | **103-1303** | 4 | CLAMP-HALF | |
| | 36 | 1 | *148-8335* | 2 | CONNECTOR AS | |
| | | | | | (EACH INCLUDES) | |
| | | 1 | **5K-9090** | 1 | SEAL-O-RING | |
| | | 1 | **6V-8635** | 1 | CONNECTOR | |
| | | 1 | **7M-8485** | 1 | SEAL-O-RING | |
| | 37 | 2 | *148-8336* | 2 | CONNECTOR AS | |
| | | | | | (EACH INCLUDES) | |
| | | 2 | **3J-1907** | 1 | SEAL-O-RING | |
| | | 2 | **6V-8397** | 1 | SEAL-O-RING | |
| | | 2 | **6V-8636** | 1 | CONNECTOR | |
| | 38 | 2 | *148-8340* | 1 | CONNECTOR AS | |
| | | 2 | **3K-0360** | 1 | SEAL-O-RING | |
| | | 2 | **6V-8398** | 1 | SEAL-O-RING | |
| | | 2 | **6V-8639** | 1 | CONNECTOR | |

## *254-6063* CONTROL & LINES GP-RIDE *(contd.)* i02715941

| NOTE | REF NO | GRAPHIC REF | PART NUMBER | QTY | PART NAME 1 2 3 4 5 6 (PRODUCT LEVEL) | SEE PAGE |
|---|---|---|---|---|---|---|
| | 39 | 1 | *148-8352* | 4 | ELBOW AS | |
| | | | | | (EACH INCLUDES) | |
| | | 1 | **5K-9090** | 1 | SEAL-O-RING | |
| | | 1 | **6V-9854** | 1 | ELBOW (SWIVEL) | |
| | 40 | 2 | *148-8364* | 1 | ELBOW AS | |
| | | 2 | **3K-0360** | 1 | SEAL-O-RING | |
| | | 2 | **6V-8398** | 1 | SEAL-O-RING | |
| | | 2 | **6V-8625** | 1 | ELBOW | |
| | 41 | 2 | *148-8370* | 1 | ELBOW AS | |
| | | 2 | **6V-8398** | 1 | SEAL-O-RING | |
| | | 2 | **6V-9851** | 1 | ELBOW | |
| | 42 | 2 | *148-8374* | 1 | ELBOW AS | |
| | | 2 | **3K-0360** | 1 | SEAL-O-RING | |
| | | 2 | **6V-8397** | 1 | SEAL-O-RING | |
| | | 2 | **6V-8723** | 1 | ELBOW (FACE SEAL) | |
| | 43 | 2 | *148-8378* | 1 | ELBOW AS | |
| | | 2 | **3J-1907** | 1 | SEAL-O-RING | |
| | | 2 | **6V-8397** | 1 | SEAL-O-RING | |
| | | 2 | **6V-8724** | 1 | ELBOW | |
| | 44 | 2 | *148-8415* | 1 | REDUCER AS | |
| | | 2 | **6V-8397** | 1 | SEAL-O-RING | |
| | | 2 | **6V-8936** | 1 | REDUCER | |
| | 45 | 2 | *148-8426* | 1 | TEE GP | |
| | | 2 | **3K-0360** | 1 | SEAL-O-RING | |
| | | 2 | **6V-8397** | 1 | SEAL-O-RING | |
| | | 2 | **6V-8398** | 1 | SEAL-O-RING | |
| | | 2 | **8T-6696** | 1 | TEE-O-RING | |
| | 46 | 1 | *148-8428* | 1 | TEE AS | |
| | | 1 | **3K-0360** | 1 | SEAL-O-RING | |
| | | 1 | **6V-8398** | 2 | SEAL-O-RING | |
| | | 1 | **6V-8782** | 1 | TEE | |
| | 47 | 2 | *148-8444* | 1 | TEE AS-SWIVEL | |
| | | 2 | **6V-8398** | 2 | SEAL-O-RING | |
| | | 2 | **6V-9837** | 1 | TEE-SWIVEL | |
| | 48 | 1 | *148-8445* | 1 | FITTING GP-TEE | |
| | | 1 | **5K-9090** | 2 | SEAL-O-RING | |
| | | 1 | **6V-9847** | 1 | TEE-SWIVEL | |
| | 49 | 2 | *150-4043* | 3 | CONNECTOR AS | |
| | | | | | (EACH INCLUDES) | |
| | | 2 | **3J-1907** | 1 | SEAL-O-RING | |
| | | 2 | **6V-8398** | 1 | SEAL-O-RING | |
| | | 2 | **6V-9873** | 1 | CONNECTOR | |
| | 50 | 2 | **1P-3704** | 1 | SEAL-RECTANGULAR | |
| | 51 | 2 | **1P-3705** | 5 | SEAL-RECTANGULAR | |
| | 52 | 1,2 | **1P-3706** | 3 | SEAL-RECTANGULAR | |
| | 53 | 2 | **1P-5767** | 2 | FLANGE-HALF | |
| | 54 | 2 | **4J-0520** | 2 | SEAL-O-RING | |
| | 55 | 1,2 | **5P-7464** | 3 | CLIP (SLOT) | |
| | 56 | 1,2 | **5P-7465** | 3 | CLIP (TAB) | |
| | 57 | 1,2 | **5P-7468** | 3 | CLIP (SLOT) | |
| | 58 | 1,2 | **5P-7469** | 3 | CLIP (TAB) | |
| | 59 | 2 | **5P-8077** | 8 | FLANGE-HALF | |
| | 60 | 1,2 | **5P-8444** | 2 | GROMMET | |
| | 61 | 2 | **5P-9085** | 2 | CLIP | |
| | 62 | 2 | **5P-9299** | 1 | CLIP | |
| | 63 | 1,2 | **6V-1249** | 3 | GROMMET | |
| | 64 | 1,2 | **6V-8398** | 2 | SEAL-O-RING | |
| | 65 | 2 | **6V-9830** | 1 | CAP AS | |
| | 66 | 2 | **7X-0515** | 6 | WASHER-HARD (17X35X5-MM THK) | |

## *254-6063* **CONTROL & LINES GP-RIDE** *(contd.)* **i02715941**

| NOTE | REF NO | GRAPHIC REF | PART NUMBER | QTY | PART NAME 1 2 3 4 5 6 (PRODUCT LEVEL) | SEE PAGE |
|---|---|---|---|---|---|---|
| M | 67 | 2 | **7X-2534** | 2 | BOLT (M6X1X50-MM) | |
| M | 68 | 1,2 | **7X-2553** | 6 | BOLT (M16X2X40-MM) | |
| M | 69 | 2 | **7X-2556** | 4 | BOLT (M16X2X100-MM) | |
| | 70 | 2 | **8C-3206** | 2 | FLANGE-HALF | |
| M | 71 | 2 | **8T-0389** | 4 | LOCKNUT (M10X1.15-THD) | |
| | 72 | 1,2 | **8T-4121** | 18 | WASHER-HARD (11X21X2.5-MM THK) | |
| M | 73 | 1,2 | **8T-4136** | 8 | BOLT (M10X1.5X25-MM) | |
| M | 74 | 2 | **8T-4137** | 1 | BOLT (M10X1.5X20-MM) | |
| M | 75 | 1,2 | **8T-4139** | 6 | BOLT (M12X1.75X30-MM) | |
| M | 76 | 2 | **8T-4140** | 15 | BOLT (M16X2X60-MM) | |
| M | 77 | 2 | **8T-4172** | 1 | BOLT (M10X1.5X80-MM) | |
| M | 78 | 1 | **8T-4173** | 8 | BOLT (M16X2X110-MM) | |
| M | 79 | 2 | **8T-4176** | 4 | BOLT (M12X1.75X90-MM) | |
| | 81 | 1,2 | **8T-4223** | 12 | WASHER-HARD (13.5X25.5X3-MM THK) | |
| M | 82 | 1,2 | **8T-4779** | 6 | BOLT (M16X2X35-MM) | |
| M | 83 | 2 | **8T-4956** | 2 | BOLT (M12X1.75X35-MM) | |
| M | 84 | 2 | **8T-5005** | 4 | BOLT (M10X1.5X70-MM) | |
| | 85 | 2 | **8T-7087** | 1 | GROMMET | |
| | 86 | 2 | **9X-8256** | 2 | WASHER (6.6X12X2-MM THK) | |
| | 87 | 1,2 | **9X-8257** | 36 | WASHER (17.5X30X3.5-MM THK) | |

I-REFER TO HYDRAULIC INFORMATION SYSTEM
M-METRIC PART
Y-SEPARATE ILLUSTRATION

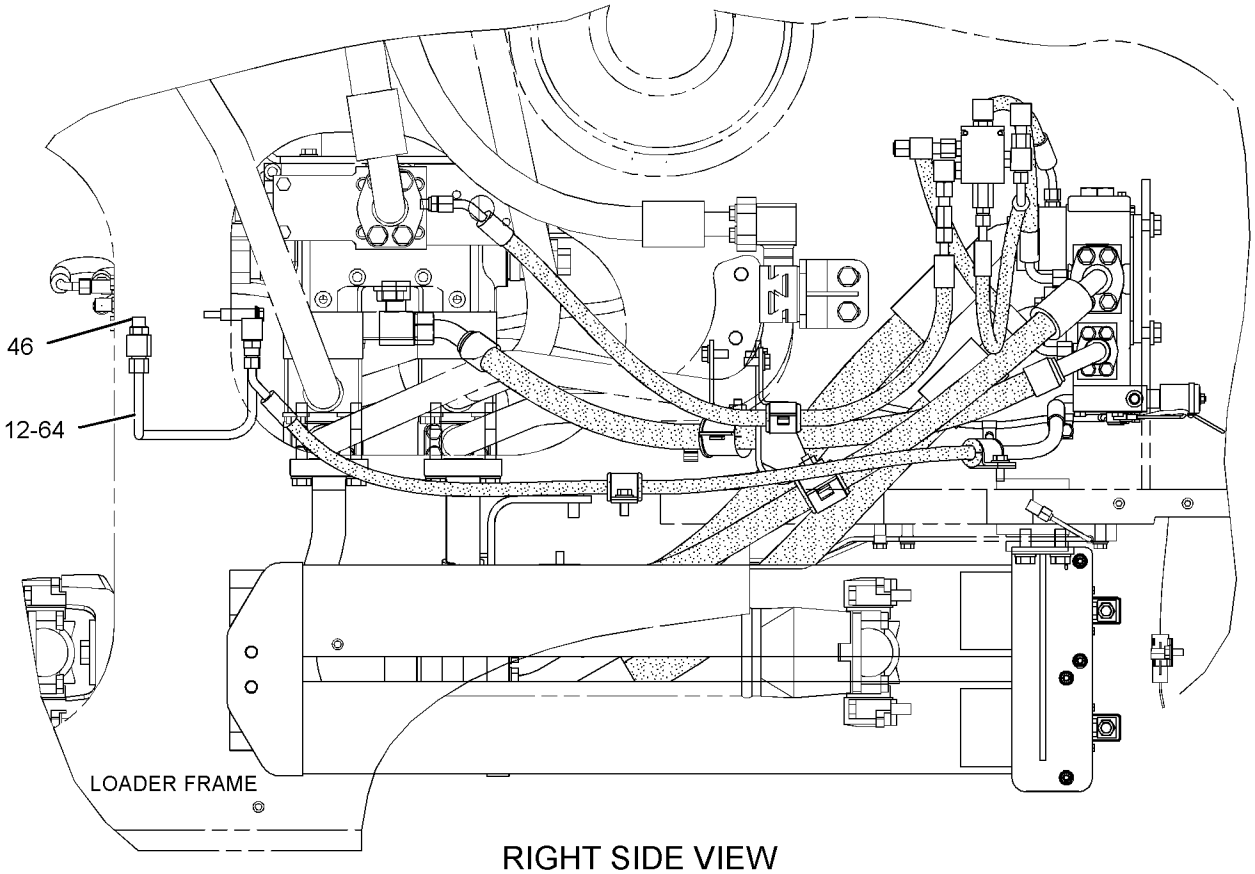


RIGHT SIDE VIEW

REFER TO ALL ILLUSTRATIONS OF THIS GROUP FOR AUXILIARY VIEWS

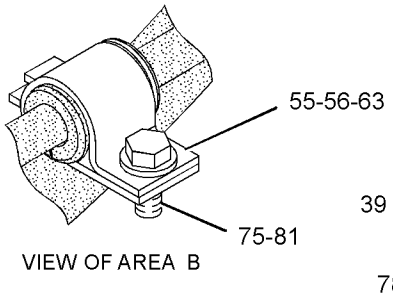


VIEW OF AREA B

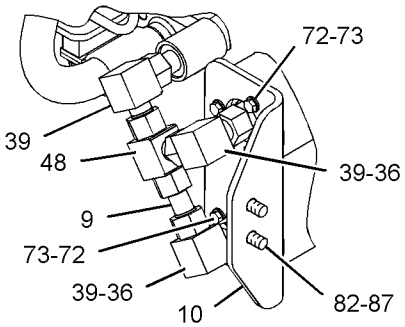


VIEW OF AREA A

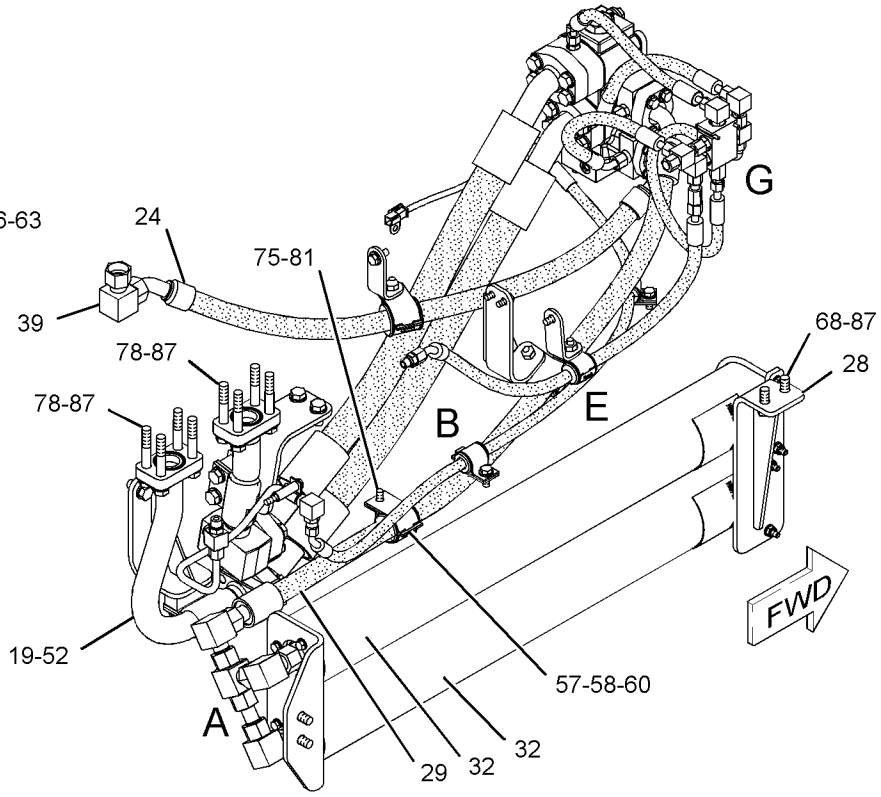


GRAPHIC #1

g01229600

*254-6063* **CONTROL & LINES GP-RIDE** *(contd.)* **i02715941**

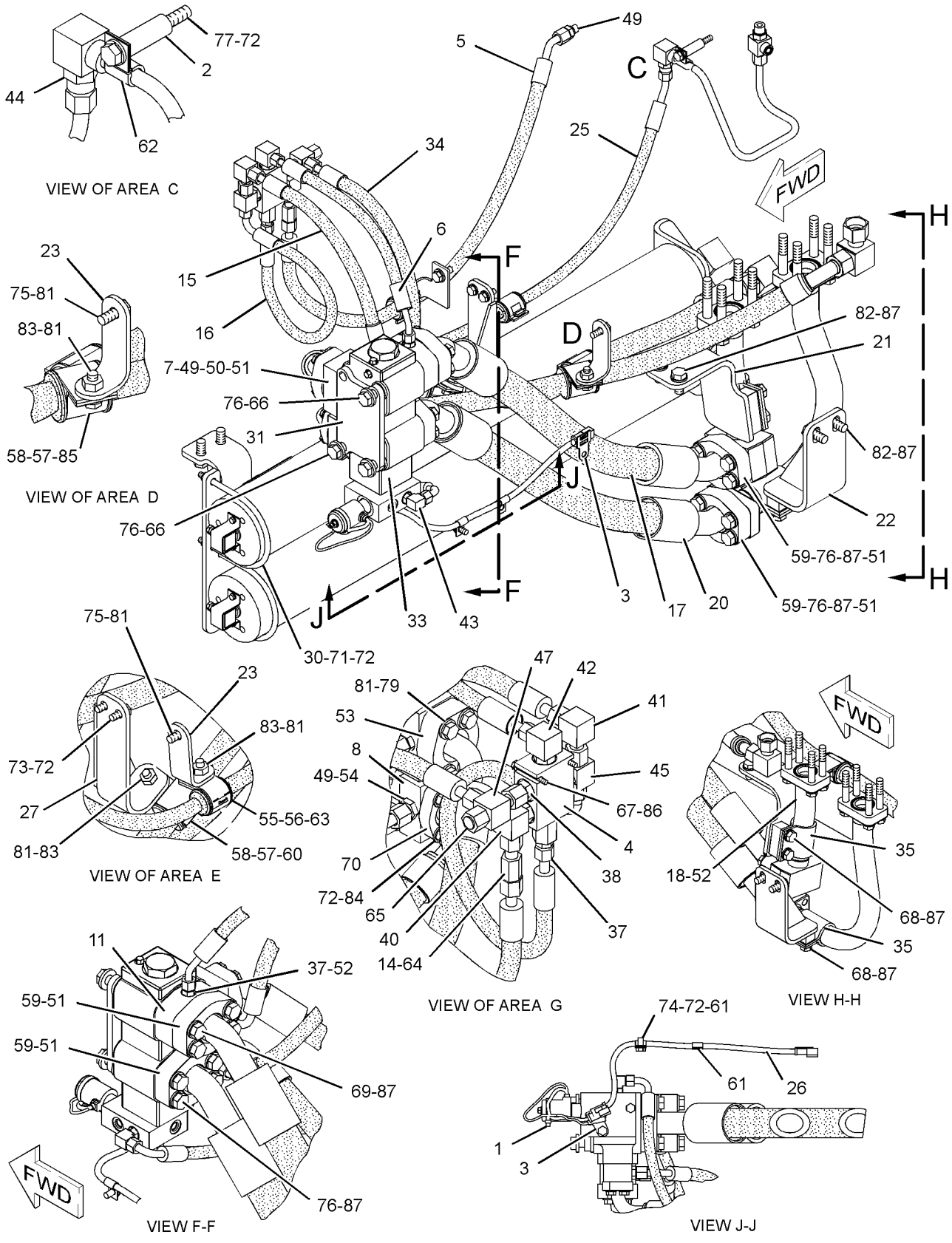


GRAPHIC #2 **<END>** g01229601

# HYDRAULIC SYSTEM

## *254-6062* CONTROL AR-RIDE

**S/N: BXY1-UP**
**AN ATTACHMENT**

**SMCS-5004** **i02224631**

| NOTE | PART NUMBER | QTY | PART NAME 1 2 3 4 5 6 (PRODUCT LEVEL) | SEE PAGE |
|---|---|---|---|---|
| Y | *254-6063* | 1 | CONTROL & LINES GP-RIDE | 1062 |
| Y | *219-5066* | 1 | GUARD GP-BOTTOM | 677 |
| Y | *219-4977* | 1 | HARDWARE GP-REAR FRAME | 701 |
| Y | *261-0416* | 1 | SWITCH GP-RIDE CONTROL | 333 |

Y-SEPARATE ILLUSTRATION

**<END>**

# HYDRAULIC SYSTEM

## *164-0058* COOLER GP-HYDRAULIC OIL

**S/N: BXY1-UP**

**PART OF 225-5432, 284-2735 CHASSIS AR**

**SMCS-1374** **i01646246**

| NOTE | REF NO | GRAPHIC REF | PART NUMBER | QTY | PART NAME 1 2 3 4 5 6 (PRODUCT LEVEL) | SEE PAGE |
|---|---|---|---|---|---|---|
| | 1 | 1 | **1M-6298** | 4 | CLAMP-MOUNTING | |
| | 2 | 1 | **1P-5411** | 2 | SLEEVE | |
| | 3 | 1 | **1P-5412** | 4 | BUSHING-TERMINAL | |
| | 4 | 1 | **3H-8726** | 2 | MOUNT AS | |
| | 5 | 1 | **4S-8875** | 2 | SPACER (22.63-MM THK) | |
| | 6 | 1 | **204-2640** | 1 | CORE AS-HYDRAULIC OIL COOLER | |
| | 7 | 1 | **7X-0590** | 2 | WASHER-HARD (13.5X44.5X6-MM THK) | |
| M | 8 | 1 | **7X-2549** | 2 | BOLT (M12X1.75X100-MM) | |
| | 9 | 1 | **8T-4121** | 8 | WASHER-HARD (11X21X2.5-MM THK) | |
| M | 10 | 1 | **8T-4172** | 6 | BOLT (M10X1.5X80-MM) | |
| M | 11 | 1 | **8T-4194** | 2 | BOLT (M12X1.75X50-MM) | |
| | 12 | 1 | **8T-4223** | 4 | WASHER-HARD (13.5X25.5X3-MM THK) | |
| M | 13 | 1 | **8T-4244** | 2 | NUT (M12X1.75-THD) | |
| I | 14 | 1 | **204-0341** | 1 | HOSE AS | |
| | 15 | 1 | *148-8327* | 1 | CONNECTOR AS | |
| | | 1 | **3D-2824** | 1 | SEAL-O-RING | |
| | | 1 | **6V-8637** | 1 | CONNECTOR | |
| | | 1 | **6V-9746** | 1 | SEAL-O-RING | |
| | 16 | 1 | *148-8347* | 1 | ELBOW AS | |
| | | 1 | **3D-2824** | 1 | SEAL-O-RING | |
| | | 1 | **6V-9007** | 1 | ELBOW | |
| | | 1 | **6V-9746** | 1 | SEAL-O-RING | |
| | 17 | 1 | **4S-4455** | 2 | CLIP | |
| M | 18 | 1 | **8T-4137** | 2 | BOLT (M10X1.5X20-MM) | |

I-REFER TO HYDRAULIC INFORMATION SYSTEM
M-METRIC PART

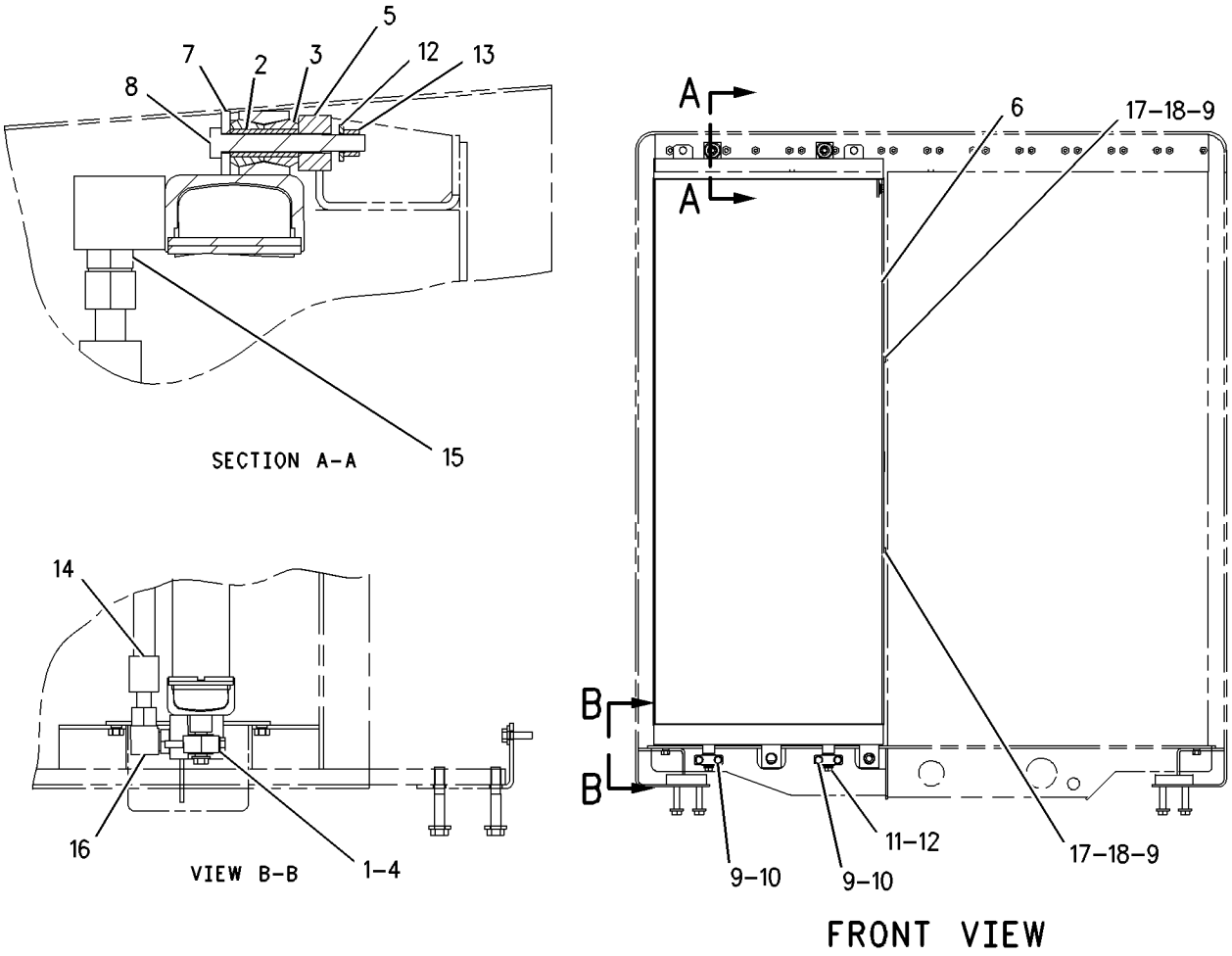


GRAPHIC #1 **<END>** g00814585

# HYDRAULIC SYSTEM

## *138-3911* COVER GP-HYDRAULIC TANK CAP

**S/N: BXY1900-UP**
**PART OF 204-6287 TANK GP-HYDRAULIC**
**AN ATTACHMENT**

**SMCS-5056, 7315** **i01268836**

| NOTE | REF NO | GRAPHIC REF | PART NUMBER | QTY | PART NAME 1 2 3 4 5 6 (PRODUCT LEVEL) | SEE PAGE |
|---|---|---|---|---|---|---|
| | 1 | 1 | **138-3909** | 1 | COVER AS | |
| M | | 1 | **8T-4219** | 2 | STUD-WELD (M10X1.5X17.5-MM) | |
| | 2 | 1 | **1U-2827** | 1 | GUIDE-VALVE | |
| | 3 | 1 | **6V-5839** | 2 | WASHER (11X21X2.5-MM THK) | |
| M | 4 | 1 | **6V-7744** | 2 | LOCKNUT (M10X1.15-THD) | |
| | 5 | 1 | **7B-3039** | 1 | SPRING | |
| | 6 | 1 | **8J-8782** | 1 | BODY-DRAIN VALVE | |
| | 7 | 1 | **8J-8783** | 1 | VALVE | |
| | 8 | 1 | **8T-3298** | 1 | SEAL-RECTANGULAR | |

M-METRIC PART

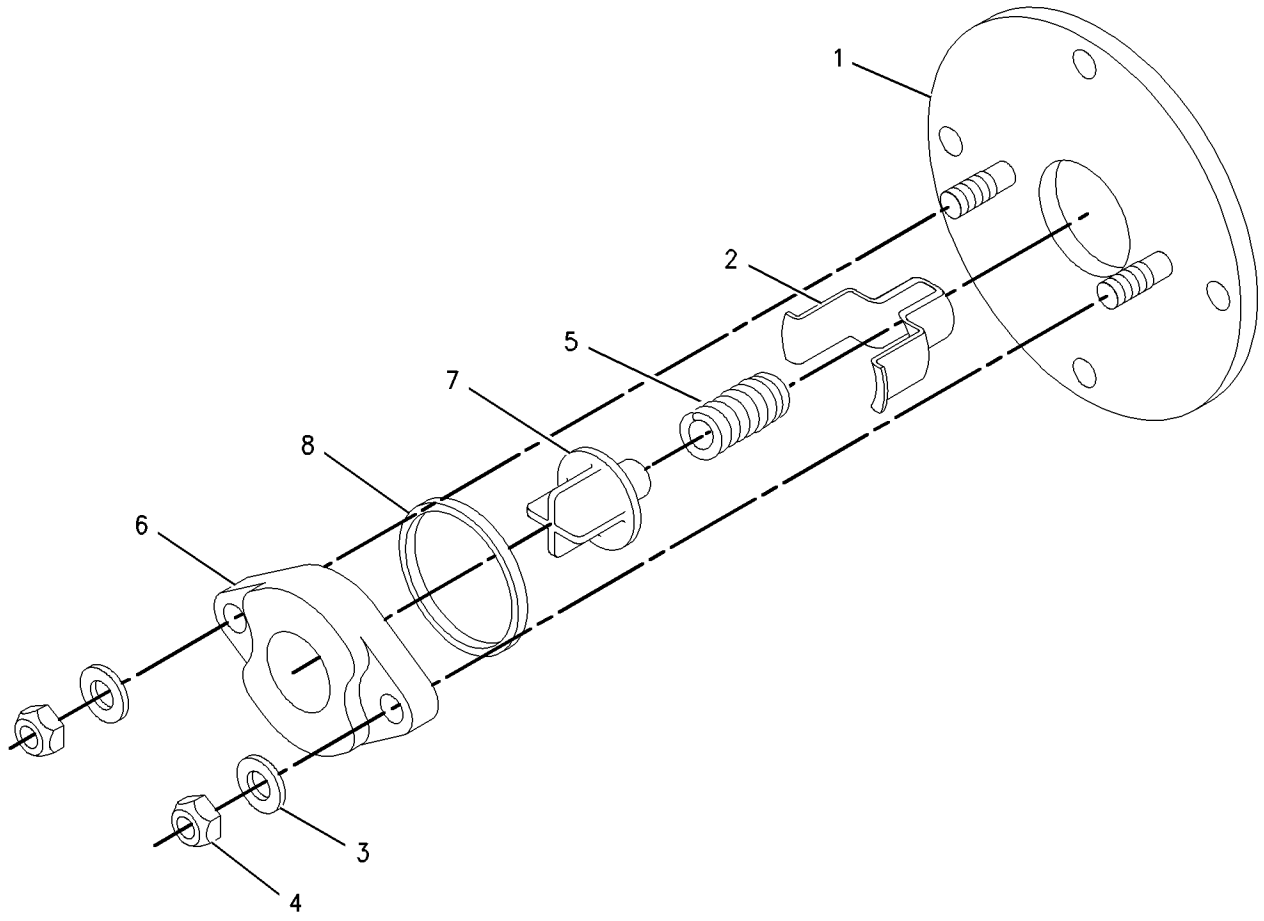


GRAPHIC #1 **<END>** g00674130

# *261-1516* CYLINDER & SENSOR GP–LIFT, TILT

**S/N: BXY1900-UP**
**PART OF 2Q-8733 STEEL MILL AR**
**AN ATTACHMENT**

**SMCS-5102, 5104, 5736** **i02730813**

| NOTE | REF NO | GRAPHIC REF | PART NUMBER | QTY | PART NAME 1 2 3 4 5 6 (PRODUCT LEVEL) | SEE PAGE |
|---|---|---|---|---|---|---|
| | 1 | 1 | **227-3315** | 1 | BRACKET AS | |
| | 2 | 1 | **227-3316** | 1 | BRACKET | |
| Y | 3 | 1 | **230-7913** | 1 | CYLINDER & SENSOR GP-TILT | 1076 |
| Y | 4 | 1 | **230-7914** | 1 | CYLINDER & SENSOR GP-LIFT (RH) | 1074 |
| | 5 | 2 | **261-1517** | 1 | HARNESS AS-SENSOR (LIFT POSITION, TILT POSITION) | |
| | | 2 | **102-8805** | 2 | KIT-RECEPTACLE (6-PIN) | |
| | | | | | (KIT INCLUDES RECEPTACLE AS AND WEDGE) | |
| | | 2 | **155-2271** | 2 | KIT-CONNECTING PLUG (4-PIN) | |
| | | | | | (KIT INCLUDES PLUG AS AND WEDGE) | |
| | 6 | 2 | **115-3071** | 1 | CLIP AS-CONNECTOR (6-PIN) | |
| | 7 | 1 | **156-4403** | 1 | U-BOLT | |
| | 8 | 2 | **5P-4295** | 1 | CLIP | |
| | 9 | 1,2 | **6D-4246** | 16 | CLIP | |
| | 10 | 1,2 | **8T-4121** | 12 | WASHER-HARD (11X21X2.5-MM THK) | |
| M | 11 | 1 | **8T-4133** | 1 | NUT (M10X1.5-THD) | |
| M | 12 | 1,2 | **8T-4137** | 11 | BOLT (M10X1.5X20-MM) | |
| M | 13 | 2 | **8T-4179** | 1 | BOLT (M12X1.75X20-MM) | |
| | 14 | 1,2 | **8T-4223** | 5 | WASHER-HARD (13.5X25.5X3-MM THK) | |
| M | 15 | 1 | **8T-4244** | 2 | NUT (M12X1.75-THD) | |
| E | 16 | 1 | **2Q-0604** | | INSULATION (223.5-CM) | |
| E | 16A | 2 | **2Q-0604** | | INSULATION (346-CM) | |

E-ORDER BY THE CENTIMETER
M-METRIC PART
Y-SEPARATE ILLUSTRATION

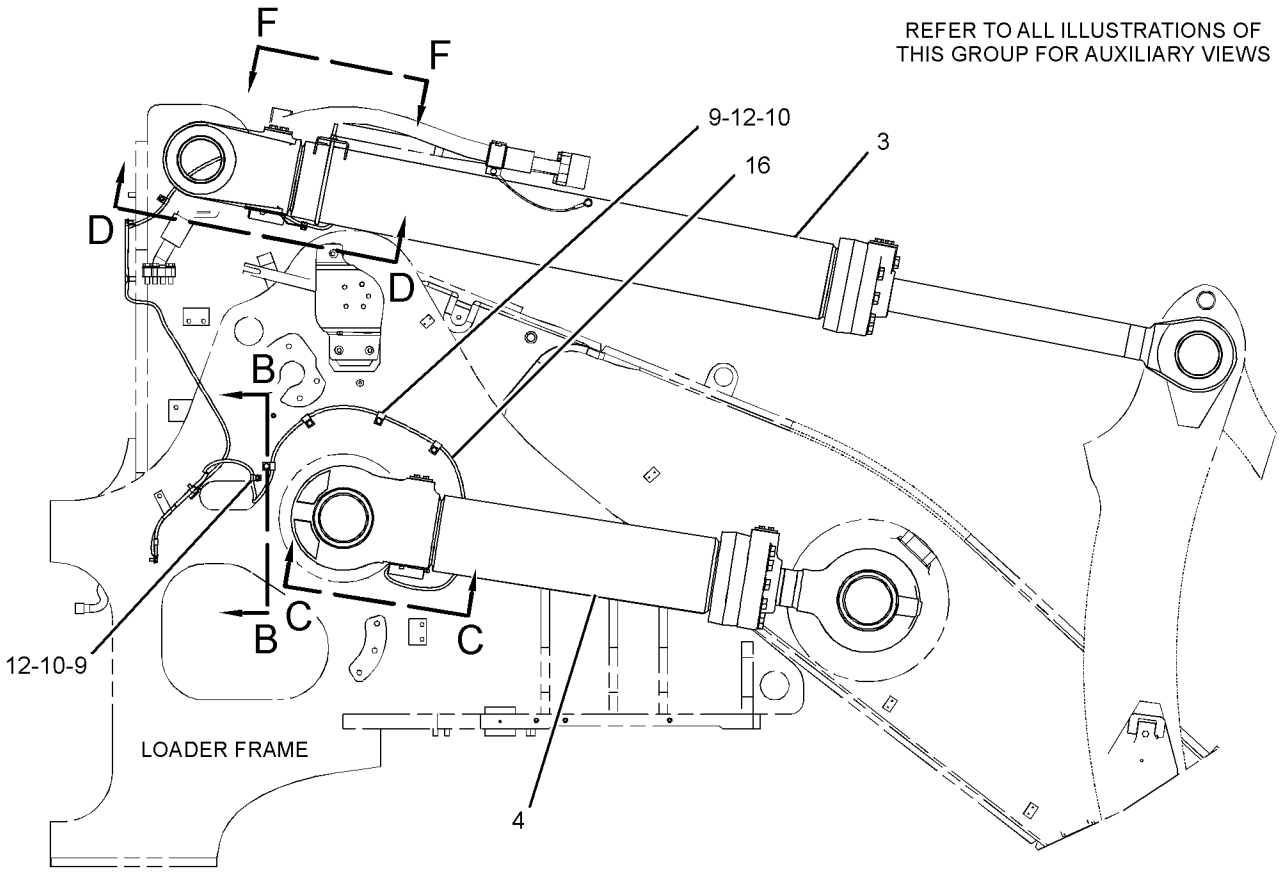


RIGHT SIDE VIEW

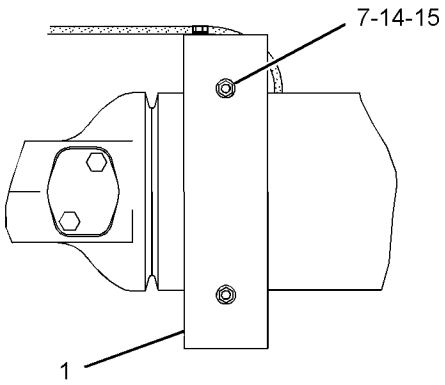


VIEW F-F

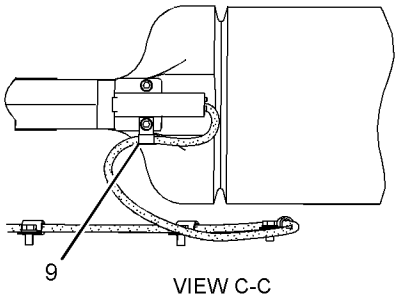


VIEW C-C

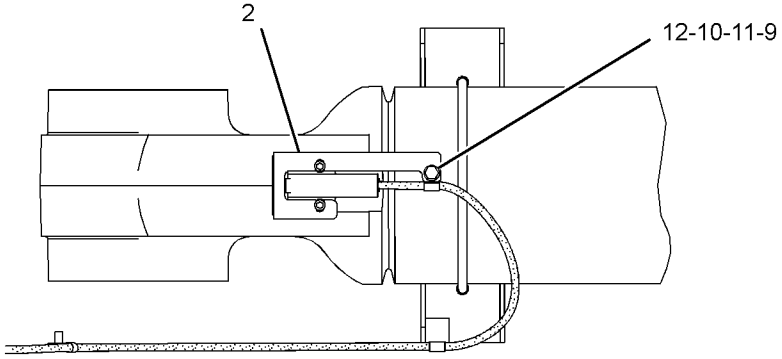


VIEW D-D

GRAPHIC #1 g01371502

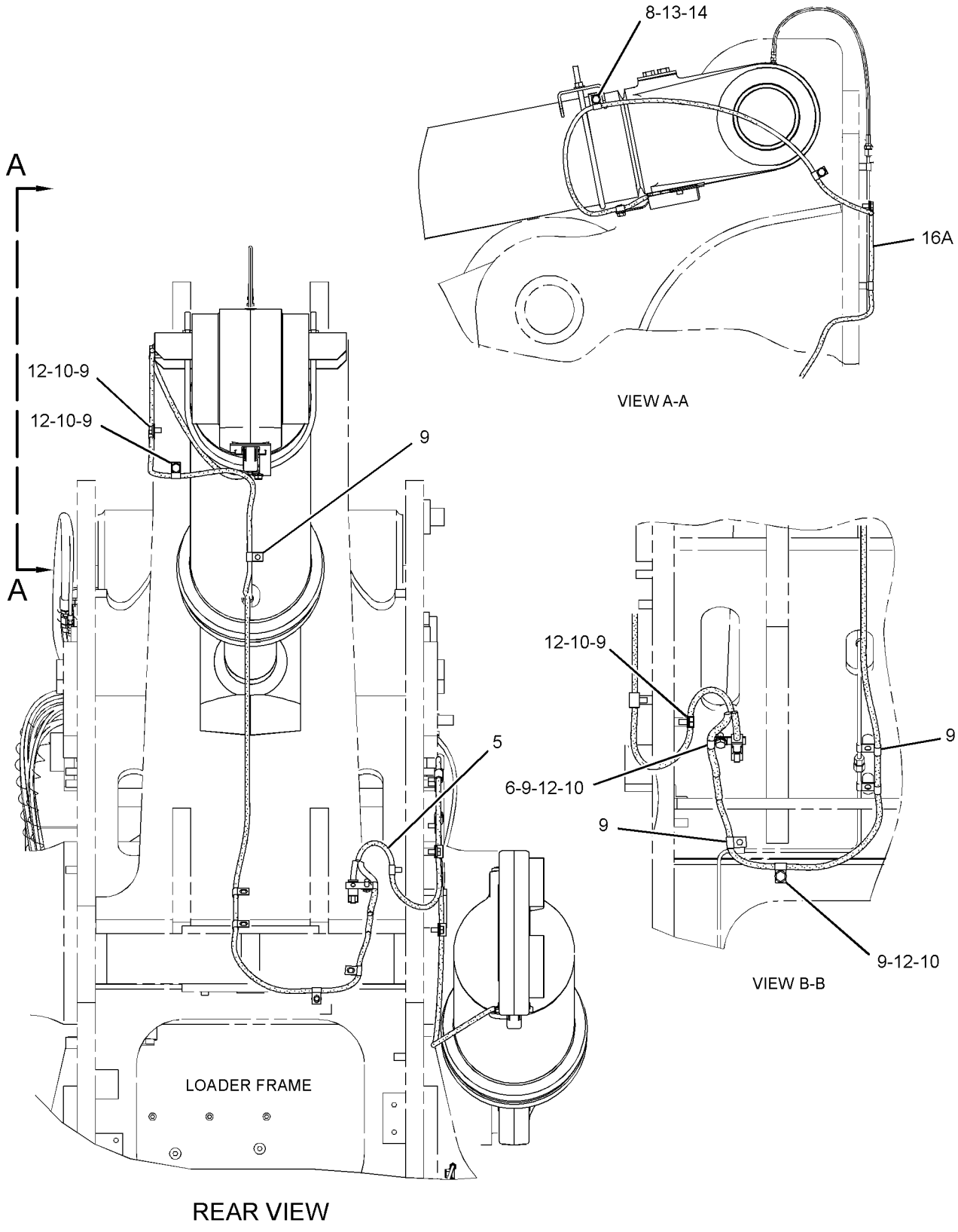


GRAPHIC #2 **<END>** g01371503

# HYDRAULIC SYSTEM

## *230-7914* CYLINDER & SENSOR GP-LIFT–RH

**S/N: BXY1900-UP**
**220-MM BORE X 911-MM STROKE**
**PART OF 261-1516 CYLINDER & SENSOR GP**
**AN ATTACHMENT**

**SMCS-5102, 5736** **i02406276**

| NOTE | REF NO | GRAPHIC REF | PART NUMBER | QTY | PART NAME 1 2 3 4 5 6 (PRODUCT LEVEL) | SEE PAGE |
|---|---|---|---|---|---|---|
| | 2 | 1 | **173-8614** | 1 | HEAD | |
| | | 1 | **225-3290** | 1 | SEAL-WIPER | |
| | 3 | 1 | **212-0907** | 1 | PLATE-CONNECTOR | |
| | 4 | 1 | **214-1639** | 1 | MAGNET | |
| | 5 | 1 | **188-2199** | 1 | SEAL-O-RING | |
| | 6 | 1 | **217-5073** | 1 | CYLINDER AS-LIFT | |
| | | 1 | **4S-5565** | 3 | BOLT (3/8-16X0.875-IN) | |
| M | | 1 | **6A-5591** | 2 | BOLT (M12X1.75X25-MM) | |
| | | 1 | **7J-7366** | 1 | GASKET | |
| | | 1 | **7J-7367** | 1 | COVER | |
| | | 1 | **217-5074** | 1 | CAP AS | |
| | | 1 | **095-0879** | 1 | PIN-SPRING | |
| | | 1 | **152-3750** | 1 | BEARING | |
| | 7 | 1 | **217-6567** | 1 | SENSOR GP-POSITION (LIFT) | |
| | 8 | 1 | **217-8763** | 1 | COVER-PROTECTION | |
| | 9 | 1 | **243-3177** | 1 | RETAINER | |
| J | 10 | 1 | **230-0877** | 1 | PISTON | |
| | 11 | 1 | **230-9985** | 1 | ROD AS | |
| | | 1 | **152-3750** | 1 | BEARING | |
| | 12 | 1 | **102-8804** | 1 | KIT-RECEPTACLE (4-PIN) | |
| | | | | | INCLUDES RECEPTACLE AND WEDGE | |
| | 13 | 1 | **108-0122** | 1 | RING-BACKUP | |
| | 14 | 1 | **167-2222** | 1 | SEAL AS-BUFFER | |
| | 15 | 1 | **167-2339** | 1 | SEAL-U-CUP | |
| | 16 | 1 | **215-1942** | 1 | RING-BACKUP | |
| J | 17 | 1 | **219-1438** | 1 | SEAL AS | |
| | | | | | (FOR USE ON PISTON WITH 15.98-MM WIDE SEAL GROOVE) | |
| | | | | | –OR– | |
| J | | 1 | **192-1425** | 1 | SEAL AS | |
| | | | | | (FOR USE ON PISTON WITH 9.63-MM WIDE SEAL GROOVE) | |
| | 18 | 1 | **225-3290** | 1 | SEAL-WIPER | |
| | 19 | 1 | **3V-2431** | 2 | WASHER (10.2X16X2-MM THK) | |
| | 20 | 1 | **4S-5565** | 2 | BOLT (3/8-16X0.875-IN) | |
| | 21 | 1 | **6E-0496** | 1 | RING-WEAR | |
| | 22 | 1 | **6V-8237** | 11 | WASHER (26X44X4-MM THK) | |
| M | 23 | 1 | **8T-0668** | 11 | BOLT (M24X3X110-MM) | |
| | 24 | 1 | **8T-3331** | 1 | RING-WEAR | |
| | 25 | 1 | **8T-5070** | 1 | SETSCREW-SOCKET (3/8-16X0.5-IN) | |
| | 26 | 1 | **8T-8737** | 1 | PLUG-SEAL | |
| | 27 | 1 | **9M-5894** | 1 | SEAL-O-RING | |
| | 28 | 1 | **9X-6017** | 1 | LOCKNUT | |
| E | 29 | 1 | **9X-1386** | | SLEEVE (23-CM) | |

E-ORDER BY THE CENTIMETER
J-SEAL MARKED J IS REQUIRED FOR PISTON MARKED J
M-METRIC PART

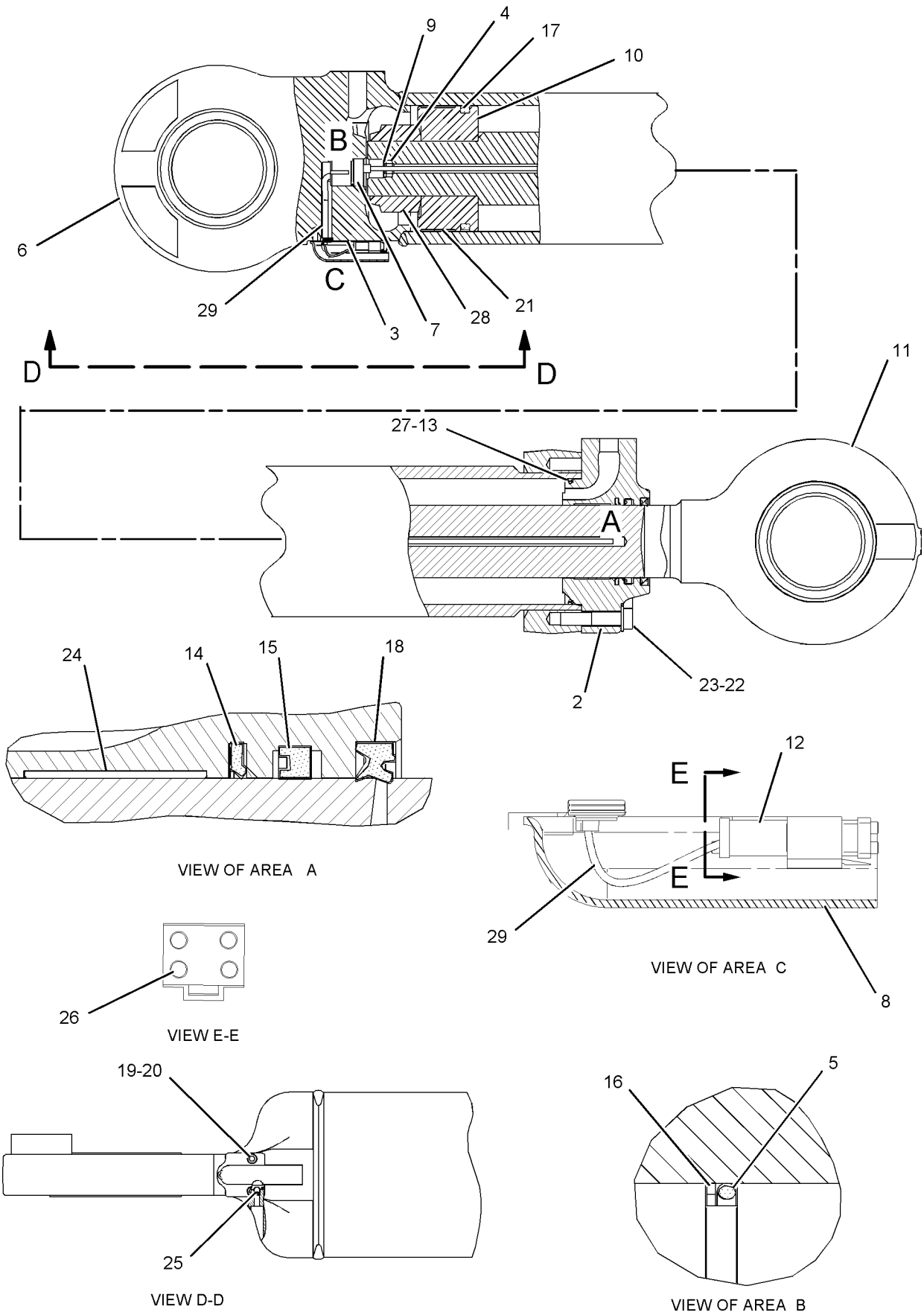


GRAPHIC #1 **<END>** g01016165

# HYDRAULIC SYSTEM

## 230-7913 CYLINDER & SENSOR GP-TILT

**S/N: BXY1900-UP**

**PART OF 261-1516 CYLINDER & SENSOR GP**

**AN ATTACHMENT**

**SMCS-5104, 5736** **i02322119**

| NOTE | REF NO | GRAPHIC REF | PART NUMBER | QTY | PART NAME 1 2 3 4 5 6 (PRODUCT LEVEL) | SEE PAGE |
|---|---|---|---|---|---|---|
| | 2 | 1 | **212-0907** | 1 | PLATE-CONNECTOR | |
| | 3 | 1 | **214-1639** | 1 | MAGNET | |
| | 4 | 1 | **188-2199** | 1 | SEAL-O-RING | |
| | 5 | 1 | **217-6566** | 1 | SENSOR GP-POSITION (TILT) | |
| | 6 | 1 | **217-8763** | 1 | COVER-PROTECTION | |
| | 7 | 1 | **243-3177** | 1 | RETAINER | |
| | 8 | 1 | **218-9733** | 1 | CYLINDER AS-TILT | |
| | | 1 | **218-9732** | 1 | CAP AS | |
| | | 1 | **095-0879** | 1 | PIN-SPRING | |
| | | 1 | **152-3739** | 2 | BEARING-SLEEVE | |
| J | 9 | 1 | **230-0877** | 1 | PISTON | |
| | 10 | 1 | **230-0915** | 1 | ROD AS | |
| | | 1 | **152-3739** | 2 | BEARING-SLEEVE | |
| | 11 | 1 | **231-1960** | 1 | HEAD | |
| | 12 | 1 | **102-8804** | 1 | KIT-RECEPTACLE (4-PIN) | |
| | | | | | (INCLUDES RECEPTACLE AS AND WEDGE) | |
| | 13 | 1 | **108-0122** | 1 | RING-BACKUP | |
| | 14 | 1 | **167-2220** | 1 | SEAL AS-BUFFER | |
| | 15 | 1 | **167-2440** | 1 | SEAL AS | |
| | 16 | 1 | **215-1942** | 1 | RING-BACKUP | |
| J | 17 | 1 | **219-1438** | 1 | SEAL AS | |
| | | | | | (FOR USE ON PISTON WITH 15.98-MM WIDE SEAL GROOVE) | |
| | | | | | —OR— | |
| J | | 1 | **192-1425** | 1 | SEAL AS | |
| | | | | | (FOR USE ON PISTON WITH 9.63-MM WIDE SEAL GROOVE) | |
| | 18 | 1 | **225-3289** | 1 | SEAL-WIPER | |
| | 19 | 1 | **3V-2431** | 2 | WASHER (10.2X16X2-MM THK) | |
| | 20 | 1 | **4S-5565** | 2 | BOLT (3/8-16X0.875-IN) | |
| | 21 | 1 | **6E-0496** | 1 | RING-WEAR | |
| | 22 | 1 | **6V-8237** | 12 | WASHER (26X44X4-MM THK) | |
| M | 23 | 1 | **8T-0666** | 10 | BOLT (M24X3X90-MM) | |
| M | 24 | 1 | **8T-0669** | 2 | BOLT (M24X3X130-MM) | |
| | 25 | 1 | **8T-5070** | 1 | SETSCREW-SOCKET (3/8-16X0.5-IN) | |
| | 26 | 1 | **8T-8737** | 1 | PLUG-SEAL | |
| | 27 | 1 | **9M-5894** | 1 | SEAL-O-RING | |
| | 28 | 1 | **9X-3579** | 1 | RING-WEAR | |
| | 29 | 1 | **9X-6017** | 1 | LOCKNUT | |
| E | 30 | 1 | **9X-1386** | | SLEEVE (23CM) | |

E-ORDER BY THE CENTIMETER
J-SEAL MARKED J IS REQUIRED FOR PISTON MARKED J
M-METRIC PART

**230-7913 CYLINDER & SENSOR GP-TILT** *(contd.)* **i02322119**

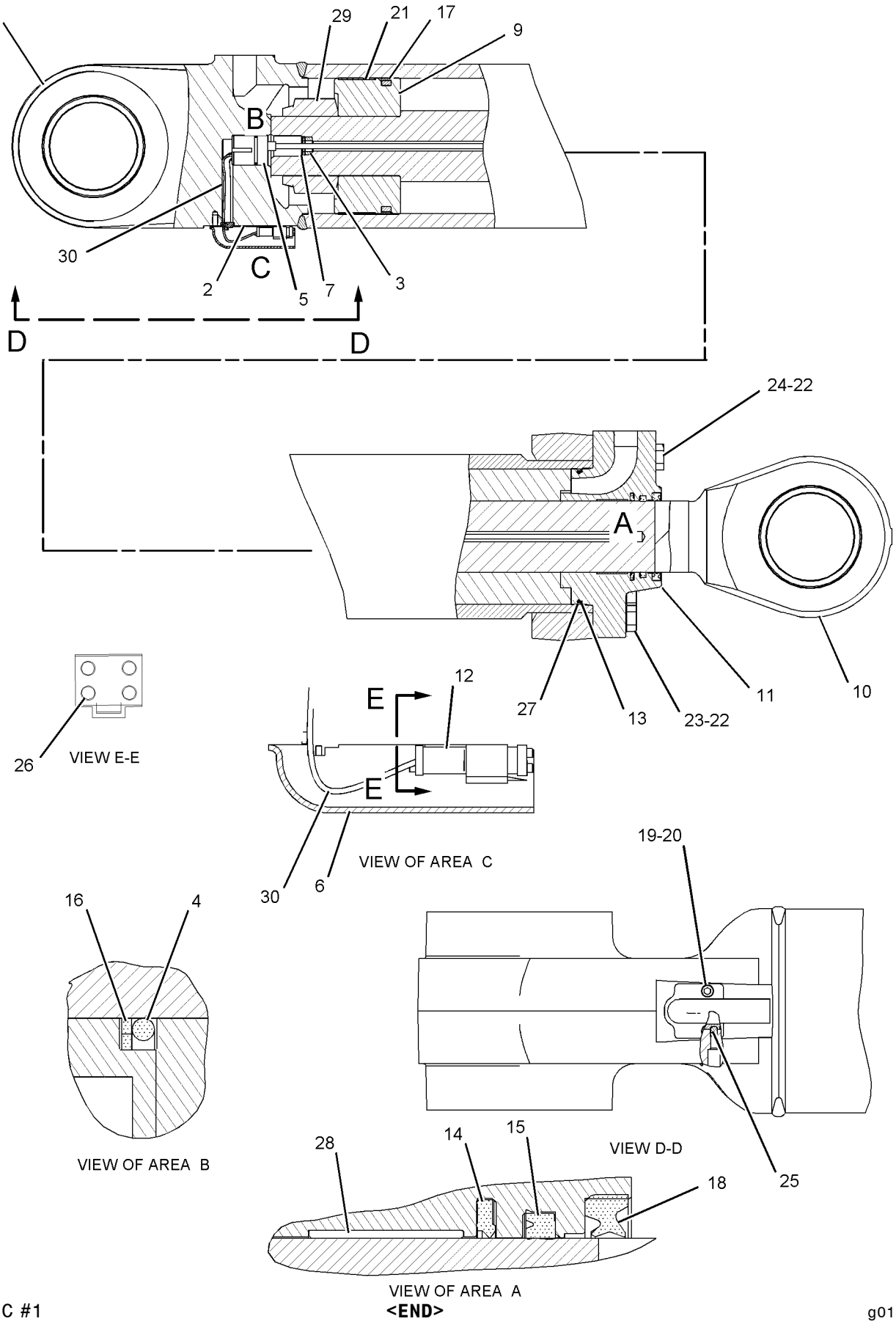


GRAPHIC #1

**<END>**

g01016308

# HYDRAULIC SYSTEM

## 173-8612 CYLINDER GP-LIFT–RH

**S/N: BXY1-UP**
**220MM BORE X 911MM STROKE**
**PART OF 132-6136 LINES GP-LIFT CYLINDER**

**SMCS-5102** **i02375318**

| NOTE | REF NO | GRAPHIC REF | PART NUMBER | QTY | PART NAME 1 2 3 4 5 6 (PRODUCT LEVEL) | SEE PAGE |
|---|---|---|---|---|---|---|
| | 1 | 1 | **173-8615** | 1 | CYLINDER AS | |
| | 1A | 1 | **152-3750** | 1 | BEARING | |
| | 2 | 1 | **7J-9250** | 1 | LOCKNUT (3-1/4X12-THD) | |
| | 3 | 1 | **6E-0496** | 1 | RING-WEAR | |
| | 4 | 1 | **219-1438** | 1 | SEAL AS | |
| | 5 | 1 | **276-0478** | 1 | PISTON | |
| | 6 | 1 | **9M-5894** | 1 | SEAL-O-RING | |
| | 7 | 1 | **108-0122** | 1 | RING-BACKUP | |
| | 8 | 1 | **173-8614** | 1 | HEAD | |
| | 9 | 1 | **135-7816** | 1 | ROD AS | |
| | | 1 | **152-3750** | 1 | BEARING | |
| | 10 | 1 | **225-3290** | 1 | SEAL-WIPER | |
| | 11 | 1 | **167-2339** | 1 | SEAL-U-CUP | |
| | 12 | 1 | **167-2222** | 1 | SEAL AS-BUFFER | |
| | 13 | 1 | **8T-3331** | 1 | RING-WEAR | |
| M | 14 | 1 | **8T-0668** | 11 | BOLT (M24X3X110-MM) | |
| | 15 | 1 | **6V-8237** | 11 | WASHER (26X44X4-MM THK) | |

M-METRIC PART

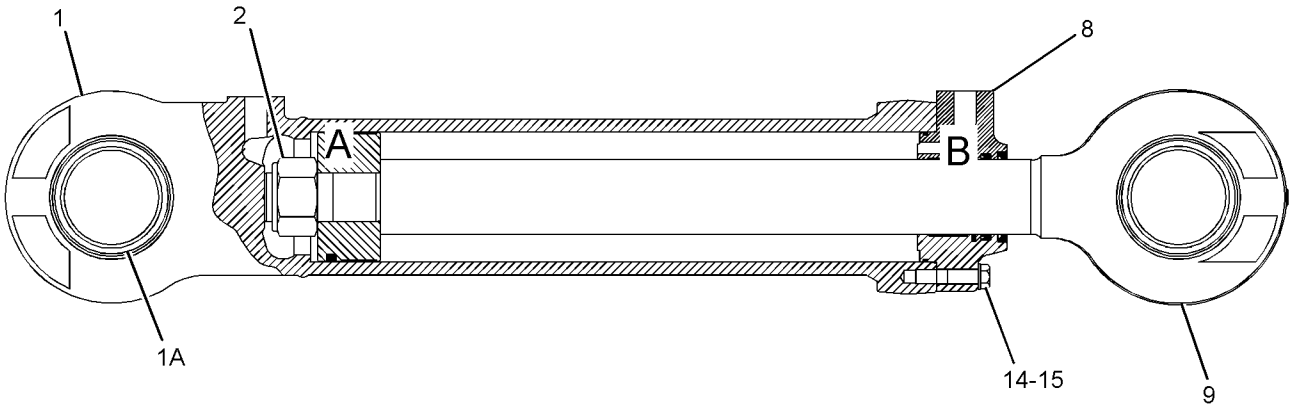


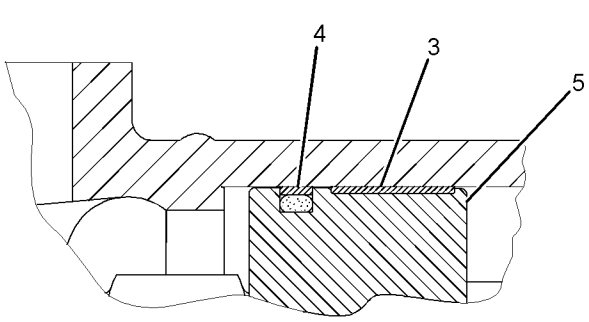


VIEW OF AREA A

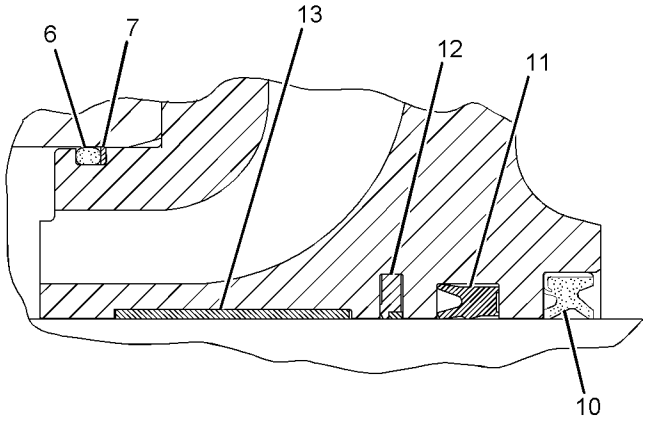


VIEW OF AREA B

GRAPHIC #1 **<END>** g01021002

# 173-8613 CYLINDER GP-LIFT–LH

**S/N: BXY1-UP**
**220MM BORE X 911MM STROKE**
**PART OF 132-6136 LINES GP-LIFT CYLINDER**

**SMCS-5102** **i02375189**

| NOTE | REF NO | GRAPHIC REF | PART NUMBER | QTY | PART NAME 1 2 3 4 5 6 (PRODUCT LEVEL) | SEE PAGE |
|---|---|---|---|---|---|---|
| | 1 | 1 | **173-8616** | 1 | CYLINDER AS | |
| | 1A | 1 | **152-3750** | 1 | BEARING | |
| | 2 | 1 | **7J-9250** | 1 | LOCKNUT (3-1/4X12-THD) | |
| | 3 | 1 | **6E-0496** | 1 | RING-WEAR | |
| | 4 | 1 | **219-1438** | 1 | SEAL AS | |
| | 5 | 1 | **276-0478** | 1 | PISTON | |
| | 6 | 1 | **9M-5894** | 1 | SEAL-O-RING | |
| | 7 | 1 | **108-0122** | 1 | RING-BACKUP | |
| | 8 | 1 | **173-8614** | 1 | HEAD | |
| | 9 | 1 | **135-7816** | 1 | ROD AS | |
| | | 1 | **152-3750** | 1 | BEARING | |
| | 10 | 1 | **225-3290** | 1 | SEAL-WIPER | |
| | 11 | 1 | **167-2339** | 1 | SEAL-U-CUP | |
| | 12 | 1 | **167-2222** | 1 | SEAL AS-BUFFER | |
| | 13 | 1 | **8T-3331** | 1 | RING-WEAR | |
| M | 14 | 1 | **8T-0668** | 11 | BOLT (M24X3X110-MM) | |
| | 15 | 1 | **6V-8237** | 11 | WASHER (26X44X4-MM THK) | |

M-METRIC PART

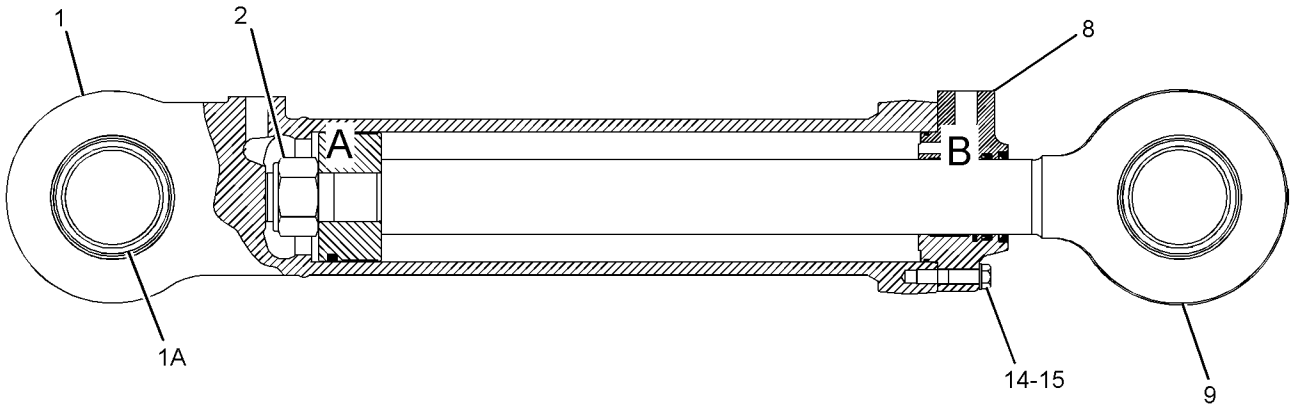


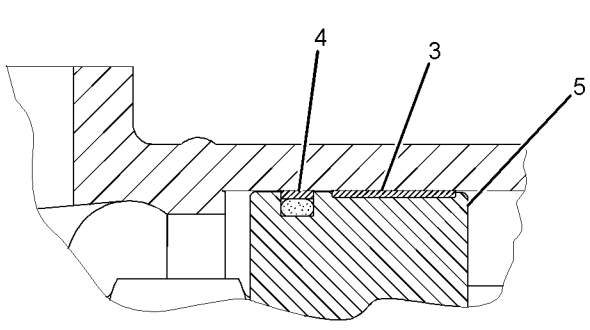


VIEW OF AREA A

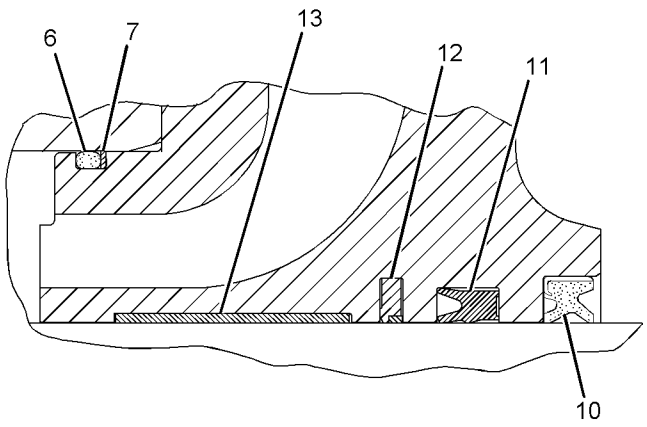


VIEW OF AREA B

GRAPHIC #1 **<END>** g01020962

# HYDRAULIC SYSTEM

## 231-1955 CYLINDER GP-TILT

**S/N: BXY1-UP**
**220-MM BORE X 1770-MM STROKE**
**PART OF 156-5519 LINES GP-TILT CYLINDER**
**AN ATTACHMENT**

**SMCS-5104** **i02173243**

| NOTE | REF NO | GRAPHIC REF | PART NUMBER | QTY | PART NAME 1 2 3 4 5 6 (PRODUCT LEVEL) | SEE PAGE |
|---|---|---|---|---|---|---|
| | 1 | 1 | **136-1082** | 1 | PISTON | |
| | 2 | 1 | **152-1646** | 1 | ROD AS | |
| | | 1 | **152-3739** | 2 | BEARING-SLEEVE | |
| | 3 | 1 | **231-1957** | 1 | CYLINDER AS | |
| | | 1 | **152-3739** | 2 | BEARING-SLEEVE | |
| | 4 | 1 | **231-1960** | 1 | HEAD | |
| | 5 | 1 | **108-0122** | 1 | RING-BACKUP | |
| | 6 | 1 | **167-2220** | 1 | SEAL AS-BUFFER | |
| | 7 | 1 | **167-2440** | 1 | SEAL AS | |
| | 8 | 1 | **192-1425** | 1 | SEAL AS | |
| | 9 | 1 | **225-3289** | 1 | SEAL-WIPER | |
| | 10 | 1 | **6E-0496** | 1 | RING-WEAR | |
| | 11 | 1 | **6V-8237** | 12 | WASHER (26X44X4-MM THK) | |
| | 12 | 1 | **7J-9250** | 1 | LOCKNUT (3-1/4X12-THD) | |
| M | 13 | 1 | **8T-0666** | 10 | BOLT (M24X3X90-MM) | |
| M | 14 | 1 | **8T-0669** | 2 | BOLT (M24X3X130-MM) | |
| | 15 | 1 | **9M-5894** | 1 | SEAL-O-RING | |
| | 16 | 1 | **9X-3579** | 1 | RING-WEAR | |

M-METRIC PART

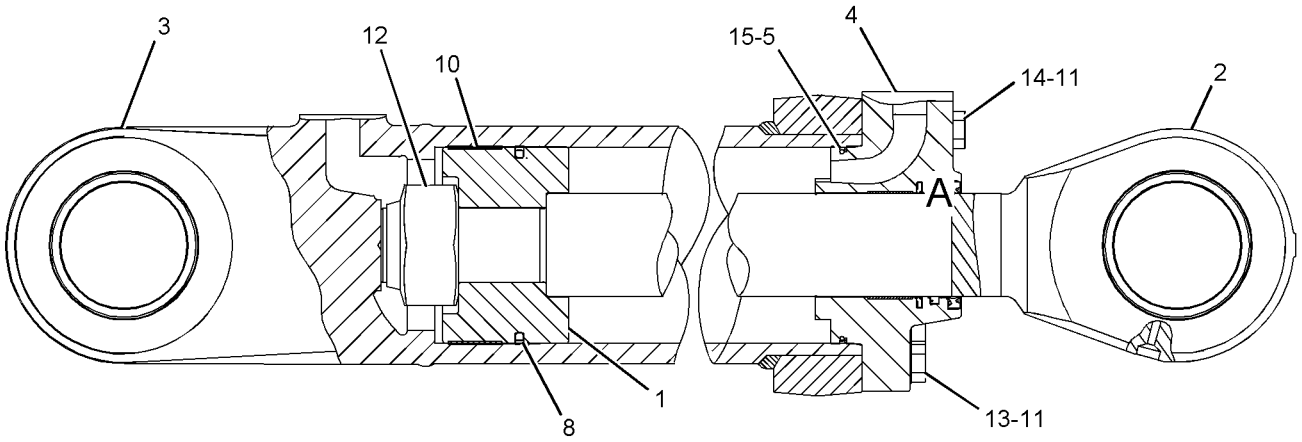


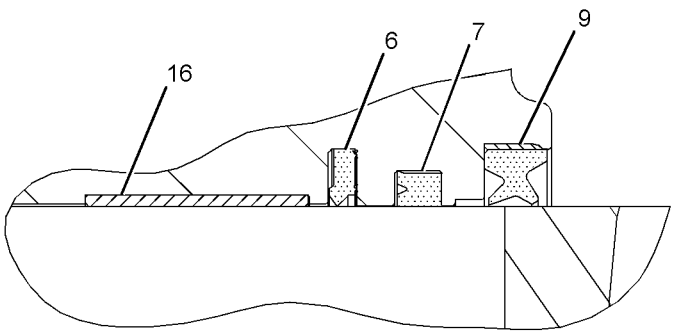


VIEW OF AREA A

GRAPHIC #1 **<END>** g01111070

# 271-6441 CYLINDER GP-TILT

**S/N: BXY1-UP**

**PART OF 246-6921 LINES GP-TILT CYLINDER**

**AN ATTACHMENT**

**SMCS-5104** **i02457362**

| NOTE | REF NO | GRAPHIC REF | PART NUMBER | QTY | PART NAME 1 2 3 4 5 6 (PRODUCT LEVEL) | SEE PAGE |
|---|---|---|---|---|---|---|
| | 1 | 1 | **231-1960** | 1 | HEAD | |
| | 2 | 1 | **253-2596** | 1 | PISTON | |
| | 3 | 1 | **254-3214** | 1 | ROD AS | |
| | | 1 | **152-3739** | 2 | BEARING-SLEEVE | |
| | 4 | 1 | **271-6442** | 1 | CYLINDER AS | |
| | | 1 | **152-3739** | 2 | BEARING-SLEEVE | |
| | 5 | 1 | **108-0122** | 1 | RING-BACKUP | |
| | 6 | 1 | **167-2220** | 1 | SEAL AS-BUFFER | |
| | 7 | 1 | **167-2336** | 1 | SEAL-U-CUP | |
| | 8 | 1 | **192-1425** | 1 | SEAL AS | |
| | 9 | 1 | **225-3289** | 1 | SEAL-WIPER | |
| | 10 | 1 | **6E-0496** | 1 | RING-WEAR | |
| | 11 | 1 | **6V-8237** | 12 | WASHER (26X44X4-MM THK) | |
| | 12 | 1 | **7J-9250** | 1 | LOCKNUT (3-1/4X12-THD) | |
| M | 13 | 1 | **8T-0666** | 10 | BOLT (M24X3X90-MM) | |
| M | 14 | 1 | **8T-0669** | 2 | BOLT (M24X3X130-MM) | |
| | 15 | 1 | **9M-5894** | 1 | SEAL-O-RING | |
| | 16 | 1 | **9X-3579** | 1 | RING-WEAR | |

M-METRIC PART

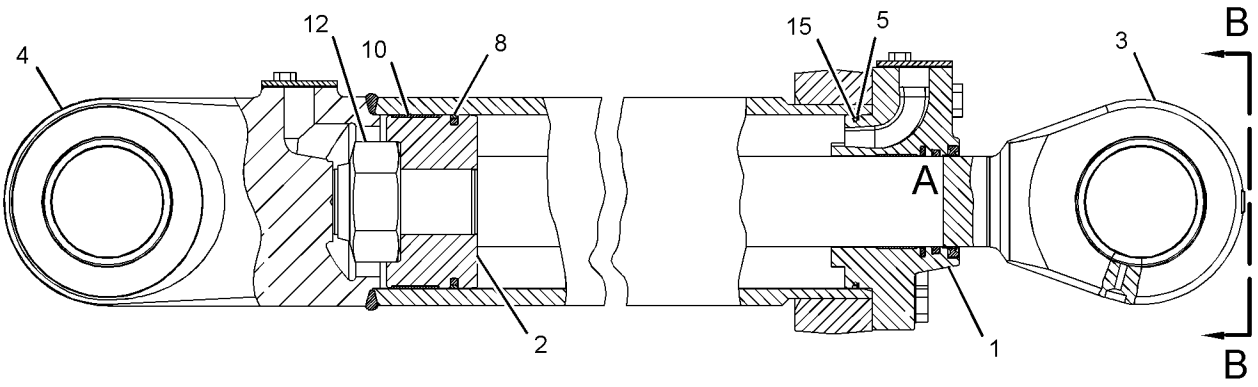


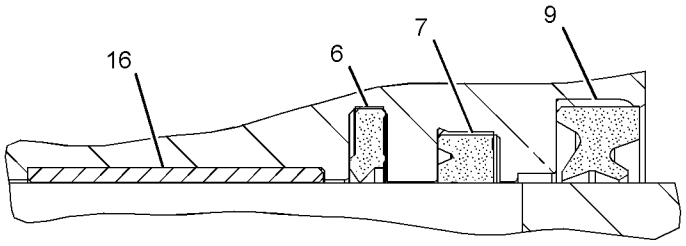


VIEW OF AREA A

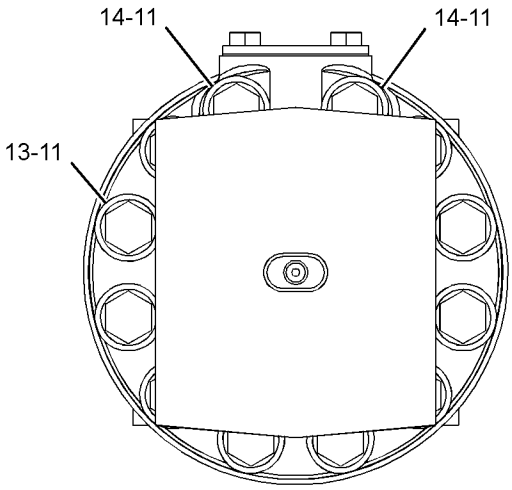


VIEW B-B

GRAPHIC #1 **<END>** g01230218

# HYDRAULIC SYSTEM

## *230-2410* FILTER & LINES GP-CASE DRAIN

**S/N: BXY1-UP**

**PART OF 225-5449, 298-2038 HYDRAULIC AR**

**SMCS-5057** **i02374206**

| NOTE | REF NO | GRAPHIC REF | PART NUMBER | QTY | PART NAME 1 2 3 4 5 6 (PRODUCT LEVEL) | SEE PAGE |
|---|---|---|---|---|---|---|
| | 1 | 1 | **6V-0852** | 2 | CAP-DUST | |
| | 2 | 1 | *148-8430* | 2 | TEE AS | |
| | | | | | (EACH INCLUDES) | |
| | | 1 | **6V-9746** | 1 | SEAL-O-RING | |
| | | 1 | **7X-0873** | 1 | TEE | |
| | 3 | 1 | *148-8443* | 1 | TEE AS | |
| | | 1 | **3J-1907** | 1 | SEAL-O-RING | |
| | | 1 | **6V-8397** | 1 | SEAL-O-RING | |
| | | 1 | **7X-2459** | 1 | TEE-O-RING | |
| Y | 4 | 2 | **166-4647** | 1 | FILTER GP-OIL (STEERING PUMP CASE DRAIN) | 1086 |
| Y | 4A | 2 | **166-4647** | 1 | FILTER GP-OIL (HYDRAULIC PUMP CASE DRAIN) | 1086 |
| Y | 4B | 2 | **166-4647** | 1 | FILTER GP-OIL (HYD FAN PUMP, MOTOR CASE DRAIN) | 1086 |
| I | 5 | 1 | **9W-1698** | 1 | HOSE AS | |
| | 6 | 1 | **179-2805** | 1 | BRACKET | |
| I | 7 | 2 | **203-4811** | 1 | HOSE AS | |
| | 8 | 1 | **203-5535** | 1 | BRACKET AS | |
| I | 9 | 2 | **204-0135** | 1 | HOSE AS | |
| I | 10 | 1 | **226-1955** | 1 | HOSE AS | |
| I | 11 | 2 | **226-1973** | 1 | HOSE AS | |
| | 12 | 2 | **226-1982** | 1 | TUBE AS | |
| I | 13 | 1 | **227-8837** | 1 | HOSE AS | |
| I | 14 | 1 | **272-7981** | 1 | HOSE AS | |
| | 15 | 2 | *148-8339* | 1 | CONNECTOR AS | |
| | | 2 | **6V-8716** | 1 | CONNECTOR | |
| | | 2 | **6V-9746** | 1 | SEAL-O-RING | |
| | | 2 | **7M-8485** | 1 | SEAL-O-RING | |
| | 16 | 2 | *148-8357* | 2 | ELBOW AS | |
| | | | | | (EACH INCLUDES) | |
| | | 2 | **5K-9090** | 1 | SEAL-O-RING | |
| | | 2 | **6V-9008** | 1 | ELBOW | |
| | | 2 | **7M-8485** | 1 | SEAL-O-RING | |
| | 17 | 1,2 | *148-8360* | 4 | ELBOW AS | |
| | | | | | (EACH INCLUDES) | |
| | | 1,2 | **6V-9182** | 1 | ELBOW (FACE SEAL) | |
| | | 1,2 | **6V-9746** | 1 | SEAL-O-RING | |
| | | 1,2 | **7M-8485** | 1 | SEAL-O-RING | |
| | 18 | 1 | *148-8429* | 1 | TEE AS | |
| | | 1 | **5K-9090** | 2 | SEAL-O-RING | |
| | | 1 | **6V-9840** | 1 | TEE-SWIVEL | |
| | 19 | 1 | *148-8449* | 1 | TEE AS-SWIVEL | |
| | | 1 | **6V-9746** | 2 | SEAL-O-RING | |
| | | 1 | **6V-9839** | 1 | TEE-SWIVEL | |
| | 20 | 1 | *153-6237* | 1 | ELBOW AS | |
| | | 1 | **3D-2824** | 1 | SEAL-O-RING | |
| | | 1 | **6V-9004** | 1 | ELBOW | |
| | | 1 | **6V-9746** | 1 | SEAL-O-RING | |
| | 21 | 1 | *155-2026* | 2 | UNION AS | |
| | | | | | (EACH INCLUDES) | |
| | | 1 | **5K-9090** | 2 | SEAL-O-RING | |
| | | 1 | **6V-8998** | 1 | UNION | |
| | 22 | 1 | *164-5567* | 2 | FITTING AS (QUICK DISCONNECT, MALE) | |
| | | | | | (EACH INCLUDES) | |
| | | 1 | **3J-1907** | 1 | SEAL-O-RING | |
| | | 1 | **6V-3965** | 1 | FITTING-COUPLER | |
| | 23 | 1 | **3P-2404** | 1 | CLIP | |
| | 24 | 1,2 | **6V-1889** | 6 | CLIP | |

## *230-2410* FILTER & LINES GP-CASE DRAIN *(contd.)* i02374206

| NOTE | REF NO | GRAPHIC REF | PART NUMBER | QTY | PART NAME 1 2 3 4 5 6 (PRODUCT LEVEL) | SEE PAGE |
|---|---|---|---|---|---|---|
| | 25 | 1 | **6V-9172** | 2 | NUT (1-7/16-12-THD) | |
| | 26 | 1 | **6V-9833** | 2 | CAP AS | |
| | 27 | 1 | **7D-7233** | 1 | CLIP | |
| | 28 | 1 | **7X-7729** | 6 | WASHER (11X25X3-MM THK) | |
| | 29 | 1 | **8T-4121** | 16 | WASHER-HARD (11X21X2.5-MM THK) | |
| M | 30 | 1 | **8T-4133** | 1 | NUT (M10X1.5-THD) | |
| M | 31 | 1 | **8T-4136** | 13 | BOLT (M10X1.5X25-MM) | |
| M | 32 | 1 | **8T-4137** | 2 | BOLT (M10X1.5X20-MM) | |
| M | 33 | 1 | **8T-4196** | 6 | BOLT (M10X1.5X35-MM) | |

I-REFER TO HYDRAULIC INFORMATION SYSTEM
M-METRIC PART
Y-SEPARATE ILLUSTRATION

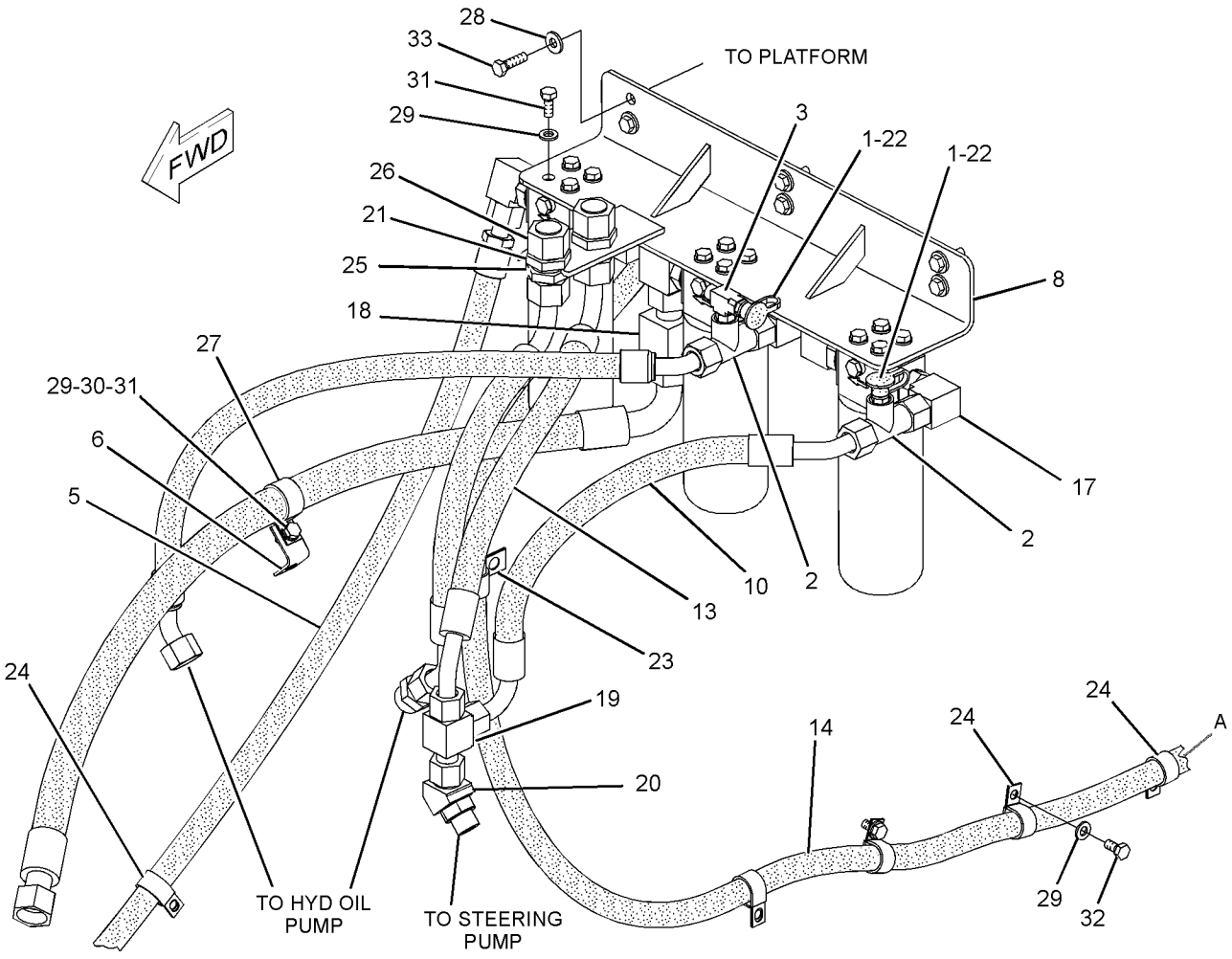


GRAPHIC #1 g01186688

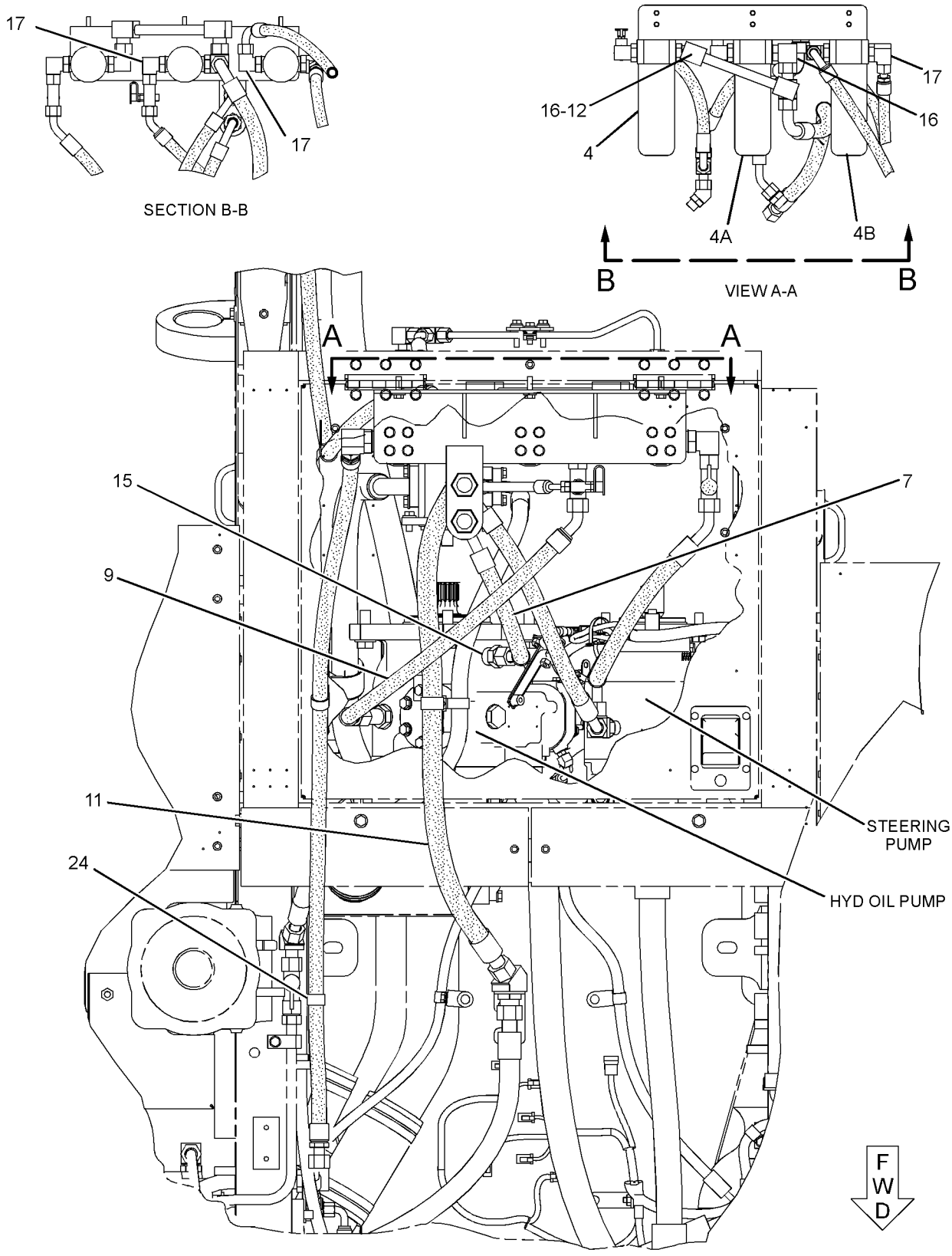


TOP VIEW

GRAPHIC #2

**<END>**

g01186690

# 115-2129 FILTER GP-OIL–STEERING, IMPLEMENT, PILOT

**S/N: BXY1-UP**

**PART OF 230-2400 LINES GP-HYDRAULIC**

**SMCS-5068, 5091, 5092** **i02419549**

| NOTE | REF NO | GRAPHIC REF | PART NUMBER | QTY | PART NAME 1 2 3 4 5 6 (PRODUCT LEVEL) | SEE PAGE |
|---|---|---|---|---|---|---|
| | 1 | 1 | **126-1817** | 1 | FILTER AS-OIL (ULTRA HIGH EFFICIENCY) | |
| | 2 | 1 | **253-2673** | 1 | SWITCH AS-PRESSURE (OIL FILTER BYPASS) | |
| | | 1 | **102-8802** | 2 | KIT-RECEPTACLE (2-PIN) | |
| | | | | | (EACH KIT INCLUDES RECEPTACLE AS AND WEDGE) | |
| | | 1 | **8T-8729** | 2 | PIN-CONNECTOR | |
| E | | 1 | **9X-1813** | | SLEEVE (14-CM) | |
| | 3 | 1 | **3J-1907** | 1 | SEAL-O-RING | |
| | 4 | 1 | **5F-9144** | 1 | SEAL-O-RING | |

E-ORDER BY THE CENTIMETER

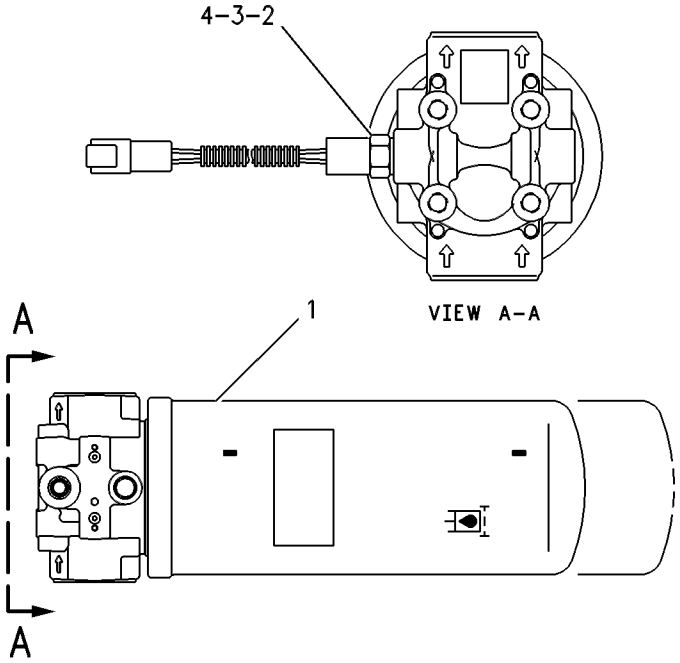


GRAPHIC #1 **<END>** g00255748

# 166-4647 FILTER GP-OIL–CASE DRAIN

**S/N: BXY1-UP**

**PART OF 230-2410 FILTER & LINES GP-CASE DRAIN**

**SMCS-5068, 5091, 5092** **i02397037**

| NOTE | REF NO | GRAPHIC REF | PART NUMBER | QTY | PART NAME 1 2 3 4 5 6 (PRODUCT LEVEL) | SEE PAGE |
|---|---|---|---|---|---|---|
| | 1 | 1 | **1G-8878** | 1 | FILTER AS-OIL (ADVANCED EFFICIENCY) (CASE DRAIN) | |
| | 2 | 1 | **164-6709** | 1 | PLUG AS | |

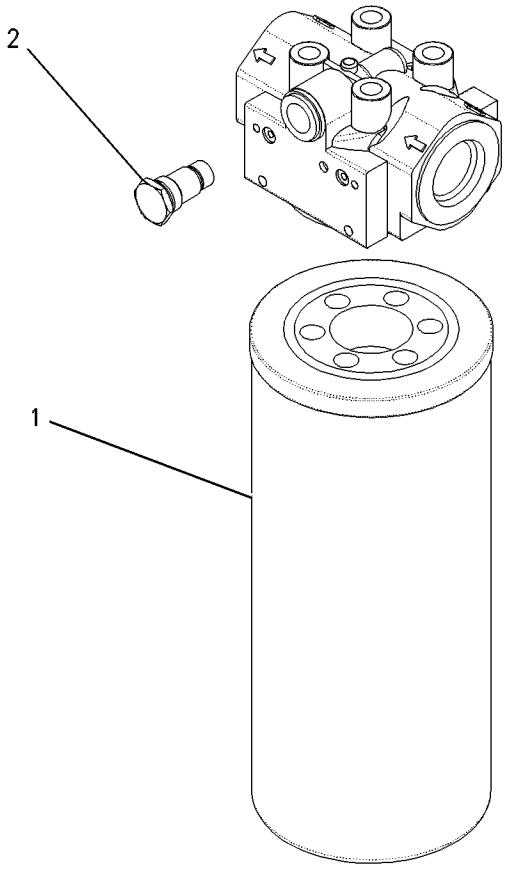


GRAPHIC #1 **<END>** g00545272

# HYDRAULIC SYSTEM

## *225-5449* HYDRAULIC AR

**S/N: BXY1-1899**

**PART OF 225-4278 COMMON AR**

**SMCS-5051** **i02261178**

| NOTE | PART NUMBER | QTY | PART NAME 1 2 3 4 5 6 (PRODUCT LEVEL) | SEE PAGE |
|---|---|---|---|---|
| Y | *217-7850* | 1 | CONTROL GP-SERVICE BRAKE (FRONT) | 975 |
| Y | *230-2407* | 1 | CONTROL GP-SERVICE BRAKE (REAR) | 977 |
| Y | *132-6140* | 1 | CYLINDER & MTG GP-STEERING | 1002 |
| Y | *230-2410* | 1 | FILTER & LINES GP-CASE DRAIN | 1082 |
| Y | *230-2400* | 1 | LINES GP-HYDRAULIC | 1097 |
| Y | *225-6716* | 1 | LINES GP-HYDRAULIC FAN | 1102 |
| Y | *132-6136* | 1 | LINES GP-LIFT CYLINDER | 1115 |
| Y | *225-6709* | 1 | LINES GP-POWER TRAIN OIL | 575 |
| Y | *247-8540* | 1 | LINES GP-STEERING | 1013 |
| Y | *132-6142* | 1 | LINES GP-STEERING NEUTRALIZER | 1025 |
| Y | *226-2040* | 1 | MOTOR & MTG GP-HYDRAULIC FAN | 1128 |
| Y | *230-2406* | 1 | PUMP & MTG GP-IMPLEMENT | 1132 |
| Y | *132-6143* | 1 | TANK & MTG GP-HYDRAULIC | 1144 |

Y-SEPARATE ILLUSTRATION

**<END>**

## *298-2038* HYDRAULIC AR

**S/N: BXY1900-UP**

**PART OF 284-2327 COMMON AR**

**SMCS-5051** **i02672228**

| NOTE | PART NUMBER | QTY | PART NAME 1 2 3 4 5 6 (PRODUCT LEVEL) | SEE PAGE |
|---|---|---|---|---|
| Y | *217-7850* | 1 | CONTROL GP-SERVICE BRAKE (FRONT) | 975 |
| Y | *230-2407* | 1 | CONTROL GP-SERVICE BRAKE (REAR) | 977 |
| Y | *285-8674* | 1 | CYLINDER & MTG GP-STEERING | 1003 |
| Y | *230-2410* | 1 | FILTER & LINES GP-CASE DRAIN | 1082 |
| Y | *230-2400* | 1 | LINES GP-HYDRAULIC | 1097 |
| Y | *225-6716* | 1 | LINES GP-HYDRAULIC FAN | 1102 |
| Y | *132-6136* | 1 | LINES GP-LIFT CYLINDER | 1115 |
| Y | *225-6709* | 1 | LINES GP-POWER TRAIN OIL | 575 |
| Y | *299-5838* | 1 | LINES GP-STEERING | 1021 |
| Y | *132-6142* | 1 | LINES GP-STEERING NEUTRALIZER | 1025 |
| Y | *226-2040* | 1 | MOTOR & MTG GP-HYDRAULIC FAN | 1128 |
| Y | *230-2406* | 1 | PUMP & MTG GP-IMPLEMENT | 1132 |
| Y | *132-6143* | 1 | TANK & MTG GP-HYDRAULIC | 1144 |

Y-SEPARATE ILLUSTRATION

**<END>**

# HYDRAULIC SYSTEM

## *201-0377* LINES GP-FRONT

**S/N: BXY1-UP**
**PART OF 255-0043 LIFT AR**
**AN ATTACHMENT**

**SMCS-5057** **i01795151**

| NOTE | REF NO | GRAPHIC REF | PART NUMBER | QTY | PART NAME 1 2 3 4 5 6 (PRODUCT LEVEL) | SEE PAGE |
|---|---|---|---|---|---|---|
| C | 1 | 2 | **7I-8640** | 12 | CLAMP-HALF | |
| | 2 | 1 | **174-0830** | 1 | TUBE AS | |
| | 3 | 1 | **174-0831** | 1 | TUBE AS | |
| | 4 | 1 | **174-0832** | 1 | TUBE AS | |
| I | 5 | 1 | **174-0833** | 1 | HOSE AS | |
| | 6 | 2 | **174-2435** | 1 | BRACKET AS | |
| | 7 | 2 | **188-7007** | 1 | BRACKET AS | |
| | 8 | 1 | **200-5254** | 2 | BRACKET AS | |
| I | 9 | 1 | **212-6862** | 1 | HOSE AS | |
| C | 10 | 2 | **217-0641** | 1 | TUBE AS | |
| C | 11 | 2 | **217-0642** | 1 | TUBE AS | |
| C | 12 | 2 | **217-0643** | 2 | BRACKET AS | |
| | 13 | 1 | **103-1303** | 8 | CLAMP-HALF | |
| C | 14 | 2 | **117-8704** | 1 | PLATE | |
| | 15 | 1 | **1P-3704** | 2 | SEAL-RECTANGULAR | |
| | 16 | 1 | **1P-3705** | 2 | SEAL-RECTANGULAR | |
| | 17 | 1 | **1P-3706** | 3 | SEAL-RECTANGULAR | |
| | 18 | 1,2 | **1P-5767** | 8 | FLANGE-HALF | |
| | 19 | 1 | **5P-8077** | 4 | FLANGE-HALF | |
| CM | 20 | 1,2 | **7X-2553** | 18 | BOLT (M16X2X40-MM) | |
| M | 21 | 1 | **7X-2556** | 8 | BOLT (M16X2X100-MM) | |
| CM | 22 | 1,2 | **8T-4140** | 10 | BOLT (M16X2X60-MM) | |
| M | 23 | 1 | **8T-4193** | 4 | BOLT (M16X2X50-MM) | |
| M | 24 | 1,2 | **8T-4194** | 16 | BOLT (M12X1.75X50-MM) | |
| | 25 | 1,2 | **8T-4223** | 16 | WASHER-HARD (13.5X25.5X3-MM THK) | |
| CM | 26 | 1,2 | **8T-4779** | 12 | BOLT (M16X2X35-MM) | |
| C | 27 | 1,2 | **9X-8257** | 52 | WASHER (17.5X30X3.5-MM THK) | |

C-CHANGE FROM PREVIOUS TYPE
I-REFER TO HYDRAULIC INFORMATION SYSTEM
M-METRIC PART

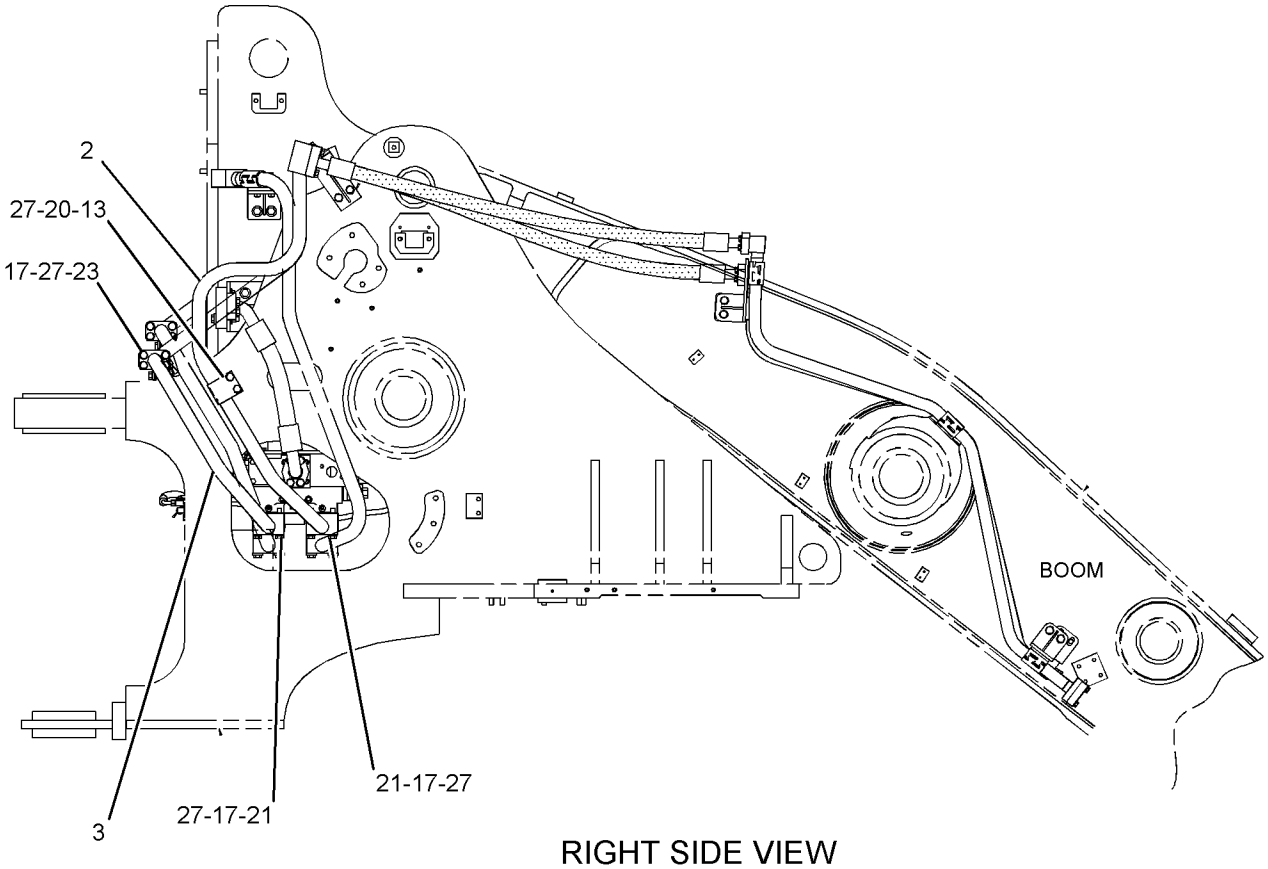


RIGHT SIDE VIEW

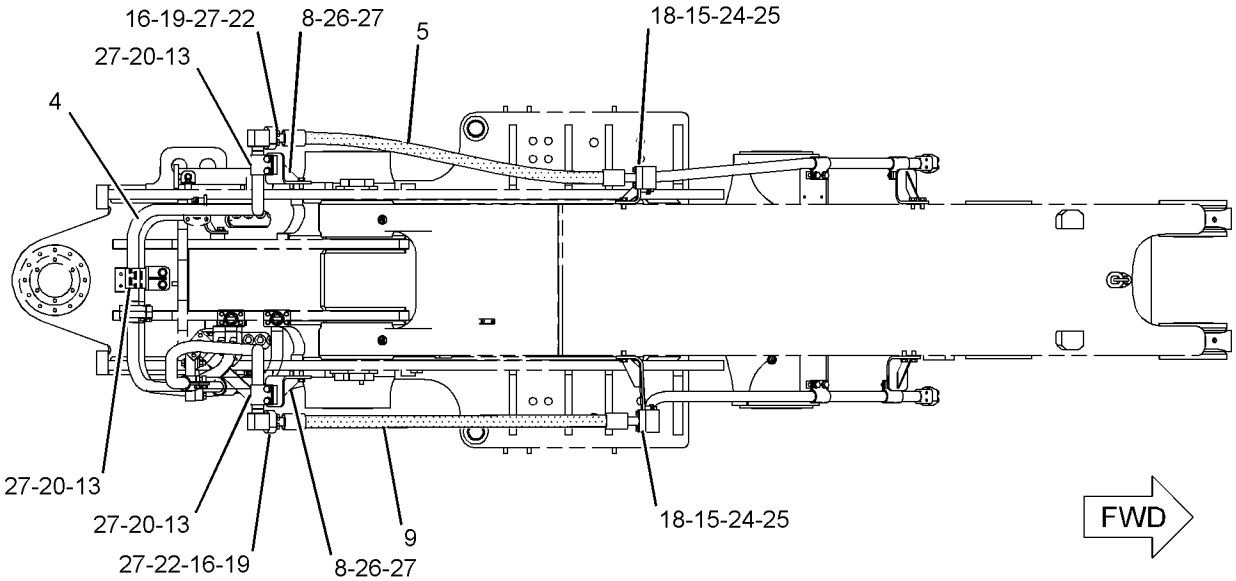


TOP VIEW

GRAPHIC #1 g01023978

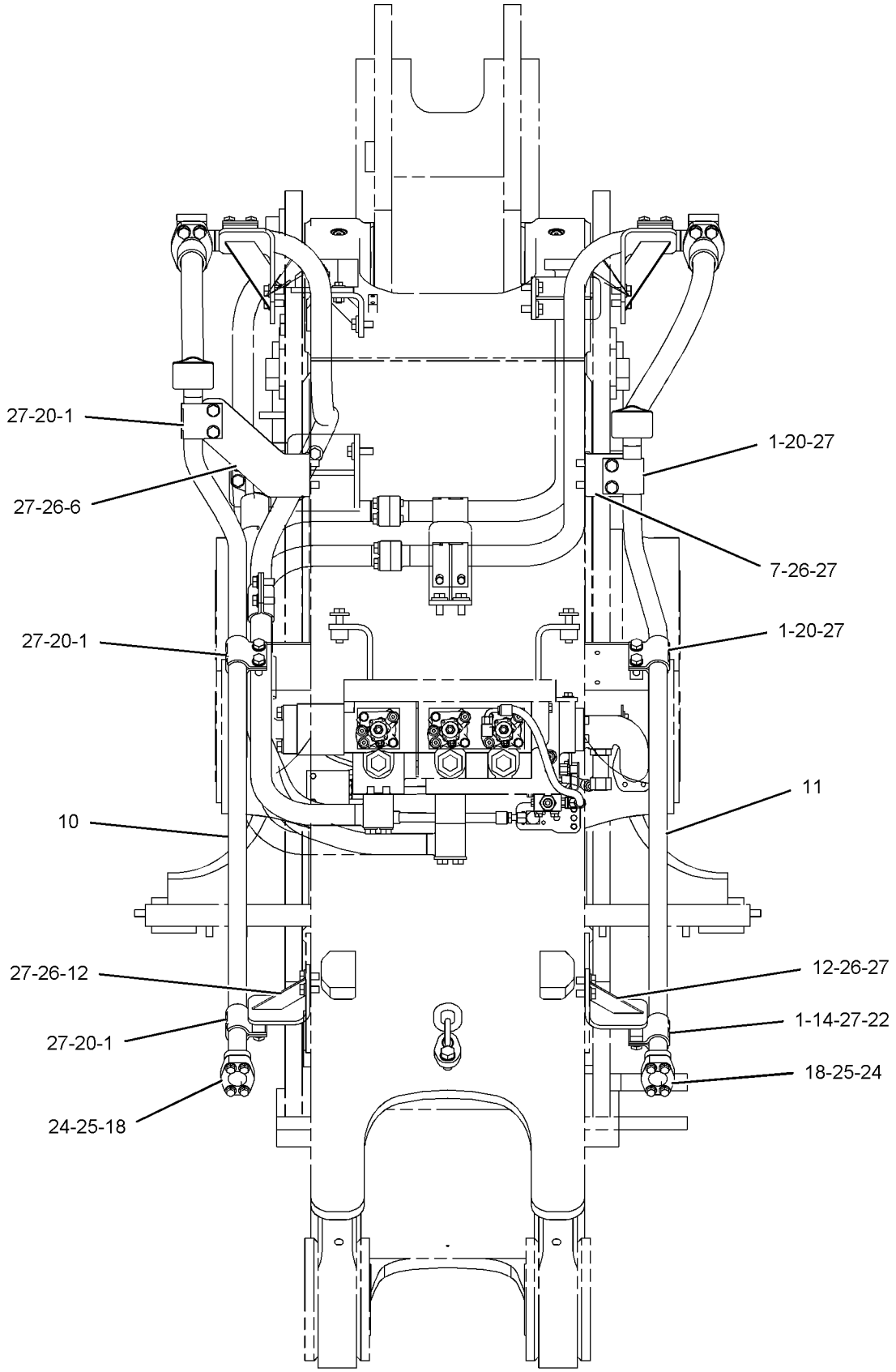


FRONT VIEW

GRAPHIC #2

**<END>**

g01023979

# HYDRAULIC SYSTEM

## *246-6923* LINES GP-FRONT

**S/N: BXY1-UP**
**PART OF 255-0041 LIFT AR**
**AN ATTACHMENT**

**SMCS-5057** **i02224929**

| NOTE | REF NO | GRAPHIC REF | PART NUMBER | QTY | PART NAME 1 2 3 4 5 6 (PRODUCT LEVEL) | SEE PAGE |
|---|---|---|---|---|---|---|
| | 1 | 1,2 | **7I-8640** | 12 | CLAMP-HALF | |
| | 2 | 1 | **174-0830** | 1 | TUBE AS | |
| | 3 | 1 | **174-0831** | 1 | TUBE AS | |
| | 4 | 1 | **174-0832** | 1 | TUBE AS | |
| I | 5 | 1 | **174-0833** | 1 | HOSE AS | |
| | 6 | 2 | **174-2435** | 1 | BRACKET AS | |
| | 7 | 2 | **188-7007** | 1 | BRACKET AS | |
| | 8 | 1 | **200-5254** | 2 | BRACKET AS | |
| I | 9 | 1 | **212-6862** | 1 | HOSE AS | |
| | 10 | 1 | **246-2305** | 1 | TUBE AS | |
| | 11 | 1 | **246-2321** | 1 | TUBE AS | |
| | 12 | 1 | **103-1303** | 8 | CLAMP-HALF | |
| | 13 | 2 | **128-9341** | 2 | BLOCK | |
| | 14 | 2 | **1P-3704** | 2 | SEAL-RECTANGULAR | |
| | 15 | 1 | **1P-3705** | 2 | SEAL-RECTANGULAR | |
| | 16 | 1 | **1P-3706** | 3 | SEAL-RECTANGULAR | |
| | 17 | 2 | **1P-5767** | 8 | FLANGE-HALF | |
| | 18 | 1 | **5P-8077** | 4 | FLANGE-HALF | |
| M | 19 | 1 | **7X-2553** | 16 | BOLT (M16X2X40-MM) | |
| M | 20 | 1 | **7X-2556** | 8 | BOLT (M16X2X100-MM) | |
| M | 21 | 1,2 | **8T-4140** | 12 | BOLT (M16X2X60-MM) | |
| M | 22 | 1 | **8T-4193** | 4 | BOLT (M16X2X50-MM) | |
| M | 23 | 2 | **8T-4194** | 16 | BOLT (M12X1.75X50-MM) | |
| | 24 | 2 | **8T-4223** | 16 | WASHER-HARD (13.5X25.5X3-MM THK) | |
| M | 25 | 1,2 | **8T-4779** | 8 | BOLT (M16X2X35-MM) | |
| | 26 | 1,2 | **9X-8257** | 48 | WASHER (17.5X30X3.5-MM THK) | |

I-REFER TO HYDRAULIC INFORMATION SYSTEM
M-METRIC PART

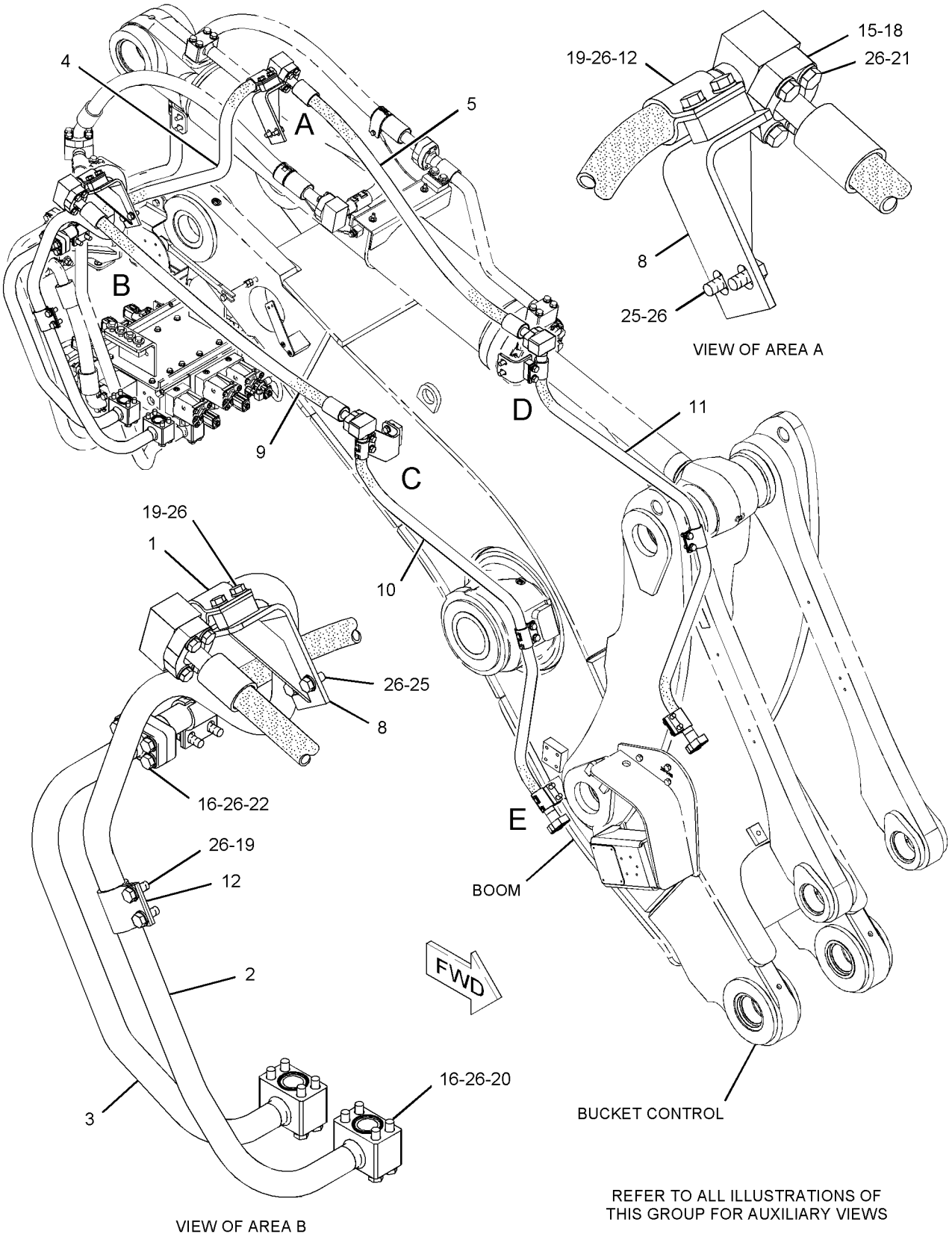


GRAPHIC #1 g01127993

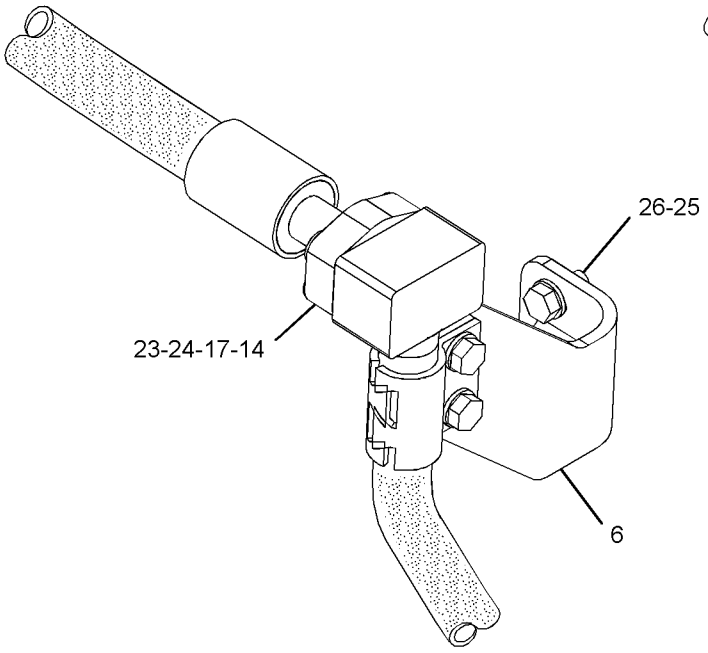


VIEW OF AREA C

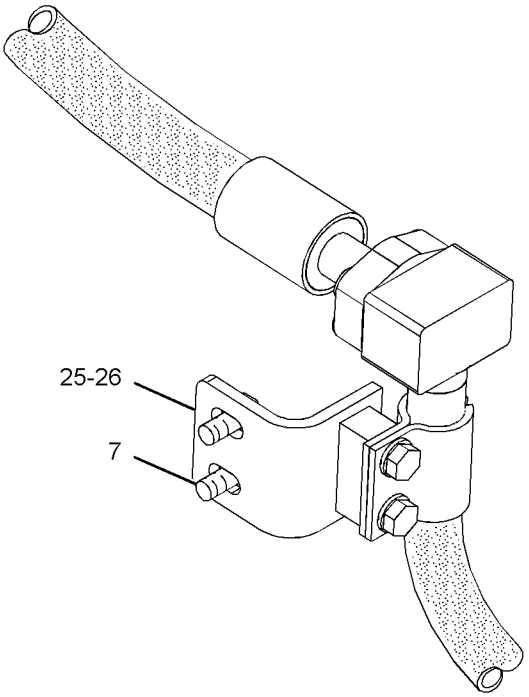


VIEW OF AREA D

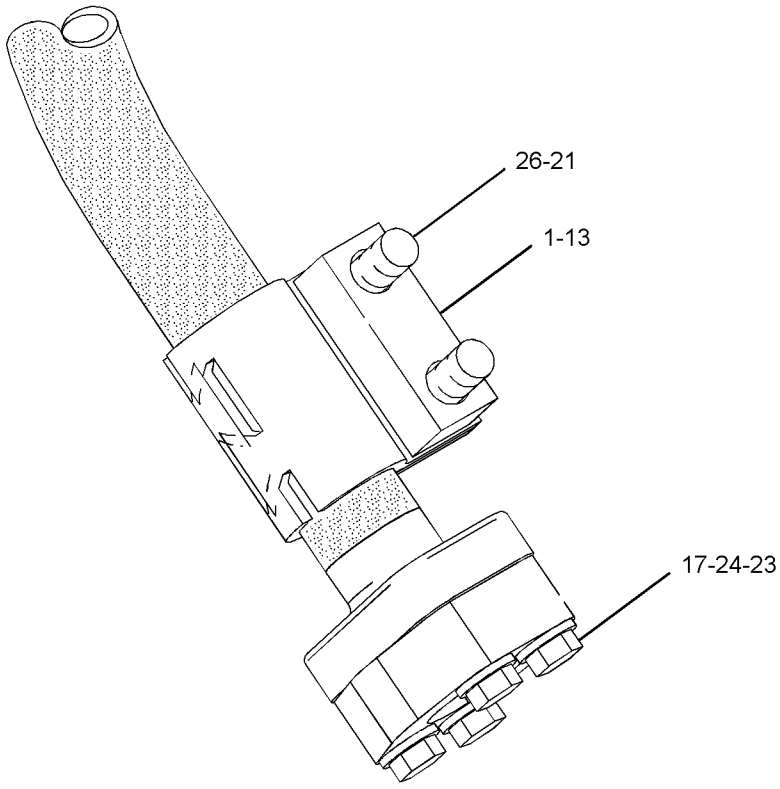


VIEW OF AREA E

GRAPHIC #2 **<END>** g01128324

# HYDRAULIC SYSTEM

## *189-7250* LINES GP-HYDRAULIC

**S/N: BXY1900-UP**
**PART OF 227-3317 GUARD GP-LINES**
**AN ATTACHMENT**

**SMCS-5057** **i01913224**

| NOTE | PART NUMBER | QTY | PART NAME 1 2 3 4 5 6 (PRODUCT LEVEL) | SEE PAGE |
|---|---|---|---|---|
| I | **227-3216** | 1 | HOSE AS | |
| | **189-7144** | 1 | HOSE AS | |
| | **189-7145** | 1 | HOSE AS | |
| | **189-7146** | 1 | HOSE AS | |
| | **189-7147** | 1 | HOSE AS | |
| | **189-7148** | 1 | HOSE AS | |
| | | | *****STANDARD REMOVAL***** | |
| JI | **126-0197** | 1 | HOSE AS | |
| JI | **9C-1079** | 1 | HOSE AS | |
| JI | **179-6793** | 1 | HOSE AS | |
| JI | **183-4491** | 1 | HOSE AS | |
| JI | **155-9462** | 1 | HOSE AS | |
| JI | **121-3286** | 1 | HOSE AS | |

I-SEE HOSE FABRICATION GUIDE
J-PART OF STANDARD LINES GP-HYDRAULIC

**<END>**

# *189-7259* LINES GP-HYDRAULIC—MAIN CONTROL VALVE

**S/N: BXY1900-UP**
**PART OF 227-3317 GUARD GP-LINES**
**AN ATTACHMENT**

**SMCS-5057** **i02403203**

| NOTE | REF NO | GRAPHIC REF | PART NUMBER | QTY | PART NAME 1 2 3 4 5 6 (PRODUCT LEVEL) | SEE PAGE |
|---|---|---|---|---|---|---|
| | 1 | 1 | **189-7165** | 1 | HOSE AS | |
| | | 1 | **9M-7958** | 2 | CLAMP-HOSE | |
| I | | 1 | **198-7667** | 1 | HOSE AS | |
| E | | 1 | **2Q-0604** | | INSULATION (33-CM) | |
| | 2 | 1 | **189-7166** | 1 | HOSE AS | |
| | | 1 | **9M-7958** | 2 | CLAMP-HOSE | |
| I | | 1 | **198-8196** | 1 | HOSE AS | |
| E | | 1 | **2Q-0604** | | INSULATION (52-CM) | |
| | 3 | 1 | **189-7167** | 1 | HOSE AS | |
| | | 1 | **9M-7958** | 2 | CLAMP-HOSE | |
| I | | 1 | **198-7670** | 1 | HOSE AS | |
| E | | 1 | **2Q-0604** | | INSULATION (24-CM) | |
| | 4 | 1 | **189-7168** | 1 | HOSE AS | |
| | | 1 | **9M-7958** | 2 | CLAMP-HOSE | |
| I | | 1 | **198-7668** | 1 | HOSE AS | |
| E | | 1 | **2Q-0604** | | INSULATION (43-CM) | |
| | 5 | 1 | **189-7169** | 1 | HOSE AS | |
| | | 1 | **9M-7958** | 2 | CLAMP-HOSE | |
| I | | 1 | **198-7669** | 1 | HOSE AS | |
| E | | 1 | **2Q-0604** | | INSULATION (70-CM) | |
| | | | | | *****ATTACHMENT REMOVAL***** | |
| AFJI | | | **198-7667** | 1 | HOSE AS | |
| AFJI | | | **198-8196** | 1 | HOSE AS | |
| AFJI | | | **198-7670** | 1 | HOSE AS | |
| AFJI | | | **198-7668** | 1 | HOSE AS | |
| AFJI | | | **198-7669** | 1 | HOSE AS | |

A-NOT PART OF THIS GROUP
E-ORDER BY THE CENTIMETER
F-NOT SHOWN
I-REFER TO HYDRAULIC INFORMATION SYSTEM
J-PART OF ATTACHMENT VALVE & MTG GP-MAIN CONTROL

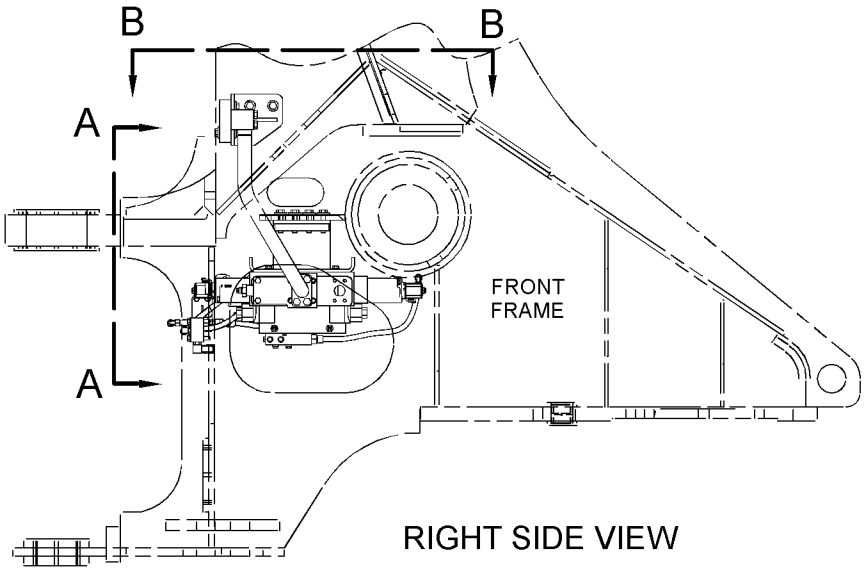


RIGHT SIDE VIEW

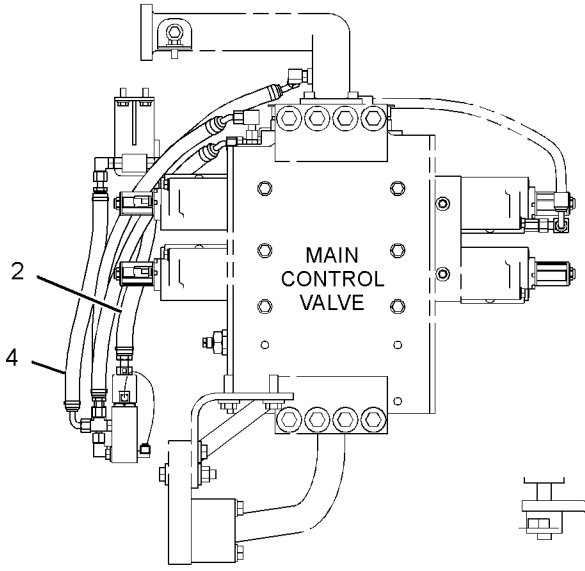


VIEW B-B

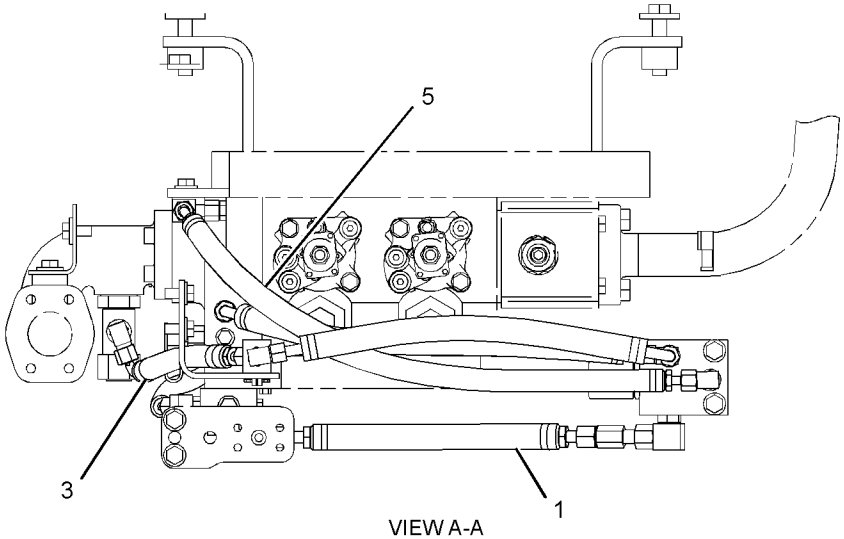


VIEW A-A

GRAPHIC #1 **<END>** g01200217

# HYDRAULIC SYSTEM

## *230-2400* LINES GP-HYDRAULIC

**S/N: BXY1-UP**

**PART OF 225-5449, 298-2038 HYDRAULIC AR**

**SMCS-5057** **i02132074**

| NOTE | REF NO | GRAPHIC REF | PART NUMBER | QTY | PART NAME 1 2 3 4 5 6 (PRODUCT LEVEL) | SEE PAGE |
|---|---|---|---|---|---|---|
| I | 1 | 2 | **4E-3447** | 1 | HOSE AS | |
| | 2 | 1,2 | **6V-0852** | 2 | CAP-DUST | |
| | 3 | 2 | **8C-3451** | 1 | CAP-DUST | |
| | 4 | 1 | **8T-4986** | 12 | CLAMP-HOSE | |
| I | 5 | 2 | **9C-1079** | 1 | HOSE AS | |
| Y | 6 | 2 | **115-2129** | 1 | FILTER GP-OIL (STEERING, IMPLEMENT PILOT) | 1085 |
| I | 7 | 2 | **126-0197** | 1 | HOSE AS | |
| | 8 | 1 | **127-4667** | 1 | STRIP AS | |
| M | | 1 | **8T-3490** | 1 | NUT-WELD (M10X1.5-THD) | |
| | 9 | 2 | **138-4049** | 1 | BRACKET AS | |
| | 10 | 1 | **141-7405** | 2 | HOSE | |
| | 11 | 2 | **152-3870** | 1 | TANK AS | |
| | 12 | 1 | **152-5713** | 1 | TUBE AS | |
| | 13 | 2 | **152-5714** | 1 | TUBE AS | |
| | 14 | 2 | **152-5715** | 1 | TUBE AS | |
| | 15 | 1 | **152-5716** | 1 | HOSE | |
| | 16 | 2 | **155-9461** | 1 | TUBE AS | |
| I | 17 | 1 | **155-9462** | 1 | HOSE AS | |
| | 18 | 1,2 | *164-5567* | 2 | FITTING AS (QUICK DISCONNECT, MALE) | |
| | | | | | (EACH INCLUDES) | |
| | | 1,2 | **3J-1907** | 1 | SEAL-O-RING | |
| | | 1,2 | **6V-3965** | 1 | FITTING-COUPLER | |
| | 19 | 2 | *164-5611* | 1 | TEE AS | |
| | | 2 | **6V-9746** | 1 | SEAL-O-RING | |
| | | 2 | **7M-8485** | 1 | SEAL-O-RING | |
| | | 2 | **8T-3312** | 1 | TEE | |
| | 20 | 2 | *169-5862* | 1 | ELBOW AS | |
| | | 2 | **3J-1907** | 1 | SEAL-O-RING | |
| | | 2 | **8C-6712** | 1 | ELBOW | |
| | 21 | 1,2 | **177-4155** | 3 | FLANGE | |
| | 22 | 1 | **179-6791** | 1 | MANIFOLD | |
| I | 23 | 1 | **179-6792** | 1 | HOSE AS | |
| I | 24 | 1 | **179-6793** | 1 | HOSE AS | |
| | 25 | 1 | **179-6794** | 1 | PLATE AS | |
| M | | 1 | **8T-3490** | 1 | NUT-WELD (M10X1.5-THD) | |
| | 26 | 1 | **183-3626** | 1 | BRACKET AS | |
| M | | 1 | **8T-3597** | 2 | NUT-WELD (M12X1.75-THD) | |
| I | 27 | 1 | **183-4491** | 1 | HOSE AS | |
| Y | 28 | 2 | **186-6218** | 1 | VALVE GP-RELIEF (STEERING, IMPLEMENT PILOT) | 1179 |
| | 29 | 1 | *188-1035* | 1 | TEE AS | |
| | | 1 | **3D-2824** | 1 | SEAL-O-RING | |
| | | 1 | **5K-9090** | 1 | SEAL-O-RING | |
| | | 1 | **6V-9746** | 1 | SEAL-O-RING | |
| | | 1 | **8T-7520** | 1 | TEE | |
| | 30 | 2 | **197-3295** | 2 | FLANGE-HALF | |
| | 31 | 2 | **203-3072** | 1 | TUBE AS | |
| I | 32 | 1 | **223-4263** | 1 | HOSE AS | |
| | 33 | 1 | **230-9101** | 1 | PLATE | |
| I | 34 | 1 | **230-9800** | 1 | HOSE AS | |
| I | 35 | 1 | **230-9802** | 1 | HOSE AS | |
| | 36 | 1 | **230-9804** | 1 | BRACKET AS | |
| I | 37 | 2 | **121-3286** | 1 | HOSE AS | |
| | 38 | 1 | *148-8327* | 1 | CONNECTOR AS | |
| | | 1 | **3D-2824** | 1 | SEAL-O-RING | |
| | | 1 | **6V-8637** | 1 | CONNECTOR | |
| | | 1 | **6V-9746** | 1 | SEAL-O-RING | |

*230-2400* **LINES GP-HYDRAULIC** ***(contd.)*** **i02132074**

| NOTE | REF NO | GRAPHIC REF | PART NUMBER | QTY | PART NAME 1 2 3 4 5 6 (PRODUCT LEVEL) | SEE PAGE |
|---|---|---|---|---|---|---|
| | 39 | 1 | *222-6869* | 1 | CONNECTOR AS | |
| | | 1 | **3J-1907** | 1 | SEAL-O-RING | |
| | | 1 | **6V-8397** | 1 | SEAL-O-RING | |
| | | 1 | **9X-2614** | 1 | CONNECTOR | |
| | 40 | 2 | *148-8340* | 1 | CONNECTOR AS | |
| | | 2 | **3K-0360** | 1 | SEAL-O-RING | |
| | | 2 | **6V-8398** | 1 | SEAL-O-RING | |
| | | 2 | **6V-8639** | 1 | CONNECTOR | |
| | 41 | 2 | *148-8347* | 3 | ELBOW AS | |
| | | | | | (EACH INCLUDES) | |
| | | 2 | **3D-2824** | 1 | SEAL-O-RING | |
| | | 2 | **6V-9007** | 1 | ELBOW | |
| | | 2 | **6V-9746** | 1 | SEAL-O-RING | |
| | 42 | 2 | *148-8360* | 1 | ELBOW AS | |
| | | 2 | **6V-9182** | 1 | ELBOW (FACE SEAL) | |
| | | 2 | **6V-9746** | 1 | SEAL-O-RING | |
| | | 2 | **7M-8485** | 1 | SEAL-O-RING | |
| | 43 | 2 | *148-8364* | 1 | ELBOW AS | |
| | | 2 | **3K-0360** | 1 | SEAL-O-RING | |
| | | 2 | **6V-8398** | 1 | SEAL-O-RING | |
| | | 2 | **6V-8625** | 1 | ELBOW | |
| | 44 | 1 | *148-8374* | 1 | ELBOW AS | |
| | | 1 | **3K-0360** | 1 | SEAL-O-RING | |
| | | 1 | **6V-8397** | 1 | SEAL-O-RING | |
| | | 1 | **6V-8723** | 1 | ELBOW (FACE SEAL) | |
| | 45 | 1 | *148-8408* | 1 | PLUG AS | |
| | | 1 | **3D-2824** | 1 | SEAL-O-RING | |
| | | 1 | **9S-4183** | 1 | PLUG-O-RING | |
| | 46 | 2 | *148-8427* | 1 | TEE AS | |
| | | 2 | **6V-8398** | 3 | SEAL-O-RING | |
| | | 2 | **8T-6895** | 1 | TEE-UNION | |
| | 47 | 2 | *150-3065* | 1 | ADAPTER AS | |
| | | 2 | **3J-1907** | 1 | SEAL-O-RING | |
| | | 2 | **6V-0484** | 1 | ADAPTER-O-RING | |
| | 48 | 1 | *153-6242* | 1 | CONNECTOR AS | |
| | | 1 | **6V-9746** | 1 | SEAL-O-RING | |
| | | 1 | **7M-8485** | 1 | SEAL-O-RING | |
| | | 1 | **8T-0197** | 1 | CONNECTOR | |
| | 49 | 1 | *155-6344* | 1 | ELBOW AS | |
| | | 1 | **5K-9090** | 2 | SEAL-O-RING | |
| | | 1 | **6V-8991** | 1 | ELBOW | |
| | 50 | 2 | *164-5590* | 1 | VALVE AS-FLUID SAMPLING | |
| | | 2 | **3J-7354** | 1 | SEAL-O-RING | |
| | | 2 | **8C-3446** | 1 | VALVE-FLUID SAMPLING | |
| | 51 | 1 | *148-8353* | 1 | ELBOW AS | |
| | | 1 | **3J-1907** | 1 | SEAL-O-RING | |
| | | 1 | **6V-8397** | 1 | SEAL-O-RING | |
| | | 1 | **6V-9001** | 1 | ELBOW | |
| | 52 | 1 | **1P-3705** | 4 | SEAL-RECTANGULAR | |
| | 53 | 1,2 | **1P-4582** | 6 | FLANGE-HALF | |
| | 54 | 1 | **2V-0600** | 2 | CLAMP-HALF | |
| | 55 | 2 | **4J-0522** | 1 | SEAL-O-RING | |
| | 56 | 1,2 | **4J-0527** | 3 | SEAL-O-RING | |
| | 57 | 1 | **4J-5267** | 2 | SEAL-O-RING | |
| | 58 | 2 | **5H-4020** | 1 | COVER | |
| | 59 | 1 | **5P-8077** | 8 | FLANGE-HALF | |
| | 60 | 1 | **6D-4246** | 1 | CLIP | |
| | 61 | 2 | **6V-9169** | 1 | NUT-BULKHEAD (13/16-16-THD) | |
| | 62 | 1 | **6V-9172** | 1 | NUT (1-7/16-12-THD) | |

*230-2400* **LINES GP-HYDRAULIC** *(contd.)* **i02132074**

| NOTE | REF NO | GRAPHIC REF | PART NUMBER | QTY | PART NAME 1 2 3 4 5 6 (PRODUCT LEVEL) | SEE PAGE |
|---|---|---|---|---|---|---|
| M | 63 | 2 | **7X-2552** | 4 | BOLT (M16X2X30-MM) | |
| | 64 | 2 | **7X-3392** | 4 | WASHER-HARD (13.5X22.5X3-MM THK) | |
| | 65 | 1 | **8C-3205** | 4 | FLANGE-HALF | |
| | 66 | 2 | **8T-1885** | 1 | CLIP (SLOT) | |
| | 67 | 2 | **8T-1886** | 1 | CLIP (TAB) | |
| | 68 | 1,2 | **8T-4121** | 17 | WASHER-HARD (11X21X2.5-MM THK) | |
| | 69 | 1 | **8T-4122** | 16 | WASHER-HARD (17X32X3.5-MM THK) | |
| M | 70 | 1,2 | **8T-4137** | 6 | BOLT (M10X1.5X20-MM) | |
| M | 71 | 1 | **8T-4139** | 2 | BOLT (M12X1.75X30-MM) | |
| M | 72 | 1 | **8T-4140** | 16 | BOLT (M16X2X60-MM) | |
| M | 74 | 1,2 | **8T-4183** | 8 | BOLT (M12X1.75X40-MM) | |
| M | 75 | 1 | **8T-4184** | 4 | BOLT (M12X1.75X45-MM) | |
| M | 76 | 1,2 | **8T-4193** | 12 | BOLT (M16X2X50-MM) | |
| M | 77 | 1 | **8T-4195** | 1 | BOLT (M10X1.5X30-MM) | |
| M | 78 | 1 | **8T-4196** | 8 | BOLT (M10X1.5X35-MM) | |
| | 79 | 1,2 | **8T-4223** | 25 | WASHER-HARD (13.5X25.5X3-MM THK) | |
| M | 80 | 1,2 | **8T-4956** | 15 | BOLT (M12X1.75X35-MM) | |
| M | 81 | 2 | **8T-6466** | 2 | BOLT (M10X1.5X60-MM) | |
| | 82 | 1,2 | **9F-7283** | 3 | SEAL-O-RING | |
| | 83 | 1,2 | **9X-8257** | 17 | WASHER (17.5X30X3.5-MM THK) | |

I-REFER TO HYDRAULIC INFORMATION SYSTEM
M-METRIC PART
Y-SEPARATE ILLUSTRATION

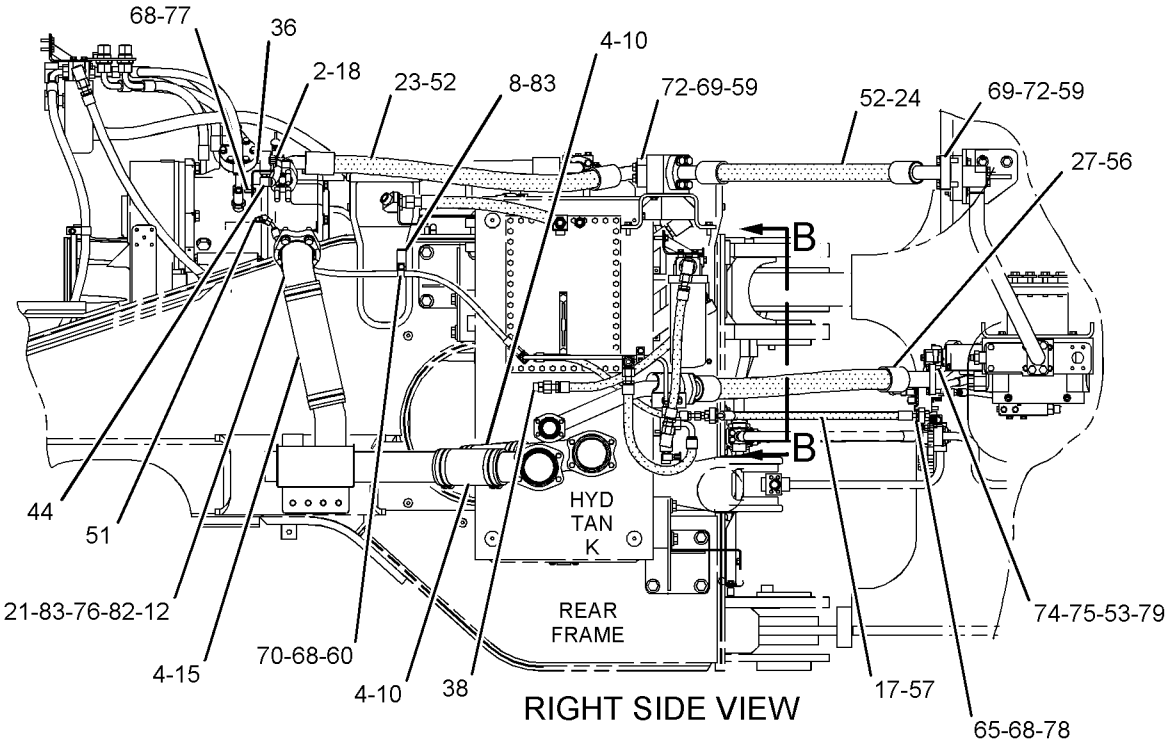


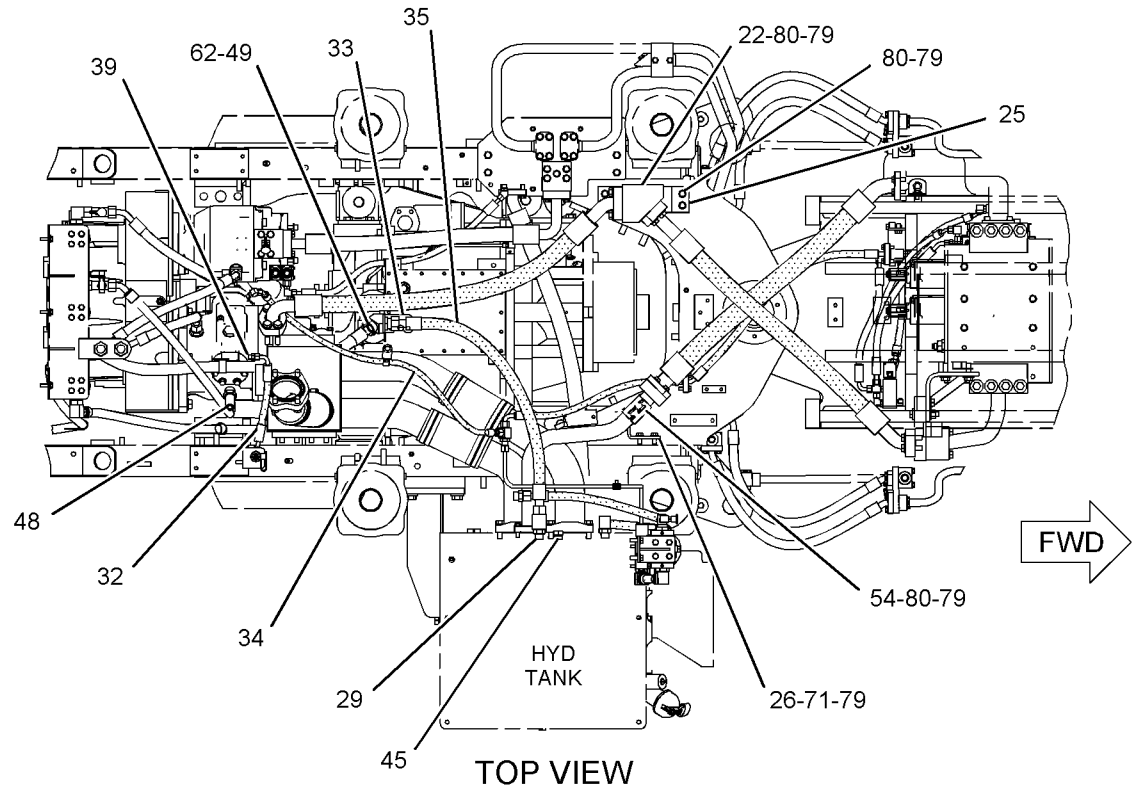


GRAPHIC #1 g01084529

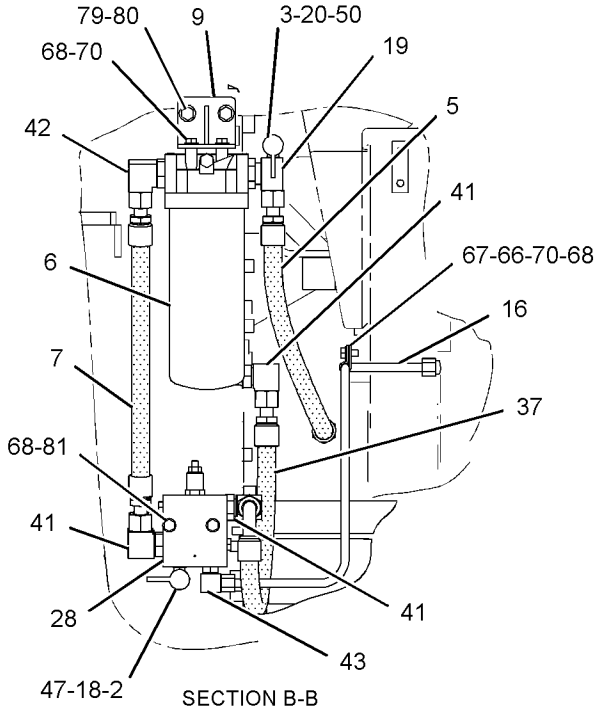


SECTION B-B

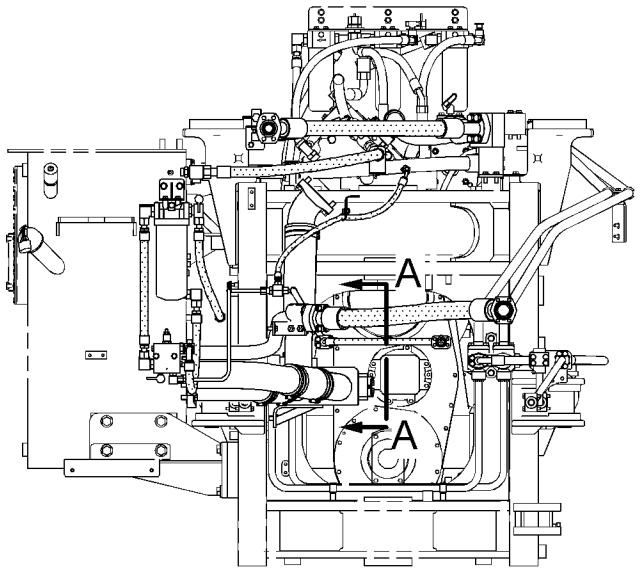


FRONT VIEW

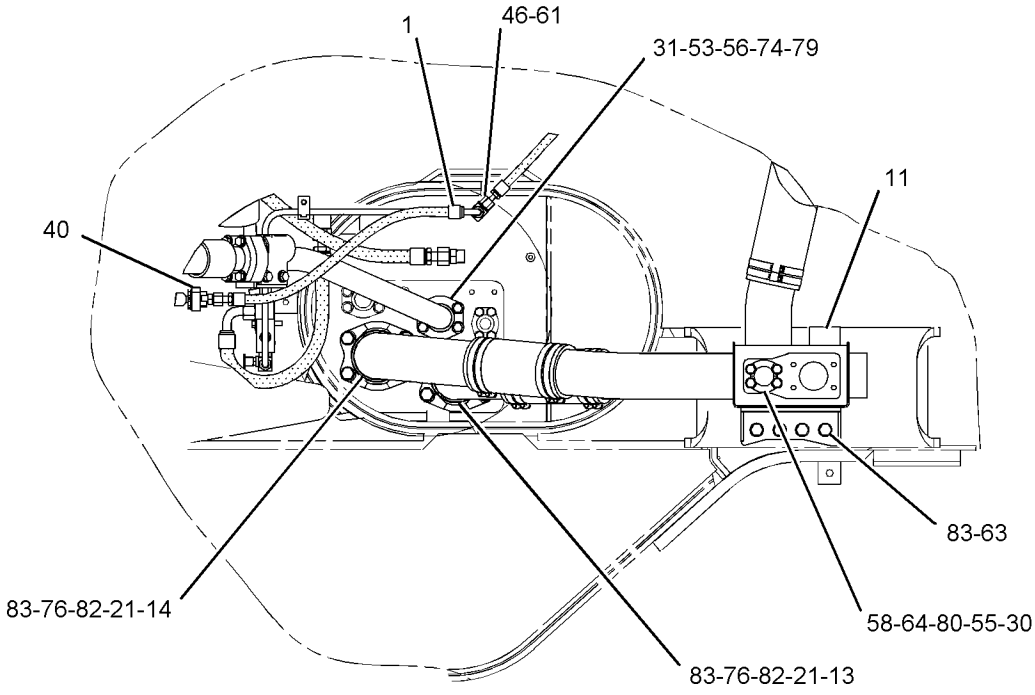


SECTION A-A

GRAPHIC #2

**<END>**

g01131947

# HYDRAULIC SYSTEM

## *225-6716* LINES GP-HYDRAULIC FAN

**S/N: BXY1-808**

**PART OF 225-5449 HYDRAULIC AR**

**SMCS-1386, 1387, 5057** **i02468392**

| NOTE | REF NO | GRAPHIC REF | PART NUMBER | QTY | PART NAME 1 2 3 4 5 6 (PRODUCT LEVEL) | SEE PAGE |
|---|---|---|---|---|---|---|
| | 1 | 3 | **1F-1609** | 2 | SPACER (13.5X25.4X39.7-MM THK) | |
| I | 2 | 1 | **3T-6848** | 1 | HOSE AS | |
| | 3 | 2 | **6E-1454** | 1 | VALVE GP-CHECK (HYDRAULIC OIL COOLER BYPASS) | |
| | 4 | 1 | **8R-0752** | 1 | ADAPTER | |
| | 5 | 3 | **9T-3752** | 1 | VALVE AS-CHECK (FAN MOTOR ANTI-CAVITATION) | |
| | 6 | 1 | **9J-3866** | 1 | ADAPTER | |
| | 7 | 3 | **145-3319** | 2 | BRACKET AS | |
| | | | | | (EACH INCLUDES) | |
| M | | 3 | **8T-3597** | 1 | NUT-WELD (M12X1.75-THD) | |
| | 8 | 1 | **154-8962** | 1 | BRACKET | |
| I | 9 | 3 | **155-7518** | 1 | HOSE AS | |
| I | 10 | 2 | **155-7525** | 1 | HOSE AS | |
| I | 11 | 2 | **155-7527** | 1 | HOSE AS | |
| | 12 | 2 | **156-7472** | 1 | MANIFOLD | |
| I | 13 | 3 | **162-7365** | 1 | HOSE AS | |
| | 14 | 3 | *167-1795* | 1 | ELBOW AS | |
| | | 3 | **3D-2824** | 1 | SEAL-O-RING | |
| | | 3 | **8T-3491** | 1 | ELBOW | |
| | 15 | 3 | *172-5277* | 1 | TEE AS | |
| | | 3 | **3D-2824** | 1 | SEAL-O-RING | |
| | | 3 | **6V-9746** | 1 | SEAL-O-RING | |
| | | 3 | **8T-8901** | 1 | TEE-O-RING PORT | |
| Y | 16 | 1 | **191-8735** | 1 | VALVE GP-DEMAND FAN | 1160 |
| I | 18 | 3 | **239-9233** | 1 | HOSE AS | |
| | 19 | 2 | **225-6717** | 1 | PLATE AS | |
| M | | 2 | **9R-2613** | 2 | BOSS-WELD (M10X1.5X25-MM OAL) | |
| I | 20 | 3 | **225-6719** | 1 | HOSE AS | |
| I | 21 | 3 | **225-6720** | 1 | HOSE AS | |
| I | 22 | 1 | **225-6723** | 1 | HOSE AS | |
| I | 23 | 1 | **225-6724** | 1 | HOSE AS | |
| | 24 | 2 | *148-8312* | 1 | ADAPTER AS | |
| | | 2 | **3D-2824** | 1 | SEAL-O-RING | |
| | | 2 | **3T-4965** | 1 | ADAPTER-O-RING | |
| | 25 | 2 | *148-8327* | 2 | CONNECTOR AS | |
| | | | | | (EACH INCLUDES) | |
| | | 2 | **3D-2824** | | SEAL-O-RING | |
| | | 2 | **6V-8637** | | CONNECTOR | |
| | | 2 | **6V-9746** | | SEAL-O-RING | |
| | 26 | 2 | *148-8347* | 1 | ELBOW AS | |
| | | 2 | **3D-2824** | 1 | SEAL-O-RING | |
| | | 2 | **6V-9007** | 1 | ELBOW | |
| | | 2 | **6V-9746** | 1 | SEAL-O-RING | |
| | 27 | 1 | *148-8353* | 2 | ELBOW AS | |
| | | | | | (EACH INCLUDES) | |
| | | 1 | **3J-1907** | 1 | SEAL-O-RING | |
| | | 1 | **6V-8397** | 1 | SEAL-O-RING | |
| | | 1 | **6V-9001** | 1 | ELBOW | |
| | 28 | 1 | *148-8359* | 1 | ELBOW AS | |
| | | 1 | **3K-0360** | 1 | SEAL-O-RING | |
| | | 1 | **6V-9746** | 1 | SEAL-O-RING | |
| | | 1 | **6V-9877** | 1 | ELBOW | |
| | 29 | 1 | *150-4027* | 1 | TEE AS | |
| | | 1 | **3E-2310** | 1 | TEE | |
| | | 1 | **3J-1907** | 1 | SEAL-O-RING | |
| | | 1 | **6V-8397** | 1 | SEAL-O-RING | |
| | 30 | 3 | *148-8372* | 1 | ELBOW AS | |

## *225-6716* **LINES GP-HYDRAULIC FAN** *(contd.)* **i02468392**

| NOTE | REF NO | GRAPHIC REF | PART NUMBER | QTY | PART NAME 1 2 3 4 5 6 (PRODUCT LEVEL) | SEE PAGE |
|---|---|---|---|---|---|---|
| | | 3 | **2M-9780** | 1 | SEAL-O-RING | |
| | | 3 | **6V-8398** | 1 | SEAL-O-RING | |
| | | 3 | **6V-8721** | 1 | ELBOW | |
| | 31 | 3 | *148-8376* | 1 | ELBOW AS | |
| | | 3 | **6V-8983** | 1 | ELBOW | |
| | | 3 | **6V-9746** | 2 | SEAL-O-RING | |
| | 32 | 1 | *148-8418* | 1 | REDUCER AS | |
| | | 1 | **6V-8398** | 1 | SEAL-O-RING | |
| | | 1 | **6V-8942** | 1 | REDUCER-O-RING | |
| | 33 | 2 | *148-8449* | 1 | TEE AS-SWIVEL | |
| | | 2 | **6V-9746** | 2 | SEAL-O-RING | |
| | | 2 | **6V-9839** | 1 | TEE-SWIVEL | |
| | 34 | 1 | *150-4037* | 1 | TEE AS | |
| | | 1 | **6V-8398** | 2 | SEAL-O-RING | |
| | | 1 | **6V-9844** | 1 | TEE-SWIVEL | |
| | 35 | 1 | *150-4043* | 1 | CONNECTOR AS | |
| | | 1 | **3J-1907** | 1 | SEAL-O-RING | |
| | | 1 | **6V-8398** | 1 | SEAL-O-RING | |
| | | 1 | **6V-9873** | 1 | CONNECTOR | |
| | 36 | 2 | *153-6236* | 1 | REDUCER AS | |
| | | 2 | **6V-8946** | 1 | REDUCER | |
| | | 2 | **6V-9746** | 1 | SEAL-O-RING | |
| | 37 | 2 | *153-6237* | 1 | ELBOW AS | |
| | | 2 | **3D-2824** | 1 | SEAL-O-RING | |
| | | 2 | **6V-9004** | 1 | ELBOW | |
| | | 2 | **6V-9746** | 1 | SEAL-O-RING | |
| | 38 | 1 | *155-3624* | 1 | PLUG AS | |
| | | 1 | **3J-7354** | 1 | SEAL-O-RING | |
| | | 1 | **9S-4182** | 1 | PLUG-O-RING | |
| I | 39 | 2 | **155-7517** | 1 | HOSE AS | |
| I | 40 | 2 | **155-7528** | 1 | HOSE AS | |
| | 41 | 3 | *164-5574* | 1 | TEE AS | |
| | | 3 | **3D-2824** | 1 | SEAL-O-RING | |
| | | 3 | **6V-8784** | 1 | TEE-FACE SEAL | |
| | | 3 | **6V-9746** | 2 | SEAL-O-RING | |
| | 42 | 1 | *164-6862* | 1 | TEE AS | |
| | | 1 | **6V-9160** | 1 | TEE-FACE SEAL | |
| | | 1 | **6V-9746** | 3 | SEAL-O-RING | |
| | 43 | 1 | *164-7908* | 1 | ELBOW AS | |
| | | 1 | **3J-7354** | 1 | SEAL-O-RING | |
| | | 1 | **6V-8397** | 1 | SEAL-O-RING | |
| | | 1 | **8T-7546** | 1 | ELBOW | |
| | 44 | 1 | **1P-4579** | 2 | FLANGE-HALF | |
| | 45 | 3 | **1P-4582** | 2 | FLANGE-HALF | |
| | 46 | 2,3 | **1S-6420** | 4 | CLIP | |
| | 47 | 1,3 | **2P-1293** | 2 | LOCKNUT (1-3/16-12-THD) | |
| | 48 | 3 | **3D-2824** | 1 | SEAL-O-RING | |
| | 49 | 3 | **3P-2404** | 2 | CLIP | |
| | 50 | 1,3 | **4J-0520** | 3 | SEAL-O-RING | |
| | 51 | 1 | **4J-0524** | 2 | SEAL-O-RING | |
| | 52 | 3 | **4J-0527** | 1 | SEAL-O-RING | |
| | 53 | 2 | **5K-9090** | 1 | SEAL-O-RING | |
| | 54 | 3 | **5P-7470** | 1 | CLIP (SLOT) | |
| | 55 | 3 | **5P-7471** | 1 | CLIP (TAB) | |
| | 56 | 3 | **5P-7703** | 1 | GROMMET | |
| | 57 | 2 | **5P-7854** | 2 | CLIP | |
| | 58 | 1,2,3 | **6V-1889** | 7 | CLIP | |
| | 59 | 3 | **6V-9746** | 1 | SEAL-O-RING | |
| | 60 | 2 | **7M-8485** | 1 | SEAL-O-RING | |

## *225-6716* **LINES GP-HYDRAULIC FAN** *(contd.)* **i02468392**

| NOTE | REF NO | GRAPHIC REF | PART NUMBER | QTY | PART NAME 1 2 3 4 5 6 (PRODUCT LEVEL) | SEE PAGE |
|---|---|---|---|---|---|---|
| | 61 | 1,3 | **8C-3206** | 4 | FLANGE-HALF | |
| | 62 | 2,3 | **8D-9947** | 3 | CLIP | |
| | 63 | 1,2,3 | **8T-4121** | 29 | WASHER-HARD (11X21X2.5-MM THK) | |
| M | 64 | 1,2,3 | **8T-4136** | 12 | BOLT (M10X1.5X25-MM) | |
| M | 65 | 1,2,3 | **8T-4137** | 5 | BOLT (M10X1.5X20-MM) | |
| M | 66 | 3 | **8T-4139** | 3 | BOLT (M12X1.75X30-MM) | |
| M | 67 | 2 | **8T-4178** | 2 | BOLT (M10X1.5X90-MM) | |
| M | 68 | 1 | **8T-4182** | 2 | BOLT (M10X1.5X45-MM) | |
| M | 69 | 3 | **8T-4184** | 4 | BOLT (M12X1.75X45-MM) | |
| M | 70 | 3 | **8T-4196** | 4 | BOLT (M10X1.5X35-MM) | |
| | 71 | 1,3 | **8T-4223** | 13 | WASHER-HARD (13.5X25.5X3-MM THK) | |
| M | 72 | 1,3 | **8T-4648** | 6 | BOLT (M12X1.75X70-MM) | |
| M | 73 | 1 | **8T-5005** | 4 | BOLT (M10X1.5X70-MM) | |
| | 74 | 1 | **9X-6580** | 1 | NUT (1-3/16-12-THD) | |
| I | 75 | 1 | **226-1958** | 1 | HOSE AS | |
| | 76 | 1 | *164-5567* | 1 | FITTING AS (QUICK DISCONNECT, MALE) | |
| | | 1 | **3J-1907** | 1 | SEAL-O-RING | |
| | | 1 | **6V-3965** | 1 | FITTING-COUPLER | |
| | 77 | 1 | **8C-3451** | 1 | CAP-DUST | |
| | 78 | 2 | **124-3019** | 2 | BRACKET AS | |
| | | | | | (EACH INCLUDES) | |
| M | | 2 | **8T-3490** | 1 | NUT-WELD (M10X1.5-THD) | |

I-REFER TO HYDRAULIC INFORMATION SYSTEM
M-METRIC PART
Y-SEPARATE ILLUSTRATION

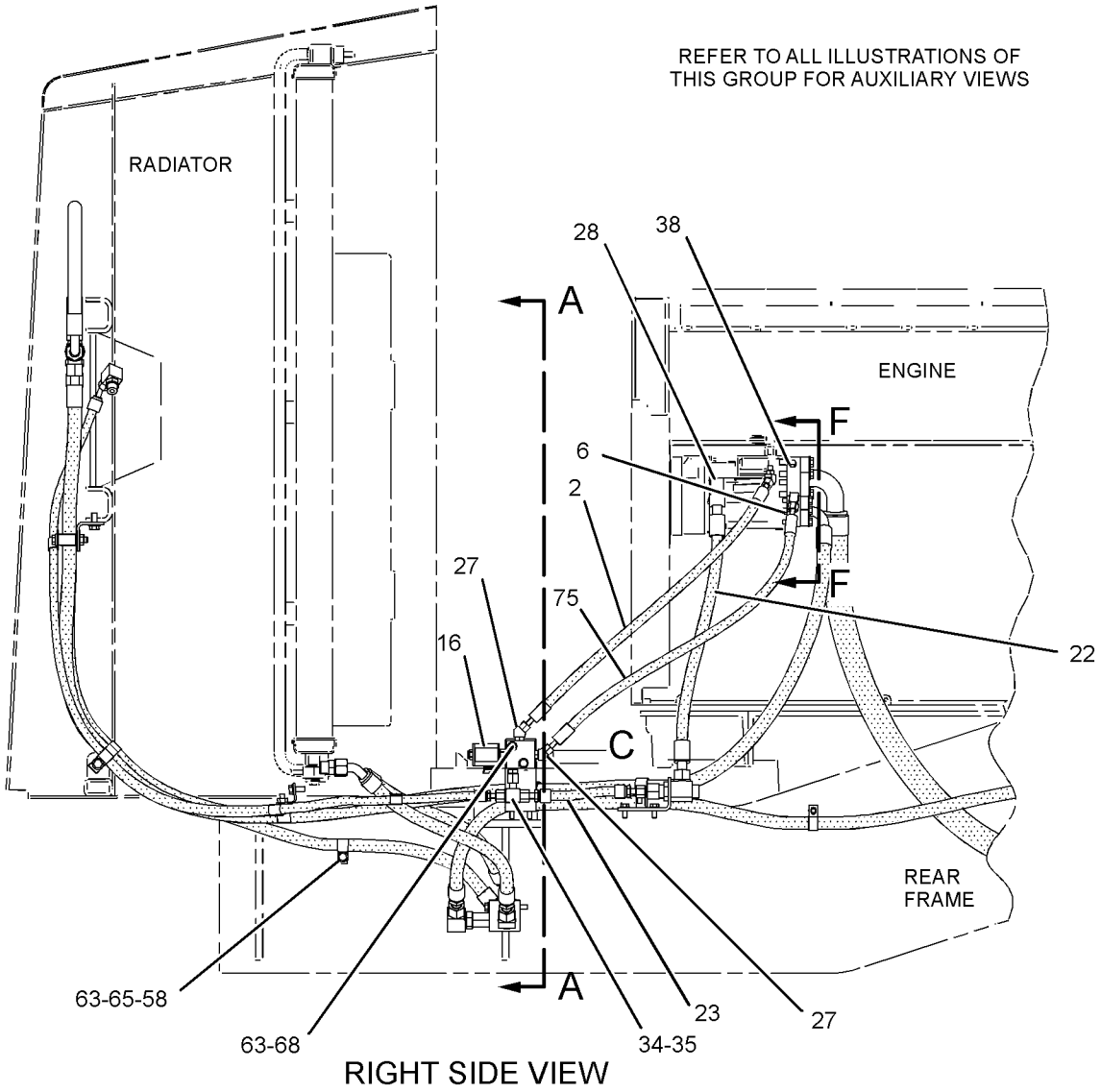


GRAPHIC #1 g01178023

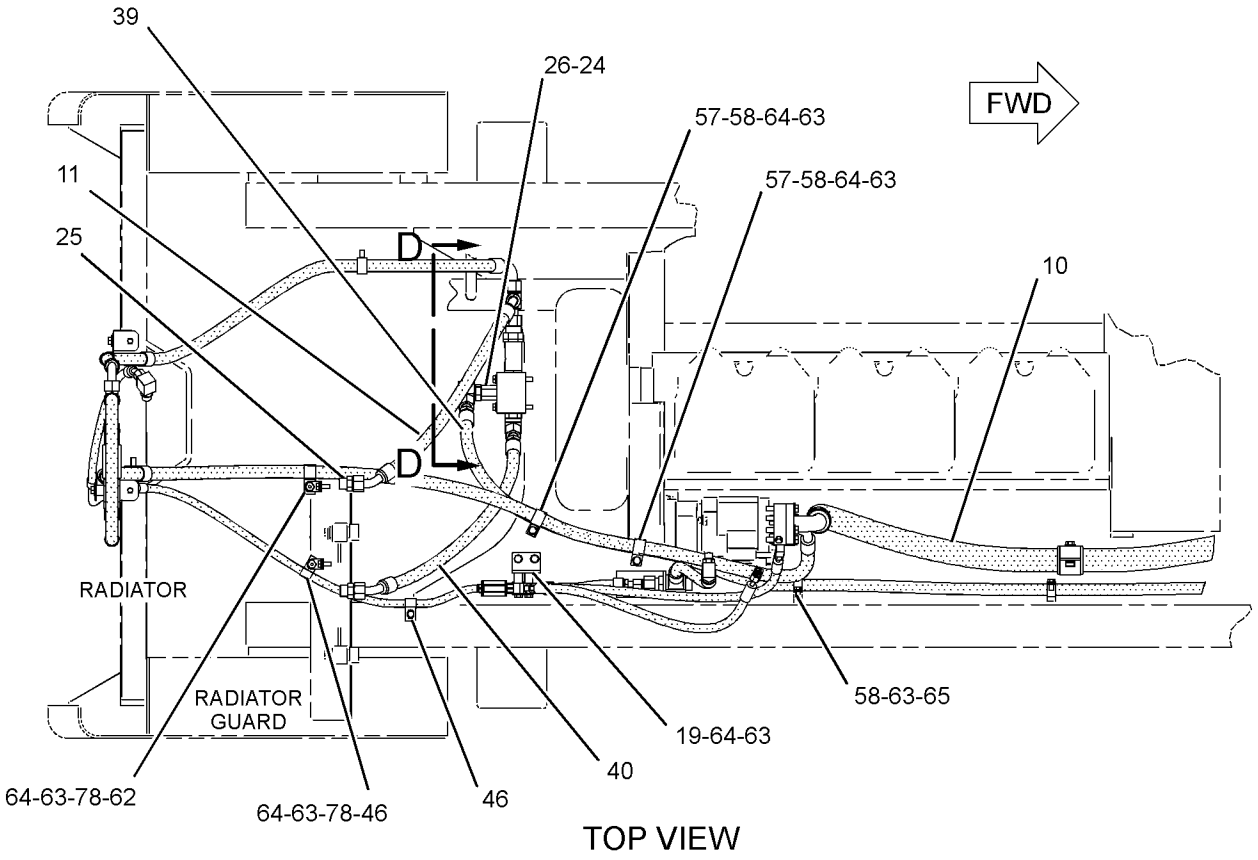


TOP VIEW

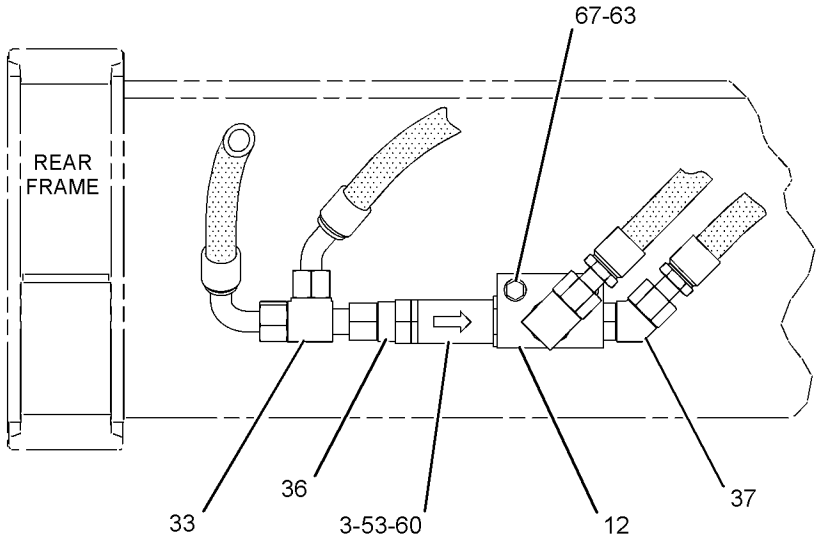


SECTION D-D

GRAPHIC #2 g01178064

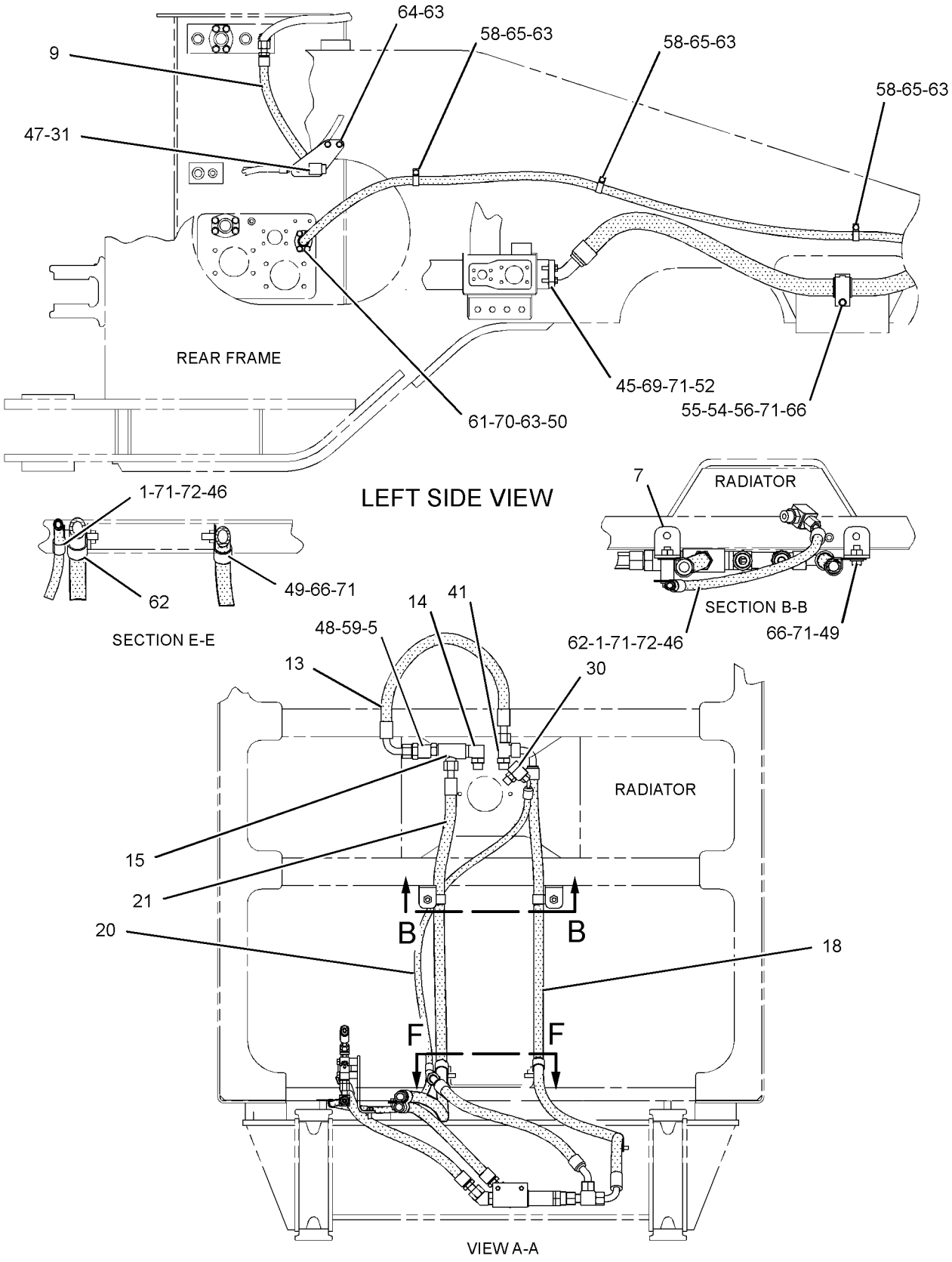


GRAPHIC #3 **<END>** g01238587

# HYDRAULIC SYSTEM

## *225-6716* LINES GP-HYDRAULIC FAN

**S/N: BXY809-UP**

**PART OF 225-5449, 298-2038 HYDRAULIC AR**

**SMCS-1386, 1387, 5057** **i02614447**

| NOTE | REF NO | GRAPHIC REF | PART NUMBER | QTY | PART NAME 1 2 3 4 5 6 (PRODUCT LEVEL) | SEE PAGE |
|---|---|---|---|---|---|---|
| C | 1 | 2,3,4 | **1F-1609** | 3 | SPACER (13.5X25.4X39.7-MM THK) | |
| | 2 | 4 | **6E-1454** | 1 | VALVE GP-CHECK (HYDRAULIC OIL COOLER BYPASS) | |
| | 3 | 4 | **8C-3451** | 1 | CAP-DUST | |
| | 4 | 4 | **8R-0752** | 1 | ADAPTER | |
| | 5 | 2 | **9J-3866** | 1 | ADAPTER | |
| | 6 | 3 | **9T-3752** | 1 | VALVE AS-CHECK (FAN MOTOR ANTI-CAVITATION) | |
| | 7 | 1 | **124-3019** | 2 | BRACKET AS | |
| | | | | | (EACH INCLUDES) | |
| M | | 1 | **8T-3490** | 1 | NUT-WELD (M10X1.5-THD) | |
| | 8 | 3 | **145-3319** | 2 | BRACKET AS | |
| | | | | | (EACH INCLUDES) | |
| M | | 3 | **8T-3597** | 1 | NUT-WELD (M12X1.75-THD) | |
| CI | 9 | 2 | **152-7737** | 1 | HOSE AS | |
| | 10 | 4 | **154-8962** | 1 | BRACKET | |
| I | 11 | 2 | **155-7518** | 1 | HOSE AS | |
| I | 12 | 1 | **290-3265** | 1 | HOSE AS | |
| I | 13 | 1 | **155-7527** | 1 | HOSE AS | |
| | 14 | 4 | **156-7472** | 1 | MANIFOLD | |
| CI | 15 | 2 | **161-6403** | 1 | HOSE AS | |
| I | 16 | 3 | **162-7365** | 1 | HOSE AS | |
| | 17 | 3 | *167-1795* | 1 | ELBOW AS | |
| | | 3 | **3D-2824** | 1 | SEAL-O-RING | |
| | | 3 | **8T-3491** | 1 | ELBOW | |
| | 18 | 3 | *172-5277* | 1 | TEE AS | |
| | | 3 | **3D-2824** | 1 | SEAL-O-RING | |
| | | 3 | **6V-9746** | 1 | SEAL-O-RING | |
| | | 3 | **8T-8901** | 1 | TEE-O-RING PORT | |
| Y | 19 | 2 | **191-8735** | 1 | VALVE GP-DEMAND FAN | 1160 |
| | 20 | 2 | **198-1854** | 1 | PLATE | |
| | 21 | 1 | **225-6717** | 1 | PLATE AS | |
| M | | 1 | **9R-2613** | 2 | BOSS-WELD (M10X1.5X25-MM OAL) | |
| I | 22 | 3 | **225-6719** | 1 | HOSE AS | |
| I | 23 | 3 | **225-6720** | 1 | HOSE AS | |
| I | 24 | 2 | **225-6723** | 1 | HOSE AS | |
| I | 25 | 2 | **225-6724** | 1 | HOSE AS | |
| I | 26 | 3 | **239-9233** | 1 | HOSE AS | |
| | 27 | 1 | *148-8312* | 1 | ADAPTER AS | |
| | | 1 | **3D-2824** | 1 | SEAL-O-RING | |
| | | 1 | **3T-4965** | 1 | ADAPTER-O-RING | |
| C | 28 | 2 | *148-8326* | 1 | CONNECTOR AS | |
| | | 2 | **3J-7354** | 1 | SEAL-O-RING | |
| | | 2 | **6V-8397** | 1 | SEAL-O-RING | |
| | | 2 | **6V-9872** | 1 | CONNECTOR | |
| | 29 | 1 | *148-8327* | 2 | CONNECTOR AS | |
| | | | | | (EACH INCLUDES) | |
| | | 1 | **3D-2824** | 1 | SEAL-O-RING | |
| | | 1 | **6V-8637** | 1 | CONNECTOR | |
| | | 1 | **6V-9746** | 1 | SEAL-O-RING | |
| C | 30 | 2 | *148-8336* | 1 | CONNECTOR AS | |
| | | 2 | **3J-1907** | 1 | SEAL-O-RING | |
| | | 2 | **6V-8397** | 1 | SEAL-O-RING | |
| | | 2 | **6V-8636** | 1 | CONNECTOR | |
| | 31 | 1 | *148-8347* | 1 | ELBOW AS | |
| | | 1 | **3D-2824** | 1 | SEAL-O-RING | |
| | | 1 | **6V-9007** | 1 | ELBOW | |
| | | 1 | **6V-9746** | 1 | SEAL-O-RING | |

## *225-6716* LINES GP-HYDRAULIC FAN *(contd.)* i02614447

| NOTE | REF NO | GRAPHIC REF | PART NUMBER | QTY | PART NAME 1 2 3 4 5 6 (PRODUCT LEVEL) | SEE PAGE |
|---|---|---|---|---|---|---|
| C | 32 | 2 | *148-8353* | 1 | ELBOW AS | |
| | | 2 | **3J-1907** | 1 | SEAL-O-RING | |
| | | 2 | **6V-8397** | 1 | SEAL-O-RING | |
| | | 2 | **6V-9001** | 1 | ELBOW | |
| | 33 | 2 | *148-8359* | 1 | ELBOW AS | |
| | | 2 | **3K-0360** | 1 | SEAL-O-RING | |
| | | 2 | **6V-9746** | 1 | SEAL-O-RING | |
| | | 2 | **6V-9877** | 1 | ELBOW | |
| | 34 | 3 | *148-8372* | 1 | ELBOW AS | |
| | | 3 | **2M-9780** | 1 | SEAL-O-RING | |
| | | 3 | **6V-8398** | 1 | SEAL-O-RING | |
| | | 3 | **6V-8721** | 1 | ELBOW | |
| | 35 | 2 | *148-8376* | 1 | ELBOW AS | |
| | | 2 | **6V-8983** | 1 | ELBOW | |
| | | 2 | **6V-9746** | 2 | SEAL-O-RING | |
| | 36 | 4 | *148-8418* | 1 | REDUCER AS | |
| | | 4 | **6V-8398** | 1 | SEAL-O-RING | |
| | | 4 | **6V-8942** | 1 | REDUCER-O-RING | |
| | 37 | 4 | *148-8449* | 1 | TEE AS-SWIVEL | |
| | | 4 | **6V-9746** | 2 | SEAL-O-RING | |
| | | 4 | **6V-9839** | 1 | TEE-SWIVEL | |
| | 38 | 4 | *150-4027* | 1 | TEE AS | |
| | | 4 | **3E-2310** | 1 | TEE | |
| | | 4 | **3J-1907** | 1 | SEAL-O-RING | |
| | | 4 | **6V-8397** | 1 | SEAL-O-RING | |
| | 39 | 2 | *150-4037* | 1 | TEE AS | |
| | | 2 | **6V-8398** | 2 | SEAL-O-RING | |
| | | 2 | **6V-9844** | 1 | TEE-SWIVEL | |
| | 40 | 2 | *150-4043* | 1 | CONNECTOR AS | |
| | | 2 | **3J-1907** | 1 | SEAL-O-RING | |
| | | 2 | **6V-8398** | 1 | SEAL-O-RING | |
| | | 2 | **6V-9873** | 1 | CONNECTOR | |
| | 41 | 4 | *153-6236* | 1 | REDUCER AS | |
| | | 4 | **6V-8946** | 1 | REDUCER | |
| | | 4 | **6V-9746** | 1 | SEAL-O-RING | |
| | 42 | 4 | *153-6237* | 1 | ELBOW AS | |
| | | 4 | **3D-2824** | 1 | SEAL-O-RING | |
| | | 4 | **6V-9004** | 1 | ELBOW | |
| | | 4 | **6V-9746** | 1 | SEAL-O-RING | |
| | 43 | 2 | *155-3624* | 1 | PLUG AS | |
| | | 2 | **3J-7354** | 1 | SEAL-O-RING | |
| | | 2 | **9S-4182** | 1 | PLUG-O-RING | |
| I | 44 | 1 | **155-7517** | 1 | HOSE AS | |
| I | 45 | 1 | **155-7528** | 1 | HOSE AS | |
| | 46 | 4 | *164-5567* | 1 | FITTING AS (QUICK DISCONNECT, MALE) | |
| | | 4 | **3J-1907** | 1 | SEAL-O-RING | |
| | | 4 | **6V-3965** | 1 | FITTING-COUPLER | |
| | 47 | 3 | *164-5574* | 1 | TEE AS | |
| | | 3 | **3D-2824** | 1 | SEAL-O-RING | |
| | | 3 | **6V-8784** | 1 | TEE-FACE SEAL | |
| | | 3 | **6V-9746** | 2 | SEAL-O-RING | |
| | 48 | 4 | *164-6862* | 1 | TEE AS | |
| | | 4 | **6V-9160** | 1 | TEE-FACE SEAL | |
| | | 4 | **6V-9746** | 3 | SEAL-O-RING | |
| | 49 | 4 | **1P-4579** | 2 | FLANGE-HALF | |
| | 50 | 2 | **1P-4582** | 2 | FLANGE-HALF | |
| | 51 | 1,3,4 | **1S-6420** | 4 | CLIP | |
| | 52 | 2,4 | **2P-1293** | 2 | LOCKNUT (1-3/16-12-THD) | |
| | 53 | 3 | **3D-2824** | 1 | SEAL-O-RING | |

## *225-6716* **LINES GP-HYDRAULIC FAN** *(contd.)* **i02614447**

| NOTE | REF NO | GRAPHIC REF | PART NUMBER | QTY | PART NAME 1 2 3 4 5 6 (PRODUCT LEVEL) | SEE PAGE |
|---|---|---|---|---|---|---|
| | 54 | 3,4 | **3P-2404** | 2 | CLIP | |
| | 55 | 2,4 | **4J-0520** | 3 | SEAL-O-RING | |
| | 56 | 4 | **4J-0524** | 2 | SEAL-O-RING | |
| | 57 | 2 | **4J-0527** | 1 | SEAL-O-RING | |
| C | 58 | 2 | **5K-5338** | 1 | CLIP | |
| | 59 | 4 | **5K-9090** | 1 | SEAL-O-RING | |
| | 60 | 2 | **5P-7470** | 1 | CLIP (SLOT) | |
| | 61 | 2 | **5P-7471** | 1 | CLIP (TAB) | |
| | 62 | 2 | **5P-7703** | 2 | GROMMET | |
| | 63 | 1 | **5P-7854** | 2 | CLIP | |
| C | 64 | 2 | **6D-4636** | 1 | CLIP | |
| | 65 | 1,2 | **6V-1889** | 7 | CLIP | |
| | 66 | 3 | **6V-9746** | 1 | SEAL-O-RING | |
| | 67 | 4 | **7M-8485** | 1 | SEAL-O-RING | |
| C | 68 | 2 | **7X-7729** | 1 | WASHER (11X25X3-MM THK) | |
| | 69 | 2,4 | **8C-3206** | 4 | FLANGE-HALF | |
| | 70 | 1,4 | **8D-9947** | 3 | CLIP | |
| | 71 | 1,2,4 | **8T-4121** | 33 | WASHER-HARD (11X21X2.5-MM THK) | |
| CM | 72 | 2 | **8T-4133** | 2 | NUT (M10X1.5-THD) | |
| M | 73 | 1,2,4 | **8T-4136** | 12 | BOLT (M10X1.5X25-MM) | |
| M | 74 | 1,2 | **8T-4137** | 5 | BOLT (M10X1.5X20-MM) | |
| M | 75 | 2,3,4 | **8T-4139** | 3 | BOLT (M12X1.75X30-MM) | |
| M | 76 | 4 | **8T-4178** | 2 | BOLT (M10X1.5X90-MM) | |
| M | 77 | 2 | **8T-4182** | 2 | BOLT (M10X1.5X45-MM) | |
| M | 78 | 2 | **8T-4184** | 4 | BOLT (M12X1.75X45-MM) | |
| M | 79 | 2 | **8T-4196** | 4 | BOLT (M10X1.5X35-MM) | |
| | 80 | 2,3,4 | **8T-4223** | 13 | WASHER-HARD (13.5X25.5X3-MM THK) | |
| M | 81 | 3,4 | **8T-4648** | 6 | BOLT (M12X1.75X70-MM) | |
| CM | 82 | 2,4 | **8T-5005** | 5 | BOLT (M10X1.5X70-MM) | |
| | 83 | 4 | **9X-6580** | 1 | NUT (1-3/16-12-THD) | |
| | 84 | 2 | **294-0058** | 1 | PLATE | |
| M | 85 | 2 | **8T-4195** | 3 | BOLT (M10X1.5X30-MM) | |
| | 86 | 2 | **3E-8026** | 1 | CLIP (SLOT) | |
| | 87 | 2 | **3E-8027** | 1 | CLIP (TAB) | |
| | 88 | 2 | **144-4613** | 1 | ANGLE AS | |
| M | | 2 | **8T-3490** | 1 | NUT-WELD (M10X1.5-THD) | |

C-CHANGE FROM PREVIOUS TYPE
I-REFER TO HYDRAULIC INFORMATION SYSTEM
M-METRIC PART
Y-SEPARATE ILLUSTRATION

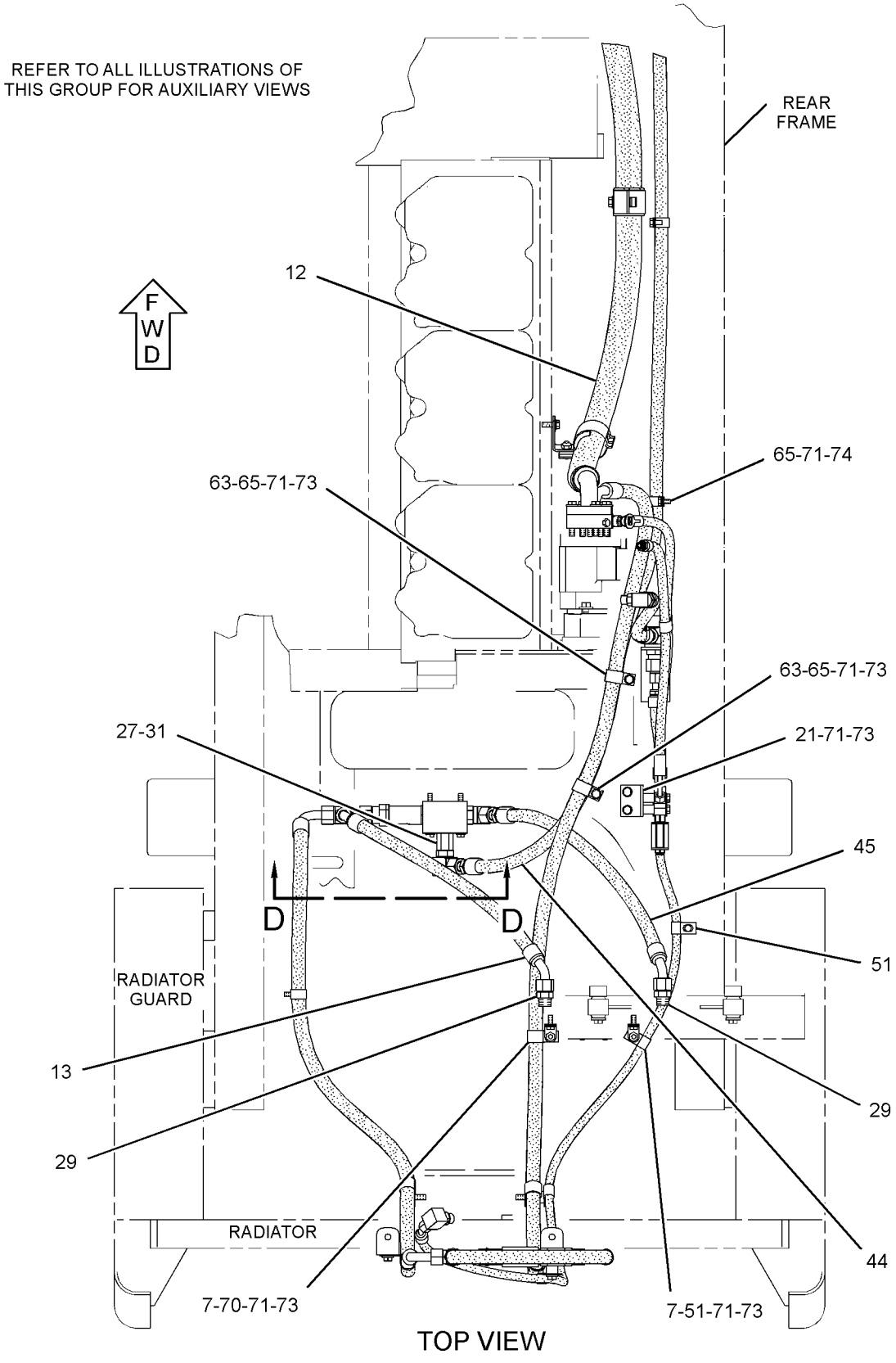


GRAPHIC #1

g01338979

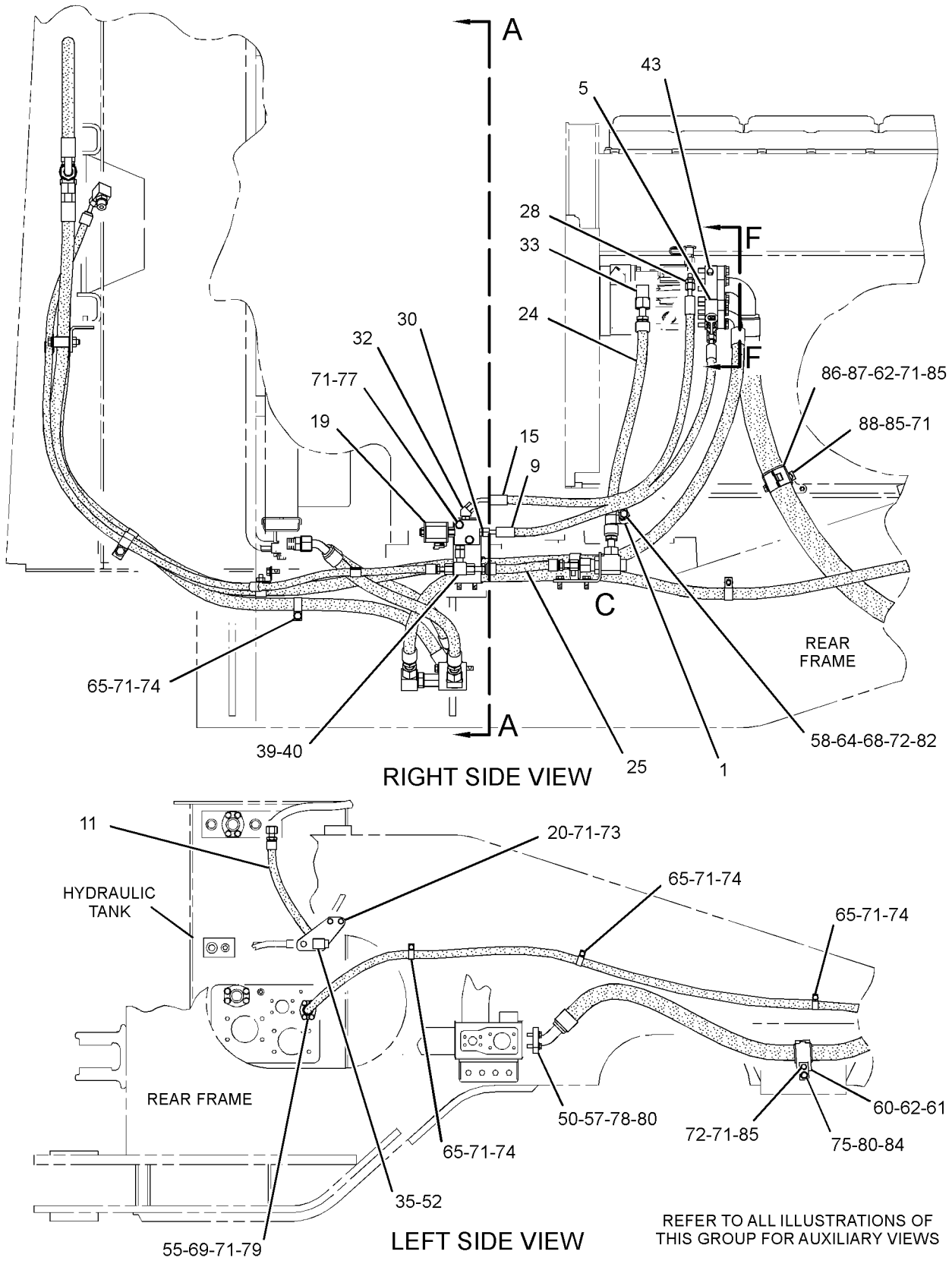


GRAPHIC #2

g01338872

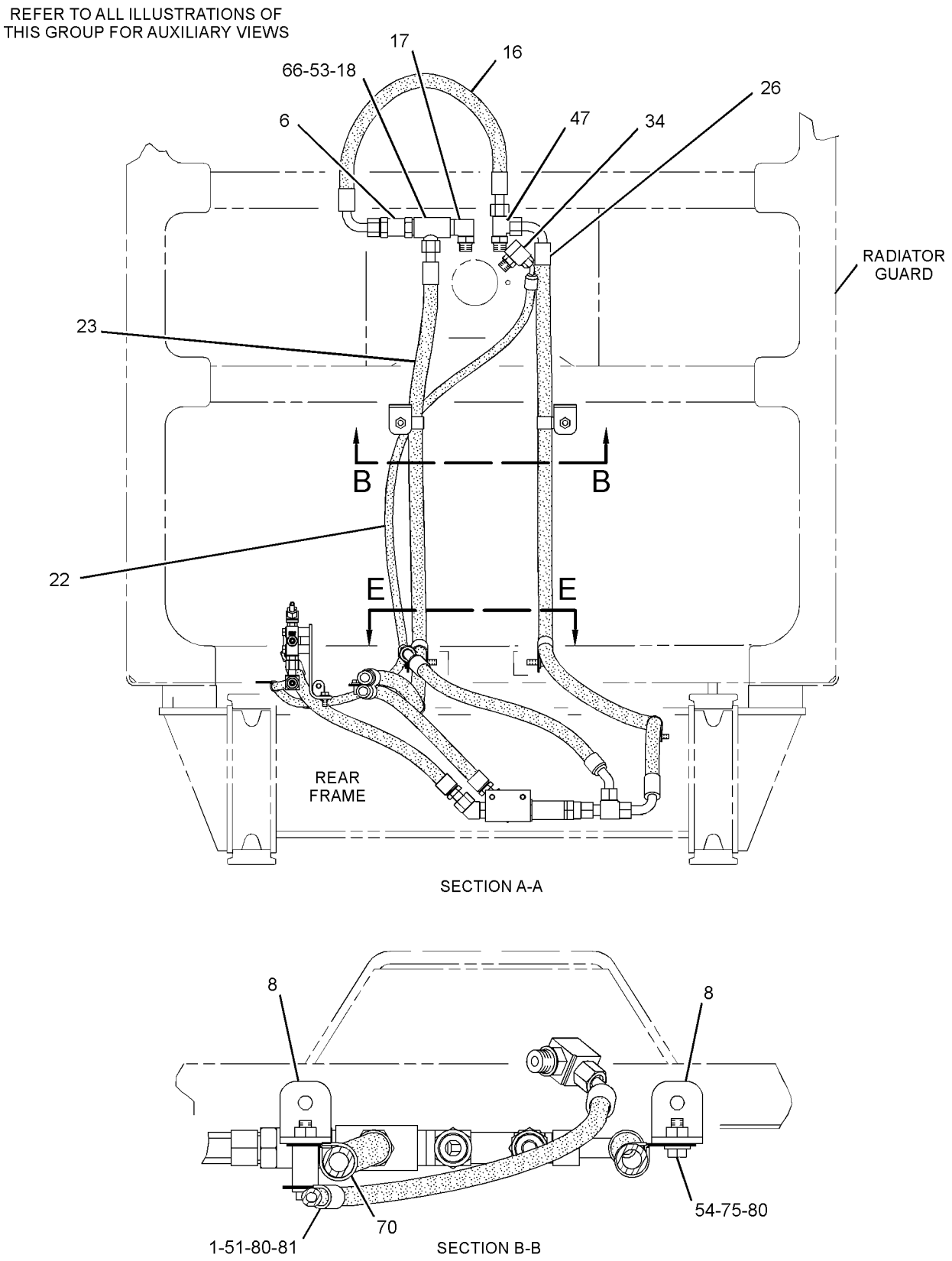


GRAPHIC #3

g01338778

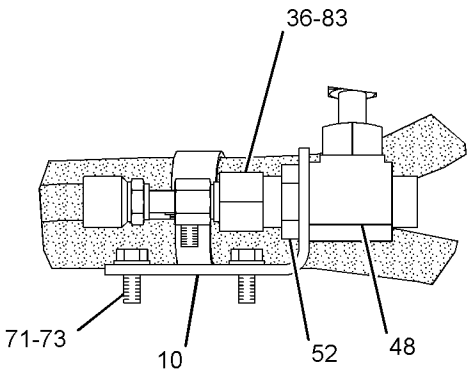


VIEW OF AREA C

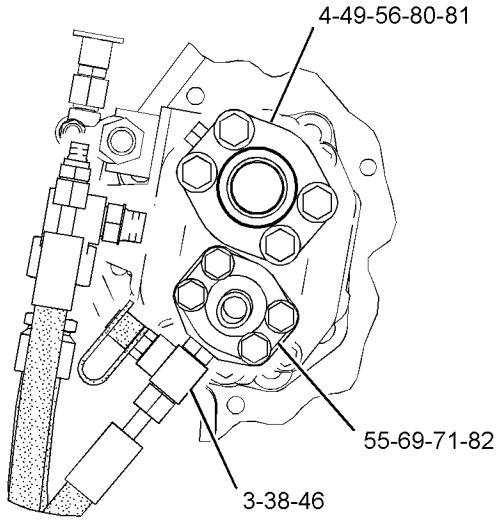


VIEW F-F

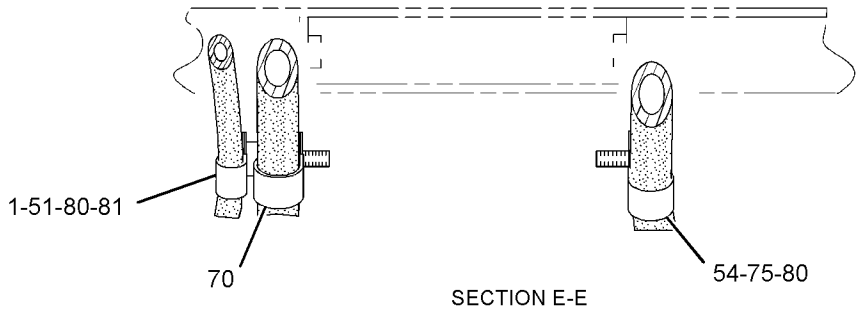


SECTION E-E

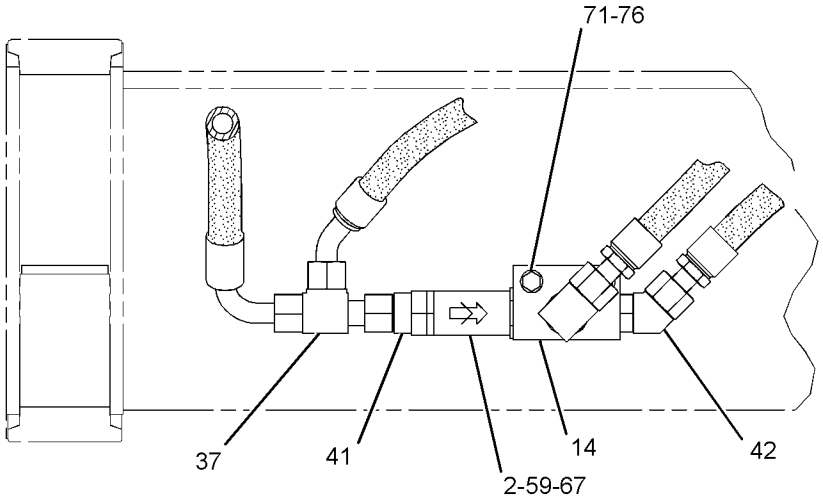


SECTION D-D

GRAPHIC #4 **<END>** g01338786

# *132-6136* LINES GP-LIFT CYLINDER

**S/N: BXY1-UP**

**PART OF 225-5449, 298-2038 HYDRAULIC AR**

**SMCS-5057, 5102** **i02261207**

| NOTE | REF NO | GRAPHIC REF | PART NUMBER | QTY | PART NAME 1 2 3 4 5 6 (PRODUCT LEVEL) | SEE PAGE |
|---|---|---|---|---|---|---|
| Y | 1 | 1 | **173-8612** | 1 | CYLINDER GP-LIFT (RH) | 1078 |
| Y | 2 | 1 | **173-8613** | 1 | CYLINDER GP-LIFT (LH) | 1079 |
| I | 3 | 1 | **153-8474** | 2 | HOSE AS | |
| I | 4 | 1 | **153-8475** | 2 | HOSE AS | |
| I | 5 | 1 | **153-8476** | 2 | HOSE AS | |
| | 6 | 1 | **153-8477** | 2 | TUBE AS | |
| | 7 | 1 | **153-8478** | 1 | TUBE AS | |
| | 8 | 1 | **153-8479** | 1 | TUBE AS | |
| | 9 | 1 | **153-8480** | 1 | TUBE AS | |
| | 10 | 1 | **153-8481** | 1 | TUBE AS | |
| | 11 | 1 | **153-8482** | 2 | MANIFOLD | |
| | 12 | 1 | **153-8483** | 2 | PLATE AS | |
| | 13 | 1 | **153-8484** | 2 | BRACKET AS | |
| | | | | | (EACH INCLUDES) | |
| | | 1 | **8X-4719** | 2 | BAR | |
| | 14 | 1 | **1P-3704** | 12 | SEAL-RECTANGULAR | |
| | 15 | 1 | **1P-3705** | 6 | SEAL-RECTANGULAR | |
| | 16 | 1 | **1P-3706** | 6 | SEAL-RECTANGULAR | |
| | 17 | 1 | **1P-5767** | 24 | FLANGE-HALF | |
| | 19 | 1 | **5P-0049** | 2 | COVER | |
| | 20 | 1 | **5P-8077** | 4 | FLANGE-HALF | |
| | 21 | 1 | **7Y-4038** | 8 | CLAMP-HALF | |
| M | 22 | 1 | **8T-4174** | 8 | BOLT (M16X2X120-MM) | |
| M | 23 | 1 | **8T-4183** | 8 | BOLT (M12X1.75X40-MM) | |
| M | 25 | 1 | **8T-4193** | 8 | BOLT (M16X2X50-MM) | |
| M | 26 | 1 | **8T-4194** | 40 | BOLT (M12X1.75X50-MM) | |
| | 27 | 1 | **8T-4223** | 64 | WASHER-HARD (13.5X25.5X3-MM THK) | |
| M | 28 | 1 | **8T-4648** | 8 | BOLT (M12X1.75X70-MM) | |
| M | 29 | 1 | **8T-4779** | 4 | BOLT (M16X2X35-MM) | |
| M | 30 | 1 | **8T-4910** | 8 | BOLT (M12X1.75X60-MM) | |
| M | 31 | 1 | **8T-4956** | 8 | BOLT (M12X1.75X35-MM) | |
| | 32 | 1 | **148-8407** | 2 | PLUG AS | |
| | 33 | 1 | **9X-8257** | 20 | WASHER (17.5X30X3.5-MM THK) | |

I-REFER TO HYDRAULIC INFORMATION SYSTEM
M-METRIC PART
Y-SEPARATE ILLUSTRATION

*132-6136* **LINES GP-LIFT CYLINDER** *(contd.)* **i02261207**

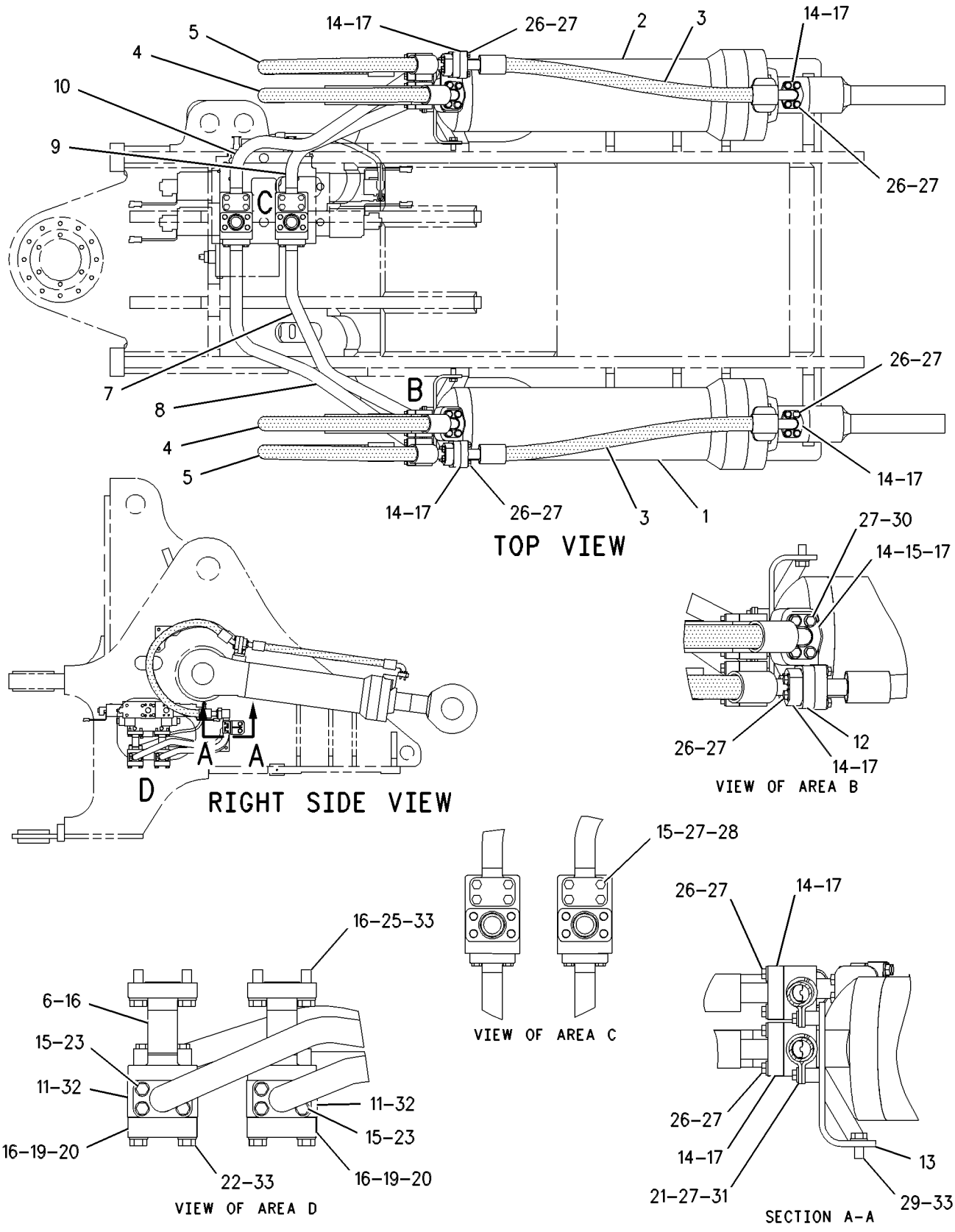


GRAPHIC #1 **<END>** g00614938

# HYDRAULIC SYSTEM

## *189-7257* LINES GP-LIFT CYLINDER

**S/N: BXY1900-UP**
**PART OF 227-3317 GUARD GP-LINES**
**AN ATTACHMENT**

**SMCS-5057, 5102** **i01915868**

| NOTE | PART NUMBER | QTY | PART NAME 1 2 3 4 5 6 (PRODUCT LEVEL) | SEE PAGE |
|---|---|---|---|---|
| | **189-7161** | 2 | HOSE AS | |
| | **189-7162** | 2 | HOSE AS | |
| | **189-7163** | 2 | HOSE AS | |
| | | | *****STANDARD REMOVAL***** | |
| JI | **153-8474** | 2 | HOSE AS | |
| JI | **153-8475** | 2 | HOSE AS | |
| JI | **153-8476** | 2 | HOSE AS | |

I-SEE HOSE FABRICATION GUIDE
J-PART OF STANDARD LINES GP-LIFT CYLINDER

**<END>**

# HYDRAULIC SYSTEM

## *156-5519* LINES GP-TILT CYLINDER—CYLINDER MOUNTED

**S/N: BXY1-UP**
**PART OF 255-0042, 255-0043 LIFT AR**
**AN ATTACHMENT**

**SMCS-5057, 5104** **i02682449**

| NOTE | REF NO | GRAPHIC REF | PART NUMBER | QTY | PART NAME 1 2 3 4 5 6 (PRODUCT LEVEL) | SEE PAGE |
|---|---|---|---|---|---|---|
| | 1 | 1 | **115-1392** | 1 | MANIFOLD | |
| | 2 | 1 | **156-4403** | 1 | U-BOLT | |
| | 3 | 1 | **165-2093** | 1 | BRACKET AS | |
| | 4 | 1 | **165-2096** | 1 | TUBE AS | |
| | 5 | 1 | **243-3720** | 2 | CLAMP | |
| CY | 6 | 1 | **231-1955** | 1 | CYLINDER GP-TILT (HIGH LIFT MACHINES) | 1080 |
| I | 7 | 1 | **304-7225** | 1 | HOSE AS | |
| | 8 | 1 | **304-7226** | 2 | BRACKET | |
| | 9 | 1 | **103-1303** | 2 | CLAMP-HALF | |
| | 10 | 1 | **1P-3705** | 2 | SEAL-RECTANGULAR | |
| | 11 | 1 | **1P-3706** | 2 | SEAL-RECTANGULAR | |
| | 12 | 1 | **3E-9411** | 4 | WASHER-HARD (17.5X38X6-MM THK) | |
| | 13 | 1 | **5P-1076** | 2 | WASHER-HARD (13.5X30X4-MM THK) | |
| | 14 | 1 | **5P-8077** | 4 | FLANGE-HALF | |
| | 15 | 1 | **6V-1574** | 1 | GROMMET | |
| M | 16 | 1 | **7X-2475** | 4 | BOLT (M16X2X130-MM) | |
| M | 17 | 1 | **7X-2543** | 4 | BOLT (M10X1.5X120-MM) | |
| M | 18 | 1 | **7X-2553** | 4 | BOLT (M16X2X40-MM) | |
| M | 19 | 1 | **7X-2556** | 4 | BOLT (M16X2X100-MM) | |
| | 20 | 1 | **7X-7729** | 8 | WASHER (11X25X3-MM THK) | |
| M | 21 | 1 | **8T-4133** | 4 | NUT (M10X1.5-THD) | |
| M | 22 | 1 | **8T-4140** | 8 | BOLT (M16X2X60-MM) | |
| M | 23 | 1 | **8T-4244** | 2 | NUT (M12X1.75-THD) | |
| | 24 | 1 | **9X-8257** | 16 | WASHER (17.5X30X3.5-MM THK) | |

C-CHANGE FROM PREVIOUS TYPE
I-REFER TO HYDRAULIC INFORMATION SYSTEM
M-METRIC PART
Y-SEPARATE ILLUSTRATION

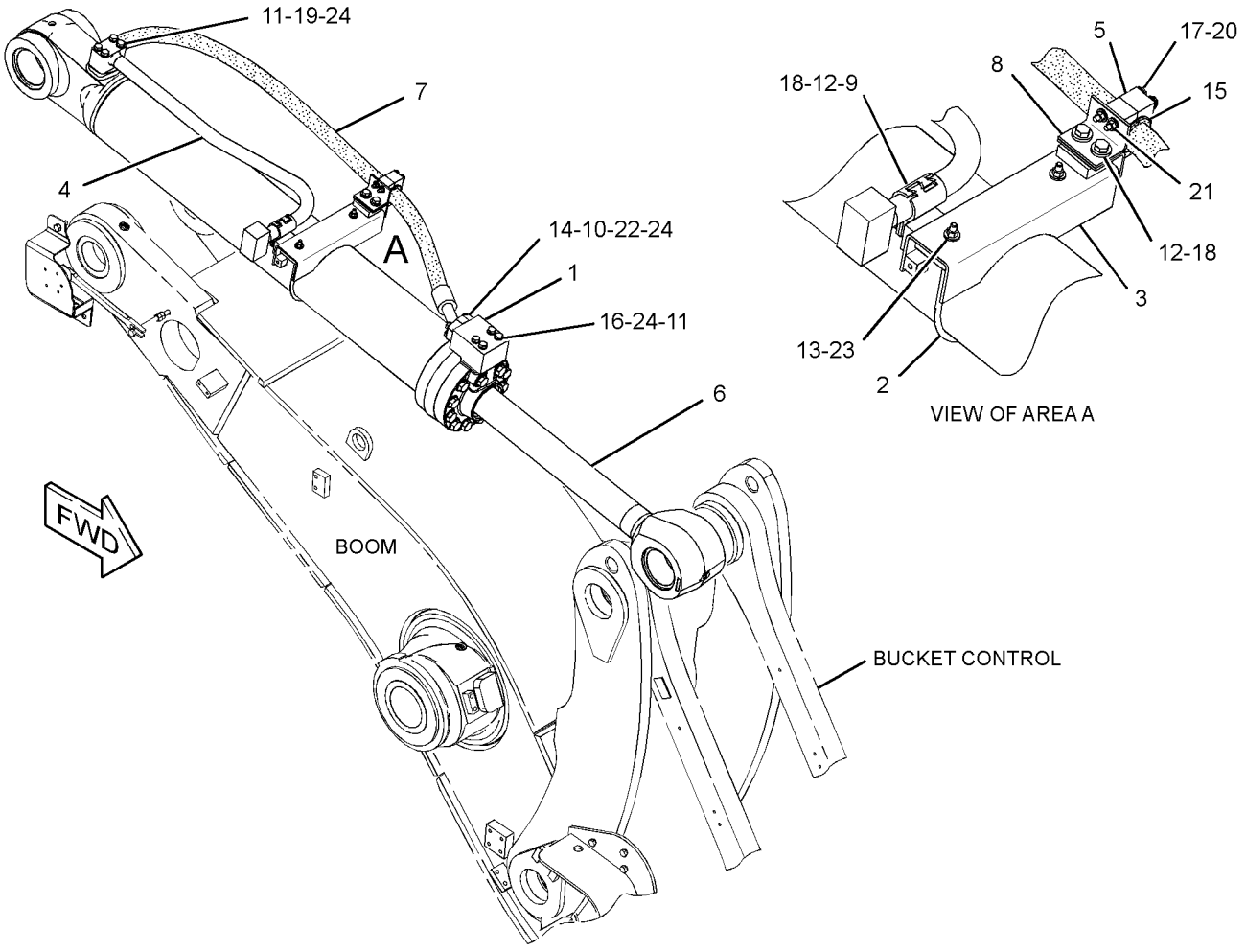


GRAPHIC #1 **<END>** g01356186

# HYDRAULIC SYSTEM

## *189-7254* LINES GP-TILT CYLINDER

**S/N: BXY1900-UP**
**PART OF 227-3317 GUARD GP-LINES**
**AN ATTACHMENT**

**SMCS-5057, 5104** **i02405158**

| NOTE | REF NO | GRAPHIC REF | PART NUMBER | QTY | PART NAME 1 2 3 4 5 6 (PRODUCT LEVEL) | SEE PAGE |
|---|---|---|---|---|---|---|
| | 1 | 1 | **217-5911** | 2 | HOSE AS (RH, LH) | |
| | | | | | (EACH INCLUDES) | |
| I | | 1 | **214-9522** | 1 | HOSE AS | |
| | | 1 | **5P-4868** | 2 | CLAMP-HOSE | |
| E | | 1 | **2Q-0584** | | INSULATION (152-CM) | |
| | 2 | 1 | **193-2120** | 2 | GROMMET | |
| | 3 | 1 | **6V-1868** | 2 | CLIP (TAB) | |
| | 4 | 1 | **6V-1867** | 2 | CLIP (SLOT) | |
| | | | | | *****ATTACHMENT REMOVAL***** | |
| AFJ | | | **6V-1572** | 2 | CLIP (SLOT) | |
| AFJ | | | **6V-1573** | 2 | CLIP (TAB) | |
| AFJ | | | **6V-1574** | 2 | GROMMET | |
| AFJI | | | **214-9522** | 2 | HOSE AS | |

A-NOT PART OF THIS GROUP
E-ORDER BY THE CENTIMETER
F-NOT SHOWN
I-REFER TO HYDRAULIC INFORMATION SYSTEM
J-PART OF ATTACHMENT LINES GP-TILT CYLINDER

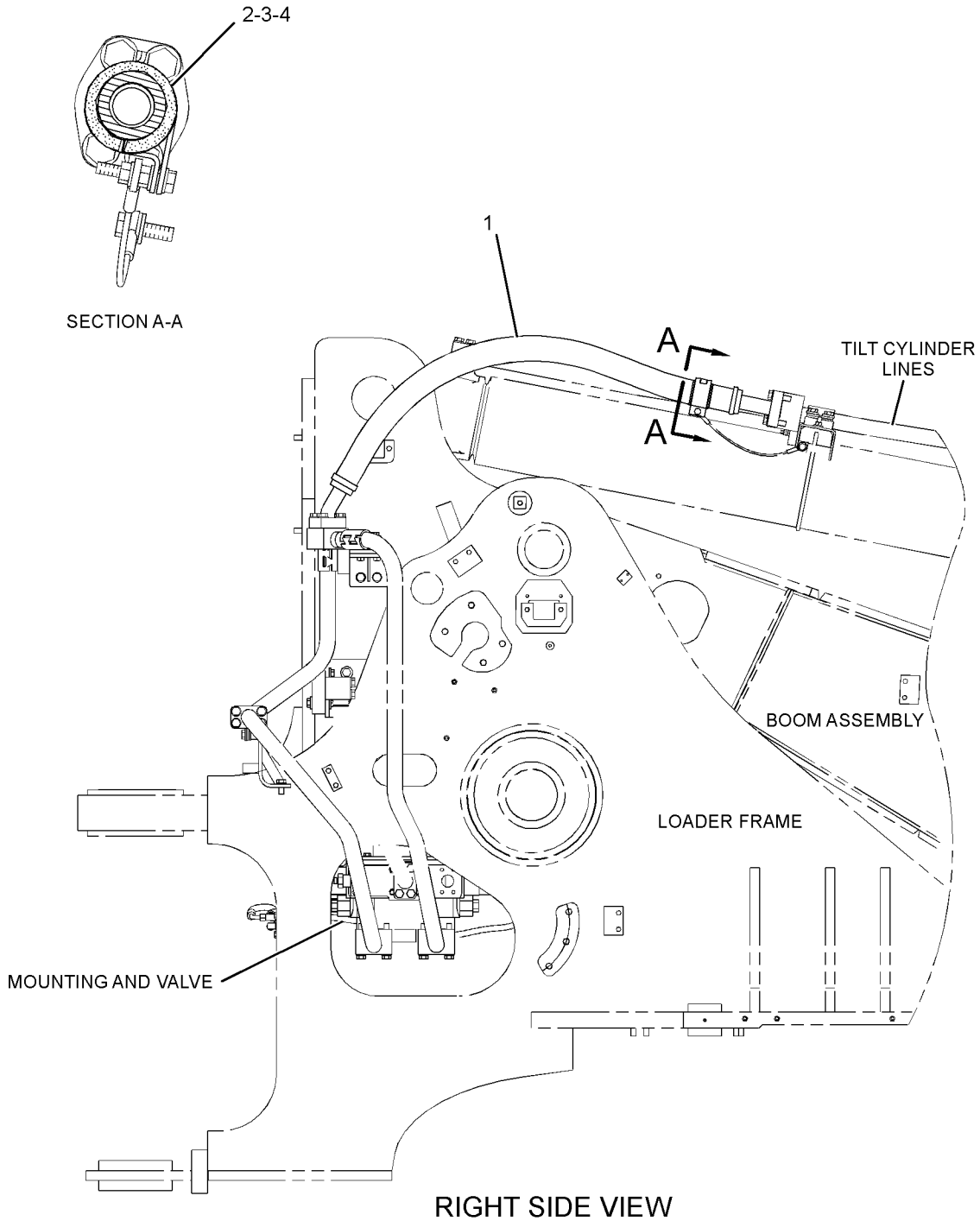


RIGHT SIDE VIEW

GRAPHIC #1 **<END>** g01199953

# HYDRAULIC SYSTEM

## *246-2322* LINES GP-TILT CYLINDER

**S/N: BXY1-UP**
**PART OF 255-0040, 255-0042 LIFT AR**
**AN ATTACHMENT**

**SMCS-5057, 5104** **i02674824**

| NOTE | REF NO | GRAPHIC REF | PART NUMBER | QTY | PART NAME 1 2 3 4 5 6 (PRODUCT LEVEL) | SEE PAGE |
|---|---|---|---|---|---|---|
| | 1 | 1 | **156-2842** | 1 | BRACKET AS | |
| | 2 | 1 | **165-2357** | 1 | BRACKET AS | |
| M | | 1 | **8T-3597** | 2 | NUT-WELD (M12X1.75-THD) | |
| | 3 | 1 | **165-2358** | 1 | BRACKET AS | |
| | 4 | 1 | **165-3825** | 1 | BRACKET AS | |
| | 5 | 1 | **165-3827** | 1 | TUBE AS | |
| | 6 | 1 | **179-2229** | 1 | CABLE AS | |
| | 7 | 1 | **214-9523** | 1 | TUBE AS | |
| | 8 | 1 | **214-9524** | 1 | TUBE AS | |
| I | 9 | 1 | **304-7223** | 1 | HOSE AS | |
| | 10 | 1 | **103-1303** | 6 | CLAMP-HALF | |
| M | 11 | 1 | **180-4686** | 1 | BOLT (M10X1.5X60-MM) | |
| | 12 | 1 | **1P-3705** | 2 | SEAL-RECTANGULAR | |
| | 13 | 1 | **1P-3706** | 3 | SEAL-RECTANGULAR | |
| | 14 | 1 | **3E-9411** | 6 | WASHER-HARD (17.5X38X6-MM THK) | |
| | 15 | 1 | **5P-1076** | 2 | WASHER-HARD (13.5X30X4-MM THK) | |
| | 16 | 1 | **5P-8077** | 4 | FLANGE-HALF | |
| | 17 | 1 | **6V-1572** | 1 | CLIP (SLOT) | |
| | 18 | 1 | **6V-1573** | 1 | CLIP (TAB) | |
| | 19 | 1 | **6V-1574** | 1 | GROMMET | |
| M | 20 | 1 | **7X-2553** | 6 | BOLT (M16X2X40-MM) | |
| M | 21 | 1 | **7X-2556** | 8 | BOLT (M16X2X100-MM) | |
| | 22 | 1 | **8T-4121** | 4 | WASHER-HARD (11X21X2.5-MM THK) | |
| | 23 | 1 | **8T-4122** | 8 | WASHER-HARD (17X32X3.5-MM THK) | |
| M | 24 | 1 | **8T-4133** | 2 | NUT (M10X1.5-THD) | |
| M | 25 | 1 | **8T-4140** | 12 | BOLT (M16X2X60-MM) | |
| M | 26 | 1 | **8T-4183** | 3 | BOLT (M12X1.75X40-MM) | |
| | 27 | 1 | **8T-4223** | 3 | WASHER-HARD (13.5X25.5X3-MM THK) | |
| M | 28 | 1 | **8T-4779** | 6 | BOLT (M16X2X35-MM) | |
| | 29 | 1 | **9X-8257** | 18 | WASHER (17.5X30X3.5-MM THK) | |

I-REFER TO HYDRAULIC INFORMATION SYSTEM
M-METRIC PART

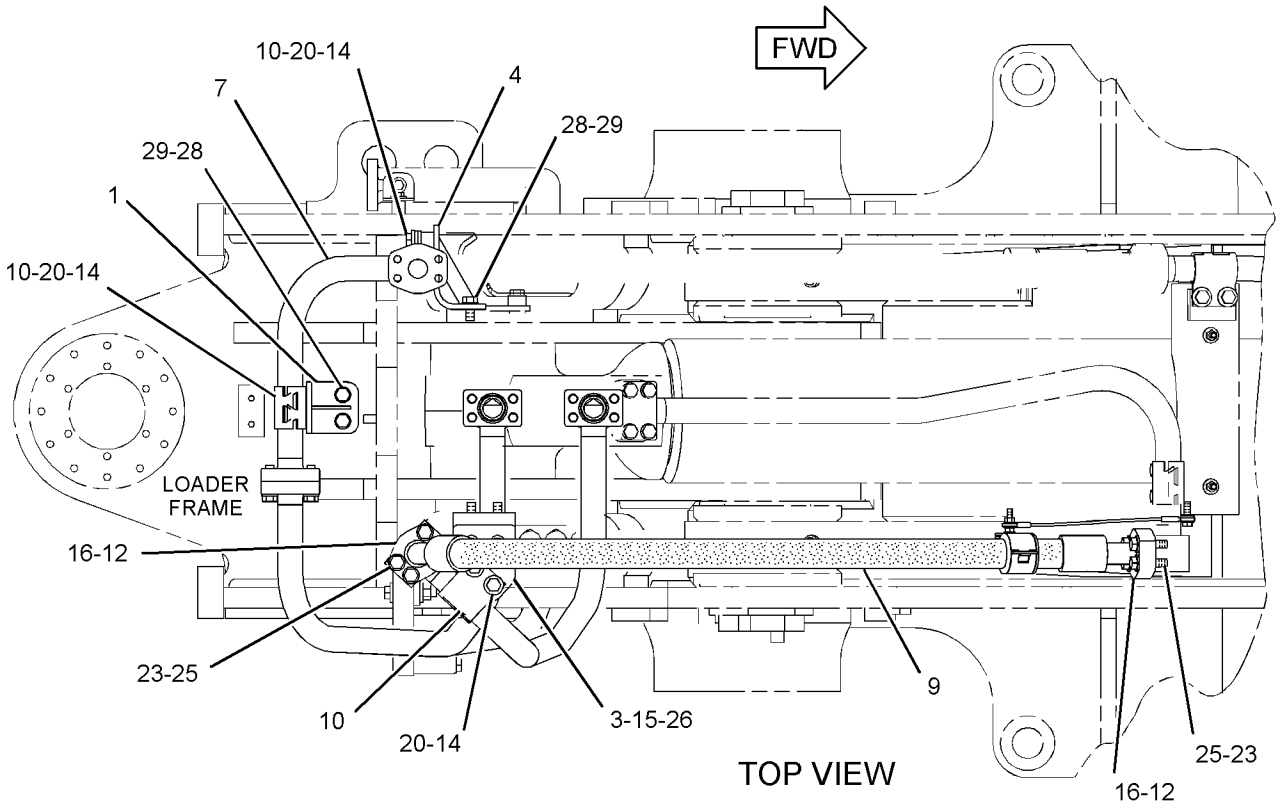


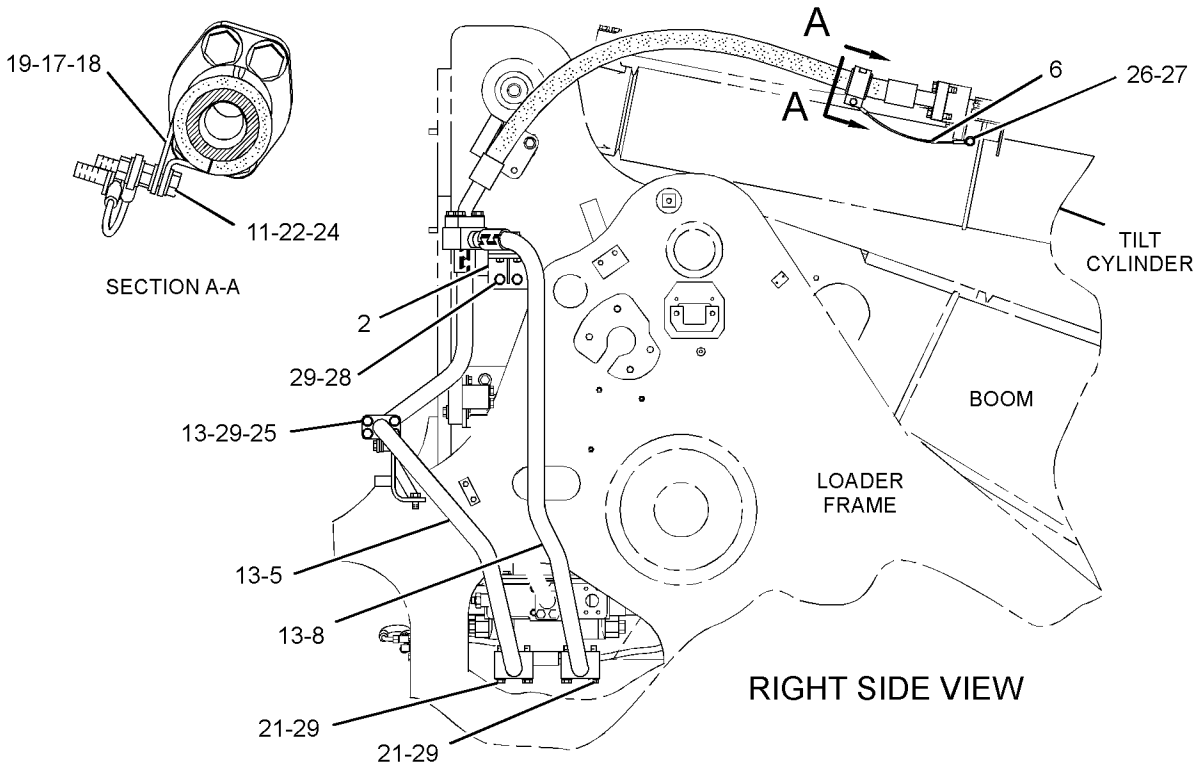


GRAPHIC #1 **<END>** g01346926

# HYDRAULIC SYSTEM

## *246-2323* LINES GP-TILT CYLINDER

**S/N: BXY1-UP**

**PART OF 255-0041, 255-0043 LIFT AR**

**AN ATTACHMENT**

**SMCS-5057, 5104** **i02674823**

| NOTE | REF NO | GRAPHIC REF | PART NUMBER | QTY | PART NAME 1 2 3 4 5 6 (PRODUCT LEVEL) | SEE PAGE |
|---|---|---|---|---|---|---|
| | 1 | 1 | **156-2842** | 1 | BRACKET AS | |
| | 2 | 1 | **156-5781** | 2 | MANIFOLD | |
| | 3 | 1 | **165-2357** | 1 | BRACKET AS | |
| M | | 1 | **8T-3597** | 2 | NUT-WELD (M12X1.75-THD) | |
| | 4 | 1 | **165-2358** | 1 | BRACKET AS | |
| | 5 | 1 | **165-3825** | 1 | BRACKET AS | |
| | 6 | 1 | **166-2101** | 1 | TUBE AS | |
| | 7 | 1 | **179-2229** | 1 | CABLE AS | |
| | 8 | 1 | **214-9523** | 1 | TUBE AS | |
| | 9 | 1 | **224-3872** | 1 | TUBE AS | |
| I | 10 | 1 | **304-7223** | 1 | HOSE AS | |
| | 11 | 1 | **103-1303** | 6 | CLAMP-HALF | |
| M | 12 | 1 | **180-4686** | 1 | BOLT (M10X1.5X60-MM) | |
| | 13 | 1 | **1P-3705** | 2 | SEAL-RECTANGULAR | |
| | 14 | 1 | **1P-3706** | 5 | SEAL-RECTANGULAR | |
| | 15 | 1 | **3E-9411** | 14 | WASHER-HARD (17.5X38X6-MM THK) | |
| | 16 | 1 | **5P-1076** | 2 | WASHER-HARD (13.5X30X4-MM THK) | |
| | 17 | 1 | **5P-8077** | 4 | FLANGE-HALF | |
| | 18 | 1 | **6V-1572** | 1 | CLIP (SLOT) | |
| | 19 | 1 | **6V-1573** | 1 | CLIP (TAB) | |
| | 20 | 1 | **6V-1574** | 1 | GROMMET | |
| M | 21 | 1 | **7X-2553** | 6 | BOLT (M16X2X40-MM) | |
| | 22 | 1 | **8T-4121** | 4 | WASHER-HARD (11X21X2.5-MM THK) | |
| | 23 | 1 | **8T-4122** | 8 | WASHER-HARD (17X32X3.5-MM THK) | |
| M | 24 | 1 | **8T-4133** | 2 | NUT (M10X1.5-THD) | |
| M | 25 | 1 | **8T-4140** | 12 | BOLT (M16X2X60-MM) | |
| M | 26 | 1 | **8T-4183** | 3 | BOLT (M12X1.75X40-MM) | |
| | 27 | 1 | **8T-4223** | 3 | WASHER-HARD (13.5X25.5X3-MM THK) | |
| M | 28 | 1 | **8T-4779** | 6 | BOLT (M16X2X35-MM) | |
| M | 29 | 1 | **8T-6385** | 8 | BOLT (M16X2X180-MM) | |
| | 30 | 1 | **9X-8257** | 10 | WASHER (17.5X30X3.5-MM THK) | |

I-REFER TO HYDRAULIC INFORMATION SYSTEM
M-METRIC PART

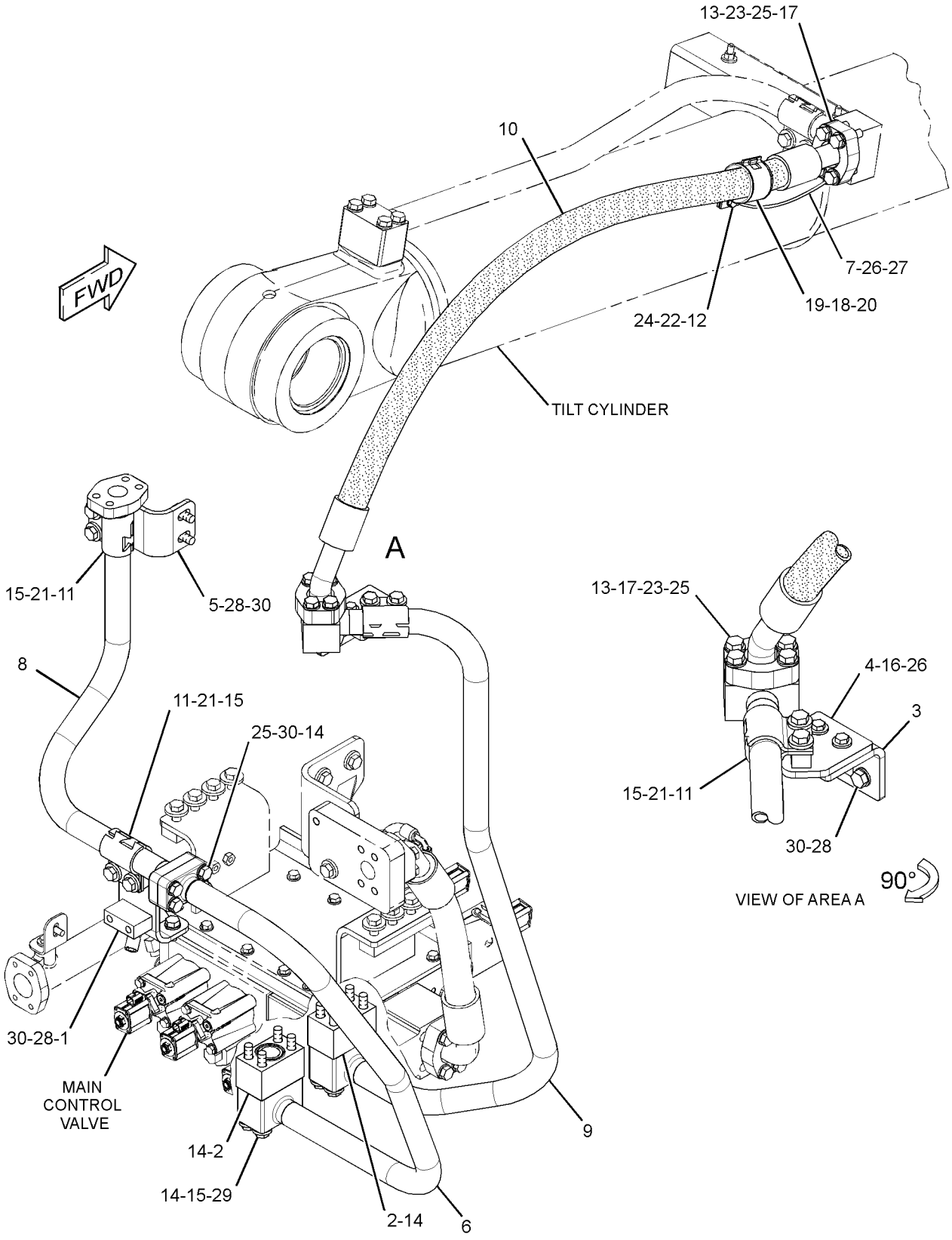


GRAPHIC #1 **<END>** g01346786

# HYDRAULIC SYSTEM

## *246-6921* LINES GP-TILT CYLINDER–

**CYLINDER MOUNTED, STANDARD LIFT**

**S/N: BXY1-UP**

**PART OF 255-0040, 255-0041 LIFT AR**

**AN ATTACHMENT**

**SMCS-5057, 5104** **i02674821**

| NOTE | REF NO | GRAPHIC REF | PART NUMBER | QTY | PART NAME 1 2 3 4 5 6 (PRODUCT LEVEL) | SEE PAGE |
|---|---|---|---|---|---|---|
| | 1 | 1 | **115-1392** | 1 | MANIFOLD | |
| | 2 | 1 | **156-4403** | 1 | U-BOLT | |
| | 3 | 1 | **165-2093** | 1 | BRACKET AS | |
| | 4 | 1 | **165-2096** | 1 | TUBE AS | |
| | 5 | 1 | **243-3720** | 2 | CLAMP | |
| Y | 6 | 1 | **271-6441** | 1 | CYLINDER GP-TILT | 1081 |
| I | 7 | 1 | **304-7224** | 1 | HOSE AS | |
| | 8 | 1 | **304-7226** | 2 | BRACKET | |
| | 9 | 1 | **103-1303** | 2 | CLAMP-HALF | |
| | 10 | 1 | **1P-3705** | 2 | SEAL-RECTANGULAR | |
| | 11 | 1 | **1P-3706** | 2 | SEAL-RECTANGULAR | |
| | 12 | 1 | **3E-9411** | 4 | WASHER-HARD (17.5X38X6-MM THK) | |
| | 13 | 1 | **5P-1076** | 2 | WASHER-HARD (13.5X30X4-MM THK) | |
| | 14 | 1 | **5P-8077** | 4 | FLANGE-HALF | |
| | 15 | 1 | **6V-1574** | 1 | GROMMET | |
| M | 16 | 1 | **7X-2475** | 4 | BOLT (M16X2X130-MM) | |
| M | 17 | 1 | **7X-2543** | 4 | BOLT (M10X1.5X120-MM) | |
| M | 18 | 1 | **7X-2553** | 4 | BOLT (M16X2X40-MM) | |
| M | 19 | 1 | **7X-2556** | 4 | BOLT (M16X2X100-MM) | |
| | 20 | 1 | **7X-7729** | 8 | WASHER (11X25X3-MM THK) | |
| M | 21 | 1 | **8T-4133** | 4 | NUT (M10X1.5-THD) | |
| M | 22 | 1 | **8T-4140** | 8 | BOLT (M16X2X60-MM) | |
| M | 23 | 1 | **8T-4244** | 2 | NUT (M12X1.75-THD) | |
| | 24 | 1 | **9X-8257** | 16 | WASHER (17.5X30X3.5-MM THK) | |

I-REFER TO HYDRAULIC INFORMATION SYSTEM
M-METRIC PART
Y-SEPARATE ILLUSTRATION

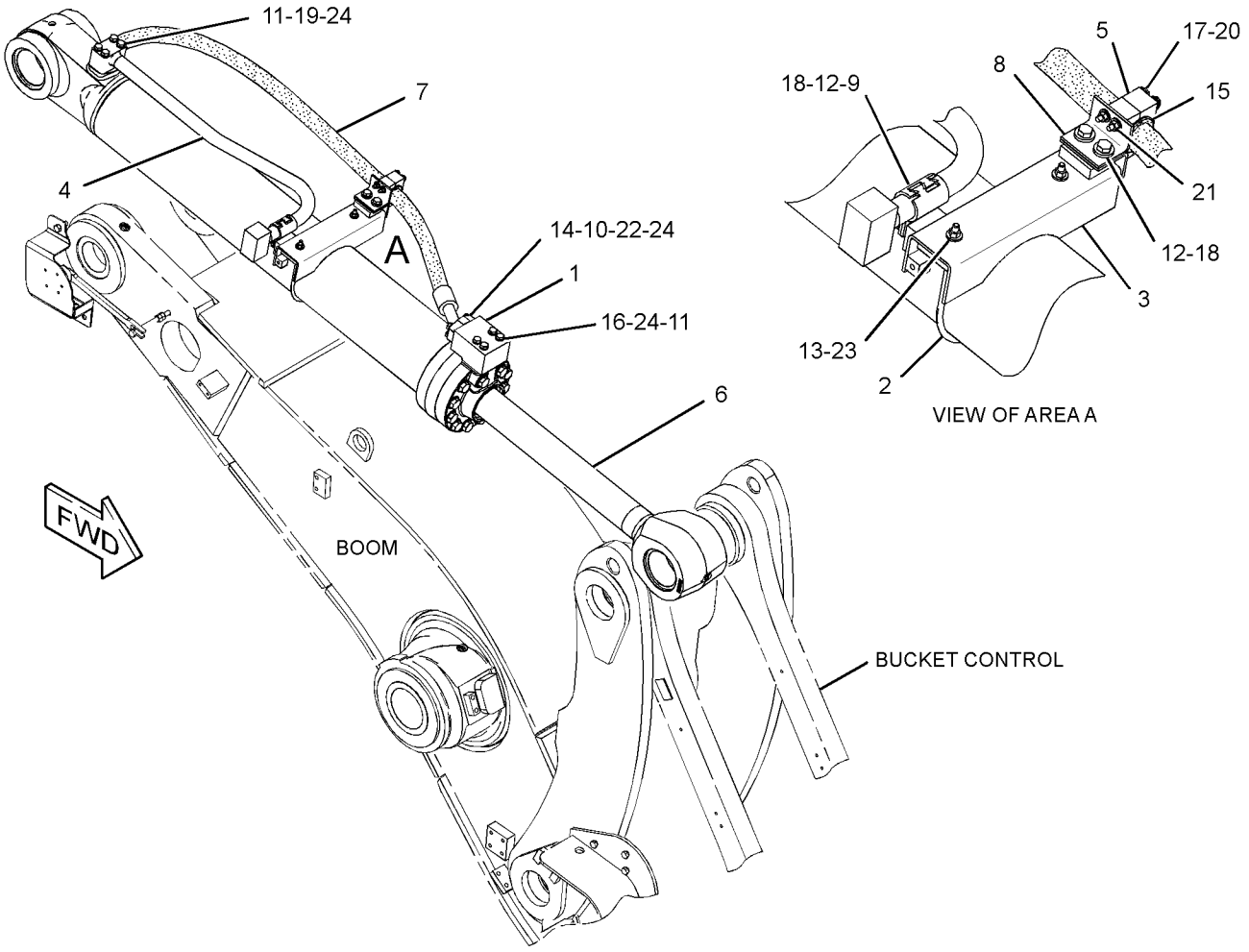


GRAPHIC #1 **<END>** g01346241

# HYDRAULIC SYSTEM

## *226-2040* MOTOR & MTG GP-HYDRAULIC FAN

**S/N: BXY1-UP**

**PART OF 225-5449, 298-2038 HYDRAULIC AR**

**SMCS-1386** **i02022998**

| NOTE | REF NO | GRAPHIC REF | PART NUMBER | QTY | PART NAME 1 2 3 4 5 6 (PRODUCT LEVEL) | SEE PAGE |
|---|---|---|---|---|---|---|
| Y | 1 | 1 | **213-5268** | 1 | MOTOR GP-PISTON (HYDRAULIC FAN) | 1129 |

Y-SEPARATE ILLUSTRATION

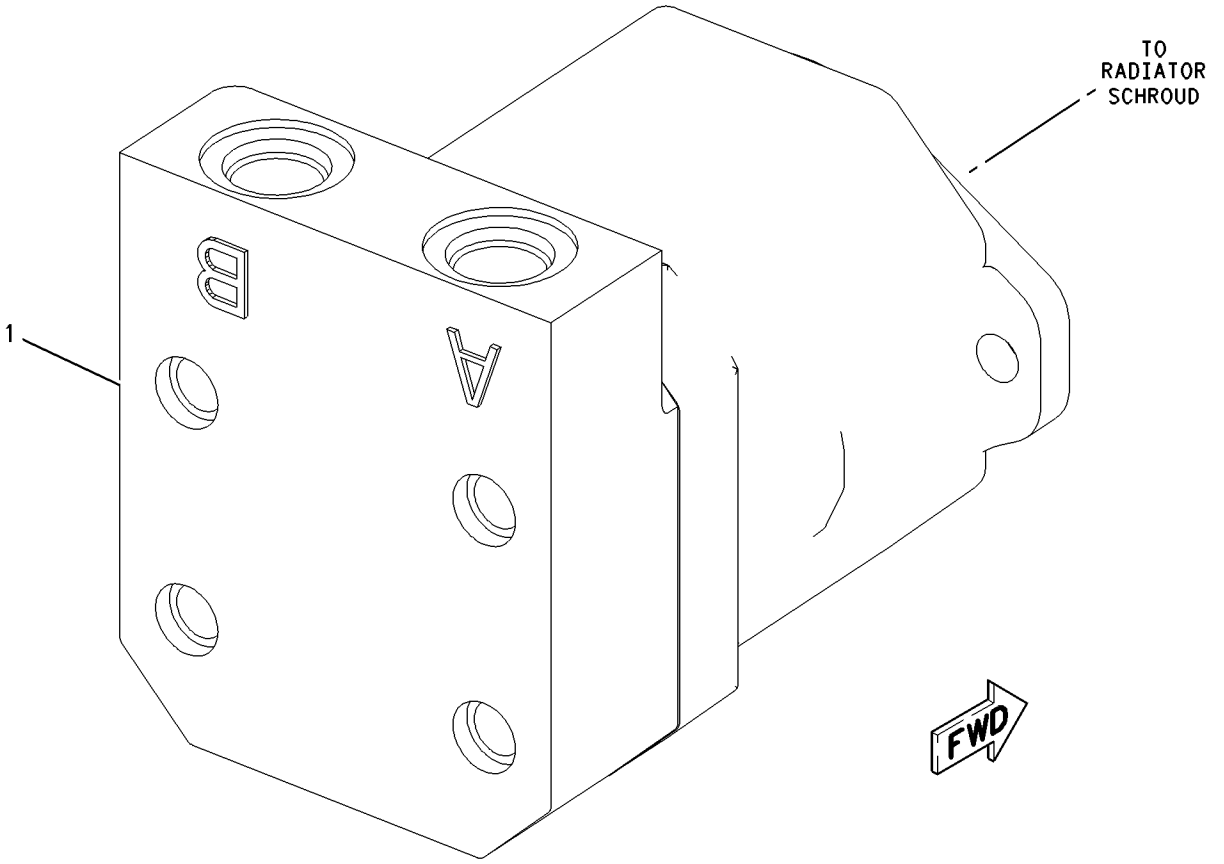


GRAPHIC #1 **<END>** g01004650

# 213-5268 MOTOR GP-PISTON—HYDRAULIC FAN*R

**S/N: BXY1-UP**

**PART OF 226-2040 MOTOR & MTG GP-HYDRAULIC FAN**

**SMCS-1386, 5058** **i01876766**

| NOTE | REF NO | GRAPHIC REF | PART NUMBER | QTY | PART NAME 1 2 3 4 5 6 (PRODUCT LEVEL) | SEE PAGE |
|---|---|---|---|---|---|---|
| | 1 | 1 | **168-7319** | 1 | SEAL-SHAFT | |
| | 2 | 1 | **9S-8006** | 1 | PLUG-O RING | |
| | 3 | 1 | **2M-9780** | 1 | SEAL-O-RING | |
| | 4 | 1 | **185-0278** | 1 | SWASHPLATE | |
| Y | 5 | 1 | **185-0275** | 1 | ROTATING GP-MOTOR | 1142 |
| | 6 | 1 | **192-7470** | 1 | SEAL-O-RING | |
| M | 7 | 1 | **095-0690** | 4 | BOLT-SOCKET HEAD (M14X2X60-MM) | |
| | 8 | 1 | **7Y-5267** | 1 | RING-RETAINING | |
| | 9 | 1 | **188-6280** | 1 | DOWEL | |
| | 10 | 1 | **101-2862** | 2 | DOWEL | |
| | 11 | 1 | **185-0295** | 1 | BEARING | |
| | 12 | 1 | **185-0280** | 1 | PLATE | |
| | 13 | 1 | **216-2515** | 1 | SHAFT | |
| | 14 | 1 | **185-0296** | 1 | BEARING | |
| B | 15 | 1 | **168-2203** | 1 | SHIM-SHAFT | |

B-USE AS REQUIRED
M-METRIC PART
Y-SEPARATE ILLUSTRATION

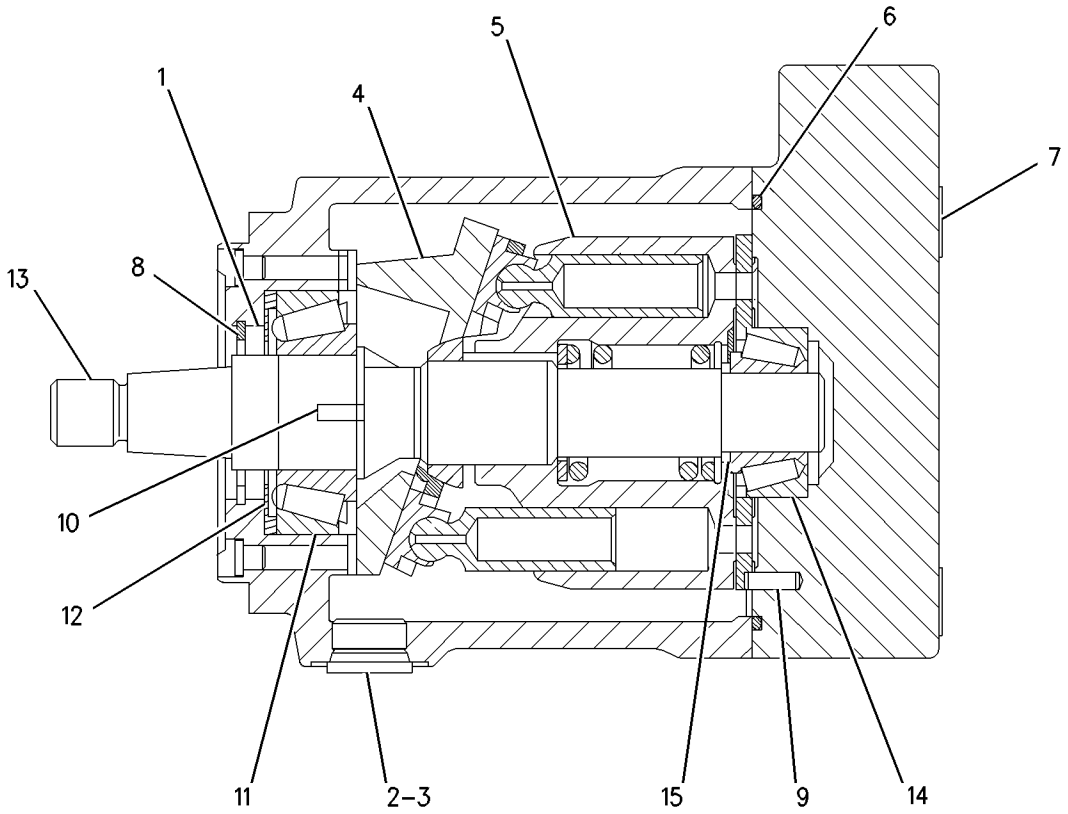


GRAPHIC #1 **<END>** g00954879

# *226-1957* PUMP & MTG GP-HYDRAULIC FAN–
## HIGH AMBIENT TEMPERATURE
**S/N: BXY1-UP**
**PART OF 226-1956 COOLING AR-HIGH AMBIENT TEMP**
**AN ATTACHMENT**

**SMCS-1387** **i02172044**

| NOTE | REF NO | GRAPHIC REF | PART NUMBER | QTY | PART NAME 1 2 3 4 5 6 (PRODUCT LEVEL) | SEE PAGE |
|---|---|---|---|---|---|---|
| | 1 | 1 | **6V-0852** | 1 | CAP-DUST | |
| | 2 | 1 | *164-5567* | 1 | FITTING AS (QUICK DISCONNECT, MALE) | |
| | | 1 | **3J-1907** | 1 | SEAL-O-RING | |
| | | 1 | **6V-3965** | 1 | FITTING-COUPLER | |
| Y | 3 | 1 | **228-3638** | 1 | PUMP GP-PISTON (HYD FAN, HIGH AMBIENT TEMP) | 1140 |
| | 4 | 1 | *150-4047* | 1 | ADAPTER AS | |
| | | 1 | **3J-7354** | 1 | SEAL-O-RING | |
| | | 1 | **8T-2353** | 1 | ADAPTER | |
| | 5 | 1 | **5P-1076** | 2 | WASHER-HARD (13.5X30X4-MM THK) | |
| | 6 | 1 | **8T-8919** | 2 | BOLT (1/2-13X1.75-IN) | |
| | 7 | 1 | **9H-8872** | 1 | GASKET | |

Y-SEPARATE ILLUSTRATION

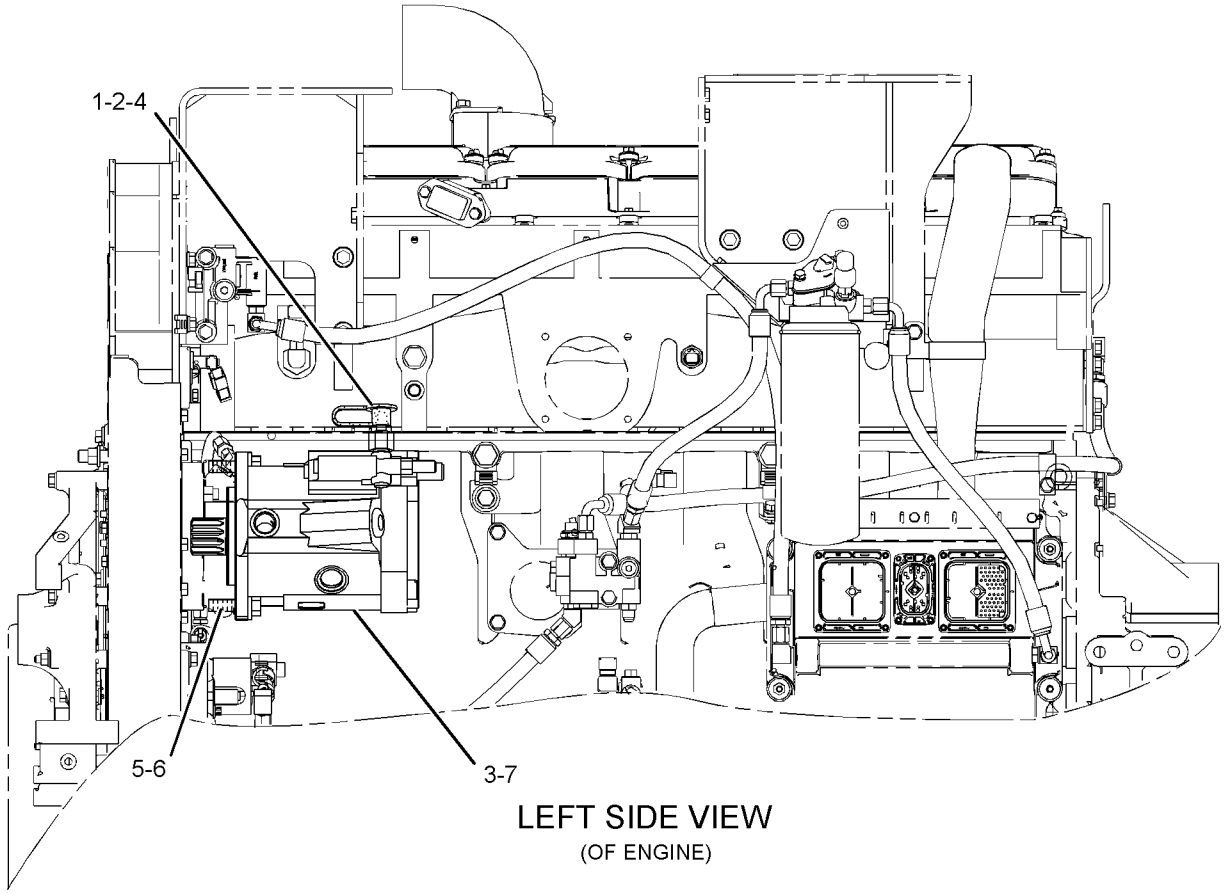


LEFT SIDE VIEW
(OF ENGINE)

GRAPHIC #1 **<END>** g01106372

# *228-0376* PUMP & MTG GP-HYDRAULIC FAN

**S/N: BXY1-UP**
**PART OF 225-6725, 226-1954 COOLING AR**
**AN ATTACHMENT**

**SMCS-1387** **i02746213**

| NOTE | REF NO | GRAPHIC REF | PART NUMBER | QTY | PART NAME 1 2 3 4 5 6 (PRODUCT LEVEL) | SEE PAGE |
|---|---|---|---|---|---|---|
| | 1 | 1 | **6V-0852** | 1 | CAP-DUST | |
| | 2 | 1 | *164-5567* | 1 | FITTING AS (QUICK DISCONNECT, MALE) | |
| | | 1 | **3J-1907** | 1 | SEAL-O-RING | |
| | | 1 | **6V-3965** | 1 | FITTING-COUPLER | |
| Y | 3 | 1 | **228-3636** | 1 | PUMP GP-PISTON (HYDRAULIC FAN) | 1138 |
| | 4 | 1 | *150-4047* | 1 | ADAPTER AS | |
| | | 1 | **3J-7354** | 1 | SEAL-O-RING | |
| | | 1 | **8T-2353** | 1 | ADAPTER | |
| | 5 | 1 | **5P-1076** | 2 | WASHER-HARD (13.5X30X4-MM THK) | |
| | 6 | 1 | **8T-8919** | 2 | BOLT (1/2-13X1.75-IN) | |
| | 7 | 1 | **9H-8872** | 1 | GASKET | |

Y-SEPARATE ILLUSTRATION

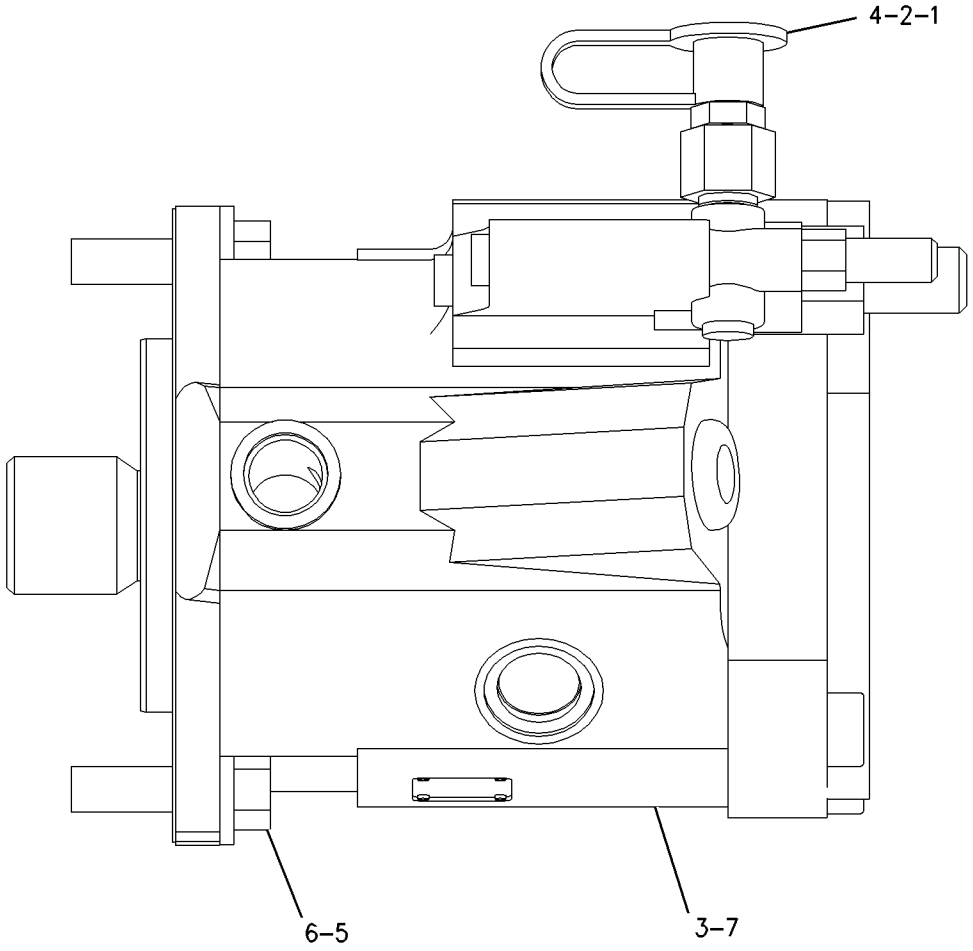


GRAPHIC #1 **<END>** g01000907

# HYDRAULIC SYSTEM

## *230-2406* PUMP & MTG GP-IMPLEMENT

**S/N: BXY1-UP**

**PART OF 225-5449, 298-2038 HYDRAULIC AR**

**SMCS-5084** **i02132058**

| NOTE | REF NO | GRAPHIC REF | PART NUMBER | QTY | PART NAME 1 2 3 4 5 6 (PRODUCT LEVEL) | SEE PAGE |
|---|---|---|---|---|---|---|
| Y | 1 | 1 | **216-8978** | 1 | PUMP GP-PISTON (IMPLEMENT) | 1133 |
| | 2 | 1 | **6V-7681** | 1 | SEAL-O-RING | |
| M | 3 | 1 | **7X-2563** | 4 | BOLT (M20X2.5X60-MM) | |
| | 4 | 1 | **8T-1739** | 4 | WASHER-HARD (21X40X3.5-MM THK) | |

M-METRIC PART
Y-SEPARATE ILLUSTRATION

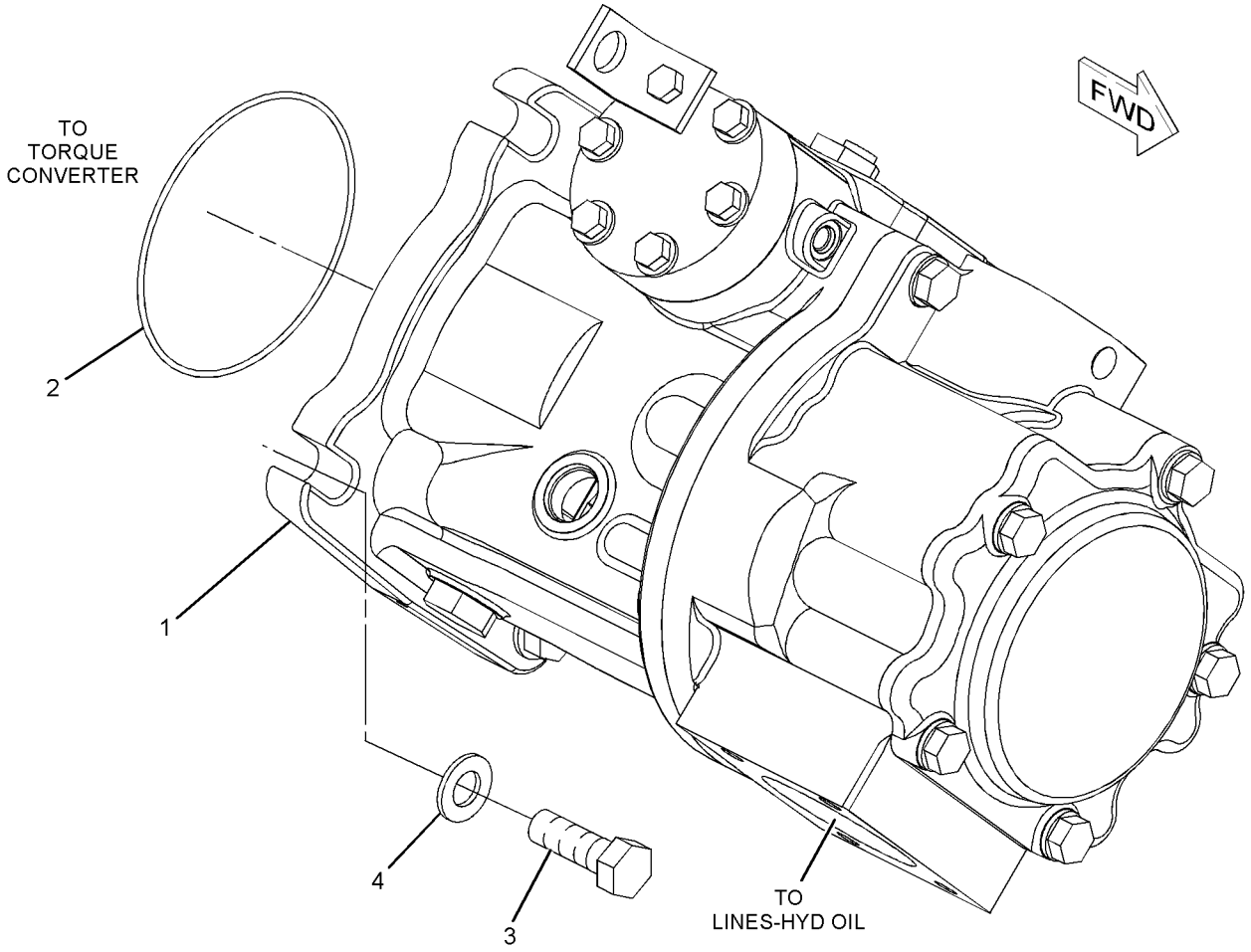


GRAPHIC #1 **<END>** g01021013

# HYDRAULIC SYSTEM

## 216-8978 PUMP GP-PISTON–IMPLEMENT

**S/N: BXY1-UP**

**PART OF 230-2406 PUMP & MTG GP-IMPLEMENT**

**SMCS-5070** **i02573851**

| NOTE | REF NO | GRAPHIC REF | PART NUMBER | QTY | PART NAME 1 2 3 4 5 6 (PRODUCT LEVEL) | SEE PAGE |
|---|---|---|---|---|---|---|
| | 1 | 2 | **4B-4158** | 4 | SCREW-DRIVE (3/16X0.25-IN) | |
| | 2 | 2 | **8J-0101** | 1 | PLATE-NOTICE (HYDRAULIC OIL FILL) | |
| | 3 | 2 | **006-0136** | 1 | KEY | |
| | 4 | 1 | **110-2973** | 2 | BEARING-SPECIAL ROLLER | |
| | 5 | 2 | **110-3971** | 1 | SWASHPLATE | |
| | 6 | 2 | **110-3978** | 1 | SPRING-WAVE | |
| | 7 | 2 | **118-5805** | 1 | BEARING-SPECIAL RACE | |
| | 8 | 2 | **137-5646** | 1 | SPACER (70.4X87.5X7.6-MM THK) | |
| | 9 | 2 | **143-2006** | 1 | COVER AS | |
| | 10 | 3 | **146-3728** | 1 | WASHER-SPRING | |
| | 11 | 2 | **146-8990** | 1 | IMPELLER | |
| | 12 | 2 | **146-8991** | 1 | SPACER (29X38X1.57-MM THK) | |
| | 13 | 3 | **148-2350** | 1 | COIL AS | |
| | 14 | 2 | **148-3548** | 1 | BEARING | |
| | 15 | 2 | **150-4355** | 9 | PISTON AS | |
| | 16 | 3 | **155-2251** | 1 | PLATE | |
| | 17 | 2 | **155-4326** | 1 | COVER | |
| | 19 | 2 | **159-7320** | 1 | PLATE-RETAINER | |
| | 20 | 1 | **164-3256** | 1 | PLATE-PORT | |
| | 21 | 3 | **165-6062** | 2 | LINK | |
| | 22 | 2 | **175-7887** | 2 | DOWEL | |
| | 23 | 3 | **179-2006** | 1 | RETAINER AS | |
| | | 3 | **6V-3382** | 2 | SEAL-LIP TYPE | |
| | | 3 | **124-1555** | 1 | PLUG | |
| | 24 | 1 | **184-3635** | 1 | SLIDE-ACTUATOR | |
| | 25 | 2 | **185-3889** | 1 | SHAFT | |
| | 26 | 2 | **187-9116** | 1 | BARREL AS-PUMP | |
| | 27 | 1 | **213-3221** | 1 | ACTUATOR | |
| | 28 | 1 | **264-0010** | 1 | RETAINER | |
| | 29 | 1 | **214-2445** | 1 | SPRING | |
| | 30 | 2 | **214-6489** | 1 | BALL | |
| | 31 | 2 | **269-5755** | 1 | COVER | |
| | 32 | 1 | **250-9329** | 1 | BODY AS | |
| | | 1 | **124-1555** | 1 | PLUG | |
| | 33 | 1 | **252-4537** | 1 | HEAD-PUMP | |
| | 34 | 3 | **263-7732** | 1 | HOUSING AS | |
| | | 3 | **124-1555** | 1 | PLUG | |
| | 35 | 2 | **142-0149** | 1 | SPACER (70.75X80X1.07-MM THK) | |
| | 36 | 3 | **030-4605** | 1 | SEAL-O-RING | |
| M | 37 | 2 | **096-0008** | 6 | BOLT-SOCKET HEAD (M16X2X140-MM) | |
| | 39 | 2 | **143-7319** | 1 | RACE-ROLLER BEARING | |
| | 40 | 3 | **154-4133** | 1 | CARTRIDGE AS | |
| | 41 | 3 | **177-1403** | 1 | SPRING | |
| | 42 | 3 | **177-1405** | 1 | SPRING | |
| | 43 | 1 | **1P-3709** | 1 | SEAL-RECTANGULAR | |
| | 44 | 1 | **2A-3630** | 2 | PIN | |
| | 45 | 2 | **2R-0239** | 1 | SEAL-O-RING | |
| | 46 | 2 | **3C-8388** | 2 | PIN-ROLL | |
| | 47 | 2 | **3J-0634** | 1 | SEAL-O-RING | |
| | 48 | 2 | **3J-1907** | 2 | SEAL-O-RING | |
| | 49 | 3 | **3J-7354** | 1 | SEAL-O-RING | |
| | 50 | 1,2,3 | **4J-5309** | 3 | SEAL-O-RING | |
| M | 51 | 3 | **5A-3604** | 3 | BOLT-SOCKET HEAD (M8X1.25X25-MM) | |
| | 52 | 3 | **5H-8848** | 1 | SEAL-O-RING | |
| | 53 | 1 | **5P-8245** | 6 | WASHER-HARD (13.5X25.5X3-MM THK) | |
| | 54 | 3 | **6F-5559** | 1 | SEAL-O-RING | |

## 216-8978 PUMP GP-PISTON *(contd. )* i02573851

| NOTE | REF NO | GRAPHIC REF | PART NUMBER | QTY | PART NAME 1 2 3 4 5 6 (PRODUCT LEVEL) | SEE PAGE |
|---|---|---|---|---|---|---|
| | 55 | 1 | **6F-7061** | 2 | DOWEL | |
| | 56 | 3 | **6S-3002** | 1 | SEAL-O-RING | |
| M | 57 | 1 | **6V-3823** | 6 | BOLT (M12X1.75X60-MM) | |
| M | 58 | 1 | **6V-5684** | 6 | BOLT (M12X1.75X45-MM) | |
| M | 59 | 2 | **6V-5686** | 7 | BOLT (M16X2X50-MM) | |
| | 60 | 2 | **6V-8243** | 1 | RING-RETAINING | |
| | 61 | 1 | **7F-8607** | 6 | SEAL-O-RING | |
| | 62 | 1 | **7M-8485** | 4 | SEAL-O-RING | |
| M | 63 | 2 | **8T-0267** | 5 | BOLT-SOCKET HEAD (M6X1X12-MM) | |
| M | 64 | 2 | **162-2165** | 4 | BOLT-SOCKET HEAD (M4X0.7X16-MM) | |
| | 65 | 1 | **9S-4181** | 4 | PLUG-O-RING | |
| | 66 | 2 | **9S-4191** | 2 | PLUG-O-RING | |
| | 67 | 3 | **9S-8002** | 1 | PLUG-O-RING | |
| | 68 | 2 | **9X-8268** | 7 | WASHER (17.5X30X3.5-MM THK) | |
| | 69 | 2 | **3D-4603** | 1 | PLUG-PIPE | |
| | | | | | AVAILABLE REPAIR KIT(S): | |
| | | | **185-5352** | 1 | KIT-SEAL | |
| | | | | | INCLUDES PIN, SEAL-ORINGS, RING-BACKUP, CAP-DUST, SEAL-LIP, AND RING-RETAINING | |
| | | | **185-5354** | | KIT-SPACER | |
| | | | | | INCLUDES THREE SPACERS | |
| | | | **227-1069** | | KIT-SPRING | |

M-METRIC PART

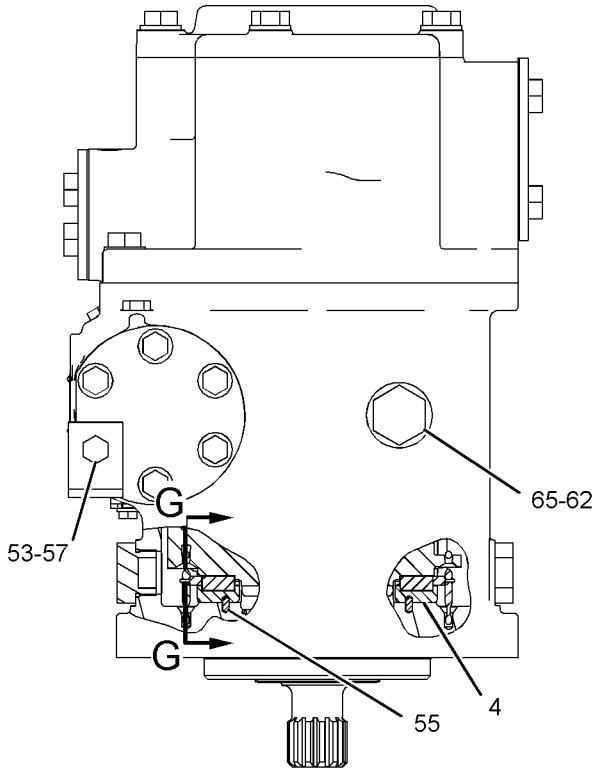


LEFT SIDE VIEW

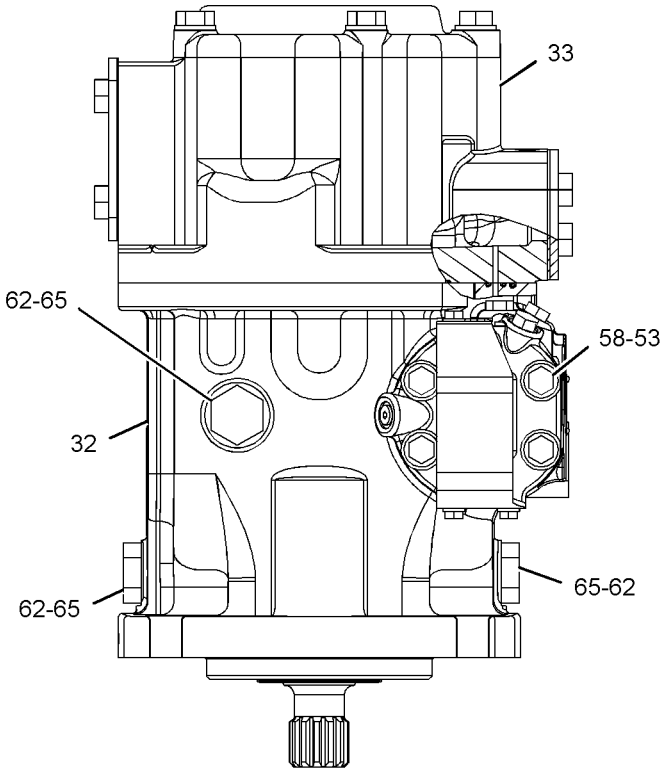


RIGHT SIDE VIEW

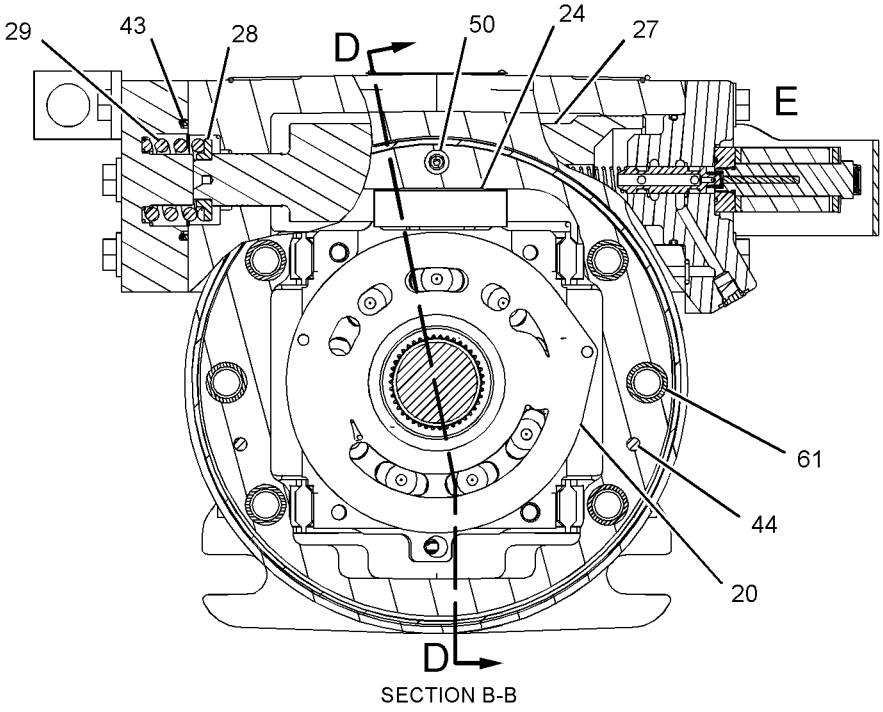


SECTION B-B

GRAPHIC #1 g01126525

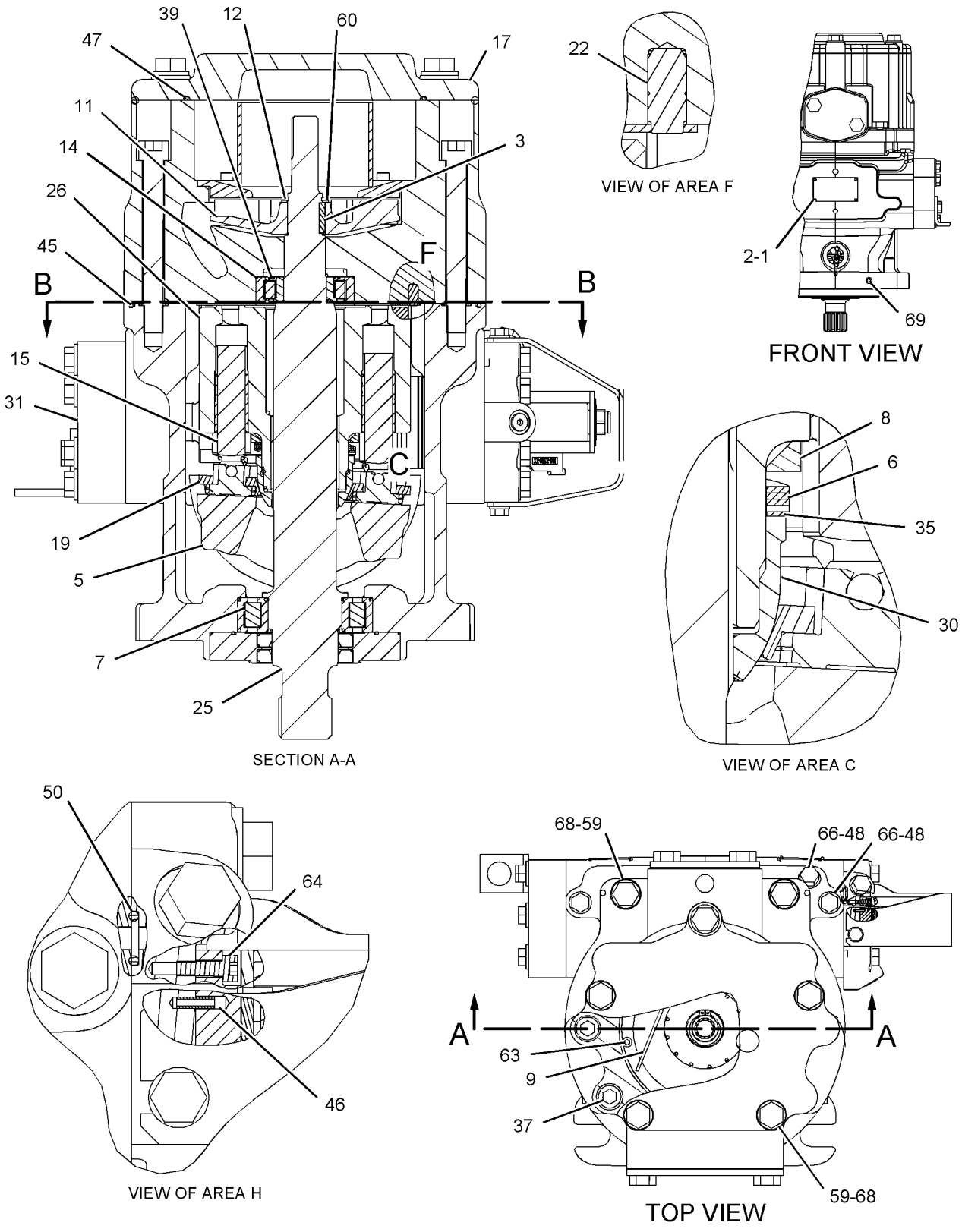


GRAPHIC #2 g01118058

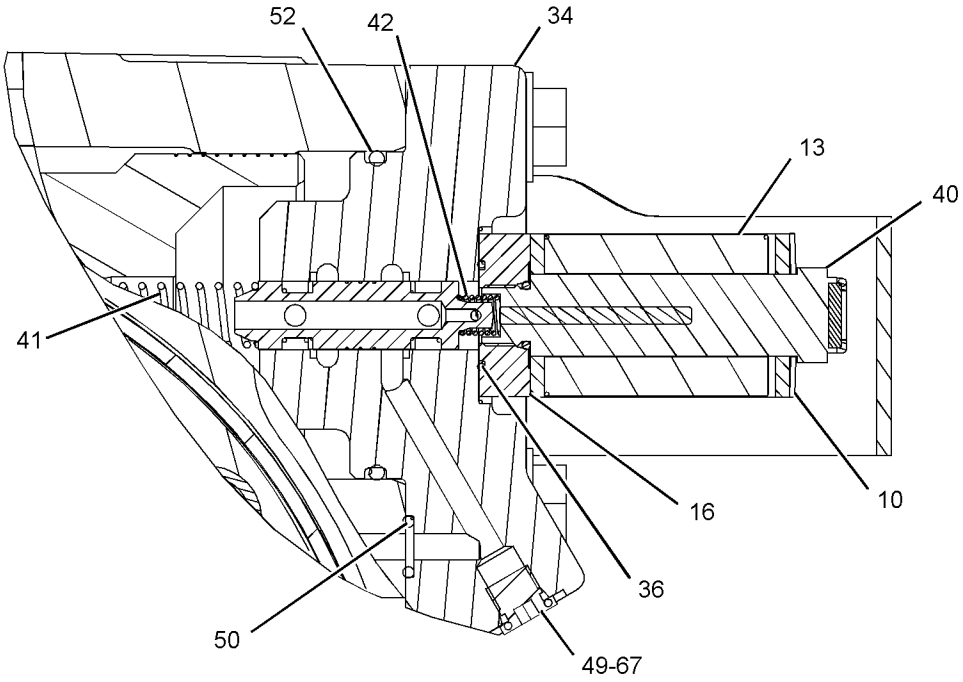


VIEW OF AREA E

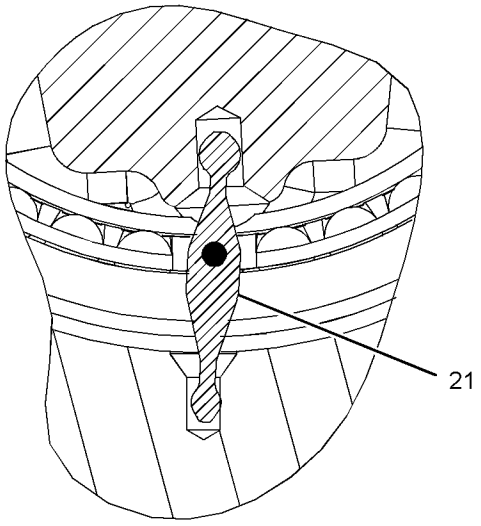


SECTION G-G

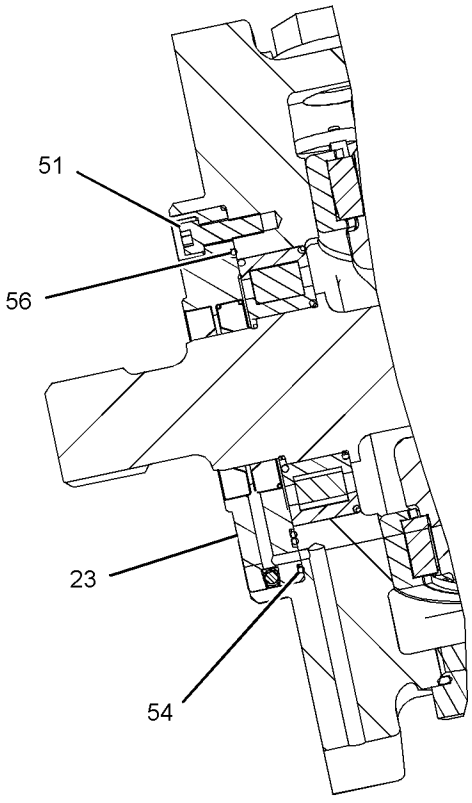


SECTION D-D

GRAPHIC #3 **<END>** g01126526

# HYDRAULIC SYSTEM

## 228-3636 PUMP GP-PISTON—HYDRAULIC FAN

**S/N: BXY1-UP**

**PART OF 228-0376 PUMP & MTG GP-HYDRAULIC FAN**

**AN ATTACHMENT**

**SMCS-5070** **i02387087**

| NOTE | REF NO | GRAPHIC REF | PART NUMBER | QTY | PART NAME 1 2 3 4 5 6 (PRODUCT LEVEL) | SEE PAGE |
|---|---|---|---|---|---|---|
| | 1 | 1 | **233-0065** | 1 | SHAFT-DRIVE | |
| | 2 | 1 | **8C-3110** | 1 | RING-RETAINING | |
| | 3 | 1 | **166-0344** | 1 | SEAL-SHAFT | |
| | 4 | 1 | **9S-8006** | 1 | PLUG-O-RING | |
| | 5 | 1 | **2M-9780** | 1 | SEAL-O-RING | |
| | 6 | 1 | **127-9490** | 1 | SPRING (BIAS) | |
| | 7 | 1 | **168-2198** | 1 | LINK-CONTROL | |
| | 8 | 1 | **168-7861** | 1 | PISTON-ACTUATOR | |
| | 9 | 1 | **175-6799** | 1 | PLUG-CONTROL | |
| | 10 | 1 | **8T-7525** | 1 | SEAL-O-RING | |
| | 11 | 1 | **083-4419** | 1 | PIN | |
| | 12 | 1 | **168-3504** | 1 | SEAL | |
| | 13 | 1 | **136-8423** | 1 | PLUG-BREAK OFF | |
| M | 14 | 1 | **095-0670** | 4 | BOLT (M12X1.75X45-MM) | |
| | 15 | 1 | **105-3035** | 1 | CONE-BEARING | |
| | 16 | 1 | **203-8609** | 1 | CUP-BEARING | |
| | 17 | 1 | **127-9485** | 1 | SEAL-O-RING | |
| B | 18 | 1 | **127-9483** | 1 | SHIM (PRELOAD) | |
| Y | 19 | 1 | **168-7868** | 1 | ROTATING GP-PUMP (HYDRAULIC FAN) | 1143 |
| | 20 | 1 | **175-6795** | 1 | SWASHPLATE | |
| | 21 | 1 | **168-7869** | 2 | BEARING-CRADLE | |
| | 22 | 1 | **203-9163** | 1 | CONE-BEARING | |
| | 23 | 1 | **6V-4636** | 1 | CUP-BEARING | |
| | 24 | 1 | **3J-7354** | 1 | SEAL-O-RING | |
| Y | 25 | 1 | **207-0695** | 1 | VALVE GP-PUMP CONTROL (PRESSURE, FLOW COMPENSATOR) | 1171 |
| | 26 | 1 | **9X-7680** | 3 | SEAL-O-RING | |
| M | 27 | 1 | **8T-8442** | 4 | BOLT-SOCKET HEAD (M6X1X30-MM) | |
| | 28 | 1 | **9S-8002** | 1 | PLUG-O-RING | |

B-USE AS REQUIRED
M-METRIC PART
Y-SEPARATE ILLUSTRATION

**228-3636 PUMP GP-PISTON** *(contd.)* **i02387087**

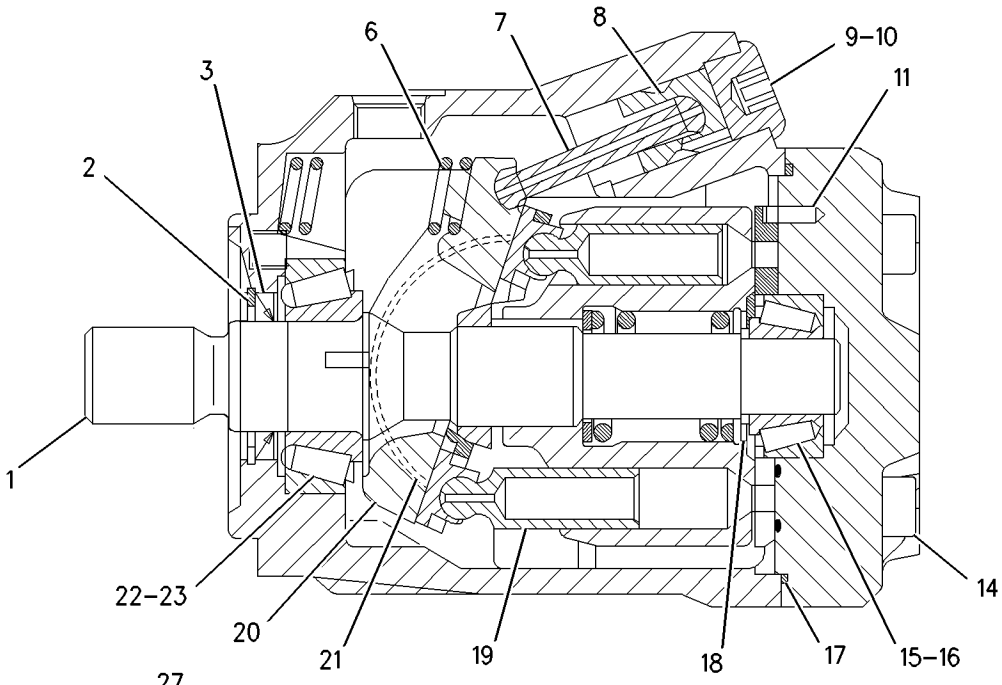


SECTION A-A

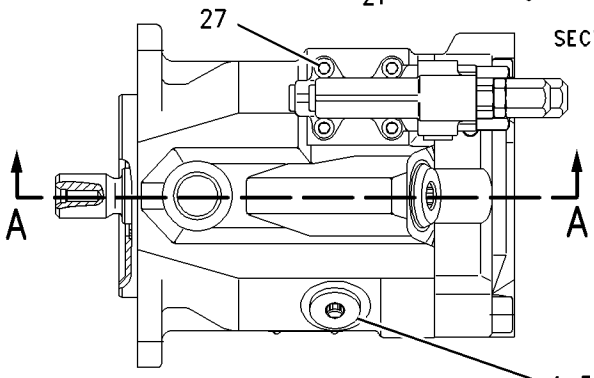


LEFT SIDE VIEW

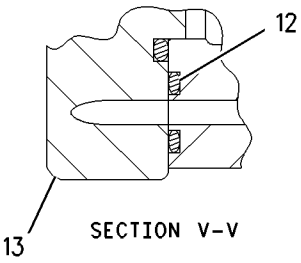


SECTION V-V

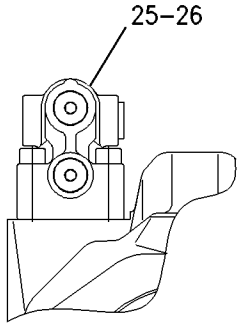


VIEW C-C

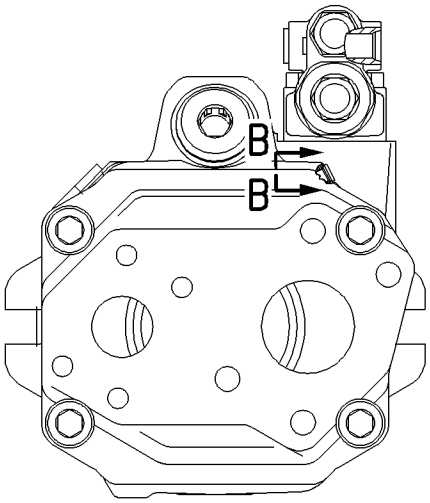


VIEW D-D

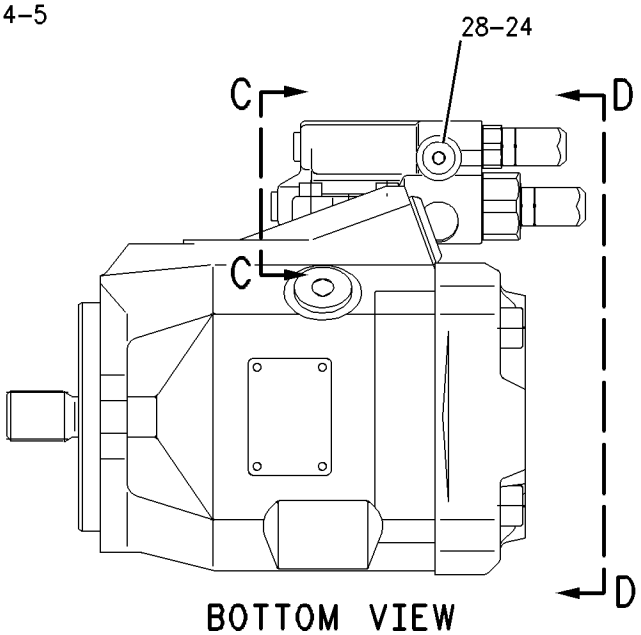


BOTTOM VIEW

GRAPHIC #1 **<END>** g01004317

# 228-3638 PUMP GP-PISTON—HYD FAN, HIGH AMBIENT TEMP

**S/N: BXY1-UP**

**PART OF 226-1957 PUMP & MTG GP-HYDRAULIC FAN**

**AN ATTACHMENT**

**SMCS-5070** **i02578670**

| NOTE | REF NO | GRAPHIC REF | PART NUMBER | QTY | PART NAME 1 2 3 4 5 6 (PRODUCT LEVEL) | SEE PAGE |
|---|---|---|---|---|---|---|
| | 1 | 1 | **233-0065** | 1 | SHAFT-DRIVE | |
| | 2 | 1 | **8C-3110** | 1 | RING-RETAINING | |
| | 3 | 1 | **166-0344** | 1 | SEAL-SHAFT | |
| | 4 | 1 | **9S-8006** | 1 | PLUG-O-RING | |
| | 5 | 1 | **2M-9780** | 1 | SEAL-O-RING | |
| | 6 | 1 | **127-9490** | 1 | SPRING (BIAS) | |
| | 7 | 1 | **168-2198** | 1 | LINK-CONTROL | |
| | 8 | 1 | **168-7861** | 1 | PISTON-ACTUATOR | |
| | 9 | 1 | **175-6799** | 1 | PLUG-CONTROL | |
| | 10 | 1 | **8T-7525** | 1 | SEAL-O-RING | |
| | 11 | 1 | **083-4419** | 1 | PIN | |
| | 12 | 1 | **168-3504** | 1 | SEAL | |
| | 13 | 1 | **136-8423** | 1 | PLUG-BREAK OFF | |
| M | 14 | 1 | **095-0670** | 4 | BOLT (M12X1.75X45-MM) | |
| | 15 | 1 | **105-3035** | 1 | CONE-BEARING | |
| | 16 | 1 | **203-8609** | 1 | CUP-BEARING | |
| | 17 | 1 | **127-9485** | 1 | SEAL-O-RING | |
| B | 18 | 1 | **127-9483** | 1 | SHIM (PRELOAD) | |
| Y | 19 | 1 | **168-7868** | 1 | ROTATING GP-PUMP (HYDRAULIC FAN) | 1143 |
| | 20 | 1 | **175-6795** | 1 | SWASHPLATE | |
| | 21 | 1 | **168-7869** | 2 | BEARING-CRADLE | |
| | 22 | 1 | **203-9163** | 1 | CONE-BEARING | |
| | 23 | 1 | **6V-4636** | 1 | CUP-BEARING | |
| | 24 | 1 | **3J-7354** | 1 | SEAL-O-RING | |
| Y | 25 | 1 | **207-0695** | 1 | VALVE GP-PUMP CONTROL (PRESSURE, FLOW COMPENSATOR) | 1171 |
| | 26 | 1 | **9X-7680** | 3 | SEAL-O-RING | |
| M | 27 | 1 | **8T-8442** | 4 | BOLT-SOCKET HEAD (M6X1X30-MM) | |
| | 28 | 1 | **9S-8002** | 1 | PLUG-O-RING | |

B-USE AS REQUIRED
M-METRIC PART
Y-SEPARATE ILLUSTRATION

**228-3638 PUMP GP-PISTON** *(contd. )* **i02578670**

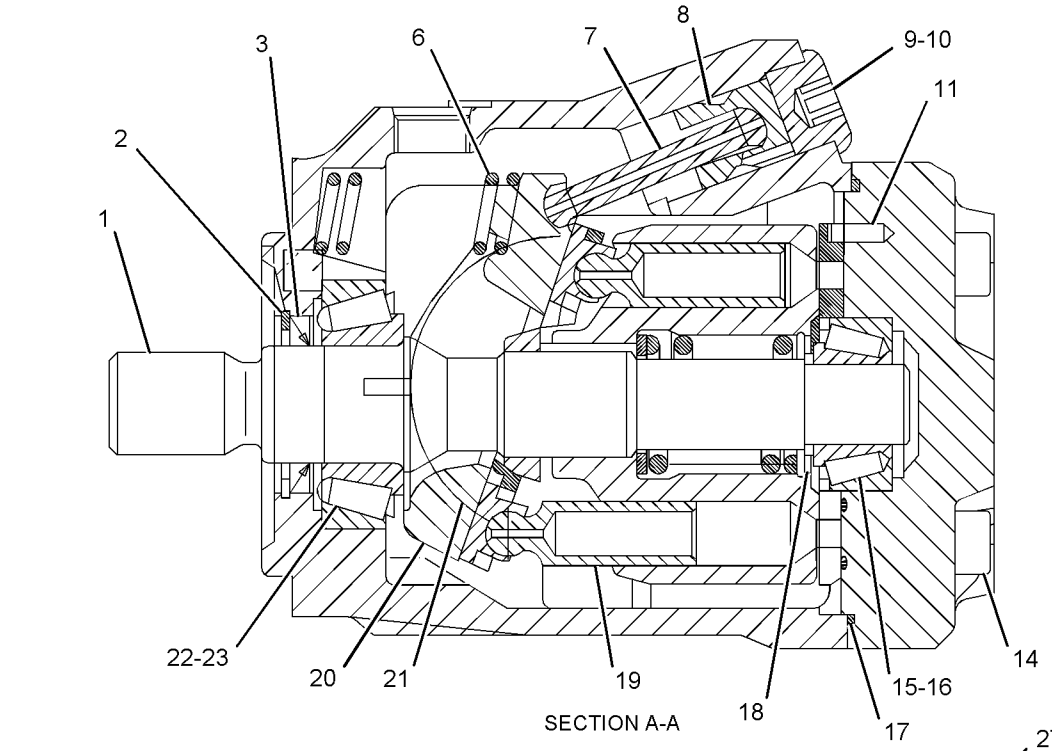


SECTION A-A

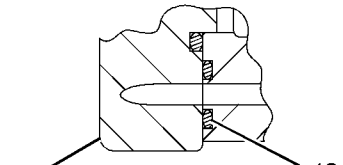


SECTION B-B

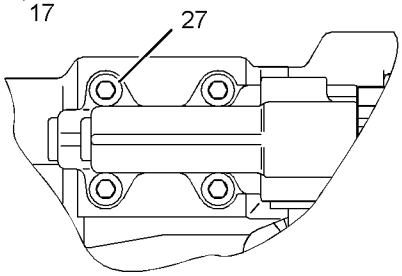


VIEW C-C

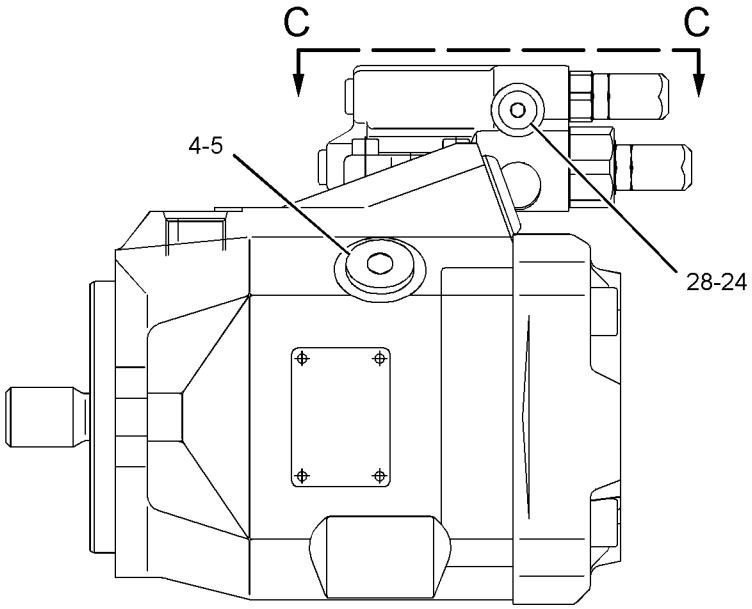


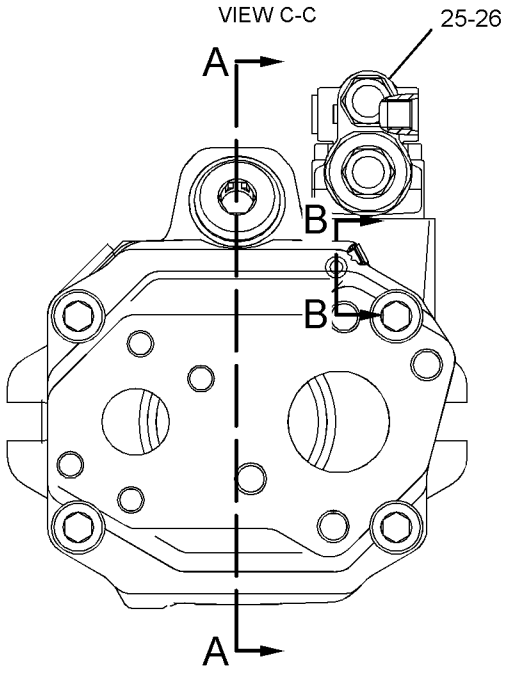


GRAPHIC #1 **<END>** g01102182

# 185-0275 ROTATING GP-MOTOR–HYDRAULIC FAN

**S/N: BXY1-UP**

**PART OF 213-5268 MOTOR GP-PISTON**

**SMCS-1386, 5058** **i02023021**

| NOTE | REF NO | GRAPHIC REF | PART NUMBER | QTY | PART NAME 1 2 3 4 5 6 (PRODUCT LEVEL) | SEE PAGE |
|---|---|---|---|---|---|---|
| | 1 | 1 | **168-3379** | 3 | PIN | |
| | 2 | 1 | **168-3382** | 1 | WASHER (42-MM ODX2.7-MM THK) | |
| | 3 | 1 | **185-0292** | 1 | SPRING | |
| | 4 | 1 | **6V-7723** | 1 | RING-RETAINING | |
| | 5 | 1 | **185-0287** | 1 | PLATE-VALVE | |
| | 6 | 1 | **185-0289** | 1 | BARREL | |
| | 7 | 1 | **168-3384** | 9 | PISTON AS-PUMP | |
| | 8 | 1 | **168-3378** | 1 | BEARING-SPHERICAL | |
| | 9 | 1 | **168-3385** | 1 | PLATE-RETRACTION | |

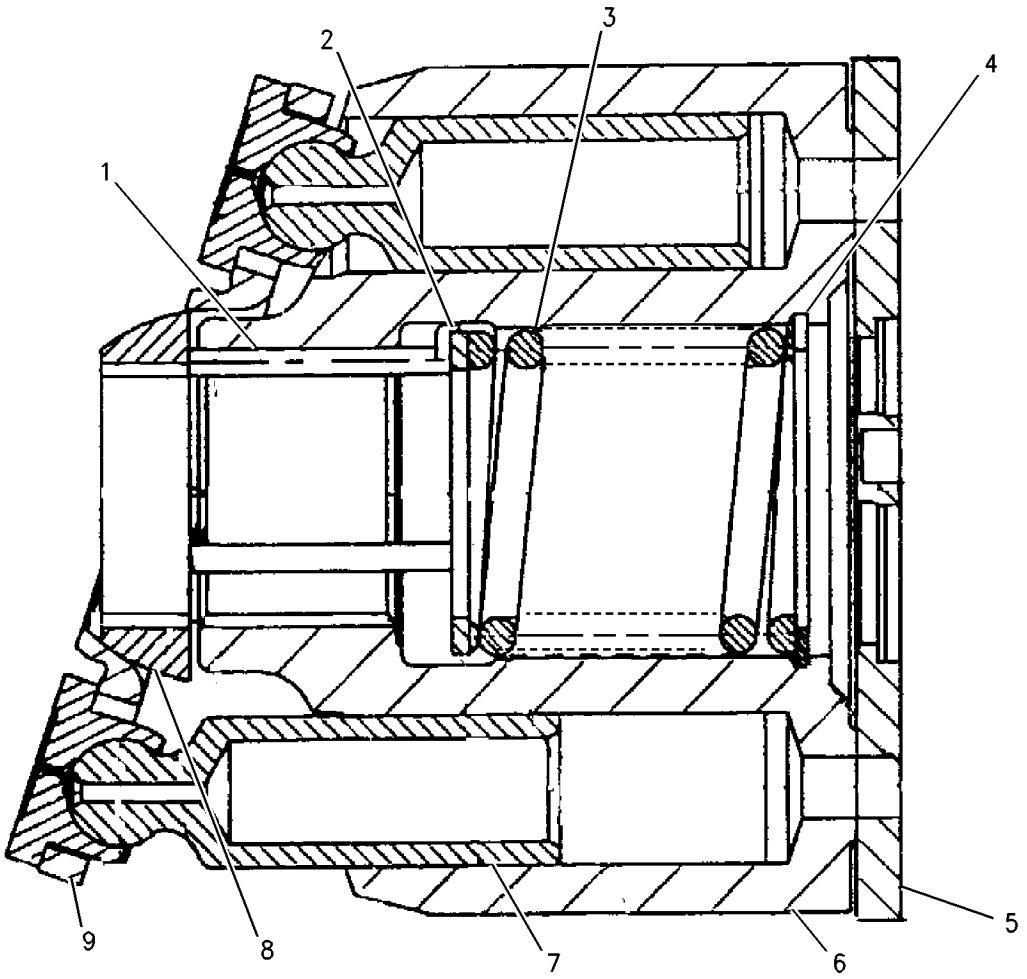


GRAPHIC #1 **<END>** g00790134

# *168-7868* ROTATING GP-PUMP–HYDRAULIC FAN

**S/N: BXY1-UP**

**PART OF 228-3636, 228-3638 PUMP GP-PISTON**

**AN ATTACHMENT**

**SMCS-1387, 5070, 5084** **i02216714**

| NOTE | REF NO | GRAPHIC REF | PART NUMBER | QTY | PART NAME 1 2 3 4 5 6 (PRODUCT LEVEL) | SEE PAGE |
|---|---|---|---|---|---|---|
| | 1 | 1 | **138-8175** | 1 | BEARING-TAPERED ROLLER | |
| | 2 | 1 | **168-7940** | 3 | PIN | |
| | 3 | 1 | **096-0015** | 1 | RING-RETAINING | |
| | 4 | 1 | **233-0455** | 1 | BARREL | |
| | 5 | 1 | **168-7941** | 1 | SPRING | |
| | 6 | 1 | **168-7942** | 1 | WASHER (2-MM THK) | |
| | 7 | 1 | **168-7943** | 9 | PISTON AS | |
| | 8 | 1 | **168-7944** | 1 | PLATE-RETRACTION | |
| | 9 | 1 | **138-8173** | 1 | PLATE-VALVE | |

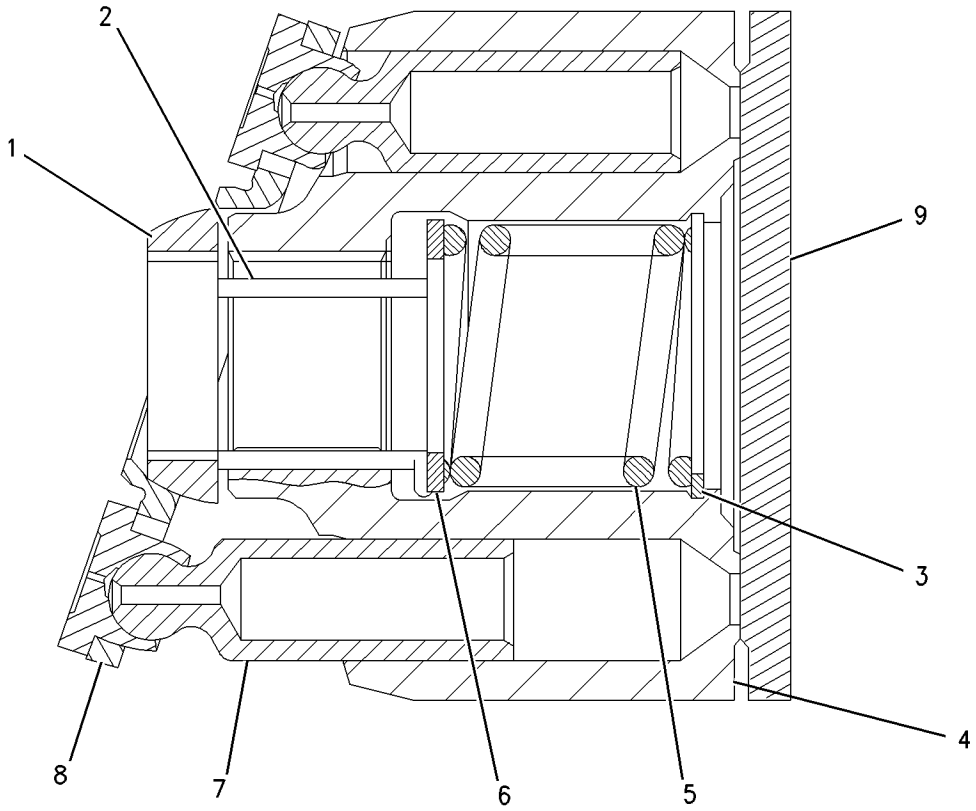


GRAPHIC #1 **<END>** g00760776

# HYDRAULIC SYSTEM

## *132-6143* TANK & MTG GP-HYDRAULIC

**S/N: BXY1-UP**

**PART OF 225-5449, 298-2038 HYDRAULIC AR**

**SMCS-5056** **i01280380**

| NOTE | REF NO | GRAPHIC REF | PART NUMBER | QTY | PART NAME 1 2 3 4 5 6 (PRODUCT LEVEL) | SEE PAGE |
|---|---|---|---|---|---|---|
| Y | 1 | 1 | *9G-9288* | 1 | PROTECTION GP-VANDALISM | 1513 |
| | 2 | 1 | **9T-0818** | 1 | VALVE-BREAKER RELIEF | |
| | 3 | 1 | **138-7496** | 2 | BRACKET AS | |
| | 4 | 1 | **138-7497** | 1 | BRACKET AS | |
| Y | 5 | 1 | *153-3602* | 1 | TANK GP-HYDRAULIC | 1148 |
| | 6 | 1 | **158-8033** | 1 | BRACKET AS | |
| | 7 | 1 | **3D-2824** | 1 | SEAL-O-RING | |
| M | 8 | 1 | **7X-2563** | 20 | BOLT (M20X2.5X60-MM) | |
| | 9 | 1 | **8T-5439** | 20 | WASHER-HARD (21.5X45X6-MM THK) | |

M-METRIC PART
Y-SEPARATE ILLUSTRATION

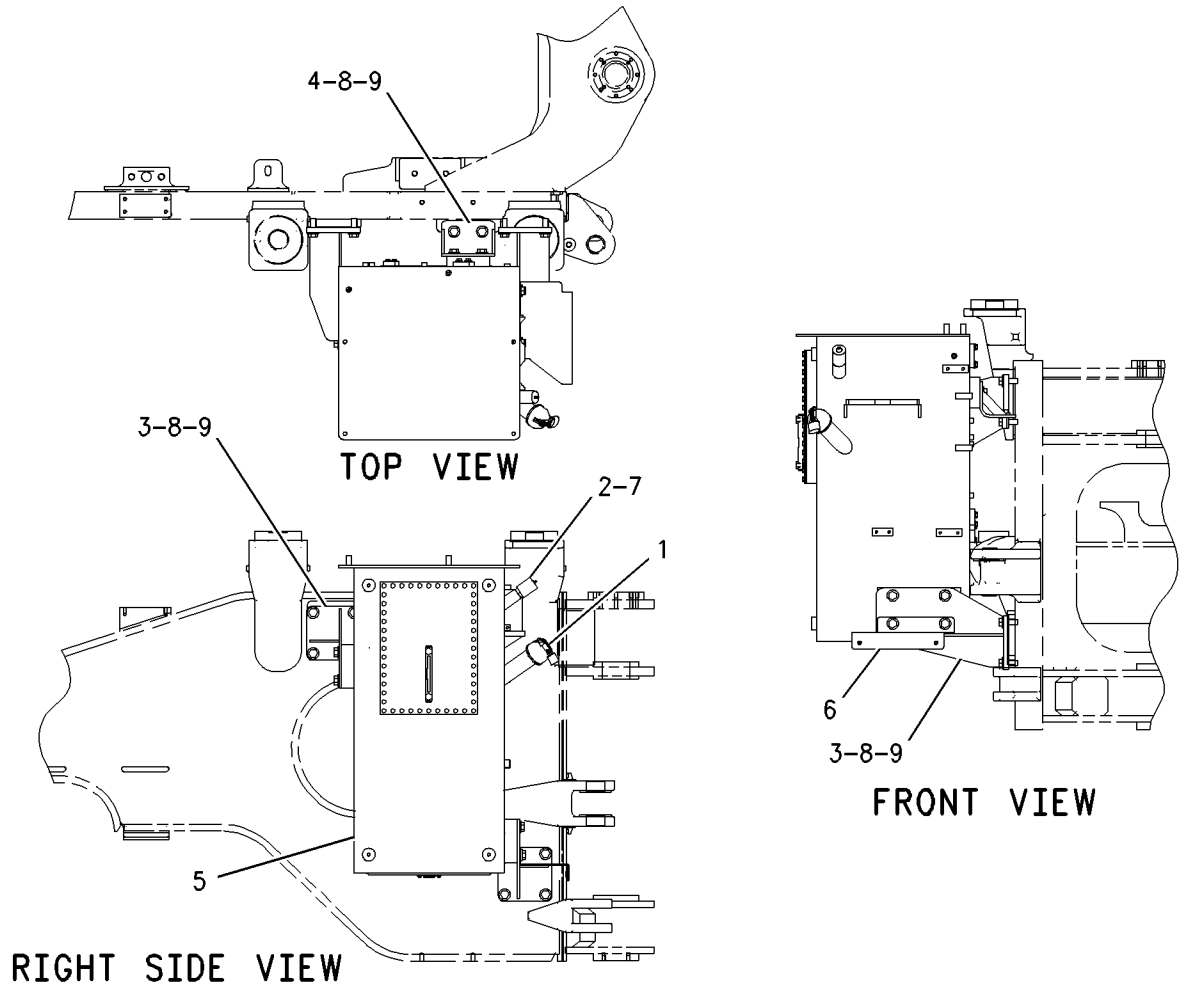


GRAPHIC #1 **<END>** g00678987

## *221-6807* TANK AR-EXPANSION–AIR

**S/N: BXY1-UP**

**CANNOT BE USED WITH 221-6808–PAGE 1145, 164-6085–PAGE 715**

**AN ATTACHMENT**

**SMCS-5505** **i02243415**

| NOTE | PART NUMBER | QTY | PART NAME 1 2 3 4 5 6 (PRODUCT LEVEL) | SEE PAGE |
|---|---|---|---|---|
| Y | *221-4201* | 1 | TANK GP-EXPANSION (AIR) | 1146 |
| | **221-5470** | 1 | HANDHOLD AS | |
| | **161-8900** | 1 | CONNECTOR | |
| | **161-9901** | 1 | SNAP | |
| | **220-6079** | 1 | CHAIN | |
| | **221-5471** | 1 | HANDHOLD AS | |
| | **221-5459** | 1 | PANEL AS | |
| Y-SEPARATE ILLUSTRATION | | | | |

**<END>**

## *221-6808* TANK AR-EXPANSION–AIR

**S/N: BXY1-UP**

**CANNOT BE USED WITH 164-6084 LADDER & FENDER AR**

**AN ATTACHMENT**

**SMCS-5505** **i01728108**

| NOTE | PART NUMBER | QTY | PART NAME 1 2 3 4 5 6 (PRODUCT LEVEL) | SEE PAGE |
|---|---|---|---|---|
| | **221-5472** | 1 | HANDHOLD AS | |
| Y | *221-4201* | 1 | TANK GP-EXPANSION (AIR) | 1146 |
| Y-SEPARATE ILLUSTRATION | | | | |

**<END>**

# HYDRAULIC SYSTEM

## *221-4201* TANK GP-EXPANSION–AIR

**S/N: BXY1-UP**

**PART OF 221-6807, 221-6808 TANK AR-EXPANSION**

**AN ATTACHMENT**

**SMCS-5505** **i02459659**

| NOTE | REF NO | GRAPHIC REF | PART NUMBER | QTY | PART NAME 1 2 3 4 5 6 (PRODUCT LEVEL) | SEE PAGE |
|---|---|---|---|---|---|---|
| | 1 | 1 | **220-2948** | 1 | TANK AS-EXPANSION | |
| | 2 | 1 | **221-3440** | 1 | TUBE AS | |
| I | 3 | 1 | **221-3481** | 1 | HOSE AS | |
| | 4 | 1 | **221-4015** | 1 | SHEET | |
| C | 5 | 1 | **236-1059** | 1 | PLATE | |
| C | 6 | 1 | **236-1239** | 1 | PLATE | |
| | 7 | 1 | **272-5606** | 1 | CAM | |
| | 8 | 1 | *148-8347* | 2 | ELBOW AS | |
| | | | | | (EACH INCLUDES) | |
| | | 1 | **3D-2824** | 1 | SEAL-O-RING | |
| | | 1 | **6V-9007** | 1 | ELBOW | |
| | | 1 | **6V-9746** | 1 | SEAL-O-RING | |
| | 9 | 1 | **220-0812** | 1 | VALVE-BREAKER RELIEF | |
| | 10 | 1 | **3D-2824** | 1 | SEAL-O-RING | |
| | 11 | 1 | **5P-4295** | 2 | CLIP | |
| | 12 | 1 | **6V-9746** | 1 | SEAL-O-RING | |
| | 13 | 1 | **8T-2561** | 1 | WASHER-HARD (10.5X28.5X5-MM THK) | |
| | 14 | 1 | **8T-4121** | 7 | WASHER-HARD (11X21X2.5-MM THK) | |
| M | 15 | 1 | **8T-4137** | 7 | BOLT (M10X1.5X20-MM) | |
| CM | 16 | 1 | **8T-4139** | 14 | BOLT (M12X1.75X30-MM) | |
| C | 17 | 1 | **8T-4223** | 14 | WASHER-HARD (13.5X25.5X3-MM THK) | |
| M | 18 | 1 | **9X-2125** | 1 | BOLT-LOCKING (M10X1.5X25-MM) | |

C-CHANGE FROM PREVIOUS TYPE
I-REFER TO HYDRAULIC INFORMATION SYSTEM
M-METRIC PART

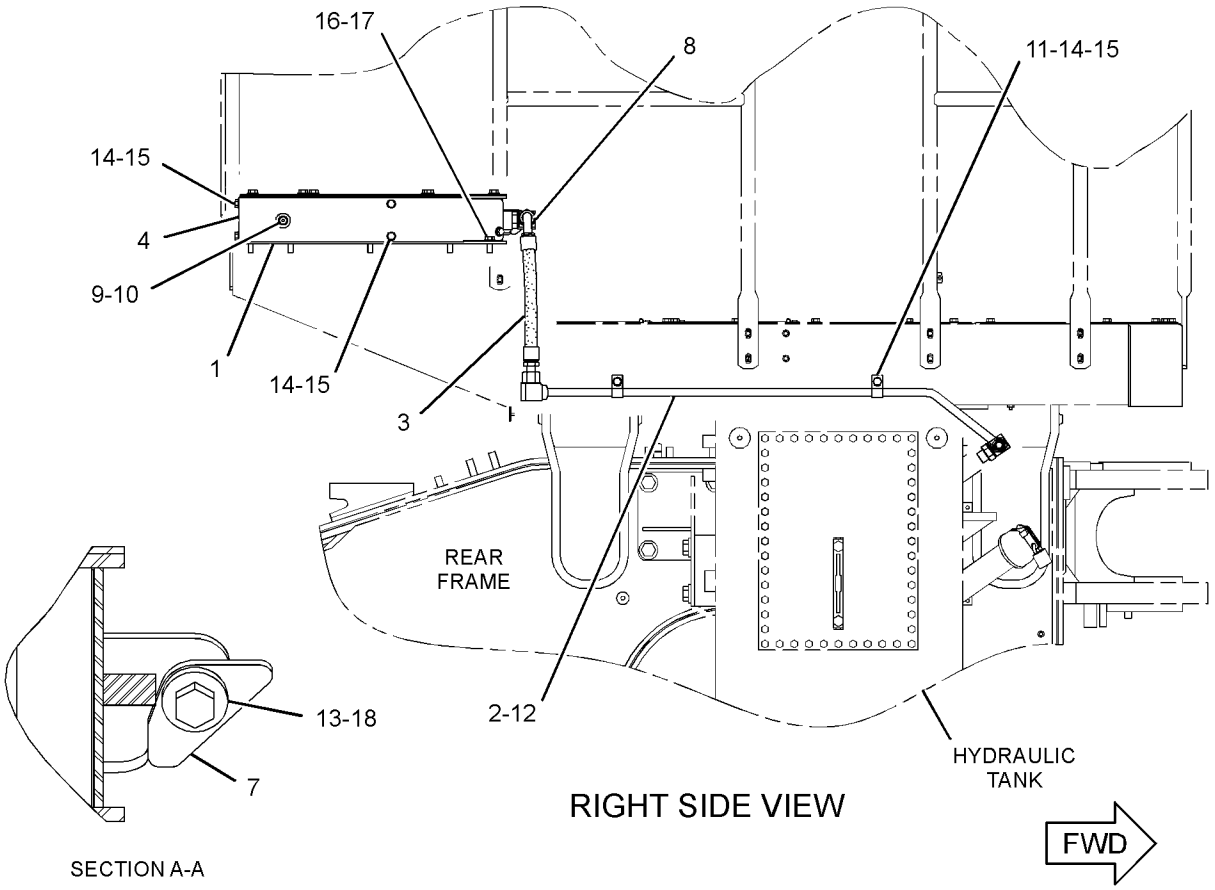


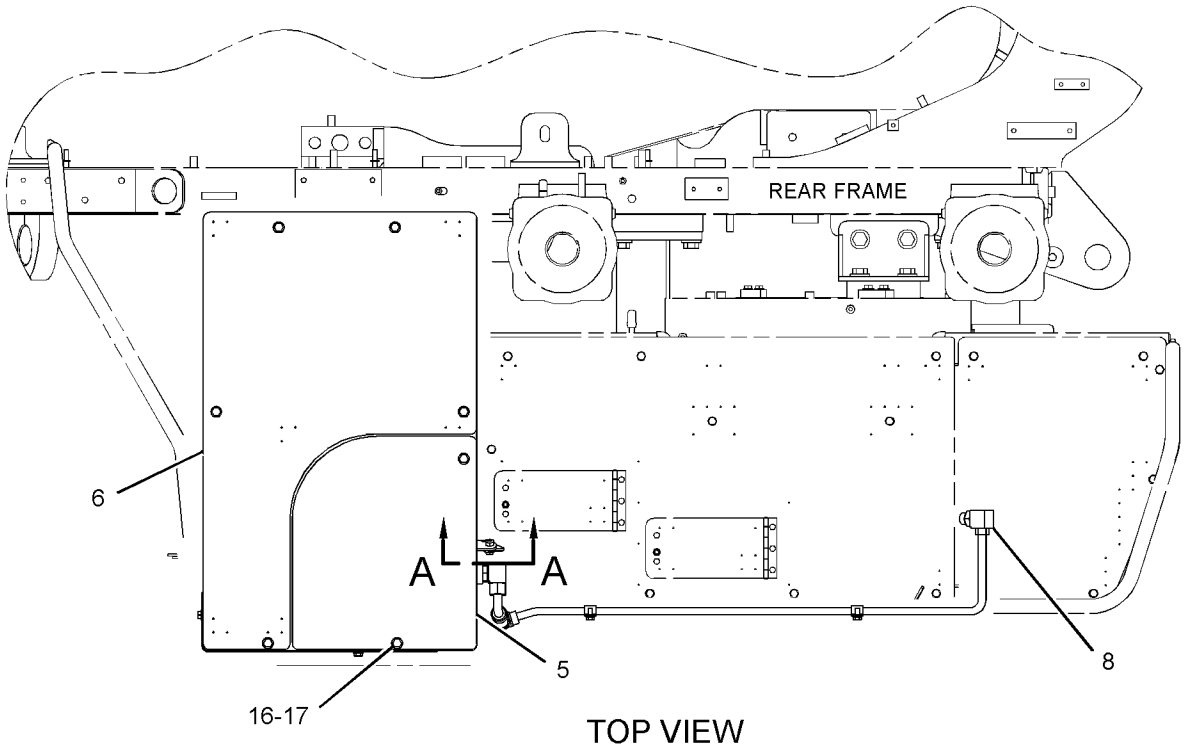


GRAPHIC #1 **<END>** g01231629

# HYDRAULIC SYSTEM

## *153-3602* TANK GP-HYDRAULIC

**S/N: BXY1-UP**

**PART OF 132-6143 TANK & MTG GP-HYDRAULIC**

**SMCS-5056** **i02735705**

| NOTE | REF NO | GRAPHIC REF | PART NUMBER | QTY | PART NAME 1 2 3 4 5 6 (PRODUCT LEVEL) | SEE PAGE |
|---|---|---|---|---|---|---|
| | 1 | 2 | **1U-2827** | 1 | GUIDE-VALVE | |
| | 2 | 2 | **2D-4202** | 1 | PLATE | |
| | 3 | 1 | **6E-6550** | 1 | GAUGE AS-LIQUID LEVEL | |
| | | 1 | **8F-3469** | 4 | SEAL-O-RING | |
| | | 1 | **121-7958** | 2 | BOLT-MOUNTING (1/2-20X1.75-IN) | |
| | 4 | 2 | **7B-3039** | 1 | SPRING | |
| | 5 | 2 | **7H-1447** | 1 | CAP-FILLER (HYDRAULIC TANK) | |
| | 6 | 2 | **7J-2656** | 3 | SCREEN GP | |
| | 7 | 2 | **8J-8782** | 1 | BODY-DRAIN VALVE | |
| | 8 | 2 | **8J-8783** | 1 | VALVE | |
| | 9 | 2 | **8T-3298** | 1 | SEAL-RECTANGULAR | |
| | 10 | 2 | **9J-3047** | 1 | STRAINER | |
| | 11 | 2 | **9J-7031** | 1 | PLUG-DRAIN | |
| | 12 | 2 | **9T-9226** | 2 | PLATE | |
| | 13 | 2 | **9T-9227** | 2 | SCREEN AS | |
| | 14 | 2 | **138-3909** | 1 | COVER AS | |
| | 15 | 2 | **142-0203** | 1 | TUBE AS | |
| | 16 | 1 | **153-9063** | 1 | TANK AS | |
| | 17 | 2 | **153-9784** | 1 | TUBE AS | |
| | 18 | 2 | **154-0930** | 3 | TUBE AS | |
| | 19 | 1 | **177-0093** | 1 | COVER AS | |
| | | 1 | **6B-6684** | 2 | NUT-FULL (1/2-20-THD) | |
| | 20 | 1 | **178-0182** | 1 | SCREEN-DIFFUSER | |
| | 21 | 1 | **304-9540** | 1 | GASKET | |
| | 22 | 2 | **1H-9696** | 4 | SEAL-O-RING | |
| | 23 | 1 | **1P-4579** | 4 | FLANGE-HALF | |
| | 24 | 1 | **1P-4582** | 2 | FLANGE-HALF | |
| | 25 | 2 | **1U-1570** | 1 | TUBE | |
| | 26 | 2 | **3G-0361** | 1 | GASKET | |
| | 27 | 1 | **3V-9862** | 2 | SPACER | |
| | 28 | 2 | **4J-0527** | 1 | SEAL-O-RING | |
| | 29 | 2 | **4M-0189** | 1 | SEAL-O-RING | |
| | 30 | 2 | **4T-8698** | 3 | WASHER (12.2X62X3.5-MM THK) | |
| | 31 | 2 | **5M-2057** | 1 | SEAL-O-RING | |
| | 32 | 2 | **5P-8245** | 4 | WASHER-HARD (13.5X25.5X3-MM THK) | |
| | 33 | 1 | **6V-5839** | 2 | WASHER (11X21X2.5-MM THK) | |
| M | 34 | 1,2 | **6V-7744** | 9 | LOCKNUT (M10X1.15-THD) | |
| | 35 | 1 | **8C-3206** | 2 | FLANGE-HALF | |
| M | 36 | 2 | **8T-0558** | 2 | BOLT-SELF-LOCKING (M12X1.75X100-MM) | |
| M | 37 | 2 | **8T-0722** | 8 | BOLT-LOCKING (M10X1.5X30-MM) | |
| | 38 | 2 | **8T-2275** | 1 | BALL | |
| | 39 | 1,2 | **8T-4121** | 57 | WASHER-HARD (11X21X2.5-MM THK) | |
| M | 40 | 1,2 | **8T-4137** | 51 | BOLT (M10X1.5X20-MM) | |
| M | 41 | 1 | **8T-4183** | 12 | BOLT (M12X1.75X40-MM) | |
| M | 42 | 1 | **8T-4196** | 4 | BOLT (M10X1.5X35-MM) | |
| | 43 | 1 | **8T-4223** | 12 | WASHER-HARD (13.5X25.5X3-MM THK) | |
| | 44 | 2 | **9H-6454** | 1 | GASKET | |

M-METRIC PART

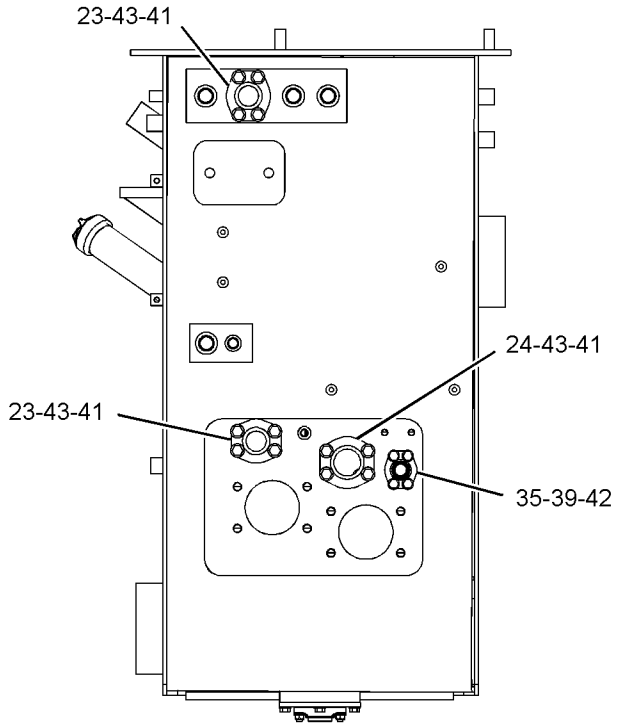


LEFT SIDE VIEW

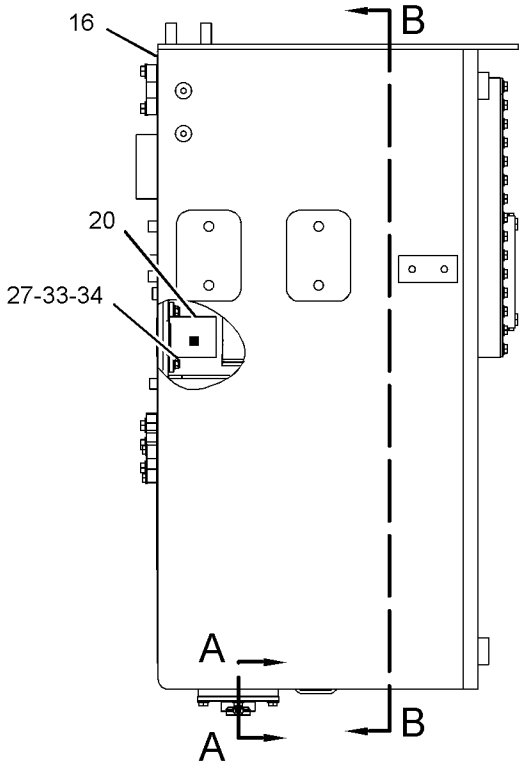


REAR VIEW

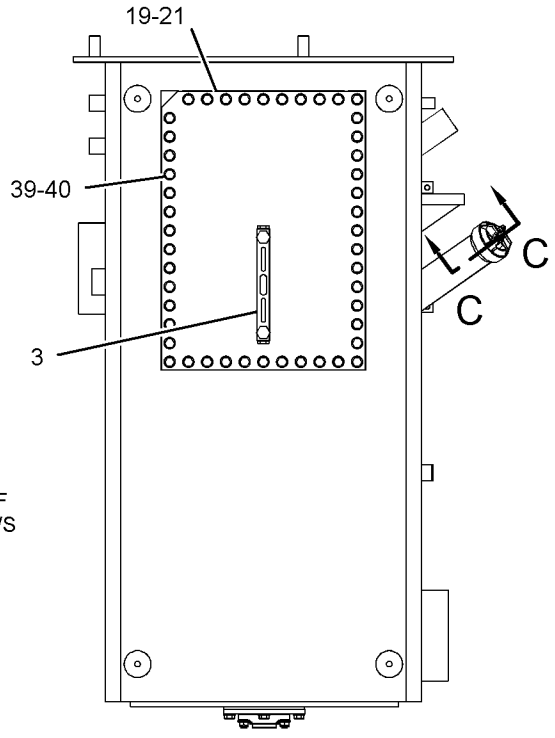


RIGHT SIDE VIEW

REFER TO ALL ILLUSTRATIONS OF THIS GROUP FOR AUXILIARY VIEWS

GRAPHIC #1

g01362711

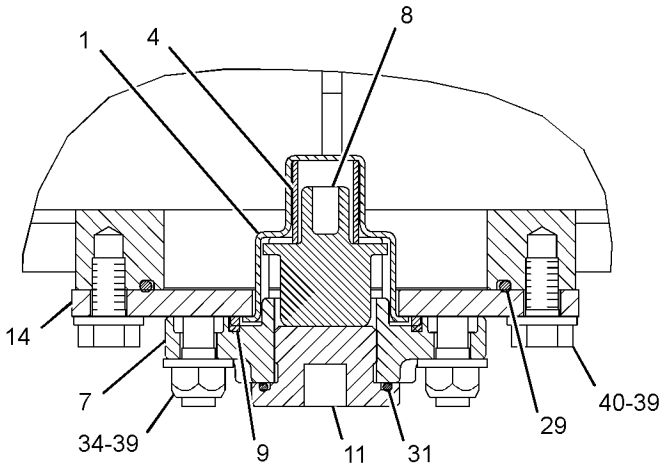


SECTION A-A

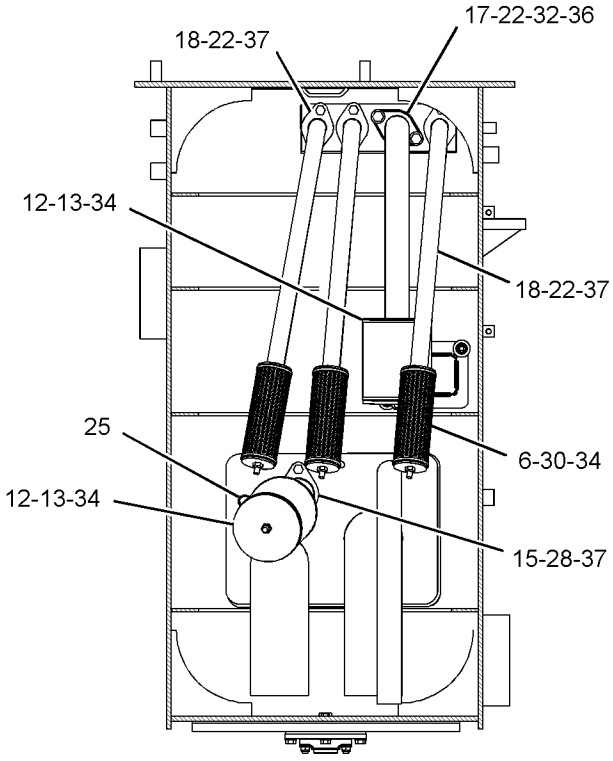


SECTION B-B

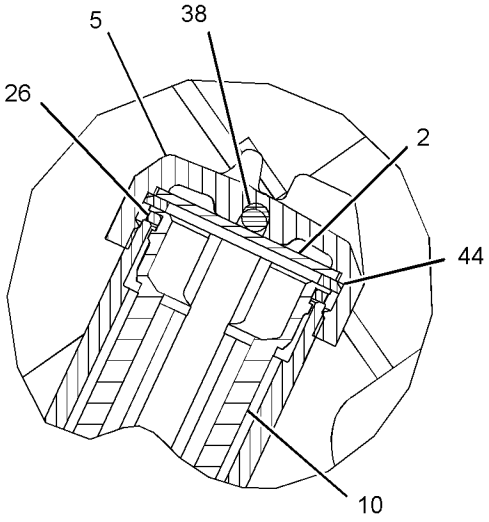


SECTION C-C

GRAPHIC #2 **<END>** g01362712

# HYDRAULIC SYSTEM

## *204-6287* TANK GP-HYDRAULIC

**S/N: BXY1900-UP**
**PART OF 308-2730 GUARD GP-REAR**
**AN ATTACHMENT**

**SMCS-5056** **i02746241**

| NOTE | REF NO | GRAPHIC REF | PART NUMBER | QTY | PART NAME 1 2 3 4 5 6 (PRODUCT LEVEL) | SEE PAGE |
|---|---|---|---|---|---|---|
| | 1 | 1 | **9J-3047** | 1 | STRAINER (HYDRAULIC TANK FILL) | |
| | 2 | 1 | **9J-7031** | 1 | PLUG-DRAIN (HYDRAULIC TANK) | |
| | 3 | 1 | **9T-9226** | 2 | PLATE | |
| | 4 | 1 | **9T-9227** | 2 | SCREEN AS | |
| Y | 5 | 1 | **138-3911** | 1 | COVER GP-HYDRAULIC TANK CAP | 1070 |
| | 6 | 1 | **142-0203** | 1 | TUBE AS | |
| M | | 1 | **6V-3822** | 1 | BOLT (M10X1.5X35-MM) | |
| | 7 | 1 | **153-9784** | 1 | TUBE AS | |
| M | | 1 | **6V-3822** | 1 | BOLT (M10X1.5X35-MM) | |
| | 8 | 1 | **154-0930** | 3 | TUBE AS | |
| | | | | | (EACH INCLUDES) | |
| M | | 1 | **6V-3822** | 1 | BOLT (M10X1.5X35-MM) | |
| | 9 | 1 | **177-0093** | 1 | COVER AS | |
| | | 1 | **6B-6684** | 2 | NUT-FULL (1/2-20-THD) | |
| | 10 | 1 | **178-0182** | 1 | SCREEN-DIFFUSER | |
| | 11 | 1 | **204-6286** | 1 | TANK AS-HYDRAULIC | |
| | 12 | 1 | **1H-9696** | 4 | SEAL-O-RING | |
| | 13 | 1 | **1P-4579** | 4 | FLANGE-HALF | |
| | 14 | 1 | **1P-4582** | 2 | FLANGE-HALF | |
| | 15 | 1 | **1U-1570** | 1 | TUBE | |
| | 16 | 1 | **2D-4202** | 1 | PLATE | |
| | 17 | 1 | **3G-0361** | 1 | GASKET | |
| | 18 | 1 | **3V-9862** | 2 | SPACER | |
| | 19 | 1 | **4J-0527** | 1 | SEAL-O-RING | |
| | 20 | 1 | **4W-0189** | 1 | KIT-STATOR REWIND (GENERATOR) | |
| | 21 | 1 | **4T-8698** | 3 | WASHER (12.2X62X3.5-MM THK) | |
| | 22 | 1 | **5M-2057** | 1 | SEAL-O-RING | |
| | 23 | 1 | **5P-8245** | 2 | WASHER-HARD (13.5X25.5X3-MM THK) | |
| | 24 | 1 | **6E-6550** | 1 | GAUGE AS-LIQUID LEVEL | |
| M | 25 | 1 | **6V-4248** | 47 | BOLT (M10X1.5X25-MM) | |
| | 26 | 1 | **6V-5839** | 2 | WASHER (11X21X2.5-MM THK) | |
| M | 27 | 1 | **6V-7744** | 7 | LOCKNUT (M10X1.15-THD) | |
| | 28 | 1 | **7H-1447** | 1 | CAP-FILLER (HYDRAULIC TANK) | |
| | 29 | 1 | **7J-2656** | 3 | SCREEN GP | |
| | 30 | 1 | **8C-3206** | 2 | FLANGE-HALF | |
| M | 31 | 1 | **8T-0558** | 2 | BOLT-SELF-LOCKING (M12X1.75X100-MM) | |
| M | 32 | 1 | **8T-0722** | 8 | BOLT-LOCKING (M10X1.5X30-MM) | |
| | 33 | 1 | **8T-2275** | 1 | BALL | |
| | 34 | 1 | **8T-4121** | 8 | WASHER-HARD (11X21X2.5-MM THK) | |
| M | 35 | 1 | **8T-4137** | 4 | BOLT (M10X1.5X20-MM) | |
| M | 36 | 1 | **8T-4183** | 12 | BOLT (M12X1.75X40-MM) | |
| M | 37 | 1 | **8T-4196** | 4 | BOLT (M10X1.5X35-MM) | |
| | 38 | 1 | **8T-4223** | 12 | WASHER-HARD (13.5X25.5X3-MM THK) | |
| | 39 | 1 | **9H-6454** | 1 | GASKET | |
| BDF | | | **5P-9119** | | GASKET-TAPE (ADHESIVE BACKED) | |

B-USE AS REQUIRED
D-ORDER BY THE METER
F-NOT SHOWN
M-METRIC PART
Y-SEPARATE ILLUSTRATION

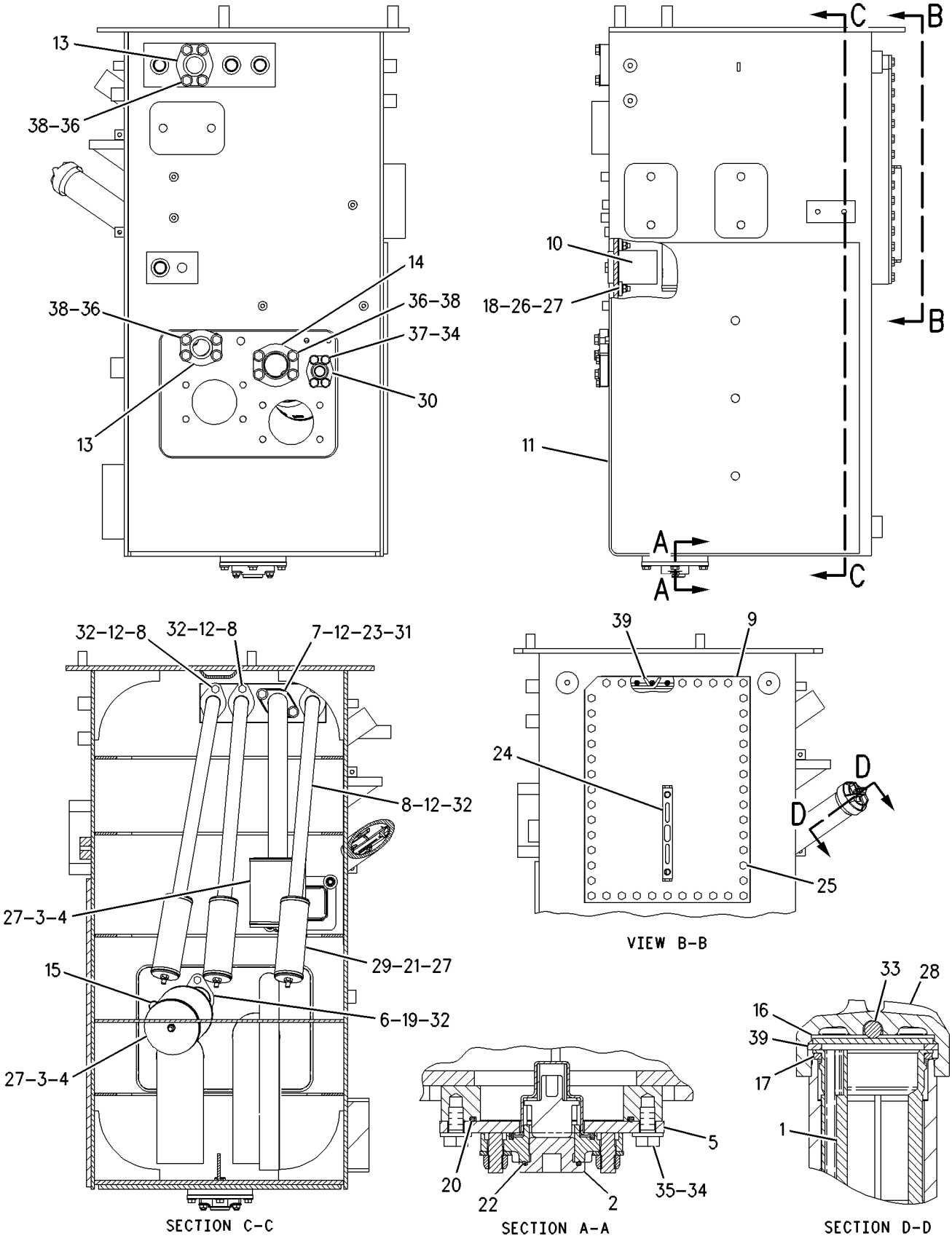


GRAPHIC #1 **<END>** g00999190

# HYDRAULIC SYSTEM

## *132-6133* VALVE & MTG GP-MAIN CONTROL–2-FUNCTION

**S/N: BXY1-UP**
**PART OF 255-0040, 255-0042 LIFT AR**
**AN ATTACHMENT**

**SMCS-5051** **i02703574**

| NOTE | REF NO | GRAPHIC REF | PART NUMBER | QTY | PART NAME 1 2 3 4 5 6 (PRODUCT LEVEL) | SEE PAGE |
|---|---|---|---|---|---|---|
| | 1 | 1 | **8T-1674** | 1 | TEE | |
| Y | 2 | 1 | **9T-3096** | 1 | VALVE GP-CHECK (PILOT) | 1159 |
| I | 3 | 1 | **198-7669** | 1 | HOSE AS | |
| | 4 | 1 | **104-7108** | 1 | VALVE GP-CHECK (PILOT) | |
| Y | 5 | 1 | **112-1817** | 1 | VALVE GP-MANUAL (LOWERING CONTROL) | 1170 |
| Y | 6 | 1 | **212-8712** | 1 | VALVE GP-MAIN CONTROL (2-FUNCTION) | 1161 |
| I | 7 | 1 | **198-7667** | 1 | HOSE AS | |
| Y | 8 | 1 | **151-7455** | 1 | VALVE GP-SOLENOID (24-VOLT) (HYDRAULIC LOCKOUT) | 1184 |
| | 9 | 1 | **153-6293** | 1 | ELBOW | |
| I | 10 | 1 | **198-8196** | 1 | HOSE AS | |
| | 11 | 1 | **154-5512** | 1 | BRACKET AS | |
| | 12 | 1 | **154-6819** | 1 | BRACKET AS | |
| | 13 | 1 | **154-6820** | 1 | PLATE | |
| | 14 | 1 | **154-6821** | 1 | TUBE AS | |
| | 15 | 1 | **154-7179** | 1 | BRACKET | |
| | 16 | 1 | **198-6434** | 1 | PLATE | |
| I | 17 | 1 | **198-7670** | 1 | HOSE AS | |
| I | 18 | 1 | **198-7668** | 1 | HOSE AS | |
| | 19 | 1 | *148-8353* | 1 | ELBOW AS | |
| | | 1 | **3J-1907** | 1 | SEAL-O-RING | |
| | | 1 | **6V-8397** | 1 | SEAL-O-RING | |
| | | 1 | **6V-9001** | 1 | ELBOW | |
| | 20 | 1 | *148-8364* | 2 | ELBOW AS | |
| | | | | | (EACH INCLUDES) | |
| | | 1 | **6V-8625** | 1 | ELBOW | |
| | | 1 | **6V-8398** | 1 | SEAL-O-RING | |
| | | 1 | **3K-0360** | 1 | SEAL-O-RING | |
| | 21 | 1 | *148-8378* | 3 | ELBOW AS | |
| | | | | | (EACH INCLUDES) | |
| | | 1 | **6V-8724** | 1 | ELBOW | |
| | | 1 | **6V-8397** | 1 | SEAL-O-RING | |
| | | 1 | **3J-1907** | 1 | SEAL-O-RING | |
| | 22 | 1 | *148-8435* | 1 | TEE AS | |
| | | 1 | **6V-8781** | 1 | TEE-FACE SEAL | |
| | | 1 | **6V-8397** | 2 | SEAL-O-RING | |
| | | 1 | **3J-1907** | 1 | SEAL-O-RING | |
| | 23 | 1 | **1P-3706** | 2 | SEAL-RECTANGULAR | |
| | 24 | 1 | **3E-9411** | 5 | WASHER-HARD (17.5X38X6-MM THK) | |
| | 25 | 1 | **3J-1907** | 1 | SEAL-O-RING | |
| | 26 | 1 | **096-6166** | 4 | WASHER-HARD (4.5X9X1-MM THK) | |
| | 27 | 1 | **4J-0527** | 1 | SEAL-O-RING | |
| | 28 | 1 | **5K-9090** | 1 | SEAL-O-RING | |
| | 29 | 1 | **5P-1076** | 2 | WASHER-HARD (13.5X30X4-MM THK) | |
| M | 30 | 1 | **6V-8200** | 4 | BOLT-SOCKET HEAD (M12X1.75X35-MM) | |
| | 31 | 1 | **6V-8397** | 1 | SEAL-O-RING | |
| | 32 | 1 | **6V-8398** | 1 | SEAL-O-RING | |
| | 33 | 1 | **6V-9833** | 1 | CAP AS | |
| | 34 | 1 | **7M-8485** | 1 | SEAL-O-RING | |
| | 35 | 1 | **7X-0583** | 8 | WASHER-HARD (17X45X6-MM THK) | |
| M | 36 | 1 | **7X-2554** | 8 | BOLT (M16X2X70-MM) | |
| M | 37 | 1 | **8T-0285** | 4 | SCREW-MACHINE (M4X0.7X12-MM) | |
| | 38 | 1 | **198-6439** | 2 | PLATE | |
| M | 39 | 1 | **8T-4132** | 1 | NUT (M16X2-THD) | |
| M | 40 | 1 | **8T-4184** | 2 | BOLT (M12X1.75X45-MM) | |
| M | 41 | 1 | **8T-4139** | 8 | BOLT (M12X1.75X30-MM) | |

## *132-6133* VALVE & MTG GP-MAIN CONTROL *(contd.)* i02703574

| NOTE | REF NO | GRAPHIC REF | PART NUMBER | QTY | PART NAME 1 2 3 4 5 6 (PRODUCT LEVEL) | SEE PAGE |
|---|---|---|---|---|---|---|
| M | 42 | 1 | **8T-4173** | 4 | BOLT (M16X2X110-MM) | |
| M | 43 | 1 | **8T-4175** | 1 | BOLT (M16X2X90-MM) | |
| M | 44 | 1 | **8T-4192** | 4 | BOLT (M12X1.75X25-MM) | |
| M | 45 | 1 | **8T-4193** | 7 | BOLT (M16X2X50-MM) | |
| | 46 | 1 | **8T-4223** | 14 | WASHER-HARD (13.5X25.5X3-MM THK) | |
| M | 47 | 1 | **8T-4648** | 2 | BOLT (M12X1.75X70-MM) | |
| | 48 | 1 | **9X-8257** | 4 | WASHER (17.5X30X3.5-MM THK) | |
| | 49 | 1 | *148-8336* | 1 | CONNECTOR AS | |
| | | 1 | **3J-1907** | 1 | SEAL-O-RING | |
| | | 1 | **6V-8397** | 1 | SEAL-O-RING | |
| | | 1 | **6V-8636** | 1 | CONNECTOR | |
| | 50 | 1 | *148-8367* | 1 | ELBOW AS | |
| | | 1 | **6V-8397** | 1 | SEAL-O-RING | |
| | | 1 | **6V-9850** | 1 | ELBOW | |

I-REFER TO HYDRAULIC INFORMATION SYSTEM
M-METRIC PART
Y-SEPARATE ILLUSTRATION

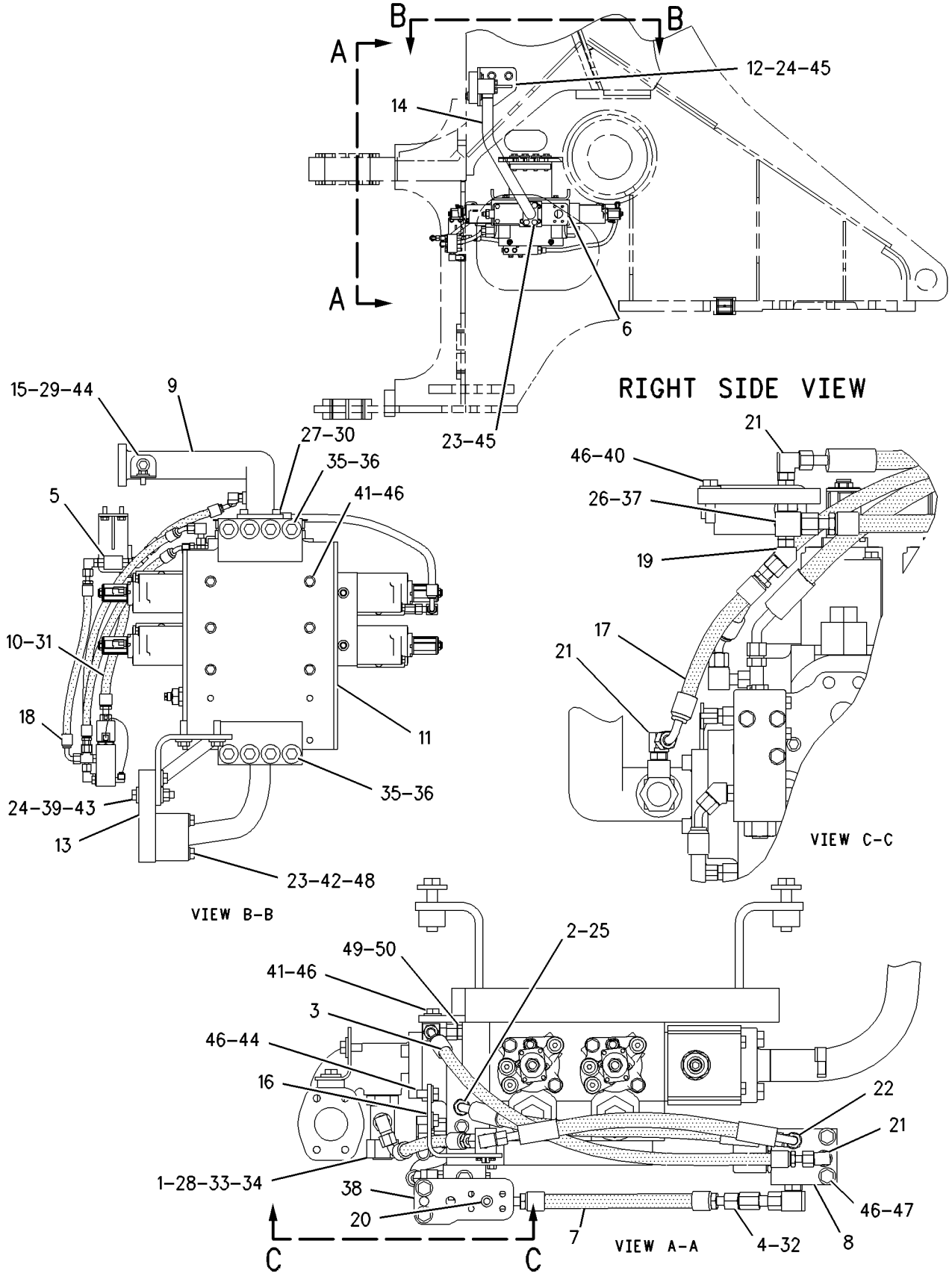


GRAPHIC #1 **<END>** g00768555

# HYDRAULIC SYSTEM

## *201-0218* VALVE & MTG GP-MAIN CONTROL—3-FUNCTION

**S/N: BXY1-UP**

**PART OF 255-0041, 255-0043 LIFT AR**

**AN ATTACHMENT**

**SMCS-5051** **i02703571**

| NOTE | REF NO | GRAPHIC REF | PART NUMBER | QTY | PART NAME 1 2 3 4 5 6 (PRODUCT LEVEL) | SEE PAGE |
|---|---|---|---|---|---|---|
| | 1 | 1 | **8T-1674** | 1 | TEE | |
| Y | 2 | 1 | **9T-3096** | 1 | VALVE GP-CHECK (PILOT) | 1159 |
| | 3 | 1 | **104-7108** | 1 | VALVE GP-CHECK (PILOT) | |
| Y | 4 | 1 | **112-1817** | 1 | VALVE GP-MANUAL (LOWERING CONTROL) | 1170 |
| Y | 5 | 1 | **151-7455** | 1 | VALVE GP-SOLENOID (24-VOLT) (HYDRAULIC LOCKOUT) | 1184 |
| | 6 | 1 | **153-6293** | 1 | ELBOW | |
| | 7 | 1 | **154-5512** | 1 | BRACKET AS | |
| | 8 | 1 | **154-6819** | 1 | BRACKET AS | |
| | 9 | 1 | **154-6820** | 1 | PLATE | |
| | 10 | 1 | **154-7179** | 1 | BRACKET | |
| I | 11 | 1 | **156-9156** | 1 | HOSE AS | |
| | 12 | 1 | **198-6434** | 1 | PLATE | |
| | 13 | 1 | **198-6439** | 1 | PLATE | |
| I | 14 | 1 | **198-7667** | 1 | HOSE AS | |
| I | 15 | 1 | **198-7668** | 1 | HOSE AS | |
| I | 16 | 1 | **198-7669** | 1 | HOSE AS | |
| I | 17 | 1 | **198-7670** | 1 | HOSE AS | |
| I | 18 | 1 | **198-8196** | 1 | HOSE AS | |
| Y | 19 | 1 | **212-8746** | 1 | VALVE GP-MAIN CONTROL (3-FUNCTION) | 1165 |
| | 20 | 1 | **096-6166** | 4 | WASHER-HARD (4.5X9X1-MM THK) | |
| | 21 | 1 | *148-8336* | 1 | CONNECTOR AS | |
| | | 1 | **6V-8636** | 1 | CONNECTOR | |
| | | 1 | **3J-1907** | 1 | SEAL-O-RING | |
| | | 1 | **6V-8397** | 1 | SEAL-O-RING | |
| | 22 | 1 | *148-8353* | 1 | ELBOW AS | |
| | | 1 | **6V-9001** | 1 | ELBOW | |
| | | 1 | **3J-1907** | 1 | SEAL-O-RING | |
| | | 1 | **6V-8397** | 1 | SEAL-O-RING | |
| | 23 | 1 | *148-8364* | 2 | ELBOW AS | |
| | | | | | (EACH INCLUDES) | |
| | | 1 | **3K-0360** | 1 | SEAL-O-RING | |
| | | 1 | **6V-8398** | 1 | SEAL-O-RING | |
| | | 1 | **6V-8625** | 1 | ELBOW | |
| | 24 | 1 | *148-8367* | 1 | ELBOW AS | |
| | | 1 | **6V-8397** | 1 | SEAL-O-RING | |
| | | 1 | **6V-9850** | 1 | ELBOW | |
| | 25 | 1 | *148-8378* | 3 | ELBOW AS | |
| | | | | | (EACH INCLUDES) | |
| | | 1 | **3J-1907** | 1 | SEAL-O-RING | |
| | | 1 | **6V-8397** | 1 | SEAL-O-RING | |
| | | 1 | **6V-8724** | 1 | ELBOW | |
| | 26 | 1 | *148-8435* | 1 | TEE AS | |
| | | 1 | **3J-1907** | 1 | SEAL-O-RING | |
| | | 1 | **6V-8397** | 2 | SEAL-O-RING | |
| | | 1 | **6V-8781** | 1 | TEE-FACE SEAL | |
| | 27 | 1 | **1P-3705** | 2 | SEAL-RECTANGULAR | |
| | 28 | 1 | **3E-9411** | 5 | WASHER-HARD (17.5X38X6-MM THK) | |
| | 29 | 1 | **3J-1907** | 1 | SEAL-O-RING | |
| | 30 | 1 | **4J-0527** | 1 | SEAL-O-RING | |
| | 31 | 1 | **5K-9090** | 1 | SEAL-O-RING | |
| | 32 | 1 | **5P-1076** | 2 | WASHER-HARD (13.5X30X4-MM THK) | |
| | 33 | 1 | **5P-8077** | 4 | FLANGE-HALF | |
| M | 34 | 1 | **6V-8200** | 4 | BOLT-SOCKET HEAD (M12X1.75X35-MM) | |
| | 35 | 1 | **6V-8397** | 1 | SEAL-O-RING | |
| | 36 | 1 | **6V-8398** | 1 | SEAL-O-RING | |

## *201-0218* VALVE & MTG GP-MAIN CONTROL *(contd.)* i02703571

| NOTE | REF NO | GRAPHIC REF | PART NUMBER | QTY | PART NAME 1 2 3 4 5 6 (PRODUCT LEVEL) | SEE PAGE |
|---|---|---|---|---|---|---|
| | 37 | 1 | **6V-9833** | 1 | CAP AS | |
| | 38 | 1 | **7M-8485** | 1 | SEAL-O-RING | |
| | 39 | 1 | **7X-0583** | 8 | WASHER-HARD (17X45X6-MM THK) | |
| M | 40 | 1 | **7X-2554** | 8 | BOLT (M16X2X70-MM) | |
| M | 41 | 1 | **8T-0285** | 4 | SCREW-MACHINE (M4X0.7X12-MM) | |
| M | 42 | 1 | **8T-4132** | 1 | NUT (M16X2-THD) | |
| M | 43 | 1 | **8T-4139** | 12 | BOLT (M12X1.75X30-MM) | |
| M | 44 | 1 | **8T-4140** | 8 | BOLT (M16X2X60-MM) | |
| M | 45 | 1 | **8T-4175** | 1 | BOLT (M16X2X90-MM) | |
| M | 46 | 1 | **8T-4184** | 2 | BOLT (M12X1.75X45-MM) | |
| M | 47 | 1 | **8T-4192** | 4 | BOLT (M12X1.75X25-MM) | |
| M | 48 | 1 | **8T-4193** | 3 | BOLT (M16X2X50-MM) | |
| | 49 | 1 | **8T-4223** | 18 | WASHER-HARD (13.5X25.5X3-MM THK) | |
| M | 50 | 1 | **8T-4648** | 2 | BOLT (M12X1.75X70-MM) | |
| | 51 | 1 | **9X-8257** | 8 | WASHER (17.5X30X3.5-MM THK) | |

I-REFER TO HYDRAULIC INFORMATION SYSTEM
M-METRIC PART
Y-SEPARATE ILLUSTRATION

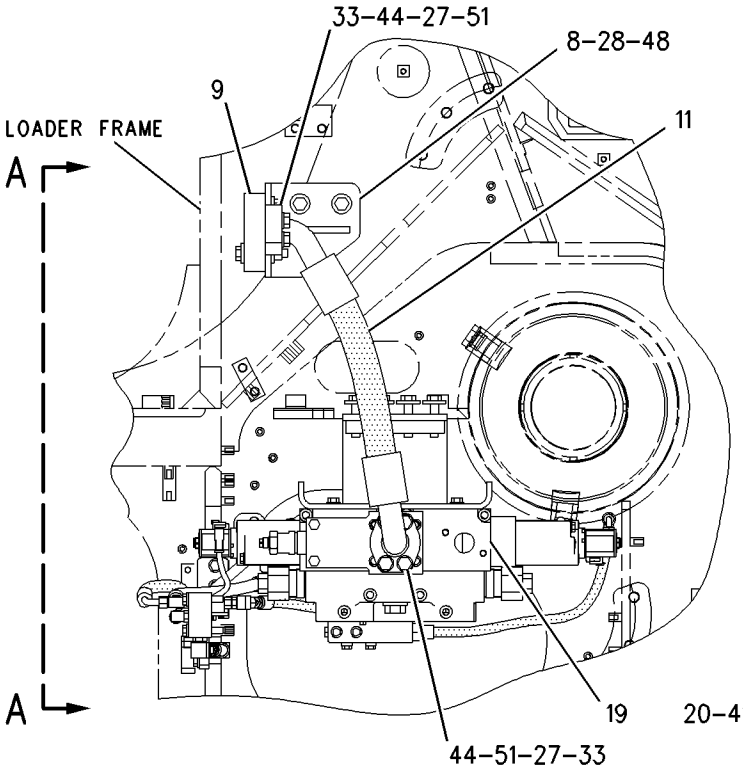


RIGHT SIDE FRAME

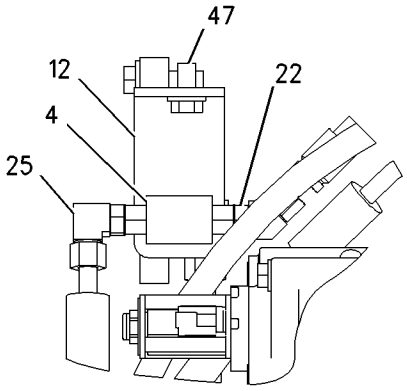


VIEW OF AREA C

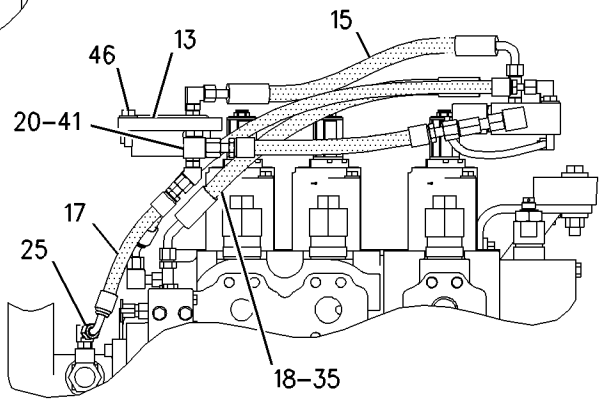


SECTION B-B

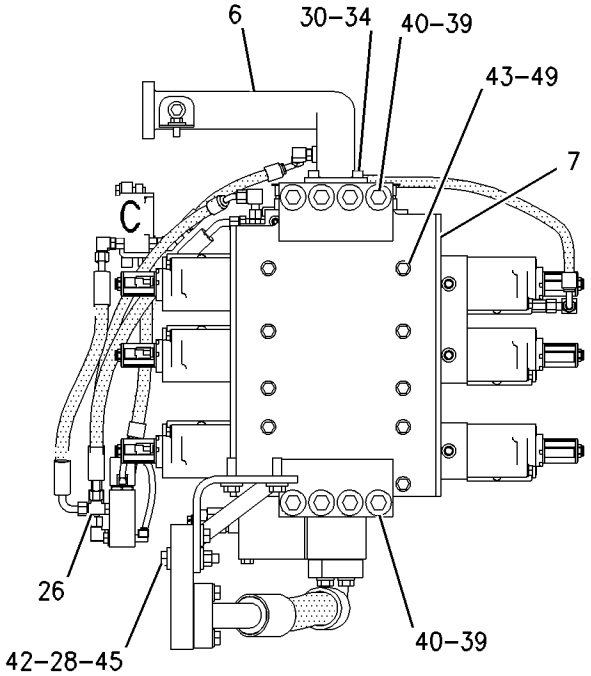


TOP VIEW

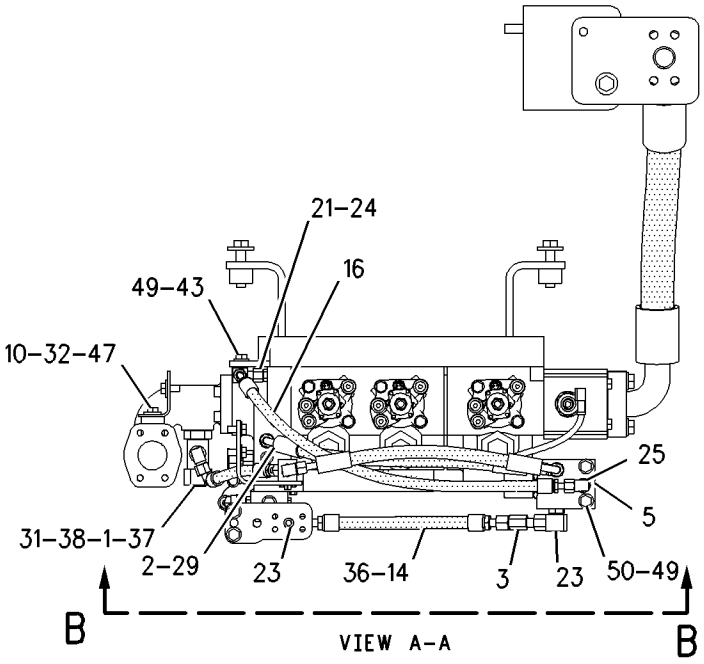


VIEW A-A

GRAPHIC #1 **<END>** g00849394

# 9T-3096 VALVE GP-CHECK–PILOT

**S/N: BXY1-UP**

**PART OF 132-6142 LINES GP-STEERING NEUTRALIZER, 132-6133, 201-0218 VALVE & MTG GP-MAIN CONTROL**

**ALSO AN ATTACHMENT**

**SMCS-4275, 5067** **i02333726**

| NOTE | PART NUMBER | QTY | PART NAME 1 2 3 4 5 6 (PRODUCT LEVEL) | SEE PAGE |
|---|---|---|---|---|
| | | | (NO SERVICED PARTS) | |

**<END>**

# HYDRAULIC SYSTEM

## 191-8735 VALVE GP-DEMAND FAN

**S/N: BXY1-UP**

**PART OF 225-6716 LINES GP-HYDRAULIC FAN**

**SMCS-5264, 5479** **i02215797**

| NOTE | REF NO | GRAPHIC REF | PART NUMBER | QTY | PART NAME 1 2 3 4 5 6 (PRODUCT LEVEL) | SEE PAGE |
|---|---|---|---|---|---|---|
| | 1 | 1 | **3E-3584** | 1 | MANIFOLD | |
| Y | 2 | 1 | **183-7595** | 1 | VALVE GP-SOLENOID (24-VOLT) (DEMAND FAN) | 1186 |

Y-SEPARATE ILLUSTRATION

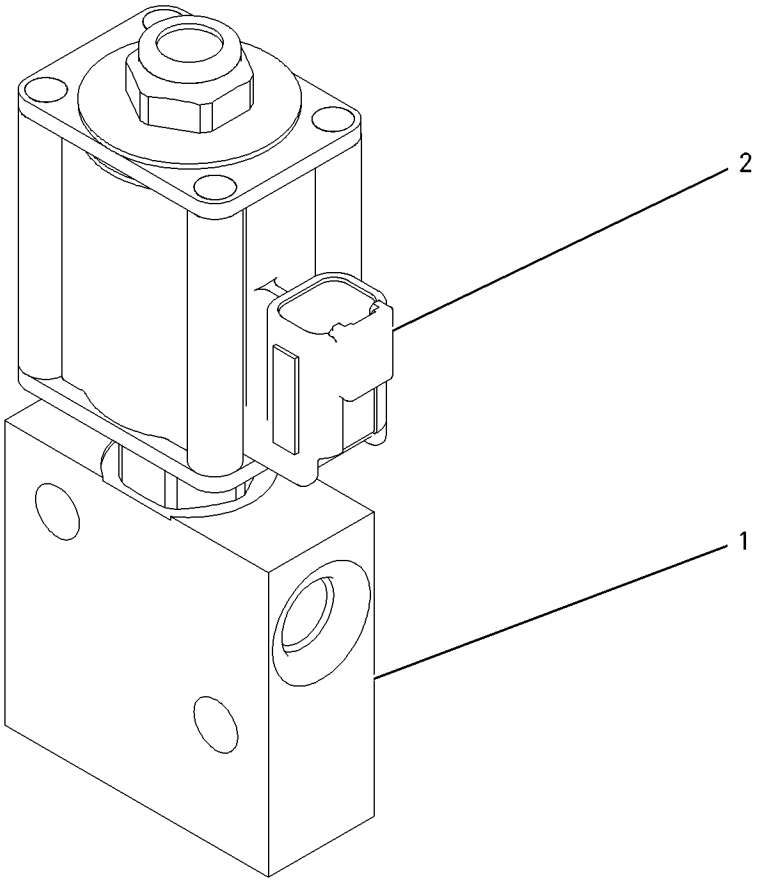


GRAPHIC #1 **<END>** g00714048

# HYDRAULIC SYSTEM

## 212-8712 VALVE GP-MAIN CONTROL–2-FUNCTION

**S/N: BXY1-UP**

**PART OF 132-6133 VALVE & MTG GP-MAIN CONTROL**

**AN ATTACHMENT**

**SMCS-5051** **i02464728**

| NOTE | REF NO | GRAPHIC REF | PART NUMBER | QTY | PART NAME 1 2 3 4 5 6 (PRODUCT LEVEL) | SEE PAGE |
|---|---|---|---|---|---|---|
| | 1 | 1 | **4B-4158** | 4 | SCREW-DRIVE (3/16X0.25-IN) | |
| Y | 2 | 1 | **4T-1860** | 1 | VALVE GP-SHUTTLE (BALL RESOLVER) | 1046 |
| | 3 | 2 | **6E-1291** | 1 | VALVE | |
| | 4 | 1 | **7D-8508** | 1 | NUT-FULL (7/8-14-THD) | |
| | 5 | 1 | **7X-2459** | 1 | TEE-O-RING | |
| | 6 | 1 | **9G-4733** | 1 | TUBE | |
| | 7 | 2 | **9L-9188** | 2 | SPRING-VALVE | |
| | 8 | 1 | **9R-5008** | 19 | SPACER (11X20X6-MM THK) | |
| I | 9 | 1 | **9R-7996** | 1 | HOSE AS | |
| | 10 | 1 | **100-6731** | 1 | STEM | |
| | 11 | 2 | **102-4156** | 2 | VALVE | |
| | 12 | 1 | **112-8244** | 1 | HOUSING | |
| | 13 | 2 | **113-8263** | 2 | PISTON | |
| Y | 14 | 1 | **117-0159** | 1 | VALVE GP-RELIEF (MAIN) | 1173 |
| Y | 15 | 2 | **117-0160** | 1 | VALVE GP-RELIEF (LINE, TILT CYL HEAD END PORT) | 1174 |
| | 16 | 1 | **117-9341** | 1 | BODY | |
| Y | 17 | 2 | **125-9349** | 1 | VALVE GP-RELIEF (LINE, LIFT CYL HEAD END PORT) | 1176 |
| | 20 | 1 | **185-5626** | 1 | SPRING | |
| | 21 | 1 | **203-8482** | 1 | MANIFOLD | |
| Y | 24 | 1 | **217-6719** | 2 | ACTUATOR GP-PILOT CONTROL (PROPORTIONAL SOLENOID) (REGENERATION VALVE) | 1058 |
| Y | 25 | 1 | **217-6720** | 2 | ACTUATOR GP-PILOT CONTROL (PROPORTIONAL SOLENOID) | 1060 |
| C | 26 | 1 | *222-4737* | 1 | PLUG AS | |
| | | 1 | **4J-7533** | 1 | SEAL-O-RING | |
| | | 1 | **9S-4180** | 1 | PLUG (5/16-24-THD) | |
| M | 27 | 1 | **095-9804** | 4 | BOLT-SOCKET HEAD (M12X1.75X110-MM) | |
| | 28 | 2 | **102-4158** | 2 | PLUG AS | |
| | | | | | (EACH INCLUDES) | |
| | | 2 | **3G-5003** | 1 | BEARING-SLEEVE | |
| Y | 29 | 2 | **117-0161** | 1 | VALVE GP-RELIEF (LINE, TILT CYL ROD END PORT) | 1175 |
| Y | 29A | 2 | **117-0161** | 1 | VALVE GP-RELIEF (LINE, LIFT CYL ROD END PORT) | 1175 |
| C | 30 | 2 | *148-8406* | 3 | PLUG AS | |
| | | | | | (EACH INCLUDES) | |
| | | 2 | **7M-8485** | 1 | SEAL-O-RING | |
| | | 2 | **9S-9334** | 1 | PLUG | |
| C | 31 | 1,2 | *148-8407* | 6 | PLUG AS | |
| | | | | | (EACH INCLUDES) | |
| | | 1,2 | **3J-1907** | 1 | SEAL-O-RING | |
| | | 1,2 | **9S-4191** | 1 | PLUG-O-RING | |
| C | 32 | 1 | *155-3624* | 7 | PLUG AS | |
| | | | | | (EACH INCLUDES) | |
| | | 1 | **3J-7354** | 1 | SEAL-O-RING | |
| | | 1 | **9S-4182** | 1 | PLUG-O-RING | |
| C | 33 | 1,2 | *162-0177* | 5 | PLUG AS | |
| | | | | | (EACH INCLUDES) | |
| | | 1,2 | **3J-1907** | 1 | SEAL-O-RING | |
| | | 1,2 | **9S-8004** | 1 | PLUG-O-RING | |
| C | 34 | 2 | *183-7263* | 4 | PLUG AS | |
| | | | | | (EACH INCLUDES) | |
| | | 2 | **3J-7354** | 1 | SEAL-O-RING | |
| | | 2 | **9S-8002** | 1 | PLUG-O-RING | |
| | 35 | 2 | **1H-5728** | 6 | SEAL-O-RING | |
| | 36 | 1 | **1P-3705** | 1 | SEAL-RECTANGULAR | |
| | 37 | 1 | **2J-6274** | 4 | SEAL-O-RING | |

## 212-8712 VALVE GP-MAIN CONTROL *(contd. )* i02464728

| NOTE | REF NO | GRAPHIC REF | PART NUMBER | QTY | PART NAME 1 2 3 4 5 6 (PRODUCT LEVEL) | SEE PAGE |
|---|---|---|---|---|---|---|
| | 38 | 1 | **2M-9780** | 1 | SEAL-O-RING | |
| | 39 | 2 | **2S-4078** | 2 | SEAL-O-RING | |
| C | 40 | 1 | **3J-1907** | 4 | SEAL-O-RING | |
| C | 41 | 1 | **3J-7354** | 2 | SEAL-O-RING | |
| | 42 | 1 | **4J-0523** | 1 | SEAL-O-RING | |
| | 43 | 1 | **4J-0525** | 1 | SEAL-O-RING | |
| | 44 | 1 | **4J-5309** | 1 | SEAL-O-RING | |
| | 45 | 1 | **6E-2140** | 1 | RETAINER AS | |
| J | 46 | 1 | **6E-4286** | 1 | VALVE GP-PRESSURE REDUCING | |
| | 47 | 1 | **6V-0852** | 2 | CAP-DUST | |
| M | 48 | 1 | **6V-3668** | 2 | BOLT (M12X1.75X30-MM) | |
| | 49 | 1 | **6V-3965** | 2 | FITTING-COUPLER | |
| | 50 | 1 | **6V-5759** | 2 | SEAL-O-RING | |
| | 51 | 1 | **6V-8397** | 2 | SEAL-O-RING | |
| | 52 | 2 | **7J-7852** | 1 | SPRING | |
| M | 53 | 1 | **7X-2546** | 4 | BOLT (M10X1.5X180-MM) | |
| M | 54 | 1 | **7X-2549** | 2 | BOLT (M12X1.75X100-MM) | |
| | 55 | 1 | **8L-6565** | 4 | PIN-SPRING | |
| | 56 | 1 | **8T-0075** | 1 | CONNECTOR | |
| | 57 | 1 | **8T-2353** | 2 | ADAPTER | |
| M | 58 | 1 | **8T-4139** | 4 | BOLT (M12X1.75X30-MM) | |
| | 59 | 1 | **8T-4205** | 1 | WASHER-HARD (7.2X14.5X2-MM THK) | |
| | 60 | 1 | **8T-4223** | 4 | WASHER-HARD (13.5X25.5X3-MM THK) | |
| M | 61 | 1 | **8T-5436** | 4 | BOLT (M10X1.5X130-MM) | |
| M | 62 | 1 | **8T-6466** | 3 | BOLT (M10X1.5X60-MM) | |
| | 63 | 1 | **8W-2966** | 1 | COVER | |
| | | | | | AVAILABLE REPAIR KIT(S): | |
| | | | **6E-4287** | 1 | KIT-SEAL (PRESSURE REDUCING VALVE) | |

C-CHANGE FROM PREVIOUS TYPE
I-REFER TO HYDRAULIC INFORMATION SYSTEM
J-KIT MARKED J SERVICES PART MARKED J
M-METRIC PART
Y-SEPARATE ILLUSTRATION

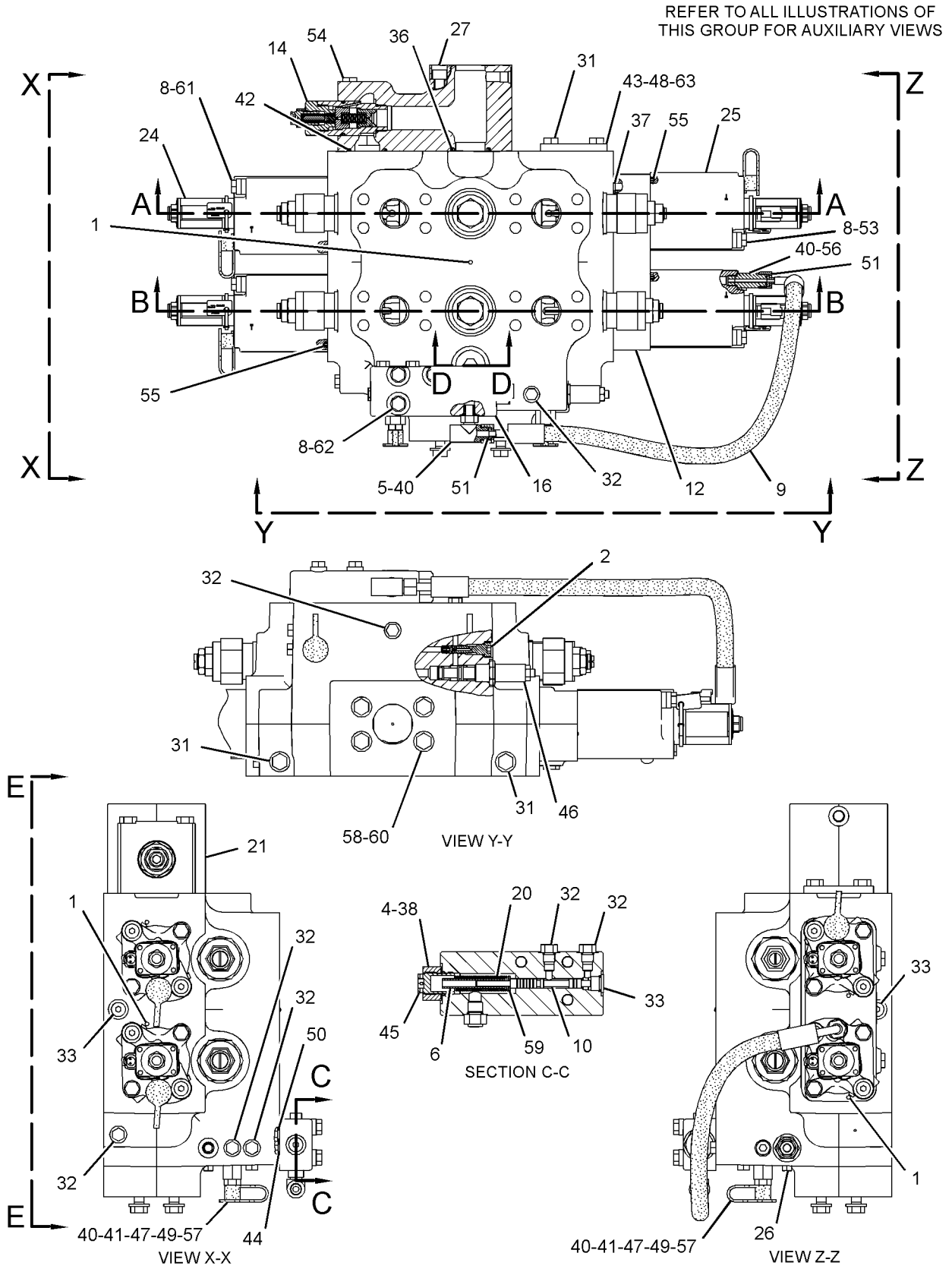


GRAPHIC #1 g01261988

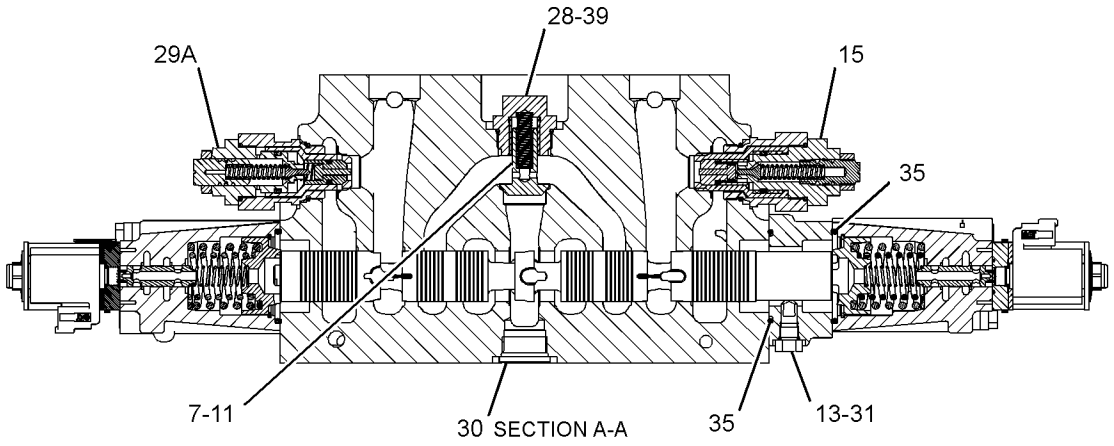


SECTION A-A

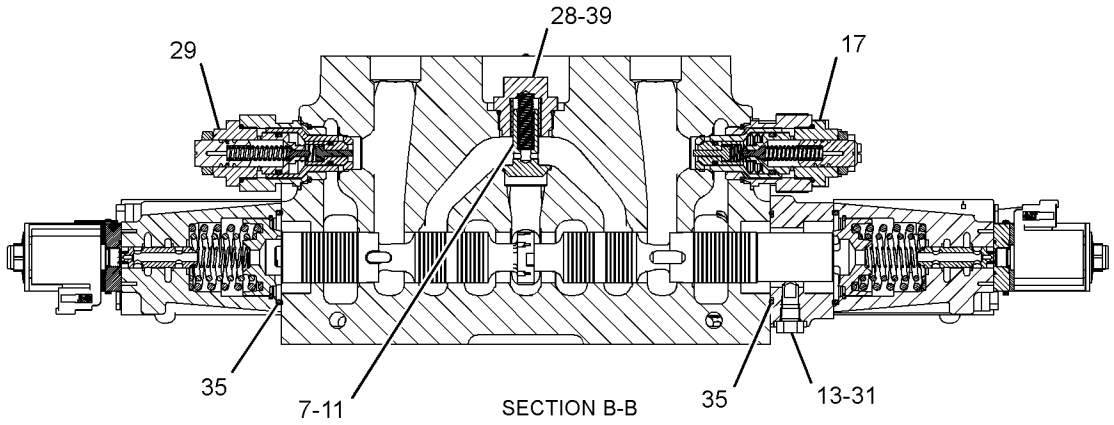


SECTION B-B

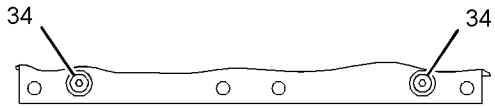


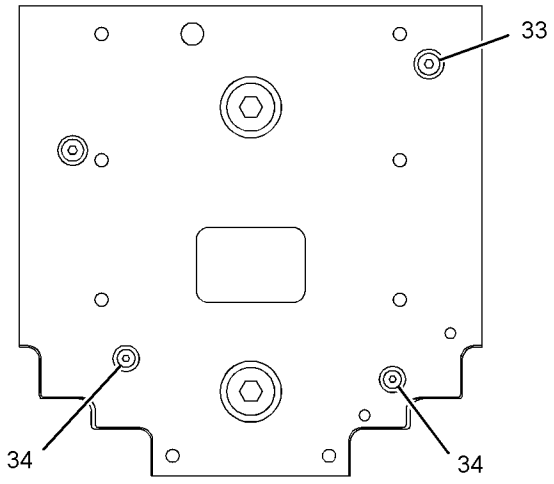


VIEW E-E

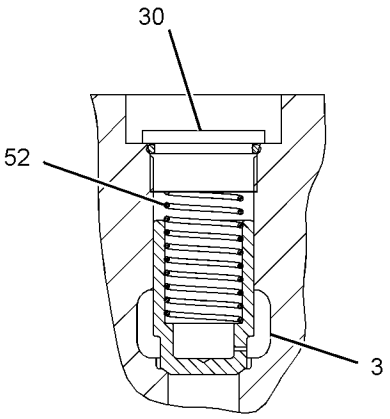


SECTION D-D

GRAPHIC #2 **<END>** g01261989

## 212-8746 VALVE GP-MAIN CONTROL–3-FUNCTION

**S/N: BXY1-UP**

**PART OF 201-0218 VALVE & MTG GP-MAIN CONTROL**

**AN ATTACHMENT**

**SMCS-5051** **i02742904**

| NOTE | REF NO | GRAPHIC REF | PART NUMBER | QTY | PART NAME 1 2 3 4 5 6 (PRODUCT LEVEL) | SEE PAGE |
|---|---|---|---|---|---|---|
| | 1 | 1 | **4B-4158** | 6 | SCREW-DRIVE (3/16X0.25-IN) | |
| Y | 2 | 3 | **4T-1860** | 1 | VALVE GP-SHUTTLE (BALL RESOLVER) | 1046 |
| | 3 | 3 | **6E-1291** | 1 | VALVE | |
| | 4 | 3 | **7D-8508** | 1 | NUT-FULL (7/8-14-THD) | |
| | 5 | 1 | **7X-2459** | 1 | TEE-O-RING | |
| | 6 | 3 | **9G-4733** | 1 | TUBE | |
| | 7 | 2 | **9L-9188** | 3 | SPRING-VALVE | |
| | 8 | 1 | **9R-5008** | 27 | SPACER (11X20X6-MM THK) | |
| I | 9 | 1 | **9R-7996** | 1 | HOSE AS | |
| | 10 | 3 | **100-6731** | 1 | STEM | |
| | 11 | 2 | **102-4156** | 3 | VALVE | |
| | 12 | 1 | **112-8244** | 1 | HOUSING | |
| | 13 | 2 | **113-8263** | 3 | PISTON | |
| Y | 14 | 1 | **117-0159** | 1 | VALVE GP-RELIEF (MAIN) | 1173 |
| Y | 15 | 2 | **117-0160** | 1 | VALVE GP-RELIEF (LINE, TILT CYL HEAD END PORT) | 1174 |
| | 16 | 1 | **117-9341** | 1 | BODY | |
| Y | 17 | 2 | **125-9349** | 1 | VALVE GP-RELIEF (LINE, LIFT CYL HEAD END PORT) | 1176 |
| | 21 | 1 | **155-2291** | 1 | HOUSING | |
| Y | 22 | 2 | **172-5481** | 1 | VALVE GP-RELIEF (LINE, AUX CYL ROD END PORT) | 1178 |
| Y | 22A | 2 | **172-5481** | 1 | VALVE GP-RELIEF (LINE, AUX CYL HEAD END PORT) | 1178 |
| | 24 | 3 | **185-5626** | 1 | SPRING | |
| | 25 | 1 | **203-8482** | 1 | MANIFOLD | |
| Y | 28 | 1 | **217-6719** | 3 | ACTUATOR GP-PILOT CONTROL (PROPORTIONAL SOLENOID) (REGENERATION VALVE) | 1058 |
| Y | 29 | 1 | **217-6720** | 3 | ACTUATOR GP-PILOT CONTROL (PROPORTIONAL SOLENOID) | 1060 |
| C | 30 | 1 | *222-4737* | 1 | PLUG AS | |
| | | 1 | **4J-7533** | | SEAL-O-RING | |
| | | 1 | **9S-4180** | 1 | PLUG (5/16-24-THD) | |
| M | 31 | 3 | **095-9804** | 4 | BOLT-SOCKET HEAD (M12X1.75X110-MM) | |
| | 32 | 2 | **102-4158** | 3 | PLUG AS | |
| | | | | | (EACH INCLUDES) | |
| | | 2 | **3G-5003** | 1 | BEARING-SLEEVE | |
| | | 2 | **102-4157** | 1 | PLUG | |
| Y | 33 | 2 | **117-0161** | 1 | VALVE GP-RELIEF (LINE, LIFT CYL ROD END PORT) | 1175 |
| Y | 33A | 2 | **117-0161** | 1 | VALVE GP-RELIEF (LINE, TILT CYL ROD END PORT) | 1175 |
| C | 34 | 2,3 | *148-8406* | 3 | PLUG AS | |
| | | | | | (EACH INCLUDES) | |
| | | 2,3 | **7M-8485** | 1 | SEAL-O-RING | |
| | | 2,3 | **9S-9334** | 1 | PLUG | |
| C | 35 | 2,3,1 | *148-8407* | 5 | PLUG AS | |
| | | | | | (EACH INCLUDES) | |
| | | 2,3,1 | **3J-1907** | 1 | SEAL-O-RING | |
| | | 2,3,1 | **9S-4191** | 1 | PLUG-O-RING | |
| C | 36 | 3,1 | *155-3624* | 7 | PLUG AS | |
| | | | | | (EACH INCLUDES) | |
| | | 3,1 | **3J-7354** | | SEAL-O-RING | |
| | | 3,1 | **9S-4182** | | PLUG-O-RING | |
| C | 37 | 3,1 | *162-0177* | 5 | PLUG AS | |
| | | | | | (EACH INCLUDES) | |
| | | 3,1 | **3J-1907** | 1 | SEAL-O-RING | |
| | | 3,1 | **9S-8004** | 1 | PLUG-O-RING | |
| M | 38 | 1 | **165-5085** | 6 | BOLT-SOCKET HEAD (M12X1.75X160-MM) | |
| C | 39 | 3 | *183-7263* | 4 | PLUG AS | |
| | | | | | (EACH INCLUDES) | |

## 212-8746 VALVE GP-MAIN CONTROL *(contd. )* i02742904

| NOTE | REF NO | GRAPHIC REF | PART NUMBER | QTY | PART NAME 1 2 3 4 5 6 (PRODUCT LEVEL) | SEE PAGE |
|---|---|---|---|---|---|---|
| | | 3 | **3J-7354** | 1 | SEAL-O-RING | |
| | | 3 | **9S-8002** | 1 | PLUG-O-RING | |
| | 40 | 2 | **1H-5728** | 3 | SEAL-O-RING | |
| | 41 | 3 | **1P-3704** | 1 | SEAL-RECTANGULAR | |
| | 42 | 3 | **1P-3705** | 1 | SEAL-RECTANGULAR | |
| | 43 | 1 | **2J-6274** | 6 | SEAL-O-RING | |
| | 44 | 3 | **2M-9780** | 1 | SEAL-O-RING | |
| | 45 | 2 | **2S-4078** | 3 | SEAL-O-RING | |
| | 46 | 3 | **3H-3385** | 2 | SEAL-O-RING | |
| | 47 | 1 | **3J-1907** | 9 | SEAL-O-RING | |
| C | 48 | 1 | **3J-7354** | 2 | SEAL-O-RING | |
| | 49 | 3,1 | **4J-0523** | 4 | SEAL-O-RING | |
| | 50 | 1 | **4J-5309** | 1 | SEAL-O-RING | |
| | 51 | 2,3 | **5P-8077** | 6 | FLANGE-HALF | |
| | 52 | 3 | **6E-2140** | 1 | RETAINER AS | |
| J | 53 | 3 | **6E-4286** | 1 | VALVE GP-PRESSURE REDUCING | |
| | 54 | 1 | **6V-0484** | 2 | ADAPTER-O-RING | |
| | 55 | 1 | **6V-0852** | 5 | CAP-DUST | |
| | 56 | 1 | **6V-3965** | 5 | FITTING-COUPLER | |
| | 57 | 1 | **6V-5759** | 2 | SEAL-O-RING | |
| | 58 | 1 | **6V-8397** | 2 | SEAL-O-RING | |
| | 59 | 1 | **7J-1592** | 1 | COVER | |
| | 60 | 3 | **7J-7852** | 1 | SPRING | |
| M | 61 | 1 | **7X-2546** | 6 | BOLT (M10X1.5X180-MM) | |
| M | 62 | 1 | **7X-2549** | 2 | BOLT (M12X1.75X100-MM) | |
| | 63 | 1 | **8L-6565** | 6 | PIN-SPRING | |
| | 64 | 1 | **8T-0075** | 1 | CONNECTOR | |
| | 65 | 1 | **8T-2353** | 2 | ADAPTER | |
| | 66 | 2,3 | **8T-4122** | 12 | WASHER-HARD (17X32X3.5-MM THK) | |
| M | 67 | 2,3,1 | **8T-4140** | 12 | BOLT (M16X2X60-MM) | |
| M | 68 | 1 | **8T-4192** | 2 | BOLT (M12X1.75X25-MM) | |
| | 69 | 3 | **8T-4205** | 1 | WASHER-HARD (7.2X14.5X2-MM THK) | |
| M | 70 | 1 | **8T-5436** | 6 | BOLT (M10X1.5X130-MM) | |
| M | 71 | 1 | **8T-6466** | 3 | BOLT (M10X1.5X60-MM) | |
| | | | | | AVAILABLE REPAIR KIT(S): | |
| J | | | **6E-4287** | 1 | KIT-SEAL (PRESSURE REDUCING VALVE) | |

C-CHANGE FROM PREVIOUS TYPE
I-REFER TO HYDRAULIC INFORMATION SYSTEM
J-KIT MARKED J SERVICES PART MARKED J
M-METRIC PART
Y-SEPARATE ILLUSTRATION

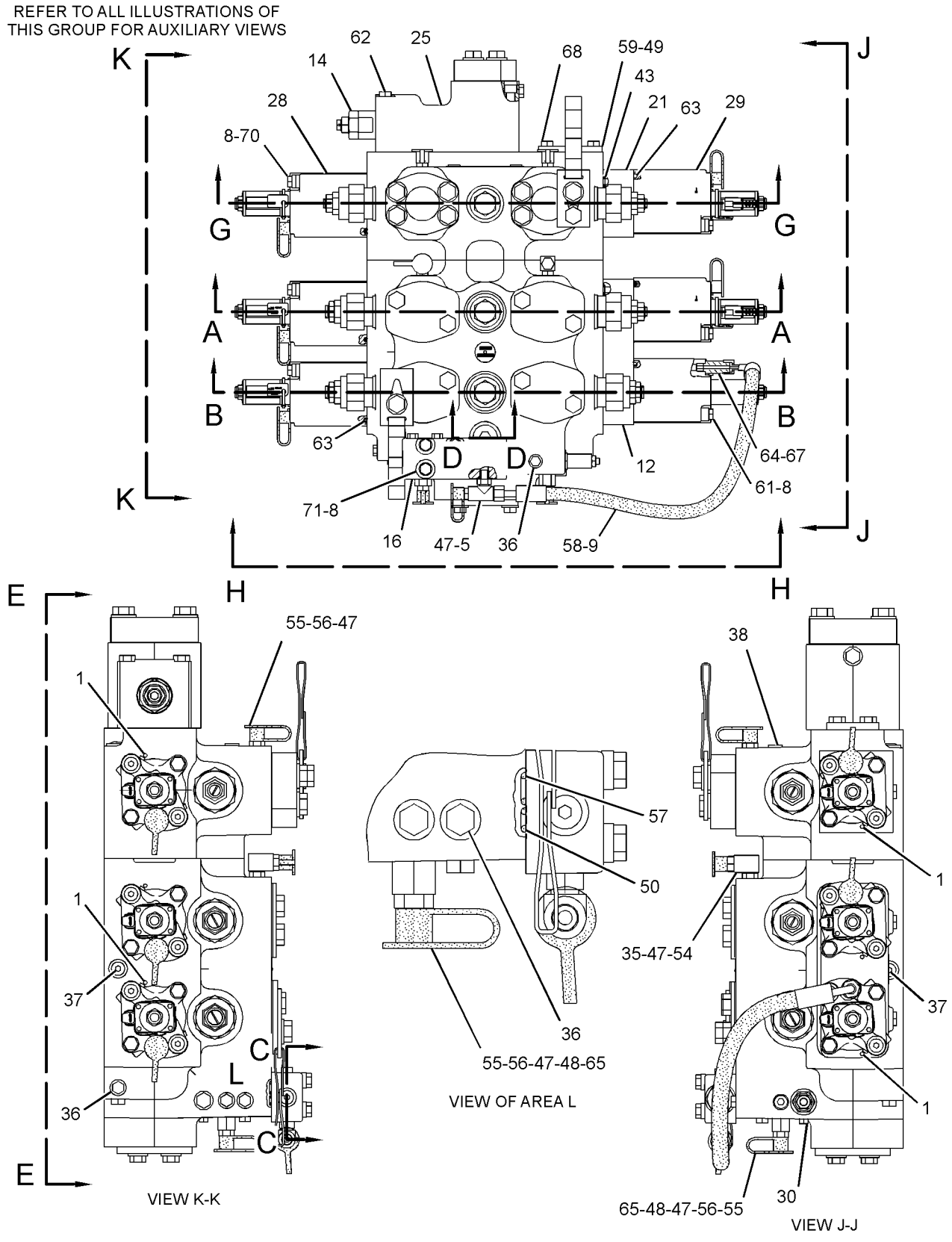


GRAPHIC #1 g01274256

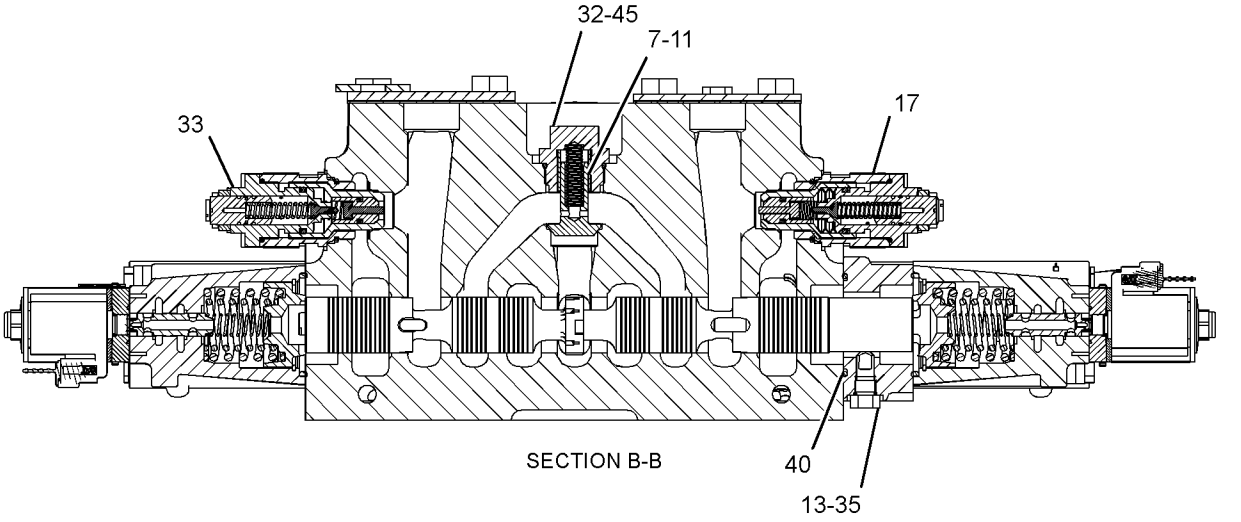


SECTION B-B

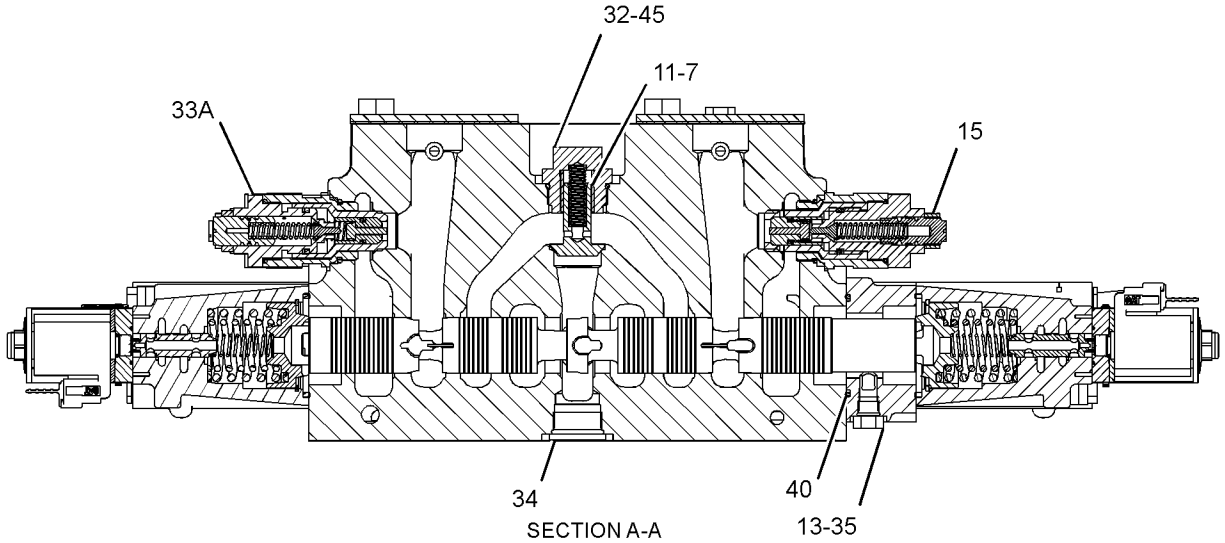


SECTION A-A

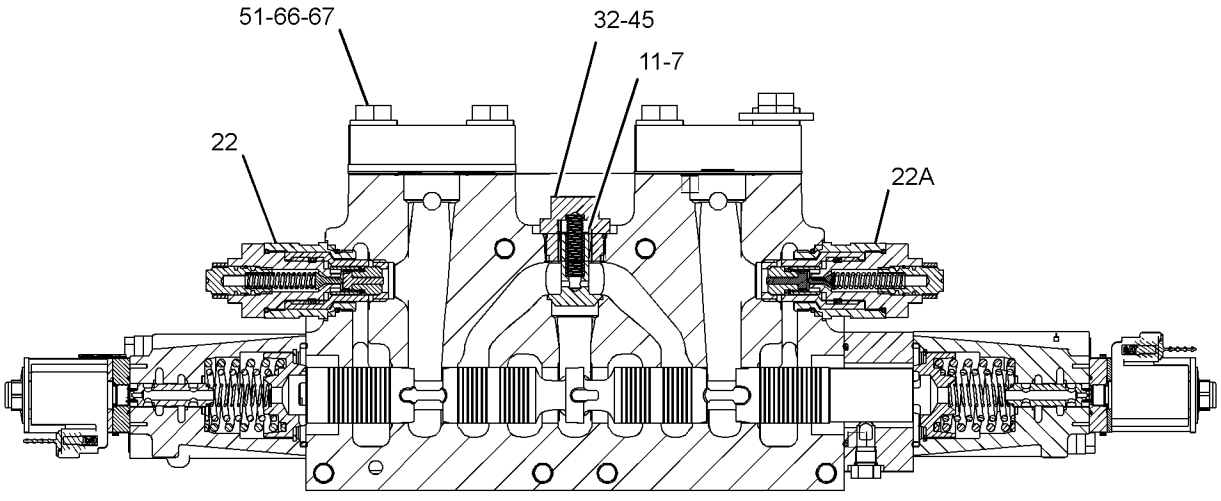


SECTION G-G

GRAPHIC #2

g01256061

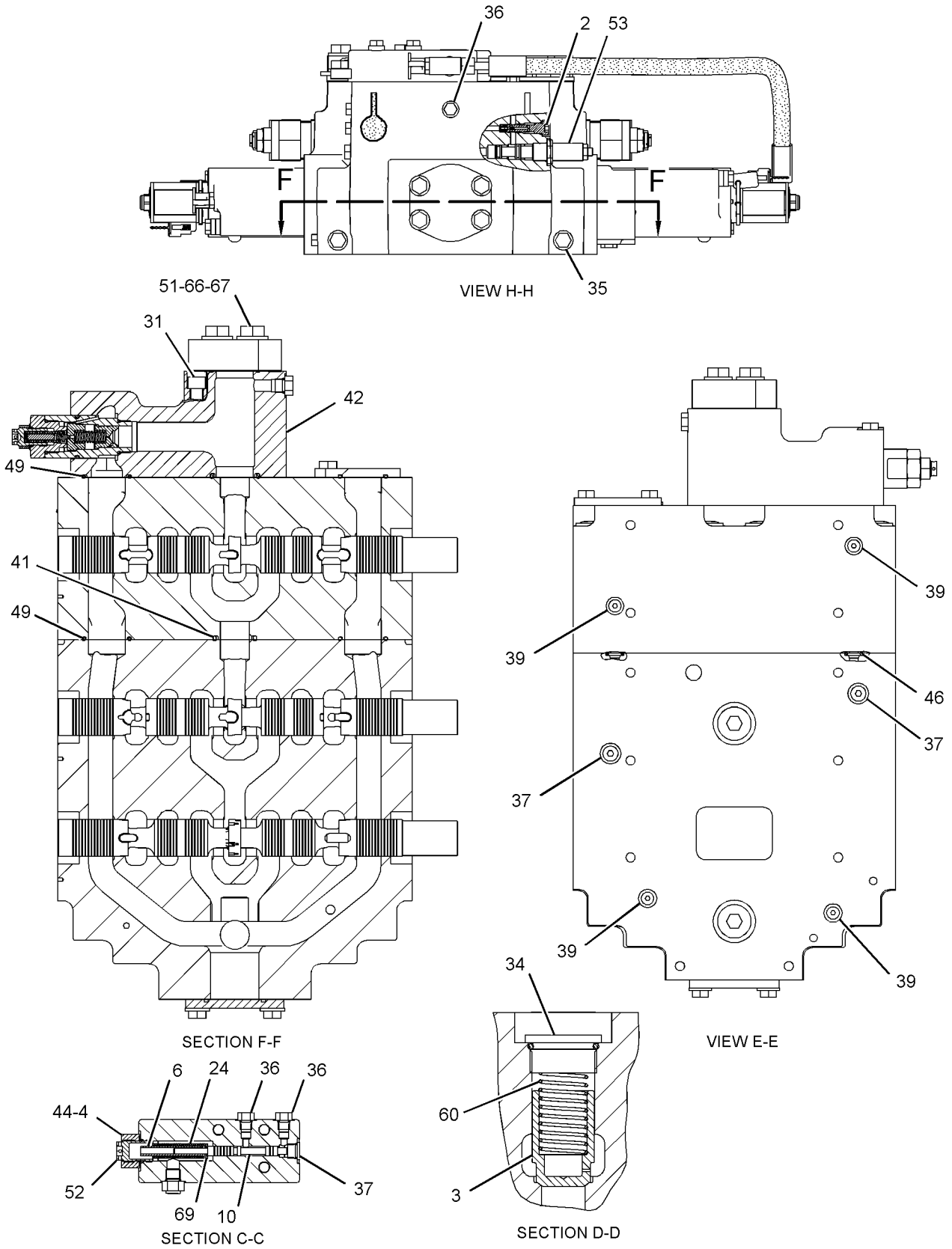


GRAPHIC #3 **<END>** g01256062

# 112-1817 VALVE GP-MANUAL–RESOLVER–LOWERING CONTROL

**S/N: BXY1-UP**

**PART OF 132-6133, 201-0218 VALVE & MTG GP-MAIN CONTROL**

**AN ATTACHMENT**

**SMCS-5001, 5130, 5147** **i02712997**

| NOTE | PART NUMBER | QTY | PART NAME 1 2 3 4 5 6 (PRODUCT LEVEL) | SEE PAGE |
|---|---|---|---|---|
| J | *202-0671* | 1 | VALVE GP-MANUAL (MANUAL LOWERING CONTROL) | |
| | | | –OR– | |
| J | *202-0673* | 1 | VALVE GP-MANUAL (MANUAL LOWERING CONTROL) | |
| | | | –OR– | |
| J | *202-0674* | 1 | VALVE GP-MANUAL (MANUAL LOWERING CONTROL) | |
| | | | AVAILABLE REPAIR KIT(S): | |
| J | **112-9861** | 1 | KIT-SEAL (DEAD ENGINE LOWERING) | |
| | | | (INCLUDES SEALS, CONNECTORS & THRUST RING) | |

J-KIT MARKED J SERVICES PARTS MARKED J

**<END>**

# *207-0695* VALVE GP-PUMP CONTROL–PRESSURE, FLOW COMPENSATOR–HYDRAULIC FAN

**S/N: BXY1-UP**

**PART OF 228-3636, 228-3638 PUMP GP-PISTON AN ATTACHMENT**

**SMCS-5455** **i01571780**

| NOTE | REF NO | GRAPHIC REF | PART NUMBER | QTY | PART NAME 1 2 3 4 5 6 (PRODUCT LEVEL) | SEE PAGE |
|---|---|---|---|---|---|---|
| | 1 | 1 | **6E-6528** | 6 | SEAL | |
| | 2 | 1 | **6E-6527** | 2 | PLUG | |
| | 3 | 1 | **193-3086** | 1 | RETAINER | |
| | 4 | 1 | **193-3087** | 1 | SPRING | |
| | 5 | 1 | **5P-9262** | 1 | SEAL-O-RING | |
| | 6 | 1 | **033-6043** | 1 | SEAL-O-RING | |
| | 7 | 1 | **6E-3272** | 1 | SEAT | |
| | 8 | 1 | **6E-6540** | 1 | PLUG | |
| M | 9 | 1 | **6E-6538** | 2 | NUT-ADJUSTMENT (M8X1-THD) | |
| M | 10 | 1 | **6E-6537** | 2 | SCREW-ADJUSTMENT (M8X1X28-MM) | |
| M | 11 | 1 | **6E-6539** | 2 | NUT-CAP (M8X1-THD) | |
| | 12 | 1 | **6E-3273** | 1 | SEAT | |
| | 13 | 1 | **6E-6536** | 1 | PLUG | |
| | 14 | 1 | **6V-8352** | 1 | SEAL-O-RING | |
| | 15 | 1 | **193-1036** | 1 | SPRING | |
| | 16 | 1 | **6E-3276** | 1 | SPRING | |
| | 17 | 1 | **6E-3269** | 1 | RETAINER-SPRING | |
| | 18 | 1 | **119-0959** | 1 | PLUG-ORIFICE | |
| | 19 | 1 | **105-2145** | 1 | VALVE-ORIFICE | |

M-METRIC PART

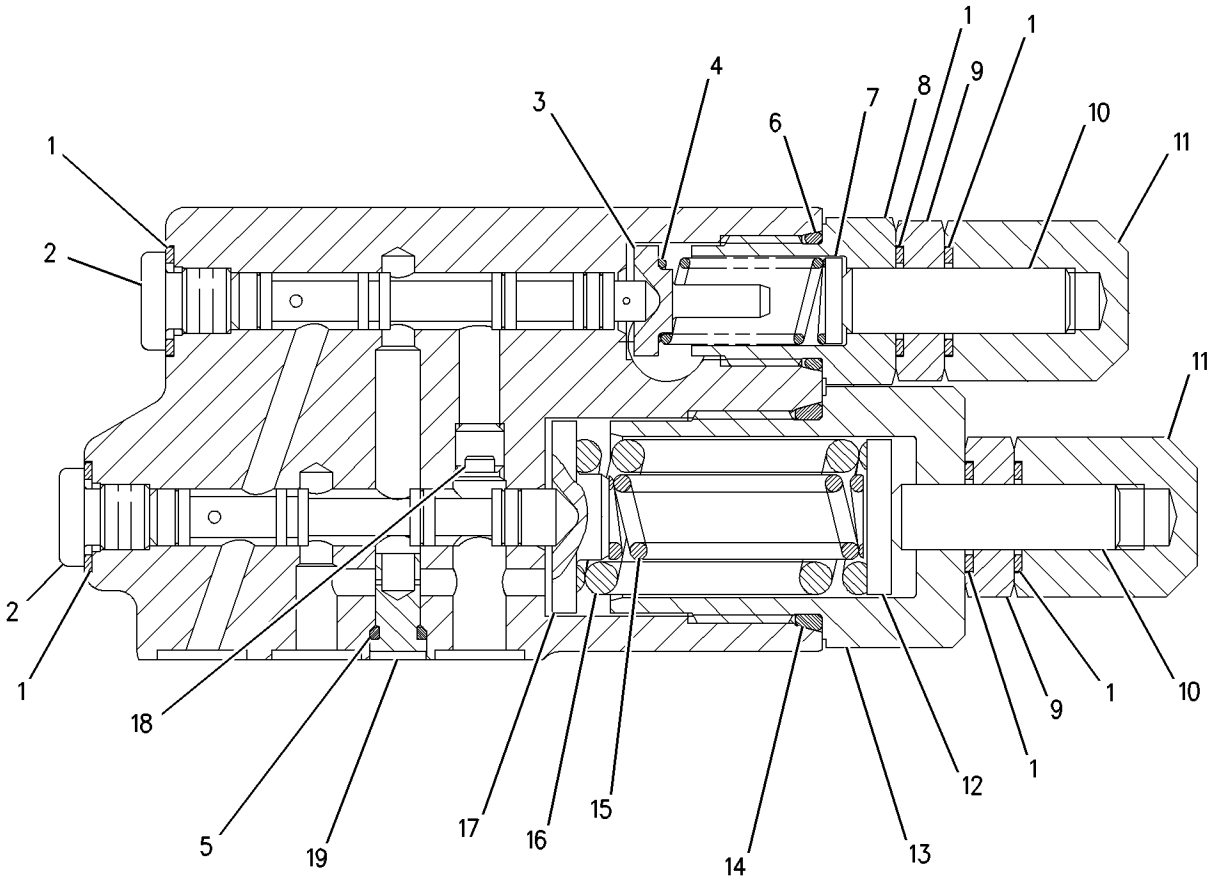


GRAPHIC #1 **<END>** g00817754

# 117-0159 VALVE GP-RELIEF–MAIN

**S/N: BXY1-UP**
**PART OF 212-8712, 212-8746 VALVE GP-MAIN CONTROL**
**AN ATTACHMENT**

**SMCS-5069, 5117** **i02259286**

| NOTE | REF NO | GRAPHIC REF | PART NUMBER | QTY | PART NAME 1 2 3 4 5 6 (PRODUCT LEVEL) | SEE PAGE |
|---|---|---|---|---|---|---|
| | 1 | 1 | **7M-8485** | 2 | SEAL-O-RING | |
| | 2 | 1 | **4J-0522** | 1 | SEAL-O-RING | |
| | 3 | 1 | **4T-2770** | 1 | SPRING | |
| | 4 | 1 | **3K-0360** | 1 | SEAL-O-RING | |
| | 5 | 1 | **4Y-5812** | 1 | PLATE | |
| | 6 | 1 | **6E-5510** | 1 | RETAINER AS | |
| | 7 | 1 | **9X-6395** | 1 | NUT (3/4-16-THD) | |
| | 8 | 1 | **6E-1127** | 1 | CAP | |
| | 9 | 1 | **8J-0331** | 1 | VALVE | |
| | 10 | 1 | **6E-6138** | 1 | VALVE GP-RELIEF (MAIN) | |
| | | 1 | **8H-3532** | 1 | SPRING-VALVE | |
| | 11 | 1 | **185-7876** | 1 | DOWEL | |

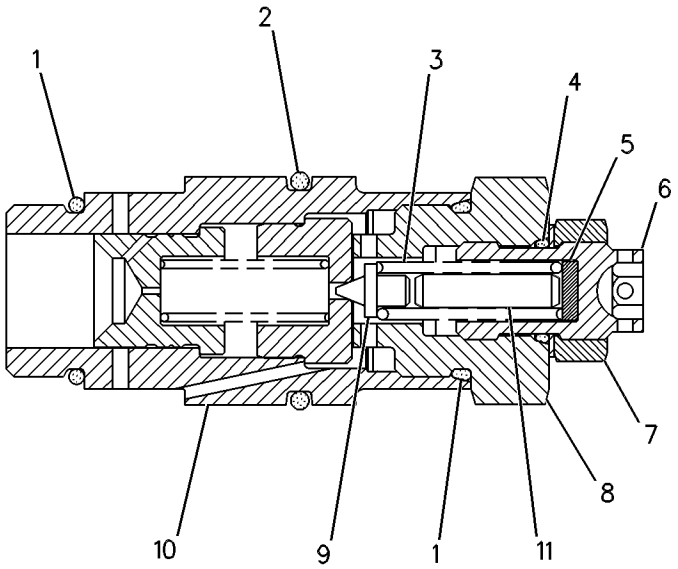


GRAPHIC #1 **<END>** g00255864

# 117-0160 VALVE GP-RELIEF–LINE

**S/N: BXY1-UP**
**PART OF 212-8712, 212-8746 VALVE GP-MAIN CONTROL**
**AN ATTACHMENT**

**SMCS-5069, 5117** **i01216639**

| NOTE | REF NO | GRAPHIC REF | PART NUMBER | QTY | PART NAME 1 2 3 4 5 6 (PRODUCT LEVEL) | SEE PAGE |
|---|---|---|---|---|---|---|
| | 1 | 1 | **9T-9992** | 1 | RING-BACKUP | |
| | 2 | 1 | **8T-9522** | 1 | SEAL-O-RING | |
| | 3 | 1 | **2S-4078** | 2 | SEAL-O-RING | |
| | 4 | 1 | **3P-1155** | 1 | SEAL-O-RING | |
| | 5 | 1 | **117-0775** | 1 | RING-BACKUP | |
| | 6 | 1 | **2P-2975** | 1 | SEAL-O-RING | |

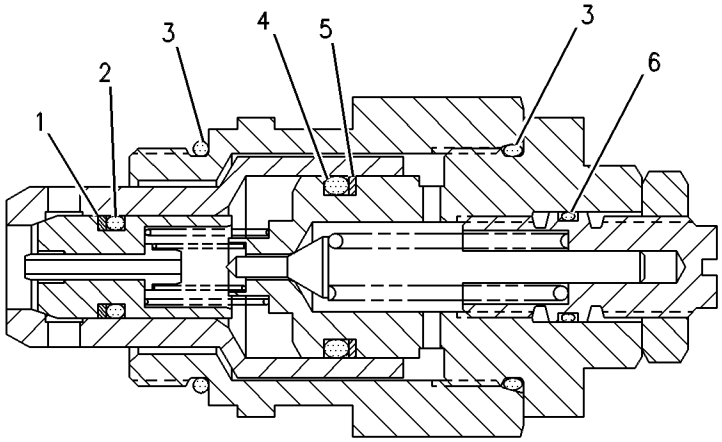


GRAPHIC #1 **<END>** g00263227

# 117-0161 VALVE GP-RELIEF–LINE

**S/N: BXY1-UP**

**PART OF 212-8712, 212-8746 VALVE GP-MAIN CONTROL**

**AN ATTACHMENT**

**SMCS-5069, 5117** **i01216037**

| NOTE | REF NO | GRAPHIC REF | PART NUMBER | QTY | PART NAME 1 2 3 4 5 6 (PRODUCT LEVEL) | SEE PAGE |
|---|---|---|---|---|---|---|
| | 1 | 1 | **9T-9992** | 1 | RING-BACKUP | |
| | 2 | 1 | **8T-9522** | 1 | SEAL-O-RING | |
| | 3 | 1 | **2S-4078** | 2 | SEAL-O-RING | |
| | 4 | 1 | **3P-1155** | 1 | SEAL-O-RING | |
| | 5 | 1 | **117-0775** | 1 | RING-BACKUP | |
| | 6 | 1 | **2P-2975** | 1 | SEAL-O-RING | |

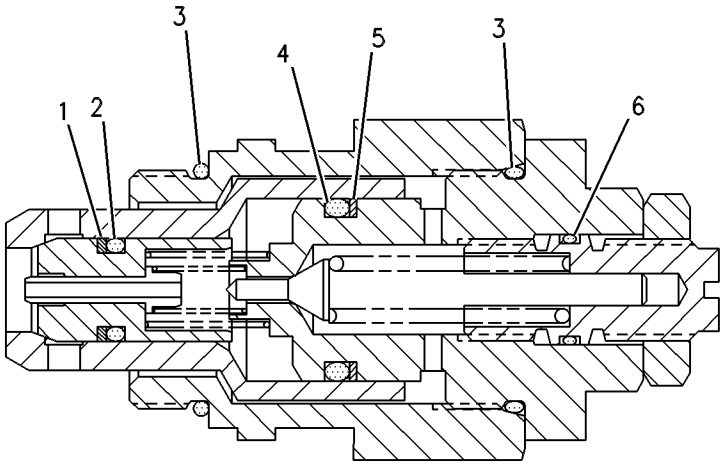


GRAPHIC #1 **<END>** g00263240

# HYDRAULIC SYSTEM

## 125-9349 VALVE GP-RELIEF–LINE

**S/N: BXY1-UP**

**PART OF 212-8712, 212-8746 VALVE GP-MAIN CONTROL**

**AN ATTACHMENT**

**SMCS-5069, 5117** **i01213076**

| NOTE | REF NO | GRAPHIC REF | PART NUMBER | QTY | PART NAME 1 2 3 4 5 6 (PRODUCT LEVEL) | SEE PAGE |
|---|---|---|---|---|---|---|
| | 1 | 1 | **9T-9992** | 1 | RING-BACKUP | |
| | 2 | 1 | **8T-9522** | 1 | SEAL-O-RING | |
| | 3 | 1 | **2S-4078** | 2 | SEAL-O-RING | |
| | 4 | 1 | **3P-1155** | 1 | SEAL-O-RING | |
| | 5 | 1 | **117-0775** | 1 | RING-BACKUP | |
| | 6 | 1 | **2P-2975** | 1 | SEAL-O-RING | |

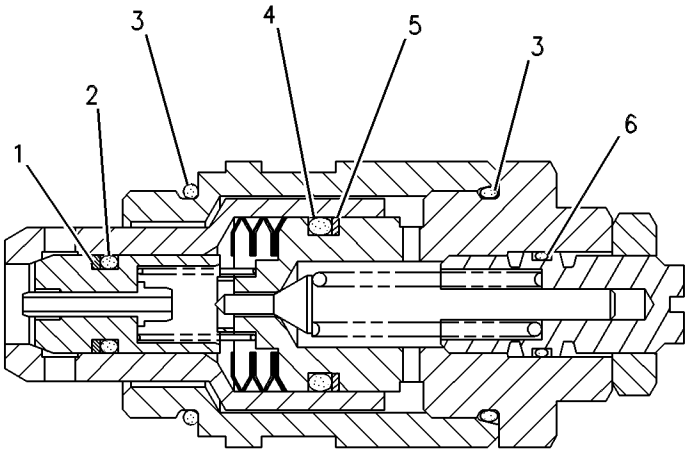


GRAPHIC #1 **<END>** g00087846

# 139-3544 VALVE GP-RELIEF–STEERING, IMPLEMENT PILOT

**S/N: BXY1-UP**

**PART OF 186-6218 VALVE GP-RELIEF**

**SMCS-5069, 5117** **i01273398**

| NOTE | REF NO | GRAPHIC REF | PART NUMBER | QTY | PART NAME 1 2 3 4 5 6 (PRODUCT LEVEL) | SEE PAGE |
|---|---|---|---|---|---|---|
| | 1 | 1 | **6V-6923** | 1 | RING-BACKUP | |
| | 2 | 1 | **033-6033** | 1 | SEAL-O-RING | |
| | 3 | 1 | **2M-9780** | 1 | SEAL-O-RING | |

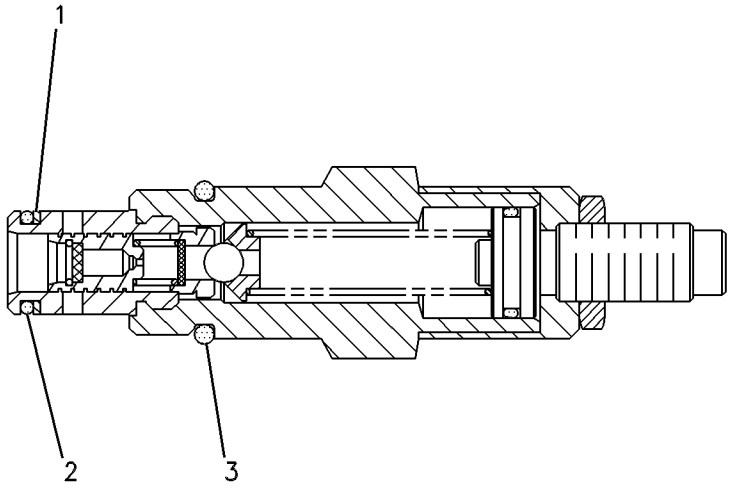


GRAPHIC #1 **<END>** g00086700

# 172-5481 VALVE GP-RELIEF–LINE

**S/N: BXY1-UP**
**PART OF 212-8746 VALVE GP-MAIN CONTROL**
**AN ATTACHMENT**

**SMCS-5069, 5117** **i01206866**

| NOTE | REF NO | GRAPHIC REF | PART NUMBER | QTY | PART NAME 1 2 3 4 5 6 (PRODUCT LEVEL) | SEE PAGE |
|---|---|---|---|---|---|---|
| | 1 | 1 | **9T-9992** | 1 | RING-BACKUP | |
| | 2 | 1 | **8T-9522** | 1 | SEAL-O-RING | |
| | 3 | 1 | **2S-4078** | 2 | SEAL-O-RING | |
| | 4 | 1 | **3P-1155** | 1 | SEAL-O-RING | |
| | 5 | 1 | **117-0775** | 1 | RING-BACKUP | |
| | 6 | 1 | **2P-2975** | 1 | SEAL-O-RING | |

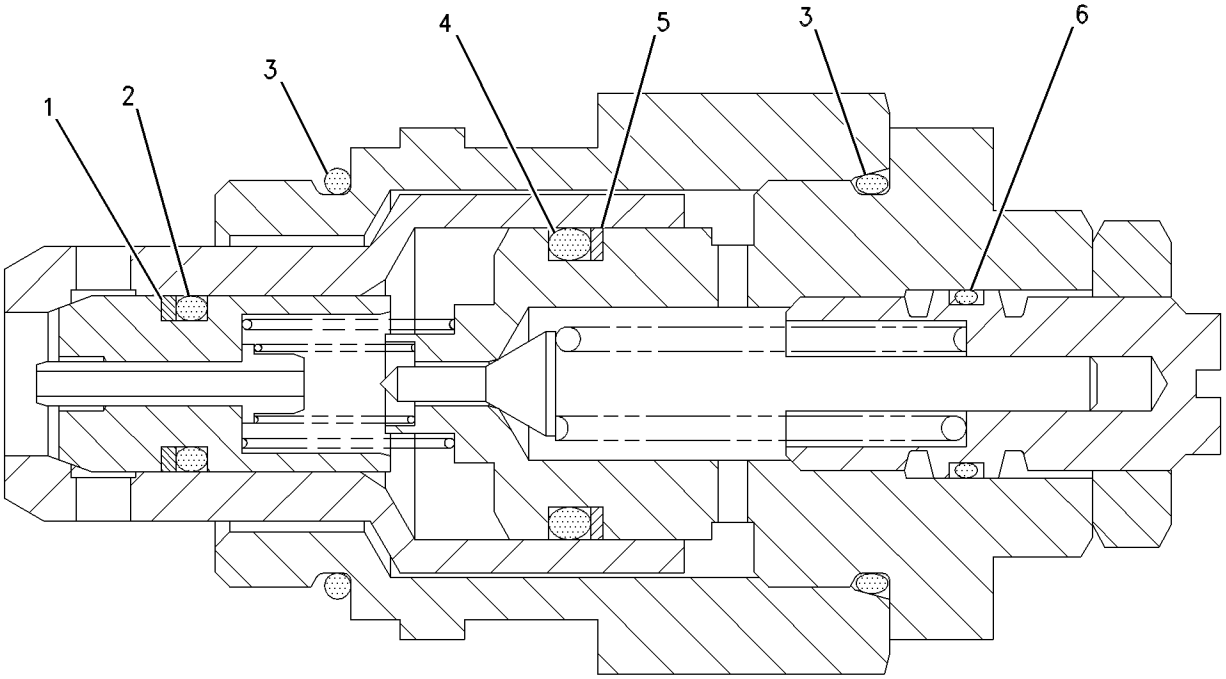


GRAPHIC #1 **<END>** g00586275

# 186-6218 VALVE GP-RELIEF–STEERING, IMPLEMENT PILOT

**S/N: BXY1-UP**

**PART OF 230-2400 LINES GP-HYDRAULIC**

**SMCS-5069, 5117** **i01646798**

| NOTE | REF NO | GRAPHIC REF | PART NUMBER | QTY | PART NAME 1 2 3 4 5 6 (PRODUCT LEVEL) | SEE PAGE |
|---|---|---|---|---|---|---|
| | 1 | 1 | **138-3815** | 1 | MANIFOLD | |
| | 2 | 1 | **3J-1907** | 1 | SEAL-O-RING | |
| | 3 | 1 | **9S-4191** | 1 | PLUG-O RING | |
| Y | 4 | 1 | **139-3544** | 1 | VALVE GP-RELIEF (STEERING & IMPLEMENT PILOT) | 1177 |

Y-SEPARATE ILLUSTRATION

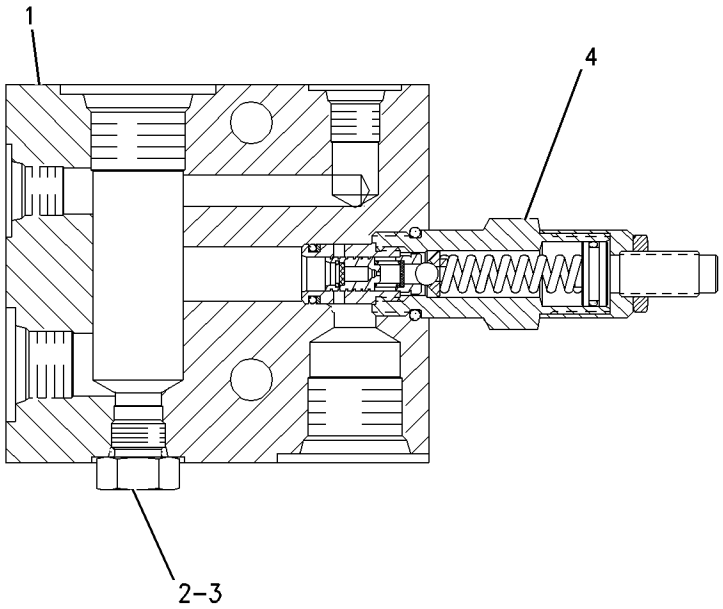


GRAPHIC #1 **<END>** g00687387

# HYDRAULIC SYSTEM

## 259-6275 VALVE GP-RIDE CONTROL

**S/N: BXY1-UP**
**PART OF 254-6063 CONTROL & LINES GP-RIDE**
**AN ATTACHMENT**

**SMCS-5054, 5066** **i02224713**

| NOTE | REF NO | GRAPHIC REF | PART NUMBER | QTY | PART NAME 1 2 3 4 5 6 (PRODUCT LEVEL) | SEE PAGE |
|---|---|---|---|---|---|---|
| M | 1 | 1 | **8T-4185** | 2 | BOLT (M10X1.5X50-MM) | |
| | 2 | 1 | **4T-1701** | 1 | SPRING | |
| | 3 | 1 | **6E-3303** | 1 | STEM | |
| | 4 | 1 | **4J-0522** | 1 | SEAL-O-RING | |
| | 5 | 1 | **8J-6815** | 1 | PLUG-ORIFICE | |
| Y | 6 | 1 | **152-8340** | 1 | VALVE GP-SOLENOID (24-VOLT) (RIDE CONTROL) | 1185 |
| | 8 | 1 | *222-4737* | 2 | PLUG AS | |
| | | | | | (EACH INCLUDES) | |
| | | 1 | **4J-7533** | 1 | SEAL-O-RING | |
| | | 1 | **9S-4180** | 1 | PLUG (5/16-24-THD) | |
| | 9 | 1 | **6V-5555** | 1 | SEAL-O-RING | |
| | 10 | 1 | *148-8407* | 3 | PLUG AS | |
| | | | | | (EACH INCLUDES) | |
| | | 1 | **3J-1907** | 1 | SEAL-O-RING | |
| | | 1 | **9S-4191** | 1 | PLUG-O-RING | |
| | 11 | 1 | *164-5616* | 1 | PLUG AS | |
| | | 1 | **2S-4078** | 1 | SEAL-O-RING | |
| | | 1 | **9S-6130** | 1 | PLUG | |

M-METRIC PART
Y-SEPARATE ILLUSTRATION

**259-6275 VALVE GP-RIDE CONTROL** *(contd. )* **i02224713**

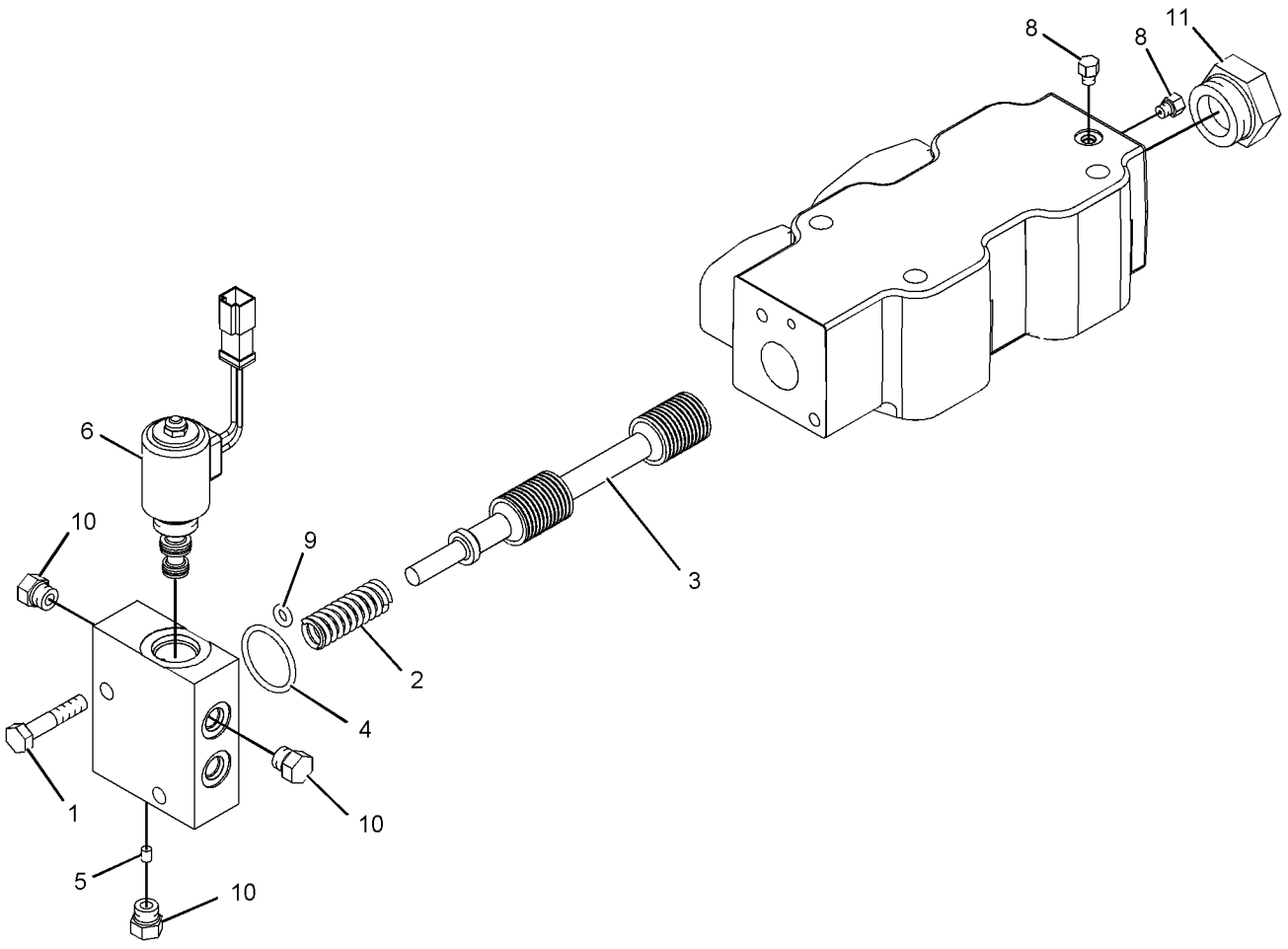


GRAPHIC #1 **<END>** g01127986

# HYDRAULIC SYSTEM

## *125-3657* VALVE GP-SHUTTLE

**S/N: BXY1-UP**
**PART OF 141-1481 VALVE GP-SHUTTLE**
**AN ATTACHMENT**

**SMCS-5079** **i02679589**

| NOTE | REF NO | GRAPHIC REF | PART NUMBER | QTY | PART NAME 1 2 3 4 5 6 (PRODUCT LEVEL) | SEE PAGE |
|---|---|---|---|---|---|---|
| | 1 | 1 | **2M-9780** | 1 | SEAL-O-RING | |
| | 2 | 1 | **6V-5142** | 1 | SEAL-O-RING | |
| | 3 | 1 | **095-1751** | 1 | SEAL-O-RING | |
| | 4 | 1 | **161-6149** | 1 | SEAL-O-RING | |
| | 5 | 1 | **169-1617** | 2 | RING-BACKUP | |
| | 6 | 1 | **169-1616** | 2 | RING-BACKUP | |
| | 7 | 1 | **161-6161** | 2 | RING-BACKUP | |

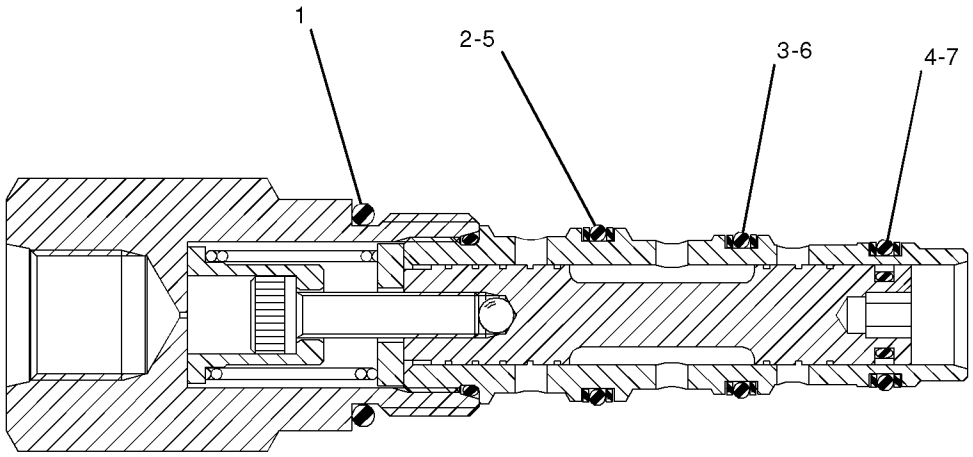


GRAPHIC #1 **<END>** g00764645

# *141-1481* VALVE GP-SHUTTLE

**S/N: BXY1-UP**
**PART OF 254-6063 CONTROL & LINES GP-RIDE**
**AN ATTACHMENT**

**SMCS-5079** **i01912777**

| NOTE | REF NO | GRAPHIC REF | PART NUMBER | QTY | PART NAME 1 2 3 4 5 6 (PRODUCT LEVEL) | SEE PAGE |
|---|---|---|---|---|---|---|
| Y | 1 | 1 | **125-3657** | 1 | VALVE GP-SHUTTLE | 1182 |

Y-SEPARATE ILLUSTRATION

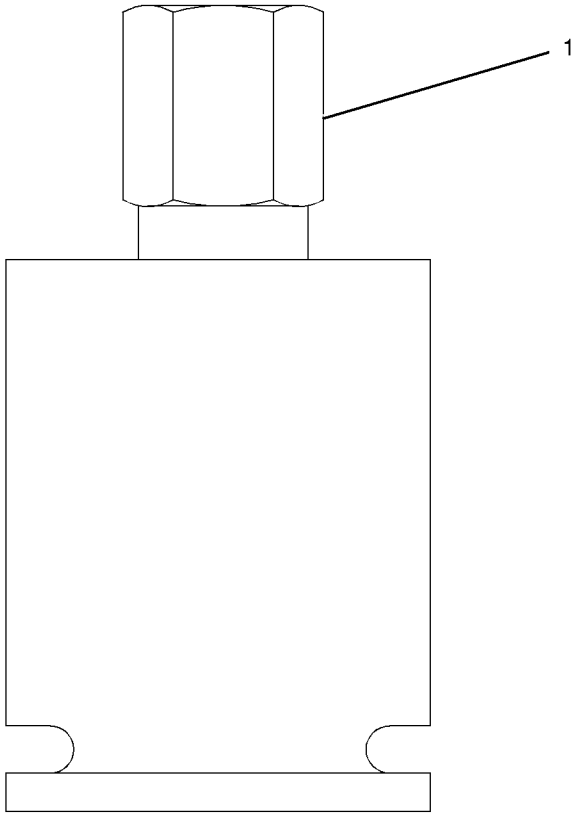


GRAPHIC #1 **<END>** g00996316

# HYDRAULIC SYSTEM

## 151-7455 VALVE GP-SOLENOID

**S/N: BXY1-UP**

**PART OF 132-6133, 201-0218 VALVE & MTG GP-MAIN CONTROL**

**AN ATTACHMENT**

**SMCS-5132, 5479** **i02262702**

| NOTE | REF NO | GRAPHIC REF | PART NUMBER | QTY | PART NAME 1 2 3 4 5 6 (PRODUCT LEVEL) | SEE PAGE |
|---|---|---|---|---|---|---|
| | 1 | 1 | **138-0549** | 1 | BODY | |
| Y | 2 | 1 | **149-2610** | 1 | VALVE GP-SOLENOID (24-VOLT) (HYDRAULIC LOCKOUT) | 641 |
| | 3 | 1 | **3J-1907** | 2 | SEAL-O-RING | |
| | 4 | 1 | **3K-0360** | 1 | SEAL-O-RING | |
| | 5 | 1 | **9S-4185** | 1 | PLUG-O RING | |
| | 6 | 1 | **9S-4191** | 2 | PLUG-O RING | |

Y-SEPARATE ILLUSTRATION

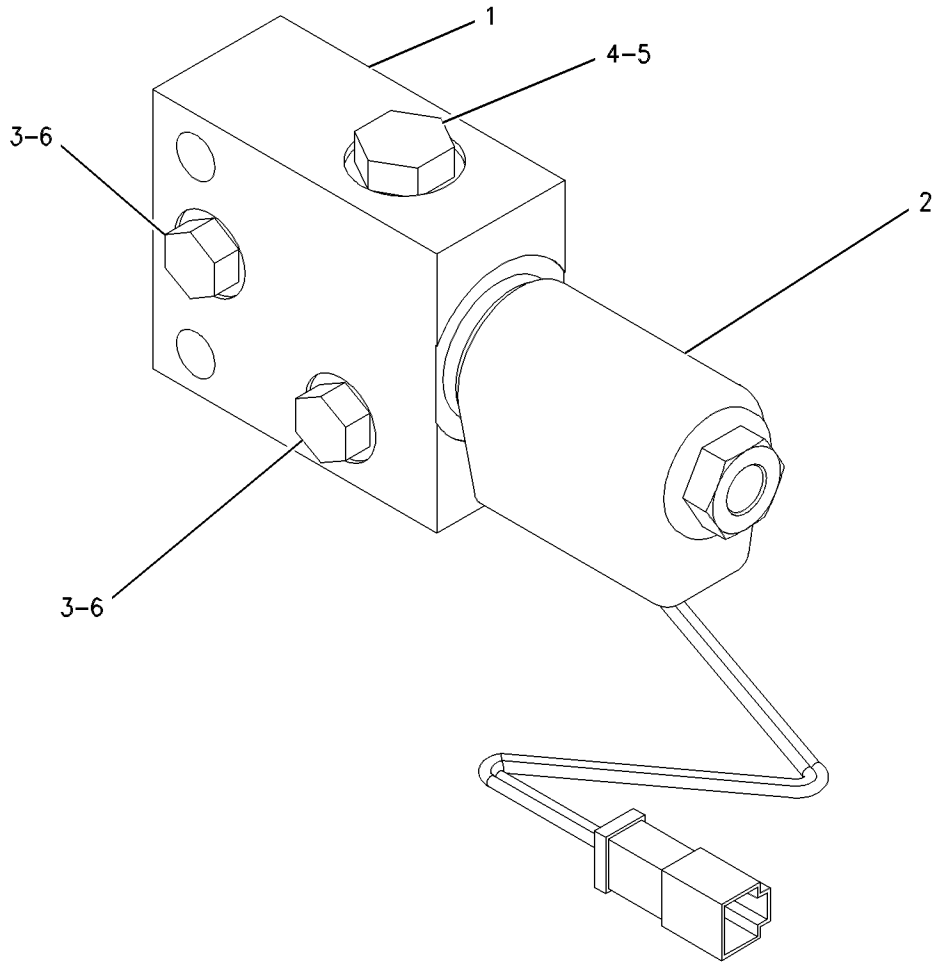


GRAPHIC #1 **<END>** g00537612

# HYDRAULIC SYSTEM

## 152-8340 VALVE GP-SOLENOID

**S/N: BXY1-UP**
**24-VOLT**
**PART OF 259-6275 VALVE GP-RIDE CONTROL**
**AN ATTACHMENT**

**SMCS-5132, 5479** **i02656894**

| NOTE | REF NO | GRAPHIC REF | PART NUMBER | QTY | PART NAME 1 2 3 4 5 6 (PRODUCT LEVEL) | SEE PAGE |
|---|---|---|---|---|---|---|
| | 1 | 1 | **8C-9987** | 1 | WASHER (8.3X28X2.5-MM THK) | |
| | 2 | 1 | **111-0343** | 1 | LOCKNUT (5/16-18-THD) | |
| | 3 | 1 | **152-8338** | 1 | CARTRIDGE AS | |
| | | 1 | **8C-9987** | 1 | WASHER (8.3X28X2.5-MM THK) | |
| | | 1 | **111-0343** | 1 | LOCKNUT (5/16-18-THD) | |
| | 4 | 1 | **189-0189** | 1 | COIL AS | |
| | | | | | —OR— | |
| | | 1 | **227-4398** | 1 | COIL AS | |
| | | | | | (EACH COIL ASSEMBLY INCLUDES) | |
| | 4A | 1 | **186-3735** | 2 | PIN-CONNECTOR (16-GA TO 18-GA) | |
| | 4B | 1 | **3E-3365** | 1 | WEDGE-RECEPTACLE LOCK (2-PIN) | |
| | 4C | 1 | **102-8802** | 1 | KIT-RECEPTACLE (2-PIN) | |
| | | | | | (INCLUDES RECEPTACLE AS & WEDGE) | |
| | 4D | 1 | **1S-9593** | 2 | STRAP-CABLE | |
| | | | | | AVAILABLE REPAIR KIT(S): | |
| | | | **197-7701** | 1 | KIT-SEAL (SOLENOID VALVE) | |
| | | | | | (INCLUDES SEALS & RINGS) | |

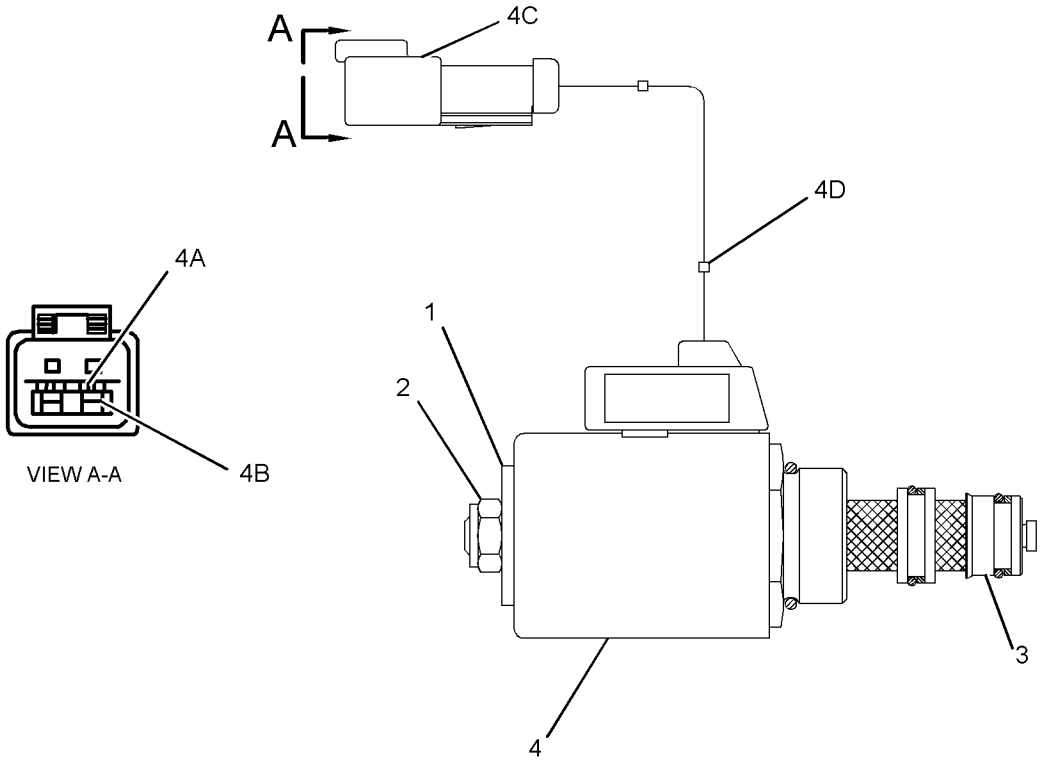


GRAPHIC #1 **<END>** g01275271

# HYDRAULIC SYSTEM

## *183-7595* VALVE GP-SOLENOID

**S/N: BXY1-UP**

**PART OF 191-8735 VALVE GP-DEMAND FAN**

**SMCS-5132, 5479** **i02279507**

| NOTE | REF NO | GRAPHIC REF | PART NUMBER | QTY | PART NAME 1 2 3 4 5 6 (PRODUCT LEVEL) | SEE PAGE |
|---|---|---|---|---|---|---|
| | 1 | 1 | **146-3728** | 1 | WASHER-SPRING | |
| | 2 | 1 | **187-8191** | 1 | COIL AS | |
| Z | 3 | 1 | | 1 | CARTRIDGE AS | |
| Z | 4 | 1 | | 1 | ADAPTER AS | |

Z-NOT SERVICED SEPARATELY

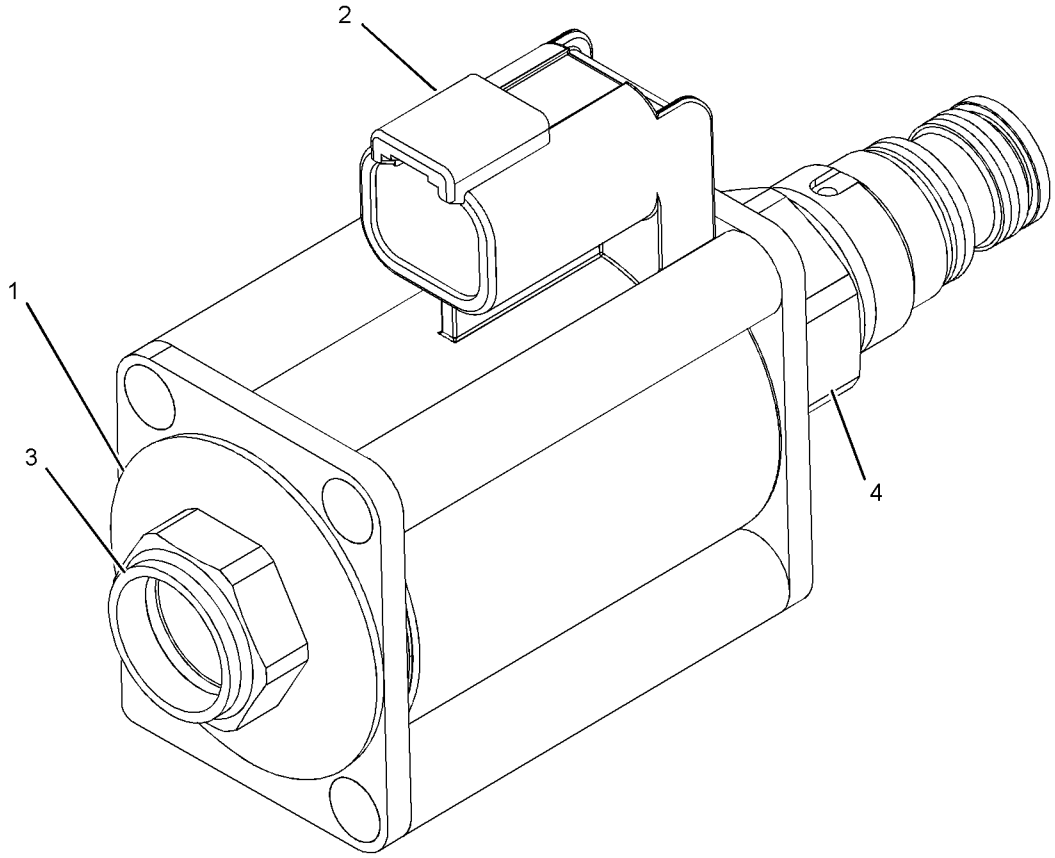


GRAPHIC #1 **<END>** g01141533

# *231-8177* BOOM & BEARING AS

**S/N: BXY1-UP**

**PART OF 201-1049 BOOM GP-LOADER, 255-0042 LIFT AR**

**AN ATTACHMENT**

**SMCS-6501** **i02173293**

| NOTE | REF NO | GRAPHIC REF | PART NUMBER | QTY | PART NAME 1 2 3 4 5 6 (PRODUCT LEVEL) | SEE PAGE |
|---|---|---|---|---|---|---|
| | 1 | 1 | **152-3728** | 2 | BEARING | |
| | 2 | 1 | **152-3743** | 2 | BEARING | |
| | 3 | 1 | **152-3749** | 2 | BEARING | |
| | 4 | 1 | **152-3752** | 1 | SPACER | |
| | 5 | 1 | **157-3612** | 1 | BLOCK | |
| | 6 | 1 | **171-5427** | 2 | BEARING | |
| | 7 | 1 | **231-8178** | 1 | BOOM AS | |
| | 8 | 1 | *148-8395* | 4 | PLUG AS | |
| | | | | | (EACH INCLUDES) | |
| | | 1 | **3K-0360** | 1 | SEAL-O-RING | |
| | | 1 | **9S-8005** | 1 | PLUG-O RING | |

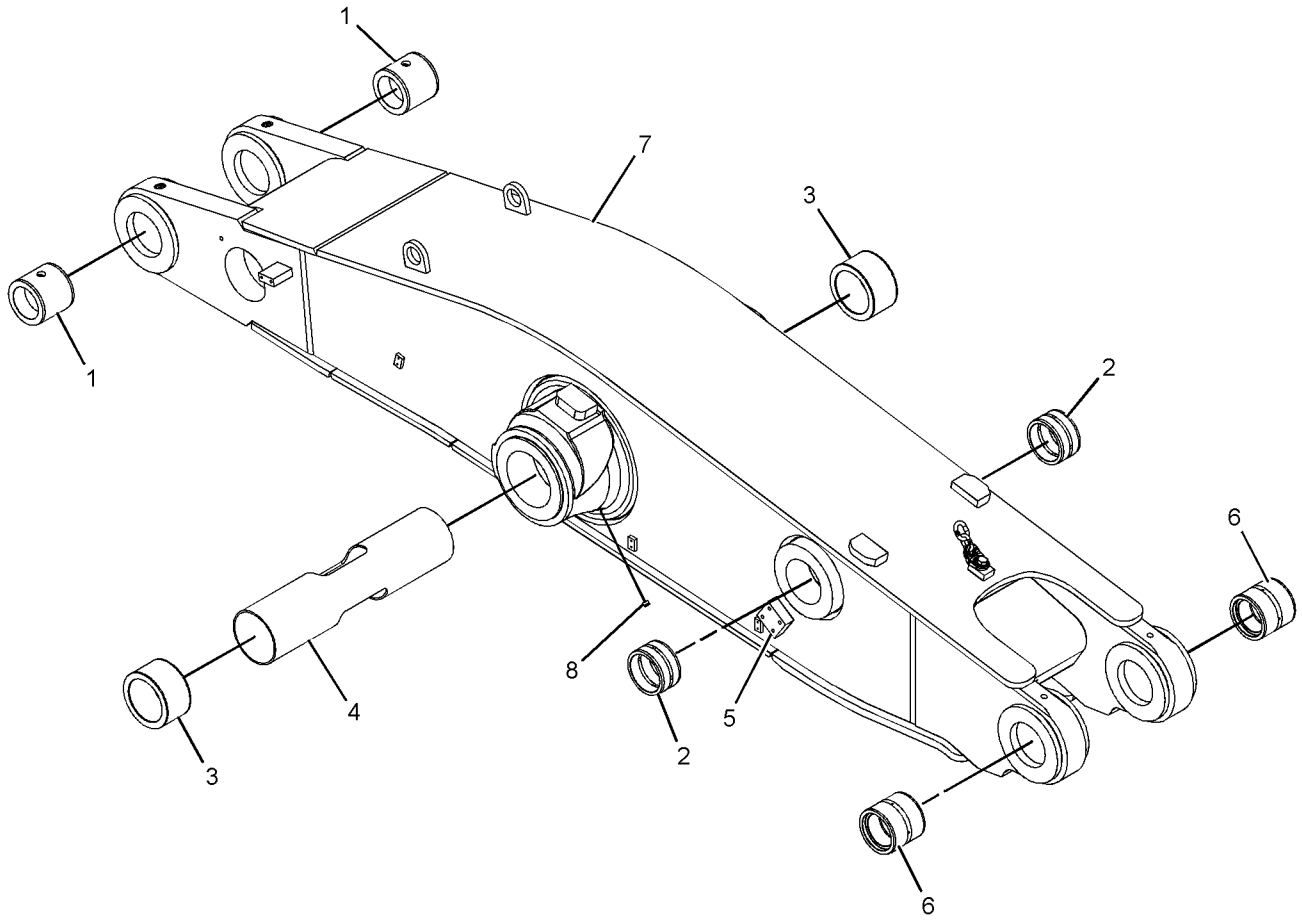


GRAPHIC #1 **<END>** g01113230

# 248-6340 BOOM & BEARING AS

**S/N: BXY1-UP**
**PART OF 255-8204 BOOM GP-LOADER, 255-0040 LIFT AR**
**AN ATTACHMENT**

**SMCS-6501** **i02224728**

| NOTE | REF NO | GRAPHIC REF | PART NUMBER | QTY | PART NAME 1 2 3 4 5 6 (PRODUCT LEVEL) | SEE PAGE |
|---|---|---|---|---|---|---|
| | 1 | 1 | **152-3728** | 2 | BEARING | |
| | 2 | 1 | **152-3743** | 2 | BEARING | |
| | 3 | 1 | **152-3749** | 2 | BEARING | |
| | 4 | 1 | **152-3752** | 1 | SPACER | |
| | 5 | 1 | **157-3612** | 1 | BLOCK | |
| | 6 | 1 | **171-5427** | 2 | BEARING | |
| | 7 | 1 | **248-6341** | 1 | BOOM AS | |
| | 8 | 1 | *148-8395* | 4 | PLUG AS | |
| | | | | | (EACH INCLUDES) | |
| | | 1 | **3K-0360** | 1 | SEAL-O-RING | |
| | | 1 | **9S-8005** | 1 | PLUG-O RING | |

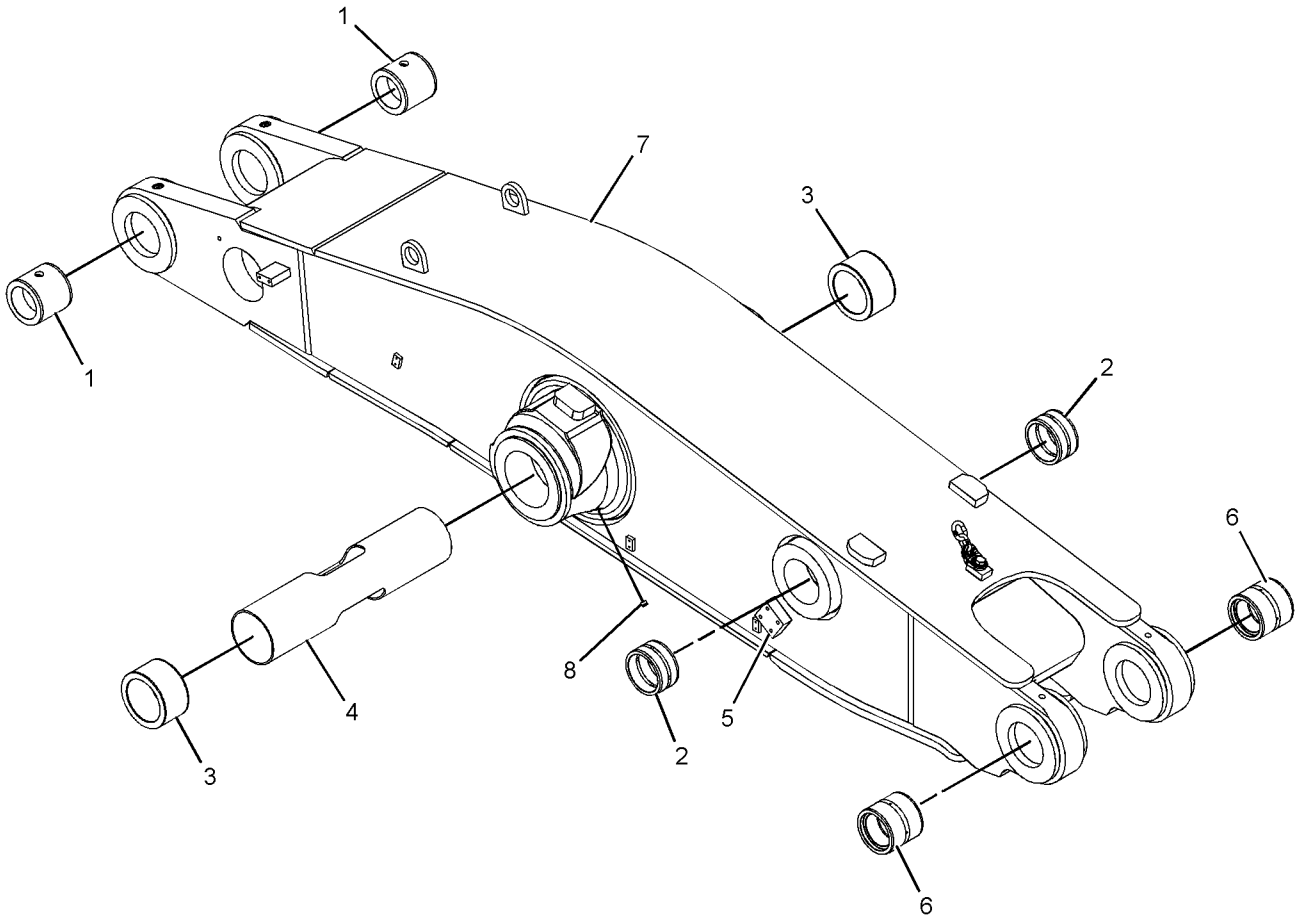


GRAPHIC #1 **<END>** g01113230

# 201-1049 BOOM GP-LOADER

**S/N: BXY1-UP**
**4.25-M**
**PART OF 255-0043 LIFT AR**
**AN ATTACHMENT**

**SMCS-6107, 6117** **i02174627**

| NOTE | REF NO | GRAPHIC REF | PART NUMBER | QTY | PART NAME 1 2 3 4 5 6 (PRODUCT LEVEL) | SEE PAGE |
|---|---|---|---|---|---|---|
| Y | 1 | 1 | **231-8177** | 1 | BOOM & BEARING AS | 1187 |
| | 2 | 1 | **103-5350** | 4 | PLATE | |
| | 3 | 1 | **6C-6739** | 2 | BLOCK | |

Y-SEPARATE ILLUSTRATION

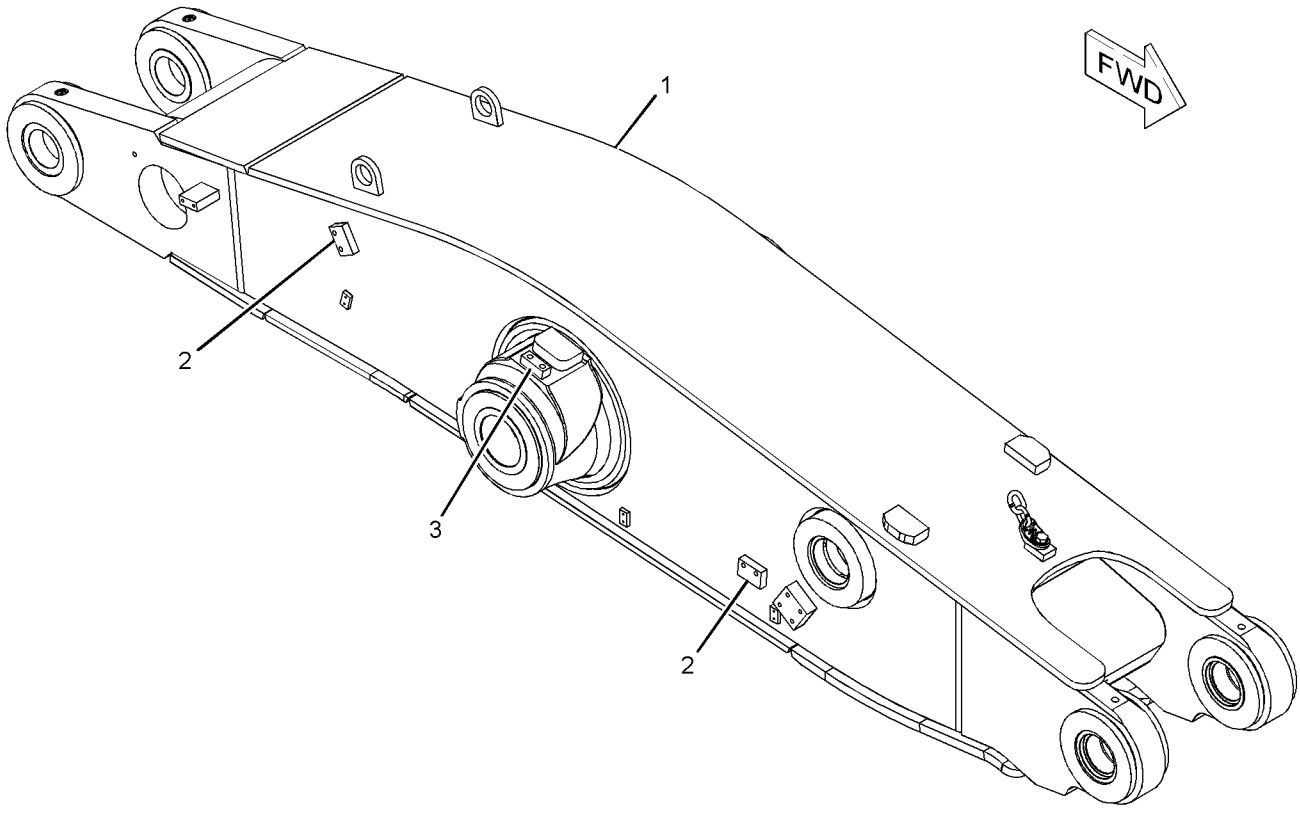


GRAPHIC #1 **<END>** g01111106

# 255-8204 BOOM GP-LOADER

**S/N: BXY1-UP**
**3.88-M**
**PART OF 255-0041 LIFT AR**
**AN ATTACHMENT**

**SMCS-6107, 6117** **i02224930**

| NOTE | REF NO | GRAPHIC REF | PART NUMBER | QTY | PART NAME 1 2 3 4 5 6 (PRODUCT LEVEL) | SEE PAGE |
|---|---|---|---|---|---|---|
| Y | 1 | 1 | **248-6340** | 1 | BOOM & BEARING AS | 1188 |
| | 2 | 1 | **103-5350** | 4 | PLATE | |
| | 3 | 1 | **6C-6739** | 2 | BLOCK | |

Y-SEPARATE ILLUSTRATION

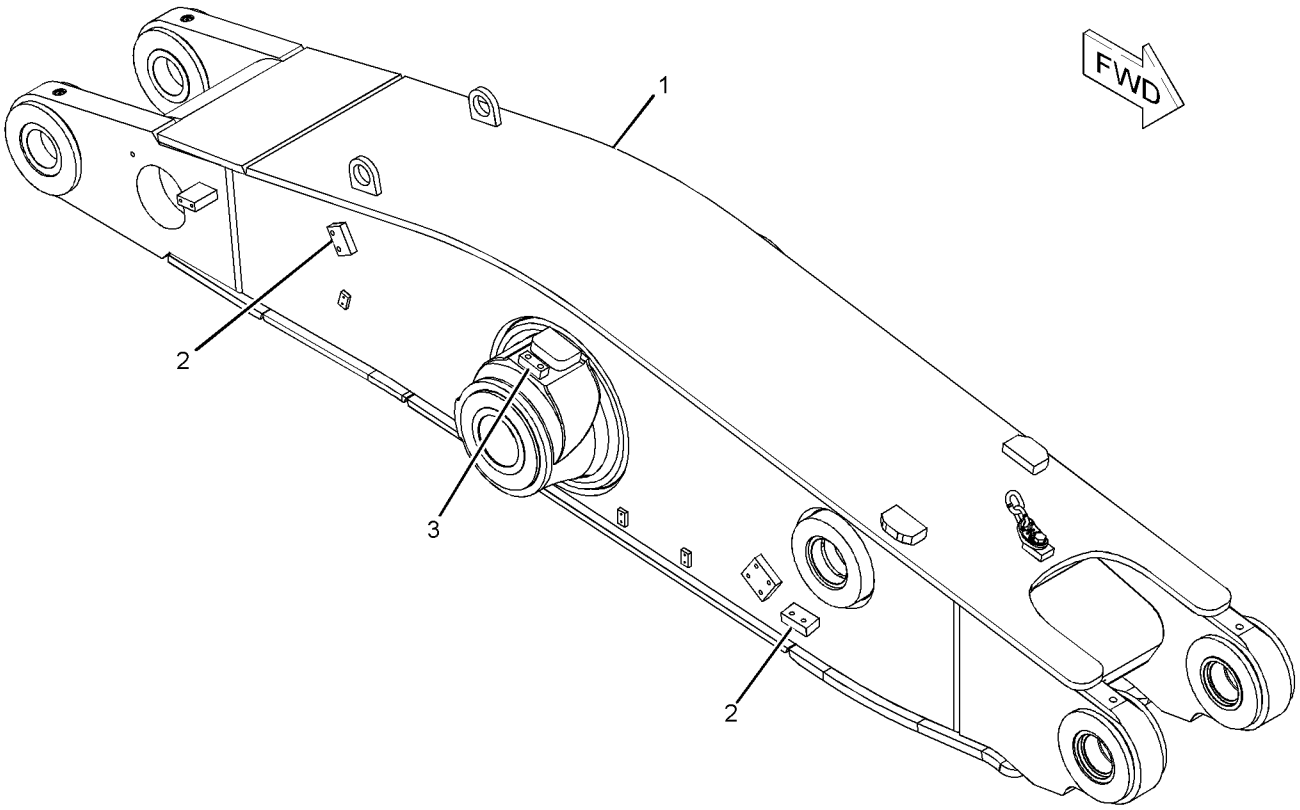


GRAPHIC #1 **<END>** g01129792

# *114-5196* CONTROL GP-BUCKET

**S/N: BXY1-UP**
**PART OF 255-0042, 255-0043 LIFT AR**
**AN ATTACHMENT**

**SMCS-6107** **i02188668**

| NOTE | REF NO | GRAPHIC REF | PART NUMBER | QTY | PART NAME 1 2 3 4 5 6 (PRODUCT LEVEL) | SEE PAGE |
|---|---|---|---|---|---|---|
| Y | 1 | 1 | *197-0679* | 2 | LINKAGE GP-BUCKET | 1207 |

Y-SEPARATE ILLUSTRATION

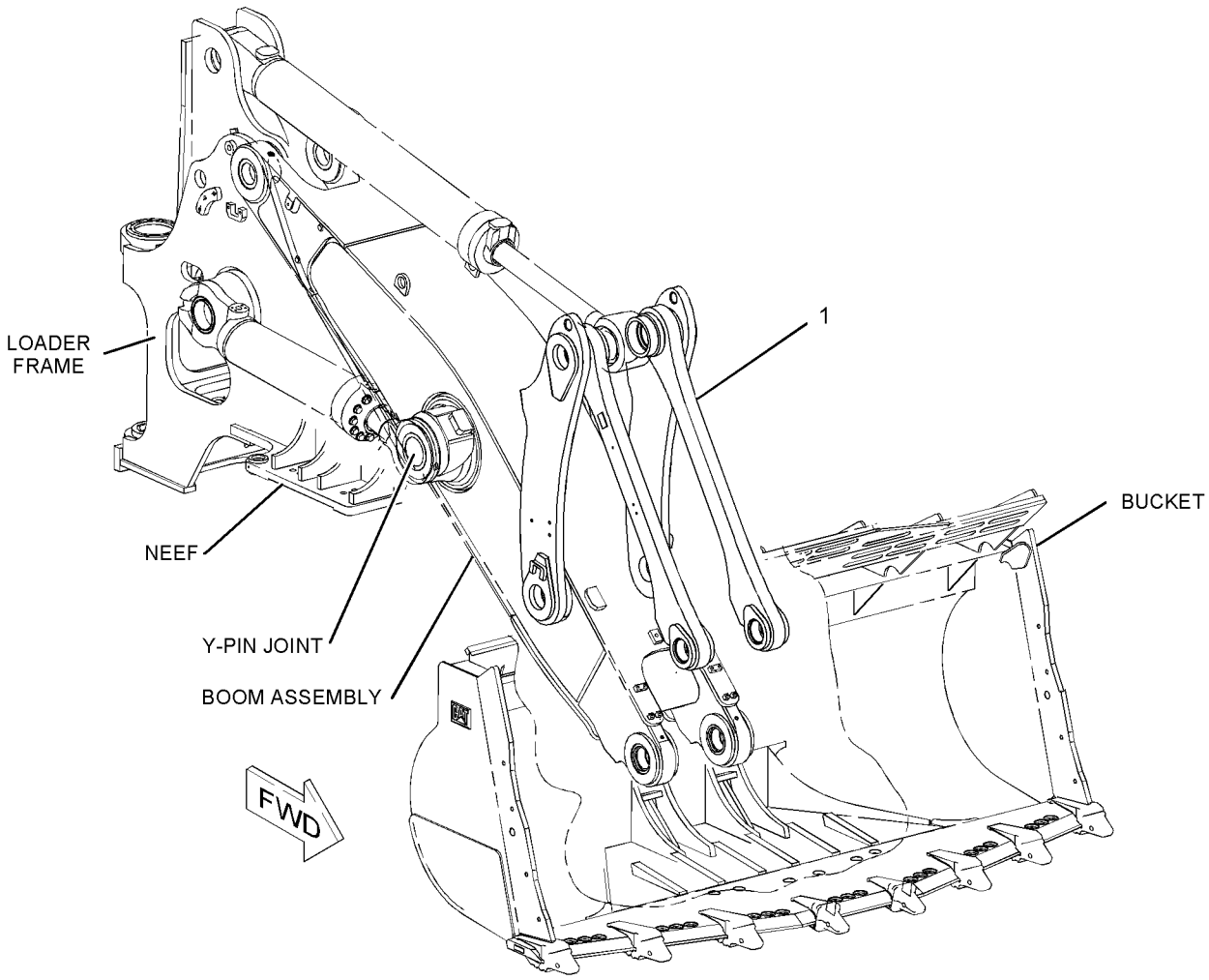


GRAPHIC #1 **<END>** g01130820

# *248-6350* CONTROL GP-BUCKET

**S/N: BXY1-UP**
**PART OF 255-0040, 255-0041 LIFT AR**
**AN ATTACHMENT**

**SMCS-6107** **i02338409**

| NOTE | REF NO | GRAPHIC REF | PART NUMBER | QTY | PART NAME 1 2 3 4 5 6 (PRODUCT LEVEL) | SEE PAGE |
|---|---|---|---|---|---|---|
| | 1 | 1 | **248-6351** | 1 | LINK AS (LH) | |
| | | 1 | **9U-0585** | 2 | RETAINER | |
| | 2 | 1 | **248-6352** | 1 | LINK AS (RH) | |
| | 3 | 1 | **248-6354** | 1 | LINK & BEARING AS (RH) | |
| | 4 | 1 | **248-6357** | 1 | LINK & BEARING AS (LH) | |
| | | | | | (EACH LINK AND BEARING INCLUDES) | |
| | 4A | 1 | **111-9758** | 1 | PLATE | |
| | 4B | 1 | **152-3735** | 1 | BEARING | |
| | 4C | 1 | **152-3740** | 1 | BEARING | |

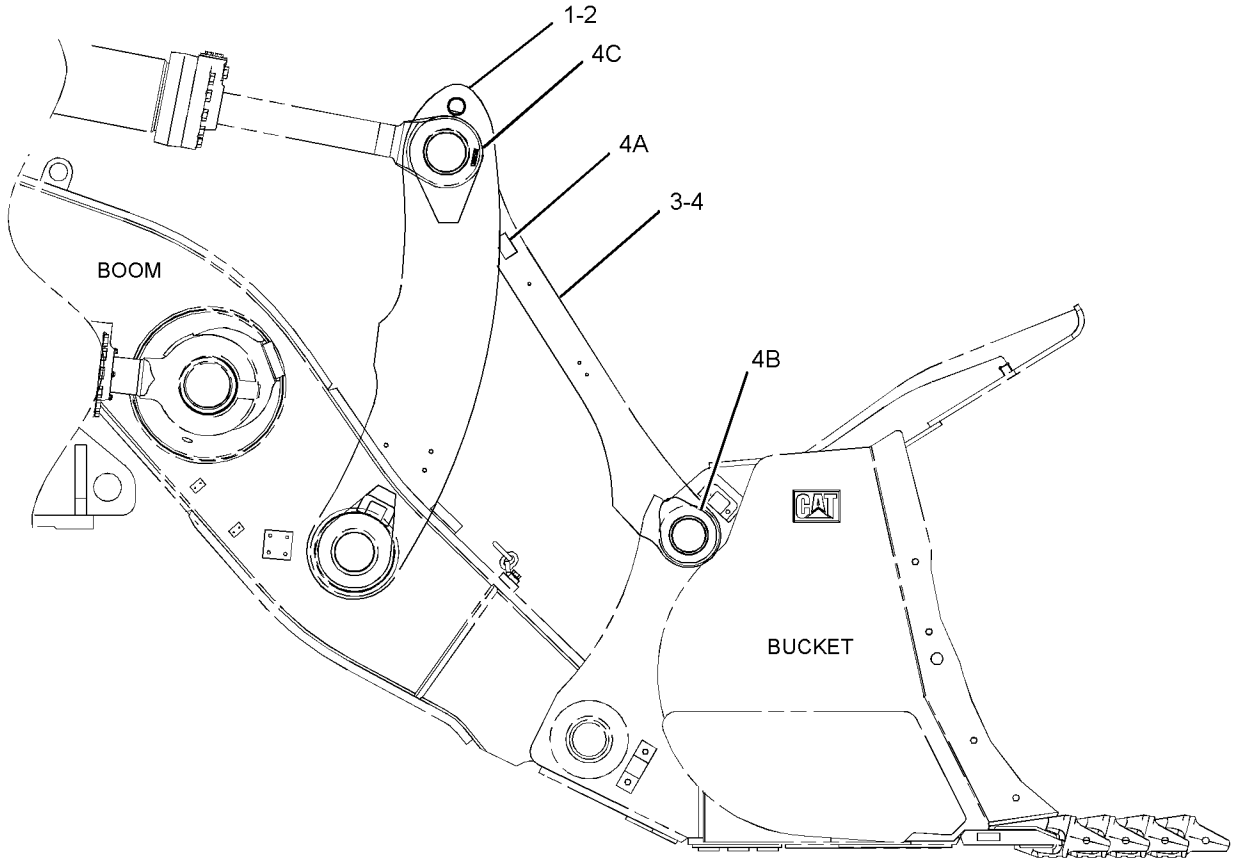


GRAPHIC #1 **<END>** g01167209

# *259-2425* CONTROL GP-BUCKET

**S/N: BXY1-1899**

**PART OF 259-2405, 259-2436 LUBRICATION AR-AUTOMATIC**

**AN ATTACHMENT**

**SMCS-6107** **i02500101**

| NOTE | REF NO | GRAPHIC REF | PART NUMBER | QTY | PART NAME 1 2 3 4 5 6 (PRODUCT LEVEL) | SEE PAGE |
|---|---|---|---|---|---|---|
| | 1 | 1 | **259-2426** | 1 | LINK AS (LH) | |
| | | 1 | **9C-6809** | 1 | BLOCK | |
| M | | 1 | **107-2344** | 1 | BOSS (M10X1.5X60-MM) | |
| | | 1 | **248-6351** | 1 | LINK AS (LH) | |
| | 2 | 1 | **259-2427** | 1 | LINK AS (RH) | |
| M | | 1 | **8T-3851** | 1 | BOSS-WELD (M10X1.5X17.5-MM) | |
| M | | 1 | **9R-2821** | 1 | BOSS (M10X1.5X15-MM) | |
| | | 1 | **9C-6809** | 1 | BLOCK | |
| | | 1 | **248-6352** | 1 | LINK AS (RH) | |
| | 3 | 1 | **259-2428** | 1 | LINK & BEARING AS (RH) | |
| M | | 1 | **9R-2821** | 1 | BOSS (M10X1.5X15-MM) | |
| | | 1 | **248-6354** | 1 | LINK & BEARING AS (RH) | |
| | 3A | 1 | **152-3735** | 1 | BEARING | |
| | 3B | 1 | **152-3740** | 1 | BEARING | |
| | 4 | 1 | **259-2429** | 1 | LINK & BEARING AS (LH) | |
| M | | 1 | **9R-2821** | 1 | BOSS (M10X1.5X15-MM) | |
| | | 1 | **248-6357** | 1 | LINK & BEARING AS (LH) | |
| | 4A | 1 | **152-3735** | 1 | BEARING | |
| | 4B | 1 | **152-3740** | 1 | BEARING | |

M-METRIC PART

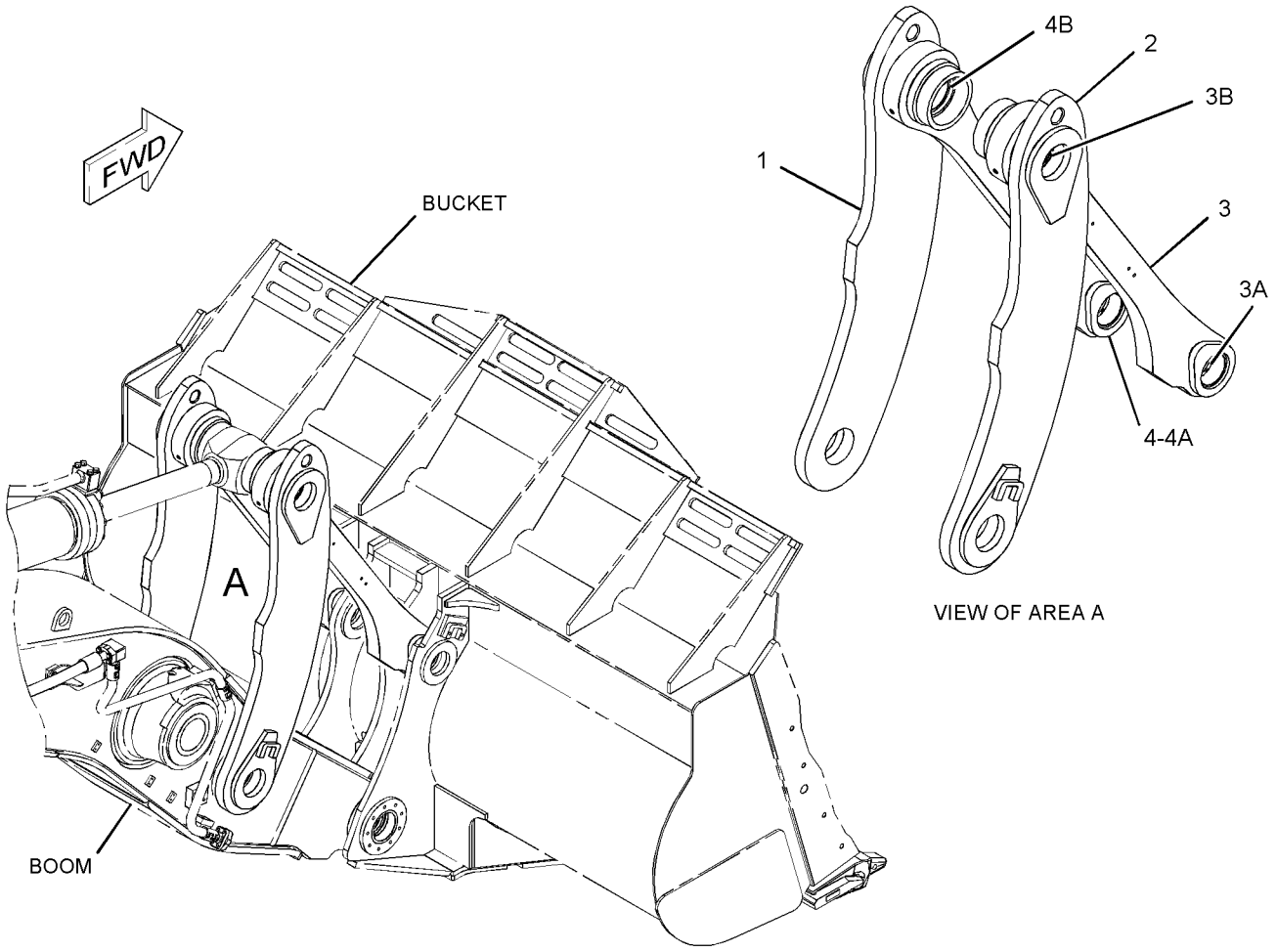


GRAPHIC #1 **<END>** g01128577

# *293-7309* CONTROL GP-BUCKET

**S/N: BXY1900-UP**

**PART OF 293-7303, 293-7304 LUBRICATION AR-AUTOMATIC**

**AN ATTACHMENT**

**SMCS-6107** **i02675894**

| NOTE | REF NO | GRAPHIC REF | PART NUMBER | QTY | PART NAME 1 2 3 4 5 6 (PRODUCT LEVEL) | SEE PAGE |
|---|---|---|---|---|---|---|
| | 1 | 1 | **259-2426** | 1 | LINK AS (LH) | |
| | 1A | 1 | **9C-6809** | 1 | BLOCK | |
| M | 1B | 1 | **107-2344** | 1 | BOSS (M10X1.5X60-MM) | |
| | 2 | 1 | **259-2427** | 1 | LINK AS (RH) | |
| M | 2A | 1 | **8T-3851** | 1 | BOSS-WELD (M10X1.5X17.5-MM) | |
| | 2B | 1 | **9C-6809** | 1 | BLOCK | |
| | 3 | 1 | **299-4793** | 1 | LINK & BEARING AS (RH) | |
| | 3A | 1 | **152-3740** | 1 | BEARING | |
| | 3B | 1 | **152-3735** | 1 | BEARING | |
| | 4 | 1 | **299-4794** | 1 | LINK & BEARING AS (LH) | |
| | 4A | 1 | **152-3740** | 1 | BEARING | |
| | 4B | 1 | **152-3735** | 1 | BEARING | |

M-METRIC PART

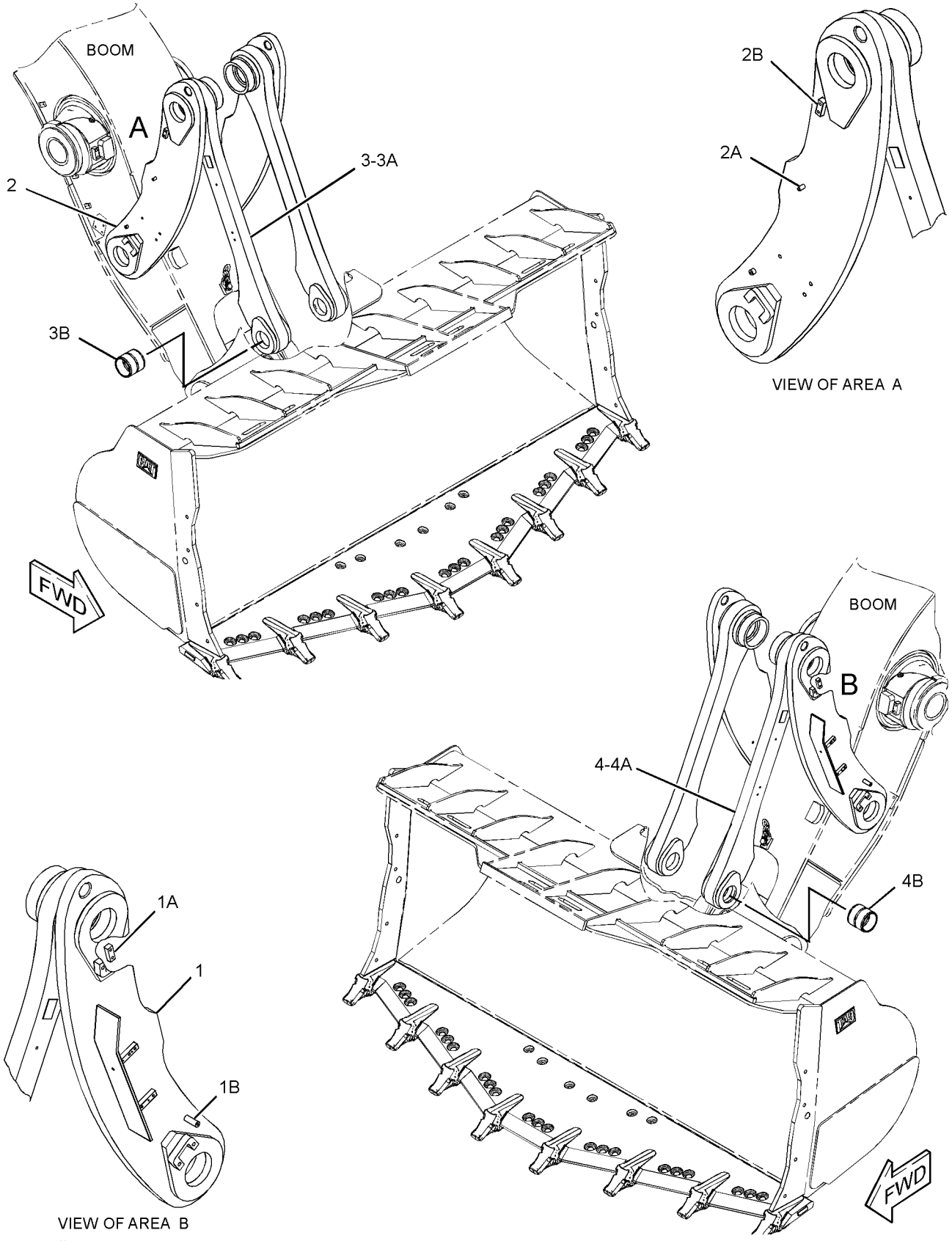


GRAPHIC #1

**<END>**

g01368130

# *293-7310* CONTROL GP-BUCKET

**S/N: BXY1900-UP**

**PART OF 293-7305, 293-7306 LUBRICATION AR-AUTOMATIC AN ATTACHMENT**

**SMCS-6107** **i02675897**

| NOTE | REF NO | GRAPHIC REF | PART NUMBER | QTY | PART NAME 1 2 3 4 5 6 (PRODUCT LEVEL) | SEE PAGE |
|---|---|---|---|---|---|---|
| | 1 | 1 | **189-7444** | 1 | LINK AS (RH) | |
| M | 1A | 1 | **8T-3851** | 1 | BOSS-WELD (M10X1.5X17.5-MM) | |
| M | 1B | 1 | **9R-2821** | 1 | BOSS (M10X1.5X15-MM) | |
| | 2 | 1 | **189-7445** | 1 | LINK AS (LH) | |
| M | 2A | 1 | **107-2344** | 1 | BOSS (M10X1.5X60-MM) | |
| | 3 | 1 | **299-4797** | 1 | LINK & BEARING AS (RH) | |
| | 3A | 1 | **111-9758** | 1 | PLATE | |
| | 3B | 1 | **152-3735** | 1 | BEARING | |
| | 3C | 1 | **152-3740** | 1 | BEARING | |
| | 4 | 1 | **299-4798** | 1 | LINK & BEARING AS (LH) | |
| | 4A | 1 | **111-9758** | 1 | PLATE | |
| | 4B | 1 | **152-3735** | 1 | BEARING | |
| | 4C | 1 | **152-3740** | 1 | BEARING | |

M-METRIC PART

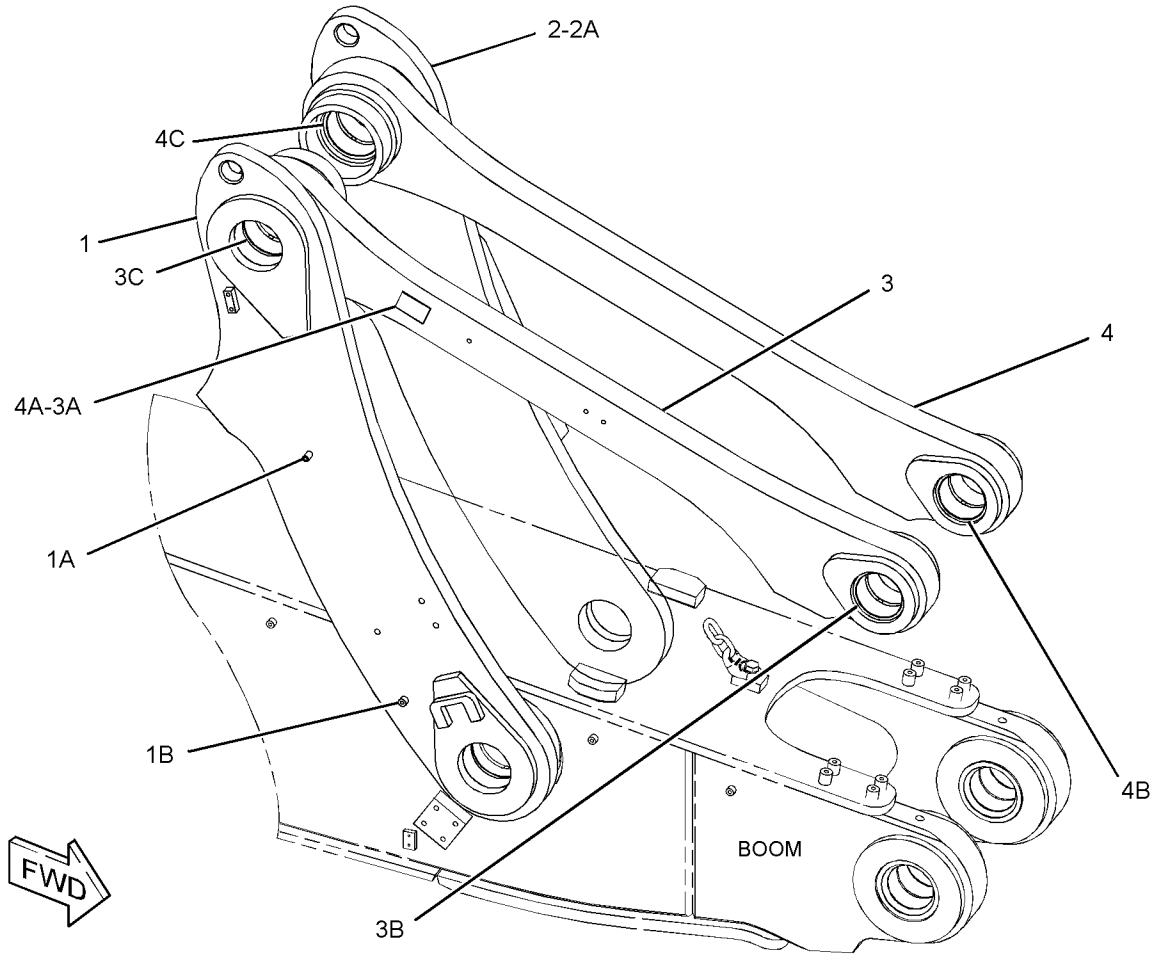


GRAPHIC #1 **<END>** g01346718

# *189-7589* HARDWARE GP-BOOM

**S/N: BXY1-1899**

**PART OF 247-7034, 259-2437 LUBRICATION AR-AUTOMATIC**

**AN ATTACHMENT**

**SMCS-6501, 7553** **i02224588**

| NOTE | REF NO | GRAPHIC REF | PART NUMBER | QTY | PART NAME 1 2 3 4 5 6 (PRODUCT LEVEL) | SEE PAGE |
|---|---|---|---|---|---|---|
| | 1 | 1 | **2R-1920** | 1 | BLOCK | |
| | 2 | 1 | *091-1735* | 1 | BLOCK | |
| | 3 | 1 | *153-4806* | 1 | BLOCK | |
| | 4 | 1 | *188-9657* | 1 | BLOCK | |
| | 5 | 1 | *225-2646* | 4 | BLOCK | |
| | 6 | 1 | *225-2647* | 2 | BLOCK | |
| M | 7 | 1 | **8T-3851** | 9 | BOSS-WELD (M10X1.5X17.5-MM) | |

M-METRIC PART

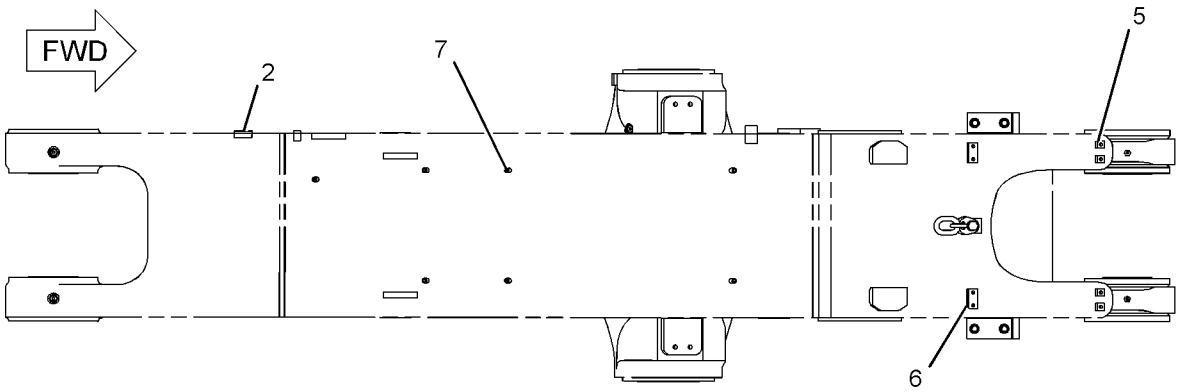


TOP VIEW

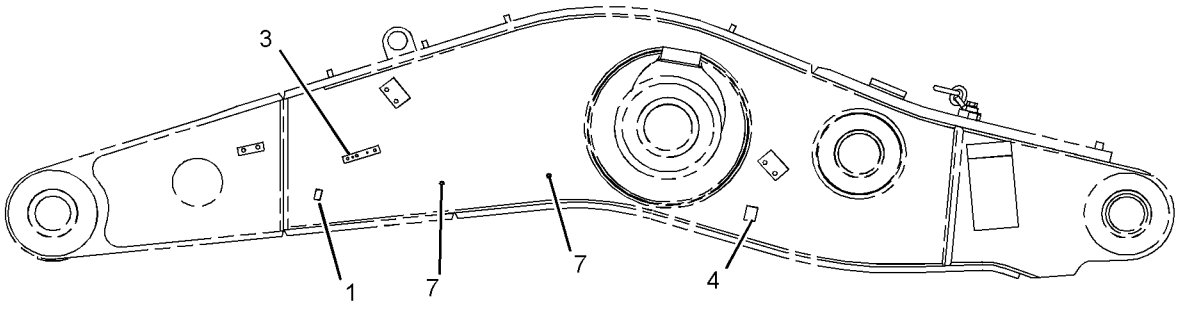


RIGHT SIDE VIEW

GRAPHIC #1

**<END>**

g01122556

# *243-5885* HARDWARE GP-BOOM

**S/N: BXY1-1899**
**PART OF 247-7033, 259-2435 LUBRICATION AR-AUTOMATIC**
**AN ATTACHMENT**

**SMCS-6501, 7553** **i02330986**

| NOTE | REF NO | GRAPHIC REF | PART NUMBER | QTY | PART NAME 1 2 3 4 5 6 (PRODUCT LEVEL) | SEE PAGE |
|---|---|---|---|---|---|---|
| | 1 | 1 | **2R-1920** | 1 | BLOCK | |
| | 2 | 1 | *091-1735* | 1 | BLOCK | |
| | 3 | 1 | *153-4806* | 1 | BLOCK | |
| | 4 | 1 | *172-5307* | 1 | BLOCK | |
| | 5 | 1 | *188-9657* | 1 | BLOCK | |
| | 6 | 1 | *9R-4595* | 10 | BOSS | |
| | 7 | 1 | *225-2647* | 2 | BLOCK | |
| | 8 | 1 | *243-5937* | 1 | BLOCK | |
| M | 9 | 1 | **8T-3851** | 2 | BOSS-WELD (M10X1.5X17.5-MM) | |

M-METRIC PART

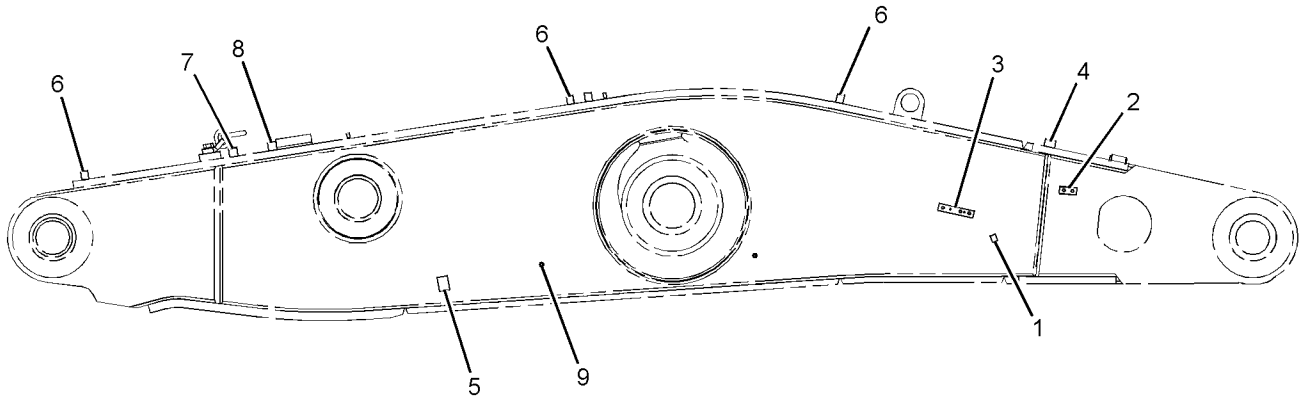


LEFT SIDE VIEW

GRAPHIC #1 **<END>** g01163537

# *259-2430* HARDWARE GP-BOOM

**S/N: BXY1-1899**

**PART OF 259-2405, 259-2436 LUBRICATION AR-AUTOMATIC**

**AN ATTACHMENT**

**SMCS-6501, 7553** **i02225026**

| NOTE | REF NO | GRAPHIC REF | PART NUMBER | QTY | PART NAME 1 2 3 4 5 6 (PRODUCT LEVEL) | SEE PAGE |
|---|---|---|---|---|---|---|
| | 1 | 1 | **2R-1920** | 1 | BLOCK | |
| | 2 | 1 | *091-1735* | 1 | BLOCK | |
| | 3 | 1 | *153-4806* | 1 | BLOCK | |
| | 4 | 1 | *188-9657* | 1 | BLOCK | |
| | 5 | 1 | *225-2647* | 2 | BLOCK | |
| | 6 | 1 | *243-5937* | 1 | BLOCK | |
| M | 7 | 1 | **8T-3851** | 2 | BOSS-WELD (M10X1.5X17.5-MM) | |
| M | 8 | 1 | **9R-2640** | 1 | BOSS (M12X1.75X25-MM) | |
| | 9 | 1 | *9R-4595* | 12 | BOSS | |

M-METRIC PART

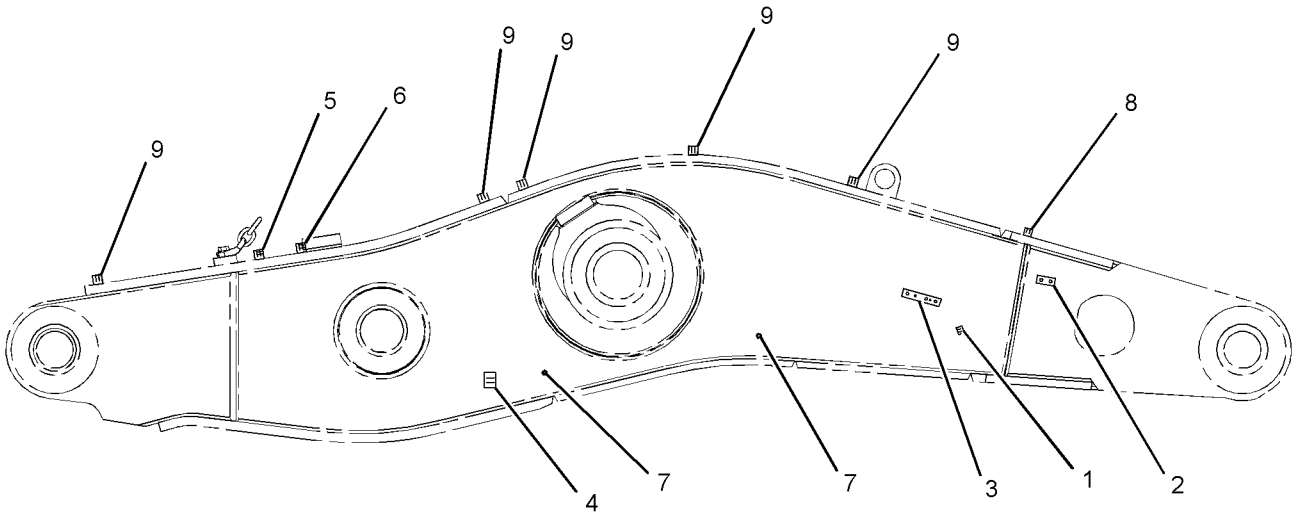


LEFT SIDE VIEW

GRAPHIC #1 **<END>** g01127979

# *285-7281* HARDWARE GP-BOOM

**S/N: BXY1900-UP**
**PART OF 293-7303, 293-7304 LUBRICATION AR-AUTOMATIC**
**AN ATTACHMENT**

**SMCS-6501, 7553** **i02675720**

| NOTE | REF NO | GRAPHIC REF | PART NUMBER | QTY | PART NAME 1 2 3 4 5 6 (PRODUCT LEVEL) | SEE PAGE |
|---|---|---|---|---|---|---|
| | 1 | 1 | **2R-1920** | 1 | BLOCK | |
| | 2 | 1 | *091-1735* | 1 | BLOCK | |
| | 3 | 1 | *153-4806* | 1 | BLOCK | |
| | 4 | 1 | *188-9657* | 1 | BLOCK | |
| M | 5 | 1 | **8T-3851** | 2 | BOSS-WELD (M10X1.5X17.5-MM) | |
| M | 6 | 1 | **9R-2821** | 8 | BOSS (M10X1.5X15-MM) | |
| | 7 | 1 | **9R-4595** | 8 | BOSS | |

M-METRIC PART

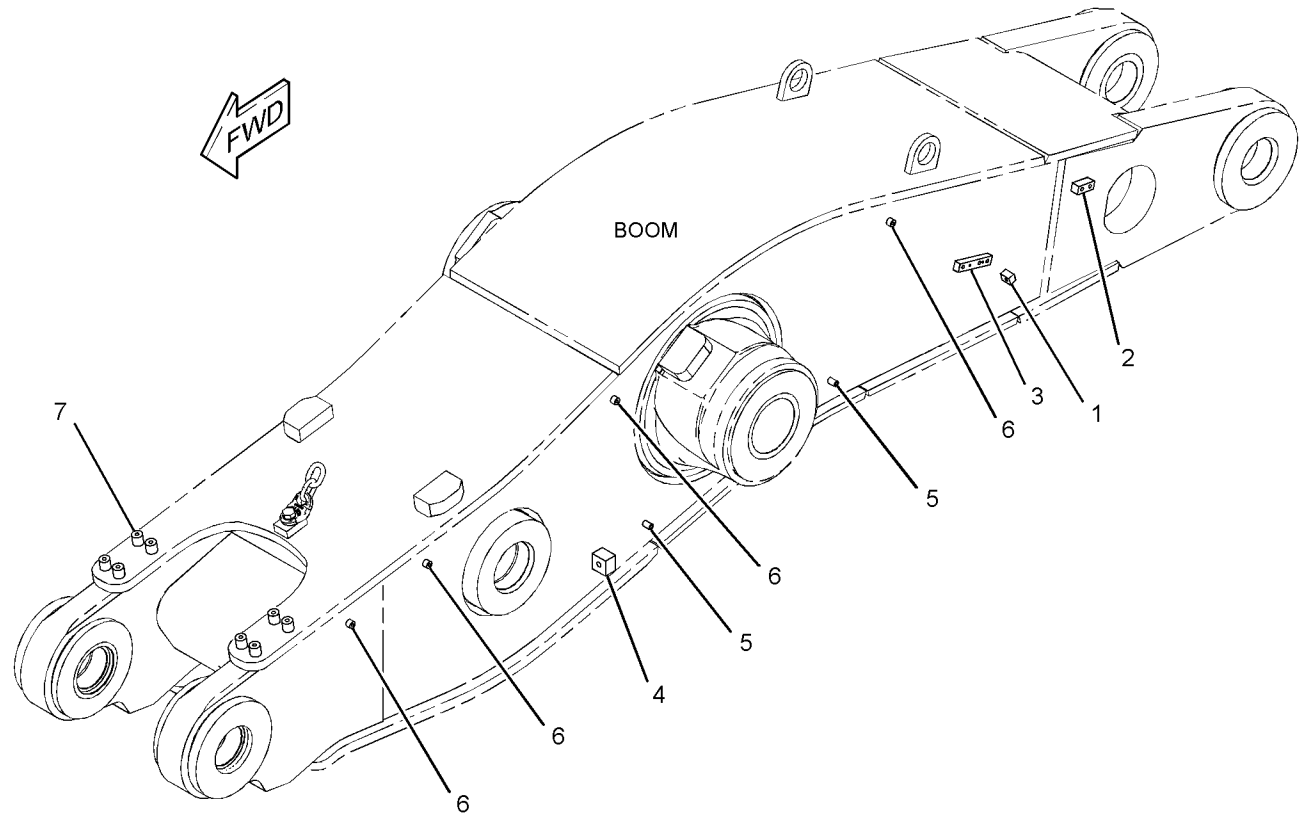


GRAPHIC #1 **<END>** g01367855

# *285-7282* HARDWARE GP-BOOM

**S/N: BXY1900-UP**

**PART OF 293-7305, 293-7306 LUBRICATION AR-AUTOMATIC**

**AN ATTACHMENT**

**SMCS-6501, 7553** **i02675728**

| NOTE | REF NO | GRAPHIC REF | PART NUMBER | QTY | PART NAME 1 2 3 4 5 6 (PRODUCT LEVEL) | SEE PAGE |
|---|---|---|---|---|---|---|
| | 1 | 1 | **2R-1920** | 1 | BLOCK | |
| | 2 | 1 | *091-1735* | 1 | BLOCK | |
| | 3 | 1 | *153-4806* | 1 | BLOCK | |
| | 4 | 1 | *188-9657* | 1 | BLOCK | |
| M | 5 | 1 | **8T-3851** | 2 | BOSS-WELD (M10X1.5X17.5-MM) | |
| M | 6 | 1 | **9R-2821** | 8 | BOSS (M10X1.5X15-MM) | |
| | 7 | 1 | **9R-4595** | 8 | BOSS | |

M-METRIC PART

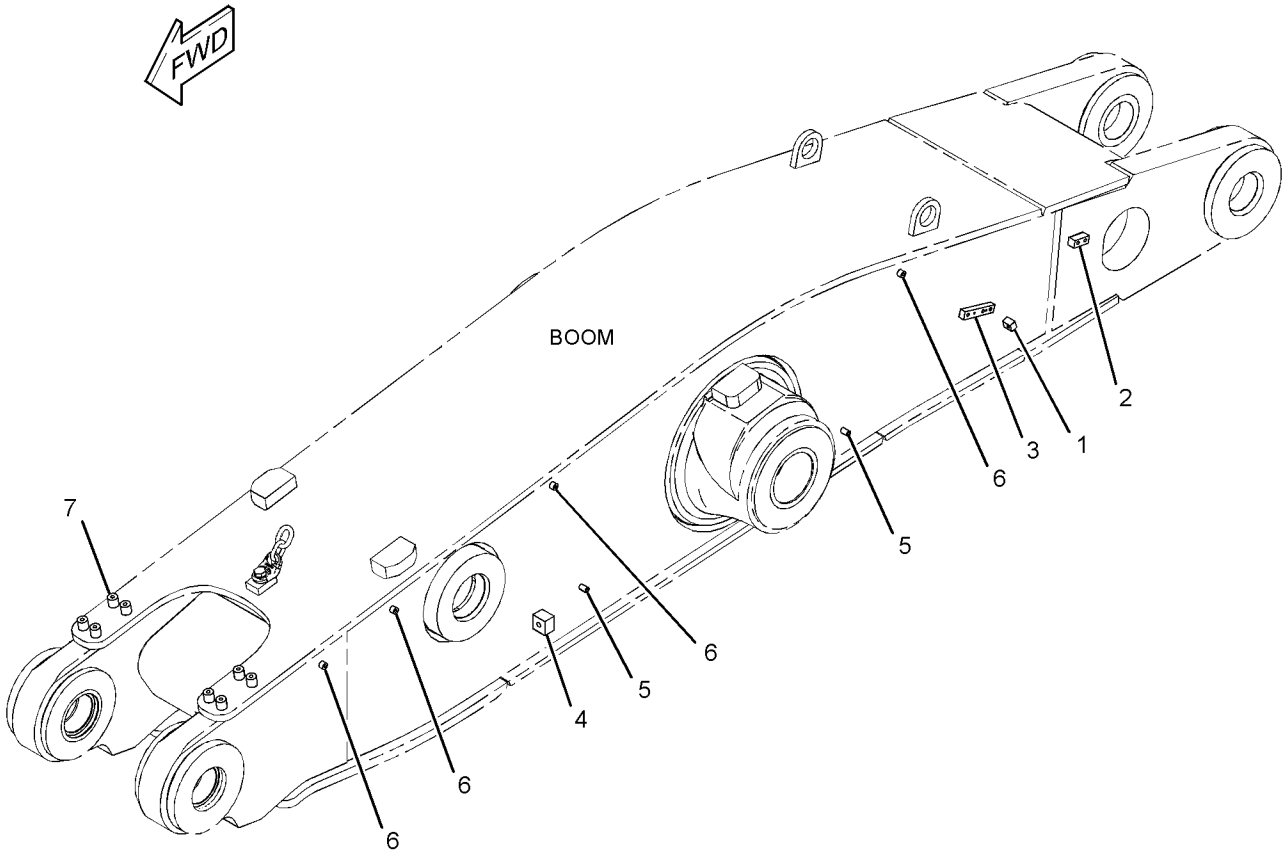


GRAPHIC #1 **<END>** g01367824

# *285-7283* HARDWARE GP-BOOM

**S/N: BXY1900-UP**
**PART OF 293-7307, 293-7308 LUBRICATION AR-AUTOMATIC**
**AN ATTACHMENT**

**SMCS-6501, 7553** **i02675730**

| NOTE | REF NO | GRAPHIC REF | PART NUMBER | QTY | PART NAME 1 2 3 4 5 6 (PRODUCT LEVEL) | SEE PAGE |
|---|---|---|---|---|---|---|
| | 1 | 1 | **2R-1920** | 1 | BLOCK | |
| | 2 | 1 | *091-1735* | 1 | BLOCK | |
| | 3 | 1 | *153-4806* | 1 | BLOCK | |
| | 4 | 1 | *188-9657* | 1 | BLOCK | |
| M | 5 | 1 | **8T-3851** | 2 | BOSS-WELD (M10X1.5X17.5-MM) | |
| M | 6 | 1 | **9R-2821** | 11 | BOSS (M10X1.5X15-MM) | |
| | 7 | 1 | **9R-4595** | 8 | BOSS | |

M-METRIC PART

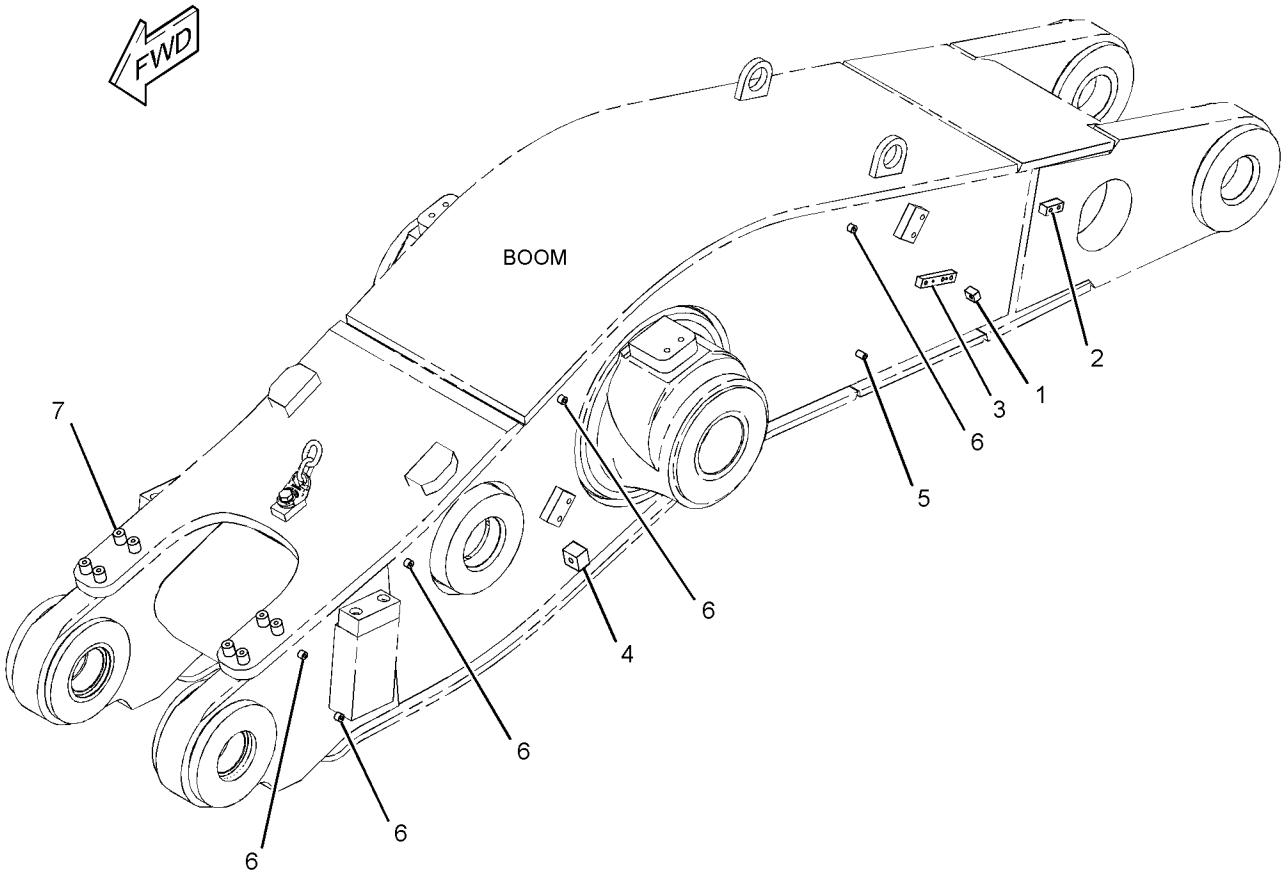


GRAPHIC #1 **<END>** g01367817

## *255-0040* LIFT AR—STANDARD LIFT MACHINES, 2-VALVE

**S/N: BXY1-UP**
**3.88-M**
**AN ATTACHMENT**

**SMCS-6000** **i02388189**

| NOTE | PART NUMBER | QTY | PART NAME 1 2 3 4 5 6 (PRODUCT LEVEL) | SEE PAGE |
|---|---|---|---|---|
| Y | **248-6340** | 1 | BOOM & BEARING AS | 1188 |
| Y | *255-6961* | 1 | BUMPER GP-REAR | 645 |
| Y | *248-6350* | 1 | CONTROL GP-BUCKET | 1192 |
| Y | *228-0918* | 1 | CONTROL GP-ELECTROHYDRAULIC (2-FUNCTION) | 1346 |
| Y | *114-5192* | 1 | CONTROL GP-LIFT & TILT POS | 219 |
| Y | *246-2322* | 1 | LINES GP-TILT CYLINDER | 1122 |
| Y | *246-6921* | 1 | LINES GP-TILT CYLINDER (CYLINDER MOUNTED, STD LIFT) | 1126 |
| Y | *132-6133* | 1 | VALVE & MTG GP-MAIN CONTROL (2-FUNCTION) | 1153 |
| Y | *255-7139* | 1 | WIRING GP-SENSOR (LIFT, TILT POSITION) | 470 |
| | **149-0606** | 1 | PLUG AS | |
| | **155-2265** | 1 | KIT-CONNECTING PLUG (8-PIN) | |
| | | | (INCLUDES PLUG AS AND WEDGE) | |
| | **8T-8737** | 5 | PLUG-SEAL | |
| E | **125-7874** | | TUBE-HEAT SHRINK (5.72-MM DIA) (5-CM) | |
| D | **5P-5677** | | WIRE (18-GA, BLACK) (1-M) | |

D-ORDER BY THE METER
E-ORDER BY THE CENTIMETER
Y-SEPARATE ILLUSTRATION

**<END>**

## *255-0041* LIFT AR—STANDARD LIFT MACHINES, 3-VALVE

**S/N: BXY1-UP**
**3.88-M**
**CANNOT BE USED WITH 255-0040—PAGE 1204, 255-0042—PAGE 1205, 255-0043—PAGE 1205**
**AN ATTACHMENT**

**SMCS-6000** **i02388188**

| NOTE | PART NUMBER | QTY | PART NAME 1 2 3 4 5 6 (PRODUCT LEVEL) | SEE PAGE |
|---|---|---|---|---|
| Y | **255-8204** | 1 | BOOM GP-LOADER (3.88-M) | 1190 |
| Y | *255-6961* | 1 | BUMPER GP-REAR | 645 |
| Y | *248-6350* | 1 | CONTROL GP-BUCKET | 1192 |
| Y | *227-0966* | 1 | CONTROL GP-ELECTROHYDRAULIC (3-FUNCTION) | 1342 |
| Y | *114-5192* | 1 | CONTROL GP-LIFT & TILT POS | 219 |
| Y | *246-6923* | 1 | LINES GP-FRONT | 1091 |
| Y | *246-2323* | 1 | LINES GP-TILT CYLINDER | 1124 |
| Y | *246-6921* | 1 | LINES GP-TILT CYLINDER (CYLINDER MOUNTED, STD LIFT) | 1126 |
| Y | *201-0218* | 1 | VALVE & MTG GP-MAIN CONTROL (3-FUNCTION) | 1156 |
| Y | *255-7139* | 1 | WIRING GP-SENSOR (LIFT, TILT POSITION) | 470 |
| | **149-0606** | 1 | PLUG AS | |
| | **155-2265** | 1 | KIT-CONNECTING PLUG (8-PIN) | |
| | | | (INCLUDES PLUG AS AND WEDGE) | |
| D | **5P-5677** | | WIRE (18-GA, BLACK) (1-M) | |
| | **186-3736** | 1 | SOCKET-CONNECTOR (16-GA TO 18-GA) | |
| | **8T-8737** | 5 | PLUG-SEAL | |
| E | **125-7874** | | TUBE-HEAT SHRINK (5.72-MM DIA) (5-CM) | |

D-ORDER BY THE METER
E-ORDER BY THE CENTIMETER
Y-SEPARATE ILLUSTRATION

**<END>**

## *255-0042* LIFT AR—HIGH LIFT MACHINES, 2-VALVE

**S/N: BXY1-UP**

**4.25-M**

**CANNOT BE USED WITH 255-0040—PAGE 1204, 255-0041—PAGE 1204, 255-0043—PAGE 1205**

**AN ATTACHMENT**

**SMCS-6000** **i02259863**

| NOTE | PART NUMBER | QTY | PART NAME 1 2 3 4 5 6 (PRODUCT LEVEL) | SEE PAGE |
|---|---|---|---|---|
| Y | **231-8177** | 1 | BOOM & BEARING AS | 1187 |
| Y | *260-1400* | 1 | BUMPER GP-REAR | 646 |
| Y | *114-5196* | 1 | CONTROL GP-BUCKET | 1191 |
| Y | *228-0918* | 1 | CONTROL GP-ELECTROHYDRAULIC (2-FUNCTION) | 1346 |
| Y | *114-5192* | 1 | CONTROL GP-LIFT & TILT POS | 219 |
| Y | *246-2322* | 1 | LINES GP-TILT CYLINDER | 1122 |
| Y | *156-5519* | 1 | LINES GP-TILT CYLINDER (CYLINDER MOUNTED) | 1118 |
| Y | *132-6133* | 1 | VALVE & MTG GP-MAIN CONTROL (2-FUNCTION) | 1153 |
| Y | *261-8025* | 1 | WIRING GP-SENSOR (LIFT, TILT POSITION) (HIGH LIFT MACHINES) | 472 |
| | **117-1903** | 1 | PLUG AS | |
| | **155-2265** | 1 | KIT-CONNECTING PLUG (8-PIN) | |
| | | | (INCLUDES PLUG AS AND WEDGE) | |
| | **8T-8737** | 3 | PLUG-SEAL | |

Y-SEPARATE ILLUSTRATION

**<END>**

## *255-0043* LIFT AR—HIGH LIFT MACHINES, 3-VALVE

**S/N: BXY1-UP**

**4.25-M**

**CANNOT BE USED WITH 255-0041—PAGE 1204, 255-0042—PAGE 1205, 255-0040—PAGE 1204**

**AN ATTACHMENT**

**SMCS-6000** **i02259864**

| NOTE | PART NUMBER | QTY | PART NAME 1 2 3 4 5 6 (PRODUCT LEVEL) | SEE PAGE |
|---|---|---|---|---|
| Y | **201-1049** | 1 | BOOM GP-LOADER (4.25-M) | 1189 |
| Y | *260-1400* | 1 | BUMPER GP-REAR | 646 |
| Y | *114-5196* | 1 | CONTROL GP-BUCKET | 1191 |
| Y | *227-0966* | 1 | CONTROL GP-ELECTROHYDRAULIC (3-FUNCTION) | 1342 |
| Y | *114-5192* | 1 | CONTROL GP-LIFT & TILT POS | 219 |
| Y | *201-0377* | 1 | LINES GP-FRONT | 1088 |
| Y | *246-2323* | 1 | LINES GP-TILT CYLINDER | 1124 |
| Y | *156-5519* | 1 | LINES GP-TILT CYLINDER (CYLINDER MOUNTED) | 1118 |
| Y | *201-0218* | 1 | VALVE & MTG GP-MAIN CONTROL (3-FUNCTION) | 1156 |
| Y | *261-8025* | 1 | WIRING GP-SENSOR (LIFT, TILT POSITION) (HIGH LIFT MACHINES) | 472 |
| | **117-1903** | 1 | PLUG AS | |
| | **155-2265** | 1 | KIT-CONNECTING PLUG (8-PIN) | |
| | | | (INCLUDES PLUG AS AND WEDGE) | |
| | **8T-8737** | 3 | PLUG-SEAL | |

Y-SEPARATE ILLUSTRATION

**<END>**

# *189-7638* LINKAGE GP-BUCKET

**S/N: BXY1-1899**

**PART OF 247-7033, 259-2435 LUBRICATION AR-AUTOMATIC**

**AN ATTACHMENT**

**SMCS-6107, 6117** **i02344240**

| NOTE | REF NO | GRAPHIC REF | PART NUMBER | QTY | PART NAME 1 2 3 4 5 6 (PRODUCT LEVEL) | SEE PAGE |
|---|---|---|---|---|---|---|
| | 1 | 1 | **189-7444** | 1 | LINK AS (RH) | |
| M | | 1 | **8T-3851** | 1 | BOSS-WELD (M10X1.5X17.5-MM) | |
| | 2 | 1 | **189-7445** | 1 | LINK AS (LH) | |
| M | | 1 | **107-2344** | 1 | BOSS (M10X1.5X60-MM) | |
| | | 1 | **9U-0585** | 2 | RETAINER | |
| | 3 | 1 | **189-7474** | 1 | LINK & BEARING AS (RH) | |
| M | | 1 | **8T-4967** | 1 | STUD-WELD (M10X1.5X23-MM OAL) | |
| | | 1 | **152-3735** | 1 | BEARING | |
| | | 1 | **152-3740** | 1 | BEARING | |
| M | | 1 | **9R-2821** | 1 | BOSS (M10X1.5X15-MM) | |
| | 4 | 1 | **189-7475** | 1 | LINK & BEARING AS (LH) | |
| M | | 1 | **8T-4967** | 1 | STUD-WELD (M10X1.5X23-MM OAL) | |
| | | 1 | **152-3735** | 1 | BEARING | |
| | | 1 | **152-3740** | 1 | BEARING | |

M-METRIC PART

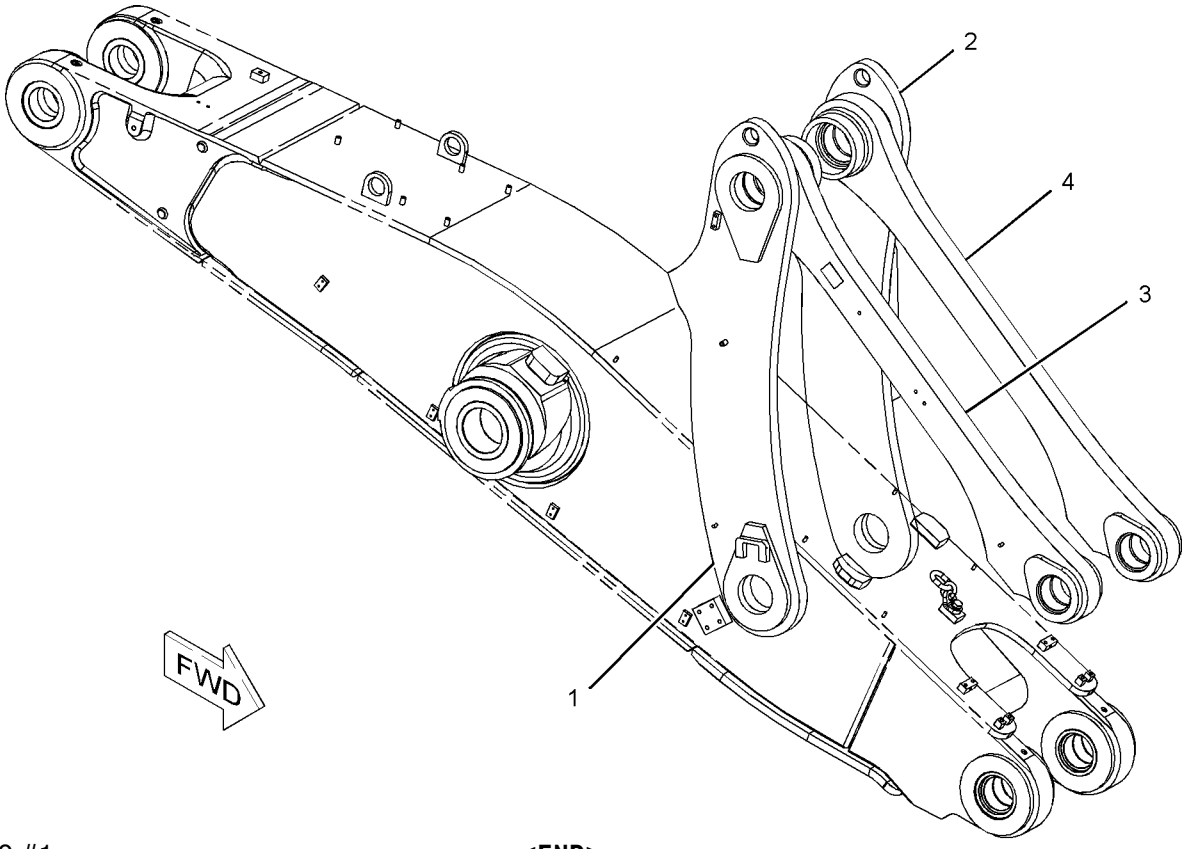


GRAPHIC #1 **<END>** g01015621

# *197-0679* LINKAGE GP-BUCKET

**S/N: BXY1-UP**
**PART OF 114-5196 CONTROL GP-BUCKET**
**AN ATTACHMENT**

**SMCS-6107, 6117** **i02461905**

| NOTE | REF NO | GRAPHIC REF | PART NUMBER | QTY | PART NAME 1 2 3 4 5 6 (PRODUCT LEVEL) | SEE PAGE |
|---|---|---|---|---|---|---|
| | 1 | 1 | **153-9839** | 1 | LINK AS-LH | |
| | 1A | 1 | **9U-0585** | 1 | RETAINER | |
| | 2 | 1 | **153-9840** | 1 | LINK AS (RH) | |
| | 2A | 1 | **9U-0585** | 1 | RETAINER | |
| | 3 | 1 | **153-9844** | 1 | LINK & BEARING AS (RH) | |
| | 3A | 1 | **152-3735** | 1 | BEARING | |
| | 3B | 1 | **152-3740** | 1 | BEARING | |
| | 4 | 1 | **154-6879** | 1 | LINK & BEARING AS (LH) | |
| | 4A | 1 | **152-3735** | 1 | BEARING | |
| | 4B | 1 | **152-3740** | 1 | BEARING | |

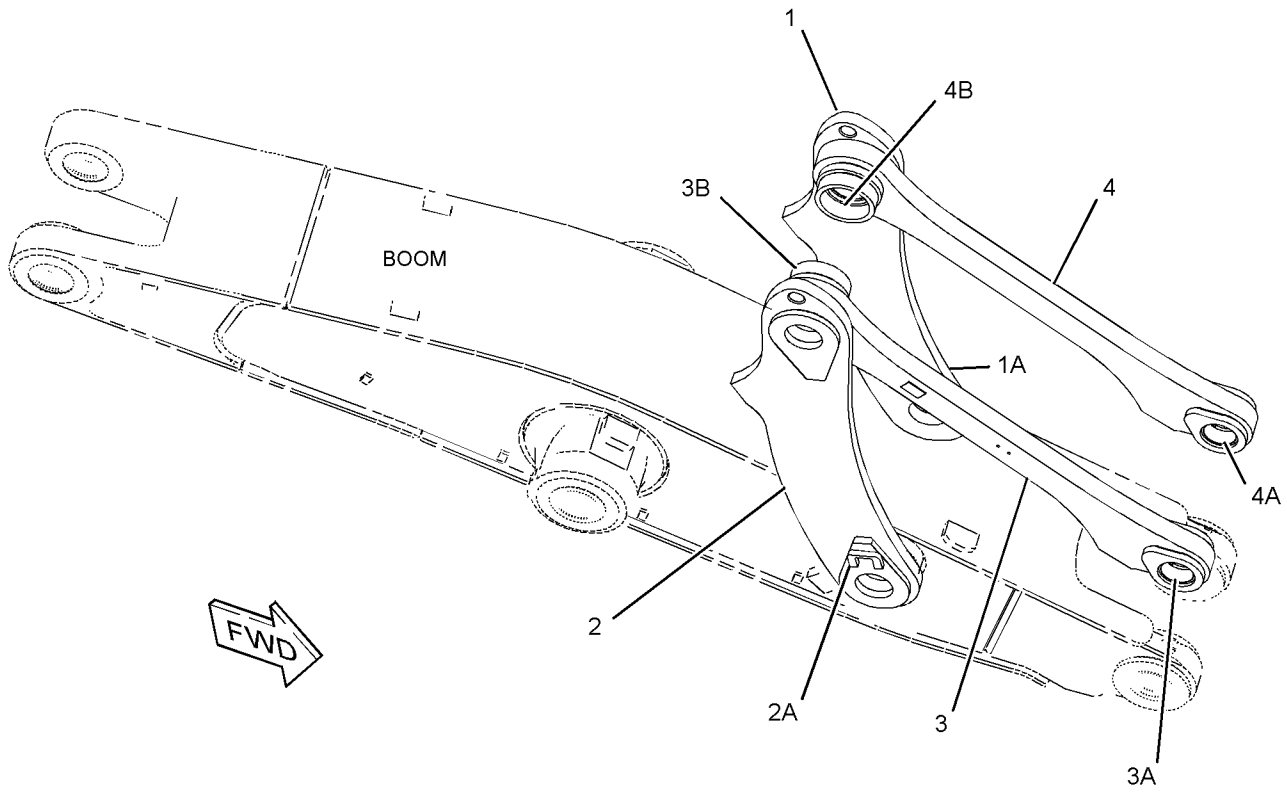


GRAPHIC #1 **<END>** g01228484

# IMPLEMENTS

## *154-7531* PIN & SEAL GP-LINKAGE

**S/N: BXY1-UP**
**BUCKET CONTROL**
**PART OF 225-5432, 284-2735 CHASSIS AR**

**SMCS-6118** **i02564876**

| NOTE | REF NO | GRAPHIC REF | PART NUMBER | QTY | PART NAME 1 2 3 4 5 6 (PRODUCT LEVEL) | SEE PAGE |
|---|---|---|---|---|---|---|
| | 1 | 2 | **1R-1052** | 4 | SEAL AS | |
| | 2 | 1 | **1R-1060** | 10 | SEAL AS | |
| | 3 | 2 | **2D-4867** | 1 | FITTING-GREASE | |
| B | 4 | 2 | **2H-3933** | 2 | SEAL-O-RING | |
| | 5 | 2 | **3B-8489** | 1 | FITTING-GREASE | |
| | 6 | 2 | **4E-5609** | 4 | PLATE | |
| B | 7 | 2 | **4F-7507** | 4 | SEAL-O-RING | |
| | 8 | 1,2 | **5K-5959** | 5 | SEAL-O-RING | |
| | 9 | 2 | **9X-4599** | 8 | SEAL-LIP TYPE | |
| | 10 | 2 | **9X-4601** | 8 | SEAL-LIP TYPE | |
| | 11 | 2 | **285-0972** | 4 | COLLAR | |
| | 12 | 2 | **152-3730** | 2 | PLATE | |
| | 13 | 2 | **152-3732** | 4 | PLATE-SEAL | |
| | 14 | 2 | **152-3738** | 1 | PIN (F PIN) | |
| | 15 | 2 | **152-3741** | 1 | PIN (E PIN) | |
| | 16 | 2 | **152-3742** | 1 | PLATE | |
| | 17 | 1 | **152-3748** | 2 | PLATE AS | |
| | 18 | 1 | **152-3751** | 2 | PLATE AS | |
| | 19 | 1 | **152-3753** | 2 | PLATE | |
| | 20 | 2 | **167-6769** | 2 | PLATE | |
| | 21 | 2 | **167-6771** | 3 | PLATE AS | |
| | | | | | (EACH INCLUDES) | |
| | | 2 | **8C-4403** | 2 | DOWEL | |
| | 22 | 2 | **168-4331** | 2 | PIN AS (C PIN) | |
| | 23 | 2 | **168-4332** | 1 | PIN AS (G PIN) | |
| | 24 | 2 | **168-8508** | 2 | SEAL-LIP TYPE | |
| | 25 | 1 | **171-6757** | 2 | PIN (K & Y PINS) | |
| | 26 | 1 | **187-0565** | 2 | SEAL-V-RING | |
| | 27 | 2 | **190-1701** | 4 | COLLAR | |
| | 28 | 2 | **194-1674** | 2 | PLATE | |
| | 29 | 2 | **196-7365** | 2 | PIN AS (A PIN) | |
| | 30 | 2 | **196-7369** | 2 | PIN AS (B PIN) | |
| M | 31 | 1 | **147-2001** | 4 | BOLT (M36X4X100-MM) | |
| | 32 | 2 | **177-1449** | 4 | BOLT | |
| | 33 | 1 | **1J-9671** | 4 | SEAL-O-RING | |
| | 34 | 1 | **3K-8460** | 4 | PLUG | |
| M | 35 | 2 | **7X-2552** | 8 | BOLT (M16X2X30-MM) | |
| M | 36 | 2 | **7X-2553** | 8 | BOLT (M16X2X40-MM) | |
| M | 37 | 2 | **7X-2575** | 4 | BOLT (M24X3X60-MM) | |
| M | 38 | 2 | **7X-2583** | 3 | BOLT (M30X3.5X120-MM) | |
| M | 39 | 2 | **8C-8722** | 4 | NUT (M30X3.5-MM-THD) | |
| M | 40 | 2 | **8T-4140** | 4 | BOLT (M16X2X60-MM) | |
| | 41 | 2 | **8T-4167** | 4 | WASHER-HARD (26X44X4-MM THK) | |
| | 42 | 2 | **9X-8257** | 16 | WASHER (17.5X30X3.5-MM THK) | |
| | 43 | 2 | **9X-8258** | 11 | WASHER (33X56X6-MM THK) | |
| | 44 | 1 | **9X-8259** | 4 | WASHER (39X66X6-MM THK) | |
| | 45 | 2 | **279-6549** | 2 | BRACKET AS | |
| | | | | | (EACH INCLUDES) | |
| | | 2 | **5T-8224** | 3 | SPACER (17X32X12.7-MM THK) | |

B-USE AS REQUIRED
M-METRIC PART

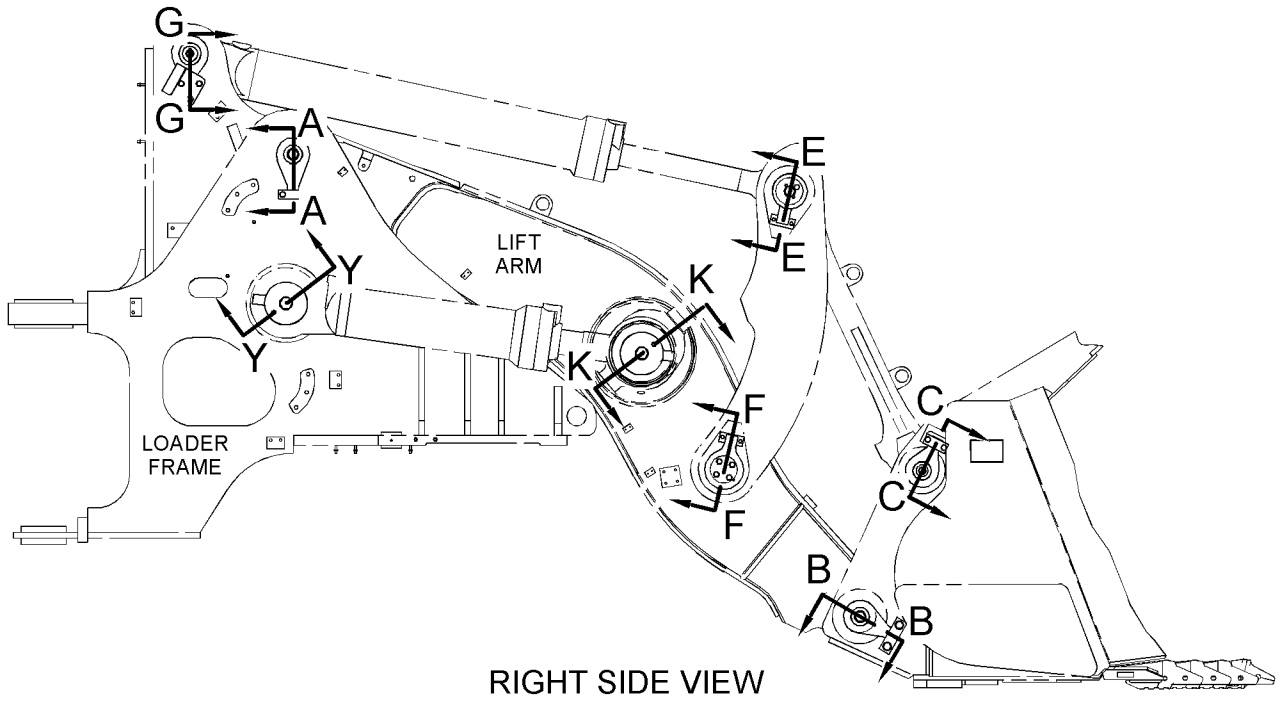


RIGHT SIDE VIEW

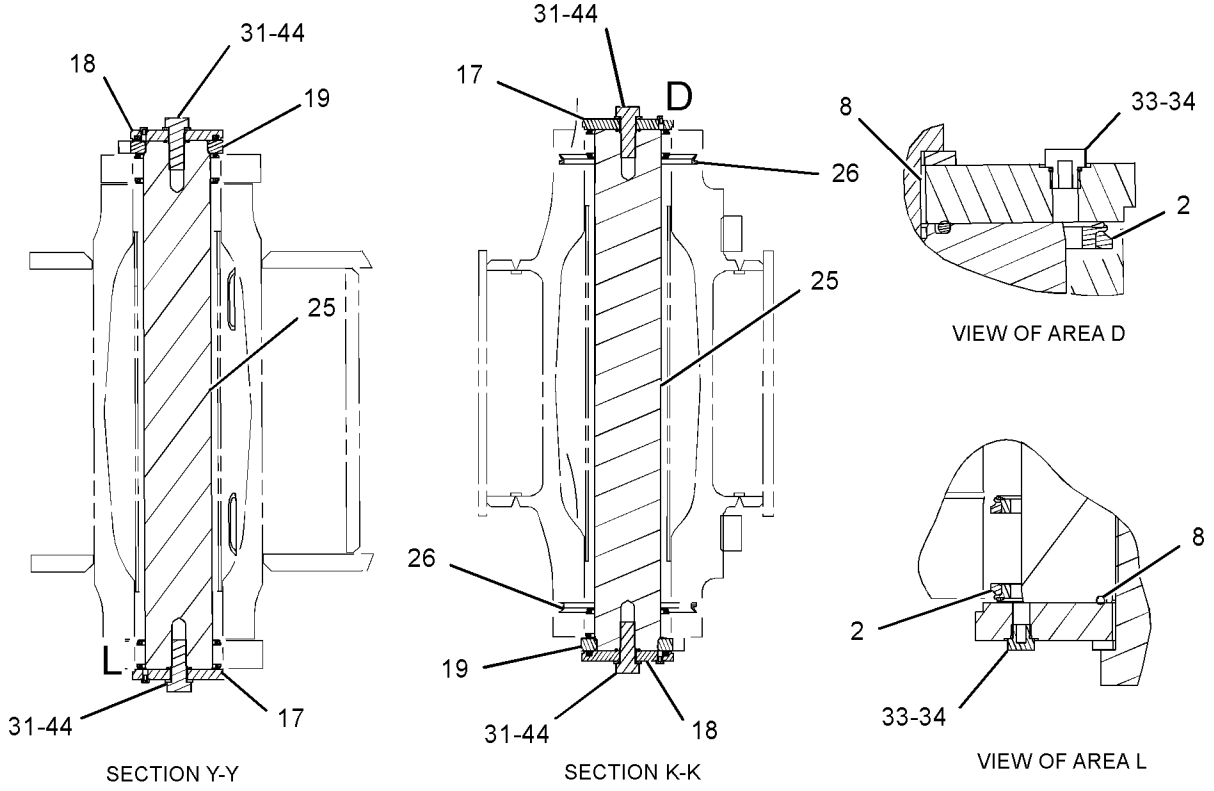


GRAPHIC #1

g01218674

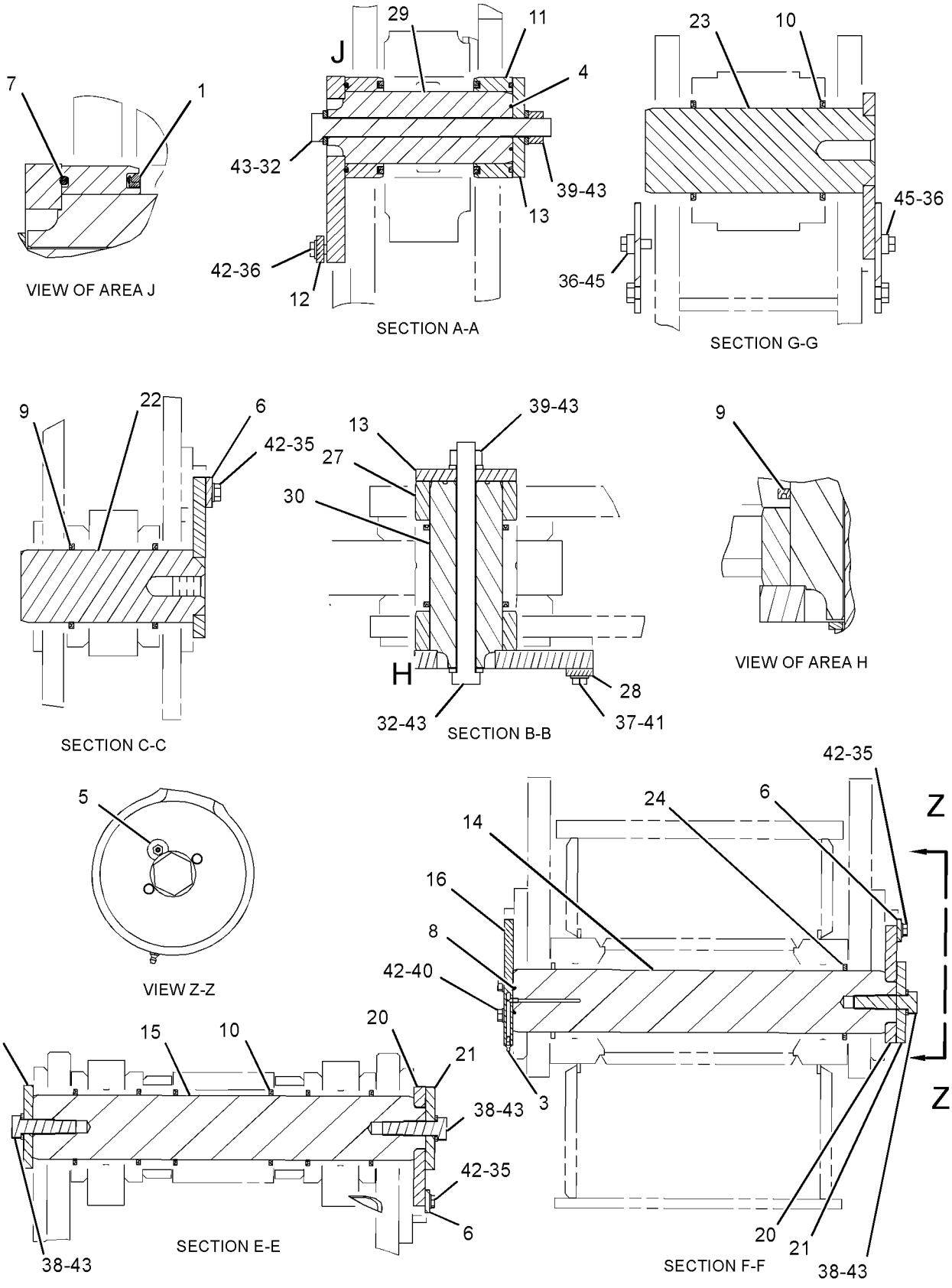


GRAPHIC #2 **<END>** g01218675

# WORK TOOLS

## *9W-1377* ADAPTER GP-TIP

**S/N: BXY1-UP**
**AN ATTACHMENT**

**SMCS-6803** **i00177625**

| NOTE | PART NUMBER | QTY | PART NAME 1 2 3 4 5 6 (PRODUCT LEVEL) | SEE PAGE |
|---|---|---|---|---|
| | **8E-2467** | 6 | ADAPTER-STRAP | |
| | **8E-2469** | 1 | ADAPTER-STRAP-LH | |
| | **8E-2468** | 1 | ADAPTER-STRAP-RH | |
| | **5P-8361** | 12 | BOLT-PLOW | |
| | **6V-8360** | 2 | BOLT-PLOW (1-1/4-7X115MM) | |
| | **5P-8362** | 14 | NUT | |

**<END>**

## *174-4117* ADAPTER GP-TIP

**S/N: BXY1-UP**
**J460 GET**
**FOR USE WITH 171-4056 BUCKET AS**
**AN ATTACHMENT**

**SMCS-6803** **i02348744**

| NOTE | PART NUMBER | QTY | PART NAME 1 2 3 4 5 6 (PRODUCT LEVEL) | SEE PAGE |
|---|---|---|---|---|
| | *6I-8298* | 1 | ADAPTER-TIP (LH) | |
| | *6I-8299* | 1 | ADAPTER-TIP (RH) | |
| | **183-4605** | 6 | ADAPTER-TIP (CENTER) | |
| | **5P-8361** | 14 | BOLT-PLOW (1-1/4-7X4.92-IN) | |
| | **6V-6535** | 2 | BOLT-PLOW (1-1/4X3.75-IN) | |
| | **5P-8362** | 12 | NUT (1-1/4-7-THD) | |
| | **3K-9770** | 4 | NUT-FULL (1-1/4-7-THD) | |

**<END>**

# WORK TOOLS

## *232-0167* ADAPTER GP-TIP

**S/N: BXY1-UP**
**K-110**
**AN ATTACHMENT**

**SMCS-6803** **i02675667**

| NOTE | REF NO | GRAPHIC REF | PART NUMBER | QTY | PART NAME 1 2 3 4 5 6 (PRODUCT LEVEL) | SEE PAGE |
|---|---|---|---|---|---|---|
| | 1 | 1 | **5P-8362** | 12 | NUT (1-1/4-7-THD) | |
| | 2 | 1 | **223-8118** | 1 | ADAPTER-TIP (RH) | |
| | 3 | 1 | **223-8119** | 1 | ADAPTER-TIP (LH) | |
| | 4 | 1 | **232-2110** | 6 | ADAPTER-TIP (CENTER) | |
| | 5 | 1 | **198-1092** | 14 | BOLT-PLOW (1-1/4-7X4.5-IN) | |
| | 6 | 1 | **3K-9770** | 4 | NUT-FULL (1-1/4-7-THD) | |
| | 7 | 1 | **5P-8823** | 2 | BOLT-PLOW (1-1/4-7X4.13-IN) | |

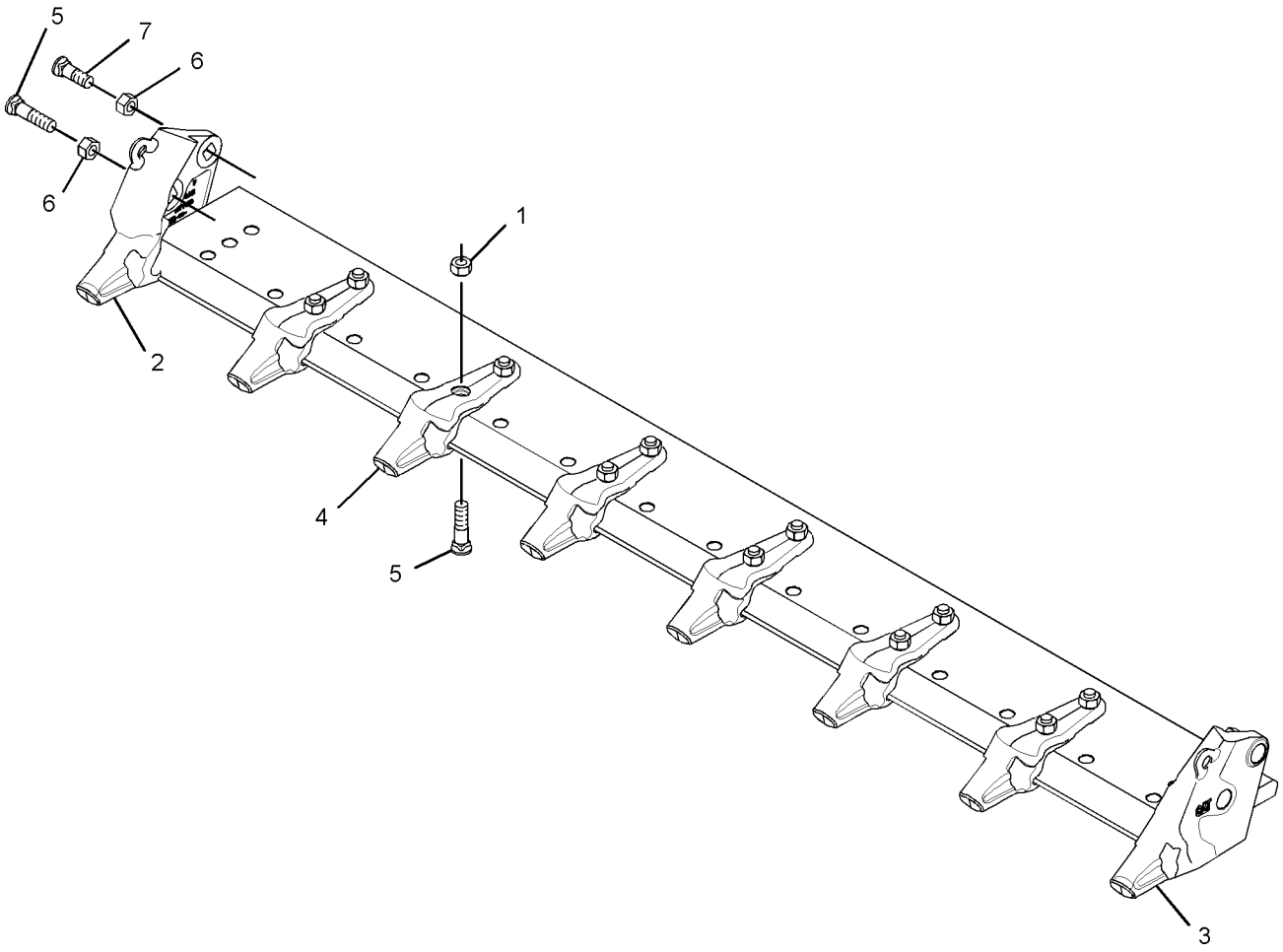


GRAPHIC #1 **<END>** g01354439

# WORK TOOLS

## 223-8114 ADAPTER-TIP–2-STRAP, CENTER

**S/N: BXY1-UP**
**K-110**
**AN ATTACHMENT**

**SMCS-6803** **i01966981**

| NOTE | REF NO | GRAPHIC REF | PART NUMBER | QTY | PART NAME 1 2 3 4 5 6 (PRODUCT LEVEL) | SEE PAGE |
|---|---|---|---|---|---|---|
| | | | | | (NO SERVICED PARTS) | |

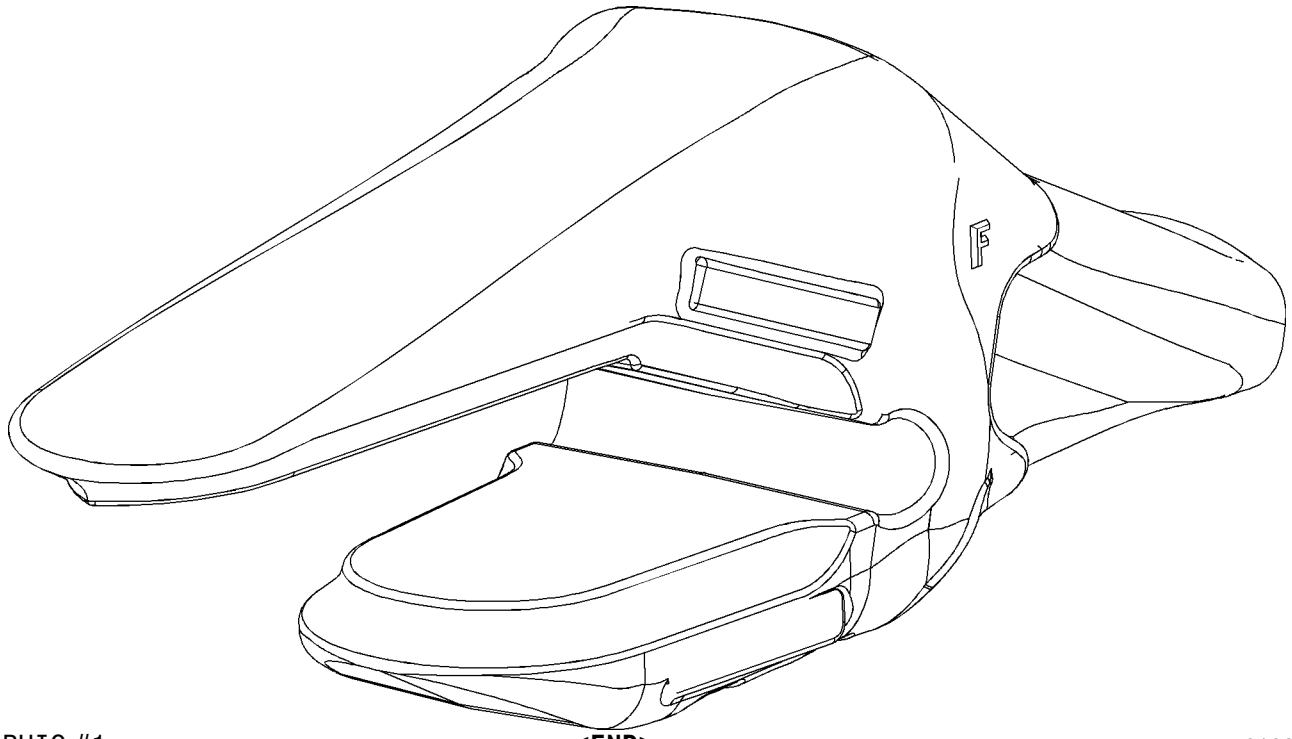


GRAPHIC #1

**<END>**

g01024877

# WORK TOOLS

## 223-8115 ADAPTER-TIP–2-STRAP, RH

**S/N: BXY1-UP**

**K-110**

**AN ATTACHMENT**

**SMCS-6803** **i01966982**

| NOTE | REF NO | GRAPHIC REF | PART NUMBER | QTY | PART NAME 1 2 3 4 5 6 (PRODUCT LEVEL) | SEE PAGE |
|---|---|---|---|---|---|---|
| | | | | | (NO SERVICED PARTS) | |

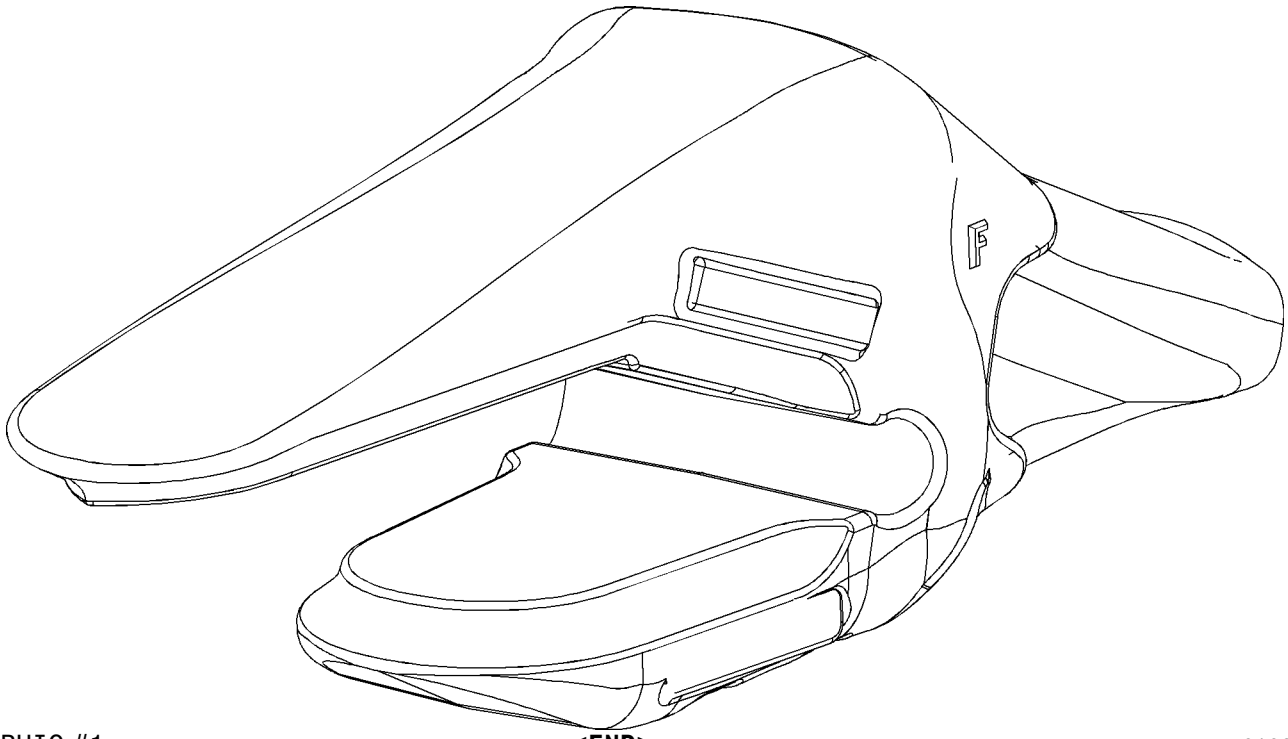


GRAPHIC #1 **<END>** g01024885

# WORK TOOLS

## 223-8116 ADAPTER-TIP–2-STRAP, LH

**S/N: BXY1-UP**
**K-110**
**AN ATTACHMENT**

**SMCS-6803** **i01966984**

| NOTE | REF NO | GRAPHIC REF | PART NUMBER | QTY | PART NAME 1 2 3 4 5 6 (PRODUCT LEVEL) | SEE PAGE |
|---|---|---|---|---|---|---|
| | | | | | (NO SERVICED PARTS) | |

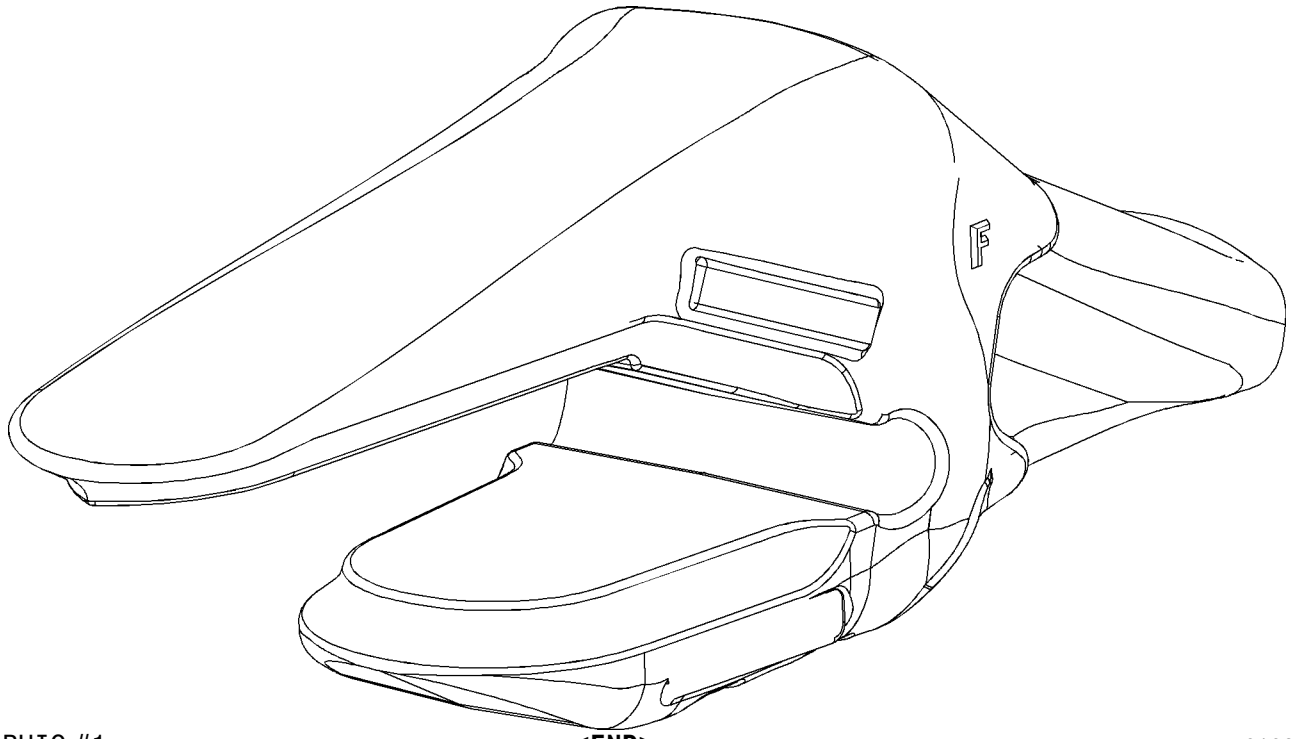


GRAPHIC #1

**<END>**

g01024883

# WORK TOOLS

## 229-7114 ADAPTER-TIP—FLUSH MOUNT

**S/N: BXY1-UP**
**K-110**
**AN ATTACHMENT**

**SMCS-6803** **i02273171**

| NOTE | REF NO | GRAPHIC REF | PART NUMBER | QTY | PART NAME 1 2 3 4 5 6 (PRODUCT LEVEL) | SEE PAGE |
|---|---|---|---|---|---|---|
| | | | | | (NO SERVICED PARTS) | |

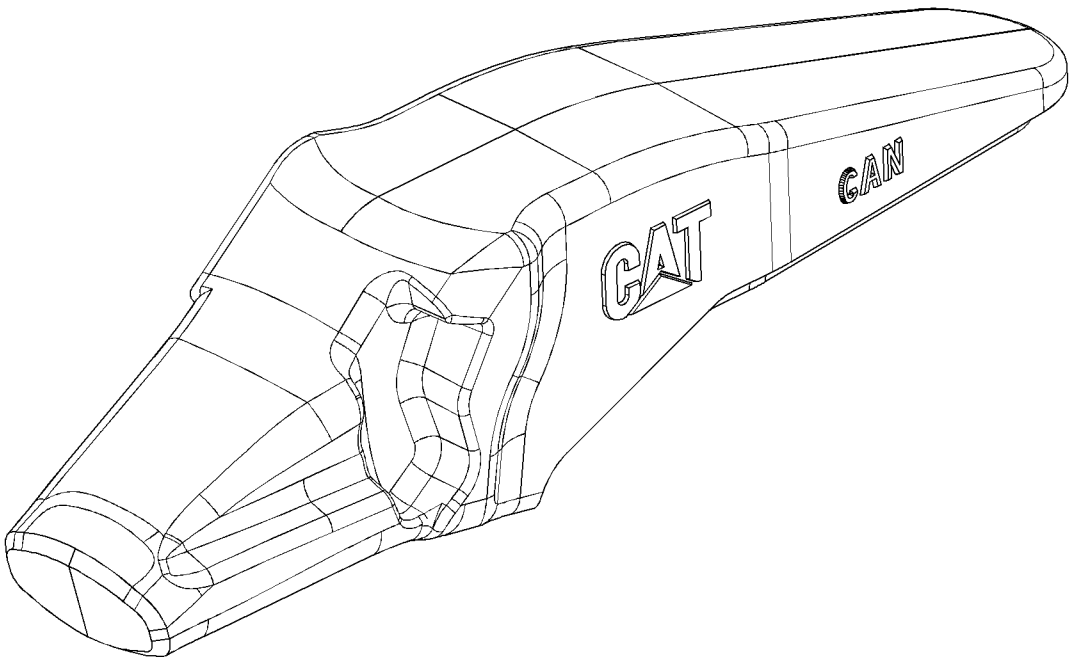


GRAPHIC #1 **<END>** g01139393

# WORK TOOLS

## 229-7134 ADAPTER-TIP—FLUSH MOUNT

**S/N: BXY1-UP**
**K-130**
**AN ATTACHMENT**

**SMCS-6803** **i02030307**

| NOTE | REF NO | GRAPHIC REF | PART NUMBER | QTY | PART NAME 1 2 3 4 5 6 (PRODUCT LEVEL) | SEE PAGE |
|---|---|---|---|---|---|---|
| | | | | | (NO SERVICED PARTS) | |

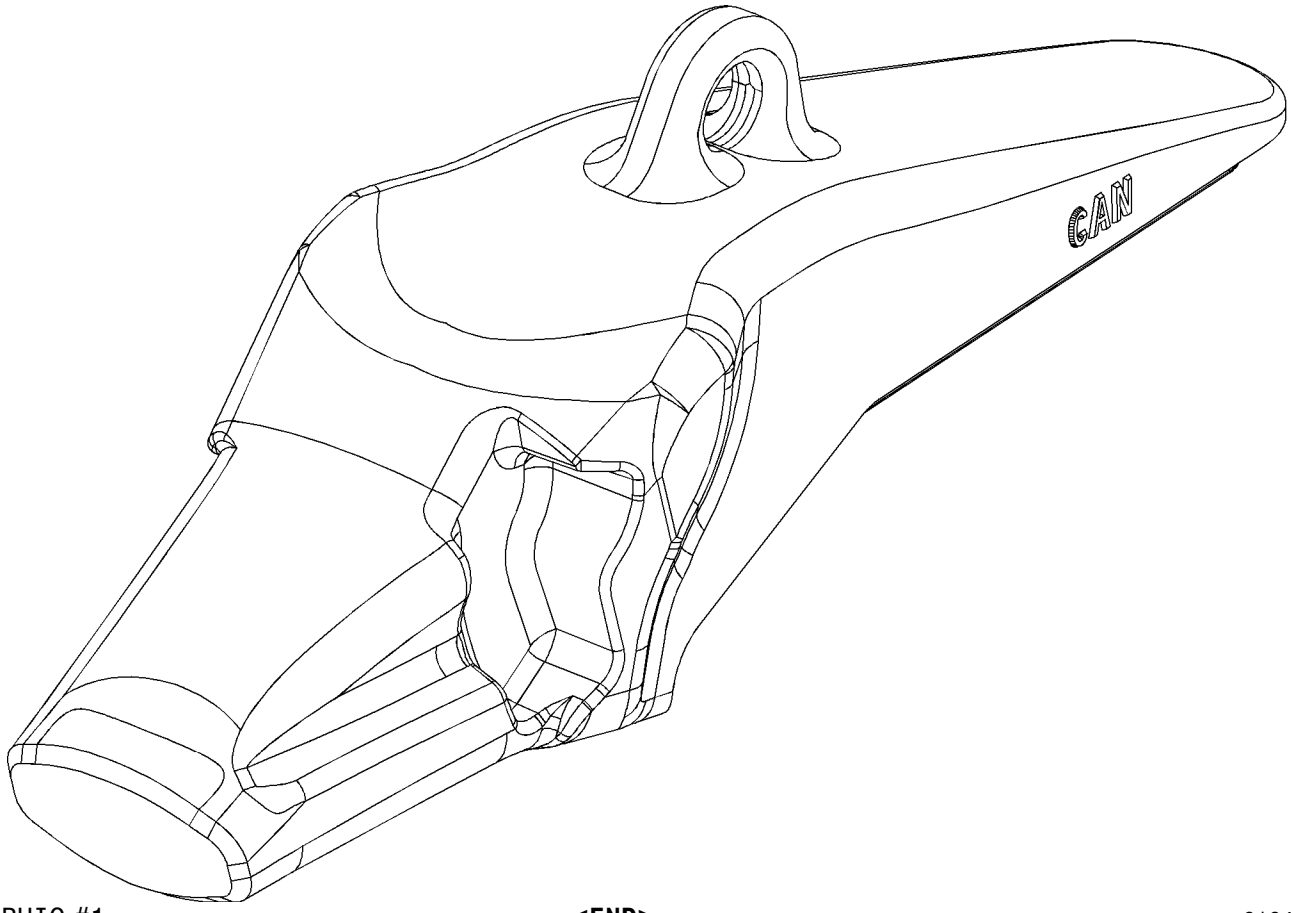


GRAPHIC #1 **<END>** g01047130

# WORK TOOLS

## 232-0134 ADAPTER-TIP–2-STRAP, CENTER

**S/N: BXY1-UP**

**K-130**

**FIELD INSTALLATION**

**SMCS-6803** **i02110879**

| NOTE | REF NO | GRAPHIC REF | PART NUMBER | QTY | PART NAME 1 2 3 4 5 6 (PRODUCT LEVEL) | SEE PAGE |
|---|---|---|---|---|---|---|
| | | | | | (NO SERVICED PARTS) | |

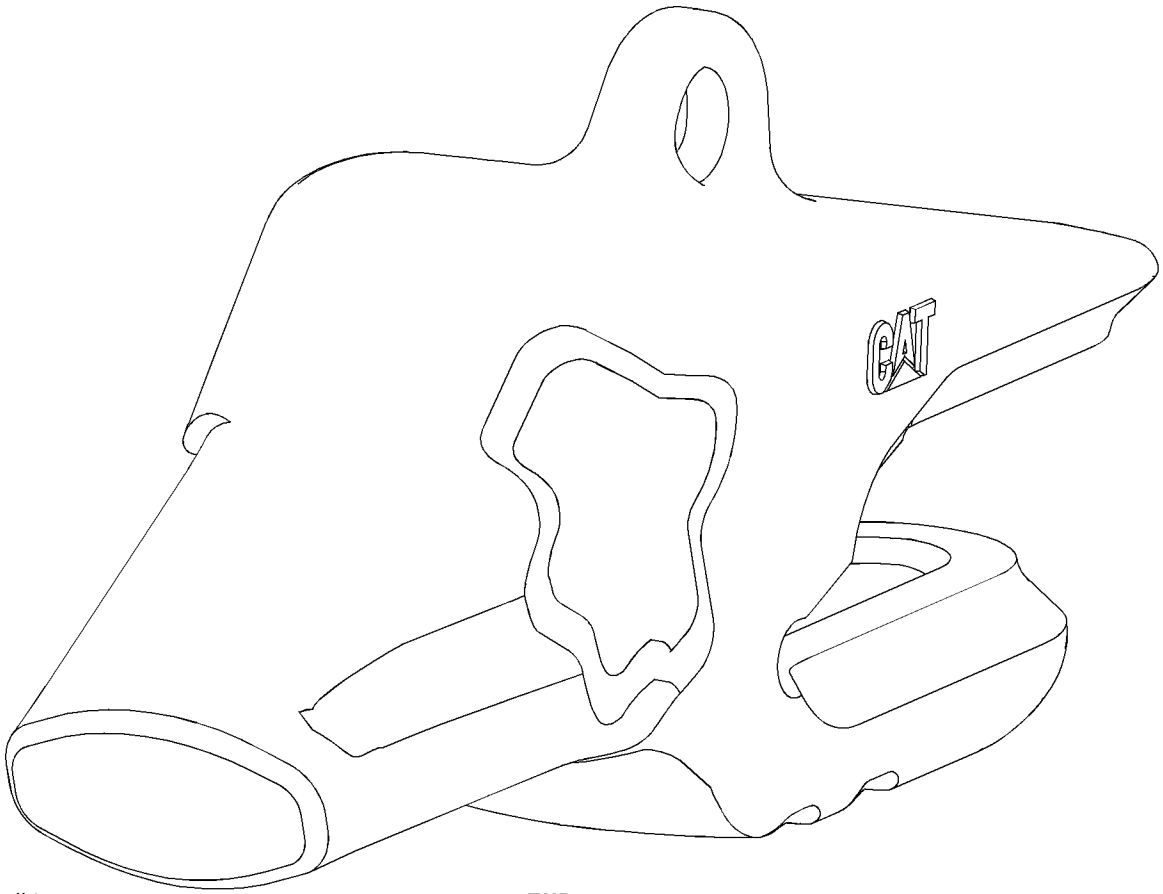


GRAPHIC #1 **<END>** g01087762

# WORK TOOLS

## 232-0135 ADAPTER-TIP–2-STRAP, RH

**S/N: BXY1-UP**
**K-130**
**FIELD INSTALLATION**

**SMCS-6803** **i02110877**

| NOTE | REF NO | GRAPHIC REF | PART NUMBER | QTY | PART NAME 1 2 3 4 5 6 (PRODUCT LEVEL) | SEE PAGE |
|---|---|---|---|---|---|---|
| | | | | | (NO SERVICED PARTS) | |

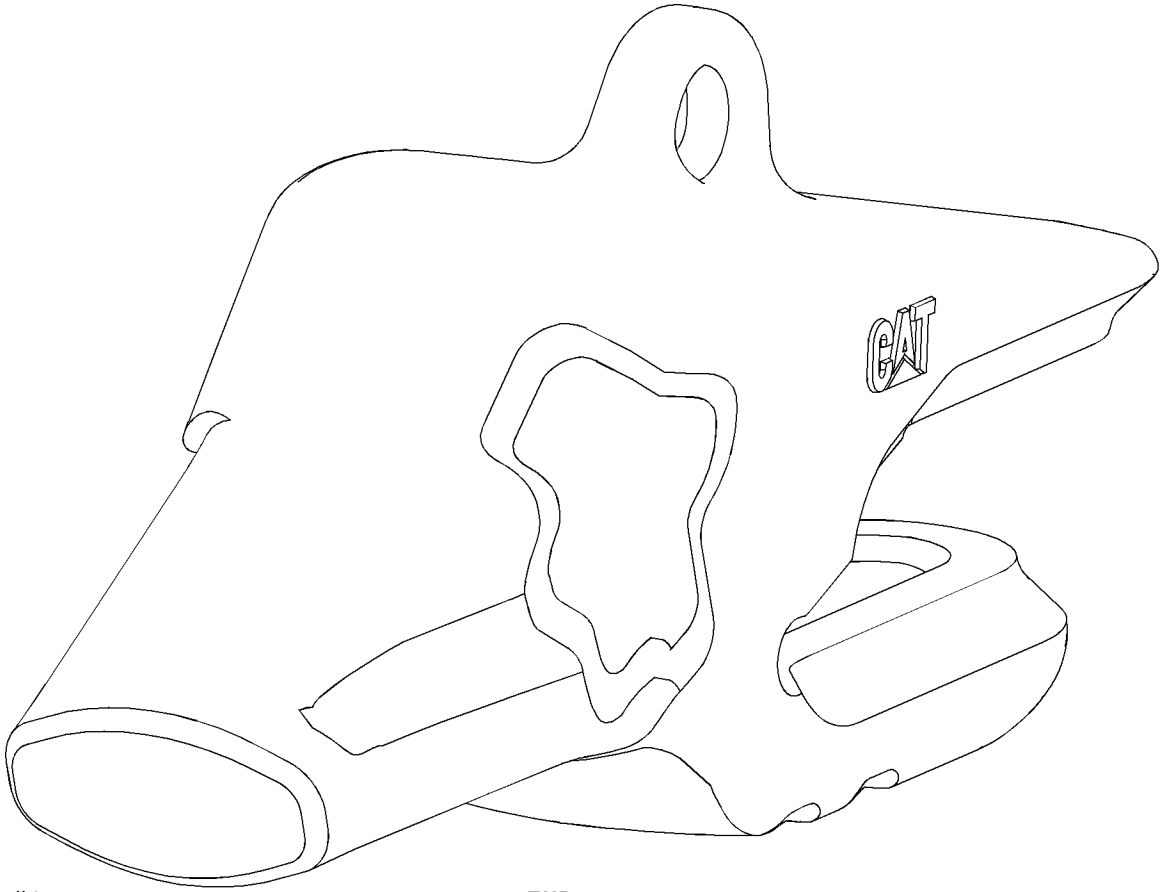


GRAPHIC #1 **<END>** g01087762

# WORK TOOLS

## 232-0136 ADAPTER-TIP–2-STRAP, LH

**S/N: BXY1-UP**

**K-130**

**FIELD INSTALLATION**

**SMCS-6803** **i02110864**

| NOTE | REF NO | GRAPHIC REF | PART NUMBER | QTY | PART NAME 1 2 3 4 5 6 (PRODUCT LEVEL) | SEE PAGE |
|---|---|---|---|---|---|---|
| | | | | | (NO SERVICED PARTS) | |

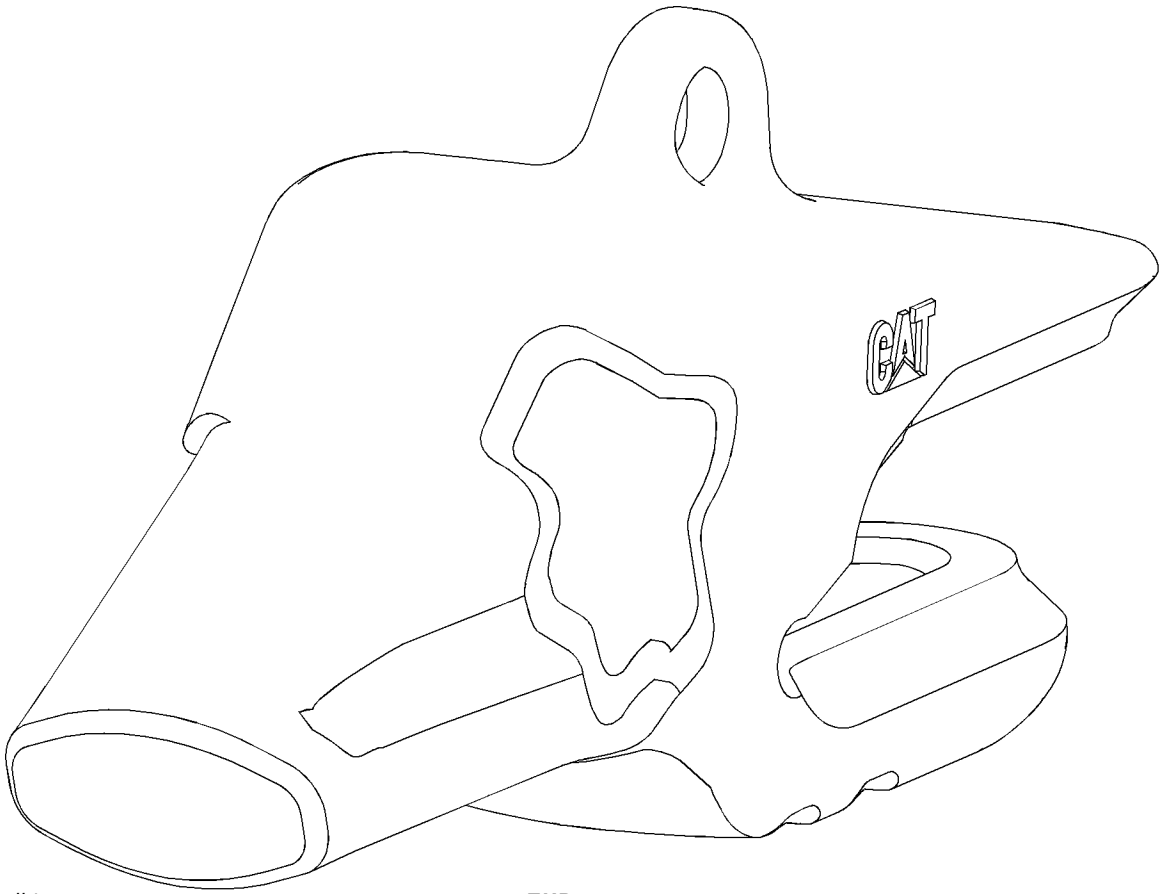

GRAPHIC #1

**<END>**

g01087762

# WORK TOOLS

## *232-0154* ADAPTER-TIP–2-STRAP, CENTER

**S/N: BXY1-UP**
**K-150**
**AN ATTACHMENT**

**SMCS-6803** **i02349357**

| NOTE | REF NO | GRAPHIC REF | PART NUMBER | QTY | PART NAME 1 2 3 4 5 6 (PRODUCT LEVEL) | SEE PAGE |
|---|---|---|---|---|---|---|
| | | | | | (NO SERVICED PARTS) | |

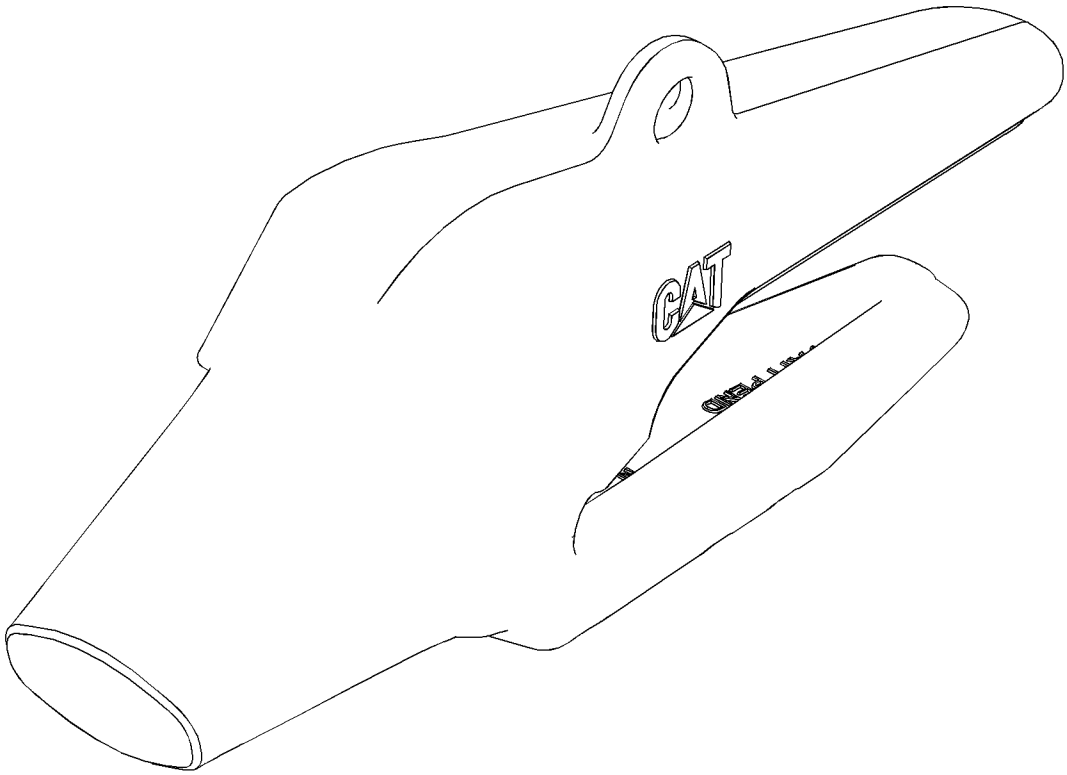


GRAPHIC #1 **<END>** g01174280

# WORK TOOLS

## *232-0155* ADAPTER-TIP–2-STRAP, RH

**S/N: BXY1-UP**
**K-150**
**AN ATTACHMENT**

**SMCS-6803** **i02349366**

| NOTE | REF NO | GRAPHIC REF | PART NUMBER | QTY | PART NAME 1 2 3 4 5 6 (PRODUCT LEVEL) | SEE PAGE |
|---|---|---|---|---|---|---|
| | | | | | (NO SERVICED PARTS) | |

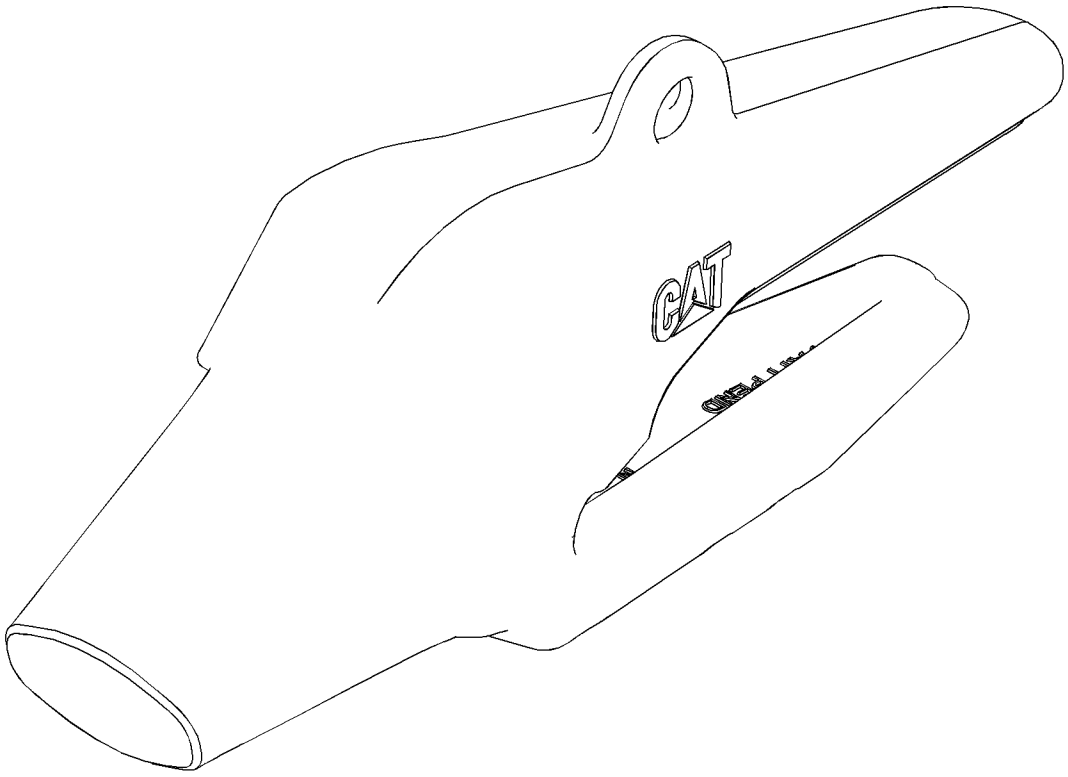


GRAPHIC #1 **<END>** g01174280

# WORK TOOLS

## *232-0156* ADAPTER-TIP–2-STRAP, LH

**S/N: BXY1-UP**
**K-150**
**AN ATTACHMENT**

**SMCS-6803** **i02349368**

| NOTE | REF NO | GRAPHIC REF | PART NUMBER | QTY | PART NAME 1 2 3 4 5 6 (PRODUCT LEVEL) | SEE PAGE |
|---|---|---|---|---|---|---|
| | | | | | (NO SERVICED PARTS) | |

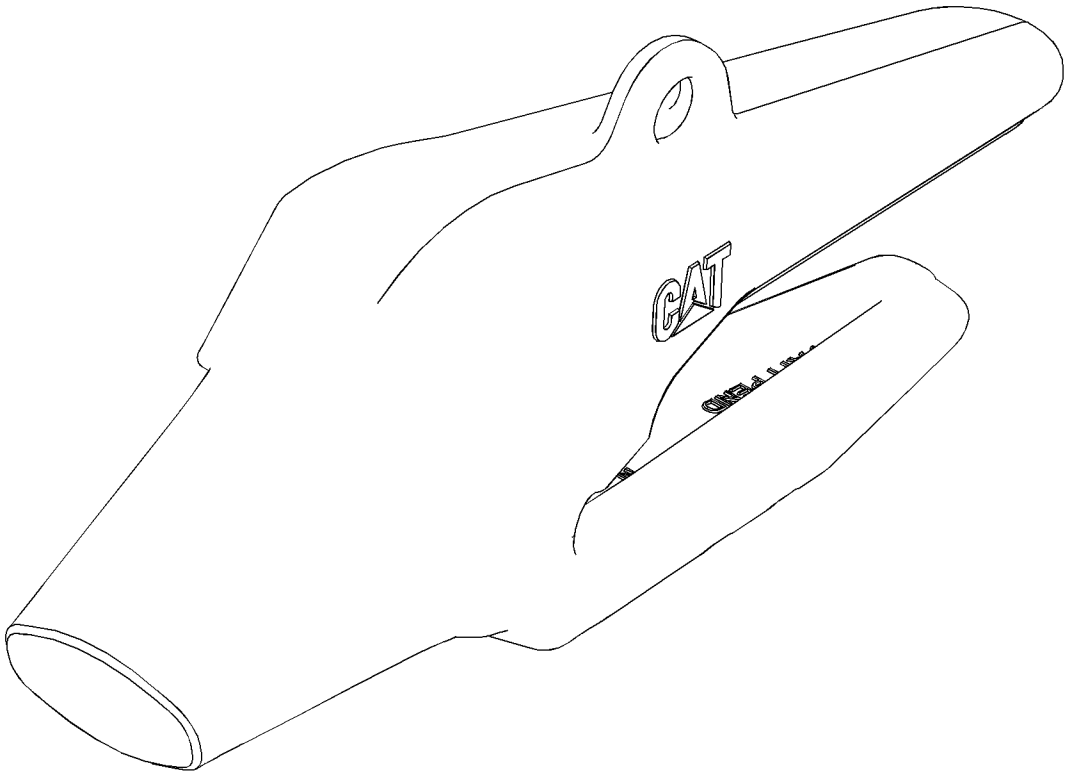


GRAPHIC #1 **<END>** g01174280

# WORK TOOLS

## 232-2117 ADAPTER-TIP—FLUSH MOUNT

**S/N: BXY1-UP**

**K-110**

**AN ATTACHMENT**

**SMCS-6803** **i02357695**

| NOTE | REF NO | GRAPHIC REF | PART NUMBER | QTY | PART NAME 1 2 3 4 5 6 (PRODUCT LEVEL) | SEE PAGE |
|---|---|---|---|---|---|---|
| | | | | | (NO SERVICED PARTS) | |

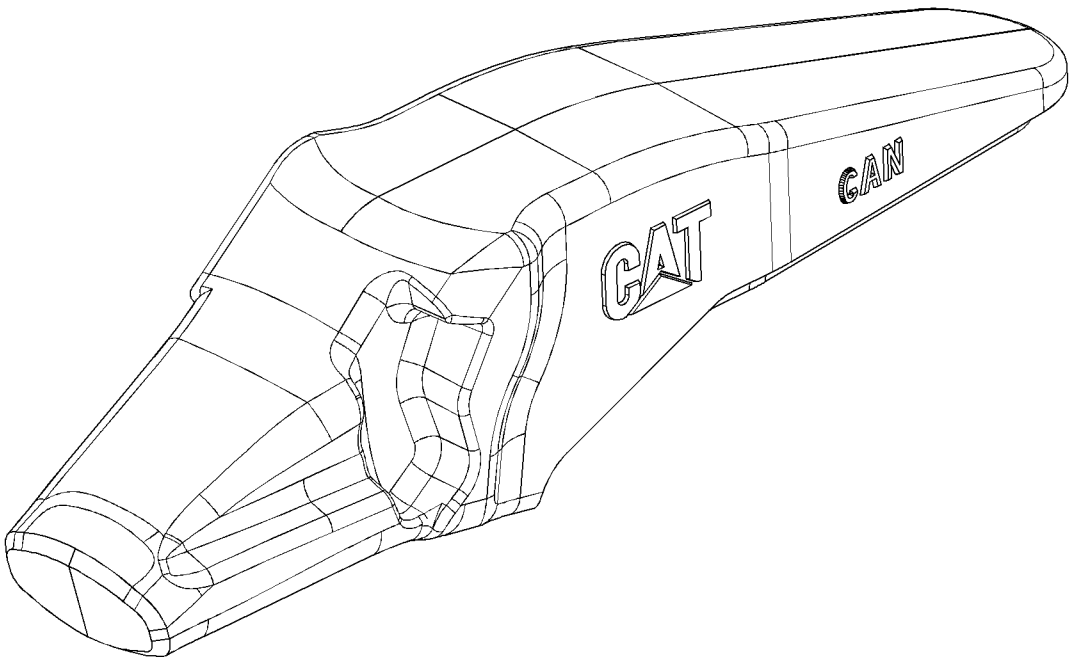


GRAPHIC #1 **<END>** g01139393

# WORK TOOLS

## 232-2154 ADAPTER-TIP–FLUSH MOUNT

**S/N: BXY1-UP**
**K-150**
**AN ATTACHMENT**

**SMCS-6803** **i02030448**

| NOTE | REF NO | GRAPHIC REF | PART NUMBER | QTY | PART NAME 1 2 3 4 5 6 (PRODUCT LEVEL) | SEE PAGE |
|---|---|---|---|---|---|---|
| | | | | | (NO SERVICED PARTS) | |

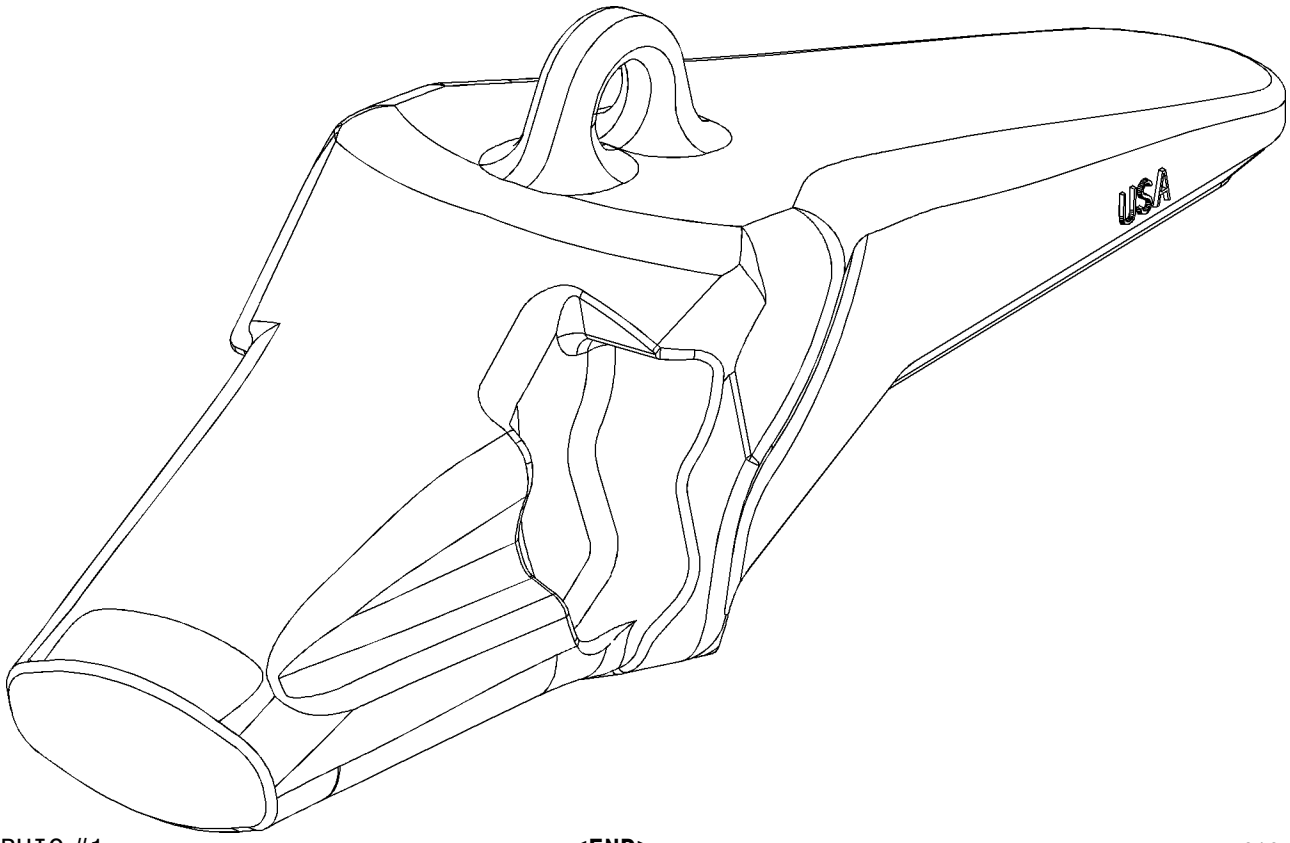


GRAPHIC #1 **<END>** g01047129

# WORK TOOLS

## 233-7154 ADAPTER-TIP–2-STRAP, CENTER

**S/N: BXY1-UP**

**K-150**

**FIELD INSTALLATION**

**SMCS-6803** **i02294167**

| NOTE | REF NO | GRAPHIC REF | PART NUMBER | QTY | PART NAME 1 2 3 4 5 6 (PRODUCT LEVEL) | SEE PAGE |
|---|---|---|---|---|---|---|
| | | | | | (NO SERVICED PARTS) | |

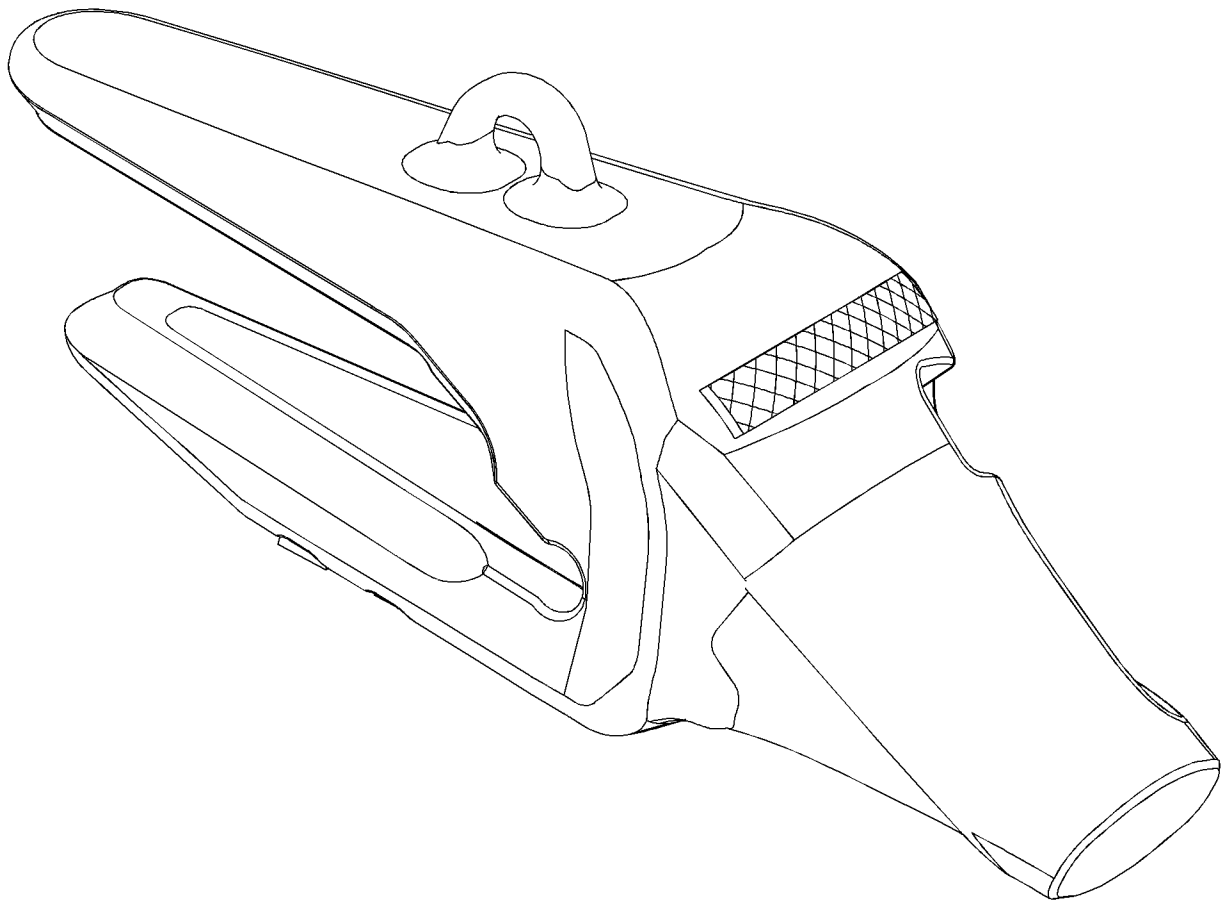

GRAPHIC #1 **<END>** g01167240

# 233-7155 ADAPTER-TIP–2-STRAP, RH

**S/N: BXY1-UP**
**K-150**
**FIELD INSTALLATION**

**SMCS-6803** **i02294168**

| NOTE | REF NO | GRAPHIC REF | PART NUMBER | QTY | PART NAME 1 2 3 4 5 6 (PRODUCT LEVEL) | SEE PAGE |
|---|---|---|---|---|---|---|
| | | | | | (NO SERVICED PARTS) | |

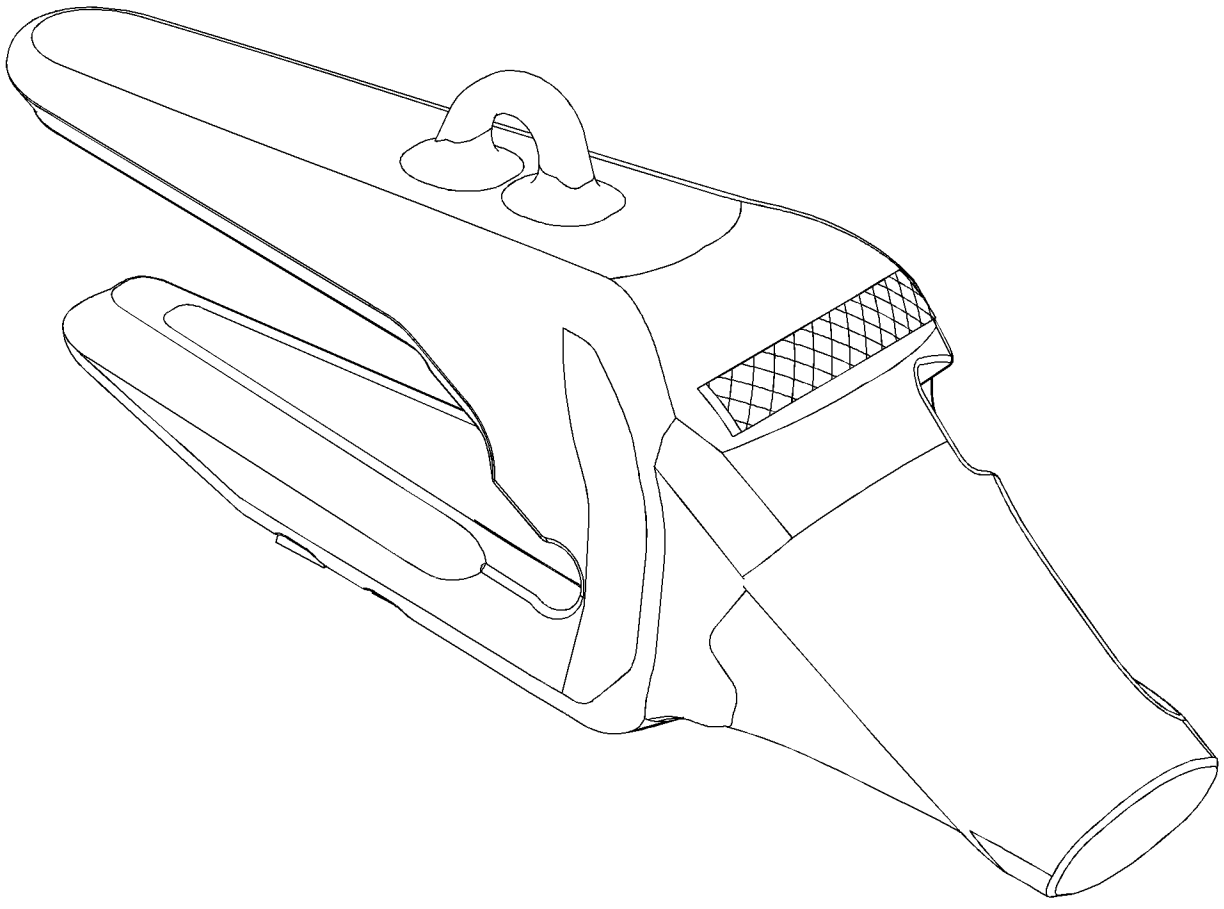

GRAPHIC #1

**<END>**

g01167240

# WORK TOOLS

## 233-7156 ADAPTER-TIP–2-STRAP, LH

**S/N: BXY1-UP**

**K-150**

**FIELD INSTALLATION**

**SMCS-6803** **i02294641**

| NOTE | REF NO | GRAPHIC REF | PART NUMBER | QTY | PART NAME 1 2 3 4 5 6 (PRODUCT LEVEL) | SEE PAGE |
|---|---|---|---|---|---|---|
| | | | | | (NO SERVICED PARTS) | |

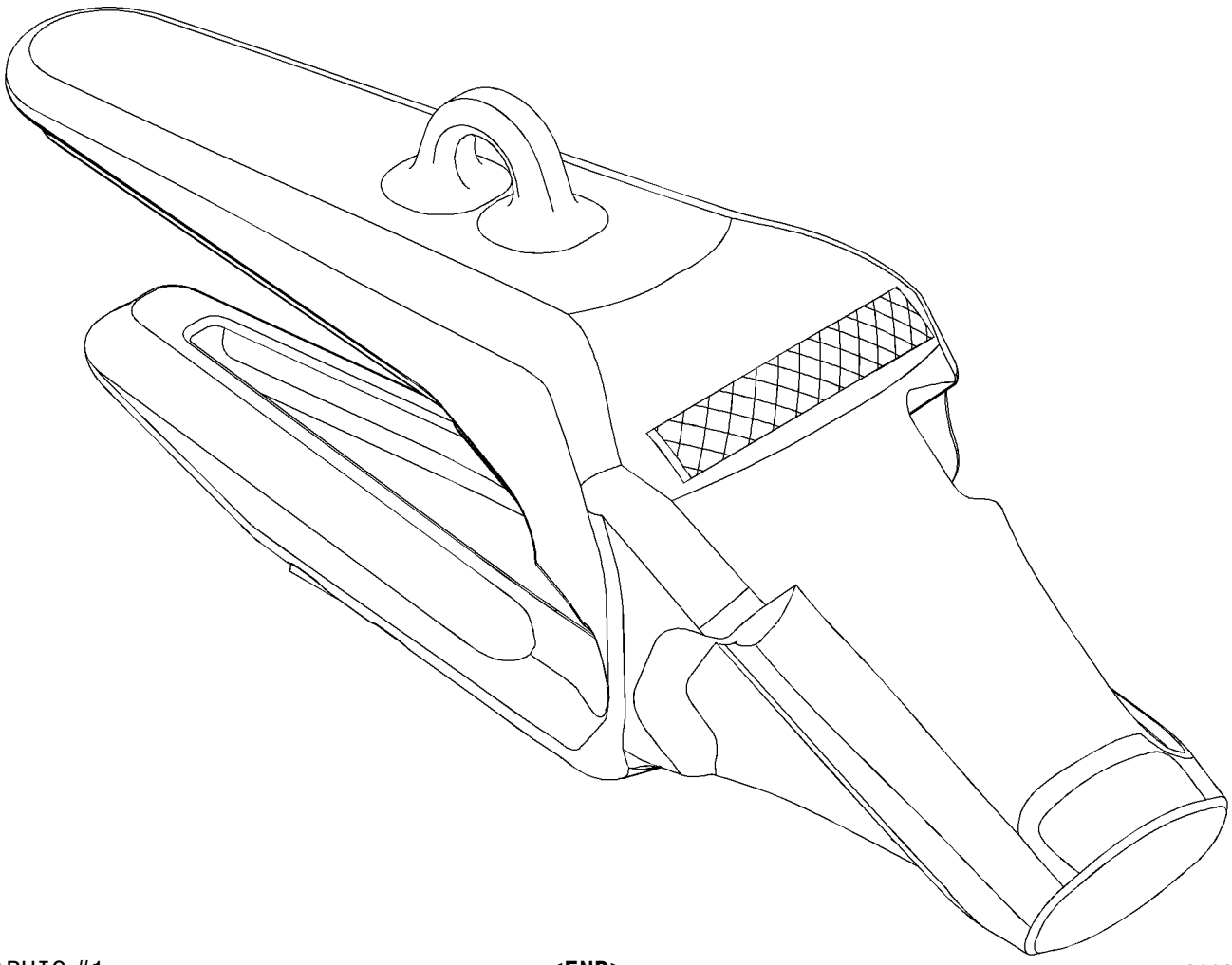

GRAPHIC #1 **<END>** g01166898

# WORK TOOLS

## *210-1236* BUCKET AS-COAL

**S/N: BXY1-UP**
**6.5-CU M (8.5-CU YDS)**
**PART OF 210-1235 BUCKET GP-COAL**
**AN ATTACHMENT**

**SMCS-6132** **i02540908**

| NOTE | REF NO | GRAPHIC REF | PART NUMBER | QTY | PART NAME 1 2 3 4 5 6 (PRODUCT LEVEL) | SEE PAGE |
|---|---|---|---|---|---|---|
| | 1 | 1 | **2C-9259** | 2 | PLATE-IDENTIFICATION (CAT) | |
| | 2 | 1 | **135-6642** | 1 | PLATE-WEAR (LH) | |
| | 3 | 1 | **136-6195** | 1 | PLATE-WEAR (RH) | |
| | 4 | 1 | **136-6203** | 1 | PLATE-WEAR | |
| | 5 | 1 | **167-1278** | 1 | PLATE-WEAR | |
| | 6 | 1 | **172-4424** | 6 | PLATE | |
| | 7 | 1 | **172-4425** | 2 | PLATE | |
| | 8 | 1 | **172-4426** | 1 | PLATE | |
| | 9 | 1 | **172-4717** | 1 | PLATE | |
| | 10 | 1 | **172-4718** | 1 | PLATE | |
| | 11 | 1 | **175-2794** | 1 | HINGE AS (OUTER, LH) | |
| | 12 | 1 | **175-2795** | 1 | HINGE AS (OUTER, RH) | |
| | 13 | 1 | **180-3039** | 1 | HINGE AS (RH-INNER) | |
| | 14 | 1 | **180-3040** | 1 | HINGE AS (INNER, LH) | |
| | 15 | 1 | **187-2863** | 1 | PLATE | |
| | 16 | 1 | **187-2864** | 1 | PLATE | |
| | 17 | 1 | **204-0721** | 1 | EDGE AS | |
| | 17A | 1 | **8E-0464** | 8 | ADAPTER | |
| | 17B | 1 | **8P-9770** | 1 | PLATE-INFORMATION | |
| | 17C | 1 | **204-0722** | 1 | EDGE | |
| | 18 | 1 | *210-2037* | 1 | PLATE AS (RH) | |
| | 18A | 1 | **193-1760** | 1 | PLATE | |
| | 18B | 1 | **210-2145** | 1 | BAR | |
| | 19 | 1 | *210-2038* | 1 | PLATE AS (LH) | |
| | 19A | 1 | **193-1760** | 1 | PLATE | |
| | 19B | 1 | **210-2145** | 1 | BAR | |

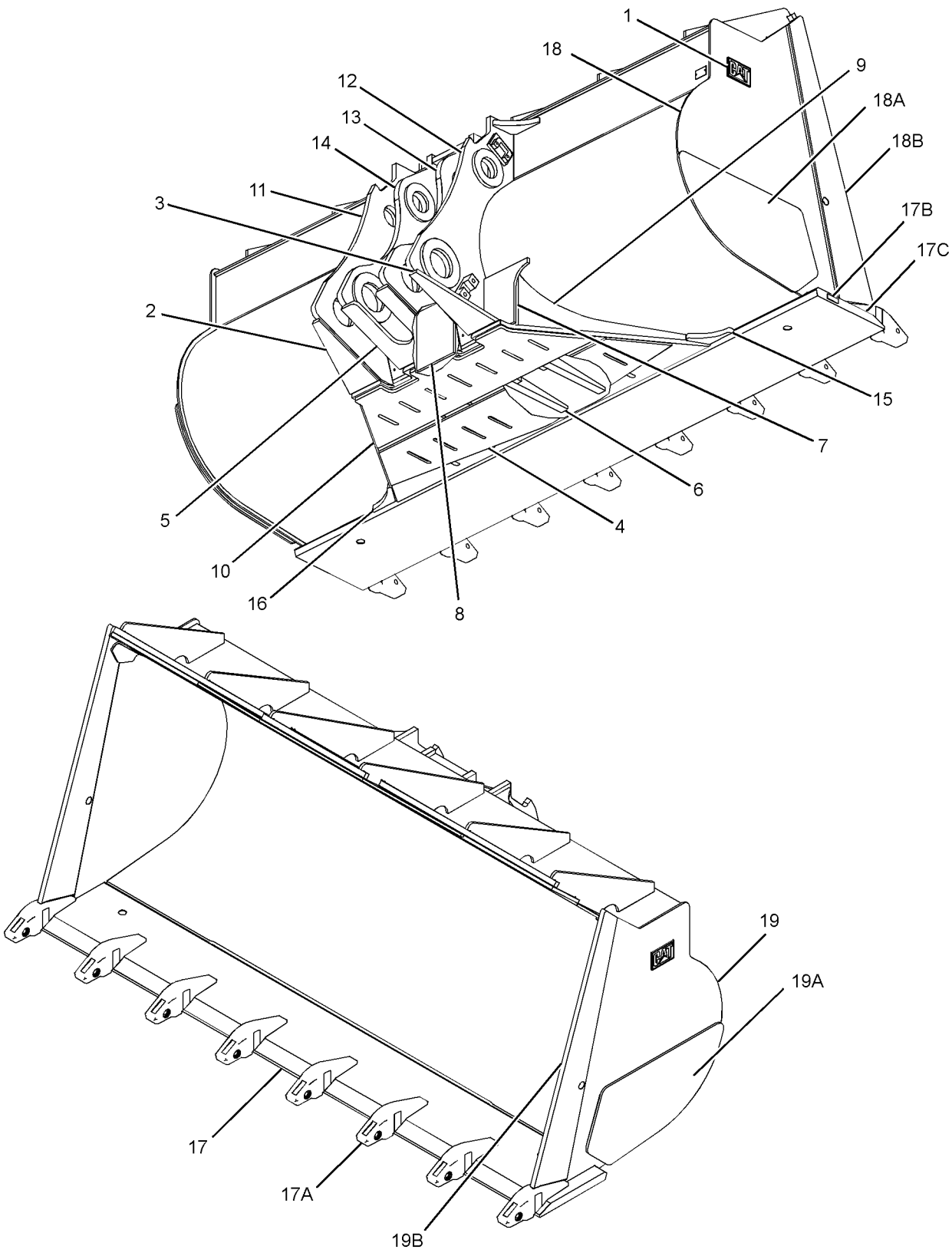


GRAPHIC #1 **<END>** g01284127

# WORK TOOLS

## 246-2753 BUCKET AS-GENERAL PURPOSE

**S/N: BXY1-UP**
**7.0-CU M (9.2 CU YD)**
**AN ATTACHMENT**

**SMCS-6101** **i02330166**

| NOTE | REF NO | GRAPHIC REF | PART NUMBER | QTY | PART NAME 1 2 3 4 5 6 (PRODUCT LEVEL) | SEE PAGE |
|---|---|---|---|---|---|---|
| | 1 | 1 | **255-6692** | 1 | HINGE AS (OUTER, LH) | |
| | 2 | 1 | **255-6695** | 1 | HINGE AS (INNER, LH) | |
| | 3 | 1 | **255-6694** | 1 | HINGE AS (INNER, RH) | |
| | 4 | 1 | **255-6691** | 1 | HINGE AS (OUTER, RH) | |
| | 5 | 1 | **257-3667** | 1 | EDGE-CUTTING | |
| | 6 | 1 | *257-3673* | 1 | PLATE AS (LH) | |
| | | 1 | **2C-9259** | 1 | PLATE-IDENTIFICATION (CAT) | |
| | | 1 | **257-3669** | 1 | PLATE | |
| | | 1 | **257-3671** | 1 | BAR | |
| | 7 | 1 | *257-3672* | 1 | PLATE AS (RH) | |
| | | 1 | **2C-9259** | 1 | PLATE-IDENTIFICATION (CAT) | |
| | | 1 | **257-3669** | 1 | PLATE | |
| | | 1 | **257-3670** | 1 | BAR | |
| | 8 | 1 | **6I-8249** | 1 | CORNER (RH) | |
| | 9 | 1 | **6I-8250** | 1 | CORNER (LH) | |
| | 10 | 1 | *110-7592* | 1 | PLATE GP-CERTIFICATION | |
| | | 1 | **8T-9530** | 4 | TACK-FASTENER | |
| | | 1 | **137-4234** | 1 | PLATE-IDENTIFICATION (WORK TOOL) | |
| | 11 | 1 | **225-9482** | 4 | BAR | |
| | 12 | 1 | **225-9584** | 2 | PLATE | |
| | 13 | 1 | **225-9602** | 2 | PLATE | |
| | 14 | 1 | **228-4727** | 2 | PAD-RUBBER | |
| | 15 | 1 | **255-6711** | 1 | PLATE-WEAR | |
| | 16 | 1 | **255-6712** | 1 | PLATE-WEAR | |
| | 17 | 1 | **257-3651** | 2 | PLATE | |
| | 18 | 1 | **257-3655** | 2 | PLATE-WEAR | |
| | 19 | 1 | **257-3679** | 1 | PLATE-WEAR | |

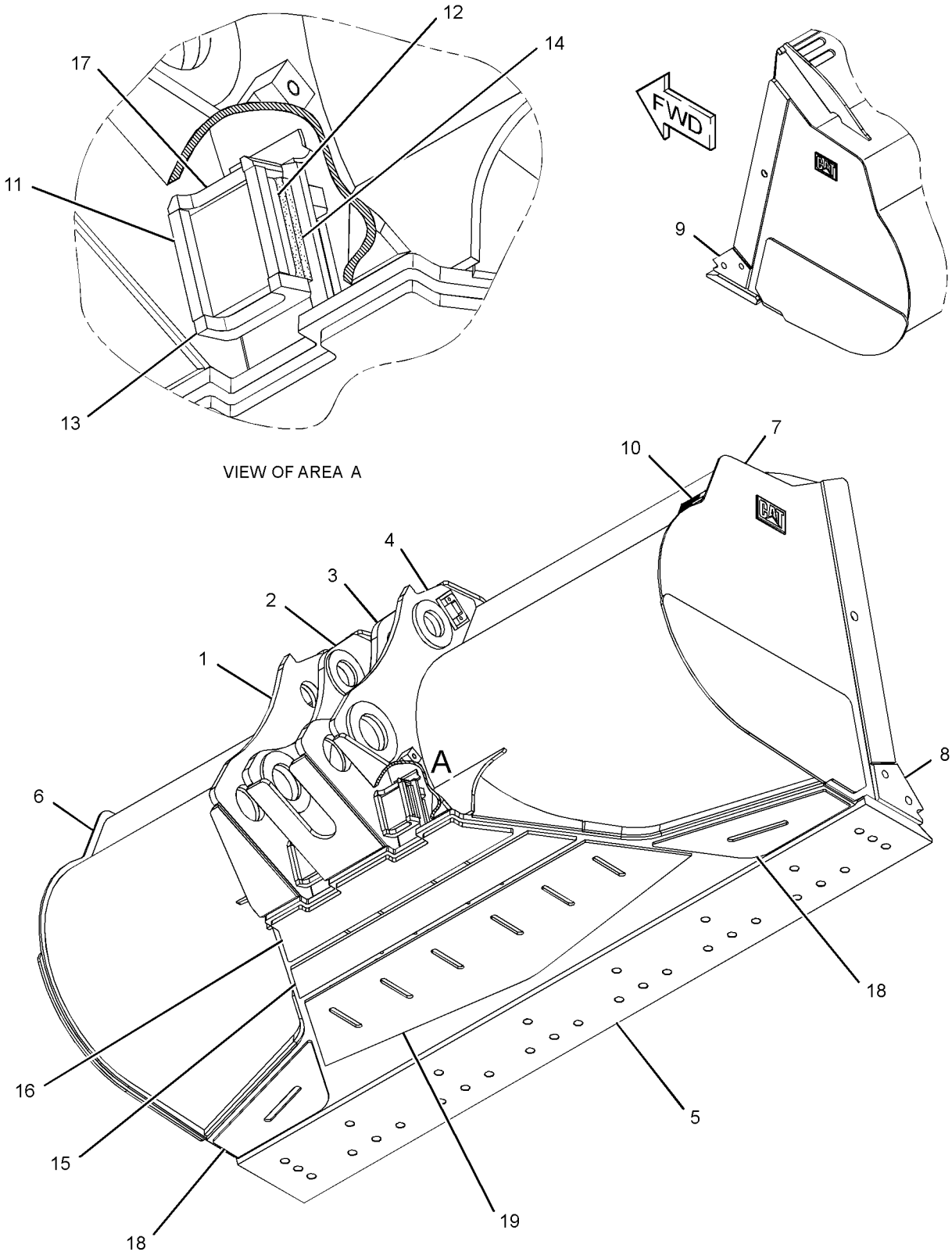


GRAPHIC #1 **<END>** g01178000

# *265-8219* BUCKET AS-GENERAL PURPOSE

**S/N: BXY1-UP**
**7.7 CU M(10 CU YD)**
**PART OF 265-8218 BUCKET GP-GENERAL PURPOSE**
**AN ATTACHMENT**

**SMCS-6101** **i02456188**

| NOTE | REF NO | GRAPHIC REF | PART NUMBER | QTY | PART NAME 1 2 3 4 5 6 (PRODUCT LEVEL) | SEE PAGE |
|---|---|---|---|---|---|---|
| | 1 | 1 | **6I-8249** | 1 | CORNER (RH) | |
| | 2 | 1 | **6I-8250** | 1 | CORNER (LH) | |
| | 3 | 1 | **225-9482** | 4 | BAR | |
| | 4 | 1 | **225-9584** | 2 | PLATE | |
| | 5 | 1 | **225-9602** | 2 | PLATE | |
| | 6 | 1 | **228-4727** | 2 | PAD-RUBBER | |
| | 7 | 1 | **250-8402** | 1 | EDGE-CUTTING | |
| | 8 | 1 | **255-6691** | 1 | HINGE AS (OUTER, RH) | |
| | 9 | 1 | **255-6692** | 1 | HINGE AS (OUTER, LH) | |
| | 10 | 1 | **255-6694** | 1 | HINGE AS (INNER, RH) | |
| | 11 | 1 | **255-6695** | 1 | HINGE AS (INNER, LH) | |
| | 12 | 1 | **255-6711** | 1 | PLATE-WEAR | |
| | 13 | 1 | **255-6712** | 1 | PLATE-WEAR | |
| | 14 | 1 | **257-3651** | 2 | PLATE | |
| | 15 | 1 | **257-3655** | 2 | PLATE-WEAR | |
| | 16 | 1 | **257-3679** | 1 | PLATE-WEAR | |
| | 17 | 1 | **2C-9259** | 2 | PLATE-IDENTIFICATION (CAT) | |
| | 18 | 1 | **265-8220** | 1 | BAR | |
| | 19 | 1 | **265-8223** | 2 | PLATE-WEAR | |
| | 20 | 1 | **265-8221** | 1 | BAR | |

*265-8219* **BUCKET AS-GENERAL PURPOSE** *(contd.)* **i02456188**

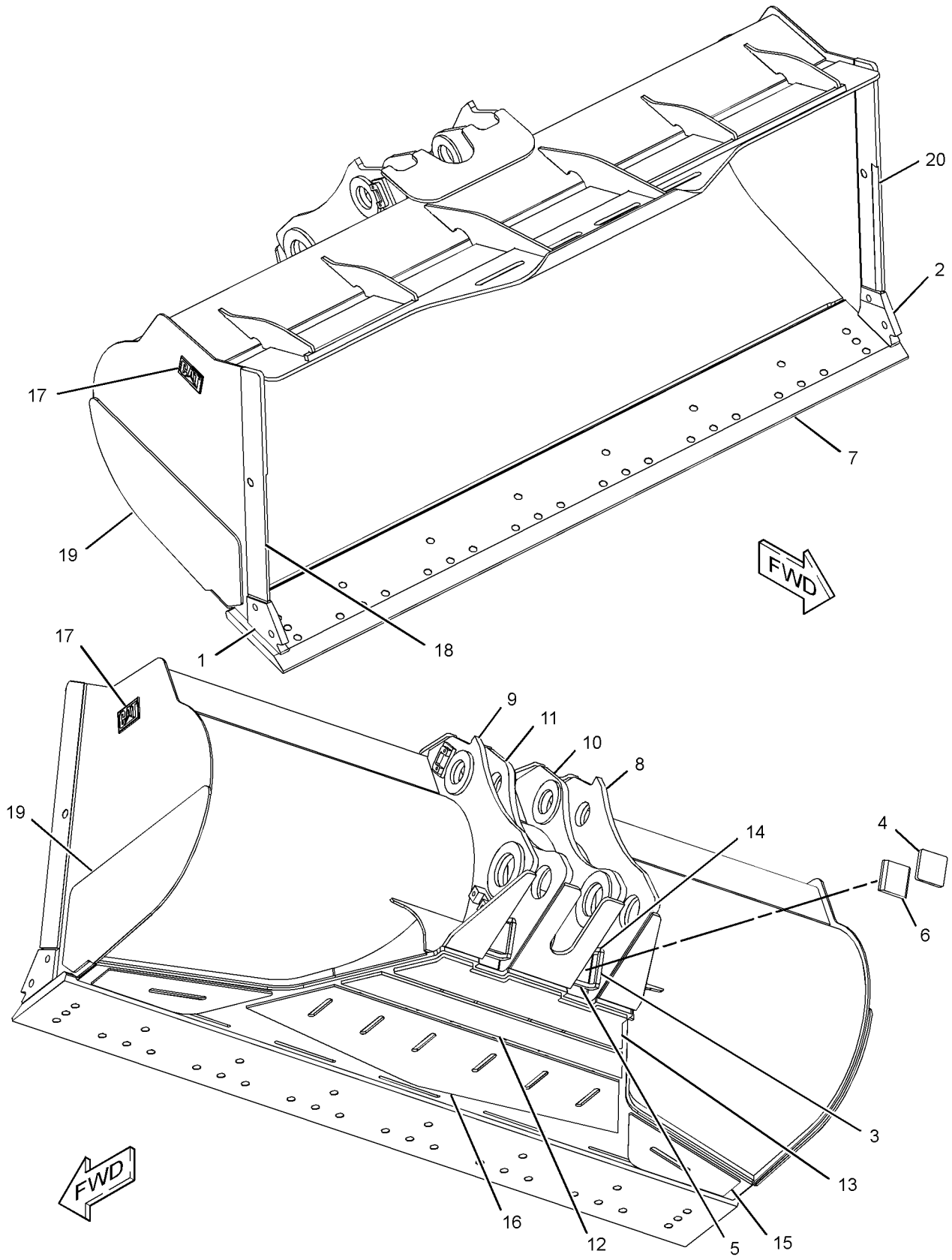


GRAPHIC #1 **<END>** g01229794

# WORK TOOLS

## *236-4696* BUCKET AS-ROCK

**S/N: BXY1-UP**
**6.9 CU M (9.0 CU YD)**
**AN ATTACHMENT**

**SMCS-6102** **i02357089**

| NOTE | REF NO | GRAPHIC REF | PART NUMBER | QTY | PART NAME 1 2 3 4 5 6 (PRODUCT LEVEL) | SEE PAGE |
|---|---|---|---|---|---|---|
| | 1 | 1 | **214-5431** | 1 | HINGE AS (INNER, LH) | |
| | 2 | 1 | **214-5432** | 1 | HINGE AS (INNER, RH) | |
| | 3 | 1 | *214-6364* | 1 | PLATE AS (RH) | |
| | | 1 | **214-6367** | 1 | BAR | |
| | | 1 | **216-3683** | 1 | PLATE | |
| | 4 | 1 | *214-6365* | 1 | PLATE AS (LH) | |
| | | 1 | **214-6367** | 1 | BAR | |
| | | 1 | **216-3683** | 1 | PLATE | |
| | 5 | 1 | **216-3681** | 1 | PLATE-WEAR | |
| | 6 | 1 | **225-9482** | 4 | BAR | |
| | 7 | 1 | **225-9584** | 2 | PLATE | |
| | 8 | 1 | **225-9602** | 4 | PLATE | |
| | 9 | 1 | **228-4727** | 2 | PAD-RUBBER | |
| | 10 | 1 | **229-8429** | 2 | BEARING | |
| | 11 | 1 | **229-8435** | 2 | BEARING | |
| | 12 | 1 | **236-4674** | 1 | PLATE AS-WEAR (RH) | |
| | 13 | 1 | **236-4676** | 1 | PLATE AS-WEAR (CENTER) | |
| | 14 | 1 | **236-4693** | 1 | EDGE AS | |
| | | 1 | **8P-9770** | 1 | PLATE-INFORMATION | |
| | | 1 | **232-2114** | 8 | ADAPTER-TIP (K-110, 2-STRAP, CENTER) | |
| | 15 | 1 | **236-4694** | 1 | HINGE AS (OUTER, RH) | |
| | 16 | 1 | **236-4695** | 1 | HINGE AS (OUTER, LH) | |
| | 17 | 1 | **236-7753** | 2 | PLATE-WEAR | |
| | 18 | 1 | **236-4675** | 1 | PLATE AS-WEAR (LH) | |
| | 19 | 1 | **236-4689** | 1 | PLATE AS-WEAR (RH) | |
| | 20 | 1 | **236-4690** | 1 | PLATE AS-WEAR (LH) | |

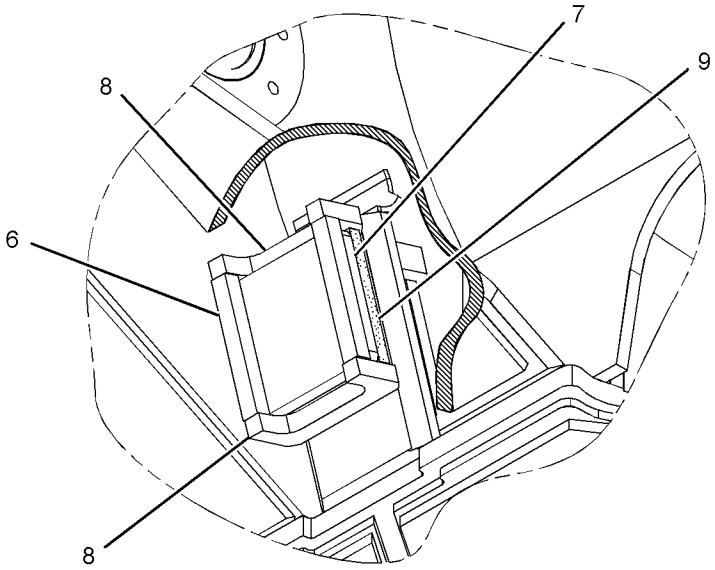


VIEW OF AREA A

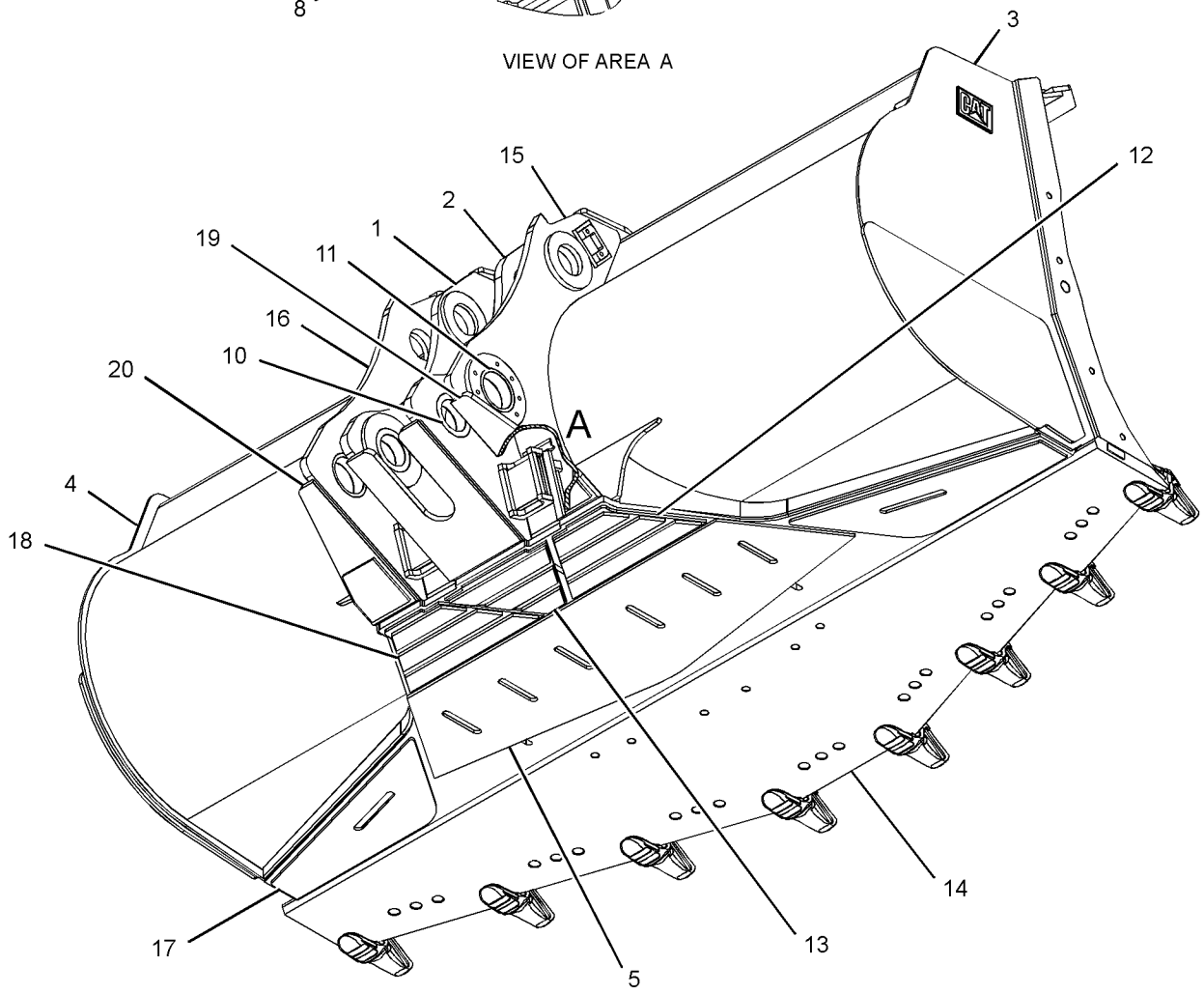


GRAPHIC #1 **<END>** g01177352

# WORK TOOLS

## *246-2755* BUCKET AS-ROCK

**S/N: BXY1-UP**
**6.9-CU M (9.0-CU YD)**
**PART OF 246-2754 BUCKET GP-ROCK**
**AN ATTACHMENT**

**SMCS-6102** **i02334743**

| NOTE | REF NO | GRAPHIC REF | PART NUMBER | QTY | PART NAME 1 2 3 4 5 6 (PRODUCT LEVEL) | SEE PAGE |
|---|---|---|---|---|---|---|
| | 1 | 1 | **149-5915** | 1 | EDGE-CUTTING | |
| | | 1 | **8P-9770** | 1 | PLATE-INFORMATION | |
| | 2 | 2 | **257-3651** | 2 | PLATE | |
| | 3 | 2 | **225-9482** | 4 | BAR | |
| | 4 | 2 | **225-9584** | 2 | PLATE | |
| | 5 | 2 | **225-9602** | 2 | PLATE | |
| | 6 | 2 | **228-4727** | 2 | PAD-RUBBER | |
| | 7 | 1 | **236-7753** | 2 | PLATE-WEAR | |
| | 8 | 1 | *240-9087* | 1 | PLATE AS (RH) | |
| | 9 | 1 | *240-9088* | 1 | PLATE AS (LH) | |
| | | | | | (EACH PLATE AS INCLUDES) | |
| | | 1 | **240-9083** | 1 | BAR | |
| | | 1 | **240-9085** | 1 | PLATE-WEAR | |
| | 10 | 2 | **255-6691** | 1 | HINGE AS (OUTER, RH) | |
| | 11 | 2 | **255-6692** | 1 | HINGE AS (OUTER, LH) | |
| | 12 | 2 | **255-6694** | 1 | HINGE AS (INNER, RH) | |
| | 13 | 2 | **255-6695** | 1 | HINGE AS (INNER, LH) | |
| | 14 | 1 | **255-6710** | 1 | PLATE-WEAR | |
| | 15 | 1 | **255-6711** | 1 | PLATE-WEAR | |
| | 16 | 1 | **255-6712** | 1 | PLATE-WEAR | |

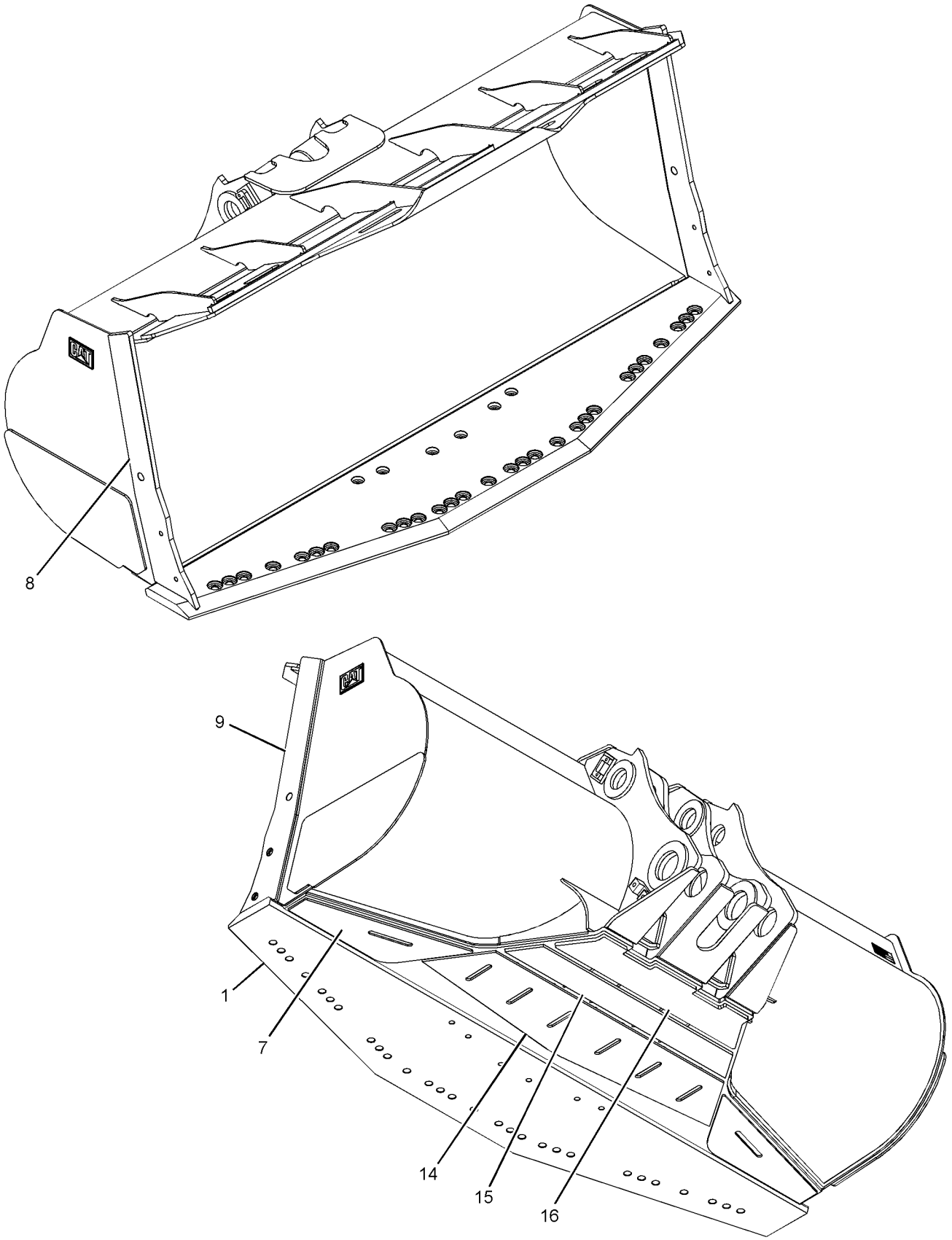


GRAPHIC #1 g01190619

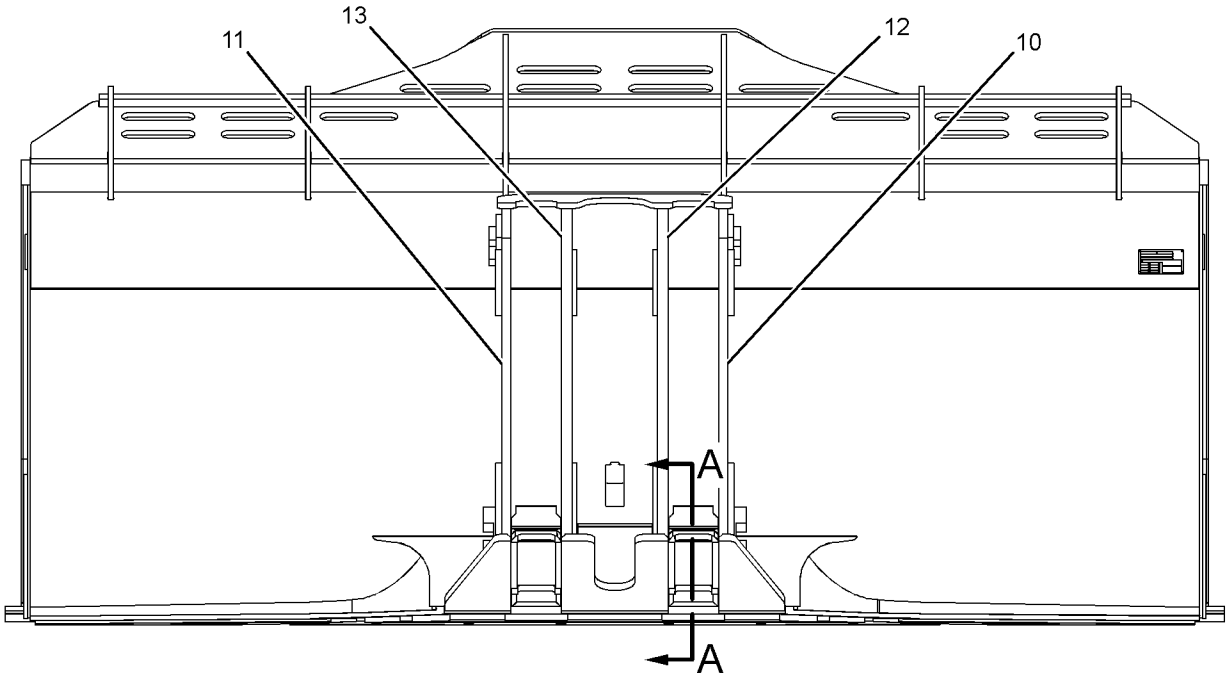


REAR VIEW

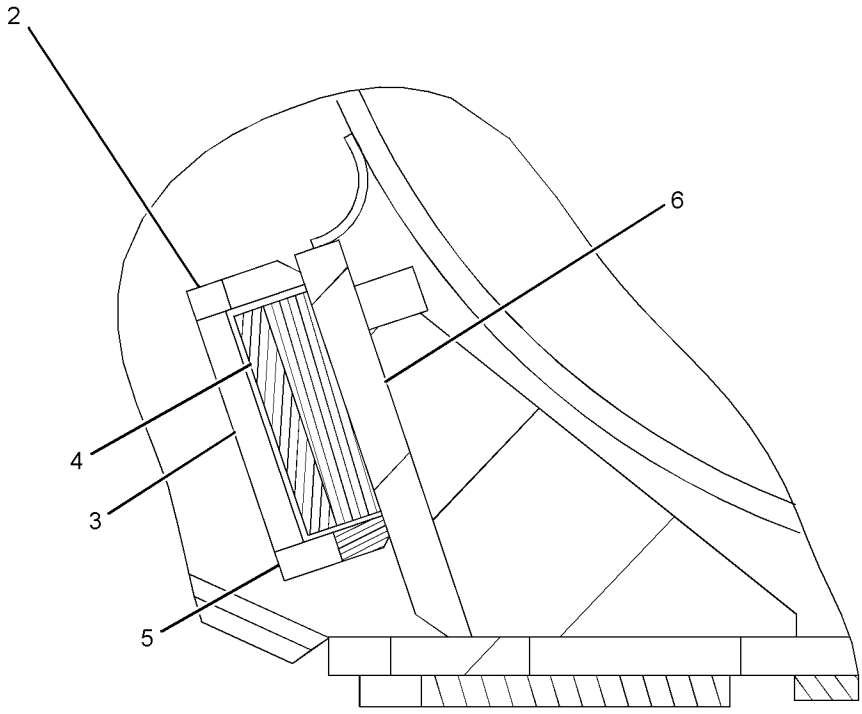


SECTION A-A

GRAPHIC #2 **<END>** g01190625

# WORK TOOLS

## 246-2756 BUCKET AS-ROCK

**S/N: BXY1-UP**
**6.3-CU M(8.2-CU YD)**
**AN ATTACHMENT**

**SMCS-6102** **i02330185**

| NOTE | REF NO | GRAPHIC REF | PART NUMBER | QTY | PART NAME 1 2 3 4 5 6 (PRODUCT LEVEL) | SEE PAGE |
|---|---|---|---|---|---|---|
| | 1 | 1 | **255-6692** | 1 | HINGE AS (OUTER, LH) | |
| | 2 | 1 | **255-6695** | 1 | HINGE AS (INNER, LH) | |
| | 3 | 1 | **255-6694** | 1 | HINGE AS (INNER, RH) | |
| | 4 | 1 | **255-6691** | 1 | HINGE AS (OUTER, RH) | |
| | 5 | 1 | **257-3649** | 1 | EDGE AS | |
| | | 1 | **8P-9770** | 1 | PLATE-INFORMATION | |
| | | 1 | **232-2114** | 8 | ADAPTER-TIP (K-110, 2-STRAP, CENTER) | |
| | 6 | 1 | *257-3665* | 1 | PLATE AS | |
| | | 1 | **2C-9259** | 1 | PLATE-IDENTIFICATION (CAT) | |
| | | 1 | **239-0245** | 1 | PLATE | |
| | | 1 | **257-3663** | 1 | BAR | |
| | 7 | 1 | *257-3664* | 1 | PLATE AS | |
| | | 1 | **2C-9259** | 1 | PLATE-IDENTIFICATION (CAT) | |
| | | 1 | **239-0245** | 1 | PLATE | |
| | | 1 | **257-3663** | 1 | BAR | |
| | 8 | 1 | *110-7592* | 1 | PLATE GP-CERTIFICATION | |
| | | 1 | **8T-9530** | 4 | TACK-FASTENER | |
| | | 1 | **137-4234** | 1 | PLATE-IDENTIFICATION (WORK TOOL) | |
| | 9 | 1 | **225-9482** | 4 | BAR | |
| | 10 | 1 | **225-9584** | 2 | PLATE | |
| | 11 | 1 | **225-9602** | 2 | PLATE | |
| | 12 | 1 | **228-4727** | 2 | PAD-RUBBER | |
| | 13 | 1 | **255-6710** | 1 | PLATE-WEAR | |
| | 14 | 1 | **255-6711** | 1 | PLATE-WEAR | |
| | 15 | 1 | **255-6712** | 1 | PLATE-WEAR | |
| | 16 | 1 | **257-3651** | 2 | PLATE | |
| | 17 | 1 | **257-3655** | 2 | PLATE-WEAR | |

**246-2756 BUCKET AS-ROCK** *(contd. )* **i02330185**

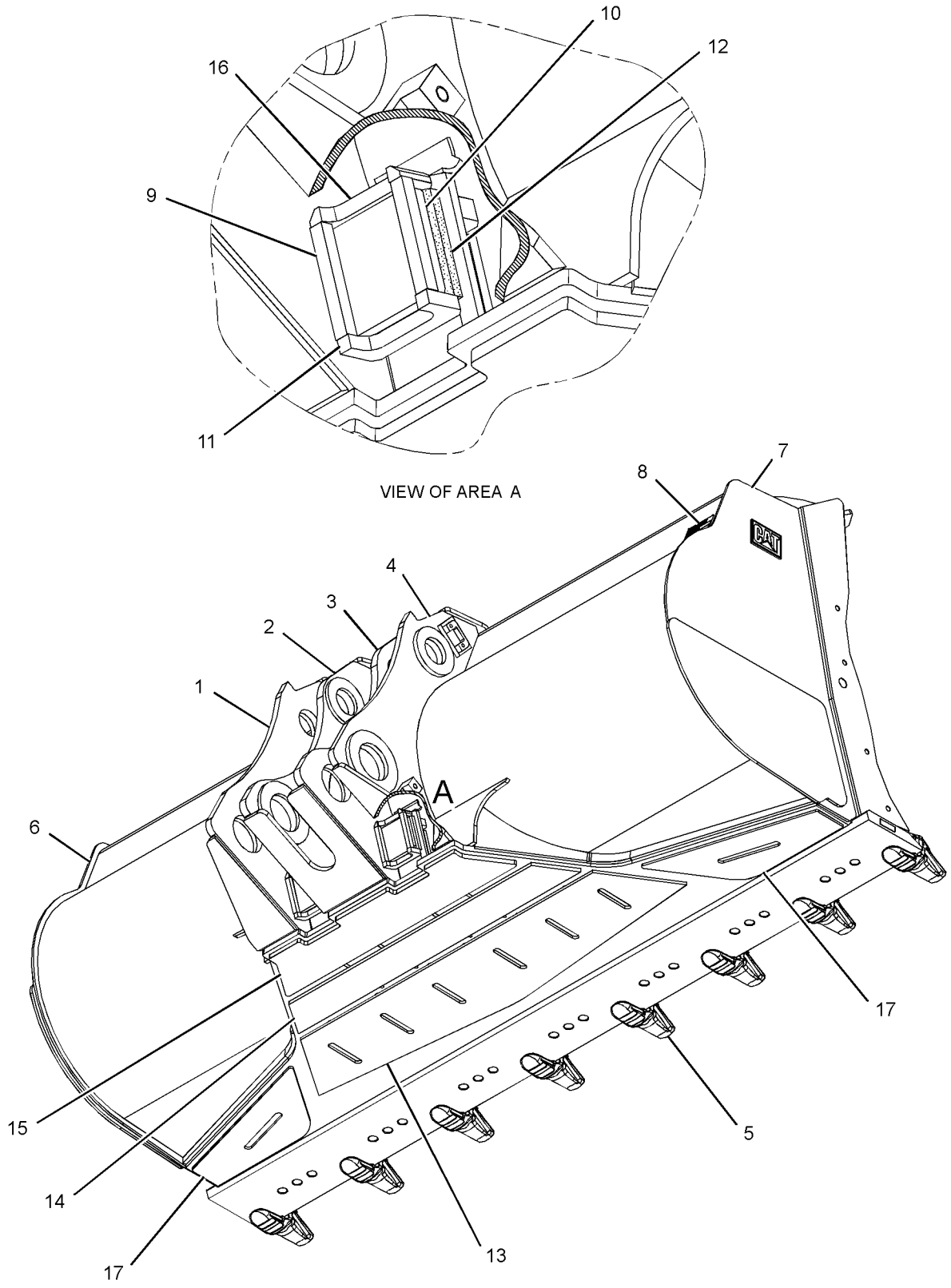


GRAPHIC #1 **<END>** g01175025

# WORK TOOLS

## 246-2757 BUCKET AS-ROCK

**S/N: BXY1-UP**
**6.7-CU M (8.75-CU YD)**
**AN ATTACHMENT**

**SMCS-6102** **i02517878**

| NOTE | REF NO | GRAPHIC REF | PART NUMBER | QTY | PART NAME 1 2 3 4 5 6 (PRODUCT LEVEL) | SEE PAGE |
|---|---|---|---|---|---|---|
| | 1 | 1 | **255-6692** | 1 | HINGE AS (OUTER, LH) | |
| | 2 | 1 | **255-6695** | 1 | HINGE AS (INNER, LH) | |
| | 3 | 1 | **255-6691** | 1 | HINGE AS (OUTER, RH) | |
| | 4 | 1 | **255-6694** | 1 | HINGE AS (INNER, RH) | |
| | 5 | 1 | **246-2766** | 1 | EDGE AS | |
| | 5A | 1 | **232-2114** | 8 | ADAPTER-TIP (K-110, 2-STRAP, CENTER) | |
| | 6 | 1 | *239-0262* | 1 | PLATE AS (LH) | |
| | 6A | 1 | **2C-9259** | 1 | PLATE-IDENTIFICATION (CAT) | |
| | 6B | 1 | **239-0245** | 1 | PLATE | |
| | 6C | 1 | **239-0258** | 1 | BAR | |
| | 7 | 1 | *239-0261* | 1 | PLATE AS (RH) | |
| | 7A | 1 | **2C-9259** | 1 | PLATE-IDENTIFICATION (CAT) | |
| | 7B | 1 | **239-0245** | 1 | PLATE | |
| | 7C | 1 | **239-0258** | 1 | BAR | |
| | 9 | 1 | **225-9482** | 4 | BAR | |
| | 10 | 1 | **225-9584** | 2 | PLATE | |
| | 11 | 1 | **225-9602** | 2 | PLATE | |
| | 12 | 1 | **228-4727** | 2 | PAD-RUBBER | |
| | 13 | 1 | **255-6710** | 1 | PLATE-WEAR | |
| | 14 | 1 | **255-6711** | 1 | PLATE-WEAR | |
| | 15 | 1 | **255-6712** | 1 | PLATE-WEAR | |
| | 16 | 1 | **257-3651** | 2 | PLATE | |
| | 17 | 1 | **257-3655** | 2 | PLATE-WEAR | |

## 246-2757 BUCKET AS-ROCK *(contd. )*

i02517878

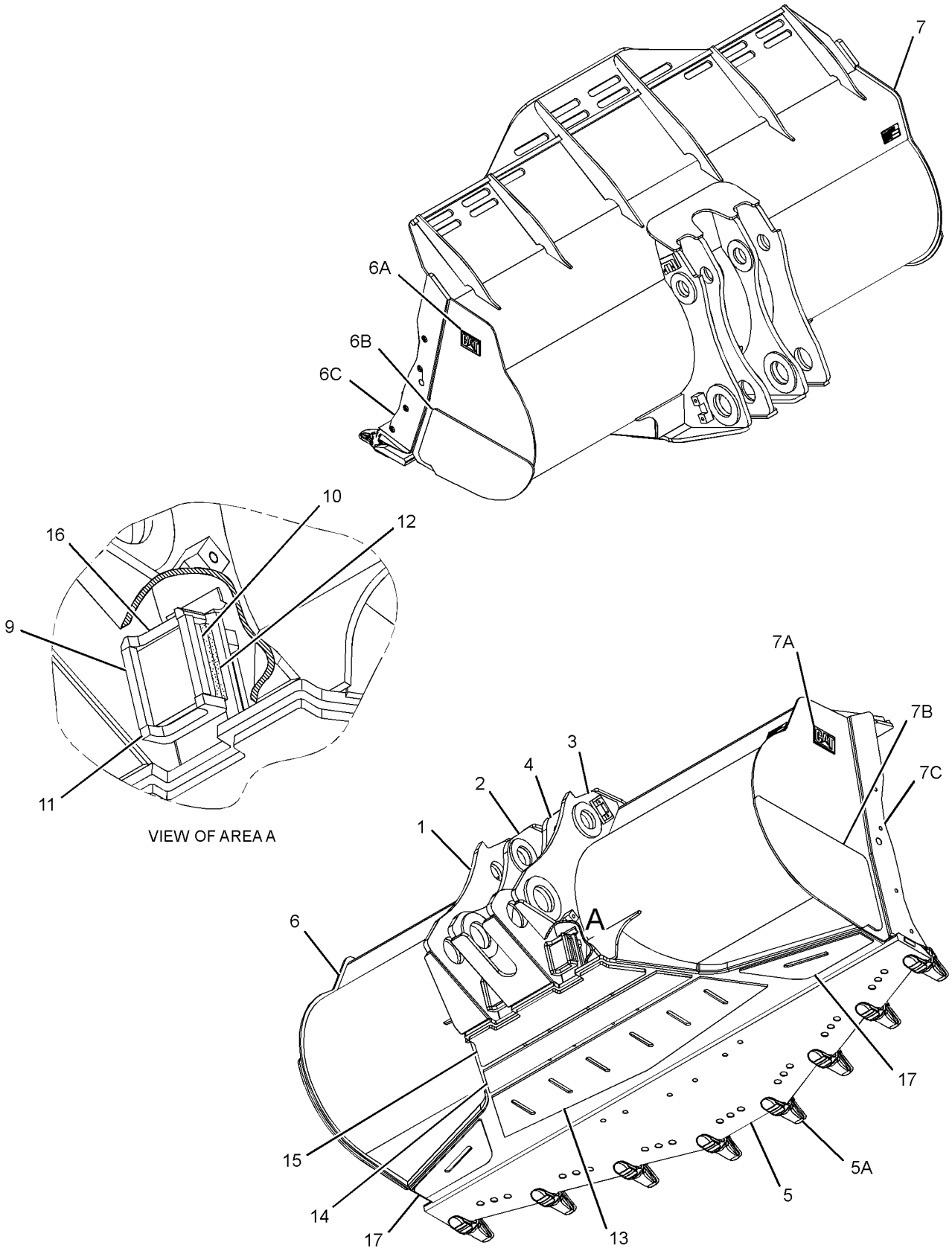


GRAPHIC #1

**<END>**

g01317735

# WORK TOOLS

## 246-2765 BUCKET AS-ROCK

**S/N: BXY1-UP**
**6.9-CU M (9.0 CU YD)**
**AN ATTACHMENT**

**SMCS-6102** **i02706430**

| NOTE | REF NO | GRAPHIC REF | PART NUMBER | QTY | PART NAME 1 2 3 4 5 6 (PRODUCT LEVEL) | SEE PAGE |
|---|---|---|---|---|---|---|
| | 1 | 1 | **255-6692** | 1 | HINGE AS (OUTER, LH) | |
| | 1A | 1 | **4E-5591** | 1 | RETAINER | |
| | 2 | 1 | **255-6695** | 1 | HINGE AS (INNER, LH) | |
| | 3 | 1 | **255-6694** | 1 | HINGE AS (INNER, RH) | |
| | 4 | 1 | **255-6691** | 1 | HINGE AS (OUTER, RH) | |
| | 4A | 1 | **4E-5591** | 1 | RETAINER | |
| | 5 | 1 | **246-2764** | 1 | EDGE AS | |
| | 5A | 1 | **232-2114** | 8 | ADAPTER-TIP (K-110, 2-STRAP, CENTER) | |
| | 7 | 1 | *214-6364* | 1 | PLATE AS (RH) | |
| | 7A | 1 | **214-6367** | 1 | BAR | |
| | 7B | 1 | **216-3683** | 1 | PLATE | |
| | 7C | 1 | **2C-9259** | 1 | PLATE-IDENTIFICATION (CAT) | |
| | 8 | 1 | *214-6365* | 1 | PLATE AS (LH) | |
| | 8A | 1 | **214-6367** | 1 | BAR | |
| | 8B | 1 | **216-3683** | 1 | PLATE | |
| | 8C | 1 | **2C-9259** | 1 | PLATE-IDENTIFICATION (CAT) | |
| | 9 | 1 | **225-9482** | 4 | BAR | |
| | 10 | 1 | **225-9584** | 2 | PLATE | |
| | 11 | 1 | **225-9602** | 2 | PLATE | |
| | 12 | 1 | **228-4727** | 2 | PAD-RUBBER | |
| | 13 | 1 | **236-7753** | 2 | PLATE-WEAR | |
| | 14 | 1 | **255-6710** | 1 | PLATE-WEAR | |
| | 15 | 1 | **255-6711** | 1 | PLATE-WEAR | |
| | 16 | 1 | **255-6712** | 1 | PLATE-WEAR | |
| | 17 | 1 | **257-3651** | 2 | PLATE | |

**246-2765 BUCKET AS-ROCK** *(contd. )* **i02706430**

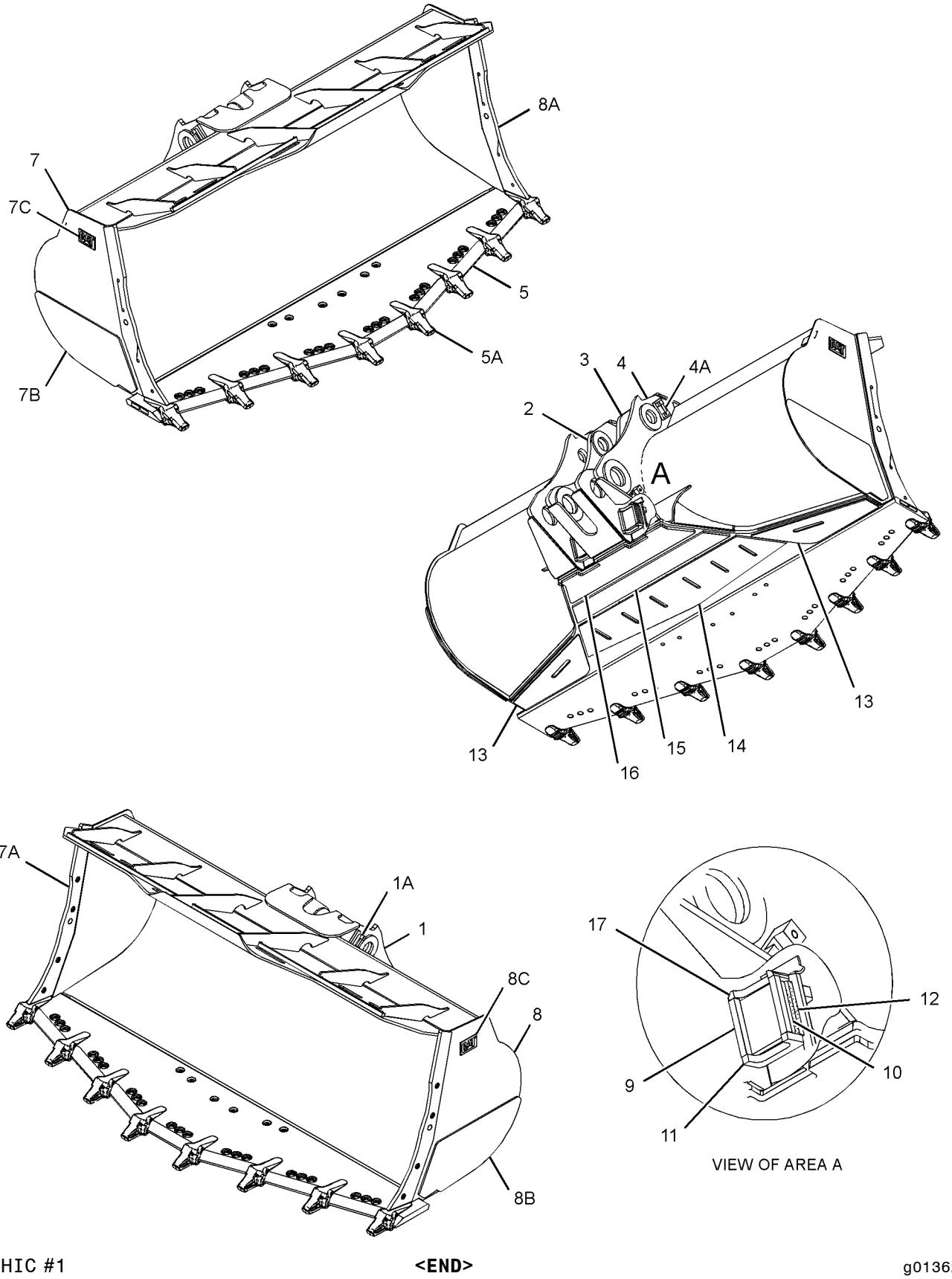


GRAPHIC #1 **<END>** g01362866

# WORK TOOLS

## 246-2767 BUCKET AS-ROCK

**S/N: BXY1-UP**
**6.4-CU M (8.33-CU YD)**
**AN ATTACHMENT**

**SMCS-6102** **i02627473**

| NOTE | REF NO | GRAPHIC REF | PART NUMBER | QTY | PART NAME 1 2 3 4 5 6 (PRODUCT LEVEL) | SEE PAGE |
|---|---|---|---|---|---|---|
| | 1 | 1 | **255-6692** | 1 | HINGE AS (OUTER, LH) | |
| | 2 | 1 | **255-6695** | 1 | HINGE AS (INNER, LH) | |
| | 3 | 1 | **255-6691** | 1 | HINGE AS (OUTER, RH) | |
| | 4 | 1 | **255-6694** | 1 | HINGE AS (INNER, RH) | |
| | 5 | 1 | **246-2766** | 1 | EDGE AS | |
| | 5A | 1 | **232-2114** | 8 | ADAPTER-TIP (K-110, 2-STRAP, CENTER) | |
| | 6 | 1 | *239-0262* | 1 | PLATE AS (LH) | |
| | 6A | 1 | **2C-9259** | 1 | PLATE-IDENTIFICATION (CAT) | |
| | 6B | 1 | **239-0245** | 1 | PLATE | |
| | 6C | 1 | **239-0258** | 1 | BAR | |
| | 7 | 1 | *239-0261* | 1 | PLATE AS (RH) | |
| | 7A | 1 | **2C-9259** | 1 | PLATE-IDENTIFICATION (CAT) | |
| | 7B | 1 | **239-0245** | 1 | PLATE | |
| | 7C | 1 | **239-0258** | 1 | BAR | |
| | 9 | 1 | **225-9482** | 4 | BAR | |
| | 10 | 1 | **225-9584** | 2 | PLATE | |
| | 11 | 1 | **225-9602** | 2 | PLATE | |
| | 12 | 1 | **228-4727** | 2 | PAD-RUBBER | |
| | 13 | 1 | **255-6710** | 1 | PLATE-WEAR | |
| | 14 | 1 | **255-6711** | 1 | PLATE-WEAR | |
| | 15 | 1 | **255-6712** | 1 | PLATE-WEAR | |
| | 16 | 1 | **257-3651** | 2 | PLATE | |
| | 17 | 1 | **257-3655** | 2 | PLATE-WEAR | |

**246-2767 BUCKET AS-ROCK** *(contd. )* **i02627473**

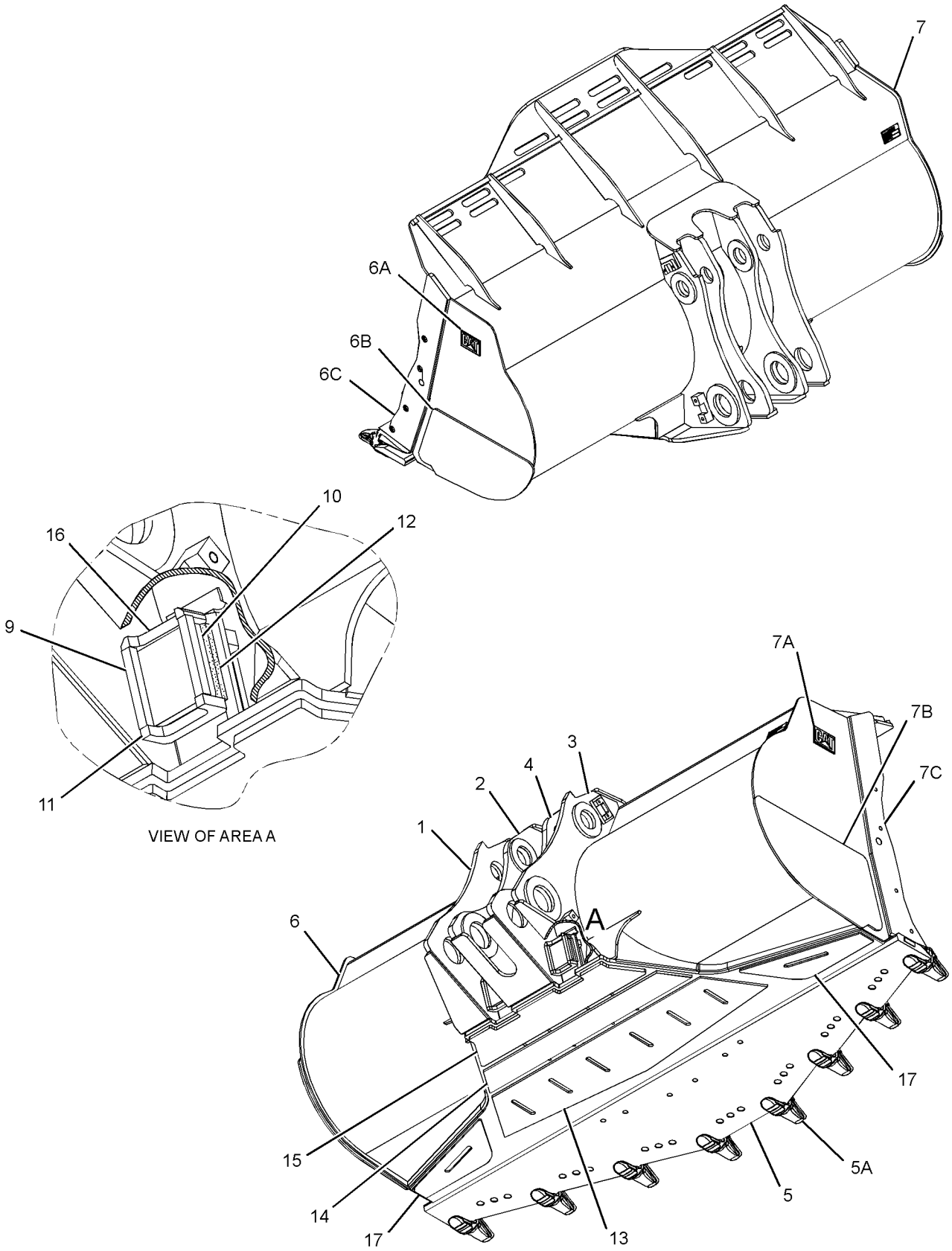


GRAPHIC #1 **<END>** g01317735

# WORK TOOLS

## *246-2770* BUCKET AS-ROCK

**S/N: BXY1-UP**
**6.4-CU M (8.33-CU YD)**
**PART OF 246-2769 BUCKET GP-ROCK**
**AN ATTACHMENT**

**SMCS-6102** **i02661645**

| NOTE | REF NO | GRAPHIC REF | PART NUMBER | QTY | PART NAME 1 2 3 4 5 6 (PRODUCT LEVEL) | SEE PAGE |
|---|---|---|---|---|---|---|
| | 1 | 1 | **225-9482** | 4 | BAR | |
| | 2 | 1 | **225-9584** | 2 | PLATE | |
| | 3 | 1 | **225-9602** | 2 | PLATE | |
| | 4 | 1 | **228-4727** | 2 | PAD-RUBBER | |
| | 5 | 1 | **257-3651** | 2 | PLATE | |
| | 6 | 2 | **283-1938** | 3 | PLATE-WEAR | |
| | 7 | 2 | **283-1937** | 1 | PLATE-WEAR | |
| | 8 | 2 | **240-7983** | 2 | PLATE-WEAR | |
| | 9 | 2 | **246-2768** | 1 | EDGE AS | |
| | | 2 | **275-5465** | 2 | BLOCK-WEAR | |
| | | 2 | **223-8134** | 7 | ADAPTER-TIP (K-130, 2-STRAP, CENTER) | |
| | 10 | 2 | **255-6691** | 1 | HINGE AS (OUTER, RH) | |
| | 11 | 2 | **255-6692** | 1 | HINGE AS (OUTER, LH) | |
| | 12 | 2 | **255-6694** | 1 | HINGE AS (INNER, RH) | |
| | 13 | 2 | **255-6695** | 1 | HINGE AS (INNER, LH) | |
| | 14 | 2 | **255-6710** | 1 | PLATE-WEAR | |
| | 15 | 2 | **255-6711** | 1 | PLATE-WEAR | |
| | 16 | 2 | **255-6712** | 1 | PLATE-WEAR | |
| | 17 | 2 | **257-3655** | 2 | PLATE-WEAR | |
| | 18 | 2 | *257-3658* | 1 | PLATE AS (RH) | |
| | 18A | 2 | **2C-9259** | 1 | PLATE-IDENTIFICATION (CAT) | |
| | 18B | 2 | **240-0286** | 1 | PLATE | |
| | 18C | 2 | **257-3657** | 1 | BAR | |
| | 19 | 2 | *257-3659* | 1 | PLATE AS (LH) | |
| | 19A | 2 | **2C-9259** | 1 | PLATE-IDENTIFICATION (CAT) | |
| | 19B | 2 | **240-0286** | 1 | PLATE | |
| | 19C | 2 | **257-3657** | 1 | BAR | |
| | 20 | 2 | **257-3660** | 2 | PLATE | |

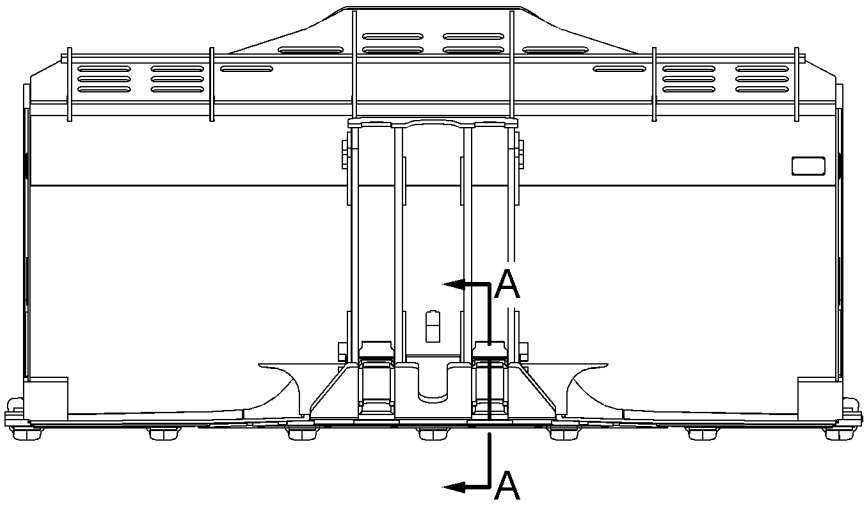


REAR VIEW

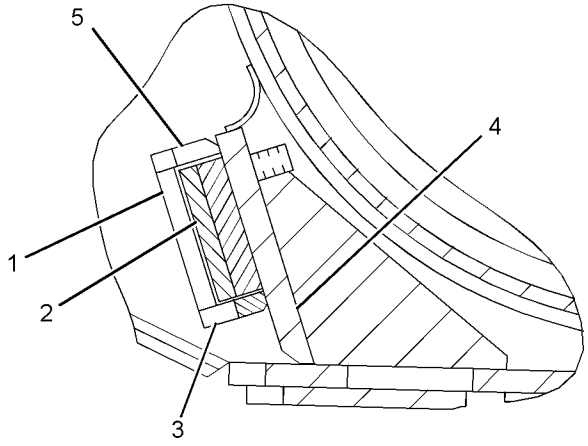


SECTION A-A

GRAPHIC #1 g01174530

*246-2770* **BUCKET AS-ROCK** *(contd.)* **i02661645**

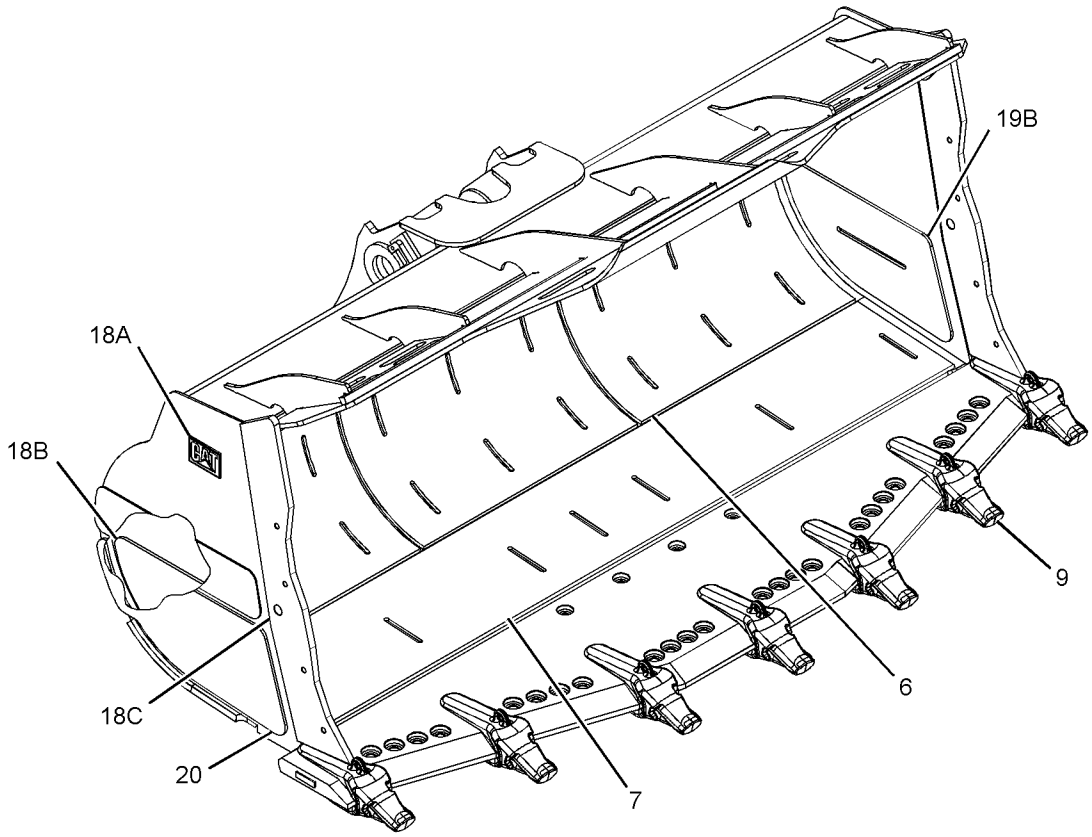


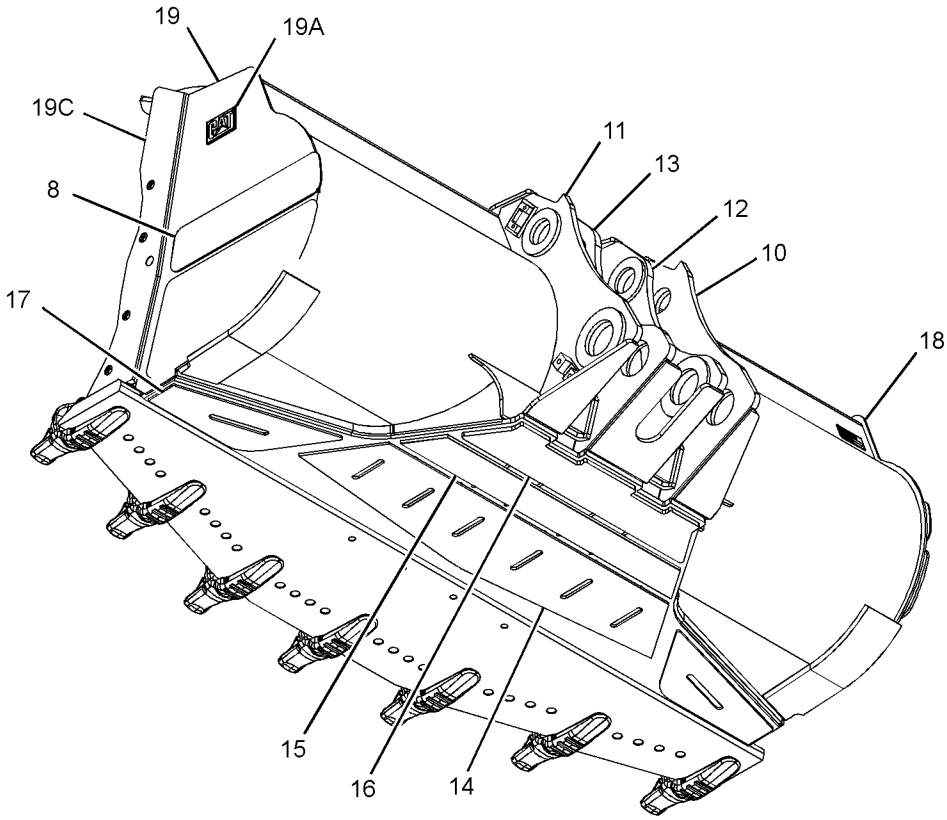


GRAPHIC #2 **<END>** g01359884

# WORK TOOLS

## *246-2772* BUCKET AS-ROCK

**S/N: BXY1-UP**
**6.4-CU M (8.33-CU YD)**
**PART OF 246-2771 BUCKET GP-ROCK**
**AN ATTACHMENT**

**SMCS-6102** **i02735823**

| NOTE | REF NO | GRAPHIC REF | PART NUMBER | QTY | PART NAME 1 2 3 4 5 6 (PRODUCT LEVEL) | SEE PAGE |
|---|---|---|---|---|---|---|
| | 1 | 1 | **225-9482** | 4 | BAR | |
| | 2 | 1 | **225-9584** | 2 | PLATE | |
| | 3 | 1 | **225-9602** | 2 | PLATE | |
| | 4 | 1 | **228-4727** | 2 | PAD-RUBBER | |
| | 5 | 1 | **240-0284** | 3 | PLATE-WEAR | |
| | 6 | 1 | **240-0285** | 1 | PLATE-WEAR | |
| | 7 | 1 | **240-7983** | 2 | PLATE-WEAR | |
| | 8 | 1 | **255-6691** | 1 | HINGE AS (OUTER, RH) | |
| | 9 | 1 | **255-6692** | 1 | HINGE AS (OUTER, LH) | |
| | 10 | 1 | **255-6694** | 1 | HINGE AS (INNER, RH) | |
| | 11 | 1 | **255-6695** | 1 | HINGE AS (INNER, LH) | |
| | 12 | 1 | **257-3651** | 2 | PLATE | |
| | 13 | 1 | **255-6710** | 1 | PLATE-WEAR | |
| | 14 | 1 | **255-6711** | 1 | PLATE-WEAR | |
| | 15 | 1 | **255-6712** | 1 | PLATE-WEAR | |
| | 16 | 1 | **257-3655** | 2 | PLATE-WEAR | |
| | 17 | 1 | **257-3660** | 2 | PLATE | |
| | 18 | 1 | **257-3695** | 1 | EDGE AS | |
| | | 1 | **8P-9770** | 1 | PLATE-INFORMATION | |
| | | 1 | **232-0138** | 5 | ADAPTER-TIP (K-130, CENTER) | |
| | | 1 | **232-0139** | 2 | ADAPTER-TIP (K-130, CORNER) | |
| | 19 | 1 | *257-3698* | 1 | PLATE AS (LH) | |
| | 19A | 1 | **2C-9259** | 1 | PLATE-IDENTIFICATION (CAT) | |
| | 19B | 1 | **240-0286** | 1 | PLATE | |
| | 19C | 1 | **278-8186** | 1 | BAR | |
| | 20 | 1 | *257-3697* | 1 | PLATE AS (RH) | |
| | 20A | 1 | **2C-9259** | 1 | PLATE-IDENTIFICATION (CAT) | |
| | 20B | 1 | **240-0286** | 1 | PLATE | |
| | 20C | 1 | **278-8186** | 1 | BAR | |

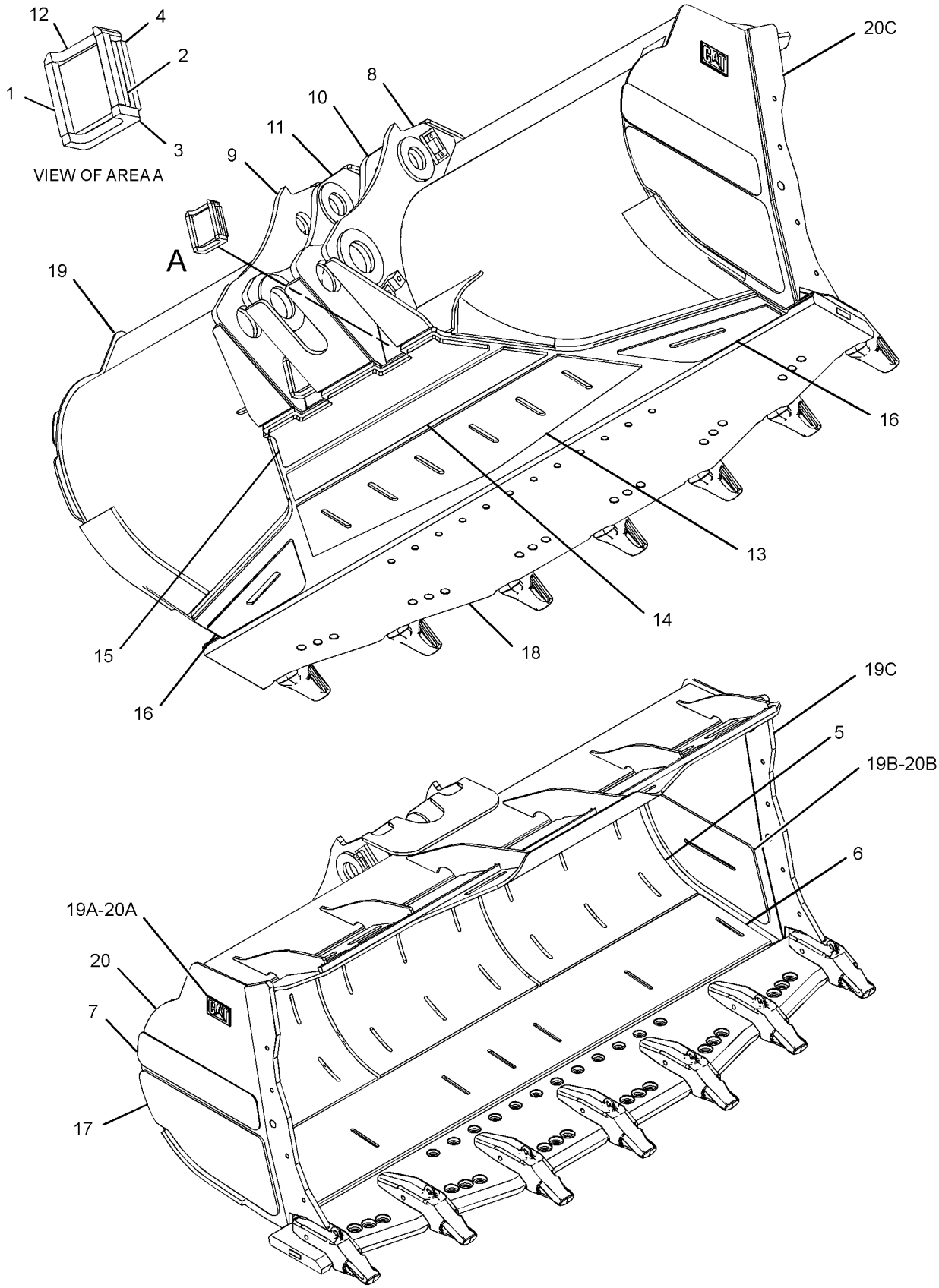


GRAPHIC #1 **<END>** g01313511

# WORK TOOLS

## *265-8231* BUCKET AS-ROCK

**S/N: BXY1-UP**
**7.7-CU M (10.0 CU YD)**
**AN ATTACHMENT**

**SMCS-6102** **i02395887**

| NOTE | REF NO | GRAPHIC REF | PART NUMBER | QTY | PART NAME 1 2 3 4 5 6 (PRODUCT LEVEL) | SEE PAGE |
|---|---|---|---|---|---|---|
| | 1 | 1 | **225-9482** | 4 | BAR | |
| | 2 | 1 | **225-9584** | 2 | PLATE | |
| | 3 | 1 | **225-9602** | 2 | PLATE | |
| | 4 | 1 | **228-4727** | 2 | PAD-RUBBER | |
| | 5 | 1 | **236-7753** | 2 | PLATE-WEAR | |
| | 6 | 1 | **246-2764** | 1 | EDGE AS | |
| | | 1 | **8P-9770** | 1 | PLATE-INFORMATION | |
| | | 1 | **232-2114** | 8 | ADAPTER-TIP (K-110, 2-STRAP, CENTER) | |
| | 7 | 1 | **255-6691** | 1 | HINGE AS (OUTER, RH) | |
| | 8 | 1 | **255-6692** | 1 | HINGE AS (OUTER, LH) | |
| | 9 | 1 | **255-6694** | 1 | HINGE AS (INNER, RH) | |
| | 10 | 1 | **255-6695** | 1 | HINGE AS (INNER, LH) | |
| | 11 | 1 | **255-6710** | 1 | PLATE-WEAR | |
| | 12 | 1 | **255-6711** | 1 | PLATE-WEAR | |
| | 13 | 1 | **255-6712** | 1 | PLATE-WEAR | |
| | 14 | 1 | **257-3651** | 2 | PLATE | |
| | 15 | 1 | *265-8235* | 1 | PLATE AS | |
| | 16 | 1 | *265-8236* | 1 | PLATE AS | |
| | | | | | (EACH PLATE AS INCLUDES) | |
| | | 1 | **2C-9259** | 1 | PLATE-IDENTIFICATION (CAT) | |
| | | 1 | **265-8232** | 1 | BAR | |
| | | 1 | **265-8234** | 1 | PLATE-WEAR | |

*265-8231* **BUCKET AS-ROCK** *(contd.)* **i02395887**

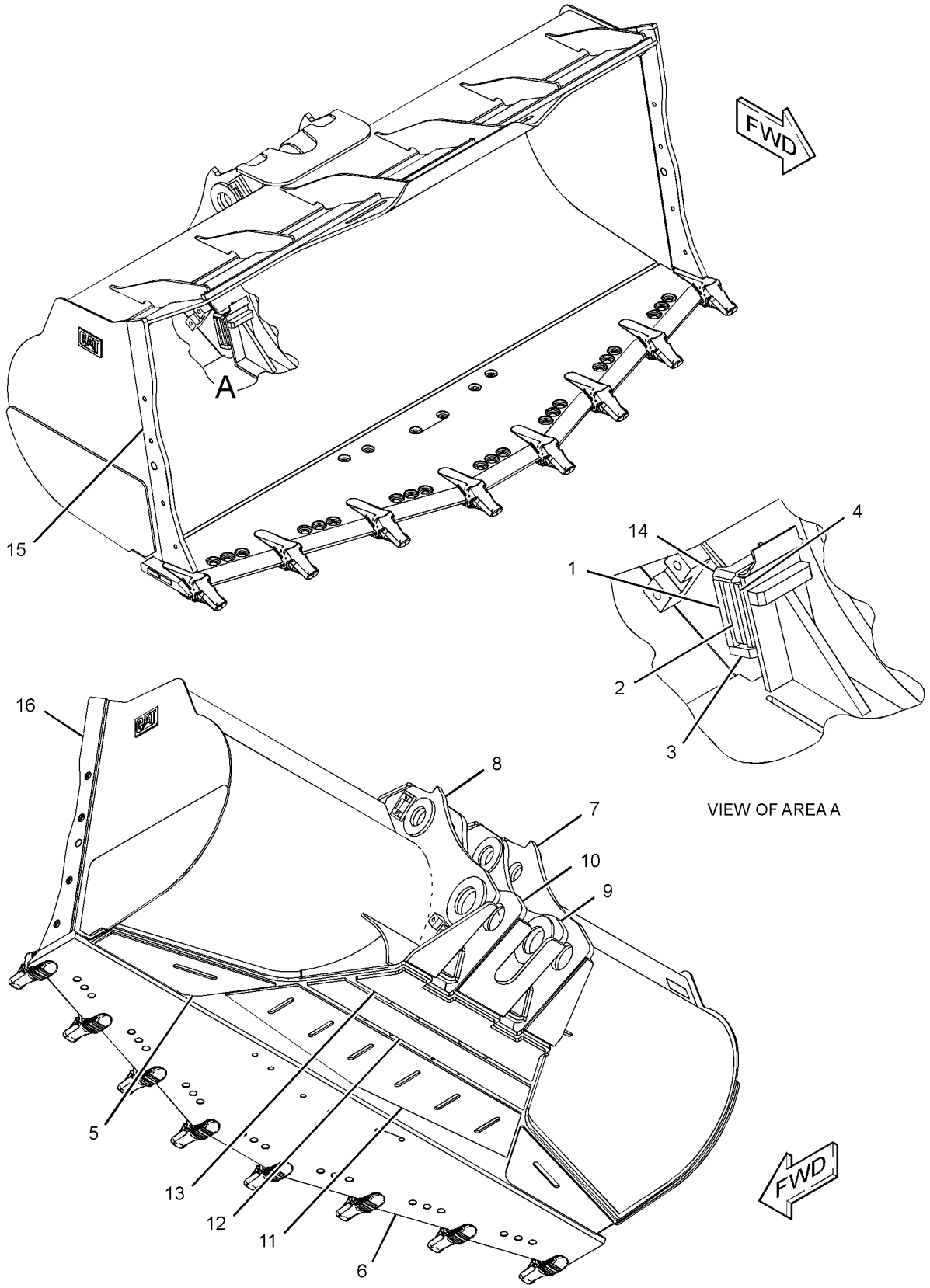


GRAPHIC #1 **<END>** g01232653

# WORK TOOLS

## *283-1851* BUCKET AS-ROCK

**S/N: BXY1-UP**
**6.5-CU M (8.5-CU YD)**
**PART OF 283-1850 BUCKET GP-ROCK**
**AN ATTACHMENT**

**SMCS-6102** **i02676098**

| NOTE | REF NO | GRAPHIC REF | PART NUMBER | QTY | PART NAME 1 2 3 4 5 6 (PRODUCT LEVEL) | SEE PAGE |
|---|---|---|---|---|---|---|
| | 1 | 2 | **138-0006** | 7 | RETAINER-G.E.T. | |
| | 2 | 2 | **138-0020** | 7 | BASE | |
| | 3 | 2 | **138-0022** | 7 | COVER | |
| | 4 | 2 | **225-9482** | 4 | BAR | |
| | 5 | 2 | **225-9584** | 2 | PLATE | |
| | 6 | 2 | **225-9602** | 2 | PLATE | |
| | 7 | 2 | **228-4727** | 2 | PAD-RUBBER | |
| | 8 | 1 | **240-7983** | 2 | PLATE-WEAR | |
| | 9 | 1 | **246-2768** | 1 | EDGE AS | |
| | 9A | 1 | **223-8134** | 7 | ADAPTER-TIP (K-130, 2-STRAP, CENTER) | |
| | 9B | 1 | **275-5465** | 2 | BLOCK-WEAR | |
| | 10 | 2 | **255-6691** | 1 | HINGE AS (OUTER, RH) | |
| | 11 | 1 | **255-6692** | 1 | HINGE AS (OUTER, LH) | |
| | 12 | 2 | **255-6694** | 1 | HINGE AS (INNER, RH) | |
| | 13 | 2 | **255-6695** | 1 | HINGE AS (INNER, LH) | |
| | 14 | 2 | **255-6710** | 1 | PLATE-WEAR | |
| | 15 | 2 | **257-3651** | 2 | PLATE | |
| | 16 | 2 | **257-3655** | 2 | PLATE-WEAR | |
| | 17 | 1 | *257-3658* | 1 | PLATE AS (RH) | |
| | 17A | 1 | **2C-9259** | 1 | PLATE-IDENTIFICATION (CAT) | |
| | 17B | 1 | **240-0286** | 1 | PLATE | |
| | 17C | 1 | **257-3657** | 1 | BAR | |
| | 18 | 1 | *257-3659* | 1 | PLATE AS (LH) | |
| | 18A | 1 | **2C-9259** | 1 | PLATE-IDENTIFICATION (CAT) | |
| | 18B | 1 | **240-0286** | 1 | PLATE | |
| | 18C | 1 | **257-3657** | 1 | BAR | |
| | 19 | 2 | **257-3660** | 2 | PLATE | |
| | 20 | 1 | **283-1937** | 1 | PLATE-WEAR | |
| | 21 | 1 | **283-1938** | 3 | PLATE-WEAR | |

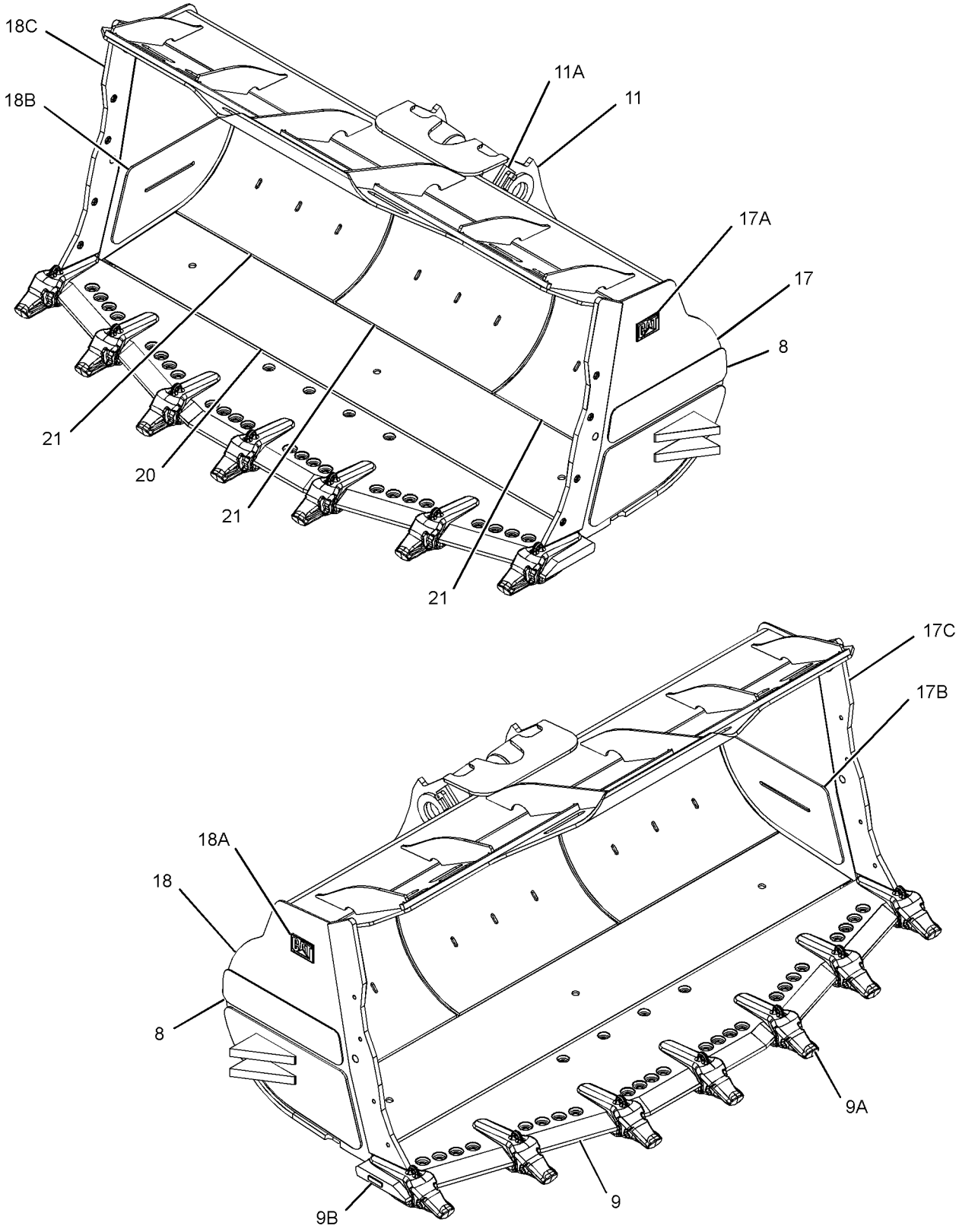


GRAPHIC #1 g01354335

*283-1851* **BUCKET AS-ROCK** *(contd.)* **i02676098**

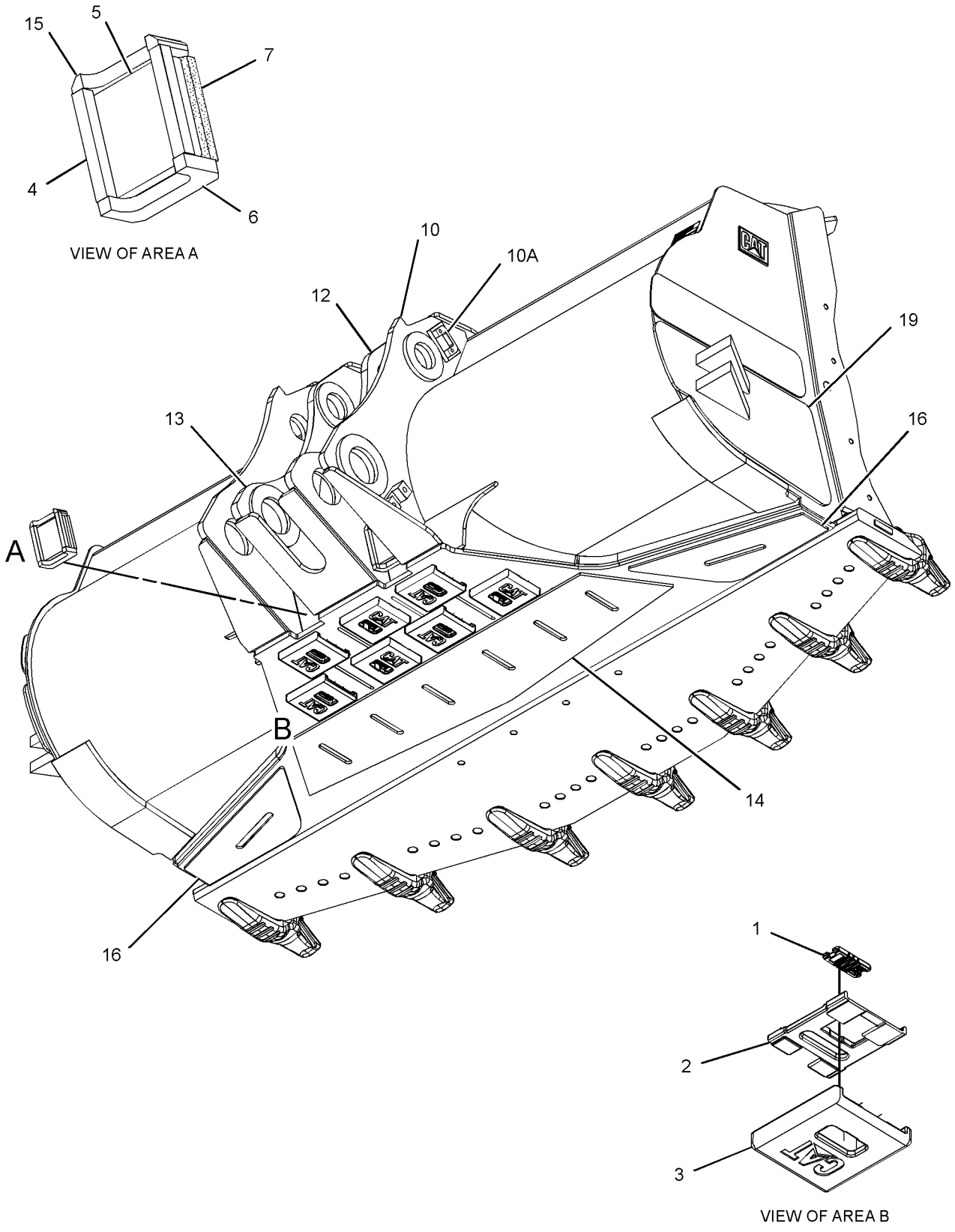


GRAPHIC #2 **<END>** g01354522

# WORK TOOLS

## *283-1941* BUCKET AS-ROCK

**S/N: BXY1-UP**
**6.5-CU M (8.5-CU YD)**
**PART OF 283-1940 BUCKET GP-ROCK**
**AN ATTACHMENT**

**SMCS-6102** **i02676100**

| NOTE | REF NO | GRAPHIC REF | PART NUMBER | QTY | PART NAME 1 2 3 4 5 6 (PRODUCT LEVEL) | SEE PAGE |
|---|---|---|---|---|---|---|
| | 1 | 1 | **225-9482** | 4 | BAR | |
| | 2 | 1 | **225-9584** | 2 | PLATE | |
| | 3 | 1 | **225-9602** | 2 | PLATE | |
| | 4 | 1 | **228-4727** | 2 | PAD-RUBBER | |
| | 5 | 1 | **240-7983** | 2 | PLATE-WEAR | |
| | 6 | 1 | **255-6691** | 1 | HINGE AS (OUTER, RH) | |
| | 7 | 1 | **255-6692** | 1 | HINGE AS (OUTER, LH) | |
| | 8 | 1 | **255-6694** | 1 | HINGE AS (INNER, RH) | |
| | 9 | 1 | **255-6695** | 1 | HINGE AS (INNER, LH) | |
| | 10 | 1 | **255-6710** | 1 | PLATE-WEAR | |
| | 11 | 1 | **138-0020** | 7 | BASE | |
| | 12 | 1 | **138-0022** | 7 | COVER | |
| | 13 | 1 | **257-3651** | 2 | PLATE | |
| | 14 | 1 | **257-3655** | 2 | PLATE-WEAR | |
| | 15 | 1 | **257-3660** | 2 | PLATE | |
| | 16 | 1 | *257-3697* | 1 | PLATE AS (RH) | |
| | 16A | 1 | **2C-9259** | 1 | PLATE-IDENTIFICATION (CAT) | |
| | 16B | 1 | **240-0286** | 1 | PLATE | |
| | 16C | 1 | **278-8186** | 1 | BAR | |
| | 17 | 1 | *257-3698* | 1 | PLATE AS (LH) | |
| | 17A | 1 | **2C-9259** | 1 | PLATE-IDENTIFICATION (CAT) | |
| | 17B | 1 | **240-0286** | 1 | PLATE | |
| | 17C | 1 | **278-8186** | 1 | BAR | |
| | 18 | 1 | **278-8185** | 1 | EDGE AS | |
| | 18A | 1 | **232-0138** | 5 | ADAPTER-TIP (K-130, CENTER) | |
| | 18B | 1 | **232-0139** | 2 | ADAPTER-TIP (K-130, CORNER) | |
| | 18C | 1 | **275-5466** | 2 | BLOCK-WEAR | |
| | 19 | 1 | **283-1937** | 1 | PLATE-WEAR | |
| | 20 | 1 | **283-1938** | 3 | PLATE-WEAR | |
| | 21 | 1 | **138-0006** | 7 | RETAINER-G.E.T. | |

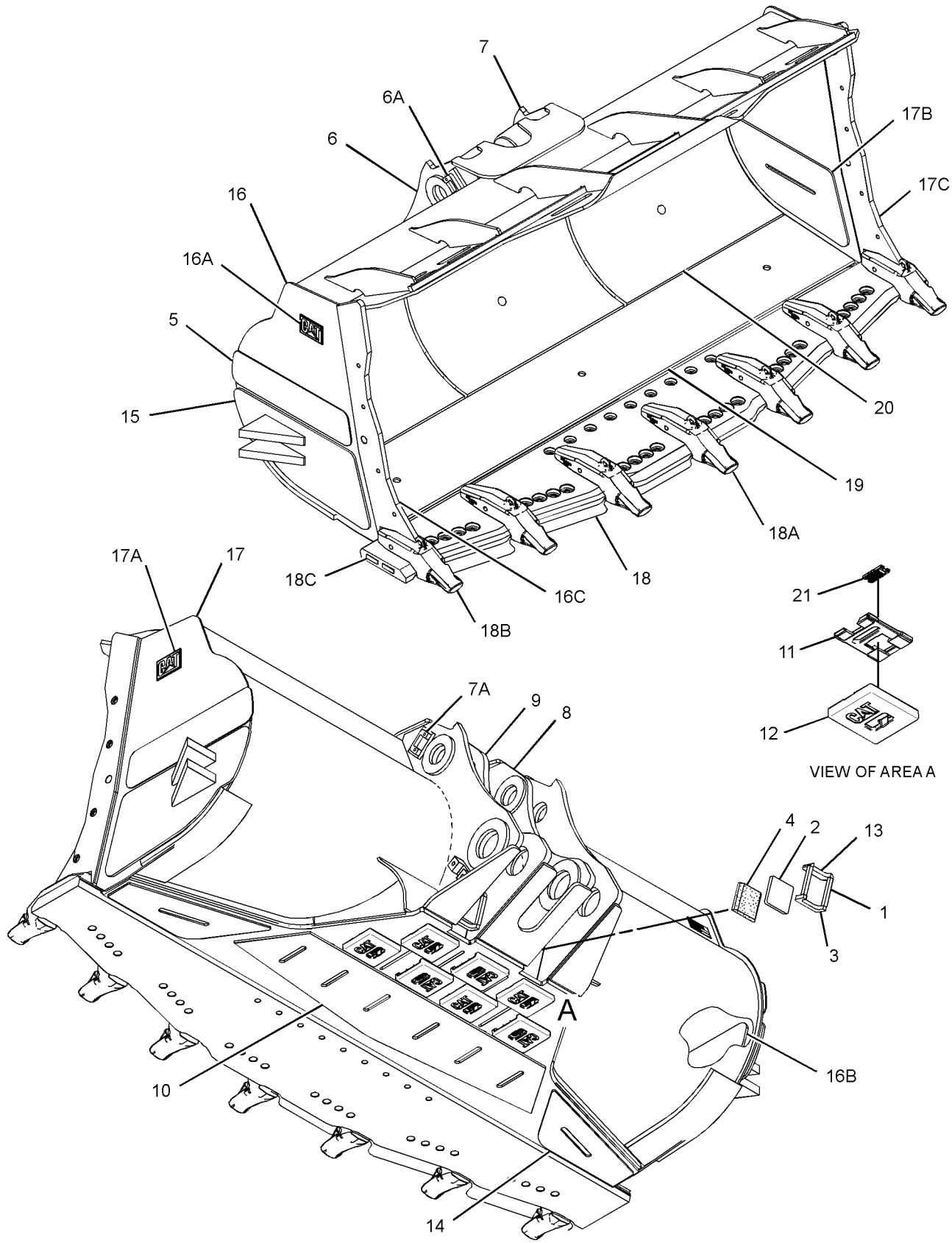


GRAPHIC #1 **<END>** g01349101

# WORK TOOLS

## *288-8251* BUCKET AS-ROCK

**S/N: BXY1-UP**
**6.5-CU M (8.5-CU YD)**
**PART OF 288-8250 BUCKET GP-ROCK**
**AN ATTACHMENT**

**SMCS-6102** **i02613002**

| NOTE | REF NO | GRAPHIC REF | PART NUMBER | QTY | PART NAME 1 2 3 4 5 6 (PRODUCT LEVEL) | SEE PAGE |
|---|---|---|---|---|---|---|
| | 4 | 2 | **225-9482** | 4 | BAR | |
| | 5 | 2 | **225-9584** | 2 | PLATE | |
| | 6 | 2 | **225-9602** | 2 | PLATE | |
| | 8 | 2 | **228-4727** | 2 | PAD-RUBBER | |
| | 10 | 2 | **240-7983** | 2 | PLATE-WEAR | |
| | 12 | 2 | **255-6691** | 1 | HINGE AS (OUTER, RH) | |
| | 13 | 2 | **255-6692** | 1 | HINGE AS (OUTER, LH) | |
| | 14 | 2 | **255-6694** | 1 | HINGE AS (INNER, RH) | |
| | 15 | 2 | **255-6695** | 1 | HINGE AS (INNER, LH) | |
| | 24 | 2 | **255-6710** | 1 | PLATE-WEAR | |
| | 25 | 2 | **255-6711** | 1 | PLATE-WEAR | |
| | 26 | 2 | **255-6712** | 1 | PLATE-WEAR | |
| | 27 | 2 | **257-3651** | 2 | PLATE | |
| | 31 | 2 | **257-3655** | 2 | PLATE-WEAR | |
| | 32 | 2 | **257-3660** | 2 | PLATE | |
| | 35 | 1 | *257-3697* | 1 | PLATE AS (RH) | |
| | 35A | 1 | **2C-9259** | 1 | PLATE-IDENTIFICATION (CAT) | |
| | 35B | 1 | **240-0286** | 1 | PLATE | |
| | 35C | 1 | **278-8186** | 1 | BAR | |
| | 36 | 1 | *257-3698* | 1 | PLATE AS (LH) | |
| | 36A | 1 | **2C-9259** | 1 | PLATE-IDENTIFICATION (CAT) | |
| | 36B | 1 | **240-0286** | 1 | PLATE | |
| | 36C | 1 | **278-8186** | 1 | BAR | |
| | 42 | 1 | **278-8185** | 1 | EDGE AS | |
| | 42A | 1 | **232-0138** | 5 | ADAPTER-TIP (K-130, CENTER) | |
| | 42B | 1 | **232-0139** | 2 | ADAPTER-TIP (K-130, CORNER) | |
| | 42C | 1 | **275-5466** | 2 | BLOCK-WEAR | |
| | 44 | 1 | **283-1937** | 1 | PLATE-WEAR | |
| | 45 | 1 | **283-1938** | 3 | PLATE-WEAR | |

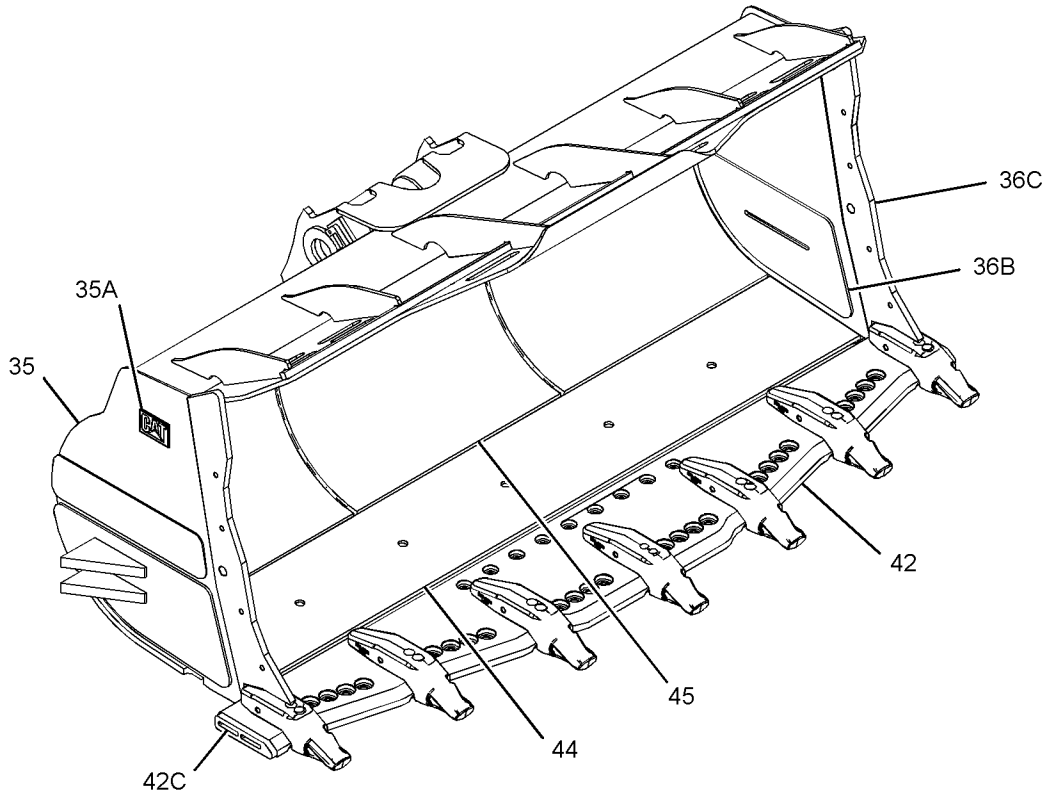


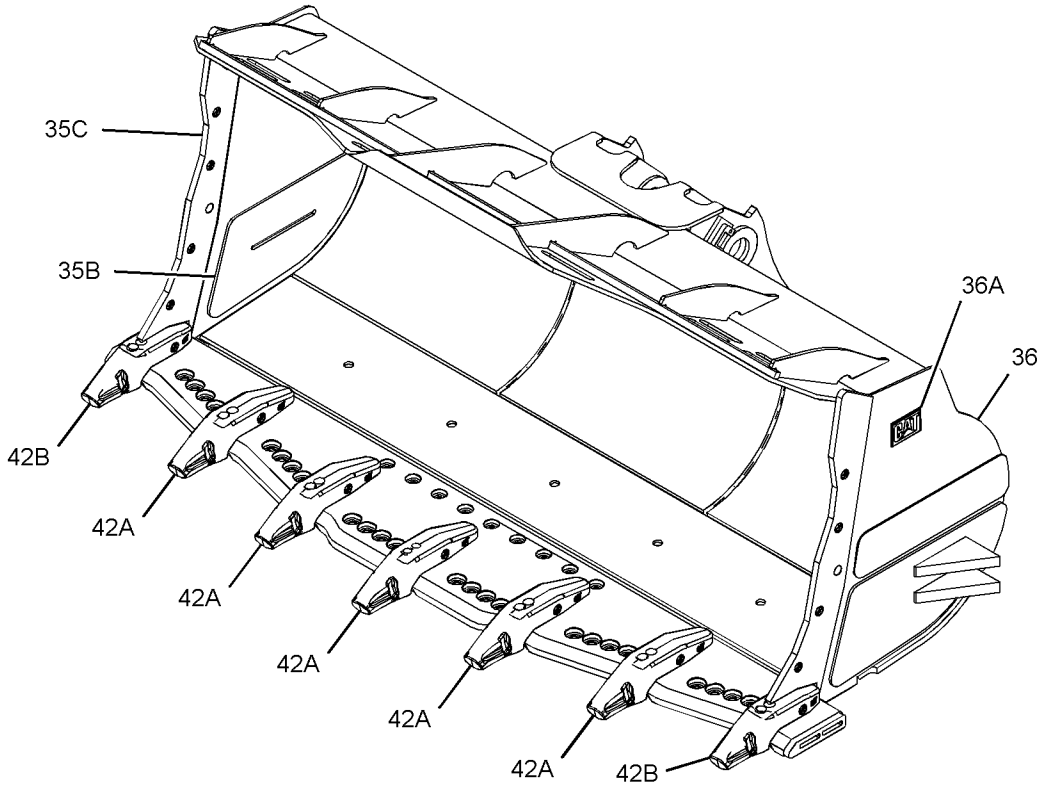


GRAPHIC #1 g01355629

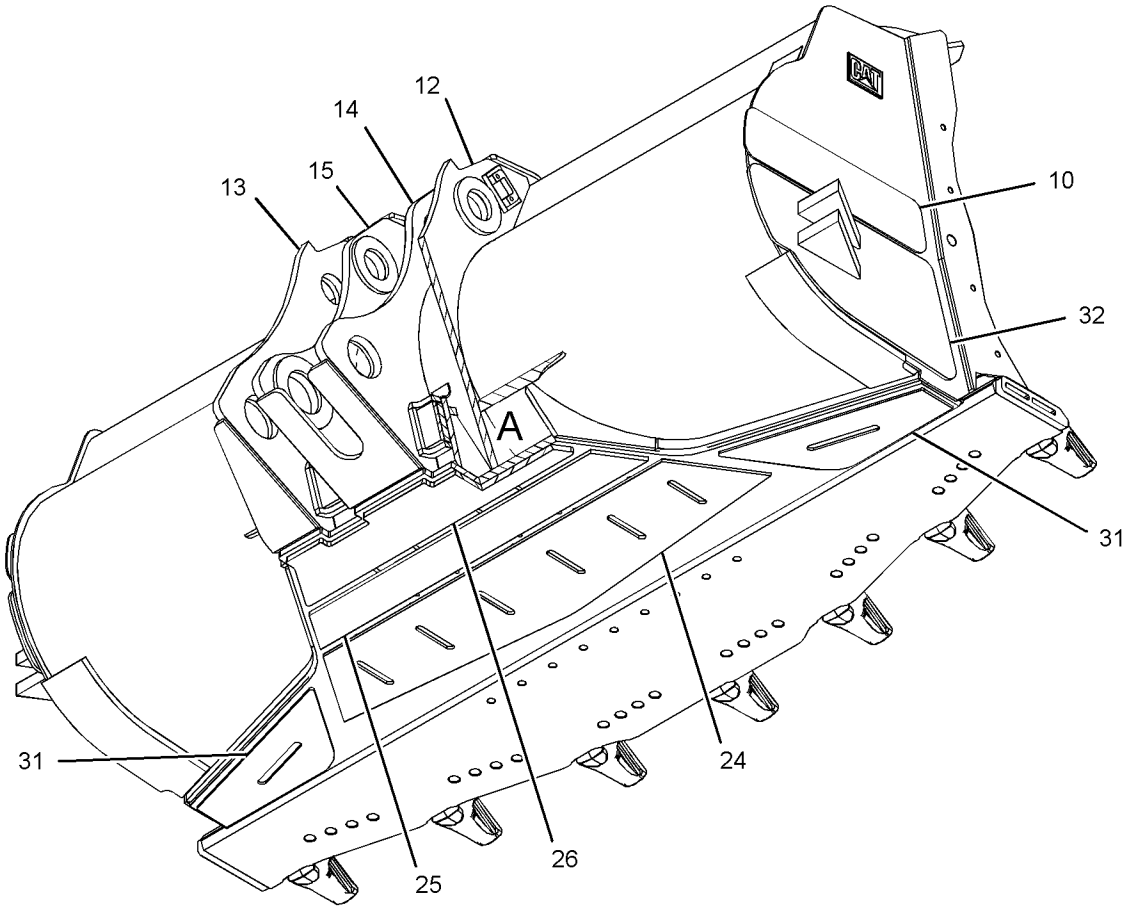


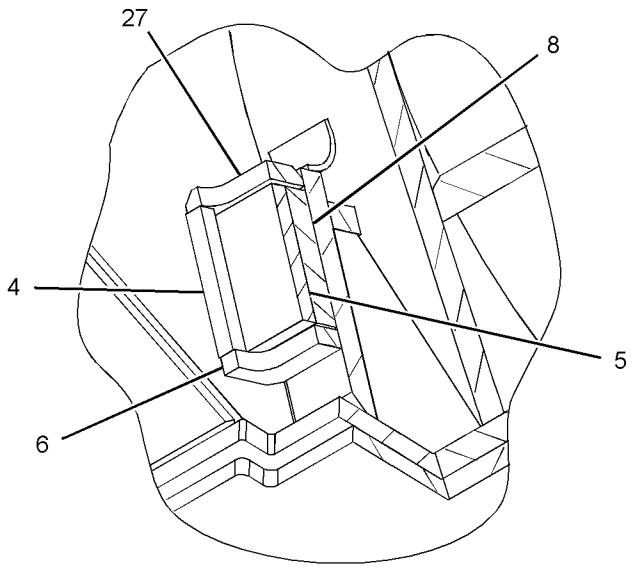


VIEW OF AREA A

GRAPHIC #2 **<END>** g01355905

# WORK TOOLS

## 288-8350 BUCKET AS-ROCK

**S/N: BXY1-UP**
**7.0-CU M (9.0-CU YD)**
**AN ATTACHMENT**

**SMCS-6102** **i02681264**

| NOTE | REF NO | GRAPHIC REF | PART NUMBER | QTY | PART NAME 1 2 3 4 5 6 (PRODUCT LEVEL) | SEE PAGE |
|---|---|---|---|---|---|---|
| | 1 | 1 | **225-9482** | 4 | BAR | |
| | 2 | 1 | **225-9584** | 2 | PLATE | |
| | 3 | 1 | **225-9602** | 2 | PLATE | |
| | 4 | 1 | **228-4727** | 2 | PAD-RUBBER | |
| | 5 | 1 | **236-7753** | 2 | PLATE-WEAR | |
| | 6 | 1 | **255-6691** | 1 | HINGE AS (OUTER, RH) | |
| | 7 | 1 | **255-6692** | 1 | HINGE AS (OUTER, LH) | |
| | 8 | 1 | **255-6694** | 1 | HINGE AS (INNER, RH) | |
| | 9 | 1 | **255-6695** | 1 | HINGE AS (INNER, LH) | |
| | 10 | 1 | **255-6710** | 1 | PLATE-WEAR | |
| | 11 | 1 | **255-6711** | 1 | PLATE-WEAR | |
| | 12 | 1 | **255-6712** | 1 | PLATE-WEAR | |
| | 13 | 1 | **257-3651** | 2 | PLATE | |
| | 14 | 1 | **292-9482** | 1 | EDGE AS | |
| | 14A | 1 | **232-0134** | 8 | ADAPTER-TIP (K-130, 2-STRAP, CENTER) | |
| | 15 | 1 | *292-9484* | 1 | PLATE AS (RH) | |
| | 15A | 1 | **2C-9259** | 1 | PLATE-IDENTIFICATION (CAT) | |
| | 15B | 1 | **216-3683** | 1 | PLATE | |
| | 16 | 1 | *292-9485* | 1 | PLATE AS (LH) | |
| | 16A | 1 | **2C-9259** | 1 | PLATE-IDENTIFICATION (CAT) | |
| | 16B | 1 | **216-3683** | 1 | PLATE | |

## 288-8350 BUCKET AS-ROCK *(contd. )* i02681264

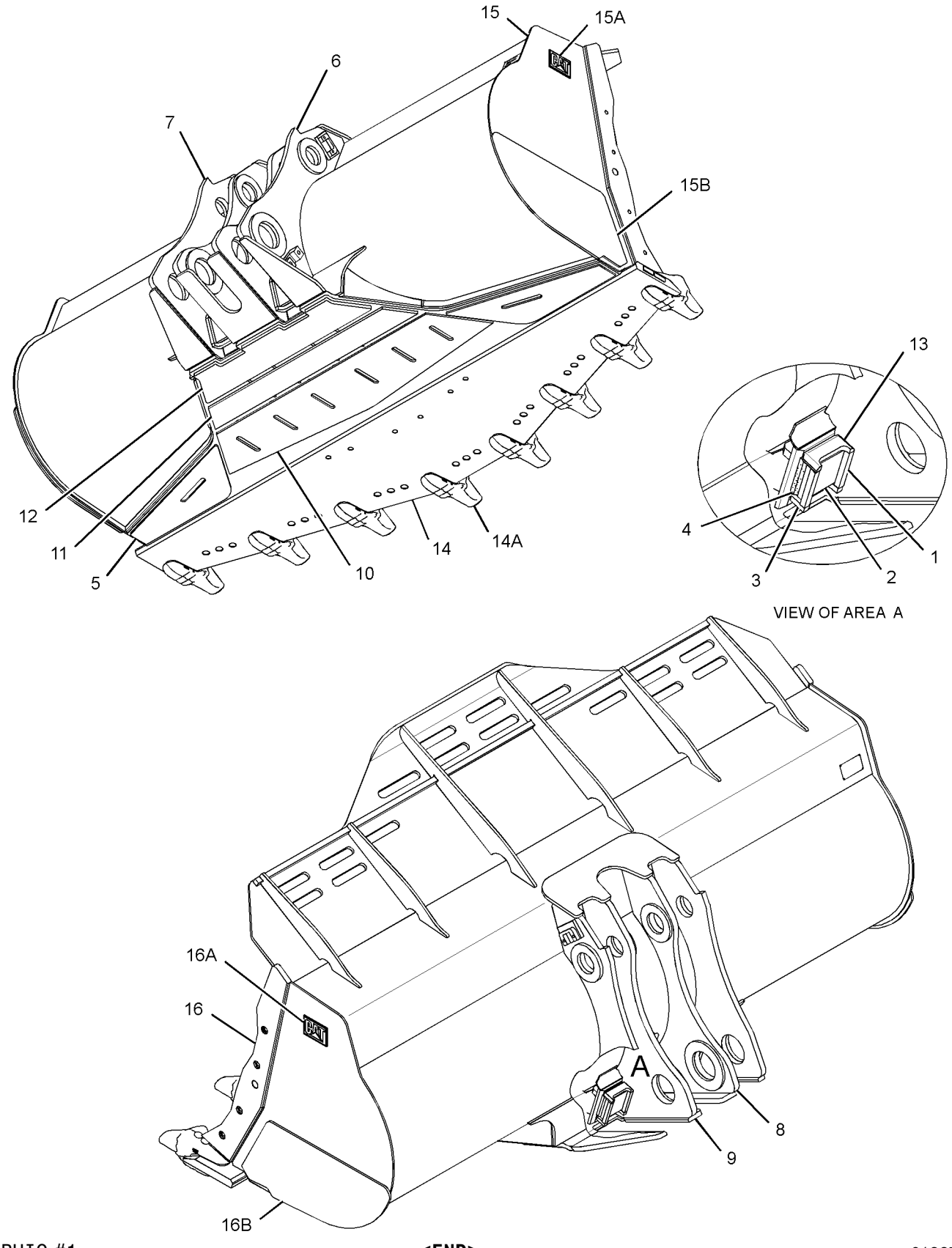


GRAPHIC #1 **<END>** g01367983

# WORK TOOLS

## *210-1235* BUCKET GP-COAL

**S/N: BXY1-UP**
**6.5 CU M (8.5 CU YD)**
**AN ATTACHMENT**

**SMCS-6132** **i02540905**

| NOTE | REF NO | GRAPHIC REF | PART NUMBER | QTY | PART NAME 1 2 3 4 5 6 (PRODUCT LEVEL) | SEE PAGE |
|---|---|---|---|---|---|---|
| | 1 | 1 | **184-9866** | 2 | STOP | |
| Y | 2 | 1 | *210-1236* | 1 | BUCKET AS-COAL | 1229 |
| M | 3 | 1 | **8T-4139** | 8 | BOLT (M12X1.75X30-MM) | |

M-METRIC PART
Y-SEPARATE ILLUSTRATION

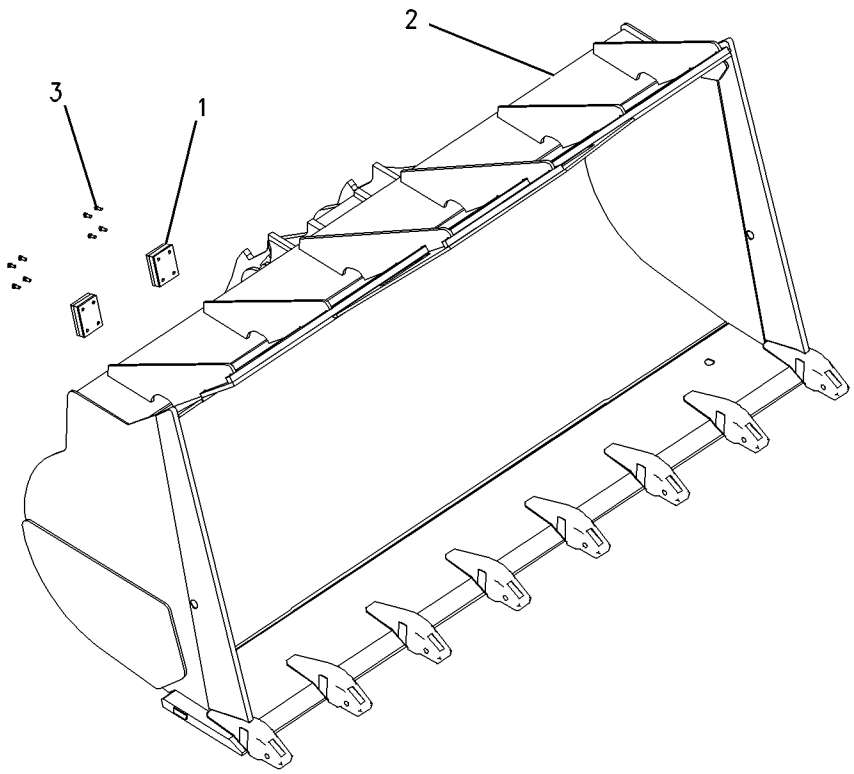


GRAPHIC #1 **<END>** g00847202

# WORK TOOLS

## *265-8218* BUCKET GP-GENERAL PURPOSE

**S/N: BXY1-UP**
**7.7 CU M(10 CU YD)**
**AN ATTACHMENT**

**SMCS-6101** **i02456187**

| NOTE | REF NO | GRAPHIC REF | PART NUMBER | QTY | PART NAME 1 2 3 4 5 6 (PRODUCT LEVEL) | SEE PAGE |
|---|---|---|---|---|---|---|
| | 1 | 1 | **1U-0761** | 2 | EDGE-END | |
| | 2 | 1 | **208-5261** | 2 | EDGE-CUTTING | |
| Y | 3 | 1 | *265-8219* | 1 | BUCKET AS-GENERAL PURPOSE | 1233 |
| | 4 | 1 | **3K-9770** | 12 | NUT-FULL (1-1/4-7-THD) | |
| | 5 | 1 | **6V-8360** | 12 | BOLT-PLOW (1-1/4-7X4.53-IN) | |

Y-SEPARATE ILLUSTRATION

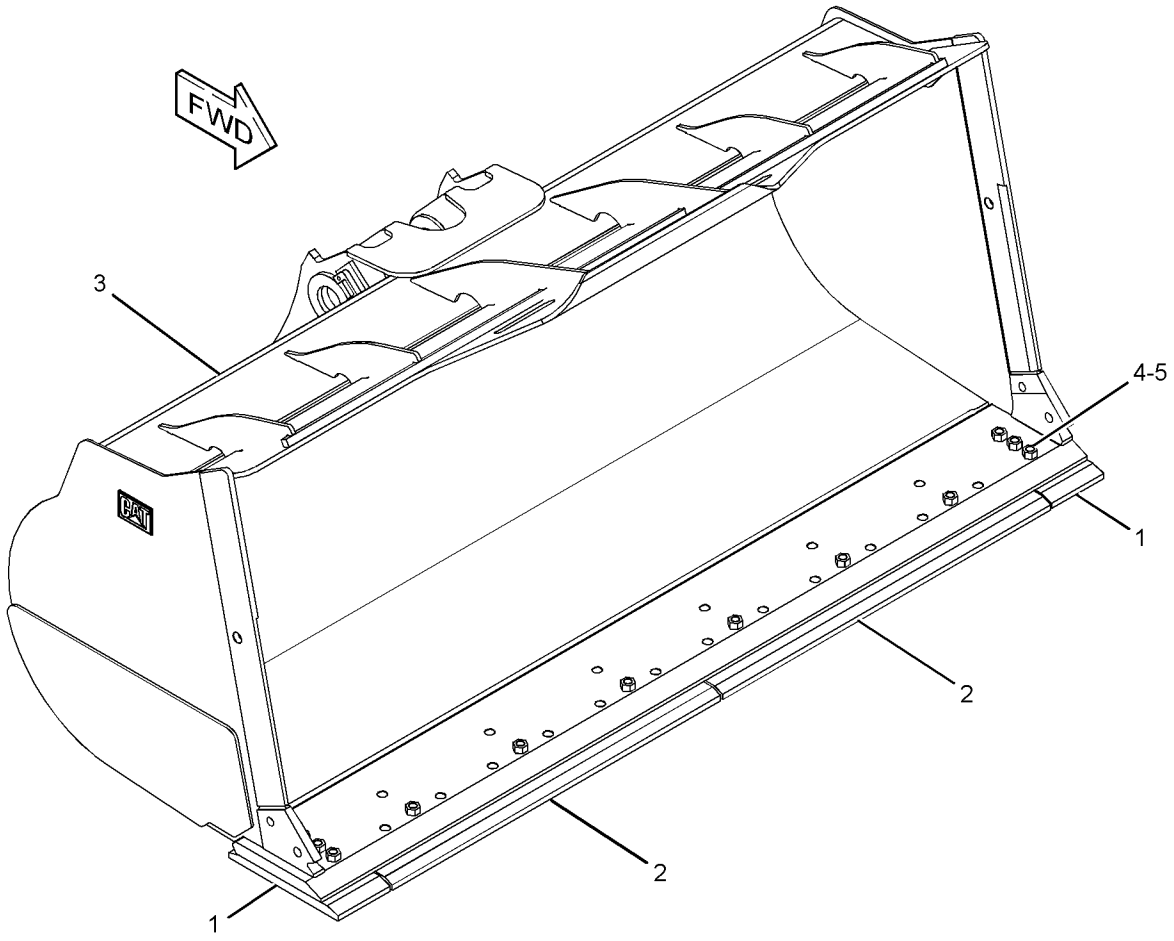


GRAPHIC #1 **<END>** g01228975

# WORK TOOLS

## *246-2754* BUCKET GP-ROCK

**S/N: BXY1-UP**
**6.9-CU M (9.0-CU YD)**
**AN ATTACHMENT**

**SMCS-6102** **i02224362**

| NOTE | REF NO | GRAPHIC REF | PART NUMBER | QTY | PART NAME 1 2 3 4 5 6 (PRODUCT LEVEL) | SEE PAGE |
|---|---|---|---|---|---|---|
| Y | 1 | 1 | **9W-5731** | 1 | EDGE-CUTTING (LH) | 1281 |
| | 2 | 1 | **9W-5732** | 1 | EDGE-CUTTING (LH) | |
| | 3 | 1 | **9W-5733** | 1 | EDGE-CUTTING (CENTER) | |
| | 4 | 1 | **9W-5734** | 1 | EDGE-SEGMENT (CENTER) | |
| Y | 5 | 1 | **9W-5735** | 1 | EDGE-CUTTING (RH) | 1282 |
| | 6 | 1 | **9W-5736** | 1 | EDGE-CUTTING (RH) | |
| Y | 7 | 1 | *246-2755* | 1 | BUCKET AS-ROCK | 1237 |
| | 8 | 1 | **3K-9770** | 28 | NUT-FULL (1-1/4-7-THD) | |
| | 9 | 1 | **6V-6535** | 28 | BOLT-PLOW (1-1/4X3.75-IN) | |

Y-SEPARATE ILLUSTRATION

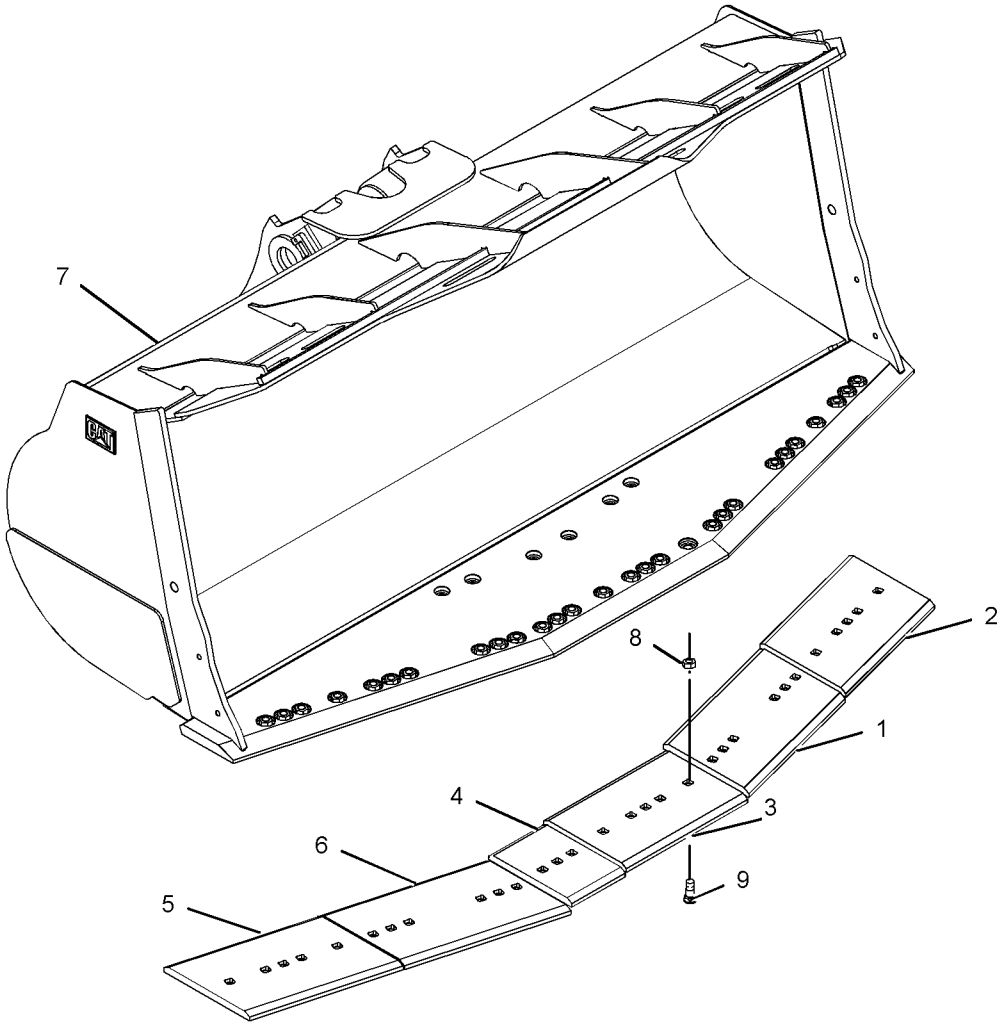


GRAPHIC #1 **<END>** g01123698

# WORK TOOLS

## 246-2769 BUCKET GP-ROCK

**S/N: BXY1-UP**
**6.4-CU M (8.33-CU YD)**
**AN ATTACHMENT**

**SMCS-6102** **i02708536**

| NOTE | REF NO | GRAPHIC REF | PART NUMBER | QTY | PART NAME 1 2 3 4 5 6 (PRODUCT LEVEL) | SEE PAGE |
|---|---|---|---|---|---|---|
| | 1 | 1 | **4T-6617** | 1 | EDGE-CUTTING | |
| Y | 2 | 1 | *106-0912* | 2 | PROTECTOR GP-SIDE BAR | 1311 |
| Y | 3 | 1 | *246-2770* | 1 | BUCKET AS-ROCK | 1248 |
| | 4 | 1 | **275-5470** | 2 | EDGE-SEGMENT | |
| | 5 | 1 | **275-5471** | 2 | EDGE-SEGMENT (RH) | |
| | 6 | 1 | **275-5472** | 2 | EDGE-SEGMENT (LH) | |
| | 7 | 1 | **2J-3507** | 4 | NUT-FULL (1-8-THD) | |
| | 8 | 1 | **3K-9770** | 24 | NUT-FULL (1-1/4-7-THD) | |
| | 9 | 1 | **5P-8136** | 4 | BOLT-PLOW (1-8X4-IN) | |
| | 10 | 1 | **5P-8250** | 4 | WASHER (28X49X5-MM THK) | |
| | 11 | 1 | **5P-8823** | 24 | BOLT-PLOW (1-1/4-7X4.13-IN) | |

Y-SEPARATE ILLUSTRATION

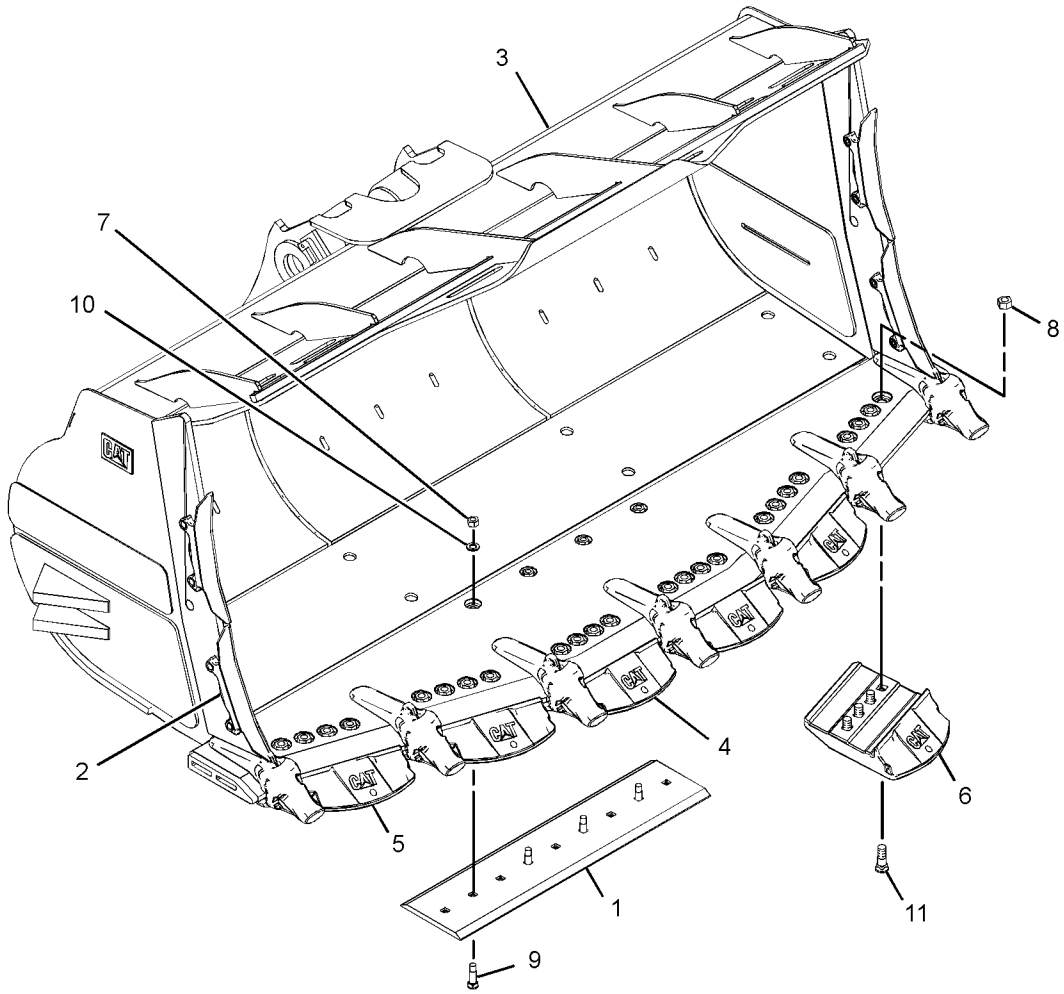


GRAPHIC #1

**<END>**

g01361085

# WORK TOOLS

## 246-2771 BUCKET GP-ROCK

**S/N: BXY1-UP**
**6.4-CU M (8.33-CU YD)**
**AN ATTACHMENT**

**SMCS-6102** **i02564932**

| NOTE | REF NO | GRAPHIC REF | PART NUMBER | QTY | PART NAME 1 2 3 4 5 6 (PRODUCT LEVEL) | SEE PAGE |
|---|---|---|---|---|---|---|
| | 1 | 1 | **5P-8362** | 24 | NUT (1-1/4-7-THD) | |
| Y | 2 | 1 | *106-0912* | 2 | PROTECTOR GP-SIDE BAR | 1311 |
| | 3 | 1 | **114-0359** | 7 | RETAINER AS (G.E.T.) | |
| Y | 4 | 1 | *246-2772* | 1 | BUCKET AS-ROCK | 1251 |
| | 5 | 1 | **251-2180** | 5 | COVER-ADAPTER (CENTER) | |
| | 6 | 1 | **251-2461** | 2 | COVER-ADAPTER (CORNER) | |
| | 7 | 1 | **251-6730** | 7 | PIN | |
| | 8 | 1 | **257-1778** | 2 | PLATE-WEAR (CENTER) | |
| | 9 | 1 | **257-1779** | 2 | PLATE-WEAR (RH) | |
| | 10 | 1 | **257-1781** | 2 | PLATE-WEAR (LH) | |
| | 11 | 1 | **257-1782** | 2 | EDGE-SEGMENT (CENTER) | |
| | 12 | 1 | **257-1783** | 2 | EDGE-SEGMENT (RH) | |
| | 13 | 1 | **257-1784** | 2 | EDGE-SEGMENT (LH) | |
| | 14 | 1 | **198-1092** | 24 | BOLT-PLOW (1-1/4-7X4.5-IN) | |
| | 15 | 1 | **2J-3507** | 9 | NUT-FULL (1-8-THD) | |
| | 16 | 1 | **3K-9770** | 24 | NUT-FULL (1-1/4-7-THD) | |
| | 17 | 1 | **4T-6617** | 1 | EDGE-CUTTING | |
| | 18 | 1 | **5P-8136** | 9 | BOLT-PLOW (1-8X4-IN) | |
| | 19 | 1 | **5P-8250** | 9 | WASHER (28X49X5-MM THK) | |

Y-SEPARATE ILLUSTRATION

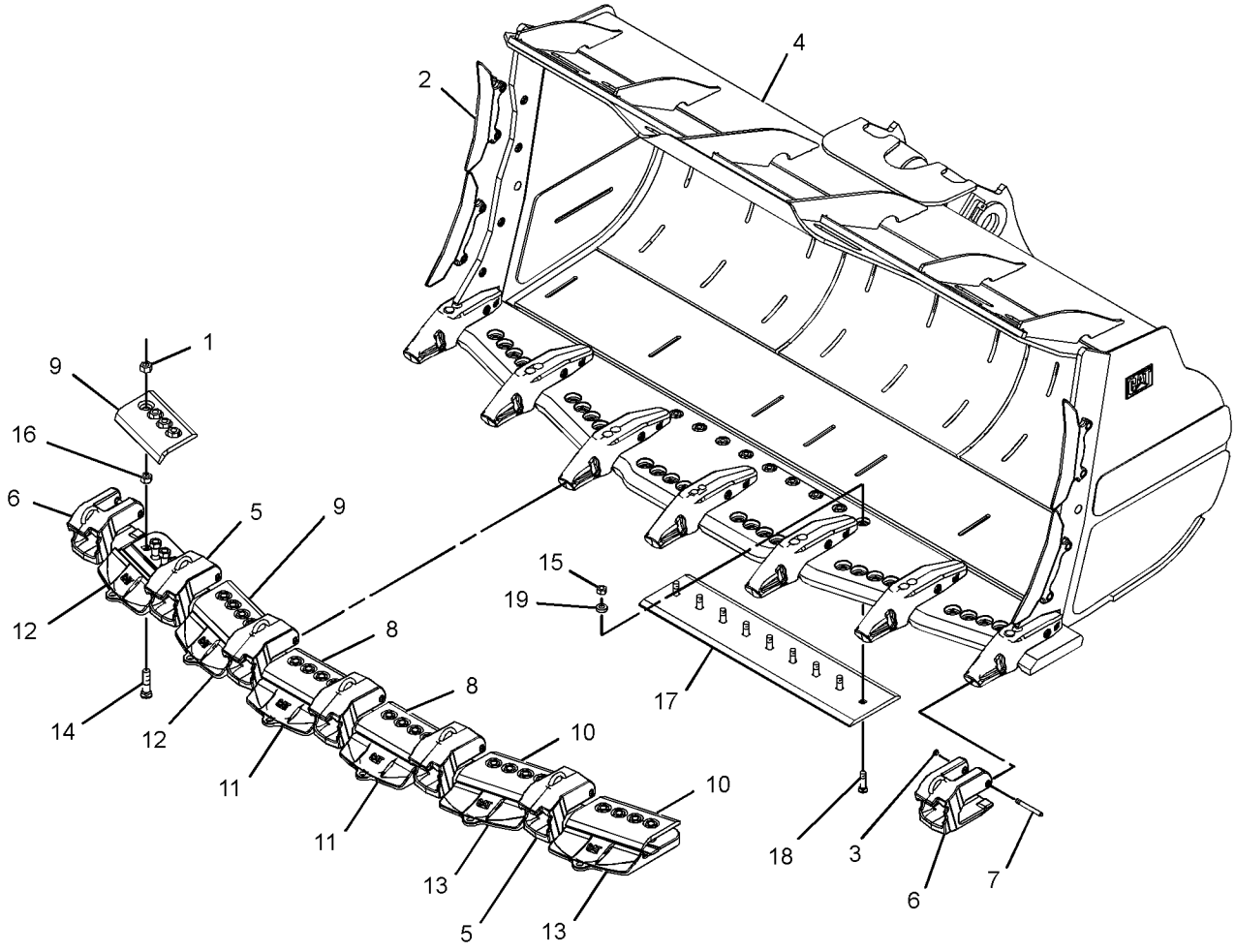


GRAPHIC #1 **<END>** g01334218

# WORK TOOLS

## *283-1850* BUCKET GP-ROCK

**S/N: BXY1-UP**
**6.5-CU M (8.5-CU YD)**
**FOR USE WITH 255-0040—PAGE 1204, 255-0042—PAGE 1205**
**AN ATTACHMENT**

**SMCS-6102** **i02675673**

| NOTE | REF NO | GRAPHIC REF | PART NUMBER | QTY | PART NAME 1 2 3 4 5 6 (PRODUCT LEVEL) | SEE PAGE |
|---|---|---|---|---|---|---|
| | 1 | 1 | **4T-6617** | 1 | EDGE-CUTTING | |
| Y | 2 | 1 | *106-0912* | 2 | PROTECTOR GP-SIDE BAR | 1311 |
| | 3 | 1 | **275-5470** | 2 | EDGE-SEGMENT | |
| | 4 | 1 | **275-5471** | 2 | EDGE-SEGMENT (RH) | |
| | 5 | 1 | **275-5472** | 2 | EDGE-SEGMENT (LH) | |
| Y | 6 | 1 | *283-1851* | 1 | BUCKET AS-ROCK | 1255 |
| | 7 | 1 | **2J-3507** | 4 | NUT-FULL (1-8-THD) | |
| | 8 | 1 | **3K-9770** | 24 | NUT-FULL (1-1/4-7-THD) | |
| | 9 | 1 | **5P-8136** | 4 | BOLT-PLOW (1-8X4-IN) | |
| | 10 | 1 | **5P-8250** | 4 | WASHER (28X49X5-MM THK) | |
| | 11 | 1 | **5P-8823** | 24 | BOLT-PLOW (1-1/4-7X4.13-IN) | |

Y-SEPARATE ILLUSTRATION

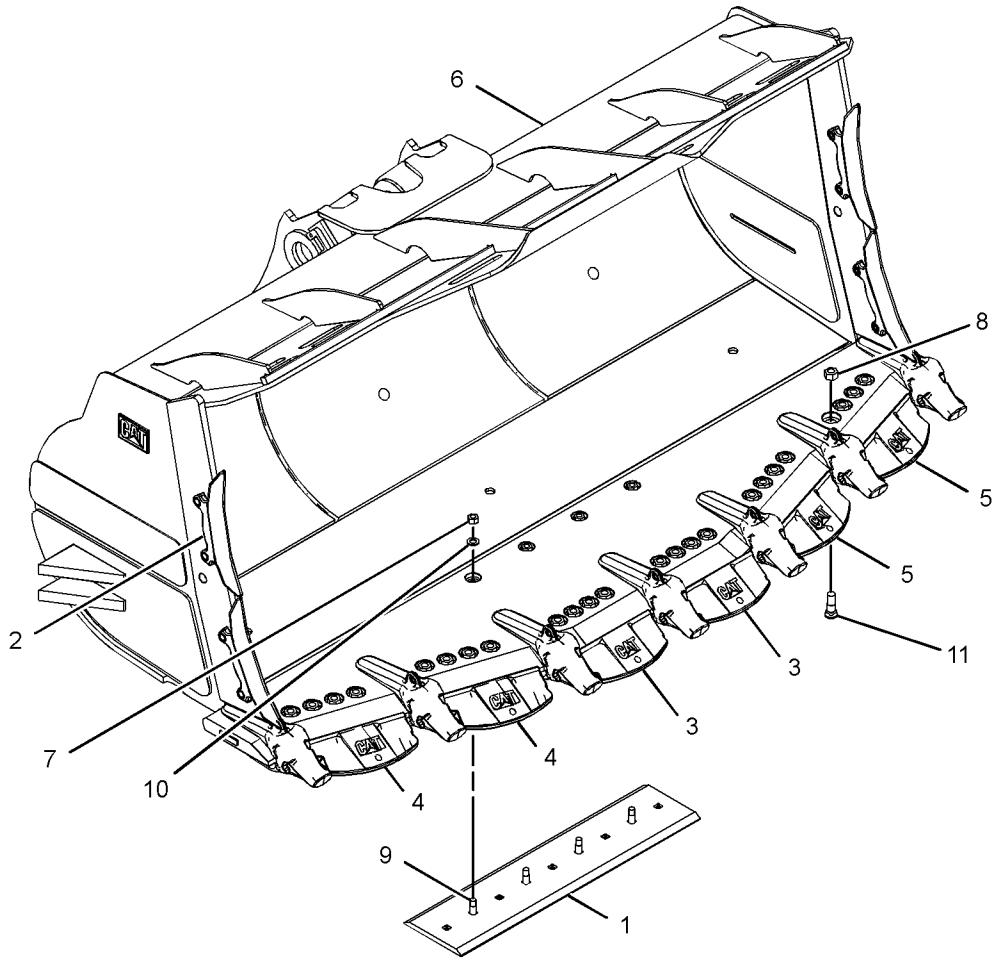


GRAPHIC #1 **<END>** g01354086

# 283-1940 BUCKET GP-ROCK

**S/N: BXY1-UP**
**6.5-CU M (8.5-CU YD)**
**FOR USE WITH 255-0040—PAGE 1204, 255-0042—PAGE 1205**
**AN ATTACHMENT**

**SMCS-6102** **i02675677**

| NOTE | REF NO | GRAPHIC REF | PART NUMBER | QTY | PART NAME 1 2 3 4 5 6 (PRODUCT LEVEL) | SEE PAGE |
|---|---|---|---|---|---|---|
| | 1 | 1 | **5P-8362** | 24 | NUT (1-1/4-7-THD) | |
| Y | 2 | 1 | *106-0912* | 2 | PROTECTOR GP-SIDE BAR | 1311 |
| | 3 | 1 | **114-0359** | 7 | RETAINER AS (G.E.T.) | |
| | 4 | 1 | **251-2180** | 5 | COVER-ADAPTER (CENTER) | |
| | 5 | 1 | **251-2461** | 2 | COVER-ADAPTER (CORNER) | |
| | 6 | 1 | **251-6730** | 7 | PIN | |
| | 7 | 1 | **257-1778** | 2 | PLATE-WEAR (CENTER) | |
| | 8 | 1 | **257-1779** | 2 | PLATE-WEAR (RH) | |
| | 9 | 1 | **257-1781** | 2 | PLATE-WEAR (LH) | |
| | 10 | 1 | **257-1782** | 2 | EDGE-SEGMENT (CENTER) | |
| | 11 | 1 | **257-1783** | 2 | EDGE-SEGMENT (RH) | |
| | 12 | 1 | **257-1784** | 2 | EDGE-SEGMENT (LH) | |
| Y | 13 | 1 | *283-1941* | 1 | BUCKET AS-ROCK | 1258 |
| | 14 | 1 | **198-1092** | 24 | BOLT-PLOW (1-1/4-7X4.5-IN) | |
| | 15 | 1 | **2J-3507** | 9 | NUT-FULL (1-8-THD) | |
| | 16 | 1 | **3K-9770** | 24 | NUT-FULL (1-1/4-7-THD) | |
| | 17 | 1 | **4T-6617** | 1 | EDGE-CUTTING | |
| | 18 | 1 | **5P-8136** | 9 | BOLT-PLOW (1-8X4-IN) | |
| | 19 | 1 | **5P-8250** | 9 | WASHER (28X49X5-MM THK) | |

Y-SEPARATE ILLUSTRATION

## 283-1940 BUCKET GP-ROCK *(contd. )* i02675677

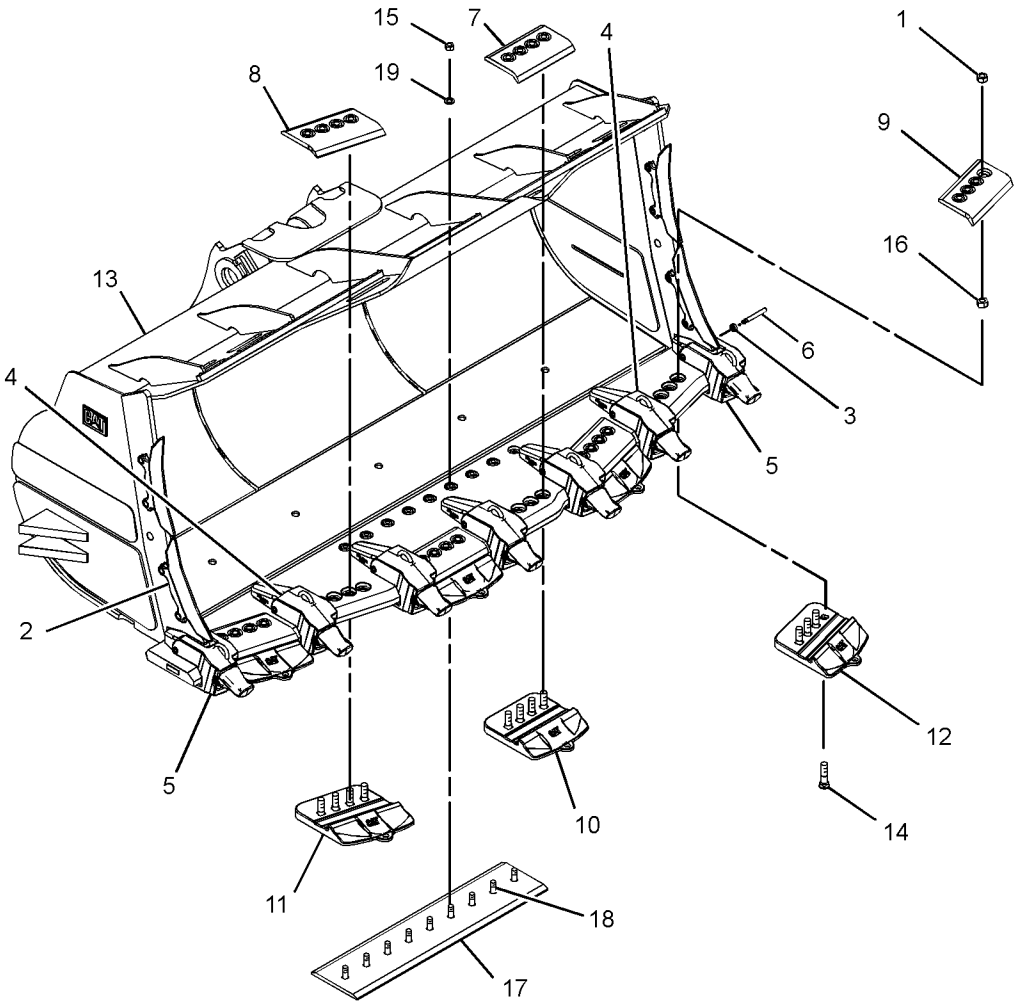


GRAPHIC #1 **<END>** g01354054

# WORK TOOLS

## 288-8250 BUCKET GP-ROCK

**S/N: BXY1-UP**
**6.5-CU M (8.5-CU YDS)**
**AN ATTACHMENT**

**SMCS-6102** **i02625426**

| NOTE | REF NO | GRAPHIC REF | PART NUMBER | QTY | PART NAME 1 2 3 4 5 6 (PRODUCT LEVEL) | SEE PAGE |
|---|---|---|---|---|---|---|
| | 1 | 1 | **5P-8362** | 24 | NUT (1-1/4-7-THD) | |
| Y | 2 | 1 | *106-0912* | 2 | PROTECTOR GP-SIDE BAR | 1311 |
| | 3 | 1 | **114-0359** | 7 | RETAINER AS (G.E.T.) | |
| | 4 | 1 | **251-2180** | 5 | COVER-ADAPTER (CENTER) | |
| | 5 | 1 | **251-2461** | 2 | COVER-ADAPTER (CORNER) | |
| | 6 | 1 | **251-6730** | 7 | PIN | |
| | 7 | 1 | **257-1778** | 2 | PLATE-WEAR (CENTER) | |
| | 8 | 1 | **257-1779** | 2 | PLATE-WEAR (RH) | |
| | 9 | 1 | **257-1781** | 2 | PLATE-WEAR (LH) | |
| | 10 | 1 | **257-1782** | 2 | EDGE-SEGMENT (CENTER) | |
| | 11 | 1 | **257-1783** | 2 | EDGE-SEGMENT (RH) | |
| | 12 | 1 | **257-1784** | 2 | EDGE-SEGMENT (LH) | |
| Y | 13 | 1 | *288-8251* | 1 | BUCKET AS-ROCK | 1260 |
| | 14 | 1 | **198-1092** | 24 | BOLT-PLOW (1-1/4-7X4.5-IN) | |
| | 15 | 1 | **2J-3507** | 9 | NUT-FULL (1-8-THD) | |
| | 16 | 1 | **3K-9770** | 24 | NUT-FULL (1-1/4-7-THD) | |
| | 17 | 1 | **4T-6617** | 1 | EDGE-CUTTING | |
| | 18 | 1 | **5P-8136** | 9 | BOLT-PLOW (1-8X4-IN) | |
| | 19 | 1 | **5P-8250** | 9 | WASHER (28X49X5-MM THK) | |

Y-SEPARATE ILLUSTRATION

## 288-8250 BUCKET GP-ROCK *(contd. )* i02625426

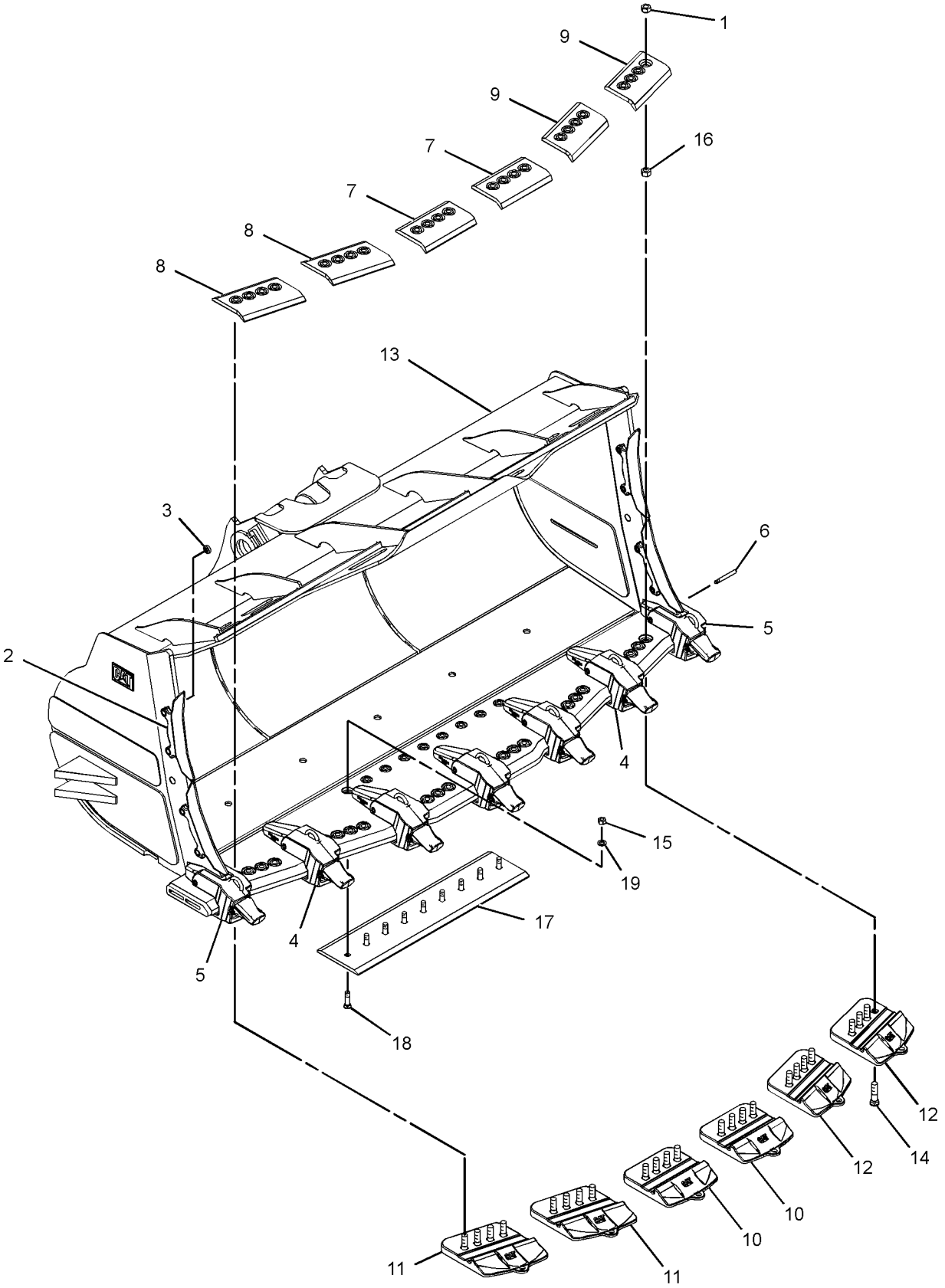


GRAPHIC #1 **<END>** g01345498

# WORK TOOLS

## *208-5336* EDGE AS-BASE

**S/N: BXY1-UP**

**FIELD INSTALLATION**

**SMCS-6801** **i01972640**

| NOTE | REF NO | GRAPHIC REF | PART NUMBER | QTY | PART NAME 1 2 3 4 5 6 (PRODUCT LEVEL) | SEE PAGE |
|---|---|---|---|---|---|---|
| | 1 | 1 | **114-0464** | 8 | ADAPTER | |

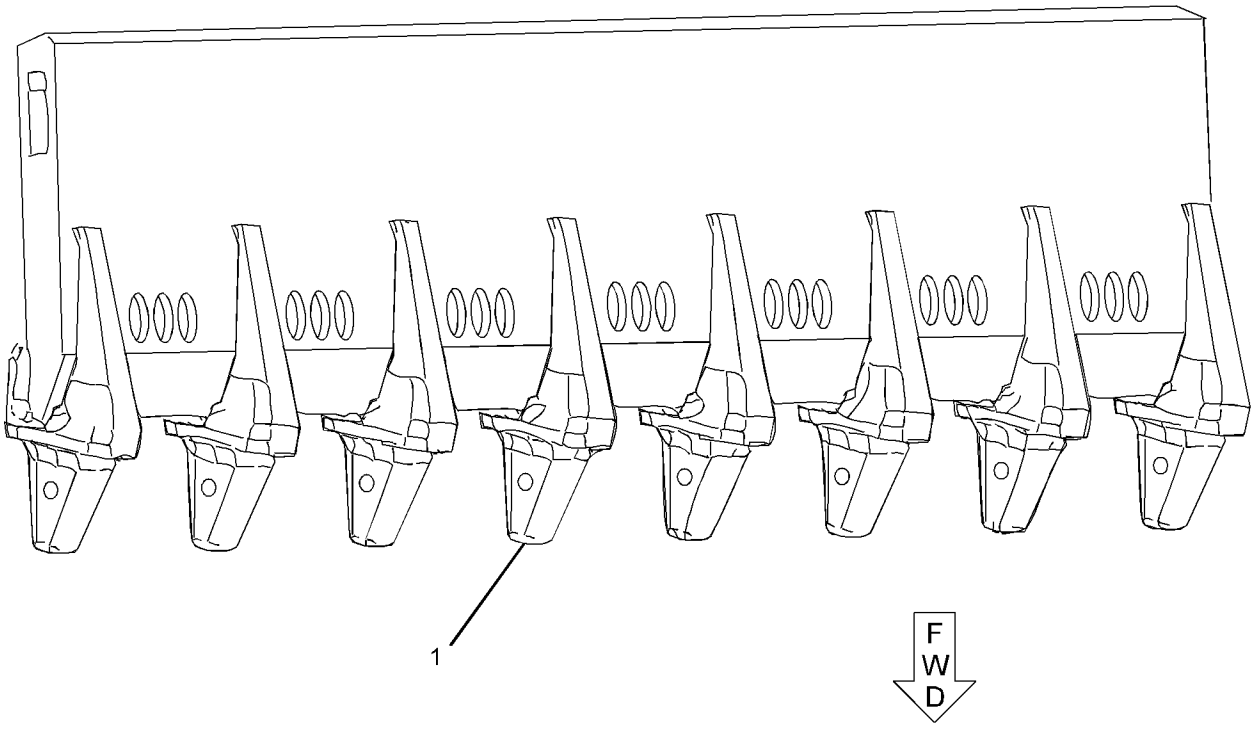


GRAPHIC #1 **<END>** g01047059

# WORK TOOLS

## *236-7043* EDGE AS-BASE

**S/N: BXY1-UP**

**FIELD INSTALLATION**

**SMCS-6801** **i02503749**

| NOTE | REF NO | GRAPHIC REF | PART NUMBER | QTY | PART NAME 1 2 3 4 5 6 (PRODUCT LEVEL) | SEE PAGE |
|---|---|---|---|---|---|---|
| | 1 | 1 | **186-3294** | 7 | ADAPTER-TIP | |
| | 2 | 1 | **8P-9770** | 1 | PLATE-INFORMATION | |

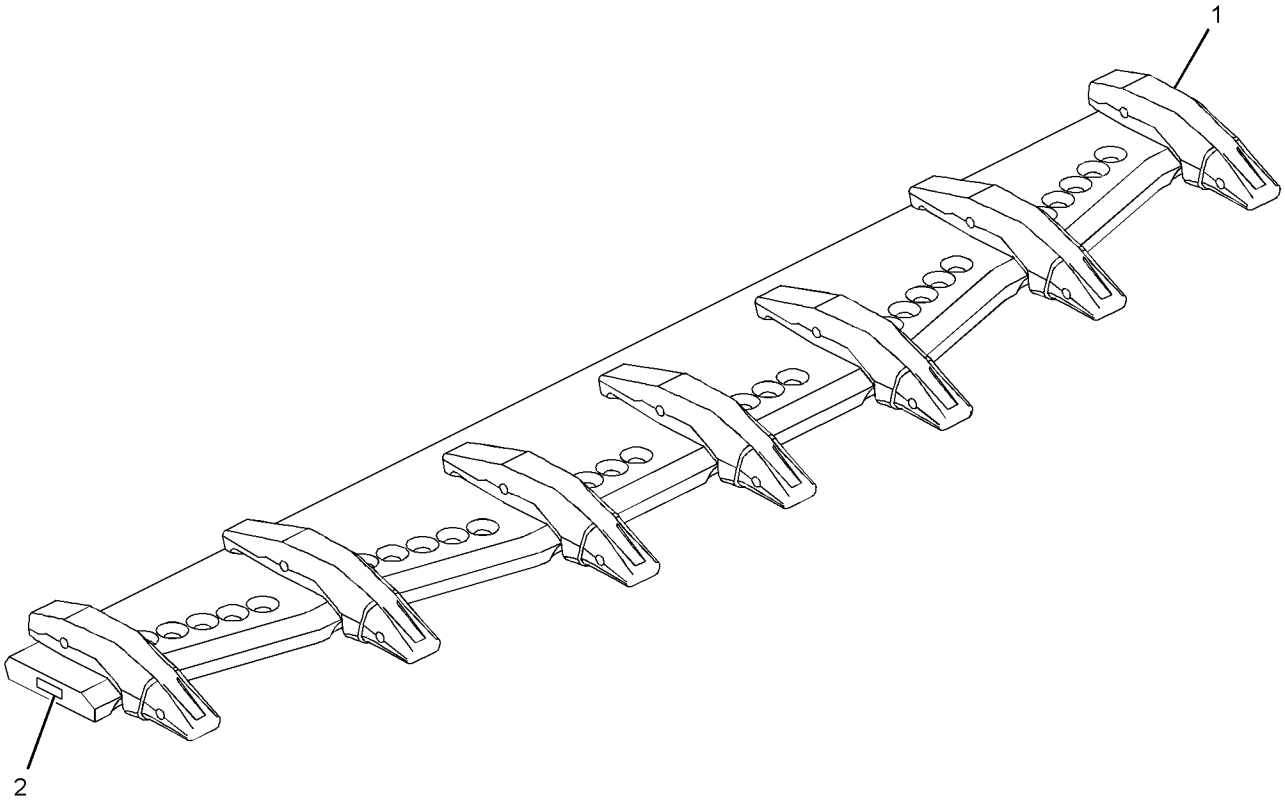


GRAPHIC #1 **<END>** g01282343

# WORK TOOLS

## 275-6048 EDGE AS-BASE

**S/N: BXY1-UP**
**K-130**
**FIELD INSTALLATION**

**SMCS-6801** **i02627846**

| NOTE | REF NO | GRAPHIC REF | PART NUMBER | QTY | PART NAME 1 2 3 4 5 6 (PRODUCT LEVEL) | SEE PAGE |
|---|---|---|---|---|---|---|
| | 1 | 1 | **135-9562** | 5 | LUG-MOUNTING | |
| | 2 | 1 | **232-0138** | 4 | ADAPTER-TIP (K-130, CENTER) | |
| | 3 | 1 | **232-0139** | 2 | ADAPTER-TIP (K-130, CORNER) | |

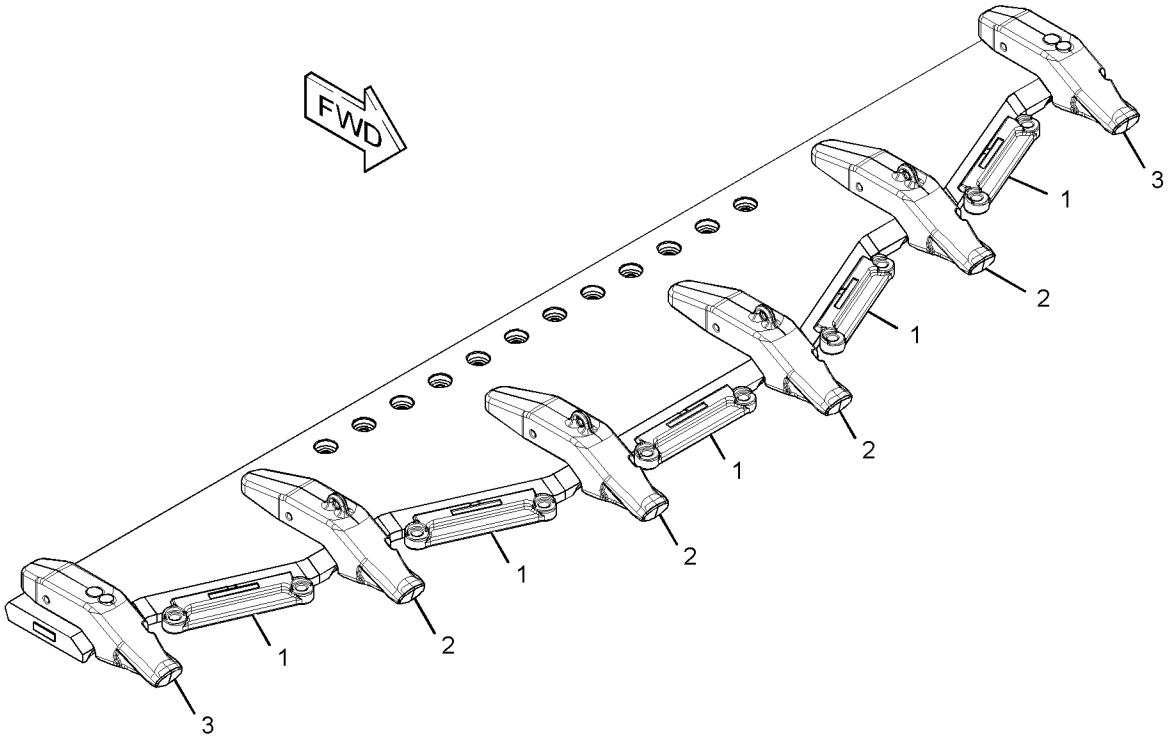


GRAPHIC #1 **<END>** g01337824

# WORK TOOLS

## *104-4369* EDGE GP-BIT & CUTTING

**S/N: BXY1-UP**
**AN ATTACHMENT**

**SMCS-6801** **i00176707**

| NOTE | PART NUMBER | QTY | PART NAME 1 2 3 4 5 6 (PRODUCT LEVEL) | SEE PAGE |
|---|---|---|---|---|
| | *5P-8823* | 12 | BOLT-PLOW (1-1/4-7X105MM) | |
| | *104-5841* | 2 | EDGE-CUTTING | |
| | *1U-0761* | 2 | EDGE-END | |
| | *3K-9770* | 12 | NUT-FULL (1-1/4-7 THD) | |

**<END>**

## *132-1071* EDGE GP-CUTTING

**S/N: BXY1-UP**
**AN ATTACHMENT**

**SMCS-6801** **i00176314**

| NOTE | PART NUMBER | QTY | PART NAME 1 2 3 4 5 6 (PRODUCT LEVEL) | SEE PAGE |
|---|---|---|---|---|
| | **5P-8823** | 12 | BOLT-PLOW (1-1/4-7X105MM) | |
| | **132-1069** | 1 | EDGE-CUTTING-LH | |
| | **132-1070** | 1 | EDGE-CUTTING-RH | |
| | **123-0335** | 1 | EDGE-END-LH | |
| | **123-0334** | 1 | EDGE-END-RH | |
| | **3K-9770** | 12 | NUT-FULL (1-1/4-7 THD) | |

**<END>**

## *183-5318* EDGE GP-CUTTING

**S/N: BXY1-UP**
**AN ATTACHMENT**

**SMCS-6801** **i01286063**

| NOTE | PART NUMBER | QTY | PART NAME 1 2 3 4 5 6 (PRODUCT LEVEL) | SEE PAGE |
|---|---|---|---|---|
| | **6V-8360** | 12 | BOLT-PLOW (1-1/4-7X4.53IN) | |
| | **183-5325** | 2 | EDGE-CUTTING | |
| | **1U-0761** | 2 | EDGE-END | |
| | **3K-9770** | 12 | NUT-FULL (1-1/4-7 THD) | |

**<END>**

## *183-5321* EDGE GP-CUTTING

**S/N: BXY1-UP**
**FOR USE WITH 171-4056 GENERAL PURPOSE BUCKET**
**AN ATTACHMENT**

**SMCS-6801** **i01286068**

| NOTE | PART NUMBER | QTY | PART NAME 1 2 3 4 5 6 (PRODUCT LEVEL) | SEE PAGE |
|---|---|---|---|---|
| | **6V-8360** | 14 | BOLT-PLOW (1-1/4-7X4.53IN) | |
| | **183-5324** | 7 | EDGE-SEGMENT | |
| | **3K-9770** | 14 | NUT-FULL (1-1/4-7 THD) | |

**<END>**

# WORK TOOLS

## *208-5262* EDGE GP-CUTTING

**S/N: BXY1-UP**
**FOR USE WITH GENERAL PURPOSE BUCKET W/ 3.6M BOOM**
**AN ATTACHMENT**

**SMCS-6801** **i01832171**

| NOTE | PART NUMBER | QTY | PART NAME 1 2 3 4 5 6 (PRODUCT LEVEL) | SEE PAGE |
|---|---|---|---|---|
| | **6V-8360** | 12 | BOLT-PLOW (1-1/4-7X4.53IN) | |
| | **208-5260** | 2 | EDGE-SEGMENT | |
| | **3K-9770** | 12 | NUT-FULL (1 1/4X7 THD) | |
| | **1U-0071** | 2 | PLATE AS-RH | |

**<END>**

## *208-8840* EDGE GP-CUTTING

**S/N: BXY1-UP**
**FOR USE WITH WHEEL LOADER ROCK BUCKETS**
**AN ATTACHMENT**

**SMCS-6801** **i01703541**

| NOTE | PART NUMBER | QTY | PART NAME 1 2 3 4 5 6 (PRODUCT LEVEL) | SEE PAGE |
|---|---|---|---|---|
| | **6V-6535** | 28 | BOLT-PLOW (1-1/4X3.75-IN) | |
| | **9W-5733** | 1 | EDGE-CUTTING (CENTER) | |
| | **9W-5731** | 1 | EDGE-CUTTING (LH) | |
| | **9W-5732** | 1 | EDGE-CUTTING (LH) | |
| | **9W-5735** | 1 | EDGE-CUTTING (RH) | |
| | **9W-5736** | 1 | EDGE-CUTTING (RH) | |
| | **9W-5734** | 1 | EDGE-SEGMENT (CENTER) | |
| | **3K-9770** | 28 | NUT-FULL (1-1/4-7-THD) | |

**<END>**

## *208-8841* EDGE GP-CUTTING

**S/N: BXY1-UP**
**HEAVY DUTY**
**FOR USE WITH WHEEL LOADER ROCK BUCKETS**
**AN ATTACHMENT**

**SMCS-6801** **i01703542**

| NOTE | PART NUMBER | QTY | PART NAME 1 2 3 4 5 6 (PRODUCT LEVEL) | SEE PAGE |
|---|---|---|---|---|
| | **6V-6535** | 28 | BOLT-PLOW (1 1/4X3.75 IN) | |
| | **106-1096** | 1 | EDGE-CUTTING | |
| | **106-1094** | 1 | EDGE-CUTTING-LH | |
| | **106-1095** | 1 | EDGE-CUTTING-LH | |
| | **106-1097** | 1 | EDGE-CUTTING-RH | |
| | **106-1098** | 1 | EDGE-CUTTING-RH | |
| | **107-3490** | 1 | EDGE-SEGMENT | |
| | **3K-9770** | 28 | NUT-FULL (1 1/4X7 THD) | |

**<END>**

# WORK TOOLS

## *217-4652* EDGE GP-CUTTING

**S/N: BXY1-UP**
**AN ATTACHMENT**

**SMCS-6801** **i01966999**

| NOTE | PART NUMBER | QTY | PART NAME 1 2 3 4 5 6 (PRODUCT LEVEL) | SEE PAGE |
|---|---|---|---|---|
| | **6V-8360** | 14 | BOLT-PLOW (1-1/4-7X4.53IN) | |
| | **208-5260** | 7 | EDGE-SEGMENT | |
| | **3K-9770** | 14 | NUT-FULL (1 1/4X7 THD) | |

**<END>**

## *229-6388* EDGE GP-CUTTING

**S/N: BXY1-UP**
**AN ATTACHMENT**

**SMCS-6801** **i02743347**

| NOTE | PART NUMBER | QTY | PART NAME 1 2 3 4 5 6 (PRODUCT LEVEL) | SEE PAGE |
|---|---|---|---|---|
| | **6V-6535** | 28 | BOLT-PLOW (1-1/4-7X3.74-IN) | |
| | **208-5281** | 1 | EDGE-CUTTING (A.R.M., LH) | |
| | **208-5282** | 1 | EDGE-CUTTING (A.R.M., LH) | |
| | **208-5285** | 1 | EDGE-CUTTING (A.R.M., RH) | |
| | **208-5286** | 1 | EDGE-CUTTING (A.R.M., RH) | |
| | **208-5283** | 1 | EDGE-CUTTING (A.R.M., CENTER) | |
| | **208-5284** | 1 | EDGE-SEGMENT (A.R.M., CENTER) | |
| | **3K-9770** | 28 | NUT-FULL (1-1/4-7-THD) | |

**<END>**

## *8E-9898* EDGE GP-SEGMENT

**S/N: BXY1-UP**
**AN ATTACHMENT**

**SMCS-6818** **i00176740**

| NOTE | PART NUMBER | QTY | PART NAME 1 2 3 4 5 6 (PRODUCT LEVEL) | SEE PAGE |
|---|---|---|---|---|
| | **6V-6535** | 21 | BOLT-PLOW | |
| | **101-9345** | 7 | COVER | |
| | **3K-9770** | 21 | NUT-FULL (1-1/4-7 THD) | |

**<END>**

## *107-3533* EDGE GP-SEGMENT

**S/N: BXY1-UP**
**FOR USE WITH 4E-6469 BUCKET GP-ROCK, 9U-4184 BUCKET GP-ROCK, 106-9820 BUCKET GP-ROCK**
**AN ATTACHMENT**

**SMCS-6818** **i00967026**

| NOTE | PART NUMBER | QTY | PART NAME 1 2 3 4 5 6 (PRODUCT LEVEL) | SEE PAGE |
|---|---|---|---|---|
| | **6V-6535** | 21 | BOLT-PLOW (1 1/4-7X95MM) | |
| | **107-3536** | 1 | EDGE-SEGMENT | |
| | **107-3538** | 3 | EDGE-SEGMENT-LH | |
| | **107-3537** | 3 | EDGE-SEGMENT-RH | |
| | **3K-9770** | 21 | NUT-FULL (1-1/4-7 THD) | |

**<END>**

# WORK TOOLS

## *107-3545* EDGE GP-SEGMENT

**S/N: BXY1-UP**
**AN ATTACHMENT**

**SMCS-6818** **i00831551**

| NOTE | PART NUMBER | QTY | PART NAME 1 2 3 4 5 6 (PRODUCT LEVEL) | SEE PAGE |
|---|---|---|---|---|
| | **6V-6535** | 21 | BOLT-PLOW (1 1/4-7X95MM) | |
| | **107-3536** | 7 | EDGE-SEGMENT | |
| | **3K-9770** | 21 | NUT-FULL (1-1/4-7 THD) | |

**<END>**

## *109-9051* EDGE GP-SEGMENT

**S/N: BXY1-UP**
**AN ATTACHMENT**

**SMCS-6818** **i00176591**

| NOTE | PART NUMBER | QTY | PART NAME 1 2 3 4 5 6 (PRODUCT LEVEL) | SEE PAGE |
|---|---|---|---|---|
| | **6V-6535** | 21 | BOLT-PLOW | |
| | **101-9435** | 1 | EDGE-SEGMENT | |
| | **101-9437** | 3 | EDGE-SEGMENT-LH | |
| | **101-9436** | 3 | EDGE-SEGMENT-RH | |
| | **3K-9770** | 21 | NUT-FULL (1-1/4-7 THD) | |

**<END>**

## *124-6346* EDGE GP-SEGMENT

**S/N: BXY1-UP**
**AN ATTACHMENT**

**SMCS-6818** **i02744589**

| NOTE | PART NUMBER | QTY | PART NAME 1 2 3 4 5 6 (PRODUCT LEVEL) | SEE PAGE |
|---|---|---|---|---|
| | **6V-6535** | 21 | BOLT-PLOW (1-1/4-7X3.74-IN) | |
| | **109-9080** | 1 | EDGE-SEGMENT (CENTER) | |
| | **109-9082** | 3 | EDGE-SEGMENT (LH) | |
| | **109-9081** | 3 | EDGE-SEGMENT (RH) | |
| | **3K-9770** | 21 | NUT-FULL (1-1/4-7-THD) | |

**<END>**

## 9W-5731 EDGE-CUTTING

**S/N: BXY1-UP**
**791.5 MM (31.16 IN.) LONG**
**PART OF 246-2754 BUCKET GP-ROCK**
**AN ATTACHMENT**

**SMCS-6801** **i01025648**

| NOTE | PART NUMBER | QTY | PART NAME 1 2 3 4 5 6 (PRODUCT LEVEL) | SEE PAGE |
|---|---|---|---|---|
| | **9W-5733** | 1 | EDGE-CUTTING (CENTER) (706 MM(27.80 IN) LONG) | |
| | **9W-5732** | 1 | EDGE-CUTTING (LH) (731 MM(28.78 IN)LONG) | |

**<END>**

# WORK TOOLS

## 9W-5735 EDGE-CUTTING

**S/N: BXY1-UP**
**731 MM (28.78 IN.) LONG**
**PART OF 246-2754 BUCKET GP-ROCK**
**AN ATTACHMENT**

**SMCS-6801** **i01025650**

| NOTE | PART NUMBER | QTY | PART NAME 1 2 3 4 5 6 (PRODUCT LEVEL) | SEE PAGE |
|---|---|---|---|---|
| | 9W-5736 | | EDGE-CUTTING (RH) (791.5MM(31.16 IN)LONG) | |
| | | | QUANTITIES TO BE DETERMINED BY CUSTOMER | |

**<END>**

# WORK TOOLS

## 275-5924 EDGE-CUTTING—RH

**S/N: BXY1-UP**

**FIELD INSTALLATION**

**SMCS-6801** **i02636672**

| NOTE | REF NO | GRAPHIC REF | PART NUMBER | QTY | PART NAME 1 2 3 4 5 6 (PRODUCT LEVEL) | SEE PAGE |
|---|---|---|---|---|---|---|
| | | | | | (NO SERVICED PARTS) | |

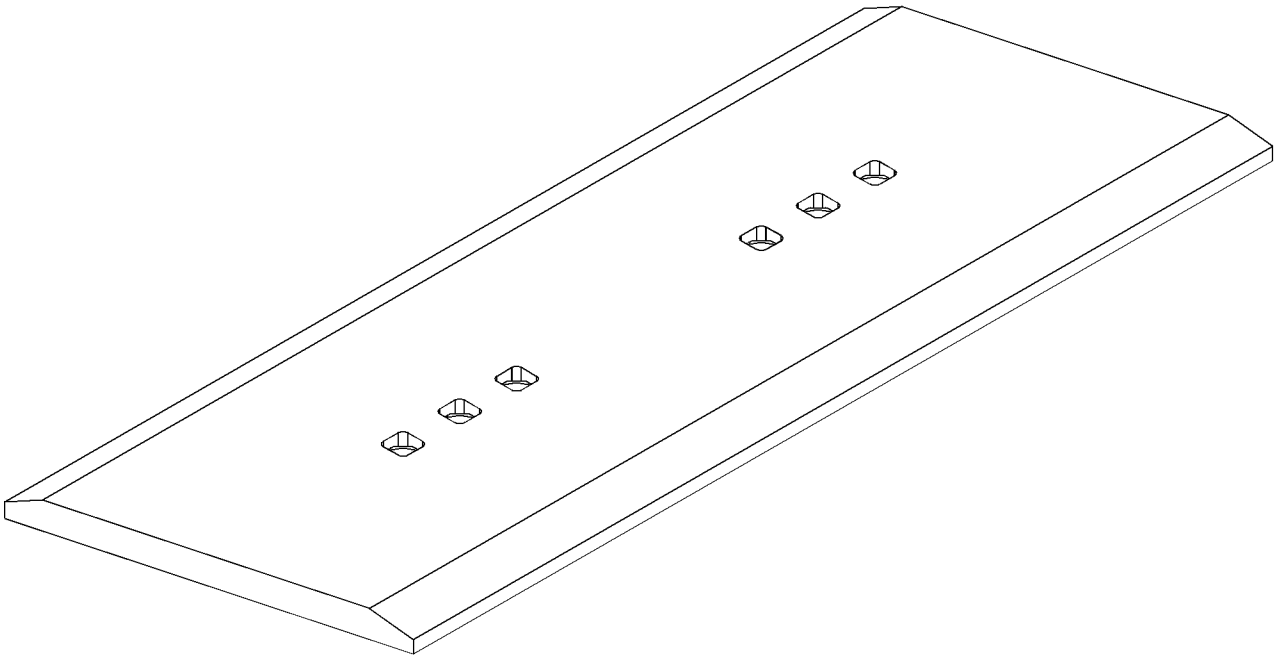

GRAPHIC #1 **<END>** g01347390

# WORK TOOLS

## 275-5925 EDGE-CUTTING—LH

**S/N: BXY1-UP**

**FIELD INSTALLATION**

**SMCS-6801** **i02636674**

| NOTE | REF NO | GRAPHIC REF | PART NUMBER | QTY | PART NAME 1 2 3 4 5 6 (PRODUCT LEVEL) | SEE PAGE |
|---|---|---|---|---|---|---|
| | | | | | (NO SERVICED PARTS) | |

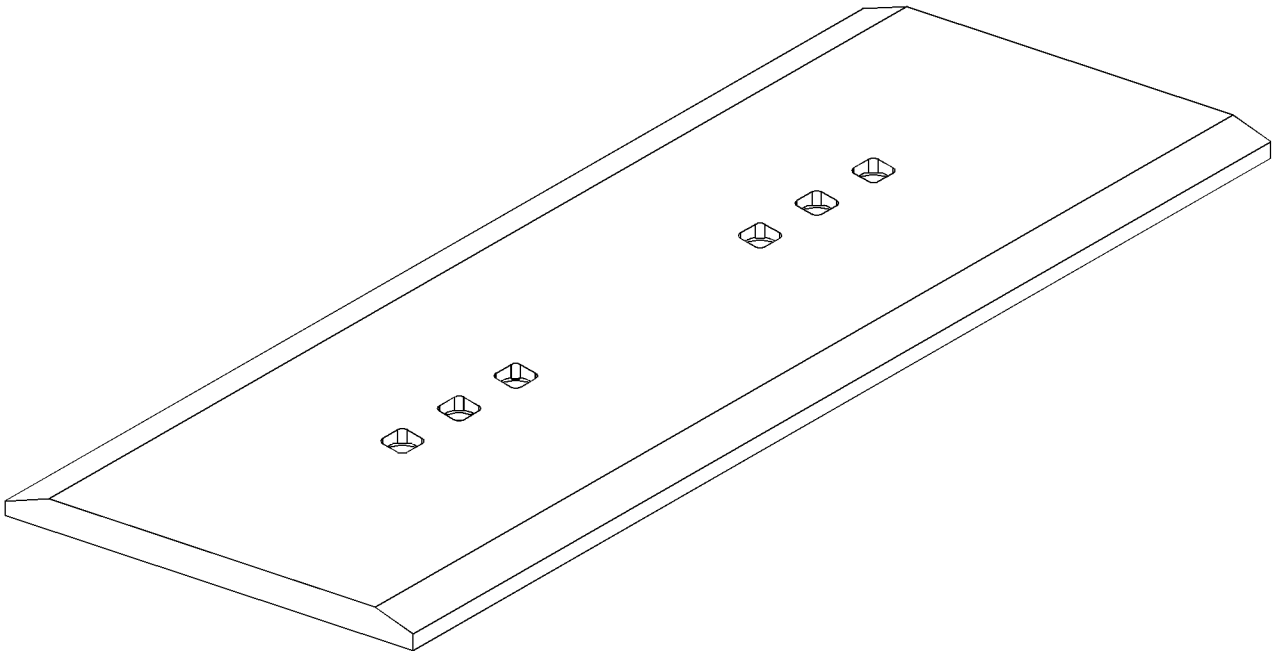

GRAPHIC #1 **<END>** g01347395

# WORK TOOLS

## 275-5926 EDGE-CUTTING

**S/N: BXY1-UP**
**K-110**
**FIELD INSTALLATION**

**SMCS-6801** **i02650397**

| NOTE | REF NO | GRAPHIC REF | PART NUMBER | QTY | PART NAME 1 2 3 4 5 6 (PRODUCT LEVEL) | SEE PAGE |
|---|---|---|---|---|---|---|
| | | | | | (NO SERVICED PARTS) | |

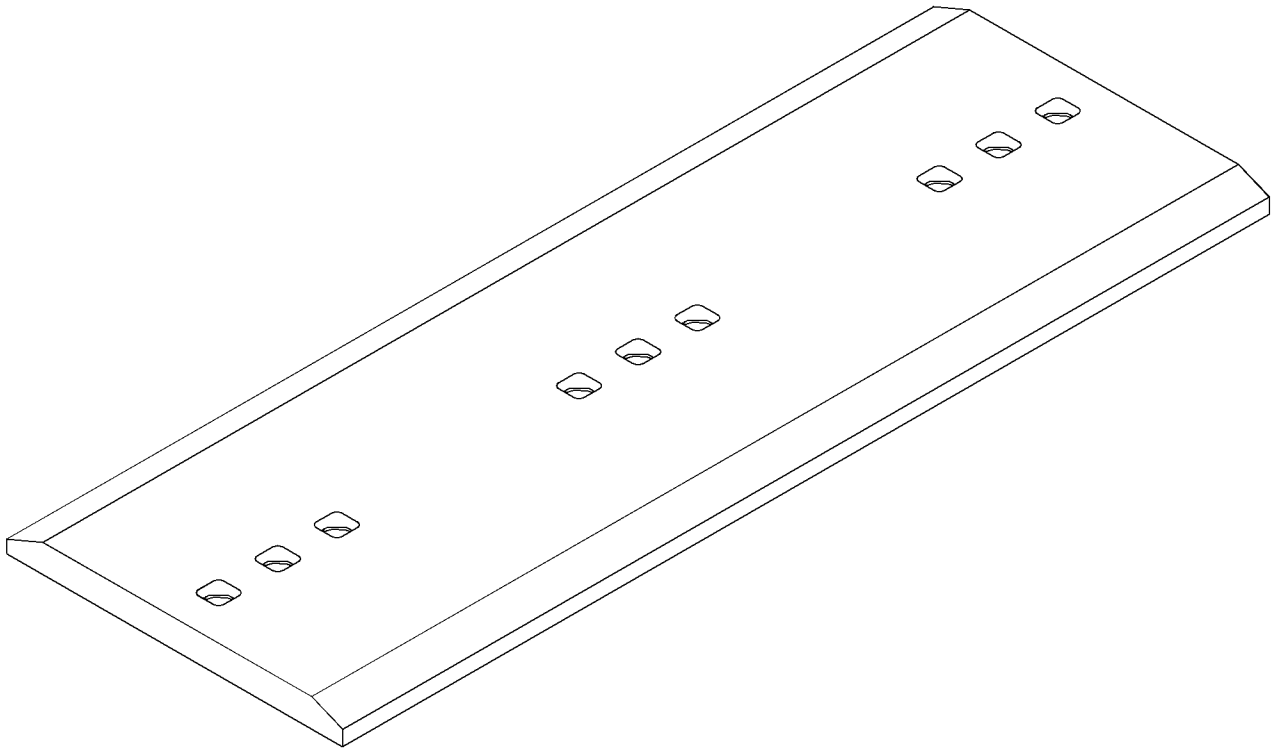

GRAPHIC #1

**<END>**

g01339314

# WORK TOOLS

## *275-5980* EDGE-CUTTING

**S/N: BXY1-UP**

**FIELD INSTALLATION**

**SMCS-6801** **i02681208**

| NOTE | REF NO | GRAPHIC REF | PART NUMBER | QTY | PART NAME 1 2 3 4 5 6 (PRODUCT LEVEL) | SEE PAGE |
|---|---|---|---|---|---|---|
| | | | | | (NO SERVICED PARTS) | |

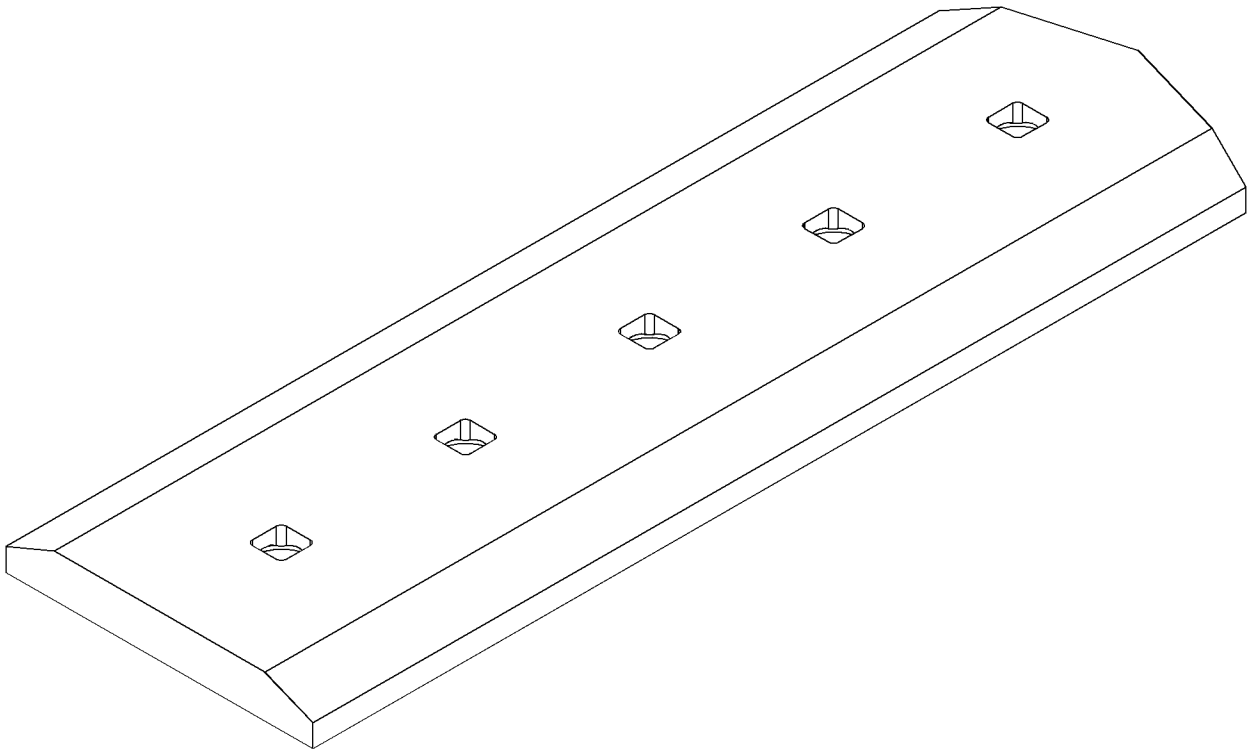

GRAPHIC #1 **<END>** g01347525

# WORK TOOLS

## *275-6008* EDGE-CUTTING—LH

**S/N: BXY1-UP**

**FIELD INSTALLATION**

**SMCS-6801** **i02728019**

| NOTE | REF NO | GRAPHIC REF | PART NUMBER | QTY | PART NAME 1 2 3 4 5 6 (PRODUCT LEVEL) | SEE PAGE |
|---|---|---|---|---|---|---|
| | | | | | (NO SERVICED PARTS) | |

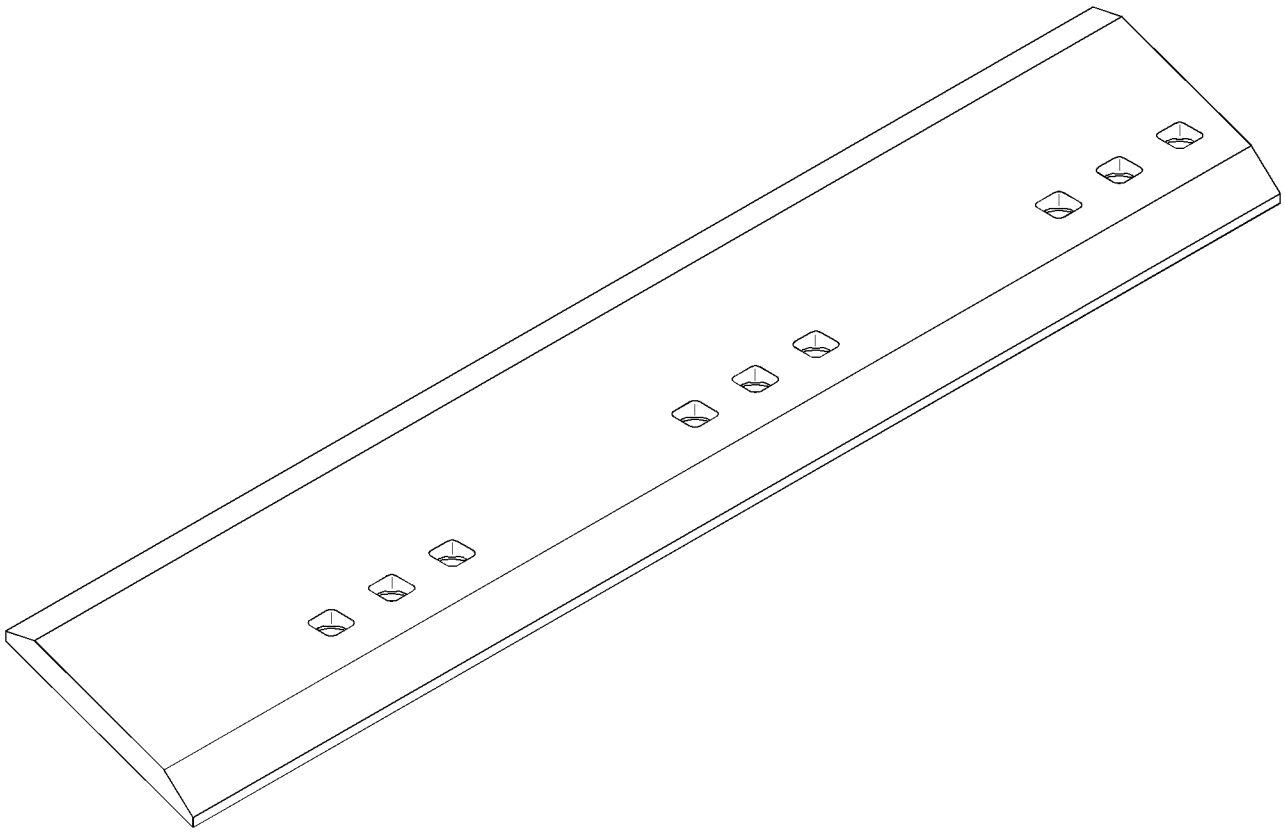

GRAPHIC #1 **<END>** g01368792

# WORK TOOLS

## *275-6009* EDGE-CUTTING—CENTER

**S/N: BXY1-UP**

**FIELD INSTALLATION**

**SMCS-6801** **i02728013**

| NOTE | REF NO | GRAPHIC REF | PART NUMBER | QTY | PART NAME 1 2 3 4 5 6 (PRODUCT LEVEL) | SEE PAGE |
|---|---|---|---|---|---|---|
| | | | | | (NO SERVICED PARTS) | |

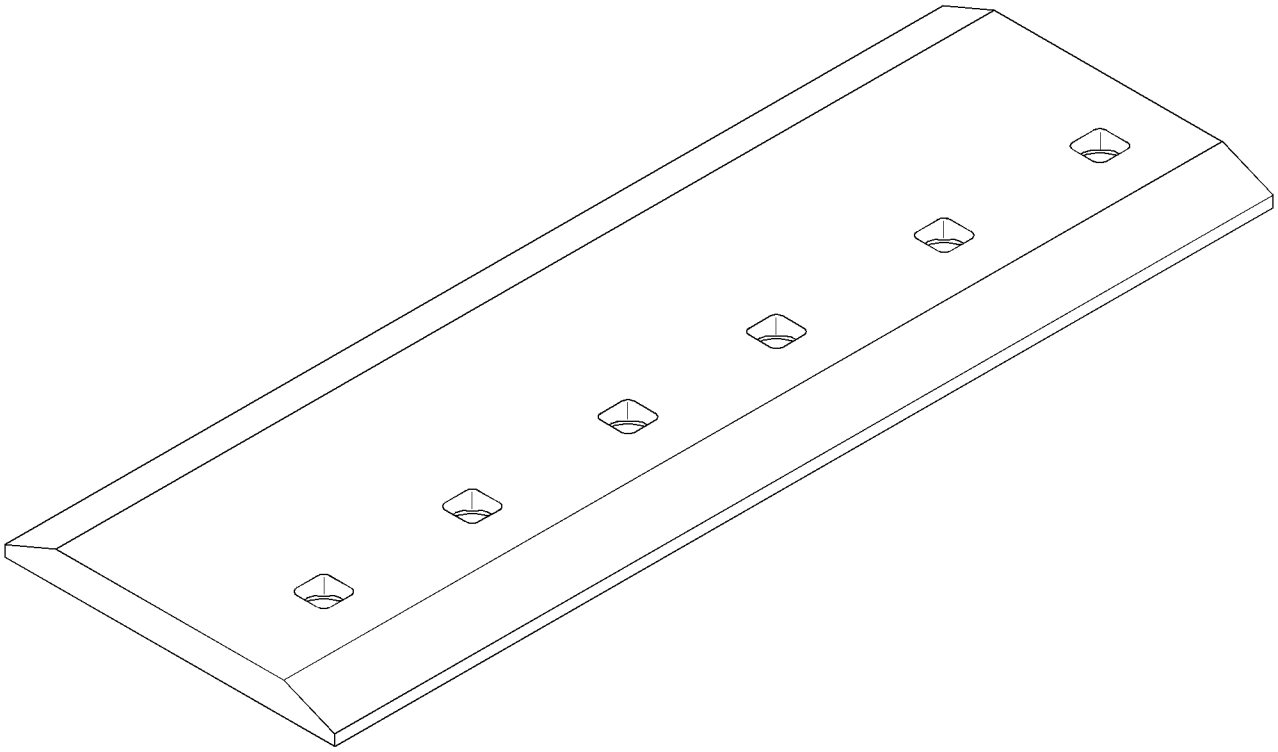

GRAPHIC #1 **<END>** g01368793

# WORK TOOLS

## *275-6010* EDGE-CUTTING—RH

**S/N: BXY1-UP**

**FIELD INSTALLATION**

**SMCS-6801** **i02728005**

| NOTE | REF NO | GRAPHIC REF | PART NUMBER | QTY | PART NAME 1 2 3 4 5 6 (PRODUCT LEVEL) | SEE PAGE |
|---|---|---|---|---|---|---|
| | | | | | (NO SERVICED PARTS) | |

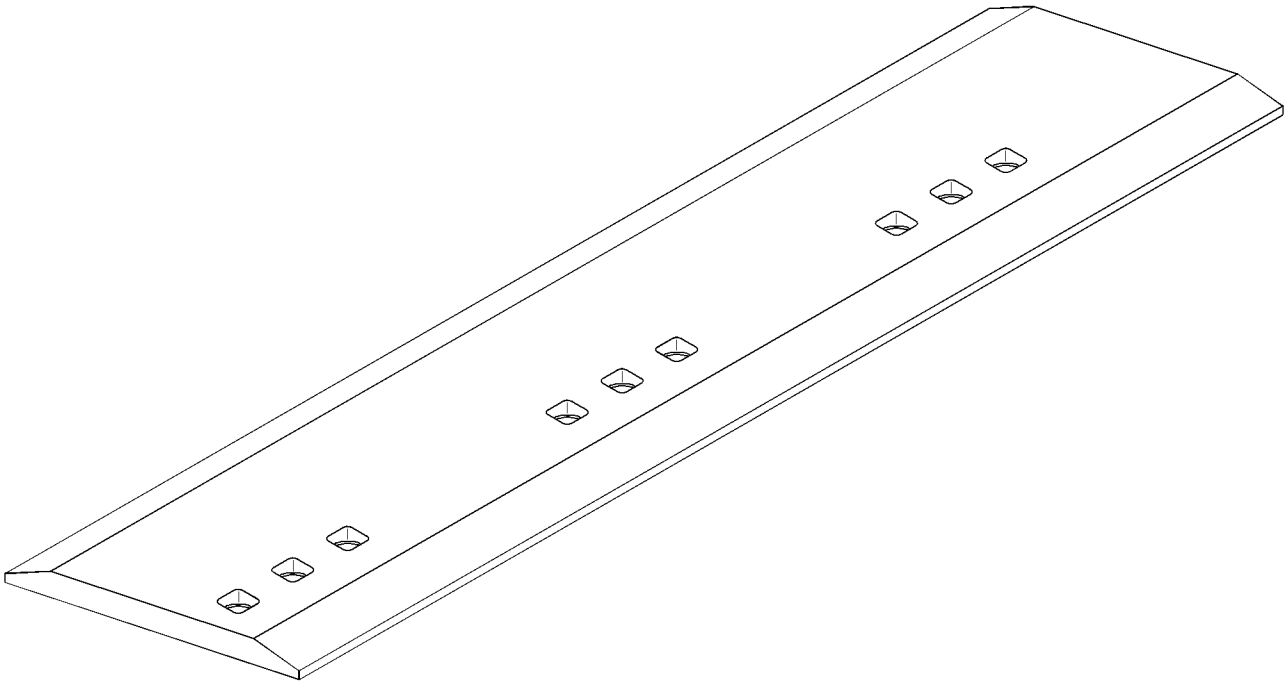

GRAPHIC #1 **<END>** g01368796

# WORK TOOLS

## 280-4060 EDGE-CUTTING—BASE

**S/N: BXY1-UP**

**FIELD INSTALLATION**

**SMCS-6801** **i02485096**

| NOTE | REF NO | GRAPHIC REF | PART NUMBER | QTY | PART NAME 1 2 3 4 5 6 (PRODUCT LEVEL) | SEE PAGE |
|---|---|---|---|---|---|---|
| | | | | | (NO SERVICED PARTS) | |

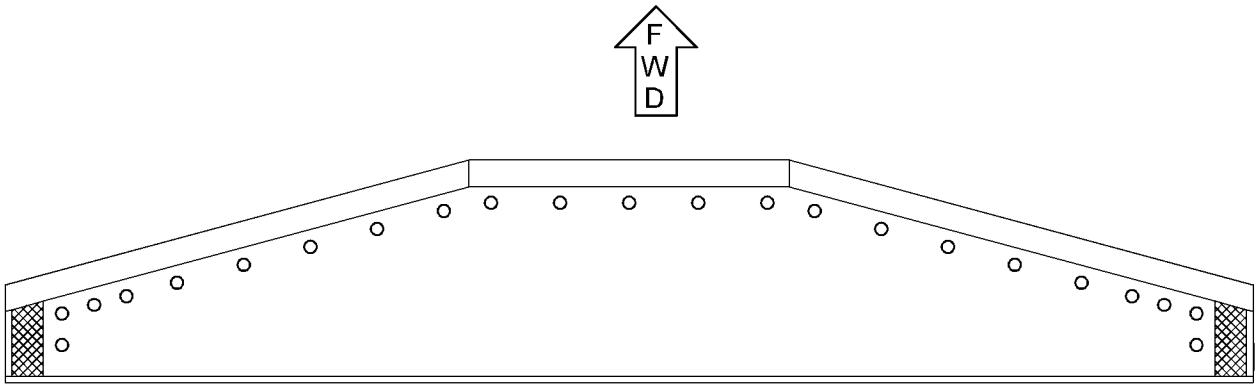


BOTTOM VIEW

GRAPHIC #1 **<END>** g01249889

# WORK TOOLS

## *280-4061* EDGE-CUTTING—RH

**S/N: BXY1-UP**

**FIELD INSTALLATION**

**SMCS-6801** **i02681206**

| NOTE | REF NO | GRAPHIC REF | PART NUMBER | QTY | PART NAME 1 2 3 4 5 6 (PRODUCT LEVEL) | SEE PAGE |
|---|---|---|---|---|---|---|
| | | | | | (NO SERVICED PARTS) | |

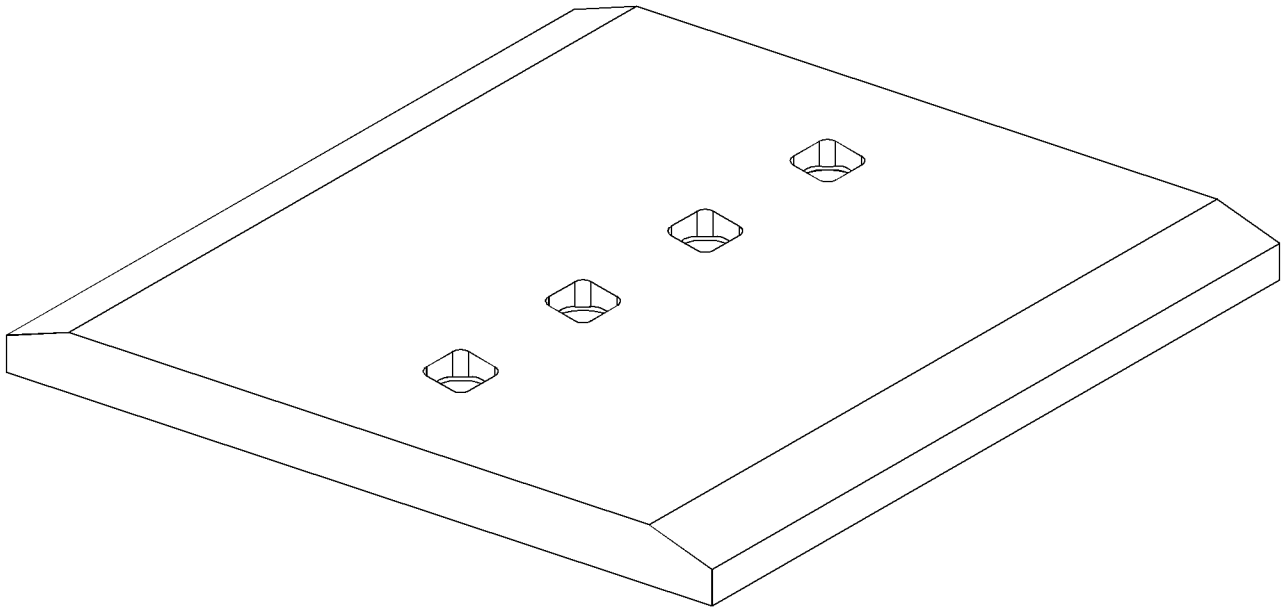

GRAPHIC #1 **<END>** g01347711

# WORK TOOLS

## 280-4062 EDGE-CUTTING–CENTER, RH

**S/N: BXY1-UP**
**40-MM THK**
**FIELD INSTALLATION**

**SMCS-6801** **i02485098**

| NOTE | REF NO | GRAPHIC REF | PART NUMBER | QTY | PART NAME 1 2 3 4 5 6 (PRODUCT LEVEL) | SEE PAGE |
|---|---|---|---|---|---|---|
| | | | | | (NO SERVICED PARTS) | |

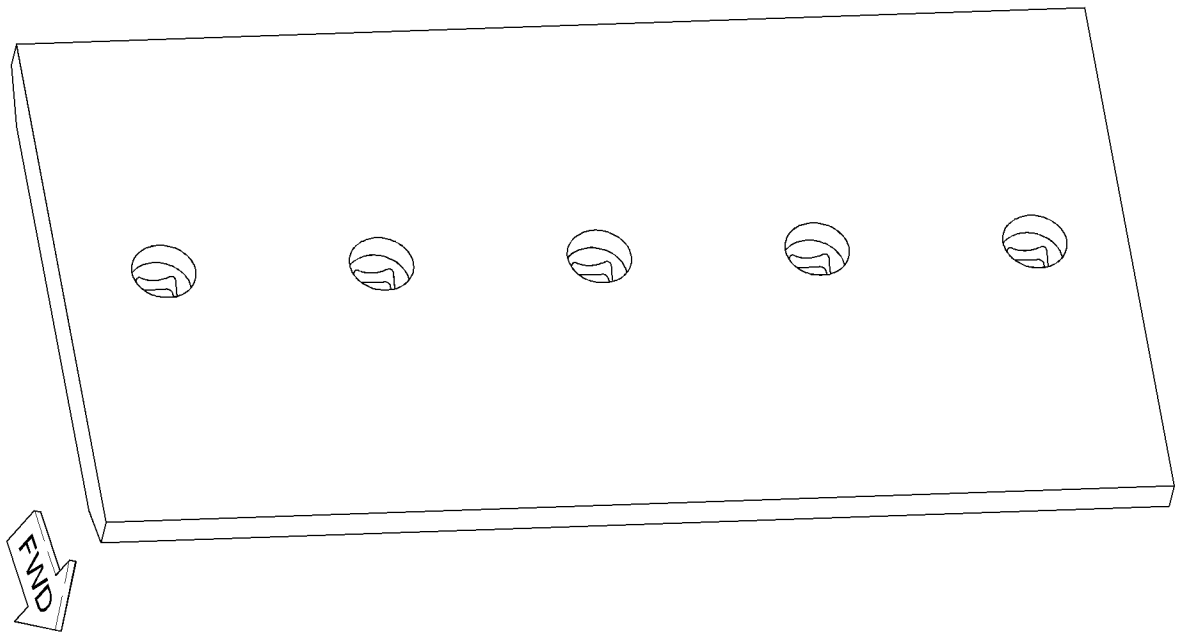


GRAPHIC #1 **<END>** g01248084

# WORK TOOLS

## *280-4063* EDGE-CUTTING

**S/N: BXY1-UP**
**FOR USE WITH 280-4060—PAGE 1290**
**FIELD INSTALLATION**

**SMCS-6801** **i02681196**

| NOTE | REF NO | GRAPHIC REF | PART NUMBER | QTY | PART NAME 1 2 3 4 5 6 (PRODUCT LEVEL) | SEE PAGE |
|---|---|---|---|---|---|---|
| | | | | | (NO SERVICED PARTS) | |

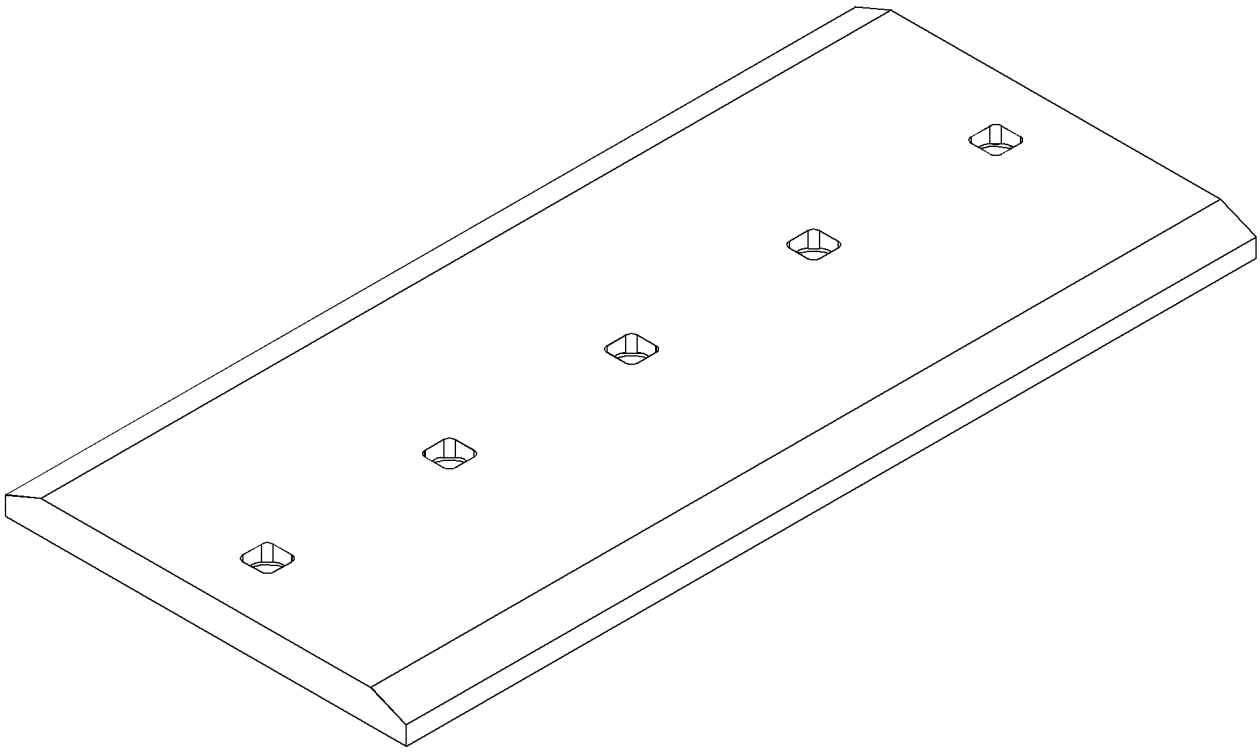

GRAPHIC #1 **<END>** g01347543

# WORK TOOLS

## *280-4064* EDGE-CUTTING—LH

**S/N: BXY1-UP**

**FOR USE WITH 280-4060—PAGE 1290**

**FIELD INSTALLATION**

**SMCS-6801** **i02681202**

| NOTE | REF NO | GRAPHIC REF | PART NUMBER | QTY | PART NAME 1 2 3 4 5 6 (PRODUCT LEVEL) | SEE PAGE |
|---|---|---|---|---|---|---|
| | | | | | (NO SERVICED PARTS) | |

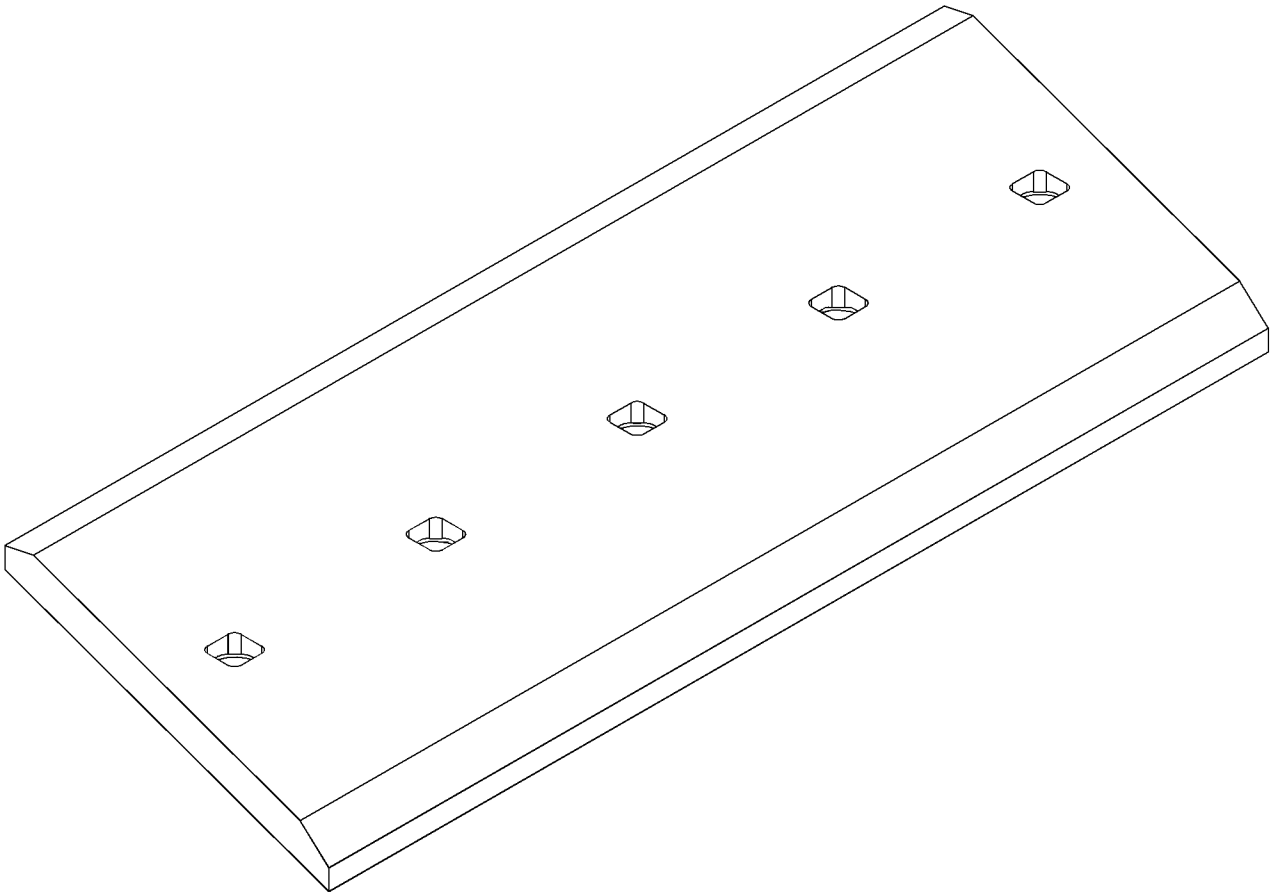

GRAPHIC #1

**<END>**

g01347546

# WORK TOOLS

## *280-4065* EDGE-CUTTING—LH

**S/N: BXY1-UP**

**FIELD INSTALLATION**

**SMCS-6801** **i02681207**

| NOTE | REF NO | GRAPHIC REF | PART NUMBER | QTY | PART NAME 1 2 3 4 5 6 (PRODUCT LEVEL) | SEE PAGE |
|---|---|---|---|---|---|---|
| | | | | | (NO SERVICED PARTS) | |

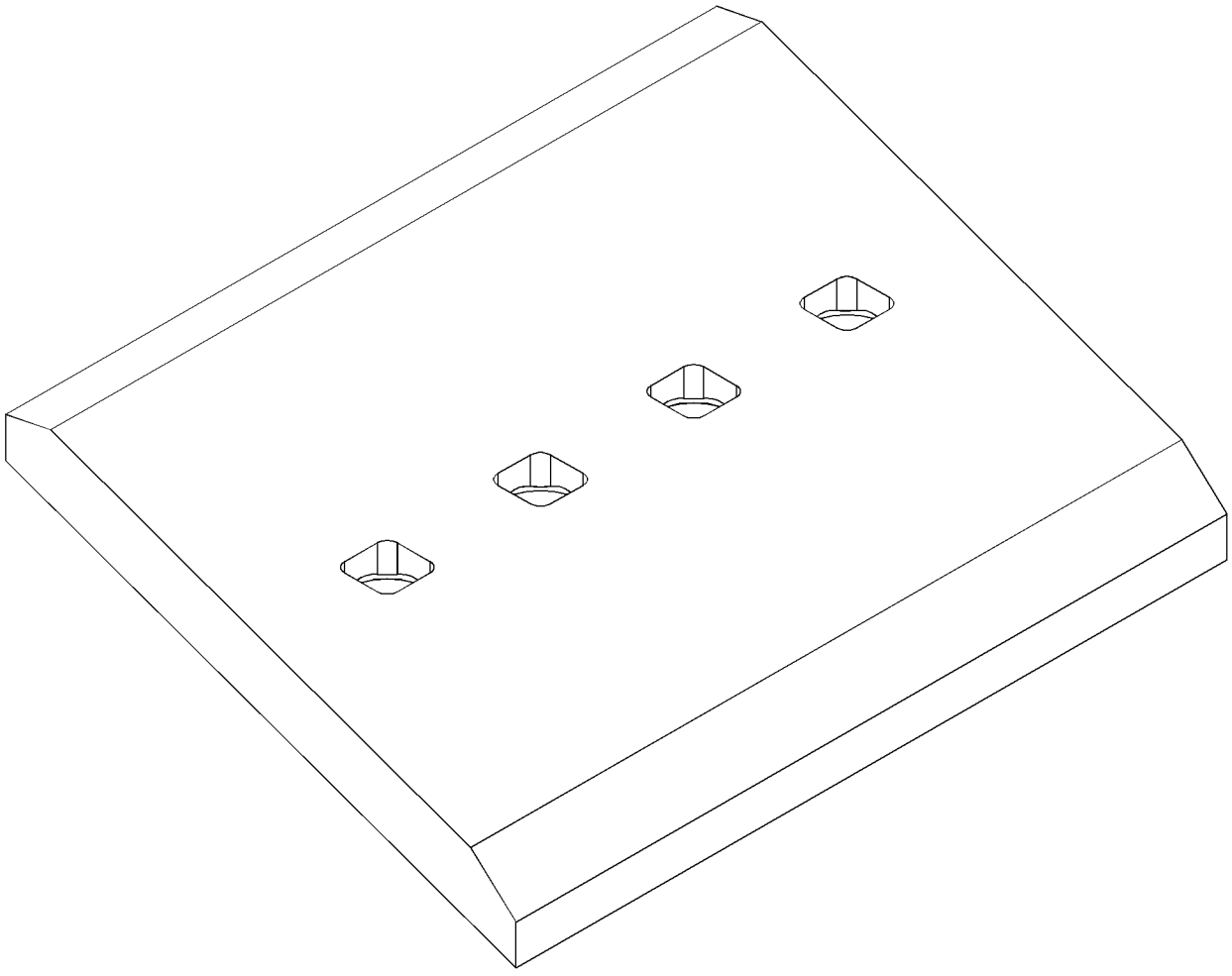

GRAPHIC #1

**<END>**

g01347526

# WORK TOOLS

## *280-4066* EDGE-CUTTING—RH

**S/N: BXY1-UP**

**FOR USE WITH 280-4060—PAGE 1290**

**FIELD INSTALLATION**

**SMCS-6801** **i02681203**

| NOTE | REF NO | GRAPHIC REF | PART NUMBER | QTY | PART NAME 1 2 3 4 5 6 (PRODUCT LEVEL) | SEE PAGE |
|---|---|---|---|---|---|---|
| | | | | | (NO SERVICED PARTS) | |

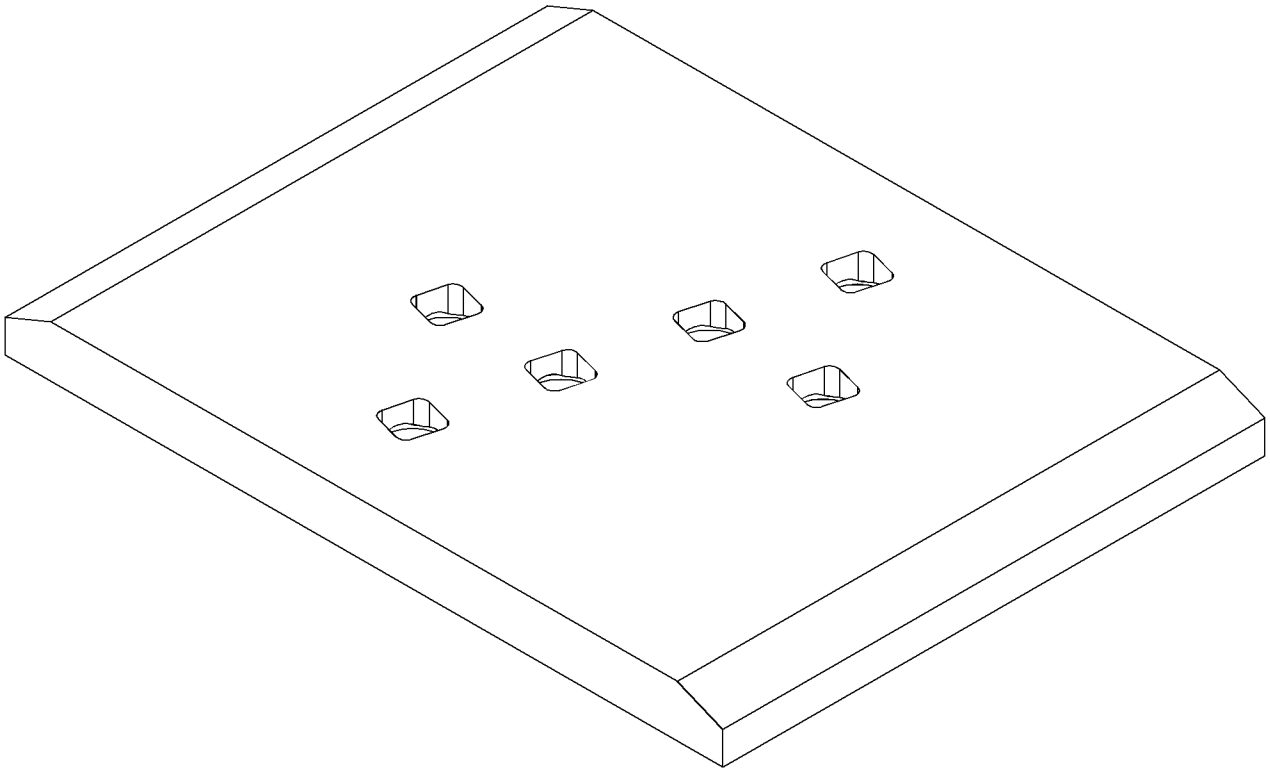

GRAPHIC #1

**<END>**

g01347552

# WORK TOOLS

## *280-4067* EDGE-CUTTING—LH

**S/N: BXY1-UP**

**FOR USE WITH 280-4060—PAGE 1290**

**FIELD INSTALLATION**

**SMCS-6801** **i02681205**

| NOTE | REF NO | GRAPHIC REF | PART NUMBER | QTY | PART NAME 1 2 3 4 5 6 (PRODUCT LEVEL) | SEE PAGE |
|---|---|---|---|---|---|---|
| | | | | | (NO SERVICED PARTS) | |

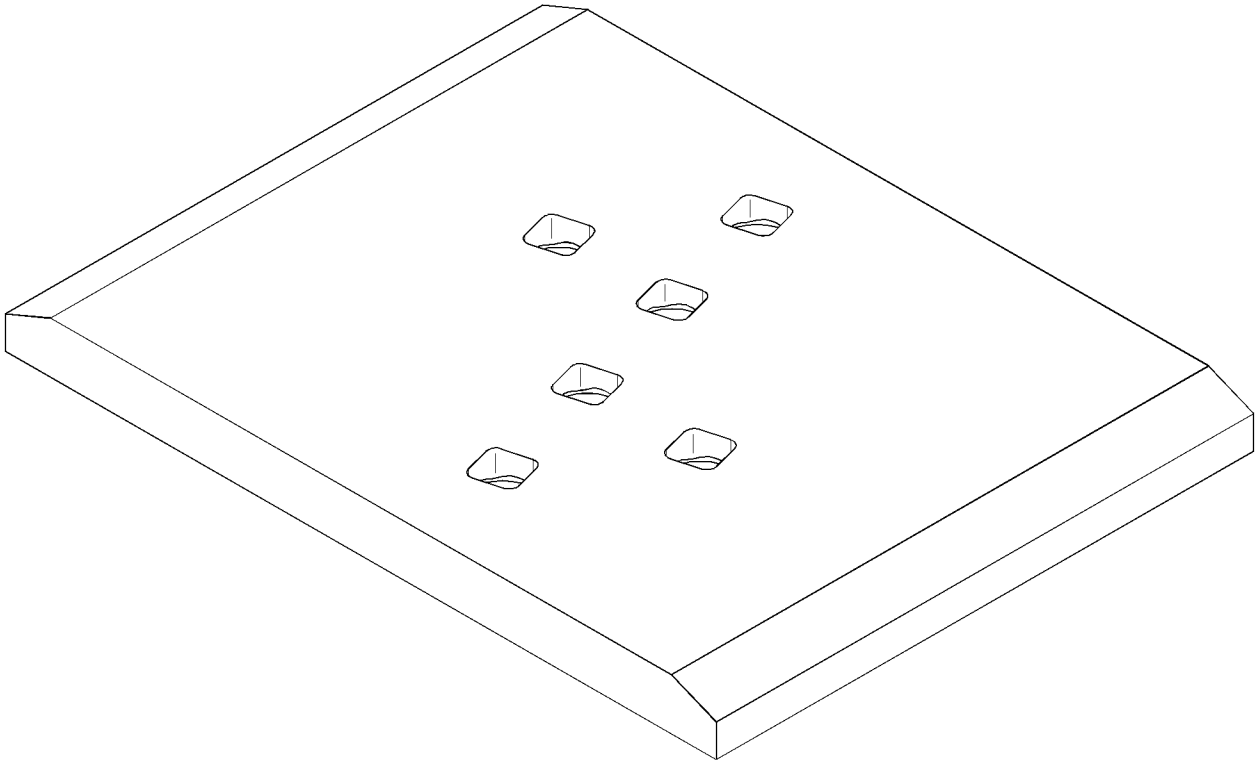

GRAPHIC #1

**<END>**

g01347557

# WORK TOOLS

## 280-4069 EDGE-CUTTING—END SECTION

**S/N: BXY1-UP**
**45-MM THK**
**FIELD INSTALLATION**

**SMCS-6801** **i02485100**

| NOTE | REF NO | GRAPHIC REF | PART NUMBER | QTY | PART NAME 1 2 3 4 5 6 (PRODUCT LEVEL) | SEE PAGE |
|---|---|---|---|---|---|---|
| | | | | | (NO SERVICED PARTS) | |

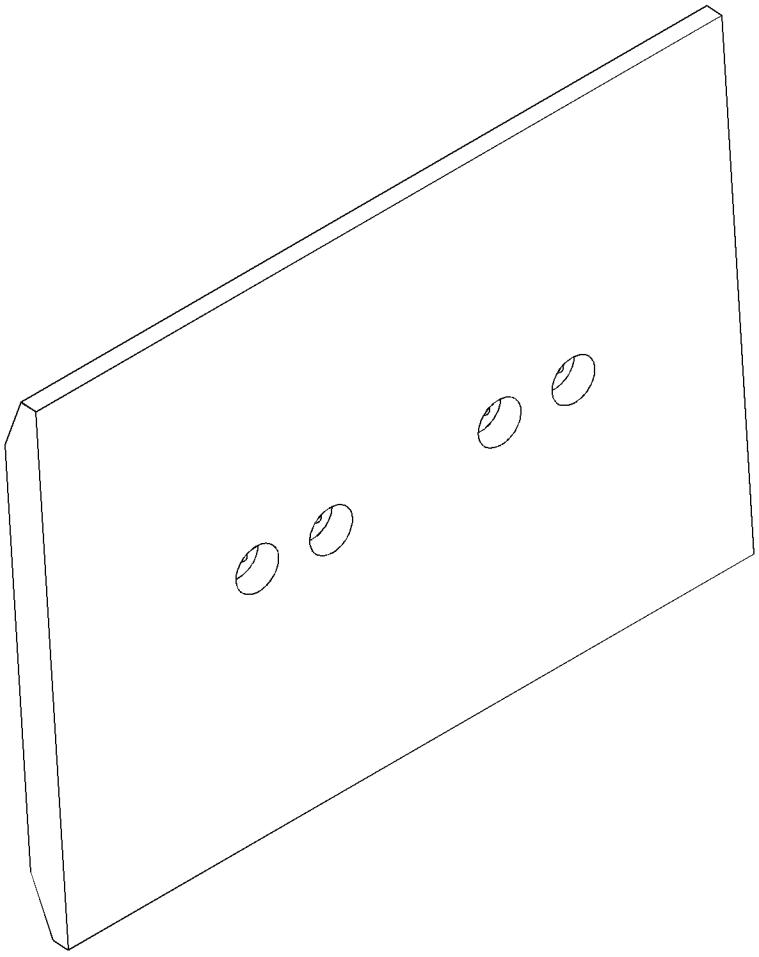

GRAPHIC #1 **<END>** g01248056

# WORK TOOLS

## *281-0680* EDGE-CUTTING

**S/N: BXY1-UP**

**FIELD INSTALLATION**

**SMCS-6801** **i02680654**

| NOTE | REF NO | GRAPHIC REF | PART NUMBER | QTY | PART NAME 1 2 3 4 5 6 (PRODUCT LEVEL) | SEE PAGE |
|---|---|---|---|---|---|---|
| | | | | | (NO SERVICED PARTS) | |

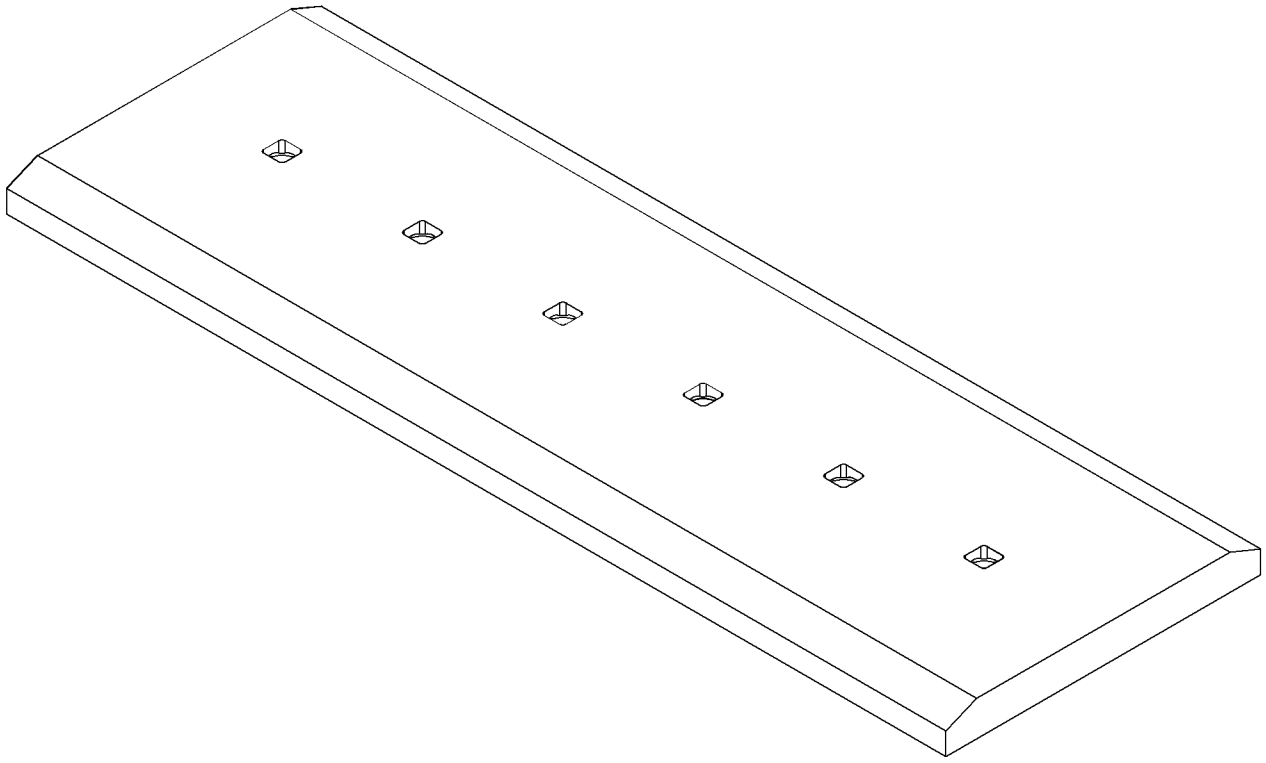

GRAPHIC #1 **<END>** g01347704

# WORK TOOLS

## *257-1817* EDGE-SEGMENT

**S/N: BXY1-UP**

**FIELD INSTALLATION**

**SMCS-6818** **i02458968**

| NOTE | REF NO | GRAPHIC REF | PART NUMBER | QTY | PART NAME 1 2 3 4 5 6 (PRODUCT LEVEL) | SEE PAGE |
|---|---|---|---|---|---|---|
| | | | | | (NO SERVICED PARTS) | |

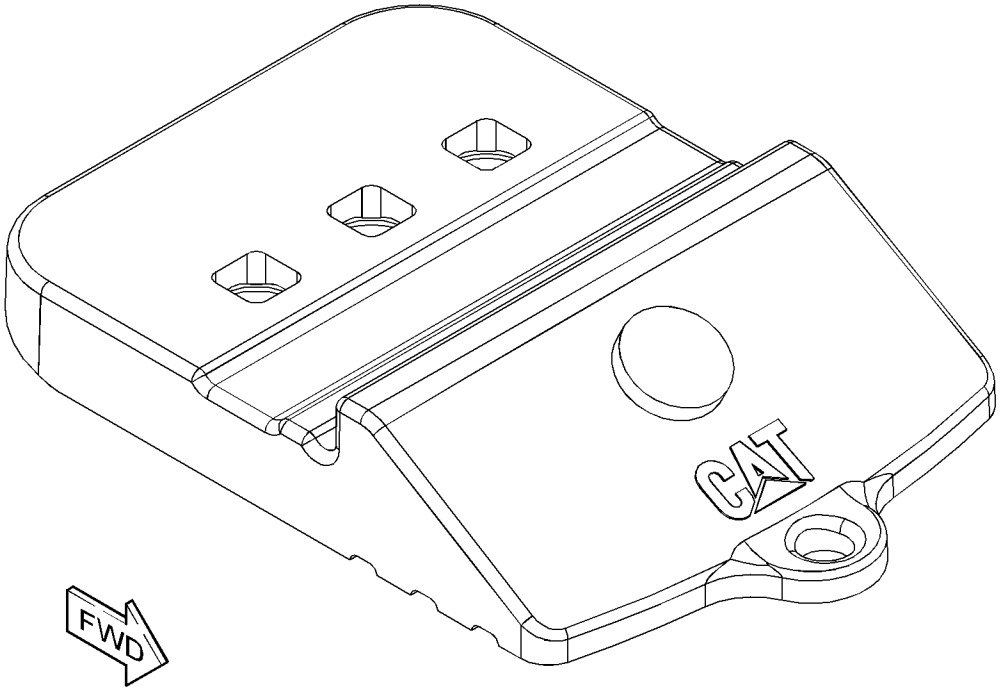


GRAPHIC #1 **<END>** g01228904

# WORK TOOLS

## *257-1818* EDGE-SEGMENT—RH

**S/N: 6AT1-UP**

**FIELD INSTALLATION**

**SMCS-6818** **i02458967**

| NOTE | REF NO | GRAPHIC REF | PART NUMBER | QTY | PART NAME 1 2 3 4 5 6 (PRODUCT LEVEL) | SEE PAGE |
|---|---|---|---|---|---|---|
| | | | | | (NO SERVICED PARTS) | |

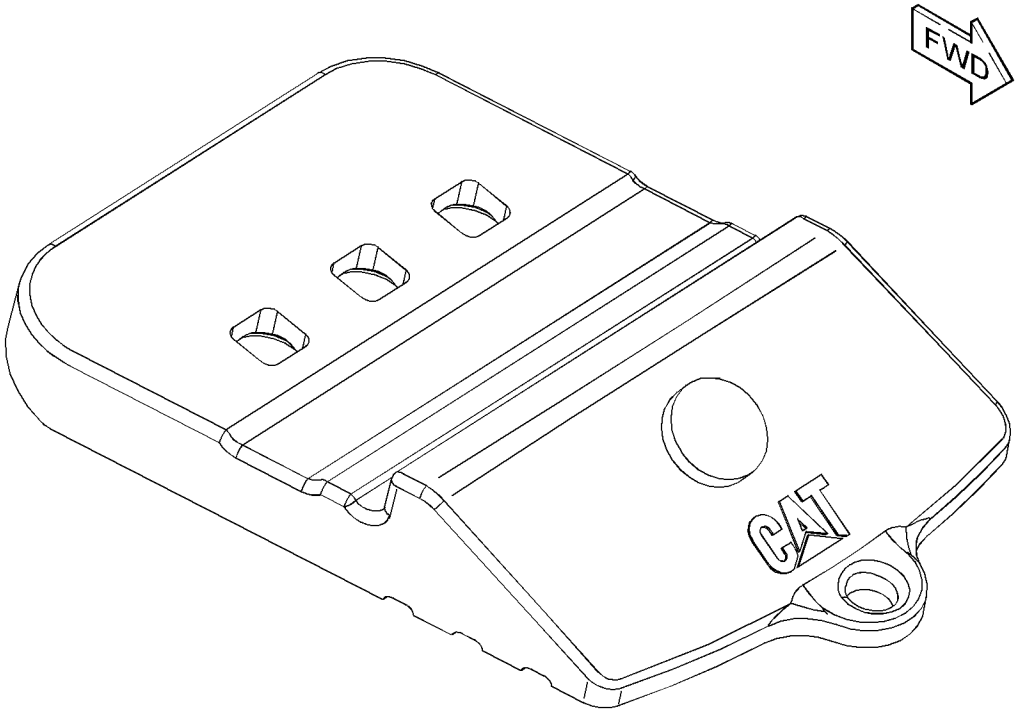


GRAPHIC #1 **<END>** g01229732

# WORK TOOLS

## *257-1819* EDGE-SEGMENT–LH

**S/N: 6AT1-UP**

**FIELD INSTALLATION**

**SMCS-6818** **i02458964**

| NOTE | REF NO | GRAPHIC REF | PART NUMBER | QTY | PART NAME 1 2 3 4 5 6 (PRODUCT LEVEL) | SEE PAGE |
|---|---|---|---|---|---|---|
| | | | | | (NO SERVICED PARTS) | |

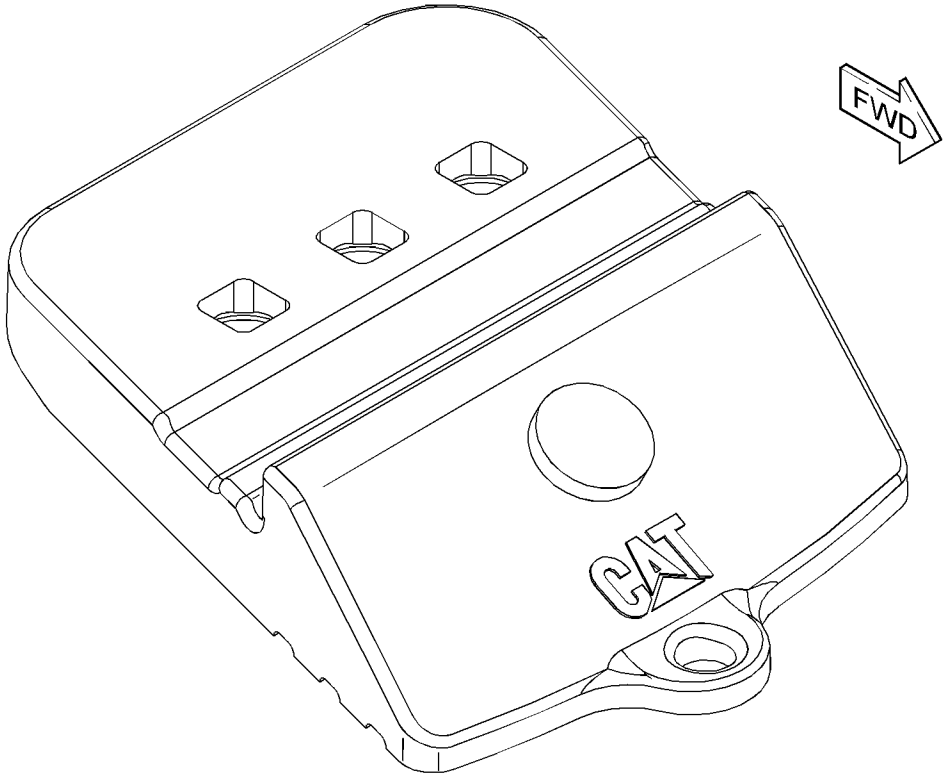


GRAPHIC #1 **<END>** g01229742

# WORK TOOLS

## *257-1821* EDGE-SEGMENT—CENTER

**S/N: BXY1-UP**

**FIELD INSTALLATION**

**SMCS-6818** **i02458961**

| NOTE | REF NO | GRAPHIC REF | PART NUMBER | QTY | PART NAME 1 2 3 4 5 6 (PRODUCT LEVEL) | SEE PAGE |
|---|---|---|---|---|---|---|
| | | | | | (NO SERVICED PARTS) | |

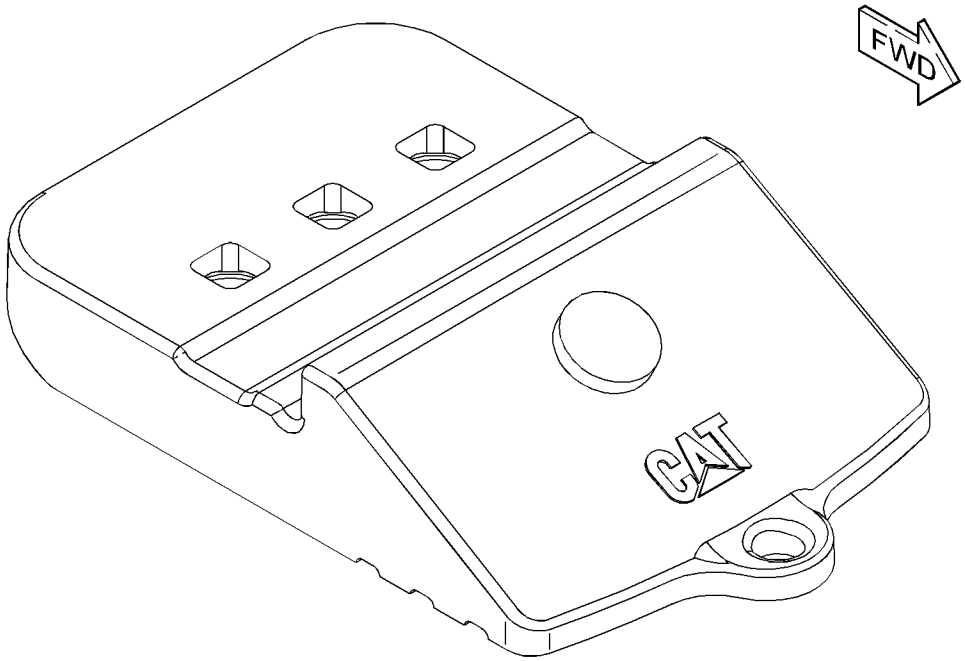


GRAPHIC #1 **<END>** g01229722

# WORK TOOLS

## *257-1822* EDGE-SEGMENT–RH

**S/N: 6AT1-UP**

**FIELD INSTALLATION**

**SMCS-6818** **i02458960**

| NOTE | REF NO | GRAPHIC REF | PART NUMBER | QTY | PART NAME 1 2 3 4 5 6 (PRODUCT LEVEL) | SEE PAGE |
|---|---|---|---|---|---|---|
| | | | | | (NO SERVICED PARTS) | |

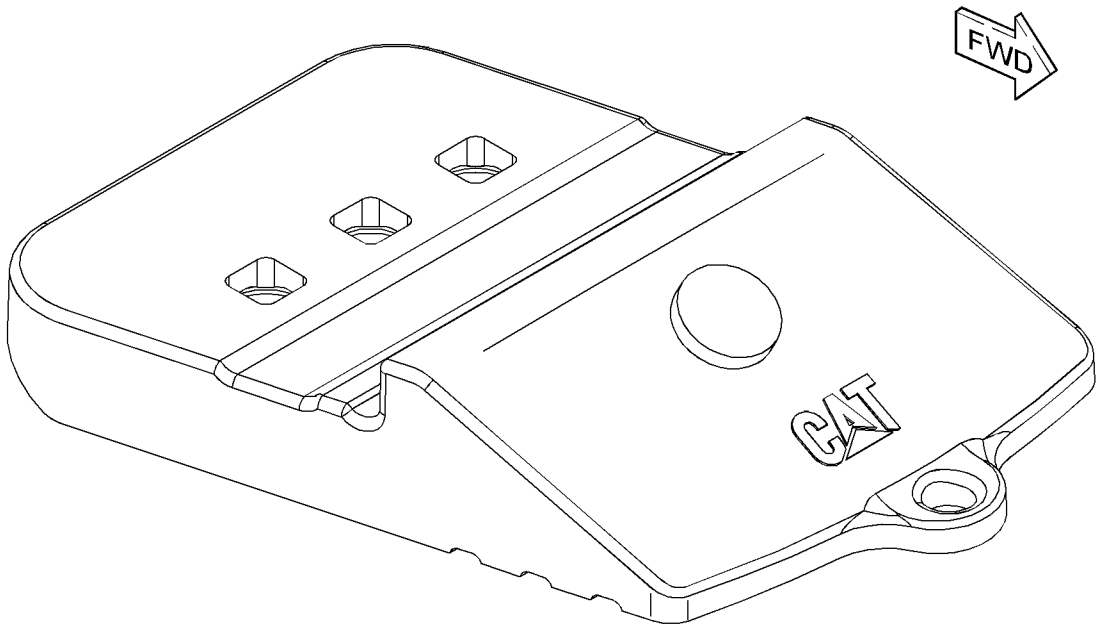


GRAPHIC #1 **<END>** g01229756

# WORK TOOLS

## *257-1823* EDGE-SEGMENT–LH

**S/N: 6AT1-UP**

**FIELD INSTALLATION**

**SMCS-6818** **i02458958**

| NOTE | REF NO | GRAPHIC REF | PART NUMBER | QTY | PART NAME 1 2 3 4 5 6 (PRODUCT LEVEL) | SEE PAGE |
|---|---|---|---|---|---|---|
| | | | | | (NO SERVICED PARTS) | |

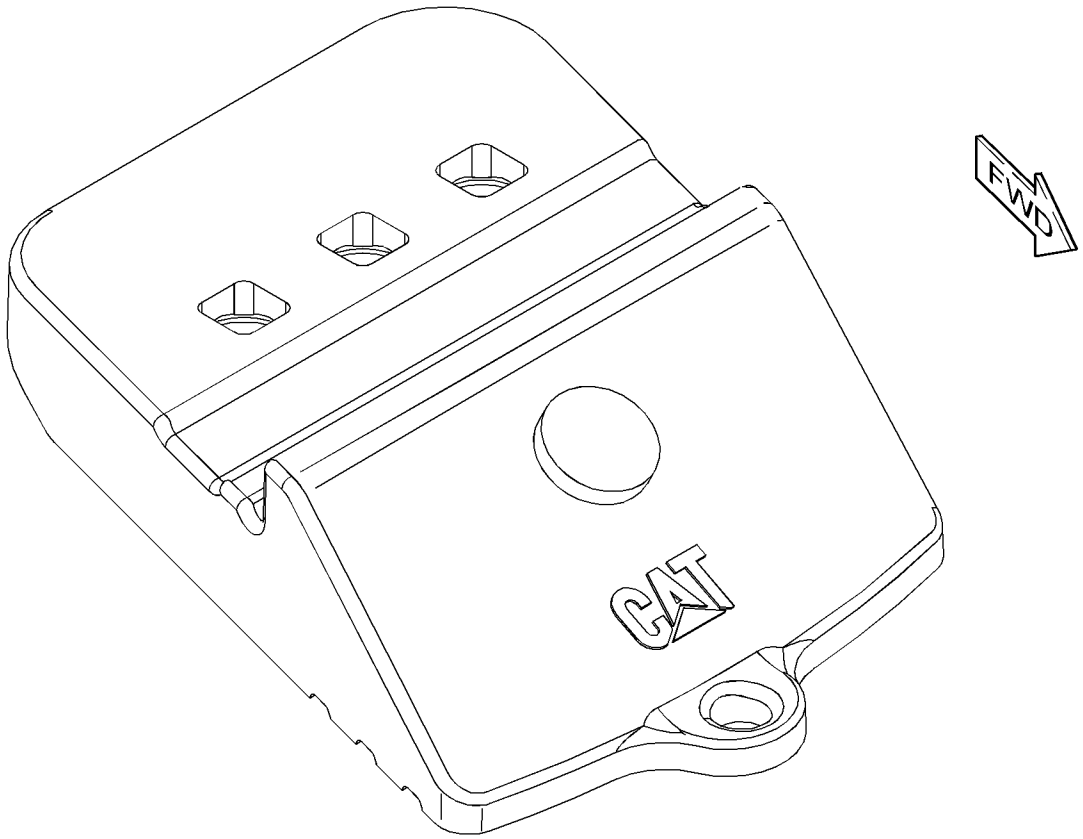


GRAPHIC #1 **<END>** g01229771

# WORK TOOLS

## *275-5936* EDGE-SEGMENT—RH

**S/N: BXY1-UP**

**FIELD INSTALLATION**

**SMCS-6818** **i02681210**

| NOTE | REF NO | GRAPHIC REF | PART NUMBER | QTY | PART NAME 1 2 3 4 5 6 (PRODUCT LEVEL) | SEE PAGE |
|---|---|---|---|---|---|---|
| | | | | | (NO SERVICED PARTS) | |

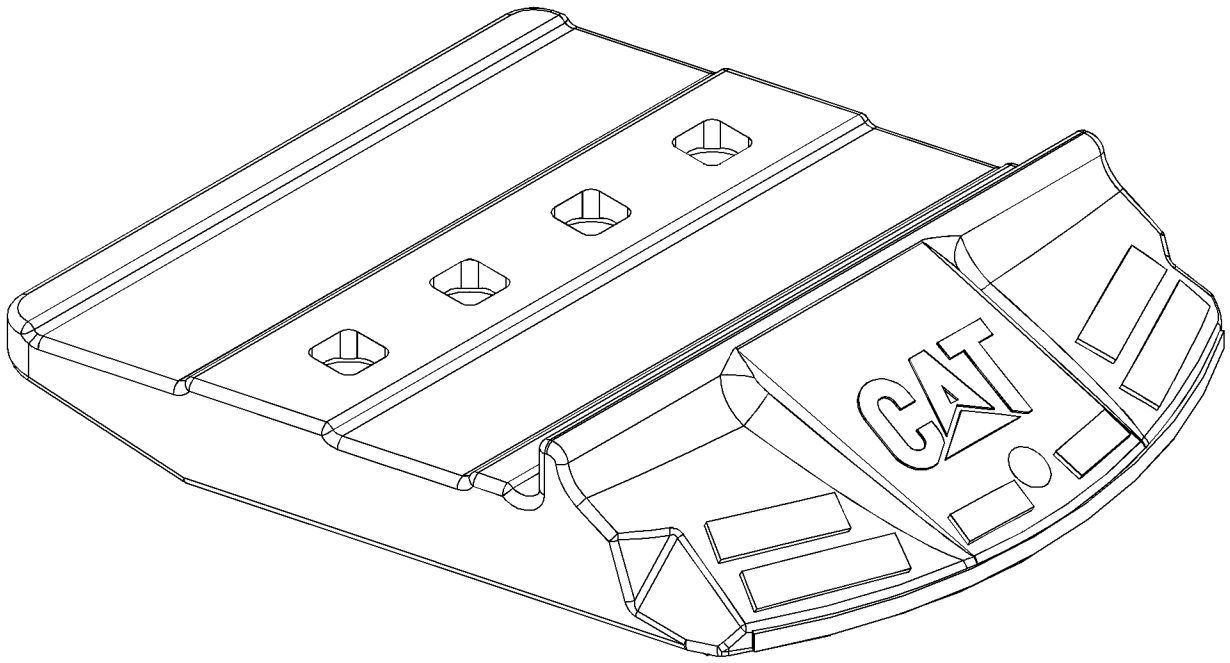


GRAPHIC #1 **<END>** g01347319

# WORK TOOLS

## *275-5937* EDGE-SEGMENT–LH

**S/N: BXY1-UP**

**FIELD INSTALLATION**

**SMCS-6818** **i02681212**

| NOTE | REF NO | GRAPHIC REF | PART NUMBER | QTY | PART NAME 1 2 3 4 5 6 (PRODUCT LEVEL) | SEE PAGE |
|---|---|---|---|---|---|---|
| | | | | | (NO SERVICED PARTS) | |

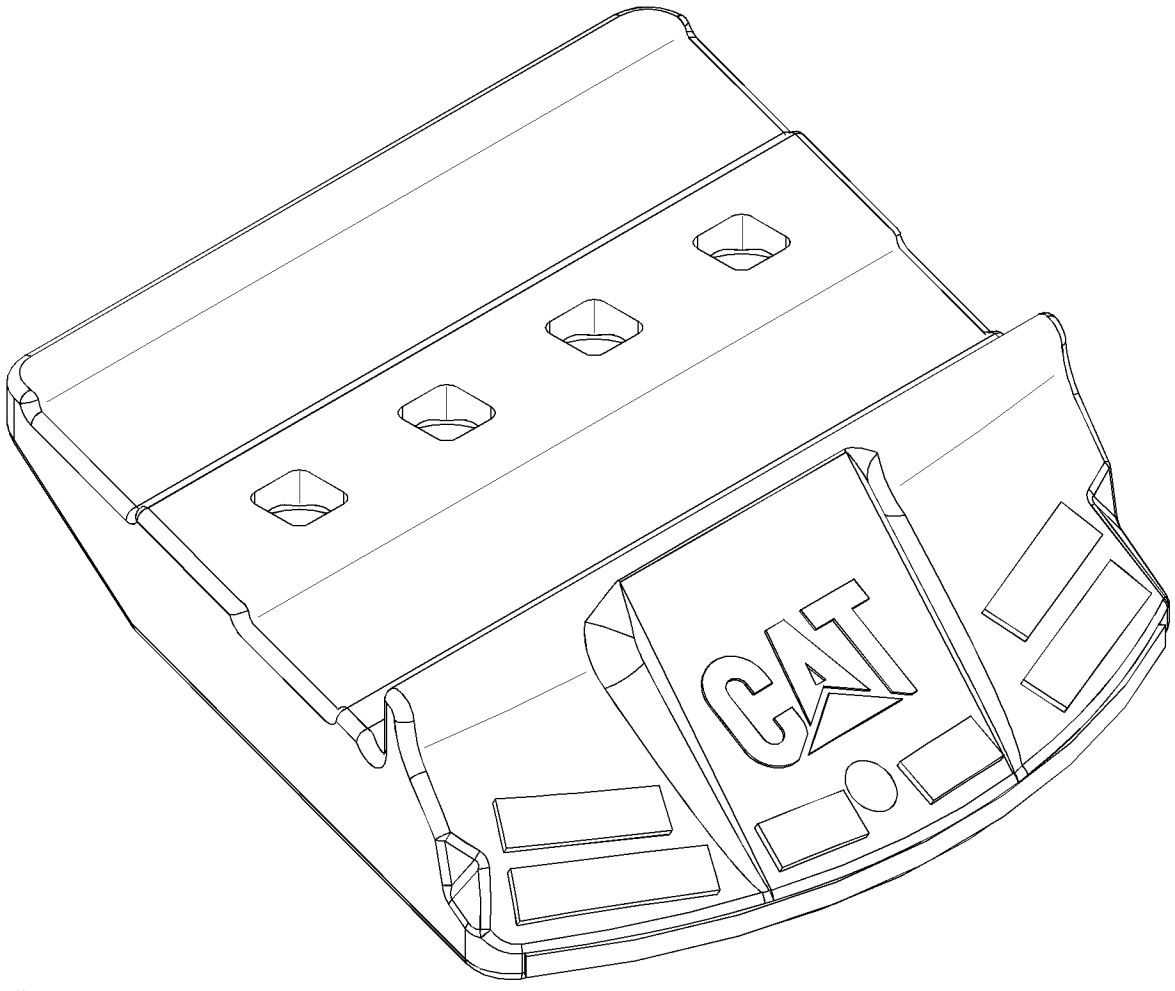


GRAPHIC #1

**<END>**

g01347320

# WORK TOOLS

## *275-5938* EDGE-SEGMENT

**S/N: BXY1-UP**

**FIELD INSTALLATION**

**SMCS-6818** **i02681214**

| NOTE | REF NO | GRAPHIC REF | PART NUMBER | QTY | PART NAME 1 2 3 4 5 6 (PRODUCT LEVEL) | SEE PAGE |
|---|---|---|---|---|---|---|
| | | | | | (NO SERVICED PARTS) | |

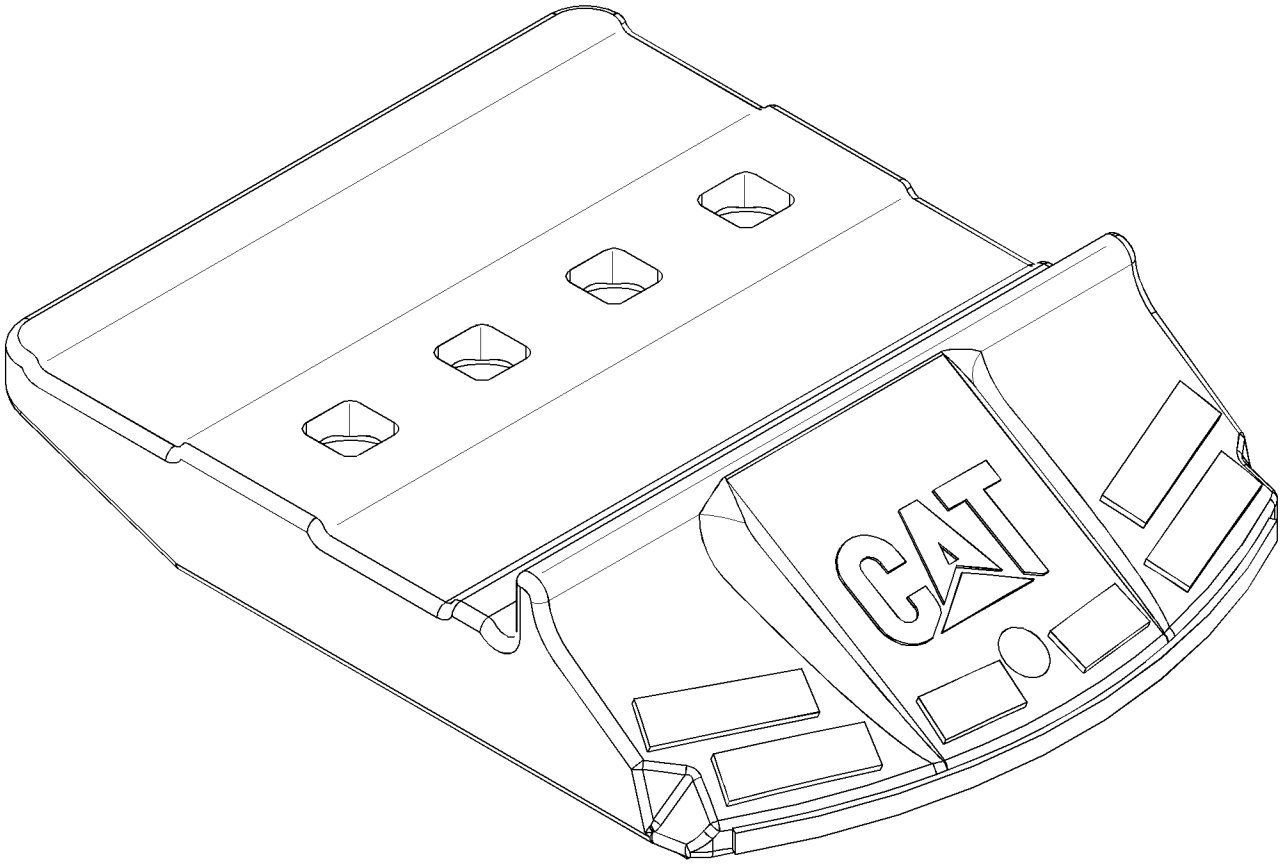


GRAPHIC #1 **<END>** g01347321

# *174-7950* GUARD GP-BUCKET CORNER

**S/N: BXY1-UP**

**FOR USE WITH A 44.5 MM THICK EDGE AND CORNERS (TWO BOLT) 6I8249 (RH) & 6I8250 (LH) AN ATTACHMENT**

**SMCS-6816** **i02675672**

| NOTE | REF NO | GRAPHIC REF | PART NUMBER | QTY | PART NAME 1 2 3 4 5 6 (PRODUCT LEVEL) | SEE PAGE |
|---|---|---|---|---|---|---|
| | 1 | 1 | **3K-9770** | 4 | NUT-FULL (1-1/4-7-THD) | |
| | 2 | 1 | **253-0066** | 1 | GUARD-BUCKET CORNER (RH) | |
| | 3 | 1 | **253-0067** | 1 | GUARD-BUCKET CORNER (LH) | |
| | 4 | 1 | **5P-8823** | 4 | BOLT-PLOW (1-1/4-7X4.13-IN) | |

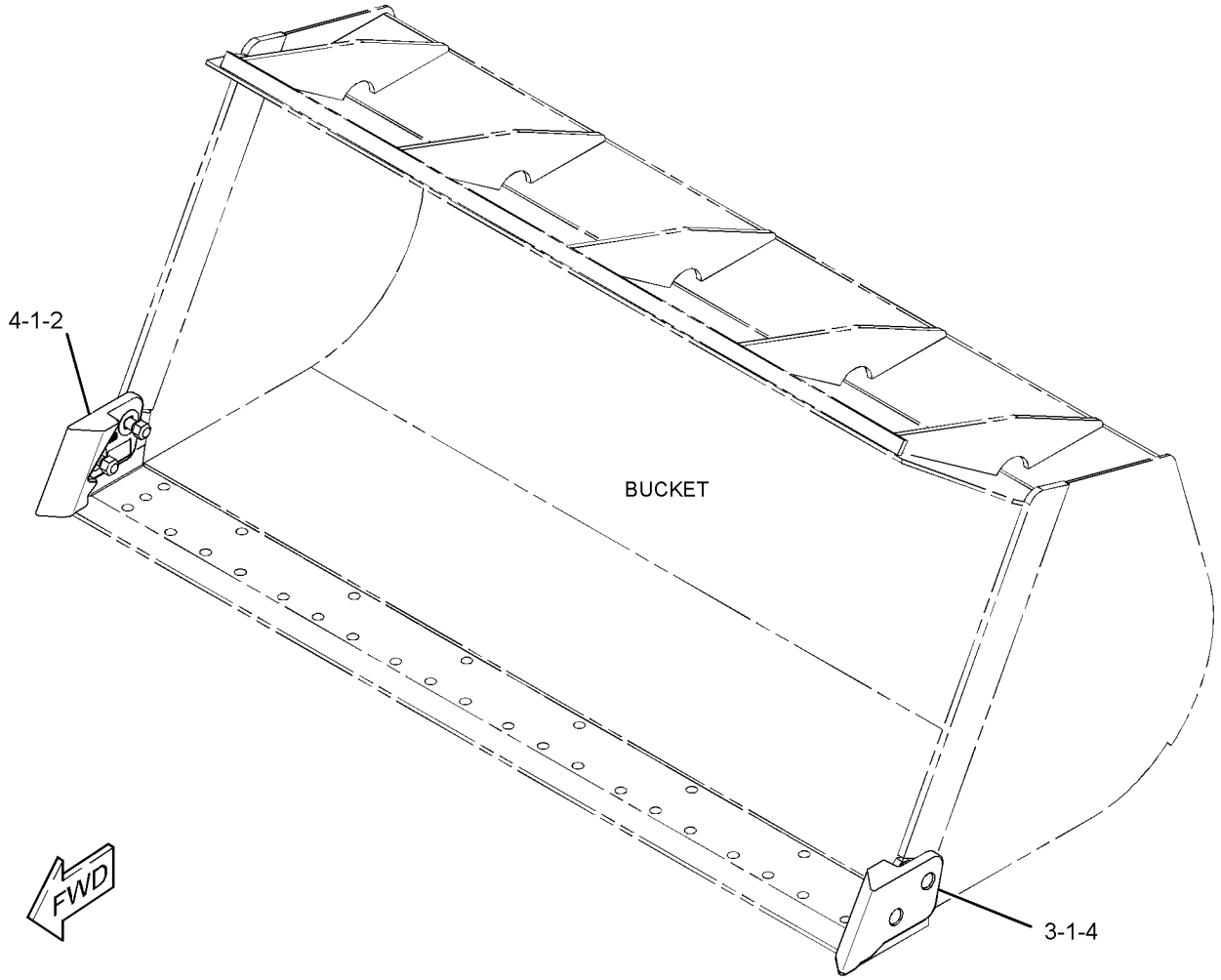


GRAPHIC #1 **<END>** g01348122

# WORK TOOLS

## *232-0161* PROTECTOR GP-EDGE

**S/N: BXY1-UP**

**FIELD INSTALLATION**

**SMCS-6120** **i02224403**

| NOTE | PART NUMBER | QTY | PART NAME 1 2 3 4 5 6 (PRODUCT LEVEL) | SEE PAGE |
|---|---|---|---|---|
| | **5P-8361** | 21 | BOLT-PLOW (1-1/4-7X4.92-IN) | |
| | **109-9080** | 1 | EDGE-SEGMENT (CENTER) | |
| | **109-9081** | 3 | EDGE-SEGMENT (LH) | |
| | **109-9082** | 3 | EDGE-SEGMENT (RH) | |
| | **5P-8362** | 21 | NUT (1-1/4-7-THD) | |
| | **3K-9770** | 21 | NUT-FULL (1-1/4-7-THD) | |
| | **195-7180** | 1 | PLATE (CENTER) | |
| | **195-7181** | 3 | PLATE-WEAR (RH) | |
| | **195-7182** | 3 | PLATE-WEAR (LH) | |

**<END>**

# WORK TOOLS

## *106-0912* PROTECTOR GP-SIDE BAR

**S/N: BXY1-UP**

**PART OF 246-2769, 246-2771, 283-1850, 283-1940, 288-8250 BUCKET GP-ROCK**

**AN ATTACHMENT**

**SMCS-6102, 6817** **i01400974**

| NOTE | REF NO | GRAPHIC REF | PART NUMBER | QTY | PART NAME 1 2 3 4 5 6 (PRODUCT LEVEL) | SEE PAGE |
|---|---|---|---|---|---|---|
| | 1 | 1 | **9J-9600** | 2 | BIT-ROUTER | |
| | 2 | 1 | **135-9350** | 4 | PIN | |
| | 3 | 1 | **114-0359** | 4 | RETAINER AS (G.E.T.) | |

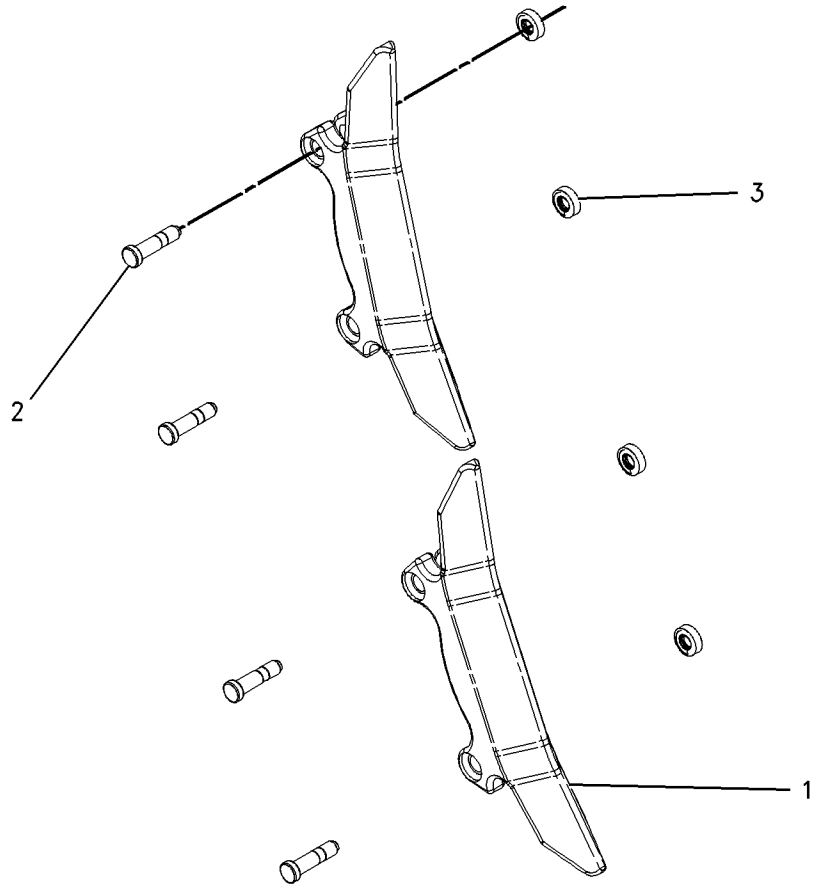


GRAPHIC #1 **<END>** g00738979

# WORK TOOLS

## *8E-3758* TIP GP-ABRASION

**S/N: BXY1-UP**
**J-460. HEAVY-DUTY**
**AN ATTACHMENT**

**SMCS-6805** **i02110591**

| NOTE | REF NO | GRAPHIC REF | PART NUMBER | QTY | PART NAME 1 2 3 4 5 6 (PRODUCT LEVEL) | SEE PAGE |
|---|---|---|---|---|---|---|
| | 1 | 1 | **114-0468** | 1 | PIN | |
| | 2 | 1 | **107-3469** | 1 | RETAINER AS | |
| | 3 | 1 | **9N-4453** | 1 | TIP-ABRASION (HEAVY-DUTY) | |

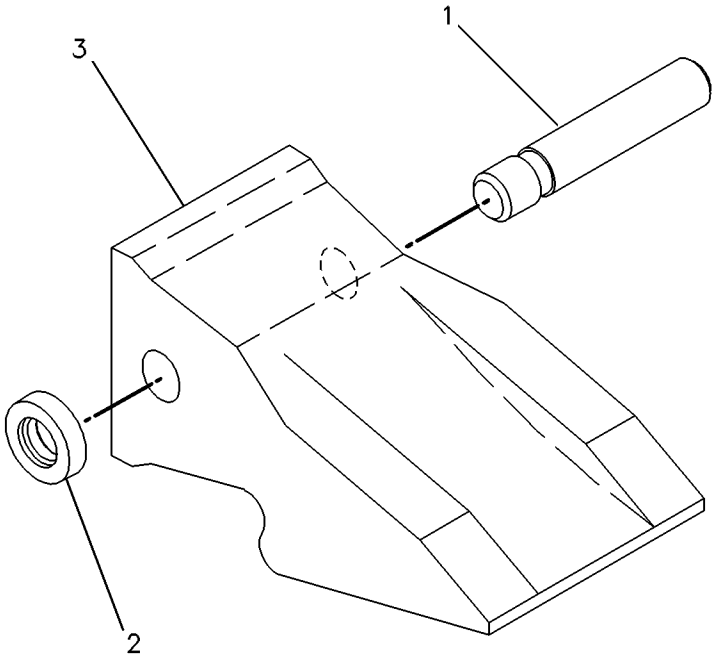


GRAPHIC #1 **<END>** g00224048

# WORK TOOLS

## *8E-3759* TIP GP-ABRASION

**S/N: BXY1-UP**
**J-550. HEAVY-DUTY**
**AN ATTACHMENT**

**SMCS-6805** **i02110550**

| NOTE | REF NO | GRAPHIC REF | PART NUMBER | QTY | PART NAME 1 2 3 4 5 6 (PRODUCT LEVEL) | SEE PAGE |
|---|---|---|---|---|---|---|
| | 1 | 1 | **6Y-2553** | 1 | TIP-ABRASION (HEAVY-DUTY) | |
| | 2 | 1 | **107-3378** | 1 | PIN | |
| | 3 | 1 | **107-8559** | 1 | RETAINER AS | |

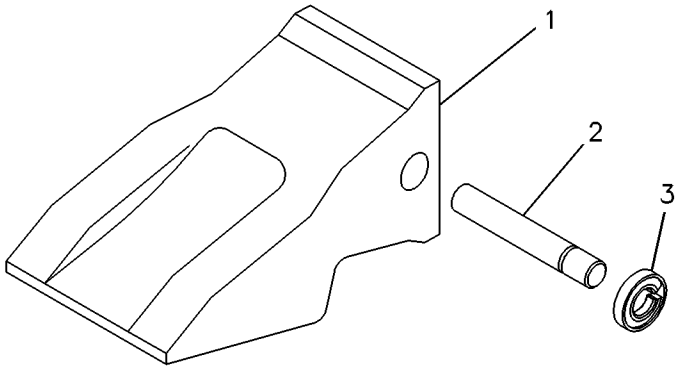


GRAPHIC #1 **<END>** g00127389

# WORK TOOLS

## *220-9169* TIP GP-ABRASION

**S/N: BXY1-UP**
**K-110**
**AN ATTACHMENT**

**SMCS-6805** **i02223787**

| NOTE | PART NUMBER | QTY | PART NAME 1 2 3 4 5 6 (PRODUCT LEVEL) | SEE PAGE |
|---|---|---|---|---|
| | **220-9110** | 1 | RETAINER-G.E.T. (K-110) | |
| | **223-8112** | 1 | TIP-ABRASION (K-110) | |

**<END>**

# WORK TOOLS

## *6Y-5373* TIP GP-LONG

**S/N: BXY1-UP**
**J-550. HEAVY-DUTY**
**AN ATTACHMENT**

**SMCS-6805** **i02110575**

| NOTE | REF NO | GRAPHIC REF | PART NUMBER | QTY | PART NAME 1 2 3 4 5 6 (PRODUCT LEVEL) | SEE PAGE |
|---|---|---|---|---|---|---|
| | 1 | 1 | **107-8559** | 1 | RETAINER AS | |
| | 2 | 1 | **107-3378** | 1 | PIN | |
| | 3 | 1 | **9N-4552** | 1 | TIP-LONG (HEAVY-DUTY) | |

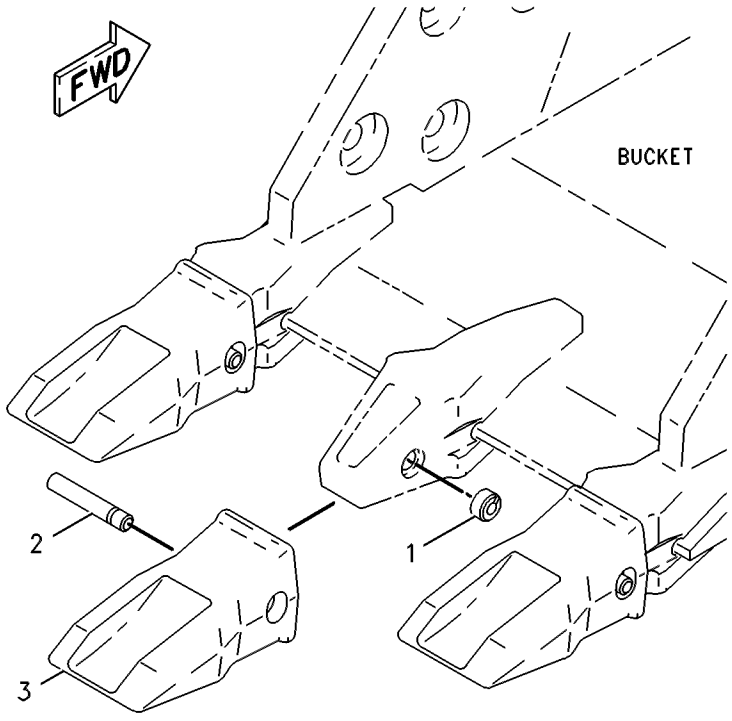


GRAPHIC #1 **<END>** g00121857

# WORK TOOLS

## *8J-9842* TIP GP-LONG

**S/N: BXY1-UP**
**J-550. HEAVY-DUTY**
**AN ATTACHMENT**

**SMCS-6805** **i02110579**

| NOTE | REF NO | GRAPHIC REF | PART NUMBER | QTY | PART NAME 1 2 3 4 5 6 (PRODUCT LEVEL) | SEE PAGE |
|---|---|---|---|---|---|---|
| | 1 | 1 | **107-3378** | 1 | PIN | |
| | 2 | 1 | **107-8559** | 1 | RETAINER AS | |
| | 3 | 1 | **9W-8552** | 1 | TIP-LONG (HEAVY-DUTY) | |

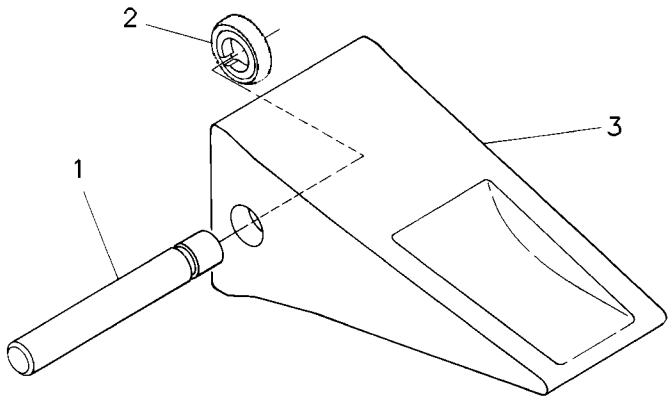


GRAPHIC #1 **<END>** g00119069

# 9N-4562 TIP GP-LONG

**S/N: BXY1-UP**
**J-460. HEAVY DUTY**
**AN ATTACHMENT**

**SMCS-6805** **i01480311**

| NOTE | REF NO | GRAPHIC REF | PART NUMBER | QTY | PART NAME 1 2 3 4 5 6 (PRODUCT LEVEL) | SEE PAGE |
|---|---|---|---|---|---|---|
| | 1 | 1 | **107-3469** | 1 | RETAINER AS-G.E.T. | |
| | 2 | 1 | **9W-8452** | 1 | TIP-LONG (HD) | |
| | 3 | 1 | **114-0468** | 1 | PIN-G.E.T. | |

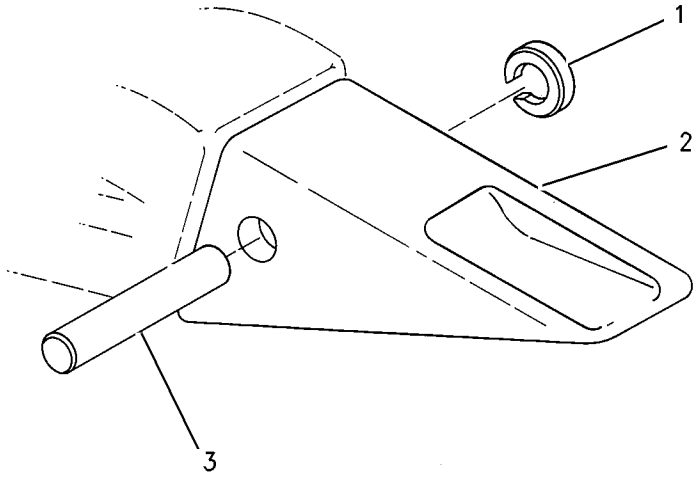


GRAPHIC #1 **<END>** g00770646

# WORK TOOLS

## *9N-4563* TIP GP-LONG

**S/N: BXY1-UP**
**J-460. ABRASIVE**
**AN ATTACHMENT**

**SMCS-6805** **i01382253**

| NOTE | REF NO | GRAPHIC REF | PART NUMBER | QTY | PART NAME 1 2 3 4 5 6 (PRODUCT LEVEL) | SEE PAGE |
|---|---|---|---|---|---|---|
| | 1 | 1 | **107-3469** | 1 | RETAINER AS | |
| | 2 | 1 | **9N-4452** | 1 | TIP-LONG | |
| | 3 | 1 | **114-0468** | 1 | PIN | |

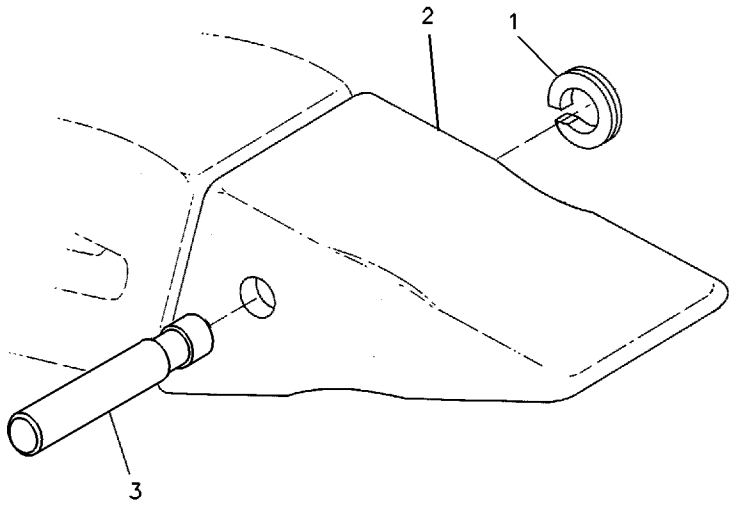


GRAPHIC #1 **<END>** g00119082

# WORK TOOLS

## *9N-4564* TIP GP-PENETRATION

**S/N: BXY1-UP**
**J-460**
**AN ATTACHMENT**

**SMCS-6805** **i01496659**

| NOTE | REF NO | GRAPHIC REF | PART NUMBER | QTY | PART NAME 1 2 3 4 5 6 (PRODUCT LEVEL) | SEE PAGE |
|---|---|---|---|---|---|---|
| | 1 | 1 | **114-0468** | 1 | PIN-G.E.T. | |
| | 2 | 1 | **9W-8459** | 1 | TIP-PENETRATION | |
| | 3 | 1 | **107-3469** | 1 | RETAINER AS-G.E.T. | |

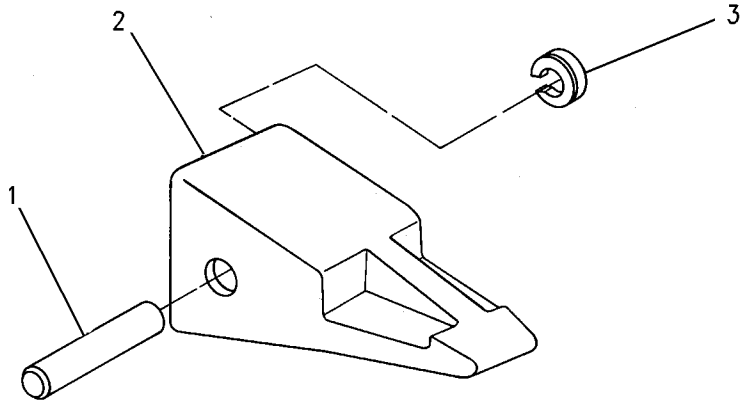


GRAPHIC #1 **<END>** g00770649

# WORK TOOLS

## *170-7295* TIP GP-PENETRATION

**S/N: BXY1-UP**
**J-460**
**AN ATTACHMENT**

**SMCS-6805** **i01493086**

| NOTE | REF NO | GRAPHIC REF | PART NUMBER | QTY | PART NAME 1 2 3 4 5 6 (PRODUCT LEVEL) | SEE PAGE |
|---|---|---|---|---|---|---|
| | 1 | 1 | **114-0468** | 1 | PIN-G.E.T. | |
| | 2 | 1 | **138-6451** | 1 | TIP-PENETRATION | |
| | 3 | 1 | **107-3469** | 1 | RETAINER AS-G.E.T. | |

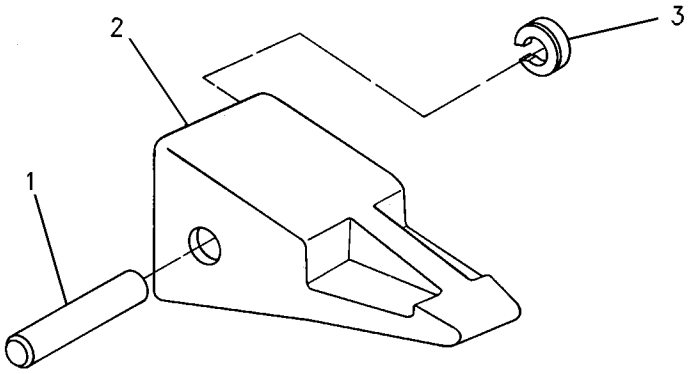


GRAPHIC #1 **<END>** g00775213

# WORK TOOLS

## *170-7296* TIP GP-PENETRATION

**S/N: BXY1-UP**
**J-550. HEAVY DUTY**
**AN ATTACHMENT**

**SMCS-6805** **i01094356**

| NOTE | PART NUMBER | QTY | PART NAME 1 2 3 4 5 6 (PRODUCT LEVEL) | SEE PAGE |
|---|---|---|---|---|
| | **107-3378** | 1 | PIN-G.E.T. | |
| | **107-8559** | 1 | RETAINER AS-G.E.T. | |
| | **138-6552** | 1 | TIP-PENETRATION | |

**<END>**

# WORK TOOLS

## *220-9168* TIP GP-PENETRATION

**S/N: BXY1-UP**
**K-110**
**FIELD INSTALLATION**

**SMCS-6805** **i02457808**

| NOTE | REF NO | GRAPHIC REF | PART NUMBER | QTY | PART NAME 1 2 3 4 5 6 (PRODUCT LEVEL) | SEE PAGE |
|---|---|---|---|---|---|---|
| | 1 | 1 | **220-9110** | 1 | RETAINER-G.E.T. (K-110) | |
| | 2 | 1 | **232-2112** | 1 | TIP-HEAVY PENETRATION (K-110) | |

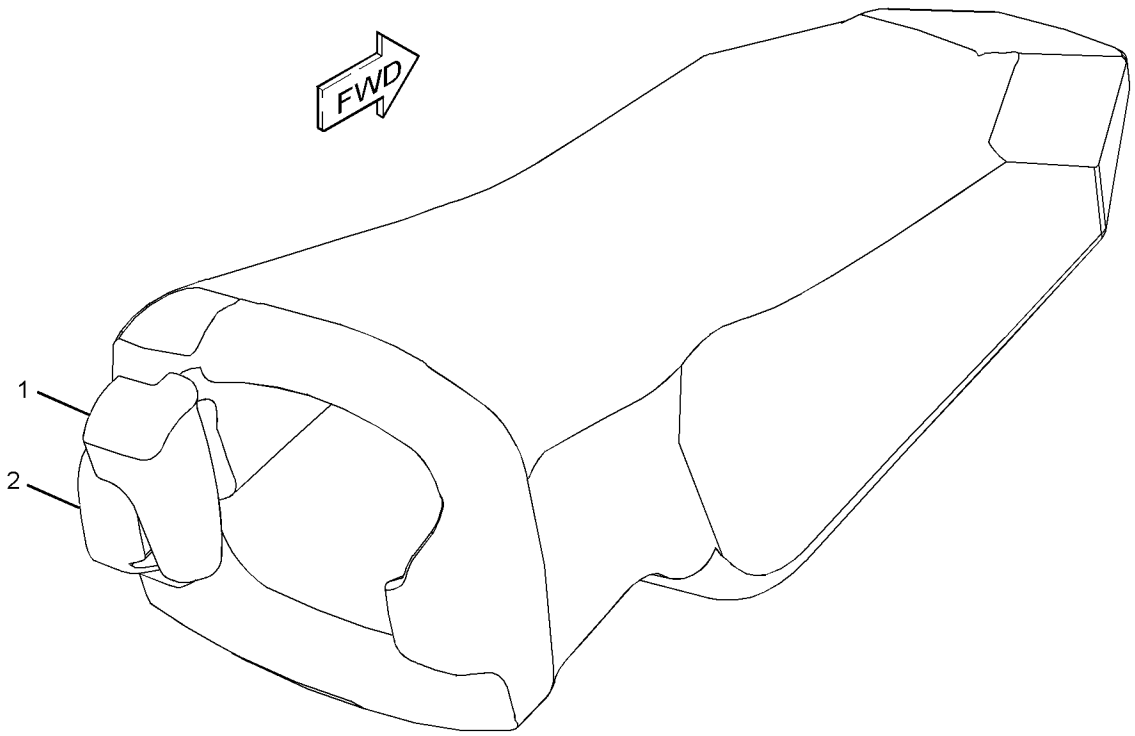


GRAPHIC #1 **<END>** g01229595

# *8J-9841* TIP GP-SHORT

**S/N: BXY1-UP**
**J-550. HEAVY-DUTY**
**AN ATTACHMENT**

**SMCS-6805** **i02110589**

| NOTE | REF NO | GRAPHIC REF | PART NUMBER | QTY | PART NAME 1 2 3 4 5 6 (PRODUCT LEVEL) | SEE PAGE |
|---|---|---|---|---|---|---|
| | 1 | 1 | **107-3378** | 1 | PIN | |
| | 2 | 1 | **107-8559** | 1 | RETAINER AS | |
| | 3 | 1 | **9W-8551** | 1 | TIP-SHORT (HEAVY-DUTY) | |

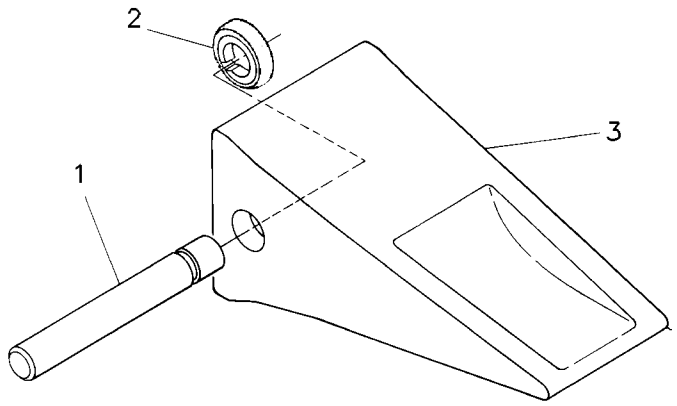


GRAPHIC #1 **<END>** g00119070

# WORK TOOLS

## *9N-4561* TIP GP-SHORT

**S/N: BXY1-UP**
**J-460. HEAVY DUTY**
**AN ATTACHMENT**

**SMCS-6805** **i01480314**

| NOTE | REF NO | GRAPHIC REF | PART NUMBER | QTY | PART NAME 1 2 3 4 5 6 (PRODUCT LEVEL) | SEE PAGE |
|---|---|---|---|---|---|---|
| | 1 | 1 | **107-3469** | 1 | RETAINER AS | |
| | 2 | 1 | **9W-8451** | 1 | TIP-SHORT (HD) | |
| | 3 | 1 | **114-0468** | 1 | PIN | |

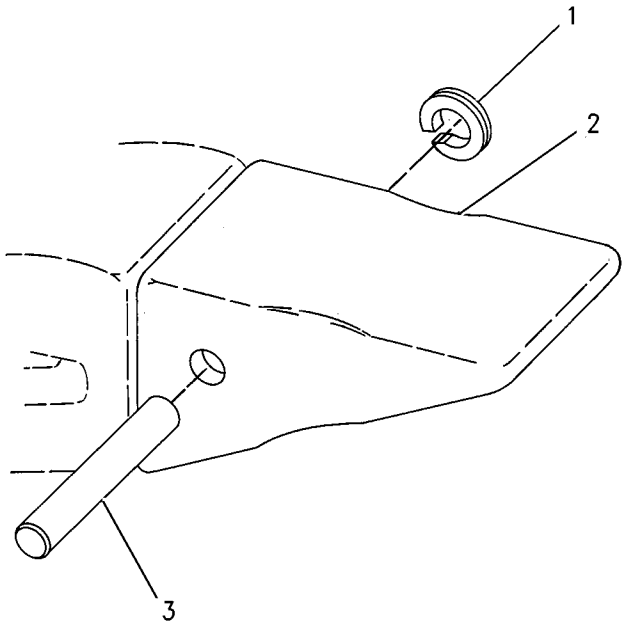


GRAPHIC #1 **<END>** g00770639

# WORK TOOLS

## 232-2112 TIP-HEAVY PENETRATION

**S/N: BXY1-UP**
**K-110**
**AN ATTACHMENT**

**SMCS-6805** **i02346413**

| NOTE | REF NO | GRAPHIC REF | PART NUMBER | QTY | PART NAME 1 2 3 4 5 6 (PRODUCT LEVEL) | SEE PAGE |
|---|---|---|---|---|---|---|
| | | | | | (NO SERVICED PARTS) | |

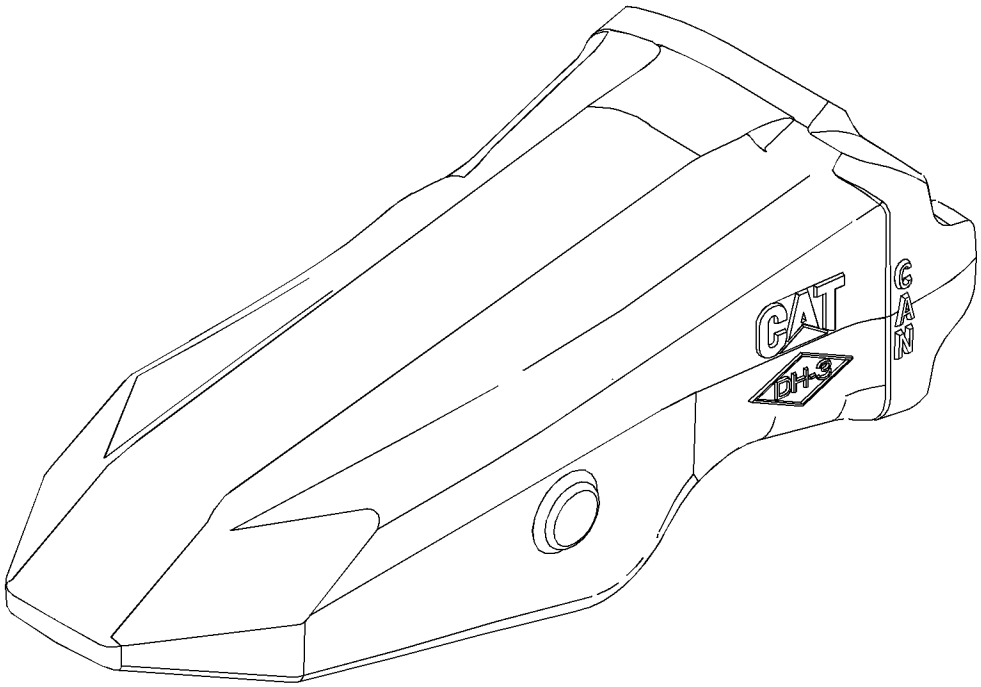


GRAPHIC #1 **<END>** g01289334

# WORK TOOLS

## 264-2226 TIP-LONG

**S/N: BXY1-UP**
**J-450**
**FIELD INSTALLATION**

**SMCS-6805** **i02379331**

| NOTE | REF NO | GRAPHIC REF | PART NUMBER | QTY | PART NAME 1 2 3 4 5 6 (PRODUCT LEVEL) | SEE PAGE |
|---|---|---|---|---|---|---|
| | | | | | (NO SERVICED PARTS) | |

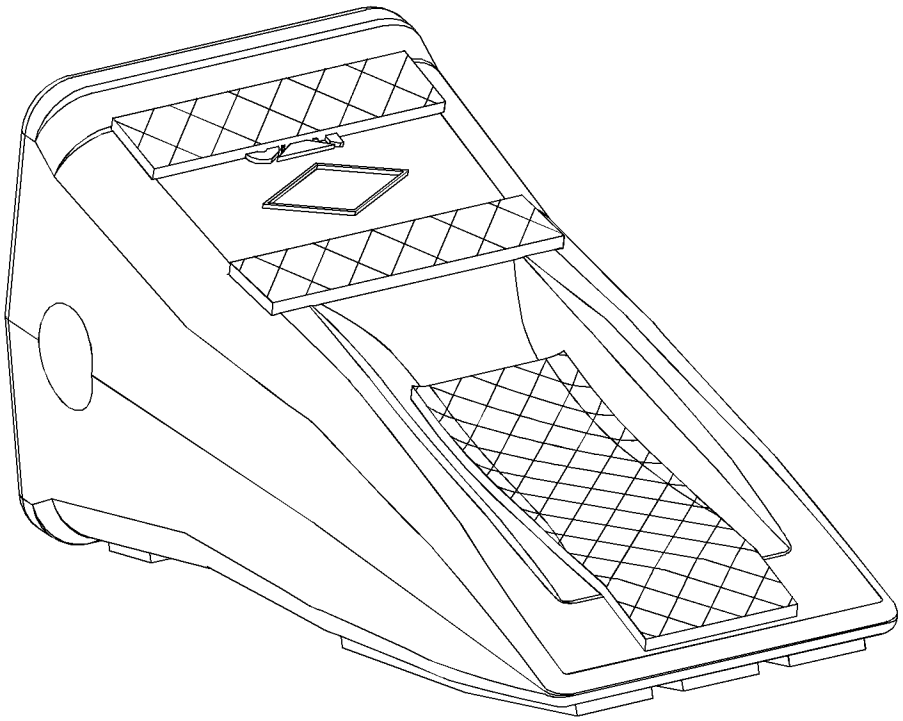

GRAPHIC #1 **<END>** g01250408

## *173-1028* ADJUSTER GP-SEAT

**S/N: BXY1-UP**
**PART OF 178-0603 SEAT GP**
**ALSO AN ATTACHMENT**

**SMCS-7321** **i02387199**

| NOTE | REF NO | GRAPHIC REF | PART NUMBER | QTY | PART NAME 1 2 3 4 5 6 (PRODUCT LEVEL) | SEE PAGE |
|---|---|---|---|---|---|---|
| | 1 | 1 | **4V-8256** | 4 | SPRING | |
| | 2 | 1 | **117-4492** | 1 | ROD | |
| | 3 | 1 | **136-1544** | 1 | LATCH AS-LH | |
| | 4 | 1 | **156-5545** | 1 | LATCH AS-RH | |
| | 5 | 1 | **164-4531** | 1 | ROD | |
| | 6 | 1 | **170-1112** | 1 | PLATE AS | |
| | 7 | 1 | **170-1114** | 1 | HANDLE (SLIDE ADJUSTMENT) | |
| | 8 | 1 | **170-1115** | 1 | HANDLE (TILT ADJUSTMENT) | |
| | 9 | 1 | **132-0338** | 2 | WASHER-PLASTIC (13X31.7X0.8-MM THK) | |
| | 10 | 1 | **2K-4973** | 2 | LOCKNUT (3/8-16 THD) | |
| | 11 | 1 | **7X-0608** | 2 | WASHER-HARD (10.2X16X2-MM THK) | |

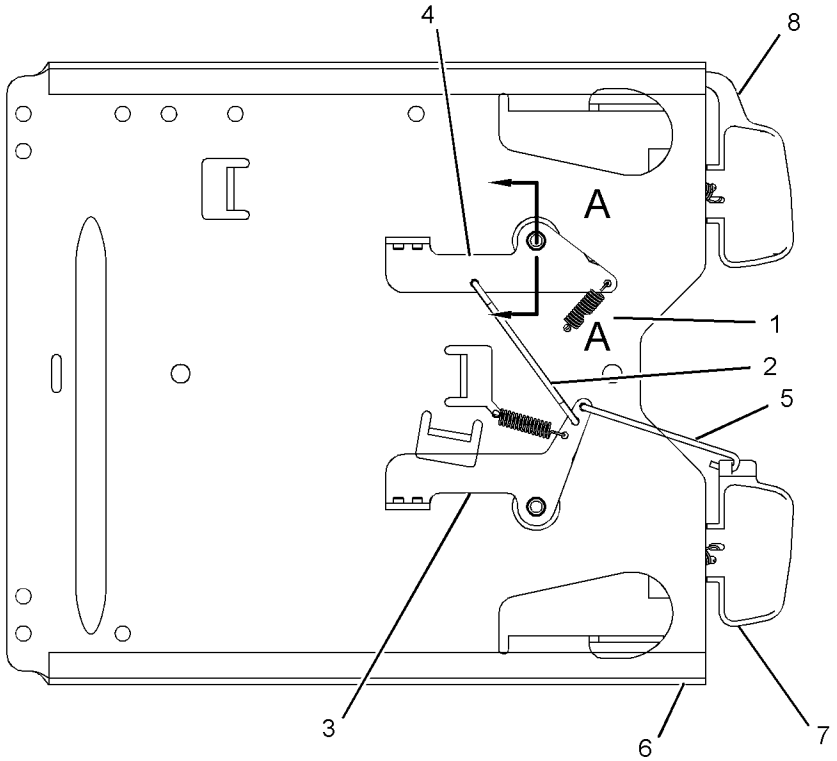


BOTTOM VIEW

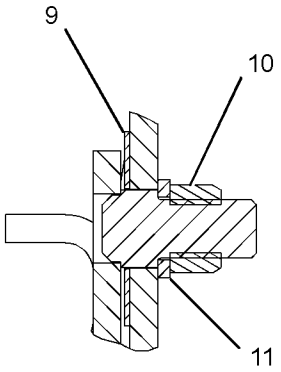


SECTION A-A

GRAPHIC #1 **<END>** g01191495

# OPERATOR STATION

## *214-0783* AIR COMPRESSOR GP-SEAT—HEAVY-DUTY

**S/N: BXY1-UP**

**OPTIONAL FIELD REPLACEMENT FOR 237-3970 STANDARD DUTY COMPRESSOR**

**SMCS-731S, 7324** **i02638502**

| NOTE | REF NO | GRAPHIC REF | PART NUMBER | QTY | PART NAME 1 2 3 4 5 6 (PRODUCT LEVEL) | SEE PAGE |
|---|---|---|---|---|---|---|
| | 1 | 1 | **5P-4423** | 1 | ELBOW | |
| | 2 | 1 | **5P-4432** | 1 | ELBOW-AIR BRAKE | |
| | 3 | 1 | **175-5058** | 1 | MOUNT | |
| | 4 | 1 | **186-5107** | 3 | SCREW (NO 8X1.25-IN) | |
| | 5 | 1 | **214-0784** | 1 | COMPRESSOR AS | |

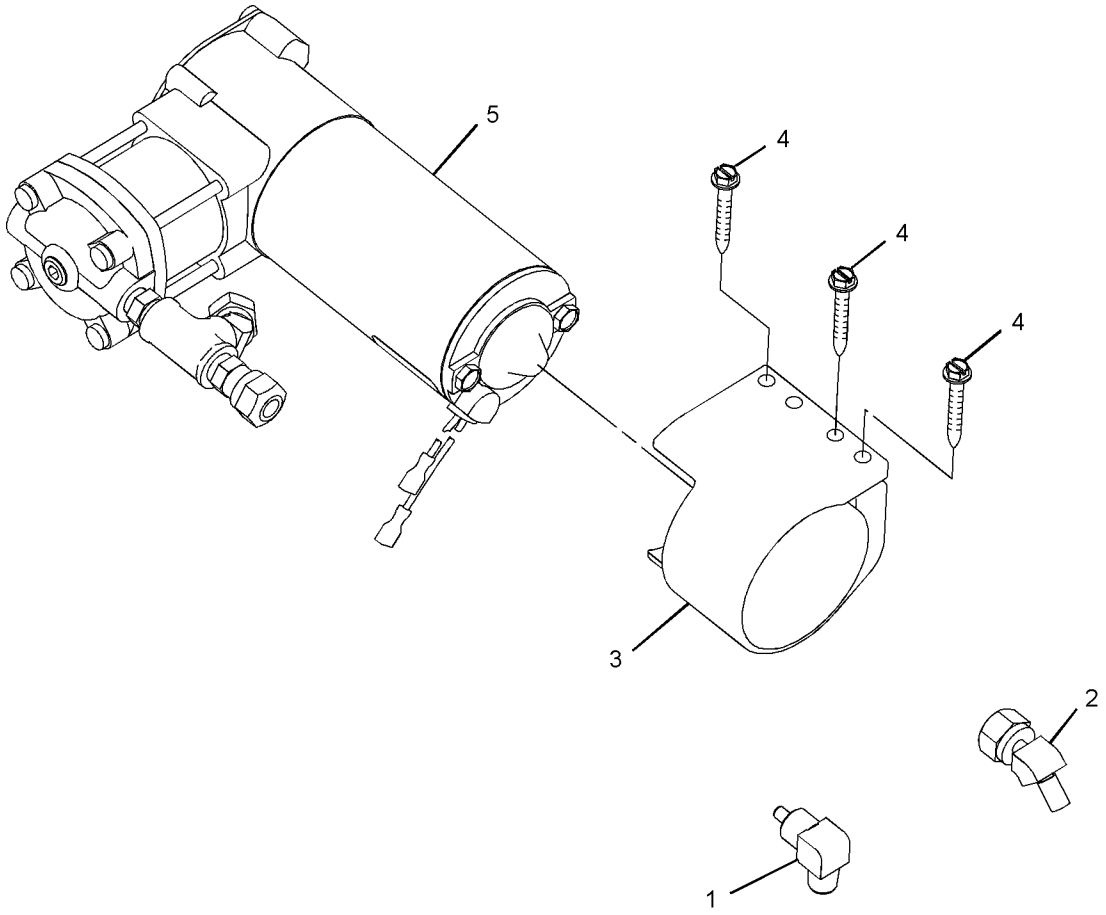


GRAPHIC #1 **<END>** g01040572

# OPERATOR STATION

## *237-3970* AIR COMPRESSOR GP-SEAT

**S/N: BXY1-UP**

**FOR OPTIONAL FIELD REPLACEMENT ORDER 214-0783 COMPRESSOR, 211-5358 CONDUIT(100-CM) & 5P-6010 TUBE (1-M), PROVIDES HEAVY DUTY SEAT COMPRESSOR**

**PART OF 191-2933 SUSPENSION GP-SEAT**

**ALSO AN ATTACHMENT**

**SMCS-731S, 7324** **i02012095**

| NOTE | REF NO | GRAPHIC REF | PART NUMBER | QTY | PART NAME 1 2 3 4 5 6 (PRODUCT LEVEL) | SEE PAGE |
|---|---|---|---|---|---|---|
| | | | | | (NO SERVICED PARTS) | |

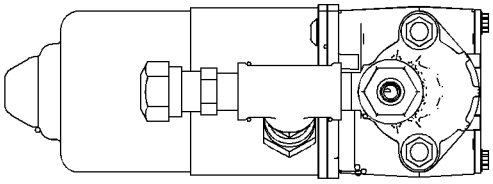

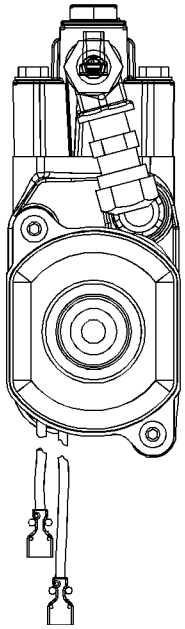

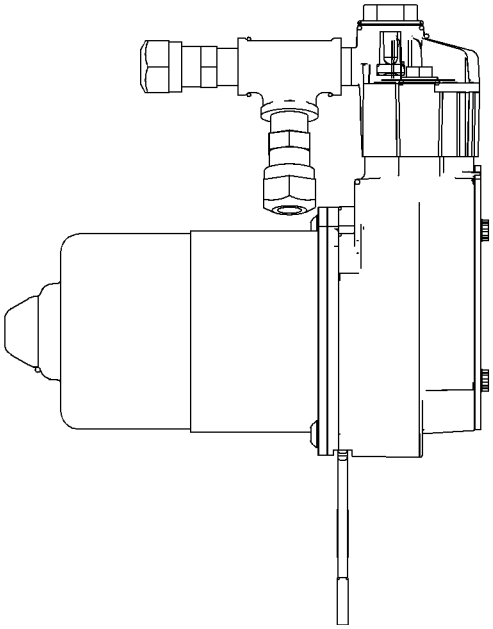

GRAPHIC #1

**<END>**

g01040576

# OPERATOR STATION

## *147-3120* AIR CONDITIONER & MOUNTING GP

**S/N: BXY1-UP**

**PART OF 227-3190, 292-6110, 308-2727 CAB AR**

**ALSO AN ATTACHMENT**

**SMCS-7320** **i02106269**

| NOTE | REF NO | GRAPHIC REF | PART NUMBER | QTY | PART NAME 1 2 3 4 5 6 (PRODUCT LEVEL) | SEE PAGE |
|---|---|---|---|---|---|---|
| | 1 | 1 | **3T-2511** | 2 | TUBE | |
| Y | 2 | 1 | **115-0627** | 1 | AIR CONDITIONER GP | 1331 |
| Y | 5 | 1 | *131-1274* | 1 | LINES GP-AIR CONDITIONER | 1398 |
| Y | 6 | 1 | *162-5812* | 1 | LINES GP-CAB HEATER | 1402 |
| M | 7 | 1 | **9X-2040** | 4 | SCREW-TRUSS HEAD | |

M-METRIC PART
Y-SEPARATE ILLUSTRATION

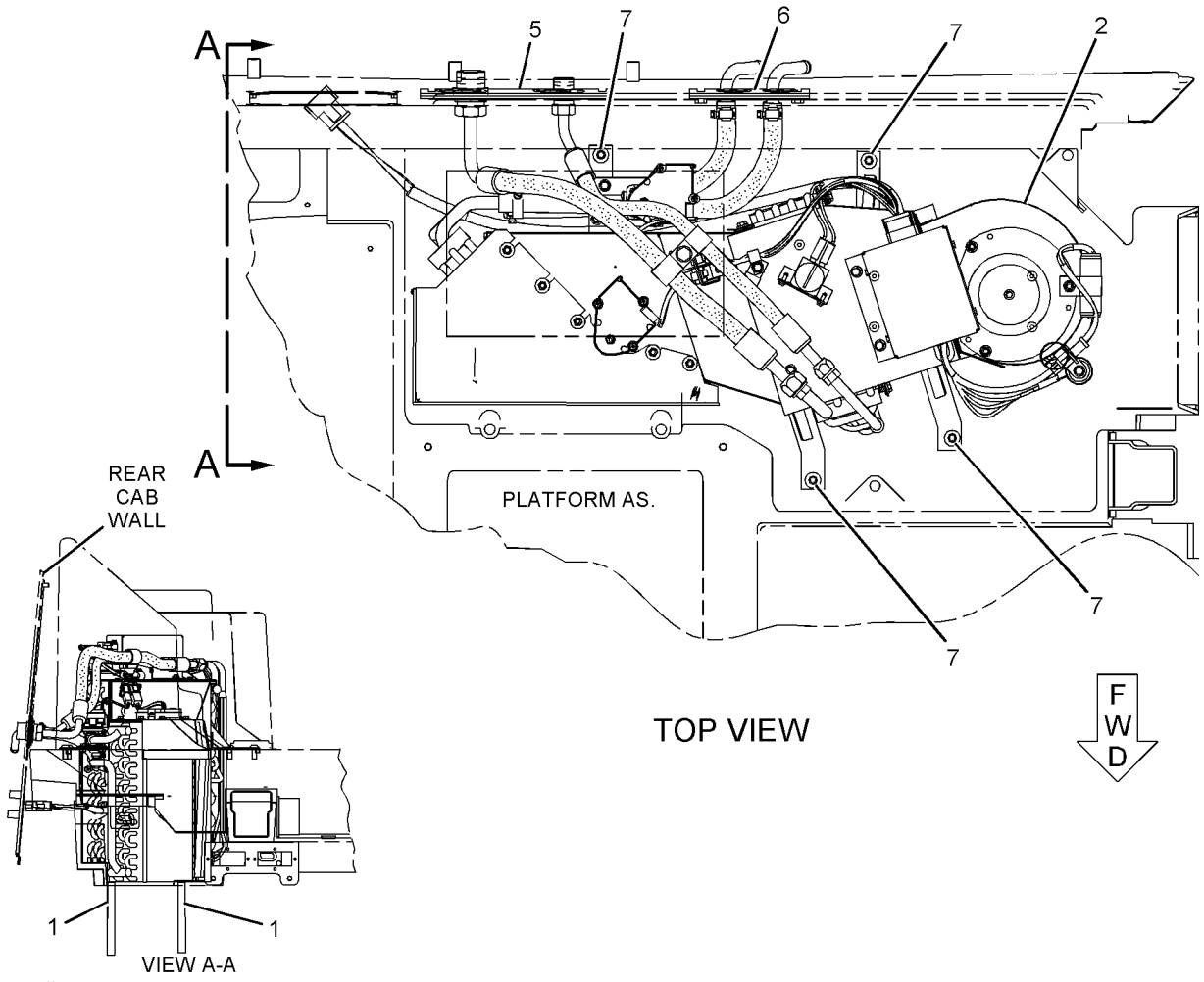


GRAPHIC #1 **<END>** g01072610

# OPERATOR STATION

## 115-0627 AIR CONDITIONER GP

**S/N: BXY1-UP**

**PART OF 147-3120 AIR CONDITIONER & MOUNTING GP**

**ALSO AN ATTACHMENT**

**SMCS-7320** **i01890904**

| NOTE | REF NO | GRAPHIC REF | PART NUMBER | QTY | PART NAME 1 2 3 4 5 6 (PRODUCT LEVEL) | SEE PAGE |
|---|---|---|---|---|---|---|
| C | 1 | 1 | **2V-3216** | 1 | CLIP | |
| | 2 | 1 | **3B-4501** | 2 | LOCKWASHER (#8) | |
| | 3 | 1 | **3E-0400** | 2 | BLOWER AS | |
| | 4 | 1 | **3E-5464** | 1 | SWITCH AS-TEMPERATURE (REFRIGERANT) | |
| | 5 | 1 | **174-1494** | 1 | MOTOR AS-BLOWER (24-VOLT, A/C, HEATER) | |
| | | 1 | **3E-3365** | 1 | WEDGE-RECEPTACLE LOCK (2-PIN) | |
| | | 1 | **9W-0852** | 2 | PIN-CONNECTOR (14-GA) | |
| | | 1 | **102-8802** | 1 | KIT-RECEPTACLE (2-PIN) | |
| | | | | | (INCLUDES RECEPTACLE AS & WEDGE) | |
| | 6 | 1 | **3S-2093** | 4 | STRAP-CABLE | |
| CM | 7 | 1 | **5C-9553** | 19 | BOLT (M6X1X16-MM) | |
| C | 8 | 1 | **9X-2488** | 2 | CLAMP-HOSE | |
| | 9 | 1 | **5P-4115** | 5 | WASHER-HARD (7.2X19X2-MM THK) | |
| | 10 | 1 | **6V-1668** | 2 | WASHER (6.5X29.1X3-MM THK) | |
| | 11 | 1 | **6V-7646** | 1 | WASHER-HARD (7.2X25X2-MM THK) | |
| | 12 | 1 | **8C-3756** | 1 | FILM-IDENTIFICATION (GROUP NUMBER) | |
| | 13 | 1 | **8C-4586** | 2 | CLAMP | |
| M | 14 | 1 | **6V-7728** | 1 | BOLT (M6X1X45-MM) | |
| | 15 | 1 | **8P-5141** | 2 | PLATE-ORIFICE | |
| M | 16 | 1 | **8T-0337** | 3 | SCREW-MACHINE (M4X0.7X12-MM) | |
| | 17 | 1 | **8T-4205** | 30 | WASHER-HARD (7.2X14.5X2-MM THK) | |
| | 18 | 1 | **8T-6631** | 2 | SCREW-MACHINE (8-32X0.5-IN) | |
| | 19 | 1 | **9G-1950** | 1 | RESISTOR | |
| C | 20 | 1 | **9M-8406** | 2 | CLIP | |
| | 21 | 1 | **9X-2185** | 4 | SCREW (8-15X11.11-MM) | |
| M | 22 | 1 | **9X-8498** | 1 | BOLT (M6X1X180-MM) | |
| | 23 | 1 | **068-8993** | 1 | GROMMET | |
| | 24 | 1 | **113-8113** | 1 | ROD | |
| | 25 | 1 | **126-5606** | 1 | COIL AS-EVAPORATOR | |
| | 26 | 1 | **126-5607** | 1 | COIL AS-HEATER | |
| | 27 | 1 | **126-5608** | 1 | HOUSING AS | |
| | 28 | 1 | **126-5609** | 1 | PLATE AS | |
| | 29 | 1 | **211-9047** | 1 | VALVE AS-WATER | |
| | 30 | 1 | *220-1828* | 1 | MOTOR-ACTUATOR | |
| | 31 | 1 | **126-5612** | 1 | HARNESS AS-HEATER & AIR COND | |
| | | 1 | **8T-8737** | 4 | PLUG-SEAL | |
| | | 1 | **102-8801** | 1 | KIT-RECEPTACLE (12-PIN) | |
| | | | | | (INCLUDES RECEPTACLE AS & WEDGE) | |
| | | 1 | **155-2255** | 1 | KIT-CONNECTING PLUG (12-PIN) | |
| | | 1 | **155-2270** | 2 | KIT-CONNECTING PLUG (2-PIN) | |
| | | | | | (TO BLOWER MOTOR & WATER VALVE MOTOR) | |
| | | 1 | **155-2274** | 1 | KIT-CONNECTING PLUG (6-PIN) | |
| | | | | | (EACH KIT INCLUDES PLUG AS & WEDGE) | |
| | 32 | 1 | **126-6006** | 1 | DOOR AS | |
| | 33 | 1 | **126-6009** | 1 | COVER | |
| | 34 | 1 | **126-6010** | 1 | CONTROL AS | |
| | 35 | 1 | **127-6422** | 1 | PLATE AS | |
| | 36 | 1 | **127-6423** | 1 | PLATE | |
| M | 37 | 1 | **129-3178** | 12 | LOCKNUT (M6X1-THD) | |
| | 38 | 1 | **130-1888** | 1 | GASKET | |
| | 39 | 1 | **130-1890** | 6 | GASKET | |
| | 40 | 1 | **131-0820** | 1 | GASKET | |
| | 41 | 1 | **131-0821** | 1 | GASKET | |
| | 42 | 1 | **131-0822** | 1 | GASKET | |
| | 43 | 1 | **131-3093** | 1 | BUSHING | |

## 115-0627 AIR CONDITIONER GP *(contd. )* i01890904

| NOTE | REF NO | GRAPHIC REF | PART NUMBER | QTY | PART NAME 1 2 3 4 5 6 (PRODUCT LEVEL) | SEE PAGE |
|---|---|---|---|---|---|---|
| E | 44 | 1 | **126-8472** | 2 | SEAL (38.1CM EACH) | |
| BCE | 45 | 1 | **136-1953** | | HOSE | |
| | 46 | 1 | **4F-2320** | 3 | WASHER | |
| CM | 47 | 1 | **8T-4138** | 2 | BOLT (M6X1X20-MM) | |
| BD | 48 | 1 | **6V-2496** | | SEAL | |
| BD | 49 | 1 | **5P-5908** | | SEAL | |

B-USE AS REQUIRED
C-CHANGE FROM PREVIOUS TYPE
D-ORDER BY THE METER
E-ORDER BY THE CENTIMETER
M-METRIC PART

## 115-0627 AIR CONDITIONER GP *(contd. )* i01890904

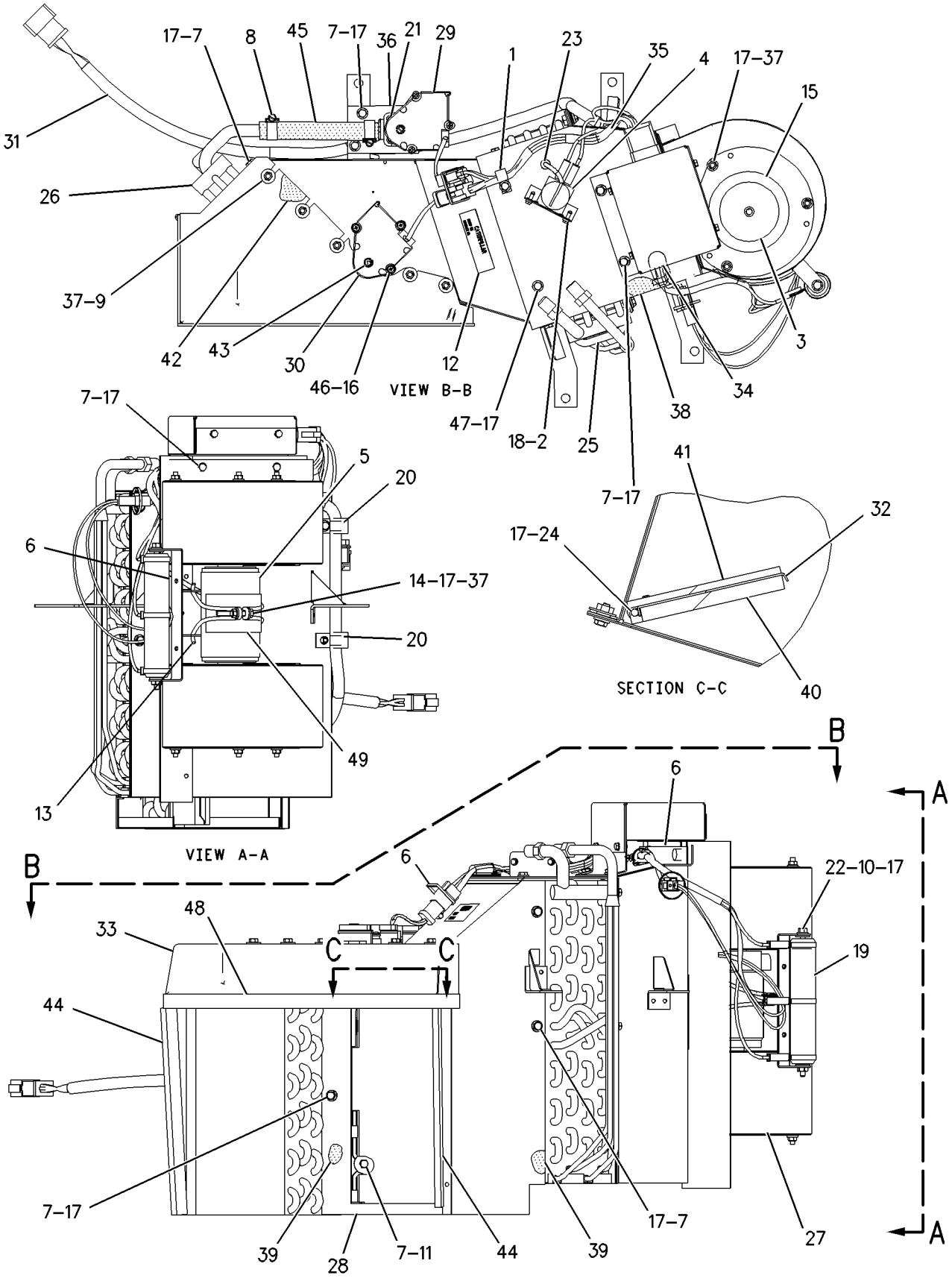


GRAPHIC #1 **<END>** g00736341

# OPERATOR STATION

## 214-7634 ARM GP-WINDOW WIPER–REAR

**S/N: BXY1-UP**

**PART OF 109-8196, 183-3756 WIPER GP-WINDOW**

**ALSO AN ATTACHMENT**

**SMCS-7305** **i02023663**

| NOTE | REF NO | GRAPHIC REF | PART NUMBER | QTY | PART NAME 1 2 3 4 5 6 (PRODUCT LEVEL) | SEE PAGE |
|---|---|---|---|---|---|---|
| M | 1 | 1 | **191-8921** | 2 | BOLT-SOCKET HEAD (M6X1X25-MM) | |
| | 2 | 1 | **227-7392** | 2 | WASHER (6.3X10.3X0.4-MM THK) | |
| M | 3 | 1 | **6V-8225** | 2 | NUT (M6X1-THD) | |
| | 4 | 1 | **136-3195** | 1 | NOZZLE AS-WASHER | |
| | 5 | 1 | **136-3188** | 3 | CLIP | |

M-METRIC PART

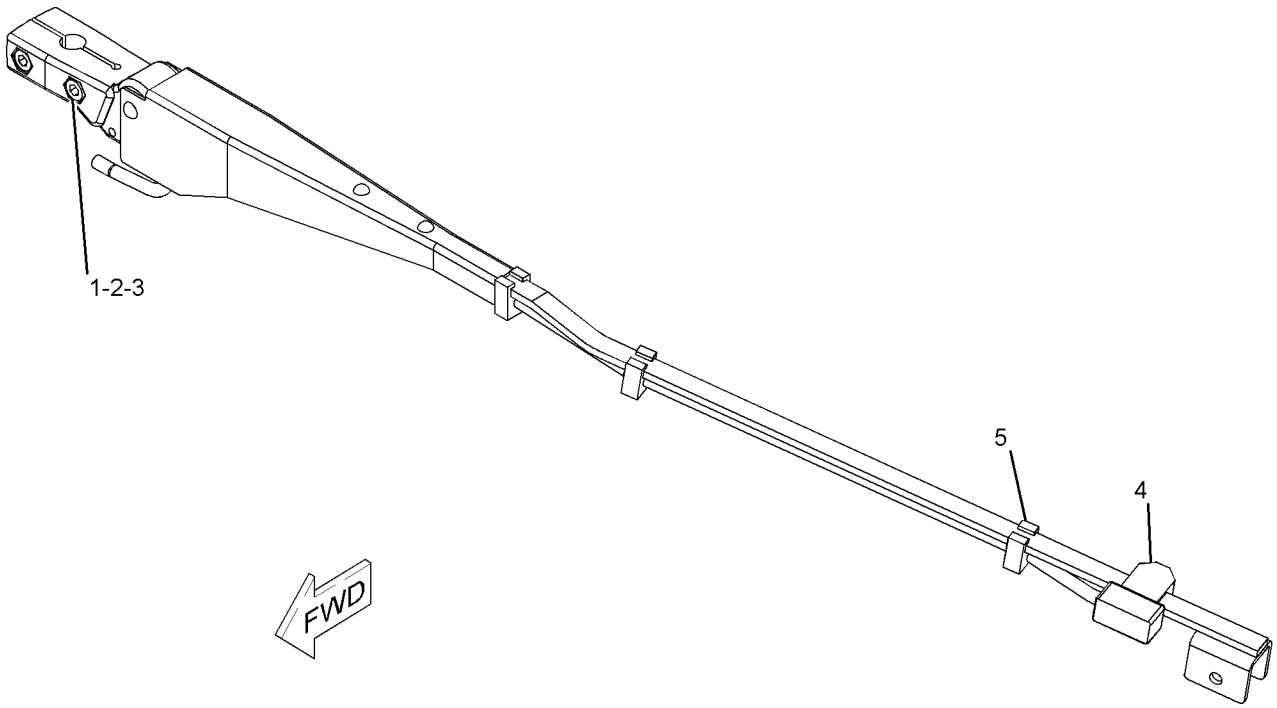


GRAPHIC #1 **<END>** g01024688

# OPERATOR STATION

## 214-7635 ARM GP-WINDOW WIPER—FRONT

**S/N: BXY1-UP**

**PART OF 109-8196, 183-3756 WIPER GP-WINDOW**

**ALSO AN ATTACHMENT**

**SMCS-7305** **i02023666**

| NOTE | REF NO | GRAPHIC REF | PART NUMBER | QTY | PART NAME 1 2 3 4 5 6 (PRODUCT LEVEL) | SEE PAGE |
|---|---|---|---|---|---|---|
| M | 1 | 1 | **191-8921** | 4 | BOLT-SOCKET HEAD (M6X1X25-MM) | |
| | 2 | 1 | **227-7392** | 4 | WASHER (6.3X10.3X0.4-MM THK) | |
| M | 3 | 1 | **6V-8225** | 4 | NUT (M6X1-THD) | |
| | 4 | 1 | **136-3190** | 1 | NOZZLE AS-WASHER | |
| | 5 | 1 | **136-3188** | 3 | CLIP | |

M-METRIC PART

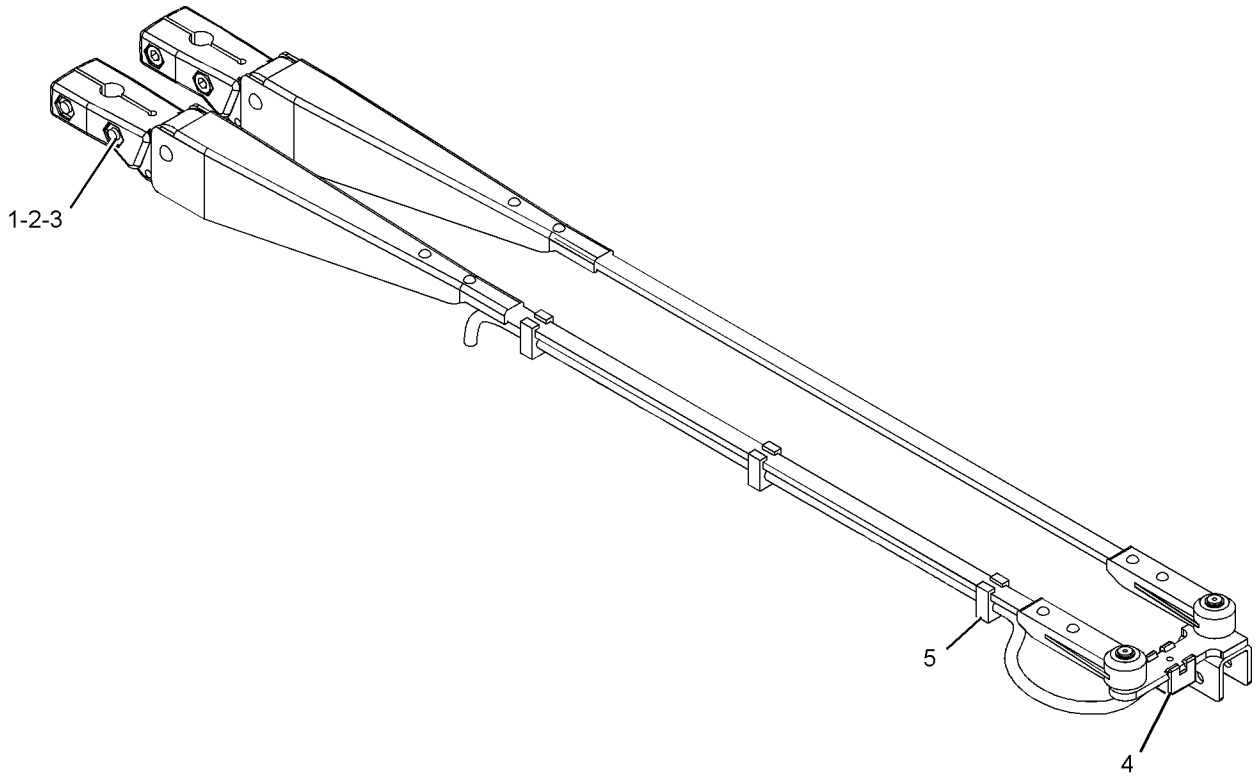


GRAPHIC #1 **<END>** g01021918

# OPERATOR STATION

## *2Q-8732* CAB AR

**S/N: BXY1900-UP**

**CANNOT BE USED WITH 300-2780—PAGE 1337, 2Q-8733—PAGE 4**

**AN ATTACHMENT**

**SMCS-7301** **i02728059**

| NOTE | PART NUMBER | QTY | PART NAME 1 2 3 4 5 6 (PRODUCT LEVEL) | SEE PAGE |
|---|---|---|---|---|
| Y | *308-2708* | 1 | ROPS GP-ENCLOSED | 1461 |

Y-SEPARATE ILLUSTRATION

**<END>**

## *227-3190* CAB AR

**S/N: BXY1-1899**

**PART OF 227-3200 OPERATOR AR**

**SMCS-7301** **i02225480**

| NOTE | PART NUMBER | QTY | PART NAME 1 2 3 4 5 6 (PRODUCT LEVEL) | SEE PAGE |
|---|---|---|---|---|
| Y | *147-3120* | 1 | AIR CONDITIONER & MOUNTING GP | 1330 |
| Y | *169-8258* | 1 | CONTROL GP-FOOT BRAKE | 967 |
| Y | *141-4644* | 1 | CONTROL GP-PARKING BRAKE | 969 |
| Y | *141-4940* | 1 | CONTROL GP-STEERING (STIC) | 1352 |
| Y | *4E-8413* | 1 | CONTROL GP-STIC | 1355 |
| Y | *187-0738* | 1 | CONTROL GP-STIC LOCKOUT | 1358 |
| Y | *164-4237* | 1 | COVER GP-DASH | 1362 |
| Y | *165-6769* | 1 | DUCT & FILTER GP-CAB AIR | 1374 |
| Y | *165-6560* | 1 | DUCT GP-CAB AIR | 1376 |
| Y | *228-9628* | 1 | INSTALLATION GP-RADIO | 1381 |
| Y | *228-0920* | 1 | LINER GP-CAB | 1385 |
| Y | *227-3192* | 1 | PANEL GP-INSTRUMENT (UPPER) | 1429 |
| Y | *227-3198* | 1 | PANEL GP-INSTRUMENT (LOWER) | 1431 |
| Y | *141-4645* | 1 | PEDAL GP-GOVERNOR | 1433 |
| Y | **228-9530** | 1 | ROPS GP-ENCLOSED | 1455 |
| Y | *117-1410* | 1 | SEALING GP-GLASS | 1467 |
| Y | **200-3174** | 1 | SEAT GP-SUSPENSION (AIR) | 1473 |
| Y | *228-9624* | 1 | SUPPORT GP-HYDRAULIC CONTROL | 1474 |
| Y | *173-1905* | 1 | SUPPORT GP-SEAT | 1478 |
| Y | *171-3897* | 1 | SUPPORT GP-STEERING CONTROL | 1479 |
| Y | *173-9375* | 1 | SUPPRESSION GP-CAB SOUND | 1482 |
| Y | *109-8196* | 1 | WIPER GP-WINDOW | 1488 |
| Y | *261-0400* | 1 | WIRING GP-CAB | 350 |

Y-SEPARATE ILLUSTRATION

**<END>**

# OPERATOR STATION

## *292-6110* CAB AR

**S/N: BXY1900-UP**

**PART OF 292-6092 OPERATOR AR**

**SMCS-7301** **i02672404**

| NOTE | PART NUMBER | QTY | PART NAME 1 2 3 4 5 6 (PRODUCT LEVEL) | SEE PAGE |
|---|---|---|---|---|
| Y | *147-3120* | 1 | AIR CONDITIONER & MOUNTING GP | 1330 |
| Y | *169-8258* | 1 | CONTROL GP-FOOT BRAKE | 967 |
| Y | *141-4644* | 1 | CONTROL GP-PARKING BRAKE | 969 |
| Y | *141-4940* | 1 | CONTROL GP-STEERING (STIC) | 1352 |
| Y | *4E-8413* | 1 | CONTROL GP-STIC | 1355 |
| Y | *187-0738* | 1 | CONTROL GP-STIC LOCKOUT | 1358 |
| Y | *164-4237* | 1 | COVER GP-DASH | 1362 |
| Y | *165-6769* | 1 | DUCT & FILTER GP-CAB AIR | 1374 |
| Y | *165-6560* | 1 | DUCT GP-CAB AIR | 1376 |
| Y | *228-9628* | 1 | INSTALLATION GP-RADIO | 1381 |
| Y | *228-0920* | 1 | LINER GP-CAB | 1385 |
| Y | *227-3192* | 1 | PANEL GP-INSTRUMENT (UPPER) | 1429 |
| Y | *227-3198* | 1 | PANEL GP-INSTRUMENT (LOWER) | 1431 |
| Y | *141-4645* | 1 | PEDAL GP-GOVERNOR | 1433 |
| Y | **292-6893** | 1 | ROPS GP-ENCLOSED | 1458 |
| Y | *117-1410* | 1 | SEALING GP-GLASS | 1467 |
| Y | **200-3174** | 1 | SEAT GP-SUSPENSION (AIR) | 1473 |
| Y | *228-9624* | 1 | SUPPORT GP-HYDRAULIC CONTROL | 1474 |
| Y | *173-1905* | 1 | SUPPORT GP-SEAT | 1478 |
| Y | *171-3897* | 1 | SUPPORT GP-STEERING CONTROL | 1479 |
| Y | *173-9375* | 1 | SUPPRESSION GP-CAB SOUND | 1482 |
| Y | *109-8196* | 1 | WIPER GP-WINDOW | 1488 |
| Y | *261-0400* | 1 | WIRING GP-CAB | 350 |

Y-SEPARATE ILLUSTRATION

**<END>**

## *300-2780* CAB AR

**S/N: BXY1900-UP**

**CANNOT BE USED WITH 2Q-8732—PAGE 1336, 2Q-8733—PAGE 4**

**AN ATTACHMENT**

**SMCS-7301** **i02727716**

| NOTE | PART NUMBER | QTY | PART NAME 1 2 3 4 5 6 (PRODUCT LEVEL) | SEE PAGE |
|---|---|---|---|---|
| Y | **308-2728** | 1 | ROPS GP-ENCLOSED | 1464 |
| Y | *183-3756* | 1 | WIPER GP-WINDOW | 1494 |

Y-SEPARATE ILLUSTRATION

**<END>**

# OPERATOR STATION

## *308-2727* CAB AR

**S/N: BXY1900-UP**
**PART OF 308-2725 OPERATOR AR**
**AN ATTACHMENT**

**SMCS-7301** **i02728714**

| NOTE | PART NUMBER | QTY | PART NAME 1 2 3 4 5 6 (PRODUCT LEVEL) | SEE PAGE |
|---|---|---|---|---|
| Y | *147-3120* | 1 | AIR CONDITIONER & MOUNTING GP | 1330 |
| Y | *169-8258* | 1 | CONTROL GP-FOOT BRAKE | 967 |
| Y | *141-4644* | 1 | CONTROL GP-PARKING BRAKE | 969 |
| Y | *141-4940* | 1 | CONTROL GP-STEERING (STIC) | 1352 |
| Y | *4E-8413* | 1 | CONTROL GP-STIC | 1355 |
| Y | *187-0738* | 1 | CONTROL GP-STIC LOCKOUT | 1358 |
| Y | *164-4237* | 1 | COVER GP-DASH | 1362 |
| Y | *165-6769* | 1 | DUCT & FILTER GP-CAB AIR | 1374 |
| Y | *165-6560* | 1 | DUCT GP-CAB AIR | 1376 |
| Y | *228-9628* | 1 | INSTALLATION GP-RADIO | 1381 |
| Y | *228-0920* | 1 | LINER GP-CAB | 1385 |
| Y | *227-3192* | 1 | PANEL GP-INSTRUMENT (UPPER) | 1429 |
| Y | *227-3198* | 1 | PANEL GP-INSTRUMENT (LOWER) | 1431 |
| Y | *141-4645* | 1 | PEDAL GP-GOVERNOR | 1433 |
| Y | *308-2728* | 1 | ROPS GP-ENCLOSED | 1464 |
| Y | *117-1410* | 1 | SEALING GP-GLASS | 1467 |
| Y | **200-3174** | 1 | SEAT GP-SUSPENSION (AIR) | 1473 |
| Y | *228-9624* | 1 | SUPPORT GP-HYDRAULIC CONTROL | 1474 |
| Y | *173-1905* | 1 | SUPPORT GP-SEAT | 1478 |
| Y | *171-3897* | 1 | SUPPORT GP-STEERING CONTROL | 1479 |
| Y | *173-9375* | 1 | SUPPRESSION GP-CAB SOUND | 1482 |
| Y | *183-3756* | 1 | WIPER GP-WINDOW | 1494 |
| Y | *261-0400* | 1 | WIRING GP-CAB | 350 |
| Y | *309-8768* | 1 | WIRING GP-TRANSMISSION | 481 |

Y-SEPARATE ILLUSTRATION

**<END>**

# OPERATOR STATION

## 218-0324 COMPRESSOR GP-REFRIGERANT

**S/N: BXY1-UP**

**PART OF 262-4948 COMPRESSOR GP-REFRIGERANT**

**SMCS-1802** **i02706217**

| NOTE | REF NO | GRAPHIC REF | PART NUMBER | QTY | PART NAME 1 2 3 4 5 6 (PRODUCT LEVEL) | SEE PAGE |
|---|---|---|---|---|---|---|
| | 1 | 1 | **102-8802** | 1 | KIT-RECEPTACLE (2-PIN) | |
| | | | | | (INCLUDES RECEPTACLE AS & WEDGE) | |
| | 2 | 1 | **114-3469** | 1 | VALVE GP-RELIEF (REFRIGERANT COMPRESSOR) | |
| | | 1 | **9X-7378** | 1 | SEAL-O-RING | |
| | 3 | 1 | **7T-4532** | 1 | PLUG AS | |
| | 4 | 1 | **9X-7385** | 2 | SEAL-O-RING | |

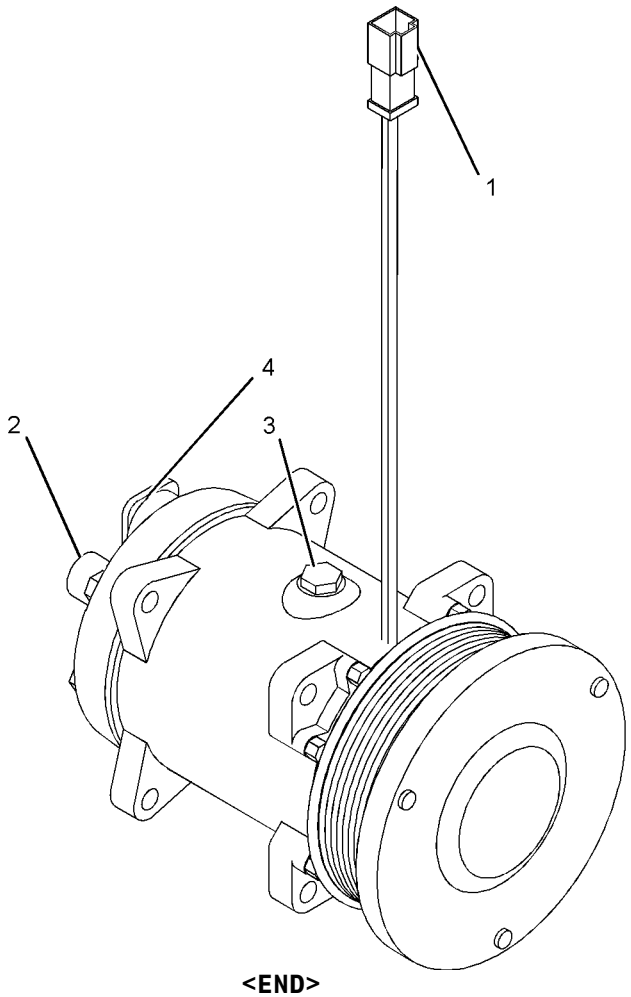


GRAPHIC #1 **<END>** g01073367

# OPERATOR STATION

## *262-4948* COMPRESSOR GP-REFRIGERANT

**S/N: BXY1-UP**

**PART OF 226-9643 INSTALLATION AR-ENGINE**

**SMCS-1802** **i02216500**

| NOTE | REF NO | GRAPHIC REF | PART NUMBER | QTY | PART NAME 1 2 3 4 5 6 (PRODUCT LEVEL) | SEE PAGE |
|---|---|---|---|---|---|---|
| Y | 1 | 1 | **218-0324** | 1 | COMPRESSOR GP-REFRIGERANT | 1339 |
| | 2 | 1 | **8T-4121** | 2 | WASHER-HARD (11X21X2.5-MM THK) | |
| M | 3 | 1 | **8T-4133** | 2 | NUT (M10X1.5-THD) | |
| M | 4 | 1 | **8T-5436** | 2 | BOLT (M10X1.5X130-MM) | |
| | 5 | 1 | **8T-7934** | 2 | WASHER-HARD (11X21X5-MM THK) | |

M-METRIC PART
Y-SEPARATE ILLUSTRATION

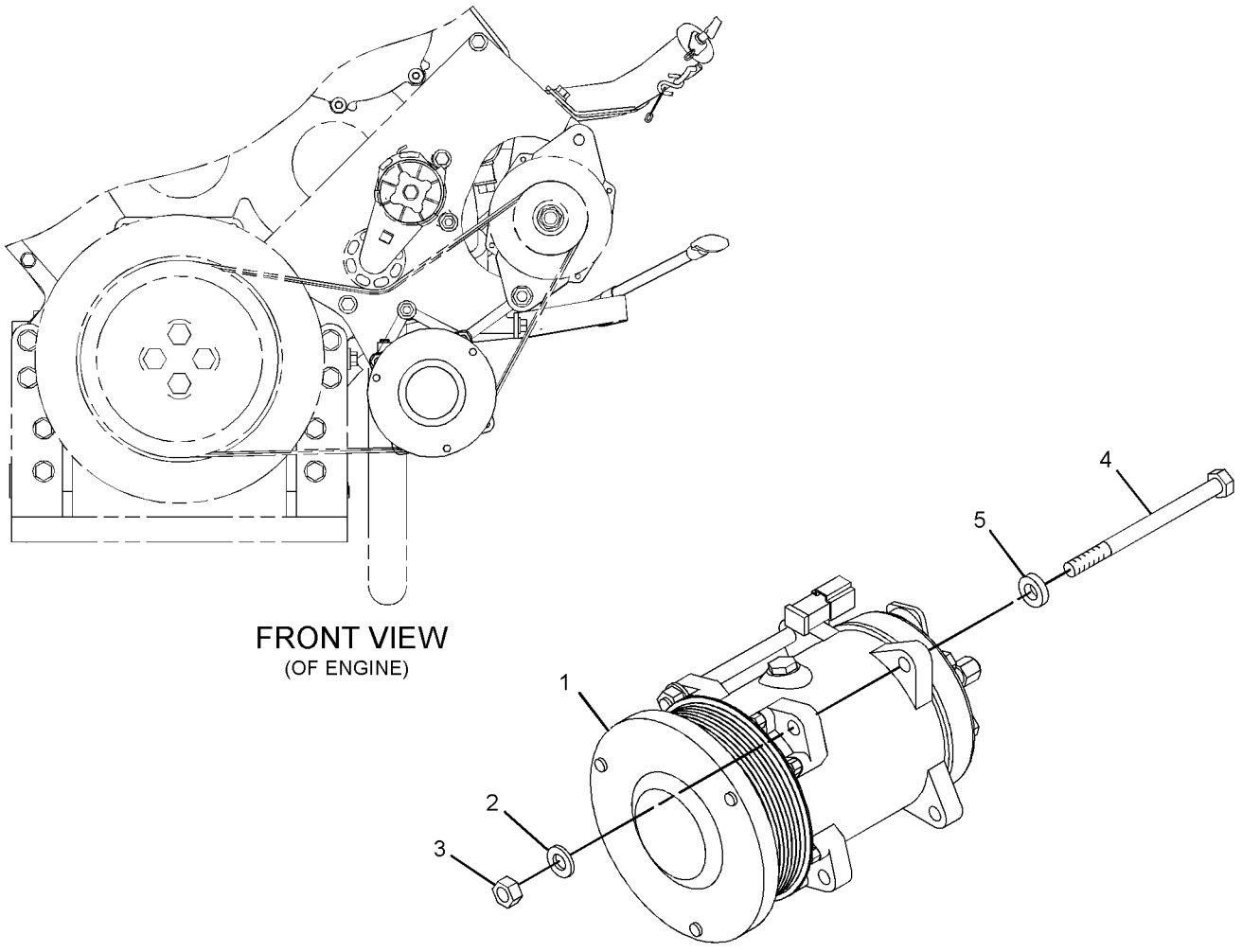


GRAPHIC #1 **<END>** g01118745

# OPERATOR STATION

## *114-5172* CONDENSER GP-REFRIGERANT

**S/N: BXY1-UP**

**PART OF 225-5432, 284-2735 CHASSIS AR**

**SMCS-1805** **i01468802**

| NOTE | REF NO | GRAPHIC REF | PART NUMBER | QTY | PART NAME 1 2 3 4 5 6 (PRODUCT LEVEL) | SEE PAGE |
|---|---|---|---|---|---|---|
| | 1 | 1 | **6N-8744** | 4 | MOUNT | |
| | 2 | 1 | **7X-0632** | 8 | WASHER-HARD (11X36X6-MM THK) | |
| | 3 | 1 | **132-3968** | 1 | CORE AS-CONDENSER | |
| | 4 | 1 | **135-6925** | 1 | ANGLE | |
| | 5 | 1 | **135-6926** | 1 | ANGLE | |
| | 6 | 1 | **7X-7729** | 6 | WASHER (11X25X3-MM THK) | |
| | 7 | 1 | **8T-4123** | 4 | WASHER (22X35X3.5-MM THK) | |
| M | 8 | 1 | **8T-4136** | 6 | BOLT (M10X1.5X25-MM) | |
| M | 9 | 1 | **8T-4186** | 4 | BOLT (M10X1.5X40-MM) | |

M-METRIC PART

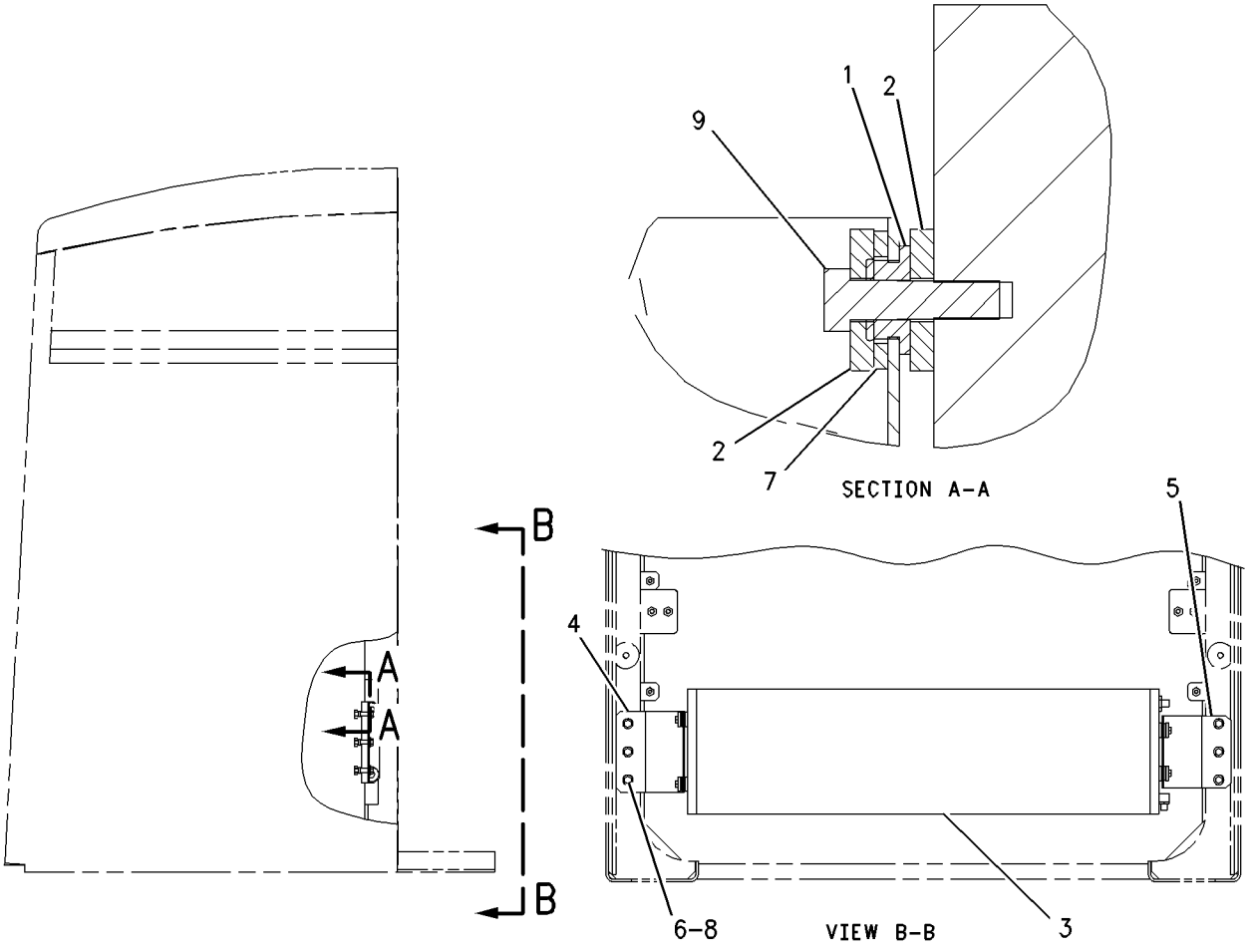


GRAPHIC #1 **<END>** g00766337

# OPERATOR STATION

## *227-0966* CONTROL GP-ELECTROHYDRAULIC—3-FUNCTION

**S/N: BXY1-UP**
**PART OF 255-0041, 255-0043 LIFT AR**
**AN ATTACHMENT**

**SMCS-5702** **i02618402**

| NOTE | REF NO | GRAPHIC REF | PART NUMBER | QTY | PART NAME 1 2 3 4 5 6 (PRODUCT LEVEL) | SEE PAGE |
|---|---|---|---|---|---|---|
| M | 2 | 2 | **5C-2874** | 4 | NUT (M5X0.8-THD) | |
| | 3 | 2 | **8L-8413** | 8 | STRAP-CABLE | |
| | 4 | 2 | **8T-0328** | 6 | WASHER-HARD (5.5X10X1-MM THK) | |
| | 5 | 2 | **8T-8737** | 2 | PLUG-SEAL | |
| | 6 | 1 | **9T-4735** | 1 | SPRING | |
| | 7 | 2 | **097-9169** | 1 | SPACER (7.5X12X12-MM THK) | |
| | 8 | 1 | **105-2976** | 4 | FLANGE | |
| | 9 | 1 | **105-3372** | 1 | SPRING | |
| | 10 | 2 | **106-1582** | 1 | HOUSING | |
| | 11 | 2 | **106-1584** | 2 | SPACER (6.22X9.52X85-MM THK) | |
| | 12 | 2 | **114-4244** | 2 | PLATE | |
| | 13 | 1,2 | **114-4247** | 4 | BRACKET AS | |
| | 14 | 2 | **114-8165** | 2 | ROD | |
| | 15 | 2 | **114-8167** | 1 | BRACKET AS | |
| M | | 2 | **6V-9632** | 10 | NUT-WELD (M6X1-THD) | |
| | 16 | 1,2 | **133-7215** | 3 | DEFLECTOR | |
| | 17 | 1 | **139-1378** | 6 | BEARING | |
| | 18 | 2 | **147-2577** | 3 | DETENT AS (CONTROL LEVER) | |
| | | | | | (EACH INCLUDES) | |
| | | 2 | **186-3735** | 2 | PIN-CONNECTOR (16-GA TO 18-GA) | |
| | | 2 | **1S-9593** | 2 | STRAP-CABLE | |
| | | 2 | **102-8802** | 1 | KIT-RECEPTACLE (2-PIN) | |
| | | | | | (INCLUDES RECEPTACLE AS AND WEDGE) | |
| | 19 | 1 | **149-3949** | 3 | LEVER-CONTROL | |
| | 20 | 2 | **150-6287** | 2 | SPACER (6.22X9.52X31-MM THK) | |
| | 21 | 1 | **170-0970** | 1 | CUSHION AS | |
| | 22 | 1 | **170-1821** | 1 | SWITCH AS-PUSH BUTTON (HORN) | |
| | | 1 | **186-3735** | 2 | PIN-CONNECTOR (16-GA TO 18-GA) | |
| | | 1 | **6F-0253** | 1 | LOCKWASHER | |
| | | 1 | **172-3511** | 1 | NUT (5/8-24-THD) | |
| | 23 | 1 | **170-7096** | 1 | GUARD AS | |
| | 24 | 1 | **185-3521** | 1 | BRACKET | |
| | 25 | 1 | **185-3522** | 1 | COVER AS | |
| | | 1 | **6F-0698** | 2 | DOWEL | |
| | 26 | 1 | **185-3523** | 1 | GUARD | |
| | 27 | 1 | **188-3983** | 1 | SWITCH AS-PUSH BUTTON (THROTTLE LOCK RESUME) | |
| | | 1 | **186-3736** | 3 | SOCKET-CONNECTOR (16-GA TO 18-GA) | |
| | | 1 | **3K-0835** | 1 | NUT (5/8-24-THD) | |
| | | 1 | **6F-0253** | 1 | LOCKWASHER | |
| | | 1 | **155-2260** | 1 | KIT-CONNECTING PLUG (3-PIN) | |
| | | | | | (INCLUDES PLUG AS AND WEDGE) | |
| | 28 | 1 | **188-3984** | 1 | SWITCH AS-PUSH BUTTON (THROTTLE LOCK SET) | |
| | | 1 | **3E-3371** | 1 | WEDGE-RECEPTACLE LOCK (3-PIN) | |
| | | 1 | **186-3735** | 3 | PIN-CONNECTOR (16-GA TO 18-GA) | |
| | | 1 | **102-8803** | 1 | KIT-RECEPTACLE (3-PIN) | |
| | | | | | (INCLUDES RECEPTACLE AS AND WEDGE) | |
| | | 1 | **3K-0835** | 1 | NUT (5/8-24-THD) | |
| | | 1 | **6F-0253** | 1 | LOCKWASHER | |
| | 29 | 2 | **208-2479** | 2 | SPACER (10X13.1X5.5-MM THK) | |
| | 30 | 1 | **233-1666** | 1 | FILM-CONTROL (IMPLEMENT CONTROLS POD) | |
| | 31 | 1 | **233-6045** | 1 | SWITCH AS-ROCKER (HYDRAULIC LOCKOUT) | |
| | 32 | 1 | **163-8119** | 3 | SPRING | |
| Y | 33 | 1 | **214-4862** | 3 | SENSOR GP-POSITION (CONTROL LEVER) | 297 |
| | 34 | 1 | **2M-4009** | 1 | PLUG-BUTTON | |

## *227-0966* **CONTROL GP-ELECTROHYDRAULIC** *(contd.)* **i02618402**

| NOTE | REF NO | GRAPHIC REF | PART NUMBER | QTY | PART NAME 1 2 3 4 5 6 (PRODUCT LEVEL) | SEE PAGE |
|---|---|---|---|---|---|---|
| | 35 | 2 | **102-8802** | 1 | KIT-RECEPTACLE (2-PIN) | |
| | | | | | (INCLUDES RECEPTACLE AS AND WEDGE) | |
| M | 36 | 2 | **3E-8020** | 1 | SCREW-TRUSS HEAD (M6X1X25-MM) | |
| M | 37 | 2 | **5C-2890** | 1 | NUT (M6X1-THD) | |
| M | 38 | 2 | **6V-7357** | 3 | BOLT (M6X1X25-MM) | |
| M | 39 | 1,2 | **6V-7743** | 4 | LOCKNUT (M6X1-THD) | |
| | 40 | 2 | **8M-2771** | 2 | CLIP | |
| M | 41 | 1,2 | **8T-4970** | 8 | BOLT (M6X1X14-MM) | |
| M | 42 | 2 | **8T-4971** | 1 | BOLT (M6X1X30-MM) | |
| | 43 | 2 | **9X-2026** | 9 | WASHER (6.5X17X1-MM THK) | |
| M | 44 | 1 | **9X-2042** | 8 | SCREW-TRUSS HEAD (M6X1X12-MM) | |
| M | 45 | 1 | **9X-2044** | 3 | SCREW-TRUSS HEAD (M6X1X16-MM) | |

M-METRIC PART
Y-SEPARATE ILLUSTRATION

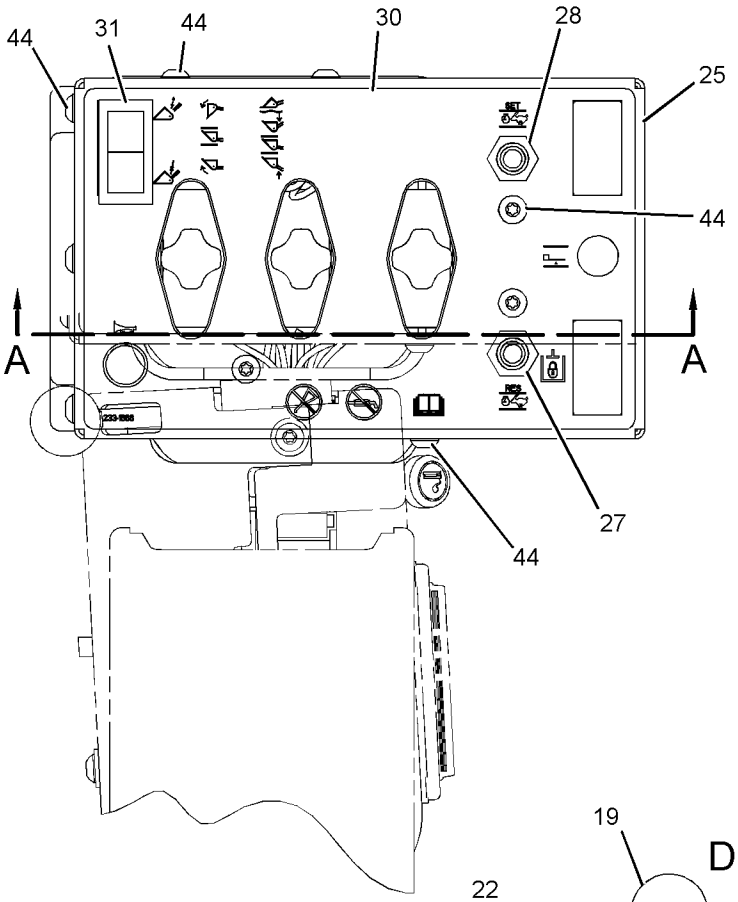


REFER TO ALL ILLUSTRATIONS OF THIS GROUP FOR AUXILIARY VIEWS

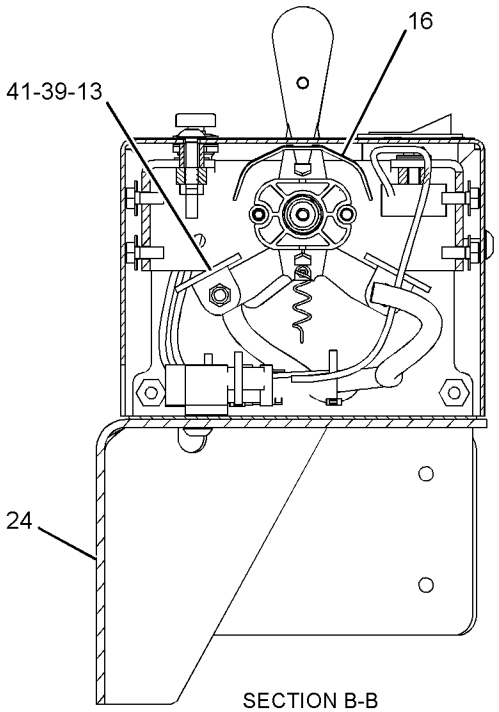


SECTION B-B

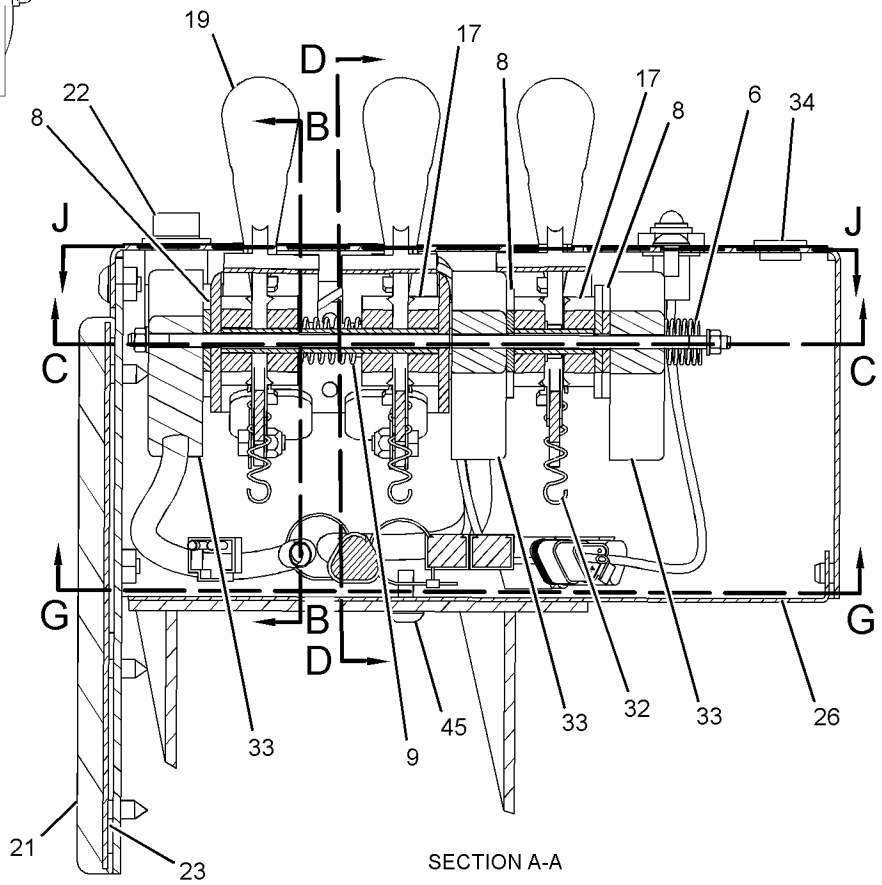


SECTION A-A

GRAPHIC #1

g01229407

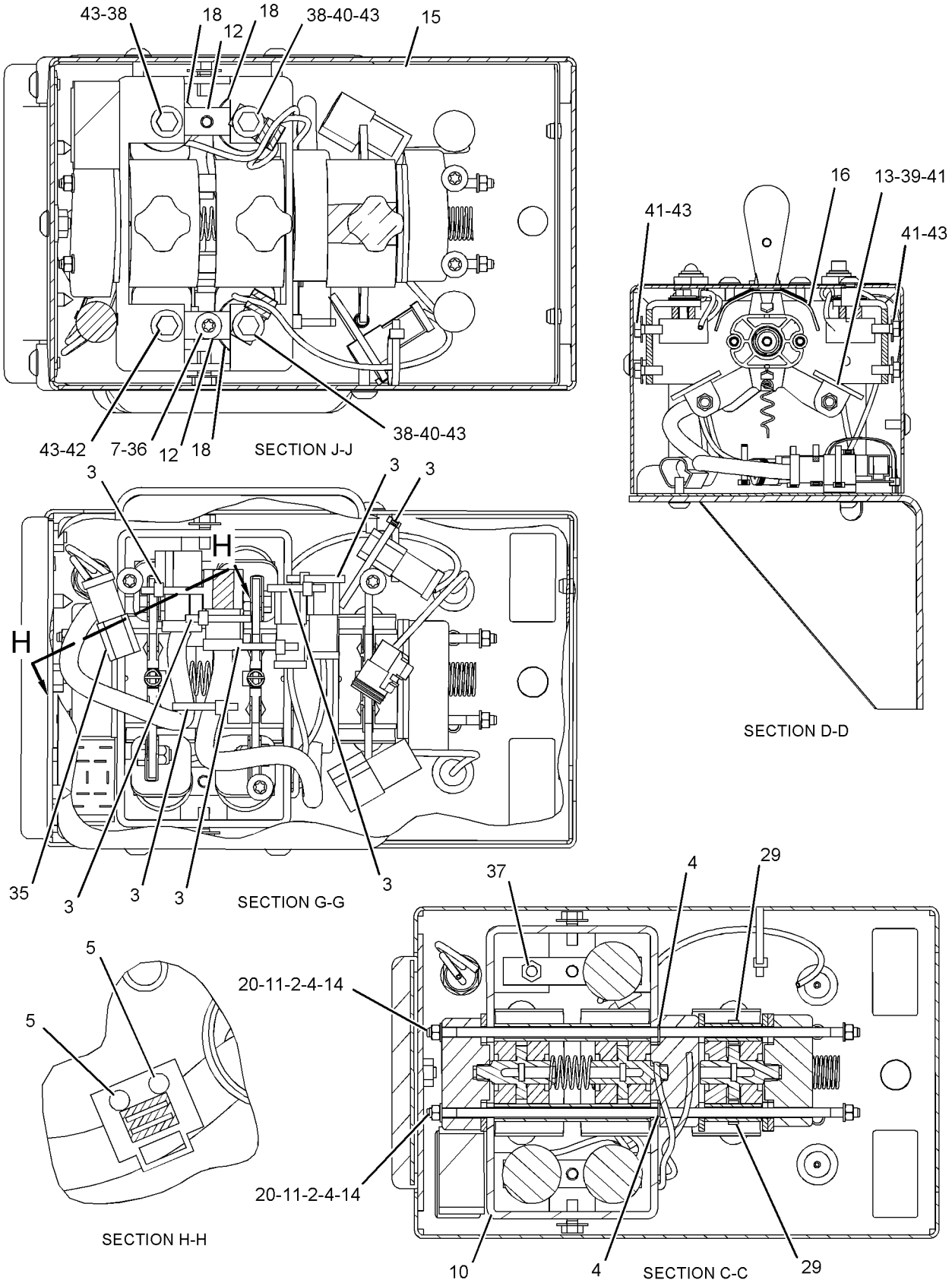


GRAPHIC #2 **<END>** g01341086

# OPERATOR STATION

## *228-0918* CONTROL GP-ELECTROHYDRAULIC–2-FUNCTION

**S/N: BXY1-UP**
**PART OF 255-0040, 255-0042 LIFT AR**
**AN ATTACHMENT**

**SMCS-5702** **i02616341**

| NOTE | REF NO | GRAPHIC REF | PART NUMBER | QTY | PART NAME 1 2 3 4 5 6 (PRODUCT LEVEL) | SEE PAGE |
|---|---|---|---|---|---|---|
| M | 2 | 2 | **5C-2874** | 4 | NUT (M5X0.8-THD) | |
| | 3 | 2 | **8L-8413** | 10 | STRAP-CABLE | |
| | 4 | 2 | **8T-0328** | 8 | WASHER-HARD (5.5X10X1-MM THK) | |
| M | 5 | 1,2 | **9X-2042** | 10 | SCREW-TRUSS HEAD (M6X1X12-MM) | |
| | 6 | 2 | **105-3372** | 1 | SPRING | |
| | 7 | 2 | **106-1582** | 1 | HOUSING | |
| | 8 | 2 | **106-1583** | 2 | ROD | |
| | 9 | 2 | **106-1584** | 2 | SPACER (6.22X9.52X85-MM THK) | |
| | 10 | 2 | **114-4244** | 2 | PLATE | |
| | 11 | 2 | **114-4247** | 4 | BRACKET AS | |
| | 12 | 2 | **133-7215** | 2 | DEFLECTOR | |
| | 13 | 2 | **139-1378** | 4 | BEARING | |
| | 14 | 2 | **147-2577** | 3 | DETENT AS (CONTROL LEVER) | |
| | | | | | (EACH INCLUDES) | |
| | | 2 | **1S-9593** | 2 | STRAP-CABLE | |
| | | 2 | **186-3735** | 2 | PIN-CONNECTOR (16-GA TO 18-GA) | |
| | | 2 | **102-8802** | 1 | KIT-RECEPTACLE (2-PIN) | |
| | | | | | (INCLUDES RECEPTACLE AS AND WEDGE) | |
| | 15 | 2 | **149-3949** | 2 | LEVER-CONTROL | |
| | 16 | 2 | **163-8119** | 2 | SPRING | |
| | 17 | 1 | **166-4804** | 1 | COVER AS | |
| | 18 | 1 | **166-4805** | 1 | GUARD AS | |
| | 19 | 1 | **170-0970** | 1 | CUSHION AS | |
| | 20 | 1 | **170-0980** | 1 | BRACKET | |
| | 21 | 1 | **170-1821** | 1 | SWITCH AS-PUSH BUTTON (HORN) | |
| | | 1 | **6F-0253** | 1 | LOCKWASHER | |
| | | 1 | **186-3735** | 2 | PIN-CONNECTOR (16-GA TO 18-GA) | |
| | | 1 | **172-3511** | 1 | NUT (5/8-24-THD) | |
| | 22 | 1 | **170-7096** | 1 | GUARD AS | |
| | 23 | 2 | **171-1055** | 1 | BRACKET AS | |
| | 24 | 2 | **171-1147** | 1 | FILM-CONTROL (IMPLEMENT CONTROLS POD) | |
| | 25 | 1 | **188-3983** | 1 | SWITCH AS-PUSH BUTTON (THROTTLE LOCK RESUME) | |
| | | 1 | **3K-0835** | 1 | NUT (5/8-24-THD) | |
| | | 1 | **6F-0253** | 1 | LOCKWASHER | |
| | | 1 | **155-2260** | 1 | KIT-CONNECTING PLUG (3-PIN) | |
| | | | | | (INCLUDES PLUG AS AND WEDGE) | |
| | | 1 | **186-3736** | 3 | SOCKET-CONNECTOR (16-GA TO 18-GA) | |
| | 26 | 2 | **188-3984** | 1 | SWITCH AS-PUSH BUTTON (THROTTLE LOCK SET) | |
| | | 2 | **3E-3371** | 1 | WEDGE-RECEPTACLE LOCK (3-PIN) | |
| | | 2 | **102-8803** | 1 | KIT-RECEPTACLE (3-PIN) | |
| | | | | | (INCLUDES RECEPTACLE AS AND WEDGE) | |
| | | 2 | **3K-0835** | 1 | NUT (5/8-24-THD) | |
| | | 2 | **6F-0253** | 1 | LOCKWASHER | |
| | | 2 | **186-3735** | 3 | PIN-CONNECTOR (16-GA TO 18-GA) | |
| Y | 27 | 2 | **214-4862** | 2 | SENSOR GP-POSITION (CONTROL LEVER) | 297 |
| | 28 | 2 | **2M-4009** | 1 | PLUG-BUTTON | |
| | 29 | 2 | **102-8802** | 1 | KIT-RECEPTACLE (2-PIN) | |
| | | | | | (INCLUDES RECEPTACLE AS AND WEDGE) | |
| M | 30 | 2 | **5C-2890** | 1 | NUT (M6X1-THD) | |
| M | 31 | 2 | **6V-7357** | 3 | BOLT (M6X1X25-MM) | |
| M | 32 | 2 | **6V-7743** | 4 | LOCKNUT (M6X1-THD) | |
| | 33 | 2 | **8M-2771** | 2 | CLIP | |
| M | 34 | 2 | **8T-4970** | 8 | BOLT (M6X1X14-MM) | |
| M | 35 | 2 | **8T-4971** | 1 | BOLT (M6X1X30-MM) | |
| | 36 | 2 | **9X-2026** | 9 | WASHER (6.5X17X1-MM THK) | |

## *228-0918* **CONTROL GP-ELECTROHYDRAULIC** *(contd.)* **i02616341**

| NOTE | REF NO | GRAPHIC REF | PART NUMBER | QTY | PART NAME 1 2 3 4 5 6 (PRODUCT LEVEL) | SEE PAGE |
|---|---|---|---|---|---|---|
| M | 37 | 2 | **9X-2044** | 4 | SCREW-TRUSS HEAD (M6X1X16-MM) | |

M-METRIC PART
Y-SEPARATE ILLUSTRATION

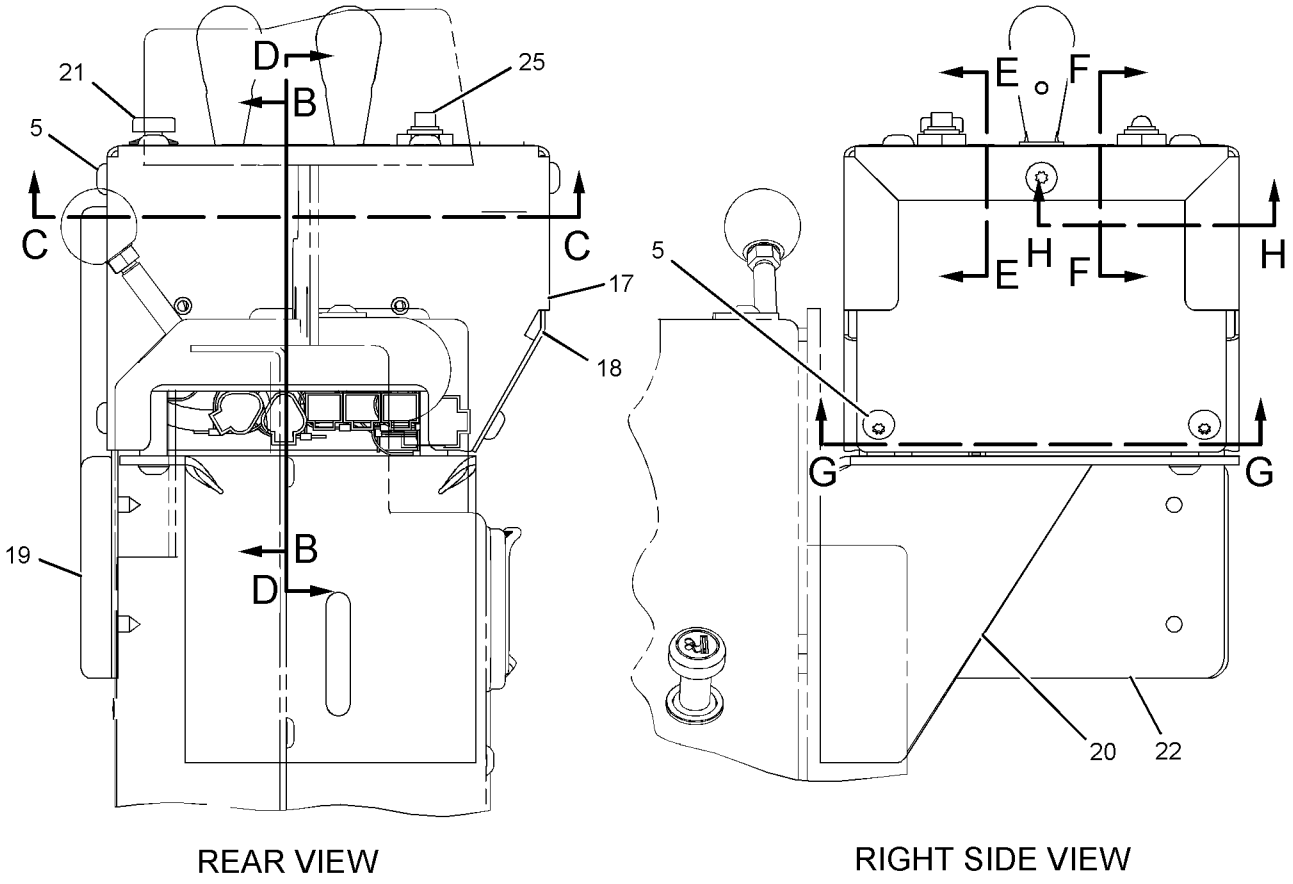


REAR VIEW

RIGHT SIDE VIEW

GRAPHIC #1

g01128212

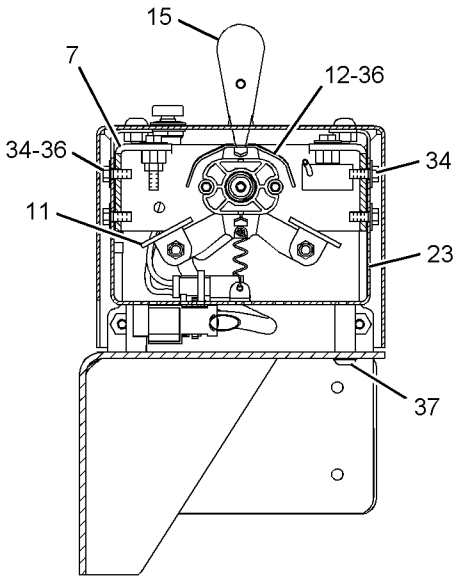


SECTION B-B

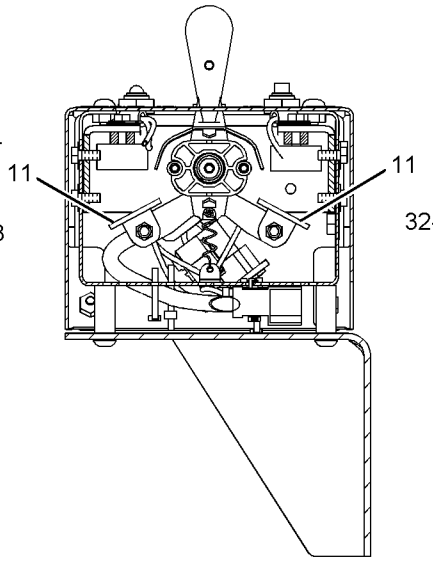


SECTION D-D

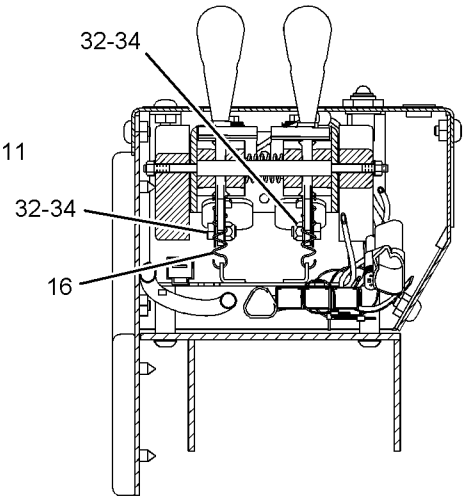


SECTION A-A

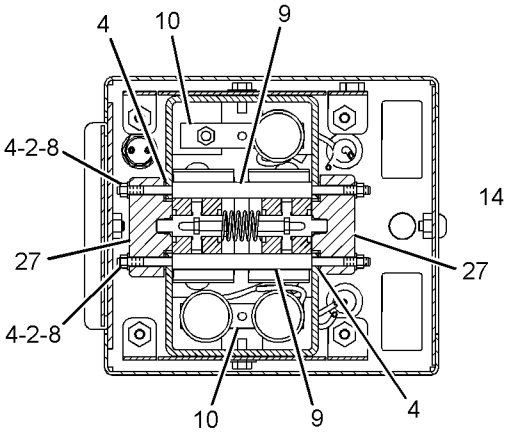


SECTION C-C

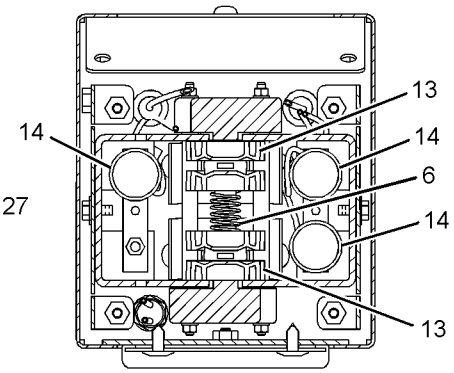


SECTION H-H

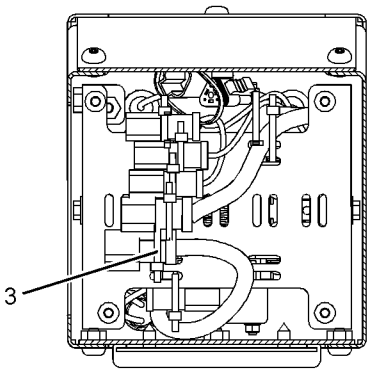


SECTION G-G

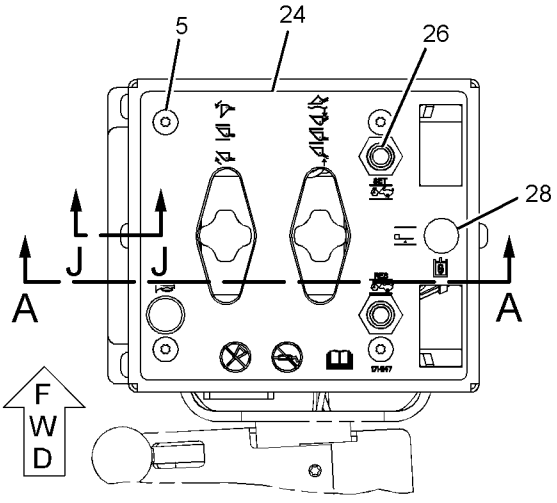


TOP VIEW

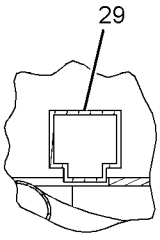


SECTION J-J

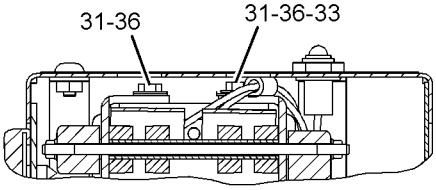


SECTION F-F

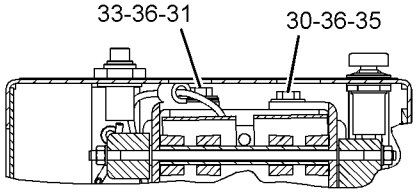


SECTION E-E

GRAPHIC #2 **<END>** g01128606

# OPERATOR STATION

## *103-5526* CONTROL GP-MONITOR—DIMMER

**S/N: BXY1-UP**

**PART OF 261-0400 WIRING GP-CAB**

**ALSO AN ATTACHMENT**

**SMCS-7490, 7494, 7601** **i02271420**

| NOTE | REF NO | GRAPHIC REF | PART NUMBER | QTY | PART NAME 1 2 3 4 5 6 (PRODUCT LEVEL) | SEE PAGE |
|---|---|---|---|---|---|---|
| | 1 | 1 | **5P-9132** | 2 | SCREW-HEX FLANGE (6-32X0.187-IN) | |
| | 2 | 1 | **186-3735** | 6 | PIN-CONNECTOR (16-GA TO 18-GA) | |
| | | | | | AVAILABLE REPAIR KIT(S): | |
| | | | **102-8805** | 1 | KIT-RECEPTACLE (6-PIN) | |
| | | | | | (INCLUDES RECEPTACLE AS & WEDGE) | |

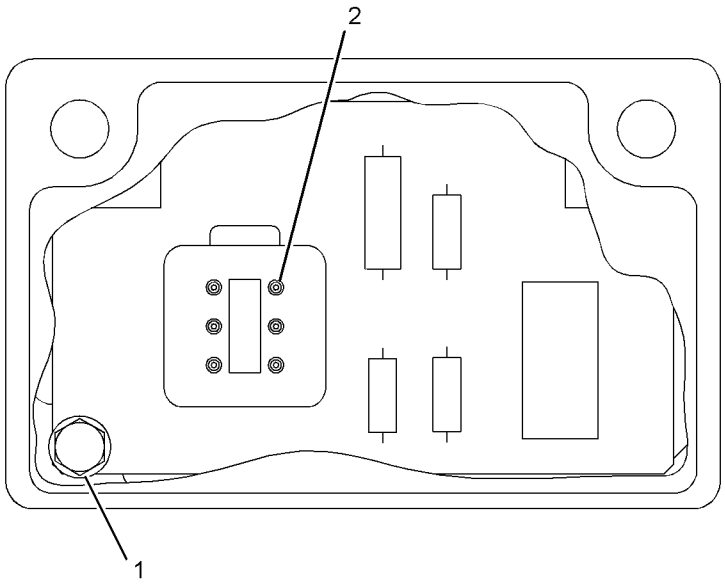


GRAPHIC #1 **<END>** g01126720

# OPERATOR STATION

## 228-6563 CONTROL GP-MONITOR–PAYLOAD

**S/N: BXY1-1241**
**PART OF 155-6649 MONITOR GP-PAYLOAD**
**AN ATTACHMENT**

**SMCS-7490, 7494, 7601** **i02135547**

| NOTE | REF NO | GRAPHIC REF | PART NUMBER | QTY | PART NAME 1 2 3 4 5 6 (PRODUCT LEVEL) | SEE PAGE |
|---|---|---|---|---|---|---|
| Z | 1 | 1 | | 1 | CONTROL AS-ELECTRONIC | |
| | 2 | 1 | **228-6562** | 1 | SOFTWARE GP-MONITOR (PAYLOAD CONTROL) | |
| | 3 | 1 | **8C-3078** | 1 | SEAL-O-RING | |
| | 4 | 1 | **129-9690** | 1 | COVER | |
| | 5 | 1 | **101-1785** | 1 | BATTERY (LITHIUM) | |

Z-NOT SERVICED SEPARATELY

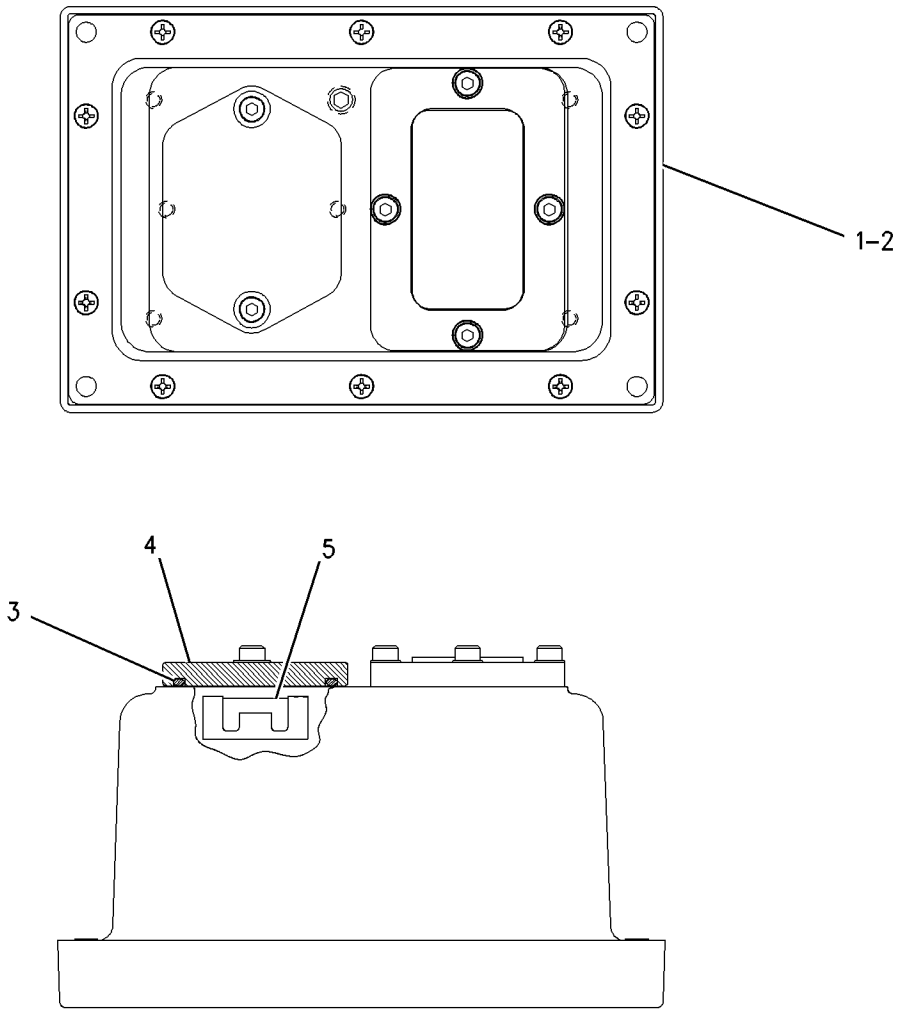


GRAPHIC #1 **<END>** g00845134

# OPERATOR STATION

## 283-1604 CONTROL GP-MONITOR–PAYLOAD

**S/N: BXY1242-UP**

**PART OF 155-6649 MONITOR GP-PAYLOAD**

**AN ATTACHMENT**

**SMCS-7490, 7494, 7601** **i02473973**

| NOTE | REF NO | GRAPHIC REF | PART NUMBER | QTY | PART NAME 1 2 3 4 5 6 (PRODUCT LEVEL) | SEE PAGE |
|---|---|---|---|---|---|---|
| Z | 1 | 1 | | | CONTROL AS-ELECTRONIC | |
| | 2 | 1 | **283-1603** | 1 | SOFTWARE GP-MONITOR (PAYLOAD CONTROL SYSTEM) | |
| | 3 | 1 | **8C-3078** | 1 | SEAL-O-RING | |
| | 4 | 1 | **129-9690** | 1 | COVER | |
| | 5 | 1 | **101-1785** | 1 | BATTERY (LITHIUM) | |

Z-NOT SERVICED SEPARATELY

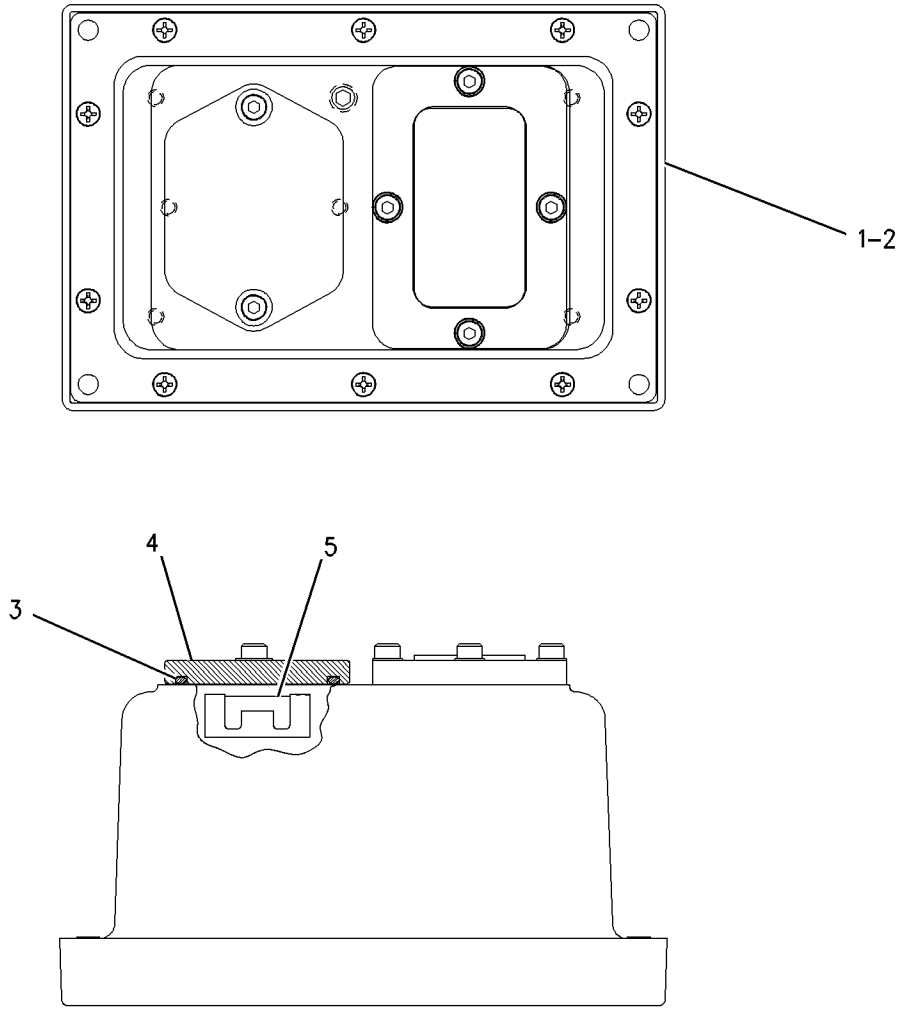


GRAPHIC #1 **<END>** g00845134

# OPERATOR STATION

## *141-4940* CONTROL GP-STEERING—STIC

**S/N: BXY1-UP**
**PART OF 227-3190, 292-6110, 308-2727 CAB AR**
**ALSO AN ATTACHMENT**

**SMCS-4304, 4309, 4310, 4338** **i02355198**

| NOTE | REF NO | GRAPHIC REF | PART NUMBER | QTY | PART NAME 1 2 3 4 5 6 (PRODUCT LEVEL) | SEE PAGE |
|---|---|---|---|---|---|---|
| | 1 | 1 | **3S-2093** | 3 | STRAP-CABLE | |
| | 2 | 2 | **5K-1094** | 4 | LOCKWASHER | |
| | 3 | 1 | **7K-1181** | 1 | STRAP-CABLE | |
| M | 4 | 1 | **105-3477** | 1 | BOLT-SOCKET HEAD (M10X1.5X45-MM) | |
| | 5 | 2 | **141-4936** | 1 | PAD | |
| Y | 6 | 2 | **249-5615** | 1 | VALVE GP-PILOT (STIC STEERING) | 1039 |
| | 7 | 1 | **151-2094** | 1 | HARNESS AS-STEERING (STIC CONTROL) | |
| | | 1 | **102-8801** | 1 | KIT-RECEPTACLE (12-PIN) | |
| | | | | | (INCLUDES RECEPTACLE AS & WEDGE) | |
| | | 1 | **155-2265** | 1 | KIT-CONNECTING PLUG (8-PIN) | |
| | | 1 | **155-2271** | 1 | KIT-CONNECTING PLUG (4-PIN) | |
| | | | | | (EACH KIT-CONNECTING PLUG INCLUDES PLUG AS & WEDGE) | |
| | | 1 | **8T-8737** | 2 | PLUG-SEAL | |
| | 8 | 2 | **155-6563** | 1 | PLATE | |
| | 9 | 1 | **163-5646** | 1 | PLATE AS | |
| M | | 1 | **8T-3490** | 3 | NUT-WELD (M10X1.5-THD) | |
| | 10 | 1 | **163-5647** | 1 | GASKET | |
| I | 11 | 1 | **180-2595** | 2 | HOSE AS | |
| I | 12 | 1 | **180-2596** | 2 | HOSE AS | |
| | 13 | 2 | **180-9971** | 2 | TUBE AS | |
| | 14 | 1 | **180-9972** | 2 | TUBE AS | |
| | 15 | 1 | **187-1867** | 1 | PLATE | |
| | 16 | 1 | **136-3607** | 2 | ELBOW | |
| | 17 | 2 | *148-8375* | 2 | ELBOW AS | |
| | | | | | (EACH INCLUDES) | |
| | | 2 | **6V-8981** | 1 | ELBOW | |
| | | 2 | **6V-8398** | 2 | SEAL-O-RING | |
| | 18 | 1 | *148-8457* | 2 | UNION AS | |
| | | | | | (EACH INCLUDES) | |
| | | 1 | **6V-8995** | 1 | UNION | |
| | | 1 | **6V-8398** | 2 | SEAL-O-RING | |
| | 19 | 1,2 | **3K-0360** | 4 | SEAL-O-RING | |
| | 20 | 2 | **6D-4247** | 2 | CLIP | |
| | 21 | 1,2 | **6V-8398** | 12 | SEAL-O-RING | |
| | 22 | 2 | **6V-8988** | 4 | ELBOW | |
| | 23 | 1,2 | **6V-9169** | 8 | NUT-BULKHEAD (13/16-16-THD) | |
| | 24 | 2 | **6V-8639** | 2 | CONNECTOR | |
| | 25 | 1,2 | **8T-4121** | 8 | WASHER-HARD (11X21X2.5-MM THK) | |
| M | 26 | 2 | **8T-4136** | 6 | BOLT (M10X1.5X25-MM) | |
| M | 27 | 1 | **8T-4185** | 2 | BOLT (M10X1.5X50-MM) | |
| | 28 | 1 | **163-8811** | 8 | CLAMP | |
| G | 29 | 1 | **160-2243** | | SLEEVE-ABRASION (6.69 IN) | |
| G | 30 | 1 | **160-2243** | | SLEEVE-ABRASION (7.09 IN) | |

G-ORDER BY THE INCH
I-REFER TO HYDRAULIC INFORMATION SYSTEM
M-METRIC PART
Y-SEPARATE ILLUSTRATION

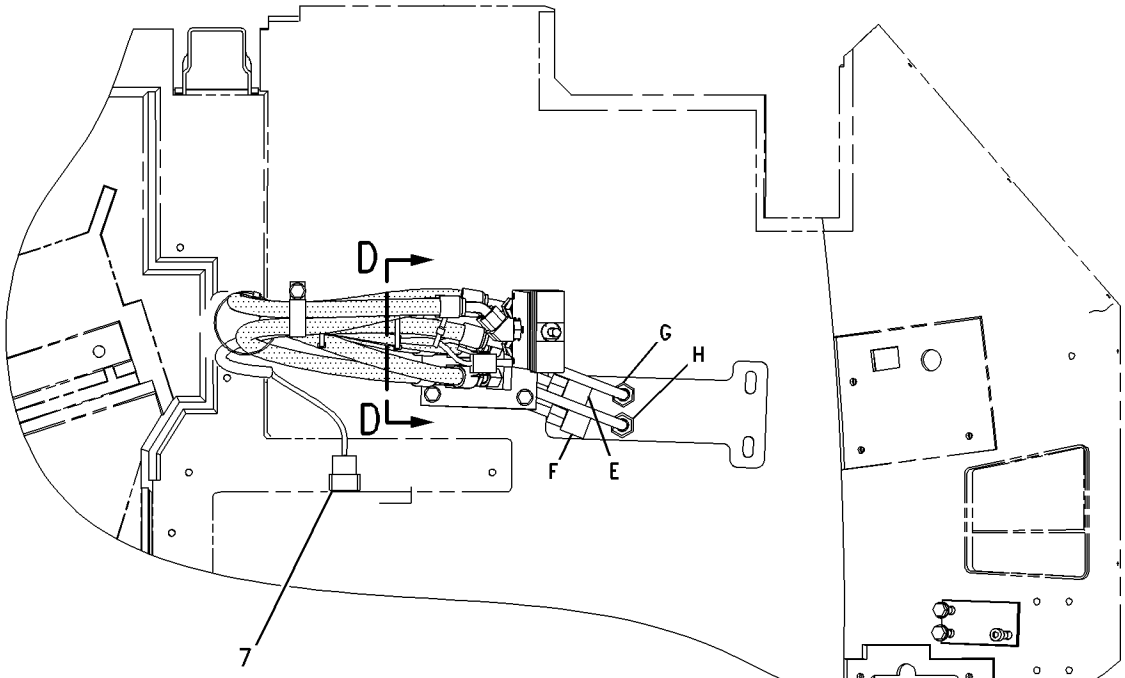


TOP VIEW

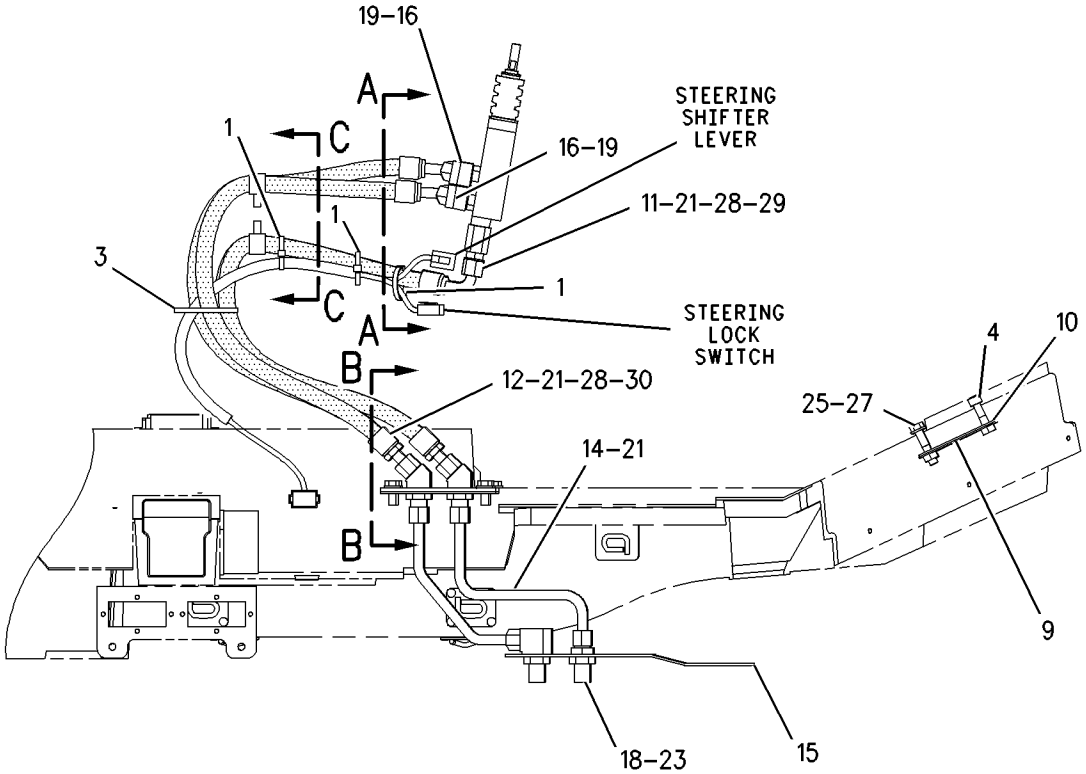


RIGHT SIDE VIEW

REFER TO ALL ILLUSTRATIONS OF THIS GROUP FOR AUXILIARY VIEWS

GRAPHIC #1 g00711120

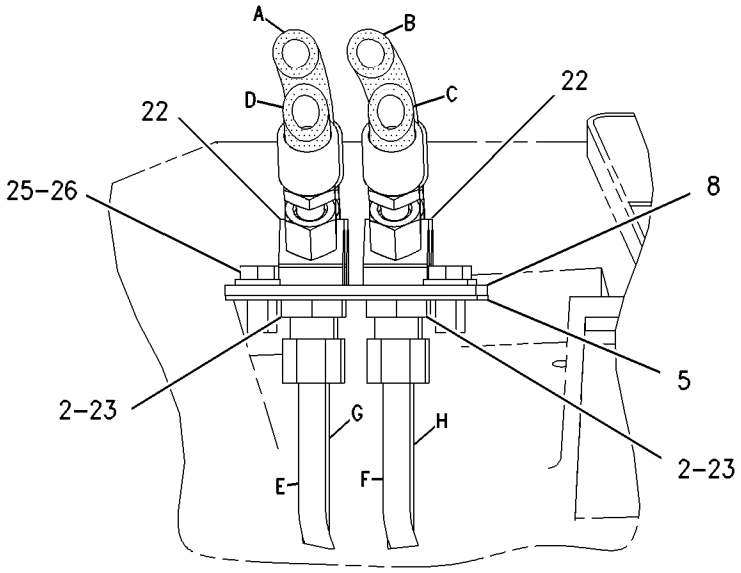


SECTION B-B

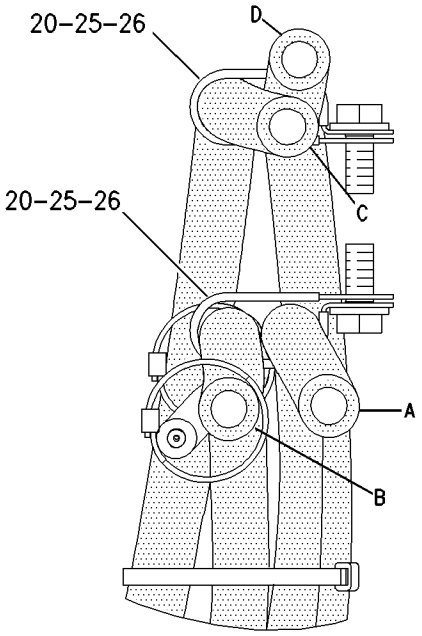


SECTION C-C

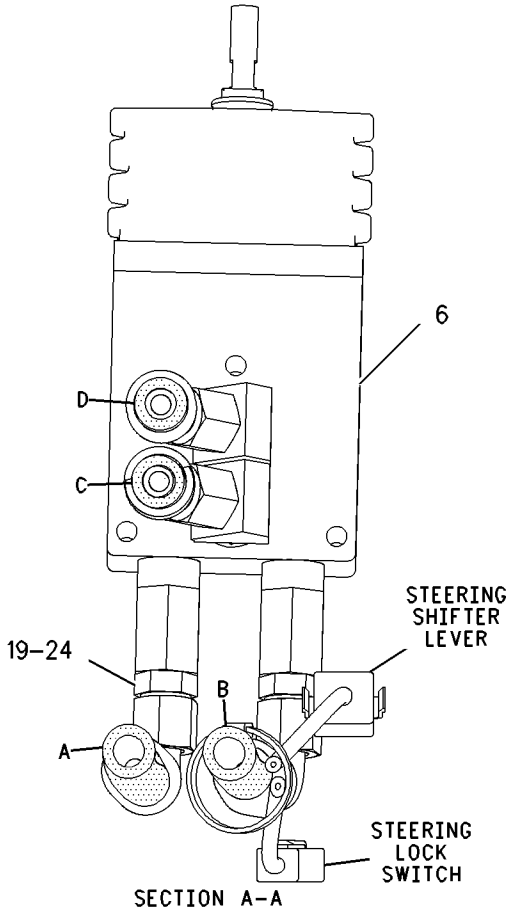


SECTION A-A

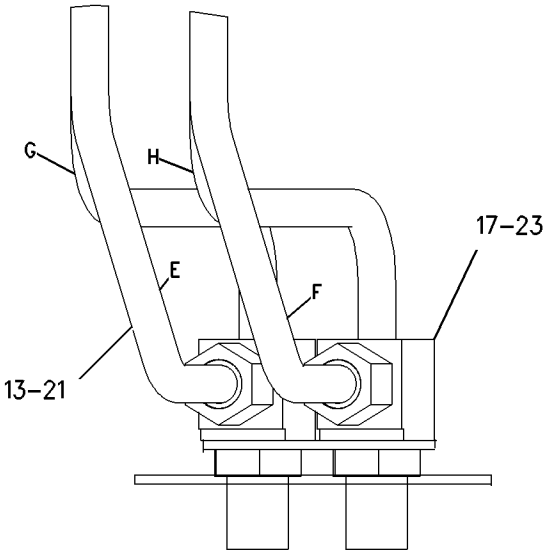


SECTION D-D

GRAPHIC #2 **<END>** g00711123

# OPERATOR STATION

## *4E-8413* CONTROL GP-STIC

**S/N: BXY1-UP**
**PART OF 227-3190, 292-6110, 308-2727 CAB AR**
**ALSO AN ATTACHMENT**

**SMCS-3033** **i02364975**

| NOTE | REF NO | GRAPHIC REF | PART NUMBER | QTY | PART NAME 1 2 3 4 5 6 (PRODUCT LEVEL) | SEE PAGE |
|---|---|---|---|---|---|---|
| | 1 | 1 | **4E-7520** | 1 | BASE | |
| | 2 | 1 | **4E-7627** | 1 | HOUSING | |
| | 3 | 1 | **4E-7628** | 1 | COVER | |
| Y | 4 | 1 | **177-4113** | 1 | CONTROL GP-STIC | 1356 |
| M | 5 | 1 | **6V-7687** | 1 | LOCKNUT (M12X1.75-THD) | |
| M | 6 | 1 | **8T-0269** | 4 | BOLT-SOCKET HEAD (M6X1X20-MM) | |
| M | 7 | 1 | **8T-0723** | 2 | SETSCREW-SOCKET | |
| M | 8 | 1 | **8T-4138** | 4 | BOLT (M6X1X20-MM) | |

M-METRIC PART
Y-SEPARATE ILLUSTRATION

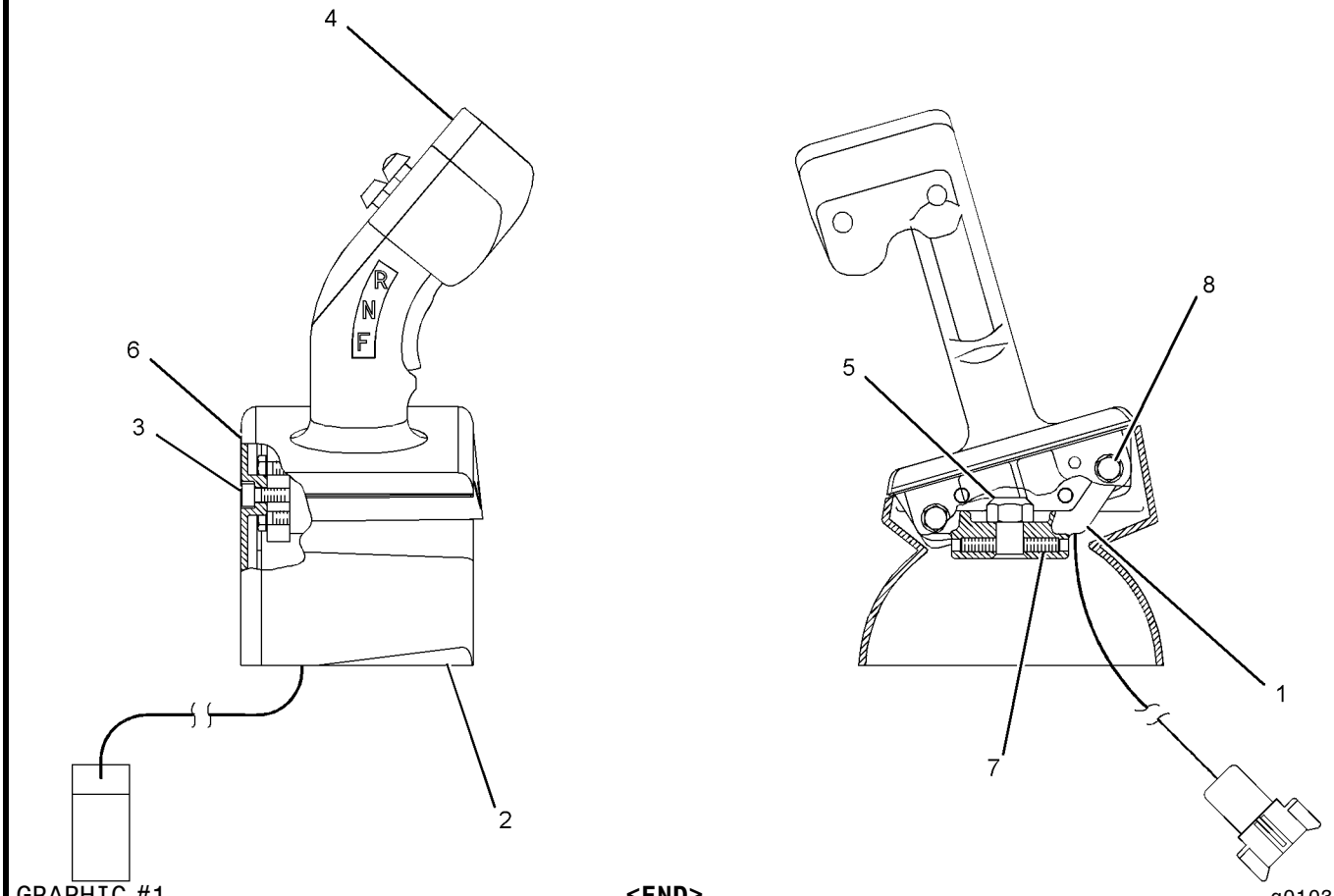


GRAPHIC #1

**<END>**

g01033706

# OPERATOR STATION

## 177-4113 CONTROL GP-STIC

**S/N: BXY1-UP**
**PART OF 4E-8413 CONTROL GP-STIC**
**ALSO AN ATTACHMENT**

**SMCS-3033** **i02273243**

| NOTE | REF NO | GRAPHIC REF | PART NUMBER | QTY | PART NAME 1 2 3 4 5 6 (PRODUCT LEVEL) | SEE PAGE |
|---|---|---|---|---|---|---|
| | 1 | 1 | **160-3518** | 1 | KIT-RECEPTACLE (8-PIN) | |
| | | | | | (INCLUDES RECEPTACLE AS AND WEDGE) | |
| | 2 | 1 | **177-4112** | 1 | CAP GP-TRANSMISSION SWITCH | |
| | 2A | 1 | **177-2374** | 1 | SWITCH AS-ROCKER (TRANSMISSION DIRECTION) | |
| | | 1 | **5S-4246** | 2 | LOCKWASHER | |
| | | 1 | **8T-8729** | 3 | PIN-CONNECTOR | |
| | | 1 | **9X-8917** | 2 | SCREW-MACHINE (4-40X9.52-MM) | |
| | | 1 | **096-5962** | 2 | WASHER-HARD (3.4X7X0.8-MM THK) | |
| | | 1 | **105-8029** | 1 | ACTUATOR | |
| | 2B | 1 | **159-8664** | 1 | SWITCH AS (TRANSMISSION UPSHIFT) | |
| | 2C | 1 | **159-8665** | 1 | SWITCH AS (TRANSMISSION DOWNSHIFT) | |
| | | | | | (EACH SWITCH AS INCLUDES) | |
| | | 1 | **3K-0835** | 1 | NUT (5/8-24-THD) | |
| | | 1 | **6F-0253** | 1 | LOCKWASHER | |
| | | 1 | **8T-8729** | 2 | PIN-CONNECTOR | |
| | 3 | 1 | **3E-3389** | 1 | WEDGE-RECEPTACLE LOCK | |
| | 4 | 1 | **105-9073** | 1 | GRIP | |
| M | 5 | 1 | **7Y-3173** | 2 | SCREW-BUTTON HEAD (M4X0.7X12-MM) | |
| | 6 | 1 | **8C-7508** | 2 | LOCKWASHER | |
| | 7 | 1 | **8C-9660** | 2 | WASHER (4.6X7.9X0.8-MM THK) | |

M-METRIC PART

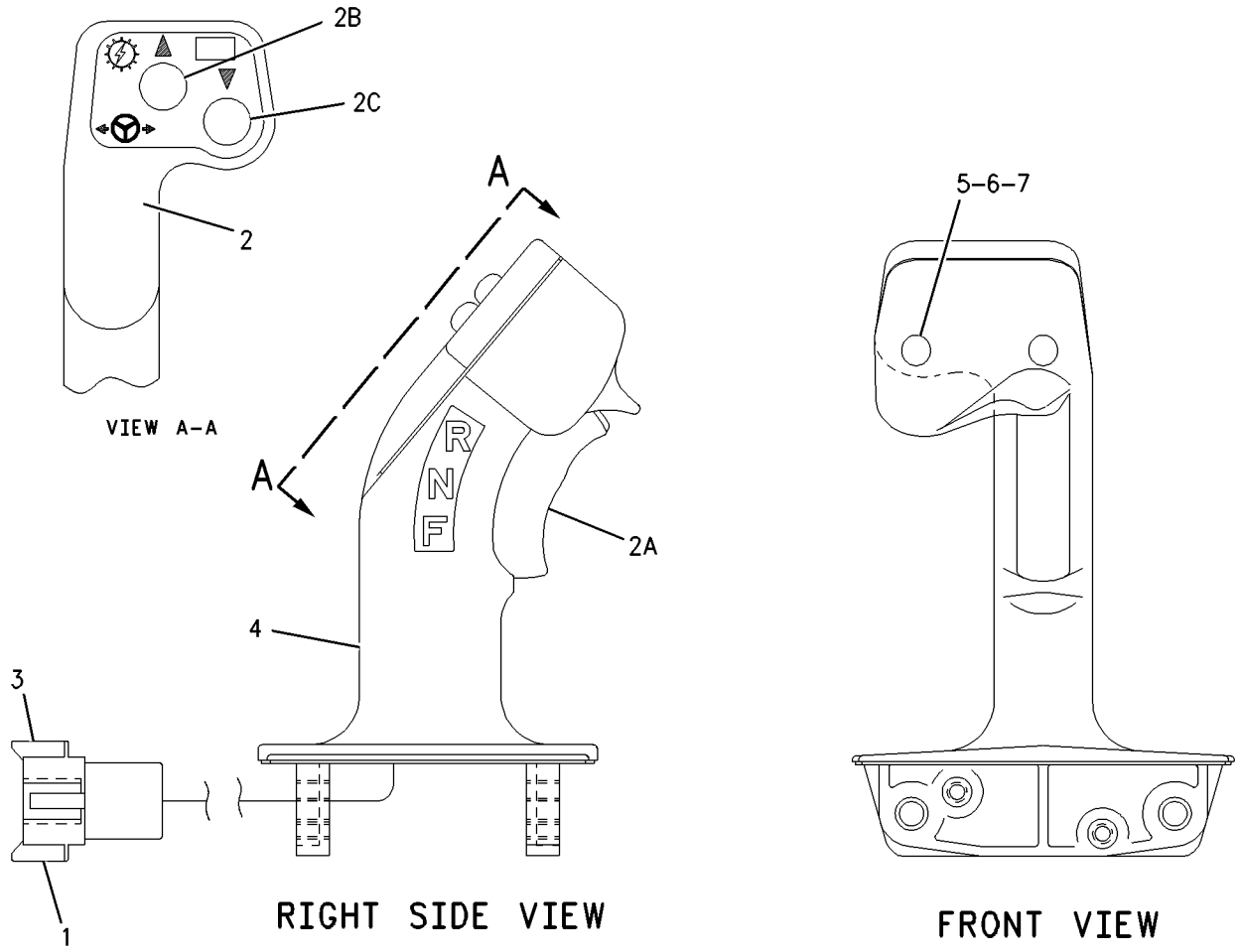


GRAPHIC #1 **<END>** g00898020

# OPERATOR STATION

## *187-0738* CONTROL GP-STIC LOCKOUT

**S/N: BXY1-UP**
**PART OF 227-3190, 292-6110, 308-2727 CAB AR**
**ALSO AN ATTACHMENT**

**SMCS-3034** **i02262633**

| NOTE | REF NO | GRAPHIC REF | PART NUMBER | QTY | PART NAME 1 2 3 4 5 6 (PRODUCT LEVEL) | SEE PAGE |
|---|---|---|---|---|---|---|
| | 1 | 1 | **2V-4387** | 1 | SPACER (10.312X25.4X23.11-MM THK) | |
| | 2 | 1 | **3S-2093** | 1 | STRAP-CABLE | |
| | 3 | 1 | **4E-8557** | 1 | SHAFT AS | |
| | 4 | 1 | **4E-8561** | 1 | CAM | |
| | 5 | 1 | **188-2048** | 1 | KNOB | |
| | 6 | 1 | **6L-8598** | 2 | RING-RETAINING | |
| | 7 | 1 | **8C-3442** | 1 | SPRING-COIL | |
| | 8 | 1 | **144-7766** | 1 | LEVER AS-STIC STEER LOCKOUT | |
| | 9 | 1 | **145-8951** | 1 | PLATE AS | |
| | 10 | 1 | **145-8952** | 1 | PLATE AS | |
| M | | 1 | **3E-6908** | 2 | STUD-WELD (M8X1.25X20-MM) | |
| | 11 | 1 | **151-6427** | 2 | BEARING | |
| | 12 | 1 | **190-4764** | 1 | GUARD AS | |
| M | | 1 | **6V-9632** | 1 | NUT-WELD (M6X1-THD) | |
| | 13 | 1 | **204-3611** | 1 | PLATE AS | |
| M | | 1 | **6V-9632** | 4 | NUT-WELD (M6X1-THD) | |
| | 14 | 1 | **171-3759** | 1 | SWITCH GP-LIMIT (STIC CONTROL LOCKOUT) | |
| | | 1 | **102-8804** | 1 | KIT-RECEPTACLE (4-PIN) | |
| | | | | | (INCLUDES RECEPTACLE AS & WEDGE) | |
| | | 1 | **9G-3695** | 1 | PLUG (GROMMET SEALING) | |
| | | 1 | **9X-3401** | 3 | PIN-CONNECTOR (16-GA TO 18-GA) | |
| BD | | 1 | **6V-1614** | | TUBE-HEAT SHRINK (9.52-MM DIA) | |
| BD | | 1 | **5P-5677** | | WIRE (18-GA, BLACK) | |
| BE | | 1 | **9X-1386** | | SLEEVE | |
| BE | | 1 | **125-7874** | | TUBE-HEAT SHRINK (5.72-MM DIA) | |
| | | 1 | **126-1767** | 1 | PIN-CONNECTOR (14-GA) | |
| | 15 | 1 | **1P-7326** | 2 | WASHER (4.32X9.52X1.52-MM THK) | |
| | 16 | 1 | **4D-7794** | 1 | CLIP | |
| | 17 | 1 | **4E-8560** | 2 | KEY-SQUARE | |
| M | 18 | 1 | **5C-7261** | 2 | NUT (M8X1.25-THD) | |
| M | 19 | 1 | **5C-7423** | 4 | SCREW (M6X1X16-MM) | |
| M | 20 | 1 | **5C-9553** | 2 | BOLT (M6X1X16-MM) | |
| M | 21 | 1 | **6V-5220** | 2 | BOLT (M8X1.25X65-MM) | |
| M | 22 | 1 | **6V-9505** | 2 | SCREW-MACHINE (M3X0.5X25-MM) | |
| M | 23 | 1 | **8T-4133** | 3 | NUT (M10X1.5-THD) | |
| M | 24 | 1 | **8T-4177** | 1 | BOLT (M8X1.25X90-MM) | |
| | 25 | 1 | **8T-4224** | 6 | WASHER-HARD (8.8X16X2-MM THK) | |

B-USE AS REQUIRED
D-ORDER BY THE METER
E-ORDER BY THE CENTIMETER
M-METRIC PART

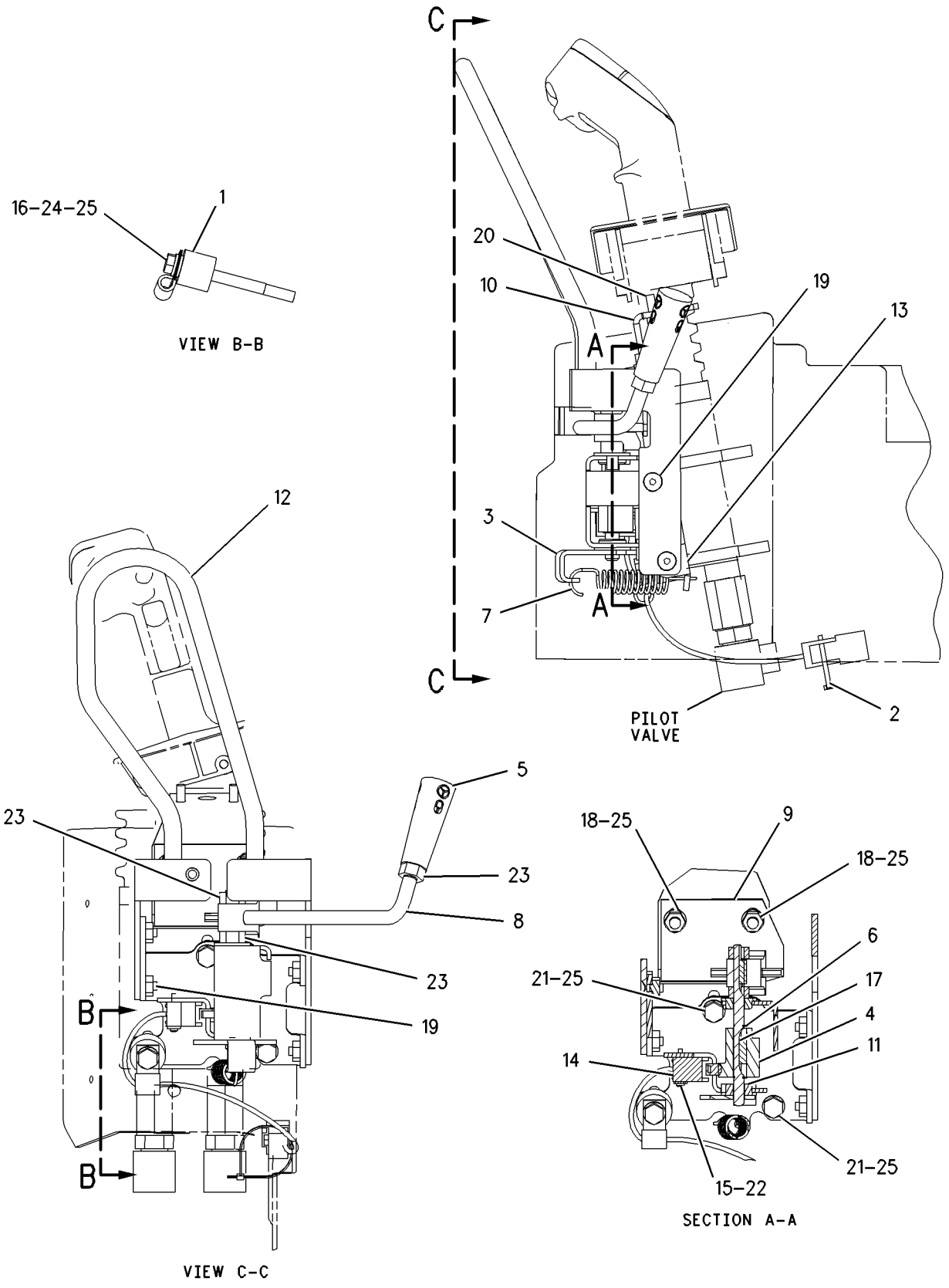


GRAPHIC #1 **<END>** g00774513

# OPERATOR STATION

## *308-2729* CONTROL GP-TMSN OVERRIDE

**S/N: BXY1900-UP**
**PART OF 2Q-8722, 2Q-8733 STEEL MILL AR**
**AN ATTACHMENT**

**SMCS-1408, 3168, 3171** **i02743373**

| NOTE | REF NO | GRAPHIC REF | PART NUMBER | QTY | PART NAME 1 2 3 4 5 6 (PRODUCT LEVEL) | SEE PAGE |
|---|---|---|---|---|---|---|
| | 1 | 1 | **189-7740** | 1 | HARNESS AS-CONTROL (TRANSMISSION OVERRIDE) | |
| | | 1 | **6D-5256** | 2 | PLUG AS | |
| E | | 1 | **114-8843** | | SLEEVE-PLASTIC (32-MM DIA) (20-CM) | |
| Y | 2 | 1 | *308-2710* | 1 | WIRING GP-ELECTRONICS BAY | 406 |
| | 3 | 1 | **1S-0994** | 1 | CLIP | |

E-ORDER BY THE CENTIMETER
Y-SEPARATE ILLUSTRATION

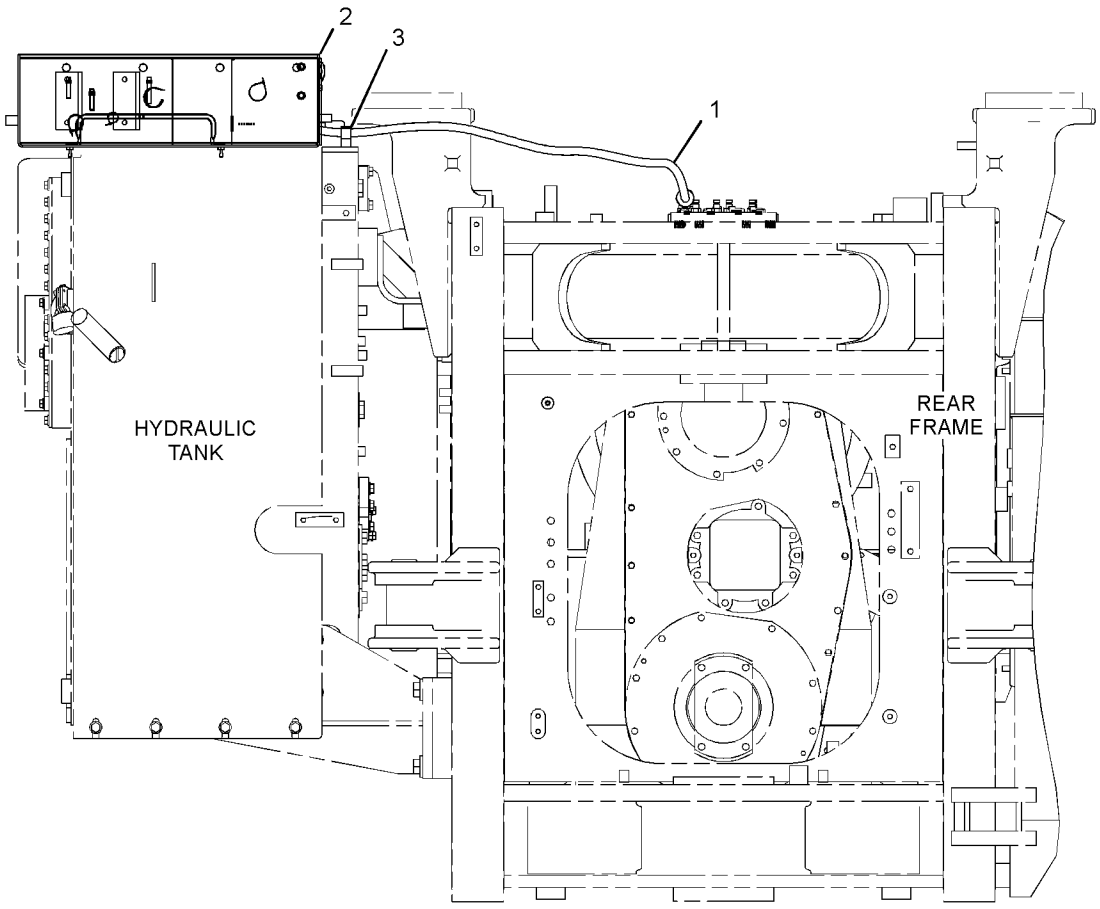


FRONT VIEW

GRAPHIC #1 **<END>** g01368501

# OPERATOR STATION

## 154-7443 CONTROL GP-UNPRGMED MONITOR–

**CATERPILLAR MONITORING SYSTEM**

**S/N: BXY1-UP**

**PART OF 261-0400 WIRING GP-CAB**

**ALSO AN ATTACHMENT**

**SMCS-7610** **i02588359**

| NOTE | REF NO | GRAPHIC REF | PART NUMBER | QTY | PART NAME 1 2 3 4 5 6 (PRODUCT LEVEL) | SEE PAGE |
|---|---|---|---|---|---|---|
| | 1 | 1 | **252-4501** | 1 | CONTROL GP-UNPRGMED MONITOR (CATERPILLAR MONITORING SYSTEM) | |

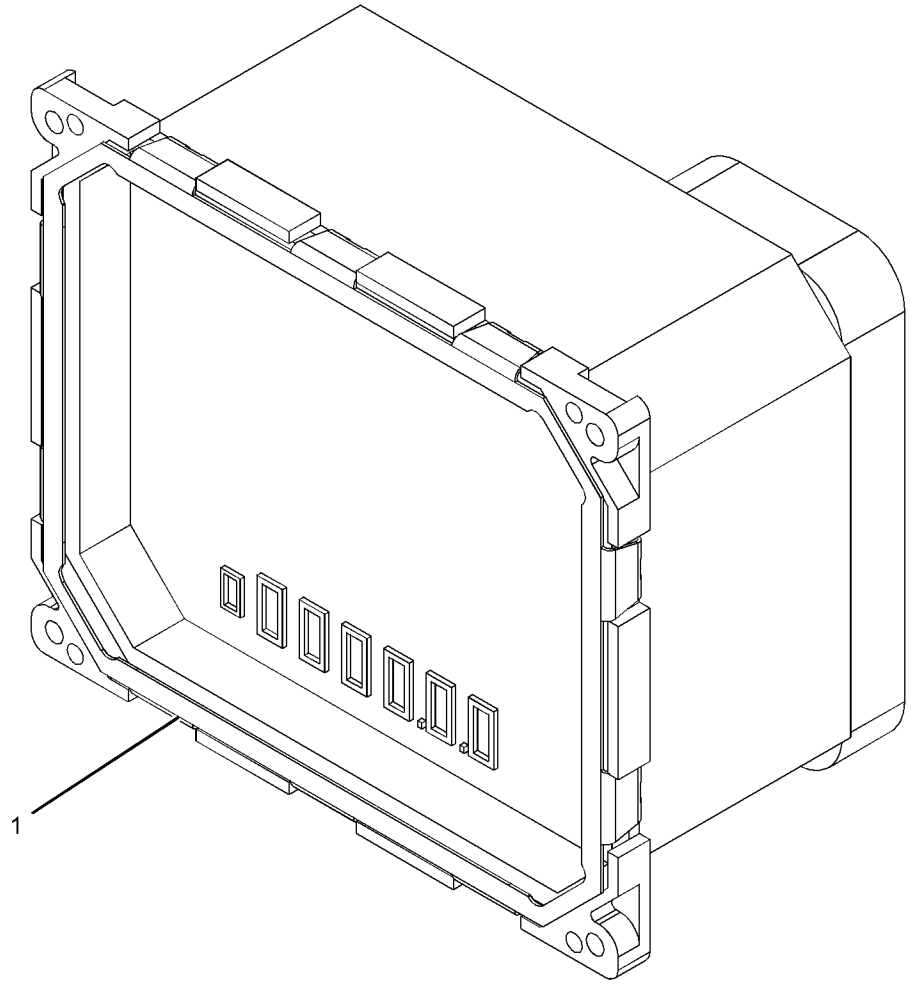


GRAPHIC #1 **<END>** g01299826

# OPERATOR STATION

## *164-4237* COVER GP-DASH

**S/N: BXY1-UP**
**STIC STEERING**
**PART OF 227-3190, 292-6110, 308-2727 CAB AR**
**ALSO AN ATTACHMENT**

**SMCS-7314** **i01573201**

| NOTE | REF NO | GRAPHIC REF | PART NUMBER | QTY | PART NAME 1 2 3 4 5 6 (PRODUCT LEVEL) | SEE PAGE |
|---|---|---|---|---|---|---|
| | 1 | 1 | **6V-2491** | 24 | RIVET-POP | |
| | 2 | 1 | **129-7184** | 1 | FILM-INSTRUCTION (ENGINE START) | |
| C | 3 | 1 | **203-7143** | 1 | PLATE AS | |
| | 4 | 1 | **173-5791** | 1 | COVER | |
| M | 5 | 1 | **9X-2042** | 14 | SCREW-TRUSS HEAD (M6X1X12-MM) | |
| M | 6 | 1 | **9X-2045** | 2 | SCREW-TRUSS HEAD (M6X1X20-MM) | |
| CM | 7 | 1 | **5C-2890** | 2 | NUT (M6X1-THD) | |
| C | 8 | 1 | **9X-8256** | 2 | WASHER (6.6X12X2-MM THK) | |
| C | 9 | 1 | **203-6481** | 1 | PLATE AS | |

C-CHANGE FROM PREVIOUS TYPE
M-METRIC PART

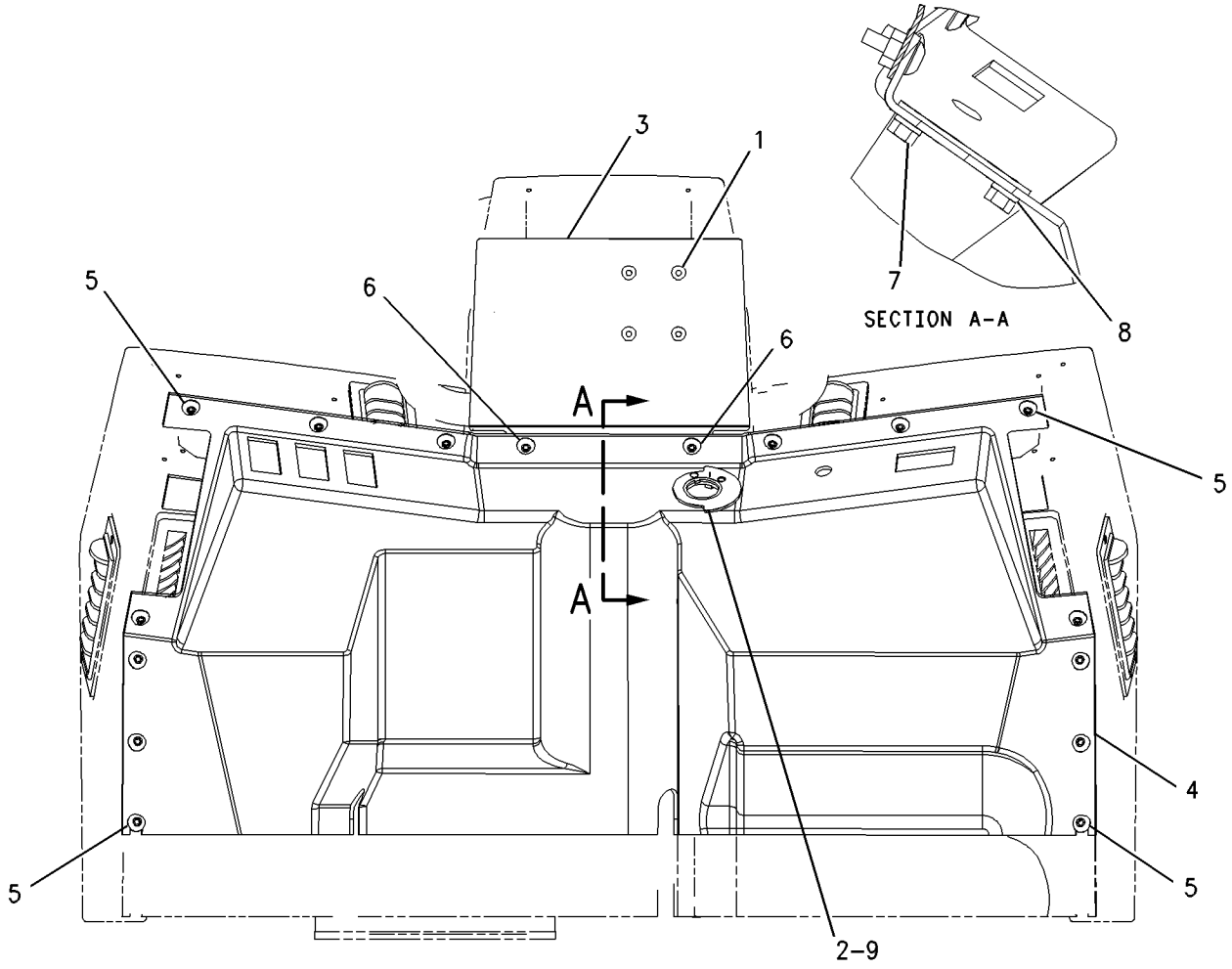


GRAPHIC #1 **<END>** g00818172

# OPERATOR STATION

## 261-3226 DISPLAY GP-CAMERA

**S/N: BXY1-UP**
**PART OF 300-5844 MONITOR GP-CAMERA**
**AN ATTACHMENT**

**SMCS-7347** **i02725969**

| NOTE | REF NO | GRAPHIC REF | PART NUMBER | QTY | PART NAME 1 2 3 4 5 6 (PRODUCT LEVEL) | SEE PAGE |
|---|---|---|---|---|---|---|
| | 1 | 1 | **261-3222** | 1 | MOUNTING GP-CAMERA DISPLAY (WAVES) | |
| | 2 | 1 | **261-3224** | 1 | MODULE GP-DISPLAY (WAVES) | |
| | | 1 | **102-8805** | 1 | KIT-RECEPTACLE (6-PIN) | |
| | | | | | (INCLUDES RECEPTACLE AS & WEDGE) | |
| | 3 | 1 | **4B-4274** | 4 | WASHER (5.5X13X1.2-MM THK) | |
| M | 4 | 1 | **8T-0288** | 4 | BOLT (M5X0.8X12-MM) | |
| | 5 | 1 | **280-2691** | 1 | CABLE AS | |

M-METRIC PART

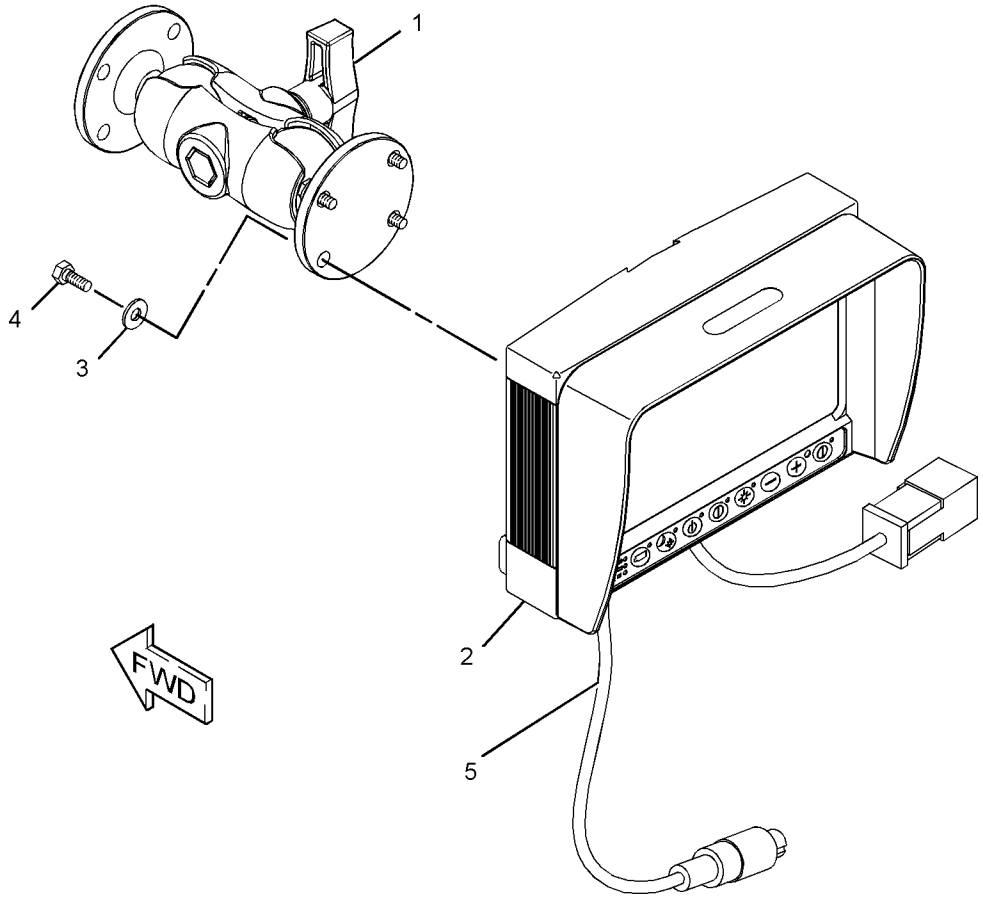


GRAPHIC #1 **<END>** g01325194

# OPERATOR STATION

## 165-5576 DOOR GP-CAB—LH

**S/N: BXY1-UP**

**PART OF 228-9530, 292-6893 ROPS GP-ENCLOSED**

**SMCS-7308** **i02613616**

| NOTE | REF NO | GRAPHIC REF | PART NUMBER | QTY | PART NAME 1 2 3 4 5 6 (PRODUCT LEVEL) | SEE PAGE |
|---|---|---|---|---|---|---|
| | 1 | 1 | **5P-7803** | 2 | PLUG-BUTTON | |
| | 2 | 1 | **7X-2497** | 1 | HANDLE-DOOR | |
| M | 3 | 1 | **8T-4180** | 4 | SCREW-MACHINE (M5X0.8X20-MM) | |
| | 4 | 1 | **8T-4747** | 2 | BRACKET | |
| | 5 | 1 | **8Y-6386** | 1 | SEAL-HANDLE | |
| M | 6 | 1 | **9X-2044** | 3 | SCREW-TRUSS HEAD (M6X1X16-MM) | |
| | 7 | 1 | **187-3554** | 1 | LATCH AS | |
| | 8 | 1 | **111-1354** | 1 | HANDLE AS | |
| | 9 | 1 | **129-2567** | 1 | GLASS | |
| | 10 | 1 | **129-2568** | 1 | GLASS | |
| | 11 | 1 | **129-2578** | 1 | COVER | |
| | 12 | 1 | **165-5575** | 1 | DOOR AS | |
| | | 1 | **129-2576** | 1 | BRACKET AS | |
| M | | 1 | **6V-9632** | 3 | NUT-WELD (M6X1-THD) | |
| | | 1 | **129-2584** | 1 | HANDLE | |
| | | 1 | **130-6392** | 3 | HINGE | |
| M | 13 | 1 | **8C-3210** | 1 | BOLT (M6X1X16-MM) | |
| M | 14 | 1 | **8T-4181** | 4 | BOLT (M6X1X20-MM) | |
| E | 15 | 1 | **3E-3805** | | SEAL (450CM) | |

E-ORDER BY THE CENTIMETER
M-METRIC PART

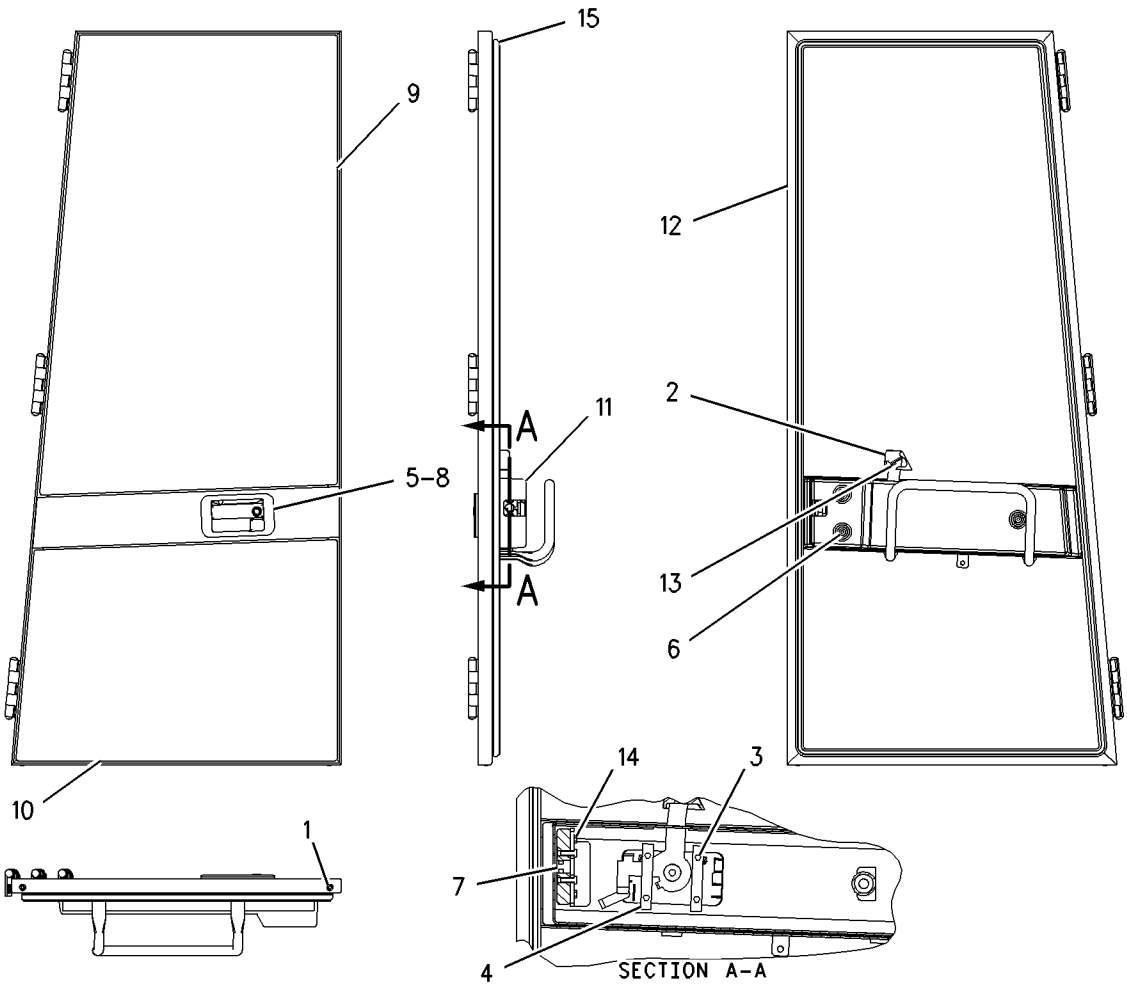


GRAPHIC #1 **<END>** g00692932

# OPERATOR STATION

## 165-5725 D00R GP-CAB–RH

**S/N: BXY1-1899**

**PART OF 228-9530 ROPS GP-ENCLOSED**

**SMCS-7308** **i01662242**

| NOTE | REF NO | GRAPHIC REF | PART NUMBER | QTY | PART NAME 1 2 3 4 5 6 (PRODUCT LEVEL) | SEE PAGE |
|---|---|---|---|---|---|---|
| | 1 | 1 | **5P-7803** | 2 | PLUG-BUTTON | |
| | 2 | 1 | **103-1122** | 1 | MOUNT-LATCH | |
| | 3 | 1 | **165-5722** | 1 | DOOR AS | |
| | | 1 | **130-6392** | 3 | HINGE | |
| | 4 | 1 | **165-5728** | 1 | GLASS | |
| E | 5 | 1 | **3E-3805** | | SEAL (450CM) | |

E-ORDER BY THE CENTIMETER

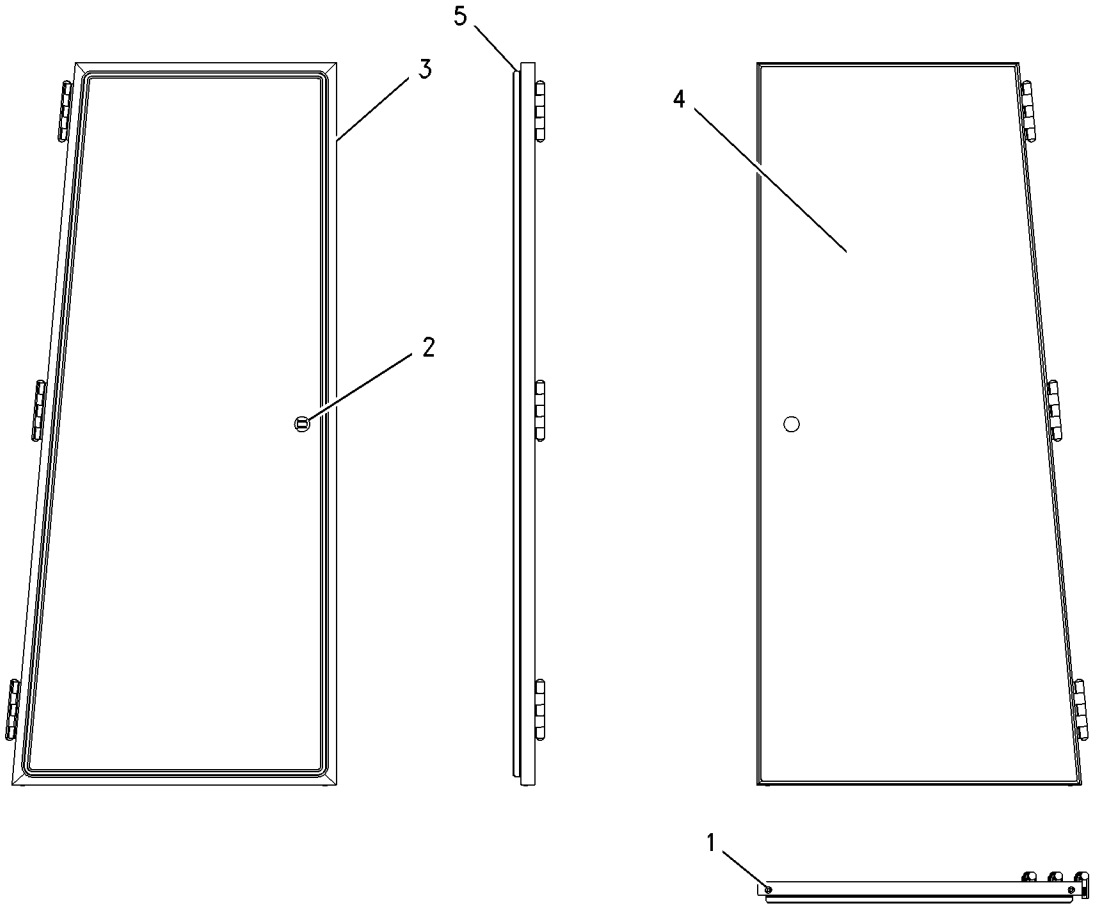


GRAPHIC #1 **<END>** g00860530

# OPERATOR STATION

## *179-3738* DOOR GP-CAB—RH

**S/N: BXY1900-UP**

**PART OF 292-6893 ROPS GP-ENCLOSED**

**SMCS-7308** **i02715943**

| NOTE | REF NO | GRAPHIC REF | PART NUMBER | QTY | PART NAME 1 2 3 4 5 6 (PRODUCT LEVEL) | SEE PAGE |
|---|---|---|---|---|---|---|
| | 1 | 1 | **5P-7803** | 2 | PLUG-BUTTON | |
| | 2 | 1 | **7X-2497** | 1 | HANDLE-DOOR | |
| M | 3 | 1 | **8T-4180** | 4 | SCREW-MACHINE (M5X0.8X20-MM) | |
| | 4 | 1 | **8T-4747** | 2 | BRACKET | |
| | 5 | 1 | **8Y-6386** | 1 | SEAL-HANDLE | |
| | 6 | 1 | **9R-8538** | 1 | PLUNGER | |
| | 7 | 1 | **111-1353** | 1 | HANDLE AS | |
| | | 1 | **8Y-4501** | 1 | SPRING-HANDLE | |
| | 8 | 1 | **111-1355** | 1 | LATCH AS-ROTARY | |
| | 9 | 1 | **129-2552** | 1 | DOOR AS | |
| | | 1 | **129-2584** | 1 | HANDLE | |
| | | 1 | **130-6392** | 3 | HINGE | |
| | 10 | 1 | **129-2565** | 1 | GLASS | |
| | 11 | 1 | **129-2577** | 1 | COVER | |
| | 12 | 1 | **201-0364** | 1 | SHEET | |
| M | 13 | 1 | **5C-2890** | 1 | NUT (M6X1-THD) | |
| | 14 | 1 | **5P-4115** | 1 | WASHER-HARD (7.2X19X2-MM THK) | |
| M | 15 | 1 | **8C-3210** | 1 | BOLT (M6X1X16-MM) | |
| M | 16 | 1 | **8T-4181** | 4 | BOLT (M6X1X20-MM) | |
| M | 17 | 1 | **8T-4971** | 1 | BOLT (M6X1X30-MM) | |
| M | 18 | 1 | **9X-2044** | 3 | SCREW-TRUSS HEAD (M6X1X16-MM) | |
| E | 19 | 1 | **3E-3805** | | SEAL (450-CM) | |

E-ORDER BY THE CENTIMETER
M-METRIC PART

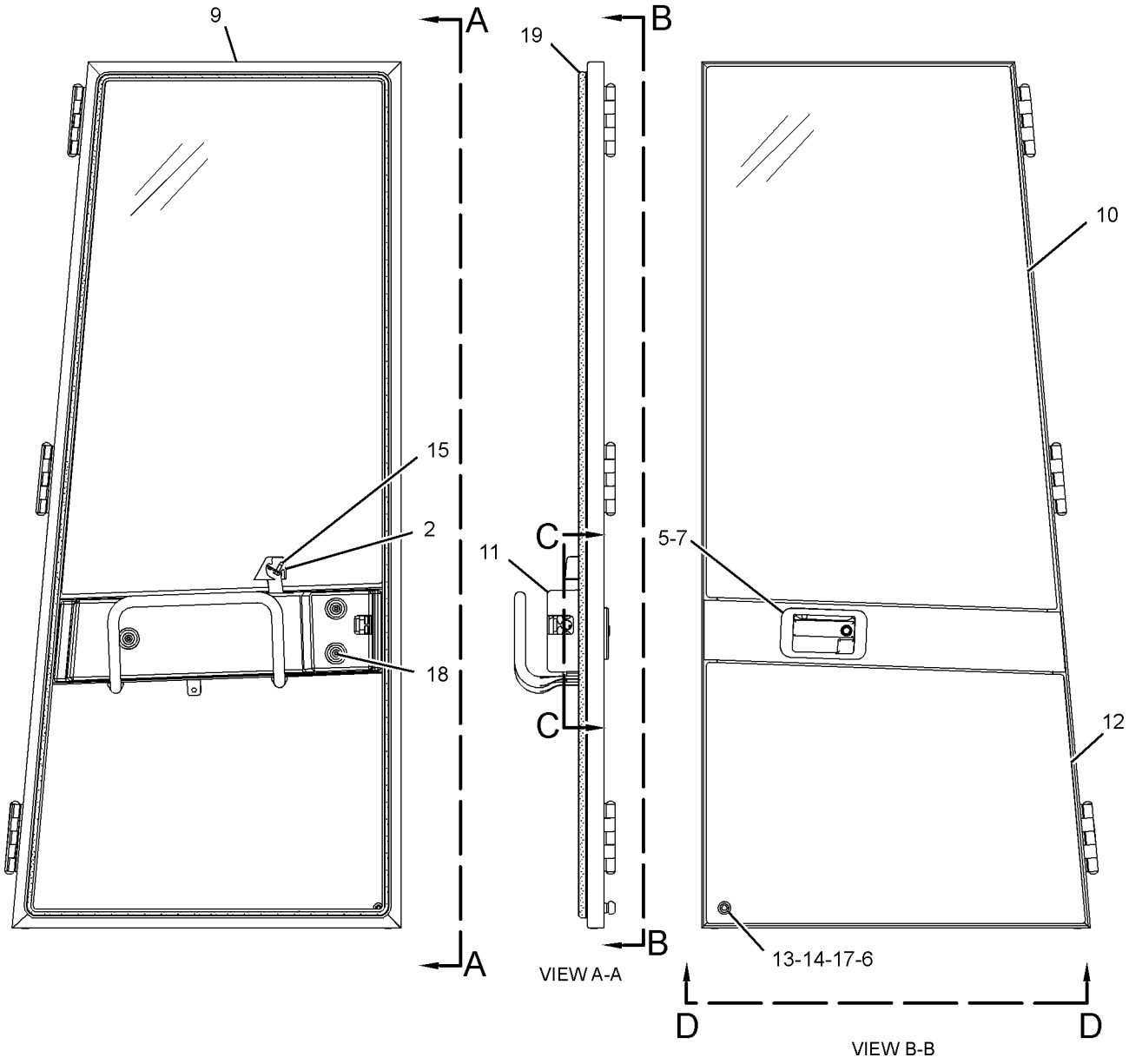


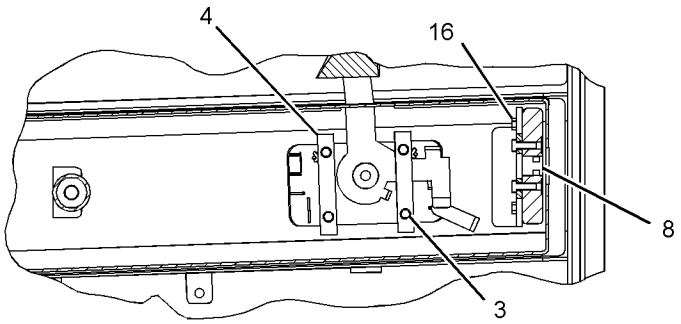


SECTION C-C

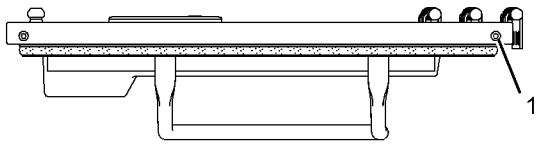


VIEW D-D

GRAPHIC #1 **<END>** g01364843

## *227-3270* DOOR GP-CAB—WITH SLIDING WINDOW, LH

**S/N: BXY1900-UP**

**PART OF 308-2708, 308-2728 ROPS GP-ENCLOSED**

**AN ATTACHMENT**

**SMCS-7308** **i01985832**

| NOTE | REF NO | GRAPHIC REF | PART NUMBER | QTY | PART NAME 1 2 3 4 5 6 (PRODUCT LEVEL) | SEE PAGE |
|---|---|---|---|---|---|---|
| | 1 | 1 | **5P-7803** | 2 | PLUG-BUTTON | |
| | 2 | 1 | **7X-2497** | 1 | HANDLE-DOOR | |
| | 3 | 1 | **8T-4747** | 2 | BRACKET | |
| | 4 | 1 | **8Y-6386** | 1 | SEAL-HANDLE | |
| | 5 | 1 | **111-1354** | 1 | HANDLE AS | |
| | | 1 | **8Y-4501** | 1 | SPRING-HANDLE | |
| Y | 6 | 1 | *113-2512* | 1 | WINDOW GP-DOOR (LH) | 1486 |
| | 7 | 1 | **129-2568** | 1 | GLASS | |
| | 8 | 1 | **129-2578** | 1 | COVER | |
| | 9 | 1 | **136-2720** | 1 | GLASS-CAB (DOOR) | |
| | 10 | 1 | **165-5575** | 1 | DOOR AS | |
| M | | 1 | **6V-9632** | 2 | NUT-WELD (M6X1-THD) | |
| | | 1 | **129-2584** | 1 | HANDLE | |
| M | | 1 | **6V-9632** | 1 | NUT-WELD (M6X1-THD) | |
| | | 1 | **130-6392** | 3 | HINGE | |
| | 11 | 1 | **187-3554** | 1 | LATCH AS | |
| M | 12 | 1 | **8C-3210** | 1 | BOLT (M6X1X16-MM) | |
| M | 13 | 1 | **8T-4180** | 4 | SCREW-MACHINE (M5X0.8X20-MM) | |
| M | 14 | 1 | **8T-4181** | 4 | BOLT (M6X1X20-MM) | |
| M | 15 | 1 | **9X-2044** | 3 | SCREW-TRUSS HEAD (M6X1X16-MM) | |
| E | 16 | 1 | **3E-3805** | | SEAL (450CM) | |

E-ORDER BY THE CENTIMETER
M-METRIC PART
Y-SEPARATE ILLUSTRATION

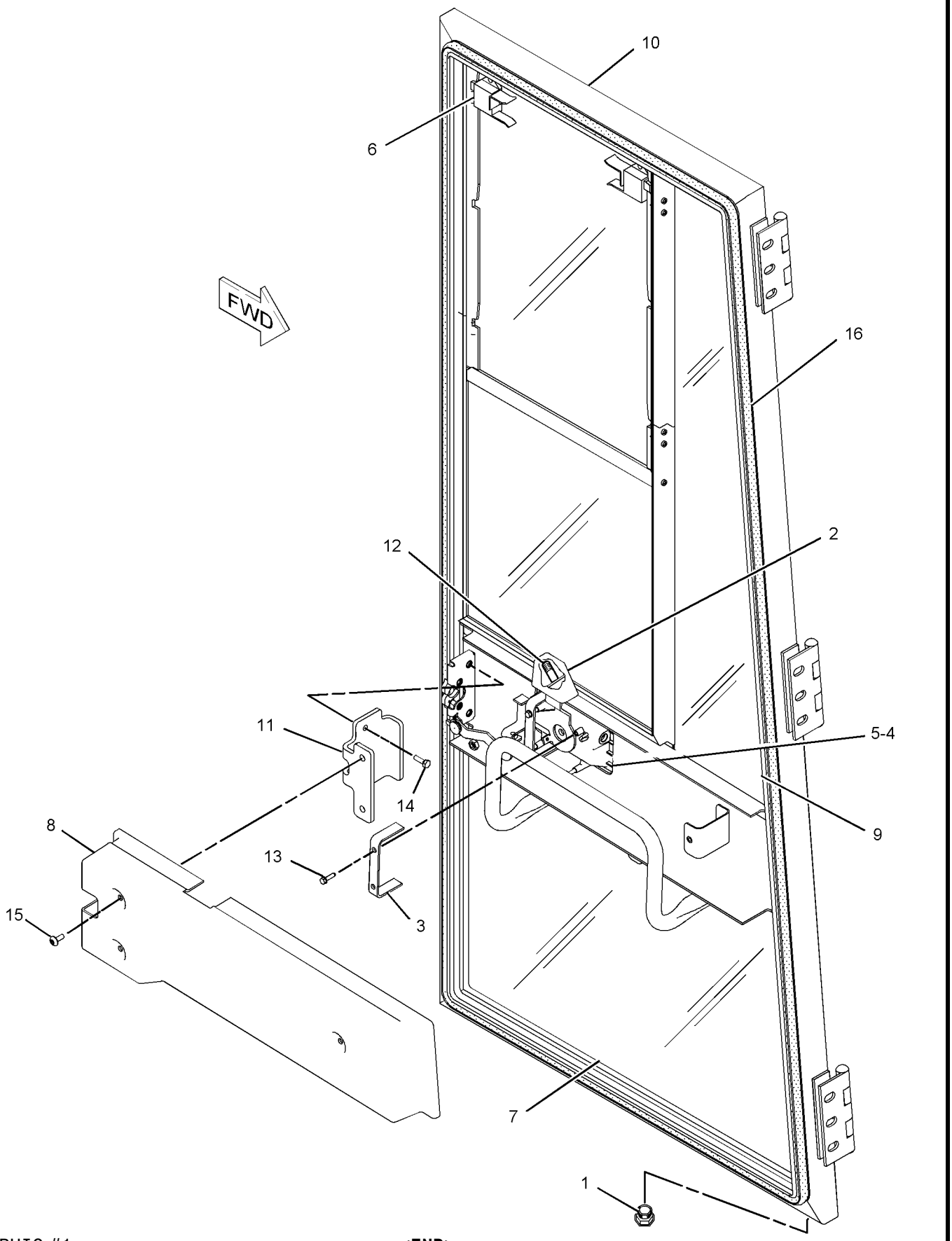


GRAPHIC #1 **<END>** g01035130

# OPERATOR STATION

## *308-2712* DOOR GP-CAB—RH

**S/N: BXY1900-UP**
**PART OF 308-2708, 308-2728 ROPS GP-ENCLOSED**
**AN ATTACHMENT**

**SMCS-7308** **i02732671**

| NOTE | REF NO | GRAPHIC REF | PART NUMBER | QTY | PART NAME 1 2 3 4 5 6 (PRODUCT LEVEL) | SEE PAGE |
|---|---|---|---|---|---|---|
| | 1 | 1 | **5P-7803** | 2 | PLUG-BUTTON | |
| | 2 | 1 | **7X-2497** | 1 | HANDLE-DOOR | |
| | 3 | 1 | **8T-4747** | 2 | BRACKET | |
| | 4 | 1 | **8Y-6386** | 1 | SEAL-HANDLE | |
| | 5 | 1 | **9R-8538** | 1 | PLUNGER (LATCH) | |
| | 6 | 1 | **111-1353** | 1 | HANDLE AS | |
| | | 1 | **8Y-4501** | 1 | SPRING-HANDLE | |
| | 7 | 1 | **111-1355** | 1 | LATCH AS-ROTARY | |
| Y | 8 | 1 | *113-2513* | 1 | WINDOW GP-DOOR (RH) | 1487 |
| | 9 | 1 | **129-2552** | 1 | DOOR AS | |
| | | 1 | **129-2584** | 1 | HANDLE | |
| | | 1 | **130-6392** | 3 | HINGE | |
| | 10 | 1 | **129-2577** | 1 | COVER | |
| B | 12 | 1 | **201-0364** | 1 | SHEET | |
| M | 13 | 1 | **5C-2890** | 1 | NUT (M6X1-THD) | |
| | 14 | 1 | **5P-4115** | 1 | WASHER-HARD (7.2X19X2-MM THK) | |
| M | 15 | 1 | **8C-3210** | 1 | BOLT (M6X1X16-MM) | |
| M | 16 | 1 | **8T-4180** | 4 | SCREW-MACHINE (M5X0.8X20-MM) | |
| M | 17 | 1 | **8T-4181** | 4 | BOLT (M6X1X20-MM) | |
| M | 18 | 1 | **8T-4971** | 1 | BOLT (M6X1X30-MM) | |
| M | 19 | 1 | **9X-2044** | 3 | SCREW-TRUSS HEAD (M6X1X16-MM) | |
| | 20 | 1 | **3E-3805** | | SEAL (450-CM) | |

B-USE AS REQUIRED
M-METRIC PART
Y-SEPARATE ILLUSTRATION

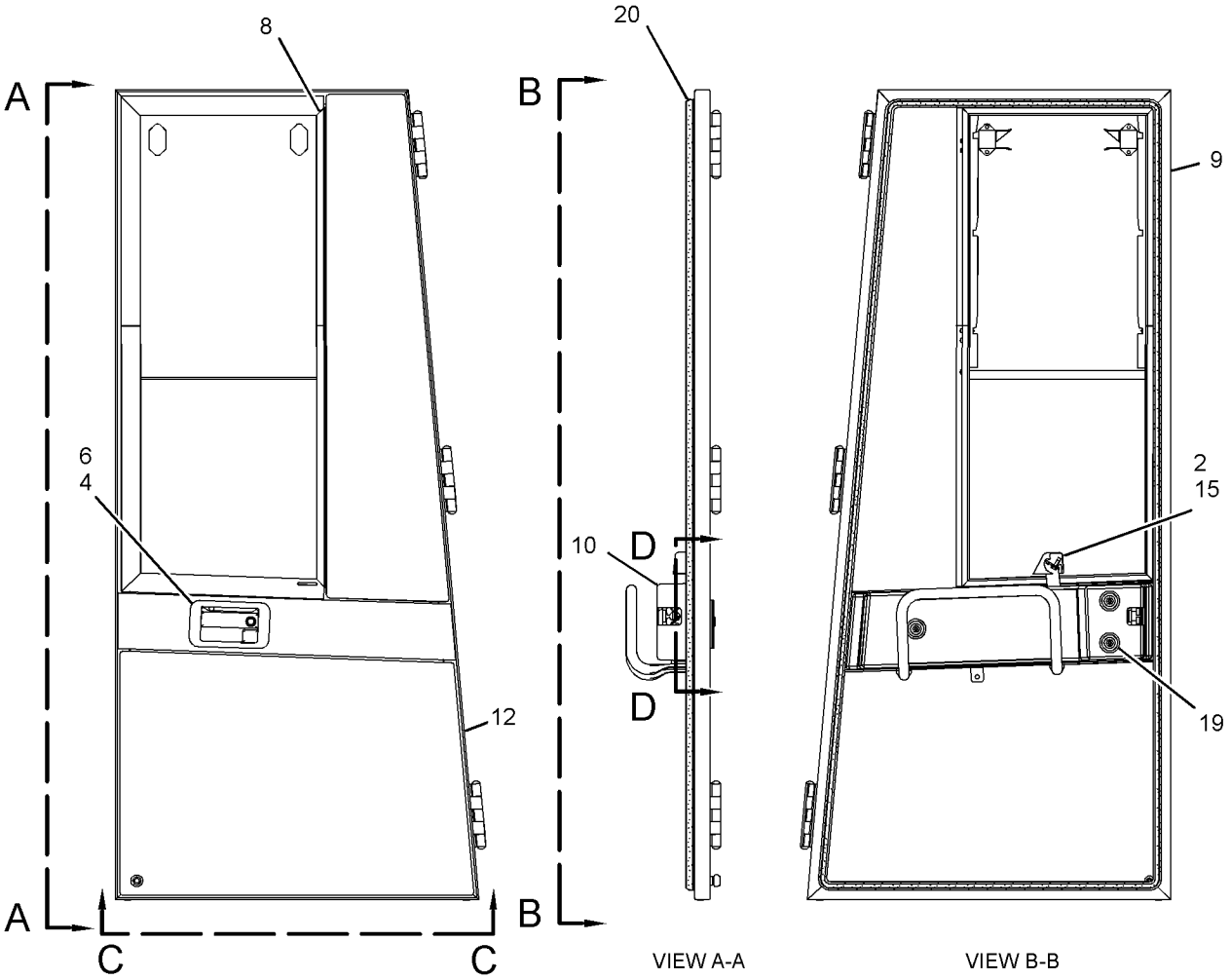


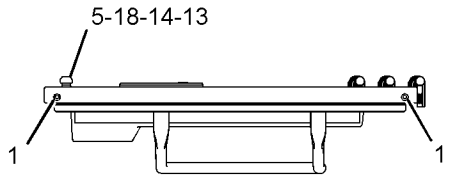


VIEW C-C

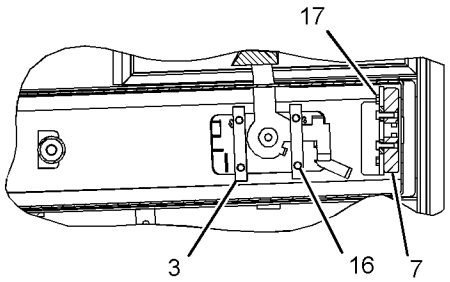


SECTION D-D

GRAPHIC #1 **<END>** g01370727

# OPERATOR STATION

## *178-4139* DOOR GP-STORAGE

**S/N: BXY1-UP**

**PART OF 114-5124 PLATFORM GP-OPERATOR**

**SMCS-7268, 7273** **i01621758**

| NOTE | REF NO | GRAPHIC REF | PART NUMBER | QTY | PART NAME 1 2 3 4 5 6 (PRODUCT LEVEL) | SEE PAGE |
|---|---|---|---|---|---|---|
| | 1 | 1 | **3B-4610** | 1 | PIN-COTTER | |
| | 2 | 1 | **4E-4450** | 1 | ROD AS | |
| | | 1 | **8T-4121** | 3 | WASHER-HARD (11X21X2.5-MM THK) | |
| | 3 | 1 | **7X-7729** | 2 | WASHER (11X25X3-MM THK) | |
| | 4 | 1 | **2V-3726** | 4 | BUMPER | |
| | 5 | 1 | **9U-1169** | 1 | BRACKET | |
| | 6 | 1 | **113-6003** | 1 | DOOR AS | |
| | | 1 | **6V-2370** | 4 | RIVET-POP | |
| | | 1 | **9X-2299** | 1 | LATCH AS | |
| M | | 1 | **8T-3490** | 2 | NUT-WELD (M10X1.5 THD) | |
| | 7 | 1 | **119-1151** | 2 | HINGE AS | |
| | | | | | (EACH INCLUDES) | |
| M | | 1 | **8T-3490** | 6 | NUT-WELD (M10X1.5 THD) | |
| | 8 | 1 | **178-4142** | 1 | FRAME AS | |
| | 9 | 1 | **8T-4121** | 13 | WASHER-HARD (11X21X2.5-MM THK) | |
| M | 10 | 1 | **8T-4136** | 14 | BOLT (M10X1.5X25-MM) | |

M-METRIC PART

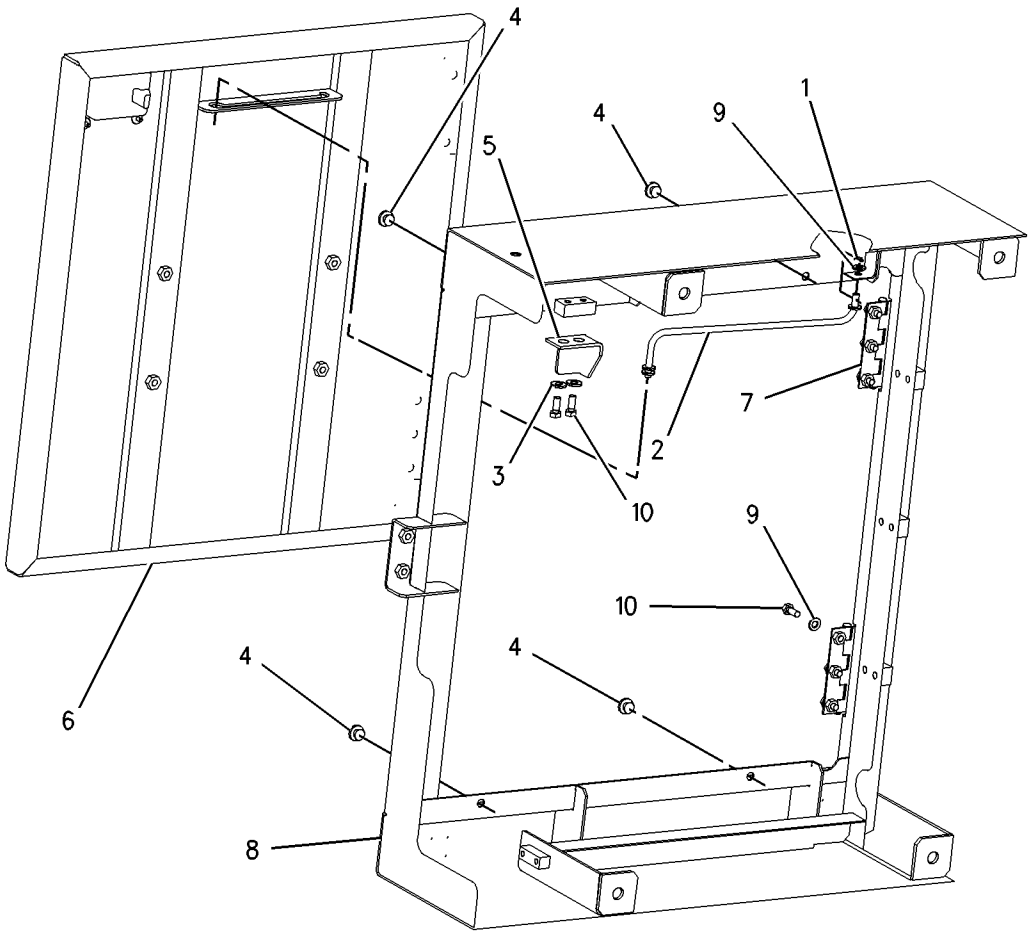


GRAPHIC #1 **<END>** g00802480

# OPERATOR STATION

## *165-6769* DUCT & FILTER GP-CAB AIR

**S/N: BXY1-UP**
**PART OF 227-3190, 292-6110, 308-2727 CAB AR**
**ALSO AN ATTACHMENT**

**SMCS-7337, 7342** **i02451030**

| NOTE | REF NO | GRAPHIC REF | PART NUMBER | QTY | PART NAME 1 2 3 4 5 6 (PRODUCT LEVEL) | SEE PAGE |
|---|---|---|---|---|---|---|
| | 1 | 1 | **3V-7476** | 1 | KEY-HANDLE | |
| | 2 | 1 | **8Y-6388** | 4 | LOUVER AS | |
| | 3 | 1 | **107-0266** | 1 | FILTER-CAB AIR | |
| | 4 | 1 | **184-6673** | 1 | DUCT AS-LH | |
| | 5 | 1 | **107-7308** | 1 | DUCT AS-RH | |
| | 6 | 1 | **112-7448** | 1 | FILTER-CAB AIR | |
| | 7 | 1 | **114-3466** | 1 | SEAL | |
| | 8 | 1 | **114-3467** | 1 | SEAL | |
| | 9 | 1 | **128-3786** | 1 | SEAL | |
| | 10 | 1 | **128-3787** | 1 | SEAL | |
| | 11 | 1 | **155-8357** | 1 | PLUG | |
| | 12 | 1 | **155-9653** | 1 | SEAL | |
| | 13 | 1 | **161-1353** | 1 | INSULATION | |
| | 14 | 1 | **176-5500** | 1 | COVER AS | |
| | 15 | 1 | **104-2091** | 8 | SCREW-FLAT HEAD (NO 6X0.5-IN) | |
| | 16 | 1 | **114-4208** | 1 | COVER AS | |
| | | 1 | **2R-2376** | 2 | WASHER (7X16X0.8-MM THK) | |
| | | 1 | **134-0780** | 2 | THUMBSCREW | |
| | | 1 | **276-6606** | 1 | PLATE | |
| M | 17 | 1 | **9X-2039** | 3 | SCREW-TRUSS HEAD (M10X1.5X35-MM) | |
| M | 18 | 1 | **9X-2040** | 2 | SCREW-TRUSS HEAD (M10X1.5X25-MM) | |
| M | 19 | 1 | **9X-2042** | 8 | SCREW-TRUSS HEAD (M6X1X12-MM) | |
| B | 20 | 1 | **121-3910** | 1 | ADHESIVE | |
| D | 22 | 1 | **6V-0723** | | SEAL (0.094-M EACH) | |
| D | 23 | 1 | **6V-0723** | | SEAL (0.05-M EACH) | |
| D | 24 | 1 | **6V-0723** | | SEAL (0.231-M) | |
| D | 25 | 1 | **6V-0723** | | SEAL (0.236-M) | |
| D | 26 | 1 | **6V-0723** | | SEAL (0.051-M) | |
| D | 28 | 1 | **6V-0723** | | SEAL (0.096-M) | |
| E | 29 | 1 | **227-0213** | | SEAL (18.5-CM) | |
| E | 30 | 1 | **227-0213** | | SEAL (2.0-CM) | |
| E | 31 | 1 | **227-0213** | | SEAL (8.0-CM) | |
| E | 32 | 1 | **227-0213** | | SEAL (227.5-CM) | |

B-USE AS REQUIRED
D-ORDER BY THE METER
E-ORDER BY THE CENTIMETER
M-METRIC PART

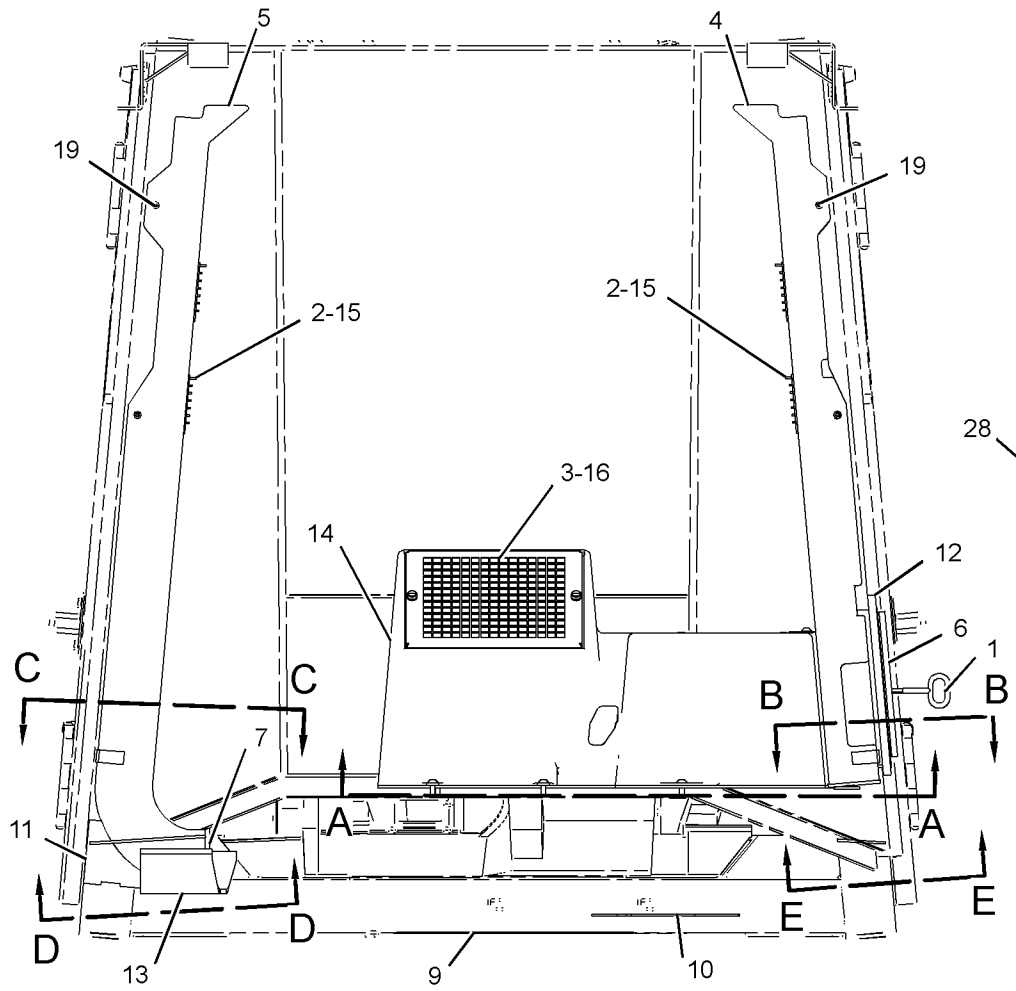


FRONT VIEW

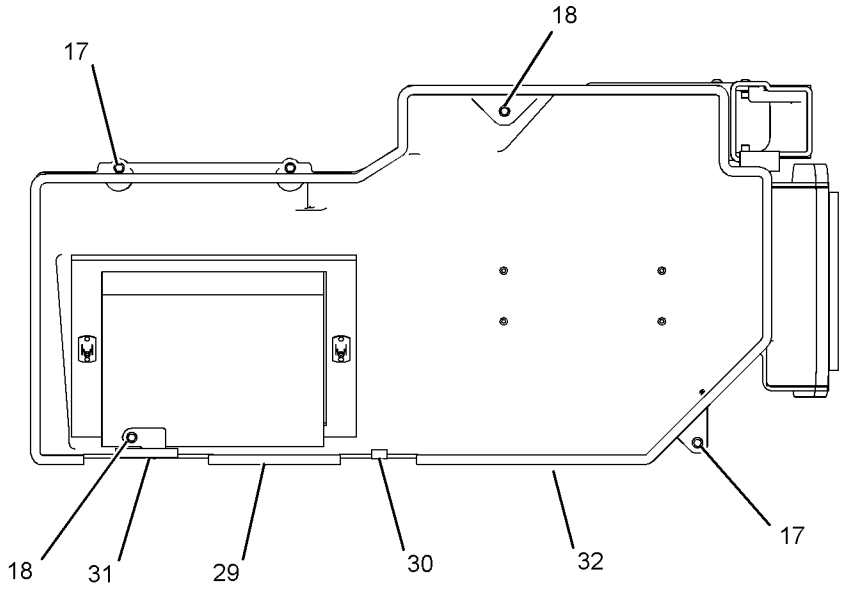


SECTION A-A

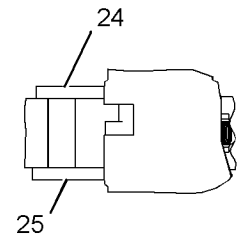


SECTION D-D

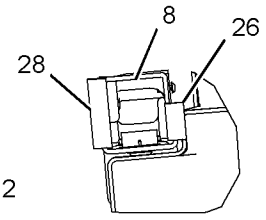


SECTION E-E

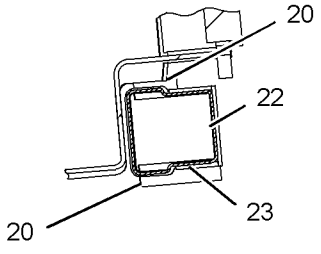


SECTION B-B

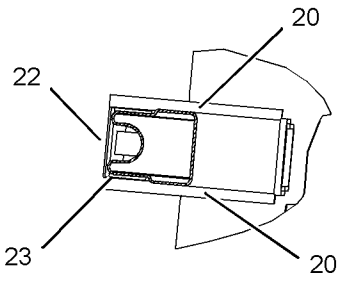


SECTION C-C

GRAPHIC #1 **<END>** g01191498

# OPERATOR STATION

## *165-6560* DUCT GP-CAB AIR

**S/N: BXY1-UP**

**PART OF 227-3190, 292-6110, 308-2727 CAB AR**

**ALSO AN ATTACHMENT**

**SMCS-734D** **i02651204**

| NOTE | REF NO | GRAPHIC REF | PART NUMBER | QTY | PART NAME 1 2 3 4 5 6 (PRODUCT LEVEL) | SEE PAGE |
|---|---|---|---|---|---|---|
| | 1 | 1 | **4P-7581** | 1 | CLIP | |
| | 2 | 1 | **8Y-6352** | 2 | LOUVER AS | |
| | 3 | 1 | **8Y-6388** | 6 | LOUVER AS | |
| | 4 | 1 | **114-3468** | 1 | SEAL | |
| | 5 | 1 | **165-6561** | 1 | DUCT AS-AIR | |
| | 6 | 1 | **104-2091** | 12 | SCREW-FLAT HEAD (NO 6X0.5-IN) | |
| M | 7 | 1 | **5C-7261** | 4 | NUT (M8X1.25-THD) | |
| | 8 | 1 | **9N-0869** | 4 | WASHER-HARD (8.8X25.5X2-MM THK) | |

M-METRIC PART

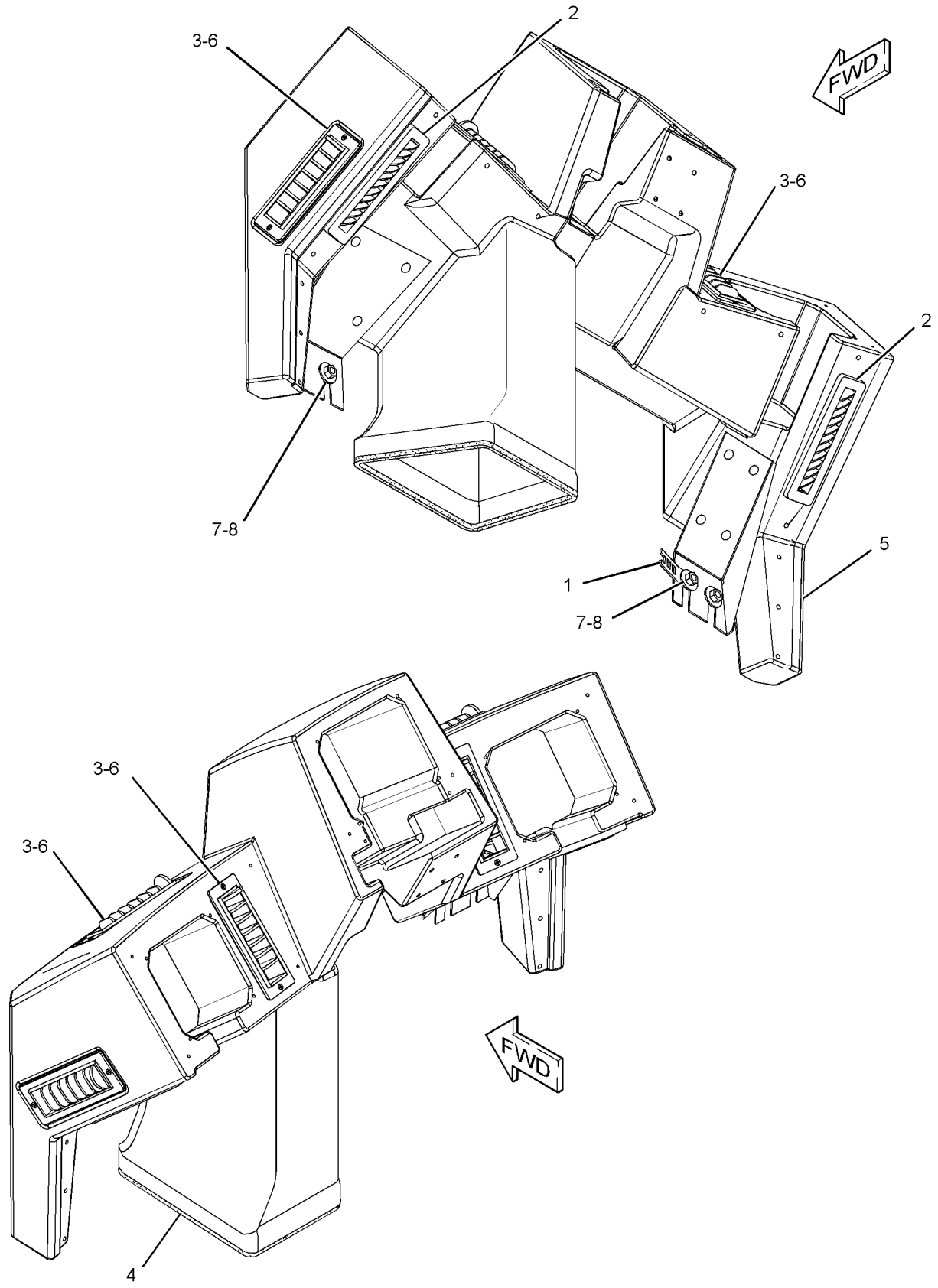


GRAPHIC #1 **<END>** g01341585

# OPERATOR STATION

## *173-8466* HORN GP-ELECTRIC

**S/N: BXY1-UP**

**PART OF 225-5452, 284-2987 ELECTRICAL AR**

**SMCS-7402** **i01529557**

| NOTE | REF NO | GRAPHIC REF | PART NUMBER | QTY | PART NAME 1 2 3 4 5 6 (PRODUCT LEVEL) | SEE PAGE |
|---|---|---|---|---|---|---|
| | 1 | 1 | **163-1201** | 2 | HORN AS (24-VOLT, LOW TONE) | |
| | 2 | 1 | **174-7875** | 2 | HORN AS (24-VOLT, HIGH TONE) | |
| | 3 | 1 | **2M-6835** | 2 | PIPE | |
| M | 4 | 1 | **8T-6870** | 2 | BOLT (M8X1.25X70-MM) | |
| | 5 | 1 | **8T-4224** | 4 | WASHER-HARD (8.8X16X2-MM THK) | |
| M | 6 | 1 | **8T-6912** | 2 | BOLT (M8X1.25X50-MM) | |
| | 7 | 1 | **1B-4971** | 2 | SPACER (0.406X1X1-IN THK) | |

M-METRIC PART

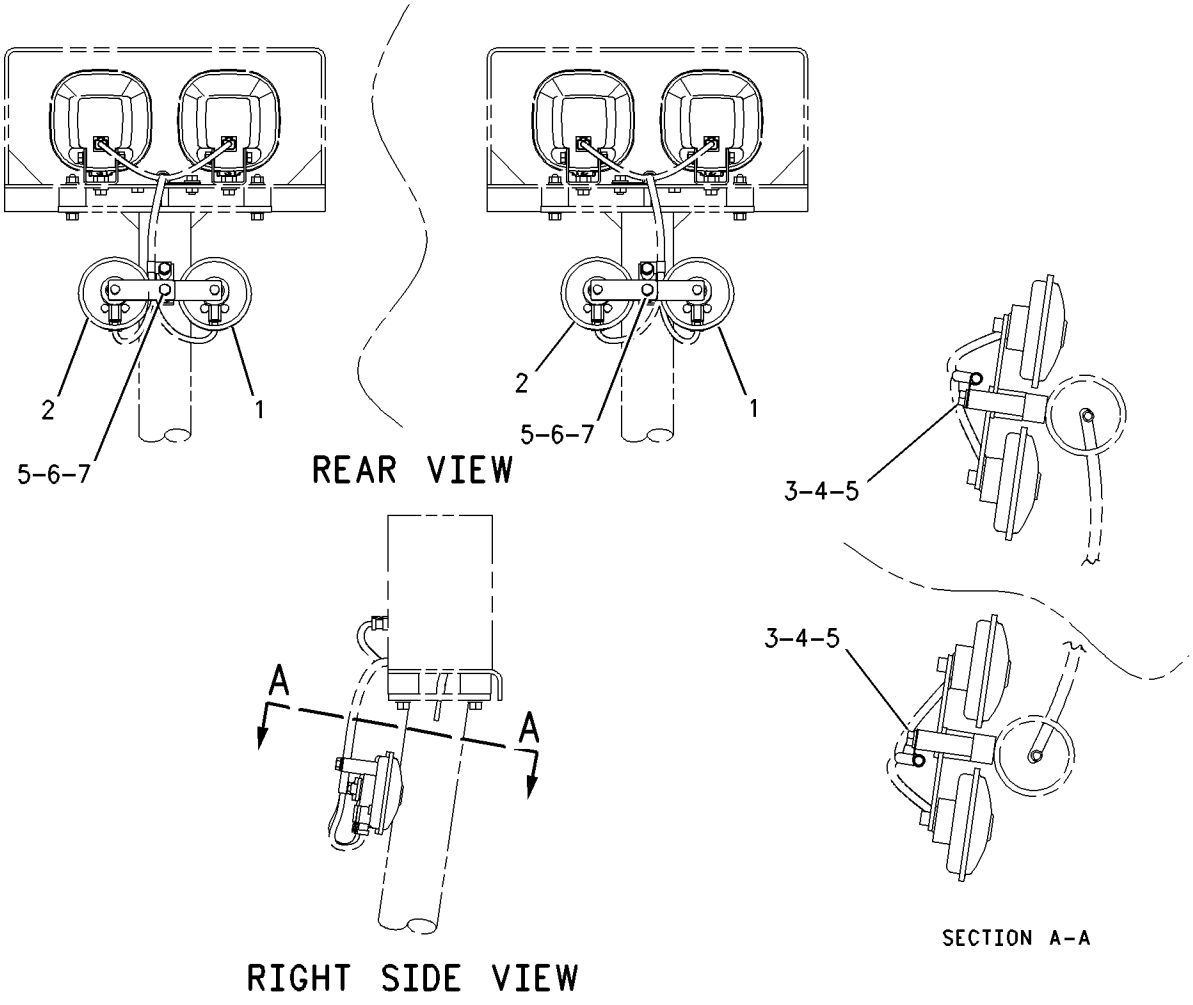


GRAPHIC #1

**<END>**

g00794049

# OPERATOR STATION

## *162-6884* INSTALLATION GP-CONTROLS

**S/N: BXY1-UP**

**PART OF 227-3200, 292-6092, 308-2725 OPERATOR AR**

**ALSO AN ATTACHMENT**

**SMCS-1265, 4284** **i01013408**

| NOTE | REF NO | GRAPHIC REF | PART NUMBER | QTY | PART NAME 1 2 3 4 5 6 (PRODUCT LEVEL) | SEE PAGE |
|---|---|---|---|---|---|---|
| | 1 | 1 | **3J-4818** | 1 | LOCKWASHER | |
| | 2 | 1 | **9U-0830** | 1 | END-YOKE ROD | |
| | 3 | 1 | **096-0067** | 1 | PIN-CLEVIS | |
| | 4 | 1 | **162-6505** | 1 | FLOOR MAT | |
| | 5 | 1 | **5B-9192** | 1 | PIN-COTTER | |
| M | 6 | 1 | **5C-2874** | 1 | NUT (M5X0.8-THD) | |

M-METRIC PART

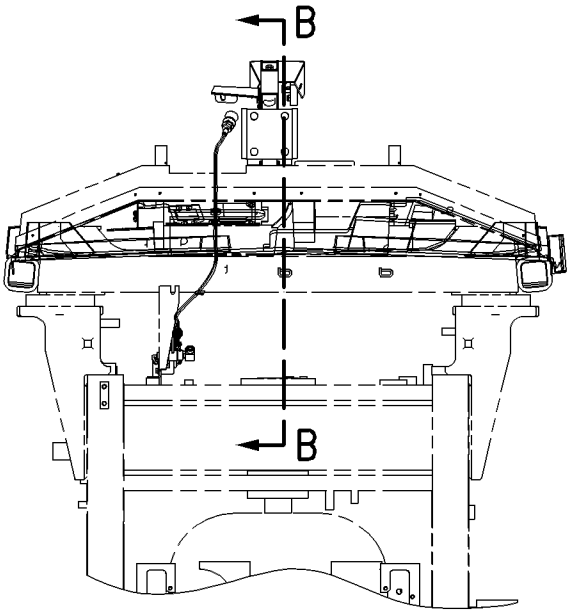


FRONT VIEW

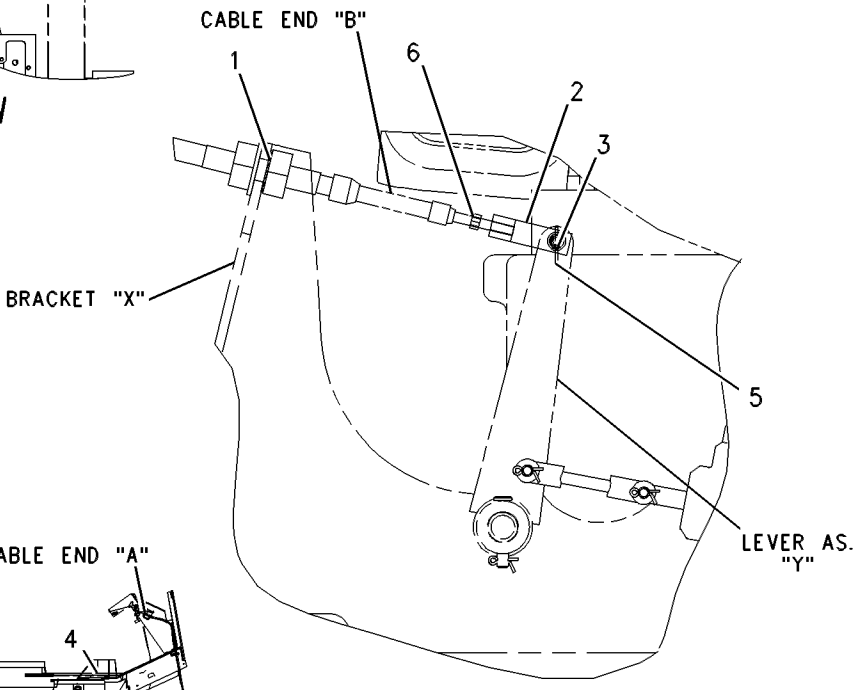


SECTION B-B

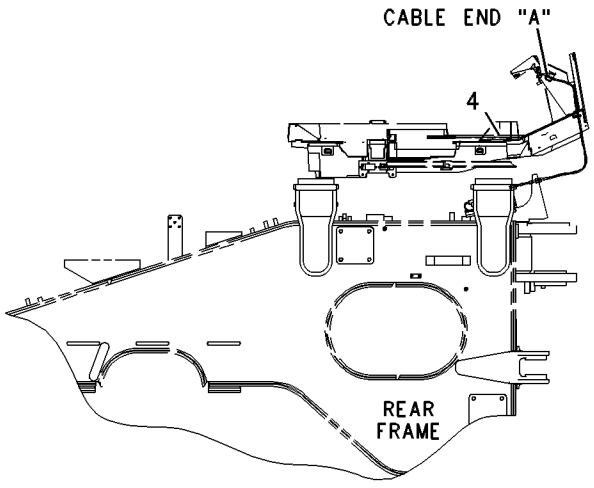


LEFT SIDE

GRAPHIC #1 **<END>** g00545553

# OPERATOR STATION

## *228-9628* INSTALLATION GP-RADIO

**S/N: BXY1-UP**

**PART OF 227-3190, 292-6110, 308-2727 CAB AR**

**ALSO AN ATTACHMENT**

**SMCS-7338** **i01925850**

| NOTE | REF NO | GRAPHIC REF | PART NUMBER | QTY | PART NAME 1 2 3 4 5 6 (PRODUCT LEVEL) | SEE PAGE |
|---|---|---|---|---|---|---|
| | 1 | 1 | **3S-2093** | 2 | STRAP-CABLE | |
| | 2 | 1 | **3V-4694** | 1 | PLUG-BUTTON | |
| | 3 | 1 | **6T-7695** | 2 | SPEAKER AS-RADIO | |
| | 4 | 1 | **6V-2687** | 8 | SCREW-PAN HEAD (10-24X1-IN) | |
| | 5 | 1 | **9U-2331** | 1 | ANTENNA AS (AM/FM) | |
| | 6 | 1 | **9U-4431** | 1 | MOUNT-ANTENNA | |
| | 7 | 1 | **9U-8263** | 1 | COVER | |
| | 8 | 1 | **124-4884** | 1 | CABLE AS | |
| | 9 | 1 | **132-3522** | 1 | PLATE | |
| | 10 | 1 | **011-7960** | 1 | GROMMET | |

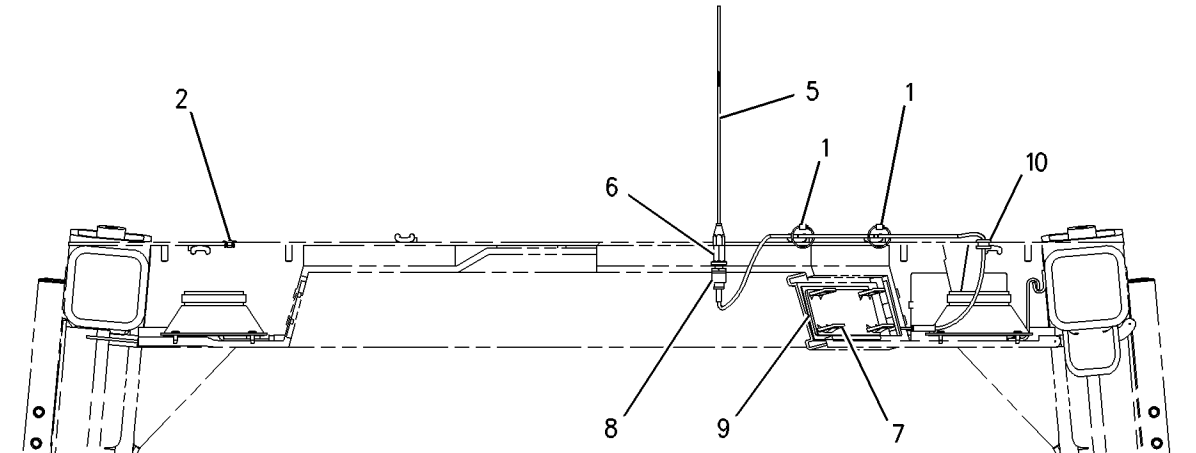


FRONT VIEW

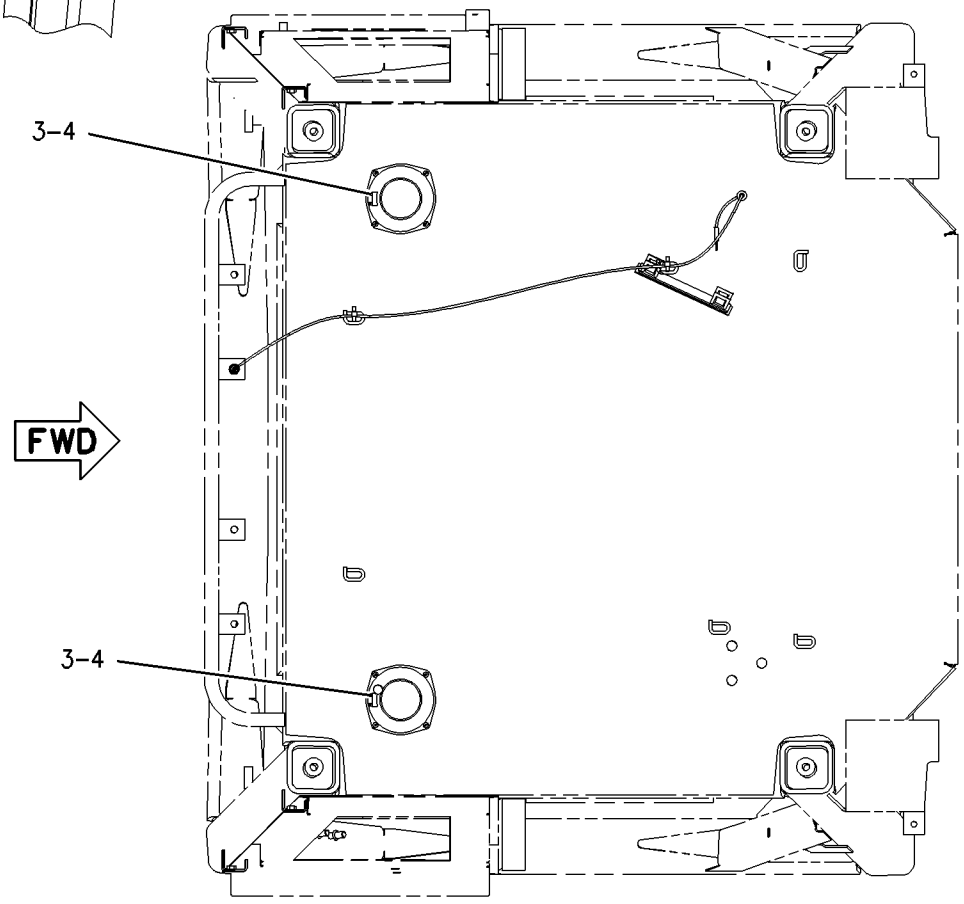


TOP VIEW

GRAPHIC #1 **<END>** g01004917

# OPERATOR STATION

## *301-4899* INSTALLATION GP-RADIO

**S/N: BXY1-UP**

**AN ATTACHMENT**

**SMCS-7338** **i02674608**

| NOTE | REF NO | GRAPHIC REF | PART NUMBER | QTY | PART NAME 1 2 3 4 5 6 (PRODUCT LEVEL) | SEE PAGE |
|---|---|---|---|---|---|---|
| | 1 | 1 | **3S-2093** | 4 | STRAP-CABLE | |
| | 2 | 1 | **7K-1181** | 1 | STRAP-CABLE | |
| | 3 | 1 | **9U-2332** | 2 | ANTENNA AS (CB) | |
| | 4 | 1 | **9U-4431** | 2 | MOUNT-ANTENNA | |
| | 5 | 1 | **191-5114** | 2 | CABLE AS | |
| | 6 | 1 | **208-3778** | 1 | BRACKET | |
| | 7 | 1 | **208-3779** | 1 | BRACKET AS | |
| | 8 | 1 | **209-0381** | 1 | CONVERTER-POWER (24-VOLT TO 12-VOLT) | |
| | 9 | 1 | **236-6253** | 2 | GROMMET | |
| | 10 | 1 | **236-7772** | 1 | HARNESS AS-RADIO | |
| | | 1 | **102-8804** | 3 | KIT-RECEPTACLE (4-PIN) | |
| | | | | | (EACH KIT INCLUDES RECEPTACLE AS AND WEDGE) | |
| | | 1 | **155-2271** | 2 | KIT-CONNECTING PLUG (4-PIN) | |
| | | 1 | **155-2274** | 1 | KIT-CONNECTING PLUG (6-PIN) | |
| | | | | | (EACH KIT INCLUDES PLUG AS AND WEDGE) | |
| | 11 | 1 | **304-4173** | 1 | BRACKET | |
| | 12 | 1 | **122-8705** | 1 | U-BOLT | |
| M | 13 | 1 | **6V-7357** | 4 | BOLT (M6X1X25-MM) | |
| | 14 | 1 | **8T-0328** | 4 | WASHER-HARD (5.5X10X1-MM THK) | |
| | 15 | 1 | **8T-4121** | 3 | WASHER-HARD (11X21X2.5-MM THK) | |
| M | 16 | 1 | **8T-4133** | 2 | NUT (M10X1.5-THD) | |
| M | 17 | 1 | **8T-4195** | 1 | BOLT (M10X1.5X30-MM) | |
| | 18 | 1 | **9X-2498** | 4 | SCREW-HEX FLANGE (10-24X0.5-IN) | |

M-METRIC PART

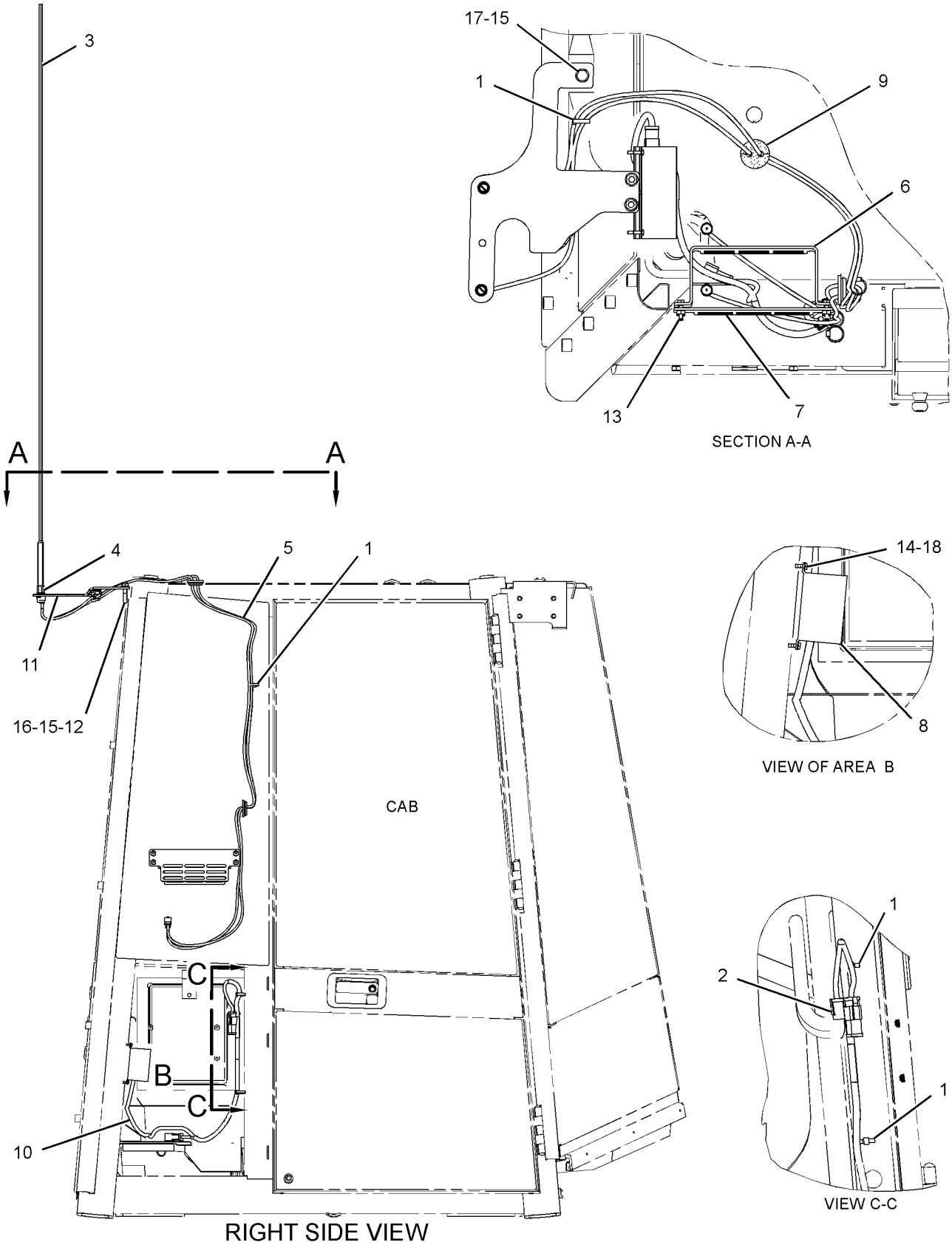


GRAPHIC #1 **<END>** g01354279

# OPERATOR STATION

## *228-0920* LINER GP-CAB

**S/N: BXY1-1899**

**PART OF 227-3190 CAB AR**

**SMCS-7329** **i02614915**

| NOTE | REF NO | GRAPHIC REF | PART NUMBER | QTY | PART NAME 1 2 3 4 5 6 (PRODUCT LEVEL) | SEE PAGE |
|---|---|---|---|---|---|---|
| | 1 | 1 | **101-2867** | 4 | WASHER-HARD (7.2X25X2-MM THK) | |
| | 2 | 1 | **5P-7958** | 1 | SLEEVE-CABLE SPLICE | |
| | 3 | 1 | **6V-8928** | 1 | HOOK-COAT | |
| M | 4 | 2 | **6V-9606** | 2 | BOLT (M6X1X140-MM) | |
| M | 5 | 1 | **8T-7963** | 8 | LOCKNUT (M8X1.25-THD) | |
| | 6 | 1,2 | **9X-2038** | 17 | WASHER (7X19X2-MM THK) | |
| | 7 | 2 | **116-6810** | 1 | TRIM AS | |
| | | 2 | **2R-2376** | 2 | WASHER (7X16X0.8-MM THK) | |
| | | 2 | **7K-3262** | 1 | SCREW (THUMB) | |
| | | 2 | **7K-4201** | 1 | NUT-SPEED | |
| | | 2 | **8M-7758** | 2 | RIVET-POP | |
| | | 2 | **123-5161** | 1 | DOOR | |
| | 8 | 1 | **8T-6842** | 1 | FILM-INSTRUCTION (ALTERNATE EXIT) | |
| | 9 | 1 | **120-8878** | 1 | INSULATION | |
| | 10 | 1 | **175-3064** | 1 | BRACKET | |
| | 11 | 2 | **123-2995** | 1 | PANEL | |
| | 12 | 1 | **124-8366** | 4 | ANGLE AS | |
| | 13 | 1 | **124-8368** | 4 | BRACKET AS | |
| M | 14 | 1 | **8T-4138** | 2 | BOLT (M6X1X20-MM) | |
| | 15 | 1 | **239-0282** | 1 | BRACKET AS | |
| M | | 1 | **8T-3612** | 8 | NUT-WELD (M8X1.25-THD) | |
| M | | 1 | **6V-9632** | 4 | NUT-WELD (M6X1-THD) | |
| | 16 | 1 | **160-9925** | 1 | LANYARD | |
| | 17 | 1 | **202-7652** | 1 | COVER AS | |
| | 18 | 1 | **161-3415** | 1 | STRAP | |
| | 19 | 1 | **164-7444** | 2 | STUD-BALL | |
| | 20 | 1 | **164-7959** | 2 | FITTING | |
| | 21 | 1 | **142-7442** | 1 | SPRING-GAS | |
| | 22 | 2 | **228-0919** | 1 | LINER AS-CAB | |
| M | 23 | 1,2 | **9X-2046** | 9 | SCREW-TRUSS HEAD (M6X1X35-MM) | |
| | 24 | 2 | **179-6051** | 1 | TRAY | |
| | 25 | 1 | **6V-8189** | 2 | NUT (5/16-18-THD) | |
| M | 26 | 1 | **7X-2535** | 2 | BOLT (M6X1X60-MM) | |
| | 27 | 1 | **8T-4121** | 6 | WASHER-HARD (11X21X2.5-MM THK) | |
| M | 28 | 1 | **8T-4195** | 6 | BOLT (M10X1.5X30-MM) | |
| | 29 | 1,2 | **8T-4205** | 6 | WASHER-HARD (7.2X14.5X2-MM THK) | |
| | 30 | 1 | **8T-4224** | 9 | WASHER-HARD (8.8X16X2-MM THK) | |
| M | 31 | 1,2 | **9X-2045** | 13 | SCREW-TRUSS HEAD (M6X1X20-MM) | |
| D | 32 | 1 | **5P-5637** | 2 | SEAL (0.23-M EACH) | |
| D | 32A | 1 | **5P-5637** | 2 | SEAL (0.27-M EACH) | |
| M | 33 | 1 | **8T-5027** | 5 | NUT (M6X1-THD) | |
| M | 34 | 1 | **3E-8020** | 4 | SCREW-TRUSS HEAD (M6X1X25-MM) | |

D-ORDER BY THE METER
M-METRIC PART

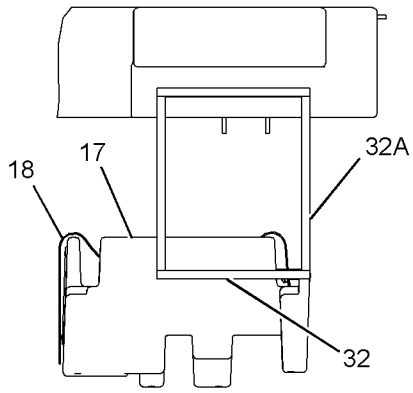


SECTION G-G

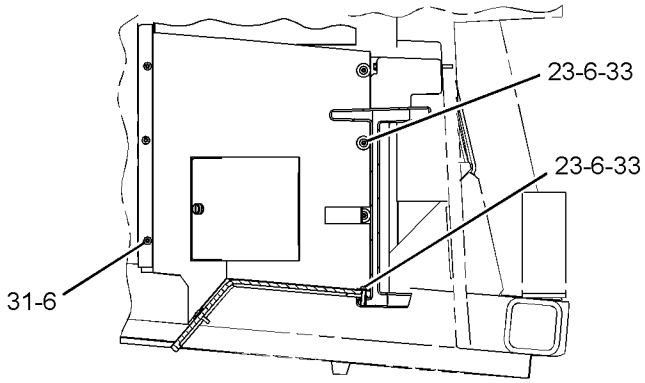


SECTION E-E

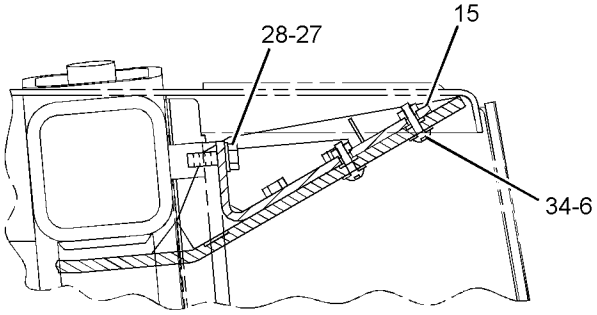


SECTION C-C

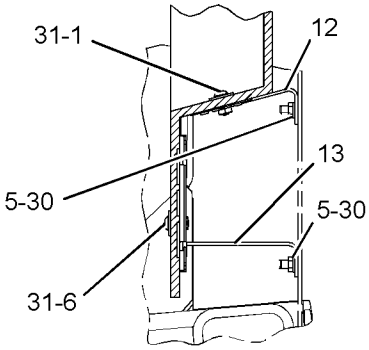


SECTION D-D

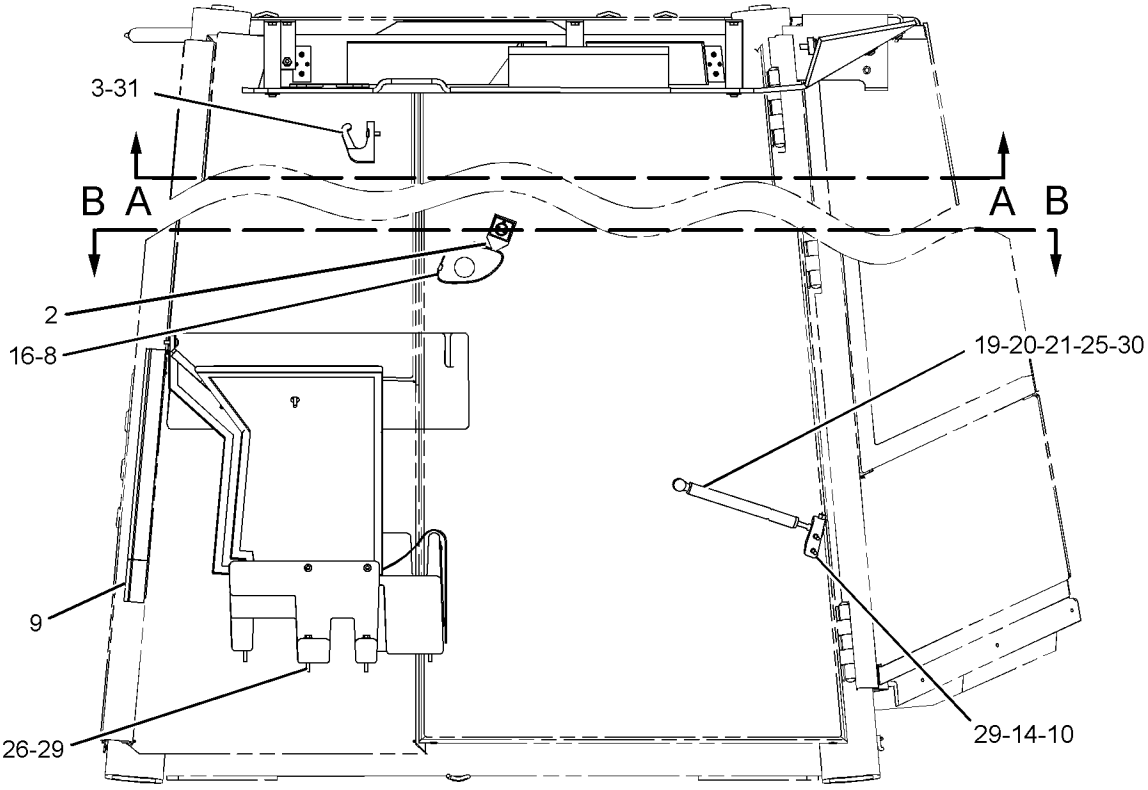


RIGHT SIDE VIEW

GRAPHIC #1

g01309666

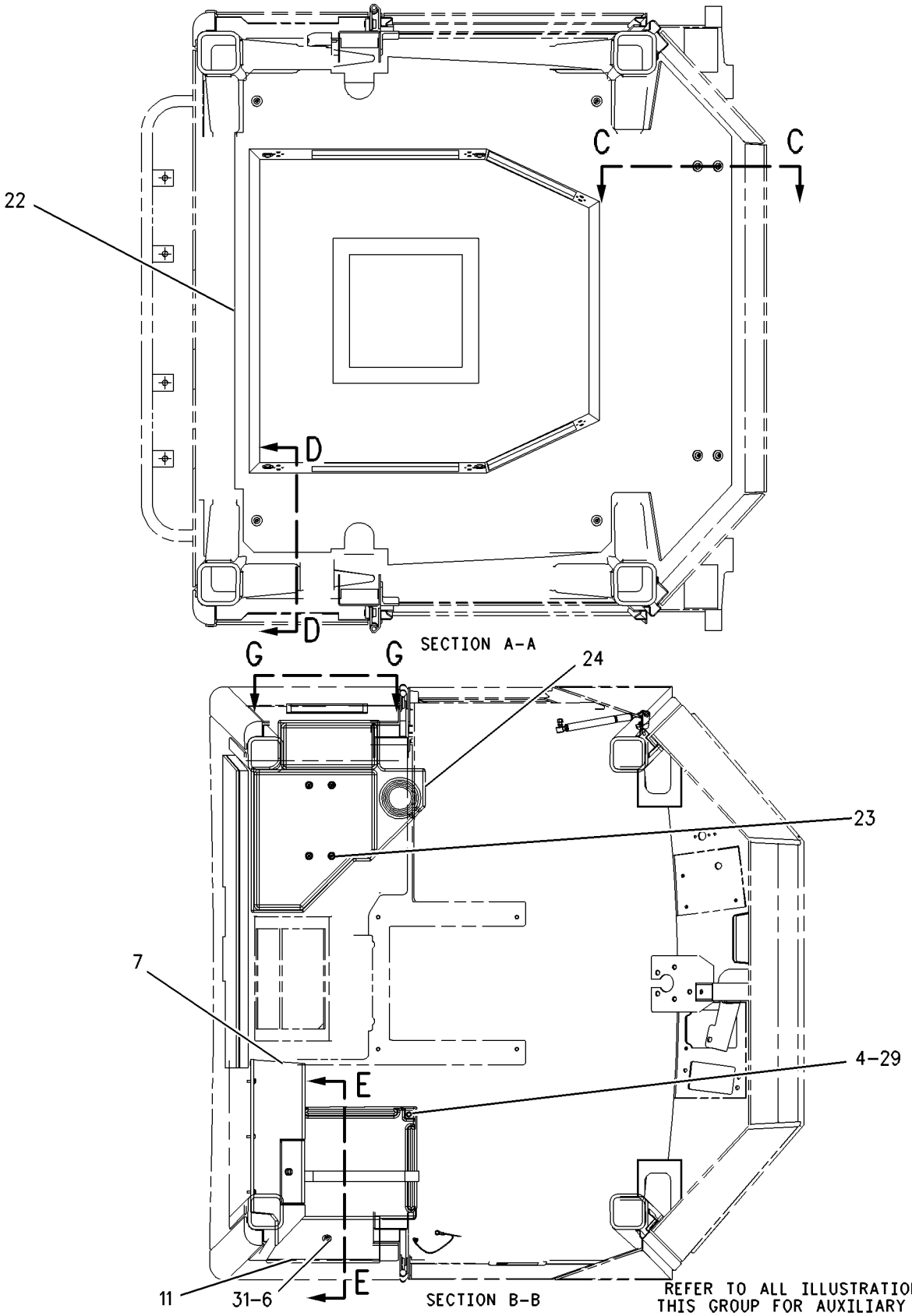


GRAPHIC #2 **<END>** g00776411

# OPERATOR STATION

## *228-0920* LINER GP-CAB

**S/N: BXY1900-UP**
**PART OF 292-6110, 308-2727 CAB AR**
**ALSO AN ATTACHMENT**

**SMCS-7329** **i02715764**

| NOTE | REF NO | GRAPHIC REF | PART NUMBER | QTY | PART NAME 1 2 3 4 5 6 (PRODUCT LEVEL) | SEE PAGE |
|---|---|---|---|---|---|---|
| | 1 | 1 | **6V-8928** | 1 | HOOK-COAT | |
| M | 2 | 2 | **6V-9606** | 2 | BOLT (M6X1X140-MM) | |
| M | 3 | 2 | **8T-5027** | 5 | NUT (M6X1-THD) | |
| M | 4 | 2 | **8T-7963** | 8 | LOCKNUT (M8X1.25-THD) | |
| | 5 | 2 | **116-6810** | 1 | TRIM AS | |
| | | 2 | **2R-2376** | 2 | WASHER (7X16X0.8-MM THK) | |
| | | 2 | **7K-3262** | 1 | SCREW (THUMB) | |
| | | 2 | **7K-4201** | 1 | NUT-SPEED | |
| | | 2 | **8M-7758** | 2 | RIVET-POP | |
| | | 2 | **123-5161** | 1 | DOOR | |
| | 6 | 1 | **120-8878** | 1 | INSULATION | |
| | 7 | 2 | **123-2995** | 1 | PANEL | |
| | 8 | 2 | **124-8366** | 4 | ANGLE AS | |
| | 9 | 2 | **124-8368** | 4 | BRACKET AS | |
| | 10 | 1 | **142-7442** | 2 | SPRING-GAS | |
| | 11 | 2 | **161-3415** | 1 | STRAP | |
| | 12 | 1 | **164-7444** | 4 | STUD-BALL | |
| | 13 | 1 | **164-7959** | 4 | FITTING | |
| | 14 | 1 | **175-3064** | 1 | BRACKET | |
| | 15 | 2 | **179-6051** | 1 | TRAY | |
| | 16 | 2 | **202-7652** | 1 | COVER AS | |
| | 17 | 1 | **228-0919** | 1 | LINER AS-CAB | |
| | 18 | 2 | **239-0282** | 1 | BRACKET AS | |
| M | | 2 | **8T-3612** | 8 | NUT-WELD (M8X1.25-THD) | |
| M | | 2 | **6V-9632** | 4 | NUT-WELD (M6X1-THD) | |
| C | 19 | 2 | **101-2867** | 4 | WASHER-HARD (7.2X25X2-MM THK) | |
| M | 20 | 2 | **3E-8020** | 4 | SCREW-TRUSS HEAD (M6X1X25-MM) | |
| | 21 | 1 | **6V-8189** | 4 | NUT (5/16-18-THD) | |
| M | 22 | 1 | **7X-2535** | 2 | BOLT (M6X1X60-MM) | |
| C | 23 | 1 | **8D-6542** | 1 | GROMMET | |
| | 24 | 2 | **8T-4121** | 6 | WASHER-HARD (11X21X2.5-MM THK) | |
| M | 25 | 1 | **8T-4138** | 4 | BOLT (M6X1X20-MM) | |
| M | 26 | 2 | **8T-4195** | 6 | BOLT (M10X1.5X30-MM) | |
| | 27 | 1,2 | **8T-4205** | 8 | WASHER-HARD (7.2X14.5X2-MM THK) | |
| | 28 | 1,2 | **8T-4224** | 10 | WASHER-HARD (8.8X16X2-MM THK) | |
| C | 29 | 2 | **9X-2038** | 17 | WASHER (7X19X2-MM THK) | |
| M | 30 | 1,2 | **9X-2045** | 13 | SCREW-TRUSS HEAD (M6X1X20-MM) | |
| M | 31 | 2 | **9X-2046** | 9 | SCREW-TRUSS HEAD (M6X1X35-MM) | |
| D | 32 | 2 | **5P-5637** | | SEAL (0.3-M EACH) | |
| | 33 | 1 | **309-5053** | 1 | BRACKET | |

C-CHANGE FROM PREVIOUS TYPE
D-ORDER BY THE METER
M-METRIC PART

REFER TO ALL ILLUSTRATIONS OF THIS GROUP FOR AUXILIARY VIEWS.

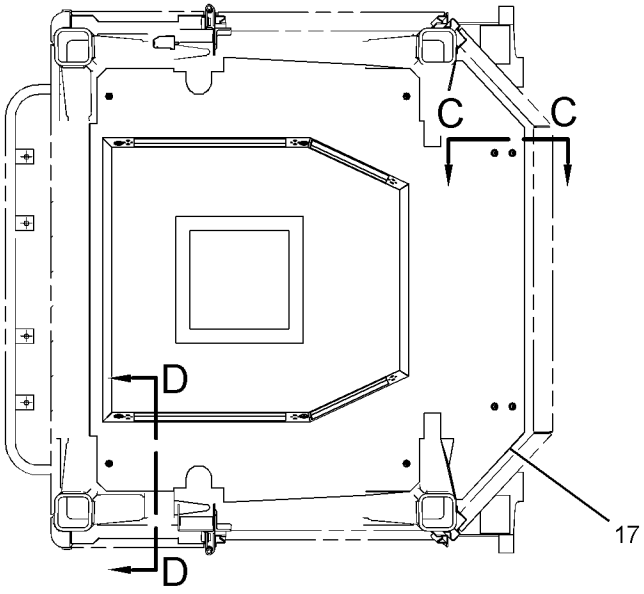


VIEW A-A

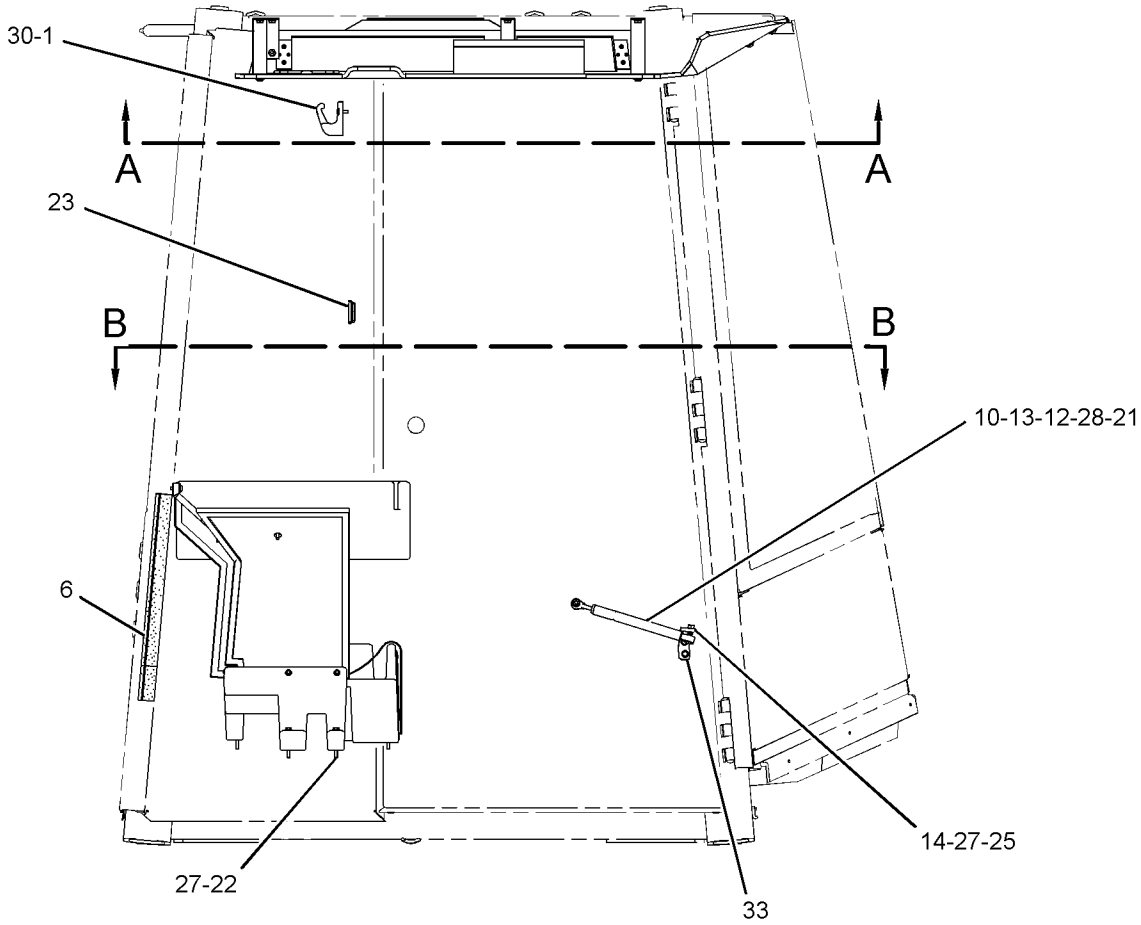


RIGHT SIDE VIEW

GRAPHIC #1 g01365016

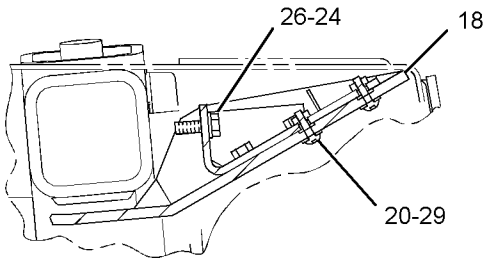


SECTION C-C

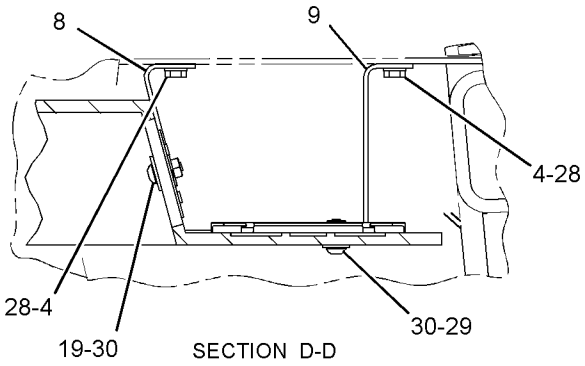


SECTION D-D

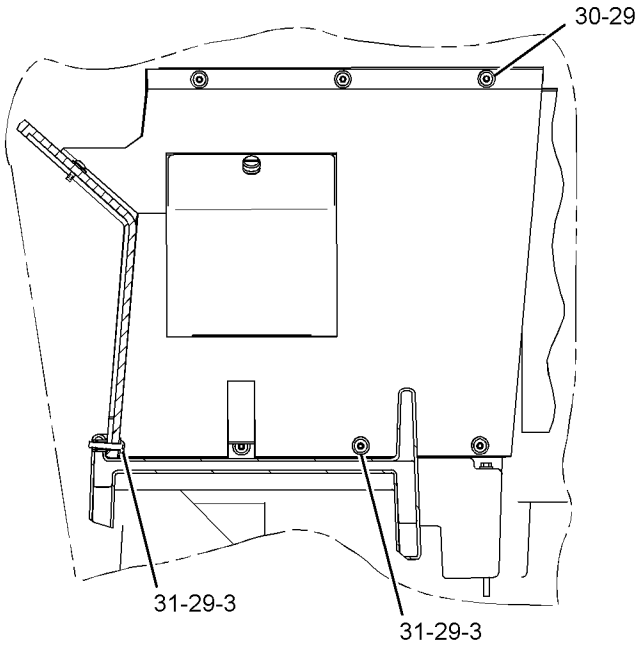


SECTION E-E

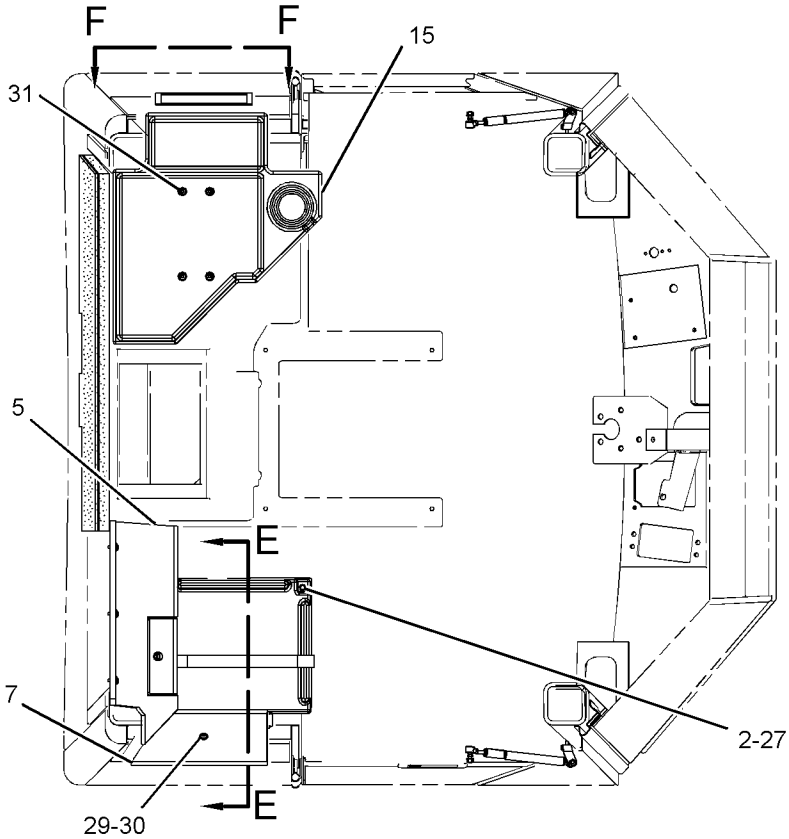


VIEW B-B

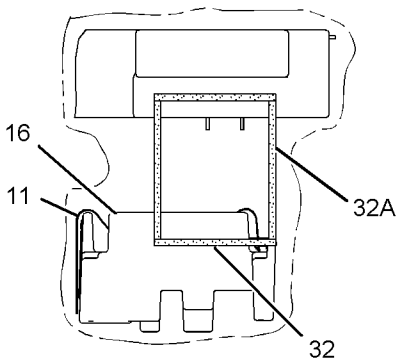


VIEW F-F

GRAPHIC #2 **<END>** g01365018

# OPERATOR STATION

## *114-5142* LINES GP-AIR CONDITIONER

**S/N: BXY1-771**

**PART OF 225-5432 CHASSIS AR**

**SMCS-1808** **i02312055**

| NOTE | REF NO | GRAPHIC REF | PART NUMBER | QTY | PART NAME 1 2 3 4 5 6 (PRODUCT LEVEL) | SEE PAGE |
|---|---|---|---|---|---|---|
| | 1 | 1 | **175-7162** | 1 | RECEIVER-DRYER GP (REFRIGERANT) | |
| | | 1 | **7X-2049** | 1 | TUBE AS-REFRIGERANT ORIFICE | |
| | 2 | 1 | **5P-3929** | 1 | COUPLING AS-REFRIGERANT | |
| | | 1 | **8F-9206** | 1 | SEAL-O-RING | |
| | | 1 | **107-4397** | 1 | VALVE AS | |
| C | 3 | 1 | **6D-1641** | 5 | CLIP | |
| | 4 | 1 | **103-6100** | 2 | FITTING AS-AIR CONDITIONER (QUICK DISCONNECT) | |
| | | | | | (EACH INCLUDES) | |
| | | 1 | **9X-7382** | 2 | SEAL-O-RING | |
| | 5 | 1 | **116-6202** | 2 | BOOT | |
| I | 6 | 1 | **226-9613** | 1 | HOSE AS | |
| I | 7 | 1 | **141-4699** | 1 | HOSE AS | |
| | 8 | 1 | **149-2491** | 1 | FITTING AS-AIR CONDITIONER | |
| | | 1 | **3E-4051** | 1 | CAP-SEAL | |
| | | 1 | **3E-4057** | 1 | VALVE AS | |
| I | 9 | 1 | **183-8040** | 1 | HOSE AS | |
| | 10 | 1 | **186-6189** | 1 | ACCUMULATOR-REFRIGERANT | |
| C | 11 | 1 | **203-5443** | 2 | BRACKET AS | |
| | | | | | (EACH INCLUDES) | |
| M | | 1 | **8T-3490** | 1 | NUT-WELD (M10X1.5-THD) | |
| CI | 12 | 1 | **203-5498** | 1 | HOSE AS | |
| CI | 13 | 1 | **203-5499** | 1 | HOSE AS | |
| C | 14 | 1 | **038-3967** | 2 | BRACKET | |
| C | 15 | 1 | **118-9902** | 1 | SPACER (12X20X43-MM THK) | |
| C | 16 | 1 | **162-3858** | 1 | SPACER (12X19X33.5-MM THK) | |
| | 17 | 1 | **1P-6356** | 1 | PLATE | |
| | 18 | 1 | **3E-4053** | 1 | FITTING AS-AIR CONDITIONER | |
| | | 1 | **3E-4052** | 1 | CAP-SEAL | |
| | | 1 | **3E-4058** | 1 | VALVE AS | |
| | 19 | 1 | **4K-8302** | 1 | CLIP | |
| | 20 | 1 | **5P-1076** | 1 | WASHER-HARD (13.5X30X4-MM THK) | |
| | 21 | 1 | **5P-3948** | 1 | COUPLING AS-REFRIGERANT | |
| | | 1 | **7F-8607** | 1 | SEAL-O-RING | |
| | | 1 | **107-4399** | 1 | VALVE AS | |
| C | 22 | 1 | **6V-1889** | 4 | CLIP | |
| | 23 | 1 | **6V-4356** | 1 | CLIP (SLOT) | |
| | 24 | 1 | **6V-4357** | 1 | CLIP (TAB) | |
| C | 25 | 1 | **7X-7729** | 2 | WASHER (11X25X3-MM THK) | |
| | 26 | 1 | **8M-2773** | 6 | CLIP | |
| | 27 | 1 | **8S-6109** | 1 | CLIP (SLOT) | |
| | 28 | 1 | **8S-6110** | 1 | CLIP (TAB) | |
| | 29 | 1 | **8T-2561** | 1 | WASHER-HARD (10.5X28.5X5-MM THK) | |
| C | 30 | 1 | **8T-4121** | 23 | WASHER-HARD (11X21X2.5-MM THK) | |
| CM | 31 | 1 | **8T-4133** | 6 | NUT (M10X1.5-THD) | |
| CM | 32 | 1 | **8T-4136** | 5 | BOLT (M10X1.5X25-MM) | |
| M | 33 | 1 | **8T-4137** | 11 | BOLT (M10X1.5X20-MM) | |
| M | 34 | 1 | **8T-4195** | 2 | BOLT (M10X1.5X30-MM) | |
| CM | 35 | 1 | **8T-5005** | 1 | BOLT (M10X1.5X70-MM) | |
| M | 36 | 1 | **8T-6466** | 2 | BOLT (M10X1.5X60-MM) | |
| | 37 | 1 | **9L-1775** | 3 | BRACKET | |
| C | 38 | 1 | **9M-8406** | 2 | CLIP | |
| | 39 | 1 | **9X-7380** | 3 | SEAL-O-RING | |
| | 40 | 1 | **9X-7381** | 2 | SEAL-O-RING | |
| | 41 | 1 | **9X-7382** | 1 | SEAL-O-RING | |
| | 42 | 1 | **9X-7383** | 3 | SEAL-O-RING | |
| | 43 | 1 | **9X-7384** | 1 | SEAL-O-RING | |

| NOTE | REF NO | GRAPHIC REF | PART NUMBER | QTY | PART NAME 1 2 3 4 5 6 (PRODUCT LEVEL) | SEE PAGE |
|---|---|---|---|---|---|---|
| D | 44 | 1 | **6V-2495** | | SEAL (.3 M) | |

C-CHANGE FROM PREVIOUS TYPE
D-ORDER BY THE METER
I-REFER TO HYDRAULIC INFORMATION SYSTEM
M-METRIC PART

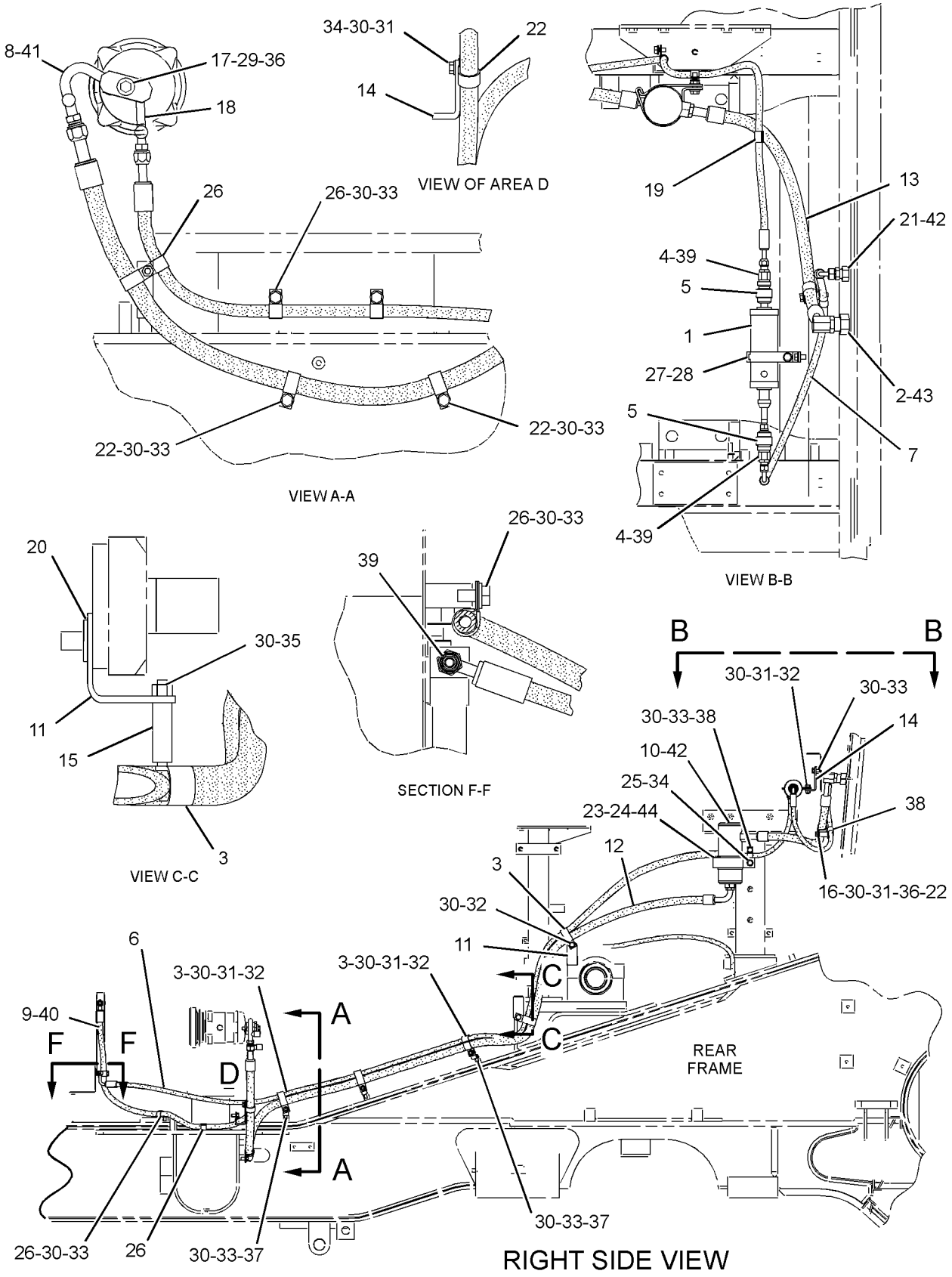


GRAPHIC #1 **<END>** g01157864

# OPERATOR STATION

## *114-5142* LINES GP-AIR CONDITIONER

**S/N: BXY772-UP**

**PART OF 225-5432, 284-2735 CHASSIS AR**

**SMCS-1808** **i02459334**

| NOTE | REF NO | GRAPHIC REF | PART NUMBER | QTY | PART NAME 1 2 3 4 5 6 (PRODUCT LEVEL) | SEE PAGE |
|---|---|---|---|---|---|---|
| | 1 | 2 | **5P-3929** | 1 | COUPLING AS-REFRIGERANT | |
| | | 2 | **8F-9206** | 1 | SEAL-O-RING | |
| | | 2 | **107-4397** | 1 | VALVE AS | |
| | 2 | 1 | **149-2491** | 1 | FITTING AS-AIR CONDITIONER | |
| | | 1 | **3E-4051** | 1 | CAP-SEAL | |
| | | 1 | **3E-4057** | 1 | VALVE AS | |
| C | 3 | 1 | **160-0564** | 2 | BRACKET AS | |
| | | | | | (EACH INCLUDES) | |
| M | | 1 | **8T-3490** | 1 | NUT-WELD (M10X1.5-THD) | |
| I | 4 | 1 | **183-8040** | 1 | HOSE AS | |
| | 5 | 1 | **186-6189** | 1 | ACCUMULATOR-REFRIGERANT | |
| | 6 | 1,2 | **203-5443** | 2 | BRACKET AS | |
| | | | | | (EACH INCLUDES) | |
| M | | 1,2 | **8T-3490** | 1 | NUT-WELD (M10X1.5-THD) | |
| CI | 7 | 1 | **246-2293** | 1 | HOSE AS | |
| CI | 8 | 1 | **246-2294** | 1 | HOSE AS | |
| C | 9 | 2 | *257-3226* | 1 | RECEIVER DRYER AS (REFRIGERANT) | |
| | | 2 | **187-1707** | 1 | TUBE AS-AIR | |
| C | 10 | 1 | **264-1440** | 1 | FITTING AS-AIR CONDITIONER | |
| CI | 11 | 2 | **266-4234** | 1 | HOSE AS | |
| CI | 12 | 2 | **266-4236** | 1 | HOSE AS | |
| | 13 | 1,2 | **038-3967** | 2 | BRACKET | |
| | 14 | 2 | **118-9902** | 1 | SPACER (12X20X43-MM THK) | |
| C | 15 | 1,2 | **130-9984** | 6 | CLIP | |
| | 16 | 1 | **162-3858** | 1 | SPACER (12X19X33.5-MM THK) | |
| | 17 | 1 | **1P-6356** | 1 | PLATE | |
| | 18 | 1 | **3E-4053** | 1 | FITTING AS-AIR CONDITIONER | |
| | | 1 | **3E-4052** | 1 | CAP-SEAL | |
| | | 1 | **3E-4058** | 1 | VALVE AS | |
| | 19 | 2 | **4K-8302** | 1 | CLIP | |
| | 20 | 2 | **5P-1076** | 1 | WASHER-HARD (13.5X30X4-MM THK) | |
| | 21 | 2 | **5P-3948** | 1 | COUPLING AS-REFRIGERANT | |
| | | 2 | **7F-8607** | 1 | SEAL-O-RING | |
| | | 2 | **107-4399** | 1 | VALVE AS | |
| | 22 | 1,2 | **6V-1889** | 4 | CLIP | |
| | 23 | 1 | **6V-4356** | 1 | CLIP (SLOT) | |
| | 24 | 1 | **6V-4357** | 1 | CLIP (TAB) | |
| C | 25 | 1 | **7X-7729** | 1 | WASHER (11X25X3-MM THK) | |
| | 26 | 1,2 | **8M-2773** | 6 | CLIP | |
| | 27 | 2 | **8S-6109** | 1 | CLIP (SLOT) | |
| | 28 | 2 | **8S-6110** | 1 | CLIP (TAB) | |
| | 29 | 1 | **8T-2561** | 1 | WASHER-HARD (10.5X28.5X5-MM THK) | |
| C | 30 | 1,2 | **8T-4121** | 24 | WASHER-HARD (11X21X2.5-MM THK) | |
| M | 31 | 1,2 | **8T-4133** | 6 | NUT (M10X1.5-THD) | |
| CM | 32 | 1,2 | **8T-4136** | 3 | BOLT (M10X1.5X25-MM) | |
| M | 33 | 1,2 | **8T-4137** | 11 | BOLT (M10X1.5X20-MM) | |
| CM | 34 | 1,2 | **8T-4195** | 5 | BOLT (M10X1.5X30-MM) | |
| M | 35 | 2 | **8T-5005** | 1 | BOLT (M10X1.5X70-MM) | |
| M | 36 | 1 | **8T-6466** | 2 | BOLT (M10X1.5X60-MM) | |
| | 37 | 1,2 | **9L-1775** | 3 | BRACKET | |
| | 38 | 1 | **9M-8406** | 2 | CLIP | |
| C | 39 | 1,2 | **9X-7380** | 2 | SEAL-O-RING | |
| C | 40 | 1,2 | **9X-7381** | 3 | SEAL-O-RING | |
| | 41 | 1 | **9X-7382** | 1 | SEAL-O-RING | |
| C | 42 | 1,2 | **9X-7383** | 4 | SEAL-O-RING | |
| | 43 | 2 | **9X-7384** | 1 | SEAL-O-RING | |

## *114-5142* LINES GP-AIR CONDITIONER *(contd.)* i02459334

| NOTE | REF NO | GRAPHIC REF | PART NUMBER | QTY | PART NAME 1 2 3 4 5 6 (PRODUCT LEVEL) | SEE PAGE |
|---|---|---|---|---|---|---|
| D | 44 | 1 | **6V-2495** | | SEAL (O.3-M) | |

C-CHANGE FROM PREVIOUS TYPE
D-ORDER BY THE METER
I-REFER TO HYDRAULIC INFORMATION SYSTEM
M-METRIC PART

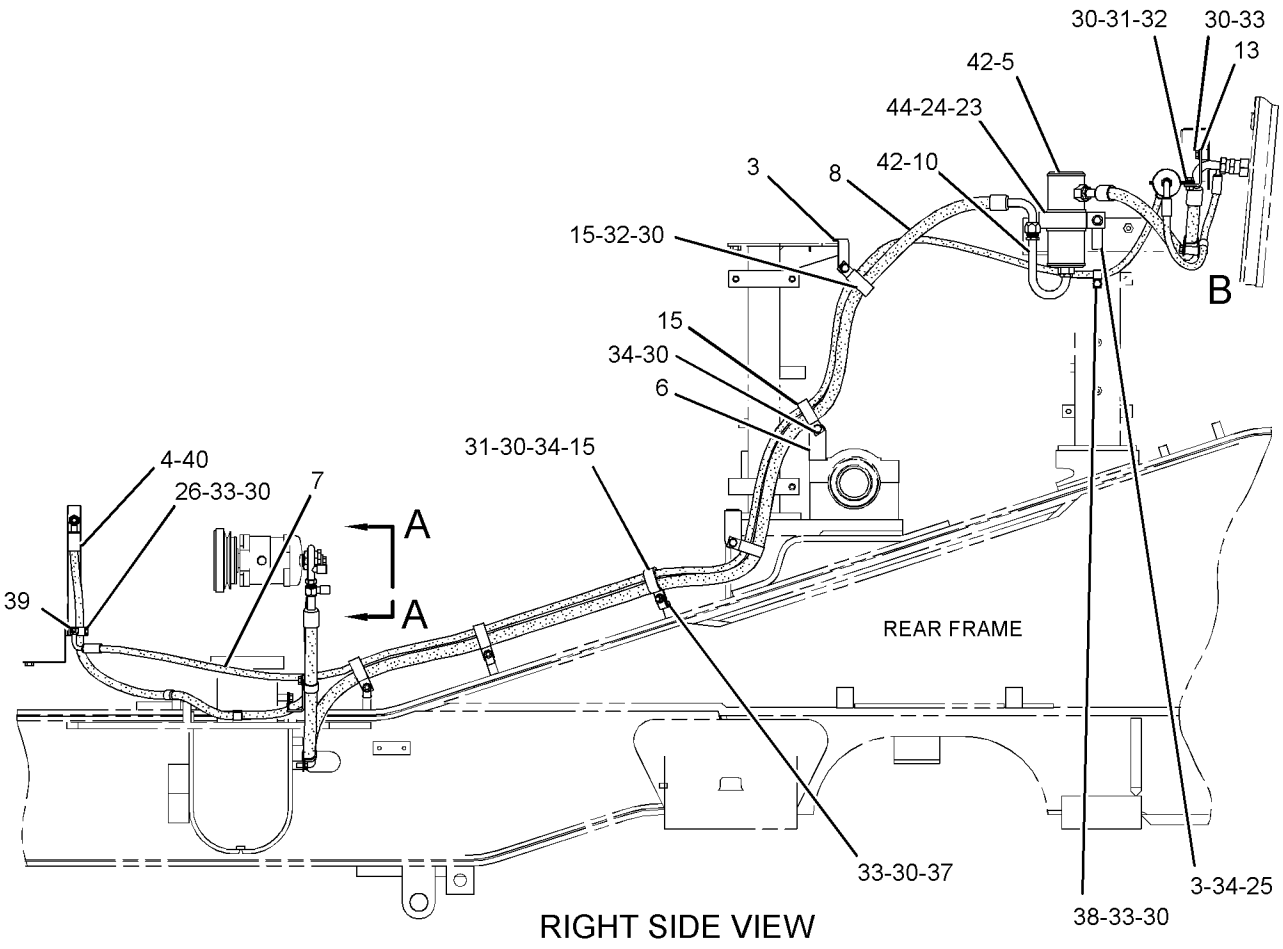


RIGHT SIDE VIEW

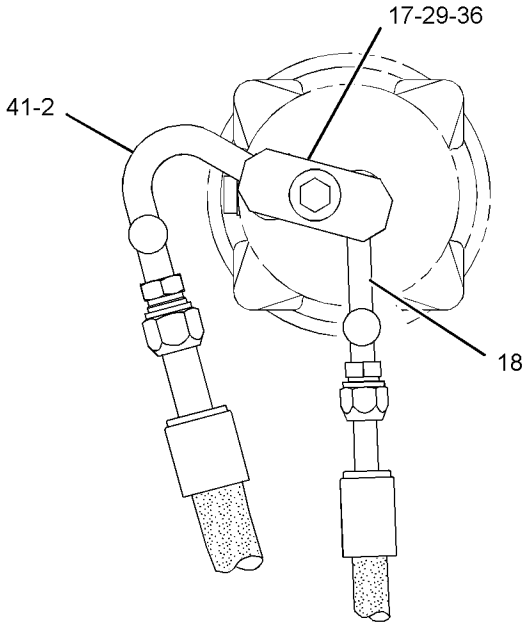


VIEW A-A

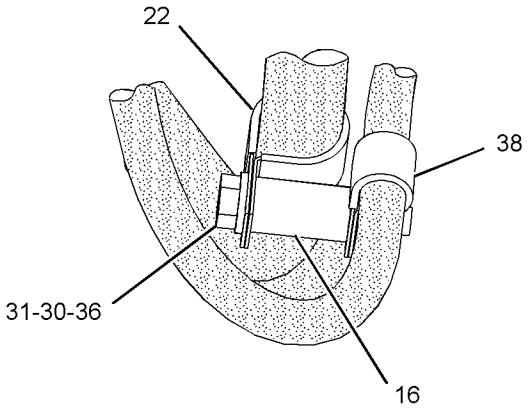


VIEW OF AREA B

GRAPHIC #1

g01230118

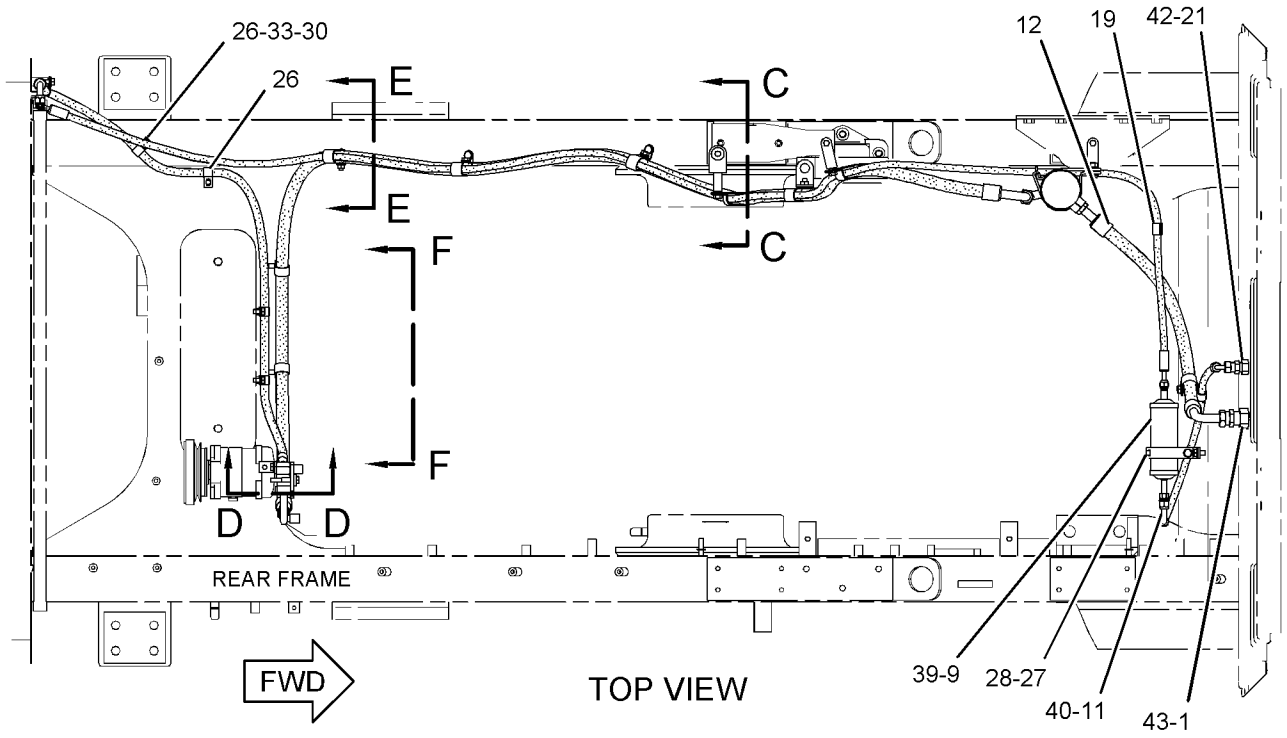


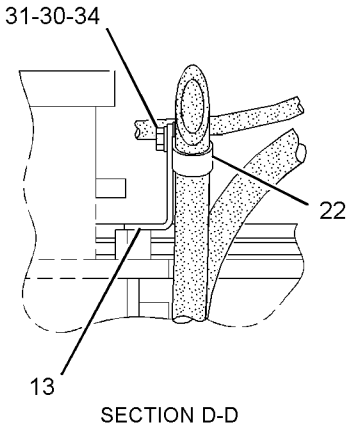


SECTION D-D

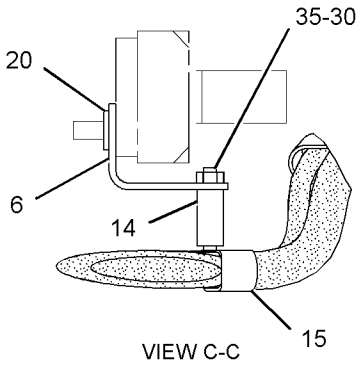


VIEW C-C

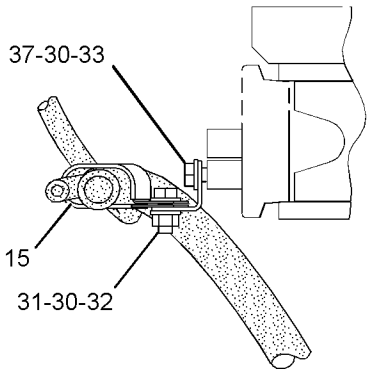


SECTION E-E

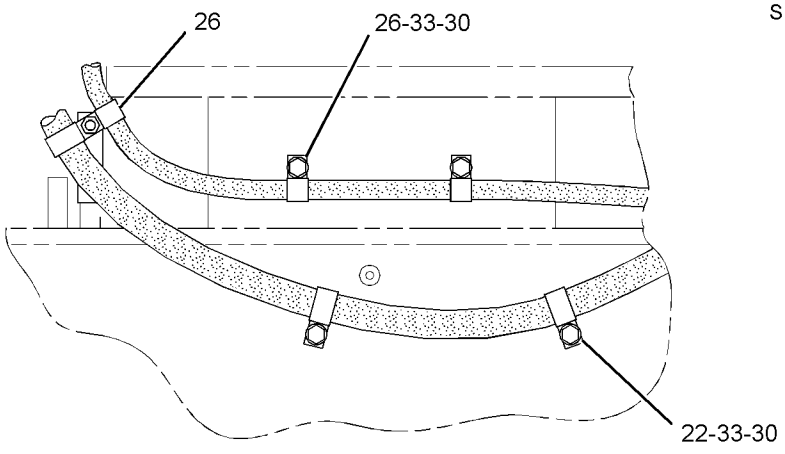


VIEW F-F

GRAPHIC #2 **<END>** g01230122

# OPERATOR STATION

## *131-1274* LINES GP-AIR CONDITIONER

**S/N: BXY1-UP**

**PART OF 147-3120 AIR CONDITIONER & MOUNTING GP**

**ALSO AN ATTACHMENT**

**SMCS-1808** **i01880260**

| NOTE | REF NO | GRAPHIC REF | PART NUMBER | QTY | PART NAME 1 2 3 4 5 6 (PRODUCT LEVEL) | SEE PAGE |
|---|---|---|---|---|---|---|
| | 1 | 1 | **5P-3928** | 1 | COUPLING AS-REFRIGERANT | |
| | | 1 | **107-4395** | 1 | VALVE AS | |
| | | 1 | **107-4396** | 1 | GASKET | |
| | 2 | 1 | **5P-4106** | 1 | NUT (1-7/16-THD) | |
| | 3 | 1 | **7K-3176** | 1 | COUPLING AS-REFRIGERANT | |
| | | 1 | **107-4393** | 1 | VALVE AS | |
| | | 1 | **107-4394** | 1 | GASKET | |
| | 4 | 1 | **7K-3304** | 1 | NUT-JAM (1-20-THD) | |
| | 5 | 1 | **126-6008** | 1 | PLATE | |
| | 6 | 1 | **130-1887** | 1 | GASKET | |
| | 7 | 1 | **170-3447** | 1 | PLATE | |
| | 8 | 1 | **170-3448** | 1 | PLATE | |
| I | 9 | 1 | **227-1369** | 1 | HOSE AS | |
| I | 10 | 1 | **227-2441** | 1 | HOSE AS | |
| | 11 | 1 | **5P-4295** | 1 | CLIP | |
| M | 12 | 1 | **6V-4248** | 1 | BOLT (M10X1.5X25-MM) | |
| | 13 | 1 | **6V-5839** | 2 | WASHER (11X21X2.5-MM THK) | |
| M | 14 | 1 | **8T-4133** | 1 | NUT (M10X1.5-THD) | |
| | 15 | 1 | **8T-7529** | 1 | CLIP | |
| | 16 | 1 | **9X-7381** | 1 | SEAL-O-RING | |
| | 17 | 1 | **9X-7382** | 1 | SEAL-O-RING | |
| | 18 | 1 | **9X-7383** | 1 | SEAL-O-RING | |
| | 19 | 1 | **9X-7384** | 1 | SEAL-O-RING | |

I-REFER TO HYDRAULIC INFORMATION SYSTEM
M-METRIC PART

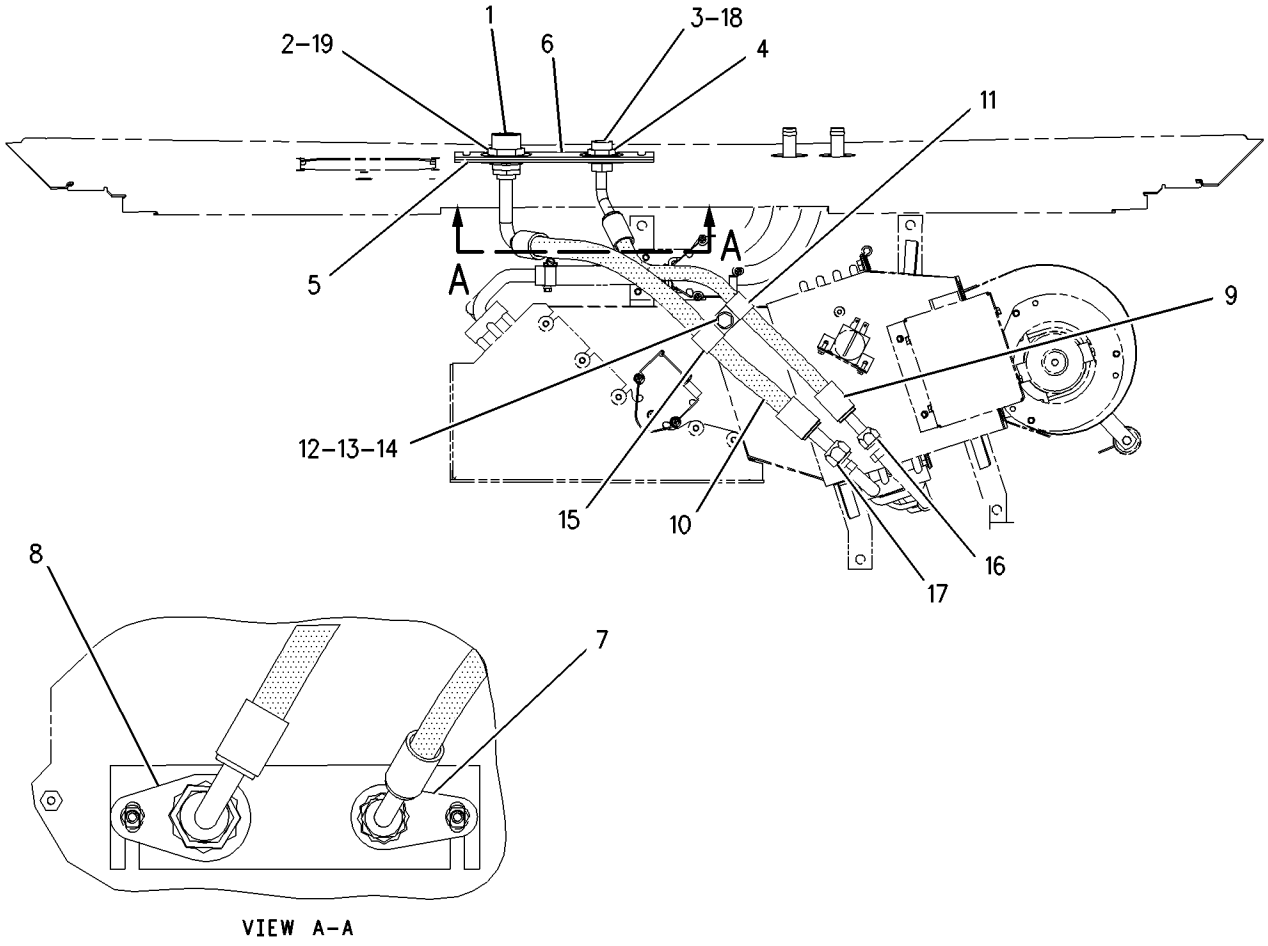


GRAPHIC #1 **<END>** g00975483

# OPERATOR STATION

## *114-5141* LINES GP-CAB HEATER

**S/N: BXY1-UP**

**PART OF 226-0947 FUEL AR-FAST FILL, 226-0307 LINES GP-FUEL HEATER AN ATTACHMENT**

**SMCS-7304** **i02505181**

| NOTE | REF NO | GRAPHIC REF | PART NUMBER | QTY | PART NAME 1 2 3 4 5 6 (PRODUCT LEVEL) | SEE PAGE |
|---|---|---|---|---|---|---|
| | 1 | 1 | **1V-1122** | 2 | TAG-IDENTIFICATION (LETTERS SPL) | |
| | 2 | 1 | **1V-1123** | 2 | TAG-IDENTIFICATION (LETTERS RET) | |
| | 3 | 1 | **8C-6523** | 2 | ADAPTER (7/8-14) | |
| | 4 | 1 | **9X-2488** | 4 | CLAMP-HOSE | |
| | 5 | 1 | *165-2273* | 2 | VALVE AS-SHUTOFF (COOLANT) | |
| | | | | | (EACH INCLUDES) | |
| | | 1 | **6V-7238** | 1 | VALVE-SHUTOFF (COOLANT DRAIN) | |
| | | 1 | **3K-0360** | | SEAL-O-RING | |
| | 6 | 1 | *148-8311* | 1 | ADAPTER AS | |
| | | 1 | **3K-0360** | 1 | SEAL-O-RING | |
| | | 1 | **8T-1715** | 1 | ADAPTER (STRAIGHT THREAD O-RING) | |
| | 7 | 1 | **6D-1641** | 6 | CLIP | |
| E | 8 | 1 | **7I-1024** | | GUARD (HOSE) (215-CM) | |
| E | 8A | 1 | **7I-1024** | | GUARD (HOSE) (182-CM) | |
| E | 8B | 1 | **7I-1024** | | GUARD (HOSE) (190-CM) | |
| E | 8C | 1 | **7I-1024** | | GUARD (HOSE) (132-CM) | |
| E | 8D | 1 | **7I-1024** | | GUARD (HOSE) (232-CM) | |
| E | 9 | 1 | **5P-0767** | | HOSE (304.8-CM) | |
| E | 9A | 1 | **5P-0767** | | HOSE (332.8-CM) | |

E-ORDER BY THE CENTIMETER

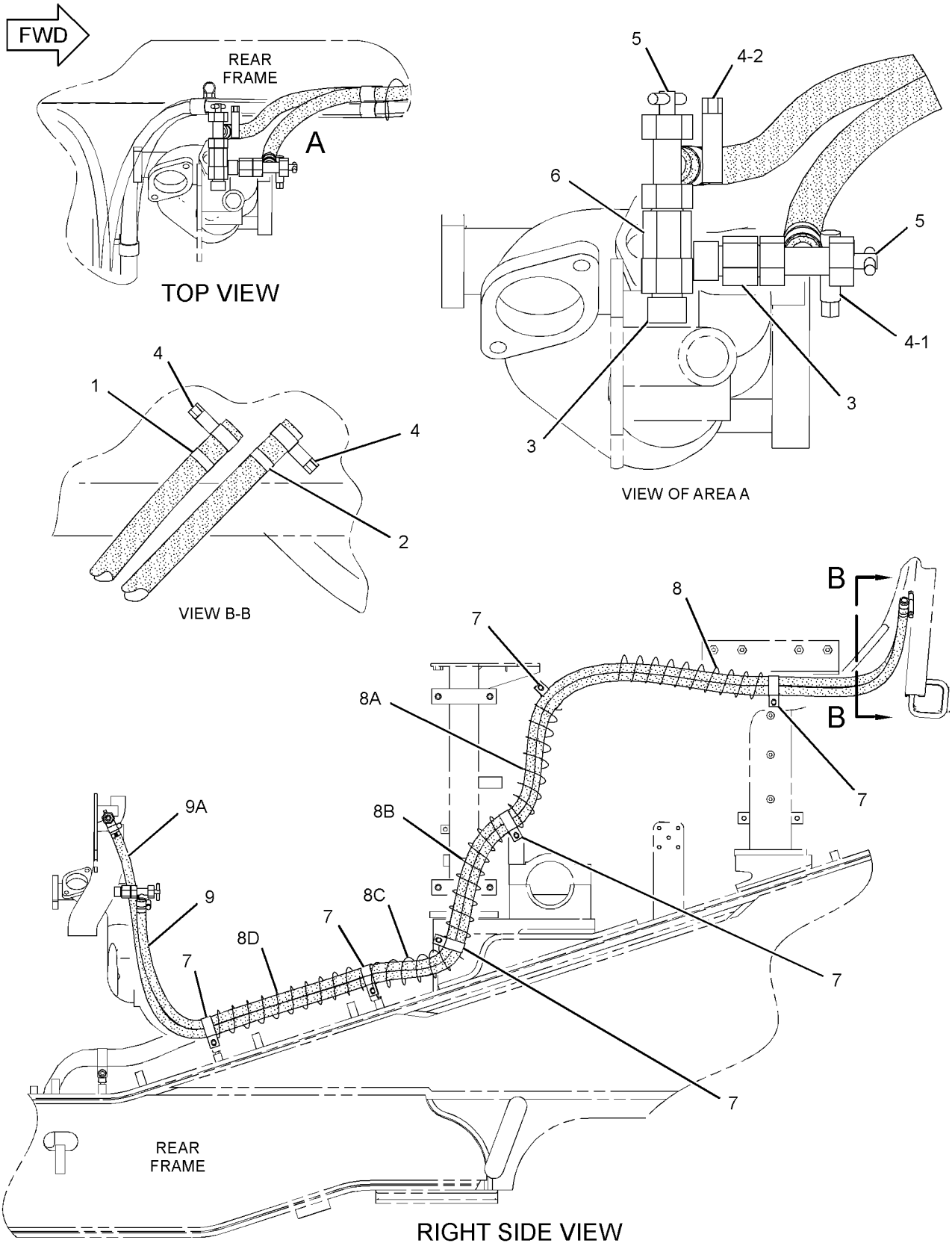


GRAPHIC #1

**<END>**

g01229922

# OPERATOR STATION

## *162-5812* LINES GP-CAB HEATER

**S/N: BXY1-UP**
**PART OF 147-3120 AIR CONDITIONER & MOUNTING GP**
**ALSO AN ATTACHMENT**

**SMCS-7304** **i01310067**

| NOTE | REF NO | GRAPHIC REF | PART NUMBER | QTY | PART NAME 1 2 3 4 5 6 (PRODUCT LEVEL) | SEE PAGE |
|---|---|---|---|---|---|---|
| | 1 | 1 | **9X-2488** | 4 | CLAMP-HOSE | |
| | 2 | 1 | **131-7741** | 1 | GASKET | |
| | 3 | 1 | **138-8187** | 1 | PLATE AS | |
| | | 1 | **139-9469** | 2 | TUBE AS | |
| M | 4 | 1 | **5C-7261** | 2 | NUT (M8X1.25-THD) | |
| | 5 | 1 | **8T-4224** | 2 | WASHER-HARD (8.8X16X2-MM THK) | |
| E | 6 | 1 | **136-1953** | | HOSE (22 CM) | |
| E | 7 | 1 | **136-1953** | | HOSE (39 CM) | |

E-ORDER BY THE CENTIMETER
M-METRIC PART

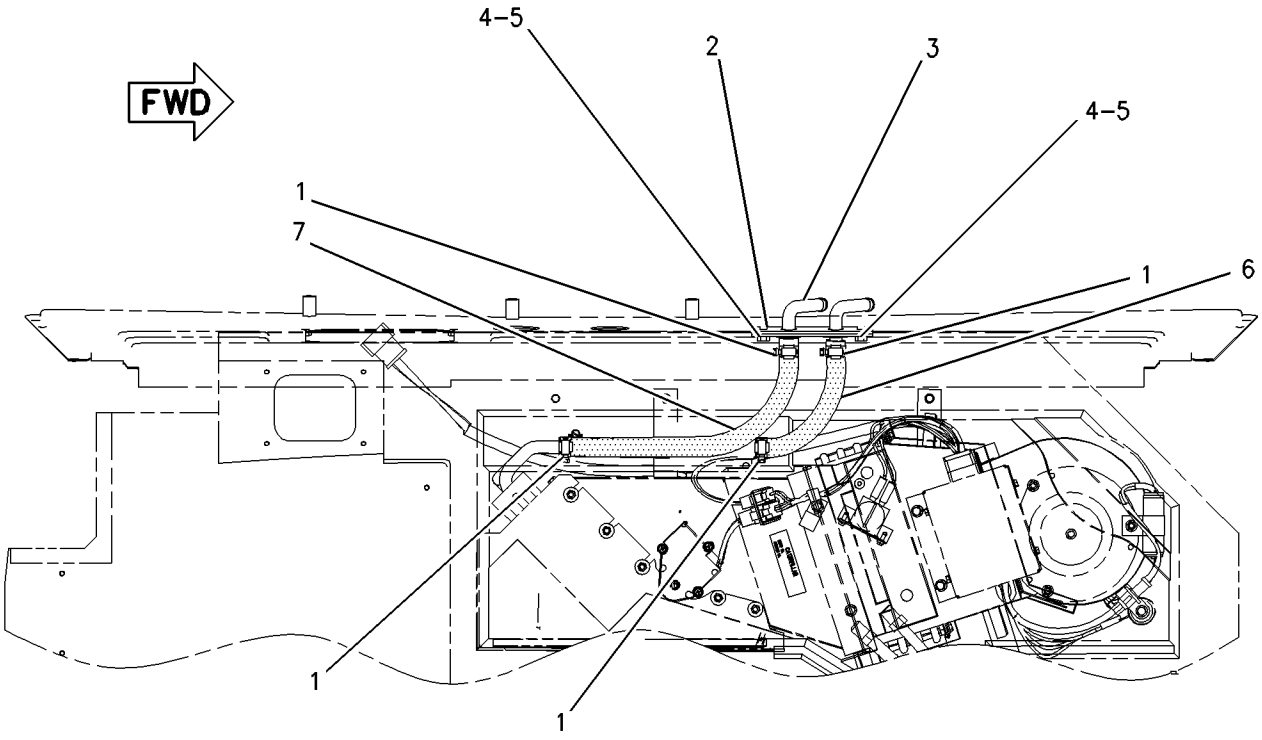


TOP VIEW

GRAPHIC #1 **<END>** g00694206

# OPERATOR STATION

## *6V-1970* LITERATURE GP

**S/N: BXY1-1899**

**PART OF 225-5432 CHASSIS AR**

**SMCS-7300, 7400** **i02300827**

| NOTE | PART NUMBER | QTY | PART NAME 1 2 3 4 5 6 (PRODUCT LEVEL) | SEE PAGE |
|---|---|---|---|---|
| | **5P-8500** | 2 | KEY (LITERATURE COMPARTMENT) | |
| | **5P-7958** | 1 | SLEEVE-CABLE SPLICE | |

**<END>**

# OPERATOR STATION

## *115-1527* MIRROR GP-REAR VIEW

**S/N: BXY1-UP**

**PART OF 225-5432, 284-2735 CHASSIS AR**

**SMCS-7319** **i01144438**

| NOTE | REF NO | GRAPHIC REF | PART NUMBER | QTY | PART NAME 1 2 3 4 5 6 (PRODUCT LEVEL) | SEE PAGE |
|---|---|---|---|---|---|---|
| CY | 1 | 1 | *166-3416* | 1 | MIRROR GP-REAR VIEW (RH) | 1405 |
| CY | 2 | 1 | *166-3417* | 1 | MIRROR GP-REAR VIEW (LH) | 1406 |

C-CHANGE FROM PREVIOUS TYPE
Y-SEPARATE ILLUSTRATION

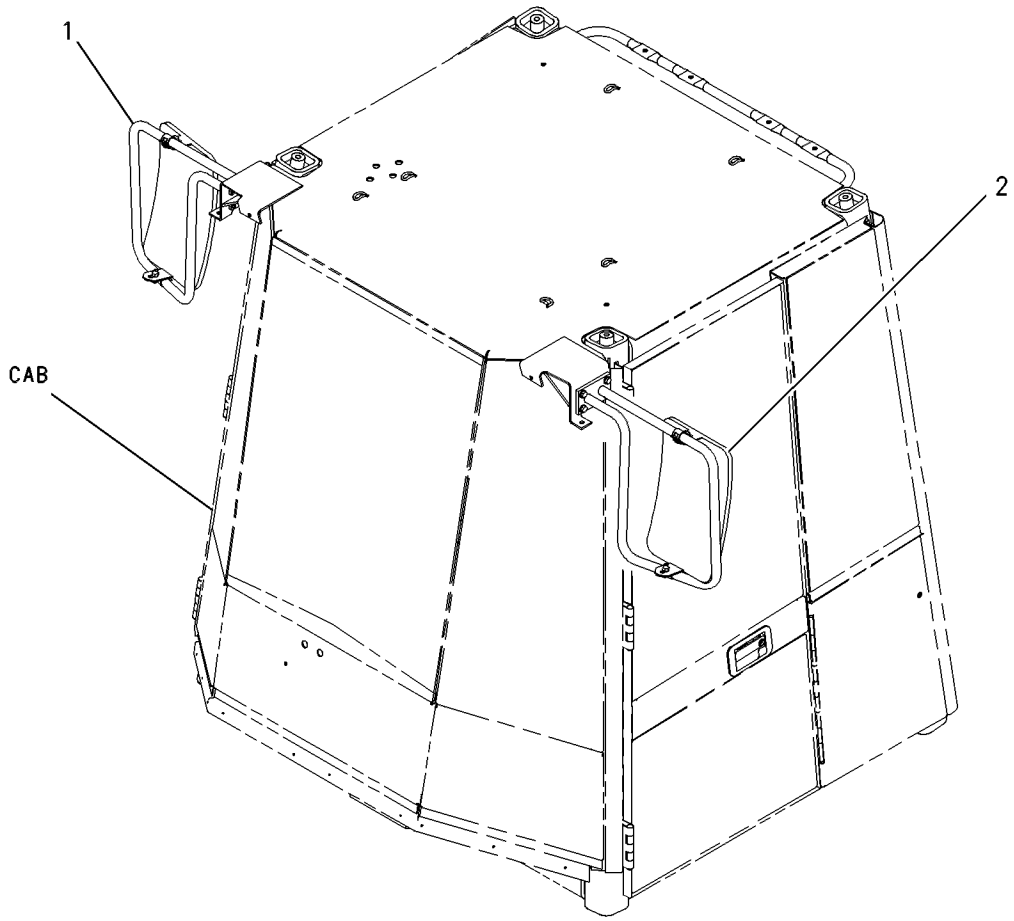


GRAPHIC #1 **<END>** g00511388

# OPERATOR STATION

## *166-3416* MIRROR GP-REAR VIEW–RH

**S/N: BXY1-UP**

**PART OF 115-1527 MIRROR GP-REAR VIEW**

**SMCS-7319** **i00998531**

| NOTE | REF NO | GRAPHIC REF | PART NUMBER | QTY | PART NAME 1 2 3 4 5 6 (PRODUCT LEVEL) | SEE PAGE |
|---|---|---|---|---|---|---|
| | 1 | 1 | **5P-6879** | 1 | MIRROR | |
| | 2 | 1 | **8T-1889** | 2 | CLIP (SLOT) | |
| | 3 | 1 | **8T-1890** | 2 | CLIP (TAB) | |
| | 4 | 1 | **154-1981** | 1 | BRACKET AS | |
| | 5 | 1 | **8T-4121** | 6 | WASHER-HARD (11X21X2.5-MM THK) | |
| M | 6 | 1 | **8T-4133** | 2 | NUT (M10X1.5-THD) | |
| M | 7 | 1 | **8T-4195** | 6 | BOLT (M10X1.5X30-MM) | |

M-METRIC PART

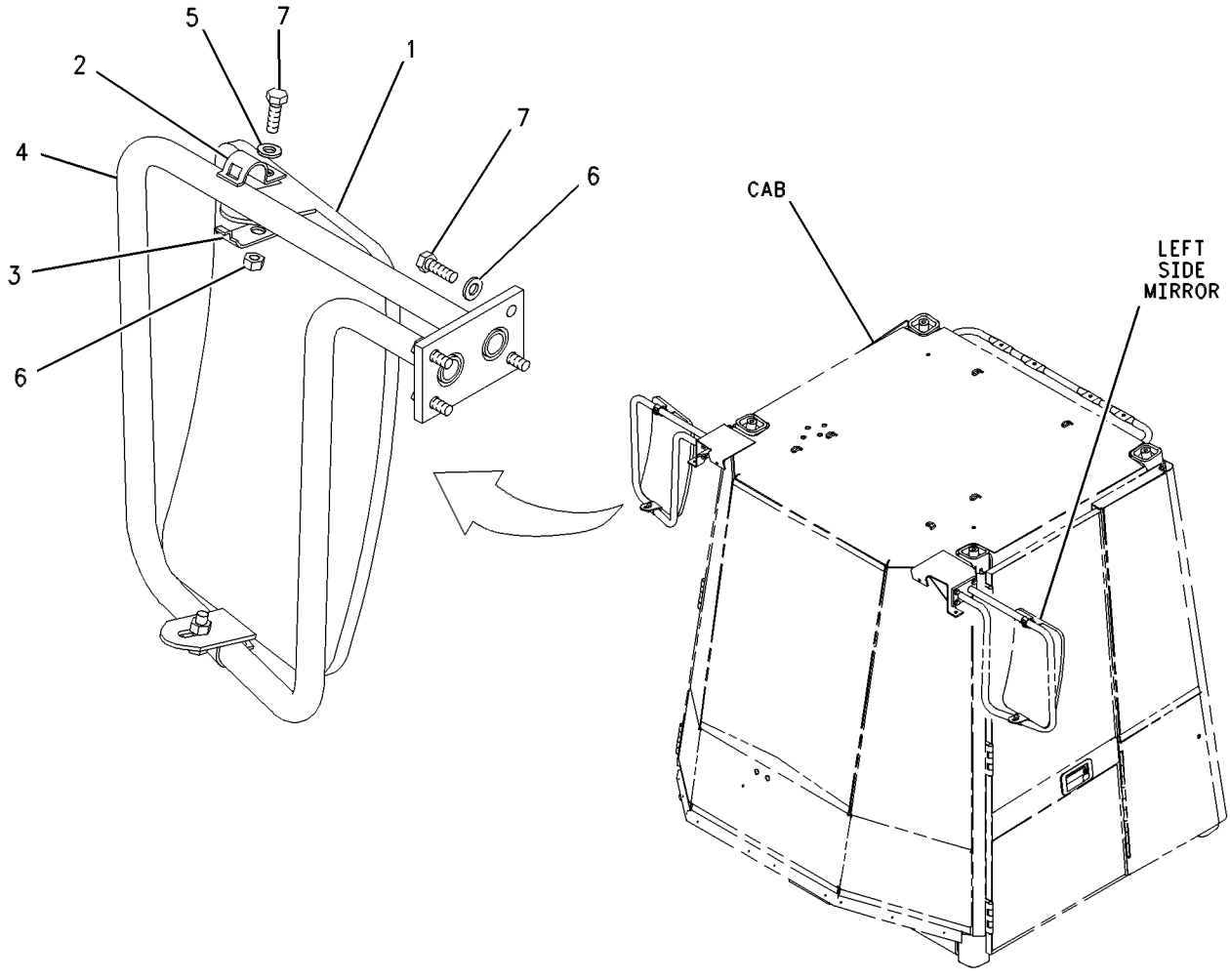


GRAPHIC #1 **<END>** g00511642

# OPERATOR STATION

## *166-3417* MIRROR GP-REAR VIEW—LH

**S/N: BXY1-UP**

**PART OF 115-1527 MIRROR GP-REAR VIEW**

**SMCS-7319** **i00998536**

| NOTE | REF NO | GRAPHIC REF | PART NUMBER | QTY | PART NAME 1 2 3 4 5 6 (PRODUCT LEVEL) | SEE PAGE |
|---|---|---|---|---|---|---|
| | 1 | 1 | **5P-6879** | 1 | MIRROR | |
| | 2 | 1 | **8T-1889** | 2 | CLIP (SLOT) | |
| | 3 | 1 | **8T-1890** | 2 | CLIP (TAB) | |
| | 4 | 1 | **154-1982** | 1 | BRACKET AS | |
| | 5 | 1 | **8T-4121** | 6 | WASHER-HARD (11X21X2.5-MM THK) | |
| M | 6 | 1 | **8T-4133** | 2 | NUT (M10X1.5-THD) | |
| M | 7 | 1 | **8T-4195** | 6 | BOLT (M10X1.5X30-MM) | |

M-METRIC PART

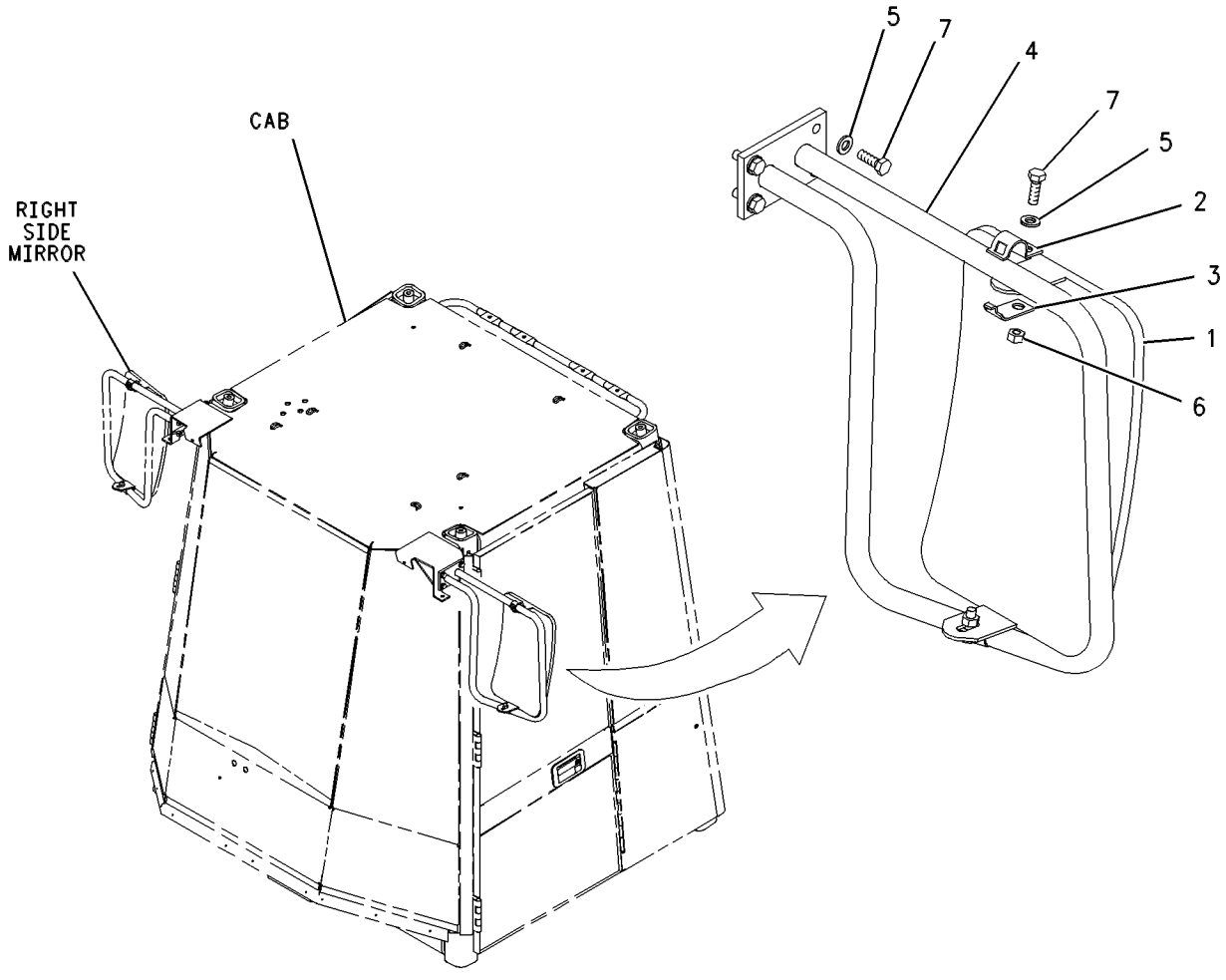


GRAPHIC #1 **<END>** g00511590

# OPERATOR STATION

## *166-6928* MODULE GP-QUAD GAUGE

**S/N: BXY1-UP**
**PART OF 261-0400 WIRING GP-CAB**
**ALSO AN ATTACHMENT**

**SMCS-7450, 7451, 7490, 7601** **i02023668**

| NOTE | REF NO | GRAPHIC REF | PART NUMBER | QTY | PART NAME 1 2 3 4 5 6 (PRODUCT LEVEL) | SEE PAGE |
|---|---|---|---|---|---|---|
| | 1 | 1 | **102-8805** | 1 | KIT-RECEPTACLE (6-PIN) | |
| | | | | | (INCLUDES RECEPTACLE AS & WEDGE) | |
| | 2 | 1 | **8T-8729** | 6 | PIN-CONNECTOR | |

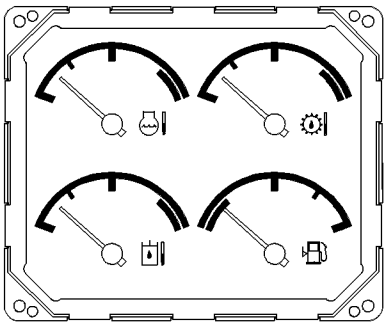

VIEW B-B

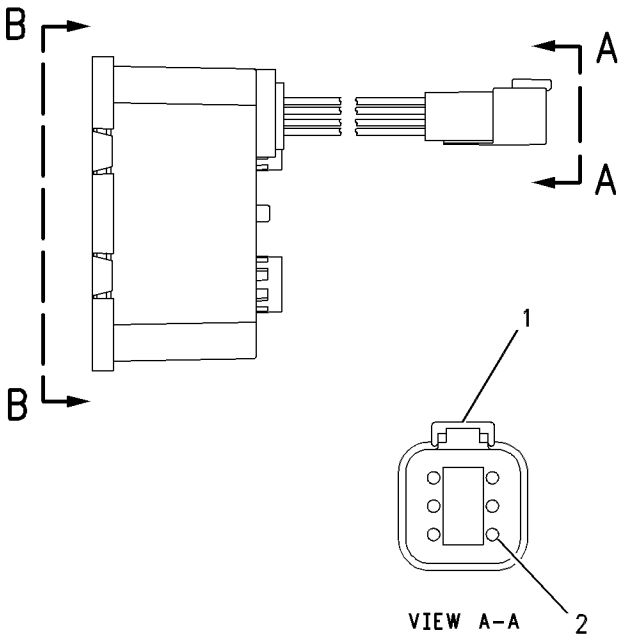


VIEW A-A

GRAPHIC #1 **<END>** g00587276

# OPERATOR STATION

## *235-4176* MONITOR AR-PAYLOAD

**S/N: BXY1-UP**

**AN ATTACHMENT**

**SMCS-7494** **i02172035**

| NOTE | PART NUMBER | QTY | PART NAME 1 2 3 4 5 6 (PRODUCT LEVEL) | SEE PAGE |
|---|---|---|---|---|
| Y | *155-6649* | 1 | MONITOR GP-PAYLOAD | 1411 |
| Y | *196-5538* | 1 | SWITCH GP-PAYLOAD STORE (REMOTE) | 330 |
| Y | *235-2506* | 1 | WIRING GP-SENSOR (LIFT CYLINDER OIL PRESSURE) | 468 |

Y-SEPARATE ILLUSTRATION

**<END>**

# OPERATOR STATION

## *300-5844* MONITOR GP-CAMERA

**S/N: BXY1-UP**
**PART OF 285-3575 CAMERA AR**
**AN ATTACHMENT**

**SMCS-7347** **i02673345**

| NOTE | REF NO | GRAPHIC REF | PART NUMBER | QTY | PART NAME 1 2 3 4 5 6 (PRODUCT LEVEL) | SEE PAGE |
|---|---|---|---|---|---|---|
| | 1 | 1 | **3S-2093** | 13 | STRAP-CABLE | |
| | 2 | 1 | **194-8648** | 2 | BOSS | |
| | 3 | 1 | **251-4243** | 1 | CONNECTOR GP-ELECTRONIC | |
| | 4 | 1 | **251-8248** | 1 | CABLE AS-COMMUNICATION (5-M) | |
| Y | 5 | 1 | **261-3226** | 1 | DISPLAY GP-CAMERA (WAVES) | 1363 |
| | 6 | 1 | **303-8126** | 1 | BRACKET | |
| | 7 | 1 | **130-5300** | 1 | CLIP | |
| | 8 | 1 | **132-5789** | 1 | CLIP | |
| | 9 | 1 | **5P-4116** | 2 | WASHER-HARD (8.8X20.5X2-MM THK) | |
| M | 10 | 1 | **6V-7357** | 4 | BOLT (M6X1X25-MM) | |
| M | 11 | 1 | **7X-0818** | 2 | BOLT (M8X1.25X45-MM) | |
| | 12 | 1 | **8T-4205** | 4 | WASHER-HARD (7.2X14.5X2-MM THK) | |
| M | 13 | 1 | **8T-7964** | 4 | NUT (M6X1-THD) | |

M-METRIC PART
Y-SEPARATE ILLUSTRATION

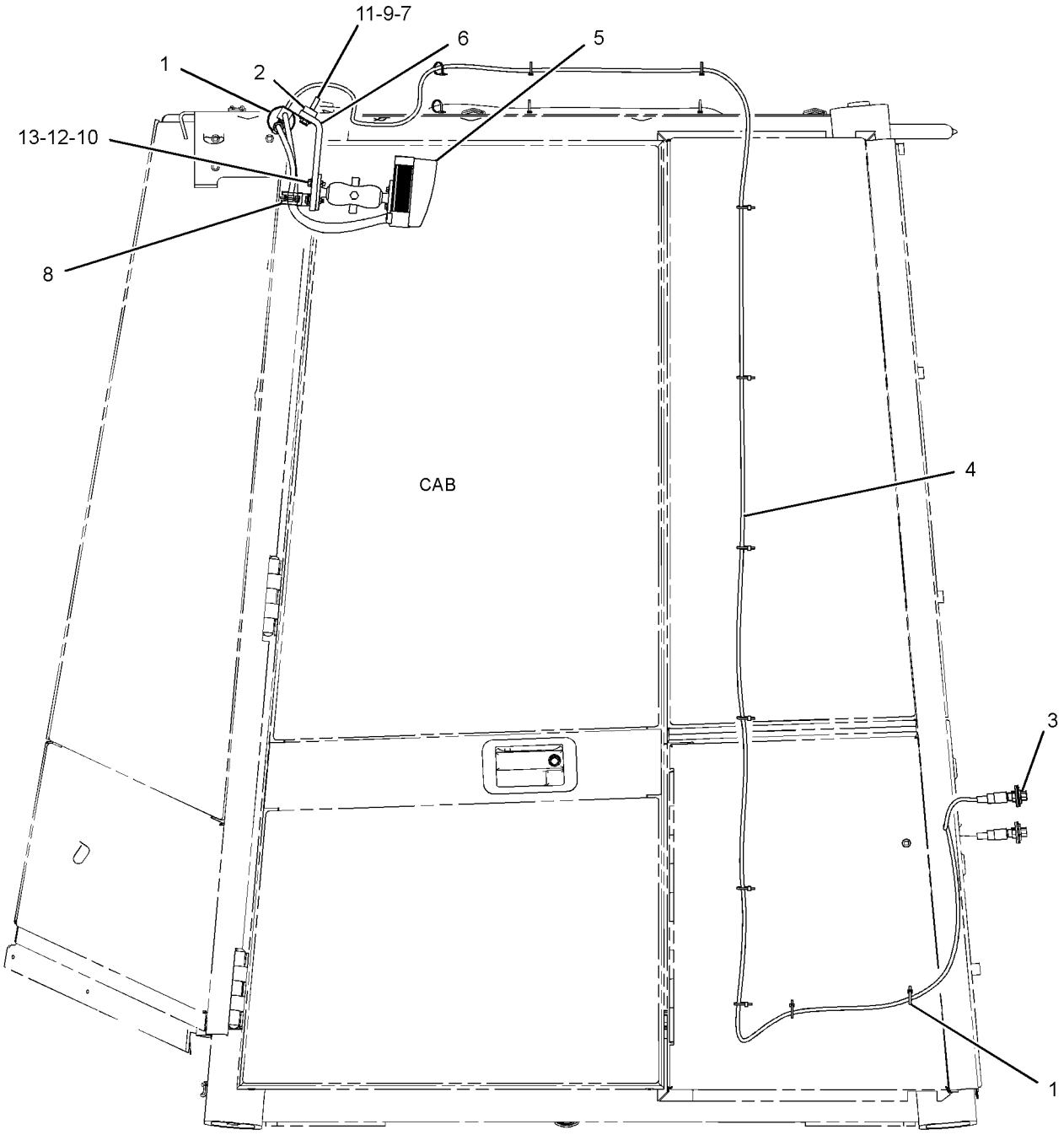


LEFT SIDE VIEW

GRAPHIC #1 **<END>** g01354828

# OPERATOR STATION

## *155-6649* MONITOR GP-PAYLOAD

**S/N: BXY1-1241**
**PART OF 235-4176 MONITOR AR-PAYLOAD**
**AN ATTACHMENT**

**SMCS-7494** **i01941015**

| NOTE | REF NO | GRAPHIC REF | PART NUMBER | QTY | PART NAME 1 2 3 4 5 6 (PRODUCT LEVEL) | SEE PAGE |
|---|---|---|---|---|---|---|
| | 1 | 1 | **3S-2093** | 2 | STRAP-CABLE | |
| | 2 | 1 | **7N-5876** | 1 | LAMP (24-VOLT) | |
| | 3 | 1 | **9X-8917** | 4 | SCREW-MACHINE (4-40X9.52-MM) | |
| M | 4 | 1 | **113-0919** | 8 | BOLT-SOCKET HEAD (M4X0.7X25-MM) | |
| | 5 | 1 | **149-3253** | 1 | MODULE GP-PAYLOAD KEYPAD | |
| | | 1 | **102-8803** | 1 | KIT-RECEPTACLE (3-PIN) | |
| | | 1 | **3E-3371** | 1 | WEDGE-RECEPTACLE LOCK (3-PIN) | |
| | | 1 | **8T-8729** | 3 | PIN-CONNECTOR | |
| CY | 6 | 1 | **228-6563** | 1 | CONTROL GP-MONITOR (PAYLOAD) | 1350 |
| | 7 | 1 | **151-2092** | 1 | HARNESS AS-MONITOR (PAYLOAD) | |
| | | 1 | **8T-8737** | 10 | PLUG-SEAL | |
| | | 1 | **7X-6222** | 1 | PLUG AS-CONNECTOR (24-PIN) | |
| | | 1 | **3E-4367** | 1 | RING-RETAINING | |
| M | | 1 | **3E-8558** | 1 | BOLT (M5X0.8X39.37-MM) | |
| | | 1 | **9X-3265** | 2 | SEAL-CONNECTOR (24-PIN) | |
| | | 1 | **102-8808** | 1 | KIT-CONNECTING PLUG (3-PIN) | |
| | | 1 | **3E-5136** | 1 | RECEPTACLE AS-CONNECTOR (5-PIN) | |
| | | 1 | **102-8801** | 1 | KIT-RECEPTACLE (12-PIN) | |
| | 8 | 1 | **193-2653** | 1 | COVER | |
| | 9 | 1 | **193-0771** | 1 | BRACKET | |
| | 10 | 1 | **193-2652** | 1 | PLATE AS | |
| M | | 1 | **6V-9632** | 9 | NUT-WELD (M6X1-THD) | |
| | 11 | 1 | **8T-4121** | 2 | WASHER-HARD (11X21X2.5-MM THK) | |
| | 12 | 1 | **2G-1133** | 2 | GROMMET | |
| M | 13 | 1 | **8T-4185** | 2 | BOLT (M10X1.5X50-MM) | |
| M | 14 | 1 | **9X-2042** | 4 | SCREW-TRUSS HEAD (M6X1X12-MM) | |
| | 15 | 1 | **3E-5165** | 1 | CAP AS-PROTECTION | |
| M | 16 | 1 | **9X-2045** | 5 | SCREW-TRUSS HEAD (M6X1X20-MM) | |

C-CHANGE FROM PREVIOUS TYPE
M-METRIC PART
Y-SEPARATE ILLUSTRATION

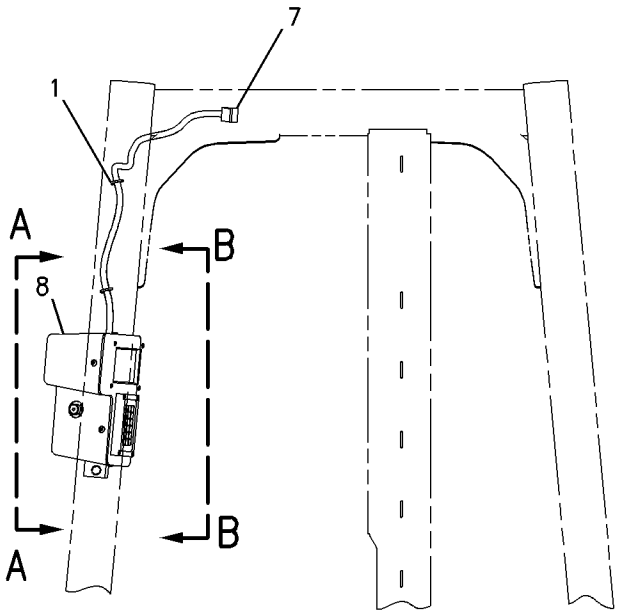


LEFT SIDE VIEW

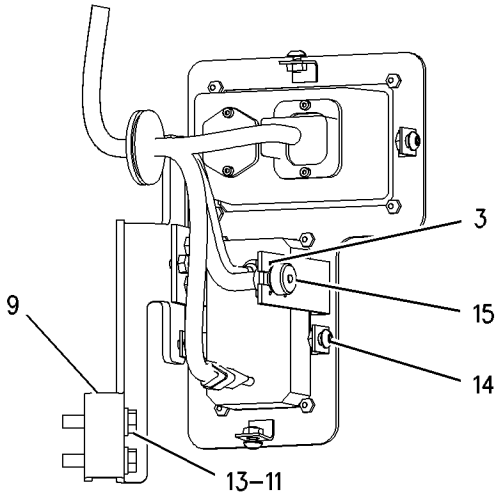


VIEW A-A

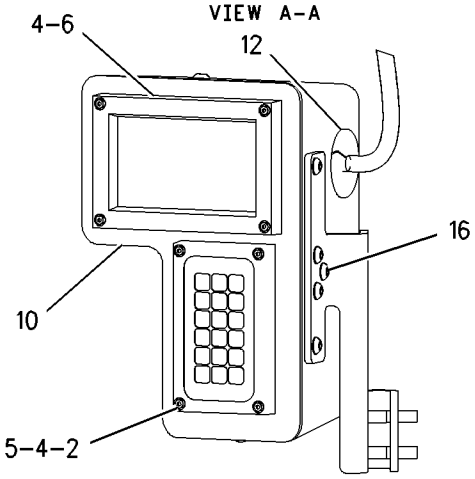


VIEW B-B

GRAPHIC #1 **<END>** g00745861

# OPERATOR STATION

## *155-6649* MONITOR GP-PAYLOAD

**S/N: BXY1242-UP**
**PART OF 235-4176 MONITOR AR-PAYLOAD**
**AN ATTACHMENT**

**SMCS-7494** **i02650401**

| NOTE | REF NO | GRAPHIC REF | PART NUMBER | QTY | PART NAME 1 2 3 4 5 6 (PRODUCT LEVEL) | SEE PAGE |
|---|---|---|---|---|---|---|
| | 1 | 1 | **3S-2093** | 2 | STRAP-CABLE | |
| | 2 | 1 | **7N-5876** | 1 | LAMP (24-VOLT) | |
| | 3 | 1 | **9X-8917** | 4 | SCREW-MACHINE (4-40X9.52-MM) | |
| M | 4 | 1 | **113-0919** | 8 | BOLT-SOCKET HEAD (M4X0.7X25-MM) | |
| | 5 | 1 | **297-1398** | 1 | MODULE GP-KEYPAD | |
| | | 1 | **301-0412** | 1 | FILM-KEYPAD | |
| | | 1 | **102-8803** | 1 | KIT-RECEPTACLE (3-PIN) | |
| | | | | | (KIT INCLUDES RECEPTACLE AS AND WEDGE) | |
| | | 1 | **3E-3371** | 1 | WEDGE-RECEPTACLE LOCK (3-PIN) | |
| | | 1 | **186-3735** | 3 | PIN-CONNECTOR (16-GA TO 18-GA) | |
| CY | 6 | 1 | **283-1604** | 1 | CONTROL GP-MONITOR (PAYLOAD) | 1351 |
| | 7 | 1 | **151-2092** | 1 | HARNESS AS-MONITOR (PAYLOAD) | |
| | | 1 | **3T-3159** | 1 | SPRING | |
| | | 1 | **155-2260** | 1 | KIT-CONNECTING PLUG (3-PIN) | |
| | | | | | (INCLUDES PLUG AS AND WEDGE) | |
| | | 1 | **7X-6222** | 1 | PLUG AS-CONNECTOR (24-PIN) | |
| | | 1 | **3E-4367** | 1 | RING-RETAINING | |
| M | | 1 | **3E-8558** | 1 | BOLT (M5X0.8X39.37-MM) | |
| | | 1 | **9X-3265** | 2 | SEAL-CONNECTOR (24-PIN) | |
| | | 1 | **3E-5136** | 1 | RECEPTACLE AS-CONNECTOR (5-PIN) | |
| | | 1 | **102-8801** | 1 | KIT-RECEPTACLE (12-PIN) | |
| | | | | | (KIT INCLUDES RECETPACLE AS AND WEDGE) | |
| | 8 | 1 | **193-2653** | 1 | COVER | |
| | 9 | 1 | **193-0771** | 1 | BRACKET | |
| | 10 | 1 | **193-2652** | 1 | PLATE AS | |
| | 11 | 1 | **8T-4121** | 2 | WASHER-HARD (11X21X2.5-MM THK) | |
| | 12 | 1 | **2G-1133** | 1 | GROMMET | |
| M | 13 | 1 | **8T-4185** | 2 | BOLT (M10X1.5X50-MM) | |
| M | 14 | 1 | **9X-2042** | 4 | SCREW-TRUSS HEAD (M6X1X12-MM) | |
| | 15 | 1 | **3E-5165** | 1 | CAP AS-PROTECTION | |
| M | 16 | 1 | **9X-2045** | 5 | SCREW-TRUSS HEAD (M6X1X20-MM) | |

C-CHANGE FROM PREVIOUS TYPE
M-METRIC PART
Y-SEPARATE ILLUSTRATION

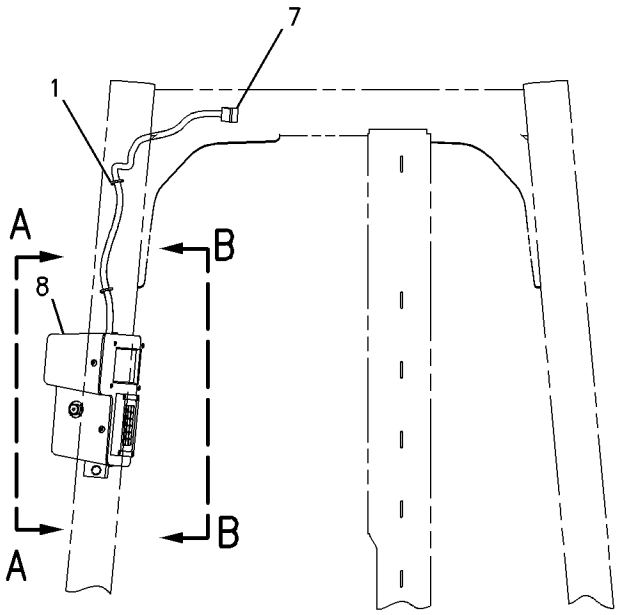


LEFT SIDE VIEW

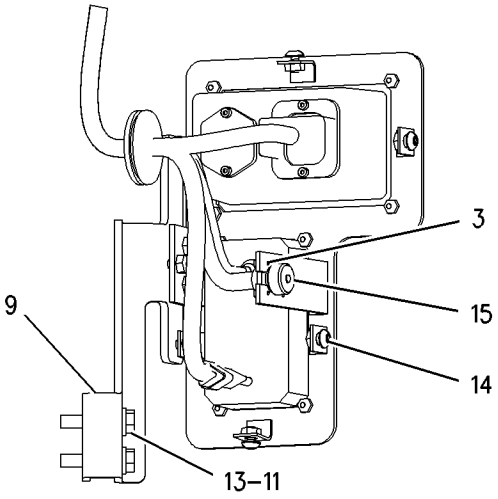


VIEW A-A

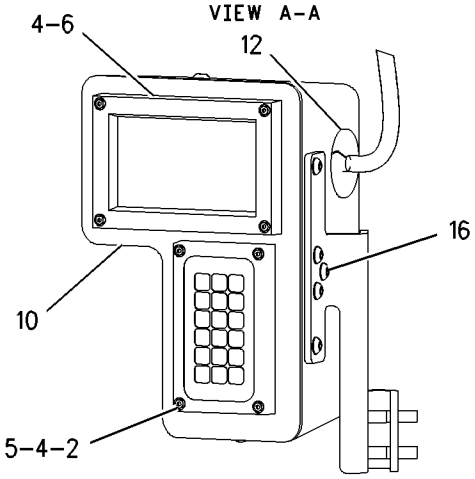


VIEW B-B

GRAPHIC #1 **<END>** g00745861

# 155-5789 MOTOR GP-WINDOW WIPER–REAR

**S/N: BXY1-UP**

**PART OF 109-8196 WIPER GP-WINDOW**

**SMCS-7305** **i02463764**

| NOTE | REF NO | GRAPHIC REF | PART NUMBER | QTY | PART NAME 1 2 3 4 5 6 (PRODUCT LEVEL) | SEE PAGE |
|---|---|---|---|---|---|---|
| | 1 | 1 | **102-8805** | 1 | KIT-RECEPTACLE (6-PIN) | |
| | | | | | (INCLUDES RECEPTACLE AS AND WEDGE) | |
| | 2 | 1 | **8T-8737** | 1 | PLUG-SEAL | |
| | 3 | 1 | **186-3735** | 5 | PIN-CONNECTOR (16-GA TO 18-GA) | |

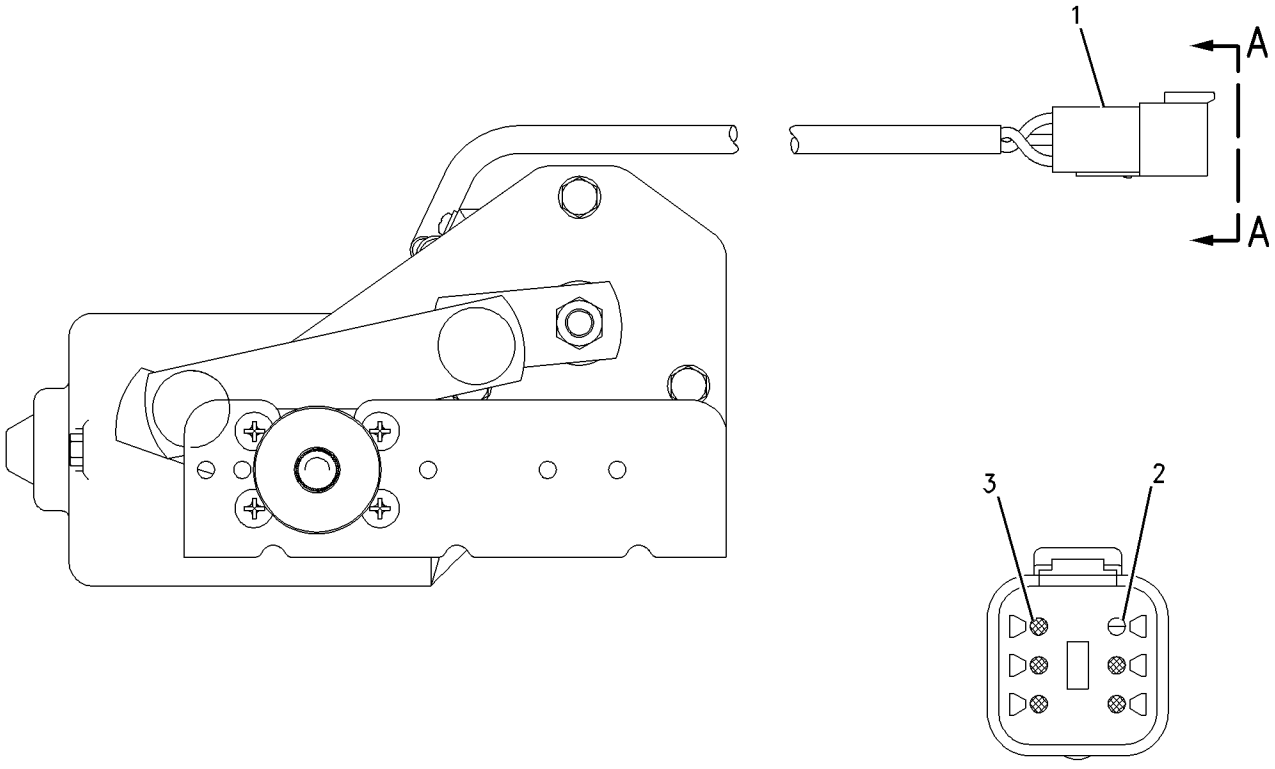


VIEW A-A

GRAPHIC #1 **<END>** g00665801

# OPERATOR STATION

## *155-5790* MOTOR GP-WINDOW WIPER–FRONT

**S/N: BXY1-UP**

**PART OF 109-8196 WIPER GP-WINDOW**

**SMCS-7305** **i01319138**

| NOTE | REF NO | GRAPHIC REF | PART NUMBER | QTY | PART NAME 1 2 3 4 5 6 (PRODUCT LEVEL) | SEE PAGE |
|---|---|---|---|---|---|---|
| | 1 | 1 | **102-8805** | 1 | KIT-RECEPTACLE (6-PIN) | |
| | | | | | (INCLUDES RECEPTACLE AS AND WEDGE) | |
| | 2 | 1 | **8T-8737** | 1 | PLUG-SEAL | |
| | 3 | 1 | **8T-8729** | 5 | PIN-CONNECTOR | |

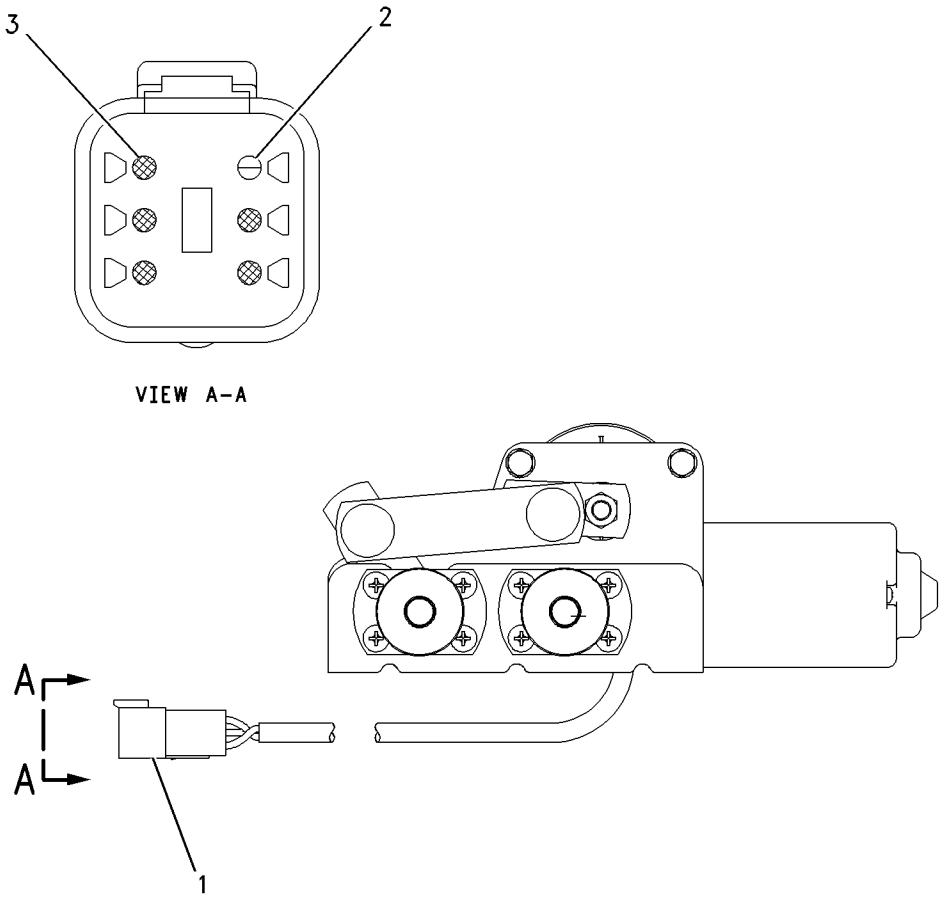


GRAPHIC #1 **<END>** g00668134

# 184-5093 MOTOR GP-WINDOW WIPER–REAR

**S/N: BXY1900-UP**
**PART OF 183-3756 WIPER GP-WINDOW**
**AN ATTACHMENT**

**SMCS-7305** **i01892838**

| NOTE | REF NO | GRAPHIC REF | PART NUMBER | QTY | PART NAME 1 2 3 4 5 6 (PRODUCT LEVEL) | SEE PAGE |
|---|---|---|---|---|---|---|
| | 1 | 1 | **102-8805** | 1 | KIT-RECEPTACLE (6-PIN) | |
| | | | | | (INCLUDES RECEPTACLE AS AND WEDGE) | |
| | 2 | 1 | **8T-8737** | 1 | PLUG-SEAL | |
| | 3 | 1 | **186-3735** | 5 | PIN-CONNECTOR (16-GA TO 18-GA) | |

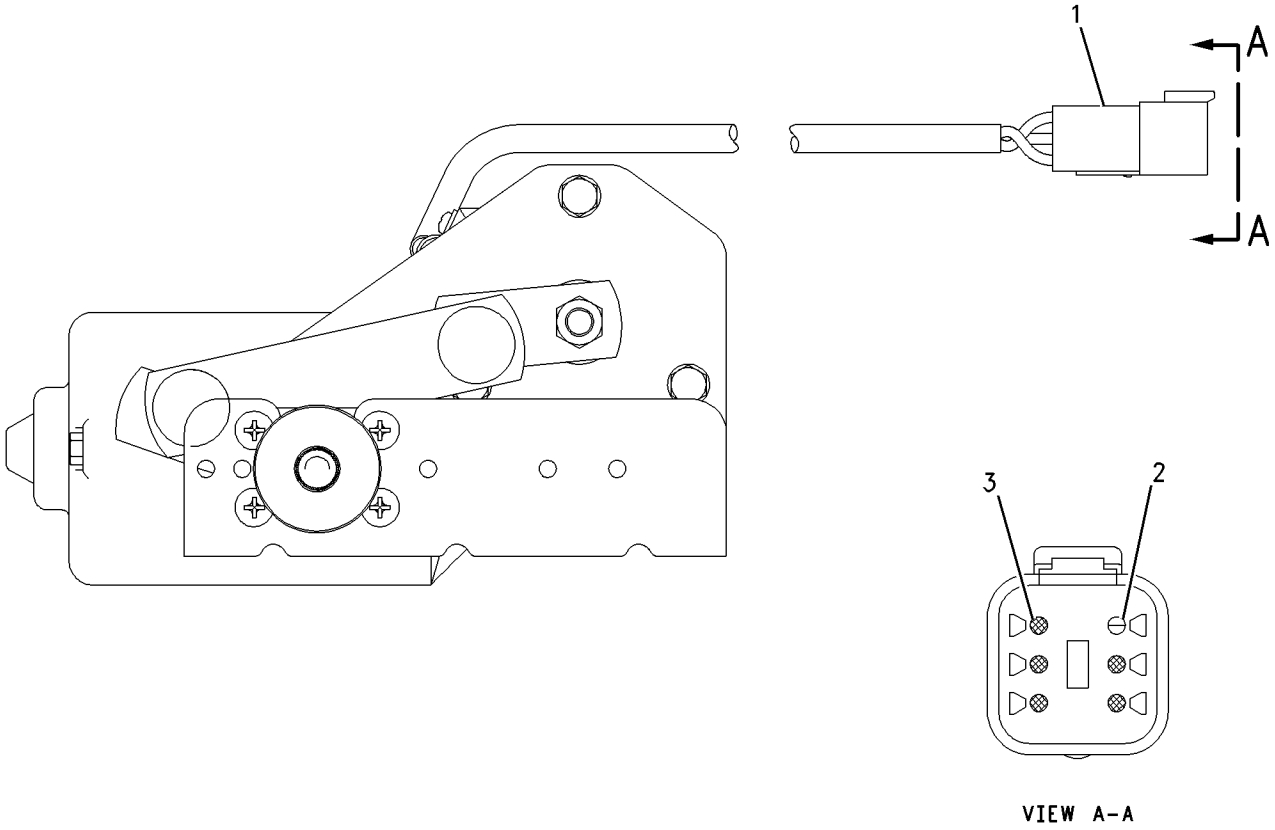


VIEW A-A

GRAPHIC #1 **<END>** g00665801

# OPERATOR STATION

## *304-4212* MOUNTING GP-ANTENNA

**S/N: BXY1-UP**

**AN ATTACHMENT**

**SMCS-7338, 7606** **i02673394**

| NOTE | REF NO | GRAPHIC REF | PART NUMBER | QTY | PART NAME 1 2 3 4 5 6 (PRODUCT LEVEL) | SEE PAGE |
|---|---|---|---|---|---|---|
| | 1 | 1 | **3S-2093** | 1 | STRAP-CABLE | |
| | 2 | 1 | **7K-1181** | 6 | STRAP-CABLE | |
| | 3 | 1 | **136-5490** | 1 | BUSHING (RADIO MOUNT) | |
| | 4 | 1 | **200-5728** | 1 | HARNESS AS-RADIO | |
| | | 1 | **160-3518** | 1 | KIT-RECEPTACLE (8-PIN) | |
| | | | | | (INCLUDES RECEPTACLE AS AND WEDGE) | |
| | 5 | 1 | **284-9055** | 1 | ANTENNA AS | |
| | 6 | 1 | **296-7575** | 1 | PLATE AS | |
| | 7 | 1 | **304-4173** | 1 | BRACKET | |
| | 8 | 1 | **122-8705** | 1 | U-BOLT | |
| M | 9 | 1 | **6V-2313** | 2 | BOLT (M5X0.8X30-MM) | |
| | 10 | 1 | **7X-7729** | 1 | WASHER (11X25X3-MM THK) | |
| | 11 | 1 | **8T-4121** | 3 | WASHER-HARD (11X21X2.5-MM THK) | |
| M | 12 | 1 | **8T-4133** | 2 | NUT (M10X1.5-THD) | |
| M | 13 | 1 | **8T-4136** | 1 | BOLT (M10X1.5X25-MM) | |
| M | 14 | 1 | **8T-4195** | 1 | BOLT (M10X1.5X30-MM) | |
| | 15 | 1 | **9G-1307** | 1 | GROMMET | |
| | 16 | 1 | **9X-8256** | 2 | WASHER (6.6X12X2-MM THK) | |

M-METRIC PART

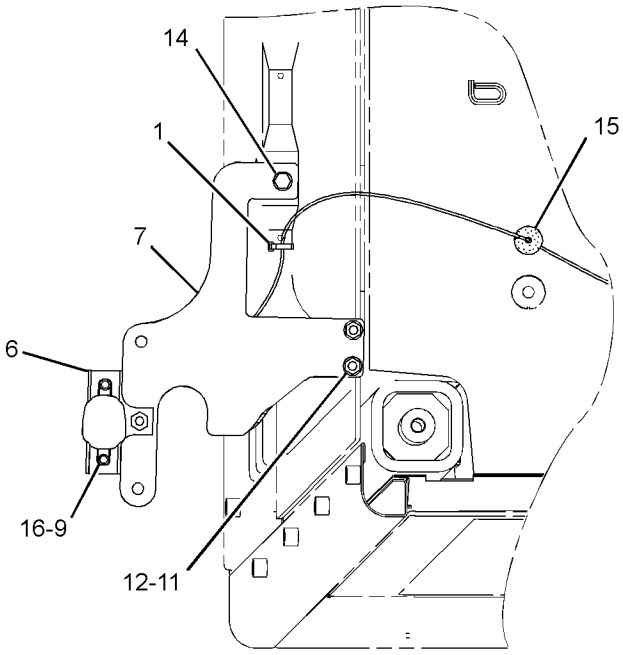


VIEW A-A

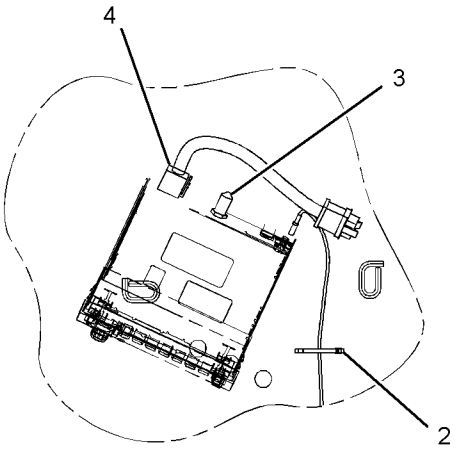


VIEW B-B

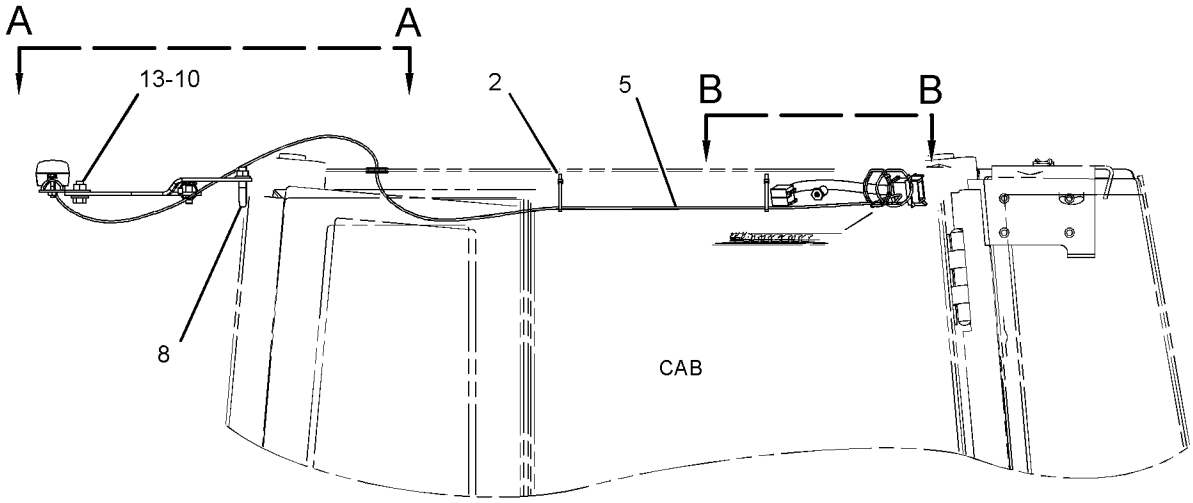


RIGHT SIDE VIEW

GRAPHIC #1 **<END>** g01355205

# OPERATOR STATION

## *183-4007* MOUNTING GP-CAB

**S/N: BXY1-1899**

**PART OF 227-3200 OPERATOR AR**

**SMCS-7301** **i01372121**

| NOTE | REF NO | GRAPHIC REF | PART NUMBER | QTY | PART NAME 1 2 3 4 5 6 (PRODUCT LEVEL) | SEE PAGE |
|---|---|---|---|---|---|---|
| | 1 | 1 | **138-8861** | 4 | WASHER AS | |
| | 2 | 1 | **138-8862** | 8 | MOUNT | |
| | 3 | 1 | **138-8863** | 4 | SLEEVE | |
| | 4 | 1 | **138-8864** | 4 | WASHER (39X135X20-MM THK) | |
| | 5 | 1 | **177-3579** | 1 | SHROUD | |
| | 6 | 1 | **8T-5463** | 4 | WASHER (39X66X5-MM THK) | |
| M | 7 | 1 | **9X-2046** | 5 | SCREW-TRUSS HEAD | |
| M | 8 | 1 | **9X-6626** | 4 | BOLT (M36X4X200-MM) | |

M-METRIC PART

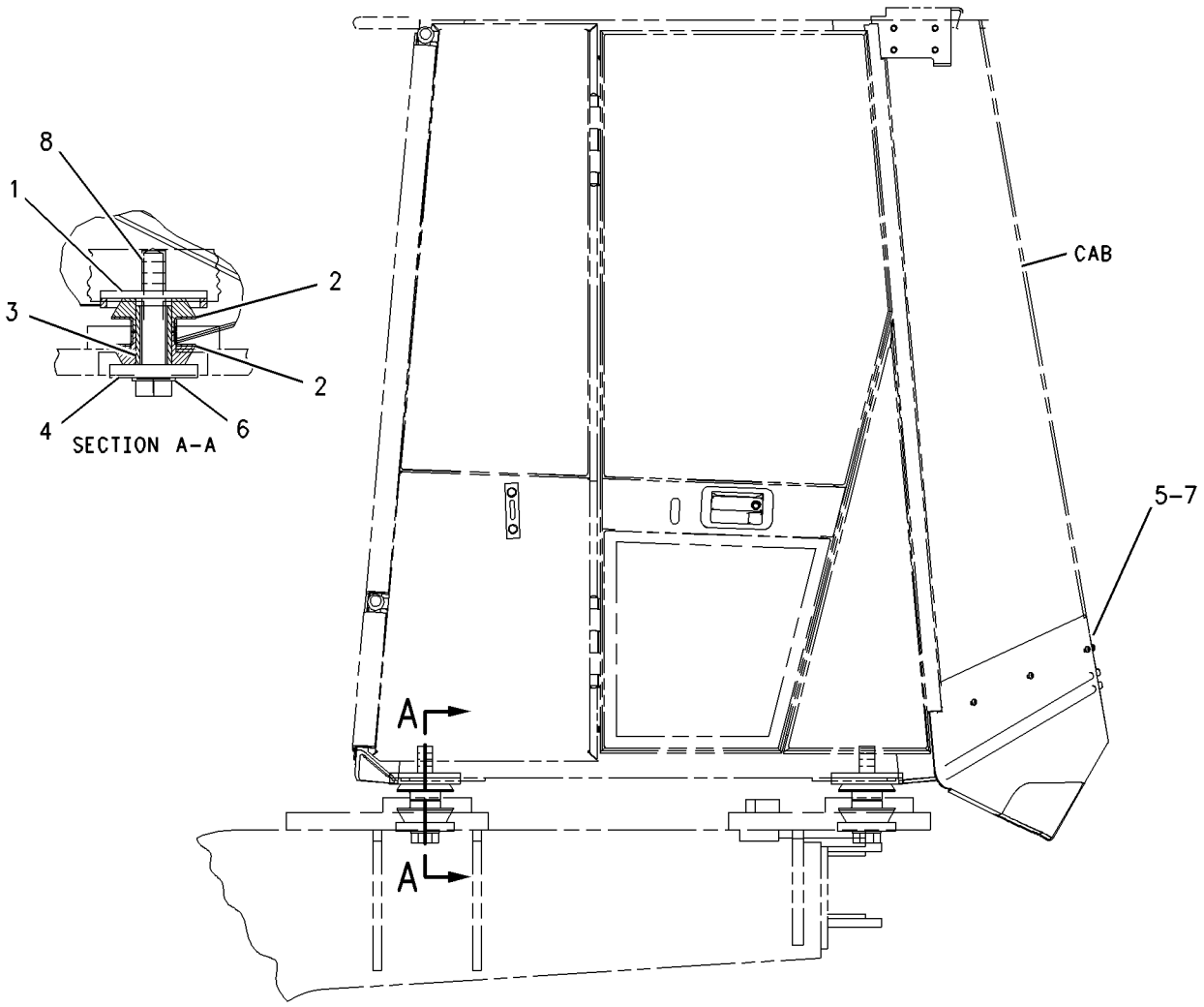


GRAPHIC #1 **<END>** g00724154

# OPERATOR STATION

## *292-6890* MOUNTING GP-CAB

**S/N: BXY1900-UP**

**PART OF 292-6092 OPERATOR AR**

**SMCS-7301** **i02672406**

| NOTE | REF NO | GRAPHIC REF | PART NUMBER | QTY | PART NAME 1 2 3 4 5 6 (PRODUCT LEVEL) | SEE PAGE |
|---|---|---|---|---|---|---|
| | 1 | 1 | **107-3157** | 8 | WASHER (22X76.2X6-MM THK) | |
| | 2 | 1 | **138-8861** | 4 | WASHER AS | |
| | 3 | 1 | **138-8862** | 8 | MOUNT | |
| | 4 | 1 | **138-8863** | 4 | SLEEVE (36-MM) | |
| | 5 | 1 | **138-8864** | 4 | WASHER (39X135X20-MM THK) | |
| | 6 | 1 | **173-2118** | 1 | ROOF | |
| | 7 | 1 | **174-2407** | 1 | INSULATION | |
| | 8 | 1 | **174-2408** | 1 | INSULATION | |
| | 9 | 1 | **177-3579** | 1 | SHROUD | |
| | 10 | 1 | **196-0436** | 4 | SPACER (25X40X12-MM THK) | |
| | 11 | 1 | **197-5470** | 4 | GROMMET | |
| | 12 | 1 | **8T-4122** | 4 | WASHER-HARD (17X32X3.5-MM THK) | |
| M | 13 | 1 | **8T-4193** | 4 | BOLT (M16X2X50-MM) | |
| | 14 | 1 | **8T-5463** | 4 | WASHER (39X66X5-MM THK) | |
| M | 15 | 1 | **9X-2046** | 10 | SCREW-TRUSS HEAD (M6X1X35-MM) | |
| M | 16 | 1 | **9X-6626** | 4 | BOLT (M36X4X200-MM) | |

M-METRIC PART

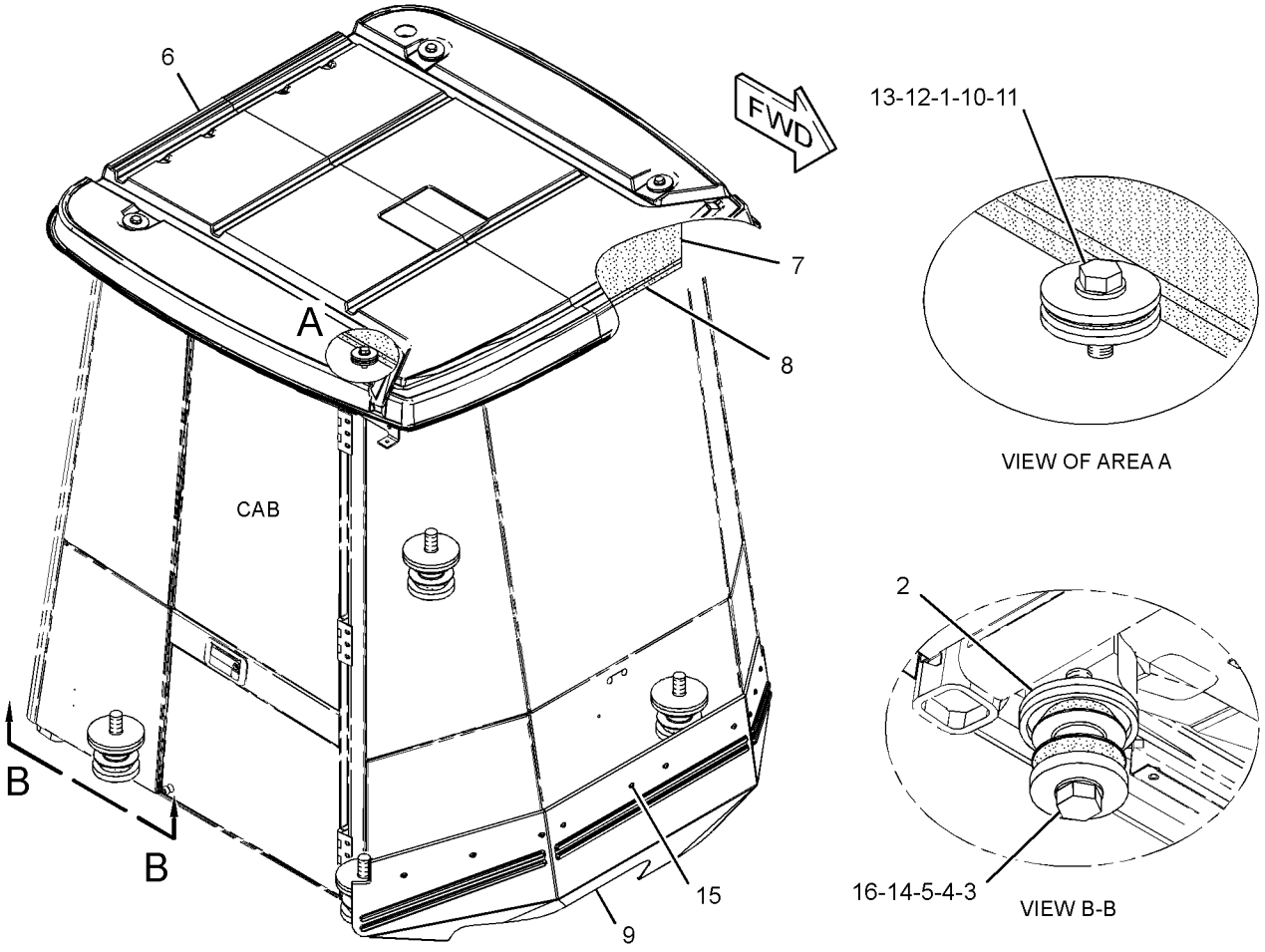


GRAPHIC #1 **<END>** g01364840

# OPERATOR STATION

## *308-2726* MOUNTING GP-CAB

**S/N: BXY1900-UP**
**PART OF 308-2725 OPERATOR AR**
**AN ATTACHMENT**

**SMCS-7301** **i02728702**

| NOTE | REF NO | GRAPHIC REF | PART NUMBER | QTY | PART NAME 1 2 3 4 5 6 (PRODUCT LEVEL) | SEE PAGE |
|---|---|---|---|---|---|---|
| | 1 | 1 | **138-8861** | 4 | WASHER AS | |
| | 2 | 1 | **138-8862** | 8 | MOUNT | |
| | 3 | 1 | **138-8863** | 4 | SLEEVE (36-MM) | |
| | 4 | 1 | **138-8864** | 4 | WASHER (39X135X20-MM THK) | |
| | 5 | 1 | **174-2407** | 1 | INSULATION | |
| | 6 | 1 | **174-2408** | 1 | INSULATION | |
| | 7 | 1 | **189-7409** | 1 | SHROUD (LH) | |
| | 8 | 1 | **189-7456** | 1 | SHROUD (RH) | |
| Y | 9 | 1 | *310-8266* | 1 | ROOF GP-CAB | 1454 |
| | 10 | 1 | **198-4780** | 4 | WASHER-HARD (17.5X32X8-MM THK) | |
| | 11 | 1 | **5P-4115** | 10 | WASHER-HARD (7.2X19X2-MM THK) | |
| M | 12 | 1 | **8T-4138** | 10 | BOLT (M6X1X20-MM) | |
| M | 13 | 1 | **8T-4175** | 4 | BOLT (M16X2X90-MM) | |
| | 14 | 1 | **8T-5463** | 4 | WASHER (39X66X5-MM THK) | |
| M | 15 | 1 | **9X-6626** | 4 | BOLT (M36X4X200-MM) | |

M-METRIC PART
Y-SEPARATE ILLUSTRATION

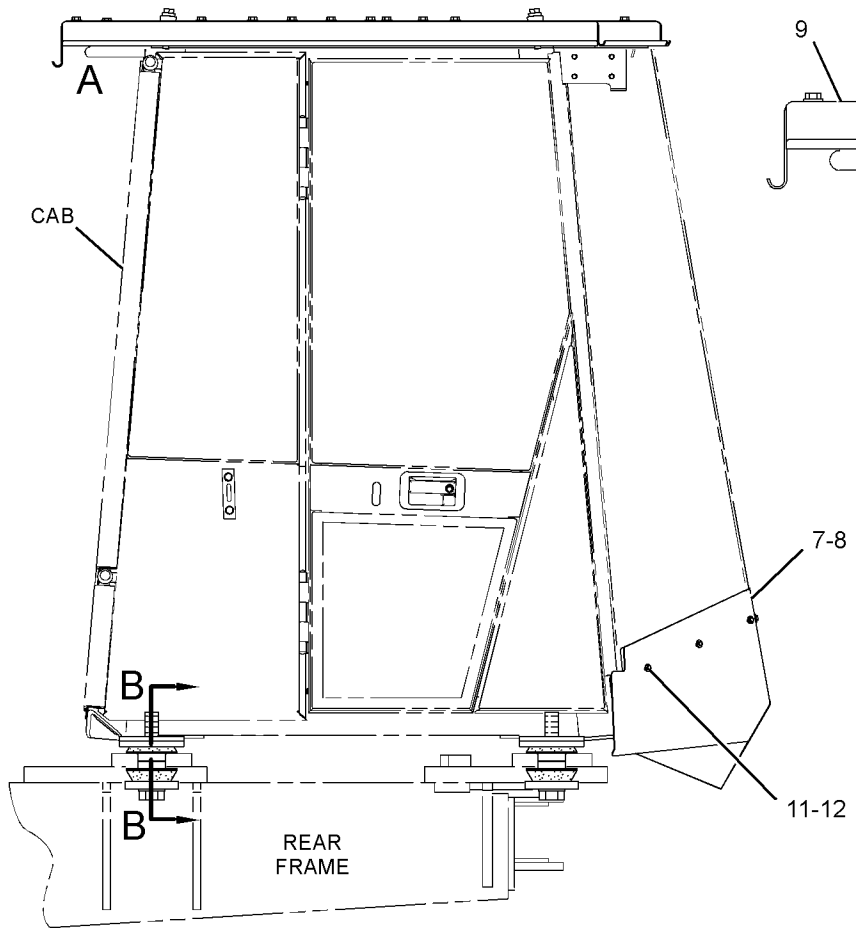


RIGHT SIDE VIEW

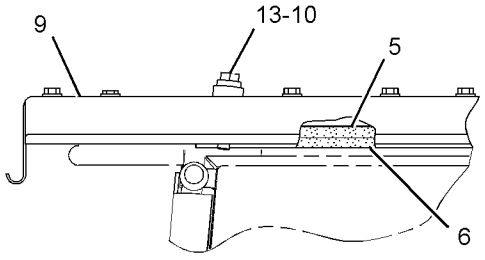


VIEW OF AREA A

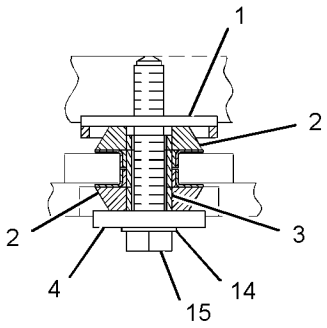


SECTION B-B

GRAPHIC #1 **<END>** g01369783

# OPERATOR STATION

## *227-3200* OPERATOR AR

**S/N: BXY1-1899**

**PART OF 225-5432 CHASSIS AR**

**SMCS-7301** **i01941249**

| NOTE | PART NUMBER | QTY | PART NAME 1 2 3 4 5 6 (PRODUCT LEVEL) | SEE PAGE |
|---|---|---|---|---|
| Y | *227-3190* | 1 | CAB AR | 1336 |
| Y | *162-6884* | 1 | INSTALLATION GP-CONTROLS | 1379 |
| Y | *183-4007* | 1 | MOUNTING GP-CAB | 1420 |

Y-SEPARATE ILLUSTRATION

**<END>**

## *292-6092* OPERATOR AR

**S/N: BXY1900-UP**

**PART OF 284-2735 CHASSIS AR**

**SMCS-7301** **i02672331**

| NOTE | PART NUMBER | QTY | PART NAME 1 2 3 4 5 6 (PRODUCT LEVEL) | SEE PAGE |
|---|---|---|---|---|
| Y | *292-6110* | 1 | CAB AR | 1337 |
| Y | *162-6884* | 1 | INSTALLATION GP-CONTROLS | 1379 |
| Y | *292-6890* | 1 | MOUNTING GP-CAB | 1422 |

Y-SEPARATE ILLUSTRATION

**<END>**

## *308-2725* OPERATOR AR

**S/N: BXY1900-UP**

**PART OF 2Q-8722, 2Q-8733 STEEL MILL AR**

**AN ATTACHMENT**

**SMCS-7301** **i02728634**

| NOTE | PART NUMBER | QTY | PART NAME 1 2 3 4 5 6 (PRODUCT LEVEL) | SEE PAGE |
|---|---|---|---|---|
| Y | *308-2727* | 1 | CAB AR | 1338 |
| Y | *162-6884* | 1 | INSTALLATION GP-CONTROLS | 1379 |
| Y | *308-2726* | 1 | MOUNTING GP-CAB | 1423 |

Y-SEPARATE ILLUSTRATION

**<END>**

# OPERATOR STATION

## *178-0604* PAN GP-BACKREST–CLOTH

**S/N: BXY1-UP**

**PART OF 178-0603 SEAT GP**

**SMCS-7312** **i02267748**

| NOTE | REF NO | GRAPHIC REF | PART NUMBER | QTY | PART NAME 1 2 3 4 5 6 (PRODUCT LEVEL) | SEE PAGE |
|---|---|---|---|---|---|---|
| | 1 | 1 | **164-4883** | 1 | KNOB-LUMBAR | |
| Y | 2 | 1 | *178-0605* | 1 | PAN GP-BACKREST (CLOTH) | 1426 |
| | 3 | 1 | **233-6745** | 1 | CUSHION AS (CLOTH) | |
| | 4 | 1 | **250-4628** | 3 | PLUG | |
| | 5 | 1 | **8T-7566** | 1 | PIN-SPRING | |

Y-SEPARATE ILLUSTRATION

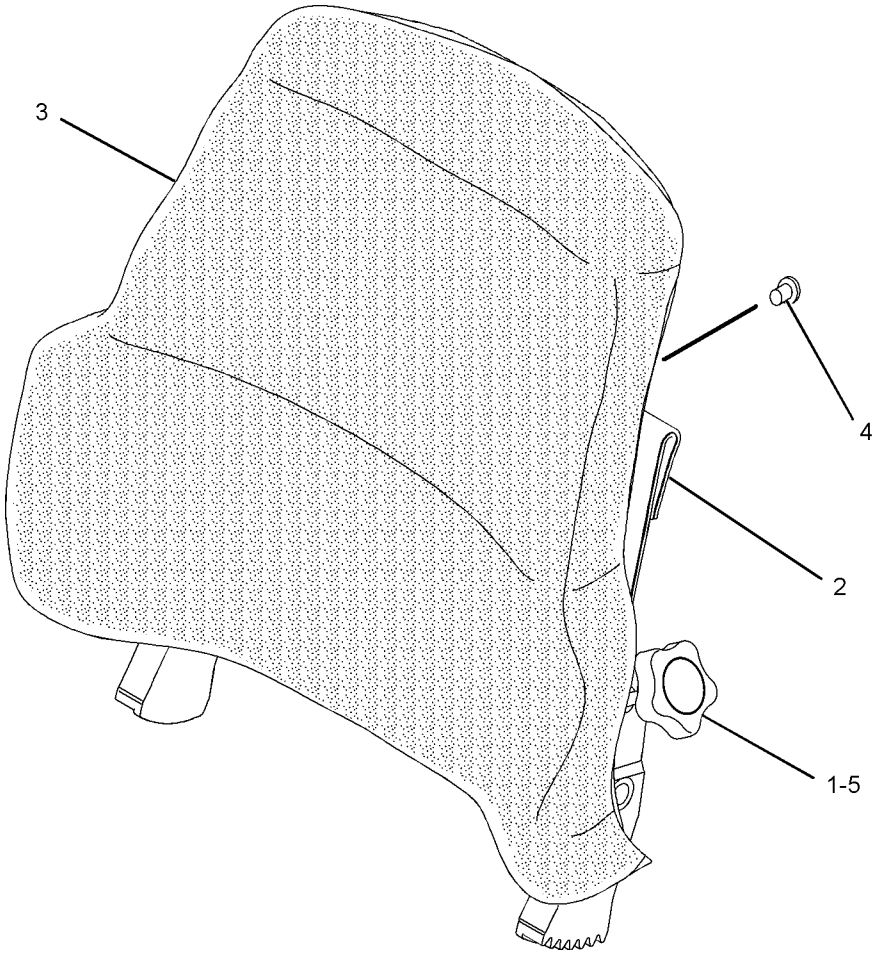


GRAPHIC #1 **<END>** g01092296

# OPERATOR STATION

## *178-0605* PAN GP-BACKREST

**S/N: BXY1-UP**

**PART OF 178-0604 PAN GP-BACKREST**

**SMCS-7312** **i02475257**

| NOTE | REF NO | GRAPHIC REF | PART NUMBER | QTY | PART NAME 1 2 3 4 5 6 (PRODUCT LEVEL) | SEE PAGE |
|---|---|---|---|---|---|---|
| | 1 | 1 | **4K-9429** | 8 | RIVET-POP | |
| | 2 | 1 | **5P-7957** | 1 | LANYARD | |
| | 3 | 1 | **136-1543** | 1 | PLATE AS-LUMBAR | |
| | 4 | 1 | **173-2052** | 1 | RETAINER | |
| | 5 | 1 | **178-7907** | 1 | HOLDER | |
| | 6 | 1 | **261-5694** | 1 | PAN AS-BACK | |

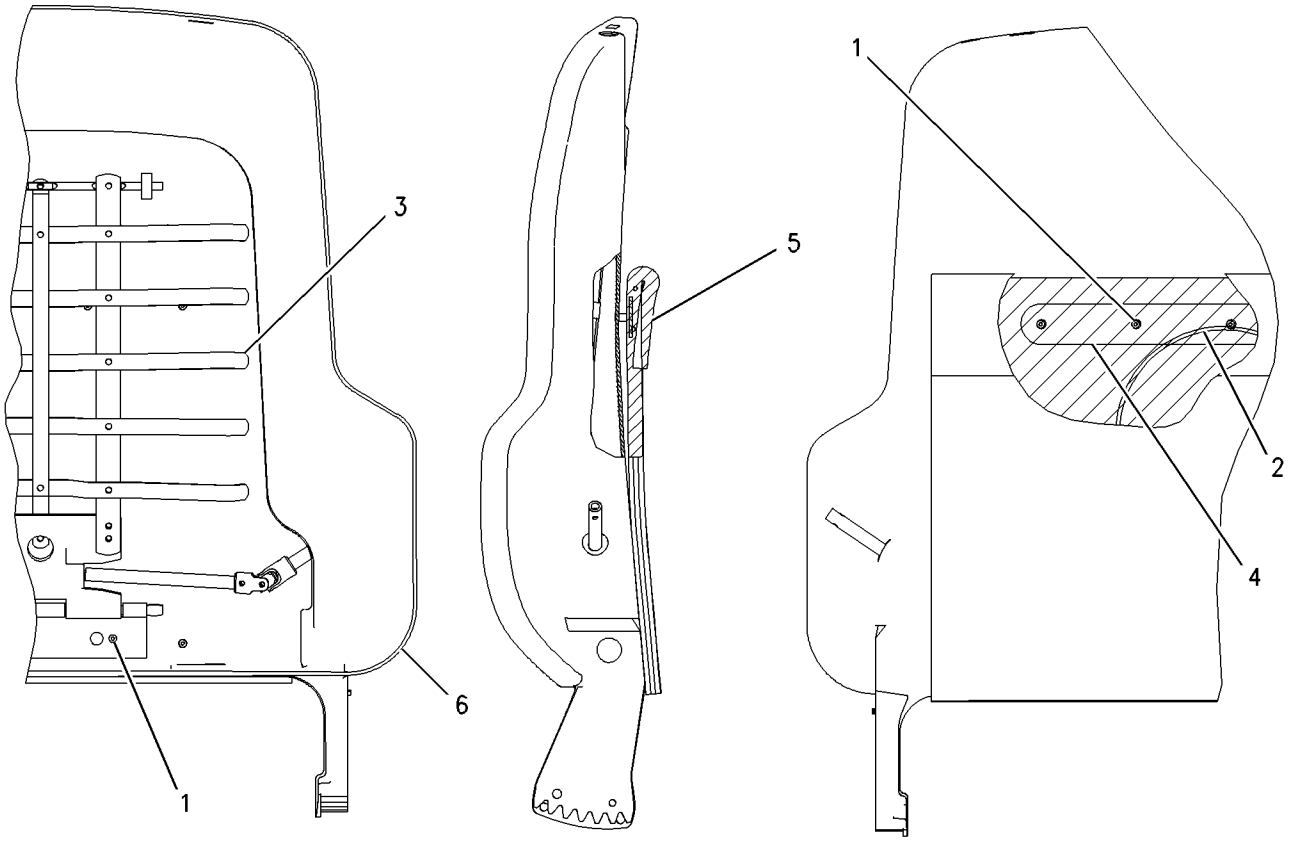


GRAPHIC #1 **<END>** g00716497

# OPERATOR STATION

## *292-6402* PAN GP-BACKREST

**S/N: BXY1-UP**
**PART OF 292-9237 PAN GP-BACKREST**
**ALSO AN ATTACHMENT**

**SMCS-7312** **i02577774**

| NOTE | REF NO | GRAPHIC REF | PART NUMBER | QTY | PART NAME 1 2 3 4 5 6 (PRODUCT LEVEL) | SEE PAGE |
|---|---|---|---|---|---|---|
| | 1 | 1 | **4K-9429** | 8 | RIVET-POP | |
| | 2 | 1 | **5P-7957** | 1 | LANYARD | |
| | 3 | 1 | **136-1543** | 1 | PLATE AS-LUMBAR | |
| | 4 | 1 | **173-2052** | 1 | RETAINER | |
| | 5 | 1 | **178-7907** | 1 | HOLDER | |
| | 6 | 1 | **261-5694** | 1 | PAN AS-BACK | |

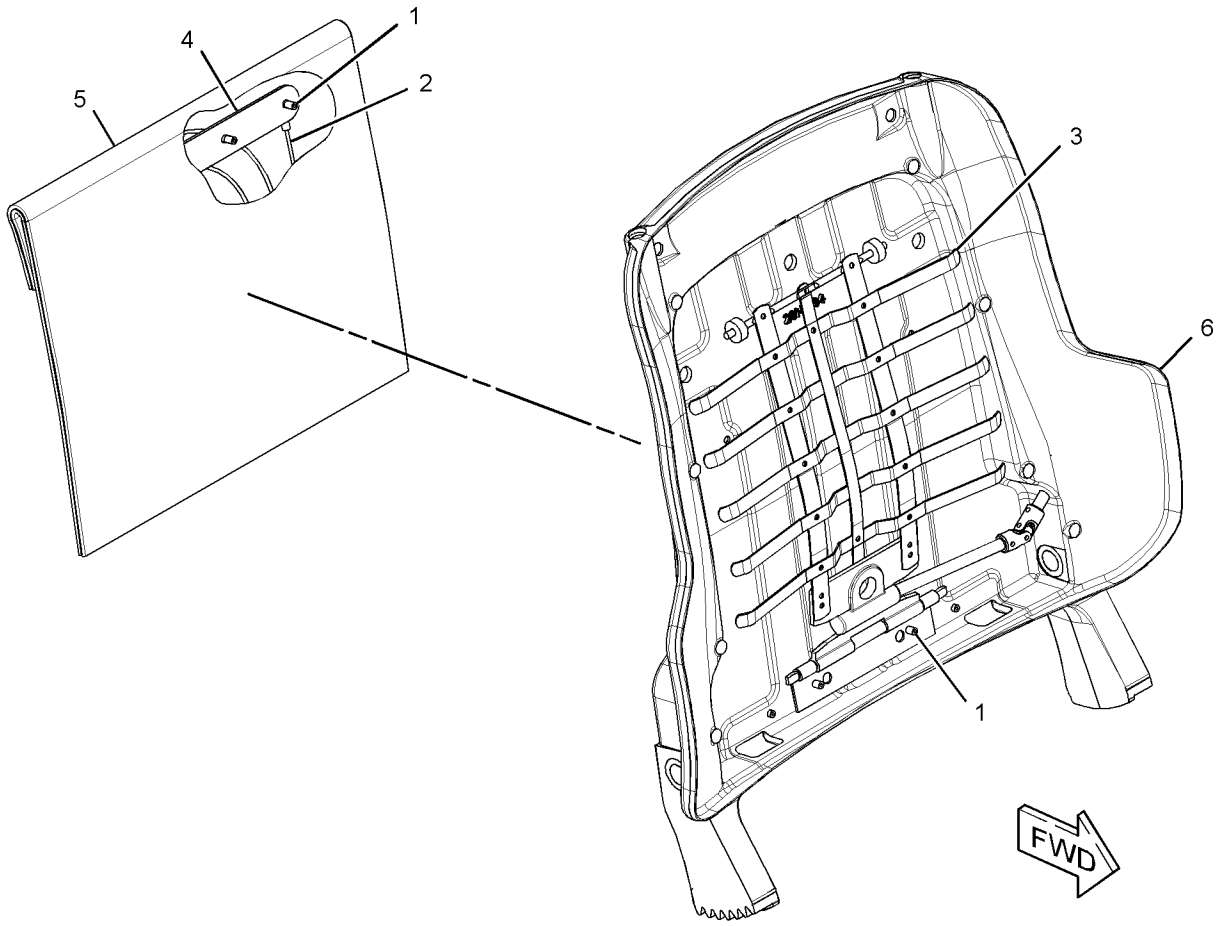


GRAPHIC #1 **<END>** g01304232

# OPERATOR STATION

## *292-9237* PAN GP-BACKREST

**S/N: BXY1-UP**
**PART OF 178-0603 SEAT GP**
**ALSO AN ATTACHMENT**

**SMCS-7312** **i02649684**

| NOTE | REF NO | GRAPHIC REF | PART NUMBER | QTY | PART NAME 1 2 3 4 5 6 (PRODUCT LEVEL) | SEE PAGE |
|---|---|---|---|---|---|---|
| | 1 | 1 | **164-4883** | 1 | KNOB-LUMBAR | |
| | 2 | 1 | **250-4628** | 3 | PLUG | |
| | 3 | 1 | **292-6097** | 1 | CUSHION AS-BACK | |
| Y | 4 | 1 | **292-6402** | 1 | PAN GP-BACKREST | 1427 |
| | 5 | 1 | **5P-0537** | 2 | WASHER-HARD (7.2X14.5X2-MM THK) | |
| | 6 | 1 | **6V-8969** | 2 | SCREW-BUTTON HEAD (1/4-20X0.5-IN) | |
| | 7 | 1 | **8T-7566** | 1 | PIN-SPRING | |

Y-SEPARATE ILLUSTRATION

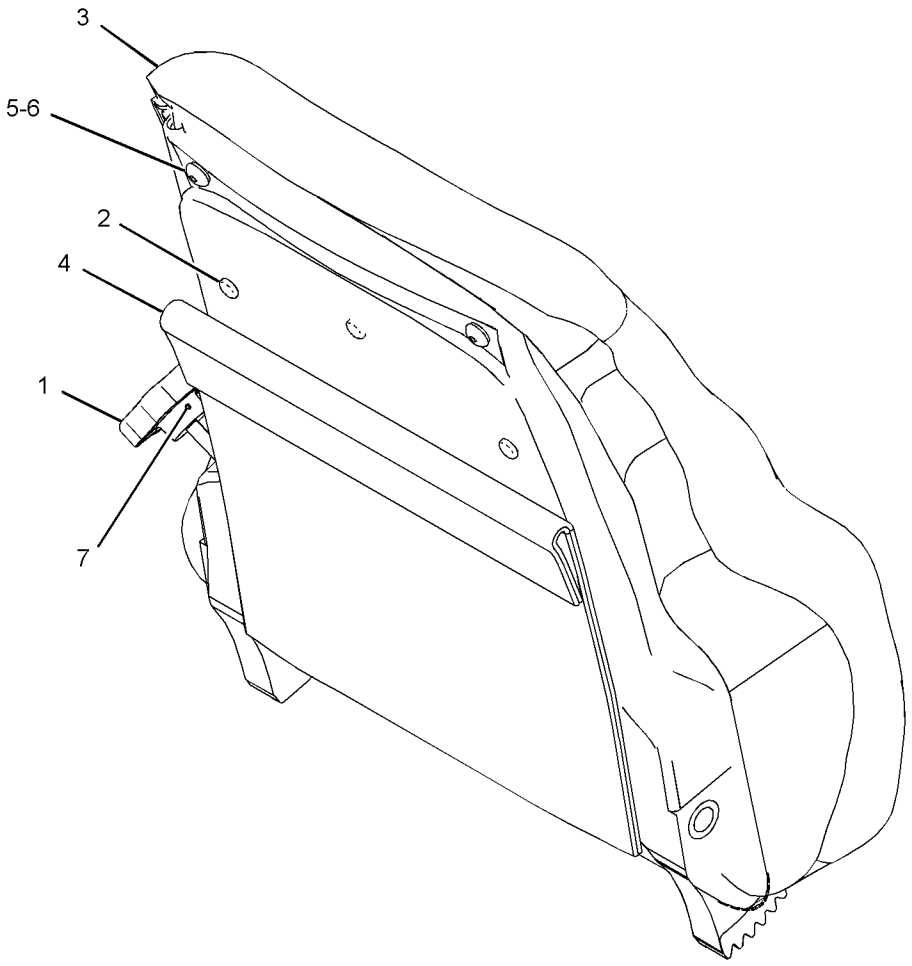


GRAPHIC #1 **<END>** g01336870

# OPERATOR STATION

## *227-3192* PANEL GP-INSTRUMENT–UPPER

**S/N: BXY1-UP**

**PART OF 227-3190, 292-6110, 308-2727 CAB AR**

**ALSO AN ATTACHMENT**

**SMCS-7451** **i02623535**

| NOTE | REF NO | GRAPHIC REF | PART NUMBER | QTY | PART NAME 1 2 3 4 5 6 (PRODUCT LEVEL) | SEE PAGE |
|---|---|---|---|---|---|---|
| | 1 | 1 | **112-5419** | 1 | BEZEL (RH) | |
| | 2 | 1 | **116-0434** | 1 | FILM-UPPER PANEL (RH-FRONT) | |
| | 3 | 1 | **138-4837** | 1 | BEZEL (LH) | |
| | 4 | 1 | **138-7822** | 1 | FILM-UPPER PANEL (REAR, RH) | |
| | 5 | 1 | **138-7823** | 1 | FILM-UPPER PANEL (LH) | |
| | 6 | 1 | **229-2257** | 1 | FILM-PANEL (REAR) | |
| M | 7 | 1 | **7Y-7256** | 12 | SCREW-TRUSS HEAD (M4X0.7-MM) | |

M-METRIC PART

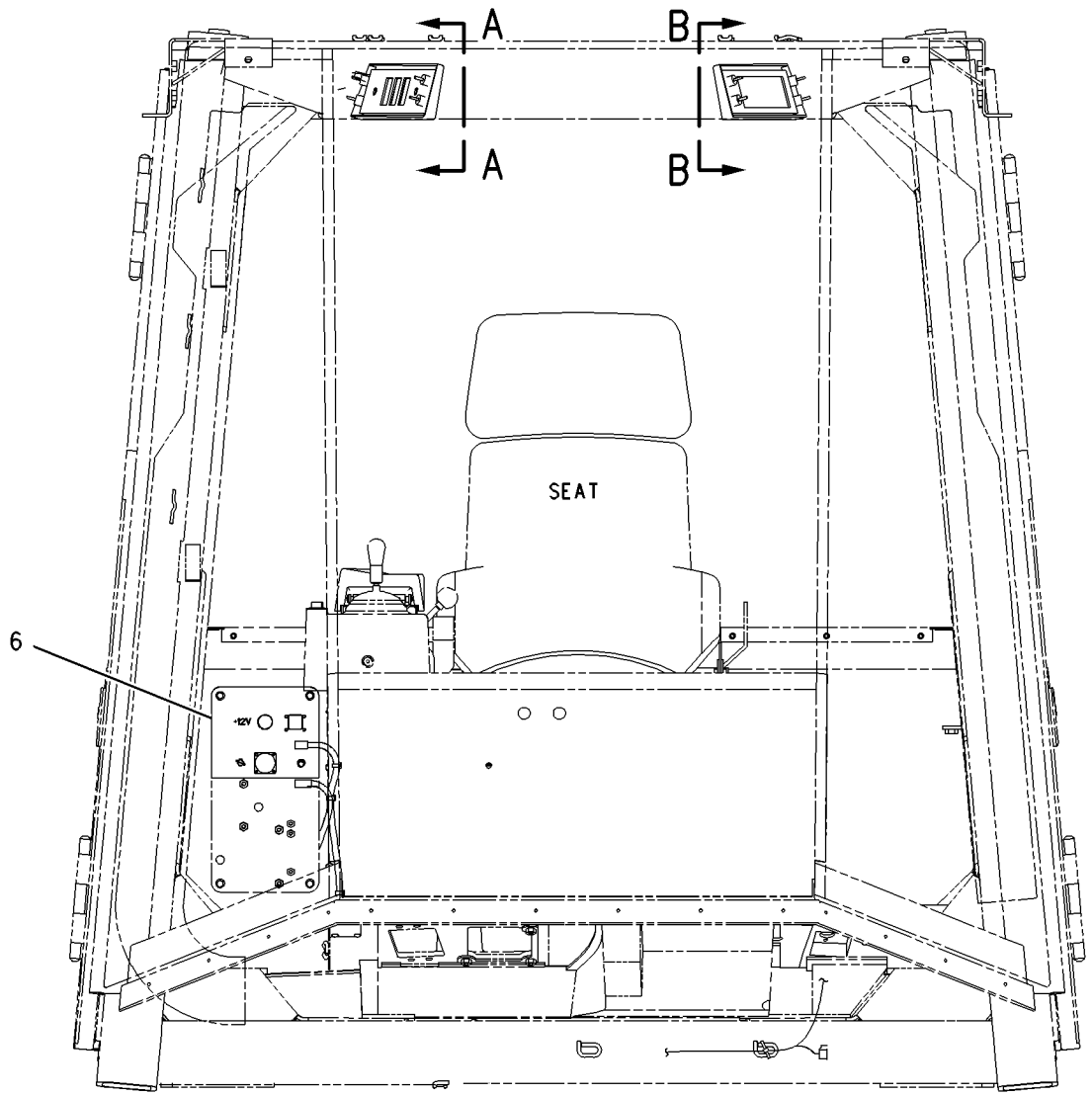


FRONT VIEW

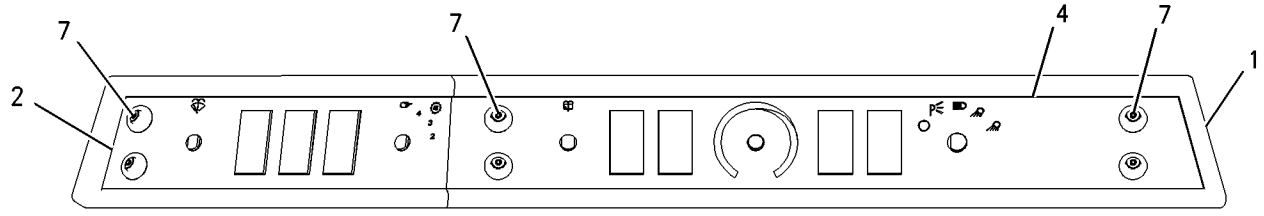


VIEW A-A

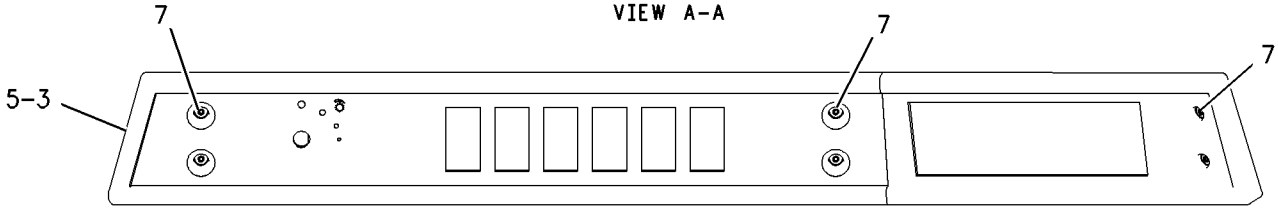


VIEW B-B

GRAPHIC #1 **<END>** g01006038

# OPERATOR STATION

## *227-3198* PANEL GP-INSTRUMENT–LOWER

**S/N: BXY1-UP**

**PART OF 227-3190, 292-6110, 308-2727 CAB AR**

**ALSO AN ATTACHMENT**

**SMCS-7451** **i01941396**

| NOTE | REF NO | GRAPHIC REF | PART NUMBER | QTY | PART NAME 1 2 3 4 5 6 (PRODUCT LEVEL) | SEE PAGE |
|---|---|---|---|---|---|---|
| | 1 | 1 | **110-4215** | 1 | BEZEL (CENTER) | |
| | 2 | 1 | **110-4216** | 1 | BEZEL-RH | |
| | 3 | 1 | **110-4217** | 1 | BEZEL-LH | |
| | 4 | 1 | **230-9085** | 1 | FILM-MONITOR (CATERPILLAR MONITORING SYSTEM) | |
| | 5 | 1 | **230-9087** | 1 | FILM-PANEL (INDICATOR) | |
| M | 6 | 1 | **9X-1046** | 10 | SCREW (M4X0.7X18MM) | |

M-METRIC PART

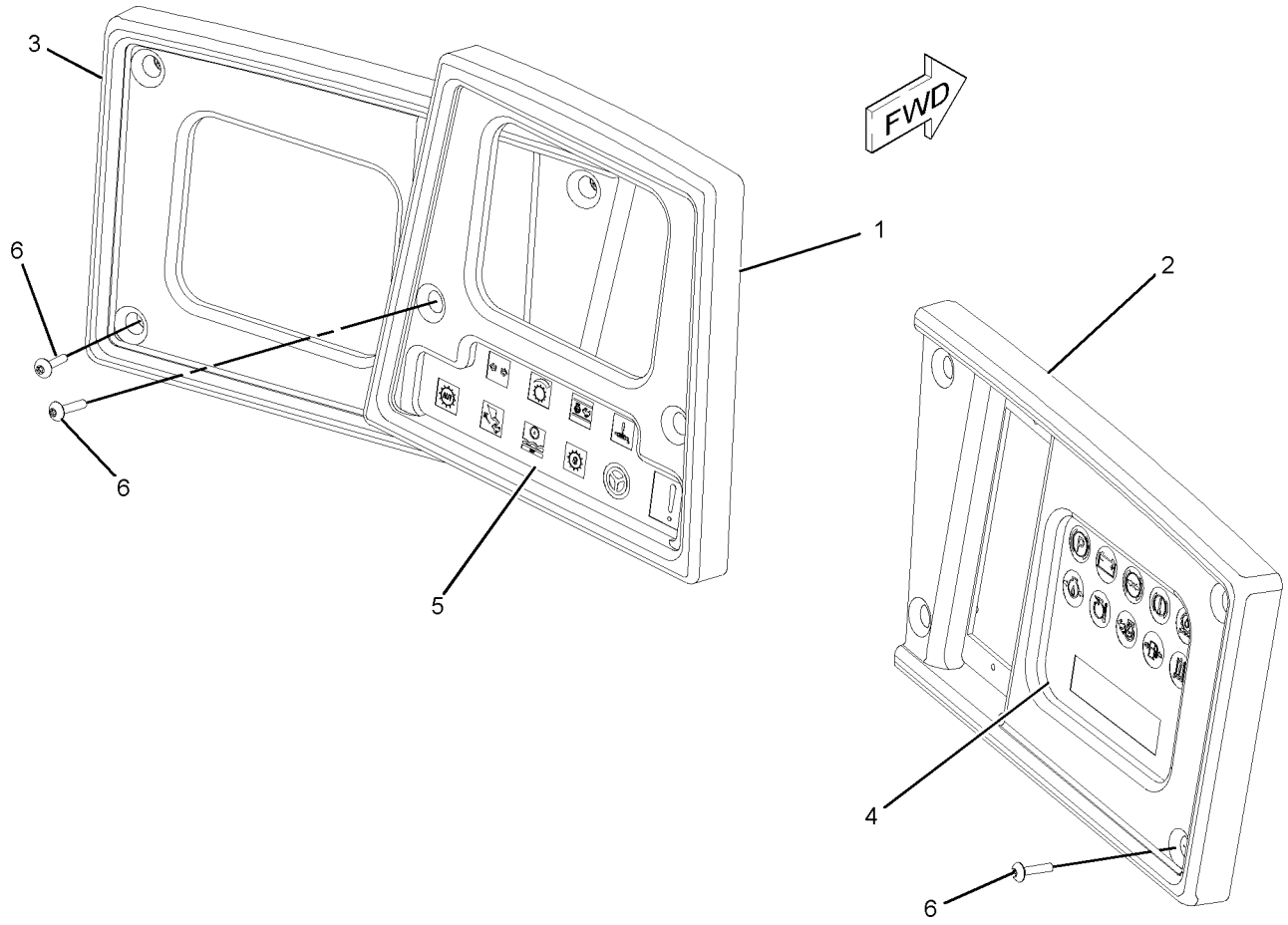


GRAPHIC #1 **<END>** g01020706

# OPERATOR STATION

## 130-8176 PEDAL GP-GOVERNOR

**S/N: BXY1-UP**

**PART OF 141-4645 PEDAL GP-GOVERNOR**

**ALSO AN ATTACHMENT**

**SMCS-1276** **i02505214**

| NOTE | REF NO | GRAPHIC REF | PART NUMBER | QTY | PART NAME 1 2 3 4 5 6 (PRODUCT LEVEL) | SEE PAGE |
|---|---|---|---|---|---|---|
| | 1 | 1 | **123-9431** | 1 | COVER | |
| | 2 | 1 | **7G-7053** | 1 | GROMMET | |
| | 3 | 1 | **160-6353** | 1 | PLATE AS | |
| Y | 4 | 1 | **204-7949** | 1 | SENSOR GP-POSITION (ROTARY) (THROTTLE) | 296 |
| | 5 | 1 | **160-6365** | 2 | SCREW | |
| | 6 | 1 | **160-6366** | 2 | CLIP | |
| | 7 | 1 | **140-2961** | 1 | KIT-ROLLER | |
| | | | | | (KIT INCLUDES SNAP RING, ROLLER AND ROLLER PIN) | |
| | 8 | 1 | **274-9189** | 1 | KIT-TREADLE PIN | |
| | | | | | (KIT INCLUDES BUSHINGS, PIN, AND PUSH NUT) | |
| | 9 | 1 | **140-2963** | 2 | SCREW | |

Y-SEPARATE ILLUSTRATION

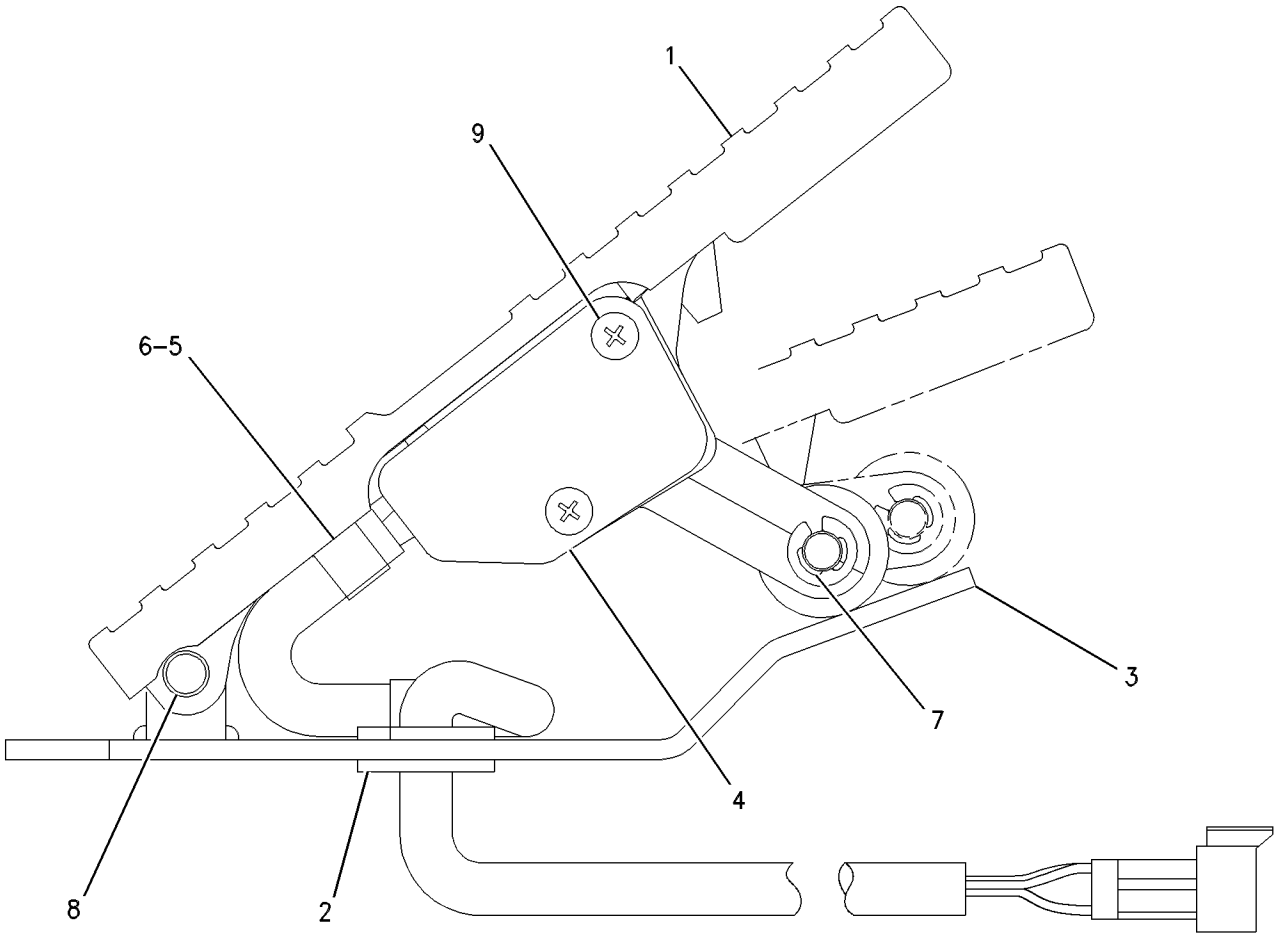


GRAPHIC #1 **<END>** g00495129

# OPERATOR STATION

## *141-4645* PEDAL GP-GOVERNOR

**S/N: BXY1-UP**
**PART OF 227-3190, 292-6110, 308-2727 CAB AR**
**ALSO AN ATTACHMENT**

**SMCS-1276** **i01501848**

| NOTE | REF NO | GRAPHIC REF | PART NUMBER | QTY | PART NAME 1 2 3 4 5 6 (PRODUCT LEVEL) | SEE PAGE |
|---|---|---|---|---|---|---|
| Y | 1 | 1 | **130-8176** | 1 | PEDAL GP-GOVERNOR | 1432 |
| | 2 | 1 | **8T-4224** | 4 | WASHER-HARD (8.8X16X2MM THK) | |
| M | 3 | 1 | **8T-7547** | 4 | BOLT (M8X1.25X30MM) | |
| | 4 | 1 | **136-3970** | 1 | GASKET | |

M-METRIC PART
Y-SEPARATE ILLUSTRATION

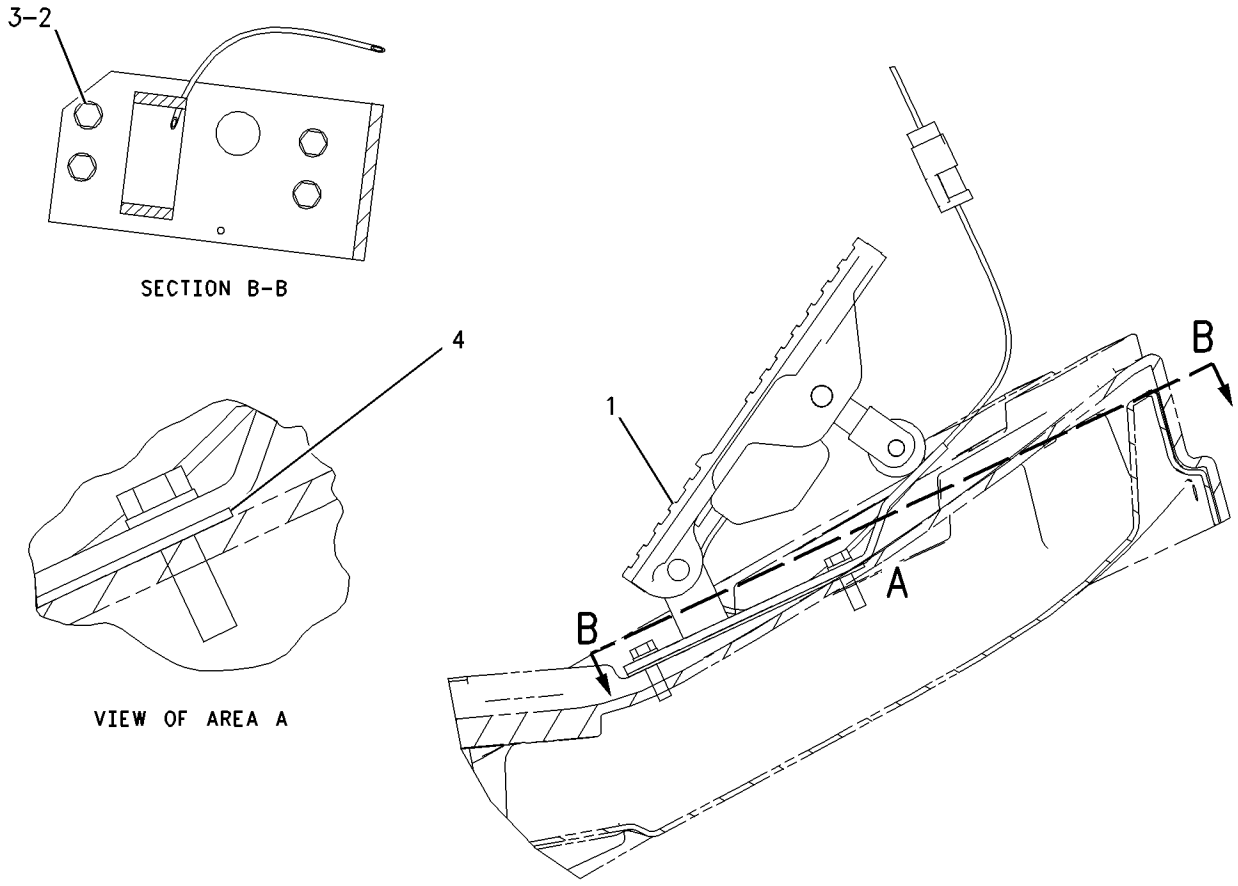


GRAPHIC #1 **<END>** g00779453

# OPERATOR STATION

## *136-3357* PLATFORM GP

**S/N: BXY1-UP**

**PART OF 172-4387 PLATFORM GP-CAB**

**SMCS-7253** **i02394070**

| NOTE | REF NO | GRAPHIC REF | PART NUMBER | QTY | PART NAME 1 2 3 4 5 6 (PRODUCT LEVEL) | SEE PAGE |
|---|---|---|---|---|---|---|
| | 1 | 1 | **2M-6102** | 3 | PIPE | |
| | 2 | 1 | **6V-2491** | 38 | RIVET-POP | |
| | 3 | 1 | **118-0040** | 1 | BRACKET | |
| | 4 | 1 | *125-3276* | 1 | PLATE AS | |
| M | | 1 | **8T-3612** | 3 | NUT-WELD (M8X1.25-THD) | |
| | 5 | 1 | *136-3645* | 1 | PLATE AS | |
| M | | 1 | **8T-3612** | 4 | NUT-WELD (M8X1.25-THD) | |
| | 6 | 1 | *163-5515* | 1 | PLATE AS | |
| M | | 1 | **8T-3612** | 3 | NUT-WELD (M8X1.25-THD) | |

M-METRIC PART

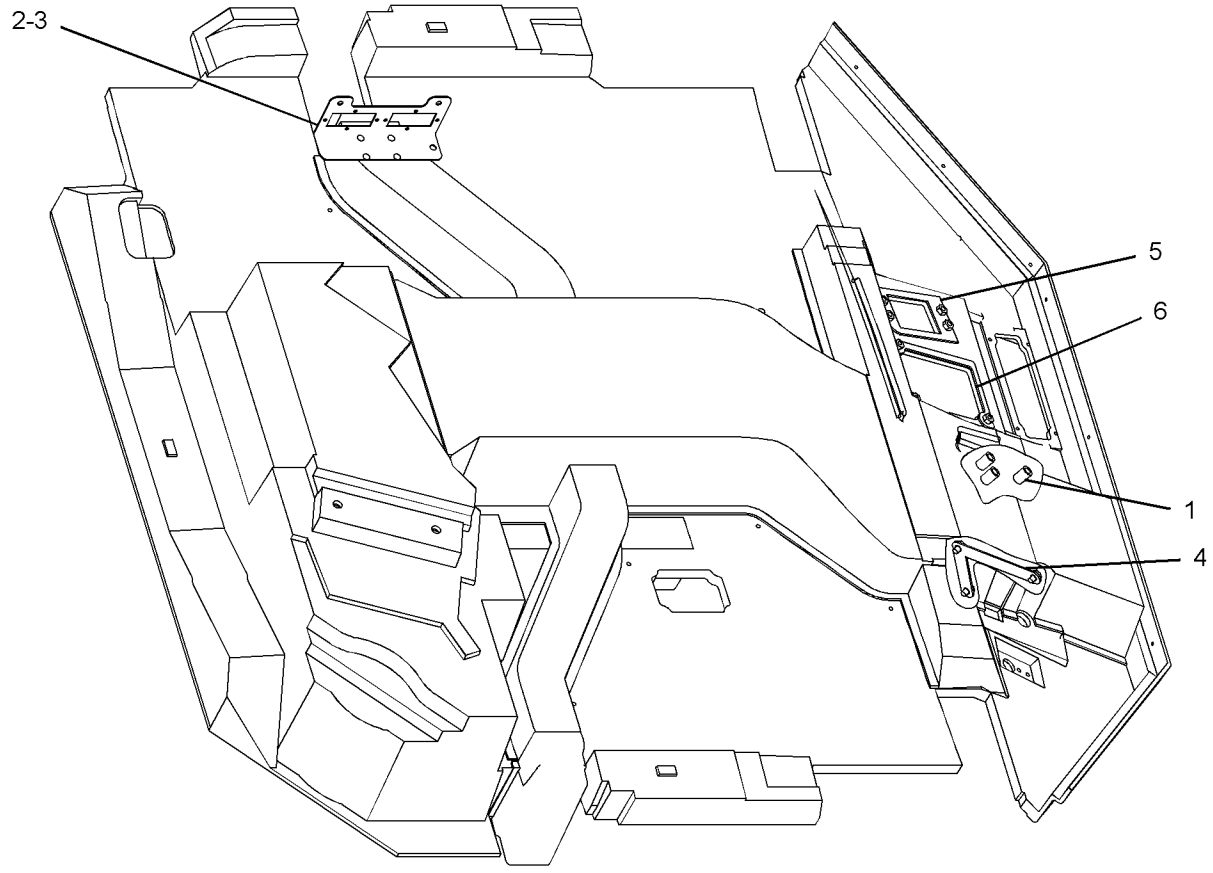


GRAPHIC #1 **<END>** g01195464

# OPERATOR STATION

## *136-3357* PLATFORM GP

**S/N: BXY1-1899**

**PART OF 172-4387 PLATFORM GP-CAB**

**SMCS-7253** **i02715758**

| NOTE | REF NO | GRAPHIC REF | PART NUMBER | QTY | PART NAME 1 2 3 4 5 6 (PRODUCT LEVEL) | SEE PAGE |
|---|---|---|---|---|---|---|
| | 1 | 1 | **2M-6102** | 3 | PIPE | |
| | 4 | 1 | **125-3276** | 1 | PLATE AS | |
| M | | 1 | **8T-3612** | 4 | NUT-WELD (M8X1.25-THD) | |
| | 6 | 1 | *136-3645* | 1 | PLATE AS | |
| M | | 1 | **8T-3612** | 3 | NUT-WELD (M8X1.25-THD) | |
| | 7 | 1 | *163-5515* | 1 | PLATE AS | |
| M | | 1 | **8T-3612** | 4 | NUT-WELD (M8X1.25-THD) | |
| | 9 | 1 | **6K-3273** | 14 | RIVET-POP | |

M-METRIC PART

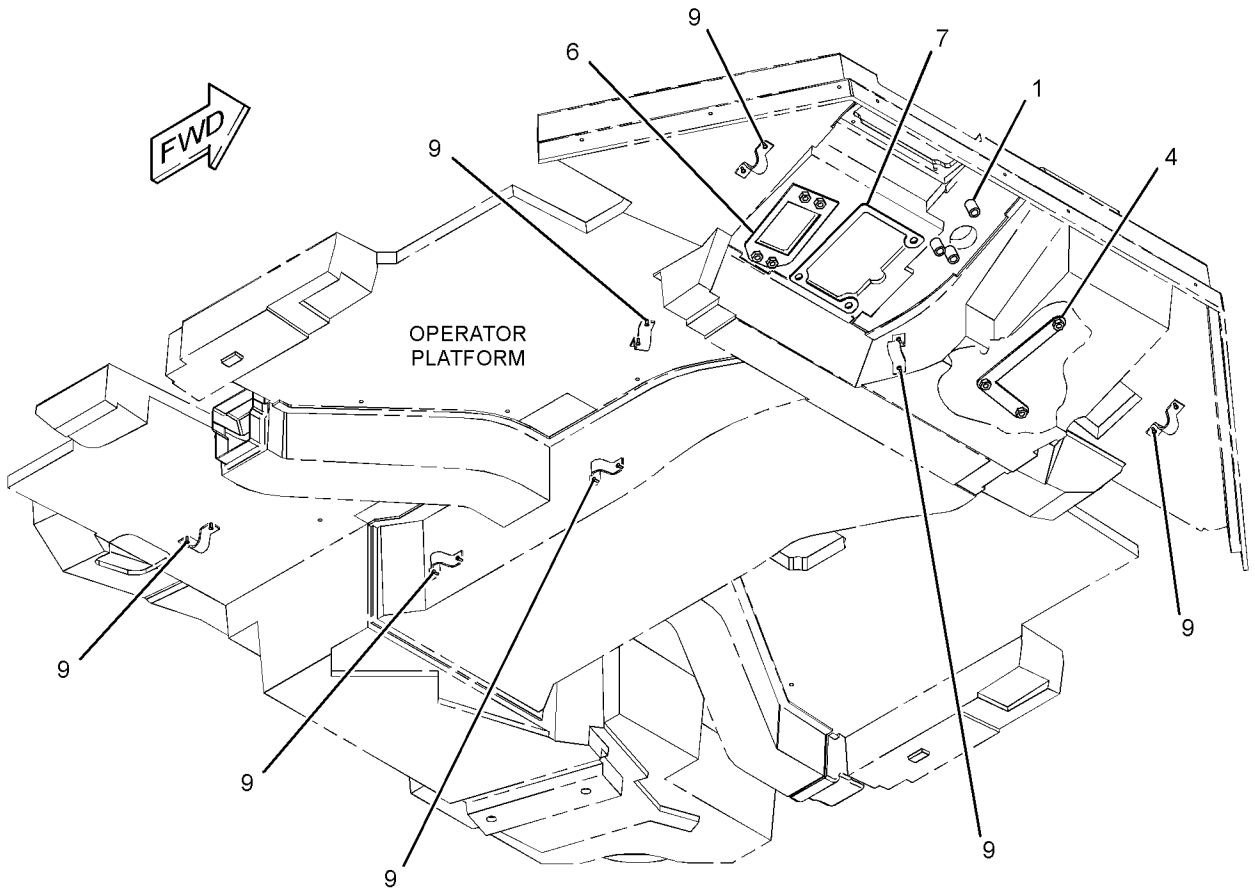


GRAPHIC #1 **<END>** g01363714

# OPERATOR STATION

## *136-3357* PLATFORM GP

**S/N: BXY1900-UP**
**PART OF 172-4387 PLATFORM GP-CAB**
**ALSO AN ATTACHMENT**

**SMCS-7253** **i02715767**

| NOTE | REF NO | GRAPHIC REF | PART NUMBER | QTY | PART NAME 1 2 3 4 5 6 (PRODUCT LEVEL) | SEE PAGE |
|---|---|---|---|---|---|---|
| | 1 | 1 | **2M-6102** | 3 | PIPE | |
| | 4 | 1 | **125-3276** | 1 | PLATE AS | |
| M | | 1 | **8T-3612** | 4 | NUT-WELD (M8X1.25-THD) | |
| | 6 | 1 | *136-3645* | 1 | PLATE AS | |
| M | | 1 | **8T-3612** | 4 | NUT-WELD (M8X1.25-THD) | |
| | 7 | 1 | *163-5515* | 1 | PLATE AS | |
| M | | 1 | **8T-3612** | 3 | NUT-WELD (M8X1.25-THD) | |
| C | 9 | 1 | **6K-3273** | 16 | RIVET-POP | |

C-CHANGE FROM PREVIOUS TYPE
M-METRIC PART

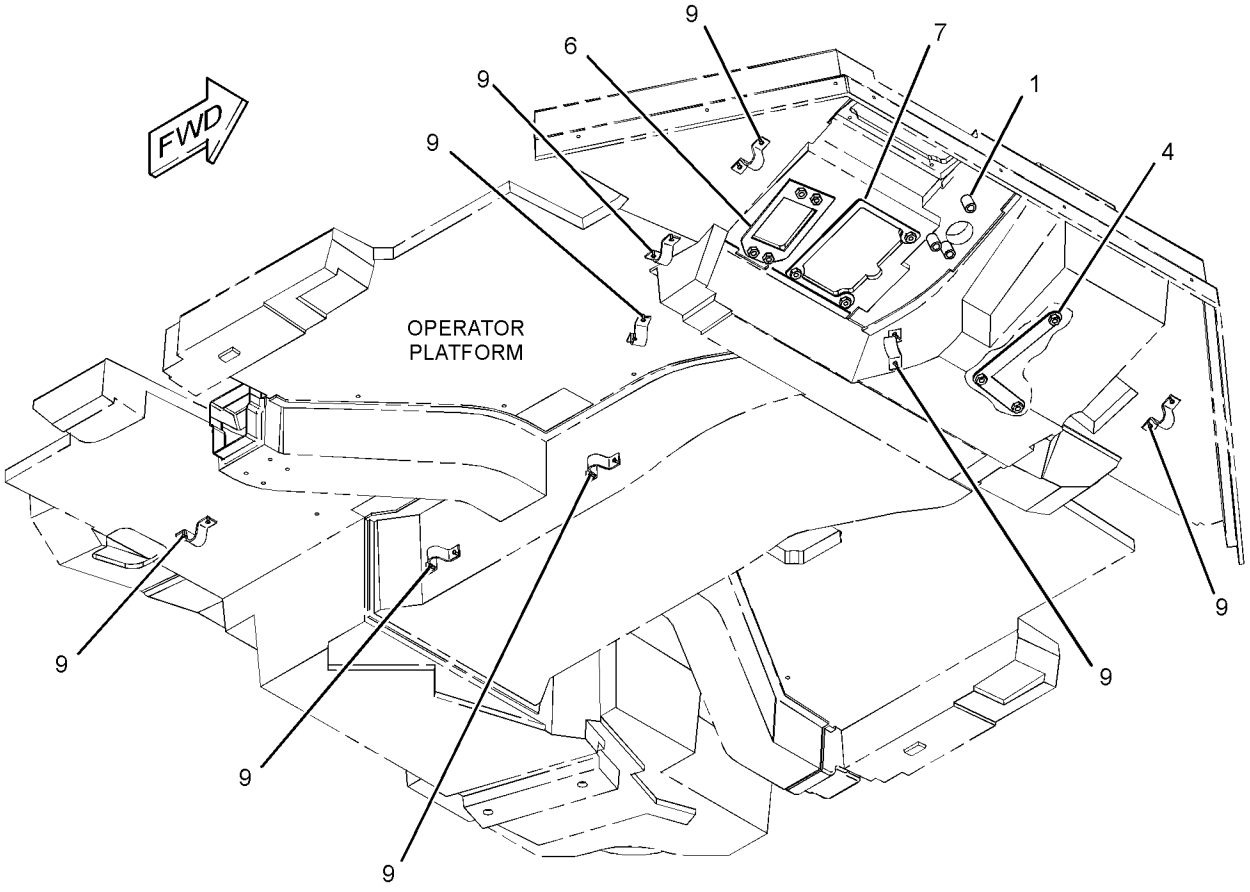


GRAPHIC #1 **<END>** g01364736

# OPERATOR STATION

## 172-4387 PLATFORM GP-CAB

**S/N: BXY1-1899**

**PART OF 228-9530 ROPS GP-ENCLOSED**

**SMCS-7253** **i01158717**

| NOTE | REF NO | GRAPHIC REF | PART NUMBER | QTY | PART NAME 1 2 3 4 5 6 (PRODUCT LEVEL) | SEE PAGE |
|---|---|---|---|---|---|---|
| Y | 1 | 1 | **136-3357** | 1 | PLATFORM GP | 1434 |
| | 2 | 1 | **155-8354** | 1 | INSULATION | |
| | 3 | 1 | **155-8355** | 1 | INSULATION | |
| | 4 | 1 | **155-8356** | 1 | INSULATION | |
| | 5 | 1 | **159-7234** | 1 | INSULATION | |

Y-SEPARATE ILLUSTRATION

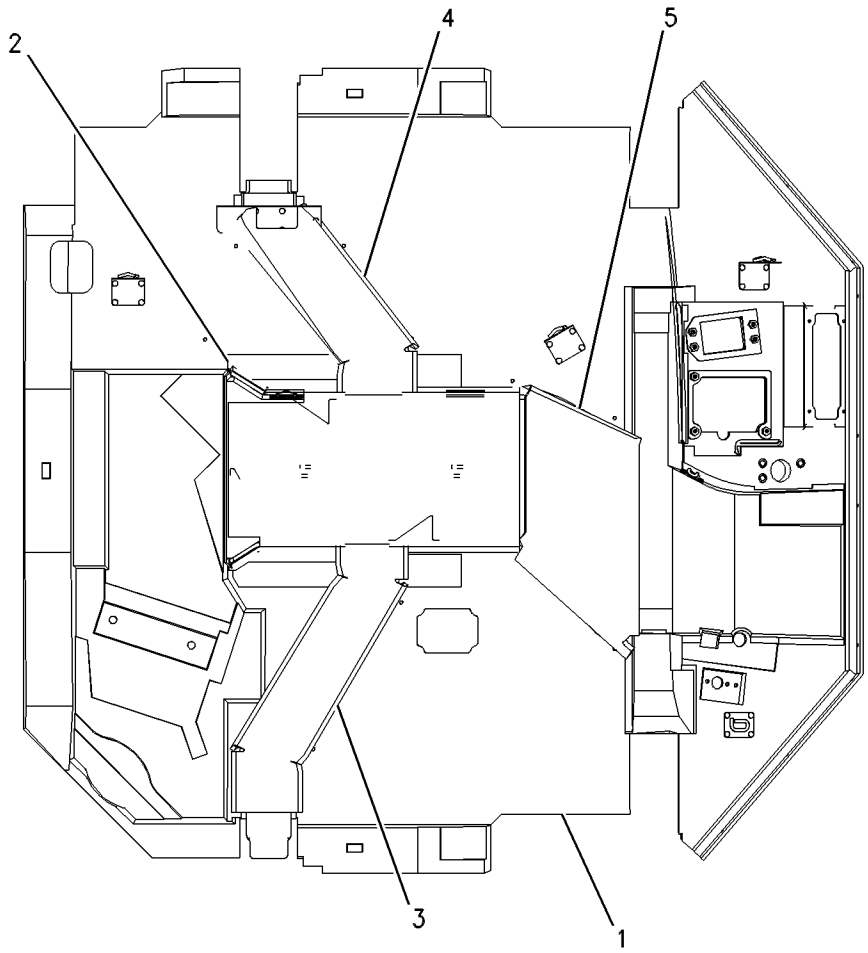


GRAPHIC #1 **<END>** g00620699

# OPERATOR STATION

## 172-4387 PLATFORM GP-CAB

**S/N: BXY1900-UP**

**PART OF 292-6893, 308-2708, 308-2728 ROPS GP-ENCLOSED**

**ALSO AN ATTACHMENT**

**SMCS-7253** **i02715775**

| NOTE | REF NO | GRAPHIC REF | PART NUMBER | QTY | PART NAME 1 2 3 4 5 6 (PRODUCT LEVEL) | SEE PAGE |
|---|---|---|---|---|---|---|
| Y | 1 | 1 | **136-3357** | 1 | PLATFORM GP | 1434 |
| | 2 | 1 | **155-8354** | 1 | INSULATION | |
| | 3 | 1 | **155-8355** | 1 | INSULATION | |
| | 4 | 1 | **155-8356** | 1 | INSULATION | |
| | 5 | 1 | **159-7234** | 1 | INSULATION | |

Y-SEPARATE ILLUSTRATION

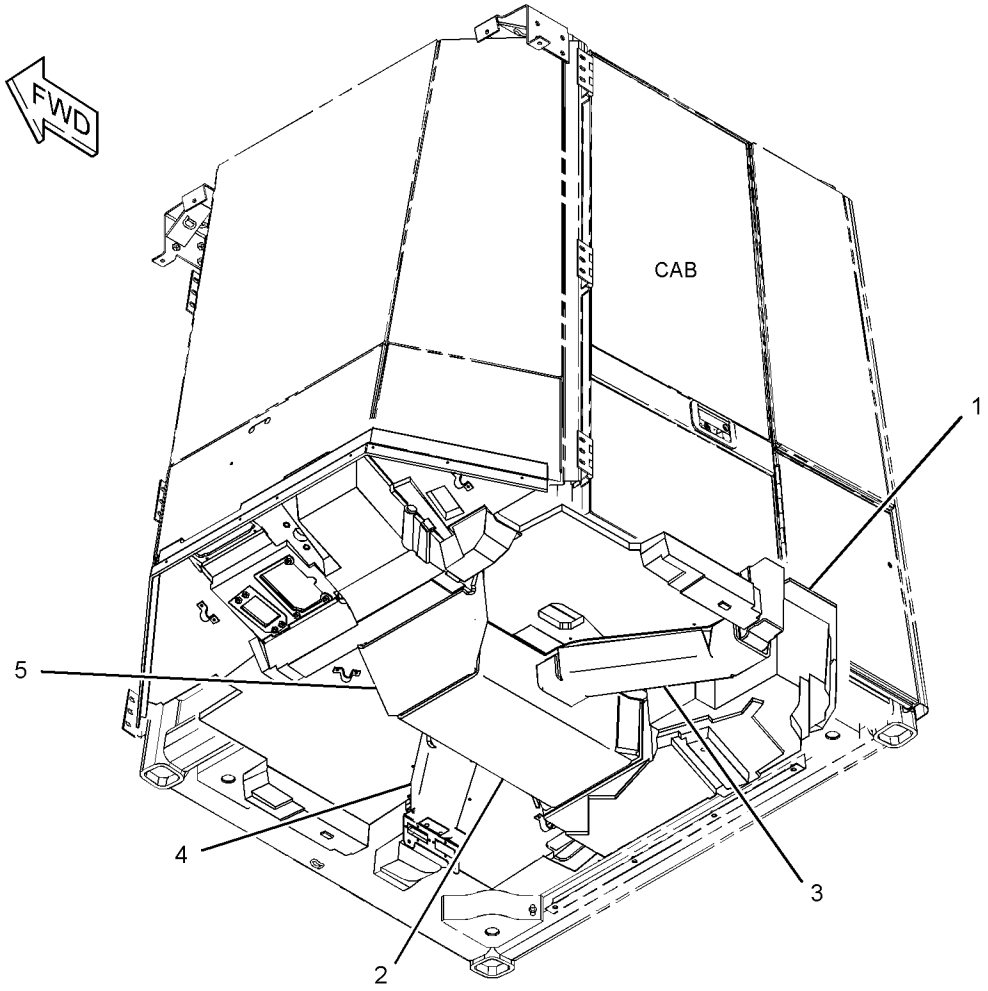


GRAPHIC #1 **<END>** g01364603

# OPERATOR STATION

## *114-5124* PLATFORM GP-OPERATOR

**S/N: BXY1-1899**

**PART OF 225-5432 CHASSIS AR**

**SMCS-7253** **i02743351**

| NOTE | REF NO | GRAPHIC REF | PART NUMBER | QTY | PART NAME 1 2 3 4 5 6 (PRODUCT LEVEL) | SEE PAGE |
|---|---|---|---|---|---|---|
| | 1 | 2 | **6V-1635** | 3 | RIVET-POP | |
| | 2 | 2 | **134-6051** | 2 | SUPPORT AS | |
| | | | | | (EACH INCLUDES) | |
| M | | 2 | **8T-3597** | 4 | NUT-WELD (M12X1.75-THD) | |
| | | 2 | **8Y-4489** | 1 | BOSS-THREADED (M10X1.5-6HX35-MM) | |
| M | | 2 | **9R-2613** | 2 | BOSS-WELD (M10X1.5X25-MM OAL) | |
| | | 2 | **9R-4595** | 1 | BOSS | |
| | 3 | 2 | **134-6052** | 2 | SUPPORT AS | |
| | | | | | (EACH INCLUDES) | |
| | | 2 | **5G-6787** | 1 | BOSS | |
| | | 2 | **7T-1099** | 1 | LINK | |
| M | | 2 | **8T-3597** | 11 | NUT-WELD (M12X1.75-THD) | |
| | 4 | 1 | **134-6722** | 1 | PLATFORM AS (LH) | |
| M | | 1 | **8T-3597** | 8 | NUT-WELD (M12X1.75-THD) | |
| | 5 | 1 | **134-6723** | 1 | PLATFORM AS (RH) | |
| M | | 1 | **8T-3597** | 9 | NUT-WELD (M12X1.75-THD) | |
| | 6 | 2 | **134-7326** | 1 | SUPPORT AS | |
| M | | 2 | **8T-3597** | 5 | NUT-WELD (M12X1.75-THD) | |
| | 7 | 2 | **138-2800** | 1 | PLATE AS | |
| M | | 2 | **9R-2613** | 2 | BOSS-WELD (M10X1.5X25-MM OAL) | |
| | 8 | 2 | **139-5544** | 1 | SHEET AS | |
| M | | 2 | **8T-3597** | 2 | NUT-WELD (M12X1.75-THD) | |
| | 9 | 2 | **183-7532** | 1 | SHEET AS-RH | |
| | 10 | 2 | **184-1700** | 1 | PANEL AS | |
| | 11 | 2 | **183-7531** | 1 | SHEET AS-LH | |
| | 12 | 2 | **160-5877** | 1 | SHEET AS | |
| M | | 2 | **8T-3597** | 1 | NUT-WELD (M12X1.75-THD) | |
| Y | 13 | 1 | *162-7599* | 1 | PLATFORM GP-OPERATOR | 1445 |
| | 14 | 2 | **195-0472** | 1 | SHEET | |
| | 15 | 1 | **168-1793** | 1 | BRACKET AS | |
| | 16 | 2 | **173-9195** | 1 | SHEET AS | |
| | 17 | 2 | **195-3162** | 1 | SHEET AS | |
| M | | 2 | **8T-3597** | 2 | NUT-WELD (M12X1.75-THD) | |
| | 18 | 2 | **173-9197** | 1 | FLAP | |
| Y | 19 | 1 | *178-4139* | 1 | DOOR GP-STORAGE | 1373 |
| | 20 | 1 | **178-8486** | 1 | SHEET | |
| | 21 | 1 | **178-8504** | 1 | SHEET | |
| | 22 | 1,2 | **5P-1076** | 44 | WASHER-HARD (13.5X30X4-MM THK) | |
| M | 23 | 1,2 | **8T-4139** | 40 | BOLT (M12X1.75X30-MM) | |
| M | 24 | 1 | **8T-4179** | 24 | BOLT (M12X1.75X20-MM) | |
| M | 25 | 1,2 | **8T-4183** | 20 | BOLT (M12X1.75X40-MM) | |
| M | 26 | 2 | **8T-4192** | 8 | BOLT (M12X1.75X25-MM) | |
| | 27 | 1,2 | **8T-4223** | 48 | WASHER-HARD (13.5X25.5X3-MM THK) | |
| | 28 | 2 | **184-1699** | 1 | PANEL AS | |
| M | 29 | 2 | **8T-4137** | 3 | BOLT (M10X1.5X20-MM) | |
| | 30 | 2 | **7X-7729** | 3 | WASHER (11X25X3-MM THK) | |
| | 31 | 2 | **173-9198** | 1 | STRIP | |

M-METRIC PART
Y-SEPARATE ILLUSTRATION

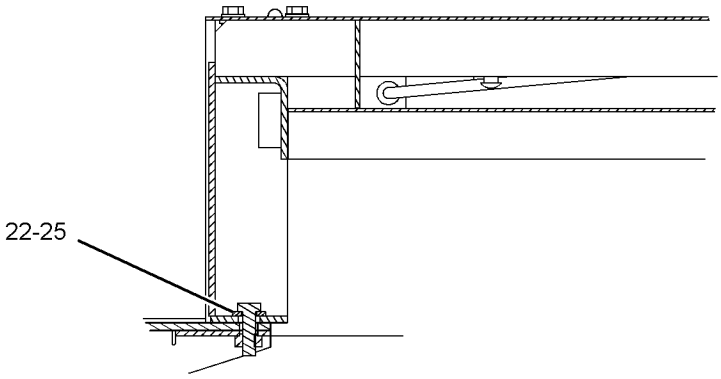


SECTION A-A

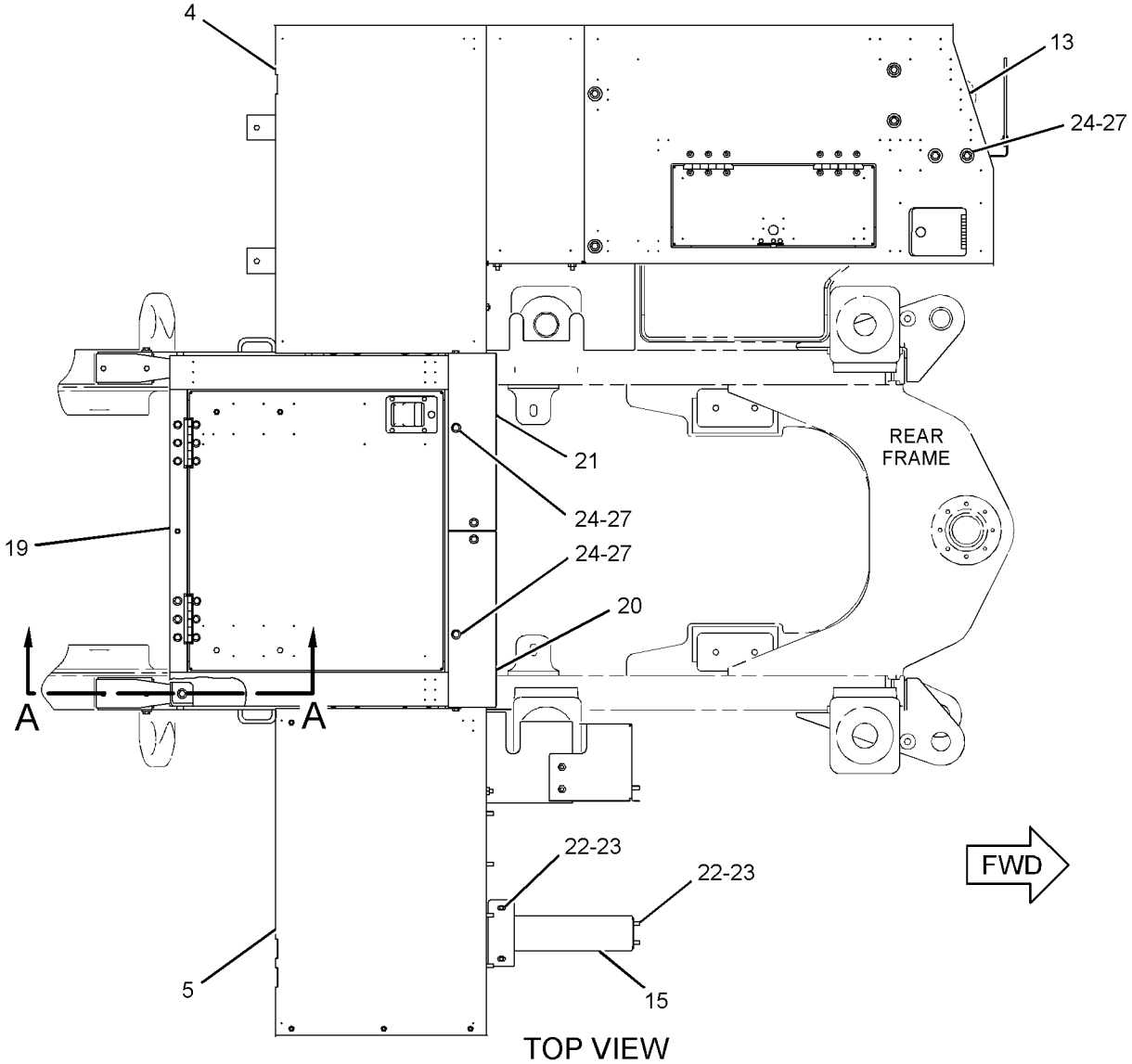


TOP VIEW

GRAPHIC #1

g01231703

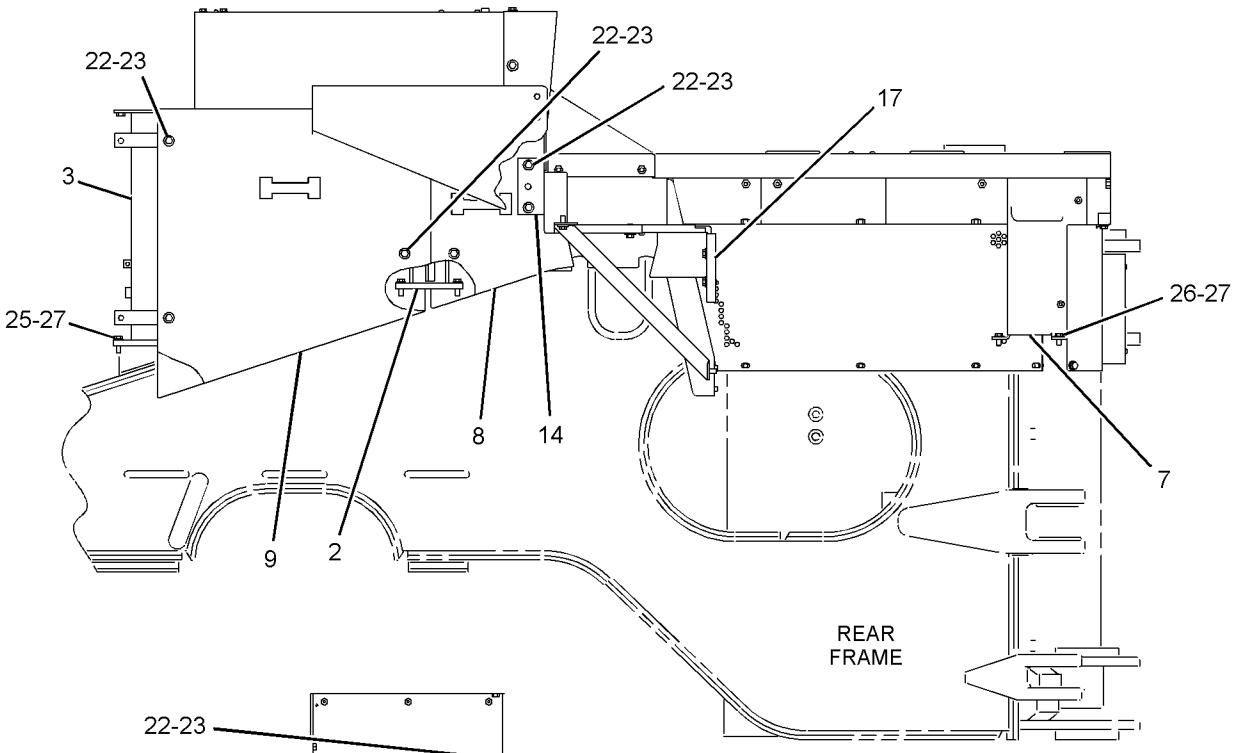


RIGHT SIDE VIEW

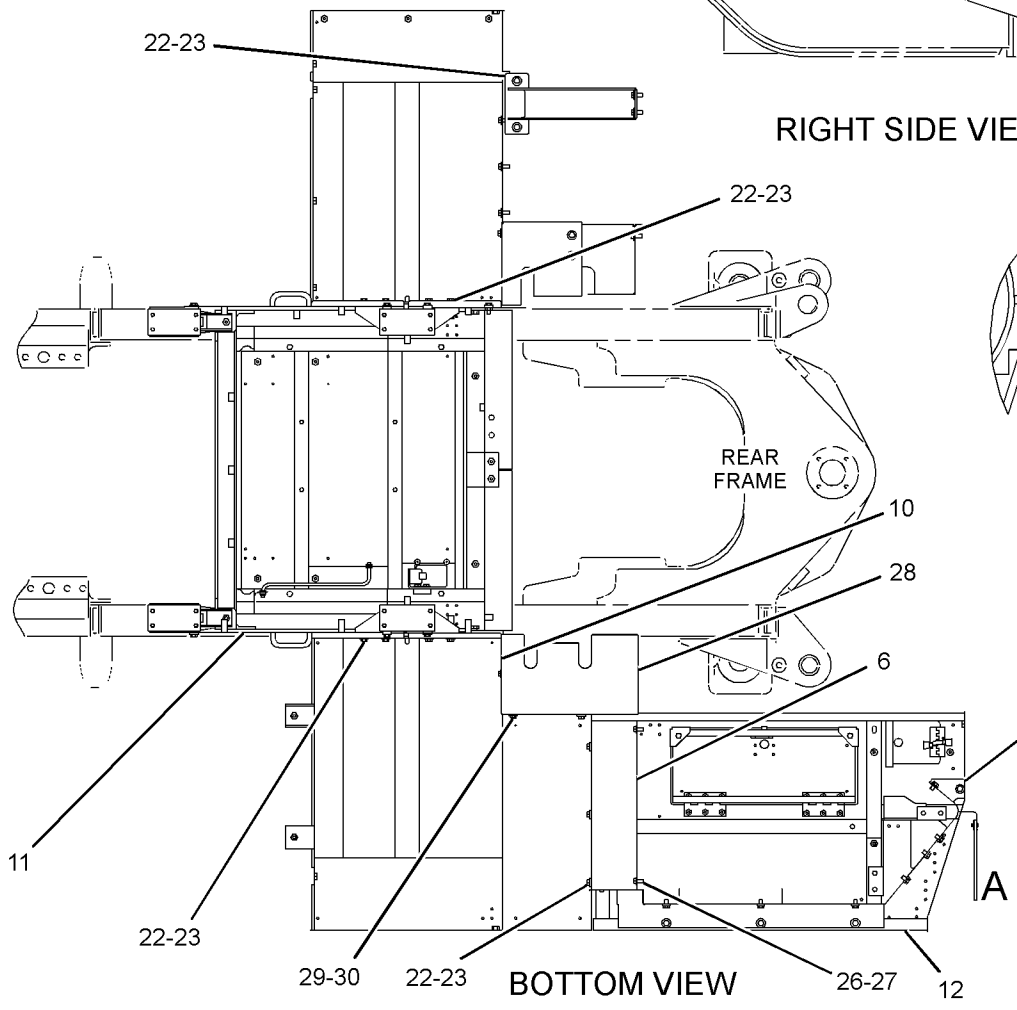


BOTTOM VIEW

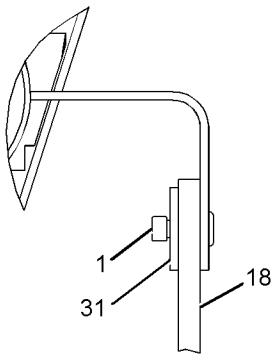


VIEW OF AREA A

GRAPHIC #2

**<END>**

g01244082

# OPERATOR STATION

## *114-5124* PLATFORM GP-OPERATOR

**S/N: BXY1900-UP**

**PART OF 284-2735 CHASSIS AR**

**SMCS-7253** **i02743352**

| NOTE | REF NO | GRAPHIC REF | PART NUMBER | QTY | PART NAME 1 2 3 4 5 6 (PRODUCT LEVEL) | SEE PAGE |
|---|---|---|---|---|---|---|
| C | 1 | 1 | **3J-9887** | 8 | PLATE | |
| | 2 | 2 | **6V-1635** | 3 | RIVET-POP | |
| | 3 | 1 | **134-6051** | 2 | SUPPORT AS | |
| | | | | | (EACH INCLUDES) | |
| M | | 1 | **8T-3597** | 4 | NUT-WELD (M12X1.75-THD) | |
| | | 1 | **4E-0019** | 3 | BOSS (M10X1.5-THD) | |
| M | | 1 | **9R-2613** | 2 | BOSS-WELD (M10X1.5X25-MM OAL) | |
| | | 1 | **9R-4595** | 2 | BOSS | |
| | 4 | 1 | **134-6052** | 2 | SUPPORT AS | |
| | | | | | (EACH INCLUDES) | |
| | | 1 | **5G-6787** | 1 | BOSS | |
| | | 1 | **7T-1099** | 1 | LINK | |
| M | | 1 | **8T-3597** | 12 | NUT-WELD (M12X1.75-THD) | |
| | 5 | 1 | **134-6722** | 1 | PLATFORM AS (LH) | |
| M | | 1 | **8T-3597** | 8 | NUT-WELD (M12X1.75-THD) | |
| | 6 | 1 | **134-6723** | 1 | PLATFORM AS (RH) | |
| M | | 1 | **8T-3597** | 16 | NUT-WELD (M12X1.75-THD) | |
| | 7 | 2 | **134-7326** | 1 | SUPPORT AS | |
| M | | 2 | **8T-3597** | 5 | NUT-WELD (M12X1.75-THD) | |
| | 8 | 1 | **138-2800** | 1 | PLATE AS | |
| M | | 1 | **8T-3597** | 5 | NUT-WELD (M12X1.75-THD) | |
| M | | 1 | **9R-2613** | 2 | BOSS-WELD (M10X1.5X25-MM OAL) | |
| | 9 | 1 | **139-5544** | 1 | SHEET AS | |
| | | 1 | **1V-8732** | 1 | HANDLE | |
| M | | 1 | **9R-2613** | 1 | BOSS-WELD (M10X1.5X25-MM OAL) | |
| M | | 1 | **8T-3597** | 2 | NUT-WELD (M12X1.75-THD) | |
| | 10 | 2 | **160-5877** | 1 | SHEET AS | |
| M | | 2 | **8T-3597** | 1 | NUT-WELD (M12X1.75-THD) | |
| Y | 11 | 1 | *162-7599* | 1 | PLATFORM GP-OPERATOR | 1445 |
| | 12 | 1 | **168-1793** | 1 | BRACKET AS | |
| | 13 | 2 | **173-9195** | 1 | SHEET AS | |
| | 14 | 2 | **173-9197** | 1 | FLAP | |
| | 15 | 2 | **173-9198** | 1 | STRIP | |
| Y | 16 | 1 | *178-4139* | 1 | DOOR GP-STORAGE | 1373 |
| | 17 | 1 | **178-8486** | 1 | SHEET | |
| | 18 | 1 | **178-8504** | 1 | SHEET | |
| | 19 | 2 | **183-7531** | 1 | SHEET AS-LH | |
| | 20 | 1 | **183-7532** | 1 | SHEET AS-RH | |
| | 21 | 2 | **184-1699** | 1 | PANEL AS | |
| | 22 | 2 | **184-1700** | 1 | PANEL AS | |
| | 23 | 1 | **195-0472** | 1 | SHEET | |
| | 24 | 1 | **195-3162** | 1 | SHEET AS | |
| C | 25 | 1,2 | **5P-1076** | 48 | WASHER-HARD (13.5X30X4-MM THK) | |
| | 26 | 2 | **7X-7729** | 3 | WASHER (11X25X3-MM THK) | |
| M | 27 | 2 | **8T-4137** | 3 | BOLT (M10X1.5X20-MM) | |
| M | 28 | 1,2 | **8T-4139** | 40 | BOLT (M12X1.75X30-MM) | |
| M | 29 | 1,2 | **8T-4179** | 24 | BOLT (M12X1.75X20-MM) | |
| M | 30 | 1 | **8T-4183** | 16 | BOLT (M12X1.75X40-MM) | |
| M | 31 | 1,2 | **8T-4192** | 8 | BOLT (M12X1.75X25-MM) | |
| | 32 | 1,2 | **8T-4223** | 48 | WASHER-HARD (13.5X25.5X3-MM THK) | |
| CM | 33 | 1 | **8T-4910** | 8 | BOLT (M12X1.75X60-MM) | |

C-CHANGE FROM PREVIOUS TYPE
M-METRIC PART
Y-SEPARATE ILLUSTRATION

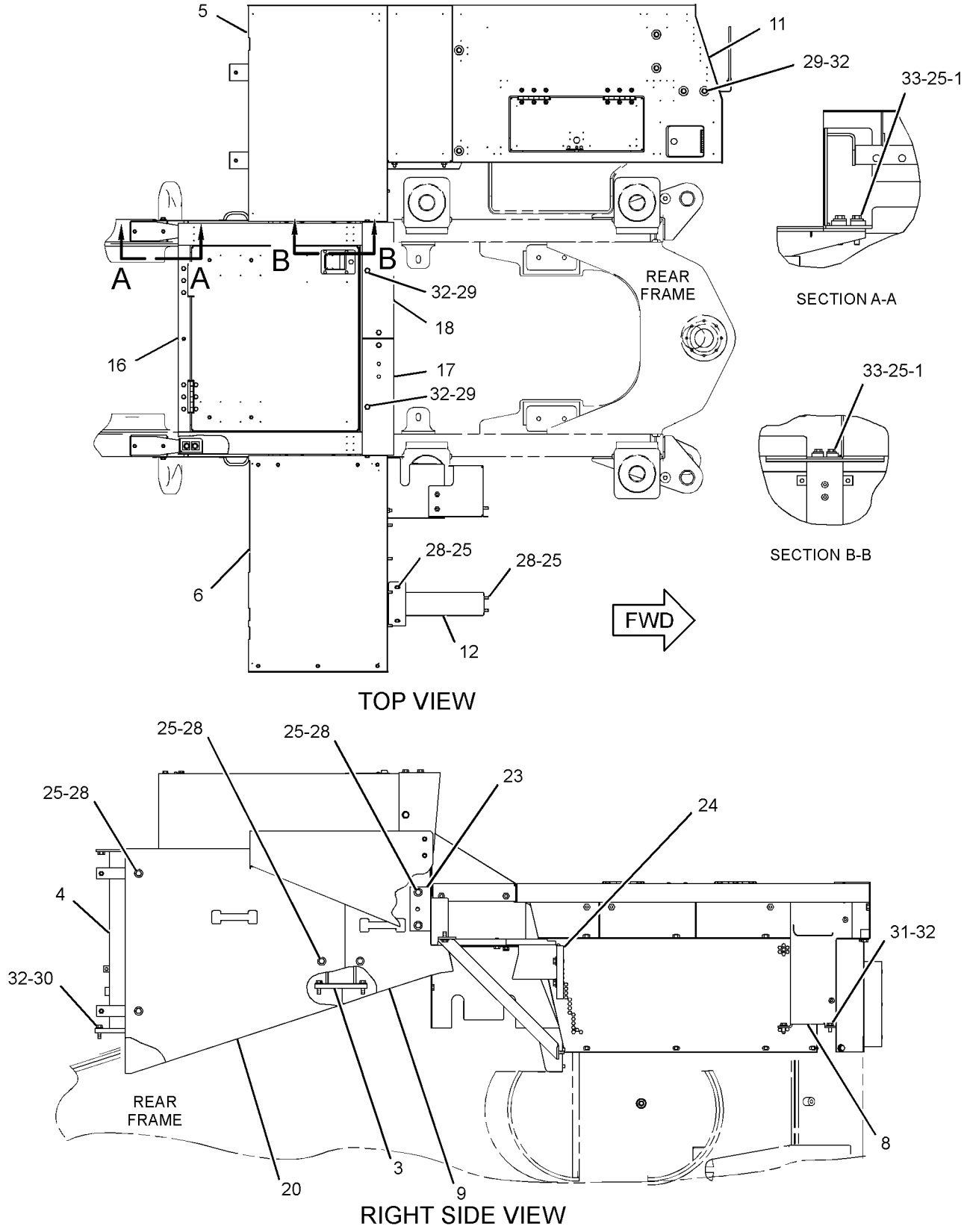


GRAPHIC #1

g01354223

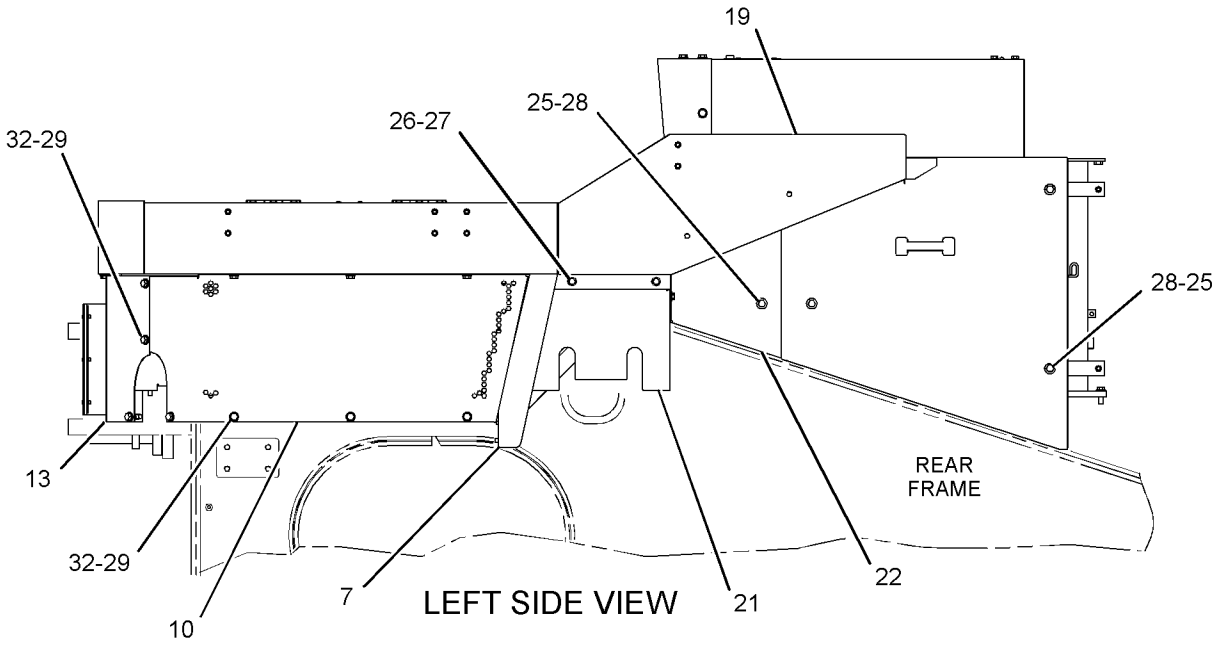


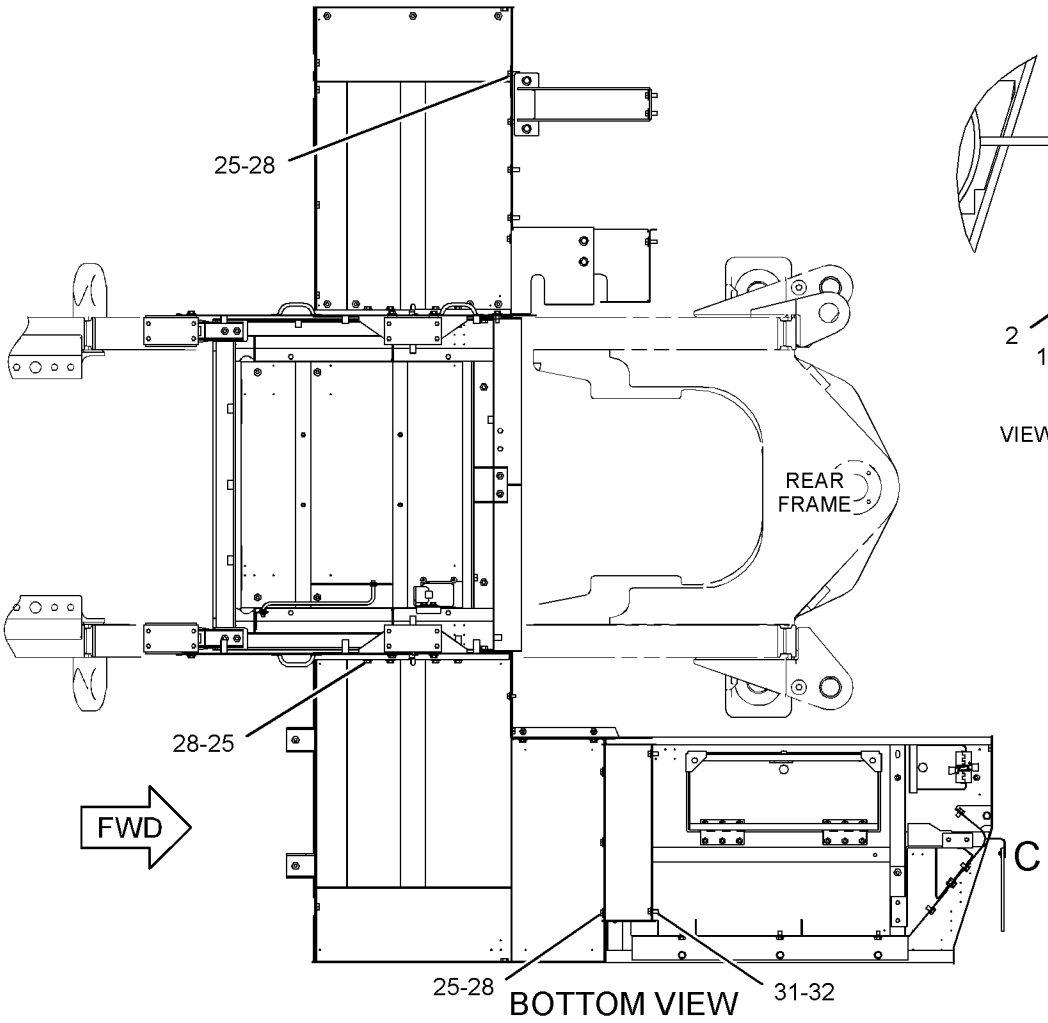


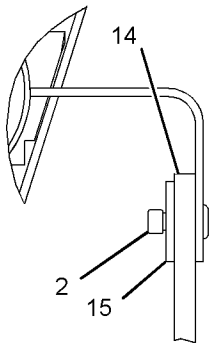


VIEW OF AREA C

GRAPHIC #2

**<END>**

g01354224

# OPERATOR STATION

## *162-7599* PLATFORM GP-OPERATOR

**S/N: BXY1-UP**

**PART OF 114-5124 PLATFORM GP-OPERATOR**

**SMCS-7253** **i01281354**

| NOTE | REF NO | GRAPHIC REF | PART NUMBER | QTY | PART NAME 1 2 3 4 5 6 (PRODUCT LEVEL) | SEE PAGE |
|---|---|---|---|---|---|---|
| | 1 | 1 | **1K-8850** | 1 | SPRING | |
| | 2 | 1 | **9M-5884** | 2 | BUMPER | |
| | 3 | 1 | **119-1151** | 2 | HINGE AS | |
| | 4 | 1 | **134-6721** | 1 | PLATFORM AS | |
| | | 1 | **3R-9322** | 1 | HINGE | |
| | | 1 | **4K-8501** | 2 | CLIP | |
| M | | 1 | **8T-3597** | 11 | NUT-WELD (M12X1.75-THD) | |
| M | | 1 | **9R-2613** | 2 | BOSS-WELD (M10X1.5X25-MM OAL) | |
| | 5 | 1 | **169-4374** | 1 | DOOR AS | |
| | | 1 | **1V-6755** | 1 | LATCH AS | |
| | | 1 | **6V-2370** | 2 | RIVET-POP | |
| M | 6 | 1 | **9X-2041** | 12 | SCREW-TRUSS HEAD (M10X1.5X20-MM) | |

M-METRIC PART

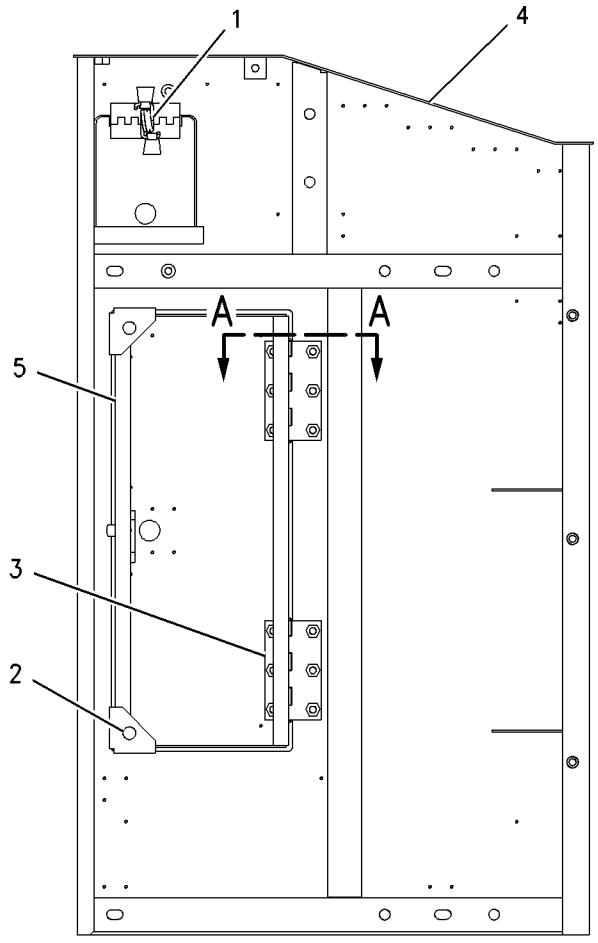


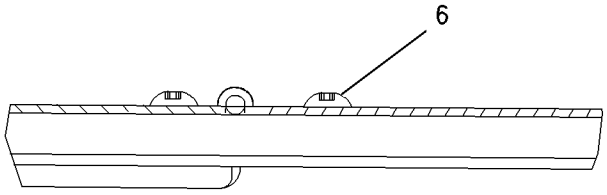


SECTION A-A

GRAPHIC #1 **<END>** g00679205

# OPERATOR STATION

## *241-4936* RADIO GP–AM/FM/WB CD PLAYER

**S/N: BXY1-UP**
**PART OF 248-4152 RADIO GP**
**AN ATTACHMENT**

**SMCS-7338** **i02743358**

| NOTE | REF NO | GRAPHIC REF | PART NUMBER | QTY | PART NAME 1 2 3 4 5 6 (PRODUCT LEVEL) | SEE PAGE |
|---|---|---|---|---|---|---|
| | 1 | 1 | **142-9681** | 1 | KNOB-SELECT (RADIO) | |
| | 2 | 1 | **192-7054** | 1 | SLEEVE | |

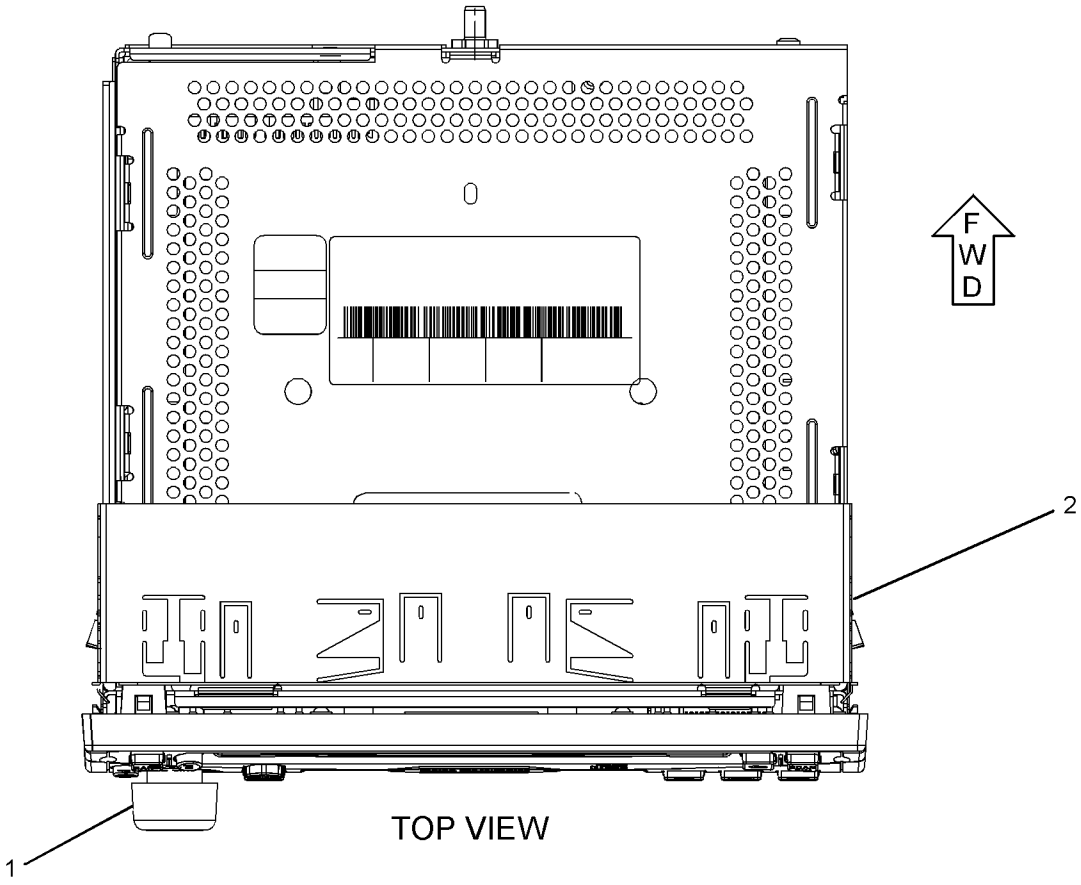


TOP VIEW

GRAPHIC #1 **<END>** g01230279

## *248-4152* RADIO GP–AM/FM/WB CD PLAYER

**S/N: BXY1-UP**
**PART OF 284-4739 RADIO GP**
**AN ATTACHMENT**

**SMCS-7338** **i02703667**

| NOTE | PART NUMBER | QTY | PART NAME 1 2 3 4 5 6 (PRODUCT LEVEL) | SEE PAGE |
|---|---|---|---|---|
| Y | **241-4936** | 1 | RADIO GP (AM/FM/WB CD PLAYER) | 1446 |
| | **241-4939** | 1 | BUSHING | |
| | **200-5728** | 1 | HARNESS AS-RADIO | |
| | **160-3518** | 1 | KIT-RECEPTACLE (8-PIN) | |
| | | | (INCLUDES RECEPTACLE AS & WEDGE) | |

Y-SEPARATE ILLUSTRATION

**<END>**

## *284-4739* RADIO GP–AM/FM CD PLAYER

**S/N: BXY1-UP**
**AN ATTACHMENT**

**SMCS-7338** **i02515133**

| NOTE | PART NUMBER | QTY | PART NAME 1 2 3 4 5 6 (PRODUCT LEVEL) | SEE PAGE |
|---|---|---|---|---|
| Y | *248-4152* | 1 | RADIO GP (AM/FM/WB CD PLAYER) | 1447 |

Y-SEPARATE ILLUSTRATION

**<END>**

# OPERATOR STATION

## *284-8954* RADIO GP–AM/FM/WB/XM/ CD PLAYER

**S/N: BXY1-UP**

**AN ATTACHMENT**

**SMCS-7338** **i02743356**

| NOTE | REF NO | GRAPHIC REF | PART NUMBER | QTY | PART NAME 1 2 3 4 5 6 (PRODUCT LEVEL) | SEE PAGE |
|---|---|---|---|---|---|---|
| | 1 | 1 | **142-9681** | 1 | KNOB-SELECT (RADIO) | |
| | 2 | 1 | **192-7054** | 1 | SLEEVE | |

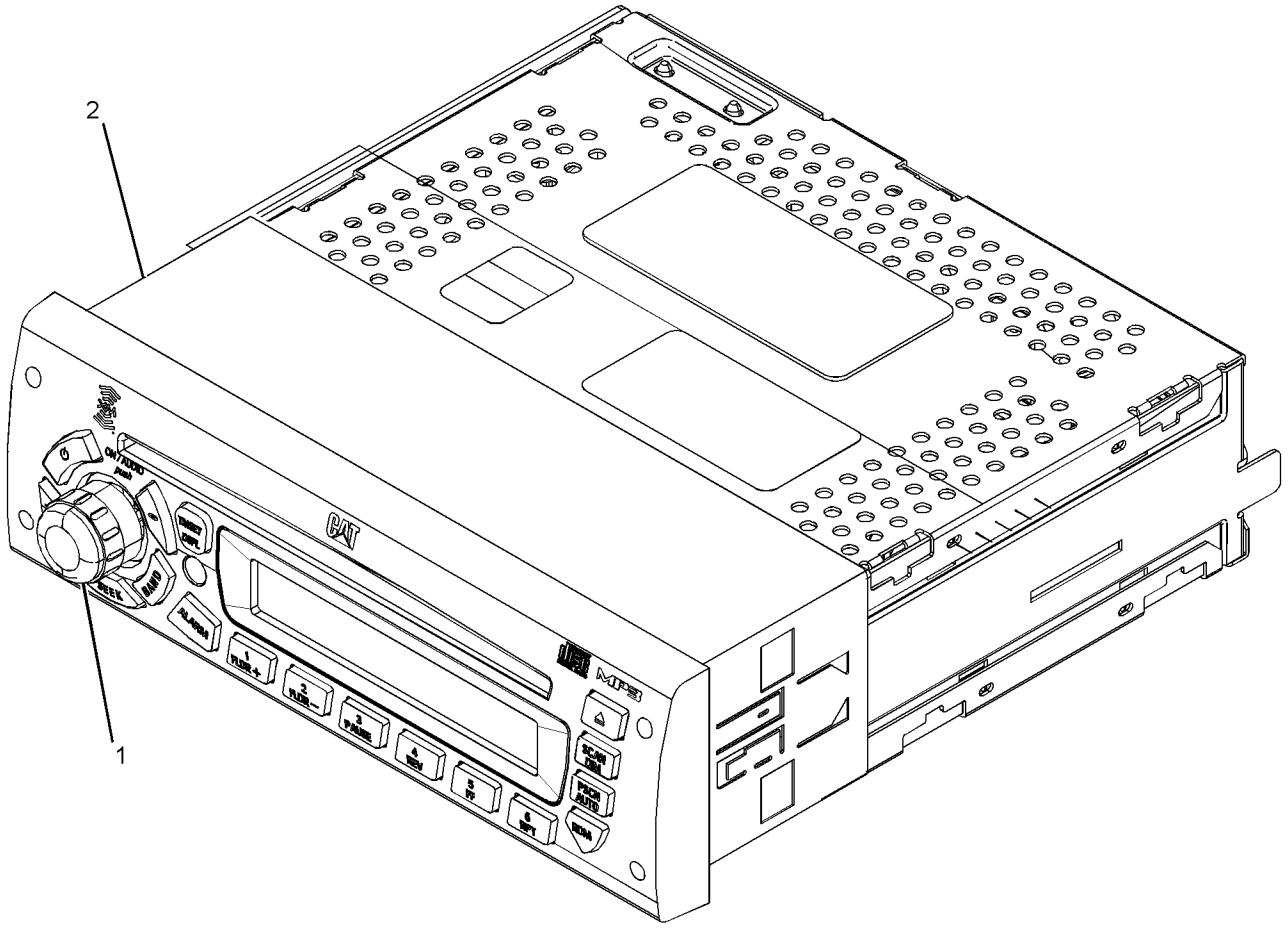


GRAPHIC #1 **<END>** g01350759

# OPERATOR STATION

## *284-8955* RADIO GP–AM/FM/WB/SIRIUS/ CD PLAYER

**S/N: BXY1-UP**

**AN ATTACHMENT**

**SMCS-7338** **i02651605**

| NOTE | REF NO | GRAPHIC REF | PART NUMBER | QTY | PART NAME 1 2 3 4 5 6 (PRODUCT LEVEL) | SEE PAGE |
|---|---|---|---|---|---|---|
| | 1 | 1 | **142-9681** | 1 | KNOB-SELECT (RADIO) | |
| | 2 | 1 | **192-7054** | 1 | SLEEVE | |

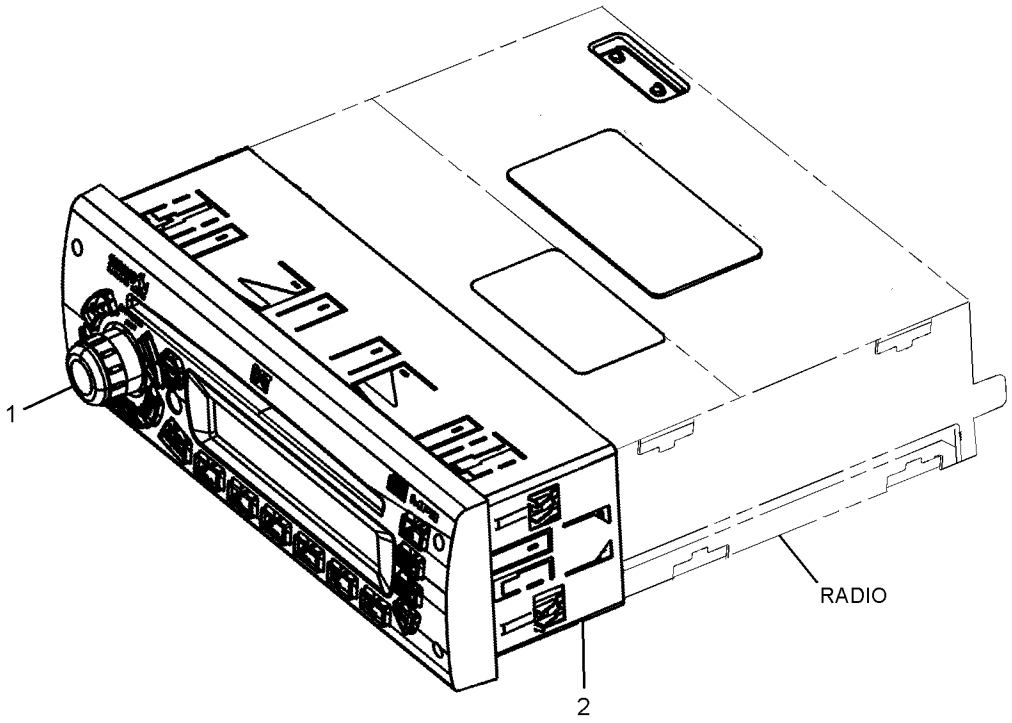


GRAPHIC #1 **<END>** g01289705

# OPERATOR STATION

## *210-2270* RECLINER GP-SEAT

**S/N: BXY1-UP**
**PART OF 178-0603 SEAT GP**
**ALSO AN ATTACHMENT**

**SMCS-7312** **i02709288**

| NOTE | REF NO | GRAPHIC REF | PART NUMBER | QTY | PART NAME 1 2 3 4 5 6 (PRODUCT LEVEL) | SEE PAGE |
|---|---|---|---|---|---|---|
| | 1 | 1 | **177-1862** | 1 | BRACKET (SEAT BELT) | |
| | 2 | 1 | **210-2262** | 1 | BRACKET AS | |
| | 3 | 1 | **210-2263** | 1 | BRACKET AS | |
| | 4 | 1 | **210-2266** | 1 | GEAR-LOCK (14-TEETH) | |
| | 5 | 1 | **293-2911** | 1 | SHAFT AS | |
| | | 1 | **2L-5893** | 2 | PIN-SPRING | |
| | | 1 | **170-8590** | 1 | SPRING | |
| | 6 | 1 | **217-7933** | 1 | LATCH | |
| | 7 | 1 | **236-5197** | 1 | SPRING | |
| | 8 | 1 | **031-0214** | 1 | BOLT-LOCKING (1/4-20X0.5-IN) | |
| | 9 | 1 | **101-2867** | 1 | WASHER-HARD (7.2X25X2-MM THK) | |
| | 10 | 1 | **4M-6425** | 1 | BOLT (5/16-18X1-IN) | |
| | 11 | 1 | **5M-2894** | 1 | WASHER-HARD (10.2X18.5X2.5-MM THK) | |
| | 12 | 1 | **5S-7383** | 1 | BOLT (3/8-16X1.75-IN) | |
| | 13 | 1 | **8T-4224** | 1 | WASHER-HARD (8.8X16X2-MM THK) | |

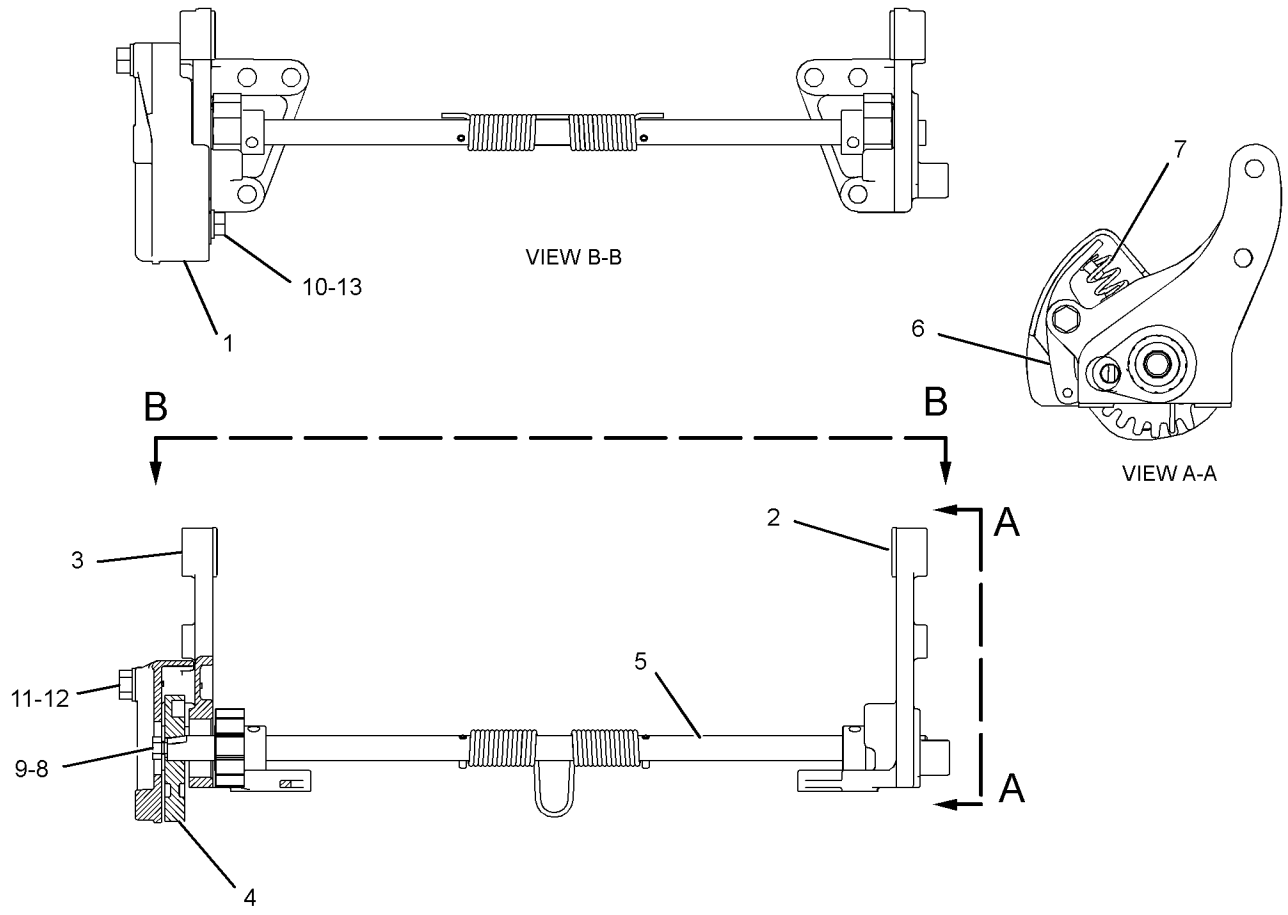


GRAPHIC #1 **<END>** g01296294

# OPERATOR STATION

## *2Q-8737* ROOF GP-CAB

**S/N: BXY1900-UP**

**CANNOT BE USED WITH 2Q-8733 STEEL MILL AR, 2Q-8722 STEEL MILL AR AN ATTACHMENT**

**SMCS-7301** **i02728744**

| NOTE | REF NO | GRAPHIC REF | PART NUMBER | QTY | PART NAME 1 2 3 4 5 6 (PRODUCT LEVEL) | SEE PAGE |
|---|---|---|---|---|---|---|
| Y | 1 | 1 | *310-8266* | 1 | ROOF GP-CAB | 1454 |
| | 2 | 1 | **198-4780** | 4 | WASHER-HARD (17.5X32X8-MM THK) | |
| M | 3 | 1 | **8T-4175** | 4 | BOLT (M16X2X90-MM) | |

M-METRIC PART
Y-SEPARATE ILLUSTRATION

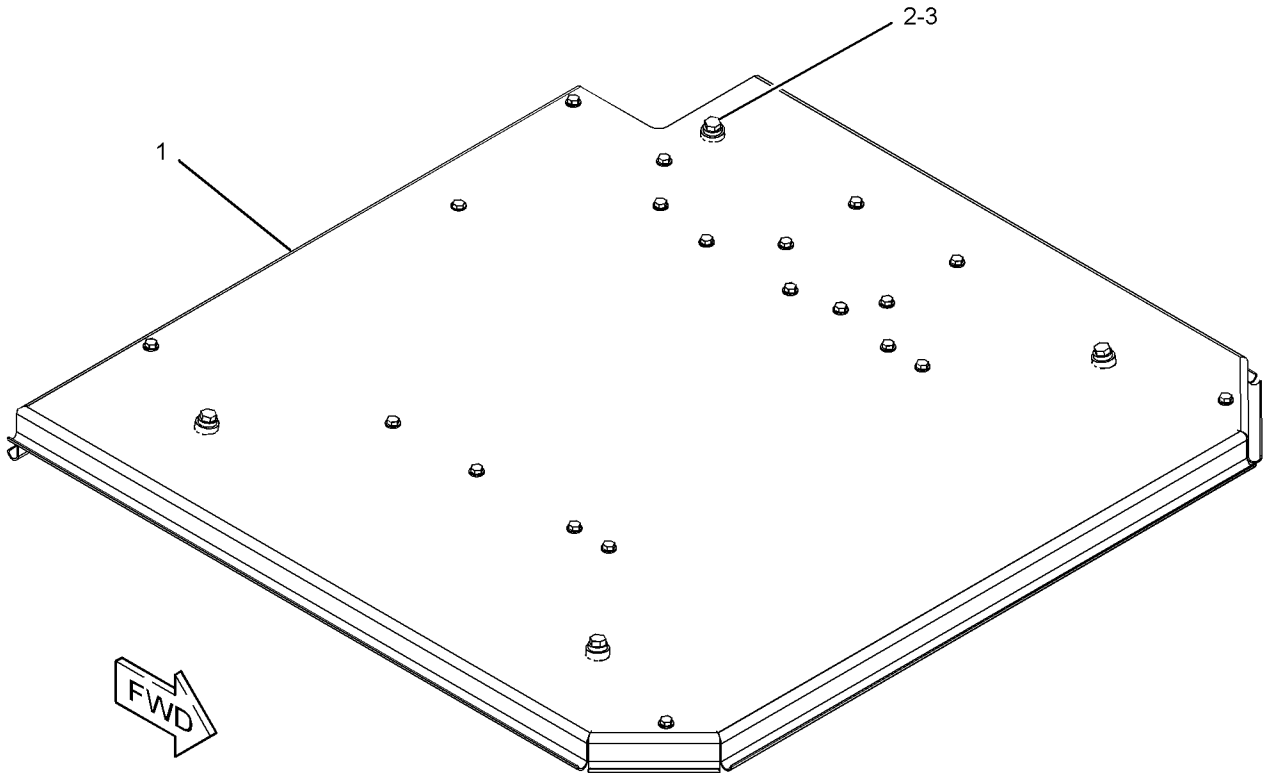


GRAPHIC #1 **<END>** g01369029

# OPERATOR STATION

## *194-3715* ROOF GP-CAB

**S/N: BXY1-UP**
**CANNOT BE USED WITH 194-3766—PAGE 1453**
**AN ATTACHMENT**

**SMCS-7301** **i01497998**

| NOTE | REF NO | GRAPHIC REF | PART NUMBER | QTY | PART NAME 1 2 3 4 5 6 (PRODUCT LEVEL) | SEE PAGE |
|---|---|---|---|---|---|---|
| | 1 | 1 | **197-5470** | 4 | GROMMET | |
| | 2 | 1 | **196-0436** | 4 | SPACER (25X40X12-MM THK) | |
| | 3 | 1 | **107-3157** | 8 | WASHER (22X76.2X6-MM THK) | |
| | 4 | 1 | **173-2118** | 1 | ROOF | |
| | 5 | 1 | **174-2407** | 1 | INSULATION | |
| | 6 | 1 | **8T-4122** | 4 | WASHER-HARD (17X32X3.5-MM THK) | |
| M | 7 | 1 | **8T-4193** | 4 | BOLT (M16X2X50-MM) | |
| | 8 | 1 | **197-4859** | 1 | FILM-CATERPILLAR (REAR CAB) | |
| | 9 | 1 | **136-2186** | 1 | FILM-WINDOW (FRONT) | |

M-METRIC PART

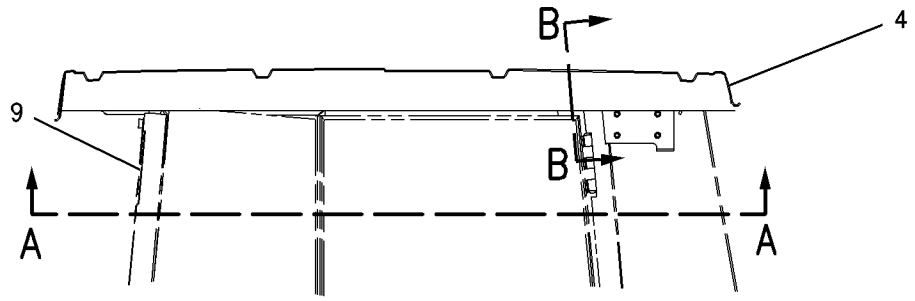


RIGHT SIDE VIEW

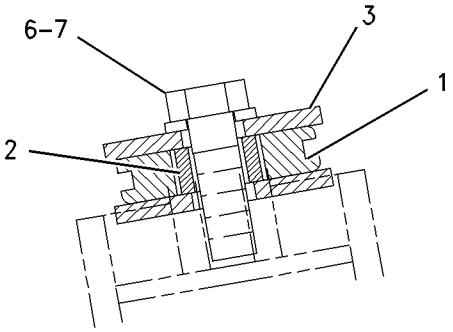


SECTION B-B

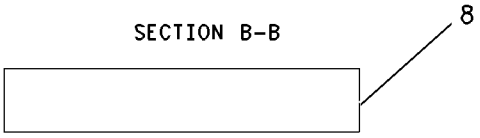


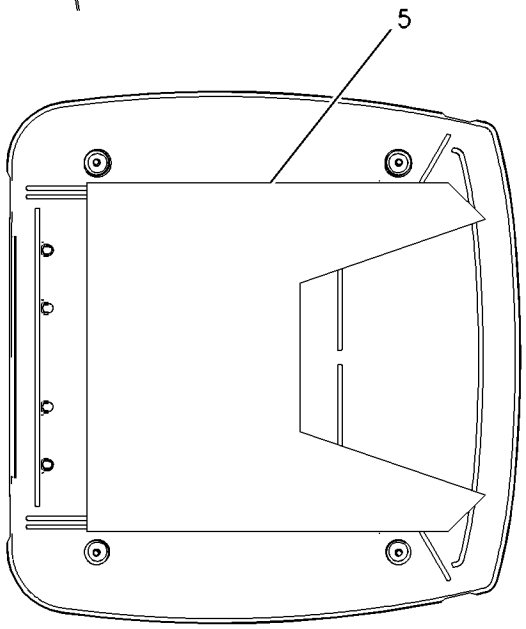


VIEW A-A

GRAPHIC #1 **<END>** g00778054

# OPERATOR STATION

## *194-3766* ROOF GP-CAB

**S/N: BXY1-UP**

**CANNOT BE USED WITH 194-3715 ROOF GP-CAB**

**AN ATTACHMENT**

**SMCS-7301** **i01475918**

| NOTE | REF NO | GRAPHIC REF | PART NUMBER | QTY | PART NAME 1 2 3 4 5 6 (PRODUCT LEVEL) | SEE PAGE |
|---|---|---|---|---|---|---|
| | 1 | 1 | **6D-5729** | 4 | GROMMET | |
| | 2 | 1 | **6P-8875** | 4 | SPACER (19X28.5X16-MM THK) | |
| | 3 | 1 | **107-3157** | 8 | WASHER (22X76.2X6-MM THK) | |
| | 4 | 1 | **174-2407** | 1 | INSULATION | |
| | 5 | 1 | **174-2408** | 1 | INSULATION | |
| | 6 | 1 | **199-5510** | 1 | ROOF | |
| | 7 | 1 | **8T-4122** | 4 | WASHER-HARD (17X32X3.5-MM THK) | |
| M | 8 | 1 | **8T-4193** | 4 | BOLT (M16X2X50-MM) | |

M-METRIC PART

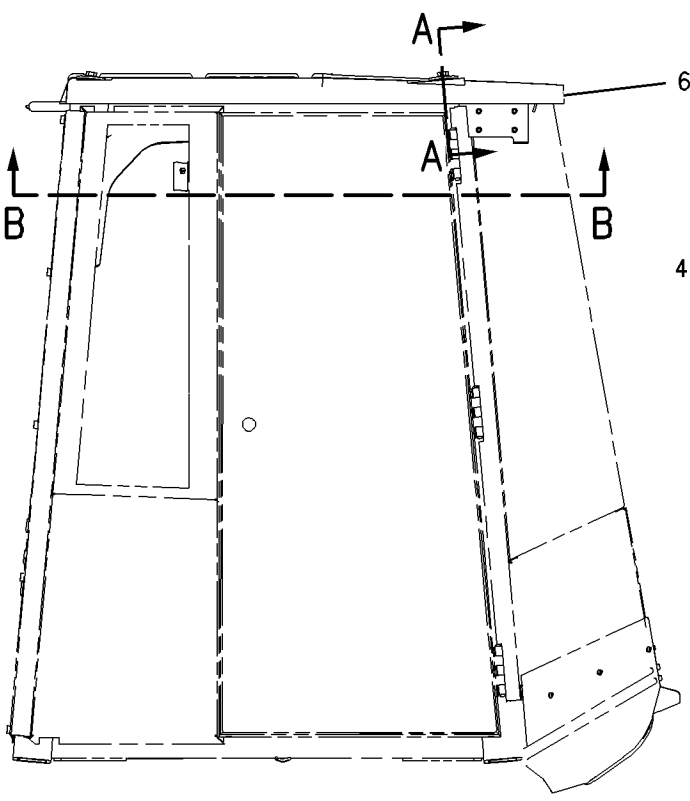


RIGHT SIDE VIEW

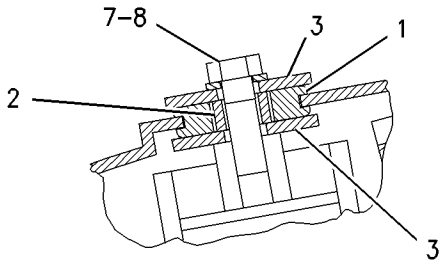


SECTION A-A

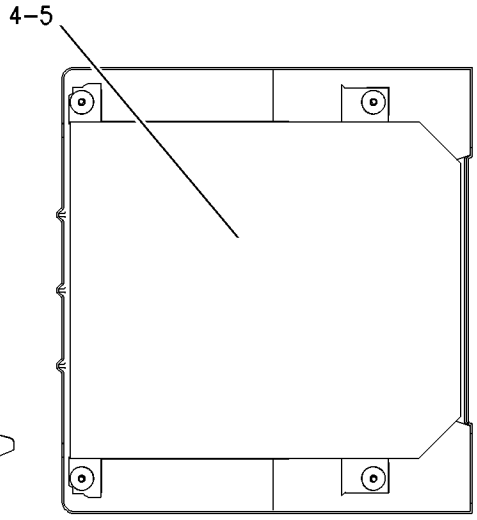


SECTION B-B

GRAPHIC #1 **<END>** g00743522

# OPERATOR STATION

## *310-8266* ROOF GP-CAB

**S/N: BXY1900-UP**

**PART OF 308-2726 MOUNTING GP-CAB, 2Q-8737 ROOF GP-CAB**

**AN ATTACHMENT**

**SMCS-7301** **i02728718**

| NOTE | REF NO | GRAPHIC REF | PART NUMBER | QTY | PART NAME 1 2 3 4 5 6 (PRODUCT LEVEL) | SEE PAGE |
|---|---|---|---|---|---|---|
| | 1 | 1 | **310-7218** | 1 | ROOF AS | |
| M | | 1 | **8T-3597** | 19 | NUT-WELD (M12X1.75-THD) | |
| | | 1 | **9R-7123** | 4 | SPACER (20X40X50-MM THK) | |
| M | 2 | 1 | **8T-4179** | 20 | BOLT (M12X1.75X20-MM) | |
| | 3 | 1 | **8T-4223** | 21 | WASHER-HARD (13.5X25.5X3-MM THK) | |
| M | 4 | 1 | **8T-4244** | 1 | NUT (M12X1.75-THD) | |

M-METRIC PART

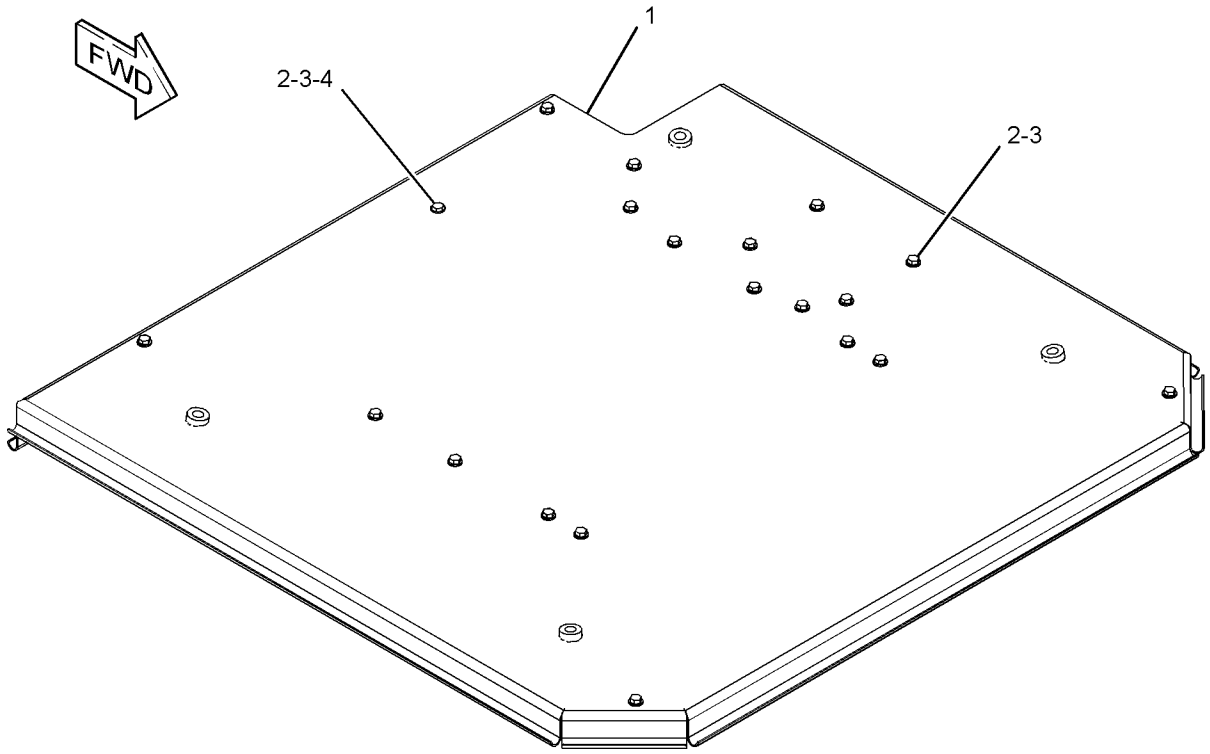


GRAPHIC #1 **<END>** g01369037

# OPERATOR STATION

## 228-9530 ROPS GP-ENCLOSED

**S/N: BXY1-1899**

**PART OF 227-3190 CAB AR**

**SMCS-7301** **i02364842**

| NOTE | REF NO | GRAPHIC REF | PART NUMBER | QTY | PART NAME 1 2 3 4 5 6 (PRODUCT LEVEL) | SEE PAGE |
|---|---|---|---|---|---|---|
| | 1 | 2 | **7T-0920** | 1 | BLOCK | |
| | 2 | 2 | **8T-6842** | 1 | FILM-INSTRUCTION (ALTERNATE EXIT) | |
| | 3 | 1 | **107-4600** | 1 | GLASS (RIGHT SIDE-REAR) | |
| | 4 | 1 | **107-4601** | 1 | GLASS (REAR) | |
| | 5 | 1 | **107-4602** | 1 | GLASS (LEFT SIDE-REAR) | |
| | 6 | 1 | **107-4603** | 1 | GLASS (FRONT) | |
| | 7 | 2 | **107-7306** | 1 | SHEET AS | |
| | 8 | 2 | **111-0687** | 1 | STRIKER AS | |
| | 9 | 1 | **121-3274** | 1 | GLASS (RIGHT FRONT CORNER) | |
| | 10 | 1 | **121-3275** | 1 | GLASS (LEFT FRONT CORNER) | |
| | 11 | 1 | **121-3277** | 1 | SHEET AS (LEFT FRONT CORNER) | |
| | 12 | 1 | **121-3278** | 1 | SHEET AS (RIGHT FRONT CORNER) | |
| | 13 | 2 | **126-1052** | 1 | PIN | |
| | 14 | 2 | **128-1026** | 1 | SHIELD-STRIKER | |
| | 15 | 2 | **129-2570** | 1 | CHANNEL AS | |
| | | 2 | **5D-9629** | 2 | ROD | |
| | 16 | 2 | **129-2572** | 1 | CHANNEL | |
| | 17 | 1 | **129-2581** | 1 | DOOR AS | |
| | | 1 | **1V-6755** | 1 | LATCH AS | |
| | | 1 | **111-1316** | 1 | HINGE | |
| | 18 | 2 | **136-1725** | 1 | TRIM (RH) | |
| | 19 | 2 | **136-1726** | 1 | TRIM (LH) | |
| | 20 | 2 | **136-1728** | 1 | TRIM | |
| | 21 | 2 | **136-1729** | 1 | TRIM | |
| | 22 | 2 | **136-1730** | 1 | TRIM | |
| | 23 | 2 | **136-1731** | 1 | BRACKET AS | |
| M | | 2 | **6V-9632** | 1 | NUT-WELD (M6X1-THD) | |
| | 24 | 1 | **136-1732** | 1 | SHEET AS | |
| M | | 1 | **6V-9632** | 3 | NUT-WELD (M6X1-THD) | |
| | 25 | 2 | **136-1734** | 1 | INSULATION | |
| | 26 | 1 | **136-9353** | 1 | TRIM | |
| | 27 | 2 | **137-7321** | 1 | TRIM | |
| | 28 | 2 | **160-5003** | 1 | BRACKET AS | |
| | | 2 | **7T-1099** | 1 | LINK | |
| M | | 2 | **8T-3490** | 4 | NUT-WELD (M10X1.5-THD) | |
| M | | 2 | **8T-3635** | 1 | STUD-WELD (M12X1.75X34.93-MM OAL) | |
| Y | 29 | 1 | **165-5576** | 1 | DOOR GP-CAB (LH) | 1364 |
| Y | 30 | 1 | **165-5725** | 1 | DOOR GP-CAB (RH) | 1366 |
| Y | 31 | 1 | **172-4387** | 1 | PLATFORM GP-CAB | 1437 |
| | 32 | 2 | **209-5018** | 1 | LATCH AS | |
| | 33 | 1 | **228-9535** | 1 | CAB AS | |
| | 34 | 1,2 | **8T-4121** | 28 | WASHER-HARD (11X21X2.5-MM THK) | |
| M | 35 | 2 | **8T-4133** | 4 | NUT (M10X1.5-THD) | |
| M | 36 | 2 | **8T-4136** | 4 | BOLT (M10X1.5X25-MM) | |
| M | 37 | 1,2 | **8T-4137** | 20 | BOLT (M10X1.5X20-MM) | |
| M | 38 | 1 | **9X-2042** | 2 | SCREW-TRUSS HEAD (M6X1X12-MM) | |
| M | 39 | 2 | **9X-2044** | 2 | SCREW-TRUSS HEAD (M6X1X16-MM) | |
| M | 40 | 1 | **9X-2041** | 2 | SCREW-TRUSS HEAD (M10X1.5X20-MM) | |
| | 41 | 2 | **270-2481** | 1 | BRACKET AS | |
| M | | 2 | **6V-9632** | 4 | NUT-WELD (M6X1-THD) | |
| | 42 | 1 | **240-9499** | 1 | TRIM AS (RH) | |
| | | 1 | **136-9353** | 1 | TRIM | |

M-METRIC PART
Y-SEPARATE ILLUSTRATION

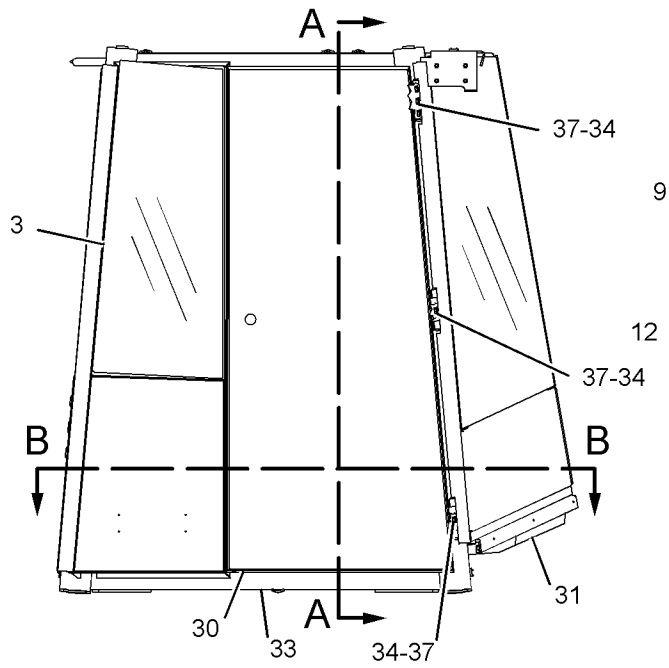


RIGHT SIDE VIEW

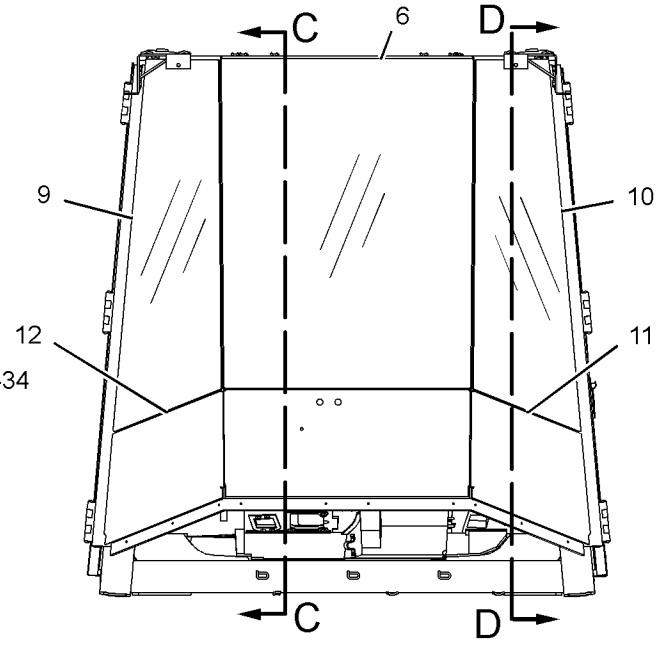


FRONT VIEW

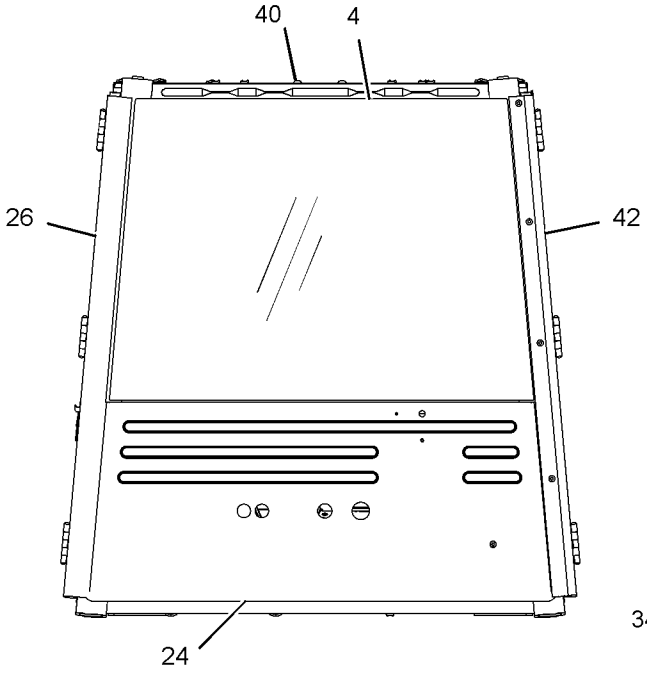


REAR VIEW

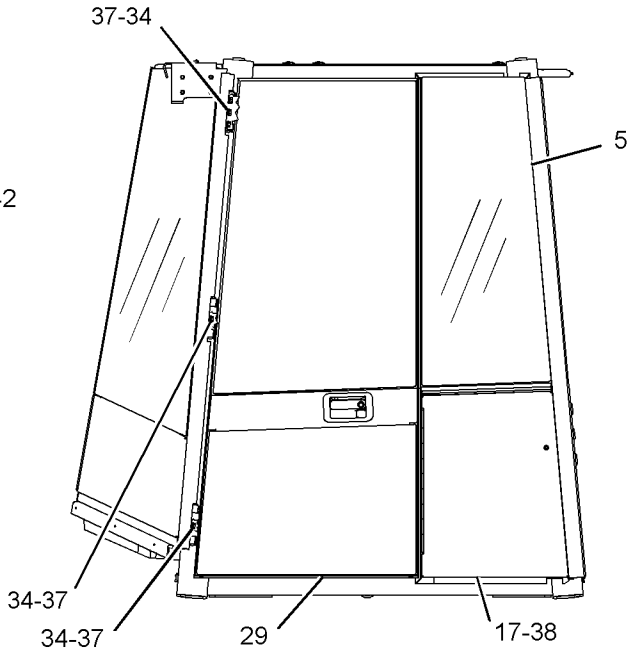


LEFT SIDE VIEW

REFER TO ALL ILLUSTRATIONS OF
THIS GROUP FOR AUXILIARY VIEWS

GRAPHIC #1

g01184832

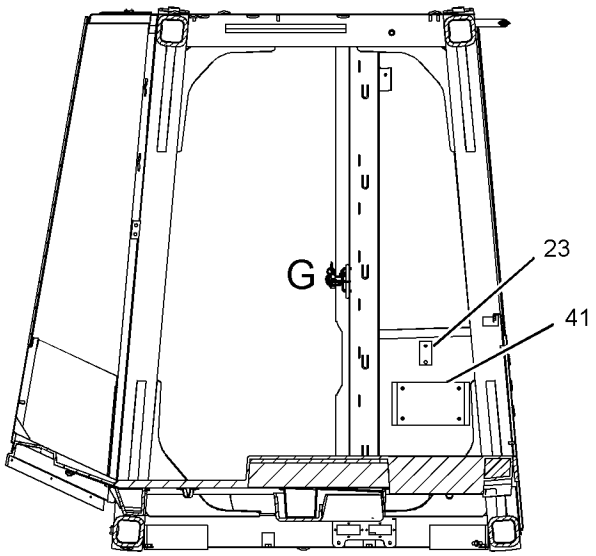


SECTION C-C

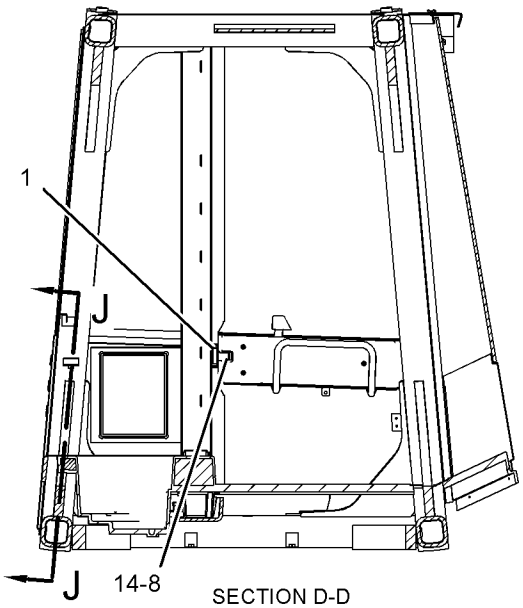


SECTION D-D

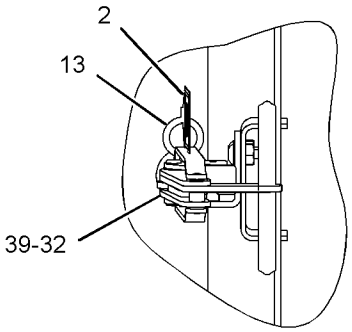


VIEW OF AREA G

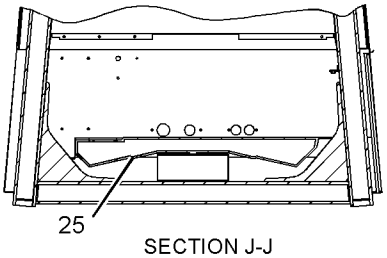


SECTION J-J

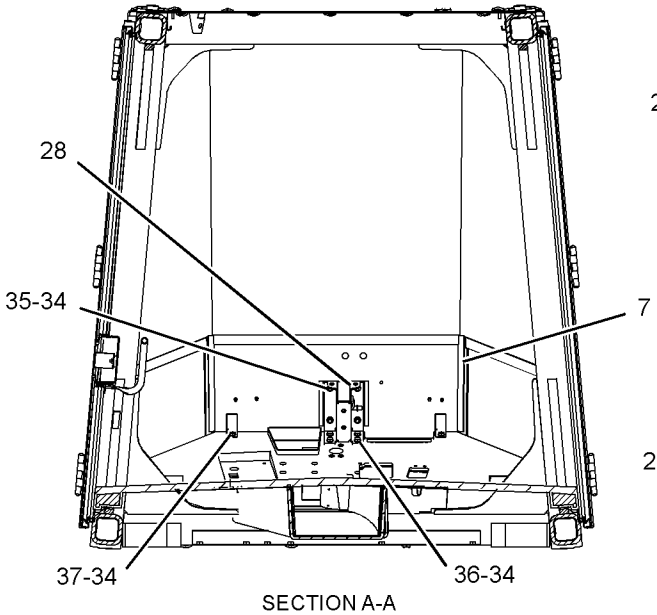


SECTION A-A

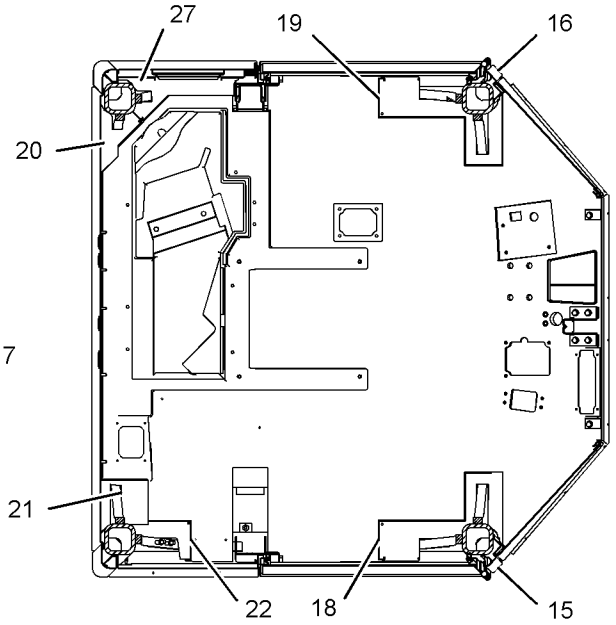


SECTION B-B

GRAPHIC #2 **<END>** g01184840

# OPERATOR STATION

## *292-6893* ROPS GP-ENCLOSED

**S/N: BXY1900-UP**

**PART OF 292-6110 CAB AR**

**SMCS-7301** **i02672409**

| NOTE | REF NO | GRAPHIC REF | PART NUMBER | QTY | PART NAME 1 2 3 4 5 6 (PRODUCT LEVEL) | SEE PAGE |
|---|---|---|---|---|---|---|
| | 1 | 1 | **107-4600** | 1 | GLASS (RIGHT SIDE-REAR) | |
| | 2 | 2 | **107-4601** | 1 | GLASS (REAR) | |
| | 3 | 2 | **107-4602** | 1 | GLASS (LEFT SIDE-REAR) | |
| | 4 | 1 | **107-4603** | 1 | GLASS (FRONT) | |
| | 5 | 1 | **107-7306** | 1 | SHEET AS | |
| | 6 | 1,2 | **111-0687** | 2 | STRIKER AS | |
| | 7 | 1 | **121-3274** | 1 | GLASS (RIGHT FRONT CORNER) | |
| | 8 | 1 | **121-3275** | 1 | GLASS (LEFT FRONT CORNER) | |
| | 9 | 1 | **121-3277** | 1 | SHEET AS (LEFT FRONT CORNER) | |
| | 10 | 1 | **121-3278** | 1 | SHEET AS (RIGHT FRONT CORNER) | |
| | 11 | 1,2 | **128-1026** | 2 | SHIELD-STRIKER | |
| | 12 | 1 | **129-2570** | 1 | CHANNEL AS | |
| | | 1 | **5D-9629** | 2 | ROD | |
| | 13 | 2 | **129-2572** | 1 | CHANNEL | |
| | 14 | 2 | **129-2581** | 1 | DOOR AS | |
| | | 2 | **1V-6755** | 1 | LATCH AS | |
| | | 2 | **111-1316** | 1 | HINGE | |
| | 15 | 1 | **136-1725** | 1 | TRIM (RH) | |
| | 16 | 2 | **136-1726** | 1 | TRIM (LH) | |
| | 17 | 2 | **136-1728** | 1 | TRIM | |
| | 18 | 2 | **136-1729** | 1 | TRIM | |
| | 19 | 2 | **136-1730** | 1 | TRIM | |
| | 20 | 2 | **136-1731** | 1 | BRACKET AS | |
| | 21 | 2 | **136-1732** | 1 | SHEET AS | |
| M | | 2 | **9R-2821** | 1 | BOSS (M10X1.5X15-MM) | |
| | 22 | 2 | **136-1734** | 1 | INSULATION | |
| | 23 | 2 | **136-9353** | 1 | TRIM | |
| | 24 | 2 | **137-7321** | 1 | TRIM | |
| | 25 | 1 | **160-5003** | 1 | BRACKET AS | |
| Y | 26 | 2 | **165-5576** | 1 | DOOR GP-CAB (LH) | 1364 |
| Y | 27 | 1 | **172-4387** | 1 | PLATFORM GP-CAB | 1437 |
| Y | 28 | 1 | **179-3738** | 1 | DOOR GP-CAB (RH) | 1367 |
| | 29 | 1 | **240-9499** | 1 | TRIM AS (RH) | |
| | 30 | 2 | **270-2481** | 1 | BRACKET AS | |
| M | | 2 | **6V-9632** | 4 | NUT-WELD (M6X1-THD) | |
| | 31 | 1 | **301-4549** | | CAB AS | |
| | 32 | 1,2 | **7T-0920** | 2 | BLOCK | |
| | 33 | 1,2 | **8T-4121** | 28 | WASHER-HARD (11X21X2.5-MM THK) | |
| M | 34 | 1 | **8T-4133** | 4 | NUT (M10X1.5-THD) | |
| M | 35 | 1 | **8T-4136** | 4 | BOLT (M10X1.5X25-MM) | |
| M | 36 | 1,2 | **8T-4137** | 20 | BOLT (M10X1.5X20-MM) | |
| M | 37 | 1 | **9X-2041** | 2 | SCREW-TRUSS HEAD (M10X1.5X20-MM) | |
| M | 38 | 2 | **9X-2042** | 2 | SCREW-TRUSS HEAD (M6X1X12-MM) | |

M-METRIC PART
Y-SEPARATE ILLUSTRATION

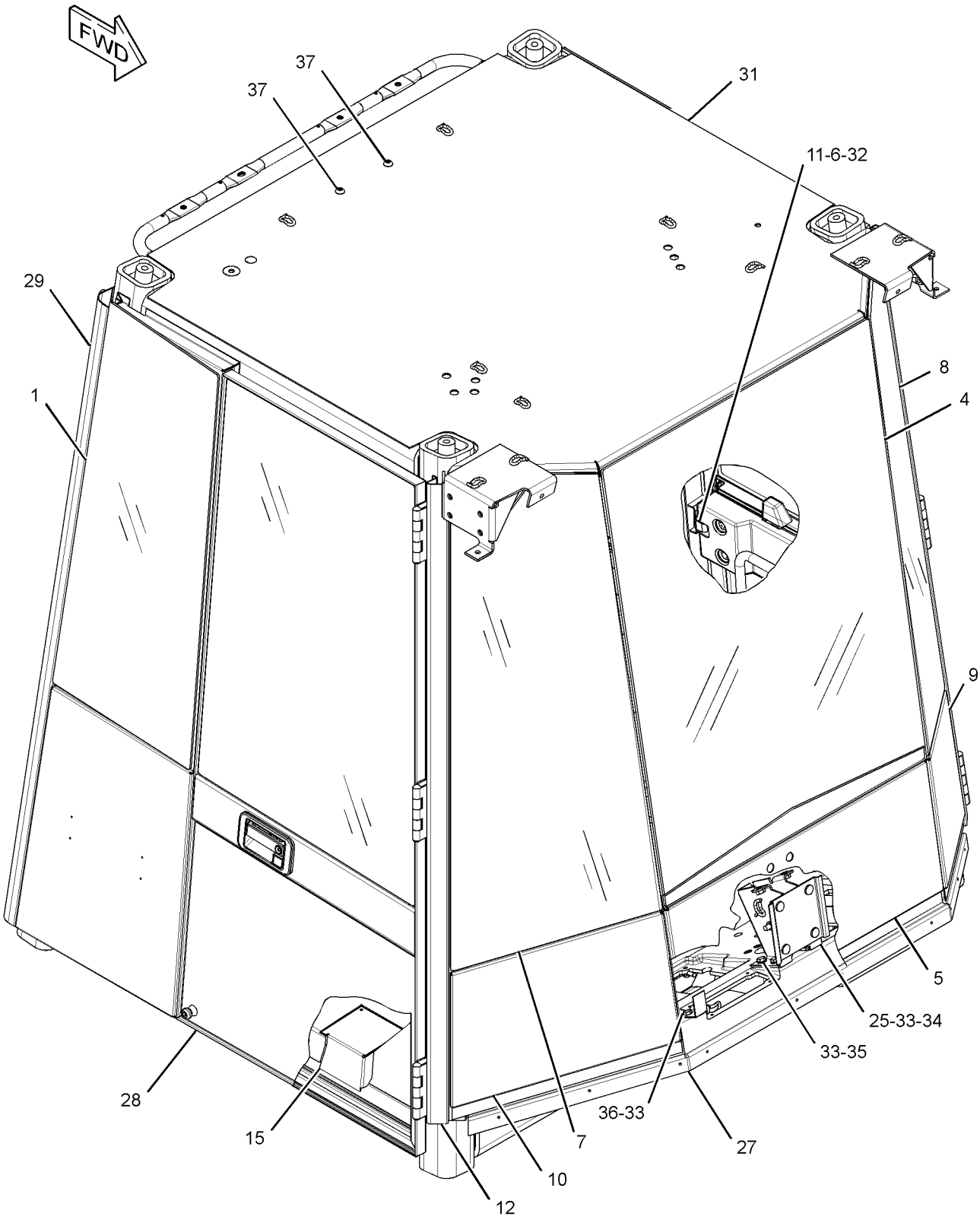


GRAPHIC #1 g01352260

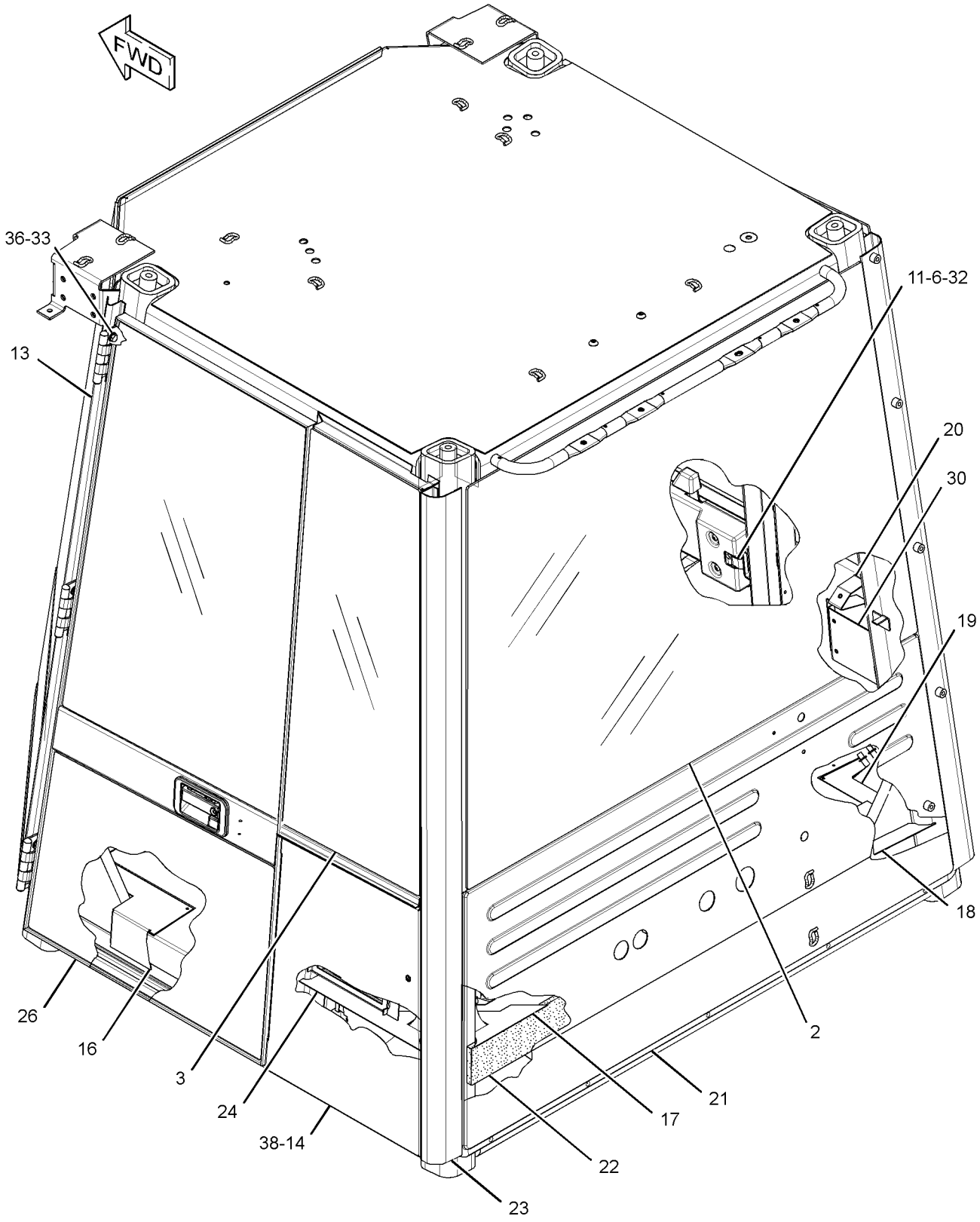


GRAPHIC #2

**<END>**

g01352261

# OPERATOR STATION

## *308-2708* ROPS GP-ENCLOSED

**S/N: BXY1900-UP**
**PART OF 2Q-8732 CAB AR**
**AN ATTACHMENT**

**SMCS-7301** **i02728063**

| NOTE | REF NO | GRAPHIC REF | PART NUMBER | QTY | PART NAME 1 2 3 4 5 6 (PRODUCT LEVEL) | SEE PAGE |
|---|---|---|---|---|---|---|
| | 1 | 1 | **107-4600** | 1 | GLASS (RIGHT SIDE-REAR) | |
| | 2 | 1 | **107-4601** | 1 | GLASS (REAR) | |
| | 3 | 1 | **107-4602** | 1 | GLASS (LEFT SIDE-REAR) | |
| | 4 | 1 | **107-4603** | 1 | GLASS (FRONT) | |
| | 5 | 2 | **107-7306** | 1 | SHEET AS | |
| | 6 | 2 | **111-0687** | 2 | STRIKER AS | |
| | 7 | 1 | **121-3274** | 1 | GLASS (RIGHT FRONT CORNER) | |
| | 8 | 1 | **121-3275** | 1 | GLASS (LEFT FRONT CORNER) | |
| | 9 | 1 | **121-3277** | 1 | SHEET AS (LEFT FRONT CORNER) | |
| | 10 | 1 | **121-3278** | 1 | SHEET AS (RIGHT FRONT CORNER) | |
| | 11 | 2 | **128-1026** | 2 | SHIELD-STRIKER | |
| | 12 | 2 | **129-2570** | 1 | CHANNEL AS | |
| | | 2 | **5D-9629** | 2 | ROD | |
| | 13 | 2 | **129-2572** | 1 | CHANNEL | |
| | 14 | 1 | **129-2581** | 1 | DOOR AS | |
| | | 1 | **1V-6755** | 1 | LATCH AS | |
| | | 1 | **111-1316** | 1 | HINGE | |
| | 15 | 2 | **136-1725** | 1 | TRIM (RH) | |
| | 16 | 2 | **136-1726** | 1 | TRIM (LH) | |
| | 17 | 2 | **136-1728** | 1 | TRIM | |
| | 18 | 2 | **136-1729** | 1 | TRIM | |
| | 19 | 2 | **136-1730** | 1 | TRIM | |
| | 20 | 2 | **136-1731** | 1 | BRACKET AS | |
| M | | 2 | **6V-9632** | 1 | NUT-WELD (M6X1-THD) | |
| | 21 | 1 | **136-1732** | 1 | SHEET AS | |
| | | 1 | **7T-1099** | 3 | LINK | |
| M | | 1 | **9R-2821** | 1 | BOSS (M10X1.5X15-MM) | |
| | 22 | 2 | **136-1734** | 1 | INSULATION | |
| | 23 | 1 | **136-9353** | 1 | TRIM | |
| | 24 | 2 | **137-7321** | 1 | TRIM | |
| | 25 | 2 | **160-5003** | 1 | BRACKET AS | |
| | | 2 | **7T-1099** | 1 | LINK | |
| M | | 2 | **8T-3490** | 4 | NUT-WELD (M10X1.5-THD) | |
| M | | 2 | **8T-3635** | 1 | STUD-WELD (M12X1.75X34.93-MM OAL) | |
| Y | 26 | 1 | **172-4387** | 1 | PLATFORM GP-CAB | 1437 |
| Y | 27 | 1 | **227-3270** | 1 | DOOR GP-CAB (WITH SLIDING WINDOW, LH) | 1369 |
| | 28 | 1 | **240-9499** | 1 | TRIM AS (RH) | |
| | 29 | 2 | **270-2481** | 1 | BRACKET AS | |
| M | | 2 | **6V-9632** | 4 | NUT-WELD (M6X1-THD) | |
| | 30 | 1 | **301-4549** | 1 | CAB AS | |
| Y | 31 | 1 | **308-2712** | 1 | DOOR GP-CAB (RH) | 1371 |
| | 32 | 2 | **7T-0920** | 2 | BLOCK | |
| | 33 | 1,2 | **8T-4121** | 28 | WASHER-HARD (11X21X2.5-MM THK) | |
| M | 34 | 2 | **8T-4133** | 4 | NUT (M10X1.5-THD) | |
| M | 35 | 2 | **8T-4136** | 4 | BOLT (M10X1.5X25-MM) | |
| M | 36 | 1,2 | **8T-4137** | 20 | BOLT (M10X1.5X20-MM) | |
| M | 37 | 1 | **9X-2041** | 2 | SCREW-TRUSS HEAD (M10X1.5X20-MM) | |
| M | 38 | 1 | **9X-2042** | 2 | SCREW-TRUSS HEAD (M6X1X12-MM) | |

M-METRIC PART
Y-SEPARATE ILLUSTRATION

REFER TO ALL ILLUSTRATIONS OF
THIS GROUP FOR AUXILIARY VIEWS

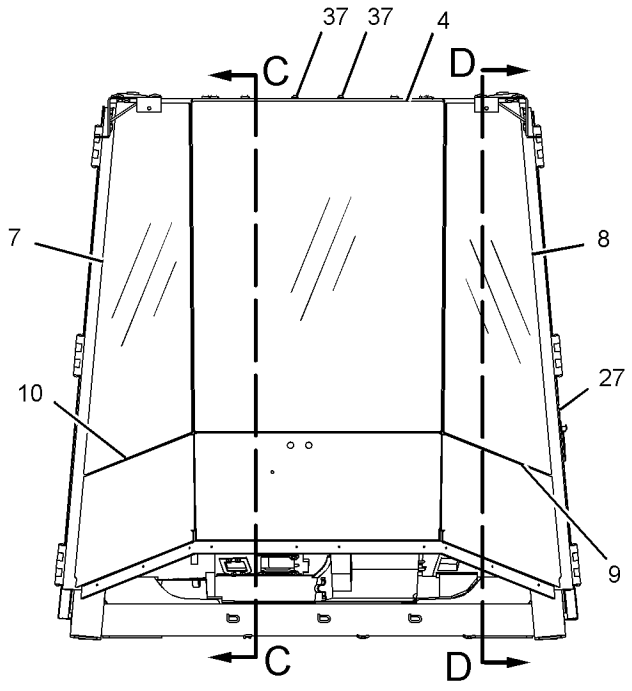


FRONT VIEW

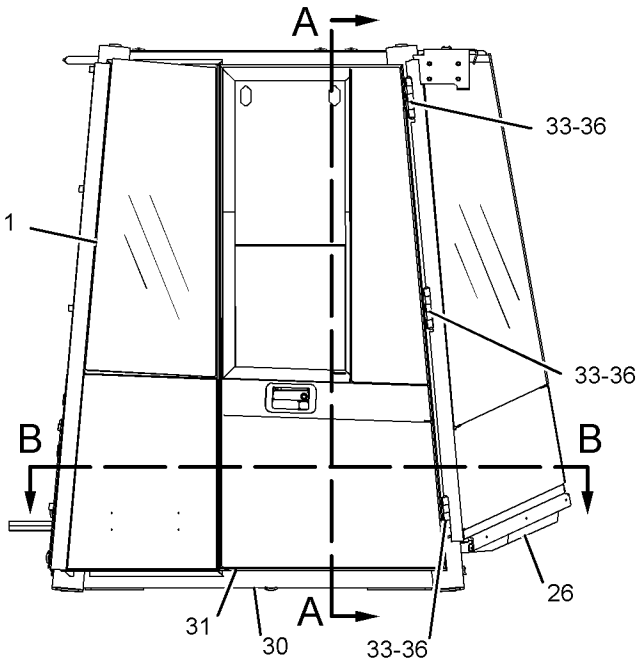


RIGHT SIDE VIEW

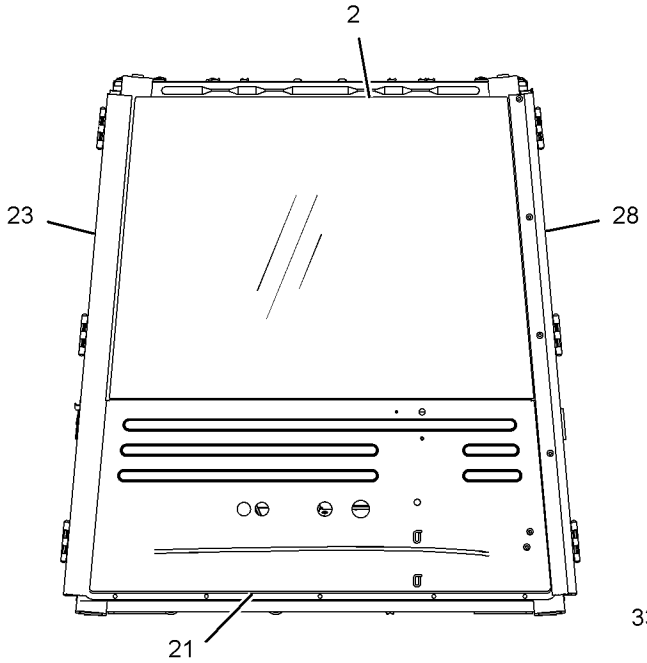


REAR VIEW

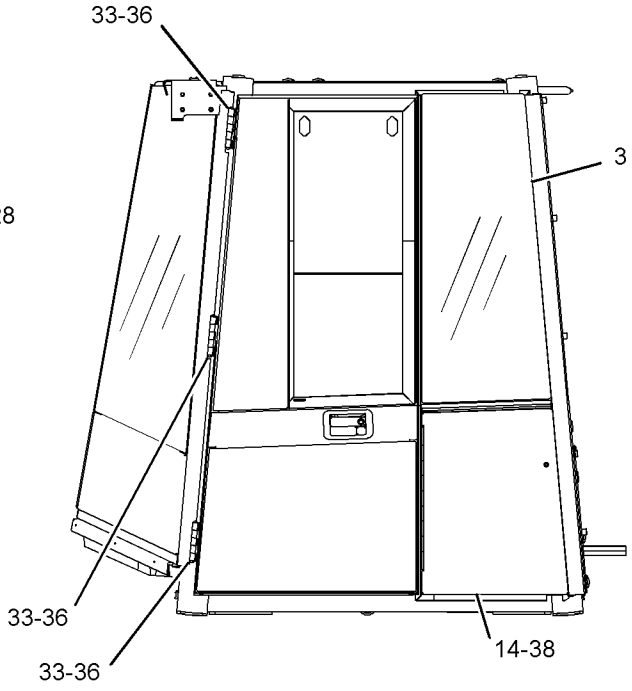


LEFT SIDE VIEW

GRAPHIC #1

g01370442

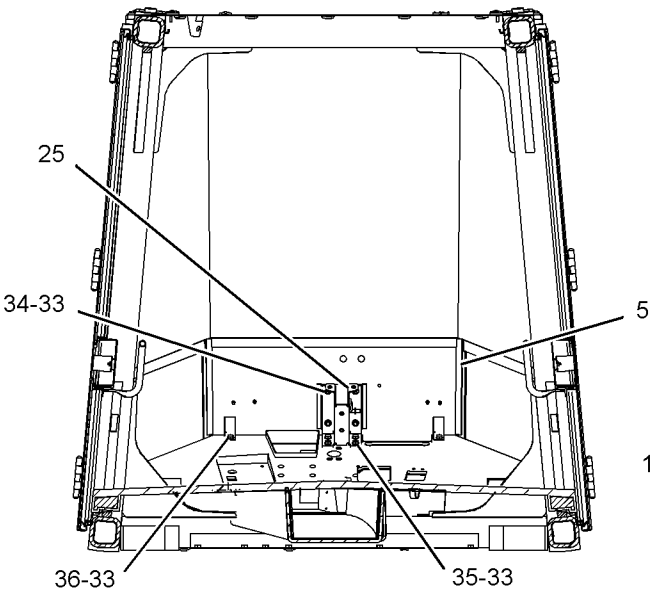


SECTION A-A

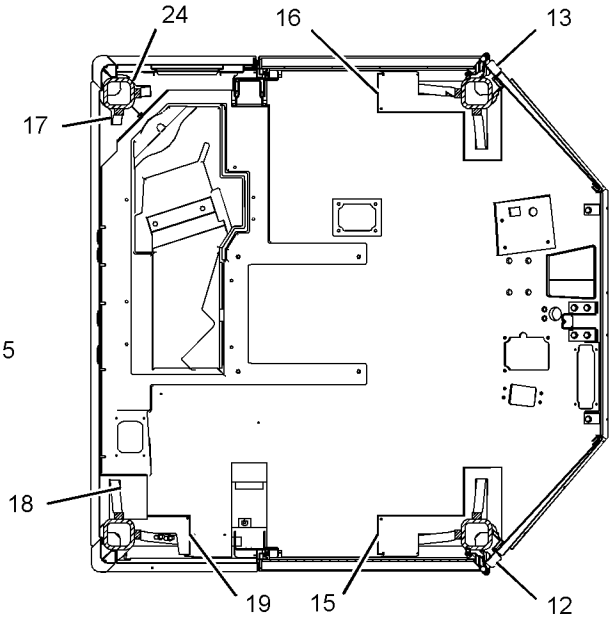


SECTION B-B

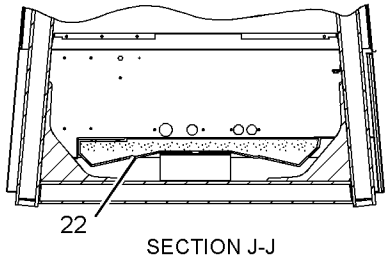


SECTION J-J

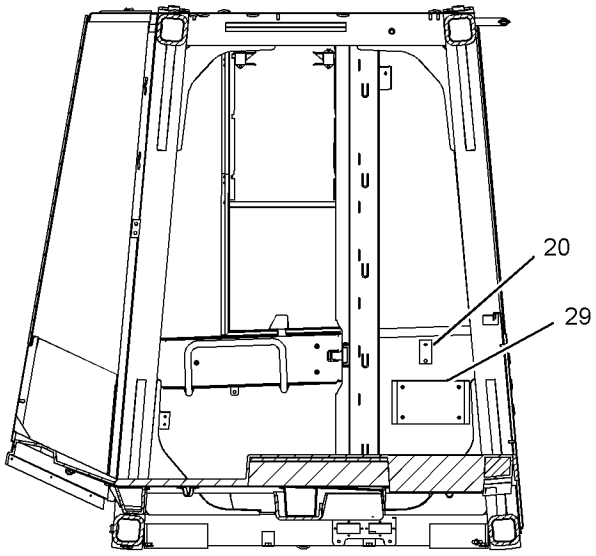


SECTION C-C

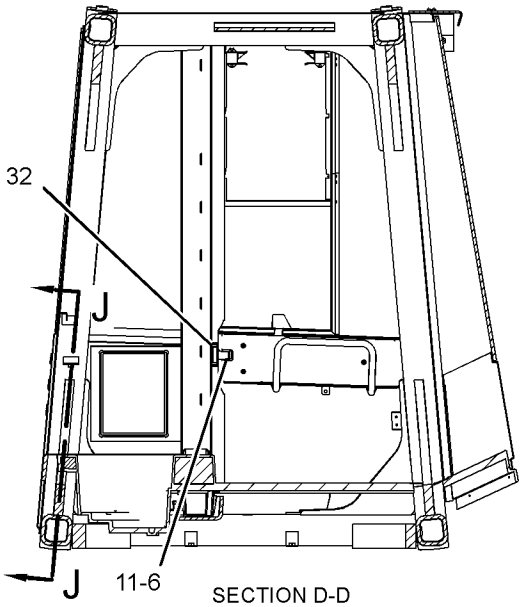


SECTION D-D

GRAPHIC #2 **<END>** g01370443

# OPERATOR STATION

## *308-2728* ROPS GP-ENCLOSED

**S/N: BXY1900-UP**
**PART OF 300-2780, 308-2727 CAB AR**
**AN ATTACHMENT**

**SMCS-7301** **i02732743**

| NOTE | REF NO | GRAPHIC REF | PART NUMBER | QTY | PART NAME 1 2 3 4 5 6 (PRODUCT LEVEL) | SEE PAGE |
|---|---|---|---|---|---|---|
| | 1 | 1 | **111-0687** | 2 | STRIKER AS | |
| | 2 | 1 | **128-1026** | 2 | SHIELD-STRIKER | |
| | 3 | 2 | **129-2581** | 1 | DOOR AS | |
| | | 2 | **1V-6755** | 1 | LATCH AS | |
| | | 2 | **111-1316** | 1 | HINGE | |
| | 4 | 2 | **136-1725** | 1 | TRIM (RH) | |
| | 5 | 2 | **136-1726** | 1 | TRIM (LH) | |
| | 6 | 2 | **136-1728** | 1 | TRIM | |
| | 7 | 2 | **136-1729** | 1 | TRIM | |
| | 8 | 2 | **136-1730** | 1 | TRIM | |
| | 9 | 2 | **136-1731** | 1 | BRACKET AS | |
| M | | 2 | **6V-9632** | 1 | NUT-WELD (M6X1-THD) | |
| | 10 | 2 | **136-1734** | 1 | INSULATION | |
| | 11 | 2 | **137-7321** | 1 | TRIM | |
| | 12 | 2 | **160-5003** | 1 | BRACKET AS | |
| | | 2 | **7T-1099** | 1 | LINK | |
| M | | 2 | **8T-3490** | 4 | NUT-WELD (M10X1.5-THD) | |
| M | | 2 | **8T-3635** | 1 | STUD-WELD (M12X1.75X34.93-MM OAL) | |
| | 13 | 1 | **165-4795** | 2 | GLASS (SIDE, REAR, RH, LH) | |
| | 14 | 1 | **165-4799** | 1 | GLASS (REAR) | |
| | 15 | 1 | **165-4801** | 1 | PANEL | |
| | 16 | 1 | **165-4806** | 2 | GLASS (FRONT QUARTER) | |
| | 17 | 1 | **165-4808** | 1 | GLASS-FRONT | |
| Y | 18 | 2 | **172-4387** | 1 | PLATFORM GP-CAB | 1437 |
| | 19 | 1 | **179-3726** | 1 | PANEL AS-FRONT | |
| | | 1 | **215-9153** | 4 | BLOCK | |
| | 20 | 1 | **180-3733** | 1 | TRIM AS (LH) | |
| Y | 21 | 2 | **227-3270** | 1 | DOOR GP-CAB (WITH SLIDING WINDOW, LH) | 1369 |
| | 22 | 1 | **240-9499** | 1 | TRIM AS (RH) | |
| | 23 | 1 | **250-3474** | 1 | PLATE AS | |
| | 24 | 1 | **250-3480** | 1 | PANEL AS-LOWER | |
| | | 1 | **7T-1099** | 3 | LINK | |
| | | 1 | **7Y-8763** | 3 | BOSS (M10X1.5X25-MM) | |
| M | | 1 | **9R-2821** | 2 | BOSS (M10X1.5X15-MM) | |
| | 25 | 1 | **250-4906** | 1 | GASKET | |
| | 26 | 2 | **270-2481** | 1 | BRACKET AS | |
| M | | 2 | **6V-9632** | 4 | NUT-WELD (M6X1-THD) | |
| | 27 | 1 | **301-4617** | 1 | CAB AS | |
| Y | 28 | 1 | **308-2712** | 1 | DOOR GP-CAB (RH) | 1371 |
| | 29 | 2 | **7T-0920** | 2 | BLOCK | |
| | 30 | 2 | **8T-4121** | 28 | WASHER-HARD (11X21X2.5-MM THK) | |
| M | 31 | 2 | **8T-4133** | 4 | NUT (M10X1.5-THD) | |
| M | 32 | 2 | **8T-4136** | 4 | BOLT (M10X1.5X25-MM) | |
| M | 33 | 2 | **8T-4137** | 20 | BOLT (M10X1.5X20-MM) | |
| M | 34 | 1 | **8T-4189** | 2 | BOLT (M8X1.25X20-MM) | |
| | 35 | 1 | **8T-4224** | 2 | WASHER-HARD (8.8X16X2-MM THK) | |
| M | 36 | 1 | **9X-2041** | 2 | SCREW-TRUSS HEAD (M10X1.5X20-MM) | |
| M | 37 | 2 | **9X-2042** | 2 | SCREW-TRUSS HEAD (M6X1X12-MM) | |
| D | 38 | 1 | **5P-5768** | | SEAL (2.50-M EACH) | |
| D | 38A | 1 | **5P-5768** | | SEAL (2.84-M EACH) | |
| D | 38B | 1 | **5P-5768** | | SEAL (3.60-M) | |
| D | 38C | 1 | **5P-5768** | | SEAL (4.14-M) | |

D-ORDER BY THE METER
M-METRIC PART
Y-SEPARATE ILLUSTRATION

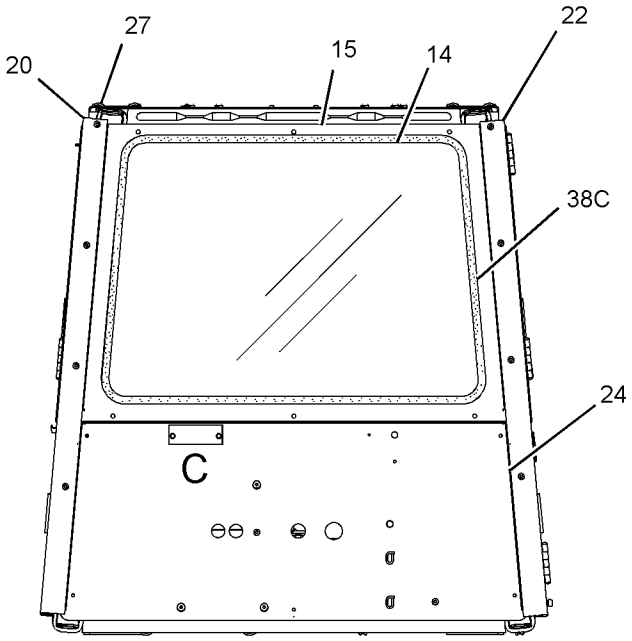


REAR VIEW

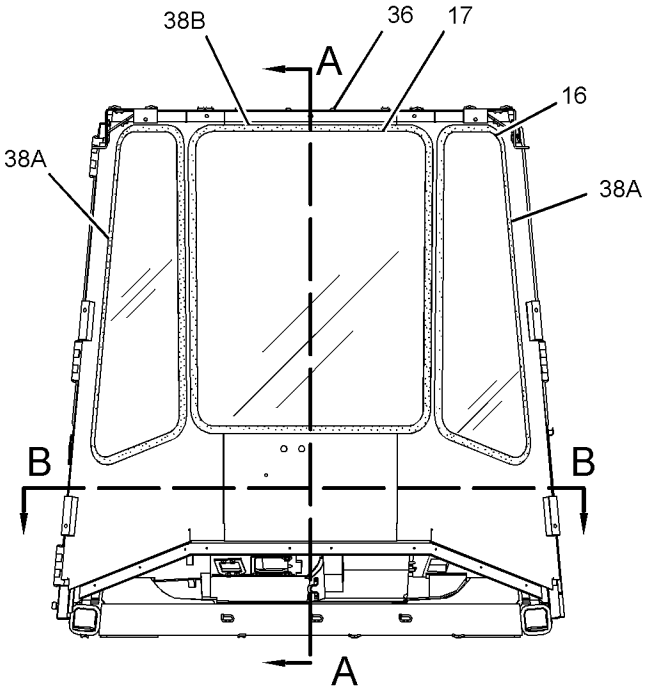


FRONT VIEW

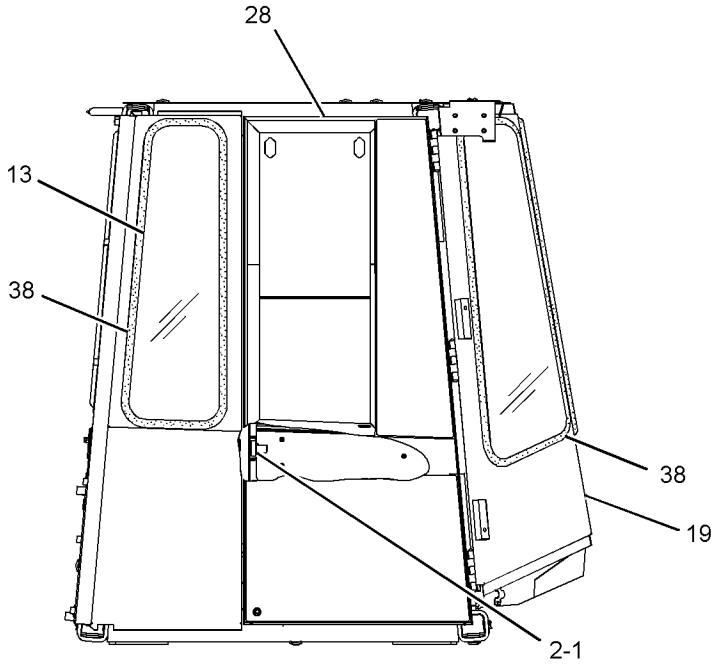


RIGHT SIDE VIEW

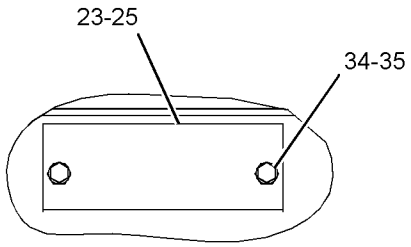


VIEW OF AREA C

REFER TO ALL ILLUSTRATIONS OF
THIS GROUP FOR AUXILIARY VIEWS

GRAPHIC #1

g01369851

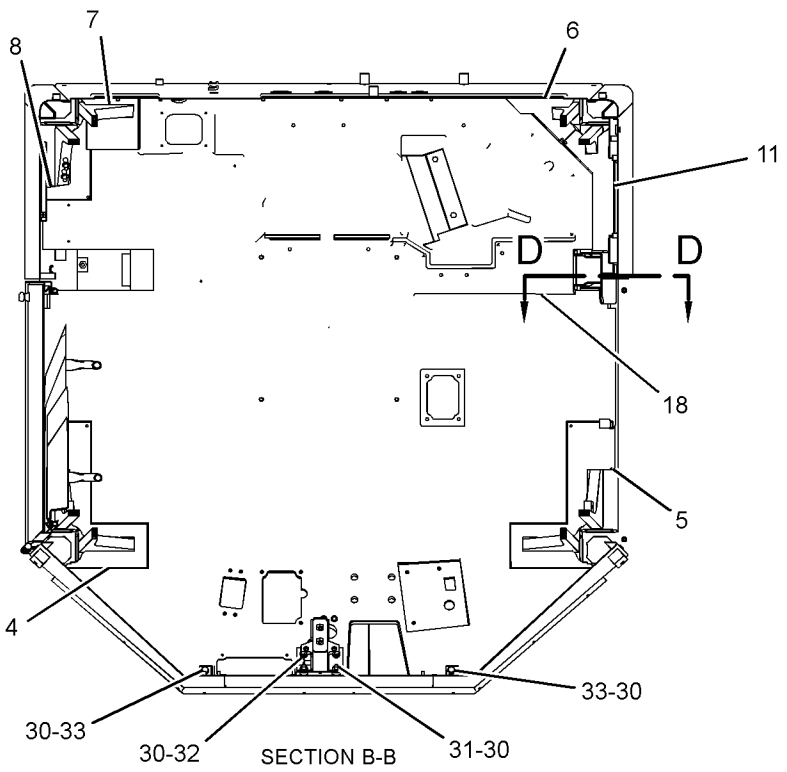


SECTION B-B

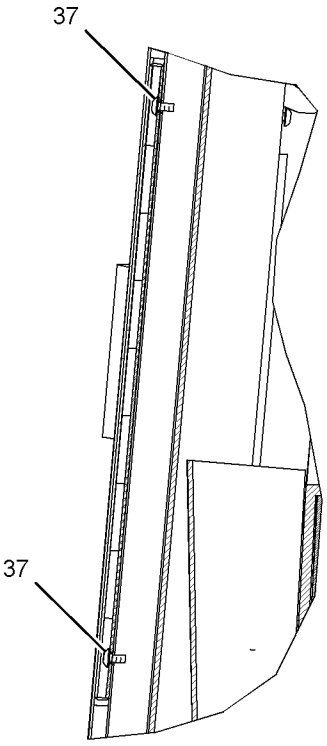


SECTION D-D

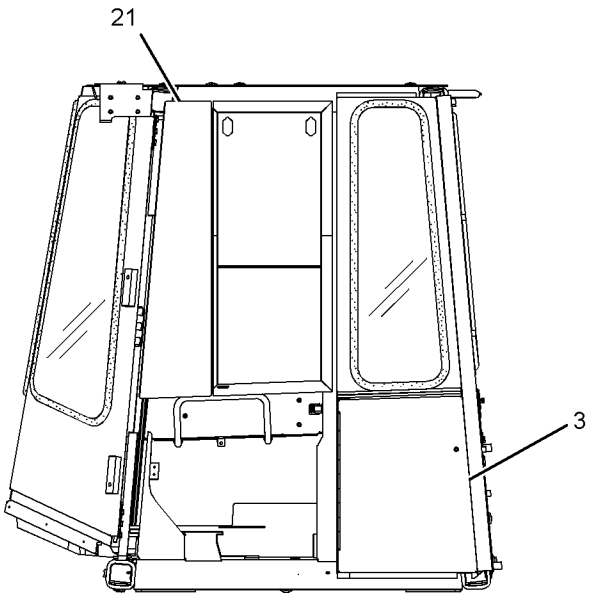


LEFT SIDE VIEW

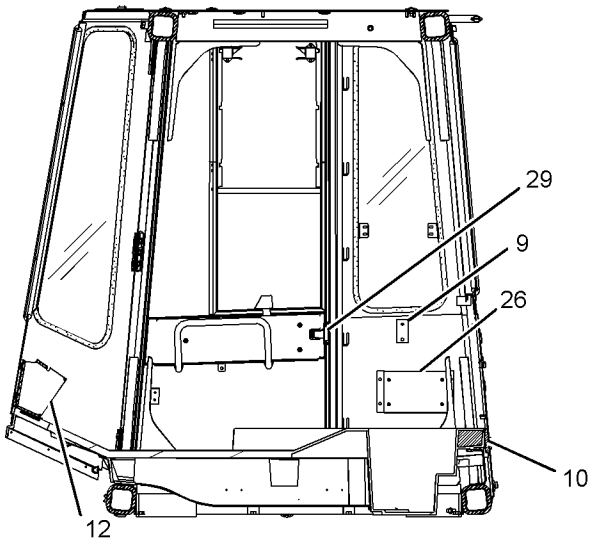


SECTION A-A

GRAPHIC #2 **<END>** g01370104

# OPERATOR STATION

## *117-1410* SEALING GP-GLASS

**S/N: BXY1-UP**

**PART OF 227-3190, 292-6110, 308-2727 CAB AR**

**ALSO AN ATTACHMENT**

**SMCS-7310, 7340** **i02737077**

| NOTE | PART NUMBER | QTY | PART NAME 1 2 3 4 5 6 (PRODUCT LEVEL) | SEE PAGE |
|---|---|---|---|---|
| B | **311-3898** | 1 | ADHESIVE | |

B-USE AS REQUIRED

**<END>**

# OPERATOR STATION

## *178-0603* SEAT GP–CLOTH

**S/N: BXY1-UP**
**PART OF 178-0606 SEAT GP**
**TYPE 1**

**SMCS-7312** **i02360439**

| NOTE | REF NO | GRAPHIC REF | PART NUMBER | QTY | PART NAME 1 2 3 4 5 6 (PRODUCT LEVEL) | SEE PAGE |
|---|---|---|---|---|---|---|
| | 1 | 1 | **218-0861** | 1 | PAN AS | |
| | | 1 | **8T-9082** | 5 | RIVET-POP | |
| | | 1 | **217-9049** | 1 | CUSHION AS | |
| | 2 | 1 | **143-1288** | 8 | LOCKNUT-FLANGE (3/8-16-THD) | |
| | 3 | 1 | **171-1230** | 6 | SCREW-BUTTON HEAD (3/8-16X1-IN) | |
| | 4 | 1 | **171-6682** | 1 | BAR | |
| | 5 | 1 | **172-2416** | 2 | PIN | |
| Y | 6 | 1 | *173-1028* | 1 | ADJUSTER GP-SEAT | 1327 |
| | 7 | 1 | **177-1863** | 2 | BOLT-PIVOT (3/8-16X2.89-IN) | |
| Y | 8 | 1 | *210-2270* | 1 | RECLINER GP-SEAT | 1450 |
| Y | 9 | 1 | *178-0604* | 1 | PAN GP-BACKREST | 1425 |
| | 10 | 1 | **184-2298** | 1 | ROD | |
| | 11 | 1 | **184-2299** | 4 | WASHER (7X25.4X2.54-MM THK) | |
| | 12 | 1 | **095-0843** | 2 | PIN-COTTER | |
| | 13 | 1 | **5V-1496** | 2 | RETAINER | |
| | 14 | 1 | **6V-7646** | 2 | WASHER-HARD (7.2X25X2-MM THK) | |
| | 15 | 1 | **8T-0328** | 1 | WASHER-HARD (5.5X10X1-MM THK) | |
| | 16 | 1 | **8T-4205** | 1 | WASHER-HARD (7.2X14.5X2-MM THK) | |
| | 17 | 1 | **8Y-6277** | 2 | SPACER (10.5X28.6X10-MM THK) | |

Y-SEPARATE ILLUSTRATION

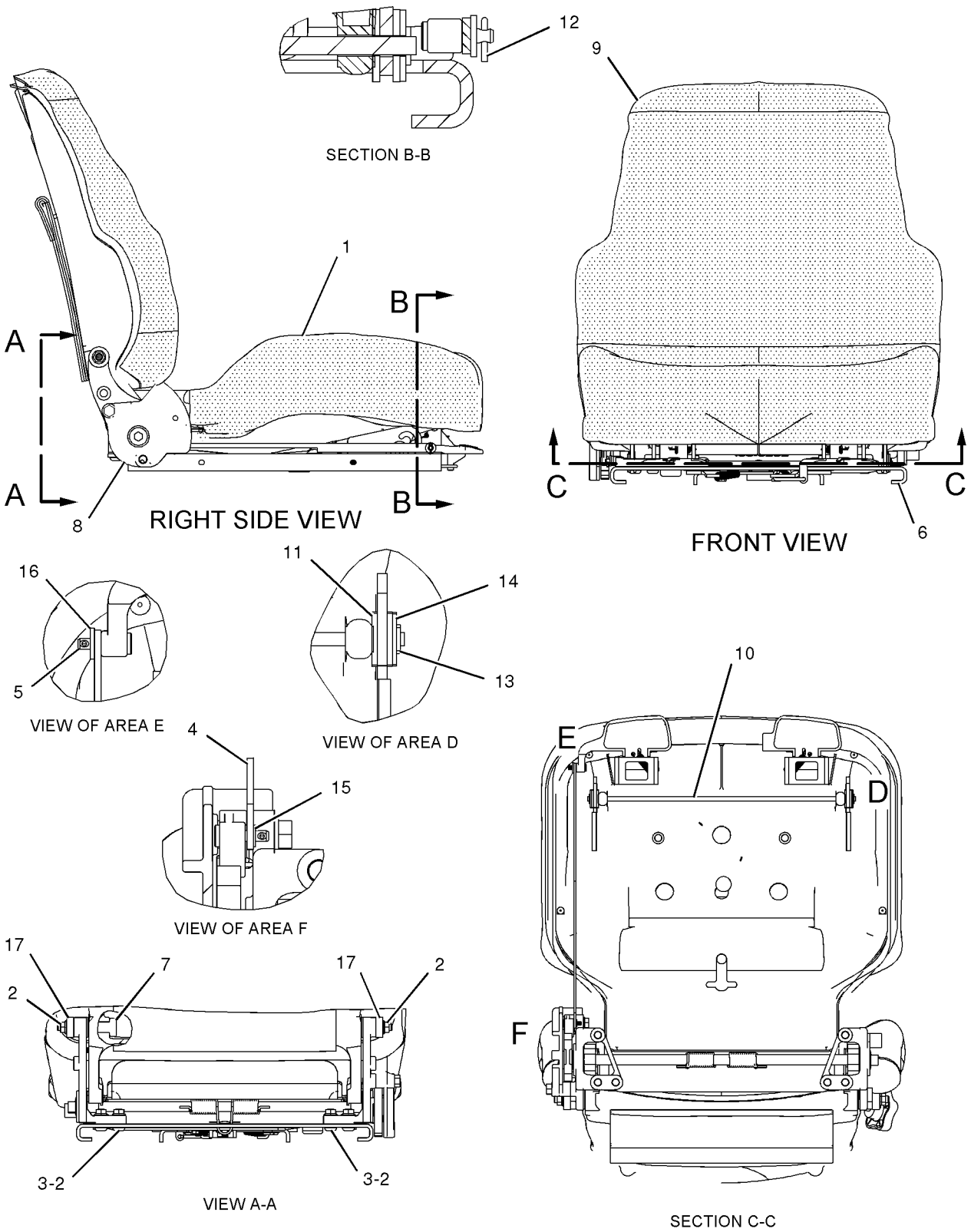


GRAPHIC #1 **<END>** g01023456

# OPERATOR STATION

## 178-0603 SEAT GP–CLOTH

**S/N: BXY1-UP**
**PART OF 178-0606 SEAT GP**
**ALSO AN ATTACHMENT**
**TYPE 2**

**SMCS-7312** **i02649569**

| NOTE | REF NO | GRAPHIC REF | PART NUMBER | QTY | PART NAME 1 2 3 4 5 6 (PRODUCT LEVEL) | SEE PAGE |
|---|---|---|---|---|---|---|
| | 1 | 1 | **218-0861** | 1 | PAN AS | |
| | | 1 | **8T-9082** | 5 | RIVET-POP | |
| | | 1 | **217-9049** | 1 | CUSHION AS | |
| | 2 | 1 | **143-1288** | 8 | LOCKNUT-FLANGE (3/8-16-THD) | |
| | 3 | 1 | **171-1230** | 6 | SCREW-BUTTON HEAD (3/8-16X1-IN) | |
| | 4 | 1 | **171-6682** | 1 | BAR | |
| | 5 | 1 | **172-2416** | 2 | PIN | |
| Y | 6 | 1 | *173-1028* | 1 | ADJUSTER GP-SEAT | 1327 |
| | 7 | 1 | **177-1863** | 2 | BOLT-PIVOT (3/8-16X2.89-IN) | |
| Y | 8 | 1 | *210-2270* | 1 | RECLINER GP-SEAT | 1450 |
| CY | 9 | 1 | *292-9237* | 1 | PAN GP-BACKREST | 1428 |
| | 10 | 1 | **184-2298** | 1 | ROD | |
| | 11 | 1 | **184-2299** | 4 | WASHER (7X25.4X2.54-MM THK) | |
| | 12 | 1 | **095-0843** | 2 | PIN-COTTER | |
| | 13 | 1 | **5V-1496** | 2 | RETAINER | |
| | 14 | 1 | **6V-7646** | 2 | WASHER-HARD (7.2X25X2-MM THK) | |
| | 15 | 1 | **8T-0328** | 1 | WASHER-HARD (5.5X10X1-MM THK) | |
| | 16 | 1 | **8T-4205** | 1 | WASHER-HARD (7.2X14.5X2-MM THK) | |
| C | 17 | 1 | **294-5042** | 2 | SPACER (11.1X19.5X9.67-MM THK) | |

C-CHANGE FROM PREVIOUS TYPE
Y-SEPARATE ILLUSTRATION

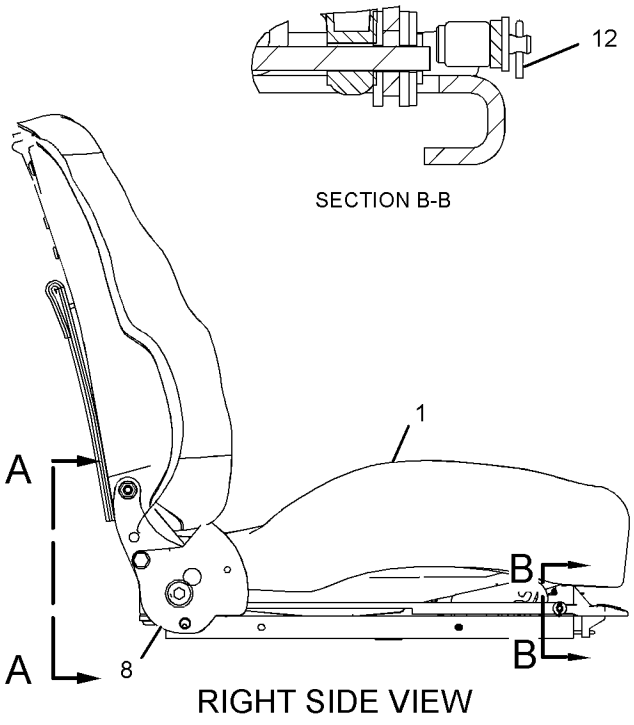


RIGHT SIDE VIEW

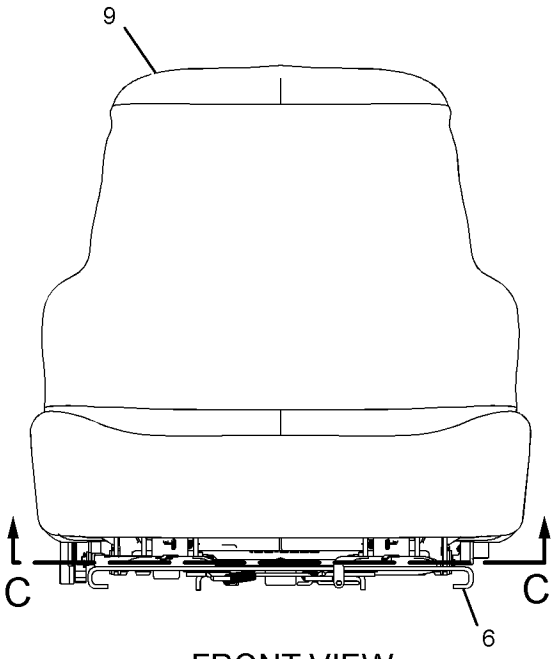


FRONT VIEW

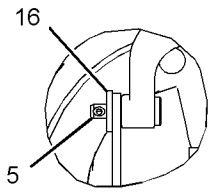


VIEW OF AREA E

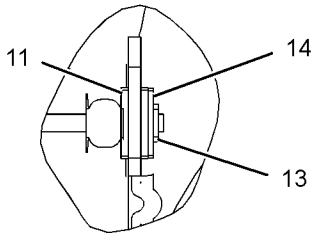


VIEW OF AREA D

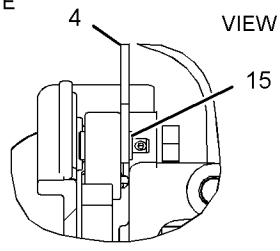


VIEW OF AREA F

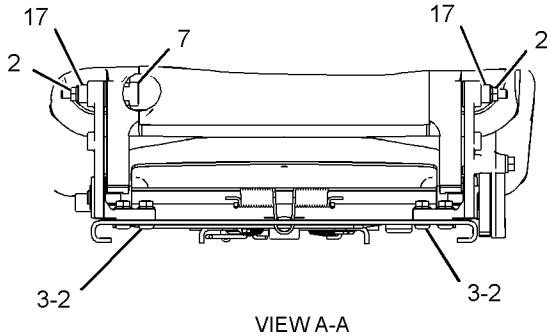


VIEW A-A

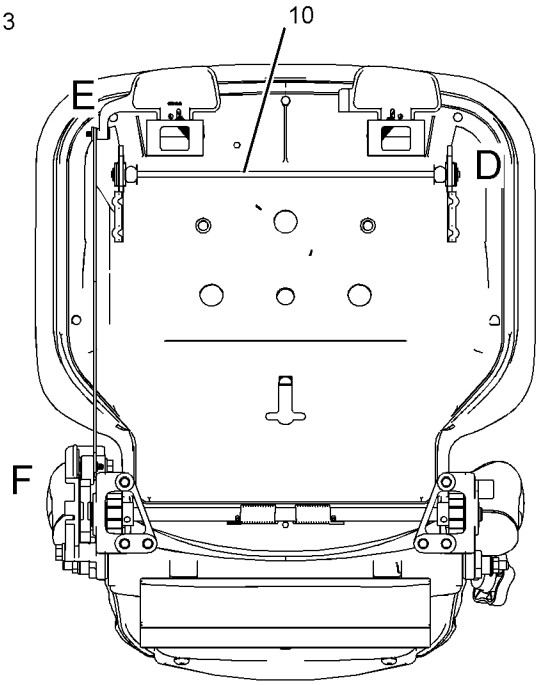


SECTION C-C

GRAPHIC #1 **<END>** g01336990

# OPERATOR STATION

## 178-0606 SEAT GP–CLOTH

**S/N: BXY1-UP**
**PART OF 200-3174 SEAT GP-SUSPENSION**
**ALSO AN ATTACHMENT**

**SMCS-7312** **i02732199**

| NOTE | REF NO | GRAPHIC REF | PART NUMBER | QTY | PART NAME 1 2 3 4 5 6 (PRODUCT LEVEL) | SEE PAGE |
|---|---|---|---|---|---|---|
| | 1 | 1 | **177-4937** | 1 | SPACER (11.7X19.8X20.3-MM THK) | |
| Y | 2 | 1 | **178-0603** | 1 | SEAT GP (CLOTH) | 1468 |
| | 3 | 1 | **222-0345** | 1 | SEAT BELT GP (RETRACTABLE) | |
| C | 4 | 1 | **229-1494** | 1 | EXTENSION GP-BACKREST (CLOTH) | |
| | 5 | 1 | **0T-0244** | 1 | BOLT (7/16-20X1.25-IN) | |
| | 6 | 1 | **205-6388** | 1 | BOLT (7/16-20X1.75-IN) | |

C-CHANGE FROM PREVIOUS TYPE
Y-SEPARATE ILLUSTRATION

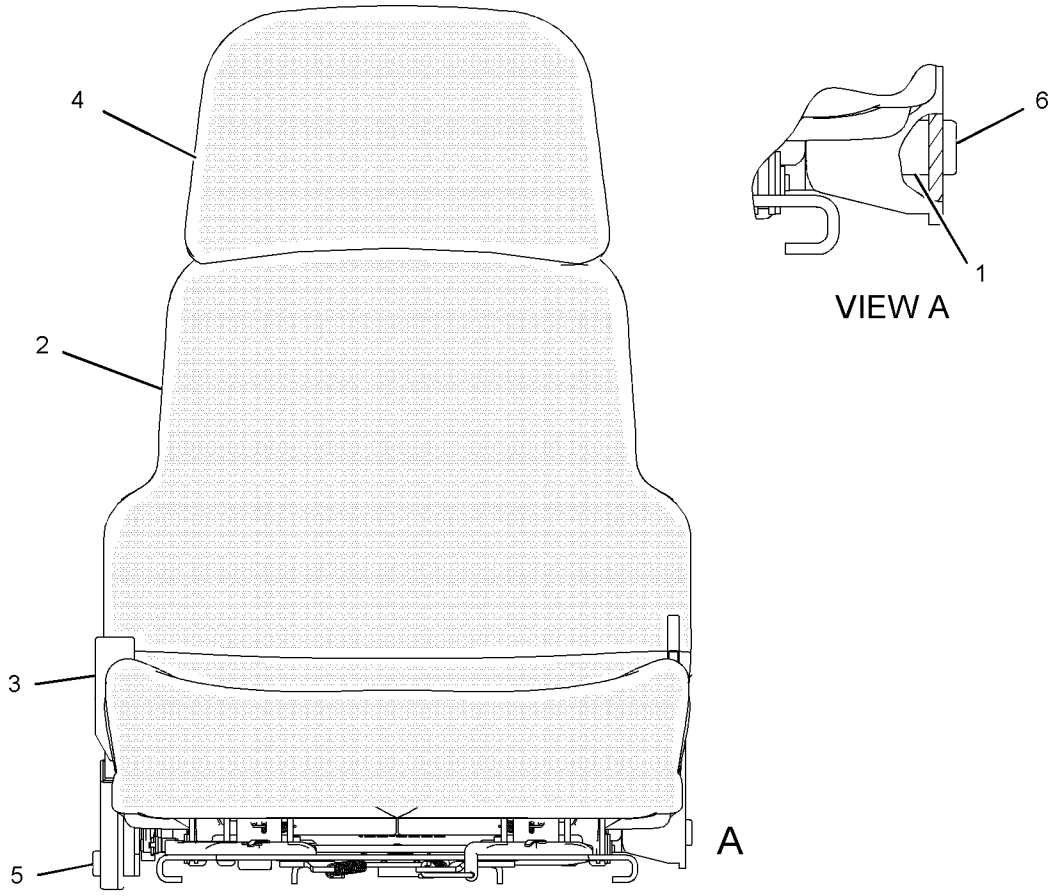


GRAPHIC #1

**<END>**

g01084230

# *200-3174* SEAT GP-SUSPENSION–AIR

**S/N: BXY1-UP**
**PART OF 227-3190, 292-6110, 308-2727 CAB AR**
**ALSO AN ATTACHMENT**

**SMCS-7324, 7336** **i02673841**

| NOTE | REF NO | GRAPHIC REF | PART NUMBER | QTY | PART NAME 1 2 3 4 5 6 (PRODUCT LEVEL) | SEE PAGE |
|---|---|---|---|---|---|---|
| J | 1 | 1 | **161-9289** | 4 | BLOCK-SLIDER | |
| J | 2 | 1 | **173-5787** | 4 | SETSCREW (1/4-20-THD) | |
| Y | 3 | 1 | **178-0606** | 1 | SEAT GP | 1472 |
| Y | 4 | 1 | **191-2933** | 1 | SUSPENSION GP-SEAT (AIR) | 1483 |
| J | 5 | 1 | **203-7703** | 2 | WASHER-HARD (10.2X22.22X2.38-MM THK) | |
| J | 6 | 1 | **4F-4879** | 1 | BOLT (3/8-16X0.5-IN) | |
| | | | | | AVAILABLE REPAIR KIT(S): | |
| J | | | **173-7035** | 1 | KIT-SLIDER BLOCK (SUSPENSION SEAT) | |

J-KIT MARKED J INCLUDES PARTS MARKED J
Y-SEPARATE ILLUSTRATION

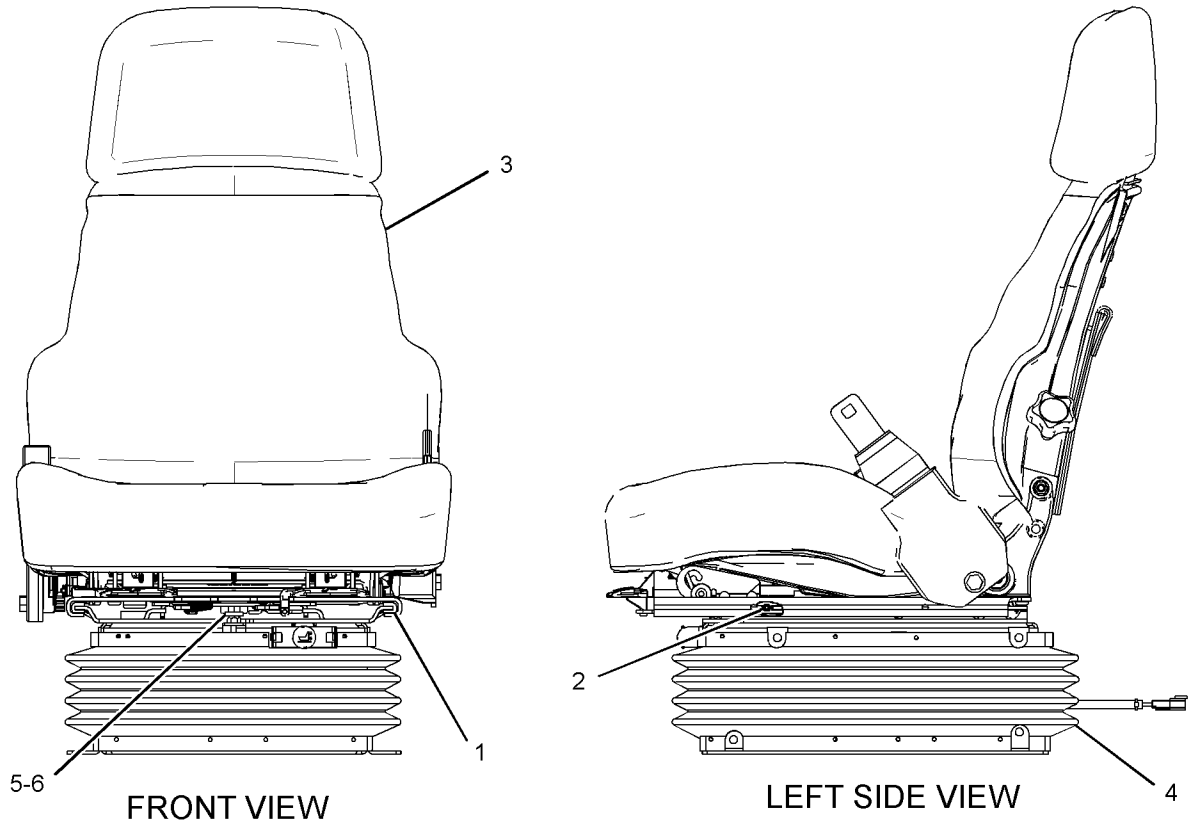


GRAPHIC #1 **<END>** g01344176

# OPERATOR STATION

## *228-9624* SUPPORT GP-HYDRAULIC CONTROL

**S/N: BXY1-UP**
**PART OF 227-3190, 292-6110, 308-2727 CAB AR**
**ALSO AN ATTACHMENT**

**SMCS-5258** **i02219693**

| NOTE | REF NO | GRAPHIC REF | PART NUMBER | QTY | PART NAME 1 2 3 4 5 6 (PRODUCT LEVEL) | SEE PAGE |
|---|---|---|---|---|---|---|
| | 1 | 1 | **3K-4897** | 1 | PIN-SPRING | |
| | 2 | 2 | **4E-6523** | 1 | SUPPORT-SLIDE | |
| | 3 | 1 | **4E-6526** | 1 | CUSHION AS (RH) | |
| | 4 | 1 | **4E-8722** | 4 | NUT | |
| | 5 | 2 | **4E-9173** | 2 | SHAFT-CONTROL | |
| | 6 | 2 | **4E-9174** | 2 | BEARING | |
| M | 7 | 2 | **6V-9327** | 4 | SETSCREW-SOCKET | |
| | 8 | 1 | **7V-0445** | 1 | SPRING | |
| | 9 | 1 | **7X-3310** | 1 | KNOB-BALL | |
| | 10 | 1 | **8Y-5746** | 1 | ASHTRAY | |
| | 11 | 1 | **8Y-6333** | 1 | GASKET (ASHTRAY) | |
| | 12 | 2 | **9U-0952** | 1 | PIN | |
| | 13 | 2 | **9U-0953** | 1 | GUIDE | |
| | 14 | 2 | **9U-0954** | 1 | STUD | |
| | 15 | 1 | **9U-0955** | 1 | PIN | |
| | 16 | 2 | **9U-0958** | 1 | SLIDER | |
| | 17 | 2 | **9U-3925** | 4 | RING-RETAINING | |
| | 18 | 2 | **9U-3926** | 6 | STOP | |
| | 19 | 2 | **9U-3927** | 1 | BEARING | |
| | 20 | 2 | **127-0323** | 1 | LEVER AS | |
| | 21 | 2 | **127-5480** | 1 | BRACKET AS | |
| M | | 2 | **6V-9632** | 1 | NUT-WELD (M6X1-THD) | |
| B | 22 | 2 | **137-6841** | 2 | SHIM (0.2-MM THK) | |
| | 23 | 1 | **239-9660** | 1 | HOUSING | |
| | 24 | 1 | **170-0490** | 1 | HOUSING | |
| | 25 | 1 | **170-0976** | 1 | BRACKET AS | |
| | 26 | 1 | **170-0978** | 1 | BRACKET AS | |
| M | | 1 | **6V-9632** | 1 | NUT-WELD (M6X1-THD) | |
| M | | 1 | **8T-3490** | 3 | NUT-WELD (M10X1.5-THD) | |
| M | | 1 | **8T-3612** | 2 | NUT-WELD (M8X1.25-THD) | |
| | 27 | 1 | **203-0328** | 1 | SPACER (16X19X9-MM THK) | |
| | 28 | 1 | **203-9991** | 1 | KNOB AS | |
| M | | 1 | **9X-8281** | 1 | STUD-TAPERLOCK (M10X1.5X45-MM) | |
| | 29 | 1 | **211-4942** | 2 | KNOB AS | |
| M | 30 | 1 | **099-3649** | 4 | BOLT (M8X1.25X40-MM) | |
| M | 31 | 1,2 | **5C-7261** | 4 | NUT (M8X1.25-THD) | |
| | 32 | 2 | **7X-0575** | 2 | WASHER-HARD (10.2X22.5X5-MM THK) | |
| M | 33 | 2 | **8T-4138** | 4 | BOLT (M6X1X20-MM) | |
| M | 34 | 2 | **8T-4189** | 2 | BOLT (M8X1.25X20-MM) | |
| M | 35 | 2 | **8T-4195** | 4 | BOLT (M10X1.5X30-MM) | |
| | 36 | 2 | **8T-4205** | 4 | WASHER-HARD (7.2X14.5X2-MM THK) | |
| | 37 | 1,2 | **8T-4224** | 7 | WASHER-HARD (8.8X16X2-MM THK) | |
| | 38 | 1 | **9N-0869** | 2 | WASHER-HARD (8.8X25.5X2-MM THK) | |
| | 40 | 1 | **9X-2027** | 1 | WASHER (11X18X2-MM THK) | |
| | 41 | 1 | **9X-2038** | 8 | WASHER (7X19X2-MM THK) | |
| M | 42 | 1 | **9X-2044** | 8 | SCREW-TRUSS HEAD (M6X1X16-MM) | |
| M | 43 | 1 | **9X-2616** | 2 | SCREW-SOCKET (M8X1.25X16-MM) | |

B-USE AS REQUIRED
M-METRIC PART

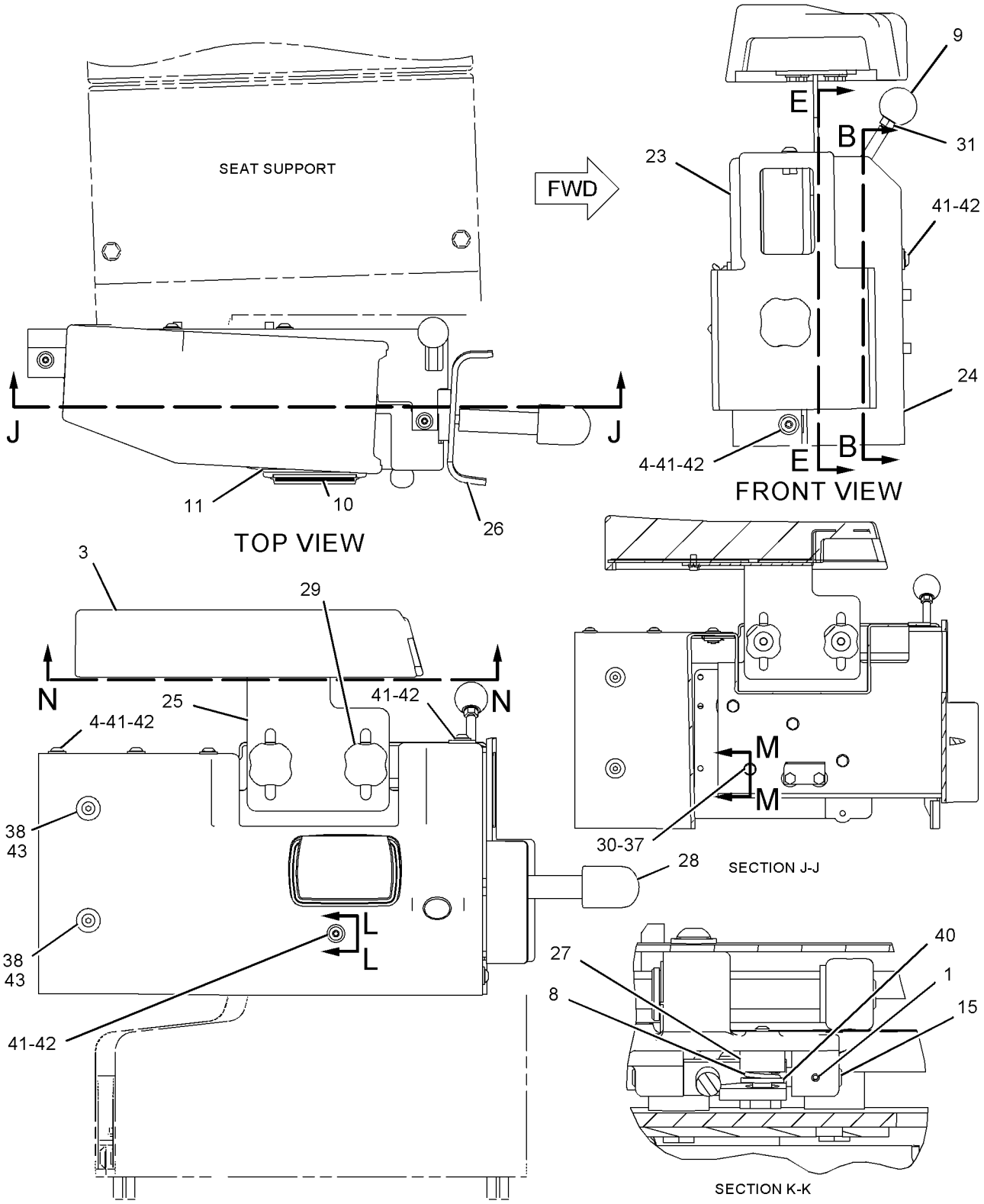


REFER TO ALL ILLUSTRATIONS OF THIS GROUP FOR AUXILIARY VIEWS

GRAPHIC #1

g01120385

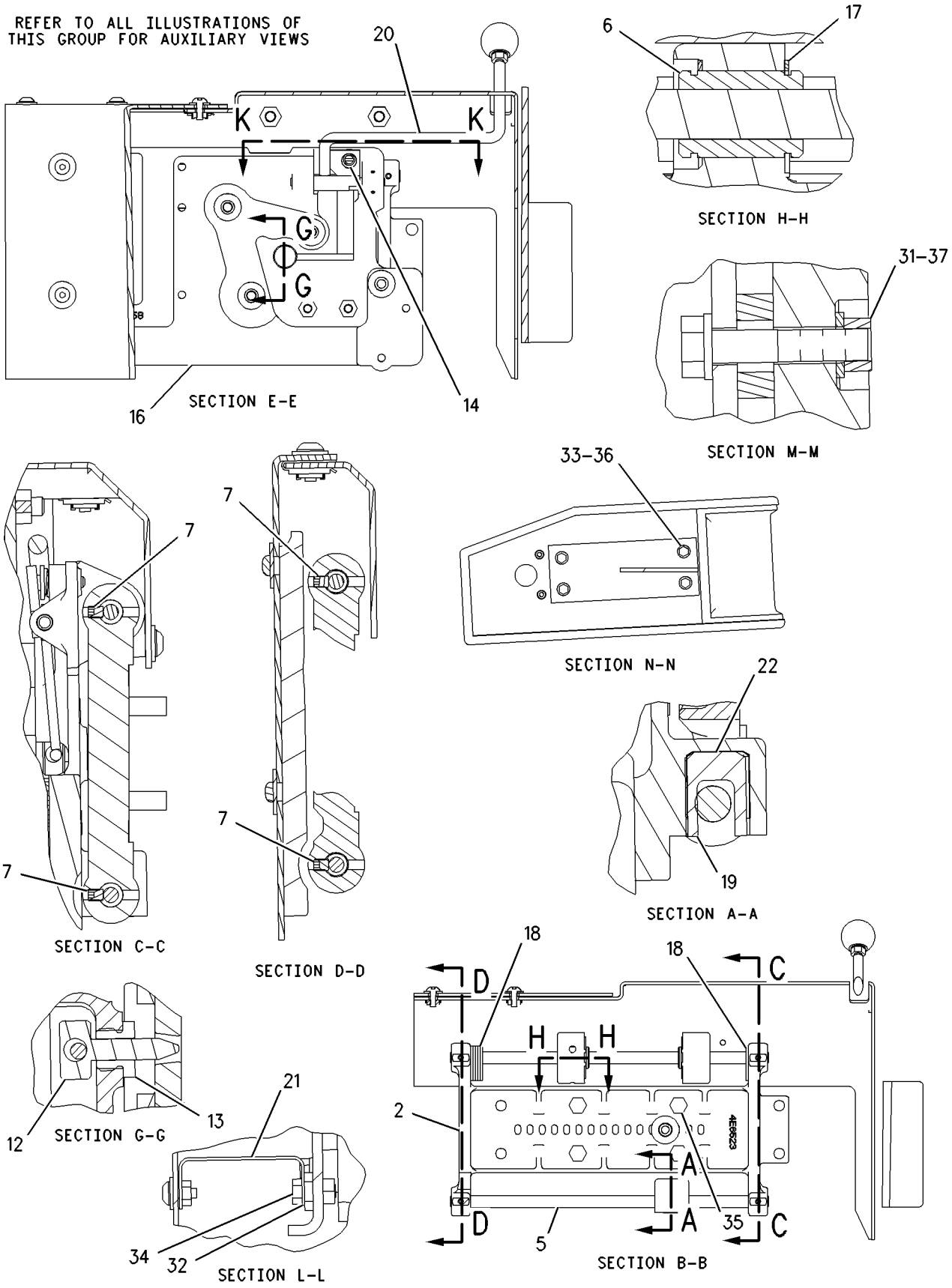


GRAPHIC #2 **<END>** g01005015

# OPERATOR STATION

## *253-9969* SUPPORT GP-HYDRAULIC CONTROL

**S/N: BXY1-UP**
**AN ATTACHMENT**

**SMCS-5258** **i02224622**

| NOTE | REF NO | GRAPHIC REF | PART NUMBER | QTY | PART NAME 1 2 3 4 5 6 (PRODUCT LEVEL) | SEE PAGE |
|---|---|---|---|---|---|---|
| | 1 | 1 | **203-9991** | 1 | KNOB AS | |
| M | | 1 | **9X-8281** | 2 | STUD-TAPERLOCK (M10X1.5X45-MM) | |
| | 2 | 1 | **253-9967** | 1 | BRACKET | |
| | 3 | 1 | **253-9968** | 1 | BRACKET AS | |
| | 4 | 1 | **254-2162** | 1 | NUT | |
| | 5 | 1 | **7X-7729** | 1 | WASHER (11X25X3-MM THK) | |

M-METRIC PART

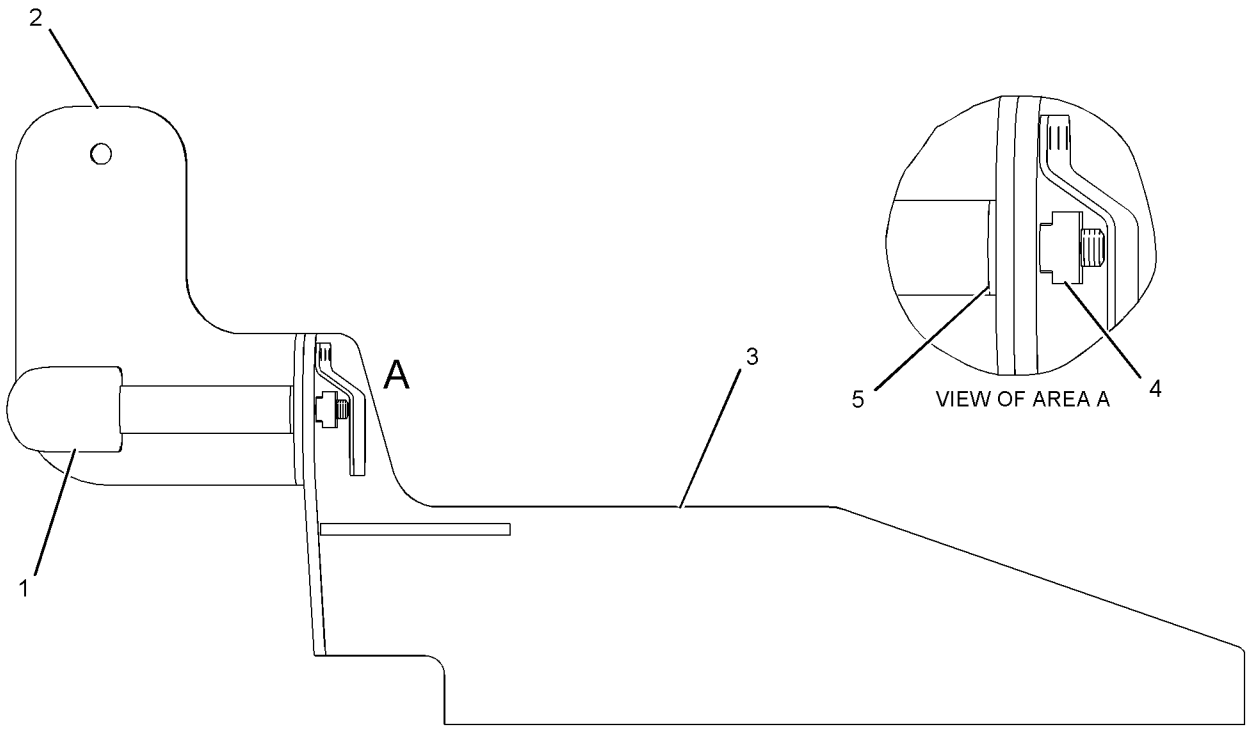


GRAPHIC #1 **<END>** g01128116

# OPERATOR STATION

## *173-1905* SUPPORT GP-SEAT

**S/N: BXY1-UP**
**PART OF 227-3190, 292-6110, 308-2727 CAB AR**
**ALSO AN ATTACHMENT**

**SMCS-7321** **i02677509**

| NOTE | REF NO | GRAPHIC REF | PART NUMBER | QTY | PART NAME 1 2 3 4 5 6 (PRODUCT LEVEL) | SEE PAGE |
|---|---|---|---|---|---|---|
| | 1 | 1 | **171-9679** | 1 | BRACKET AS (RH) | |
| | 2 | 1 | **171-9683** | 1 | BRACKET AS (LH) | |
| M | 3 | 1 | **168-4510** | 4 | BOLT (M10X1.5X70-MM) | |
| | 4 | 1 | **8T-4121** | 4 | WASHER-HARD (11X21X2.5-MM THK) | |
| | 5 | 1 | **4P-7581** | 1 | CLIP | |

M-METRIC PART

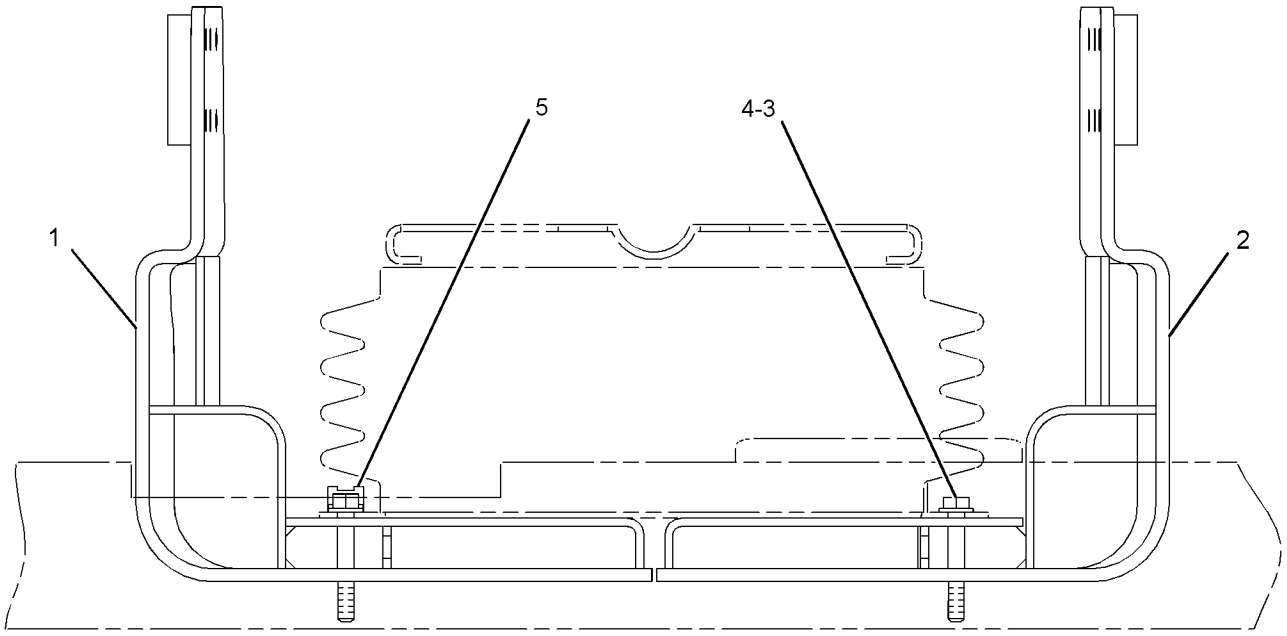


FRONT VIEW

GRAPHIC #1 **<END>** g01354341

# OPERATOR STATION

## *171-3897* SUPPORT GP-STEERING CONTROL

**S/N: BXY1-UP**
**PART OF 227-3190, 292-6110, 308-2727 CAB AR**
**ALSO AN ATTACHMENT**

**SMCS-5258** **i02346760**

| NOTE | REF NO | GRAPHIC REF | PART NUMBER | QTY | PART NAME 1 2 3 4 5 6 (PRODUCT LEVEL) | SEE PAGE |
|---|---|---|---|---|---|---|
| | 1 | 2 | **3G-4711** | 1 | SPRING | |
| B | 2 | 2 | **4B-4276** | 8 | WASHER (7X16X1.6-MM THK) | |
| | 3 | 1 | **4E-6335** | 1 | CUSHION AS (LH) | |
| | 4 | 2 | **4E-6439** | 1 | LEVER AS | |
| | 5 | 2 | **4E-6444** | 1 | ROD | |
| | 6 | 2 | **4E-6445** | 1 | PIN | |
| | 7 | 2 | **4E-6446** | 1 | GUIDE | |
| | 8 | 2 | **4E-6523** | 1 | SUPPORT-SLIDE | |
| | 9 | 2 | **4E-7163** | 1 | SLIDER | |
| | 10 | 1 | **4E-8722** | 5 | NUT | |
| | 11 | 2 | **4E-9173** | 2 | SHAFT-CONTROL | |
| | 12 | 2 | **4E-9174** | 2 | BEARING | |
| | 13 | 2 | **6E-0923** | 1 | SPACER (15.2-MM THK) | |
| | 14 | 2 | **9U-3925** | 4 | RING-RETAINING | |
| | 15 | 2 | **9U-3926** | 6 | STOP | |
| | 16 | 2 | **9U-3927** | 1 | BEARING | |
| B | 17 | 2 | **137-6841** | 2 | SHIM (0.2-MM THK) | |
| | 18 | 1 | **166-4731** | 1 | HOUSING | |
| | 19 | 1 | **166-4732** | 1 | HOUSING | |
| | 20 | 1 | **170-0696** | 1 | BRACKET AS | |
| M | 20A | 1 | **6V-9632** | 2 | NUT-WELD (M6X1-THD) | |
| | 21 | 1 | **170-0971** | 1 | CUSHION AS | |
| | 22 | 1 | **170-0977** | 1 | BRACKET AS | |
| | 23 | 2 | **170-0979** | 1 | PLATE AS | |
| M | 23A | 2 | **8T-3490** | 2 | NUT-WELD (M10X1.5-THD) | |
| | 24 | 1 | **211-4942** | 2 | KNOB AS | |
| | 25 | 1 | **170-8540** | 1 | BRACKET AS | |
| M | 25A | 1 | **6V-9632** | 2 | NUT-WELD (M6X1-THD) | |
| | 26 | 2 | **013-8502** | 1 | LOCKWASHER | |
| M | 27 | 2 | **095-0758** | 1 | SCREW-MACHINE (M6X1X14-MM) | |
| M | 28 | 2 | **098-5747** | 1 | NUT-THIN (M16X2-THD) | |
| | 29 | 2 | **1J-5799** | 1 | PIN-SPRING | |
| M | 30 | 1 | **5C-7261** | 1 | NUT (M8X1.25-THD) | |
| M | 31 | 2 | **6V-9327** | 4 | SETSCREW-SOCKET | |
| M | 32 | 2 | **7X-2534** | 1 | BOLT (M6X1X50-MM) | |
| | 33 | 1 | **7X-3310** | 1 | KNOB-BALL | |
| M | 34 | 2 | **8T-4134** | 1 | NUT (M6X1-THD) | |
| M | 35 | 1 | **8T-4138** | 4 | BOLT (M6X1X20-MM) | |
| M | 36 | 1 | **8T-4189** | 2 | BOLT (M8X1.25X20-MM) | |
| M | 37 | 2 | **8T-4195** | 6 | BOLT (M10X1.5X30-MM) | |
| M | 38 | 2 | **8T-4200** | 2 | BOLT (M8X1.25X16-MM) | |
| | 39 | 1 | **8T-4205** | 4 | WASHER-HARD (7.2X14.5X2-MM THK) | |
| | 40 | 1,2 | **8T-4224** | 4 | WASHER-HARD (8.8X16X2-MM THK) | |
| M | 41 | 2 | **8T-4244** | 1 | NUT (M12X1.75-THD) | |
| | 42 | 1 | **9X-2038** | 11 | WASHER (7X19X2-MM THK) | |
| M | 43 | 1 | **9X-2043** | 11 | SCREW-TRUSS HEAD (M6X1X14-MM) | |

B-USE AS REQUIRED
M-METRIC PART

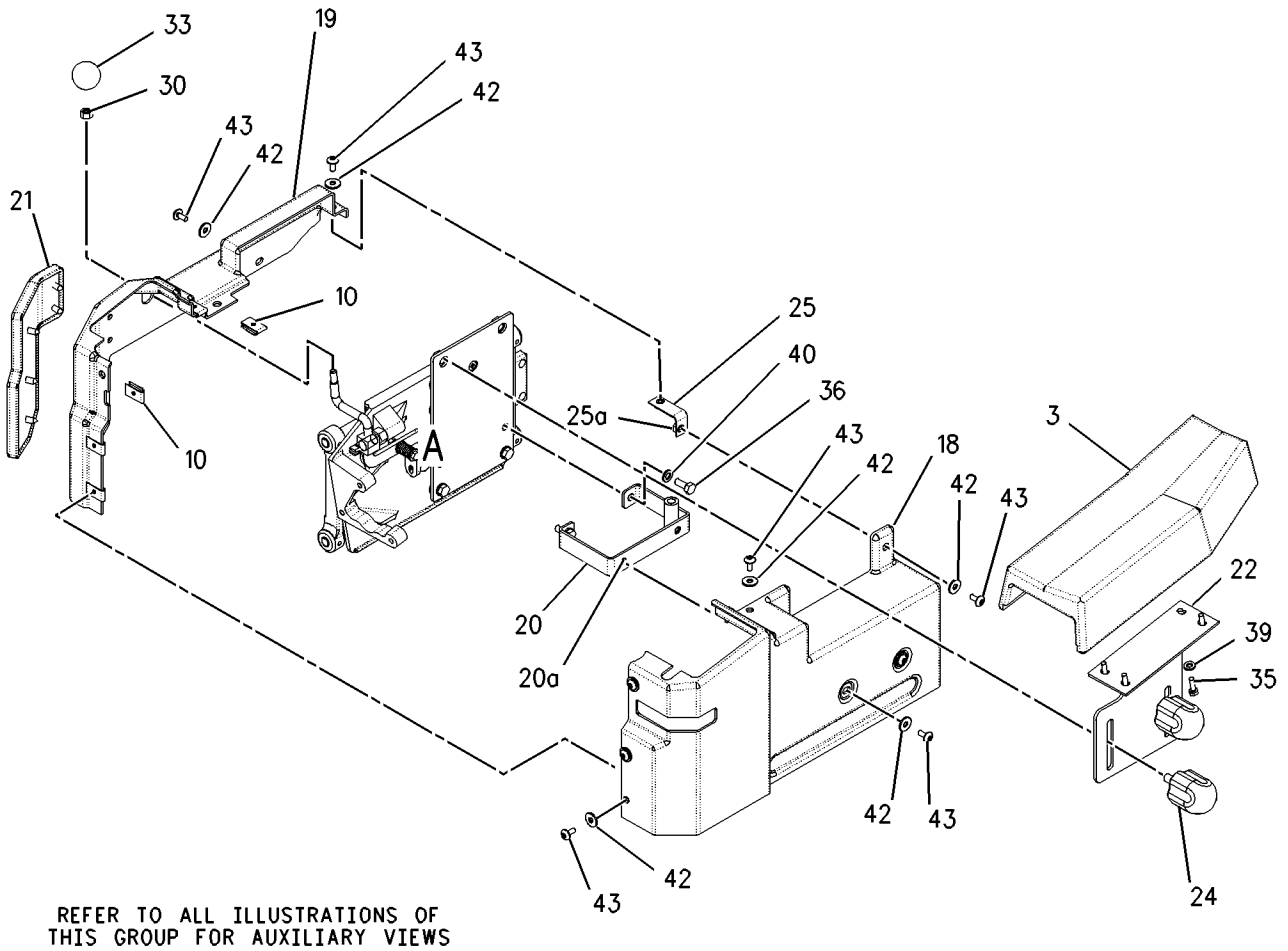


GRAPHIC #1 g00835251

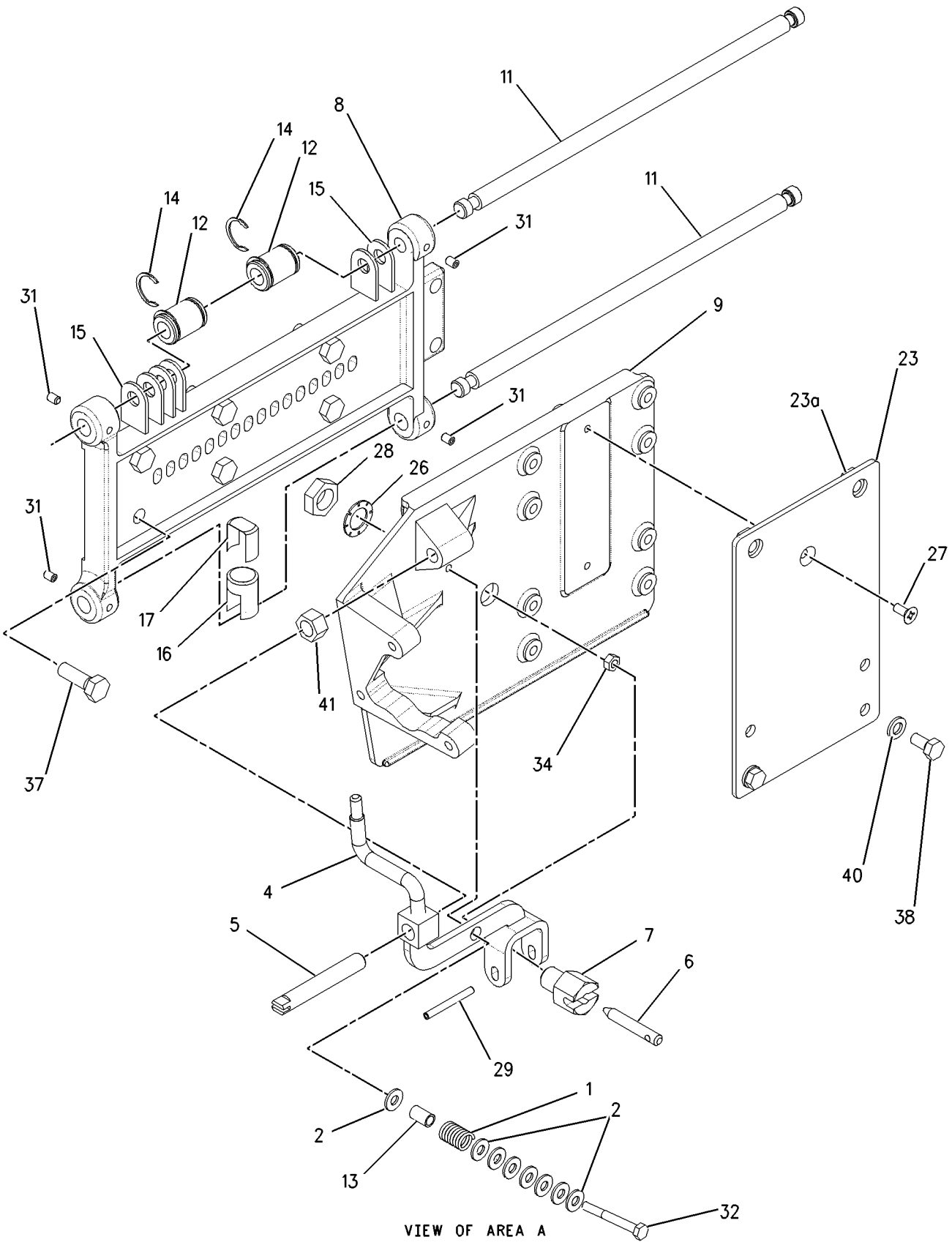


VIEW OF AREA A

GRAPHIC #2 **<END>** g00742840

# OPERATOR STATION

## *173-9375* SUPPRESSION GP-CAB SOUND

**S/N: BXY1-UP**

**PART OF 227-3190, 292-6110, 308-2727 CAB AR**

**ALSO AN ATTACHMENT**

**SMCS-7329** **i02715924**

| NOTE | REF NO | GRAPHIC REF | PART NUMBER | QTY | PART NAME 1 2 3 4 5 6 (PRODUCT LEVEL) | SEE PAGE |
|---|---|---|---|---|---|---|
| | 1 | 1 | **168-9980** | 1 | PLATE | |
| | 2 | 1 | **169-6430** | 2 | PLATE | |
| | 3 | 1 | **173-9376** | 1 | INSULATION AS | |
| | 4 | 1 | **174-3055** | 2 | PLATE AS | |
| | 5 | 1 | **183-1989** | 1 | PLATE | |
| M | 6 | 1 | **8T-0722** | 14 | BOLT-LOCKING (M10X1.5X30-MM) | |
| | 7 | 1 | **8T-4121** | 14 | WASHER-HARD (11X21X2.5-MM THK) | |

M-METRIC PART

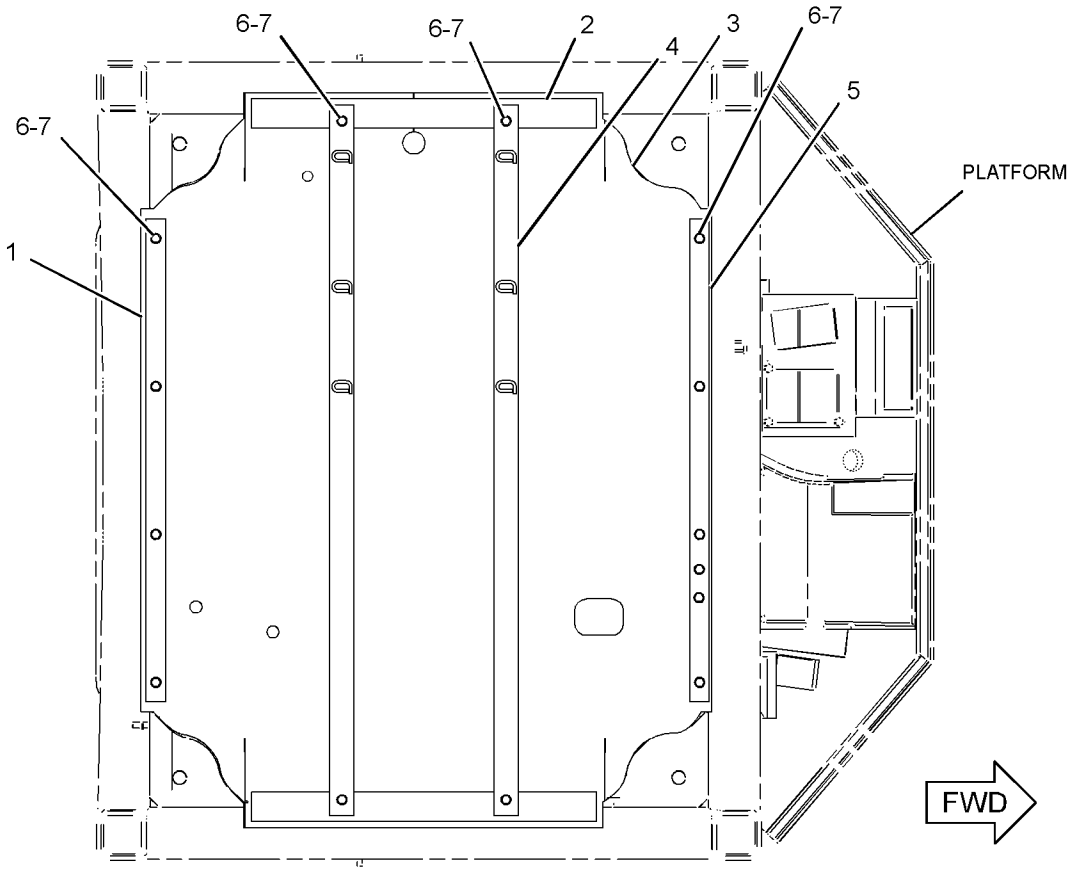


GRAPHIC #1 **<END>** g01363970

# OPERATOR STATION

## *191-2933* SUSPENSION GP-SEAT—AIR

**S/N: BXY1-UP**
**PART OF 200-3174 SEAT GP-SUSPENSION**
**ALSO AN ATTACHMENT**

**SMCS-7324** **i02396615**

| NOTE | REF NO | GRAPHIC REF | PART NUMBER | QTY | PART NAME 1 2 3 4 5 6 (PRODUCT LEVEL) | SEE PAGE |
|---|---|---|---|---|---|---|
| | 1 | 1 | **3P-9900** | 5 | WASHER (10.5X30X3-MM THK) | |
| | 2 | 1 | **4B-4278** | 2 | WASHER (10.2X20.5X1.6-MM THK) | |
| | 3 | 1 | **4V-8577** | 12 | BEARING | |
| | 4 | 1 | **8L-8413** | 1 | STRAP-CABLE | |
| | 5 | 1 | **145-0326** | 1 | FILM-INSTRUCTION (SEAT ADJUSTMENT) | |
| | 6 | 1 | **164-1234** | 1 | PLATE | |
| | 7 | 1 | **101-0003** | 33 | FASTENER | |
| | 8 | 1 | **169-7380** | 1 | BOLT-SOCKET HEAD (3/8-16X0.375-IN) | |
| | 9 | 1 | **186-5107** | 2 | SCREW (NO 8X1.25-IN) | |
| | 10 | 1 | **192-7752** | 4 | SHAFT AS | |
| | 11 | 1 | **192-7755** | 1 | HOUSING AS | |
| | 12 | 1 | **192-7760** | 1 | SHAFT | |
| | 13 | 1 | **192-7767** | 1 | SCISSORS AS | |
| | 14 | 1 | **192-7783** | 1 | TOGGLE AS | |
| | 15 | 1 | **192-7787** | 1 | TOGGLE AS | |
| | 16 | 1 | **192-7790** | 1 | HOUSING AS | |
| | 17 | 1 | **192-7795** | 1 | BOOT | |
| | 18 | 1 | **192-7805** | 1 | HARNESS AS-VALVE (SEAT AIR COMPRESSOR) | |
| | | 1 | **102-8802** | 1 | KIT-RECEPTACLE (2-PIN) | |
| | | | | | (INCLUDES RECEPTACLE AS & WEDGE) | |
| | 19 | 1 | **192-7810** | 1 | SPRING AS-AIR | |
| | | 1 | **5P-4423** | 1 | ELBOW | |
| | | 1 | **163-1135** | 1 | SPRING | |
| | 20 | 1 | **192-7812** | 1 | BOLT-SHOULDER (3/8-16X2-IN) | |
| | 21 | 1 | **192-7820** | 3 | BUMPER | |
| | 22 | 1 | **192-7822** | 1 | SHAFT | |
| | 23 | 1 | **237-3943** | 1 | BRACKET | |
| Y | 24 | 1 | **237-3970** | 1 | AIR COMPRESSOR GP-SEAT | 1329 |
| | 25 | 1 | **1H-8296** | 1 | SCREW-MACHINE (3/8-16X0.52-IN) | |
| | 26 | 1 | **2K-4973** | 8 | LOCKNUT (3/8-16-THD) | |
| | 27 | 1 | **3J-4818** | 1 | LOCKWASHER | |
| M | 28 | 1 | **5C-2890** | 3 | NUT (M6X1-THD) | |
| | 29 | 1 | **8T-9371** | 1 | BOLT (3/8-16X0.5-IN) | |
| E | 30 | 1 | **211-5358** | | CONDUIT-FLEXIBLE (26.7-CM) | |
| E | 30A | 1 | **211-5358** | | CONDUIT-FLEXIBLE (35.6-CM) | |
| D | 31 | 1 | **5P-6010** | | TUBE (0.267-M) | |
| D | 31A | 1 | **5P-6010** | | TUBE (0.356-M) | |
| | | | | | AVAILABLE REPAIR KIT(S): | |
| | | | **192-7799** | 1 | KIT-AIR VALVE (SUSPENSION SEAT) | |
| | | | | | (INCLUDES KNOB AS, NUT, VALVE, LOCKWASHER & FITTING) | |
| | | | **192-7848** | 1 | KIT-SHOCK ABSORBER (SUSPENSION SEAT) | |
| | | | | | (INCLUDES LOCKNUT, LOCKWASHER, SHOCK ABSORBER, BEARING, WASHER, & BOLTS) | |
| | | | **211-9294** | 1 | KIT-TETHER (SUSPENSION SEAT) | |

D-ORDER BY THE METER
E-ORDER BY THE CENTIMETER
M-METRIC PART
Y-SEPARATE ILLUSTRATION

*191-2933* **SUSPENSION GP-SEAT** *(contd.)* **i02396615**

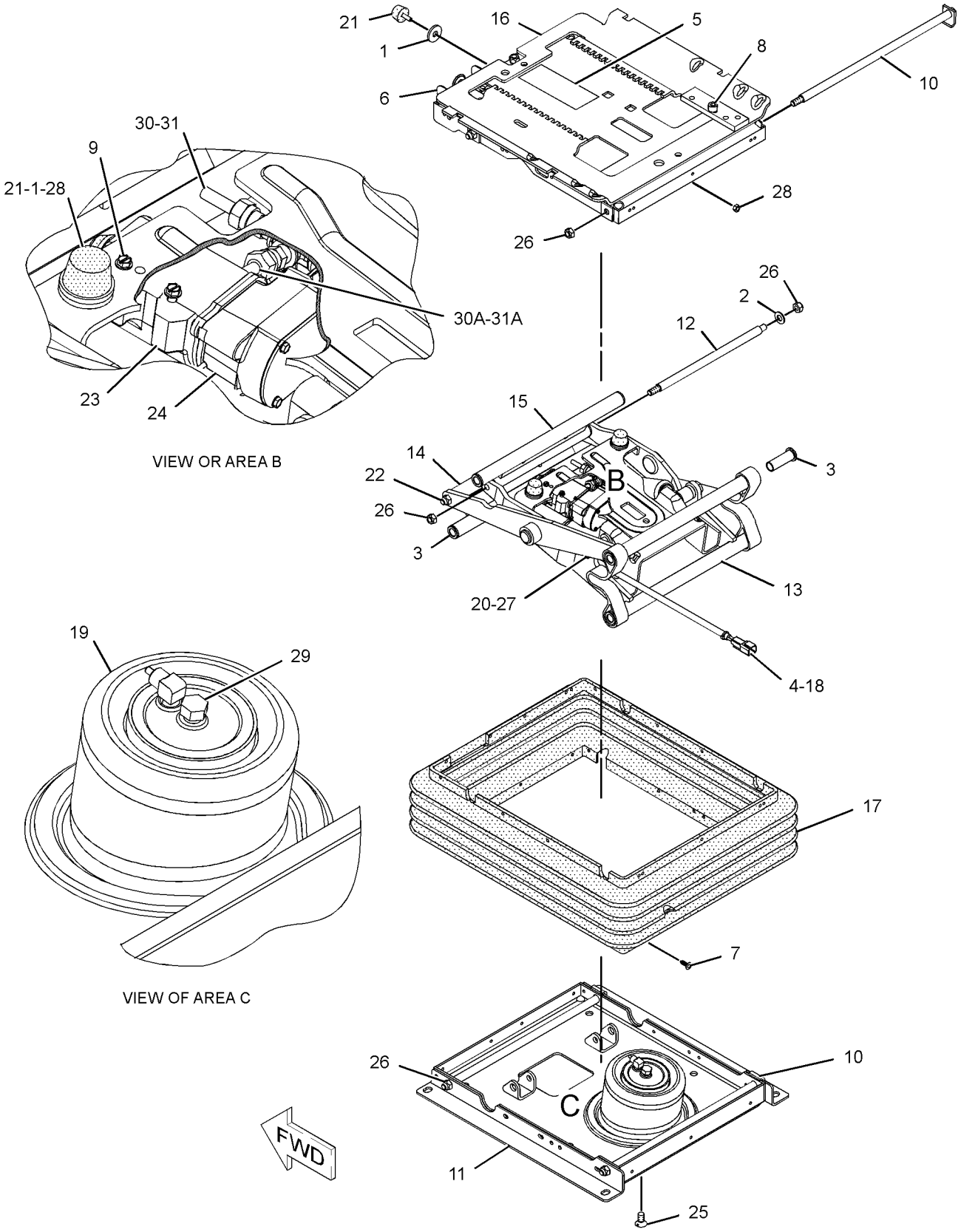


GRAPHIC #1 **<END>** g01197079

# OPERATOR STATION

## *114-5127* WASHER GP-WINDOW

**S/N: BXY1-UP**

**PART OF 225-5432, 284-2735 CHASSIS AR**

**SMCS-7306** **i01495657**

| NOTE | REF NO | GRAPHIC REF | PART NUMBER | QTY | PART NAME 1 2 3 4 5 6 (PRODUCT LEVEL) | SEE PAGE |
|---|---|---|---|---|---|---|
| | 1 | 1 | **3S-2093** | 4 | STRAP-CABLE | |
| | 2 | 1 | **5G-7398** | 1 | TANK AS-WINDOW WASHER | |
| | | 1 | **3W-6398** | 1 | CAP | |
| | | 1 | **3W-6399** | 1 | PACKING | |
| | | 1 | **7T-8890** | 2 | PUMP AS-WASHER | |
| | | 1 | **8T-5913** | 2 | SCREEN-FILTER | |
| | | 1 | **8T-5914** | 2 | GROMMET | |
| | 3 | 1 | **201-4221** | 1 | STRIP AS | |
| M | | 1 | **8T-4133** | 1 | NUT (M10X1.5-THD) | |
| | 4 | 1 | **201-4222** | 1 | STRIP | |
| | 5 | 1 | **7X-7729** | 3 | WASHER (11X25X3-MM THK) | |
| M | 6 | 1 | **8T-4137** | 3 | BOLT (M10X1.5X20-MM) | |
| E | 7 | 1 | **144-0195** | | HOSE (480 CM) | |
| D | 8 | 1 | **6V-2496** | | SEAL (.3M) | |

D-ORDER BY THE METER
E-ORDER BY THE CENTIMETER
M-METRIC PART

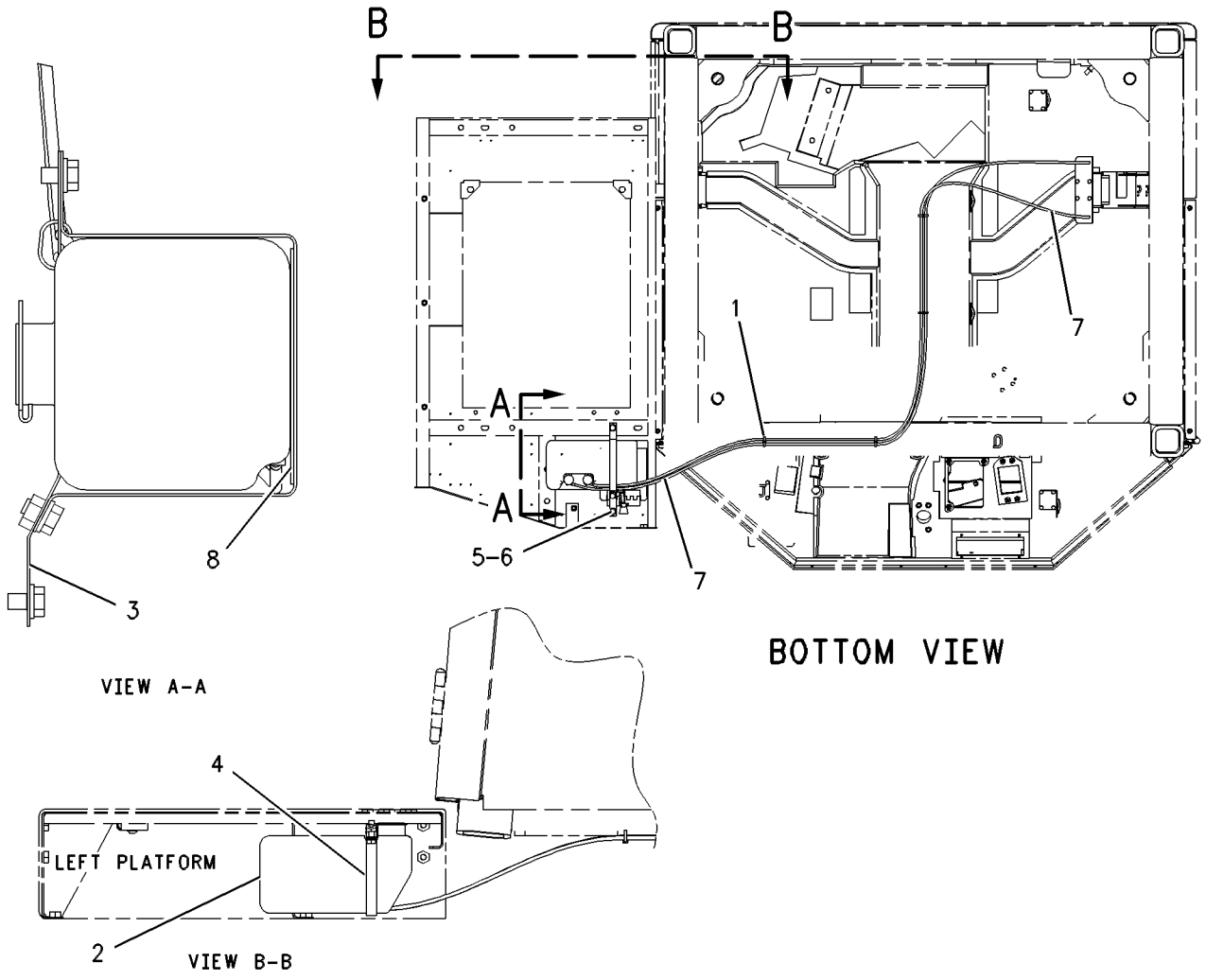


GRAPHIC #1 **<END>** g00554549

# OPERATOR STATION

## *113-2512* WINDOW GP-DOOR–LH

**S/N: BXY1900-UP**
**PART OF 227-3270 DOOR GP-CAB**
**AN ATTACHMENT**

**SMCS-7310** **i02531177**

| NOTE | REF NO | GRAPHIC REF | PART NUMBER | QTY | PART NAME 1 2 3 4 5 6 (PRODUCT LEVEL) | SEE PAGE |
|---|---|---|---|---|---|---|
| C | 1 | 1 | **8C-6738** | 2 | SCREW-PAN HEAD (6-20X1-IN) | |
| C | 2 | 1 | **187-5127** | 1 | CATCH AS (LH) | |
| C | 3 | 1 | **187-5128** | 1 | CATCH AS (RH) | |
| C | 4 | 1 | **207-0533** | 1 | GLASS | |
| C | 5 | 1 | **207-0534** | 1 | GLASS | |
| C | 6 | 1 | **207-0535** | 1 | FRAME AS | |
| C | 7 | 1 | **207-0547** | 1 | STRIP AS | |
| C | 8 | 1 | **286-9380** | 1 | KIT-SEAL | |
| | | | | | (SEAL KIT INCLUDES GLAZING SEALS AND STOP) | |

C-CHANGE FROM PREVIOUS TYPE

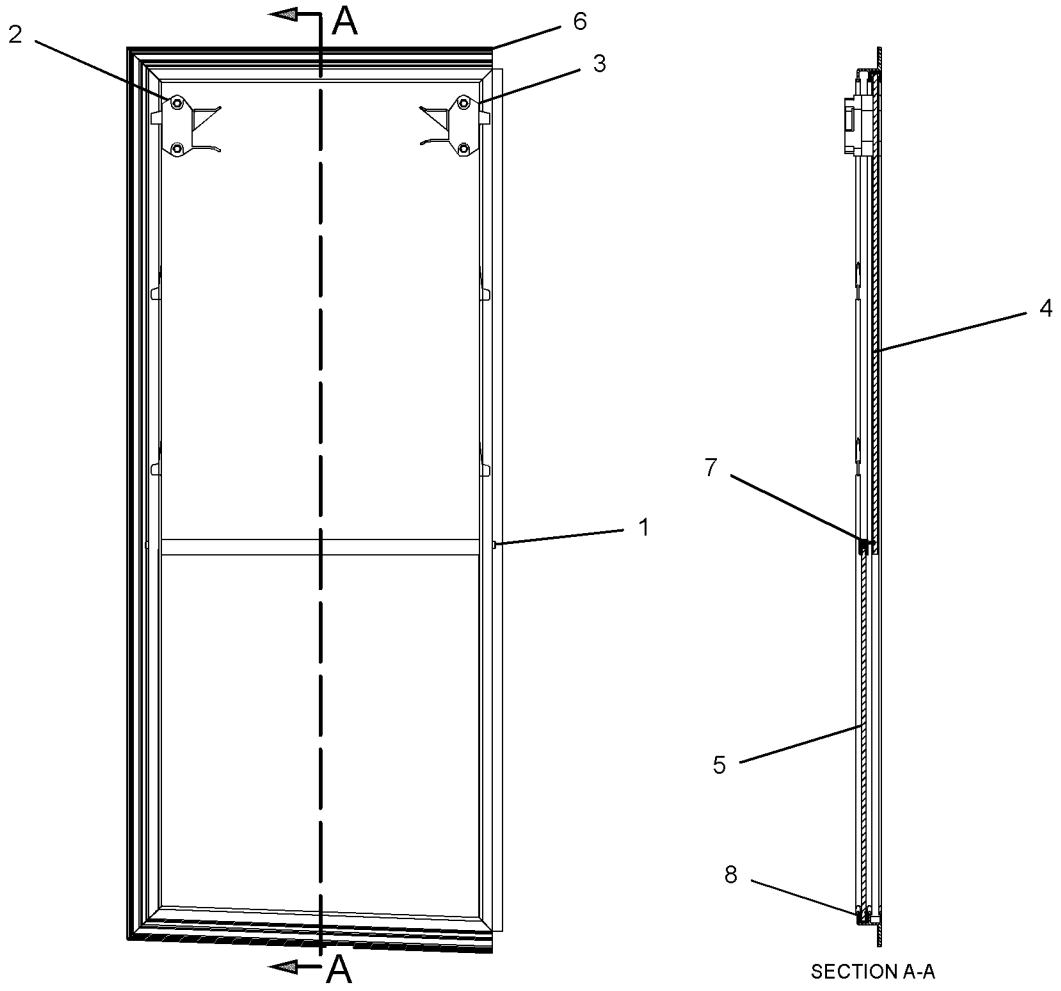


SECTION A-A

GRAPHIC #1 **<END>** g01284267

# OPERATOR STATION

## *113-2513* WINDOW GP-DOOR–RH

**S/N: BXY1900-UP**
**PART OF 308-2712 DOOR GP-CAB**
**AN ATTACHMENT**

**SMCS-7310** **i02531179**

| NOTE | REF NO | GRAPHIC REF | PART NUMBER | QTY | PART NAME 1 2 3 4 5 6 (PRODUCT LEVEL) | SEE PAGE |
|---|---|---|---|---|---|---|
| C | 1 | 1 | **8C-6738** | 2 | SCREW-PAN HEAD (6-20X1-IN) | |
| C | 2 | 1 | **187-5127** | 1 | CATCH AS (LH) | |
| C | 3 | 1 | **187-5128** | 1 | CATCH AS (RH) | |
| C | 4 | 1 | **207-0533** | 1 | GLASS | |
| C | 5 | 1 | **207-0534** | 1 | GLASS | |
| C | 6 | 1 | **207-0547** | 1 | STRIP AS | |
| C | 7 | 1 | **208-5150** | 1 | FRAME AS | |
| C | 8 | 1 | **286-9380** | 2 | KIT-SEAL | |
| | | | | | (EACH INCLUDES) | |
| D | | 1 | **9X-2532** | | SEAL (1-M) | |
| D | | 1 | **9X-2533** | | STOP (1-M) | |
| E | | 1 | **137-2170** | | SEAL (275-CM) | |
| E | | 1 | **208-5022** | | SEAL (150-CM) | |

C-CHANGE FROM PREVIOUS TYPE
D-ORDER BY THE METER
E-ORDER BY THE CENTIMETER

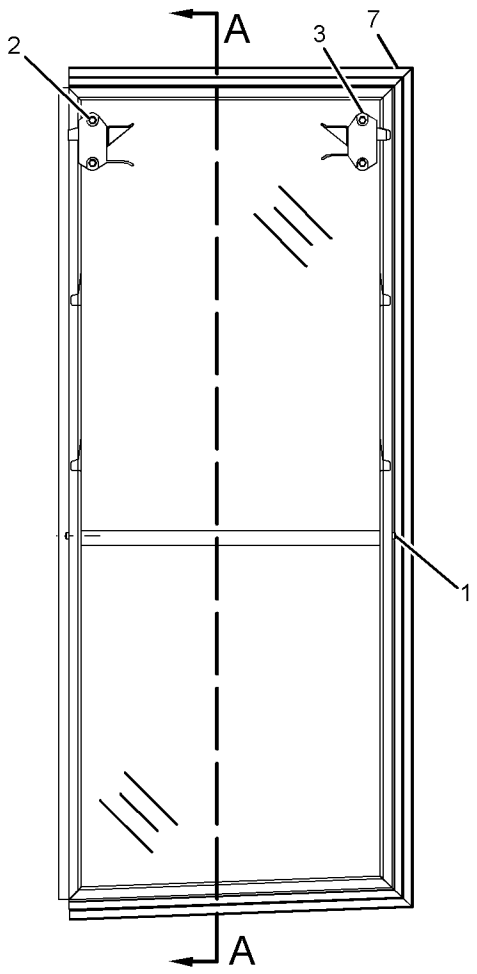


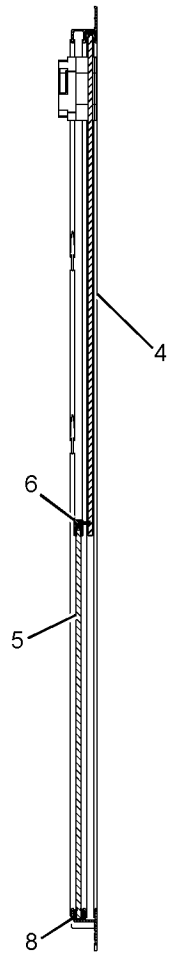


SECTION A-A

GRAPHIC #1 **<END>** g01286521

# OPERATOR STATION

## *109-8196* WIPER GP-WINDOW

**S/N: BXY1-201**

**PART OF 227-3190 CAB AR**

**SMCS-7305** **i02387234**

| NOTE | REF NO | GRAPHIC REF | PART NUMBER | QTY | PART NAME 1 2 3 4 5 6 (PRODUCT LEVEL) | SEE PAGE |
|---|---|---|---|---|---|---|
| | 1 | 2 | **3S-2093** | 4 | STRAP-CABLE | |
| | 2 | 1 | **5P-9297** | 1 | CLIP | |
| | 3 | 1 | **6V-6210** | 1 | GASKET-SHAFT | |
| M | 4 | 1,2 | **6V-6889** | 4 | NUT (M8X1.25-THD) | |
| | 5 | 1,2 | **6V-7419** | 2 | BLADE AS-WIPER | |
| | 6 | 1,2 | **8T-5400** | 4 | CONNECTOR | |
| | 7 | 1 | **124-3637** | 1 | PLATE-WIPER | |
| CY | 8 | 2 | **214-7635** | 1 | ARM GP-WINDOW WIPER (FRONT) | 1335 |
| CY | 9 | 1 | **214-7634** | 1 | ARM GP-WINDOW WIPER (REAR) | 1334 |
| Y | 10 | 1 | **155-5789** | 1 | MOTOR GP-WINDOW WIPER (REAR) | 1415 |
| Y | 11 | 1 | **155-5790** | 1 | MOTOR GP-WINDOW WIPER (FRONT) | 1416 |
| M | 12 | 1 | **5C-9553** | 1 | BOLT (M6X1X16-MM) | |
| | 13 | 1 | **8T-4205** | 1 | WASHER-HARD (7.2X14.5X2-MM THK) | |
| D | 14 | 2 | **144-0195** | | HOSE (1.1-M) | |
| D | 15 | 2 | **144-0195** | | HOSE (1.9-M) | |

C-CHANGE FROM PREVIOUS TYPE
D-ORDER BY THE METER
M-METRIC PART
Y-SEPARATE ILLUSTRATION

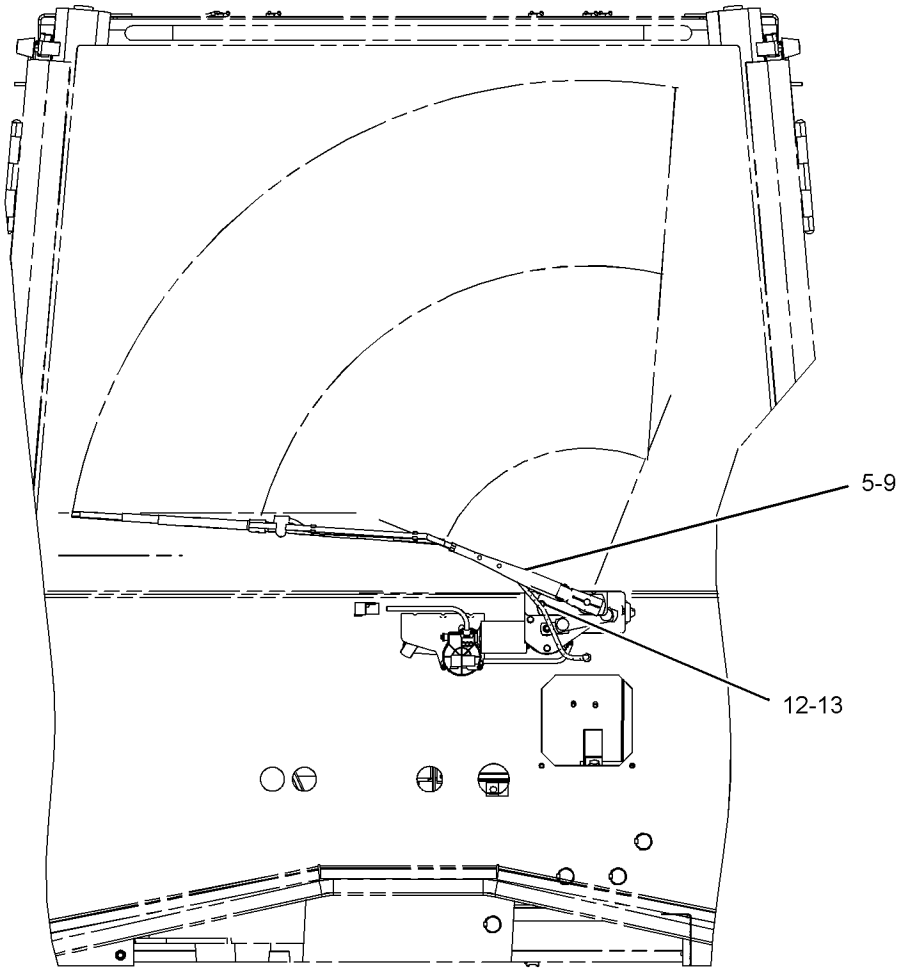


REAR VIEW

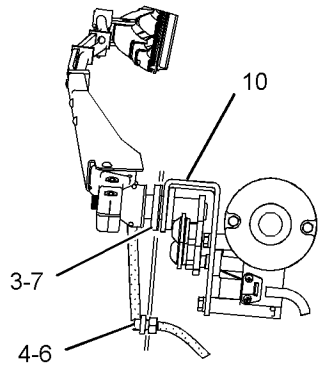


VIEW OF AREA A

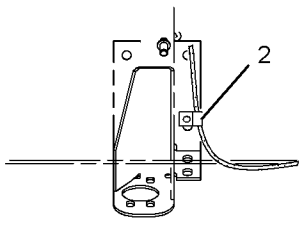


VIEW D-D

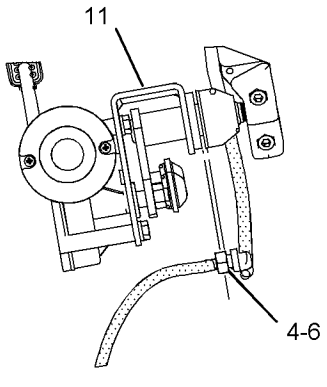


VIEW OF AREA B

GRAPHIC #1 g01021908

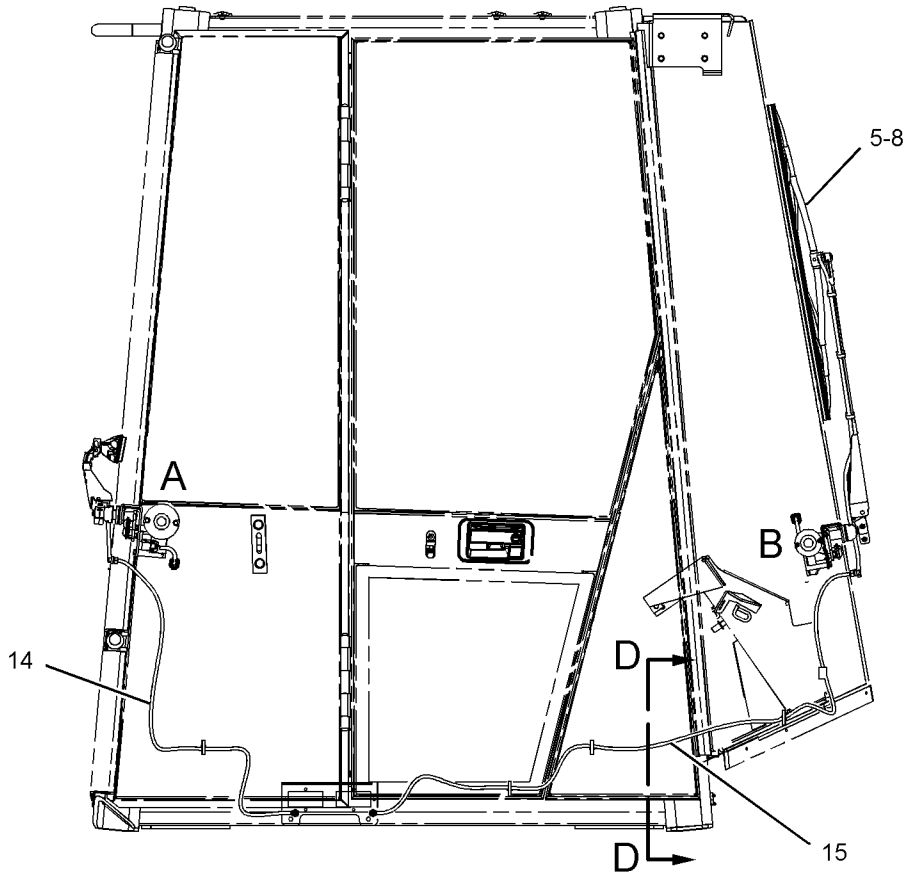


RIGHT SIDE VIEW

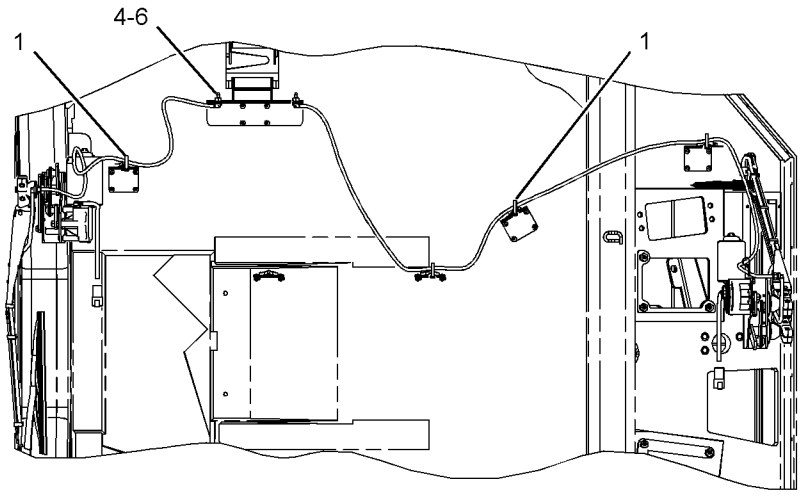


BOTTOM VIEW

GRAPHIC #2

**<END>**

g01021910

# OPERATOR STATION

## *109-8196* WIPER GP-WINDOW

**S/N: BXY202-UP**

**PART OF 227-3190, 292-6110 CAB AR**

**SMCS-7305** **i02610408**

| NOTE | REF NO | GRAPHIC REF | PART NUMBER | QTY | PART NAME 1 2 3 4 5 6 (PRODUCT LEVEL) | SEE PAGE |
|---|---|---|---|---|---|---|
| | 1 | 1 | **3S-2093** | 4 | STRAP-CABLE | |
| C | 2 | 1 | **3V-3263** | 2 | CONNECTOR | |
| | 3 | 1 | **6V-6210** | 1 | GASKET-SHAFT | |
| | 4 | 1,2 | **6V-7419** | 2 | BLADE AS-WIPER | |
| C | 5 | 1,2 | **8T-5400** | 2 | CONNECTOR | |
| | 6 | 1 | **124-3637** | 1 | PLATE-WIPER | |
| Y | 7 | 1 | **155-5789** | 1 | MOTOR GP-WINDOW WIPER (REAR) | 1415 |
| Y | 8 | 2 | **155-5790** | 1 | MOTOR GP-WINDOW WIPER (FRONT) | 1416 |
| Y | 9 | 2 | **214-7634** | 1 | ARM GP-WINDOW WIPER (REAR) | 1334 |
| Y | 10 | 1 | **214-7635** | 1 | ARM GP-WINDOW WIPER (FRONT) | 1335 |
| M | 11 | 2 | **5C-9553** | 1 | BOLT (M6X1X16-MM) | |
| C | 12 | 1 | **5P-9085** | 2 | CLIP | |
| | 13 | 2 | **8T-4205** | 1 | WASHER-HARD (7.2X14.5X2-MM THK) | |
| CE | 14 | 1 | **144-0195** | | HOSE (110-CM) | |
| CE | 14A | 1 | **144-0195** | | HOSE (190-CM) | |

C-CHANGE FROM PREVIOUS TYPE
E-ORDER BY THE CENTIMETER
M-METRIC PART
Y-SEPARATE ILLUSTRATION

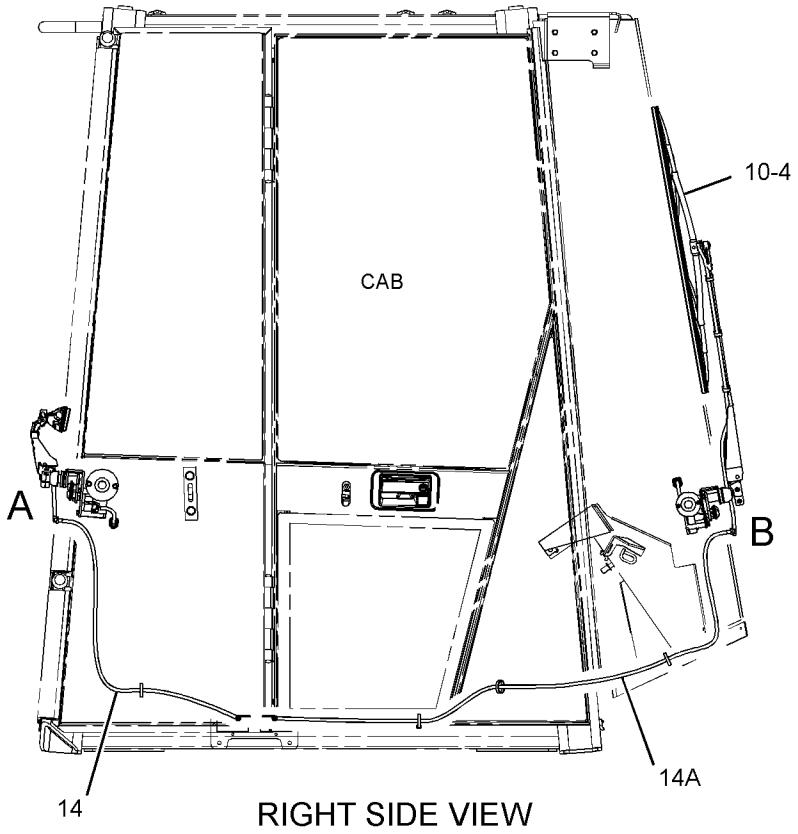


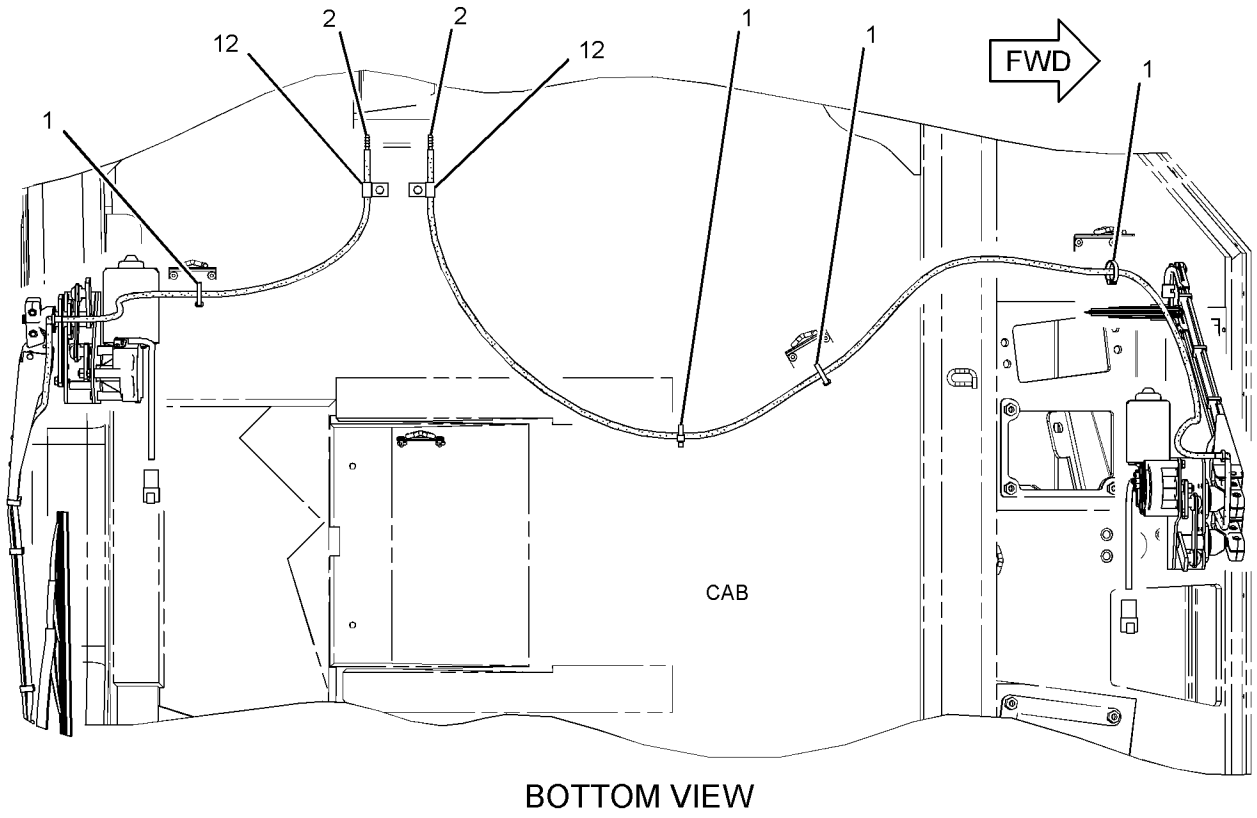


GRAPHIC #1 g01338113

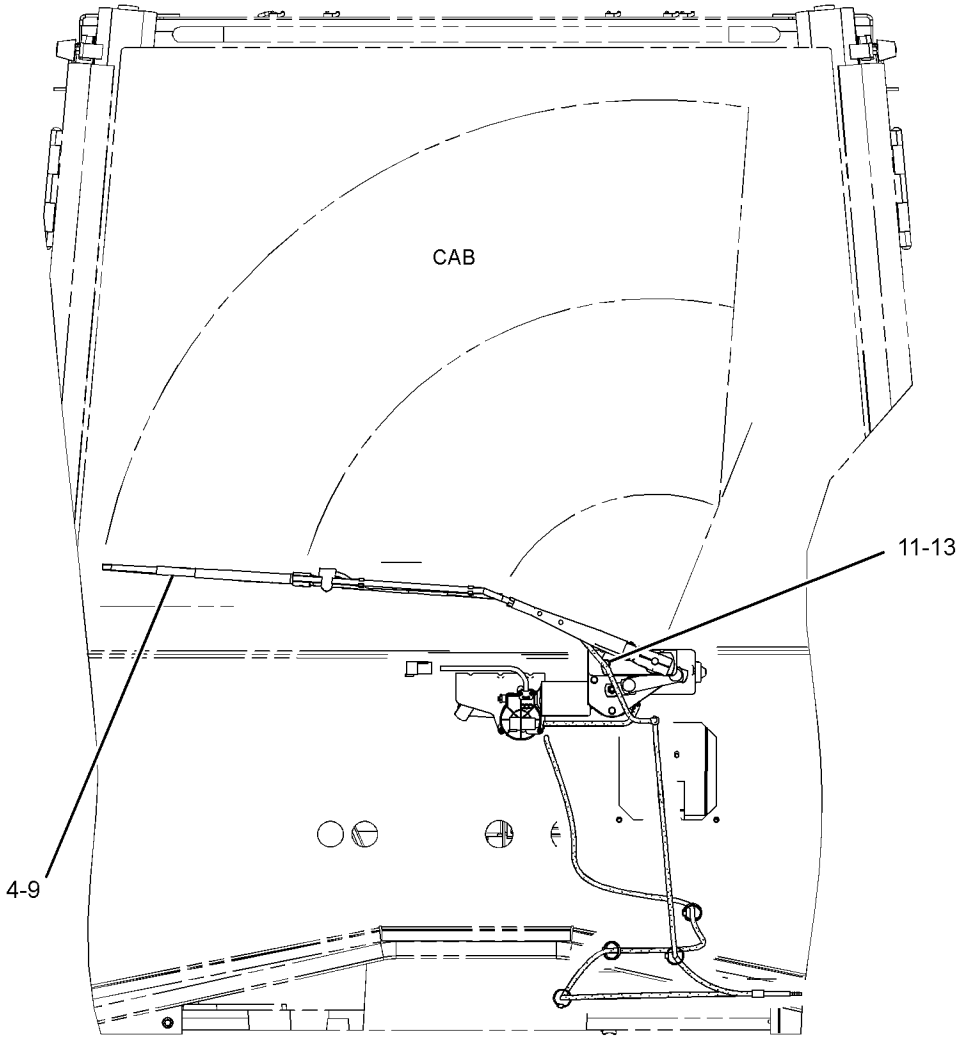


REAR VIEW

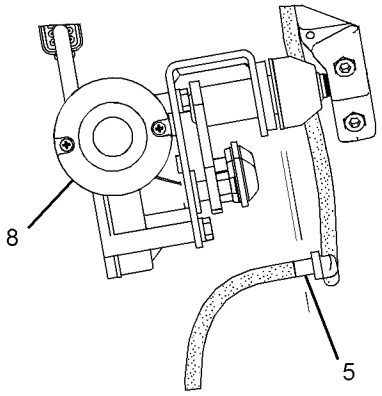


VIEW OF AREA B

GRAPHIC #2 **<END>** g01338115

# OPERATOR STATION

## *183-3756* WIPER GP-WINDOW

**S/N: BXY1900-UP**
**PART OF 300-2780, 308-2727 CAB AR**
**AN ATTACHMENT**

**SMCS-7305** **i02673911**

| NOTE | REF NO | GRAPHIC REF | PART NUMBER | QTY | PART NAME 1 2 3 4 5 6 (PRODUCT LEVEL) | SEE PAGE |
|---|---|---|---|---|---|---|
| | 1 | 1 | **3S-2093** | 4 | STRAP-CABLE | |
| C | 2 | 1 | **3V-3263** | 2 | CONNECTOR (HOSE) | |
| | 3 | 1 | **6V-6210** | 1 | GASKET-SHAFT | |
| | 4 | 1 | **6V-6864** | 1 | BLADE AS-WIPER (REAR) | |
| | 5 | 1 | **6V-7419** | 1 | BLADE AS-WIPER (FRONT) | |
| C | 6 | 1 | **8T-5400** | 2 | CONNECTOR (90-DEG) | |
| | 7 | 1 | **124-3637** | 1 | PLATE-WIPER | |
| | 8 | 1 | **184-5092** | 1 | MOTOR GP-WINDOW WIPER (FRONT) | |
| | | 1 | **8T-8737** | 1 | PLUG-SEAL | |
| | | 1 | **186-3735** | 5 | PIN-CONNECTOR (16-GA TO 18-GA) | |
| | | 1 | **102-8805** | 1 | KIT-RECEPTACLE (6-PIN) | |
| | | | | | (INCLUDES RECEPTACLE AS AND WEDGE) | |
| Y | 9 | 1 | **184-5093** | 1 | MOTOR GP-WINDOW WIPER (REAR) | 1417 |
| Y | 10 | 1 | **214-7634** | 1 | ARM GP-WINDOW WIPER (REAR) | 1334 |
| Y | 11 | 1 | **214-7635** | 1 | ARM GP-WINDOW WIPER (FRONT) | 1335 |
| M | 12 | 1 | **5C-9553** | 1 | BOLT (M6X1X16-MM) | |
| C | 13 | 1 | **5P-9085** | 2 | CLIP | |
| | 14 | 1 | **8T-4123** | 4 | WASHER (22X35X3.5-MM THK) | |
| | 15 | 1 | **8T-4205** | 1 | WASHER-HARD (7.2X14.5X2-MM THK) | |
| E | 16 | 1 | **144-0195** | | HOSE (190-CM) | |
| E | 16A | 1 | **144-0195** | | HOSE (110-CM) | |

C-CHANGE FROM PREVIOUS TYPE
E-ORDER BY THE CENTIMETER
M-METRIC PART
Y-SEPARATE ILLUSTRATION

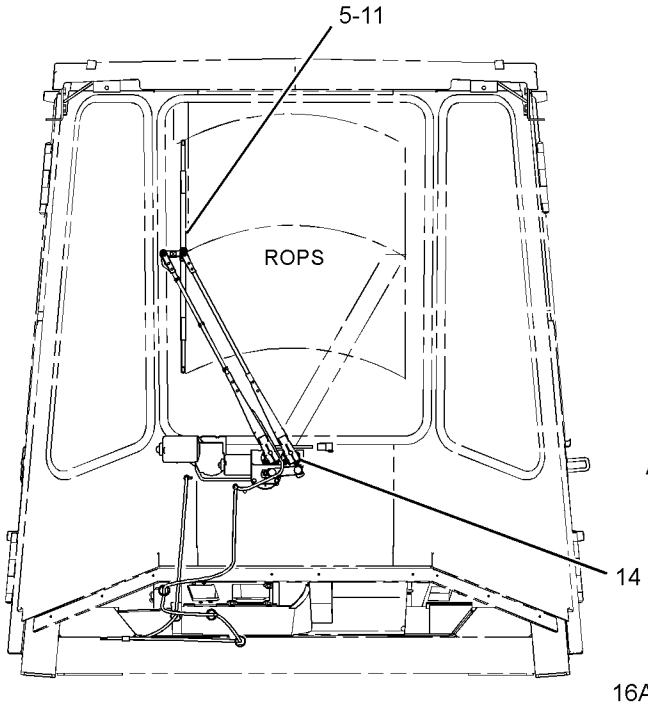


FRONT VIEW

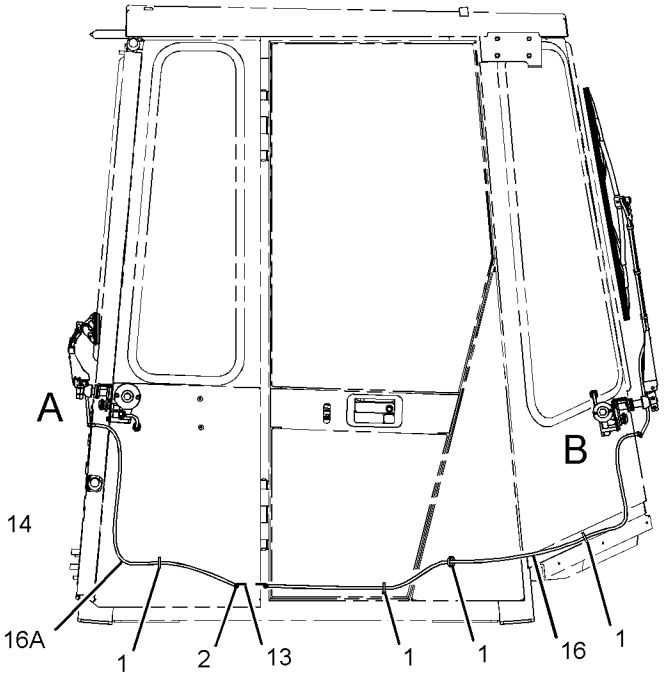


RIGHT SIDE VIEW

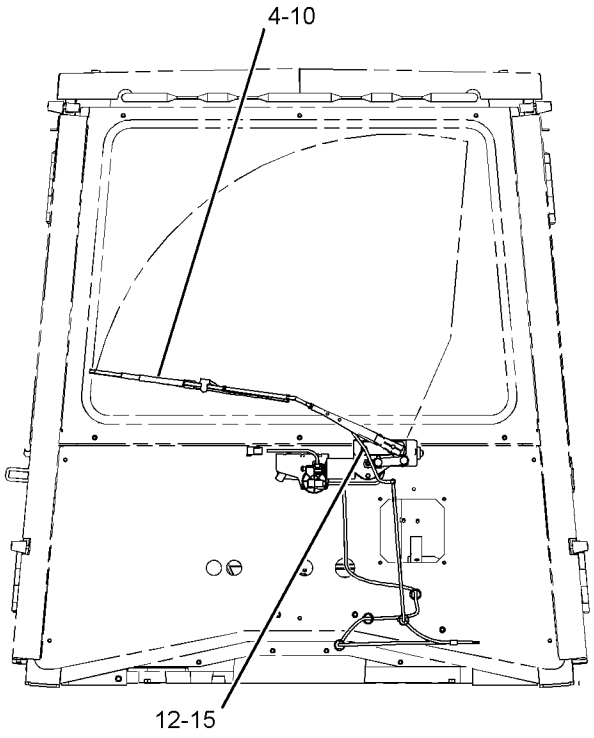


REAR VIEW

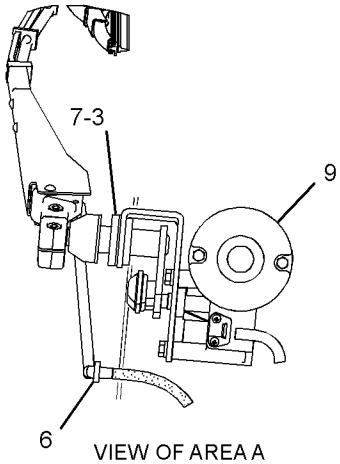


VIEW OF AREA A

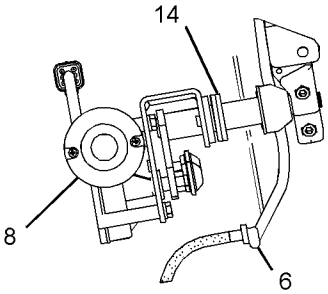


VIEW OF AREA B

GRAPHIC #1 **<END>** g01353899

# SERVICE EQUIPMENT AND SUPPLIES

## 234-8940 CERTIFICATION GP-MACHINE

**S/N: BXY1-UP**

**FOR USE WITH 225-8337—PAGE 865. CANNOT BE USED WITH 226-1956—PAGE 119**

**AN ATTACHMENT**

**SMCS-7557** **i02279491**

| NOTE | PART NUMBER | QTY | PART NAME 1 2 3 4 5 6 (PRODUCT LEVEL) | SEE PAGE |
|---|---|---|---|---|
| | 132-3392 | 3 | FORM-CERTIFICATION | |

**<END>**

# SERVICE EQUIPMENT AND SUPPLIES

## *236-7530* FILM GP–PAYLOAD CONTROL

**S/N: BXY1-UP**

**AN ATTACHMENT**

**SMCS-7405, 7557** **i02153525**

| NOTE | REF NO | GRAPHIC REF | PART NUMBER | QTY | PART NAME 1 2 3 4 5 6 (PRODUCT LEVEL) | SEE PAGE |
|---|---|---|---|---|---|---|
| | 1 | 1 | **236-8117** | 1 | FILM-INFORMATION (PAYLOAD CONTROL) | |

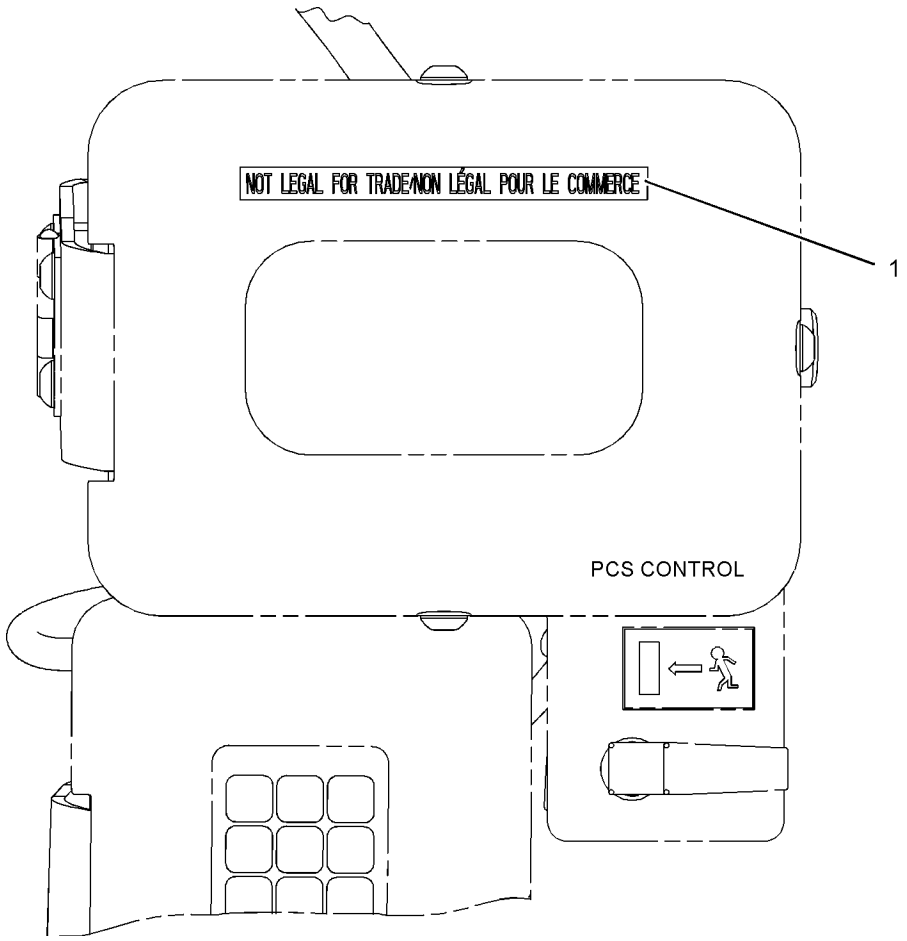


GRAPHIC #1

**<END>**

g01095710

# SERVICE EQUIPMENT AND SUPPLIES

## *252-9667* FILM GP

**S/N: BXY1-1899**

**PART OF 233-8479 PLATE & FILM GP**

**SMCS-7405, 7557** **i02219405**

| NOTE | REF NO | GRAPHIC REF | PART NUMBER | QTY | PART NAME 1 2 3 4 5 6 (PRODUCT LEVEL) | SEE PAGE |
|---|---|---|---|---|---|---|
| | 1 | 1 | **171-1856** | 1 | FILM-STRIPE (LH) | |
| | 2 | 1 | **100-5621** | 2 | FILM-IDENTIFICATION (CATERPILLAR) | |
| | 3 | 1 | **171-1855** | 1 | FILM-STRIPE (LH) | |
| | 4 | 1 | **171-1152** | 1 | FILM-STRIPE (RH) | |
| | 5 | 1 | **171-1151** | 2 | FILM-IDENTIFICATION (CAT) | |
| | 6 | 1 | **171-1150** | 2 | FILM-STRIPE | |
| | 7 | 1 | **252-9668** | 1 | FILM-STRIPE (988H, LH) | |
| | 8 | 1 | **252-9669** | 1 | FILM-STRIPE (988H, RH) | |
| | 9 | 1 | **171-1153** | 1 | FILM-STRIPE (RH) | |

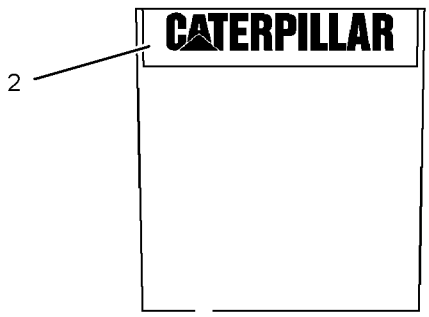


FRONT VIEW
(WINDSHIELD)

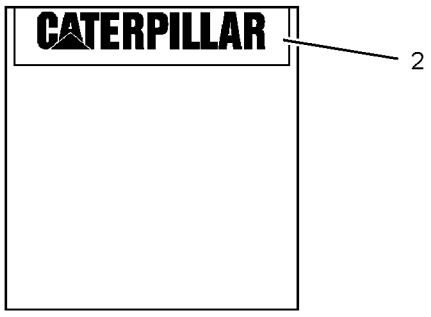


REAR VIEW
(CAB GLASS)

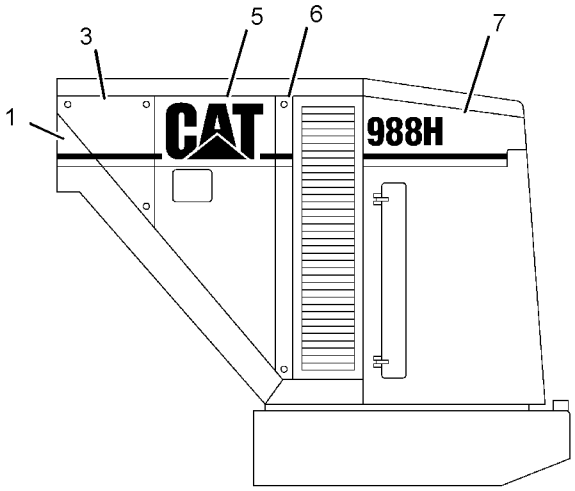


LEFT SIDE VIEW

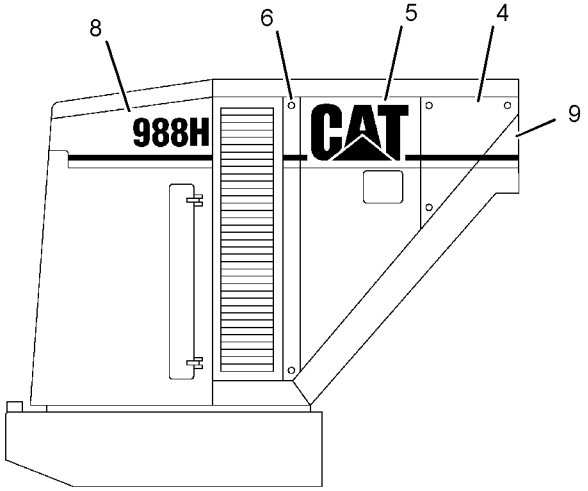


RIGHT SIDE VIEW

GRAPHIC #1 **<END>** g01125294

# SERVICE EQUIPMENT AND SUPPLIES

## *291-5560* FILM GP

**S/N: BXY1900-UP**

**PART OF 233-8479 PLATE & FILM GP**

**SMCS-7405, 7557** **i02675700**

| NOTE | REF NO | GRAPHIC REF | PART NUMBER | QTY | PART NAME 1 2 3 4 5 6 (PRODUCT LEVEL) | SEE PAGE |
|---|---|---|---|---|---|---|
| | 1 | 1 | **100-5621** | 1 | FILM-IDENTIFICATION (CATERPILLAR) | |
| | 2 | 1 | **197-4859** | 1 | FILM-CATERPILLAR (REAR CAB) | |
| | 3 | 1 | **291-5558** | 1 | FILM-IDENTIFICATION (988H, LH) | |
| | 4 | 1 | **291-5561** | 1 | FILM-IDENTIFICATION (988H, RH) | |
| | 5 | 1 | **291-5556** | 1 | FILM-IDENTIFICATION (CAT, RH) | |
| | 6 | 1 | **291-5554** | 1 | FILM-STRIPE (FILLER, RH) | |
| | 7 | 1 | **253-0861** | 2 | FILM-INFORMATION (CAT POWER, ACERT TECHNOLOGY) | |
| | 8 | 1 | **291-5553** | 1 | FILM-STRIPE (FILLER, LH) | |
| | 9 | 1 | **291-5555** | 1 | FILM-IDENTIFICATION (CAT, LH) | |
| | 10 | 1 | **136-2186** | 1 | FILM-WINDOW (FRONT) | |

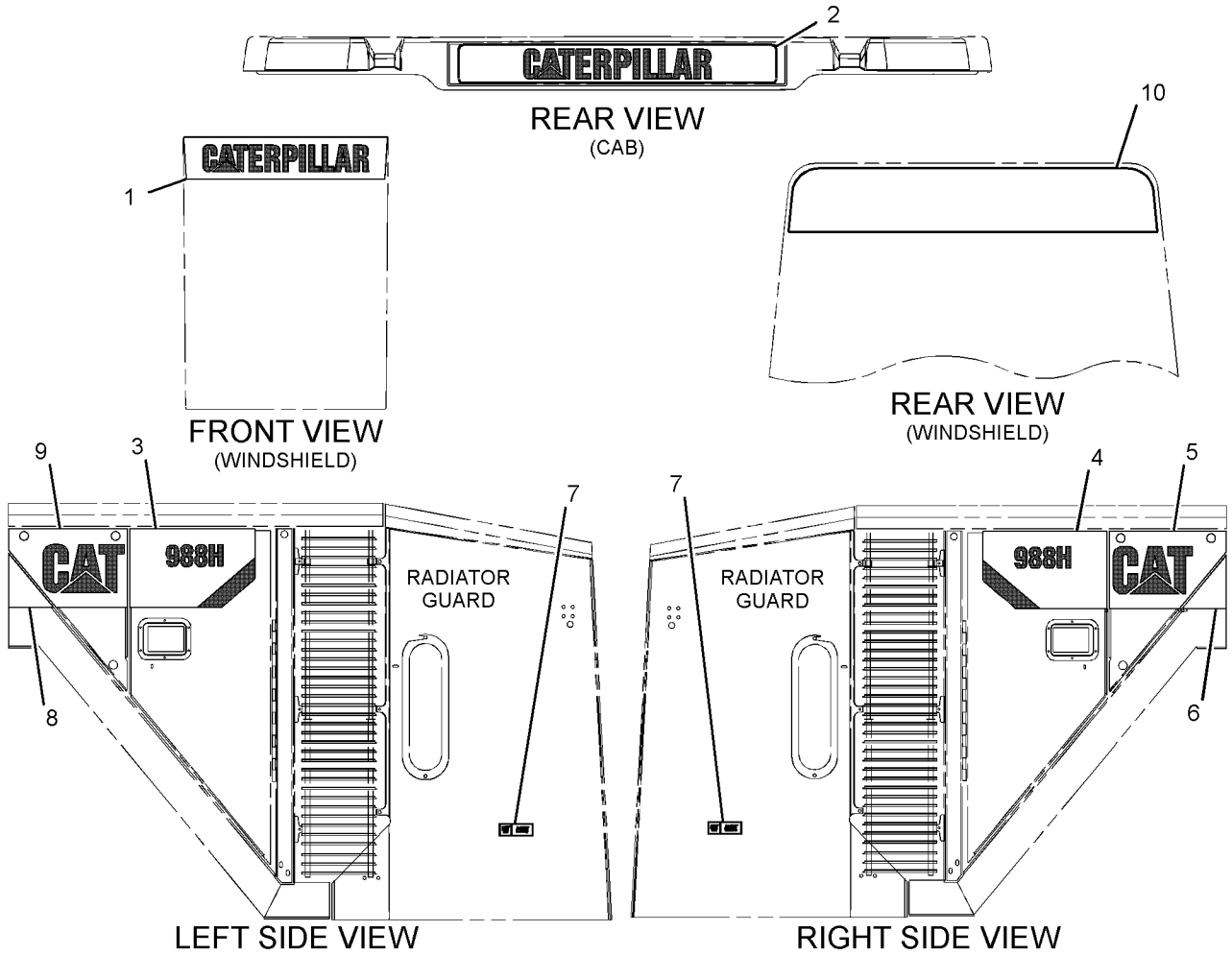


GRAPHIC #1 **<END>** g01364079

## *226-1970* LINES GP-DIAGNOSTIC—REMOTE PRESSURE TAPS—TMSN, LOCKUP TORQUE CONVERTER

**S/N: BXY1-UP**

**PART OF 231-7842 TORQUE CONVERTER AR-LOCKUP**

**AN ATTACHMENT**

**SMCS-7554** **i02546327**

| NOTE | REF NO | GRAPHIC REF | PART NUMBER | QTY | PART NAME 1 2 3 4 5 6 (PRODUCT LEVEL) | SEE PAGE |
|---|---|---|---|---|---|---|
| | 1 | 3 | **6B-6205** | 3 | SPACER (0.438X0.875X1.281-IN THK) | |
| | 2 | 1 | **6V-0852** | 10 | CAP-DUST | |
| | 3 | 4 | **118-6878** | 1 | BRACKET AS | |
| M | | 4 | **8T-3490** | 1 | NUT-WELD (M10X1.5-THD) | |
| | 4 | 3 | **165-6750** | 1 | BRACKET AS | |
| M | | 3 | **8T-3597** | 1 | NUT-WELD (M12X1.75-THD) | |
| | 5 | 4 | **185-6250** | 10 | FITTING AS | |
| | 6 | 4 | **228-4388** | 1 | BRACKET | |
| | 7 | 3 | **228-4389** | 1 | HOSE AS (TC IMPELLER CLUTCH PRESSURE) | |
| | 8 | 3 | **228-4390** | 1 | HOSE AS (TC LOCKUP CLUTCH PRESSURE) | |
| | 9 | 3 | **228-4391** | 1 | HOSE AS (TORQUE CONVERTER OUTLET PRESS) | |
| | 10 | 3 | **228-4392** | 1 | HOSE AS (TORQUE CONVERTER INLET PRESS) | |
| | 11 | 2 | **228-4393** | 1 | HOSE AS (TMSN CLUTCH 6 PRESSURE) | |
| | 12 | 2 | **228-4394** | 1 | HOSE AS (TMSN CLUTCH 5 PRESSURE) | |
| | 13 | 2 | **228-4395** | 1 | HOSE AS (TMSN CLUTCH 4 PRESSURE) | |
| | 14 | 2 | **228-4396** | 1 | HOSE AS (TMSN CLUTCH 3 PRESSURE) | |
| | 15 | 2 | **228-4397** | 1 | HOSE AS (TMSN CLUTCH 2 PRESSURE) | |
| | 16 | 2 | **228-4403** | 1 | HOSE AS (TMSN CLUTCH 1 PRESSURE) | |
| | 17 | 2,3 | *148-8325* | 9 | CONNECTOR AS | |
| | | | | | (EACH INCLUDES) | |
| | | 2,3 | **6V-8641** | 1 | CONNECTOR | |
| | | 2,3 | **3J-1907** | 1 | SEAL-O-RING | |
| | | 2,3 | **4J-5477** | 1 | SEAL-O-RING | |
| | 18 | 3 | *148-8368* | 1 | ELBOW AS | |
| | | 3 | **6V-8627** | 1 | ELBOW | |
| | | 3 | **3J-1907** | 1 | SEAL-O-RING | |
| | | 3 | **4J-5477** | 1 | SEAL-O-RING | |
| | 19 | 4 | **170-4735** | 10 | RING-RETAINING | |
| | 20 | 3 | **1S-6420** | 1 | CLIP | |
| | 21 | 4 | **4J-5477** | 10 | SEAL-O-RING | |
| | 22 | 3 | **6D-4246** | 3 | CLIP | |
| | 23 | 1 | **6V-1228** | 1 | CLIP | |
| | 24 | 3,4 | **8T-4121** | 4 | WASHER-HARD (11X21X2.5-MM THK) | |
| M | 25 | 4 | **8T-4136** | 1 | BOLT (M10X1.5X25-MM) | |
| M | 26 | 1,3 | **8T-4139** | 3 | BOLT (M12X1.75X30-MM) | |
| | 27 | 1,3 | **8T-4223** | 3 | WASHER-HARD (13.5X25.5X3-MM THK) | |
| M | 28 | 3 | **8T-6466** | 3 | BOLT (M10X1.5X60-MM) | |
| | 29 | 3,4 | **9X-8250** | 2 | CLIP | |
| E | 30 | 2 | **206-2723** | | GUARD-HOSE (94.5-CM) | |

E-ORDER BY THE CENTIMETER
M-METRIC PART

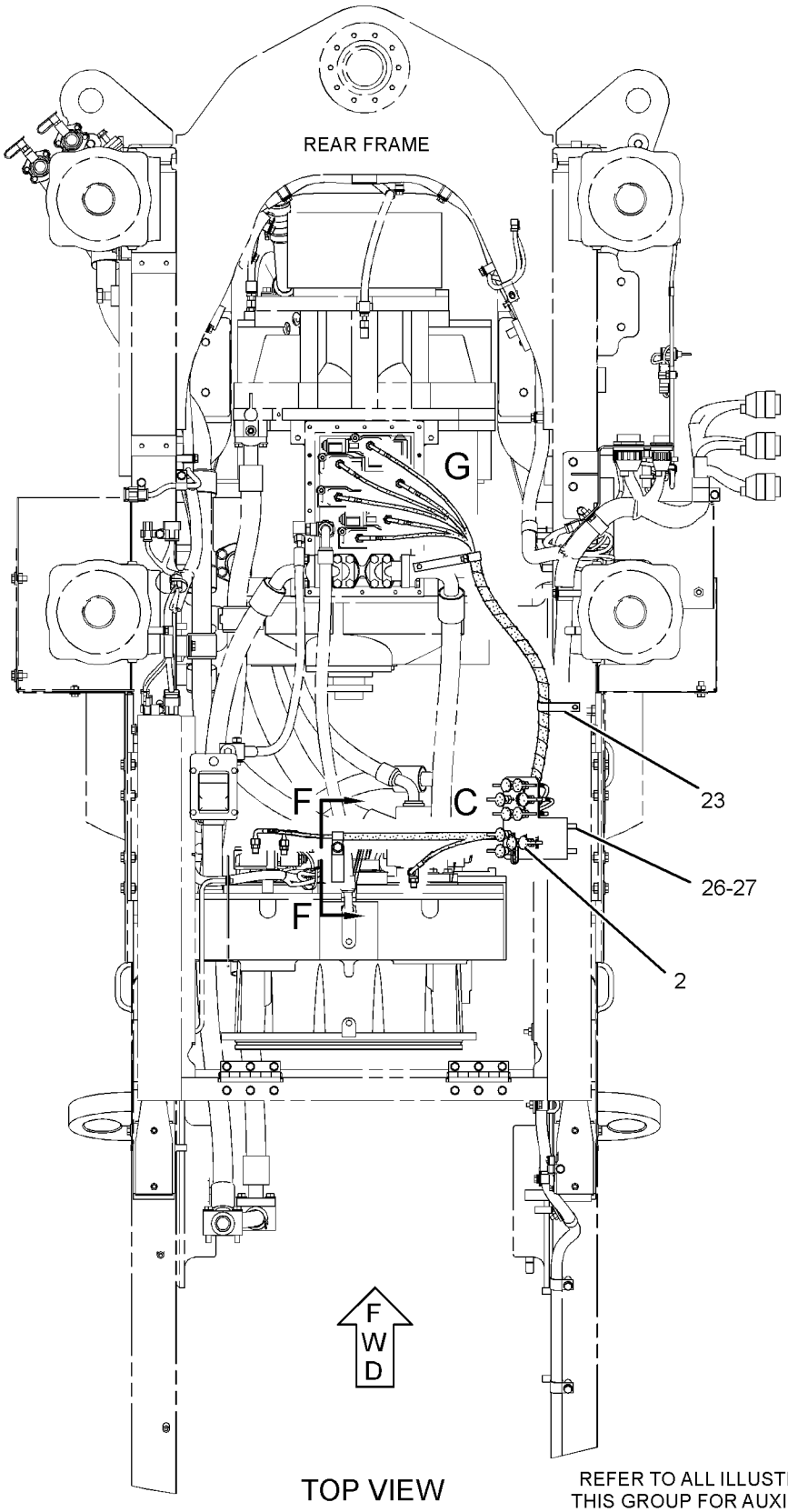


GRAPHIC #1

g01274295

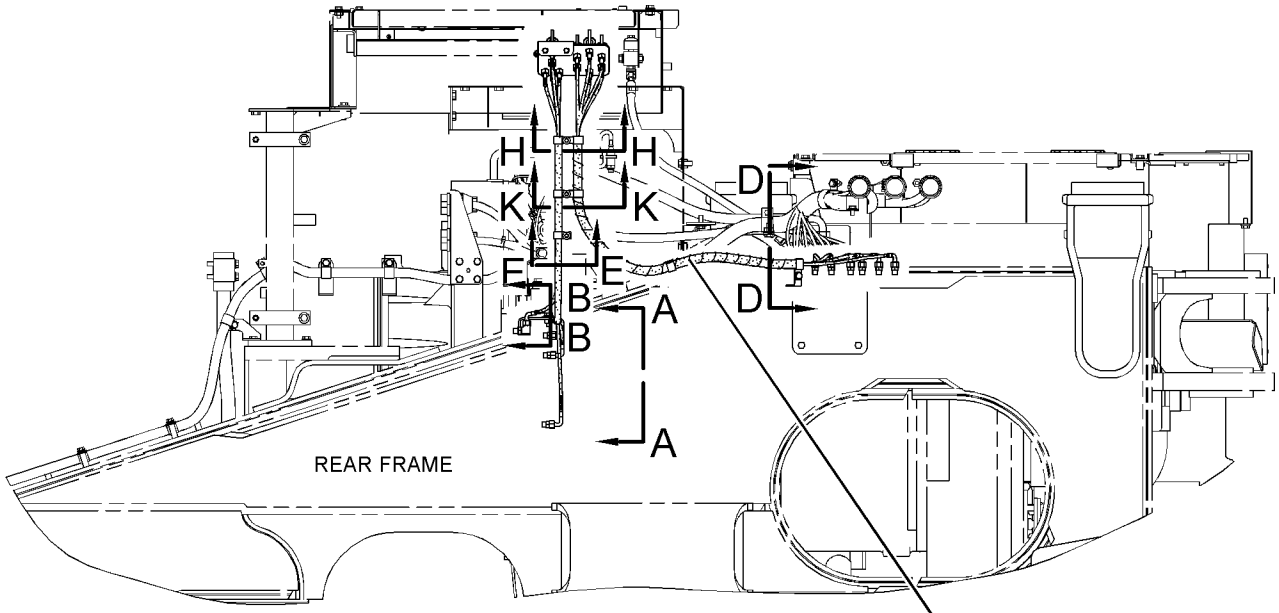


RIGHT SIDE VIEW

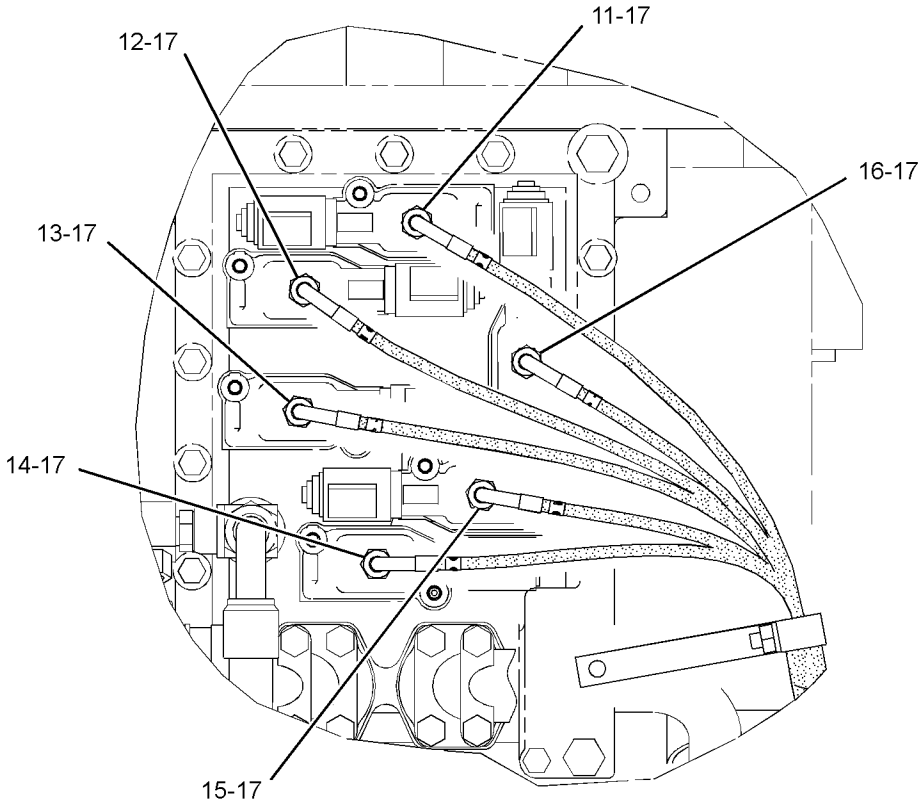


VIEW OF AREA G

REFER TO ALL ILLUSTRATIONS OF THIS GROUP FOR AUXILIARY VIEWS

GRAPHIC #2

g01229261

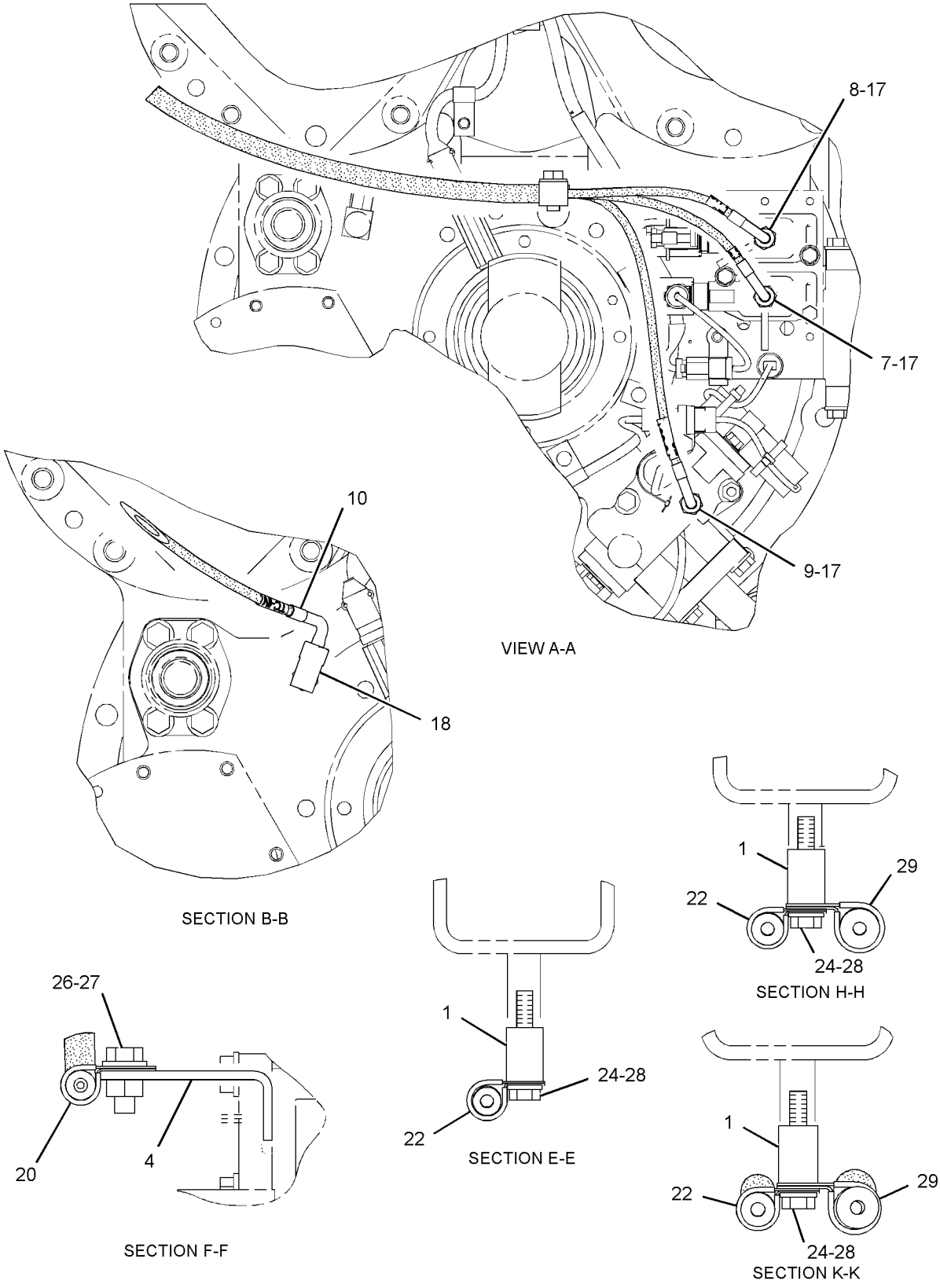


GRAPHIC #3

g01229262

| | REMOTE PRESSURE TAPS DESCRIPTION |
|---|---|
| 1 | TRANSMISSION CLUTCH 1 PRESSURE |
| 2 | TRANSMISSION CLUTCH 2 PRESSURE |
| 3 | TRANSMISSION CLUTCH 3 PRESSURE |
| 4 | TRANSMISSION CLUTCH 4 PRESSURE |
| 5 | TRANSMISSION CLUTCH 5 PRESSURE |
| 6 | TRANSMISSION CLUTCH 6 PRESSURE |
| TC - IN | TORQUE CONVERTER INLET PRESSURE |
| TC - OUT | TORQUE CONVERTER OUTLET PRESSURE |
| IC | TORQUE CONVERTER IMPELLER CLUTCH PRESSURE |
| LUC | TORQUE CONVERTER LOCKUP CLUTCH PRESSURE |

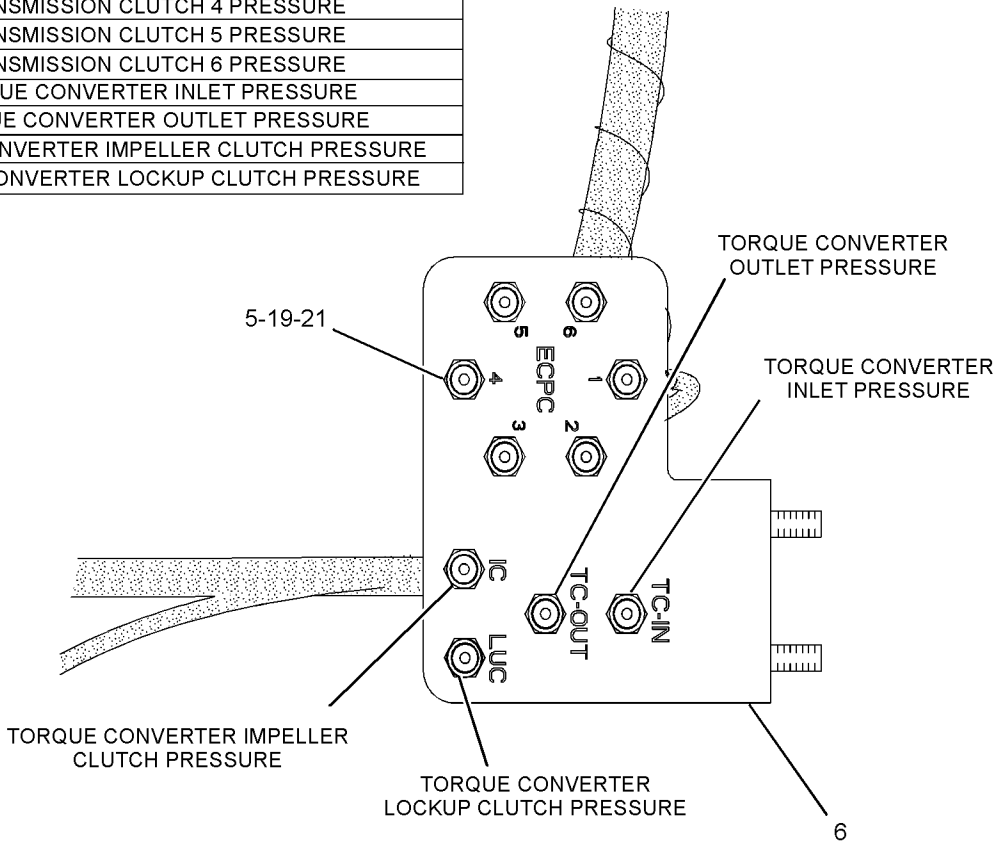


VIEW OF AREA C
(WITH CAPS REMOVED)

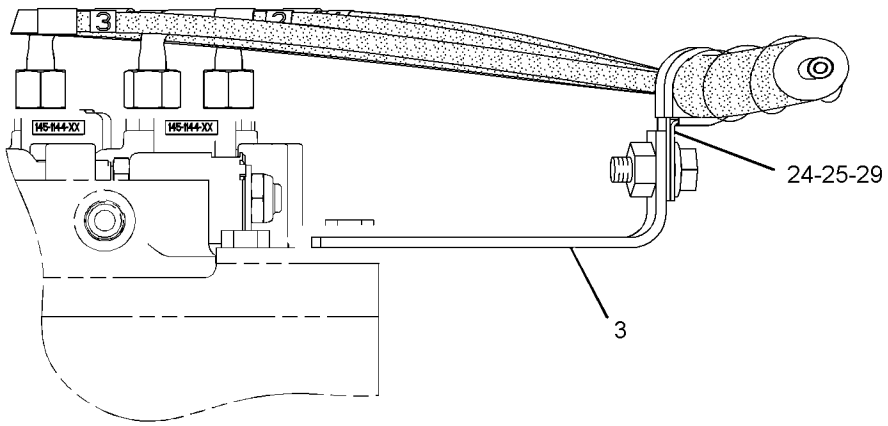


SECTION D-D

GRAPHIC #4 **<END>** g01274296

# *226-1971* LINES GP-DIAGNOSTIC—REMOTE PRESSURE TAPS—TRANSMISSION, STANDARD TC

**S/N: BXY1-UP**

**PART OF 231-7844 TORQUE CONVERTER AR**

**AN ATTACHMENT**

**SMCS-7554** **i02456690**

| NOTE | REF NO | GRAPHIC REF | PART NUMBER | QTY | PART NAME 1 2 3 4 5 6 (PRODUCT LEVEL) | SEE PAGE |
|---|---|---|---|---|---|---|
| | 1 | 1 | **6B-6205** | 3 | SPACER (0.438X0.875X1.281-IN THK) | |
| | 2 | 1 | **6V-0852** | 9 | CAP-DUST | |
| | 3 | 1 | **118-6878** | 1 | BRACKET AS | |
| | 4 | 1 | **165-6750** | 1 | BRACKET AS | |
| | 5 | 2 | **185-6250** | 9 | FITTING AS | |
| | 6 | 2 | **228-4388** | 1 | BRACKET | |
| | 7 | 1 | **228-4389** | 1 | HOSE AS (TC IMPELLER CLUTCH PRESSURE) | |
| | 8 | 1 | **228-4391** | 1 | HOSE AS (TORQUE CONVERTER OUTLET PRESS) | |
| | 9 | 1 | **228-4392** | 1 | HOSE AS (TORQUE CONVERTER INLET PRESS) | |
| | 10 | 1 | **228-4393** | 1 | HOSE AS (TMSN CLUTCH 6 PRESSURE) | |
| | 11 | 1 | **228-4394** | 1 | HOSE AS (TMSN CLUTCH 5 PRESSURE) | |
| | 12 | 1 | **228-4395** | 1 | HOSE AS (TMSN CLUTCH 4 PRESSURE) | |
| | 13 | 1 | **228-4396** | 1 | HOSE AS (TMSN CLUTCH 3 PRESSURE) | |
| | 14 | 1 | **228-4397** | 1 | HOSE AS (TMSN CLUTCH 2 PRESSURE) | |
| | 15 | 1 | **228-4403** | 1 | HOSE AS (TMSN CLUTCH 1 PRESSURE) | |
| | 16 | 1 | *148-8325* | 8 | CONNECTOR AS | |
| | | | | | (EACH INCLUDES) | |
| | | 1 | **6V-8641** | 1 | CONNECTOR | |
| | | 1 | **3J-1907** | 1 | SEAL-O-RING | |
| | | 1 | **4J-5477** | 1 | SEAL-O-RING | |
| | 17 | 1 | *148-8368* | 1 | ELBOW AS | |
| | | 1 | **6V-8627** | 1 | ELBOW | |
| | | 1 | **3J-1907** | 1 | SEAL-O-RING | |
| | | 1 | **4J-5477** | 1 | SEAL-O-RING | |
| | 18 | 2 | **170-4735** | 9 | RING-RETAINING | |
| | 19 | 2 | **4J-5477** | 9 | SEAL-O-RING | |
| | 20 | 1 | **6V-1228** | 1 | CLIP | |
| | 21 | 1 | **6V-2383** | 2 | CLIP | |
| | 22 | 1 | **8M-2773** | 3 | CLIP | |
| | 23 | 1 | **8T-4121** | 4 | WASHER-HARD (11X21X2.5-MM THK) | |
| M | 24 | 1 | **8T-4136** | 1 | BOLT (M10X1.5X25-MM) | |
| M | 25 | 1 | **8T-4139** | 3 | BOLT (M12X1.75X30-MM) | |
| | 26 | 1 | **8T-4223** | 3 | WASHER-HARD (13.5X25.5X3-MM THK) | |
| M | 27 | 1 | **8T-6466** | 3 | BOLT (M10X1.5X60-MM) | |
| | 28 | 1 | **9X-8250** | 3 | CLIP | |
| E | 29 | 1 | **206-2723** | | GUARD-HOSE (95-CM) | |

E-ORDER BY THE CENTIMETER
M-METRIC PART

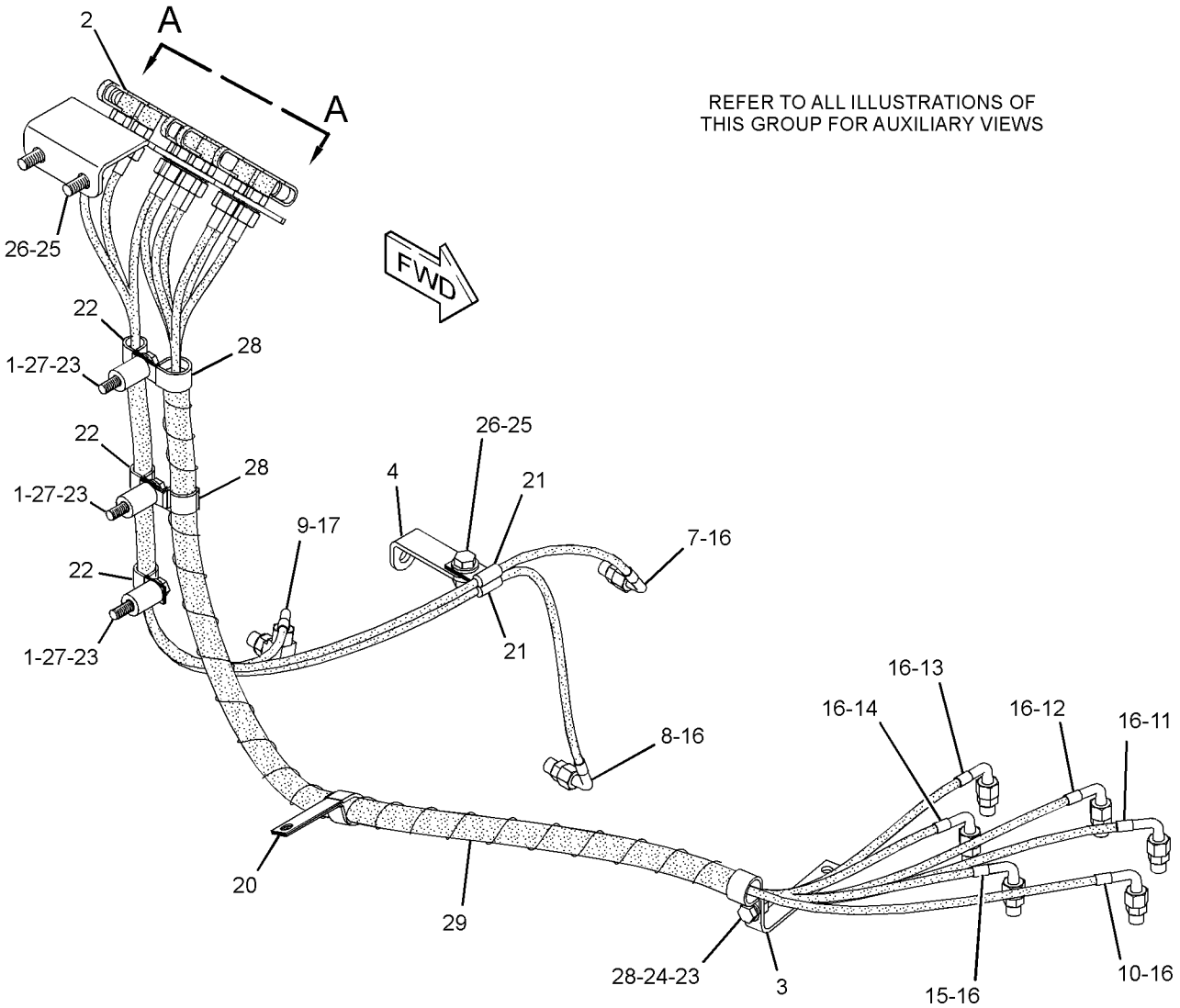


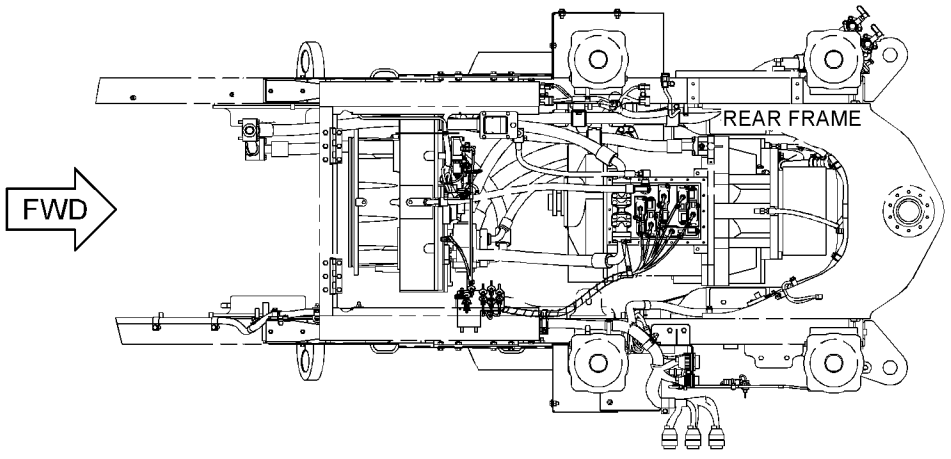


TOP VIEW

GRAPHIC #1

g01230684

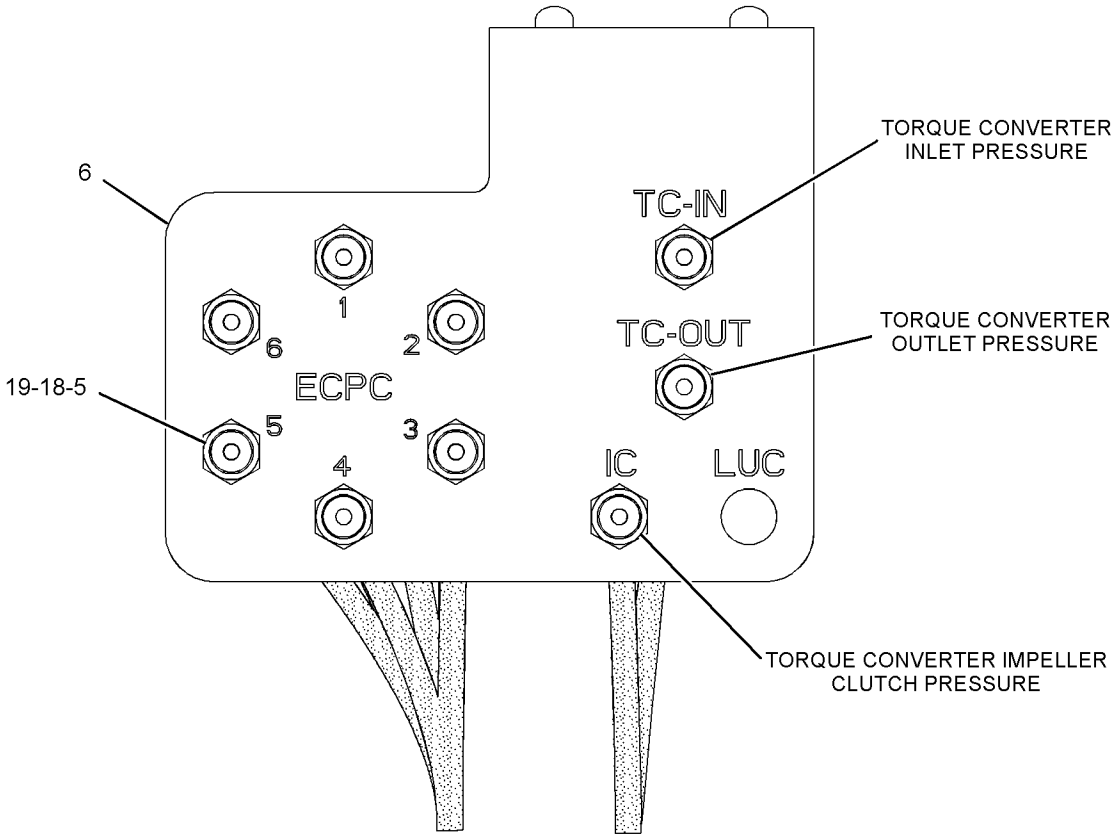


VIEW A-A
(WITH CAPS REMOVED)

| | REMOTE PRESSURE TAPS DESCRIPTION |
|---|---|
| 1 | TRANSMISSION CLUTCH 1 PRESSURE |
| 2 | TRANSMISSION CLUTCH 2 PRESSURE |
| 3 | TRANSMISSION CLUTCH 3 PRESSURE |
| 4 | TRANSMISSION CLUTCH 4 PRESSURE |
| 5 | TRANSMISSION CLUTCH 5 PRESSURE |
| 6 | TRANSMISSION CLUTCH 6 PRESSURE |
| TC - IN | TORQUE CONVERTER INLET PRESSURE |
| TC - OUT | TORQUE CONVERTER OUTLET PRESSURE |
| IC | TORQUE CONVERTER IMPELLER CLUTCH PRESSURE |

GRAPHIC #2 **<END>** g01231655

# SERVICE EQUIPMENT AND SUPPLIES

## *233-8479* PLATE & FILM GP

**S/N: BXY1-UP**

**PART OF 225-5432, 284-2735 CHASSIS AR**

**SMCS-7405, 7557** **i02675924**

| NOTE | PART NUMBER | QTY | PART NAME 1 2 3 4 5 6 (PRODUCT LEVEL) | SEE PAGE |
|---|---|---|---|---|
| Y | *252-9667* | 1 | FILM GP | 1498 |
| | | | S/N: BXY1-1899 | |
| Y | *291-5560* | 1 | FILM GP | 1499 |
| | | | S/N: BXY1900-UP | |
| | **169-8373** | 1 | BOTTLE GP-FLUID SAMPLING | |
| | | | IN TRAY OF CAB AR (LEFT REAR OF CAB) | |
| | **118-1225** | 1 | FILM-IDENTIFICATION (TRANSMISSION TANK FILL CAP) | |
| | | | ON TRANSMISSION OIL FILLER TUBE | |
| | **5P-1175** | 1 | FILM-IDENTIFICATION (ENGINE OIL FILL) | |
| | | | ON ENGINE OIL FILLER CAP | |
| | **8C-5346** | 1 | FILM-IDENTIFICATION (HYDRAULIC OIL FILTER) | |
| | | | ON HYDRAULIC OIL FILTER | |
| | **8C-8902** | 1 | FILM-IDENTIFICATION (ENGINE OIL FILTER) | |
| | | | ON ENGINE OIL FILTER | |
| | **190-5386** | 2 | FILM-IDENTIFICATION (ROUND RED REFLECTIVE) | |
| | | | ON REAR OUTSIDE SURFACE OF BUMPER, 75-MM FROM EACH SIDE, CENTERED ON FLAT SURFACE | |
| | **134-7258** | 1 | FILM-INFORMATION (EXTENDED LIFE COOLANT-READ OMM) | |
| | | | ON UNDERSIDE OF RADIATOR FILL CAP ACCESS DOOR | |
| | **146-6747** | 1 | FILM-INFORMATION (24-VOLT) | |
| | | | ON UNDER SIDE OF BATTERY BOX DOOR | |
| | **237-0212** | 1 | FILM-INFORMATION (ROPS, FOPS, READ OMM) | |
| | | | ON LH REAR SURFACE OF CAB, BELOW WINDOW | |
| | **188-0583** | 1 | FILM-INFORMATION (HYDRAULIC OIL LEVEL) | |
| | | | TO THE RIGHT OF THE HYDRAULIC OIL SIGHT GAGE ON THE HYDRAULIC OIL TANK, | |
| | | | CENTERING MARKS WITH MIDDLE OPENING OF LIQUID LEVEL GAGE | |
| | **163-3119** | 1 | FILM-INFORMATION (TRANSMISSION OIL LEVEL) | |
| | | | ON PLATE NEAR TRANSMISSION SIGHT GAGE, ALIGN LOW LINE OF THE PLATE-IDENT WITH CENTERLINE OF THE VEHICLES DRIVESHAFT | |
| | **253-0861** | 2 | FILM-INFORMATION (CAT POWER, ACERT TECHNOLOGY) | |
| | | | ON BOTH SIDES OF MACHINE, IN LOWER CORNER OF THE GUARD GP-RADIATOR 150-MM AWAY FROM THE BOTTOM EDGE OF GUARD, | |
| | | | AND 150-MM AWAY FROM THE BACK EDGE OF THE GUARD | |
| | **3E-1552** | 1 | FILM-INSTRUCTION (TRANSMISSION FILTER) | |
| | | | ON TRAMSMISSION OIL FILTER | |
| | **6V-2679** | 1 | FILM-INSTRUCTION (WIPER) | |
| | | | ON CAP OF WINDSHIELD WASHER BOTTLE LOCATED IN THE LH PLATFORM | |
| | **7X-3229** | 4 | FILM-INSTRUCTION (LIFT EYE, TIE-DOWN LOCATION) | |
| | | | ONE EACH AT FRONT AND REAR LIFT & TIEDOWN EYES | |
| | **8T-7038** | 1 | FILM-WARNING (DO NOT LIFT) | |
| | | | NEAR DRAW-BAR PIN | |
| | **219-0305** | 1 | FILM-WARNING (NO WELD, NO DRILL, READ OMM) | |
| | | | ON LH REAR SURFACE OF CAB, BELOW WINDOW | |
| | **239-6986** | 1 | PLATE-IDENTIFICATION (MACHINE) | |
| | | | ON PLATE 60-MM FORWARD AND 80-MM DOWN ON LH LOADER FRAME SIDE-PLATE | |
| | | | FOR CONCEALED PIN LOCATION REFER TO CHART LOCATION (CONCEALED PIN) | |
| A | **3N-3790** | 1 | PLATE-SERIAL NUMBER (ENGINE) | |
| | | | ON LOWER RH REAR CORNER OF CYLINDER BLOCK | |

A-NOT PART OF THIS GROUP

*233-8479* **PLATE & FILM GP** *(contd.)* **i02675924**

Y-SEPARATE ILLUSTRATION

**<END>**

## *236-0964* PLATE & FILM GP

**S/N: BXY1-UP**
**AN ATTACHMENT**

**SMCS-7405, 7557** **i02708514**

| NOTE | PART NUMBER | QTY | PART NAME 1 2 3 4 5 6 (PRODUCT LEVEL) | SEE PAGE |
|---|---|---|---|---|
| | **227-7391** | 1 | FILM-WARNING (SEAT BELT) | |
| | | | ON LEFT FRONT ROP TUBE | |
| | **225-0312** | 1 | FILM-WARNING (JUMP START, READ OMM, INTL) | |
| | | | ON UNDERSIDE OF BATTERY BOX DOOR | |
| | **225-4257** | 1 | FILM-WARNING (HOT FLUID UNDER PRESS, INTL) | |
| | | | ON UNDERSIDE OF RADIATOR FILL CAP ACCESS DOOR | |
| | **226-1240** | 2 | FILM-WARNING (CRUSH HAZARD, STAY BACK) | |
| | | | ON SIDE FACE OF LOADER FRAME ONE ON EACH SIDE | |
| | **226-1274** | 1 | FILM-WARNING (CRUSH HAZARD, READ OMM) | |
| | | | ON SIDE FACE OF LOADER FRAME SAME SIDE AS SAFETY BAR | |
| | **228-2616** | 1 | FILM-WARNING (UNIVERSAL, READ OMM) | |
| | | | IN CAB ON INSIDE OF FRONT DOOR POST | |
| | **236-7227** | 1 | FILM-WARNING (PARKING BRAKE) | |
| | | | ON CENTER OF RETAINING PLATE ON PARKING BRAKE GROUP | |

**<END>**

## *236-0966* PLATE & FILM GP

**S/N: BXY1-UP**
**AN ATTACHMENT**

**SMCS-7405, 7557** **i02708515**

| NOTE | PART NUMBER | QTY | PART NAME 1 2 3 4 5 6 (PRODUCT LEVEL) | SEE PAGE |
|---|---|---|---|---|
| | **227-7390** | 1 | FILM-WARNING (SEAT BELT) | |
| | | | ON THE LEFT FRONT ROP TUBE | |
| | **225-0313** | 1 | FILM-WARNING (JUMP START, READ OMM, U.S.) | |
| | | | ON UNDERSIDE OF BATTERY BOX DOOR | |
| | **225-4256** | 1 | FILM-WARNING (HOT FLUID UNDER PRESSURE, U.S.) | |
| | | | ON UNDERSIDE OF RADIATOR FILL CAP ACCESS DOOR | |
| | **226-1242** | 2 | FILM-WARNING (CRUSH HAZARD, STAY BACK) | |
| | | | ON SIDE OF FACE OF LOADER FRAME ONE ON EACH SIDE | |
| | **226-1275** | 1 | FILM-WARNING (CRUSH HAZARD, READ MANUAL) | |
| | | | ON SIDE OF FACE OF LOADER FRAME SAME SIDE AS SAFETY BAR | |
| | **228-2615** | 1 | FILM-WARNING (UNIVERSAL) | |
| | | | IN CAB ON INSIDE OF FRONT DOOR POST | |
| | **236-7226** | 1 | FILM-WARNING (PARKING BRAKE, WHEEL CHOCK) | |
| | | | ON CENTER OF RETAINING PLATE ON PARKING BRAKE GROUP | |

**<END>**

# SERVICE EQUIPMENT AND SUPPLIES

## *224-3979* PLATE GP-ENGINE IDENTIFICATION

**S/N: RHX1-UP**
**PART OF 225-6065, 225-6106 ENGINE AR-COMPLETE**
**AN ATTACHMENT**
**TYPE 1**

**SMCS-7557** **i02682761**

| NOTE | REF NO | GRAPHIC REF | PART NUMBER | QTY | PART NAME 1 2 3 4 5 6 (PRODUCT LEVEL) | SEE PAGE |
|---|---|---|---|---|---|---|
| | 1 | 1 | **229-5669** | 1 | PLATE-IDENTIFICATION (C18 ACERT) | |
| | 2 | 1 | **234-1400** | 1 | PLATE-IDENTIFICATION (BLANK) | |
| | 3 | 1 | **234-1401** | 1 | PLATE-IDENTIFICATION (CAT) | |

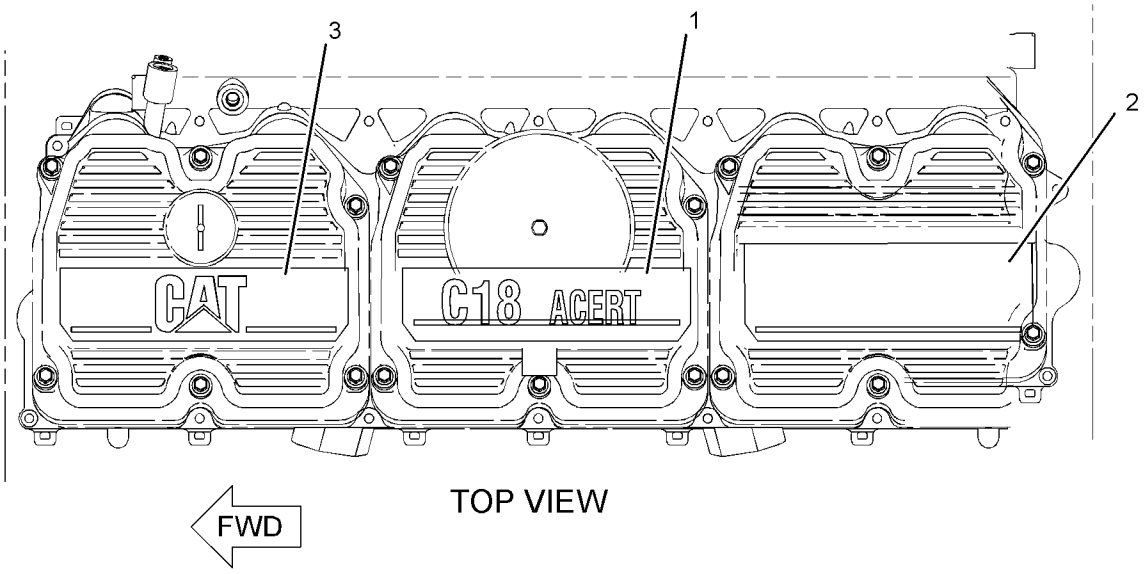


GRAPHIC #1 **<END>** g01348241

# SERVICE EQUIPMENT AND SUPPLIES

## *224-3979* PLATE GP-ENGINE IDENTIFICATION

**S/N: RHX1-UP**
**PART OF 225-6065, 225-6106 ENGINE AR-COMPLETE**
**AN ATTACHMENT**
**TYPE 2**

**SMCS-7557** **i02716734**

| NOTE | REF NO | GRAPHIC REF | PART NUMBER | QTY | PART NAME 1 2 3 4 5 6 (PRODUCT LEVEL) | SEE PAGE |
|---|---|---|---|---|---|---|
| C | 1 | 1 | **300-0572** | 1 | PLATE-IDENTIFICATION (CAT C18 ACERT) | |

C-CHANGE FROM PREVIOUS TYPE

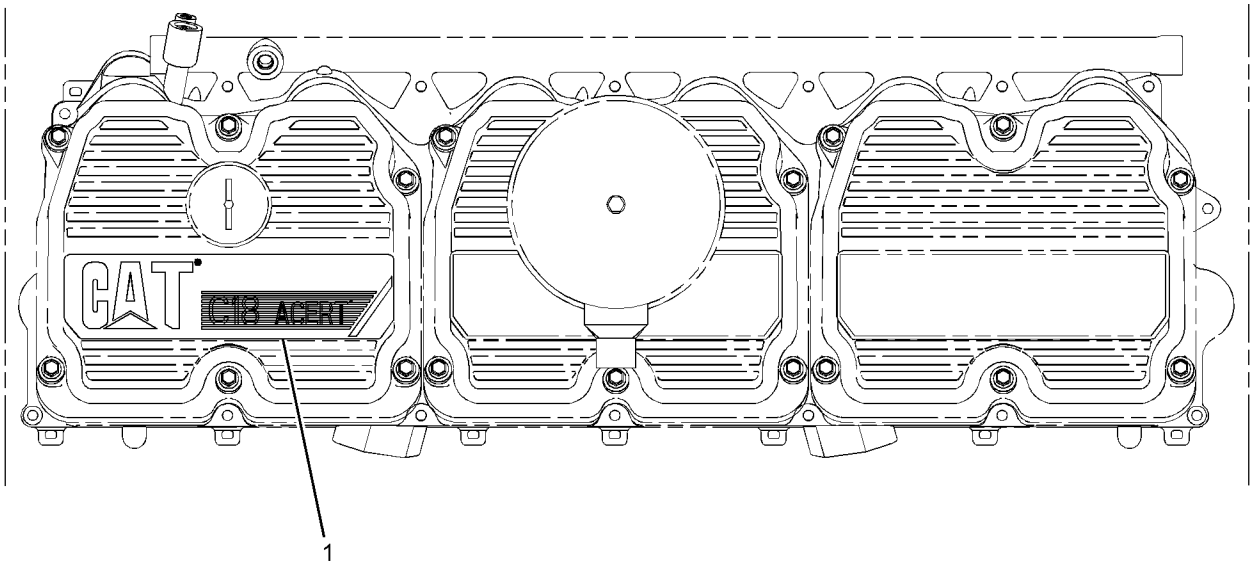


TOP VIEW OF ENGINE

GRAPHIC #1 **<END>** g01367503

# SERVICE EQUIPMENT AND SUPPLIES

## *1N-4296* PROTECTION GP-VANDALISM

**S/N: BXY1-UP**

**CAP**

**PART OF 225-6709 LINES GP-POWER TRAIN OIL**

**SMCS-1273, 3005, 3030, 5056, 7315** **i02741391**

| NOTE | REF NO | GRAPHIC REF | PART NUMBER | QTY | PART NAME 1 2 3 4 5 6 (PRODUCT LEVEL) | SEE PAGE |
|---|---|---|---|---|---|---|
| | 1 | 1 | **5P-8502** | 1 | PADLOCK GP | |
| | | 1 | **5P-8500** | 1 | KEY (CORPORATE) | |
| | | 1 | **8Y-6364** | 1 | SLEEVE | |
| | 2 | 1 | **8S-4212** | 2 | RIVET | |
| | 3 | 1 | **8S-3746** | 2 | COVER-FILLER CAP | |
| | 4 | 1 | **7W-1484** | 1 | CAP AS-OIL FILLER (POWER TRAIN) | |
| | | 1 | **6H-0411** | 1 | WASHER (32.5X50.8X1.6-MM THK) | |

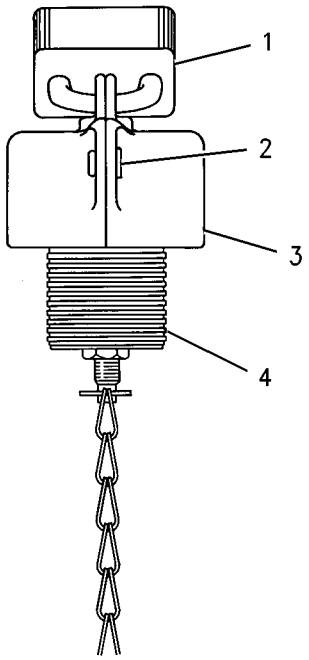


GRAPHIC #1 **<END>** g00775220

# *9G-9288* PROTECTION GP-VANDALISM

**S/N: BXY1-UP**

**PART OF 308-2730 GUARD GP-REAR, 132-6143 TANK & MTG GP-HYDRAULIC**

**ALSO AN ATTACHMENT**

**SMCS-1273, 3005, 3030, 5056, 7315** **i02248629**

| NOTE | REF NO | GRAPHIC REF | PART NUMBER | QTY | PART NAME 1 2 3 4 5 6 (PRODUCT LEVEL) | SEE PAGE |
|---|---|---|---|---|---|---|
| | 1 | 1 | **1L-5072** | 1 | DOWEL | |
| | 2 | 1 | **9M-7394** | 1 | LEVER (HYDRAULIC TANK FILL) | |
| | 3 | 1 | **5D-1911** | 1 | COVER-HYDRAULIC CAP | |
| | 4 | 1 | **2J-7761** | 1 | RING-RETAINING | |
| | 5 | 1 | **246-2641** | 1 | PADLOCK GP (HYDRAULIC TANK FILL) | |
| | | 1 | **5P-8500** | 2 | KEY (CORPORATE) | |

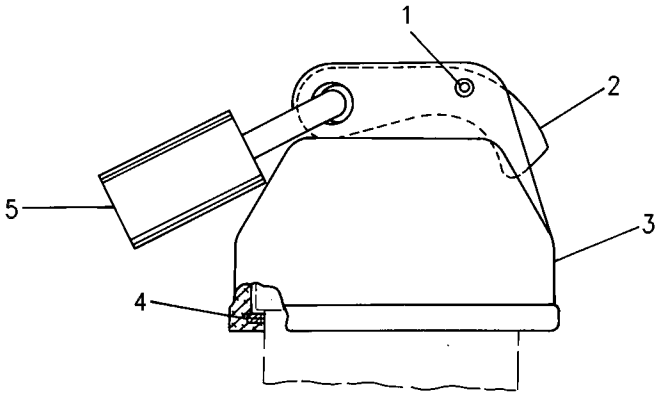


GRAPHIC #1 **<END>** g00600453

# SERVICE EQUIPMENT AND SUPPLIES

## *4C-8195* TOOL GP-CONTROL SERVICE

**S/N: BXY1-UP**
**FOR IMPLEMENT & POWER TRAIN CALIBRATION**
**PART OF 225-5432, 284-2735 CHASSIS AR**

**SMCS-0785** **i01346135**

| NOTE | REF NO | GRAPHIC REF | PART NUMBER | QTY | PART NAME 1 2 3 4 5 6 (PRODUCT LEVEL) | SEE PAGE |
|---|---|---|---|---|---|---|
| | 1 | 1 | **170-3791** | 1 | COVER AS | |
| | 2 | 1 | **9X-2129** | 6 | SCREW-FLAT HEAD | |
| | 3 | 1 | **4C-8196** | 1 | CABLE AS | |
| | 4 | 1 | **9X-8917** | 2 | SCREW-MACHINE (4-40X9.52-MM) | |
| | 5 | 1 | **6B-4540** | 2 | NUT (4-40 THD) | |
| | 6 | 1 | **5S-4246** | 2 | LOCKWASHER | |
| | 7 | 1 | **4C-8197** | 1 | CABLE AS | |
| | 8 | 1 | **138-7795** | 1 | CABLE AS | |

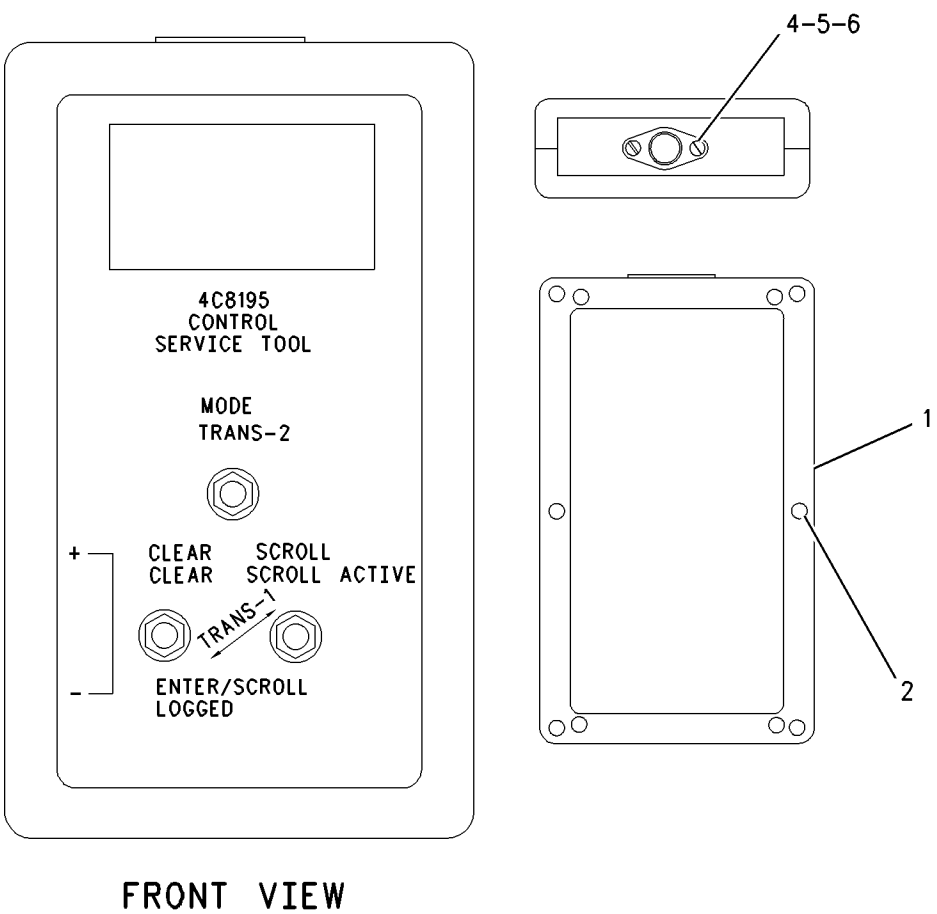


FRONT VIEW

GRAPHIC #1 **<END>** g00712245

# PART NUMBER INDEX


| Part | Page |
|---|---|
| **0** | |
| 0A-3721 | 1013 |
| | 1017 |
| | 1021 |
| 0L-1143 | 100 |
| 0L-1328 | 534 |
| | 538 |
| 0L-1351 | 112 |
| | 113 |
| | 114 |
| | 131 |
| 0L-1558 | 964 |
| 0L-2061 | 622 |
| | 624 |
| 0L-2070 | 67 |
| | 131 |
| 0L-2315 | 590 |
| 0S-0509 | 101 |
| | 423 |
| | 425 |
| 0S-0699 | 186 |
| | 187 |
| 0S-1571 | 62 |
| | 116 |
| 0S-1576 | 423 |
| | 425 |
| 0S-1577 | 60 |
| 0S-1585 | 52 |
| | 531 |
| 0S-1587 | 78 |
| | 80 |
| | 488 |
| | 534 |
| | 538 |
| 0S-1588 | 26 |
| | 67 |
| | 78 |
| | 80 |
| | 82 |
| | 84 |
| | 101 |
| | 102 |
| | 104 |
| | 106 |
| | 109 |
| | 110 |
| | 113 |
| | 114 |
| | 146 |
| | 874 |
| 0S-1590 | 55 |
| | 100 |
| | 102 |
| | 104 |
| | 106 |
| 0S-1591 | 112 |
| | 113 |
| | 114 |
| | 127 |
| | 131 |
| | 138 |
| | 157 |
| | 182 |
| | 291 |
| 0S-1594 | 22 |
| | 23 |
| | 57 |
| | 65 |
| | 69 |
| | 84 |
| | 101 |
| | 102 |
| | 104 |
| | 106 |
| | 109 |
| | 293 |
| | 964 |
| | 1030 |
| 0S-1595 | 70 |
| | 964 |
| | 1030 |
| 0S-1608 | 77 |
| | 131 |
| 0S-1617 | 591 |
| 0S-1619 | 65 |
| | 83 |
| | 182 |
| 0S-1621 | 964 |
| 0T-0055 | 26 |
| | 67 |
| | 84 |
| 0T-0065 | 131 |
| | 591 |
| 0T-0102 | 515 |
| | 531 |
| 0T-0244 | 1472 |
| 0T-0573 | 77 |
| **1** | |
| 1A-1135 | 138 |
| 1A-1460 | 534 |
| | 538 |
| 1A-2029 | 78 |
| | 80 |
| | 112 |
| | 113 |
| | 114 |
| | 131 |
| 1A-2223 | 488 |
| | 609 |
| 1A-3203 | 52 |
| 1A-4273 | 423 |
| | 425 |
| 1A-4790 | 990 |
| | 992 |
| 1A-5183 | 26 |
| 1A-5822 | 515 |
| | 964 |
| 1A-5964 | 84 |
| | 182 |
| 1A-8651 | 534 |
| | 538 |
| 1B-0676 | 650 |
| | 652 |
| 1B-2790 | 131 |
| 1B-2886 | 1030 |
| 1B-3057 | 136 |
| 1B-3867 | 15 |
| 1B-3908 | 1032 |
| 1B-3909 | 1032 |
| 1B-3953 | 531 |
| 1B-3955 | 531 |
| 1B-4367 | 535 |
| | 538 |
| 1B-4971 | 1378 |
| 1B-7182 | 138 |
| 1B-8705 | 62 |
| 1B-8736 | 598 |
| 1B-9575 | 217 |
| 1B-9920 | 650 |
| | 652 |
| 1C-2251 | 157 |
| 1D-4327 | 617 |
| | 619 |
| 1D-4566 | 131 |
| 1D-4569 | 964 |
| 1D-5117 | 205 |
| | 209 |
| 1F-0750 | 101 |
| | 157 |
| | 257 |
| | 268 |
| | 272 |
| | 276 |
| 1F-1006 | 617 |
| | 619 |
| 1F-1609 | 1102 |
| | 1108 |
| 1F-7958 | 58 |
| | 534 |
| | 538 |
| 1G-5928 | 1040 |
| 1G-8878 | 1086 |
| 1H-1023 | 321 |
| 1H-3244 | 202 |
| | 386 |
| | 394 |
| 1H-3338 | 328 |
| 1H-4393 | 960 |
| 1H-5728 | 1161 |
| | 1166 |
| 1H-6227 | 517 |
| | 564 |
| | 568 |
| | 979 |
| 1H-7262 | 650 |
| | 652 |
| 1H-7263 | 650 |
| | 652 |
| 1H-7365 | 650 |
| | 652 |
| 1H-7366 | 650 |
| | 652 |
| 1H-8128 | 164 |
| | 165 |
| | 184 |
| | 235 |
| 1H-8171 | 985 |
| | 986 |
| 1H-8278 | 605 |
| 1H-8296 | 1483 |
| 1H-8306 | 192 |
| | 194 |
| 1H-8647 | 15 |
| 1H-9696 | 1148 |
| | 1151 |
| 1J-2919 | 849 |
| 1J-4246 | 602 |
| | 604 |
| 1J-5799 | 1479 |
| 1J-9671 | 110 |
| | 164 |
| | 165 |
| | 958 |
| | 959 |
| | 1208 |
| 1K-6853 | 486 |
| 1K-8850 | 1445 |
| 1L-3162 | 638 |
| 1L-3768 | 596 |
| 1L-5072 | 1513 |
| 1M-0644 | 118 |
| 1M-3909 | 598 |
| 1M-6119 | 205 |
| | 206 |
| | 209 |
| | 210 |
| 1M-6120 | 205 |
| | 206 |
| | 209 |
| | 210 |
| 1M-6298 | 1068 |
| 1M-6718 | 1046 |
| 1N-3974 | 54 |
| 1N-4296 | 575 |
| | 582 |
| | ▶1512 |
| 1N-5410 | 591 |
| 1P-0014 | 591 |
| 1P-3702 | 1014 |
| | 1017 |
| | 1022 |
| 1P-3703 | 548 |
| | 552 |
| | 557 |
| | 561 |
| | 1014 |
| | 1018 |
| | 1022 |
| 1P-3704 | 548 |
| | 552 |
| | 557 |
| | 561 |
| | 1014 |
| | 1018 |
| | 1022 |
| | 1063 |
| | 1088 |
| | 1091 |
| | 1115 |
| | 1166 |
| 1P-3705 | 576 |


▶ **PRIMARY REFERENCE**

# PART NUMBER INDEX


| Part | Page | Part | Page | Part | Page | Part | Page |
|---|---|---|---|---|---|---|---|
| | 583 | | 583 | 1S-9540 . . . . . | 35 | | 1458 |
| | 1063 | | 1014 | | 37 | | 1461 |
| | 1088 | | 1018 | 1S-9593 . . . . . | 386 | | 1464 |
| | 1091 | | 1022 | | 394 | 1V-8279 . . . . . | 964 |
| | 1098 | 1P-5411 . . . . . | 1068 | | 641 | 1V-8732 . . . . . | 857 |
| | 1115 | 1P-5412 . . . . . | 1068 | | 1185 | | 1442 |
| | 1118 | 1P-5767 . . . . . | 1014 | | 1342 | 1W-3136 . . . . . | 65 |
| | 1122 | | 1018 | | 1346 | 1W-6137 . . . . . | 110 |
| | 1124 | | 1022 | 1S-9989 . . . . . | 591 | 1W-6448 . . . . . | 291 |
| | 1126 | | 1063 | 1T-0479 . . . . . | 485 | | 293 |
| | 1156 | | 1088 | | 486 | 1W-7238 . . . . . | 118 |
| | 1161 | | 1091 | 1T-0720 . . . . . | 287 | 1W-7239 . . . . . | 118 |
| | 1166 | | 1115 | | 288 | 1Y-0413 . . . . . | 872 |
| 1P-3706 . . . . . | 1063 | 1P-6356 . . . . . | 1391 | 1T-0765 . . . . . | 186 | | 874 |
| | 1088 | | 1394 | | 187 | | |
| | 1091 | 1P-7326 . . . . . | 1358 | 1T-0766 . . . . . | 622 | | |
| | 1115 | 1P-7346 . . . . . | 62 | 1T-0786 . . . . . | 622 | **2** | |
| | 1118 | 1P-9261 . . . . . | 591 | | 624 | | |
| | 1122 | 1P-9269 . . . . . | 534 | 1T-0787 . . . . . | 622 | 2A-1162 . . . . . | 65 |
| | 1124 | | 538 | | 624 | 2A-1531 . . . . . | 964 |
| | 1126 | 1R-0716 . . . . . | 102 | 1T-0795 . . . . . | 622 | 2A-2677 . . . . . | 690 |
| | 1153 | 1R-0762 . . . . . | 167 | | 624 | 2A-3630 . . . . . | 1133 |
| 1P-3709 . . . . . | 1058 | | 169 | 1T-0806 . . . . . | 622 | 2A-4429 . . . . . | 45 |
| | 1060 | 1R-0771 . . . . . | 171 | | 624 | | 46 |
| | 1133 | 1R-1052 . . . . . | 1208 | 1T-0807 . . . . . | 622 | | 47 |
| 1P-3958 . . . . . | 592 | 1R-1060 . . . . . | 1208 | | 624 | | 49 |
| 1P-4078 . . . . . | 534 | 1R-1808 . . . . . | 104 | 1T-0847 . . . . . | 624 | 2A-4639 . . . . . | 534 |
| | 538 | | 106 | 1T-0887 . . . . . | 624 | | 538 |
| 1P-4079 . . . . . | 534 | 1R-6072 . . . . . | 347 | 1T-0895 . . . . . | 624 | 2B-0941 . . . . . | 413 |
| 1P-4082 . . . . . | 534 | | 348 | 1T-0896 . . . . . | 624 | | 416 |
| 1P-4085 . . . . . | 964 | 1S-0496 . . . . . | 475 | 1T-0936 . . . . . | 624 | | 1013 |
| 1P-4278 . . . . . | 141 | 1S-0994 . . . . . | 206 | | 1047 | | 1017 |
| | 143 | | 210 | | 1051 | | 1021 |
| | 174 | | 427 | 1T-1315 . . . . . | 624 | 2B-2404 . . . . . | 531 |
| | 178 | | 430 | 1T-1356 . . . . . | 624 | 2B-2695 . . . . . | 24 |
| 1P-4577 . . . . . | 564 | | 436 | 1T-1401 . . . . . | 622 | 2C-9259 . . . . . | 1229 |
| | 568 | | 443 | | 624 | | 1231 |
| | 1008 | | 447 | 1T-1426 . . . . . | 624 | | 1233 |
| 1P-4578 . . . . . | 564 | | 481 | 1T-1616 . . . . . | 624 | | 1240 |
| | 568 | | 576 | 1T-1617 . . . . . | 624 | | 1242 |
| | 598 | | 583 | 1T-1639 . . . . . | 617 | | 1244 |
| | 979 | | 774 | | 619 | | 1246 |
| 1P-4579 . . . . . | 576 | | 778 | 1T-1897 . . . . . | 622 | | 1248 |
| | 583 | | 784 | | 624 | | 1251 |
| | 598 | | 790 | 1U-0071 . . . . . | 1279 | | 1253 |
| | 1008 | | 792 | 1U-0322 . . . . . | 1051 | | 1255 |
| | 1014 | | 795 | 1U-0323 . . . . . | 1051 | | 1258 |
| | 1018 | | 812 | 1U-0761 . . . . . | 1266 | | 1260 |
| | 1022 | | 818 | | 1278 | | 1263 |
| | 1047 | | 971 | 1U-1570 . . . . . | 1148 | 2D-0388 . . . . . | 481 |
| | 1051 | | 1014 | | 1151 | 2D-4202 . . . . . | 1148 |
| | 1103 | | 1018 | 1U-2827 . . . . . | 539 | | 1151 |
| | 1109 | | 1022 | | 1070 | 2D-4867 . . . . . | 1208 |
| | 1148 | | 1360 | | 1148 | 2D-6392 . . . . . | 321 |
| | 1151 | 1S-3889 . . . . . | 642 | 1U-8846 . . . . . | 488 | 2D-6533 . . . . . | 486 |
| 1P-4582 . . . . . | 164 | 1S-4295 . . . . . | 161 | | 642 | 2D-6642 . . . . . | 590 |
| | 165 | | 162 | 1V-0134 . . . . . | 659 | 2D-6648 . . . . . | 1058 |
| | 576 | 1S-6420 . . . . . | 1103 | 1V-1122 . . . . . | 236 | | 1060 |
| | 583 | | 1109 | | 1400 | 2D-8009 . . . . . | 598 |
| | 1098 | | 1500 | 1V-1123 . . . . . | 236 | 2D-8363 . . . . . | 591 |
| | 1103 | 1S-6595 . . . . . | 535 | | 1400 | 2D-8540 . . . . . | 605 |
| | 1109 | | 539 | 1V-6341 . . . . . | 535 | 2G-1133 . . . . . | 1411 |
| | 1148 | 1S-7251 . . . . . | 205 | | 539 | | 1413 |
| | 1151 | | 209 | 1V-6755 . . . . . | 1445 | 2G-3747 . . . . . | 521 |
| 1P-4584 . . . . . | 576 | 1S-7446 . . . . . | 321 | | 1455 | 2G-8767 . . . . . | 205 |

# PART NUMBER INDEX


| Part | Page | Part | Page | Part | Page | Part | Page |
|---|---|---|---|---|---|---|---|
| | 209 | | 1434 | 2P-4470 . . . . . | 622 | 2T-3019 . . . . . | 413 |
| 2H-2255 . . . . . | 623 | | 1435 | | 624 | | 416 |
| | 624 | | 1436 | 2P-4538 . . . . . | 638 | | 454 |
| 2H-2665 . . . . . | 535 | 2M-6835 . . . . . | 1378 | 2P-7214 . . . . . | 182 | | 456 |
| | 539 | 2M-9780 . . . . . | 106 | 2Q-0584 . . . . . | 574 | | 460 |
| | 964 | | 174 | | 1120 | 2U-7345 . . . . . | 1051 |
| 2H-2722 . . . . . | 1025 | | 178 | 2Q-0604 . . . . . | 1071 | 2U-7354 . . . . . | 1047 |
| 2H-3429 . . . . . | 321 | | 236 | | 1095 | | 1052 |
| 2H-3755 . . . . . | 291 | | 859 | 2Q-3691 . . . . . | 866 | 2V-0600 . . . . . | 1098 |
| | 293 | | 1000 | 2Q-8722 . . . . . | ▶3 | 2V-1771 . . . . . | 206 |
| 2H-3920 . . . . . | 338 | | 1001 | 2Q-8732 . . . . . | ▶1336 | | 210 |
| | 350 | | 1045 | 2Q-8733 . . . . . | ▶4 | 2V-2043 . . . . . | 117 |
| | 357 | | 1047 | 2Q-8737 . . . . . | ▶1451 | 2V-3216 . . . . . | 255 |
| | 364 | | 1051 | 2R-0098 . . . . . | 642 | | 260 |
| | 374 | | 1103 | 2R-0239 . . . . . | 622 | | 268 |
| 2H-3922 . . . . . | 325 | | 1109 | | 624 | | 272 |
| 2H-3926 . . . . . | 494 | | 1129 | | 1133 | | 276 |
| | 499 | | 1138 | 2R-1920 . . . . . | 1198 | | 1331 |
| | 504 | | 1140 | | 1199 | 2V-3726 . . . . . | 1373 |
| | 548 | | 1162 | | 1200 | 2V-4387 . . . . . | 1358 |
| | 552 | | 1166 | | 1201 | 2W-5568 . . . . . | 576 |
| | 557 | | 1177 | | 1202 | | 583 |
| | 561 | | 1182 | | 1203 | | |
| | 564 | 2N-0822 . . . . . | 531 | 2R-2376 . . . . . | 1374 | | |
| | 568 | 2N-3253 . . . . . | 704 | | 1385 | **3** | |
| 2H-3932 . . . . . | 517 | 2N-3254 . . . . . | 704 | | 1388 | | |
| 2H-3933 . . . . . | 534 | 2N-3350 . . . . . | 110 | 2R-6806 . . . . . | 167 | 3B-0623 . . . . . | 39 |
| | 538 | 2P-1293 . . . . . | 494 | | 169 | | 42 |
| | 605 | | 499 | | 182 | 3B-0645 . . . . . | 39 |
| | 1208 | | 504 | 2S-0795 . . . . . | 131 | | 42 |
| 2H-6489 . . . . . | 534 | | 548 | 2S-1647 . . . . . | 128 | 3B-1915 . . . . . | 78 |
| | 538 | | 552 | | 790 | | 80 |
| 2H-6490 . . . . . | 534 | | 557 | | 792 | | 423 |
| | 538 | | 561 | | 795 | | 425 |
| 2H-9523 . . . . . | 349 | | 564 | | 812 | 3B-4501 . . . . . | 1331 |
| 2H-9524 . . . . . | 416 | | 568 | 2S-1654 . . . . . | 680 | 3B-4607 . . . . . | 970 |
| 2J-3118 . . . . . | 62 | | 1103 | 2S-2596 . . . . . | 1047 | | 990 |
| 2J-3507 . . . . . | 1268 | | 1109 | | 1051 | | 992 |
| | 1269 | 2P-1314 . . . . . | 155 | 2S-2760 . . . . . | 118 | | 994 |
| | 1270 | 2P-1974 . . . . . | 77 | 2S-3440 . . . . . | 145 | 3B-4610 . . . . . | 650 |
| | 1271 | 2P-2772 . . . . . | 65 | 2S-3567 . . . . . | 288 | | 652 |
| | 1273 | 2P-2975 . . . . . | 1174 | 2S-4078 . . . . . | 436 | | 1373 |
| 2J-6274 . . . . . | 1161 | | 1175 | | 443 | 3B-4617 . . . . . | 650 |
| | 1166 | | 1176 | | 447 | | 652 |
| 2J-7761 . . . . . | 1513 | | 1178 | | 547 | 3B-4640 . . . . . | 994 |
| 2J-8163 . . . . . | 321 | 2P-3205 . . . . . | 78 | | 551 | 3B-6487 . . . . . | 572 |
| 2K-4472 . . . . . | 531 | | 80 | | 556 | | 877 |
| | 534 | | 118 | | 560 | | 927 |
| | 538 | 2P-3760 . . . . . | 102 | | 1047 | | 931 |
| 2K-4821 . . . . . | 202 | | 104 | | 1051 | 3B-6493 . . . . . | 729 |
| 2K-4973 . . . . . | 1327 | | 106 | | 1162 | | 732 |
| | 1483 | | 110 | | 1166 | | 842 |
| 2K-6830 . . . . . | 1004 | 2P-3761 . . . . . | 102 | | 1174 | | 925 |
| | 1005 | | 104 | | 1175 | | 927 |
| | 1006 | | 106 | | 1176 | | 930 |
| 2L-5893 . . . . . | 1450 | | 110 | | 1178 | | 931 |
| 2L-6679 . . . . . | 321 | 2P-4301 . . . . . | 102 | | 1180 | 3B-6552 . . . . . | 572 |
| 2L-8075 . . . . . | 223 | | 104 | 2S-7905 . . . . . | 118 | | 735 |
| 2L-8078 . . . . . | 223 | | 106 | 2T-1051 . . . . . | 572 | | 740 |
| 2M-0849 . . . . . | 964 | 2P-4304 . . . . . | 102 | 2T-2305 . . . . . | 576 | | 744 |
| 2M-4009 . . . . . | 1342 | | 104 | | 583 | | 748 |
| | 1346 | | 106 | 2T-2396 . . . . . | 572 | | 753 |
| 2M-4036 . . . . . | 971 | 2P-4305 . . . . . | 102 | | 922 | | 757 |
| 2M-4287 . . . . . | 600 | | 104 | | 929 | | 762 |
| 2M-6102 . . . . . | 345 | | 106 | 2T-3013 . . . . . | 632 | | 766 |


▶ **PRIMARY REFERENCE**

# PART NUMBER INDEX


| Part | Page | Part | Page | Part | Page | Part | Page |
|---|---|---|---|---|---|---|---|
| | 770 | | 770 | | 1082 | | 365 |
| | 774 | | 774 | | 1097 | | 374 |
| | 778 | | 778 | | 1098 | | 375 |
| | 784 | | 784 | | 1102 | 3E-3389 . . . . . | 338 |
| | 887 | | 798 | | 1103 | | 357 |
| | 901 | | 802 | | 1108 | | 364 |
| | 903 | | 806 | | 1109 | | 374 |
| | 905 | | 818 | | 1144 | | 1356 |
| | 907 | | 822 | | 1146 | 3E-3584 . . . . . | 1160 |
| | 932 | | 825 | 3D-4603 . . . . . | 1134 | 3E-3805 . . . . . | 1364 |
| | 936 | | 830 | 3D-8317 . . . . . | 639 | | 1366 |
| | 952 | | 833 | 3D-9799 . . . . . | 387 | | 1367 |
| | 953 | | 837 | | 395 | | 1369 |
| | 954 | | 842 | | 402 | | 1371 |
| | 955 | | 846 | | 406 | 3E-4051 . . . . . | 1391 |
| 3B-7255 . . . . . | 236 | | 954 | | 407 | | 1394 |
| 3B-7262 . . . . . | 572 | | 955 | 3E-0109 . . . . . | 350 | 3E-4052 . . . . . | 1391 |
| 3B-7263 . . . . . | 729 | | 956 | | 357 | | 1394 |
| | 732 | | 1208 | | 364 | 3E-4053 . . . . . | 1391 |
| | 922 | 3B-8686 . . . . . | 846 | | 374 | | 1394 |
| | 925 | 3B-8822 . . . . . | 726 | 3E-0400 . . . . . | 1331 | 3E-4057 . . . . . | 1391 |
| | 929 | | 922 | 3E-1552 . . . . . | 1508 | | 1394 |
| | 930 | | 929 | 3E-2310 . . . . . | 970 | 3E-4058 . . . . . | 1391 |
| 3B-7285 . . . . . | 729 | 3C-8388 . . . . . | 1058 | | 990 | | 1394 |
| | 732 | | 1060 | | 1102 | 3E-4352 . . . . . | 131 |
| | 925 | | 1133 | | 1109 | 3E-4367 . . . . . | 1411 |
| | 930 | 3D-0490 . . . . . | 534 | 3E-2333 . . . . . | 468 | | 1413 |
| 3B-7720 . . . . . | 572 | | 538 | | 812 | 3E-5136 . . . . . | 1411 |
| 3B-7721 . . . . . | 735 | 3D-2435 . . . . . | 394 | | 992 | | 1413 |
| | 740 | | 401 | 3E-2338 . . . . . | 525 | 3E-5165 . . . . . | 1411 |
| | 744 | | 407 | 3E-2345 . . . . . | 790 | | 1413 |
| | 748 | 3D-2824 . . . . . | 324 | | 792 | 3E-5169 . . . . . | 477 |
| | 753 | | 436 | | 795 | | 479 |
| | 757 | | 443 | | 812 | | 481 |
| | 806 | | 447 | 3E-3365 . . . . . | 201 | 3E-5239 . . . . . | 386 |
| | 822 | | 493 | | 306 | | 394 |
| | 830 | | 498 | | 324 | | 401 |
| | 833 | | 503 | | 331 | | 406 |
| 3B-7733 . . . . . | 155 | | 543 | | 339 | 3E-5464 . . . . . | 1331 |
| | 726 | | 547 | | 641 | 3E-5519 . . . . . | 386 |
| | 925 | | 551 | | 1185 | | 394 |
| | 930 | | 552 | | 1331 | | 401 |
| 3B-7896 . . . . . | 740 | | 556 | 3E-3368 . . . . . | 301 | | 406 |
| | 753 | | 557 | 3E-3371 . . . . . | 295 | 3E-6328 . . . . . | ▶201 |
| | 757 | | 560 | | 296 | | 350 |
| | 766 | | 561 | | 297 | | 357 |
| | 770 | | 564 | | 298 | | 364 |
| | 778 | | 568 | | 304 | | 374 |
| | 784 | | 575 | | 310 | 3E-6389 . . . . . | ▶241 |
| 3B-8153 . . . . . | 650 | | 576 | | 312 | | 350 |
| | 652 | | 582 | | 326 | | 357 |
| 3B-8488 . . . . . | 952 | | 590 | | 330 | | 364 |
| | 953 | | 634 | | 337 | | 374 |
| | 954 | | 691 | | 477 | 3E-6753 . . . . . | 128 |
| 3B-8489 . . . . . | 605 | | 790 | | 479 | 3E-6761 . . . . . | 1029 |
| | 729 | | 792 | | 970 | 3E-6772 . . . . . | 48 |
| | 732 | | 795 | | 990 | | 50 |
| | 735 | | 812 | | 1008 | 3E-6790 . . . . . | 110 |
| | 740 | | 978 | | 1342 | 3E-6908 . . . . . | 1358 |
| | 744 | | 1025 | | 1346 | 3E-6909 . . . . . | 174 |
| | 748 | | 1032 | | 1411 | | 178 |
| | 753 | | 1047 | | 1413 | | 975 |
| | 757 | | 1051 | 3E-3377 . . . . . | 477 | 3E-7996 . . . . . | 351 |
| | 762 | | 1055 | | 479 | | 352 |
| | 766 | | 1068 | 3E-3383 . . . . . | 364 | | 358 |


▶ **PRIMARY REFERENCE**

# PART NUMBER INDEX


| Part | Page | Part | Page | Part | Page | Part | Page |
|---|---|---|---|---|---|---|---|
| | 376 | | 527 | | 1184 | | 1108 |
| 3E-8008 | 97 | | 531 | | 1500 | | 1109 |
| 3E-8020 | 1343 | | 575 | | 1505 | | 1130 |
| | 1385 | | 576 | 3J-3712 | 515 | | 1131 |
| | 1388 | | 582 | 3J-4818 | 1379 | | 1133 |
| 3E-8026 | 1110 | | 583 | | 1483 | | 1138 |
| 3E-8027 | 1110 | | 592 | 3J-5389 | 790 | | 1140 |
| 3E-8044 | 67 | | 617 | | 792 | | 1161 |
| 3E-8048 | 295 | | 619 | | 795 | | 1162 |
| 3E-8320 | 205 | | 635 | | 812 | | 1165 |
| | 209 | | 636 | | 872 | | 1166 |
| 3E-8558 | 1411 | | 637 | | 874 | 3J-9887 | 1442 |
| | 1413 | | 638 | 3J-5390 | 884 | 3K-0360 | 131 |
| 3E-8822 | 284 | | 642 | | 886 | | 167 |
| 3E-8825 | 284 | | 808 | | 887 | | 169 |
| 3E-9411 | 543 | | 810 | | 901 | | 174 |
| | 677 | | 812 | | 903 | | 178 |
| | 1118 | | 816 | | 905 | | 182 |
| | 1122 | | 848 | | 907 | | 185 |
| | 1124 | | 872 | | 909 | | 236 |
| | 1126 | | 874 | | 911 | | 436 |
| | 1153 | | 964 | | 913 | | 443 |
| | 1156 | | 970 | | 916 | | 447 |
| 3F-3442 | 590 | | 971 | | 918 | | 454 |
| 3F-5792 | 534 | | 977 | | 920 | | 456 |
| | 538 | | 978 | | 922 | | 460 |
| 3F-9556 | 202 | | 990 | | 925 | | 543 |
| 3G-0361 | 1148 | | 992 | | 927 | | 547 |
| | 1151 | | 994 | | 929 | | 551 |
| 3G-2683 | 1051 | | 1008 | | 930 | | 556 |
| 3G-4711 | 1479 | | 1013 | | 931 | | 560 |
| 3G-5003 | 1161 | | 1017 | | 932 | | 576 |
| | 1165 | | 1021 | | 936 | | 583 |
| 3G-8175 | 641 | | 1022 | | 938 | | 642 |
| 3G-8607 | 977 | | 1025 | | 940 | | 966 |
| 3H-0110 | 515 | | 1026 | | 942 | | 970 |
| 3H-0761 | 65 | | 1035 | | 943 | | 975 |
| 3H-2599 | 697 | | 1046 | | 944 | | 977 |
| 3H-3385 | 1166 | | 1047 | | 945 | | 978 |
| 3H-7654 | 966 | | 1051 | | 947 | | 997 |
| 3H-8726 | 1068 | | 1058 | 3J-7352 | 54 | | 1008 |
| 3J-0634 | 1133 | | 1060 | 3J-7354 | 102 | | 1025 |
| 3J-1907 | 102 | | 1062 | | 104 | | 1026 |
| | 104 | | 1063 | | 106 | | 1037 |
| | 106 | | 1082 | | 128 | | 1038 |
| | 145 | | 1085 | | 131 | | 1043 |
| | 155 | | 1097 | | 141 | | 1044 |
| | 167 | | 1098 | | 143 | | 1062 |
| | 169 | | 1102 | | 454 | | 1063 |
| | 182 | | 1103 | | 456 | | 1098 |
| | 427 | | 1104 | | 460 | | 1102 |
| | 430 | | 1108 | | 493 | | 1109 |
| | 436 | | 1109 | | 498 | | 1153 |
| | 443 | | 1130 | | 503 | | 1156 |
| | 447 | | 1131 | | 524 | | 1173 |
| | 454 | | 1133 | | 617 | | 1184 |
| | 456 | | 1153 | | 619 | | 1187 |
| | 460 | | 1154 | | 872 | | 1188 |
| | 468 | | 1156 | | 874 | | 1352 |
| | 489 | | 1161 | | 962 | | 1400 |
| | 491 | | 1162 | | 977 | 3K-0835 | 330 |
| | 515 | | 1165 | | 1047 | | 1342 |
| | 517 | | 1166 | | 1051 | | 1346 |
| | 524 | | 1179 | | 1098 | | 1356 |
| | 525 | | 1180 | | 1103 | 3K-2518 | 964 |


► **PRIMARY REFERENCE**

# PART NUMBER INDEX


| Part | Page |
|---|---|
| 3K-2556 | 964 |
| 3K-4897 | 1474 |
| 3K-5178 | 376 |
| 3K-6113 | 1047 |
| | 1051 |
| 3K-6401 | 704 |
| 3K-7928 | 236 |
| 3K-8460 | 110 |
| | 1208 |
| 3K-8681 | 666 |
| 3K-8782 | 387 |
| | 395 |
| 3K-9608 | 605 |
| 3K-9770 | 1211 |
| | 1212 |
| | 1266 |
| | 1267 |
| | 1268 |
| | 1269 |
| | 1270 |
| | 1271 |
| | 1273 |
| | 1278 |
| | 1279 |
| | 1280 |
| | 1281 |
| | 1309 |
| | 1310 |
| 3L-3380 | 321 |
| 3L-6513 | 420 |
| 3L-7634 | 205 |
| | 209 |
| 3L-8187 | 481 |
| | 872 |
| | 874 |
| 3L-9409 | 531 |
| 3L-9410 | 531 |
| 3N-3790 | 1508 |
| 3P-0650 | 110 |
| 3P-0747 | 598 |
| 3P-1155 | 291 |
| | 293 |
| | 1174 |
| | 1175 |
| | 1176 |
| | 1178 |
| 3P-1932 | 131 |
| | 167 |
| | 169 |
| 3P-2404 | 576 |
| | 583 |
| | 979 |
| | 1082 |
| | 1103 |
| | 1110 |
| 3P-2685 | 590 |
| 3P-2761 | 591 |
| 3P-2768 | 591 |
| 3P-2791 | 590 |
| 3P-2792 | 591 |
| 3P-2793 | 590 |
| 3P-2794 | 590 |
| 3P-2983 | 592 |
| 3P-3059 | 590 |
| 3P-3060 | 591 |
| 3P-3098 | 590 |
| 3P-3103 | 591 |
| 3P-3242 | 591 |
| 3P-3246 | 592 |
| 3P-3304 | 590 |
| 3P-3321 | 590 |
| 3P-3418 | 592 |
| 3P-3505 | 964 |
| 3P-3635 | 590 |
| 3P-3735 | 591 |
| 3P-3743 | 591 |
| 3P-4050 | 591 |
| 3P-4051 | 590 |
| 3P-6061 | 531 |
| 3P-7447 | 591 |
| 3P-7489 | 591 |
| 3P-9658 | 531 |
| 3P-9900 | 1483 |
| 3R-9322 | 1445 |
| 3S-1262 | 964 |
| 3S-1284 | 622 |
| | 624 |
| 3S-1307 | 287 |
| 3S-1349 | 617 |
| | 619 |
| 3S-2093 | 16 |
| | 128 |
| | 167 |
| | 169 |
| | 205 |
| | 209 |
| | 255 |
| | 285 |
| | 318 |
| | 352 |
| | 358 |
| | 366 |
| | 375 |
| | 423 |
| | 425 |
| | 427 |
| | 790 |
| | 792 |
| | 795 |
| | 808 |
| | 810 |
| | 812 |
| | 816 |
| | 1331 |
| | 1352 |
| | 1358 |
| | 1381 |
| | 1383 |
| | 1409 |
| | 1411 |
| | 1413 |
| | 1418 |
| | 1485 |
| | 1488 |
| | 1491 |
| | 1494 |
| 3S-2708 | 591 |
| 3S-6049 | 205 |
| | 209 |
| 3S-8664 | 1026 |
| 3S-8665 | 128 |
| 3S-9643 | 131 |
| 3T-0203 | 351 |
| | 358 |
| | 365 |
| | 376 |
| 3T-0204 | 436 |
| | 443 |
| | 446 |
| 3T-2511 | 388 |
| | 1330 |
| 3T-2662 | 387 |
| | 395 |
| | 402 |
| | 407 |
| 3T-3159 | 1413 |
| 3T-3410 | 386 |
| | 394 |
| 3T-3412 | 351 |
| | 358 |
| | 365 |
| | 436 |
| | 443 |
| 3T-3418 | 321 |
| 3T-3422 | 321 |
| 3T-3423 | 321 |
| 3T-3424 | 321 |
| 3T-3434 | 321 |
| 3T-4709 | 321 |
| 3T-4710 | 321 |
| 3T-4965 | 1102 |
| | 1108 |
| 3T-6175 | 534 |
| | 538 |
| 3T-6246 | 622 |
| | 624 |
| 3T-6848 | 1102 |
| 3T-7138 | 591 |
| 3T-9494 | 321 |
| 3T-9525 | 321 |
| 3T-9549 | 435 |
| | 442 |
| | 446 |
| 3V-2431 | 1074 |
| | 1076 |
| 3V-3263 | 1491 |
| | 1494 |
| 3V-4694 | 1381 |
| 3V-7476 | 1374 |
| 3V-9862 | 1148 |
| | 1151 |
| 3W-6398 | 1485 |
| 3W-6399 | 1485 |
| 3W-9117 | 669 |
| | 672 |
| | 1028 |
| | 4 |
| 4B-0418 | 134 |
| | 136 |
| | 528 |
| 4B-1240 | 387 |
| | 395 |
| | 402 |
| | 407 |
| 4B-2049 | 352 |
| | 359 |
| | 366 |
| | 376 |
| 4B-2913 | 990 |
| | 992 |
| 4B-4043 | 65 |
| 4B-4158 | 964 |
| | 1133 |
| | 1161 |
| | 1165 |
| 4B-4274 | 387 |
| | 395 |
| | 402 |
| | 407 |
| | 962 |
| | 1363 |
| 4B-4276 | 386 |
| | 394 |
| | 1479 |
| 4B-4278 | 1483 |
| 4B-4550 | 704 |
| 4B-4863 | 387 |
| | 395 |
| | 402 |
| | 406 |
| | 407 |
| 4B-8440 | 846 |
| 4B-9373 | 517 |
| 4B-9374 | 517 |
| 4B-9782 | 91 |
| | 93 |
| | 94 |
| | 95 |
| | 96 |
| | 1047 |
| | 1051 |
| 4B-9784 | 1000 |
| | 1001 |
| 4B-9880 | 639 |
| 4C-8195 | 1 |
| | 2 |
| | ►1514 |
| 4C-8196 | 1514 |
| 4C-8197 | 1514 |
| 4D-3704 | 60 |
| 4D-6293 | 158 |
| 4D-6473 | 534 |
| | 538 |
| 4D-7388 | 128 |
| | 233 |
| | 413 |
| | 416 |
| | 436 |
| | 443 |
| | 447 |
| 4D-7735 | 420 |
| | 470 |
| | 472 |
| | 808 |
| | 810 |
| | 816 |
| 4D-7794 | 436 |


► PRIMARY REFERENCE

# PART NUMBER INDEX


| Part | Page | Part | Page | Part | Page | Part | Page |
|---|---|---|---|---|---|---|---|
| | 443 | | 272 | | 672 | | 822 |
| | 447 | | 276 | 4I-7077 . . . . . | 669 | | 825 |
| | 470 | 4E-7499 . . . . . | 268 | | 672 | | 830 |
| | 472 | | 272 | 4I-7596 . . . . . | 263 | | 833 |
| | 726 | | 276 | 4J-0520 . . . . . | 543 | | 837 |
| | 729 | 4E-7520 . . . . . | 1355 | | 564 | | 844 |
| | 732 | 4E-7627 . . . . . | 1355 | | 568 | | 1500 |
| | 735 | 4E-7628 . . . . . | 1355 | | 979 | | 1505 |
| | 740 | 4E-8266 . . . . . | 406 | | 1008 | 4J-7533 . . . . . | 996 |
| | 744 | 4E-8413 . . . . . | 1336 | | 1063 | | 1161 |
| | 748 | | 1337 | | 1103 | | 1165 |
| | 753 | | 1338 | | 1110 | | 1180 |
| | 757 | | ▶1355 | 4J-0521 . . . . . | 1008 | 4J-8224 . . . . . | 1047 |
| | 762 | 4E-8557 . . . . . | 1358 | 4J-0522 . . . . . | 543 | | 1051 |
| | 766 | 4E-8560 . . . . . | 1358 | | 548 | 4J-8634 . . . . . | 1047 |
| | 770 | 4E-8561 . . . . . | 1358 | | 552 | | 1051 |
| | 774 | 4E-8583 . . . . . | 964 | | 557 | 4K-3026 . . . . . | 735 |
| | 778 | 4E-8722 . . . . . | 1474 | | 561 | | 740 |
| | 784 | | 1479 | | 564 | | 744 |
| | 790 | 4E-8852 . . . . . | 722 | | 568 | | 748 |
| | 792 | 4E-8892 . . . . . | 722 | | 576 | | 753 |
| | 795 | 4E-8975 . . . . . | 280 | | 583 | | 757 |
| | 798 | | 281 | | 979 | | 762 |
| | 802 | 4E-8976 . . . . . | 280 | | 1044 | | 766 |
| | 806 | | 281 | | 1098 | | 770 |
| | 808 | 4E-9173 . . . . . | 1474 | | 1173 | | 774 |
| | 810 | | 1479 | | 1180 | | 778 |
| | 812 | 4E-9174 . . . . . | 1474 | 4J-0523 . . . . . | 1162 | | 784 |
| | 816 | | 1479 | | 1166 | | 798 |
| | 818 | 4E-9271 . . . . . | 128 | 4J-0524 . . . . . | 576 | | 802 |
| | 822 | 4E-9609 . . . . . | 257 | | 583 | | 806 |
| | 825 | | 268 | | 1008 | | 818 |
| | 830 | | 272 | | 1014 | | 822 |
| | 833 | | 276 | | 1018 | | 825 |
| | 837 | 4E-9664 . . . . . | 960 | | 1022 | | 830 |
| | 1358 | | 962 | | 1103 | | 833 |
| 4D-8123 . . . . . | 427 | 4E-9667 . . . . . | 968 | | 1110 | | 837 |
| | 430 | 4E-9668 . . . . . | 968 | 4J-0525 . . . . . | 1162 | | 842 |
| | 798 | 4E-9924 . . . . . | 280 | 4J-0527 . . . . . | 164 | | 844 |
| | 802 | | 281 | | 165 | | 884 |
| | 806 | | 282 | | 576 | | 886 |
| 4D-8148 . . . . . | 609 | 4E-9925 . . . . . | 280 | | 583 | | 909 |
| 4D-9517 . . . . . | 174 | | 281 | | 1098 | | 911 |
| | 178 | | 282 | | 1103 | | 913 |
| 4E-0019 . . . . . | 669 | 4F-0411 . . . . . | 131 | | 1110 | | 916 |
| | 672 | 4F-2294 . . . . . | 329 | | 1148 | | 940 |
| | 1442 | 4F-2320 . . . . . | 1332 | | 1151 | | 942 |
| 4E-1966 . . . . . | 517 | 4F-3508 . . . . . | 174 | | 1153 | 4K-5122 . . . . . | 387 |
| 4E-3447 . . . . . | 1097 | 4F-4879 . . . . . | 1473 | | 1156 | | 395 |
| 4E-3601 . . . . . | 517 | 4F-6568 . . . . . | 1002 | 4J-2677 . . . . . | 97 | 4K-6066 . . . . . | 543 |
| 4E-4450 . . . . . | 1373 | | 1003 | 4J-5267 . . . . . | 543 | 4K-8302 . . . . . | 1391 |
| 4E-5542 . . . . . | 977 | 4F-7507 . . . . . | 1208 | | 975 | | 1394 |
| 4E-5591 . . . . . | 1244 | 4F-7957 . . . . . | 15 | | 1014 | 4K-8501 . . . . . | 1445 |
| 4E-5609 . . . . . | 1208 | | 16 | | 1018 | 4K-8864 . . . . . | 257 |
| 4E-6015 . . . . . | 849 | | 18 | | 1022 | | 268 |
| 4E-6335 . . . . . | 1479 | | 19 | | 1098 | | 272 |
| 4E-6439 . . . . . | 1479 | 4H-1225 . . . . . | 861 | 4J-5309 . . . . . | 1133 | | 276 |
| 4E-6444 . . . . . | 1479 | | 862 | | 1162 | | 427 |
| 4E-6445 . . . . . | 1479 | 4H-6112 . . . . . | 575 | | 1166 | | 436 |
| 4E-6446 . . . . . | 1479 | | 582 | 4J-5477 . . . . . | 128 | | 443 |
| 4E-6523 . . . . . | 1474 | 4H-6730 . . . . . | 617 | | 141 | | 447 |
| | 1479 | | 619 | | 143 | 4K-9097 . . . . . | 157 |
| 4E-6526 . . . . . | 1474 | 4I-3398 . . . . . | 669 | | 575 | 4K-9429 . . . . . | 1426 |
| 4E-7163 . . . . . | 1479 | | 672 | | 582 | | 1427 |
| 4E-7498 . . . . . | 268 | 4I-6289 . . . . . | 669 | | 818 | 4L-6454 . . . . . | 134 |


▶ **PRIMARY REFERENCE**

# PART NUMBER INDEX


| Part | Page |
|---|---|
| | 136 |
| | 413 |
| | 416 |
| 4L-7124 | 386 |
| | 394 |
| 4L-9337 | 115 |
| | 116 |
| | 167 |
| | 169 |
| 4M-0189 | 1148 |
| 4M-1827 | 321 |
| 4M-1828 | 321 |
| 4M-1829 | 321 |
| 4M-1831 | 321 |
| 4M-1853 | 321 |
| 4M-1854 | 321 |
| 4M-2381 | 639 |
| 4M-5905 | 639 |
| 4M-6425 | 1450 |
| 4M-8239 | 638 |
| 4M-8973 | 735 |
| | 740 |
| | 744 |
| | 748 |
| | 753 |
| | 757 |
| | 762 |
| | 766 |
| | 770 |
| | 774 |
| | 778 |
| | 784 |
| | 798 |
| | 802 |
| | 806 |
| | 818 |
| | 822 |
| | 825 |
| | 830 |
| | 833 |
| | 837 |
| | 884 |
| | 886 |
| | 909 |
| | 911 |
| | 913 |
| | 916 |
| | 918 |
| | 920 |
| | 922 |
| | 925 |
| | 927 |
| | 929 |
| | 930 |
| | 931 |
| | 938 |
| | 940 |
| | 942 |
| | 943 |
| | 944 |
| | 945 |
| | 947 |
| | 955 |
| | 956 |
| 4N-0683 | 35 |
| | 37 |
| 4N-0684 | 30 |
| 4N-0699 | 22 |
| 4N-0826 | 110 |
| 4N-0827 | 102 |
| | 104 |
| 4N-0913 | 112 |
| | 113 |
| | 114 |
| 4N-0914 | 112 |
| | 113 |
| | 114 |
| 4N-0933 | 65 |
| 4N-0952 | 600 |
| 4N-1059 | 320 |
| | 323 |
| 4N-1151 | 78 |
| 4N-1156 | 131 |
| 4N-1199 | 131 |
| 4N-1216 | 110 |
| 4N-1294 | 109 |
| 4N-1650 | 35 |
| | 37 |
| 4N-2481 | 6 |
| | 8 |
| | ▶100 |
| 4N-2514 | 60 |
| 4N-8150 | 102 |
| | 104 |
| | 106 |
| | 110 |
| 4N-8227 | 238 |
| 4P-0519 | 78 |
| | 80 |
| 4P-2383 | 140 |
| 4P-4278 | 91 |
| 4P-4279 | 91 |
| 4P-4460 | 115 |
| | 116 |
| 4P-6817 | 6 |
| | 8 |
| | ▶60 |
| 4P-6818 | 60 |
| 4P-6846 | 6 |
| | 8 |
| | ▶57 |
| 4P-7371 | 91 |
| 4P-7373 | 112 |
| | 113 |
| | 114 |
| 4P-7429 | 423 |
| | 425 |
| 4P-7581 | 167 |
| | 169 |
| | 352 |
| | 359 |
| | 366 |
| | 376 |
| | 387 |
| | 395 |
| | 402 |
| | 407 |
| | 413 |
| | 416 |
| | 423 |
| | 425 |
| | 454 |
| | 456 |
| | 460 |
| | 1376 |
| | 1478 |
| 4P-7582 | 413 |
| | 416 |
| | 423 |
| 4P-7882 | 97 |
| 4P-8134 | 352 |
| | 359 |
| | 366 |
| | 376 |
| | 387 |
| | 395 |
| | 402 |
| | 406 |
| | 407 |
| | 413 |
| | 416 |
| | 423 |
| | 425 |
| 4P-9131 | 112 |
| | 113 |
| | 114 |
| 4S-1962 | 206 |
| | 210 |
| | 413 |
| | 416 |
| | 427 |
| | 436 |
| | 443 |
| | 475 |
| | 735 |
| | 740 |
| | 744 |
| | 748 |
| | 753 |
| | 757 |
| | 790 |
| | 792 |
| | 795 |
| | 806 |
| | 822 |
| | 830 |
| | 833 |
| 4S-4455 | 416 |
| | 447 |
| | 454 |
| | 456 |
| | 460 |
| | 548 |
| | 552 |
| | 557 |
| | 561 |
| | 1068 |
| 4S-5565 | 1074 |
| | 1076 |
| 4S-8537 | 590 |
| | 591 |
| 4S-8598 | 535 |
| | 539 |
| 4S-8603 | 535 |
| | 539 |
| 4S-8875 | 1068 |
| 4T-0925 | 1046 |
| 4T-1701 | 1180 |
| 4T-1860 | ▶1046 |
| | 1047 |
| | 1051 |
| | 1161 |
| | 1165 |
| 4T-2741 | 997 |
| 4T-2770 | 1044 |
| | 1173 |
| 4T-4934 | ▶997 |
| | 998 |
| 4T-6617 | 1268 |
| | 1269 |
| | 1270 |
| | 1271 |
| | 1273 |
| 4T-7571 | 997 |
| 4T-8698 | 1148 |
| | 1151 |
| 4T-8761 | 1030 |
| 4T-9298 | 1030 |
| 4T-9300 | 1030 |
| 4T-9301 | 1030 |
| 4T-9905 | 1000 |
| | 1001 |
| 4V-1074 | 659 |
| 4V-1541 | 990 |
| | 992 |
| 4V-1939 | 446 |
| | 470 |
| | 472 |
| 4V-4164 | 350 |
| | 357 |
| | 364 |
| | 374 |
| 4V-8256 | 1327 |
| 4V-8577 | 1483 |
| 4V-9803 | 864 |
| 4W-0189 | 1151 |
| 4W-5698 | 30 |
| 4W-5699 | 30 |
| 4W-5700 | 30 |
| 4W-5701 | 30 |
| 4W-9160 | 155 |
| 4W-9890 | 22 |
| 4Y-5812 | 1044 |
| | 1173 |
| 4Z-6480 | 998 |
| | 5 |
| 5A-3604 | 1133 |
| 5B-0651 | 846 |
| 5B-2638 | 131 |
| 5B-3180 | 639 |
| 5B-9192 | 1379 |
| 5C-2873 | 1029 |
| 5C-2874 | 268 |
| | 272 |
| | 276 |
| | 1342 |
| | 1346 |


▶ PRIMARY REFERENCE

# PART NUMBER INDEX


| Part | Page | Part | Page | Part | Page | Part | Page |
|---|---|---|---|---|---|---|---|
| | 1379 | 5C-8312 . . . . . | 352 | 5J-4776 . . . . . | 1047 | | 792 |
| 5C-2890 . . . . . | 206 | | 359 | | 1051 | | 795 |
| | 210 | | 366 | 5J-5314 . . . . . | 321 | | 798 |
| | 268 | | 376 | 5J-5794 . . . . . | 59 | | 802 |
| | 272 | 5C-8964 . . . . . | 268 | | 591 | | 806 |
| | 276 | | 272 | 5K-1094 . . . . . | 1352 | | 812 |
| | 280 | | 276 | 5K-1770 . . . . . | 235 | 5L-3708 . . . . . | 217 |
| | 281 | 5C-9029 . . . . . | 268 | 5K-2298 . . . . . | 729 | | 218 |
| | 282 | | 272 | | 732 | 5L-5502 . . . . . | 872 |
| | 326 | | 276 | 5K-3294 . . . . . | 454 | | 874 |
| | 328 | 5C-9553 . . . . . | 192 | | 456 | 5M-2054 . . . . . | 591 |
| | 352 | | 255 | | 460 | 5M-2057 . . . . . | 539 |
| | 359 | | 260 | 5K-3661 . . . . . | 517 | | 1148 |
| | 366 | | 290 | 5K-3968 . . . . . | 605 | | 1151 |
| | 376 | | 475 | 5K-5338 . . . . . | 1110 | 5M-2894 . . . . . | 22 |
| | 387 | | 684 | 5K-5959 . . . . . | 1208 | | 23 |
| | 395 | | 686 | 5K-7696 . . . . . | 642 | | 26 |
| | 656 | | 688 | 5K-9065 . . . . . | 617 | | 55 |
| | 726 | | 694 | | 619 | | 57 |
| | 729 | | 1331 | 5K-9090 . . . . . | 117 | | 65 |
| | 732 | | 1358 | | 493 | | 67 |
| | 735 | | 1488 | | 498 | | 69 |
| | 740 | | 1491 | | 503 | | 77 |
| | 744 | | 1494 | | 504 | | 78 |
| | 748 | 5D-1911 . . . . . | 1513 | | 1014 | | 80 |
| | 753 | 5D-6298 . . . . . | 642 | | 1018 | | 83 |
| | 757 | 5D-9231 . . . . . | 155 | | 1022 | | 84 |
| | 806 | 5D-9629 . . . . . | 285 | | 1062 | | 100 |
| | 822 | | 1455 | | 1063 | | 101 |
| | 830 | | 1458 | | 1082 | | 102 |
| | 833 | | 1461 | | 1097 | | 104 |
| | 969 | 5E-8771 . . . . . | 62 | | 1098 | | 106 |
| | 1343 | 5F-0149 . . . . . | 535 | | 1103 | | 109 |
| | 1346 | | 539 | | 1110 | | 110 |
| | 1362 | 5F-0304 . . . . . | 65 | | 1153 | | 112 |
| | 1367 | 5F-1678 . . . . . | 642 | | 1156 | | 113 |
| | 1371 | 5F-3106 . . . . . | 1008 | 5K-9242 . . . . . | 729 | | 114 |
| | 1483 | | 1014 | | 732 | | 115 |
| 5C-7261 . . . . . | 255 | | 1018 | | 844 | | 116 |
| | 257 | | 1022 | | 846 | | 118 |
| | 260 | 5F-8000 . . . . . | 534 | 5K-9243 . . . . . | 531 | | 131 |
| | 262 | 5F-9035 . . . . . | 1055 | | 729 | | 146 |
| | 263 | 5F-9144 . . . . . | 527 | | 732 | | 150 |
| | 268 | | 1085 | | 735 | | 157 |
| | 272 | 5G-6505 . . . . . | 210 | | 740 | | 182 |
| | 276 | 5G-6787 . . . . . | 1439 | | 744 | | 186 |
| | 289 | | 1442 | | 748 | | 187 |
| | 290 | 5G-7398 . . . . . | 1485 | | 753 | | 287 |
| | 326 | 5G-7817 . . . . . | 174 | | 757 | | 288 |
| | 340 | | 178 | | 762 | | 291 |
| | 352 | 5H-1504 . . . . . | 48 | | 766 | | 293 |
| | 359 | | 50 | | 770 | | 423 |
| | 366 | 5H-4020 . . . . . | 1098 | | 774 | | 425 |
| | 376 | 5H-6005 . . . . . | 1058 | | 778 | | 531 |
| | 694 | | 1060 | | 784 | | 534 |
| | 716 | 5H-6555 . . . . . | 326 | | 808 | | 538 |
| | 718 | 5H-6734 . . . . . | 164 | | 810 | | 591 |
| | 720 | | 165 | | 816 | | 638 |
| | 726 | | 184 | | 842 | | 1450 |
| | 1358 | | 235 | | 844 | 5M-3034 . . . . . | 321 |
| | 1376 | 5H-8848 . . . . . | 1133 | 5K-9660 . . . . . | 475 | 5M-3062 . . . . . | 236 |
| | 1402 | 5J-1086 . . . . . | 517 | 5K-9979 . . . . . | 726 | | 257 |
| | 1474 | | 534 | | 729 | | 268 |
| | 1479 | | 538 | | 732 | | 272 |
| 5C-7423 . . . . . | 1358 | 5J-3419 . . . . . | 1051 | | 790 | | 276 |


► **PRIMARY REFERENCE**

# PART NUMBER INDEX


| Part | Page | Part | Page | Part | Page | Part | Page |
|---|---|---|---|---|---|---|---|
| | 413 | | 706 | 5P-2618 . . . . . | 164 | | 1146 |
| | 416 | | 709 | | 165 | | 1398 |
| | 420 | | 712 | 5P-2673 . . . . . | 704 | 5P-4423 . . . . . | 1328 |
| | 958 | | 716 | 5P-2675 . . . . . | 971 | | 1483 |
| | 959 | | 718 | 5P-3422 . . . . . | 729 | 5P-4432 . . . . . | 1328 |
| 5M-3154 . . . . . | 535 | | 720 | | 732 | 5P-4484 . . . . . | 485 |
| | 539 | | 722 | | 735 | | 486 |
| 5M-6126 . . . . . | 591 | | 724 | | 740 | 5P-4868 . . . . . | 574 |
| 5M-6187 . . . . . | 590 | | 725 | | 744 | | 1120 |
| 5M-6213 . . . . . | 65 | | 735 | | 748 | 5P-5637 . . . . . | 1385 |
| | 515 | | 740 | | 753 | | 1388 |
| | 528 | | 744 | | 757 | 5P-5639 . . . . . | 494 |
| 5M-6214 . . . . . | 927 | | 748 | | 762 | | 499 |
| | 931 | | 753 | | 766 | | 504 |
| 5M-6592 . . . . . | 517 | | 757 | | 770 | 5P-5677 . . . . . | 1204 |
| 5M-6755 . . . . . | 960 | | 762 | | 774 | | 1358 |
| | 962 | | 766 | | 778 | 5P-5678 . . . . . | 16 |
| 5M-7925 . . . . . | 591 | | 770 | | 784 | | 18 |
| 5M-9548 . . . . . | 638 | | 774 | | 798 | 5P-5755 . . . . . | 141 |
| 5M-9622 . . . . . | 638 | | 778 | | 802 | | 143 |
| 5M-9623 . . . . . | 638 | | 784 | | 806 | | 494 |
| 5M-9624 . . . . . | 638 | | 798 | | 818 | | 499 |
| 5P-0049 . . . . . | 1115 | | 802 | | 822 | | 504 |
| 5P-0403 . . . . . | 591 | | 806 | | 825 | | 509 |
| 5P-0537 . . . . . | 16 | | 818 | | 830 | | 511 |
| | 18 | | 822 | | 833 | | 513 |
| | 19 | | 825 | | 837 | 5P-5768 . . . . . | 1464 |
| | 252 | | 830 | | 877 | 5P-5777 . . . . . | 978 |
| | 1428 | | 833 | | 952 | 5P-5908 . . . . . | 1332 |
| 5P-0597 . . . . . | 151 | | 837 | | 953 | 5P-6008 . . . . . | 446 |
| | 575 | | 842 | | 954 | | 970 |
| | 582 | | 857 | | 955 | 5P-6010 . . . . . | 1483 |
| 5P-0747 . . . . . | 205 | | 1118 | | 956 | 5P-6298 . . . . . | 321 |
| | 209 | | 1122 | 5P-3928 . . . . . | 1398 | 5P-6604 . . . . . | 485 |
| 5P-0761 . . . . . | 205 | | 1124 | 5P-3929 . . . . . | 1391 | | 486 |
| | 209 | | 1126 | | 1394 | 5P-6718 . . . . . | 489 |
| 5P-0763 . . . . . | 99 | | 1130 | 5P-3948 . . . . . | 1391 | | 491 |
| 5P-0767 . . . . . | 236 | | 1131 | | 1394 | 5P-6724 . . . . . | 990 |
| | 1400 | | 1153 | 5P-3961 . . . . . | 159 | | 992 |
| 5P-0840 . . . . . | 35 | | 1156 | 5P-4106 . . . . . | 1398 | | 994 |
| | 37 | | 1391 | 5P-4115 . . . . . | 206 | 5P-6879 . . . . . | 1405 |
| | 48 | | 1394 | | 210 | | 1406 |
| | 50 | | 1439 | | 387 | 5P-6944 . . . . . | 436 |
| 5P-1075 . . . . . | 257 | | 1442 | | 395 | | 443 |
| | 268 | 5P-1175 . . . . . | 1508 | | 656 | | 447 |
| | 272 | 5P-1251 . . . . . | 129 | | 684 | 5P-7068 . . . . . | 600 |
| | 276 | 5P-1259 . . . . . | 128 | | 686 | 5P-7211 . . . . . | 120 |
| 5P-1076 . . . . . | 128 | 5P-1265 . . . . . | 128 | | 688 | | 121 |
| | 141 | 5P-1291 . . . . . | 575 | | 1331 | | 141 |
| | 143 | | 582 | | 1367 | | 143 |
| | 146 | 5P-1404 . . . . . | 178 | | 1371 | | 684 |
| | 152 | 5P-2199 . . . . . | 1047 | | 1423 | | 686 |
| | 153 | | 1051 | 5P-4116 . . . . . | 352 | | 688 |
| | 204 | 5P-2228 . . . . . | 128 | | 359 | 5P-7462 . . . . . | 172 |
| | 233 | 5P-2369 . . . . . | 108 | | 366 | | 174 |
| | 494 | | 564 | | 376 | | 178 |
| | 499 | | 568 | | 494 | | 184 |
| | 504 | 5P-2503 . . . . . | 617 | | 499 | | 206 |
| | 645 | | 619 | | 504 | | 210 |
| | 646 | 5P-2504 . . . . . | 617 | | 1409 | | 543 |
| | 648 | | 619 | 5P-4142 . . . . . | 62 | 5P-7463 . . . . . | 172 |
| | 684 | 5P-2525 . . . . . | 704 | 5P-4255 . . . . . | 67 | | 174 |
| | 686 | 5P-2587 . . . . . | 488 | 5P-4295 . . . . . | 494 | | 178 |
| | 688 | | 534 | | 1008 | | 184 |
| | 691 | | 538 | | 1071 | | 206 |

# PART NUMBER INDEX


| Part | Page | Part | Page | Part | Page | Part | Page |
|---|---|---|---|---|---|---|---|
| | 210 | 5P-7703 . . . . . | 1014 | | 1148 | | 572 |
| | 543 | | 1018 | | 1151 | | 971 |
| 5P-7464 . . . . . | 576 | | 1022 | 5P-8247 . . . . . | 65 | | 1063 |
| | 583 | | 1103 | | 202 | | 1491 |
| | 729 | | 1110 | | 214 | | 1494 |
| | 732 | 5P-7803 . . . . . | 1364 | | 423 | 5P-9119 . . . . . | 1151 |
| | 790 | | 1366 | | 425 | 5P-9132 . . . . . | 1349 |
| | 792 | | 1367 | | 520 | 5P-9186 . . . . . | 1032 |
| | 795 | | 1369 | | 522 | 5P-9262 . . . . . | 1171 |
| | 808 | | 1371 | | 534 | 5P-9297 . . . . . | 215 |
| | 810 | 5P-7854 . . . . . | 436 | | 538 | | 257 |
| | 813 | | 443 | | 704 | | 268 |
| | 816 | | 447 | 5P-8248 . . . . . | 517 | | 272 |
| | 1063 | | 1103 | 5P-8250 . . . . . | 1268 | | 276 |
| 5P-7465 . . . . . | 576 | | 1110 | | 1269 | | 468 |
| | 583 | 5P-7957 . . . . . | 1426 | | 1270 | | 735 |
| | 729 | | 1427 | | 1271 | | 740 |
| | 732 | 5P-7958 . . . . . | 2 | | 1273 | | 744 |
| | 790 | | 350 | 5P-8356 . . . . . | 1040 | | 748 |
| | 792 | | 357 | 5P-8361 . . . . . | 1211 | | 753 |
| | 795 | | 364 | | 1310 | | 757 |
| | 808 | | 374 | 5P-8362 . . . . . | 1211 | | 762 |
| | 810 | | 1385 | | 1212 | | 766 |
| | 813 | | 1403 | | 1269 | | 770 |
| | 816 | 5P-8068 . . . . . | 110 | | 1271 | | 774 |
| | 1063 | 5P-8077 . . . . . | 1063 | | 1273 | | 778 |
| 5P-7466 . . . . . | 1022 | | 1088 | | 1310 | | 784 |
| 5P-7467 . . . . . | 1022 | | 1091 | 5P-8439 . . . . . | 255 | | 798 |
| 5P-7468 . . . . . | 543 | | 1098 | | 260 | | 802 |
| | 576 | | 1115 | 5P-8444 . . . . . | 576 | | 818 |
| | 583 | | 1118 | | 583 | | 822 |
| | 790 | | 1122 | | 1008 | | 825 |
| | 792 | | 1124 | | 1063 | | 830 |
| | 795 | | 1126 | 5P-8500 . . . . . | 2 | | 837 |
| | 813 | | 1156 | | 712 | | 1488 |
| | 1008 | | 1166 | | 1403 | 5P-9299 . . . . . | 109 |
| | 1063 | 5P-8112 . . . . . | 1022 | | 1512 | | 436 |
| 5P-7469 . . . . . | 543 | 5P-8119 . . . . . | 966 | | 1513 | | 443 |
| | 576 | | 985 | 5P-8502 . . . . . | 1512 | | 447 |
| | 583 | | 986 | 5P-8823 . . . . . | 1212 | | 1063 |
| | 790 | 5P-8136 . . . . . | 1268 | | 1268 | 5P-9769 . . . . . | 704 |
| | 792 | | 1269 | | 1270 | 5R-4373 . . . . . | 611 |
| | 795 | | 1270 | | 1278 | 5S-0085 . . . . . | 486 |
| | 813 | | 1271 | | 1309 | 5S-0581 . . . . . | 138 |
| | 1008 | | 1273 | 5P-8874 . . . . . | 978 | 5S-4245 . . . . . | 352 |
| | 1063 | 5P-8182 . . . . . | 552 | | 1008 | | 359 |
| 5P-7470 . . . . . | 552 | | 576 | 5P-8939 . . . . . | 206 | | 366 |
| | 576 | | 583 | | 210 | | 376 |
| | 583 | | 979 | 5P-9085 . . . . . | 260 | 5S-4246 . . . . . | 1356 |
| | 979 | 5P-8245 . . . . . | 58 | | 267 | | 1514 |
| | 1103 | | 65 | | 341 | 5S-7001 . . . . . | 1045 |
| | 1110 | | 70 | | 345 | 5S-7018 . . . . . | 1045 |
| 5P-7471 . . . . . | 552 | | 98 | | 413 | 5S-7349 . . . . . | 202 |
| | 576 | | 488 | | 416 | 5S-7383 . . . . . | 115 |
| | 583 | | 515 | | 427 | | 116 |
| | 979 | | 517 | | 430 | | 174 |
| | 1103 | | 531 | | 436 | | 178 |
| | 1110 | | 534 | | 443 | | 1450 |
| 5P-7483 . . . . . | 656 | | 538 | | 447 | 5T-5009 . . . . . | 886 |
| | 857 | | 591 | | 470 | | 913 |
| 5P-7701 . . . . . | 78 | | 605 | | 472 | | 916 |
| | 80 | | 622 | | 489 | | 918 |
| | 494 | | 624 | | 491 | | 925 |
| | 499 | | 704 | | 564 | | ▶949 |
| | 504 | | 1133 | | 568 | 5T-5012 . . . . . | 884 |


▶ **PRIMARY REFERENCE**

# PART NUMBER INDEX


| Part | Page |
|---|---|
| | 886 |
| | 887 |
| | 901 |
| | 903 |
| | 905 |
| | 907 |
| | 909 |
| | 911 |
| | 913 |
| | 916 |
| | 918 |
| | 920 |
| | 922 |
| | 925 |
| | 927 |
| 5T-5045 | 949 |
| | 950 |
| | 951 |
| 5T-7676 | 642 |
| 5T-8224 | 1208 |
| 5T-9020 | 365 |
| | 375 |
| 5T-9813 | 970 |
| 5V-1496 | 1468 |
| | 1470 |
| 5V-3854 | 706 |
| | 709 |
| | 712 |
| 5V-5476 | 842 |
| | 844 |
| 5V-6152 | 427 |
| | 430 |
| 5V-6153 | 427 |
| | 430 |
| 5V-9221 | 435 |
| | 442 |
| **6** | |
| 6A-5591 | 515 |
| | 1074 |
| 6B-0689 | 53 |
| 6B-4540 | 352 |
| | 359 |
| | 366 |
| | 376 |
| | 1514 |
| 6B-4661 | 236 |
| 6B-4852 | 517 |
| 6B-5072 | 872 |
| | 874 |
| 6B-6205 | 128 |
| | 435 |
| | 442 |
| | 446 |
| | 706 |
| | 709 |
| | 712 |
| | 790 |
| | 792 |
| | 795 |
| | 812 |
| | 1500 |
| | 1505 |
| 6B-6684 | 1148 |
| | 1151 |
| 6B-6863 | 591 |
| 6B-8085 | 720 |
| 6C-3060 | 192 |
| | 194 |
| 6C-6739 | 1189 |
| | 1190 |
| 6D-0692 | 642 |
| 6D-1004 | 548 |
| | 552 |
| | 557 |
| | 561 |
| 6D-1641 | 210 |
| | 236 |
| | 790 |
| | 792 |
| | 795 |
| | 813 |
| | 1391 |
| | 1400 |
| 6D-3479 | 128 |
| | 141 |
| | 143 |
| | 427 |
| | 430 |
| | 436 |
| | 443 |
| | 447 |
| 6D-4244 | 413 |
| | 416 |
| | 437 |
| | 443 |
| | 447 |
| | 528 |
| 6D-4246 | 206 |
| | 436 |
| | 443 |
| | 447 |
| | 475 |
| | 1071 |
| | 1098 |
| | 1500 |
| 6D-4247 | 813 |
| | 1352 |
| 6D-4636 | 422 |
| | 447 |
| | 979 |
| | 1110 |
| 6D-5256 | 1360 |
| 6D-5729 | 1453 |
| 6D-6146 | 352 |
| | 359 |
| | 366 |
| | 376 |
| 6D-7128 | 134 |
| | 136 |
| 6D-7889 | 454 |
| | 456 |
| | 460 |
| | 633 |
| 6E-0381 | 1037 |
| | 1038 |
| 6E-0410 | 1047 |
| | 1051 |
| 6E-0496 | 1074 |
| | 1076 |
| | 1078 |
| | 1079 |
| | 1080 |
| | 1081 |
| 6E-0763 | 1040 |
| 6E-0770 | 1041 |
| 6E-0923 | 1479 |
| 6E-1127 | 1044 |
| | 1173 |
| 6E-1291 | 1161 |
| | 1165 |
| 6E-1454 | 1102 |
| | 1108 |
| 6E-1835 | 997 |
| 6E-2140 | 1162 |
| | 1166 |
| 6E-2943 | 1030 |
| 6E-3269 | 1171 |
| 6E-3272 | 1171 |
| 6E-3273 | 1171 |
| 6E-3276 | 1171 |
| 6E-3303 | 1180 |
| 6E-3767 | 1040 |
| 6E-3769 | 1040 |
| 6E-3775 | 1047 |
| | 1051 |
| 6E-3779 | 1047 |
| | 1051 |
| 6E-3780 | 1051 |
| 6E-3986 | ▶1043 |
| | 1051 |
| 6E-4286 | 1047 |
| | 1051 |
| | 1162 |
| | 1166 |
| 6E-4287 | 1048 |
| | 1052 |
| | 1162 |
| | 1166 |
| 6E-4499 | 1047 |
| | 1051 |
| 6E-4500 | 1047 |
| | 1052 |
| 6E-4513 | 1047 |
| | 1051 |
| 6E-4514 | 1047 |
| | 1051 |
| 6E-4753 | 1043 |
| 6E-5444 | 970 |
| 6E-5510 | 1044 |
| | 1173 |
| 6E-5566 | 1008 |
| | ▶1045 |
| 6E-6138 | 1044 |
| | 1173 |
| 6E-6188 | ▶1044 |
| | 1047 |
| | 1051 |
| 6E-6527 | 1171 |
| 6E-6528 | 1171 |
| 6E-6536 | 1171 |
| 6E-6537 | 1171 |
| 6E-6538 | 1171 |
| 6E-6539 | 1171 |
| 6E-6540 | 1171 |
| 6E-6550 | 1148 |
| | 1151 |
| 6F-0156 | 590 |
| 6F-0253 | 330 |
| | 1342 |
| | 1346 |
| | 1356 |
| 6F-0698 | 1342 |
| 6F-5559 | 1133 |
| 6F-7045 | 325 |
| 6F-7061 | 1134 |
| 6G-2256 | 205 |
| | 209 |
| 6G-2263 | 205 |
| | 209 |
| 6G-4195 | 872 |
| | 874 |
| 6H-0411 | 1512 |
| 6H-1717 | 515 |
| 6H-3956 | 656 |
| 6H-6043 | 622 |
| | 625 |
| 6H-7062 | 977 |
| 6I-0213 | 188 |
| | 189 |
| | 190 |
| 6I-0901 | 91 |
| | 93 |
| | 96 |
| 6I-0928 | 45 |
| | 46 |
| | 47 |
| | 49 |
| 6I-1055 | 35 |
| | 37 |
| 6I-1418 | 217 |
| | 218 |
| | 386 |
| | 394 |
| | 401 |
| | 406 |
| 6I-1458 | 71 |
| | 72 |
| | 73 |
| | 74 |
| | 75 |
| | 76 |
| 6I-2431 | 141 |
| | 143 |
| 6I-2435 | 141 |
| | 143 |
| 6I-3623 | 62 |
| 6I-3624 | 62 |
| 6I-3625 | 62 |
| 6I-3638 | 6 |
| | 8 |
| | ▶55 |
| 6I-4025 | 48 |
| | 50 |
| 6I-4421 | 35 |
| | 37 |
| 6I-4575 | 15 |
| 6I-4582 | 62 |


▶ PRIMARY REFERENCE

# PART NUMBER INDEX


| Part | Page | Part | Page | Part | Page | Part | Page |
|---|---|---|---|---|---|---|---|
| 6I-8249 | 1231 | | 732 | | 766 | | 210 |
| | 1233 | | 735 | | 770 | | 543 |
| 6I-8250 | 1231 | | 740 | | 774 | 6V-0723 | 1374 |
| | 1233 | | 744 | | 778 | 6V-0826 | 422 |
| 6I-8298 | 1211 | | 748 | | 784 | | 447 |
| 6I-8299 | 1211 | | 753 | | 818 | 6V-0836 | 590 |
| 6I-9255 | 591 | | 757 | | 822 | 6V-0852 | 167 |
| 6J-2386 | 1030 | | 762 | | 825 | | 169 |
| 6J-2419 | 534 | | 766 | | 830 | | 174 |
| 6J-2680 | 576 | | 770 | | 833 | | 454 |
| | 583 | | 774 | | 837 | | 456 |
| | 1014 | | 778 | 6S-6251 | 493 | | 460 |
| | 1018 | | 784 | | 498 | | 489 |
| | 1022 | | 798 | | 503 | | 491 |
| 6J-2797 | 1004 | | 802 | | 575 | | 524 |
| | 1005 | | 806 | | 582 | | 575 |
| | 1006 | | 808 | | 706 | | 582 |
| 6J-4568 | 1055 | | 810 | | 709 | | 617 |
| 6J-6439 | 997 | | 816 | | 712 | | 619 |
| 6J-6721 | 591 | | 842 | 6S-8620 | 128 | | 633 |
| 6K-0806 | 1058 | | 846 | 6T-0363 | 321 | | 638 |
| | 1060 | 6L-8598 | 1358 | 6T-0371 | 321 | | 970 |
| 6K-1972 | 872 | 6L-8617 | 128 | 6T-0372 | 321 | | 977 |
| | 874 | 6M-1622 | 485 | 6T-3631 | 337 | | 1013 |
| 6K-3273 | 1435 | | 486 | | 477 | | 1017 |
| | 1436 | | 645 | | 479 | | 1021 |
| 6K-4934 | 548 | | 646 | | 481 | | 1035 |
| | 552 | | 648 | 6T-3632 | 337 | | 1058 |
| | 557 | 6M-1637 | 517 | | 477 | | 1060 |
| | 561 | 6M-1638 | 517 | | 479 | | 1082 |
| 6K-4935 | 548 | 6M-6853 | 489 | | 481 | | 1097 |
| | 552 | | 491 | 6T-3633 | 337 | | 1130 |
| | 557 | 6M-9155 | 966 | | 477 | | 1131 |
| | 561 | 6N-1931 | 118 | | 479 | | 1162 |
| 6K-5290 | 552 | 6N-3279 | 321 | | 481 | | 1166 |
| | 557 | 6N-3826 | 321 | 6T-3642 | 387 | | 1500 |
| | 561 | 6N-6984 | 691 | | 395 | | 1505 |
| | 977 | 6N-7654 | 52 | | 402 | 6V-1197 | 21 |
| 6K-5291 | 548 | 6N-8744 | 1341 | | 407 | 6V-1228 | 1500 |
| | 552 | 6N-9590 | 145 | 6T-3643 | 387 | | 1505 |
| | 557 | 6P-4903 | 535 | | 395 | 6V-1249 | 729 |
| | 561 | | 539 | | 402 | | 732 |
| | 979 | 6P-4947 | 534 | | 408 | | 790 |
| 6K-6307 | 1047 | | 538 | 6T-3644 | 406 | | 792 |
| | 1052 | 6P-5751 | 590 | 6T-3720 | 590 | | 795 |
| 6K-6967 | 735 | 6P-6641 | 257 | 6T-5545 | 642 | | 808 |
| | 740 | | 268 | 6T-5598 | 420 | | 810 |
| | 748 | | 272 | | 422 | | 813 |
| | 753 | | 276 | 6T-6052 | 590 | | 816 |
| | 757 | 6P-6739 | 591 | 6T-7695 | 1381 | | 1063 |
| | 762 | 6P-7379 | 591 | 6T-8115 | 395 | 6V-1270 | 531 |
| | 766 | 6P-7705 | 591 | 6V-0128 | 16 | 6V-1322 | 321 |
| | 770 | 6P-8875 | 1453 | | 18 | 6V-1392 | 650 |
| | 774 | 6P-9553 | 624 | | 19 | 6V-1525 | 156 |
| | 778 | 6P-9592 | 287 | 6V-0467 | 977 | 6V-1572 | 568 |
| | 784 | 6R-3966 | 1030 | 6V-0484 | 178 | | 1014 |
| | 818 | 6S-1753 | 591 | | 524 | | 1018 |
| | 822 | 6S-3002 | 1134 | | 1098 | | 1022 |
| | 825 | 6S-4039 | 735 | | 1166 | | 1120 |
| | 830 | | 740 | 6V-0675 | 145 | | 1122 |
| 6K-8178 | 268 | | 744 | 6V-0683 | 172 | | 1124 |
| | 272 | | 748 | | 174 | 6V-1573 | 568 |
| 6K-9194 | 489 | | 753 | | 178 | | 1014 |
| | 491 | | 757 | | 184 | | 1018 |
| 6L-3616 | 729 | | 762 | | 206 | | 1022 |


► **PRIMARY REFERENCE**

# PART NUMBER INDEX


| Part | Page | Part | Page | Part | Page | Part | Page |
|---|---|---|---|---|---|---|---|
| | 1120 | 6V-2687 . . . . . | 352 | | 1082 | 6V-5839 . . . . . | 489 |
| | 1122 | | 359 | | 1097 | | 491 |
| | 1124 | | 366 | | 1104 | | 535 |
| 6V-1574 . . . . . | 568 | | 376 | | 1109 | | 539 |
| | 1118 | | 1381 | | 1130 | | 598 |
| | 1120 | 6V-3251 . . . . . | 89 | | 1131 | | 605 |
| | 1122 | 6V-3265 . . . . . | 268 | | 1162 | | 622 |
| | 1124 | | 272 | | 1166 | | 625 |
| | 1126 | | 277 | 6V-4248 . . . . . | 535 | | 1070 |
| 6V-1614 . . . . . | 1358 | | 427 | | 539 | | 1148 |
| 6V-1635 . . . . . | 663 | | 430 | | 600 | | 1151 |
| | 681 | | 436 | | 622 | | 1398 |
| | 1439 | | 443 | | 625 | 6V-5842 . . . . . | 489 |
| | 1442 | | 447 | | 1151 | | 491 |
| 6V-1668 . . . . . | 1331 | | 454 | | 1398 | 6V-5843 . . . . . | 622 |
| 6V-1746 . . . . . | 642 | | 468 | 6V-4349 . . . . . | 790 | | 625 |
| 6V-1820 . . . . . | 605 | | 489 | | 792 | 6V-6210 . . . . . | 1488 |
| 6V-1867 . . . . . | 1120 | | 491 | | 795 | | 1491 |
| 6V-1868 . . . . . | 1120 | | 979 | | 813 | | 1494 |
| 6V-1874 . . . . . | 543 | 6V-3303 . . . . . | 489 | 6V-4356 . . . . . | 1391 | 6V-6317 . . . . . | 535 |
| 6V-1889 . . . . . | 509 | | 491 | | 1394 | | 539 |
| | 511 | | 557 | 6V-4357 . . . . . | 1391 | 6V-6535 . . . . . | 1211 |
| | 513 | | 561 | | 1394 | | 1267 |
| | 548 | 6V-3341 . . . . . | 352 | 6V-4429 . . . . . | 525 | | 1279 |
| | 552 | | 359 | 6V-4589 . . . . . | 174 | | 1280 |
| | 557 | | 366 | | 178 | | 1281 |
| | 561 | | 376 | | 195 | 6V-6609 . . . . . | 87 |
| | 1082 | 6V-3382 . . . . . | 1133 | | 196 | | 89 |
| | 1103 | 6V-3532 . . . . . | 517 | | 331 | | 182 |
| | 1110 | 6V-3668 . . . . . | 515 | | 332 | | 314 |
| | 1391 | | 622 | 6V-4636 . . . . . | 1138 | | 317 |
| | 1394 | | 642 | | 1140 | 6V-6640 . . . . . | 535 |
| 6V-1949 . . . . . | 1055 | | 1162 | 6V-5048 . . . . . | 54 | | 538 |
| 6V-1970 . . . . . | 1 | 6V-3677 . . . . . | 62 | | 167 | 6V-6703 . . . . . | 221 |
| | 2 | 6V-3683 . . . . . | 287 | | 169 | | 222 |
| | ▶1403 | | 288 | | 174 | | 228 |
| 6V-2235 . . . . . | 790 | 6V-3822 . . . . . | 1151 | | 199 | | 229 |
| | 792 | 6V-3823 . . . . . | 607 | | 287 | | 231 |
| | 795 | | 622 | | 288 | | 232 |
| | 813 | | 625 | | 291 | 6V-6716 . . . . . | 436 |
| 6V-2313 . . . . . | 962 | | 632 | | 293 | | 442 |
| | 1418 | | 1134 | | 303 | | 446 |
| 6V-2316 . . . . . | 872 | 6V-3830 . . . . . | 78 | | 305 | 6V-6718 . . . . . | 960 |
| | 874 | | 80 | 6V-5049 . . . . . | 48 | 6V-6864 . . . . . | 1494 |
| 6V-2317 . . . . . | 639 | 6V-3935 . . . . . | 617 | | 50 | 6V-6889 . . . . . | 1488 |
| 6V-2370 . . . . . | 645 | | 619 | | 89 | 6V-6923 . . . . . | 197 |
| | 648 | 6V-3964 . . . . . | 217 | | 178 | | 198 |
| | 656 | | 218 | | 291 | | 1177 |
| | 1373 | 6V-3965 . . . . . | 524 | | 293 | 6V-7238 . . . . . | 1400 |
| | 1445 | | 576 | | 302 | 6V-7357 . . . . . | 326 |
| 6V-2383 . . . . . | 342 | | 583 | 6V-5065 . . . . . | 88 | | 377 |
| | 343 | | 617 | 6V-5142 . . . . . | 1042 | | 1343 |
| | 345 | | 619 | | 1182 | | 1346 |
| | 436 | | 635 | 6V-5220 . . . . . | 1358 | | 1383 |
| | 443 | | 636 | 6V-5258 . . . . . | 564 | | 1409 |
| | 447 | | 637 | 6V-5324 . . . . . | 1046 | 6V-7419 . . . . . | 1488 |
| | 726 | | 638 | 6V-5555 . . . . . | 1180 | | 1491 |
| | 1505 | | 971 | 6V-5684 . . . . . | 517 | | 1494 |
| 6V-2491 . . . . . | 1362 | | 977 | | 622 | 6V-7420 . . . . . | 174 |
| | 1434 | | 1013 | | 625 | | 178 |
| 6V-2495 . . . . . | 1392 | | 1017 | | 1134 | 6V-7423 . . . . . | 617 |
| | 1395 | | 1022 | 6V-5686 . . . . . | 1134 | | 619 |
| 6V-2496 . . . . . | 1332 | | 1035 | 6V-5758 . . . . . | 1041 | 6V-7646 . . . . . | 1331 |
| | 1485 | | 1058 | 6V-5759 . . . . . | 1162 | | 1468 |
| 6V-2679 . . . . . | 1508 | | 1060 | | 1166 | | 1470 |


▶ **PRIMARY REFERENCE**

# PART NUMBER INDEX


| Part | Page | Part | Page | Part | Page | Part | Page |
|---|---|---|---|---|---|---|---|
| 6V-7675 | 617 | | 357 | | 930 | | 1063 |
| | 619 | | 364 | | 931 | | 1098 |
| 6V-7681 | 1132 | | 374 | | 932 | | 1103 |
| 6V-7687 | 661 | 6V-8373 | 872 | | 936 | | 1109 |
| | 864 | | 874 | | 938 | | 1153 |
| | 1355 | 6V-8374 | 481 | | 940 | | 1156 |
| 6V-7723 | 1142 | 6V-8376 | 387 | | 942 | | 1352 |
| 6V-7727 | 194 | | 395 | | 943 | 6V-8400 | 543 |
| 6V-7728 | 1331 | | 402 | | 944 | | 547 |
| 6V-7743 | 1343 | | 406 | | 945 | | 548 |
| | 1346 | | 407 | | 947 | | 551 |
| 6V-7744 | 656 | | 408 | | 970 | | 552 |
| | 1070 | 6V-8397 | 115 | | 971 | | 556 |
| | 1148 | | 116 | | 977 | | 557 |
| | 1151 | | 182 | | 978 | | 560 |
| 6V-8076 | 1013 | | 468 | | 979 | | 561 |
| | 1017 | | 493 | | 990 | 6V-8455 | 517 |
| | 1021 | | 498 | | 992 | 6V-8625 | 975 |
| 6V-8077 | 1013 | | 499 | | 994 | | 978 |
| | 1017 | | 503 | | 1008 | | 1063 |
| | 1021 | | 504 | | 1013 | | 1098 |
| 6V-8132 | 589 | | 528 | | 1017 | | 1153 |
| 6V-8149 | 605 | | 575 | | 1021 | | 1156 |
| 6V-8150 | 966 | | 576 | | 1025 | 6V-8626 | 174 |
| 6V-8185 | 386 | | 582 | | 1026 | | 178 |
| | 394 | | 583 | | 1062 | 6V-8627 | 1500 |
| | 402 | | 762 | | 1063 | | 1505 |
| | 408 | | 766 | | 1082 | 6V-8632 | 174 |
| 6V-8187 | 387 | | 770 | | 1098 | | 178 |
| | 395 | | 774 | | 1102 | | 236 |
| | 402 | | 778 | | 1103 | | 1025 |
| | 407 | | 784 | | 1108 | 6V-8634 | 115 |
| 6V-8188 | 54 | | 790 | | 1109 | | 116 |
| | 206 | | 792 | | 1153 | | 978 |
| | 210 | | 795 | | 1154 | | 1025 |
| | 659 | | 798 | | 1156 | 6V-8635 | 117 |
| | 1009 | | 802 | | 1162 | | 493 |
| 6V-8189 | 202 | | 808 | | 1166 | | 498 |
| | 1385 | | 810 | 6V-8398 | 128 | | 503 |
| | 1388 | | 812 | | 145 | | 1062 |
| 6V-8200 | 165 | | 813 | | 174 | 6V-8636 | 575 |
| | 1153 | | 816 | | 178 | | 582 |
| | 1156 | | 818 | | 468 | | 971 |
| 6V-8212 | 525 | | 825 | | 528 | | 978 |
| 6V-8225 | 252 | | 837 | | 572 | | 992 |
| | 1334 | | 848 | | 790 | | 994 |
| | 1335 | | 872 | | 792 | | 1025 |
| 6V-8237 | 589 | | 874 | | 795 | | 1062 |
| | 601 | | 884 | | 812 | | 1108 |
| | 1074 | | 886 | | 848 | | 1154 |
| | 1076 | | 887 | | 872 | | 1156 |
| | 1078 | | 901 | | 874 | 6V-8637 | 543 |
| | 1079 | | 903 | | 922 | | 547 |
| | 1080 | | 905 | | 929 | | 551 |
| | 1081 | | 907 | | 971 | | 556 |
| 6V-8243 | 1134 | | 909 | | 975 | | 560 |
| 6V-8281 | 642 | | 911 | | 977 | | 564 |
| 6V-8352 | 1171 | | 913 | | 978 | | 568 |
| 6V-8360 | 1211 | | 916 | | 979 | | 575 |
| | 1266 | | 918 | | 990 | | 582 |
| | 1278 | | 920 | | 992 | | 978 |
| | 1279 | | 922 | | 994 | | 1068 |
| | 1280 | | 925 | | 1008 | | 1097 |
| 6V-8369 | 338 | | 927 | | 1026 | | 1102 |
| | 350 | | 929 | | 1062 | | 1108 |


► **PRIMARY REFERENCE**

# PART NUMBER INDEX


| Part | Page |
|---|---|
| 6V-8639 | 978 |
| | 1062 |
| | 1098 |
| | 1352 |
| 6V-8641 | 575 |
| | 582 |
| | 1500 |
| | 1505 |
| 6V-8647 | 128 |
| | 141 |
| | 143 |
| 6V-8713 | 1025 |
| 6V-8716 | 498 |
| | 503 |
| | 547 |
| | 551 |
| | 556 |
| | 560 |
| | 564 |
| | 1082 |
| 6V-8721 | 1103 |
| | 1109 |
| 6V-8722 | 236 |
| 6V-8723 | 182 |
| | 576 |
| | 583 |
| | 1026 |
| | 1063 |
| | 1098 |
| 6V-8724 | 468 |
| | 971 |
| | 978 |
| | 1008 |
| | 1013 |
| | 1017 |
| | 1021 |
| | 1026 |
| | 1063 |
| | 1153 |
| | 1156 |
| 6V-8775 | 1026 |
| 6V-8780 | 128 |
| 6V-8781 | 992 |
| | 1153 |
| | 1156 |
| 6V-8782 | 979 |
| | 1063 |
| 6V-8784 | 1103 |
| | 1109 |
| 6V-8789 | 975 |
| 6V-8791 | 564 |
| | 568 |
| 6V-8801 | 214 |
| | 257 |
| | 268 |
| | 272 |
| | 277 |
| 6V-8928 | 1385 |
| | 1388 |
| 6V-8936 | 468 |
| | 971 |
| | 1063 |
| 6V-8941 | 493 |
| | 499 |
| | 504 |
| 6V-8942 | 1103 |
| | 1109 |
| 6V-8946 | 1013 |
| | 1017 |
| | 1021 |
| | 1103 |
| | 1109 |
| 6V-8969 | 1428 |
| 6V-8981 | 971 |
| | 978 |
| | 1026 |
| | 1352 |
| 6V-8983 | 493 |
| | 499 |
| | 504 |
| | 1103 |
| | 1109 |
| 6V-8985 | 556 |
| | 560 |
| 6V-8987 | 790 |
| | 792 |
| | 795 |
| | 812 |
| 6V-8988 | 790 |
| | 792 |
| | 795 |
| | 812 |
| | 1352 |
| 6V-8990 | 548 |
| | 552 |
| | 557 |
| | 561 |
| | 564 |
| | 568 |
| 6V-8991 | 1098 |
| 6V-8995 | 971 |
| | 979 |
| | 1352 |
| 6V-8997 | 548 |
| | 552 |
| | 557 |
| | 561 |
| | 564 |
| | 568 |
| 6V-8998 | 1082 |
| 6V-9001 | 576 |
| | 583 |
| | 994 |
| | 1013 |
| | 1017 |
| | 1021 |
| | 1025 |
| | 1098 |
| | 1102 |
| | 1109 |
| | 1153 |
| | 1156 |
| 6V-9002 | 1008 |
| 6V-9004 | 543 |
| | 552 |
| | 557 |
| | 561 |
| | 1082 |
| | 1103 |
| | 1109 |
| 6V-9005 | 117 |
| 6V-9007 | 493 |
| | 498 |
| | 503 |
| | 543 |
| | 1068 |
| | 1098 |
| | 1102 |
| | 1108 |
| | 1146 |
| 6V-9008 | 494 |
| | 499 |
| | 504 |
| | 1082 |
| 6V-9023 | 402 |
| 6V-9027 | 131 |
| | 134 |
| | 136 |
| 6V-9160 | 1103 |
| | 1109 |
| 6V-9162 | 576 |
| | 583 |
| 6V-9168 | 468 |
| | 528 |
| | 530 |
| | 790 |
| | 792 |
| | 795 |
| | 808 |
| | 810 |
| | 813 |
| | 816 |
| 6V-9169 | 790 |
| | 792 |
| | 795 |
| | 813 |
| | 971 |
| | 979 |
| | 985 |
| | 986 |
| | 1026 |
| | 1098 |
| | 1352 |
| 6V-9172 | 1083 |
| | 1098 |
| 6V-9173 | 557 |
| | 561 |
| 6V-9182 | 493 |
| | 498 |
| | 503 |
| | 547 |
| | 551 |
| | 556 |
| | 560 |
| | 1082 |
| | 1098 |
| 6V-9189 | 244 |
| | 245 |
| | 248 |
| 6V-9191 | 625 |
| 6V-9200 | 493 |
| | 498 |
| | 872 |
| | 874 |
| 6V-9327 | 1474 |
| | 1479 |
| 6V-9505 | 1358 |
| 6V-9606 | 1385 |
| | 1388 |
| 6V-9632 | 255 |
| | 260 |
| | 285 |
| | 326 |
| | 350 |
| | 351 |
| | 357 |
| | 358 |
| | 365 |
| | 375 |
| | 420 |
| | 427 |
| | 430 |
| | 447 |
| | 472 |
| | 1342 |
| | 1358 |
| | 1364 |
| | 1369 |
| | 1385 |
| | 1388 |
| | 1411 |
| | 1455 |
| | 1458 |
| | 1461 |
| | 1464 |
| | 1474 |
| | 1479 |
| 6V-9746 | 493 |
| | 494 |
| | 498 |
| | 499 |
| | 503 |
| | 504 |
| | 543 |
| | 547 |
| | 548 |
| | 551 |
| | 552 |
| | 556 |
| | 557 |
| | 560 |
| | 561 |
| | 564 |
| | 568 |
| | 575 |
| | 576 |
| | 577 |
| | 582 |
| | 583 |
| | 584 |
| | 634 |
| | 790 |
| | 792 |
| | 795 |
| | 813 |
| | 977 |
| | 978 |
| | 979 |
| | 1013 |
| | 1014 |


► **PRIMARY REFERENCE**

# PART NUMBER INDEX


| Part | Page |
|---|---|
| | 1017 |
| | 1018 |
| | 1021 |
| | 1022 |
| | 1068 |
| | 1082 |
| | 1097 |
| | 1098 |
| | 1102 |
| | 1103 |
| | 1108 |
| | 1109 |
| | 1110 |
| | 1146 |
| 6V-9807 | 808 |
| | 810 |
| | 816 |
| 6V-9830 | 1063 |
| 6V-9833 | 1083 |
| | 1153 |
| | 1157 |
| 6V-9836 | 848 |
| | 884 |
| | 887 |
| | 901 |
| | 903 |
| | 905 |
| | 907 |
| | 909 |
| | 911 |
| | 920 |
| | 927 |
| | 931 |
| | 932 |
| | 936 |
| | 938 |
| | 940 |
| | 943 |
| | 947 |
| | 1026 |
| 6V-9837 | 812 |
| | 971 |
| | 979 |
| | 1063 |
| 6V-9838 | 1026 |
| 6V-9839 | 564 |
| | 568 |
| | 1082 |
| | 1103 |
| | 1109 |
| 6V-9840 | 1082 |
| 6V-9844 | 971 |
| | 1103 |
| | 1109 |
| 6V-9847 | 1063 |
| 6V-9850 | 468 |
| | 576 |
| | 583 |
| | 808 |
| | 810 |
| | 816 |
| | 884 |
| | 886 |
| | 909 |
| | 911 |
| | 913 |
| | 916 |
| | 918 |
| | 920 |
| | 925 |
| | 930 |
| | 940 |
| | 942 |
| | 943 |
| | 944 |
| | 945 |
| | 947 |
| | 1026 |
| | 1154 |
| | 1156 |
| 6V-9851 | 978 |
| | 1026 |
| | 1063 |
| 6V-9853 | 548 |
| | 552 |
| | 557 |
| | 561 |
| | 978 |
| 6V-9854 | 493 |
| | 498 |
| | 503 |
| | 1063 |
| 6V-9855 | 543 |
| | 547 |
| | 552 |
| | 557 |
| | 560 |
| 6V-9872 | 134 |
| | 136 |
| | 503 |
| | 1108 |
| 6V-9873 | 872 |
| | 874 |
| | 990 |
| | 1026 |
| | 1063 |
| | 1103 |
| | 1109 |
| 6V-9877 | 543 |
| | 547 |
| | 551 |
| | 556 |
| | 560 |
| | 1102 |
| | 1109 |
| 6Y-0802 | 624 |
| 6Y-0803 | 622 |
| | 624 |
| 6Y-0806 | 622 |
| | 624 |
| 6Y-1414 | 624 |
| 6Y-1616 | 590 |
| 6Y-2090 | 97 |
| 6Y-2553 | 1313 |
| 6Y-2736 | 1032 |
| 6Y-2737 | 1032 |
| 6Y-3484 | 590 |
| 6Y-4638 | 639 |
| 6Y-5373 | ▶1315 |
| 6Y-5793 | 591 |
| 6Y-6328 | 534 |
| | 538 |
| 6Y-6329 | 534 |
| | 538 |
| 6Y-6441 | 534 |
| | 538 |
| 6Y-6584 | 233 |
| 6Y-6848 | 515 |
| 7B-1480 | 572 |
| 7B-1597 | 489 |
| | 491 |
| | 531 |
| 7B-3028 | 535 |
| | 539 |
| 7B-3039 | 539 |
| | 1070 |
| | 1148 |
| 7C-1445 | 24 |
| 7C-4354 | 352 |
| | 359 |
| | 366 |
| | 376 |
| 7C-4355 | 101 |
| 7C-6921 | 564 |
| | 568 |
| 7D-1553 | 436 |
| | 443 |
| | 548 |
| 7D-1728 | 818 |
| | 822 |
| | 825 |
| | 830 |
| | 833 |
| | 837 |
| 7D-1979 | 617 |
| | 619 |
| 7D-4719 | 521 |
| 7D-4721 | 521 |
| 7D-5238 | 1004 |
| | 1005 |
| | 1006 |
| 7D-7026 | 236 |
| 7D-7233 | 1083 |
| 7D-8508 | 1161 |
| | 1165 |
| 7D-8636 | 531 |
| 7D-8637 | 531 |
| 7D-9984 | 167 |
| | 169 |
| 7E-4341 | 78 |
| | 80 |
| 7E-4342 | 78 |
| | 80 |
| 7E-4508 | 112 |
| | 113 |
| | 114 |
| 7E-5639 | 352 |
| | 359 |
| | 366 |
| | 376 |
| 7E-6508 | 16 |
| | 18 |
| | 19 |
| 7E-8630 | 146 |
| 7E-9171 | 145 |
| 7F-0560 | 206 |
| | 210 |
| | 402 |
| | 408 |
| 7F-2122 | 591 |
| 7F-3491 | 321 |
| 7F-3525 | 321 |
| 7F-6013 | 622 |
| | 625 |
| 7F-8607 | 617 |
| | 619 |
| | 1134 |
| | 1391 |
| | 1394 |
| 7F-9090 | 102 |
| | 104 |
| | 106 |
| 7F-9223 | 658 |
| 7G-0141 | 622 |
| | 624 |
| 7G-0283 | 591 |
| 7G-0897 | 591 |
| 7G-2476 | 591 |
| 7G-2486 | 591 |
| 7G-2928 | 590 |
| 7G-3457 | 591 |
| 7G-4817 | 590 |
| 7G-4818 | 590 |
| 7G-5746 | 590 |
| 7G-6772 | 590 |
| 7G-7053 | 284 |
| | 285 |
| | 1432 |
| 7G-7917 | 351 |
| | 413 |
| | 436 |
| 7G-7918 | 413 |
| | 436 |
| 7G-7920 | 351 |
| | 413 |
| | 436 |
| 7G-8839 | 706 |
| | 709 |
| | 712 |
| 7H-1447 | 1148 |
| | 1151 |
| 7H-7658 | 592 |
| 7I-1024 | 236 |
| | 735 |
| | 740 |
| | 744 |
| | 748 |
| | 753 |
| | 757 |
| | 762 |
| | 766 |
| | 770 |
| | 774 |
| | 778 |
| | 779 |
| | 784 |


7

▶ **PRIMARY REFERENCE**

# PART NUMBER INDEX


| Part | Page |
|---|---|
| | 785 |
| | 798 |
| | 802 |
| | 806 |
| | 819 |
| | 822 |
| | 825 |
| | 830 |
| | 833 |
| | 837 |
| | 1400 |
| 7I-4078 | 994 |
| 7I-8640 | 1088 |
| | 1091 |
| 7J-0402 | 515 |
| 7J-1089 | 1047 |
| | 1051 |
| 7J-1592 | 1166 |
| 7J-2546 | 1044 |
| 7J-2656 | 1148 |
| | 1151 |
| 7J-2927 | 1047 |
| | 1051 |
| 7J-7366 | 1074 |
| 7J-7367 | 1074 |
| 7J-7423 | 1051 |
| 7J-7852 | 1162 |
| | 1166 |
| 7J-9108 | 174 |
| | 178 |
| | 179 |
| | 236 |
| | 1025 |
| | 1026 |
| 7J-9250 | 1078 |
| | 1079 |
| | 1080 |
| | 1081 |
| 7J-9933 | 997 |
| 7K-1181 | 178 |
| | 215 |
| | 284 |
| | 350 |
| | 351 |
| | 352 |
| | 357 |
| | 358 |
| | 359 |
| | 364 |
| | 365 |
| | 366 |
| | 374 |
| | 376 |
| | 406 |
| | 427 |
| | 430 |
| | 437 |
| | 442 |
| | 446 |
| | 481 |
| | 1352 |
| | 1383 |
| | 1418 |
| 7K-1401 | 576 |
| | 583 |
| 7K-1402 | 576 |
| | 583 |
| 7K-1972 | 669 |
| | 672 |
| 7K-3176 | 1398 |
| 7K-3262 | 1385 |
| | 1388 |
| 7K-3304 | 1398 |
| 7K-3436 | 872 |
| | 874 |
| 7K-4201 | 1385 |
| | 1388 |
| 7K-4942 | 964 |
| | 977 |
| 7K-6058 | 65 |
| 7K-9197 | 155 |
| 7K-9204 | 964 |
| 7L-2181 | 534 |
| | 538 |
| 7L-2894 | 321 |
| 7L-9061 | 331 |
| | 332 |
| 7M-0326 | 321 |
| 7M-0327 | 321 |
| 7M-0847 | 590 |
| 7M-1297 | 525 |
| 7M-5130 | 1047 |
| | 1051 |
| 7M-8480 | 590 |
| 7M-8485 | 117 |
| | 128 |
| | 192 |
| | 194 |
| | 485 |
| | 486 |
| | 493 |
| | 494 |
| | 498 |
| | 499 |
| | 503 |
| | 504 |
| | 525 |
| | 543 |
| | 547 |
| | 548 |
| | 551 |
| | 552 |
| | 556 |
| | 557 |
| | 560 |
| | 564 |
| | 617 |
| | 619 |
| | 639 |
| | 666 |
| | 971 |
| | 978 |
| | 979 |
| | 985 |
| | 986 |
| | 998 |
| | 1044 |
| | 1062 |
| | 1082 |
| | 1097 |
| | 1098 |
| | 1103 |
| | 1110 |
| | 1134 |
| | 1153 |
| | 1157 |
| | 1161 |
| | 1165 |
| | 1173 |
| 7M-9909 | 617 |
| | 619 |
| 7N-0296 | 318 |
| 7N-0452 | 57 |
| 7N-0719 | 205 |
| | 209 |
| | ▶325 |
| 7N-1228 | 525 |
| 7N-2059 | 340 |
| 7N-2156 | 118 |
| 7N-5876 | 1411 |
| | 1413 |
| 7N-7559 | 115 |
| | 116 |
| 7N-7878 | 150 |
| 7N-9801 | 339 |
| 7N-9943 | 241 |
| 7R-0042 | 564 |
| | 568 |
| 7S-0530 | 1028 |
| 7S-1201 | 960 |
| 7S-1801 | 575 |
| | 582 |
| 7S-2962 | 535 |
| | 539 |
| 7S-3996 | 964 |
| 7S-3997 | 964 |
| 7S-3998 | 548 |
| | 683 |
| 7S-4002 | 964 |
| 7S-5005 | 30 |
| 7S-8491 | 1051 |
| 7S-8553 | 1045 |
| 7T-0020 | 241 |
| 7T-0920 | 1455 |
| | 1458 |
| | 1461 |
| | 1464 |
| 7T-1099 | 157 |
| | 665 |
| | 709 |
| | 1439 |
| | 1442 |
| | 1455 |
| | 1461 |
| | 1464 |
| 7T-1159 | 128 |
| 7T-3974 | 321 |
| 7T-4532 | 1339 |
| 7T-4925 | 206 |
| | 210 |
| 7T-6799 | 350 |
| | 357 |
| | 364 |
| | 374 |
| 7T-7388 | 872 |
| | 874 |
| 7T-8331 | 146 |
| | 706 |
| | 709 |
| | 712 |
| | 718 |
| | 722 |
| 7T-8890 | 1485 |
| 7T-9988 | 206 |
| | 210 |
| 7V-0445 | 1474 |
| 7V-6571 | 422 |
| 7V-8346 | 966 |
| 7V-9275 | 386 |
| | 394 |
| | 401 |
| | 407 |
| 7W-1484 | 1512 |
| 7W-2297 | 160 |
| 7W-6492 | 102 |
| | 104 |
| 7W-7417 | 155 |
| 7W-8106 | 413 |
| | 416 |
| | 808 |
| | 810 |
| | 816 |
| 7X-0288 | 413 |
| 7X-0297 | 174 |
| | 179 |
| 7X-0325 | 576 |
| | 583 |
| 7X-0345 | 90 |
| 7X-0492 | 818 |
| | 822 |
| | 825 |
| | 830 |
| | 833 |
| | 837 |
| | 844 |
| 7X-0515 | 219 |
| | 678 |
| | 684 |
| | 686 |
| | 688 |
| | 718 |
| | 720 |
| | 722 |
| | 869 |
| | 870 |
| | 1007 |
| | 1063 |
| 7X-0550 | 125 |
| 7X-0575 | 1474 |
| 7X-0583 | 1153 |
| | 1157 |
| 7X-0584 | 1014 |
| | 1018 |
| | 1022 |
| 7X-0590 | 146 |
| | 576 |
| | 583 |
| | 706 |
| | 709 |
| | 712 |


▶ PRIMARY REFERENCE

# PART NUMBER INDEX


| Part | Page |
|---|---|
| | 718 |
| | 722 |
| | 1068 |
| 7X-0603 | 862 |
| 7X-0608 | 1327 |
| 7X-0613 | 174 |
| | 179 |
| 7X-0618 | 494 |
| | 499 |
| | 504 |
| 7X-0620 | 268 |
| | 272 |
| | 277 |
| 7X-0632 | 1341 |
| 7X-0732 | 808 |
| | 810 |
| | 816 |
| 7X-0750 | 413 |
| | 416 |
| | 666 |
| | 695 |
| 7X-0751 | 669 |
| | 672 |
| 7X-0766 | 656 |
| 7X-0772 | 341 |
| 7X-0818 | 289 |
| | 387 |
| | 395 |
| | 402 |
| | 408 |
| | 617 |
| | 619 |
| | 1409 |
| 7X-0871 | 971 |
| | 977 |
| 7X-0873 | 977 |
| | 1082 |
| 7X-2049 | 1391 |
| 7X-2393 | 716 |
| | 718 |
| | 720 |
| 7X-2438 | 1032 |
| 7X-2459 | 1082 |
| | 1161 |
| | 1165 |
| 7X-2475 | 1118 |
| | 1126 |
| 7X-2488 | 609 |
| 7X-2497 | 1364 |
| | 1367 |
| | 1369 |
| | 1371 |
| 7X-2532 | 97 |
| 7X-2533 | 246 |
| | 247 |
| 7X-2534 | 447 |
| | 470 |
| | 472 |
| | 726 |
| | 729 |
| | 732 |
| | 735 |
| | 740 |
| | 744 |
| | 748 |
| | 753 |
| | 757 |
| | 806 |
| | 822 |
| | 830 |
| | 833 |
| | 1064 |
| | 1479 |
| 7X-2535 | 1385 |
| | 1388 |
| 7X-2537 | 726 |
| 7X-2543 | 1118 |
| | 1126 |
| 7X-2546 | 1162 |
| | 1166 |
| 7X-2549 | 548 |
| | 576 |
| | 583 |
| | 1014 |
| | 1018 |
| | 1022 |
| | 1068 |
| | 1162 |
| | 1166 |
| 7X-2552 | 576 |
| | 583 |
| | 1099 |
| | 1208 |
| 7X-2553 | 219 |
| | 609 |
| | 678 |
| | 718 |
| | 720 |
| | 722 |
| | 869 |
| | 870 |
| | 1064 |
| | 1088 |
| | 1091 |
| | 1118 |
| | 1122 |
| | 1124 |
| | 1126 |
| | 1208 |
| 7X-2554 | 1153 |
| | 1157 |
| 7X-2555 | 622 |
| | 625 |
| 7X-2556 | 684 |
| | 686 |
| | 688 |
| | 1064 |
| | 1088 |
| | 1091 |
| | 1118 |
| | 1122 |
| | 1126 |
| 7X-2563 | 97 |
| | 691 |
| | 1132 |
| | 1144 |
| 7X-2564 | 97 |
| 7X-2575 | 1208 |
| 7X-2583 | 1208 |
| 7X-2618 | 971 |
| | 990 |
| | 992 |
| | 994 |
| 7X-2621 | 757 |
| | 785 |
| | 818 |
| | 822 |
| | 825 |
| | 830 |
| | 833 |
| | 837 |
| 7X-2622 | 609 |
| 7X-3164 | 970 |
| 7X-3186 | 422 |
| 7X-3229 | 1508 |
| 7X-3310 | 1474 |
| | 1479 |
| 7X-3319 | 350 |
| | 357 |
| | 364 |
| | 374 |
| 7X-3373 | 321 |
| 7X-3392 | 543 |
| | 564 |
| | 568 |
| | 576 |
| | 583 |
| | 979 |
| | 1099 |
| 7X-4743 | 366 |
| | 481 |
| 7X-4776 | 1043 |
| 7X-4780 | 267 |
| | 290 |
| | 465 |
| | 466 |
| | 694 |
| 7X-6222 | 1411 |
| | 1413 |
| 7X-6315 | 221 |
| | 222 |
| | 223 |
| | 224 |
| | 227 |
| | 228 |
| | 229 |
| | 230 |
| | 231 |
| | 232 |
| 7X-7700 | 165 |
| | 192 |
| | 194 |
| 7X-7729 | 120 |
| | 121 |
| | 128 |
| | 141 |
| | 143 |
| | 206 |
| | 210 |
| | 257 |
| | 268 |
| | 272 |
| | 277 |
| | 384 |
| | 494 |
| | 499 |
| | 504 |
| | 509 |
| | 511 |
| | 513 |
| | 552 |
| | 557 |
| | 561 |
| | 655 |
| | 656 |
| | 663 |
| | 681 |
| | 683 |
| | 684 |
| | 686 |
| | 688 |
| | 706 |
| | 709 |
| | 712 |
| | 716 |
| | 718 |
| | 720 |
| | 722 |
| | 844 |
| | 856 |
| | 979 |
| | 1083 |
| | 1110 |
| | 1118 |
| | 1126 |
| | 1341 |
| | 1373 |
| | 1391 |
| | 1394 |
| | 1418 |
| | 1439 |
| | 1442 |
| | 1477 |
| | 1485 |
| 7X-7731 | 65 |
| | 131 |
| 7X-7740 | 704 |
| 7Y-0467 | 1032 |
| 7Y-1863 | 564 |
| | 568 |
| 7Y-1976 | 128 |
| 7Y-2522 | 669 |
| | 672 |
| 7Y-3173 | 1356 |
| 7Y-3729 | 1014 |
| | 1018 |
| | 1022 |
| 7Y-4038 | 1115 |
| 7Y-5267 | 1129 |
| 7Y-7256 | 1429 |
| 7Y-8763 | 406 |
| | 1464 |
| | |
| | |
| 8B-1312 | 591 |
| 8B-2664 | 236 |
| | 872 |
| | 874 |


8

► **PRIMARY REFERENCE**

# PART NUMBER INDEX


| Part | Page |
|---|---|
| 8B-4884 | 726 |
| | 922 |
| | 925 |
| | 929 |
| | 930 |
| 8B-9294 | 284 |
| 8C-0624 | 101 |
| 8C-3056 | 401 |
| | 407 |
| | 420 |
| | 422 |
| 8C-3078 | 1350 |
| | 1351 |
| 8C-3089 | 154 |
| | 321 |
| 8C-3093 | 494 |
| | 499 |
| | 504 |
| 8C-3097 | 1043 |
| 8C-3110 | 1138 |
| | 1140 |
| 8C-3205 | 543 |
| | 975 |
| | 1014 |
| | 1018 |
| | 1022 |
| | 1099 |
| 8C-3206 | 543 |
| | 979 |
| | 1064 |
| | 1104 |
| | 1110 |
| | 1148 |
| | 1151 |
| 8C-3210 | 1364 |
| | 1367 |
| | 1369 |
| | 1371 |
| 8C-3236 | 517 |
| 8C-3364 | 552 |
| | 557 |
| | 560 |
| 8C-3442 | 1358 |
| 8C-3445 | 102 |
| | 104 |
| | 106 |
| 8C-3446 | 102 |
| | 104 |
| | 106 |
| | 175 |
| | 199 |
| | 524 |
| | 1098 |
| 8C-3447 | 524 |
| 8C-3451 | 1097 |
| | 1104 |
| | 1108 |
| 8C-3756 | 1331 |
| 8C-4403 | 1208 |
| 8C-4586 | 1331 |
| 8C-5063 | 54 |
| 8C-5230 | 110 |
| 8C-5346 | 1508 |
| 8C-5607 | 385 |
| 8C-5608 | 246 |
| | 247 |
| | 385 |
| 8C-5917 | 205 |
| | 209 |
| 8C-6162 | 564 |
| | 568 |
| 8C-6354 | 350 |
| | 357 |
| | 364 |
| | 374 |
| 8C-6358 | 205 |
| | 209 |
| 8C-6523 | 1400 |
| 8C-6712 | 524 |
| | 1097 |
| 8C-6738 | 1486 |
| | 1487 |
| 8C-6869 | 762 |
| | 766 |
| | 770 |
| | 774 |
| | 778 |
| | 784 |
| | 798 |
| | 802 |
| | 808 |
| | 810 |
| | 816 |
| | 818 |
| | 825 |
| | 837 |
| | 884 |
| | 886 |
| | 887 |
| | 901 |
| | 903 |
| | 905 |
| | 907 |
| | 909 |
| | 911 |
| | 913 |
| | 916 |
| | 918 |
| | 920 |
| | 922 |
| | 925 |
| | 927 |
| | 929 |
| | 930 |
| | 931 |
| | 932 |
| | 936 |
| | 938 |
| | 940 |
| | 942 |
| | 943 |
| | 944 |
| | 945 |
| | 947 |
| 8C-6871 | 128 |
| | 134 |
| | 136 |
| | 572 |
| 8C-6872 | 790 |
| | 792 |
| | 795 |
| | 812 |
| | 872 |
| | 874 |
| 8C-6959 | 175 |
| | 179 |
| 8C-7508 | 1356 |
| 8C-7528 | 454 |
| | 456 |
| | 460 |
| 8C-8451 | 385 |
| 8C-8533 | 575 |
| | 582 |
| 8C-8722 | 1208 |
| 8C-8723 | 645 |
| | 646 |
| | 648 |
| 8C-8902 | 1508 |
| 8C-8988 | 790 |
| | 792 |
| | 795 |
| | 812 |
| | 1008 |
| 8C-8989 | 790 |
| | 792 |
| | 795 |
| | 812 |
| | 971 |
| | 979 |
| | 1026 |
| 8C-8992 | 642 |
| 8C-9029 | 564 |
| 8C-9160 | 1004 |
| | 1005 |
| | 1006 |
| 8C-9660 | 321 |
| | 1356 |
| 8C-9987 | 641 |
| | 1185 |
| 8D-6542 | 1388 |
| 8D-9947 | 1104 |
| | 1110 |
| 8E-0464 | 1229 |
| 8E-2467 | 1211 |
| 8E-2468 | 1211 |
| 8E-2469 | 1211 |
| 8E-2882 | 622 |
| | 624 |
| 8E-3758 | ▶1312 |
| 8E-3759 | ▶1313 |
| 8E-7366 | 515 |
| 8E-7367 | 515 |
| 8E-8304 | 591 |
| 8E-8316 | 592 |
| 8E-8328 | 622 |
| | 624 |
| 8E-9898 | ▶1280 |
| 8F-0212 | 534 |
| 8F-0492 | 1021 |
| 8F-3469 | 530 |
| | 1148 |
| 8F-8544 | 590 |
| 8F-9206 | 1391 |
| | 1394 |
| 8H-2768 | 531 |
| 8H-3127 | 16 |
| | 18 |
| | 19 |
| 8H-3532 | 1044 |
| | 1173 |
| 8H-3981 | 617 |
| | 619 |
| 8H-5303 | 325 |
| 8H-5306 | 325 |
| 8H-8257 | 515 |
| | 964 |
| 8J-0101 | 1133 |
| 8J-0331 | 1044 |
| | 1173 |
| 8J-2357 | 326 |
| 8J-2962 | 661 |
| 8J-3415 | 257 |
| | 269 |
| | 273 |
| | 277 |
| 8J-4351 | 287 |
| | 288 |
| 8J-6815 | 617 |
| | 619 |
| | 622 |
| | 624 |
| | 1180 |
| 8J-6875 | 970 |
| | ▶999 |
| 8J-8782 | 539 |
| | 1070 |
| | 1148 |
| 8J-8783 | 539 |
| | 1070 |
| | 1148 |
| 8J-9841 | ▶1323 |
| 8J-9842 | ▶1316 |
| 8K-1433 | 128 |
| 8K-4739 | 174 |
| 8L-2777 | 91 |
| | 93 |
| | 94 |
| | 95 |
| | 96 |
| 8L-2786 | 87 |
| | 89 |
| | 115 |
| | 116 |
| | 167 |
| | 169 |
| | 313 |
| | 315 |
| | 316 |
| 8L-5008 | 726 |
| | 729 |
| | 732 |
| | 735 |
| | 740 |
| | 744 |
| | 748 |
| | 753 |
| | 757 |
| | 762 |
| | 766 |
| | 770 |


▶ PRIMARY REFERENCE

# PART NUMBER INDEX


| Part | Page | Part | Page | Part | Page | Part | Page |
|---|---|---|---|---|---|---|---|
| | 774 | | 766 | | 1388 | | 447 |
| | 778 | | 770 | 8M-8157 . . . . . | 576 | | 481 |
| | 784 | | 774 | | 583 | 8N-1725 . . . . . | 205 |
| | 798 | | 778 | 8M-8489 . . . . . | 118 | | 209 |
| | 802 | | 784 | | 598 | 8N-2104 . . . . . | 112 |
| | 806 | | 798 | 8M-8627 . . . . . | 638 | | 113 |
| | 808 | | 802 | 8M-8659 . . . . . | 534 | | 114 |
| | 810 | | 806 | | 538 | 8N-4617 . . . . . | 149 |
| | 816 | | 808 | 8M-8948 . . . . . | 387 | 8P-4617 . . . . . | 590 |
| | 818 | | 810 | | 395 | 8P-5141 . . . . . | 1331 |
| | 822 | | 816 | 8M-9024 . . . . . | 157 | 8P-8540 . . . . . | 277 |
| | 825 | | 833 | 8N-0869 . . . . . | 205 | | 282 |
| | 830 | | 837 | | 209 | 8P-8701 . . . . . | 600 |
| | 833 | | 842 | 8N-1513 . . . . . | 386 | 8P-9770 . . . . . | 1229 |
| | 837 | | 844 | | 394 | | 1235 |
| | 884 | 8M-2773 . . . . . | 427 | | 436 | | 1237 |
| | 886 | | 430 | | 443 | | 1240 |
| | 909 | | 436 | | 446 | | 1251 |
| | 911 | | 443 | 8N-1514 . . . . . | 351 | | 1253 |
| | 913 | | 447 | | 358 | | 1276 |
| | 916 | | 454 | | 365 | 8R-0052 . . . . . | 517 |
| | 927 | | 456 | | 376 | 8R-0053 . . . . . | 517 |
| | 931 | | 460 | | 436 | 8R-0752 . . . . . | 1102 |
| | 940 | | 465 | | 443 | | 1108 |
| | 942 | | 466 | 8N-1515 . . . . . | 436 | 8R-2014 . . . . . | 509 |
| | 953 | | 528 | | 443 | | 511 |
| 8L-6005 . . . . . | 236 | | 576 | | 446 | | 513 |
| | 922 | | 583 | 8N-1516 . . . . . | 413 | 8R-2857 . . . . . | 517 |
| | 925 | | 735 | | 416 | 8R-4001 . . . . . | 284 |
| | 927 | | 740 | 8N-1517 . . . . . | 386 | | 285 |
| | 929 | | 744 | | 394 | 8R-4147 . . . . . | 611 |
| | 930 | | 748 | | 406 | 8R-5144 . . . . . | 528 |
| | 931 | | 753 | | 436 | 8R-5645 . . . . . | 254 |
| 8L-6565 . . . . . | 1162 | | 757 | | 443 | | ▶280 |
| | 1166 | | 774 | | 446 | 8R-7102 . . . . . | 255 |
| 8L-8137 . . . . . | 151 | | 778 | 8N-1518 . . . . . | 413 | | 260 |
| 8L-8413 . . . . . | 59 | | 784 | | 416 | 8R-7858 . . . . . | 706 |
| | 1342 | | 806 | | 436 | | 709 |
| | 1346 | | 818 | | 443 | | 712 |
| | 1483 | | 822 | | 446 | 8S-0768 . . . . . | 489 |
| 8M-0456 . . . . . | 387 | | 825 | 8N-1519 . . . . . | 386 | | 491 |
| | 395 | | 830 | | 394 | | 619 |
| 8M-1013 . . . . . | 639 | | 833 | | 406 | 8S-0948 . . . . . | 257 |
| 8M-2537 . . . . . | 638 | | 837 | 8N-1520 . . . . . | 351 | | 276 |
| 8M-2770 . . . . . | 430 | | 1391 | | 358 | | 762 |
| | 436 | | 1394 | | 365 | | 766 |
| | 443 | | 1505 | | 376 | | 770 |
| | 447 | 8M-3837 . . . . . | 642 | 8N-1521 . . . . . | 351 | | 774 |
| | 572 | 8M-4390 . . . . . | 592 | | 358 | | 778 |
| 8M-2771 . . . . . | 1343 | 8M-4443 . . . . . | 576 | | 365 | | 784 |
| | 1346 | | 583 | | 376 | | 790 |
| 8M-2772 . . . . . | 164 | 8M-4986 . . . . . | 576 | | 413 | | 792 |
| | 165 | | 583 | | 416 | | 795 |
| | 326 | | 638 | | 436 | | 798 |
| | 413 | 8M-4989 . . . . . | 622 | | 443 | | 802 |
| | 416 | | 625 | | 446 | | 813 |
| | 729 | 8M-5127 . . . . . | 576 | 8N-1528 . . . . . | 406 | | 818 |
| | 732 | | 583 | 8N-1529 . . . . . | 481 | | 825 |
| | 735 | 8M-6146 . . . . . | 454 | 8N-1535 . . . . . | 351 | | 837 |
| | 740 | | 456 | | 358 | 8S-2225 . . . . . | 960 |
| | 744 | | 460 | | 365 | | 962 |
| | 748 | 8M-6393 . . . . . | 525 | | 376 | 8S-2332 . . . . . | 320 |
| | 753 | 8M-6802 . . . . . | 1039 | | 406 | | 323 |
| | 757 | 8M-7066 . . . . . | 145 | | 436 | 8S-2634 . . . . . | 205 |
| | 762 | 8M-7758 . . . . . | 1385 | | 443 | | 209 |


▶ **PRIMARY REFERENCE**

# PART NUMBER INDEX


| Part | Page |
|---|---|
| 8S-3371 | 624 |
| 8S-3746 | 1512 |
| 8S-4212 | 1512 |
| 8S-6109 | 1391 |
| | 1394 |
| 8S-6110 | 1391 |
| | 1394 |
| 8S-6212 | 591 |
| 8S-6511 | 118 |
| 8S-6823 | 148 |
| 8S-6824 | 148 |
| 8S-7374 | 608 |
| 8S-9089 | 131 |
| 8S-9094 | 35 |
| 8S-9104 | 590 |
| 8S-9191 | 188 |
| | 189 |
| | 190 |
| 8T-0075 | 1162 |
| | 1166 |
| 8T-0081 | 174 |
| | 178 |
| 8T-0106 | 605 |
| 8T-0119 | 175 |
| | 179 |
| 8T-0130 | 528 |
| 8T-0197 | 1098 |
| 8T-0267 | 1134 |
| 8T-0269 | 1355 |
| 8T-0273 | 164 |
| | 625 |
| 8T-0281 | 605 |
| | 608 |
| | 630 |
| | 631 |
| 8T-0285 | 1153 |
| | 1157 |
| 8T-0288 | 1363 |
| 8T-0328 | 402 |
| | 408 |
| | 1342 |
| | 1346 |
| | 1383 |
| | 1468 |
| | 1470 |
| 8T-0336 | 572 |
| 8T-0337 | 352 |
| | 359 |
| | 366 |
| | 376 |
| | 1331 |
| 8T-0375 | 589 |
| 8T-0389 | 1064 |
| 8T-0441 | 486 |
| 8T-0558 | 1148 |
| | 1151 |
| 8T-0650 | 520 |
| | 522 |
| 8T-0666 | 1076 |
| | 1080 |
| | 1081 |
| 8T-0668 | 1074 |
| | 1078 |
| | 1079 |
| 8T-0669 | 589 |
| | 601 |
| | 1076 |
| | 1080 |
| | 1081 |
| 8T-0722 | 535 |
| | 539 |
| | 1148 |
| | 1151 |
| | 1482 |
| 8T-0723 | 1355 |
| 8T-0741 | 990 |
| | 992 |
| | 994 |
| 8T-0785 | 1004 |
| | 1005 |
| | 1006 |
| 8T-1141 | 590 |
| | 966 |
| 8T-1158 | 622 |
| | 625 |
| 8T-1578 | 656 |
| 8T-1583 | 523 |
| 8T-1674 | 1153 |
| | 1156 |
| 8T-1685 | 494 |
| | 499 |
| | 504 |
| 8T-1686 | 174 |
| | 178 |
| 8T-1715 | 1400 |
| 8T-1739 | 1132 |
| 8T-1885 | 979 |
| | 1026 |
| | 1099 |
| 8T-1886 | 979 |
| | 1026 |
| | 1099 |
| 8T-1889 | 1405 |
| | 1406 |
| 8T-1890 | 1405 |
| | 1406 |
| 8T-2223 | 1047 |
| | 1052 |
| 8T-2275 | 1148 |
| | 1151 |
| 8T-2353 | 1130 |
| | 1131 |
| | 1162 |
| | 1166 |
| 8T-2561 | 686 |
| | 688 |
| | 1146 |
| | 1391 |
| | 1394 |
| 8T-2899 | 962 |
| 8T-3013 | 517 |
| 8T-3282 | 486 |
| | 552 |
| | 642 |
| 8T-3298 | 538 |
| | 1070 |
| | 1148 |
| 8T-3312 | 1097 |
| 8T-3331 | 1074 |
| | 1078 |
| | 1079 |
| 8T-3490 | 120 |
| | 121 |
| | 122 |
| | 128 |
| | 141 |
| | 143 |
| | 157 |
| | 174 |
| | 178 |
| | 184 |
| | 205 |
| | 209 |
| | 210 |
| | 255 |
| | 257 |
| | 260 |
| | 262 |
| | 263 |
| | 267 |
| | 268 |
| | 272 |
| | 276 |
| | 282 |
| | 413 |
| | 416 |
| | 427 |
| | 430 |
| | 435 |
| | 437 |
| | 442 |
| | 446 |
| | 454 |
| | 456 |
| | 460 |
| | 468 |
| | 503 |
| | 509 |
| | 511 |
| | 513 |
| | 551 |
| | 655 |
| | 662 |
| | 665 |
| | 684 |
| | 706 |
| | 709 |
| | 712 |
| | 735 |
| | 740 |
| | 744 |
| | 748 |
| | 753 |
| | 757 |
| | 762 |
| | 766 |
| | 770 |
| | 774 |
| | 778 |
| | 784 |
| | 790 |
| | 792 |
| | 795 |
| | 798 |
| | 802 |
| 8T-3491 | 1102 |
| | 1108 |
| 8T-3518 | 401 |
| | 407 |
| 8T-3519 | 205 |
| | 209 |
| 8T-3597 | 122 |
| | 125 |
| | 503 |
| | 665 |
| | 684 |
| | 691 |
| | 706 |
| | 709 |
| | 712 |
| | 718 |
| | 722 |
| | 1013 |
| | 1017 |
| | 1021 |
| | 1025 |
| | 1062 |
| | 1097 |
| | 1102 |
| | 1108 |
| | 1122 |
| | 1124 |
| | 1439 |
| | 1442 |
| | 1445 |
| | 1454 |
| | 1500 |
| 8T-3611 | 547 |
| | 551 |
| | 556 |
| | 560 |
| 8T-3612 | 159 |


► PRIMARY REFERENCE

# PART NUMBER INDEX


| Part | Page | Part | Page | Part | Page | Part | Page |
|---|---|---|---|---|---|---|---|
| | 174 | | 206 | | 528 | | 1014 |
| | 178 | | 210 | | 544 | | 1018 |
| | 290 | | 215 | | 548 | | 1022 |
| | 340 | | 233 | | 552 | | 1026 |
| | 406 | | 235 | | 557 | | 1064 |
| | 503 | | 244 | | 561 | | 1068 |
| | 706 | | 255 | | 564 | | 1071 |
| | 709 | | 257 | | 568 | | 1083 |
| | 712 | | 260 | | 572 | | 1099 |
| | 970 | | 262 | | 576 | | 1104 |
| | 1025 | | 263 | | 583 | | 1110 |
| | 1385 | | 265 | | 598 | | 1122 |
| | 1388 | | 267 | | 617 | | 1124 |
| | 1434 | | 269 | | 619 | | 1146 |
| | 1435 | | 273 | | 622 | | 1148 |
| | 1436 | | 277 | | 625 | | 1151 |
| | 1474 | | 280 | | 650 | | 1340 |
| 8T-3635 . . . . . | 669 | | 281 | | 652 | | 1352 |
| | 672 | | 282 | | 665 | | 1373 |
| | 1455 | | 289 | | 684 | | 1383 |
| | 1461 | | 290 | | 686 | | 1385 |
| | 1464 | | 318 | | 688 | | 1388 |
| 8T-3647 . . . . . | 387 | | 341 | | 691 | | 1391 |
| | 395 | | 342 | | 694 | | 1394 |
| | 402 | | 345 | | 726 | | 1405 |
| | 408 | | 347 | | 729 | | 1406 |
| | 454 | | 348 | | 732 | | 1411 |
| | 456 | | 349 | | 735 | | 1413 |
| | 460 | | 352 | | 740 | | 1418 |
| | 971 | | 359 | | 744 | | 1455 |
| 8T-3851 . . . . . | 666 | | 366 | | 748 | | 1458 |
| | 669 | | 376 | | 753 | | 1461 |
| | 672 | | 387 | | 757 | | 1464 |
| | 695 | | 395 | | 762 | | 1478 |
| | 697 | | 402 | | 766 | | 1482 |
| | 699 | | 406 | | 770 | | 1500 |
| | 700 | | 408 | | 774 | | 1505 |
| | 1193 | | 413 | | 778 | 8T-4122 . . . . . | 285 |
| | 1195 | | 416 | | 784 | | 675 |
| | 1197 | | 420 | | 790 | | 1099 |
| | 1198 | | 422 | | 792 | | 1122 |
| | 1199 | | 427 | | 795 | | 1124 |
| | 1200 | | 430 | | 798 | | 1166 |
| | 1201 | | 436 | | 802 | | 1422 |
| | 1202 | | 443 | | 806 | | 1452 |
| | 1203 | | 447 | | 808 | | 1453 |
| | 1206 | | 454 | | 810 | 8T-4123 . . . . . | 97 |
| 8T-3998 . . . . . | 1058 | | 456 | | 813 | | 122 |
| | 1060 | | 460 | | 816 | | 125 |
| 8T-4121 . . . . . | 20 | | 465 | | 818 | | 191 |
| | 117 | | 466 | | 822 | | 609 |
| | 122 | | 468 | | 825 | | 660 |
| | 128 | | 470 | | 830 | | 661 |
| | 141 | | 472 | | 833 | | 1002 |
| | 143 | | 475 | | 837 | | 1003 |
| | 145 | | 486 | | 842 | | 1341 |
| | 151 | | 489 | | 844 | | 1494 |
| | 155 | | 491 | | 872 | 8T-4127 . . . . . | 269 |
| | 164 | | 494 | | 874 | | 273 |
| | 165 | | 499 | | 967 | | 277 |
| | 172 | | 504 | | 971 | 8T-4128 . . . . . | 818 |
| | 175 | | 509 | | 975 | | 822 |
| | 179 | | 511 | | 977 | | 825 |
| | 184 | | 513 | | 979 | | 830 |
| | 204 | | 517 | | 1008 | | 833 |

# PART NUMBER INDEX


| Part | Page | Part | Page | Part | Page | Part | Page |
|---|---|---|---|---|---|---|---|
| | 837 | | 833 | | 544 | | 141 |
| | 844 | | 837 | | 548 | | 143 |
| 8T-4131 . . . . . | 122 | | 844 | | 552 | | 175 |
| | 125 | | 856 | | 557 | | 179 |
| 8T-4132 . . . . . | 219 | | 872 | | 561 | | 206 |
| | 1153 | | 874 | | 565 | | 210 |
| | 1157 | | 967 | | 568 | | 233 |
| 8T-4133 . . . . . | 215 | | 979 | | 576 | | 255 |
| | 257 | | 1071 | | 583 | | 257 |
| | 269 | | 1083 | | 663 | | 260 |
| | 273 | | 1110 | | 681 | | 262 |
| | 277 | | 1118 | | 684 | | 263 |
| | 352 | | 1122 | | 686 | | 267 |
| | 359 | | 1124 | | 688 | | 269 |
| | 366 | | 1126 | | 694 | | 273 |
| | 376 | | 1340 | | 726 | | 277 |
| | 395 | | 1358 | | 729 | | 289 |
| | 402 | | 1383 | | 732 | | 318 |
| | 408 | | 1391 | | 735 | | 341 |
| | 413 | | 1394 | | 740 | | 342 |
| | 416 | | 1398 | | 744 | | 345 |
| | 454 | | 1405 | | 748 | | 347 |
| | 456 | | 1406 | | 753 | | 348 |
| | 460 | | 1418 | | 757 | | 349 |
| | 509 | | 1455 | | 762 | | 352 |
| | 511 | | 1458 | | 766 | | 359 |
| | 513 | | 1461 | | 770 | | 366 |
| | 528 | | 1464 | | 774 | | 376 |
| | 576 | | 1485 | | 778 | | 387 |
| | 583 | 8T-4134 . . . . . | 1479 | | 784 | | 395 |
| | 663 | 8T-4136 . . . . . | 117 | | 790 | | 402 |
| | 690 | | 128 | | 792 | | 407 |
| | 716 | | 155 | | 795 | | 408 |
| | 718 | | 165 | | 798 | | 413 |
| | 720 | | 206 | | 802 | | 416 |
| | 722 | | 210 | | 806 | | 420 |
| | 726 | | 257 | | 813 | | 422 |
| | 729 | | 263 | | 818 | | 427 |
| | 732 | | 269 | | 822 | | 430 |
| | 735 | | 273 | | 825 | | 436 |
| | 740 | | 277 | | 830 | | 443 |
| | 744 | | 290 | | 833 | | 448 |
| | 748 | | 384 | | 837 | | 454 |
| | 753 | | 387 | | 979 | | 456 |
| | 757 | | 395 | | 1008 | | 460 |
| | 762 | | 402 | | 1014 | | 465 |
| | 766 | | 408 | | 1018 | | 466 |
| | 770 | | 413 | | 1022 | | 468 |
| | 774 | | 416 | | 1064 | | 470 |
| | 778 | | 436 | | 1083 | | 472 |
| | 784 | | 443 | | 1104 | | 475 |
| | 790 | | 448 | | 1110 | | 489 |
| | 792 | | 454 | | 1341 | | 491 |
| | 795 | | 456 | | 1352 | | 548 |
| | 798 | | 460 | | 1373 | | 552 |
| | 802 | | 489 | | 1391 | | 557 |
| | 806 | | 491 | | 1394 | | 561 |
| | 808 | | 494 | | 1418 | | 572 |
| | 810 | | 499 | | 1455 | | 576 |
| | 813 | | 504 | | 1458 | | 583 |
| | 816 | | 509 | | 1461 | | 655 |
| | 818 | | 511 | | 1464 | | 684 |
| | 822 | | 513 | | 1500 | | 688 |
| | 825 | | 517 | | 1505 | | 726 |
| | 830 | | 528 | 8T-4137 . . . . . | 128 | | 729 |

# PART NUMBER INDEX


| Part | Page | Part | Page | Part | Page | Part | Page |
|---|---|---|---|---|---|---|---|
| | 732 | | 376 | | 825 | | 1104 |
| | 735 | | 387 | | 830 | | 1110 |
| | 740 | | 395 | | 833 | 8T-4179 . . . . . | 233 |
| | 744 | | 402 | | 837 | | 577 |
| | 748 | | 408 | | 842 | | 584 |
| | 753 | | 475 | | 857 | | 720 |
| | 757 | | 481 | | 971 | | 979 |
| | 762 | | 1332 | | 979 | | 1071 |
| | 766 | | 1355 | | 1014 | | 1439 |
| | 770 | | 1385 | | 1018 | | 1442 |
| | 774 | | 1388 | | 1022 | | 1454 |
| | 778 | | 1423 | | 1064 | 8T-4180 . . . . . | 1364 |
| | 784 | | 1474 | | 1099 | | 1367 |
| | 791 | | 1479 | | 1104 | | 1369 |
| | 793 | 8T-4139 . . . . . | 122 | | 1110 | | 1371 |
| | 796 | | 125 | | 1146 | 8T-4181 . . . . . | 1364 |
| | 798 | | 141 | | 1153 | | 1367 |
| | 802 | | 143 | | 1157 | | 1369 |
| | 806 | | 206 | | 1162 | | 1371 |
| | 808 | | 210 | | 1265 | 8T-4182 . . . . . | 175 |
| | 810 | | 233 | | 1439 | | 179 |
| | 813 | | 436 | | 1442 | | 979 |
| | 816 | | 443 | | 1500 | | 1104 |
| | 818 | | 448 | | 1505 | | 1110 |
| | 822 | | 494 | 8T-4140 . . . . . | 285 | 8T-4183 . . . . . | 125 |
| | 825 | | 499 | | 544 | | 152 |
| | 830 | | 504 | | 565 | | 153 |
| | 833 | | 528 | | 569 | | 219 |
| | 837 | | 544 | | 1064 | | 494 |
| | 842 | | 548 | | 1088 | | 499 |
| | 844 | | 552 | | 1091 | | 504 |
| | 866 | | 557 | | 1099 | | 528 |
| | 869 | | 561 | | 1118 | | 544 |
| | 870 | | 565 | | 1122 | | 548 |
| | 872 | | 568 | | 1124 | | 552 |
| | 874 | | 576 | | 1126 | | 557 |
| | 971 | | 583 | | 1157 | | 561 |
| | 975 | | 645 | | 1166 | | 577 |
| | 979 | | 646 | | 1208 | | 584 |
| | 1026 | | 648 | 8T-4149 . . . . . | 494 | | 598 |
| | 1064 | | 665 | | 499 | | 645 |
| | 1068 | | 691 | | 504 | | 646 |
| | 1071 | | 706 | 8T-4167 . . . . . | 1208 | | 648 |
| | 1083 | | 709 | 8T-4172 . . . . . | 1009 | | 684 |
| | 1099 | | 712 | | 1064 | | 686 |
| | 1104 | | 718 | | 1068 | | 688 |
| | 1110 | | 722 | 8T-4173 . . . . . | 1064 | | 716 |
| | 1146 | | 724 | | 1154 | | 718 |
| | 1148 | | 735 | 8T-4174 . . . . . | 1115 | | 720 |
| | 1151 | | 740 | 8T-4175 . . . . . | 1154 | | 722 |
| | 1391 | | 744 | | 1157 | | 725 |
| | 1394 | | 748 | | 1423 | | 971 |
| | 1439 | | 753 | | 1451 | | 975 |
| | 1442 | | 757 | 8T-4176 . . . . . | 565 | | 979 |
| | 1455 | | 762 | | 569 | | 1014 |
| | 1458 | | 766 | | 576 | | 1018 |
| | 1461 | | 770 | | 583 | | 1022 |
| | 1464 | | 774 | | 1064 | | 1047 |
| | 1485 | | 778 | 8T-4177 . . . . . | 326 | | 1052 |
| 8T-4138 . . . . . | 215 | | 784 | | 1358 | | 1099 |
| | 284 | | 798 | 8T-4178 . . . . . | 20 | | 1115 |
| | 285 | | 802 | | 577 | | 1122 |
| | 352 | | 806 | | 583 | | 1124 |
| | 359 | | 818 | | 683 | | 1148 |
| | 366 | | 822 | | 978 | | 1151 |


► **PRIMARY REFERENCE**

# PART NUMBER INDEX


| Part | Page |
|---|---|
| | 1439 |
| | 1442 |
| 8T-4184 . . . . . | 148 |
| | 864 |
| | 1009 |
| | 1014 |
| | 1018 |
| | 1022 |
| | 1099 |
| | 1104 |
| | 1110 |
| | 1153 |
| | 1157 |
| 8T-4185 . . . . . | 413 |
| | 416 |
| | 572 |
| | 706 |
| | 709 |
| | 712 |
| | 762 |
| | 766 |
| | 770 |
| | 774 |
| | 778 |
| | 784 |
| | 791 |
| | 793 |
| | 796 |
| | 798 |
| | 802 |
| | 808 |
| | 810 |
| | 813 |
| | 816 |
| | 818 |
| | 825 |
| | 837 |
| | 1009 |
| | 1026 |
| | 1180 |
| | 1352 |
| | 1411 |
| | 1413 |
| 8T-4186 . . . . . | 125 |
| | 206 |
| | 210 |
| | 257 |
| | 265 |
| | 269 |
| | 273 |
| | 277 |
| | 352 |
| | 359 |
| | 366 |
| | 377 |
| | 413 |
| | 416 |
| | 528 |
| | 565 |
| | 569 |
| | 577 |
| | 584 |
| | 690 |
| | 691 |
| | 1026 |
| | 1341 |
| 8T-4187 . . . . . | 683 |
| | 725 |
| 8T-4189 . . . . . | 124 |
| | 175 |
| | 179 |
| | 244 |
| | 340 |
| | 470 |
| | 472 |
| | 475 |
| | 481 |
| | 494 |
| | 499 |
| | 504 |
| | 990 |
| | 992 |
| | 994 |
| | 1464 |
| | 1474 |
| | 1479 |
| 8T-4191 . . . . . | 665 |
| | 1014 |
| | 1018 |
| | 1022 |
| 8T-4192 . . . . . | 577 |
| | 584 |
| | 681 |
| | 691 |
| | 735 |
| | 740 |
| | 744 |
| | 748 |
| | 753 |
| | 757 |
| | 762 |
| | 766 |
| | 770 |
| | 774 |
| | 778 |
| | 784 |
| | 979 |
| | 1026 |
| | 1154 |
| | 1157 |
| | 1166 |
| | 1439 |
| | 1442 |
| 8T-4193 . . . . . | 454 |
| | 456 |
| | 460 |
| | 675 |
| | 683 |
| | 1088 |
| | 1091 |
| | 1099 |
| | 1115 |
| | 1154 |
| | 1157 |
| | 1422 |
| | 1452 |
| | 1453 |
| 8T-4194 . . . . . | 436 |
| | 443 |
| | 448 |
| | 494 |
| | 499 |
| | 504 |
| | 577 |
| | 584 |
| | 642 |
| | 704 |
| | 722 |
| | 864 |
| | 1014 |
| | 1018 |
| | 1022 |
| | 1068 |
| | 1088 |
| | 1091 |
| | 1115 |
| 8T-4195 . . . . . | 120 |
| | 121 |
| | 122 |
| | 125 |
| | 128 |
| | 141 |
| | 143 |
| | 145 |
| | 151 |
| | 164 |
| | 172 |
| | 175 |
| | 179 |
| | 184 |
| | 206 |
| | 235 |
| | 269 |
| | 273 |
| | 277 |
| | 280 |
| | 281 |
| | 282 |
| | 413 |
| | 416 |
| | 436 |
| | 443 |
| | 448 |
| | 528 |
| | 544 |
| | 552 |
| | 569 |
| | 577 |
| | 584 |
| | 617 |
| | 619 |
| | 622 |
| | 625 |
| | 650 |
| | 652 |
| | 656 |
| | 684 |
| | 686 |
| | 688 |
| | 691 |
| | 694 |
| | 706 |
| | 709 |
| | 712 |
| | 716 |
| | 718 |
| | 720 |
| | 722 |
| | 729 |
| | 732 |
| | 735 |
| | 740 |
| | 744 |
| | 748 |
| | 753 |
| | 757 |
| | 762 |
| | 766 |
| | 770 |
| | 774 |
| | 778 |
| | 784 |
| | 798 |
| | 802 |
| | 806 |
| | 808 |
| | 810 |
| | 816 |
| | 818 |
| | 822 |
| | 825 |
| | 830 |
| | 833 |
| | 837 |
| | 861 |
| | 862 |
| | 872 |
| | 971 |
| | 1014 |
| | 1018 |
| | 1022 |
| | 1026 |
| | 1099 |
| | 1110 |
| | 1383 |
| | 1385 |
| | 1388 |
| | 1391 |
| | 1394 |
| | 1405 |
| | 1406 |
| | 1418 |
| | 1474 |
| | 1479 |
| 8T-4196 . . . . . | 122 |
| | 387 |
| | 395 |
| | 402 |
| | 408 |
| | 470 |
| | 472 |
| | 475 |
| | 494 |
| | 499 |
| | 504 |
| | 544 |
| | 565 |
| | 569 |
| | 598 |
| | 729 |


► PRIMARY REFERENCE

# PART NUMBER INDEX


| Part | Page | Part | Page | Part | Page | Part | Page |
|---|---|---|---|---|---|---|---|
| | 732 | | 125 | | 744 | | 353 |
| | 808 | | 706 | | 748 | | 359 |
| | 810 | | 709 | | 753 | | 367 |
| | 816 | | 712 | | 757 | | 377 |
| | 975 | | 866 | | 762 | | 387 |
| | 979 | | 869 | | 766 | | 395 |
| | 1009 | | 870 | | 770 | | 402 |
| | 1014 | 8T-4223 . . . . . | 54 | | 774 | | 408 |
| | 1018 | | 122 | | 778 | | 454 |
| | 1083 | | 125 | | 784 | | 456 |
| | 1099 | | 148 | | 970 | | 460 |
| | 1104 | | 158 | | 971 | | 470 |
| | 1110 | | 165 | | 975 | | 472 |
| | 1148 | | 175 | | 979 | | 475 |
| | 1151 | | 179 | | 1008 | | 481 |
| 8T-4200 . . . . . | 134 | | 204 | | 1014 | | 494 |
| | 136 | | 206 | | 1018 | | 499 |
| | 326 | | 210 | | 1022 | | 504 |
| | 454 | | 219 | | 1026 | | 617 |
| | 456 | | 233 | | 1035 | | 619 |
| | 460 | | 265 | | 1047 | | 633 |
| | 1479 | | 284 | | 1052 | | 694 |
| 8T-4205 . . . . . | 194 | | 353 | | 1064 | | 716 |
| | 202 | | 359 | | 1068 | | 718 |
| | 269 | | 366 | | 1071 | | 720 |
| | 273 | | 377 | | 1088 | | 726 |
| | 277 | | 387 | | 1091 | | 866 |
| | 280 | | 395 | | 1099 | | 872 |
| | 281 | | 402 | | 1104 | | 874 |
| | 282 | | 408 | | 1110 | | 971 |
| | 284 | | 423 | | 1115 | | 990 |
| | 285 | | 425 | | 1122 | | 992 |
| | 321 | | 436 | | 1124 | | 994 |
| | 335 | | 443 | | 1146 | | 1026 |
| | 352 | | 448 | | 1148 | | 1358 |
| | 359 | | 494 | | 1151 | | 1378 |
| | 366 | | 499 | | 1154 | | 1385 |
| | 377 | | 504 | | 1157 | | 1388 |
| | 387 | | 544 | | 1162 | | 1402 |
| | 395 | | 548 | | 1439 | | 1433 |
| | 402 | | 552 | | 1442 | | 1450 |
| | 407 | | 557 | | 1454 | | 1464 |
| | 408 | | 561 | | 1500 | | 1474 |
| | 971 | | 565 | | 1505 | | 1479 |
| | 1162 | | 569 | 8T-4224 . . . . . | 124 | 8T-4226 . . . . . | 861 |
| | 1166 | | 577 | | 134 | | 862 |
| | 1331 | | 584 | | 136 | 8T-4244 . . . . . | 146 |
| | 1385 | | 598 | | 175 | | 204 |
| | 1388 | | 617 | | 179 | | 206 |
| | 1409 | | 619 | | 202 | | 210 |
| | 1468 | | 650 | | 206 | | 233 |
| | 1470 | | 652 | | 210 | | 353 |
| | 1474 | | 659 | | 219 | | 359 |
| | 1479 | | 661 | | 255 | | 367 |
| | 1488 | | 665 | | 257 | | 377 |
| | 1491 | | 675 | | 260 | | 387 |
| | 1494 | | 681 | | 262 | | 395 |
| 8T-4219 . . . . . | 790 | | 691 | | 263 | | 402 |
| | 792 | | 704 | | 269 | | 408 |
| | 795 | | 706 | | 273 | | 436 |
| | 812 | | 709 | | 277 | | 443 |
| | 1070 | | 712 | | 289 | | 448 |
| 8T-4222 . . . . . | 120 | | 720 | | 290 | | 577 |
| | 121 | | 735 | | 326 | | 584 |
| | 122 | | 740 | | 340 | | 706 |


► **PRIMARY REFERENCE**

# PART NUMBER INDEX


| Part | Page |
|---|---|
| | 709 |
| | 712 |
| | 718 |
| | 970 |
| | 971 |
| | 979 |
| | 1025 |
| | 1068 |
| | 1071 |
| | 1118 |
| | 1126 |
| | 1454 |
| | 1479 |
| 8T-4648 | 146 |
| | 577 |
| | 584 |
| | 706 |
| | 709 |
| | 712 |
| | 1014 |
| | 1018 |
| | 1022 |
| | 1104 |
| | 1110 |
| | 1115 |
| | 1154 |
| | 1157 |
| 8T-4747 | 1364 |
| | 1367 |
| | 1369 |
| | 1371 |
| 8T-4779 | 675 |
| | 1007 |
| | 1064 |
| | 1088 |
| | 1091 |
| | 1115 |
| | 1122 |
| | 1124 |
| 8T-4835 | 204 |
| 8T-4896 | 134 |
| | 136 |
| | 159 |
| | 167 |
| | 169 |
| | 214 |
| | 236 |
| | 413 |
| | 416 |
| | 420 |
| | 422 |
| | 423 |
| | 425 |
| | 650 |
| | 652 |
| 8T-4908 | 206 |
| | 210 |
| | 619 |
| | 866 |
| 8T-4910 | 122 |
| | 125 |
| | 158 |
| | 284 |
| | 565 |
| | 569 |
| | 577 |
| | 584 |
| | 706 |
| | 709 |
| | 712 |
| | 718 |
| | 722 |
| | 1022 |
| | 1115 |
| | 1442 |
| 8T-4935 | 669 |
| | 672 |
| 8T-4956 | 125 |
| | 544 |
| | 565 |
| | 569 |
| | 577 |
| | 584 |
| | 617 |
| | 619 |
| | 661 |
| | 675 |
| | 680 |
| | 735 |
| | 740 |
| | 744 |
| | 748 |
| | 753 |
| | 757 |
| | 762 |
| | 766 |
| | 770 |
| | 774 |
| | 778 |
| | 784 |
| | 971 |
| | 979 |
| | 1014 |
| | 1018 |
| | 1022 |
| | 1064 |
| | 1099 |
| | 1115 |
| | 1206 |
| | 335 |
| | 1343 |
| | 1346 |
| | 656 |
| | 1343 |
| | 1346 |
| | 1367 |
| | 1371 |
| | 131 |
| | 1097 |
| | 489 |
| | 491 |
| | 704 |
| | 989 |
| | 658 |
| | 290 |
| | 544 |
| | 548 |
| | 552 |
| | 557 |
| | 561 |
| | 565 |
| | 569 |
| | 866 |
| | 979 |
| | 1064 |
| | 1104 |
| | 1110 |
| | 1391 |
| | 1394 |
| 8T-5027 | 1385 |
| | 1388 |
| 8T-5041 | 1008 |
| | 1035 |
| 8T-5070 | 1074 |
| | 1076 |
| 8T-5400 | 1488 |
| | 1491 |
| | 1494 |
| 8T-5413 | 856 |
| 8T-5432 | 402 |
| | 408 |
| 8T-5436 | 1162 |
| | 1166 |
| | 1340 |
| 8T-5439 | 609 |
| | 691 |
| | 725 |
| | 985 |
| | 986 |
| | 1144 |
| 8T-5460 | 191 |
| | 704 |
| 8T-5463 | 1420 |
| | 1422 |
| | 1423 |
| 8T-5913 | 1485 |
| 8T-5914 | 1485 |
| 8T-6381 | 609 |
| 8T-6383 | 219 |
| 8T-6385 | 1124 |
| 8T-6411 | 269 |
| | 273 |
| | 277 |
| | 280 |
| | 281 |
| | 282 |
| 8T-6430 | 609 |
| | 660 |
| | 661 |
| | 1002 |
| | 1003 |
| 8T-6466 | 128 |
| | 145 |
| | 206 |
| | 210 |
| | 437 |
| | 443 |
| | 448 |
| | 548 |
| | 552 |
| | 557 |
| | 561 |
| | 706 |
| | 709 |
| | 712 |
| | 872 |
| | 979 |
| | 1014 |
| | 1018 |
| | 1022 |
| | 1026 |
| | 1099 |
| | 1162 |
| | 1166 |
| | 1391 |
| | 1394 |
| | 1500 |
| | 1505 |
| 8T-6631 | 1331 |
| 8T-6684 | 493 |
| | 498 |
| | 504 |
| 8T-6696 | 1063 |
| 8T-6757 | 39 |
| | 42 |
| 8T-6761 | 131 |
| 8T-6765 | 146 |
| 8T-6767 | 131 |
| 8T-6842 | 1385 |
| | 1455 |
| 8T-6868 | 246 |
| | 247 |
| | 565 |
| | 569 |
| | 577 |
| | 584 |
| 8T-6869 | 175 |
| | 179 |
| | 245 |
| | 248 |
| | 255 |
| | 257 |
| | 260 |
| | 262 |
| | 263 |
| | 269 |
| | 273 |
| | 277 |
| | 454 |
| | 456 |
| | 460 |
| | 489 |
| | 491 |
| | 633 |
| 8T-6870 | 1026 |
| | 1378 |
| 8T-6876 | 145 |
| | 848 |
| | 990 |
| | 992 |
| | 994 |
| | 1008 |
| 8T-6895 | 1098 |
| 8T-6911 | 669 |
| | 672 |
| 8T-6912 | 290 |
| | 407 |
| | 694 |
| | 1378 |
| 8T-6974 | 427 |


► PRIMARY REFERENCE

# PART NUMBER INDEX


| Part | Page | Part | Page | Part | Page | Part | Page |
|---|---|---|---|---|---|---|---|
| | 430 | | 352 | | 394 | | 1376 |
| 8T-6991 | 704 | | 357 | | 401 | 8Y-8306 | 656 |
| 8T-7038 | 1508 | | 364 | | 406 | | |
| 8T-7062 | 14 | | 374 | | 407 | | |
| 8T-7087 | 1064 | | 387 | 8T-9757 | 205 | | |
| 8T-7338 | 617 | | 413 | | 209 | | |
| | 619 | | 423 | 8T-9834 | 352 | 9B-0453 | 970 |
| | 677 | | 425 | | 358 | 9B-7233 | 387 |
| | 1014 | | 427 | | 366 | | 395 |
| | 1018 | | 430 | | 375 | | 402 |
| | 1022 | | 435 | 8V-3609 | 966 | | 406 |
| 8T-7520 | 1097 | | 436 | 8V-5386 | 605 | | 407 |
| 8T-7525 | 1138 | | 447 | 8V-6879 | 992 | | 408 |
| | 1140 | | 460 | 8W-2555 | 949 | 9B-7237 | 159 |
| 8T-7529 | 1398 | | 465 | | 950 | | 204 |
| 8T-7535 | 1002 | | 468 | | 951 | 9C-1079 | 1094 |
| | 1003 | | 472 | 8W-2597 | 884 | | 1097 |
| 8T-7546 | 1103 | | 1074 | | 909 | 9C-2399 | 564 |
| 8T-7547 | 219 | | 1076 | | 911 | | 568 |
| | 290 | | 1204 | | 920 | 9C-4935 | 669 |
| | 475 | | 1205 | | 922 | | 672 |
| | 494 | | 1331 | | 927 | 9C-6809 | 669 |
| | 499 | | 1342 | | ▶950 | | 672 |
| | 504 | | 1352 | 8W-2966 | 1162 | | 699 |
| | 694 | | 1411 | 8X-0674 | 704 | | 700 |
| | 1433 | | 1415 | 8X-1106 | 949 | | 1193 |
| 8T-7566 | 1425 | | 1416 | | 950 | | 1195 |
| | 1428 | | 1417 | | 951 | 9C-7863 | 666 |
| 8T-7927 | 543 | | 1494 | 8X-2323 | 874 | | 669 |
| 8T-7930 | 204 | 8T-8827 | 420 | 8X-3467 | 1025 | | 672 |
| 8T-7934 | 844 | | 422 | 8X-4086 | 603 | | 691 |
| | 1340 | 8T-8874 | 351 | | 604 | 9C-7929 | 701 |
| 8T-7963 | 1385 | | 358 | 8X-4719 | 1115 | 9D-0630 | 164 |
| | 1388 | | 365 | 8X-4886 | 564 | | 165 |
| 8T-7964 | 1409 | | 375 | | 568 | 9D-1829 | 552 |
| 8T-8442 | 1138 | 8T-8887 | 1008 | | 575 | | 557 |
| | 1140 | 8T-8899 | 979 | | 582 | | 561 |
| 8T-8667 | 454 | 8T-8900 | 498 | 8X-5803 | 350 | 9D-6134 | 683 |
| 8T-8729 | 306 | 8T-8901 | 1102 | | 357 | 9F-2167 | 966 |
| | 312 | | 1108 | | 364 | 9F-3788 | 590 |
| | 326 | 8T-8919 | 1130 | | 374 | 9F-5599 | 321 |
| | 338 | | 1131 | 8X-5963 | 703 | 9F-5644 | 325 |
| | 477 | 8T-9082 | 1468 | 8X-6166 | 515 | 9F-6641 | 1039 |
| | 641 | | 1470 | 8X-9227 | 810 | 9F-7283 | 1099 |
| | 990 | 8T-9358 | 468 | | 816 | 9F-8125 | 350 |
| | 1085 | | 808 | 8Y-3966 | 656 | | 357 |
| | 1356 | | 810 | 8Y-3998 | 656 | | 364 |
| | 1407 | | 812 | 8Y-3999 | 656 | | 374 |
| | 1411 | | 816 | 8Y-4489 | 1439 | 9F-9327 | 402 |
| | 1416 | 8T-9371 | 1483 | 8Y-4501 | 1367 | | 408 |
| 8T-8730 | 299 | 8T-9377 | 416 | | 1369 | 9G-0003 | 205 |
| 8T-8731 | 299 | 8T-9397 | 489 | | 1371 | | 209 |
| | 427 | | 491 | 8Y-5743 | 684 | 9G-0004 | 205 |
| | 435 | 8T-9522 | 1174 | | 686 | | 209 |
| | 442 | | 1175 | | 688 | 9G-1307 | 1418 |
| 8T-8732 | 311 | | 1176 | 8Y-5746 | 1474 | 9G-1950 | 1331 |
| | 460 | | 1178 | 8Y-6277 | 1468 | 9G-2673 | 353 |
| 8T-8737 | 4 | 8T-9527 | 55 | 8Y-6333 | 1474 | | 359 |
| | 167 | 8T-9530 | 1231 | 8Y-6352 | 1376 | | 367 |
| | 257 | | 1240 | 8Y-6364 | 1512 | | 377 |
| | 338 | 8T-9655 | 174 | 8Y-6386 | 1364 | 9G-3695 | 477 |
| | 343 | | 178 | | 1367 | | 479 |
| | 347 | | 217 | | 1369 | | 1358 |
| | 350 | | 218 | | 1371 | 9G-4101 | 321 |
| | 351 | | 386 | 8Y-6388 | 1374 | 9G-4224 | 386 |




▶ **PRIMARY REFERENCE**

# PART NUMBER INDEX


| Part | Page | Part | Page | Part | Page | Part | Page |
|---|---|---|---|---|---|---|---|
| | 394 | | 624 | 9N-5253 . . . . . | 434 | | 1367 |
| 9G-4343 . . . . . | 401 | 9M-4313 . . . . . | 638 | 9N-6108 . . . . . | 83 | | 1371 |
| 9G-4733 . . . . . | 1161 | 9M-4355 . . . . . | 590 | 9P-0719 . . . . . | 367 | 9S-1343 . . . . . | 590 |
| | 1165 | 9M-4370 . . . . . | 598 | | 377 | 9S-2544 . . . . . | 321 |
| 9G-5321 . . . . . | 642 | 9M-5024 . . . . . | 517 | 9P-5531 . . . . . | 591 | 9S-4167 . . . . . | 167 |
| 9G-8140 . . . . . | 729 | 9M-5870 . . . . . | 353 | 9P-6476 . . . . . | 622 | | 169 |
| | 732 | | 359 | | 624 | 9S-4180 . . . . . | 1161 |
| 9G-8451 . . . . . | 386 | | 367 | 9P-7121 . . . . . | 192 | | 1165 |
| | 394 | | 377 | | 194 | | 1180 |
| 9G-9288 . . . . . | 691 | 9M-5884 . . . . . | 1445 | 9R-1733 . . . . . | 406 | 9S-4181 . . . . . | 486 |
| | 1144 | 9M-5894 . . . . . | 1074 | | 435 | | 617 |
| | ▶1513 | | 1076 | | 666 | | 619 |
| 9H-1031 . . . . . | 31 | | 1078 | | 697 | | 666 |
| | 33 | | 1079 | | 699 | | 998 |
| 9H-3757 . . . . . | 321 | | 1080 | 9R-2613 . . . . . | 289 | | 1134 |
| 9H-5537 . . . . . | 591 | | 1081 | | 290 | 9S-4182 . . . . . | 287 |
| 9H-6454 . . . . . | 1148 | 9M-6097 . . . . . | 486 | | 548 | | 288 |
| | 1151 | 9M-6527 . . . . . | 138 | | 645 | | 1047 |
| 9H-6832 . . . . . | 642 | 9M-7394 . . . . . | 1513 | | 665 | | 1051 |
| 9H-8872 . . . . . | 1130 | 9M-7609 . . . . . | 321 | | 666 | | 1103 |
| | 1131 | 9M-7783 . . . . . | 214 | | 669 | | 1109 |
| 9J-3047 . . . . . | 1148 | 9M-7958 . . . . . | 128 | | 672 | | 1161 |
| | 1151 | | 1095 | | 703 | | 1165 |
| 9J-3866 . . . . . | 977 | 9M-8406 . . . . . | 175 | | 706 | 9S-4183 . . . . . | 1098 |
| | 1102 | | 179 | | 709 | 9S-4185 . . . . . | 1026 |
| | 1108 | | 206 | | 712 | | 1184 |
| 9J-7031 . . . . . | 538 | | 427 | | 744 | 9S-4190 . . . . . | 174 |
| | 1148 | | 430 | | 748 | | 178 |
| | 1151 | | 454 | | 830 | 9S-4191 . . . . . | 515 |
| 9J-9600 . . . . . | 1311 | | 456 | | 861 | | 525 |
| 9J-9821 . . . . . | 1047 | | 460 | | 862 | | 592 |
| | 1052 | | 762 | | 1102 | | 617 |
| 9K-0803 . . . . . | 704 | | 766 | | 1108 | | 619 |
| 9L-1775 . . . . . | 1391 | | 770 | | 1439 | | 964 |
| | 1394 | | 798 | | 1442 | | 1013 |
| 9L-5854 . . . . . | 32 | | 802 | | 1445 | | 1017 |
| | 34 | | 825 | 9R-2640 . . . . . | 666 | | 1021 |
| 9L-6770 . . . . . | 202 | | 837 | | 701 | | 1047 |
| 9L-7494 . . . . . | 531 | | 1331 | | 1200 | | 1051 |
| 9L-8439 . . . . . | 101 | | 1391 | 9R-2821 . . . . . | 1193 | | 1134 |
| 9L-8925 . . . . . | 16 | | 1394 | | 1197 | | 1161 |
| | 18 | 9N-0869 . . . . . | 175 | | 1201 | | 1165 |
| | 19 | | 179 | | 1202 | | 1179 |
| 9L-9188 . . . . . | 1161 | | 217 | | 1203 | | 1180 |
| | 1165 | | 218 | | 1206 | | 1184 |
| 9M-0164 . . . . . | 99 | | 387 | | 1458 | 9S-4205 . . . . . | 485 |
| | 108 | | 396 | | 1461 | | 486 |
| 9M-0853 . . . . . | 102 | | 402 | | 1464 | 9S-4368 . . . . . | 622 |
| | 104 | | 407 | 9R-4595 . . . . . | 669 | | 625 |
| | 106 | | 408 | | 672 | 9S-4372 . . . . . | 622 |
| | 110 | | 481 | | 703 | | 624 |
| 9M-1503 . . . . . | 590 | | 1376 | | 1199 | 9S-6130 . . . . . | 1180 |
| 9M-1974 . . . . . | 24 | | 1474 | | 1200 | 9S-7712 . . . . . | 729 |
| | 217 | 9N-2038 . . . . . | 160 | | 1201 | | 732 |
| | 218 | | 163 | | 1202 | 9S-7949 . . . . . | 531 |
| | 291 | 9N-3167 . . . . . | 78 | | 1203 | 9S-7950 . . . . . | 531 |
| | 293 | | 80 | | 1439 | 9S-8001 . . . . . | 996 |
| | 489 | 9N-3666 . . . . . | 236 | | 1442 | 9S-8002 . . . . . | 87 |
| | 491 | 9N-4452 . . . . . | 1318 | 9R-5008 . . . . . | 1161 | | 131 |
| | 639 | 9N-4453 . . . . . | 1312 | | 1165 | | 154 |
| 9M-2076 . . . . . | 966 | 9N-4552 . . . . . | 1315 | 9R-7123 . . . . . | 1454 | | 962 |
| 9M-2095 . . . . . | 590 | 9N-4561 . . . . . | ▶1324 | 9R-7996 . . . . . | 1161 | | 1051 |
| 9M-2904 . . . . . | 53 | 9N-4562 . . . . . | ▶1317 | | 1165 | | 1134 |
| 9M-3786 . . . . . | 140 | 9N-4563 . . . . . | ▶1318 | 9R-8185 . . . . . | 683 | | 1138 |
| 9M-4007 . . . . . | 622 | 9N-4564 . . . . . | ▶1319 | 9R-8538 . . . . . | 656 | | 1140 |


▶ **PRIMARY REFERENCE**

# PART NUMBER INDEX


| Part | Page | Part | Page | Part | Page | Part | Page |
|---|---|---|---|---|---|---|---|
| | 1161 | 9T-4735 | 1342 | 9W-1377 | ▶1211 | 9X-1343 | 352 |
| | 1166 | 9T-5134 | 498 | 9W-1572 | 590 | | 358 |
| 9S-8004 | 48 | | 503 | 9W-1579 | 591 | | 366 |
| | 50 | | 564 | 9W-1698 | 1082 | | 375 |
| | 102 | 9T-6149 | 999 | 9W-1951 | 351 | 9X-1386 | 312 |
| | 104 | | ▶1000 | | 358 | | 416 |
| | 106 | 9T-6150 | 999 | | 365 | | 1074 |
| | 517 | | ▶1001 | | 376 | | 1076 |
| | 1058 | 9T-6943 | 669 | 9W-2977 | 590 | | 1358 |
| | 1060 | | 672 | 9W-3898 | 592 | 9X-1813 | 295 |
| | 1161 | 9T-7419 | 1047 | 9W-4361 | 257 | | 299 |
| | 1165 | | 1051 | | 268 | | 300 |
| 9S-8005 | 87 | 9T-9226 | 1148 | | 272 | | 301 |
| | 89 | | 1151 | | 276 | | 304 |
| | 131 | 9T-9227 | 1148 | 9W-5568 | 639 | | 306 |
| | 167 | | 1151 | 9W-5731 | 1267 | | 310 |
| | 169 | 9T-9992 | 1174 | | 1279 | | 324 |
| | 182 | | 1175 | | ▶1281 | | 328 |
| | 185 | | 1176 | 9W-5732 | 1267 | | 331 |
| | 642 | | 1178 | | 1279 | | 332 |
| | 1030 | 9U-0560 | 269 | | 1281 | | 430 |
| | 1187 | | 273 | 9W-5733 | 1267 | | 447 |
| | 1188 | 9U-0561 | 268 | | 1279 | | 460 |
| 9S-8006 | 87 | | 272 | | 1281 | | 1008 |
| | 89 | 9U-0585 | 1192 | 9W-5734 | 1267 | | 1085 |
| | 102 | | 1206 | | 1279 | 9X-2026 | 1343 |
| | 104 | | 1207 | 9W-5735 | 1267 | | 1346 |
| | 106 | 9U-0830 | 1379 | | 1279 | 9X-2027 | 215 |
| | 1129 | 9U-0853 | 666 | | ▶1282 | | 1474 |
| | 1138 | 9U-0952 | 1474 | 9W-5736 | 1267 | 9X-2038 | 15 |
| | 1140 | 9U-0953 | 1474 | | 1279 | | 1385 |
| 9S-8008 | 590 | 9U-0954 | 1474 | | 1282 | | 1388 |
| | 1032 | 9U-0955 | 1474 | 9W-6582 | 97 | | 1474 |
| | 1047 | 9U-0958 | 1474 | | 609 | | 1479 |
| | 1051 | 9U-1169 | 1373 | 9W-6584 | 97 | 9X-2039 | 1374 |
| | 1052 | 9U-1793 | 669 | 9W-8297 | 592 | 9X-2040 | 1330 |
| 9S-8010 | 88 | | 672 | 9W-8298 | 591 | | 1374 |
| | 1047 | 9U-2277 | 268 | 9W-8394 | 236 | 9X-2041 | 215 |
| | 1051 | | 272 | 9W-8451 | 1324 | | 1445 |
| 9S-8752 | 55 | | 276 | 9W-8452 | 1317 | | 1455 |
| | 62 | | 340 | 9W-8459 | 1319 | | 1458 |
| | 67 | | 427 | 9W-8551 | 1323 | | 1461 |
| | 77 | | 430 | 9W-8552 | 1316 | | 1464 |
| | 84 | | 564 | 9W-9856 | 591 | 9X-2042 | 387 |
| | 102 | | 568 | 9W-9930 | 97 | | 396 |
| | 104 | 9U-2331 | 1381 | | 609 | | 402 |
| | 106 | 9U-2332 | 1383 | 9X-0141 | 351 | | 407 |
| | 186 | 9U-3925 | 1474 | | 358 | | 408 |
| | 187 | | 1479 | | 365 | | 1343 |
| 9S-9334 | 78 | 9U-3926 | 1474 | | 376 | | 1346 |
| | 80 | | 1479 | 9X-0196 | 446 | | 1362 |
| | 192 | 9U-3927 | 1474 | 9X-0261 | 454 | | 1374 |
| | 194 | | 1479 | | 456 | | 1411 |
| | 1161 | 9U-3928 | 605 | | 460 | | 1413 |
| | 1165 | 9U-4431 | 1381 | 9X-0262 | 291 | | 1455 |
| 9T-0818 | 691 | | 1383 | | 293 | | 1458 |
| | 1144 | 9U-8263 | 1381 | 9X-1046 | 353 | | 1461 |
| 9T-1258 | 1030 | 9V-3659 | 658 | | 360 | | 1464 |
| 9T-3096 | 1025 | 9W-0852 | 338 | | 367 | 9X-2043 | 1479 |
| | 1153 | | 350 | | 377 | 9X-2044 | 402 |
| | 1156 | | 351 | | 1431 | | 408 |
| | ▶1159 | | 357 | 9X-1054 | 386 | | 1343 |
| 9T-3752 | 634 | | 364 | | 394 | | 1347 |
| | 1102 | | 374 | | 401 | | 1364 |
| | 1108 | | 1331 | | 406 | | 1367 |


▶ **PRIMARY REFERENCE**

# PART NUMBER INDEX


| Part | Page |
|---|---|
| | 1369 |
| | 1371 |
| | 1455 |
| | 1474 |
| 9X-2045 | 1362 |
| | 1385 |
| | 1388 |
| | 1411 |
| | 1413 |
| 9X-2046 | 1385 |
| | 1388 |
| | 1420 |
| | 1422 |
| 9X-2125 | 1146 |
| 9X-2129 | 1514 |
| 9X-2133 | 128 |
| 9X-2145 | 596 |
| 9X-2158 | 598 |
| 9X-2185 | 1331 |
| 9X-2205 | 165 |
| | 192 |
| | 194 |
| 9X-2289 | 575 |
| | 582 |
| 9X-2299 | 1373 |
| 9X-2327 | 547 |
| | 551 |
| | 556 |
| | 597 |
| 9X-2370 | 53 |
| 9X-2404 | 642 |
| 9X-2480 | 353 |
| | 360 |
| | 367 |
| | 377 |
| | 470 |
| | 472 |
| 9X-2488 | 236 |
| | 1331 |
| | 1400 |
| | 1402 |
| 9X-2498 | 1383 |
| 9X-2532 | 1487 |
| 9X-2533 | 1487 |
| 9X-2614 | 1098 |
| 9X-2616 | 1474 |
| 9X-2647 | 548 |
| 9X-3265 | 1411 |
| | 1413 |
| 9X-3401 | 295 |
| | 304 |
| | 1358 |
| 9X-3463 | 242 |
| | 243 |
| | 249 |
| 9X-3495 | 427 |
| | 435 |
| | 442 |
| | 454 |
| | 456 |
| | 460 |
| 9X-3579 | 1076 |
| | 1080 |
| | 1081 |
| 9X-4008 | 155 |
| 9X-4493 | 268 |
| | 272 |
| | 276 |
| 9X-4597 | 704 |
| 9X-4599 | 1208 |
| 9X-4601 | 1208 |
| 9X-4605 | 622 |
| | 625 |
| 9X-4609 | 639 |
| 9X-6015 | 547 |
| | 551 |
| | 556 |
| | 560 |
| 9X-6017 | 1074 |
| | 1076 |
| 9X-6032 | 1014 |
| | 1018 |
| | 1022 |
| 9X-6151 | 523 |
| 9X-6165 | 246 |
| | 247 |
| | 353 |
| | 360 |
| | 367 |
| | 377 |
| | 385 |
| 9X-6258 | 326 |
| 9X-6269 | 3 |
| | 4 |
| 9X-6395 | 997 |
| | 1044 |
| | 1173 |
| 9X-6458 | 26 |
| | 62 |
| | 82 |
| | 84 |
| | 101 |
| | 112 |
| | 113 |
| | 114 |
| | 131 |
| | 175 |
| | 179 |
| 9X-6580 | 494 |
| | 499 |
| | 504 |
| | 1104 |
| | 1110 |
| 9X-6626 | 1420 |
| | 1422 |
| | 1423 |
| 9X-6763 | 206 |
| | 210 |
| 9X-6772 | 260 |
| | 342 |
| | 343 |
| | 345 |
| | 347 |
| | 348 |
| | 349 |
| | 351 |
| | 358 |
| | 365 |
| | 376 |
| | 384 |
| | 385 |
| | 386 |
| | 394 |
| | 401 |
| | 406 |
| | 407 |
| | 413 |
| | 416 |
| | 420 |
| | 427 |
| | 430 |
| | 435 |
| | 436 |
| | 442 |
| | 443 |
| | 446 |
| | 447 |
| | 454 |
| | 456 |
| | 460 |
| | 465 |
| | 466 |
| | 468 |
| | 481 |
| | 489 |
| | 491 |
| | 564 |
| | 568 |
| | 1008 |
| | 1062 |
| 9X-7145 | 352 |
| | 359 |
| | 366 |
| | 375 |
| 9X-7146 | 351 |
| | 358 |
| | 365 |
| | 376 |
| 9X-7317 | 188 |
| | 189 |
| | 190 |
| 9X-7344 | 465 |
| | 466 |
| 9X-7378 | 413 |
| | 417 |
| | 1339 |
| 9X-7380 | 1391 |
| | 1394 |
| 9X-7381 | 1391 |
| | 1394 |
| | 1398 |
| 9X-7382 | 1391 |
| | 1394 |
| | 1398 |
| 9X-7383 | 1391 |
| | 1394 |
| | 1398 |
| 9X-7384 | 1391 |
| | 1394 |
| | 1398 |
| 9X-7385 | 1339 |
| 9X-7418 | 189 |
| 9X-7419 | 189 |
| 9X-7430 | 39 |
| | 42 |
| 9X-7680 | 1138 |
| | 1140 |
| 9X-7722 | 1030 |
| 9X-7743 | 531 |
| 9X-7849 | 252 |
| 9X-8139 | 252 |
| 9X-8250 | 422 |
| | 437 |
| | 443 |
| | 448 |
| | 1500 |
| | 1505 |
| 9X-8256 | 192 |
| | 215 |
| | 255 |
| | 260 |
| | 290 |
| | 387 |
| | 396 |
| | 402 |
| | 408 |
| | 427 |
| | 430 |
| | 448 |
| | 470 |
| | 472 |
| | 475 |
| | 481 |
| | 694 |
| | 726 |
| | 729 |
| | 732 |
| | 735 |
| | 740 |
| | 744 |
| | 748 |
| | 753 |
| | 757 |
| | 806 |
| | 822 |
| | 830 |
| | 833 |
| | 1064 |
| | 1362 |
| | 1418 |
| 9X-8257 | 454 |
| | 456 |
| | 460 |
| | 565 |
| | 569 |
| | 577 |
| | 584 |
| | 589 |
| | 609 |
| | 617 |
| | 619 |
| | 677 |
| | 994 |
| | 1014 |
| | 1018 |
| | 1022 |
| | 1064 |
| | 1088 |
| | 1091 |
| | 1099 |


► **PRIMARY REFERENCE**

# PART NUMBER INDEX


| Part | Page |
|---|---|
| | 1115 |
| | 1118 |
| | 1122 |
| | 1124 |
| | 1126 |
| | 1154 |
| | 1157 |
| | 1208 |
| 9X-8258 | 645 |
| | 646 |
| | 648 |
| | 1208 |
| 9X-8259 | 1208 |
| 9X-8268 | 489 |
| | 491 |
| | 535 |
| | 539 |
| | 557 |
| | 561 |
| | 617 |
| | 619 |
| | 1134 |
| 9X-8281 | 1474 |
| | 1477 |
| 9X-8399 | 517 |
| | 523 |
| 9X-8408 | 971 |
| | 979 |
| 9X-8498 | 1331 |
| 9X-8582 | 729 |
| | 732 |
| 9X-8600 | 165 |
| | 192 |
| | 194 |
| 9X-8872 | 61 |
| 9X-8873 | 131 |
| | 534 |
| | 538 |
| 9X-8874 | 534 |
| | 538 |
| 9X-8875 | 535 |
| | 539 |
| 9X-8878 | 98 |
| 9X-8917 | 1356 |
| | 1411 |
| | 1413 |
| | 1514 |
| 9X-9120 | 401 |
| | 407 |
| 9X-9639 | 284 |
| 9X-9896 | 246 |
| | 247 |
| 9Y-1792 | 118 |
| 9Y-4104 | 131 |
| 9Y-6089 | 65 |
| 9Y-9236 | 128 |

## 0

| Part | Page |
|---|---|
| 000-7244 | 236 |
| 002-0639 | 931 |
| | 932 |
| | 938 |
| | 940 |
| | 942 |
| | 943 |
| | 944 |
| | 945 |
| | 947 |
| 002-6453 | 872 |
| | 874 |
| 002-6454 | 872 |
| | 874 |
| 003-2143 | 925 |
| | 930 |
| 006-0136 | 1133 |
| 006-8350 | 525 |
| 008-3214 | 1030 |
| 009-3101 | 960 |
| | 962 |
| | 968 |
| 011-7960 | 1381 |
| 012-0380 | 328 |
| 013-8502 | 1479 |
| 030-1712 | 402 |
| 030-4605 | 1058 |
| | 1060 |
| | 1133 |
| 030-7946 | 54 |
| 030-7947 | 182 |
| | 489 |
| | 491 |
| | 531 |
| 030-8188 | 167 |
| | 169 |
| 030-8539 | 531 |
| 031-0214 | 1450 |
| 031-3185 | 62 |
| 031-4155 | 25 |
| 031-9295 | 206 |
| | 209 |
| | 210 |
| 032-3506 | 872 |
| | 874 |
| 032-9313 | 91 |
| 033-5853 | 87 |
| | 154 |
| 033-6033 | 197 |
| | 198 |
| | 1177 |
| 033-6039 | 1032 |
| 033-6042 | 182 |
| | 1030 |
| 033-6043 | 1171 |
| 033-8248 | 257 |
| | 268 |
| | 272 |
| | 276 |
| | 345 |
| | 347 |
| | 348 |
| | 349 |
| | 387 |
| | 395 |
| | 402 |
| | 407 |
| | 413 |
| | 416 |
| | 427 |
| | 430 |
| | 436 |
| | 443 |
| | 447 |
| | 489 |
| | 491 |
| | 970 |
| 034-3557 | 534 |
| | 538 |
| 036-9821 | 321 |
| 038-3967 | 1391 |
| | 1394 |
| 039-8557 | 174 |
| | 178 |
| 061-7208 | 128 |
| 061-8639 | 91 |
| | 93 |
| | 94 |
| | 95 |
| | 96 |
| 061-9455 | 24 |
| 067-9425 | 151 |
| 068-0592 | 551 |
| | 556 |
| | 560 |
| 068-8579 | 288 |
| 068-8993 | 1331 |
| 069-2535 | 958 |
| | 959 |
| 070-0617 | 877 |
| | 879 |
| | 925 |
| | 930 |
| 070-0618 | 884 |
| | 893 |
| | 909 |
| | 913 |
| | 923 |
| | 943 |
| 077-3790 | 1030 |
| 077-4643 | 1030 |
| 083-4419 | 1138 |
| | 1140 |
| 085-8091 | 1017 |
| | 1021 |
| 091-0081 | 436 |
| | 443 |
| | 447 |
| 091-1735 | 1198 |
| | 1199 |
| | 1200 |
| | 1201 |
| | 1202 |
| | 1203 |
| 091-1745 | 994 |
| 093-0349 | 1002 |
| | 1003 |
| 093-2065 | 790 |
| | 792 |
| | 795 |
| | 812 |
| 095-0670 | 1138 |
| | 1140 |
| 095-0690 | 1129 |
| 095-0758 | 1479 |
| 095-0843 | 1468 |
| | 1470 |
| 095-0879 | 1074 |
| | 1076 |
| 095-0939 | 1034 |
| 095-0942 | 1032 |
| 095-1519 | 1041 |
| 095-1751 | 1182 |
| 095-9804 | 1161 |
| | 1165 |
| 096-0008 | 1133 |
| 096-0015 | 1143 |
| 096-0067 | 1379 |
| 096-1331 | 598 |
| 096-5962 | 352 |
| | 359 |
| | 366 |
| | 376 |
| | 1356 |
| 096-6166 | 1153 |
| | 1156 |
| 097-4896 | 572 |
| 097-9169 | 1342 |
| 098-5747 | 1479 |
| 098-8968 | 350 |
| | 357 |
| | 364 |
| | 374 |
| 099-3095 | 596 |
| | 989 |
| 099-3649 | 967 |
| | 1474 |

## 1

| Part | Page |
|---|---|
| 100-3098 | 26 |
| 100-3866 | 679 |
| | 683 |
| 100-4311 | ▶299 |
| | 454 |
| | 456 |
| | 460 |
| 100-4995 | 148 |
| 100-5072 | 188 |
| | 189 |
| | 190 |
| 100-5218 | 16 |
| | 18 |
| | 19 |
| 100-5219 | 16 |
| | 18 |
| | 19 |
| 100-5621 | 1498 |
| | 1499 |
| 100-6731 | 1161 |
| | 1165 |
| 100-7399 | 35 |
| | 37 |
| 101-0003 | 1483 |
| 101-0852 | 221 |
| | 222 |
| | 228 |
| | 229 |
| | 231 |


▶ **PRIMARY REFERENCE**

# PART NUMBER INDEX


| Part | Page |
|---|---|
| | 232 |
| 101-1785 | 1350 |
| | 1351 |
| 101-2862 | 1129 |
| 101-2867 | 1385 |
| | 1388 |
| | 1450 |
| 101-3120 | 157 |
| 101-3125 | 146 |
| 101-3846 | 990 |
| | 992 |
| 101-6596 | 54 |
| 101-7404 | 184 |
| | 235 |
| 101-8468 | 62 |
| 101-9083 | 489 |
| | 491 |
| | 575 |
| | 582 |
| 101-9345 | 1280 |
| 101-9435 | 1281 |
| 101-9436 | 1281 |
| 101-9437 | 1281 |
| 101-9878 | 611 |
| 102-4156 | 1161 |
| | 1165 |
| 102-4157 | 1165 |
| 102-4158 | 1161 |
| | 1165 |
| 102-5861 | 62 |
| 102-8801 | 345 |
| | 352 |
| | 358 |
| | 359 |
| | 365 |
| | 366 |
| | 375 |
| | 385 |
| | 386 |
| | 387 |
| | 394 |
| | 395 |
| | 406 |
| | 436 |
| | 443 |
| | 446 |
| | 1331 |
| | 1352 |
| | 1411 |
| | 1413 |
| 102-8802 | 201 |
| | 251 |
| | 252 |
| | 306 |
| | 307 |
| | 324 |
| | 328 |
| | 331 |
| | 339 |
| | 341 |
| | 343 |
| | 345 |
| | 347 |
| | 348 |
| | 349 |
| | 351 |
| | 352 |
| | 358 |
| | 359 |
| | 365 |
| | 366 |
| | 375 |
| | 376 |
| | 386 |
| | 394 |
| | 401 |
| | 406 |
| | 413 |
| | 416 |
| | 423 |
| | 425 |
| | 427 |
| | 430 |
| | 435 |
| | 442 |
| | 446 |
| | 454 |
| | 456 |
| | 460 |
| | 465 |
| | 466 |
| | 641 |
| | 1062 |
| | 1085 |
| | 1185 |
| | 1331 |
| | 1339 |
| | 1342 |
| | 1343 |
| | 1346 |
| | 1483 |
| 102-8803 | 167 |
| | 169 |
| | 241 |
| | 250 |
| | 295 |
| | 296 |
| | 297 |
| | 298 |
| | 304 |
| | 310 |
| | 312 |
| | 326 |
| | 330 |
| | 337 |
| | 342 |
| | 345 |
| | 351 |
| | 352 |
| | 358 |
| | 359 |
| | 365 |
| | 366 |
| | 375 |
| | 423 |
| | 425 |
| | 427 |
| | 430 |
| | 435 |
| | 442 |
| | 446 |
| | 456 |
| | 460 |
| | 468 |
| | 477 |
| | 479 |
| | 970 |
| | 990 |
| | 1008 |
| | 1342 |
| | 1346 |
| | 1411 |
| | 1413 |
| 102-8804 | 350 |
| | 351 |
| | 357 |
| | 358 |
| | 364 |
| | 365 |
| | 374 |
| | 375 |
| | 427 |
| | 430 |
| | 435 |
| | 442 |
| | 447 |
| | 477 |
| | 479 |
| | 1074 |
| | 1076 |
| | 1358 |
| | 1383 |
| 102-8805 | 268 |
| | 272 |
| | 276 |
| | 343 |
| | 351 |
| | 357 |
| | 358 |
| | 364 |
| | 365 |
| | 374 |
| | 375 |
| | 427 |
| | 430 |
| | 435 |
| | 442 |
| | 446 |
| | 447 |
| | 470 |
| | 472 |
| | 475 |
| | 1071 |
| | 1349 |
| | 1363 |
| | 1407 |
| | 1415 |
| | 1416 |
| | 1417 |
| | 1494 |
| 102-8806 | 167 |
| | 169 |
| | 257 |
| | 338 |
| | 350 |
| | 351 |
| | 357 |
| | 358 |
| | 364 |
| | 365 |
| | 374 |
| | 375 |
| | 427 |
| | 430 |
| | 435 |
| | 442 |
| | 446 |
| | 447 |
| | 477 |
| | 479 |
| | 1074 |
| | 1076 |
| | 1358 |
| | 1383 |
| 102-8808 | 1411 |
| 102-9089 | 21 |
| 102-9862 | 284 |
| 103-0010 | 427 |
| | 430 |
| | 970 |
| 103-0126 | 61 |
| 103-1122 | 1366 |
| 103-1303 | 1062 |
| | 1088 |
| | 1091 |
| | 1118 |
| | 1122 |
| | 1124 |
| | 1126 |
| 103-1328 | 577 |
| | 584 |
| 103-2543 | 402 |
| | 408 |
| 103-5350 | 666 |
| | 669 |
| | 672 |
| | 701 |
| | 1189 |
| | 1190 |
| 103-5526 | 350 |
| | 357 |
| | 364 |
| | 374 |
| | ▶1349 |
| 103-6100 | 1391 |
| 103-6318 | 1041 |
| 103-6319 | 1039 |
| | 1041 |
| 103-7407 | 1040 |
| 103-7410 | 1040 |
| 103-8134 | 16 |
| | 18 |
| | 19 |
| 104-2091 | 352 |
| | 359 |
| | 366 |
| | 376 |
| | 1374 |
| | 1376 |
| 104-4255 | 1039 |
| 104-4256 | 1039 |
| 104-4270 | 1039 |
| 104-4271 | 1039 |
| 104-4272 | 1039 |
| 104-4273 | 1039 |


▶ PRIMARY REFERENCE

# PART NUMBER INDEX


| Part | Page |
|---|---|
| 104-4274 | 1039 |
| 104-4369 | ▶1278 |
| 104-5013 | 575 |
| | 582 |
| | ▶638 |
| 104-5014 | 638 |
| 104-5841 | 1278 |
| 104-5888 | 994 |
| 104-6202 | 423 |
| | 425 |
| 104-6729 | 491 |
| 104-7108 | 970 |
| | 1025 |
| | 1153 |
| | 1156 |
| 105-2145 | 1171 |
| 105-2976 | 1342 |
| 105-3035 | 1138 |
| | 1140 |
| 105-3372 | 1342 |
| | 1346 |
| 105-3477 | 1352 |
| 105-3483 | 219 |
| 105-3484 | 164 |
| | 165 |
| 105-4728 | 320 |
| 105-4729 | 13 |
| | ▶320 |
| 105-6117 | 962 |
| 105-8029 | 1356 |
| 105-8750 | 966 |
| 105-9073 | 1356 |
| 106-0912 | 1268 |
| | 1269 |
| | 1270 |
| | 1271 |
| | 1273 |
| | ▶1311 |
| 106-0933 | 608 |
| | 630 |
| | 631 |
| 106-1094 | 1279 |
| 106-1095 | 1279 |
| 106-1096 | 1279 |
| 106-1097 | 1279 |
| 106-1098 | 1279 |
| 106-1582 | 1342 |
| | 1346 |
| 106-1583 | 1346 |
| 106-1584 | 1342 |
| | 1346 |
| 106-1774 | 990 |
| | 992 |
| | 994 |
| | ▶996 |
| 106-1792 | 156 |
| 106-3969 | 149 |
| 106-3973 | 149 |
| 106-4572 | 141 |
| | 143 |
| 106-5673 | 48 |
| | 50 |
| 106-6434 | 720 |
| 106-7798 | 590 |
| 106-9010 | 650 |
| 106-9212 | 639 |
| 107-0266 | 1374 |
| 107-0583 | 62 |
| 107-2344 | 1193 |
| | 1195 |
| | 1197 |
| | 1206 |
| 107-2884 | 1030 |
| 107-2886 | 1030 |
| 107-2887 | 1030 |
| 107-2888 | 1030 |
| 107-2890 | 1030 |
| 107-2891 | 1030 |
| 107-2893 | 1030 |
| 107-3114 | 1032 |
| 107-3157 | 1422 |
| | 1452 |
| | 1453 |
| 107-3378 | 1313 |
| | 1315 |
| | 1316 |
| | 1321 |
| | 1323 |
| 107-3469 | 1312 |
| | 1317 |
| | 1318 |
| | 1319 |
| | 1320 |
| | 1324 |
| 107-3490 | 1279 |
| 107-3533 | ▶1280 |
| 107-3536 | 1280 |
| | 1281 |
| 107-3537 | 1280 |
| 107-3538 | 1280 |
| 107-3545 | ▶1281 |
| 107-3727 | 387 |
| | 395 |
| | 402 |
| | 407 |
| 107-4393 | 1398 |
| 107-4394 | 1398 |
| 107-4395 | 1398 |
| 107-4396 | 1398 |
| 107-4397 | 1391 |
| | 1394 |
| 107-4399 | 1391 |
| | 1394 |
| 107-4600 | 1455 |
| | 1458 |
| | 1461 |
| 107-4601 | 1455 |
| | 1458 |
| | 1461 |
| 107-4602 | 1455 |
| | 1458 |
| | 1461 |
| 107-4603 | 1455 |
| | 1458 |
| | 1461 |
| 107-4749 | 446 |
| | 470 |
| | 472 |
| 107-5769 | 186 |
| | 187 |
| 107-6736 | 6 |
| | 8 |
| | ▶22 |
| 107-7306 | 1455 |
| | 1458 |
| | 1461 |
| 107-7308 | 1374 |
| 107-8265 | 575 |
| | 582 |
| 107-8559 | 1313 |
| | 1315 |
| | 1316 |
| | 1321 |
| | 1323 |
| 107-9172 | 966 |
| 108-0122 | 1074 |
| | 1076 |
| | 1078 |
| | 1079 |
| | 1080 |
| | 1081 |
| 108-0358 | 335 |
| 108-2735 | 590 |
| 108-2736 | 590 |
| 108-3320 | 350 |
| | 357 |
| | 364 |
| | 374 |
| 108-3612 | 156 |
| 108-3866 | 1045 |
| 108-4441 | 623 |
| | 624 |
| 108-7550 | 1013 |
| | 1017 |
| | 1021 |
| 108-7930 | 138 |
| 108-9382 | 6 |
| | 8 |
| | ▶58 |
| 109-0072 | 112 |
| | 113 |
| | 114 |
| 109-0076 | 78 |
| | 80 |
| 109-0077 | 131 |
| | 140 |
| 109-0078 | 112 |
| | 113 |
| | 114 |
| 109-1641 | 989 |
| 109-1645 | 436 |
| | 442 |
| | 446 |
| 109-1657 | 10 |
| | 12 |
| | ▶59 |
| 109-2373 | 6 |
| | 8 |
| | ▶127 |
| 109-3969 | 639 |
| 109-5816 | 1017 |
| | 1021 |
| 109-5839 | 78 |
| | 80 |
| 109-5840 | 80 |
| 109-8196 | 1336 |
| | 1337 |
| | ▶1488 |
| | ▶1491 |
| 109-9051 | ▶1281 |
| 109-9080 | 1281 |
| | 1310 |
| 109-9081 | 1281 |
| | 1310 |
| 109-9082 | 1281 |
| | 1310 |
| 109-9985 | 69 |
| 110-0044 | 611 |
| 110-2023 | 669 |
| | 672 |
| 110-2079 | 350 |
| | 357 |
| | 364 |
| | 374 |
| | 851 |
| | 852 |
| | 853 |
| | 854 |
| | 855 |
| 110-2446 | 966 |
| 110-2973 | 1133 |
| 110-3971 | 1133 |
| 110-3978 | 1133 |
| 110-4215 | 1431 |
| 110-4216 | 1431 |
| 110-4217 | 1431 |
| 110-4218 | 350 |
| | 357 |
| | 364 |
| | 374 |
| 110-4344 | 70 |
| 110-6109 | 350 |
| | 357 |
| | 364 |
| | 374 |
| 110-6845 | 352 |
| | 359 |
| | 366 |
| | 375 |
| | 436 |
| | 443 |
| | 446 |
| 110-6846 | 386 |
| | 394 |
| | 401 |
| | 406 |
| 110-6848 | 386 |
| | 394 |
| | 401 |
| 110-7592 | 1231 |
| | 1240 |
| 110-7886 | 338 |
| | 350 |
| | 357 |
| | 364 |
| | 374 |
| 110-7887 | 350 |
| | 357 |
| | 364 |


▶ **PRIMARY REFERENCE**

# PART NUMBER INDEX


| Part | Page |
|---|---|
| | 374 |
| 110-8330 | 182 |
| 110-8826 | 117 |
| 110-8827 | 117 |
| 111-0343 | 641 |
| | 1185 |
| 111-0687 | 1455 |
| | 1458 |
| | 1461 |
| | 1464 |
| 111-1316 | 1455 |
| | 1458 |
| | 1461 |
| | 1464 |
| 111-1353 | 1367 |
| | 1371 |
| 111-1354 | 1364 |
| | 1369 |
| 111-1355 | 1367 |
| | 1371 |
| 111-2088 | 6 |
| | 8 |
| | ▶69 |
| 111-2355 | 6 |
| | 8 |
| | ▶70 |
| 111-9110 | 958 |
| | 959 |
| 111-9289 | 236 |
| 111-9758 | 1192 |
| | 1197 |
| 111-9827 | 236 |
| 112-1817 | 1153 |
| | 1156 |
| | ▶1170 |
| 112-2276 | 960 |
| 112-3927 | 605 |
| 112-4511 | 591 |
| 112-4550 | 311 |
| 112-4558 | 864 |
| 112-5282 | 635 |
| 112-5419 | 1429 |
| 112-5421 | 350 |
| | 357 |
| | 364 |
| | 374 |
| 112-5927 | 350 |
| | 357 |
| | 364 |
| | 374 |
| 112-5928 | 350 |
| | 357 |
| | 364 |
| | 374 |
| 112-6150 | 1062 |
| 112-6174 | 350 |
| 112-7308 | 591 |
| 112-7309 | 591 |
| 112-7448 | 1374 |
| 112-8244 | 1161 |
| | 1165 |
| 112-9217 | 62 |
| 112-9486 | 141 |
| | 143 |
| 112-9861 | 1170 |
| 113-0002 | 350 |
| | 357 |
| | 364 |
| | 374 |
| 113-0580 | 351 |
| | 358 |
| | 365 |
| | 376 |
| | 427 |
| | 430 |
| 113-0919 | 1411 |
| | 1413 |
| 113-2512 | 1369 |
| | ▶1486 |
| 113-2513 | 1371 |
| | ▶1487 |
| 113-4659 | 969 |
| 113-6003 | 1373 |
| 113-7752 | 960 |
| | 962 |
| 113-8113 | 1331 |
| 113-8263 | 1161 |
| | 1165 |
| 113-8490 | 401 |
| | 407 |
| 113-8491 | 401 |
| | 407 |
| 113-8492 | 401 |
| | 407 |
| 114-0359 | 1269 |
| | 1271 |
| | 1273 |
| | 1311 |
| 114-0464 | 1275 |
| 114-0468 | 1312 |
| | 1317 |
| | 1318 |
| | 1319 |
| | 1320 |
| | 1324 |
| 114-3466 | 1374 |
| 114-3467 | 1374 |
| 114-3468 | 1376 |
| 114-3469 | 1339 |
| 114-4208 | 1374 |
| 114-4244 | 1342 |
| | 1346 |
| 114-4247 | 1342 |
| | 1346 |
| 114-5121 | 1 |
| | 2 |
| | ▶849 |
| 114-5124 | 1 |
| | 2 |
| | ▶1439 |
| | ▶1442 |
| 114-5125 | ▶660 |
| | 715 |
| 114-5126 | 1 |
| | 2 |
| | ▶665 |
| 114-5127 | 1 |
| | 2 |
| | ▶1485 |
| 114-5133 | 1 |
| | 2 |
| | ▶716 |
| 114-5137 | 1 |
| | 2 |
| | ▶683 |
| 114-5138 | 1 |
| | 2 |
| | ▶609 |
| 114-5141 | 172 |
| | 184 |
| | ▶1400 |
| 114-5142 | 1 |
| | 2 |
| | ▶1391 |
| | ▶1394 |
| 114-5147 | ▶589 |
| | 595 |
| 114-5172 | 1 |
| | 2 |
| | ▶1341 |
| 114-5175 | 120 |
| | ▶122 |
| 114-5186 | 253 |
| | 254 |
| | ▶255 |
| 114-5192 | ▶219 |
| | 1204 |
| | 1205 |
| 114-5196 | ▶1191 |
| | 1205 |
| 114-5198 | ▶117 |
| 114-5333 | 413 |
| | 416 |
| 114-8165 | 1342 |
| 114-8167 | 1342 |
| 114-8843 | 422 |
| | 1360 |
| 114-9491 | 968 |
| 115-0617 | 262 |
| | 276 |
| 115-0627 | 1330 |
| | ▶1331 |
| 115-1392 | 1118 |
| | 1126 |
| 115-1527 | 1 |
| | 2 |
| | ▶1404 |
| 115-2129 | ▶1085 |
| | 1097 |
| 115-2247 | 960 |
| | 962 |
| 115-2422 | 205 |
| | 209 |
| 115-3069 | 289 |
| | 290 |
| | 694 |
| | 970 |
| | 990 |
| | 1008 |
| 115-3071 | 470 |
| | 472 |
| | 475 |
| | 1071 |
| 115-3072 | 257 |
| | 276 |
| | 436 |
| | 443 |
| | 447 |
| 115-3082 | 386 |
| | 394 |
| | 401 |
| 115-3083 | 394 |
| | 401 |
| 115-7087 | 160 |
| | 163 |
| 115-9346 | 386 |
| | 394 |
| | 401 |
| | 407 |
| 116-0118 | 430 |
| | 446 |
| 116-0434 | 1429 |
| 116-4491 | 413 |
| | 416 |
| | 437 |
| | 442 |
| | 446 |
| 116-4731 | 1013 |
| 116-4798 | 977 |
| | 1025 |
| 116-5710 | 289 |
| 116-6202 | 1391 |
| 116-6810 | 1385 |
| | 1388 |
| 116-7471 | 401 |
| | 407 |
| 116-9331 | 977 |
| | 1025 |
| 117-0159 | 1161 |
| | 1165 |
| | ▶1173 |
| 117-0160 | 1161 |
| | 1165 |
| | ▶1174 |
| 117-0161 | 1161 |
| | 1165 |
| | ▶1175 |
| 117-0775 | 1174 |
| | 1175 |
| | 1176 |
| | 1178 |
| 117-1410 | 1336 |
| | 1337 |
| | 1338 |
| | ▶1467 |
| 117-1903 | 1205 |
| 117-2311 | 350 |
| | 357 |
| | 364 |
| | 374 |
| 117-2983 | 635 |
| 117-3335 | 145 |
| 117-4492 | 1327 |
| 117-7865 | 1004 |
| | 1005 |
| | 1006 |
| 117-8704 | 1088 |
| 117-8801 | 62 |
| 117-9341 | 1161 |
| | 1165 |


▶ PRIMARY REFERENCE

# PART NUMBER INDEX


| Part | Page |
|---|---|
| 118-0040 | 1434 |
| 118-0275 | 680 |
| 118-1225 | 1508 |
| 118-1277 | 205 |
| | 209 |
| 118-2079 | 206 |
| | 210 |
| 118-2080 | 205 |
| | 209 |
| 118-5068 | 109 |
| 118-5083 | 1058 |
| | 1060 |
| 118-5085 | 1058 |
| | 1060 |
| 118-5086 | 1058 |
| | 1060 |
| 118-5087 | 1058 |
| | 1060 |
| 118-5805 | 1133 |
| 118-6606 | 966 |
| 118-6878 | 454 |
| | 456 |
| | 460 |
| | 1500 |
| | 1505 |
| 118-7226 | ▶310 |
| | 489 |
| | 491 |
| 118-7362 | 350 |
| | 357 |
| 118-9901 | 528 |
| | 575 |
| | 582 |
| | 1026 |
| 118-9902 | 1391 |
| | 1394 |
| 119-0036 | 21 |
| 119-0959 | 1171 |
| 119-1151 | 1373 |
| | 1445 |
| 119-3662 | 295 |
| 119-4258 | 486 |
| 119-7837 | 477 |
| 119-7839 | 435 |
| | 442 |
| | 446 |
| 119-8984 | 285 |
| 120-5737 | 219 |
| 120-6052 | 613 |
| 120-8878 | 1385 |
| | 1388 |
| 120-9027 | 244 |
| | 245 |
| | 246 |
| | 247 |
| | 248 |
| 120-9243 | 67 |
| 120-9847 | 6 |
| | 8 |
| | ▶24 |
| 121-1257 | 517 |
| 121-1905 | 669 |
| | 672 |
| 121-2051 | 1058 |
| | 1060 |
| 121-3274 | 1455 |
| | 1458 |
| | 1461 |
| 121-3275 | 1455 |
| | 1458 |
| | 1461 |
| 121-3277 | 1455 |
| | 1458 |
| | 1461 |
| 121-3278 | 1455 |
| | 1458 |
| | 1461 |
| 121-3286 | 1094 |
| | 1097 |
| 121-3910 | 1374 |
| 121-7848 | 205 |
| | 209 |
| 121-7958 | 530 |
| | 1148 |
| 122-0447 | 39 |
| | 42 |
| 122-0450 | 416 |
| 122-1472 | 16 |
| | 18 |
| | 19 |
| 122-1671 | 969 |
| | 970 |
| 122-2222 | 468 |
| 122-3772 | 140 |
| 122-4026 | 128 |
| | 158 |
| 122-4429 | 350 |
| | 357 |
| | 364 |
| | 374 |
| 122-6872 | 145 |
| 122-7375 | 39 |
| | 42 |
| 122-8612 | 39 |
| | 42 |
| 122-8705 | 215 |
| | 1383 |
| | 1418 |
| 122-8905 | 134 |
| 122-9854 | 350 |
| | 357 |
| | 364 |
| | 374 |
| 123-0334 | 1278 |
| 123-0335 | 1278 |
| 123-1373 | 205 |
| | 209 |
| 123-2876 | 534 |
| | 538 |
| 123-2877 | 534 |
| | 538 |
| 123-2995 | 1385 |
| | 1388 |
| 123-2997 | 534 |
| | 538 |
| 123-3202 | 16 |
| | 18 |
| | 19 |
| 123-4627 | 350 |
| | 357 |
| | 364 |
| | 374 |
| 123-5161 | 1385 |
| | 1388 |
| 123-5298 | 534 |
| | 538 |
| 123-6383 | 350 |
| | 357 |
| | 364 |
| | 374 |
| 123-9431 | 1432 |
| 124-0174 | 465 |
| | 466 |
| | 489 |
| | 491 |
| 124-0501 | 534 |
| | 538 |
| 124-0502 | 534 |
| | 538 |
| 124-0503 | 534 |
| | 538 |
| 124-0504 | 534 |
| | 538 |
| 124-0665 | 530 |
| 124-0689 | 530 |
| 124-1479 | 430 |
| 124-1555 | 1133 |
| 124-1718 | 1062 |
| 124-1854 | 48 |
| | 50 |
| 124-1855 | 48 |
| | 50 |
| 124-3019 | 209 |
| | 427 |
| | 430 |
| | 551 |
| | 1104 |
| | 1108 |
| 124-3637 | 1488 |
| | 1491 |
| | 1494 |
| 124-4884 | 1381 |
| 124-5811 | 960 |
| 124-6346 | ▶1281 |
| 124-7649 | 477 |
| | 479 |
| 124-8366 | 1385 |
| | 1388 |
| 124-8368 | 1385 |
| | 1388 |
| 125-0434 | 131 |
| 125-0965 | 985 |
| | 986 |
| 125-0966 | 985 |
| | 986 |
| 125-0971 | 808 |
| | 810 |
| | 816 |
| 125-1302 | ▶328 |
| | 386 |
| | 394 |
| | 401 |
| | 407 |
| 125-1355 | 484 |
| | ▶985 |
| 125-1356 | 985 |
| 125-1357 | 985 |
| 125-1358 | 484 |
| | ▶986 |
| 125-1359 | 986 |
| 125-1360 | 986 |
| 125-2706 | 489 |
| | 491 |
| 125-3276 | 1434 |
| | 1435 |
| | 1436 |
| 125-3295 | 960 |
| | 962 |
| 125-3657 | ▶1182 |
| | 1183 |
| 125-7874 | 1204 |
| | 1358 |
| 125-7876 | 401 |
| 125-8176 | 658 |
| 125-9349 | 1161 |
| | 1165 |
| | ▶1176 |
| 126-0081 | 6 |
| | 8 |
| | ▶154 |
| 126-0197 | 1094 |
| | 1097 |
| 126-1052 | 1455 |
| 126-1756 | 62 |
| 126-1757 | 67 |
| 126-1767 | 1358 |
| 126-1774 | 376 |
| | 385 |
| 126-1817 | 1085 |
| 126-3883 | 619 |
| 126-4935 | 23 |
| | 131 |
| 126-5483 | ▶617 |
| | 621 |
| 126-5606 | 1331 |
| 126-5607 | 1331 |
| 126-5608 | 1331 |
| 126-5609 | 1331 |
| 126-5612 | 1331 |
| 126-6006 | 1331 |
| 126-6008 | 1398 |
| 126-6009 | 1331 |
| 126-6010 | 1331 |
| 126-7168 | 658 |
| 126-7574 | 224 |
| | 227 |
| 126-7631 | 6 |
| | 8 |
| | ▶214 |
| 126-8182 | 517 |
| 126-8449 | 214 |
| 126-8472 | 1332 |
| 127-0323 | 1474 |
| 127-0785 | 167 |
| | 169 |
| | 174 |
| 127-0929 | 154 |
| 127-1001 | 624 |
| 127-4540 | 351 |
| | 357 |


▶ **PRIMARY REFERENCE**

# PART NUMBER INDEX


| Part | Page | Part | Page | Part | Page | Part | Page |
|---|---|---|---|---|---|---|---|
| | 364 | | 1461 | | 427 | | 1087 |
| | 375 | | 1464 | | 435 | 132-6142 . . . . . | ▶1025 |
| 127-4667 . . . . . | 575 | 129-2584 . . . . . | 1364 | | 442 | | 1087 |
| | 582 | | 1367 | 131-0820 . . . . . | 1331 | 132-6143 . . . . . | 1087 |
| | 1013 | | 1369 | 131-0821 . . . . . | 1331 | | ▶1144 |
| | 1017 | | 1371 | 131-0822 . . . . . | 1331 | 132-6144 . . . . . | ▶1008 |
| | 1021 | 129-3178 . . . . . | 970 | 131-1274 . . . . . | 1330 | 132-6236 . . . . . | 13 |
| | 1097 | | 1331 | | ▶1398 | | ▶97 |
| 127-4832 . . . . . | 1032 | 129-3180 . . . . . | 246 | 131-3093 . . . . . | 1331 | 132-7486 . . . . . | 683 |
| 127-4988 . . . . . | 960 | | 247 | 131-5879 . . . . . | 691 | 132-7487 . . . . . | 679 |
| 127-5480 . . . . . | 1474 | 129-5427 . . . . . | 67 | 131-6593 . . . . . | 669 | 132-7488 . . . . . | 683 |
| 127-6356 . . . . . | 118 | 129-5428 . . . . . | 67 | | 672 | 132-7551 . . . . . | 210 |
| 127-6422 . . . . . | 1331 | 129-7184 . . . . . | 1362 | 131-7035 . . . . . | 977 | 132-9770 . . . . . | 291 |
| 127-6423 . . . . . | 1331 | 129-9690 . . . . . | 1350 | 131-7123 . . . . . | 62 | | 293 |
| 127-9483 . . . . . | 1138 | | 1351 | 131-7417 . . . . . | 622 | 133-0125 . . . . . | 131 |
| | 1140 | 129-9907 . . . . . | 138 | | 624 | 133-0261 . . . . . | 307 |
| 127-9485 . . . . . | 1138 | 130-1887 . . . . . | 1398 | 131-7418 . . . . . | 617 | 133-1643 . . . . . | 862 |
| | 1140 | 130-1888 . . . . . | 1331 | | 619 | 133-1645 . . . . . | 862 |
| 127-9490 . . . . . | 1138 | 130-1890 . . . . . | 1331 | 131-7419 . . . . . | 617 | 133-2198 . . . . . | 525 |
| | 1140 | 130-4698 . . . . . | 62 | | 619 | 133-2904 . . . . . | 590 |
| 128-0317 . . . . . | 138 | 130-4701 . . . . . | 62 | 131-7741 . . . . . | 1402 | 133-3359 . . . . . | 156 |
| 128-0606 . . . . . | 960 | 130-5300 . . . . . | 174 | 131-7810 . . . . . | 861 | 133-3630 . . . . . | 695 |
| 128-0607 . . . . . | 960 | | 178 | 131-7811 . . . . . | 861 | | 701 |
| 128-1026 . . . . . | 1455 | | 268 | 131-7812 . . . . . | 122 | 133-4292 . . . . . | 517 |
| | 1458 | | 272 | | 125 | | 538 |
| | 1461 | | 341 | 131-8107 . . . . . | 65 | 133-5209 . . . . . | 603 |
| | 1464 | | 342 | 132-0338 . . . . . | 1327 | | 604 |
| 128-3786 . . . . . | 1374 | | 345 | 132-1069 . . . . . | 1278 | 133-5587 . . . . . | 622 |
| 128-3787 . . . . . | 1374 | | 347 | 132-1070 . . . . . | 1278 | | 624 |
| 128-5302 . . . . . | 619 | | 348 | 132-1071 . . . . . | ▶1278 | 133-6347 . . . . . | 617 |
| | ▶622 | | 349 | 132-2927 . . . . . | 609 | | 619 |
| 128-5303 . . . . . | ▶619 | | 387 | 132-3392 . . . . . | 1496 | 133-6517 . . . . . | 238 |
| | 621 | | 395 | 132-3522 . . . . . | 1381 | | 239 |
| 128-7115 . . . . . | 622 | | 402 | 132-3968 . . . . . | 1341 | 133-6567 . . . . . | 639 |
| 128-7116 . . . . . | 622 | | 406 | 132-4450 . . . . . | 622 | 133-6588 . . . . . | 617 |
| 128-7348 . . . . . | 624 | | 407 | | 624 | | 619 |
| 128-8704 . . . . . | 622 | | 413 | 132-4451 . . . . . | 622 | 133-6589 . . . . . | 622 |
| | 624 | | 416 | | 624 | 133-6934 . . . . . | 416 |
| 128-8795 . . . . . | 622 | | 427 | 132-4452 . . . . . | 622 | 133-7133 . . . . . | 622 |
| | 624 | | 430 | | 624 | | 624 |
| 128-9341 . . . . . | 1091 | | 436 | 132-4454 . . . . . | 617 | 133-7134 . . . . . | 622 |
| 129-0822 . . . . . | 622 | | 443 | | 619 | | 624 |
| | 624 | | 447 | 132-4455 . . . . . | 617 | 133-7215 . . . . . | 1342 |
| 129-0987 . . . . . | 534 | | 454 | | 619 | | 1346 |
| 129-0988 . . . . . | 534 | | 456 | 132-4457 . . . . . | 624 | 133-7221 . . . . . | 617 |
| 129-1598 . . . . . | 622 | | 460 | 132-4458 . . . . . | 617 | | 619 |
| 129-2552 . . . . . | 1367 | | 468 | | 619 | 133-8116 . . . . . | ▶534 |
| | 1371 | | 489 | 132-4460 . . . . . | 617 | | ▶538 |
| 129-2565 . . . . . | 1367 | | 491 | | 619 | | 629 |
| 129-2567 . . . . . | 1364 | | 726 | 132-4463 . . . . . | 622 | 133-8608 . . . . . | 1035 |
| 129-2568 . . . . . | 1364 | | 1062 | | 624 | | ▶1047 |
| | 1369 | | 1409 | 132-5789 . . . . . | 157 | 133-8609 . . . . . | 1008 |
| 129-2570 . . . . . | 1455 | 130-6392 . . . . . | 1364 | | 352 | | ▶1051 |
| | 1458 | | 1366 | | 359 | 133-9116 . . . . . | 186 |
| | 1461 | | 1367 | | 366 | | 187 |
| 129-2572 . . . . . | 1455 | | 1369 | | 376 | 133-9906 . . . . . | 15 |
| | 1458 | | 1371 | | 423 | 133-9907 . . . . . | ▶15 |
| | 1461 | 130-7093 . . . . . | 617 | | 425 | | 55 |
| 129-2576 . . . . . | 1364 | | 619 | | 1409 | 133-9928 . . . . . | 617 |
| 129-2577 . . . . . | 1367 | 130-8176 . . . . . | ▶1432 | 132-6133 . . . . . | ▶1153 | | 619 |
| | 1371 | | 1433 | | 1204 | 134-0037 . . . . . | 966 |
| 129-2578 . . . . . | 1364 | 130-9811 . . . . . | 313 | | 1205 | 134-0039 . . . . . | 966 |
| | 1369 | | 314 | 132-6136 . . . . . | 1087 | 134-0780 . . . . . | 1374 |
| 129-2581 . . . . . | 1455 | 130-9984 . . . . . | 1394 | | ▶1115 | 134-2252 . . . . . | ▶312 |
| | 1458 | 131-0427 . . . . . | ▶311 | 132-6140 . . . . . | ▶1002 | | 454 |


▶ PRIMARY REFERENCE

# PART NUMBER INDEX


| Part | Page |
|---|---|
| | 456 |
| 134-2552 | 864 |
| 134-2554 | 722 |
| | ▶864 |
| 134-2636 | 205 |
| 134-2778 | 706 |
| | 709 |
| | 712 |
| 134-2779 | 706 |
| | 709 |
| | 712 |
| 134-2780 | 706 |
| 134-2781 | 706 |
| 134-2782 | 684 |
| 134-2809 | 6 |
| | 8 |
| | ▶65 |
| 134-4126 | 221 |
| | 222 |
| | 223 |
| | 224 |
| | 227 |
| | 228 |
| | 229 |
| | 230 |
| | 231 |
| | 232 |
| 134-4821 | 722 |
| 134-5623 | 598 |
| 134-5628 | 600 |
| 134-6051 | 1439 |
| | 1442 |
| 134-6052 | 1439 |
| | 1442 |
| 134-6721 | 1445 |
| 134-6722 | 1439 |
| | 1442 |
| 134-6723 | 1439 |
| | 1442 |
| 134-7258 | 1508 |
| 134-7326 | 1439 |
| | 1442 |
| 134-8459 | 1013 |
| | 1017 |
| 134-9817 | 534 |
| | 538 |
| 135-0426 | ▶250 |
| | 268 |
| | 272 |
| | 276 |
| | 280 |
| | 281 |
| | 282 |
| 135-1844 | 600 |
| 135-1845 | 600 |
| 135-2572 | 1004 |
| | 1005 |
| 135-3161 | 1004 |
| | 1005 |
| | 1006 |
| 135-3489 | 989 |
| 135-3490 | 596 |
| | 989 |
| 135-3573 | 989 |
| 135-4928 | 138 |
| 135-5154 | 864 |
| 135-5155 | 864 |
| 135-6642 | 1229 |
| 135-6925 | 1341 |
| 135-6926 | 1341 |
| 135-6928 | 128 |
| 135-6929 | 141 |
| | 143 |
| 135-6931 | 722 |
| 135-7052 | 575 |
| | 582 |
| 135-7123 | 958 |
| | 959 |
| 135-7816 | 1078 |
| | 1079 |
| 135-9350 | 1311 |
| 135-9562 | 1277 |
| 135-9941 | 617 |
| | 619 |
| 136-0007 | 977 |
| 136-0008 | 977 |
| 136-0012 | 975 |
| 136-0013 | 975 |
| 136-0019 | 977 |
| 136-1082 | 1080 |
| 136-1107 | 138 |
| 136-1543 | 1426 |
| | 1427 |
| 136-1544 | 1327 |
| 136-1722 | 595 |
| | ▶605 |
| 136-1725 | 1455 |
| | 1458 |
| | 1461 |
| | 1464 |
| 136-1726 | 1455 |
| | 1458 |
| | 1461 |
| | 1464 |
| 136-1728 | 1455 |
| | 1458 |
| | 1461 |
| | 1464 |
| 136-1729 | 1455 |
| | 1458 |
| | 1461 |
| | 1464 |
| 136-1730 | 1455 |
| | 1458 |
| | 1461 |
| | 1464 |
| 136-1731 | 1455 |
| | 1458 |
| | 1461 |
| 136-1732 | 1455 |
| | 1458 |
| | 1461 |
| 136-1734 | 1455 |
| | 1458 |
| | 1461 |
| 136-1747 | 605 |
| | ▶630 |
| 136-1748 | 630 |
| 136-1749 | 605 |
| | ▶631 |
| 136-1750 | 631 |
| 136-1753 | 605 |
| 136-1754 | 595 |
| | ▶607 |
| 136-1755 | 607 |
| | ▶632 |
| 136-1756 | 632 |
| 136-1953 | 1332 |
| | 1402 |
| 136-2186 | 1452 |
| | 1499 |
| 136-2623 | 509 |
| | 511 |
| | 513 |
| 136-2720 | 1369 |
| 136-3188 | 1334 |
| | 1335 |
| 136-3190 | 1335 |
| 136-3195 | 1334 |
| 136-3357 | ▶1434 |
| | ▶1435 |
| | ▶1436 |
| | 1437 |
| | 1438 |
| 136-3607 | 1352 |
| 136-3645 | 1434 |
| | 1435 |
| | 1436 |
| 136-3742 | 138 |
| 136-3842 | 989 |
| 136-3970 | 1433 |
| 136-4838 | 591 |
| 136-4839 | 591 |
| 136-4840 | 591 |
| 136-4841 | 591 |
| 136-5049 | 645 |
| | 646 |
| | 648 |
| | ▶659 |
| 136-5490 | 1418 |
| 136-6195 | 1229 |
| 136-6203 | 1229 |
| 136-6381 | 97 |
| 136-6382 | 97 |
| 136-7227 | 87 |
| | 102 |
| | 104 |
| | 106 |
| 136-8035 | 517 |
| 136-8036 | 517 |
| 136-8423 | 1032 |
| | 1138 |
| | 1140 |
| 136-9353 | 1455 |
| | 1458 |
| | 1461 |
| 136-9466 | 718 |
| | 722 |
| 136-9698 | 977 |
| 136-9718 | 716 |
| 136-9719 | 716 |
| 136-9720 | 720 |
| 136-9721 | 720 |
| 136-9722 | 720 |
| 136-9723 | 722 |
| 136-9759 | 720 |
| 137-2170 | 1487 |
| 137-2196 | 97 |
| 137-3300 | 704 |
| 137-4234 | 1231 |
| | 1240 |
| 137-5109 | 257 |
| | 268 |
| | 272 |
| | 276 |
| 137-5646 | 1133 |
| 137-6841 | 1474 |
| | 1479 |
| 137-7321 | 1455 |
| | 1458 |
| | 1461 |
| | 1464 |
| 137-7331 | 131 |
| 137-8832 | ▶484 |
| | 595 |
| 137-8833 | ▶484 |
| | 595 |
| 137-8834 | 484 |
| | ▶486 |
| 137-8836 | 485 |
| | 486 |
| 137-8837 | 642 |
| 137-8843 | 642 |
| 137-8846 | 642 |
| 137-8849 | 642 |
| 137-8851 | 484 |
| | ▶517 |
| 137-8856 | 517 |
| 137-8857 | 517 |
| 137-8858 | 517 |
| | ▶520 |
| 137-8859 | 520 |
| | 522 |
| 137-8862 | 484 |
| | ▶485 |
| 137-8865 | ▶523 |
| | 595 |
| 138-0006 | 1255 |
| | 1258 |
| 138-0020 | 1255 |
| | 1258 |
| 138-0022 | 1255 |
| | 1258 |
| 138-0444 | 192 |
| | 194 |
| 138-0549 | 1184 |
| 138-1523 | 724 |
| 138-1870 | 1002 |
| | 1003 |
| 138-1873 | 666 |
| 138-1875 | 669 |
| | 672 |
| 138-2237 | 493 |
| | 498 |
| | 503 |
| 138-2238 | 493 |
| | 498 |
| | 503 |


▶ **PRIMARY REFERENCE**

# PART NUMBER INDEX


| Part | Page |
|---|---|
| 138-2239 | ▶124 |
| | 493 |
| | 498 |
| | 503 |
| 138-2240 | 124 |
| 138-2800 | 1439 |
| | 1442 |
| 138-3815 | 1179 |
| 138-3909 | 1070 |
| | 1148 |
| 138-3911 | ▶1070 |
| | 1151 |
| 138-4048 | 977 |
| 138-4049 | 1097 |
| 138-4050 | 547 |
| | 551 |
| | 556 |
| | 560 |
| 138-4837 | 1429 |
| 138-6108 | 665 |
| | 678 |
| | 706 |
| | 709 |
| | 712 |
| | 857 |
| 138-6451 | 1320 |
| 138-6552 | 1321 |
| 138-6744 | 138 |
| 138-7496 | 1144 |
| 138-7497 | 1144 |
| 138-7795 | 1514 |
| 138-7822 | 1429 |
| 138-7823 | 1429 |
| 138-8173 | 1143 |
| 138-8175 | 1143 |
| 138-8187 | 1402 |
| 138-8861 | 1420 |
| | 1422 |
| | 1423 |
| 138-8862 | 1420 |
| | 1422 |
| | 1423 |
| 138-8863 | 1420 |
| | 1422 |
| | 1423 |
| 138-8864 | 1420 |
| | 1422 |
| | 1423 |
| 138-9651 | 978 |
| 139-0178 | 387 |
| | 395 |
| 139-1378 | 1342 |
| | 1346 |
| 139-1398 | 447 |
| 139-2116 | 477 |
| | 479 |
| 139-2212 | 205 |
| | 209 |
| 139-3213 | 1030 |
| 139-3544 | ▶1177 |
| | 1179 |
| 139-3550 | 131 |
| 139-3884 | 205 |
| | 209 |
| 139-5544 | 1439 |
| | 1442 |
| 139-5943 | 523 |
| 139-6366 | 656 |
| 139-9189 | 528 |
| | ▶530 |
| | 575 |
| | 582 |
| 139-9391 | 520 |
| 139-9392 | 520 |
| 139-9469 | 1402 |
| 140-0205 | 977 |
| 140-0206 | 970 |
| | 977 |
| 140-1088 | 255 |
| | 257 |
| | 260 |
| | 262 |
| | 263 |
| | 268 |
| | 272 |
| | 276 |
| 140-2961 | 1432 |
| 140-2963 | 1432 |
| 140-3094 | 695 |
| 140-3129 | 645 |
| | 646 |
| | 648 |
| 140-3673 | 659 |
| 140-5856 | 528 |
| | 575 |
| | 582 |
| 140-6553 | 520 |
| 140-6554 | 520 |
| 140-6555 | 520 |
| 140-8949 | 122 |
| 140-9746 | 6 |
| | 8 |
| | ▶23 |
| 140-9859 | 122 |
| 140-9860 | 122 |
| 141-1481 | 1062 |
| | ▶1183 |
| 141-2107 | 887 |
| | 901 |
| | 903 |
| | 905 |
| | 907 |
| | ▶951 |
| 141-2150 | 704 |
| 141-2151 | 704 |
| 141-2155 | 704 |
| 141-2156 | 704 |
| 141-2158 | 849 |
| 141-4644 | ▶969 |
| | 1336 |
| | 1337 |
| | 1338 |
| 141-4645 | 1336 |
| | 1337 |
| | 1338 |
| | ▶1433 |
| 141-4699 | 1391 |
| 141-4936 | 1352 |
| 141-4940 | 1336 |
| | 1337 |
| 141-7072 | 543 |
| | 547 |
| | 551 |
| | 556 |
| | 560 |
| 141-7405 | 1097 |
| 141-7909 | 977 |
| 141-7913 | 977 |
| 141-8698 | 386 |
| | 394 |
| | 401 |
| | 407 |
| 141-8712 | 435 |
| | 442 |
| 141-8713 | 255 |
| | 260 |
| 141-8714 | 435 |
| | 442 |
| 141-9520 | 1013 |
| | 1017 |
| | 1021 |
| 141-9521 | 1013 |
| | 1017 |
| | 1021 |
| 141-9666 | 1008 |
| 141-9809 | 601 |
| | ▶602 |
| 141-9811 | ▶601 |
| | 611 |
| | 612 |
| | 613 |
| | 614 |
| | 615 |
| | 616 |
| 142-0149 | 1133 |
| 142-0203 | 1148 |
| | 1151 |
| 142-0358 | 386 |
| | 394 |
| | 401 |
| | 407 |
| 142-0811 | 122 |
| | 125 |
| 142-2133 | 1030 |
| 142-2137 | 1030 |
| 142-2329 | 35 |
| | 37 |
| 142-3331 | 427 |
| | 430 |
| 142-5017 | 665 |
| 142-5795 | 663 |
| 142-5797 | 663 |
| 142-5798 | 663 |
| 142-5799 | 663 |
| | 715 |
| | ▶718 |
| 142-5800 | ▶663 |
| | 715 |
| 142-5801 | 718 |
| 142-5802 | 718 |
| 142-5803 | 663 |
| 142-5804 | 663 |
| 142-5805 | 663 |
| | 1338 |
| | ▶1352 |
| 142-5807 | 663 |
| 142-5808 | 663 |
| 142-5809 | 663 |
| 142-5867 | 30 |
| 142-5868 | 65 |
| 142-6988 | 704 |
| 142-6989 | 704 |
| 142-6994 | 844 |
| 142-6995 | 844 |
| 142-6996 | 844 |
| 142-7008 | 656 |
| 142-7009 | 656 |
| 142-7010 | 856 |
| 142-7011 | 856 |
| 142-7022 | 684 |
| 142-7442 | 1385 |
| | 1388 |
| 142-8870 | 124 |
| 142-9681 | 1446 |
| | 1448 |
| | 1449 |
| 143-1288 | 1468 |
| | 1470 |
| 143-2006 | 1133 |
| 143-3000 | 481 |
| 143-3669 | 153 |
| 143-4158 | 1013 |
| | 1017 |
| | 1021 |
| 143-4512 | 642 |
| 143-7319 | 1133 |
| 143-8971 | 54 |
| 143-9148 | 979 |
| 143-9361 | 706 |
| | 709 |
| | 712 |
| | ▶856 |
| 143-9393 | 131 |
| 143-9732 | 54 |
| 144-0178 | 454 |
| 144-0195 | 1485 |
| | 1488 |
| | 1491 |
| | 1494 |
| 144-0290 | 602 |
| | 604 |
| 144-1636 | 332 |
| 144-2223 | 386 |
| | 394 |
| 144-4524 | 517 |
| 144-4613 | 416 |
| | 446 |
| | 1110 |
| 144-5385 | 603 |
| | 604 |
| 144-5386 | 603 |
| 144-6142 | 54 |
| 144-7033 | 970 |
| 144-7263 | ▶589 |
| | 601 |
| 144-7766 | 1358 |
| 144-9528 | 665 |
| 144-9529 | 665 |
| 144-9530 | 665 |
| 144-9531 | 665 |


▶ PRIMARY REFERENCE

# PART NUMBER INDEX


| Part | Page | Part | Page | Part | Page | Part | Page |
|---|---|---|---|---|---|---|---|
| 145-0326 | 1483 | | 1336 | | 493 | | 560 |
| 145-0415 | ▶611 | | 1337 | | 498 | | 1102 |
| 145-0421 | ▶611 | | 1338 | | 503 | | 1109 |
| 145-2379 | 340 | 147-3324 | 977 | | 1062 | 148-8360 | 493 |
| 145-3319 | 1102 | 147-6457 | 642 | 148-8336 | 575 | | 498 |
| | 1108 | 147-6603 | 1046 | | 582 | | 503 |
| 145-3849 | 23 | 147-6604 | 1046 | | 971 | | 547 |
| 145-4922 | 844 | 147-6605 | 1046 | | 978 | | 551 |
| 145-8130 | 706 | 147-8561 | 531 | | 992 | | 556 |
| 145-8951 | 1358 | 147-8562 | 531 | | 994 | | 560 |
| 145-8952 | 1358 | 147-8563 | 531 | | 1025 | | 1082 |
| 145-9283 | 131 | 148-1546 | 642 | | 1062 | | 1098 |
| 145-9959 | 489 | 148-1928 | 639 | | 1108 | 148-8361 | 493 |
| | 491 | 148-2350 | 1058 | | 1154 | | 498 |
| 146-1890 | 960 | | 1060 | | 1156 | 148-8362 | 493 |
| 146-1891 | 960 | | 1133 | 148-8339 | 498 | | 498 |
| 146-1892 | 962 | 148-3548 | 1133 | | 503 | | 503 |
| 146-1893 | 962 | 148-5581 | 960 | | 547 | 148-8364 | 975 |
| 146-2274 | 978 | 148-6729 | 435 | | 551 | | 978 |
| 146-2598 | 962 | 148-7482 | 10 | | 556 | | 1063 |
| 146-3338 | 165 | | ▶71 | | 560 | | 1098 |
| 146-3725 | 977 | | ▶72 | | 564 | | 1153 |
| | ▶990 | 148-7919 | 128 | | 1082 | | 1156 |
| 146-3728 | 1058 | | ▶145 | 148-8340 | 978 | 148-8365 | 145 |
| | 1060 | 148-8240 | 862 | | 1062 | | 848 |
| | 1133 | 148-8306 | 978 | | 1098 | | 990 |
| | 1186 | 148-8307 | 978 | 148-8341 | 1025 | | 992 |
| 146-4378 | ▶521 | | 1008 | 148-8342 | 174 | | 994 |
| | 522 | 148-8311 | 1400 | | 178 | | 1008 |
| 146-5067 | 122 | 148-8312 | 1102 | | 236 | 148-8366 | 790 |
| | 125 | | 1108 | | 1025 | | 792 |
| 146-6734 | 435 | 148-8313 | 436 | 148-8344 | 575 | | 795 |
| | 442 | | 443 | | 582 | | 812 |
| | 446 | | 447 | 148-8346 | 174 | 148-8367 | 468 |
| 146-6747 | 1508 | 148-8316 | 128 | | 178 | | 528 |
| 146-7271 | 522 | | 141 | 148-8347 | 493 | | 576 |
| 146-7272 | ▶522 | | 143 | | 543 | | 583 |
| 146-7274 | 521 | 148-8318 | 978 | | 1068 | | 808 |
| 146-7275 | 521 | | 1025 | | 1098 | | 810 |
| 146-7571 | 1025 | 148-8325 | 575 | | 1102 | | 816 |
| | ▶1055 | | 582 | | 1108 | | 884 |
| 146-8349 | 661 | | 1500 | | 1146 | | 886 |
| 146-8350 | 718 | | 1505 | 148-8352 | 493 | | 909 |
| 146-8351 | 663 | 148-8326 | 503 | | 498 | | 911 |
| 146-8352 | 663 | | 1108 | | 503 | | 913 |
| 146-8353 | 663 | 148-8327 | 543 | | 1063 | | 916 |
| 146-8354 | 663 | | 547 | 148-8353 | 576 | | 918 |
| 146-8990 | 1133 | | 551 | | 583 | | 920 |
| 146-8991 | 1133 | | 556 | | 994 | | 925 |
| 146-9408 | 990 | | 560 | | 1013 | | 930 |
| | 992 | | 564 | | 1017 | | 940 |
| 147-0192 | 131 | | 568 | | 1021 | | 942 |
| 147-0319 | ▶242 | | 575 | | 1025 | | 943 |
| | 262 | | 582 | | 1098 | | 944 |
| | 263 | | 978 | | 1102 | | 945 |
| 147-0385 | 970 | | 1068 | | 1109 | | 947 |
| 147-1237 | 1039 | | 1097 | | 1153 | | 1008 |
| | ▶1040 | | 1102 | | 1156 | | 1025 |
| 147-1238 | 1039 | | 1108 | 148-8354 | 1008 | | 1154 |
| | ▶1041 | 148-8333 | 543 | 148-8355 | 117 | | 1156 |
| 147-2001 | 1208 | 148-8334 | 547 | 148-8357 | 1082 | 148-8368 | 1500 |
| 147-2577 | 1342 | | 551 | 148-8359 | 543 | | 1505 |
| | 1346 | | 556 | | 547 | 148-8370 | 978 |
| 147-3061 | 1040 | | 560 | | 551 | | 1026 |
| 147-3120 | ▶1330 | 148-8335 | 117 | | 556 | | 1063 |


▶ **PRIMARY REFERENCE**

# PART NUMBER INDEX


| Part | Page |
|---|---|
| 148-8371 | 790 |
| | 792 |
| | 795 |
| | 812 |
| 148-8372 | 1102 |
| | 1109 |
| 148-8373 | 551 |
| | 556 |
| | 560 |
| 148-8374 | 182 |
| | 576 |
| | 583 |
| | 1026 |
| | 1063 |
| | 1098 |
| 148-8375 | 971 |
| | 978 |
| | 1026 |
| | 1352 |
| 148-8376 | 493 |
| | 499 |
| | 504 |
| | 1103 |
| | 1109 |
| 148-8378 | 468 |
| | 971 |
| | 978 |
| | 1008 |
| | 1013 |
| | 1017 |
| | 1021 |
| | 1026 |
| | 1063 |
| | 1153 |
| | 1156 |
| 148-8380 | 790 |
| | 792 |
| | 795 |
| | 812 |
| 148-8387 | 543 |
| | 547 |
| | 552 |
| | 557 |
| | 560 |
| 148-8389 | 818 |
| | 822 |
| | 833 |
| | 837 |
| | 844 |
| 148-8390 | 174 |
| | 178 |
| 148-8392 | 547 |
| | 552 |
| | 557 |
| | 561 |
| | 978 |
| 148-8395 | 167 |
| | 169 |
| | 1187 |
| | 1188 |
| 148-8406 | 1161 |
| | 1165 |
| 148-8407 | 1013 |
| | 1017 |
| | 1021 |
| | 1047 |
| | 1051 |
| | 1115 |
| | 1161 |
| | 1165 |
| | 1180 |
| 148-8408 | 1098 |
| 148-8409 | 1047 |
| | 1051 |
| 148-8410 | 174 |
| | 178 |
| 148-8411 | 1026 |
| 148-8415 | 468 |
| | 971 |
| | 1063 |
| 148-8417 | 493 |
| | 499 |
| | 504 |
| 148-8418 | 1103 |
| | 1109 |
| 148-8426 | 1063 |
| 148-8427 | 1098 |
| 148-8428 | 978 |
| | 1063 |
| 148-8429 | 1082 |
| 148-8430 | 977 |
| | 1082 |
| 148-8433 | 848 |
| | 884 |
| | 887 |
| | 901 |
| | 903 |
| | 905 |
| | 907 |
| | 909 |
| | 911 |
| | 920 |
| | 927 |
| | 931 |
| | 932 |
| | 936 |
| | 938 |
| | 940 |
| | 943 |
| | 947 |
| | 1026 |
| 148-8435 | 992 |
| | 1153 |
| | 1156 |
| 148-8436 | 1026 |
| 148-8442 | 493 |
| | 499 |
| | 504 |
| 148-8443 | 1082 |
| 148-8444 | 812 |
| | 971 |
| | 979 |
| | 1063 |
| 148-8445 | 1063 |
| 148-8446 | 1026 |
| 148-8449 | 564 |
| | 568 |
| | 1082 |
| | 1103 |
| | 1109 |
| 148-8451 | 564 |
| | 568 |
| 148-8454 | 975 |
| 148-8455 | 548 |
| | 552 |
| | 557 |
| | 561 |
| | 564 |
| | 568 |
| 148-8457 | 971 |
| | 979 |
| | 1352 |
| 148-8458 | 808 |
| | 810 |
| | 816 |
| 148-8889 | 531 |
| 149-0606 | 1204 |
| 149-2491 | 1391 |
| | 1394 |
| 149-2610 | 564 |
| | 568 |
| | ▶641 |
| | 1184 |
| 149-2611 | 641 |
| 149-3253 | 1411 |
| 149-3949 | 1342 |
| | 1346 |
| 149-4617 | 1025 |
| | ▶1036 |
| 149-4925 | 962 |
| 149-5268 | 58 |
| 149-5915 | 1237 |
| 149-6378 | 725 |
| 149-7378 | 27 |
| | 28 |
| 149-7738 | 416 |
| 149-8112 | 614 |
| | 616 |
| 149-8379 | 454 |
| | 456 |
| | 460 |
| 149-8452 | 650 |
| | 652 |
| 149-9110 | 62 |
| 150-1541 | ▶679 |
| | 865 |
| 150-3065 | 524 |
| | 1098 |
| 150-4027 | 970 |
| | 990 |
| | 1102 |
| | 1109 |
| 150-4029 | 128 |
| 150-4037 | 971 |
| | 1103 |
| | 1109 |
| 150-4043 | 990 |
| | 1026 |
| | 1063 |
| | 1103 |
| | 1109 |
| 150-4047 | 1130 |
| | 1131 |
| 150-4048 | 236 |
| 150-4049 | 494 |
| | 499 |
| | 504 |
| 150-4279 | 7 |
| | 8 |
| | ▶186 |
| | ▶187 |
| 150-4355 | 1133 |
| 150-6287 | 1342 |
| 150-6765 | 406 |
| 150-7585 | 1008 |
| | ▶1030 |
| 150-8993 | 684 |
| | 686 |
| | 688 |
| 151-2092 | 1411 |
| | 1413 |
| 151-2094 | 1352 |
| 151-2384 | ▶1035 |
| 151-2680 | 1013 |
| | 1017 |
| | 1021 |
| 151-2766 | 718 |
| 151-2767 | 718 |
| 151-5925 | 85 |
| 151-5966 | 62 |
| 151-6008 | 706 |
| | 709 |
| 151-6009 | 706 |
| 151-6250 | 966 |
| 151-6251 | 966 |
| 151-6427 | 1358 |
| 151-7455 | 1153 |
| | 1156 |
| | ▶1184 |
| 151-8754 | 244 |
| 152-0961 | 141 |
| | 143 |
| 152-1130 | 525 |
| 152-1626 | 509 |
| | 511 |
| | 513 |
| 152-1646 | 1080 |
| 152-3426 | 143 |
| 152-3728 | 1187 |
| | 1188 |
| 152-3730 | 1208 |
| 152-3732 | 1208 |
| 152-3735 | 1192 |
| | 1193 |
| | 1195 |
| | 1197 |
| | 1206 |
| | 1207 |
| 152-3738 | 1208 |
| 152-3739 | 1076 |
| | 1080 |
| | 1081 |
| 152-3740 | 1192 |
| | 1193 |
| | 1195 |
| | 1197 |
| | 1206 |
| | 1207 |
| 152-3741 | 1208 |
| 152-3742 | 1208 |


▶ PRIMARY REFERENCE

# PART NUMBER INDEX


| Part | Page |
|---|---|
| 152-3743 | 1187 |
| | 1188 |
| 152-3748 | 1208 |
| 152-3749 | 666 |
| | 1187 |
| | 1188 |
| 152-3750 | 1074 |
| | 1078 |
| | 1079 |
| 152-3751 | 1208 |
| 152-3752 | 666 |
| | 1187 |
| | 1188 |
| 152-3753 | 1208 |
| 152-3832 | 128 |
| 152-3870 | 1097 |
| 152-5713 | 1097 |
| 152-5714 | 1097 |
| 152-5715 | 1097 |
| 152-5716 | 1097 |
| 152-7582 | 41 |
| 152-7737 | 1108 |
| 152-8338 | 1185 |
| 152-8340 | 1180 |
| | ▶1185 |
| 152-9152 | 1047 |
| 152-9840 | 548 |
| 153-1256 | 138 |
| 153-1804 | 684 |
| | 686 |
| | 688 |
| 153-2073 | ▶243 |
| | 255 |
| | 257 |
| | 260 |
| | 268 |
| | 272 |
| | 276 |
| 153-3570 | 684 |
| | 686 |
| | 688 |
| 153-3602 | 1144 |
| | ▶1148 |
| 153-4806 | 697 |
| | 699 |
| | 700 |
| | 1198 |
| | 1199 |
| | 1200 |
| | 1201 |
| | 1202 |
| | 1203 |
| 153-6224 | 969 |
| 153-6236 | 1013 |
| | 1017 |
| | 1021 |
| | 1103 |
| | 1109 |
| 153-6237 | 543 |
| | 552 |
| | 557 |
| | 561 |
| | 1082 |
| | 1103 |
| | 1109 |
| 153-6241 | 790 |
| | 792 |
| | 795 |
| | 812 |
| | 971 |
| | 979 |
| | 1026 |
| 153-6242 | 1098 |
| 153-6249 | 1008 |
| 153-6252 | 971 |
| | 979 |
| 153-6273 | 960 |
| | 962 |
| 153-6293 | 1153 |
| | 1156 |
| 153-6479 | 1030 |
| 153-6480 | 1030 |
| 153-6481 | 1030 |
| 153-7023 | 45 |
| | 46 |
| | 47 |
| 153-7024 | 45 |
| | 46 |
| | 47 |
| | 49 |
| 153-7044 | 715 |
| | ▶720 |
| 153-7095 | 435 |
| | 442 |
| | 446 |
| 153-7655 | 977 |
| 153-7656 | 977 |
| 153-7738 | 977 |
| 153-8474 | 1115 |
| | 1117 |
| 153-8475 | 1115 |
| | 1117 |
| 153-8476 | 1115 |
| | 1117 |
| 153-8477 | 1115 |
| 153-8478 | 1115 |
| 153-8479 | 1115 |
| 153-8480 | 1115 |
| 153-8481 | 1115 |
| 153-8482 | 1115 |
| 153-8483 | 1115 |
| 153-8484 | 1115 |
| 153-8921 | 977 |
| 153-8922 | 977 |
| | 988 |
| 153-9023 | 138 |
| 153-9063 | 1148 |
| 153-9624 | 1013 |
| | 1017 |
| | 1021 |
| | ▶1032 |
| 153-9784 | 1148 |
| | 1151 |
| 153-9839 | 1207 |
| 153-9840 | 1207 |
| 153-9844 | 1207 |
| 154-0351 | 1025 |
| 154-0352 | 1025 |
| 154-0930 | 1148 |
| | 1151 |
| 154-1981 | 1405 |
| 154-1982 | 1406 |
| 154-2302 | 475 |
| 154-4133 | 1058 |
| | 1060 |
| | 1133 |
| 154-4383 | 520 |
| 154-4475 | 120 |
| | 121 |
| 154-5512 | 1153 |
| | 1156 |
| 154-6333 | 509 |
| | 511 |
| | 513 |
| 154-6518 | 257 |
| | 268 |
| | 272 |
| | 276 |
| 154-6626 | 413 |
| | 416 |
| | 435 |
| 154-6659 | 1008 |
| 154-6819 | 1153 |
| | 1156 |
| 154-6820 | 1153 |
| | 1156 |
| 154-6821 | 1153 |
| 154-6879 | 1207 |
| 154-7179 | 1153 |
| | 1156 |
| 154-7443 | 351 |
| | 358 |
| | 365 |
| | 375 |
| | ▶1361 |
| 154-7531 | 1 |
| | 2 |
| | ▶1208 |
| 154-7532 | 1025 |
| 154-7997 | 517 |
| 154-7998 | 517 |
| 154-8962 | 1102 |
| | 1108 |
| 154-9023 | 131 |
| 154-9731 | 525 |
| 155-0054 | 547 |
| | 551 |
| | 556 |
| | 560 |
| 155-0696 | 217 |
| | 218 |
| 155-0698 | 217 |
| | 218 |
| 155-0809 | 32 |
| | 34 |
| 155-0810 | 32 |
| | 34 |
| 155-1838 | 977 |
| 155-2026 | 1082 |
| 155-2077 | 622 |
| | 624 |
| 155-2079 | 718 |
| 155-2251 | 1058 |
| | 1060 |
| | 1133 |
| 155-2255 | 347 |
| | 348 |
| | 349 |
| | 351 |
| | 352 |
| | 358 |
| | 359 |
| | 365 |
| | 366 |
| | 375 |
| | 376 |
| | 386 |
| | 387 |
| | 394 |
| | 395 |
| | 401 |
| | 406 |
| | 423 |
| | 425 |
| | 436 |
| | 443 |
| | 447 |
| | 454 |
| | 456 |
| | 465 |
| | 466 |
| | 489 |
| | 1331 |
| 155-2257 | 491 |
| 155-2260 | 300 |
| | 301 |
| | 343 |
| | 345 |
| | 347 |
| | 348 |
| | 349 |
| | 351 |
| | 352 |
| | 358 |
| | 359 |
| | 365 |
| | 366 |
| | 375 |
| | 376 |
| | 413 |
| | 416 |
| | 423 |
| | 425 |
| | 427 |
| | 430 |
| | 435 |
| | 436 |
| | 442 |
| | 443 |
| | 446 |
| | 447 |
| | 454 |
| | 456 |
| | 460 |
| | 465 |
| | 466 |
| | 468 |
| | 470 |
| | 472 |
| | 475 |


▶ **PRIMARY REFERENCE**

# PART NUMBER INDEX


| Part | Page | Part | Page | Part | Page | Part | Page |
|---|---|---|---|---|---|---|---|
| | 489 | | 446 | | 1051 | 157-0670 . . . . . | 131 |
| | 491 | | 447 | | 1103 | 157-2017 . . . . . | 858 |
| | 808 | | 454 | | 1109 | 157-3612 . . . . . | 1187 |
| | 810 | | 456 | | 1161 | | 1188 |
| | 812 | | 460 | | 1165 | 157-4428 . . . . . | 117 |
| | 816 | | 465 | 155-3677 . . . . . | 1025 | 157-6138 . . . . . | 575 |
| | 858 | | 466 | 155-3678 . . . . . | 1025 | | 582 |
| | 960 | | 489 | 155-3679 . . . . . | 1025 | 157-6210 . . . . . | 290 |
| | 1342 | | 491 | | 1028 | | 694 |
| | 1346 | | 859 | 155-3680 . . . . . | 1025 | 157-8853 . . . . . | 192 |
| | 1413 | | 962 | 155-3681 . . . . . | 1025 | | 194 |
| 155-2265 . . . . . | 4 | | 1062 | 155-3683 . . . . . | 1025 | 157-8954 . . . . . | 842 |
| | 351 | | 1331 | 155-4320 . . . . . | 1025 | 157-8955 . . . . . | 842 |
| | 358 | 155-2271 . . . . . | 347 | 155-4326 . . . . . | 1133 | 157-8957 . . . . . | 744 |
| | 365 | | 348 | 155-5619 . . . . . | 65 | | 748 |
| | 376 | | 349 | 155-5789 . . . . . | ▶1415 | | 830 |
| | 386 | | 351 | | 1488 | 158-0248 . . . . . | 242 |
| | 394 | | 352 | | 1491 | | 243 |
| | 423 | | 358 | 155-5790 . . . . . | ▶1416 | 158-0250 . . . . . | 242 |
| | 425 | | 359 | | 1488 | | 243 |
| | 435 | | 365 | | 1491 | | 249 |
| | 442 | | 366 | 155-6344 . . . . . | 1098 | 158-0252 . . . . . | 242 |
| | 446 | | 375 | 155-6563 . . . . . | 1352 | | 243 |
| | 1204 | | 376 | 155-6649 . . . . . | 1408 | | 249 |
| | 1205 | | 430 | | ▶1411 | 158-2336 . . . . . | 1056 |
| | 1352 | | 436 | | ▶1413 | | 1057 |
| 155-2269 . . . . . | 423 | | 443 | 155-7328 . . . . . | 494 | 158-3416 . . . . . | 62 |
| | 425 | | 447 | | 499 | 158-6153 . . . . . | 530 |
| 155-2270 . . . . . | 167 | | 454 | | 504 | 158-6185 . . . . . | ▶842 |
| | 255 | | 456 | 155-7517 . . . . . | 1103 | | 847 |
| | 257 | | 460 | | 1109 | 158-6634 . . . . . | 477 |
| | 260 | | 468 | 155-7518 . . . . . | 1102 | | 479 |
| | 268 | | 1071 | | 1108 | 158-8032 . . . . . | 681 |
| | 272 | | 1352 | 155-7525 . . . . . | 1102 | 158-8033 . . . . . | 1144 |
| | 276 | | 1383 | 155-7527 . . . . . | 1102 | 158-8785 . . . . . | 1 |
| | 284 | 155-2274 . . . . . | 257 | | 1108 | | 2 |
| | 285 | | 268 | 155-7528 . . . . . | 1103 | | ▶681 |
| | 307 | | 272 | | 1109 | 158-8881 . . . . . | 67 |
| | 318 | | 276 | 155-8354 . . . . . | 1437 | 159-0250 . . . . . | 977 |
| | 329 | | 351 | | 1438 | 159-1533 . . . . . | 62 |
| | 347 | | 352 | 155-8355 . . . . . | 1437 | 159-3945 . . . . . | 605 |
| | 348 | | 358 | | 1438 | 159-6159 . . . . . | 6 |
| | 349 | | 359 | 155-8356 . . . . . | 1437 | | 8 |
| | 351 | | 365 | | 1438 | | ▶25 |
| | 352 | | 366 | 155-8357 . . . . . | 1374 | 159-7234 . . . . . | 1437 |
| | 358 | | 375 | 155-9457 . . . . . | 1008 | | 1438 |
| | 359 | | 376 | 155-9461 . . . . . | 1097 | 159-7320 . . . . . | 1133 |
| | 365 | | 427 | 155-9462 . . . . . | 1094 | 159-8053 . . . . . | 205 |
| | 366 | | 430 | | 1097 | | 209 |
| | 375 | | 436 | 155-9524 . . . . . | 67 | 159-8054 . . . . . | 205 |
| | 376 | | 443 | 155-9653 . . . . . | 1374 | | 206 |
| | 386 | | 447 | 156-0052 . . . . . | 701 | | 209 |
| | 394 | | 489 | 156-1817 . . . . . | 666 | | 210 |
| | 401 | | 491 | 156-2842 . . . . . | 1122 | 159-8524 . . . . . | 62 |
| | 406 | | 1331 | | 1124 | 159-8612 . . . . . | 844 |
| | 413 | | 1383 | 156-4403 . . . . . | 1071 | 159-8613 . . . . . | 844 |
| | 416 | 155-2291 . . . . . | 1165 | | 1118 | 159-8614 . . . . . | 543 |
| | 423 | 155-2478 . . . . . | 952 | | 1126 | 159-8615 . . . . . | 543 |
| | 425 | | 953 | 156-5519 . . . . . | ▶1118 | 159-8664 . . . . . | 1356 |
| | 427 | | 954 | | 1205 | 159-8665 . . . . . | 1356 |
| | 430 | | 955 | 156-5545 . . . . . | 1327 | 159-9322 . . . . . | 385 |
| | 435 | | 956 | 156-5781 . . . . . | 1124 | 159-9362 . . . . . | 6 |
| | 436 | 155-2793 . . . . . | 32 | 156-7472 . . . . . | 1102 | | 8 |
| | 442 | | 34 | | 1108 | | ▶108 |
| | 443 | 155-3624 . . . . . | 1047 | 156-9156 . . . . . | 1156 | 160-0222 . . . . . | 990 |


▶ PRIMARY REFERENCE

# PART NUMBER INDEX


| Part | Page | Part | Page | Part | Page | Part | Page |
|---|---|---|---|---|---|---|---|
| | 992 | 161-4515 | 525 | 163-1883 | 334 | 164-4831 | 862 |
| 160-0564 | 818 | 161-5718 | 138 | 163-1884 | 335 | 164-4856 | 621 |
| | 822 | 161-5719 | ▶138 | 163-2478 | 45 | | ▶633 |
| | 825 | | 140 | | 46 | 164-4865 | ▶861 |
| | 830 | 161-6149 | 1182 | | 47 | | 865 |
| | 833 | 161-6154 | 1037 | | 49 | 164-4866 | ▶862 |
| | 837 | | 1038 | 163-3119 | 1508 | | 865 |
| | 1394 | 161-6161 | 1182 | 163-3926 | 960 | 164-4883 | 1425 |
| 160-0595 | 590 | 161-6403 | 1108 | 163-3997 | 225 | | 1428 |
| 160-1638 | 535 | 161-6622 | 108 | | 226 | 164-4891 | 590 |
| | 539 | 161-6958 | 160 | | ▶477 | 164-5079 | 591 |
| 160-1744 | 726 | | 163 | 163-4565 | 25 | 164-5544 | 468 |
| | 790 | 161-6963 | 160 | 163-4572 | 642 | | 812 |
| | 792 | | 163 | 163-4797 | 866 | | 992 |
| | 795 | 161-7419 | 217 | 163-4798 | 866 | 164-5567 | 524 |
| | 812 | | 218 | 163-5442 | 1013 | | 576 |
| 160-2243 | 1352 | 161-8900 | 1145 | | 1017 | | 583 |
| 160-2425 | 975 | 161-9275 | 484 | | 1021 | | 971 |
| 160-3518 | 1356 | | ▶966 | 163-5515 | 1434 | | 977 |
| | 1418 | 161-9289 | 1473 | | 1435 | | 1013 |
| | 1447 | 161-9901 | 1145 | | 1436 | | 1017 |
| 160-4357 | 645 | 161-9903 | 128 | 163-5596 | 1013 | | 1021 |
| | 646 | 162-0177 | 1058 | | 1017 | | 1035 |
| | 648 | | 1060 | | 1021 | | 1082 |
| 160-5003 | 1455 | | 1161 | 163-5646 | 1352 | | 1097 |
| | 1458 | | 1165 | 163-5647 | 1352 | | 1104 |
| | 1461 | 162-0225 | 612 | 163-7902 | 866 | | 1109 |
| | 1464 | 162-2077 | 249 | 163-7903 | 866 | | 1130 |
| 160-5760 | 1 | 162-2127 | 1013 | 163-7908 | 866 | | 1131 |
| | 2 | | 1017 | 163-8033 | ▶656 | 164-5574 | 1103 |
| | ▶120 | | 1021 | | 706 | | 1109 |
| | ▶121 | 162-2128 | 1013 | | 709 | 164-5586 | 971 |
| 160-5877 | 1439 | | 1017 | | 712 | | 977 |
| | 1442 | | 1021 | 163-8119 | 1342 | 164-5590 | 524 |
| 160-6328 | 656 | 162-2165 | 1134 | | 1346 | | 1098 |
| 160-6353 | 1432 | 162-3052 | 528 | 163-8811 | 1352 | 164-5611 | 1097 |
| 160-6365 | 1432 | 162-3858 | 1391 | 164-0058 | 1 | 164-5616 | 1180 |
| 160-6366 | 1432 | | 1394 | | 2 | 164-5619 | 106 |
| 160-6381 | 236 | 162-5812 | 1330 | | ▶1068 | 164-5789 | 13 |
| 160-7271 | 25 | | ▶1402 | 164-0327 | 856 | | ▶53 |
| 160-7277 | ▶611 | 162-6505 | 1379 | 164-1234 | 1483 | 164-6084 | ▶715 |
| 160-7689 | 376 | 162-6884 | ▶1379 | 164-2108 | 635 | 164-6085 | ▶715 |
| | 413 | | 1424 | | 637 | 164-6709 | 527 |
| | 416 | 162-7365 | 1102 | 164-2751 | 486 | | 1086 |
| | 446 | | 1108 | 164-2752 | 486 | 164-6862 | 1103 |
| 160-7690 | 385 | 162-7599 | 1439 | 164-3256 | 1133 | | 1109 |
| 160-8510 | 486 | | 1442 | 164-3302 | 590 | 164-6867 | 167 |
| 160-9925 | 1385 | | ▶1445 | 164-3303 | 590 | | 169 |
| 161-0022 | 962 | 162-8455 | 1013 | 164-3417 | 184 | 164-6871 | 468 |
| 161-0114 | 683 | | 1017 | | 235 | 164-6877 | 489 |
| 161-1353 | 1374 | | 1021 | 164-3765 | 386 | | 491 |
| 161-1382 | 1025 | 162-8617 | 83 | | 394 | | 531 |
| 161-1383 | 1025 | 162-8619 | 83 | 164-3766 | 386 | 164-7444 | 1385 |
| 161-3415 | 1385 | 163-1135 | 1483 | | 394 | | 1388 |
| | 1388 | 163-1201 | 1378 | 164-4156 | 486 | 164-7577 | ▶324 |
| 161-3509 | ▶249 | 163-1876 | 351 | 164-4175 | 486 | | 435 |
| | 257 | | 358 | 164-4180 | 666 | | 442 |
| | 268 | | 365 | 164-4237 | 1336 | | 446 |
| | 272 | | 375 | | 1337 | 164-7908 | 1103 |
| | 276 | | 1009 | | 1338 | 164-7959 | 1385 |
| 161-3565 | 131 | 163-1878 | 333 | | ▶1362 | | 1388 |
| 161-4113 | 7 | | 351 | 164-4531 | 1327 | 164-8911 | 128 |
| | 8 | | 358 | 164-4767 | 862 | 164-9324 | 517 |
| | ▶118 | | 365 | 164-4769 | 862 | 164-9326 | 517 |
| 161-4511 | 525 | | 375 | 164-4817 | 862 | 165-0373 | 575 |


▶ **PRIMARY REFERENCE**

# PART NUMBER INDEX


| Part | Page |
|---|---|
| | 582 |
| 165-2093 | 1118 |
| | 1126 |
| 165-2096 | 1118 |
| | 1126 |
| 165-2135 | 517 |
| 165-2273 | 1400 |
| 165-2357 | 1122 |
| | 1124 |
| 165-2358 | 1122 |
| | 1124 |
| 165-3825 | 1122 |
| | 1124 |
| 165-3827 | 1122 |
| 165-3929 | 65 |
| 165-3933 | 65 |
| 165-4795 | 1464 |
| 165-4799 | 1464 |
| 165-4801 | 1464 |
| 165-4806 | 1464 |
| 165-4808 | 1464 |
| 165-4930 | 489 |
| | 491 |
| 165-4931 | 1013 |
| | 1017 |
| | 1021 |
| 165-4933 | 548 |
| | 552 |
| | 557 |
| | 561 |
| | 564 |
| | 568 |
| 165-5085 | 1165 |
| 165-5575 | 1364 |
| | 1369 |
| 165-5576 | ▶1364 |
| | 1455 |
| | 1458 |
| 165-5722 | 1366 |
| 165-5725 | ▶1366 |
| | 1455 |
| 165-5728 | 1366 |
| 165-5970 | 174 |
| | 178 |
| | ▶337 |
| 165-6062 | 1133 |
| 165-6170 | 109 |
| 165-6560 | 1336 |
| | 1337 |
| | 1338 |
| | ▶1376 |
| 165-6561 | 1376 |
| 165-6750 | 1500 |
| | 1505 |
| 165-6769 | 1336 |
| | 1337 |
| | 1338 |
| | ▶1374 |
| 165-6984 | 509 |
| | 511 |
| | 513 |
| 166-0344 | 1138 |
| | 1140 |
| 166-1880 | 551 |
| 166-2101 | 1124 |
| 166-2903 | 42 |
| 166-2904 | 39 |
| | 42 |
| 166-3416 | 1404 |
| | ▶1405 |
| 166-3417 | 1404 |
| | ▶1406 |
| 166-4647 | 1082 |
| | ▶1086 |
| 166-4731 | 1479 |
| 166-4732 | 1479 |
| 166-4804 | 1346 |
| 166-4805 | 1346 |
| 166-6693 | 287 |
| | 288 |
| 166-6928 | 351 |
| | 358 |
| | 365 |
| | 375 |
| | ▶1407 |
| 166-7057 | 155 |
| 166-9144 | 67 |
| 166-9367 | 525 |
| 167-0080 | 701 |
| 167-0642 | 41 |
| 167-0643 | 41 |
| 167-1278 | 1229 |
| 167-1335 | 122 |
| | 125 |
| 167-1742 | 481 |
| 167-1795 | 1102 |
| | 1108 |
| 167-2009 | 525 |
| 167-2201 | 1004 |
| | 1005 |
| | 1006 |
| 167-2220 | 1076 |
| | 1080 |
| | 1081 |
| 167-2222 | 1074 |
| | 1078 |
| | 1079 |
| 167-2312 | 1004 |
| | 1005 |
| | 1006 |
| 167-2336 | 1081 |
| 167-2339 | 1074 |
| | 1078 |
| | 1079 |
| 167-2440 | 1076 |
| | 1080 |
| 167-4322 | 3 |
| | 4 |
| | ▶1007 |
| 167-6769 | 1208 |
| 167-6771 | 1208 |
| 167-8081 | 31 |
| | 33 |
| 167-8083 | 31 |
| | 33 |
| 167-8130 | 52 |
| 167-9196 | 146 |
| 167-9524 | 635 |
| | 636 |
| | 637 |
| 168-0287 | 681 |
| 168-0300 | 182 |
| 168-1793 | 1439 |
| | 1442 |
| 168-2198 | 1138 |
| | 1140 |
| 168-2203 | 1129 |
| 168-3378 | 1142 |
| 168-3379 | 1142 |
| 168-3382 | 1142 |
| 168-3384 | 1142 |
| 168-3385 | 1142 |
| 168-3504 | 1138 |
| | 1140 |
| 168-4331 | 1208 |
| 168-4332 | 1208 |
| 168-4510 | 1478 |
| 168-4658 | 1007 |
| 168-4659 | 1007 |
| 168-6514 | 219 |
| 168-7319 | 1129 |
| 168-7800 | 156 |
| | 161 |
| | 162 |
| 168-7861 | 1138 |
| | 1140 |
| 168-7868 | 1138 |
| | 1140 |
| | ▶1143 |
| 168-7869 | 1138 |
| | 1140 |
| 168-7940 | 1143 |
| 168-7941 | 1143 |
| 168-7942 | 1143 |
| 168-7943 | 1143 |
| 168-7944 | 1143 |
| 168-8508 | 1208 |
| 168-8974 | 182 |
| 168-9026 | 236 |
| 168-9980 | 1482 |
| 169-0417 | 289 |
| | 290 |
| | ▶295 |
| | 694 |
| 169-1529 | 351 |
| | 358 |
| 169-1616 | 1182 |
| 169-1617 | 1182 |
| 169-3295 | 117 |
| 169-3301 | 219 |
| | ▶289 |
| 169-3302 | 219 |
| | ▶290 |
| 169-3311 | 289 |
| 169-4279 | 790 |
| | 792 |
| | 795 |
| | 812 |
| 169-4374 | 1445 |
| 169-5862 | 524 |
| | 1097 |
| 169-6430 | 1482 |
| 169-7055 | 591 |
| 169-7380 | 1483 |
| 169-8258 | ▶967 |
| 169-8373 | 1508 |
| 170-0050 | 525 |
| 170-0490 | 1474 |
| 170-0493 | 958 |
| | 959 |
| | 1056 |
| | 1057 |
| 170-0696 | 1479 |
| 170-0970 | 1342 |
| | 1346 |
| 170-0971 | 1479 |
| 170-0976 | 1474 |
| 170-0977 | 1479 |
| 170-0978 | 1474 |
| 170-0979 | 1479 |
| 170-0980 | 1346 |
| 170-1107 | ▶611 |
| 170-1112 | 1327 |
| 170-1114 | 1327 |
| 170-1115 | 1327 |
| 170-1757 | 13 |
| | ▶90 |
| 170-1821 | 1342 |
| | 1346 |
| 170-3447 | 1398 |
| 170-3448 | 1398 |
| 170-3791 | 1514 |
| 170-3843 | 524 |
| | ▶525 |
| 170-4042 | ▶524 |
| | 575 |
| | 582 |
| 170-4673 | 131 |
| 170-4735 | 1500 |
| | 1505 |
| 170-4737 | 41 |
| 170-4738 | 41 |
| 170-6712 | 964 |
| 170-7096 | 1342 |
| | 1346 |
| 170-7295 | ▶1320 |
| 170-7296 | ▶1321 |
| 170-7309 | 534 |
| | 538 |
| 170-7313 | 716 |
| | ▶722 |
| 170-7314 | 715 |
| | ▶724 |
| 170-7339 | ▶661 |
| | 715 |
| 170-7340 | ▶715 |
| 170-8540 | 1479 |
| 170-8590 | 1450 |
| 170-9372 | 386 |
| | 394 |
| 171-1055 | 1346 |
| 171-1147 | 1346 |
| 171-1150 | 1498 |
| 171-1151 | 1498 |
| 171-1152 | 1498 |
| 171-1153 | 1498 |
| 171-1230 | 1468 |


▶ PRIMARY REFERENCE

# PART NUMBER INDEX


| Part | Page |
|---|---|
| | 1470 |
| 171-1391 | 964 |
| 171-1855 | 1498 |
| 171-1856 | 1498 |
| 171-2205 | 387 |
| | 395 |
| | 402 |
| | 407 |
| 171-2212 | 387 |
| | 395 |
| | 402 |
| | 407 |
| 171-3759 | 1358 |
| 171-3897 | 1336 |
| | 1337 |
| | 1338 |
| | ▶1479 |
| 171-5349 | 306 |
| 171-5415 | 547 |
| | 551 |
| | 556 |
| | 560 |
| 171-5427 | 1187 |
| | 1188 |
| 171-6021 | 690 |
| 171-6022 | 690 |
| 171-6023 | 690 |
| 171-6024 | 690 |
| 171-6682 | 1468 |
| | 1470 |
| 171-6723 | 979 |
| 171-6727 | 818 |
| | 822 |
| | 825 |
| | 830 |
| | 833 |
| | 837 |
| 171-6731 | 128 |
| | 572 |
| 171-6757 | 1208 |
| 171-6786 | ▶690 |
| | 720 |
| 171-8867 | 952 |
| 171-8868 | 953 |
| | 955 |
| 171-8869 | 952 |
| | 953 |
| | 954 |
| | 955 |
| | 956 |
| 171-8870 | 952 |
| | 953 |
| | 954 |
| | 955 |
| | 956 |
| 171-8964 | 878 |
| | 889 |
| | 891 |
| | 897 |
| | 899 |
| | 901 |
| | 903 |
| | 905 |
| | 907 |
| 171-9679 | 1478 |
| 171-9683 | 1478 |
| 172-0084 | 623 |
| 172-1482 | 295 |
| 172-2416 | 1468 |
| | 1470 |
| 172-3511 | 1342 |
| | 1346 |
| 172-4387 | ▶1437 |
| | ▶1438 |
| | 1455 |
| | 1458 |
| | 1461 |
| | 1464 |
| 172-4424 | 1229 |
| 172-4425 | 1229 |
| 172-4426 | 1229 |
| 172-4622 | 564 |
| 172-4717 | 1229 |
| 172-4718 | 1229 |
| 172-4848 | 90 |
| 172-5277 | 1102 |
| | 1108 |
| 172-5307 | 1199 |
| 172-5481 | 1165 |
| | ▶1178 |
| 172-6409 | 1004 |
| | 1005 |
| | 1006 |
| 172-9200 | 335 |
| 172-9389 | ▶221 |
| | 387 |
| | 395 |
| | 402 |
| | 407 |
| 172-9391 | ▶222 |
| | 386 |
| | 394 |
| | 401 |
| | 407 |
| 172-9981 | 1004 |
| | 1005 |
| | 1006 |
| 173-0714 | 534 |
| | 538 |
| 173-0715 | 534 |
| | 538 |
| 173-1028 | ▶1327 |
| | 1468 |
| | 1470 |
| 173-1583 | 420 |
| | 422 |
| 173-1827 | 531 |
| 173-1830 | 531 |
| 173-1905 | 1336 |
| | 1337 |
| | 1338 |
| | ▶1478 |
| 173-1957 | 82 |
| 173-2052 | 1426 |
| | 1427 |
| 173-2118 | 1422 |
| | 1452 |
| 173-2469 | 534 |
| | 538 |
| 173-5787 | 1473 |
| 173-5791 | 1362 |
| 173-5850 | 517 |
| 173-5986 | 645 |
| | 646 |
| 173-5987 | 645 |
| | 646 |
| 173-6640 | 609 |
| 173-6706 | 493 |
| | 498 |
| | 503 |
| 173-6753 | 493 |
| | 498 |
| | 503 |
| 173-7035 | 1473 |
| 173-7223 | 454 |
| | 456 |
| | 460 |
| 173-7760 | 525 |
| 173-8278 | 525 |
| 173-8466 | 225 |
| | 226 |
| | ▶1378 |
| 173-8612 | ▶1078 |
| | 1115 |
| 173-8613 | ▶1079 |
| | 1115 |
| 173-8614 | 1074 |
| | 1078 |
| | 1079 |
| 173-8615 | 1078 |
| 173-8616 | 1079 |
| 173-9195 | 1439 |
| | 1442 |
| 173-9197 | 1439 |
| | 1442 |
| 173-9198 | 1439 |
| | 1442 |
| 173-9375 | 1336 |
| | 1337 |
| | 1338 |
| | ▶1482 |
| 173-9376 | 1482 |
| 173-9682 | 1004 |
| | 1005 |
| | 1006 |
| 173-9684 | 485 |
| | 486 |
| 174-0830 | 1088 |
| | 1091 |
| 174-0831 | 1088 |
| | 1091 |
| 174-0832 | 1088 |
| | 1091 |
| 174-0833 | 1088 |
| | 1091 |
| 174-1494 | 1331 |
| 174-1550 | 964 |
| 174-1552 | 595 |
| | ▶964 |
| 174-2031 | 479 |
| 174-2407 | 1422 |
| | 1423 |
| | 1452 |
| | 1453 |
| 174-2408 | 1422 |
| | 1423 |
| | 1453 |
| 174-2435 | 1088 |
| | 1091 |
| 174-3055 | 1482 |
| 174-3874 | 6 |
| | 8 |
| | ▶82 |
| 174-4117 | ▶1211 |
| 174-4312 | 970 |
| | 990 |
| 174-4613 | 468 |
| 174-5807 | 663 |
| 174-5907 | 420 |
| | 454 |
| | 456 |
| | 460 |
| | 489 |
| | 491 |
| 174-5986 | 7 |
| | 9 |
| | ▶140 |
| 174-6381 | 658 |
| 174-7875 | 1378 |
| 174-7950 | ▶1309 |
| 174-8849 | 219 |
| 174-9169 | 318 |
| 175-1366 | 25 |
| 175-1367 | 25 |
| 175-1372 | 977 |
| 175-1373 | 977 |
| 175-1374 | 977 |
| 175-1375 | 977 |
| | 988 |
| 175-1376 | 977 |
| | 988 |
| 175-2794 | 1229 |
| 175-2795 | 1229 |
| 175-2853 | 642 |
| 175-3064 | 1385 |
| | 1388 |
| 175-3183 | 174 |
| | 178 |
| 175-3244 | 435 |
| | 442 |
| | 446 |
| 175-3617 | 41 |
| 175-3860 | 6 |
| | 8 |
| | ▶78 |
| | ▶80 |
| 175-3868 | 78 |
| | 80 |
| 175-5058 | 1328 |
| 175-6795 | 1138 |
| | 1140 |


▶ **PRIMARY REFERENCE**

# PART NUMBER INDEX


| Part | Page |
|---|---|
| 175-6799 | 1138 |
| | 1140 |
| 175-7162 | 1391 |
| 175-7419 | 654 |
| 175-7739 | 182 |
| 175-7887 | 1133 |
| 175-7900 | 1004 |
| | 1005 |
| | 1006 |
| 176-5500 | 1374 |
| 176-5504 | 575 |
| | 582 |
| 176-6448 | 498 |
| | 503 |
| | ▶634 |
| 176-7289 | 605 |
| 176-7507 | 1032 |
| 176-7508 | 1032 |
| 176-7509 | 1032 |
| | ▶1034 |
| 176-7510 | 1032 |
| 176-7511 | 1032 |
| 176-7512 | 1032 |
| 176-7513 | 1032 |
| 176-7514 | 1032 |
| 176-7516 | 1032 |
| 176-7517 | 1032 |
| 176-7518 | 1032 |
| 176-7519 | 1032 |
| 176-7520 | 1032 |
| | ▶1042 |
| 176-7521 | 1032 |
| 176-7692 | 1032 |
| 176-7693 | 1032 |
| 176-7696 | 1032 |
| 176-8350 | 5 |
| | ▶326 |
| 176-9369 | 1036 |
| | ▶1037 |
| 176-9370 | 1036 |
| | ▶1038 |
| 177-0093 | 1148 |
| | 1151 |
| 177-1403 | 1133 |
| 177-1405 | 1058 |
| | 1060 |
| | 1133 |
| 177-1449 | 1208 |
| 177-1483 | 964 |
| 177-1862 | 1450 |
| 177-1863 | 1468 |
| | 1470 |
| 177-2374 | 1356 |
| 177-3579 | 1420 |
| | 1422 |
| 177-4112 | 1356 |
| 177-4113 | 1355 |
| | ▶1356 |
| 177-4122 | 387 |
| | 396 |
| | 402 |
| | 408 |
| | 654 |
| 177-4152 | 16 |
| | 18 |
| 177-4155 | 1097 |
| 177-4686 | 956 |
| 177-4687 | 954 |
| 177-4937 | 1472 |
| 177-8839 | 548 |
| 177-8924 | 977 |
| | ▶989 |
| 177-9645 | 351 |
| | 358 |
| | 365 |
| | 386 |
| 177-9648 | 351 |
| | 358 |
| | 365 |
| | 386 |
| | 394 |
| 177-9653 | 447 |
| 177-9656 | 447 |
| 178-0182 | 1148 |
| | 1151 |
| 178-0603 | ▶1468 |
| | ▶1470 |
| | 1472 |
| 178-0604 | ▶1425 |
| | 1468 |
| 178-0605 | 1425 |
| | ▶1426 |
| 178-0606 | ▶1472 |
| | 1473 |
| 178-1602 | 493 |
| | 498 |
| | 503 |
| 178-2500 | 134 |
| | 136 |
| 178-2991 | 517 |
| 178-2992 | 523 |
| 178-2999 | 1025 |
| 178-3000 | 1025 |
| 178-3001 | 1025 |
| 178-3002 | 1025 |
| 178-4139 | ▶1373 |
| | 1439 |
| | 1442 |
| 178-4142 | 1373 |
| 178-4640 | 534 |
| | 538 |
| 178-4641 | 534 |
| | 538 |
| 178-6265 | 290 |
| 178-7597 | 84 |
| 178-7907 | 1426 |
| | 1427 |
| 178-8486 | 1439 |
| | 1442 |
| 178-8504 | 1439 |
| | 1442 |
| 178-8583 | 351 |
| | 358 |
| | 365 |
| | 375 |
| 179-2006 | 1133 |
| 179-2229 | 1122 |
| | 1124 |
| 179-2805 | 796 |
| | 812 |
| | 1082 |
| 179-3211 | 78 |
| | 80 |
| 179-3274 | 1008 |
| 179-3726 | 1464 |
| 179-3738 | ▶1367 |
| | 1458 |
| 179-4324 | 970 |
| 179-6051 | 1385 |
| | 1388 |
| 179-6791 | 1097 |
| 179-6792 | 1097 |
| 179-6793 | 1094 |
| | 1097 |
| 179-6794 | 1097 |
| 179-6878 | 575 |
| | 582 |
| 179-6998 | 531 |
| 179-8107 | 326 |
| 179-9392 | 351 |
| | 358 |
| | 365 |
| | 375 |
| 180-2595 | 1352 |
| 180-2596 | 1352 |
| 180-2624 | 1025 |
| 180-2625 | 1025 |
| 180-3039 | 1229 |
| 180-3040 | 1229 |
| 180-3732 | ▶338 |
| 180-3733 | 1464 |
| 180-3994 | 968 |
| 180-3999 | 967 |
| | ▶968 |
| 180-4000 | ▶960 |
| | 968 |
| 180-4001 | ▶962 |
| | 968 |
| 180-4533 | 665 |
| 180-4686 | 1122 |
| | 1124 |
| 180-5021 | 575 |
| | 582 |
| 180-5567 | 109 |
| 180-7110 | 420 |
| 180-7350 | 85 |
| 180-8424 | 134 |
| | 136 |
| 180-9267 | 128 |
| 180-9270 | 658 |
| 180-9272 | ▶658 |
| | 706 |
| | 709 |
| | 712 |
| 180-9339 | 456 |
| | 460 |
| 180-9340 | 300 |
| | 435 |
| | 442 |
| | 446 |
| | 808 |
| | 810 |
| | 812 |
| | 816 |
| 180-9595 | 575 |
| | 582 |
| 180-9971 | 1352 |
| 180-9972 | 1352 |
| 183-1989 | 1482 |
| 183-2299 | 669 |
| | 672 |
| 183-3408 | 89 |
| 183-3409 | 154 |
| 183-3626 | 1097 |
| 183-3681 | 345 |
| 183-3756 | 1337 |
| | 1338 |
| | ▶1494 |
| 183-4007 | ▶1420 |
| | 1424 |
| 183-4063 | 1056 |
| | 1057 |
| 183-4491 | 1094 |
| | 1097 |
| 183-4605 | 1211 |
| 183-5318 | ▶1278 |
| 183-5321 | ▶1278 |
| 183-5324 | 1278 |
| 183-5325 | 1278 |
| 183-5382 | 883 |
| | 887 |
| 183-5384 | 879 |
| | 881 |
| | 884 |
| | 943 |
| 183-5509 | 893 |
| | 895 |
| | 923 |
| 183-5512 | 879 |
| | 881 |
| | 893 |
| | 895 |
| | 909 |
| | 911 |
| | 918 |
| | 920 |
| | 923 |
| | 940 |
| | 945 |
| | 947 |
| 183-5825 | 881 |
| | 884 |
| | 886 |
| | 889 |
| | 897 |
| | 901 |
| | 905 |
| | 918 |
| | 920 |
| | 922 |
| | 923 |
| | 927 |
| | 929 |
| | 931 |
| | 935 |
| | 943 |
| | 944 |
| | 945 |
| | 947 |


▶ PRIMARY REFERENCE

# PART NUMBER INDEX


| Part | Page | Part | Page | Part | Page | Part | Page |
|---|---|---|---|---|---|---|---|
| 183-7228 | 862 | 185-0296 | 1129 | | 357 | 187-9116 | 1133 |
| 183-7262 | 1047 | 185-1933 | ▶83 | | 358 | 188-0158 | 206 |
| | 1051 | | 865 | | 364 | 188-0210 | 80 |
| 183-7263 | 1051 | 185-2192 | 83 | | 365 | 188-0583 | 1508 |
| | 1161 | 185-2638 | 202 | | 374 | 188-0960 | 964 |
| | 1165 | 185-2639 | 202 | | 375 | 188-1035 | 1097 |
| 183-7531 | 1439 | 185-2644 | 202 | | 416 | 188-1754 | 6 |
| | 1442 | 185-2645 | 202 | | 430 | | 8 |
| 183-7532 | 1439 | 185-2647 | 202 | | 446 | | ▶77 |
| | 1442 | 185-2648 | 202 | | 479 | 188-1755 | 77 |
| 183-7535 | 866 | 185-2650 | 202 | | 970 | 188-2048 | 1358 |
| 183-7536 | 866 | 185-2651 | 202 | | 1008 | 188-2199 | 1074 |
| 183-7537 | 866 | 185-2653 | 202 | | 1185 | | 1076 |
| 183-7538 | 866 | 185-2654 | 202 | | 1342 | 188-3983 | 1342 |
| 183-7539 | 866 | 185-2655 | 202 | | 1346 | | 1346 |
| 183-7540 | 866 | 185-2658 | 202 | | 1349 | 188-3984 | 330 |
| 183-7595 | 1160 | 185-3521 | 1342 | | 1413 | | 1342 |
| | ▶1186 | 185-3522 | 1342 | | 1415 | | 1346 |
| 183-8004 | 598 | 185-3523 | 1342 | | 1417 | 188-6280 | 1129 |
| 183-8040 | 1391 | 185-3653 | 642 | | 1494 | 188-7007 | 1088 |
| | 1394 | 185-3889 | 1133 | 186-3736 | 4 | | 1091 |
| 183-9409 | 866 | 185-4021 | 174 | | 329 | 188-8849 | 242 |
| 183-9411 | 866 | | 178 | | 1204 | | 243 |
| 183-9412 | 866 | 185-4022 | 174 | | 1342 | | 249 |
| 183-9413 | 866 | | 178 | | 1346 | 188-9657 | 699 |
| 183-9414 | 866 | 185-5352 | 1134 | 186-5107 | 1328 | | 1198 |
| 183-9415 | 869 | 185-5354 | 1134 | | 1483 | | 1199 |
| | 870 | 185-5626 | 1161 | 186-6189 | 1391 | | 1200 |
| 183-9416 | 869 | | 1165 | | 1394 | | 1201 |
| | 870 | 185-6250 | 1500 | 186-6218 | 1097 | | 1202 |
| 184-1699 | 1439 | | 1505 | | ▶1179 | | 1203 |
| | 1442 | 185-6278 | 7 | 187-0565 | 1208 | 189-0189 | 641 |
| 184-1700 | 1439 | | 9 | 187-0678 | 531 | | 1185 |
| | 1442 | | ▶98 | 187-0681 | 977 | 189-0852 | 307 |
| 184-2298 | 1468 | 185-6334 | 146 | 187-0682 | 977 | 189-1858 | 790 |
| | 1470 | 185-6690 | 326 | 187-0738 | 1336 | | 792 |
| 184-2299 | 1468 | 185-7541 | 884 | | 1337 | | 795 |
| | 1470 | 185-7876 | 1173 | | 1338 | | 812 |
| 184-2472 | 223 | 185-9956 | 675 | | ▶1358 | | 872 |
| | 230 | | 679 | 187-0844 | 590 | | 874 |
| 184-3635 | 1133 | | 683 | 187-1679 | 184 | 189-4383 | 859 |
| 184-3675 | 964 | 186-2001 | 45 | | 235 | 189-4384 | 859 |
| 184-3677 | 964 | | 46 | 187-1707 | 1394 | 189-4387 | 859 |
| 184-4617 | 964 | | 47 | 187-1867 | 1352 | 189-4388 | 859 |
| 184-4902 | 435 | | 49 | 187-2108 | 962 | 189-4390 | 859 |
| | 442 | 186-3294 | 1276 | 187-2710 | 636 | 189-4391 | 859 |
| | 446 | 186-3735 | 201 | 187-2863 | 1229 | 189-4393 | 872 |
| 184-4903 | 435 | | 241 | 187-2864 | 1229 | | 874 |
| 184-5092 | 1494 | | 250 | 187-3554 | 1364 | 189-4394 | 872 |
| 184-5093 | ▶1417 | | 251 | | 1369 | | 874 |
| | 1494 | | 252 | 187-5127 | 1486 | 189-4395 | 872 |
| 184-6673 | 1374 | | 296 | | 1487 | | 874 |
| 184-9866 | 1265 | | 297 | 187-5128 | 1486 | 189-4398 | 872 |
| 185-0004 | 547 | | 298 | | 1487 | | 874 |
| | 551 | | 310 | 187-5420 | 67 | 189-4401 | 872 |
| | 556 | | 311 | 187-6237 | 131 | | 874 |
| | 560 | | 324 | 187-8191 | 1186 | 189-4402 | 872 |
| 185-0275 | 1129 | | 328 | 187-8567 | 1029 | | 874 |
| | ▶1142 | | 330 | 187-8674 | 401 | 189-4404 | 872 |
| 185-0278 | 1129 | | 331 | | 407 | | 874 |
| 185-0280 | 1129 | | 337 | 187-8675 | 401 | 189-4407 | 872 |
| 185-0287 | 1142 | | 339 | | 407 | | 874 |
| 185-0289 | 1142 | | 341 | 187-8979 | 62 | 189-4408 | 872 |
| 185-0292 | 1142 | | 350 | 187-8980 | 62 | | 874 |
| 185-0295 | 1129 | | 351 | 187-8981 | 30 | 189-4409 | 872 |


▶ **PRIMARY REFERENCE**

# PART NUMBER INDEX


| Part | Page |
|---|---|
| | 874 |
| 189-4918 | 30 |
| 189-5719 | 977 |
| 189-7031 | 879 |
| | 881 |
| | 909 |
| | 911 |
| | 923 |
| | 940 |
| 189-7038 | 790 |
| | 792 |
| | 795 |
| | 812 |
| 189-7144 | 1094 |
| 189-7145 | 1094 |
| 189-7146 | 1094 |
| 189-7147 | 1094 |
| 189-7148 | 1094 |
| 189-7151 | 988 |
| 189-7152 | 542 |
| 189-7153 | 542 |
| 189-7156 | 574 |
| 189-7157 | 528 |
| 189-7161 | 1117 |
| 189-7162 | 1117 |
| 189-7163 | 1117 |
| 189-7165 | 1095 |
| 189-7166 | 1095 |
| 189-7167 | 1095 |
| 189-7168 | 1095 |
| 189-7169 | 1095 |
| 189-7250 | 682 |
| | ▶1094 |
| 189-7251 | 682 |
| | ▶1012 |
| 189-7252 | 682 |
| | ▶988 |
| 189-7253 | ▶542 |
| | 682 |
| 189-7254 | 682 |
| | ▶1120 |
| 189-7255 | ▶574 |
| | 682 |
| 189-7257 | 682 |
| | ▶1117 |
| 189-7259 | 682 |
| | ▶1095 |
| 189-7288 | 851 |
| | 852 |
| | 853 |
| | 854 |
| | 855 |
| 189-7337 | 694 |
| 189-7338 | 694 |
| 189-7370 | 970 |
| 189-7372 | 970 |
| 189-7373 | 970 |
| 189-7394 | 691 |
| 189-7409 | 1423 |
| 189-7412 | 691 |
| 189-7413 | 691 |
| 189-7421 | 970 |
| 189-7422 | 970 |
| 189-7423 | 970 |
| 189-7425 | 970 |
| 189-7428 | 970 |
| 189-7429 | 970 |
| 189-7441 | ▶700 |
| | 850 |
| | 851 |
| | 852 |
| | 853 |
| | 854 |
| | 855 |
| 189-7444 | 1197 |
| | 1206 |
| 189-7445 | 1197 |
| | 1206 |
| 189-7456 | 1423 |
| 189-7467 | 691 |
| 189-7470 | 970 |
| 189-7474 | 1206 |
| 189-7475 | 1206 |
| 189-7482 | 790 |
| | 792 |
| | 795 |
| | 812 |
| 189-7483 | 790 |
| | 792 |
| | 795 |
| | 812 |
| 189-7488 | 790 |
| | 792 |
| | 795 |
| | 812 |
| 189-7490 | 848 |
| 189-7492 | 848 |
| 189-7493 | 848 |
| 189-7494 | 808 |
| 189-7495 | 808 |
| | 810 |
| | 816 |
| 189-7496 | 808 |
| | 810 |
| | 816 |
| 189-7497 | 762 |
| | 766 |
| | 770 |
| | 798 |
| | 802 |
| | 825 |
| | 837 |
| 189-7498 | 762 |
| | 766 |
| | 770 |
| | 825 |
| 189-7499 | 762 |
| | 766 |
| | 798 |
| 189-7500 | 762 |
| | 766 |
| | 770 |
| | 774 |
| | 778 |
| | 784 |
| | 798 |
| | 802 |
| | 818 |
| | 825 |
| | 837 |
| 189-7501 | 790 |
| | 792 |
| | 795 |
| | 812 |
| 189-7502 | 790 |
| | 792 |
| | 795 |
| | 812 |
| 189-7503 | 808 |
| | 810 |
| | 816 |
| 189-7508 | 808 |
| | 810 |
| | 816 |
| 189-7509 | 808 |
| | 810 |
| | 816 |
| 189-7514 | 735 |
| | 740 |
| | 762 |
| | 766 |
| | 770 |
| 189-7515 | 735 |
| | 740 |
| | 762 |
| | 766 |
| | 770 |
| 189-7531 | 825 |
| | 830 |
| | 879 |
| | 893 |
| | 895 |
| | 911 |
| | 913 |
| | 916 |
| | 922 |
| | 929 |
| | 937 |
| | 940 |
| | 942 |
| 189-7534 | 879 |
| 189-7535 | 925 |
| | 930 |
| 189-7536 | 818 |
| | 822 |
| | 925 |
| | 930 |
| | 934 |
| 189-7540 | 879 |
| | 881 |
| | 884 |
| | 920 |
| | 923 |
| 189-7541 | 889 |
| | 891 |
| | 893 |
| | 895 |
| | 897 |
| | 899 |
| | 909 |
| | 911 |
| | 922 |
| | 929 |
| | 940 |
| 189-7543 | 876 |
| | 886 |
| | 889 |
| | 891 |
| | 893 |
| | 895 |
| | 897 |
| | 899 |
| | 901 |
| | 903 |
| | 905 |
| | 907 |
| | 913 |
| | 916 |
| | 918 |
| | 922 |
| | 929 |
| | 942 |
| 189-7546 | 876 |
| | 881 |
| | 886 |
| | 909 |
| | 913 |
| | 916 |
| | 918 |
| | 922 |
| | 923 |
| | 927 |
| | 929 |
| | 931 |
| | 942 |
| | 944 |
| | 945 |
| 189-7547 | 881 |
| | 920 |
| | 923 |
| | 947 |
| 189-7548 | 879 |
| | 881 |
| | 895 |
| | 911 |
| | 916 |
| | 920 |
| | 923 |
| | 940 |
| | 942 |
| | 947 |
| 189-7552 | 922 |
| | 929 |
| | 936 |
| 189-7553 | 887 |
| | 920 |
| | 923 |
| | 947 |
| 189-7554 | 876 |
| | 878 |
| | 893 |
| | 895 |
| | 909 |
| | 911 |
| | 922 |
| | 929 |
| | 940 |


▶ PRIMARY REFERENCE

# PART NUMBER INDEX


| Part | Page |
|---|---|
| 189-7581 | 695 |
| 189-7589 | 850 |
| | 852 |
| | ▶1198 |
| 189-7590 | 3 |
| | 4 |
| | ▶528 |
| 189-7592 | 528 |
| 189-7593 | 528 |
| 189-7594 | 528 |
| 189-7595 | 528 |
| 189-7609 | 798 |
| 189-7617 | 691 |
| 189-7622 | 691 |
| 189-7623 | 691 |
| 189-7638 | 850 |
| | 851 |
| | ▶1206 |
| 189-7700 | 691 |
| 189-7702 | 691 |
| 189-7703 | 691 |
| 189-7718 | 883 |
| | 889 |
| | 891 |
| | 897 |
| | 899 |
| | 934 |
| | 935 |
| | 937 |
| 189-7722 | 3 |
| | 4 |
| 189-7736 | 481 |
| 189-7737 | 365 |
| 189-7739 | 481 |
| 189-7740 | 1360 |
| 189-7779 | 3 |
| | 4 |
| | ▶230 |
| 189-7787 | 1062 |
| 189-7788 | 1062 |
| 189-7852 | 3 |
| | 4 |
| 189-7855 | 691 |
| 189-7895 | 1062 |
| 189-7897 | 1062 |
| 189-7981 | 877 |
| | 893 |
| | 895 |
| | 918 |
| | 945 |
| 189-7982 | 877 |
| 189-8048 | 889 |
| | 891 |
| | 901 |
| | 903 |
| 189-8050 | 883 |
| 189-8069 | 858 |
| 190-0009 | ▶73 |
| 190-1701 | 1208 |
| 190-3132 | ▶238 |
| 190-3635 | 204 |
| 190-4764 | 1358 |
| 190-5386 | 1508 |
| 190-6560 | 20 |
| 190-6563 | 13 |
| | ▶20 |
| 191-0554 | 949 |
| | 950 |
| | 951 |
| 191-0965 | 102 |
| | 104 |
| | 106 |
| 191-1782 | 174 |
| | 178 |
| 191-2933 | 1473 |
| | ▶1483 |
| 191-5114 | 1383 |
| 191-6084 | 509 |
| | 511 |
| | 513 |
| 191-7585 | 1034 |
| 191-7587 | 1034 |
| 191-7589 | 1034 |
| 191-7591 | 1034 |
| 191-7594 | 1034 |
| 191-7596 | 1034 |
| 191-7597 | 1034 |
| 191-7599 | 1029 |
| 191-7607 | 1042 |
| 191-8303 | 308 |
| 191-8735 | 1102 |
| | 1108 |
| | ▶1160 |
| 191-8921 | 1334 |
| | 1335 |
| 192-0815 | 642 |
| 192-0816 | 642 |
| 192-0822 | 484 |
| | ▶642 |
| 192-1425 | 1074 |
| | 1076 |
| | 1080 |
| | 1081 |
| 192-1590 | ▶223 |
| | 406 |
| 192-4151 | 91 |
| | 93 |
| | 94 |
| | 95 |
| | 96 |
| 192-5017 | 413 |
| | 416 |
| 192-7054 | 1446 |
| | 1448 |
| | 1449 |
| 192-7439 | 406 |
| 192-7455 | 435 |
| | 442 |
| | 446 |
| 192-7470 | 1129 |
| 192-7752 | 1483 |
| 192-7755 | 1483 |
| 192-7760 | 1483 |
| 192-7767 | 1483 |
| 192-7783 | 1483 |
| 192-7787 | 1483 |
| 192-7790 | 1483 |
| 192-7795 | 1483 |
| 192-7799 | 1483 |
| 192-7805 | 1483 |
| 192-7810 | 1483 |
| 192-7812 | 1483 |
| 192-7820 | 1483 |
| 192-7822 | 1483 |
| 192-7848 | 1483 |
| 192-7969 | 284 |
| 192-8848 | 645 |
| | 646 |
| | 648 |
| 192-8851 | ▶650 |
| | 720 |
| 192-8852 | ▶652 |
| | 718 |
| 193-0771 | 1411 |
| | 1413 |
| 193-0980 | ▶598 |
| | 600 |
| 193-1036 | 1171 |
| 193-1760 | 1229 |
| 193-2120 | 1120 |
| 193-2550 | ▶306 |
| | 535 |
| | 539 |
| 193-2652 | 1411 |
| | 1413 |
| 193-2653 | 1411 |
| | 1413 |
| 193-3086 | 1171 |
| 193-3087 | 1171 |
| 193-3973 | 427 |
| | 430 |
| 193-5572 | 263 |
| 193-7404 | 182 |
| 193-8912 | 686 |
| | 688 |
| 193-9131 | 413 |
| | 416 |
| 193-9179 | 598 |
| 194-1497 | 498 |
| | 503 |
| 194-1674 | 1208 |
| 194-2147 | 970 |
| 194-2905 | 575 |
| | 582 |
| 194-2906 | 575 |
| | 582 |
| 194-2909 | 575 |
| | 582 |
| 194-2910 | 574 |
| | 575 |
| | 582 |
| 194-3285 | 1042 |
| 194-3286 | ▶1029 |
| | 1042 |
| 194-3287 | 1042 |
| 194-3288 | 1042 |
| 194-3289 | 1042 |
| 194-3715 | ▶1452 |
| 194-3766 | ▶1453 |
| 194-4132 | 612 |
| 194-4133 | ▶612 |
| 194-4136 | ▶612 |
| 194-4185 | 612 |
| 194-4186 | ▶612 |
| 194-4497 | 1029 |
| 194-5226 | 301 |
| 194-6626 | 598 |
| 194-6722 | ▶300 |
| | 302 |
| 194-6725 | ▶301 |
| | 303 |
| 194-6849 | 1029 |
| 194-7264 | 572 |
| 194-8648 | 1409 |
| 195-0462 | 975 |
| | 988 |
| 195-0472 | 1439 |
| | 1442 |
| 195-2251 | 326 |
| 195-2271 | 326 |
| 195-3162 | 812 |
| | 1439 |
| | 1442 |
| 195-3324 | 1029 |
| 195-3325 | 1029 |
| 195-3326 | 1029 |
| 195-3327 | 1029 |
| 195-3328 | 1029 |
| 195-5979 | 575 |
| | 582 |
| | ▶600 |
| 195-5981 | 598 |
| 195-5985 | 598 |
| 195-5988 | 598 |
| 195-7180 | 1310 |
| 195-7181 | 1310 |
| 195-7182 | 1310 |
| 196-0056 | 528 |
| | 576 |
| | 583 |
| 196-0342 | 265 |
| 196-0436 | 1422 |
| | 1452 |
| 196-5069 | 91 |
| | 93 |
| | 94 |
| | 95 |
| | 96 |
| 196-5070 | 91 |
| | 93 |
| | 94 |
| | 95 |
| | 96 |
| 196-5538 | ▶330 |
| | 1408 |
| 196-7365 | 1208 |
| 196-7369 | 1208 |
| 197-0679 | 1191 |
| | ▶1207 |
| 197-1488 | 101 |
| 197-1563 | 872 |
| | 874 |
| 197-3295 | 543 |
| | 547 |
| | 551 |
| | 556 |
| | 560 |
| | 575 |
| | 582 |
| | 977 |


▶ **PRIMARY REFERENCE**

# PART NUMBER INDEX


| Part | Page | Part | Page | Part | Page | Part | Page |
|---|---|---|---|---|---|---|---|
| | 1097 | | 1451 | 200-0819 | 642 | 203-5498 | 1391 |
| 197-4859 | 1452 | 198-6434 | 1153 | 200-0820 | 485 | 203-5499 | 1391 |
| | 1499 | | 1156 | 200-0866 | 977 | 203-5535 | 1082 |
| 197-4971 | 62 | 198-6439 | 975 | 200-1137 | 146 | 203-5870 | 978 |
| 197-5470 | 1422 | | 1153 | 200-3174 | 1336 | 203-5871 | 978 |
| | 1452 | | 1156 | | 1337 | 203-6481 | 1362 |
| 197-6660 | 735 | 198-6570 | 351 | | 1338 | 203-6490 | 669 |
| | 740 | | 358 | | ▶1473 | | 672 |
| | 744 | | 365 | 200-5156 | ▶613 | 203-6992 | ▶614 |
| | 748 | | 375 | 200-5161 | ▶613 | 203-7143 | 1362 |
| | 753 | 198-6571 | 358 | 200-5165 | ▶613 | 203-7703 | 1473 |
| | 757 | | 365 | 200-5169 | ▶613 | 203-8482 | 1161 |
| | 762 | | 375 | 200-5172 | ▶614 | | 1165 |
| | 766 | 198-7667 | 1095 | 200-5177 | 614 | 203-8609 | 1138 |
| | 770 | | 1153 | 200-5178 | 613 | | 1140 |
| | 774 | | 1156 | 200-5180 | 613 | 203-8822 | 91 |
| | 778 | 198-7668 | 1095 | 200-5181 | 613 | 203-8824 | 91 |
| | 784 | | 1153 | 200-5254 | 1088 | | 93 |
| | 818 | | 1156 | | 1091 | | 94 |
| | 822 | 198-7669 | 1095 | 200-5728 | 1418 | | 95 |
| | 825 | | 1153 | | 1447 | | 96 |
| | 830 | | 1156 | 200-5962 | 970 | 203-9163 | 1138 |
| | 842 | 198-7670 | 1095 | | ▶998 | | 1140 |
| 197-7565 | 351 | | 1153 | 200-6345 | 427 | 203-9364 | 564 |
| | 358 | | 1156 | | 430 | | 568 |
| | 365 | 198-8196 | 1095 | 200-7949 | ▶614 | 203-9368 | 547 |
| | 376 | | 1153 | 200-7951 | 614 | | 551 |
| 197-7701 | 1185 | | 1156 | 201-0218 | ▶1156 | | 556 |
| 197-7863 | 735 | 198-8871 | 1062 | | 1204 | | 560 |
| | 740 | 198-9229 | 1 | | 1205 | 203-9369 | 547 |
| | 744 | | 2 | 201-0364 | 1367 | | 551 |
| | 748 | | ▶680 | | 1371 | | 556 |
| | 753 | 198-9230 | 680 | 201-0377 | ▶1088 | | 560 |
| | 757 | 198-9397 | 650 | | 1205 | 203-9991 | 1474 |
| | 762 | 198-9403 | 650 | 201-1049 | ▶1189 | | 1477 |
| | 766 | | 652 | | 1205 | 204-0135 | 1082 |
| | 770 | 198-9406 | 650 | 201-4221 | 1485 | 204-0157 | 547 |
| | 774 | 198-9407 | 650 | 201-4222 | 1485 | | 551 |
| | 778 | | 652 | 201-4340 | 37 | | 556 |
| | 784 | 198-9408 | 652 | 201-6617 | ▶307 | | 597 |
| | 818 | 198-9412 | 652 | | 309 | 204-0341 | 1068 |
| | 822 | 198-9898 | 71 | 201-7244 | 608 | 204-0721 | 1229 |
| | 825 | | ▶91 | 201-7245 | 605 | 204-0722 | 1229 |
| | 830 | 199-1293 | 669 | | ▶608 | 204-1505 | 668 |
| | 842 | | 672 | 201-9677 | 543 | 204-2640 | 1068 |
| 197-8391 | 167 | 199-3066 | ▶668 | 202-0671 | 1170 | 204-3546 | 614 |
| | 291 | 199-3368 | ▶251 | 202-0673 | 1170 | 204-3547 | ▶614 |
| | ▶313 | | 268 | 202-0674 | 1170 | 204-3611 | 1358 |
| 197-8392 | 291 | | 272 | 202-2762 | 268 | 204-6050 | 970 |
| | ▶314 | | 276 | | 272 | 204-6286 | 1151 |
| 197-8820 | ▶202 | 199-3721 | 612 | | 276 | 204-6287 | 691 |
| | 204 | 199-3722 | ▶612 | 202-3702 | 493 | | ▶1151 |
| 198-0997 | 468 | 199-5510 | 1453 | | 498 | 204-7846 | 141 |
| 198-1092 | 1212 | 199-5670 | 290 | | 503 | | 143 |
| | 1269 | | 694 | 202-7652 | 1385 | 204-7847 | 143 |
| | 1271 | 199-6290 | 528 | | 1388 | 204-7949 | ▶296 |
| | 1273 | | 576 | 202-8038 | 978 | | 1432 |
| 198-1854 | 1108 | | 583 | 203-0147 | 110 | 204-9316 | ▶61 |
| 198-3406 | 542 | 199-7891 | 202 | 203-0328 | 1474 | | 62 |
| | 543 | 199-8436 | 202 | 203-1095 | 1032 | 204-9734 | 413 |
| 198-3407 | 542 | | | 203-3072 | 1097 | | 416 |
| | 543 | | | 203-3940 | 308 | 205-0626 | 202 |
| 198-4266 | 666 | | | 203-4811 | 1082 | 205-3583 | 962 |
| 198-4777 | 125 | | | 203-5443 | 1391 | 205-6051 | 617 |
| 198-4780 | 1423 | 200-0818 | 642 | | 1394 | | 619 |


2

▶ PRIMARY REFERENCE

# PART NUMBER INDEX


| Part | Page |
|---|---|
| 205-6388 | 1472 |
| 205-9184 | 575 |
| | 582 |
| 205-9293 | 131 |
| 206-1345 | 425 |
| 206-2723 | 1500 |
| | 1505 |
| 206-2736 | 552 |
| 206-4227 | 6 |
| | 8 |
| | ▶54 |
| 207-0449 | 10 |
| | 11 |
| | 12 |
| | ▶62 |
| 207-0533 | 1486 |
| | 1487 |
| 207-0534 | 1486 |
| | 1487 |
| 207-0535 | 1486 |
| 207-0547 | 1486 |
| | 1487 |
| 207-0580 | 230 |
| 207-0581 | 230 |
| 207-0695 | 1138 |
| | 1140 |
| | ▶1171 |
| 207-1462 | 575 |
| | 582 |
| 207-1810 | 1062 |
| 207-5248 | 91 |
| 207-6901 | 238 |
| 207-7025 | 239 |
| 207-7030 | ▶239 |
| 207-8128 | 108 |
| 208-0545 | ▶334 |
| | 621 |
| 208-1629 | 572 |
| 208-2479 | 1342 |
| 208-3778 | 1383 |
| 208-3779 | 1383 |
| 208-5022 | 1487 |
| 208-5150 | 1487 |
| 208-5260 | 1279 |
| | 1280 |
| 208-5261 | 1266 |
| 208-5262 | ▶1279 |
| 208-5281 | 1280 |
| 208-5282 | 1280 |
| 208-5283 | 1280 |
| 208-5284 | 1280 |
| 208-5285 | 1280 |
| 208-5286 | 1280 |
| 208-5336 | ▶1275 |
| 208-7448 | 146 |
| 208-7948 | 869 |
| 208-8094 | 596 |
| 208-8661 | 525 |
| 208-8840 | ▶1279 |
| 208-8841 | ▶1279 |
| 209-0381 | 351 |
| | 358 |
| | 365 |
| | 375 |
| | 1383 |
| 209-3569 | 25 |
| 209-4573 | 128 |
| 209-4580 | 128 |
| 209-5018 | 1455 |
| 209-6638 | 244 |
| | 245 |
| | 248 |
| 209-6694 | 486 |
| 209-6696 | 517 |
| 209-7659 | 174 |
| | 178 |
| 210-1235 | ▶1265 |
| 210-1236 | ▶1229 |
| | 1265 |
| 210-2037 | 1229 |
| 210-2038 | 1229 |
| 210-2145 | 1229 |
| 210-2262 | 1450 |
| 210-2263 | 1450 |
| 210-2266 | 1450 |
| 210-2270 | ▶1450 |
| | 1468 |
| | 1470 |
| 210-5692 | 575 |
| | 582 |
| 210-8423 | ▶244 |
| | ▶245 |
| | 260 |
| 210-8620 | 978 |
| 210-9246 | 115 |
| | 116 |
| 211-0247 | 666 |
| 211-0248 | 661 |
| | 662 |
| 211-0592 | 30 |
| 211-3122 | 45 |
| | 46 |
| | 47 |
| | 49 |
| 211-3123 | 45 |
| | 46 |
| | 47 |
| | 49 |
| 211-4942 | 1474 |
| | 1479 |
| 211-5237 | 136 |
| 211-5358 | 1483 |
| 211-9047 | 1331 |
| 211-9294 | 1483 |
| 212-0907 | 1074 |
| | 1076 |
| 212-6862 | 1088 |
| | 1091 |
| 212-6933 | 128 |
| 212-8712 | 1153 |
| | ▶1161 |
| 212-8739 | 617 |
| | 619 |
| 212-8746 | 1156 |
| | ▶1165 |
| 212-9580 | ▶171 |
| | 200 |
| 213-3217 | 85 |
| 213-3221 | 1133 |
| 213-4740 | 174 |
| | 178 |
| | ▶200 |
| 213-4998 | 246 |
| | 247 |
| 213-5268 | 1128 |
| | ▶1129 |
| 213-7465 | 1008 |
| 213-7466 | 1008 |
| 213-9100 | 341 |
| 214-0783 | ▶1328 |
| 214-0784 | 1328 |
| 214-1639 | 1074 |
| | 1076 |
| 214-2445 | 1133 |
| 214-2484 | 291 |
| | 293 |
| | ▶308 |
| 214-4208 | 401 |
| | 406 |
| 214-4862 | ▶297 |
| | 1342 |
| | 1346 |
| 214-4863 | ▶298 |
| | 962 |
| 214-5431 | 1235 |
| 214-5432 | 1235 |
| 214-6364 | 1235 |
| | 1244 |
| 214-6365 | 1235 |
| | 1244 |
| 214-6367 | 1235 |
| | 1244 |
| 214-6489 | 1133 |
| 214-7568 | 178 |
| 214-7634 | ▶1334 |
| | 1488 |
| | 1491 |
| | 1494 |
| 214-7635 | ▶1335 |
| | 1488 |
| | 1491 |
| | 1494 |
| 214-9522 | 1120 |
| 214-9523 | 1122 |
| | 1124 |
| 214-9524 | 1122 |
| 215-1933 | 246 |
| | 247 |
| 215-1942 | 1074 |
| | 1076 |
| 215-2423 | 662 |
| 215-2424 | 662 |
| 215-2425 | 661 |
| 215-2426 | 661 |
| 215-6406 | 420 |
| 215-9153 | 1464 |
| 215-9554 | 684 |
| 216-0273 | 534 |
| 216-2515 | 1129 |
| 216-3011 | 812 |
| 216-3681 | 1235 |
| 216-3683 | 1235 |
| | 1244 |
| | 1263 |
| 216-4884 | 493 |
| 216-4889 | 493 |
| | 498 |
| | 503 |
| 216-5342 | 633 |
| | ▶635 |
| 216-5582 | 39 |
| | 42 |
| 216-8978 | 1132 |
| | ▶1133 |
| 216-9195 | 1013 |
| | 1017 |
| | 1021 |
| 217-0641 | 1088 |
| 217-0642 | 1088 |
| 217-0643 | 1088 |
| 217-0751 | 39 |
| | 42 |
| 217-0752 | 39 |
| | 42 |
| 217-1557 | 684 |
| 217-2708 | 454 |
| | 456 |
| | 460 |
| | ▶636 |
| 217-3549 | 859 |
| 217-4590 | 172 |
| | 174 |
| | 178 |
| | 184 |
| | 427 |
| | 430 |
| 217-4652 | ▶1280 |
| 217-5073 | 1074 |
| 217-5074 | 1074 |
| 217-5911 | 1120 |
| 217-6566 | 1076 |
| 217-6567 | 1074 |
| 217-6719 | ▶1058 |
| | 1161 |
| | 1165 |
| 217-6720 | ▶1060 |
| | 1161 |
| | 1165 |
| 217-7850 | ▶975 |
| | 1087 |
| 217-7933 | 1450 |
| 217-8763 | 1074 |
| | 1076 |
| 217-8938 | 20 |
| 217-8946 | 154 |
| 217-9049 | 1468 |
| | 1470 |
| 218-0324 | ▶1339 |
| | 1340 |
| 218-0861 | 1468 |
| | 1470 |
| 218-9732 | 1076 |
| 218-9733 | 1076 |
| 219-0305 | 1508 |
| 219-0313 | 155 |
| 219-0601 | 282 |
| 219-0602 | 282 |
| 219-1438 | 1074 |


▶ **PRIMARY REFERENCE**

# PART NUMBER INDEX


| Part | Page |
|---|---|
| | 1076 |
| | 1078 |
| | 1079 |
| 219-2432 | 420 |
| 219-4418 | 219 |
| 219-4443 | 6 |
| | 8 |
| | ▶110 |
| 219-4458 | 85 |
| 219-4960 | 970 |
| 219-4961 | 971 |
| 219-4977 | ▶701 |
| | 1067 |
| 219-5023 | 682 |
| | ▶1028 |
| 219-5029 | 3 |
| | 4 |
| | ▶695 |
| 219-5030 | 1028 |
| 219-5031 | 3 |
| | 4 |
| | ▶675 |
| 219-5032 | 675 |
| 219-5038 | 879 |
| | 881 |
| | 893 |
| | 895 |
| 219-5039 | 879 |
| | 881 |
| | 923 |
| 219-5053 | 677 |
| 219-5055 | 675 |
| 219-5066 | 675 |
| | ▶677 |
| | 1067 |
| 219-5073 | 798 |
| | 802 |
| | 806 |
| 219-5074 | 798 |
| | 802 |
| | 806 |
| 219-5098 | 1062 |
| 219-5120 | 1062 |
| 219-5155 | 970 |
| | ▶992 |
| 219-8899 | 596 |
| 219-9521 | 351 |
| | 358 |
| | 365 |
| | 375 |
| 219-9522 | 285 |
| 219-9523 | 351 |
| | 358 |
| | 365 |
| | 375 |
| 219-9533 | 352 |
| | 359 |
| | 366 |
| | 376 |
| 219-9536 | 335 |
| 220-0812 | 1146 |
| 220-1432 | ▶957 |
| | 970 |
| | 978 |
| 220-1441 | 10 |
| 220-1645 | 1062 |
| 220-1646 | 1062 |
| 220-1650 | 1062 |
| 220-1657 | 1062 |
| 220-1659 | 1062 |
| 220-1828 | 1331 |
| 220-2720 | ▶958 |
| 220-2779 | 572 |
| 220-2917 | 6 |
| | 8 |
| | ▶109 |
| 220-2948 | 1146 |
| 220-3444 | 844 |
| 220-3445 | 844 |
| 220-3446 | 844 |
| 220-3447 | 975 |
| 220-3448 | 975 |
| 220-6043 | 486 |
| 220-6079 | 1145 |
| 220-6372 | 6 |
| | 8 |
| | ▶156 |
| 220-7087 | 420 |
| 220-8358 | 352 |
| | 359 |
| | 366 |
| | 376 |
| 220-8678 | 171 |
| 220-8796 | 543 |
| 220-9110 | 1314 |
| | 1322 |
| 220-9168 | ▶1322 |
| 220-9169 | ▶1314 |
| 221-0130 | 1062 |
| 221-0134 | 1062 |
| 221-0135 | 1062 |
| 221-1426 | 156 |
| 221-1879 | 543 |
| 221-1880 | 543 |
| 221-1881 | 543 |
| 221-1882 | 543 |
| 221-3404 | 808 |
| | 810 |
| | 812 |
| | 816 |
| 221-3405 | 435 |
| | 442 |
| | 446 |
| 221-3416 | 468 |
| 221-3440 | 1146 |
| 221-3481 | 1146 |
| 221-4015 | 1146 |
| 221-4201 | 1145 |
| | ▶1146 |
| 221-5303 | 165 |
| 221-5304 | 165 |
| 221-5377 | 1062 |
| 221-5459 | 1145 |
| 221-5470 | 1145 |
| 221-5471 | 1145 |
| 221-5472 | 1145 |
| 221-6807 | ▶1145 |
| 221-6808 | ▶1145 |
| 221-7693 | 164 |
| | 165 |
| 221-8690 | 192 |
| 221-8691 | ▶164 |
| | 172 |
| | 173 |
| 221-8693 | 164 |
| 222-0345 | 1472 |
| 222-1549 | 486 |
| 222-2029 | 844 |
| 222-2030 | 844 |
| 222-2402 | 988 |
| 222-2403 | 988 |
| 222-2404 | 988 |
| 222-3584 | 695 |
| | 701 |
| 222-3756 | 682 |
| | ▶988 |
| 222-4737 | 1161 |
| | 1165 |
| | 1180 |
| 222-6713 | 527 |
| 222-6869 | 1098 |
| 223-0147 | 155 |
| 223-2112 | 564 |
| | 568 |
| 223-4254 | ▶572 |
| | 595 |
| 223-4263 | 1097 |
| 223-4296 | 215 |
| 223-4591 | 164 |
| 223-5118 | 141 |
| | 143 |
| 223-5814 | 110 |
| 223-5836 | 642 |
| 223-7263 | ▶39 |
| | 42 |
| | 45 |
| | 47 |
| | 49 |
| 223-8112 | 1314 |
| 223-8114 | ▶1213 |
| 223-8115 | ▶1214 |
| 223-8116 | ▶1215 |
| 223-8118 | 1212 |
| 223-8119 | 1212 |
| 223-8134 | 1248 |
| | 1255 |
| 223-8969 | 334 |
| 223-8971 | 352 |
| | 359 |
| | 366 |
| | 376 |
| 223-8972 | 352 |
| | 359 |
| | 366 |
| | 376 |
| 223-8975 | 265 |
| 223-8976 | 352 |
| | 359 |
| | 366 |
| 223-8979 | 335 |
| 223-8982 | 352 |
| | 359 |
| 223-9159 | 85 |
| 223-9250 | ▶45 |
| | ▶46 |
| | ▶47 |
| | 48 |
| 223-9659 | 1007 |
| 223-9660 | 1007 |
| 223-9732 | 10 |
| | 11 |
| | 12 |
| | ▶30 |
| 224-2687 | 158 |
| 224-2988 | 165 |
| 224-3245 | 85 |
| 224-3246 | 85 |
| 224-3872 | 1124 |
| 224-3951 | 876 |
| | ▶952 |
| 224-3952 | 726 |
| | 735 |
| | 740 |
| | 744 |
| | 748 |
| | 753 |
| | 757 |
| | 806 |
| | 822 |
| | 830 |
| | 833 |
| 224-3953 | 726 |
| 224-3954 | 726 |
| | ▶876 |
| 224-3955 | ▶726 |
| | 850 |
| | 851 |
| | 853 |
| | 854 |
| | 855 |
| 224-3956 | 876 |
| 224-3957 | 876 |
| | 878 |
| 224-3958 | 726 |
| 224-3979 | 6 |
| | 8 |
| | ▶1510 |
| | ▶1511 |
| 224-3983 | 39 |
| 224-4044 | ▶697 |
| | 850 |
| | 851 |
| | 853 |
| | 854 |
| | 855 |
| 224-4057 | ▶729 |
| | ▶732 |
| | 850 |
| | 851 |
| | 853 |
| | 854 |
| | 855 |
| 224-4229 | 660 |
| | ▶662 |
| 224-4325 | 729 |


▶ PRIMARY REFERENCE

# PART NUMBER INDEX


| Part | Page |
|---|---|
| | 732 |
| 224-4326 . . . . . | 878 |
| | ▶953 |
| 224-4327 . . . . . | 877 |
| | ▶954 |
| 224-4328 . . . . . | 729 |
| | 732 |
| | ▶877 |
| 224-4329 . . . . . | 729 |
| 224-4330 . . . . . | 729 |
| | 732 |
| 224-4331 . . . . . | 729 |
| | 732 |
| 224-4332 . . . . . | 729 |
| | 732 |
| 224-4333 . . . . . | 729 |
| | 732 |
| 224-4334 . . . . . | 729 |
| | 732 |
| 224-4335 . . . . . | 729 |
| | 732 |
| 224-4338 . . . . . | 729 |
| | 732 |
| | ▶878 |
| 224-4404 . . . . . | 879 |
| 224-4405 . . . . . | 879 |
| | 881 |
| 224-4410 . . . . . | 735 |
| | 740 |
| | 830 |
| | ▶879 |
| | ▶881 |
| 224-4411 . . . . . | 806 |
| | ▶883 |
| 224-4415 . . . . . | 726 |
| | ▶858 |
| 224-4416 . . . . . | 735 |
| | 740 |
| | 744 |
| | 748 |
| | 753 |
| | 757 |
| | 762 |
| | 766 |
| | 770 |
| | 774 |
| | 778 |
| | 784 |
| | 798 |
| | 802 |
| | 806 |
| | 818 |
| | 822 |
| | 825 |
| | 830 |
| | 833 |
| | 837 |
| 224-4417 . . . . . | 735 |
| | 740 |
| | 744 |
| | 748 |
| | 753 |
| | 757 |
| | 762 |
| | 766 |
| | 770 |
| | 774 |
| | 778 |
| | 784 |
| | 798 |
| | 802 |
| | 806 |
| | 818 |
| | 822 |
| | 825 |
| | 830 |
| | 833 |
| | 837 |
| 224-4420 . . . . . | 879 |
| | 881 |
| | 893 |
| | 895 |
| | 923 |
| | ▶955 |
| 224-4422 . . . . . | 883 |
| | 889 |
| | 891 |
| | 897 |
| | 899 |
| | 934 |
| | 935 |
| | 937 |
| | ▶956 |
| 224-5122 . . . . . | 48 |
| | 50 |
| 224-7696 . . . . . | 165 |
| 224-9280 . . . . . | 254 |
| | ▶282 |
| 224-9454 . . . . . | 146 |
| 224-9455 . . . . . | 1 |
| | 2 |
| | ▶146 |
| 224-9456 . . . . . | 119 |
| | ▶141 |
| 225-0312 . . . . . | 1509 |
| 225-0313 . . . . . | 1509 |
| 225-1144 . . . . . | 27 |
| 225-1148 . . . . . | ▶27 |
| | 29 |
| 225-2646 . . . . . | 1198 |
| 225-2647 . . . . . | 1198 |
| | 1199 |
| | 1200 |
| 225-2648 . . . . . | 735 |
| | 740 |
| | 762 |
| | 766 |
| | 770 |
| 225-3281 . . . . . | 1004 |
| | 1005 |
| | 1006 |
| 225-3289 . . . . . | 1076 |
| | 1080 |
| | 1081 |
| 225-3290 . . . . . | 1074 |
| | 1078 |
| | 1079 |
| 225-4256 . . . . . | 1509 |
| 225-4257 . . . . . | 1509 |
| 225-4278 . . . . . | ▶2 |
| 225-5235 . . . . . | 1 |
| | 2 |
| | ▶706 |
| | ▶709 |
| | ▶712 |
| 225-5237 . . . . . | 706 |
| | 709 |
| | 712 |
| 225-5239 . . . . . | 706 |
| | 709 |
| | 712 |
| 225-5240 . . . . . | 706 |
| | 709 |
| | 712 |
| 225-5432 . . . . . | ▶1 |
| | 2 |
| 225-5449 . . . . . | 2 |
| | ▶1087 |
| 225-5452 . . . . . | 2 |
| | ▶225 |
| 225-5455 . . . . . | 2 |
| | 3 |
| | ▶595 |
| 225-6065 . . . . . | ▶6 |
| 225-6106 . . . . . | 5 |
| | ▶8 |
| 225-6319 . . . . . | 1 |
| | 2 |
| | ▶128 |
| 225-6320 . . . . . | 128 |
| 225-6330 . . . . . | 141 |
| 225-6331 . . . . . | 141 |
| 225-6332 . . . . . | 141 |
| 225-6333 . . . . . | 119 |
| | ▶143 |
| 225-6334 . . . . . | 1 |
| | 2 |
| | ▶684 |
| | ▶686 |
| | ▶688 |
| 225-6709 . . . . . | ▶575 |
| | ▶582 |
| | 1087 |
| 225-6712 . . . . . | 575 |
| | 582 |
| 225-6713 . . . . . | 575 |
| | 582 |
| 225-6714 . . . . . | 574 |
| | 575 |
| | 582 |
| 225-6716 . . . . . | 1087 |
| | ▶1102 |
| | ▶1108 |
| 225-6717 . . . . . | 1102 |
| | 1108 |
| 225-6719 . . . . . | 1102 |
| | 1108 |
| 225-6720 . . . . . | 1102 |
| | 1108 |
| 225-6723 . . . . . | 1102 |
| | 1108 |
| 225-6724 . . . . . | 1102 |
| | 1108 |
| 225-6725 . . . . . | ▶119 |
| 225-6841 . . . . . | 225 |
| | 226 |
| | ▶233 |
| 225-6845 . . . . . | 254 |
| | ▶257 |
| 225-6851 . . . . . | 225 |
| | 226 |
| | ▶413 |
| | ▶416 |
| 225-6852 . . . . . | 225 |
| | ▶427 |
| 225-6856 . . . . . | 225 |
| | ▶465 |
| 225-6859 . . . . . | 225 |
| | ▶435 |
| | ▶442 |
| 225-6993 . . . . . | 253 |
| | 254 |
| | ▶260 |
| 225-6999 . . . . . | 253 |
| | ▶268 |
| | ▶272 |
| 225-7922 . . . . . | 1 |
| | 2 |
| | ▶669 |
| | ▶672 |
| 225-8334 . . . . . | 1 |
| | 2 |
| | ▶174 |
| | ▶178 |
| 225-8337 . . . . . | ▶865 |
| 225-8338 . . . . . | ▶865 |
| 225-9199 . . . . . | 148 |
| 225-9482 . . . . . | 1231 |
| | 1233 |
| | 1235 |
| | 1237 |
| | 1240 |
| | 1242 |
| | 1244 |
| | 1246 |
| | 1248 |
| | 1251 |
| | 1253 |
| | 1255 |
| | 1258 |
| | 1260 |
| | 1263 |
| 225-9584 . . . . . | 1231 |
| | 1233 |
| | 1235 |
| | 1237 |
| | 1240 |
| | 1242 |
| | 1244 |
| | 1246 |
| | 1248 |
| | 1251 |
| | 1253 |
| | 1255 |
| | 1258 |
| | 1260 |
| | 1263 |
| 225-9602 . . . . . | 1231 |
| | 1233 |
| | 1235 |


▶ **PRIMARY REFERENCE**

# PART NUMBER INDEX


| Part | Page |
|---|---|
| | 1237 |
| | 1240 |
| | 1242 |
| | 1244 |
| | 1246 |
| | 1248 |
| | 1251 |
| | 1253 |
| | 1255 |
| | 1258 |
| | 1260 |
| | 1263 |
| 226-0306 | 172 |
| | 184 |
| 226-0307 | ▶184 |
| 226-0483 | 236 |
| 226-0947 | ▶172 |
| 226-0960 | ▶235 |
| 226-0961 | 173 |
| | 235 |
| | ▶236 |
| 226-1236 | 386 |
| | 394 |
| 226-1240 | 1509 |
| 226-1242 | 1509 |
| 226-1244 | ▶173 |
| 226-1274 | 1509 |
| 226-1275 | 1509 |
| 226-1954 | ▶119 |
| 226-1955 | 1082 |
| 226-1956 | ▶119 |
| 226-1957 | 119 |
| | ▶1130 |
| 226-1958 | 575 |
| | 582 |
| | 1104 |
| 226-1970 | 621 |
| | ▶1500 |
| 226-1971 | 621 |
| | ▶1505 |
| 226-1973 | 1082 |
| 226-1982 | 1082 |
| 226-2040 | 1087 |
| | ▶1128 |
| 226-2045 | 1013 |
| | 1017 |
| | 1021 |
| 226-2051 | 225 |
| | ▶228 |
| 226-2060 | 225 |
| | 226 |
| | ▶229 |
| 226-2061 | 225 |
| | ▶231 |
| 226-4737 | 7 |
| | 9 |
| 226-5561 | 39 |
| 226-6571 | 152 |
| 226-9431 | 174 |
| | 178 |
| 226-9613 | 1391 |
| 226-9622 | 635 |
| | 637 |
| 226-9643 | 2 |
| | 3 |
| | ▶13 |
| 226-9798 | 865 |
| | ▶866 |
| 226-9799 | 866 |
| 226-9800 | 866 |
| 226-9801 | 866 |
| 226-9802 | 866 |
| 227-0091 | 866 |
| 227-0213 | 1374 |
| 227-0966 | 1204 |
| | 1205 |
| | ▶1342 |
| 227-1069 | 1134 |
| 227-1204 | 35 |
| | 37 |
| 227-1369 | 1398 |
| 227-2441 | 1398 |
| 227-3047 | 762 |
| | 766 |
| | 770 |
| | ▶884 |
| 227-3048 | 762 |
| | 766 |
| | 770 |
| | ▶886 |
| 227-3190 | ▶1336 |
| | 1424 |
| 227-3192 | 1336 |
| | 1337 |
| | 1338 |
| | ▶1429 |
| 227-3198 | 1336 |
| | 1337 |
| | 1338 |
| | ▶1431 |
| 227-3200 | 1 |
| | ▶1424 |
| 227-3213 | 970 |
| 227-3216 | 1094 |
| 227-3232 | 194 |
| 227-3250 | 798 |
| | 802 |
| | 806 |
| 227-3253 | 877 |
| | 913 |
| 227-3254 | 729 |
| | 732 |
| 227-3255 | 923 |
| 227-3270 | ▶1369 |
| | 1461 |
| | 1464 |
| 227-3275 | 1062 |
| 227-3276 | 1062 |
| 227-3281 | 1062 |
| 227-3315 | 1071 |
| 227-3316 | 1071 |
| 227-3317 | 3 |
| | 4 |
| | ▶682 |
| 227-3704 | 52 |
| 227-3705 | 6 |
| | 8 |
| | ▶52 |
| 227-3791 | 284 |
| 227-3792 | ▶284 |
| 227-3812 | 167 |
| 227-3872 | 98 |
| 227-3917 | 6 |
| | 8 |
| | ▶112 |
| | ▶113 |
| | ▶114 |
| 227-4002 | 423 |
| | 425 |
| 227-4239 | 42 |
| 227-4398 | 1185 |
| 227-4564 | 6 |
| | 8 |
| | ▶131 |
| 227-5373 | 225 |
| | ▶454 |
| | ▶456 |
| 227-7390 | 1509 |
| 227-7391 | 1509 |
| 227-7392 | 1334 |
| | 1335 |
| 227-8837 | 1082 |
| 227-9980 | 6 |
| | 8 |
| | ▶84 |
| 228-0376 | 119 |
| | ▶1131 |
| 228-0755 | 872 |
| | 874 |
| 228-0918 | 1204 |
| | 1205 |
| | ▶1346 |
| 228-0919 | 1385 |
| | 1388 |
| 228-0920 | 1336 |
| | 1337 |
| | 1338 |
| | ▶1385 |
| | ▶1388 |
| 228-1787 | 1 |
| | 2 |
| | ▶191 |
| 228-2615 | 1509 |
| 228-2616 | 1509 |
| 228-3636 | 1131 |
| | ▶1138 |
| 228-3638 | 1130 |
| | ▶1140 |
| 228-4388 | 1500 |
| | 1505 |
| 228-4389 | 1500 |
| | 1505 |
| 228-4390 | 1500 |
| 228-4391 | 1500 |
| | 1505 |
| 228-4392 | 1500 |
| | 1505 |
| 228-4393 | 1500 |
| | 1505 |
| 228-4394 | 1500 |
| | 1505 |
| 228-4395 | 1500 |
| | 1505 |
| 228-4396 | 1500 |
| | 1505 |
| 228-4397 | 1500 |
| | 1505 |
| 228-4403 | 1500 |
| | 1505 |
| 228-4727 | 1231 |
| | 1233 |
| | 1235 |
| | 1237 |
| | 1240 |
| | 1242 |
| | 1244 |
| | 1246 |
| | 1248 |
| | 1251 |
| | 1253 |
| | 1255 |
| | 1258 |
| | 1260 |
| | 1263 |
| 228-4947 | 309 |
| 228-6562 | 1350 |
| 228-6563 | ▶1350 |
| | 1411 |
| 228-7024 | 1062 |
| 228-7026 | 547 |
| 228-7092 | 568 |
| 228-9514 | 351 |
| | 358 |
| | 365 |
| | 375 |
| 228-9530 | 1336 |
| | ▶1455 |
| 228-9535 | 1455 |
| 228-9624 | 1336 |
| | 1337 |
| | 1338 |
| | ▶1474 |
| 228-9628 | 1336 |
| | 1337 |
| | 1338 |
| | ▶1381 |
| 229-0659 | 547 |
| | 551 |
| | 556 |
| 229-1494 | 1472 |
| 229-2106 | 265 |
| 229-2257 | 1429 |
| 229-2622 | 798 |
| | 802 |
| | ▶887 |
| 229-3177 | 436 |
| | 442 |
| | 446 |
| 229-5669 | 1510 |
| 229-5843 | 6 |
| | 8 |
| | ▶182 |
| 229-6259 | 85 |
| 229-6388 | ▶1280 |
| 229-7114 | ▶1216 |
| 229-7134 | ▶1217 |
| 229-7316 | 639 |
| 229-8122 | 575 |
| | 582 |
| 229-8429 | 1235 |


▶ PRIMARY REFERENCE

# PART NUMBER INDEX


| Part | Page |
|---|---|
| 229-8435 | 1235 |
| 229-8568 | ▶31 |
| | 32 |
| 229-9969 | 244 |
| | 245 |
| 229-9972 | 244 |
| 229-9974 | 244 |
| | 245 |
| | 248 |
| 230-0104 | 6 |
| | 8 |
| | ▶26 |
| 230-0877 | 1074 |
| | 1076 |
| 230-0915 | 1076 |
| 230-1434 | 318 |
| 230-2400 | 1087 |
| | ▶1097 |
| 230-2406 | 1087 |
| | ▶1132 |
| 230-2407 | ▶977 |
| | 1087 |
| 230-2410 | ▶1082 |
| | 1087 |
| 230-2569 | 85 |
| 230-3633 | 493 |
| | 498 |
| | 503 |
| | ▶527 |
| 230-3728 | 188 |
| | 190 |
| 230-3775 | 188 |
| | 190 |
| 230-4011 | 169 |
| | 332 |
| 230-4012 | 169 |
| 230-4182 | 1 |
| | 2 |
| | ▶857 |
| 230-4183 | 857 |
| 230-4186 | 857 |
| 230-5008 | 430 |
| | 447 |
| | 460 |
| 230-5378 | 6 |
| | 8 |
| | ▶89 |
| 230-5669 | ▶254 |
| 230-5671 | ▶254 |
| 230-5672 | ▶253 |
| 230-5673 | ▶253 |
| 230-5771 | 1008 |
| 230-6315 | 595 |
| | ▶629 |
| 230-6316 | ▶590 |
| | 629 |
| 230-6317 | ▶488 |
| | 629 |
| 230-6318 | ▶489 |
| | 629 |
| 230-7913 | 1071 |
| | ▶1076 |
| 230-7914 | 1071 |
| | ▶1074 |
| 230-8152 | 268 |
| | 272 |
| | 276 |
| | 280 |
| | 281 |
| | 282 |
| 230-9085 | 1431 |
| 230-9087 | 1431 |
| 230-9101 | 1097 |
| 230-9446 | 56 |
| 230-9447 | 56 |
| 230-9501 | 978 |
| 230-9715 | 268 |
| | 272 |
| | 276 |
| 230-9716 | 276 |
| 230-9717 | 276 |
| 230-9800 | 1097 |
| 230-9802 | 1097 |
| 230-9804 | 1097 |
| 230-9961 | 157 |
| 230-9962 | 6 |
| | 8 |
| | ▶157 |
| 230-9985 | 1074 |
| 231-0321 | 6 |
| | 8 |
| | ▶167 |
| | ▶169 |
| 231-1270 | 590 |
| 231-1955 | ▶1080 |
| | 1118 |
| 231-1957 | 1080 |
| 231-1960 | 1076 |
| | 1080 |
| | 1081 |
| 231-1973 | 7 |
| | 9 |
| | ▶291 |
| | ▶293 |
| 231-2036 | 865 |
| | ▶869 |
| | ▶870 |
| 231-2037 | 869 |
| 231-2307 | 617 |
| | ▶624 |
| 231-3529 | 489 |
| 231-3882 | 225 |
| | 226 |
| | ▶341 |
| 231-3947 | 186 |
| 231-4779 | 489 |
| | 491 |
| 231-4780 | 489 |
| | 491 |
| 231-4781 | 639 |
| 231-5295 | 488 |
| 231-6525 | 253 |
| | 254 |
| | ▶262 |
| 231-6526 | 253 |
| | 254 |
| | ▶263 |
| 231-6558 | 386 |
| | 394 |
| 231-7084 | 13 |
| | ▶148 |
| 231-7090 | 13 |
| | ▶158 |
| 231-7705 | 575 |
| 231-7706 | 575 |
| 231-7842 | ▶621 |
| 231-7844 | ▶621 |
| 231-8177 | ▶1187 |
| | 1189 |
| | 1205 |
| 231-8178 | 1187 |
| 231-8900 | 489 |
| | 491 |
| 231-9006 | 191 |
| | ▶192 |
| 231-9411 | ▶285 |
| 231-9458 | 531 |
| 232-0134 | ▶1218 |
| | 1263 |
| 232-0135 | ▶1219 |
| 232-0136 | ▶1220 |
| 232-0138 | 1251 |
| | 1258 |
| | 1260 |
| | 1277 |
| 232-0139 | 1251 |
| | 1258 |
| | 1260 |
| | 1277 |
| 232-0154 | ▶1221 |
| 232-0155 | ▶1222 |
| 232-0156 | ▶1223 |
| 232-0161 | ▶1310 |
| 232-0167 | ▶1212 |
| 232-0209 | ▶515 |
| | 629 |
| 232-0253 | 91 |
| | 93 |
| 232-0347 | 13 |
| | ▶155 |
| 232-0348 | 158 |
| 232-0350 | 151 |
| 232-0362 | 13 |
| | ▶99 |
| 232-0364 | 13 |
| | ▶151 |
| 232-0366 | 157 |
| 232-1104 | ▶531 |
| | 629 |
| 232-1206 | 189 |
| 232-1293 | 489 |
| | 491 |
| 232-1374 | 174 |
| | 178 |
| 232-1376 | 174 |
| | 178 |
| 232-1767 | 164 |
| | 165 |
| 232-2110 | 1212 |
| 232-2112 | 1322 |
| | ▶1325 |
| 232-2114 | 1235 |
| 232-2117 | ▶1224 |
| 232-2154 | ▶1225 |
| 232-3235 | 85 |
| 232-3236 | 85 |
| 232-3243 | 351 |
| | 358 |
| | 365 |
| | 375 |
| 232-3346 | 228 |
| 232-3347 | 228 |
| 232-5214 | 229 |
| 232-5217 | 229 |
| 232-7562 | 386 |
| | 394 |
| 232-7610 | 253 |
| | ▶335 |
| 233-0065 | 1138 |
| | 1140 |
| 233-0455 | 1143 |
| 233-0891 | 217 |
| | 218 |
| 233-1666 | 1342 |
| 233-1704 | 489 |
| | 491 |
| | ▶639 |
| 233-2545 | 386 |
| | 394 |
| 233-6045 | 1342 |
| 233-6046 | 851 |
| | 852 |
| | 853 |
| | 854 |
| | 855 |
| 233-6216 | 7 |
| | 9 |
| | ▶423 |
| | ▶425 |
| 233-6742 | 167 |
| | 169 |
| | ▶195 |
| | ▶196 |
| 233-6745 | 1425 |
| 233-7154 | ▶1226 |
| 233-7155 | ▶1227 |
| 233-7156 | ▶1228 |
| 233-7183 | 13 |
| | ▶134 |
| | ▶136 |
| 233-7185 | 134 |
| | 136 |
| 233-7186 | 134 |
| | 136 |
| 233-7245 | 11 |
| | ▶14 |
| 233-8479 | 1 |
| | 2 |
| | ▶1508 |
| 233-8675 | 109 |
| 233-8676 | 101 |
| 233-8677 | 6 |


▶ **PRIMARY REFERENCE**

# PART NUMBER INDEX


| Part | Page | Part | Page | Part | Page | Part | Page |
|---|---|---|---|---|---|---|---|
| | 8 | | 874 | 239-0245 | 1240 | 240-9085 | 1237 |
| | ▶101 | 235-8159 | 131 | | 1242 | 240-9087 | 1237 |
| 234-1400 | 1510 | 235-8397 | 6 | | 1246 | 240-9088 | 1237 |
| 234-1401 | 1510 | | 8 | 239-0258 | 1242 | 240-9499 | 1455 |
| 234-3550 | 547 | | ▶87 | | 1246 | | 1458 |
| | 551 | 235-8631 | 859 | 239-0261 | 1242 | | 1461 |
| | 556 | 236-0964 | ▶1509 | | 1246 | | 1464 |
| | 560 | 236-0966 | ▶1509 | 239-0262 | 1242 | 240-9687 | 872 |
| 234-3551 | 547 | 236-1059 | 1146 | | 1246 | | 874 |
| | 551 | 236-1239 | 1146 | 239-0282 | 1385 | 240-9689 | 872 |
| | 556 | 236-4674 | 1235 | | 1388 | | 874 |
| | 560 | 236-4675 | 1235 | 239-1134 | ▶339 | 240-9690 | 872 |
| 234-5002 | 16 | 236-4676 | 1235 | | 340 | | 874 |
| 234-5005 | 10 | 236-4689 | 1235 | 239-2395 | 291 | 240-9692 | 735 |
| | 11 | 236-4690 | 1235 | | 293 | | 740 |
| | 12 | 236-4693 | 1235 | | ▶302 | | ▶889 |
| | ▶16 | 236-4694 | 1235 | 239-2396 | 167 | | ▶891 |
| 234-5013 | 169 | 236-4695 | 1235 | | 169 | 241-0478 | 67 |
| | ▶315 | 236-4696 | ▶1235 | | 291 | 241-3283 | 134 |
| 234-5132 | 128 | 236-5197 | 1450 | | 293 | | 136 |
| 234-5706 | ▶5 | 236-5420 | 572 | | ▶303 | | 150 |
| 234-5925 | 401 | 236-5605 | 49 | 239-3478 | ▶304 | 241-4936 | ▶1446 |
| | 407 | 236-6253 | 1383 | | 305 | | 1447 |
| 234-7900 | 21 | 236-7043 | ▶1276 | 239-4111 | ▶28 | 241-4939 | 1447 |
| 234-7935 | 10 | 236-7226 | 1509 | | 29 | 241-5933 | 6 |
| | 11 | 236-7227 | 1509 | 239-4113 | 6 | | ▶10 |
| | 12 | 236-7530 | ▶1497 | | 8 | 241-5934 | 8 |
| | ▶21 | 236-7753 | 1235 | | ▶29 | | ▶11 |
| 234-8940 | ▶1496 | | 1237 | 239-4258 | 642 | 241-6186 | 291 |
| 234-9505 | 14 | | 1244 | 239-4259 | 642 | | 293 |
| 234-9508 | 14 | | 1253 | 239-5674 | 291 | 241-6215 | 1013 |
| 235-0251 | 978 | | 1263 | | 293 | | 1017 |
| 235-0368 | 808 | 236-7772 | 1383 | | ▶305 | | 1021 |
| | 810 | 236-8117 | 1497 | 239-5928 | 291 | 241-8368 | ▶329 |
| | 816 | 236-8722 | 351 | | 293 | | 386 |
| 235-1054 | 6 | | 358 | | ▶309 | | 394 |
| | 8 | | 365 | 239-5929 | 423 | | 401 |
| | ▶115 | | 375 | | 425 | | 407 |
| | ▶116 | 237-0212 | 1508 | 239-6304 | 131 | 241-8538 | 859 |
| 235-1088 | 14 | 237-1962 | 320 | 239-6986 | 1508 | 241-9265 | 155 |
| 235-1089 | 14 | | ▶321 | 239-7440 | 655 | 242-3360 | 160 |
| 235-1402 | 10 | | 323 | 239-7441 | 655 | | 163 |
| | 11 | 237-1964 | 6 | 239-8129 | 159 | 242-3375 | 115 |
| | 12 | | 8 | 239-9233 | 1102 | | 116 |
| | ▶188 | | ▶150 | | 1108 | 242-3376 | 115 |
| | ▶189 | 237-2227 | 178 | 239-9624 | 14 | 242-5175 | 655 |
| | ▶190 | 237-3943 | 1483 | | ▶56 | 242-5176 | 655 |
| 235-1587 | 118 | 237-3970 | ▶1329 | 239-9660 | 1474 | 242-5177 | 119 |
| 235-1869 | 468 | | 1483 | 239-9954 | ▶224 | | ▶655 |
| 235-2415 | 624 | 237-9310 | 167 | | 385 | 242-9537 | 27 |
| 235-2418 | 622 | | 169 | 240-0284 | 1251 | | 28 |
| 235-2506 | ▶468 | 237-9848 | 538 | 240-0285 | 1251 | 243-0943 | ▶41 |
| | 1408 | 237-9849 | 538 | 240-0286 | 1248 | | 42 |
| 235-2974 | 10 | 238-0296 | 195 | | 1251 | 243-1159 | 27 |
| | 11 | | ▶197 | | 1255 | | 28 |
| | 12 | 238-1006 | 790 | | 1258 | 243-1560 | 6 |
| | ▶48 | | 792 | | 1260 | | 8 |
| 235-3350 | 468 | | 795 | 240-2653 | 13 | | ▶217 |
| 235-3595 | 167 | | 812 | | ▶159 | | ▶218 |
| | 169 | | ▶872 | 240-7983 | 1248 | 243-3177 | 1074 |
| 235-3937 | ▶252 | | ▶874 | | 1251 | | 1076 |
| | 284 | 238-2707 | 85 | | 1255 | 243-3720 | 1118 |
| | 285 | 238-5082 | 568 | | 1258 | | 1126 |
| 235-4176 | ▶1408 | 238-8685 | ▶160 | | 1260 | 243-4507 | 430 |
| 235-5316 | 872 | | 161 | 240-9083 | 1237 | 243-5499 | 470 |


▶ PRIMARY REFERENCE

# PART NUMBER INDEX


| Part | Page |
|---|---|
| | 472 |
| | 475 |
| 243-5786 | 6 |
| | 8 |
| | ▶67 |
| 243-5875 | ▶735 |
| | ▶740 |
| | 850 |
| 243-5885 | 850 |
| | 851 |
| | ▶1199 |
| 243-5929 | 744 |
| 243-5930 | 735 |
| | 740 |
| | 762 |
| | 766 |
| | 770 |
| 243-5932 | 735 |
| | 740 |
| | 744 |
| | 748 |
| | 753 |
| | 757 |
| | 762 |
| | 766 |
| | 770 |
| | 774 |
| | 778 |
| | 784 |
| 243-5937 | 1199 |
| | 1200 |
| 243-5938 | 735 |
| | 740 |
| | 762 |
| | 766 |
| | 770 |
| 243-5942 | 889 |
| | 891 |
| | 901 |
| | 903 |
| 243-6741 | ▶42 |
| | 46 |
| 244-3114 | 489 |
| | 491 |
| | ▶637 |
| 244-6626 | 128 |
| 244-7716 | 188 |
| 245-7465 | 636 |
| 246-0561 | 1062 |
| 246-2293 | 1394 |
| 246-2294 | 1394 |
| 246-2305 | 1091 |
| 246-2321 | 1091 |
| 246-2322 | ▶1122 |
| | 1204 |
| | 1205 |
| 246-2323 | ▶1124 |
| | 1204 |
| | 1205 |
| 246-2641 | 191 |
| | 650 |
| | 652 |
| | 706 |
| | 709 |
| | 712 |
| | 1513 |
| 246-2753 | ▶1231 |
| 246-2754 | ▶1267 |
| 246-2755 | ▶1237 |
| | 1267 |
| 246-2756 | ▶1240 |
| 246-2757 | ▶1242 |
| 246-2764 | 1244 |
| | 1253 |
| 246-2765 | ▶1244 |
| 246-2766 | 1242 |
| | 1246 |
| 246-2767 | ▶1246 |
| 246-2768 | 1248 |
| | 1255 |
| 246-2769 | ▶1268 |
| 246-2770 | ▶1248 |
| | 1268 |
| 246-2771 | ▶1269 |
| 246-2772 | ▶1251 |
| | 1269 |
| 246-2812 | 543 |
| 246-2813 | 543 |
| 246-2817 | 547 |
| | 551 |
| | 556 |
| | 560 |
| 246-2818 | 547 |
| | 551 |
| | 556 |
| | 560 |
| 246-2828 | 1062 |
| 246-4395 | 155 |
| 246-4545 | 508 |
| | ▶543 |
| 246-4546 | 547 |
| | 551 |
| | 556 |
| | 560 |
| 246-4547 | 493 |
| | 498 |
| | 503 |
| 246-4548 | 493 |
| | 498 |
| | 503 |
| 246-4549 | 493 |
| 246-4551 | 493 |
| 246-4552 | 493 |
| | 498 |
| | 503 |
| 246-4553 | 493 |
| | 498 |
| | 503 |
| 246-4555 | 508 |
| | ▶564 |
| | ▶568 |
| 246-4559 | 547 |
| | 551 |
| | 556 |
| | 560 |
| 246-4561 | 509 |
| | 511 |
| | 513 |
| 246-5659 | 85 |
| 246-6036 | 116 |
| 246-6624 | 7 |
| | 9 |
| | ▶161 |
| | ▶162 |
| 246-6720 | 246 |
| | 247 |
| 246-6921 | ▶1126 |
| | 1204 |
| 246-6923 | ▶1091 |
| | 1204 |
| 246-9308 | 575 |
| | 582 |
| 247-0293 | ▶246 |
| | 265 |
| 247-0294 | ▶247 |
| | 265 |
| 247-0848 | 1 |
| | 2 |
| | ▶318 |
| 247-0849 | 318 |
| | ▶340 |
| 247-5556 | 318 |
| 247-6050 | 200 |
| 247-6120 | 85 |
| 247-7033 | ▶850 |
| 247-7034 | ▶850 |
| 247-8529 | 1013 |
| 247-8530 | 1013 |
| 247-8531 | 1013 |
| 247-8532 | 1013 |
| 247-8535 | 1012 |
| | 1013 |
| 247-8536 | 1012 |
| | 1013 |
| | 1017 |
| 247-8537 | 1012 |
| | 1013 |
| 247-8538 | 1012 |
| | 1013 |
| | 1017 |
| 247-8540 | ▶1013 |
| | ▶1017 |
| | 1087 |
| 248-1130 | 686 |
| | 688 |
| 248-4068 | 217 |
| 248-4152 | 1447 |
| 248-5513 | 131 |
| 248-6340 | ▶1188 |
| | 1190 |
| | 1204 |
| 248-6341 | 1188 |
| 248-6350 | ▶1192 |
| | 1204 |
| 248-6351 | 1192 |
| | 1193 |
| 248-6352 | 1192 |
| | 1193 |
| 248-6354 | 1192 |
| | 1193 |
| 248-6357 | 1192 |
| | 1193 |
| 248-8889 | 148 |
| | ▶149 |
| 249-0945 | 149 |
| 249-5615 | ▶1039 |
| | 1352 |
| 249-5616 | 1039 |
| 249-7734 | 102 |
| | 104 |
| | 106 |
| 249-7738 | 6 |
| | 8 |
| | ▶102 |
| | ▶104 |
| 250-0466 | 35 |
| | 37 |
| 250-1423 | 556 |
| | 560 |
| 250-1440 | 970 |
| 250-3474 | 1464 |
| 250-3480 | 1464 |
| 250-4628 | 1425 |
| | 1428 |
| 250-4906 | 1464 |
| 250-5634 | 978 |
| 250-8402 | 1233 |
| 250-9329 | 1133 |
| 250-9378 | 56 |
| 250-9983 | 642 |
| 251-2180 | 1269 |
| | 1271 |
| | 1273 |
| 251-2461 | 1269 |
| | 1271 |
| | 1273 |
| 251-4160 | 384 |
| 251-4162 | 384 |
| 251-4243 | 1409 |
| 251-4361 | 602 |
| | ▶603 |
| 251-4363 | 603 |
| 251-6192 | 866 |
| 251-6730 | 1269 |
| | 1271 |
| | 1273 |
| 251-8248 | 384 |
| | 1409 |
| 251-9991 | 970 |
| 252-1285 | 1013 |
| | 1017 |
| | 1021 |
| 252-4501 | 1361 |
| 252-4537 | 1133 |
| 252-9667 | ▶1498 |
| | 1508 |
| 252-9668 | 1498 |
| 252-9669 | 1498 |
| 253-0066 | 1309 |
| 253-0067 | 1309 |
| 253-0616 | 190 |
| 253-0861 | 1499 |
| | 1508 |
| 253-1752 | 30 |
| 253-2111 | 387 |
| | 395 |
| | 402 |
| | 407 |
| 253-2596 | 1081 |
| 253-2673 | 1085 |


▶ **PRIMARY REFERENCE**

# PART NUMBER INDEX


| Part | Page |
|---|---|
| 253-4280 | 1013 |
| | 1017 |
| | 1021 |
| 253-4768 | 509 |
| | 511 |
| | 513 |
| 253-7135 | 970 |
| 253-8745 | 706 |
| | 709 |
| | 712 |
| 253-8766 | 32 |
| | 34 |
| 253-9967 | 1477 |
| 253-9968 | 1477 |
| 253-9969 | ▶1477 |
| 254-2162 | 1477 |
| 254-3214 | 1081 |
| 254-5665 | 596 |
| 254-6062 | ▶1067 |
| 254-6063 | ▶1062 |
| | 1067 |
| 254-6999 | 116 |
| 254-7000 | 116 |
| 254-7018 | 978 |
| 255-0040 | ▶1204 |
| 255-0041 | ▶1204 |
| 255-0042 | ▶1205 |
| 255-0043 | ▶1205 |
| 255-0614 | 735 |
| | 740 |
| | 744 |
| | 748 |
| | 753 |
| | 757 |
| | 762 |
| | 766 |
| | 770 |
| | 774 |
| | 778 |
| | 784 |
| | 798 |
| | 802 |
| | 806 |
| | 818 |
| | 822 |
| | 825 |
| | 830 |
| | 833 |
| | 837 |
| 255-6691 | 1231 |
| | 1233 |
| | 1237 |
| | 1240 |
| | 1242 |
| | 1244 |
| | 1246 |
| | 1248 |
| | 1251 |
| | 1253 |
| | 1255 |
| | 1258 |
| | 1260 |
| | 1263 |
| 255-6692 | 1231 |
| | 1233 |
| | 1237 |
| | 1240 |
| | 1242 |
| | 1244 |
| | 1246 |
| | 1248 |
| | 1251 |
| | 1253 |
| | 1255 |
| | 1258 |
| | 1260 |
| | 1263 |
| 255-6694 | 1231 |
| | 1233 |
| | 1237 |
| | 1240 |
| | 1242 |
| | 1244 |
| | 1246 |
| | 1248 |
| | 1251 |
| | 1253 |
| | 1255 |
| | 1258 |
| | 1260 |
| | 1263 |
| 255-6695 | 1231 |
| | 1233 |
| | 1237 |
| | 1240 |
| | 1242 |
| | 1244 |
| | 1246 |
| | 1248 |
| | 1251 |
| | 1253 |
| | 1255 |
| | 1258 |
| | 1260 |
| | 1263 |
| 255-6710 | 1237 |
| | 1240 |
| | 1242 |
| | 1244 |
| | 1246 |
| | 1248 |
| | 1251 |
| | 1253 |
| | 1255 |
| | 1258 |
| | 1260 |
| | 1263 |
| 255-6711 | 1231 |
| | 1233 |
| | 1237 |
| | 1240 |
| | 1242 |
| | 1244 |
| | 1246 |
| | 1248 |
| | 1251 |
| | 1253 |
| | 1255 |
| | 1258 |
| | 1260 |
| | 1263 |
| 255-6712 | 1231 |
| | 1233 |
| | 1237 |
| | 1240 |
| | 1242 |
| | 1244 |
| | 1246 |
| | 1248 |
| | 1251 |
| | 1253 |
| | 1255 |
| | 1258 |
| | 1260 |
| | 1263 |
| 255-6961 | ▶645 |
| | 1204 |
| 255-6963 | 645 |
| 255-7139 | ▶470 |
| | 1204 |
| 255-8204 | ▶1190 |
| | 1204 |
| 255-8232 | 704 |
| 255-8239 | 704 |
| 255-8243 | 1 |
| | 2 |
| | ▶704 |
| 255-8244 | 704 |
| 255-8245 | 704 |
| 255-8246 | 704 |
| 256-1142 | 265 |
| 256-1143 | 265 |
| 256-2211 | 182 |
| 256-2213 | 182 |
| 256-2214 | 182 |
| 256-3839 | 686 |
| | 688 |
| 256-6453 | 315 |
| 256-9817 | 205 |
| | 209 |
| 257-0051 | 225 |
| | ▶386 |
| 257-0053 | 386 |
| | 394 |
| 257-1778 | 1269 |
| | 1271 |
| | 1273 |
| 257-1779 | 1269 |
| | 1271 |
| | 1273 |
| 257-1781 | 1269 |
| | 1271 |
| | 1273 |
| 257-1782 | 1269 |
| | 1271 |
| | 1273 |
| 257-1783 | 1269 |
| | 1271 |
| | 1273 |
| 257-1784 | 1269 |
| | 1271 |
| | 1273 |
| 257-1817 | ▶1300 |
| 257-1818 | ▶1301 |
| 257-1819 | ▶1302 |
| 257-1821 | ▶1303 |
| 257-1822 | ▶1304 |
| 257-1823 | ▶1305 |
| 257-2537 | 1 |
| | 2 |
| | ▶666 |
| 257-3226 | 1394 |
| 257-3448 | 468 |
| 257-3649 | 1240 |
| 257-3651 | 1231 |
| | 1233 |
| | 1237 |
| | 1240 |
| | 1242 |
| | 1244 |
| | 1246 |
| | 1248 |
| | 1251 |
| | 1253 |
| | 1255 |
| | 1258 |
| | 1260 |
| | 1263 |
| 257-3655 | 1231 |
| | 1233 |
| | 1240 |
| | 1242 |
| | 1246 |
| | 1248 |
| | 1251 |
| | 1255 |
| 257-3657 | 1248 |
| | 1255 |
| 257-3658 | 1248 |
| | 1255 |
| 257-3659 | 1248 |
| | 1255 |
| 257-3660 | 1248 |
| | 1251 |
| | 1255 |
| | 1258 |
| | 1260 |
| 257-3663 | 1240 |
| 257-3664 | 1240 |
| 257-3665 | 1240 |
| 257-3667 | 1231 |
| 257-3669 | 1231 |
| 257-3670 | 1231 |
| 257-3671 | 1231 |
| 257-3672 | 1231 |
| 257-3673 | 1231 |
| 257-3679 | 1231 |
| | 1233 |
| 257-3695 | 1251 |
| 257-3697 | 1251 |
| | 1258 |
| | 1260 |
| 257-3698 | 1251 |
| | 1258 |
| | 1260 |
| 257-4183 | ▶483 |
| 257-5028 | ▶205 |
| | 225 |
| 257-5075 | 225 |
| | 226 |
| | ▶347 |
| | ▶348 |


▶ PRIMARY REFERENCE

# PART NUMBER INDEX


| Part | Page |
|---|---|
| 257-5076 | 347 |
| 257-7676 | 996 |
| 257-7804 | 1013 |
| | 1017 |
| | 1021 |
| 257-7805 | 508 |
| | ▶509 |
| | ▶511 |
| | ▶513 |
| 257-7806 | 547 |
| 257-7807 | 547 |
| 257-7808 | 564 |
| | 568 |
| 257-7809 | 493 |
| | 498 |
| | 503 |
| 257-7810 | 508 |
| | ▶547 |
| | ▶551 |
| | ▶556 |
| | ▶560 |
| 257-7811 | 493 |
| 257-7814 | 564 |
| | 568 |
| 257-7815 | ▶493 |
| | ▶498 |
| | ▶503 |
| | 509 |
| | 511 |
| | 513 |
| 257-7816 | 564 |
| 258-0883 | 167 |
| | ▶331 |
| 258-4142 | 401 |
| | 407 |
| 258-4524 | 160 |
| | 163 |
| 258-5060 | 564 |
| | 568 |
| | ▶596 |
| 258-7014 | 604 |
| 258-7015 | 604 |
| 258-7916 | 468 |
| 258-8721 | 91 |
| | 93 |
| | 94 |
| | 95 |
| | 96 |
| 258-9757 | 427 |
| | 430 |
| 259-0576 | 604 |
| 259-1228 | 420 |
| 259-1965 | 427 |
| 259-1986 | 420 |
| 259-2095 | 253 |
| | ▶276 |
| 259-2401 | 1 |
| | 2 |
| | ▶844 |
| 259-2402 | ▶846 |
| | 847 |
| 259-2403 | 846 |
| 259-2404 | 846 |
| 259-2405 | ▶851 |
| 259-2406 | ▶744 |
| | ▶748 |
| | ▶753 |
| | ▶757 |
| | 851 |
| 259-2407 | 744 |
| | 748 |
| | 753 |
| | 757 |
| | 822 |
| | ▶893 |
| | ▶895 |
| 259-2408 | 744 |
| | 748 |
| | 753 |
| | 757 |
| | ▶897 |
| | ▶899 |
| 259-2409 | 744 |
| | 748 |
| | 753 |
| | 757 |
| | 774 |
| | 778 |
| | 784 |
| 259-2410 | 744 |
| | 748 |
| | 753 |
| | 757 |
| | 774 |
| | 778 |
| | 784 |
| 259-2411 | 735 |
| | 740 |
| | 744 |
| | 748 |
| | 753 |
| | 757 |
| | 762 |
| | 766 |
| | 770 |
| | 774 |
| | 778 |
| | 784 |
| 259-2414 | 762 |
| | 766 |
| | 770 |
| | ▶901 |
| | ▶903 |
| 259-2415 | 744 |
| | 748 |
| | 753 |
| | 757 |
| | 774 |
| | 778 |
| | 784 |
| 259-2416 | 744 |
| | 748 |
| | 753 |
| | 757 |
| | 774 |
| | 778 |
| | 784 |
| 259-2417 | 744 |
| | 748 |
| | 753 |
| | 757 |
| | 774 |
| | 778 |
| | 784 |
| 259-2418 | 897 |
| | 899 |
| | 905 |
| | 907 |
| 259-2419 | 897 |
| | 899 |
| | 905 |
| | 907 |
| 259-2420 | ▶847 |
| 259-2421 | 881 |
| | 884 |
| | 886 |
| | 893 |
| | 895 |
| | 909 |
| | 911 |
| | 940 |
| | 943 |
| | 944 |
| 259-2422 | 774 |
| | 778 |
| | 784 |
| | ▶905 |
| | ▶907 |
| 259-2423 | 893 |
| 259-2424 | 893 |
| | 895 |
| | 923 |
| 259-2425 | 851 |
| | 852 |
| | ▶1193 |
| 259-2426 | 1193 |
| | 1195 |
| 259-2427 | 1193 |
| | 1195 |
| 259-2428 | 1193 |
| 259-2429 | 1193 |
| 259-2430 | 851 |
| | 852 |
| | ▶1200 |
| 259-2431 | 774 |
| | 778 |
| | 784 |
| | ▶909 |
| | ▶911 |
| 259-2432 | 774 |
| | 778 |
| | 784 |
| | ▶913 |
| | ▶916 |
| 259-2433 | ▶762 |
| | ▶766 |
| | ▶770 |
| | 851 |
| 259-2434 | ▶774 |
| | ▶778 |
| | ▶784 |
| | 852 |
| 259-2435 | ▶851 |
| 259-2436 | ▶852 |
| 259-2437 | ▶852 |
| | 757 |
| | 774 |
| | 778 |
| | 784 |
| | 818 |
| 259-2438 | 774 |
| | 778 |
| | 784 |
| | 818 |
| 259-2439 | 774 |
| | 778 |
| | 784 |
| | 818 |
| 259-2440 | 774 |
| | 778 |
| 259-2441 | ▶790 |
| | ▶792 |
| | ▶795 |
| | 851 |
| | 852 |
| 259-2442 | 790 |
| | 792 |
| | 795 |
| | 812 |
| | ▶848 |
| 259-2443 | 848 |
| 259-2444 | ▶798 |
| | ▶802 |
| | 852 |
| 259-2445 | 798 |
| | 802 |
| | ▶918 |
| 259-2446 | 798 |
| | 802 |
| | ▶920 |
| 259-2447 | 790 |
| | 792 |
| | 795 |
| | ▶922 |
| 259-2448 | 806 |
| | 833 |
| | ▶923 |
| 259-2449 | ▶806 |
| | 850 |
| 259-2450 | ▶808 |
| | ▶810 |
| | 851 |
| | 852 |
| 259-2451 | 808 |
| | 810 |
| | ▶925 |
| 259-2452 | ▶699 |
| | 851 |
| | 852 |
| | 853 |
| | 854 |
| | 855 |
| 259-2453 | 808 |
| | 810 |
| | ▶927 |
| 259-2454 | 808 |
| | 810 |
| | 816 |
| 259-2458 | 891 |
| | 899 |
| | 903 |
| | 907 |
| 259-2467 | 735 |
| | 740 |
| | 748 |


▶ **PRIMARY REFERENCE**

# PART NUMBER INDEX


| Part | Page |
|---|---|
| | 753 |
| | 757 |
| | 762 |
| | 766 |
| | 770 |
| | 774 |
| | 778 |
| | 784 |
| 259-4694 | ▶1056 |
| | 1062 |
| 259-4695 | ▶1057 |
| 259-4733 | 1002 |
| | ▶1004 |
| 259-4737 | 1002 |
| | ▶1005 |
| 259-4738 | 1005 |
| 259-4739 | 1004 |
| 259-5825 | 253 |
| | 254 |
| | ▶265 |
| 259-6275 | 1062 |
| | ▶1180 |
| 259-7143 | 1062 |
| 259-7155 | 454 |
| 259-8339 | 413 |
| 259-8357 | 106 |
| 259-8449 | ▶508 |
| 259-9251 | 435 |
| | 442 |
| 260-0081 | ▶342 |
| | 850 |
| | 851 |
| | 853 |
| | 854 |
| | 855 |
| 260-0194 | 413 |
| | 416 |
| 260-0254 | 205 |
| | 209 |
| 260-0255 | 205 |
| | 209 |
| 260-0256 | 205 |
| | 209 |
| 260-0266 | 6 |
| | 8 |
| | ▶287 |
| 260-0443 | 257 |
| 260-0445 | 268 |
| | 272 |
| | 276 |
| 260-0446 | 268 |
| | 272 |
| | 276 |
| 260-0447 | 257 |
| | 268 |
| | 272 |
| | 276 |
| 260-0859 | 318 |
| 260-0907 | 427 |
| 260-1395 | 465 |
| 260-1400 | ▶646 |
| | 1205 |
| 260-1401 | 646 |
| 260-1578 | 134 |
| 260-3158 | 225 |
| | ▶420 |
| 260-3198 | 386 |
| | 395 |
| | 401 |
| | 407 |
| 260-7652 | 240 |
| 260-7653 | 240 |
| 260-8638 | 386 |
| | 395 |
| | 401 |
| | 407 |
| 260-8902 | 596 |
| 260-8903 | 596 |
| 260-8904 | 596 |
| 260-8905 | 596 |
| 260-9234 | 178 |
| 260-9236 | 178 |
| 261-0052 | ▶32 |
| | 35 |
| 261-0191 | 10 |
| | 11 |
| | 12 |
| | ▶35 |
| | ▶37 |
| 261-0400 | ▶350 |
| | ▶357 |
| | ▶364 |
| | ▶374 |
| | 1336 |
| | 1337 |
| | 1338 |
| 261-0410 | 351 |
| | 358 |
| | 365 |
| 261-0411 | 351 |
| | 358 |
| | 365 |
| 261-0412 | 352 |
| | 359 |
| | 366 |
| 261-0413 | 352 |
| | 359 |
| | 366 |
| 261-0416 | ▶333 |
| | 1067 |
| 261-1463 | 3 |
| | 4 |
| | ▶629 |
| 261-1510 | 3 |
| | 4 |
| | ▶678 |
| 261-1515 | 4 |
| 261-1516 | 4 |
| | ▶1071 |
| 261-1517 | 1071 |
| 261-2893 | ▶491 |
| | 629 |
| 261-3024 | 205 |
| 261-3222 | 1363 |
| 261-3223 | 384 |
| 261-3224 | 1363 |
| 261-3226 | ▶1363 |
| | 1409 |
| 261-3429 | 39 |
| 261-3430 | 39 |
| 261-3650 | 205 |
| | 209 |
| 261-3770 | 386 |
| 261-3855 | 206 |
| | 209 |
| 261-3857 | ▶589 |
| | 601 |
| 261-3862 | ▶601 |
| | 616 |
| 261-3863 | 601 |
| | ▶604 |
| 261-4911 | 333 |
| 261-5694 | 1426 |
| | 1427 |
| 261-8023 | 470 |
| 261-8024 | 472 |
| 261-8025 | ▶472 |
| | 1205 |
| 261-9418 | 387 |
| | 395 |
| | 401 |
| | 407 |
| 261-9420 | 387 |
| | 395 |
| | 401 |
| | 407 |
| | ▶654 |
| 262-0558 | ▶343 |
| | 851 |
| | 852 |
| 262-2043 | ▶227 |
| | 240 |
| 262-2878 | 218 |
| 262-3887 | 343 |
| 262-4158 | 387 |
| | 395 |
| 262-4948 | 13 |
| | ▶1340 |
| 262-5019 | 1012 |
| 262-5020 | 1012 |
| 262-5021 | 1012 |
| 262-5022 | 1012 |
| 262-5046 | 13 |
| | ▶204 |
| 262-5490 | ▶615 |
| 262-5491 | 615 |
| 262-6754 | 160 |
| 262-6880 | 93 |
| 262-7100 | 74 |
| | ▶93 |
| 262-8009 | 574 |
| 263-3217 | 491 |
| 263-4920 | 39 |
| 263-5374 | 6 |
| | 8 |
| | ▶106 |
| 263-7358 | 13 |
| | ▶199 |
| 263-7732 | 1133 |
| 263-9088 | 215 |
| 264-0010 | 1133 |
| 264-1440 | 1394 |
| 264-2226 | ▶1326 |
| 264-4297 | 316 |
| | 317 |
| 264-5111 | 420 |
| 264-7671 | 215 |
| 264-9879 | 406 |
| 264-9880 | 406 |
| 265-8218 | ▶1266 |
| 265-8219 | ▶1233 |
| | 1266 |
| 265-8220 | 1233 |
| 265-8221 | 1233 |
| 265-8223 | 1233 |
| 265-8231 | ▶1253 |
| 265-8232 | 1253 |
| 265-8234 | 1253 |
| 265-8235 | 1253 |
| 265-8236 | 1253 |
| 265-9091 | 13 |
| | ▶323 |
| 266-0195 | 162 |
| | ▶163 |
| 266-2861 | 215 |
| 266-3699 | 11 |
| | ▶74 |
| | ▶75 |
| 266-4234 | 1394 |
| 266-4236 | 1394 |
| 266-8577 | 456 |
| | 460 |
| 266-9266 | 534 |
| | 538 |
| 267-2060 | ▶49 |
| | 50 |
| 267-2074 | 615 |
| 267-2075 | ▶615 |
| 267-4631 | ▶33 |
| | 34 |
| 267-8338 | 402 |
| | 407 |
| | 422 |
| 267-8658 | 163 |
| 268-1960 | 119 |
| | ▶152 |
| 268-1961 | 119 |
| | ▶153 |
| 268-2960 | 163 |
| 269-3947 | 13 |
| | ▶185 |
| 269-4136 | 93 |
| 269-5346 | 932 |
| | 936 |
| | 938 |
| 269-5348 | 930 |
| | 942 |
| | 944 |
| | 945 |
| 269-5352 | 929 |
| | 931 |
| | 940 |
| | 943 |


▶ PRIMARY REFERENCE

# PART NUMBER INDEX


| Part | Page | Part | Page | Part | Page | Part | Page |
|---|---|---|---|---|---|---|---|
| | 947 | 273-3224 | 582 | | 95 | 283-1603 | 1351 |
| 269-5755 | 1133 | 273-3239 | 551 | | 96 | 283-1604 | ▶1351 |
| 269-6348 | 28 | | 556 | 276-5726 | 872 | | 1413 |
| 270-2481 | 1455 | | 560 | | 874 | 283-1850 | ▶1270 |
| | 1458 | 273-5632 | 443 | 276-6606 | 1374 | 283-1851 | ▶1255 |
| | 1461 | | 446 | 277-0468 | ▶248 | | 1270 |
| | 1464 | 274-1716 | 709 | | 267 | 283-1937 | 1248 |
| 270-3561 | 686 | | 712 | 277-3082 | 248 | | 1255 |
| | 688 | 274-1717 | 709 | 278-1363 | 96 | | 1258 |
| 270-5320 | 171 | | 712 | 278-1364 | 95 | | 1260 |
| 270-6873 | 385 | 274-1718 | 709 | 278-1365 | 94 | 283-1938 | 1248 |
| 270-9046 | ▶215 | | 712 | | 95 | | 1255 |
| | 240 | 274-1953 | 10 | 278-1929 | 73 | | 1258 |
| 271-1750 | 615 | | ▶50 | | 76 | | 1260 |
| 271-5160 | 121 | 274-4491 | 94 | | ▶94 | 283-1940 | ▶1271 |
| | ▶125 | | 95 | 278-1931 | 72 | 283-1941 | ▶1258 |
| 271-5562 | 125 | | 96 | | ▶95 | | 1271 |
| 271-5563 | 125 | 274-5643 | 491 | 278-1938 | 75 | 283-9815 | 267 |
| 271-5564 | 125 | 274-7395 | 293 | | ▶96 | 284-1570 | 648 |
| 271-5565 | 125 | | ▶316 | 278-5657 | 18 | 284-1571 | 648 |
| 271-6441 | ▶1081 | 274-7396 | 293 | | 19 | 284-2327 | ▶3 |
| | 1126 | | ▶317 | 278-5662 | 10 | 284-2409 | 456 |
| 271-6442 | 1081 | 274-8359 | 85 | | ▶18 | 284-2735 | ▶2 |
| 271-7301 | 174 | 274-8501 | ▶601 | | ▶19 | | 3 |
| | 178 | 274-9189 | 1432 | 278-7109 | 395 | 284-2987 | 3 |
| 271-7303 | 174 | 275-0701 | 859 | | 401 | | ▶226 |
| | 178 | 275-0702 | ▶859 | | 407 | 284-2990 | 225 |
| 271-8503 | ▶240 | | 872 | 278-8185 | 1258 | | 226 |
| 271-9062 | 240 | | 874 | | 1260 | | ▶422 |
| | ▶385 | 275-1253 | 169 | 278-8186 | 1251 | 284-2991 | 226 |
| 271-9276 | ▶240 | | ▶332 | | 1258 | | ▶229 |
| 272-0390 | 19 | 275-5465 | 1248 | | 1260 | 284-2995 | 226 |
| 272-0455 | 155 | | 1255 | 278-8981 | 342 | | ▶232 |
| 272-5068 | 872 | 275-5466 | 1258 | 279-1280 | 136 | 284-2998 | 226 |
| | 874 | | 1260 | 279-1282 | 136 | | ▶446 |
| 272-5090 | ▶812 | 275-5470 | 1268 | 279-6549 | 1208 | 284-3003 | 226 |
| | 853 | | 1270 | 280-2166 | 6 | | ▶460 |
| | 854 | 275-5471 | 1268 | | ▶12 | 284-3007 | 226 |
| | 855 | | 1270 | 280-2167 | 12 | | ▶430 |
| 272-5091 | 812 | 275-5472 | 1268 | | ▶76 | 284-3008 | 430 |
| | ▶929 | | 1270 | 280-2691 | 1363 | 284-3010 | ▶209 |
| 272-5092 | ▶816 | 275-5727 | ▶194 | 280-4033 | 225 | | 225 |
| | 853 | | 691 | | ▶394 | | 226 |
| | 854 | 275-5924 | ▶1283 | 280-4060 | ▶1290 | 284-3502 | 116 |
| | 855 | 275-5925 | ▶1284 | 280-4061 | ▶1291 | 284-4739 | ▶1447 |
| 272-5093 | 816 | 275-5926 | ▶1285 | 280-4062 | ▶1292 | 284-5790 | 615 |
| | ▶930 | 275-5936 | ▶1306 | 280-4063 | ▶1293 | | 616 |
| 272-5094 | 816 | 275-5937 | ▶1307 | 280-4064 | ▶1294 | 284-8954 | ▶1448 |
| | ▶931 | 275-5938 | ▶1308 | 280-4065 | ▶1295 | 284-8955 | ▶1449 |
| 272-5099 | 881 | 275-5980 | ▶1286 | 280-4066 | ▶1296 | 284-9055 | 1418 |
| 272-5100 | 802 | 275-6008 | ▶1287 | 280-4067 | ▶1297 | 285-0972 | 1208 |
| | 837 | 275-6009 | ▶1288 | 280-4069 | ▶1298 | 285-1202 | ▶165 |
| 272-5475 | 564 | 275-6010 | ▶1289 | 280-6800 | 395 | 285-3564 | 446 |
| | 568 | 275-6048 | ▶1277 | 281-0680 | ▶1299 | 285-3570 | 401 |
| 272-5606 | 1146 | 275-7848 | 551 | 281-2725 | 196 | | 407 |
| 272-7981 | 1082 | 275-7850 | 564 | | ▶198 | 285-3575 | ▶213 |
| 272-7990 | 978 | 276-0478 | 1078 | 281-5972 | 568 | 285-3602 | 416 |
| 272-9800 | 252 | | 1079 | 281-7608 | 669 | 285-3606 | 460 |
| 273-0155 | 359 | 276-3091 | 169 | | 672 | 285-5531 | 267 |
| | 366 | 276-3462 | ▶615 | 281-8261 | 48 | 285-6399 | ▶254 |
| | 375 | 276-3607 | 1062 | | 50 | 285-6400 | ▶253 |
| 273-1182 | 709 | 276-4132 | 96 | 282-3731 | 14 | 285-7275 | ▶818 |
| 273-2598 | 231 | 276-5317 | 91 | 283-0136 | 551 | | 853 |
| 273-2599 | 231 | | 93 | 283-0137 | 551 | 285-7276 | ▶822 |
| 273-2999 | 151 | | 94 | 283-1137 | ▶959 | | 853 |


▶ **PRIMARY REFERENCE**

# PART NUMBER INDEX


| Part | Page |
|---|---|
| 285-7277 | ▶825 |
| | 854 |
| 285-7278 | ▶830 |
| | 854 |
| 285-7279 | ▶833 |
| | 855 |
| 285-7280 | ▶837 |
| | 855 |
| 285-7281 | 853 |
| | ▶1201 |
| 285-7282 | 854 |
| | ▶1202 |
| 285-7283 | 855 |
| | ▶1203 |
| 285-7284 | 818 |
| | ▶932 |
| 285-7285 | 822 |
| | ▶934 |
| 285-7286 | 770 |
| | 825 |
| 285-7287 | 830 |
| | ▶935 |
| 285-7288 | 837 |
| | ▶936 |
| 285-7289 | 833 |
| | ▶937 |
| 285-7290 | 818 |
| | 822 |
| | 825 |
| | 830 |
| | 833 |
| | 837 |
| 285-7293 | 818 |
| | 822 |
| 285-7294 | 818 |
| | 822 |
| 285-7295 | 818 |
| | 822 |
| 285-7296 | 825 |
| | 830 |
| 285-7297 | 825 |
| | 830 |
| 285-7298 | 825 |
| | 830 |
| 285-7299 | 833 |
| | 837 |
| 285-7300 | 833 |
| | 837 |
| 285-7301 | 833 |
| | 837 |
| 285-7302 | 784 |
| | 818 |
| 285-7303 | 932 |
| | 934 |
| | 935 |
| | 936 |
| | 937 |
| | 938 |
| 285-7304 | 825 |
| | ▶938 |
| 285-7305 | 932 |
| | 938 |
| 285-7306 | 895 |
| 285-7307 | 812 |
| 285-7309 | 802 |
| 285-7310 | 818 |
| | ▶940 |
| 285-7311 | 818 |
| | ▶942 |
| 285-7312 | 825 |
| | ▶943 |
| 285-7313 | 825 |
| | ▶944 |
| 285-7314 | 837 |
| | ▶945 |
| 285-7315 | 837 |
| | ▶947 |
| 285-8674 | ▶1003 |
| | 1087 |
| 286-0916 | 430 |
| 286-0951 | 422 |
| 286-1092 | 213 |
| | ▶384 |
| 286-1094 | 401 |
| 286-1755 | 870 |
| 286-2486 | 678 |
| | 870 |
| 286-3219 | 547 |
| | 551 |
| | 556 |
| | 597 |
| 286-7232 | 226 |
| | ▶466 |
| 286-7273 | 447 |
| 286-7275 | 401 |
| | 407 |
| 286-7276 | 447 |
| 286-7925 | 253 |
| | ▶267 |
| 286-9380 | 1486 |
| | 1487 |
| 287-3585 | 517 |
| 287-3679 | 3 |
| | ▶694 |
| 287-8013 | ▶615 |
| 287-8397 | 466 |
| 288-0568 | 1003 |
| | ▶1006 |
| 288-0569 | 1006 |
| 288-1023 | 425 |
| 288-1683 | 401 |
| | 407 |
| 288-1772 | ▶345 |
| | 853 |
| | 854 |
| | 855 |
| 288-1773 | 345 |
| 288-2518 | 348 |
| 288-4883 | 39 |
| 288-4884 | 39 |
| 288-8250 | ▶1273 |
| 288-8251 | ▶1260 |
| | 1273 |
| 288-8350 | ▶1263 |
| 288-8390 | 430 |
| | 447 |
| | 460 |
| 289-8215 | 19 |
| 290-0106 | 384 |
| 290-0461 | 1034 |
| 290-2682 | 874 |
| 290-2685 | 874 |
| 290-2688 | 874 |
| 290-2693 | 859 |
| 290-2694 | 859 |
| 290-3265 | 1108 |
| 290-4821 | 1017 |
| 290-4822 | 1017 |
| 290-4824 | 568 |
| 290-8866 | 187 |
| 291-4392 | 498 |
| | 503 |
| 291-4397 | 498 |
| | 503 |
| 291-4398 | 498 |
| 291-4399 | 498 |
| 291-4400 | 498 |
| 291-5553 | 1499 |
| 291-5554 | 1499 |
| 291-5555 | 1499 |
| 291-5556 | 1499 |
| 291-5558 | 1499 |
| 291-5560 | ▶1499 |
| | 1508 |
| 291-5561 | 1499 |
| 292-1312 | 1017 |
| 292-3869 | 447 |
| 292-6092 | 2 |
| | ▶1424 |
| 292-6097 | 1428 |
| 292-6110 | ▶1337 |
| | 1424 |
| 292-6402 | ▶1427 |
| | 1428 |
| 292-6890 | ▶1422 |
| | 1424 |
| 292-6893 | 1337 |
| | ▶1458 |
| 292-8134 | 226 |
| | ▶401 |
| 292-9237 | ▶1428 |
| | 1470 |
| 292-9482 | 1263 |
| 292-9484 | 1263 |
| 292-9485 | 1263 |
| 292-9779 | 406 |
| 292-9911 | 551 |
| | 556 |
| | 597 |
| 292-9912 | 560 |
| | ▶597 |
| 292-9966 | 556 |
| | 560 |
| 292-9967 | 556 |
| | 560 |
| 292-9968 | 556 |
| | 560 |
| 293-2911 | 1450 |
| 293-5328 | 568 |
| 293-7303 | ▶853 |
| 293-7304 | ▶853 |
| 293-7305 | ▶854 |
| 293-7306 | ▶854 |
| 293-7307 | ▶855 |
| 293-7308 | ▶855 |
| 293-7309 | 853 |
| | ▶1195 |
| 293-7310 | 854 |
| | ▶1197 |
| 293-9130 | 375 |
| 294-0058 | 1110 |
| 294-0321 | 977 |
| 294-1072 | 401 |
| 294-1153 | 1021 |
| 294-1154 | 1021 |
| 294-1155 | 1021 |
| 294-1156 | 1021 |
| 294-2318 | 205 |
| | 209 |
| 294-2319 | 205 |
| | 206 |
| | 209 |
| | 210 |
| 294-5042 | 1470 |
| 294-5804 | 227 |
| 294-5805 | 227 |
| 294-9162 | ▶616 |
| 295-1299 | 401 |
| | 407 |
| 295-1300 | 406 |
| 296-6055 | 254 |
| | ▶281 |
| 296-7575 | 1418 |
| 296-7759 | 245 |
| | 248 |
| 296-8073 | ▶434 |
| 297-0831 | 688 |
| 297-1398 | 1413 |
| 297-1813 | 25 |
| 297-4902 | 285 |
| 298-2038 | 3 |
| | ▶1087 |
| 298-2518 | 375 |
| 298-2534 | 375 |
| 299-4132 | 691 |
| 299-4134 | 691 |
| 299-4136 | 691 |
| 299-4793 | 1195 |
| 299-4794 | 1195 |
| 299-4797 | 1197 |
| 299-4798 | 1197 |
| 299-5838 | ▶1021 |
| 299-5845 | 204 |
| 299-6993 | 1062 |
| 299-7326 | 6 |
| | 8 |
| | ▶288 |
| 299-9618 | 402 |
| | 407 |
| 300-0572 | 1511 |
| 300-2780 | ▶1337 |
| 300-3639 | 229 |
| 300-3640 | 229 |
| 300-3643 | 229 |


3

▶ PRIMARY REFERENCE

# PART NUMBER INDEX


| Part | Page | Part | Page | Part | Page | Part | Page |
|---|---|---|---|---|---|---|---|
| 300-3644 | 229 | | 4 | | | | |
| 300-3649 | 232 | | ▶725 | | | | |
| 300-3650 | 232 | 308-2716 | 994 | | | | |
| 300-5844 | 213 | 308-2718 | 3 | | | | |
| | ▶1409 | | 4 | | | | |
| 301-0104 | 503 | | ▶703 | | | | |
| 301-0105 | 503 | 308-2720 | 3 | | | | |
| 301-0106 | 503 | | 4 | | | | |
| 301-0412 | 1413 | | ▶648 | | | | |
| 301-3018 | ▶34 | 308-2722 | ▶479 | | | | |
| | 37 | | 970 | | | | |
| 301-4549 | 1458 | 308-2723 | 479 | | | | |
| | 1461 | 308-2724 | 3 | | | | |
| 301-4617 | 1464 | | 4 | | | | |
| 301-4899 | ▶1383 | | ▶970 | | | | |
| 301-7980 | 712 | 308-2725 | 3 | | | | |
| 301-7981 | 712 | | 4 | | | | |
| 301-8685 | 210 | | ▶1424 | | | | |
| 301-9554 | 210 | 308-2726 | ▶1423 | | | | |
| 302-2177 | 3 | | 1424 | | | | |
| | ▶475 | 308-2727 | ▶1338 | | | | |
| 303-6325 | ▶616 | | 1424 | | | | |
| 303-6328 | 616 | 308-2728 | 1337 | | | | |
| 303-8126 | 1409 | | 1338 | | | | |
| 303-8246 | 475 | | ▶1464 | | | | |
| 303-8248 | 475 | 308-2729 | 3 | | | | |
| 304-4173 | 1383 | | 4 | | | | |
| | 1418 | | ▶1360 | | | | |
| 304-4212 | ▶1418 | 308-2730 | 3 | | | | |
| 304-7223 | 1122 | | 4 | | | | |
| | 1124 | | ▶691 | | | | |
| 304-7224 | 1126 | 308-6336 | ▶616 | | | | |
| 304-7225 | 1118 | 308-8466 | 725 | | | | |
| 304-7226 | 1118 | 308-8470 | 725 | | | | |
| | 1126 | 308-8496 | 648 | | | | |
| 304-7716 | 1021 | 309-5053 | 1388 | | | | |
| 304-8401 | 624 | 309-8768 | ▶481 | | | | |
| 304-8652 | 376 | | 1338 | | | | |
| 304-8704 | 609 | 310-4307 | 349 | | | | |
| 304-9540 | 1148 | 310-4785 | 970 | | | | |
| 304-9553 | 14 | 310-5991 | 3 | | | | |
| 305-5522 | 376 | | 4 | | | | |
| 305-9196 | 37 | | ▶349 | | | | |
| | ▶88 | 310-7218 | 1454 | | | | |
| 305-9882 | 406 | 310-8266 | 1423 | | | | |
| 305-9883 | 406 | | 1451 | | | | |
| 306-8156 | 323 | | ▶1454 | | | | |
| 306-8927 | ▶616 | 311-3898 | 1467 | | | | |
| 307-8322 | 94 | | | | | | |
| | 95 | | | | | | |
| 307-9901 | 691 | | | | | | |
| 308-2708 | 1336 | | | | | | |
| | ▶1461 | | | | | | |
| 308-2709 | 481 | | | | | | |
| 308-2710 | ▶406 | | | | | | |
| | 1360 | | | | | | |
| 308-2711 | 406 | | | | | | |
| 308-2712 | ▶1371 | | | | | | |
| | 1461 | | | | | | |
| | 1464 | | | | | | |
| 308-2713 | 4 | | | | | | |
| | ▶229 | | | | | | |
| 308-2714 | 970 | | | | | | |
| | ▶994 | | | | | | |
| 308-2715 | 3 | | | | | | |


▶ **PRIMARY REFERENCE**

# MEMORANDA



© 2007 Caterpillar
All Rights Reserved

Printed in U.S.A.

SEBP3906-19
VOLUME II
Pages 645-1514

988H Wheel Loader

BXY1-Up