CATERPILLAR®

SEBP2415-43
May 2001

VOLUME I
Pages 1-672

RUTHZIL TRATOR COMERCIAL DE PEÇAS LTDA 11 97083-6812 ROLANDO

Parts Manual

SIS

See “General Information” for New Parts Manual Features.

992G Wheel Loader

7HR1-Up (Machine)
2GR1-Up (Engine)
9BX1-Up (Transmission)
3ZT1-Up (Torque Converter)
4CT1-Up (Torque Converter)

Powered By 3508B Engine

Product and Dealer Information

Note: For product identification plate locations, see the section “Product Identification Information” in the Operation and Maintenance Manual.

Delivery Date: _____

Product Information

Model: _____

Product Identification Number: _____

Engine Serial Number: _____

Transmission Serial Number: _____

Generator Serial Number: _____

Attachment Serial Numbers: _____

Attachment Information: _____

Customer Equipment Number: _____

Dealer Equipment Number: _____

Dealer Information

Name: _____ Branch: _____

Address: _____

_____

_____

	Dealer Contact	Phone Number	Hours
Sales:	_____	_____	_____
Parts:	_____	_____	_____
Service:	_____	_____	_____

Informations produit et concessionnaire

Nota: Voir l'emplacement de la plaque signalétique du produit au chapitre "Informations produit" du guide d'utilisation et d'entretien.

Date de livraison: _____

Informations produit

Modèle: _____

Numéro d'identification produit: _____

Numéro de série du moteur: _____

Numéro de série de la boîte de vitesses: _____

Numéro de série de l'alternateur: _____

Numéros de série d'équipement: _____

Informations sur l'équipement: _____

Numéro matériel client: _____

Numéro matériel concessionnaire: _____

Informations concessionnaire

Nom: _____ Agence: _____

Adresse: _____

_____

_____

	Contact concessionnaire	Numéro de téléphone	Heures
Ventes:			
Pièces:			
Service:			

Información del Producto/Distribuidor

Nota: Para saber la ubicación de las placas de identificación del producto, ver la sección “Información sobre identificación del producto” en el Manual de Operación y Mantenimiento.

Fecha de entrega: _____

Información del producto

Modelo: _____

Número de identificación del producto: _____

Número de serie del motor: _____

Número de serie de la transmisión: _____

Número de serie del generador: _____

Números de serie de los accesorios: _____

Información sobre los accesorios: _____

Número del equipo del cliente: _____

Número del equipo del distribuidor: _____

Información del distribuidor

Nombre: _____ Sucursal: _____

Dirección: _____

_____

_____

	Comunicación con el distribuidor	Número de teléfono	Horas
Ventas:	_____	_____	_____
Piezas:	_____	_____	_____
Servicio:	_____	_____	_____

Informações Sobre Produto e Revendedor

Nota: Para localizações da placa de identificação do produto, consulte a seção, “Informações Sobre Identificação do Produto” no Manual de Operação e Manutenção.

Data de Entrega: _____

Informações Sobre o Produto

Modelo: _____

Número de Identificação do Produto: _____

Número de Série do Motor: _____

Número de Série da Transmissão: _____

Número de Série do Gerador: _____

Números de Série de Acessórios: _____

Informações Sobre Acessórios: _____

Número do Equipamento do Cliente: _____

Número do Equipamento do Revendedor: _____

Informações Sobre o Revendedor

Nome: _____ Filial: _____

Endereço: _____

_____

_____

	Contato do Revendedor	Telefone	Horas
Vendas:	_____	_____	_____
Peças:	_____	_____	_____
Serviço:	_____	_____	_____

Produkt- und Händlerinformation

Anmerkung: Für die Lage der Produkt-Identnummer und Seriennummern siehe Abschnitt “Produkt-Identinformation” im Betriebs- und Wartungshandbuch.

Lieferdatum: _____

Produkt-Identinformation

Modell: _____

Produkt-Identnummer: _____

Seriennummer des Motors: _____

Seriennummer des Getriebes: _____

Seriennummer des Generators: _____

Seriennummern der Arbeitsgeräte: _____

Arbeitsgeräteinformation: _____

Kundennummer: _____

Händlernummer: _____

Händlerinformation

Name: _____ Niederlassung: _____

Adresse: _____

_____

_____

	Kontaktperson beim Händler	Telefon	Dienststunden
Verkauf:	_____	_____	_____
Ersatzteile:	_____	_____	_____
Service:	_____	_____	_____

MEMORANDA

TABLE OF CONTENTS

Name	Page
GENERAL INFORMATION	A27
REPAIR ALTERNATIVES	A46
SUPPLEMENTAL COOLANT ADDITIVES	A51
MAINTENANCE PARTS	A56
INDEX	A103
MACHINE ARRANGEMENT	1
CHASSIS AR	1
COMMON AR	2
ENGINE ARRANGEMENT	4
ENGINE AR	4
INSTALLATION AR-ENGINE	7
BASIC ENGINE	8
BALANCER GP	8
BASE GP-VALVE COVER	9
CAMSHAFT GP	10
COVER GP-ACCESSORY DRIVE	12
COVER GP-CYLINDER BLOCK	13
COVER GP-FLYWHEEL HOUSING	14
COVER GP-FRONT HOUSING	16
COVER GP-VALVE MECHANISM	18
CRANKSHAFT GP	19
CYLINDER BLOCK AS	21
CYLINDER BLOCK GP	24
CYLINDER HEAD AS	29
CYLINDER HEAD GP	36
DAMPER GP	42
DRIVE GP-ACCESSORY	43
EXTENSION GP-DRAIN	48
FLYWHEEL GP	49
GEAR GP-FRONT	50
GEAR GP-REAR	52
GUARD GP-BELT	54
HOUSING GP-FLYWHEEL	56
HOUSING GP-FRONT	58
LIFTING GP-ENGINE	59
MOUNTING GP-ALTERNATOR	60
PAN GP-OIL	62
PISTON & ROD GP	66
SEAL GP-CRANKSHAFT	68
SUPPORT GP-ENGINE	69
VALVE MECHANISM GP	72
LUBRICATION SYSTEM	76
BREATHER GP	76
FILLER GP-ENGINE OIL	77
FILTER GP-ENGINE OIL	78
FUMES DISPOSAL GP	82
GAUGE GP-OIL LEVEL (DIPSTICK)	83
LINES GP-ENGINE OIL	84
LINES GP-TURBOCHARGER OIL	92
OIL CHANGE GP-HIGH SPEED	94
PUMP & LINES GP-SUMP	95
PUMP GP-ENGINE OIL	96
PUMP GP-SCAVENGE	98
COOLING SYSTEM	99
CONNECTION GP-WATER	99
COOLER GP-ENGINE OIL	100
CORE GP-OIL COOLER	101
FAN GP-SUCTION	102
HOUSING & REGULATOR GP	103
LINES GP-COOLANT	104
LINES GP-RADIATOR	106
LINES GP-TURBOCHARGER WATER	118
LINES GP-WATER	120
PUMP GP-WATER	134
RADIATOR GP	138
SHROUD GP-RADIATOR	142
TANK GP-RADIATOR TOP	143
VALVE GP-RADIATOR DRAIN	144
AIR INLET AND EXHAUST SYSTEM	145
AFTERCOOLER GP-WATER	145
AIR CLEANER GP	146
LINES GP-AIR	152
MANIFOLD GP-EXHAUST	156
MUFFLER GP	162
PRECLEANER GP	165
SHIELD GP-EXHAUST	166
TURBOCHARGER GP	170
FUEL SYSTEM	178
ADAPTER GP-FAST FILL FUEL	178
FILTER GP-FUEL	184
FUEL AR-CONVENTIONAL FILL	186
FUEL AR-FAST FILL	196
INJECTOR GP-FUEL	199
KIT-GOVERNOR	202
LINES GP-FUEL	203
LINES GP-FUEL INJECTION	204
MANIFOLD GP-FUEL	211
PUMP GP-FUEL PRIMING	213
PUMP GP-FUEL TRANSFER	216
PUMP GP-UNIT INJECTION	222
SHIELD GP-FUEL LINES	226
TANK GP-FUEL	228
ELECTRICAL AND STARTING SYSTEM	233
ALARM GP	233
ALTERNATOR GP-CHARGING	234
BATTERY & WIRING GP	236
BUFFER GP-SENSOR	240

TABLE OF CONTENTS

Name	Page
CONTROL & MTG GP-ENGINE ELEK	241
CONTROL GP-ENG RATINGS ELEK	243
CONTROL GP-ENGINE ELECTRONIC	248
CONTROL GP-UNPROGRAMMED	252
ELECTRICAL AR	258
ELECTRONICS GP-ENGINE RATINGS	259
ELECTRONICS GP-IMPLEMENT	260
ELECTRONICS GP-MONITOR	261
ELECTRONICS GP-POWER TRAIN	289
FASTENER GP-ELECTRONICS	290
HEATER AR-FUEL	291
HEATER GP-FUEL	294
HEATER GP-JACKET WATER	298
LAMP GP-DOME	300
LAMP GP-FLOOD	301
LAMP GP-HEAD	305
LAMP GP-SIGNAL	306
LAMP GP-VIMS SERVICE INDICATOR	309
LIGHTING GP-FLOOD	310
LIGHTING GP-FRONT	312
LIGHTING GP-REAR	314
LIGHTING GP-STOP	316
MODULE GP-VIDS/VIMS INTERFACE	319
SENSOR GP-EXHAUST TEMPERATURE	320
SENSOR GP-POSITION	321
SENSOR GP-PRESSURE	328
SENSOR GP-SPEED	346
SENSOR GP-TEMPERATURE	350
STARTING AID GP-ETHER	351
STARTING MOTOR GP-ELECTRIC	354
SWITCH GP-BYPASS	363
SWITCH GP-COOLANT FLOW	364
SWITCH GP-DISCONNECT	365
SWITCH GP-FLOW	366
SWITCH GP-LIQUID LEVEL	367
SWITCH GP-MAGNETIC	368
SWITCH GP-ROCKER	369
SWITCH GP-START	370
SWITCH GP-WIPER	371
THERMOCOUPLE GP	372
WARNING GP-BACKUP	373
WIRING GP-BUMPER	374
WIRING GP-CAB	376
WIRING GP-ENGINE	382
WIRING GP-FRONT	402
WIRING GP-MACHINE	406
WIRING GP-POWER TRAIN	416
WIRING GP-REAR	436
WIRING GP-SHUTOFF	438
WIRING GP-VIDS MONITOR	440
WIRING GP-VIMS	452
WIRING GP-VIMS MONITOR	460
POWER TRAIN	471
AXLE AR-FIXED	471
AXLE AR-OSCILLATING	472
AXLE GP-FIXED	474
AXLE GP-OSCILLATING	476
BLOCK GP-HYDRAULIC	479
CASE & PARTS GP-PLANETARY	482
CONTROL GP-STIC	484
CONTROL GP-TRANSMISSION HYD	492
COOLER GP-AXLE OIL	494
COVER GP-SHIPPING	520
DIFFERENTIAL & BEVEL GEAR GP	522
DIFFERENTIAL GP	526
FILLER GP-POWER TRAIN OIL	527
FILTER & MTG GP-POWER TRAIN	530
FILTER GP-OIL	536
GAUGE GP-LIQUID LEVEL	542
GEAR & CASE GP-OUTPUT TRANSFER	544
GEAR GP-INPUT TRANSFER	548
KIT-TRANSMISSION BEARING	550
LINES GP-AXLE VENT	551
LINES GP-POWER TRAIN OIL	552
LOCK GP-STIC CONTROL	568
MOUNTING GP-AXLE	574
MOUNTING GP-RIM	575
MOUNTING GP-TORQUE CONVERTER	576
PLANETARY GP-TRANSMISSION	578
POWER TRAIN AR	589
PUMP GP-GEAR	590
PUMP GP-TRANSMISSION	591
RIM AR	594
RIM GP-DEMOUNTABLE	595
SHAFT GP-DRIVE	596
SHAFT GP-INPUT DRIVE	600
SLIP JOINT GP	601
SPIDER & BEARING GP	603
SUPPORT GP-TRANSMISSION	604
TIRE & RIM AR	605
TORQUE CONVERTER & HOUSING GP	618
TORQUE CONVERTER AR	630
TORQUE CONVERTER AR-LOCKUP	631
TORQUE CONVERTER GP	632
TORQUE CONVERTER GP-LOCKUP	640
TRANSMISSION AR	647
UNIVERSAL JOINT GP	648
VALVE & MTG GP-LOCKUP CLUTCH	651
VALVE GP-MODULATING	653
VALVE GP-RELIEF	658
VALVE GP-SELECTOR	659
VALVE GP-SELECTOR & PRESS CONT	660
VALVE GP-SOLENOID	662

TABLE OF CONTENTS

Name	Page
VALVE GP-TORQUE CONV PRIORITY	664
VALVE GP-TRANSMISSION CONTROL	666
WHEEL & FINAL DRIVE GP	668
WHEEL GP-FINAL DRIVE & BRAKE	670
FRAME AND BODY	673
BUMPER AR-REAR	673
BUMPER GP-REAR	677
DRAWBAR GP	679
ENCLOSURE GP-HYDRAULIC TANK	680
FENDER GP-FRONT	689
FIREWALL GP	690
FRAME AS-LOADER	692
FRAME AS-REAR	699
FRAME GP-LOADER	701
GUARD GP-CRANKCASE	702
GUARD GP-POWER TRAIN	703
GUARD GP-RADIATOR	704
HITCH GP-ARTICULATING	708
HOOD & GUARD GP	710
LADDER GP	730
LINES GP-GREASE	740
LINK GP-STEERING FRAME LOCK	746
MOUNTING GP-BUMPER	748
PANEL GP-HOOD	750
PANEL GP-TOP	751
STEP GP	752
SUPPORT GP-AIR INLET	753
BRAKING SYSTEM	755
ACCUMULATOR GP-BRAKE	755
BRAKE GP-PARKING	758
BRAKE GP-SERVICE	762
CONTROL GP-FOOT BRAKE	766
CONTROL GP-PARKING BRAKE	771
CONTROL GP-SERVICE BRAKE	772
FILTER & LINES GP-BRAKE	798
LINES GP-SERVICE BRAKE	800
PUMP GP-PISTON	802
ROTATING GP-PUMP	805
VALVE & MTG GP-BRAKE CONTROL	808
VALVE GP-BRAKE CONTROL	810
VALVE GP-PRESSURE COMPENSATOR	811
STEERING SYSTEM	812
ACTUATOR GP-PISTON PUMP	812
BLOCK GP-HYDRAULIC	816
CONTROL GP-PUMP	817
CONTROL GP-STEERING	818
CYLINDER & MTG GP-STEERING	822
CYLINDER GP-STEERING	824
FILTER & LINES GP-STEERING	826
FILTER GP-OIL	828
LINES GP-SECONDARY STEERING	830
LINES GP-STEERING	840
LINES GP-STEERING NEUTRALIZER	850
LINES GP-STEERING OIL COOLER	854
PUMP GP-GEAR	862
PUMP GP-PISTON	866
STEERING AR	872
STOP GP-STEERING	874
VALVE & MTG GP-STEERING NEUT	876
VALVE GP-CHECK	878
VALVE GP-FLOW COMPENSATOR	883
VALVE GP-PILOT	887
VALVE GP-PILOT CARTRIDGE	888
VALVE GP-PRESS & FLOW CMPNSTR	890
VALVE GP-PRESSURE COMPENSATOR	894
VALVE GP-RELIEF	895
VALVE GP-SELECTOR & PRESS CONT	901
VALVE GP-SHUTTLE	902
VALVE GP-STEERING	904
VALVE GP-STEERING NEUTRALIZER	919
HYDRAULIC SYSTEM	920
ACCUMULATOR GP-RIDE CONTROL	920
ACTUATOR GP-PILOT CONTROL	921
CONTROL & LINES GP-RIDE	922
CONTROL AR-RIDE	930
CONTROL GP-HYD ELECTRONIC	932
COOLER GP-HYDRAULIC OIL	956
COVER GP-HYDRAULIC TANK CAP	959
CYLINDER GP-LIFT	960
CYLINDER GP-TILT	972
HYDRAULIC AR	974
KICKOUT & POSITIONER GP	976
LINES GP-HYDRAULIC	996
LINES GP-HYDRAULIC FAN	1008
LINES GP-LIFT CYLINDER	1026
LINES GP-TILT CYLINDER	1032
MOTOR GP-PISTON	1034
PUMP GP-PISTON	1036
ROTATING GP-MOTOR	1044
ROTATING GP-PUMP	1048
SWASHPLATE GP	1049
TANK & MTG GP-HYDRAULIC	1051
TANK GP-HYDRAULIC	1054
VALVE & MTG GP-FAN SPEED CONT	1060
VALVE & MTG GP-HYDRAULIC FAN	1062
VALVE & MTG GP-MAIN CONTROL	1064
VALVE & MTG GP-PILOT RELIEF	1067
VALVE & MTG GP-VARIABLE PUMP	1069
VALVE GP-CHECK	1071
VALVE GP-CONTROL	1072
VALVE GP-MAIN CONTROL	1082
VALVE GP-MAKEUP	1085

TABLE OF CONTENTS

Name	Page
VALVE GP-PRESS & FLOW CMPNSTR	1086
VALVE GP-PRESSURE COMPENSATOR	1087
VALVE GP-PUMP CONTROL	1088
VALVE GP-RELIEF	1090
VALVE GP-RIDE CONTROL	1096
VALVE GP-SHUTTLE	1097
VALVE GP-SOLENOID	1098
VALVE GP-SOLENOID & MANIFOLD	1102
VALVE GP-TORQUE LIMITER CONT	1103
IMPLEMENTS	1104
CONTROL GP-BUCKET	1104
LIFT AR-HIGH	1118
LIFT AR-STANDARD	1122
LINK GP-BUCKET	1126
LINK GP-BUCKET & BOOM	1132
PIN & SEAL GP-LINKAGE	1136
WORK TOOLS	1155
ADAPTER-CENTER	1155
ADAPTER-LH	1157
ADAPTER-RH	1160
ADAPTER-TIP	1162
BASE-WEAR PLATE	1167
BUCKET AS-ROCK	1168
BUCKET GP-ROCK	1182
COVER GP-ADAPTER	1194
EDGE GP-CUTTING	1195
EDGE GP-SEGMENT	1197
EDGE-SEGMENT	1201
PLATE GP-WEAR	1202
PLATE-WEAR	1203
PROTECTOR GP-EDGE	1205
PROTECTOR GP-SIDEBAR	1209
RETAINER-G.E.T.	1210
TIP GP	1211
TIP GP-ABRASION	1217
TIP GP-LONG	1223
TIP GP-PENETRATION	1233
TIP GP-SHORT	1240
TIP-BUCKET	1246
TIP-LONG	1247
TIP-PENETRATION	1248
OPERATOR STATION	1250
ACCUMULATOR & MTG GP-REFRIG	1250
AIR CONDITIONER AR	1251
AIR CONDITIONER GP	1252
BOX GP-STORAGE	1256
CAB & PLATFORM GP	1260
CAB AR	1261
CAB GP	1264
COMPRESSOR & MTG GP-REFRIG	1268
COMPRESSOR GP-REFRIGERANT	1272
CONDENSER & MTG GP-REFRIGERANT	1282
COVER GP-CAB	1283
DOOR GP-LH	1284
DOOR GP-SIDE	1286
DUCT GP-AIR	1294
EXTENSION GP-BACKREST	1296
FILTER GP-CAB AIR	1297
HANDHOLD GP	1300
HORN GP-ELECTRIC	1302
INSTALLATION GP-RADIO	1304
LATCH GP-CAB DOOR & WINDOW	1308
LINER GP-CAB	1312
LINES GP-AIR CONDITIONER	1320
LINES GP-HEATER	1322
MIRROR GP	1323
MIRROR GP-REAR VIEW	1325
MODULE GP-MESSAGE CENTER	1326
MODULE GP-MONITOR KEYPAD	1328
MODULE GP-QUAD GAUGE	1329
MOTOR GP-WINDOW WIPER	1331
MOUNTING GP-PLATFORM	1332
OPERATOR AR	1333
PAN GP-BACKREST	1334
PAN GP-SEAT	1336
PANEL GP-INSTRUMENT	1340
PEDAL GP-GOVERNOR	1349
PLATE GP-SLIDE	1351
PLATFORM GP-OPERATOR	1354
RECLINER GP-SEAT	1358
ROPS GP	1359
SCREEN GP-SUN	1360
SEALING GP-GLASS	1362
SEAT BELT GP	1363
SEAT GP	1366
SEAT GP-SUSPENSION	1383
SPRING GP-CAB DOOR	1388
SUPPORT GP-HYDRAULIC CONTROL	1390
SUPPORT GP-SEAT	1401
SUPPORT GP-STEERING CONTROL	1402
SUSPENSION GP-SEAT	1410
VIDS AR	1420
VIMS AR	1421
WASHER GP-WINDOW	1422
WIPER & WASHER GP-WINDOW	1424
WIPER GP-WINDOW	1434
WIPER PIVOT GP	1442
SERVICE EQUIPMENT AND SUPPLIES	1444
FILM GP	1444
PLATE & FILM GP	1446
PROTECTION GP-VANDALISM	1448
PART NUMBER INDEX	B1

TABLE DES MATIÈRES

Désignation	Page
GÉNÉRALITÉS	A30
OPTIONS DE RÉPARATION	A47
ADDITIFS POUR LIQUIDE DE REFROIDISSEMENT	A52
PIÈCES DE RECHANGE	A64
INDEX	A121
VERSION DE MACHINE	1
VERSION DE CHASSIS	1
VERSION NORMALE	2
MOTEUR (VERSION)	4
MOTEUR (VERSION)	4
MONTAGE DE MOTEUR (VERSION)	7
MOTEUR STANDARD	8
BALANCEUR (ASS)	8
SUPPORT - CACHE-SOUPAPES (ASS)	9
ARBRE A CAMES (ASS)	10
COUVERCLE D'ENTRAINEMENT AUXILIAIRE (ASS)	12
BLOC-CYLINDRES - COUVERCLE (ASS)	13
COUVERCLE DE CARTER DE VOLANT (ASS)	14
COUVERCLE DE CARTER AV (ASS)	16
CACHE-SOUPAPES (ASS)	18
VILEBREQUIN (ASS)	19
BLOC-CYLINDRES (ENS)	21
BLOC-CYLINDRES (ASS)	24
CULASSE (ENS)	29
CULASSE (ASS)	36
AMORTISSEUR DE VIBRATIONS (ASS)	42
ENTRAÎNEMENT AUXILIAIRE (ASS)	43
RALLONGE DE VIDANGE (ASS)	48
VOLANT MOTEUR (ASS)	49
PIGNONNERIE AV (ASS)	50
PIGNON AR (ASS)	52
PROTEGE-COURROIE (ASS)	54
CARTER DE VOLANT (ASS)	56
CARTER AV (ASS)	58
OEILLETONS DE LEVAGE MOTEUR (ASS)	59
MONTAGE D'ALTERNATEUR (ASS)	60
HUILE MOTEUR - CARTER (ASS)	62
PISTON ET BIELLE (ASS)	66
JOINT DE VILEBREQUIN (ASS)	68
SUPPORT DE MOTEUR (ASS)	69
CULBUTERIE (ASS)	72
CIRCUIT DE GRAISSAGE	76
RENIFLARD (ASS)	76
BOUCHON DE REMPLISSAGE D'HUILE MOTEUR (ASS)	77
FILTRE À HUILE MOTEUR (ASS)	78
DISPOSITIF D'EVACUATION DES VAPEURS DE CARTER	82
JAUGE D'HUILE MOTEUR (BAIONNETTE) (ASS)	83
CANALISATIONS D'HUILE MOTEUR (ASS)	84
CANALISATIONS D'HUILE DE TURBOCOMPRESSEUR (ASS)	92
DISPOSITIF DE VIDANGE RAPIDE D'HUILE (ASS)	94
POMPE DE CARTER (GR)	95
POMPE A HUILE MOTEUR (ASS)	96
POMPE DE REPRISE (ASS)	98
CIRCUIT DE REFROIDISSEMENT	99
RACCORD D'EAU (ASS)	99
REFROIDISSEUR D'HUILE MOTEUR (ASS)	100
FAISCEAU DU REFROIDISSEUR D'HUILE (ASS)	101
VENTILATEUR ASPIRANT (ASS)	102
THERMOSTAT ET BOITIER (ASS)	103
CANALISATIONS DE LIQUIDE DE REFROIDISSEMENT (ASS)	104
CANALISATIONS DE RADIATEUR (ASS)	106
CANALISATIONS D'EAU DE TURBOCOMPRESSEUR	118
CANALISATIONS D'EAU (ASS)	120
POMPE A EAU (ASS)	134
RADIATEUR (ASS)	138
CARÉNAGE DU RADIATEUR (ASS)	142
RÉSERVOIR DU COUVERCLE DE RADIATEUR (ASS)	143
ROBINET DE VIDANGE DE RADIATEUR (ASS)	144
CIRCUIT D'ADMISSION D'AIR ET D'ÉCHAPPEMENT	145
ADMISSION REFROIDIE PAR EAU (ASS)	145
FILTRE A AIR (ASS)	146
CANALISATIONS D'AIR (ASS)	152
COLLECTEUR D'ÉCHAPPEMENT (ASS)	156
SILENCIEUX (ASS)	162
PREFILTRE (ASS)	165
DEFLECTEUR D'ECHAPPEMENT (ASS)	166
TURBOCOMPRESSEUR (ASS)	170

TABLE DES MATIÈRES

Désignation	Page
CIRCUIT DE CARBURANT	178
ADAPTATEUR DE REMPLIS. RAPIDE DE CARBURANT (ASS)	178
FILTRE A CARBURANT (ASS)	184
CARBURANT - REMPLISSAGE CLASSIQUE (VERSION)	186
REMPLISSAGE RAPIDE DE CARBURANT (VERSION)	196
INJECTEUR DE CARBURANT (ASS)	199
KIT DE RÉGULATEUR	202
CANALISATIONS DE CARBURANT (ASS)	203
CANALISATIONS D'INJECTION DE CARBURANT (ASS)	204
COLLECTEUR DE CARBURANT (ASS)	211
POMPE D'AMORÇAGE DE CARBURANT (ASS)	213
POMPE D'ALIMENTATION EN CARBURANT (ASS)	216
POMPE D'INJECTION (ASS)	222
PROTECTION DE CANALISATIONS DE CARBURANT	226
RÉSERVOIR DE CARBURANT (ASS)	228
CIRCUIT ELECTRIQUE ET DE DEMARRAGE	233
AVERTISSEUR (ASS)	233
ALTERNATEUR DE CHARGE (ASS)	234
BATTERIE ET CÂBLAGE	236
AMPLIFICATEUR - CAPTEUR (ASS)	240
COMMANDE ET MONTAGE - MOTEUR	241
COMMANDE ÉLECTRIQUE DE RÉGLAGE DU MOTEUR (ASS)	243
COMMANDE ELECTRONIQUE DE MOTEUR (ASS)	248
COMMANDE NON PROGRAMMEE (ASS)	252
VERSION ÉLECTRIQUE	258
RÉGLAGE ÉLECTRO. DE PUISSANCE DU MOTEUR	259
COMMANDE ÉLECTRONIQUE D'ÉQUIPEMENT (ASS)	260
ÉLECTRONIQUE-MONITEUR (ASS)	261
ÉLECTRONIQUE DE TRANSMISSION (ASS)	289
BOULONNERIE - COMPOSANT ÉLECTRONIQUE (ASS)	290
RÉCHAUFFEUR DE CARBURANT (VERSION)	291
RECHAUFFEUR DE CARBURANT (ASS)	294
EAU DES CHEMISES - RECHAUFFEUR (ASS)	298
PLAFONNIER (ASS)	300
LAMPE - PHARE (ASS)	301
PHARE AV (ASS)	305
LAMPE - CLIGNOTANT DE DIRECTION (ASS)	306
LAMPE - TÉMOIN D'ENTRETIEN DU SYSTÈME VIMS	309
ÉCLAIRAGE - PROJECTEURS (ASS)	310
ECLAIRAGE AV (ASS)	312
ECLAIRAGE AR (ASS)	314
ÉCLAIRAGE-FEUX D'ARRÊT (ASS)	316
MODULE - INTERFACE VIDS/VIMS (ASS)	319
CAPTEUR DE TEMPERATURE D'ECHAPPEMENT (ASS)	320
SONDE - CIRCUIT DE CARBURANT	321
CAPTEUR DE PRESSION (ASS)	328
CAPTEUR DE VITESSE (ASS)	346
CAPTEUR DE TEMPERATURE (ASS)	350
AUXILIAIRE DE DÉMARRAGE À L'ÉTHER	351
DÉMARREUR ÉLECTRIQUE (ASS)	354
INTERRUPTEUR - DÉRIVATION (ASS)	363
CONTACTEUR-DÉBIT DE LIQUIDE DE REFROIDISSEMENT	364
ROBINET DE BATTERIE (ASS)	365
CONTACTEUR DE DEBIT (ASS)	366
CONTACTEUR - NIVEAU DE LIQUIDE (ASS)	367
CONTACTEUR MAGNETIQUE (ASS)	368
INTERRUPTEUR À BASCULE (ASS)	369
INTERRUPTEUR DE DÉMARRAGE (ASS)	370
INTERRUPTEUR D'ESSUIE-GLACE (ASS)	371
THERMOCOUPLE (ASS)	372
AVERTISSEUR DE RECUL (ASS)	373
CÂBLAGE D'AMORTISSEUR (ASS)	374
CABLAGE DE CABINE (ASS)	376
CABLAGE DE MOTEUR (ASS)	382
CABLAGE AV (ASS)	402
CABLAGE DE LA MACHINE (ASS)	406
CABLAGE DE TRANSMISSION (ASS)	416
CABLAGE AR (ASS)	436
CABLAGE D'ARRET DE SECURITE	438
CABLAGE - MONITEUR DU SYSTÈME VIDS (ASS)	440
CABLAGE DU SYSTÈME VIMS (ASS)	452
CABLAGE - MONITEUR DU SYSTÈME VIMS (ASS)	460
TRANSMISSION	471
ESSIEU FIXE (VERSION)	471
ESSIEU OSCILLANT (VERSION)	472
ESSIEU FIXE	474

TABLE DES MATIÈRES

Désignation	Page
ESSIEU OSCILLANT	476
BLOC - HYDRAULIQUE (ASS)	479
TRAINS PLANÉTAIRES - CARTER ET PIÈCES	482
COMMANDE DE BRAS (ASS)	484
COMMANDE HYDRAULIQUE DE BOÎTE (ASS)	492
REFROIDISSEUR D'HUILE D'ESSIEU (ASS)	494
COUVERCLES D'EXPEDITION (ASS)	520
COURONNE ET DIFFERENTIEL (ASS)	522
DIFFERENTIEL (ASS)	526
GOULOTTE DE REMPLISSAGE D'HUILE DE TRANSMISSION	527
FILTRE ET MONTAGE - TRANSMISSION (ASS)	530
FILTRE A HUILE (ASS)	536
INSTRUMENT DE NIVEAU DE LIQUIDE (ASS)	542
ENGRENAGE DE TRANSFERT ET CARTER	544
PIGNONNERIE D'ENTREE DE TRANSFERT (ASS)	548
KIT DE COUSSINETS - BOITE DE VITESSES	550
CANALISATIONS D'ÉVENT D'ESSIEU (ASS)	551
CANALISATIONS D'HUILE DE TRANSMISSION (ASS)	552
VERROUILLAGE DE COMMANDE STIC	568
MONTAGE D'ESSIEU (ASS)	574
MONTAGE DE JANTE (ASS)	575
CONVERTISSEUR DE COUPLE - MONTAGE (ASS)	576
BOÎTE PLANÉTAIRE (ASS)	578
TRANSMISSION (VERSION)	589
POMPE A ENGRENAGES (ASS)	590
POMPE DE BOÎTE DE VITESSES (ASS)	591
JANTE (VERSION)	594
JANTE DÉMONTABLE (ASS)	595
ARBRE D'ENTRAÎNEMENT (ASS)	596
ARBRE DE TRANSMISSION D'ENTRÉE (ASS)	600
CARDAN COULISSANT (ASS)	601
CROISILLON ET ROULEMENT	603
SUPPORT DE TRANSMISSION (ASS)	604
PNEU ET JANTE (VERSION)	605
CONVERTISSEUR DE COUPLE ET CARTER (ASS)	618
CONVERTISSEUR DE COUPLE (VERSION)	630
VERROUILLAGE DE CONVERTISSEUR DE COUPLE (VERSION)	631
CONVERTISSEUR DE COUPLE (ASS)	632
CONVERTISSEUR DE COUPLE - VERROUILLAGE (ASS)	640
BOÎTE DE VITESSES (VERSION)	647
JOINT UNIVERSEL (ASS)	648
SOUPAPE ET MONTAGE - EMBRAYAGE DE VERROUILLAGE (ASS)	651
SOUPAPE DE MODULATION (ASS)	653
CLAPET DE DECHARGE (ASS)	658
SOUPAPE SÉLECTRICE (ASS)	659
SOUPAPE SELECTRICE ET REGULATRICE DE PRESSION	660
SOUPAPE - SOLÉNOÏDE (ASS)	662
SOUPAPE DE PRIORITÉ DE CONVERTISSEUR DE COUPLE (ASS)	664
DISTRIBUTEUR DE BOITE (ASS)	666
ROUE ET RÉDUCTEURS (ASS)	668
RÉDUCTEURS, ROUE ET FREIN (ASS)	670
CHÂSSIS ET BENNE	673
VERSION DE PARE-CHOCS ARRIÈRE	673
PARE-CHOCS AR (ASS)	677
BARRE D'ATTELAGE (ASS)	679
CARENAGE - RESERVOIR HYDRAULIQUE (ASS)	680
GARDE-BOUE AV (ASS)	689
CLOISON PARE-FEU (ASS)	690
BÂTI - CHARGEUSE (ENS)	692
BÂTI AR (ENS)	699
BATI - CHARGEUSE (ASS)	701
CARTER - BLINDAGE (ASS)	702
BLINDAGE DE TRANSMISSION (ASS)	703
PROTÈGE-RADIATEUR (ASS)	704
ATTELAGE D'ARTICULATION (ASS)	708
CAPOT ET PROTECTION (ASS)	710
ECHELLE (ASS)	730
CANALISATIONS DE GRAISSAGE (ASS)	740
LIAISON - VERROUILLAGE DE CHÂSSIS DE DIRECTION (ASS)	746
MONTAGE DE PARE-CHOCS (ASS)	748
TABLEAU - CAISSON (ASS)	750
PANNEAU SUPERIEUR (ASS)	751
MARCHEPIED (ASS)	752
SUPPORTS D'ADMISSION D'AIR (ASS)	753
CIRCUIT DE FREINS	755
ACCUMULATEUR - FREIN	755
FREIN DE STATIONNEMENT (ASS)	758

TABLE DES MATIÈRES

Désignation	Page
FREIN DE MANOEUVRE (ASS)	762
COMMANDE DE LA PÉDALE DE FREIN (ASS)	766
COMMANDE DE FREIN DE STATIONNEMENT (ASS)	771
FREIN DE MANOEUVRE - COMMANDE (ASS)	772
FILTRE ET CANALISATIONS DE FREIN (ASS)	798
CANALISATIONS DU FREIN DE MANOEUVRE (ASS)	800
POMPE A PISTONS (ASS)	802
GROUPE DE ROTATION DE POMPE	805
SOUPAPE ET MONTAGE - COMMANDE DE FREIN (ASS)	808
DISTRIBUTEUR DE FREIN (ASS)	810
SOUPAPE DE COMPENSATION DE PRESSION (ASS)	811
CIRCUIT DE DIRECTION	812
MECANISME DE COMMANDE DE LA POMPE A PISTONS (ASS)	812
BLOC - HYDRAULIQUE (ASS)	816
COMMANDE DE POMPE (ASS)	817
COMMANDE DE DIRECTION (ASS)	818
VERIN DE DIRECTION ET MONTAGE (ASS)	822
VERIN DE DIRECTION (ASS)	824
FILTRE ET CANALISATIONS DE DIRECTION (ASS)	826
FILTRE A HUILE (ASS)	828
CANALISATION DE DIRECTION AUXILIAIRE	830
CANALISATIONS DE DIRECTION (ASS)	840
CANALISATIONS DE NEUTRALISATION DE DIRECTION (ASS)	850
CANALISATIONS DE REFROIDISSEUR D'HUILE DE DIRECTION	854
POMPE A ENGRENAGES (ASS)	862
POMPE A PISTONS (ASS)	866
DIRECTION (ENS)	872
ARRÊT-DIRECTION (ASS)	874
SOUPAPE DE NEUTR. DE DIRECTION ET MONTAGE (ASS)	876
CLAPET DE RETENUE (ENS)	878
SOUPAPE DE REGULATION DE DEBIT (ASS)	883
SOUPAPE PILOTE (ASS)	887
SOUPAPE - CARTOUCHE PILOTE (ASS)	888
SOUPAPE RÉGULATRICE DE PRESSION ET DÉBIT	890
SOUPAPE DE COMPENSATION DE PRESSION (ASS)	894
CLAPET DE DECHARGE (ASS)	895
SOUPAPE SELECTRICE ET REGULATRICE DE PRESSION	901
VANNE PILOTE (ASS)	902
SOUPAPE DE DIRECTION (ASS)	904
SOUPAPE DE NEUTRALISATION DE DIRECTION (ASS)	919
CIRCUIT HYDRAULIQUE	920
ACCUMULATEUR - COMMANDE DE TRANSLATION (ASS)	920
COMMANDE DE SYSTÈME PILOTE (ASS)	921
COMMANDE ET CANALIS. - TRANSLATION (ASS)	922
COMMANDE DE TRANSLATION (VERSION)	930
COMMANDE ÉLECTRONIQUE (HYDRAULIQUE)	932
REFROIDISSEUR D'HUILE HYDRAULIQUE (ASS)	956
COUVERCLE DE RÉSERVOIR HYDRAULIQUE	959
VÉRIN DE LEVAGE (ASS)	960
VÉRIN D'INCLINAISON (ASS)	972
VERSION HYDRAULIQUE	974
LIMITEUR DE LEVAGE ET RETOUR À L'ANGLE DE CAVAGE	976
CANALISATIONS HYDRAULIQUES (ASS)	996
CANALISATIONS HYDRAULIQUES DE VENTILATEUR (ASS)	1008
CANALISATIONS DE VÉRIN DE LEVAGE (ASS)	1026
CANALISATIONS DU VÉRIN D'INCLINAISON (ASS)	1032
GROUPE DE MOTEUR A PISTONS	1034
POMPE A PISTONS (ASS)	1036
GROUPE DE ROTATION DE MOTEUR	1044
GROUPE DE ROTATION DE POMPE	1048
PLATEAU OSCILLANT (ASS)	1049
RÉSERVOIR HYDRAULIQUE ET MONTAGE (ASS)	1051
RÉSERVOIR HYDRAULIQUE (ASS)	1054
SOUPAPE ET MONTAGE-COMMANDE DE VITESSE DE VENTILATEUR (ASS)	1060
SOUPAPE ET MONTAGE - VENTILATEUR HYDRAULIQUE (ASS)	1062
COMMANDE PRINCIPALE DE SOUPAPE ET MONTAGE (ASS)	1064
CLAPET DE DÉCHARGE PILOTE ET MONTAGE (ASS)	1067
SOUPAPE ET MONTAGE - POMPE À CYLINDRE VARIABLE (ASS)	1069
CLAPET DE RETENUE (ENS)	1071

TABLE DES MATIÈRES

Désignation	Page
DISTRIBUTEUR (ASS)	1072
SOUPAPE DE COMMANDE PRINCIPALE (ASS)	1082
CLAPET DE COMPENSATION (ASS)	1085
SOUPAPE RÉGULATRICE DE PRESSION ET DÉBIT	1086
SOUPAPE DE COMPENSATION DE PRESSION (ASS)	1087
DISTRIBUTEUR DE POMPE (ASS)	1088
CLAPET DE DECHARGE (ASS)	1090
DISTRIBUTEUR DE COMMANDE ANTI-TANGAGE	1096
VANNE PILOTE (ASS)	1097
SOUPAPE - SOLÉNOÏDE (ASS)	1098
SOUPAGE - SOLÉNOIDE ET COLLECTEUR	1102
SOUPAPE DE COMMANDE DE LIMITEUR DE COUPLE (ASS)	1103
ÉQUIPEMENTS	1104
COMMANDE DE GODET (ASS)	1104
HAUTE PORTEE (VERSION)	1118
LEVAGE STANDARD (VERSION)	1122
LIAISON-GODET (ASS)	1126
BIELLETTE-GODET ET FLÈCHE (ASS)	1132
AXE ET JOINT - TIMONERIE (ASS)	1136
OUTILS DE TRAVAIL	1155
PORTE-POINTE CENTRAL	1155
PORTE-POINTE GAUCHE	1157
PORTE-POINTE DE DROITE	1160
PORTE-POINTE	1162
SUPPORT DE PLAQUE D'USURE	1167
GODET-ROCHE (ENS)	1168
GODET-ROCHE (ASS)	1182
COUVERCLE D'ADAPTATEUR (ASS)	1194
LAME DE COUPE (ASS)	1195
SEGMENT DE LAME DE COUPE (ASS)	1197
SEGMENT DE LAME	1201
PLAQUE D'USURE (ASS)	1202
PLAQUE D'USURE	1203
PROTECTEURS DE LAME (ASS)	1205
PROTECTEUR LATERAL (ASS)	1209
FIXATION D'OUTILS D'ATTAQUE DU SOL	1210
POINTE (ASS)	1211
POINTE ABRASION (ASS)	1217
POINTE LONGUE (ASS)	1223
POINTE PENETRATION	1233
POINTE COURTE (ASS)	1240
GODET - POINTE	1246
POINTE LONGUE	1247
POINTE PENETRATION	1248
POSTE DE CONDUITE	1250
ACCUMULATEUR ET MONTAGE DE RÉFRIGÉRANT (ASS)	1250
CLIMATISEUR (VERSION)	1251
CLIMATISEUR (ASS)	1252
COFFRE DE RANGEMENT (ASS)	1256
CABINE ET PLATE-FORME (ASS)	1260
CABINE (VERSION)	1261
CABINE (ASS)	1264
COMPRESSEUR ET MONTAGE - RÉFRIGÉRANT (ASS)	1268
COMPRESSEUR DE REFRIGERANT (ASS)	1272
CONDENSATEUR ET MONTAGE (RÉFRIGÉRANT)	1282
COUVERCLE - CABINE (ASS)	1283
PORTIERE GAUCHE (ASS)	1284
PORTE LATÉRALE (ASS)	1286
GAINE D'AIR (ASS)	1294
RALLONGE DU DOSSIER DE SIEGE	1296
FILTRE À AIR DE CABINE (ASS)	1297
POIGNÉE	1300
KLAXON ÉLECTRIQUE (ASS)	1302
MONTAGE DE RADIO (ASS)	1304
LOQUET - PORTE DE CABINE ET GLACE	1308
CABINE - REVÊTEMENT (ASS)	1312
CANALISATIONS DE CLIMATISEUR (ASS)	1320
CANALISATIONS DE CHAUFFAGE (ASS)	1322
RÉTROVISEUR (ASS)	1323
MODULE (ASS)-CENTRE DE MESSAGE	1326
MODULE (ASS)-TOUCHE DE MODULE DE SURVEILLANCE	1328
MODULE - QUATRE INSTRUMENTS (ASS)	1329
MOTEUR D'ESSUIE-GLACE (ASS)	1331
MONTAGE DE PLATE-FORME (ASS)	1332
POSTE DE CONDUITE (VERSION)	1333
COUVERCLE INFÉRIEUR-DOSSIER (ASS)	1334
SIEGE - COUVERCLE INFERIEUR (ASS)	1336
TABLEAU DE BORD (ASS)	1340
RÉGULATEUR - PÉDALE (ASS)	1349
PLAQUE-GLISSIÈRE (ASS)	1351
PLATE-FORME DE CABINE	1354
SIÈGE INCLINABLE (ASS)	1358
TOIT ROPS (ASS)	1359
PARE-SOLEIL (ASS)	1360
ÉTANCHÉITÉ - GLACE (ASS)	1362
CEINTURE DE SECURITE (ASS)	1363
SIÈGE (ASS)	1366

TABLE DES MATIÈRES

Désignation	Page
SIÈGE AVEC SUSPENSION (ASS)	1383
PORTE DE CABINE - RESSORT (ASS)	1388
SUPPORT DE COMMANDE HYDRAULIQUE (ASS)	1390
SUPPORT DE SIÈGE (ASS)	1401
SUPPORT DE COMMANDE DE DIRECTION (ASS)	1402
SIÈGE AVEC SUSPENSION (ASS)	1410
SYSTÈME VIDS (VERSION)	1420
SYSTEME DE GESTION D'INFORMATION VITALE (VERSION)	1421
LAVE-GLACE - VITRE (ASS)	1422
ESSUIE-GLACE ET LAVE-GLACE	1424
ESSUIE-GLACE (ASS)	1434
PIVOT D'ESSUIE-GLACE (ASS)	1442
MATÉRIEL ET FOURNITURES D'ENTRETIEN	1444
PLAQUE SIGNALÉTIQUE (ASS)	1444
PLAQUES SIGNALETIQUES ET AUTOCOLLANTS (ASS)	1446
PROTECTION ANTIVANDALISME (ASS)	1448
INDEX DE NUMÉROS DE PIÈCES	B1

CONTENIDO

Nombre	Página
INFORMACIÓN GENERAL	A34
ALTERNATIVAS DE REPARACIÓN	A48
ADITIVOS DE REFRIGERANTE SUPLEMENTARIOS	A53
PIEZAS DE MANTENIMIENTO	A74
INDICE	A141
CONFIGURACIÓN DE MÁQUINAS	1
CHASIS (CONFIG)	1
CONFIGURACIÓN COMÚN	2
CONFIGURACION DE MOTOR	4
CONFIGURACIÓN DE MOTORES	4
CONFIGURACIÓN DE INSTALACIÓN DEL MOTOR	7
MOTOR BÁSICO	8
EQUILIBRADOR (GR)	8
BASE DE LA TAPA DE VÁLVULAS (GR)	9
ÁRBOL DE LEVAS (GR)	10
TAPA DEL MANDO DE ACCESORIOS (GR)	12
TAPA DEL BLOQUE MOTOR (GR)	13
TAPA DE LA CAJA DE VOLANTE (GR)	14
TAPA DE LA CAJA DELANTERA (GR)	16
TAPA DEL MECANISMO DE VÁLVULAS (GR)	18
CIGÜEÑAL (GR)	19
BLOQUE MOTOR (CONJ)	21
BLOQUE MOTOR (GR)	24
CULATA DE CILINDROS (CONJ)	29
CULATA DE CILINDROS (GR)	36
AMORTIGUADOR DE VIBRACIONES (GR)	42
ACCESORIOS - IMPULSOR DE (GR)	43
EXTENSIÓN DE DRENAJE (GR)	48
VOLANTE (GR)	49
ENGRANAJE DELANTERO (GR)	50
ENGRANAJE TRASERO (GR)	52
PROTECTOR DE CORREA (GR)	54
VOLANTE - CAJA DE (GR)	56
CAJA DELANTERA (GR)	58
CÁNCAMOS DE LEVANTAMIENTO DEL MOTOR (GR)	59
MONTAJE DEL ALTERNADOR (GR)	60
CÁRTER - COLECTOR DEL (GR)	62
PISTÓN Y BIELA (GR)	66
SELLO DE CIGÜEÑAL (GR)	68
MOTOR - SOPORTE DEL (GR)	69
MECANISMO DE VÁLVULAS (GR)	72
SISTEMA DE LUBRICACIÓN	76
RESPIRADERO (GR)	76
TUBO DE LLENADO DE ACEITE (GR)	77
FILTRO DE ACEITE DEL MOTOR (GR)	78
ESCAPE DE GASES (GR)	82
INDICADOR DEL NIVEL DE ACEITE (VARILLA) (GR)	83
TUBERÍAS DE ACEITE DEL MOTOR (GR)	84
TURBOCOMPRESOR - TUBERÍAS DE ACEITE DEL (GR)	92
CAMBIO RÁPIDO DE ACEITE (GR)	94
BOMBA DE SUMIDERO Y TUBERÍAS (GR)	95
BOMBA DE ACEITE DEL MOTOR (GR)	96
BOMBA DE BARRIDO (GR)	98
SISTEMA DE ENFRIAMIENTO	99
AGUA - CONEXIÓN DE (GR)	99
ENFRIADOR DE ACEITE DEL MOTOR (GR)	100
NÚCLEO DEL ENFRIADOR DE ACEITE (GR)	101
SUCCIÓN - VENTILADOR DE (GR)	102
REGULADOR Y CAJA (GR)	103
REFRIGERANTE - TUBERÍAS DE (GR)	104
TUBERÍAS DEL RADIADOR (GR)	106
TUBERIAS DE AGUA DEL TURBOCOMPRESOR (GR)	118
TUBERÍAS DEL AGUA (GR)	120
BOMBA DE AGUA (GR)	134
RADIADOR (GR)	138
PROTECTOR DE RADIADOR (GR)	142
TAPA DEL TANQUE DE RADIADOR (GR)	143
VÁLVULA DE DRENAJE DEL RADIADOR (GR)	144
SISTEMA DE AIRE DE ADMISIÓN Y ESCAPE	145
POSENFRIADOR DE AGUA (GR)	145
FILTRO DE AIRE (GR)	146
AIRE - TUBERÍAS DE (GR)	152
MÚLTIPLE DE ESCAPE (GR)	156
SILENCIADOR (GR)	162
ANTEFILTRO (GR)	165
PROTECTOR DEL ESCAPE (GR)	166
TURBOCOMPRESOR (GR)	170
SISTEMA DE COMBUSTIBLE	178
ADAPTADOR DE LLENADO RÁPIDO DE COMBUSTIBLE (GR)	178
FILTRO DE COMBUSTIBLE (GR)	184

CONTENIDO

Nombre	Página
COMBUSTIBLE-LLENADO CONVENCIONAL (CONFIG)	186
LLENADO RÁPIDO DE COMBUSTIBLE (CONFIG)	196
INYECTOR DE COMBUSTIBLE (GR)	199
JUEGO DE REGULADOR	202
TUBERÍAS DE COMBUSTIBLE (GR)	203
TUBERÍAS DE INYECCIÓN DE COMBUSTIBLE (GR)	204
MULTIPLE DE COMBUSTIBLE (GR)	211
BOMBA DE CEBADO DE COMBUSTIBLE (GR)	213
BOMBA DE TRANSFERENCIA DE COMBUSTIBLE (GR)	216
BOMBA DE INYECCIÓN UNITARIA (GR)	222
PROTECTOR DE LAS TUBERÍAS DE COMBUSTIBLE (GR)	226
COMBUSTIBLE - TANQUE DE (GR)	228
SISTEMA ELECTRICO Y DE ARRANQUE	233
ALARMA (GR)	233
CARGA - ALTERNADOR DE (GR)	234
BATERÍA Y CABLES (GR)	236
SENSOR DE AMORTIGUADOR (GR)	240
CONTROL ELECTRÓNICO DEL MOTOR Y MONTAJE	241
CONTROL ELECTRÓNICO DE CLASIFICACIÓN DE MOTOR (GR)	243
CONTROL ELECTRÓNICO DEL MOTOR (GR)	248
CONTROL NO PROGRAMADO (GR)	252
CONFIGURACIÓN ELÉCTRICA	258
GRUPO ELECTRONICO DE CLASIFICACION DE MOTORES	259
IMPLEMENTOS (GR ELECTRÓNICO)	260
ELECTRONICA DE MONITOR (GR)	261
TREN DE FUERZA-GRUPO ELECTRÓNICO	289
TORNILLERÍA DEL SISTEMA ELECTRÓNICO (GR)	290
CALENTADOR DE COMBUSTIBLE	291
CALENTADOR DEL COMBUSTIBLE (GR)	294
AGUA DE LAS CAMISAS - CALENTADOR DEL (GR)	298
LÁMPARA DEL TECHO (GR)	300
REFLECTOR (GR)	301
LÁMPARA DE FARO DELANTERO (GR)	305
LUZ DE SEÑAL DE GIRO (GR)	306
LUZ INDIC DE SERV DEL SIST VIMS (GR)	309
LUCES DE REFLECTOR (GR)	310
LUCES DELANTERAS (GR)	312
LUCES TRASERAS (GR)	314
LUCES DE PARADA (GR)	316
MODULO DE INTERFAZ DEL VIMS/VIDS (GR)	319
SENSOR DE TEMPERATURA DE ESCAPE (GR)	320
DETECTOR DE POSICIÓN (SISTEMA DE COMBUST.) (GR)	321
SENSOR DE PRESIÓN (GR)	328
SENSOR DE VELOCIDAD (GR)	346
SENSOR DE TEMPERATURA (GR)	350
AUXILIAR DE ARRANQUE CON ÉTER (GR)	351
MOTOR DE ARRANQUE ELÉCTRICO (GR)	354
INTERRUPTOR DE DERIVACIÓN	363
INTERRUPTOR DE FLUJO DE REFRIGERANTE (GR)	364
DISYUNTOR (GR)	365
INTERRUPTOR DE FLUJO (GR)	366
INTERRUPTOR DE NIVEL DE LIQUIDO (GR)	367
INTERRUPTOR MAGNÉTICO (GR)	368
INTERRUPTOR DE VOLQUETE (GR)	369
ARRANQUE - INTERRUPTOR DE (GR)	370
INTERRUPTOR DEL LIMPIADOR (GR)	371
TERMOPAR (GR)	372
RETROCESO - ALARMA DE (GR)	373
CABLES DEL PARAGOLPES (GR)	374
CABLES DE LA CABINA (GR)	376
CABLES DEL MOTOR (GR)	382
CABLES DELANTEROS (GR)	402
CABLES DE LA MÁQUINA (GR)	406
CABLES DEL TREN DE FUERZA (GR)	416
CABLES POSTERIORES (GR)	436
CABLES DE PARADA DE EMERGENCIA (GR)	438
CABLES DEL MONITOR DEL SISTEMA VIDS (GR)	440
CABLES DEL SISTEMA VIMS (GR)	452
CABLES DEL MONITOR DEL SIST DE ADMIN DE INFO VIT (GR)	460
TREN DE FUERZA	471
EJE FIJO (CONFIG)	471
EJE OSCILANTE (CONFIG)	472
EJE FIJO (GR)	474
EJE OSCILANTE (GR)	476
BLOQUE HIDRÁULICO (GR)	479
CAJA Y PIEZAS DE LOS PLANETARIOS	482
CONTROL DE LA PALANCA (GR)	484

CONTENIDO

Nombre	Página
CONTROL HIDRÁULICO DE LA TRANSMISIÓN (GR)	492
ENFRIADOR DE ACEITE DEL EJE (GR)	494
TAPAS PROTECTORAS DE EMBARQUE (GR)	520
DIFERENCIAL Y CORONA (GR)	522
DIFERENCIAL (GR)	526
TUBO DE LLENADO DE ACEITE DE LA TRANSMISIÓN (GR)	527
FILTRO Y MONTAJE DEL TREN DE FUERZA (GR)	530
FILTRO DE ACEITE (GR)	536
MEDIDOR DEL NIVEL DE LÍQUIDO (GR)	542
CAJA Y ENGRANAJE DE TRANSFERENCIA DE SALIDA (GR)	544
ENGRANAJE DE TRANSFERENCIA DE ENTRADA (GR)	548
JUEGO DE COJINETES DE LA TRANSMISIÓN	550
TUBERÍAS DE VENTILACIÓN DEL EJE (GR)	551
TUBERÍAS DE ACEITE DEL TREN DE FUERZA (GR)	552
TRABA DE LA PALANCA DE CONTROL (GR)	568
EJE - GRUPO DE MONTAJE	574
MONTAJE DE ARO	575
MONTAJE DEL CONVERTIDOR DE PAR (GR)	576
TRANSMISIÓN PLANETARIA (GR)	578
TREN DE FUERZA (CONFIG)	589
BOMBA DE ENGRANAJES (GR)	590
BOMBA DE LA TRANSMISIÓN (GR)	591
LLANTA (CONFIG)	594
ARO DESMONTABLE (GR)	595
EJE DE MANDO (GR)	596
EJE DE MANDO DE ENTRADA (GR)	600
JUNTA DESLIZANTE (GR)	601
CRUCETA Y COJINETE (GR)	603
SOPORTE DE LA TRANSMISIÓN (GR)	604
ARO Y RUEDA	605
CONVERTIDOR DE PAR Y CAJA (GR)	618
CONVERTIDOR DE PAR (CONFIG))	630
CONVERTIDOR DE PAR CON DESCONEXIÓN (CONFIG)	631
CONVERTIDOR DE PAR (GR)	632
TRABA DEL CONVERTIDOR DE PAR (GR)	640
TRANSMISION (CONFIG)	647
JUNTA UNIVERSAL (GR)	648
VÁLVULA DEL EMBRAGUE DE DESCONEXIÓN Y MONTAJE (GR)	651
VÁLVULA DE MODULACIÓN (GR)	653
VÁLVULA DE ALIVIO (GR)	658
VÁLVULA SELECTORA (GR)	659
VÁLVULA SELECTORA Y DE CONTROL DE PRESIÓN (GR)	660
VÁLVULA DE SOLENOIDE (GR)	662
VÁLVULA DE PRIORIDAD DEL CONVERTIDOR DE PAR (GR)	664
VÁLVULA DE CONTROL DE LA TRANSMISIÓN (GR)	666
RUEDA Y MANDOS FINALES	668
MANDOS FINALES, RUEDA Y FRENO (GR)	670
BASTIDOR Y CAJA	673
PARACHOQUES TRASERO (CONFIG)	673
PARAGOLPES TRASERO (GR)	677
BARRA DE TIRO (GR)	679
COMPARTIMIENTO DEL TANQUE HIDRÁULICO (GR)	680
GUARDABARROS DELANTERO (GR)	689
MAMPARA ANTITÉRMICA (GR)	690
BASTIDOR DEL CARGADOR (CONJ)	692
BASTIDOR TRASERO (CONJ)	699
BASTIDOR DEL CARGADOR (GR)	701
CÁRTER - PROTECTOR DEL (GR)	702
PROTECTOR DEL TREN DE FUERZA (GR)	703
PROTECTOR DEL RADIADOR (GR)	704
ENGANCHE ARTICULADO (GR)	708
CAPO Y PROTECTOR (GR)	710
ESCALERILLA (GR)	730
TUBERÍAS DE ENGRASE (GR)	740
TIRANTE DE TRABA DEL BASTIDOR DE DIRECCIÓN (GR)	746
MONTAJE DEL PARACHOQUES (GR)	748
PANEL DEL CAPÓ (GR)	750
PANEL SUPERIOR (GR)	751
ESTRIBO DEL OPERADOR (GR)	752
SOPORTE DE LA ADMISIÓN DE AIRE (GR)	753
SISTEMA DE FRENOS	755
ACUMULADOR DEL FRENO (GR)	755
FRENO DE ESTACIONAMIENTO (GR)	758
FRENO DE SERVICIO (GR)	762
CONTROL DEL PEDAL DE FRENO (GR)	766
CONTROL DEL FRENO DE ESTACIONAMIENTO	771
FRENO DE SERVICIO - CONTROL (GR)	772
FILTRO Y TUBERIAS DEL FRENO (GR)	798
TUBERÍAS DEL FRENO DE SERVICIO (GR)	800

CONTENIDO

Nombre	Página
BOMBA DE PISTONES (GR)	802
GRUPO GIRATORIO DE BOMBA	805
VÁLVULA Y MONTAJE DEL CONTROL DE FRENO (GR)	808
VÁLVULA DE CONTROL DEL FRENO (GR)	810
VÁLVULA COMPENSADORA DE PRESIÓN (GR)	811
SISTEMA DE DIRECCIÓN	812
ACCIONADOR DE BOMBA DE PISTONES (GR)	812
BLOQUE HIDRÁULICO (GR)	816
CONTROL DE LA BOMBA (GR)	817
CONTROL DE DIRECCIÓN (GR)	818
CILINDRO DE DIRECCIÓN Y MONTAJE (GR)	822
CILINDRO DE DIRECCIÓN (GR)	824
FILTRO Y TUBERIAS DE DIRECCION (GR)	826
FILTRO DE ACEITE (GR)	828
TUBERÍAS DE LA DIRECCIÓN SECUNDARIA (GR)	830
TUBERÍAS DE DIRECCIÓN (GR)	840
TUBERÍAS DE NEUTRALIZACIÓN DE LA DIRECCIÓN (GR)	850
TUBERIAS DE ENFRIADOR DE ACEITE DE DIRECCION (GR)	854
BOMBA DE ENGRANAJES (GR)	862
BOMBA DE PISTONES (GR)	866
DIRECCIÓN (CONFIG)	872
TOPE DE DIRECCION (GR)	874
VÁLV DE NEUTRALIZ DE DIR Y MONTAJE (GR)	876
VÁLVULA DE RETENCIÓN (GR)	878
VALVULA COMPENSADORA DE FLUJO (GR)	883
VÁLVULA PILOTO (GR)	887
VALVULA PILOTO DE CARTUCHO (GR)	888
VÁLVULA COMPENSADORA DE FLUJO Y PRESIÓN (GR)	890
VÁLVULA COMPENSADORA DE PRESIÓN (GR)	894
VÁLVULA DE ALIVIO (GR)	895
VÁLVULA SELECTORA Y DE CONTROL DE PRESIÓN (GR)	901
VÁLVULA DE LANZADERA (GR)	902
VÁLVULAS DE LA DIRECCIÓN (GR)	904
VÁLVULA NEUTRALIZADORA DE DIRECCIÓN (GR)	919
SISTEMA HIDRÁULICO	920
ACUMULADOR DE CONTROL DE AMORTIGUACION (GR)	920
ACCIONADOR DE CONTROL PILOTO (GR)	921
CONTROL DE DESPLAZAMIENTO Y TUBERÍAS (GR)	922
CONTROL DE AMORTIGUACIÓN (CONFIG)	930
CONTROL ELECTRÓNICO HIDRÁULICO (GR)	932
ENFRIADOR DEL ACEITE HIDRAULICO (GR)	956
TAPA DEL TAPÓN DEL TANQUE HIDRÁULICO (GR)	959
CILINDRO DE LEVANTAMIENTO (GR)	960
INCLINACIÓN HORIZONTAL - CILINDRO DE (GR)	972
HIDRÁULICA (CONFIG)	974
POSICIONADOR DEL CUCHARÓN Y DESCONEXIÓN (GR)	976
TUBERÍAS HIDRÁULICAS (GR)	996
TUBERÍAS HIDRÁULICAS DEL VENTILADOR (GR)	1008
CILINDRO DE LEVANTAMIENTO - TUBERÍAS DEL (GR)	1026
TUBERÍAS DEL CILINDRO DE INCLINACIÓN (GR)	1032
PISTONES DEL MOTOR (GR)	1034
BOMBA DE PISTONES (GR)	1036
GRUPO DE ROTACIÓN DEL MOTOR (GR)	1044
GRUPO GIRATORIO DE BOMBA	1048
PLATO OSCILANTE (GR)	1049
TANQUE HIDRÁULICO Y MONTAJE (GR)	1051
TANQUE HIDRÁULICO (GR)	1054
VALVULA Y MONTAJE DE CONTROL DE VELOCIDAD DE VENTILADOR (GR)	1060
VÁLVULA Y MONTAJE DEL VENTILADOR HIDRÁULICO (GR)	1062
MONTAJE Y VALVULA DEL CONTROL PRINCIPAL (GR)	1064
VÁLVULA DE ALIVIO PILOTO Y MONTAJE (GR)	1067
VÁLVULA DE LA BOMBA VARIABLE Y MONTAJE (GR)	1069
VÁLVULA DE RETENCIÓN (GR)	1071
VÁLVULA DE CONTROL (GR)	1072
VÁLVULA DEL CONTROL PRINCIPAL (GR)	1082
VÁLVULA DE COMPENSACION (GR)	1085
VÁLVULA COMPENSADORA DE FLUJO Y PRESIÓN (GR)	1086
VÁLVULA COMPENSADORA DE PRESIÓN (GR)	1087
VALVULA DE CONTROL DE LA BOMBA (GR)	1088

CONTENIDO

Nombre	Página
VÁLVULA DE ALIVIO (GR)	1090
VÁLVULA DE CONTROL DE LA AMORTIGUACIÓN (GR)	1096
VÁLVULA DE LANZADERA (GR)	1097
VÁLVULA DE SOLENOIDE (GR)	1098
VÁLVULA DE SOLENOIDE Y MÚLTIPLE (GR)	1102
VÁLVULA DE CONTROL DEL LIMITADOR DE PAR (GR)	1103
IMPLEMENTOS	1104
CONTROL DEL CUCHARÓN (GR)	1104
LEVANTAMIENTO ALTO (CONFIG)	1118
LEVANTAMIENTO ESTÁNDAR (CONFIG)	1122
ESLABON DEL CUCHARON (GR)	1126
ESLABON DE CUCHARON Y PLUMA	1132
PASADOR Y SELLO-VARILLAJE (GR)	1136
HERRAMIENTAS	1155
ADAPTADOR CENTRAL	1155
ADAPTADOR-COSTADO IZQUIERDO	1157
ADAPTADOR DER	1160
PUNTA ADAPTADORA	1162
BASE DE LA PLANCHA DE DESGASTE	1167
CUCHARÓN PARA ROCA (CONJ)	1168
CUCHARÓN PARA ROCA (GR)	1182
TAPA DE ADAPTADOR (GR)	1194
CUCHILLA (GR)	1195
SEGMENTO DE CUCHILLA (GR)	1197
SEGMENTO DE CUCHILLA	1201
PLANCHA DE DESGASTE (GR)	1202
PLANCHA DE DESGASTE	1203
PROTECTOR DE LA CUCHILLA (GR)	1205
PROTECTOR LATERAL (CUCHARÓN) (GR)	1209
SOPORTE	1210
PUNTA (GR)	1211
PUNTA RESISTENTE A LA ABRASIÓN (GR)	1217
PUNTA LARGA (GR)	1223
PUNTA PARA PENETRACIÓN (GR)	1233
PUNTA CORTA (GR)	1240
PUNTA DEL CUCHARÓN	1246
PUNTA LARGA	1247
PUNTA PARA PENETRACIÓN	1248
PUESTO DEL OPERADOR	1250
ACUMULADOR DEL REFRIGERANTE Y MONTAJE (GR)	1250
ACONDICIONADOR DE AIRE (CONFIG)	1251
ACONDICIONADOR DE AIRE (GR)	1252
CAJA DE ALMACENAMIENTO	1256
CABINA Y PLATAFORMA (GR)	1260
CABINA (CONFIG)	1261
CABINA (GR)	1264
COMPRESOR DE REFRIGERANTE Y GRUPO DE MONTAJE	1268
COMPRESOR DE REFRIGERANTE (GR)	1272
CONDENSADOR DEL REFRIGERANTE Y MONTAJE (GR)	1282
TAPA DE LA CABINA (GR)	1283
PUERTA IZQUIERDA (GR)	1284
PUERTA LATERAL (GR)	1286
CONDUCTO DE AIRE (GR)	1294
EXTENSIÓN DEL RESPALDO (GR)	1296
FILTRO DE AIRE DE LA CABINA (GR)	1297
PASAMANOS (GR)	1300
BOCINA ELÉCTRICA (GR)	1302
INSTALACIÓN DE RADIO (GR)	1304
PESTILLO DE PUERTA Y VENTANA DE LA CABINA (GR)	1308
REVESTIMIENTO DE LA CABINA (GR)	1312
TUBERÍAS DE ACONDICIONADOR DE AIRE (GR)	1320
TUBERÍAS DE LA CALEFACCIÓN (GR)	1322
ESPEJO (GR)	1323
RETROVISOR (GR)	1325
MODULO CENTRAL DE MENSAJES(GR)	1326
MODULO DEL TECLADO MONITOR (GR)	1328
MODULO ELECTRÓNICO DE CUATRO INDICADORES (GR)	1329
MOTOR-LIMPIAPARABRISAS (GR)	1331
MONTAJE DE LA PLATAFORMA (GR)	1332
COMPARTIMIENTO DEL OPERADOR (CONFIG)	1333
SOPORTE DEL RESPALDO (GR)	1334
CUBIERTA INFERIOR DEL ASIENTO DEL OPERADOR (GR)	1336
TABLERO DE INSTRUMENTOS (GR)	1340
REGULADOR - PEDAL DEL (GR)	1349
PLANCHA CORREDERA (GR)	1351
PLATAFORMA DE LA CABINA	1354
RECLINACION DE ASIENTO (GR)	1358
ESTRUCTURA ROPS (GR)	1359
PERSIANA PARA EL SOL (GR)	1360
SELLADO DEL VIDRIO (GR)	1362
CINTURÓN DE SEGURIDAD (GR)	1363
ASIENTO (GR)	1366
SUSPENSIÓN - ASIENTO CON (GR)	1383
RESORTE DE LA PUERTA DE LA CABINA (GR)	1388
SOPORTE DEL CONTROL HIDRÁULICO (GR)	1390

CONTENIDO

Nombre	Página	Nombre	Página
SOPORTE DEL ASIENTO (GR)	1401		
SOPORTE DE CONTROL DE LA DIRECCIÓN (GR)	1402		
ASIENTO CON SUSPENSIÓN (GR)	1410		
VIDS (CONFIG)	1420		
CONFIGURACIÓN VIMS	1421		
LAVAPARABRISAS DE LA VENTANA (GR)	1422		
LIMPIA Y LAVAPARABRISAS (GR)	1424		
LIMPIAPARABRISAS DE LA VENTANA (GR)	1434		
PIVOTE DEL LIMPIADOR (GR)	1442		
EQUIPO DE SERVICIO Y SUMINISTROS	1444		
ETIQUETA DE ADVERTENCIA (GR)	1444		
CALCOMANÍAS Y PLACAS DE IDENTIFICACIÓN (GR)	1446		
GRUPO DE PROTECCIÓN CONTRA EL VANDALISMO	1448		
INDICE DE NUMEROS DE PIEZA	B1		

ÍNDICE

Designação	Página
INFORMAÇÃO GERAL	A38
ALTERNATIVAS DE REPARO	A49
ADITIVOS SUPLEMENTARES DO LÍQUIDO ARREFECEDOR	A54
PEÇAS DE MANUTENÇÃO	A85
ÍNDICE	A161
MÁQUINA - ARRANJO	1
CHASSI	1
ARRANJO BÁSICO	2
MOTOR - ARRANJO	4
MOTOR	4
GRUPO DE INSTALAÇÃO - MOTOR	7
MOTOR BÁSICO	8
BALANCEADOR	8
BASE - TAMPA DA VÁLVULA	9
EIXO-COMANDO DE VÁLVULA	10
TAMPA - COMANDO DE ACESSÓRIOS	12
TAMPA - BLOCO DO MOTOR	13
TAMPA - CAIXA DO VOLANTE	14
TAMPA - CAIXA DIANTEIRA	16
TAMPA - MECANISMO DAS VÁLVULAS	18
VIRABREQUIM	19
BLOCO DO MOTOR	21
CABEÇOTE DO MOTOR	29
AMORTECEDOR	42
COMANDO DE ACESSÓRIOS	43
EXTENSÃO DO TUBO DE DRENAGEM	48
VOLANTE DO MOTOR	49
ENGRENAGENS DE DISTRIBUIÇÃO	50
ENGRENAGENS DE COMANDO TRASEIRO	52
PROTETOR - CORREIAS	54
CAIXA DO VOLANTE DO MOTOR	56
CAIXA DIANTEIRA	58
LEVANTAMENTO DO MOTOR	59
MONTAGEM - ALTERNADOR	60
CÁRTER DO ÓLEO DO MOTOR	62
PISTÃO E BIELA	66
RETENTOR DO VIRABREQUIM	68
SUPORTE DO MOTOR	69
MECANISMO DAS VÁLVULAS	72
SISTEMA DE LUBRIFICAÇÃO	76
RESPIRO	76
BOCAL DE ENCHIMENTO DE ÓLEO DO MOTOR	77
FILTRO - ÓLEO DO MOTOR	78
ELIMINAÇÃO DE VAPORES DO CÁRTER	82
INDICADOR - NÍVEL DO ÓLEO (VARETA)	83
TUBOS - ÓLEO DO MOTOR	84
TUBOS - ÓLEO DO TURBOALIMENTADOR	92
ÓLEO - ARRANJO PARA TROCA RÁPIDA	94
BOMBA MANUAL DO CÁRTER	95
BOMBA DE ÓLEO - MOTOR	96
BOMBA AUXILIAR DO SISTEMA DE TRANSMISSÃO	98
SISTEMA DE ARREFECIMENTO	99
CONEXÃO - TUBO D'ÁGUA	99
ARREFECEDOR - ÓLEO DO MOTOR	100
COLMÉIA - ARREFECEDOR DE ÓLEO	101
VENTILADOR DE SUCÇÃO	102
TERMOSTATO / REGULADOR DE TEMPERATURA	103
TUBOS - SISTEMA DE ARREFECIMENTO	104
TUBOS - RADIADOR	106
TUBOS - ÁGUA DO TURBOALIMENTADOR	118
TUBOS - ÁGUA	120
BOMBA DE ÁGUA	134
RADIADOR	138
DEFLETOR DO RADIADOR	142
TANQUE SUPERIOR DO RADIADOR	143
VÁLVULA DE DRENAGEM DO RADIADOR	144
SISTEMA DA ADMISSÃO DE AR E DE ESCAPE	145
PÓS-ARREFECEDOR A ÁGUA	145
PURIFICADOR DE AR	146
TUBOS - AR	152
COLETOR DE ESCAPE	156
SILENCIADOR	162
PRÉ-PURIFICADOR	165
BLINDAGEM DO COLETOR DE ESCAPE	166
TURBOALIMENTADOR	170
SISTEMA DE COMBUSTÍVEL	178
ADAPTADOR - ABASTECIMENTO RÁPIDO DE COMBUSTÍVEL	178
FILTRO - COMBUSTÍVEL	184

ÍNDICE

Designação	Página
COMBUSTÍVEL - ABASTECIMENTO CONVENCIONAL	186
COMBUSTÍVEL - ABASTECIMENTO RÁPIDO	196
INJETOR DE COMBUSTÍVEL	199
JOGO DO GOVERNADOR	202
TUBOS - COMBUSTÍVEL	203
TUBOS - INJEÇÃO DO COMBUSTÍVEL	204
COLETOR DE COMBUSTÍVEL	211
BOMBA DE ESCORVA DO COMBUSTÍVEL	213
BOMBA DE TRANSFERÊNCIA DO COMBUSTÍVEL	216
BOMBA DA UNIDADE INJETORA	222
BLINDAGEM DOS TUBOS DO COMBUSTÍVEL	226
TANQUE DE COMBUSTÍVEL	228
SISTEMA ELÉTRICO E DE PARTIDA	233
ALARME	233
ALTERNADOR DE CORRENTE	234
BATERIA E CABOS / FIOS ELÉTRICOS	236
AMORTECEDOR - SENSOR	240
CONTROLE ELETRÔNICO E MONTAGEM - MOTOR	241
CONTROLE ELETRÔNICO DO MOTOR - CLASSIFICAÇÃO	243
CONTROLE ELETRÔNICO - MOTOR	248
CONTROLE - NÃO PROGRAMADO	252
SISTEMA ELÉTRICO	258
SISTEMA ELETRÔNICO - CLASSIFICAÇÕES DO MOTOR	259
SIST. ELETRÔNICO - ACESSÓRIO	260
SISTEMA ELETRÔNICO - MONITOR	261
SISTEMA ELETRÔNICO - TREM DE FORÇA	289
FIXADOR DO SISTEMA ELETRÔNICO	290
AQUECEDOR - COMBUSTÍVEL	291
AQUECEDOR DO COMBUSTÍVEL	294
AQUECEDOR DA ÁGUA DO MOTOR	298
LÂMPADA - TETO	300
LÂMPADA - FAROL	301
FAROL DIANTEIRO	305
LÂMPADA - SINALIZAÇÃO	306
LUZ - INDICADOR DE SERVIÇO DO SIST. DE GERENCIAM. DE INFORMAÇÕES VITAIS - VIMS	309
SISTEMA DE ILUMINAÇÃO - FARÓIS	310
ILUMINAÇÃO - DIANTEIRA	312
ILUMINAÇÃO - TRASEIRA	314
ILUMINAÇÃO - FREIOS	316
MÓDULO - INTERFACE VIDS/VIMS	319
SENSOR - TEMPERATURA DE ESCAPE	320
EMISSOR - POSIÇÃO	321
SENSOR - PRESSÃO	328
SENSOR DE VELOCIDADE	346
SENSOR - TEMPERATURA	350
AUXILIAR DE PARTIDA A ÉTER	351
MOTOR ELÉTRICO DE PARTIDA	354
INTERRUPTOR DE DERIVAÇÃO	363
INTERRUPTOR - FLUXO DO LÍQUIDO ARREFECEDOR	364
CHAVE GERAL	365
INTERRUPTOR - FLUXO	366
INTERRUPTOR - NÍVEL DO LÍQUIDO	367
INTERRUPTOR - MAGNÉTICO	368
INTERRUPTOR - BALANCIM	369
INTERRUPTOR - PARTIDA	370
INTERRUPTOR - LIMPADOR DO PÁRA-BRISA	371
TERMOPAR	372
ALARME DE MARCHA À RÉ	373
CABOS E FIOS ELÉTRICOS - PÁRA-CHOQUE	374
CABOS/FIOS ELÉTRICOS - CABINE	376
CABOS/FIOS ELÉTRICOS - MOTOR	382
CABOS/FIOS ELÉTRICOS - DIANTEIROS	402
CABOS/FIOS ELÉTRICOS - MÁQUINA	406
CABOS/FIOS ELÉTRICOS - TREM DE FORÇA	416
CABOS/FIOS ELÉTRICOS - TRASEIROS	436
CABOS/FIOS ELÉTRICOS - PARADA	438
CABOS/FIOS ELÉTRICOS - MONITOR DO SIST. DE EXIBIÇÃO DE INFORMAÇÕES VITAIS - VIDS	440
CABOS/FIOS ELÉTRICOS - SIST. DE GERENCIAM. DE INFORMAÇÕES VITAIS - VIMS	452
CABOS/FIOS ELÉTRICOS - MONITOR DO SIST. DE GERENCIAM. DE INFORM. VITAIS - VIMS	460
TREM DE FORÇA	471
EIXO FIXO	471
EIXO OSCILANTE	472
EIXO FIXO	474
EIXO OSCILANTE	476
BLOCO HIDRÁULICO	479
CARCAÇA DAS ENGRENAGENS PLANETÁRIAS E COMPONENTES	482
CONTROLE INTEGRADO DA TRANSMISSÂO DA DIREÇÃO	484
CONTROLE HIDRÁULICO DA TRANSMISSÃO	492

ÍNDICE

Designação	Página
ARREFECEDOR DO ÓLEO DO EIXO	494
TAMPA - EMBARQUE	520
DIFERENCIAL E COROA	522
DIFERENCIAL	526
BOCAL DE ENCHIMENTO DE ÓLEO DO TREM DE FORÇA	527
FILTRO DO TREM DE FORÇA E MONTAGEM	530
FILTRO - ÓLEO	536
INDICADOR - NÍVEL DE LÍQUIDO	542
CAIXA DE ENGRENAGEM DE TRANSFERÊNCIA	544
ENGRENAGEM - TRANSFERÊNCIA DE ENTRADA	548
JOGO DE MANCAL DA TRANSMISSÃO	550
TUBOS - VENTILADOR DO EIXO	551
TUBOS - ÓLEO DA TRANSMISSÃO	552
TRAVA - CONTROLE DO BRAÇO	568
MONTAGEM DO EIXO	574
MONTAGEM - ARO	575
MONTAGEM - CONVERSOR DE TORQUE	576
ENGRENAGENS PLANETÁRIAS - TRANSMISSÃO	578
TREM DE FORÇA	589
BOMBA DE ENGRENAGENS	590
BOMBA DA TRANSMISSÃO	591
ARO	594
ARO DESMONTÁVEL	595
EIXO DE TRANSMISSÃO	596
EIXO DO COMANDO DE ENTRADA	600
JUNTA CORREDIÇA	601
CRUZETA E MANCAL	603
SUPORTE - TRANSMISSÃO	604
PNEU E ARO	605
CONVERSOR DE TORQUE E CARCAÇA	618
CONVERSOR DE TORQUE	630
CONVERSOR DE TORQUE - TRAVA	631
CONVERSOR DE TORQUE	632
CONVERSOR DE TORQUE - TRAVA	640
TRANSMISSÃO	647
JUNTA UNIVERSAL	648
VÁLVULA DA EMBREAGEM DE TRAVAMENTO E MONTAGEM	651
VÁLVULA DE MODULAÇÃO	653
VÁLVULA DE ALÍVIO	658
VÁLVULA SELETORA	659
VÁLVULA SELETORA E CONTROLE DE PRESSÃO	660
VÁLVULA SOLENÓIDE	662
VÁLVULA DE PRIORIDADE DO CONVERSOR DE TORQUE	664
VÁLVULA DE CONTROLE - TRANSMISSÃO	666
RODA E COMANDO FINAL	668
RODA - COMANDO FINAL E FREIO	670
CHASSI E CARROCERIA	673
PÁRA-CHOQUE TRASEIRO	673
BARRA DE TRAÇÃO	679
COBERTURA - TANQUE HIDRÁULICO	680
PÁRA-LAMA DIANTEIRO	689
PAINEL TRASEIRO DO MOTOR	690
CHASSI DIANTEIRO	692
CHASSI TRASEIRO	699
CHASSI DIANTEIRO	701
PROTETOR - CÁRTER DO ÓLEO DO MOTOR	702
PROTETOR - TREM DE FORÇA	703
PROTETOR - RADIADOR	704
ENGATE - ARTICULAÇÃO	708
CAPÔ E PROTETOR	710
ESCADA	730
TUBOS - GRAXA	740
ELO - TRAVA DA ARMAÇÃO DA DIREÇÃO	746
MONTAGEM - PÁRA-CHOQUE	748
PAINEL DO CAPÔ	750
PAINEL - SUPERIOR	751
DEGRAU	752
SUPORTE - ADMISSÃO DE AR	753
SISTEMA DE FREIO	755
ACUMULADOR - FREIO	755
FREIO DE ESTACIONAMENTO	758
FREIO DE SERVIÇO	762
CONTROLE DO PEDAL DO FREIO	766
CONTROLE DO FREIO DE ESTACIONAMENTO	771
CONTROLE DO FREIO DE SERVIÇO	772
FILTROS E TUBOS - FREIO	798
TUBOS - FREIO DE SERVIÇO	800
BOMBA DE PISTÃO	802
GRUPO ROTATIVO DA BOMBA	805
VÁLVULA DE CONTROLE E MONTAGEM - FREIOS	808
VÁLVULA DE CONTROLE DOS FREIOS	810
VÁLVULA DE COMPENSAÇÃO DE PRESSÃO	811
SISTEMA DE DIREÇÃO	812
ACIONADOR - BOMBA DE PISTÃO	812
BLOCO HIDRÁULICO	816
CONTROLE DA BOMBA	817
CONTROLE DE DIREÇÃO	818

ÍNDICE

Designação	Página
CILINDRO DE DIREÇÃO E MONTAGEM	822
CILINDRO DA DIREÇÃO	824
FILTRO E TUBOS - DIREÇÃO	826
FILTRO - ÓLEO	828
TUBOS - DIREÇÃO SECUNDÁRIA	830
TUBOS - DIREÇÃO	840
TUBOS - NEUTRALIZADOR DA DIREÇÃO	850
TUBOS - ARREFECEDOR DO ÓLEO DA DIREÇÃO	854
BOMBA DE ENGRENAGENS	862
BOMBA DE PISTÃO	866
DIREÇÃO	872
BATENTE - DIREÇÃO	874
VÁLVULA NEUTRALIZADORA DA DIREÇÃO E MONTAGEM	876
VÁLVULA DE RETENÇÃO	878
VÁLVULA DE COMPENSAÇÃO DE FLUXO	883
VÁLVULA DE CONTROLE PILOTO	887
VÁLVULA DO CARTUCHO PILOTO	888
VÁLVULA DE CONTROLE - PRESSÃO E COMPENSAÇÃO DE FLUXO	890
VÁLVULA DE COMPENSAÇÃO DE PRESSÃO	894
VÁLVULA DE ALÍVIO	895
VÁLVULA SELETORA E CONTROLE DE PRESSÃO	901
VÁLVULA DE SEPARAÇÃO	902
VÁLVULA DA DIREÇÃO	904
VÁLVULA - NEUTRALIZADOR DA DIREÇÃO	919
SISTEMA HIDRÁULICO	920
ACUMULADOR DO SISTEMA DE ABSORÇÃO DE IMPACTOS	920
ACIONADOR DO CONTROLE PILOTO	921
SISTEMA DE ABSORÇÃO DE IMPACTOS E TUBOS	922
SISTEMA DE ABSORÇÃO DE IMPACTOS	930
CONTROL ELETROHIDRÁULICO	932
ARREFECEDOR DO ÓLEO HIDRÁULICO	956
TAMPA - TANQUE HIDRÁULICO	959
CILINDRO DE LEVANTAMENTO	960
CILINDRO DE INCLINAÇÃO	972
COMANDO HIDRÁULICO	974
DESENGATE E POSICIONADOR DA CAÇAMBA	976
TUBOS - ÓLEO HIDRÁULICO	996
TUBOS - VENTILADOR HIDRÁULICOS	1008
TUBOS - CILINDRO DE LEVANTAMENTO	1026
TUBOS - CILINDRO DE INCLINAÇÃO	1032
MOTOR - PISTÃO	1034
BOMBA DE PISTÃO	1036
MOTOR DO GRUPO ROTATIVO	1044
GRUPO ROTATIVO DA BOMBA	1048
PLACA BASCULANTE	1049
TANQUE DE ÓLEO HIDRÁULICO E MONTAGEM	1051
TANQUE HIDRÁULICO	1054
VÁLVULA E MONTAGEM - CONTROLE DE VELOCIDADE DO VENTILADOR	1060
VÁLVULA DO VENTILADOR HIDRÁULICO	1062
VÁLVULA DO CONTROLE PRINCIPAL E MONTAGEM	1064
VÂLVULA DE ALÍVIO - PILOTO E MONTAGEM	1067
VÁLVULA E MONTAGEM - BOMBA VARIÁVEL	1069
VÁLVULA DE RETENÇÃO	1071
VÁLVULA DE CONTROLE	1072
VÁLVULA - CONTROLE PRINCIPAL	1082
VÁLVULA COMPENSADORA	1085
VÁLVULA DE CONTROLE - PRESSÃO E COMPENSAÇÃO DE FLUXO	1086
VÁLVULA DE COMPENSAÇÃO DE PRESSÃO	1087
VÁLVULA DE CONTROLE DA BOMBA	1088
VÁLVULA DE ALÍVIO	1090
VÁLVULA DE CONTROLE DE ABSORÇÃO DE IMPACTOS	1096
VÁLVULA DE SEPARAÇÃO	1097
VÁLVULA SOLENÓIDE	1098
VÁLVULA - COLETOR E SOLENÓIDE	1102
VÁLVULA DE CONTROLE DO LIMITADOR DE TORQUE	1103
ACESSÓRIOS	1104
CONTROLE DA CAÇAMBA	1104
ARRANJO PARA LEVANTAMENTO ALTO	1118
LEVANTAMENTO PADRÃO	1122
ARTICULAÇÃO - CAÇAMBA	1126
ARTICULAÇÃO - CAÇAMBA E LANÇA	1132
PINO E RETENTOR - ARTICULAÇÃO	1136
FERRAMENTAS DE TRABALHO	1155
ADAPTADOR CENTRAL	1155
ADAPTADOR DO LADO ESQUERDO	1157
ADAPTADOR DO LADO DIREITO	1160
ADAPTADOR DA PONTA	1162
BASE - PLACA DE DESGASTE	1167
CAÇAMBA PARA ROCHAS	1168

ÍNDICE

Designação	Página
TAMPA - ADAPTADOR	1194
BORDA CORTANTE	1195
BORDA SEGMENTADA DA CAÇAMBA	1197
BORDA SEGMENTADA	1201
PLACA DE DESGASTE	1202
PROTETOR DA BORDA CORTANTE	1205
PROTETOR LATERAL	1209
RETENTOR - FPS	1210
PONTA	1211
PONTA - ABRASÃO	1217
PONTA LONGA	1223
PONTA - PENETRAÇÃO	1233
PONTA CURTA	1240
PONTA - CAÇAMBA	1246
PONTA - COMPRIDA	1247
PONTA - PENETRAÇÃO	1248
ESTAÇÃO DO OPERADOR	1250
ACUMULADOR DO REFRIGERANTE E MONTAGEM	1250
CONDICIONADOR DE AR	1251
CAIXA DE ARMAZENAMENTO	1256
CABINE E PLATAFORMA	1260
CABINE	1261
COMPRESSOR DE REFRIGERANTE E MONTAGEM	1268
COMPRESSOR DE REFRIGERANTE	1272
CONDENSADOR DO REFRIGERANTE E MONTAGEM	1282
TAMPA - CABINE	1283
PORTA - LADO ESQUERDO	1284
PORTA LATERAL	1286
DUCTO DE AR	1294
EXTENSÃO - ENCOSTO	1296
FILTRO - AR DA CABINE	1297
PEGA-MÃO	1300
BUZINA ELÉTRICA	1302
INSTALAÇÃO DO RÁDIO	1304
TRINCO - PORTA DA CABINA E JANELA	1308
REVESTIMENTO DA CABINE	1312
TUBOS - AR CONDICIONADO	1320
TUBOS - AQUECEDOR	1322
ESPELHO	1323
ESPELHO RETROVISOR	1325
MÓDULO - CENTRO DE MENSAGEM	1326
MÓDULO - TECLADO DO MONITOR	1328
MÓDULO ELETRÔNICO DE QUATRO INDICADORES	1329
MOTOR - LIMPADOR DO VIDRO	1331
MONTAGEM - PLATAFORMA	1332
CABINE	1333
FUNDO - ENCOSTO	1334
ASSENTO - FUNDO	1336
PAINEL DE INSTRUMENTOS	1340
PEDAL DO GOVERNADOR	1349
PLACA DESLIZANTE	1351
PLATAFORMA DO OPERADOR	1354
RECLINAÇÃO - ASSENTO	1358
ESTRUTURA ROPS	1359
TELA PÁRA-SOL	1360
RETENÇÃO - VIDRO	1362
CINTO DE SEGURANÇA	1363
ASSENTO	1366
ASSENTO COM SUSPENSÃO	1383
MOLA - PORTA DA CABINA	1388
SUPORTE - CONTROLE HIDRÁULICO	1390
SUPORTE - ASSENTO	1401
SUPORTE - CONTRÔLE DA DIREÇÃO	1402
SUSPENSÃO - ASSENTO	1410
VIDS	1420
SISTEMA DE GERÊNCIA DE INFORMAÇÃO VITAL - VIMS	1421
LAVADOR DO VIDRO	1422
LIMPADOR E LAVADOR - JANELA	1424
LIMPADOR DO VIDRO	1434
PIVÔ DO LIMPADOR	1442
EQUIPAMENTOS DE SERVIÇO E SUPRIMENTOS	1444
DECALQUE	1444
PLACA E DECALQUE	1446
PROTEÇÃO CONTRA VANDALISMO	1448
ÍNDICE DE NÚMERO DE PEÇA	B1

INHALTSVERZEICHNIS

Bezeichnung	Seite
ALLGEMEINE HINWEISE	A42
REPARATURALTERNATIVEN	A50
KÜHLMITTELZUSATZ	A55
WARTUNGSTEILE	A95
STICHWORTVERZEICHNIS	A180
MASCHINE	1
FAHRWERK	1
GRUNDAUSFÜHRUNG	2
MOTOR	4
MOTORAUSFÜHRUNG	4
MOTOR-EINBAUSATZ	7
MOTOR (GRUNDAUSFÜHRUNG)	8
AUSGLEICHSWELLE	8
VENTILDECKEL - UNTERTEIL	9
NOCKENWELLE	10
STEUERANTRIEBSGEHÄUSE-DECKEL	12
MOTORBLOCKDECKEL	13
SCHWUNGRADGEHÄUSEDECKEL	14
STIRNRADGEHÄUSEDECKEL	16
VENTILDECKEL	18
KURBELWELLE	19
MOTORBLOCK	21
ZYLINDERKOPF	29
DÄMPFER	42
NEBENANTRIEB	43
ABLASSVERLÄNGERUNG	48
SCHWUNGRAD	49
STIRNRAD	50
ZAHNRADVORGELEGE	52
RIEMENSCHUTZ	54
SCHWUNGRADGEHÄUSE	56
STIRNRADGEHÄUSE	58
MOTORHUBÖSE	59
DREHSTROMGENERATOR - BEFESTIGUNG	60
ÖLWANNE	62
PLEUELSTANGE UND KOLBEN	66
KURBELWELLENDICHTUNG	68
MOTORAUFHÄNGUNG	69
VENTILSTEUERUNG	72
SCHMIERSYSTEM	76
ENTLÜFTER	76
MOTORÖLEINFÜLLSTUTZEN	77
ÖLFILTER	78
ENTDUNSTER	82
ÖLMESSSTAB	83
MOTORÖLLEITUNGEN	84
TURBOLADERÖLLEITUNGEN	92
ÖLSCHNELLWECHSELANSCHLUSS	94
WANNENPUMPE U. LEITUNGEN	95
SCHMIERPUMPE	96
RÜCKSPÜLPUMPE	98
KÜHLSYSTEM	99
KÜHLWASSERANSCHLUSS	99
MOTORÖLKÜHLER	100
ÖLKÜHLERBLOCK	101
SAUGLÜFTER	102
KÜHLWASSER-TEMPERATURREGLER UND GEHÄUSE	103
KÜHLMITTELLEITUNGEN	104
KÜHLERLEITUNGEN	106
TURBOLADER-KÜHLWASSERLEITUNGEN	118
KÜHLWASSERLEITUNGEN	120
KÜHLWASSERPUMPE	134
KÜHLER	138
KÜHLERABDECKUNG	142
KÜHLERWASSERKASTEN, OBEN	143
KÜHLERABLASSVENTIL	144
LUFTANSAUG- UND ABGASSYSTEM	145
LADELUFTKÜHLER, WASSERGEKÜHLT	145
LUFTREINIGER	146
DRUCKLUFTLEITUNGEN	152
AUSPUFFKRÜMMER	156
SCHALLDÄMPFER	162
VORREINIGER	165
AUSPUFFABSCHIRMUNG	166
TURBOLADER	170
KRAFTSTOFFSYSTEM	178
SCHNELLBETANKUNGSANSCHLUSS	178
KRAFTSTOFFILTER	184
KRAFTSTOFFEINFÜLLVORRICHTUNG (STANDARD)	186
KRAFTSTOFFEINFÜLLVORRICHTUNG (SCHNELLFÜLLUNG)	196
KRAFTSTOFFEINSPRITZDÜSE	199
REGLER-EINBAUSATZ	202
KRAFTSTOFFLEITUNGEN	203
KRAFTSTOFFEINSPRITZLEITUNGEN	204
KRAFTSTOFFKRÜMMER	211
KRAFTSTOFF-ENTLÜFTUNGSPUMPE	213
KRAFTSTOFFÖRDERPUMPE	216
EINSPRITZDÜSENPUMPE	222
KRAFTSTOFFLEITUNGSSCHUTZ	226

INHALTSVERZEICHNIS

Bezeichnung	Seite
KRAFTSTOFFTANK	228
ELEKTRISCHE ANLAGE U. STARTSYSTEM	233
WARNVORRICHTUNG	233
DREHSTROMGENERATOR	234
BATTERIE UND VERDRAHTUNG	236
PUFFER - SENSOR	240
STEUERUNGSEINHEIT, ELEKTRON. FÜR MOTOR UND BEFEST.	241
MOTORNENNLEISTUNGSSTEUERUNG, ELEKTRON.	243
MOTORSTEUERUNG, ELEKTRON.	248
STEUERUNG - NICHT PROGRAMMIERT	252
ELEKTR. ANLAGE	258
ELEKTRONIK - MOTORNENNLEISTUNG	259
ARBEITSGERÄTEELEKTRONIK	260
ELEKTRONIK - MONITOR	261
KRAFTÜBERTRAGUNGSELEKTRONIK	289
ELEKTRONIKBEFESTIGUNG	290
KRAFTSTOFFHEIZUNG	291
UMLAUFKÜHLWASSERHEIZUNG	298
FAHRERHAUSBELEUCHTUNG	300
ARBEITSLEUCHTEN	301
FRONTSCHEINWERFER	305
BLINKLEUCHTE	306
VIMS-WARTUNGSKONTROLLEUCHTE	309
ARBEITSLEUCHTEN	310
FRONTBELEUCHTUNG	312
HECKBELEUCHTUNG	314
BREMSBELEUCHTUNG	316
VIDS/VIMS INTERFACE - MODUL	319
AUSPUFFTEMPERATURSENSOR	320
STELLUNGSSENSOR	321
DRUCKSENSOR	328
DREHZAHLSENSOR	346
TEMPERATURSENSOR	350
ÄTHERSTARTHILFE	351
STARTERMOTOR	354
UMGEHUNGSSCHALTER	363
KÜHLMITTELFLUSSSCHALTER	364
TRENNSCHALTER	365
STRÖMUNGSSCHALTER	366
FLÜSSIGKEITSSTANDSCHALTER	367
MAGNETSCHALTER	368
KIPPSCHALTER	369
STARTSCHALTER	370
SCHEIBENWISCHERSCHALTER	371
THERMOELEMENT	372
RÜCKFAHRWARNHORN	373
STOSSSTANGENVERDRAHTUNG	374
FAHRERHAUSVERDRAHTUNG	376
MOTORVERDRAHTUNG	382
VERDRAHTUNG, VORNE	402
MASCHINENVERDRAHTUNG	406
KRAFTÜBERTRAGUNGSVERDRAHTUNG	416
VERDRAHTUNG, HINTEN	436
NOTABSCHALTERVERDRAHTUNG	438
VIDS-MONITOR-VERDRAHTUNG	440
VIMS-VERDRAHTUNG	452
VIMS-MONITOR-VERDRAHTUNG	460
KRAFTÜBERTRAGUNG	471
STARRACHSE	471
PENDELACHSE	472
STARRACHSE	474
PENDELACHSE	476
HYDRAULIKBLOCK	479
PLANETENANTRIEBSGEHÄUSE U. TEILE	482
STIC-KOMBIHEBEL	484
GETRIEBEHYDRAULIK	492
ACHSÖLKÜHLER	494
VERSANDDECKEL	520
DIFFERENTIAL UND TELLERRAD	522
DIFFERENTIAL	526
GETRIEBEÖLFÜLLSTUTZEN	527
KRAFTÜBERTRAGUNG - FILTER U. BEFESTIGUNG	530
ÖLFILTER	536
SCHAUGLAS - FLÜSSIGKEITSSTAND	542
GETRIEBE U. GEHÄUSE (AUSGANGSÜBERTRAGUNG)	544
VERTEILERGETRIEBEANTRIEB	548
GETRIEBELAGERSATZ	550
ACHSENTLÜFTERLEITUNGEN	551
ÖLLEITUNGEN - KRAFTÜBERTRAGUNG	552
STIC-KOMBIHEBEL - STEUERUNGSSPERRE	568
ACHSENANBAUSATZ	574
FELGENAUFHÄNGUNG	575
DREHMOMENTWANDLERAUFHÄNGUNG	576
PLANETENGETRIEBE	578
KRAFTÜBERTRAGUNG	589
ZAHNRADPUMPE	590
GETRIEBEPUMPE	591
FELGE	594
FELGE (TEILBAR)	595
ANTRIEBSWELLE	596
ANTRIEBSWELLEN-KEILVERZAHNUNG	601
KREUZGELENK UND LAGER	603
GETRIEBEAUFHÄNGUNG	604

INHALTSVERZEICHNIS

Bezeichnung	Seite
REIFEN UND FELGE	605
DREHZAHLWANDLER U. GEHÄUSE	618
DREHMOMENTWANDLER	630
DREHMOMENTWANDLERSPERRE	631
DREHMOMENTWANDLER	632
DREHMOMENTWANDLERSPERRE	640
GETRIEBE	647
KREUZGELENK	648
KUPPLUNGSSPERRENVENTIL U. BEFESTIGUNGSTEILE	651
MODULATORVENTIL	653
ÜBERDRUCKVENTIL	658
SCHALTVENTIL	659
VENTIL - SCHALT- UND DRUCKSTEUERUNG	660
MAGNETVENTIL	662
DREHMOMENTWANDLER-VORRANGVENTIL	664
GETRIEBESTEUERVENTIL	666
SEITENANTRIEB UND RAD	668
SEITENANTRIEB UND RADBREMSE	670
RAHMEN UND FAHRGESTELL	673
HINTERE STOSSTANGE	673
HECKSTOSSSTANGE	677
ZUGSTANGE	679
HYDRAULIKTANKVERKLEIDUNG	680
SCHUTZBLECHE, VORNE	689
FEUERSCHUTZWAND	690
LADERRAHMEN	692
HINTERRAHMEN	699
LADERRAHMEN	701
PANZERWANNE	702
ANTRIEBSSCHUTZ	703
KÜHLERSCHUTZ	704
KNICKGELENK-ANHÄNGUNG	708
MOTORHAUBE UND VERKLEIDUNG	710
STEIGLEITER	730
SCHMIERLEITUNGEN	740
KNICKGELENKSPERRE	746
STOSSTANGEN-BEFESTIGUNGSTEILE	748
HAUBENBLENDE	750
OBERE ABDECKPLATTE	751
STEIGLEITER	752
LUFTEINLASS-TRÄGER	753
BREMSSYSTEM	755
BREMSDRUCKSPEICHER	755
FESTSTELLBREMSE	758
BETRIEBSBREMSE	762
FUSSBREMSGESTÄNGE	766
FESTSTELLBREMSGESTÄNGE	771
BREMSGESTÄNGE	772
BREMSFILTER U. -LEITUNGEN	798
BETRIEBSBREMSLEITUNGEN	800
KOLBENPUMPE	802
KOLBENPUMPENUMLAUFSATZ	805
BREMSSTEUERVENTIL UND BEFESTIGUNGSTEILE	808
BREMSSTEUERVENTIL	810
DRUCKAUSGLEICHSVENTIL	811
LENKSYSTEM	812
KOLBENPUMPENBETÄTIGER	812
HYDRAULIKBLOCK	816
PUMPENSTEUERUNG	817
LENKBETÄTIGUNG	818
LENKZYLINDER UND AUFHÄNGUNG	822
LENKZYLINDER	824
LENKFILTER U. LEITUNGEN	826
ÖLFILTER	828
NOTLENKUNGSLEITUNGEN	830
LENKÖLLEITUNGEN	840
LENKNEUTRALISIERLEITUNGEN	850
LENKÖLKÜHLERLEITUNGEN	854
ZAHNRADPUMPE	862
KOLBENPUMPE	866
LENKUNG	872
LENKUNGSANSCHLAG	874
LENKNEUTRALISIERVENTIL U. BEFESTIGUNGSTEILE	876
SPERRVENTIL	878
DURCHFLUSSAUSGLEICHSVENTIL	883
VORSTEUERVENTIL	887
EINBAUVORSTEUERVENTIL	888
DRUCK- U. STROMAUSGLEICHSVENTIL	890
DRUCKAUSGLEICHSVENTIL	894
ÜBERDRUCKVENTIL	895
VENTIL - SCHALT- UND DRUCKSTEUERUNG	901
PENDELVENTIL	902
LENKVENTIL	904
LENKNEUTRALISIERVENTIL	919
HYDRAULIKSYSTEM	920
DRUCKSPEICHER, HYDRAULISCHE SCHWINGUNGSDÄMPFUNG	920
VORSTEUERSTELLANTRIEB	921
SCHWINGUNGSDÄMPFUNG U. LEITUNGEN	922
HYDRAULISCHE SCHWINGUNGSDÄMPFUNG	930
HYDRAULIKSTEUERUNG, ELEKTRON.	932
HYDRAULIKÖLKÜHLER	956
ZUGANGSKLAPPE - HYDRAULIKTANKKAPPE	959
HUBZYLINDER	960

INHALTSVERZEICHNIS

Bezeichnung	Seite
KIPPZYLINDER	972
HYDRAULIKSYSTEM	974
SCHAUFELAUSSCHALTER UND -EINSTELLER	976
HYDRAULIKLEITUNGEN	996
HYDRAULIKLÜFTERLEITUNGEN	1008
HUBZYLINDERLEITUNGEN	1026
NEIGEZYLINDERLEITUNGEN	1032
KOLBENMOTOR	1034
KOLBENPUMPE	1036
MOTORDREHVORRICHTUNG	1044
KOLBENPUMPENUMLAUFSATZ	1048
SCHWENKSCHEIBE	1049
HYDRAULIKTANK UND BEFESTIGUNGSTEILE	1051
HYDRAULIKTANK	1054
LÜFTERGESCHWINDIGKEITS-REGELVENTIL U. BEFESTIGUNGSTEILE	1060
HYDRAULIKLÜFTERVENTIL U. BEFESTIGUNGSTEILE	1062
VENTIL UND BEFESTIGUNGSTEILE - HAUPTSTEUERUNG	1064
VORSTEUERDRUCKBEGRENZUNGSVENTIL U. BEFESTIGUNGSTEILE	1067
VENTIL U. BEFESTIGUNGSTEILE (VERSTELLPUMPE)	1069
SPERRVENTIL	1071
STEUERVENTIL	1072
HAUPTSTEUERVENTIL	1082
AUSGLEICHSVENTIL	1085
DRUCK- U. STROMAUSGLEICHSVENTIL	1086
DRUCKAUSGLEICHSVENTIL	1087
PUMPENSTEUERVENTIL	1088
ÜBERDRUCKVENTIL	1090
VENTIL - HYDRAULISCHE SCHWINGUNGSDÄMPFUNG	1096
PENDELVENTIL	1097
MAGNETVENTIL	1098
VENTILSOLENOID U. -KRÜMMER	1102
DREHMOMENTBEGRENZUNGS-STEUERVENTIL	1103
ARBEITSGERÄTE	1104
SCHAUFELSTEUERUNG	1104
HOCHHUBVORRICHTUNG	1118
STANDARDHUBVORRICHTUNG	1122
SCHAUFELUMLENKMECHANISMUS	1126
SCHAUFEL- U. AUSLEGERUMLENKMECHANISMUS	1132
GESTÄNGEBOLZEN UND DICHTUNG	1136
ARBEITSGERÄTE	1155
ZAHNHALTER, MITTE	1155
ADAPTER, LINKS	1157
ANSCHLUSS, RECHTS	1160
ZAHNHALTER	1162
SOCKELVERSCHLEISSPLATTE	1167
FELSSCHAUFEL	1168
ANSCHLUSSKAPPE	1194
SCHNEIDMESSER	1195
SCHNEIDMESSERSEGMENT	1197
UNTERSCHRAUBSEGMENT	1201
VERSCHLEISSPLATTEN	1202
VERSCHLEISSPLATTE	1203
MESSERSCHUTZ	1205
KANTENSCHUTZ	1209
HALTEBÜGEL (SCHNEIDWERKZEUGE)	1210
ZAHNSPITZE	1211
ZAHNSPITZE, VERSTÄRKT	1217
ZAHNSPITZE, LANG	1223
ZAHNSPITZE, SCHARF	1233
ZAHNSPITZE, KURZ	1240
ZAHNSPITZE	1246
ZAHNSPITZE, LANG	1247
ZAHNSPITZE, SCHARF	1248
FAHRERHAUS	1250
KÄLTEMITTEL-DRUCKSPEICHER UND BEFESTIGUNG	1250
KLIMAANLAGE	1251
VERSTAUKASTEN	1256
FAHRERHAUS UND PLATTFORM	1260
FAHRERHAUS	1261
KÄLTEMITTELKOMPRESSOR U. BEFESTIGUNG	1268
KÄLTEMITTELKOMPRESSOR	1272
KÄLTEMITTELKONDENSATOR U. BEFESTIGUNGSTEILE	1282
FAHRERHAUSABDECKUNG	1283
FAHRERHAUSTÜR (LINKS)	1284
SEITENTÜR	1286
LUFTKANAL	1294
RÜCKLEHNENVERLÄNGERUNG	1296
FAHRERHAUSLUFTFILTER	1297
HALTEGRIFF	1300
WARNHORN, ELEKTR.	1302
RADIOEINBAUSATZ	1304
FAHRERHAUSTÜR- U. FENSTERVERRIEGELUNG	1308
FAHRERHAUSAUSKLEIDUNG	1312
KLIMAANLAGENLEITUNGEN	1320
HEIZUNGSLEITUNGEN	1322
SPIEGEL	1323
RÜCKSPIEGEL	1325
MELDEZENTRUMMODUL	1326
MODUL-MONITORTASTATUR	1328
MODUL - VIER ELEKTRON. ANZEIGEN	1329

INHALTSVERZEICHNIS

Bezeichnung	Seite
SCHEIBENWISCHERMOTOR	1331
PLATTFORM-ANBAUSATZ	1332
FAHRERHAUS	1333
SCHALE - RÜCKENLEHNE	1334
FAHRERSITZVERKLEIDUNG	1336
INSTRUMENTENTAFEL	1340
GASPEDAL	1349
GLEITPLATTE	1351
FAHRERPLATTFORM	1354
VERSTELLBARER SITZ	1358
ÜBERROLLSCHUTZ	1359
SONNENBLENDE	1360
GLASDICHTUNG	1362
SICHERHEITSGURT	1363
FAHRERSITZ	1366
SCHWINGSITZ	1383
FAHRERHAUSTÜRFEDER	1388
HYDRAULIKSTEUERAUFHÄNGUNG	1390
SITZUNTERBAU	1401
LENKBETÄTIGUNGSAUFHÄNGUNG	1402
FAHRERSITZFEDERUNG	1410
MASCHINENDATENANZEIGESYSTEM (VIDS)	1420
MASCHINENDATEN-ERFASSUNGSSYSTEM (VIMS)	1421
SCHEIBENWASCHANLAGE	1422
SCHEIBENWISCHER UND -WASCHANLAGE	1424
SCHEIBENWISCHER	1434
WISCHERARM	1442
WARTUNGSAUSRÜSTUNG UND -ZUBEHÖR	1444
AUFKLEBER	1444
SCHILD UND AUFKLEBER	1446
SCHUTZABDECKUNG	1448
ERSATZTEILNUMMERNINDEX	B1

1. MACHINE IDENTIFICATION

Caterpillar machines are identified by Product Identification Numbers (PIN). Some components included in a machine may be identified by Serial Numbers (S/N). Typical components that will be serialized include engines, transmissions, bulldozers, and rippers. The machine and engine are further identified by arrangement numbers and in some cases modification numbers. These numbers are shown on the product identification plate(s) and on the master plate in the operator's compartment.

Caterpillar dealers need all of these numbers to determine accurate parts identification.

SIS ***New Feature***

Effective First Quarter 2001 the Caterpillar Product Identification Number (PIN) will change from 8 to 17 characters. In an effort to provide uniform equipment identification, Caterpillar and other construction equipment manufacturers are moving to comply with the latest version of the product identification numbering standard. Non-road machine PINs are defined by ISO 10261. The new PIN format will apply to all Caterpillar machines and generator sets. The PIN plates and frame marking will display the 17 character PIN. The new format will look like the following:

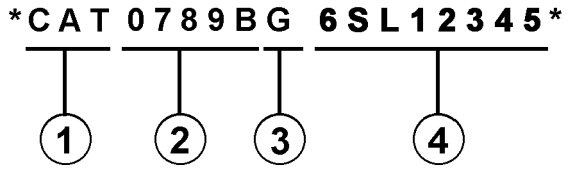

Where:

1. Caterpillar's World Manufacturing Code (characters 1-3)

2. Machine Descriptor (characters 4-8)

3. Check Character (character 9)

4. Machine Indicator Section (MIS) or Product Sequence Number (characters 10-17). These were previously referred to as the Serial Number.

Machines and generator sets produced before First Quarter 2001 will maintain their 8 character PIN format.

Components such as engines, transmissions, axles, etc. and work tools will continue to use an 8 character Serial Number (S/N).

2. ORDERING PARTS

⚠ WARNING

When replacement parts are required for this product Caterpillar recommends using Caterpillar replacement parts or parts with equivalent specifications including, but not limited to, physical dimensions, type, strength and material.

Failure to heed this warning can lead to premature failures, product damage, personal injury or death.

Quality Caterpillar replacement parts are available from Caterpillar dealers throughout the world. Their parts inventories are up to date and include all parts normally required to protect your investment in Caterpillar machines. Dealers may offer repair kits or remanufactured parts to allow selection of the most effective repair alternative for a particular situation. When ordering parts, your order should specify the quantity, part number, part name, and the serial number/product identification number of the machine for which the parts are needed.

3. PARTS MANUAL ORGANIZATION

Product information in this manual is presented as "information elements" that represent all of the components for the specific model. Engine Arrangement and Seat Group are examples of information elements. The information elements are organized alphabetically by part name and secondarily by part number within each major section of the manual.

4. TABLE OF CONTENTS

SIS ***New Feature***

A table of contents (TOC) is found at the beginning of the manual. The TOC lists each section of the manual with a complete list of all information elements organized as they appear in the manual. Page numbers are provided for quick reference to detailed parts identification illustrations and serviceable consist lists.

5. MAINTENANCE PARTS INDEX

The Maintenance Parts Index, located near the beginning of the manual, references most frequently used maintenance part numbers, providing description, quantity, usage and page number. This information is organized alphabetically by part description.

6. INDEX

The index located near the front of the manual is an alphabetical listing of all information elements included in the manual. Page numbers are provided for quick reference to detailed parts identification illustrations and serviceable consist lists.

7. PART NUMBER INDEX

A numerical index listing all part numbers and the corresponding page number(s) appears at the back of the manual.

8. CAPTIONS

Captions located at the top of each page of an information element identify the part number and part name along with additional descriptive information. PIN and S/N information found in each caption should be used to select correct information for a specific machine. Field replacement options, identification of optional attachment components, and where used ("part of") information is also provided.

SIS ***New Feature***

The first line of a caption is shown in larger type font to indicate the beginning of an information element. Captions for additional pages that may be required to illustrate an information element will be shown in standard type font and will include the term *(contd.)* .

9. NON-SERVICED PARTS

SIS ***New Feature***

In some instances it is necessary to display non-serviced parts that are a link to a lower level serviceable consist lists. These non-serviced part numbers are shown in *italic* type indicating that they are not available.

10. PARTS LIST REFERENCE NUMBERS

SIS ***New Feature***

Numbers shown in the Ref No column correspond to numbers used in the associated graphic(s). An alphabetic suffix may be added to a reference number to identify lower level consist items. Numbers shown in the Graphic Ref column refer to the graphic number identifier displayed in the lower left corner of each illustration. The Graphic Ref number may be used in combination with the item Ref No to determine the correct part number. There may be intentional omission of a Ref No in a consist list as information is updated to reflect the latest serviceable part numbers.

11. INDENTED PART NAMES

When a part name is indented in a parts list, it is part of (included in) the group or assembly under which it is indented.

12. ILLUSTRATION REFERENCE LETTERS

When necessary, illustrations contain reference letters (A, B, C etc.) that are intended to track lines and harnesses from one point to another. They are also used to show where to reconnect illustrations that have been separated.

13. ABBREVIATIONS AND SYMBOLS

O.D. – Outside Diameter
I.D. – Inside Diameter
A – Not Part Of This Group
B – Use As Required
C – Change From Previous Type
D – Order By The Meter
E – Order By The Centimeter
F – Not Shown
G – Order By The Inch
I – See Hose Fabrication Guide
M – Metric Part
R – Remfg Part May Be Available
Y – Separate Illustration
Z – Not Serviced Separately

NOTE:

Continuing improvement and advancement of product design may cause changes to your machine which may not be included in this publication. Whenever a question arises regarding your Caterpillar product or this publication, please consult your Caterpillar dealer for the latest available information.

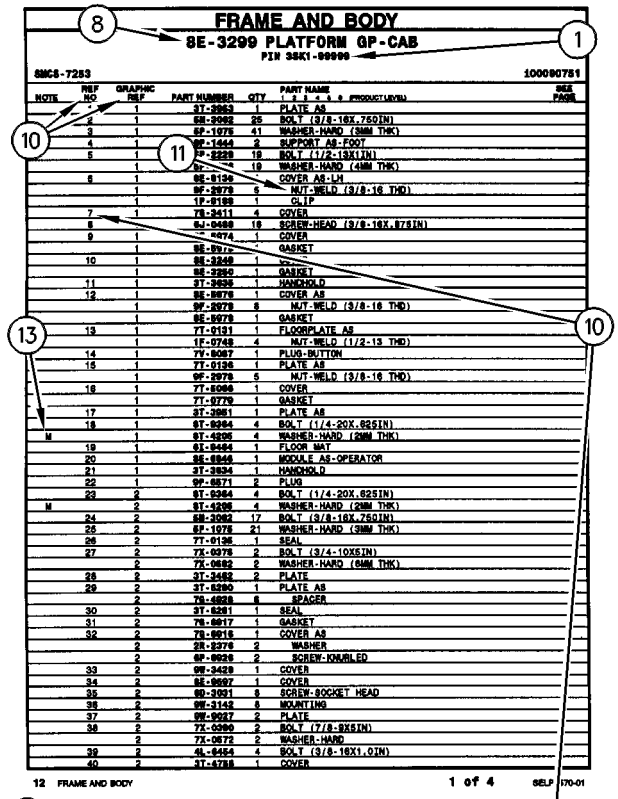

NOTE	REF NO	GRAPHIC REF	PART NUMBER	QTY	PART NAME (1 2 3 4 5 6 PRODUCT LEVEL)	SEE PAGE
	1	1	3T-2953	1	PLATE AS	
	2	1	5B-2992	25	BOLT (3/8-16X.750IN)	
	3	1	5P-1075	41	WASHER-HARD (38M THK)	
	4	1	9P-1444	2	SUPPORT AS-FOOT	
	5	1	9P-2229	19	BOLT (1/2-13X1IN)	
		1	5P-[illegible]4	19	WASHER-HARD (41MM THK)	
	6	1	9E-9136	1	COVER AS-LH	
		1	9F-2979	6	NUT-WELD (3/8-16 THD)	
		1	1P-0188	1	CLIP	
	7	1	7S-3411	4	COVER	
	8	1	6J-0488	18	SCREW-HEAD (3/8-16X.875IN)	
	9	1	[illegible]-4474	1	COVER	
		1	9E-9[illegible]7		GASKET	
	10	1	9E-3249	1	[illegible]	
		1	9E-3250	1	GASKET	
	11	1	3T-3935	1	HANDHOLD	
	12	1	9E-9078	1	COVER AS	
		1	9F-2979	8	NUT-WELD (3/8-16 THD)	
		1	9E-9079	1	GASKET	
	13	1	7T-0131	1	FLOORPLATE AS	
		1	1F-0748	4	NUT-WELD (1/2-13 THD)	
	14	1	7Y-9087	1	PLUG-BUTTON	
	15	1	7T-0136	1	PLATE AS	
		1	9F-2979	6	NUT-WELD (3/8-16 THD)	
	16	1	7T-9096	1	COVER	
		1	7T-9779	1	GASKET	
	17	1	3T-3981	1	PLATE AS	
	18	1	6T-9364	4	BOLT (1/4-20X.625IN)	
M		1	6T-4205	4	WASHER-HARD (2MM THK)	
	19	1	6L-9484	1	FLOOR MAT	
	20	1	9E-9946	1	MODULE AS-OPERATOR	
	21	1	3T-3934	1	HANDHOLD	
	22	1	9P-8571	2	PLUG	
	23	2	6T-9364	4	BOLT (1/4-20X.625IN)	
M		2	6T-4205	4	WASHER-HARD (2MM THK)	
	24	2	5B-3062	17	BOLT (3/8-16X.750IN)	
	26	2	5P-1075	21	WASHER-HARD (38M THK)	
	26	2	7T-0135	1	SEAL	
	27	2	7X-0378	2	BOLT (3/4-10X5IN)	
		2	7X-0682	2	WASHER-HARD (64M THK)	
	28	2	3T-3482	2	PLATE	
	29	2	3T-5290	1	PLATE AS	
		2	7S-0038	8	SPACER	
	30	2	3T-5281	1	SEAL	
	31	2	7S-0017	1	GASKET	
	32	2	7S-0016	1	COVER AS	
		2	2R-2276	2	WASHER	
		2	6P-0028	2	SCREW-KNURLED	
	33	2	9W-3429	1	COVER	
	34	2	9E-9697	1	COVER	
	35	2	9D-3031	8	SCREW-SOCKET HEAD	
	36	2	9W-3142	8	MOUNTING	
	37	2	9W-9027	2	PLATE	
	38	2	7X-0390	2	BOLT (7/8-9X5IN)	
		2	7X-0672	2	WASHER-HARD	
	39	2	4L-9454	4	BOLT (3/8-16X1.0IN)	
	40	2	3T-4788	1	COVER	

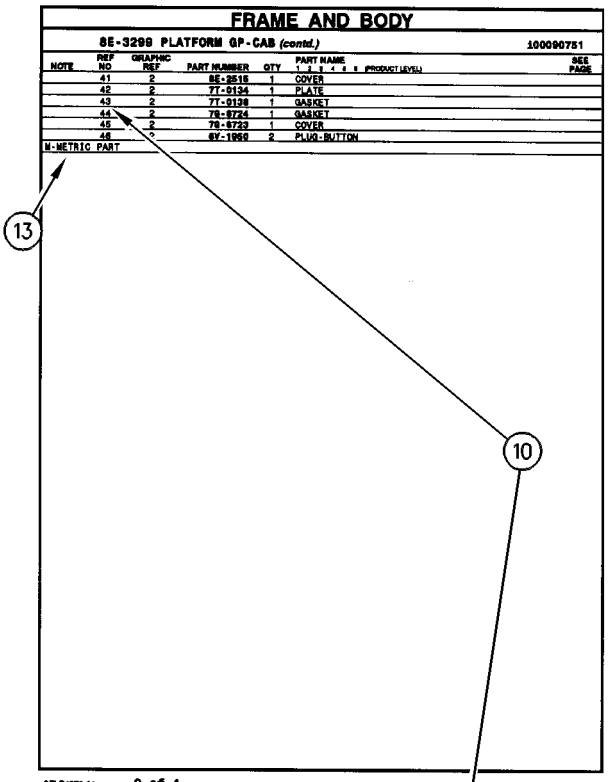

NOTE	REF NO	GRAPHIC REF	PART NUMBER	QTY	PART NAME (1 2 3 4 5 6 PRODUCT LEVEL)	SEE PAGE
	41	2	8E-3515	1	COVER	
	42	2	7T-0134	1	PLATE	
	43	2	7T-0139	1	GASKET	
	44	2	7S-9724	1	GASKET	
	45	2	7S-9723	1	COVER	
	46	2	6V-1969	2	PLUG-BUTTON	

M-METRIC PART

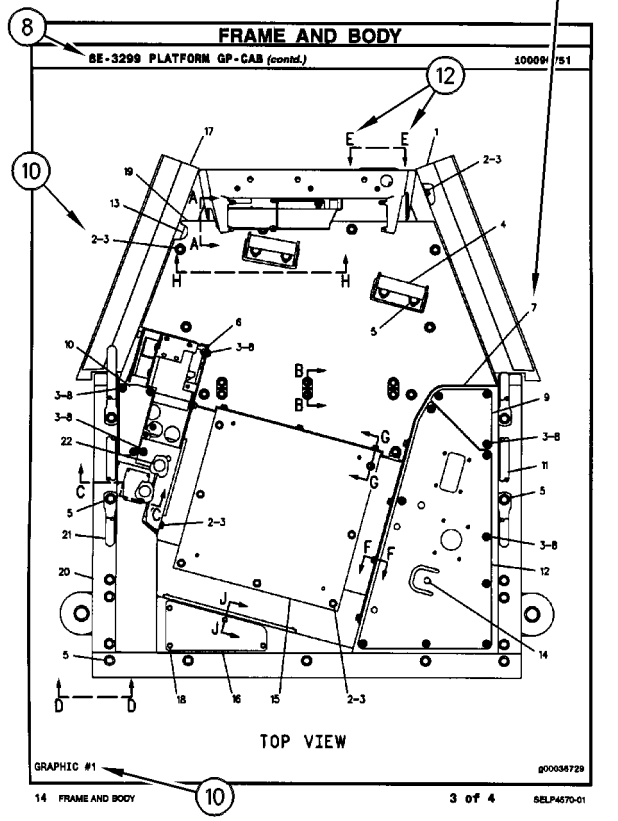

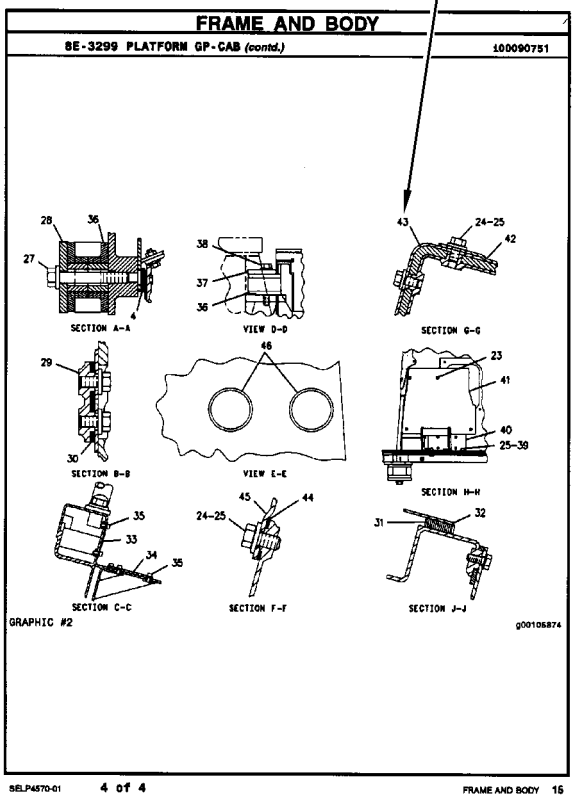

1. IDENTIFICATION DE LA MACHINE

Toutes les machines Caterpillar portent un numéro d'identification (PIN). Certains composants des machines peuvent porter des numéros de série (S/N). En général, parmi les composants qui portent des numéros de série il y a les moteurs, les transmissions, les bulldozers et les rippers. En plus, la machine et le moteur peuvent recevoir des numéros de version, et dans certains cas, de modification. Ces numéros figurent sur les plaques de numéro de série et sur la plaque signalétique principale qui se trouve dans le poste de conduite.

Les concessionnaires Caterpillar doivent connaître tous ces numéros pour identifier correctement les pièces.

SIS ***Nouvelle Caractéristique***

À partir du premier trimestre 2001, le numéro d'identification produit (PIN) Caterpillar passe de 8 à 17 caractères. Afin de permettre une identification uniforme des matériels, Caterpillar et d'autres constructeurs de machines de travaux publics s'efforcent de se conformer à la norme la plus récente portant sur les numéros d'identification des produits. Les numéros d'identification (PIN) de machines de chantier sont définis par la norme ISO 10261. Le nouveau format du numéro d'identification est valable pour toutes les machines et tous les groupes électrogènes Caterpillar. Le numéro d'identification produit (PIN) figurant sur la plaque et sur le châssis se composera de 17 caractères. Le nouveau format ressemblera à ceci:

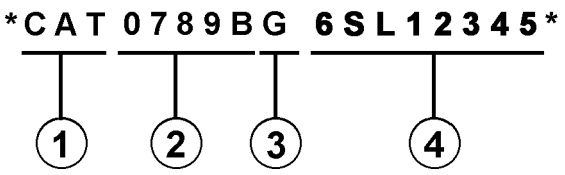

Il se décomposera de la façon suivante:

1. Code international de fabrication de Caterpillar (caractères 1 à 3)

2. Descriptif de la machine (caractères 4 à 8)

3. Contrôle (caractère 9)

4. Indicateur machine (MIS) ou numéro de séquence produit (caractères 10 à 17). Ceux-ci étaient auparavant désignés sous le terme de numéro de série.

Les machines et les groupes électrogènes construits avant le premier trimestre 2001 garderont le format à 8 caractères du numéro d'identification produit (PIN).

Les organes tels que les moteurs, les boîtes de vitesses, les essieux, etc., continueront d'être désignés par un numéro de série (S/N) à 8 caractères.

2. COMMANDE DE PIÈCES

⚠ DANGER

Lorsqu'il faut remplacer des pièces de rechange pour ce produit Caterpillar recommande d'utiliser les pièces de rechange Caterpillar ou les pièces qui ont des spécifications équivalentes dont les dimensions physiques, le type, la force et le matériau. Ces équivalences ne se limitent pas à l'énoncé précédent.

L'inobservation de cette mise en garde peut entraîner des défaillances prématurées, des dommages au produit, des blessures ou même la mort.

Les concessionnaires Caterpillar fournissent dans le monde entier des pièces de rechange de qualité Caterpillar. Leurs stocks de pièces sont constamment réapprovisionnés et comptent toutes les pièces nécessaires pour assurer la bonne marche de vos machines Caterpillar. Certains concessionnaires proposent également des kits de réparation ou des pièces rénovées, ce qui permet de choisir la solution la plus économique dans une situation donnée. Lors des commandes de pièces, mentionner la quantité, le numéro et la désignation des pièces ainsi que le numéro de série ou le numéro d'identification (PIN) de la machine pour laquelle ces pièces sont requises.

3. ORGANISATION DU CATALOGUE DE PIÈCES

Les renseignements sur les produits sont présentés sous forme de "Information element" (élément d'information) représentant tous les composants d'un modèle donné. "Engine Arrangement" (version de moteur) et "Seat Group" (assemblage de siège)" sont des exemples d'éléments d'information. Les éléments d'information sont classés par ordre alphabétique par la désignation standard des pièces et par numéros de pièces dans chaque partie importante du manuel.

4. TABLE DES MATIÈRES

Nouvelle Caractéristique

La table des matières se trouve au début du manuel. La table des matières fournit la liste de tous les chapitres du manuel avec une liste complète de tous les éléments d'information classés par ordre d'apparition dans le manuel. Les numéros de page sont fournis afin que l'utilisateur puisse trouver rapidement les illustrations détaillées concernant l'identification des pièces et les listes des pièces d'entretien.

5. INDEX DES PIÈCES D'ENTRETIEN

La rubrique "Index des pièces d'entretien" qui se trouve au début du manuel renvoie aux pièces d'entretien les plus fréquemment utilisées en précisant la désignation, la quantité, là où la pièce est utilisée et le numéro de page. Ces pièces sont classés par ordre alphabétique.

6. INDEX

L'index qui se trouve vers le début du manuel est une liste alphabétique de tous les éléments d'information du manuel. Les numéros de page sont fournis afin que l'utilisateur puisse trouver rapidement les illustrations détaillées concernant l'identification des pièces et les listes des pièces d'entretien.

7. INDEX DES NUMÉROS DE PIÈCES

Une liste numérique de tous les numéros de pièces et des pages correspondantes se trouve à la fin du manuel.

8. LÉGENDES

Les légendes qui se trouvent en haut de chaque page de chaque élément d'information fournissent le numéro de pièce, la désignation ainsi que des renseignements supplémentaires sur les pièces. Les renseignements concernant les numéros de série (S/N) qui se trouvent dans chaque légende doivent être utilisés pour sélectionner les informations correctes pour un moteur donné. Les informations concernant les options de remplacement sur le chantier, l'identification des composants des équipements offerts en option et les lieux d'application sont aussi fournies.

Nouvelle Caractéristique

Les lettres de la première ligne d'une légende sont présentées en police plus grande afin d'indiquer le début d'une unité d'information. Les légendes qui pourraient être requises pour des pages supplémentaires afin d'illustrer une unité d'information seront présentées en police standard et comprendront le terme (à suivre).

9. PIÈCES NON FOURNIES

Nouvelle Caractéristique

Dans certains cas, il est nécessaire d'indiquer les pièces non fournies qui sont en aval de la liste des pièces d'entretien. Les numéros des pièces non fournies dans la liste des pièces et les légendes seront en italique pour signaler qu'ils ne sont pas disponibles.

10. NUMÉROS DE RÉFÉRENCE DE LA LISTE DES PIÈCES

Nouvelle Caractéristique

Les numéros indiqués dans la colonne des numéros de références correspondent aux numéros utilisés dans les illustrations auxquelles ils sont associés. Un suffixe alphabétique peut être ajouté à un numéro de référence pour identifier la liste des articles en aval. Les numéros indiqués dans la colonne de référence de l'illustration renvoient à l'identification du numéro affiché dans le coin inférieur gauche de chaque illustration. Le numéro de référence de l'illustration pourrait être utilisé avec le numéro de référence de l'article pour déterminer le numéro de pièce correct. Il peut y avoir une omission intentionnelle d'un numéro de référence dans une liste de pièces suite à la mise à jour des informations en vue de refléter les numéros de pièces les plus récentes.

11. DÉSIGNATIONS DE PIÈCES EN RETRAIT

Lorsqu'une désignation de pièce est en retrait, cela veut dire que l'article en regard fait partie de l'ensemble sous lequel il figure.

12. LETTRES DE RÉFÉRENCE DES ILLUSTRATIONS

Quand cela est nécessaire, les illustrations comportent des lettres de référence (A, B, C, etc.) pour montrer le trajet des canalisations et faisceaux de câbles d'un point à l'autre. Elles sont utilisées également pour indiquer où relier les illustrations séparées auparavant.

13. ABRÉVIATIONS ET SYMBOLES

O.D. – Diamètre extérieur
I.D. – Diamètre intérieur
A – Ne fait pas partie de ce groupe
B – Utiliser selon besoin
C – Modification
D – Commander par mètre
E – Commander par centimètre
F – Non représenté
G – Commander par pouce
I – Voir "Hose Fabrication Guide"
M – Pièce métrique
R – Pièce rénovée éventuellement disponible
Y – Illustration séparée
Z – Non fourni séparément

NOTA:

En raison du progrès technique et des améliorations continuelles apportées au matériel, votre machine comporte peut-être des modifications qui n'apparaissent pas dans la présente publication. En cas de doute sur un détail de votre machine Caterpillar ou sur le texte de la présente publication, adressez-vous à votre concessionnaire Caterpillar.

FRAME AND BODY

8E-3299 PLATFORM GP-CAB

PIN 38K1-09999

SMCS-7253 100090751

NOTE	REF NO	GRAPHIC REF	PART NUMBER	QTY	PART NAME (1 2 3 4 5 6 PRODUCT LEVEL)	SEE PAGE
	1	1	3T-2953	1	PLATE AS	
	2	1	5B-2992	25	BOLT (3/8-16X.750IN)	
	3	1	6P-1075	41	WASHER-HARD (3MM THK)	
	4	1	9P-1444	2	SUPPORT AS-FOOT	
	5	1	9P-2229	19	BOLT (1/2-13X1IN)	
		1	6P-[illegible]4	19	WASHER-HARD (4MM THK)	
	6	1	8E-8136	1	COVER AS-LH	
		1	9F-2979	6	NUT-WELD (3/8-16 THD)	
		1	1P-8188	1	CLIP	
	7	1	7S-3411	4	COVER	
	8	1	6J-0488	18	SCREW-HEAD (3/8-16X.875IN)	
	9	1	[illegible]-4474	1	COVER	
		1	8E-8[illegible]7		GASKET	
	10	1	8E-3248	1	[illegible]	
		1	8E-3250	1	GASKET	
	11	1	3T-3835	1	HANDHOLD	
	12	1	8E-8878	1	COVER AS	
		1	9F-2979	8	NUT-WELD (3/8-16 THD)	
		1	8E-8078	1	GASKET	
	13	1	7T-0131	1	FLOORPLATE AS	
		1	1F-0748	4	NUT-WELD (1/2-13 THD)	
	14	1	7Y-8087	1	PLUG-BUTTON	
	15	1	7T-0136	1	PLATE AS	
		1	9F-2978	6	NUT-WELD (3/8-16 THD)	
	16	1	7T-8086	1	COVER	
		1	7T-0779	1	GASKET	
	17	1	3T-3981	1	PLATE AS	
	18	1	6T-9364	4	BOLT (1/4-20X.625IN)	
M		1	6T-4205	4	WASHER-HARD (2MM THK)	
	19	1	6L-8484	1	FLOOR MAT	
	20	1	9E-8946	1	MODULE AS-OPERATOR	
	21	1	3T-3834	1	HANDHOLD	
	22	1	9P-8571	2	PLUG	
	23	2	6T-9364	4	BOLT (1/4-20X.625IN)	
M		2	6T-4205	4	WASHER-HARD (2MM THK)	
	24	2	5B-3062	17	BOLT (3/8-16X.750IN)	
	25	2	6F-1075	21	WASHER-HARD (3MM THK)	
	26	2	7T-0135	1	SEAL	
	27	2	7X-0378	2	BOLT (3/4-10X5IN)	
		2	7X-0682	2	WASHER-HARD (5MM THK)	
	28	2	3T-3482	2	PLATE	
	29	2	3T-8280	1	PLATE AS	
		2	7S-0038	8	SPACER	
	30	2	3T-8281	1	SEAL	
	31	2	7S-8017	1	GASKET	
	32	2	7S-8018	1	COVER AS	
		2	2R-2276	2	WASHER	
		2	6P-0028	2	SCREW-KNURLED	
	33	2	9W-3429	1	COVER	
	34	2	8E-8697	1	COVER	
	35	2	9D-3031	8	SCREW-SOCKET HEAD	
	36	2	9W-3142	8	MOUNTING	
	37	2	9W-9027	2	PLATE	
	38	2	7X-0390	2	BOLT (7/8-9X5IN)	
		2	7X-0672	2	WASHER-HARD	
	39	2	4L-8454	4	BOLT (3/8-16X1.0IN)	
	40	2	3T-4788	1	COVER	

12 FRAME AND BODY 1 of 4 SELP4570-01

FRAME AND BODY

8E-3299 PLATFORM GP-CAB (contd.)

100090751

NOTE	REF NO	GRAPHIC REF	PART NUMBER	QTY	PART NAME (1 2 3 4 5 6 PRODUCT LEVEL)	SEE PAGE
	41	2	8E-3515	1	COVER	
	42	2	7T-0134	1	PLATE	
	43	2	7T-0139	1	GASKET	
	44	2	7S-0724	1	GASKET	
	45	2	7S-8723	1	COVER	
	46	2	6Y-1969	2	PLUG-BUTTON	

M-METRIC PART

SELP4570-01 2 of 4 FRAME AND BODY 13

FRAME AND BODY

8E-3299 PLATFORM GP-CAB (contd.)

100090751

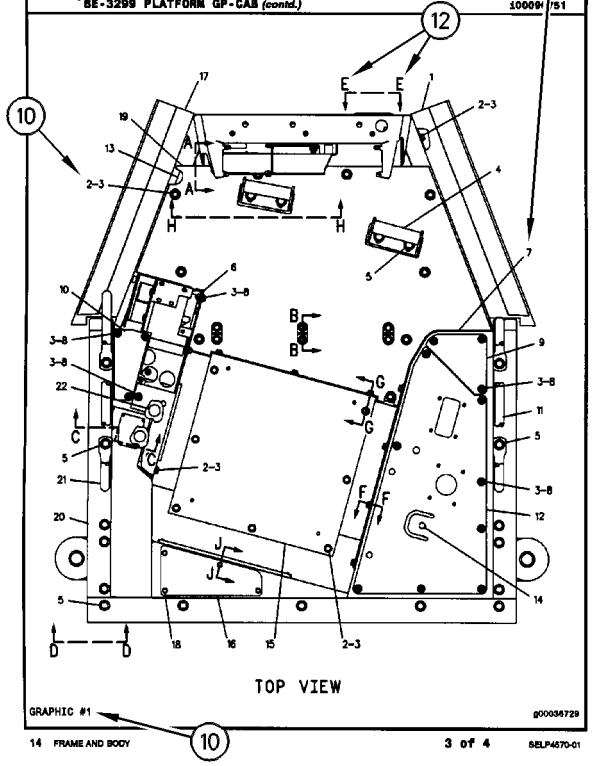

14 FRAME AND BODY 3 of 4 SELP4570-01

FRAME AND BODY

8E-3299 PLATFORM GP-CAB (contd.)

100090751

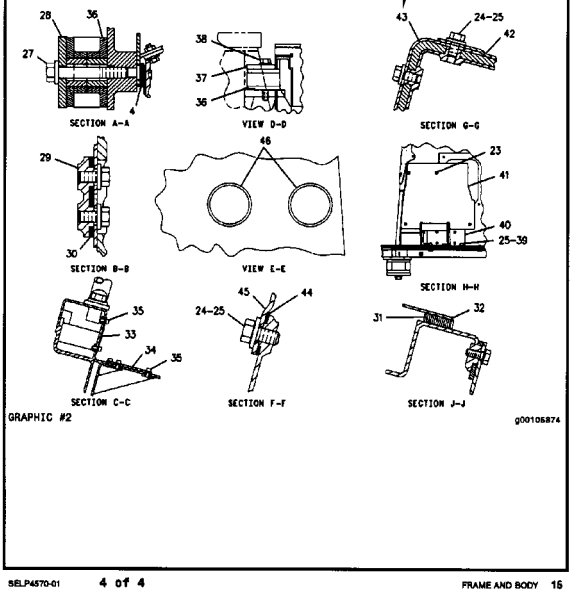

SELP4570-01 4 of 4 FRAME AND BODY 15

1. MÁQUINAS

Las máquinas Caterpillar se identifican con Números de Identificación del Producto (PIN). Algunos componentes incluídos en la máquina pueden estar identificados con Números de Serie (N/S). Los componentes que tienen típicamente esta identificación incluyen motores, transmisiones, hojas topadoras y desgarradores. La máquina y el motor se identifican además con Números de Configuración y en algunos casos, Números de Modificación. Estos números están en las placas de identificación del producto o en la placa principal en la cabina del operador.

Los distribuidores Caterpillar necesitan estos números para identificar con exactitud los números de piezas de repuesto.

SIS ***Nueva Característica***

A partir del primer trimestre del 2001, el Número de Identificación de Producto (PIN) de Caterpillar cambiará de 8 a 17 caracteres. Para hacer más uniforme el método de identificación de equipos, Caterpillar y otros fabricantes de equipo de construcción han tomado medidas para cumplir con la versión más reciente de la norma de numeración de identificación de productos. Los Números de Identificación de Producto para máquinas que no se operan en carreteras son definidos por la norma ISO 10261. El nuevo formato PIN corresponderá a todas las máquinas y grupos electrógenos Caterpillar. Las placas y los caracteres PIN estampados en el bastidor mostrarán el PIN de 17 caracteres. El nuevo formato tendrá la apariencia siguiente:

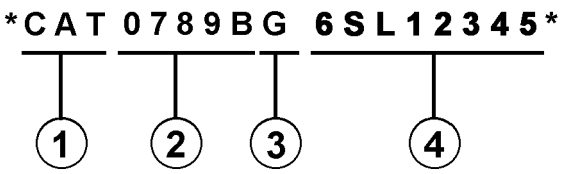

Significado de los caracteres:

1. Código de Fabricación Mundial de Caterpillar (caracteres 1-3)

2. Sección Descriptor de la Máquina (caracteres 4-8)

3. Carácter de Verificación (carácter 9)

4. Sección Indicador de la Máquina (MIS) o Número de Secuencia de Producto (caracteres 10-17). Anteriormente, estos caracteres constituían el Número de Serie.

Las máquinas y grupos electrógenos producidos antes del primer semestre del 2001 mantendrán su formato PIN de 8 caracteres.

Los componentes como motores, transmisiones, ejes, herramientas de trabajo, etc., continuarán usando un Número de Serie (S/N) de 8 caracteres.

2. COMO PEDIR REPUESTOS

⚠ ADVERTENCIA

Cuando se necesiten piezas de repuesto para este producto, Caterpillar recomienda usar piezas de repuesto Caterpillar o piezas que tengan especificaciones equivalentes incluyendo, pero sin estar limitadas a, dimensiones físicas, tipo, fortaleza y material.

El no hacer caso de esta advertencia puede llevar a fallas prematuras, daños al producto y lesiones graves o mortales.

Las piezas de repuesto Caterpillar de calidad están a la disposición de los distribuidores Caterpillar en todo el mundo. Sus existencias actualizadas incluyen todas las piezas normalmente requeridas para proteger su inversión en máquinas Caterpillar. Los distribuidores pueden tener juegos de reparación o piezas remanufacturadas para permitir la selección de la mejor alternativa de reparación en un caso en particular. Al pedir piezas de repuesto, especifique en su pedido la cantidad, el número de pieza, el nombre de la pieza y el número de serie/número de identificación del producto, de la máquina para la cual se necesitan estas piezas.

3. ORGANIZACION DEL MANUAL DE PIEZAS

La información sobre el producto, se presenta en este manual, como "elementos de información" que representan todos los componentes de un modelo específico. Las configuraciones de motores y los grupos de asientos son ejemplos de elementos de información. Los elementos de información están organizados primeramente por nombres de piezas en orden alfabético y en segundo lugar, por el número de pieza dentro de cada sección principal del manual.

4. CONTENIDO

SIS *Nueva Característica*

La página de Contenido se encuentra al principio del manual. El Contenido indica cada sección del manual con una lista completa de todos los elementos de información organizados en el orden que aparecen en el manual. Los números de página proporcionan una referencia rápida a las ilustraciones detalladas de identificación de piezas y a las listas de componentes de repuesto de dichas piezas.

5. ÍNDICE DE PIEZAS DE MANTENIMIENTO

Al principio de este catálogo se encuentra un índice de los números de piezas utilizadas más frecuentemente para el mantenimiento, que incluye descripción, cantidad necesaria, lugar de utilización y número de página. Esta información está organizada alfabéticamente, por descripción de la pieza.

6. ÍNDICE

El Índice, ubicado cerca del principio del manual, es una lista en orden alfabético de todos los elementos de información incluídos en el manual. Los números de página proporcionan una referencia rápida a las ilustraciones detalladas de identificación de piezas y a las listas de componentes de repuesto de dichas piezas.

7. INDICE NUMÉRICO DE PIEZAS

Un índice numérico de piezas con el correspondiente número de página aparece al final de este catálogo.

8. TÍTULOS

Los títulos ubicados en la parte superior de cada página de elementos de información identifican el número y el nombre de la pieza junto con información descriptiva adicional para ayudar al usuario a determinar las piezas necesarias para una máquina en particular. También se suministra información sobre las opciones de reparación en el campo, la identificación de componentes de accesorios optativos y el lugar de ubicación de la pieza ("es parte de").

SIS *Nueva Característica*

La primera línea del título se muestra con un tipo de letra más grande para indicar el comienzo de un elemento de información. Si se requieren páginas adicionales para ilustrar un elemento de información, los títulos se muestran con un tipo de letra normal y la continuación se indica entre paréntesis.

9. PIEZAS QUE NO SE SUMINISTRAN COMO REPUESTO

SIS *Nueva Característica*

En algunos casos es necesario indicar piezas que no se suministran como repuesto pero que pueden estar conectadas a listas de componentes de otras piezas de repuesto. En tal caso, dichas piezas se muestran en cursiva para indicar que no son piezas disponibles.

10. NÚMEROS DE REFERENCIA

SIS *Nueva Característica*

Los números en la columna de No. de Referencia corresponden a los números indicados en la ilustración que pertenece a ese número de pieza. Los números que tienen un sufijo alfabético identifican artículos de las listas de componentes de piezas. Los números en la columna de Referencia de la ilustración se identifican en la esquina inferior izquierda de cada ilustración. Para determinar el número de pieza correcto se puede utilizar tanto el No. de Referencia de la ilustración como el No. de Referencia del artículo. A medida que se actualiza la información para indicar los más recientes números de piezas de repuesto, puede omitirse intencionalmente un No. de Referencia en una lista de componentes de piezas.

11. NOMBRES DE PIEZA SANGRADOS

Cuando el nombre de una pieza está sangrado en una lista, significa que esta pieza forma parte del grupo o conjunto del renglón inmediatamente superior.

12. LETRAS DE REFERENCIA DE ILUSTRACIONES

Las ilustraciones contienen algunas veces letras de referencia (A, B, C etc.) cuyo propósito es seguir el trayecto de líneas y mazos de cables de un punto a otro. También se utilizan para mostrar dónde volver a unir ilustraciones que se habían separado.

13. ABREVIATURAS Y SIMBOLOS

O.D. – Diámetro exterior
I.D. – Diámetro interior
A – No es pieza de este grupo
B – Utilizado según la demanda
C – Indica cambio
D – Se pide por metro
E – Se pide por centímetro
F – No se muestra
G – Se pide por pulgada
I – Ver "Hose Fabrication Guide"
M – Pieza métrica
R – Puede estar disponible como pieza remanufacturada
Y – Ilustración separada
Z – No se suministra por separado

NOTA:

Las contínuas mejoras y adelantos en diseño podrían originar cambios a su máquina que no se incluyen en esta publicación. Cuando tenga alguna pregunta acerca de su producto Caterpillar o de esta publicación, consulte al distribuidor Caterpillar para obtener la información más reciente.

FRAME AND BODY

8E-3299 PLATFORM GP-CAB

PIN 38K1-09999

SMCS-7253 100090751

NOTE	REF NO	GRAPHIC REF	PART NUMBER	QTY	PART NAME (1 2 3 4 5 6 PRODUCT LEVEL)	SEE PAGE
	1	1	3T-3953	1	PLATE AS	
	2	1	5B-2992	25	BOLT (3/8-16X.750IN)	
	3	1	6P-1075	41	WASHER-HARD (3MM THK)	
	4	1	9P-1444	2	SUPPORT AS-FOOT	
	5	1	9P-2228	19	BOLT (1/2-13X1IN)	
		1	5C-[illegible]4	19	WASHER-HARD (4MM THK)	
	6	1	9E-9136	1	COVER AS-LH	
		1	9F-2979	6	NUT-WELD (3/8-16 THD)	
		1	1P-0188	1	CLIP	
	7	1	7S-3411	4	COVER	
	8	1	6J-0488	18	SCREW-HEAD (3/8-16X.875IN)	
	9	1	[illegible]-4474	1	COVER	
		1	9E-9[illegible]7		GASKET	
	10	1	9E-3249	1	[illegible]	
		1	9E-3250	1	GASKET	
	11	1	3T-3935	1	HANDHOLD	
	12	1	9E-9078	1	COVER AS	
		1	9F-2979	8	NUT-WELD (3/8-16 THD)	
		1	9E-9079	1	GASKET	
	13	1	7T-0131	1	FLOORPLATE AS	
		1	1F-0748	4	NUT-WELD (1/2-13 THD)	
	14	1	7Y-9087	1	PLUG-BUTTON	
	15	1	7T-0136	1	PLATE AS	
		1	9F-2978	6	NUT-WELD (3/8-16 THD)	
	16	1	7T-9086	1	COVER	
		1	7T-9779	1	GASKET	
	17	1	3T-3981	1	PLATE AS	
	18	1	6T-9364	4	BOLT (1/4-20X.625IN)	
M		1	6T-4205	4	WASHER-HARD (2MM THK)	
	19	1	6L-9484	1	FLOOR MAT	
	20	1	9E-9946	1	MODULE AS-OPERATOR	
	21	1	3T-3934	1	HANDHOLD	
	22	1	9P-8571	2	PLUG	
	23	2	6T-9364	4	BOLT (1/4-20X.625IN)	
M		2	6T-4205	4	WASHER-HARD (2MM THK)	
	24	2	5B-2992	17	BOLT (3/8-16X.750IN)	
	26	2	6F-1075	21	WASHER-HARD (3MM THK)	
	26	2	7T-9135	1	SEAL	
	27	2	7X-9378	2	BOLT (3/4-10X5IN)	
		2	7X-0682	2	WASHER-HARD (6MM THK)	
	28	2	3T-3482	2	PLATE	
	29	2	3T-5290	1	PLATE AS	
		2	7S-0038	8	SPACER	
	30	2	3T-5281	1	SEAL	
	31	2	7S-9017	1	GASKET	
	32	2	7S-9016	1	COVER AS	
		2	2R-2276	2	WASHER	
		2	6P-9028	2	SCREW-KNURLED	
	33	2	9W-3429	1	COVER	
	34	2	9E-9097	1	COVER	
	35	2	9D-3031	8	SCREW-SOCKET HEAD	
	36	2	9W-3142	8	MOUNTING	
	37	2	9W-9027	2	PLATE	
	38	2	7X-0390	2	BOLT (7/8-9X5IN)	
		2	7X-0672	2	WASHER-HARD	
	39	2	4L-9454	4	BOLT (3/8-16X1.0IN)	
	40	2	3T-4788	1	COVER	

FRAME AND BODY

8E-3299 PLATFORM GP-CAB (contd.)

100090751

NOTE	REF NO	GRAPHIC REF	PART NUMBER	QTY	PART NAME (1 2 3 4 5 6 PRODUCT LEVEL)	SEE PAGE
	41	2	8E-3515	1	COVER	
	42	2	7T-0134	1	PLATE	
	43	2	7T-0139	1	GASKET	
	44	2	7S-9724	1	GASKET	
	45	2	7S-9723	1	COVER	
	46	2	6V-1969	2	PLUG-BUTTON	

M-METRIC PART

FRAME AND BODY

8E-3299 PLATFORM GP-CAB (contd.)

100090751

TOP VIEW

GRAPHIC #1 g00036729

FRAME AND BODY

8E-3299 PLATFORM GP-CAB (contd.)

100090751

SECTION A-A VIEW D-D SECTION G-G

SECTION B-B VIEW E-E SECTION H-H

SECTION C-C SECTION F-F SECTION J-J

GRAPHIC #2 g00105874

INFORMAÇÃO GERAL

1. IDENTIFICAÇÃO DA MÁQUINA

As máquinas Caterpillar são identificadas pelos Números de Informação do Produto (PIN). Alguns componentes incluídos numa máquina podem ser identificados por Números de Série (S/N). Componentes típicos que serão enumerados com números de série incluem motores, transmissões, lâminas e ríperes. Além do número de série, a máquina e o motor são ainda identificados por números de arranjo e, em alguns casos, números de modificações. Tais números encontram-se na(s) placa(s) de identificação do produto e na placa mestre no compartimento do operador.

SIS ***Novidades***

A partir do primeiro trimestre de 2001 o Número de Identificação de Produto da Caterpillar (PIN) vai mudar de 8 para 17 caracteres. Esforçando-se para fornecer uma identificação uniforme de equipamentos, a Caterpillar e outros fabricantes de equipamento de construção estão mudando para atender a versão mais atualizada do padrão de identificação de produtos. Os números de PIN para produtos de aplicações não rodoviárias são definidos pela ISO 10261. O novo formato de número PIN será adotado em todas as máquinas e grupos geradores Caterpillar. As placas e as marcações do chassi mostrarão os 17 dígitos de PIN. O novo formato terá a seguinte disposição:

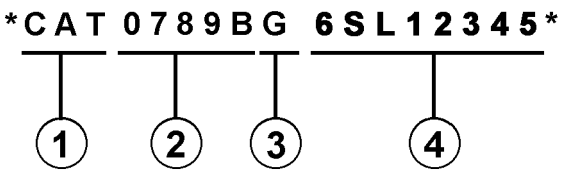

Onde:

1. Código de Fabricação Mundial da Caterpillar (dígitos 1-3)

2. Descrição da Máquina (dígitos 4-8)

3. Dígito de Verificação (dígito 9)

4. Seção de Indicador da Máquina (MIS) ou Número de Seqüência de Produto (dígitos 10-17). Estes eram anteriormente chamados de Número de Série.

Máquinas e grupos geradores produzidos antes do primeiro trimestre de 2001 manterão o formato de 8 caracteres de PIN.

Componentes como motores, transmissões, eixos, ferramentas de trabalho, etc. continuarão a usar Número de Série (S/N) com oito caracteres.

2. COMO OBTER PEÇAS

⚠ CUIDADO

Quando peças de substituição são exigidas para este produto, a Caterpillar recomenda a utilização de peças de substituição Caterpillar ou peças com as especificações equivalentes incluindo, mas não limitadas, à dimensões físicas, tipos, resistência e materiais.

A inobservância desta advertência poderá resultar em falhas prematuras, danos ao produto, ferimentos ou morte.

As Peças de Reposição de Qualidade Caterpillar encontram-se disponíveis nos revendedores Caterpillar no mundo inteiro. Seus estoques de peças são atualizados e incluem todas as peças normalmente necessárias para proteger seu investimento em máquinas Caterpillar. Alguns revendedores podem oferecer jogos de reparo ou peças de troca/remanufaturadas disponíveis como uma opção da alternativa de reparo mais eficaz para uma situação específica. Ao encomendar peças, seu pedido deve especificar a quantidade, o número e o nome da peça e o número de série/número de identificação do produto referentes à máquina para a qual as peças se destinam.

3. ORGANIZAÇÃO DO MANUAL DE PEÇAS

A informação do produto neste manual é apresentada em forma de "elementos de informação" que representam todos os componentes para o modelo específico. Arranjo de Motor e Grupo de Assento são exemplos de elementos de informação. Os elementos de informação são organizados em ordem alfabética por nome de peça ou secundariamente, por número de peça incluído em cada seção principal do manual.

4. LISTA DE CONTEÚDOS

SIS ***Novidades***

A Lista de Conteúdos (TOC) se encontra no princípio do manual. A Lista de Conteúdos (TOC) relaciona em cada seção do manual uma lista completa com todos os elementos de informação organizados conforme aparecem no manual. Números de página são fornecidos para que se tenha referência rápida de ilustrações de peças detalhadas e listas de conteúdos que podem receber serviço de manutenção.

5. ÍNDICE DE PEÇAS DE MANUTENÇÃO

O Índice de Peças de Manutenção, localizado perto do princípio do manual, faz referência aos números de peça de manutenção usados com maior frequência, fornecendo uma descrição, a quantidade, o uso e o número de página. Esta informação é organizada com a descrição da peça em ordem alfabética.

6. ÍNDICE

O Índice localizado perto do princípio do manual, consiste de uma lista em ordem alfabética de todos os elementos de informação incluídos no manual. Números de página são fornecidos para que se tenha referência rápida de ilustrações de peças detalhadas e listas de conteúdos que podem receber serviço de manutenção.

7. ÍNDICE DE NÚMERO DE PEÇA

Um índice numérico relacionando todos os números de peça e a(s) página(s) correspondentes, aparece no final do manual.

8. LEGENDAS

As legendas localizadas na parte de cima de cada página de um elemento de informação identifica o número de peça e o nome da peça, juntamente com informação descritiva adicional. Informações sobre o Número de Informação do Produto (PIN) e o Número de Série (S/N) encontradas em cada legenda devem ser usadas para selecionar a informação correta sobre uma máquina específica. Opções de substituição no campo, identificação de componentes de acessórios opcionais e informações sobre onde são utilizados ("parte de") são também fornecidas.

SIS ***Novidades***

A primeira linha de uma legenda é indicada em tipo maior para indicar o princípio de um elemento de informação. Legendas para páginas adicionais que podem ser necessárias para ilustrar um elemento de informação serão apresentadas em tipo padrão e incluirão o termo *(continua)* .

9. NÃO DISPONÍVEL SEPARADAMENTE

SIS ***Novidades***

Em alguns casos, é necessário mostrar peças não disponíveis separadamente que têm uma ligação com listas de conteúdos de nível inferior que podem receber serviço de manutenção. Os números de peça destes componentes não disponíveis aparecerão em *itálico* , a fim de indicar que não estão disponíveis.

10. NÙMEROS DE REFERÊNCIA À LISTA DE PEÇAS

SIS ***Novidades***

Os números indicados na coluna Ref No (No. de Referência) correspondem-se aos números usados no(s) gráfico(s) correspondente(s). Um sufixo com letras pode ser acrescentado a um número de referência para identificar itens de conteúdo de nível inferior. Os números indicados na coluna Graphic Ref (Referência de Gráfico) referem-se ao identificador de número de gráfico presente no canto esquerdo inferior de cada ilustração. O número de Referência de Gráfico pode ser usado em combinação com o item Ref No para determinar-se o número de peça correto. Poderá haver omissão intencional de um número de referência (Ref No) de uma lista de conteúdos uma vez que as informações são atualizadas para refletir os números de peça mais recentes que podem receber serviço de manutenção.

11. NOMES DE PEÇAS DESALINHADOS

Quando um nome de peça encontra-se desalinhado numa lista de peças, significa que tal item faz parte do (está incluído no) grupo ou conjunto sob o qual está relacionado.

12. LETRAS DE REFERÊNCIA NAS ILUSTRAÇÕES

Quando necessário, as ilustrações contêm letras de referência (A, B, C, etc.) que são utilizadas para seguir tubulações e cabos elétricos de um ponto a outro. Também foram utilizadas para indicar onde se pode reconectar as ilustrações que foram separadas.

13. ABREVIAÇÕES E SÍMBOLOS

O.D. – "Outside Diameter" (Diâmetro Externo)
I.D. – "Inside Diameter" (Diâmetro Interno)
A – Não faz parte deste grupo
B – Use conforme necessário
C – Indica modificação
D – Vendido por metro
E – Vendido por centímetro
F – Não ilustrado
G – Vendido por polegada
I – Consulte o seu revendedor quanto a mangueira
M – Peça métrica
R – Peça remanufaturada pode estar disponível; consulte o seu revendedor Cat
Y – Ilustração separada
Z – Não disponível separadamente

NOTA:

Os contínuos aperfeiçoamentos e avanços no projeto do produto podem ocasionar modificações em sua máquina que talvez ainda não estejam incluídas nesta publicação. Sempre que surgirem dúvidas quanto a um produto Caterpillar ou quanto à presente publicação, consulte o seu revendedor Caterpillar para obter as informações mais recentes disponíveis.

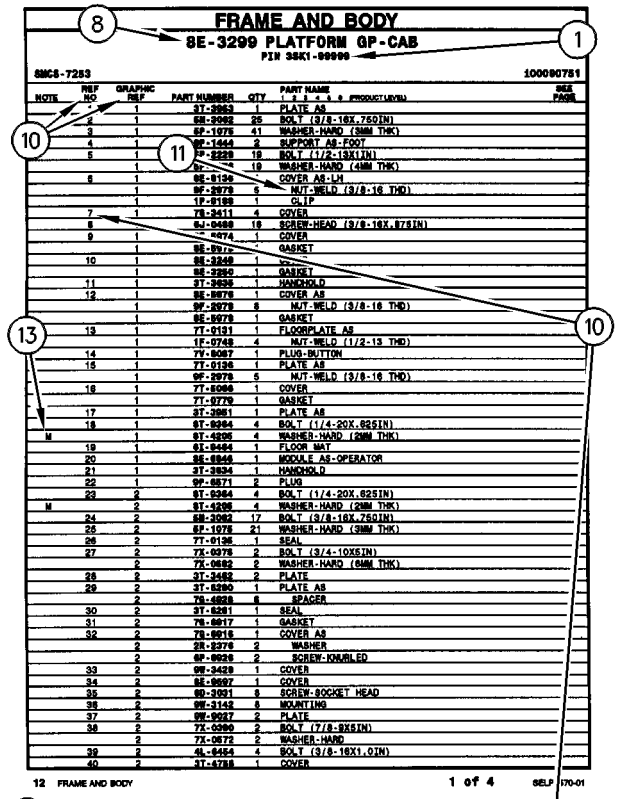

FRAME AND BODY

8E-3299 PLATFORM GP-CAB

PIN 38K1-09999

SMCS-7253 100090751

NOTE	REF NO	GRAPHIC REF	PART NUMBER	QTY	PART NAME (1 2 3 4 5 6 PRODUCT LEVEL)	SEE PAGE
	1	1	3T-3963	1	PLATE AS	
	2	1	5B-2992	25	BOLT (3/8-16X.750IN)	
	3	1	6P-1075	41	WASHER-HARD (38M THK)	
	4	1	8P-1444	2	SUPPORT AS-FOOT	
	5	1	8P-2228	19	BOLT (1/2-13X1IN)	
		1	8P-[illegible]4	19	WASHER-HARD (41MM THK)	
	6	1	8E-8136	1	COVER AS-LH	
		1	9F-2978	6	NUT-WELD (3/8-16 THD)	
		1	1P-8188	1	CLIP	
	7	1	7S-3411	4	COVER	
	8	1	6J-0488	18	SCREW-HEAD (3/8-16X.875IN)	
	9	1	[illegible]-4474	1	COVER	
		1	8E-8[illegible]7		GASKET	
	10	1	8E-3248	1	[illegible]	
		1	8E-3250	1	GASKET	
	11	1	3T-3835	1	HANDHOLD	
	12	1	8E-8078	1	COVER AS	
		1	9F-2978	8	NUT-WELD (3/8-16 THD)	
		1	8E-8078	1	GASKET	
	13	1	7T-0131	1	FLOORPLATE AS	
		1	1F-0748	4	NUT-WELD (1/2-13 THD)	
	14	1	7Y-8087	1	PLUG-BUTTON	
	15	1	7T-0136	1	PLATE AS	
		1	9F-2978	6	NUT-WELD (3/8-16 THD)	
	16	1	7T-8086	1	COVER	
		1	7T-8779	1	GASKET	
	17	1	3T-3981	1	PLATE AS	
	18	1	6T-9364	4	BOLT (1/4-20X.625IN)	
M		1	6T-4205	4	WASHER-HARD (2MM THK)	
	19	1	6L-8484	1	FLOOR MAT	
	20	1	9E-8946	1	MODULE AS-OPERATOR	
	21	1	3T-3834	1	HANDHOLD	
	22	1	9P-8571	2	PLUG	
	23	2	6T-9364	4	BOLT (1/4-20X.625IN)	
M		2	6T-4205	4	WASHER-HARD (2MM THK)	
	24	2	5B-3062	17	BOLT (3/8-16X.750IN)	
	26	2	6F-1075	21	WASHER-HARD (38M THK)	
	26	2	7T-0135	1	SEAL	
	27	2	7X-0378	2	BOLT (3/4-10X5IN)	
		2	7X-0682	2	WASHER-HARD (64M THK)	
	28	2	3T-3482	2	PLATE	
	29	2	3T-8280	1	PLATE AS	
		2	7S-8038	8	SPACER	
	30	2	3T-8281	1	SEAL	
	31	2	7S-8017	1	GASKET	
	32	2	7S-8016	1	COVER AS	
		2	2R-2276	2	WASHER	
		2	6P-8028	2	SCREW-KNURLED	
	33	2	9W-3429	1	COVER	
	34	2	8E-8697	1	COVER	
	35	2	9D-3031	8	SCREW-SOCKET HEAD	
	36	2	9W-3142	8	MOUNTING	
	37	2	9W-9027	2	PLATE	
	38	2	7X-0390	2	BOLT (7/8-9X5IN)	
		2	7X-0672	2	WASHER-HARD	
	39	2	4L-8454	4	BOLT (3/8-16X1.0IN)	
	40	2	3T-4788	1	COVER	

12 FRAME AND BODY 1 of 4 SELP4570-01

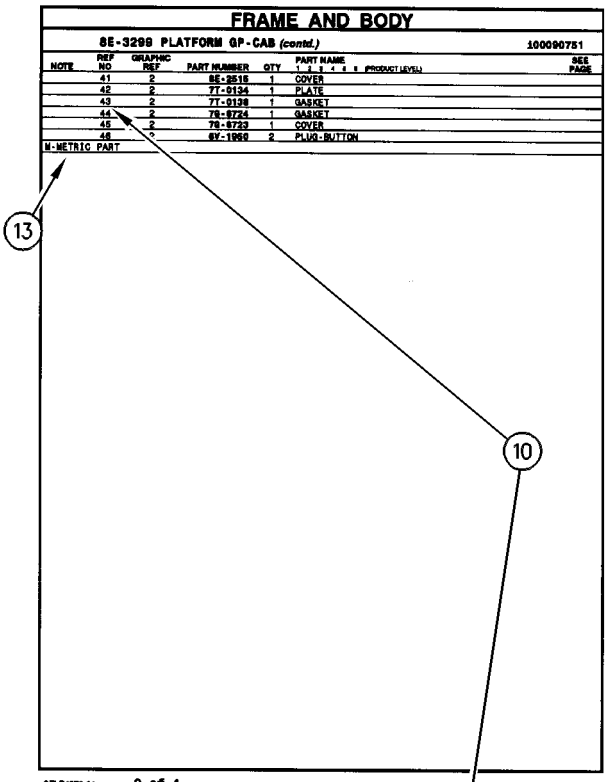

FRAME AND BODY

8E-3299 PLATFORM GP-CAB (contd.) 100090751

NOTE	REF NO	GRAPHIC REF	PART NUMBER	QTY	PART NAME (1 2 3 4 5 6 PRODUCT LEVEL)	SEE PAGE
	41	2	8E-3515	1	COVER	
	42	2	7T-0134	1	PLATE	
	43	2	7T-0139	1	GASKET	
	44	2	7S-8724	1	GASKET	
	45	2	7S-8723	1	COVER	
	46	2	6Y-1969	2	PLUG-BUTTON	

M-METRIC PART

SELP4570-01 2 of 4 FRAME AND BODY 13

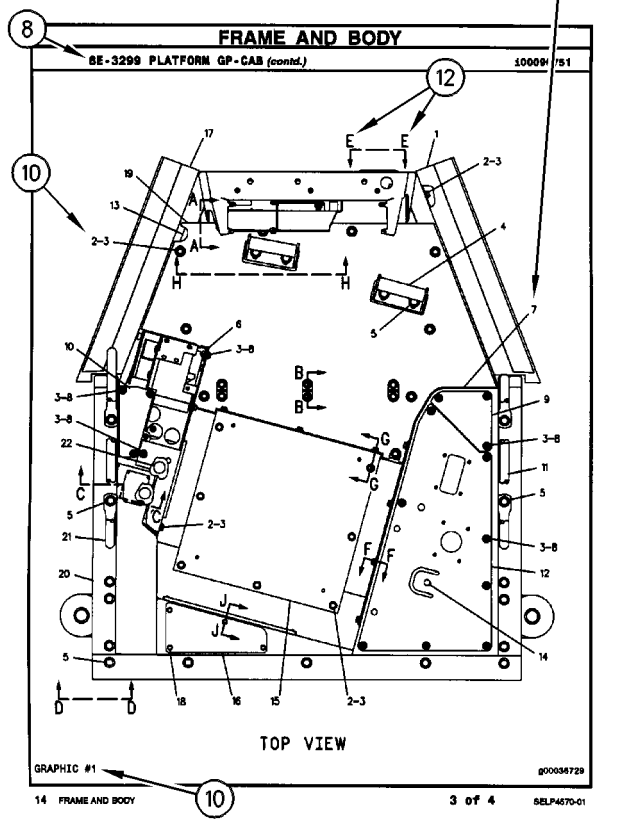

FRAME AND BODY

8E-3299 PLATFORM GP-CAB (contd.) 100090751

TOP VIEW

GRAPHIC #1 g00036729

14 FRAME AND BODY 3 of 4 SELP4570-01

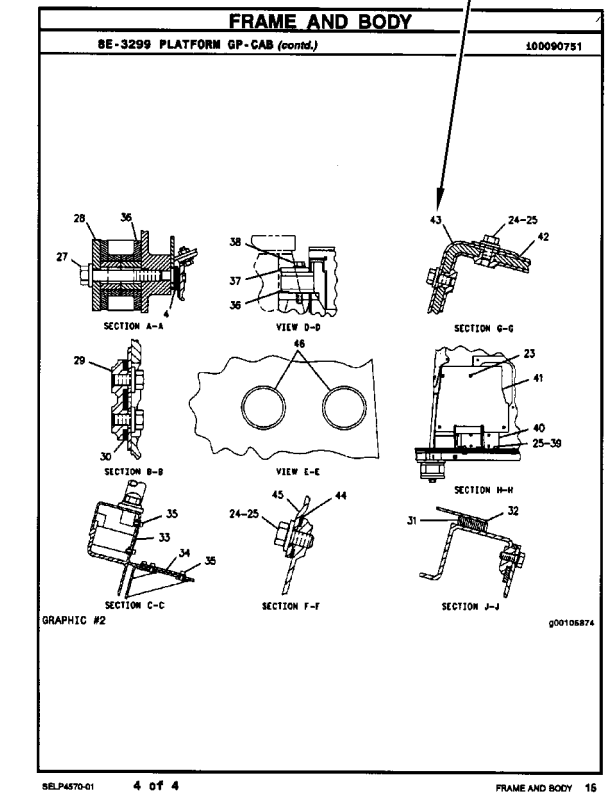

FRAME AND BODY

8E-3299 PLATFORM GP-CAB (contd.) 100090751

SECTION A-A VIEW D-D SECTION G-G

SECTION B-B VIEW E-E SECTION H-H

SECTION C-C SECTION F-F SECTION J-J

GRAPHIC #2 g00105874

SELP4570-01 4 of 4 FRAME AND BODY 15

ALLGEMEINE HINWEISE

1. MASCHINENKENNZEICHNUNG

Caterpillar-Maschinen sind mit PRODUCT IDENTIFICATION NUMBERS (PIN) (Produkt-Identnummern) gekennzeichnet. Einige Baugruppen, z.B. Motoren, Getriebe, Planierschilde und Aufreißer, sind mit SERIAL NUMBERS (S/N) (Seriennummern) gekennzeichnet. An der Maschine und am Motor befinden sich außerdem ARRANGEMENT NUMBERS (Ausrüstungsnummern) sowie in einigen Fällen MODIFICATION NUMBERS (Änderungsnummern). Sie befinden sich auf den PIN-Schildern und auf dem Typenschild im Fahrerhaus.

Bei Ersatzteilbestellungen müssen dem Händler alle diese Nummern zur Verfügung gestellt werden.

SIS ***Neu im Parts Manual***

Vom ersten Quartal 2001 ab wird die Caterpillar Produkt-Identnummer (PIN) von 8 auf 17 Zeichen geändert. Um zur Standardisierung der Produkt-Identnummer beizutragen, sind Caterpillar und andere Baumaschinenhersteller bestrebt, die aktuellste Norm zur Produkt-Identnummerierung einzuführen. Produkt-Identnummern für Baumaschinen sind durch ISO 10261 definiert. Das neue Format der Produkt-Identnummern gilt für alle Caterpillar-Maschinen und -Stromaggregate. Die Produkt-Identschilder und -Identrahmenmarkierung enthalten die aus 17 Zeichen bestehende Identnummer. Das neue Format hat folgende Abschnitte:

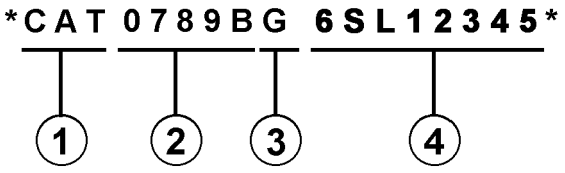

Abschnitte:

1. Caterpillars weltweiter Herstellungscode (Zeichen 1-3)

2. Modell (Zeichen 4-8)

3. Kontrollzeichen (Zeichen 9)

4. Maschinenspezifische Kennung (MIS) oder Produktsequenznummer (Zeichen 10-17). Diese wurde früher als Seriennummer bezeichnet.

Für vor dem ersten Quartal 2001 hergestellte Maschinen und Stromaggregate wird das aus 8 Zeichen bestehende PIN-Format beibehalten.

Bauteile wie z.B. Motoren, Getriebe, Achsen sowie Arbeitsgeräte werden weiterhin eine aus 8 Zeichen bestehende Seriennummer (S/N) aufweisen.

2. BESTELLEN VON ERSATZTEILEN

⚠ WARNUNG

Wenn für diese Maschine Ersatzteile benötigt werden, empfiehlt Caterpillar, ausschließlich Caterpillar-Ersatzteile oder solche zu verwenden, die die gleichen technischen Merkmale hinsichtlich Typ, Festigkeit, Werkzeugeigenschaften und die gleichen Maße aufweisen.

Bei Nichtbeachtung dieser Warnung besteht Verletzungs- oder sogar Lebensgefahr! Ferner kann Nichtbeachtung vorzeitige Ausfälle der Teile und Beschädigung der Maschine zur Folge haben.

Original Caterpillar-Ersatzteile können weltweit bei jedem Caterpillar-Händlern bestellt werden. Die umfangreichen Händlerlager enthalten normalerweise alle Teile, die Sie für Ihre Caterpillar-Maschine benötigen. Einige Händler bieten Reparatursätze, Austausch- oder werküberholte Teile an, so daß Sie eine Auswahl unter verschiedenen Reparaturmöglichkeiten treffen können. Ihre Bestellung muß folgende Angaben enthalten: Anzahl der benötigten Teile, Bestellnummer, Bezeichnung des Teils, Serien-Nr./Produkt-Ident-Nr., Ausrüstungs-Nr. und Änderungs-Nr. der Maschine, für die diese Teile benötigt werden.

3. AUFBAU DES PARTS MANUAL

Die Produktinformationen für alle Komponenten eines bestimmten Modells sind in INFORMATION ELEMENTS (Informationseinheiten) gegliedert. ENGINE ARRANGEMENT (Motorausführung) und SEAT GROUP (Fahrersitz) sind Beispiele für solche Informationseinheiten. Sie sind innerhalb jeder Gruppe alphabetisch, entsprechend der Ersatzteilbezeichnung, und zusätzlich numerisch, entsprechend der Ersatzteilnummer, geordnet.

4. INHALTSVERZEICHNIS

SIS *Neu im Parts Manual*

Das Inhaltsverzeichnis befindet sich am Anfang des Buches. Im Inhaltsverzeichnis werden die einzelnen Abschnitte des Buches aufgeführt. Die Abschnitte enthalten eine vollständige Aufstellung aller Informationseinheiten. Diese sind entsprechend ihrem Erscheinen im Buch geordnet. Das Inhaltsverzeichnis enthält Seitenangaben für Schnellverweise auf detaillierte Abbildungen und Teillisten.

5. INDEX FÜR WARTUNGSTEILE

Der Index für Wartungsteile vorn im Buch enthält die Bestellnummern, Seitenangaben, Mengenangaben und Informationen über den Einsatzbereich für die am häufigsten benötigten Ersatzteile. Die Angaben sind alphabetisch entsprechend der Teilebezeichnung geordnet.

6. INDEX

Der Index vorn im Buch enthält eine alphabetische Liste aller Informationseinheiten. Er enthält Seitenangaben für Schnellverweise auf detaillierte Abbildungen und Teillisten.

7. INDEX FÜR BESTELLNUMMERN

Hinten im Buch befindet sich ein numerischer Index, mit allen Bestellnummern und dem Hinweis auf die Seite, auf der sich die betreffende Abbildung befindet.

8. ÜBERSCHRIFTEN

Die Überschriften, die sich oben auf den Seiten der Informationseinheiten befinden, enthalten Bestellnummern, Ersatzteilbezeichnungen und zusätzliche beschreibende Informationen. Produkt-Ident- und Seriennummern in den Überschriften sollten zur Auswahl der richtigen Informationen für die betreffende Maschine verwendet werden. Die Überschriften enthalten außerdem Informationen über möglichen Außendienstersatz, mögliche Baugerätekomponenten und die Baugruppe, zu der das Teil gehört.

SIS *Neu im Parts Manual*

Die erste Zeile einer Überschrift erscheint in einer größeren Schriftart, um den Anfang einer Informationseinheit zu kennzeichnen. Überschriften für zusätzliche Seiten, die zur Erläuterung einer Informationseinheit notwendig sind, erscheinen in normaler Schriftart und enthalten den Begriff "(contd.)".

9. NICHT EINZELN LIEFERBARE TEILE

SIS *Neu im Parts Manual*

In einigen Fällen ist es notwendig nicht lieferbare Teile, die selbst mit einer eigenen Teilliste im Buch vertreten sind, aufzuführen. Die Bestellnummern dieser nicht einzeln lieferbaren Teile erscheinen kursiv, wodurch angezeigt wird, daß sie nur in Verbindung mit anderen Teilen lieferbar sind.

10. REFERENZNUMMER FÜR ERSATZTEILE

SIS *Neu im Parts Manual*

Die Zahlen, die in der Spalte "Ref No" aufgeführt sind, stimmen mit den Zahlen in den beigefügten Abbildungen überein. Ein Buchstaben-Suffix kann zu einer Referenznummer hinzugefügt werden, um zu kennzeichnen, daß das Teil mit einer eigenen Teilliste im Buch aufgeführt ist. Die in der Spalte "Graphic Ref" angeführten Zahlen verweisen auf die Identifikationsnummer der Abbildung, die sich in der linken unteren Ecke der Abbildung befindet. Diese Nummer kann zusammen mit der Referenznummer des Teils angegeben werden, um die richtige Ersatzteilnummer zu ermitteln. Referenznummern können absichtlich weggelassen werden, da die Nummern der lieferbaren Ersatzteile ständig aktualisiert werden.

11. EINGERÜCKTE BEZEICHNUNGEN

Wenn eine Bezeichnung eingerückt ist, wird dadurch angezeigt, daß das Teil zu einer Baugruppe gehört, unter deren Bezeichnung es eingerückt ist.

12. REFERENZBUCHSTABEN

Falls erforderlich sind in den Abbildungen Referenzbuchstaben enthalten (z.B. A, B, C, usw.), die Leitungen und Kabelbäume von einem Punkt zum anderen verfolgen. Außerdem geben sie die Stelle an, an der getrennte Abbildungen fortgesetzt werden.

13. ABKÜRZUNGEN UND SYMBOLE

O.D. – Außendurchmesser
I.D. – Innendurchmesser
A – kein Teil dieser Gruppe
B – nach Bedarf verwenden
C – Hinweis auf eine Änderung
D – in Meter-Länge bestellen
E – in Zentimeter-Länge bestellen
F – nicht gezeigt
G – in Zoll-Länge bestellen
I – siehe "Hose Fabrication Guide"
M – metrisches Teil
R – werküberholtes Teil unter Umständen lieferbar
Y – separate Abbildung
Z – nicht einzeln lieferbar

ANMERKUNG:

Ständig vorgenommene Verbesserungen und Weiterentwicklungen an Ihrer Maschine können Änderungen verursachen, die in der vorliegenden Ausgabe noch nicht berücksichtigt sind. Fragen zu Ihrer Caterpillar-Maschine oder diesem Ersatzteilbuch beantwortet Ihr Caterpillar-Händler.

ALLGEMEINE HINWEISE

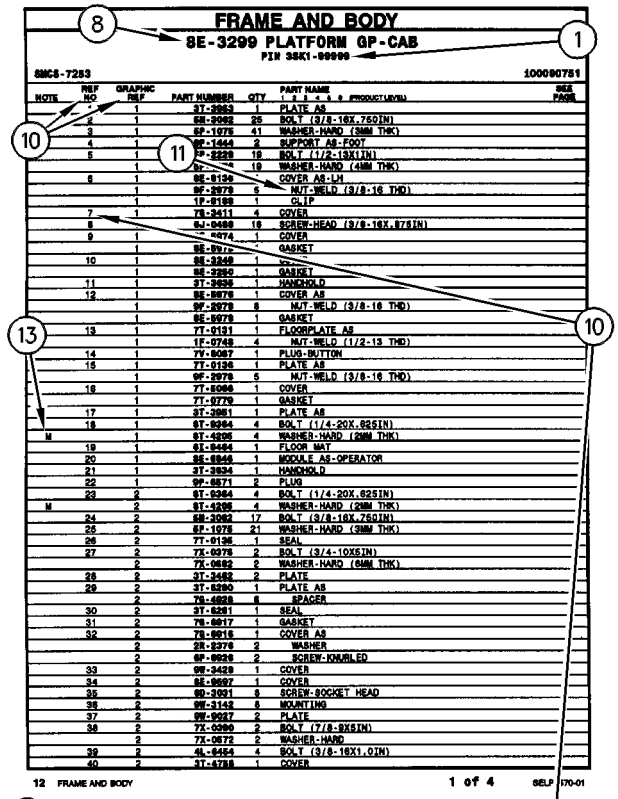

NOTE	REF NO	GRAPHIC REF	PART NUMBER	QTY	PART NAME (1 2 3 4 5 6 PRODUCT LEVEL)	SEE PAGE
	1	1	3T-2953	1	PLATE AS	
	2	1	5B-2992	25	BOLT (3/8-16X.750IN)	
	3	1	6P-1075	41	WASHER-HARD (38M THK)	
	4	1	8P-1444	2	SUPPORT AS-FOOT	
	5	1	9P-2229	19	BOLT (1/2-13X1IN)	
		1	9P-[illegible]4	19	WASHER-HARD (41MM THK)	
	6	1	9E-9136	1	COVER AS-LH	
		1	9F-2979	6	NUT-WELD (3/8-16 THD)	
		1	1P-0188	1	CLIP	
	7	1	7S-3411	4	COVER	
	8	1	6J-0488	18	SCREW-HEAD (3/8-16X.875IN)	
	9	1	9[illegible]4	1	COVER	
		1	9E-9[illegible]7	1	GASKET	
	10	1	9E-3249	1	[illegible]	
		1	9E-3250	1	GASKET	
	11	1	3T-3635	1	HANDHOLD	
	12	1	9E-9078	1	COVER AS	
		1	9F-2979	8	NUT-WELD (3/8-16 THD)	
		1	9E-9079	1	GASKET	
	13	1	7T-0131	1	FLOORPLATE AS	
		1	1F-0748	4	NUT-WELD (1/2-13 THD)	
	14	1	7Y-9087	1	PLUG-BUTTON	
	15	1	7T-0136	1	PLATE AS	
		1	9F-2979	6	NUT-WELD (3/8-16 THD)	
	16	1	7T-9096	1	COVER	
		1	7T-9779	1	GASKET	
	17	1	3T-3981	1	PLATE AS	
	18	1	6T-9364	4	BOLT (1/4-20X.625IN)	
M		1	6T-4205	4	WASHER-HARD (2MM THK)	
	19	1	6L-9484	1	FLOOR MAT	
	20	1	9E-9946	1	MODULE AS-OPERATOR	
	21	1	3T-3934	1	HANDHOLD	
	22	1	9P-8571	2	PLUG	
	23	2	6T-9364	4	BOLT (1/4-20X.625IN)	
M		2	6T-4205	4	WASHER-HARD (2MM THK)	
	24	2	5B-3062	17	BOLT (3/8-16X.750IN)	
	26	2	6P-1075	21	WASHER-HARD (38M THK)	
	26	2	7T-9126	1	SEAL	
	27	2	7X-9378	2	BOLT (3/4-10X5IN)	
		2	7X-0682	2	WASHER-HARD (84M THK)	
	28	2	3T-3482	2	PLATE	
	29	2	3T-5290	1	PLATE AS	
		2	7S-0028	8	SPACER	
	30	2	3T-5281	1	SEAL	
	31	2	7S-9017	1	GASKET	
	32	2	7S-9016	1	COVER AS	
		2	2R-2276	2	WASHER	
		2	6P-9028	2	SCREW-KNURLED	
	33	2	9W-3429	1	COVER	
	34	2	9E-9697	1	COVER	
	35	2	9D-3031	8	SCREW-SOCKET HEAD	
	36	2	9W-3142	8	MOUNTING	
	37	2	9W-9027	2	PLATE	
	38	2	7X-0390	2	BOLT (7/8-9X5IN)	
		2	7X-0672	2	WASHER-HARD	
	39	2	4L-9454	4	BOLT (3/8-16X1.0IN)	
	40	2	3T-4788	1	COVER	

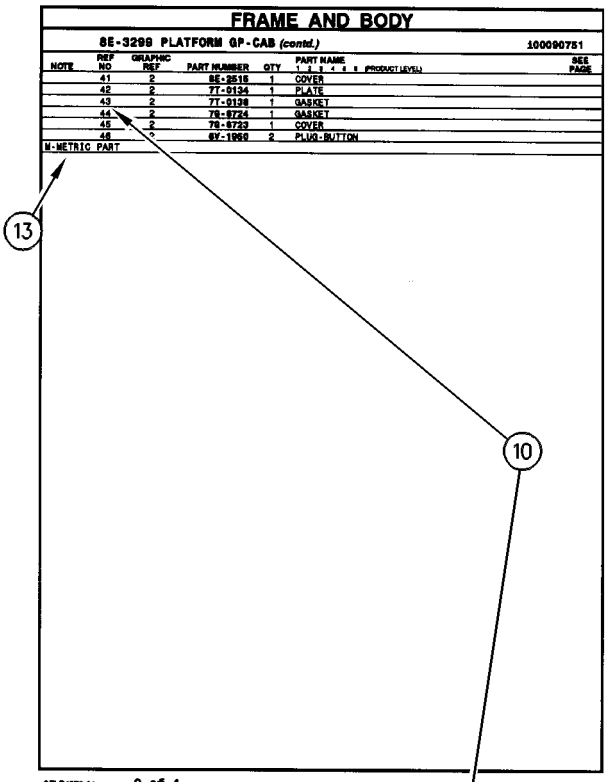

NOTE	REF NO	GRAPHIC REF	PART NUMBER	QTY	PART NAME (1 2 3 4 5 6 PRODUCT LEVEL)	SEE PAGE
	41	2	8E-3515	1	COVER	
	42	2	7T-0134	1	PLATE	
	43	2	7T-0139	1	GASKET	
	44	2	7S-9724	1	GASKET	
	45	2	7S-9723	1	COVER	
	46	2	6Y-1969	2	PLUG-BUTTON	

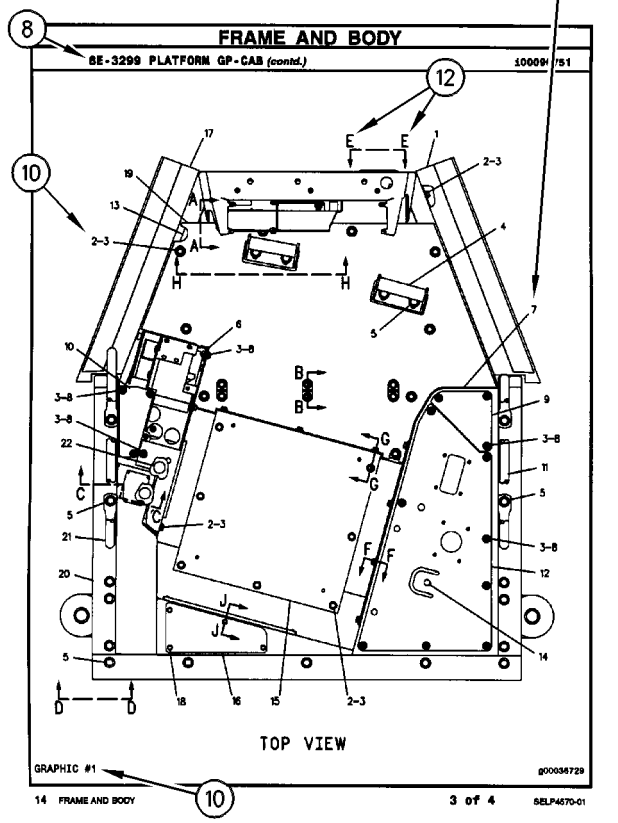

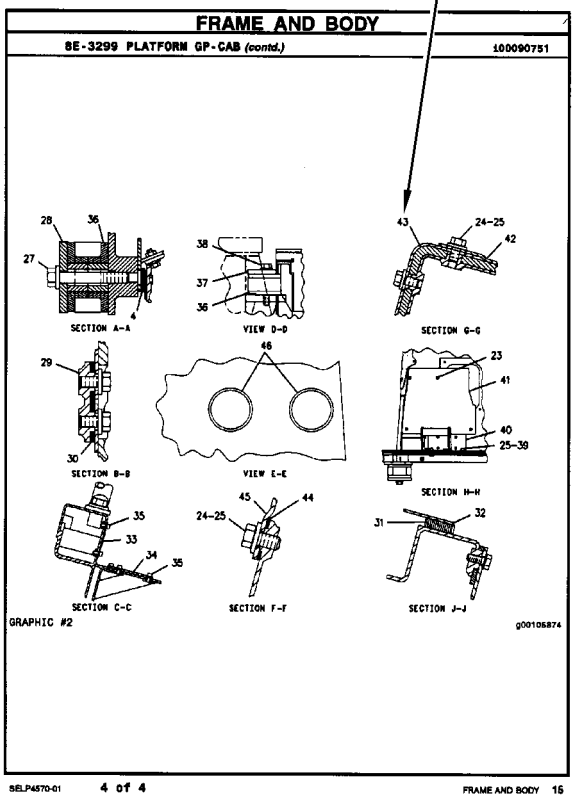

REMANUFACTURED COMPONENTS

As an option when making repairs consider Caterpillar Remanufactured Components. Components that are available through the Caterpillar Remanufactured Program are identified three ways in the parts book:

- with the letter R in the note field of the parts list
- with an R* at the beginning of the first line of the caption
- with an *R at the end of the first line of the caption

Typical components included in the Remanufacturing Program include:

ALTERNATORS
CONNECTING RODS
CRANKSHAFTS - UNDERSIZE
CRANKSHAFTS - UPGRADE TO NEW
CYLINDER HEADS
ELECTRONIC CONTROL MODULES (ECM)
ELECTRONIC SENSORS
FUEL INJECTORS
FUEL NOZZLES
FUEL PUMPS
GOVERNORS
OIL PUMPS
PISTONS
SHORT BLOCKS
STARTERS
TURBOCHARGERS - COMPLETE
TURBOCHARGER CARTRIDGES
WATER PUMPS

Caterpillar Remanufactured engines for many engine arrangements are also available.

COMPOSANTS RÉNOVÉS

Comme option de réparation, considérer les composants rénovés Caterpillar. Les composants disponibles dans le cadre du programme Caterpillar de composants rénovés sont identifiés de trois façons dans le catalogue de pièces:

- avec la lettre "R" dans l'espace note de la liste des pièces
- avec R* au début de la première ligne des légendes
- avec *R à la fin de la première ligne des légendes

Les composants suivants figurent parmi les composants typiques du programme de rénovation:

ALTERNATEURS
BIELLES
VILEBREQUINS - SOUS-DIMENSIONNÉS
VILEBREQUINS - REMIS À NEUF
CULASSES
MODULES DE COMMANDE ÉLECTRONIQUE (ECM)
CAPTEURS ÉLECTRONIQUES
INJECTEURS
TÊTES D'INJECTEURS
POMPES À CARBURANT
RÉGULATEURS
POMPES À HUILE
PISTONS
BLOCS EMBIELLÉS
DÉMARREURS
TURBOCOMPRESSEURS - COMPLETS
CARTOUCHES DE TURBOCOMPRESSEUR
POMPES À EAU

Des moteurs rénovés sont aussi disponibles pour plusieurs versions de moteur.

ALTERNATIVAS DE REPARACIÓN

COMPONENTES REMANUFACTURADOS

Al hacer reparaciones, tenga en cuenta la opción de Componentes Remanufacturados Caterpillar. Los componentes que están disponibles por medio del programa de Productos Remanufacturados Caterpillar se identifican de tres maneras en el manual de piezas:

- con la letra R en el espacio de Nota de la lista de piezas
- con una R* al comienzo de la primera línea de la leyenda
- con una *R al final de la primera línea de la leyenda

Los componentes que se incluyen típicamente en el Programa de Productos Remanufacturados son:

ALTERNADORES
BIELAS
CIGÜEÑALES - BAJOMEDIDA
CIGÜEÑALES - REMANUFACTURADOS A NUEVO
CULATAS
MÓDULOS DE CONTROL ELECTRÓNICO (ECM)
SENSORES ELECTRONICOS
INYECTORES
BOQUILLAS
BOMBAS DE COMBUSTIBLE
REGULADORES
BOMBAS DE ACEITE
PISTONES
MONOBLOQUES
MOTORES DE ARRANQUE
TURBOCOMPRESORES - COMPLETOS
NÚCLEOS DE TURBOCOMPRESOR
BOMBAS DE AGUA

También hay disponibles motores Remanufacturados Caterpillar para muchas de las configuraciones de motores.

COMPONENTES REMANUFATURADOS

Considere o uso de Componentes Remanufaturados Caterpillar ao efetuar reparos. Os componentes disponíveis através do Programa de Remanufatura Caterpillar são identificados de três formas no manual de peças:

- com um R na área da nota da lista de peças
- com um R* no princípio da primeira linha da legenda
- com um *R no final da primeira linha da legenda

Os componentes típicos que constam no Programa de Remanufatura incluem:

ALTERNADORES
BIELAS
VIRABREQUINS - SUBMEDIDAS
VIRABREQUINS - ATUALIZAÇÃO
CABEÇOTES
MÓDULOS DE CONTROLE ELETRÔNICO (ECM)
SENSORES ELETRÔNICOS
INJETORES DE COMBUSTÍVEL
BICOS DE ABASTECIMENTO DE COMBUSTÍVEL
BOMBAS DE COMBUSTÍVEL
GOVERNADORES
BOMBAS DE ÓLEO
PISTÕES
BLOCOS BÁSICOS DO MOTOR
MOTORES DE PARTIDA
TURBOALIMENTADORES - COMPLETOS
CARTUCHOS DE TURBOALIMENTADORES
BOMBAS D'ÁGUA

Motores Remanufaturados Caterpillar também encontram-se disponíveis para diversos arranjos de motor.

REPARATURALTERNATIVEN

WERKÜBERHOLTE AT-PRODUKTE

Bei Reparaturen sollten werküberholte AT-Produkte von Caterpillar in Betracht gezogen werden. Die durch das AT-Programm von Caterpillar erhältlichen Teile sind im Parts Book auf drei verschiedene Arten gekennzeichnet:

- mit dem Buchstaben R in der Spalte NOTE der Ersatzteilliste
- mit einem R* am Anfang der ersten Zeile der Überschrift
- mit einem *R am Ende der ersten Zeile der Überschrift

Das AT-Programm umfaßt u.a. folgende Produkte:

DREHSTROMGENERATOREN
PLEUELSTANGEN
KURBELWELLEN - MIT UNTERMASS
KURBELWELLEN - MIT ORIGINALMASS
ZYLINDERKÖPFE
ELEKTRONISCHE STEUEREINHEITEN (EMC)
ELEKTRONISCHE SENSOREN
PUMPENDÜSEN
EINSPRITZDÜSEN
KRAFTSTOFFPUMPEN
DREHZAHLREGLER
ÖLPUMPEN
KOLBEN
TEILMOTOREN
ANLASSER
TURBOLADER - KOMPLETT
TURBOLADERLAUFZEUGE
KÜHLWASSERPUMPEN

Viele Motoren können durch werküberholte AT-Motoren von Caterpillar ersetzt werden.

SUPPLEMENTAL COOLANT ADDITIVES

CUSTOMER BENEFITS:

Protects against cavitation, foam, erosion, corrosion, and scale buildup in cooling systems.

- Provides measured coolant conditioner.

DESCRIPTION:

Additives deplete from the coolant with normal operation. For this reason, Supplemental Coolant Additives (SCA) must be added to all heavy duty coolants at regular intervals. In addition, when not using a fully formulated, pre-charged antifreeze, like Caterpillar's DEAC, an initial charge of SCA must be added to the cooling system. The amount of SCA added to the system is dependent on the capacity of the system.

The SCA for initial fill is provided as a liquid. SCA's for maintenance intervals are available in liquid form and as a spin-on element. (No Spin-on available for 3600 Family of Engines)

NOTE:

The amount of SCA added at initial fill is not the same as the amount added at maintenance intervals.

The coolant additive elements can be used with any ethylene or propylene glycol type antifreeze which meets ASTM D4985 or ASTM D5345 Specifications.

NOTE:

For use with standard heavy duty coolant only, not for use with Extended Life Coolant.

PARTS NEEDED:

Cooling System Capacity		Liquid SCA at Initial Fill	Liquid SCA at Maintenance*	Spin-on SCA Maintenance Element*
Liters	Gallons			
22-30	(6-8)	3P-2044 (1)	6V-3542 (1)	111-2370 (1)
30-38	(8-10)	3P-2044 (1) 6V-3542 (1)	111-2372 (1)	111-2369 (1)
38-49	(10-13)	3P-2044 (1) 8T-1589 (1)	111-2372 (1)	111-2369 (1)
49-64	(13-17)	3P-2044 (2)	8T-1589 (1)	9N-3368 (1)
64-83	(17-22)	3P-2044 (2) 8T-1589 (1)	111-2372 (1) 6V-3542 (1)	111-2371 (1)
83-114	(22-30)	3P-2044 (3) 8T-1589 (1)	3P-2044 (1)	9N-3718 (1)
114-163	(30-43)	3P-2044 (5)	3P-2044 (1) 6V-3542 (1)	111-2371 (2)
163-242	(43-64)	3P-2044 (8)	3P-2044 (2)	9N-3718 (2)

** Normal maintenance period is 250 hrs. See your Operation and Maintenance Manual for complete coolant maintenance instructions.*

( ) Indicates quantity required.

ADDITIFS POUR LIQUIDE DE REFROIDISSEMENT

AVANTAGES POUR LE CLIENT

L'additif protège contre la cavitation, la mousse, l'érosion, la corrosion et l'accumulation de dépôts dans le circuit de refroidissement.

- L'additif complémentaire fournit une quantité mesurée d'additif.

DESCRIPTION:

Les additifs s'épuisent pendant l'utilisation du moteur. C'est pourquoi l'on doit ajouter de l'additif au liquide de refroidissement/antigel pour moteurs diesel à intervalles réguliers. En plus, si l'on n'utilise pas de l'antigel entièrement formulé et pré-chargé comme le liquide de refroidissement/antigel Caterpillar pour moteurs diesel, une quantité initiale d'additif doit être ajoutée au circuit de refroidissement. La quantité d'additif à ajouter au circuit dépend de la contenance du circuit.

L'additif pour le remplissage initial est fourni sous forme liquide. L'additif pour l'entretien ultérieur est disponible sous forme liquide et sous forme d'élément à visser. (Il n'y a pas d'élément à visser pour les moteurs de la famille 3600).

NOTA:

La quantité d'additif à ajouter au remplissage initial diffère de la quantité à ajouter aux intervalles d'entretien.

Les éléments d'additif peuvent être utilisés avec tout antigel de type éthylène ou propylène-glycol conforme à la norme ASTM D4985 ou ASTM D5345.

NOTA:

A utiliser uniquement avec du liquide de refroidissement pour moteurs diesel et non avec le liquide de refroidissement longue durée.

PIÈCES NÉCESSAIRES:

Contenance du circuit de refroidissement		Additif liquide au remplissage initial	Additif liquide aux intervalles d'entretien*	Elément d'additif à visser aux intervalles d'entretien*
Litres	Gallons U.S.			
22-30	(6-8)	3P-2044 (1)	6V-3542 (1)	111-2370 (1)
30-38	(8-10)	3P-2044 (1) 6V-3542 (1)	111-2372 (1)	111-2369 (1)
38-49	(10-13)	3P-2044 (1) 8T-1589 (1)	111-2372 (1)	111-2369 (1)
49-64	(13-17)	3P-2044 (2)	8T-1589 (1)	9N-3368 (1)
64-83	(17-22)	3P-2044 (2) 8T-1589 (1)	111-2372 (1) 6V-3542 (1)	111-2371 (1)
83-114	(22-30)	3P-2044 (3) 8T-1589 (1)	3P-2044 (1)	9N-3718 (1)
114-163	(30-43)	3P-2044 (5)	3P-2044 (1) 6V-3542 (1)	111-2371 (2)
163-242	(43-64)	3P-2044 (8)	3P-2044 (2)	9N-3718 (2)

** L'intervalle d'entretien normal est de 250 heures-service. Voir le Guide d'utilisation et d'entretien pour de plus amples renseignements concernant l'entretien du circuit de refroidissement.*

( ) Indique la quantité exigée.

ADITIVOS DE REFRIGERANTE SUPLEMENTARIOS

VENTAJAS PARA EL USUARIO:

Protegen contra la cavitación, la formación de espuma, la corrosión y la acumulación de escamas en los sistemas de enfriamiento.

- Suministra un acondicionador dosificado de refrigerante.

DESCRIPCIÓN:

Los aditivos en el refrigerante se agotan con la operación normal. Por esta razón, se debe agregar Aditivo de refrigerante suplementario (SCA) a todos los refrigerantes para servicio pesado, a intervalos regulares. Además, cuando no se usa un anticongelante de precarga completo, tal como el DEAC de Caterpillar, es necesario agregar una cantidad de aditivo de refrigerante suplementario inicial al sistema de enfriamiento. La cantidad de aditivo que se debe agregar depende de la capacidad del sistema.

El SCA de llenado inicial es líquido. El que se usa para el mantenimiento está disponible tanto en líquido como en un elemento enroscable. (No hay elemento enroscable disponible para la Familia de Motores 3600).

NOTA:

La cantidad de aditivo de llenado inicial no es la misma que se agrega en los intervalos de mantenimiento.

Los elementos de aditivo de refrigerante se pueden usar con cualquier anticongelante de tipo glicol etilénico o propílico que esté de acuerdo con las especificaciones de las normas ASTM D4985 o ASTM D5345.

NOTA:

Se debe utilizar únicamente con refrigerante estándar para servicio pesado; no se debe usar con Refrigerante de Larga Duración.

PIEZAS NECESARIAS:

Capacidad del Sistema de Enfriamiento		SCA líquido de llenado inicial	SCA líquido de mantenimiento*	Elemento de mantenimiento enroscable*
litros	gal EE.UU.			
22-30	6-8	3P-2044 (1)	6V-3542 (1)	111-2370 (1)
30-38	8-10	3P-2044 (1) 6V-3542 (1)	111-2372 (1)	111-2369 (1)
38-49	10-13	3P-2044 (1) 8T-1589 (1)	111-2372 (1)	111-2369 (1)
49-64	13-17	3P-2044 (2)	8T-1589 (1)	9N-3368 (1)
64-83	17-22	3P-2044 (2) 8T-1589 (1)	111-2372 (1) 6V-3542 (1)	111-2371 (1)
83-114	22-30	3P-2044 (3) 8T-1589 (1)	3P-2044 (1)	9N-3718 (1)
114-163	30-43	3P-2044 (5)	3P-2044 (1) 6V-3542 (1)	111-2371 (2)
163-242	43-64	3P-2044 (8)	3P-2044 (2)	9N-3718 (2)

** El período normal de mantenimiento es de 250 horas. Para ver las instrucciones completas sobre el mantenimiento del refrigerante, consulte el Manual de Operación y Mantenimiento.*

( ) Indica la cantidad necesaria.

ADITIVOS SUPLEMENTARES DO LÍQUIDO ARREFECEDOR

BENEFÍCIOS PARA O CLIENTE:

Protege contra cavitação, espuma, erosão, corrosão e acúmulo de crostas nos sistemas de arrefecimento.

- Fornece uma quantidade pré-determinada de condicionador de arrefecimento.

DESCRIÇÃO:

Com a operação normal, os aditivos se esgotam do líquido arrefecedor. Por isso, Aditivos Suplementares do Líquido Arrefecedor (SCA) devem ser acrescentados a todos os líquidos arrefecedores para serviço pesado em intervalos regulares. Além disso, quando um anticongelante pré-carregado, totalmente formulado não for usado, como o DEAC Caterpillar, uma carga inicial de SCA deve ser acrescentada ao sistema de arrefecimento. A quantidade de SCA acrescentada ao sistema depende da capacidade do sistema.

O SCA para abastecimento inicial é fornecido em forma de líquido. Os aditivos suplementares (SCA) para intervalos de manutenção estão à disposição em forma líquida e como um elemento com roscas. (Exceto os Motores da Família 3600)

NOTA:

A quantidade de SCA adicionada no abastecimento inicial não é a mesma que a acrescentada nos intervalos de manutenção.

Os elementos do aditivo do líquido arrefecedor podem ser usados com qualquer tipo de anticongelante etileno ou propileno que satisfaz as Especificações ASTM D4985 ou ASTM D5345.

NOTA:

Para uso apenas com líquido arrefecedor para serviço pesado padrão, não deve ser usado com Líquido Arrefecedor de Vida Longa.

PEÇAS NECESSÁRIAS:

Capacidade do Sistema de Arrefecimento		Líquido SCA Durante Abastecimento Inicial	Líquido SCA Durante Manutenção*	Elemento de Manutenção de SCA com Roscas*
Litros	Galões			
22-30	6-8	3P-2044 (1)	6V-3542 (1)	111-2370 (1)
30-38	8-10	3P-2044 (1) 6V-3542 (1)	111-2372 (1)	111-2369 (1)
38-49	10-13	3P-2044 (1) 8T-1589 (1)	111-2372 (1)	111-2369 (1)
49-64	13-17	3P-2044 (2)	8T-1589 (1)	9N-3368 (1)
64-83	17-22	3P-2044 (2) 8T-1589 (1)	111-2372 (1) 6V-3542 (1)	111-2371 (1)
83-114	22-30	3P-2044 (3) 8T-1589 (1)	3P-2044 (1)	9N-3718 (1)
114-163	30-43	3P-2044 (5)	3P-2044 (1) 6V-3542 (1)	111-2371 (2)
163-242	43-64	3P-2044 (8)	3P-2044 (2)	9N-3718 (2)

** O período normal de manutenção é de 250 horas. Consulte o Manual de Operação e Manutenção para obter instruções completas quanto à manutenção do líquido arrefecedor.*

( ) Indica a quantidade exigida.

KÜHLMITTELZUSATZ

VORTEILE FÜR DEN KUNDEN:

Schutz gegen Kavitation, Schaumbildung, Erosion, Korrosion und Kesselsteinbildung in Kühlsystemen.

- Richtig dosierter Kühlmittelzusatz

BESCHREIBUNG:

Additive erschöpfen sich während des Motorbetriebs. Deshalb muß allen HD-Kühlmitteln regelmäßig Kühlmittelzusatz beigefügt werden. Wenn bei Erstfüllung kein vollwertiges Fertigkühlmittel, wie das Frostschutz- und Kühlmittel für Dieselmotoren von Caterpiller (DEAC), verwendet wird, muß bei Erstfüllung Kühlmittelzusatz beigefügt werden. Wieviel Kühlmittelzusatz beigefügt werden muß, hängt vom Inhalt des Kühlsystems ab.

Für Erstfüllung ist Kühlmittelzusatz nur in flüssiger Form erhältlich. Für Wartungsintervalle ist Kühlmittelzusatz in flüssiger Form und als Zusatzelement erhältlich. (Für die Motorbaureihe 3600 sind keine Zusatzelemente erhältlich.)

ANMERKUNG:

Die Kühlmittelmenge bei Erstfüllung ist nicht die gleiche Menge, die bei Wartungsintervallen beigefügt werden muß.

Die Kühlmittelzusatzelemente können mit allen Frostschutzmitteln auf Ethylen- oder Propylenglykolbasis verwendet werden, die den Standards nach ASTM D4985 oder ASTM D5345 entsprechen.

ANMERKUNG:

Den Kühlmittelzusatz nicht mit Langzeitkühlmittel (ELC) von Caterpillar verwenden. Der Kühlmittelzusatz ist nur für HD-Kühlmittel bestimmt.

TEILEBEZEICHNUNG:

Kühlsysteminhalt		Kühlmittelzusatz bei Erstfüllung	Flüssiger Kühlmittelzusatz bei Wartung*	Kühlmittelzusatzelement bei Wartung*
Liter	US-Gall.			
22-30	(6-8)	3P-2044 (1)	6V-3542 (1)	111-2370 (1)
30-38	(8-10)	3P-2044 (1) 6V-3542 (1)	111-2372 (1)	111-2369 (1)
38-49	(10-13)	3P-2044 (1) 8T-1589 (1)	111-2372 (1)	111-2369 (1)
49-64	(13-17)	3P-2044 (2)	8T-1589 (1)	9N-3368 (1)
64-83	(17-22)	3P-2044 (2) 8T-1589 (1)	111-2372 (1) 6V-3542 (1)	111-2371 (1)
83-114	(22-30)	3P-2044 (3) 8T-1589 (1)	3P-2044 (1)	9N-3718 (1)
114-163	(30-43)	3P-2044 (5)	3P-2044 (1) 6V-3542 (1)	111-2371 (2)
163-242	(43-64)	3P-2044 (8)	3P-2044 (2)	9N-3718 (2)

** Der normale Wartungsintervall beträgt 250 Betriebsstunden. Für vollständige Anweisungen zur Wartung des Kühlsystems, siehe Betriebs- und Wartungshandbuch.*

( ) Erforderliche Anzahl

MAINTENANCE PARTS

DESCRIPTION	PART NUMBER	QTY	WHERE USED	PAGE
AIR INLET AND EXHAUST SYSTEM				
ELEMENT AS-PRIMARY	123-6855	1	AIR CLEANER GP	150
ELEMENT AS-SECONDARY	123-6856	1	AIR CLEANER GP	150
BASIC ENGINE				
CAP AS	7E-6508	1	VALVE MECHANISM GP	72
		1	VALVE MECHANISM GP	74
FLANGE	7N-5418	1	PAN GP-OIL	64
GASKET-OIL PAN	7E-2631	1	PAN GP-OIL	64
PLUG-DRAIN	2A-5220	6	HOUSING GP-FRONT	58
PLUG-OIL DRAIN	6I-0723	1	PAN GP-OIL	64
SCREEN AS	7N-5395	1	PAN GP-OIL	62
		1	PAN GP-OIL	64
SEAL-O-RING	6V-5167	1	PAN GP-OIL	64
V-BELT	141-7116	1	MOUNTING GP-ALTERNATOR	60
BRAKING SYSTEM				
CAP-DUST	6V-0852	2	CONTROL GP-SERVICE BRAKE	772
		2	CONTROL GP-SERVICE BRAKE	778
		2	CONTROL GP-SERVICE BRAKE	784
		2	CONTROL GP-SERVICE BRAKE	792
		4	LINES GP-SERVICE BRAKE	800
COOLING SYSTEM				
CAP-RADIATOR	6L-8617	1	TANK GP-RADIATOR TOP	143
FILTER-WATER	4N-5834	2	PUMP GP-WATER	136
FILTER-WATER (WATER PUMP)	4N-5834	2	PUMP GP-WATER	137
HOSE	106-4572	14	LINES GP-RADIATOR	114
REGULATOR-TEMPERATURE	6I-4950	4	HOUSING & REGULATOR GP	103
ELECTRICAL AND STARTING SYSTEM				
BATTERY (CLOCK)	101-1785	1	CONTROL GP-UNPROGRAMMED	252
		1	CONTROL GP-UNPROGRAMMED	257
BATTERY (12 VOLT/DRY)	9X-9730	4	BATTERY & WIRING GP	236
BREATHER	9G-9981	1	HEATER AR-FUEL	291
		1	HEATER AR-FUEL	292
BRUSH AS	3T-9524	6	STARTING MOTOR GP-ELECTRIC	356
		6	STARTING MOTOR GP-ELECTRIC	360
CAP AS-DUST	6N-1604	2	HEATER GP-JACKET WATER	298
		2	HEATER GP-JACKET WATER	299
CAP AS-FUEL TANK	123-6305	1	HEATER AR-FUEL	291
		1	HEATER AR-FUEL	292
CAP AS-PROTECTION	3E-5165	1	WIRING GP-SHUTOFF	439
CAP-DUST	6V-0852	2	WIRING GP-POWER TRAIN	416
		2	WIRING GP-POWER TRAIN	420
		2	WIRING GP-POWER TRAIN	424
		2	WIRING GP-POWER TRAIN	428
		2	WIRING GP-POWER TRAIN	432
CAP-FUSE HOLDER	7N-2867	1	WIRING GP-VIMS MONITOR	460
		1	WIRING GP-VIMS MONITOR	466
	139-0178	1	WIRING GP-VIDS MONITOR	440
		1	WIRING GP-VIDS MONITOR	446
CAP-RECEPTACLE	8C-6354	1	WIRING GP-VIDS MONITOR	441
		1	WIRING GP-VIDS MONITOR	447

DESCRIPTION	PART NUMBER	QTY	WHERE USED	PAGE
		1	WIRING GP-VIMS MONITOR	461
		1	WIRING GP-VIMS MONITOR	467
CIRCUIT BREAKER AS (10 AMP) (KEY START)	6T-3642	1	WIRING GP-VIDS MONITOR	441
		1	WIRING GP-VIDS MONITOR	447
		1	WIRING GP-VIMS MONITOR	461
		1	WIRING GP-VIMS MONITOR	467
CIRCUIT BREAKER AS (105 AMP) (ALTERNATOR)	3E-7294	2	WIRING GP-VIMS MONITOR	461
		1	WIRING GP-VIMS MONITOR	467
CIRCUIT BREAKER AS (105 AMP) (ALTERNATOR & MAIN)	3E-7294	2	WIRING GP-VIDS MONITOR	440
CIRCUIT BREAKER AS (105 AMP) (ALTERNATOR-MAIN)	3E-7294	2	WIRING GP-VIDS MONITOR	447
CIRCUIT BREAKER AS (105 AMP) (MAIN)	3E-7294	1	WIRING GP-VIMS MONITOR	467
CIRCUIT BREAKER AS (15 AMP) (ENGINE ECM)	6T-3643	1	WIRING GP-VIDS MONITOR	441
		1	WIRING GP-VIDS MONITOR	447
		1	WIRING GP-VIMS MONITOR	461
		1	WIRING GP-VIMS MONITOR	467
CIRCUIT BREAKER AS (15 AMP) (RUNNING LAMPS)	3T-2662	1	WIRING GP-VIDS MONITOR	441
		1	WIRING GP-VIDS MONITOR	447
		1	WIRING GP-VIMS MONITOR	461
		1	WIRING GP-VIMS MONITOR	467
CYLINDER AS-ETHER	7X-1062	1	STARTING AID GP-ETHER	352
ELEMENT AS-JACKET WATER HEATER (120 VOLT, 1500 WATT)	9G-6655	2	HEATER GP-JACKET WATER	298
ELEMENT AS-JACKET WATER HEATER (240 VOLT, 1500 WATT)	6T-3764	2	HEATER GP-JACKET WATER	299
FILTER & GASKET AS	9X-7138	1	STARTING AID GP-ETHER	352
FUSE (10 AMP)	3K-8782	8	WIRING GP-VIDS MONITOR	440
		8	WIRING GP-VIDS MONITOR	446
		8	WIRING GP-VIMS MONITOR	460
		8	WIRING GP-VIMS MONITOR	466
FUSE (15 AMP)	8M-8948	4	WIRING GP-VIDS MONITOR	440
		4	WIRING GP-VIDS MONITOR	446
		4	WIRING GP-VIMS MONITOR	460
		4	WIRING GP-VIMS MONITOR	466
FUSE (20 AMP)	8M-0456	1	WIRING GP-VIDS MONITOR	440
		1	WIRING GP-VIDS MONITOR	446
		1	WIRING GP-VIMS MONITOR	460
		1	WIRING GP-VIMS MONITOR	466
KEY	5P-8500	1	HEATER AR-FUEL	292
KEY (BATTERY DISCONNECT)	8H-5306	1	SWITCH GP-DISCONNECT	365
LAMP	9X-4492	1	LAMP GP-SIGNAL	306
LAMP GP-SIGNAL (STOP/TAIL)	135-0426	2	LIGHTING GP-STOP	318
LAMP-MINIATURE (28 VOLT)	7N-5876	11	WIRING GP-CAB	376
LAMP (24 VOLT)	9X-4493	1	LAMP GP-SIGNAL	307
		1	LAMP GP-VIMS SERVICE INDICATOR	309
LAMP (24 VOLT)(65 WATT)	9X-3463	1	LAMP GP-FLOOD	301
		1	LAMP GP-FLOOD	303
		1	LAMP GP-FLOOD	304

MAINTENANCE PARTS

DESCRIPTION	PART NUMBER	QTY	WHERE USED	PAGE
LAMP (24 VOLT)(65 WATT) (HEAD)	9X-3463	1	LAMP GP-HEAD	305
LAMP (24 VOLT)(65 WATTS)	9X-3463	1	LAMP GP-FLOOD	302
LAMP (28 VOLT)	9W-2111	1	WIRING GP-CAB	376
LAMP (28 VOLT) (DOME)	7N-9943	1	LAMP GP-DOME	300
LENS AS	9X-4174	1	LAMP GP-FLOOD	303
LENS AS (FLOODLIGHT)	9X-4174	1	LAMP GP-FLOOD	301
	158-0248	1	LAMP GP-FLOOD	304
LENS AS-FLOODLIGHT	9X-4174	1	LAMP GP-FLOOD	302
LENS AS (HEADLIGHT) (LOW BEAM)	9X-7798	1	LAMP GP-HEAD	305
LENS-BLUE	107-2283	1	LAMP GP-VIMS SERVICE INDICATOR	309
LENS-DOME LAMP	7T-0020	1	LAMP GP-DOME	300
LENS-RED	9X-3064	1	LAMP GP-SIGNAL	307
PADLOCK GP	5P-8502	1	HEATER AR-FUEL	292
SLEEVE	8Y-6364	1	HEATER AR-FUEL	292
SPRING-BRUSH	3T-9494	1	STARTING MOTOR GP-ELECTRIC	356
		6	STARTING MOTOR GP-ELECTRIC	357
		1	STARTING MOTOR GP-ELECTRIC	360
		6	STARTING MOTOR GP-ELECTRIC	361
FRAME AND BODY				
ELEMENT-FILTER	7M-1674	1	SUPPORT GP-AIR INLET	753
		1	SUPPORT GP-AIR INLET	754
FITTING-GREASE	3B-8489	6	LINES GP-GREASE	740
		3	LINES GP-GREASE	744
FITTING-GREASE (1/8-27 THD)	3B-8489	5	LINES GP-GREASE	742
KEY	5P-8500	1	HOOD & GUARD GP	718
		1	HOOD & GUARD GP	722
		1	HOOD & GUARD GP	726
		1	MOUNTING GP-BUMPER	748
PADLOCK GP	5P-8502	2	HOOD & GUARD GP	718
		2	HOOD & GUARD GP	722
		2	HOOD & GUARD GP	726
		1	MOUNTING GP-BUMPER	748
SLEEVE	8Y-6364	1	HOOD & GUARD GP	718
		1	HOOD & GUARD GP	722
		1	HOOD & GUARD GP	726
		1	MOUNTING GP-BUMPER	748

MAINTENANCE PARTS

DESCRIPTION	PART NUMBER	QTY	WHERE USED	PAGE
FUEL SYSTEM				
AIR CLEANER AS	136-6202	2	ADAPTER GP-FAST FILL FUEL	178
		2	ADAPTER GP-FAST FILL FUEL	180
		1	FUEL AR-CONVENTIONAL FILL	190
BREATHER	9G-9981	1	FUEL AR-CONVENTIONAL FILL	188
		1	FUEL AR-CONVENTIONAL FILL	194
CAP AS-FUEL TANK	123-6305	1	FUEL AR-CONVENTIONAL FILL	186
		1	FUEL AR-CONVENTIONAL FILL	188
		1	FUEL AR-CONVENTIONAL FILL	190
		1	FUEL AR-CONVENTIONAL FILL	192
		1	FUEL AR-CONVENTIONAL FILL	194
CAP AS-FUEL TANK FILLER	101-8909	1	ADAPTER GP-FAST FILL FUEL	178
		1	ADAPTER GP-FAST FILL FUEL	180
		1	ADAPTER GP-FAST FILL FUEL	182
COVER-DUST	9D-0630	1	ADAPTER GP-FAST FILL FUEL	178
		1	ADAPTER GP-FAST FILL FUEL	180
		1	ADAPTER GP-FAST FILL FUEL	182
ELEMENT AS-FUEL FILTER (PRIMARY)	9M-2342	1	FILTER GP-FUEL	184
FILTER AS-FUEL (SECONDARY)	1R-0755	2	FILTER GP-FUEL	184
GASKET	8H-2778	1	FILTER GP-FUEL	184
KEY	5P-8500	1	ADAPTER GP-FAST FILL FUEL	182
		1	FUEL AR-CONVENTIONAL FILL	194
		1	TANK GP-FUEL	228
KIT-CAP FILTER	9X-2205	1	FUEL AR-CONVENTIONAL FILL	186
KIT-VENT	5T-8645	1	FUEL AR-CONVENTIONAL FILL	192
PADLOCK GP	5P-8502	1	ADAPTER GP-FAST FILL FUEL	182
		1	FUEL AR-CONVENTIONAL FILL	194
		1	TANK GP-FUEL	228
PLUG-PIPE (3/8-18 NPTF THD)	8T-6767	1	TANK GP-FUEL	230
SEAL-O-RING (110.49MM ID)	9X-8600	1	ADAPTER GP-FAST FILL FUEL	178
		1	ADAPTER GP-FAST FILL FUEL	180
		1	ADAPTER GP-FAST FILL FUEL	182
		1	FUEL AR-CONVENTIONAL FILL	186
		1	FUEL AR-CONVENTIONAL FILL	188
		1	FUEL AR-CONVENTIONAL FILL	190
SLEEVE	8Y-6364	1	ADAPTER GP-FAST FILL FUEL	182
		1	FUEL AR-CONVENTIONAL FILL	194
		1	TANK GP-FUEL	228
STRAINER-FUEL	9P-7121	1	TANK GP-FUEL	230
STRAINER-FUEL TANK	9P-7121	1	TANK GP-FUEL	228

MAINTENANCE PARTS

DESCRIPTION	PART NUMBER	QTY	WHERE USED	PAGE
HYDRAULIC SYSTEM				
CAP AS	6V-9829	4	VALVE GP-CONTROL	1073
CAP AS (11/16-16 THD)	6V-9829	1	VALVE & MTG GP-VARIABLE PUMP	1069
		1	VALVE & MTG GP-VARIABLE PUMP	1070
CAP-DUST	6V-0852	2	LINES GP-HYDRAULIC	996
		2	LINES GP-HYDRAULIC	1002
		1	LINES GP-HYDRAULIC FAN	1008
		1	LINES GP-HYDRAULIC FAN	1014
		1	LINES GP-HYDRAULIC FAN	1020
		1	VALVE & MTG GP-HYDRAULIC FAN	1062
		1	VALVE & MTG GP-MAIN CONTROL	1064
		1	VALVE & MTG GP-PILOT RELIEF	1067
		1	VALVE & MTG GP-PILOT RELIEF	1068
		3	VALVE GP-CONTROL	1073
	8C-3451	1	LINES GP-HYDRAULIC	997
		1	LINES GP-HYDRAULIC	1004
CAP-FILLER	4J-3754	1	TANK GP-HYDRAULIC	1054
		1	TANK GP-HYDRAULIC	1058
COVER-HYDRAULIC CAP	5D-1902	1	TANK GP-HYDRAULIC	1054
FITTING AS (QUICK DISCONNECT)	6V-3965	1	VALVE & MTG GP-HYDRAULIC FAN	1062
PADLOCK GP	5P-8502	1	COVER GP-HYDRAULIC TANK CAP	959
PLUG-O-RING (7/16-20 THD)	9S-4190	1	LINES GP-HYDRAULIC FAN	1008
		1	LINES GP-HYDRAULIC FAN	1014
		1	LINES GP-HYDRAULIC FAN	1020
		1	LINES GP-HYDRAULIC FAN	1021
		1	PUMP GP-PISTON	1038
SCREEN	118-8693	2	TANK GP-HYDRAULIC	1054
SCREEN AS	9T-9227	1	TANK GP-HYDRAULIC	1054
		4	TANK GP-HYDRAULIC	1058
SCREEN GP	7J-2656	1	TANK GP-HYDRAULIC	1054
SEAL-O-RING (94.84MM ID)	1H-8128	3	LINES GP-HYDRAULIC	997
		3	LINES GP-HYDRAULIC	1003
STRAINER AS	3D-6678	1	TANK GP-HYDRAULIC	1054
		1	TANK GP-HYDRAULIC	1058
LUBRICATION SYSTEM				
BREATHER AS (CRANKCASE)	4W-3027	2	BREATHER GP	76
CAP AS	9S-9272	1	FILTER GP-ENGINE OIL	78
		1	FILTER GP-ENGINE OIL	80
		1	OIL CHANGE GP-HIGH SPEED	94
CAP AS-OIL FILL	133-5946	1	FILLER GP-ENGINE OIL	77
CAP-DUST	6V-0852	1	LINES GP-ENGINE OIL	85
		1	LINES GP-ENGINE OIL	89
	8C-3445	1	FILTER GP-ENGINE OIL	78
		1	FILTER GP-ENGINE OIL	80
FILTER AS-ENGINE OIL	2P-4005	2	FILTER GP-ENGINE OIL	78
		2	FILTER GP-ENGINE OIL	80
SCREEN-SCAVENGE	4P-4917	1	PUMP & LINES GP-SUMP	95
	4P-5500	1	PUMP & LINES GP-SUMP	95

MAINTENANCE PARTS

DESCRIPTION	PART NUMBER	QTY	WHERE USED	PAGE
OPERATOR STATION				
BLADE AS-WIPER	6V-7419	2	WIPER & WASHER GP-WINDOW	1430
		2	WIPER & WASHER GP-WINDOW	1432
BLADE AS-WIPER (FRONT)	6V-7419	1	WIPER & WASHER GP-WINDOW	1424
		1	WIPER & WASHER GP-WINDOW	1426
		1	WIPER & WASHER GP-WINDOW	1428
BLADE AS-WIPER (REAR)	6V-5851	1	WIPER & WASHER GP-WINDOW	1424
		1	WIPER & WASHER GP-WINDOW	1426
		1	WIPER & WASHER GP-WINDOW	1428
BOLT (M10X1.50X12MM)	7X-2621	2	WIPER & WASHER GP-WINDOW	1424
CAP	9U-0126	1	WASHER GP-WINDOW	1423
CAP AS-PROTECTION	3E-5165	1	PANEL GP-INSTRUMENT	1340
CAP-SEAL	3E-4052	1	LINES GP-AIR CONDITIONER	1320
FILTER-AIR	9X-8216	1	CAB GP	1264
		1	FILTER GP-CAB AIR	1297
		1	FILTER GP-CAB AIR	1298
FILTER-SCREEN	8T-5913	2	WASHER GP-WINDOW	1422
		4	WASHER GP-WINDOW	1423
LAMP	9X-4494	1	INSTALLATION GP-RADIO	1304
LAMP-MAP	8Y-6335	1	INSTALLATION GP-RADIO	1304
LAMP (24 VOLT)	7N-5876	6	PANEL GP-INSTRUMENT	1346
SCREEN GP-SUN (FRONT)	8Y-6339	1	SCREEN GP-SUN	1360
		1	SCREEN GP-SUN	1361
SCREEN GP-SUN (REAR)	8Y-6340	1	SCREEN GP-SUN	1360
		1	SCREEN GP-SUN	1361
SEAT BELT GP	183-3648	1	SEAT GP	1382
SEAT BELT GP (RETRACTABLE)	156-1148	1	SEAT GP	1379
V-BELT	112-6055	1	COMPRESSOR & MTG GP-REFRIG	1268
	141-7138	1	COMPRESSOR & MTG GP-REFRIG	1270

MAINTENANCE PARTS

DESCRIPTION	PART NUMBER	QTY	WHERE USED	PAGE
POWER TRAIN				
BREATHER	4H-6112	3	LINES GP-POWER TRAIN OIL	557
		3	LINES GP-POWER TRAIN OIL	561
		3	LINES GP-POWER TRAIN OIL	565
CAP-DUST	6V-0852	1	FILTER & MTG GP-POWER TRAIN	530
		1	FILTER & MTG GP-POWER TRAIN	532
		1	FILTER & MTG GP-POWER TRAIN	534
		1	LINES GP-POWER TRAIN OIL	553
		1	LINES GP-POWER TRAIN OIL	557
		1	LINES GP-POWER TRAIN OIL	561
		1	LINES GP-POWER TRAIN OIL	565
		1	TORQUE CONVERTER & HOUSING GP	618
		1	TORQUE CONVERTER & HOUSING GP	622
		1	TORQUE CONVERTER & HOUSING GP	626
		1	TORQUE CONVERTER & HOUSING GP	628
		1	VALVE & MTG GP-LOCKUP CLUTCH	651
		1	VALVE & MTG GP-LOCKUP CLUTCH	652
		1	VALVE GP-RELIEF	658
		1	VALVE GP-TORQUE CONV PRIORITY	664
	8C-3447	1	FILTER & MTG GP-POWER TRAIN	530
		1	FILTER & MTG GP-POWER TRAIN	532
		1	FILTER & MTG GP-POWER TRAIN	534
CAP-VALVE (2.0IN THK)	9K-7951	1	RIM GP-DEMOUNTABLE	595
ELEMENT-FILTER (POWERTRAIN)	132-8876	1	FILTER GP-OIL	539
FILTER	1G-8878	1	FILTER GP-OIL	540
FILTER AS-HYDRAULIC	1G-8878	1	FILTER GP-OIL	541
FILTER ELEMENT AS-HYDRAULIC (POWER TRAIN)	132-8876	1	FILTER GP-OIL	538
FILTER ELEMENT AS-OIL (HYDRAULIC)	132-8876	1	FILTER GP-OIL	536
FITTING	1K-6853	2	AXLE GP-OSCILLATING	476
FITTING-GREASE (1/8-27 THD)	3B-8489	1	SHAFT GP-DRIVE	598
PLUG-DRAIN (1-1/2-12 THD)	4B-2363	1	GEAR & CASE GP-OUTPUT TRANSFER	544
PLUG-MAGNETIC	5P-4484	1	AXLE GP-FIXED	474
		1	AXLE GP-OSCILLATING	476
PLUG-MAGNETIC (1 5/8-12 THD)	6V-0439	1	WHEEL & FINAL DRIVE GP	668
SCREEN-SUCTION	3S-3875	2	GEAR & CASE GP-OUTPUT TRANSFER	545
SEAL-O-RING (133.66MM ID)	5H-5672	2	PLANETARY GP-TRANSMISSION	579
		2	PLANETARY GP-TRANSMISSION	585
SEAL-O-RING (81.92MM ID)	4L-9564	1	SHAFT GP-DRIVE	596
		1	SHAFT GP-DRIVE	598
SERVICE EQUIPMENT AND SUPPLIES				
CAP AS-OIL FILTER	7W-1484	1	PROTECTION GP-VANDALISM	1448
KEY	5P-8500	1	PROTECTION GP-VANDALISM	1448
PADLOCK GP	5P-8502	1	PROTECTION GP-VANDALISM	1448

DESCRIPTION	PART NUMBER	QTY	WHERE USED	PAGE
STEERING SYSTEM				
CAP-DUST	6V-0852	1	LINES GP-SECONDARY STEERING	830
		1	LINES GP-SECONDARY STEERING	832
		1	LINES GP-SECONDARY STEERING	836
		2	LINES GP-STEERING	840
		2	LINES GP-STEERING	846
		1	LINES GP-STEERING OIL COOLER	854
		1	LINES GP-STEERING OIL COOLER	858
		1	STEERING AR	872
		1	STEERING AR	873
	8C-3451	1	LINES GP-STEERING OIL COOLER	855
		1	LINES GP-STEERING OIL COOLER	859
FILTER AS-OIL	126-1817	1	FILTER GP-OIL	828
SEAL-O-RING (94.84MM ID)	1H-8128	1	LINES GP-STEERING	840
		1	LINES GP-STEERING	846

PIÈCES DE RECHANGE

DESCRIPTION	NUMÉRO DE PIECÈS	QTÉ	DOMAINE D'APPLICATION	PAGE
CHÂSSIS ET BENNE				
CADENAS (ASS)	5P-8502	2	CAPOT ET PROTECTION (ASS)	718
		2	CAPOT ET PROTECTION (ASS)	722
		2	CAPOT ET PROTECTION (ASS)	726
		1	MONTAGE DE PARE-CHOCS (ASS)	748
CLÉ	5P-8500	1	CAPOT ET PROTECTION (ASS)	718
		1	CAPOT ET PROTECTION (ASS)	722
		1	CAPOT ET PROTECTION (ASS)	726
		1	MONTAGE DE PARE-CHOCS (ASS)	748
ÉLÉMENT DE FILTRE	7M-1674	1	SUPPORTS D'ADMISSION D'AIR (ASS)	753
		1	SUPPORTS D'ADMISSION D'AIR (ASS)	754
GRAISSEUR	3B-8489	6	CANALISATIONS DE GRAISSAGE (ASS)	740
		3	CANALISATIONS DE GRAISSAGE (ASS)	744
GRAISSEUR (FILET 1/8-27)	3B-8489	5	CANALISATIONS DE GRAISSAGE (ASS)	742
MANCHON	8Y-6364	1	CAPOT ET PROTECTION (ASS)	718
		1	CAPOT ET PROTECTION (ASS)	722
		1	CAPOT ET PROTECTION (ASS)	726
		1	MONTAGE DE PARE-CHOCS (ASS)	748
CIRCUIT D'ADMISSION D'AIR ET D'ÉCHAPPEMENT				
ÉLÉMENT PRINCIPAL (ENS)	123-6855	1	FILTRE A AIR (ASS)	150
ÉLÉMENT SECONDAIRE (ENS)	123-6856	1	FILTRE A AIR (ASS)	150
CIRCUIT DE CARBURANT				
BOUCHON DE REMPLISSAGE DU RÉSERVOIR DE CARBURANT	101-8909	1	ADAPTATEUR DE REMPLIS. RAPIDE DE CARBURANT (ASS)	178
		1	ADAPTATEUR DE REMPLIS. RAPIDE DE CARBURANT (ASS)	180
		1	ADAPTATEUR DE REMPLIS. RAPIDE DE CARBURANT (ASS)	182
BOUCHON DE RÉSERVOIR DE CARBURANT (ENS)	123-6305	1	CARBURANT - REMPLISSAGE CLASSIQUE (VERSION)	186
		1	CARBURANT - REMPLISSAGE CLASSIQUE (VERSION)	188
		1	CARBURANT - REMPLISSAGE CLASSIQUE (VERSION)	190
		1	CARBURANT - REMPLISSAGE CLASSIQUE (VERSION)	192
		1	CARBURANT - REMPLISSAGE CLASSIQUE (VERSION)	194
BOUCHON FILETÉ (FILET 3/8-18 NPTF)	8T-6767	1	RÉSERVOIR DE CARBURANT (ASS)	230
CADENAS (ASS)	5P-8502	1	ADAPTATEUR DE REMPLIS. RAPIDE DE CARBURANT (ASS)	182
		1	CARBURANT - REMPLISSAGE CLASSIQUE (VERSION)	194
		1	RÉSERVOIR DE CARBURANT (ASS)	228
CLÉ	5P-8500	1	ADAPTATEUR DE REMPLIS. RAPIDE DE CARBURANT (ASS)	182
		1	CARBURANT - REMPLISSAGE CLASSIQUE (VERSION)	194
		1	RÉSERVOIR DE CARBURANT (ASS)	228

PIÈCES DE RECHANGE

DESCRIPTION	NUMÉRO DE PIECÈS	QTÉ	DOMAINE D'APPLICATION	PAGE
COUVERCLE ANTI-POUSSIÈRE	9D-0630	1	ADAPTATEUR DE REMPLIS. RAPIDE DE CARBURANT (ASS)	178
		1	ADAPTATEUR DE REMPLIS. RAPIDE DE CARBURANT (ASS)	180
		1	ADAPTATEUR DE REMPLIS. RAPIDE DE CARBURANT (ASS)	182
ÉLÉMENT DE FILTRE À CARBURANT (ENS) (PRINCIPAL)	9M-2342	1	FILTRE A CARBURANT (ASS)	184
FILTRE A AIR (ENS)	136-6202	2	ADAPTATEUR DE REMPLIS. RAPIDE DE CARBURANT (ASS)	178
		2	ADAPTATEUR DE REMPLIS. RAPIDE DE CARBURANT (ASS)	180
		1	CARBURANT - REMPLISSAGE CLASSIQUE (VERSION)	190
FILTRE À CARBURANT	9P-7121	1	RÉSERVOIR DE CARBURANT (ASS)	230
FILTRE A CARBURANT (ENS) (AUXILIAIRE)	1R-0755	2	FILTRE A CARBURANT (ASS)	184
JOINT PLAT	8H-2778	1	FILTRE A CARBURANT (ASS)	184
JOINT TORIQUE (DIA INT 110,49MM)	9X-8600	1	ADAPTATEUR DE REMPLIS. RAPIDE DE CARBURANT (ASS)	178
		1	ADAPTATEUR DE REMPLIS. RAPIDE DE CARBURANT (ASS)	180
		1	ADAPTATEUR DE REMPLIS. RAPIDE DE CARBURANT (ASS)	182
		1	CARBURANT - REMPLISSAGE CLASSIQUE (VERSION)	186
		1	CARBURANT - REMPLISSAGE CLASSIQUE (VERSION)	188
		1	CARBURANT - REMPLISSAGE CLASSIQUE (VERSION)	190
KIT DE CHAPEAU DE FILTRE	9X-2205	1	CARBURANT - REMPLISSAGE CLASSIQUE (VERSION)	186
KIT DE RENIFLARD	5T-8645	1	CARBURANT - REMPLISSAGE CLASSIQUE (VERSION)	192
MANCHON	8Y-6364	1	ADAPTATEUR DE REMPLIS. RAPIDE DE CARBURANT (ASS)	182
		1	CARBURANT - REMPLISSAGE CLASSIQUE (VERSION)	194
		1	RÉSERVOIR DE CARBURANT (ASS)	228
RENIFLARD	9G-9981	1	CARBURANT - REMPLISSAGE CLASSIQUE (VERSION)	188
		1	CARBURANT - REMPLISSAGE CLASSIQUE (VERSION)	194
TAMIS DE RÉSERVOIR DE CARBURANT	9P-7121	1	RÉSERVOIR DE CARBURANT (ASS)	228

PIÈCES DE RECHANGE

DESCRIPTION	NUMÉRO DE PIECÈS	QTÉ	DOMAINE D'APPLICATION	PAGE
CIRCUIT DE DIRECTION				
FILTRE À HUILE (ENS)	126-1817	1	FILTRE A HUILE (ASS)	828
JOINT TORIQUE (DIA INT 94,84MM)	1H-8128	1	CANALISATIONS DE DIRECTION (ASS)	840
		1	CANALISATIONS DE DIRECTION (ASS)	846
PARE-POUSSIERE	6V-0852	1	CANALISATION DE DIRECTION AUXILIAIRE	830
		1	CANALISATION DE DIRECTION AUXILIAIRE	832
		1	CANALISATION DE DIRECTION AUXILIAIRE	836
		2	CANALISATIONS DE DIRECTION (ASS)	840
		2	CANALISATIONS DE DIRECTION (ASS)	846
		1	CANALISATIONS DE REFROIDISSEUR D'HUILE DE DIRECTION	854
		1	CANALISATIONS DE REFROIDISSEUR D'HUILE DE DIRECTION	858
		1	DIRECTION (ENS)	872
		1	DIRECTION (ENS)	873
	8C-3451	1	CANALISATIONS DE REFROIDISSEUR D'HUILE DE DIRECTION	855
		1	CANALISATIONS DE REFROIDISSEUR D'HUILE DE DIRECTION	859
CIRCUIT DE FREINS				
PARE-POUSSIERE	6V-0852	4	CANALISATIONS DU FREIN DE MANOEUVRE (ASS)	800
		2	FREIN DE MANOEUVRE - COMMANDE (ASS)	772
		2	FREIN DE MANOEUVRE - COMMANDE (ASS)	778
		2	FREIN DE MANOEUVRE - COMMANDE (ASS)	784
		2	FREIN DE MANOEUVRE - COMMANDE (ASS)	792

PIÈCES DE RECHANGE

DESCRIPTION	NUMÉRO DE PIECÈS	QTÉ	DOMAINE D'APPLICATION	PAGE
CIRCUIT DE GRAISSAGE				
BOUCHON DE LA GOULOTTE DE REMPLIS. D'HUILE	133-5946	1	BOUCHON DE REMPLISSAGE D'HUILE MOTEUR (ASS)	77
CHAPEAU (ENS)	9S-9272	1	DISPOSITIF DE VIDANGE RAPIDE D'HUILE (ASS)	94
		1	FILTRE À HUILE MOTEUR (ASS)	78
		1	FILTRE À HUILE MOTEUR (ASS)	80
ÉCRAN - REPRISE	4P-4917	1	POMPE DE CARTER (GR)	95
	4P-5500	1	POMPE DE CARTER (GR)	95
FILTRE A HUILE MOTEUR (ENS)	2P-4005	2	FILTRE À HUILE MOTEUR (ASS)	78
		2	FILTRE À HUILE MOTEUR (ASS)	80
PARE-POUSSIERE	6V-0852	1	CANALISATIONS D'HUILE MOTEUR (ASS)	85
		1	CANALISATIONS D'HUILE MOTEUR (ASS)	89
	8C-3445	1	FILTRE À HUILE MOTEUR (ASS)	78
		1	FILTRE À HUILE MOTEUR (ASS)	80
RENIFLARD (ENS) (CARTER)	4W-3027	2	RENIFLARD (ASS)	76
CIRCUIT DE REFROIDISSEMENT				
CHAPEAU - RADIATEUR	6L-8617	1	RÉSERVOIR DU COUVERCLE DE RADIATEUR (ASS)	143
FILTRE -EAU	4N-5834	2	POMPE A EAU (ASS)	136
FILTRE -EAU (POMPE À EAU)	4N-5834	2	POMPE A EAU (ASS)	137
FLEXIBLE	106-4572	14	CANALISATIONS DE RADIATEUR (ASS)	114
THERMOSTAT	6I-4950	4	THERMOSTAT ET BOITIER (ASS)	103
CIRCUIT ELECTRIQUE ET DE DEMARRAGE				
AMPOULE	9X-4492	1	LAMPE - CLIGNOTANT DE DIRECTION (ASS)	306
AMPOULE (24 VOLTS)	9X-4493	1	LAMPE - CLIGNOTANT DE DIRECTION (ASS)	307
		1	LAMPE - TÉMOIN D'ENTRETIEN DU SYSTÈME VIMS	309
AMPOULE (24 VOLTS)(65 WATTS)	9X-3463	1	LAMPE - PHARE (ASS)	301
		1	LAMPE - PHARE (ASS)	302
		1	LAMPE - PHARE (ASS)	303
		1	LAMPE - PHARE (ASS)	304
AMPOULE (24 VOLTS)(65 WATTS) (TÊTE)	9X-3463	1	PHARE AV (ASS)	305
AMPOULE (28 VOLTS)	9W-2111	1	CABLAGE DE CABINE (ASS)	376
AMPOULE (28 VOLTS) (PLAFONNIER)	7N-9943	1	PLAFONNIER (ASS)	300
BATTERIE (HORLOGE)	101-1785	1	COMMANDE NON PROGRAMMEE (ASS)	252
		1	COMMANDE NON PROGRAMMEE (ASS)	257
BATTERIE (12 VOLTS/SEC)	9X-9730	4	BATTERIE ET CÂBLAGE	236
BOUCHON - PROTECTION (ENS)	3E-5165	1	CABLAGE D'ARRET DE SECURITE	439
BOUCHON DE PRISE ÉLECTRIQUE	8C-6354	1	CABLAGE - MONITEUR DU SYSTÈME VIDS (ASS)	441
		1	CABLAGE - MONITEUR DU SYSTÈME VIDS (ASS)	447

PIÈCES DE RECHANGE

DESCRIPTION	NUMÉRO DE PIECÈS	QTÉ	DOMAINE D'APPLICATION	PAGE
		1	CABLAGE - MONITEUR DU SYSTÈME VIMS (ASS)	461
		1	CABLAGE - MONITEUR DU SYSTÈME VIMS (ASS)	467
BOUCHON DE RÉSERVOIR DE CARBURANT (ENS)	123-6305	1	RÉCHAUFFEUR DE CARBURANT (VERSION)	291
		1	RÉCHAUFFEUR DE CARBURANT (VERSION)	292
BROSSE (ENS)	3T-9524	6	DÉMARREUR ÉLECTRIQUE (ASS)	356
		6	DÉMARREUR ÉLECTRIQUE (ASS)	360
CADENAS (ASS)	5P-8502	1	RÉCHAUFFEUR DE CARBURANT (VERSION)	292
CHAPEAU ANTI-POUSSIERE	6N-1604	2	EAU DES CHEMISES - RECHAUFFEUR (ASS)	298
		2	EAU DES CHEMISES - RECHAUFFEUR (ASS)	299
CHAPEAU (PORTE-FUSIBLES)	7N-2867	1	CABLAGE - MONITEUR DU SYSTÈME VIMS (ASS)	460
		1	CABLAGE - MONITEUR DU SYSTÈME VIMS (ASS)	466
	139-0178	1	CABLAGE - MONITEUR DU SYSTÈME VIDS (ASS)	440
		1	CABLAGE - MONITEUR DU SYSTÈME VIDS (ASS)	446
CLÉ	5P-8500	1	RÉCHAUFFEUR DE CARBURANT (VERSION)	292
CLÉ (COUPE-BATTERIE)	8H-5306	1	ROBINET DE BATTERIE (ASS)	365
CYLINDRE D'ETHER (ENS)	7X-1062	1	AUXILIAIRE DE DÉMARRAGE À L'ÉTHER	352
DISJONCTEUR (ENS) (10A) (CONTACTEUR DE DÉMARRAGE À CLÉ)	6T-3642	1	CABLAGE - MONITEUR DU SYSTÈME VIDS (ASS)	441
		1	CABLAGE - MONITEUR DU SYSTÈME VIDS (ASS)	447
		1	CABLAGE - MONITEUR DU SYSTÈME VIMS (ASS)	461
		1	CABLAGE - MONITEUR DU SYSTÈME VIMS (ASS)	467
DISJONCTEUR (ENS) (105A) (ALTERNATEUR)	3E-7294	2	CABLAGE - MONITEUR DU SYSTÈME VIMS (ASS)	461
		1	CABLAGE - MONITEUR DU SYSTÈME VIMS (ASS)	467
DISJONCTEUR (ENS) (105A) (ALTERNATEUR ET CIRCUIT PRINCIPAL)	3E-7294	2	CABLAGE - MONITEUR DU SYSTÈME VIDS (ASS)	440
DISJONCTEUR (ENS) (105A) (ALTERNATEUR PRINCIPAL)	3E-7294	2	CABLAGE - MONITEUR DU SYSTÈME VIDS (ASS)	447
DISJONCTEUR (ENS) (105A) (PRINCIPAL)	3E-7294	1	CABLAGE - MONITEUR DU SYSTÈME VIMS (ASS)	467
DISJONCTEUR (ENS) (15A) (FEUX DE ROUTE)	3T-2662	1	CABLAGE - MONITEUR DU SYSTÈME VIDS (ASS)	441
		1	CABLAGE - MONITEUR DU SYSTÈME VIDS (ASS)	447

PIÈCES DE RECHANGE

DESCRIPTION	NUMÉRO DE PIECÈS	QTÉ	DOMAINE D'APPLICATION	PAGE
		1	CABLAGE - MONITEUR DU SYSTÈME VIMS (ASS)	461
		1	CABLAGE - MONITEUR DU SYSTÈME VIMS (ASS)	467
DISJONCTEUR (ENS) (15A) (MODULE DE COMMANDE MOTEUR)	6T-3643	1	CABLAGE - MONITEUR DU SYSTÈME VIDS (ASS)	441
		1	CABLAGE - MONITEUR DU SYSTÈME VIDS (ASS)	447
		1	CABLAGE - MONITEUR DU SYSTÈME VIMS (ASS)	461
		1	CABLAGE - MONITEUR DU SYSTÈME VIMS (ASS)	467
ÉLÉMENT DU RÉCHAUFFEUR D'EAU DES CHEMISES (ENS) (120 VOLTS, 1500 WATTS)	9G-6655	2	EAU DES CHEMISES - RECHAUFFEUR (ASS)	298
ÉLÉMENT DU RÉCHAUFFEUR D'EAU DES CHEMISES (ENS) (240 VOLTS, 1500 WATTS)	6T-3764	2	EAU DES CHEMISES - RECHAUFFEUR (ASS)	299
FILTRE ET JOINT (ENS)	9X-7138	1	AUXILIAIRE DE DÉMARRAGE À L'ÉTHER	352
FUSIBLE (10A)	3K-8782	8	CABLAGE - MONITEUR DU SYSTÈME VIDS (ASS)	440
		8	CABLAGE - MONITEUR DU SYSTÈME VIDS (ASS)	446
		8	CABLAGE - MONITEUR DU SYSTÈME VIMS (ASS)	460
		8	CABLAGE - MONITEUR DU SYSTÈME VIMS (ASS)	466
FUSIBLE (15A)	8M-8948	4	CABLAGE - MONITEUR DU SYSTÈME VIDS (ASS)	440
		4	CABLAGE - MONITEUR DU SYSTÈME VIDS (ASS)	446
		4	CABLAGE - MONITEUR DU SYSTÈME VIMS (ASS)	460
		4	CABLAGE - MONITEUR DU SYSTÈME VIMS (ASS)	466
FUSIBLE (20 A)	8M-0456	1	CABLAGE - MONITEUR DU SYSTÈME VIDS (ASS)	440
		1	CABLAGE - MONITEUR DU SYSTÈME VIDS (ASS)	446
		1	CABLAGE - MONITEUR DU SYSTÈME VIMS (ASS)	460
		1	CABLAGE - MONITEUR DU SYSTÈME VIMS (ASS)	466
LAMPE - CLIGNOTANT DE DIRECTION (ASS) (ARRÊT/ARRIÈRE)	135-0426	2	ÉCLAIRAGE-FEUX D'ARRÊT (ASS)	318
LAMPE (AMPOULE MINIATURE) (28 VOLTS)	7N-5876	11	CABLAGE DE CABINE (ASS)	376
LENTILLE-BLEUE	107-2283	1	LAMPE - TÉMOIN D'ENTRETIEN DU SYSTÈME VIMS	309
LENTILLE DE PLAFONNIER	7T-0020	1	PLAFONNIER (ASS)	300
LENTILLE (ENS)	9X-4174	1	LAMPE - PHARE (ASS)	303
LENTILLE (ENS) (PHARE AVANT) (FEUX DE CROISEMENT)	9X-7798	1	PHARE AV (ASS)	305

PIÈCES DE RECHANGE

DESCRIPTION	NUMÉRO DE PIECÈS	QTÉ	DOMAINE D'APPLICATION	PAGE
LENTILLE (ENS) (PLAFONNIER)	9X-4174	1	LAMPE - PHARE (ASS)	301
	158-0248	1	LAMPE - PHARE (ASS)	304
LENTILLE (ENS)-PROJECTEUR	9X-4174	1	LAMPE - PHARE (ASS)	302
LENTILLE ROUGE	9X-3064	1	LAMPE - CLIGNOTANT DE DIRECTION (ASS)	307
MANCHON	8Y-6364	1	RÉCHAUFFEUR DE CARBURANT (VERSION)	292
PARE-POUSSIERE	6V-0852	2	CABLAGE DE TRANSMISSION (ASS)	416
		2	CABLAGE DE TRANSMISSION (ASS)	420
		2	CABLAGE DE TRANSMISSION (ASS)	424
		2	CABLAGE DE TRANSMISSION (ASS)	428
		2	CABLAGE DE TRANSMISSION (ASS)	432
RENIFLARD	9G-9981	1	RÉCHAUFFEUR DE CARBURANT (VERSION)	291
		1	RÉCHAUFFEUR DE CARBURANT (VERSION)	292
RESSORT DE BALAI	3T-9494	1	DÉMARREUR ÉLECTRIQUE (ASS)	356
		6	DÉMARREUR ÉLECTRIQUE (ASS)	357
		1	DÉMARREUR ÉLECTRIQUE (ASS)	360
		6	DÉMARREUR ÉLECTRIQUE (ASS)	361
CIRCUIT HYDRAULIQUE				
BOUCHON DE GOULOTTE DE REMPLISSAGE	4J-3754	1	RÉSERVOIR HYDRAULIQUE (ASS)	1054
		1	RÉSERVOIR HYDRAULIQUE (ASS)	1058
BOUCHON-JOINT TORIQUE (FILET 7/16-20)	9S-4190	1	CANALISATIONS HYDRAULIQUES DE VENTILATEUR (ASS)	1008
		1	CANALISATIONS HYDRAULIQUES DE VENTILATEUR (ASS)	1014
		1	CANALISATIONS HYDRAULIQUES DE VENTILATEUR (ASS)	1020
		1	CANALISATIONS HYDRAULIQUES DE VENTILATEUR (ASS)	1021
		1	POMPE A PISTONS (ASS)	1038
CADENAS (ASS)	5P-8502	1	COUVERCLE DE RÉSERVOIR HYDRAULIQUE	959
CHAPEAU (ENS)	6V-9829	4	DISTRIBUTEUR (ASS)	1073
CHAPEAU (ENS) (FILET 11/16-16)	6V-9829	1	SOUPAPE ET MONTAGE - POMPE À CYLINDRE VARIABLE (ASS)	1069
		1	SOUPAPE ET MONTAGE - POMPE À CYLINDRE VARIABLE (ASS)	1070
COUVERCLE - BOUCHON DU RÉSERVOIR HYDRAULIQUE	5D-1902	1	RÉSERVOIR HYDRAULIQUE (ASS)	1054
CREPINE (ENS)	3D-6678	1	RÉSERVOIR HYDRAULIQUE (ASS)	1054
		1	RÉSERVOIR HYDRAULIQUE (ASS)	1058
ÉCRAN	118-8693	2	RÉSERVOIR HYDRAULIQUE (ASS)	1054
ECRAN (ASS)	7J-2656	1	RÉSERVOIR HYDRAULIQUE (ASS)	1054
ÉCRAN (ENS)	9T-9227	1	RÉSERVOIR HYDRAULIQUE (ASS)	1054
		4	RÉSERVOIR HYDRAULIQUE (ASS)	1058
GRAISSEUR (ENS) (DÉBRANCHEMENT RAPIDE)	6V-3965	1	SOUPAPE ET MONTAGE - VENTILATEUR HYDRAULIQUE (ASS)	1062
JOINT TORIQUE (DIA INT 94,84MM)	1H-8128	3	CANALISATIONS HYDRAULIQUES (ASS)	997

PIÈCES DE RECHANGE

DESCRIPTION	NUMÉRO DE PIECÈS	QTÉ	DOMAINE D'APPLICATION	PAGE
		3	CANALISATIONS HYDRAULIQUES (ASS)	1003
PARE-POUSSIERE	6V-0852	2	CANALISATIONS HYDRAULIQUES (ASS)	996
		2	CANALISATIONS HYDRAULIQUES (ASS)	1002
		1	CANALISATIONS HYDRAULIQUES DE VENTILATEUR (ASS)	1008
		1	CANALISATIONS HYDRAULIQUES DE VENTILATEUR (ASS)	1014
		1	CANALISATIONS HYDRAULIQUES DE VENTILATEUR (ASS)	1020
		1	CLAPET DE DÉCHARGE PILOTE ET MONTAGE (ASS)	1067
		1	CLAPET DE DÉCHARGE PILOTE ET MONTAGE (ASS)	1068
		1	COMMANDE PRINCIPALE DE SOUPAPE ET MONTAGE (ASS)	1064
		3	DISTRIBUTEUR (ASS)	1073
		1	SOUPAPE ET MONTAGE - VENTILATEUR HYDRAULIQUE (ASS)	1062
	8C-3451	1	CANALISATIONS HYDRAULIQUES (ASS)	997
		1	CANALISATIONS HYDRAULIQUES (ASS)	1004
MATÉRIEL ET FOURNITURES D'ENTRETIEN				
CADENAS (ASS)	5P-8502	1	PROTECTION ANTIVANDALISME (ASS)	1448
CHAPEAU DE FILTRE A HUILE (ENS)	7W-1484	1	PROTECTION ANTIVANDALISME (ASS)	1448
CLÉ	5P-8500	1	PROTECTION ANTIVANDALISME (ASS)	1448
MOTEUR STANDARD				
BOUCHON DE VIDANGE	2A-5220	6	CARTER AV (ASS)	58
BOUCHON DE VIDANGE D'HUILE	6I-0723	1	HUILE MOTEUR - CARTER (ASS)	64
BRIDE	7N-5418	1	HUILE MOTEUR - CARTER (ASS)	64
CHAPEAU (ENS)	7E-6508	1	CULBUTERIE (ASS)	72
		1	CULBUTERIE (ASS)	74
COURROIE TRAPEZOIDALE	141-7116	1	MONTAGE D'ALTERNATEUR (ASS)	60
ÉCRAN (ENS)	7N-5395	1	HUILE MOTEUR - CARTER (ASS)	62
		1	HUILE MOTEUR - CARTER (ASS)	64
JOINT DE CARTER D'HUILE	7E-2631	1	HUILE MOTEUR - CARTER (ASS)	64
JOINT TORIQUE	6V-5167	1	HUILE MOTEUR - CARTER (ASS)	64

PIÈCES DE RECHANGE

DESCRIPTION	NUMÉRO DE PIECÈS	QTÉ	DOMAINE D'APPLICATION	PAGE
POSTE DE CONDUITE				
AMPOULE	9X-4494	1	MONTAGE DE RADIO (ASS)	1304
AMPOULE (24 VOLTS)	7N-5876	6	TABLEAU DE BORD (ASS)	1346
BALAI D'ESSUIE-GLACE (ENS)	6V-7419	2	ESSUIE-GLACE ET LAVE-GLACE	1430
		2	ESSUIE-GLACE ET LAVE-GLACE	1432
BALAI D'ESSUIE-GLACE (ENS) (ARRIÈRE)	6V-5851	1	ESSUIE-GLACE ET LAVE-GLACE	1424
		1	ESSUIE-GLACE ET LAVE-GLACE	1426
		1	ESSUIE-GLACE ET LAVE-GLACE	1428
BALAI D'ESSUIE-GLACE (ENS) (AVANT)	6V-7419	1	ESSUIE-GLACE ET LAVE-GLACE	1424
		1	ESSUIE-GLACE ET LAVE-GLACE	1426
		1	ESSUIE-GLACE ET LAVE-GLACE	1428
BOUCHON - PROTECTION (ENS)	3E-5165	1	TABLEAU DE BORD (ASS)	1340
BOUCHON D'ÉTANCHÉITÉ	3E-4052	1	CANALISATIONS DE CLIMATISEUR (ASS)	1320
BOULON (M10X1,50X12MM)	7X-2621	2	ESSUIE-GLACE ET LAVE-GLACE	1424
CEINTURE DE SECURITE (ASS)	183-3648	1	SIÈGE (ASS)	1382
CEINTURE DE SECURITE (ASS) (RÉTRACTABLE)	156-1148	1	SIÈGE (ASS)	1379
CHAPEAU	9U-0126	1	LAVE-GLACE - VITRE (ASS)	1423
COURROIE TRAPEZOIDALE	112-6055	1	COMPRESSEUR ET MONTAGE - RÉFRIGÉRANT (ASS)	1268
	141-7138	1	COMPRESSEUR ET MONTAGE - RÉFRIGÉRANT (ASS)	1270
FILTRE À AIR	9X-8216	1	CABINE (ASS)	1264
		1	FILTRE À AIR DE CABINE (ASS)	1297
		1	FILTRE À AIR DE CABINE (ASS)	1298
LAMPE - CARTE	8Y-6335	1	MONTAGE DE RADIO (ASS)	1304
PARE-SOLEIL (ASS) (ARRIÈRE)	8Y-6340	1	PARE-SOLEIL (ASS)	1360
		1	PARE-SOLEIL (ASS)	1361
PARE-SOLEIL (ASS) (AVANT)	8Y-6339	1	PARE-SOLEIL (ASS)	1360
		1	PARE-SOLEIL (ASS)	1361
TAMIS DE FILTRE	8T-5913	2	LAVE-GLACE - VITRE (ASS)	1422
		4	LAVE-GLACE - VITRE (ASS)	1423
TRANSMISSION				
BOUCHON AIMANTÉ	5P-4484	1	ESSIEU FIXE	474
		1	ESSIEU OSCILLANT	476
BOUCHON AIMANTÉ (FILET 1 5/8-12)	6V-0439	1	ROUE ET RÉDUCTEURS (ASS)	668
BOUCHON DE VIDANGE (FILET 1-1/2-12)	4B-2363	1	ENGRENAGE DE TRANSFERT ET CARTER	544
CHAPEAU DE VALVE (2,0 POUCES D'ÉPAISSEUR)	9K-7951	1	JANTE DÉMONTABLE (ASS)	595
ELEMENT DE FILTRE - HYDRAULIQUE (TRANSMISSION)	132-8876	1	FILTRE A HUILE (ASS)	538
ÉLÉMENT DE FILTRE À HUILE (ENS) (HYDRAULIQUE)	132-8876	1	FILTRE A HUILE (ASS)	536
ÉLÉMENT DE FILTRE (TRANSMISSION)	132-8876	1	FILTRE A HUILE (ASS)	539
FILTRE	1G-8878	1	FILTRE A HUILE (ASS)	540
FILTRE HYDRAULIQUE (ENS)	1G-8878	1	FILTRE A HUILE (ASS)	541
GRAISSEUR	1K-6853	2	ESSIEU OSCILLANT	476
GRAISSEUR (FILET 1/8-27)	3B-8489	1	ARBRE D'ENTRAÎNEMENT (ASS)	598
JOINT TORIQUE (DIA INT 133,66MM)	5H-5672	2	BOÎTE PLANÉTAIRE (ASS)	579
		2	BOÎTE PLANÉTAIRE (ASS)	585

PIÈCES DE RECHANGE

DESCRIPTION	NUMÉRO DE PIECÈS	QTÉ	DOMAINE D'APPLICATION	PAGE
JOINT TORIQUE (DIA INT 81,92MM)	4L-9564	1	ARBRE D'ENTRAÎNEMENT (ASS)	596
		1	ARBRE D'ENTRAÎNEMENT (ASS)	598
PARE-POUSSIERE	6V-0852	1	CANALISATIONS D'HUILE DE TRANSMISSION (ASS)	553
		1	CANALISATIONS D'HUILE DE TRANSMISSION (ASS)	557
		1	CANALISATIONS D'HUILE DE TRANSMISSION (ASS)	561
		1	CANALISATIONS D'HUILE DE TRANSMISSION (ASS)	565
		1	CLAPET DE DECHARGE (ASS)	658
		1	CONVERTISSEUR DE COUPLE ET CARTER (ASS)	618
		1	CONVERTISSEUR DE COUPLE ET CARTER (ASS)	622
		1	CONVERTISSEUR DE COUPLE ET CARTER (ASS)	626
		1	CONVERTISSEUR DE COUPLE ET CARTER (ASS)	628
		1	FILTRE ET MONTAGE - TRANSMISSION (ASS)	530
		1	FILTRE ET MONTAGE - TRANSMISSION (ASS)	532
		1	FILTRE ET MONTAGE - TRANSMISSION (ASS)	534
		1	SOUPAPE DE PRIORITÉ DE CONVERTISSEUR DE COUPLE (ASS)	664
		1	SOUPAPE ET MONTAGE - EMBRAYAGE DE VERROUILLAGE (ASS)	651
		1	SOUPAPE ET MONTAGE - EMBRAYAGE DE VERROUILLAGE (ASS)	652
	8C-3447	1	FILTRE ET MONTAGE - TRANSMISSION (ASS)	530
		1	FILTRE ET MONTAGE - TRANSMISSION (ASS)	532
		1	FILTRE ET MONTAGE - TRANSMISSION (ASS)	534
RENIFLARD	4H-6112	3	CANALISATIONS D'HUILE DE TRANSMISSION (ASS)	557
		3	CANALISATIONS D'HUILE DE TRANSMISSION (ASS)	561
		3	CANALISATIONS D'HUILE DE TRANSMISSION (ASS)	565
TAMIS D'ASPIRATION	3S-3875	2	ENGRENAGE DE TRANSFERT ET CARTER	545

PIEZAS DE MANTENIMIENTO

DESCRIPCION	NUMERO DE PIEZA	CANT	SE UTILIZA EN	PAGINA
BASTIDOR Y CAJA				
CANDADO (GR)	5P-8502	2	CAPO Y PROTECTOR (GR)	718
		2	CAPO Y PROTECTOR (GR)	722
		2	CAPO Y PROTECTOR (GR)	726
		1	MONTAJE DEL PARACHOQUES (GR)	748
CONEXIÓN DE ENGRASE	3B-8489	6	TUBERÍAS DE ENGRASE (GR)	740
		3	TUBERÍAS DE ENGRASE (GR)	744
CONEXIÓN DE ENGRASE (ROSCA DE 1/8-27)	3B-8489	5	TUBERÍAS DE ENGRASE (GR)	742
ELEMENTO DE FILTRO	7M-1674	1	SOPORTE DE LA ADMISIÓN DE AIRE (GR)	753
		1	SOPORTE DE LA ADMISIÓN DE AIRE (GR)	754
LLAVE	5P-8500	1	CAPO Y PROTECTOR (GR)	718
		1	CAPO Y PROTECTOR (GR)	722
		1	CAPO Y PROTECTOR (GR)	726
		1	MONTAJE DEL PARACHOQUES (GR)	748
MANGUITO	8Y-6364	1	CAPO Y PROTECTOR (GR)	718
		1	CAPO Y PROTECTOR (GR)	722
		1	CAPO Y PROTECTOR (GR)	726
		1	MONTAJE DEL PARACHOQUES (GR)	748
EQUIPO DE SERVICIO Y SUMINISTROS				
CANDADO (GR)	5P-8502	1	GRUPO DE PROTECCIÓN CONTRA EL VANDALISMO	1448
LLAVE	5P-8500	1	GRUPO DE PROTECCIÓN CONTRA EL VANDALISMO	1448
TAPA DE TUBO DE LLENADO DEL FILTRO DE ACEITE (GR)	7W-1484	1	GRUPO DE PROTECCIÓN CONTRA EL VANDALISMO	1448
MOTOR BÁSICO				
BRIDA	7N-5418	1	CÁRTER - COLECTOR DEL (GR)	64
CORREA TRAPEZOIDAL	141-7116	1	MONTAJE DEL ALTERNADOR (GR)	60
JUNTA DEL COLECTOR DEL CARTER	7E-2631	1	CÁRTER - COLECTOR DEL (GR)	64
PANTALLA (CONJ)	7N-5395	1	CÁRTER - COLECTOR DEL (GR)	62
		1	CÁRTER - COLECTOR DEL (GR)	64
SELLO ANULAR	6V-5167	1	CÁRTER - COLECTOR DEL (GR)	64
TAPÓN (CONJ)	7E-6508	1	MECANISMO DE VÁLVULAS (GR)	72
		1	MECANISMO DE VÁLVULAS (GR)	74
TAPÓN DE DRENAJE	2A-5220	6	CAJA DELANTERA (GR)	58
TAPON DE DRENAJE DE ACEITE	6I-0723	1	CÁRTER - COLECTOR DEL (GR)	64

PIEZAS DE MANTENIMIENTO

DESCRIPCION	NUMERO DE PIEZA	CANT	SE UTILIZA EN	PAGINA
PUESTO DEL OPERADOR				
CINTURÓN DE SEGURIDAD (GR)	183-3648	1	ASIENTO (GR)	1382
CINTURÓN DE SEGURIDAD (GR) (RETRACTIL)	156-1148	1	ASIENTO (GR)	1379
CORREA TRAPEZOIDAL	112-6055	1	COMPRESOR DE REFRIGERANTE Y GRUPO DE MONTAJE	1268
	141-7138	1	COMPRESOR DE REFRIGERANTE Y GRUPO DE MONTAJE	1270
FILTRO DE AIRE	9X-8216	1	CABINA (GR)	1264
		1	FILTRO DE AIRE DE LA CABINA (GR)	1297
		1	FILTRO DE AIRE DE LA CABINA (GR)	1298
HOJA DE LIMPIAPARABRISAS (CONJ)	6V-7419	2	LIMPIA Y LAVAPARABRISAS (GR)	1430
		2	LIMPIA Y LAVAPARABRISAS (GR)	1432
HOJA DE LIMPIAPARABRISAS (CONJ) (FRENTE)	6V-7419	1	LIMPIA Y LAVAPARABRISAS (GR)	1424
		1	LIMPIA Y LAVAPARABRISAS (GR)	1426
		1	LIMPIA Y LAVAPARABRISAS (GR)	1428
HOJA DE LIMPIAPARABRISAS (CONJ) (PARTE TRASERA)	6V-5851	1	LIMPIA Y LAVAPARABRISAS (GR)	1424
		1	LIMPIA Y LAVAPARABRISAS (GR)	1426
		1	LIMPIA Y LAVAPARABRISAS (GR)	1428
LÁMPARA	9X-4494	1	INSTALACIÓN DE RADIO (GR)	1304
LÁMPARA (24 VOLTIOS)	7N-5876	6	TABLERO DE INSTRUMENTOS (GR)	1346
LUZ DEL MAPA	8Y-6335	1	INSTALACIÓN DE RADIO (GR)	1304
PERNO (M10X1,50X12MM)	7X-2621	2	LIMPIA Y LAVAPARABRISAS (GR)	1424
PERSIANA PARA EL SOL (GR) (FRENTE)	8Y-6339	1	PERSIANA PARA EL SOL (GR)	1360
		1	PERSIANA PARA EL SOL (GR)	1361
PERSIANA PARA EL SOL (GR) (PARTE TRASERA)	8Y-6340	1	PERSIANA PARA EL SOL (GR)	1360
		1	PERSIANA PARA EL SOL (GR)	1361
REJILLA DE FILTRO	8T-5913	2	LAVAPARABRISAS DE LA VENTANA (GR)	1422
		4	LAVAPARABRISAS DE LA VENTANA (GR)	1423
TAPA	9U-0126	1	LAVAPARABRISAS DE LA VENTANA (GR)	1423
TAPA DE SELLO	3E-4052	1	TUBERÍAS DE ACONDICIONADOR DE AIRE (GR)	1320
TAPA PROTECTORA (CONJ)	3E-5165	1	TABLERO DE INSTRUMENTOS (GR)	1340
SISTEMA DE AIRE DE ADMISIÓN Y ESCAPE				
ELEMENTO PRIMARIO (CONJ)	123-6855	1	FILTRO DE AIRE (GR)	150
ELEMENTO SECUNDARIO (CONJ)	123-6856	1	FILTRO DE AIRE (GR)	150
SISTEMA DE COMBUSTIBLE				
CANDADO (GR)	5P-8502	1	ADAPTADOR DE LLENADO RÁPIDO DE COMBUSTIBLE (GR)	182
		1	COMBUSTIBLE - TANQUE DE (GR)	228
		1	COMBUSTIBLE-LLENADO CONVENCIONAL (CONFIG)	194
COLADOR DE COMBUSTIBLE	9P-7121	1	COMBUSTIBLE - TANQUE DE (GR)	230
COLADOR DEL TANQUE DE COMBUSTIBLE	9P-7121	1	COMBUSTIBLE - TANQUE DE (GR)	228

PIEZAS DE MANTENIMIENTO

DESCRIPCION	NUMERO DE PIEZA	CANT	SE UTILIZA EN	PAGINA
ELEMENTO DEL FILTRO DE COMBUSTIBLE (PRIMARIO)	9M-2342	1	FILTRO DE COMBUSTIBLE (GR)	184
EMPAQUETADURA	8H-2778	1	FILTRO DE COMBUSTIBLE (GR)	184
FILTRO DE AIRE (CONJ)	136-6202	2	ADAPTADOR DE LLENADO RÁPIDO DE COMBUSTIBLE (GR)	178
		2	ADAPTADOR DE LLENADO RÁPIDO DE COMBUSTIBLE (GR)	180
		1	COMBUSTIBLE-LLENADO CONVENCIONAL (CONFIG)	190
FILTRO DE COMBUSTIBLE (CONJ) (SECUNDARIO(A))	1R-0755	2	FILTRO DE COMBUSTIBLE (GR)	184
JUEGO DE FILTRO DE TAPA	9X-2205	1	COMBUSTIBLE-LLENADO CONVENCIONAL (CONFIG)	186
JUEGO DE RESPIRADERO	5T-8645	1	COMBUSTIBLE-LLENADO CONVENCIONAL (CONFIG)	192
LLAVE	5P-8500	1	ADAPTADOR DE LLENADO RÁPIDO DE COMBUSTIBLE (GR)	182
		1	COMBUSTIBLE - TANQUE DE (GR)	228
		1	COMBUSTIBLE-LLENADO CONVENCIONAL (CONFIG)	194
MANGUITO	8Y-6364	1	ADAPTADOR DE LLENADO RÁPIDO DE COMBUSTIBLE (GR)	182
		1	COMBUSTIBLE - TANQUE DE (GR)	228
		1	COMBUSTIBLE-LLENADO CONVENCIONAL (CONFIG)	194
RESPIRADERO	9G-9981	1	COMBUSTIBLE-LLENADO CONVENCIONAL (CONFIG)	188
		1	COMBUSTIBLE-LLENADO CONVENCIONAL (CONFIG)	194
SELLO ANULAR (DI DE 110,49 MM)	9X-8600	1	ADAPTADOR DE LLENADO RÁPIDO DE COMBUSTIBLE (GR)	178
		1	ADAPTADOR DE LLENADO RÁPIDO DE COMBUSTIBLE (GR)	180
		1	ADAPTADOR DE LLENADO RÁPIDO DE COMBUSTIBLE (GR)	182
		1	COMBUSTIBLE-LLENADO CONVENCIONAL (CONFIG)	186
		1	COMBUSTIBLE-LLENADO CONVENCIONAL (CONFIG)	188
		1	COMBUSTIBLE-LLENADO CONVENCIONAL (CONFIG)	190
TAPA CONTRA EL POLVO	9D-0630	1	ADAPTADOR DE LLENADO RÁPIDO DE COMBUSTIBLE (GR)	178
		1	ADAPTADOR DE LLENADO RÁPIDO DE COMBUSTIBLE (GR)	180
		1	ADAPTADOR DE LLENADO RÁPIDO DE COMBUSTIBLE (GR)	182
TAPA DEL TANQUE DE COMBUSTIBLE (CONJ)	123-6305	1	COMBUSTIBLE-LLENADO CONVENCIONAL (CONFIG)	186
		1	COMBUSTIBLE-LLENADO CONVENCIONAL (CONFIG)	188
		1	COMBUSTIBLE-LLENADO CONVENCIONAL (CONFIG)	190

PIEZAS DE MANTENIMIENTO

DESCRIPCION	NUMERO DE PIEZA	CANT	SE UTILIZA EN	PAGINA
		1	COMBUSTIBLE-LLENADO CONVENCIONAL (CONFIG)	192
		1	COMBUSTIBLE-LLENADO CONVENCIONAL (CONFIG)	194
TAPA DEL TUBO DE LLENADO DEL TANQUE DE COMBUSTIBLE (CONJ)	101-8909	1	ADAPTADOR DE LLENADO RÁPIDO DE COMBUSTIBLE (GR)	178
		1	ADAPTADOR DE LLENADO RÁPIDO DE COMBUSTIBLE (GR)	180
		1	ADAPTADOR DE LLENADO RÁPIDO DE COMBUSTIBLE (GR)	182
TAPON DE TUBO (ROSCA 3/8-18 NPTF)	8T-6767	1	COMBUSTIBLE - TANQUE DE (GR)	230
SISTEMA DE DIRECCIÓN				
FILTRO DE ACEITE (CONJ)	126-1817	1	FILTRO DE ACEITE (GR)	828
SELLO ANULAR (94,84 MM DIAMETRO INTERIOR)	1H-8128	1	TUBERÍAS DE DIRECCIÓN (GR)	840
		1	TUBERÍAS DE DIRECCIÓN (GR)	846
TAPA CONTRA EL POLVO	6V-0852	1	DIRECCIÓN (CONFIG)	872
		1	DIRECCIÓN (CONFIG)	873
		2	TUBERÍAS DE DIRECCIÓN (GR)	840
		2	TUBERÍAS DE DIRECCIÓN (GR)	846
		1	TUBERIAS DE ENFRIADOR DE ACEITE DE DIRECCION (GR)	854
		1	TUBERIAS DE ENFRIADOR DE ACEITE DE DIRECCION (GR)	858
		1	TUBERÍAS DE LA DIRECCIÓN SECUNDARIA (GR)	830
		1	TUBERÍAS DE LA DIRECCIÓN SECUNDARIA (GR)	832
		1	TUBERÍAS DE LA DIRECCIÓN SECUNDARIA (GR)	836
	8C-3451	1	TUBERIAS DE ENFRIADOR DE ACEITE DE DIRECCION (GR)	855
		1	TUBERIAS DE ENFRIADOR DE ACEITE DE DIRECCION (GR)	859
SISTEMA DE ENFRIAMIENTO				
FILTRO DE AGUA	4N-5834	2	BOMBA DE AGUA (GR)	136
FILTRO DE AGUA (BOMBA DE AGUA)	4N-5834	2	BOMBA DE AGUA (GR)	137
MANGUERA	106-4572	14	TUBERÍAS DEL RADIADOR (GR)	114
REGULADOR DE TEMPERATURA (TERMOSTATO)	6I-4950	4	REGULADOR Y CAJA (GR)	103
TAPA DEL RADIADOR	6L-8617	1	TAPA DEL TANQUE DE RADIADOR (GR)	143

PIEZAS DE MANTENIMIENTO

DESCRIPCION	NUMERO DE PIEZA	CANT	SE UTILIZA EN	PAGINA
SISTEMA DE FRENOS				
TAPA CONTRA EL POLVO	6V-0852	2	FRENO DE SERVICIO - CONTROL (GR)	772
		2	FRENO DE SERVICIO - CONTROL (GR)	778
		2	FRENO DE SERVICIO - CONTROL (GR)	784
		2	FRENO DE SERVICIO - CONTROL (GR)	792
		4	TUBERÍAS DEL FRENO DE SERVICIO (GR)	800
SISTEMA DE LUBRICACIÓN				
FILTRO DE ACEITE DEL MOTOR (CONJ)	2P-4005	2	FILTRO DE ACEITE DEL MOTOR (GR)	78
		2	FILTRO DE ACEITE DEL MOTOR (GR)	80
REJILLA PARA BARRIDO	4P-4917	1	BOMBA DE SUMIDERO Y TUBERÍAS (GR)	95
	4P-5500	1	BOMBA DE SUMIDERO Y TUBERÍAS (GR)	95
RESPIRADERO (CONJ) (CÁRTER DEL MOTOR)	4W-3027	2	RESPIRADERO (GR)	76
TAPA CONTRA EL POLVO	6V-0852	1	TUBERÍAS DE ACEITE DEL MOTOR (GR)	85
		1	TUBERÍAS DE ACEITE DEL MOTOR (GR)	89
	8C-3445	1	FILTRO DE ACEITE DEL MOTOR (GR)	78
		1	FILTRO DE ACEITE DEL MOTOR (GR)	80
TAPÓN (CONJ)	133-5946	1	TUBO DE LLENADO DE ACEITE (GR)	77
	9S-9272	1	CAMBIO RÁPIDO DE ACEITE (GR)	94
		1	FILTRO DE ACEITE DEL MOTOR (GR)	78
		1	FILTRO DE ACEITE DEL MOTOR (GR)	80
SISTEMA ELECTRICO Y DE ARRANQUE				
BATERÍA (RELOJ)	101-1785	1	CONTROL NO PROGRAMADO (GR)	252
		1	CONTROL NO PROGRAMADO (GR)	257
BATERÍA (12 VOLTIOS/SECO)	9X-9730	4	BATERÍA Y CABLES (GR)	236
CANDADO (GR)	5P-8502	1	CALENTADOR DE COMBUSTIBLE	292
CILINDRO DE ÉTER (CONJ)	7X-1062	1	AUXILIAR DE ARRANQUE CON ÉTER (GR)	352
DISYUNTOR (CONJ) (10 A) (ARRANQUE CON LLAVE)	6T-3642	1	CABLES DEL MONITOR DEL SIST DE ADMIN DE INFO VIT (GR)	461
		1	CABLES DEL MONITOR DEL SIST DE ADMIN DE INFO VIT (GR)	467
		1	CABLES DEL MONITOR DEL SISTEMA VIDS (GR)	441
		1	CABLES DEL MONITOR DEL SISTEMA VIDS (GR)	447
DISYUNTOR (CONJ) (105 AMP) (ALTERNADOR)	3E-7294	2	CABLES DEL MONITOR DEL SIST DE ADMIN DE INFO VIT (GR)	461
		1	CABLES DEL MONITOR DEL SIST DE ADMIN DE INFO VIT (GR)	467
DISYUNTOR (CONJ) (105 AMP) (ALTERNADOR PRINCIPAL)	3E-7294	2	CABLES DEL MONITOR DEL SISTEMA VIDS (GR)	447

PIEZAS DE MANTENIMIENTO

DESCRIPCION	NUMERO DE PIEZA	CANT	SE UTILIZA EN	PAGINA
DISYUNTOR (CONJ) (105 AMP) (ALTERNADOR Y PRINCIPAL)	3E-7294	2	CABLES DEL MONITOR DEL SISTEMA VIDS (GR)	440
DISYUNTOR (CONJ) (105 AMP) (PRINCIPAL)	3E-7294	1	CABLES DEL MONITOR DEL SIST DE ADMIN DE INFO VIT (GR)	467
DISYUNTOR (CONJ) (15 A) (ECM (MÓDULO DE CONTROL ELECTRÓNICO) DEL MOTOR)	6T-3643	1	CABLES DEL MONITOR DEL SIST DE ADMIN DE INFO VIT (GR)	461
		1	CABLES DEL MONITOR DEL SIST DE ADMIN DE INFO VIT (GR)	467
		1	CABLES DEL MONITOR DEL SISTEMA VIDS (GR)	441
		1	CABLES DEL MONITOR DEL SISTEMA VIDS (GR)	447
DISYUNTOR (CONJ) (15 A) (LUCES DE TRABAJO)	3T-2662	1	CABLES DEL MONITOR DEL SIST DE ADMIN DE INFO VIT (GR)	461
		1	CABLES DEL MONITOR DEL SIST DE ADMIN DE INFO VIT (GR)	467
		1	CABLES DEL MONITOR DEL SISTEMA VIDS (GR)	441
		1	CABLES DEL MONITOR DEL SISTEMA VIDS (GR)	447
ELEMENTO DEL CALENTADOR DEL AGUA DE LAS CAMISAS (120 VOLTIOS, 1500 VATIOS)	9G-6655	2	AGUA DE LAS CAMISAS - CALENTADOR DEL (GR)	298
ELEMENTO DEL CALENTADOR DEL AGUA DE LAS CAMISAS (240 VOLTIOS, 1500 VATIOS)	6T-3764	2	AGUA DE LAS CAMISAS - CALENTADOR DEL (GR)	299
ESCOBILLA (CONJ)	3T-9524	6	MOTOR DE ARRANQUE ELÉCTRICO (GR)	356
		6	MOTOR DE ARRANQUE ELÉCTRICO (GR)	360
FILTRO Y EMPAQUETADURA (CONJ)	9X-7138	1	AUXILIAR DE ARRANQUE CON ÉTER (GR)	352
FUSIBLE (10 A)	3K-8782	8	CABLES DEL MONITOR DEL SIST DE ADMIN DE INFO VIT (GR)	460
		8	CABLES DEL MONITOR DEL SIST DE ADMIN DE INFO VIT (GR)	466
		8	CABLES DEL MONITOR DEL SISTEMA VIDS (GR)	440
		8	CABLES DEL MONITOR DEL SISTEMA VIDS (GR)	446
FUSIBLE (15 A)	8M-8948	4	CABLES DEL MONITOR DEL SIST DE ADMIN DE INFO VIT (GR)	460
		4	CABLES DEL MONITOR DEL SIST DE ADMIN DE INFO VIT (GR)	466
		4	CABLES DEL MONITOR DEL SISTEMA VIDS (GR)	440
		4	CABLES DEL MONITOR DEL SISTEMA VIDS (GR)	446
FUSIBLE (20 A)	8M-0456	1	CABLES DEL MONITOR DEL SIST DE ADMIN DE INFO VIT (GR)	460
		1	CABLES DEL MONITOR DEL SIST DE ADMIN DE INFO VIT (GR)	466

PIEZAS DE MANTENIMIENTO

DESCRIPCION	NUMERO DE PIEZA	CANT	SE UTILIZA EN	PAGINA
		1	CABLES DEL MONITOR DEL SISTEMA VIDS (GR)	440
		1	CABLES DEL MONITOR DEL SISTEMA VIDS (GR)	446
LÁMPARA	9X-4492	1	LUZ DE SEÑAL DE GIRO (GR)	306
LÁMPARA MINIATURA (28 VOLTIOS)	7N-5876	11	CABLES DE LA CABINA (GR)	376
LÁMPARA (24 VOLTIOS)	9X-4493	1	LUZ DE SEÑAL DE GIRO (GR)	307
		1	LUZ INDIC DE SERV DEL SIST VIMS (GR)	309
LÁMPARA (24 VOLTIOS)(65 VATIOS)	9X-3463	1	REFLECTOR (GR)	301
		1	REFLECTOR (GR)	302
		1	REFLECTOR (GR)	303
		1	REFLECTOR (GR)	304
LÁMPARA (24 VOLTIOS)(65 VATIOS) (DELANTERA)	9X-3463	1	LÁMPARA DE FARO DELANTERO (GR)	305
LÁMPARA (28 VOLTIOS)	9W-2111	1	CABLES DE LA CABINA (GR)	376
LÁMPARA (28 VOLTIOS) (CÚPULA)	7N-9943	1	LÁMPARA DEL TECHO (GR)	300
LENTE AZUL	107-2283	1	LUZ INDIC DE SERV DEL SIST VIMS (GR)	309
LENTE DE LAMPARA DEL TECHO	7T-0020	1	LÁMPARA DEL TECHO (GR)	300
LENTE-ROJO	9X-3064	1	LUZ DE SEÑAL DE GIRO (GR)	307
LLAVE	5P-8500	1	CALENTADOR DE COMBUSTIBLE	292
LLAVE (DESCONECTAR BATERIA)	8H-5306	1	DISYUNTOR (GR)	365
LUZ DE SEÑAL DE GIRO (GR) (PARADA/TRASERA)	135-0426	2	LUCES DE PARADA (GR)	318
MANGUITO	8Y-6364	1	CALENTADOR DE COMBUSTIBLE	292
RESORTE DE ESCOBILLA	3T-9494	1	MOTOR DE ARRANQUE ELÉCTRICO (GR)	356
		6	MOTOR DE ARRANQUE ELÉCTRICO (GR)	357
		1	MOTOR DE ARRANQUE ELÉCTRICO (GR)	360
		6	MOTOR DE ARRANQUE ELÉCTRICO (GR)	361
RESPIRADERO	9G-9981	1	CALENTADOR DE COMBUSTIBLE	291
		1	CALENTADOR DE COMBUSTIBLE	292
TAPA CONTRA EL POLVO	6V-0852	2	CABLES DEL TREN DE FUERZA (GR)	416
		2	CABLES DEL TREN DE FUERZA (GR)	420
		2	CABLES DEL TREN DE FUERZA (GR)	424
		2	CABLES DEL TREN DE FUERZA (GR)	428
		2	CABLES DEL TREN DE FUERZA (GR)	432
TAPA CONTRA EL POLVO (CONJ)	6N-1604	2	AGUA DE LAS CAMISAS - CALENTADOR DEL (GR)	298
		2	AGUA DE LAS CAMISAS - CALENTADOR DEL (GR)	299
TAPA DE PORTAFUSIBLES	7N-2867	1	CABLES DEL MONITOR DEL SIST DE ADMIN DE INFO VIT (GR)	460
		1	CABLES DEL MONITOR DEL SIST DE ADMIN DE INFO VIT (GR)	466
	139-0178	1	CABLES DEL MONITOR DEL SISTEMA VIDS (GR)	440
		1	CABLES DEL MONITOR DEL SISTEMA VIDS (GR)	446

PIEZAS DE MANTENIMIENTO

DESCRIPCION	NUMERO DE PIEZA	CANT	SE UTILIZA EN	PAGINA
TAPA DEL RECEPTACULO	8C-6354	1	CABLES DEL MONITOR DEL SIST DE ADMIN DE INFO VIT (GR)	461
		1	CABLES DEL MONITOR DEL SIST DE ADMIN DE INFO VIT (GR)	467
		1	CABLES DEL MONITOR DEL SISTEMA VIDS (GR)	441
		1	CABLES DEL MONITOR DEL SISTEMA VIDS (GR)	447
TAPA DEL TANQUE DE COMBUSTIBLE (CONJ)	123-6305	1	CALENTADOR DE COMBUSTIBLE	291
		1	CALENTADOR DE COMBUSTIBLE	292
TAPA PROTECTORA (CONJ)	3E-5165	1	CABLES DE PARADA DE EMERGENCIA (GR)	439
VIDRIO (CONJ)	9X-4174	1	REFLECTOR (GR)	303
VIDRIO (CONJ) (FARO DELANTERO) (LUZ BAJA)	9X-7798	1	LÁMPARA DE FARO DELANTERO (GR)	305
VIDRIO (CONJ) (REFLECTOR)	9X-4174	1	REFLECTOR (GR)	301
	158-0248	1	REFLECTOR (GR)	304
VIDRIO DE LOS REFLECTORES (CONJ)	9X-4174	1	REFLECTOR (GR)	302

PIEZAS DE MANTENIMIENTO

DESCRIPCION	NUMERO DE PIEZA	CANT	SE UTILIZA EN	PAGINA
SISTEMA HIDRÁULICO				
CANDADO (GR)	5P-8502	1	TAPA DEL TAPÓN DEL TANQUE HIDRÁULICO (GR)	959
COLADOR (CONJ)	3D-6678	1	TANQUE HIDRÁULICO (GR)	1054
		1	TANQUE HIDRÁULICO (GR)	1058
CONEXION (CONJ) (DESCONEXION RAPIDA)	6V-3965	1	VÁLVULA Y MONTAJE DEL VENTILADOR HIDRÁULICO (GR)	1062
PANTALLA (CONJ)	9T-9227	4	TANQUE HIDRÁULICO (GR)	1058
		1	TANQUE HIDRÁULICO (GR)	1054
REJILLA	118-8693	2	TANQUE HIDRÁULICO (GR)	1054
REJILLA (GR)	7J-2656	1	TANQUE HIDRÁULICO (GR)	1054
SELLO ANULAR (94,84 MM DIAMETRO INTERIOR)	1H-8128	3	TUBERÍAS HIDRÁULICAS (GR)	997
		3	TUBERÍAS HIDRÁULICAS (GR)	1003
TAPA CONTRA EL POLVO	6V-0852	1	MONTAJE Y VALVULA DEL CONTROL PRINCIPAL (GR)	1064
		1	TUBERÍAS HIDRÁULICAS DEL VENTILADOR (GR)	1008
		1	TUBERÍAS HIDRÁULICAS DEL VENTILADOR (GR)	1014
		1	TUBERÍAS HIDRÁULICAS DEL VENTILADOR (GR)	1020
		2	TUBERÍAS HIDRÁULICAS (GR)	996
		2	TUBERÍAS HIDRÁULICAS (GR)	1002
		1	VÁLVULA DE ALIVIO PILOTO Y MONTAJE (GR)	1067
		1	VÁLVULA DE ALIVIO PILOTO Y MONTAJE (GR)	1068
		3	VÁLVULA DE CONTROL (GR)	1073
		1	VÁLVULA Y MONTAJE DEL VENTILADOR HIDRÁULICO (GR)	1062
	8C-3451	1	TUBERÍAS HIDRÁULICAS (GR)	997
		1	TUBERÍAS HIDRÁULICAS (GR)	1004
TAPA DEL TUBO DE LLENADO	4J-3754	1	TANQUE HIDRÁULICO (GR)	1054
		1	TANQUE HIDRÁULICO (GR)	1058
TAPA PROTECTORA DEL TANQUE HIDRÁULICO	5D-1902	1	TANQUE HIDRÁULICO (GR)	1054
TAPÓN (CONJ)	6V-9829	4	VÁLVULA DE CONTROL (GR)	1073
TAPÓN (CONJ) (ROSCA 11/16-16)	6V-9829	1	VÁLVULA DE LA BOMBA VARIABLE Y MONTAJE (GR)	1069
		1	VÁLVULA DE LA BOMBA VARIABLE Y MONTAJE (GR)	1070
TAPÓN (ROSCA 7/16-20)	9S-4190	1	BOMBA DE PISTONES (GR)	1038
		1	TUBERÍAS HIDRÁULICAS DEL VENTILADOR (GR)	1008
		1	TUBERÍAS HIDRÁULICAS DEL VENTILADOR (GR)	1014
		1	TUBERÍAS HIDRÁULICAS DEL VENTILADOR (GR)	1020
		1	TUBERÍAS HIDRÁULICAS DEL VENTILADOR (GR)	1021

PIEZAS DE MANTENIMIENTO

DESCRIPCION	NUMERO DE PIEZA	CANT	SE UTILIZA EN	PAGINA
TREN DE FUERZA				
CONEXIÓN	1K-6853	2	EJE OSCILANTE (GR)	476
CONEXIÓN DE ENGRASE (ROSCA DE 1/8-27)	3B-8489	1	EJE DE MANDO (GR)	598
ELEMENTO DE FILTRO DE ACEITE (CONJ) (HIDRAULICO)	132-8876	1	FILTRO DE ACEITE (GR)	536
ELEMENTO DE FILTRO (TREN DE FUERZA)	132-8876	1	FILTRO DE ACEITE (GR)	539
ELEMENTO DEL FILTRO HIDRÁULICO (CONJ) (TREN DE FUERZA)	132-8876	1	FILTRO DE ACEITE (GR)	538
FILTRO	1G-8878	1	FILTRO DE ACEITE (GR)	540
FILTRO HIDRÁULICO (CONJ)	1G-8878	1	FILTRO DE ACEITE (GR)	541
REJILLA DE SUCCIÓN	3S-3875	2	CAJA Y ENGRANAJE DE TRANSFERENCIA DE SALIDA (GR)	545
RESPIRADERO	4H-6112	3	TUBERÍAS DE ACEITE DEL TREN DE FUERZA (GR)	557
		3	TUBERÍAS DE ACEITE DEL TREN DE FUERZA (GR)	561
		3	TUBERÍAS DE ACEITE DEL TREN DE FUERZA (GR)	565
SELLO ANULAR (133,66MM DI)	5H-5672	2	TRANSMISIÓN PLANETARIA (GR)	579
		2	TRANSMISIÓN PLANETARIA (GR)	585
SELLO ANULAR (81,92MM DI)	4L-9564	1	EJE DE MANDO (GR)	596
		1	EJE DE MANDO (GR)	598
TAPA CONTRA EL POLVO	6V-0852	1	CONVERTIDOR DE PAR Y CAJA (GR)	618
		1	CONVERTIDOR DE PAR Y CAJA (GR)	622
		1	CONVERTIDOR DE PAR Y CAJA (GR)	626
		1	CONVERTIDOR DE PAR Y CAJA (GR)	628
		1	FILTRO Y MONTAJE DEL TREN DE FUERZA (GR)	530
		1	FILTRO Y MONTAJE DEL TREN DE FUERZA (GR)	532
		1	FILTRO Y MONTAJE DEL TREN DE FUERZA (GR)	534
		1	TUBERÍAS DE ACEITE DEL TREN DE FUERZA (GR)	553
		1	TUBERÍAS DE ACEITE DEL TREN DE FUERZA (GR)	557
		1	TUBERÍAS DE ACEITE DEL TREN DE FUERZA (GR)	561
		1	TUBERÍAS DE ACEITE DEL TREN DE FUERZA (GR)	565
		1	VÁLVULA DE ALIVIO (GR)	658
		1	VÁLVULA DE PRIORIDAD DEL CONVERTIDOR DE PAR (GR)	664
		1	VÁLVULA DEL EMBRAGUE DE DESCONEXIÓN Y MONTAJE (GR)	651
		1	VÁLVULA DEL EMBRAGUE DE DESCONEXIÓN Y MONTAJE (GR)	652
	8C-3447	1	FILTRO Y MONTAJE DEL TREN DE FUERZA (GR)	530
		1	FILTRO Y MONTAJE DEL TREN DE FUERZA (GR)	532

PIEZAS DE MANTENIMIENTO

DESCRIPCION	NUMERO DE PIEZA	CANT	SE UTILIZA EN	PAGINA
		1	FILTRO Y MONTAJE DEL TREN DE FUERZA (GR)	534
TAPA (2,0 PULGADAS DE GROSOR)	9K-7951	1	ARO DESMONTABLE (GR)	595
TAPÓN DE DRENAJE (ROSCA 1-1/2-12)	4B-2363	1	CAJA Y ENGRANAJE DE TRANSFERENCIA DE SALIDA (GR)	544
TAPÓN MAGNÉTICO	5P-4484	1	EJE FIJO (GR)	474
		1	EJE OSCILANTE (GR)	476
TAPÓN MAGNÉTICO (ROSCA 1 5/8-12)	6V-0439	1	RUEDA Y MANDOS FINALES	668

PEÇAS DE MANUTENÇÃO

DESCRIÇÃO	NÚMERO DE PEÇA	QUANT	UTILIZADA EM	PÁGINA
CHASSI E CARROCERIA				
CADEADO	5P-8502	2	CAPÔ E PROTETOR	718
		2	CAPÔ E PROTETOR	722
		2	CAPÔ E PROTETOR	726
		1	MONTAGEM - PÁRA-CHOQUE	748
CAMISA	8Y-6364	1	CAPÔ E PROTETOR	718
		1	CAPÔ E PROTETOR	722
		1	CAPÔ E PROTETOR	726
		1	MONTAGEM - PÁRA-CHOQUE	748
CHAVE	5P-8500	1	CAPÔ E PROTETOR	718
		1	CAPÔ E PROTETOR	722
		1	CAPÔ E PROTETOR	726
		1	MONTAGEM - PÁRA-CHOQUE	748
ELEMENTO - FILTRANTE	7M-1674	1	SUPORTE - ADMISSÃO DE AR	753
		1	SUPORTE - ADMISSÃO DE AR	754
GRAXEIRA	3B-8489	6	TUBOS - GRAXA	740
		3	TUBOS - GRAXA	744
GRAXEIRA (ROSCA 1/8-27 POL)	3B-8489	5	TUBOS - GRAXA	742
EQUIPAMENTOS DE SERVIÇO E SUPRIMENTOS				
CADEADO	5P-8502	1	PROTEÇÃO CONTRA VANDALISMO	1448
CHAVE	5P-8500	1	PROTEÇÃO CONTRA VANDALISMO	1448
PROTETOR DO FILTRO DE ÓLEO	7W-1484	1	PROTEÇÃO CONTRA VANDALISMO	1448

PEÇAS DE MANUTENÇÃO

DESCRIÇÃO	NÚMERO DE PEÇA	QUANT	UTILIZADA EM	PÁGINA
ESTAÇÃO DO OPERADOR				
CINTO DE SEGURANÇA	183-3648	1	ASSENTO	1382
CINTO DE SEGURANÇA (RETRÁTIL)	156-1148	1	ASSENTO	1379
CORREIA EM V	112-6055	1	COMPRESSOR DE REFRIGERANTE E MONTAGEM	1268
	141-7138	1	COMPRESSOR DE REFRIGERANTE E MONTAGEM	1270
FILTRO - AR	9X-8216	1	CABINE	1264
		1	FILTRO - AR DA CABINE	1297
		1	FILTRO - AR DA CABINE	1298
FILTRO - TELA	8T-5913	2	LAVADOR DO VIDRO	1422
		4	LAVADOR DO VIDRO	1423
LÂMINA DO LIMPADOR DE PÁRA-BRISA	6V-7419	2	LIMPADOR E LAVADOR - JANELA	1430
		2	LIMPADOR E LAVADOR - JANELA	1432
LÂMINA DO LIMPADOR DE PÁRA-BRISA (DIANTEIRO)	6V-7419	1	LIMPADOR E LAVADOR - JANELA	1424
		1	LIMPADOR E LAVADOR - JANELA	1426
		1	LIMPADOR E LAVADOR - JANELA	1428
LÂMINA DO LIMPADOR DE PÁRA-BRISA (TRASEIRO)	6V-5851	1	LIMPADOR E LAVADOR - JANELA	1424
		1	LIMPADOR E LAVADOR - JANELA	1426
		1	LIMPADOR E LAVADOR - JANELA	1428
LÂMPADA	9X-4494	1	INSTALAÇÃO DO RÁDIO	1304
LÂMPADA - MAPA	8Y-6335	1	INSTALAÇÃO DO RÁDIO	1304
LÂMPADA (24 V)	7N-5876	6	PAINEL DE INSTRUMENTOS	1346
PARAFUSO (M10X1,50X12MM)	7X-2621	2	LIMPADOR E LAVADOR - JANELA	1424
TAMPA	9U-0126	1	LAVADOR DO VIDRO	1423
TAMPA - PROTEÇÃO	3E-5165	1	PAINEL DE INSTRUMENTOS	1340
TAMPA - RETENTOR	3E-4052	1	TUBOS - AR CONDICIONADO	1320
TELA PÁRA-SOL (DIANTEIRO)	8Y-6339	1	TELA PÁRA-SOL	1360
		1	TELA PÁRA-SOL	1361
TELA PÁRA-SOL (TRASEIRO)	8Y-6340	1	TELA PÁRA-SOL	1360
		1	TELA PÁRA-SOL	1361
MOTOR BÁSICO				
BUJÃO - DRENAGEM DO ÓLEO	6I-0723	1	CÁRTER DO ÓLEO DO MOTOR	64
BUJÃO DO DRENO	2A-5220	6	CAIXA DIANTEIRA	58
CORREIA EM V	141-7116	1	MONTAGEM - ALTERNADOR	60
FLANGE	7N-5418	1	CÁRTER DO ÓLEO DO MOTOR	64
JUNTA - CÁRTER DE ÓLEO DO MOTOR	7E-2631	1	CÁRTER DO ÓLEO DO MOTOR	64
RETENTOR DE ANEL-O	6V-5167	1	CÁRTER DO ÓLEO DO MOTOR	64
TAMPA	7E-6508	1	MECANISMO DAS VÁLVULAS	72
		1	MECANISMO DAS VÁLVULAS	74
TELA FILTRANTE	7N-5395	1	CÁRTER DO ÓLEO DO MOTOR	62
		1	CÁRTER DO ÓLEO DO MOTOR	64
SISTEMA DA ADMISSÃO DE AR E DE ESCAPE				
ELEMENTO - PRIMÁRIO	123-6855	1	PURIFICADOR DE AR	150
ELEMENTO - SECUNDÁRIO	123-6856	1	PURIFICADOR DE AR	150

PEÇAS DE MANUTENÇÃO

DESCRIÇÃO	NÚMERO DE PEÇA	QUANT	UTILIZADA EM	PÁGINA
SISTEMA DE ARREFECIMENTO				
FILTRO - ÁGUA	4N-5834	2	BOMBA DE ÁGUA	136
FILTRO - ÁGUA (BOMBA D'ÁGUA)	4N-5834	2	BOMBA DE ÁGUA	137
MANGUEIRA	106-4572	14	TUBOS - RADIADOR	114
REGULADOR DE TEMPERATURA/TERMOSTATO	6I-4950	4	TERMOSTATO / REGULADOR DE TEMPERATURA	103
TAMPA - RADIADOR	6L-8617	1	TANQUE SUPERIOR DO RADIADOR	143
SISTEMA DE COMBUSTÍVEL				
BUJÃO - CANO/TUBO (ROSCA NPTF 3/8-18)	8T-6767	1	TANQUE DE COMBUSTÍVEL	230
CADEADO	5P-8502	1	ADAPTADOR - ABASTECIMENTO RÁPIDO DE COMBUSTÍVEL	182
		1	COMBUSTÍVEL - ABASTECIMENTO CONVENCIONAL	194
		1	TANQUE DE COMBUSTÍVEL	228
CHAVE	5P-8500	1	ADAPTADOR - ABASTECIMENTO RÁPIDO DE COMBUSTÍVEL	182
		1	COMBUSTÍVEL - ABASTECIMENTO CONVENCIONAL	194
		1	TANQUE DE COMBUSTÍVEL	228
ELEMENTO - FILTRO DE COMBUSTÍVEL (PRIMÁRIO)	9M-2342	1	FILTRO - COMBUSTÍVEL	184
FILTRO - COMBUSTÍVEL	9P-7121	1	TANQUE DE COMBUSTÍVEL	230
FILTRO - COMBUSTÍVEL (SECUNDÁRIO)	1R-0755	2	FILTRO - COMBUSTÍVEL	184
JOGO DE FILTRO DA TAMPA	9X-2205	1	COMBUSTÍVEL - ABASTECIMENTO CONVENCIONAL	186
JOGO DE RESPIRO	5T-8645	1	COMBUSTÍVEL - ABASTECIMENTO CONVENCIONAL	192
JUNTA	8H-2778	1	FILTRO - COMBUSTÍVEL	184
LUVA	8Y-6364	1	ADAPTADOR - ABASTECIMENTO RÁPIDO DE COMBUSTÍVEL	182
		1	COMBUSTÍVEL - ABASTECIMENTO CONVENCIONAL	194
		1	TANQUE DE COMBUSTÍVEL	228
PENEIRA DO TANQUE DE COMBUSTÍVEL	9P-7121	1	TANQUE DE COMBUSTÍVEL	228
PROTETOR CONTRA POEIRA	9D-0630	1	ADAPTADOR - ABASTECIMENTO RÁPIDO DE COMBUSTÍVEL	178
		1	ADAPTADOR - ABASTECIMENTO RÁPIDO DE COMBUSTÍVEL	180
		1	ADAPTADOR - ABASTECIMENTO RÁPIDO DE COMBUSTÍVEL	182
PURIFICADOR DE AR	136-6202	2	ADAPTADOR - ABASTECIMENTO RÁPIDO DE COMBUSTÍVEL	178
		2	ADAPTADOR - ABASTECIMENTO RÁPIDO DE COMBUSTÍVEL	180
		1	COMBUSTÍVEL - ABASTECIMENTO CONVENCIONAL	190
RESPIRO	9G-9981	1	COMBUSTÍVEL - ABASTECIMENTO CONVENCIONAL	188
		1	COMBUSTÍVEL - ABASTECIMENTO CONVENCIONAL	194

PEÇAS DE MANUTENÇÃO

DESCRIÇÃO	NÚMERO DE PEÇA	QUANT	UTILIZADA EM	PÁGINA
RETENTOR DE ANEL-O (DIÂMETRO INTERNO DE 110,49 MM)	9X-8600	1	ADAPTADOR - ABASTECIMENTO RÁPIDO DE COMBUSTÍVEL	178
		1	ADAPTADOR - ABASTECIMENTO RÁPIDO DE COMBUSTÍVEL	180
		1	ADAPTADOR - ABASTECIMENTO RÁPIDO DE COMBUSTÍVEL	182
		1	COMBUSTÍVEL - ABASTECIMENTO CONVENCIONAL	186
		1	COMBUSTÍVEL - ABASTECIMENTO CONVENCIONAL	188
		1	COMBUSTÍVEL - ABASTECIMENTO CONVENCIONAL	190
TAMPA DO BOCAL DE ENCHIMENTO DO TANQUE DE COMBUSTÍVEL	101-8909	1	ADAPTADOR - ABASTECIMENTO RÁPIDO DE COMBUSTÍVEL	178
		1	ADAPTADOR - ABASTECIMENTO RÁPIDO DE COMBUSTÍVEL	180
		1	ADAPTADOR - ABASTECIMENTO RÁPIDO DE COMBUSTÍVEL	182
TAMPA DO TANQUE DE COMBUSTÍVEL	123-6305	1	COMBUSTÍVEL - ABASTECIMENTO CONVENCIONAL	186
		1	COMBUSTÍVEL - ABASTECIMENTO CONVENCIONAL	188
		1	COMBUSTÍVEL - ABASTECIMENTO CONVENCIONAL	190
		1	COMBUSTÍVEL - ABASTECIMENTO CONVENCIONAL	192
		1	COMBUSTÍVEL - ABASTECIMENTO CONVENCIONAL	194
SISTEMA DE DIREÇÃO				
FILTRO - ÓLEO	126-1817	1	FILTRO - ÓLEO	828
RETENTOR DE ANEL-O (94,84MM DE DIÂMETRO INTERNO)	1H-8128	1	TUBOS - DIREÇÃO	840
		1	TUBOS - DIREÇÃO	846
TAMPA CONTRA POEIRA	6V-0852	1	DIREÇÃO	872
		1	DIREÇÃO	873
		1	TUBOS - ARREFECEDOR DO ÓLEO DA DIREÇÃO	854
		1	TUBOS - ARREFECEDOR DO ÓLEO DA DIREÇÃO	858
		2	TUBOS - DIREÇÃO	840
		2	TUBOS - DIREÇÃO	846
		1	TUBOS - DIREÇÃO SECUNDÁRIA	830
		1	TUBOS - DIREÇÃO SECUNDÁRIA	832
		1	TUBOS - DIREÇÃO SECUNDÁRIA	836
	8C-3451	1	TUBOS - ARREFECEDOR DO ÓLEO DA DIREÇÃO	855
		1	TUBOS - ARREFECEDOR DO ÓLEO DA DIREÇÃO	859

PEÇAS DE MANUTENÇÃO

DESCRIÇÃO	NÚMERO DE PEÇA	QUANT	UTILIZADA EM	PÁGINA
SISTEMA DE FREIO				
TAMPA CONTRA POEIRA	6V-0852	2	CONTROLE DO FREIO DE SERVIÇO	772
		2	CONTROLE DO FREIO DE SERVIÇO	778
		2	CONTROLE DO FREIO DE SERVIÇO	784
		2	CONTROLE DO FREIO DE SERVIÇO	792
		4	TUBOS - FREIO DE SERVIÇO	800
SISTEMA DE LUBRIFICAÇÃO				
FILTRO - ÓLEO DO MOTOR	2P-4005	2	FILTRO - ÓLEO DO MOTOR	78
		2	FILTRO - ÓLEO DO MOTOR	80
RESPIRO (CÁRTER DO MOTOR)	4W-3027	2	RESPIRO	76
TAMPA	9S-9272	1	FILTRO - ÓLEO DO MOTOR	78
		1	FILTRO - ÓLEO DO MOTOR	80
		1	ÓLEO - ARRANJO PARA TROCA RÁPIDA	94
TAMPA - BOCAL DE ENCHIMENTO DE ÓLEO	133-5946	1	BOCAL DE ENCHIMENTO DE ÓLEO DO MOTOR	77
TAMPA CONTRA POEIRA	6V-0852	1	TUBOS - ÓLEO DO MOTOR	85
		1	TUBOS - ÓLEO DO MOTOR	89
	8C-3445	1	FILTRO - ÓLEO DO MOTOR	78
		1	FILTRO - ÓLEO DO MOTOR	80
TELA - RETORNO	4P-4917	1	BOMBA MANUAL DO CÁRTER	95
	4P-5500	1	BOMBA MANUAL DO CÁRTER	95
SISTEMA ELÉTRICO E DE PARTIDA				
BATERIA (RELÓGIO)	101-1785	1	CONTROLE - NÃO PROGRAMADO	252
		1	CONTROLE - NÃO PROGRAMADO	257
BATERIA (12 VOLT/SECO)	9X-9730	4	BATERIA E CABOS / FIOS ELÉTRICOS	236
CADEADO	5P-8502	1	AQUECEDOR - COMBUSTÍVEL	292
CHAVE	5P-8500	1	AQUECEDOR - COMBUSTÍVEL	292
CHAVE (DESCONECTAR A BATERIA)	8H-5306	1	CHAVE GERAL	365
CILINDRO DE ÉTER	7X-1062	1	AUXILIAR DE PARTIDA A ÉTER	352
DISJUNTOR AUTOMÁTICO DE CIRCUITO (10 A) (CHAVE DE PARTIDA)	6T-3642	1	CABOS/FIOS ELÉTRICOS - MONITOR DO SIST. DE EXIBIÇÃO DE INFORMAÇÕES VITAIS - VIDS	441
		1	CABOS/FIOS ELÉTRICOS - MONITOR DO SIST. DE EXIBIÇÃO DE INFORMAÇÕES VITAIS - VIDS	447
		1	CABOS/FIOS ELÉTRICOS - MONITOR DO SIST. DE GERENCIAM. DE INFORM. VITAIS - VIMS	461
		1	CABOS/FIOS ELÉTRICOS - MONITOR DO SIST. DE GERENCIAM. DE INFORM. VITAIS - VIMS	467
DISJUNTOR AUTOMÁTICO DE CIRCUITO (105 A) (ALTERNADOR)	3E-7294	2	CABOS/FIOS ELÉTRICOS - MONITOR DO SIST. DE GERENCIAM. DE INFORM. VITAIS - VIMS	461
		1	CABOS/FIOS ELÉTRICOS - MONITOR DO SIST. DE GERENCIAM. DE INFORM. VITAIS - VIMS	467
DISJUNTOR AUTOMÁTICO DE CIRCUITO (105 A) (ALTERNADOR - PRINCIPAL)	3E-7294	2	CABOS/FIOS ELÉTRICOS - MONITOR DO SIST. DE EXIBIÇÃO DE INFORMAÇÕES VITAIS - VIDS	447

PEÇAS DE MANUTENÇÃO

DESCRIÇÃO	NÚMERO DE PEÇA	QUANT	UTILIZADA EM	PÁGINA
DISJUNTOR AUTOMÁTICO DE CIRCUITO (105 A) (ALTERNADOR E PRINCIPAL)	3E-7294	2	CABOS/FIOS ELÉTRICOS - MONITOR DO SIST. DE EXIBIÇÃO DE INFORMAÇÕES VITAIS - VIDS	440
DISJUNTOR AUTOMÁTICO DE CIRCUITO (105 A) (PRINCIPAL)	3E-7294	1	CABOS/FIOS ELÉTRICOS - MONITOR DO SIST. DE GERENCIAM. DE INFORM. VITAIS - VIMS	467
DISJUNTOR AUTOMÁTICO DE CIRCUITO (15 A) (ECM DO MOTOR)	6T-3643	1	CABOS/FIOS ELÉTRICOS - MONITOR DO SIST. DE EXIBIÇÃO DE INFORMAÇÕES VITAIS - VIDS	441
		1	CABOS/FIOS ELÉTRICOS - MONITOR DO SIST. DE EXIBIÇÃO DE INFORMAÇÕES VITAIS - VIDS	447
		1	CABOS/FIOS ELÉTRICOS - MONITOR DO SIST. DE GERENCIAM. DE INFORM. VITAIS - VIMS	461
		1	CABOS/FIOS ELÉTRICOS - MONITOR DO SIST. DE GERENCIAM. DE INFORM. VITAIS - VIMS	467
DISJUNTOR AUTOMÁTICO DE CIRCUITO (15 A) (LUZES DE OPERAÇÃO)	3T-2662	1	CABOS/FIOS ELÉTRICOS - MONITOR DO SIST. DE EXIBIÇÃO DE INFORMAÇÕES VITAIS - VIDS	441
		1	CABOS/FIOS ELÉTRICOS - MONITOR DO SIST. DE EXIBIÇÃO DE INFORMAÇÕES VITAIS - VIDS	447
		1	CABOS/FIOS ELÉTRICOS - MONITOR DO SIST. DE GERENCIAM. DE INFORM. VITAIS - VIMS	461
		1	CABOS/FIOS ELÉTRICOS - MONITOR DO SIST. DE GERENCIAM. DE INFORM. VITAIS - VIMS	467
ELEMENTO - AQUECEDOR DE ÁGUA DA CAMISA (120 VOLTS, 1500 WATTS)	9G-6655	2	AQUECEDOR DA ÁGUA DO MOTOR	298
ELEMENTO - AQUECEDOR DE ÁGUA DA CAMISA (240 VOLTS, 1500 WATTS)	6T-3764	2	AQUECEDOR DA ÁGUA DO MOTOR	299
ESCOVA	3T-9524	6	MOTOR ELÉTRICO DE PARTIDA	356
		6	MOTOR ELÉTRICO DE PARTIDA	360
FILTRO E JUNTA	9X-7138	1	AUXILIAR DE PARTIDA A ÉTER	352
FUSÍVEL (10 A)	3K-8782	8	CABOS/FIOS ELÉTRICOS - MONITOR DO SIST. DE EXIBIÇÃO DE INFORMAÇÕES VITAIS - VIDS	440
		8	CABOS/FIOS ELÉTRICOS - MONITOR DO SIST. DE EXIBIÇÃO DE INFORMAÇÕES VITAIS - VIDS	446
		8	CABOS/FIOS ELÉTRICOS - MONITOR DO SIST. DE GERENCIAM. DE INFORM. VITAIS - VIMS	460
		8	CABOS/FIOS ELÉTRICOS - MONITOR DO SIST. DE GERENCIAM. DE INFORM. VITAIS - VIMS	466
FUSÍVEL (15 A)	8M-8948	4	CABOS/FIOS ELÉTRICOS - MONITOR DO SIST. DE EXIBIÇÃO DE INFORMAÇÕES VITAIS - VIDS	440

PEÇAS DE MANUTENÇÃO

DESCRIÇÃO	NÚMERO DE PEÇA	QUANT	UTILIZADA EM	PÁGINA
		4	CABOS/FIOS ELÉTRICOS - MONITOR DO SIST. DE EXIBIÇÃO DE INFORMAÇÕES VITAIS - VIDS	446
		4	CABOS/FIOS ELÉTRICOS - MONITOR DO SIST. DE GERENCIAM. DE INFORM. VITAIS - VIMS	460
		4	CABOS/FIOS ELÉTRICOS - MONITOR DO SIST. DE GERENCIAM. DE INFORM. VITAIS - VIMS	466
FUSÍVEL (20 A)	8M-0456	1	CABOS/FIOS ELÉTRICOS - MONITOR DO SIST. DE EXIBIÇÃO DE INFORMAÇÕES VITAIS - VIDS	440
		1	CABOS/FIOS ELÉTRICOS - MONITOR DO SIST. DE EXIBIÇÃO DE INFORMAÇÕES VITAIS - VIDS	446
		1	CABOS/FIOS ELÉTRICOS - MONITOR DO SIST. DE GERENCIAM. DE INFORM. VITAIS - VIMS	460
		1	CABOS/FIOS ELÉTRICOS - MONITOR DO SIST. DE GERENCIAM. DE INFORM. VITAIS - VIMS	466
LÂMPADA	9X-4492	1	LÂMPADA - SINALIZAÇÃO	306
LÂMPADA - MINIATURA (28 V)	7N-5876	11	CABOS/FIOS ELÉTRICOS - CABINE	376
LÂMPADA - SINALIZAÇÃO (FREIO E TRASEIRA)	135-0426	2	ILUMINAÇÃO - FREIOS	318
LÂMPADA (24 V)	9X-4493	1	LÂMPADA - SINALIZAÇÃO	307
		1	LUZ - INDICADOR DE SERVIÇO DO SIST. DE GERENCIAM. DE INFORMAÇÕES VITAIS - VIMS	309
LÂMPADA (24 VOLTS - 65 WATTS)	9X-3463	1	LÂMPADA - FAROL	302
LÂMPADA (24 VOLTS)(65 WATTS)	9X-3463	1	LÂMPADA - FAROL	301
		1	LÂMPADA - FAROL	303
		1	LÂMPADA - FAROL	304
LÂMPADA (24 VOLTS)(65 WATTS) (CABEÇA)	9X-3463	1	FAROL DIANTEIRO	305
LÂMPADA (28 V)	9W-2111	1	CABOS/FIOS ELÉTRICOS - CABINE	376
LÂMPADA (28 V) (TETO)	7N-9943	1	LÂMPADA - TETO	300
LENTE	9X-4174	1	LÂMPADA - FAROL	303
LENTE - AZUL	107-2283	1	LUZ - INDICADOR DE SERVIÇO DO SIST. DE GERENCIAM. DE INFORMAÇÕES VITAIS - VIMS	309
LENTE DA LÂMPADO DO TETO	7T-0020	1	LÂMPADA - TETO	300
LENTE (HOLOFOTE)	9X-4174	1	LÂMPADA - FAROL	301
	158-0248	1	LÂMPADA - FAROL	304
LENTE (LUZES DIANTEIRAS) (FAROL BAIXO)	9X-7798	1	FAROL DIANTEIRO	305
LENTE VERMELHA	9X-3064	1	LÂMPADA - SINALIZAÇÃO	307
LENTES - LUZES DE TRABALHO	9X-4174	1	LÂMPADA - FAROL	302
LUVA	8Y-6364	1	AQUECEDOR - COMBUSTÍVEL	292
MOLA - ESCOVA	3T-9494	1	MOTOR ELÉTRICO DE PARTIDA	356
		6	MOTOR ELÉTRICO DE PARTIDA	357
		1	MOTOR ELÉTRICO DE PARTIDA	360
		6	MOTOR ELÉTRICO DE PARTIDA	361
RESPIRO	9G-9981	1	AQUECEDOR - COMBUSTÍVEL	291

PEÇAS DE MANUTENÇÃO

DESCRIÇÃO	NÚMERO DE PEÇA	QUANT	UTILIZADA EM	PÁGINA
		1	AQUECEDOR - COMBUSTÍVEL	292
TAMPA - PORTA-FUSÍVEL	7N-2867	1	CABOS/FIOS ELÉTRICOS - MONITOR DO SIST. DE GERENCIAM. DE INFORM. VITAIS - VIMS	460
		1	CABOS/FIOS ELÉTRICOS - MONITOR DO SIST. DE GERENCIAM. DE INFORM. VITAIS - VIMS	466
	139-0178	1	CABOS/FIOS ELÉTRICOS - MONITOR DO SIST. DE EXIBIÇÃO DE INFORMAÇÕES VITAIS - VIDS	440
		1	CABOS/FIOS ELÉTRICOS - MONITOR DO SIST. DE EXIBIÇÃO DE INFORMAÇÕES VITAIS - VIDS	446
TAMPA - PROTEÇÃO	3E-5165	1	CABOS/FIOS ELÉTRICOS - PARADA	439
TAMPA - RECEPTÁCULO	8C-6354	1	CABOS/FIOS ELÉTRICOS - MONITOR DO SIST. DE EXIBIÇÃO DE INFORMAÇÕES VITAIS - VIDS	441
		1	CABOS/FIOS ELÉTRICOS - MONITOR DO SIST. DE EXIBIÇÃO DE INFORMAÇÕES VITAIS - VIDS	447
		1	CABOS/FIOS ELÉTRICOS - MONITOR DO SIST. DE GERENCIAM. DE INFORM. VITAIS - VIMS	461
		1	CABOS/FIOS ELÉTRICOS - MONITOR DO SIST. DE GERENCIAM. DE INFORM. VITAIS - VIMS	467
TAMPA CONTRA POEIRA	6N-1604	2	AQUECEDOR DA ÁGUA DO MOTOR	298
		2	AQUECEDOR DA ÁGUA DO MOTOR	299
	6V-0852	2	CABOS/FIOS ELÉTRICOS - TREM DE FORÇA	416
		2	CABOS/FIOS ELÉTRICOS - TREM DE FORÇA	420
		2	CABOS/FIOS ELÉTRICOS - TREM DE FORÇA	424
		2	CABOS/FIOS ELÉTRICOS - TREM DE FORÇA	428
		2	CABOS/FIOS ELÉTRICOS - TREM DE FORÇA	432
TAMPA DO TANQUE DE COMBUSTÍVEL	123-6305	1	AQUECEDOR - COMBUSTÍVEL	291
		1	AQUECEDOR - COMBUSTÍVEL	292

PEÇAS DE MANUTENÇÃO

DESCRIÇÃO	NÚMERO DE PEÇA	QUANT	UTILIZADA EM	PÁGINA
SISTEMA HIDRÁULICO				
BUJÃO - ANEL O (7/16-20 THD)	9S-4190	1	BOMBA DE PISTÃO	1038
		1	TUBOS - VENTILADOR HIDRÁULICOS	1008
		1	TUBOS - VENTILADOR HIDRÁULICOS	1014
		1	TUBOS - VENTILADOR HIDRÁULICOS	1020
		1	TUBOS - VENTILADOR HIDRÁULICOS	1021
CADEADO	5P-8502	1	TAMPA - TANQUE HIDRÁULICO	959
CONEXÃO (DESCONEXÃO RÁPIDA)	6V-3965	1	VÁLVULA DO VENTILADOR HIDRÁULICO	1062
RETENTOR DE ANEL-O (94,84MM DE DIÂMETRO INTERNO)	1H-8128	3	TUBOS - ÓLEO HIDRÁULICO	997
		3	TUBOS - ÓLEO HIDRÁULICO	1003
TAMPA	6V-9829	4	VÁLVULA DE CONTROLE	1073
TAMPA - BOCAL DE ENCHIMENTO	4J-3754	1	TANQUE HIDRÁULICO	1054
		1	TANQUE HIDRÁULICO	1058
TAMPA CONTRA POEIRA	6V-0852	2	TUBOS - ÓLEO HIDRÁULICO	996
		2	TUBOS - ÓLEO HIDRÁULICO	1002
		1	TUBOS - VENTILADOR HIDRÁULICOS	1008
		1	TUBOS - VENTILADOR HIDRÁULICOS	1014
		1	TUBOS - VENTILADOR HIDRÁULICOS	1020
		1	VÂLVULA DE ALÍVIO - PILOTO E MONTAGEM	1067
		1	VÂLVULA DE ALÍVIO - PILOTO E MONTAGEM	1068
		3	VÁLVULA DE CONTROLE	1073
		1	VÁLVULA DO CONTROLE PRINCIPAL E MONTAGEM	1064
		1	VÁLVULA DO VENTILADOR HIDRÁULICO	1062
	8C-3451	1	TUBOS - ÓLEO HIDRÁULICO	997
		1	TUBOS - ÓLEO HIDRÁULICO	1004
TAMPA DO RESERVATÓRIO HIDRÁULICO	5D-1902	1	TANQUE HIDRÁULICO	1054
TAMPA (ROSCA 11/16-16)	6V-9829	1	VÁLVULA E MONTAGEM - BOMBA VARIÁVEL	1069
		1	VÁLVULA E MONTAGEM - BOMBA VARIÁVEL	1070
TELA FILTRANTE	3D-6678	1	TANQUE HIDRÁULICO	1054
		1	TANQUE HIDRÁULICO	1058
	7J-2656	1	TANQUE HIDRÁULICO	1054
	9T-9227	1	TANQUE HIDRÁULICO	1054
		4	TANQUE HIDRÁULICO	1058
	118-8693	2	TANQUE HIDRÁULICO	1054
TREM DE FORÇA				
BUJÃO DO DRENO (1-1/2-12 ROSCA)	4B-2363	1	CAIXA DE ENGRENAGEM DE TRANSFERÊNCIA	544
BUJÃO MAGNÉTICO	5P-4484	1	EIXO FIXO	474
		1	EIXO OSCILANTE	476
BUJÃO MAGNÉTICO (ROSCA 1 5/8-12)	6V-0439	1	RODA E COMANDO FINAL	668
CONEXÃO	1K-6853	2	EIXO OSCILANTE	476
ELEMENTO - FILTRANTE (TREM DE FORÇA)	132-8876	1	FILTRO - ÓLEO	539

PEÇAS DE MANUTENÇÃO

DESCRIÇÃO	NÚMERO DE PEÇA	QUANT	UTILIZADA EM	PÁGINA
ELEMENTO FILTRANTE - ÓLEO (HIDRÁULICO)	132-8876	1	FILTRO - ÓLEO	536
ELEMENTO FILTRANTE HIDRÁULICO (TREM DE FORÇA)	132-8876	1	FILTRO - ÓLEO	538
FILTRO	1G-8878	1	FILTRO - ÓLEO	540
FILTRO - HIDRÁULICO	1G-8878	1	FILTRO - ÓLEO	541
GRAXEIRA (ROSCA 1/8-27 POL)	3B-8489	1	EIXO DE TRANSMISSÃO	598
RESPIRO	4H-6112	3	TUBOS - ÓLEO DA TRANSMISSÃO	557
		3	TUBOS - ÓLEO DA TRANSMISSÃO	561
		3	TUBOS - ÓLEO DA TRANSMISSÃO	565
RETENTOR DE ANEL-O (DIÂMETRO INTERNO DE 81,92MM)	4L-9564	1	EIXO DE TRANSMISSÃO	596
		1	EIXO DE TRANSMISSÃO	598
RETENTOR DE ANEL-O (133,66 MM DE DIÂMETRO INTERNO)	5H-5672	2	ENGRENAGENS PLANETÁRIAS - TRANSMISSÃO	579
		2	ENGRENAGENS PLANETÁRIAS - TRANSMISSÃO	585
TAMPA CONTRA POEIRA	6V-0852	1	CONVERSOR DE TORQUE E CARCAÇA	618
		1	CONVERSOR DE TORQUE E CARCAÇA	622
		1	CONVERSOR DE TORQUE E CARCAÇA	626
		1	CONVERSOR DE TORQUE E CARCAÇA	628
		1	FILTRO DO TREM DE FORÇA E MONTAGEM	530
		1	FILTRO DO TREM DE FORÇA E MONTAGEM	532
		1	FILTRO DO TREM DE FORÇA E MONTAGEM	534
		1	TUBOS - ÓLEO DA TRANSMISSÃO	553
		1	TUBOS - ÓLEO DA TRANSMISSÃO	557
		1	TUBOS - ÓLEO DA TRANSMISSÃO	561
		1	TUBOS - ÓLEO DA TRANSMISSÃO	565
		1	VÁLVULA DA EMBREAGEM DE TRAVAMENTO E MONTAGEM	651
		1	VÁLVULA DA EMBREAGEM DE TRAVAMENTO E MONTAGEM	652
		1	VÁLVULA DE ALÍVIO	658
		1	VÁLVULA DE PRIORIDADE DO CONVERSOR DE TORQUE	664
	8C-3447	1	FILTRO DO TREM DE FORÇA E MONTAGEM	530
		1	FILTRO DO TREM DE FORÇA E MONTAGEM	532
		1	FILTRO DO TREM DE FORÇA E MONTAGEM	534
TAMPA DA VÁLVULA (2,0 POL. ESP.)	9K-7951	1	ARO DESMONTÁVEL	595
TELA DE SUCÇÃO	3S-3875	2	CAIXA DE ENGRENAGEM DE TRANSFERÊNCIA	545

WARTUNGSTEILE

BESCHREIBUNG	ERSATZTEIL-NUMMER	MENGE	VERWENDET IN	SEITE
BREMSSYSTEM				
STAUBKAPPE	6V-0852	4	BETRIEBSBREMSLEITUNGEN	800
		2	BREMSGESTÄNGE	772
		2	BREMSGESTÄNGE	778
		2	BREMSGESTÄNGE	784
		2	BREMSGESTÄNGE	792
ELEKTRISCHE ANLAGE U. STARTSYSTEM				
ABDECKGLAS	9X-4174	1	ARBEITSLEUCHTEN	303
ABDECKGLAS (ARBEITSSCHEIN-WERFER)	9X-4174	1	ARBEITSLEUCHTEN	301
	158-0248	1	ARBEITSLEUCHTEN	304
ABDECKGLAS (FRONTSCHEINWER-FER) (ABBLENDLICHT)	9X-7798	1	FRONTSCHEINWERFER	305
ARBEITSSCHEINWERFERLINSE	9X-4174	1	ARBEITSLEUCHTEN	302
ÄTHERSTARTHILFEZYLINDER	7X-1062	1	ÄTHERSTARTHILFE	352
BATTERIE (UHR)	101-1785	1	STEUERUNG - NICHT PROGRAMMIERT	252
		1	STEUERUNG - NICHT PROGRAMMIERT	257
BATTERIE (12 V/TROCKEN)	9X-9730	4	BATTERIE UND VERDRAHTUNG	236
BLINKLEUCHTE (BREMS-/RÜCK-LEUCHTE)	135-0426	2	BREMSBELEUCHTUNG	318
BÜRSTENFEDER	3T-9494	1	STARTERMOTOR	356
		6	STARTERMOTOR	357
		1	STARTERMOTOR	360
		6	STARTERMOTOR	361
BÜRSTENSATZ	3T-9524	6	STARTERMOTOR	356
		6	STARTERMOTOR	360
ENTLÜFTER	9G-9981	1	KRAFTSTOFFHEIZUNG	291
		1	KRAFTSTOFFHEIZUNG	292
FAHRERHAUSLEUCHTENLINSE	7T-0020	1	FAHRERHAUSBELEUCHTUNG	300
FILTER U. DICHTUNG	9X-7138	1	ÄTHERSTARTHILFE	352
KRAFTSTOFFTANKKAPPE	123-6305	1	KRAFTSTOFFHEIZUNG	291
		1	KRAFTSTOFFHEIZUNG	292
LEUCHTE	9X-4492	1	BLINKLEUCHTE	306
LEUCHTE (24 V)	9X-4493	1	BLINKLEUCHTE	307
		1	VIMS-WARTUNGSKONTROLLEUCHTE	309
LEUCHTE (24 V)(65 W)	9X-3463	1	ARBEITSLEUCHTEN	301
		1	ARBEITSLEUCHTEN	302
		1	ARBEITSLEUCHTEN	303
		1	ARBEITSLEUCHTEN	304
LEUCHTE (24 V)(65 W) (FRONTSCHEINWERFER)	9X-3463	1	FRONTSCHEINWERFER	305
LEUCHTE (28 V)	9W-2111	1	FAHRERHAUSVERDRAHTUNG	376
LEUCHTE (28 V) (FAHRERHAUSDACH)	7N-9943	1	FAHRERHAUSBELEUCHTUNG	300
LINSE - ROT	9X-3064	1	BLINKLEUCHTE	307
LINSE, BLAU	107-2283	1	VIMS-WARTUNGSKONTROLLEUCHTE	309
MINIATURLEUCHTE (28 V)	7N-5876	11	FAHRERHAUSVERDRAHTUNG	376
SCHLÜSSEL	5P-8500	1	KRAFTSTOFFHEIZUNG	292
SCHLÜSSEL (HAUPTSCHALTER)	8H-5306	1	TRENNSCHALTER	365
SCHUTZ	8Y-6364	1	KRAFTSTOFFHEIZUNG	292
SCHUTZKAPPE	3E-5165	1	NOTABSCHALTERVERDRAHTUNG	439
SICHERUNG (10 A)	3K-8782	8	VIDS-MONITOR-VERDRAHTUNG	440

WARTUNGSTEILE

BESCHREIBUNG	ERSATZTEIL-NUMMER	MENGE	VERWENDET IN	SEITE
		8	VIDS-MONITOR-VERDRAHTUNG	446
		8	VIMS-MONITOR-VERDRAHTUNG	460
		8	VIMS-MONITOR-VERDRAHTUNG	466
SICHERUNG (15 A)	8M-8948	4	VIDS-MONITOR-VERDRAHTUNG	440
		4	VIDS-MONITOR-VERDRAHTUNG	446
		4	VIMS-MONITOR-VERDRAHTUNG	460
		4	VIMS-MONITOR-VERDRAHTUNG	466
SICHERUNG (20 A)	8M-0456	1	VIDS-MONITOR-VERDRAHTUNG	440
		1	VIDS-MONITOR-VERDRAHTUNG	446
		1	VIMS-MONITOR-VERDRAHTUNG	460
		1	VIMS-MONITOR-VERDRAHTUNG	466
SICHERUNGSHALTERKAPPE	7N-2867	1	VIMS-MONITOR-VERDRAHTUNG	460
		1	VIMS-MONITOR-VERDRAHTUNG	466
	139-0178	1	VIDS-MONITOR-VERDRAHTUNG	440
		1	VIDS-MONITOR-VERDRAHTUNG	446
STAUBKAPPE	6N-1604	2	UMLAUFKÜHLWASSERHEIZUNG	298
		2	UMLAUFKÜHLWASSERHEIZUNG	299
	6V-0852	2	KRAFTÜBERTRAGUNGSVERDRAHTUNG	416
		2	KRAFTÜBERTRAGUNGSVERDRAHTUNG	420
		2	KRAFTÜBERTRAGUNGSVERDRAHTUNG	424
		2	KRAFTÜBERTRAGUNGSVERDRAHTUNG	428
		2	KRAFTÜBERTRAGUNGSVERDRAHTUNG	432
STECKDOSENDECKEL	8C-6354	1	VIDS-MONITOR-VERDRAHTUNG	441
		1	VIDS-MONITOR-VERDRAHTUNG	447
		1	VIMS-MONITOR-VERDRAHTUNG	461
		1	VIMS-MONITOR-VERDRAHTUNG	467
UMLAUFKÜHLWASSERHEIZUNGS-ELEMENT (120 V, 1500 W)	9G-6655	2	UMLAUFKÜHLWASSERHEIZUNG	298
UMLAUFKÜHLWASSERHEIZUNGS-ELEMENT (240 V, 1500 W)	6T-3764	2	UMLAUFKÜHLWASSERHEIZUNG	299
UNTERBRECHER (10 A) (STARTSCHLÜSSEL)	6T-3642	1	VIDS-MONITOR-VERDRAHTUNG	441
		1	VIDS-MONITOR-VERDRAHTUNG	447
		1	VIMS-MONITOR-VERDRAHTUNG	461
		1	VIMS-MONITOR-VERDRAHTUNG	467
UNTERBRECHER (105 A) (DREHSTROMGENERATOR)	3E-7294	2	VIMS-MONITOR-VERDRAHTUNG	461
		1	VIMS-MONITOR-VERDRAHTUNG	467
UNTERBRECHER (105 A) (DREHSTROMGENERATOR-HAUPT-UNTERBRECHERSCHALTER)	3E-7294	2	VIDS-MONITOR-VERDRAHTUNG	447
UNTERBRECHER (105 A) (DREHSTROMGENERATOR U. HAUPT-)	3E-7294	2	VIDS-MONITOR-VERDRAHTUNG	440
UNTERBRECHER (105 A) (HAUPTUNTERBRECHER)	3E-7294	1	VIMS-MONITOR-VERDRAHTUNG	467
UNTERBRECHER (15 A) (ELEKTRON. STEUERMODUL DES MOTORS)	6T-3643	1	VIDS-MONITOR-VERDRAHTUNG	447
		1	VIMS-MONITOR-VERDRAHTUNG	461

BESCHREIBUNG	ERSATZTEIL-NUMMER	MENGE	VERWENDET IN	SEITE
		1	VIMS-MONITOR-VERDRAHTUNG	467
		1	VIDS-MONITOR-VERDRAHTUNG	441
UNTERBRECHER (15 A) (FAHRSCHEINWERFER)	3T-2662	1	VIDS-MONITOR-VERDRAHTUNG	441
		1	VIDS-MONITOR-VERDRAHTUNG	447
		1	VIMS-MONITOR-VERDRAHTUNG	461
		1	VIMS-MONITOR-VERDRAHTUNG	467
VORHÄNGESCHLOSS	5P-8502	1	KRAFTSTOFFHEIZUNG	292
FAHRERHAUS				
DICHTUNGSKAPPE	3E-4052	1	KLIMAANLAGENLEITUNGEN	1320
FILTERSIEB	8T-5913	2	SCHEIBENWASCHANLAGE	1422
		4	SCHEIBENWASCHANLAGE	1423
KAPPE	9U-0126	1	SCHEIBENWASCHANLAGE	1423
KARTENLEUCHTE	8Y-6335	1	RADIOEINBAUSATZ	1304
KEILRIEMEN	112-6055	1	KÄLTEMITTELKOMPRESSOR U. BEFESTIGUNG	1268
	141-7138	1	KÄLTEMITTELKOMPRESSOR U. BEFESTIGUNG	1270
LEUCHTE	9X-4494	1	RADIOEINBAUSATZ	1304
LEUCHTE (24 V)	7N-5876	6	INSTRUMENTENTAFEL	1346
LUFTFILTER	9X-8216	1	FAHRERHAUS	1264
		1	FAHRERHAUSLUFTFILTER	1297
		1	FAHRERHAUSLUFTFILTER	1298
SCHEIBENWISCHERBLATT	6V-7419	2	SCHEIBENWISCHER UND -WASCHANLAGE	1430
		2	SCHEIBENWISCHER UND -WASCHANLAGE	1432
SCHEIBENWISCHERBLATT (HINTEN)	6V-5851	1	SCHEIBENWISCHER UND -WASCHANLAGE	1424
		1	SCHEIBENWISCHER UND -WASCHANLAGE	1426
		1	SCHEIBENWISCHER UND -WASCHANLAGE	1428
SCHEIBENWISCHERBLATT (VORNE)	6V-7419	1	SCHEIBENWISCHER UND -WASCHANLAGE	1424
		1	SCHEIBENWISCHER UND -WASCHANLAGE	1426
		1	SCHEIBENWISCHER UND -WASCHANLAGE	1428
SCHRAUBE (M10X1,50X12MM)	7X-2621	2	SCHEIBENWISCHER UND -WASCHANLAGE	1424
SCHUTZKAPPE	3E-5165	1	INSTRUMENTENTAFEL	1340
SICHERHEITSGURT	183-3648	1	FAHRERSITZ	1382
SICHERHEITSGURT ((AUTOMATIKSICHERHEITSGURT))	156-1148	1	FAHRERSITZ	1379
SONNENBLENDE (HINTEN)	8Y-6340	1	SONNENBLENDE	1360
		1	SONNENBLENDE	1361
SONNENBLENDE (VORNE)	8Y-6339	1	SONNENBLENDE	1360
		1	SONNENBLENDE	1361

WARTUNGSTEILE

BESCHREIBUNG	ERSATZTEIL-NUMMER	MENGE	VERWENDET IN	SEITE
HYDRAULIKSYSTEM				
ANSCHLUSSSTÜCK (SCHNELLWECHSELANSCHLUSS)	6V-3965	1	HYDRAULIKLÜFTERVENTIL U. BEFESTIGUNGSTEILE	1062
EINFÜLLSTUTZENKAPPE	4J-3754	1	HYDRAULIKTANK	1054
		1	HYDRAULIKTANK	1058
FILTERSIEB	3D-6678	1	HYDRAULIKTANK	1054
		1	HYDRAULIKTANK	1058
HYDRAULIKSIEB	7J-2656	1	HYDRAULIKTANK	1054
HYDRAULIKTANKKAPPENDECKEL	5D-1902	1	HYDRAULIKTANK	1054
KAPPE	6V-9829	4	STEUERVENTIL	1073
KAPPE (11/16-16-GEWINDE)	6V-9829	1	VENTIL U. BEFESTIGUNGSTEILE (VERSTELLPUMPE)	1069
		1	VENTIL U. BEFESTIGUNGSTEILE (VERSTELLPUMPE)	1070
O-RING-DICHTUNG (94,84 MM ID)	1H-8128	3	HYDRAULIKLEITUNGEN	997
		3	HYDRAULIKLEITUNGEN	1003
O-RING-STOPFEN (7/16-20 GEWINDE)	9S-4190	1	HYDRAULIKLÜFTERLEITUNGEN	1008
		1	HYDRAULIKLÜFTERLEITUNGEN	1014
		1	HYDRAULIKLÜFTERLEITUNGEN	1020
		1	HYDRAULIKLÜFTERLEITUNGEN	1021
		1	KOLBENPUMPE	1038
SCREEN	118-8693	2	HYDRAULIKTANK	1054
SIEB	9T-9227	1	HYDRAULIKTANK	1054
		4	HYDRAULIKTANK	1058
STAUBKAPPE	6V-0852	2	HYDRAULIKLEITUNGEN	996
		2	HYDRAULIKLEITUNGEN	1002
		1	HYDRAULIKLÜFTERLEITUNGEN	1008
		1	HYDRAULIKLÜFTERLEITUNGEN	1014
		1	HYDRAULIKLÜFTERLEITUNGEN	1020
		1	HYDRAULIKLÜFTERVENTIL U. BEFESTIGUNGSTEILE	1062
		3	STEUERVENTIL	1073
		1	VENTIL UND BEFESTIGUNGSTEILE - HAUPTSTEUERUNG	1064
		1	VORSTEUERDRUCKBEGRENZUNGS-VENTIL U. BEFESTIGUNGSTEILE	1067
		1	VORSTEUERDRUCKBEGRENZUNGS-VENTIL U. BEFESTIGUNGSTEILE	1068
	8C-3451	1	HYDRAULIKLEITUNGEN	997
		1	HYDRAULIKLEITUNGEN	1004
VORHÄNGESCHLOSS	5P-8502	1	ZUGANGSKLAPPE - HYDRAULIKTANKKAPPE	959
KRAFTSTOFFSYSTEM				
BUCHSE	8Y-6364	1	KRAFTSTOFFEINFÜLLVORRICHTUNG (STANDARD)	194
		1	KRAFTSTOFFTANK	228
		1	SCHNELLBETANKUNGSANSCHLUSS	182
DICHTUNG	8H-2778	1	KRAFTSTOFFILTER	184
ENTLÜFTER	9G-9981	1	KRAFTSTOFFEINFÜLLVORRICHTUNG (STANDARD)	188
		1	KRAFTSTOFFEINFÜLLVORRICHTUNG (STANDARD)	194

WARTUNGSTEILE

BESCHREIBUNG	ERSATZTEIL-NUMMER	MENGE	VERWENDET IN	SEITE
ENTLÜFTUNGSSATZ	5T-8645	1	KRAFTSTOFFEINFÜLLVORRICHTUNG (STANDARD)	192
KAPPENFILTERSATZ	9X-2205	1	KRAFTSTOFFEINFÜLLVORRICHTUNG (STANDARD)	186
KRAFTSTOFFILTER (HAUPTELEMENT)	9M-2342	1	KRAFTSTOFFILTER	184
KRAFTSTOFFILTER (SICHERHEITSELEMENT)	1R-0755	2	KRAFTSTOFFILTER	184
KRAFTSTOFFKAPPE	101-8909	1	SCHNELLBETANKUNGSANSCHLUSS	178
		1	SCHNELLBETANKUNGSANSCHLUSS	180
		1	SCHNELLBETANKUNGSANSCHLUSS	182
KRAFTSTOFFSIEB	9P-7121	1	KRAFTSTOFFTANK	230
KRAFTSTOFFTANK-SIEBEINSATZ	9P-7121	1	KRAFTSTOFFTANK	228
KRAFTSTOFFTANKKAPPE	123-6305	1	KRAFTSTOFFEINFÜLLVORRICHTUNG (STANDARD)	186
		1	KRAFTSTOFFEINFÜLLVORRICHTUNG (STANDARD)	188
		1	KRAFTSTOFFEINFÜLLVORRICHTUNG (STANDARD)	190
		1	KRAFTSTOFFEINFÜLLVORRICHTUNG (STANDARD)	192
		1	KRAFTSTOFFEINFÜLLVORRICHTUNG (STANDARD)	194
LUFTREINIGER	136-6202	1	KRAFTSTOFFEINFÜLLVORRICHTUNG (STANDARD)	190
		2	SCHNELLBETANKUNGSANSCHLUSS	178
		2	SCHNELLBETANKUNGSANSCHLUSS	180
O-RING-DICHTUNG (110,49 MM INNENDURCHMESSER)	9X-8600	1	KRAFTSTOFFEINFÜLLVORRICHTUNG (STANDARD)	186
		1	KRAFTSTOFFEINFÜLLVORRICHTUNG (STANDARD)	188
		1	KRAFTSTOFFEINFÜLLVORRICHTUNG (STANDARD)	190
		1	SCHNELLBETANKUNGSANSCHLUSS	178
		1	SCHNELLBETANKUNGSANSCHLUSS	180
		1	SCHNELLBETANKUNGSANSCHLUSS	182
ROHRSTOPFEN (3/8-18 NPTF-GEWINDE)	8T-6767	1	KRAFTSTOFFTANK	230
SCHLÜSSEL	5P-8500	1	KRAFTSTOFFEINFÜLLVORRICHTUNG (STANDARD)	194
		1	KRAFTSTOFFTANK	228
		1	SCHNELLBETANKUNGSANSCHLUSS	182
STAUBDECKEL	9D-0630	1	SCHNELLBETANKUNGSANSCHLUSS	178
		1	SCHNELLBETANKUNGSANSCHLUSS	180
		1	SCHNELLBETANKUNGSANSCHLUSS	182
VORHÄNGESCHLOSS	5P-8502	1	KRAFTSTOFFEINFÜLLVORRICHTUNG (STANDARD)	194
		1	KRAFTSTOFFTANK	228
		1	SCHNELLBETANKUNGSANSCHLUSS	182
KRAFTÜBERTRAGUNG				
ABLASSSTOPFEN (1-1/2-12 GEWINDE)	4B-2363	1	GETRIEBE U. GEHÄUSE (AUSGANGSÜBERTRAGUNG)	544
ANSAUGSIEB	3S-3875	2	GETRIEBE U. GEHÄUSE (AUSGANGSÜBERTRAGUNG)	545

WARTUNGSTEILE

BESCHREIBUNG	ERSATZTEIL-NUMMER	MENGE	VERWENDET IN	SEITE
ENTLÜFTER	4H-6112	3	ÖLLEITUNGEN - KRAFTÜBERTRAGUNG	557
		3	ÖLLEITUNGEN - KRAFTÜBERTRAGUNG	561
		3	ÖLLEITUNGEN - KRAFTÜBERTRAGUNG	565
FILTER	1G-8878	1	ÖLFILTER	540
FILTER (KRAFTÜBERTRAGUNG)	132-8876	1	ÖLFILTER	539
HYDRAULIKFILTER	1G-8878	1	ÖLFILTER	541
HYDRAULIKFILTER (KRAFTÜBERTRAGUNG)	132-8876	1	ÖLFILTER	538
MAGNETSTOPFEN	5P-4484	1	PENDELACHSE	476
		1	STARRACHSE	474
MAGNETSTOPFEN (GEWINDE 1 5/8-12)	6V-0439	1	SEITENANTRIEB UND RAD	668
NIPPEL	1K-6853	2	PENDELACHSE	476
O-RING-DICHTUNG (133,66 MM ID)	5H-5672	2	PLANETENGETRIEBE	579
		2	PLANETENGETRIEBE	585
O-RING-DICHTUNG (81,92 MM ID)	4L-9564	1	ANTRIEBSWELLE	596
		1	ANTRIEBSWELLE	598
ÖLFILTERELEMENT (HYDRAULISCH)	132-8876	1	ÖLFILTER	536
SCHMIERNIPPEL (1/8-27-GEWINDE)	3B-8489	1	ANTRIEBSWELLE	598
STAUBKAPPE	6V-0852	1	DREHMOMENTWANDLER-VORRANGVENTIL	664
		1	DREHZAHLWANDLER U. GEHÄUSE	618
		1	DREHZAHLWANDLER U. GEHÄUSE	622
		1	DREHZAHLWANDLER U. GEHÄUSE	626
		1	DREHZAHLWANDLER U. GEHÄUSE	628
		1	KRAFTÜBERTRAGUNG - FILTER U. BEFESTIGUNG	530
		1	KRAFTÜBERTRAGUNG - FILTER U. BEFESTIGUNG	532
		1	KRAFTÜBERTRAGUNG - FILTER U. BEFESTIGUNG	534
		1	KUPPLUNGSSPERRENVENTIL U. BEFESTIGUNGSTEILE	651
		1	KUPPLUNGSSPERRENVENTIL U. BEFESTIGUNGSTEILE	652
		1	ÖLLEITUNGEN - KRAFTÜBERTRAGUNG	553
		1	ÖLLEITUNGEN - KRAFTÜBERTRAGUNG	557
		1	ÖLLEITUNGEN - KRAFTÜBERTRAGUNG	561
		1	ÖLLEITUNGEN - KRAFTÜBERTRAGUNG	565
		1	ÜBERDRUCKVENTIL	658
	8C-3447	1	KRAFTÜBERTRAGUNG - FILTER U. BEFESTIGUNG	530
		1	KRAFTÜBERTRAGUNG - FILTER U. BEFESTIGUNG	532
		1	KRAFTÜBERTRAGUNG - FILTER U. BEFESTIGUNG	534
VENTILKAPPE (STÄRKE 2,0 ZOLL)	9K-7951	1	FELGE (TEILBAR)	595

WARTUNGSTEILE

BESCHREIBUNG	ERSATZTEIL-NUMMER	MENGE	VERWENDET IN	SEITE
KÜHLSYSTEM				
KÜHLERKAPPE	6L-8617	1	KÜHLERWASSERKASTEN, OBEN	143
SCHLAUCHLEITUNG	106-4572	14	KÜHLERLEITUNGEN	114
TEMPERATURREGLER	6I-4950	4	KÜHLWASSER-TEMPERATURREGLER UND GEHÄUSE	103
WASSERFILTER	4N-5834	2	KÜHLWASSERPUMPE	136
WASSERFILTER (WASSERPUMPE)	4N-5834	2	KÜHLWASSERPUMPE	137
LENKSYSTEM				
O-RING-DICHTUNG (94,84 MM ID)	1H-8128	1	LENKÖLLEITUNGEN	840
		1	LENKÖLLEITUNGEN	846
ÖLFILTER	126-1817	1	ÖLFILTER	828
STAUBKAPPE	6V-0852	1	LENKÖLKÜHLERLEITUNGEN	854
		1	LENKÖLKÜHLERLEITUNGEN	858
		2	LENKÖLLEITUNGEN	840
		2	LENKÖLLEITUNGEN	846
		1	LENKUNG	872
		1	LENKUNG	873
		1	NOTLENKUNGSLEITUNGEN	830
		1	NOTLENKUNGSLEITUNGEN	832
		1	NOTLENKUNGSLEITUNGEN	836
	8C-3451	1	LENKÖLKÜHLERLEITUNGEN	855
		1	LENKÖLKÜHLERLEITUNGEN	859
LUFTANSAUG- UND ABGASSYSTEM				
HAUPTFILTER	123-6855	1	LUFTREINIGER	150
SICHERHEITSFILTER	123-6856	1	LUFTREINIGER	150
MOTOR (GRUNDAUSFÜHRUNG)				
ABLASSSTOPFEN	2A-5220	6	STIRNRADGEHÄUSE	58
FLANSCH	7N-5418	1	ÖLWANNE	64
KAPPE	7E-6508	1	VENTILSTEUERUNG	72
		1	VENTILSTEUERUNG	74
KEILRIEMEN	141-7116	1	DREHSTROMGENERATOR - BEFESTIGUNG	60
O-RING-DICHTUNG	6V-5167	1	ÖLWANNE	64
ÖLABLASSSCHRAUBE	6I-0723	1	ÖLWANNE	64
ÖLWANNENDICHTUNG	7E-2631	1	ÖLWANNE	64
SIEB	7N-5395	1	ÖLWANNE	62
		1	ÖLWANNE	64

WARTUNGSTEILE

BESCHREIBUNG	ERSATZTEIL-NUMMER	MENGE	VERWENDET IN	SEITE
RAHMEN UND FAHRGESTELL				
BUCHSE	8Y-6364	1	MOTORHAUBE UND VERKLEIDUNG	718
		1	MOTORHAUBE UND VERKLEIDUNG	722
		1	MOTORHAUBE UND VERKLEIDUNG	726
		1	STOSSTANGEN-BEFESTIGUNGS-TEILE	748
FILTER	7M-1674	1	LUFTEINLASS-TRÄGER	753
		1	LUFTEINLASS-TRÄGER	754
SCHLÜSSEL	5P-8500	1	MOTORHAUBE UND VERKLEIDUNG	718
		1	MOTORHAUBE UND VERKLEIDUNG	722
		1	MOTORHAUBE UND VERKLEIDUNG	726
		1	STOSSTANGEN-BEFESTIGUNGS-TEILE	748
SCHMIERNIPPEL	3B-8489	6	SCHMIERLEITUNGEN	740
		3	SCHMIERLEITUNGEN	744
SCHMIERNIPPEL (1/8-27-GEWINDE)	3B-8489	5	SCHMIERLEITUNGEN	742
VORHÄNGESCHLOSS	5P-8502	2	MOTORHAUBE UND VERKLEIDUNG	718
		2	MOTORHAUBE UND VERKLEIDUNG	722
		2	MOTORHAUBE UND VERKLEIDUNG	726
		1	STOSSTANGEN-BEFESTIGUNGS-TEILE	748
SCHMIERSYSTEM				
ABSAUGSIEB	4P-4917	1	WANNENPUMPE U. LEITUNGEN	95
	4P-5500	1	WANNENPUMPE U. LEITUNGEN	95
ENTLÜFTER (KURBELGEHÄUSE)	4W-3027	2	ENTLÜFTER	76
FÜLLSTUTZENKAPPE	133-5946	1	MOTORÖLEINFÜLLSTUTZEN	77
KAPPE	9S-9272	1	ÖLFILTER	78
		1	ÖLFILTER	80
		1	ÖLSCHNELLWECHSELANSCHLUSS	94
ÖLFILTER	2P-4005	2	ÖLFILTER	78
		2	ÖLFILTER	80
STAUBKAPPE	6V-0852	1	MOTORÖLLEITUNGEN	85
		1	MOTORÖLLEITUNGEN	89
	8C-3445	1	ÖLFILTER	78
		1	ÖLFILTER	80
WARTUNGSAUSRÜSTUNG UND -ZUBEHÖR				
ÖLFILTERKAPPE	7W-1484	1	SCHUTZABDECKUNG	1448
SCHLÜSSEL	5P-8500	1	SCHUTZABDECKUNG	1448
VORHÄNGESCHLOSS	5P-8502	1	SCHUTZABDECKUNG	1448

INDEX

Name	Page
A	
ACCUMULATOR & MTG GP-REFRIG	1250
ACCUMULATOR GP-BRAKE	755
	756
ACCUMULATOR GP-RIDE CONTROL	920
ACTUATOR GP-PILOT CONTROL	921
ACTUATOR GP-PISTON PUMP	812
	813
	814
	815
ADAPTER-CENTER	1155
	1156
ADAPTER GP-FAST FILL FUEL	178
	180
	182
ADAPTER-LH	1157
	1158
	1159
ADAPTER-RH	1160
	1161
ADAPTER-TIP	1162
	1163
	1164
	1165
	1166
AFTERCOOLER GP-WATER	145
AIR CLEANER AS	178
	180
	190
AIR CLEANER GP	146
	148
	150
AIR CONDITIONER AR	1251
AIR CONDITIONER GP	1252
ALARM AS-BACKUP	373
ALARM GP	233
	1340
ALARM GP (ACTION)	1342
	1344
ALTERNATOR GP-CHARGING	234
ASHTRAY	1390
	1394
	1398
AXLE AR-FIXED	471
AXLE AR-OSCILLATING	472
AXLE GP-FIXED	474
AXLE GP-OSCILLATING	476
B	
BALANCER GP	8
BASE GP-VALVE COVER	9
BASE-WEAR PLATE	1167
BATTERY & WIRING GP	236
BATTERY (CLOCK)	252
	257
BATTERY (12 VOLT/DRY)	236
BLADE AS-WIPER	1430
	1432
BLADE AS-WIPER (FRONT)	1424
	1426
	1428
BLADE AS-WIPER (REAR)	1424
	1426
	1428
BLOCK GP-HYDRAULIC–AXLE OIL COOLER	479
	480
BLOCK GP-HYDRAULIC–STEERING	816
BOLT (M10X1.50X12MM)	1424
BOX GP-STORAGE	1256
	1258
BRAKE GP-PARKING	758
	760
BRAKE GP-SERVICE	762
	764
BREATHER	188
	194
	291
	292
	557
	561
	565
BREATHER AS (CRANKCASE)	76
BREATHER GP	76
BRUSH AS	356
	360
BUCKET AS-ROCK	1168
	1170
	1172
	1174
	1176
	1178
BUCKET AS-ROCK–IRON ORE	1180
BUCKET GP-ROCK	1182
	1183
	1184
	1185
	1186
	1187
	1188
	1189
	1190
	1191
BUCKET GP-ROCK–IRON ORE	1192
BUFFER GP-SENSOR	240
BUMPER AR-REAR	673
	674
	675
	676

INDEX

Name	Page
BUMPER GP-REAR	677
	678

C

Name	Page
CAB & PLATFORM GP	1260
CAB AR	1261
	1262
CAB GP	1264
	1266
CAMSHAFT GP	10
	11
CAP	1423
CAP AS	72
	74
	78
	80
	94
	1073
CAP AS-DUST	298
	299
CAP AS-FUEL TANK	186
	188
	190
	192
	194
	291
	292
CAP AS-FUEL TANK FILLER	178
	180
	182
CAP AS-OIL FILL	77
CAP AS-OIL FILTER	1448
CAP AS-PROTECTION	439
	1340
CAP AS (11/16-16 THD)	1069
	1070
CAP-DUST	78
	80
	85
	89
	416
	420
	424
	428
	432
	530
	532
	534
	553
	557
	561
	565
	618
	622
	626
	628
	651
	652
	658
	664
	772
	778
	784
	792
	800
	830
	832
	836
	840
	846
	854
	855
	858
	859
	872
	873
	996
	997
	1002
	1004
	1008
	1014
	1020
	1062
	1064
	1067
	1068
	1073
CAP-FILLER	1054
	1058
CAP-FUSE HOLDER	440
	446
	460
	466
CAP-RADIATOR	143
CAP-RECEPTACLE	441
	447
	461
	467
CAP-SEAL	1320
CAP-VALVE (2.0IN THK)	595
CARTRIDGE GP	173
CARTRIDGE GP-TURBOCHARGER	172
	176
CASE & PARTS GP-PLANETARY	482
CHASSIS AR	1
CIRCUIT BREAKER AS (10 AMP) (KEY START)	441
	447

INDEX

Name	Page
	461
	467
CIRCUIT BREAKER AS (105 AMP) (ALTERNATOR)	461
	467
CIRCUIT BREAKER AS (105 AMP) (ALTERNATOR & MAIN)	440
CIRCUIT BREAKER AS (105 AMP) (ALTERNATOR-MAIN)	447
CIRCUIT BREAKER AS (105 AMP) (MAIN)	467
CIRCUIT BREAKER AS (15 AMP) (ENGINE ECM)	441
	447
	461
	467
CIRCUIT BREAKER AS (15 AMP) (RUNNING LAMPS)	441
	447
	461
	467
CLAMP-BOOT	356
COMMON AR	2
COMPRESSOR & MTG GP-REFRIG	4
	1268
	1270
COMPRESSOR GP-REFRIGERANT	1272
	1273
	1274
	1275
	1276
	1278
	1280
CONDENSER & MTG GP-REFRIGERANT	1282
CONNECTION GP-WATER	99
CONTROL & LINES GP-RIDE	922
	926
CONTROL & MTG GP-ENGINE ELEK	241
	242
CONTROL AR-RIDE	930
CONTROL GP-BUCKET	1104
	1105
	1106
	1108
	1110
	1112
	1113
	1114
	1116
CONTROL GP-ENG RATINGS ELEK	243
	244
	245
	246
	247
CONTROL GP-ENGINE ELECTRONIC	248
	249
	250
	251
CONTROL GP-FOOT BRAKE	766
	768
CONTROL GP-HYD ELECTRONIC	932
	936
	940
	944
	950
CONTROL GP-PARKING BRAKE	771
CONTROL GP-PUMP	817
CONTROL GP-SERVICE BRAKE	772
	778
	784
	792
CONTROL GP-STEERING	818
	820
CONTROL GP-STIC	484
	485
	486
	487
	488
	490
CONTROL GP-TRANSMISSION HYD	492
CONTROL GP-UNPROGRAMMED–IMPLEMENT	254
	256
CONTROL GP-UNPROGRAMMED–POWER TRAIN	253
	255
CONTROL GP-UNPROGRAMMED–VIDS/VIMS MAIN MODULE	252
	257
CONTROL GP-UNPROGRAMMED (IMPLEMENT)	446
	466
CONVERTER-POWER (24 VOLT TO 12 VOLT)	1304
COOLANT HEATER LINES	1322
COOLER GP-AXLE OIL	494
	498
	502
	508
	514
COOLER GP-ENGINE OIL	100
COOLER GP-HYDRAULIC OIL	956
	958
CORD AS-HEATER	298
CORE GP-OIL COOLER	101
COUPLING AS-REFRIGERANT	1320
COVER-DUST	178
	180
	182
COVER GP-ACCESSORY DRIVE–RH	12
COVER GP-ADAPTER	1194
COVER GP-CAB	1283

INDEX

Name	Page
COVER GP-CYLINDER BLOCK	13
COVER GP-FLYWHEEL HOUSING	14
COVER GP-FRONT HOUSING	16
	17
COVER GP-HYDRAULIC TANK CAP	959
	1051
COVER GP-SHIPPING	520
COVER GP-VALVE MECHANISM	18
COVER-HYDRAULIC CAP	1054
CRANKSHAFT GP	19
	20
CYLINDER & MTG GP-STEERING	822
CYLINDER AS-ETHER	352
CYLINDER BLOCK AS	21
	22
CYLINDER BLOCK GP	24
	26
	28
CYLINDER GP-LIFT–LH	960
	962
	970
CYLINDER GP-LIFT–RH	964
	966
	968
CYLINDER GP-STEERING	824
CYLINDER GP-TILT	972
CYLINDER HEAD AS	29
	30
	31
	32
	33
	34
	35
CYLINDER HEAD GP	36
	37
	38
	39
	40
	41

D

DAMPER GP	42
DIFFERENTIAL & BEVEL GEAR GP	522
	524
DIFFERENTIAL GP	526
DOOR GP-LH	1284
DOOR GP-SIDE	1286
	1288
	1290
	1292
DRAWBAR GP	679
DRIVE GP-ACCESSORY	44
	46
DRIVE GP-ACCESSORY–UPPER RH	43
DRYER	1250
DUCT GP-AIR	1294

E

EDGE GP-CUTTING	1195
	1196
EDGE GP-SEGMENT	1197
	1198
	1199
	1200
EDGE-SEGMENT	1201
ELECTRICAL AR	258
ELECTRONICS GP-ENGINE RATINGS	259
ELECTRONICS GP-IMPLEMENT	260
ELECTRONICS GP-MONITOR	261
	262
	263
	264
	265
	266
	267
	268
	269
	270
	271
	272
	273
	274
	275
	276
	277
	278
	279
	280
	281
	282
	283
	284
	285
	286
	287
	288
ELECTRONICS GP-POWER TRAIN	289
ELEMENT AS-FUEL FILTER (PRIMARY)	184
ELEMENT AS-JACKET WATER HEATER (120 VOLT, 1500 WATT)	298
ELEMENT AS-JACKET WATER HEATER (240 VOLT, 1500 WATT)	299
ELEMENT AS-PRIMARY	150
ELEMENT AS-SECONDARY	150
ELEMENT-FILTER	753
	754
ELEMENT-FILTER (POWERTRAIN)	539
ENCLOSURE GP-HYDRAULIC TANK	680

INDEX

Name	Page
	681
	682
	683
	684
	685
	686
	688
ENGINE AR	4
EXTENSION GP-BACKREST	1296
EXTENSION GP-BACKREST (FABRIC)	1382
EXTENSION GP-DRAIN	48

F

FAN-ALTERNATOR	234
FAN GP-SUCTION	102
FASTENER GP-CYLINDER HEAD	38
FASTENER GP-ELECTRONICS	290
FENDER GP-FRONT	689
FILLER GP-ENGINE OIL	77
FILLER GP-POWER TRAIN OIL	527
	528
FILM	248
FILM-DASH	1346
	1430
FILM-FACE	1340
	1342
	1344
FILM GP	1444
FILM-IDENTIFICATION	252
	440
	441
	446
	447
	460
	461
	466
	467
	933
	937
	941
FILM-IDENTIFICATION (EXTENDED LIFE COOLANT)	1446
FILM-IDENTIFICATION (VIDS/VIMS)(INTERFACE MODULE)	319
FILM-IDENTIFICATION (VIMS/VIDS MAIN MODULE)	257
FILM-INSTRUCTION	441
	447
	461
	467
FILM-INSTRUCTION (SEAT ADJUSTMENT)	1414
FILM-INSTRUCTION (WATER IN/WATER OUT)	1252
FILTER	540
FILTER & GASKET AS	352
FILTER & LINES GP-BRAKE–CASE DRAIN	798
FILTER & LINES GP-STEERING–PRIMARY STEERING CASE DRAIN	826
FILTER & LINES GP-STEERING–SECONDARY STEERING CASE DRAIN	827
FILTER & MTG GP-POWER TRAIN	530
	532
	534
FILTER-AIR	1264
	1297
	1298
FILTER AS-ENGINE OIL	78
	80
FILTER AS-FUEL (SECONDARY)	184
FILTER AS-HYDRAULIC	541
FILTER AS-OIL	828
FILTER ELEMENT AS-HYDRAULIC (POWER TRAIN)	538
FILTER ELEMENT AS-OIL (HYDRAULIC)	536
FILTER GP-CAB AIR	1297
	1298
FILTER GP-ENGINE OIL	78
	80
FILTER GP-FUEL	184
FILTER GP-OIL	536
	540
	828
FILTER GP-OIL–AXLE OIL COOLER	541
FILTER GP-OIL–POWER TRAIN	538
	539
FILTER-SCREEN	1422
	1423
FILTER-WATER	136
FILTER-WATER (WATER PUMP)	137
FINAL DRIVE & WHEEL	668
FIREWALL GP	690
FITTING	476
FITTING AS (QUICK DISCONNECT)	1062
FITTING-GREASE	740
	744
FITTING-GREASE (1/8-27 THD)	598
	742
FLANGE	64
FLOOR MAT	1312
FLYWHEEL GP	49
FRAME AS-LOADER	692
	694
	696
	698
FRAME AS-REAR	699
	700
FRAME GP-LOADER	701
FUEL AR-CONVENTIONAL FILL	186
	188

INDEX

Name	Page
	190
	192
	194
FUEL AR-FAST FILL	196
	197
	198
FUMES DISPOSAL GP	82
FUSE (10 AMP)	440
	446
	460
	466
FUSE (15 AMP)	440
	446
	460
	466
FUSE (20 AMP)	440
	446
	460
	466
G	
GASKET	184
GASKET-OIL PAN	64
GAUGE AS-LIQUID LEVEL	143
	1054
	1058
GAUGE GP-LIQUID LEVEL	542
GAUGE GP-OIL LEVEL (DIPSTICK)	83
GEAR & CASE GP-OUTPUT TRANSFER	544
GEAR GP-FRONT	50
GEAR GP-INPUT TRANSFER	548
GEAR GP-REAR	52
GUARD GP-BELT	55
GUARD GP-BELT–ALTERNATOR	54
GUARD GP-CRANKCASE	702
GUARD GP-POWER TRAIN	703
GUARD GP-RADIATOR	704
	706
GUARD-SWITCH	438
	439
H	
HANDHOLD GP	1300
HANDLE (SLIDE ADJUSTMENT)	1351
	1352
HANDLE (TILT ADJUSTMENT)	1351
	1352
HARNESS AS-STEERING (STIC CONTROL)	818
	820
HEATER AR-FUEL	291
	292
HEATER GP-FUEL	294
	296
HEATER GP-JACKET WATER	298
	299
HITCH GP-ARTICULATING	708
HOOD & GUARD GP	710
	714
	718
	722
	726
HORN AS (24 VOLT)	1303
HORN GP-ELECTRIC	1302
	1303
HOSE	114
HOUSING & REGULATOR GP–OUTLET CONTROL	103
HOUSING GP-FLYWHEEL	56
HOUSING GP-FRONT	58
HYDRAULIC AR	974
I	
INJECTOR GP-FUEL	199
	200
	201
INSTALLATION AR-ENGINE	7
INSTALLATION GP-RADIO	1304
	1306
J	
JUNCTION BLOCK AS	236
K	
KEY	182
	194
	228
	292
	718
	722
	726
	748
	1448
KEY (BATTERY DISCONNECT)	365
KICKOUT & POSITIONER GP–LIFT	976
	978
KICKOUT & POSITIONER GP–TILT	980
	984
	988
	992
KIT-ADJUSTER (BOTTOM SEAT PAN)	1339
KIT-ADJUSTER (PAN BOTTOM)	1336
KIT-AIR SPRING	1410
KIT-ALTERNATOR TERMINAL	234
KIT-BACK TILT	1336
	1339

INDEX

Name	Page
KIT-BIAS PISTON	1038
KIT-CAP FILTER	186
KIT-COMPRESSOR	1410
KIT-CONNECTING PLUG (12 PIN)	374
	402
	406
	436
	1347
	1390
	1394
	1398
KIT-CONNECTING PLUG (2 PIN)	240
	312
	314
	374
	402
	406
	407
	416
	420
	424
	428
	432
	436
	662
	766
	768
	922
	926
	932
	940
	944
	950
	1253
	1347
KIT-CONNECTING PLUG (3 PIN)	328
	329
	334
	336
	337
	338
	340
	341
	342
	343
	344
	345
	346
	347
	374
	402
	406
	416
	420
	424
	428
	432
	436
	766
	768
	932
	933
	936
	937
	940
	941
	944
	950
	980
	984
	988
	992
	1347
	1390
	1394
	1398
KIT-CONNECTING PLUG (4 PIN)	312
	402
	406
	818
	820
	932
	936
	940
	944
	950
	1253
	1347
KIT-CONNECTING PLUG (4 PIN) (WASHER/WIPER)	1423
KIT-CONNECTING PLUG (6 PIN)	374
	1430
	1432
KIT-CONNECTING PLUG (6 PINS)	1253
	1304
	1347
KIT-CONNECTING PLUG (8 PIN)	416
	420
	424
	428
	432
	818
	820
	932
	936
	940
	944
	950
	1347
	1390

INDEX

Name	Page
	1394
	1398
	1430
	1432
KIT-CONTROL PISTON	1038
KIT-CUSHION (CLOTH BACKREST)	1296
KIT-DIAL SENSOR	228
	230
KIT-FASTENER	1410
KIT-FASTENER (SEAT SUSPENSION)	1414
	1418
KIT-GASKET (SINGLE CYLINDER LINER)	5
KIT-GASKET (SINGLE FUEL INJECTOR)	5
KIT-GOVERNOR	202
KIT-HOUSING	1410
KIT-LAMP CONVERSION (24V)	369
	932
	936
	940
	1304
	1346
	1347
KIT-PUMP SEAL	802
	804
KIT-RECEPTACLE (12 PIN)	402
	406
	436
	818
	820
	932
	936
	940
	944
	950
	1304
	1391
	1395
	1398
KIT-RECEPTACLE (2 PIN)	233
	309
	348
	349
	352
	364
	366
	367
	368
	373
	394
	395
	398
	399
	402
	406
	407
	416
	420
	424
	428
	432
	436
	446
	447
	461
	467
	654
	657
	666
	828
	921
	936
	940
	945
	951
	1098
	1099
	1100
	1101
	1252
	1272
	1273
	1276
	1410
	1414
KIT-RECEPTACLE (2 PIN) (FLOODLAMP)	304
KIT-RECEPTACLE (2 PIN) (MESSAGE MODULE)	1327
KIT-RECEPTACLE (3 PIN)	240
	306
	307
	308
	320
	321
	322
	323
	324
	325
	326
	327
	331
	332
	333
	339
	376
	380
	390
	394
	398
	402
	406

INDEX

Name	Page
	416
	420
	424
	428
	432
	655
	808
	830
	832
	836
	932
	936
	937
	940
	941
	944
	950
	1342
	1344
	1347
	1391
	1395
	1398
KIT-RECEPTACLE (3 PIN) (DOME LAMP)	300
KIT-RECEPTACLE (4 PIN)	312
	402
	407
	568
	808
	945
	951
	1328
	1347
KIT-RECEPTACLE (6 PIN)	374
	407
	1253
	1329
	1330
	1331
	1340
	1342
	1344
	1347
	1428
	1434
	1436
KIT-RECEPTACLE (6 PIN) (MESSAGE MODULE)	1326
	1327
KIT-RECEPTACLE (8 PIN)	371
	406
	487
	488
	490
	932
	936
	940
	944
	950
	1347
	1391
	1395
	1398
KIT-RELAY TERMINAL (ALTERNATOR)	234
KIT-RELIEF VALVE	590
KIT-RETAINING BOLT	251
	253
	254
	255
	256
KIT-ROLLER	1350
	1410
	1414
	1418
KIT-SEAL	590
	601
	602
	755
	756
	810
	862
	895
	904
	908
	912
	916
	960
	962
	964
	1060
	1072
	1100
	1101
KIT-SEAL (RAD/HYD COOLING FAN PUMP SOL)	1099
KIT-SEAL (SOLENOID VALVE)	1098
KIT-SEAT CUSHION	1372
	1376
KIT-SEAT CUSHION (CLOTH)	1366
KIT-SEAT KNOB	1366
	1372
	1376
KIT-SEAT TILT	1336
	1339
KIT-SHAFT SHIM (17 SHIMS)	1038
KIT-SLIDER BLOCK	1366
	1376
	1383
	1384
	1385

INDEX

Name	Page
	1386
KIT-SLIDER BLOCK (INCLS BLOCKS & BOLT)	1372
KIT-TERMINAL	357
	361
KIT-TETHER	1410
	1414
	1418
KIT-TILT PAN	1366
	1372
	1376
KIT-TRANSMISSION BEARING	550
KIT-TREADLE PIN	1350
KIT-VENT	178
	180
	182
	190
	192
KIT-WIRING HARNESS	1410
	1414
	1418
KNOB-LUMBAR	1334
KNOB-WIPER SWITCH	1346

L

LADDER GP	730
	734
	738
LAMP	306
	1304
LAMP GP-DOME	300
LAMP GP-DOME (24 VOLT)(WITH SWITCH)	1264
LAMP GP-FLOOD	301
	302
	303
	304
	314
LAMP GP-FLOOD (24 VOLT)(SUSPENDED)	312
LAMP GP-FLOOD (24 VOLT)(VERTICAL)	312
	314
LAMP GP-HEAD–LOW BEAM	305
LAMP GP-HEAD (LOW BEAM)	312
LAMP GP-SIGNAL	306
LAMP GP-SIGNAL–STOP/TAIL	307
	308
LAMP GP-SIGNAL (STOP/TAIL)	318
LAMP GP-VIMS SERVICE INDICATOR	309
LAMP-MAP	1304
LAMP-MINIATURE (28 VOLT)	376
LAMP (24 VOLT)	307
	309
	1346
LAMP (24 VOLT)(65 WATT)	301
	303
	304
LAMP (24 VOLT)(65 WATT) (HEAD)	305
LAMP (24 VOLT)(65 WATTS)	302
LAMP (28 VOLT)	376
LAMP (28 VOLT) (DOME)	300
LATCH GP-CAB DOOR & WINDOW	1308
LENS AS	303
LENS AS (FLOODLIGHT)	301
	304
LENS AS-FLOODLIGHT	302
LENS AS (HEADLIGHT) (LOW BEAM)	305
LENS-BLUE	309
LENS-DOME LAMP	300
LENS-RED	307
LEVER	1054
LIFT AR-HIGH–INSTALLED	1119
LIFT AR-HIGH–NON-INSTALLED	1118
LIFT AR-HIGH–VIDS	1120
LIFT AR-HIGH–VIMS	1121
LIFT AR-STANDARD–INSTALLED	1123
LIFT AR-STANDARD–NON-INSTALLED	1122
LIFT AR-STANDARD–VIDS	1124
LIFT AR-STANDARD–VIMS	1125
LIFTING GP-ENGINE	59
LIGHTER AS (CIGAR)(24 VOLT)	1390
	1394
	1398
LIGHTING GP-FLOOD	310
LIGHTING GP-FRONT	312
LIGHTING GP-REAR	314
LIGHTING GP-STOP	316
	317
	318
LINER GP-CAB	1312
	1316
LINES GP-AIR	152
	154
LINES GP-AIR CONDITIONER	1320
LINES GP-AXLE VENT	551
LINES GP-COOLANT	104
LINES GP-ENGINE OIL	84
	88
LINES GP-FUEL	203
LINES GP-FUEL INJECTION	204
	208
LINES GP-GREASE	740
	742
	744
LINES GP-HEATER	1322
LINES GP-HYDRAULIC	996
	1002
LINES GP-HYDRAULIC FAN	1008
	1014
	1020
LINES GP-LIFT CYLINDER	1026

INDEX

Name	Page
	1028
	1030
LINES GP-POWER TRAIN OIL	552
	556
	560
	564
LINES GP-RADIATOR	106
	110
	114
LINES GP-SECONDARY STEERING	830
	832
	836
LINES GP-SERVICE BRAKE	800
LINES GP-STEERING	840
	844
	845
	846
LINES GP-STEERING NEUTRALIZER	850
	852
LINES GP-STEERING OIL COOLER	854
	858
LINES GP-TILT CYLINDER	1032
LINES GP-TURBOCHARGER OIL	92
LINES GP-TURBOCHARGER WATER	118
LINES GP-WATER	122
	124
	128
LINES GP-WATER–TURBOCHARGER	130
	132
LINES GP-WATER–UPPER	120
LINK GP-BUCKET	1126
	1127
	1128
	1130
LINK GP-BUCKET & BOOM–HIGH LIFT	1134
	1135
LINK GP-BUCKET & BOOM–STANDARD LIFT	1132
	1133
LINK GP-STEERING FRAME LOCK	746
LOCK GP-STIC CONTROL	568
	570
	572

M

MANIFOLD GP-EXHAUST	156
	158
	160
MANIFOLD GP-FUEL	211
	212
MIRROR GP	1323
	1324
MIRROR GP-REAR VIEW	1325
MODULE GP-MESSAGE CENTER	1326
	1327
MODULE GP-MONITOR KEYPAD	1328
MODULE GP-QUAD GAUGE	1329
	1330
MODULE GP-SPEEDOMETER & TACH	1340
	1342
	1344
MODULE GP-VIDS/VIMS INTERFACE	319
MOTOR GP-ELECTRIC (27 VOLT)	1252
MOTOR GP-PISTON–FAN DRIVE	1034
	1035
MOTOR GP-WINDOW WIPER–REAR	1331
MOUNTING GP-ALTERNATOR	60
MOUNTING GP-AXLE	574
MOUNTING GP-BUMPER	748
MOUNTING GP-PLATFORM	1332
MOUNTING GP-RIM	575
MOUNTING GP-TORQUE CONVERTER	576
MUFFLER GP	162
	163
	164

O

OIL CHANGE GP-HIGH SPEED	94
OPERATOR AR	1333

P

PADLOCK GP	182
	194
	228
	292
	718
	722
	726
	748
	959
	1448
PAN GP-BACKREST	1334
PAN GP-OIL	62
	64
PAN GP-SEAT–BACK	1338
PAN GP-SEAT–BOTTOM	1336
	1339
PAN GP-SEAT (BACK)	1366
PAN GP-SEAT (BOTTOM)	1366
PANEL GP-HOOD–SIDE	750
PANEL GP-INSTRUMENT	1346
PANEL GP-INSTRUMENT–FRONT	1340
	1342
	1344
PANEL GP-TOP	751
PEDAL GP-GOVERNOR	1349
	1350
PIN & SEAL GP-LINKAGE	1136

INDEX

Name	Page
	1138
	1140
	1142
	1146
	1148
	1152
PISTON & ROD GP	66
PLANETARY GP-TRANSMISSION	578
	584
PLATE & FILM GP	1446
	1447
PLATE GP-SLIDE	1351
	1352
PLATE GP-WEAR	1202
PLATE-HYDRAULIC ACCUMULATOR	920
PLATE-IDENTIFICATION	441
	447
	461
	467
PLATE-SERIAL NUMBER (ENGINE)	1446
PLATE-WARNING (HIGH PRESSURE CYLINDER)	920
PLATE-WEAR	1203
	1204
PLATFORM GP-OPERATOR	1354
	1357
PLUG-DRAIN	58
PLUG-DRAIN (1-1/2-12 THD)	544
PLUG-MAGNETIC	474
	476
PLUG-MAGNETIC (1 5/8-12 THD)	668
PLUG-O-RING (7/16-20 THD)	1008
	1014
	1020
	1021
	1038
PLUG-OIL DRAIN	64
PLUG-PIPE (3/8-18 NPTF THD)	230
PLUG-SEAL	655
	818
	820
	1253
	1304
	1398
	1428
POWER TRAIN AR	589
PRECLEANER GP	165
PROTECTION GP-VANDALISM	527
	528
	1448
PROTECTOR GP-EDGE	1205
	1206
	1207
	1208
PROTECTOR GP-SIDEBAR	1209
PUMP & LINES GP-SUMP	95
PUMP GP-ENGINE OIL	96
	97
PUMP GP-FUEL PRIMING	213
	214
PUMP GP-FUEL TRANSFER	216
	218
	219
	220
PUMP GP-GEAR–AXLE OIL COOLER	590
PUMP GP-GEAR–SECONDARY STEERING	862
PUMP GP-GEAR–STEERING & IMPLEMENT PILOT	864
PUMP GP-PISTON–BRAKE	802
	804
PUMP GP-PISTON–FAN DRIVE	1038
PUMP GP-PISTON–IMPLEMENT, FIXED DISPLACEMENT	1036
PUMP GP-PISTON–IMPLEMENT, VAR DISPLACEMENT	1040
	1042
PUMP GP-PISTON–STEERING	866
	868
	870
PUMP GP-PISTON (IMPLEMENT FIXED DISPLACEMENT)	996
	1002
PUMP GP-SCAVENGE–ENGINE OIL	98
PUMP GP-TRANSMISSION	591
	592
PUMP GP-UNIT INJECTION	222
	223
	224
	225
PUMP GP-WATER	134
	135
	136
	137

R

RADIATOR GP	138
	139
	140
	141
RECEPTACLE AS-POWER (12 VOLT)	1346
RECLINER GP-SEAT	1358
REGULATOR-TEMPERATURE	103
RETAINER-G.E.T.	1210
RIM AR	594
RIM GP-DEMOUNTABLE	595
RING-RETAINING	184
	976
ROPS GP	1359
ROTATING GP-MOTOR	1044

INDEX

Name	Page
	1046
ROTATING GP-PUMP	805
	806
	1048

S

SCREEN	1054
SCREEN AS	62
	64
	1054
	1058
SCREEN GP	1054
SCREEN GP-SUN	1360
	1361
SCREEN GP-SUN (FRONT)	1360
	1361
SCREEN GP-SUN (REAR)	1360
	1361
SCREEN-SCAVENGE	95
SCREEN-SUCTION	545
SEAL GP-CRANKSHAFT	68
SEAL GP-CRANKSHAFT (CCW ROT)	68
SEAL GP-CRANKSHAFT (CW ROT)	68
SEAL-O-RING	64
SEAL-O-RING (110.49MM ID)	178
	180
	182
	186
	188
	190
SEAL-O-RING (133.66MM ID)	579
	585
SEAL-O-RING (81.92MM ID)	596
	598
SEAL-O-RING (94.84MM ID)	840
	846
	997
	1003
SEALING GP-GLASS	1362
SEAT BELT GP	1363
	1364
	1365
	1382
SEAT BELT GP (RETRACTABLE)	1379
SEAT GP	1382
SEAT GP–CLOTH	1366
	1368
	1369
	1370
	1372
	1376
	1379
	1380
SEAT GP-SUSPENSION	1383
	1384
	1385
	1386
SENSOR GP-EXHAUST TEMPERATURE	320
SENSOR GP-POSITION	325
	327
SENSOR GP-POSITION–CONTROL LEVER	322
	326
SENSOR GP-POSITION–TC IMPELLER CLUTCH	321
	324
SENSOR GP-POSITION–TILT LINKAGE	323
SENSOR GP-POSITION (LIFT)	976
	978
SENSOR GP-POSITION (SPRINGLESS) (CONTROL LEVER)	932
	936
	940
	945
	951
SENSOR GP-POSITION (TC IMPELLER CLUTCH)	766
SENSOR GP-POSITION (TILT)	980
	984
	988
	992
SENSOR GP-PRESSURE	329
	338
	340
	343
	344
	345
SENSOR GP-PRESSURE–BRAKE OIL	330
SENSOR GP-PRESSURE–ENGINE OIL	328
	337
	342
SENSOR GP-PRESSURE–FAN PUMP OIL	334
SENSOR GP-PRESSURE–IMPLEMENT PUMP OIL	335
SENSOR GP-PRESSURE–LIFT CYLINDER HEAD END OIL	332
SENSOR GP-PRESSURE–OIL	339
SENSOR GP-PRESSURE–STEERING PILOT OIL	331
SENSOR GP-PRESSURE–TORQUE CONVERTER OIL	333
SENSOR GP-PRESSURE–TURBO OUTLET	336
	341
SENSOR GP-PRESSURE (ATMOSPHERE)	382
	394
SENSOR GP-PRESSURE (CRANKCASE)	382
	394
SENSOR GP-PRESSURE (ENGINE OIL)	383
SENSOR GP-PRESSURE (FAN PUMP OIL)	416
	420

INDEX

Name	Page
	424
	428
	432
SENSOR GP-PRESSURE (IMPLEMENT PUMP OIL)	407
	412
SENSOR GP-PRESSURE (LH TURBO INLET)	382
SENSOR GP-PRESSURE (RH TURBO INLET)	382
SENSOR GP-PRESSURE (STEERING MAIN PUMP OIL)	452
	456
SENSOR GP-PRESSURE (TC OIL)	452
	456
SENSOR GP-PRESSURE (TURBO INLET)	394
SENSOR GP-PRESSURE (TURBO OUTLET)	382
	398
SENSOR GP-SPEED	348
	349
SENSOR GP-SPEED–ENGINE SPEED/TIMING–ENGINE SPEED/TIMING	346
	347
SENSOR GP-SPEED (ENGINE)	383
	387
	391
SENSOR GP-SPEED (ENGINE SPEED TIMING)	382
SENSOR GP-SPEED (ENGINE SPEED/TIMING)	386
	390
	394
	398
SENSOR GP-SPEED (TC OUTPUT)	416
	420
	424
	428
	432
SENSOR GP-SPEED (TIMING CALIBRATION)	395
	399
SENSOR GP-SPEED (TRANSMISSION OUTPUT)	416
	420
	424
	428
	432
SENSOR GP-TEMPERATURE	350
SENSOR GP-TEMPERATURE (COOLANT)	382
	386
	390
	394
	398
SENSOR GP-TEMPERATURE (FRONT AXLE OIL)	402
SENSOR GP-TEMPERATURE (HYDRAULIC OIL)	407
	412
SENSOR GP-TEMPERATURE (REAR AXLE OIL)	407
	412
SENSOR GP-TEMPERATURE (STEERING OIL)	407
	412
SENSOR GP-TEMPERATURE (TC OIL)	416
	420
	424
	428
	432
SHAFT GP-DRIVE	596
	598
SHAFT GP-INPUT DRIVE	600
SHIELD GP-EXHAUST	166
	168
SHIELD GP-FUEL LINES	226
SHROUD GP-RADIATOR	142
SLEEVE	182
	194
	228
	292
	718
	722
	726
	748
SLIP JOINT GP	601
	602
SOFTWARE GP-IMPLEMENT	260
SOFTWARE GP-POWER TRAIN	289
SOLENOID AS-PROPORTIONAL (HOIST)	921
SPIDER & BEARING GP	603
SPRING-BRUSH	356
	357
	360
	361
SPRING GP-CAB DOOR	1388
STARTING AID GP-ETHER	351
	352
	353
STARTING MOTOR GP-ELECTRIC	354
	356
	360
STEERING AR	872
	873
STEP GP	752
STOP GP-STEERING	874
STRAINER AS	1054
	1058
STRAINER-FUEL	230
STRAINER-FUEL TANK	228
SUPPORT GP-AIR INLET	753

INDEX

Name	Page
	754
SUPPORT GP-ENGINE	69
	70
SUPPORT GP-HYDRAULIC CONTROL	1390
	1394
	1398
SUPPORT GP-SEAT	1401
SUPPORT GP-STEERING CONTROL	1402
	1406
SUPPORT GP-TRANSMISSION	604
SUSPENSION GP-SEAT	1410
	1418
SUSPENSION GP-SEAT–AIR	1414
SWASHPLATE GP	1049
	1050
SWITCH AS	1346
	1347
SWITCH AS-LIMIT	766
	768
SWITCH AS-LIMIT (PARKING BRAKE)	808
SWITCH AS-LIMIT (STIC CONTROL LOCK)	568
SWITCH AS-LIMIT (STOP LAMP)	766
	768
SWITCH AS-MAGNETIC	446
SWITCH AS-MAGNETIC (FLOOD LAMP RELAY)	440
SWITCH AS-MAGNETIC (FLOODLAMP RELAY)	460
	466
SWITCH AS-MAGNETIC (MAIN POWER RELAY)	441
	460
	466
SWITCH AS (MAP LIGHT)	1304
SWITCH AS-PRESSURE (FUEL FILTER)	452
	456
SWITCH AS-PRESSURE (HYD FILTER BYPASS)	828
SWITCH AS-PRESSURE (PRIMARY STEERING)	830
	832
	836
SWITCH AS-PRESSURE (REFRIGERANT)	382
	386
	390
	394
	398
SWITCH AS-PUSH (HORN)	932
	936
	940
SWITCH AS-PUSH (PAYLOAD CONTROL STORE)	380
SWITCH AS-PUSH (THROTTLE LOCK RESUME)	933
	937
SWITCH AS-PUSH (THROTTLE LOCK SET)	932
	936
	940
	944
	950
SWITCH AS (REDUCED/MAX RIMPULL)	932
	936
	940
SWITCH AS-ROCKER	1346
SWITCH AS-ROCKER (RIDE CONTROL)	930
SWITCH AS-ROCKER (START AID)	1346
SWITCH AS-ROCKER (24 VOLT)(ILLUMINATED) (IMPLEMENT LOCKOUT)	932
	936
	940
SWITCH AS-ROTARY (FAN SPEED)	1346
SWITCH AS-ROTARY (REDUCED RIMPULL)	1347
SWITCH AS-ROTARY (WIPER & WASHER) (ON/OFF)	1430
	1432
SWITCH AS-ROTARY (WIPER/WASHER)(REAR) (REAR WIPER)	1346
SWITCH AS-THERMOSTAT	1252
SWITCH GP-BYPASS	363
SWITCH GP-BYPASS (TRANSMISSION OIL FILTER)	407
	412
SWITCH GP-COOLANT FLOW	364
SWITCH GP-DISCONNECT	365
SWITCH GP-DISCONNECT (BATTERY)	237
SWITCH GP-FLOW–COOLANT	366
SWITCH GP-LIQUID LEVEL	367
SWITCH GP-LIQUID LEVEL (ENGINE OIL)	456
SWITCH GP-LIQUID LEVEL (HYDRAULIC TANK)	456
SWITCH GP-LIQUID LEVEL (STEERING/BRAKE HYD TANK)	456
SWITCH GP-MAGNETIC	368
	441
SWITCH GP-MAGNETIC (START RELAY)	461
	467
SWITCH GP-MAGNETIC (START RELAYS)	447
SWITCH GP-ROCKER–TC LOCKUP	369
SWITCH GP-START	370
SWITCH GP-START (KEY)	1346
SWITCH GP-WIPER	371
SWITCH GP-WIPER (24 VOLT)	1346
SWITCH-TOGGLE (GROUND LEVEL ENGINE SHUTDOWN)	439
SWITCH-TOGGLE (STAIRWAY ACCESS LIGHTS)	438
	439

INDEX

Name	Page
T	
TANK & MTG GP-HYDRAULIC	1051
	1052
TANK GP-FUEL	228
	230
	232
TANK GP-HYDRAULIC	1058
TANK GP-HYDRAULIC–STEERING & BRAKE	1054
TANK GP-RADIATOR TOP	143
THERMOCOUPLE GP	372
TIP-BUCKET	1246
TIP GP	1211
	1212
	1213
	1214
	1215
	1216
TIP GP-ABRASION	1217
	1218
	1219
	1220
	1221
	1222
TIP GP-LONG	1223
	1224
	1225
	1226
	1227
	1228
	1229
	1230
	1231
	1232
TIP GP-PENETRATION	1233
	1234
	1235
	1236
	1237
	1238
	1239
TIP GP-SHORT	1240
	1241
	1242
	1243
	1244
	1245
TIP-LONG	1247
TIP-PENETRATION	1248
	1249
TIRE & RIM AR	605
	606
	607
	608
	609
	610
	611
	612
	613
	614
	615
	616
	617
TORQUE CONVERTER & HOUSING GP	618
	622
TORQUE CONVERTER & HOUSING GP–LOCKUP	626
	628
TORQUE CONVERTER AR	630
TORQUE CONVERTER AR-LOCKUP	631
TORQUE CONVERTER GP	632
	636
TORQUE CONVERTER GP-LOCKUP	640
	644
TRACK-RH	1390
	1394
TRANSMISSION AR	647
TURBOCHARGER GP	170
	171
	172
	173
	174
	175
	176
U	
UNIVERSAL JOINT GP	648
	649
	650
V	
V-BELT	60
	1268
	1270
VALVE	896
	904
	908
	1054
	1058
	1078
	1090
	1095
VALVE & MTG GP-BRAKE CONTROL–PARKING	808
VALVE & MTG GP-FAN SPEED CONT	1060
VALVE & MTG GP-HYDRAULIC FAN	1062
VALVE & MTG GP-LOCKUP CLUTCH	651
	652

INDEX

Name	Page
VALVE & MTG GP-MAIN CONTROL	1064
VALVE & MTG GP-PILOT RELIEF	1067
	1068
VALVE & MTG GP-STEERING NEUT	876
VALVE & MTG GP-VARIABLE PUMP	1069
	1070
VALVE AS-FLUID SAMPLING	534
	858
VALVE-BALL	1064
VALVE-BREATHER	398
VALVE-BYPASS	88
VALVE-FLUID SAMPLING	78
	80
	530
	532
VALVE-GAS	755
	756
VALVE GP-BRAKE CONTROL–PARKING	810
VALVE GP-CHECK	880
	881
	882
	1071
	1072
VALVE GP-CHECK–STEERING QUAD	878
	879
VALVE GP-CHECK (BRAKE MANIFOLD)	800
VALVE GP-CHECK (COOLER BYPASS)	854
	1008
	1014
	1020
VALVE GP-CHECK (STEERING)	882
VALVE GP-CHECK (STEERING PILOT)	840
	846
VALVE GP-CHECK (STEERING QUAD)	879
VALVE GP-CONTROL–LEFT	1072
VALVE GP-CONTROL–RIGHT	1078
VALVE GP-FLOW COMPENSATOR	883
	884
	885
	886
VALVE GP-MAIN CONTROL	1082
VALVE GP-MAKEUP	1078
VALVE GP-MAKEUP–FAN DRIVE	1085
VALVE GP-MODULATING–TC IMPELLER CLUTCH	655
	656
VALVE GP-MODULATING–TC LOCKUP CLUTCH	653
	654
	657
VALVE GP-MODULATING (TC IMPELLER CLUTCH)	416
	420
	424
	428
	433
	656
VALVE GP-MODULATING (TC LOCKUP CLUTCH)	651
	654
	657
VALVE GP-PILOT	818
VALVE GP-PILOT–STEERING	887
VALVE GP-PILOT CARTRIDGE	888
	889
VALVE GP-PILOT (STEERING)	820
VALVE GP-PRESS & FLOW CMPNSTR	890
	892
	1086
VALVE GP-PRESSURE COMPENSATOR	894
	1087
	1088
VALVE GP-PRESSURE COMPENSATOR–BRAKE	811
VALVE GP-PRESSURE REDUCING	904
	908
	1072
VALVE GP-PRESSURE REDUCING (STEERING)	912
	916
VALVE GP-PUMP CONTROL–PRESS & TOR LMTR CONT	1088
VALVE GP-RADIATOR DRAIN	144
VALVE GP-RELIEF	896
	897
	900
	1090
	1095
VALVE GP-RELIEF–LEFT MAIN	1090
VALVE GP-RELIEF–LINE	1091
	1092
	1093
	1094
VALVE GP-RELIEF–PILOT	897
	898
	899
VALVE GP-RELIEF–PUMP BACKUP	896
VALVE GP-RELIEF–RIGHT, BACKUP	1095
VALVE GP-RELIEF–SECONDARY STEERING	895
VALVE GP-RELIEF–TORQUE CONVERTER OUTLET	658
VALVE GP-RELIEF (TORQUE CONVERTER OUTLET)	564
VALVE GP-RIDE CONTROL	1096
VALVE GP-SELECTOR–TRANSMISSION	659
VALVE GP-SELECTOR & PRESS CONT–STEERING	901
VALVE GP-SELECTOR & PRESS CONT–TRANSMISSION	660

INDEX

Name	Page
VALVE GP-SELECTOR (TRANSMISSION)	666
VALVE GP-SHUTTLE	902
	1097
VALVE GP-SHUTTLE (RESOLVER)	904
VALVE GP-SOLENOID	662
VALVE GP-SOLENOID–FAN CONTROL	1099
VALVE GP-SOLENOID– PILOT PRESSURE SUPPLY	1100
VALVE GP-SOLENOID–PUMP CONTROL	1098
VALVE GP-SOLENOID–RIDE CONTROL	1101
VALVE GP-SOLENOID & MANIFOLD– VARIABLE DISPLACEMENT PUMP	1102
VALVE GP-SOLENOID (PILOT PRESSURE SUPPLY)	1082
VALVE GP-SOLENOID (RIDE CONTROL)	1096
VALVE GP-STEERING	912
	916
VALVE GP-STEERING– WITH SECONDARY STEERING	904
	908
VALVE GP-STEERING NEUTRALIZER	876
	919
VALVE GP-TORQUE CONV PRIORITY	664
VALVE GP-TORQUE LIMITER CONT	1103
VALVE GP-TRANSMISSION CONTROL	666
VALVE MECHANISM GP	72
	74
VALVE-SHUTOFF	124
VIDS AR	1420
VIMS AR	1421

W

Name	Page
WARNING GP-BACKUP	373
WASHER GP-WINDOW	1422
	1423
WHEEL & FINAL DRIVE GP	668
WHEEL GP-FINAL DRIVE & BRAKE	670
	671
WIPER & WASHER GP-WINDOW	1262
	1424
	1426
	1428
	1430
	1432
WIPER GP-WINDOW–FRONT	1440
WIPER GP-WINDOW–LH	1436
WIPER GP-WINDOW–REAR	1438
WIPER GP-WINDOW–RH	1434
WIPER PIVOT GP	1442
WIRING GP-BUMPER	374
WIRING GP-CAB	376
	380
WIRING GP-ENGINE	382
	386
	390
	394
	398
WIRING GP-FRONT	402
WIRING GP-MACHINE	406
	412
WIRING GP-POWER TRAIN	416
	420
	424
	428
	432
WIRING GP-REAR	436
WIRING GP-SHUTOFF–GROUND LEVEL	438
WIRING GP-SHUTOFF–VIMS	439
WIRING GP-VIDS MONITOR	440
	446
WIRING GP-VIMS	452
	456
WIRING GP-VIMS MONITOR	460
	466

INDEX

Désignation	Page

A

ACCUMULATEUR - COMMANDE DE TRANSLATION (ASS)	920
ACCUMULATEUR - FREIN	755
	756
ACCUMULATEUR ET MONTAGE DE RÉFRIGÉRANT (ASS)	1250
ADAPTATEUR DE REMPLIS. RAPIDE DE CARBURANT (ASS)	178
	180
	182
ADMISSION REFROIDIE PAR EAU (ASS)	145
ALLUME-CIGARE (ENS) (CIGARE)(24 VOLTS)	1390
	1394
	1398
ALTERNATEUR DE CHARGE (ASS)	234
ALTERNATEUR-VENTILATEUR	234
AMORTISSEUR DE VIBRATIONS (ASS)	42
AMPLIFICATEUR - CAPTEUR (ASS)	240
AMPOULE	306
	1304
AMPOULE (24 VOLTS)	307
	309
	1346
AMPOULE (24 VOLTS)(65 WATTS)	301
	302
	303
	304
AMPOULE (24 VOLTS)(65 WATTS) (TÊTE)	305
AMPOULE (28 VOLTS)	376
AMPOULE (28 VOLTS) (PLAFONNIER)	300
ANNEAU	184
	976
ARBRE A CAMES (ASS)	10
	11
ARBRE DE TRANSMISSION D'ENTRÉE (ASS)	600
ARBRE D'ENTRAÎNEMENT (ASS)	596
ARBRE D'ENTRAÎNEMENT (ASS)	598
ARRÊT-DIRECTION (ASS)	874
ATTELAGE D'ARTICULATION (ASS)	708
AUTOCOLLANT	248
AUTOCOLLANT D'IDENTIFICATION	252
	440
	441
	446
	447
	460
	461
	466
	467
	933
	937
	941
AUTOCOLLANT D'IDENTIFICATION (LIQUIDE DE REFROIDISSEMENT LONGUE DURÉE)	1446
AUTOCOLLANT D'IDENTIFICATION (MODULE PRINCIPAL VIMS/VIDS)	257
AUTOCOLLANT D'IDENTIFICATION (VIDS/VIMS)(MODULE D'INTERFACE)	319
AUTOCOLLANT DU PANNEAU	1346
	1430
AUXILIAIRE DE DÉMARRAGE À L'ÉTHER	351
	352
	353
AVERTISSEUR (ASS)	233
	1340
AVERTISSEUR (ASS) (TÉMOIN D'ACTIONNEMENT)	1342
	1344
AVERTISSEUR DE RECUL (ASS)	373
AVERTISSEUR DE RECUL (ENS)	373
AXE ET JOINT - TIMONERIE (ASS)	1136
	1138
	1140
	1142
	1146
	1148
	1152

B

BALAI D'ESSUIE-GLACE (ENS)	1430
	1432
BALAI D'ESSUIE-GLACE (ENS) (ARRIÈRE)	1424
	1426
	1428
BALAI D'ESSUIE-GLACE (ENS) (AVANT)	1424
	1426
	1428
BALANCEUR (ASS)	8
BARRE D'ATTELAGE (ASS)	679
BATI - CHARGEUSE (ASS)	701
BÂTI - CHARGEUSE (ENS)	692
	694
	696
	698
BÂTI AR (ENS)	699
	700
BATTERIE ET CÂBLAGE	236
BATTERIE (HORLOGE)	252
	257
BATTERIE (12 VOLTS/SEC)	236
BIELLETTE-GODET ET FLÈCHE (ASS)	1132
	1133
	1134
	1135

INDEX

Désignation	Page
BLINDAGE DE TRANSMISSION (ASS)	703
BLOC - HYDRAULIQUE (ASS)	479
	480
	816
BLOC-CYLINDRES - COUVERCLE (ASS)	13
BLOC-CYLINDRES (ASS)	24
	26
	28
BLOC-CYLINDRES (ENS)	21
	22
BLOC DE BRANCHEMENT (ENS)	236
BOÎTE DE VITESSES (VERSION)	647
BOÎTE PLANÉTAIRE (ASS)	578
	584
BOUCHON - PROTECTION (ENS)	439
BOUCHON - PROTECTION (ENS)	1340
BOUCHON AIMANTÉ	474
	476
BOUCHON AIMANTÉ (FILET 1 5/8-12)	668
BOUCHON DE GOULOTTE DE REMPLISSAGE	1054
	1058
BOUCHON DE LA GOULOTTE DE REMPLIS. D'HUILE	77
BOUCHON DE PRISE ÉLECTRIQUE	441
	447
	461
	467
BOUCHON DE REMPLISSAGE D'HUILE MOTEUR (ASS)	77
BOUCHON DE REMPLISSAGE DU RÉSERVOIR DE CARBURANT	178
	180
	182
BOUCHON DE RÉSERVOIR DE CARBURANT (ENS)	186
	291
	292
BOUCHON DE RÉSERVOIR DE CARBURANT (ENS)	188
	190
	192
	194
BOUCHON DE VIDANGE	58
BOUCHON DE VIDANGE D'HUILE	64
BOUCHON DE VIDANGE (FILET 1-1/2-12)	544
BOUCHON D'ÉTANCHÉITÉ	1320
BOUCHON FILETÉ (FILET 3/8-18 NPTF)	230
BOUCHON-JOINT	655
	818
	820
	1253
	1304
	1398
	1428
BOUCHON-JOINT TORIQUE (FILET 7/16-20)	1008
	1014
	1020
	1021
	1038
BOULON (M10X1,50X12MM)	1424
BOULONNERIE - COMPOSANT ÉLECTRONIQUE (ASS)	290
BOULONNERIE DE LA CULASSE (ASS)	38
BOUTON DE CONTACTEUR D'ESSUIE-GLACE	1346
BOUTON-LOMBAIRE	1334
BOUTON POUSSOIR (ENS) (ENSEMBLE DE VERROU DE LA MANETTE DE GAZ)	932
	936
	940
	944
	950
BOUTON POUSSOIR (ENS) (KLAXON)	932
	936
	940
BOUTON POUSSOIR (ENS) (RÉENCLENCHEMENT DU VERROU DE LA MANETTE DE GAZ)	933
	937
BOUTON POUSSOIR (ENS) (STOCKAGE DE COMMANDE UTILE)	380
BRIDE	64
BROSSE (ENS)	356
	360

C

CABINE - REVÊTEMENT (ASS)	1312
	1316
CABINE (ASS)	1264
CABINE (ASS)	1266
CABINE ET PLATE-FORME (ASS)	1260
CABINE (VERSION)	1261
	1262
CABLAGE - MONITEUR DU SYSTÈME VIDS (ASS)	440
	446
CABLAGE - MONITEUR DU SYSTÈME VIMS (ASS)	460
CABLAGE - MONITEUR DU SYSTÈME VIMS (ASS)	466
CABLAGE AR (ASS)	436
CABLAGE AV (ASS)	402
CÂBLAGE D'AMORTISSEUR (ASS)	374
CABLAGE D'ARRET DE SECURITE	438
	439
CABLAGE DE CABINE (ASS)	376
	380
CABLAGE DE LA MACHINE (ASS)	406

INDEX

Désignation	Page
	412
CABLAGE DE MOTEUR (ASS)	382
	386
	390
	394
	398
CABLAGE DE TRANSMISSION (ASS)	420
	424
	428
	432
CABLAGE DE TRANSMISSION (ASS)	416
CABLAGE DU SYSTÈME VIMS (ASS)	452
CABLAGE DU SYSTÈME VIMS (ASS)	456
CABLE DE BRANCHEMENT DE RECHAUFFEUR (ENS)	298
CACHE-SOUPAPES (ASS)	18
CADENAS (ASS)	182
	194
	228
	292
	718
	722
	726
	748
	959
	1448
CANALISATION DE DIRECTION AUXILIAIRE	830
	832
	836
CANALISATIONS D'AIR (ASS)	152
	154
CANALISATIONS DE CARBURANT (ASS)	203
CANALISATIONS DE CHAUFFAGE (ASS)	1322
CANALISATIONS DE CLIMATISEUR (ASS)	1320
CANALISATIONS DE DIRECTION (ASS)	840
CANALISATIONS DE DIRECTION (ASS)	844
	845
	846
CANALISATIONS DE GRAISSAGE (ASS)	740
	742
CANALISATIONS DE GRAISSAGE (ASS)	744
CANALISATIONS DE LIQUIDE DE REFROIDISSEMENT (ASS)	104
CANALISATIONS DE NEUTRALISATION DE DIRECTION (ASS)	850
	852
CANALISATIONS DE RADIATEUR (ASS)	106
	110
	114
CANALISATIONS DE RÉCHAUFFEUR DE LIQUIDE DE REFROIDISSEMENT	1322
CANALISATIONS DE REFROIDISSEUR D'HUILE DE DIRECTION	854
	858

Désignation	Page
CANALISATIONS DE VÉRIN DE LEVAGE (ASS)	1026
	1028
	1030
CANALISATIONS D'EAU (ASS)	120
	122
	124
	128
	130
	132
CANALISATIONS D'EAU DE TURBOCOMPRESSEUR	118
CANALISATIONS D'ÉVENT D'ESSIEU (ASS)	551
CANALISATIONS D'HUILE DE TRANSMISSION (ASS)	552
	556
	560
	564
CANALISATIONS D'HUILE DE TURBOCOMPRESSEUR (ASS)	92
CANALISATIONS D'HUILE MOTEUR (ASS)	84
	88
CANALISATIONS D'INJECTION DE CARBURANT (ASS)	204
	208
CANALISATIONS DU FREIN DE MANOEUVRE (ASS)	800
CANALISATIONS DU VÉRIN D'INCLINAISON (ASS)	1032
CANALISATIONS HYDRAULIQUES (ASS)	996
CANALISATIONS HYDRAULIQUES (ASS)	1002
CANALISATIONS HYDRAULIQUES DE VENTILATEUR (ASS)	1008
	1014
	1020
CAPOT ET PROTECTION (ASS)	710
	714
	718
	722
	726
CAPTEUR DE PRESSION (ASS)	329
	330
	331
	335
	336
	337
	338
	339
	341
	342
	343
	344
	345
CAPTEUR DE PRESSION (ASS)	328
	332

INDEX

Désignation	Page
	333
	334
	340
CAPTEUR DE PRESSION (ASS) (ADMISSION DE TURBOCOMPRESSEUR)	394
CAPTEUR DE PRESSION (ASS) (ADMISSION DU TURBOCOMPRESSEUR DROITE)	382
CAPTEUR DE PRESSION (ASS) (ADMISSION DU TURBOCOMPRESSEUR GAUCHE)	382
CAPTEUR DE PRESSION (ASS) (ATMOSPHÉRIQUE)	382
	394
CAPTEUR DE PRESSION (ASS) (CARTER)	382
	394
CAPTEUR DE PRESSION (ASS) (HUILE DE CONVERTISSEUR DE COUPLE)	452
	456
CAPTEUR DE PRESSION (ASS) (HUILE DE POMPE DE DIRECTION PRINCIPALE)	452
	456
CAPTEUR DE PRESSION (ASS) (HUILE DE POMPE DE VENTILATEUR)	416
	420
	424
	428
	432
CAPTEUR DE PRESSION (ASS) (HUILE DE POMPE D'ÉQUIPEMENT)	407
	412
CAPTEUR DE PRESSION (ASS) (HUILE MOTEUR)	383
CAPTEUR DE PRESSION (ASS) (SORTIE DE TURBOCOMPRESSEUR)	382
	398
CAPTEUR DE TEMPERATURE (ASS)	350
CAPTEUR DE TEMPERATURE (ASS) (HUILE DE CONVERTISSEUR DE COUPLE)	416
	420
	424
	428
	432
CAPTEUR DE TEMPERATURE (ASS) (HUILE DE DIRECTION)	407
	412
CAPTEUR DE TEMPERATURE (ASS) (HUILE D'ESSIEU ARRIÈRE)	407
	412
CAPTEUR DE TEMPERATURE (ASS) (HUILE D'ESSIEU AVANT)	402
CAPTEUR DE TEMPERATURE (ASS) (HUILE HYDRAULIQUE)	407
	412
CAPTEUR DE TEMPERATURE (ASS) (LIQUIDE DE REFROIDISSEMENT)	382
	386
	390
	394
	398
CAPTEUR DE TEMPERATURE D'ECHAPPEMENT (ASS)	320
CAPTEUR DE VITESSE (ASS)	346
	347
	348
	349
CAPTEUR DE VITESSE (ASS) (CALAGE DE VITESSE DU MOTEUR)	382
CAPTEUR DE VITESSE (ASS) (ÉTALONNAGE DU CALAGE)	395
	399
CAPTEUR DE VITESSE (ASS) (MOTEUR)	383
	387
	391
CAPTEUR DE VITESSE (ASS) (RÉGIME MOTEUR/SYNCHRONISATION)	386
	390
	394
	398
CAPTEUR DE VITESSE (ASS) (SORTIE DE BOÎTE DE VITESSES)	416
	420
	424
	428
	432
CAPTEUR DE VITESSE (ASS) (SORTIE DE CONVERTISSEUR DE COUPLE)	416
	420
	424
	428
	432
CARBURANT - REMPLISSAGE CLASSIQUE (VERSION)	186
CARBURANT - REMPLISSAGE CLASSIQUE (VERSION)	188
	190
	192
	194
CARDAN COULISSANT (ASS)	601
	602
CARENAGE - RESERVOIR HYDRAULIQUE (ASS)	680
	681
	682
	683
	684
	685
	686
	688
CARÉNAGE DU RADIATEUR (ASS)	142
CARTER - BLINDAGE (ASS)	702
CARTER AV (ASS)	58

INDEX

Désignation	Page
CARTER DE VOLANT (ASS)	56
CARTOUCHE (ASS)	173
CEINTURE DE SECURITE (ASS)	1363
	1364
	1365
	1382
CEINTURE DE SECURITE (ASS) (RÉTRACTABLE)	1379
CENDRIER	1390
	1394
	1398
CHAÎNE DROITE	1390
	1394
CHAPEAU	1423
CHAPEAU - RADIATEUR	143
CHAPEAU ANTI-POUSSIERE	298
	299
CHAPEAU DE FILTRE A HUILE (ENS)	1448
CHAPEAU DE VALVE (2,0 POUCES D'ÉPAISSEUR)	595
CHAPEAU (ENS)	72
	74
	78
	80
	94
	1073
CHAPEAU (ENS) (FILET 11/16-16)	1069
	1070
CHAPEAU (PORTE-FUSIBLES)	446
	466
CHAPEAU (PORTE-FUSIBLES)	440
	460
CLAPET	896
	904
	908
	1054
	1058
	1078
	1090
	1095
CLAPET A BILLE	1064
CLAPET DE COMPENSATION (ASS)	1085
CLAPET DE COMPENSATION (ASS)	1078
CLAPET DE DECHARGE (ASS)	658
	895
	896
	897
	898
	899
	900
	1090
	1091
	1092
	1093
	1094
	1095
CLAPET DE DECHARGE (ASS) (SORTIE DE CONVERTISSEUR DE COUPLE)	564
CLAPET DE DÉCHARGE PILOTE ET MONTAGE (ASS)	1067
	1068
CLAPET DE RETENUE (ENS)	878
	879
	1071
	1072
CLAPET DE RETENUE (ENS)	880
	881
	882
CLAPET DE RETENUE (ENS) (COLLECTEUR DE FREIN)	800
CLAPET DE RETENUE (ENS) (DÉRIVATION DE REFROIDISSEUR)	854
	1008
	1014
	1020
CLAPET DE RETENUE (ENS) (DIRECTION)	882
CLAPET DE RETENUE (ENS) (DIRECTION QUADRUPLE)	879
CLAPET DE RETENUE (ENS) (PILOTE DE DIRECTION)	840
	846
CLÉ	182
	194
	228
	292
	718
	722
	726
	748
	1448
CLÉ (COUPE-BATTERIE)	365
CLIMATISEUR (ASS)	1252
CLIMATISEUR (VERSION)	1251
CLOISON PARE-FEU (ASS)	690
COFFRE DE RANGEMENT (ASS)	1256
	1258
COLLECTEUR DE CARBURANT (ASS)	211
	212
COLLECTEUR D'ÉCHAPPEMENT (ASS)	156
	158
	160
COLLIER-GAINE	356
COMMANDE DE BRAS (ASS)	484
	485
	486
	487
COMMANDE DE BRAS (ASS)	488
	490
COMMANDE DE DIRECTION (ASS)	818
COMMANDE DE DIRECTION (ASS)	820

INDEX

Désignation	Page
COMMANDE DE FREIN DE STATIONNEMENT (ASS)	771
COMMANDE DE GODET (ASS)	1104
	1105
	1106
	1108
	1110
	1112
	1113
	1114
	1116
COMMANDE DE LA PÉDALE DE FREIN (ASS)	766
COMMANDE DE LA PÉDALE DE FREIN (ASS)	768
COMMANDE DE POMPE (ASS)	817
COMMANDE DE SYSTÈME PILOTE (ASS)	921
COMMANDE DE TRANSLATION (VERSION)	930
COMMANDE ÉLECTRIQUE DE RÉGLAGE DU MOTEUR (ASS)	243
	244
	245
	246
	247
COMMANDE ELECTRONIQUE DE MOTEUR (ASS)	248
	249
	250
	251
COMMANDE ÉLECTRONIQUE D'ÉQUIPEMENT (ASS)	260
COMMANDE ÉLECTRONIQUE (HYDRAULIQUE)	932
COMMANDE ÉLECTRONIQUE (HYDRAULIQUE)	936
	940
	944
COMMANDE ÉLECTRONIQUE (HYDRAULIQUE)	950
COMMANDE ET CANALIS. - TRANSLATION (ASS)	922
	926
COMMANDE ET MONTAGE - MOTEUR	241
	242
COMMANDE HYDRAULIQUE DE BOÎTE (ASS)	492
COMMANDE NON PROGRAMMEE (ASS)	253
	254
	255
	256
	257
COMMANDE NON PROGRAMMEE (ASS)	252
COMMANDE NON PROGRAMMEE (ASS) (ÉQUIPEMENT)	446
	466
COMMANDE PRINCIPALE DE SOUPAPE ET MONTAGE (ASS)	1064
COMPRESSEUR DE REFRIGERANT (ASS)	1272
COMPRESSEUR DE REFRIGERANT (ASS)	1273
	1274
	1275
	1276
	1278
	1280
COMPRESSEUR ET MONTAGE - RÉFRIGÉRANT (ASS)	4
COMPRESSEUR ET MONTAGE - RÉFRIGÉRANT (ASS)	1268
	1270
CONDENSATEUR ET MONTAGE (RÉFRIGÉRANT)	1282
CONTACTEUR - NIVEAU DE LIQUIDE (ASS)	367
CONTACTEUR - NIVEAU DE LIQUIDE (ASS) (HUILE MOTEUR)	456
CONTACTEUR - NIVEAU DE LIQUIDE (ASS) (RÉSERVOIR HYDRAULIQUE)	456
CONTACTEUR - NIVEAU DE LIQUIDE (ASS) (RÉSERVOIR HYDRAULIQUE DE DIRECTION/FREIN)	456
CONTACTEUR DE DEBIT (ASS)	366
CONTACTEUR-DÉBIT DE LIQUIDE DE REFROIDISSEMENT	364
CONTACTEUR (ENS)	1346
	1347
CONTACTEUR (ENS) (EFFORT À LA JANTE RÉDUIT OU MAXIMUM)	932
	936
	940
CONTACTEUR (ENS) (LAMPE DE LECTURE)	1304
CONTACTEUR MAGNETIQUE (ASS)	441
CONTACTEUR MAGNETIQUE (ASS)	368
CONTACTEUR MAGNETIQUE (ASS) (RELAIS DE DÉMARRAGE)	447
	461
	467
CONTACTEUR MAGNETIQUE (ENS)	446
CONTACTEUR MAGNETIQUE (ENS) (RELAIS DE PROJECTEUR)	440
	460
	466
CONTACTEUR MAGNETIQUE (ENS) (RELAIS DE PUISSANCE PRINCIPAL)	441
	460
	466
CONVERTISSEUR DE COUPLE - MONTAGE (ASS)	576
CONVERTISSEUR DE COUPLE - VERROUILLAGE (ASS)	640
	644
CONVERTISSEUR DE COUPLE (ASS)	632

INDEX

Désignation	Page
	636
CONVERTISSEUR DE COUPLE ET CARTER (ASS)	618
	622
	626
	628
CONVERTISSEUR DE COUPLE (VERSION)	630
COURONNE ET DIFFERENTIEL (ASS)	522
	524
COURROIE TRAPEZOIDALE	60
	1268
	1270
COUVERCLE - BOUCHON DU RÉSERVOIR HYDRAULIQUE	1054
COUVERCLE - CABINE (ASS)	1283
COUVERCLE ANTI-POUSSIÈRE	178
	180
	182
COUVERCLE D'ADAPTATEUR (ASS)	1194
COUVERCLE DE CARTER AV (ASS)	16
	17
COUVERCLE DE CARTER DE VOLANT (ASS)	14
COUVERCLE DE RÉSERVOIR HYDRAULIQUE	959
	1051
COUVERCLE D'ENTRAINEMENT AUXILIAIRE (ASS)	12
COUVERCLE INFÉRIEUR-DOSSIER (ASS)	1334
COUVERCLES D'EXPEDITION (ASS)	520
CREPINE (ENS)	1054
	1058
CROISILLON ET ROULEMENT	603
CULASSE (ASS)	36
	37
	38
	39
	40
	41
CULASSE (ENS)	29
	30
	31
	32
	33
	34
	35
CULBUTERIE (ASS)	72
	74
CYLINDRE D'ETHER (ENS)	352

D

Désignation	Page
DEFLECTEUR D'ECHAPPEMENT (ASS)	166
	168
DÉMARREUR ÉLECTRIQUE (ASS)	354
	356
	360
DÉSHYDRATEUR	1250
DIFFERENTIEL (ASS)	526
DIRECTION (ENS)	872
	873
DISJONCTEUR DE SECURITE (ENS)	766
	768
DISJONCTEUR DE SECURITE (ENS) (FEU D'ARRÊT)	766
	768
DISJONCTEUR DE SECURITE (ENS) (FREIN DE STATIONNEMENT)	808
DISJONCTEUR DE SECURITE (ENS) (VERROUILLAGE DE COMMANDE DE BRAS)	568
DISJONCTEUR (ENS) (10A) (CONTACTEUR DE DÉMARRAGE À CLÉ)	441
	447
	461
	467
DISJONCTEUR (ENS) (105A) (ALTERNATEUR)	461
	467
DISJONCTEUR (ENS) (105A) (ALTERNATEUR ET CIRCUIT PRINCIPAL)	440
DISJONCTEUR (ENS) (105A) (ALTERNATEUR PRINCIPAL)	447
DISJONCTEUR (ENS) (105A) (PRINCIPAL)	467
DISJONCTEUR (ENS) (15A) (FEUX DE ROUTE)	441
	447
	461
	467
DISJONCTEUR (ENS) (15A) (MODULE DE COMMANDE MOTEUR)	441
	447
	461
	467
DISPOSITIF DE VIDANGE RAPIDE D'HUILE (ASS)	94
DISPOSITIF D'EVACUATION DES VAPEURS DE CARTER	82
DISTRIBUTEUR (ASS)	1072
	1078
DISTRIBUTEUR DE BOITE (ASS)	666
DISTRIBUTEUR DE COMMANDE ANTI-TANGAGE	1096
DISTRIBUTEUR DE FREIN (ASS)	810
DISTRIBUTEUR DE POMPE (ASS)	1088

E

Désignation	Page
EAU DES CHEMISES - RECHAUFFEUR (ASS)	299

INDEX

Désignation	Page
EAU DES CHEMISES - RECHAUFFEUR (ASS)	298
ECHELLE (ASS)	730
	734
	738
ÉCLAIRAGE - PROJECTEURS (ASS)	310
ECLAIRAGE AR (ASS)	314
ECLAIRAGE AV (ASS)	312
ÉCLAIRAGE-FEUX D'ARRÊT (ASS)	316
	317
	318
ÉCRAN	1054
ÉCRAN - REPRISE	95
ECRAN (ASS)	1054
ÉCRAN (ENS)	62
	64
	1054
	1058
ÉLECTRONIQUE DE TRANSMISSION (ASS)	289
ÉLECTRONIQUE-MONITEUR (ASS)	261
	262
	263
	264
	265
	266
	267
	268
	269
	270
	271
	272
	273
	274
	275
	276
	277
	278
	279
	280
	281
	282
	283
	284
	285
	286
	287
	288
ÉLÉMENT DE FILTRE	753
	754
ELEMENT DE FILTRE - HYDRAULIQUE (TRANSMISSION)	538
ÉLÉMENT DE FILTRE À CARBURANT (ENS) (PRINCIPAL)	184
ÉLÉMENT DE FILTRE À HUILE (ENS) (HYDRAULIQUE)	536
ÉLÉMENT DE FILTRE (TRANSMISSION)	539
ÉLÉMENT DU RÉCHAUFFEUR D'EAU DES CHEMISES (ENS) (120 VOLTS, 1500 WATTS)	298
ÉLÉMENT DU RÉCHAUFFEUR D'EAU DES CHEMISES (ENS) (240 VOLTS, 1500 WATTS)	299
ÉLÉMENT PRINCIPAL (ENS)	150
ÉLÉMENT SECONDAIRE (ENS)	150
ENGRENAGE DE TRANSFERT ET CARTER	544
ENTRAÎNEMENT AUXILIAIRE (ASS)	43
	44
	46
ESSIEU FIXE	474
ESSIEU FIXE (VERSION)	471
ESSIEU OSCILLANT	476
ESSIEU OSCILLANT (VERSION)	472
ESSUIE-GLACE (ASS)	1434
	1436
	1438
	1440
ESSUIE-GLACE ET LAVE-GLACE	1262
	1424
	1426
	1428
	1430
	1432
ÉTANCHÉITÉ - GLACE (ASS)	1362

F

Désignation	Page
FAISCEAU DE DIRECTION (ENS) (COMMANDE STIC)	818
	820
FAISCEAU DU REFROIDISSEUR D'HUILE (ASS)	101
FILTRE	540
FILTRE -EAU	136
FILTRE -EAU (POMPE À EAU)	137
FILTRE À AIR	1264
	1297
	1298
FILTRE A AIR (ASS)	146
	148
	150
FILTRE À AIR DE CABINE (ASS)	1297
	1298
FILTRE A AIR (ENS)	178
	180
	190
FILTRE À CARBURANT	230
FILTRE A CARBURANT (ASS)	184
FILTRE A CARBURANT (ENS) (AUXILIAIRE)	184
FILTRE A HUILE (ASS)	536
	538

INDEX

Désignation	Page
	539
	540
	541
	828
FILTRE À HUILE (ENS)	828
FILTRE À HUILE MOTEUR (ASS)	78
FILTRE À HUILE MOTEUR (ASS)	80
FILTRE A HUILE MOTEUR (ENS)	78
FILTRE A HUILE MOTEUR (ENS)	80
FILTRE ET CANALISATIONS DE DIRECTION (ASS)	826
	827
FILTRE ET CANALISATIONS DE FREIN (ASS)	798
FILTRE ET JOINT (ENS)	352
FILTRE ET MONTAGE - TRANSMISSION (ASS)	530
	532
	534
FILTRE HYDRAULIQUE (ENS)	541
FIXATION D'OUTILS D'ATTAQUE DU SOL	1210
FLEXIBLE	114
FREIN DE MANOEUVRE - COMMANDE (ASS)	772
	778
	784
	792
FREIN DE MANOEUVRE (ASS)	762
	764
FREIN DE STATIONNEMENT (ASS)	758
	760
FUSIBLE (10A)	440
	446
	460
	466
FUSIBLE (15A)	440
	446
	460
	466
FUSIBLE (20 A)	440
	446
	460
	466

G

GAINE D'AIR (ASS)	1294
GARDE-BOUE AV (ASS)	689
GODET - POINTE	1246
GODET-ROCHE (ASS)	1182
	1183
	1184
	1185
	1186
	1187
	1188
	1189
	1190
	1191
	1192
GODET-ROCHE (ENS)	1168
	1170
	1172
	1174
	1176
	1178
	1180
GOULOTTE DE REMPLISSAGE D'HUILE DE TRANSMISSION	528
GOULOTTE DE REMPLISSAGE D'HUILE DE TRANSMISSION	527
GRAISSEUR	476
	740
	744
GRAISSEUR (ENS) (DÉBRANCHEMENT RAPIDE)	1062
GRAISSEUR (FILET 1/8-27)	598
	742
GROUPE DE MOTEUR A PISTONS	1034
	1035
GROUPE DE ROTATION DE MOTEUR	1044
	1046
GROUPE DE ROTATION DE POMPE	805
	806
	1048

H

HAUTE PORTEE (VERSION)	1118
	1119
	1120
	1121
HUILE MOTEUR - CARTER (ASS)	62
	64

I

INJECTEUR DE CARBURANT (ASS)	199
	200
	201
INSTRUMENT - NIVEAU DE LIQUIDE (ENS)	143
INSTRUMENT - NIVEAU DE LIQUIDE (ENS)	1054
	1058
INSTRUMENT DE NIVEAU DE LIQUIDE (ASS)	542
INTERRUPTEUR - DÉRIVATION (ASS)	363
INTERRUPTEUR - DÉRIVATION (ASS) (FILTRE Â HUILE DE BOÎTE DE VITESSES)	407
	412

INDEX

Désignation	Page
INTERRUPTEUR A BASCULE (ARRÊT DE MOTEUR À HAUTEUR D'HOMME)	439
INTERRUPTEUR À BASCULE (ASS)	369
INTERRUPTEUR A BASCULE (ÉCLAIRAGE DE MARCHEPIED)	438 439
INTERRUPTEUR BALANCIER (ENS)	1346
INTERRUPTEUR BALANCIER (ENS) (AUXILIAIRE DE DÉMARRAGE)	1346
INTERRUPTEUR BALANCIER (ENS) (COMMANDE DE TRANSLATION)	930
INTERRUPTEUR BALANCIER (ENS) (24 VOLTS) (ILLUMINÉ) (VERROUILLAGE D'ÉQUIPEMENT)	932 936 940
INTERRUPTEUR DE DÉMARRAGE (ASS)	370
INTERRUPTEUR DE DÉMARRAGE (ASS) (CLÉ)	1346
INTERRUPTEUR DE THERMOSTAT (ENS)	1252
INTERRUPTEUR D'ESSUIE-GLACE (ASS)	371
INTERRUPTEUR D'ESSUIE-GLACE (ASS) (24 VOLTS)	1346
INTERRUPTEUR ROTATIF (ENS) (ESSUIE-GLACE ET LAVE-GLACE) (MARCHE-ARRÊT)	1430 1432
INTERRUPTEUR ROTATIF (ENS) (ESSUIE-GLACE/LAVE-GLACE)(ARRIÈRE) (ESSUIE-GLACE ARRIÈRE)	1346
INTERRUPTEUR ROTATIF (ENS) (RÉDUCTION DE L'EFFORT À LA JANTE)	1347
INTERRUPTEUR ROTATIF (ENS) (VITESSE DU VENTILATEUR)	1346

J

Désignation	Page
JANTE DÉMONTABLE (ASS)	595
JANTE (VERSION)	594
JAUGE D'HUILE MOTEUR (BAIONNETTE) (ASS)	83
JOINT DE CARTER D'HUILE	64
JOINT DE VILEBREQUIN (ASS)	68
JOINT DE VILEBREQUIN (ASS) (ROTATION EN SENS D'HORLOGE)	68
JOINT DE VILEBREQUIN (ASS) (ROTATION EN SENS INVERSE D'HORLOGE)	68
JOINT PLAT	184
JOINT TORIQUE	64
JOINT TORIQUE (DIA INT 110,49MM)	178 180 182 186 188 190
JOINT TORIQUE (DIA INT 133,66MM)	579 585
JOINT TORIQUE (DIA INT 81,92MM)	596 598
JOINT TORIQUE (DIA INT 94,84MM)	840 846 997 1003
JOINT UNIVERSEL (ASS)	648 649 650

K

Désignation	Page
KIT - COUSSIN (DOSSIER EN TOILE)	1296
KIT D'ATTACHE	1410 1414 1418
KIT D'AXE À PÉDALE	1350
KIT DE BLOC COULISSANT	1366 1376 1383 1384 1385 1386
KIT DE BLOC COULISSANT (COMPREND BLOCS ET VIS)	1372
KIT DE BORNE	357 361
KIT DE BORNE D'ALTERNATEUR	234
KIT DE BORNE DE RELAIS (ALTERNATEUR)	234
KIT DE BOUGIE (12 BROCHES)	374 402 406 436 1347 1390 1394 1398
KIT DE BOUGIE (2 BROCHES)	240 312 314 374 402 406 407 416 420 424 428 432 436 662 766 768

INDEX

Désignation	Page
	922
	926
	932
	940
	944
	950
	1253
	1347
KIT DE BOUGIE (3 BROCHES)	328
	329
	334
	336
	337
	338
	340
	341
	342
	343
	344
	345
	346
	347
	374
	402
	406
	416
	420
	424
	428
	432
	436
	766
	768
	932
	933
	936
	937
	940
	941
	944
	950
	980
	984
	988
	992
	1347
	1390
	1394
	1398
KIT DE BOUGIE (4 BROCHES)	312
	402
	406
	818
	820
	932
	936
	940
	944
	950
	1253
	1347
KIT DE BOUGIE (4 BROCHES) (LAVE-GLACE/ESSUIE-GLACE)	1423
KIT DE BOUGIE (6 BROCHES)	374
	1253
	1304
	1347
	1430
	1432
KIT DE BOUGIE (8 BROCHES)	416
	420
	424
	428
	432
	818
	820
	932
	936
	940
	944
	950
	1347
	1390
	1394
	1398
	1430
	1432
KIT DE BOULONNERIE	1410
KIT DE BOULONNERIE (SUSPENSION DU SIÈGE)	1414
	1418
KIT DE BOUTON DE SIEGE	1366
	1372
	1376
KIT DE CALE D'ÉPAISSEUR D'ARBRE (17 CALES)	1038
KIT DE CAPTEUR À CADRAN	228
	230
KIT DE CARTER	1410
KIT DE CHAPEAU DE FILTRE	186
KIT DE CLAPET DE DECHARGE	590
KIT DE COMPRESSEUR	1410
KIT DE COUSSIN DE SIEGE	1372
	1376
KIT DE COUSSIN DE SIEGE (EN TOILE)	1366
KIT DE COUSSINETS - BOITE DE VITESSES	550
KIT DE FAISCEAU DE CABLAGE	1410
	1414
	1418
KIT DE JOINTS	590

INDEX

Désignation	Page
	601
	602
	755
	756
	810
	862
	895
	904
	908
	912
	916
	960
	962
	964
	1060
	1072
	1100
	1101
KIT DE JOINTS (ÉLECTROVANNE)	1098
KIT DE JOINTS (SOLÉNOÏDE DE POMPE DE VENTILATEUR DE REFROIDISSEMENT HYDRAULIQUE/RADIATEUR)	1099
KIT DE PANNEAU DU DOSSIER DU SIEGE	1366
	1372
	1376
KIT DE PISTON DE COMMANDE	1038
KIT DE PISTON EXCENTRIQUE	1038
KIT DE PRISE FEMELLE (12 BROCHES)	402
	406
	436
	818
	820
	932
	936
	940
	944
	950
	1304
	1391
	1395
	1398
KIT DE PRISE FEMELLE (2 BROCHES)	233
	309
	348
	349
	352
	364
	366
	367
	368
	373
	394
	395
	398
	399
	402
	406
	407
	416
	420
	424
	428
	432
	436
	446
	447
	461
	467
	654
	657
	666
	828
	921
	936
	940
	945
	951
	1098
	1099
	1100
	1101
	1252
	1272
	1273
	1276
	1410
	1414
KIT DE PRISE FEMELLE (2 BROCHES) (MODULE DE MESSAGES)	1327
KIT DE PRISE FEMELLE (2 BROCHES) (PROJECTEUR)	304
KIT DE PRISE FEMELLE (3 BROCHES)	240
	306
	307
	308
	320
	321
	322
	323
	324
	325
	326
	327
	331
	332
	333
	339
	376
	380
	390

INDEX

Désignation	Page
	394
	398
	402
	406
	416
	420
	424
	428
	432
	655
	808
	830
	832
	836
	932
	936
	937
	940
	941
	944
	950
	1342
	1344
	1347
	1391
	1395
	1398
KIT DE PRISE FEMELLE (3 BROCHES) (PLAFONNIER)	300
KIT DE PRISE FEMELLE (4 BROCHES)	312
	402
	407
	568
	808
	945
	951
	1328
	1347
KIT DE PRISE FEMELLE (6 BROCHES)	374
	407
	1253
	1329
	1330
	1331
	1340
	1342
	1344
	1347
	1428
	1434
	1436
KIT DE PRISE FEMELLE (6 BROCHES) (MODULE DE MESSAGES)	1326
	1327
KIT DE PRISE FEMELLE (8 BROCHES)	371
	406
	487
	488
	490
	932
	936
	940
	944
	950
	1347
	1391
	1395
	1398
KIT DE REDRESSEMENT	1336
	1339
KIT DE REGLAGE (BAS DE CUVETTE)	1336
KIT DE REGLAGE (CUVETTE DU BAS DU SIÈGE)	1339
KIT DE REGLAGE DE SIEGE - INCLINAISON	1336
	1339
KIT DE RÉGULATEUR	202
KIT DE RENIFLARD	178
	180
	182
	190
	192
KIT DE RESSORT PNEUMATIQUE	1410
KIT DE ROULEAU	1350
	1410
	1414
	1418
KIT DE TRANSFORMATION DE LAMPE (24 V)	369
	932
	936
	940
	1304
	1346
	1347
KIT DE VIS DE RETENUE	251
	253
	254
	255
	256
KIT (JOINT CHASSIS PORTEUR) (CHEMISE DE CYLINDRE UNIQUE)	5
KIT (JOINT CHASSIS PORTEUR) (INJECTEUR UNIQUE)	5
KIT (JOINTS DE POMPE)	802
	804
KLAXON ÉLECTRIQUE (ASS)	1302
	1303
KLAXON (ENS) (24 VOLTS)	1303

INDEX

Désignation	Page

L

LAME DE COUPE (ASS) 1195
1196
LAMPE - CARTE 1304
LAMPE - CLIGNOTANT DE DIRECTION (ASS) 306
LAMPE - CLIGNOTANT DE DIRECTION (ASS) 307
308
LAMPE - CLIGNOTANT DE DIRECTION (ASS) (ARRÊT/ARRIÈRE) 318
LAMPE - PHARE (ASS) 301
LAMPE - PHARE (ASS) 302
303
304
LAMPE - PHARE (ASS) 314
LAMPE - PHARE (ASS) (24 VOLTS)(SUSPENDU) 312
LAMPE - PHARE (ASS) (24 VOLTS)(VERTICAL) 312
314
LAMPE - TÉMOIN D'ENTRETIEN DU SYSTÈME VIMS 309
LAMPE (AMPOULE MINIATURE) (28 VOLTS) . . . 376
LAVE-GLACE - VITRE (ASS) 1422
1423
LENTILLE-BLEUE 309
LENTILLE DE PLAFONNIER 300
LENTILLE (ENS) 303
LENTILLE (ENS) (PHARE AVANT) (FEUX DE CROISEMENT) 305
LENTILLE (ENS) (PLAFONNIER) 301
304
LENTILLE (ENS)-PROJECTEUR 302
LENTILLE ROUGE 307
LEVAGE STANDARD (VERSION) 1122
1123
1124
1125
LEVIER 1054
LIAISON - VERROUILLAGE DE CHÂSSIS DE DIRECTION (ASS) 746
LIAISON-GODET (ASS) 1126
1127
1128
1130
LIMITEUR DE LEVAGE ET RETOUR À L'ANGLE DE CAVAGE 976
978
980
984
988
992
LOGICIEL - TRANSMISSION (ASS) 289
LOGICIEL-ÉQUIPEMENT (ASS) 260
LOQUET - PORTE DE CABINE ET GLACE 1308

M

MANCHON 182
194
228
292
718
722
726
748
MANOCONTACT (ENS) (DÉRIVATION DU FILTRE HYDRAULIQUE) . . . 828
MANOCONTACT (ENS) (DIRECTION PRINCIPALE) 830
832
836
MANOCONTACT (ENS) (FILTRE À CARBURANT) 452
456
MANOCONTACT (ENS) (RÉFRIGÉRANT) 382
386
390
394
398
MARCHEPIED (ASS) 752
MECANISME DE COMMANDE DE LA POMPE A PISTONS (ASS) 812
813
814
815
MODULE - INTERFACE VIDS/VIMS (ASS) 319
MODULE - QUATRE INSTRUMENTS (ASS) 1329
1330
MODULE (ASS)-CENTRE DE MESSAGE 1326
1327
MODULE (ASS)-TOUCHE DE MODULE DE SURVEILLANCE 1328
MODULE D'INDICATEUR DE VITESSE ET COMPTE-TOURS (ASS) 1340
1342
1344
MONTAGE D'ALTERNATEUR (ASS) 60
MONTAGE DE JANTE (ASS) 575
MONTAGE DE MOTEUR (VERSION) 7
MONTAGE DE PARE-CHOCS (ASS) 748
MONTAGE DE PLATE-FORME (ASS) 1332
MONTAGE DE RADIO (ASS) 1304
1306
MONTAGE D'ESSIEU (ASS) 574
MOTEUR D'ESSUIE-GLACE (ASS) 1331
MOTEUR ELECTRIQUE (ASS) (27 VOLTS) 1252
MOTEUR (VERSION) 4

INDEX

Désignation	Page
O	
OEILLETONS DE LEVAGE MOTEUR (ASS)	59
P	
PANNEAU SUPERIEUR (ASS)	751
PARE-CHOCS AR (ASS)	677
	678
PARE-POUSSIERE	78
	80
	85
	89
	416
	420
	424
	428
	432
	530
	532
	534
	553
	557
	561
	565
	618
	622
	626
	628
	651
	652
	658
	664
	772
	778
	784
	792
	800
	830
	832
	836
	840
	846
	854
	855
	858
	859
	872
	873
	996
	997
	1002
	1004
	1008
	1014
	1020
	1062
	1064
	1067
	1068
	1073
PARE-SOLEIL (ASS)	1361
PARE-SOLEIL (ASS)	1360
PARE-SOLEIL (ASS) (ARRIÈRE)	1360
	1361
PARE-SOLEIL (ASS) (AVANT)	1360
	1361
PHARE AV (ASS)	305
PHARE AV (ASS) (FEUX DE CROISEMENT)	312
PIGNON AR (ASS)	52
PIGNONNERIE AV (ASS)	50
PIGNONNERIE D'ENTREE DE TRANSFERT (ASS)	548
PISTON ET BIELLE (ASS)	66
PIVOT D'ESSUIE-GLACE (ASS)	1442
PLAFONNIER (ASS)	300
PLAFONNIER (ASS) (24 VOLTS)(AVEC INTERRUPTEUR)	1264
PLAQUE - AVERTISSEMENT (VÉRIN HAUTE PRESSION)	920
PLAQUE-ACCUMULATEUR HYDRAULIQUE	920
PLAQUE DE NUMÉRO DE SÉRIE (MOTEUR)	1446
PLAQUE D'USURE	1203
	1204
PLAQUE D'USURE (ASS)	1202
PLAQUE-GLISSIÈRE (ASS)	1351
	1352
PLAQUE (IDENTIFICATION)	441
	447
	461
	467
PLAQUE SIGNALETIQUE	1340
	1342
	1344
PLAQUE SIGNALÉTIQUE (ASS)	1444
PLAQUES SIGNALETIQUES ET AUTOCOLLANTS (ASS)	1446
	1447
PLATE-FORME DE CABINE	1354
	1357
PLATEAU OSCILLANT (ASS)	1049
	1050
PNEU ET JANTE (VERSION)	605
	606
	607
	608
	609
	610
	611
	612

INDEX

Désignation	Page
	613
	614
	615
	616
	617
POIGNÉE	1300
POIGNÉE (RÉGLAGE DE GLISSIÈRE)	1351
	1352
POIGNÉE (RÉGLAGE D'INCLINAISON)	1351
	1352
POINTE ABRASION (ASS)	1217
	1218
	1219
	1220
	1221
	1222
POINTE (ASS)	1211
	1212
	1213
	1214
	1215
	1216
POINTE COURTE (ASS)	1240
	1241
	1242
	1243
	1244
	1245
POINTE LONGUE	1247
POINTE LONGUE (ASS)	1223
	1224
	1225
	1226
	1227
	1228
	1229
	1230
	1231
	1232
POINTE PENETRATION	1233
	1234
	1235
	1236
	1237
	1238
	1239
	1248
	1249
POMPE A EAU (ASS)	134
	135
	136
	137
POMPE A ENGRENAGES (ASS)	590
	862
	864
POMPE A HUILE MOTEUR (ASS)	96
	97
POMPE A PISTONS (ASS)	802
	804
	866
	868
	870
	1036
	1038
	1040
	1042
POMPE A PISTONS (ASS) (CYLINDRÉE FIXE D'ÉQUIPEMENT)	996
	1002
POMPE D'ALIMENTATION EN CARBURANT (ASS)	216
	218
	219
	220
POMPE D'AMORÇAGE DE CARBURANT (ASS)	213
	214
POMPE DE BOÎTE DE VITESSES (ASS)	591
	592
POMPE DE CARTER (GR)	95
POMPE DE REPRISE (ASS)	98
POMPE D'INJECTION (ASS)	222
	223
	224
	225
PORTE DE CABINE - RESSORT (ASS)	1388
PORTE LATÉRALE (ASS)	1286
	1288
	1290
	1292
PORTE-POINTE	1162
	1163
	1164
	1165
	1166
PORTE-POINTE CENTRAL	1155
	1156
PORTE-POINTE DE DROITE	1160
	1161
PORTE-POINTE GAUCHE	1157
	1158
	1159
PORTIERE GAUCHE (ASS)	1284
POSTE DE CONDUITE (VERSION)	1333
PREFILTRE (ASS)	165
PRISE DE COURANT (ENS) (12 VOLTS)	1346
PROTECTEUR LATERAL (ASS)	1209
PROTECTEURS DE LAME (ASS)	1205
	1206
	1207

INDEX

Désignation	Page
	1208
PROTECTION - CONTACTEUR	438
	439
PROTECTION ANTIVANDALISME (ASS)	1448
PROTECTION ANTIVANDALISME (ASS)	527
	528
PROTECTION DE CANALISATIONS DE CARBURANT	226
PROTEGE-COURROIE (ASS)	54
	55
PROTÈGE-RADIATEUR (ASS)	704
	706

R

RACCORD DE RÉFRIGÉRANT (ENS)	1320
RACCORD D'EAU (ASS)	99
RADIATEUR (ASS)	138
	139
	140
	141
RALLONGE DE VIDANGE (ASS)	48
RALLONGE DU DOSSIER DE SIEGE	1296
RALLONGE DU DOSSIER DE SIEGE (TISSU)	1382
RECHAUFFEUR DE CARBURANT (ASS)	294
	296
RÉCHAUFFEUR DE CARBURANT (VERSION)	291
	292
RÉDUCTEUR ET ROUE	668
RÉDUCTEURS, ROUE ET FREIN (ASS)	670
	671
REFROIDISSEUR D'HUILE D'ESSIEU (ASS)	494
	498
	502
	508
	514
REFROIDISSEUR D'HUILE HYDRAULIQUE (ASS)	956
	958
REFROIDISSEUR D'HUILE MOTEUR (ASS)	100
RÉGLAGE ÉLECTRO. DE PUISSANCE DU MOTEUR	259
RÉGULATEUR - PÉDALE (ASS)	1349
	1350
REMPLISSAGE RAPIDE DE CARBURANT (VERSION)	196
	197
	198
RENIFLARD	188
	194
	291
	292
	557
	561
	565
RENIFLARD (ASS)	76
RENIFLARD (ENS) (CARTER)	76
RÉSERVOIR DE CARBURANT (ASS)	228
	230
	232
RÉSERVOIR DU COUVERCLE DE RADIATEUR (ASS)	143
RÉSERVOIR HYDRAULIQUE (ASS)	1054
	1058
RÉSERVOIR HYDRAULIQUE ET MONTAGE (ASS)	1051
	1052
RESSORT DE BALAI	356
	357
	360
	361
RÉTROVISEUR (ASS)	1323
	1324
	1325
ROBINET DE BATTERIE (ASS)	365
ROBINET DE BATTERIE (ASS) (BATTERIE)	237
ROBINET DE VIDANGE DE RADIATEUR (ASS)	144
ROBINET-ÉCHANTILLON DE LIQUIDE (ENS)	534
	858
ROBINET-PRÉLÈVEMENT D'ÉCHANTILLON DE LIQUIDE	78
	80
	530
	532
ROTATION DE LA ROUE DU VENTILATEUR SOUFFLANT	441
	447
	461
	467
ROTATION DE LA ROUE DU VENTILATEUR SOUFFLANT (ENTRÉE D'EAU/SORTIE D'EAU)	1252
ROTATION DE LA ROUE DU VENTILATEUR SOUFFLANT (RÉGLAGE DU SIÈGE)	1414
ROUE ET RÉDUCTEURS (ASS)	668

S

SEGMENT DE LAME	1201
SEGMENT DE LAME DE COUPE (ASS)	1197
	1198
	1199
	1200
SIEGE - COUVERCLE INFERIEUR (ASS)	1338
	1339
SIEGE - COUVERCLE INFERIEUR (ASS)	1336
SIEGE - COUVERCLE INFERIEUR (ASS) (ARRIÈRE)	1366

INDEX

Désignation	Page
SIEGE - COUVERCLE INFERIEUR (ASS) (FOND)	1366
SIÈGE (ASS)	1366
	1368
	1369
	1370
	1372
	1376
	1379
	1380
	1382
SIÈGE AVEC SUSPENSION (ASS)	1410
	1414
	1418
SIÈGE AVEC SUSPENSION (ASS)	1383
	1384
	1385
	1386
SIÈGE INCLINABLE (ASS)	1358
SILENCIEUX (ASS)	162
	163
	164
SOLÉNOÏDE - PROPORTIONNEL (ENS) (TREUIL)	921
SONDE - CIRCUIT DE CARBURANT	321
	322
	323
	324
	325
	326
	327
SONDE - CIRCUIT DE CARBURANT (EMBRAYAGE DU ROTOR DU CONVERTISSEUR DE COUPLE)	766
SONDE - CIRCUIT DE CARBURANT (INCLINAISON)	980
	984
	988
	992
SONDE - CIRCUIT DE CARBURANT (LEVAGE)	976
	978
SONDE - CIRCUIT DE CARBURANT (SANS RESSORT) (LEVIER DE COMMANDE)	932
	936
	940
	945
	951
SOUPAGE - SOLÉNOIDE ET COLLECTEUR	1102
SOUPAPE - CARTOUCHE PILOTE (ASS)	888
	889
SOUPAPE - GAZ (CIRCUIT DE FREINAGE)	755
	756
SOUPAPE - RENIFLARD	398
SOUPAPE - SOLÉNOÏDE (ASS)	662
	1099
	1100
	1101
SOUPAPE - SOLÉNOÏDE (ASS)	1098
SOUPAPE - SOLÉNOÏDE (ASS) (ALIMENTATION DE PRESSION PILOTE)	1082
SOUPAPE - SOLÉNOÏDE (ASS) (COMMANDE DE TRANSLATION)	1096
SOUPAPE D'ARRÊT	124
SOUPAPE DE COMMANDE DE LIMITEUR DE COUPLE (ASS)	1103
SOUPAPE DE COMMANDE PRINCIPALE (ASS)	1082
SOUPAPE DE COMPENSATION DE PRESSION (ASS)	811
SOUPAPE DE COMPENSATION DE PRESSION (ASS)	894
SOUPAPE DE COMPENSATION DE PRESSION (ASS)	1087
	1088
SOUPAPE DE DÉRIVATION	88
SOUPAPE DE DIRECTION (ASS)	904
	912
	916
SOUPAPE DE DIRECTION (ASS)	908
SOUPAPE DE MODULATION (ASS)	653
	654
SOUPAPE DE MODULATION (ASS)	655
	657
SOUPAPE DE MODULATION (ASS)	656
SOUPAPE DE MODULATION (ASS) (EMBRAYAGE DE VERROUILLAGE DE CONVERTISSEUR DE COUPLE)	651
	654
	657
SOUPAPE DE MODULATION (ASS) (EMBRAYAGE DU ROTOR DU CONVERTISSEUR DE COUPLE)	656
SOUPAPE DE MODULATION (ASS) (EMBRAYAGE DU ROTOR DU CONVERTISSEUR DE COUPLE)	416
	420
	424
	428
	433
SOUPAPE DE NEUTR. DE DIRECTION ET MONTAGE (ASS)	876
SOUPAPE DE NEUTRALISATION DE DIRECTION (ASS)	919
SOUPAPE DE NEUTRALISATION DE DIRECTION (ASS)	876
SOUPAPE DE PRIORITÉ DE CONVERTISSEUR DE COUPLE (ASS)	664

INDEX

Désignation	Page
SOUPAPE DE REGULATION DE DEBIT (ASS)	883, 884, 885, 886
SOUPAPE ET MONTAGE - COMMANDE DE FREIN (ASS)	808
SOUPAPE ET MONTAGE - EMBRAYAGE DE VERROUILLAGE (ASS)	651
SOUPAPE ET MONTAGE - EMBRAYAGE DE VERROUILLAGE (ASS)	652
SOUPAPE ET MONTAGE - POMPE À CYLINDRE VARIABLE (ASS)	1069, 1070
SOUPAPE ET MONTAGE - VENTILATEUR HYDRAULIQUE (ASS)	1062
SOUPAPE ET MONTAGE-COMMANDE DE VITESSE DE VENTILATEUR (ASS)	1060
SOUPAPE PILOTE (ASS)	818, 887
SOUPAPE PILOTE (ASS) (DIRECTION)	820
SOUPAPE RÉDUCTRICE DE PRESSION (ASS)	908, 1072
SOUPAPE RÉDUCTRICE DE PRESSION (ASS)	904
SOUPAPE RÉDUCTRICE DE PRESSION (ASS) (DIRECTION)	912, 916
SOUPAPE RÉGULATRICE DE PRESSION ET DÉBIT	890, 892, 1086
SOUPAPE SÉLECTRICE (ASS)	659
SOUPAPE SÉLECTRICE (ASS) (BOÎTE DE VITESSES)	666
SOUPAPE SELECTRICE ET REGULATRICE DE PRESSION	660, 901
SUPPORT - CACHE-SOUPAPES (ASS)	9
SUPPORT DE COMMANDE DE DIRECTION (ASS)	1402, 1406
SUPPORT DE COMMANDE HYDRAULIQUE (ASS)	1390
SUPPORT DE COMMANDE HYDRAULIQUE (ASS)	1394, 1398
SUPPORT DE MOTEUR (ASS)	69, 70
SUPPORT DE PLAQUE D'USURE	1167
SUPPORT DE SIÈGE (ASS)	1401
SUPPORT DE TRANSMISSION (ASS)	604
SUPPORTS D'ADMISSION D'AIR (ASS)	753, 754
SYSTEME DE GESTION D'INFORMATION VITALE (VERSION)	1421
SYSTÈME VIDS (VERSION)	1420

T

Désignation	Page
TABLEAU - CAISSON (ASS)	750
TABLEAU DE BORD (ASS)	1342, 1344, 1346
TABLEAU DE BORD (ASS)	1340
TAMIS D'ASPIRATION	545
TAMIS DE FILTRE	1422, 1423
TAMIS DE RÉSERVOIR DE CARBURANT	228
TAPIS DE PLANCHER	1312
THERMOCOUPLE (ASS)	372
THERMOSTAT	103
THERMOSTAT ET BOITIER (ASS)	103
TOIT ROPS (ASS)	1359
TRAINS PLANÉTAIRES - CARTER ET PIÈCES	482
TRANSFORMATEUR DE PUISSANCE (24 VOLTS À 12 VOLTS)	1304
TRANSMISSION (VERSION)	589
TURBOCOMPRESSEUR - CARTOUCHE (ASS)	172, 176
TURBOCOMPRESSEUR (ASS)	170, 171, 172, 173, 174, 175, 176

V

Désignation	Page
VANNE PILOTE (ASS)	902, 1097
VANNE PILOTE (ASS) (RÉPARTITEUR)	904
VENTILATEUR ASPIRANT (ASS)	102
VERIN DE DIRECTION (ASS)	824
VERIN DE DIRECTION ET MONTAGE (ASS)	822
VÉRIN DE LEVAGE (ASS)	960, 962, 964, 966, 968, 970
VÉRIN D'INCLINAISON (ASS)	972
VERROUILLAGE DE COMMANDE STIC	568, 570, 572

INDEX

Désignation	Page	Désignation	Page
VERROUILLAGE DE CONVERTISSEUR DE COUPLE (VERSION)	631		
VERSION DE CHASSIS	1		
VERSION DE PARE-CHOCS ARRIÈRE	673		
	674		
	675		
	676		
VERSION ÉLECTRIQUE	258		
VERSION HYDRAULIQUE	974		
VERSION NORMALE	2		
VILEBREQUIN (ASS)	19		
	20		
VOLANT MOTEUR (ASS)	49		

INDICE

Nombre	Página
A	
ABRAZADERA DE FUNDA	356
ACCESORIOS - IMPULSOR DE (GR)	43
	44
	46
ACCIONADOR DE BOMBA DE PISTONES (GR)	812
	813
	814
	815
ACCIONADOR DE CONTROL PILOTO (GR)	921
ACONDICIONADOR DE AIRE (CONFIG)	1251
ACONDICIONADOR DE AIRE (GR)	1252
ACUMULADOR DE CONTROL DE AMORTIGUACION (GR)	920
ACUMULADOR DEL FRENO (GR)	755
	756
ACUMULADOR DEL REFRIGERANTE Y MONTAJE (GR)	1250
ADAPTADOR CENTRAL	1155
	1156
ADAPTADOR-COSTADO IZQUIERDO	1157
	1158
	1159
ADAPTADOR DE LLENADO RÁPIDO DE COMBUSTIBLE (GR)	178
	180
	182
ADAPTADOR DER	1160
	1161
AGUA - CONEXIÓN DE (GR)	99
AGUA DE LAS CAMISAS - CALENTADOR DEL (GR)	299
AGUA DE LAS CAMISAS - CALENTADOR DEL (GR)	298
AIRE - TUBERÍAS DE (GR)	152
	154
ALARMA DE RETROCESO (CONJ)	373
ALARMA (GR)	233
	1340
ALARMA (GR) (ACCIONAMIENTO)	1342
	1344
ALFOMBRILLA DEL PISO	1312
AMORTIGUADOR DE VIBRACIONES (GR)	42
ANILLO RETEN	184
	976
ANTEFILTRO (GR)	165
ÁRBOL DE LEVAS (GR)	10
	11
ARO DESMONTABLE (GR)	595
ARO Y RUEDA	605
	606
	607
	608
	609
	610
	611
	612
	613
	614
	615
	616
	617
ARRANQUE - INTERRUPTOR DE (GR)	370
ARRANQUE - INTERRUPTOR DE (GR) (LLAVE)	1346
ASIENTO CON SUSPENSIÓN (GR)	1410
	1414
	1418
ASIENTO (GR)	1366
	1368
	1369
	1370
	1372
	1376
	1379
	1380
	1382
AUXILIAR DE ARRANQUE CON ÉTER (GR)	351
	352
	353
B	
BARRA DE TIRO (GR)	679
BASE DE LA PLANCHA DE DESGASTE	1167
BASE DE LA TAPA DE VÁLVULAS (GR)	9
BASTIDOR DEL CARGADOR (CONJ)	692
	694
	696
	698
BASTIDOR DEL CARGADOR (GR)	701
BASTIDOR TRASERO (CONJ)	699
	700
BATERÍA (RELOJ)	252
	257
BATERÍA Y CABLES (GR)	236
BATERÍA (12 VOLTIOS/SECO)	236
BLOQUE DE EMPALME (CONJ)	236
BLOQUE DESLIZANTE-JUEGO	1366
	1376
	1383
	1384
	1385
	1386
BLOQUE DESLIZANTE-JUEGO (INCL BLOQUES Y PERNO)	1372
BLOQUE HIDRÁULICO (GR)	816
BLOQUE HIDRÁULICO (GR)	479

INDICE

Nombre	Página
	480
BLOQUE MOTOR (CONJ)	21
	22
BLOQUE MOTOR (GR)	24
	26
	28
BOCINA (CONJ) (24 VOLTIOS)	1303
BOCINA ELÉCTRICA (GR)	1302
	1303
BOMBA DE ACEITE DEL MOTOR (GR)	96
	97
BOMBA DE AGUA (GR)	134
	135
	136
	137
BOMBA DE BARRIDO (GR)	98
BOMBA DE CEBADO DE COMBUSTIBLE (GR)	213
	214
BOMBA DE ENGRANAJES (GR)	862
	864
BOMBA DE ENGRANAJES (GR)	590
BOMBA DE INYECCIÓN UNITARIA (GR)	222
	223
	224
	225
BOMBA DE LA TRANSMISIÓN (GR)	591
	592
BOMBA DE PISTONES (GR)	804
	866
	868
	870
	1036
	1038
BOMBA DE PISTONES (GR)	1040
	1042
BOMBA DE PISTONES (GR)	802
BOMBA DE PISTONES (GR) (DESPLAZAMIENTO FIJO DE IMPLEMENTO)	996
	1002
BOMBA DE SUMIDERO Y TUBERÍAS (GR)	95
BOMBA DE TRANSFERENCIA DE COMBUSTIBLE (GR)	216
	218
	219
	220
BRIDA	64

C

CABINA (CONFIG)	1261
	1262
CABINA (GR)	1264
	1266
CABINA Y PLATAFORMA (GR)	1260
CABLE DE ENCHUFE DEL CALENTADOR	298
CABLES DE LA CABINA (GR)	376
	380
CABLES DE LA MÁQUINA (GR)	412
CABLES DE LA MÁQUINA (GR)	406
CABLES DE PARADA DE EMERGENCIA (GR)	439
CABLES DE PARADA DE EMERGENCIA (GR)	438
CABLES DEL MONITOR DEL SIST DE ADMIN DE INFO VIT (GR)	460
CABLES DEL MONITOR DEL SIST DE ADMIN DE INFO VIT (GR)	466
CABLES DEL MONITOR DEL SISTEMA VIDS (GR)	440
	446
CABLES DEL MOTOR (GR)	386
CABLES DEL MOTOR (GR)	390
	394
CABLES DEL MOTOR (GR)	382
	398
CABLES DEL PARAGOLPES (GR)	374
CABLES DEL SISTEMA VIMS (GR)	452
	456
CABLES DEL TREN DE FUERZA (GR)	420
	424
	428
	432
CABLES DEL TREN DE FUERZA (GR)	416
CABLES DELANTEROS (GR)	402
CABLES POSTERIORES (GR)	436
CADENA - LADO DERECHO	1390
	1394
CAJA DE ALMACENAMIENTO	1256
	1258
CAJA DELANTERA (GR)	58
CAJA Y ENGRANAJE DE TRANSFERENCIA DE SALIDA (GR)	544
CAJA Y PIEZAS DE LOS PLANETARIOS	482
CALCOMANÍA	248
CALCOMANÍA DE ADVERTENCIA	441
	447
	461
	467
CALCOMANÍA DE ADVERTENCIA (AGUA ADENTRO/AGUA AFUERA)	1252
CALCOMANÍA DE ADVERTENCIA (ASIENTO AJUSTABLE)	1414
CALCOMANÍA DE IDENTIFICACIÓN	252
	440
	441
	446
	447
	460

INDICE

Nombre	Página
	461
	466
	467
	933
	937
	941
CALCOMANÍA DE IDENTIFICACIÓN (MODULO PRINCIPAL DEL VIMS/VIDS)	257
CALCOMANÍA DE IDENTIFICACIÓN (REFRIGERANTE DE VIDA UTIL EXTENDIDA)	1446
CALCOMANÍA DE IDENTIFICACIÓN (VIDS/VIMS)(MODULO DE INTERFAZ)	319
CALCOMANÍA DEL TABLERO	1346
	1430
CALCOMANIA DEL TABLERO DE INSTRUMENTOS	1340
	1342
	1344
CALCOMANÍAS Y PLACAS DE IDENTIFICACIÓN (GR)	1446
	1447
CALENTADOR DE COMBUSTIBLE	291
	292
CALENTADOR DEL COMBUSTIBLE (GR)	294
	296
CAMBIO RÁPIDO DE ACEITE (GR)	94
CÁNCAMOS DE LEVANTAMIENTO DEL MOTOR (GR)	59
CANDADO (GR)	182
	194
	228
	292
	718
	722
	726
	748
	959
	1448
CAPO Y PROTECTOR (GR)	710
	714
	718
	722
	726
CARGA - ALTERNADOR DE (GR)	234
CÁRTER - COLECTOR DEL (GR)	62
	64
CÁRTER - PROTECTOR DEL (GR)	702
CENICERO	1390
	1394
	1398
CHASIS (CONFIG)	1
CIGÜEÑAL (GR)	19
	20
CILINDRO DE DIRECCIÓN (GR)	824
CILINDRO DE DIRECCIÓN Y MONTAJE (GR)	822
CILINDRO DE ÉTER (CONJ)	352
CILINDRO DE LEVANTAMIENTO - TUBERÍAS DEL (GR)	1026
	1028
	1030
CILINDRO DE LEVANTAMIENTO (GR)	960
	962
	964
	966
	968
	970
CINTURÓN DE SEGURIDAD (GR)	1382
CINTURÓN DE SEGURIDAD (GR)	1363
	1364
	1365
CINTURÓN DE SEGURIDAD (GR) (RETRACTIL)	1379
COLADOR (CONJ)	1054
	1058
COLADOR DE COMBUSTIBLE	230
COLADOR DEL TANQUE DE COMBUSTIBLE	228
COMBUSTIBLE - TANQUE DE (GR)	228
	230
COMBUSTIBLE - TANQUE DE (GR)	232
COMBUSTIBLE-LLENADO CONVENCIONAL (CONFIG)	194
COMBUSTIBLE-LLENADO CONVENCIONAL (CONFIG)	186
COMBUSTIBLE-LLENADO CONVENCIONAL (CONFIG)	188
	190
	192
COMPARTIMIENTO DEL OPERADOR (CONFIG)	1333
COMPARTIMIENTO DEL TANQUE HIDRÁULICO (GR)	680
	681
	682
	683
	684
	685
	686
	688
COMPRESOR DE REFRIGERANTE (GR)	1272
	1273
	1274
	1275
	1276
	1278
	1280
COMPRESOR DE REFRIGERANTE Y GRUPO DE MONTAJE	4
	1268
	1270

INDICE

Nombre	Página
CONDENSADOR DEL REFRIGERANTE Y MONTAJE (GR)	1282
CONDUCTO DE AIRE (GR)	1294
CONEXIÓN	476
CONEXION (CONJ) (DESCONEXION RAPIDA)	1062
CONEXIÓN DE ENGRASE	740
	744
CONEXIÓN DE ENGRASE (ROSCA DE 1/8-27)	598
	742
CONFIGURACIÓN COMÚN	2
CONFIGURACIÓN DE INSTALACIÓN DEL MOTOR	7
CONFIGURACIÓN DE MOTORES	4
CONFIGURACIÓN ELÉCTRICA	258
CONFIGURACIÓN VIMS	1421
CONTROL DE AMORTIGUACIÓN (CONFIG)	930
CONTROL DE DESPLAZAMIENTO Y TUBERÍAS (GR)	922
	926
CONTROL DE DIRECCIÓN (GR)	818
CONTROL DE DIRECCIÓN (GR)	820
CONTROL DE LA BOMBA (GR)	817
CONTROL DE LA PALANCA (GR)	484
	485
	486
	487
CONTROL DE LA PALANCA (GR)	488
	490
CONTROL DEL CUCHARÓN (GR)	1104
	1105
	1106
	1108
	1110
	1112
	1113
	1114
	1116
CONTROL DEL FRENO DE ESTACIONAMIENTO	771
CONTROL DEL PEDAL DE FRENO (GR)	766
CONTROL DEL PEDAL DE FRENO (GR)	768
CONTROL ELECTRÓNICO DE CLASIFICACIÓN DE MOTOR (GR)	243
	244
	245
	246
	247
CONTROL ELECTRÓNICO DEL MOTOR (GR)	248
	249
	250
	251
CONTROL ELECTRÓNICO DEL MOTOR Y MONTAJE	241
	242
CONTROL ELECTRÓNICO HIDRÁULICO (GR)	950
CONTROL ELECTRÓNICO HIDRÁULICO (GR)	932
CONTROL ELECTRÓNICO HIDRÁULICO (GR)	936
	940
	944
CONTROL HIDRÁULICO DE LA TRANSMISIÓN (GR)	492
CONTROL NO PROGRAMADO (GR)	254
	255
	256
	257
CONTROL NO PROGRAMADO (GR)	252
CONTROL NO PROGRAMADO (GR)	253
CONTROL NO PROGRAMADO (GR) (IMPLEMENTO)	446
	466
CONVERSIÓN DE JUEGO DE LÁMPARA (24V)	369
	932
	936
	940
	1304
	1346
	1347
CONVERTIDOR DE PAR CON DESCONEXIÓN (CONFIG)	631
CONVERTIDOR DE PAR (CONFIG))	630
CONVERTIDOR DE PAR (GR)	632
	636
CONVERTIDOR DE PAR Y CAJA (GR)	618
	622
	626
	628
CONVERTIDOR DE VOLTAJE (24 VOLTIOS A 12 VOLTIOS)	1304
CORREA TRAPEZOIDAL	60
	1268
	1270
CRUCETA Y COJINETE (GR)	603
CUBIERTA INFERIOR DEL ASIENTO DEL OPERADOR (GR)	1338
	1339
CUBIERTA INFERIOR DEL ASIENTO DEL OPERADOR (GR)	1336
CUBIERTA INFERIOR DEL ASIENTO DEL OPERADOR (GR) (PARTE INFERIOR)	1366
CUBIERTA INFERIOR DEL ASIENTO DEL OPERADOR (GR) (PARTE TRASERA)	1366
CUCHARÓN PARA ROCA (CONJ)	1168

INDICE

Nombre	Página
	1170
	1172
	1174
	1176
	1178
	1180
CUCHARÓN PARA ROCA (GR)	1182
	1183
	1184
	1185
	1186
	1187
	1188
	1189
	1190
	1191
	1192
CUCHILLA (GR)	1195
	1196
CULATA DE CILINDROS - TORNILLERÍA DE LA (GR)	38
CULATA DE CILINDROS (CONJ)	29
	30
	31
	32
	33
	34
	35
CULATA DE CILINDROS (GR)	39
	40
	41
CULATA DE CILINDROS (GR)	36
	37
	38

D

DETECTOR DE POSICIÓN (SISTEMA DE COMBUST.) (GR)	321
	322
	323
	324
	325
	326
	327
DETECTOR DE POSICIÓN (SISTEMA DE COMBUST.) (GR) (EMBRAGUE DEL RODETE DEL CONVERTIDOR DE PAR)	766
DETECTOR DE POSICIÓN (SISTEMA DE COMBUST.) (GR) (INCLINACIÓN)	980
	984
	988
	992
DETECTOR DE POSICIÓN (SISTEMA DE COMBUST.) (GR) (LEVANTAMIENTO)	976
	978
DETECTOR DE POSICIÓN (SISTEMA DE COMBUST.) (GR) (SIN RESORTE) (PALANCA DE CONTROL)	932
	936
	940
	945
	951
DIFERENCIAL (GR)	526
DIFERENCIAL Y CORONA (GR)	522
	524
DIRECCIÓN (CONFIG)	872
	873
DISYUNTOR (CONJ) (10 A) (ARRANQUE CON LLAVE)	441
	447
	461
	467
DISYUNTOR (CONJ) (105 AMP) (ALTERNADOR)	461
	467
DISYUNTOR (CONJ) (105 AMP) (ALTERNADOR PRINCIPAL)	447
DISYUNTOR (CONJ) (105 AMP) (ALTERNADOR Y PRINCIPAL)	440
DISYUNTOR (CONJ) (105 AMP) (PRINCIPAL)	467
DISYUNTOR (CONJ) (15 A) (ECM (MÓDULO DE CONTROL ELECTRÓNICO) DEL MOTOR)	441
	447
	461
	467
DISYUNTOR (CONJ) (15 A) (LUCES DE TRABAJO)	441
	447
	461
	467
DISYUNTOR (GR)	365
DISYUNTOR (GR) (BATERÍA)	237

E

EJE - GRUPO DE MONTAJE	574
EJE DE MANDO DE ENTRADA (GR)	600
EJE DE MANDO (GR)	598
EJE DE MANDO (GR)	596
EJE FIJO (CONFIG)	471
EJE FIJO (GR)	474
EJE OSCILANTE (CONFIG)	472
EJE OSCILANTE (GR)	476
ELECTRONICA DE MONITOR (GR)	261
	262
	263
	264
	265
	266

INDICE

Nombre	Página
	267
	268
	269
	270
	271
	272
	273
	274
	275
	276
	277
	278
	279
	280
	281
	282
	283
	284
	285
	286
	287
	288
ELEMENTO DE FILTRO	753
	754
ELEMENTO DE FILTRO DE ACEITE (CONJ) (HIDRAULICO)	536
ELEMENTO DE FILTRO (TREN DE FUERZA)	539
ELEMENTO DEL CALENTADOR DEL AGUA DE LAS CAMISAS (120 VOLTIOS, 1500 VATIOS)	298
ELEMENTO DEL CALENTADOR DEL AGUA DE LAS CAMISAS (240 VOLTIOS, 1500 VATIOS)	299
ELEMENTO DEL FILTRO DE COMBUSTIBLE (PRIMARIO)	184
ELEMENTO DEL FILTRO HIDRÁULICO (CONJ) (TREN DE FUERZA)	538
ELEMENTO PRIMARIO (CONJ)	150
ELEMENTO SECUNDARIO (CONJ)	150
EMPAQUETADURA	184
ENCENDEDOR (CONJ) (CIGARRO)(24 VOLTIOS)	1390
	1394
	1398
ENFRIADOR DE ACEITE DEL EJE (GR)	494
	498
	502
	508
	514
ENFRIADOR DE ACEITE DEL MOTOR (GR)	100
ENFRIADOR DEL ACEITE HIDRAULICO (GR)	956
	958
ENGANCHE ARTICULADO (GR)	708
ENGRANAJE DE TRANSFERENCIA DE ENTRADA (GR)	548
ENGRANAJE DELANTERO (GR)	50
ENGRANAJE TRASERO (GR)	52
EQUILIBRADOR (GR)	8
ESCALERILLA (GR)	730
	734
	738
ESCAPE DE GASES (GR)	82
ESCOBILLA (CONJ)	356
	360
ESLABON DE CUCHARON Y PLUMA	1132
	1133
	1134
	1135
ESLABON DEL CUCHARON (GR)	1126
	1127
	1128
	1130
ESPEJO (GR)	1323
	1324
ESTRIBO DEL OPERADOR (GR)	752
ESTRUCTURA ROPS (GR)	1359
ETIQUETA DE ADVERTENCIA (GR)	1444
EXTENSIÓN DE DRENAJE (GR)	48
EXTENSIÓN DEL RESPALDO (GR)	1296
EXTENSIÓN DEL RESPALDO (GR) (TELA)	1382

F

FILTRO	540
FILTRO DE ACEITE (CONJ)	828
FILTRO DE ACEITE DEL MOTOR (CONJ)	78
	80
FILTRO DE ACEITE DEL MOTOR (GR)	80
FILTRO DE ACEITE DEL MOTOR (GR)	78
FILTRO DE ACEITE (GR)	536
	538
	539
	540
	541
	828
FILTRO DE AGUA	136
FILTRO DE AGUA (BOMBA DE AGUA)	137
FILTRO DE AIRE	1264
	1297
	1298
FILTRO DE AIRE (CONJ)	178
	180
	190
FILTRO DE AIRE DE LA CABINA (GR)	1297
	1298
FILTRO DE AIRE (GR)	146
	148
	150

INDICE

Nombre	Página
FILTRO DE COMBUSTIBLE (CONJ) (SECUNDARIO(A))	184
FILTRO DE COMBUSTIBLE (GR)	184
FILTRO HIDRÁULICO (CONJ)	541
FILTRO Y EMPAQUETADURA (CONJ)	352
FILTRO Y MONTAJE DEL TREN DE FUERZA (GR)	530 532 534
FILTRO Y TUBERIAS DE DIRECCION (GR)	826 827
FILTRO Y TUBERIAS DEL FRENO (GR)	798
FRENO DE ESTACIONAMIENTO (GR)	758 760
FRENO DE SERVICIO - CONTROL (GR)	772 778 784 792
FRENO DE SERVICIO (GR)	762 764
FUSIBLE (10 A)	440 446 460 466
FUSIBLE (15 A)	440 446 460 466
FUSIBLE (20 A)	440 446 460 466

G

Nombre	Página
GRUPO DE PROTECCIÓN CONTRA EL VANDALISMO	527 528 1448
GRUPO DE ROTACIÓN DEL MOTOR (GR)	1044 1046
GRUPO ELECTRONICO DE CLASIFICACION DE MOTORES	259
GRUPO GIRATORIO DE BOMBA	805 806 1048
GUARDABARROS DELANTERO (GR)	689

H

Nombre	Página
HIDRÁULICA (CONFIG)	974
HOJA DE LIMPIAPARABRISAS (CONJ)	1432
HOJA DE LIMPIAPARABRISAS (CONJ)	1430
HOJA DE LIMPIAPARABRISAS (CONJ) (FRENTE)	1424 1426 1428
HOJA DE LIMPIAPARABRISAS (CONJ) (PARTE TRASERA)	1424 1426 1428

I

Nombre	Página
IMPLEMENTOS (GR ELECTRÓNICO)	260
INCLINACIÓN HORIZONTAL - CILINDRO DE (GR)	972
INDICADOR DE NIVEL DE LÍQUIDO	143
INDICADOR DE NIVEL LIQUIDO(CONJ)	1054 1058
INDICADOR DEL NIVEL DE ACEITE (VARILLA) (GR)	83
INSTALACIÓN DE RADIO (GR)	1304 1306
INTERRUPTOR (CONJ)	1346 1347
INTERRUPTOR (CONJ) (AJUSTE DE TRABA DE ACELERACION)	932 936 940 944 950
INTERRUPTOR (CONJ) (ALMACENAMIENTO DE CONTROL DE CARGA UTIL)	380
INTERRUPTOR (CONJ) (BOCINA)	932 936 940
INTERRUPTOR (CONJ) (LUZ PARA MAPAS)	1304
INTERRUPTOR (CONJ) (REDUCIDA - MAXIMA FUERZA DE TRACCION DE LAS RUEDAS)	932 936 940
INTERRUPTOR (CONJ) (RESUMICION DEL AJUSTE DE LA TRABA DE ACELERACION)	933 937
INTERRUPTOR DE DERIVACIÓN	363
INTERRUPTOR DE DERIVACIÓN (FILTRO DEL ACEITE DE TRANSMISION)	407 412
INTERRUPTOR DE FLUJO DE REFRIGERANTE (GR)	364
INTERRUPTOR DE FLUJO (GR)	366
INTERRUPTOR DE LÍMITE (CONJ)	768
INTERRUPTOR DE LÍMITE (CONJ)	766
INTERRUPTOR DE LÍMITE (CONJ) (FRENO DE ESTACIONAMIENTO)	808
INTERRUPTOR DE LÍMITE (CONJ) (LUZ DE PARADA)	766

INDICE

Nombre	Página
	768
INTERRUPTOR DE LÍMITE (CONJ) (TRABA DEL CONTROL STIC)	568
INTERRUPTOR DE NIVEL DE LIQUIDO (GR)	367
INTERRUPTOR DE NIVEL DE LIQUIDO (GR) (ACEITE DEL MOTOR)	456
INTERRUPTOR DE NIVEL DE LIQUIDO (GR) (TANQUE HIDRÁULICO)	456
INTERRUPTOR DE NIVEL DE LIQUIDO (GR) (TANQUE HIDRAULICO DE DIRECCION/FRENO)	456
INTERRUPTOR DE PRESIÓN (CONJ) (DERIVACION DEL FILTRO HIDRAULICO)	828
INTERRUPTOR DE PRESIÓN (CONJ) (DIRECCION PRINCIPAL)	830
	832
	836
INTERRUPTOR DE PRESIÓN (CONJ) (FILTRO DE COMBUSTIBLE)	452
	456
INTERRUPTOR DE PRESIÓN (CONJ) (REFRIGERANTE)	382
	386
	390
	394
	398
INTERRUPTOR DE VOLQUETE (CONJ)	1346
INTERRUPTOR DE VOLQUETE (CONJ) (AUXILIAR DE ARRANQUE)	1346
INTERRUPTOR DE VOLQUETE (CONJ) (CONTROL DE AMORT.)	930
INTERRUPTOR DE VOLQUETE (CONJ) (ILUMINADO CON 24 VOLTIOS) (IMPLEMENTO DE LA TRABA)	932
	936
	940
INTERRUPTOR DE VOLQUETE (GR)	369
INTERRUPTOR DE VOLQUETE (LUZ DE ACCESO A LA ESCALERA)	438
	439
INTERRUPTOR DE VOLQUETE (PARADA DEL MOTOR AL NIVEL DE PISO)	439
INTERRUPTOR DEL LIMPIADOR (GR)	371
INTERRUPTOR DEL LIMPIADOR (GR) (24 VOLTIOS)	1346
INTERRUPTOR DEL TERMOSTATO (CONJ)	1252
INTERRUPTOR MAGNÉTICO (CONJ)	446
INTERRUPTOR MAGNÉTICO (CONJ) (RELÉ DE FUERZA PRINCIPAL)	441
	460
	466
INTERRUPTOR MAGNÉTICO (CONJ) (RELE DE REFLECTOR)	460
	466
INTERRUPTOR MAGNÉTICO (CONJ) (RELÉ DE REFLECTOR)	440
INTERRUPTOR MAGNÉTICO (GR)	441
INTERRUPTOR MAGNÉTICO (GR)	368
INTERRUPTOR MAGNÉTICO (GR) (RELÉ DE ARRANQUE)	461
	467
INTERRUPTOR MAGNÉTICO (GR) (RELES DE ARRANQUE)	447
INTERRUPTOR ROTATIVO (CONJ) (FUERZA DE TRACCIÓN REDUCIDA)	1347
INTERRUPTOR ROTATIVO (CONJ) (LIIMPIA/LAVAPARABRISAS)(TRASERO) (LIMPIAPARABRISAS TRASERO)	1346
INTERRUPTOR ROTATIVO (CONJ) (LIMPIADOR Y LAVADOR) (APAGADO/ENCENDIDO)	1430
	1432
INTERRUPTOR ROTATIVO (CONJ) (VELOCIDAD DEL VENTILADOR)	1346
INYECTOR DE COMBUSTIBLE (GR)	199
	200
	201

J

Nombre	Página
JUEGO DE AJUSTE DEL ASIENTO (PARTE INFERIOR)	1336
JUEGO DE AJUSTE DEL ASIENTO (SOPORTE INFERIOR DE ASIENTO)	1339
JUEGO DE AMORTIGUADOR (RESPALDO DE TELA)	1296
JUEGO DE ATADURA	1410
	1414
	1418
JUEGO DE BOTÓN DEL ASIENTO	1366
	1372
	1376
JUEGO DE CAJA	1410
JUEGO DE CALCE DE EJE (17 CALCES)	1038
JUEGO DE COJÍN DEL ASIENTO	1372
	1376
JUEGO DE COJÍN DEL ASIENTO (TELA)	1366
JUEGO DE COJINETES DE LA TRANSMISIÓN	550
JUEGO DE COMPRESOR	1410
JUEGO DE CONTROL DE PISTÓN	1038
JUEGO DE EMPAQUETADURA (INYECTOR DE COMBUSTIBLE SENCILLO)	5
JUEGO DE EMPAQUETADURA (UNA SOLA CAMISA DE CILINDRO)	5
JUEGO DE ENCHUFE (12 PASADORES)	374
	402
	406
	436

INDICE

Nombre	Página
	1347
	1390
	1394
	1398
JUEGO DE ENCHUFE (2 CLAVIJAS)	240
	312
	314
	374
	402
	406
	407
	416
	420
	424
	428
	432
	436
	662
	766
	768
	922
	926
	932
	940
	944
	950
	1253
	1347
JUEGO DE ENCHUFE (3 CLAVIJAS)	328
	329
	334
	336
	337
	338
	340
	341
	342
	343
	344
	345
	346
	347
	374
	402
	406
	416
	420
	424
	428
	432
	436
	766
	768
	932
	933
	936
	937
	940
	941
	944
	950
	980
	984
	988
	992
	1347
	1390
	1394
	1398
JUEGO DE ENCHUFE (4 PASADORES)	312
	402
	406
	818
	820
	932
	936
	940
	944
	950
	1253
	1347
JUEGO DE ENCHUFE (4 PASADORES) (LAVADOR/LIMPIADOR)	1423
JUEGO DE ENCHUFE (6 PASADORES)	374
	1253
	1304
	1347
	1430
	1432
JUEGO DE ENCHUFE (8 PASADORES)	416
	420
	424
	428
	432
	818
	820
	932
	936
	940
	944
	950
	1347
	1390
	1394
	1398
	1430
	1432
JUEGO DE FILTRO DE TAPA	186
JUEGO DE INCLINACIÓN DE ASIENTO	1336
	1339

INDICE

Nombre	Página
JUEGO DE INCLINACIÓN TRASERA	1336
	1339
JUEGO DE MAZO DE CABLES	1410
	1414
	1418
JUEGO DE PANEL DEL RESPALDO DEL ASIENTO	1366
	1372
	1376
JUEGO DE PASADOR DE PEDAL	1350
JUEGO DE PERNO RETENEDOR	251
	253
	254
	255
	256
JUEGO DE PISTÓN	1038
JUEGO DE RECEPTÁCULO (12 PASADORES)	402
	406
	436
	818
	820
	932
	936
	940
	944
	950
	1304
	1391
	1395
	1398
JUEGO DE RECEPTÁCULO (2 CLAVIJAS)	233
	309
	348
	349
	352
	364
	366
	367
	368
	373
	394
	395
	398
	399
	402
	406
	407
	416
	420
	424
	428
	432
	436
	446
	447
	461
	467
	654
	657
	666
	828
	921
	936
	940
	945
	951
	1098
	1099
	1100
	1101
	1252
	1272
	1273
	1276
	1410
	1414
JUEGO DE RECEPTÁCULO (2 CLAVIJAS) (MODULO DE MENSAJE)	1327
JUEGO DE RECEPTÁCULO (2 CLAVIJAS) (REFLECTOR)	304
JUEGO DE RECEPTÁCULO (3 CLAVIJAS)	240
	306
	307
	308
	320
	321
	322
	323
	324
	325
	326
	327
	331
	332
	333
	339
	376
	380
	390
	394
	398
	402
	406
	416
	420
	424
	428
	432
	655

INDICE

Nombre	Página
	808
	830
	832
	836
	932
	936
	937
	940
	941
	944
	950
	1342
	1344
	1347
	1391
	1395
	1398
JUEGO DE RECEPTÁCULO (3 CLAVIJAS) (LÁMPARA DEL TECHO)	300
JUEGO DE RECEPTÁCULO (4 PASADORES)	312
	402
	407
	568
	808
	945
	951
	1328
	1347
JUEGO DE RECEPTÁCULO (6 PASADORES)	374
	407
	1253
	1329
	1330
	1331
	1340
	1342
	1344
	1347
	1428
	1434
	1436
JUEGO DE RECEPTÁCULO (6 PASADORES) (MODULO DE MENSAJE)	1326
	1327
JUEGO DE RECEPTÁCULO (8 PASADORES)	371
	406
	487
	488
	490
	932
	936
	940
	944
	950
	1347
	1391
	1395
	1398
JUEGO DE REGULADOR	202
JUEGO DE RESORTES (AIRE)	1410
JUEGO DE RESPIRADERO	178
	180
	182
	190
	192
JUEGO DE RODILLO	1350
	1410
	1414
	1418
JUEGO DE SELLO DE BOMBA	802
	804
JUEGO DE SELLOS	590
	601
	602
	755
	756
	810
	862
	895
	904
	908
	912
	916
	960
	962
	964
	1060
	1072
	1100
	1101
JUEGO DE SELLOS (RADIADOR/SOLENOIDE DE BOMBA DE VENTILADOR DE ENFRIAM. HIDRAULICO)	1099
JUEGO DE SELLOS (VALVULA DE SOLENOIDE)	1098
JUEGO DE SENSOR DE DIAL	228
	230
JUEGO DE TERMINAL	357
	361
JUEGO DE TERMINAL DE ALTERNADOR	234
JUEGO DE TERMINAL DE RELÉ (ALTERNADOR)	234
JUEGO DE TORNILLERÍA	1410
JUEGO DE TORNILLERÍA (SUSPENSION DE ASIENTO)	1414
	1418
JUEGO DE VÁLVULA DE ALIVIO	590
JUNTA DEL COLECTOR DEL CARTER	64
JUNTA DESLIZANTE (GR)	601
	602

INDICE

Nombre	Página
JUNTA UNIVERSAL (GR)	648 649 650

L

Nombre	Página
LÁMPARA	306 1304
LÁMPARA DE FARO DELANTERO (GR)	305
LÁMPARA DE FARO DELANTERO (GR) (LUZ BAJA)	312
LÁMPARA DEL TECHO (GR)	300
LÁMPARA DEL TECHO (GR) (24 VOLTIOS)(CON INTERRUPTOR)	1264
LÁMPARA MINIATURA (28 VOLTIOS)	376
LÁMPARA (24 VOLTIOS)	307 309 1346
LÁMPARA (24 VOLTIOS)(65 VATIOS)	301 302 303 304
LÁMPARA (24 VOLTIOS)(65 VATIOS) (DELANTERA)	305
LÁMPARA (28 VOLTIOS)	376
LÁMPARA (28 VOLTIOS) (CÚPULA)	300
LAVAPARABRISAS DE LA VENTANA (GR)	1422 1423
LENTE AZUL	309
LENTE DE LAMPARA DEL TECHO	300
LENTE-ROJO	307
LEVANTAMIENTO ALTO (CONFIG)	1118 1119 1120 1121
LEVANTAMIENTO ESTÁNDAR (CONFIG)	1122 1123 1124 1125
LIMPIA Y LAVAPARABRISAS (GR)	1262 1424 1426 1428 1430 1432
LIMPIAPARABRISAS DE LA VENTANA (GR)	1436 1438 1440
LIMPIAPARABRISAS DE LA VENTANA (GR)	1434
LLANTA (CONFIG)	594
LLAVE	182 194 228 292 718 722 726 748 1448
LLAVE (DESCONECTAR BATERIA)	365
LLENADO RÁPIDO DE COMBUSTIBLE (CONFIG)	196 197 198
LUCES DE PARADA (GR)	316 317 318
LUCES DE REFLECTOR (GR)	310
LUCES DELANTERAS (GR)	312
LUCES TRASERAS (GR)	314
LUZ DE SEÑAL DE GIRO (GR)	306
LUZ DE SEÑAL DE GIRO (GR)	307 308
LUZ DE SEÑAL DE GIRO (GR) (PARADA/TRASERA)	318
LUZ DEL MAPA	1304
LUZ INDIC DE SERV DEL SIST VIMS (GR)	309

M

Nombre	Página
MAMPARA ANTITÉRMICA (GR)	690
MANDOS FINALES, RUEDA Y FRENO (GR)	670 671
MANGUERA	114
MANGUITO	182 194 228 292 718 722 726 748
MANIJA (AJUSTE DE INCLINACION)	1351 1352
MANIJA (AJUSTE DESLIZANTE)	1351 1352
MAZO DE CABLES DE DIRECCION (CONJ) (CONTROL DE STIC)	818 820
MECANISMO DE VÁLVULAS (GR)	72 74
MEDIDOR DEL NIVEL DE LÍQUIDO (GR)	542
MODULO CENTRAL DE MENSAJES(GR)	1326 1327
MODULO DE INTERFAZ DEL VIMS/VIDS (GR)	319
MÓDULO DEL TACÓMETRO Y DEL VELOCÍMETRO (GR)	1342 1344

INDICE

Nombre	Página
MÓDULO DEL TACÓMETRO Y DEL VELOCÍMETRO (GR)	1340
MODULO DEL TECLADO MONITOR (GR)	1328
MODULO ELECTRÓNICO DE CUATRO INDICADORES (GR)	1329
	1330
MONTAJE DE ARO	575
MONTAJE DE LA PLATAFORMA (GR)	1332
MONTAJE DEL ALTERNADOR (GR)	60
MONTAJE DEL CONVERTIDOR DE PAR (GR)	576
MONTAJE DEL PARACHOQUES (GR)	748
MONTAJE Y VALVULA DEL CONTROL PRINCIPAL (GR)	1064
MOTOR - SOPORTE DEL (GR)	69
	70
MOTOR DE ARRANQUE ELÉCTRICO (GR)	354
	356
	360
MOTOR ELÉCTRICO (GR) (27 VOLTIOS)	1252
MOTOR-LIMPIAPARABRISAS (GR)	1331
MULTIPLE DE COMBUSTIBLE (GR)	211
	212
MÚLTIPLE DE ESCAPE (GR)	156
	158
	160

N

N	260
NÚCLEO DE TURBOCOMPRESOR (GR)	172
	176
NÚCLEO DEL ENFRIADOR DE ACEITE (GR)	101
NÚCLEO (GR)	173

P

PALANCA	1054
PANEL DEL CAPÓ (GR)	750
PANEL SUPERIOR (GR)	751
PANTALLA (CONJ)	62
	64
	1058
PANTALLA (CONJ)	1054
PARACHOQUES TRASERO (CONFIG)	673
	674
	675
	676
PARAGOLPES TRASERO (GR)	677
	678
PASADOR Y SELLO-VARILLAJE (GR)	1136
	1138
	1140
	1142
	1146
	1148
	1152
PASAMANOS (GR)	1300
PERILLA DE INTERRUPTOR DE LIMPIAPARABRISAS	1346
PERILLA LUMBAR	1334
PERNO (M10X1,50X12MM)	1424
PERSIANA PARA EL SOL (GR)	1360
PERSIANA PARA EL SOL (GR)	1361
PERSIANA PARA EL SOL (GR) (FRENTE)	1360
	1361
PERSIANA PARA EL SOL (GR) (PARTE TRASERA)	1360
	1361
PESTILLO DE PUERTA Y VENTANA DE LA CABINA (GR)	1308
PISTÓN Y BIELA (GR)	66
PISTONES DEL MOTOR (GR)	1034
	1035
PIVOTE DEL LIMPIADOR (GR)	1442
PLACA DE ADVERTENCIA (CILINDRO PARA ALTA PRESION)	920
PLACA DE IDENTIFICACION	441
	447
	461
	467
PLACA DEL NÚMERO DE SERIE (MOTOR)	1446
PLANCHA CORREDERA (GR)	1351
	1352
PLANCHA DE ACUMULADOR HIDRAULICO	920
PLANCHA DE DESGASTE	1203
	1204
PLANCHA DE DESGASTE (GR)	1202
PLATAFORMA DE LA CABINA	1354
	1357
PLATO OSCILANTE (GR)	1049
	1050
POSENFRIADOR DE AGUA (GR)	145
POSICIONADOR DEL CUCHARÓN Y DESCONEXIÓN (GR)	978
	980
	984
	988
	992
POSICIONADOR DEL CUCHARÓN Y DESCONEXIÓN (GR)	976
PROTECTOR -INTERRUPTOR	438
	439
PROTECTOR DE CORREA (GR)	54
	55
PROTECTOR DE LA CUCHILLA (GR)	1205
	1206
	1207
	1208
PROTECTOR DE LAS TUBERÍAS DE COMBUSTIBLE (GR)	226

INDICE

Nombre	Página
PROTECTOR DE RADIADOR (GR)	142
PROTECTOR DEL ESCAPE (GR)	166
	168
PROTECTOR DEL RADIADOR (GR)	704
	706
PROTECTOR DEL TREN DE FUERZA (GR)	703
PROTECTOR LATERAL (CUCHARÓN) (GR)	1209
PUERTA IZQUIERDA (GR)	1284
PUERTA LATERAL (GR)	1286
	1288
	1290
	1292
PUNTA ADAPTADORA	1162
	1163
	1164
	1165
	1166
PUNTA CORTA (GR)	1240
	1241
	1242
	1243
	1244
	1245
PUNTA DEL CUCHARÓN	1246
PUNTA (GR)	1211
	1212
	1213
	1214
	1215
	1216
PUNTA LARGA	1247
PUNTA LARGA (GR)	1223
	1224
	1225
	1226
	1227
	1228
	1229
	1230
	1231
	1232
PUNTA PARA PENETRACIÓN	1248
	1249
PUNTA PARA PENETRACIÓN (GR)	1233
	1234
	1235
	1236
	1237
	1238
	1239
PUNTA RESISTENTE A LA ABRASIÓN (GR)	1217
	1218
	1219
	1220
	1221
	1222

R

Nombre	Página
RADIADOR (GR)	138
	139
	140
	141
RECEPTACULO DE POTENCIA (CONJ) (12 VOLTIOS)	1346
RECLINACION DE ASIENTO (GR)	1358
REFLECTOR (GR)	301
	302
	303
	304
	314
REFLECTOR (GR) (24 VOLTIOS)(SUSPENDIDA)	312
REFLECTOR (GR) (24 VOLTIOS)(VERTICAL)	312
	314
REFRIGERANTE - TUBERÍAS DE (GR)	104
REFRIGERANTE DEL ACOPLAMIENTO (CONJ)	1320
REGULADOR - PEDAL DEL (GR)	1349
	1350
REGULADOR DE TEMPERATURA (TERMOSTATO)	103
REGULADOR Y CAJA (GR)	103
REJILLA	1054
REJILLA DE FILTRO	1422
	1423
REJILLA DE SUCCIÓN	545
REJILLA (GR)	1054
REJILLA PARA BARRIDO	95
RESORTE DE ESCOBILLA	356
	357
	360
	361
RESORTE DE LA PUERTA DE LA CABINA (GR)	1388
RESPIRADERO	188
	194
	291
	292
	557
	561
	565
RESPIRADERO (CONJ) (CÁRTER DEL MOTOR)	76
RESPIRADERO (GR)	76
RETROCESO - ALARMA DE (GR)	373
RETROVISOR (GR)	1325
REVESTIMIENTO DE LA CABINA (GR)	1312
	1316
RUEDA Y MANDOS FINALES	668

INDICE

Nombre	Página
S	
SECADOR	1250
SEGMENTO DE CUCHILLA	1201
SEGMENTO DE CUCHILLA (GR)	1197
	1198
	1199
	1200
SELLADO DEL VIDRIO (GR)	1362
SELLO ANULAR	64
SELLO ANULAR (DI DE 110,49 MM)	178
	180
	182
	186
	188
	190
SELLO ANULAR (133,66MM DI)	579
	585
SELLO ANULAR (81,92MM DI)	596
	598
SELLO ANULAR (94,84 MM DIAMETRO INTERIOR)	840
	846
	997
	1003
SELLO DE CIGÜEÑAL (GR)	68
SELLO DE CIGÜEÑAL (GR) (ROTACION HACIA LA DERECHA)	68
SELLO DE CIGÜEÑAL (GR) (ROTACION HACIA LA IZQ.)	68
SENSOR DE AMORTIGUADOR (GR)	240
SENSOR DE PRESIÓN (GR)	328
	332
	333
	334
	340
SENSOR DE PRESIÓN (GR)	329
	330
	331
	335
	336
	337
	338
	339
	341
	342
	343
	344
	345
SENSOR DE PRESIÓN (GR) (ACEITE DE BOMBA DE IMPLEMENTO)	407
	412
SENSOR DE PRESIÓN (GR) (ACEITE DE BOMBA DE VENTILADOR)	416
	420
	424
	428
	432
SENSOR DE PRESIÓN (GR) (ACEITE DE BOMBA PRINCIPAL DE DIRECCION)	452
	456
SENSOR DE PRESIÓN (GR) (ACEITE DEL CONVERTIDOR DE PAR)	452
	456
SENSOR DE PRESIÓN (GR) (ACEITE DEL MOTOR)	383
SENSOR DE PRESIÓN (GR) (ATMÓSFERA)	382
	394
SENSOR DE PRESIÓN (GR) (CÁRTER DEL MOTOR)	382
	394
SENSOR DE PRESIÓN (GR) (ENTRADA DE TURBOCOMPRESOR)	394
SENSOR DE PRESIÓN (GR) (ENTRADA DERECHA DEL TURBO)	382
SENSOR DE PRESIÓN (GR) (SALIDA DE TURBOCOMPRESOR)	382
	398
SENSOR DE PRESIÓN (GR) (TURBO ADMISIÓN DEL LADO IZQ.)	382
SENSOR DE TEMPERATURA DE ESCAPE (GR)	320
SENSOR DE TEMPERATURA (GR)	350
SENSOR DE TEMPERATURA (GR) (ACEITE DE LA DIRECCIÓN)	407
	412
SENSOR DE TEMPERATURA (GR) (ACEITE DEL CONVERTIDOR DE PAR)	416
	420
	424
	428
	432
SENSOR DE TEMPERATURA (GR) (ACEITE DEL EJE DELANTERO)	402
SENSOR DE TEMPERATURA (GR) (ACEITE DEL EJE POSTERIOR)	407
	412
SENSOR DE TEMPERATURA (GR) (ACEITE HIDRÁULICO)	407
	412
SENSOR DE TEMPERATURA (GR) (REFRIGERANTE)	382
	386
	390
	394
	398
SENSOR DE VELOCIDAD (GR)	346
	347
	348
	349

INDICE

Nombre	Página
SENSOR DE VELOCIDAD (GR) (CALIBRACIÓN SINCRONIZACIÓN)	395
	399
SENSOR DE VELOCIDAD (GR) (MOTOR)	383
	387
	391
SENSOR DE VELOCIDAD (GR) (SALIDA DE CONVERTIDOR DE PAR)	416
	420
	424
	428
	432
SENSOR DE VELOCIDAD (GR) (SALIDA DE LA TRANSMISION)	416
	420
	424
	428
	432
SENSOR DE VELOCIDAD (GR) (SINCRONIZACION DE VELOCIDAD DEL MOTOR)	382
SENSOR DE VELOCIDAD (GR) (TOMA DE TIEMPO DE LA VELOCIDAD DEL MOTOR)	386
	390
	394
	398
SILENCIADOR (GR)	162
	163
	164
SOFTWARE DEL TREN DE FUERZA (GR)	289
SOLENOIDE PROPORCIONAL (CONJ) (LEVANTAMIENTO)	921
SOPORTE	1210
SOPORTE DE CONTROL DE LA DIRECCIÓN (GR)	1402
	1406
SOPORTE DE LA ADMISIÓN DE AIRE (GR)	753
	754
SOPORTE DE LA TRANSMISIÓN (GR)	604
SOPORTE DEL ASIENTO (GR)	1401
SOPORTE DEL CONTROL HIDRÁULICO (GR)	1390
SOPORTE DEL CONTROL HIDRÁULICO (GR)	1394
	1398
SOPORTE DEL RESPALDO (GR)	1334
SUCCIÓN - VENTILADOR DE (GR)	102
SUSPENSIÓN - ASIENTO CON (GR)	1383
	1384
	1385
	1386

T

Nombre	Página
TABLERO DE INSTRUMENTOS (GR)	1340
TABLERO DE INSTRUMENTOS (GR)	1342
	1344
	1346
TANQUE HIDRÁULICO (GR)	1054
	1058
TANQUE HIDRÁULICO Y MONTAJE (GR)	1051
TANQUE HIDRÁULICO Y MONTAJE (GR)	1052
TAPA	1423
TAPA CONTRA EL POLVO	78
	80
	85
	89
	178
	180
	182
	416
	420
	424
	428
	432
	530
	532
	534
	553
	557
	561
	565
	618
	622
	626
	628
	651
	652
	658
	664
	772
	778
	784
	792
	800
	830
	832
	836
	840
	846
	854
	855
	858
	859
	872
	873
	996
	997
	1002
	1004

INDICE

Nombre	Página
	1008
	1014
	1020
	1062
	1064
	1067
	1068
	1073
TAPA CONTRA EL POLVO (CONJ)	298
	299
TAPA DE ADAPTADOR (GR)	1194
TAPA DE LA CABINA (GR)	1283
TAPA DE LA CAJA DE VOLANTE (GR)	14
TAPA DE LA CAJA DELANTERA (GR)	16
	17
TAPA DE PORTAFUSIBLES	440
	446
	460
	466
TAPA DE SELLO	1320
TAPA DE TUBO DE LLENADO DEL FILTRO DE ACEITE (GR)	1448
TAPA DEL BLOQUE MOTOR (GR)	13
TAPA DEL MANDO DE ACCESORIOS (GR)	12
TAPA DEL MECANISMO DE VÁLVULAS (GR)	18
TAPA DEL RADIADOR	143
TAPA DEL RECEPTACULO	441
	447
	461
	467
TAPA DEL TANQUE DE COMBUSTIBLE (CONJ)	186
	188
	190
	192
	194
TAPA DEL TANQUE DE COMBUSTIBLE (CONJ)	291
	292
TAPA DEL TANQUE DE RADIADOR (GR)	143
TAPA DEL TAPÓN DEL TANQUE HIDRÁULICO (GR)	1051
TAPA DEL TAPÓN DEL TANQUE HIDRÁULICO (GR)	959
TAPA DEL TUBO DE LLENADO	1054
	1058
TAPA DEL TUBO DE LLENADO DEL TANQUE DE COMBUSTIBLE (CONJ)	178
	180
	182
TAPA PROTECTORA (CONJ)	439
	1340
TAPA PROTECTORA DEL TANQUE HIDRÁULICO	1054
TAPA (2,0 PULGADAS DE GROSOR)	595
TAPAS PROTECTORAS DE EMBARQUE (GR)	520
TAPÓN (CONJ)	72
	74
	77
	78
	80
	94
	1073
TAPÓN (CONJ) (ROSCA 11/16-16)	1069
	1070
TAPÓN DE DRENAJE	58
TAPON DE DRENAJE DE ACEITE	64
TAPÓN DE DRENAJE (ROSCA 1-1/2-12)	544
TAPON DE SELLO	655
	818
	820
	1253
	1304
	1398
	1428
TAPON DE TUBO (ROSCA 3/8-18 NPTF)	230
TAPÓN MAGNÉTICO	474
	476
TAPÓN MAGNÉTICO (ROSCA 1 5/8-12)	668
TAPÓN (ROSCA 7/16-20)	1008
	1014
	1020
	1021
	1038
TERMOPAR (GR)	372
TIRANTE DE TRABA DEL BASTIDOR DE DIRECCIÓN (GR)	746
TOPE DE DIRECCION (GR)	874
TORNILLERÍA DEL SISTEMA ELECTRÓNICO (GR)	290
TRABA DE LA PALANCA DE CONTROL (GR)	568
TRABA DE LA PALANCA DE CONTROL (GR)	570
	572
TRABA DEL CONVERTIDOR DE PAR (GR)	640
	644
TRANSMISION (CONFIG)	647
TRANSMISIÓN PLANETARIA (GR)	578
	584
TREN DE FUERZA (CONFIG)	589
TREN DE FUERZA-GRUPO ELECTRÓNICO	289
TUBERÍAS DE ACEITE DEL MOTOR (GR)	84
	88
TUBERÍAS DE ACEITE DEL TREN DE FUERZA (GR)	552
	556
	560
	564
TUBERÍAS DE ACONDICIONADOR DE AIRE (GR)	1320

INDICE

Nombre	Página
TUBERIAS DE AGUA DEL TURBOCOMPRESOR (GR)	118
TUBERIAS DE CALEFACCION	1322
TUBERÍAS DE COMBUSTIBLE (GR)	203
TUBERÍAS DE DIRECCIÓN (GR)	844
	845
	846
TUBERÍAS DE DIRECCIÓN (GR)	840
TUBERIAS DE ENFRIADOR DE ACEITE DE DIRECCION (GR)	858
TUBERIAS DE ENFRIADOR DE ACEITE DE DIRECCION (GR)	854
TUBERÍAS DE ENGRASE (GR)	740
	742
TUBERÍAS DE ENGRASE (GR)	744
TUBERÍAS DE INYECCIÓN DE COMBUSTIBLE (GR)	204
	208
TUBERÍAS DE LA CALEFACCIÓN (GR)	1322
TUBERÍAS DE LA DIRECCIÓN SECUNDARIA (GR)	830
	832
	836
TUBERÍAS DE NEUTRALIZACIÓN DE LA DIRECCIÓN (GR)	850
	852
TUBERÍAS DE VENTILACIÓN DEL EJE (GR)	551
TUBERÍAS DEL AGUA (GR)	120
	122
	124
	128
	130
	132
TUBERÍAS DEL CILINDRO DE INCLINACIÓN (GR)	1032
TUBERÍAS DEL FRENO DE SERVICIO (GR)	800
TUBERÍAS DEL RADIADOR (GR)	106
	110
	114
TUBERÍAS HIDRÁULICAS DEL VENTILADOR (GR)	1014
	1020
TUBERÍAS HIDRÁULICAS DEL VENTILADOR (GR)	1008
TUBERÍAS HIDRÁULICAS (GR)	1002
TUBERÍAS HIDRÁULICAS (GR)	996
TUBO DE LLENADO DE ACEITE DE LA TRANSMISIÓN (GR)	527
	528
TUBO DE LLENADO DE ACEITE (GR)	77
TURBOCOMPRESOR - TUBERÍAS DE ACEITE DEL (GR)	92
TURBOCOMPRESOR (GR)	170
	171
	172
	173
	174
	175
	176

V

Nombre	Página
VÁLV DE NEUTRALIZ DE DIR Y MONTAJE (GR)	876
VÁLVULA	896
	904
	908
	1054
	1058
	1078
	1090
	1095
VÁLVULA - ESFERA	1064
VALVULA COMPENSADORA DE FLUJO (GR)	883
	884
	885
	886
VÁLVULA COMPENSADORA DE FLUJO Y PRESIÓN (GR)	1086
VÁLVULA COMPENSADORA DE FLUJO Y PRESIÓN (GR)	890
	892
VÁLVULA COMPENSADORA DE PRESIÓN (GR)	811
VÁLVULA COMPENSADORA DE PRESIÓN (GR)	894
	1087
VÁLVULA COMPENSADORA DE PRESIÓN (GR)	1088
VÁLVULA DE ALIVIO (GR)	895
	896
	897
	898
	899
	900
	1090
	1091
	1092
	1093
	1094
	1095
VÁLVULA DE ALIVIO (GR)	658
VÁLVULA DE ALIVIO (GR) (SALIDA DE CONVERTIDOR DE PAR)	564
VÁLVULA DE ALIVIO PILOTO Y MONTAJE (GR)	1067
	1068
VÁLVULA DE COMPENSACION (GR)	1085
VÁLVULA DE COMPENSACION (GR)	1078

INDICE

Nombre	Página
VÁLVULA DE CONTROL DE LA AMORTIGUACIÓN (GR)	1096
VALVULA DE CONTROL DE LA BOMBA (GR)	1088
VÁLVULA DE CONTROL DE LA TRANSMISIÓN (GR)	666
VÁLVULA DE CONTROL DEL FRENO (GR)	810
VÁLVULA DE CONTROL DEL LIMITADOR DE PAR (GR)	1103
VÁLVULA DE CONTROL (GR)	1072
	1078
VÁLVULA DE CORTE	124
VALVULA DE DERIVACION	88
VÁLVULA DE DRENAJE DEL RADIADOR (GR)	144
VÁLVULA DE GAS	755
	756
VÁLVULA DE LA BOMBA VARIABLE Y MONTAJE (GR)	1070
VÁLVULA DE LA BOMBA VARIABLE Y MONTAJE (GR)	1069
VÁLVULA DE LANZADERA (GR)	902
VÁLVULA DE LANZADERA (GR)	1097
VÁLVULA DE LANZADERA (GR) (RESOLVEDOR)	904
VÁLVULA DE MODULACIÓN (GR)	653
	654
VÁLVULA DE MODULACIÓN (GR)	655
	657
VÁLVULA DE MODULACIÓN (GR)	656
VÁLVULA DE MODULACIÓN (GR) (EMBRAGUE DE TRABA DE CONVERTIDOR DE PAR)	651
	654
	657
VÁLVULA DE MODULACIÓN (GR) (EMBRAGUE DEL RODETE DEL CONVERTIDOR DE PAR)	416
	420
	424
	428
	433
	656
VALVULA DE MUESTRA DE FLUIDO (CONJ)	534
	858
VÁLVULA DE MUESTREO	78
	80
	530
	532
VÁLVULA DE PRIORIDAD DEL CONVERTIDOR DE PAR (GR)	664
VÁLVULA DE RETENCIÓN (GR)	1071
	1072
VÁLVULA DE RETENCIÓN (GR)	878
	879
VÁLVULA DE RETENCIÓN (GR)	880
	881
	882
VÁLVULA DE RETENCIÓN (GR) (DIRECCIÓN)	882
VÁLVULA DE RETENCIÓN (GR) (DIRECCION POR PILOTO)	840
	846
VÁLVULA DE RETENCIÓN (GR) (ENFRIADOR DE LA DERIVACION)	854
	1008
	1014
	1020
VÁLVULA DE RETENCIÓN (GR) (GRUPO DE CUATRO VALVULAS HIDRAULICAS DE LA DIRECCION)	879
VÁLVULA DE RETENCIÓN (GR) (MULTIPLE DE FRENO)	800
VÁLVULA DE SOLENOIDE (GR)	662
	1099
	1100
VÁLVULA DE SOLENOIDE (GR)	1098
VÁLVULA DE SOLENOIDE (GR)	1101
VÁLVULA DE SOLENOIDE (GR) (CONTROL DE AMORT.)	1096
VÁLVULA DE SOLENOIDE (GR) (SUMINISTRO DE PRESION PILOTO)	1082
VÁLVULA DE SOLENOIDE Y MÚLTIPLE (GR)	1102
VÁLVULA DEL CONTROL PRINCIPAL (GR)	1082
VÁLVULA DEL EMBRAGUE DE DESCONEXIÓN Y MONTAJE (GR)	652
VÁLVULA DEL EMBRAGUE DE DESCONEXIÓN Y MONTAJE (GR)	651
VÁLVULA NEUTRALIZADORA DE DIRECCIÓN (GR)	919
VÁLVULA NEUTRALIZADORA DE DIRECCIÓN (GR)	876
VALVULA PILOTO DE CARTUCHO (GR)	888
	889
VÁLVULA PILOTO (GR)	818
	887
VÁLVULA PILOTO (GR) (DIRECCIÓN)	820
VÁLVULA REDUCTORA DE PRESIÓN (GR)	904
VÁLVULA REDUCTORA DE PRESIÓN (GR)	1072
VÁLVULA REDUCTORA DE PRESIÓN (GR)	908
VÁLVULA REDUCTORA DE PRESIÓN (GR) (DIRECCIÓN)	912
	916
VÁLVULA-RESPIRADERO	398
VÁLVULA SELECTORA (GR)	659
VÁLVULA SELECTORA (GR) (TRANSMISION)	666
VÁLVULA SELECTORA Y DE CONTROL DE PRESIÓN (GR)	660
VÁLVULA SELECTORA Y DE CONTROL DE PRESIÓN (GR)	901

INDICE

Nombre	Página
VALVULA Y MONTAJE DE CONTROL DE VELOCIDAD DE VENTILADOR (GR)	1060
VÁLVULA Y MONTAJE DEL CONTROL DE FRENO (GR)	808
VÁLVULA Y MONTAJE DEL VENTILADOR HIDRÁULICO (GR)	1062
VÁLVULAS DE LA DIRECCIÓN (GR)	908
VÁLVULAS DE LA DIRECCIÓN (GR)	916
VÁLVULAS DE LA DIRECCIÓN (GR)	904
VÁLVULAS DE LA DIRECCIÓN (GR)	912
VENTILADOR DE ALTERNADOR	234
VIDRIO (CONJ)	303
VIDRIO (CONJ) (FARO DELANTERO) (LUZ BAJA)	305
VIDRIO (CONJ) (REFLECTOR)	301 304
VIDRIO DE LOS REFLECTORES (CONJ)	302
VIDS (CONFIG)	1420
VOLANTE - CAJA DE (GR)	56
VOLANTE (GR)	49

ÍNDICE

Designação	Página

A

ABRAÇADEIRA DO PROTETOR 356
ACENDEDOR (CIGARRO)(24 VOLTS) 1390
1394
1398
ACIONADOR - BOMBA DE PISTÃO 812
813
814
815
ACIONADOR DO CONTROLE PILOTO 921
ACOPLAMENTO - REFRIGERANTE 1320
ACUMULADOR - FREIO 755
756
ACUMULADOR DO REFRIGERANTE E MONTAGEM 1250
ACUMULADOR DO SISTEMA DE ABSORÇÃO DE IMPACTOS 920
ADAPTADOR - ABASTECIMENTO RÁPIDO DE COMBUSTÍVEL 178
180
182
ADAPTADOR CENTRAL 1155
1156
ADAPTADOR DA PONTA 1162
1163
1164
1165
1166
ADAPTADOR DO LADO DIREITO 1160
1161
ADAPTADOR DO LADO ESQUERDO 1157
1158
1159
ALARME 233
1340
ALARME (AÇÃO) 1342
1344
ALARME DE MARCHA À RÉ 373
ALAVANCA 1054
ALTERNADOR DE CORRENTE 234
AMORTECEDOR 42
AMORTECEDOR - SENSOR 240
ANEL RETENTOR 184
976
AQUECEDOR - COMBUSTÍVEL 291
292
AQUECEDOR DA ÁGUA DO MOTOR 298
299
AQUECEDOR DO COMBUSTÍVEL 294
296
ARO 594
ARO DESMONTÁVEL 595
ARRANJO BÁSICO 2
ARRANJO PARA LEVANTAMENTO ALTO 1118
1119
1120
1121
ARREFECEDOR - ÓLEO DO MOTOR 100
ARREFECEDOR DO ÓLEO DO EIXO 494
498
502
508
514
ARREFECEDOR DO ÓLEO HIDRÁULICO 956
958
ARTICULAÇÃO - CAÇAMBA 1126
1127
1128
1130
ARTICULAÇÃO - CAÇAMBA E LANÇA 1132
1133
1134
1135
ASSENTO 1366
1368
1369
1370
1372
1376
1379
1380
1382
ASSENTO - FUNDO 1336
1338
1339
ASSENTO - FUNDO (INFERIOR) 1366
ASSENTO - FUNDO (PARTE TRASEIRA) 1366
ASSENTO COM SUSPENSÃO 1383
1384
1385
1386
AUXILIAR DE PARTIDA A ÉTER 351
352
353

B

BALANCEADOR 8
BARRA DE TRAÇÃO 679
BASE - PLACA DE DESGASTE 1167
BASE - TAMPA DA VÁLVULA 9
BATENTE - DIREÇÃO 874
BATERIA E CABOS / FIOS ELÉTRICOS 236
BATERIA (RELÓGIO) 252
257
BATERIA (12 VOLT/SECO) 236
BLINDAGEM DO COLETOR DE ESCAPE 166
168

ÍNDICE

Designação	Página
BLINDAGEM DOS TUBOS DO COMBUSTÍVEL	226
BLOCO DE JUNÇÃO	236
BLOCO DO MOTOR	21
	22
	24
	26
	28
BLOCO HIDRÁULICO	479
	480
	816
BOCAL DE ENCHIMENTO DE ÓLEO DO MOTOR	77
BOCAL DE ENCHIMENTO DE ÓLEO DO TREM DE FORÇA	527
	528
BOMBA AUXILIAR DO SISTEMA DE TRANSMISSÃO	98
BOMBA DA TRANSMISSÃO	591
	592
BOMBA DA UNIDADE INJETORA	222
	223
	224
	225
BOMBA DE ÁGUA	134
	135
	136
	137
BOMBA DE ENGRENAGENS	590
	862
	864
BOMBA DE ESCORVA DO COMBUSTÍVEL	213
	214
BOMBA DE ÓLEO - MOTOR	96
	97
BOMBA DE PISTÃO	802
	804
	866
	868
	870
	1036
	1038
	1040
	1042
BOMBA DE PISTÃO (BOMBA ININTERRUPTA DO ACESSÓRIO)	996
	1002
BOMBA DE TRANSFERÊNCIA DO COMBUSTÍVEL	216
	218
	219
	220
BOMBA MANUAL DO CÁRTER	95
BORDA CORTANTE	1195
	1196
BORDA SEGMENTADA	1201
BORDA SEGMENTADA DA CAÇAMBA	1197
	1198
	1199
	1200
BOTÃO - INTERRUPTOR DO LIMPADOR	1346
BOTÃO - LOMBAR	1334
BUJÃO - ANEL O (7/16-20 THD)	1008
	1014
	1020
	1021
	1038
BUJÃO - CANO/TUBO (ROSCA NPTF 3/8-18)	230
BUJÃO - DRENAGEM DO ÓLEO	64
BUJÃO DO DRENO	58
BUJÃO DO DRENO (1-1/2-12 ROSCA)	544
BUJÃO MAGNÉTICO	474
	476
BUJÃO MAGNÉTICO (ROSCA 1 5/8-12)	668
BUJÃO-RETENTOR	655
	818
	820
	1253
	1304
	1398
	1428
BUZINA ELÉTRICA	1302
	1303
BUZINA (24 V)	1303

C

CABEÇOTE DO MOTOR	29
	30
	31
	32
	33
	34
	35
	36
	37
	38
	39
	40
	41
CABINE	1261
	1262
	1264
	1266
	1333
CABINE E PLATAFORMA	1260
CABO ELÉTRICO DO AQUECEDOR	298
CABO/ALAVANCA DE CONTROLE (AJUSTE DE DESLIZAMENTO)	1351
	1352

ÍNDICE

Designação	Página
CABO/ALAVANCA DE CONTROLE (AJUSTE DE INCLINAÇÃO)	1351
	1352
CABOS E FIOS ELÉTRICOS - PÁRA-CHOQUE	374
CABOS/FIOS ELÉTRICOS - CABINE	376
	380
CABOS/FIOS ELÉTRICOS - DIANTEIROS	402
CABOS/FIOS ELÉTRICOS - MÁQUINA	406
	412
CABOS/FIOS ELÉTRICOS - MONITOR DO SIST. DE EXIBIÇÃO DE INFORMAÇÕES VITAIS - VIDS	440
	446
CABOS/FIOS ELÉTRICOS - MONITOR DO SIST. DE GERENCIAM. DE INFORM. VITAIS - VIMS	466
CABOS/FIOS ELÉTRICOS - MONITOR DO SIST. DE GERENCIAM. DE INFORM. VITAIS - VIMS	460
CABOS/FIOS ELÉTRICOS - MOTOR	382
	386
	390
	394
	398
CABOS/FIOS ELÉTRICOS - PARADA	438
	439
CABOS/FIOS ELÉTRICOS - SIST. DE GERENCIAM. DE INFORMAÇÕES VITAIS - VIMS	456
CABOS/FIOS ELÉTRICOS - SIST. DE GERENCIAM. DE INFORMAÇÕES VITAIS - VIMS	452
CABOS/FIOS ELÉTRICOS - TRASEIROS	436
CABOS/FIOS ELÉTRICOS - TREM DE FORÇA	416
	420
	424
	428
	432
CAÇAMBA PARA ROCHAS	1168
	1170
	1172
	1174
	1176
	1178
	1180
	1182
	1183
	1184
	1185
	1186
	1187
	1188
	1189
	1190
	1191
	1192
CADEADO	182
	194
	228
	292
	718
	722
	726
	748
	959
	1448
CAIXA DE ARMAZENAMENTO	1256
	1258
CAIXA DE ENGRENAGEM DE TRANSFERÊNCIA	544
CAIXA DIANTEIRA	58
CAIXA DO VOLANTE DO MOTOR	56
CAMISA	718
	722
	726
	748
CAPÔ E PROTETOR	710
	714
	718
	722
	726
CARCAÇA DAS ENGRENAGENS PLANETÁRIAS E COMPONENTES	482
CÁRTER DO ÓLEO DO MOTOR	62
	64
CARTUCHO	173
CARTUCHO DO TURBOALIMENTADOR	172
	176
CHASSI	1
CHASSI DIANTEIRO	692
	694
	696
	698
	701
CHASSI TRASEIRO	699
	700
CHAVE	182
	194
	228
	292
	718
	722
	726
	748
	1448
CHAVE (DESCONECTAR A BATERIA)	365
CHAVE GERAL	365
CHAVE GERAL (BATERIA)	237

ÍNDICE

Designação	Página
CHICOTE-DIREÇÃO (CONTROLE INTEGRADO DA TRANSMISSÂO DA DIREÇÃO)	818
	820
CILINDRO DA DIREÇÃO	824
CILINDRO DE DIREÇÃO E MONTAGEM	822
CILINDRO DE ÉTER	352
CILINDRO DE INCLINAÇÃO	972
CILINDRO DE LEVANTAMENTO	960
	962
	964
	966
	968
	970
CINTO DE SEGURANÇA	1363
	1364
	1365
	1382
CINTO DE SEGURANÇA (RETRÁTIL)	1379
CINZEIRO	1390
	1394
	1398
COBERTURA - TANQUE HIDRÁULICO	680
	681
	682
	683
	684
	685
	686
	688
COLETOR DE COMBUSTÍVEL	211
	212
COLETOR DE ESCAPE	156
	158
	160
COLMÉIA - ARREFECEDOR DE ÓLEO	101
COMANDO DE ACESSÓRIOS	43
	44
	46
COMANDO FINAL E RODA	668
COMANDO HIDRÁULICO	974
COMBUSTÍVEL - ABASTECIMENTO CONVENCIONAL	186
	188
	190
	192
	194
COMBUSTÍVEL - ABASTECIMENTO RÁPIDO	196
	197
	198
COMPRESSOR DE REFRIGERANTE	1272
	1273
	1274
	1275
	1276
	1278
	1280
COMPRESSOR DE REFRIGERANTE E MONTAGEM	4
	1268
	1270
CONDENSADOR DO REFRIGERANTE E MONTAGEM	1282
CONDICIONADOR DE AR	1251
	1252
CONEXÃO	476
CONEXÃO - TUBO D'ÁGUA	99
CONEXÃO (DESCONEXÃO RÁPIDA)	1062
CONTROL ELETROHIDRÁULICO	932
	936
	940
	944
	950
CONTROLE - NÃO PROGRAMADO	252
	253
	254
	255
	256
	257
CONTROLE - NÃO PROGRAMADO (IMPLEMENTO)	446
	466
CONTROLE DA BOMBA	817
CONTROLE DA CAÇAMBA	1104
	1105
	1106
	1108
	1110
	1112
	1113
	1114
	1116
CONTROLE DE DIREÇÃO	818
	820
CONTROLE DO FREIO DE ESTACIONAMENTO	771
CONTROLE DO FREIO DE SERVIÇO	772
	778
	784
	792
CONTROLE DO PEDAL DO FREIO	766
	768
CONTROLE ELETRÔNICO - MOTOR	248
	249
	250
	251
CONTROLE ELETRÔNICO DO MOTOR - CLASSIFICAÇÃO	243
	244
	245
	246

ÍNDICE

Designação	Página
	247
CONTROLE ELETRÔNICO E MONTAGEM - MOTOR	241
	242
CONTROLE HIDRÁULICO DA TRANSMISSÃO	492
CONTROLE INTEGRADO DA TRANSMISSÂO DA DIREÇÃO	484
	485
	486
	487
	488
	490
CONVERSOR DE POTÊNCIA (24 VOLTS A 12 VOLTS)	1304
CONVERSOR DE TORQUE	630
	632
	636
CONVERSOR DE TORQUE - TRAVA	631
	640
	644
CONVERSOR DE TORQUE E CARCAÇA	618
	622
	626
	628
CORREIA EM V	60
	1268
	1270
CRUZETA E MANCAL	603

D

DECALCOMANIA - FACIAL	1340
	1342
	1344
DECALQUE	248
	1444
DECALQUE - IDENTIFICAÇÃO	252
	440
	441
	446
	447
	460
	461
	466
	467
	933
	937
	941
DECALQUE - IDENTIFICAÇÃO (LÍQUIDO ARREFECEDOR DE VIDA PROLONGADA)	1446
DECALQUE - IDENTIFICAÇÃO (MÓDULO PRINCIPAL VIMS/VIDS)	257
DECALQUE - IDENTIFICAÇÃO (VIMS/VIDS)(MÓDULO DE INTERFACE)	319
DECALQUE - INSTRUÇÃO	441
	447
	461
	467
DECALQUE - INSTRUÇÃO (AJUSTE DO ASSENTO)	1414
DECALQUE - INSTRUÇÃO (ENTRADA E SAÍDA DE ÁGUA)	1252
DECALQUE - PAINEL DE INSTRUMENTOS	1346
	1430
DEFLETOR DO RADIADOR	142
DEGRAU	752
DESENGATE E POSICIONADOR DA CAÇAMBA	976
	978
	980
	984
	988
	992
DIFERENCIAL	526
DIFERENCIAL E COROA	522
	524
DIREÇÃO	872
	873
DISJUNTOR AUTOMÁTICO DE CIRCUITO (10 A) (CHAVE DE PARTIDA)	441
	447
	461
	467
DISJUNTOR AUTOMÁTICO DE CIRCUITO (105 A) (ALTERNADOR)	461
	467
DISJUNTOR AUTOMÁTICO DE CIRCUITO (105 A) (ALTERNADOR - PRINCIPAL)	447
DISJUNTOR AUTOMÁTICO DE CIRCUITO (105 A) (ALTERNADOR E PRINCIPAL)	440
DISJUNTOR AUTOMÁTICO DE CIRCUITO (105 A) (PRINCIPAL)	467
DISJUNTOR AUTOMÁTICO DE CIRCUITO (15 A) (ECM DO MOTOR)	441
	447
	461
	467
DISJUNTOR AUTOMÁTICO DE CIRCUITO (15 A) (LUZES DE OPERAÇÃO)	441
	447
	461
	467
DUCTO DE AR	1294

E

EIXO-COMANDO DE VÁLVULA	10

ÍNDICE

Designação	Página
	11
EIXO DE TRANSMISSÃO	596
	598
EIXO DO COMANDO DE ENTRADA	600
EIXO FIXO	471
	474
EIXO OSCILANTE	472
	476
ELEMENTO - AQUECEDOR DE ÁGUA DA CAMISA (120 VOLTS, 1500 WATTS)	298
ELEMENTO - AQUECEDOR DE ÁGUA DA CAMISA (240 VOLTS, 1500 WATTS)	299
ELEMENTO - FILTRANTE	753
	754
ELEMENTO - FILTRANTE (TREM DE FORÇA)	539
ELEMENTO - FILTRO DE COMBUSTÍVEL (PRIMÁRIO)	184
ELEMENTO - PRIMÁRIO	150
ELEMENTO - SECUNDÁRIO	150
ELEMENTO FILTRANTE - ÓLEO (HIDRÁULICO)	536
ELEMENTO FILTRANTE HIDRÁULICO (TREM DE FORÇA)	538
ELIMINAÇÃO DE VAPORES DO CÁRTER	82
ELO - TRAVA DA ARMAÇÃO DA DIREÇÃO	746
EMISSOR - POSIÇÃO	321
	322
	323
	324
	325
	326
	327
EMISSOR - POSIÇÃO (EMBREAGEM IMPULSORA DO CONVERSOR DE TORQUE)	766
EMISSOR - POSIÇÃO (INCLINAÇÃO)	980
	984
	988
	992
EMISSOR - POSIÇÃO (LEVANTAMENTO)	976
	978
EMISSOR - POSIÇÃO (SEM MOLA) (ALAVANCA DE CONTROLE)	932
	936
	940
	945
	951
ENGATE - ARTICULAÇÃO	708
ENGRENAGEM - TRANSFERÊNCIA DE ENTRADA	548
ENGRENAGENS DE COMANDO TRASEIRO	52
ENGRENAGENS DE DISTRIBUIÇÃO	50
ENGRENAGENS PLANETÁRIAS - TRANSMISSÃO	578
	584
ESCADA	730
	734
	738
ESCOVA	356
	360
ESPELHO	1323
	1324
ESPELHO RETROVISOR	1325
ESTEIRA - LADO DIREITO	1390
	1394
ESTRUTURA ROPS	1359
EXTENSÃO - ENCOSTO	1296
EXTENSÃO - ENCOSTO (TECIDO)	1382
EXTENSÃO DO TUBO DE DRENAGEM	48

F

FAROL DIANTEIRO	305
FAROL DIANTEIRO (LUZ BAIXA)	312
FILTRO	540
FILTRO - ÁGUA	136
FILTRO - ÁGUA (BOMBA D'ÁGUA)	137
FILTRO - AR	1264
	1297
	1298
FILTRO - AR DA CABINE	1297
	1298
FILTRO - COMBUSTÍVEL	184
	230
FILTRO - COMBUSTÍVEL (SECUNDÁRIO)	184
FILTRO - HIDRÁULICO	541
FILTRO - ÓLEO	536
	538
	539
	540
	541
	828
FILTRO - ÓLEO DO MOTOR	78
	80
FILTRO - TELA	1422
	1423
FILTRO DO TREM DE FORÇA E MONTAGEM	530
	532
	534
FILTRO E JUNTA	352
FILTRO E TUBOS - DIREÇÃO	826
	827
FILTROS E TUBOS - FREIO	798
FIXADOR DO SISTEMA ELETRÔNICO	290
FIXADORES - CABEÇOTE DO MOTOR	38
FLANGE	64
FREIO DE ESTACIONAMENTO	758
	760
FREIO DE SERVIÇO	762
	764

ÍNDICE

Designação	Página
FUNDO - ENCOSTO	1334
FUSÍVEL (10 A)	440 446 460 466
FUSÍVEL (15 A)	440 446 460 466
FUSÍVEL (20 A)	440 446 460 466
G	
GRAXEIRA	740 744
GRAXEIRA (ROSCA 1/8-27 POL)	598 742
GRUPO DE INSTALAÇÃO - MOTOR	7
GRUPO ROTATIVO DA BOMBA	805 806 1048
I	
ILUMINAÇÃO - DIANTEIRA	312
ILUMINAÇÃO - FREIOS	316 317 318
ILUMINAÇÃO - TRASEIRA	314
INDICADOR - NÍVEL DE LÍQUIDO	542
INDICADOR - NÍVEL DO ÓLEO (VARETA)	83
INJETOR DE COMBUSTÍVEL	199 200 201
INSTALAÇÃO DO RÁDIO	1304 1306
INTERRUPTOR	1346 1347
INTERRUPTOR - BALANCIM	369 1346
INTERRUPTOR - BALANCIM (AUXILIAR DE PARTIDA)	1346
INTERRUPTOR - BALANCIM (LUZES DE ACESSO AOS DEGRAUS)	438 439
INTERRUPTOR - BALANCIM (PARADA DO MOTOR AO NÍVEL DO SOLO)	439
INTERRUPTOR - BALANCIM (SISTEMA DE ABSORÇÃO DE IMPACTOS)	930
INTERRUPTOR - BALANCIM (24 VOLT)(ILUMINADO) (TRAVA DO ACESSÓRIO)	932 936 940
INTERRUPTOR - FLUXO	366
INTERRUPTOR - FLUXO DO LÍQUIDO ARREFECEDOR	364
INTERRUPTOR - LIMITADOR	766 768
INTERRUPTOR - LIMITADOR (FREIO DE ESTACIONAMENTO)	808
INTERRUPTOR - LIMITADOR (LUZ DO FREIO)	766 768
INTERRUPTOR - LIMITADOR (TRAVA DO CONTROLE INTEGRADO DA TRANSMISSÃO DA DIREÇÃO)	568
INTERRUPTOR - LIMPADOR DO PÁRA-BRISA	371
INTERRUPTOR - LIMPADOR DO PÁRA-BRISA (24 V)	1346
INTERRUPTOR - MAGNÉTICO	368 441 446
INTERRUPTOR - MAGNÉTICO (RELÉ DA LÂMPADA DO FAROL)	460 466
INTERRUPTOR - MAGNÉTICO (RELÉ DE PARTIDA)	461 467
INTERRUPTOR - MAGNÉTICO (RELÉ DO FAROL)	440
INTERRUPTOR - MAGNÉTICO (RELÉ PRINCIPAL DE POTÊNCIA)	441 460 466
INTERRUPTOR - MAGNÉTICO (RELÉS DE PARTIDA)	447
INTERRUPTOR - NÍVEL DO LÍQUIDO	367
INTERRUPTOR - NÍVEL DO LÍQUIDO (ÓLEO DO MOTOR)	456
INTERRUPTOR - NÍVEL DO LÍQUIDO (TANQUE HIDRÁULICO)	456
INTERRUPTOR - NÍVEL DO LÍQUIDO (TANQUE HIDRÁULICO DE DIREÇÃO/FREIO)	456
INTERRUPTOR - PARTIDA	370
INTERRUPTOR - PARTIDA (CHAVE)	1346
INTERRUPTOR - PRESSÃO (DERIVAÇÃO DO FILTRO HIDRÁULICO)	828
INTERRUPTOR - PRESSÃO (DIREÇÃO PRIMÁRIA)	830 832 836
INTERRUPTOR - PRESSÃO (FILTRO DE COMBUSTÍVEL)	452 456

ÍNDICE

Designação	Página
INTERRUPTOR - PRESSÃO (REFRIGERANTE)	382, 386, 390, 394, 398
INTERRUPTOR - ROTATIVO (FORÇA DE TRAÇÃO REDUZIDA)	1347
INTERRUPTOR - ROTATIVO (LIMPADOR E LAVADOR) (LIGAR/DESLIGAR)	1430, 1432
INTERRUPTOR - ROTATIVO (LIMPADOR/LAVADOR TRASEIRO) (LIMPADOR TRASEIRO)	1346
INTERRUPTOR - ROTATIVO (VELOCIDADE DO VENTILADOR)	1346
INTERRUPTOR - TERMOSTATO	1252
INTERRUPTOR (AJUSTAR A TRAVA DO ACELERADOR)	932, 936, 940, 944, 950
INTERRUPTOR (ARMAZENAGEM DE CONTROLE DA CARGA ÚTIL)	380
INTERRUPTOR (BUZINA)	932, 936, 940
INTERRUPTOR DE DERIVAÇÃO	363
INTERRUPTOR DE DERIVAÇÃO (FILTRO DO ÓLEO DA TRANSMISSÃO)	407, 412
INTERRUPTOR (FOÇA DE TRAÇÃO REDUZIDA/AUMENTADA AO MÁXIMO)	932, 936, 940
INTERRUPTOR (LUZ - MAPA)	1304
INTERRUPTOR (RETOMAR A TRAVA DO ACELERADOR)	933, 937

J

Designação	Página
JOGO DE AJUSTADOR (PARTE INFERIOR)	1336
JOGO DE AJUSTADOR (PARTE INFERIOR DO ASSENTO)	1339
JOGO DE ALMOFADA DO ASSENTO	1372, 1376
JOGO DE ALMOFADA DO ASSENTO (TECIDO)	1366
JOGO DE ALMOFADA (ENCOSTO DE TECIDO)	1296
JOGO DE BLOCO DESLIZADOR	1366, 1376, 1383, 1384, 1385, 1386
JOGO DE BLOCO DESLIZADOR (INCLUI BLOCOS E PARAFUSO)	1372
JOGO DE CAIXA	1410
JOGO DE CALÇO (17 CALÇOS)	1038
JOGO DE CÁRTER DE INCLINAÇÃO	1366, 1372, 1376
JOGO DE CHICOTE	1410, 1414, 1418
JOGO DE COMPRESSOR	1410
JOGO DE CORDÃO	1410, 1414, 1418
JOGO DE FILTRO DA TAMPA	186
JOGO DE FIXADORES	1410
JOGO DE FIXADORES (SUSPENSÃO DO ASSENTO)	1414, 1418
JOGO DE INCLINAÇÃO DO ASSENTO	1336, 1339
JOGO DE INCLINAÇÃO TRASEIRA	1336, 1339
JOGO DE JUNTAS (CAMISA DO CILINDRO SIMPLES)	5
JOGO DE JUNTAS (INJETOR DE COMBUSTÍVEL SIMPLES)	5
JOGO DE LÂMPADA - CONVERSÃO (24 V)	369, 932, 936, 940, 1304, 1346, 1347
JOGO DE MAÇANETA DO ASSENTO	1366, 1372, 1376
JOGO DE MANCAL DA TRANSMISSÃO	550
JOGO DE MOLA PNEUMÁTICA DO ASSENTO	1410
JOGO DE PARAFUSO DE RETENÇÃO	251, 253, 254, 255, 256
JOGO DE PINO DO PEDAL	1350
JOGO DE PISTÃO	1038
JOGO DE PISTÃO DE CONTROLE	1038
JOGO DE RECEPTÁCULO (12 PINOS)	402, 406, 436

ÍNDICE

Designação	Página
	818
	820
	932
	936
	940
	944
	950
	1304
	1391
	1395
	1398
JOGO DE RECEPTÁCULO (2 PINOS)	233
	309
	348
	349
	352
	364
	366
	367
	368
	373
	394
	395
	398
	399
	402
	406
	407
	416
	420
	424
	428
	432
	436
	446
	447
	461
	467
	654
	657
	666
	828
	921
	936
	940
	945
	951
	1098
	1099
	1100
	1101
	1252
	1272
	1273
	1276
	1410
	1414
JOGO DE RECEPTÁCULO (2 PINOS) (FAROL)	304
JOGO DE RECEPTÁCULO (2 PINOS) (MÓDILO DE MENSAGEM)	1327
JOGO DE RECEPTÁCULO (3 PINOS)	240
	306
	307
	308
	320
	321
	322
	323
	324
	325
	326
	327
	331
	332
	333
	339
	376
	380
	390
	394
	398
	402
	406
	416
	420
	424
	428
	432
	655
	808
	830
	832
	836
	932
	936
	937
	940
	941
	944
	950
	1342
	1344
	1347
	1391
	1395
	1398
JOGO DE RECEPTÁCULO (3 PINOS) (LUZ DE TETO)	300
JOGO DE RECEPTÁCULO (4 PINOS)	312

ÍNDICE

Designação	Página
	402
	407
	568
	808
	945
	951
	1328
	1347
JOGO DE RECEPTÁCULO (6 PINOS)	374
	407
	1253
	1329
	1330
	1331
	1340
	1342
	1344
	1347
	1428
	1434
	1436
JOGO DE RECEPTÁCULO (6 PINOS) (MÓDILO DE MENSAGEM)	1326
	1327
JOGO DE RECEPTÁCULO (8 PINOS)	371
	406
	487
	488
	490
	932
	936
	940
	944
	950
	1347
	1391
	1395
	1398
JOGO DE RESPIRO	178
	180
	182
	190
	192
JOGO DE RETENTOR	590
	601
	602
	755
	756
	810
	862
	895
	904
	908
	912
	916
	960
	962
	964
	1060
	1072
	1100
	1101
JOGO DE RETENTOR DA BOMBA	802
	804
JOGO DE RETENTOR (SOLENÓIDE DO RADIADOR E BOMBA HIDRÁULICA DO VENTILADOR DE ARREFECIMENTO)	1099
JOGO DE RETENTOR (VÁLVULA SOLENÓIDE)	1098
JOGO DE ROLO	1350
	1410
	1414
	1418
JOGO DE SENSOR DE DIAL	228
	230
JOGO DE TERMINAL	357
	361
JOGO DE TERMINAL ALTERNADOR	234
JOGO DE TERMINAL RELÉ (ALTERNADOR)	234
JOGO DE TOMADA DE CONEXÃO (12 PINOS)	374
	402
	406
	436
	1347
	1390
	1394
	1398
JOGO DE TOMADA DE CONEXÃO (2 PINOS)	240
	312
	314
	374
	402
	406
	407
	416
	420
	424
	428
	432
	436
	662
	766
	768
	922
	926
	932
	940
	944
	950

ÍNDICE

Designação	Página
	1253
	1347
JOGO DE TOMADA DE CONEXÃO (3 PINOS) . . .	328
	329
	334
	336
	337
	338
	340
	341
	342
	343
	344
	345
	346
	347
	374
	402
	406
	416
	420
	424
	428
	432
	436
	766
	768
	932
	933
	936
	937
	940
	941
	944
	950
	980
	984
	988
	992
	1347
	1390
	1394
	1398
JOGO DE TOMADA DE CONEXÃO (4 PINOS) . . .	312
	402
	406
	818
	820
	932
	936
	940
	944
	950
	1253
	1347

Designação	Página
JOGO DE TOMADA DE CONEXÃO (4 PINOS) (LAVADOR/LIMPADOR)	1423
JOGO DE TOMADA DE CONEXÃO (6 PINOS) . . .	374
	1253
	1304
	1347
	1430
	1432
JOGO DE TOMADA DE CONEXÃO (8 PINOS) . . .	416
	420
	424
	428
	432
	818
	820
	932
	936
	940
	944
	950
	1347
	1390
	1394
	1398
	1430
	1432
JOGO DE VÁLVULA DE ALÍVIO	590
JOGO DO GOVERNADOR	202
JUNTA	184
JUNTA - CÁRTER DE ÓLEO DO MOTOR	64
JUNTA CORREDIÇA	601
	602
JUNTA UNIVERSAL	648
	649
	650

L

LÂMINA DO LIMPADOR DE PÁRA-BRISA	1430
	1432
LÂMINA DO LIMPADOR DE PÁRA-BRISA (DIANTEIRO)	1424
	1426
	1428
LÂMINA DO LIMPADOR DE PÁRA-BRISA (TRASEIRO)	1424
	1426
	1428
LÂMPADA	306
	1304
LÂMPADA - FAROL	301
	302
	303
	304
	314

ÍNDICE

Designação	Página
LÂMPADA - FAROL (24 VOLT)(SUSPENSO)	312
LÂMPADA - FAROL (24 VOLTS)(VERTICAL)	312
	314
LÂMPADA - MAPA	1304
LÂMPADA - MINIATURA (28 V)	376
LÂMPADA - SINALIZAÇÃO	306
	307
	308
LÂMPADA - SINALIZAÇÃO (FREIO E TRASEIRA)	318
LÂMPADA - TETO	300
LÂMPADA - TETO (24 VOLTS - COM INTERRUPTOR)	1264
LÂMPADA (24 V)	307
	309
	1346
LÂMPADA (24 VOLTS - 65 WATTS)	302
LÂMPADA (24 VOLTS)(65 WATTS)	301
	303
	304
LÂMPADA (24 VOLTS)(65 WATTS) (CABEÇA)	305
LÂMPADA (28 V)	376
LÂMPADA (28 V) (TETO)	300
LAVADOR DO VIDRO	1422
	1423
LENTE	303
LENTE - AZUL	309
LENTE DA LÂMPADO DO TETO	300
LENTE (HOLOFOTE)	301
	304
LENTE (LUZES DIANTEIRAS) (FAROL BAIXO)	305
LENTE VERMELHA	307
LENTES - LUZES DE TRABALHO	302
LEVANTAMENTO DO MOTOR	59
LEVANTAMENTO PADRÃO	1122
	1123
	1124
	1125
LIMPADOR DO VIDRO	1434
	1436
	1438
	1440
LIMPADOR E LAVADOR - JANELA	1262
	1424
	1426
	1428
	1430
	1432
LUVA	182
	194
	228
	292
LUZ - INDICADOR DE SERVIÇO DO SIST. DE GERENCIAM. DE INFORMAÇÕES VITAIS - VIMS	309

M

MANGUEIRA	114
MECANISMO DAS VÁLVULAS	72
	74
MÓDULO - CENTRO DE MENSAGEM	1326
	1327
MÓDULO - INTERFACE VIDS/VIMS	319
MÓDULO - TECLADO DO MONITOR	1328
MÓDULO - VELOCÍMETRO E TACÔMETRO	1340
	1342
	1344
MÓDULO ELETRÔNICO DE QUATRO INDICADORES	1329
	1330
MOLA - ESCOVA	356
	357
	360
	361
MOLA - PORTA DA CABINA	1388
MONTAGEM - ALTERNADOR	60
MONTAGEM - ARO	575
MONTAGEM - CONVERSOR DE TORQUE	576
MONTAGEM - PÁRA-CHOQUE	748
MONTAGEM - PLATAFORMA	1332
MONTAGEM DO EIXO	574
MOTOR	4
MOTOR - LIMPADOR DO VIDRO	1331
MOTOR - PISTÃO	1034
	1035
MOTOR DO GRUPO ROTATIVO	1044
	1046
MOTOR ELÉTRICO DE PARTIDA	354
	356
	360
MOTOR ELÉTRICO (27 VOLT)	1252

O

ÓLEO - ARRANJO PARA TROCA RÁPIDA	94

P

PAINEL - SUPERIOR	751
PAINEL DE INSTRUMENTOS	1340
	1342
	1344
	1346
PAINEL DO CAPÔ	750
PAINEL TRASEIRO DO MOTOR	690
PÁRA-CHOQUE TRASEIRO	673

ÍNDICE

Designação	Página
	674
	675
	676
	677
	678
PÁRA-LAMA DIANTEIRO	689
PARAFUSO (M10X1,50X12MM)	1424
PEDAL DO GOVERNADOR	1349
	1350
PEGA-MÃO	1300
PENEIRA DO TANQUE DE COMBUSTÍVEL	228
PINO E RETENTOR - ARTICULAÇÃO	1136
	1138
	1140
	1142
	1146
	1148
	1152
PISTÃO E BIELA	66
PIVÔ DO LIMPADOR	1442
PLACA - NÚMERO DE SÉRIE (MOTOR)	1446
PLACA-ACUMULADOR HIDRÁULICO	920
PLACA BASCULANTE	1049
	1050
PLACA DE ADVERTÊNCIA (CILINDRO DE ALTA PRESSÃO)	920
PLACA DE DESGASTE	1202
	1203
	1204
PLACA DE IDENTIFICAÇÃO	441
	447
	461
	467
PLACA DESLIZANTE	1351
	1352
PLACA E DECALQUE	1446
	1447
PLATAFORMA DO OPERADOR	1354
	1357
PNEU E ARO	605
	606
	607
	608
	609
	610
	611
	612
	613
	614
	615
	616
	617
PONTA	1211
	1212
	1213
	1214
	1215
	1216
PONTA - ABRASÃO	1217
	1218
	1219
	1220
	1221
	1222
PONTA - CAÇAMBA	1246
PONTA - COMPRIDA	1247
PONTA - PENETRAÇÃO	1233
	1234
	1235
	1236
	1237
	1238
	1239
	1248
	1249
PONTA CURTA	1240
	1241
	1242
	1243
	1244
	1245
PONTA LONGA	1223
	1224
	1225
	1226
	1227
	1228
	1229
	1230
	1231
	1232
PORTA - LADO ESQUERDO	1284
PORTA LATERAL	1286
	1288
	1290
	1292
PÓS-ARREFECEDOR A ÁGUA	145
PRÉ-PURIFICADOR	165
PROTEÇÃO CONTRA VANDALISMO	527
	528
	1448
PROTETOR - CÁRTER DO ÓLEO DO MOTOR	702
PROTETOR - CORREIAS	54
	55
PROTETOR - RADIADOR	704
	706
PROTETOR - TREM DE FORÇA	703
PROTETOR CONTRA POEIRA	178
	180
	182

ÍNDICE

Designação	Página
PROTETOR DA BORDA CORTANTE	1205, 1206, 1207, 1208
PROTETOR DO FILTRO DE ÓLEO	1448
PROTETOR-INTERRUPTOR	438, 439
PROTETOR LATERAL	1209
PURIFICADOR DE AR	146, 148, 150, 178, 180, 190

R

RADIADOR	138, 139, 140, 141
RECEPTÁCULO PARA ENERGIA (12 V)	1346
RECLINAÇÃO - ASSENTO	1358
REGULADOR DE TEMPERATURA/ TERMOSTATO	103
RESPIRO	76, 188, 194, 291, 292, 557, 561, 565
RESPIRO (CÁRTER DO MOTOR)	76
RETENÇÃO - VIDRO	1362
RETENTOR - FPS	1210
RETENTOR DE ANEL-O	64
RETENTOR DE ANEL-O (DIÂMETRO INTERNO DE 110,49 MM)	178, 180, 182, 186, 188, 190
RETENTOR DE ANEL-O (DIÂMETRO INTERNO DE 81,92MM)	596, 598
RETENTOR DE ANEL-O (133,66 MM DE DIÂMETRO INTERNO)	579, 585
RETENTOR DE ANEL-O (94,84MM DE DIÂMETRO INTERNO)	840, 846, 997, 1003
RETENTOR DO VIRABREQUIM	68
RETENTOR DO VIRABREQUIM (ROTAÇÃO - SENTIDO ANTI-HORÁRIO)	68
RETENTOR DO VIRABREQUIM (ROTAÇÃO - SENTIDO HORÁRIO)	68
REVESTIMENTO DA CABINE	1312, 1316
RODA - COMANDO FINAL E FREIO	670, 671
RODA E COMANDO FINAL	668

S

SECADOR	1250
SENSOR - PRESSÃO	328, 329, 330, 331, 332, 333, 334, 335, 336, 337, 338, 339, 340, 341, 342, 343, 344, 345
SENSOR - PRESSÃO (ADMISSÃO DO TURBOALIMENTADOR - LADO DIREITO)	382
SENSOR - PRESSÃO (ATMOSFERA)	382, 394
SENSOR - PRESSÃO (CÁRTER DO MOTOR)	382, 394
SENSOR - PRESSÃO (ENTRADA DO TURBOALIMENTADOR)	394
SENSOR - PRESSÃO (ENTRADA DO TURBOALIMENTADOR - LADO ESQUERDO)	382
SENSOR - PRESSÃO (ÓLEO DA BOMBA DE VENTILAÇÃO)	416, 420, 424, 428, 432
SENSOR - PRESSÃO (ÓLEO DA BOMBA DO ACESSÓRIO)	407, 412
SENSOR - PRESSÃO (ÓLEO DA BOMBA PRINCIPAL DA DIREÇÃO)	452, 456

ÍNDICE

Designação	Página
SENSOR - PRESSÃO (ÓLEO DO CONVERSOR DE TORQUE)	452, 456
SENSOR - PRESSÃO (ÓLEO DO MOTOR)	383
SENSOR - PRESSÃO (SAÍDA DO TURBOALIMENTADOR)	382, 398
SENSOR - TEMPERATURA	350
SENSOR - TEMPERATURA DE ESCAPE	320
SENSOR - TEMPERATURA (LÍQUIDO ARREFECEDOR)	382, 386, 390, 394, 398
SENSOR - TEMPERATURA (ÓLEO DA DIREÇÃO)	407, 412
SENSOR - TEMPERATURA (ÓLEO DO CONVERSOR DE TORQUE)	416, 420, 424, 428, 432
SENSOR - TEMPERATURA (ÓLEO DO EIXO DIANTEIRO)	402
SENSOR - TEMPERATURA (ÓLEO DO EIXO TRASEIRO)	407, 412
SENSOR - TEMPERATURA (ÓLEO HIDRÁULICO)	407, 412
SENSOR DE VELOCIDADE	346, 347, 348, 349
SENSOR DE VELOCIDADE (MOTOR)	383, 387, 391
SENSOR DE VELOCIDADE (REGULAGEM DA CALIBRAGEM)	395, 399
SENSOR DE VELOCIDADE (REGULAGEM DA ROTAÇÃO DO MOTOR)	382
SENSOR DE VELOCIDADE (ROTAÇÃO/REGULAGEM DO MOTOR)	386, 390, 394, 398
SENSOR DE VELOCIDADE (SAÍDA DA TRANSMISSÃO)	416, 420, 424, 428, 432
SENSOR DE VELOCIDADE (SAÍDA DO CT)	416, 420, 424, 428, 432
SILENCIADOR	162, 163, 164
SIST. ELETRÔNICO - ACESSÓRIO	260
SISTEMA DE ABSORÇÃO DE IMPACTOS	930
SISTEMA DE ABSORÇÃO DE IMPACTOS E TUBOS	922, 926
SISTEMA DE GERÊNCIA DE INFORMAÇÃO VITAL - VIMS	1421
SISTEMA DE ILUMINAÇÃO - FARÓIS	310
SISTEMA ELÉTRICO	258
SISTEMA ELETRÔNICO - CLASSIFICAÇÕES DO MOTOR	259
SISTEMA ELETRÔNICO - MONITOR	261, 262, 263, 264, 265, 266, 267, 268, 269, 270, 271, 272, 273, 274, 275, 276, 277, 278, 279, 280, 281, 282, 283, 284, 285, 286, 287, 288
SISTEMA ELETRÔNICO - TREM DE FORÇA	289
SOFTWARE - IMPLEMENTO	260
SOFTWARE - TREM DE FORÇA	289
SOLENÓIDE PROPORCIONAL (CILINDRO DE LEVANTAMENTO)	921
SUPORTE - ADMISSÃO DE AR	753, 754
SUPORTE - ASSENTO	1401

ÍNDICE

Designação	Página
SUPORTE - CONTRÔLE DA DIREÇÃO	1402
	1406
SUPORTE - CONTROLE HIDRÁULICO	1390
	1394
	1398
SUPORTE - TRANSMISSÃO	604
SUPORTE DO MOTOR	69
	70
SUSPENSÃO - ASSENTO	1410
	1414
	1418
T	
TAMPA	72
	74
	78
	80
	94
	1073
	1423
TAMPA - ADAPTADOR	1194
TAMPA - BLOCO DO MOTOR	13
TAMPA - BOCAL DE ENCHIMENTO	1054
	1058
TAMPA - BOCAL DE ENCHIMENTO DE ÓLEO	77
TAMPA - CABINE	1283
TAMPA - CAIXA DIANTEIRA	16
	17
TAMPA - CAIXA DO VOLANTE	14
TAMPA - COMANDO DE ACESSÓRIOS	12
TAMPA - EMBARQUE	520
TAMPA - MECANISMO DAS VÁLVULAS	18
TAMPA - PORTA-FUSÍVEL	440
	446
	460
	466
TAMPA - PROTEÇÃO	439
	1340
TAMPA - RADIADOR	143
TAMPA - RECEPTÁCULO	441
	447
	461
	467
TAMPA - RETENTOR	1320
TAMPA - TANQUE HIDRÁULICO	959
	1051
TAMPA CONTRA POEIRA	78
	80
	85
	89
	298
	299
	416
	420
	424
	428
	432
	530
	532
	534
	553
	557
	561
	565
	618
	622
	626
	628
	651
	652
	658
	664
	772
	778
	784
	792
	800
	830
	832
	836
	840
	846
	854
	855
	858
	859
	872
	873
	996
	997
	1002
	1004
	1008
	1014
	1020
	1062
	1064
	1067
	1068
	1073
TAMPA DA VÁLVULA (2,0 POL. ESP.)	595
TAMPA DO BOCAL DE ENCHIMENTO DO TANQUE DE COMBUSTÍVEL	178
	180
	182
TAMPA DO RESERVATÓRIO HIDRÁULICO	1054
TAMPA DO TANQUE DE COMBUSTÍVEL	186
	188
	190

ÍNDICE

Designação	Página
	192
	194
	291
	292
TAMPA (ROSCA 11/16-16)	1069
	1070
TANQUE DE COMBUSTÍVEL	228
	230
	232
TANQUE DE ÓLEO HIDRÁULICO E MONTAGEM	1051
	1052
TANQUE HIDRÁULICO	1054
	1058
TANQUE SUPERIOR DO RADIADOR	143
TAPETE	1312
TELA - RETORNO	95
TELA DE SUCÇÃO	545
TELA FILTRANTE	62
	64
	1054
	1058
TELA PÁRA-SOL	1360
	1361
TELA PÁRA-SOL (DIANTEIRO)	1360
	1361
TELA PÁRA-SOL (TRASEIRO)	1360
	1361
TERMOPAR	372
TERMOSTATO / REGULADOR DE TEMPERATURA	103
TRANSMISSÃO	647
TRAVA - CONTROLE DO BRAÇO	568
	570
	572
TREM DE FORÇA	589
TRINCO - PORTA DA CABINA E JANELA	1308
TUBOS - ÁGUA	120
	122
	124
	128
	130
	132
TUBOS - ÁGUA DO TURBOALIMENTADOR	118
TUBOS - AQUECEDOR	1322
TUBOS - AR	152
	154
TUBOS - AR CONDICIONADO	1320
TUBOS - ARREFECEDOR DO ÓLEO DA DIREÇÃO	854
	858
TUBOS - CILINDRO DE INCLINAÇÃO	1032
TUBOS - CILINDRO DE LEVANTAMENTO	1026
	1028
	1030
TUBOS - COMBUSTÍVEL	203
TUBOS - DIREÇÃO	840
	844
	845
	846
TUBOS - DIREÇÃO SECUNDÁRIA	830
	832
	836
TUBOS - FREIO DE SERVIÇO	800
TUBOS - GRAXA	740
	742
	744
TUBOS - INJEÇÃO DO COMBUSTÍVEL	204
	208
TUBOS - NEUTRALIZADOR DA DIREÇÃO	850
	852
TUBOS - ÓLEO DA TRANSMISSÃO	552
	556
	560
	564
TUBOS - ÓLEO DO MOTOR	84
	88
TUBOS - ÓLEO DO TURBOALIMENTADOR	92
TUBOS - ÓLEO HIDRÁULICO	996
	1002
TUBOS - RADIADOR	106
	110
	114
TUBOS - SISTEMA DE ARREFECIMENTO	104
TUBOS - VENTILADOR DO EIXO	551
TUBOS - VENTILADOR HIDRÁULICOS	1008
	1014
	1020
TUBOS DO AQUECEDOR	1322
TURBOALIMENTADOR	170
	171
	172
	173
	174
	175
	176

V

VÁLVULA	896
	904
	908
	1054
	1058
	1078
	1090
	1095
VÁLVULA - AMOSTRA DE FLUIDOS	534
	858
VÁLVULA - COLETOR E SOLENÓIDE	1102

ÍNDICE

Designação	Página
VÁLVULA - CONTROLE PRINCIPAL	1082
VÁLVULA - ESFERA	1064
VÁLVULA - NEUTRALIZADOR DA DIREÇÃO	876
	919
VÁLVULA - OBTENÇÃO DE AMOSTRAS DE FLUIDOS	78
	80
	530
	532
VÁLVULA COMPENSADORA	1078
	1085
VÁLVULA DA DIREÇÃO	904
	908
	912
	916
VÁLVULA DA EMBREAGEM DE TRAVAMENTO E MONTAGEM	651
	652
VÁLVULA DE ALÍVIO	658
	895
	896
	897
	898
	899
	900
	1090
	1091
	1092
	1093
	1094
	1095
VÂLVULA DE ALÍVIO - PILOTO E MONTAGEM	1067
	1068
VÁLVULA DE ALÍVIO (SAÍDA DO CONVERSOR DE TORQUE)	564
VÁLVULA DE COMPENSAÇÃO DE FLUXO	883
	884
	885
	886
VÁLVULA DE COMPENSAÇÃO DE PRESSÃO	811
	894
	1087
	1088
VÁLVULA DE CONTROLE	1072
	1078
VÁLVULA DE CONTROLE - PRESSÃO E COMPENSAÇÃO DE FLUXO	890
	892
	1086
VÁLVULA DE CONTROLE - TRANSMISSÃO	666
VÁLVULA DE CONTROLE DA BOMBA	1088
VÁLVULA DE CONTROLE DE ABSORÇÃO DE IMPACTOS	1096
VÁLVULA DE CONTROLE DO LIMITADOR DE TORQUE	1103
VÁLVULA DE CONTROLE DOS FREIOS	810
VÁLVULA DE CONTROLE E MONTAGEM - FREIOS	808
VÁLVULA DE CONTROLE PILOTO	818
	887
VÁLVULA DE CONTROLE PILOTO (DIREÇÃO)	820
VÁLVULA DE DESVIO	88
VÁLVULA DE DRENAGEM DO RADIADOR	144
VÁLVULA DE GÁS	755
	756
VÁLVULA DE MODULAÇÃO	653
	654
	655
	656
	657
VÁLVULA DE MODULAÇÃO (EMBREAGEM DE TRAVAMENTO DO CONVERSOR DE TORQUE)	651
	654
	657
VÁLVULA DE MODULAÇÃO (EMBREAGEM IMPULSORA DO CONVERSOR DE TORQUE)	416
	420
	424
	428
	433
	656
VÁLVULA DE PARADA	124
VÁLVULA DE PRIORIDADE DO CONVERSOR DE TORQUE	664
VÁLVULA DE REDUÇÃO DE PRESSÃO	904
	908
	1072
VÁLVULA DE REDUÇÃO DE PRESSÃO (DIREÇÃO)	912
	916
VÁLVULA DE RETENÇÃO	878
	879
	880
	881
	882
	1071
	1072
VÁLVULA DE RETENÇÃO (COLETOR DO FREIO)	800
VÁLVULA DE RETENÇÃO (DERIVAÇÃO DO ARREFECEDOR)	854
	1008
	1014
	1020
VÁLVULA DE RETENÇÃO (DIREÇÃO)	879

ÍNDICE

Designação	Página
	882
VÁLVULA DE RETENÇÃO (DIREÇÃO PILOTO)	840
	846
VÁLVULA DE SEPARAÇÃO	902
	1097
VÁLVULA DE SEPARAÇÃO (RESOLVEDOR)	904
VÁLVULA DO CARTUCHO PILOTO	888
	889
VÁLVULA DO CONTROLE PRINCIPAL E MONTAGEM	1064
VÁLVULA DO RESPIRO	398
VÁLVULA DO VENTILADOR HIDRÁULICO	1062
VÁLVULA E MONTAGEM - BOMBA VARIÁVEL	1069
	1070
VÁLVULA E MONTAGEM - CONTROLE DE VELOCIDADE DO VENTILADOR	1060
VÁLVULA NEUTRALIZADORA DA DIREÇÃO E MONTAGEM	876
VÁLVULA SELETORA	659
VÁLVULA SELETORA E CONTROLE DE PRESSÃO	660
	901
VÁLVULA SELETORA (TRANSMISSÃO)	666
VÁLVULA SOLENÓIDE	662
	1098
	1099
	1100
	1101
VÁLVULA SOLENÓIDE (SISTEMA DE ABSORÇÃO DE IMPACTOS)	1096
VÁLVULA SOLENÓIDE (SUPRIMENTO DE PRESSÃO PILOTO)	1082
VARETA DE NÍVEL DE LÍQUIDO	143
	1054
	1058
VENTILADOR - ALTERNADOR	234
VENTILADOR DE SUCÇÃO	102
VIDS	1420
VIRABREQUIM	19
	20
VOLANTE DO MOTOR	49

STICHWORTVERZEICHNIS

Bezeichnung	Seite
A	
ABDECKGLAS	303
ABDECKGLAS (ARBEITSSCHEINWERFER)	301, 304
ABDECKGLAS (FRONTSCHEINWERFER) (ABBLENDLICHT)	305
ABLASSSTOPFEN	58
ABLASSSTOPFEN (1-1/2-12 GEWINDE)	544
ABLASSVERLÄNGERUNG	48
ABSAUGSIEB	95
ABSPERRVENTIL	124
ACHSENANBAUSATZ	574
ACHSENTLÜFTERLEITUNGEN	551
ACHSÖLKÜHLER	494, 498, 502, 508, 514
ADAPTER, LINKS	1157, 1158, 1159
ANSAUGSIEB	545
ANSCHLUSS, RECHTS	1160, 1161
ANSCHLUSSKAPPE	1194
ANSCHLUSSKLEMMENSATZ	357, 361
ANSCHLUSSSTÜCK (SCHNELLWECHSELAN-SCHLUSS)	1062
ANTRIEBSSCHUTZ	703
ANTRIEBSWELLE	596, 598, 600
ANTRIEBSWELLEN-KEILVERZAHNUNG	601, 602
ANZUGSLEINE	1410, 1414, 1418
ARBEITSGERÄTE-SOFTWARE	260
ARBEITSGERÄTEELEKTRONIK	260
ARBEITSLEUCHTEN	301, 302, 303, 304, 310, 314
ARBEITSLEUCHTEN (24 VOLT)(HÄNGEND)	312
ARBEITSLEUCHTEN (24 V)(SENKRECHT)	312, 314
ARBEITSSCHEINWERFERLINSE	302
ASCHENBECHER	1390, 1394, 1398
ÄTHERSTARTHILFE	351, 352, 353
ÄTHERSTARTHILFEZYLINDER	352
AUFKLEBER	248, 1340, 1342, 1344, 1444
AUFKLEBER - ARMATURENBRETT	1346, 1430
AUSGLEICHSVENTIL	1078, 1085
AUSGLEICHSWELLE	8
AUSPUFFABSCHIRMUNG	166, 168
AUSPUFFKRÜMMER	156, 158, 160
AUSPUFFTEMPERATURSENSOR	320
B	
BATTERIE (UHR)	252, 257
BATTERIE UND VERDRAHTUNG	236
BATTERIE (12 V/TROCKEN)	236
BEFESTIGUNGSSCHRAUBENSATZ	251, 253, 254, 255, 256
BETRIEBSBREMSE	762, 764
BETRIEBSBREMSLEITUNGEN	800
BLINKLEUCHTE	306, 307, 308
BLINKLEUCHTE (BREMS-/RÜCKLEUCHTE)	318
BREMSBELEUCHTUNG	316, 317, 318
BREMSDRUCKSPEICHER	755, 756
BREMSFILTER U. -LEITUNGEN	798
BREMSGESTÄNGE	772, 778, 784, 792
BREMSSTEUERVENTIL	810
BREMSSTEUERVENTIL UND BEFESTIGUNGS-TEILE	808
BUCHSE	182

* ÜBERSETZUNG ZUM ZEITPUNKT DER DRUCKLEGUNG NICHT VORHANDEN

STICHWORTVERZEICHNIS

Bezeichnung	Seite
	194
	228
	718
	722
	726
	748
BÜRSTENFEDER	356
	357
	360
	361
BÜRSTENSATZ	356
	360

D

DÄMPFER	42
DICHTUNG	184
DICHTUNGSKAPPE	1320
DICHTUNGSSATZ	590
	601
	602
	755
	756
	810
	862
	895
	904
	908
	912
	916
	960
	962
	964
	1060
	1072
	1100
	1101
DICHTUNGSSATZ (EINZELEINSPRITZUNG)	5
DICHTUNGSSATZ (EINZELZYLINDERLAUFBUCHSE)	5
DICHTUNGSSATZ (KÜHLER/HYDRAULIK-KÜHLÜFTERLPUMPE - MAGNETVENTIL)	1099
DICHTUNGSSATZ (SOLENOIDVENTIL)	1098
DICHTUNGSSTOPFEN	655
	818
	820
	1253
	1304
	1398
	1428
DIFFERENTIAL	526
DIFFERENTIAL UND TELLERRAD	522
	524
DREHKNOPFSCHALTER (LÜFTERGESCHWINDIGKEIT)	1346
DREHKNOPFSCHALTER (REDUZIERTE FELGENZUGLEISTUNG)	1347
DREHKNOPFSCHALTER (SCHEIBENWISCHER U. -WASCHER) (EIN/AUS)	1430
	1432
DREHKNOPFSCHALTER (WISCHER/WASCHER)(HECK) (HINTERER SCHEIBENWISCHER)	1346
DREHMOMENTBEGRENZUNGS-STEUERVENTIL	1103
DREHMOMENTWANDLER	630
	632
	636
DREHMOMENTWANDLER-VORRANGVENTIL	664
DREHMOMENTWANDLERAUFHÄNGUNG	576
DREHMOMENTWANDLERSPERRE	631
	640
	644
DREHSTROMGENERATOR	234
DREHSTROMGENERATOR - ANSCHLUSSKLEMMENSATZ	234
DREHSTROMGENERATOR - BEFESTIGUNG	60
DREHSTROMGENERATOR-VENTILATOR	234
DREHZAHLSENSOR	346
	347
	348
	349
DREHZAHLSENSOR (EINSPRITZZEITPUNKT-KALIBRIERUNG)	395
	399
DREHZAHLSENSOR (GETRIEBEAUSGANG)	416
	420
	424
	428
	432
DREHZAHLSENSOR (MOTOR)	383
	387
	391
DREHZAHLSENSOR (MOTORDREHZAHL - EINSPRITZZEITPUNKT)	386
	390
	394
	398
DREHZAHLSENSOR (MOTORDREHZAHLEINSTELLUNG)	382
DREHZAHLSENSOR (TURBOLADERAUSGABE)	416
	420
	424
	428

* ÜBERSETZUNG ZUM ZEITPUNKT DER DRUCKLEGUNG NICHT VORHANDEN

STICHWORTVERZEICHNIS

Bezeichnung	Seite
	432
DREHZAHLWANDLER U. GEHÄUSE	618
	622
	626
	628
DRUCK- U. STROMAUSGLEICHSVENTIL	890
	892
	1086
DRUCKAUSGLEICHSVENTIL	811
	894
	1087
	1088
DRUCKLUFTLEITUNGEN	152
	154
DRUCKREDUZIERVENTIL	904
	908
	1072
DRUCKREDUZIERVENTIL (LENKUNG)	912
	916
DRUCKSCHALTER (DREHZAHLSPERRE BETÄTIGEN)	932
	936
	940
	944
	950
DRUCKSCHALTER (DREHZAHLSPERRE WIEDER AUFNEHMEN)	933
	937
DRUCKSCHALTER (HAUPTLENKUNG)	830
	832
	836
DRUCKSCHALTER (HUPE)	932
	936
	940
DRUCKSCHALTER (HYDRAULIKFILTERUMGEHUNG)	828
DRUCKSCHALTER (KRAFTSTOFFILTER)	452
	456
DRUCKSCHALTER (KÜHLMITTEL)	382
	386
	390
	394
	398
DRUCKSCHALTER (WÄGEEINRICHTUNG-SPEICHERN)	380
DRUCKSENSOR	328
	329
	330
	331
	332
	333
	334
	335
	336
	337
	338
	339
	340
	341
	342
	343
	344
	345
DRUCKSENSOR (ARBEITSGERÄTEPUMPEN-ÖL)	407
	412
DRUCKSENSOR (ATMOSPHÄRENDRUCK)	382
	394
DRUCKSENSOR (DREHMOMENTWANDLER-ÖL)	456
DRUCKSENSOR (DREHMOMENTWANDLER-ÖL)	452
DRUCKSENSOR (HAUPTLENKPUMPENÖL)	452
	456
DRUCKSENSOR (KURBELGEHÄUSE)	382
	394
DRUCKSENSOR (LÜFTERPUMPENÖL)	416
	420
	424
	428
	432
DRUCKSENSOR (MOTORÖL)	383
DRUCKSENSOR (TURBOEINALSS, LINKS)	382
DRUCKSENSOR (TURBOEINLASS)	394
DRUCKSENSOR (TURBOLADERAUSLASS)	382
	398
DRUCKSENSOR (TURBOLADEREINLASS, RECHTS)	382
DRUCKSPEICHER, HYDRAULISCHE SCHWINGUNGSDÄMPFUNG	920
DURCHFLUSSAUSGLEICHSVENTIL	883
	884
	885
	886

E

EINBAUVORSTEUERVENTIL	888
	889
EINFÜLLSTUTZENKAPPE	1054
	1058
EINSATZ	173
EINSPRITZDÜSENPUMPE	222
	223
	224
	225

* ÜBERSETZUNG ZUM ZEITPUNKT DER DRUCKLEGUNG NICHT VORHANDEN

STICHWORTVERZEICHNIS

Bezeichnung	Seite
EINSTELLER-EINBAUSATZ (SITZSCHALE, UNTEN)	1336
EINSTELLER-EINBAUSATZ (UNTERE SITZSCHALE)	1339
ELEKTR. ANLAGE	258
ELEKTR. UMFORMER (24 V ZU 12 V)	1304
ELEKTRONIK - MONITOR	261
	262
	263
	264
	265
	266
	267
	268
	269
	270
	271
	272
	273
	274
	275
	276
	277
	278
	279
	280
	281
	282
	283
	284
	285
	286
	287
	288
ELEKTRONIK - MOTORNENNLEISTUNG	259
ELEKTRONIKBEFESTIGUNG	290
ENDSCHALTER	766
	768
ENDSCHALTER (BREMSLEUCHTE)	766
	768
ENDSCHALTER (FESTSTELLBREMSE)	808
ENDSCHALTER (FÜR SPERRHEBEL FÜR STIC-STEUERUNG)	568
ENTDUNSTER	82
ENTLÜFTER	76
	188
	194
	291
	292
	557
	561
	565
ENTLÜFTER (KURBELGEHÄUSE)	76
ENTLÜFTERVENTIL	398
ENTLÜFTUNGSSATZ	178
	180
	182
	190
	192

F

FAHRERHAUS	1261
	1262
	1264
	1266
	1333
FAHRERHAUS UND PLATTFORM	1260
FAHRERHAUSABDECKUNG	1283
FAHRERHAUSAUSKLEIDUNG	1312
	1316
FAHRERHAUSBELEUCHTUNG	300
FAHRERHAUSBELEUCHTUNG (24 V)(MIT SCHALTER)	1264
FAHRERHAUSLEUCHTENLINSE	300
FAHRERHAUSLUFTFILTER	1297
	1298
FAHRERHAUSTÜR- U. FENSTERVERRIEGELUNG	1308
FAHRERHAUSTÜR (LINKS)	1284
FAHRERHAUSTÜRFEDER	1388
FAHRERHAUSVERDRAHTUNG	376
	380
FAHRERPLATTFORM	1354
	1357
FAHRERSITZ	1366
	1368
	1369
	1370
	1372
	1376
	1379
	1380
	1382
FAHRERSITZ, KIPPVORRICHTUNG	1336
	1339
FAHRERSITZFEDERUNG	1410
	1414
	1418
FAHRERSITZVERKLEIDUNG	1336
	1338
	1339
FAHRERSITZVERKLEIDUNG (SITZFLÄCHE)	1366
FAHRERSITZVERKLEIDUNG (SITZLEHNE)	1366
FAHRWERK	1
FELGE	594

* ÜBERSETZUNG ZUM ZEITPUNKT DER DRUCKLEGUNG NICHT VORHANDEN

STICHWORTVERZEICHNIS

Bezeichnung	Seite
FELGE (TEILBAR)	595
FELGENAUFHÄNGUNG	575
FELSSCHAUFEL	1168
	1170
	1172
	1174
	1176
	1178
	1180
	1182
	1183
	1184
	1185
	1186
	1187
	1188
	1189
	1190
	1191
	1192
FESTSTELLBREMSE	758
	760
FESTSTELLBREMSGESTÄNGE	771
FEUERSCHUTZWAND	690
FILTER	540
	753
	754
FILTER (KRAFTÜBERTRAGUNG)	539
FILTER U. DICHTUNG	352
FILTERSIEB	1054
	1058
	1422
	1423
FLANSCH	64
FLÜSSIGKEITSPROBEENTNAHMEVENTIL	78
	80
	530
	532
FLÜSSIGKEITSSTANDANZEIGE	143
	1054
	1058
FLÜSSIGKEITSSTANDSCHALTER	367
FLÜSSIGKEITSSTANDSCHALTER (HYDRAULIKTANK)	456
FLÜSSIGKEITSSTANDSCHALTER (LENKUNGS-/BREMSHYDRAULIKTANK)	456
FLÜSSIGKEITSSTANDSCHALTER (MOTORÖL)	456
FRONTBELEUCHTUNG	312
FRONTSCHEINWERFER	305
FRONTSCHEINWERFER (*LOW BEAM)	312
FÜLLSTUTZENKAPPE	77
FUSSBREMSGESTÄNGE	766
	768
FUSSMATTE	1312

G

GASPEDAL	1349
	1350
GASVENTIL	755
	756
GEHÄUSE-EINBAUSATZ	1410
GESCHWINDIGKEITS- U. DREHZAHLMESSER-MODUL	1340
	1342
	1344
GESTÄNGEBOLZEN UND DICHTUNG	1136
	1138
	1140
	1142
	1146
	1148
	1152
GETRIEBE	647
GETRIEBE U. GEHÄUSE (AUSGANGSÜBER-TRAGUNG)	544
GETRIEBEAUFHÄNGUNG	604
GETRIEBEHYDRAULIK	492
GETRIEBELAGERSATZ	550
GETRIEBEÖLFÜLLSTUTZEN	527
	528
GETRIEBEPUMPE	591
	592
GETRIEBESTEUERVENTIL	666
GLASDICHTUNG	1362
GLEITPLATTE	1351
	1352
GLEITSCHIENENBLOCK-EINBAUSATZ	1366
	1376
	1383
	1384
	1385
	1386
GLEITSCHIENENBLOCK-EINBAUSATZ (EINSCHL. BLÖCKE U. BOLZEN)	1372
GRIFF (GLEITEINSTELLUNG)	1351
GRIFF (GLEITEINSTELLUNG)	1352
GRIFF (KIPPEINSTELLUNG)	1351
	1352
GRUNDAUSFÜHRUNG	2

H

HALTEBÜGEL (SCHNEIDWERKZEUGE)	1210
HALTEGRIFF	1300

* ÜBERSETZUNG ZUM ZEITPUNKT DER DRUCKLEGUNG NICHT VORHANDEN

STICHWORTVERZEICHNIS

Bezeichnung	Seite
HALTERING	184, 976
HALTETEILESATZ	1410
HALTETEILESATZ (SITZFEDERUNG)	1414, 1418
HAUBENBLENDE	750
HAUPTFILTER	150
HAUPTSTEUERVENTIL	1082
HEBEL	1054
HECKBELEUCHTUNG	314
HECKSTOSSSTANGE	677, 678
HEIZUNGSKABEL	298
HEIZUNGSLEITUNGEN	1322
HINTERE STOSSTANGE	673, 674, 675, 676
HINTERRAHMEN	699, 700
HOCHHUBVORRICHTUNG	1118, 1119, 1120, 1121
HUBZYLINDER	960, 962, 964, 966, 968, 970
HUBZYLINDERLEITUNGEN	1026, 1028, 1030
HYDRAULIKBLOCK	479, 480, 816
HYDRAULIKFILTER	541
HYDRAULIKFILTER (KRAFTÜBERTRAGUNG)	538
HYDRAULIKLEITUNGEN	996, 1002
HYDRAULIKLÜFTERLEITUNGEN	1008, 1014, 1020
HYDRAULIKLÜFTERVENTIL U. BEFESTIGUNGSTEILE	1062
HYDRAULIKÖLKÜHLER	956, 958
HYDRAULIKSIEB	1054
HYDRAULIKSTEUERAUFHÄNGUNG	1390, 1394, 1398
HYDRAULIKSTEUERUNG, ELEKTRON.	932, 936, 940, 944
HYDRAULIKSYSTEM	974
HYDRAULIKTANK	1054, 1058
HYDRAULIKTANK UND BEFESTIGUNGSTEILE	1051, 1052
HYDRAULIKTANKKAPPENDECKEL	1054
HYDRAULIKTANKVERKLEIDUNG	680, 681, 682, 683, 684, 685, 686, 688
HYDRAULISCHE SCHWINGUNGSDÄMPFUNG	930

I

Bezeichnung	Seite
IDENTIFIKATIONSSCHILD	441, 447, 461, 467
IDENTIFIZIERUNGS-AUFKLEBER	252, 440, 441, 446, 447, 460, 461, 466, 467, 933, 937, 941
IDENTIFIZIERUNGS-AUFKLEBER (LANGZEITKÜHLMITTEL)	1446
IDENTIFIZIERUNGS-AUFKLEBER (VIDS/VIMS)(SCHNITTSTELLENMODUL)	319
IDENTIFIZIERUNGS-AUFKLEBER (VIMS/VIDS - HAUPTMODUL)	257
INSTRUKTIONS-AUFKLEBER	441, 447, 461, 467
INSTRUKTIONS-AUFKLEBER (FÜR SITZVERSTELLUNG)	1414

* ÜBERSETZUNG ZUM ZEITPUNKT DER DRUCKLEGUNG NICHT VORHANDEN

STICHWORTVERZEICHNIS

Bezeichnung	Seite
INSTRUKTIONS-AUFKLEBER (WASSER - EINLASS/AUSLASS)	1252
INSTRUMENTENTAFEL	1340
	1342
	1344
	1346
K	
KÄLTEMITTEL-DRUCKSPEICHER UND BEFESTIGUNG	1250
KÄLTEMITTELANSCHLUSS	1320
KÄLTEMITTELKOMPRESSOR	1272
	1273
	1274
	1275
	1276
	1278
	1280
KÄLTEMITTELKOMPRESSOR U. BEFESTIGUNG	4
KÄLTEMITTELKOMPRESSOR U. BEFESTIGUNG	1268
	1270
KÄLTEMITTELKONDENSATOR U. BEFESTIGUNGSTEILE	1282
KANTENSCHUTZ	1209
KAPPE	72
	74
	78
	80
	94
	1073
	1423
KAPPE (11/16-16-GEWINDE)	1069
	1070
KAPPENFILTERSATZ	186
KARTENLEUCHTE	1304
KEILRIEMEN	60
	1268
	1270
KIPPSCHALTER	369
	1346
KIPPSCHALTER (MOTORABSTELLUNG (STANDEBENE))	439
KIPPSCHALTER (SCHWINGUNGSDÄMP-FUNG)	930
KIPPSCHALTER (STARTHILFE)	1346
KIPPSCHALTER (STEIGLEITERLEUCHTEN)	439
KIPPSCHALTER (STEIGLEITERLEUCHTEN)	438
KIPPSCHALTER (24 V)(ERLEUCHTET) (ARBEITSGERÄTESPERRE)	932
	936
	940
KIPPVORRICHTUNG NACH HINTEN, REPARATURSATZ	1336
	1339
KIPPWANNENSATZ	1366
	1372
	1376
KIPPZYLINDER	972
KLIMAANLAGE	1251
	1252
KLIMAANLAGENLEITUNGEN	1320
KNICKGELENK-ANHÄNGUNG	708
KNICKGELENKSPERRE	746
KOLBENMOTOR	1034
	1035
KOLBENPUMPE	802
	804
	866
	868
	870
	1036
	1038
	1040
	1042
KOLBENPUMPE (KONSTANTPUMPE F. ARBEITSGERÄTE)	1002
KOLBENPUMPE (KONSTANTPUMPE F. ARBEITSGERÄTE)	996
KOLBENPUMPENBETÄTIGER	812
	813
	814
	815
KOLBENPUMPENUMLAUFSATZ	805
	806
	1048
KOMPRESSORSATZ	1410
KRAFTSTOFF-ENTLÜFTUNGSPUMPE	213
	214
KRAFTSTOFFEINFÜLLVORRICHTUNG (SCHNELLFÜLLUNG)	196
	197
	198
KRAFTSTOFFEINFÜLLVORRICHTUNG (STANDARD)	186
	188
	190
	192
	194
KRAFTSTOFFEINSPRITZDÜSE	199
	200
	201
KRAFTSTOFFEINSPRITZLEITUNGEN	204
	208

* ÜBERSETZUNG ZUM ZEITPUNKT DER DRUCKLEGUNG NICHT VORHANDEN

STICHWORTVERZEICHNIS

Bezeichnung	Seite
KRAFTSTOFFHEIZUNG	291 292 294 296
KRAFTSTOFFILTER	184
KRAFTSTOFFILTER (HAUPTELEMENT)	184
KRAFTSTOFFILTER (SICHERHEITSELEMENT)	184
KRAFTSTOFFKAPPE	178 180 182
KRAFTSTOFFKRÜMMER	211 212
KRAFTSTOFFLEITUNGEN	203
KRAFTSTOFFLEITUNGSSCHUTZ	226
KRAFTSTOFFÖRDERPUMPE	216 218 219 220
KRAFTSTOFFSIEB	230
KRAFTSTOFFTANK	228 230 232
KRAFTSTOFFTANK-SIEBEINSATZ	228
KRAFTSTOFFTANKKAPPE	186 188 190 192 194 291 292
KRAFTÜBERTRAGUNG	589
KRAFTÜBERTRAGUNG - FILTER U. BEFESTIGUNG	530 532 534
KRAFTÜBERTRAGUNGSELEKTRONIK	289
KRAFTÜBERTRAGUNGSVERDRAHTUNG	416 420 424 428 432
KREUZGELENK	648 649 650
KREUZGELENK UND LAGER	603
KUGELVENTIL	1064
KÜHLER	138 139 140 141
KÜHLERABDECKUNG	142
KÜHLERABLASSVENTIL	144
KÜHLERKAPPE	143
KÜHLERLEITUNGEN	106 110 114
KÜHLERSCHUTZ	704 706
KÜHLERWASSERKASTEN, OBEN	143
KÜHLMITTELFLUSSSCHALTER	364
KÜHLMITTELLEITUNGEN	104
KÜHLWASSER-TEMPERATURREGLER UND GEHÄUSE	103
KÜHLWASSERANSCHLUSS	99
KÜHLWASSERLEITUNGEN	120 122 124 128 130 132
KÜHLWASSERPUMPE	134 135 136 137
KUPPLUNGSSPERRENVENTIL U. BEFESTIGUNGSTEILE	651 652
KURBELWELLE	19 20
KURBELWELLENDICHTUNG	68
KURBELWELLENDICHTUNG (LINKSDREHUNG)	68
KURBELWELLENDICHTUNG (RECHTSDREHUNG)	68

L

Bezeichnung	Seite
LADELUFTKÜHLER, WASSERGEKÜHLT	145
LADERRAHMEN	692 694 696 698 701
LAUFWERKSKETTE, RECHTS	1390 1394
LENKBETÄTIGUNG	818 820
LENKBETÄTIGUNGSAUFHÄNGUNG	1402 1406
LENKFILTER U. LEITUNGEN	826 827
LENKNEUTRALISIERLEITUNGEN	850 852
LENKNEUTRALISIERVENTIL	876 919

* ÜBERSETZUNG ZUM ZEITPUNKT DER DRUCKLEGUNG NICHT VORHANDEN

STICHWORTVERZEICHNIS

Bezeichnung	Seite
LENKNEUTRALISIERVENTIL U. BEFESTIGUNGSTEILE	876
LENKÖLKÜHLERLEITUNGEN	854
	858
LENKÖLLEITUNGEN	840
	844
	845
	846
LENKUNG	872
	873
LENKUNGSANSCHLAG	874
LENKUNGSKABELBAUM (STEUERUNG - LENL-SCHALT-SYSTEM)	818
	820
LENKVENTIL	904
	908
	912
	916
LENKZYLINDER	824
LENKZYLINDER UND AUFHÄNGUNG	822
LEUCHTE	306
	1304
LEUCHTE (24 V)	307
	309
	1346
LEUCHTE (24 V)(65 W)	301
	302
	303
	304
LEUCHTE (24 V)(65 W) (FRONTSCHEINWERFER)	305
LEUCHTE (28 V)	376
LEUCHTE (28 V) (FAHRERHAUSDACH)	300
LEUCHTEN-UMBAUSATZ (24 V)	932
	936
	940
	1346
LEUCHTEN-UMBAUSATZ (24 V)	369
	1304
LEUCHTEN-UMBAUSATZ (24 V)	1347
LINSE - ROT	307
LINSE, BLAU	309
LUFTEINLASS-TRÄGER	753
	754
LÜFTERGESCHWINDIGKEITS-REGELVENTIL U. BEFESTIGUNGSTEILE	1060
LUFTFEDER-EINBAUSATZ	1410
LUFTFILTER	1264
	1297
	1298
LUFTKANAL	1294
LUFTREINIGER	146
	148
	150
	178
	180
	190

M

Bezeichnung	Seite
MAGNETSCHALTER	368
	441
	446
MAGNETSCHALTER (ARBEITSLEUCHTENRELAIS)	440
	460
	466
MAGNETSCHALTER (HAUPTSCHALTER)	441
	460
	466
MAGNETSCHALTER (STARTERRELAIS)	447
MAGNETSCHALTER (STARTRELAIS)	461
	467
MAGNETSTOPFEN	474
	476
MAGNETSTOPFEN (GEWINDE 1 5/8-12)	668
MAGNETVENTIL	662
	1098
	1099
	1100
	1101
MAGNETVENTIL (SCHWINGUNGSDÄMPFUNG)	1096
MAGNETVENTIL (VORSTEUERDRUCKZULAUF)	1082
MANSCHETTENKLEMME	356
MASCHINENDATEN-ERFASSUNGSSYSTEM (VIMS)	1421
MASCHINENDATENANZEIGESYSTEM (VIDS)	1420
MASCHINENVERDRAHTUNG	406
	412
MELDEZENTRUMMODUL	1326
	1327
MESSERSCHUTZ	1205
	1206
	1207
	1208
MINIATURLEUCHTE (28 V)	376
MODUL - VIER ELEKTRON. ANZEIGEN	1329
	1330
MODUL-MONITORTASTATUR	1328
MODULATORVENTIL	653
	654
	655
	656

* ÜBERSETZUNG ZUM ZEITPUNKT DER DRUCKLEGUNG NICHT VORHANDEN

STICHWORTVERZEICHNIS

Bezeichnung	Seite
	657
MODULATORVENTIL (DREHMOMENTWANDLER-SPERRENKUPPLUNG)	651
	654
	657
MODULATORVENTIL (WANDLERIMPELLER-KUPPLUNG)	416
	420
	424
	428
	433
	656
MOTOR-EINBAUSATZ	7
MOTOR, ELEKTR. (27 V)	1252
MOTORAUFHÄNGUNG	69
	70
MOTORAUSFÜHRUNG	4
MOTORBLOCK	21
	22
	24
	26
	28
MOTORBLOCKDECKEL	13
MOTORDREHVORRICHTUNG	1044
	1046
MOTORHAUBE UND VERKLEIDUNG	710
	714
	718
	722
	726
MOTORHUBÖSE	59
MOTORNENNLEISTUNGSSTEUERUNG, ELEKTRON.	243
	244
	245
	246
	247
MOTORÖLEINFÜLLSTUTZEN	77
MOTORÖLKÜHLER	100
MOTORÖLLEITUNGEN	84
	88
MOTORSTEUERUNG, ELEKTRON.	248
	249
	250
	251
MOTORVERDRAHTUNG	382
	386
	390
	394
	398

N

Bezeichnung	Seite
NEBENANTRIEB	43
	44
	46
NEIGEZYLINDERLEITUNGEN	1032
NIPPEL	476
NOCKENWELLE	10
	11
NOTABSCHALTERVERDRAHTUNG	438
	439
NOTLENKUNGSLEITUNGEN	830
	832
	836

O

Bezeichnung	Seite
O-RING-DICHTUNG	64
O-RING-DICHTUNG (110,49 MM INNENDURCHMESSER)	178
	180
	182
	186
	188
	190
O-RING-DICHTUNG (133,66 MM ID)	579
	585
O-RING-DICHTUNG (81,92 MM ID)	596
	598
O-RING-DICHTUNG (94,84 MM ID)	840
	846
O-RING-DICHTUNG (94,84 MM ID)	997
	1003
O-RING-STOPFEN (7/16-20 GEWINDE)	1008
	1014
	1020
	1021
	1038
OBERE ABDECKPLATTE	751
ÖLABLASSSCHRAUBE	64
ÖLFILTER	78
	80
	536
	538
	539
	540
	541
	828
ÖLFILTERELEMENT (HYDRAULISCH)	536
ÖLFILTERKAPPE	1448
ÖLKÜHLERBLOCK	101
ÖLLEITUNGEN - KRAFTÜBERTRAGUNG	552
	556
	560

* ÜBERSETZUNG ZUM ZEITPUNKT DER DRUCKLEGUNG NICHT VORHANDEN

STICHWORTVERZEICHNIS

Bezeichnung	Seite
	564
ÖLMESSSTAB	83
ÖLSCHNELLWECHSELANSCHLUSS	94
ÖLWANNE	62
	64
ÖLWANNENDICHTUNG	64

P

PANZERWANNE	702
PEDALBOLZEN	1350
PENDELACHSE	472
	476
PENDELVENTIL	902
	1097
PENDELVENTIL (FUNKTIONSGEBER)	904
PLANETENANTRIEBSGEHÄUSE U. TEILE	482
PLANETENGETRIEBE	578
	584
PLATTFORM-ANBAUSATZ	1332
PLEUELSTANGE UND KOLBEN	66
POLSTEREINBAUSATZ (TEXTILRÜCKENLEHNE)	1296
PROBEENTNAHMEVENTIL F. WARTUNGSFL.	534
	858
PROPORTIONALSOLENOID (HUBVORRICHTUNG)	921
PUFFER - SENSOR	240
PUMPENDICHTUNGSSATZ	802
	804
PUMPENSTEUERUNG	817
PUMPENSTEUERVENTIL	1088

R

RADIOEINBAUSATZ	1304
	1306
REGLER-EINBAUSATZ	202
REIFEN UND FELGE	605
	606
	607
	608
	609
	610
	611
	612
	613
	614
	615
	616
	617
RELAISANSCHLUSSKLEMMENSATZ (DREHSTROMGENERATOR)	234
RIEMENSCHUTZ	54
	55
ROHRSTOPFEN (3/8-18 NPTF-GEWINDE)	230
ROLLENSATZ	1350
	1410
	1414
	1418
RÜCKENSTÜTZEN-EINSTELLKNOPF	1334
RÜCKFAHRWARNHORN	373
RÜCKLEHNENVERLÄNGERUNG	1296
RÜCKLEHNENVERLÄNGERUNG (STOFF)	1382
RÜCKSPIEGEL	1325
RÜCKSPÜLPUMPE	98

S

SAUGLÜFTER	102
SCHALE - RÜCKENLEHNE	1334
SCHALLDÄMPFER	162
	163
	164
SCHALTER	1346
	1347
SCHALTER (LESELEUCHTE)	1304
SCHALTER (REDUZIERTE/MAXIMALE FELGENZUGKRAFT)	932
	936
	940
SCHALTERVERKLEIDUNG	438
	439
SCHALTVENTIL	659
SCHALTVENTIL (GETRIEBE)	666
SCHAUFEL- U. AUSLEGERUMLENKMECHANISMUS	1132
	1133
	1134
	1135
SCHAUFELAUSSCHALTER UND -EINSTELLER	976
	978
	980
	984
	988
	992
SCHAUFELSTEUERUNG	1104
	1105
	1106
	1108
	1110
	1112
	1113

* ÜBERSETZUNG ZUM ZEITPUNKT DER DRUCKLEGUNG NICHT VORHANDEN

STICHWORTVERZEICHNIS

Bezeichnung	Seite
	1114
	1116
SCHAUFELUMLENKMECHANISMUS	1126
	1127
	1128
	1130
SCHAUGLAS - FLÜSSIGKEITSSTAND	542
SCHEIBENWASCHANLAGE	1422
	1423
SCHEIBENWISCHER	1434
	1436
	1438
	1440
SCHEIBENWISCHER UND -WASCHANLAGE	1262
	1424
	1426
	1428
	1430
	1432
SCHEIBENWISCHERBLATT	1430
	1432
SCHEIBENWISCHERBLATT (HINTEN)	1424
	1426
	1428
SCHEIBENWISCHERBLATT (VORNE)	1424
	1426
	1428
SCHEIBENWISCHERMOTOR	1331
SCHEIBENWISCHERSCHALTER	371
SCHEIBENWISCHERSCHALTER (24 V)	1346
SCHILD - HYDRAULISCHER DRUCKSPEICHER	920
SCHILD UND AUFKLEBER	1446
	1447
SCHLAUCHLEITUNG	114
SCHLÜSSEL	182
	194
	228
	292
	718
	722
	726
	748
	1448
SCHLÜSSEL (HAUPTSCHALTER)	365
SCHMIERLEITUNGEN	740
	742
	744
SCHMIERNIPPEL	740
	744
SCHMIERNIPPEL (1/8-27-GEWINDE)	742
SCHMIERNIPPEL (1/8-27-GEWINDE)	598
SCHMIERPUMPE	96
	97
SCHNEIDMESSER	1195
	1196
SCHNEIDMESSERSEGMENT	1197
	1198
	1199
	1200
SCHNELLBETANKUNGSANSCHLUSS	178
	180
	182
SCHRÄGKOLBEN-EINBAUSATZ	1038
SCHRAUBE (M10X1,50X12MM)	1424
SCHUTZ	292
SCHUTZABDECKUNG	527
	528
	1448
SCHUTZBLECHE, VORNE	689
SCHUTZKAPPE	439
	1340
SCHWENKSCHEIBE	1049
	1050
SCHWINGSITZ	1383
	1384
	1385
	1386
SCHWINGUNGSDÄMPFUNG U. LEITUNGEN	922
SCHWINGUNGSDÄMPFUNG U. LEITUNGEN	926
SCHWUNGRAD	49
SCHWUNGRADGEHÄUSE	56
SCHWUNGRADGEHÄUSEDECKEL	14
SCREEN	1054
SEITENANTRIEB U. RAD	668
SEITENANTRIEB UND RAD	668
SEITENANTRIEB UND RADBREMSE	670
	671
SEITENTÜR	1286
	1288
	1290
	1292
SENSORANSCHLUSSSATZ (12POLIG)	1390
	1394
SENSORANSCHLUSSSATZ (12POLIG)	374
	402
	406
	436
SENSORANSCHLUSSSATZ (12POLIG)	1347
	1398
SENSORANSCHLUSSSATZ (2POLIG)	240
	312
	314
	374
	402
	406

* ÜBERSETZUNG ZUM ZEITPUNKT DER DRUCKLEGUNG NICHT VORHANDEN

STICHWORTVERZEICHNIS

Bezeichnung	Seite
	407
	416
	420
	424
	428
	432
	436
	662
	766
	768
	922
	926
	944
	950
	1253
SENSORANSCHLUSSSATZ (2POLIG)	932
	940
	1347
SENSORANSCHLUSSSATZ (3POLIG)	328
	329
	334
	336
	337
	338
	340
	341
	342
	343
	344
	345
	346
	347
	374
	402
	406
	416
	420
	424
	428
	432
	436
	766
	768
	932
	933
	936
	937
	940
	941
	944
	950
	980
	984
	988
	992
	1390
	1394
SENSORANSCHLUSSSATZ (3POLIG)	932
	936
	940
	1347
	1398
SENSORANSCHLUSSSATZ (4 POLIG)	312
	818
	820
	944
	950
SENSORANSCHLUSSSATZ (4 POLIG)	402
	406
	932
	936
	940
	1253
SENSORANSCHLUSSSATZ (4 POLIG)	1347
SENSORANSCHLUSSSATZ (4 POLIG) (SCHEIBENWASCHER/-WISCHER)	1423
SENSORANSCHLUSSSATZ (6POLIG)	374
	1253
	1304
	1430
	1432
SENSORANSCHLUSSSATZ (6POLIG)	1347
SENSORANSCHLUSSSATZ (8POLIG)	416
	420
	424
	428
	432
	818
	820
	932
	936
	940
	944
	950
	1390
	1394
	1430
	1432
SENSORANSCHLUSSSATZ (8POLIG)	1347
	1398
SERIENNUMMERNSCHILD (MOTOR)	1446
SICHERHEITSFILTER	150
SICHERHEITSGURT	1363
	1364
	1365
	1382

* ÜBERSETZUNG ZUM ZEITPUNKT DER DRUCKLEGUNG NICHT VORHANDEN

STICHWORTVERZEICHNIS

Bezeichnung	Seite
SICHERHEITSGURT ((AUTOMATIKSICHERHEITSGURT))	1379
SICHERUNG (10 A)	440
	446
	460
	466
SICHERUNG (15 A)	440
	446
	460
	466
SICHERUNG (20 A)	440
	446
	460
	466
SICHERUNGSHALTERKAPPE	440
	446
	460
	466
SIEB	62
	64
	1054
	1058
SITZHEBEL-EINBAUSATZ	1366
	1372
	1376
SITZKISSENEINBAUSATZ	1372
	1376
SITZKISSENEINBAUSATZ (STOFF)	1366
SITZUNTERBAU	1401
SOCKELVERSCHLEISSPLATTE	1167
SOFTWARE - KRAFTÜBERTRAGUNG	289
SONNENBLENDE	1360
	1361
SONNENBLENDE (HINTEN)	1360
	1361
SONNENBLENDE (VORNE)	1360
	1361
SPERRVENTIL	878
	879
	880
	881
	882
	1071
	1072
SPERRVENTIL (BREMSKRÜMMER)	800
SPERRVENTIL (KÜHLERUMGEHUNG)	854
	1008
	1014
	1020
SPERRVENTIL (LENKUNG)	882
SPERRVENTIL (LENKUNGSVORSTEUERUNG)	840
	846
SPERRVENTIL (VIERWEGLENKVENTIL)	879
SPIEGEL	1323
	1324
STANDARDHUBVORRICHTUNG	1122
	1123
	1124
	1125
STARRACHSE	471
	474
STARTERMOTOR	354
	356
	360
STARTSCHALTER	370
STARTSCHALTER (SCHLÜSSEL)	1346
STAUBDECKEL	178
	180
	182
STAUBKAPPE	78
	80
	85
	89
	298
	299
	416
	420
	424
	428
	432
	530
	532
	534
	553
	557
	561
	565
	618
	622
	626
	628
	651
	652
	658
	664
	772
	778
	784
	792
	800
	830
	832
	836
	840
	846

* ÜBERSETZUNG ZUM ZEITPUNKT DER DRUCKLEGUNG NICHT VORHANDEN

STICHWORTVERZEICHNIS

Bezeichnung	Seite
	854
	855
	858
	859
	872
	873
	996
	997
	1002
	1004
	1008
	1014
	1020
	1062
	1064
	1067
	1068
	1073
STECKDOSEN - EINBAUSATZ (12POLIG)	436
	818
	820
	932
	936
	940
	950
	1391
	1395
	1398
STECKDOSEN - EINBAUSATZ (12POLIG)	402
	406
	944
	1304
STECKDOSEN - EINBAUSATZ (2POLIG)	233
	309
	348
	349
	352
	364
	366
	367
	368
	373
	394
	395
	398
	399
	402
	406
	407
	416
	420
	424
	428
	432
	436
	447
	461
	467
	654
	657
	828
	921
	936
	940
	945
	951
	1098
	1099
	1100
	1101
	1410
STECKDOSEN - EINBAUSATZ (2POLIG)	446
STECKDOSEN - EINBAUSATZ (2POLIG)	407
STECKDOSEN - EINBAUSATZ (2POLIG)	1414
STECKDOSEN - EINBAUSATZ (2POLIG)	666
	1252
STECKDOSEN - EINBAUSATZ (2POLIG)	1272
	1273
	1276
STECKDOSEN - EINBAUSATZ (2POLIG) (ARBEITSLEUCHTE)	304
STECKDOSEN - EINBAUSATZ (2POLIG) (MELDUNGSMODUL)	1327
STECKDOSEN - EINBAUSATZ (3POLIG)	306
	307
	308
	320
	321
	322
	323
	324
	325
	326
	327
	331
	332
	333
	339
	376
	380
	390
	394
	398
	402
	406
	416

* ÜBERSETZUNG ZUM ZEITPUNKT DER DRUCKLEGUNG NICHT VORHANDEN

STICHWORTVERZEICHNIS

Bezeichnung	Seite
	420
	424
	428
	432
	655
	808
	830
	832
	836
	932
	936
	937
	940
	941
	944
	950
	1342
	1344
	1347
	1391
	1395
	1398
STECKDOSEN - EINBAUSATZ (3POLIG)	240
STECKDOSEN - EINBAUSATZ (3POLIG) (FAHRERHAUSBELEUCHTUNG)	300
STECKDOSEN - EINBAUSATZ (4 POLIG)	312
	568
	808
	945
	951
STECKDOSEN - EINBAUSATZ (4 POLIG)	402
	407
	1328
	1347
STECKDOSEN - EINBAUSATZ (6POLIG)	374
	407
	1253
	1329
	1330
	1331
	1340
	1342
	1344
	1347
	1428
	1434
	1436
STECKDOSEN - EINBAUSATZ (6POLIG)	407
STECKDOSEN - EINBAUSATZ (6POLIG) (MELDUNGSMODUL)	1326
	1327
STECKDOSEN - EINBAUSATZ (8POLIG)	371
	406
	487
	488
	490
	932
	936
	940
	944
	950
	1347
	1391
	1395
	1398
STECKDOSENDECKEL	441
	447
	461
	467
STEIGLEITER	730
	734
	738
	752
STELLUNGSSENSOR	321
	322
	323
	324
	325
	326
	327
STELLUNGSSENSOR (HUB)	976
	978
STELLUNGSSENSOR (KIPPEN)	980
	984
	988
	992
STELLUNGSSENSOR (OHNE FEDER) (STEUERHEBEL)	932
	936
	940
	945
	951
STELLUNGSSENSOR (WANDLERIMPELLER-KUPPLUNG)	766
STEUERANTRIEBSGEHÄUSEDECKEL	12
STEUERKOLBENSATZ	1038
STEUERUNG - NICHT PROGRAMMIERT	252
	253
	254
	255
	256
	257
STEUERUNG - NICHT PROGRAMMIERT (ARBEITSGERÄT)	466
STEUERUNG - NICHT PROGRAMMIERT (ARBEITSGERÄT)	446

* ÜBERSETZUNG ZUM ZEITPUNKT DER DRUCKLEGUNG NICHT VORHANDEN

STICHWORTVERZEICHNIS

Bezeichnung	Seite
STEUERUNGSEINHEIT, ELEKTRON. FÜR MOTOR UND BEFEST.	241
	242
STEUERVENTIL	1072
	1078
STIC-KOMBIHEBEL	484
	485
	486
	487
	488
	490
STIC-KOMBIHEBEL - STEUERUNGSSPERRE	568
	570
	572
STIRNRAD	50
STIRNRADGEHÄUSE	58
STIRNRADGEHÄUSEDECKEL	16
	17
STOSSSTANGENVERDRAHTUNG	374
STOSSTANGEN-BEFESTIGUNGSTEILE	748
STROMANSCHLUSS-STECKDOSE (12 V)	1346
STRÖMUNGSSCHALTER	366

T

TEMPERATURREGLER	103
TEMPERATURSENSOR	350
TEMPERATURSENSOR (DREHMOMENT-WANDLERÖL)	416
	420
	424
	428
	432
TEMPERATURSENSOR (HINTERACHSÖL)	407
	412
TEMPERATURSENSOR (HYDRAULIKÖL)	407
	412
TEMPERATURSENSOR (KÜHLMITTEL)	382
	386
	390
	394
	398
TEMPERATURSENSOR (LENKUNGSÖL)	407
	412
TEMPERATURSENSOR (VORDERACHSÖL)	402
THERMOELEMENT	372
THERMOSTATSCHALTER	1252
TRENNSCHALTER	365
TRENNSCHALTER (BATTERIE)	237
TROCKNER	1250
TURBOLADER	170
	171
	172
	173
	174
	175
	176
TURBOLADER-KÜHLWASSERLEITUNGEN	118
TURBOLADEREINSATZ	172
	176
TURBOLADERÖLLEITUNGEN	92

U

ÜBERDRUCKVENTIL	658
	895
	896
	897
	898
	899
	900
	1090
	1091
	1092
	1093
	1094
	1095
ÜBERDRUCKVENTIL (DREHZAHLWANDLERAUSLASS)	564
ÜBERDRUCKVENTIL-EINBAUSATZ	590
ÜBERROLLSCHUTZ	1359
UMGEHUNGSSCHALTER	363
UMGEHUNGSSCHALTER (GETRIEBEÖLFILTER)	407
UMGEHUNGSSCHALTER (GETRIEBEÖLFILTER)	412
UMGEHUNGSVENTIL	88
UMLAUFKÜHLWASSERHEIZUNG	298
	299
UMLAUFKÜHLWASSERHEIZUNGS-ELEMENT (120 V, 1500 W)	298
UMLAUFKÜHLWASSERHEIZUNGS-ELEMENT (240 V, 1500 W)	299
UNTERBRECHER (10 A) (STARTSCHLÜSSEL)	441
	447
	461
	467
UNTERBRECHER (105 A) (DREHSTROMGENERATOR)	461
UNTERBRECHER (105 A) (DREHSTROMGENERATOR)	467
UNTERBRECHER (105 A) (DREHSTROMGENERATOR-HAUPTUNTERBRECHERSCHALTER)	447

* ÜBERSETZUNG ZUM ZEITPUNKT DER DRUCKLEGUNG NICHT VORHANDEN

STICHWORTVERZEICHNIS

Bezeichnung	Seite
UNTERBRECHER (105 A) (DREHSTROMGENERATOR U. HAUPT-)	440
UNTERBRECHER (105 A) (HAUPTUNTERBRECHER)	467
UNTERBRECHER (15 A) (ELEKTRON. STEUERMODUL DES MOTORS)	441 447 461 467
UNTERBRECHER (15 A) (FAHRSCHEINWERFER)	441 447 461 467
UNTERSCHRAUBSEGMENT	1201

V

VENTIL	896 904 908 1054 1058 1078 1090 1095
VENTIL - HYDRAULISCHE SCHWINGUNGSDÄMPFUNG	1096
VENTIL - SCHALT- UND DRUCKSTEUERUNG	660 901
VENTIL U. BEFESTIGUNGSTEILE (VERSTELLPUMPE)	1069 1070
VENTIL UND BEFESTIGUNGSTEILE - HAUPTSTEUERUNG	1064
VENTILDECKEL	18
VENTILDECKEL - UNTERTEIL	9
VENTILKAPPE (STÄRKE 2,0 ZOLL)	595
VENTILSOLENOID U. -KRÜMMER	1102
VENTILSTEUERUNG	72 74
VERDRAHTUNG, HINTEN	436
VERDRAHTUNG, VORNE	402
VERDRAHTUNGSSATZ	1410 1414 1418
VERSANDDECKEL	520
VERSCHLEISSPLATTE	1203 1204
VERSCHLEISSPLATTEN	1202
VERSTAUKASTEN	1256 1258
VERSTELLBARER SITZ	1358
VERTEILERBLOCK	236
VERTEILERGETRIEBEANTRIEB	548
VIDS-MONITOR-VERDRAHTUNG	440 446
VIDS/VIMS INTERFACE - MODUL	319
VIMS-MONITOR-VERDRAHTUNG	460 466
VIMS-VERDRAHTUNG	452 456
VIMS-WARTUNGSKONTROLLEUCHTE	309
VORHÄNGESCHLOSS	182 194 228 292 718 722 726 748 959 1448
VORREINIGER	165
VORSTEUERDRUCKBEGRENZUNGSVENTIL U. BEFESTIGUNGSTEILE	1067 1068
VORSTEUERSTELLANTRIEB	921
VORSTEUERVENTIL	818 887
VORSTEUERVENTIL (LENKUNG)	820

W

WÄHLSENSOR	228 230
WANNENPUMPE U. LEITUNGEN	95
WARNHORN, ELEKTR.	1302 1303
WARNHORN (24 V)	1303
WARNSCHILD (HOCHDRUCKZYLINDER)	920
WARNVORRICHTUNG	233 1340
WARNVORRICHTUNG (WARNLEUCHTE)	1342 1344
WASSERFILTER	136
WASSERFILTER (WASSERPUMPE)	137
WELLENSCHEIBEN-EINBAUSATZ (17 BEILEGSCHEIBEN)	1038
WISCHERARM	1442
WISCHERSCHALTER	1346

Z

ZAHNHALTER	1162

* ÜBERSETZUNG ZUM ZEITPUNKT DER DRUCKLEGUNG NICHT VORHANDEN

STICHWORTVERZEICHNIS

Bezeichnung	Seite
	1163
	1164
	1165
	1166
ZAHNHALTER, MITTE	1155
	1156
ZAHNRADPUMPE	590
	862
	864
ZAHNRADVORGELEGE	52
ZAHNSPITZE	1211
	1212
	1213
	1214
	1215
	1216
	1246
ZAHNSPITZE, KURZ	1240
	1241
	1242
	1243
	1244
	1245
ZAHNSPITZE, LANG	1223
	1224
	1225
	1226
	1227
	1228
	1229
	1230
	1231
	1232
	1247
ZAHNSPITZE, SCHARF	1233
	1234
	1235
	1236
	1237
	1238
	1239
	1248
	1249
ZAHNSPITZE, VERSTÄRKT	1217
	1218
	1219
	1220
	1221
	1222
ZIGARETTENANZÜNDER (ZIGARETTENANZ.) (24V)	1390
ZIGARETTENANZÜNDER (ZIGARETTENANZ.) (24V)	1394
	1398
ZUGANGSKLAPPE - HYDRAULIKTANKKAPPE	959
	1051
ZUGSTANGE	679
ZYLINDERKOPF	29
	30
	31
	32
	33
	34
	35
	36
	37
	38
	39
	40
	41
ZYLINDERKOPF-HALTETEILE	38

* ÜBERSETZUNG ZUM ZEITPUNKT DER DRUCKLEGUNG NICHT VORHANDEN

MACHINE ARRANGEMENT

109-6819 CHASSIS AR

S/N: 7HR1-UP

PART OF 109-6815 COMMON AR

SMCS-7000 **i01543127**

NOTE	PART NUMBER	QTY	PART NAME 1 2 3 4 5 6 (PRODUCT LEVEL)	SEE PAGE
Y	*110-8685*	1	CONDENSER & MTG GP-REFRIGERANT	1282
Y	*110-8686*	1	COOLER GP-HYDRAULIC OIL	956
			—OR—	
Y	*194-0949*	1	COOLER GP-HYDRAULIC OIL	958
Y	*109-6847*	1	ENCLOSURE GP-HYDRAULIC TANK	680
Y	*109-6908*	1	ENCLOSURE GP-HYDRAULIC TANK	683
Y	*110-8684*	1	FAN GP-SUCTION	102
Y	*109-6845*	1	FENDER GP-FRONT	689
Y	**109-6846**	1	FIREWALL GP	690
Y	**109-6835**	1	FRAME AS-LOADER	692
Y	*109-6834*	1	FRAME AS-REAR	699
			—OR—	
Y	*167-7460*	1	FRAME AS-REAR	700
Y	*109-6856*	1	GUARD GP-POWER TRAIN	703
Y	*109-6843*	1	GUARD GP-RADIATOR	704
Y	**153-9050**	1	HANDHOLD GP	1300
			S/N: 7HR1-317	
Y	*8R-5637*	1	HITCH GP-ARTICULATING	708
Y	*109-6842*	1	HOOD & GUARD GP	710
Y	*109-6851*	1	LADDER GP	730
Y	*109-6863*	1	LINES GP-AIR CONDITIONER	1320
Y	**109-6850**	1	LINES GP-FUEL	203
Y	*109-6860*	1	LINES GP-GREASE	740
Y	*109-6862*	1	LINES GP-HEATER	1322
Y	*112-8635*	1	LINES GP-RADIATOR	106
Y	*109-6839*	1	LINK GP-STEERING FRAME LOCK	746
Y	**109-6885**	1	MIRROR GP-REAR VIEW	1325
Y	*109-6852*	1	MOUNTING GP-PLATFORM	1332
Y	*109-6866*	1	OPERATOR AR	1333
Y	*109-6837*	1	PIN & SEAL GP-LINKAGE	1136
Y	*109-6854*	1	PLATE & FILM GP	1446
Y	*109-6844*	1	PLATFORM GP-OPERATOR	1354
Y	*109-6838*	1	ROPS GP	1359
Y	*112-7252*	1	SHROUD GP-RADIATOR	142
Y	*109-6911*	1	STARTING AID GP-ETHER	351
Y	*109-6861*	1	SUPPORT GP-TRANSMISSION	604
Y	*156-5929*	1	TANK GP-FUEL	228
			S/N: 7HR1-290	
Y	*170-1931*	1	MOUNTING GP-BUMPER	748
			S/N: 7HR291-UP	

Y-SEPARATE ILLUSTRATION

MACHINE ARRANGEMENT

109-6815 COMMON AR

S/N: 7HR1-UP

SMCS-7000 **i00737964**

NOTE	PART NUMBER	QTY	PART NAME 1 2 3 4 5 6 (PRODUCT LEVEL)	SEE PAGE
Y	*109-6819*	1	CHASSIS AR	1
Y	*109-6821*	1	ELECTRICAL AR	258
Y	**107-8762**	1	ENGINE AR	4
Y	*109-6820*	1	HYDRAULIC AR	974
Y	*112-6000*	1	INSTALLATION AR-ENGINE	7
Y	*109-6822*	1	POWER TRAIN AR	589

Y-SEPARATE ILLUSTRATION

MEMORANDA

ENGINE ARRANGEMENT

107-8762 ENGINE AR*R

S/N: 2GR1-UP

PART OF 109-6815 COMMON AR

SMCS-1000 **i01538072**

NOTE	PART NUMBER	QTY	PART NAME 1 2 3 4 5 6 (PRODUCT LEVEL)	SEE PAGE
Y	*107-0281*	1	AFTERCOOLER GP-WATER	145
Y	*112-6067*	1	AIR CLEANER GP	146
YR	**9X-7803**	1	ALTERNATOR GP-CHARGING (24 VOLT, 100 AMP)	234
Y	*101-0833*	1	BALANCER GP	8
Y	*101-0838*	1	BREATHER GP	76
Y	*106-4582*	1	CAMSHAFT GP	10
Y	*112-6030*	1	COMPRESSOR & MTG GP-REFRIG	1268
			S/N: 2GR1-1886	
Y	*170-1138*	1	COMPRESSOR GP-REFRIGERANT	1278
			S/N: 2GR1887-UP	
Y	*112-6014*	1	CONNECTION GP-WATER	99
Y	*112-6005*	1	CONTROL & MTG GP-ENGINE ELEK	241
Y	*2W-6571*	1	COOLER GP-ENGINE OIL	100
YR	**4W-0419**	1	CORE GP-OIL COOLER	101
Y	*8N-4263*	1	COVER GP-ACCESSORY DRIVE	12
			S/N: 2GR1-3101	
Y	*119-6285*	1	COVER GP-CYLINDER BLOCK	13
Y	*112-6019*	1	COVER GP-FLYWHEEL HOUSING	14
Y	*7W-2378*	1	COVER GP-FRONT HOUSING	16
			S/N: 2GR1-3101	
Y	*163-1472*	1	COVER GP-FRONT HOUSING	17
			S/N: 2GR3102-UP	
Y	*101-0831*	5	COVER GP-VALVE MECHANISM	18
Y	*101-0336*	1	CRANKSHAFT GP	19
Y	*101-0827*	1	CYLINDER BLOCK GP	24
Y	*101-0830*	8	CYLINDER HEAD GP	36
Y	*8N-7182*	1	DAMPER GP	42
Y	*112-6035*	1	DRIVE GP-ACCESSORY	44
Y	*123-6939*	1	DRIVE GP-ACCESSORY (LOWER LH)	46
Y	*4P-0853*	1	DRIVE GP-ACCESSORY (UPPER RH)	43
Y	*116-4197*	1	ELECTRONICS GP-ENGINE RATINGS	259
			S/N: 2GR580-UP	
Y	*112-6033*	1	FILLER GP-ENGINE OIL	77
Y	*1W-0714*	1	FILTER GP-ENGINE OIL	78
Y	*112-6025*	1	FILTER GP-FUEL	184
Y	*9Y-7669*	1	FLYWHEEL GP	49
Y	*112-6001*	1	FUMES DISPOSAL GP	82
			S/N: 2GR580-UP	
Y	*119-6317*	1	GAUGE GP-OIL LEVEL (DIPSTICK)	83
Y	*8N-7174*	1	GEAR GP-FRONT	50
Y	*101-0834*	1	GEAR GP-REAR	52
Y	*4P-3747*	1	GUARD GP-BELT	54
			S/N: 2GR1-579	
Y	*7W-5780*	1	GUARD GP-BELT	55
			S/N: 2GR580-UP	
Y	*4W-1510*	1	HOUSING & REGULATOR GP	103
Y	*112-6070*	1	HOUSING GP-FLYWHEEL	56
Y	*4P-5426*	1	HOUSING GP-FRONT	58
Y	*7E-6872*	1	LIFTING GP-ENGINE	59
Y	*112-6068*	1	LINES GP-AIR	152
Y	*1W-0717*	1	LINES GP-ENGINE OIL	84
Y	*112-6050*	1	LINES GP-FUEL INJECTION	204
Y	*112-6010*	1	LINES GP-TURBOCHARGER OIL	92
Y	*112-6060*	1	LINES GP-WATER (AFTERCOOLER)	128
Y	*112-6020*	1	LINES GP-WATER (BYPASS)	122
Y	*112-6048*	1	LINES GP-WATER (LOWER)	124

ENGINE ARRANGEMENT

107-8762 ENGINE AR *(contd.)* i01538072

NOTE	PART NUMBER	QTY	PART NAME 1 2 3 4 5 6 (PRODUCT LEVEL)	SEE PAGE
Y	*123-6918*	1	LINES GP-WATER (TURBO)	130
			S/N: 2GR1-986	
Y	*153-7486*	1	LINES GP-TURBOCHARGER WATER	118
			S/N: 2GR987-1819	
Y	*155-0542*	1	LINES GP-WATER (TURBO)	132
			S/N: 2GR1820-UP	
Y	*7E-9218*	1	LINES GP-WATER (UPPER)	120
Y	*115-0550*	1	MANIFOLD GP-EXHAUST	156
Y	*141-7115*	1	MOUNTING GP-ALTERNATOR	60
			S/N: 2GR580-UP	
Y	*100-8051*	1	PAN GP-OIL	62
			S/N: 2GR1-922	
Y	*143-5129*	1	PAN GP-OIL	64
			S/N: 2GR923-UP	
Y	*101-0829*	8	PISTON & ROD GP	66
Y	*7W-2947*	1	PUMP & LINES GP-SUMP	95
Y	*7N-8715*	1	PUMP GP-ENGINE OIL	96
Y	*8N-7763*	1	PUMP GP-FUEL PRIMING	213
			S/N: 2GR1-1886	
Y	*165-9154*	1	PUMP GP-FUEL PRIMING	214
			S/N: 2GR1887-UP	
Y	*8N-6151*	1	PUMP GP-FUEL TRANSFER	218
Y	*116-7010*	8	PUMP GP-UNIT INJECTION	222
Y	*8N-8085*	1	PUMP GP-WATER	134
Y	*7W-3813*	1	SEAL GP-CRANKSHAFT	68
Y	*141-7180*	1	SHIELD GP-EXHAUST	166
			S/N: 2GR580-1851	
Y	*123-6938*	1	SHIELD GP-FUEL LINES	226
Y	*136-6338*	1	STARTING AID GP-ETHER	353
			S/N: 2GR580-UP	
Y	*1W-6363*	1	STARTING MOTOR GP-ELECTRIC	354
Y	*7E-4722*	1	SUPPORT GP-ENGINE	69
Y	*7E-8098*	8	THERMOCOUPLE GP	372
			S/N: 2GR1-2692	
Y	*112-6015*	1	TURBOCHARGER GP	170
			S/N: 2GR1-1819	
Y	*156-6262*	1	TURBOCHARGER GP	174
			S/N: 2GR1820-UP	
Y	*100-3905*	8	VALVE MECHANISM GP	72
			S/N: 2GR1-3157	
Y	*195-1928*	8	VALVE MECHANISM GP	74
			S/N: 2GR3158-UP	
Y	*112-6045*	1	WIRING GP-ENGINE	382
			AVAILABLE GASKET KIT(S):	
	149-0064		KIT-GASKET (AFTERCOOLER & LINES)	
	152-0681		KIT-GASKET (CENTRAL & LOWER STRUCTURE)	
	149-0068		KIT-GASKET (FRONT STRUCTURE)	
	149-0067		KIT-GASKET (FUEL SYSTEM)	
	149-0069		KIT-GASKET (MANIFOLD)	
	130-0920		KIT-GASKET (MULTIPLE CYLINDER HEAD)	
	149-0071		KIT-GASKET (OIL COOLER & LINES)	
	197-5346		KIT-GASKET (OIL PUMP)	
	149-0073		KIT-GASKET (REAR STRUCTURE)	
	193-4035		KIT-GASKET (SINGLE CYLINDER HEAD)	
	6V-3774		KIT-GASKET (SINGLE CYLINDER LINER)	
	106-3385		KIT-GASKET (SINGLE FUEL INJECTOR)	
	149-0075		KIT-GASKET (TURBOCHARGER)	
	149-0076		KIT-GASKET (WATER LINES)	
	178-2989		KIT-GASKET (WATER PUMP)	

R-REMFG PART MAY BE AVAILABLE
Y-SEPARATE ILLUSTRATION

ENGINE ARRANGEMENT

112-6000 INSTALLATION AR-ENGINE

S/N: 7HR1-UP

PART OF 109-6815 COMMON AR

SMCS-1000 **i01092910**

NOTE	PART NUMBER	QTY	PART NAME 1 2 3 4 5 6 (PRODUCT LEVEL)	SEE PAGE
Y	*112-6004*	1	EXTENSION GP-DRAIN	48
Y	*112-6064*	1	LINES GP-COOLANT	104
Y	*112-6003*	1	MUFFLER GP	162
Y	*112-6008*	1	PRECLEANER GP	165
Y	*141-7185*	1	SHIELD GP-EXHAUST	168
			S/N: 7HR1-305	
Y	*112-6002*	1	SUPPORT GP-ENGINE	70

Y-SEPARATE ILLUSTRATION

BASIC ENGINE

101-0833 BALANCER GP

S/N: 2GR1-UP

PART OF 107-8762 ENGINE AR

SMCS-1220 **i00116752**

NOTE	REF NO	GRAPHIC REF	PART NUMBER	QTY	PART NAME 1 2 3 4 5 6 (PRODUCT LEVEL)	SEE PAGE
	1	1	**4W-4998**	1	SHAFT-CLUSTER GEAR	
	2	1	**0S-1595**	4	BOLT (1/2-13X1.25IN)	
	3	1	**7N-5254**	1	PLATE-THRUST	
	4	1	**101-9043**	1	GEAR AS-BALANCER (92 TEETH)	
	5	1	**7N-6983**	1	BEARING-SLEEVE	
	6	1	**0L-1351**	4	BOLT (3/8-16X.875IN)	

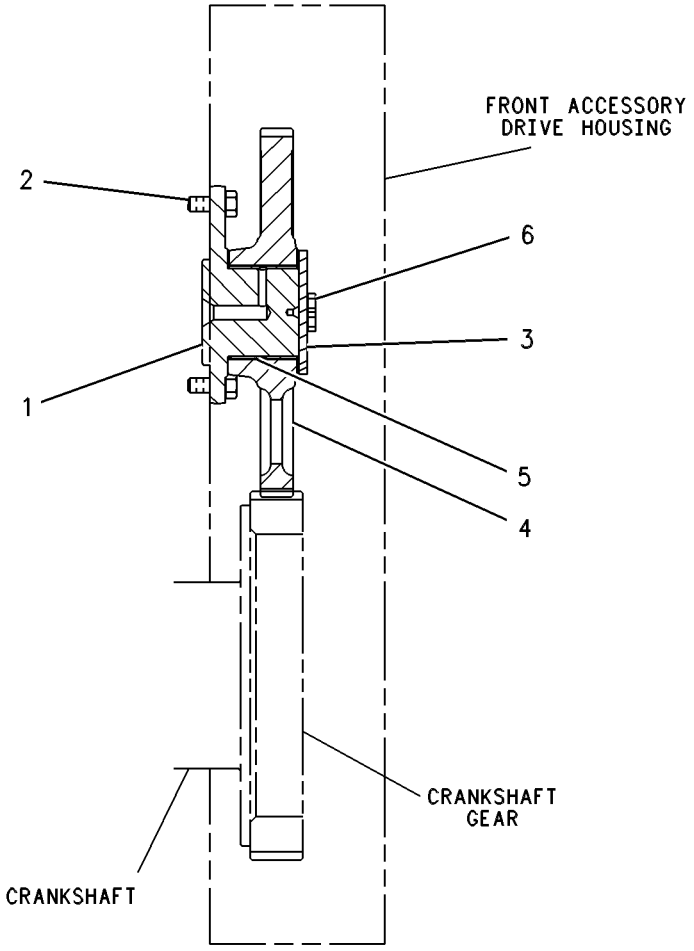

GRAPHIC #1 g00086048

120-7413 BASE GP-VALVE COVER

S/N: 2GR1-UP

PART OF 100-3905, 195-1928 VALVE MECHANISM GP

SMCS-1120 **i01433493**

NOTE	REF NO	GRAPHIC REF	PART NUMBER	QTY	PART NAME 1 2 3 4 5 6 (PRODUCT LEVEL)	SEE PAGE
	1	1	**119-0839**	1	SPACER	
	2	1	**6V-6228**	3	SEAL-O-RING (26.64MM ID)	
	3	1	**119-0838**	1	SPACER	
	4	1	**120-7412**	1	BASE AS-ROCKER ARM	
	4A	1	**120-4339**	1	WASHER-SPRING	
F		1	**8N-4387**	1	DOWEL-HOLLOW	

F-NOT SHOWN

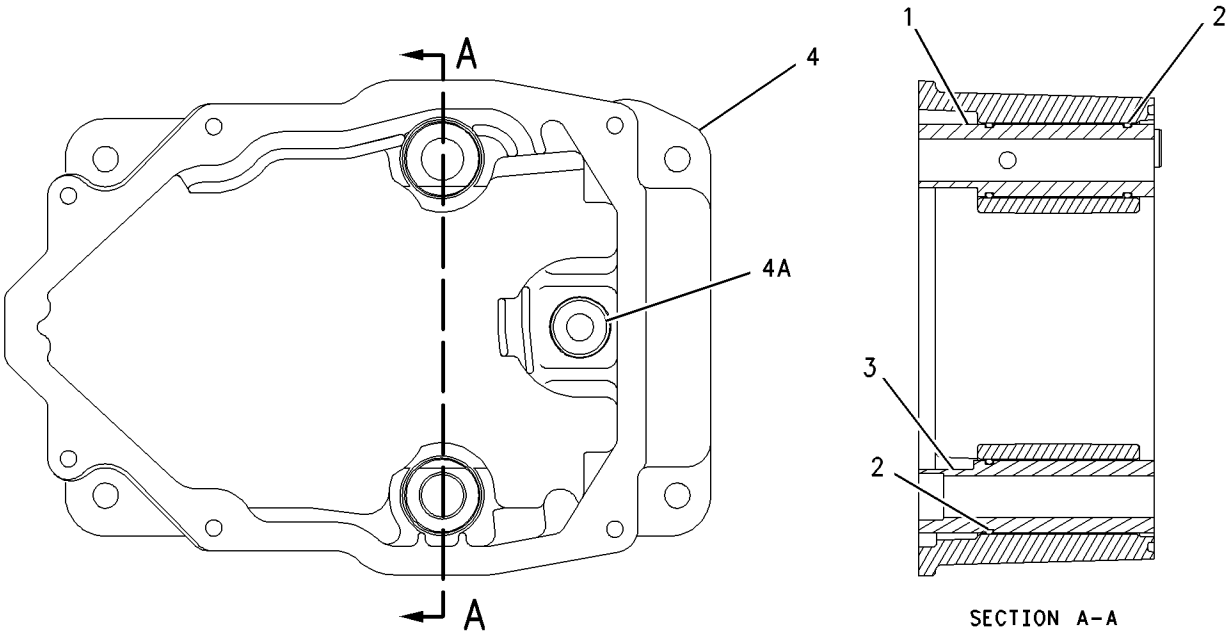

GRAPHIC #1 g00751259

106-4582 CAMSHAFT GP

S/N: 2GR1-2334

PART OF 107-8762 ENGINE AR

SMCS-1210, 1211, 1212 **i00116799**

NOTE	REF NO	GRAPHIC REF	PART NUMBER	QTY	PART NAME 1 2 3 4 5 6 (PRODUCT LEVEL)	SEE PAGE
	1	1	**127-5404**	1	CAMSHAFT AS-LH	
		1	**5B-5821**	1	DOWEL	
	2	1	**1A-2029**	4	BOLT (3/8-16X1.125IN)	
	3	1	**4W-6664**	2	PLATE AS-TIMING	
					(EACH INCLUDES)	
		1	**4W-6662**	1	PIN	
	4	1	**0S-0509**	2	BOLT (3/8-16X.75IN)	
	5	1	**5M-2894**	2	WASHER (2.5MM THK)	
	6	1	**133-4079**	1	CAMSHAFT AS-RH	
		1	**5B-5821**	1	DOWEL	
	7	1	**128-5994**	2	WASHER AS-THRUST	
					(EACH INCLUDES)	
		1	**4B-4161**	1	SCREW-DRIVE (NO.6X3/8)	
	8	1	**117-9308**	2	PLATE	

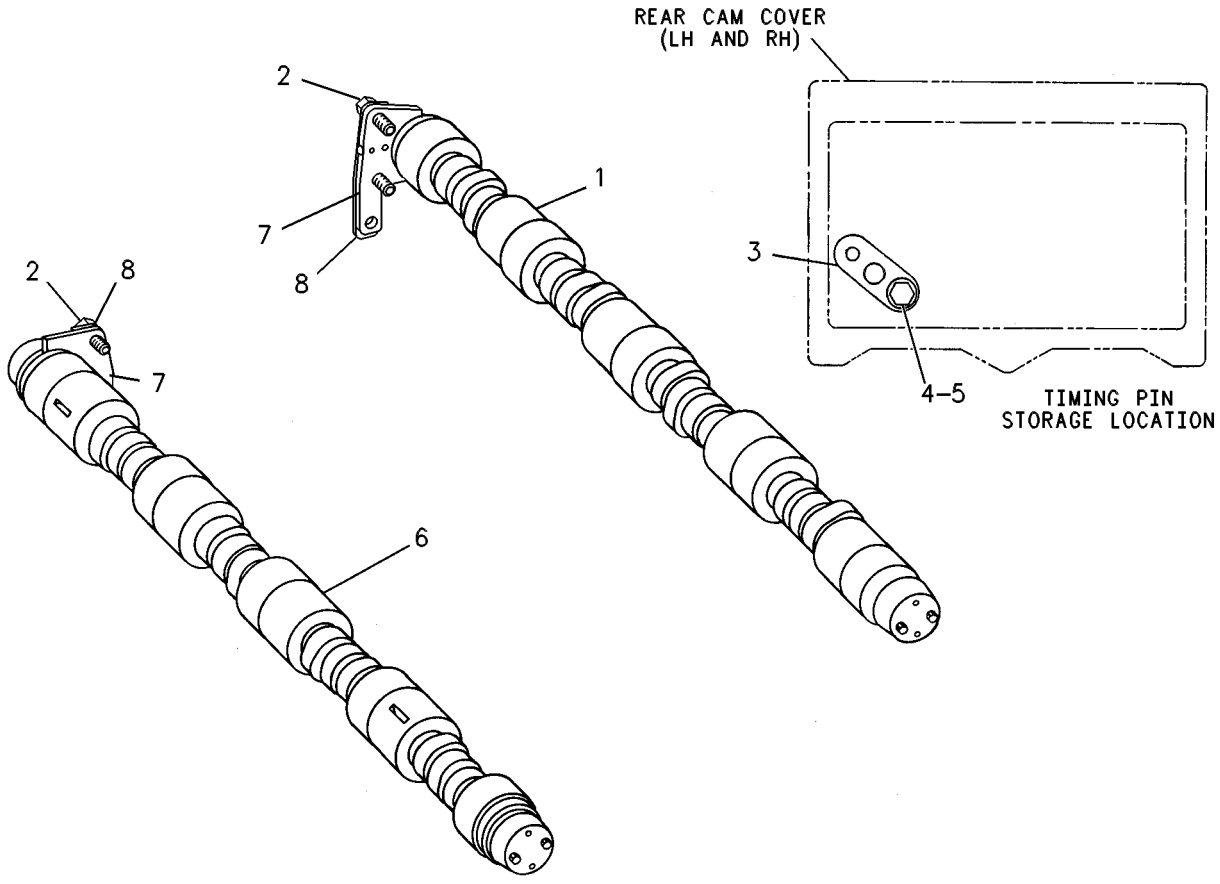

GRAPHIC #1 g00086036

106-4582 CAMSHAFT GP

S/N: 2GR2335-UP

PART OF 107-8762 ENGINE AR

SMCS-1210, 1211, 1212 **i01266500**

NOTE	REF NO	GRAPHIC REF	PART NUMBER	QTY	PART NAME 1 2 3 4 5 6 (PRODUCT LEVEL)	SEE PAGE
R	1	1	**127-5404**	1	CAMSHAFT AS-LH	
		1	**5B-5821**	1	DOWEL (25.5MM LG X 9.4 DIA)	
C	2	1	**0L-1351**	4	BOLT (3/8-16X.875IN)	
	3	1	**4W-6664**	2	PLATE AS-TIMING	
					(EACH INCLUDES)	
		1	**4W-6662**	1	PIN	
	4	1	**0S-0509**	2	BOLT (3/8-16X.75IN)	
	5	1	**5M-2894**	2	WASHER (2.5MM THK)	
	6	1	**133-4079**	1	CAMSHAFT AS-RH	
		1	**5B-5821**	1	DOWEL (25.5MM LG X 9.4 DIA)	
C	7	1	**7N-3218**	2	WASHER-THRUST	

C-CHANGE FROM PREVIOUS TYPE
R-REMFG PART MAY BE AVAILABLE

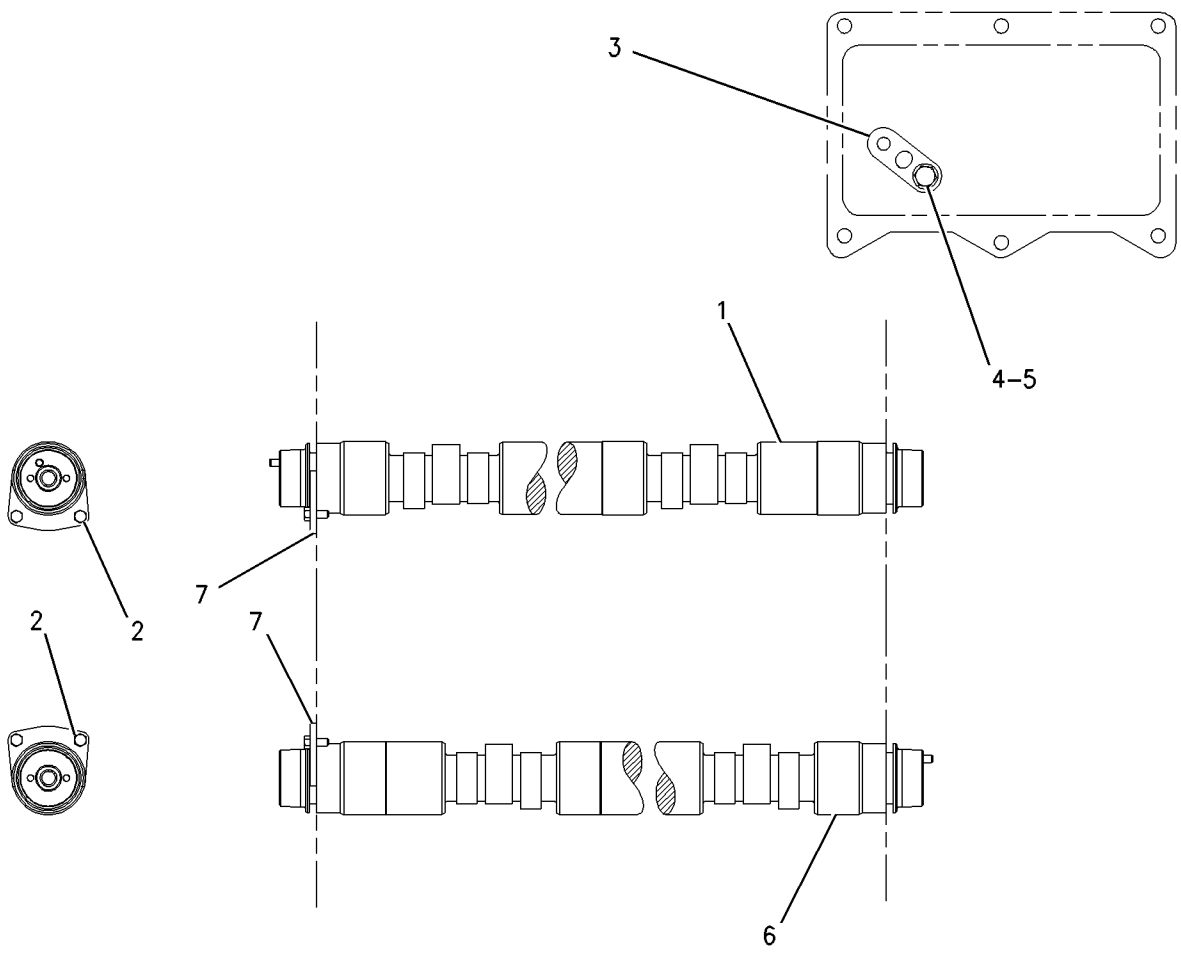

GRAPHIC #1 g00673338

8N-4263 COVER GP-ACCESSORY DRIVE–RH

S/N: 2GR1-3101

PART OF 107-8762 ENGINE AR

SMCS-1207 **i01314935**

NOTE	REF NO	GRAPHIC REF	PART NUMBER	QTY	PART NAME 1 2 3 4 5 6 (PRODUCT LEVEL)	SEE PAGE
	1	1	**8M-5255**	1	SEAL-O-RING (120.24MM ID)	
	2	1	**1A-2029**	10	BOLT (3/8-16X1.125IN)	
	3	1	**5M-2894**	10	WASHER-HARD (2.5MM THK)	
	4	1	**7N-4952**	1	COVER	
	5	1	**1T-0132**	1	SEAL-O-RING (234.54MM ID)	
	6	1	**7N-4951**	1	COVER	
	7	1	**3B-8453**	1	SEAL-O-RING (18.42MM ID)	
	8	1	**2M-4453**	1	SEAL-O-RING (12.29MM ID)	

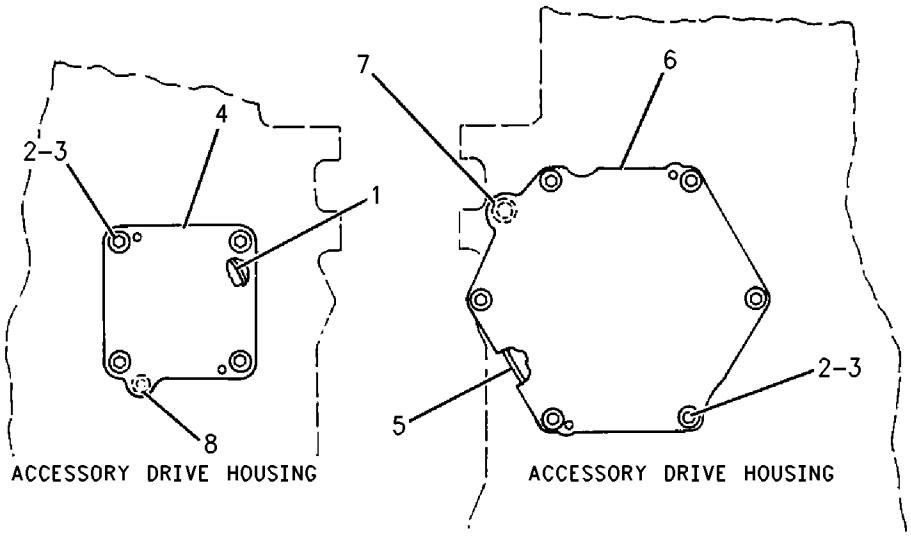

REAR VIEW FRONT VIEW

GRAPHIC #1 g00696014

BASIC ENGINE

119-6285 COVER GP-CYLINDER BLOCK

S/N: 2GR1-UP

PART OF 107-8762 ENGINE AR

SMCS-1201 **i01125691**

NOTE	REF NO	GRAPHIC REF	PART NUMBER	QTY	PART NAME 1 2 3 4 5 6 (PRODUCT LEVEL)	SEE PAGE
	1	1	**8N-9992**	5	COVER-CAMSHAFT	
	2	1	**0S-1594**	58	BOLT (3/8-16X1.0IN)	
	3	1	**162-7473**	8	SEAL-O-RING (226MM ID)	
	4	1	**2W-0752**	1	GASKET	
	5	1	**0S-1588**	4	BOLT (3/8-16X1.25IN)	
	6	1	**7N-3298**	3	COVER-BLOCK	
	7	1	**7N-4945**	3	GASKET	
	8	1	**8T-6761**	2	PLUG-PIPE (1-11-1/2 NPTF THD)	
	9	1	**169-4834**	8	SEAL-O-RING (270MM ID)	
	10	1	**5M-2894**	82	WASHER (2.5MM THK)	
	11	1	**1N-2914**	8	COVER-CYLINDER BLOCK SIDE	
	12	1	**8N-9993**	3	COVER-CAMSHAFT	
	13	1	**9X-8872**	32	BOLT-LOCKING (3/8-16X0.875IN)	
	14	1	**117-0066**	1	BRACKET-MOUNTING	

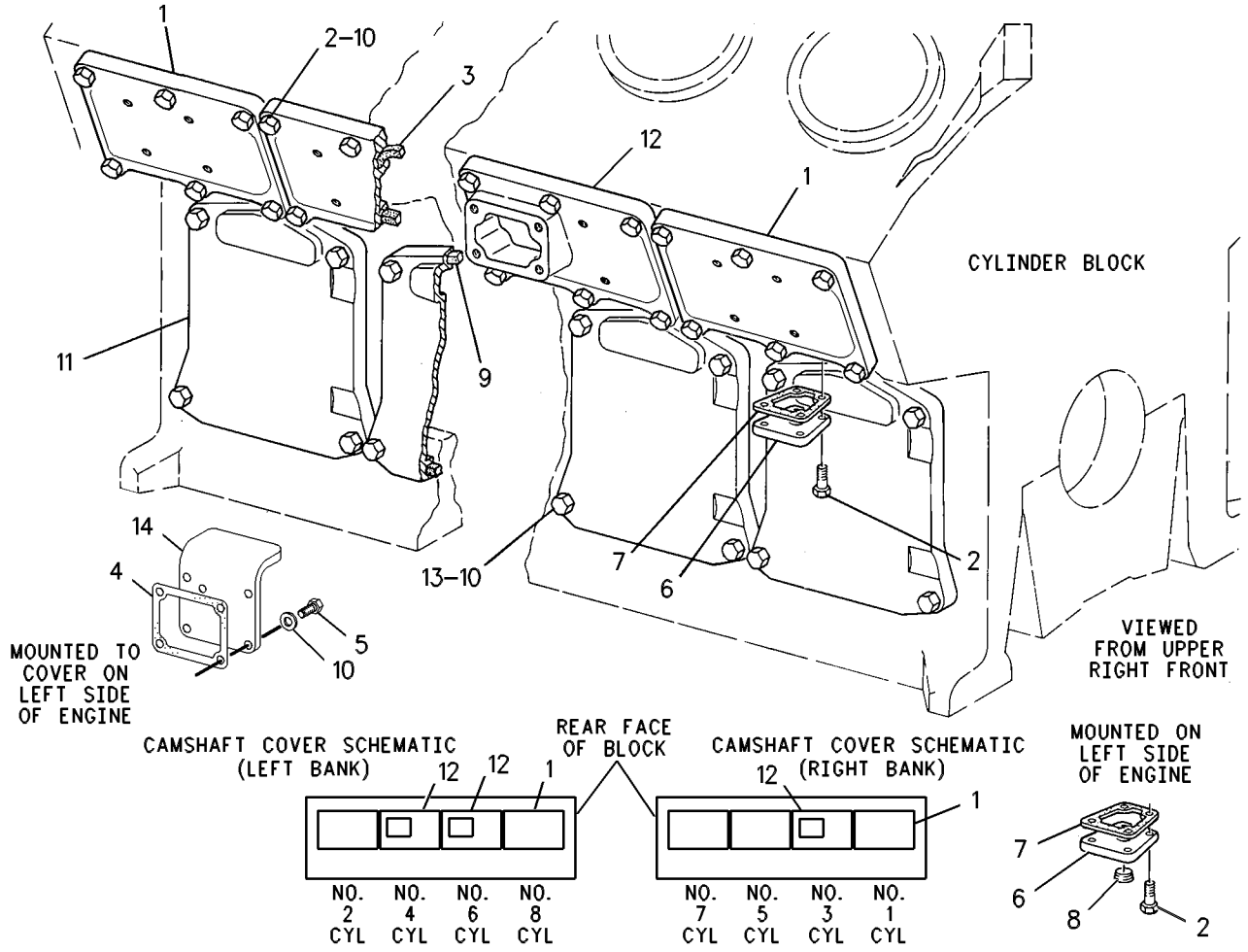

GRAPHIC #1 g00595788

BASIC ENGINE

112-6019 COVER GP-FLYWHEEL HOUSING

S/N: 2GR1-UP

PART OF 107-8762 ENGINE AR

SMCS-1157 **i00847458**

NOTE	REF NO	GRAPHIC REF	PART NUMBER	QTY	PART NAME 1 2 3 4 5 6 (PRODUCT LEVEL)	SEE PAGE
	1	1	**1W-4954**	1	GASKET-COVER	
	2	1	**3D-0490**	4	STUD-TAPERLOCK	
	3	1	**4B-3140**	1	COVER	
	4	1	**4B-8407**	3	GASKET	
	5	1	**4N-0933**	1	GASKET	
	6	1	**5F-0304**	2	PLUG-DRAIN	
	7	1	**7E-9784**	1	COVER	
	8	1	**7N-3170**	1	COVER	
	9	1	**7N-4319**	2	COVER	
	10	1	**7N-4320**	2	GASKET	
	11	1	**5M-2894**	44	WASHER (2.5MM THK)	
	12	1	**3F-5792**	1	SEAL-O-RING (129.77MM ID)	
	13	1	**8T-6765**	1	PLUG-PIPE (1/4-18 NPTF THD)	
	14	1	**9L-2662**	1	GASKET	
	15	1	**9L-4234**	1	SPACER (.962IN THK)	
	16	1	**104-4767**	1	ADAPTER	
	17	1	**104-4768**	1	COVER	
	18	1	**112-6051**	2	BRACKET	
	19	1	**122-3173**	1	ANGLE	
	20	1	**0S-1588**	2	BOLT (3/8-16X1.25IN)	
	21	1	**0S-1591**	4	BOLT (3/8-16X1.5IN)	
	22	1	**0S-1594**	35	BOLT (3/8-16X1IN)	
	23	1	**0T-0055**	1	BOLT (3/8-16X4.25IN)	
	24	1	**1A-2029**	2	BOLT (3/8-16X1.125IN)	
	25	1	**1F-7958**	4	NUT-FULL (1/2-13 THD)	
	26	1	**5P-8245**	4	WASHER (3MM THK)	

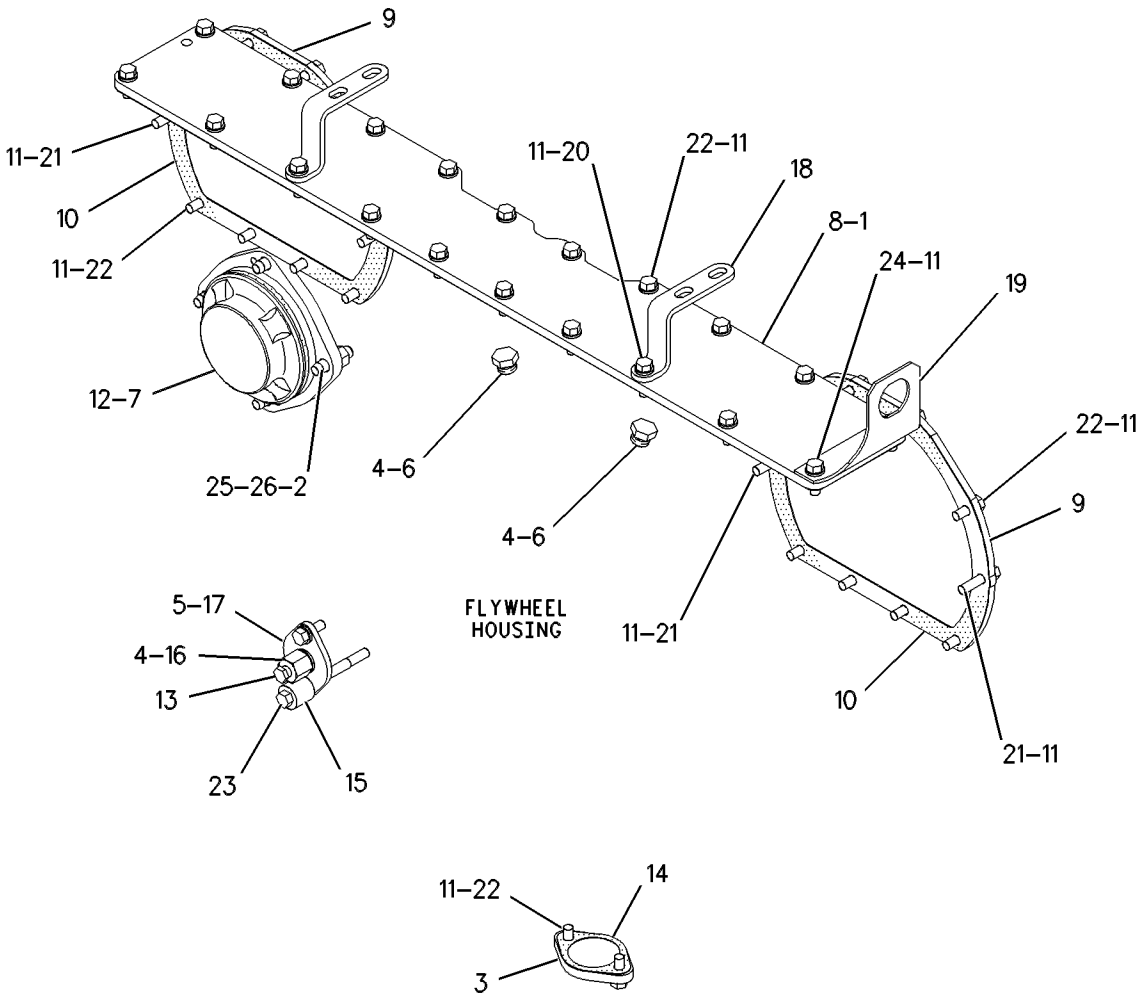

GRAPHIC #1

g00292930

BASIC ENGINE

7W-2378 COVER GP-FRONT HOUSING

S/N: 2GR1-3101

PART OF 107-8762 ENGINE AR

SMCS-1151, 1166 **i01334029**

NOTE	REF NO	GRAPHIC REF	PART NUMBER	QTY	PART NAME 1 2 3 4 5 6 (PRODUCT LEVEL)	SEE PAGE
	1	1	**2W-5285**	1	COVER	
	2	1	**8N-9885**	1	GASKET-DRIVE HOUSING	
	3	1	**1A-2029**	7	BOLT (3/8-16X1.125 IN)	
	4	1	**5M-2894**	7	WASHER-HARD (2.5MM THK)	

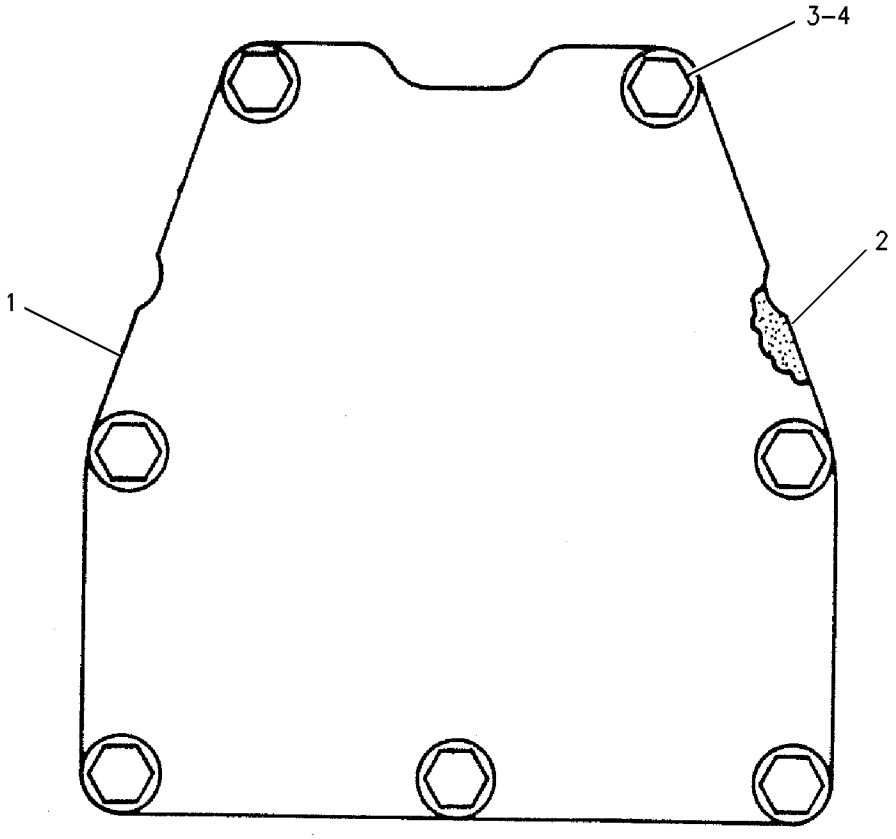

GRAPHIC #1 g00705512

BASIC ENGINE

163-1472 COVER GP-FRONT HOUSING

S/N: 2GR3102-UP

PART OF 107-8762 ENGINE AR

SMCS-1151, 1166 **i01195090**

NOTE	REF NO	GRAPHIC REF	PART NUMBER	QTY	PART NAME 1 2 3 4 5 6 (PRODUCT LEVEL)	SEE PAGE
	1	1	**7N-4951**	1	COVER	
	2	1	**1T-0132**	1	SEAL-O-RING (234.54MM ID)	
	3	1	**3B-8453**	1	SEAL-O-RING (18.42MM ID)	
	4	1	**1A-2029**	17	BOLT (3/8-16X1.125IN)	
	5	1	**5M-2894**	17	WASHER (2.5MM THK)	
	6	1	**7N-4952**	1	COVER	
	7	1	**8M-5255**	1	SEAL-O-RING (120.24MM ID)	
	8	1	**2M-4453**	1	SEAL-O-RING (12.29MM ID)	
	11	1	**2W-5285**	1	COVER	
	12	1	**8N-9885**	1	GASKET-DRIVE HOUSING	
	15	1	**3P-1896**	2	PLUG-CUP (35.31MM AVG OD)	

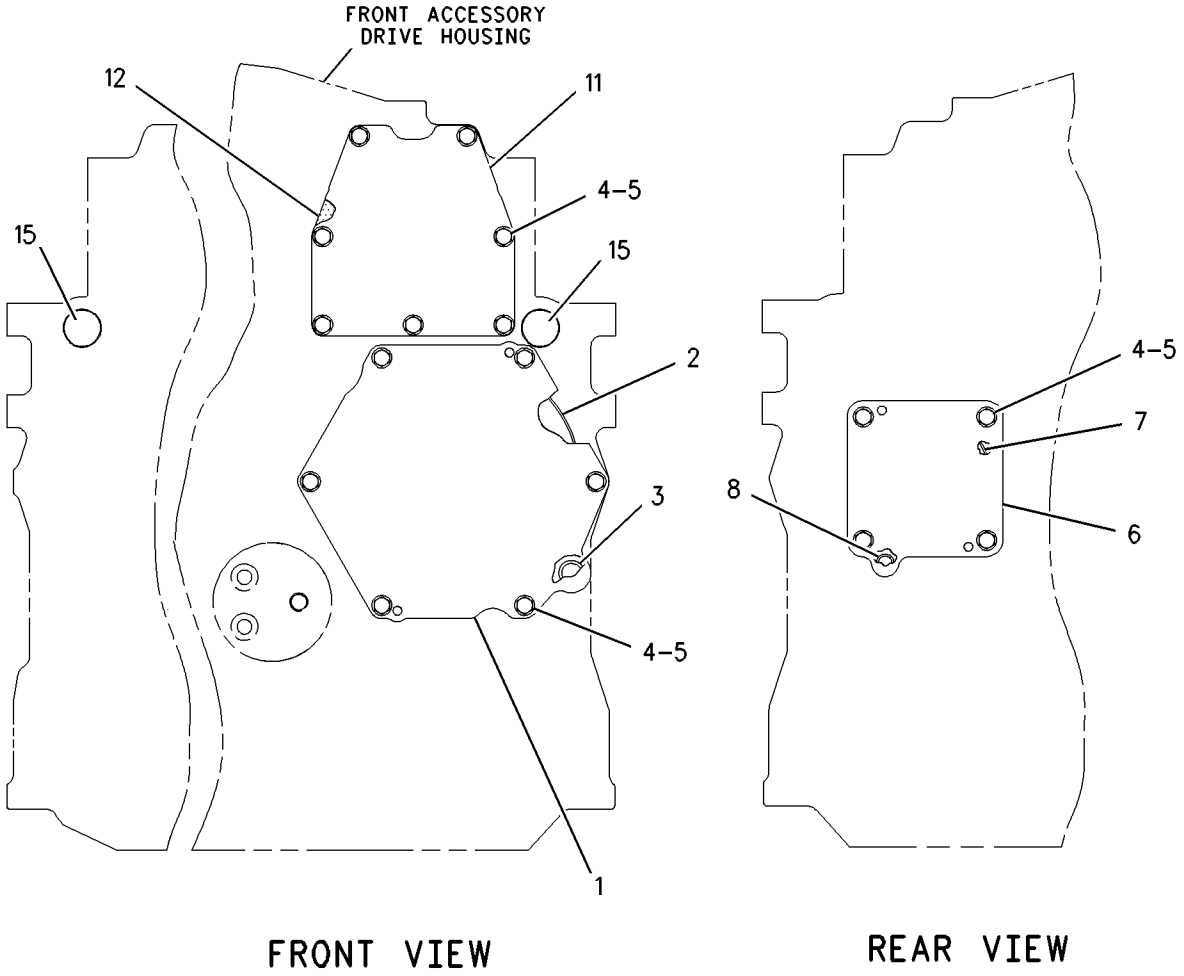

GRAPHIC #1 g00639214

BASIC ENGINE

101-0831 COVER GP-VALVE MECHANISM

S/N: 2GR1-UP

PART OF 107-8762 ENGINE AR

SMCS-1107 **i01487443**

NOTE	REF NO	GRAPHIC REF	PART NUMBER	QTY	PART NAME 1 2 3 4 5 6 (PRODUCT LEVEL)	SEE PAGE
	1	1	**101-4197**	1	COVER	
	2	1	**1A-9579**	3	BOLT (5/16-18X1.5 IN)	
	3	1	**9M-1974**	3	WASHER-HARD (8.8X16X2MM THK)	
	4	1	**162-7473**	1	SEAL-O-RING	
B	5	1	**1A-9579**	1	BOLT (5/16-18X1.5 IN)	
B	6	1	**9M-1974**	1	WASHER-HARD (8.8X16X2MM THK)	

B-USE AS REQUIRED

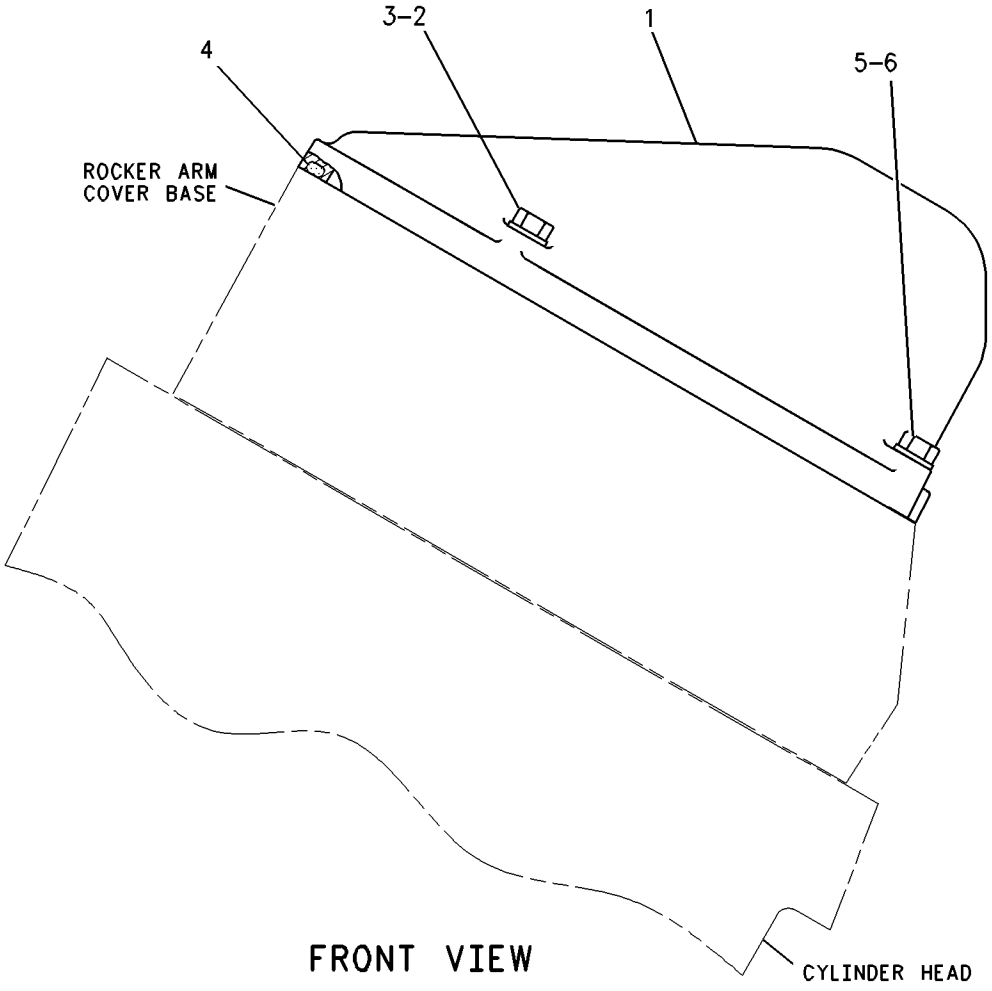

GRAPHIC #1 g00773092

BASIC ENGINE

101-0336 CRANKSHAFT GP

S/N: 2GR1-2409

PART OF 107-8762 ENGINE AR

SMCS-1202 **i00751453**

NOTE	REF NO	GRAPHIC REF	PART NUMBER	QTY	PART NAME 1 2 3 4 5 6 (PRODUCT LEVEL)	SEE PAGE
	1	1	**152-7625**	1	CRANKSHAFT AS	
	2	1	**128-4845**	18	BOLT AS	
	3	1	**7N-2003**	12	DOWEL	
	4	1	**2W-2288**	8	PLUG	
	5	1	**7C-6209**	2	PLATE-THRUST	
	6	1	**105-0253**	5	BEARING-MAIN	
A		1	**105-0254**	5	BEARING-MAIN (0.63MM US)	
A		1	**105-0255**	5	BEARING-MAIN (1.27MM US)	
A		1	**105-0256**	5	BEARING-MAIN (0.63MM OS)	
A		1	**105-0257**	5	BEARING-MAIN (0.63MM US-0.63MM OS)	

A-NOT PART OF THIS GROUP

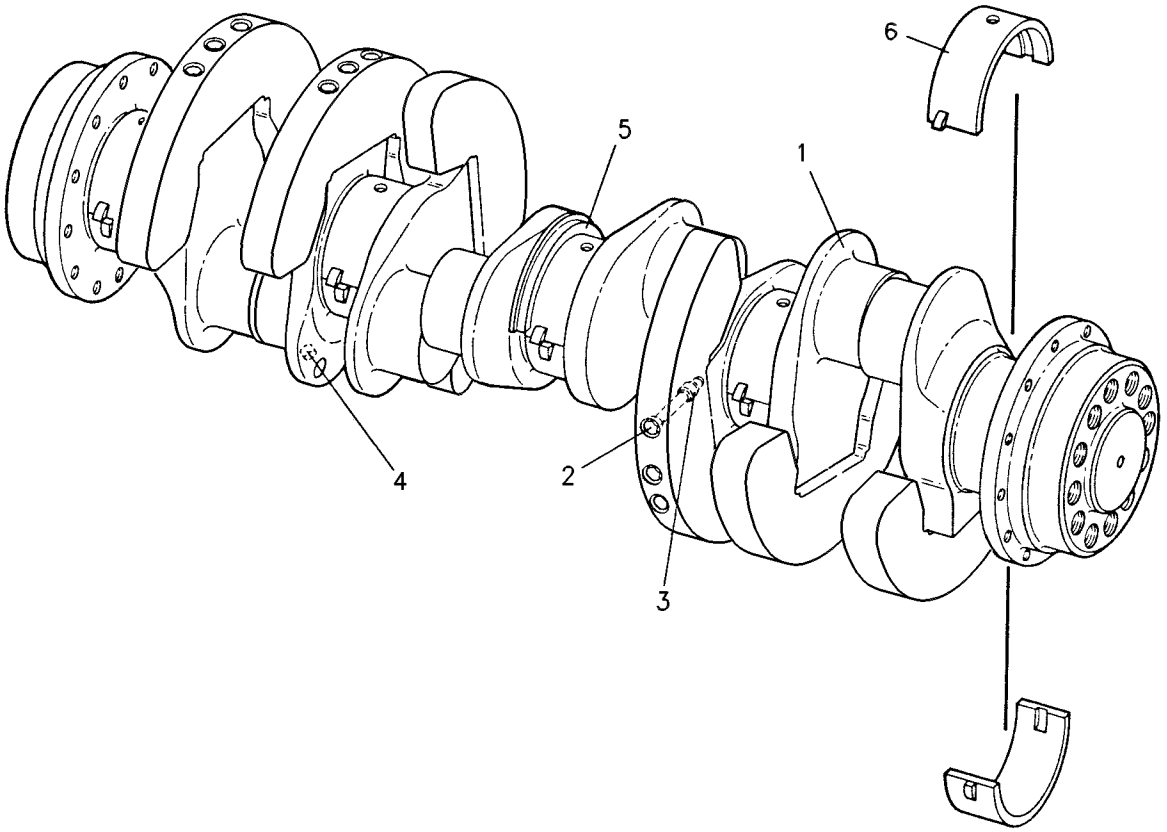

GRAPHIC #1 g00338016

BASIC ENGINE

101-0336 CRANKSHAFT GP

S/N: 2GR2410-UP

PART OF 107-8762 ENGINE AR

SMCS-1202 **i01320494**

NOTE	REF NO	GRAPHIC REF	PART NUMBER	QTY	PART NAME 1 2 3 4 5 6 (PRODUCT LEVEL)	SEE PAGE
R	1	1	**152-7625**	1	CRANKSHAFT AS	
	2	1	**128-4845**	18	BOLT AS	
	3	1	**7N-2003**	12	DOWEL	
	4	1	**2W-2288**	8	PLUG	
	5	1	**7C-6209**	2	PLATE-THRUST	
C	6	1	**149-6031**	5	BEARING-MAIN (STANDARD)	
AC		1	**149-6032**	5	BEARING-MAIN (0.63MM US)	
AC		1	**149-6033**	5	BEARING-MAIN (1.27MM US)	
AC		1	**149-6034**	5	BEARING-MAIN (0.63MM OS)	
AC		1	**149-6035**	5	BEARING-MAIN (0.63MM US - 0.63MM OS)	

A-NOT PART OF THIS GROUP
C-CHANGE FROM PREVIOUS TYPE
R-REMFG PART MAY BE AVAILABLE

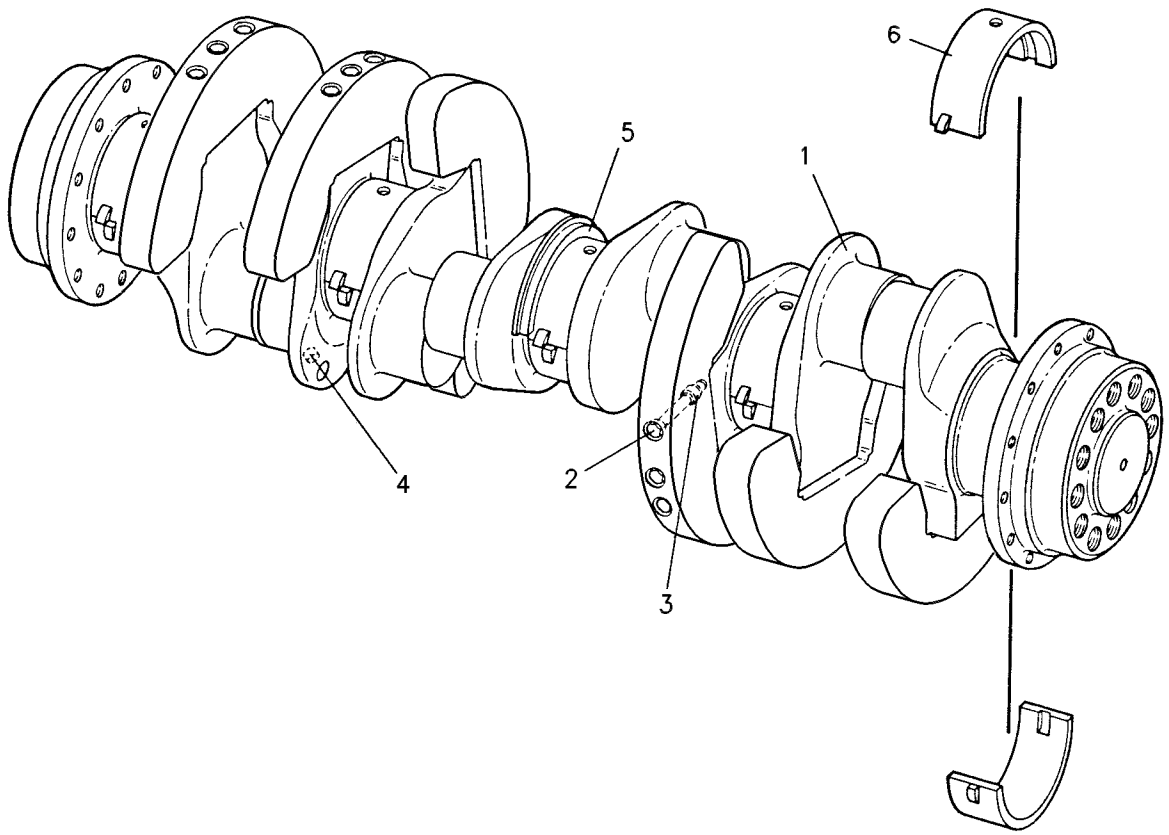

GRAPHIC #1 g00338016

101-1171 CYLINDER BLOCK AS

S/N: 2GR1-UP

PART OF 101-0827 CYLINDER BLOCK GP

FIELD REPLACEMENT ORDER 115-3503—PAGE 28

SMCS-1201 **i01420582**

NOTE	REF NO	GRAPHIC REF	PART NUMBER	QTY	PART NAME 1 2 3 4 5 6 (PRODUCT LEVEL)	SEE PAGE
	1	1	**5P-8249**	20	WASHER-HARD (24X41.5X4MM THK)	
	2	1	**7X-7925**	20	BOLT (7/8-14X11 IN)	
	3	1	**9Y-9175**	5	CAP-CRANKSHAFT BEARING	
	4	1	**4W-4813**	1	PLUG (2-1/4-12 THD)	
	5	1	**8T-2929**	1	SEAL-O-RING (63.2MM ID)	
	6	1	**118-9494**	8	LINER-CYLINDER	
	7	1	**7N-2046**	24	SEAL-O-RING (175.0MM ID)	
	8	1	**8N-4707**	8	BAND-FILLER	
	9	1	**8T-2928**	1	SEAL-O-RING (53.1MM ID)	

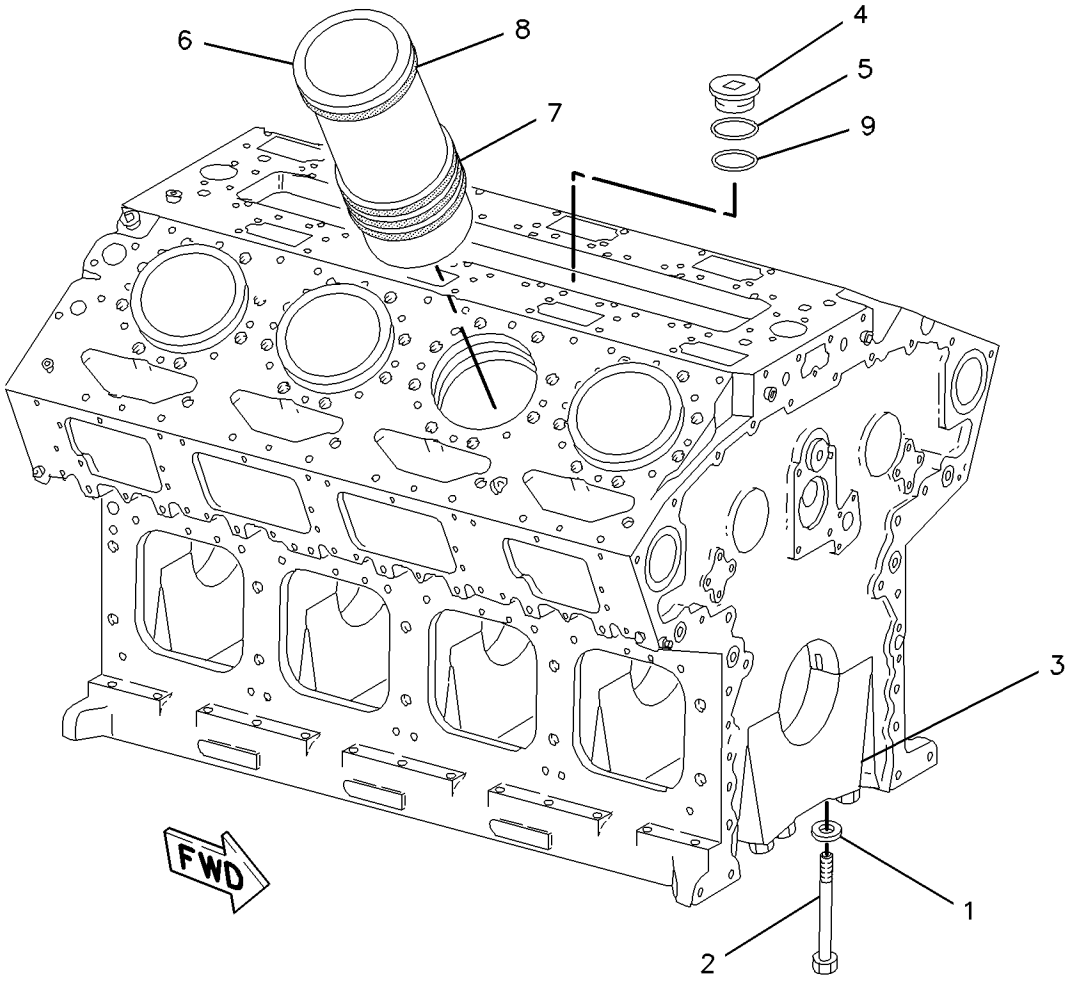

GRAPHIC #1 g00728242

BASIC ENGINE

106-2778 CYLINDER BLOCK AS

S/N: 2GR1-UP

PART OF 115-3503 CYLINDER BLOCK GP

SMCS-1201 **i01420589**

NOTE	REF NO	GRAPHIC REF	PART NUMBER	QTY	PART NAME 1 2 3 4 5 6 (PRODUCT LEVEL)	SEE PAGE
	1	1	**5P-8249**	20	WASHER-HARD (24X41.5X4MM THK)	
	2	1	**7X-7925**	20	BOLT (7/8-14X11 IN)	
	3	1	**9Y-9175**	5	CAP-CRANKSHAFT BEARING	
	4	1	**4W-4813**	2	PLUG	
	5	1	**8T-2929**	2	SEAL-O-RING (63.2MM ID)	
	6	1	**8T-2928**	2	SEAL-O-RING (53.1MM ID)	

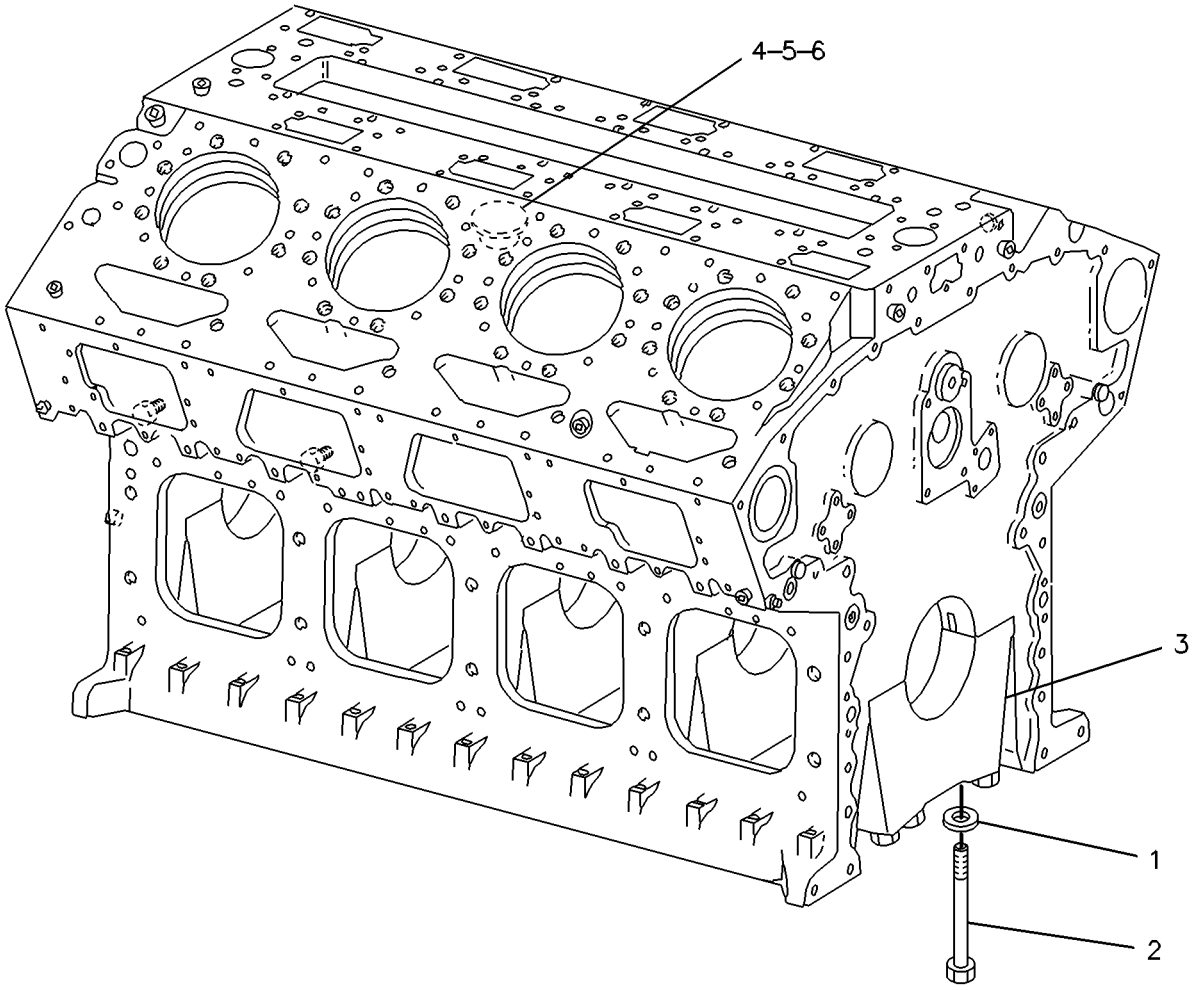

GRAPHIC #1 g00082318

MEMORANDA

101-0827 CYLINDER BLOCK GP

S/N: 2GR1-2334

PART OF 107-8762 ENGINE AR

SMCS-1201 **i01420591**

NOTE	REF NO	GRAPHIC REF	PART NUMBER	QTY	PART NAME 1 2 3 4 5 6 (PRODUCT LEVEL)	SEE PAGE
Y	1	1	*101-1171*	1	CYLINDER BLOCK AS	21
	2	1	**9M-1974**	8	WASHER-HARD (8.8X16X2MM THK)	
	3	1	**5P-8245**	1	WASHER-HARD (13.5X25.5X3MM THK)	
	4	1	**1A-2029**	1	BOLT (3/8-16X1.125 IN)	
B	5	1	**7X-7731**	1	PLUG-PIPE	
	6	1	**9S-4191**	6	PLUG-O-RING	
	7	1	**2W-2940**	8	PLUG-OIL MANIFOLD	
	8	1	**7N-2044**	2	DOWEL	
	9	1	**8T-6762**	4	PLUG-PIPE	
	10	1	**5M-2894**	9	WASHER-HARD (10.2X18.5X2.5MM THK)	
	11	1	**7N-2047**	3	DOWEL	
	12	1	**7X-4805**	3	SEAL-O-RING (9.12MM ID)	
	13	1	**116-3253**	8	TUBE AS-OIL JET	
	14	1	**0T-0102**	8	BOLT (3/8-16X0.625 IN)	
	15	1	**101-1198**	10	BEARING-CAMSHAFT	
	16	1	**4N-0683**	2	DOWEL	
	17	1	**8T-6763**	16	PLUG-PIPE	
	18	1	**0S-1595**	1	BOLT (1/2-13X1.25 IN)	
	19	1	**8T-0099**	16	DOWEL	
	20	1	**7N-5641**	2	PLUG-MANIFOLD	
	21	1	**7N-2049**	8	DOWEL	
	22	1	**5P-0840**	16	SEAL-O-RING (12.29MM ID)	
	23	1	**144-5692**	8	GASKET-PLATE	
	24	1	**110-6994**	8	PLATE-SPACER	
	25	1	**5F-9657**	4	SEAL-O-RING (36.09MM ID)	
	26	1	**5P-8210**	1	SEAL-O-RING (31.34MM ID)	
	27	1	**1B-2790**	8	BOLT (5/16-18X1.375 IN)	
	28	1	**7C-3722**	8	RETAINER AS-JET	
					(EACH INCLUDES)	
		1	**6V-3537**	1	DOWEL	
	29	1	**8N-8056**	1	COVER	
	30	1	**6V-3348**	8	SEAL-O-RING (18.42MM ID)	
	31	1	**4W-4813**	1	PLUG	
	32	1	**8T-2929**	1	SEAL-O-RING (63.2MM ID)	
	33	1	**8T-2928**	1	SEAL-O-RING (53.1MM ID)	
	34	1	**033-6042**	6	SEAL-O-RING (11.89MM ID)	
B	35	1	**8N-8056**	1	COVER	
B	36	1	**1A-2029**	1	BOLT (3/8-16X1.125 IN)	
B	37	1	**5M-2894**	1	WASHER-HARD (10.2X18.5X2.5MM THK)	
	38	1	**7X-7731**	1	PLUG-PIPE	
B	39	1	**5P-8245**	1	WASHER-HARD (13.5X25.5X3MM THK)	
B	40	1	**0S-1595**	1	BOLT (1/2-13X1.25 IN)	
B	41	1	**5P-8210**	1	SEAL-O-RING (31.34MM ID)	

B-USE AS REQUIRED
Y-SEPARATE ILLUSTRATION

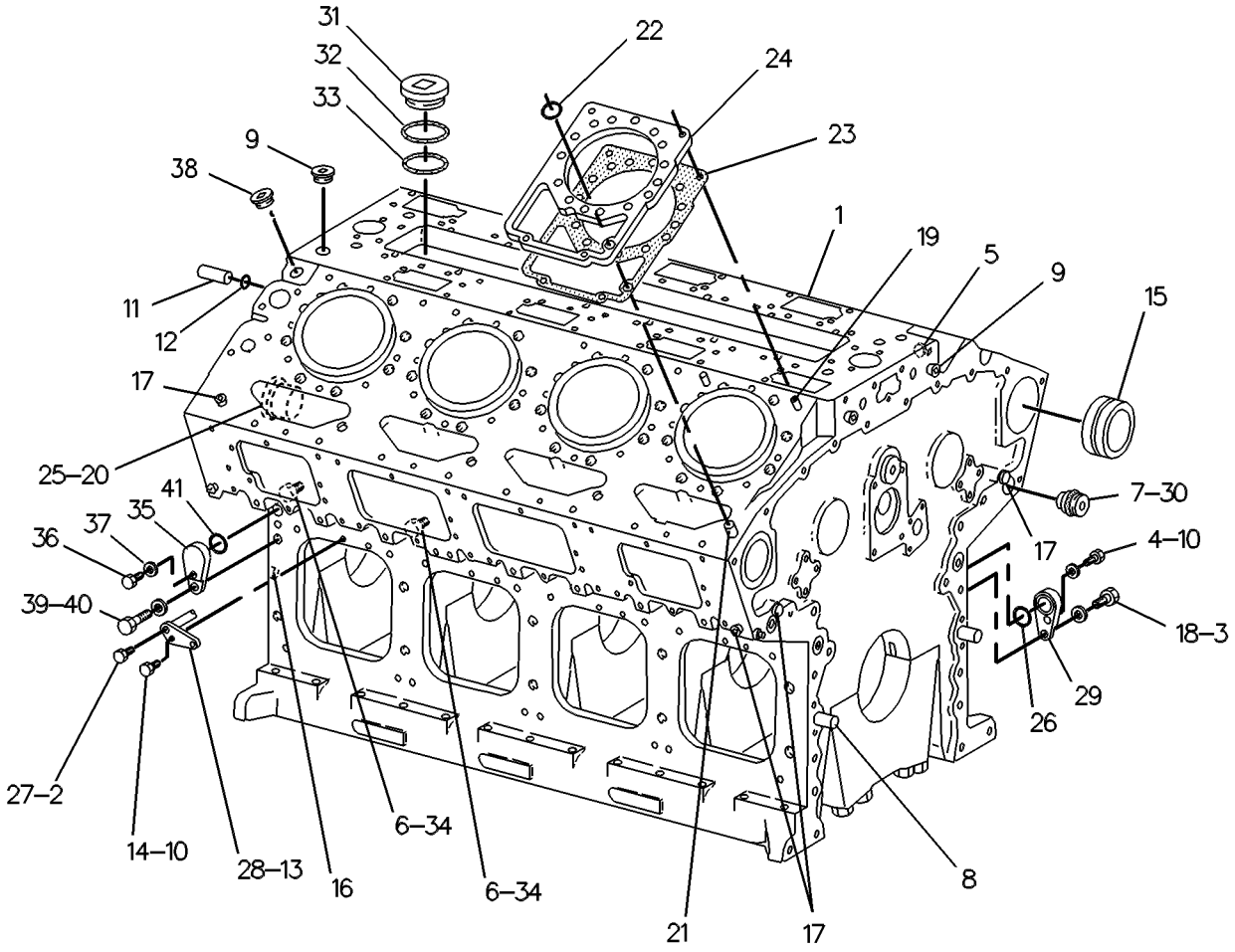

GRAPHIC #1 g00086042

BASIC ENGINE

101-0827 CYLINDER BLOCK GP

S/N: 2GR2335-UP

PART OF 107-8762 ENGINE AR

SMCS-1201 **i01290253**

NOTE	REF NO	GRAPHIC REF	PART NUMBER	QTY	PART NAME 1 2 3 4 5 6 (PRODUCT LEVEL)	SEE PAGE
Y	1	1	*101-1171*	1	CYLINDER BLOCK AS	21
	2	1	**9M-1974**	8	WASHER-HARD (2MM THK)	
	3	1	**5P-8245**	1	WASHER-HARD (3MM THK)	
	4	1	**1A-2029**	1	BOLT (3/8-16X1.125IN)	
B	5	1	**7X-7731**	1	PLUG-PIPE (3/4-14 NPTF THD)	
	6	1	**9S-4191**	6	PLUG-O-RING (9/16-18 THD)	
	7	1	**2W-2940**	8	PLUG-OIL MANIFOLD	
	8	1	**7N-2044**	2	DOWEL	
	9	1	**8T-6762**	4	PLUG-PIPE (1/2-14 NPTF THD)	
	10	1	**5M-2894**	9	WASHER (2.5MM THK)	
	11	1	**7N-2047**	3	DOWEL	
	12	1	**7X-4805**	3	SEAL-O-RING (9.12MM ID)	
	13	1	**116-3253**	8	TUBE AS-OIL JET	
	14	1	**0T-0102**	8	BOLT (3/8-16X0.625IN)	
	15	1	**101-1198**	10	BEARING-CAMSHAFT	
	16	1	**4N-0683**	2	DOWEL (15.88 X 31.88MM)	
	17	1	**8T-6763**	18	PLUG-PIPE (1/4-18 NPTF THD)	
	18	1	**0S-1595**	1	BOLT (1/2-13X1.25IN)	
	19	1	**8T-0099**	16	DOWEL	
	20	1	**7N-5641**	2	PLUG-MANIFOLD	
	21	1	**7N-2049**	8	DOWEL	
	22	1	**5P-0840**	16	SEAL-O-RING (12.29MM ID)	
	23	1	**144-5692**	8	GASKET-PLATE	
	24	1	**110-6994**	8	PLATE-SPACER	
	25	1	**5F-9657**	4	SEAL-O-RING (36.09MM ID)	
	26	1	**5P-8210**	1	SEAL-O-RING (31.34MM ID)	
	27	1	**7X-7731**	1	PLUG-PIPE (3/4-14 NPTF THD)	
	28	1	**4W-4813**	1	PLUG (2-1/4-12 THD)	
	29	1	**8N-8056**	1	COVER	
	30	1	**6V-3348**	8	SEAL-O-RING (18.42MM ID)	
	31	1	**7C-3722**	8	RETAINER AS-JET	
					(EACH INCLUDES)	
		1	**6V-3537**	1	DOWEL	
	32	1	**1B-2790**	8	BOLT (5/16-18X1.375IN)	
	33	1	**8T-2929**	1	SEAL (63.2MM ID)	
	34	1	**033-6042**	6	SEAL-O-RING (11.89MM ID)	
	35	1	**8T-2928**	1	SEAL (53.1MM ID)	
B	36	1	**8N-8056**	1	COVER	
B	37	1	**1A-2029**	1	BOLT (3/8-16X1.125IN)	
B	38	1	**5M-2894**	1	WASHER (2.5MM THK)	
B	39	1	**5P-8245**	1	WASHER-HARD (3MM THK)	
B	40	1	**0S-1595**	1	BOLT (1/2-13X1.25IN)	
B	41	1	**5P-8210**	1	SEAL-O-RING (31.34MM ID)	

B-USE AS REQUIRED
Y-SEPARATE ILLUSTRATION

101-0827 **CYLINDER BLOCK GP** *(contd.)* **i01290253**

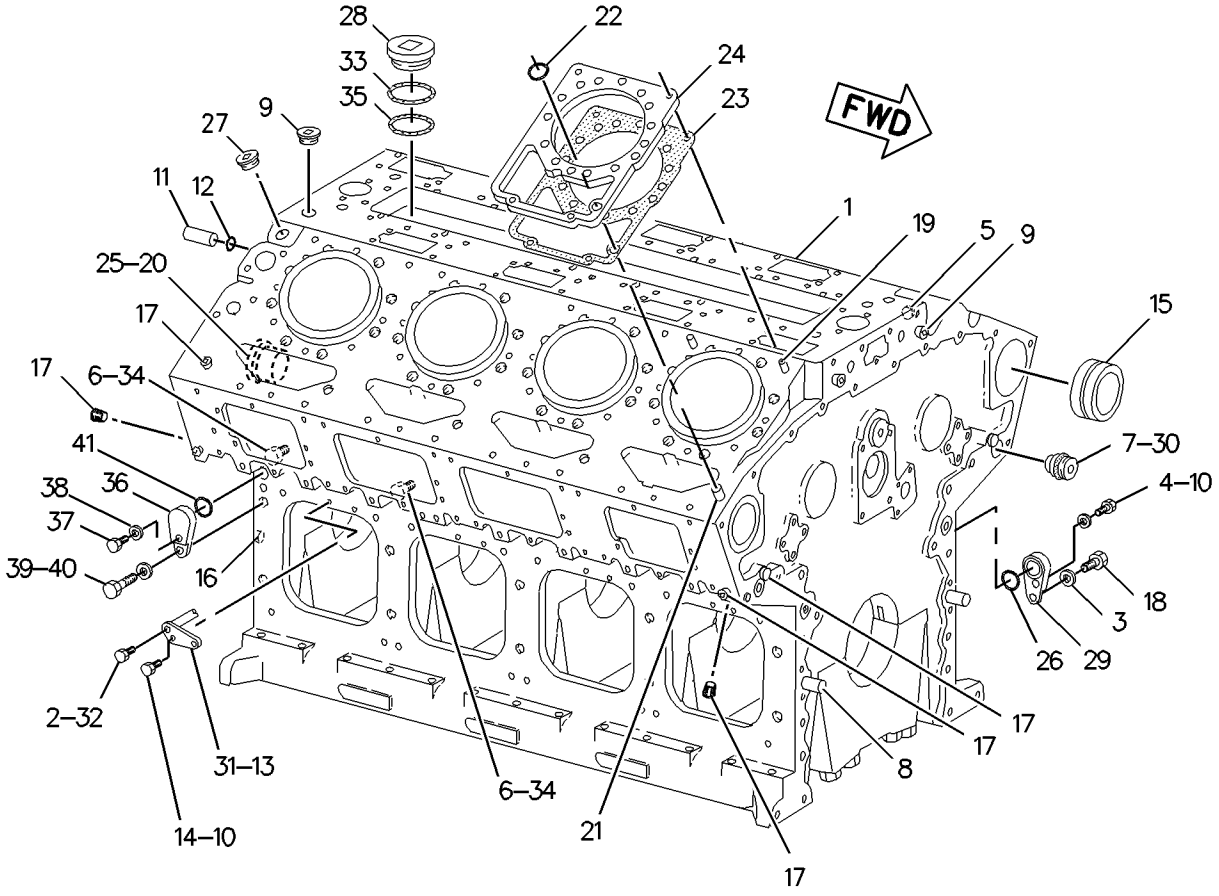

GRAPHIC #1 g00673358

115-3503 CYLINDER BLOCK GP

S/N: 2GR1-UP

FIELD REPLACEMENT FOR 101-1171—PAGE 21

SMCS-1201 **i01196354**

NOTE	REF NO	GRAPHIC REF	PART NUMBER	QTY	PART NAME 1 2 3 4 5 6 (PRODUCT LEVEL)	SEE PAGE
	1	1	**9S-4191**	6	PLUG-O-RING (9/16-18 THD)	
	2	1	**8T-6762**	4	PLUG-PIPE (1/2-14 NPTF THD)	
	3	1	**7X-7731**	2	PLUG-PIPE (3/4-14 NPTF THD)	
	4	1	**8T-6763**	18	PLUG-PIPE (1/4-18 NPTF THD)	
	5	1	**2W-2940**	8	PLUG-OIL MANIFOLD	
	6	1	**6V-3348**	8	SEAL-O-RING (18.42MM ID)	
	7	1	**7N-5641**	2	PLUG-MANIFOLD	
	8	1	**5F-9657**	4	SEAL-O-RING (36.09MM ID)	
	9	1	**033-6042**	6	SEAL-O-RING (11.89MM ID)	
Y	10	1	*106-2778*	1	CYLINDER BLOCK AS	22

Y-SEPARATE ILLUSTRATION

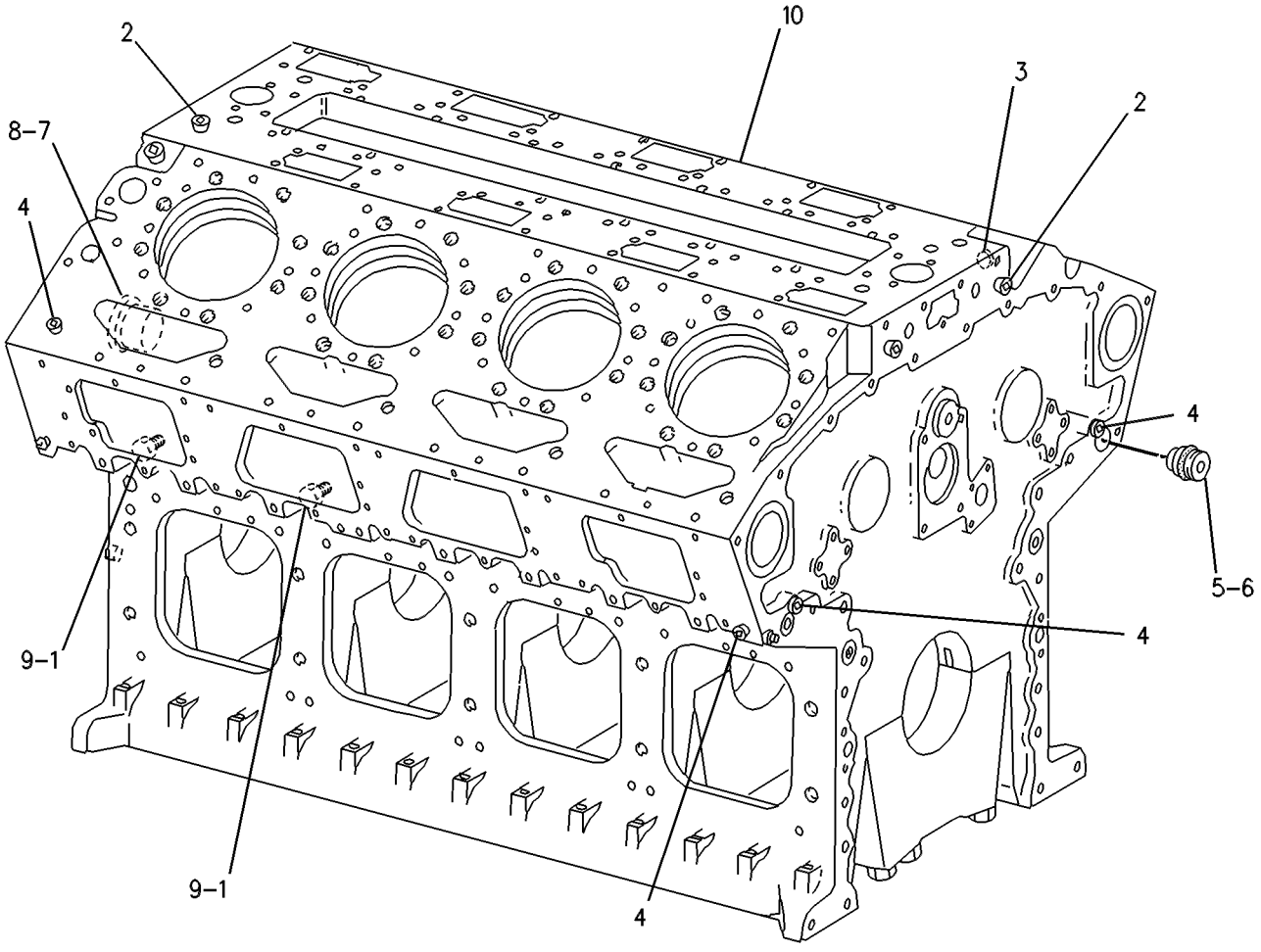

GRAPHIC #1 g00087344

BASIC ENGINE

101-1175 CYLINDER HEAD AS

S/N: 2GR1-1586; 7HR1-UP

PART OF 119-7330 CYLINDER HEAD AS, 101-1174 CYLINDER HEAD GP

FIELD REPLACEMENT ORDER 131-4338—PAGE 32

SMCS-1100, 1101 **i00647158**

NOTE	REF NO	GRAPHIC REF	PART NUMBER	QTY	PART NAME 1 2 3 4 5 6 (PRODUCT LEVEL)	SEE PAGE
	1	1	**7E-5862**	2	INSERT-SEAT (INTAKE)	
	2	1	**3B-0645**	5	PLUG-CUP (32.08MM AVG OD)	
	3	1	**9S-8002**	4	PLUG-O-RING (7/16-20 THD)	
	4	1	**3J-7354**	4	SEAL-O-RING (8.92MM ID)	
	5	1	**118-9491**	2	INSERT-VALVE SEAT (EXHAUST)	
	6	1	**3B-0623**	5	PLUG-CUP (25.73MM AVG OD)	

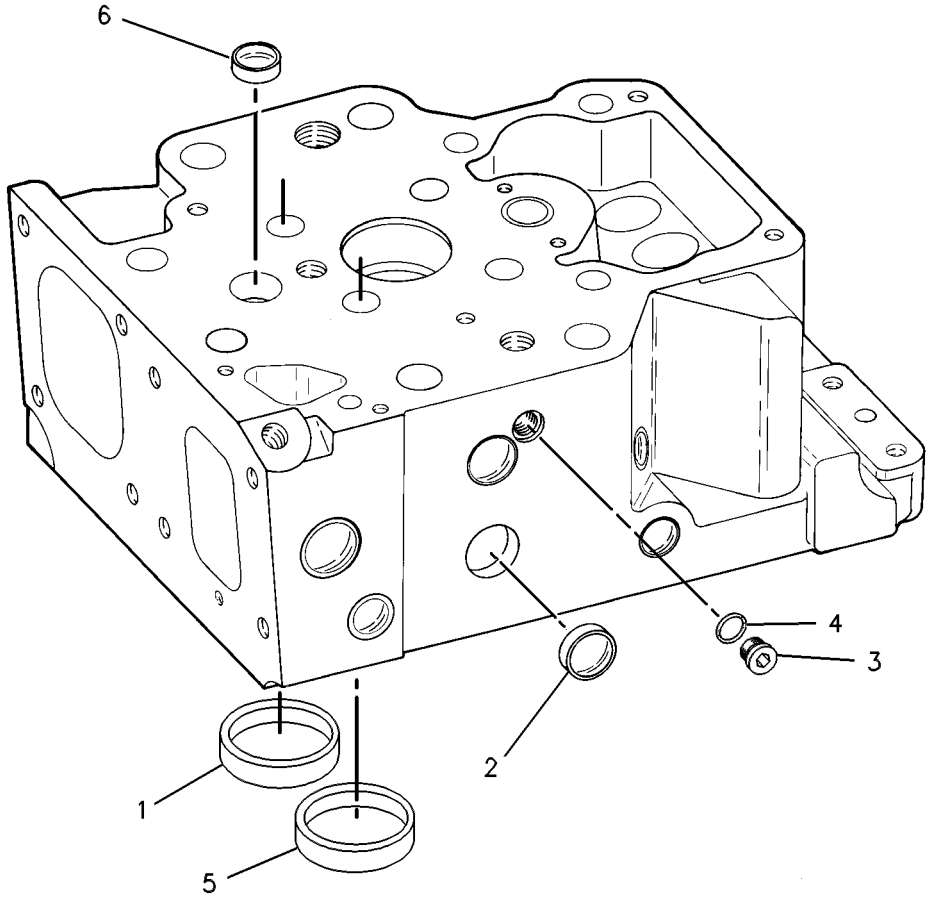

GRAPHIC #1 g00273634

119-7330 CYLINDER HEAD AS*R

S/N: 7HR1-UP

FIELD REPLACEMENT FOR 101-1175—PAGE 29

FIELD INSTALLATION

SMCS-1100, 1101 **i01152331**

NOTE	REF NO	GRAPHIC REF	PART NUMBER	QTY	PART NAME 1 2 3 4 5 6 (PRODUCT LEVEL)	SEE PAGE
Y	1	1	*101-1175*	1	CYLINDER HEAD AS	29
	2	1	**7N-1819**	4	GUIDE-VALVE	
	3	1	**7N-1902**	2	DOWEL	
	4	1	**8T-6759**	1	PLUG-PIPE (1/16-27 THD)	

Y-SEPARATE ILLUSTRATION

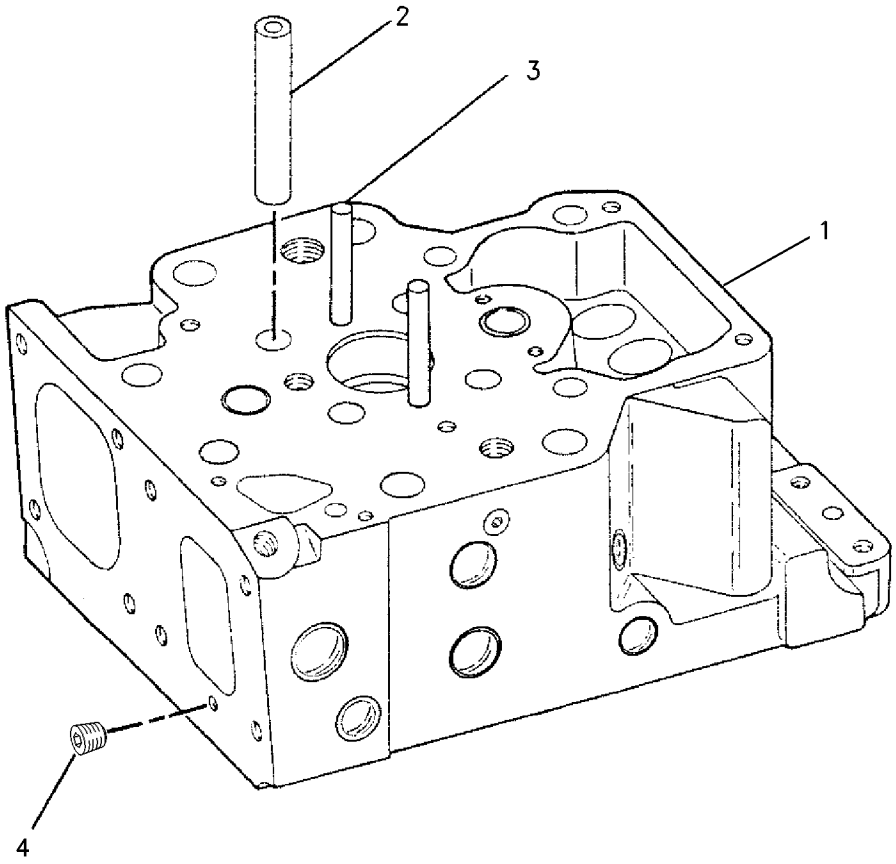

GRAPHIC #1 g00611710

131-0423 CYLINDER HEAD AS

S/N: 2GR1587-1944

PART OF 155-5274 CYLINDER HEAD AS, 155-5273 CYLINDER HEAD GP

FIELD REPLACEMENT ORDER 155-5274—PAGE 34

SMCS-1100, 1101 **i01202513**

NOTE	REF NO	GRAPHIC REF	PART NUMBER	QTY	PART NAME 1 2 3 4 5 6 (PRODUCT LEVEL)	SEE PAGE
	1	1	**136-9630**	2	INSERT-VALVE SEAT (INTAKE)	
	2	1	**3B-0645**	5	PLUG-CUP (32.08MM AVG OD)	
	3	1	**9S-8002**	4	PLUG-O-RING (7/16-20 THD)	
	4	1	**3J-7354**	4	SEAL-O-RING (8.92MM ID)	
	5	1	**131-4340**	2	INSERT-VALVE SEAT (EXHAUST)	
	6	1	**3B-0623**	5	PLUG-CUP (25.73MM OD)	

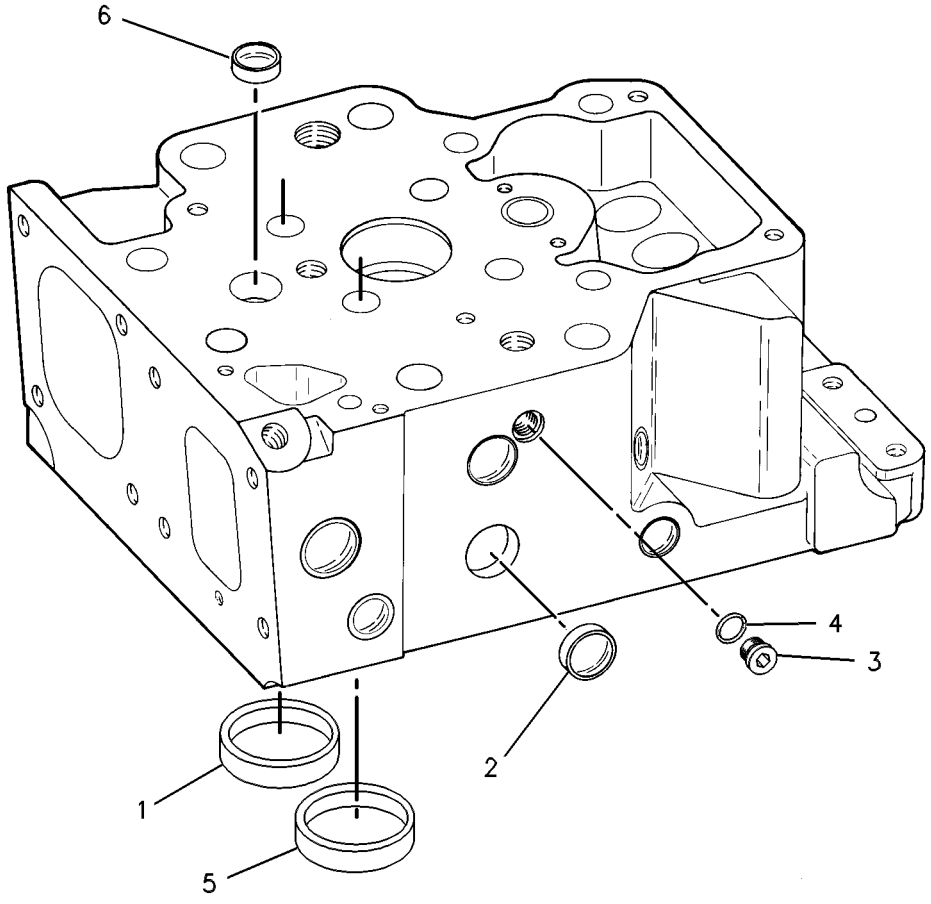

GRAPHIC #1 g00273634

131-4338 CYLINDER HEAD AS

S/N: 2GR1-1944

FIELD REPLACEMENT FOR 101-1175—PAGE 29

SMCS-1100, 1101 **i01173437**

NOTE	REF NO	GRAPHIC REF	PART NUMBER	QTY	PART NAME 1 2 3 4 5 6 (PRODUCT LEVEL)	SEE PAGE
CY	1	1	**154-1612**	1	CYLINDER HEAD AS	33
	2	1	**133-9306**	4	GUIDE-VALVE	
	3	1	**7N-1902**	2	DOWEL	
	4	1	**4D-0514**	1	PLUG-PIPE (1/16-27 NPTF)	

C-CHANGE FROM PREVIOUS TYPE
Y-SEPARATE ILLUSTRATION

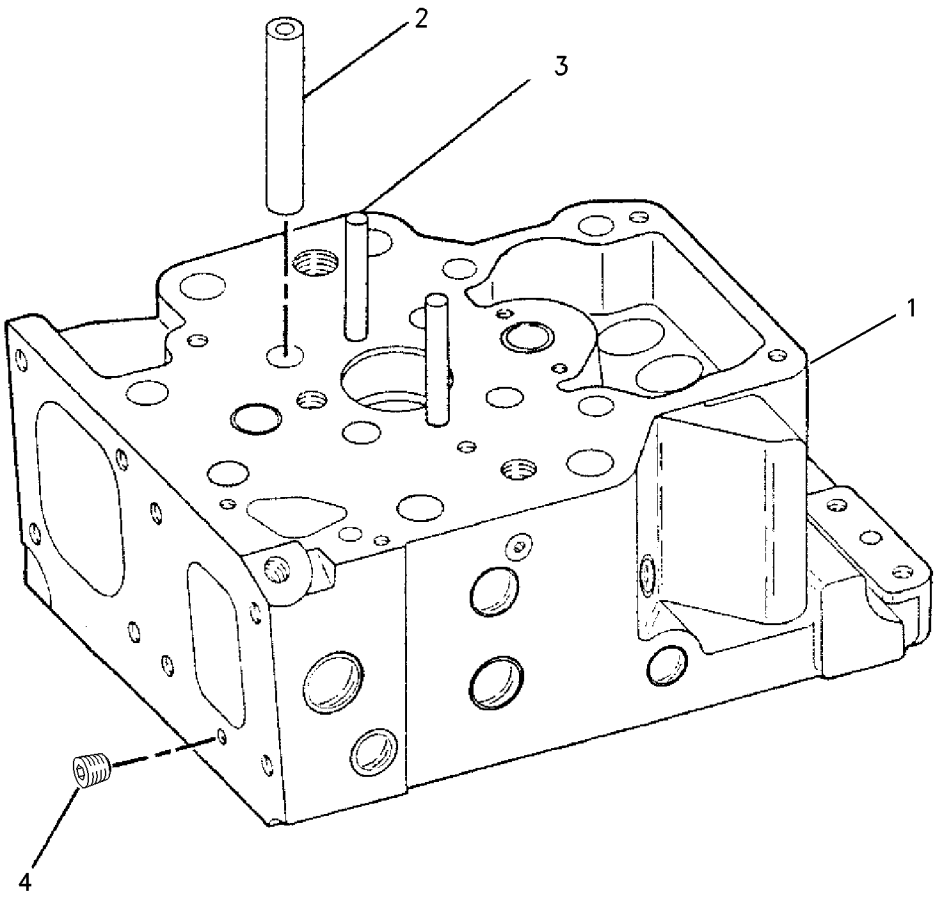

GRAPHIC #1 g00628096

154-1612 CYLINDER HEAD AS

S/N: 2GR1945-UP

PART OF 131-4338, 161-2508 CYLINDER HEAD AS, 145-3216 CYLINDER HEAD GP

FIELD REPLACEMENT ORDER 161-2508—PAGE 35

SMCS-1100, 1101 **i01502371**

NOTE	REF NO	GRAPHIC REF	PART NUMBER	QTY	PART NAME 1 2 3 4 5 6 (PRODUCT LEVEL)	SEE PAGE
	1	1	**3B-0623**	5	PLUG-CUP	
	2	1	**3B-0645**	5	PLUG-CUP	
	3	1	**3J-7354**	4	SEAL-O-RING	
	4	1	**9S-8002**	4	PLUG-O-RING	
	5	1	**130-2607**	2	INSERT-VALVE SEAT (INLET) (STANDARD)	
AB		1	**149-1981**		INSERT-VALVE SEAT (INLET) (0.508MM OS)	
	6	1	**130-2608**	2	INSERT-VALVE SEAT (EXHAUST) (STANDARD)	
AB		1	**166-5945**		INSERT-VALVE SEAT (EXHAUST) (0.508MM OS)	

A-NOT PART OF THIS GROUP
B-USE AS REQUIRED

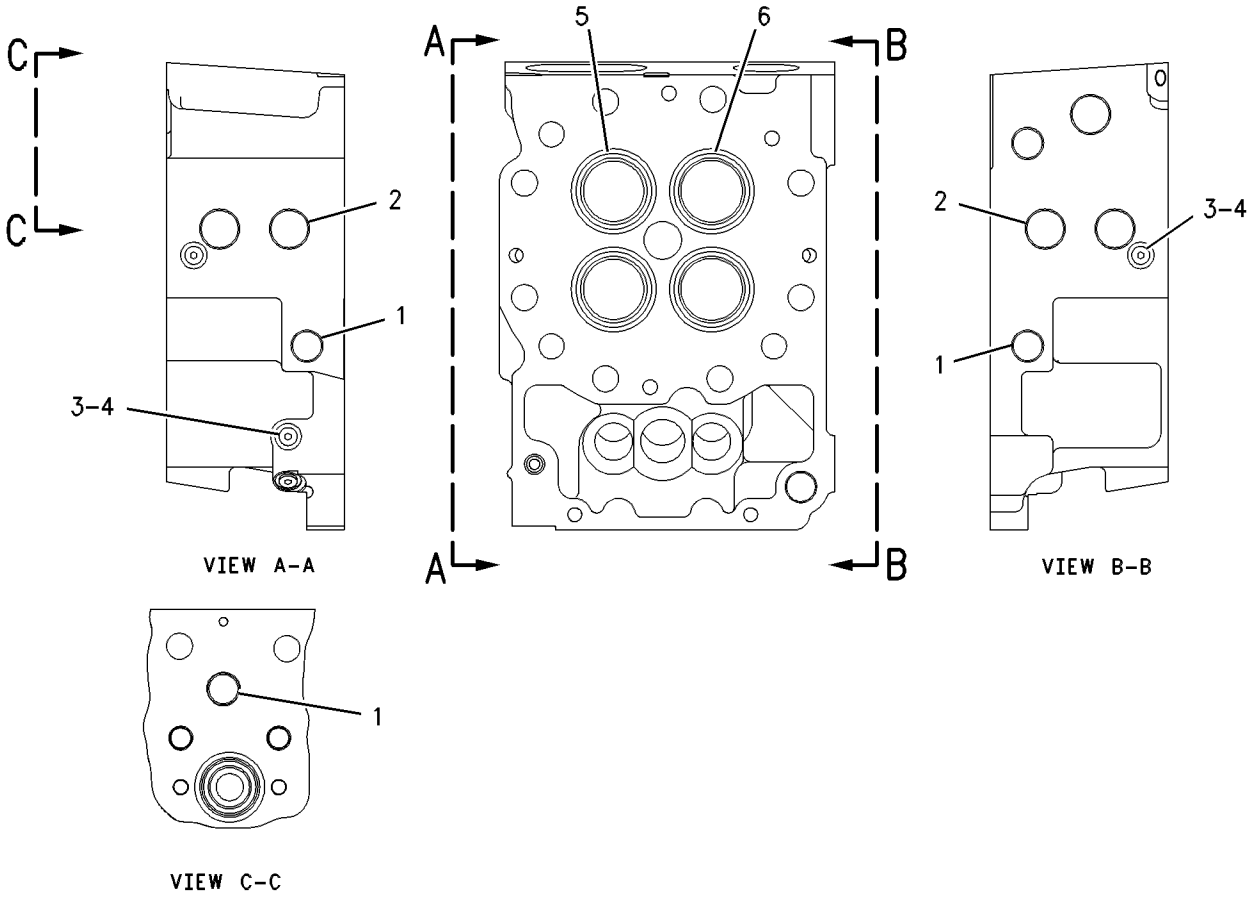

GRAPHIC #1 g00358157

155-5274 CYLINDER HEAD AS*R

S/N: 2GR1-UP

FIELD REPLACEMENT FOR 131-0423—PAGE 31

SMCS-1100, 1101 **i01487518**

NOTE	REF NO	GRAPHIC REF	PART NUMBER	QTY	PART NAME 1 2 3 4 5 6 (PRODUCT LEVEL)	SEE PAGE
Y	1	1	*131-0423*	1	CYLINDER HEAD AS	31
	2	1	**133-9306**	2	GUIDE-VALVE (INLET)	
	2A	1	**133-9306**	2	GUIDE-VALVE (EXHAUST)	
	3	1	**7N-1902**	2	DOWEL	
	4	1	**8T-6759**	1	PLUG-PIPE	

Y-SEPARATE ILLUSTRATION

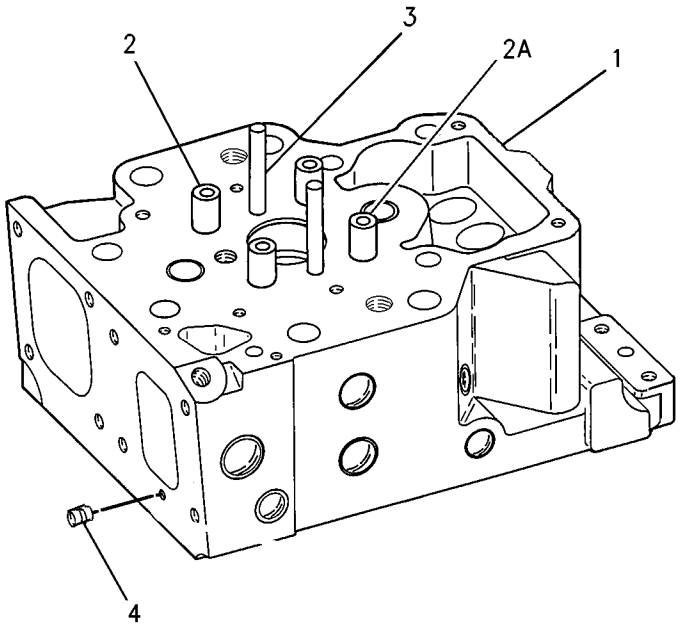

GRAPHIC #1 g00774716

BASIC ENGINE

161-2508 CYLINDER HEAD AS*R

S/N: 2GR1945-UP

FIELD REPLACEMENT FOR 154-1612—PAGE 33

SMCS-1100, 1101 **i01514940**

NOTE	REF NO	GRAPHIC REF	PART NUMBER	QTY	PART NAME 1 2 3 4 5 6 (PRODUCT LEVEL)	SEE PAGE
Y	1	1	**154-1612**	1	CYLINDER HEAD AS	33
	2	1	**133-9306**	2	GUIDE-VALVE (EXHAUST)	
AB		1	**149-1982**		GUIDE-VALVE (0.508MM OS OD) (EXHAUST)	
AB		1	**166-5944**		GUIDE-VALVE (0.127MM OS OD) (EXHAUST)	
	2A	1	**133-9306**	2	GUIDE-VALVE (INLET)	
AB		1	**149-1982**		GUIDE-VALVE (0.508MM OS OD) (INLET)	
AB		1	**166-5944**		GUIDE-VALVE (0.127MM OS OD) (INLET)	
	3	1	**7N-1902**	2	DOWEL	
	4	1	**8T-6759**	1	PLUG-PIPE	

A-NOT PART OF THIS GROUP
B-USE AS REQUIRED
Y-SEPARATE ILLUSTRATION

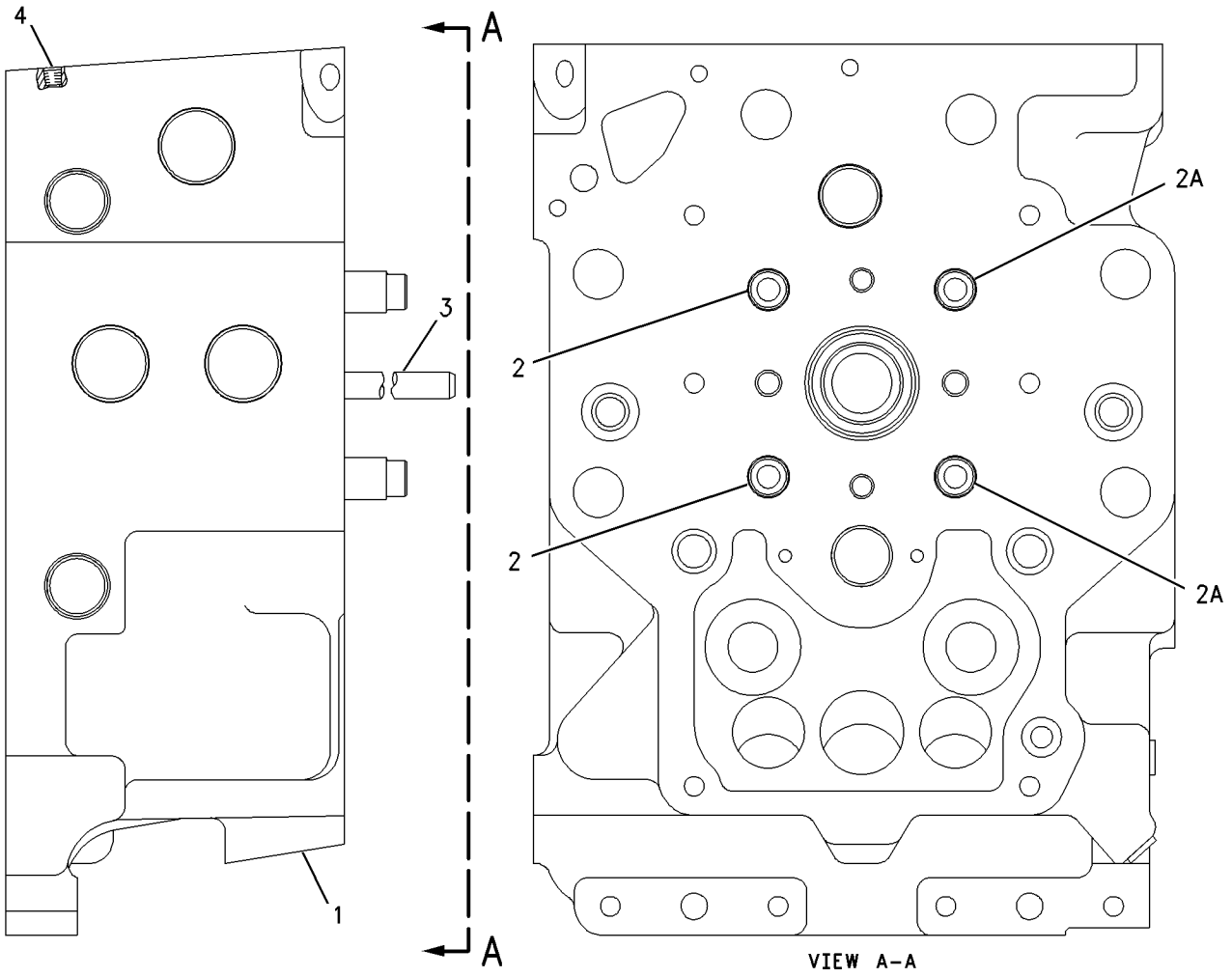

GRAPHIC #1 g00787167

101-0830 CYLINDER HEAD GP

S/N: 2GR1-1586

PART OF 107-8762 ENGINE AR

SMCS-1100 **i01055228**

NOTE	REF NO	GRAPHIC REF	PART NUMBER	QTY	PART NAME 1 2 3 4 5 6 (PRODUCT LEVEL)	SEE PAGE
	1	1	**7N-1961**	8	BOLT-12 POINT HEAD	
	2	1	**5P-8248**	8	WASHER-HARD (3.5MM THK)	
	3	1	**9Y-0635**	1	SPACER	
YR	4	1	**101-1174**	1	CYLINDER HEAD GP	39
	5	1	**7N-1961**	2	BOLT-12 POINT HEAD	
	6	1	**5P-8248**	2	WASHER-HARD (3.5MM THK)	
	7	1	**110-6991**	1	GASKET-CYLINDER HEAD	
	8	1	**126-1112**	4	SEAL-WATER	
	9	1	**126-1113**	4	SEAL-WATER	
	10	1	**5B-7890**	1	PLUG-PIPE	
	11	1	**8T-6759**	1	PLUG-PIPE (1/16-27 THD)	

R-REMFG PART MAY BE AVAILABLE
Y-SEPARATE ILLUSTRATION

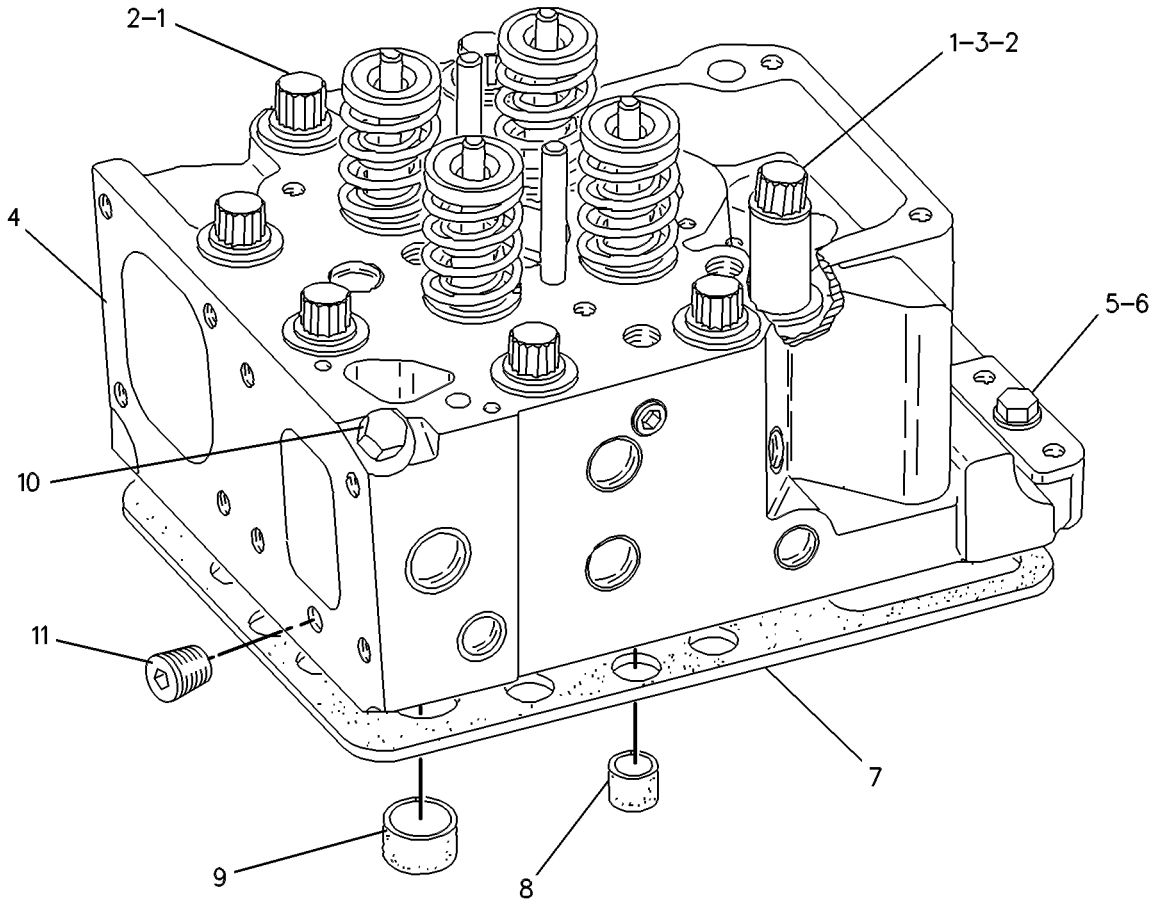

GRAPHIC #1 g00248670

101-0830 CYLINDER HEAD GP

S/N: 2GR1587-1944

PART OF 107-8762 ENGINE AR

SMCS-1100 **i01420593**

NOTE	REF NO	GRAPHIC REF	PART NUMBER	QTY	PART NAME 1 2 3 4 5 6 (PRODUCT LEVEL)	SEE PAGE
	1	1	**5B-7890**	1	PLUG-PIPE	
CYR	2	1	**155-5273**	1	CYLINDER HEAD GP	41
	3	1	**7N-1961**	6	BOLT-12 POINT HEAD	
		1	**5P-8248**	6	WASHER-HARD (20X36.5X3.5MM THK)	
	4	1	**7N-1961**	2	BOLT-12 POINT HEAD	
		1	**5P-8248**	2	WASHER-HARD (20X36.5X3.5MM THK)	
		1	**9Y-0635**	2	SPACER (45MM THK)	
	6	1	**5B-0213**	2	BOLT (3/8-16 X 2.375 IN)	
	7	1	**5M-2894**	2	WASHER-HARD (10.2X18.5X2.5MM THK)	
	8	1	**110-6991**	1	GASKET-CYLINDER HEAD	
	9	1	**126-1113**	4	SEAL-WATER (21.2MM ID)	
	10	1	**126-1112**	4	SEAL-WATER (11.2MM ID)	

C-CHANGE FROM PREVIOUS TYPE
R-REMFG PART MAY BE AVAILABLE
Y-SEPARATE ILLUSTRATION

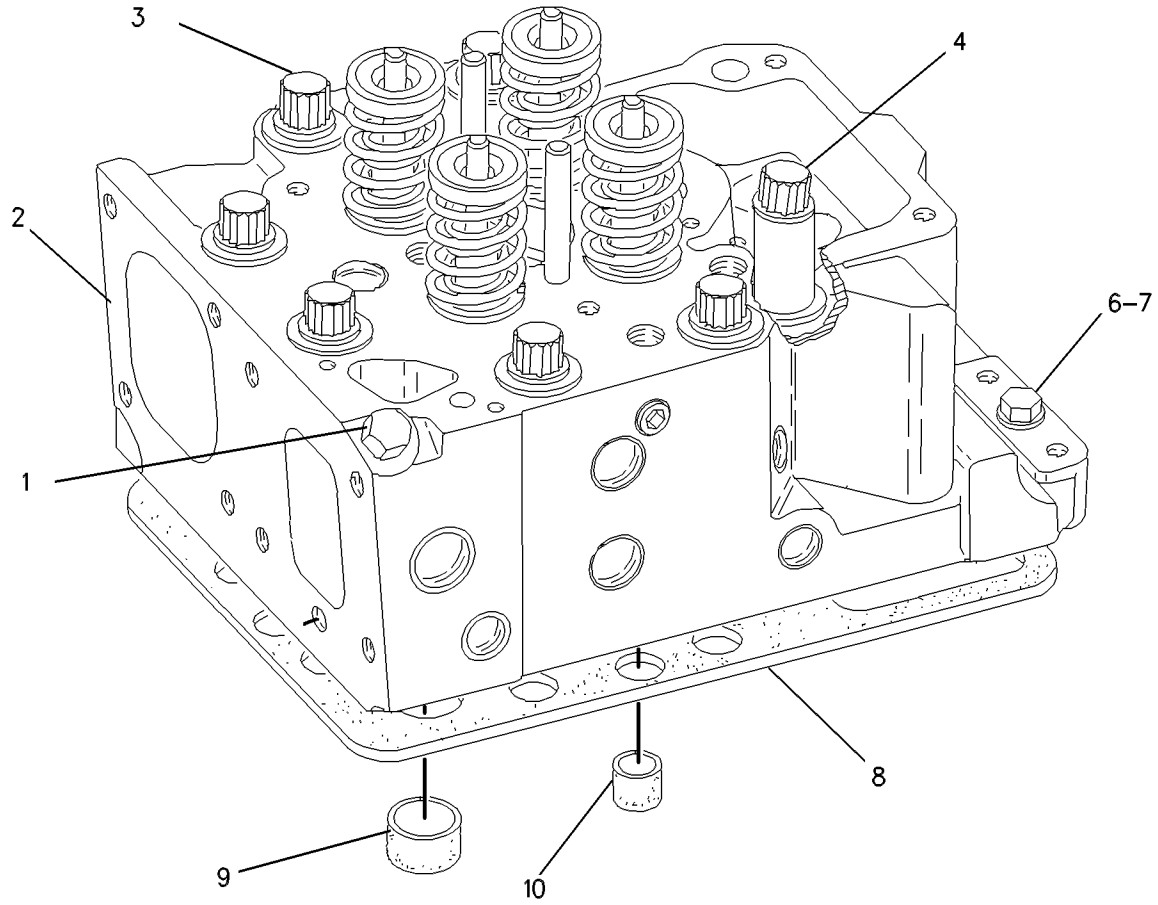

GRAPHIC #1 g00462364

101-0830 CYLINDER HEAD GP

S/N: 2GR1945-UP

PART OF 107-8762 ENGINE AR

SMCS-1100 **i01421083**

NOTE	REF NO	GRAPHIC REF	PART NUMBER	QTY	PART NAME 1 2 3 4 5 6 (PRODUCT LEVEL)	SEE PAGE
	1	1	**5B-7890**	1	PLUG-PIPE	
CYR	2	1	**145-3216**	1	CYLINDER HEAD GP	40
	3	1	**131-0420**	6	FASTENER GP-CYLINDER HEAD	
					(EACH INCLUDES)	
		1	**5P-8248**	1	WASHER-HARD (20X36.5X3.5MM THK)	
		1	**7N-1961**	1	BOLT-12 POINT HEAD	
	4	1	**131-0421**	2	FASTENER GP-CYLINDER HEAD	
					(EACH INCLUDES)	
		1	**5P-8248**	1	WASHER-HARD (20X36.5X3.5MM THK)	
		1	**7N-1961**	1	BOLT-12 POINT HEAD	
		1	**9Y-0635**	1	SPACER (45MM THK)	
	6	1	**5B-0213**	2	BOLT (3/8-16 X 2.375 IN)	
	7	1	**5M-2894**	2	WASHER-HARD (10.2X18.5X2.5MM THK)	
	8	1	**110-6991**	1	GASKET-CYLINDER HEAD	
	9	1	**126-1113**	4	SEAL-WATER (21.2MM ID)	
	10	1	**126-1112**	4	SEAL-WATER (11.2MM ID)	

C-CHANGE FROM PREVIOUS TYPE
R-REMFG PART MAY BE AVAILABLE
Y-SEPARATE ILLUSTRATION

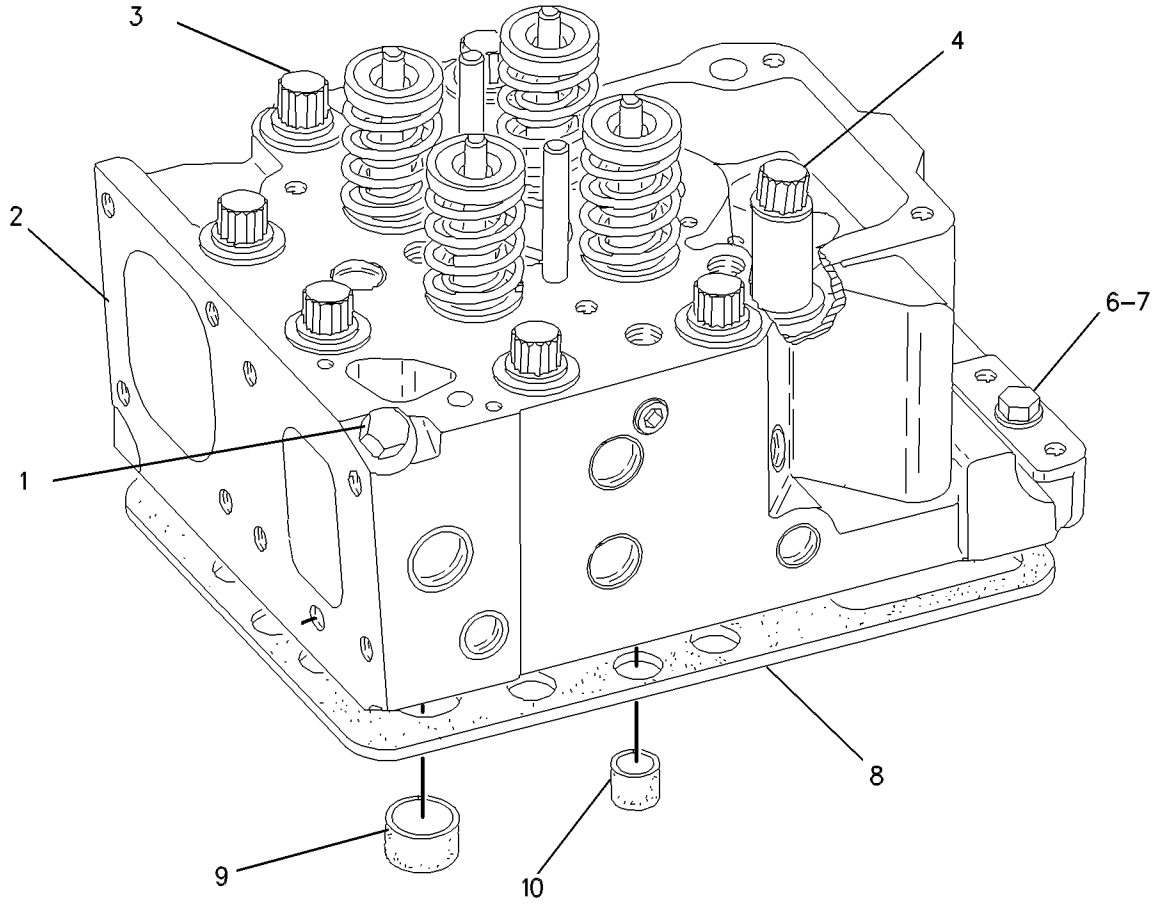

GRAPHIC #1 g00462364

BASIC ENGINE

101-1174 CYLINDER HEAD GP*R

S/N: 2GR1-1586

PART OF 101-0830 CYLINDER HEAD GP

SMCS-1100 **i01207850**

NOTE	REF NO	GRAPHIC REF	PART NUMBER	QTY	PART NAME 1 2 3 4 5 6 (PRODUCT LEVEL)	SEE PAGE
	1	1	**101-1177**	4	SPRING-VALVE	
	2	1	**2W-2662**	4	WASHER	
	3	1	**101-1180**	4	SPRING-VALVE	
	4	1	**133-3814**	4	ROTOCOIL AS	
	5	1	**2A-4429**	8	LOCK-RETAINER	
	6	1	**7E-4609**	2	VALVE-INLET	
	7	1	**7N-1902**	2	DOWEL	
	8	1	**130-2613**	4	GUIDE-VALVE	
Y	9	1	*101-1175*	1	CYLINDER HEAD AS	29
	10	1	**121-9839**	2	VALVE-EXHAUST	

Y-SEPARATE ILLUSTRATION

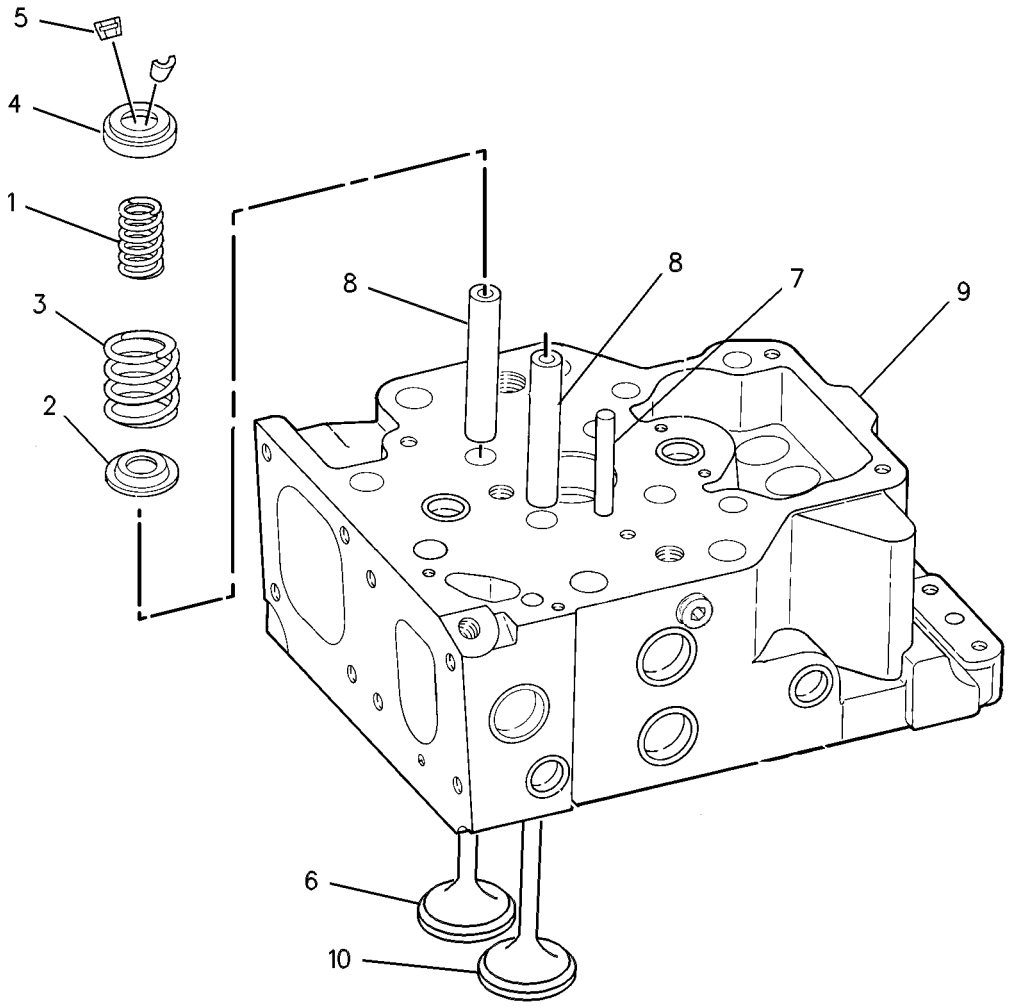

GRAPHIC #1 g00248629

BASIC ENGINE

145-3216 CYLINDER HEAD GP*R

S/N: 2GR1945-UP

PART OF 101-0830 CYLINDER HEAD GP

SMCS-1100 **i01540690**

NOTE	REF NO	GRAPHIC REF	PART NUMBER	QTY	PART NAME 1 2 3 4 5 6 (PRODUCT LEVEL)	SEE PAGE
	1	1	**2A-4429**	8	LOCK-RETAINER	
	2	1	**137-6856**	2	SEAL (VALVE STEM)	
	3	1	**133-3814**	4	ROTOCOIL AS	
	4	1	**7N-1902**	2	DOWEL	
	5	1	**101-1180**	4	SPRING-VALVE (OUTER)	
	6	1	**101-1177**	4	SPRING-VALVE (INNER)	
	7	1	**8T-6759**	1	PLUG-PIPE	
	8	1	**121-2028**	2	VALVE-INLET	
C	9	1	**121-9835**	2	VALVE-EXHAUST	
CY	10	1	**154-1612**	1	CYLINDER HEAD AS	33
	11	1	**133-9306**	2	GUIDE-VALVE (INLET)	
	11A	1	**133-9306**	2	GUIDE-VALVE (EXHAUST)	
AB		1	**149-1982**		GUIDE-VALVE (0.508MM OS OD)	
AB		1	**166-5944**		GUIDE-VALVE (0.127MM OS OD)	
	12	1	**2W-2662**	2	WASHER (17.8X45X0.89MM THK)	

A-NOT PART OF THIS GROUP
B-USE AS REQUIRED
C-CHANGE FROM PREVIOUS TYPE
Y-SEPARATE ILLUSTRATION

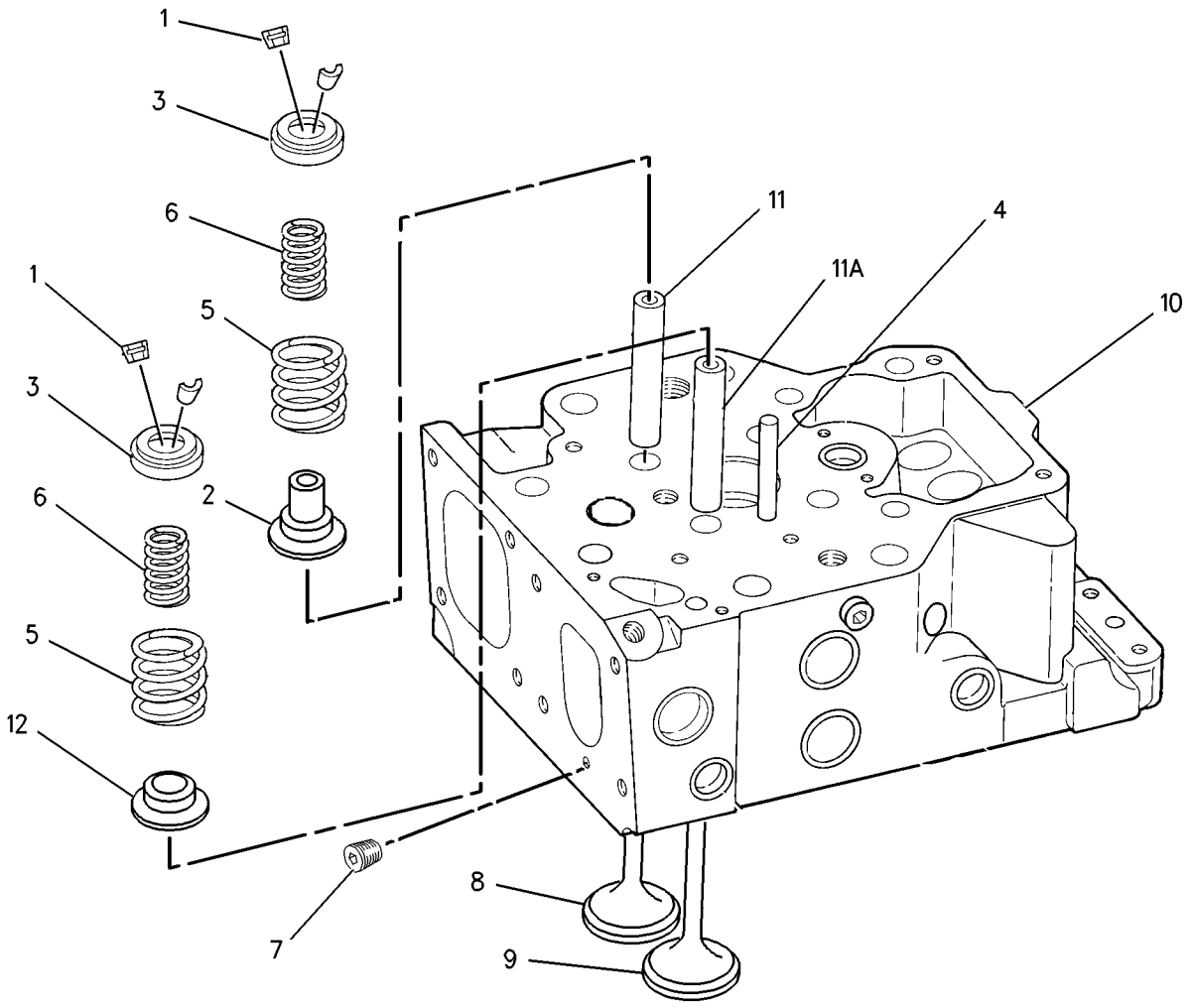

GRAPHIC #1 g00800239

BASIC ENGINE

155-5273 CYLINDER HEAD GP*R

S/N: 2GR1587-1944

PART OF 101-0830 CYLINDER HEAD GP

SMCS-1100 **i01207856**

NOTE	REF NO	GRAPHIC REF	PART NUMBER	QTY	PART NAME 1 2 3 4 5 6 (PRODUCT LEVEL)	SEE PAGE
	1	1	**2A-4429**	8	LOCK-RETAINER	
	2	1	**137-6856**	4	SEAL (VALVE STEM)	
	3	1	**133-3814**	4	ROTOCOIL AS	
	4	1	**7N-1902**	2	DOWEL	
	5	1	**101-1177**	4	SPRING-VALVE	
	6	1	**101-1180**	4	SPRING-VALVE	
	7	1	**121-9839**	2	VALVE-EXHAUST	
	8	1	**7E-4609**	2	VALVE-INLET	
Y	9	1	*131-0423*	1	CYLINDER HEAD AS	31
	10	1	**133-9306**	4	GUIDE-VALVE	
	11	1	**8T-6759**	1	PLUG-PIPE (1/16-27 THD)	

Y-SEPARATE ILLUSTRATION

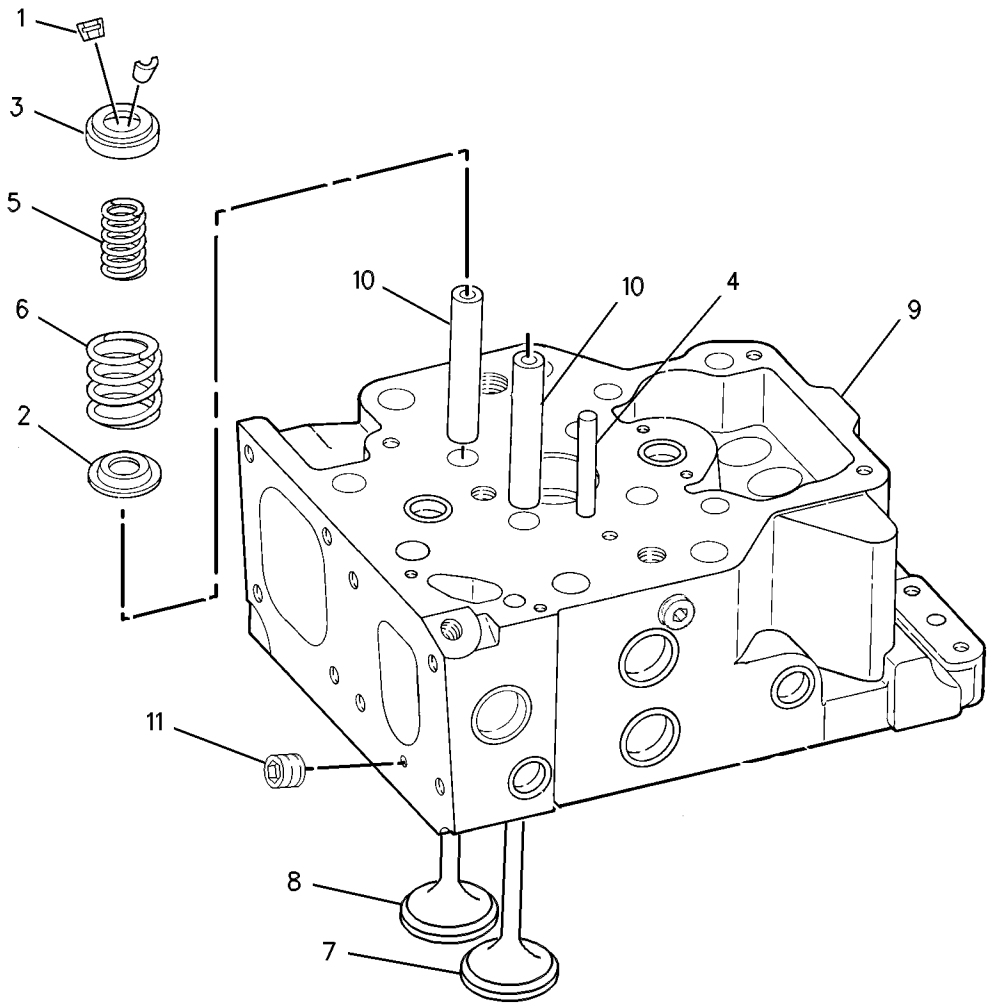

GRAPHIC #1 g00464244

8N-7182 DAMPER GP

S/N: 2GR1-UP

PART OF 107-8762 ENGINE AR

SMCS-1205 **i01420595**

NOTE	REF NO	GRAPHIC REF	PART NUMBER	QTY	PART NAME 1 2 3 4 5 6 (PRODUCT LEVEL)	SEE PAGE
C	1	1	**7E-0854**	1	ADAPTER-DAMPER	
	2	1	**193-3288**	1	DAMPER AS	
B	3	1	**8S-4757**	6	BOLT (1-14X8 IN)	
B	4	1	**5P-8250**	6	WASHER (28X49X5MM THK)	
	5	1	**7B-3235**	10	BOLT (1/2-13X1.375 IN)	
	6	1	**2M-0849**	10	WASHER-HARD (13.5X25.5X5MM THK)	

B-USE AS REQUIRED
C-CHANGE FROM PREVIOUS TYPE

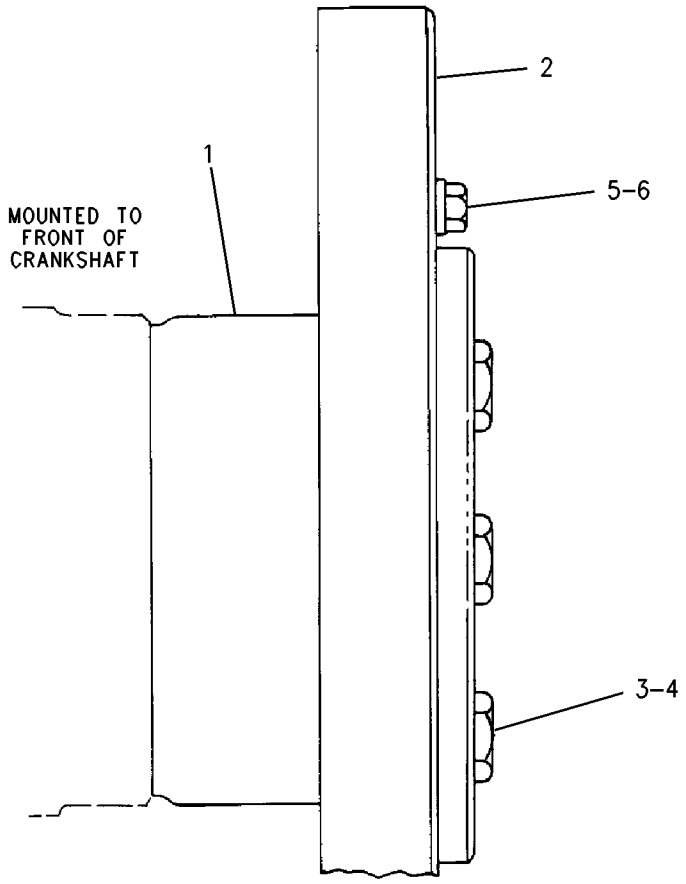

GRAPHIC #1 g00678416

4P-0853 DRIVE GP-ACCESSORY—UPPER RH

S/N: 2GR1-UP
STANDARD ROTATION
PART OF 107-8762 ENGINE AR

SMCS-1207 **i01130120**

NOTE	REF NO	GRAPHIC REF	PART NUMBER	QTY	PART NAME 1 2 3 4 5 6 (PRODUCT LEVEL)	SEE PAGE
	1	1	**7C-4165**	1	ADAPTER AS	
	2	1	**7N-5244**	1	BEARING-SLEEVE	
	3	1	**8M-5255**	1	SEAL-O-RING (120.24MM ID)	
	4	1	**7W-1102**	1	GEAR-ACCESSORY DRIVE (55 TEETH)	
	5	1	**1T-0132**	1	SEAL-O-RING (234.54MM ID)	
	6	1	**7C-4164**	1	ADAPTER AS	
	7	1	**127-5400**	1	BEARING-SLEEVE	
	8	1	**0S-1594**	6	BOLT (3/8-16X1.0IN)	
	9	1	**8T-6757**	2	PLUG-PIPE (1/8-27 NPTF)	
	10	1	**3B-8453**	1	SEAL-O-RING (18.42MM ID)	
	11	1	**0L-1351**	4	BOLT (3/8-16X.875IN)	
	12	1	**8T-6759**	1	PLUG-PIPE (1/16-27 THD)	
		1	**2M-4453**	1	SEAL-O-RING (12.29MM ID)	

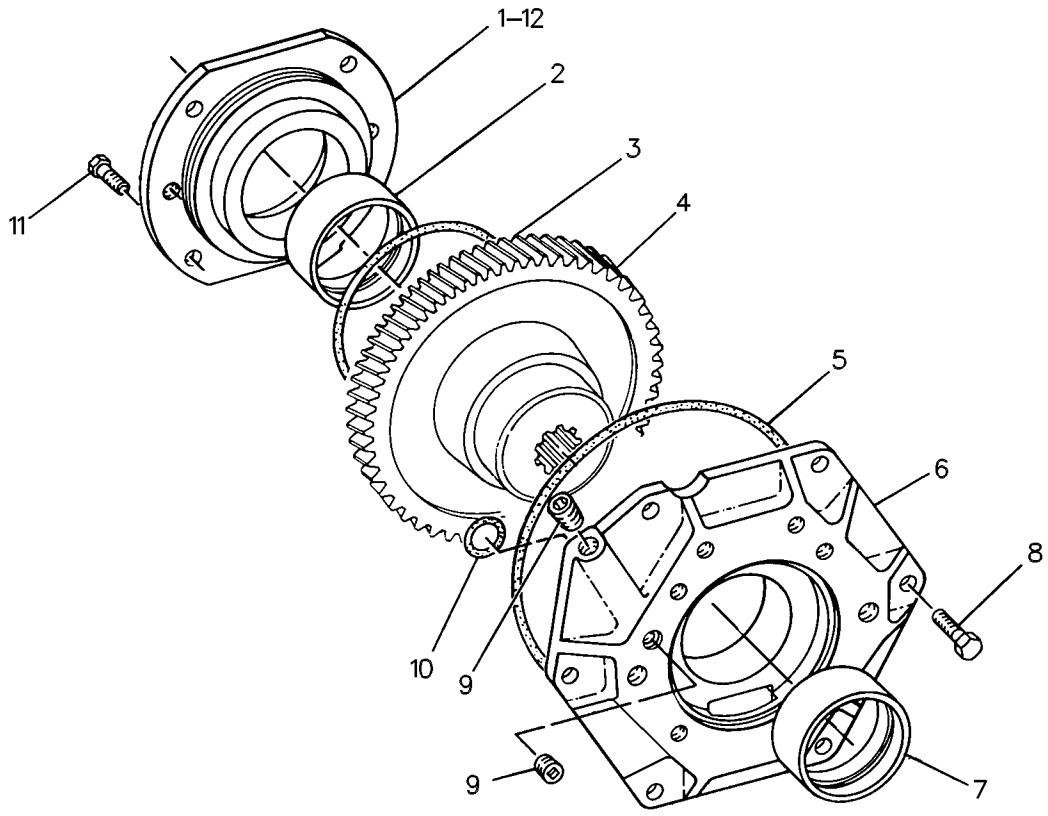

GRAPHIC #1 g00597496

BASIC ENGINE

112-6035 DRIVE GP-ACCESSORY

S/N: 2GR1-UP

PART OF 107-8762 ENGINE AR

SMCS-1207 **i01477864**

NOTE	REF NO	GRAPHIC REF	PART NUMBER	QTY	PART NAME 1 2 3 4 5 6 (PRODUCT LEVEL)	SEE PAGE
	1	1	**5R-7136**	4	WASHER-SEALING	
	2	1	**112-6036**	1	ADAPTER	
	3	1	**141-7141**	1	PULLEY AS	
	4	1	**189-5178**	1	SEAL-LIP TYPE	
	5	1	**0S-1621**	4	BOLT (1/2-13X1 IN)	
	6	1	**0T-0573**	4	BOLT (3/8-16X2.75 IN)	
	7	1	**5F-3106**	1	SEAL-O-RING	
	8	1	**5M-2894**	4	WASHER-HARD (10.2X18.5X2.5MM THK)	

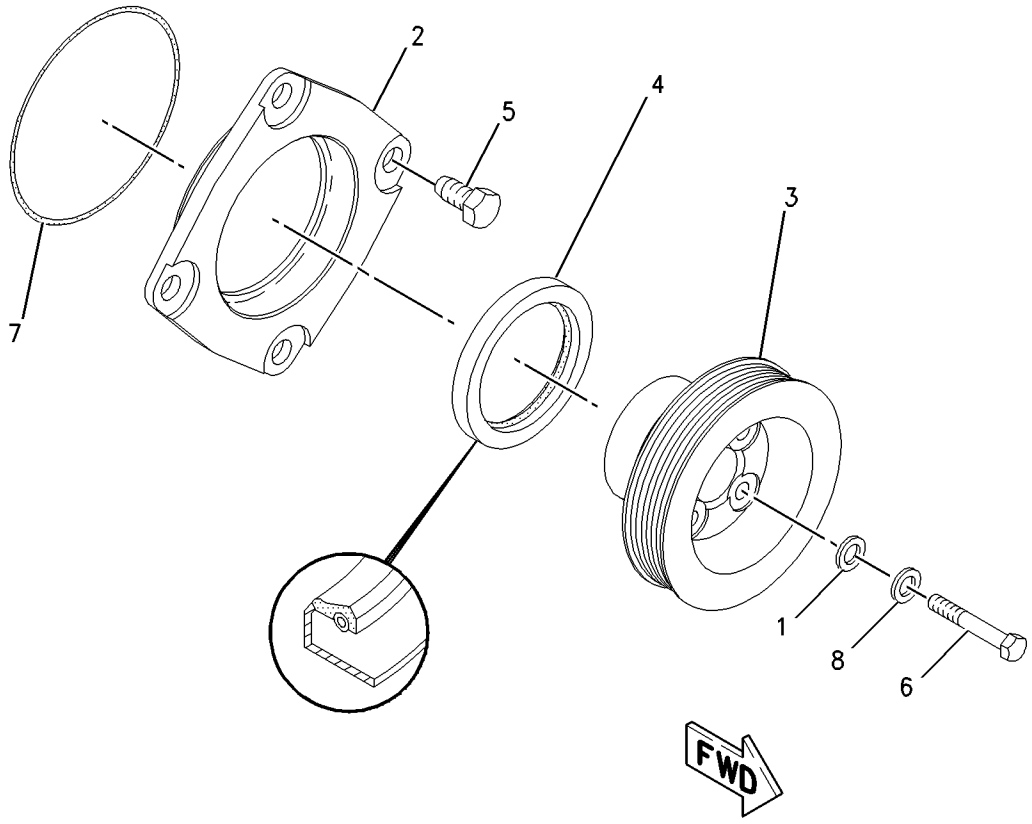

GRAPHIC #1 g00769683

MEMORANDA

BASIC ENGINE

123-6939 DRIVE GP-ACCESSORY

S/N: 2GR1-UP

PART OF 107-8762 ENGINE AR

SMCS-1207 **i01154759**

NOTE	REF NO	GRAPHIC REF	PART NUMBER	QTY	PART NAME 1 2 3 4 5 6 (PRODUCT LEVEL)	SEE PAGE
	1	1	**9X-8879**	2	BOLT (1/2-13X5.5IN)	
	2	1	**153-1243**	1	GEAR AS (60/47 TEETH) (IDLER)	
	3	1	**116-1365**	1	BEARING	
	4	1	**2W-0553**	1	SHAFT-GOVERNOR CONTROL	
	5	1	**2W-0554**	1	ADAPTER AS	
	6	1	**127-5400**	1	BEARING-SLEEVE	
	7	1	**4S-6137**	4	STUD-TAPERLOCK (3/8-16X3.1IN)	
	8	1	**5R-7136**	1	WASHER-SEAL (1.27MM THK)	
	9	1	**5R-7137**	2	WASHER-SEAL (1.27MM THK)	
	10	1	**7C-3258**	1	WASHER AS-THRUST	
	11	1	**7N-2047**	1	DOWEL	
	12	1	**7N-5279**	1	ADAPTER AS	
	13	1	**127-5400**	1	BEARING-SLEEVE	
	14	1	**7N-8374**	1	COVER-DRIVE OPENING	
	15	1	**8N-2802**	1	COVER	
	16	1	**0S-1592**	2	BOLT (5/8-11X1.25IN)	
	17	1	**0S-1594**	6	BOLT (3/8-16X1 IN)	
	18	1	**0T-0055**	1	BOLT (3/8-16X4.25IN)	
	19	1	**1T-0132**	1	SEAL-O-RING (234.54MM ID)	
	20	1	**1T-0720**	2	BOLT-12 POINT HEAD (3/8-16X1.25IN)	
	21	1	**2B-2695**	4	BOLT (5/16-18X.875IN)	
	22	1	**2M-4453**	1	SEAL-O-RING (12.29MM ID)	
	23	1	**3B-8453**	1	SEAL-O-RING (18.42MM ID)	
	24	1	**8T-6759**	1	PLUG-PIPE (1/16-27 THD)	
	25	1	**5M-2894**	1	WASHER (2.5MM THK)	
	26	1	**5P-8245**	2	WASHER-HARD (3MM THK)	
	27	1	**5P-8247**	2	WASHER-HARD (3.5MM THK)	
	28	1	**6K-3771**	12	BOLT-12 POINT HEAD (7/16-14X1.5 IN)	
	29	1	**8M-5255**	2	SEAL-O-RING (120.24MM ID)	
	30	1	**8T-6757**	2	PLUG-PIPE (1/8-27 NPTF)	
	31	1	**9M-1974**	4	WASHER-HARD (2MM THK)	
	32	1	**9S-8752**	4	NUT (3/8-16 THD)	
	33	1	**2W-0552**	1	GEAR-WATER PUMP DRIVE (65 TEETH)	
	34	1	**2W-0556**	1	GASKET	
	35	1	**7C-3261**	1	SHAFT-GOVERNOR CONTROL	
	36	1	**7N-7539**	2	WASHER-THRUST	
	37	1	**5F-3106**	1	SEAL-O-RING (126.59MM ID)	
	38	1	**9L-9132**	4	WASHER (2.5MM THK)	

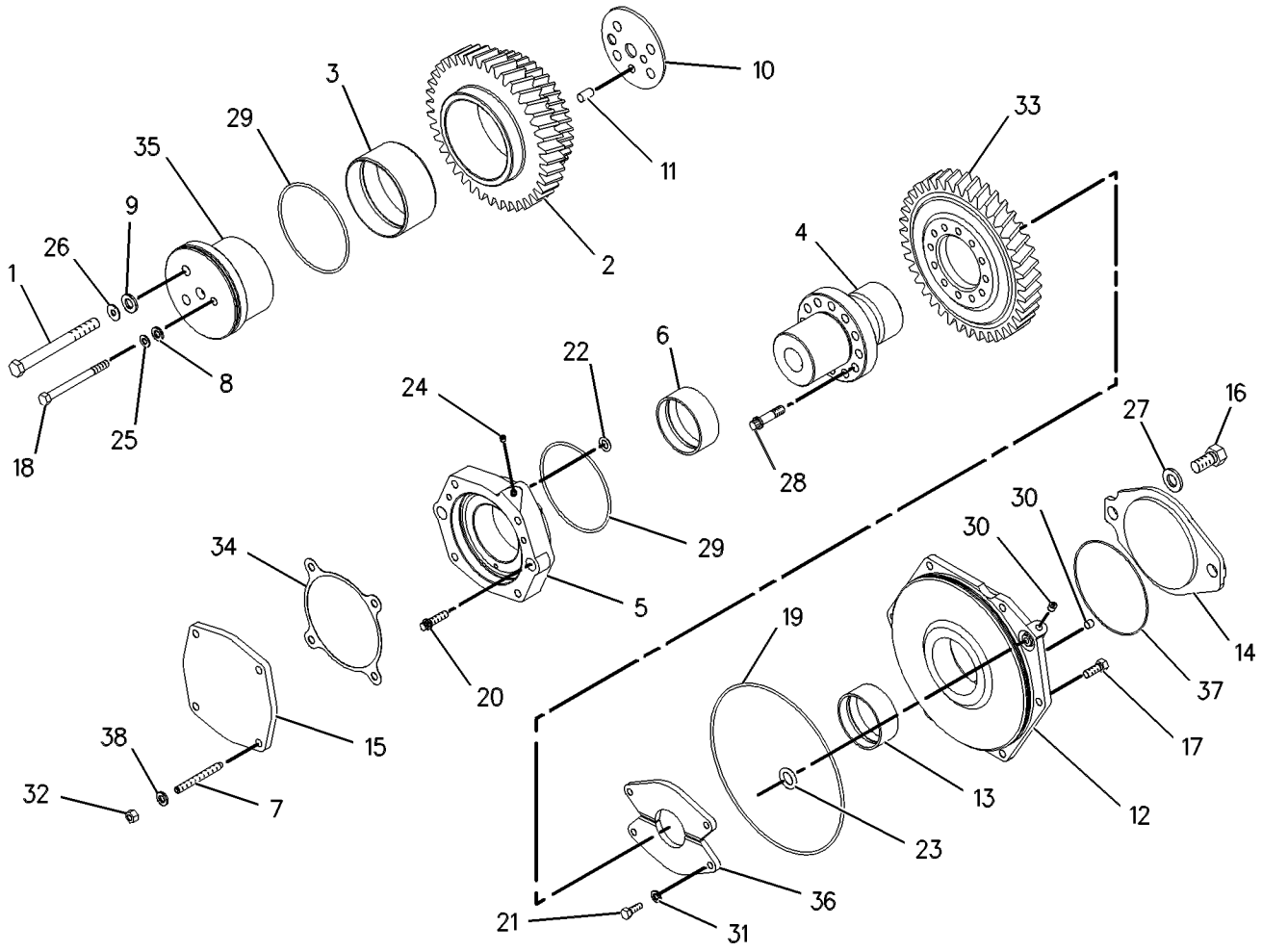

GRAPHIC #1 g00385834

112-6004 EXTENSION GP-DRAIN

S/N: 7HR1-UP

PART OF 112-6000 INSTALLATION AR-ENGINE

SMCS-1302 **i00745212**

NOTE	REF NO	GRAPHIC REF	PART NUMBER	QTY	PART NAME 1 2 3 4 5 6 (PRODUCT LEVEL)	SEE PAGE
	1	1	**6B-8129**	1	NIPPLE-PIPE	
	2	1	**5P-2230**	1	CLAMP-HOSE	
E	3	1	**5P-1255**		HOSE (40CM)	
E	4	1	**5P-1260**		HOSE (52CM)	

E-ORDER BY THE CENTIMETER

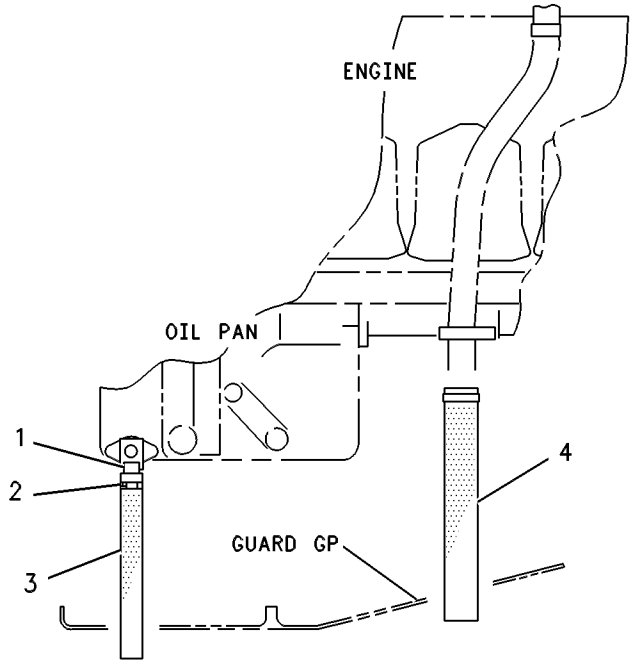

GRAPHIC #1 g00271709

BASIC ENGINE

9Y-7669 FLYWHEEL GP

S/N: 2GR1-UP

PART OF 107-8762 ENGINE AR

SMCS-1156 **i00547870**

NOTE	REF NO	GRAPHIC REF	PART NUMBER	QTY	PART NAME 1 2 3 4 5 6 (PRODUCT LEVEL)	SEE PAGE
	1	1	**9Y-7668**	1	FLYWHEEL AS	
	2	1	**8N-0896**	1	GEAR (151 TEETH)	
	3	1	**9S-8893**	12	BOLT-12 POINT HEAD	
	4	1	**5P-8839**	12	WASHER-HARD	

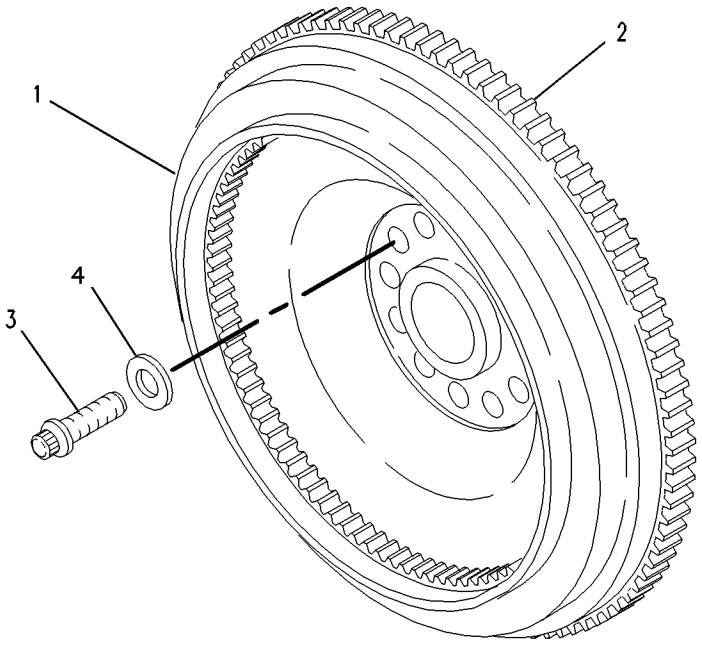

GRAPHIC #1 g00082250

BASIC ENGINE

8N-7174 GEAR GP-FRONT

S/N: 2GR1-UP
SAE STANDARD ENGINE ROTATION
PART OF 107-8762 ENGINE AR

SMCS-1206 **i01420599**

NOTE	REF NO	GRAPHIC REF	PART NUMBER	QTY	PART NAME 1 2 3 4 5 6 (PRODUCT LEVEL)	SEE PAGE
C	1	1	**2W-2895**	1	GEAR-CRANKSHAFT (92 TEETH)	
	2	1	**3S-1307**	12	BOLT-12 POINT HEAD (3/8-16X2 IN)	
	3	1	**144-8263**	1	GEAR AS-IDLER (53 TEETH)	
	3A	1	**140-9597**	1	BEARING-SLEEVE	
C	4	1	**7C-3260**	1	SHAFT-GOVERNOR CONTROL	
	5	1	**8M-5255**	2	SEAL-O-RING (120.24MM ID)	
C	6	1	**7C-3258**	1	WASHER AS-THRUST	
	6A	1	**7N-2047**	1	DOWEL	
C	7	1	**9X-8879**	2	BOLT (1/2-13X5.5 IN)	
C	8	1	**0T-0055**	1	BOLT (3/8-16X4.25 IN)	
	9	1	**7E-0275**	1	GEAR-WATER PUMP DRIVE (69 TEETH)	
B	10	1	**6K-3771**	12	BOLT-12 POINT HEAD (7/16-14X1.5 IN)	
	11	1	**7N-5239**	1	SHAFT AS-PUMP DRIVE	
	11A	1	**8T-2153**	1	SETSCREW-SOCKET (1/4-28X7.94MM)	
	12	1	**7N-5263**	1	ADAPTER AS-PUMP (OIL)	
	12A	1	**127-5400**	1	BEARING-SLEEVE	
	13	1	**1T-0132**	1	SEAL-O-RING (234.54MM ID)	
	14	1	**3B-8453**	1	SEAL-O-RING (18.42MM ID)	
	15	1	**0S-1594**	2	BOLT (3/8-16X1 IN)	
	16	1	**7N-5246**	2	WASHER-THRUST	
	17	1	**4B-3388**	4	BOLT (5/16-18X1.125 IN)	
	18	1	**7N-5245**	1	ADAPTER AS-PUMP (WATER)	
	18A	1	**127-5400**	1	BEARING-SLEEVE	
	19	1	**9M-1974**	4	WASHER-HARD (8.8X16X2MM THK)	
C	20	1	**5P-8245**	2	WASHER-HARD (13.5X25.5X3MM THK)	
C	21	1	**5R-7137**	2	WASHER-SEALING	
C	22	1	**5M-2894**	6	WASHER-HARD (10.2X18.5X2.5MM THK)	
C	23	1	**5R-7136**	1	WASHER-SEALING	
	24	1	**0S-1590**	5	BOLT (3/8-16X2 IN)	
	25	1	**7C-8246**	5	SPACER (10.5X20X24MM THK)	

B-USE AS REQUIRED
C-CHANGE FROM PREVIOUS TYPE

8N-7174 **GEAR GP-FRONT** *(contd.)* **i01420599**

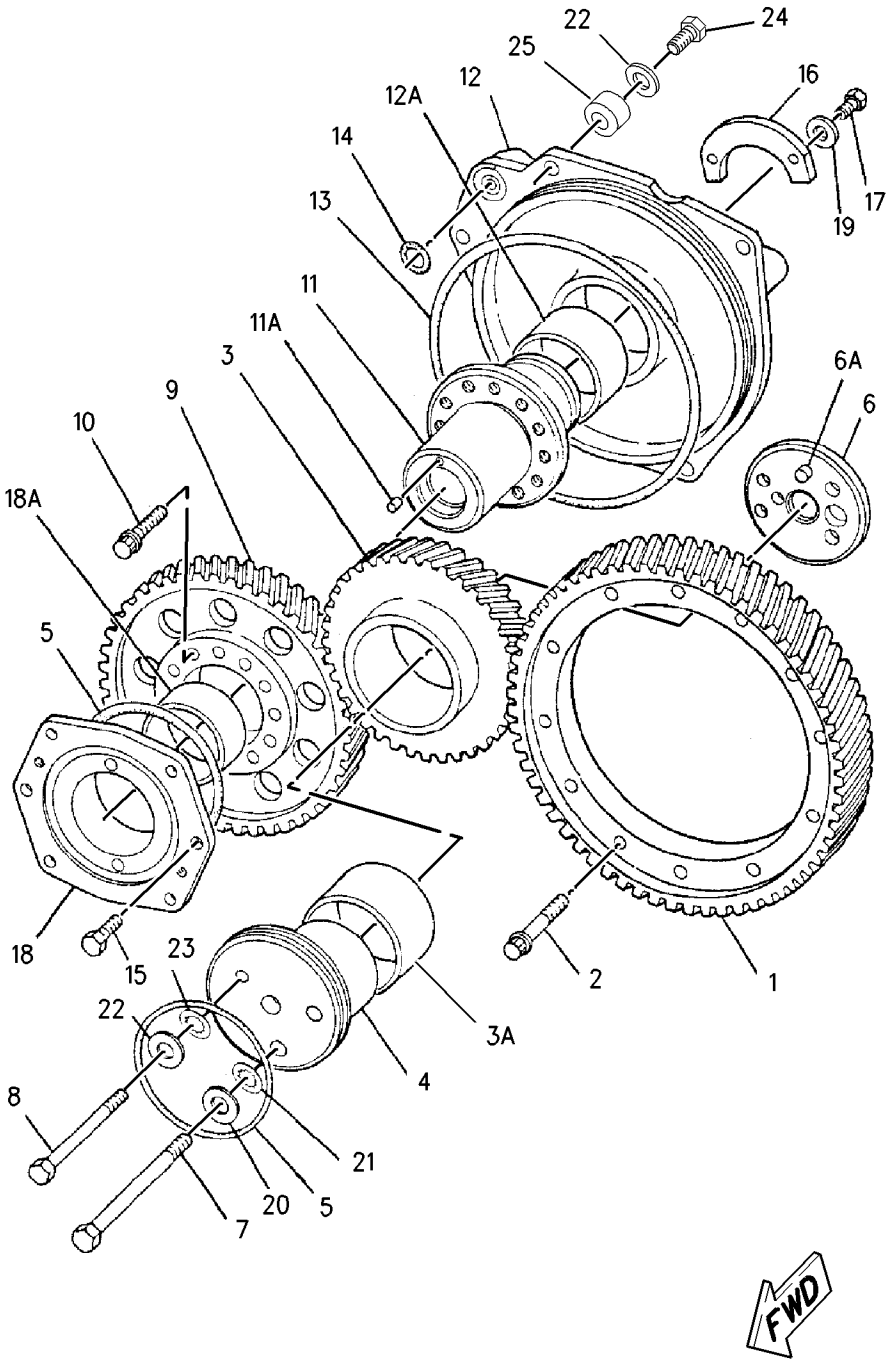

GRAPHIC #1 g00703991

BASIC ENGINE

101-0834 GEAR GP-REAR

S/N: 2GR1-UP

PART OF 107-8762 ENGINE AR

SMCS-1204, 1234 **i01239192**

NOTE	REF NO	GRAPHIC REF	PART NUMBER	QTY	PART NAME 1 2 3 4 5 6 (PRODUCT LEVEL)	SEE PAGE
	1	1	**3S-1307**	12	BOLT-12 POINT HEAD (3/8-16X2 IN)	
	2	1	**101-1363**	1	GEAR AS-BALANCER (92/35 TEETH) (CLUSTER IDLER - REAR)	
	2A	1	**101-1372**	1	BEARING-SLEEVE	
	3	1	**101-1366**	1	SHAFT-GEAR (CLUSTER)	
	4	1	**8M-2530**	4	BOLT-12 POINT HEAD (1/2-13X1.25IN)	
	5	1	**101-1365**	1	PLATE-THRUST	
	6	1	**0L-1351**	4	BOLT (3/8-16X.875IN)	
	7	1	**101-1364**	2	GEAR AS-IDLER (69 TEETH)	
					(EACH INCLUDES)	
	7A	1	**125-9751**	1	BEARING-SLEEVE	
	8	1	**101-1367**	2	SHAFT-IDLER	
	9	1	**5P-8248**	2	WASHER-HARD (3.5MM THK)	
	10	1	**9X-8887**	2	BOLT (3/4-10X3IN)	
	11	1	**1B-4367**	4	BOLT (5/8-11X3IN)	
	12	1	**101-1368**	2	WASHER-THRUST (19.50 X 106 X 1.9MM THK)	
	13	1	**101-1369**	2	GEAR-CAMSHAFT DRIVE (70 TEETH)	
	14	1	**4W-4586**	1	PLATE	
	15	1	**101-1370**	1	GEAR-CRANKSHAFT (92 TEETH)	
	16	1	**8S-2331**	2	BOLT-12 POINT HEAD (5/8-11 X 2IN)	
	17	1	**7E-5324**	1	RING	

101-0834 **GEAR GP-REAR** *(contd.)* **i01239192**

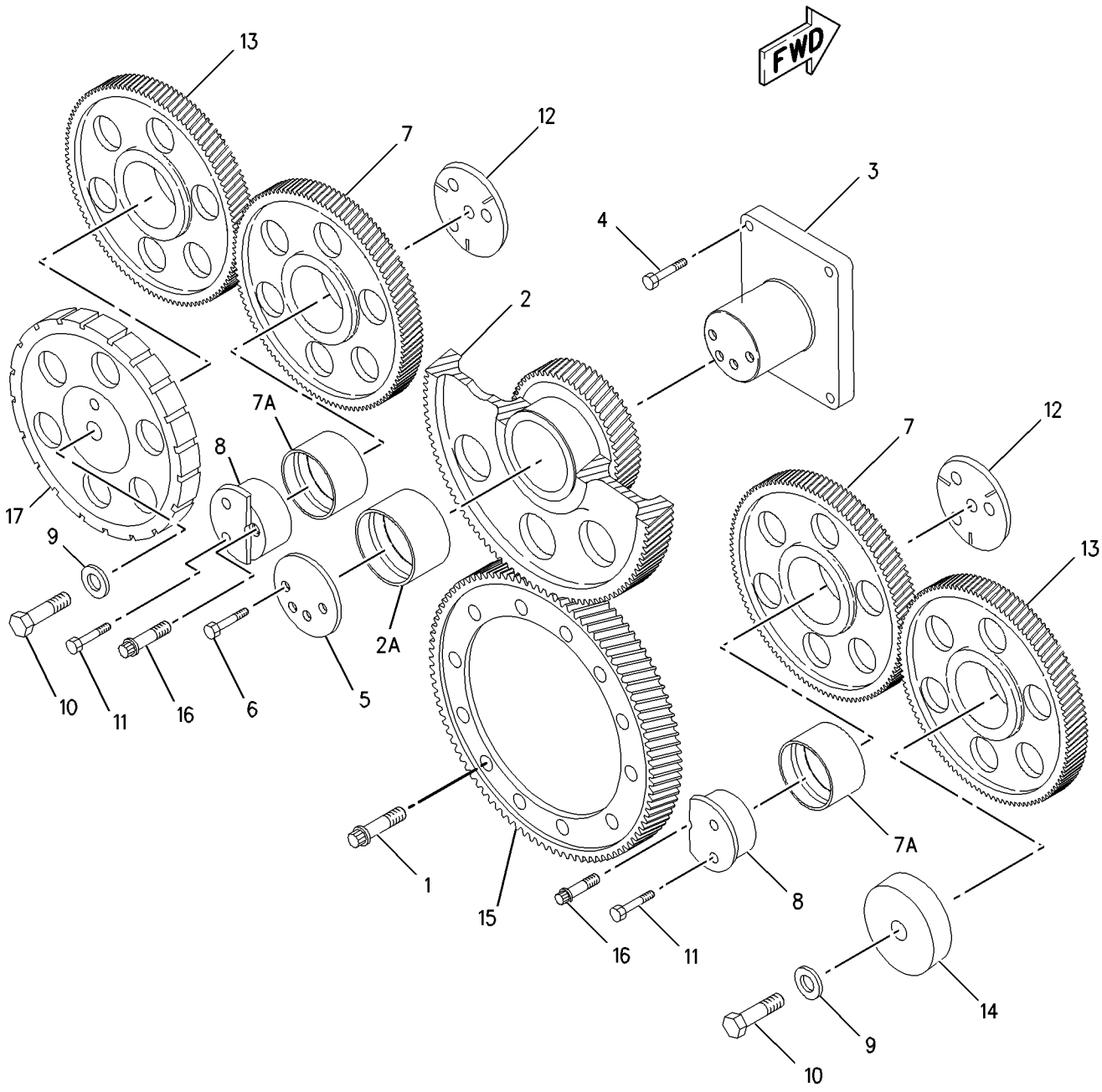

GRAPHIC #1 g00662923

4P-3747 GUARD GP-BELT–ALTERNATOR

S/N: 2GR1-579

PART OF 107-8762 ENGINE AR

SMCS-7174 **i01441596**

NOTE	REF NO	GRAPHIC REF	PART NUMBER	QTY	PART NAME 1 2 3 4 5 6 (PRODUCT LEVEL)	SEE PAGE
	1	1	**160-9811**	1	GUARD AS (ALTERNATOR)	
	2	1	**7E-5639**	2	SPACER (13.88X21.34X25MM THK)	
	3	1	**1A-2029**	2	BOLT (3/8-16X1.125 IN)	
	4	1	**4P-3486**	1	GUARD AS-ALTERNATOR	
	5	1	**5M-2894**	2	WASHER-HARD (10.2X18.5X2.5MM THK)	
	6	1	**0S-0509**	1	BOLT (3/8-16X.75 IN)	
	7	1	**9L-9132**	1	WASHER (10.2X25.5X2.5MM THK)	

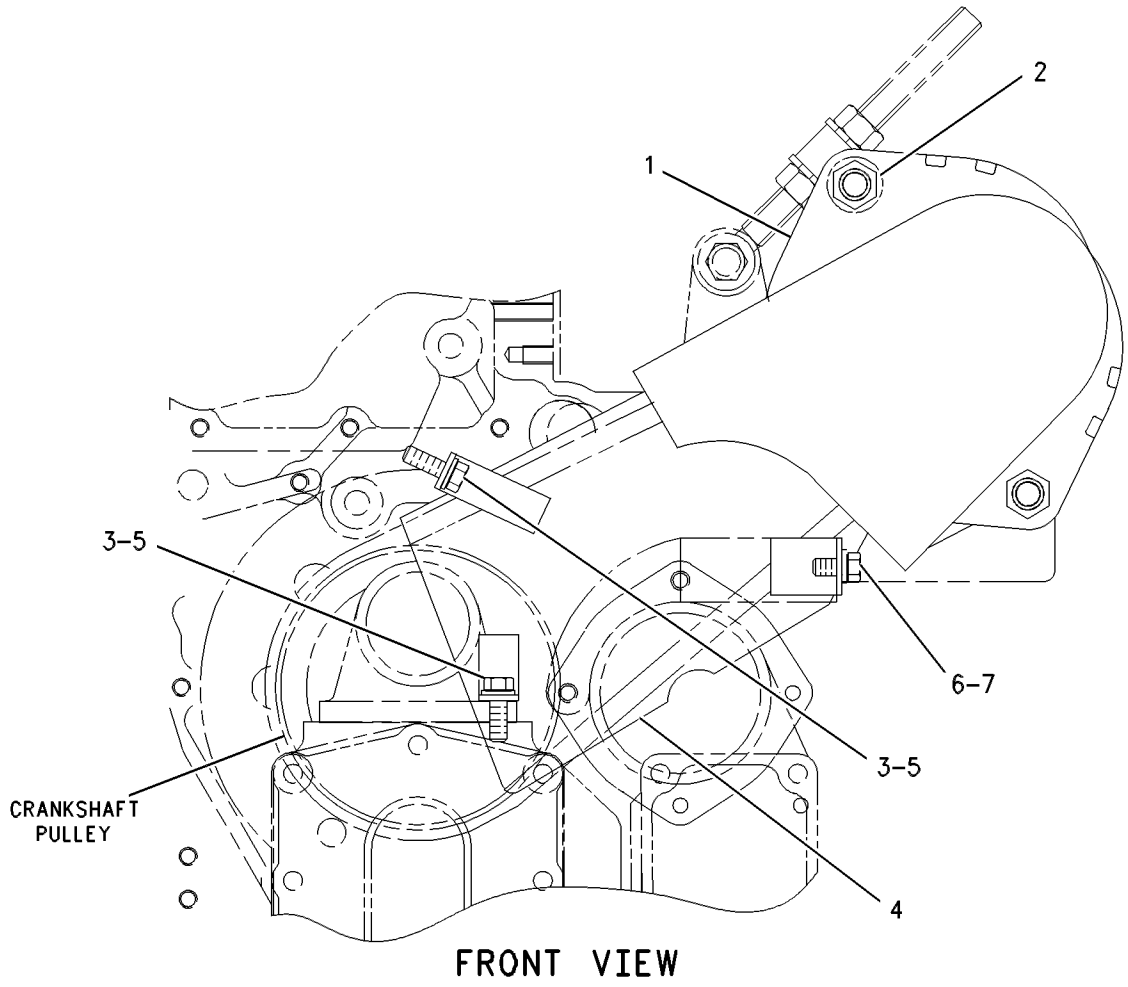

GRAPHIC #1 g00510654

7W-5780 GUARD GP-BELT

S/N: 2GR580-UP

PART OF 107-8762 ENGINE AR

SMCS-7174 **i01170269**

NOTE	REF NO	GRAPHIC REF	PART NUMBER	QTY	PART NAME 1 2 3 4 5 6 (PRODUCT LEVEL)	SEE PAGE
	1	1	**160-9811**	1	GUARD AS	
	2	1	**7E-5639**	1	SPACER	

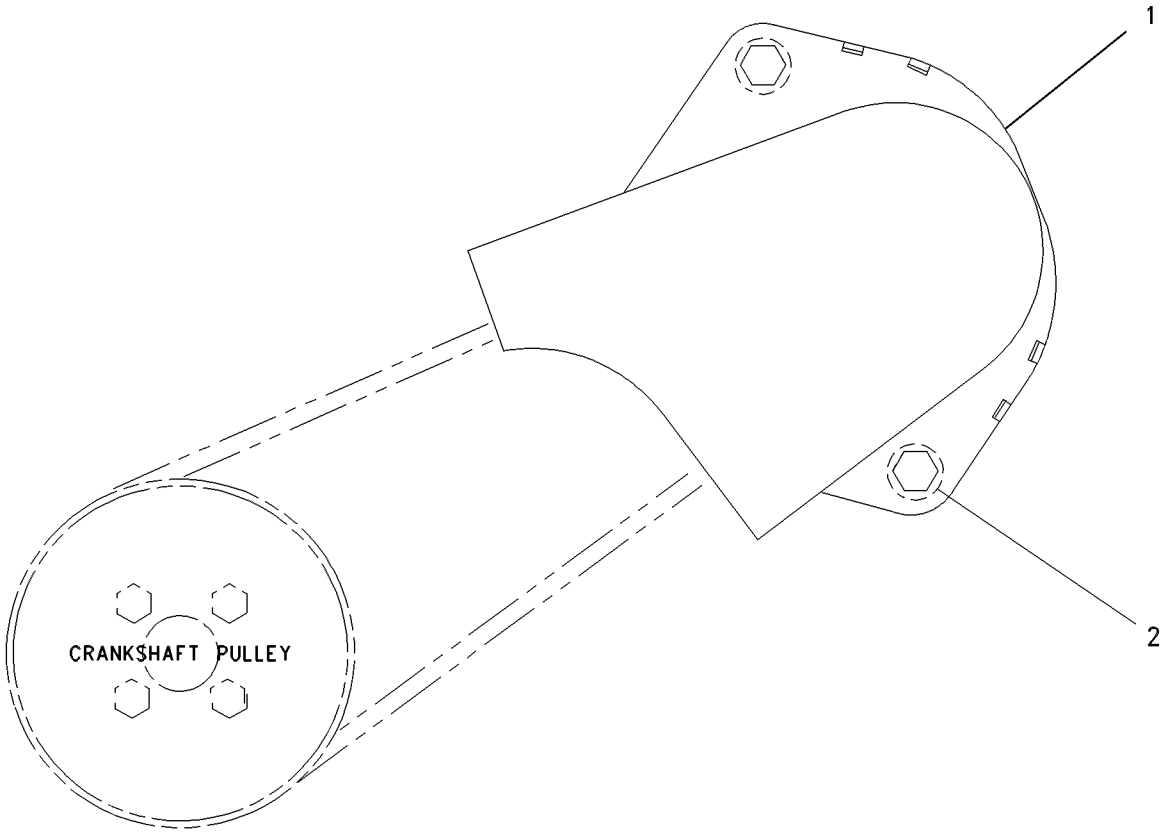

GRAPHIC #1 g00624562

BASIC ENGINE

112-6070 HOUSING GP-FLYWHEEL

S/N: 2GR1-UP

PART OF 107-8762 ENGINE AR

SMCS-1157 **i01147453**

NOTE	REF NO	GRAPHIC REF	PART NUMBER	QTY	PART NAME 1 2 3 4 5 6 (PRODUCT LEVEL)	SEE PAGE
	1	1	**112-6071**	1	HOUSING AS-FLYWHEEL	
	2	1	**3F-6808**	1	DOWEL	
	3	1	**7N-2047**	3	DOWEL	
	4	1	**3F-6795**	2	DOWEL	
	5	1	**0S-1595**	7	BOLT (1/2-13X1.25IN)	
	6	1	**8T-6763**	5	PLUG-PIPE (1/4-18 NPTF THD)	
	8	1	**1D-4574**	8	BOLT (1/2-13X6IN)	
	9	1	**5D-9514**	12	BOLT (5/8-11X6.25IN)	
	10	1	**1D-4597**	1	BOLT (5/8-11X6.5 IN)	
	11	1	**5P-8247**	17	WASHER-HARD (3.5MM THK)	
	12	1	**8M-5255**	1	SEAL-O-RING (120.24MM ID)	
	13	1	**4P-5218**	1	COVER	
	14	1	**9X-8873**	2	BOLT (1/2-13X2.25IN)	
	15	1	**5D-3954**	2	STUD-TAPERLOCK	
	16	1	**4K-0367**	2	NUT (5/8-11 THD)	
	17	1	**1V-6341**	2	SEAL	
	18	1	**4P-5217**	1	COVER	
	19	1	**1A-1460**	4	BOLT (1/2-13X2IN)	
	20	1	**5P-4626**	2	BOLT (5/8-11X10.5IN)	
	21	1	**5P-8245**	19	WASHER-HARD (3MM THK)	
	22	1	**5R-7137**	4	WASHER-SEAL (1.27MM THK)	

112-6070 **HOUSING GP-FLYWHEEL** *(contd.)* **i01147453**

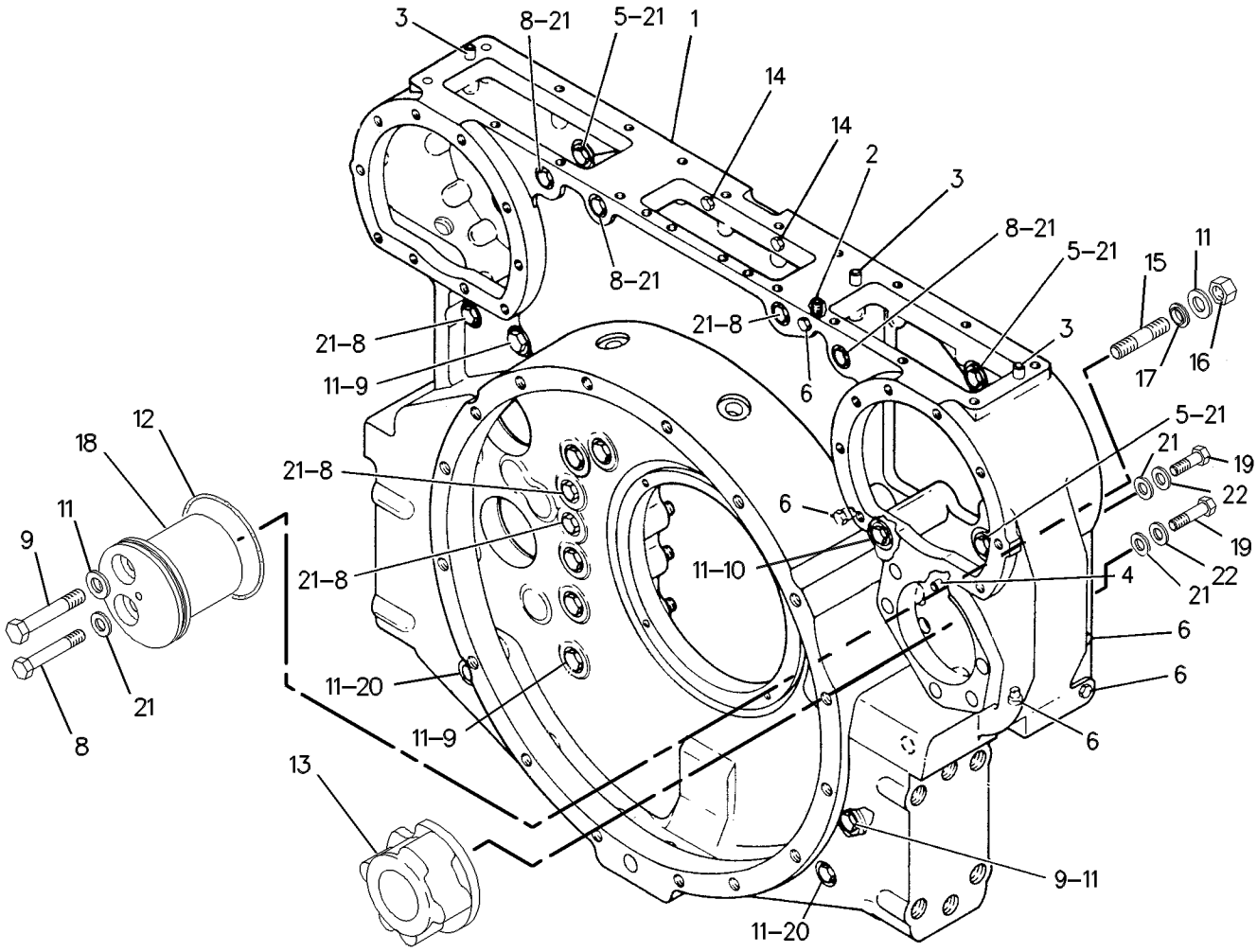

GRAPHIC #1 g00608810

BASIC ENGINE

4P-5426 HOUSING GP-FRONT

S/N: 2GR1-UP

PART OF 107-8762 ENGINE AR

SMCS-1151, 1162 **i01441599**

NOTE	REF NO	GRAPHIC REF	PART NUMBER	QTY	PART NAME 1 2 3 4 5 6 (PRODUCT LEVEL)	SEE PAGE
B	1	1	**1D-4597**	2	BOLT (5/8-11X6.5 IN)	
	2	1	**0S-1587**	4	BOLT (1/2-13X1.75 IN)	
	3	1	**1D-4593**	10	BOLT (5/8-11X5.5 IN)	
	4	1	**102-8634**	1	HOUSING-ACCESSORY DRIVE	
	5	1	**1B-4218**	6	WASHER (.064IN THK)	
	6	1	**2A-5220**	6	PLUG-DRAIN	
B	7	1	**8T-6765**	7	PLUG-PIPE	
	8	1	**7N-3049**	1	GASKET	
	9	1	**8T-6762**	1	PLUG-PIPE	
	10	1	**8T-6758**	1	PLUG-PIPE	
B	11	1	**9H-8260**	6	BOLT (1/2-13X6.25 IN)	
B	12	1	**9H-8260**	4	BOLT (1/2-13X6.25 IN)	

B-USE AS REQUIRED

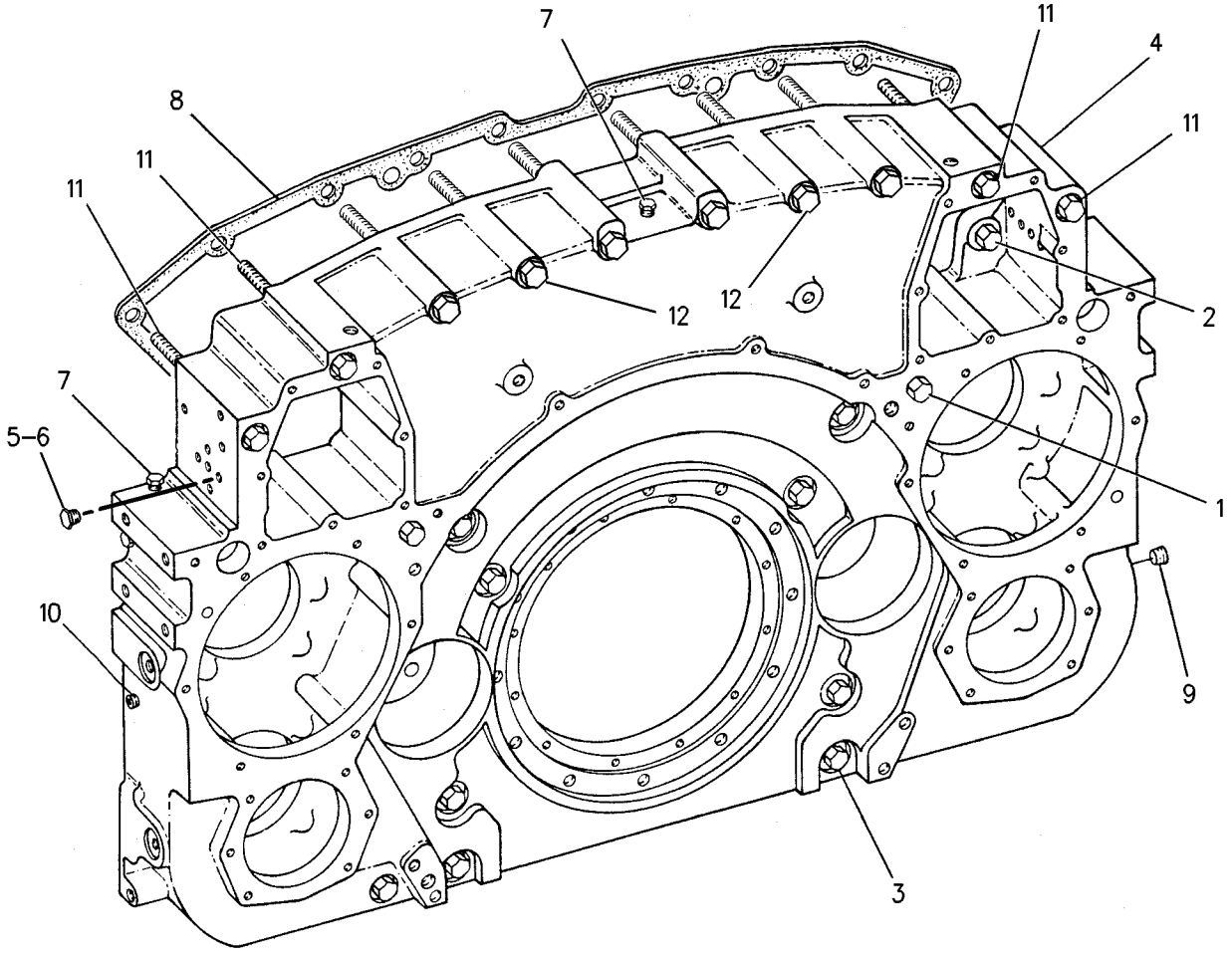

GRAPHIC #1 g00716143

BASIC ENGINE

7E-6872 LIFTING GP-ENGINE

S/N: 2GR1-UP

PART OF 107-8762 ENGINE AR

SMCS-1122 **i01539911**

NOTE	REF NO	GRAPHIC REF	PART NUMBER	QTY	PART NAME 1 2 3 4 5 6 (PRODUCT LEVEL)	SEE PAGE
	1	1	**7N-2326**	2	EYE-LIFTING	
	2	1	**7N-2328**	4	DOWEL	
	3	1	**155-0726**	2	BRACKET AS	
					(EACH INCLUDES 2 BRACKETS & HARDWARE)	
	4	1	**193-3286**	1	RETAINER (REAR)	
	5	1	**4P-4642**	1	RETAINER-EYE (FRONT)	
	6	1	**0S-0509**	4	BOLT (3/8-16X0.75 IN)	
	7	1	**5P-1075**	4	WASHER-HARD (10.2X22.5X3MM THK)	

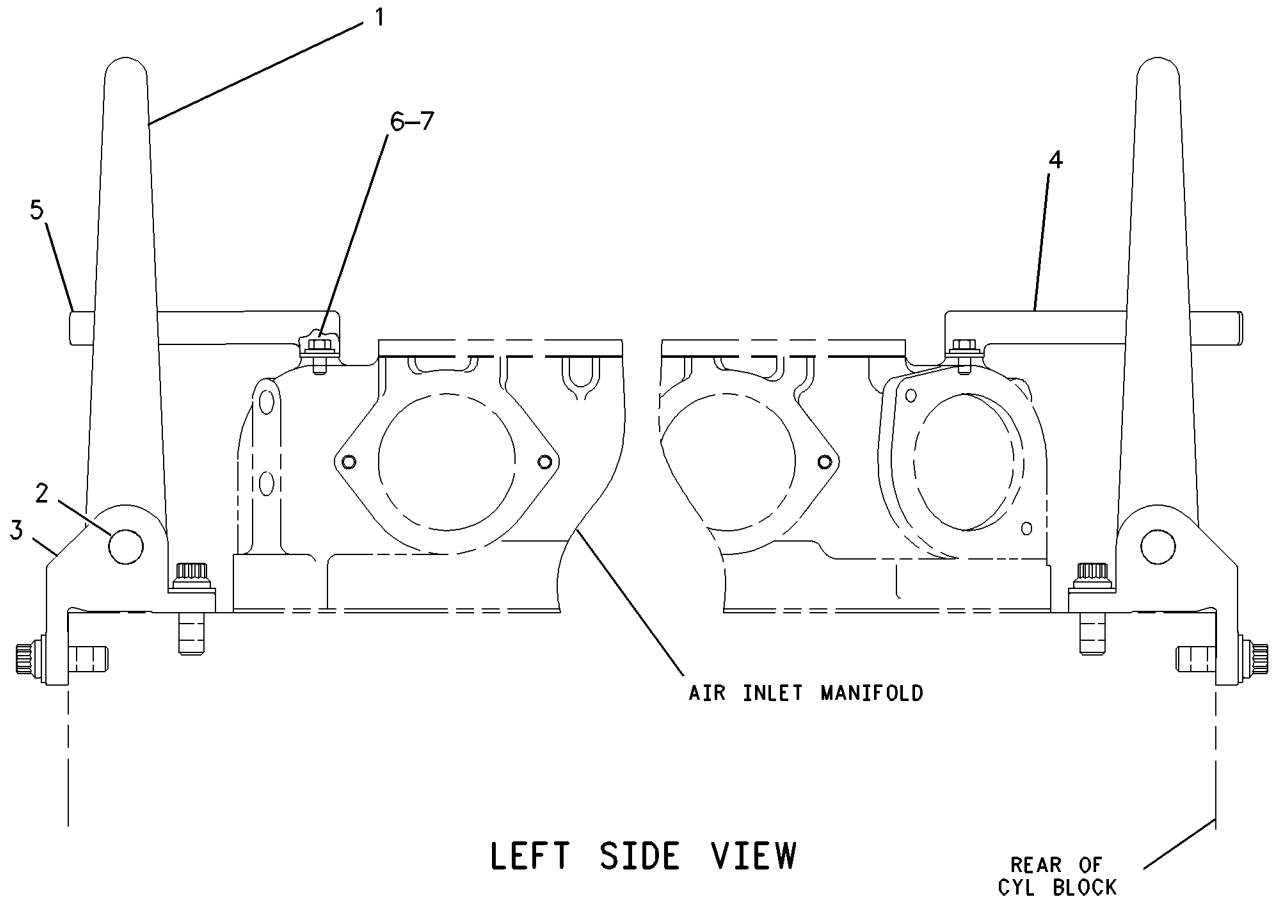

LEFT SIDE VIEW

GRAPHIC #1 g00799817

BASIC ENGINE

141-7115 MOUNTING GP-ALTERNATOR

S/N: 2GR580-UP

PART OF 107-8762 ENGINE AR

SMCS-1405 **i01391574**

NOTE	REF NO	GRAPHIC REF	PART NUMBER	QTY	PART NAME 1 2 3 4 5 6 (PRODUCT LEVEL)	SEE PAGE
	1	1	**1S-4589**	1	ROD	
	2	1	**4P-5211**	1	SUPPORT-ALTERNATOR	
	3	1	**7E-4839**	1	PULLEY	
	4	1	**7E-4838**	1	PULLEY	
	4A	1	**053-5065**	1	SLEEVE	
	5	1	**7N-2597**	1	SPACER (13.5X25.4X8.08MM THK)	
	6	1	**8S-5383**	1	BLOCK	
	7	1	**141-7116**	1	V-BELT	
	8	1	**189-5178**	1	SEAL-LIP TYPE	
	9	1	**0S-1571**	4	BOLT (3/8-16X1.75 IN)	
	10	1	**1A-0168**	1	BOLT (1/2-13X7.5IN)	
	11	1	**1A-1460**	2	BOLT (1/2-13X2 IN)	
	12	1	**1D-4586**	1	BOLT (5/8-11X3.5IN)	
	13	1	**1F-7958**	2	NUT-FULL (1/2-13 THD)	
	14	1	**3K-2889**	1	LOCKNUT (5/8-11 THD)	
	15	1	**4K-0367**	2	NUT (5/8-11 THD)	
	16	1	**5P-8245**	4	WASHER-HARD (13.5X25.5X3MM THK)	
	17	1	**5P-8247**	3	WASHER-HARD (17X32X3.5MM THK)	
	18	1	**7B-3235**	2	BOLT (1/2-13X1.375 IN)	
	19	1	**7D-9766**	1	BOLT (1/2-13X4.25IN)	

141-7115 **MOUNTING GP-ALTERNATOR** ***(contd.)*** **i01391574**

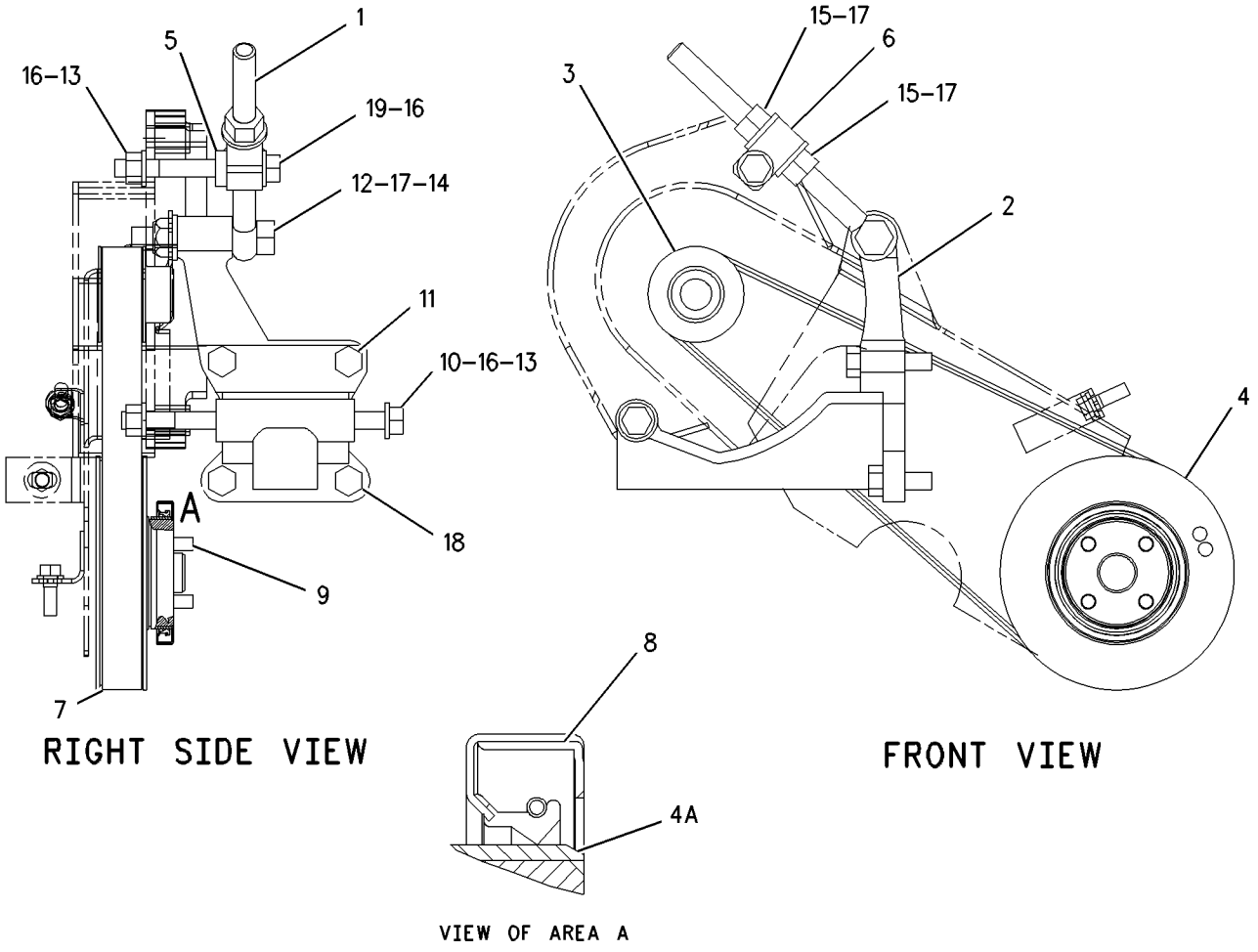

GRAPHIC #1 g00733782

100-8051 PAN GP-OIL

S/N: 2GR1-922

PART OF 107-8762 ENGINE AR

SMCS-1302 **i01197314**

NOTE	REF NO	GRAPHIC REF	PART NUMBER	QTY	PART NAME 1 2 3 4 5 6 (PRODUCT LEVEL)	SEE PAGE
	1	1	**7E-2631**	1	GASKET-OIL PAN	
	2	1	**137-8258**	1	PAN-OIL	
	3	1	**8M-3175**	39	WASHER-HARD (3MM THK)	
	4	1	**0S-1588**	2	BOLT (3/8-16X1.25IN)	
	5	1	**3H-7654**	20	WASHER (3MM THK)	
	6	1	**4K-5175**	20	BOLT-12 POINT HEAD (1/2-13X1.5IN)	
	7	1	**132-6260**	1	SEAL-INTEGRAL	
	8	1	**7M-8485**	3	SEAL-O-RING (29.74MM ID)	
	9	1	**9S-4183**	1	PLUG (1 1/16-12 THD)	
	10	1	**3D-2824**	1	SEAL-O-RING (23.47MM ID)	
	11	1	**137-8254**	1	PAN AS-OIL	
		1	**101-2862**	2	DOWEL	
		1	**119-6296**	1	PIPE	
	12	1	**6I-0723**	1	PLUG-OIL DRAIN	
	13	1	**5P-8068**	2	SEAL-O-RING (37.47MM ID)	
	14	1	**6I-0724**	1	ADAPTER-PLUG	
	15	1	**8S-9089**	2	BOLT (1/2-13X4.5IN)	
	16	1	**5P-7701**	1	SEAL-O-RING (29.74MM ID)	
	17	1	**9S-4181**	4	PLUG-STRAIGHT THREAD (1-5/16-12 THD)	
	18	1	**5F-3181**	1	GASKET	
	19	1	**5F-6259**	1	COVER	
	20	1	**2A-4639**	8	BOLT (3/8-16X1.625IN)	
	21	1	**2B-2695**	6	BOLT (5/16-18X.875IN)	
	22	1	**9M-1974**	6	WASHER-HARD (2MM THK)	
	23	1	**7N-5418**	1	FLANGE	
	24	1	**6V-5167**	1	SEAL-O-RING (139.07MM ID)	
	25	1	**0S-1591**	6	BOLT (3/8-16X1.5 IN)	
	26	1	**1T-0720**	18	BOLT-12 POINT HEAD (3/8-16X1.25IN)	
	27	1	**4W-9571**	1	BELL-PUMP SUCTION	
	28	1	**7N-5395**	1	SCREEN AS	
	29	1	**7N-5417**	1	ELBOW-OIL PUMP INLET	
	30	1	**0T-0065**	5	BOLT (3/8-16X3.5IN)	
	31	1	**7X-4810**	1	SEAL-O-RING (183.52MM ID)	
	32	1	**6V-0973**	1	SEAL (88.27MM ID)	
	33	1	**7W-5994**	1	ELBOW-PUMP INLET	
	34	1	**0S-1594**	2	BOLT (3/8-16X1 IN)	
	35	1	**8T-9383**	1	BOLT (1/2-13X0.75IN)	
	36	1	**6F-7062**	1	WASHER (1.83MM THK)	
	37	1	**6V-5101**	1	SEAL-O-RING (107.32MM ID)	
	38	1	**8T-6761**	1	PLUG-PIPE (1-11-1/2 NPTF THD)	
	39	1	**4P-9853**	1	BLOCK	
B	40	1	**8M-3175**	1	WASHER-HARD (3MM THK)	
B	41	1	**0S-1591**	1	BOLT (3/8-16X1.5 IN)	

B-USE AS REQUIRED

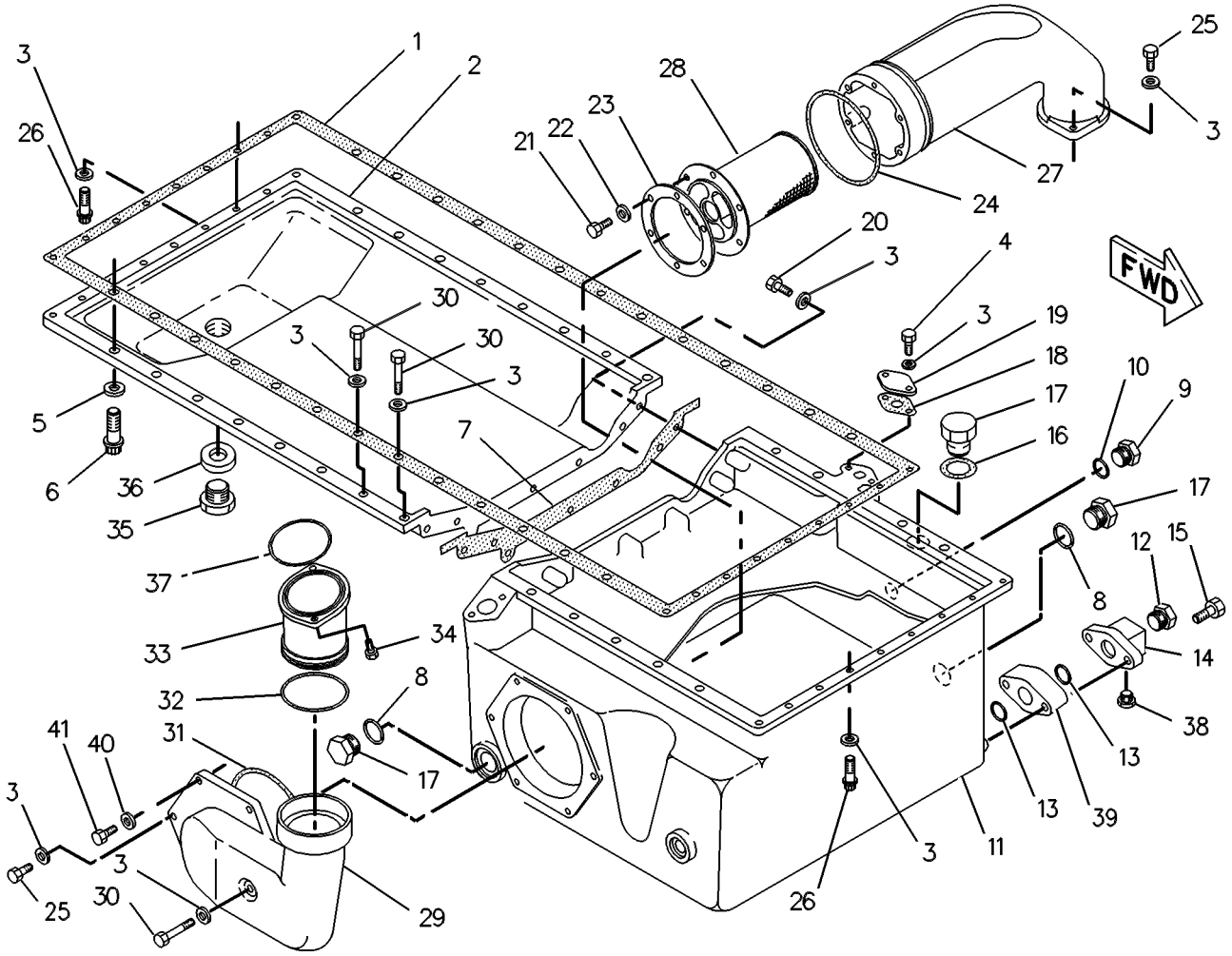

GRAPHIC #1 g00269141

143-5129 PAN GP-OIL

S/N: 2GR923-UP

PART OF 107-8762 ENGINE AR

SMCS-1302 **i01456940**

NOTE	REF NO	GRAPHIC REF	PART NUMBER	QTY	PART NAME 1 2 3 4 5 6 (PRODUCT LEVEL)	SEE PAGE
	1	1	**3H-7654**	18	WASHER-HARD (13.5X22.5X3MM THK)	
	2	1	**4W-9571**	1	BELL-PUMP SUCTION	
	3	1	**6I-0723**	1	PLUG-OIL DRAIN	
	4	1	**6I-0724**	1	ADAPTER-PLUG	
	5	1	**7E-2631**	1	GASKET-OIL PAN	
	6	1	**7N-5395**	1	SCREEN AS	
	7	1	**7N-5417**	1	ELBOW-OIL PUMP INLET	
	8	1	**7N-5418**	1	FLANGE	
	9	1	**7W-5994**	1	ELBOW-PUMP INLET	
	10	1	**132-6260**	1	SEAL-INTEGRAL	
	11	1	**137-8254**	1	PAN AS-OIL	
		1	**101-2862**	2	DOWEL	
		1	**119-6296**	1	PIPE	
	12	1	**137-8258**	1	PAN-OIL	
	13	1	**0S-1587**	2	BOLT (1/2-13X1.75 IN)	
	14	1	**0S-1588**	2	BOLT (3/8-16X1.25 IN)	
	15	1	**0S-1591**	6	BOLT (3/8-16X1.5 IN)	
	16	1	**0S-1594**	2	BOLT (3/8-16X1 IN)	
	17	1	**0T-0065**	5	BOLT (3/8-16X3.5 IN)	
	18	1	**1T-0720**	18	BOLT-12 POINT HEAD (3/8-16X1.25 IN)	
	19	1	**2A-4639**	8	BOLT (3/8-16X1.625 IN)	
	20	1	**2B-2695**	6	BOLT (5/16-18X0.875 IN)	
	21	1	**2M-9780**	1	SEAL-O-RING	
	22	1	**3D-2824**	1	SEAL-O-RING	
	23	1	**4K-5175**	18	BOLT-12 POINT HEAD (1/2-13X1.5IN)	
	24	1	**5F-3181**	1	GASKET	
	25	1	**5F-6259**	1	COVER	
	26	1	**5P-8068**	1	SEAL-O-RING	
	27	1	**6F-7062**	1	WASHER (12.7X19.05X1.83MM THK)	
	28	1	**6V-0973**	1	SEAL-O-RING	
	29	1	**6V-5101**	1	SEAL-O-RING	
	30	1	**6V-5167**	1	SEAL-O-RING	
	31	1	**7M-8485**	3	SEAL-O-RING	
	32	1	**7X-4810**	1	SEAL-O-RING	
	33	1	**8M-3175**	39	WASHER-HARD (10.2X16X3MM THK)	
	34	1	**8T-6761**	1	PLUG-PIPE	
	35	1	**8T-9383**	1	BOLT (1/2-13X0.75 IN)	
	36	1	**9M-1974**	6	WASHER-HARD (8.8X16X2MM THK)	
	37	1	**9S-4181**	3	PLUG-STRAIGHT THREAD	
	38	1	**9S-4183**	1	PLUG	
	39	1	**9S-4190**	1	PLUG-O-RING	
B	40	1	**5P-7701**	1	SEAL-O-RING	
B	41	1	**7W-6492**	1	PLUG-PIPE	
B	42	1	**9S-4181**	1	PLUG-STRAIGHT THREAD	

B-USE AS REQUIRED

143-5129 **PAN GP-OIL** *(contd.)* **i01456940**

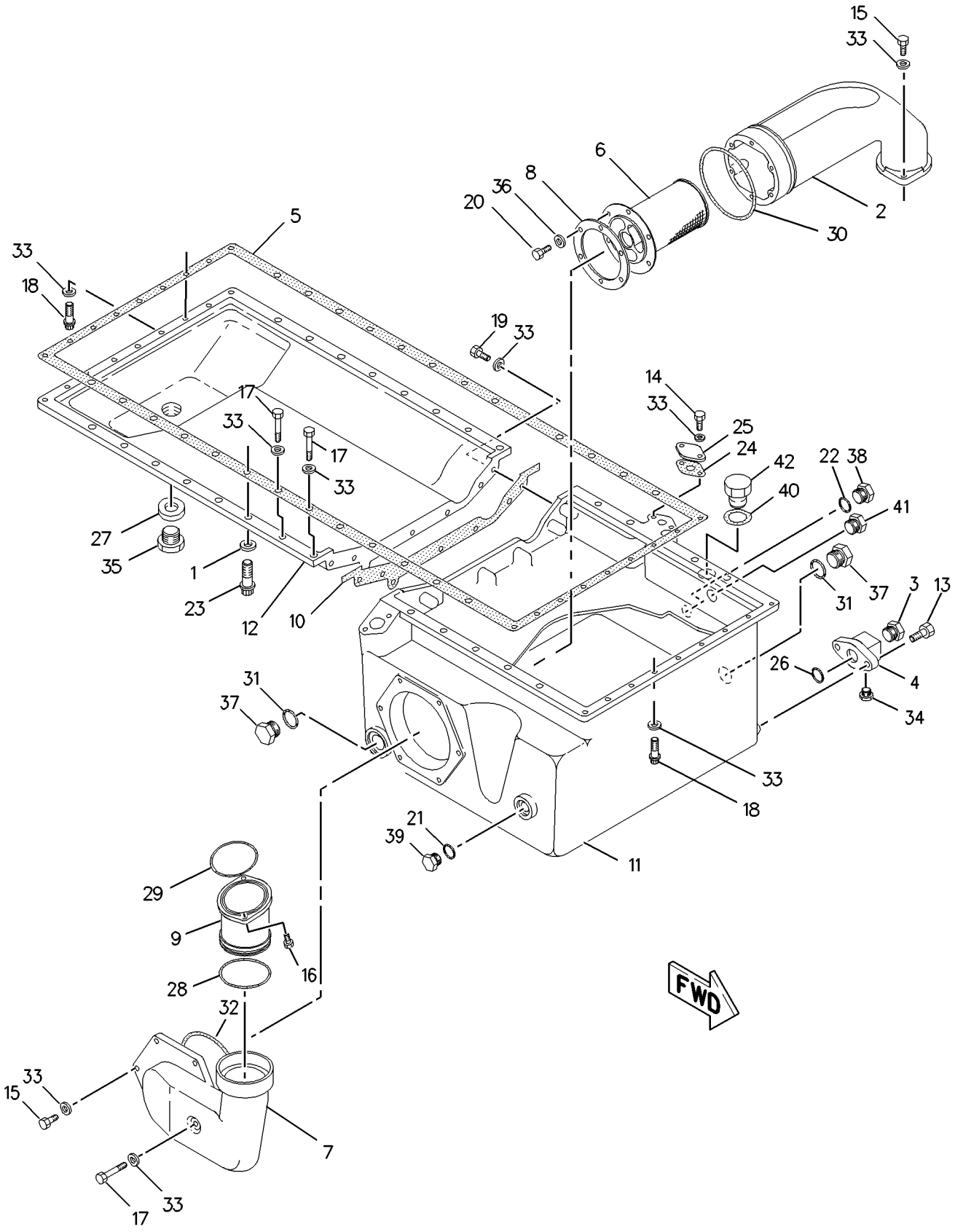

GRAPHIC #1 g00761640

101-0829 PISTON & ROD GP

S/N: 2GR1-UP

PART OF 107-8762 ENGINE AR

SMCS-1225 **i01502407**

NOTE	REF NO	GRAPHIC REF	PART NUMBER	QTY	PART NAME 1 2 3 4 5 6 (PRODUCT LEVEL)	SEE PAGE
	1	1	**144-0725**	1	ROD AS	
		1	**118-1655**	1	BEARING-SLEEVE	
		1	**7N-2043**	1	DOWEL	
		1	**7N-2405**	4	BOLT-CONNECTING ROD	
	2	1	**125-2782**	1	SKIRT-PISTON	
R	3	1	**144-0720**	1	CROWN AS-PISTON	
	4	1	**138-8507**	1	PIN-PISTON	
	5	1	**107-7330**	1	BEARING-CONNECTING ROD (STANDARD)	
AB		1	**107-7331**		BEARING-CONNECTING ROD (0.63MM US ID)	
AB		1	**107-7332**		BEARING-CONNECTING ROD (1.27MM US ID)	
AB		1	**107-7333**		BEARING-CONNECTING ROD (0.25MM OS OD)	
AB		1	**107-7334**		BEARING-CONNECTING ROD (0.63MM US ID, 0.25MM OS OD)	
AB		1	**107-7335**		BEARING-CONNECTING ROD (1.27MM US ID, 0.25MM OS OD)	
	6	1	**8N-7296**	2	RETAINER-PIN	
	7	1	**144-5694**	1	RING-PISTON (TOP)	
	8	1	**144-5695**	1	RING-PISTON (INTERMEDIATE)	
	9	1	**123-4268**	1	RING-PISTON (OIL)	

A-NOT PART OF THIS GROUP
B-USE AS REQUIRED
R-REMFG PART MAY BE AVAILABLE

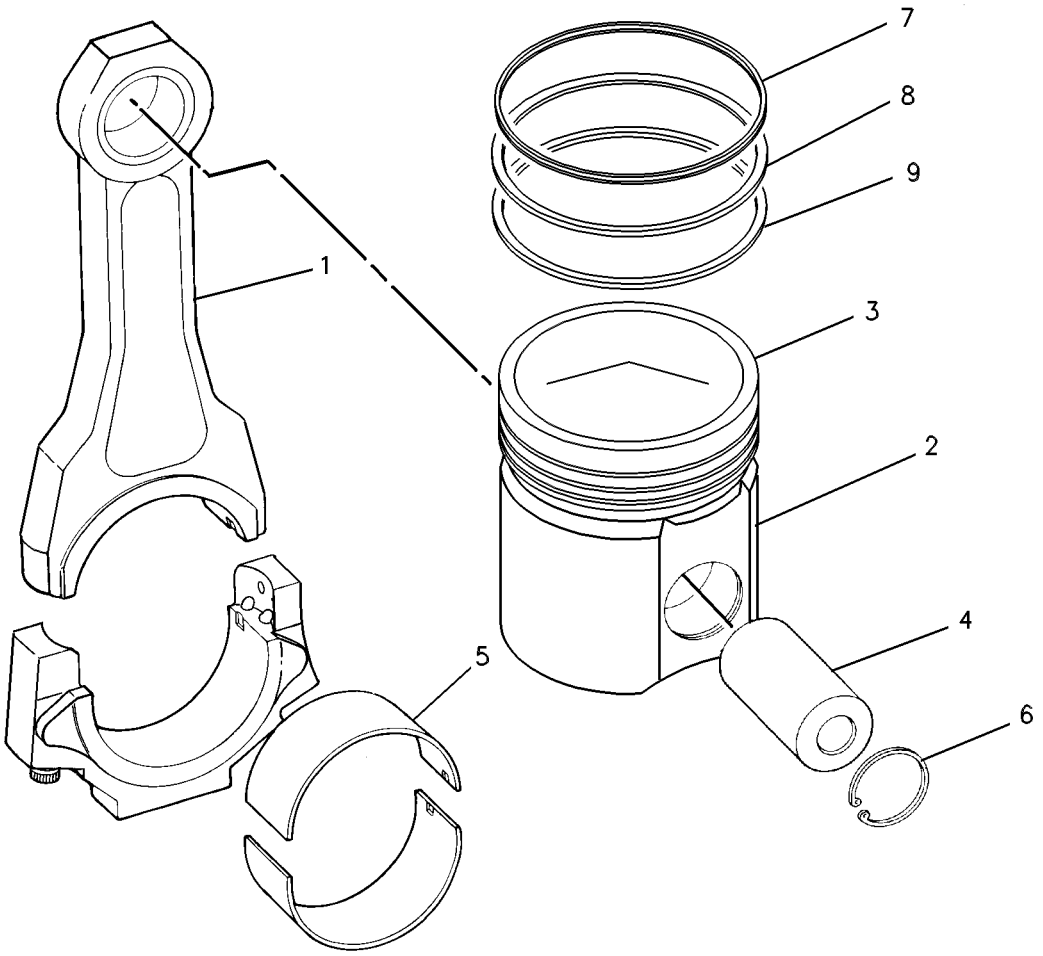

GRAPHIC #1 g00085724

BASIC ENGINE

7W-3813 SEAL GP-CRANKSHAFT

S/N: 2GR1-UP

PART OF 107-8762 ENGINE AR

SMCS-1160, 1161 **i01391967**

NOTE	REF NO	GRAPHIC REF	PART NUMBER	QTY	PART NAME 1 2 3 4 5 6 (PRODUCT LEVEL)	SEE PAGE
C	1	1	**113-8433**	1	SEAL GP-CRANKSHAFT (CCW ROT)	
					(INSTALL IN FLYWHEEL HSG ON STD ROTATION ENGINES & IN FRONT HSG ON REVERSE ROTATION ENGINES)	
C	2	1	**113-8432**	1	SEAL GP-CRANKSHAFT (CW ROT)	
					(INSTALL IN FRONT HSG ON STD ROTATION ENGINES & IN FLYWHEEL HSG ON REVERSE ROTATION ENGINES)	

C-CHANGE FROM PREVIOUS TYPE

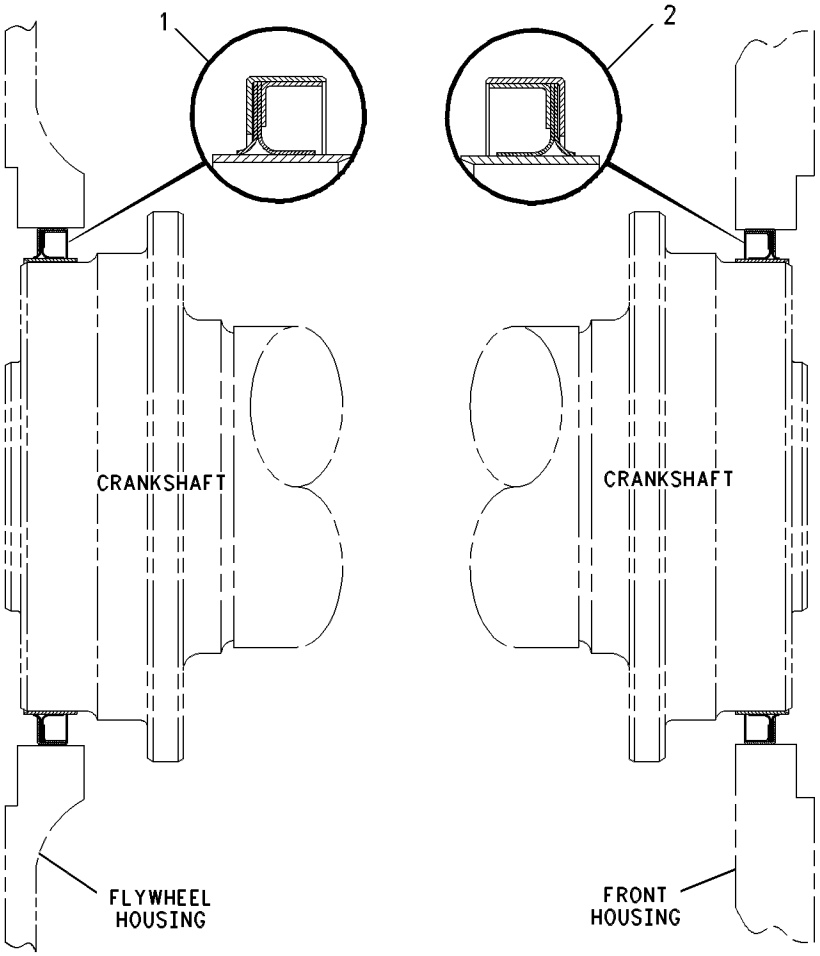

GRAPHIC #1 g00623877

BASIC ENGINE

7E-4722 SUPPORT GP-ENGINE

S/N: 2GR1-UP

PART OF 107-8762 ENGINE AR

SMCS-1154 **i00095540**

NOTE	REF NO	GRAPHIC REF	PART NUMBER	QTY	PART NAME 1 2 3 4 5 6 (PRODUCT LEVEL)	SEE PAGE
	1	1	**7E-4721**	1	SUPPORT-FRONT	
	2	1	**1D-4566**	20	BOLT (1/2-13X3.5IN)	
	3	1	**5P-8245**	20	WASHER (3MM THK)	

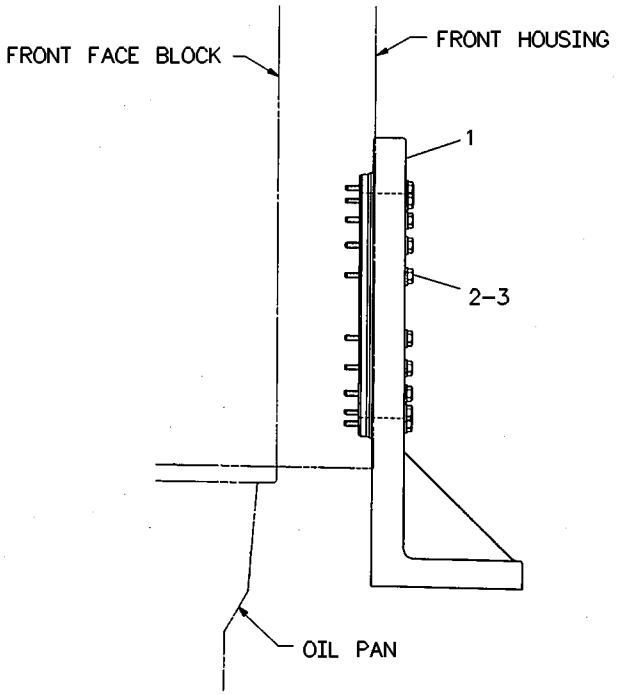

GRAPHIC #1 g00082364

112-6002 SUPPORT GP-ENGINE

S/N: 7HR1-UP

PART OF 112-6000 INSTALLATION AR-ENGINE

SMCS-1154 **i01197339**

NOTE	REF NO	GRAPHIC REF	PART NUMBER	QTY	PART NAME 1 2 3 4 5 6 (PRODUCT LEVEL)	SEE PAGE
	1	1	**7W-0659**	2	PLATE-MOUNTING	
	2	1	**2N-5006**	6	BOLT-12 POINT HEAD (1-14X2.5 IN)	
	3	1	**8W-0587**	2	CAP	
	4	1	**7W-2425**	2	MOUNT AS	
	5	1	**5P-8250**	6	WASHER (5.0MM THK)	
	6	1	**5P-8086**	6	BOLT-12 POINT HEAD (1-14X6.5 IN)	
	7	1	**5P-8839**	6	WASHER-HARD	
	8	1	**114-3505**	2	SUPPORT	
M	9	1	**110-6968**	8	BOLT-HEX HEAD (M16X2X280 MM)	
	10	1	**5P-8247**	16	WASHER-HARD (3.5MM THK)	
M	11	1	**7X-2578**	2	BOLT (M24X3X200MM)	
M	12	1	**8T-4001**	2	NUT (M24X3.00 THD)	
	13	1	**8T-4167**	4	WASHER (4.0MM THK)	
	14	1	**9W-7388**	2	WASHER (12.0MM THK)	
	15	1	**6Y-9960**	2	MOUNT AS	
	16	1	**9W-7385**	2	SLEEVE	
	17	1	**9L-7028**	4	DOWEL	

M-METRIC PART

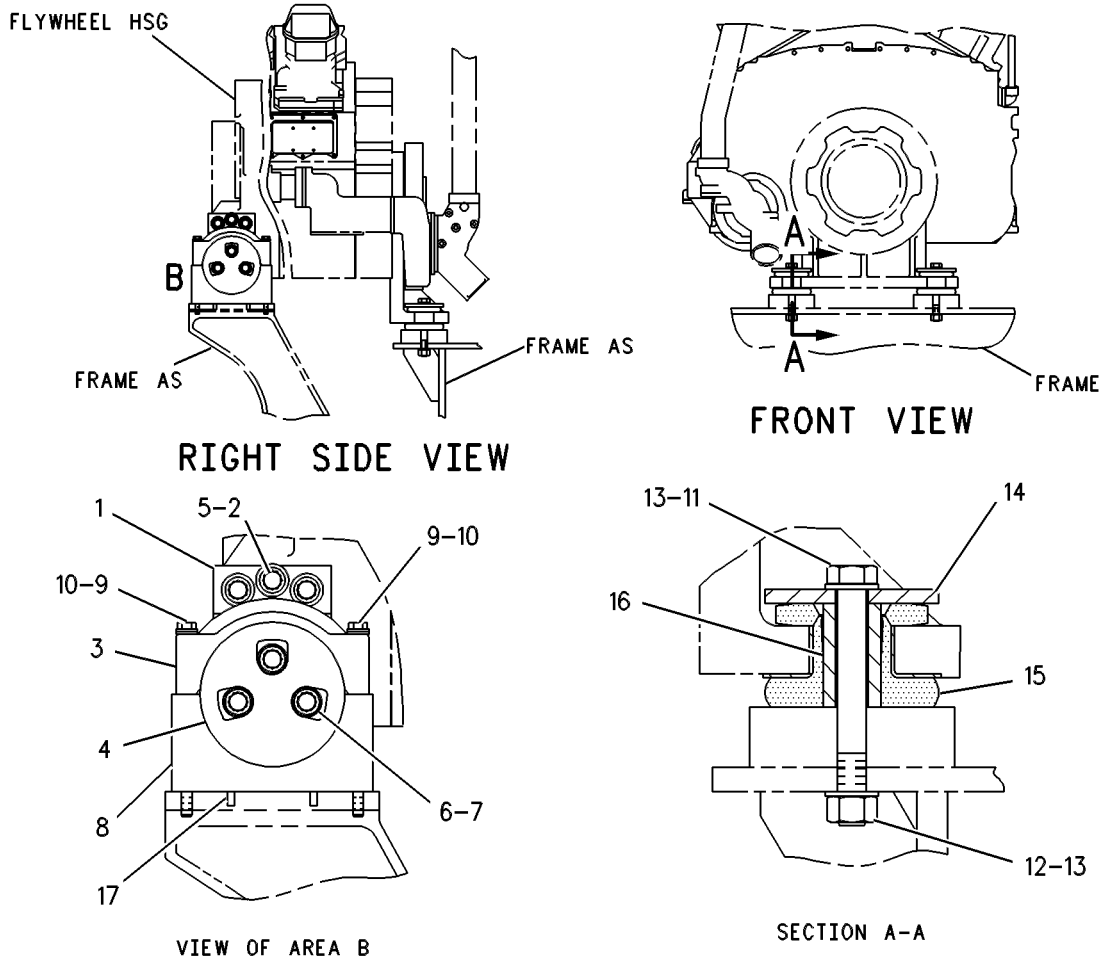

GRAPHIC #1 g00268738

MEMORANDA

100-3905 VALVE MECHANISM GP

S/N: 2GR1-3157

PART OF 107-8762 ENGINE AR

SMCS-1102, 1121, 1123 **i01535729**

NOTE	REF NO	GRAPHIC REF	PART NUMBER	QTY	PART NAME 1 2 3 4 5 6 (PRODUCT LEVEL)	SEE PAGE
C	1	1	**117-9315**	1	SEAL	
	2	1	**121-5481**	2	LIFTER AS-VALVE	
	3	1	**196-4791**	1	SHAFT AS	
	4	1	**5M-2894**	4	WASHER-HARD (10.2X18.5X2.5MM THK)	
	5	1	**0L-2070**	2	BOLT (3/8-16X2.25 IN)	
	6	1	**100-3880**	2	PUSHROD-VALVE	
	7	1	**7C-0204**	2	SCREW-ADJUSTMENT (1/2-20X2.73 IN)	
	8	1	**3J-9196**	2	NUT-JAM (1/2-20 THD)	
	9	1	**7N-4782**	2	SPRING-LIFTER GUIDE	
	10	1	**9S-1354**	1	NUT (5/8-18 THD)	
	11	1	**100-3879**	1	PUSHROD-INJECTOR	
	12	1	**2N-5842**	2	SCREW (3/8-24X1 IN)	
	13	1	**9L-7712**	2	NUT (3/8-24 THD)	
	14	1	**129-4181**	2	BRIDGE AS	
	15	1	**127-9870**	1	SCREW-ADJUSTING	
	16	1	**100-3877**	1	RETAINER-SPRING	
	17	1	**5P-7530**	1	SEAL-O-RING	
	18	1	**5P-0537**	1	WASHER-HARD (7.2X14.5X2MM THK)	
	19	1	**154-6388**	2	ROCKER ARM AS	
					(EACH INCLUDES)	
		1	**123-4271**	1	BEARING-SLEEVE	
		1	**8N-7197**	1	SOCKET-ARM	
	20	1	**0S-1615**	1	BOLT (1/4-20X0.75 IN)	
	21	1	**9X-0352**	1	RECEPTACLE AS	
	22	1	**6J-2245**	1	SEAL-O-RING	
	23	1	**132-6469**	1	HARNESS AS-WIRING	
CY	24	1	*120-7413*	1	BASE GP-VALVE COVER	9
	25	1	**100-3878**	1	SPRING-INJECTOR	
	26	1	**8D-7942**	2	BOLT-12 POINT HEAD (5/8-11X6.5 IN)	
	27	1	**7E-6508**	1	CAP AS	
	28	1	**0S-1590**	2	BOLT (3/8-16X2 IN)	
	29	1	**136-9640**	1	LIFTER AS-UNIT INJECTOR	
	30	1	**154-6389**	3	BUTTON	
	31	1	**9F-7707**	3	RING-RETAINING	
	32	1	**196-4793**	1	ROCKER ARM AS	
		1	**123-4271**	1	BEARING-SLEEVE	
		1	**8N-7197**	1	SOCKET-ARM	

C-CHANGE FROM PREVIOUS TYPE
Y-SEPARATE ILLUSTRATION

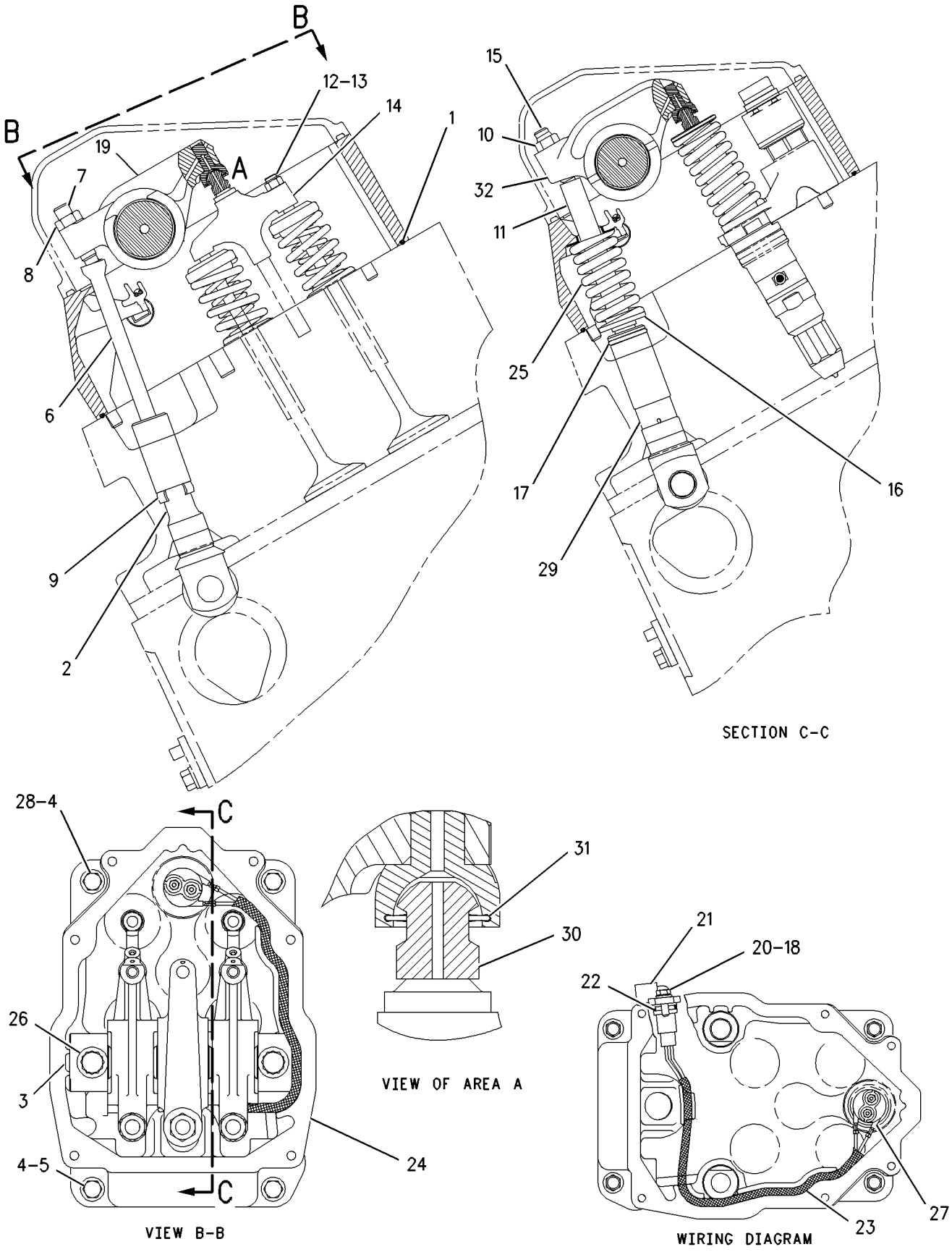

GRAPHIC #1

g00797561

BASIC ENGINE

195-1928 VALVE MECHANISM GP

S/N: 2GR3158-UP

PART OF 107-8762 ENGINE AR

SMCS-1102, 1121, 1123 **i01534922**

NOTE	REF NO	GRAPHIC REF	PART NUMBER	QTY	PART NAME 1 2 3 4 5 6 (PRODUCT LEVEL)	SEE PAGE
	1	1	**117-9315**	1	SEAL	
	2	1	**192-8746**	2	LIFTER AS (VALVE)	
	3	1	**192-8747**	1	LIFTER AS (INJECTOR)	
	4	1	**5M-2894**	4	WASHER-HARD (10.2X18.5X2.5MM THK)	
	5	1	**0L-2070**	2	BOLT (3/8-16X2.25 IN)	
	6	1	**100-3880**	2	PUSHROD-VALVE	
	7	1	**7C-0204**	2	SCREW-ADJUSTMENT (1/2-20X2.73 IN)	
	8	1	**3J-9196**	2	NUT-JAM (1/2-20 THD)	
	9	1	**7N-4782**	2	SPRING-LIFTER GUIDE	
	10	1	**9S-1354**	1	NUT (5/8-18 THD)	
	11	1	**100-3879**	1	PUSHROD-INJECTOR	
	12	1	**2N-5842**	2	SCREW (3/8-24X1 IN)	
	13	1	**9L-7712**	2	NUT (3/8-24 THD)	
	14	1	**129-4181**	2	BRIDGE AS	
	15	1	**127-9870**	1	SCREW-ADJUSTING	
	16	1	**9F-7707**	3	RING-RETAINING	
	17	1	**100-3877**	1	RETAINER-SPRING	
	18	1	**5P-7530**	1	SEAL-O-RING	
	19	1	**5P-0537**	1	WASHER-HARD (7.2X14.5X2MM THK)	
	20	1	**154-6388**	2	ROCKER ARM AS	
					(EACH INCLUDES)	
		1	**8N-7197**	1	SOCKET-ARM	
		1	**123-4271**	1	BEARING-SLEEVE	
	21	1	**196-4791**	1	SHAFT AS	
	22	1	**0S-1615**	1	BOLT (1/4-20X0.75 IN)	
	23	1	**9X-0352**	1	RECEPTACLE AS	
	24	1	**6J-2245**	1	SEAL-O-RING	
	25	1	**132-6469**	1	HARNESS AS-WIRING	
Y	26	1	*120-7413*	1	BASE GP-VALVE COVER	9
	27	1	**100-3878**	1	SPRING-INJECTOR	
	28	1	**8D-7942**	2	BOLT-12 POINT HEAD (5/8-11X6.5 IN)	
	29	1	**7E-6508**	1	CAP AS	
	30	1	**0S-1590**	2	BOLT (3/8-16X2 IN)	
	31	1	**154-6389**	3	BUTTON	
	32	1	**196-4793**	1	ROCKER ARM AS	
		1	**8N-7197**	1	SOCKET-ARM	
		1	**123-4271**	1	BEARING-SLEEVE	

Y-SEPARATE ILLUSTRATION

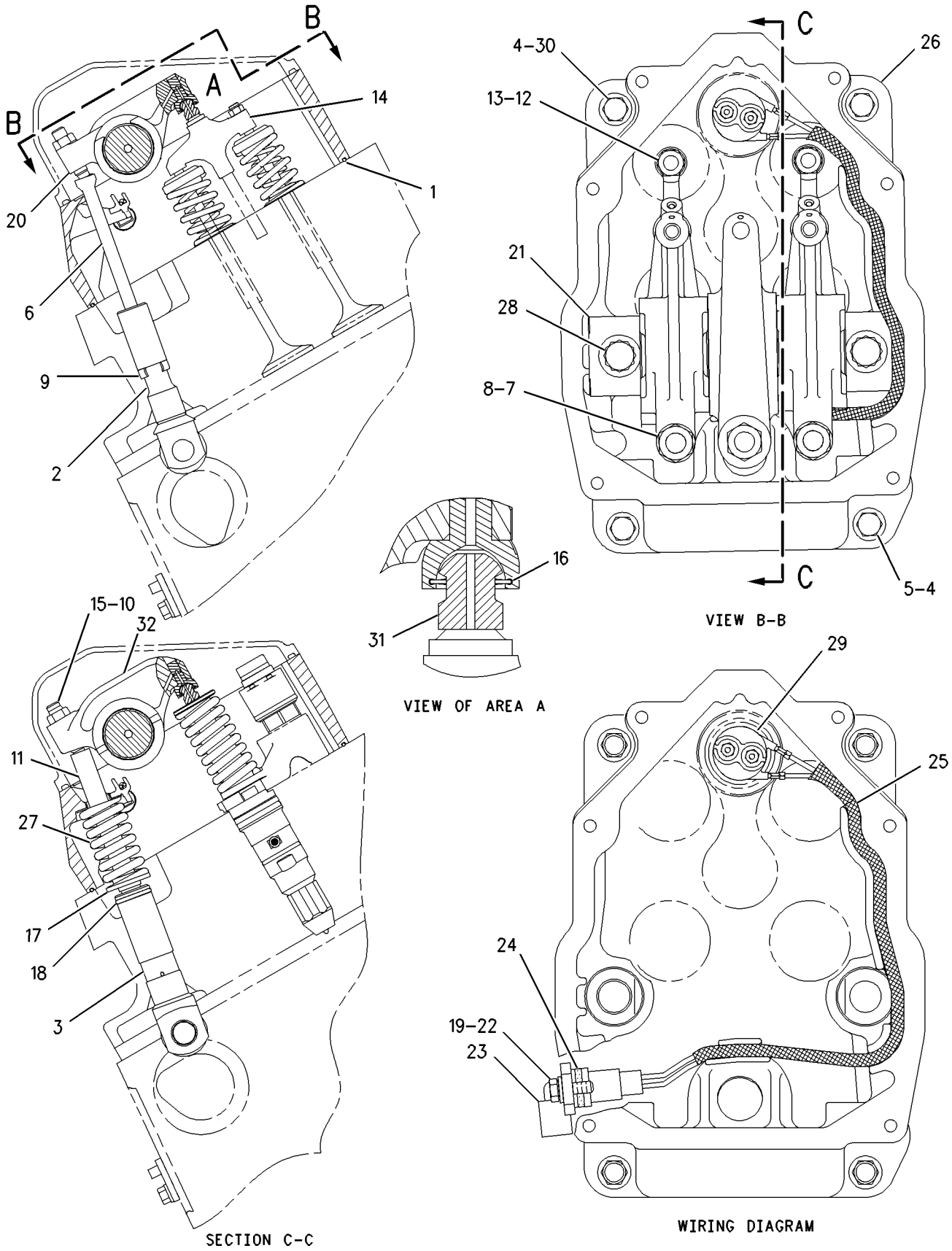

GRAPHIC #1 g00797107

101-0838 BREATHER GP

S/N: 2GR1-UP

PART OF 107-8762 ENGINE AR

SMCS-1317 **i01218656**

NOTE	REF NO	GRAPHIC REF	PART NUMBER	QTY	PART NAME 1 2 3 4 5 6 (PRODUCT LEVEL)	SEE PAGE
	1	1	**162-7473**	2	SEAL-O-RING (226MM ID)	
	2	1	**4W-3027**	2	BREATHER AS (CRANKCASE)	
	3	1	**141-7149**	1	HOSE-TEE	
	4	1	**033-6031**	2	SEAL-O-RING (69.44MM ID)	
	5	1	**1A-9579**	8	BOLT (5/16-18X1.5IN)	
	6	1	**9M-1974**	8	WASHER-HARD (2MM THK)	
	7	1	**101-4199**	2	COVER AS	
	8	1	**4W-3034**	2	CLAMP	
	9	1	**5P-0597**	2	CLAMP (HOSE)	
	10	1	**5P-4868**	1	CLAMP (HOSE)	

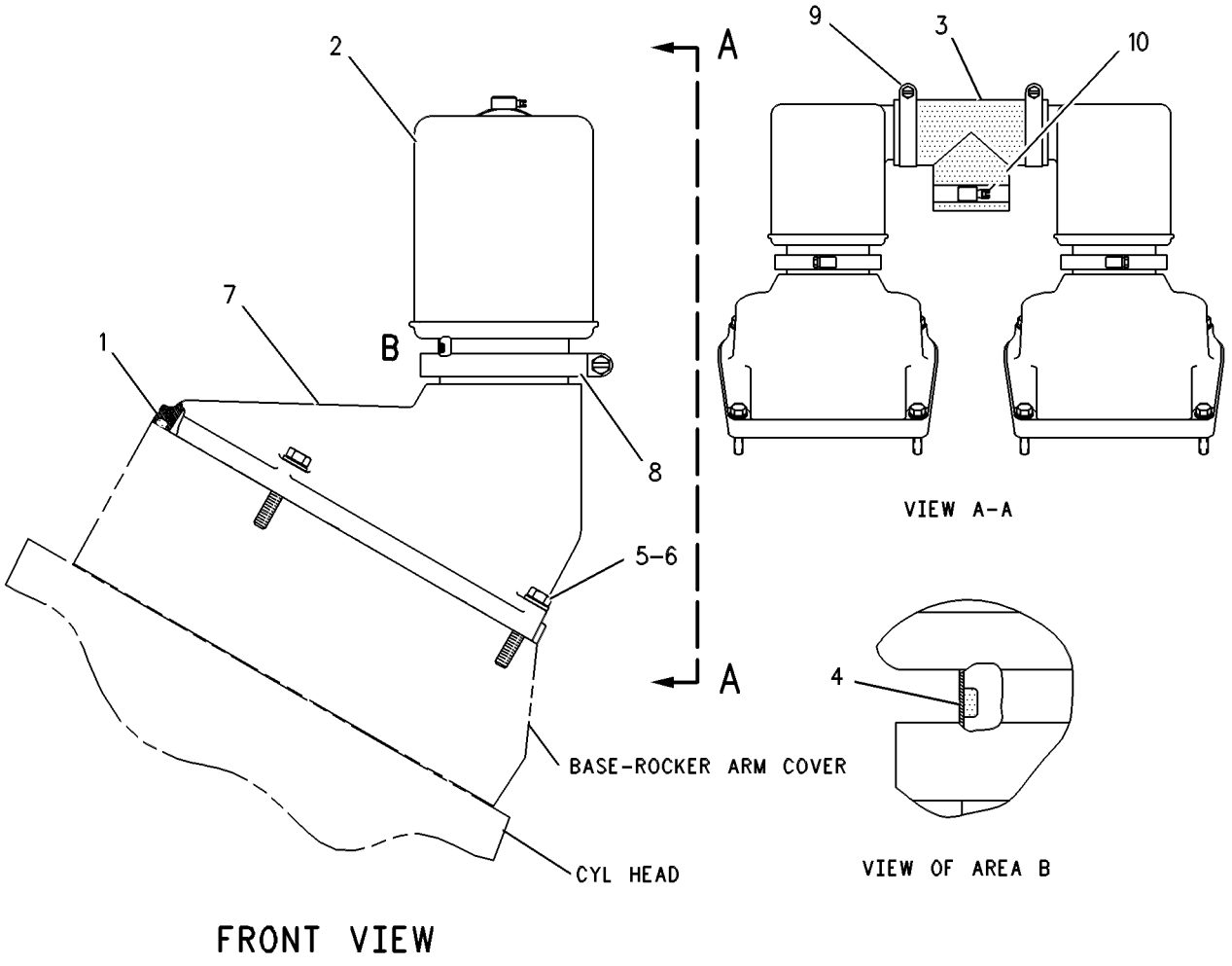

GRAPHIC #1 g00086032

112-6033 FILLER GP-ENGINE OIL

S/N: 2GR1-UP

PART OF 107-8762 ENGINE AR

SMCS-1316 **i01533326**

NOTE	REF NO	GRAPHIC REF	PART NUMBER	QTY	PART NAME 1 2 3 4 5 6 (PRODUCT LEVEL)	SEE PAGE
	1	1	**2B-2695**	1	BOLT (5/16-18X0.875 IN)	
	2	1	**4P-9226**	1	BRACKET	
	3	1	**101-4199**	1	COVER AS	
	4	1	**133-5946**	1	CAP AS-OIL FILL	
	5	1	**162-7473**	1	SEAL-O-RING	
	6	1	**031-4155**	1	LOCKNUT (5/16X18 THD)	
	7	1	**1A-9579**	4	BOLT (5/16-18X1.5 IN)	
	8	1	**9M-1974**	5	WASHER-HARD (8.8X16X2MM THK)	
	9	1	**9N-0869**	1	WASHER-HARD (8.8X25.5X2MM THK)	

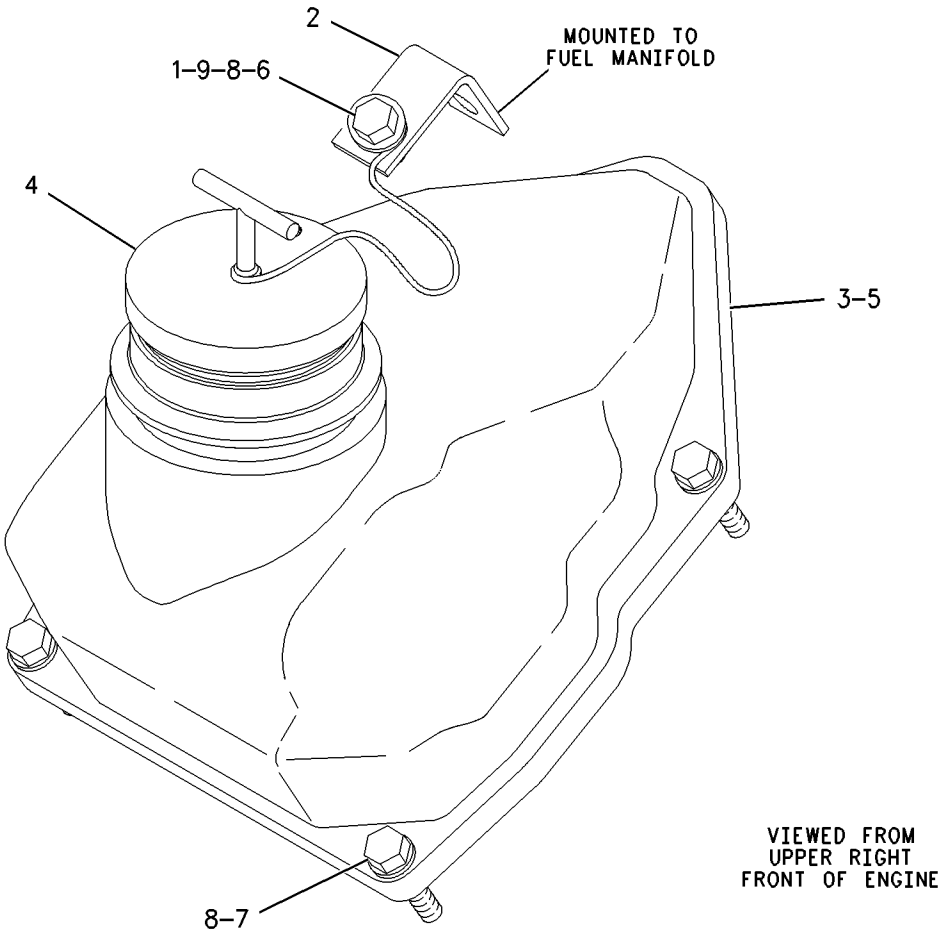

GRAPHIC #1 g00796774

LUBRICATION SYSTEM

1W-0714 FILTER GP-ENGINE OIL

S/N: 2GR1-2632

PART OF 107-8762 ENGINE AR

SMCS-1306, 1308 **i00681610**

NOTE	REF NO	GRAPHIC REF	PART NUMBER	QTY	PART NAME 1 2 3 4 5 6 (PRODUCT LEVEL)	SEE PAGE
	1	1	**8N-2001**	2	BASE AS-OIL FILTER	
					(EACH INCLUDES)	
		1	**2P-4304**	1	STUD-TAPERLOCK	
	2	1	**1P-1367**	2	PLUNGER	
	3	1	**1S-7106**	2	COVER	
C	4	1	**9Y-8387**	2	GASKET	
	5	1	**2B-2695**	4	BOLT (5/16-18X.875IN)	
	6	1	**9M-1974**	4	WASHER-HARD (2MM THK)	
	7	1	**111-6119**	2	SHIELD	
	8	1	**7F-9090**	4	SCREW-DRIVE	
	9	1	**2P-4005**	2	FILTER AS-ENGINE OIL	
	10	1	**0S-1591**	13	BOLT (3/8-16X1.5IN)	
	11	1	**9S-8752**	21	NUT-FULL (3/8-16 THD)	
	12	1	**0S-1608**	1	BOLT (3/8-16X3.75IN)	
	13	1	**141-7110**	1	PLATE-DRAIN	
	14	1	**1W-2750**	1	ADAPTER-BASE	
	15	1	**9Y-8388**	3	GASKET	
	16	1	**1A-5964**	1	BOLT (3/8-16X4.5IN)	
	17	1	**7G-6713**	2	SPRING-MAIN	
	18	1	**0S-1594**	6	BOLT (3/8-16X1IN)	
C	19	1	**0S-1571**	6	BOLT (3/8-16X1.75IN)	
C	20	1	**8C-3446**	1	VALVE-FLUID SAMPLING	
C	21	1	**8C-3445**	1	CAP-DUST	
C	22	1	**6V-5048**	1	SEAL-O-RING (8.92MM ID)	
B	23	1	**9S-4190**	1	PLUG-O-RING (7/16-20 THD)	
	24	1	**9S-9272**	1	CAP AS	
	25	1	**9S-9271**	1	COUPLER-MALE	
B	26	1	**3J-7354**	1	SEAL-O-RING (8.92MM ID)	
B	27	1	**9S-4182**	1	PLUG (7/16-20 THD)	
B	28	1	**2M-9780**	1	SEAL-O-RING (19.18MM ID)	

B-USE AS REQUIRED
C-CHANGE FROM PREVIOUS TYPE

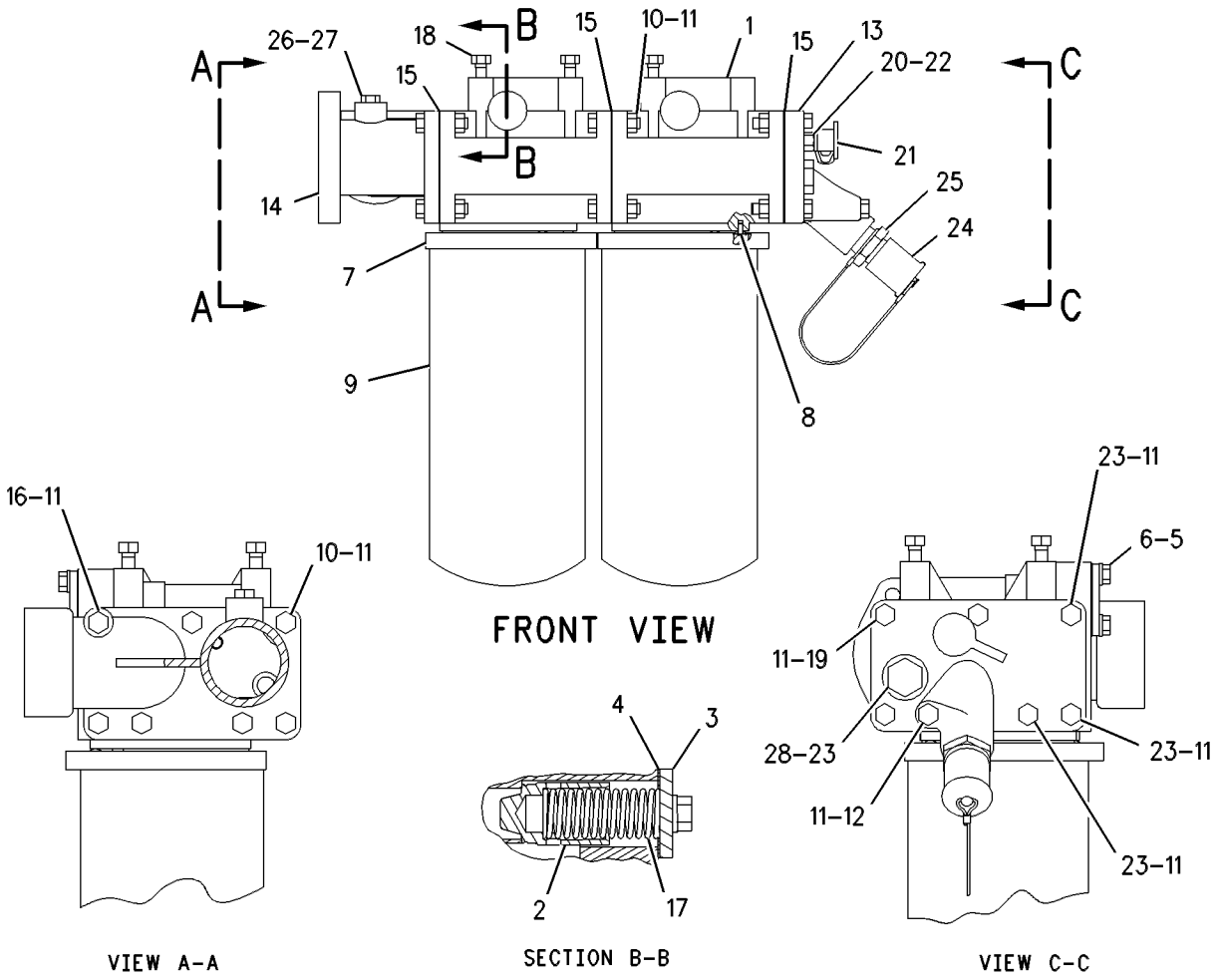

GRAPHIC #1

g00292929

LUBRICATION SYSTEM

1W-0714 FILTER GP-ENGINE OIL

S/N: 2GR2633-UP

PART OF 107-8762 ENGINE AR

SMCS-1306, 1308 **i01389699**

NOTE	REF NO	GRAPHIC REF	PART NUMBER	QTY	PART NAME 1 2 3 4 5 6 (PRODUCT LEVEL)	SEE PAGE
B	1	1	**0S-1571**	3	BOLT (3/8-16X1.75 IN)	
B	2	1	**9S-8752**	3	NUT-FULL (3/8-16 THD)	
	3	1	**1P-1367**	2	PLUNGER (OIL COOLER RELIEF VALVE)	
	4	1	**1S-7106**	2	COVER	
	5	1	**1W-2750**	1	ADAPTER-BASE	
	6	1	**2P-4005**	2	FILTER AS-ENGINE OIL	
	7	1	**7F-9090**	4	SCREW-DRIVE	
	8	1	**7G-6713**	2	SPRING-MAIN	
	9	1	**8C-3445**	1	CAP-DUST	
	10	1	**8C-3446**	1	VALVE-FLUID SAMPLING	
	11	1	**9S-9271**	1	COUPLER-MALE	
	12	1	**9S-9272**	1	CAP AS	
	13	1	**9Y-8387**	2	GASKET	
C	14	1	**9Y-8388**	2	GASKET	
	15	1	**111-6119**	2	SHIELD	
	16	1	**141-7110**	1	PLATE-DRAIN	
C	17	1	**151-9270**	1	BASE AS-OIL FILTER	
		1	**2P-4304**	2	STUD-TAPERLOCK	
	18	1	**0S-1571**	3	BOLT (3/8-16X1.75 IN)	
C	19	1	**0S-1591**	6	BOLT (3/8-16X1.5 IN)	
	20	1	**0S-1594**	6	BOLT (3/8-16X1 IN)	
	21	1	**0S-1608**	1	BOLT (3/8-16X3.75IN)	
	22	1	**1A-5964**	1	BOLT (3/8-16X4.5IN)	
	23	1	**2B-2695**	4	BOLT (5/16-18X.875 IN)	
	24	1	**2M-9780**	1	SEAL-O-RING (19.18MM ID)	
	25	1	**3J-7354**	1	SEAL-O-RING (8.92MM ID)	
	26	1	**6V-5048**	1	SEAL-O-RING (8.92MM ID)	
	27	1	**9M-1974**	4	WASHER-HARD (8.8X16X2MM THK)	
	28	1	**9S-4182**	1	PLUG-O-RING	
	29	1	**9S-4190**	1	PLUG-O-RING	
C	30	1	**9S-8752**	11	NUT-FULL (3/8-16 THD)	

B-USE AS REQUIRED
C-CHANGE FROM PREVIOUS TYPE

1W-0714 **FILTER GP-ENGINE OIL** ***(contd.)*** **i01389699**

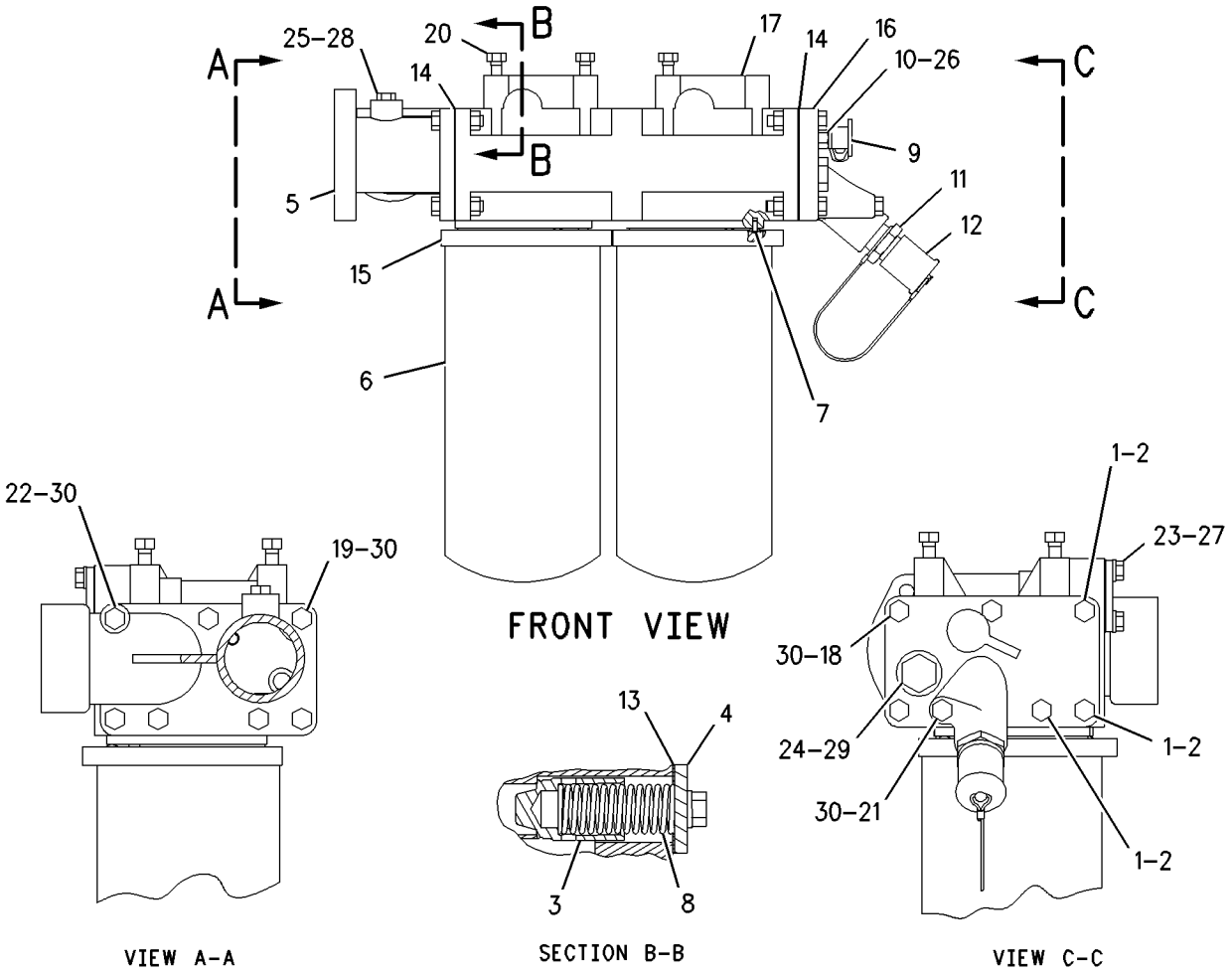

GRAPHIC #1

g00732633

LUBRICATION SYSTEM

112-6001 FUMES DISPOSAL GP

S/N: 2GR580-UP

PART OF 107-8762 ENGINE AR

SMCS-1317 **i01325864**

NOTE	REF NO	GRAPHIC REF	PART NUMBER	QTY	PART NAME 1 2 3 4 5 6 (PRODUCT LEVEL)	SEE PAGE
	1	1	**4P-8097**	1	BRACKET	
	4	1	**6V-0267**	2	CLIP (TAB)	
	5	1	**9D-3521**	1	BRACKET	
	6	1	**133-5931**	1	TUBE	
	7	1	**0S-1588**	1	BOLT (3/8-16X1.25 IN)	
	8	1	**1A-2029**	2	BOLT (3/8-16X1.125 IN)	
	9	1	**6V-0268**	2	CLIP (SLOT)	
	10	1	**9S-8752**	2	NUT-FULL (3/8-16 THD)	
	11	1	**9X-6458**	5	WASHER-HARD (3MM THK)	

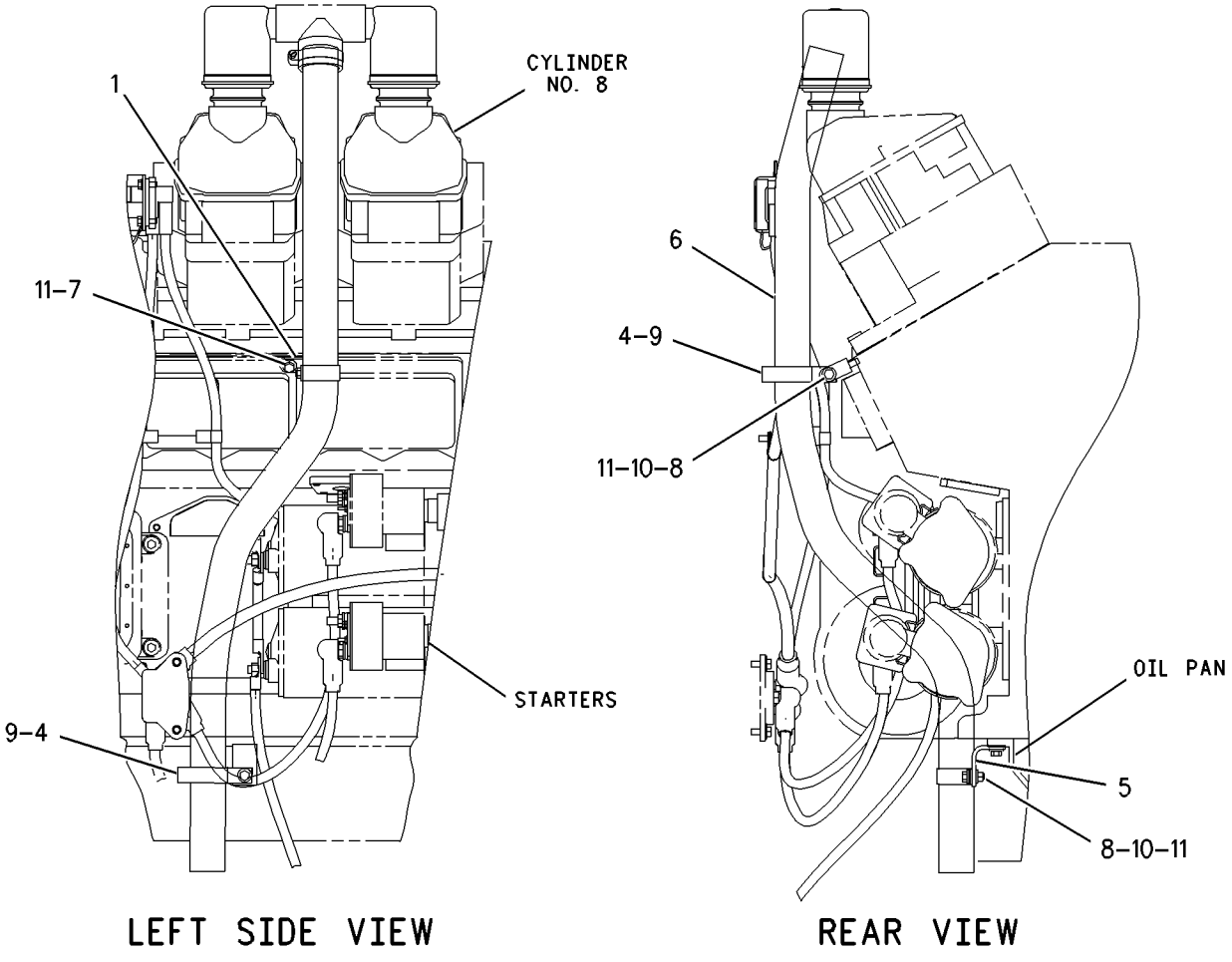

GRAPHIC #1 g00701612

119-6317 GAUGE GP-OIL LEVEL (DIPSTICK)

S/N: 2GR1-UP

PART OF 107-8762 ENGINE AR

SMCS-1326 **i00746163**

NOTE	REF NO	GRAPHIC REF	PART NUMBER	QTY	PART NAME 1 2 3 4 5 6 (PRODUCT LEVEL)	SEE PAGE
	1	1	**4F-3765**	2	GASKET-SHAFT	
	2	1	**4P-0707**	2	CLAMP AS	
	3	1	**7C-2318**	1	TUBE AS	
	4	1	**7E-5335**	1	BRACKET	
	5	1	**8M-3175**	2	WASHER-HARD	
	6	1	**122-3176**	1	TUBE AS	
	7	1	**122-3177**	1	GAUGE AS-OIL LEVEL	
	8	1	**0L-1143**	1	BOLT (3/8-16X2.5IN)	
	9	1	**5M-2894**	2	WASHER (2.5MM THK)	
	10	1	**9S-8752**	3	NUT-FULL (3/8-16 THD)	
	11	1	**3M-0496**	1	STUD-TAPERLOCK (.374IN NC X 2.60)	

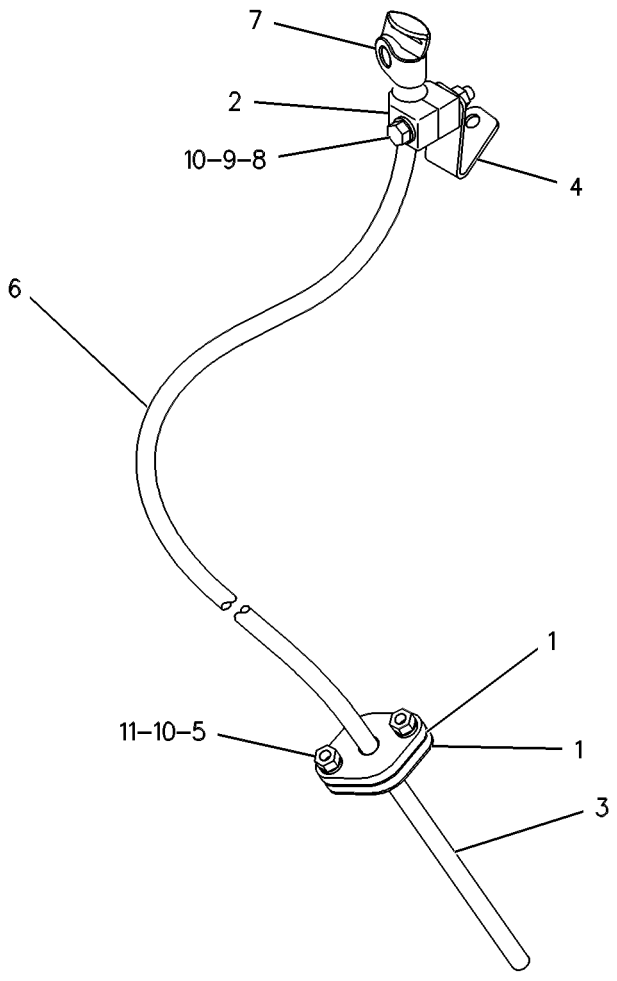

GRAPHIC #1 g00271752

LUBRICATION SYSTEM

1W-0717 LINES GP-ENGINE OIL

S/N: 2GR1-1732

PART OF 107-8762 ENGINE AR

SMCS-1307 **i01420610**

NOTE	REF NO	GRAPHIC REF	PART NUMBER	QTY	PART NAME 1 2 3 4 5 6 (PRODUCT LEVEL)	SEE PAGE
	1	1	**9S-8752**	4	NUT-FULL (3/8-16 THD)	
	2	1	**0S-1594**	9	BOLT (3/8-16X1 IN)	
	3	1	**7W-1856**	1	SUPPORT-TUBE	
	4	1	**7W-4379**	1	TUBE AS	
	5	1	**1A-1460**	4	BOLT (1/2-13X2 IN)	
		1	**5P-8245**	4	WASHER-HARD (13.5X25.5X3MM THK)	
	6	1	**1P-3709**	1	SEAL-RECTANGULAR	
	7	1	**4P-2535**	1	ELBOW AS	
	8	1	**1P-5764**	2	FLANGE-HALF	
	9	1	**061-9456**	4	SEAL-O-RING (53.57MM ID)	
	10	1	**0S-1588**	6	BOLT (3/8-16X1.25 IN)	
	11	1	**8N-2929**	2	COVER	
	12	1	**7D-6954**	1	CLAMP	
	13	1	**0S-1571**	2	BOLT (3/8-16X1.75 IN)	
B	14	1	**8T-6762**	1	PLUG-PIPE	
C	15	1	**5P-1404**	2	ADAPTER-O-RING (STRAIGHT THREAD)	
C		1	**6V-4589**	2	SEAL-O-RING (19.18MM ID)	
C	16	1	**2W-7226**	1	ADAPTER (TURBO OIL SUPPLY)	
	17	1	**109-2332**	1	SEAL-O-RING (56.52MM ID)	
	18	1	**0L-1143**	4	BOLT (3/8-16X2.50 IN)	
	19	1	**5M-2894**	16	WASHER-HARD (10.2X18.5X2.5MM THK)	
	20	1	**111-3820**	1	RING-RETAINING	
	21	1	**7N-5416**	1	ELBOW-OUTLET (OIL PUMP)	
	22	1	**6V-3908**	1	SEAL-O-RING (100.97MM ID)	
	23	1	**3P-0655**	2	SEAL-O-RING (72.39MM ID)	
	24	1	**4W-5597**	1	COVER	
	25	1	**1A-2029**	4	BOLT (3/8-16X1.125 IN)	
	26	1	**0S-1591**	2	BOLT (3/8-16X1.5 IN)	
	27	1	**4W-5596**	1	COVER	
	28	1	**5F-4899**	1	BOLT (3/8-16X5.5 IN)	
	29	1	**7C-9217**	1	ELBOW-COOLER BYPASS	
	30	1	**9S-4182**	1	PLUG-O-RING	
		1	**6V-5048**	1	SEAL-O-RING (8.92MM ID)	
	31	1	**8M-9024**	2	WASHER-HARD (10.2X22.5X5MM THK)	
	32	1	**100-8075**	2	CLAMP AS	
	33	1	**9S-4191**	2	PLUG-O-RING	
	34	1	**3J-1907**	2	SEAL-O-RING (11.89MM ID)	
	35	2	**3P-0655**	1	SEAL-O-RING (72.39MM ID)	
	36	2	**8T-6765**	1	PLUG-PIPE	
	37	2	**7N-5413**	1	ELBOW (OIL COOLER INLET)	
	38	2	**0S-1594**	6	BOLT (3/8-16X1 IN)	
	39	2	**4B-3140**	1	COVER	
	40	2	**5P-5846**	1	SEAL-O-RING (40.64MM ID)	
	41	2	**1N-3333**	1	TUBE	
	42	2	**109-2332**	4	SEAL-O-RING (56.52MM ID)	
	43	2	**1N-3873**	1	TUBE	
	44	2	**2W-1969**	1	VALVE-BYPASS	
	45	2	**2W-1635**	1	SPRING	
	46	2	**5P-4892**	1	SEAL-O-RING (59.92MM ID)	
	47	2	**5B-2638**	2	BOLT (3/8-16X5.25 IN)	
	48	2	**2W-1053**	1	PLUG (2-1/2-12 THD)	
		2	**5P-7817**	1	SEAL-O-RING (59.36 MM ID)	
	49	2	**1A-5964**	2	BOLT (3/8-16X4.5 IN)	
	50	2	**7X-7730**	1	PLUG-PIPE	
	51	2	**6B-5072**	1	BUSHING-TERMINAL	
	52	2	**6B-9202**	1	SPRING	

1W-0717 LINES GP-ENGINE OIL *(contd.)* i01420610

NOTE	REF NO	GRAPHIC REF	PART NUMBER	QTY	PART NAME 1 2 3 4 5 6 (PRODUCT LEVEL)	SEE PAGE
	53	2	**7N-7697**	2	PLUNGER AS	
					(EACH INCLUDES)	
		2	**7M-1808**	1	DOWEL	
	54	2	**5M-2894**	2	WASHER-HARD (10.2X18.5X2.5MM THK)	
	55	2	**6V-3966**	1	FITTING	
	56	2	**6V-0852**	1	CAP-DUST	

B-USE AS REQUIRED
C-CHANGE FROM PREVIOUS TYPE

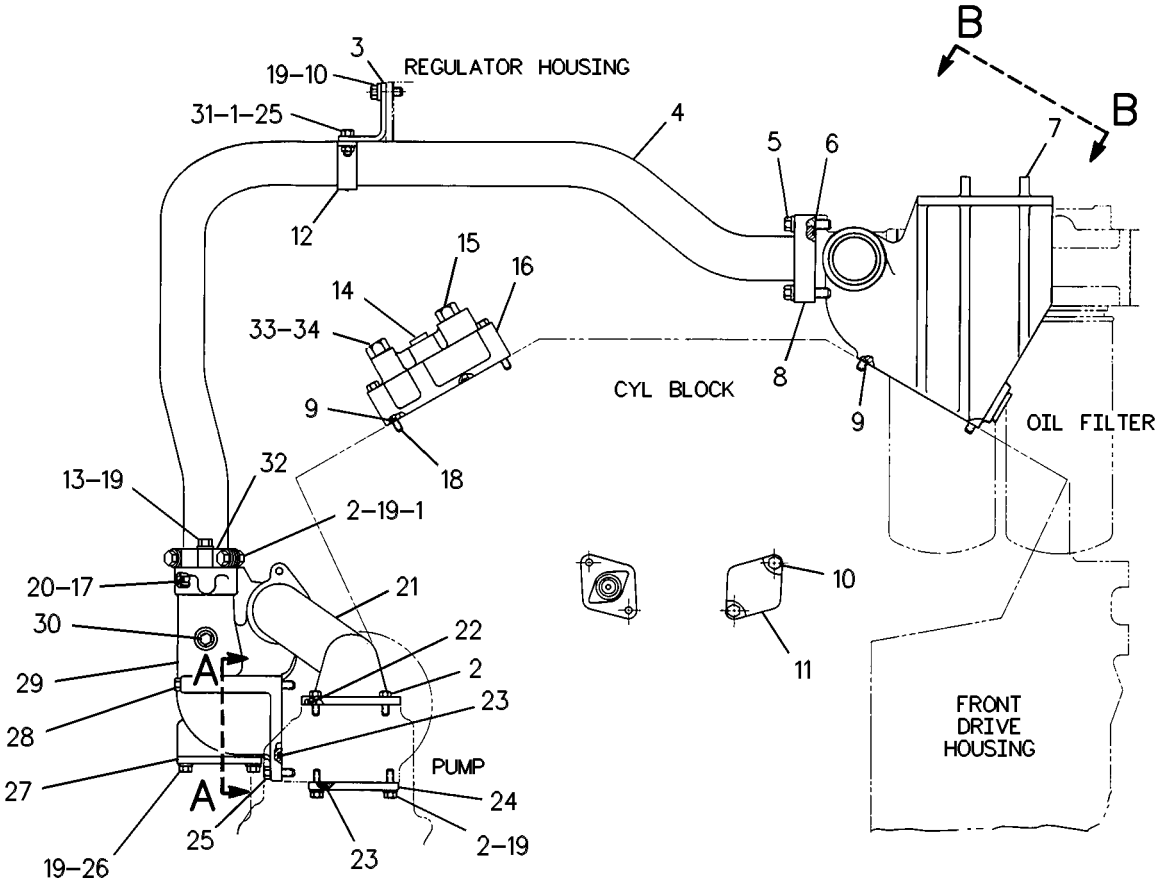

FRONT VIEW REFER TO ALL ILLUSTRATIONS OF THIS GROUP FOR AUXILIARY VIEWS

GRAPHIC #1 g00269021

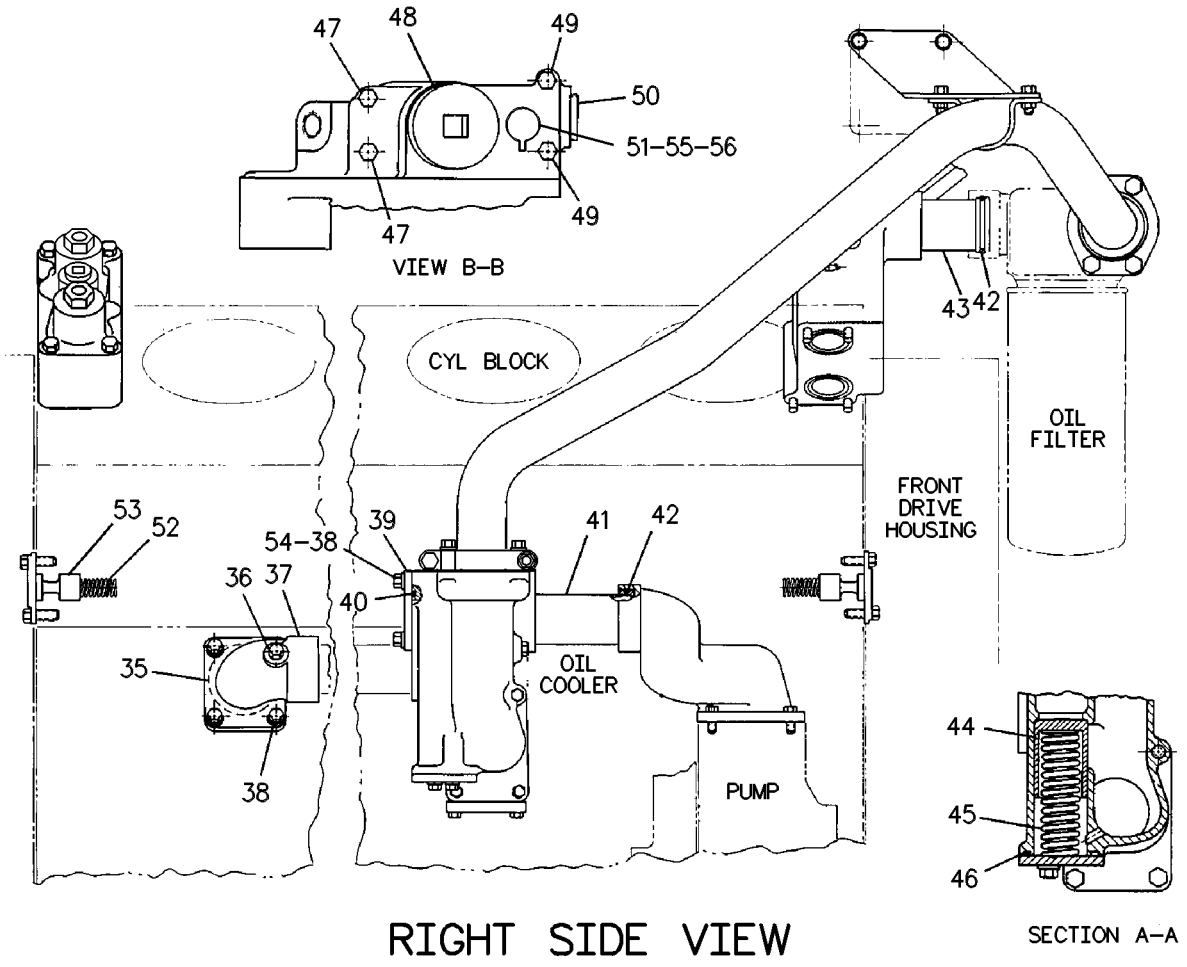

GRAPHIC #2

g00339327

MEMORANDA

LUBRICATION SYSTEM

1W-0717 LINES GP-ENGINE OIL

S/N: 2GR1733-UP

PART OF 107-8762 ENGINE AR

SMCS-1307 **i01420614**

NOTE	REF NO	GRAPHIC REF	PART NUMBER	QTY	PART NAME 1 2 3 4 5 6 (PRODUCT LEVEL)	SEE PAGE
	1	1	**9S-8752**	4	NUT-FULL (3/8-16 THD)	
B	2	1	**0S-1594**	9	BOLT (3/8-16X1 IN)	
	3	1	**7W-1856**	1	SUPPORT-TUBE	
	4	1	**7W-4379**	1	TUBE AS	
	5	1	**1A-1460**	4	BOLT (1/2-13X2 IN)	
		1	**5P-8245**	4	WASHER-HARD (13.5X25.5X3MM THK)	
	6	1	**1P-3709**	1	SEAL-RECTANGULAR	
	7	1	**4P-2535**	1	ELBOW AS	
	8	1	**1P-5764**	2	FLANGE-HALF	
	9	1	**061-9456**	4	SEAL-O-RING (53.57MM ID)	
	10	1	**0S-1588**	6	BOLT (3/8-16X1.25 IN)	
	11	1	**8N-2929**	2	COVER	
	12	1	**7D-6954**	1	CLAMP	
	13	1	**0S-1571**	2	BOLT (3/8-16X1.75 IN)	
B	14	1	**8T-6762**	1	PLUG-PIPE	
C	15	1	**5P-1404**	2	ADAPTER-O-RING (STRAIGHT THREAD)	
C		1	**6V-4589**	2	SEAL-O-RING (19.18MM ID)	
C	16	1	**2W-7226**	1	ADAPTER (TURBO OIL SUPPLY)	
	17	1	**109-2332**	1	SEAL-O-RING (56.52MM ID)	
	18	1	**0L-1143**	4	BOLT (3/8-16X2.50 IN)	
	19	1,2	**5M-2894**	18	WASHER-HARD (10.2X18.5X2.5MM THK)	
	20	1	**111-3820**	1	RING-RETAINING	
	21	1	**7N-5416**	1	ELBOW-OUTLET (OIL PUMP)	
	22	1	**6V-3908**	1	SEAL-O-RING (100.97MM ID)	
	23	1	**3P-0655**	2	SEAL-O-RING (72.39MM ID)	
	24	1	**4W-5597**	1	COVER	
	25	1	**1A-2029**	4	BOLT (3/8-16X1.125 IN)	
	26	1	**0S-1591**	2	BOLT (3/8-16X1.5 IN)	
	27	1	**4W-5596**	1	COVER	
	28	1	**5F-4899**	1	BOLT (3/8-16X5.5 IN)	
	29	1	**7C-9217**	1	ELBOW-COOLER BYPASS	
	30	1	**9S-4182**	1	PLUG-O-RING	
		1	**6V-5048**	1	SEAL-O-RING (8.92MM ID)	
	31	1	**8M-9024**	2	WASHER-HARD (10.2X22.5X5MM THK)	
	32	1	**100-8075**	2	CLAMP AS	
	33	1	**9S-4191**	2	PLUG-O-RING	
	34	1	**3J-1907**	2	SEAL-O-RING (11.89MM ID)	
	35	2	**3P-0655**	1	SEAL-O-RING (72.39MM ID)	
	36	2	**8T-6765**	1	PLUG-PIPE	
	37	2	**7N-5413**	1	ELBOW (OIL COOLER INLET)	
	38	2	**0S-1594**	4	BOLT (3/8-16X1 IN)	
	39	2	**4B-3140**	1	COVER	
	40	2	**5P-5846**	1	SEAL-O-RING (40.64MM ID)	
	41	2	**1N-3333**	1	TUBE	
	42	2	**109-2332**	4	SEAL-O-RING (56.52MM ID)	
	43	2	**1N-3873**	1	TUBE	
	44	2	**2W-1969**	1	VALVE-BYPASS	
	45	2	**2W-1635**	1	SPRING	
	46	2	**5P-4892**	1	SEAL-O-RING (59.92MM ID)	
	47	2	**5B-2638**	2	BOLT (3/8-16X5.25 IN)	
	48	2	**2W-1053**	1	PLUG (2-1/2-12 THD)	
		2	**5P-7817**	1	SEAL-O-RING (59.36 MM ID)	
	49	2	**1A-5964**	2	BOLT (3/8-16X4.5 IN)	
	50	2	**7X-7730**	1	PLUG-PIPE	
B	51	2	**6B-5072**	1	BUSHING-TERMINAL	
	52	2	**6B-9202**	1	SPRING	

1W-0717 LINES GP-ENGINE OIL *(contd.)* i01420614

NOTE	REF NO	GRAPHIC REF	PART NUMBER	QTY	PART NAME 1 2 3 4 5 6 (PRODUCT LEVEL)	SEE PAGE
	53	2	**7N-7697**	2	PLUNGER AS	
					(EACH INCLUDES)	
		2	**7M-1808**	1	DOWEL	
	54	2	**5M-2894**	2	WASHER-HARD (10.2X18.5X2.5MM THK)	
B	55	2	**6V-3966**	1	FITTING	
B	56	2	**6V-0852**	1	CAP-DUST	
C	57	2	**3B-1915**	2	BOLT (3/8-16X1.37 IN)	
BC	58	1	**6V-0852**	1	CAP-DUST	
BC	59	1	**6V-3966**	1	FITTING	

B-USE AS REQUIRED
C-CHANGE FROM PREVIOUS TYPE

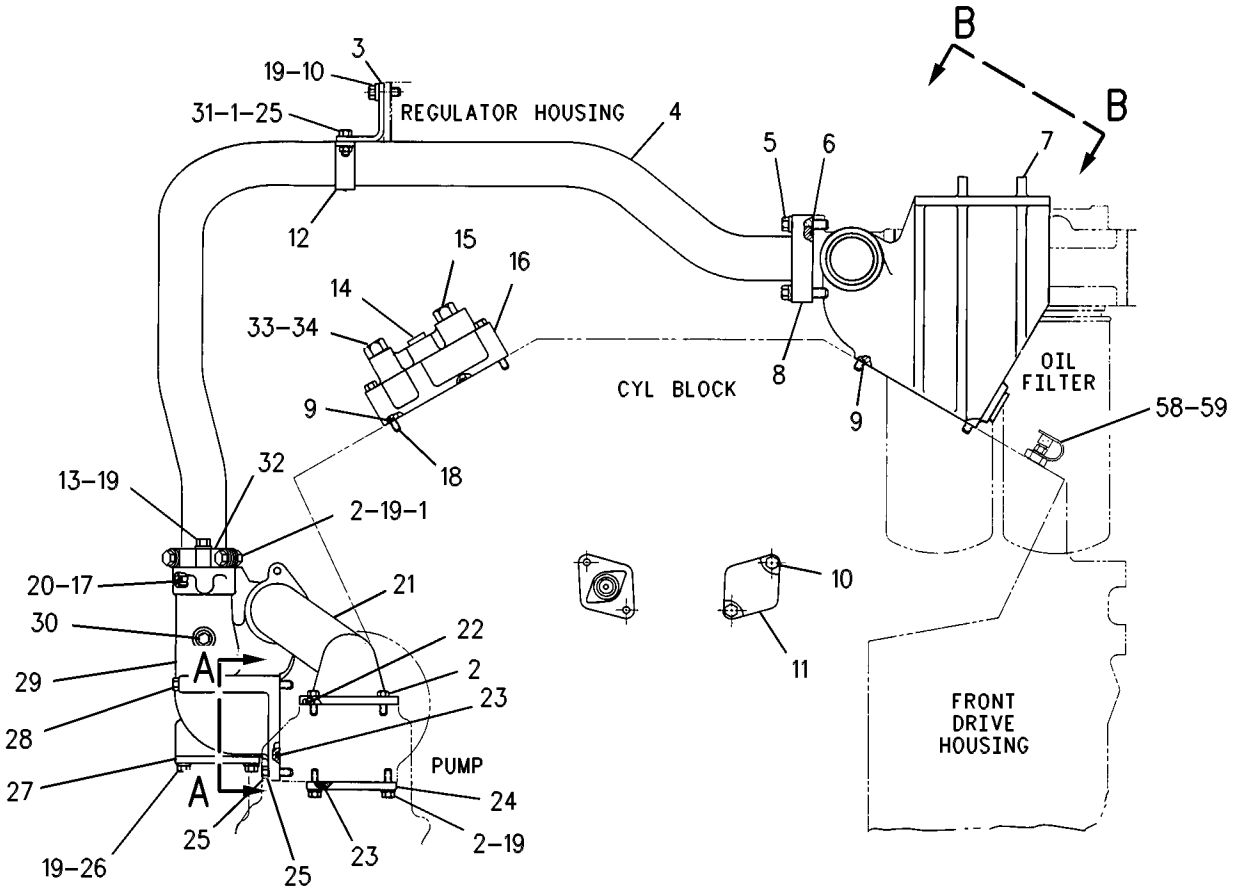

FRONT VIEW

REFER TO ALL ILLUSTRATIONS OF THIS GROUP FOR AUXILIARY VIEWS

GRAPHIC #1

g00534459

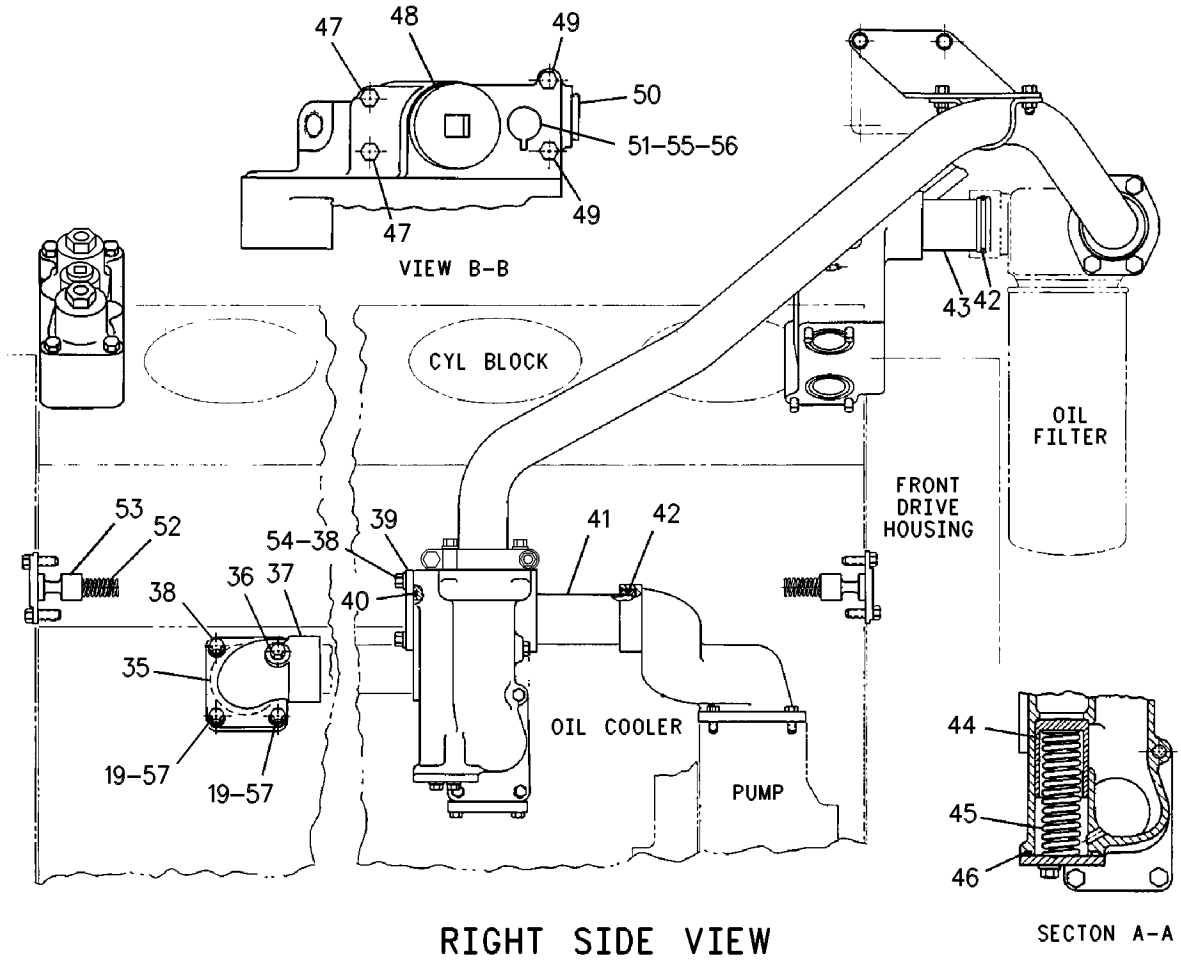

GRAPHIC #2

g00534460

MEMORANDA

LUBRICATION SYSTEM

112-6010 LINES GP-TURBOCHARGER OIL

S/N: 2GR1-UP

PART OF 107-8762 ENGINE AR

SMCS-1052, 1307 **i01429100**

NOTE	REF NO	GRAPHIC REF	PART NUMBER	QTY	PART NAME 1 2 3 4 5 6 (PRODUCT LEVEL)	SEE PAGE
	1	1	**1W-7990**	1	TUBE-LH	
	2	1	**2W-0752**	2	GASKET	
	3	1	**4P-0692**	4	CLAMP AS	
					(EACH INCLUDES)	
		1	**108-1434**	1	GROMMET	
	4	1	**4P-0693**	8	CLAMP AS	
					(EACH INCLUDES)	
		1	**108-1434**	2	GROMMET	
	5	1	**4P-4460**	2	GASKET	
	6	1	**6I-0804**	1	ADAPTER-TURBOCHARGER OIL	
	7	1	**6I-0805**	1	ADAPTER-TURBOCHARGER OIL	
	8	1	**6I-0810**	1	TUBE AS-OIL (LH FRONT)	
	9	1	**6K-5535**	2	CLIP	
	10	1	**6K-5536**	2	BRACKET	
	11	1	**7E-5335**	2	BRACKET	
	12	1	**7E-5338**	1	TUBE (RH)	
	13	1	**7N-5094**	2	ELBOW-DRAIN	
	14	1	**7N-7559**	2	GASKET	
	15	1	**9Y-5814**	2	ELBOW-DRAIN	
	16	1	**112-6011**	1	TUBE AS (RH FRONT)	
	17	1	**184-3229**	2	HOSE AS	
	18	1	**031-4136**	1	TEE-FLARED	
	19	1	**0L-2070**	2	BOLT (3/8-16X2.25 IN)	
	20	1	**0S-1588**	8	BOLT (3/8-16X1.25 IN)	
	21	1	**0S-1594**	2	BOLT (3/8-16X1 IN)	
	22	1	**0S-1608**	2	BOLT (3/8-16X3.75 IN)	
	23	1	**0T-0055**	4	BOLT (3/8-16X4.25 IN)	
	24	1	**2B-2694**	4	BOLT (5/16-18X2 IN)	
	25	1	**2P-7636**	2	CONNECTOR-FLARED	
	26	1	**3B-1915**	2	BOLT (3/8-16X1.37 IN)	
	27	1	**5M-2894**	6	WASHER-HARD (10.2X18.5X2.5MM THK)	
	28	1	**5P-4900**	2	ELBOW-FLARED	
	29	1	**5P-9890**	4	SEAL-O-RING (23.16MM ID)	
	30	1	**6V-4589**	1	SEAL-O-RING (19.18MM ID)	
	31	1	**8L-2786**	2	SEAL-O-RING (16.36MM ID)	
	32	1	**9L-9132**	4	WASHER (10.2X25.5X2.5MM THK)	
	33	1	**9N-0869**	4	WASHER-HARD (8.8X25.5X2MM THK)	
	34	1	**9S-8752**	2	NUT-FULL (3/8-16 THD)	

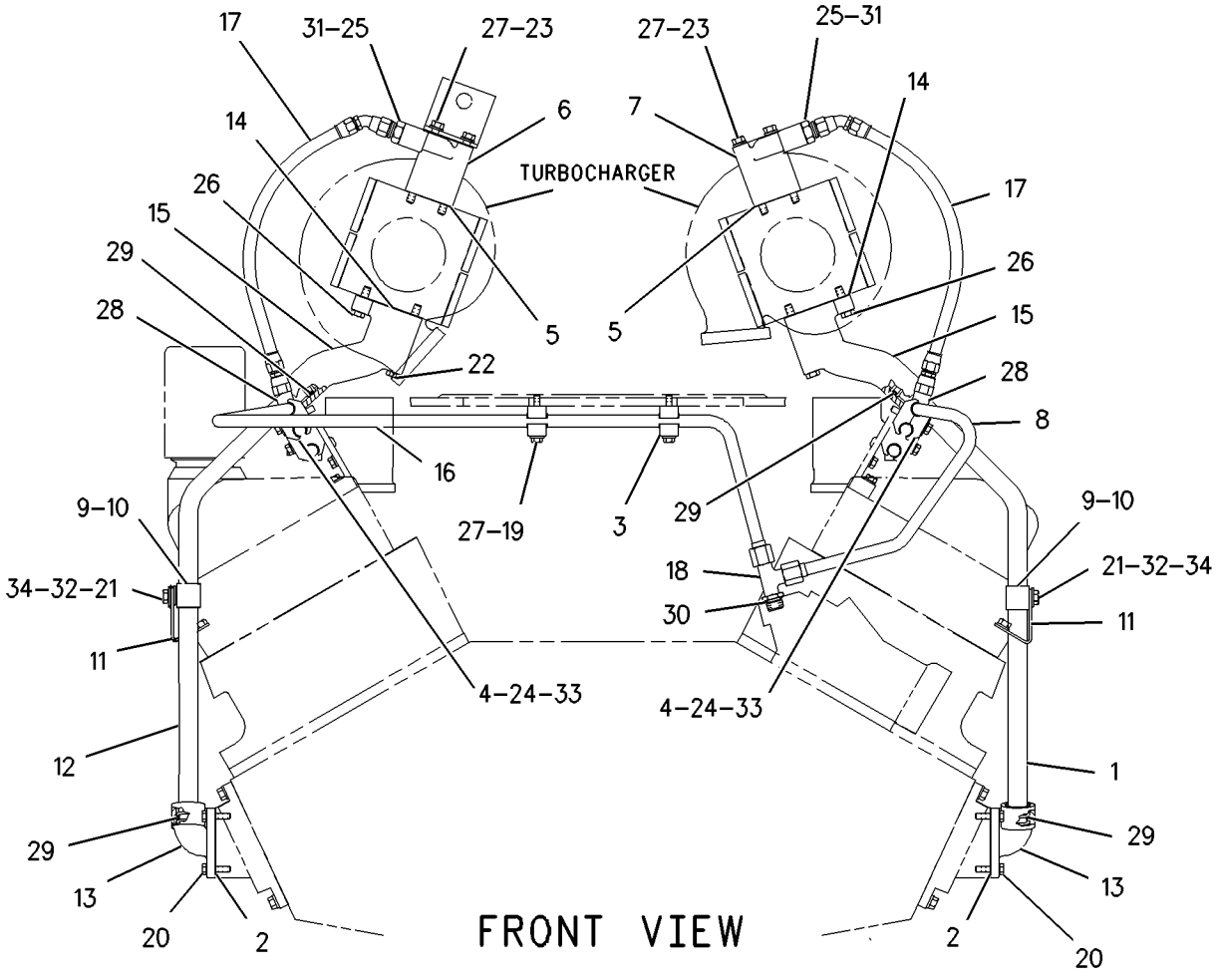

GRAPHIC #1

g00748726

LUBRICATION SYSTEM

127-4479 OIL CHANGE GP-HIGH SPEED

S/N: 7HR1-UP
AN ATTACHMENT

SMCS-1325 **i01069573**

NOTE	REF NO	GRAPHIC REF	PART NUMBER	QTY	PART NAME 1 2 3 4 5 6 (PRODUCT LEVEL)	SEE PAGE
	1	1	**6N-2656**	1	TUBE AS-OIL CHANGE	
	2	1	**1S-0004**	1	SEAL-O-RING (18.42MM ID)	
	3	1	**4S-6680**	1	CONNECTOR-FLARED	
	4	1	**7M-8485**	1	SEAL-O-RING (29.74MM ID)	
I	5	1	**7V-4250**	1	HOSE AS	
	7	1	**6L-2479**	1	BRACE	
	8	1	**6V-1889**	1	CLIP (28.58MM ID)	
	9	1	**5S-7379**	1	BOLT (3/8-16X.875IN)	
	10	1	**8T-4896**	2	WASHER-HARD (2.5MM THK)	
	11	1	**6V-8801**	1	NUT (3/8-16 THD)	
	12	1	**7T-6515**	1	BRACKET AS	
	13	1	**6K-8420**	1	LOCKNUT (1-1/16-12 THD)	
	14	1	**1P-7919**	1	COUPLER-MALE	
	15	1	**9S-9272**	1	CAP AS	
	16	1	**5B-0213**	2	BOLT (3/8-16 X 2.375IN)	
	17	1	**8M-3175**	2	WASHER-HARD (3MM THK)	

I-SEE HOSE FABRICATION GUIDE

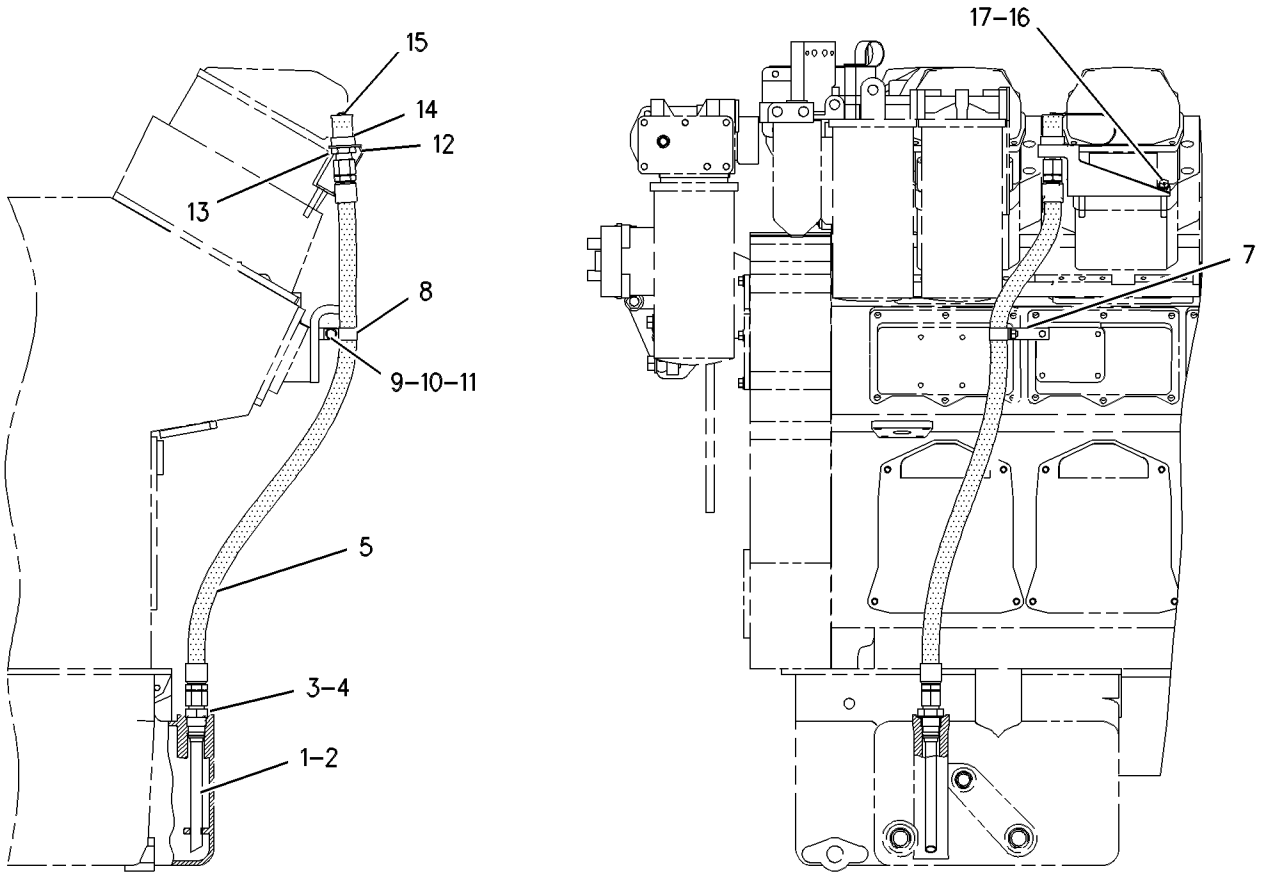

FRONT VIEW LEFT SIDE VIEW

GRAPHIC #1 g00592838

LUBRICATION SYSTEM

7W-2947 PUMP & LINES GP-SUMP

S/N: 2GR1-UP

REAR

PART OF 107-8762 ENGINE AR

SMCS-1307, 1324 **i01197374**

NOTE	REF NO	GRAPHIC REF	PART NUMBER	QTY	PART NAME 1 2 3 4 5 6 (PRODUCT LEVEL)	SEE PAGE
YR	1	1	**8N-9164**	1	PUMP GP-SCAVENGE	98
	2	1	**4F-9351**	4	BOLT-GROUND BODY (3/8-16X1X1.375 IN)	
	3	1	**1N-3243**	1	TUBE AS	
C	4	1	**3P-0657**	2	SEAL-O-RING (62.86MM ID)	
	5	1	**6K-6164**	1	CLIP	
	6	1	**6K-6167**	1	CLIP	
	7	1	**0L-1351**	3	BOLT (3/8-16X.875IN)	
	8	1	**5M-2894**	9	WASHER (2.5MM THK)	
	9	1	**1N-3193**	1	HOUSING	
	10	1	**0S-1590**	2	BOLT (3/8-16X2 IN)	
C	11	1	**4P-5500**	1	SCREEN-SCAVENGE	
	12	1	**1N-3225**	1	COVER-SCAVENGE PUMP	
C	13	1	**0S-1591**	8	BOLT (3/8-16X1.5 IN)	
	14	1	**1N-3239**	1	ELBOW	
C	15	1	**4P-4917**	1	SCREEN-SCAVENGE	

C-CHANGE FROM PREVIOUS TYPE
R-REMFG PART MAY BE AVAILABLE
Y-SEPARATE ILLUSTRATION

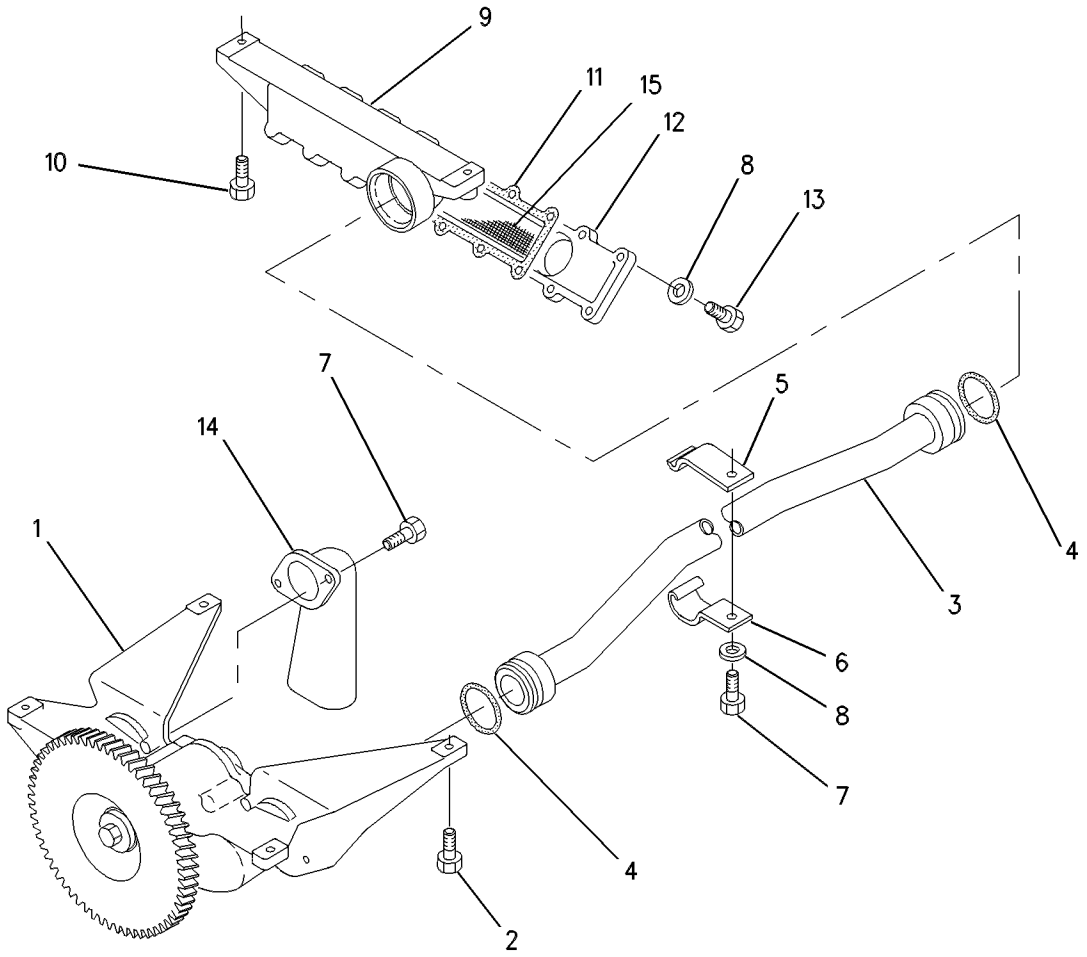

GRAPHIC #1 g00489582

7N-8715 PUMP GP-ENGINE OIL

S/N: 2GR1-UP

PART OF 107-8762 ENGINE AR

SMCS-1304, 1315 **i01420625**

NOTE	REF NO	GRAPHIC REF	PART NUMBER	QTY	PART NAME 1 2 3 4 5 6 (PRODUCT LEVEL)	SEE PAGE
CY	1	1	**7W-0053**	1	PUMP GP-ENGINE OIL	97
C	2	1	**6V-7681**	1	SEAL-O-RING (164.69MM ID)	
	3	1	**4S-5882**	1	BOLT (1/2-13X7.25 IN)	
		1	**5P-8245**	1	WASHER-HARD (13.5X25.5X3MM THK)	
B	4	1	**4S-5882**	2	BOLT (1/2-13X7.25 IN)	
B		1	**5P-8245**	2	WASHER-HARD (13.5X25.5X3MM THK)	

B-USE AS REQUIRED
C-CHANGE FROM PREVIOUS TYPE
Y-SEPARATE ILLUSTRATION

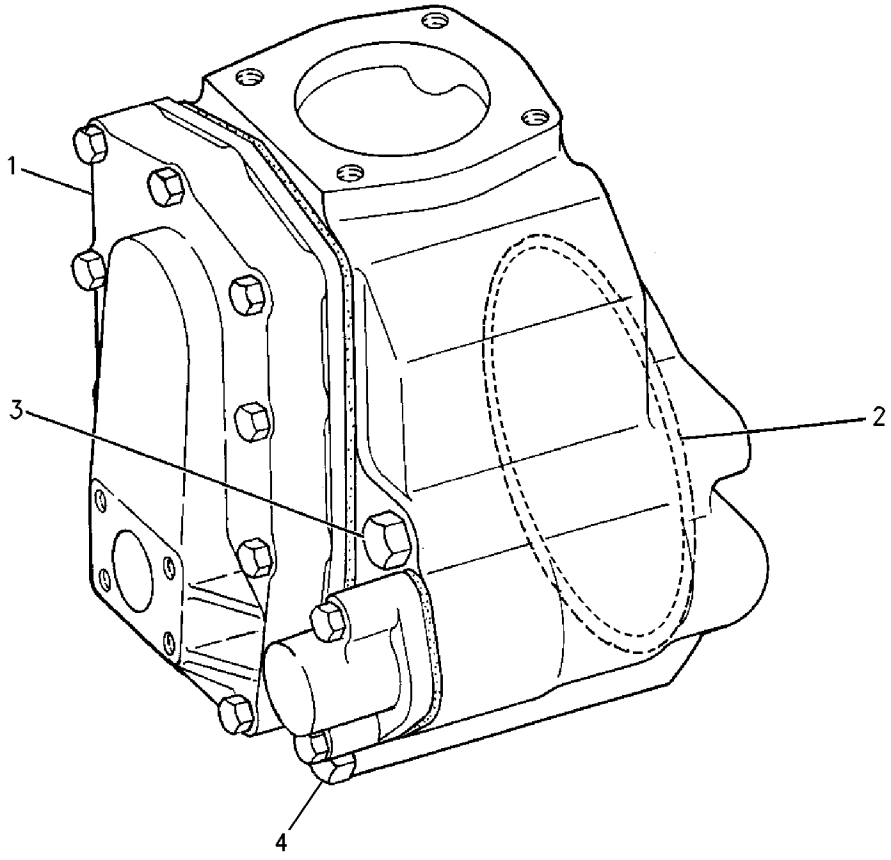

GRAPHIC #1 g00623771

7W-0053 PUMP GP-ENGINE OIL

S/N: 2GR1-UP
TWO SECTION GEAR
PART OF 7N-8715 PUMP GP-ENGINE OIL

SMCS-1304, 1315 **i00112842**

NOTE	REF NO	GRAPHIC REF	PART NUMBER	QTY	PART NAME 1 2 3 4 5 6 (PRODUCT LEVEL)	SEE PAGE
	1	1	**0S-1590**	9	BOLT (3/8-16X2IN)	
	2	1	**5M-2894**	11	WASHER (2.5MM THK)	
	3	1	**7N-5057**	1	GASKET	
	4	1	**7W-0050**	1	COVER AS-PUMP	
	5	1	**1W-6005**	3	BEARING-SLEEVE	
	6	1	**4M-3248**	2	DOWEL-HOLLOW	
	7	1	**2W-5476**	2	SHAFT AS-IDLER	
	8	1	**7F-1866**	2	BOLT (3/8-16X3.0IN)	
	9	1	**7W-0051**	1	BODY AS-OIL PUMP	
C	10	1	**1W-6005**	3	BEARING-SLEEVE	
	11	1	**1N-4637**	1	COVER AS-PUMP	
	12	1	**7N-2043**	2	DOWEL	
	13	1	**7N-5449**	1	SPOOL-PRESSURE RELIEF	
	14	1	**0S-1585**	6	BOLT (1/2-13X1.50IN)	
	15	1	**2S-2760**	1	SPRING	
	16	1	**2W-6619**	1	SHAFT AS-PUMP DRIVE	
	17	1	**111-1349**	1	GASKET	
	18	1	**7N-5049**	1	COVER-RELIEF VALVE	

C-CHANGE FROM PREVIOUS TYPE

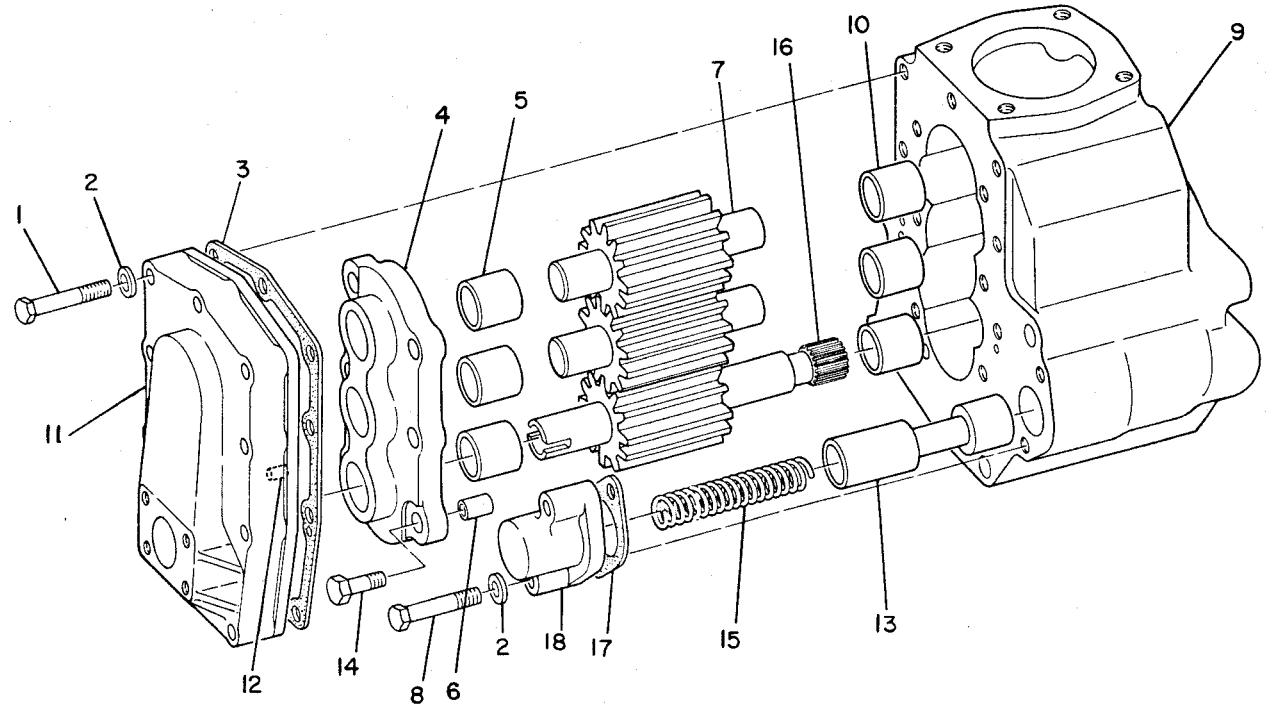

GRAPHIC #1 g00082118

LUBRICATION SYSTEM

8N-9164 PUMP GP-SCAVENGE–ENGINE OIL*R

S/N: 2GR1-UP

PART OF 7W-2947 PUMP & LINES GP-SUMP

SMCS-1312 **i01215700**

NOTE	REF NO	GRAPHIC REF	PART NUMBER	QTY	PART NAME 1 2 3 4 5 6 (PRODUCT LEVEL)	SEE PAGE
C	1	1	**2W-6727**	1	BODY AS-PUMP	
C	1A	1	**1W-6005**	2	BEARING-SLEEVE	
C	2	1	**7W-0059**	1	SHAFT AS-PUMP	
C	3	1	**176-3225**	1	SHAFT AS-DRIVE	
	4	1	**7N-8527**	1	COVER AS-PUMP	
	4A	1	**4M-3248**	2	DOWEL-HOLLOW	
	4B	1	**1W-6005**	2	BEARING-SLEEVE	
	5	1	**0S-1587**	4	BOLT (1/2-13X1.75IN)	
	7	1	**0S-0484**	1	BOLT (1/2-20X2.25IN)	
	8	1	**053-4679**	1	WASHER (10.0MM THK)	
C	9	1	**161-2513**	1	GEAR-DRIVE (71 TEETH)	

C-CHANGE FROM PREVIOUS TYPE

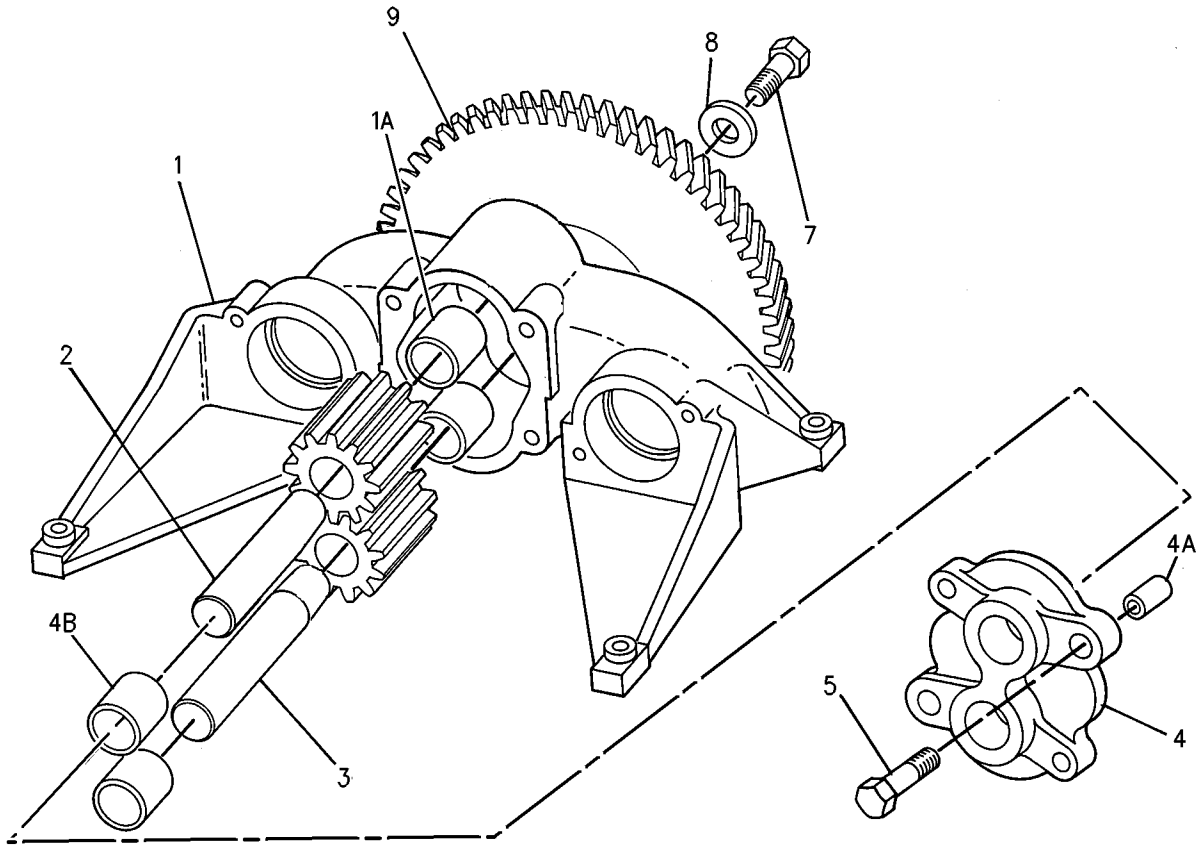

GRAPHIC #1 g00649813

112-6014 CONNECTION GP-WATER

S/N: 2GR1-UP

PART OF 107-8762 ENGINE AR

SMCS-1380 **i00745240**

NOTE	REF NO	GRAPHIC REF	PART NUMBER	QTY	PART NAME 1 2 3 4 5 6 (PRODUCT LEVEL)	SEE PAGE
	1	1	**7E-6016**	1	GASKET	
	2	1	**8T-6762**	1	PLUG-PIPE	
	3	1	**8T-6765**	1	PLUG-PIPE (1/4-18 NPTF THD)	
	4	1	**7N-4930**	1	ELBOW-OUTLET	
	5	1	**1A-2029**	4	BOLT (3/8-16X1.125IN)	

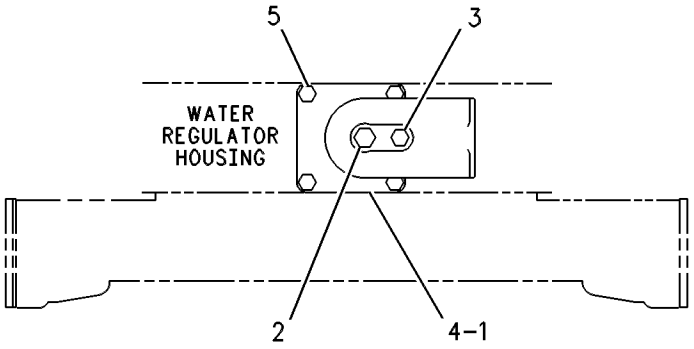

FRONT VIEW

GRAPHIC #1 g00253912

COOLING SYSTEM

2W-6571 COOLER GP-ENGINE OIL

S/N: 2GR1-UP

PART OF 107-8762 ENGINE AR

SMCS-1378 **i01197414**

NOTE	REF NO	GRAPHIC REF	PART NUMBER	QTY	PART NAME 1 2 3 4 5 6 (PRODUCT LEVEL)	SEE PAGE
	1	1	**3B-1915**	3	BOLT (3/8-16X1.375IN)	
	2	1	**4L-8606**	2	GASKET	
	3	1	**7W-1928**	1	TUBE	
C	4	1	**109-2332**	2	SEAL-O-RING (56.52MM ID)	
	5	1	**8S-9191**	8	BOLT (3/8-16X4IN)	
CR	6	1	**124-5142**	1	CORE AS-OIL COOLER	
	7	1	**9S-4185**	1	PLUG-O-RING (3/4-16 THD)	
		1	**8L-2786**	1	SEAL-O-RING (16.36MM ID)	
	8	1	**1A-5183**	4	BOLT (3/8-16X4.75IN)	
	9	1	**0S-1590**	1	BOLT (3/8-16X2 IN)	

C-CHANGE FROM PREVIOUS TYPE
R-REMFG PART MAY BE AVAILABLE

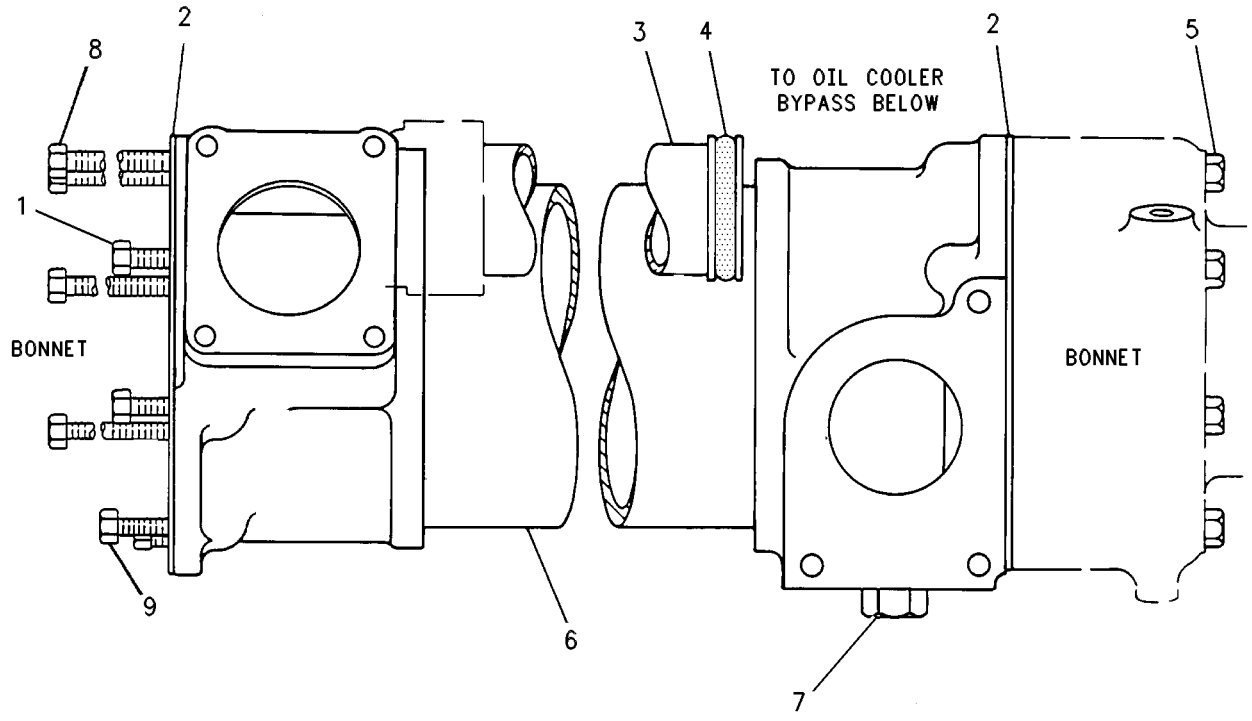

GRAPHIC #1 g00086522

4W-0419 CORE GP-OIL COOLER*R

S/N: 2GR1-UP
TRANSMISSION
PART OF 107-8762 ENGINE AR

SMCS-1375, 1378 **i01229172**

NOTE	REF NO	GRAPHIC REF	PART NUMBER	QTY	PART NAME 1 2 3 4 5 6 (PRODUCT LEVEL)	SEE PAGE
	1	1	**1W-2247**	1	SHELL AS-OIL COOLER	
		1	**3H-9675**	1	PIN-SPRING	
		1	**5M-6214**	2	PLUG-PIPE (1/8-27 THD)	
	2	1	**1W-2250**	1	BUNDLE AS-TUBE	
	3	1	**6V-3689**	2	SEAL-O-RING (158.34MM ID)	
	4	1	**1S-4974**	1	SEAL-O-RING (164.69MM ID)	

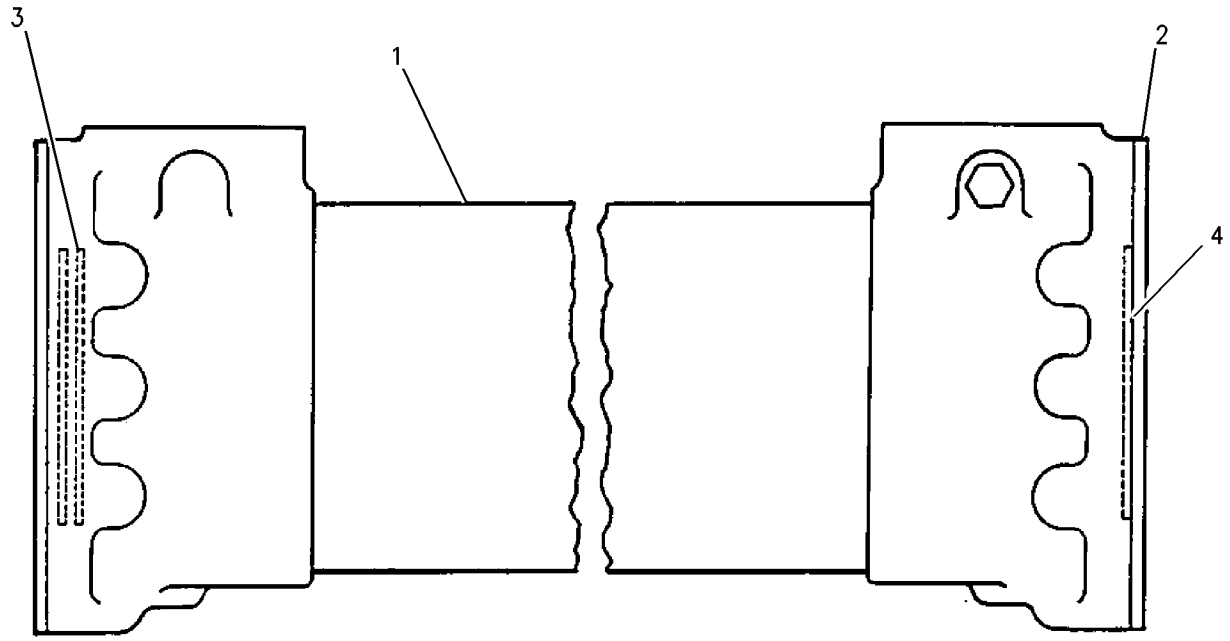

GRAPHIC #1 g00657332

COOLING SYSTEM

110-8684 FAN GP-SUCTION

S/N: 7HR1-UP

PART OF 109-6819 CHASSIS AR

SMCS-1356 **i01423542**

NOTE	REF NO	GRAPHIC REF	PART NUMBER	QTY	PART NAME 1 2 3 4 5 6 (PRODUCT LEVEL)	SEE PAGE
	1	1	**4P-6565**	1	SPIDER AS-FAN (8 BLADES)	
	2	1	**7X-0540**	1	WASHER-HARD (10MM THK)	
	3	1	**112-7249**	1	SUPPORT AS	
	4	1	**112-7250**	1	ADAPTER	
	5	1	**131-6085**	2	GUARD AS-FAN	
	6	1	**131-6086**	2	GUARD AS-FAN	
	7	1	**146-5067**	8	SPACER (22.2MM LG X 30MM DIA)	
	8	1	**5P-7782**	1	BOLT-LOCKING (5/8-11X3.75IN)	
	9	1	**7X-0515**	1	WASHER-HARD (17X35X5MM THK)	
	10	1	**7X-7729**	20	WASHER (11X25X3MM THK)	
M	11	1	**8T-4185**	8	BOLT (M10X1.5X50MM)	
M	12	1	**8T-4195**	26	BOLT (M10X1.5X30MM)	
	13	1	**8T-4222**	14	WASHER-PLATED (11X32X2.5MM THK)	
	14	1	**8T-4223**	8	WASHER-HARD (13.5X25.5X3MM THK)	
M	15	1	**8T-4910**	8	BOLT (M12X1.75X60MM)	

M-METRIC PART

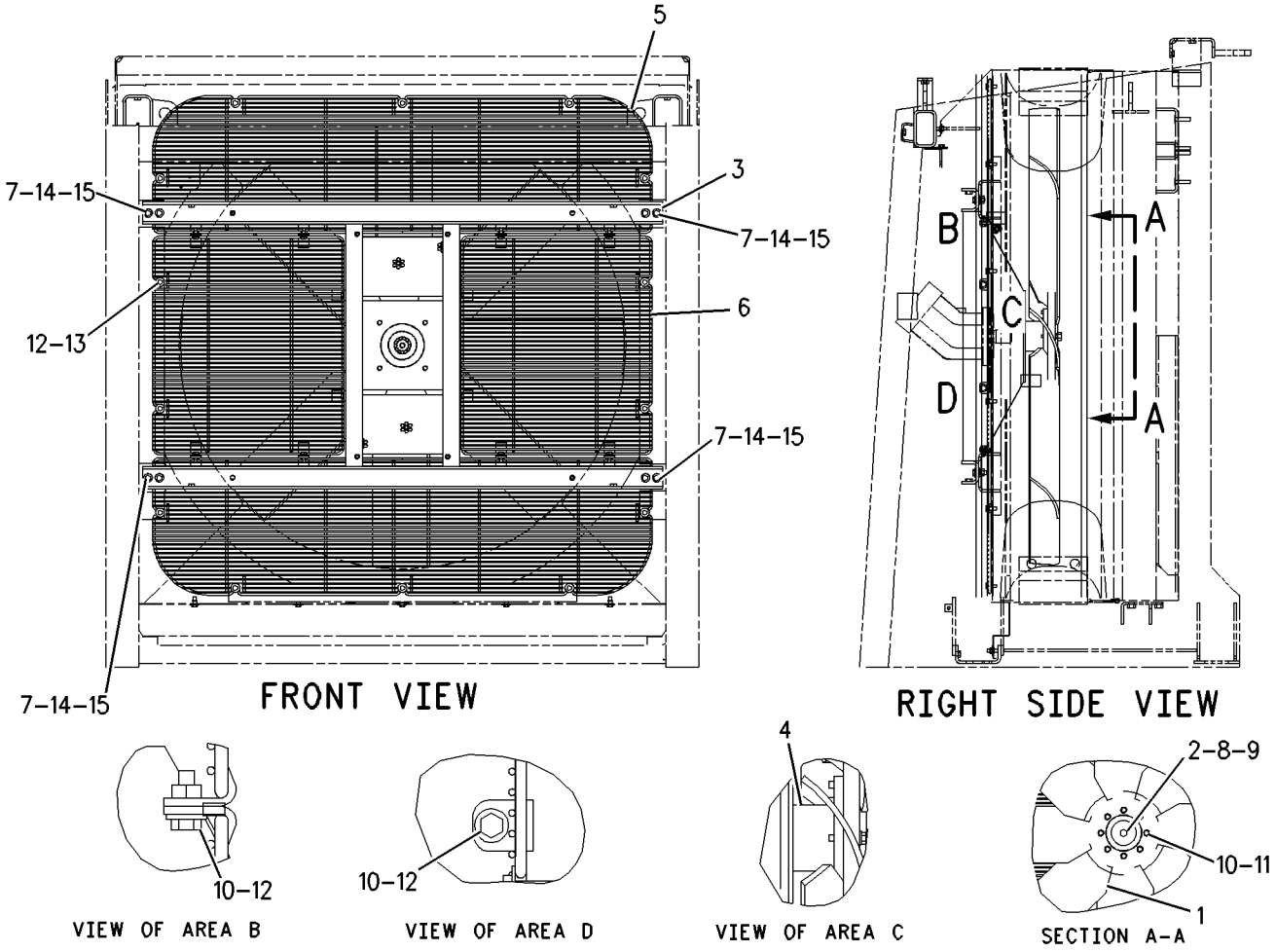

GRAPHIC #1

g00747905

4W-1510 HOUSING & REGULATOR GP—OUTLET CONTROL

S/N: 2GR1-UP
THERMOSTAT
PART OF 107-8762 ENGINE AR

SMCS-1355, 1393 **i00112835**

NOTE	REF NO	GRAPHIC REF	PART NUMBER	QTY	PART NAME 1 2 3 4 5 6 (PRODUCT LEVEL)	SEE PAGE
	1	1	**127-4432**	1	HOUSING AS-REGULATOR	
	2	1	**3S-9643**	4	SEAL-LIP	
	3	1	**111-4374**	1	VALVE AS-LINE (VENT)	
	4	1	**6I-4950**	4	REGULATOR-TEMPERATURE	
B	5	1	**3J-7354**	1	SEAL-O-RING (8.92MM ID)	
B	6	1	**9S-4182**	1	PLUG (7/16-20 THD)	
	7	1	**7N-4927**	1	GASKET-HOUSING COVER	

B-USE AS REQUIRED

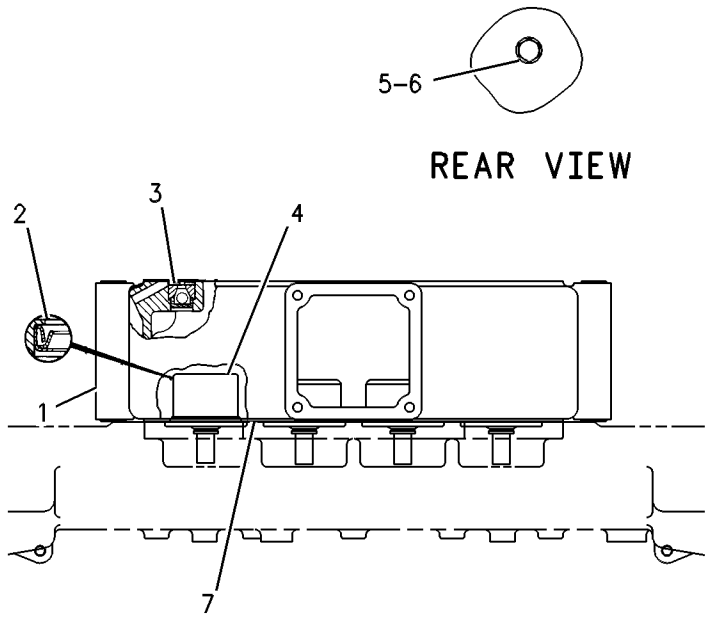

GRAPHIC #1 g00086544

112-6064 LINES GP-COOLANT

S/N: 7HR1-UP

PART OF 112-6000 INSTALLATION AR-ENGINE

SMCS-1380 **i01197431**

NOTE	REF NO	GRAPHIC REF	PART NUMBER	QTY	PART NAME 1 2 3 4 5 6 (PRODUCT LEVEL)	SEE PAGE
E	1	1	**5P-0764**		HOSE (88.9 MM ID) (18CM)	
E	2	1	**5P-0764**		HOSE (88.9 MM ID) (30CM)	
	3	1	**8T-4985**	8	CLAMP-HOSE	
	4	1	**8T-4986**	4	CLAMP-HOSE	
	5	1	**112-6058**	1	HOSE	
	6	1	**112-6065**	1	TUBE	
	7	1	**103-0892**	1	GROMMET	
	8	1	**6V-6782**	1	CLIP (SLOT)	
	9	1	**6V-6783**	1	CLIP (TAB)	
M	10	1	**8T-4139**	1	BOLT (M12X1.75X30MM)	
	11	1	**8T-4223**	1	WASHER-HARD (3MM THK)	

E-ORDER BY THE CENTIMETER
M-METRIC PART

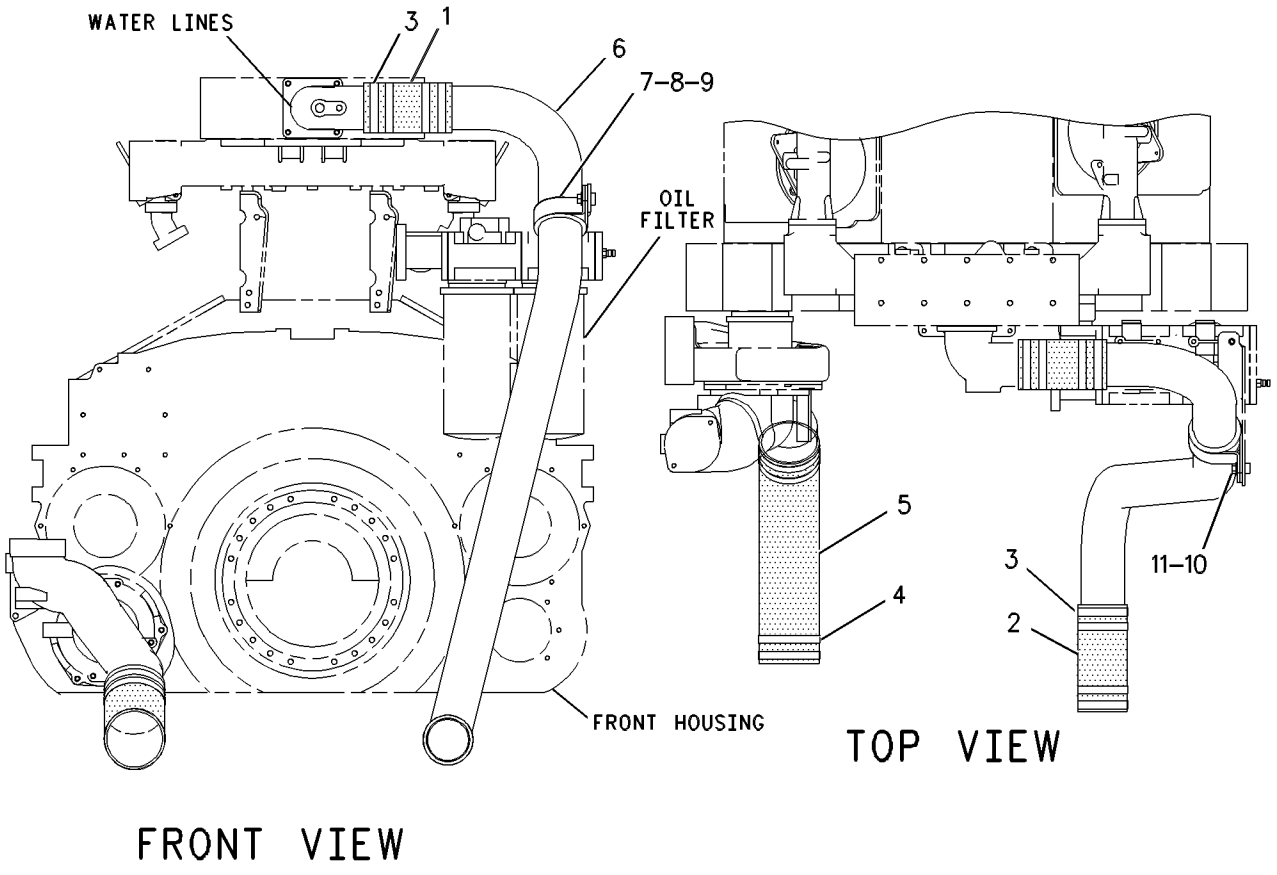

GRAPHIC #1 g00393136

MEMORANDA

COOLING SYSTEM

112-8635 LINES GP-RADIATOR

S/N: 7HR1-331

PART OF 109-6819 CHASSIS AR

SMCS-1353, 1380 **i01191446**

NOTE	REF NO	GRAPHIC REF	PART NUMBER	QTY	PART NAME 1 2 3 4 5 6 (PRODUCT LEVEL)	SEE PAGE
	1	2	**1P-4278**	32	CLAMP (HOSE)	
	2	2	**2S-9485**	1	GASKET	
	3	2	**2T-2171**	1	ELBOW-O-RING	
	4	2	**2V-4869**	2	FITTING	
I	5	2	**4E-3447**	1	HOSE AS	
	6	2	**5B-3254**	2	NUT (7/16-20 THD)	
I	7	2	**5G-8317**	1	HOSE AS	
	8	1	**6I-2431**	15	SEAL	
	9	1	**6I-2435**	15	SPACER	
	10	2	**6L-2479**	1	BRACE	
I	11	2	**7T-1159**	2	HOSE AS	
	12	2	**7T-8331**	4	MOUNTING	
	13	1	**8T-4983**	2	CLAMP-HOSE	
	14	2	**8T-6701**	2	ADAPTER	
	15	2	**090-2782**	2	REDUCER	
	16	2	**106-4572**	16	HOSE	
	17	1	**112-8637**	1	TANK AS-BOTTOM	
	18	1	**112-9486**	15	RETAINER	
I	19	2	**117-3330**	1	HOSE AS	
	20	2	**117-3353**	1	TUBE AS	
Y	21	1	*134-1437*	1	TANK GP-RADIATOR TOP	143
Y	22	2	*134-1438*	1	VALVE GP-RADIATOR DRAIN	144
	23	1	**170-1131**	1	TUBE AS	
	24	1	**170-1136**	1	TUBE AS	
	25	1	**145-3872**	2	TUBE AS	
	26	2	**030-7983**	1	UNION-FLARED	
	27	2	**1S-0994**	2	CLIP (20.64MM ID)	
	28	1	**2N-3378**	1	ELBOW	
	29	2	**2P-1278**	2	UNION-BULKHEAD	
	30	2	**2P-1279**	2	LOCKNUT (9/16-18 THD)	
	31	2	**2P-7216**	2	ELBOW	
	32	1	**3D-2824**	1	SEAL-O-RING (23.47MM ID)	
	33	2	**3K-0360**	1	SEAL-O-RING (16.36MM ID)	
	34	1	**4D-7388**	4	CLIP (34.92MM ID)	
	35	1,2	**4J-5477**	4	SEAL-O-RING (8.61MM ID)	
	36	1,2	**5K-3294**	2	CLIP (12.7MM ID)	
	37	2	**6D-3479**	2	CLIP (14.29MM ID)	
	38	1	**6S-5693**	1	TEE	
	39	1	**6V-3265**	5	CLIP (9.52MM ID)	
	40	2	**6V-8397**	5	SEAL-O-RING (9.27MM ID)	
	41	2	**6V-8398**	5	SEAL-O-RING (12.47MM ID)	
	42	2	**6V-8625**	1	ELBOW-90 DEGREE (3/4-16 THD)	
	43	1	**5P-9789**	1	REDUCER (9.52MM ID)	
	44	2	**7X-0590**	4	WASHER-HARD (6.0MM THK)	
M	45	1	**7X-2553**	4	BOLT (M16X2.0X40MM)	
	46	1,2	**7X-7729**	35	WASHER (3MM THK)	
	47	2	**8M-2773**	1	CLIP (17.46MM ID)	
	48	1,2	**8T-4121**	12	WASHER (2.5MM THK)	
M	49	2	**8T-4133**	2	NUT (M10X1.50 THD)	
M	50	1,2	**8T-4137**	17	BOLT (M10X1.50X20MM)	
M	51	2	**8T-4956**	4	BOLT (M12X1.75X35MM)	
M	52	2	**8T-4195**	30	BOLT (M10X1.50X30MM)	
	53	2	**5P-1076**	5	WASHER-HARD (4MM THK)	
M	54	2	**8T-4648**	4	BOLT (M12X1.75X70MM)	
	56	1	**8T-5429**	1	ELBOW-90 DEGREE (1 1/16-12 THD)	
	57	1	**9X-8257**	4	WASHER (3.50MM THK)	

112-8635 **LINES GP-RADIATOR** *(contd.)* **i01191446**

NOTE	REF NO	GRAPHIC REF	PART NUMBER	QTY	PART NAME 1 2 3 4 5 6 (PRODUCT LEVEL)	SEE PAGE
	58	2	**5K-9660**	1	CLIP	

I-SEE HOSE FABRICATION GUIDE
M-METRIC PART
Y-SEPARATE ILLUSTRATION

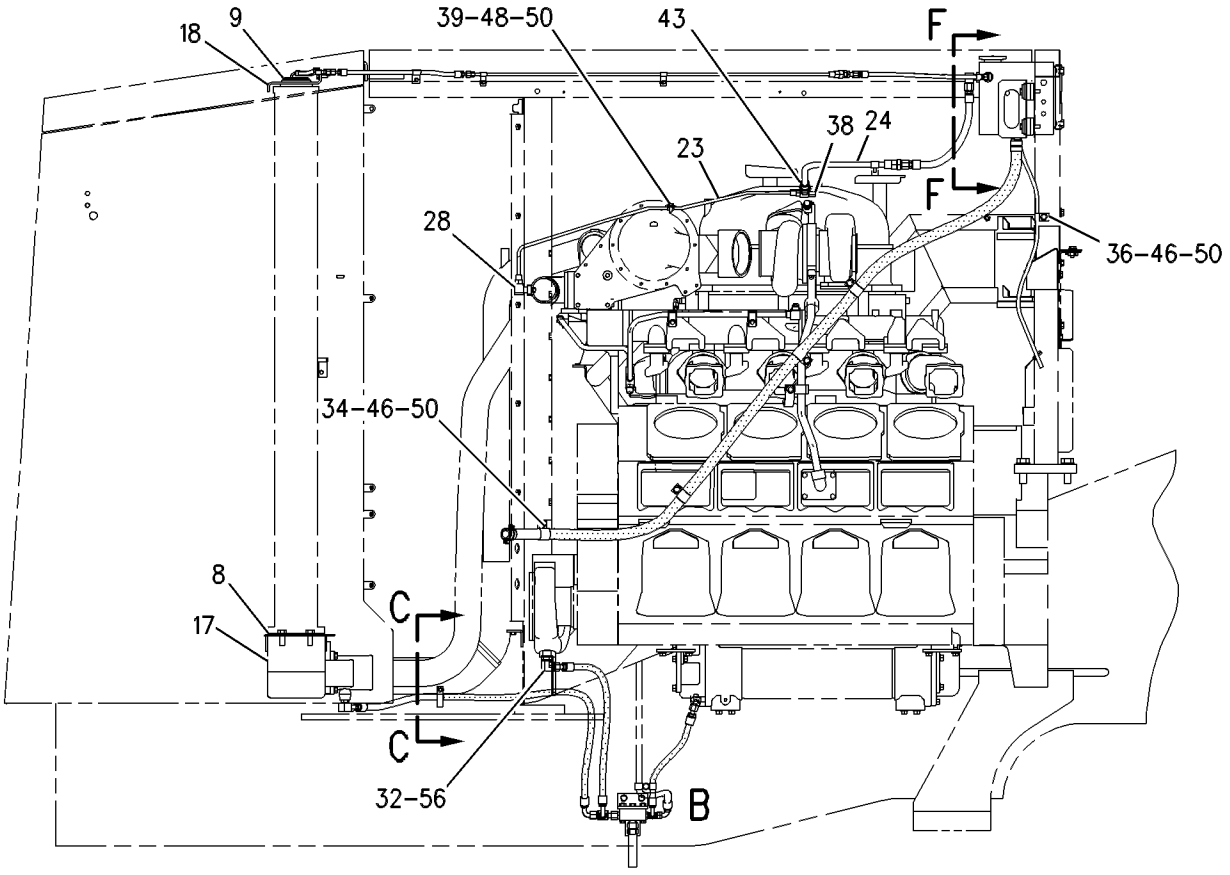

RIGHT SIDE VIEW

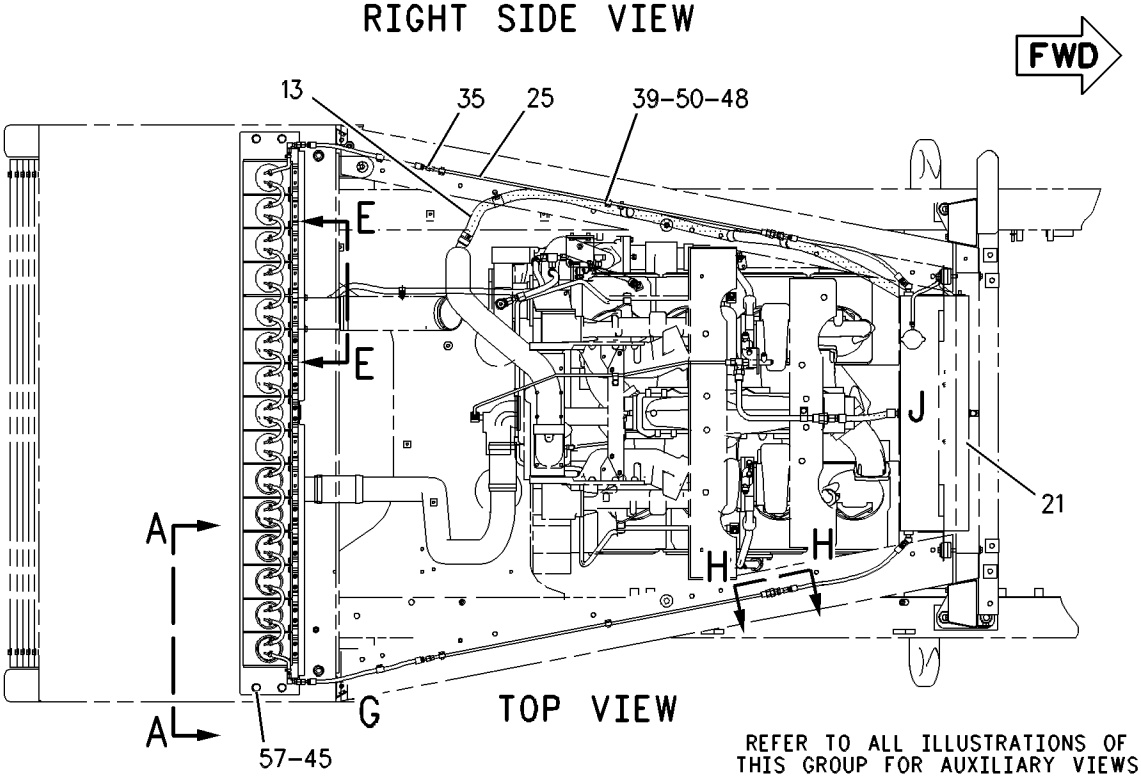

TOP VIEW

REFER TO ALL ILLUSTRATIONS OF THIS GROUP FOR AUXILIARY VIEWS

GRAPHIC #1 g00341837

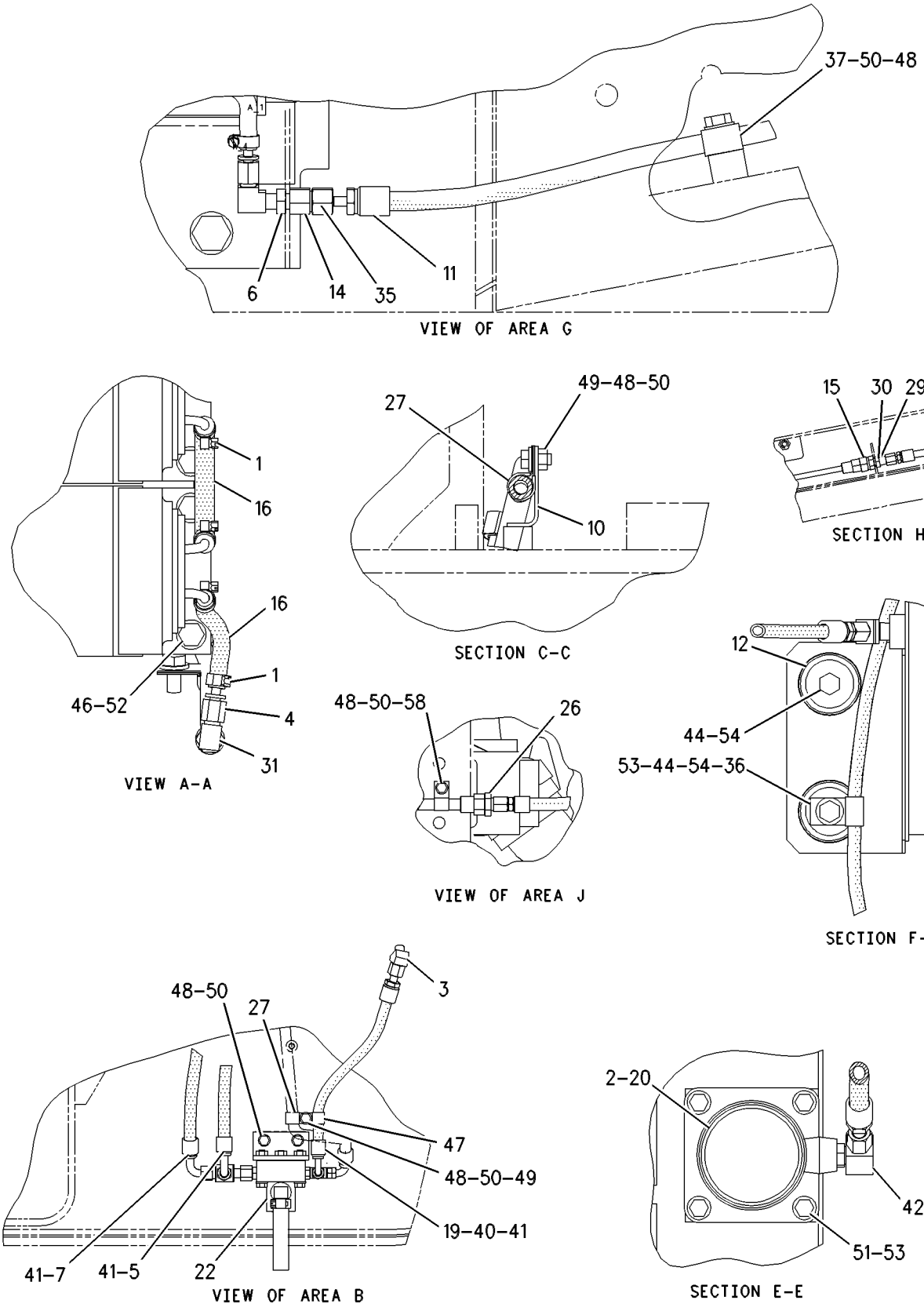

GRAPHIC #2

g00539598

COOLING SYSTEM

112-8635 LINES GP-RADIATOR

S/N: 7HR332-338

PART OF 109-6819 CHASSIS AR

SMCS-1353, 1380 **i01191448**

NOTE	REF NO	GRAPHIC REF	PART NUMBER	QTY	PART NAME 1 2 3 4 5 6 (PRODUCT LEVEL)	SEE PAGE
	1	2	**1P-4278**	32	CLAMP (HOSE)	
	2	2	**2S-9485**	1	GASKET	
	3	2	**2T-2171**	1	ELBOW-O-RING	
	4	2	**2V-4869**	2	FITTING	
I	5	2	**4E-3447**	1	HOSE AS	
	6	2	**5B-3254**	2	NUT (7/16-20 THD)	
I	7	2	**5G-8317**	1	HOSE AS	
	8	1	**6I-2431**	15	SEAL	
	9	1	**6I-2435**	15	SPACER	
	10	2	**6L-2479**	1	BRACE	
I	11	2	**7T-1159**	2	HOSE AS	
	12	2	**7T-8331**	4	MOUNTING	
	13	1	**8T-4983**	2	CLAMP-HOSE	
	14	2	**8T-6701**	2	ADAPTER	
	15	2	**090-2782**	2	REDUCER	
	16	2	**106-4572**	16	HOSE	
	17	1	**112-8637**	1	TANK AS-BOTTOM	
	18	1	**112-9486**	15	RETAINER	
I	19	2	**117-3330**	1	HOSE AS	
	20	2	**117-3353**	1	TUBE AS	
Y	21	1	*134-1437*	1	TANK GP-RADIATOR TOP	143
Y	22	2	*134-1438*	1	VALVE GP-RADIATOR DRAIN	144
C	23	1	**173-0252**	1	TUBE AS	
	24	1	**170-1136**	1	TUBE AS	
	25	1	**145-3872**	2	TUBE AS	
	26	2	**030-7983**	1	UNION-FLARED	
	27	2	**1S-0994**	2	CLIP (20.64MM ID)	
	28	1	**2N-3378**	1	ELBOW	
	29	2	**2P-1278**	2	UNION-BULKHEAD	
	30	2	**2P-1279**	2	LOCKNUT (9/16-18 THD)	
	31	2	**2P-7216**	2	ELBOW	
	32	1	**3D-2824**	1	SEAL-O-RING (23.47MM ID)	
	33	2	**3K-0360**	1	SEAL-O-RING (16.36MM ID)	
	34	1	**4D-7388**	4	CLIP (34.92MM ID)	
	35	1,2	**4J-5477**	4	SEAL-O-RING (8.61MM ID)	
	36	1,2	**5K-3294**	2	CLIP (12.7MM ID)	
	37	2	**6D-3479**	2	CLIP (14.29MM ID)	
	38	1	**6S-5693**	1	TEE	
C	39	1	**6V-3265**	4	CLIP (9.52MM ID)	
	40	2	**6V-8397**	5	SEAL-O-RING (9.27MM ID)	
	41	2	**6V-8398**	5	SEAL-O-RING (12.47MM ID)	
	42	2	**6V-8625**	1	ELBOW-90 DEGREE (3/4-16 THD)	
	43	1	**5P-9789**	1	REDUCER (9.52MM ID)	
	44	2	**7X-0590**	4	WASHER-HARD (6.0MM THK)	
M	45	1	**7X-2553**	4	BOLT (M16X2.0X40MM)	
	46	1,2	**7X-7729**	35	WASHER (3MM THK)	
	47	2	**8M-2773**	1	CLIP (17.46MM ID)	
	48	1,2	**8T-4121**	12	WASHER (2.5MM THK)	
M	49	2	**8T-4133**	2	NUT (M10X1.50 THD)	
M	50	1,2	**8T-4137**	17	BOLT (M10X1.50X20MM)	
M	51	2	**8T-4956**	4	BOLT (M12X1.75X35MM)	
M	52	2	**8T-4195**	30	BOLT (M10X1.50X30MM)	
	53	2	**5P-1076**	5	WASHER-HARD (4MM THK)	
M	54	2	**8T-4648**	4	BOLT (M12X1.75X70MM)	
	56	1	**8T-5429**	1	ELBOW-90 DEGREE (1 1/16-12 THD)	
	57	1	**9X-8257**	4	WASHER (3.50MM THK)	

112-8635 **LINES GP-RADIATOR** *(contd.)* **i01191448**

NOTE	REF NO	GRAPHIC REF	PART NUMBER	QTY	PART NAME 1 2 3 4 5 6 (PRODUCT LEVEL)	SEE PAGE
	58	2	**5K-9660**	1	CLIP	
C	59	1	**5P-9299**	1	CLIP (12.7MM ID)	

C-CHANGE FROM PREVIOUS TYPE
I-SEE HOSE FABRICATION GUIDE
M-METRIC PART
Y-SEPARATE ILLUSTRATION

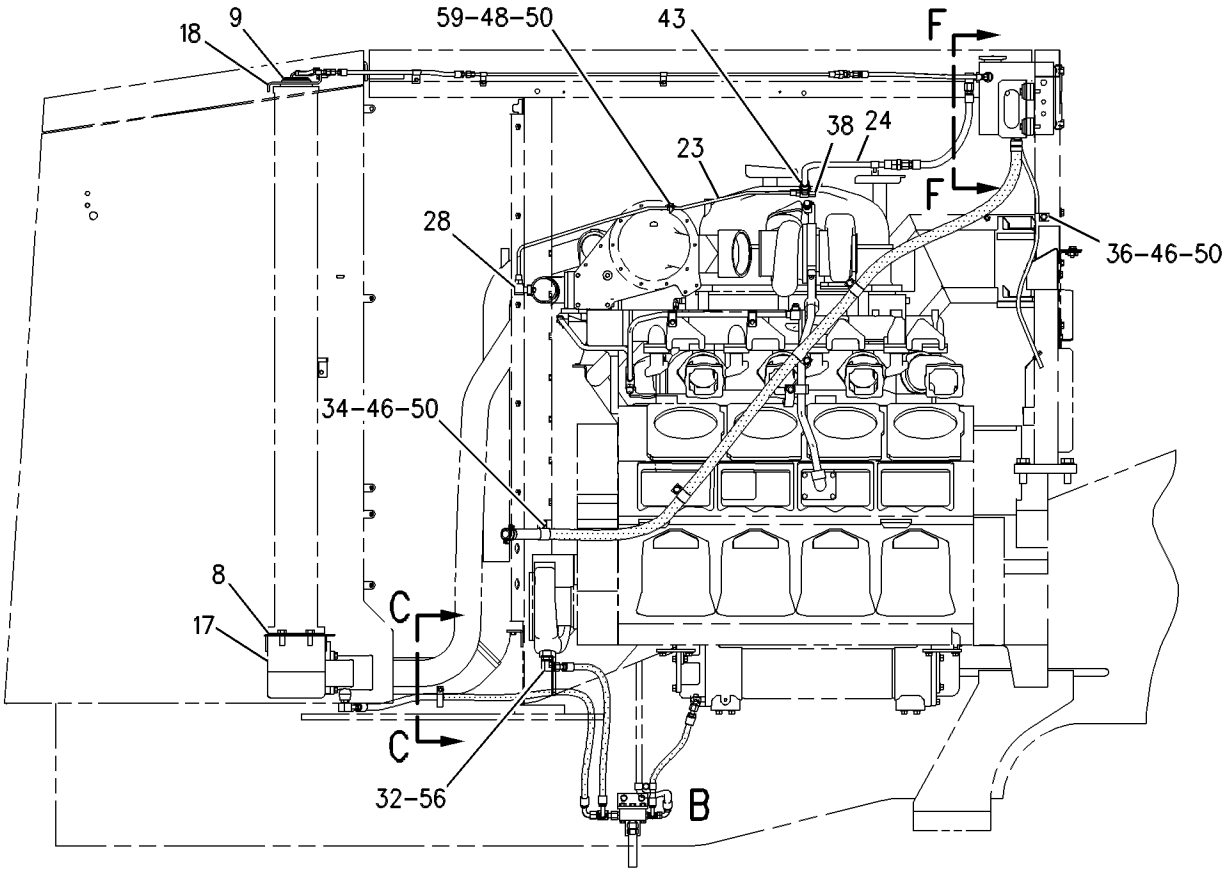

RIGHT SIDE VIEW

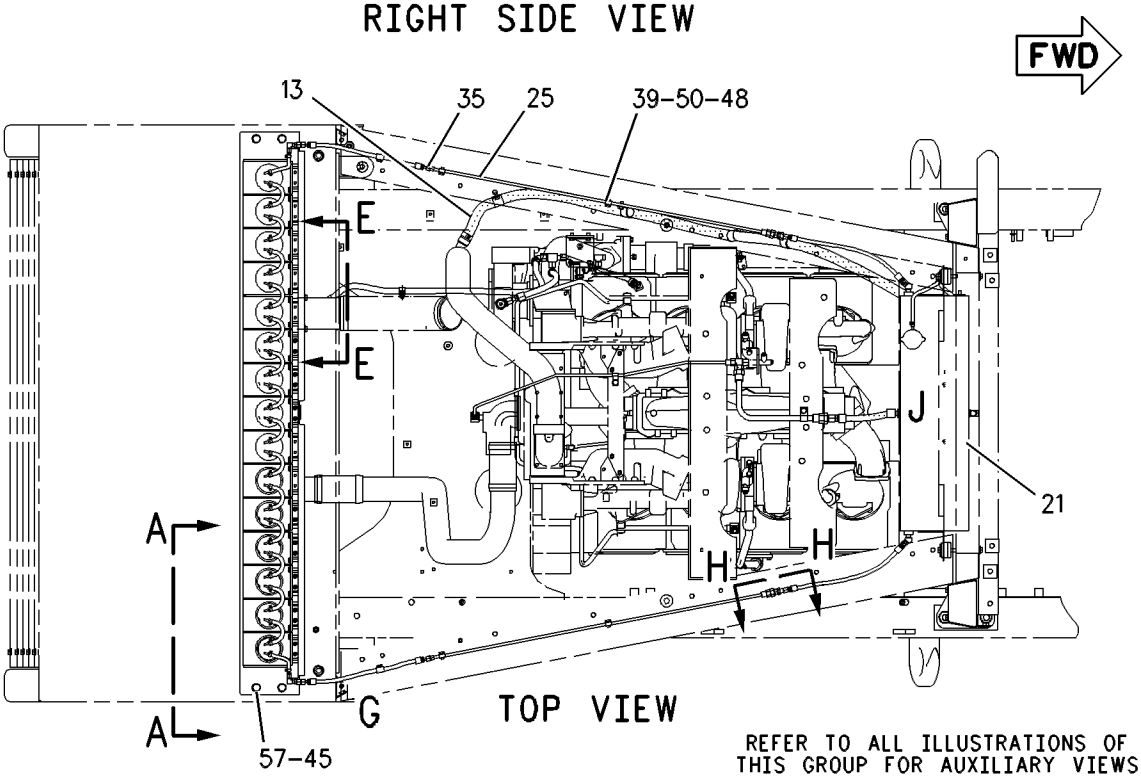

TOP VIEW

REFER TO ALL ILLUSTRATIONS OF THIS GROUP FOR AUXILIARY VIEWS

GRAPHIC #1 g00607302

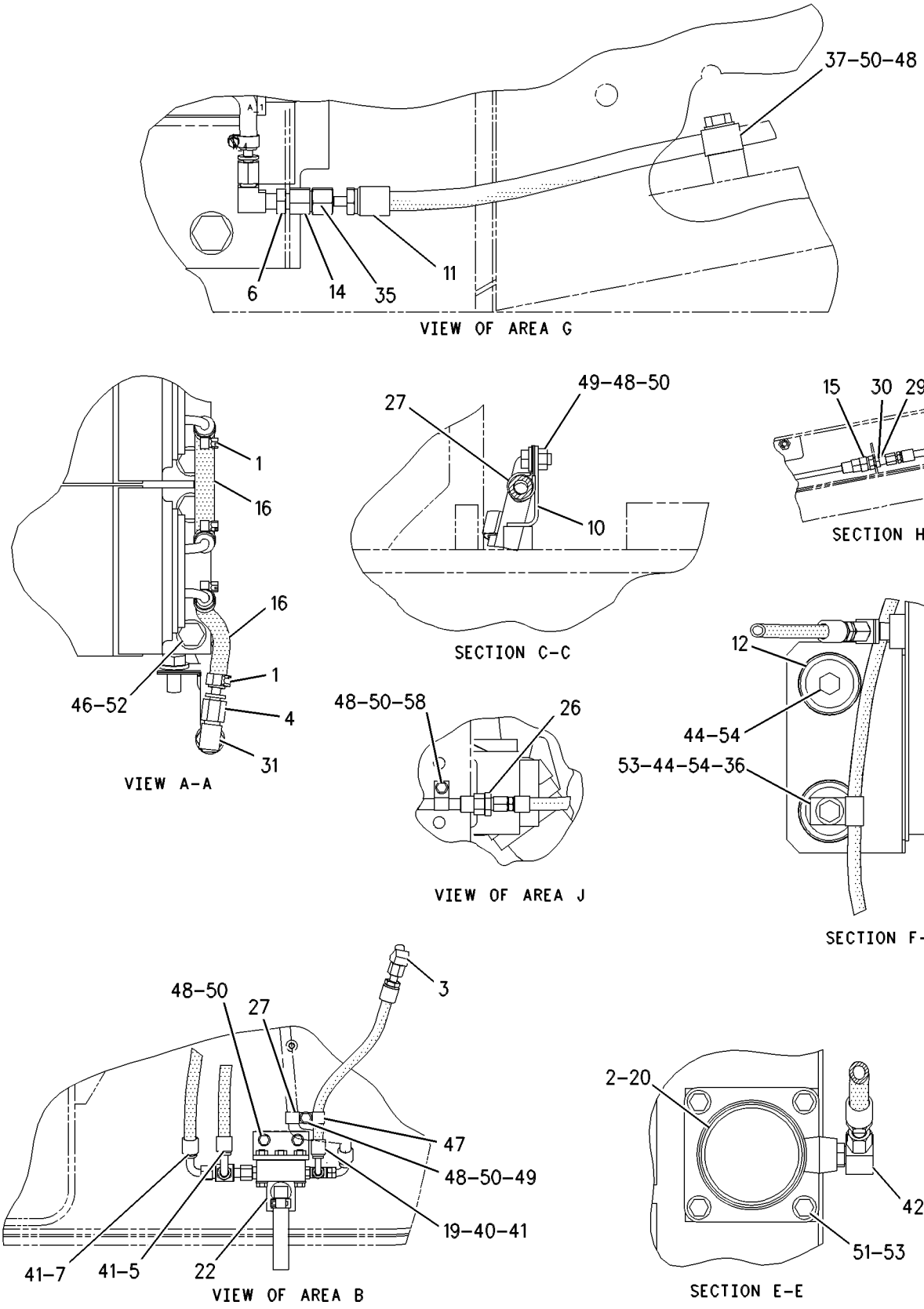

GRAPHIC #2

g00539598

COOLING SYSTEM

112-8635 LINES GP-RADIATOR

S/N: 7HR339-UP

PART OF 109-6819 CHASSIS AR

SMCS-1353, 1380 **i01424857**

NOTE	REF NO	GRAPHIC REF	PART NUMBER	QTY	PART NAME 1 2 3 4 5 6 (PRODUCT LEVEL)	SEE PAGE
	1	2	**1P-4278**	30	CLAMP-HOSE	
	2	2	**2S-9485**	1	GASKET	
	3	2	**2T-2171**	1	ELBOW-O-RING	
I	5	2	**4E-3447**	1	HOSE AS	
M	6	2	**8T-4186**	6	BOLT (M10X1.5X40MM)	
I	7	2	**5G-8317**	1	HOSE AS	
	8	1	**6I-2431**	15	SEAL	
	9	1	**6I-2435**	15	SPACER	
	10	2	**6L-2479**	1	BRACE	
	11	2	**194-2955**	2	HOSE AS	
	12	2	**7T-8331**	4	MOUNTING	
	13	1	**8T-4983**	2	CLAMP-HOSE	
	14	2	**7X-4780**	2	GROMMET	
C	15	1,2	**090-2782**	3	REDUCER	
	16	2	**106-4572**	14	HOSE	
	17	1	**180-5966**	1	TANK AS-COOLANT	
	18	1	**112-9486**	15	RETAINER	
I	19	2	**117-3330**	1	HOSE AS	
	20	2	**117-3353**	1	TUBE AS	
Y	21	1	*134-1437*	1	TANK GP-RADIATOR TOP	143
Y	22	2	*134-1438*	1	VALVE GP-RADIATOR DRAIN	144
C	23	1	**177-0767**	1	TUBE AS	
	24	1	**170-1136**	1	TUBE AS	
	25	1	**145-3872**	2	TUBE AS	
	26	2	**030-7983**	1	UNION-FLARED	
	27	2	**1S-0994**	1	CLIP	
C	28	1	**7D-8793**	1	ELBOW-FLARED	
	29	2	**2P-1278**	2	UNION-BULKHEAD	
	30	2	**2P-1279**	2	LOCKNUT (9/16-18 THD)	
	31	2	**030-7972**	2	ELBOW	
C	32	1	**0S-1588**	1	BOLT (3/8-16X1.25 IN)	
C	33	1	**5M-2894**	1	WASHER-HARD (10.2X18.5X2.5MM THK)	
	34	1	**4D-7388**	4	CLIP	
	35	1	**4J-5477**	2	SEAL-O-RING (7.67MM ID)	
	36	1,2	**5K-3294**	2	CLIP	
	37	2	**6D-3479**	2	CLIP	
	38	1	**6S-5693**	1	TEE	
	39	1	**6V-3265**	4	CLIP	
	40	2	**6V-8397**	1	SEAL-O-RING (9.27MM ID)	
C	41	2	**6V-8398**	3	SEAL-O-RING (12.47MM ID)	
C	42	1	**177-0696**	1	BRACKET AS	
M		1	**8T-3490**	1	NUT-WELD (M10X1.5 THD)	
	43	1	**5P-9789**	1	REDUCER (9.52MM ID)	
	44	2	**7X-0590**	4	WASHER-HARD (13.5X44.5X6MM THK)	
M	45	1	**7X-2553**	4	BOLT (M16X2X40MM)	
	46	1,2	**7X-7729**	35	WASHER (11X25X3MM THK)	
C	48	1,2	**8T-4121**	12	WASHER-HARD (11X21X2.5MM THK)	
M	49	2	**8T-4133**	1	NUT (M10X1.5 THD)	
CM	50	1,2	**8T-4137**	17	BOLT (M10X1.5X20MM)	
M	51	2	**8T-4956**	4	BOLT (M12X1.75X35MM)	
M	52	2	**8T-4195**	24	BOLT (M10X1.5X30MM)	
	53	2	**5P-1076**	5	WASHER-HARD (13.5X30X4MM THK)	
M	54	2	**8T-4648**	4	BOLT (M12X1.75X70MM)	
	57	1	**9X-8257**	4	WASHER (17.5X30X3.5MM THK)	
	58	2	**5K-9660**	1	CLIP	
C	59	1	**5P-9299**	2	CLIP	

112-8635 **LINES GP-RADIATOR** *(contd.)* **i01424857**

NOTE	REF NO	GRAPHIC REF	PART NUMBER	QTY	PART NAME 1 2 3 4 5 6 (PRODUCT LEVEL)	SEE PAGE
C	60	1	**8T-5429**	1	ELBOW	
		1	**6V-8398**	1	SEAL-O-RING (12.47MM ID)	
		1	**3D-2824**	1	SEAL-O-RING (23.47MM ID)	
C	61	1	**6V-8625**	1	ELBOW	
		1	**6V-8398**	1	SEAL-O-RING (12.47MM ID)	
		1	**3K-0360**	1	SEAL-O-RING (16.36MM ID)	

C-CHANGE FROM PREVIOUS TYPE
I-SEE HOSE FABRICATION GUIDE
M-METRIC PART
Y-SEPARATE ILLUSTRATION

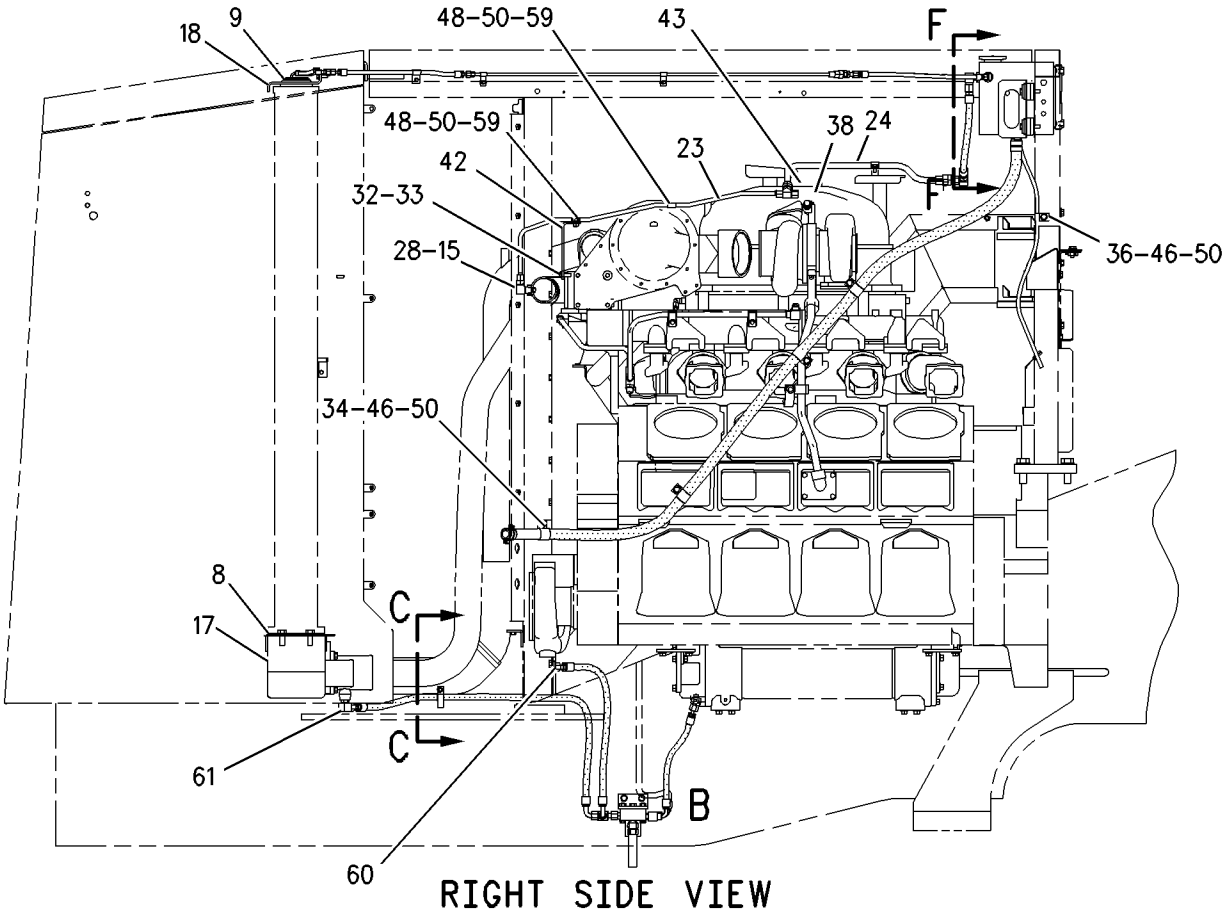

RIGHT SIDE VIEW

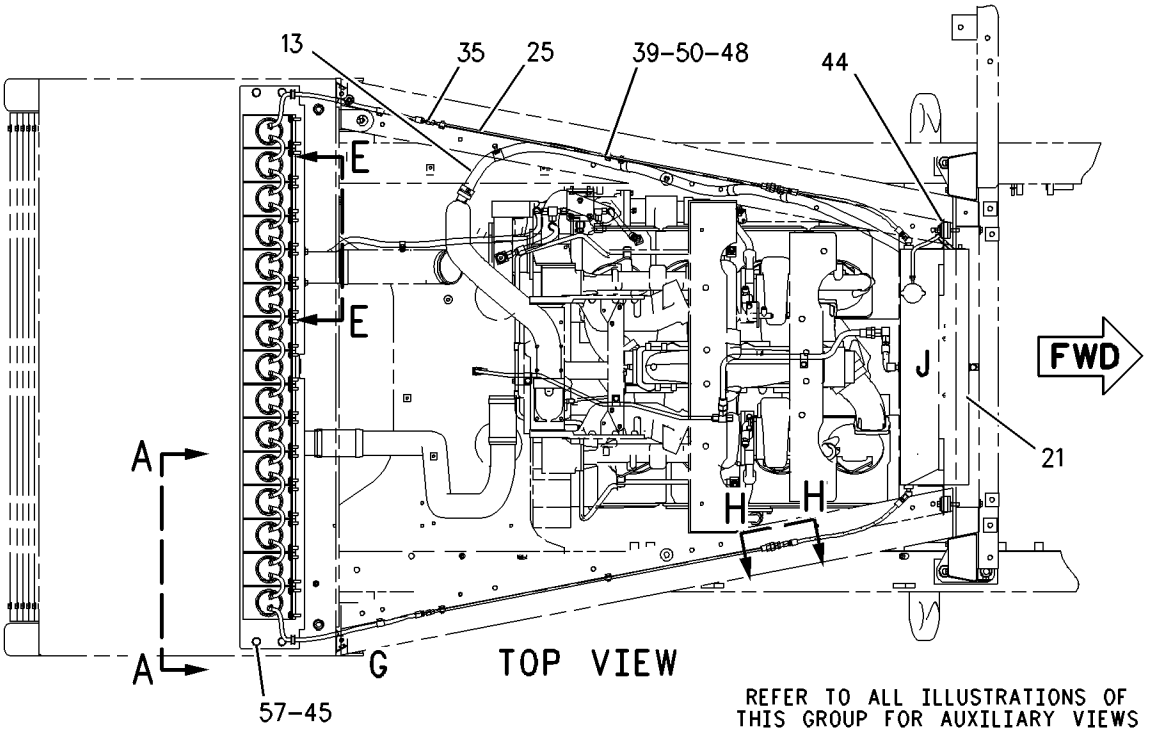

TOP VIEW

REFER TO ALL ILLUSTRATIONS OF THIS GROUP FOR AUXILIARY VIEWS

GRAPHIC #1 g00747582

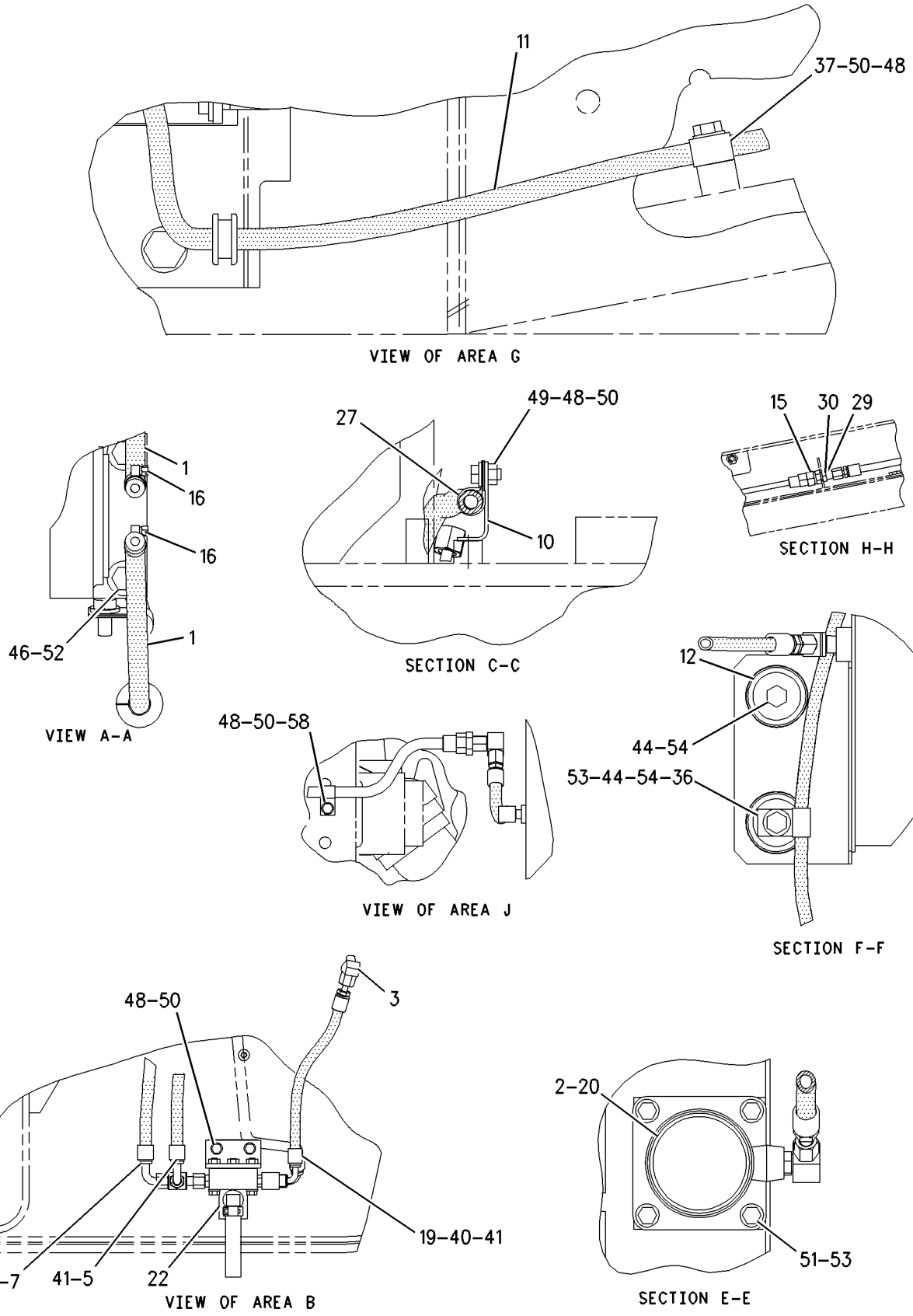

GRAPHIC #2

g00747583

COOLING SYSTEM

153-7486 LINES GP-TURBOCHARGER WATER

S/N: 2GR987-1819

PART OF 107-8762 ENGINE AR

SMCS-1052, 1380 **i01057339**

NOTE	REF NO	GRAPHIC REF	PART NUMBER	QTY	PART NAME 1 2 3 4 5 6 (PRODUCT LEVEL)	SEE PAGE
	1	1	**7N-7628**	8	GASKET	
	2	1	**0S-1594**	12	BOLT (3/8-16X1.0IN)	
	3	1	**5M-2894**	18	WASHER (2.5MM THK)	
	4	1	**8N-0788**	2	COVER	
	5	1	**8M-0505**	2	CONNECTOR	
	6	1	**7N-7878**	4	PLATE-COVER	
	7	1	**030-7948**	2	ELBOW	
	8	1	**7C-3565**	2	TUBE AS	
	9	1	**7F-2050**	2	LOCKNUT (3/4X16 THD)	
	10	1	**2P-8130**	1	TEE-UNION	
	11	1	**4W-5463**	2	BRACKET	
	12	1	**6V-6609**	2	SEAL-O-RING (16.36MM ID)	
	13	1	**113-8188**	2	ELBOW	
	14	1	**0S-1608**	2	BOLT (3/8-16X3.75IN)	
	15	1	**3B-1915**	2	BOLT (3/8-16X1.375IN)	
	16	1	**112-6054**	1	TUBE AS	
	17	1	**112-6053**	1	TUBE AS	
	18	1	**8M-0755**	2	CONNECTOR	
	19	1	**3K-0360**	2	SEAL-O-RING (16.36MM ID)	
	20	1	**113-8169**	1	TUBE AS	
	21	1	**2P-2204**	1	ELBOW-UNION	
	22	1	**4P-0707**	2	CLAMP AS	
	23	1	**127-4470**	1	BRACKET	
	24	1	**0L-1143**	1	BOLT (3/8X2.50IN)	
	25	1	**9S-8752**	1	NUT (3/8-16 THD)	

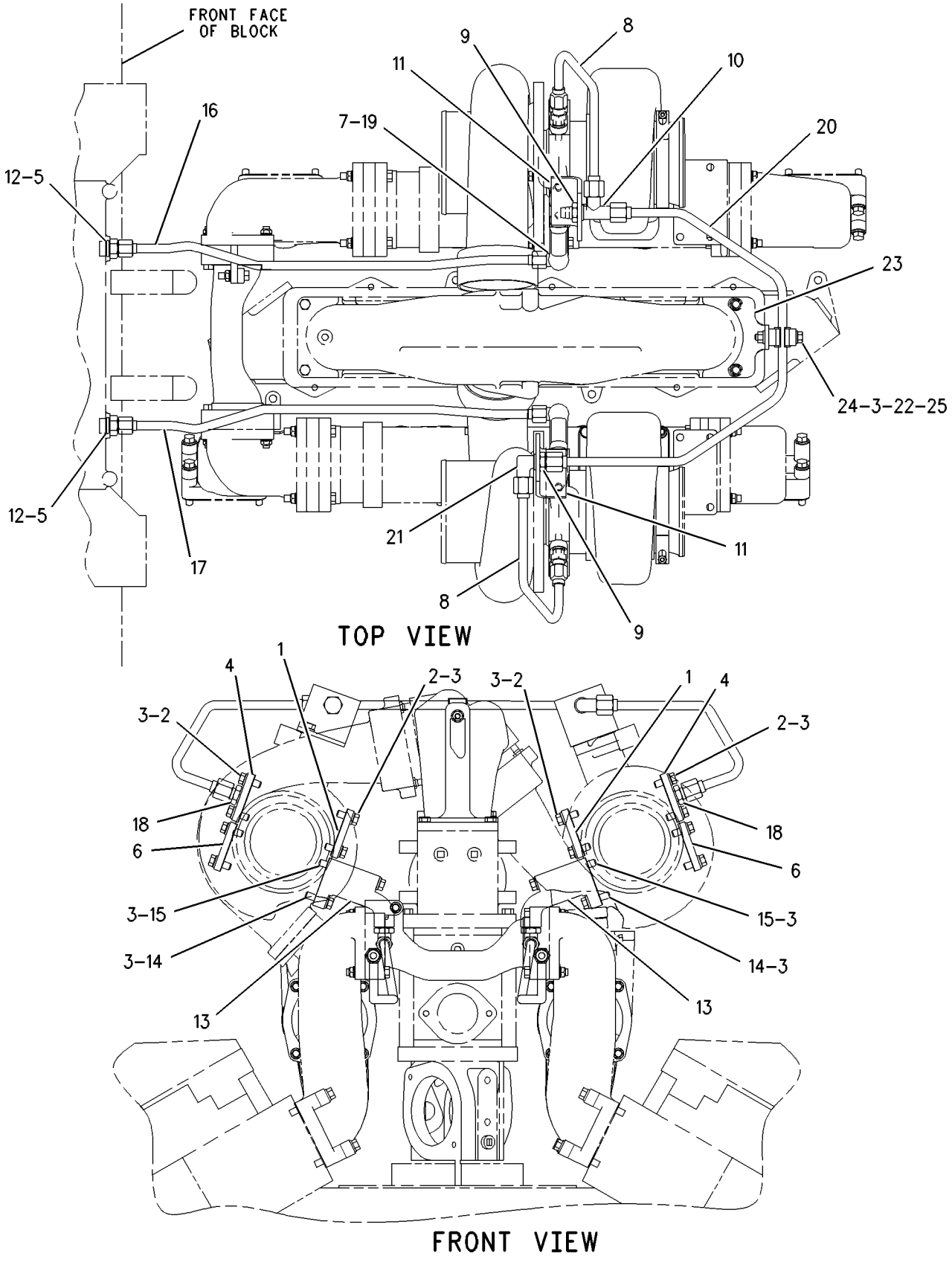

GRAPHIC #1

g00345245

7E-9218 LINES GP-WATER—UPPER

S/N: 2GR1-UP

PART OF 107-8762 ENGINE AR

SMCS-1380 **i01049241**

NOTE	REF NO	GRAPHIC REF	PART NUMBER	QTY	PART NAME 1 2 3 4 5 6 (PRODUCT LEVEL)	SEE PAGE
	1	1	**4P-1654**	1	MANIFOLD-REAR-LH	
	2	1	**154-1618**	1	MANIFOLD-FRONT	
	3	1	**135-0175**	4	BRACKET	
	4	1	**9Y-4090**	1	HOUSING-REGULATOR	
	5	1	**8N-9528**	2	BRACKET	
	6	1	**0S-1594**	23	BOLT (3/8-16X1.0IN)	
	7	1	**5M-2894**	8	WASHER (2.5MM THK)	
B	8	1	**9S-4182**	1	PLUG (7/16-20 THD)	
B		1	**6V-9027**	1	SEAL-O-RING (8.92MM ID)	
	9	1	**133-8382**	4	BRACKET	
	10	1	**8T-6762**	4	PLUG-PIPE (1/4-14 NPTF THD)	
	11	1	**6V-9769**	8	SEAL-O-RING (37.47MM ID)	
	12	1	**2W-3146**	8	FLANGE	
	13	1	**8N-7639**	8	ELBOW	
	14	1	**1B-7182**	32	BOLT (5/16-18X1.25IN)	
	15	1	**7N-3297**	2	COVER	
	16	1	**7N-3368**	2	GASKET	
B	17	1	**0S-1594**	1	BOLT (3/8-16X1.0IN)	
	18	1	**1W-8545**	2	GASKET	
	19	1	**127-2176**	8	SEAL	
	20	1	**0S-1618**	30	BOLT (5/16-18X1.0IN)	
	21	1	**9M-1974**	30	WASHER-HARD (2MM THK)	
	22	1	**8N-4524**	8	GASKET	
	23	1	**154-1619**	1	MANIFOLD-FRONT	
	24	1	**122-8856**	2	GASKET	
	25	1	**4P-3896**	1	MANIFOLD-REAR-RH	

B-USE AS REQUIRED

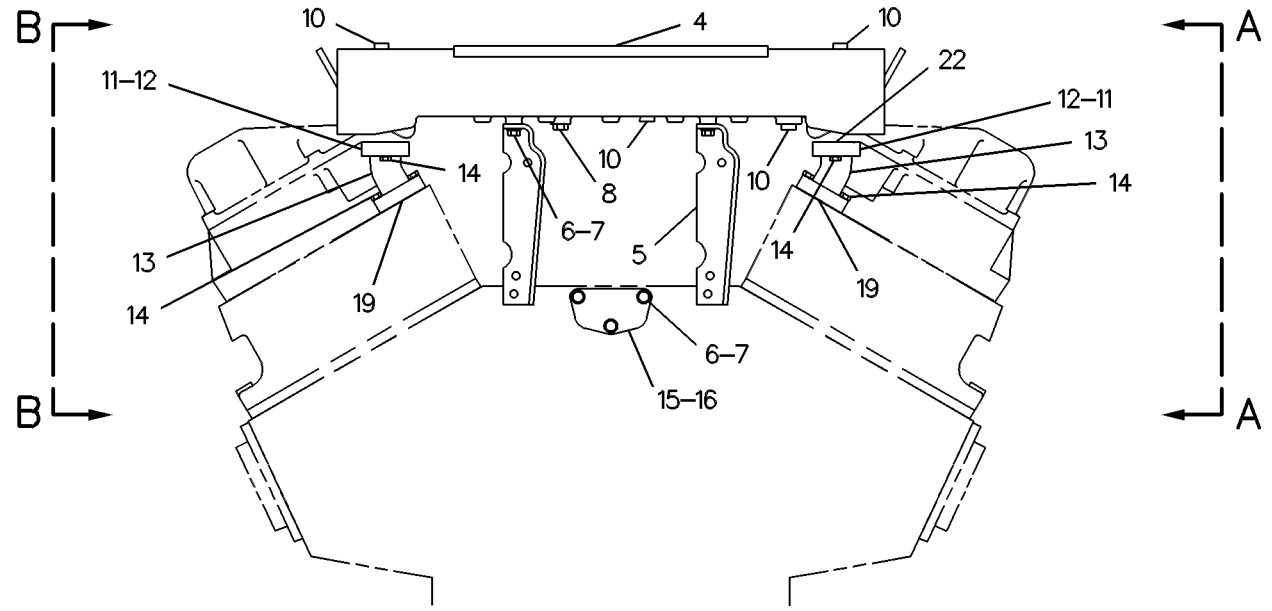

FRONT VIEW

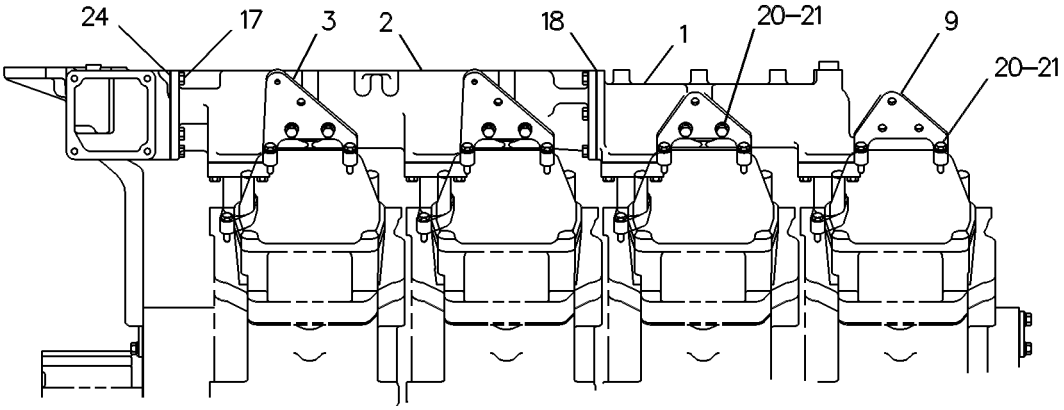

VIEW A–A

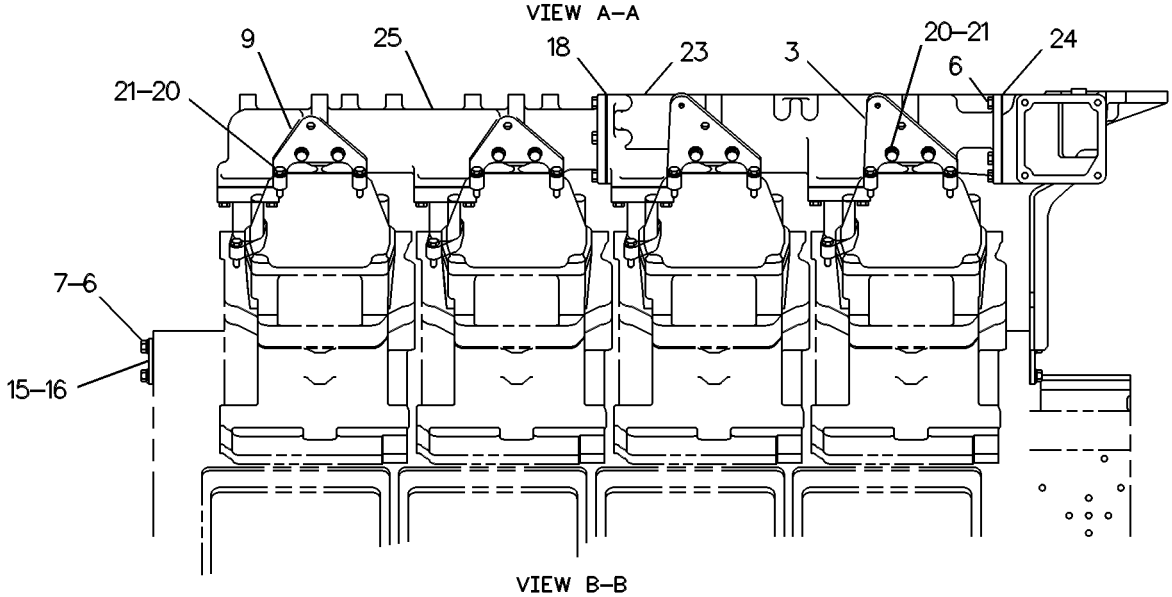

VIEW B–B

GRAPHIC #1 g00270753

COOLING SYSTEM

112-6020 LINES GP-WATER

S/N: 2GR1-UP

PART OF 107-8762 ENGINE AR

SMCS-1380 **i01176894**

NOTE	REF NO	GRAPHIC REF	PART NUMBER	QTY	PART NAME 1 2 3 4 5 6 (PRODUCT LEVEL)	SEE PAGE
	2	1	**2N-0931**	1	GASKET	
	3	1	**4P-5752**	1	ELBOW	
	4	1	**4W-3100**	1	GASKET	
	6	1	**7E-9584**	1	ELBOW	
	7	1	**8N-3639**	4	RETAINER	
	8	1	**8N-3640**	2	RING-RETAINING	
	11	1	**112-6021**	1	TUBE AS	
	12	1	**112-6022**	1	PLATE	
	13	1	**127-9823**	1	BRACKET AS	
M		1	**8T-3597**	1	NUT-WELD (M12X1.75 THD)	
	14	1	**0L-1351**	2	BOLT (3/8-16X.875IN)	
	15	1	**0S-1594**	9	BOLT (3/8-16X1 IN)	
	16	1	**103-0892**	1	GROMMET	
	17	1	**1A-2029**	1	BOLT (3/8-16X1.125IN)	
	18	1	**1A-5183**	2	BOLT (3/8-16X4.75IN)	
	19	1	**1D-4706**	3	BOLT (3/8-16X6IN)	
	20	1	**3B-1915**	2	BOLT (3/8-16X1.375IN)	
	21	1	**3J-1907**	1	SEAL-O-RING (11.89MM ID)	
	22	1	**5B-2638**	1	BOLT (3/8-16X5.25IN)	
	23	1	**5M-2894**	13	WASHER (2.5MM THK)	
	24	1	**6V-5066**	2	SEAL-O-RING (85.09MM ID)	
	25	1	**6V-6782**	1	CLIP (SLOT)	
	26	1	**6V-6783**	1	CLIP (TAB)	
	27	1	**6V-6809**	1	SEAL-O-RING (139.07MM ID)	
	28	1	**7F-3425**	1	BOLT (3/8-16X5.75IN)	
	29	1	**7L-7524**	1	BOLT (3/8-16X10.25IN)	
	30	1	**7N-4928**	1	COVER	
	31	1	**8T-6765**	3	PLUG-PIPE (1/4-18 NPTF THD)	
	32	1	**8T-6767**	1	PLUG-PIPE (3/8-18 NPTF THD)	
	33	1	**9L-9132**	2	WASHER (2.5MM THK)	
	34	1	**9S-4191**	1	PLUG-O-RING (9/16-18 THD)	
	35	1	**9S-8752**	1	NUT (3/8-16 THD)	

M-METRIC PART

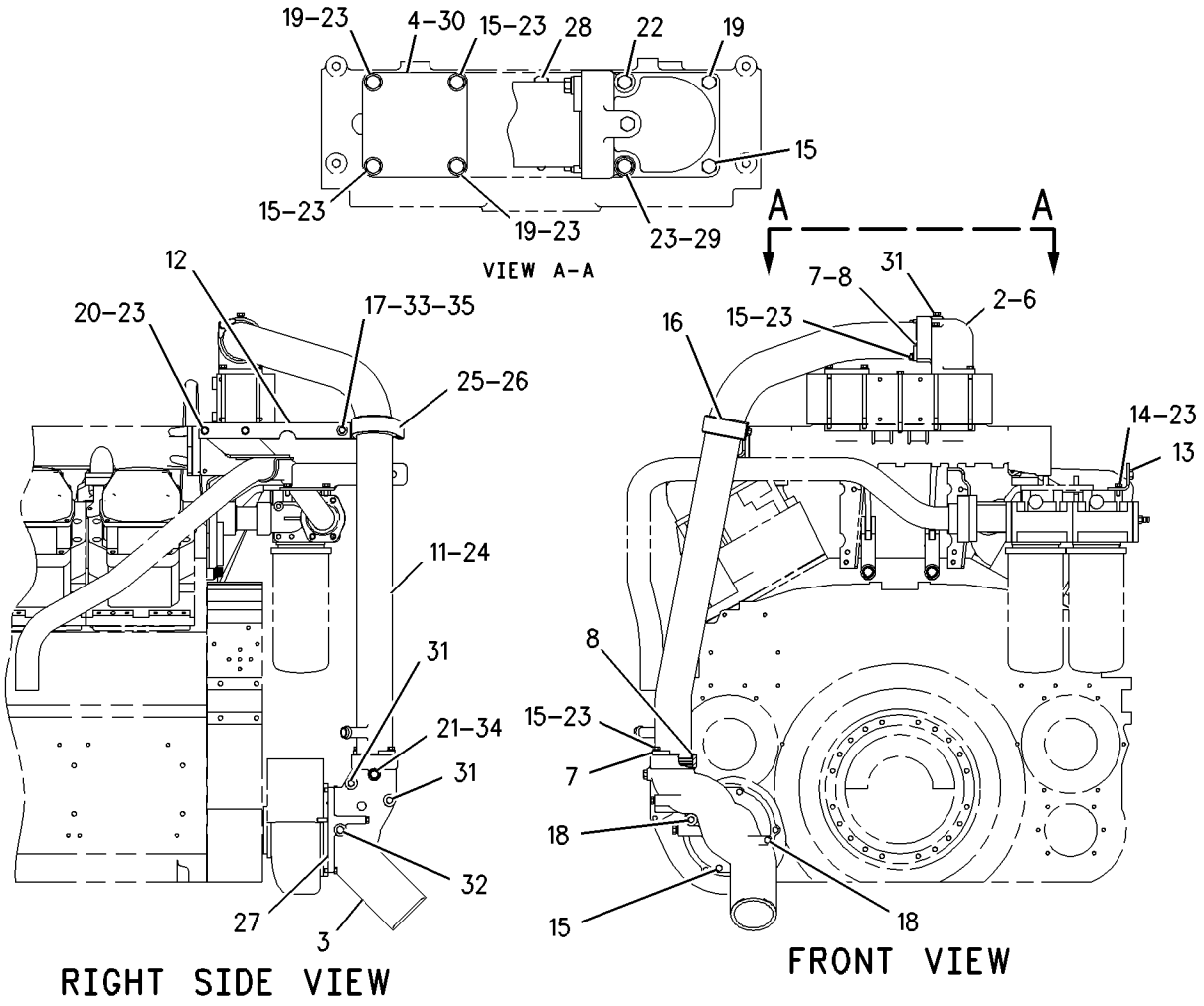

GRAPHIC #1 g00629960

COOLING SYSTEM

112-6048 LINES GP-WATER

S/N: 2GR1-UP

PART OF 107-8762 ENGINE AR

SMCS-1380 **i01455649**

NOTE	REF NO	GRAPHIC REF	PART NUMBER	QTY	PART NAME 1 2 3 4 5 6 (PRODUCT LEVEL)	SEE PAGE
	2	1	**2N-0876**	1	GASKET	
	4	1	**4N-1320**	1	GASKET-ADAPTER	
	5	1	**4W-5095**	1	BRACKET	
	6	1	**4W-5901**	1	SUPPORT AS	
	7	1	**4W-6034**	1	BONNET-OIL COOLER	
	8	1	**4W-6035**	1	BONNET-OIL COOLER	
	9	1	**4W-6094**	1	PLATE AS	
	10	1	**4W-6095**	1	PLATE	
	11	1	**4W-9495**	1	BONNET	
	12	1	**4W-9625**	1	BONNET	
	13	1	**4W-9839**	1	GASKET	
	14	1	**5N-6501**	1	BRACKET	
	15	1	**6T-2723**	1	BRACKET	
	16	1	**7N-4939**	1	BONNET-OIL COOLER	
	17	1	**7N-4940**	1	BRACKET	
	18	1	**7N-4945**	1	GASKET	
	19	1	**7S-8767**	2	GASKET	
	20	1	**7W-3541**	1	ADAPTER-WATER LINE	
	21	1	**8C-6872**	1	CONNECTOR	
B	22	1	**8F-8151**	1	VALVE-SHUTOFF	
	23	1	**8N-0386**	1	FLANGE	
	24	1	**8N-7641**	1	TUBE	
	25	1	**8N-8089**	1	GASKET	
	26	1	**9L-6533**	1	PIPE-COOLER OUTLET	
	27	1	**9X-6772**	1	STRAP-CABLE	
B	28	1	**003-2143**	1	ELBOW	
	29	1	**115-0580**	1	COVER	
	30	1	**153-7488**	1	TUBE	
	31	1	**153-7489**	1	BRACKET	
I	32	1	**170-1157**	1	HOSE AS	
	33	1	**170-1158**	1	HOSE AS	
	34	1	**032-1267**	1	CONNECTOR-FLARED	
	35	1	**032-1268**	1	ELBOW	
	36	1	**061-9593**	1	BUSHING-REDUCER (1/2-14 NPTF)	
	37	1	**0S-1571**	2	BOLT (3/8-16X1.75 IN)	
	38	1	**0S-1573**	1	BOLT (1/2-13X4 IN)	
	39	1	**0S-1585**	7	BOLT (1/2-13X1.50 IN)	
	40	1	**0S-1587**	2	BOLT (1/2-13X1.75 IN)	
	41	1	**0S-1588**	3	BOLT (3/8-16X1.25 IN)	
	42	1	**0S-1590**	2	BOLT (3/8-16X2 IN)	
	43	1	**0S-1594**	4	BOLT (3/8-16X1 IN)	
	45	1	**1A-1460**	6	BOLT (1/2-13X2 IN)	
	46	1	**1A-5183**	2	BOLT (3/8-16X4.75 IN)	
	47	1	**1D-4706**	2	BOLT (3/8-16X6 IN)	
	48	1	**1S-0994**	1	CLIP	
	49	1	**2A-4639**	3	BOLT (3/8-16X1.625 IN)	
	50	1	**3B-1915**	2	BOLT (3/8-16X1.37 IN)	
B	51	1	**3B-7255**	1	BUSHING-REDUCING	
	52	1	**5B-9603**	2	BOLT (3/8-16X5 IN)	
	53	1	**5M-2894**	17	WASHER-HARD (10.2X18.5X2.5MM THK)	
	54	1	**5P-8210**	1	SEAL-O-RING	
	55	1	**5P-8245**	16	WASHER-HARD (13.5X25.5X3MM THK)	
	56	1	**6H-1717**	2	BOLT (1/2-13X1.125 IN)	
	57	1	**6V-1454**	2	SEAL-O-RING	
	58	1	**6V-5039**	1	CLIP (SLOT)	
	59	1	**6V-5040**	1	CLIP (TAB)	

112-6048 **LINES GP-WATER** ***(contd.)*** **i01455649**

NOTE	REF NO	GRAPHIC REF	PART NUMBER	QTY	PART NAME 1 2 3 4 5 6 (PRODUCT LEVEL)	SEE PAGE
	60	1	**6V-5066**	2	SEAL-O-RING	
	61	1	**6V-8398**	2	SEAL-O-RING	
	63	1	**7F-3425**	4	BOLT (3/8-16X5.75IN)	
	64	1	**7H-2444**	2	SEAL	
	66	1	**8F-8544**	2	BOLT (3/8-16X6.25IN)	
	67	1	**8S-9089**	4	BOLT (1/2-13X4.5IN)	
	68	1	**8T-6758**	1	PLUG-PIPE	
	69	1	**8T-6761**	1	PLUG-PIPE	
	70	1	**8T-6767**	1	PLUG-PIPE	
	71	1	**9L-9132**	1	WASHER (10.2X25.5X2.5MM THK)	
	72	1	**9S-1374**	2	BOLT (1/2-13X8IN)	
	73	1	**9S-8752**	6	NUT-FULL (3/8-16 THD)	

B-USE AS REQUIRED
I-SEE HOSE FABRICATION GUIDE

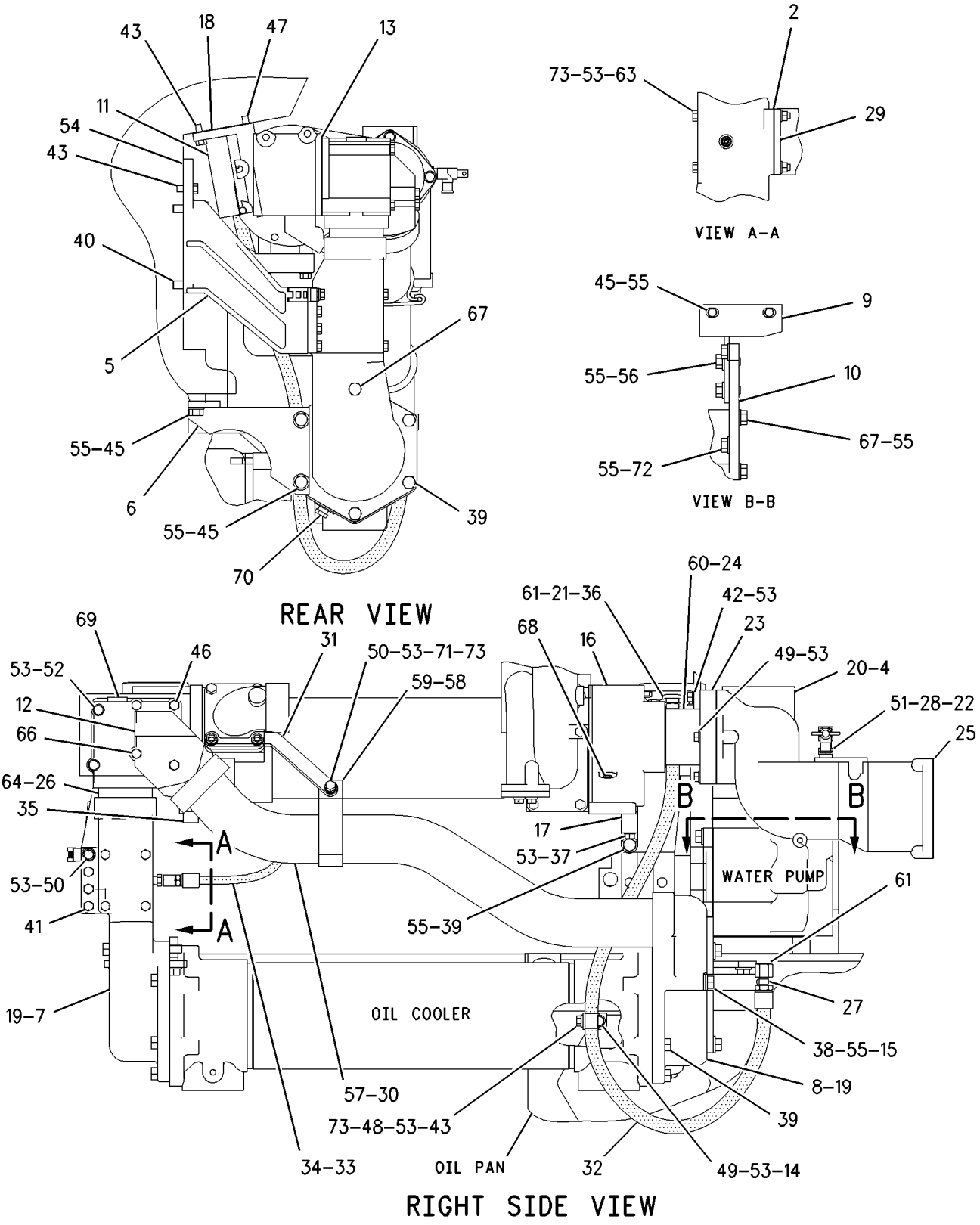

GRAPHIC #1 g00761117

MEMORANDA

COOLING SYSTEM

112-6060 LINES GP-WATER

S/N: 2GR1-UP

PART OF 107-8762 ENGINE AR

SMCS-1380 **i01528459**

NOTE	REF NO	GRAPHIC REF	PART NUMBER	QTY	PART NAME 1 2 3 4 5 6 (PRODUCT LEVEL)	SEE PAGE
	1	1	**1A-9066**	2	GASKET	
	2	1	**6H-6698**	1	COVER	
	3	1	**6V-1869**	1	GROMMET	
	4	1	**7C-9597**	2	FLANGE	
	5	1	**7E-6016**	1	GASKET	
	6	1	**7E-6017**	1	COVER	
	7	1	**7W-1855**	2	RING-RETAINING	
	8	1	**7W-1857**	4	RETAINER	
	9	1	**112-1555**	1	ELBOW	
	10	1	**112-6061**	1	TUBE	
	11	1	**160-9824**	1	BRACKET	
	12	1	**187-4606**	1	HOSE AS	
	13	1	**0L-1351**	2	BOLT (3/8-16X0.875 IN)	
	14	1	**0L-2070**	2	BOLT (3/8-16X2.25 IN)	
	15	1	**0S-1588**	2	BOLT (3/8-16X1.25 IN)	
	16	1	**0S-1591**	2	BOLT (3/8-16X1.5 IN)	
	17	1	**1A-2029**	2	BOLT (3/8-16X1.125 IN)	
	18	1	**1C-2251**	2	BOLT (3/8-16X1.87 IN)	
	19	1	**3B-1915**	1	BOLT (3/8-16X1.37 IN)	
	20	1	**3J-7354**	2	SEAL-O-RING	
	21	1	**5B-4399**	1	SEAL-O-RING	
	22	1	**5M-2894**	10	WASHER-HARD (10.2X18.5X2.5MM THK)	
	23	1	**5P-2645**	2	ELBOW	
	24	1	**6J-2680**	2	SEAL-O-RING	
	25	1	**6V-1867**	1	CLIP (SLOT)	
	26	1	**6V-1868**	1	CLIP (TAB)	
	27	1	**8T-1919**	2	SEAL-O-RING	
	28	1	**9S-8752**	1	NUT-FULL (3/8-16 THD)	

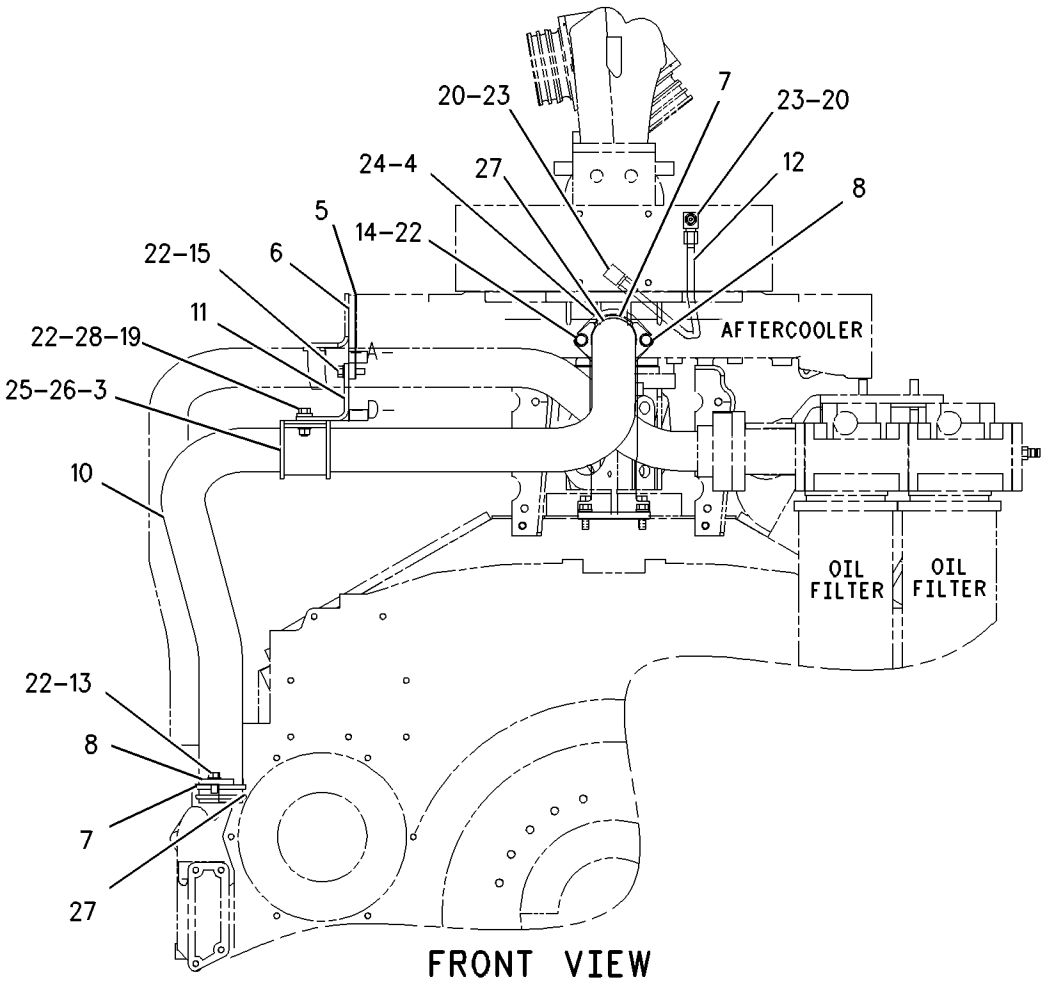

FRONT VIEW

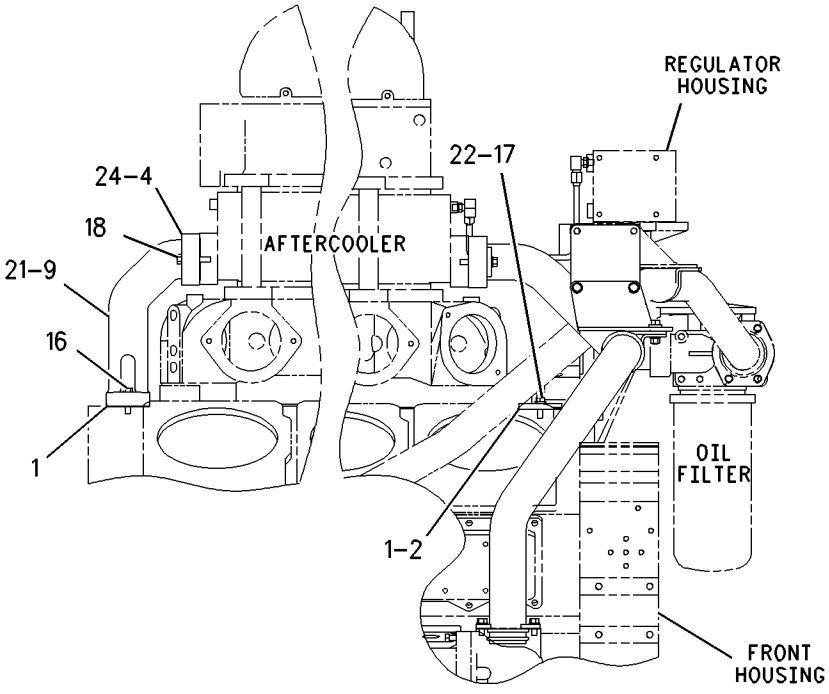

RIGHT SIDE VIEW

GRAPHIC #1 g00793375

123-6918 LINES GP-WATER—TURBOCHARGER

S/N: 2GR1-986

PART OF 107-8762 ENGINE AR

SMCS-1380 **i01090847**

NOTE	REF NO	GRAPHIC REF	PART NUMBER	QTY	PART NAME 1 2 3 4 5 6 (PRODUCT LEVEL)	SEE PAGE
	1	1	**7N-7628**	8	GASKET	
	2	1	**0S-1594**	14	BOLT (3/8-16X1.0IN)	
	3	1	**5M-2894**	20	WASHER (2.5MM THK)	
	4	1	**8N-0788**	2	COVER	
	5	1	**8M-0505**	2	CONNECTOR	
	6	1	**7N-7878**	4	PLATE-COVER	
	7	1	**118-4728**	2	ELBOW	
	8	1	**7C-3565**	2	TUBE AS	
	9	1	**7F-2050**	2	LOCKNUT (3/4X16 THD)	
	10	1	**2P-8130**	1	TEE-UNION	
	11	1	**4W-5463**	2	BRACKET	
	12	1	**6V-6609**	2	SEAL-O-RING (16.36MM ID)	
	13	1	**113-8188**	2	ELBOW	
	14	1	**0S-1608**	2	BOLT (3/8-16X3.75IN)	
	15	1	**3B-1915**	2	BOLT (3/8-16X1.375IN)	
	16	1	**112-6054**	1	TUBE AS	
	17	1	**112-6053**	1	TUBE AS	
	18	1	**8M-0755**	2	CONNECTOR	
	19	1	**3K-0360**	2	SEAL-O-RING (16.36MM ID)	
	20	1	**113-8169**	1	TUBE AS	
	21	1	**2P-2204**	1	ELBOW-UNION	
	22	1	**4P-0707**	2	CLAMP AS	
	23	1	**127-4470**	1	BRACKET	
	24	1	**0L-1143**	1	BOLT (3/8X2.50IN)	
	25	1	**9S-8752**	1	NUT (3/8-16 THD)	
	26	1	**152-6594**	2	BRACKET	
	27	1	**0S-1617**	2	BOLT (5/16-18X.75IN)	
	28	1	**3E-4352**	2	WASHER-HARD (2.5MM THK)	
	29	1	**8T-1885**	2	CLIP (SLOT)	
	30	1	**8T-1886**	2	CLIP (TAB)	

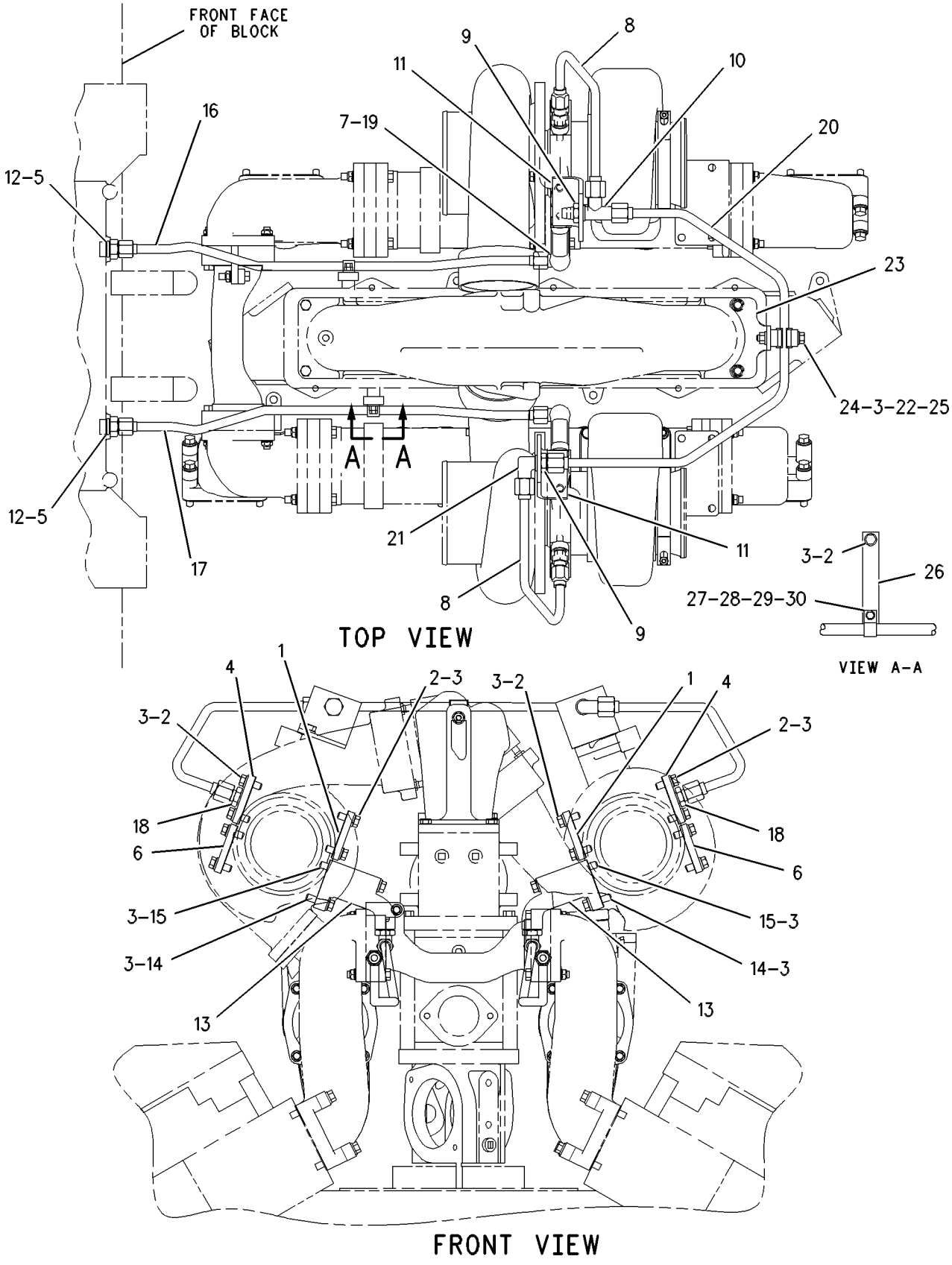

GRAPHIC #1

g00335403

COOLING SYSTEM

155-0542 LINES GP-WATER–TURBOCHARGER

S/N: 2GR1820-UP

PART OF 107-8762 ENGINE AR

SMCS-1380 **i00960326**

NOTE	REF NO	GRAPHIC REF	PART NUMBER	QTY	PART NAME 1 2 3 4 5 6 (PRODUCT LEVEL)	SEE PAGE
	1	1	**9X-6458**	2	WASHER-HARD (3MM THK)	
	2	1	**4P-0707**	2	CLAMP AS	
	3	1	**4W-5463**	2	BRACKET	
	4	1	**7F-2050**	2	LOCKNUT (3/4X16 THD)	
	5	1	**7N-7628**	8	GASKET	
	6	1	**7N-7878**	4	PLATE-COVER	
	7	1	**8N-0788**	2	COVER	
	8	1	**8T-1885**	2	CLIP (SLOT)	
	9	1	**8T-1886**	2	CLIP (TAB)	
	10	1	**112-6053**	1	TUBE AS	
	11	1	**112-6054**	1	TUBE AS	
	12	1	**113-8188**	2	ELBOW	
	13	1	**127-4470**	1	BRACKET	
	14	1	**152-6594**	2	BRACKET	
	15	1	**155-0499**	1	TUBE AS	
	16	1	**4W-5461**	2	TUBE AS	
	17	1	**118-4728**	2	ELBOW	
	18	1	**0L-1143**	1	BOLT (3/8X2.50IN)	
	19	1	**0S-1594**	14	BOLT (3/8X1.0IN)	
	20	1	**0S-1608**	2	BOLT (3/8-16X3.75IN)	
	21	1	**0S-1617**	2	BOLT (5/16-18X.75IN)	
	22	1	**2P-2204**	1	ELBOW-UNION	
	23	1	**2P-8130**	1	TEE-UNION	
	24	1	**3B-1915**	2	BOLT (3/8-16X1.375IN)	
	25	1	**3E-4352**	2	WASHER-HARD (2.5MM THK)	
	26	1	**3K-0360**	2	SEAL-O-RING (16.36MM ID)	
	27	1	**5M-2894**	18	WASHER (2.5MM THK)	
	28	1	**6V-6609**	2	SEAL-O-RING (16.36MM ID)	
	29	1	**8M-0505**	2	CONNECTOR	
	30	1	**8M-0755**	2	CONNECTOR	
	31	1	**9S-8752**	1	NUT-FULL (3/8-16 THD)	

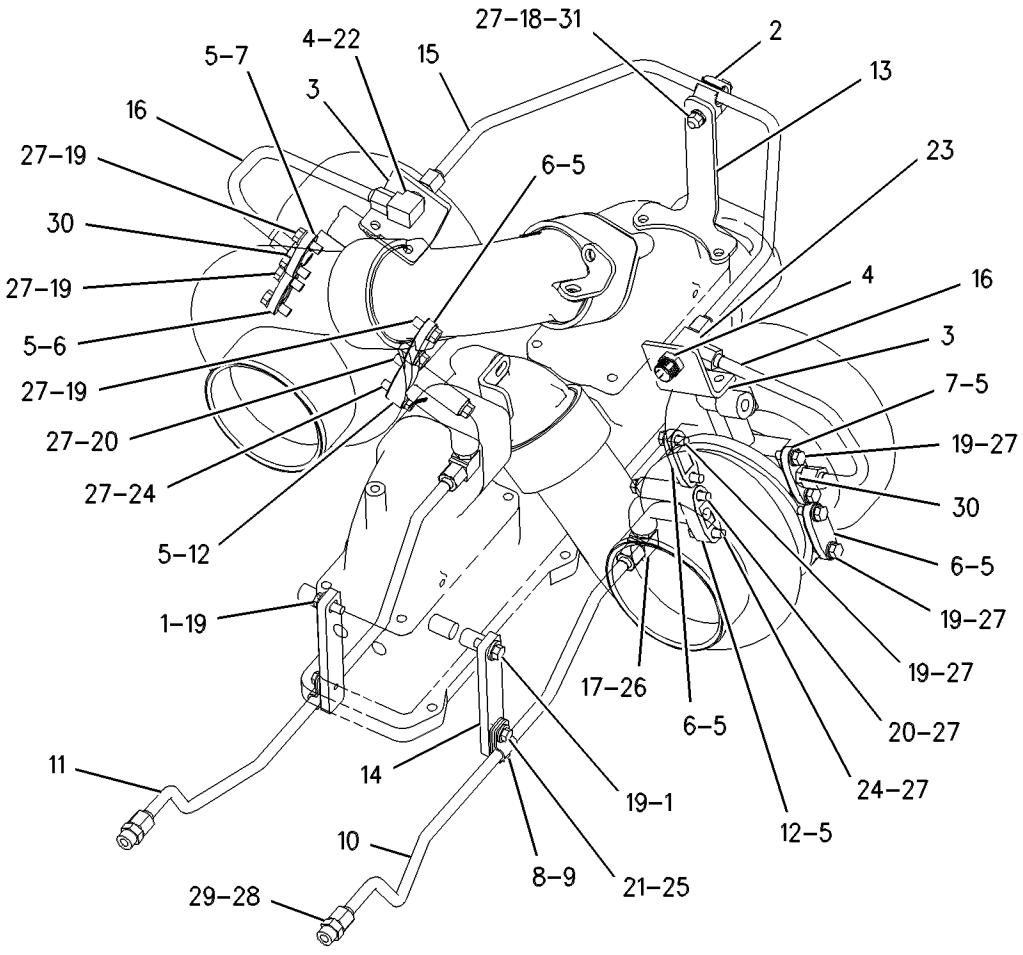

VIEWED FROM UPPER LEFT

GRAPHIC #1 g00453138

8N-8085 PUMP GP-WATER

S/N: 2GR1-1912
PART OF 107-8762 ENGINE AR

SMCS-1361 **i01197444**

NOTE	REF NO	GRAPHIC REF	PART NUMBER	QTY	PART NAME 1 2 3 4 5 6 (PRODUCT LEVEL)	SEE PAGE
	1	1	**5H-6734**	1	SEAL-O-RING (113.89MM ID)	
CY	2	1	**122-0503**	1	PUMP GP-WATER	136
	3	1	**1H-8278**	1	SEAL-O-RING (196.44MM ID)	
	4	1	**8N-6423**	1	COVER-PUMP INLET	
	5	1	**9S-8752**	4	NUT (3/8-16 THD)	
	6	1	**3B-1915**	4	BOLT (3/8-16X1.375IN)	
	7	1	**9M-2151**	3	STUD-TAPERLOCK (3/8-16X1.38IN)	
	8	1	**4F-0411**	3	BOLT (3/8-16X6.5IN)	
	9	1	**4L-4644**	1	STUD-TAPERLOCK	

C-CHANGE FROM PREVIOUS TYPE
Y-SEPARATE ILLUSTRATION

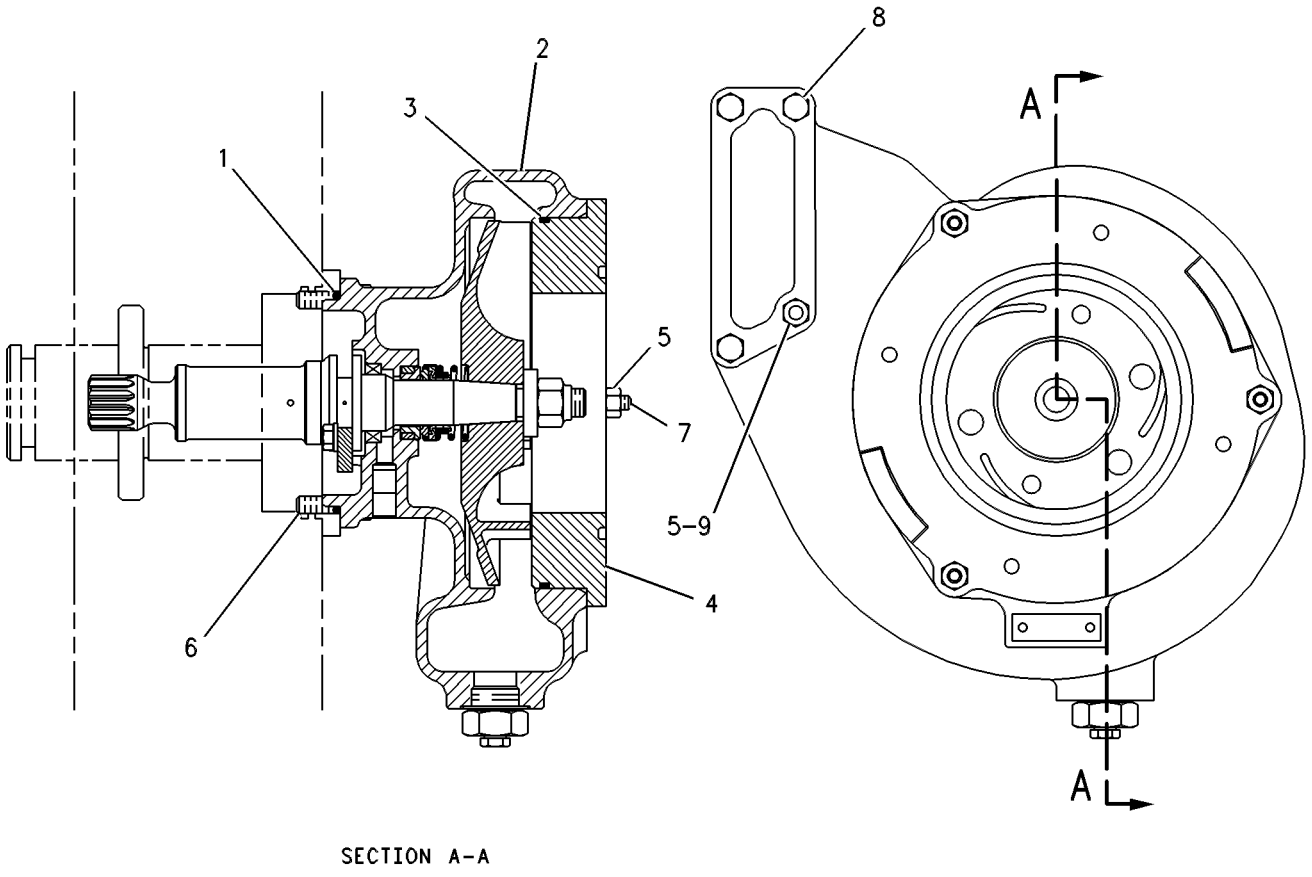

SECTION A-A

GRAPHIC #1 g00287338

8N-8085 PUMP GP-WATER

S/N: 2GR1913-UP
PART OF 107-8762 ENGINE AR

SMCS-1361 **i01211543**

NOTE	REF NO	GRAPHIC REF	PART NUMBER	QTY	PART NAME 1 2 3 4 5 6 (PRODUCT LEVEL)	SEE PAGE
CYR	1	1	**166-4380**	1	PUMP GP-WATER	137
	2	1	**8N-6423**	1	COVER-PUMP INLET	
	3	1	**9S-8752**	4	NUT (3/8-16 THD)	
	4	1	**9M-2151**	3	STUD-TAPERLOCK (3/8-16X1.38IN)	
	5	1	**1H-8278**	1	SEAL-O-RING (196.44MM ID)	
	6	1	**3B-1915**	4	BOLT (3/8-16X1.375IN)	
	7	1	**5H-6734**	1	SEAL-O-RING (113.89MM ID)	
	8	1	**4F-0411**	3	BOLT (3/8-16X6.5IN)	
	9	1	**4L-4644**	1	STUD-TAPERLOCK	

C-CHANGE FROM PREVIOUS TYPE
R-REMFG PART MAY BE AVAILABLE
Y-SEPARATE ILLUSTRATION

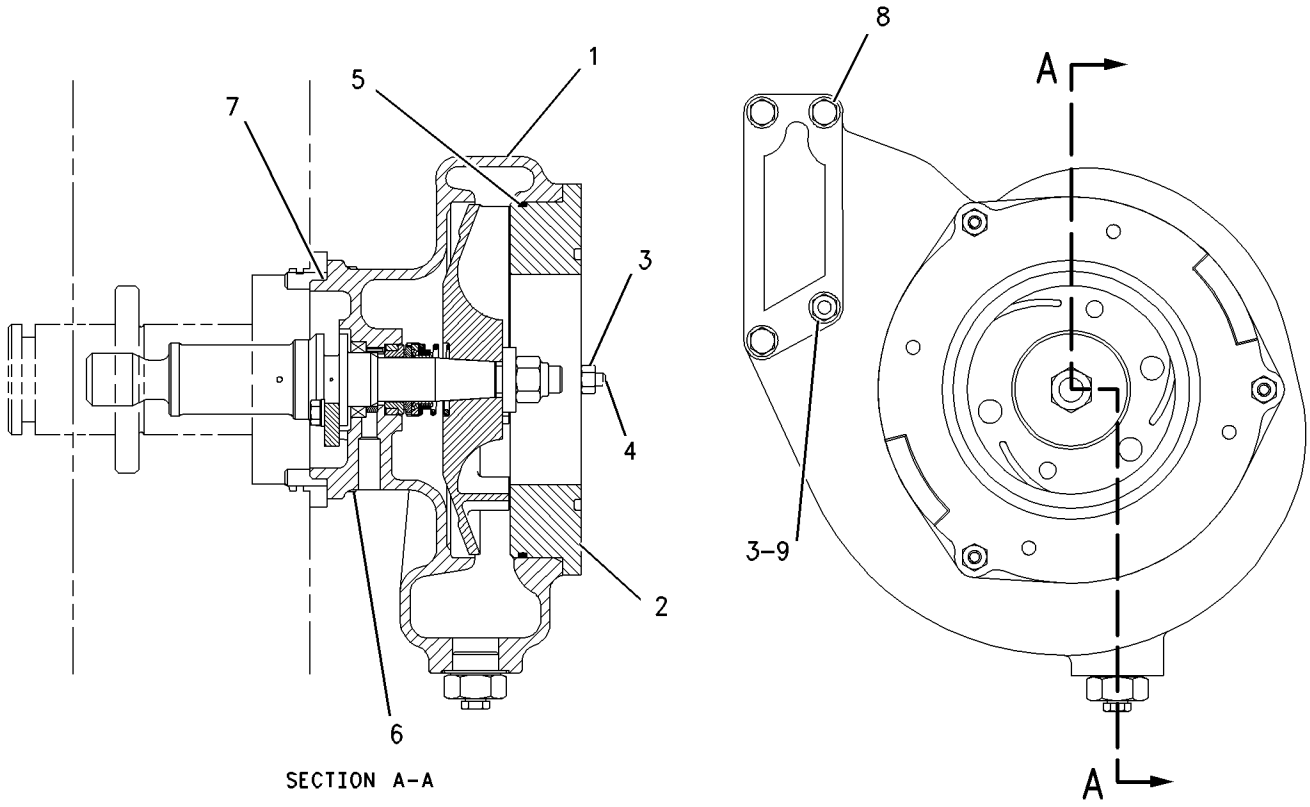

GRAPHIC #1 g00647909

COOLING SYSTEM

122-0503 PUMP GP-WATER

S/N: 2GR1-1912

PART OF 8N-8085 PUMP GP-WATER

SMCS-1361 **i01158692**

NOTE	REF NO	GRAPHIC REF	PART NUMBER	QTY	PART NAME 1 2 3 4 5 6 (PRODUCT LEVEL)	SEE PAGE
	1	1	**2W-7777**	1	HOUSING AS	
		1	**3D-2824**	1	SEAL-O-RING (23.47MM ID)	
		1	**4N-5834**	2	FILTER-WATER	
		1	**7G-8478**	1	ADAPTER-O-RING (1-1/16-12 THD)	
		1	**8T-6765**	1	PLUG-PIPE (1/4-18 NPTF THD)	
	2	1	**2W-9723**	1	SHAFT AS-PUMP DRIVE	
		1	**6F-7172**	1	DOWEL	
	3	1	**0S-1618**	2	BOLT (5/16-18X1.0IN)	
	4	1	**9M-1974**	2	WASHER-HARD (2MM THK)	
	5	1	**7N-4758**	1	WASHER-THRUST	
	6	1	**8C-5236**	1	SEAL-LIP	
	7	1	**124-5245**	1	SEAL GP-FACE	
		1	**7N-8268**	1	TOOL-INSTALLATION	
	8	1	**2W-9724**	1	IMPELLER-PUMP	
	9	1	**6V-8287**	1	LOCKNUT (5/8-18 THD)	
	10	1	**5S-0581**	1	WASHER-HARD (8MM THK)	

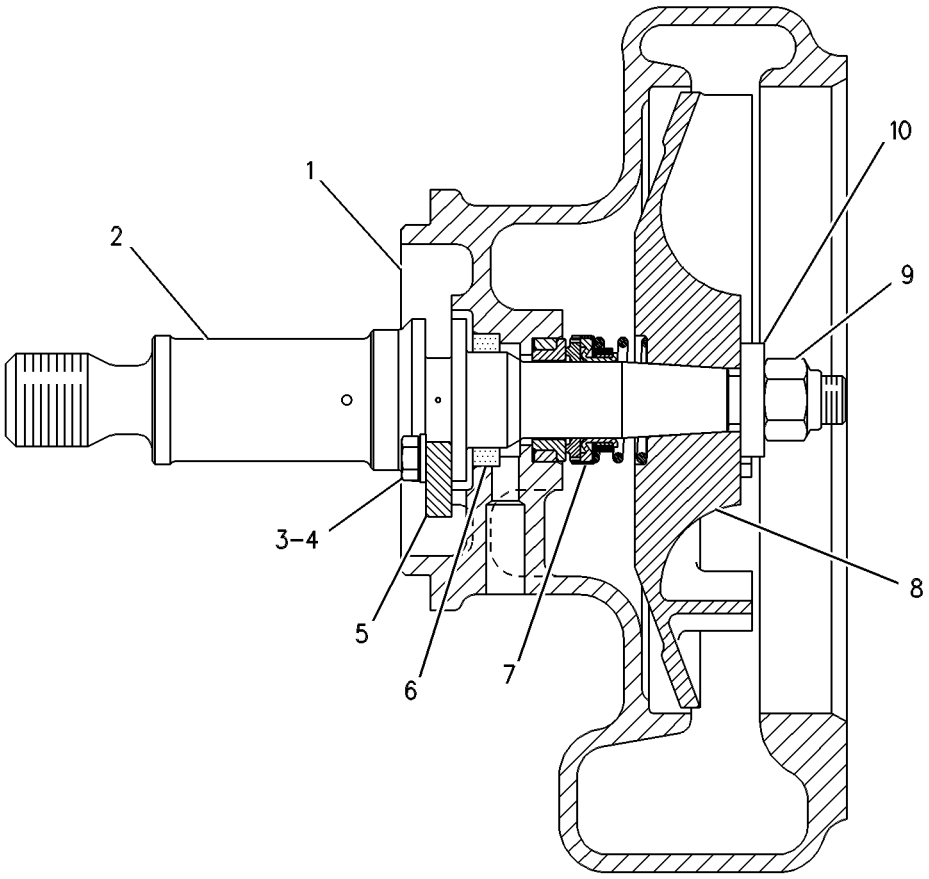

GRAPHIC #1 g00086550

COOLING SYSTEM

166-4380 PUMP GP-WATER*R

S/N: 2GR1913-UP

PART OF 8N-8085 PUMP GP-WATER

SMCS-1361 **i01288722**

NOTE	REF NO	GRAPHIC REF	PART NUMBER	QTY	PART NAME 1 2 3 4 5 6 (PRODUCT LEVEL)	SEE PAGE
	1	1	**2W-7777**	1	HOUSING AS	
		1	**3D-2824**	1	SEAL-O-RING (23.47MM ID)	
		1	**4N-5834**	2	FILTER-WATER (WATER PUMP)	
		1	**7G-8478**	1	ADAPTER-O-RING (1-1/16-12 THD)	
		1	**8T-6765**	1	PLUG-PIPE (1/4-18 NPTF THD)	
	2	1	**2W-9723**	1	SHAFT AS-PUMP DRIVE	
		1	**6F-7172**	1	DOWEL	
	3	1	**0S-1618**	2	BOLT (5/16-18X1.0IN)	
	4	1	**9M-1974**	2	WASHER-HARD (2MM THK)	
	5	1	**7N-4758**	1	WASHER-THRUST	
	6	1	**8C-5236**	1	SEAL-LIP	
	7	1	**166-4376**	1	SEAL GP-WATER PUMP	
	8	1	**2W-9724**	1	IMPELLER-PUMP	
	9	1	**6V-8287**	1	LOCKNUT (5/8-18 THD)	
	10	1	**5S-0581**	1	WASHER-HARD (8MM THK)	
	11	1	**166-4374**	1	RING AS	
		1	**1L-5316**	1	PIN-SPRING	

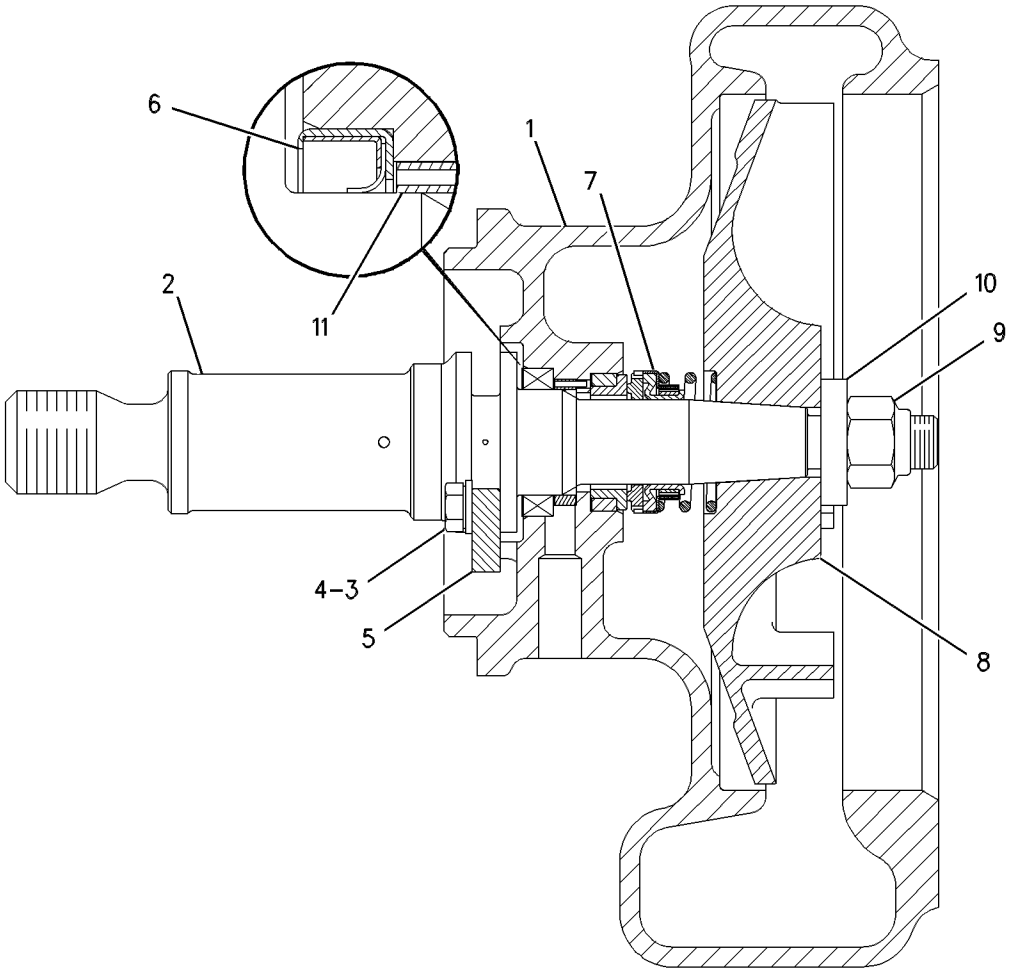

GRAPHIC #1 g00580354

COOLING SYSTEM

143-5250 RADIATOR GP

S/N: 7HR1-UP
HIGH AMBIENT
AN ATTACHMENT
TYPE 1

SMCS-1353 **i00747896**

NOTE	REF NO	GRAPHIC REF	PART NUMBER	QTY	PART NAME 1 2 3 4 5 6 (PRODUCT LEVEL)	SEE PAGE
	1	1	**112-7248**	1	STRIP AS	
M		1	**8T-3490**	30	NUT-WELD (M10X1.5 THD)	
	2	1	**114-4416**	15	CORE AS-RADIATOR	
	3	1	**8T-4121**	32	WASHER (2.5MM THK)	
M	4	1	**8T-4186**	32	BOLT (M10X1.50X40MM)	

M-METRIC PART

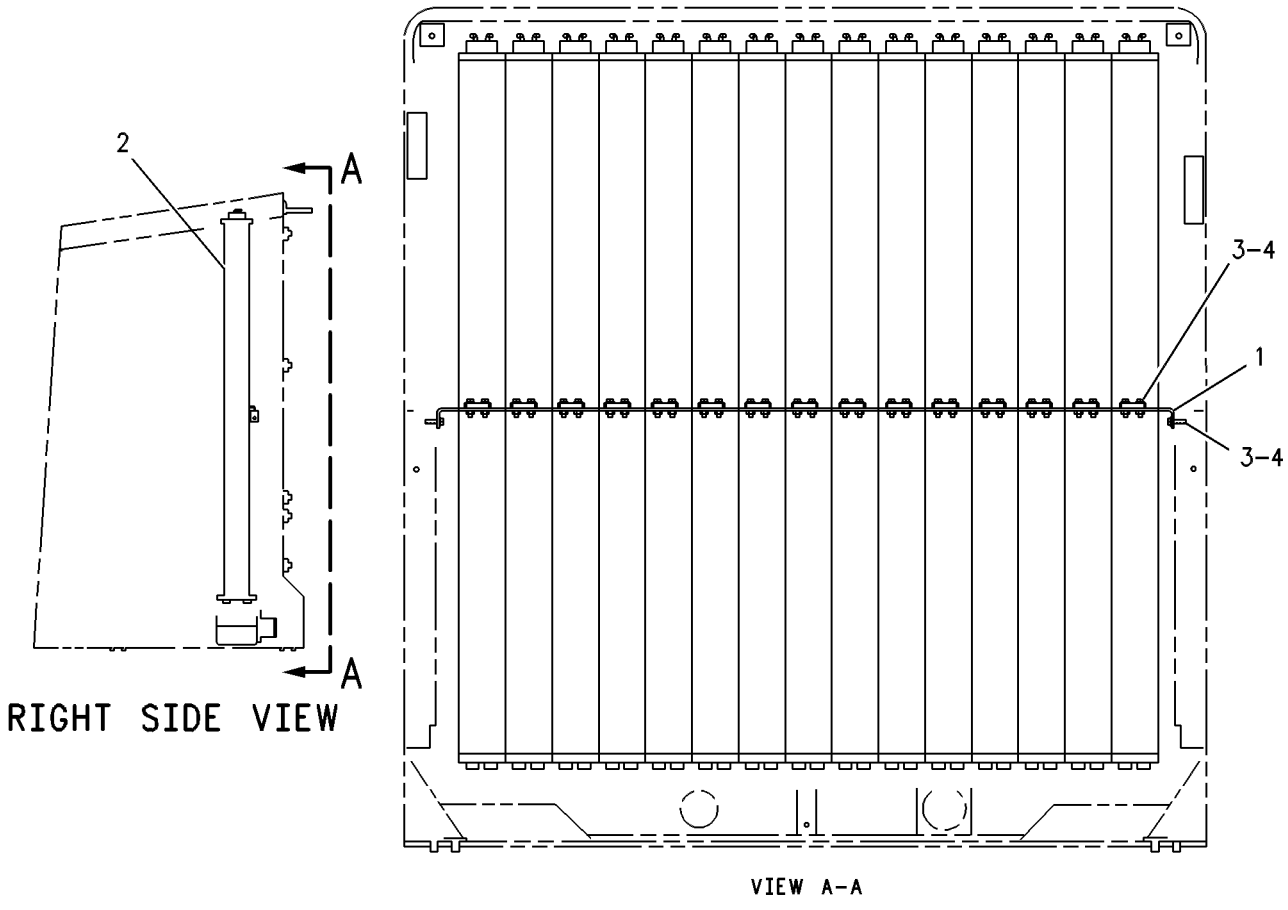

RIGHT SIDE VIEW

VIEW A-A

GRAPHIC #1 g00272207

COOLING SYSTEM

143-5250 RADIATOR GP

S/N: 7HR1-UP
HIGH AMBIENT
AN ATTACHMENT
TYPE 2

SMCS-1353 **i00747884**

NOTE	REF NO	GRAPHIC REF	PART NUMBER	QTY	PART NAME 1 2 3 4 5 6 (PRODUCT LEVEL)	SEE PAGE
	1	1	**114-4416**	15	CORE AS-RADIATOR	

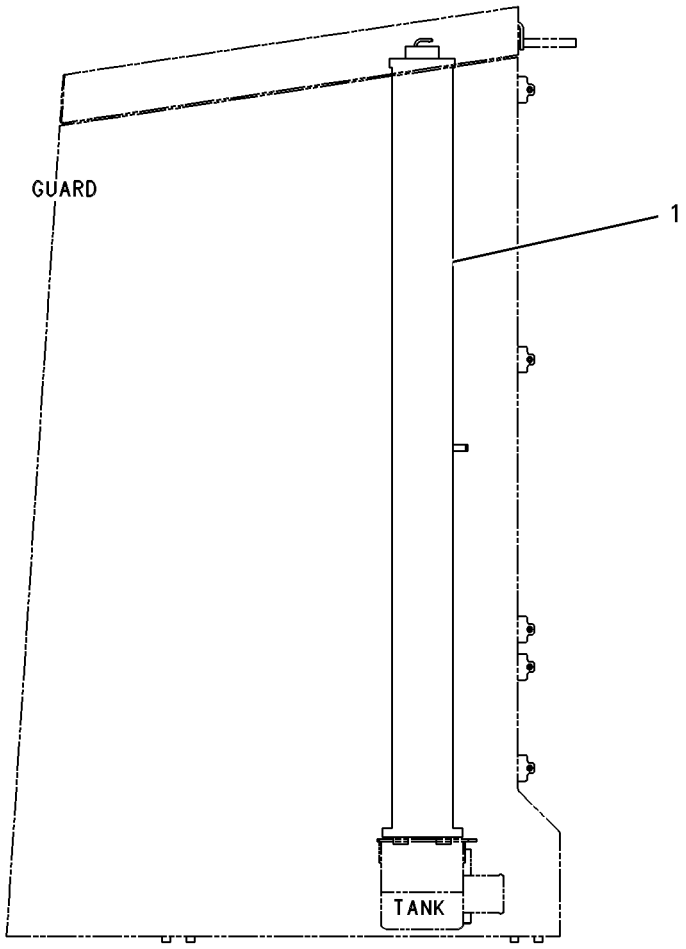

RIGHT SIDE VIEW

GRAPHIC #1 g00281741

143-5251 RADIATOR GP

S/N: 7HR1-UP
AN ATTACHMENT
TYPE 1

SMCS-1353 **i00812938**

NOTE	REF NO	GRAPHIC REF	PART NUMBER	QTY	PART NAME 1 2 3 4 5 6 (PRODUCT LEVEL)	SEE PAGE
	1	1	**143-5439**	1	STRIP AS	
M		1	**8T-3490**	30	NUT-WELD (M10X1.5 THD)	
	2	1	**140-7690**	15	CORE AS-RADIATOR	
	3	1	**8T-4121**	32	WASHER (2.5MM THK)	
M	4	1	**8T-4186**	32	BOLT (M10X1.50X40MM)	

M-METRIC PART

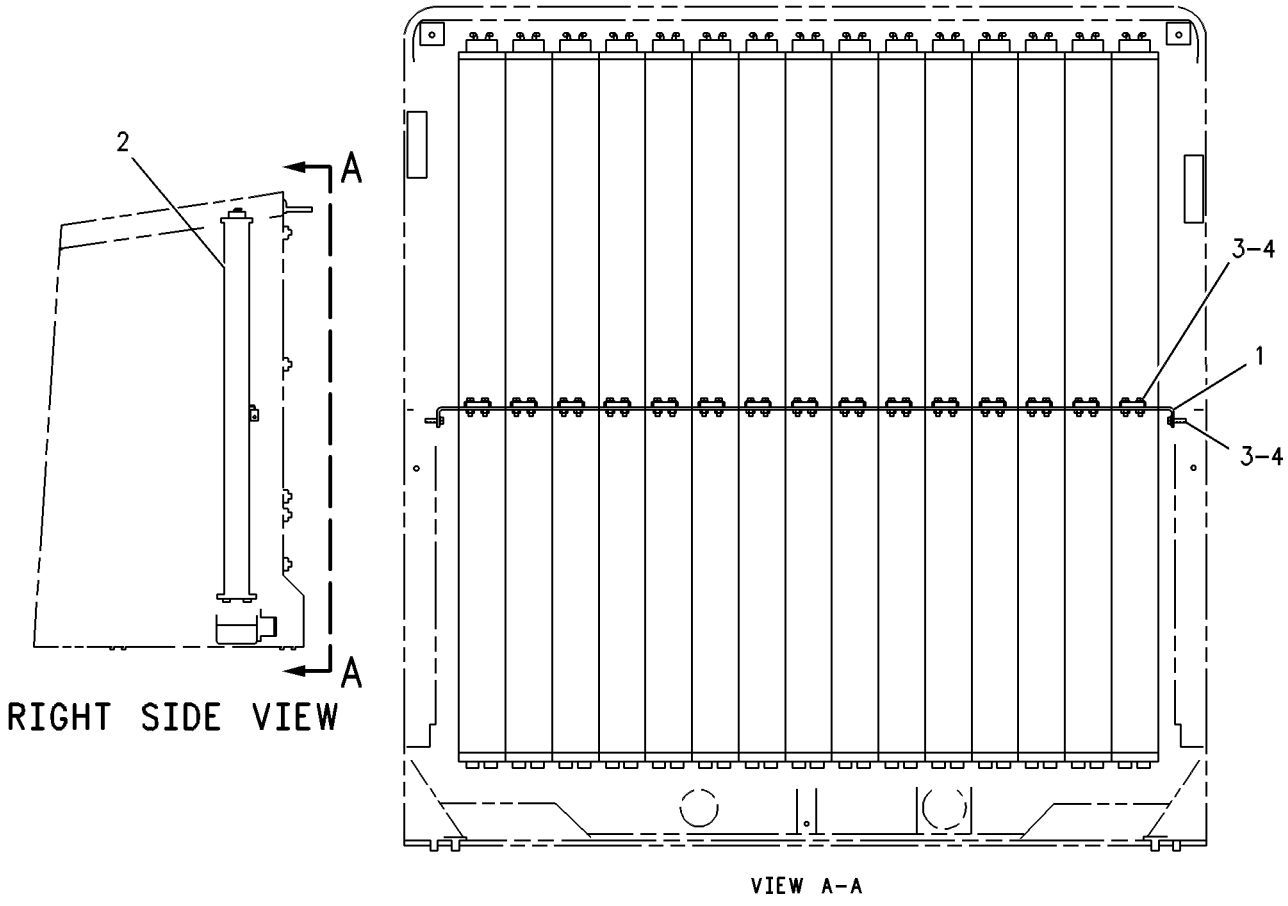

GRAPHIC #1 g00272207

COOLING SYSTEM

143-5251 RADIATOR GP

S/N: 7HR1-UP
AN ATTACHMENT
TYPE 2

SMCS-1353 **i00777191**

NOTE	REF NO	GRAPHIC REF	PART NUMBER	QTY	PART NAME 1 2 3 4 5 6 (PRODUCT LEVEL)	SEE PAGE
	1	1	**140-7690**	1	CORE AS-RADIATOR	

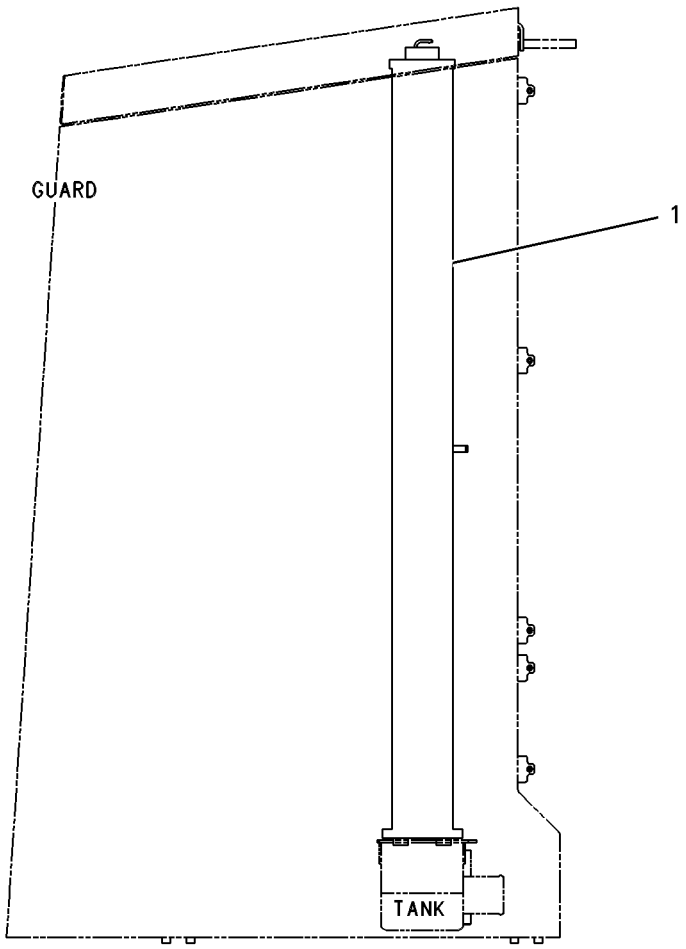

RIGHT SIDE VIEW

GRAPHIC #1 g00281742

COOLING SYSTEM

112-7252 SHROUD GP-RADIATOR

S/N: 7HR1-UP

PART OF 109-6819 CHASSIS AR

SMCS-7272 **i01208529**

NOTE	REF NO	GRAPHIC REF	PART NUMBER	QTY	PART NAME 1 2 3 4 5 6 (PRODUCT LEVEL)	SEE PAGE
M	1	1	**096-4883**	17	LOCKNUT (M10X1.50 THD)	
	2	1	**111-8076**	4	BRACKET	
	3	1	**112-7253**	1	SHROUD AS	
M		1	**8T-3490**	5	NUT-WELD (M10X1.5 THD)	
	4	1	**112-7254**	2	BAFFLE	
	5	1	**122-4593**	1	BAFFLE AS	
M		1	**8T-3490**	2	NUT-WELD (M10X1.5 THD)	
	6	1	**122-4594**	2	BAFFLE	
	7	1	**122-4597**	1	BAFFLE	
M	8	1	**8T-4186**	16	BOLT (M10X1.50X40MM)	
M	9	1	**8T-4195**	32	BOLT (M10X1.50X30MM)	
	10	1	**8T-4222**	65	WASHER-PLATED (2.5MM THK)	
D	11	1	**5P-7211**		SEAL (18.25 M)	
D	12	1	**5P-7211**		SEAL (16.46 M)	

D-ORDER BY THE METER
M-METRIC PART

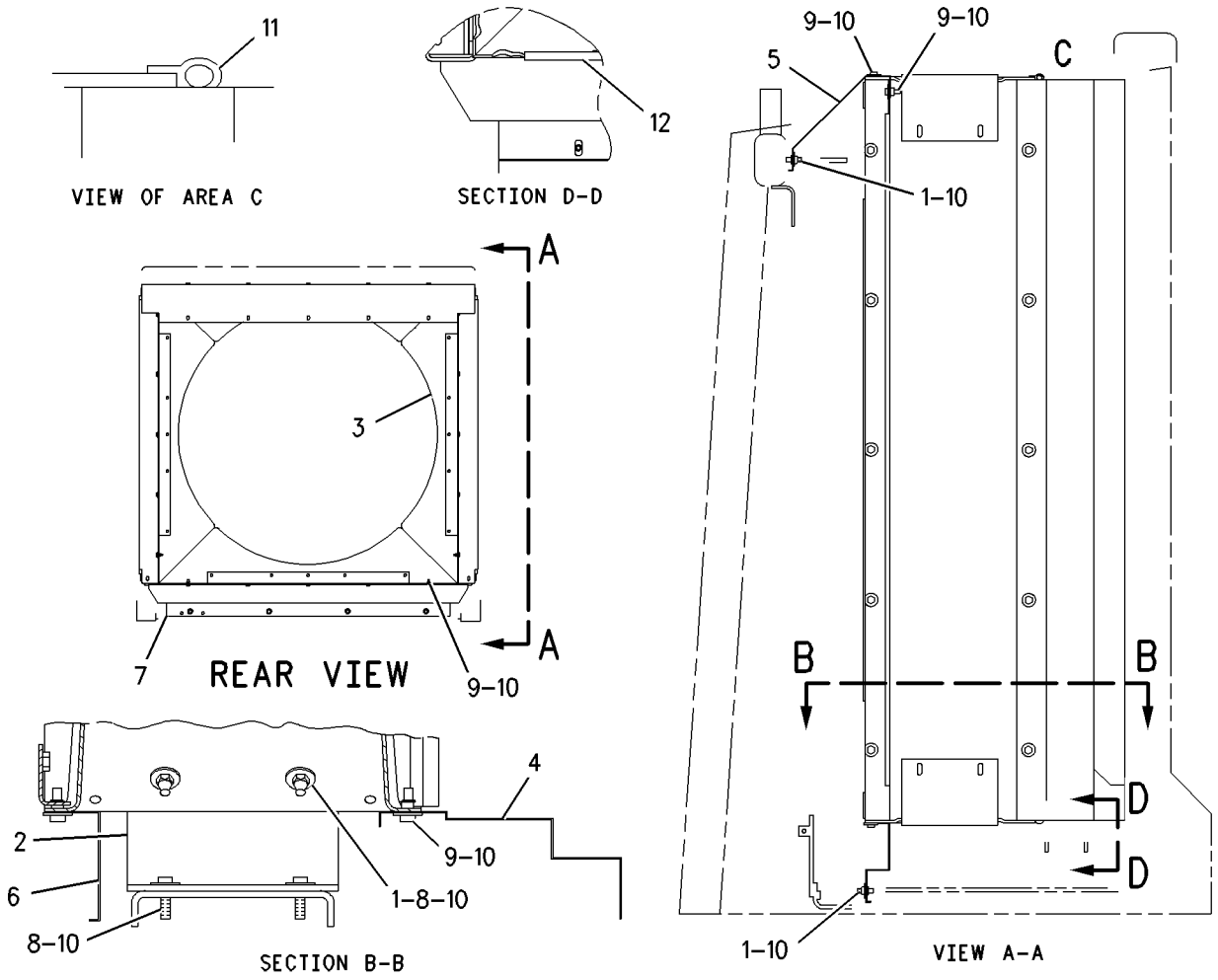

GRAPHIC #1 g00635993

COOLING SYSTEM

134-1437 TANK GP-RADIATOR TOP

S/N: 7HR1-UP

PART OF 112-8635 LINES GP-RADIATOR

SMCS-1377 **i01432582**

NOTE	REF NO	GRAPHIC REF	PART NUMBER	QTY	PART NAME 1 2 3 4 5 6 (PRODUCT LEVEL)	SEE PAGE
	1	1	**1P-4278**	1	CLAMP-HOSE	
	2	1	**6E-6550**	1	GAUGE AS-LIQUID LEVEL	
	3	1	**6L-8617**	1	CAP-RADIATOR	
	4	1	**8T-4983**	2	CLAMP-HOSE	
	5	1	**108-2300**	2	HOSE AS	
	6	1	**112-8638**	1	TANK AS	
		1	**8N-8846**	1	NECK-FILLER	
	7	1	**006-2325**	1	ELBOW-FLARED	
	8	1	**4W-4076**	2	ELBOW	
E	9	1	**7Y-1976**		HOSE-WATER (125CM)	
	10	1	**146-7639**	1	HOSE AS	
	11	1	**122-6873**		HOSE-HYDRAULIC (251CM)	
M	12	1	**8T-4137**	1	BOLT (M10X1.5X20MM)	
	13	1	**8T-4121**	1	WASHER-HARD (11X21X2.5MM THK)	
	14	1	**4D-9517**	1	CLIP	

E-ORDER BY THE CENTIMETER
M-METRIC PART

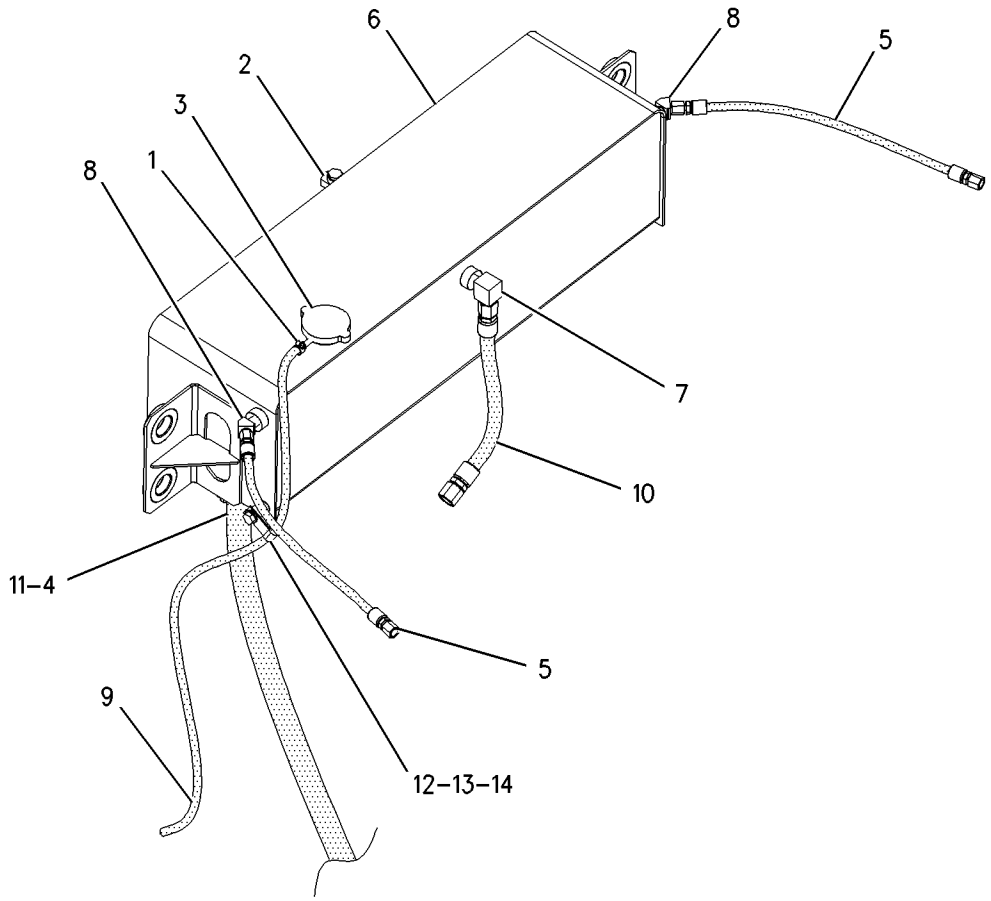

GRAPHIC #1 g00751574

COOLING SYSTEM

134-1438 VALVE GP-RADIATOR DRAIN

S/N: 7HR1-UP

PART OF 112-8635 LINES GP-RADIATOR

SMCS-1353 **i01161318**

NOTE	REF NO	GRAPHIC REF	PART NUMBER	QTY	PART NAME 1 2 3 4 5 6 (PRODUCT LEVEL)	SEE PAGE
	1	1	**2S-3440**	1	CLAMP-HOSE	
	2	1	**6N-9590**	1	PLUG-DRAIN	
	3	1	**6V-0675**	1	ELBOW	
	4	1	**7E-9171**	1	ADAPTER-PLUG	
	5	1	**8M-7066**	1	GASKET	
	6	1	**117-3335**	1	BRACKET AS	
	7	1	**3J-1907**	2	SEAL-O-RING (11.89MM ID)	
	8	1	**6V-8398**	1	SEAL-O-RING (16.03MM ID)	
	9	1	**6V-8781**	1	TEE-FACE SEAL	
	10	1	**6V-9837**	1	TEE-SWIVEL	
	11	1	**6V-9873**	1	CONNECTOR	
	12	1	**8T-4121**	3	WASHER (2.5MM THK)	
M	13	1	**8T-4195**	1	BOLT (M10X1.50X30MM)	
M	14	1	**8T-6466**	2	BOLT (M10X1.50X60MM)	
E	15	1	**122-6872**		HOSE-HYDRAULIC (13CM)	
	16	1	**6V-8397**	1	SEAL-O-RING (9.27MM ID)	
	17	1	**3E-2333**	1	ELBOW-90 DEGREE	

E-ORDER BY THE CENTIMETER
M-METRIC PART

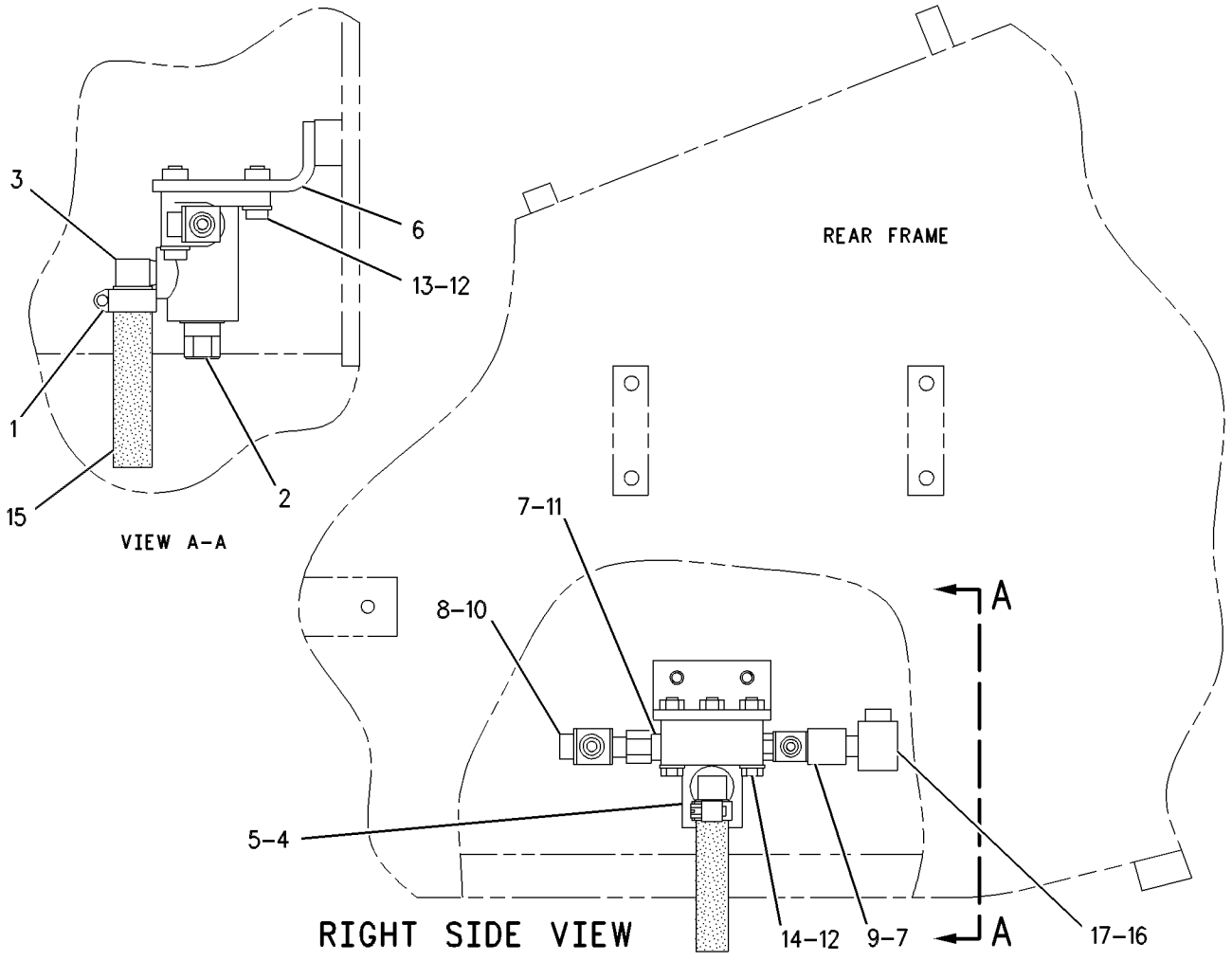

GRAPHIC #1 g00364575

AIR INLET AND EXHAUST SYSTEM

107-0281 AFTERCOOLER GP-WATER

S/N: 2GR1-UP

PART OF 107-8762 ENGINE AR

SMCS-1063 **i00116837**

NOTE	REF NO	GRAPHIC REF	PART NUMBER	QTY	PART NAME 1 2 3 4 5 6 (PRODUCT LEVEL)	SEE PAGE
	1	1	**6V-9027**	1	SEAL-O-RING (8.92MM ID)	
	2	1	**9S-4182**	1	PLUG (7/16-20 THD)	
	3	1	**107-3758**	2	SEAL-AFTERCOOLER	
	4	1	**113-4655**	1	CORE AS-AFTERCOOLER	

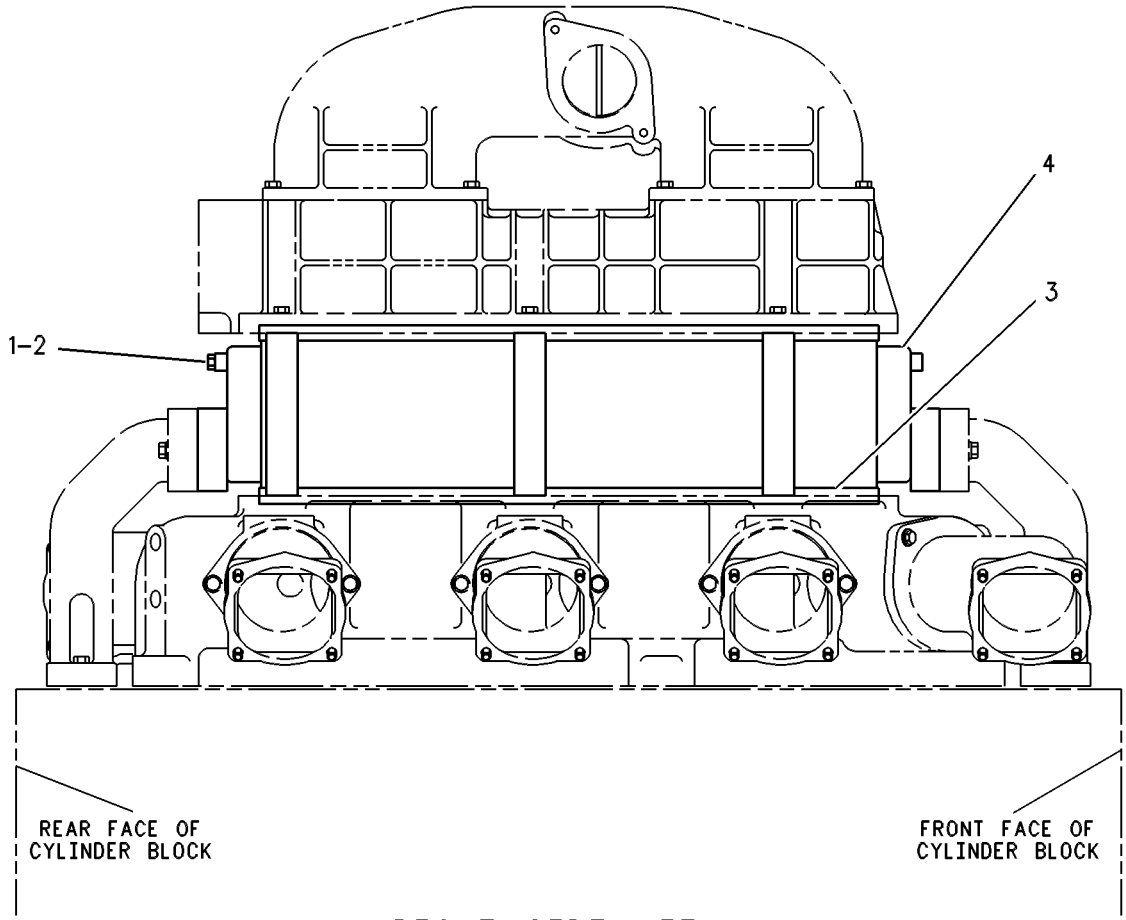

RIGHT SIDE VIEW

GRAPHIC #1 g00086038

AIR INLET AND EXHAUST SYSTEM

112-6067 AIR CLEANER GP

S/N: 2GR1-1749

PART OF 107-8762 ENGINE AR

SMCS-1051, 1054 **i01228853**

NOTE	REF NO	GRAPHIC REF	PART NUMBER	QTY	PART NAME 1 2 3 4 5 6 (PRODUCT LEVEL)	SEE PAGE
	1	1	**1W-2976**	2	ELBOW	
	2	1	**1W-9745**	1	BRACKET AS-LH	
	3	1	**1W-9747**	1	BRACKET AS-RH	
	4	1	**7C-9770**	2	GASKET	
	5	1	**9M-2151**	20	STUD-TAPERLOCK (3/8-16X1.38IN)	
	6	1	**112-6039**	1	PLATE AS	
Y	7	1	**123-6854**	2	AIR CLEANER GP	150
	8	1	**112-6042**	1	SUPPORT-AIR CLEANER	
	9	1	**112-6041**	1	SUPPORT-AIR CLEANER	
	10	1	**2K-4973**	20	LOCKNUT (3/8-16 THD)	
	11	1	**2M-5173**	8	SEAL-O-RING (126.36MM ID)	
	12	1	**5S-7379**	14	BOLT (3/8-16X.875IN)	
	13	1	**5S-7382**	2	BOLT (3/8 X 16 X 1.375 IN)	
	14	1	**5S-7383**	6	BOLT (3/8-16X1.75IN)	
	15	1	**8T-4896**	42	WASHER-HARD (2.5MM THK)	

Y-SEPARATE ILLUSTRATION

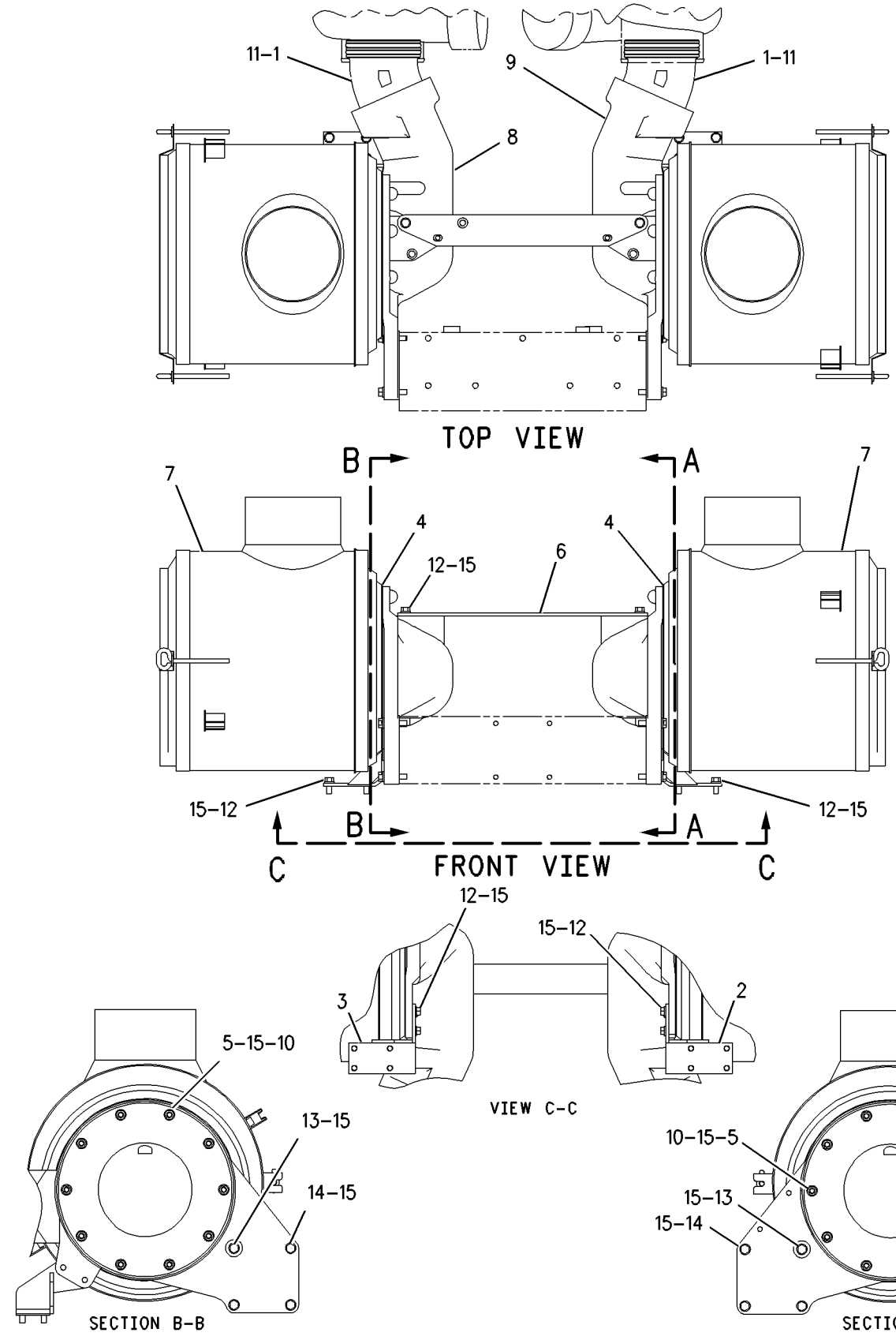

GRAPHIC #1

g00657125

AIR INLET AND EXHAUST SYSTEM

112-6067 AIR CLEANER GP

S/N: 2GR1750-UP

PART OF 107-8762 ENGINE AR

SMCS-1051, 1054 **i01204549**

NOTE	REF NO	GRAPHIC REF	PART NUMBER	QTY	PART NAME 1 2 3 4 5 6 (PRODUCT LEVEL)	SEE PAGE
	1	1	**1W-2976**	2	ELBOW	
	2	1	**1W-9745**	1	BRACKET AS-LH	
	3	1	**1W-9747**	1	BRACKET AS-RH	
	4	1	**7C-9770**	2	GASKET	
	5	1	**9M-2151**	20	STUD-TAPERLOCK (3/8-16X1.38IN)	
	6	1	**112-6039**	1	PLATE AS	
Y	7	1	**123-6854**	2	AIR CLEANER GP	150
CY	8	1	*135-3103*	1	SUPPORT GP-AIR INLET	753
CY	9	1	*135-3104*	1	SUPPORT GP-AIR INLET	754
	10	1	**2K-4973**	20	LOCKNUT (3/8-16 THD)	
	11	1	**2M-5173**	8	SEAL-O-RING (126.36MM ID)	
	12	1	**5S-7379**	14	BOLT (3/8-16X.875IN)	
	13	1	**5S-7382**	2	BOLT (3/8 X 16 X 1.375 IN)	
	14	1	**5S-7383**	6	BOLT (3/8-16X1.75IN)	
	15	1	**8T-4896**	42	WASHER-HARD (2.5MM THK)	

C-CHANGE FROM PREVIOUS TYPE
Y-SEPARATE ILLUSTRATION

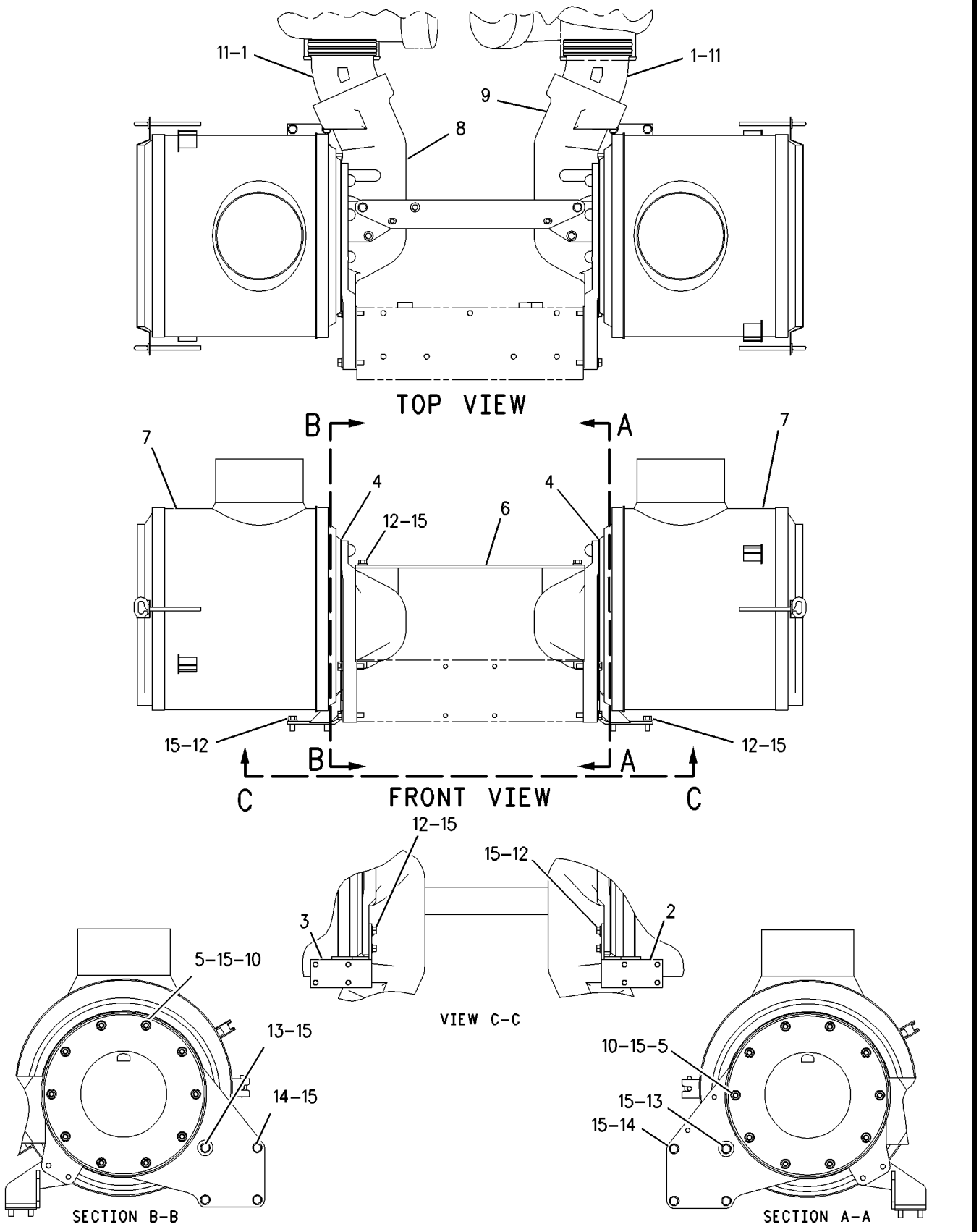

GRAPHIC #1

g00644896

AIR INLET AND EXHAUST SYSTEM

123-6854 AIR CLEANER GP

S/N: 2GR1-UP

PART OF 112-6067 AIR CLEANER GP

SMCS-1051, 1054 **i00595046**

NOTE	REF NO	GRAPHIC REF	PART NUMBER	QTY	PART NAME 1 2 3 4 5 6 (PRODUCT LEVEL)	SEE PAGE
	1	1	**111-4376**	1	COVER AS	
E	2	1	**7X-2634**		SEAL (128CM)	
	3	1	**9M-3695**	2	ROD AS	
	4	1	**123-6855**	1	ELEMENT AS-PRIMARY	
	5	1	**123-6856**	1	ELEMENT AS-SECONDARY	

E-ORDER BY THE CENTIMETER

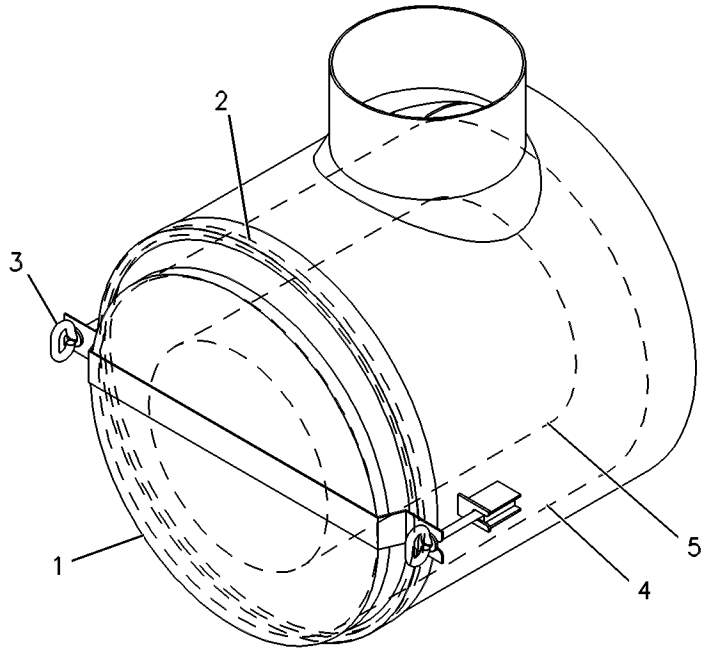

GRAPHIC #1 g00254201

MEMORANDA

AIR INLET AND EXHAUST SYSTEM

112-6068 LINES GP-AIR

S/N: 2GR1-1819

PART OF 107-8762 ENGINE AR

SMCS-1071 **i01089001**

NOTE	REF NO	GRAPHIC REF	PART NUMBER	QTY	PART NAME 1 2 3 4 5 6 (PRODUCT LEVEL)	SEE PAGE
	1	1	**123-6983**	1	PLATE	
	2	1	**7C-7909**	6	ELBOW-AIR INLET	
	3	1	**7C-7910**	2	ELBOW-AIR INLET	
	4	1	**107-6747**	1	MANIFOLD-AIR	
	5	1	**155-0511**	2	ELBOW	
	6	1	**122-3175**	1	ELBOW-AIR INLET	
	7	1	**107-0765**	2	ADAPTER	
	8	1	**5M-2894**	71	WASHER (2.5MM THK)	
	9	1	**4I-3144**	4	WASHER-HARD (3.2MM THK)	
	10	1	**109-7411**	2	SEAL-O-RING (177.17MM ID)	
	11	1	**0S-1594**	12	BOLT (3/8-16X1.0IN)	
	12	1	**2A-4639**	16	BOLT (3/8-16X1.625IN)	
	13	1	**6V-0973**	2	SEAL (88.27MM ID)	
	14	1	**6V-5101**	8	SEAL-O-RING (107.32MM ID)	
	15	1	**9F-2773**	6	BOLT (3/8-16X8.5IN)	
	16	1	**0S-1590**	4	BOLT (3/8-16X2IN)	
	17	1	**1T-0720**	32	BOLT-12 POINT HEAD (3/8-16X1.25IN)	
	18	1	**7N-5080**	8	GASKET-MANIFOLD	
	19	1	**7C-8199**	8	FLANGE	
	20	1	**4S-5898**	8	SEAL-O-RING (126.59MM ID)	
	21	1	**6V-3917**	4	SEAL-O-RING (94.62MM ID)	
	22	1	**0S-1591**	16	BOLT (3/8-16X1.5IN)	
	23	1	**2N-2765**	8	BOLT-HIGH TEMPERATURE (3/8-16X1.75IN)	
	24	1	**112-3591**	1	COVER-AIR INLET	
	25	1	**2N-2766**	8	LOCKNUT (3/8-16 THD)	
	26	1	**110-9517**	1	COVER	
	27	1	**8T-6762**	7	PLUG-PIPE (1/2-14 NPTF THD)	
	28	1	**8T-6764**	2	PLUG-PIPE (1/8-27 NPTF THD)	
	29	1	**5P-8940**	1	SEAL-O-RING (120.02MM ID)	
	30	1	**0S-1588**	2	BOLT (3/8-16X1.25IN)	
	31	1	**0S-0509**	7	BOLT (3/8-16X.75IN)	
	32	1	**123-6982**	2	BAR	
	33	1	**8R-9137**	1	ANGLE	

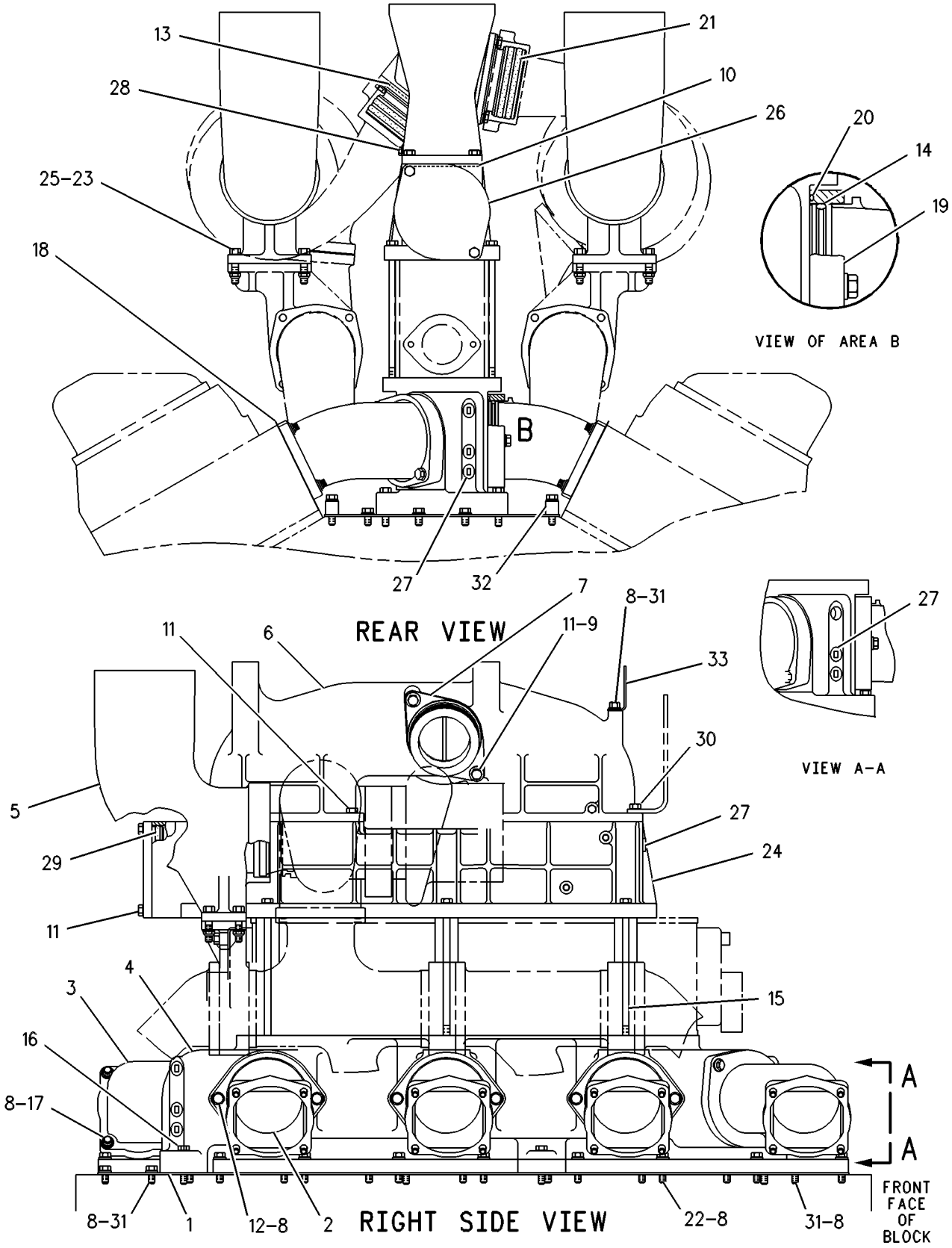

GRAPHIC #1

g00257871

AIR INLET AND EXHAUST SYSTEM

112-6068 LINES GP-AIR

S/N: 2GR1820-UP

PART OF 107-8762 ENGINE AR

SMCS-1071 **i01507950**

NOTE	REF NO	GRAPHIC REF	PART NUMBER	QTY	PART NAME 1 2 3 4 5 6 (PRODUCT LEVEL)	SEE PAGE
	1	1	**2N-2765**	8	BOLT-HIGH TEMPERATURE (3/8-16X1.75 IN)	
	2	1	**7C-7909**	6	ELBOW-AIR INLET	
	3	1	**7C-7910**	2	ELBOW-AIR INLET	
	4	1	**7C-8199**	8	FLANGE	
	5	1	**7N-5080**	8	GASKET-MANIFOLD	
	6	1	**107-6747**	1	MANIFOLD-AIR	
	7	1	**110-9517**	1	COVER	
	8	1	**112-3591**	1	COVER-AIR INLET	
	9	1	**123-6982**	2	BAR	
	10	1	**123-6983**	1	PLATE	
	11	1	**146-7383**	2	FLANGE	
	12	1	**155-0511**	2	ELBOW	
	13	1	**155-0544**	1	ELBOW	
	14	1	**155-0545**	1	ELBOW	
	15	1	**156-6261**	2	BRACKET	
	16	1	**156-9830**	1	ELBOW-AIR INLET	
	17	1	**156-9831**	1	ELBOW-AIR INLET	
	18	1	**168-7800**	8	LOCKNUT (HIGH TEMPERATURE)	
	19	1	**0S-0509**	6	BOLT (3/8-16X0.75 IN)	
	20	1	**0S-1590**	4	BOLT (3/8-16X2 IN)	
	21	1	**0S-1591**	18	BOLT (3/8-16X1.5 IN)	
	22	1	**0S-1594**	12	BOLT (3/8-16X1 IN)	
	23	1	**0S-1619**	2	BOLT (3/8-16X3 IN)	
	24	1	**0T-0573**	2	BOLT (3/8-16X2.75 IN)	
	25	1	**109-7411**	2	SEAL-O-RING	
	26	1	**1A-2029**	2	BOLT (3/8-16X1.125 IN)	
	27	1	**1T-0720**	32	BOLT-12 POINT HEAD (3/8-16X1.25 IN)	
	28	1	**2A-4639**	16	BOLT (3/8-16X1.625 IN)	
	29	1	**4S-5898**	8	SEAL-O-RING	
	30	1	**5D-5957**	2	SEAL-O-RING	
	31	1	**5M-2894**	80	WASHER-HARD (10.2X18.5X2.5MM THK)	
	32	1	**5P-8940**	1	SEAL-O-RING	
	33	1	**6V-3917**	8	SEAL-O-RING	
	34	1	**6V-5101**	8	SEAL-O-RING	
	35	1	**7W-3145**	4	PLATE	
	36	1	**8T-6762**	7	PLUG-PIPE	
	37	1	**8T-6764**	2	PLUG-PIPE	
	38	1	**9F-2773**	6	BOLT (3/8-16X8.5 IN)	
	39	1	**9X-6458**	2	WASHER-HARD (10.2X22.5X3MM THK)	

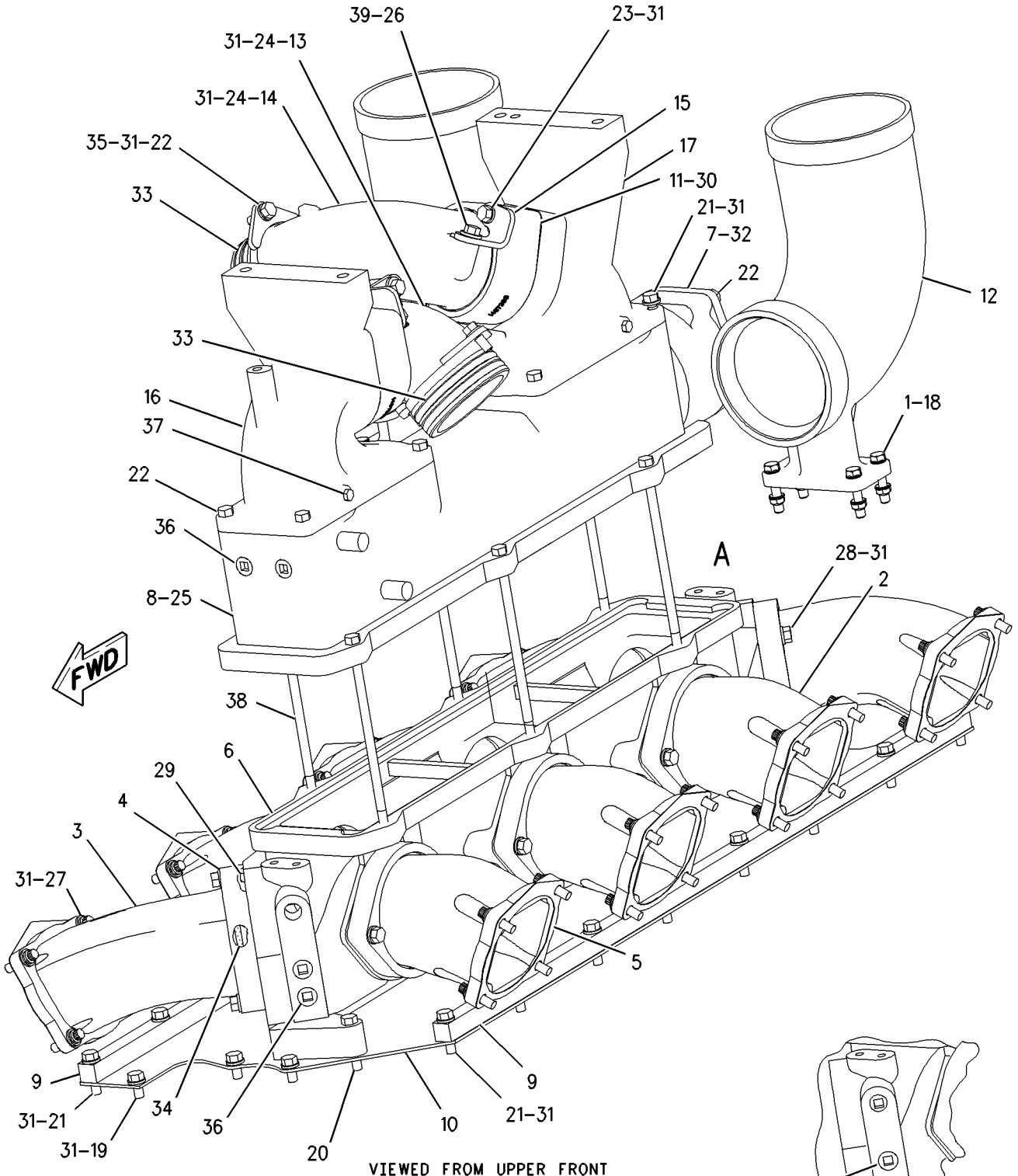

GRAPHIC #1

g00793419

AIR INLET AND EXHAUST SYSTEM

115-0550 MANIFOLD GP-EXHAUST

S/N: 2GR1-1172

PART OF 107-8762 ENGINE AR

SMCS-1059 **i01197448**

NOTE	REF NO	GRAPHIC REF	PART NUMBER	QTY	PART NAME 1 2 3 4 5 6 (PRODUCT LEVEL)	SEE PAGE
	1	1	**130-5274**	6	SLEEVE-EXHAUST MANIFOLD	
	2	1	**2N-2766**	24	LOCKNUT (3/8-16 THD)	
	3	1	**4P-7680**	31	SPACER-HIGH TEMPERATURE	
	4	1	**5P-2755**	16	BOLT-HIGH TEMPERATURE (3/8-16X69.85MM)	
	5	1	**5P-3345**	8	BOLT (3/8-16X3.00IN)	
	6	1	**5P-3961**	32	BOLT (3/8-16X2.50IN)	
	7	1	**7W-8145**	8	GASKET-EXHAUST MANIFOLD	
	8	1	**127-8269**	4	SEAL-EXHAUST (116.4MM ID)	
	9	1	**133-5937**	2	SLEEVE-ELBOW SUPPORT	
	10	1	**113-8172**	1	MANIFOLD-EXHAUST	
	11	1	**113-8189**	1	SPACER-HIGH TEMPERATURE	
	12	1	**115-0549**	1	MANIFOLD-EXHAUST	
	13	1	**115-0553**	1	MANIFOLD-EXHAUST (INTERMEDIATE)	
	14	1	**115-0554**	1	MANIFOLD-EXHAUST (INTERMEDIATE)	
	15	1	**115-0555**	2	MANIFOLD-EXHAUST	
	16	1	**115-0556**	1	MANIFOLD-EXHAUST (INTERMEDIATE)	
	17	1	**115-0557**	1	MANIFOLD-EXHAUST (INTERMEDIATE)	
	18	1	**5M-2894**	32	WASHER (2.5MM THK)	
	19	1	**1W-5499**	2	SLEEVE-EXHAUST MANIFOLD	

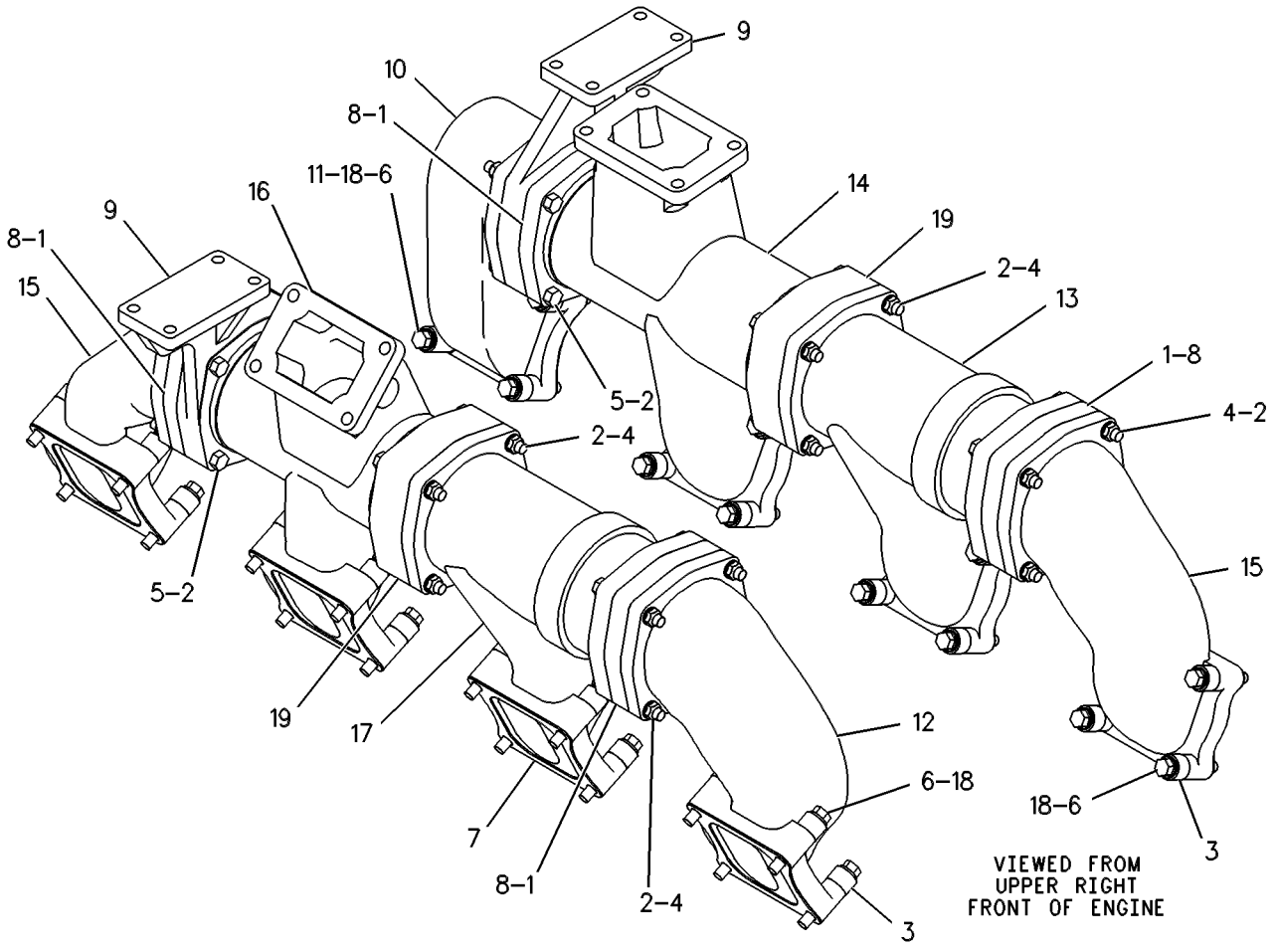

GRAPHIC #1 g00271756

MEMORANDA

AIR INLET AND EXHAUST SYSTEM

115-0550 MANIFOLD GP-EXHAUST

S/N: 2GR1173-UP
PART OF 107-8762 ENGINE AR
TYPE 1

SMCS-1059 **i01197458**

NOTE	REF NO	GRAPHIC REF	PART NUMBER	QTY	PART NAME 1 2 3 4 5 6 (PRODUCT LEVEL)	SEE PAGE
	1	1	**1W-5499**	2	SLEEVE-EXHAUST MANIFOLD	
	2	1	**2N-2766**	29	LOCKNUT (3/8-16 THD)	
	3	1	**4P-7680**	31	SPACER-HIGH TEMPERATURE	
	4	1	**5P-2755**	16	BOLT-HIGH TEMPERATURE (3/8-16X69.85MM)	
	5	1	**5P-3345**	8	BOLT (3/8-16X3.00IN)	
	6	1	**5P-3961**	32	BOLT (3/8-16X2.50IN)	
	7	1	**7L-6443**	4	BOLT (3/8-16X2.25IN)	
	8	1	**7W-8145**	8	GASKET-EXHAUST MANIFOLD	
	9	1	**9L-2295**	1	BOLT-HIGH TEMPERATURE (3/8-16X1.50IN)	
	10	1	**107-8719**	2	SLEEVE-EXHAUST MANIFOLD	
	11	1	**110-8771**	1	MANIFOLD-EXHAUST	
	12	1	**110-8772**	1	MANIFOLD-EXHAUST	
	13	1	**113-8172**	1	MANIFOLD-EXHAUST	
	14	1	**113-8189**	1	SPACER-HIGH TEMPERATURE	
	15	1	**115-0553**	1	MANIFOLD-EXHAUST (INTERMEDIATE)	
	16	1	**115-0554**	1	MANIFOLD-EXHAUST (INTERMEDIATE)	
	17	1	**115-0555**	1	MANIFOLD-EXHAUST	
	18	1	**115-0556**	1	MANIFOLD-EXHAUST (INTERMEDIATE)	
	19	1	**115-0557**	1	MANIFOLD-EXHAUST (INTERMEDIATE)	
	20	1	**127-8269**	4	SEAL-EXHAUST (116.4MM ID)	
	21	1	**129-9547**	1	MANIFOLD-EXHAUST	
	22	1	**130-5274**	6	SLEEVE-EXHAUST MANIFOLD	
	23	1	**133-5937**	2	SLEEVE-ELBOW SUPPORT	
	24	1	**5M-2894**	32	WASHER (2.5MM THK)	

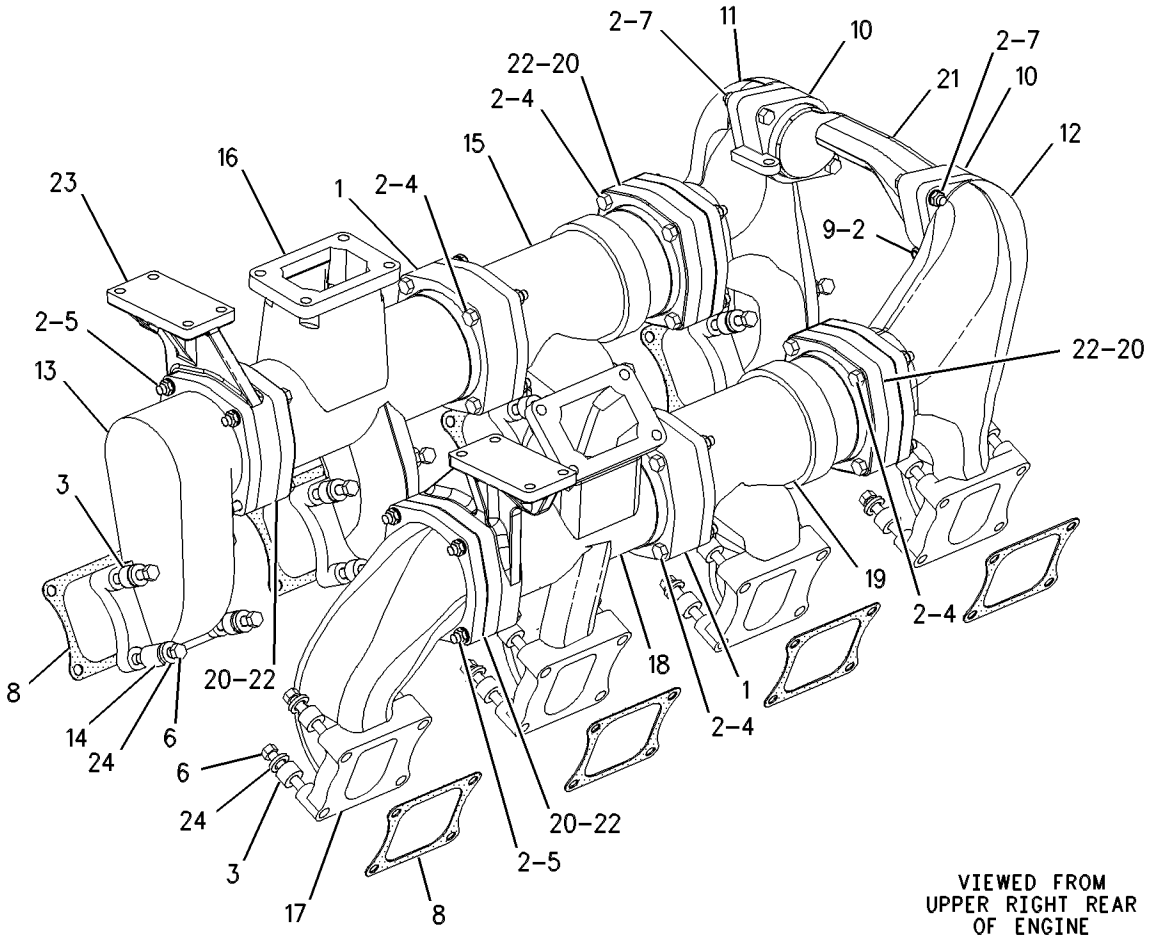

GRAPHIC #1 g00388696

AIR INLET AND EXHAUST SYSTEM

115-0550 MANIFOLD GP-EXHAUST

S/N: 2GR1173-UP
PART OF 107-8762 ENGINE AR
TYPE 2

SMCS-1059 **i01477901**

NOTE	REF NO	GRAPHIC REF	PART NUMBER	QTY	PART NAME 1 2 3 4 5 6 (PRODUCT LEVEL)	SEE PAGE
	1	1	**1W-5499**	2	SLEEVE-EXHAUST MANIFOLD	
	2	1	**5P-2755**	8	BOLT-HIGH TEMPERATURE (3/8-16X69.85MM)	
	3	1	**5P-3345**	16	BOLT (3/8-16X3.00IN)	
	4	1	**5P-3961**	32	BOLT (3/8-16X2.50IN)	
	5	1	**7L-6443**	4	BOLT (3/8-16X2.25IN)	
	6	1	**7W-8145**	8	GASKET-EXHAUST MANIFOLD	
	7	1	**9L-2295**	1	BOLT-HIGH TEMPERATURE (3/8-16X1.50IN)	
	8	1	**107-8719**	2	SLEEVE-EXHAUST MANIFOLD	
	9	1	**110-8771**	1	MANIFOLD-EXHAUST (LH FRONT)	
	10	1	**110-8772**	1	MANIFOLD-EXHAUST (RH FRONT)	
	11	1	**113-8172**	1	MANIFOLD-EXHAUST (LH REAR)	
	12	1	**113-8189**	1	SPACER-HIGH TEMPERATURE	
	13	1	**115-0553**	1	MANIFOLD-EXHAUST (INTERMEDIATE)	
	14	1	**115-0554**	1	MANIFOLD-EXHAUST (INTERMEDIATE)	
	15	1	**115-0555**	1	MANIFOLD-EXHAUST (RH REAR)	
	16	1	**115-0556**	1	MANIFOLD-EXHAUST (INTERMEDIATE)	
	17	1	**115-0557**	1	MANIFOLD-EXHAUST (INTERMEDIATE)	
	18	1	**127-8269**	4	SEAL-EXHAUST (116.4MM ID)	
	19	1	**129-9547**	1	MANIFOLD-EXHAUST	
C	20	1	**153-7474**	6	SLEEVE-EXHAUST MANIFOLD	
C	21	1	**166-8422**	2	SLEEVE-ELBOW SUPPORT	
	22	1	**168-7800**	29	LOCKNUT (HIGH TEMPERATURE)	
	23	1	**198-0230**	31	SPACER (10.5X19X15MM THK)	
	24	1	**5M-2894**	32	WASHER-HARD (10.2X18.5X2.5MM THK)	

C-CHANGE FROM PREVIOUS TYPE

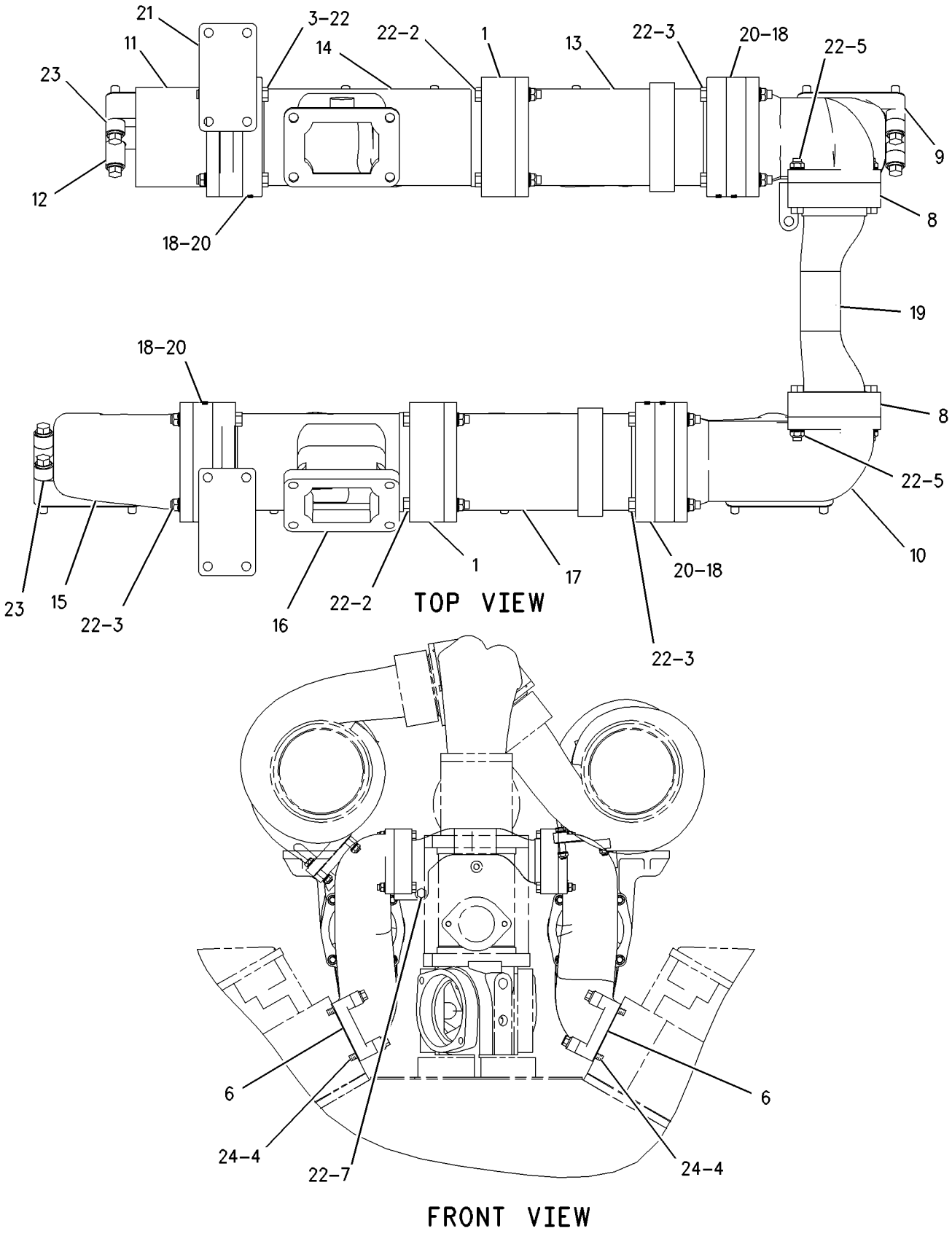

GRAPHIC #1 g00769698

AIR INLET AND EXHAUST SYSTEM

112-6003 MUFFLER GP

S/N: 7HR1-301

PART OF 112-6000 INSTALLATION AR-ENGINE

SMCS-1062 **i00745211**

NOTE	REF NO	GRAPHIC REF	PART NUMBER	QTY	PART NAME 1 2 3 4 5 6 (PRODUCT LEVEL)	SEE PAGE
	1	1	**7E-1397**	4	CLAMP-BENT BOLT	
	2	1	**1W-1115**	2	ELBOW	
	3	1	**7W-2478**	2	GASKET	
	4	1	**122-3166**	1	SUPPORT AS	
	5	1	**122-3167**	1	SUPPORT AS	
	6	1	**122-3168**	1	BRACE	
	7	1	**122-3169**	2	MUFFLER AS	
	8	1	**123-6941**	2	PIPE-EXHAUST	
	9	1	**5P-1076**	14	WASHER-HARD (4MM THK)	
M	10	1	**8T-4139**	2	BOLT (M12X1.75X30MM)	
M	11	1	**8T-4172**	2	BOLT (M10X1.50X80MM)	
M	12	1	**8T-4183**	8	BOLT (M12X1.75X40MM)	
M	13	1	**8T-4192**	4	BOLT (M12X1.75X25MM)	
M	14	1	**8T-4195**	2	BOLT (M10X1.50X30MM)	

M-METRIC PART

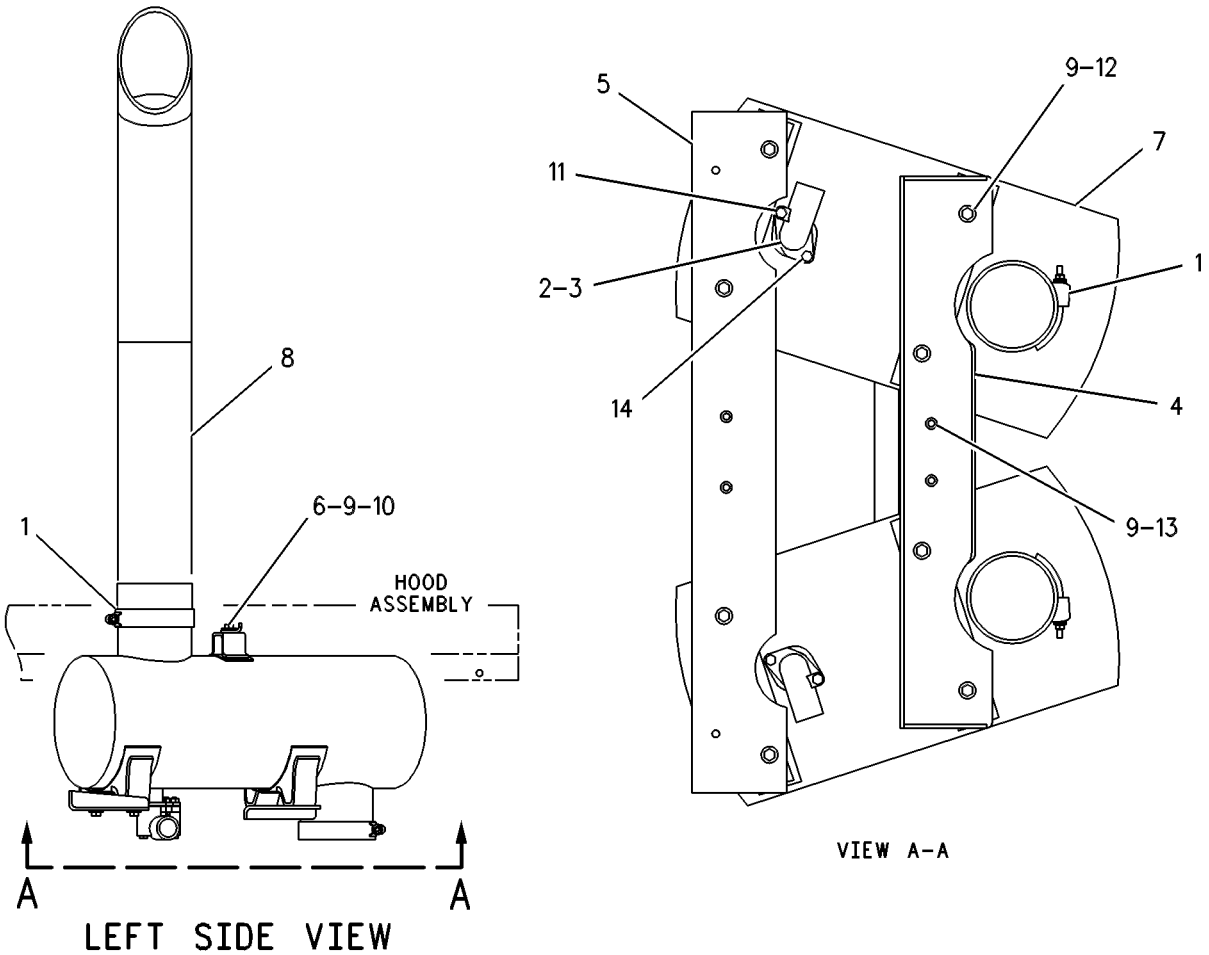

GRAPHIC #1 g00273164

AIR INLET AND EXHAUST SYSTEM

112-6003 MUFFLER GP

S/N: 7HR302-331

PART OF 112-6000 INSTALLATION AR-ENGINE

SMCS-1062 **i01058267**

NOTE	REF NO	GRAPHIC REF	PART NUMBER	QTY	PART NAME 1 2 3 4 5 6 (PRODUCT LEVEL)	SEE PAGE
	1	1	**7E-1397**	2	CLAMP-BENT BOLT	
	2	1	**1W-1115**	2	ELBOW	
	3	1	**7W-2478**	2	GASKET	
	4	1	**122-3168**	1	BRACE	
	5	1	**157-2828**	2	MUFFLER AS	
	6	1	**160-9833**	1	SUPPORT AS	
	7	1	**160-9834**	1	SUPPORT AS	
	8	1	**5P-1076**	14	WASHER-HARD (4MM THK)	
M	9	1	**8T-4139**	2	BOLT (M12X1.75X30MM)	
M	10	1	**8T-4172**	2	BOLT (M10X1.50X80MM)	
M	11	1	**8T-4183**	8	BOLT (M12X1.75X40MM)	
M	12	1	**8T-4192**	4	BOLT (M12X1.75X25MM)	
M	13	1	**8T-4195**	2	BOLT (M10X1.50X30MM)	

M-METRIC PART

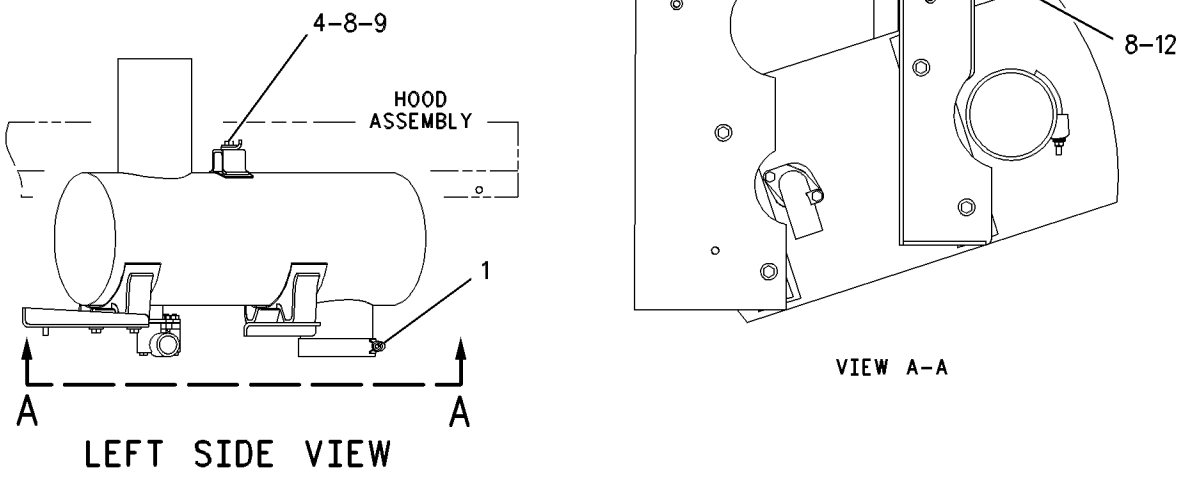

GRAPHIC #1 g00552069

AIR INLET AND EXHAUST SYSTEM

112-6003 MUFFLER GP

S/N: 7HR332-UP

PART OF 112-6000 INSTALLATION AR-ENGINE

SMCS-1062 **i01129914**

NOTE	REF NO	GRAPHIC REF	PART NUMBER	QTY	PART NAME 1 2 3 4 5 6 (PRODUCT LEVEL)	SEE PAGE
	1	1	**7E-1397**	2	CLAMP-BENT BOLT	
	2	1	**1W-1115**	2	ELBOW	
	3	1	**7W-2478**	2	GASKET	
	4	1	**122-3168**	1	BRACE	
	5	1	**157-2828**	2	MUFFLER AS	
	6	1	**160-9833**	1	SUPPORT AS	
		1	**9R-2613**	1	BOSS (M10X25MM)	
	7	1	**160-9834**	1	SUPPORT AS	
	8	1	**5P-1076**	12	WASHER-HARD (4MM THK)	
M	9	1	**8T-4139**	2	BOLT (M12X1.75X30MM)	
M	10	1	**8T-4172**	2	BOLT (M10X1.50X80MM)	
M	11	1	**8T-4183**	8	BOLT (M12X1.75X40 THD)	
M	12	1	**8T-4192**	2	BOLT (M12X1.75X25MM)	
M	13	1	**8T-4195**	2	BOLT (M10X1.50X30MM)	
JM	14	1	**8T-4192**	2	BOLT (M12X1.75X25MM)	
J	15	1	**5P-1076**	2	WASHER-HARD (4MM THK)	

J-NOT REQUIRED FOR MODEL T927
M-METRIC PART

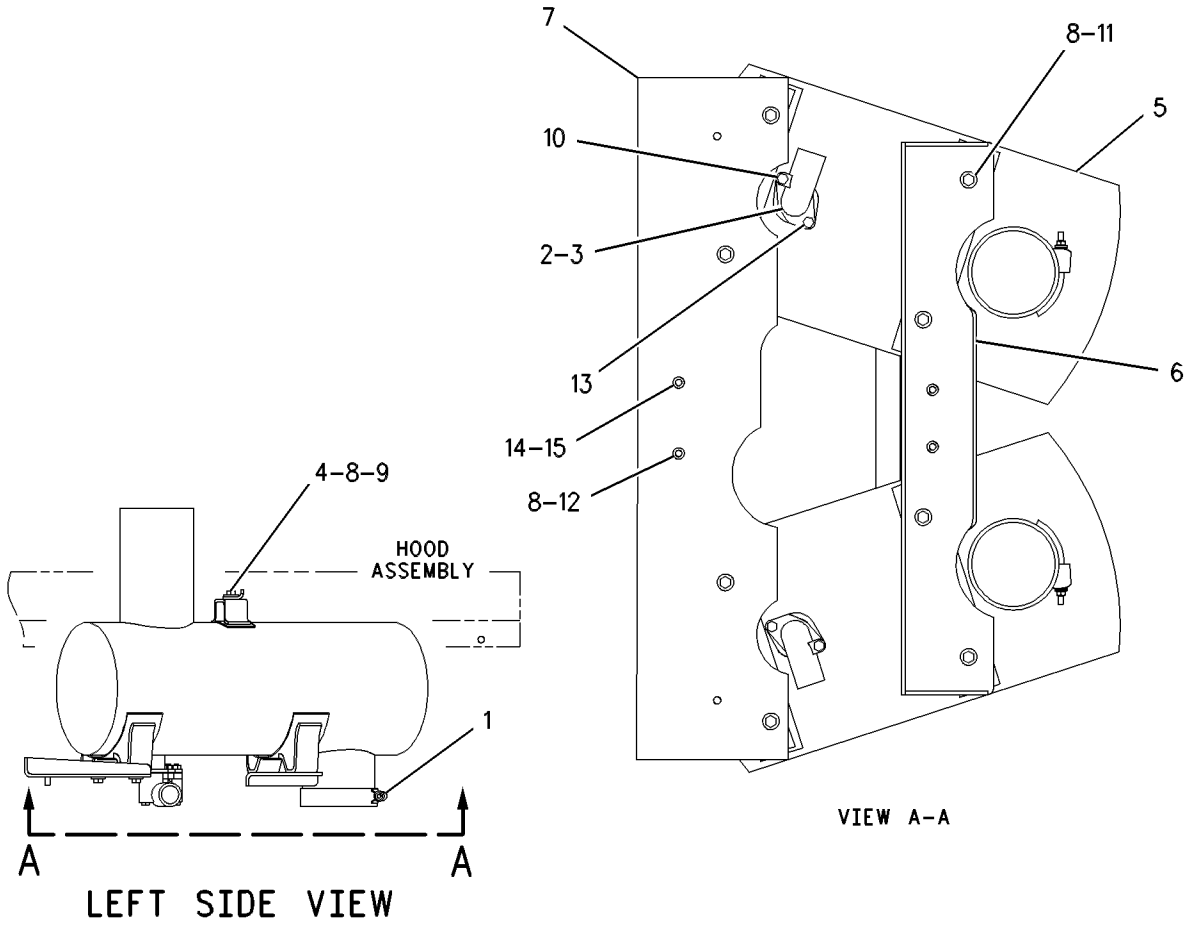

GRAPHIC #1 g00597860

AIR INLET AND EXHAUST SYSTEM

112-6008 PRECLEANER GP

S/N: 7HR1-UP

PART OF 112-6000 INSTALLATION AR-ENGINE

SMCS-1055 **i01191451**

NOTE	REF NO	GRAPHIC REF	PART NUMBER	QTY	PART NAME 1 2 3 4 5 6 (PRODUCT LEVEL)	SEE PAGE
	1	1	**5P-4869**	4	CLAMP-HOSE	
	2	1	**7S-8817**	2	PRECLEANER AS	
					(EACH INCLUDES)	
		1	**0S-1591**	1	BOLT (3/8-16X1.5 IN)	
		1	**1D-4717**	1	NUT (3/8-16 THD)	
	3	1	**8R-9137**	1	ANGLE	
	4	1	**9W-1991**	3	SPACER (40MM THK)	
	5	1	**112-6009**	2	HOSE-HUMP	
	6	1	**123-6942**	2	BODY AS-PRECLEANER	
	7	1	**127-4471**	4	CLAMP-HOSE	
	8	1	**129-9518**	2	HOSE	
	9	1	**5P-4325**	4	CLIP (54MM ID)	
	10	1	**8T-4121**	15	WASHER (2.5MM THK)	
M	11	1	**8T-4133**	3	NUT (M10X1.50 THD)	
M	12	1	**8T-4137**	9	BOLT (M10X1.50X20MM)	
M	13	1	**8T-5005**	3	BOLT (M10X1.50X70MM)	

M-METRIC PART

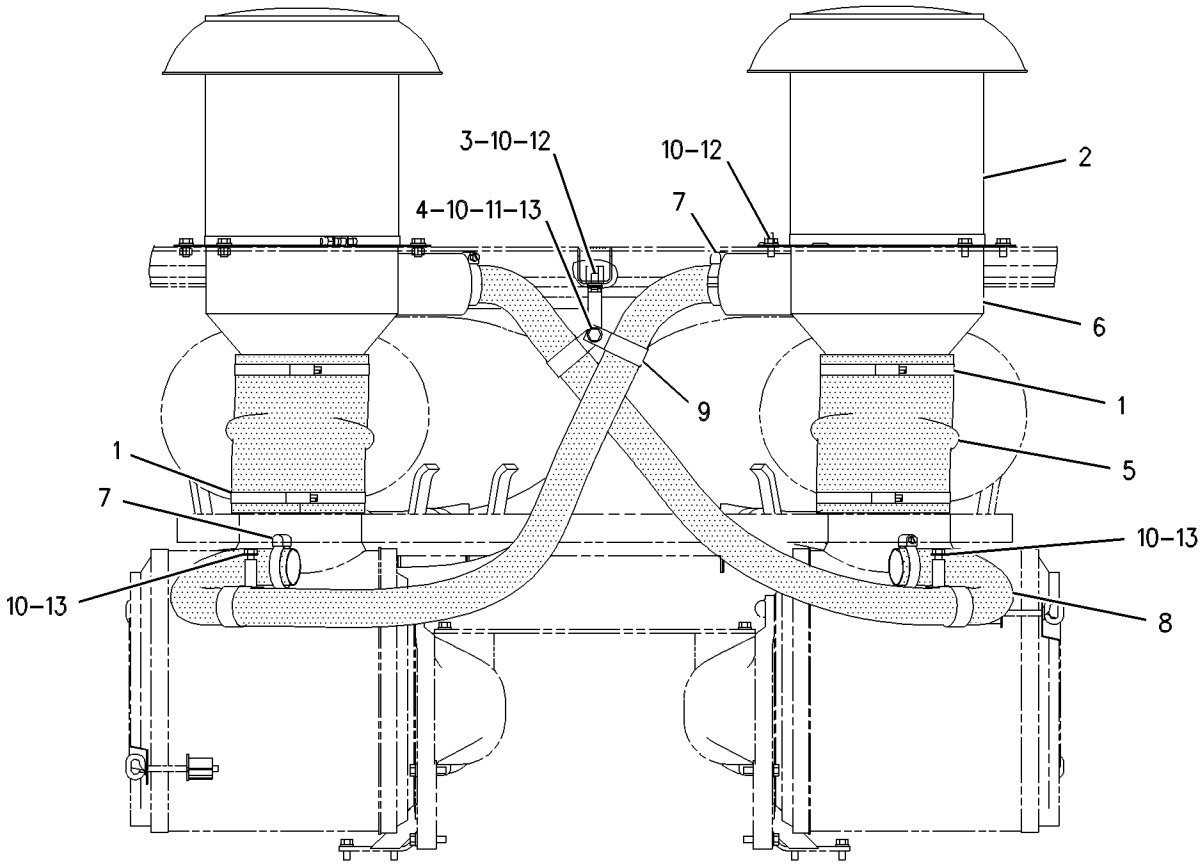

FRONT VIEW

GRAPHIC #1 g00293270

AIR INLET AND EXHAUST SYSTEM

141-7180 SHIELD GP-EXHAUST

S/N: 2GR580-1851

PART OF 107-8762 ENGINE AR

SMCS-1067 **i00767889**

NOTE	REF NO	GRAPHIC REF	PART NUMBER	QTY	PART NAME 1 2 3 4 5 6 (PRODUCT LEVEL)	SEE PAGE
	1	1	**141-7176**	1	SHIELD AS-TURBOCHARGER	
	2	1	**141-7177**	2	SHIELD AS-TURBOCHARGER	
	3	1	**155-0531**	1	SHIELD AS-MANIFOLD	
	4	1	**155-0532**	1	SHIELD AS-MANIFOLD	
	5	1	**155-0533**	1	SHIELD AS-MANIFOLD	
	6	1	**155-0534**	2	SHIELD AS-MANIFOLD	
D	7	1	**5P-6025**		LOCKWIRE (3M)	

D-ORDER BY THE METER

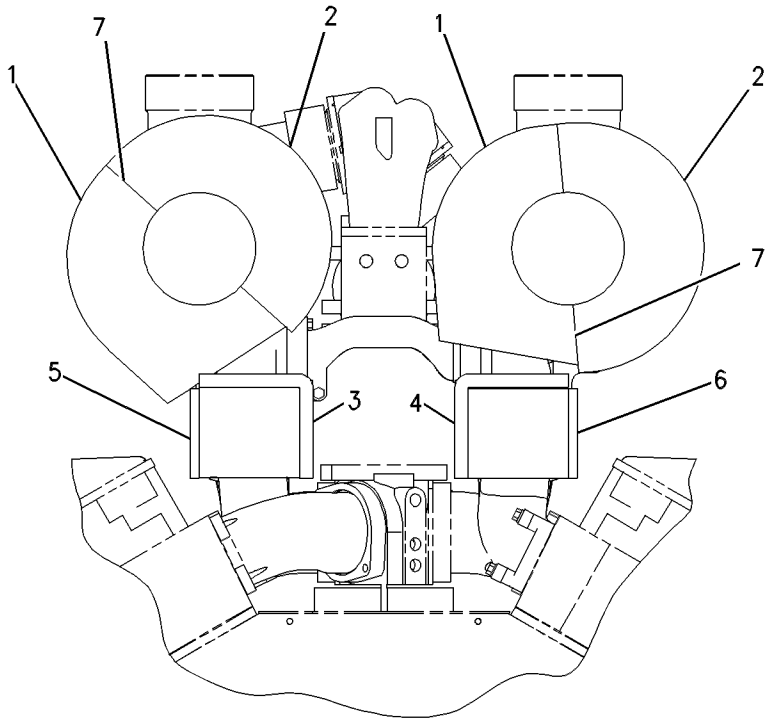

FRONT VIEW

GRAPHIC #1 g00377413

MEMORANDA

AIR INLET AND EXHAUST SYSTEM

141-7185 SHIELD GP-EXHAUST

S/N: 7HR1-305

PART OF 112-6000 INSTALLATION AR-ENGINE

SMCS-1067 **i00921233**

NOTE	REF NO	GRAPHIC REF	PART NUMBER	QTY	PART NAME 1 2 3 4 5 6 (PRODUCT LEVEL)	SEE PAGE
	1	1	**141-7172**	2	SHIELD AS-EXHAUST	
	2	1	**141-7173**	4	SHIELD AS-EXHAUST	
	3	1	**141-7174**	1	SHIELD AS-EXHAUST	
	4	1	**141-7175**	1	SHIELD AS-EXHAUST	
BD	5	1	**5P-6025**		LOCKWIRE (10M)	

B-USE AS REQUIRED
D-ORDER BY THE METER

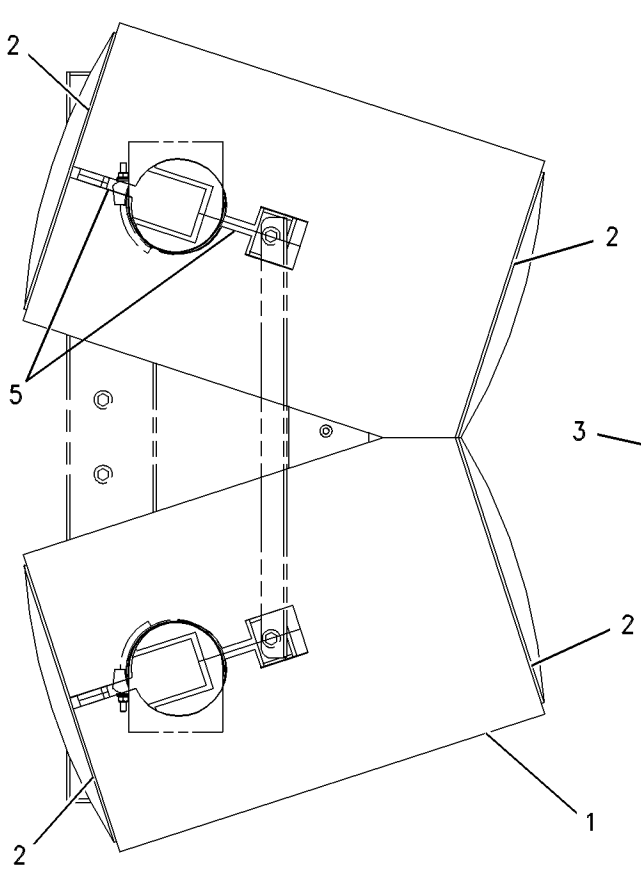

TOP VIEW

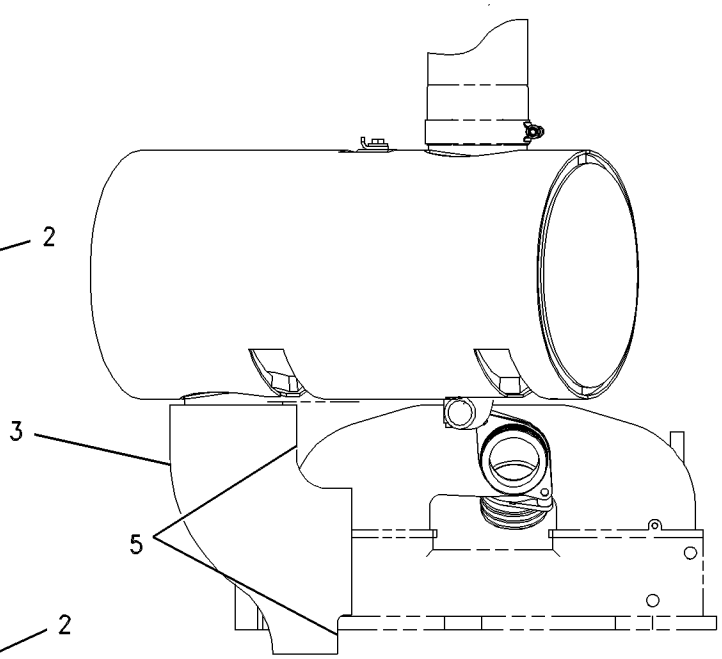

RIGHT SIDE VIEW

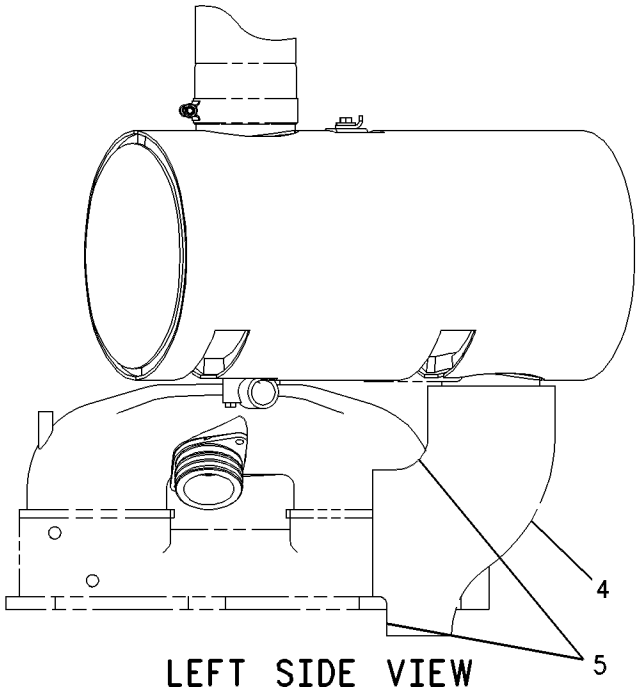

LEFT SIDE VIEW

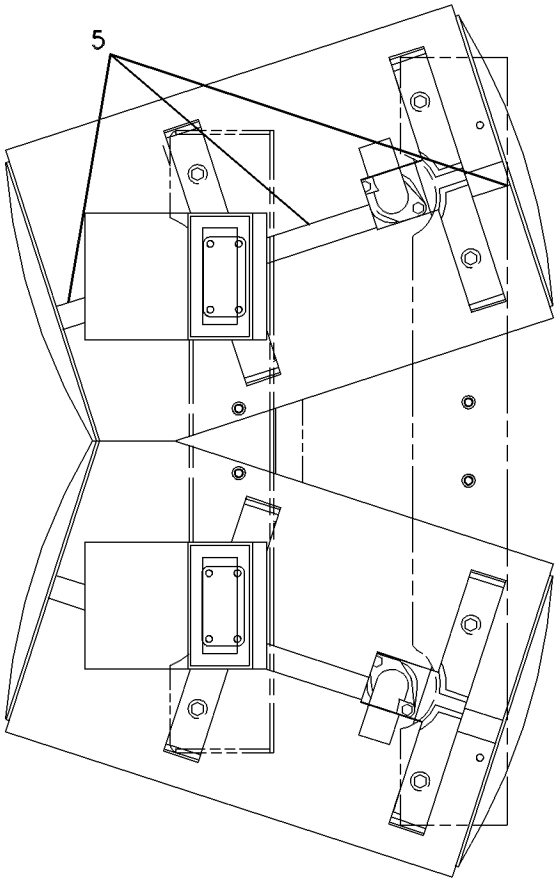

BOTTOM VIEW

GRAPHIC #1 g00477167

AIR INLET AND EXHAUST SYSTEM

112-6015 TURBOCHARGER GP

S/N: 2GR1-309

PART OF 107-8762 ENGINE AR

SMCS-1052, 1053 **i01055260**

NOTE	REF NO	GRAPHIC REF	PART NUMBER	QTY	PART NAME 1 2 3 4 5 6 (PRODUCT LEVEL)	SEE PAGE
	1	1	**124-5514**	2	COUPLING-EXHAUST	
	2	1	**7M-7273**	2	GASKET-TURBOCHARGER	
	3	1	**2N-2765**	8	BOLT-HIGH TEMPERATURE	
	4	1	**3E-8018**	8	LOCKNUT (3/8-16 THD)	
Y	5	1	*114-2656*	2	TURBOCHARGER GP	172
	6	1	**6L-3005**	2	CLAMP	

Y-SEPARATE ILLUSTRATION

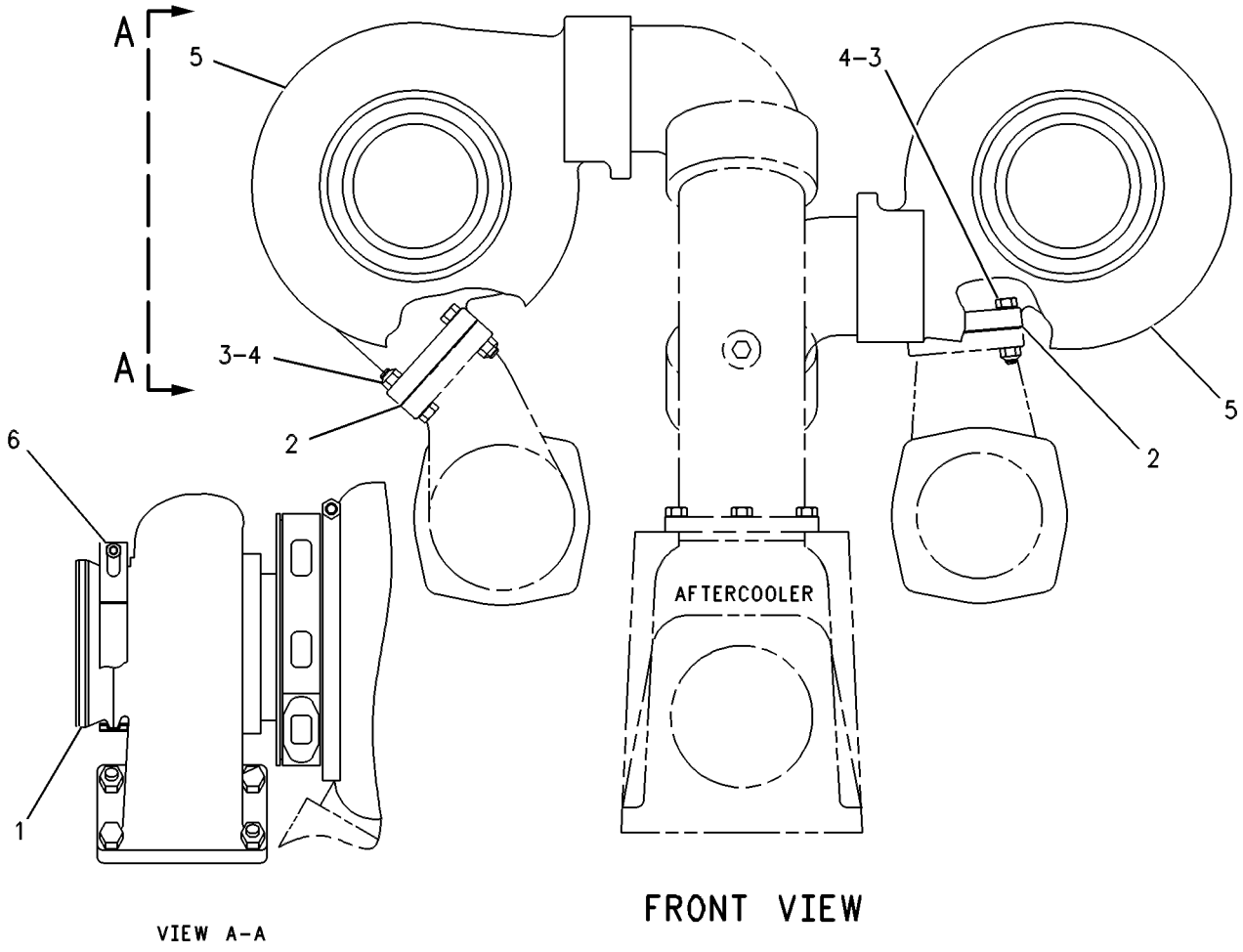

GRAPHIC #1 g00253927

AIR INLET AND EXHAUST SYSTEM

112-6015 TURBOCHARGER GP

S/N: 2GR310-1819

PART OF 107-8762 ENGINE AR

SMCS-1052, 1053 **i01055259**

NOTE	REF NO	GRAPHIC REF	PART NUMBER	QTY	PART NAME 1 2 3 4 5 6 (PRODUCT LEVEL)	SEE PAGE
	1	1	**124-5514**	2	COUPLING-EXHAUST	
	2	1	**121-5736**	2	GASKET-TURBOCHARGER	
	3	1	**2N-2765**	8	BOLT-HIGH TEMPERATURE	
	4	1	**2N-2766**	8	LOCKNUT (3/8-16 THD)	
YR	5	1	**148-8172**	2	TURBOCHARGER GP	173
	6	1	**6L-3005**	2	CLAMP	

R-REMFG PART MAY BE AVAILABLE
Y-SEPARATE ILLUSTRATION

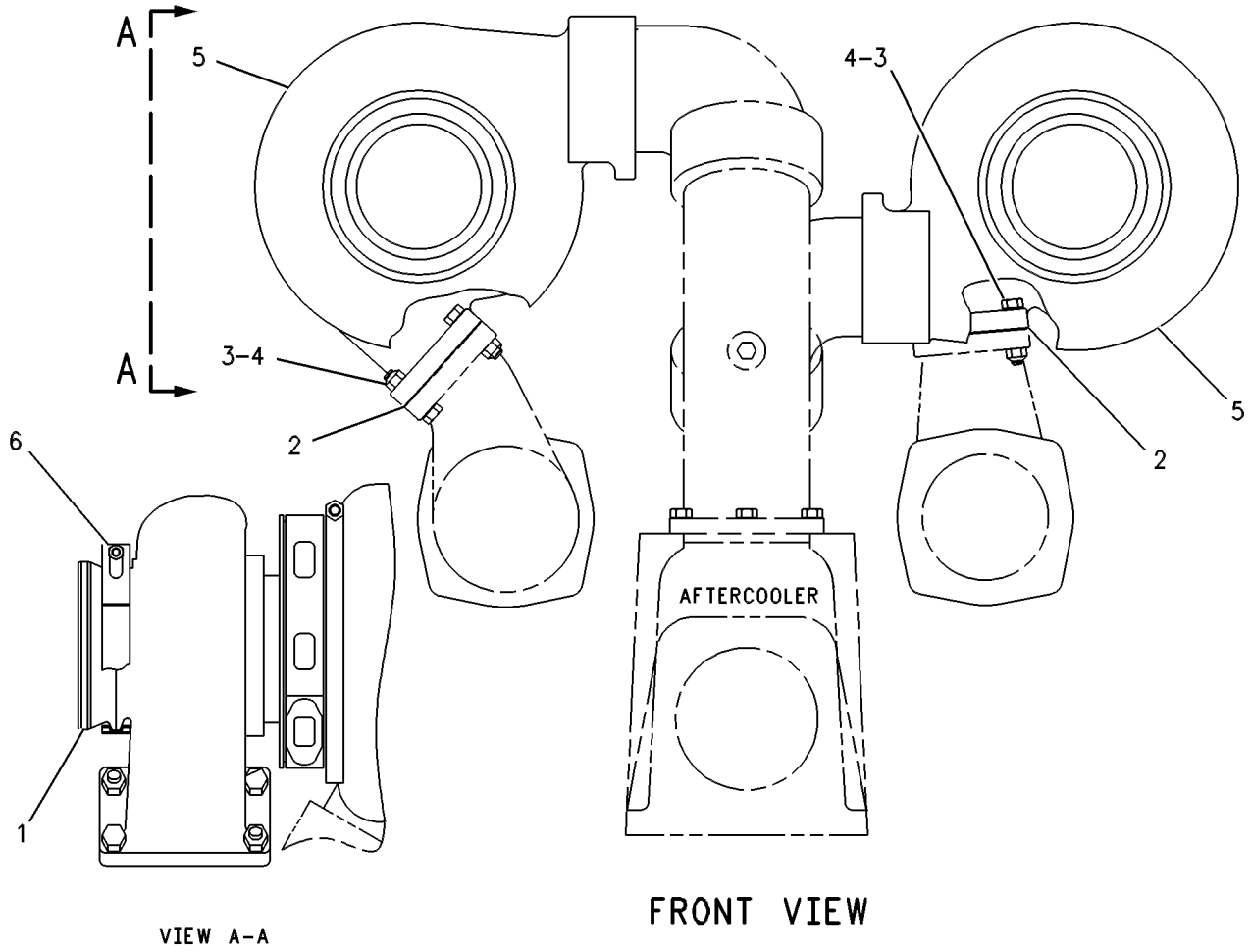

GRAPHIC #1 g00253927

AIR INLET AND EXHAUST SYSTEM

114-2656 TURBOCHARGER GP

S/N: 2GR1-309

PART OF 112-6015 TURBOCHARGER GP

SMCS-1052, 1053 **i00749623**

NOTE	REF NO	GRAPHIC REF	PART NUMBER	QTY	PART NAME 1 2 3 4 5 6 (PRODUCT LEVEL)	SEE PAGE
	1	1	**118-6534**	1	COVER-COMPRESSOR	
	2	1	**4W-9977**	1	CLAMP AS (COMPRESSOR)	
	3	1	**119-1328**	1	HOUSING-TURBINE	
	4	1	**9N-2038**	1	CLAMP AS (TURBINE)	
	5	1	**126-0903**	1	CARTRIDGE GP-TURBOCHARGER	
	6	1	**2F-0808**	2	SCREW	
		1	**1W-4795**	1	PLATE-IDENTIFICATION	

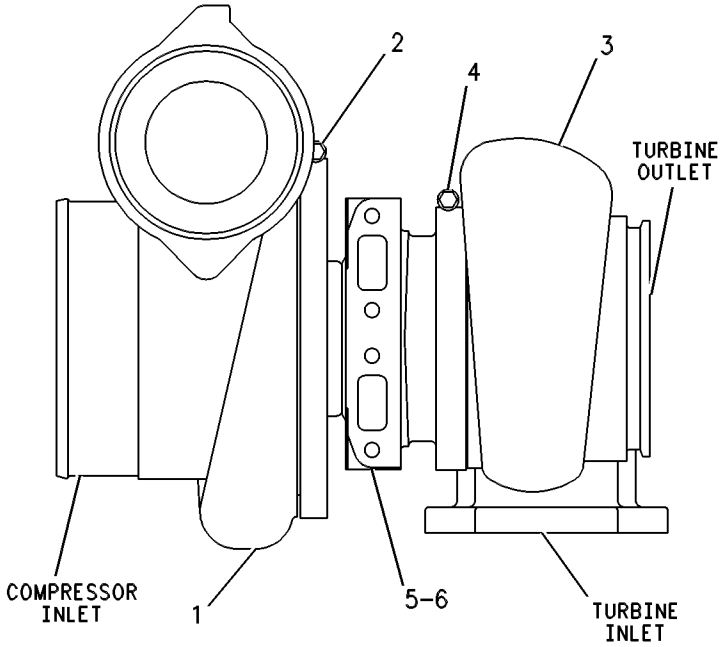

GRAPHIC #1 g00253921

AIR INLET AND EXHAUST SYSTEM

148-8172 TURBOCHARGER GP*R

S/N: 2GR310-1915

PART OF 112-6015, 156-6262 TURBOCHARGER GP

SMCS-1052, 1053 **i01420654**

NOTE	REF NO	GRAPHIC REF	PART NUMBER	QTY	PART NAME 1 2 3 4 5 6 (PRODUCT LEVEL)	SEE PAGE
R	1	1	**148-8170**	1	CARTRIDGE GP	
	2	1	**149-6518**	1	COVER-COMPRESSOR	
	3	1	**119-1328**	1	HOUSING-TURBINE	
	4	1	**4W-9977**	1	CLAMP AS (COMPRESSOR)	
	5	1	**9N-2038**	1	CLAMP AS (TURBINE)	

R-REMFG PART MAY BE AVAILABLE

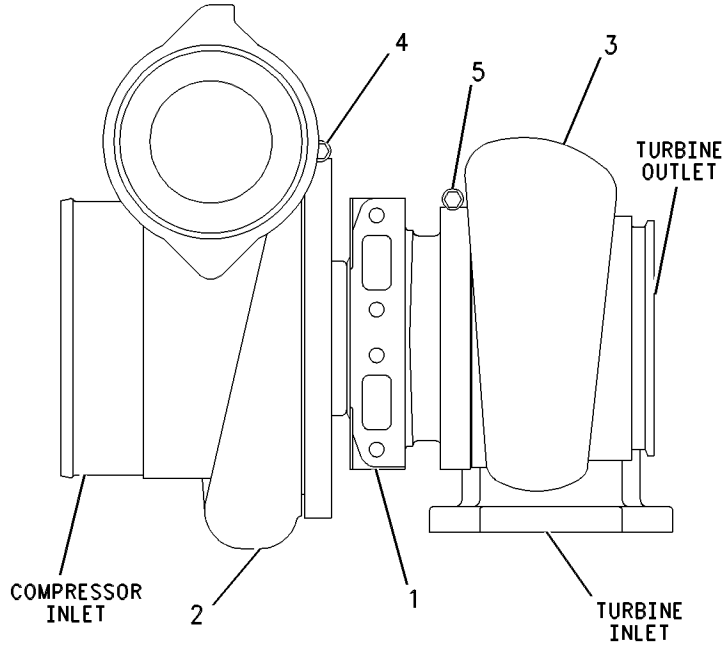

GRAPHIC #1 g00287611

AIR INLET AND EXHAUST SYSTEM

156-6262 TURBOCHARGER GP

S/N: 2GR1820-1915

PART OF 107-8762 ENGINE AR

SMCS-1052, 1053 **i01207870**

NOTE	REF NO	GRAPHIC REF	PART NUMBER	QTY	PART NAME 1 2 3 4 5 6 (PRODUCT LEVEL)	SEE PAGE
	1	1	**2N-2765**	8	BOLT-HIGH TEMPERATURE (3/8-16X1.75IN)	
	2	1	**2N-2766**	8	LOCKNUT (3/8-16 THD)	
	3	1	**6L-3005**	2	CLAMP-V-BAND	
		1	**8T-0122**	1	NUT-FULL (HIGH TEMPERATURE)	
	4	1	**121-5736**	2	GASKET-TURBOCHARGER	
	5	1	**124-5514**	2	COUPLING-EXHAUST	
YR	6	1	**148-8172**	2	TURBOCHARGER GP	173

R-REMFG PART MAY BE AVAILABLE
Y-SEPARATE ILLUSTRATION

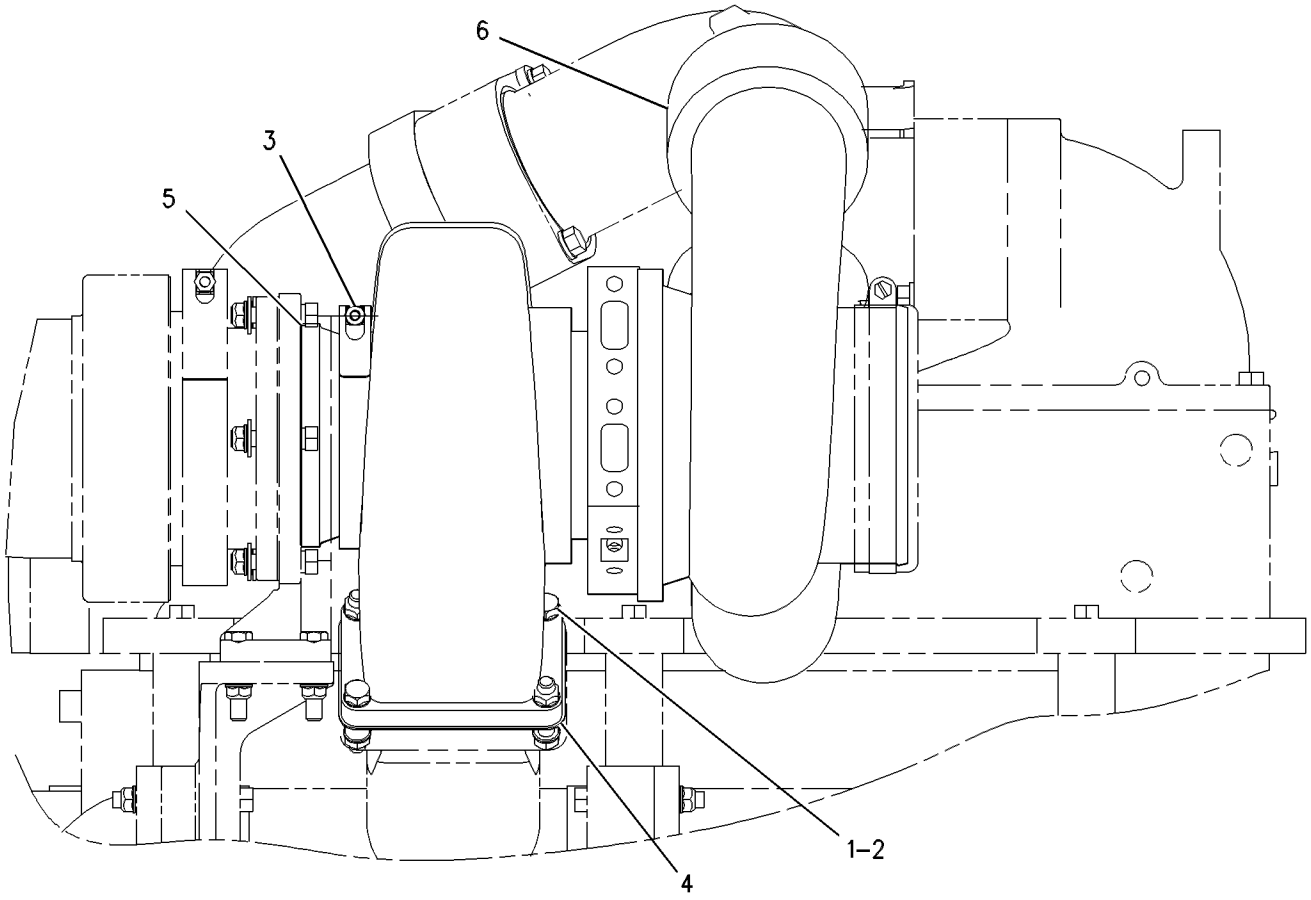

RIGHT SIDE VIEW

GRAPHIC #1 g00453236

AIR INLET AND EXHAUST SYSTEM

156-6262 TURBOCHARGER GP

S/N: 2GR1916-UP

PART OF 107-8762 ENGINE AR

SMCS-1052, 1053 **i01181685**

NOTE	REF NO	GRAPHIC REF	PART NUMBER	QTY	PART NAME 1 2 3 4 5 6 (PRODUCT LEVEL)	SEE PAGE
	1	1	**2N-2765**	8	BOLT-HIGH TEMPERATURE (3/8-16X1.75IN)	
	2	1	**6L-3005**	2	CLAMP-V-BAND	
	3	1	**121-5736**	2	GASKET-TURBOCHARGER	
	4	1	**124-5514**	2	COUPLING-EXHAUST	
	5	1	**168-7800**	8	LOCKNUT (HIGH TEMPERATURE)	
CYR	6	1	**169-2573**	2	TURBOCHARGER GP	176

C-CHANGE FROM PREVIOUS TYPE
R-REMFG PART MAY BE AVAILABLE
Y-SEPARATE ILLUSTRATION

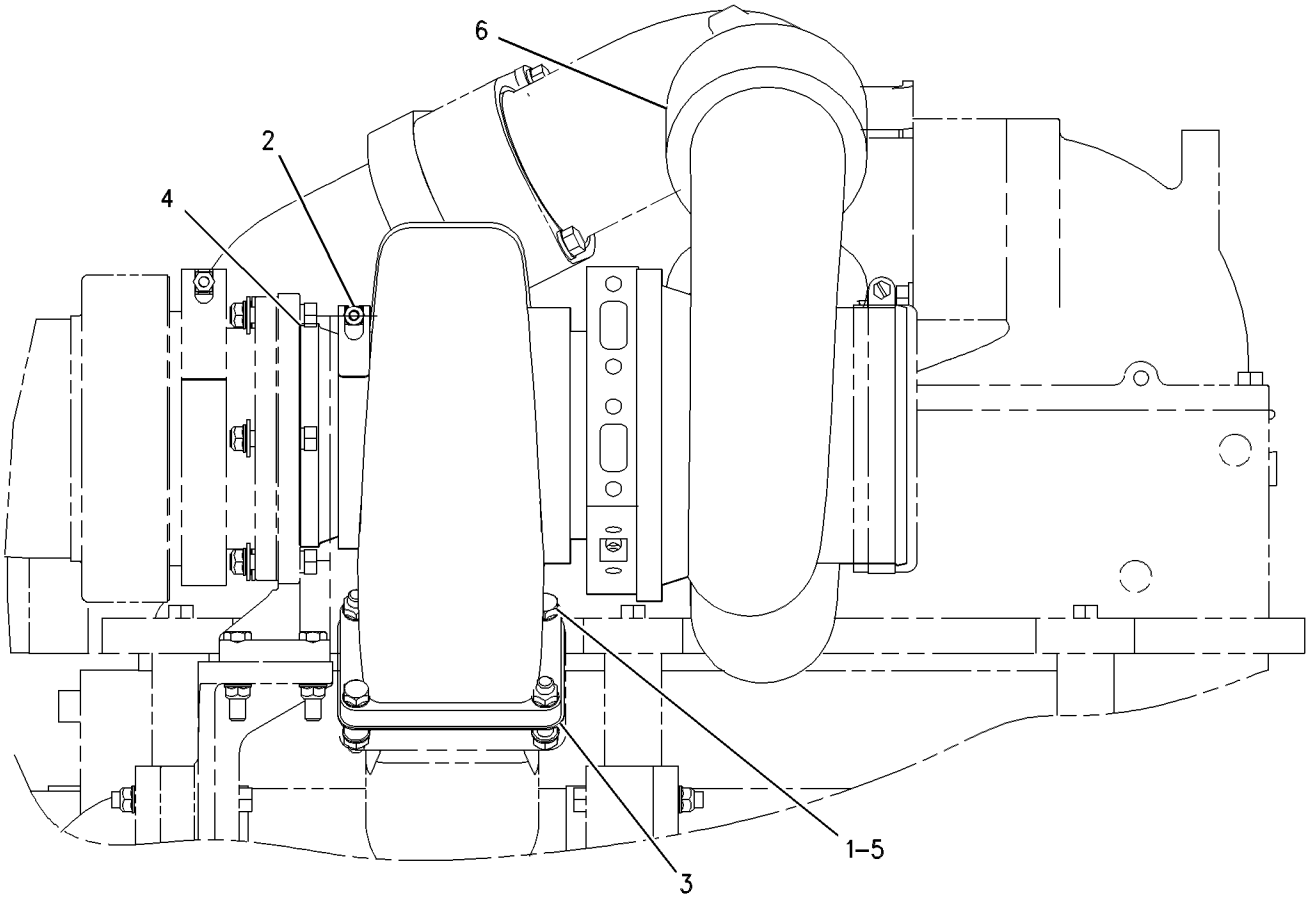

RIGHT SIDE VIEW

GRAPHIC #1 g00596699

AIR INLET AND EXHAUST SYSTEM

169-2573 TURBOCHARGER GP*R

S/N: 2GR1916-UP

PART OF 156-6262 TURBOCHARGER GP

SMCS-1052, 1053 **i01420655**

NOTE	REF NO	GRAPHIC REF	PART NUMBER	QTY	PART NAME 1 2 3 4 5 6 (PRODUCT LEVEL)	SEE PAGE
R	1	1	**169-2578**	1	CARTRIDGE GP-TURBOCHARGER	
	2	1	**149-6518**	1	COVER-COMPRESSOR	
	3	1	**119-1328**	1	HOUSING-TURBINE	
	4	1	**4W-9977**	1	CLAMP AS (COMPRESSOR)	
	5	1	**9N-2038**	1	CLAMP AS (TURBINE)	

R-REMFG PART MAY BE AVAILABLE

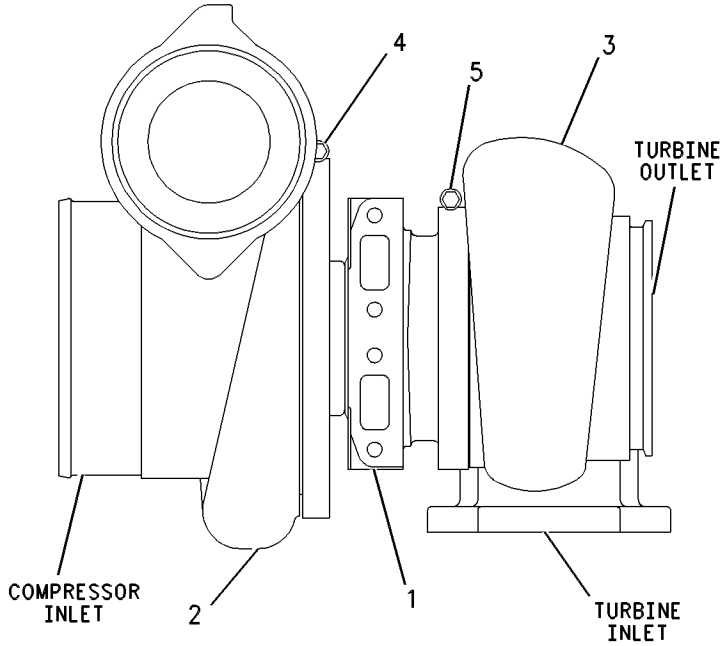

GRAPHIC #1 g00287611

MEMORANDA

109-6859 ADAPTER GP-FAST FILL FUEL

S/N: 7HR1-265

PART OF 131-8141, 132-1491 FUEL AR-FAST FILL

AN ATTACHMENT

SMCS-1710 **i01147396**

NOTE	REF NO	GRAPHIC REF	PART NUMBER	QTY	PART NAME 1 2 3 4 5 6 (PRODUCT LEVEL)	SEE PAGE
	1	1	**7X-7958**	4	CLAMP-HOSE	
	2	1	**3B-6491**	2	COUPLING-PIPE	
	3	1	**5V-6106**	2	VENT AS	
	4	1	**9D-0630**	1	COVER-DUST	
	5	1	**8T-6703**	2	CLAMP-HOSE	
	6	1	**032-8707**	2	ELBOW-HOSE	
	7	1	**101-8909**	1	CAP AS-FUEL TANK FILLER	
		1	**9X-8600**	1	SEAL-O-RING (110.49MM ID)	
	8	1	**124-3238**	1	PLATE AS	
		1	**6V-2370**	7	RIVET-POP	
	9	1	**124-3239**	1	PLATE AS	
		1	**6V-2370**	7	RIVET-POP	
	10	1	**136-6202**	2	AIR CLEANER AS	
	11	1	**156-6311**	2	ADAPTER AS	
	12	1	**147-0998**	1	ADAPTER GROUP-FAST FILL FUEL	
	13	1	**7M-8485**	1	SEAL-O-RING (29.74MM ID)	
	14	1	**8T-4121**	4	WASHER (2.5MM THK)	
M	15	1	**8T-4137**	4	BOLT (M10X1.50X20MM)	
	16	1	**9S-9334**	1	PLUG (1 5/16-12 THD)	
E	17	1	**5P-0742**	2	HOSE (25.2CM EACH)	
					AVAILABLE REPAIR KIT(S):	
			5T-8645	1	KIT-VENT	

E-ORDER BY THE CENTIMETER
M-METRIC PART

109-6859 **ADAPTER GP-FAST FILL FUEL** *(contd.)* **i01147396**

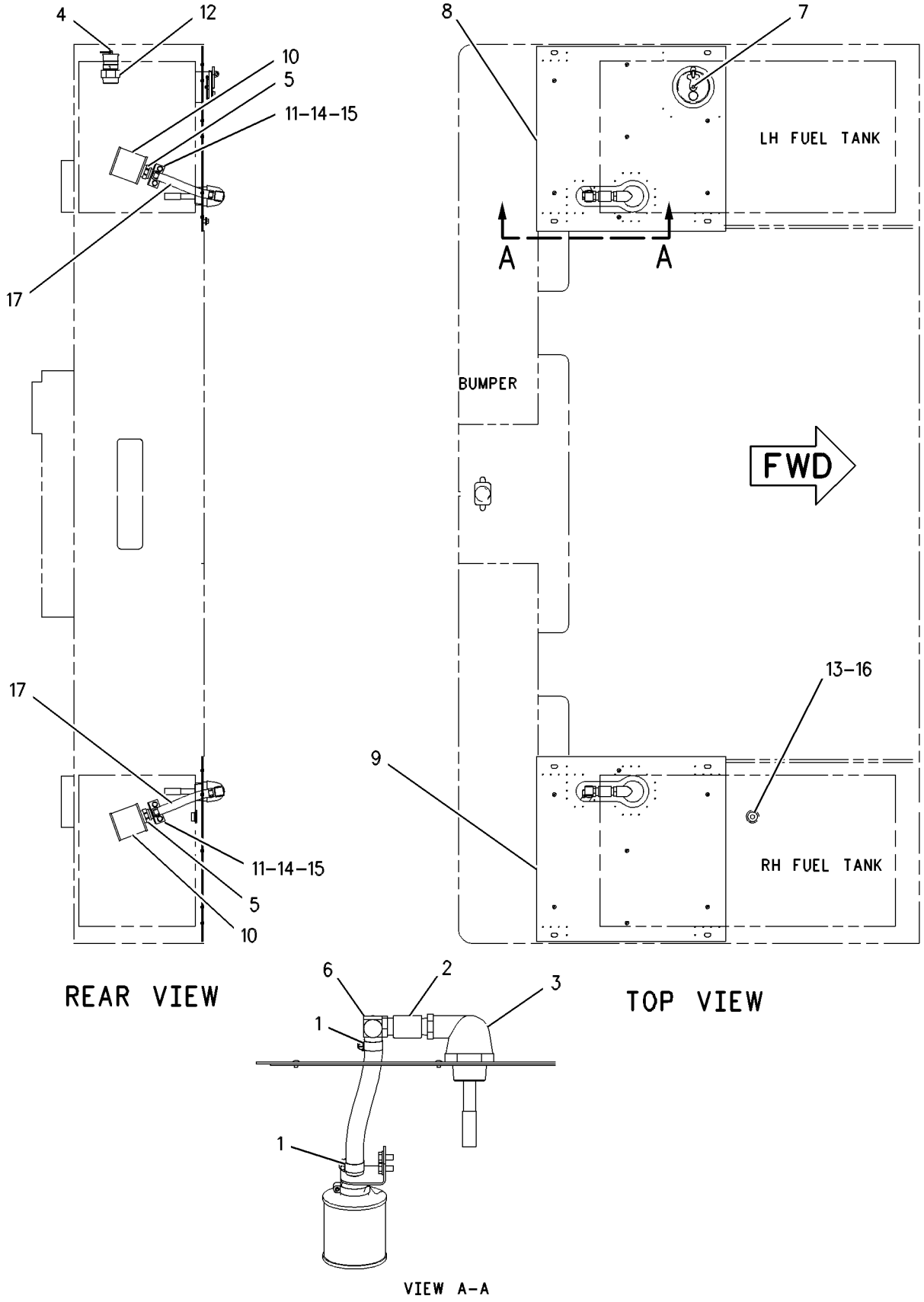

GRAPHIC #1 g00407481

156-5926 ADAPTER GP-FAST FILL FUEL

S/N: 7HR266-290

PART OF 131-8141, 132-1491 FUEL AR-FAST FILL

AN ATTACHMENT

SMCS-1710 **i01139113**

NOTE	REF NO	GRAPHIC REF	PART NUMBER	QTY	PART NAME 1 2 3 4 5 6 (PRODUCT LEVEL)	SEE PAGE
	1	1	**2S-3440**	4	CLAMP-HOSE	
	2	1	**3B-6491**	2	COUPLING-PIPE	
J	3	1	**5V-6106**	2	VENT AS	
	4	1	**9D-0630**	1	COVER-DUST	
	5	1	**9M-0164**	2	CLAMP-HOSE	
	6	1	**032-8707**	2	ELBOW-HOSE	
	7	1	**101-8909**	1	CAP AS-FUEL TANK FILLER	
		1	**9X-8600**	1	SEAL-O-RING (110.49MM ID)	
	8	1	**136-6202**	2	AIR CLEANER AS	
	9	1	**156-6311**	2	ADAPTER AS	
M	10	1	**8T-3597**	6	NUT-WELD (M12X1.75 THD)	
	12	1	**163-6594**	1	SHEET AS-RH	
	13	1	**163-6595**	1	SHEET AS-LH	
					(EACH SHEET AS INCLUDES)	
		1	**1V-6755**	1	LATCH AS	
		1	**6V-2370**	5	RIVET-POP	
	14	1	**147-0998**	1	ADAPTER GROUP-FAST FILL FUEL	
	15	1	**5P-1076**	18	WASHER-HARD (4MM THK)	
	16	1	**8T-4121**	4	WASHER (2.5MM THK)	
M	17	1	**8T-4137**	4	BOLT (M10X1.50X20MM)	
M	18	1	**8T-4192**	18	BOLT (M12X1.75X25MM)	
	19	1	**8T-6767**	2	PLUG-PIPE (3/8-18 NPTF THD)	
E	20	1	**5P-0742**		HOSE (53CM)	
					AVAILABLE REPAIR KIT(S):	
J			**5T-8645**	1	KIT-VENT	

E-ORDER BY THE CENTIMETER
J-PART MARKED J INCLUDES KIT MARKED J
M-METRIC PART

156-5926 **ADAPTER GP-FAST FILL FUEL** ***(contd.)*** **i01139113**

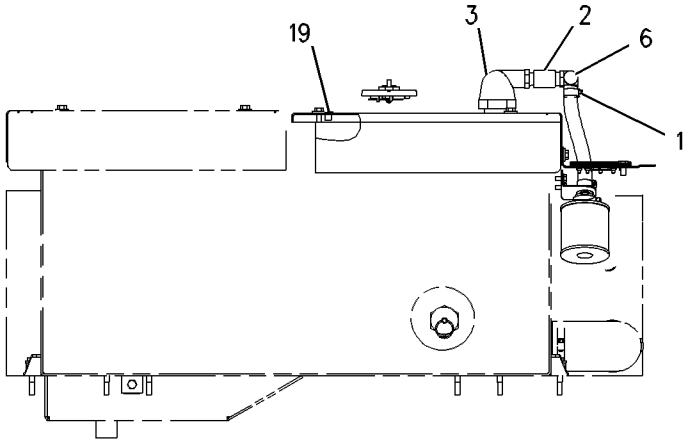

LEFT SIDE VIEW

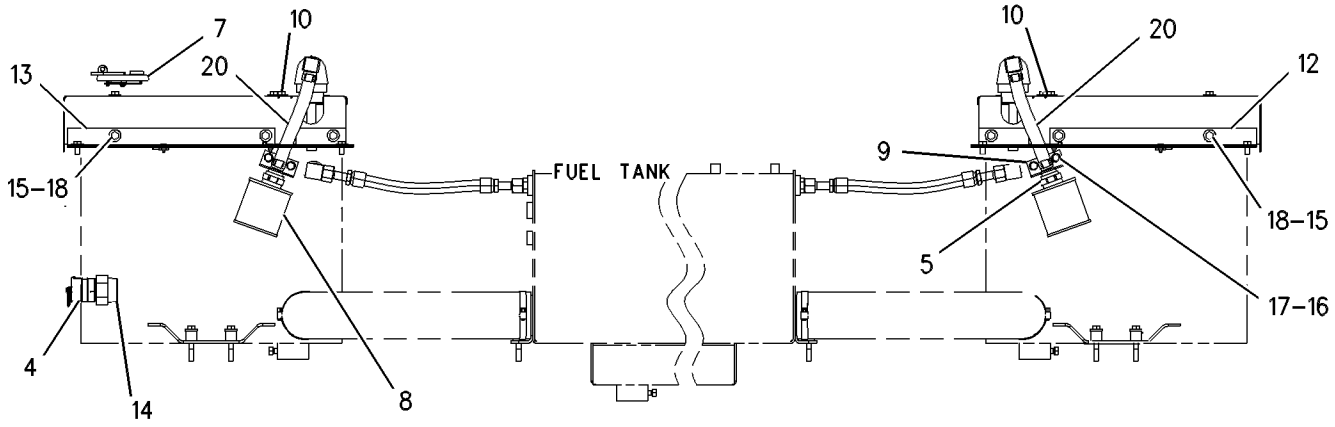

REAR VIEW

GRAPHIC #1 g00526279

156-5926 ADAPTER GP-FAST FILL FUEL

S/N: 7HR291-UP

PART OF 131-8141, 132-1491 FUEL AR-FAST FILL

AN ATTACHMENT

SMCS-1710 **i01388872**

NOTE	REF NO	GRAPHIC REF	PART NUMBER	QTY	PART NAME 1 2 3 4 5 6 (PRODUCT LEVEL)	SEE PAGE
	1	1	**1H-9779**	6	CONNECTOR-HOSE	
	2	1	**2S-3440**	6	CLAMP-HOSE	
J	3	1	**5V-6106**	2	VENT AS	
	4	1	**7X-4736**	2	GROMMET	
	5	1	**9D-0630**	1	COVER-DUST	
	6	1	**101-8909**	1	CAP AS-FUEL TANK FILLER	
		1	**9X-8600**	1	SEAL-O-RING (110.49MM ID)	
	7	1	**160-9340**	2	TANK AS-FUEL	
	8	1	**167-1413**	2	PLATE	
	9	1	**061-9593**	2	BUSHING-REDUCER (1/2-14 NPTF)	
	11	1	**147-0998**	1	ADAPTER GP-FAST FILL FUEL	
	12	1	**3B-6498**	2	ELBOW (1 IN)	
	15	1	**7X-7729**	8	WASHER (11X25X3MM THK)	
	16	1	**8D-9947**	2	CLIP	
M	17	1	**8T-4192**	4	BOLT (M12X1.75X25MM)	
M	18	1	**8T-4179**	2	BOLT (M12X1.75X20MM)	
M	19	1	**8T-4195**	8	BOLT (M10X1.5X30MM)	
	20	1	**8T-4223**	6	WASHER-HARD (13.5X25.5X3MM THK)	
	21	1	**8T-6767**	1	PLUG-PIPE (3/8-18 NPTF THD)	
E	22	1	**5P-0742**	2	HOSE (206.3CM EA)	
E	23	1	**5P-0742**	2	HOSE (38.6CM EA)	
	24	1	**5P-8502**	1	PADLOCK GP	
A		1	**5P-8500**	1	KEY	
A		1	**8Y-6364**	1	SLEEVE	
					AVAILABLE REPAIR KIT(S):	
J			**5T-8645**	1	KIT-VENT	

A-NOT PART OF THIS GROUP
E-ORDER BY THE CENTIMETER
J-PART MARKED J INCLUDES KIT MARKED J
M-METRIC PART

156-5926 **ADAPTER GP-FAST FILL FUEL** *(contd.)* **i01388872**

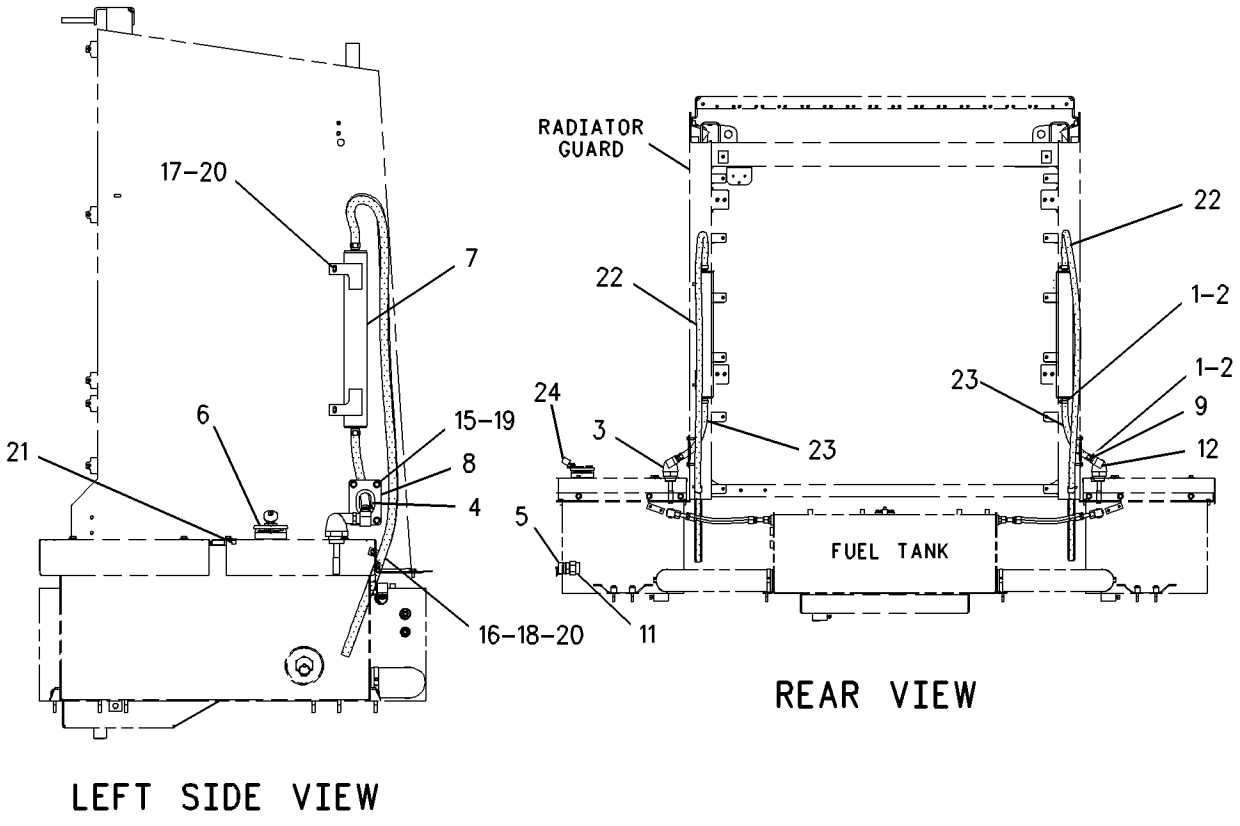

GRAPHIC #1 g00733555

FUEL SYSTEM

112-6025 FILTER GP-FUEL

S/N: 2GR1-UP

PART OF 107-8762 ENGINE AR

SMCS-1261 **i01141067**

NOTE	REF NO	GRAPHIC REF	PART NUMBER	QTY	PART NAME 1 2 3 4 5 6 (PRODUCT LEVEL)	SEE PAGE
	1	1	**1L-3769**	1	RING-RETAINING	
	2	1	**1R-0755**	2	FILTER AS-FUEL (SECONDARY)	
	3	1	**1W-7559**	1	BASE AS-FUEL FILTER	
		1	**6N-1127**	1	SHIELD-OIL FILTER	
		1	**7F-9090**	2	SCREW-DRIVE	
		1	**8N-3653**	1	STUD-TAPERLOCK	
	4	1	**1W-8129**	1	SUPPORT	
	5	1	**7E-1815**	1	BASE AS-FUEL FILTER	
		1	**6N-1127**	1	SHIELD-OIL FILTER	
		1	**7F-9090**	2	SCREW-DRIVE	
	6	1	**7H-9678**	1	RETAINER-ELEMENT	
	7	1	**7L-6326**	1	CLIP	
	8	1	**7M-4672**	1	WASHER	
	9	1	**7N-1628**	1	NUT	
	10	1	**7S-9323**	1	SPRING	
	11	1	**8H-7202**	1	CASE AS-FUEL FILTER	
	12	1	**9M-2342**	1	ELEMENT AS-FUEL FILTER (PRIMARY)	
	13	1	**9W-6825**	1	BRACKET	
	14	1	**123-6936**	1	BRACKET	
	15	1	**123-6948**	1	PLUG	
	16	1	**0L-2070**	3	BOLT (3/8-16X2.25IN)	
	17	1	**0S-1571**	3	BOLT (3/8-16X1.75IN)	
	18	1	**0S-1588**	2	BOLT (3/8-16X1.25IN)	
	19	1	**0S-1591**	5	BOLT (3/8-16X1.5 IN)	
	20	1	**0S-1594**	1	BOLT (3/8-16X1 IN)	
	21	1	**0T-0055**	2	BOLT (3/8-16X4.25IN)	
	22	1	**2H-3429**	1	RING-RETAINING	
	23	1	**2K-8198**	2	SEAL-O-RING (32.99MM ID)	
	24	1	**3J-1907**	3	SEAL-O-RING (11.89MM ID)	
	25	1	**3K-0360**	4	SEAL-O-RING (16.36MM ID)	
	26	1	**5H-8038**	1	SEAL-O-RING	
	27	1	**5M-2894**	26	WASHER (2.5MM THK)	
	28	1	**6V-0871**	1	GROMMET	
	29	1	**6V-3922**	1	SEAL-O-RING (18.72MM ID)	
	30	1	**7J-9108**	1	SEAL-O-RING (15.72MM ID)	
	31	1	**8H-2778**	1	GASKET	
	32	1	**9S-4185**	3	PLUG-O-RING (3/4-16 THD)	
	33	1	**9S-4191**	3	PLUG-O-RING (9/16-18 THD)	
	34	1	**9S-8005**	1	PLUG-O-RING (3/4-16 THD)	
	35	1	**9S-8752**	13	NUT (3/8-16 THD)	

112-6025 **FILTER GP-FUEL** *(contd.)* **i01141067**

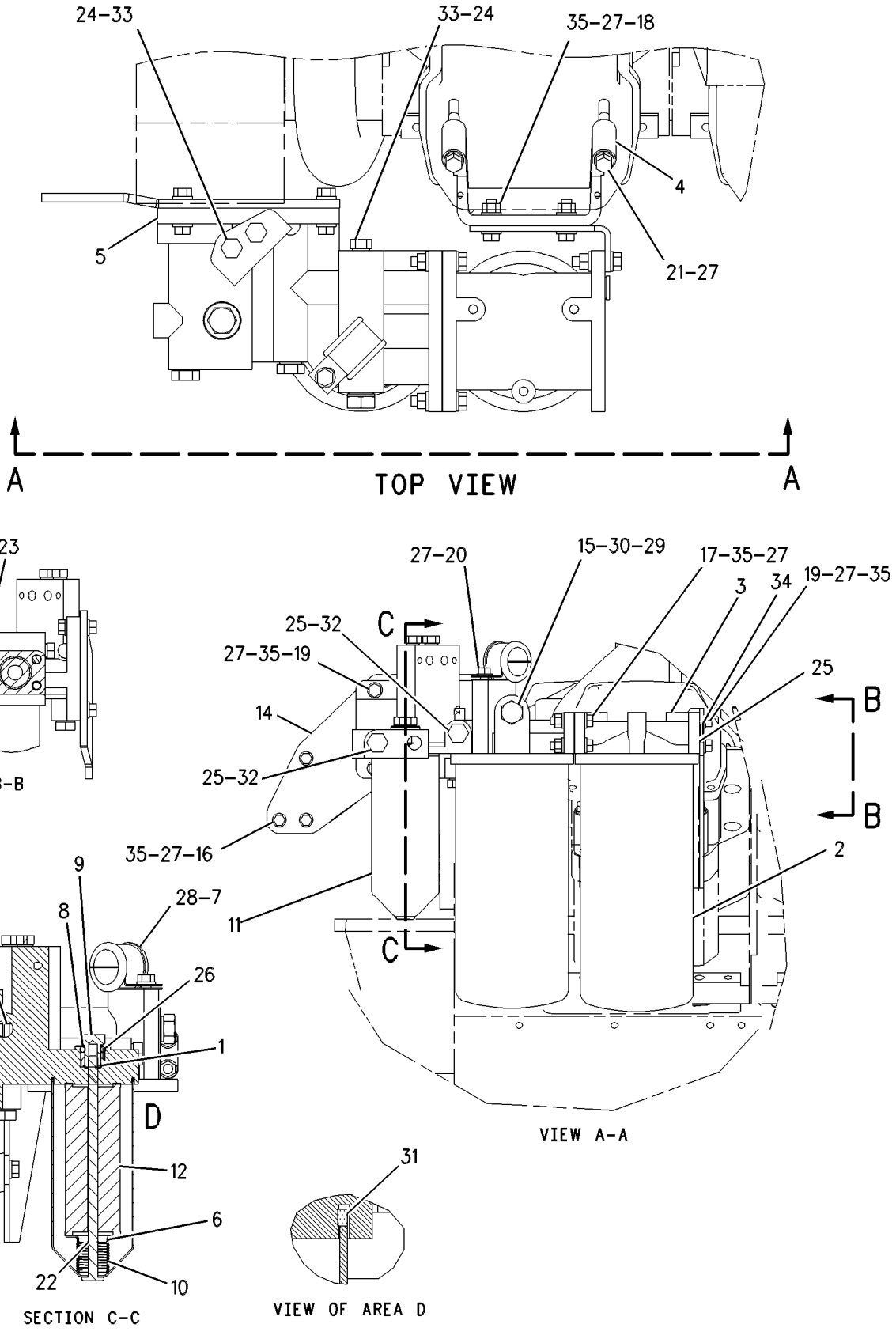

GRAPHIC #1 g00604461

131-1244 FUEL AR-CONVENTIONAL FILL

S/N: 7HR1-265

CANNOT BE USED WITH 132-1491 FUEL AR-FAST FILL, 131-8141 FUEL AR-FAST FILL, 132-1492 HEATER AR-FUEL

AN ATTACHMENT

SMCS-1273, 1274 **i01070890**

NOTE	REF NO	GRAPHIC REF	PART NUMBER	QTY	PART NAME 1 2 3 4 5 6 (PRODUCT LEVEL)	SEE PAGE
	1	1	**123-6305**	1	CAP AS-FUEL TANK	
		1	**9X-8600**	1	SEAL-O-RING (110.49MM ID)	
	2	1	**123-8640**	1	VALVE AS	
	3	1	**124-3039**	1	PLATE AS	
		1	**6V-2370**	7	RIVET-POP	
	4	1	**124-3040**	1	PLATE AS	
		1	**6V-2370**	7	RIVET-POP	
	5	1	**4H-9027**	3	PLUG-PIPE (2-11 1/2 NPTF THD)	
	6	1	**6V-8625**	1	ELBOW-90 DEGREE (3/4-16 THD)	
	7	1	**6V-8626**	1	ELBOW-90 DEGREE (7/8-14 THD)	
					AVAILABLE REPAIR KIT(S):	
			9X-2205	1	KIT-CAP FILTER	

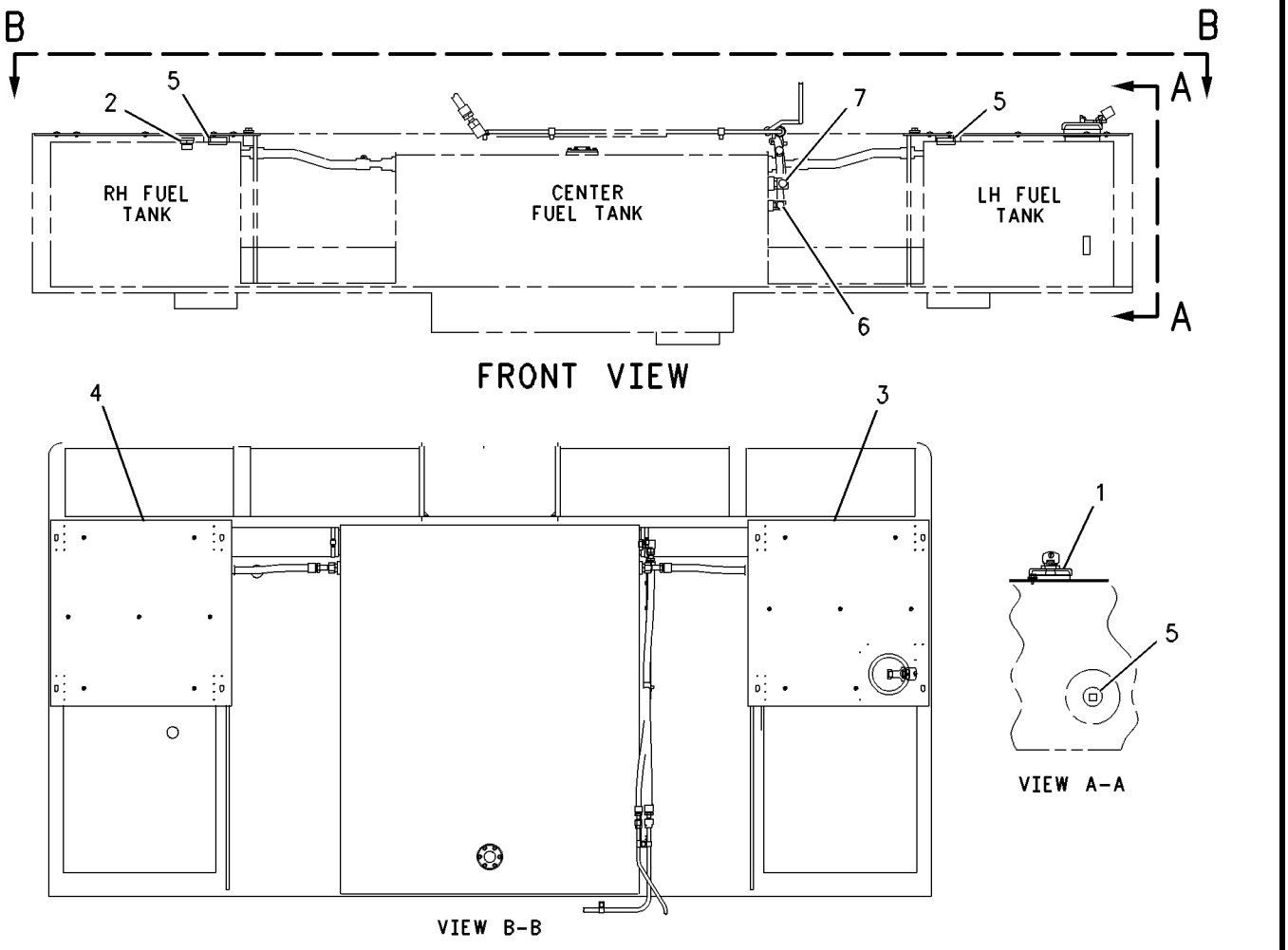

GRAPHIC #1 g00286142

MEMORANDA

131-1244 FUEL AR-CONVENTIONAL FILL

S/N: 7HR266-290

CANNOT BE USED WITH 132-1491 FUEL AR-FAST FILL, 131-8141 FUEL AR-FAST FILL, 132-1492 HEATER AR-FUEL

AN ATTACHMENT

SMCS-1273, 1274 **i01109600**

NOTE	REF NO	GRAPHIC REF	PART NUMBER	QTY	PART NAME 1 2 3 4 5 6 (PRODUCT LEVEL)	SEE PAGE
	1	1	**123-6305**	1	CAP AS-FUEL TANK	
		1	**9X-8600**	1	SEAL-O-RING (110.49MM ID)	
C	2	1	*163-6590*	1	SHEET AS-RH	
M		1	**8T-3597**	5	NUT-WELD (M12X1.75 THD)	
C	3	1	**163-6591**	1	SHEET-RH	
C	4	1	*163-6592*	1	SHEET AS-LH	
M		1	**8T-3597**	3	NUT-WELD (M12X1.75 THD)	
C	5	1	**163-6593**	1	SHEET-LH	
C	6	1	**163-9374**	1	GUARD	
	7	1	**4H-9027**	3	PLUG-PIPE (2-11 1/2 NPTF THD)	
C	8	1	**5B-1309**	1	COUPLING-PIPE	
C	9	1	**5P-1076**	20	WASHER-HARD (4MM THK)	
C	10	1	**6V-0678**	1	NIPPLE-PIPE	
	11	1	**6V-8625**	1	ELBOW-90 DEGREE (3/4-16 THD)	
	12	1	**6V-8626**	1	ELBOW-90 DEGREE (7/8-14 THD)	
CM	13	1	**8T-4192**	20	BOLT (M12X1.75X25MM)	
C	14	1	**8T-6767**	1	PLUG-PIPE (3/8-18 NPTF THD)	
	15	1	**9G-9981**	1	BREATHER	

C-CHANGE FROM PREVIOUS TYPE
M-METRIC PART

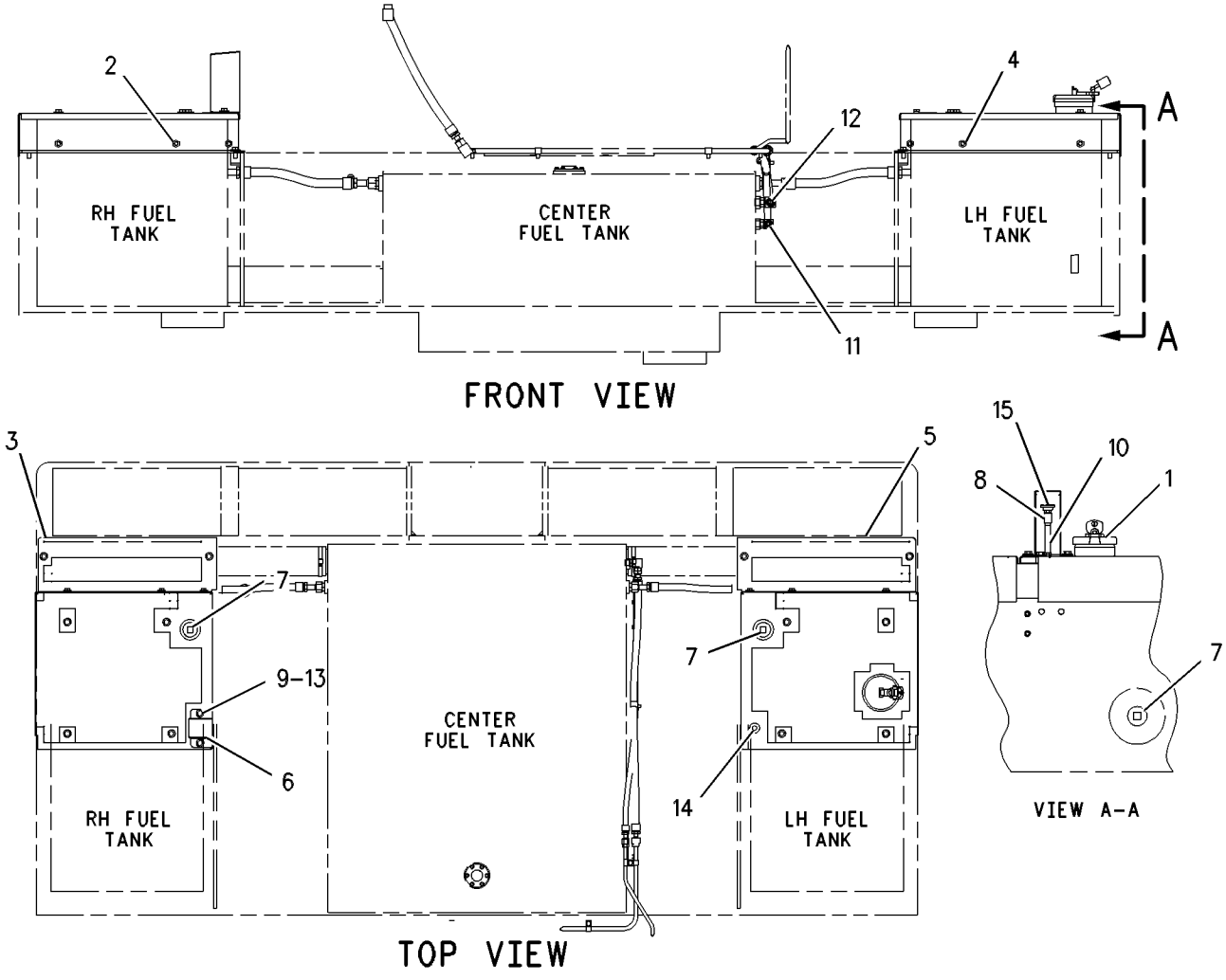

GRAPHIC #1 g00585759

131-1244 FUEL AR-CONVENTIONAL FILL

S/N: 7HR291-298

CANNOT BE USED WITH 132-1491 FUEL AR-FAST FILL, 131-8141 FUEL AR-FAST FILL, 132-1492 HEATER AR-FUEL

AN ATTACHMENT

SMCS-1273, 1274 **i01138783**

NOTE	REF NO	GRAPHIC REF	PART NUMBER	QTY	PART NAME 1 2 3 4 5 6 (PRODUCT LEVEL)	SEE PAGE
C	1	1	**2S-3440**	2	CLAMP-HOSE	
C	2	1	**3B-6491**	1	COUPLING-PIPE	
C	3	1	**5V-6106**	1	VENT AS	
C	4	1	**9M-0164**	1	CLAMP-HOSE	
C	5	1	**032-8707**	1	ELBOW-HOSE	
	6	1	**123-6305**	1	CAP AS-FUEL TANK	
		1	**9X-8600**	1	SEAL-O-RING (110.49MM ID)	
C	7	1	**136-6202**	1	AIR CLEANER AS	
C	8	1	**156-6311**	1	ADAPTER AS	
C	9	1	**156-9097**	1	SHEET AS-RH	
M		1	**8T-3597**	3	NUT-WELD (M12X1.75 THD)	
	10	1	**163-6592**	1	SHEET AS-LH	
M		1	**8T-3597**	3	NUT-WELD (M12X1.75 THD)	
	11	1	**163-6593**	1	SHEET-LH	
C	12	1	**163-6594**	1	SHEET AS-RH	
		1	**1V-6755**	1	LATCH AS	
		1	**6V-2370**	5	RIVET-POP	
	13	1	**163-9374**	1	GUARD	
C	14	1	**4H-9027**	2	PLUG-PIPE (2-11 1/2 NPTF THD)	
C	15	1	**5P-1076**	18	WASHER-HARD (4MM THK)	
	16	1	**6V-8625**	1	ELBOW-90 DEGREE (3/4-16 THD)	
	17	1	**6V-8626**	1	ELBOW-90 DEGREE (7/8-14 THD)	
C	18	1	**8T-4121**	2	WASHER (2.5MM THK)	
CM	19	1	**8T-4137**	2	BOLT (M10X1.50X20MM)	
CM	20	1	**8T-4192**	18	BOLT (M12X1.75X25MM)	
C	21	1	**8T-6767**	2	PLUG-PIPE (3/8-18 NPTF THD)	
CE	22	1	**5P-0742**		HOSE (26CM)	
					AVAILABLE REPAIR KIT(S):	
			5T-8645	1	KIT-VENT	

C-CHANGE FROM PREVIOUS TYPE
E-ORDER BY THE CENTIMETER
M-METRIC PART

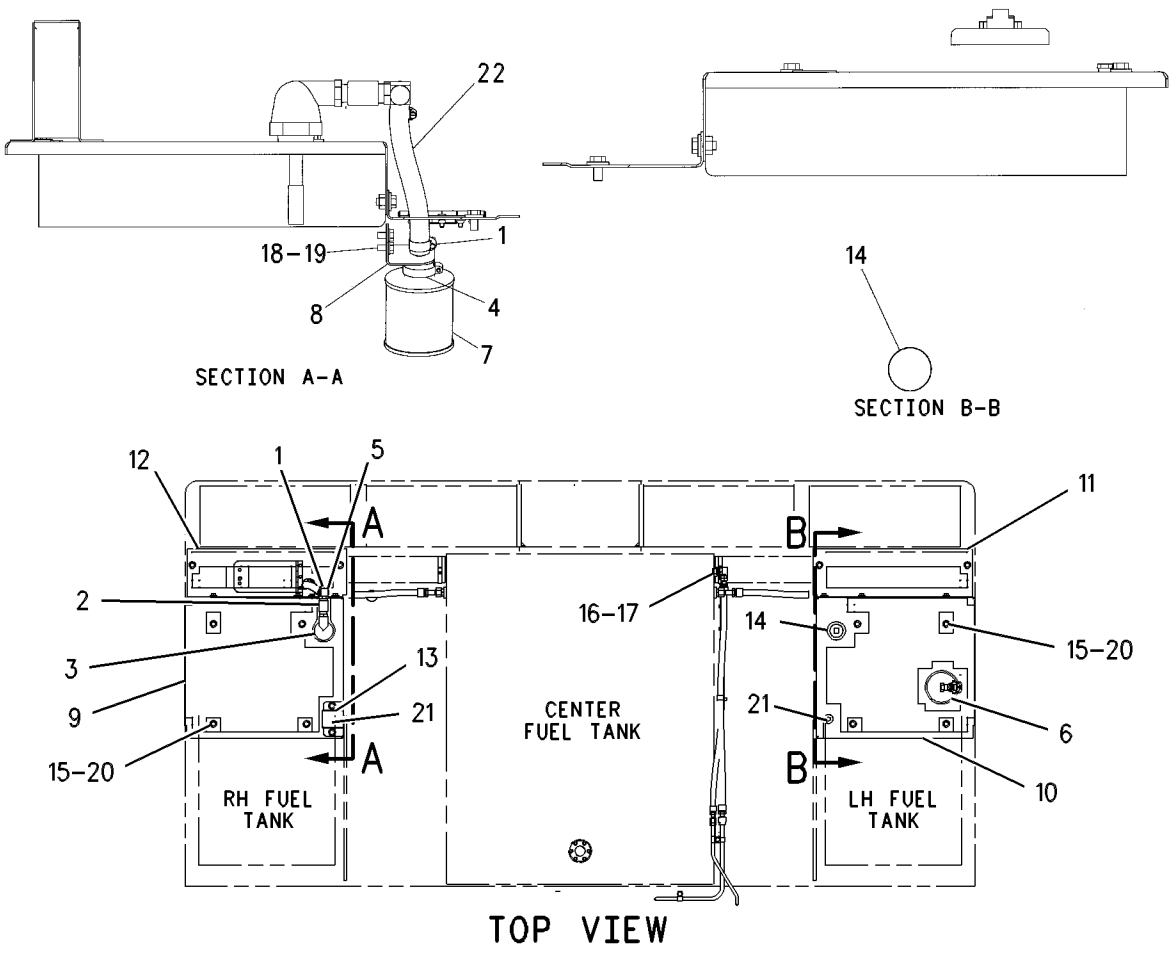

GRAPHIC #1 g00611333

131-1244 FUEL AR-CONVENTIONAL FILL

S/N: 7HR299-351

CANNOT BE USED WITH 132-1491 FUEL AR-FAST FILL, 131-8141 FUEL AR-FAST FILL, 132-1492 HEATER AR-FUEL

AN ATTACHMENT

SMCS-1273, 1274 **i01154948**

NOTE	REF NO	GRAPHIC REF	PART NUMBER	QTY	PART NAME 1 2 3 4 5 6 (PRODUCT LEVEL)	SEE PAGE
	1	1	**1H-9779**	3	CONNECTOR-HOSE	
	2	1	**2S-3440**	3	CLAMP-HOSE	
J	3	1	**5V-6106**	1	VENT AS	
	4	1	**7X-4736**	1	GROMMET	
	5	1	**123-6305**	1	CAP AS-FUEL TANK	
	6	1	**160-9340**	1	TANK AS-FUEL	
	7	1	**167-1413**	1	PLATE	
	8	1	**168-0393**	1	PLATE	
	9	1	**061-9593**	1	BUSHING-REDUCER	
	10	1	**103-0892**	2	GROMMET	
	11	1	*148-8364*	1	ELBOW AS	
		1	**3K-0360**	1	SEAL-O-RING (16.36MM ID)	
		1	**6V-8398**	1	SEAL-O-RING (16.03MM ID)	
		1	**6V-8625**	1	ELBOW-90 DEGREE (3/4-16 THD)	
	12	1	*148-8390*	1	ELBOW AS	
		1	**2M-9780**	1	SEAL-O-RING (19.18MM ID)	
		1	**6V-8626**	1	ELBOW-90 DEGREE (7/8-14 THD)	
		1	**7J-9108**	1	SEAL-O-RING (15.72MM ID)	
	13	1	**3B-6498**	1	ELBOW (1 IN)	
	14	1	**4H-9027**	2	PLUG-PIPE (2-11 1/2 NPTF THD)	
	15	1	**6V-6782**	2	CLIP (SLOT)	
	16	1	**6V-6783**	2	CLIP (TAB)	
	17	1	**7X-7729**	8	WASHER (3MM THK)	
	18	1	**8D-9947**	1	CLIP (31.8MM ID)	
M	19	1	**8T-4139**	2	BOLT (M12X1.75X30MM)	
M	20	1	**8T-4179**	1	BOLT (M12X1.75X20MM)	
M	21	1	**8T-4195**	8	BOLT (M10X1.50X30MM)	
	22	1	**8T-4223**	3	WASHER-HARD (3MM THK)	
	23	1	**8T-6767**	1	PLUG-PIPE (3/8-18 NPTF THD)	
E	24	1	**5P-0742**		HOSE (247CM)	
					AVAILABLE REPAIR KIT(S):	
J			**5T-8645**	1	KIT-VENT	

E-ORDER BY THE CENTIMETER
J-PART MARKED J INCLUDES KIT MARKED J
M-METRIC PART

131-1244 **FUEL AR-CONVENTIONAL FILL** *(contd.)* **i01154948**

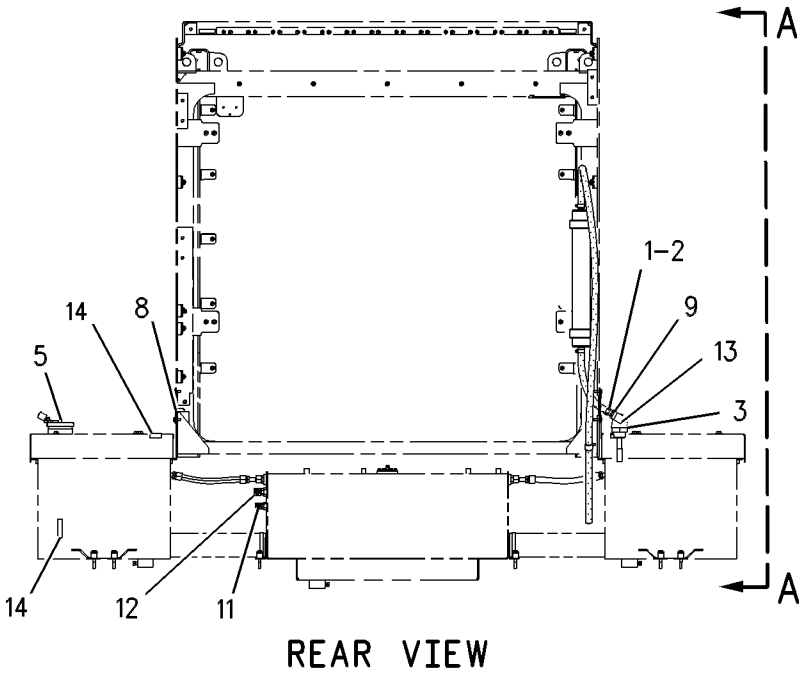

REAR VIEW

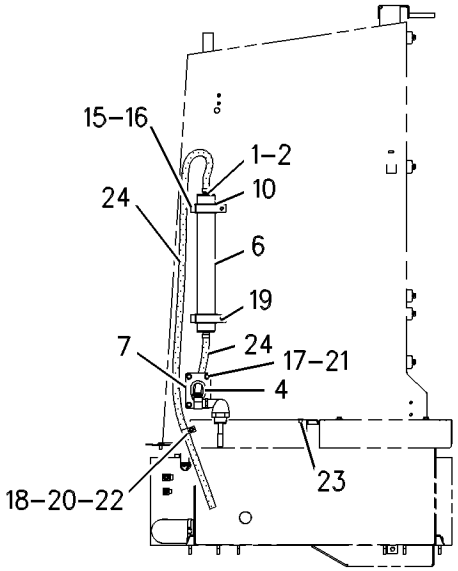

VIEW A–A

GRAPHIC #1

g00620370

131-1244 FUEL AR-CONVENTIONAL FILL

S/N: 7HR352-UP

CANNOT BE USED WITH 132-1491 FUEL AR-FAST FILL, 131-8141 FUEL AR-FAST FILL, 132-1492 HEATER AR-FUEL

AN ATTACHMENT

SMCS-1273, 1274 **i01167758**

NOTE	REF NO	GRAPHIC REF	PART NUMBER	QTY	PART NAME 1 2 3 4 5 6 (PRODUCT LEVEL)	SEE PAGE
	1	1	**5P-8502**	1	PADLOCK GP	
A		1	**5P-8500**	1	KEY	
A		1	**8Y-6364**	1	SLEEVE	
	2	1	**123-6305**	1	CAP AS-FUEL TANK	
	3	1	**163-9374**	1	GUARD	
	4	1	**168-0393**	2	PLATE	
	5	1	*148-8364*	1	ELBOW AS	
		1	**3K-0360**	1	SEAL-O-RING (16.36MM ID)	
		1	**6V-8398**	1	SEAL-O-RING (16.03MM ID)	
		1	**6V-8625**	1	ELBOW-90 DEGREE (3/4-16 THD)	
	6	1	*148-8390*	1	ELBOW AS	
		1	**2M-9780**	1	SEAL-O-RING (19.18MM ID)	
		1	**6V-8626**	1	ELBOW-90 DEGREE (7/8-14 THD)	
		1	**7J-9108**	1	SEAL-O-RING (15.72MM ID)	
	7	1	**5B-1309**	1	COUPLING-PIPE	
	8	1	**5P-1076**	2	WASHER-HARD (4MM THK)	
	9	1	**6V-0678**	1	NIPPLE-PIPE	
	10	1	**7X-7729**	8	WASHER (3MM THK)	
M	11	1	**8T-4192**	2	BOLT (M12X1.75X25MM)	
M	12	1	**8T-4195**	8	BOLT (M10X1.50X30MM)	
	13	1	**9G-9981**	1	BREATHER	

A-NOT PART OF THIS GROUP
M-METRIC PART

131-1244 **FUEL AR-CONVENTIONAL FILL** *(contd.)* **i01167758**

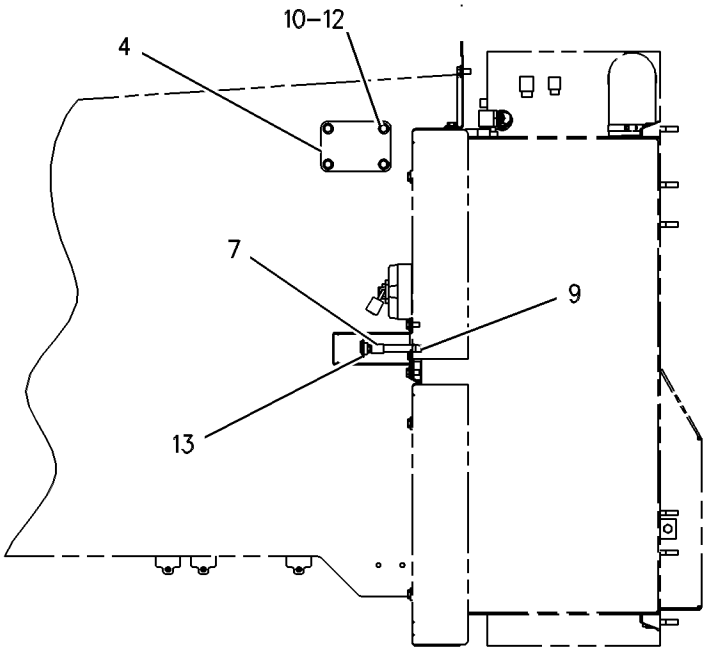

SECTION A-A

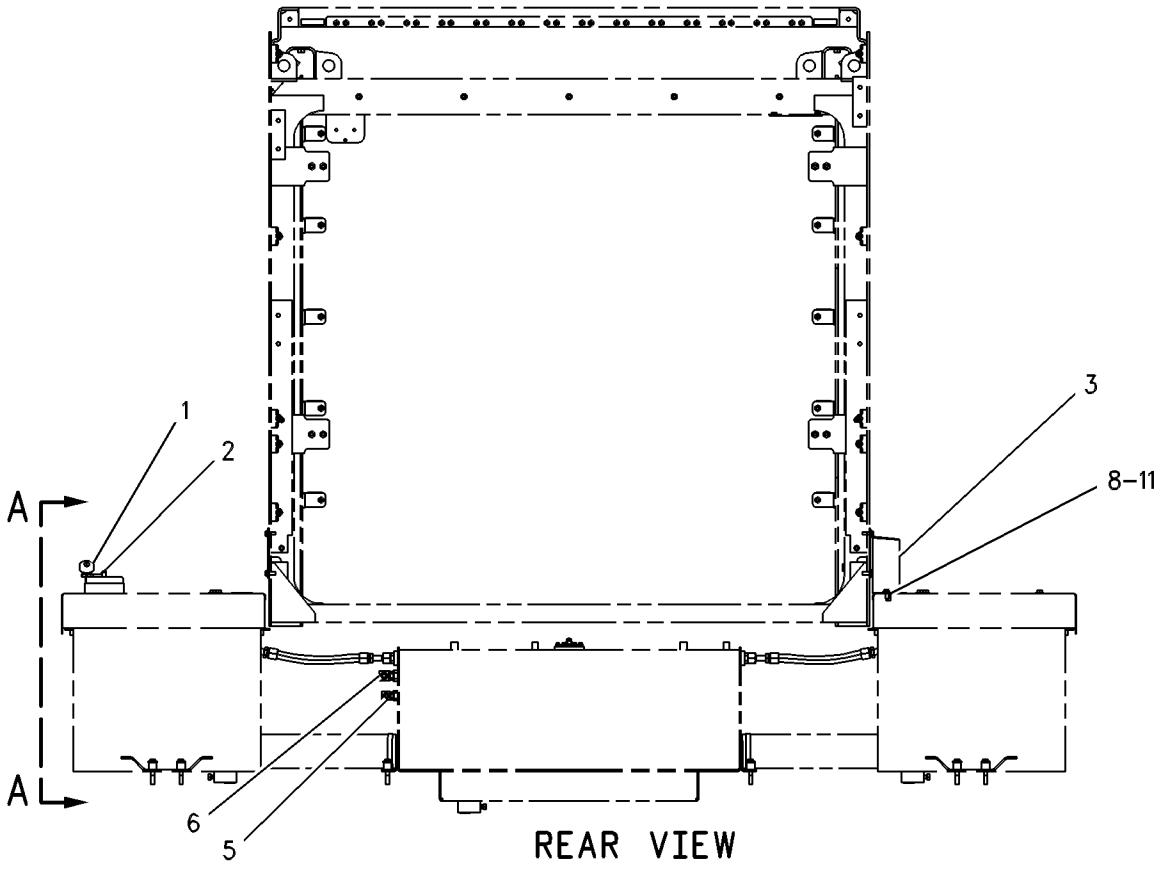

REAR VIEW

GRAPHIC #1 g00623787

131-8141 FUEL AR-FAST FILL

S/N: 7HR1-UP
CANNOT BE USED WITH 131-1244 FUEL AR-CONVENTIONAL FILL, 132-1491 FUEL AR-FAST FILL, 132-1492 HEATER AR-FUEL
AN ATTACHMENT

SMCS-1710 **i01034545**

NOTE	PART NUMBER	QTY	PART NAME 1 2 3 4 5 6 (PRODUCT LEVEL)	SEE PAGE
Y	*109-6859*	1	ADAPTER GP-FAST FILL FUEL	178
			—OR—	
Y	*156-5926*	1	ADAPTER GP-FAST FILL FUEL	180
Y	*109-6883*	1	HEATER GP-FUEL	294

Y-SEPARATE ILLUSTRATION

132-1491 FUEL AR-FAST FILL

S/N: 7HR1-265

CANNOT BE USED WITH 131-1244 FUEL AR-CONVENTIONAL FILL, 132-1492 HEATER AR-FUEL, 131-8141 FUEL AR-FAST FILL

AN ATTACHMENT

SMCS-1710 **i01167786**

NOTE	PART NUMBER	QTY	PART NAME 1 2 3 4 5 6 (PRODUCT LEVEL)	SEE PAGE
Y	*109-6859*	1	ADAPTER GP-FAST FILL FUEL	178
	148-8364	1	ELBOW AS	
	3K-0360	1	SEAL-O-RING (16.36MM ID)	
	6V-8398	1	SEAL-O-RING (16.03MM ID)	
	6V-8625	1	ELBOW-90 DEGREE (3/4-16 THD)	
	148-8390	1	ELBOW AS	
	2M-9780	1	SEAL-O-RING (19.18MM ID)	
	6V-8626	1	ELBOW-90 DEGREE (7/8-14 THD)	
	7J-9108	1	SEAL-O-RING (15.72MM ID)	

Y-SEPARATE ILLUSTRATION

132-1491 FUEL AR-FAST FILL

S/N: 7HR266-UP

CANNOT BE USED WITH 131-1244 FUEL AR-CONVENTIONAL FILL, 132-1492 HEATER AR-FUEL, 131-8141 FUEL AR-FAST FILL

AN ATTACHMENT

SMCS-1710 **i01167797**

NOTE	REF NO	GRAPHIC REF	PART NUMBER	QTY	PART NAME 1 2 3 4 5 6 (PRODUCT LEVEL)	SEE PAGE
Y	1	1	*156-5926*	1	ADAPTER GP-FAST FILL FUEL	180
	2	1	*148-8364*	1	ELBOW AS	
		1	**3K-0360**	1	SEAL-O-RING (16.36MM ID)	
		1	**6V-8398**	1	SEAL-O-RING (16.03MM ID)	
		1	**6V-8625**	1	ELBOW-90 DEGREE (3/4-16 THD)	
	3	1	*148-8390*	1	ELBOW AS	
		1	**2M-9780**	1	SEAL-O-RING (19.18MM ID)	
		1	**6V-8626**	1	ELBOW-90 DEGREE (7/8-14 THD)	
		1	**7J-9108**	1	SEAL-O-RING (15.72MM ID)	

Y-SEPARATE ILLUSTRATION

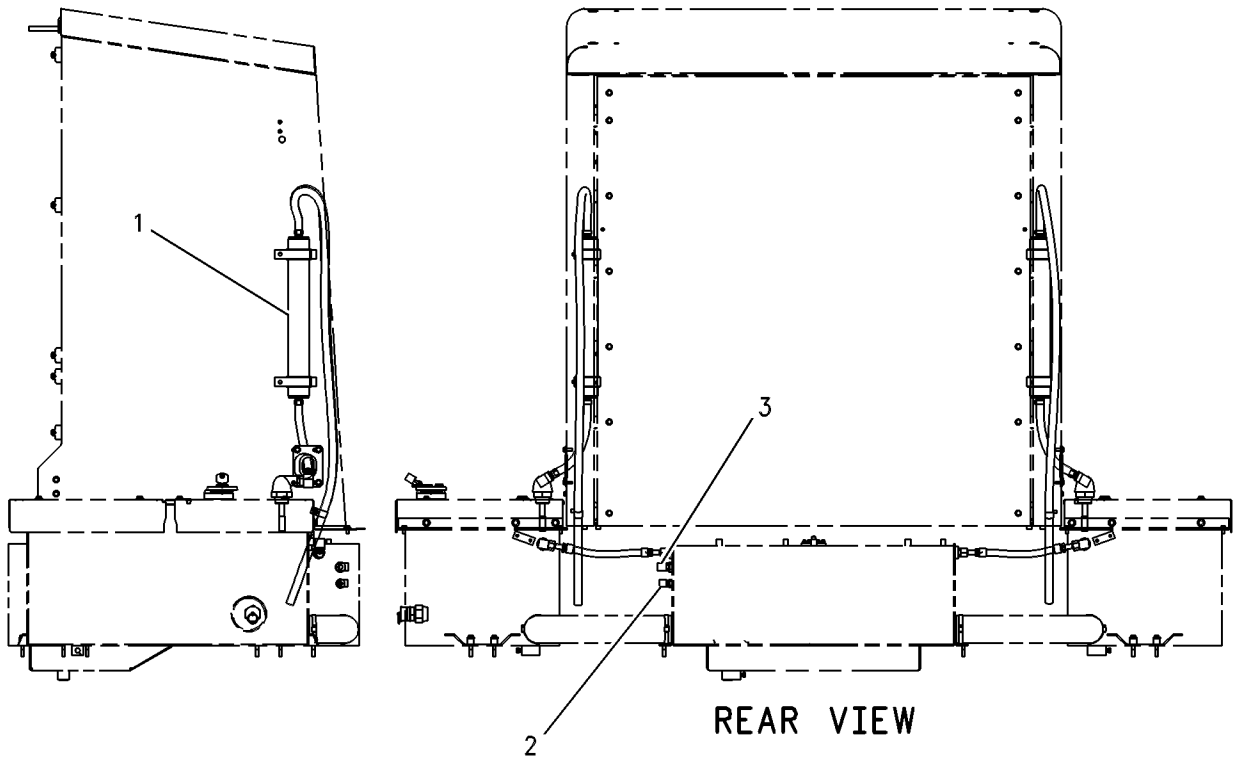

GRAPHIC #1 g00623777

116-7534 INJECTOR GP-FUEL

S/N: 2GR1-UP

PART OF 116-7010 PUMP GP-UNIT INJECTION

SMCS-1254, 1290 **i00756491**

NOTE	REF NO	GRAPHIC REF	PART NUMBER	QTY	PART NAME 1 2 3 4 5 6 (PRODUCT LEVEL)	SEE PAGE
	1	1	**8J-8725**	1	SEAL-O-RING (40.87ID)	
	2	1	**9X-7735**	1	SEAL-O-RING (36.17 ID)	

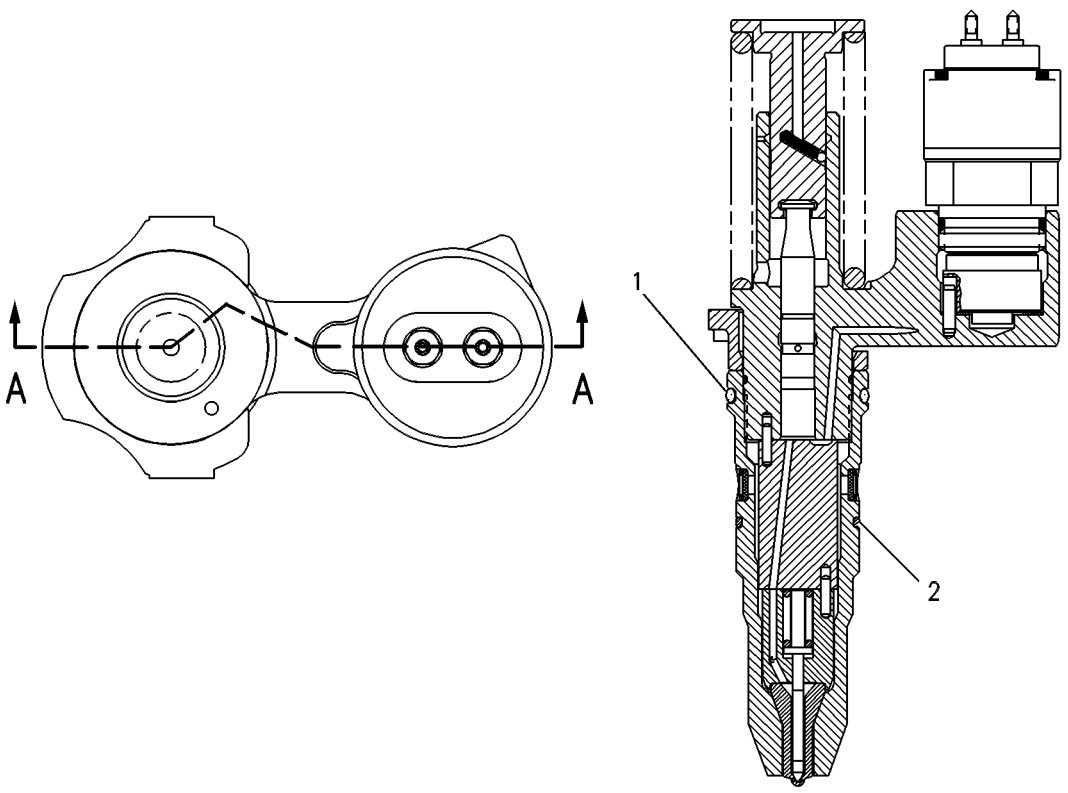

SECTION A-A

GRAPHIC #1 g00248935

126-7992 INJECTOR GP-FUEL*R

S/N: 2GR1-UP

PART OF 116-7010 PUMP GP-UNIT INJECTION

SMCS-1254, 1290 **i00749647**

NOTE	REF NO	GRAPHIC REF	PART NUMBER	QTY	PART NAME 1 2 3 4 5 6 (PRODUCT LEVEL)	SEE PAGE
	1	1	**8J-8725**	1	SEAL-O-RING (40.87ID)	
	2	1	**9X-7735**	1	SEAL-O-RING (36.17 ID)	

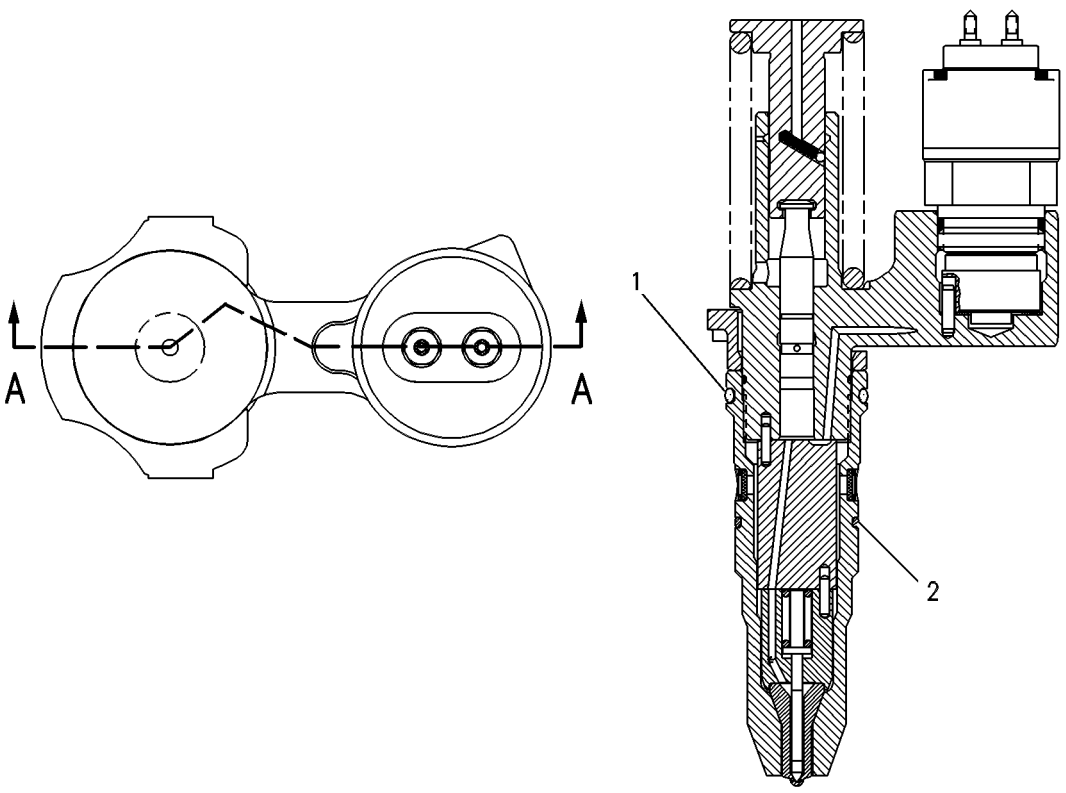

SECTION A-A

GRAPHIC #1 g00253942

FUEL SYSTEM

132-0202 INJECTOR GP-FUEL

S/N: 2GR1-1999

PART OF 116-7010 PUMP GP-UNIT INJECTION

SMCS-1254, 1290 **i00756492**

NOTE	REF NO	GRAPHIC REF	PART NUMBER	QTY	PART NAME 1 2 3 4 5 6 (PRODUCT LEVEL)	SEE PAGE
	1	1	**8J-8725**	1	SEAL-O-RING (40.87ID)	
	2	1	**9X-7735**	1	SEAL-O-RING (36.17 ID)	

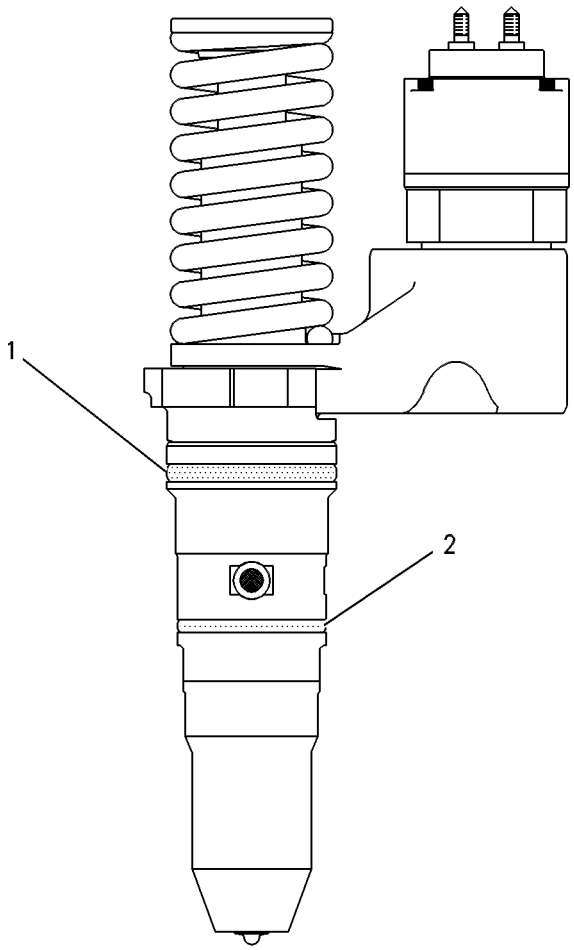

GRAPHIC #1 g00106326

136-1120 KIT-GOVERNOR

S/N: 7HR1-UP

PROVIDES WIDER CONTACT AREA GOVERNOR WEIGHTS & LARGER DIAMETER RACE

FIELD INSTALLATION

SMCS-1264 **i00174336**

NOTE	REF NO	GRAPHIC REF	PART NUMBER	QTY	PART NAME 1 2 3 4 5 6 (PRODUCT LEVEL)	SEE PAGE
	1	1	**136-1118**	1	WEIGHT AS-GOVERNOR	
	2	1	**6N-7818**	1	LOCKRING	
	3	1	**136-1117**	1	RACE AS	
	4	1	**2P-8630**	1	DOWEL	

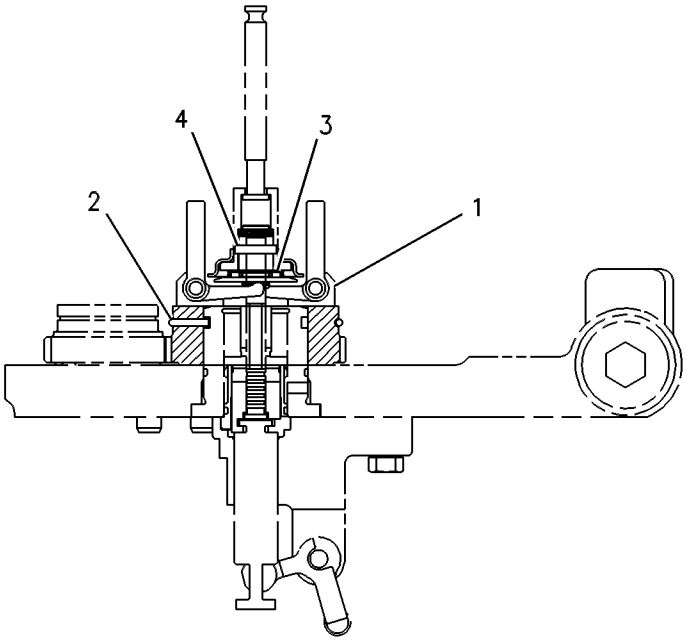

GRAPHIC #1 g00122177

FUEL SYSTEM

109-6850 LINES GP-FUEL

S/N: 7HR1-UP

PART OF 109-6819 CHASSIS AR

SMCS-1274 **i00743352**

NOTE	REF NO	GRAPHIC REF	PART NUMBER	QTY	PART NAME 1 2 3 4 5 6 (PRODUCT LEVEL)	SEE PAGE
	1	1	**117-4080**	1	TUBE AS	
I	2	1	**117-5980**	1	HOSE AS	
I	3	1	**117-5981**	1	HOSE AS	
I	4	1	**127-9733**	1	HOSE AS	
I	5	1	**127-9734**	1	HOSE AS	
	6	1	**128-0152**	1	TUBE AS	
	7	1	**1S-0994**	1	CLIP (20.64MM ID)	
	8	1	**2M-9780**	1	SEAL-O-RING (19.18MM ID)	
	9	1	**3K-0360**	1	SEAL-O-RING (16.36MM ID)	
	10	1	**5P-9299**	4	CLIP (12.7MM ID)	
	11	1	**6V-8398**	4	SEAL-O-RING (12.47MM ID)	
	12	1	**6V-9809**	2	UNION-90 DEGREE	
	13	1	**7C-4354**	1	CLIP (25.40MM ID)	
	14	1	**7J-9108**	6	SEAL-O-RING (15.72MM ID)	
	15	1	**8T-4121**	8	WASHER (2.5MM THK)	
M	16	1	**8T-4137**	8	BOLT (M10X1.50X20MM)	
	17	1	**9M-8406**	4	CLIP (15.8MM ID)	

I-SEE HOSE FABRICATION GUIDE
M-METRIC PART

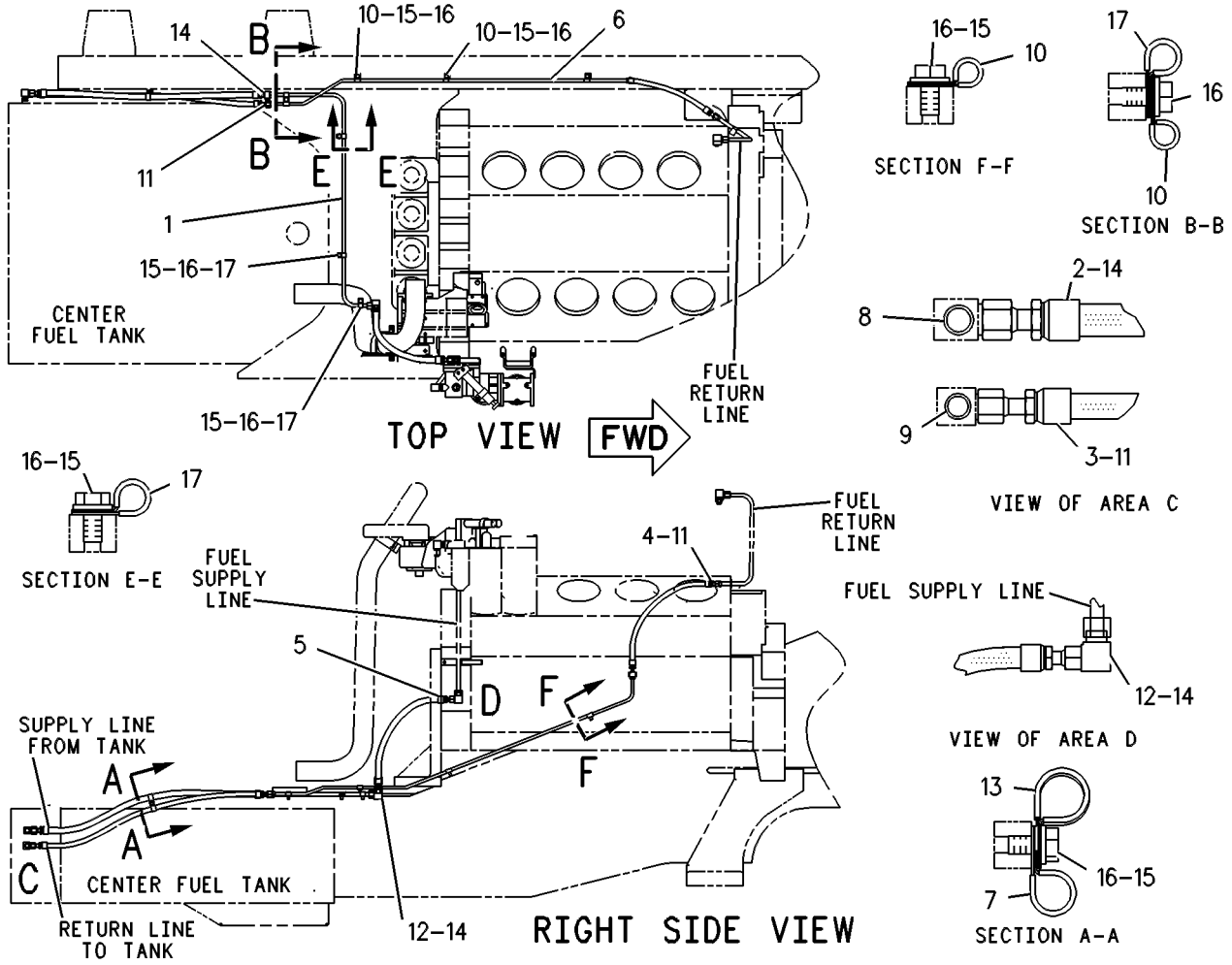

GRAPHIC #1 g00264308

FUEL SYSTEM

112-6050 LINES GP-FUEL INJECTION

S/N: 2GR1-2049

PART OF 107-8762 ENGINE AR

SMCS-1252, 1254 **i01185275**

NOTE	REF NO	GRAPHIC REF	PART NUMBER	QTY	PART NAME 1 2 3 4 5 6 (PRODUCT LEVEL)	SEE PAGE
	1	1	**4P-0692**	22	CLAMP AS	
					(EACH INCLUDES)	
		1	**108-1434**	1	GROMMET	
	2	1	**4P-0693**	4	CLAMP AS	
					(EACH INCLUDES)	
		1	**108-1434**	2	GROMMET	
	3	1	**4P-3485**	1	BRACKET	
	4	1	**4P-4342**	1	ADAPTER-MANIFOLD	
	5	1	**4P-4343**	1	ADAPTER-MANIFOLD	
	6	1	**141-7136**	1	MANIFOLD AS-FUEL (RH)	
	7	1	**141-7137**	1	MANIFOLD AS-FUEL (LH)	
					(EACH MANIFOLD AS INCLUDES)	
		1	**101-4135**	4	PIN-SPRING	
		1	**4P-0693**	8	CLAMP AS	
					(EACH INCLUDES)	
		1	**108-1434**	2	GROMMET	
	8	1	**4P-7048**	1	BRACKET	
	9	1	**4W-1807**	2	ELBOW-FLARED	
	10	1	**9S-8752**	6	NUT (3/8-16 THD)	
	11	1	**7C-7677**	8	TUBE AS	
	12	1	**7C-7678**	8	TUBE AS	
	13	1	**7K-3377**	2	PIPE	
	14	1	**7W-2122**	16	CONNECTOR-PORT	
	15	1	**8B-0544**	1	SPACER (1 IN THK)	
	16	1	**9N-4053**	1	SPRING	
	17	1	**003-8581**	1	TEE-UNION	
	18	1	**105-4309**	1	BRACKET	
	19	1	**112-6017**	1	HOSE AS	
	20	1	**112-6023**	1	HOSE AS	
	21	1	**112-6028**	1	TUBE AS	
	22	1	**114-5477**	1	PLUNGER-REGULATING VALVE	
	23	1	**123-6928**	1	TUBE AS	
	24	1	**123-6929**	1	TUBE AS	
	25	1	**123-6930**	1	TUBE AS	
	26	1	**123-6931**	1	TUBE AS	
	27	1	**123-6932**	1	TUBE AS	
	28	1	**123-6934**	1	TUBE AS	
	29	1	**123-6935**	1	TUBE AS	
	30	1	**127-9729**	1	TUBE AS	
	31	1	**128-0150**	1	TUBE AS	
	32	1	**030-7949**	2	ELBOW	
	33	1	**030-7964**	1	ELBOW	
	34	1	**030-7972**	1	ELBOW	
	35	1	**061-8248**	2	UNION-FLARED	
	36	1	**0L-1143**	5	BOLT (3/8-16X2.50IN)	
	37	1	**0L-2070**	2	BOLT (3/8-16X2.25IN)	
	38	1	**0S-1594**	1	BOLT (3/8-16X1 IN)	
	39	1	**0S-1619**	1	BOLT (3/8-16X3.0IN)	
	40	1	**0T-0573**	1	BOLT (3/8-16X2.75IN)	
	41	1	**1D-4539**	8	BOLT (5/16-18X2.5IN)	
	42	1	**1P-7625**	2	ELBOW-FLARED	
	43	1	**1S-0994**	2	CLIP (20.64MM ID)	
	44	1	**2B-2694**	1	BOLT (5/16-18X2IN)	
	45	1	**2M-0849**	1	WASHER-HARD (5MM THK)	
	46	1	**2M-9780**	8	SEAL-O-RING (19.18MM ID)	
	47	1	**2P-7636**	1	CONNECTOR-FLARED	

112-6050 **LINES GP-FUEL INJECTION** ***(contd.)*** **i01185275**

NOTE	REF NO	GRAPHIC REF	PART NUMBER	QTY	PART NAME 1 2 3 4 5 6 (PRODUCT LEVEL)	SEE PAGE
	48	1	**3J-1907**	17	SEAL-O-RING (11.89MM ID)	
	49	1	**3J-7354**	1	SEAL-O-RING (8.92MM ID)	
	50	1	**3K-0360**	3	SEAL-O-RING (16.36MM ID)	
	51	1	**4B-0831**	1	BOLT (5/16-18X3.75IN)	
	52	1	**5B-2638**	2	BOLT (3/8-16X5.25IN)	
	53	1	**5M-2894**	19	WASHER (2.5MM THK)	
	54	1	**5S-0003**	1	NUT (5/16-18 THD)	
	55	1	**6H-1717**	1	BOLT (1/2-13X1.125IN)	
	56	1	**9N-0869**	9	WASHER-HARD (2MM THK)	
	57	1	**9S-4182**	1	PLUG (7/16-20 THD)	
	58	1	**9S-4191**	1	PLUG-O-RING (9/16-18 THD)	
	59	1	**7N-6806**	4	SEAL-RECTANGULAR	
	60	1	**9M-1974**	2	WASHER-HARD (2MM THK)	
	61	1	**9M-4584**	4	CONNECTOR-FLARED	
	62	1	**9N-0869**	9	WASHER-HARD (2MM THK)	
	63	1	**9S-4182**	1	PLUG (7/16-20 THD)	
	64	1	**9S-4191**	1	PLUG-O-RING (9/16-18 THD)	
	65	1	**9S-8752**	6	NUT (3/8-16 THD)	

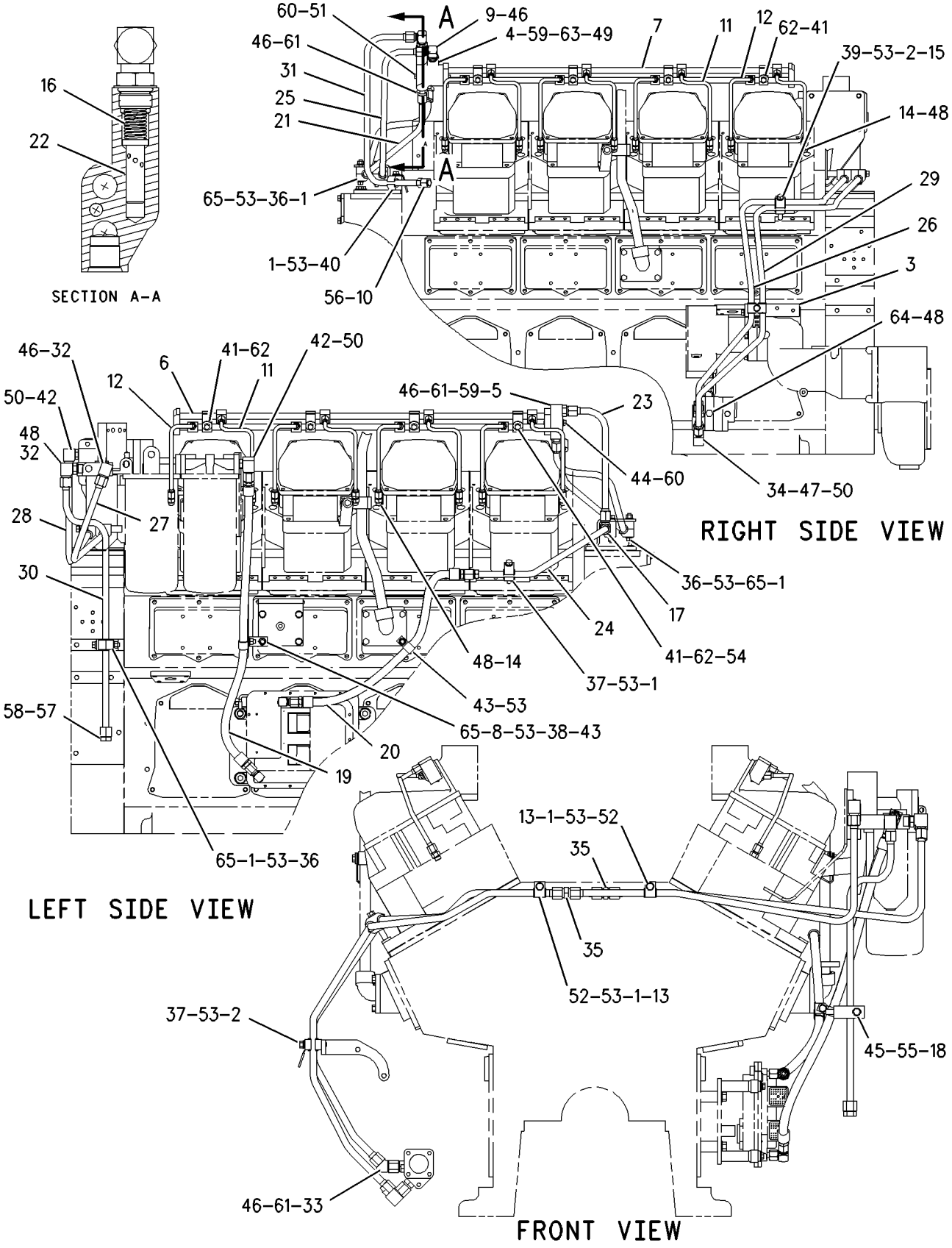

GRAPHIC #1

g00634639

MEMORANDA

FUEL SYSTEM

112-6050 LINES GP-FUEL INJECTION

S/N: 2GR2050-UP

PART OF 107-8762 ENGINE AR

SMCS-1252, 1254 **i01456007**

NOTE	REF NO	GRAPHIC REF	PART NUMBER	QTY	PART NAME 1 2 3 4 5 6 (PRODUCT LEVEL)	SEE PAGE
	1	1	**4P-0692**	22	CLAMP AS	
					(EACH INCLUDES)	
		1	**108-1434**	1	GROMMET	
	2	1	**4P-0693**	4	CLAMP AS	
					(EACH INCLUDES)	
		1	**108-1434**	2	GROMMET	
	3	1	**4P-3485**	1	BRACKET	
	4	1	**4P-4342**	1	ADAPTER-MANIFOLD (RH)	
	5	1	**4P-4343**	1	ADAPTER-MANIFOLD (LH)	
	6	1	**4W-1807**	2	ELBOW-FLARED	
C	7	1	**6L-2479**	1	BRACE	
	9	1	**7C-7677**	8	TUBE AS	
	10	1	**7C-7678**	8	TUBE AS	
	11	1	**7K-3377**	2	PIPE	
	12	1	**7W-2122**	16	CONNECTOR-PORT	
	13	1	**8B-0544**	1	SPACER (1 IN THK)	
	14	1	**9N-4053**	1	SPRING	
	15	1	**003-8581**	1	TEE-UNION	
	16	1	**105-4309**	1	BRACKET	
	17	1	**112-6017**	1	HOSE AS	
	18	1	**112-6023**	1	HOSE AS	
	19	1	**112-6028**	1	TUBE AS	
	20	1	**114-5477**	1	PLUNGER-REGULATING VALVE	
	21	1	**123-6928**	1	TUBE AS	
	22	1	**123-6929**	1	TUBE AS	
	23	1	**123-6930**	1	TUBE AS	
	24	1	**123-6931**	1	TUBE AS	
	25	1	**123-6932**	1	TUBE AS	
	26	1	**123-6934**	1	TUBE AS	
	27	1	**123-6935**	1	TUBE AS	
	28	1	**127-9729**	1	TUBE AS	
	29	1	**128-0150**	1	TUBE AS	
CY	30	1	**156-9749**	1	MANIFOLD GP-FUEL (LH)	211
CY	31	1	**156-9750**	1	MANIFOLD GP-FUEL (RH)	212
	32	1	**030-7949**	2	ELBOW-FLARED	
	33	1	**030-7964**	1	ELBOW	
	34	1	**030-7972**	1	ELBOW	
	35	1	**061-8248**	2	UNION-FLARED	
	36	1	**0L-1143**	5	BOLT (3/8-16X2.50 IN)	
	37	1	**0L-2070**	2	BOLT (3/8-16X2.25 IN)	
	38	1	**0S-1594**	1	BOLT (3/8-16X1 IN)	
	39	1	**0S-1619**	1	BOLT (3/8-16X3 IN)	
	40	1	**0T-0573**	1	BOLT (3/8-16X2.75 IN)	
	41	1	**1P-7625**	2	ELBOW	
	42	1	**1S-0994**	2	CLIP	
	43	1	**2B-2694**	1	BOLT (5/16-18X2 IN)	
	44	1	**2M-0849**	1	WASHER-HARD (13.5X25.5X5MM THK)	
	45	1	**2M-9780**	8	SEAL-O-RING	
	46	1	**2P-7636**	1	CONNECTOR-FLARED	
	47	1	**3J-1907**	17	SEAL-O-RING	
	48	1	**3J-7354**	1	SEAL-O-RING	
	49	1	**3K-0360**	3	SEAL-O-RING	
	50	1	**4B-0831**	1	BOLT (5/16-18X3.75 IN)	
	51	1	**5B-2638**	2	BOLT (3/8-16X5.25 IN)	
	52	1	**5M-2894**	19	WASHER-HARD (10.2X18.5X2.5MM THK)	
	53	1	**5S-0003**	1	NUT (5/16-18 THD)	

112-6050 **LINES GP-FUEL INJECTION** *(contd.)* **i01456007**

NOTE	REF NO	GRAPHIC REF	PART NUMBER	QTY	PART NAME 1 2 3 4 5 6 (PRODUCT LEVEL)	SEE PAGE
	54	1	**6H-1717**	1	BOLT (1/2-13X1.125 IN)	
	58	1	**7N-6806**	4	SEAL-RECTANGULAR	
C	59	1	**9M-1974**	3	WASHER-HARD (8.8X16X2MM THK)	
	60	1	**9M-4584**	4	CONNECTOR-FLARED	
	61	1	**9S-4182**	1	PLUG-O-RING	
	62	1	**9S-4191**	1	PLUG-STRAIGHT THREAD	
	63	1	**9S-8752**	6	NUT-FULL (3/8-16 THD)	

C-CHANGE FROM PREVIOUS TYPE
Y-SEPARATE ILLUSTRATION

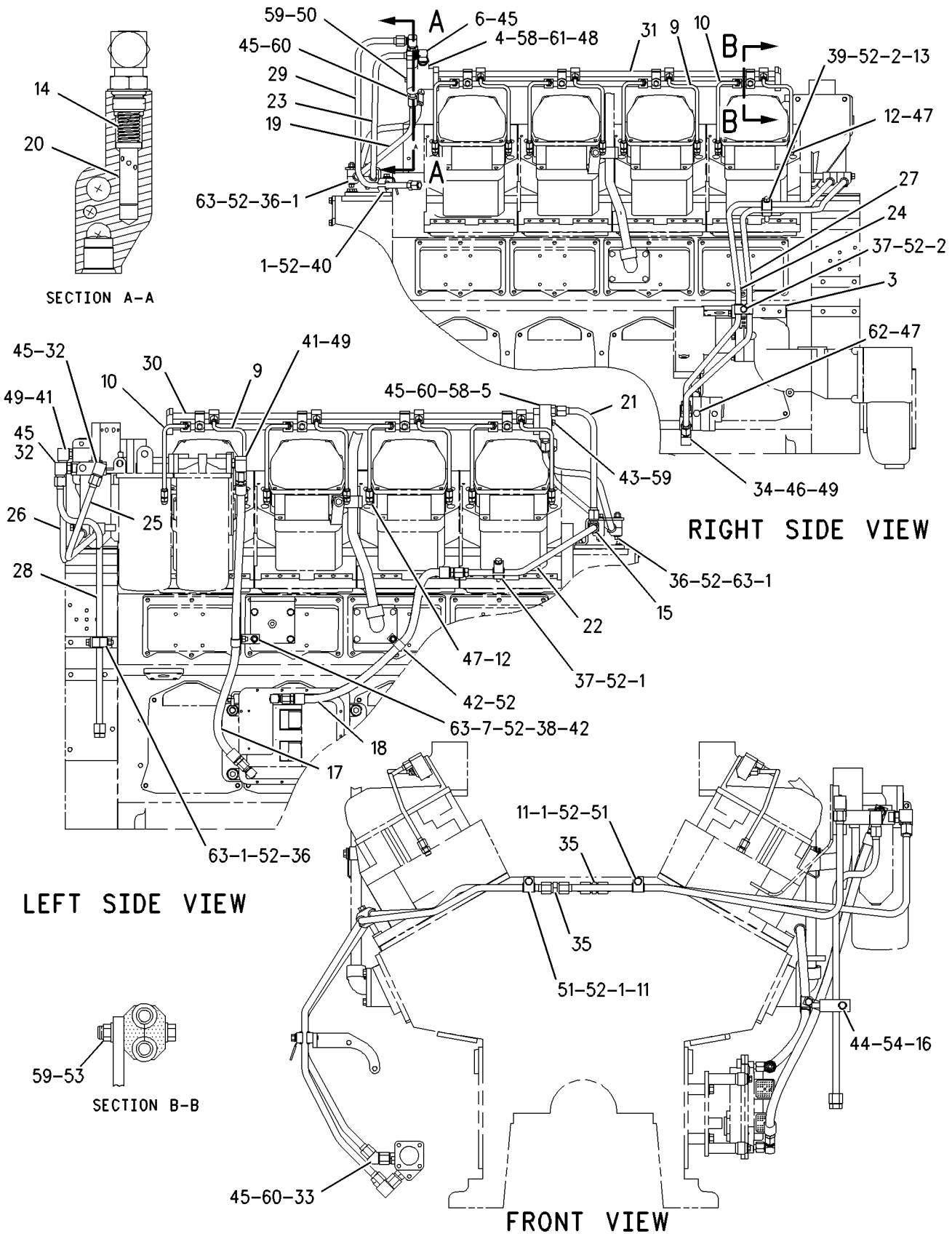

GRAPHIC #1

g00646725

156-9749 MANIFOLD GP-FUEL

S/N: 2GR2050-UP

PART OF 112-6050 LINES GP-FUEL INJECTION

SMCS-1274 **i01450988**

NOTE	REF NO	GRAPHIC REF	PART NUMBER	QTY	PART NAME 1 2 3 4 5 6 (PRODUCT LEVEL)	SEE PAGE
	1	1	**9Y-0047**	4	CLAMP	
	2	1	**147-3745**	4	WASHER-RETAINING	
	3	1	**156-9748**	4	CLAMP	
	4	1	**100-3237**	8	GROMMET	
	5	1	**1D-4539**	4	BOLT (5/16-18X2.5 IN)	
	6	1	**9N-0869**	4	WASHER-HARD (8.8X25.5X2MM THK)	

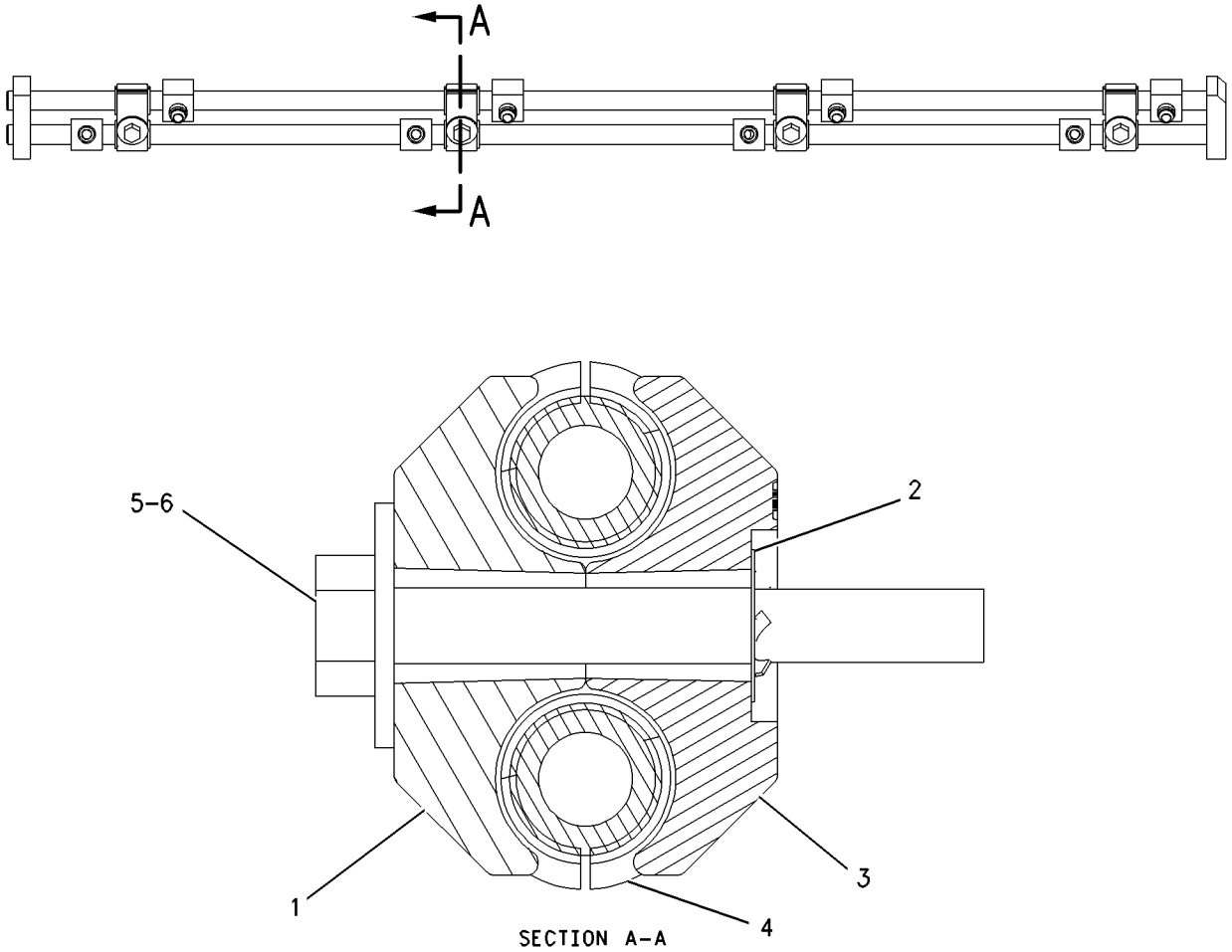

GRAPHIC #1 g00761339

FUEL SYSTEM

156-9750 MANIFOLD GP-FUEL

S/N: 2GR2050-UP

PART OF 112-6050 LINES GP-FUEL INJECTION

SMCS-1274 **i01450998**

NOTE	REF NO	GRAPHIC REF	PART NUMBER	QTY	PART NAME 1 2 3 4 5 6 (PRODUCT LEVEL)	SEE PAGE
	1	1	**9Y-0047**	4	CLAMP	
	2	1	**147-3745**	4	WASHER-RETAINING	
	3	1	**156-9748**	4	CLAMP	
	4	1	**100-3237**	8	GROMMET	
	5	1	**1D-4539**	4	BOLT (5/16-18X2.5 IN)	
	6	1	**9N-0869**	4	WASHER-HARD (8.8X25.5X2MM THK)	

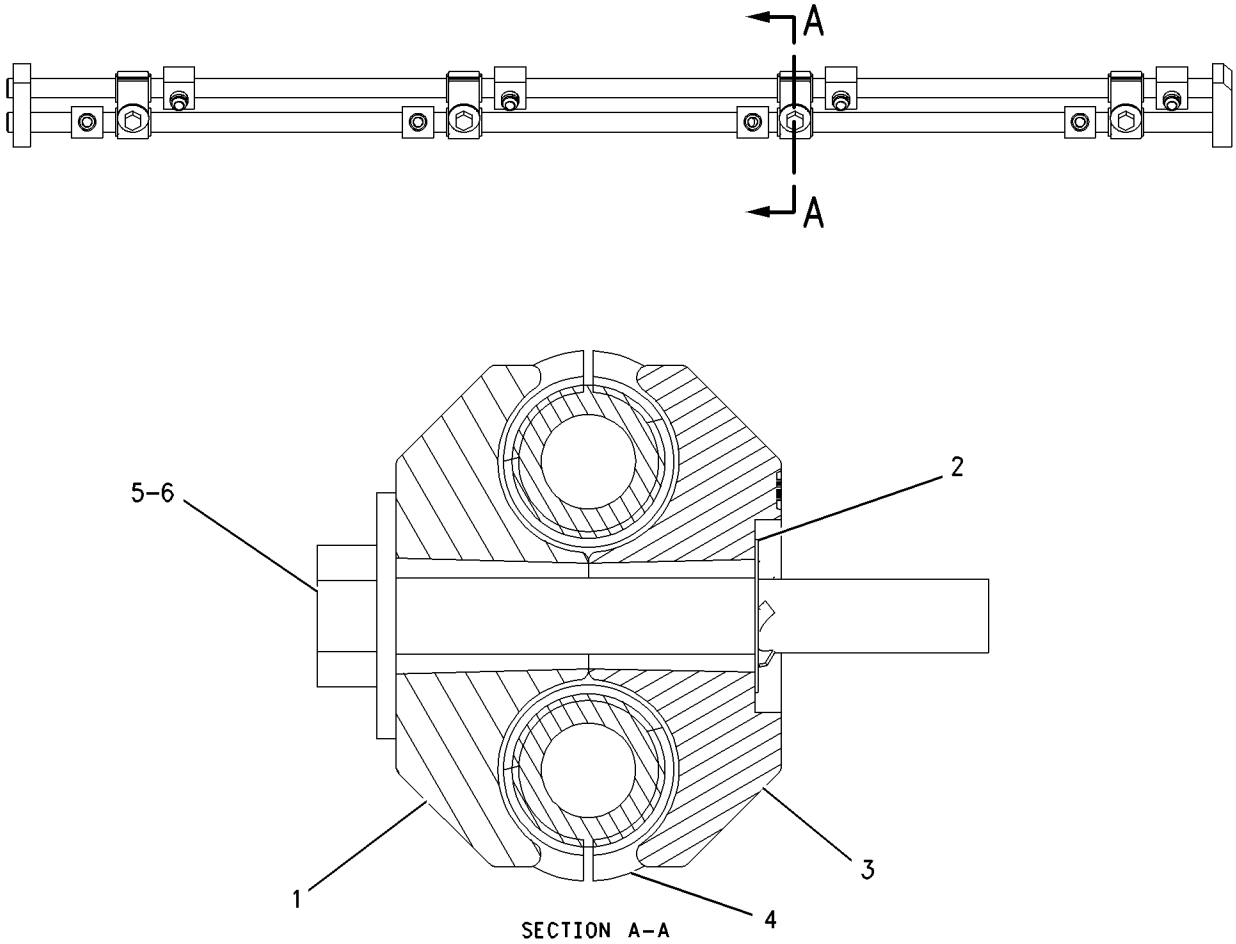

GRAPHIC #1 g00761332

FUEL SYSTEM

8N-7763 PUMP GP-FUEL PRIMING

S/N: 2GR1-1886

PART OF 107-8762 ENGINE AR

SMCS-1258 **i01421061**

NOTE	REF NO	GRAPHIC REF	PART NUMBER	QTY	PART NAME 1 2 3 4 5 6 (PRODUCT LEVEL)	SEE PAGE
	1	1	**9Y-8389**	1	GASKET	
	2	1	**1B-2790**	1	BOLT (5/16-18X1.375 IN)	
		1	**9M-1974**	1	WASHER-HARD (8.8X16X2MM THK)	
	3	1	**7B-2742**	1	BOLT (1/4-20X1.25 IN)	
		1	**5P-0537**	1	WASHER-HARD (7.2X14.5X2MM THK)	
	4	1	**2W-2605**	1	PUMP AS-FUEL PRIMING	
		1	**1H-8171**	1	SEAL-O-RING (20.2MM ID)	
		1	**7E-5346**	2	VALVE AS	

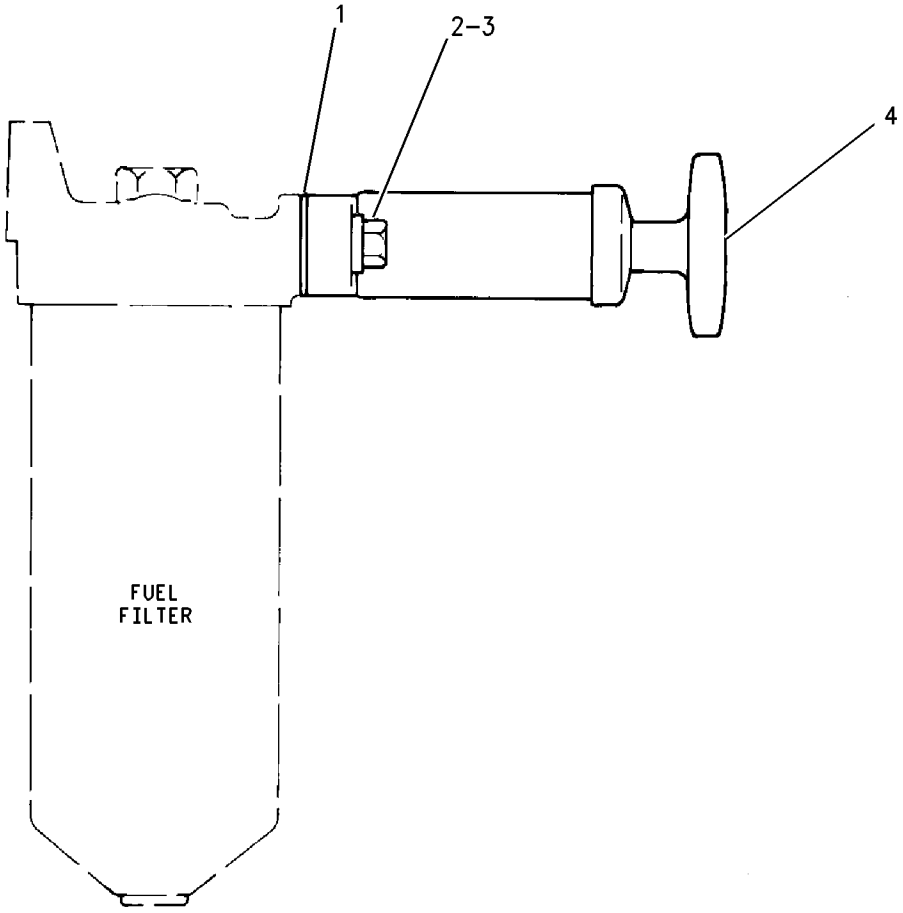

GRAPHIC #1 g00635844

165-9154 PUMP GP-FUEL PRIMING

S/N: 2GR1887-UP

PART OF 107-8762 ENGINE AR

SMCS-1258 **i01420959**

NOTE	REF NO	GRAPHIC REF	PART NUMBER	QTY	PART NAME 1 2 3 4 5 6 (PRODUCT LEVEL)	SEE PAGE
	1	1	**9Y-8389**	1	GASKET	
	2	1	**183-2823**	1	PUMP AS-FUEL PRIMING	
	3	1	**1B-2790**	1	BOLT (5/16-18X1.375 IN)	
	4	1	**5P-0537**	1	WASHER-HARD (7.2X14.5X2MM THK)	
	5	1	**7B-2742**	1	BOLT (1/4-20X1.25 IN)	
	6	1	**9M-1974**	1	WASHER-HARD (8.8X16X2MM THK)	

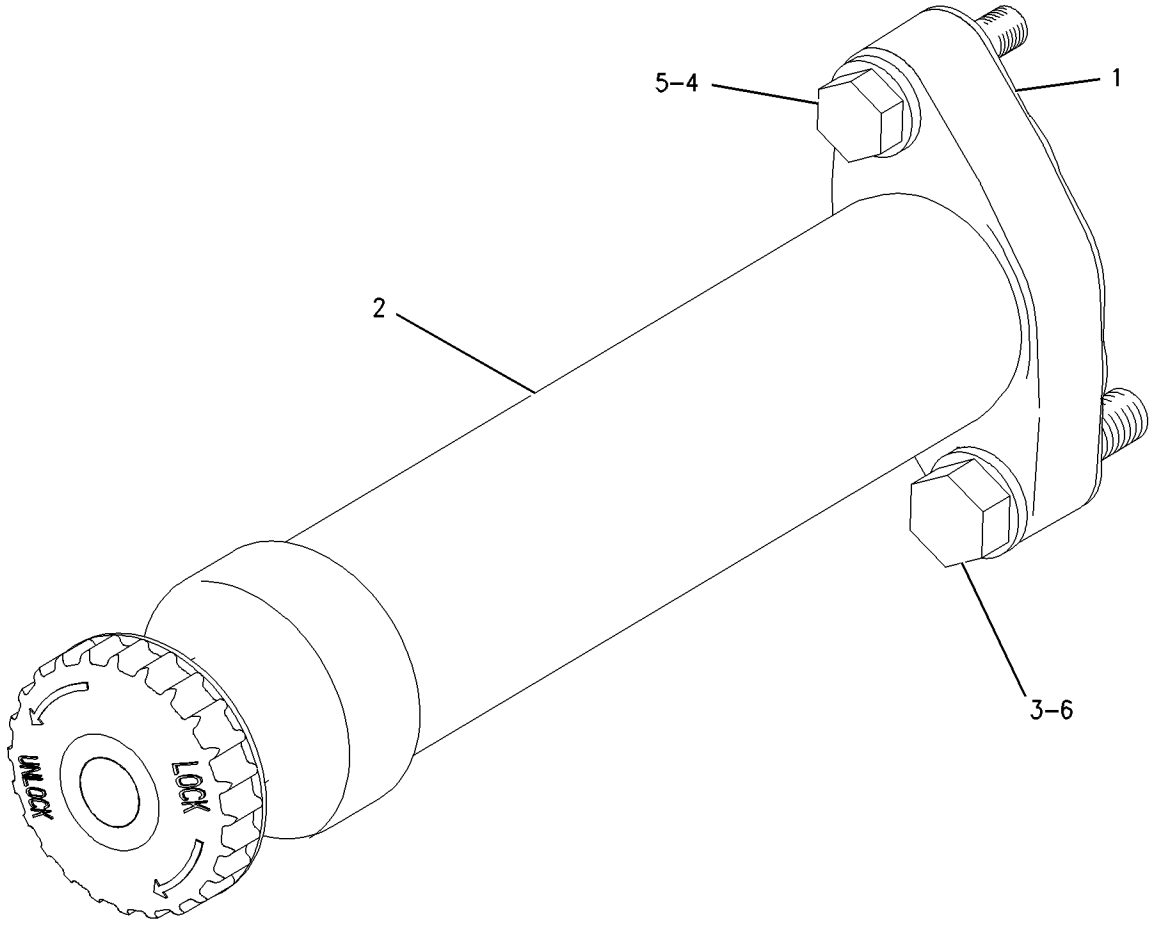

GRAPHIC #1 g00655069

MEMORANDA

1N-4478 PUMP GP-FUEL TRANSFER*R

S/N: 2GR1-UP
ONE SECTION GEAR
PART OF 8N-6151 PUMP GP-FUEL TRANSFER

SMCS-1256 **i01444457**

NOTE	REF NO	GRAPHIC REF	PART NUMBER	QTY	PART NAME 1 2 3 4 5 6 (PRODUCT LEVEL)	SEE PAGE
	1	1	**1W-4003**	1	GEAR AS-IDLER	
	2	1	**124-9437**	1	SHAFT AS-DRIVE	
	3	1	**1W-4005**	1	HEAD AS	
	3A	1	**1W-4009**	1	VALVE AS	
	4	1	**1W-4006**	1	CASING	
	5	1	**1W-4007**	1	POPPET-VALVE (RELIEF)	
	6	1	**1W-4008**	1	GASKET	
C	7	1	**1W-4010**	1	PLATE AS	
		1	**7C-2870**	2	BUSHING-TERMINAL	
C	8	1	**1W-4121**	1	BRACKET AS	
		1	**7C-2870**	2	BUSHING-TERMINAL	
	9	1	**112-3596**	1	SEAL-LIP (OUTER)	
	10	1	**112-3597**	1	SEAL-LIP (INNER)	
	11	1	**6V-0895**	2	SEAL-O-RING (50.52MM ID)	
C	12	1	**7W-3556**	1	WASHER (1.50MM THK)	
	13	1	**8S-4710**	1	BOLT (1/4-20X4 IN)	
	14	1	**8F-8178**	1	BOLT (1/4-20X3.25 IN)	
	15	1	**1W-4655**	1	SPRING-RELIEF VALVE	
	16	1	**1W-6935**	2	SLEEVE	
	17	1	**1W-6936**	1	CAP	

C-CHANGE FROM PREVIOUS TYPE

1N-4478 PUMP GP-FUEL TRANSFER *(contd.)* i01444457

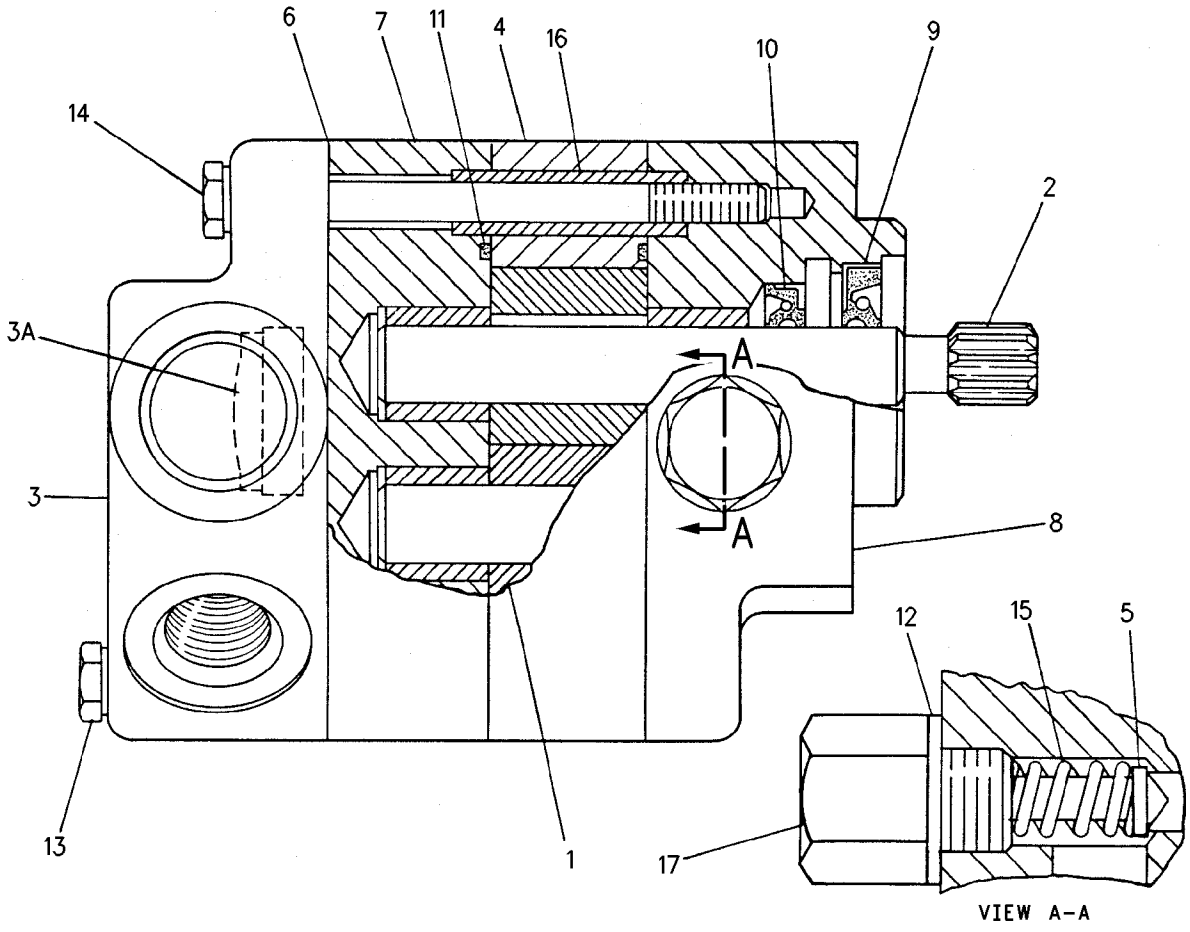

GRAPHIC #1 g00717276

8N-6151 PUMP GP-FUEL TRANSFER

S/N: 2GR1-2023
ONE SECTION GEAR
PART OF 107-8762 ENGINE AR

SMCS-1256 **i01488766**

NOTE	REF NO	GRAPHIC REF	PART NUMBER	QTY	PART NAME 1 2 3 4 5 6 (PRODUCT LEVEL)	SEE PAGE
	1	1	**3H-3243**	2	BOLT (5/16-18X4.75 IN)	
	2	1	**1H-9696**	1	SEAL-O-RING	
	3	1	**1N-4636**	1	COUPLING-DRIVE	
YR	4	1	*1N-4478*	1	PUMP GP-FUEL TRANSFER	216
	5	1	**5L-1761**	2	BOLT (5/16-18X5.5 IN)	

R-REMFG PART MAY BE AVAILABLE
Y-SEPARATE ILLUSTRATION

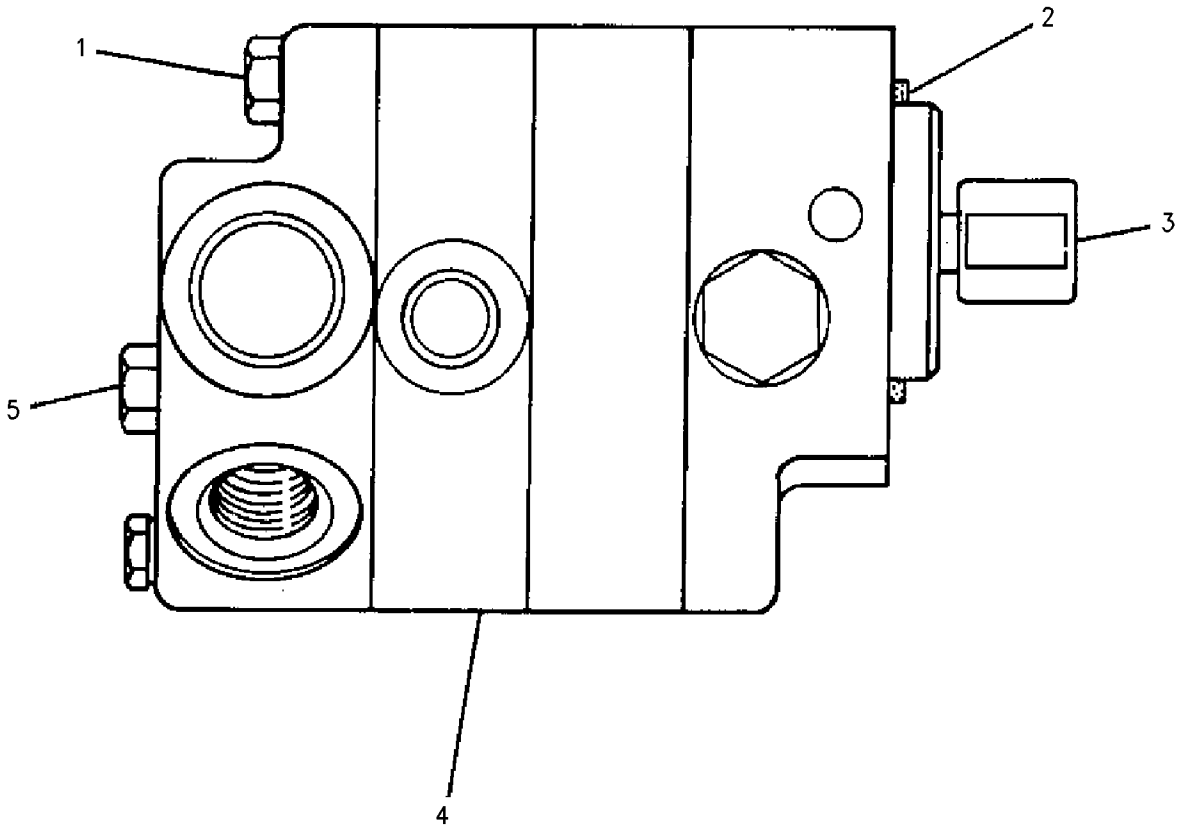

GRAPHIC #1 g00773824

8N-6151 PUMP GP-FUEL TRANSFER

S/N: 2GR1-UP
ONE SECTION GEAR
PART OF 107-8762 ENGINE AR

SMCS-1256 **i01488765**

NOTE	REF NO	GRAPHIC REF	PART NUMBER	QTY	PART NAME 1 2 3 4 5 6 (PRODUCT LEVEL)	SEE PAGE
	1	1	**1N-4636**	1	COUPLING-DRIVE	
CYR	2	1	**169-8615**	1	PUMP GP-FUEL TRANSFER	220
	3	1	**1H-9696**	1	SEAL-O-RING	
	4	1	**3H-3243**	2	BOLT (5/16-18X4.75 IN)	
	5	1	**5L-1761**	2	BOLT (5/16-18X5.5 IN)	

C-CHANGE FROM PREVIOUS TYPE
R-REMFG PART MAY BE AVAILABLE
Y-SEPARATE ILLUSTRATION

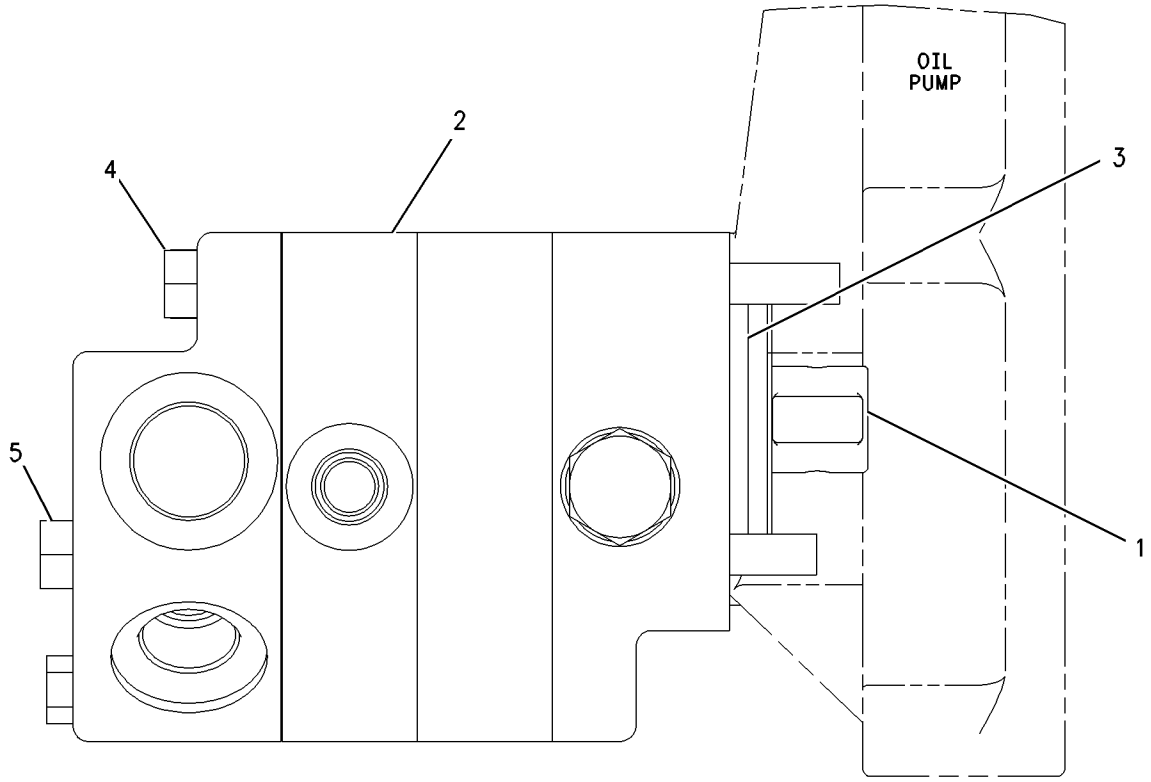

GRAPHIC #1 g00773828

169-8615 PUMP GP-FUEL TRANSFER*R

S/N: 2GR1-UP
ONE SECTION GEAR
PART OF 8N-6151 PUMP GP-FUEL TRANSFER

SMCS-1256 **i01394533**

NOTE	REF NO	GRAPHIC REF	PART NUMBER	QTY	PART NAME 1 2 3 4 5 6 (PRODUCT LEVEL)	SEE PAGE
	1	1	**1W-4003**	1	GEAR AS-IDLER	
	2	1	**1W-4005**	1	HEAD AS	
	2A	1	**1W-4009**	1	VALVE AS	
	3	1	**1W-4006**	1	CASING	
	4	1	**1W-4007**	1	POPPET-VALVE (RELIEF)	
	5	1	**1W-4008**	1	GASKET	
	6	1	**1W-4010**	1	PLATE AS	
		1	**7C-2870**	2	BUSHING-TERMINAL	
	7	1	**1W-4121**	1	BRACKET AS	
		1	**7C-2870**	2	BUSHING-TERMINAL	
	8	1	**1W-4655**	1	SPRING-RELIEF VALVE	
	9	1	**1W-6935**	2	SLEEVE	
	10	1	**1W-6936**	1	CAP	
	11	1	**6V-0895**	2	SEAL-O-RING (50.52MM ID)	
	12	1	**112-3597**	1	SEAL-LIP (INNER)	
	13	1	**124-9437**	1	SHAFT AS-DRIVE	
	14	1	**169-8617**	1	SEAL-LIP TYPE (OUTER)	
	15	1	**7W-3556**	1	WASHER (1.50MM THK)	
	16	1	**8F-8178**	1	BOLT (1/4-20X3.25 IN)	
	17	1	**8S-4710**	1	BOLT (1/4-20X4 IN)	

169-8615 **PUMP GP-FUEL TRANSFER** ***(contd.)*** **i01394533**

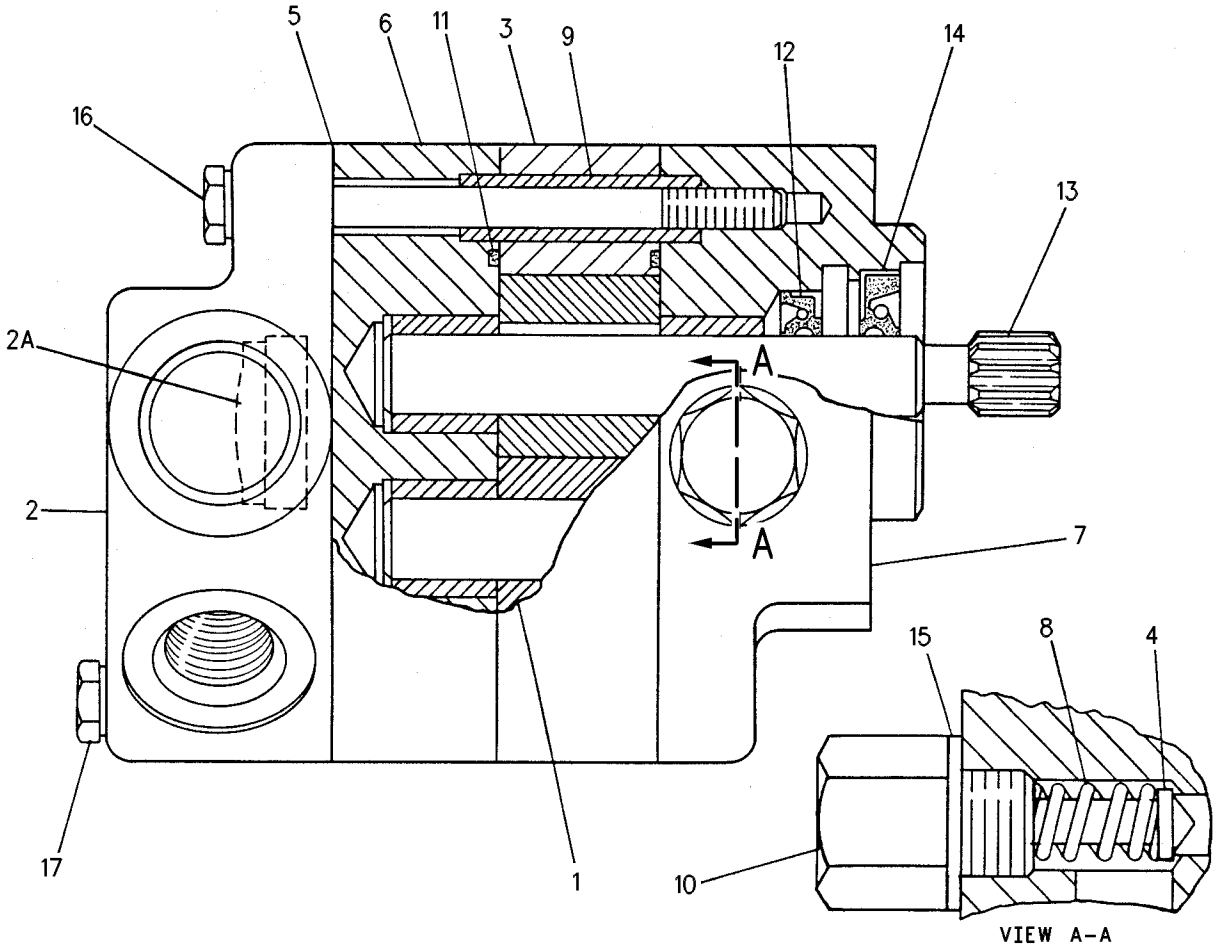

GRAPHIC #1 g00580404

FUEL SYSTEM

116-7010 PUMP GP-UNIT INJECTION

S/N: 2GR1-228

PART OF 107-8762 ENGINE AR

SMCS-1290 **i01055314**

NOTE	REF NO	GRAPHIC REF	PART NUMBER	QTY	PART NAME 1 2 3 4 5 6 (PRODUCT LEVEL)	SEE PAGE
CYR	1	1	**126-7992**	1	INJECTOR GP-FUEL	200
	2	1	**7C-2615**	1	PLUG	
	3	1	**7E-2580**	1	CLAMP-INJECTOR	
	4	1	**7N-5487**	1	WASHER	
	5	1	**7F-8698**	1	BOLT (7/16-14X3.5IN)	

C-CHANGE FROM PREVIOUS TYPE
R-REMFG PART MAY BE AVAILABLE
Y-SEPARATE ILLUSTRATION

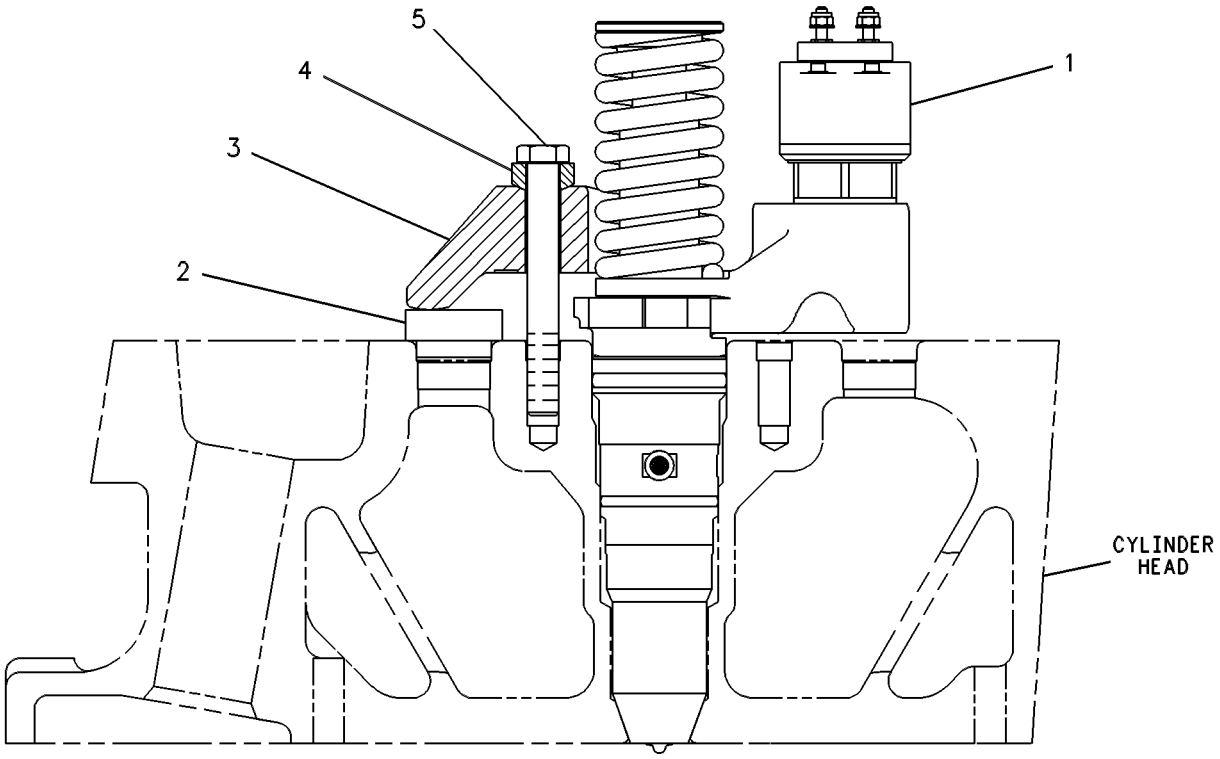

GRAPHIC #1 g00248722

116-7010 PUMP GP-UNIT INJECTION

S/N: 2GR1-UP

PART OF 107-8762 ENGINE AR

SMCS-1290 **i01055267**

NOTE	REF NO	GRAPHIC REF	PART NUMBER	QTY	PART NAME 1 2 3 4 5 6 (PRODUCT LEVEL)	SEE PAGE
Y	1	1	*116-7534*	1	INJECTOR GP-FUEL	199
	2	1	**7C-2615**	1	PLUG	
	3	1	**7E-2580**	1	CLAMP-INJECTOR	
	4	1	**7N-5487**	1	WASHER	
	5	1	**7F-8698**	1	BOLT (7/16-14X3.5IN)	

Y-SEPARATE ILLUSTRATION

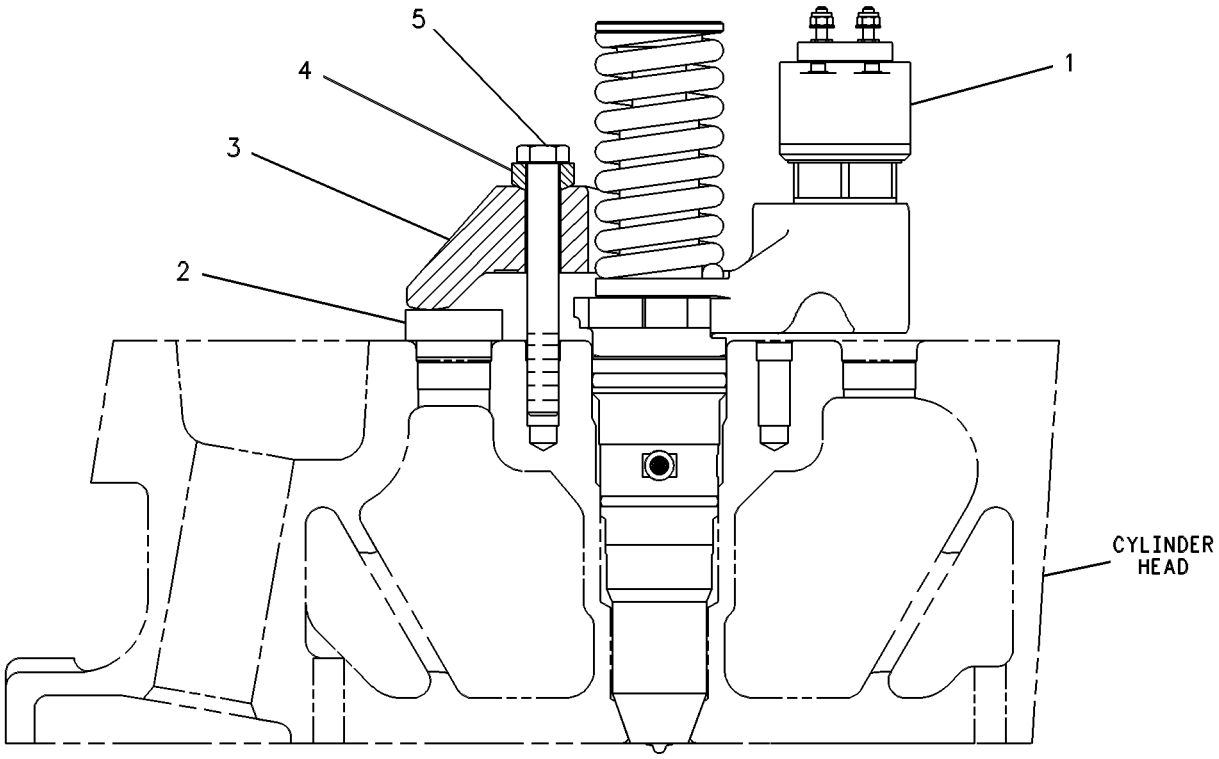

GRAPHIC #1 g00248722

116-7010 PUMP GP-UNIT INJECTION

S/N: 2GR229-1999

PART OF 107-8762 ENGINE AR

SMCS-1290 **i01154664**

NOTE	REF NO	GRAPHIC REF	PART NUMBER	QTY	PART NAME 1 2 3 4 5 6 (PRODUCT LEVEL)	SEE PAGE
CY	1	1	**132-0202**	1	INJECTOR GP-FUEL	201
	2	1	**7C-2615**	1	PLUG	
	3	1	**7E-2580**	1	CLAMP-INJECTOR	
	4	1	**7N-5487**	1	WASHER	
	5	1	**7F-8698**	1	BOLT (7/16-14X3.5IN)	

C-CHANGE FROM PREVIOUS TYPE
Y-SEPARATE ILLUSTRATION

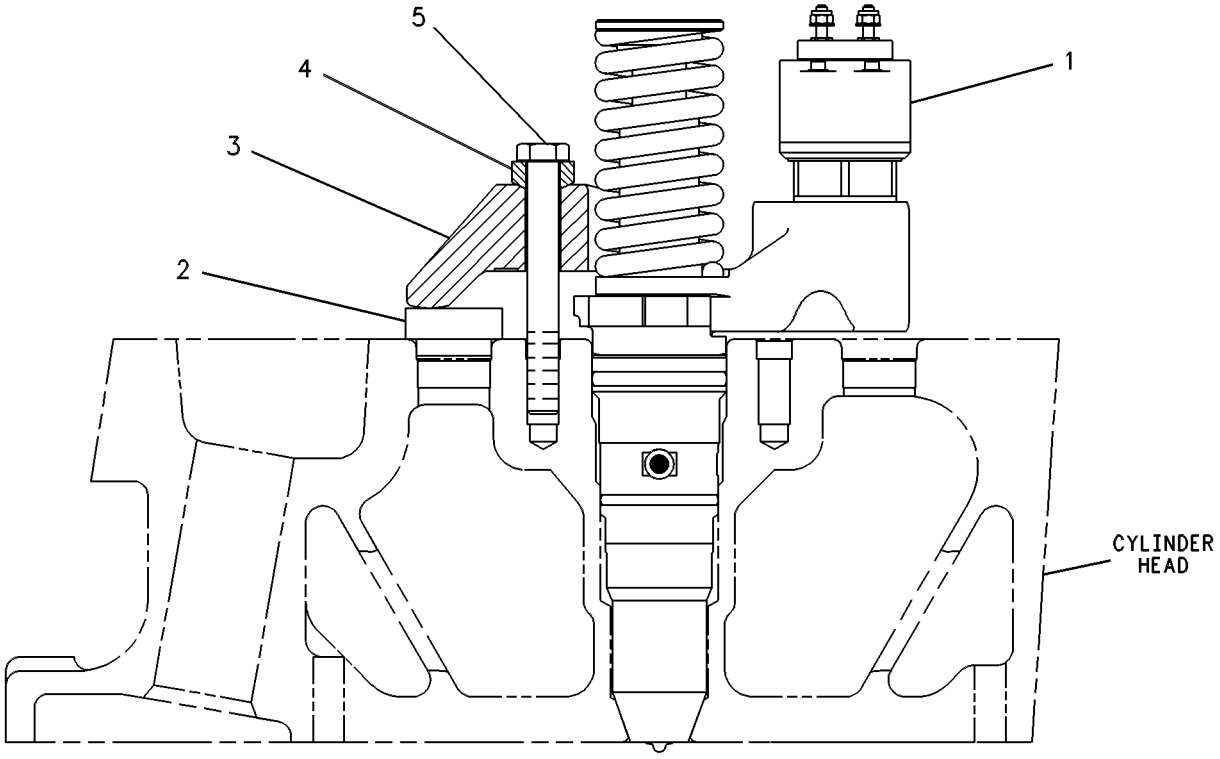

GRAPHIC #1 g00248722

116-7010 PUMP GP-UNIT INJECTION

S/N: 2GR2000-UP

PART OF 107-8762 ENGINE AR

SMCS-1290 **i01154122**

NOTE	REF NO	GRAPHIC REF	PART NUMBER	QTY	PART NAME 1 2 3 4 5 6 (PRODUCT LEVEL)	SEE PAGE
C	1	1	**162-8809**	1	INJECTOR GP-FUEL	
	1A	1	**8J-8725**	1	SEAL-O-RING (40.87ID)	
	1B	1	**9X-7735**	1	SEAL-O-RING (36.17 ID)	
	2	1	**7C-2615**	1	PLUG	
	3	1	**7E-2580**	1	CLAMP-INJECTOR	
	4	1	**7N-5487**	1	WASHER	
	5	1	**7F-8698**	1	BOLT (7/16-14X3.5IN)	

C-CHANGE FROM PREVIOUS TYPE

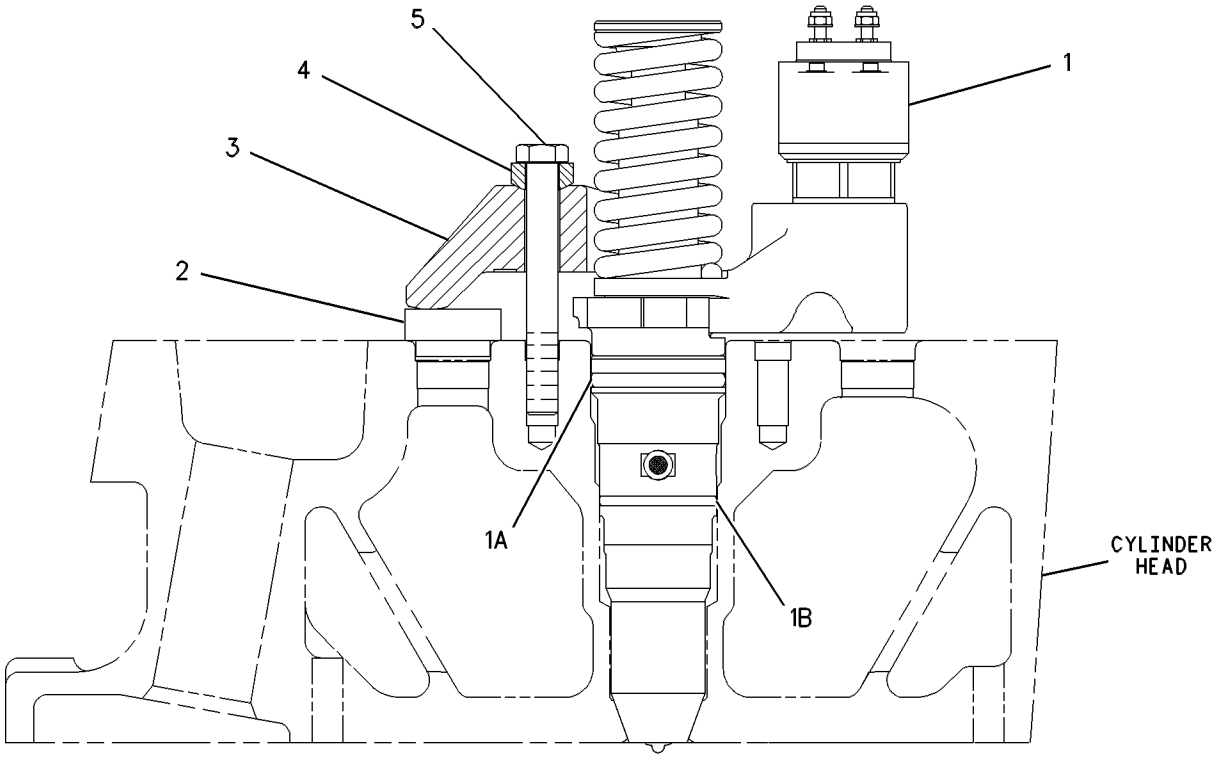

GRAPHIC #1 g00608936

123-6938 SHIELD GP-FUEL LINES

S/N: 2GR1-UP

PART OF 107-8762 ENGINE AR

SMCS-1067, 1252 **i01051854**

NOTE	REF NO	GRAPHIC REF	PART NUMBER	QTY	PART NAME 1 2 3 4 5 6 (PRODUCT LEVEL)	SEE PAGE
	1	1	**4P-9030**	1	SHIELD AS-RH	
		1	**1F-0750**	2	NUT-WELD (3/8-16 THD)	
	2	1	**4P-9034**	1	SHIELD AS-LH	
	3	1	**4P-9031**	1	SHIELD	
		1	**1F-0750**	1	NUT-WELD (3/8-16 THD)	
	4	1	**4P-9035**	1	SHIELD AS	
	5	1	**0S-0509**	1	BOLT (3/8X.75IN)	
	7	1	**0S-1617**	6	BOLT (5/16-18X.75IN)	
	8	1	**0S-1594**	6	BOLT (3/8-16X1.0IN)	
	10	1	**9S-8752**	2	NUT (3/8-16 THD)	
	11	1	**3B-1915**	2	BOLT (3/8-16X1.375IN)	
	12	1	**107-0776**	1	BRACKET	
	13	1	**107-8770**	1	BRACKET	
	14	1	**3E-4352**	16	WASHER-HARD (2.5MM THK)	
	15	1	**9X-6458**	13	WASHER-HARD (3MM THK)	
	16	1	**0L-1351**	2	BOLT (3/8X.875IN)	
	17	1	**2B-2695**	4	BOLT (5/16-18X.875IN)	

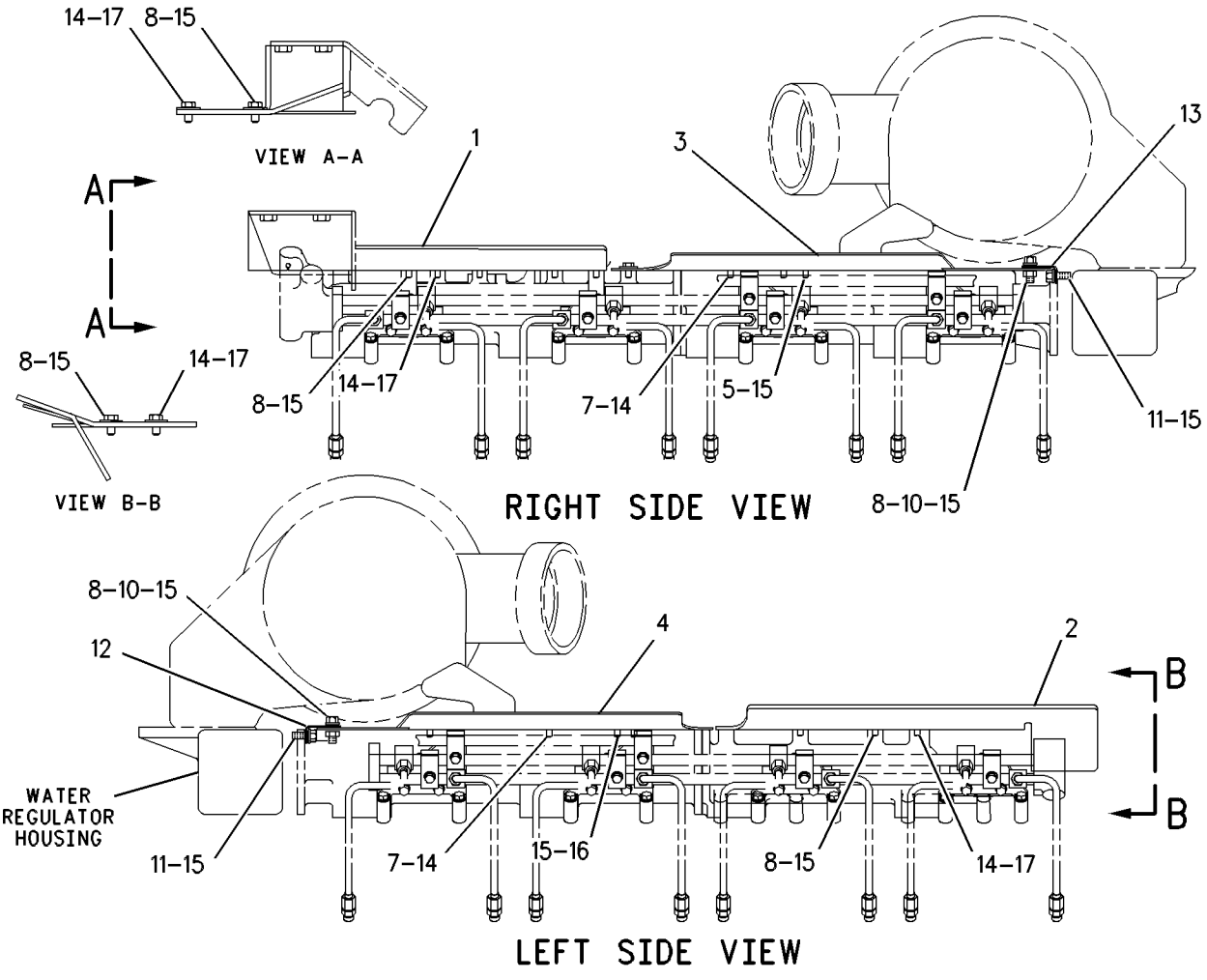

GRAPHIC #1 g00555528

MEMORANDA

FUEL SYSTEM

156-5929 TANK GP-FUEL

S/N: 7HR1-290

PART OF 109-6819 CHASSIS AR

SMCS-1273 **i01185278**

NOTE	REF NO	GRAPHIC REF	PART NUMBER	QTY	PART NAME 1 2 3 4 5 6 (PRODUCT LEVEL)	SEE PAGE
	1	1	**1H-8306**	3	SCREW (1/2-20X1.625IN)	
	2	1	**5P-8502**	1	PADLOCK GP	
A		1	**5P-8500**	1	KEY	
A		1	**8Y-6364**	1	SLEEVE	
	3	1	**6C-3060**	1	GASKET (62MM ID)	
	4	1	**7V-0638**	8	SPACER	
	5	1	**8T-4986**	4	CLAMP-HOSE	
	6	1	**9P-7121**	1	STRAINER-FUEL TANK	
Y	7	1	*156-5930*	1	TANK GP-FUEL	232
	8	1	**138-0443**	1	SENDER AS-FUEL	
		1	**138-0444**	1	KIT-DIAL SENSOR	
	9	1	**114-3676**	2	HOSE	
I	10	1	**116-7486**	2	HOSE AS	
	11	1	**3D-2824**	4	SEAL-O-RING (23.47MM ID)	
M	12	1	**6V-7727**	6	BOLT (M6X1.0X16MM)	
	13	1	**6V-8637**	2	CONNECTOR-SEAL	
	14	1	**6V-9007**	2	ELBOW-90 DEGREE (1 1/16-12 THD)	
	15	1	**6V-9746**	4	SEAL-O-RING (18.94MM ID)	
	16	1	**7M-8485**	3	SEAL-O-RING (29.74MM ID)	
	17	1	**5P-1076**	24	WASHER-HARD (4MM THK)	
M	18	1	**8T-6868**	16	BOLT (M12X1.75X80MM)	
	19	1	**8T-4205**	6	WASHER-HARD (2MM THK)	
	20	1	**9S-9334**	3	PLUG (1 5/16-12 THD)	
M	21	1	**8T-4192**	8	BOLT (M12X1.75X25MM)	
	24	1	**8T-6767**	1	PLUG-PIPE (3/8-18 NPTF THD)	

A-NOT PART OF THIS GROUP
I-SEE HOSE FABRICATION GUIDE
M-METRIC PART
Y-SEPARATE ILLUSTRATION

156-5929 **TANK GP-FUEL** *(contd.)* **i01185278**

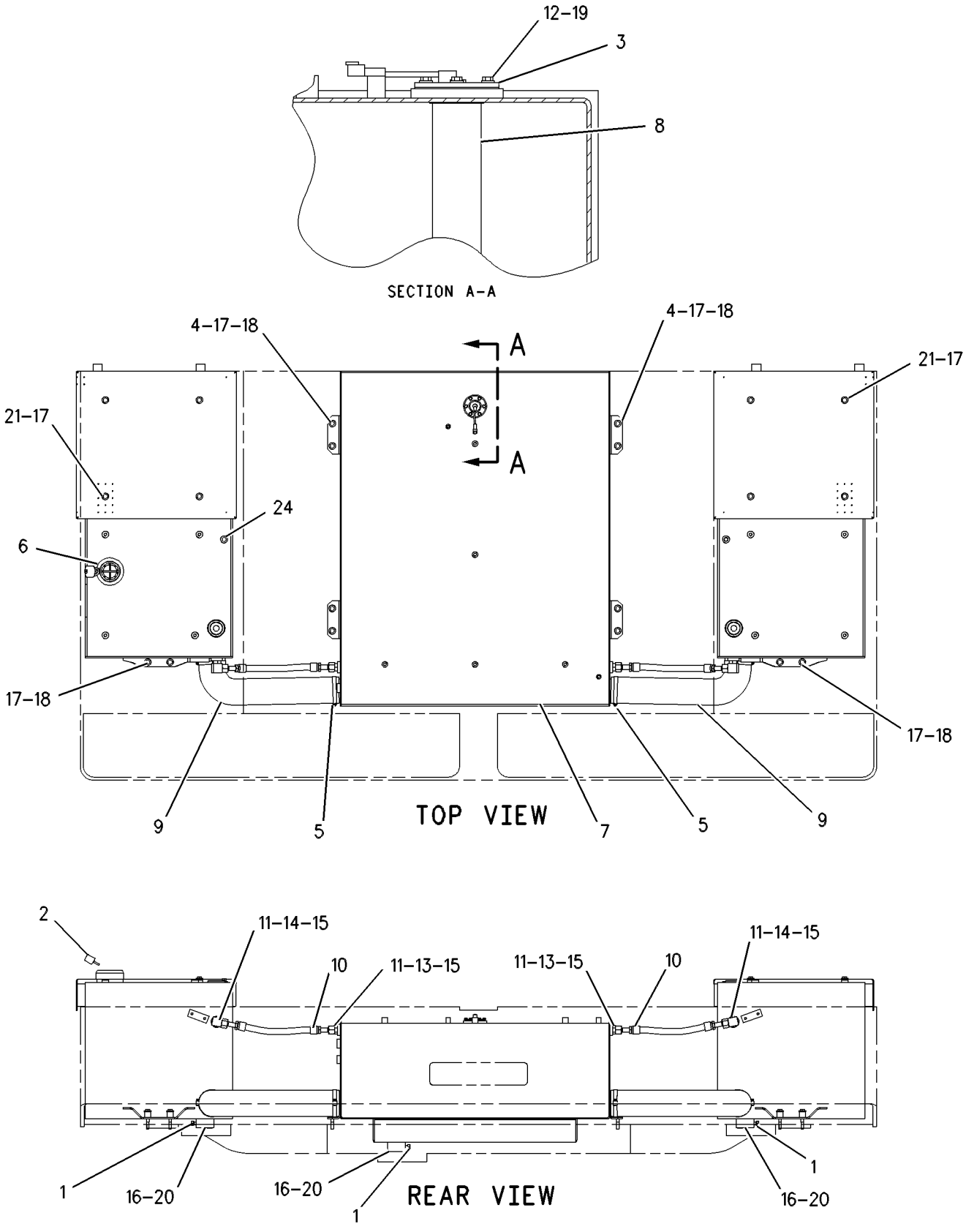

GRAPHIC #1 g00528671

FUEL SYSTEM

156-5929 TANK GP-FUEL

S/N: 7HR291-UP

PART OF 169-9053, 169-9054, 169-9055, 169-9056 BUMPER AR-REAR

AN ATTACHMENT

SMCS-1273 **i01388913**

NOTE	REF NO	GRAPHIC REF	PART NUMBER	QTY	PART NAME 1 2 3 4 5 6 (PRODUCT LEVEL)	SEE PAGE
	1	1	**1H-8306**	3	SCREW-PURGE (1/2-20X1.625IN)	
	3	1	**6C-3060**	1	GASKET (62MM ID)	
	4	1	**7V-0638**	8	SPACER	
	5	1	**8T-4986**	4	CLAMP-HOSE	
	6	1	**9P-7121**	1	STRAINER-FUEL	
	7	1	**114-3676**	2	HOSE	
I	8	1	**116-7486**	2	HOSE AS	
	9	1	**138-0443**	1	SENDER AS-FUEL	
		1	**138-0444**	1	KIT-DIAL SENSOR	
Y	10	1	*156-5930*	1	TANK GP-FUEL	232
	11	1	**156-9096**	1	SHEET-RH	
	12	1	**156-9099**	1	SHEET-LH	
	13	1	**163-6590**	1	SHEET AS-RH	
	14	1	**163-6591**	1	SHEET-RH	
	15	1	**163-6592**	1	SHEET AS-LH	
	16	1	**163-6593**	1	SHEET-LH	
	17	1	*148-8327*	2	CONNECTOR GP	
					(EACH INCLUDES)	
		1	**3D-2824**	1	SEAL-O-RING (23.47MM ID)	
		1	**6V-8637**	1	CONNECTOR	
		1	**6V-9746**	1	SEAL-O-RING (18.94MM ID)	
	18	1	*148-8347*	2	ELBOW GP	
					(EACH INCLUDES)	
		1	**3D-2824**	1	SEAL-O-RING (23.47MM ID)	
		1	**6V-9007**	1	ELBOW-90 DEGREE	
		1	**6V-9746**	1	SEAL-O-RING (18.94MM ID)	
	19	1	**5P-1076**	42	WASHER-HARD (13.5X30X4MM THK)	
M	20	1	**6V-7727**	6	BOLT (M6X1.0X16MM)	
	21	1	**7M-8485**	3	SEAL-O-RING (29.74MM ID)	
M	22	1	**8T-4192**	26	BOLT (M12X1.75X25MM)	
	23	1	**8T-4205**	6	WASHER-HARD (7.2X14.5X2MM THK)	
	24	1	**8T-6767**	1	PLUG-PIPE (3/8-18 NPTF THD)	
M	25	1	**8T-6868**	16	BOLT (M12X1.75X80MM)	
	26	1	**9S-9334**	3	PLUG (1 5/16-12 THD)	
	27	1	**4H-9027**	3	PLUG-PIPE (2-11 1/2 NPTF THD)	

I-SEE HOSE FABRICATION GUIDE
M-METRIC PART
Y-SEPARATE ILLUSTRATION

156-5929 **TANK GP-FUEL** ***(contd.)*** **i01388913**

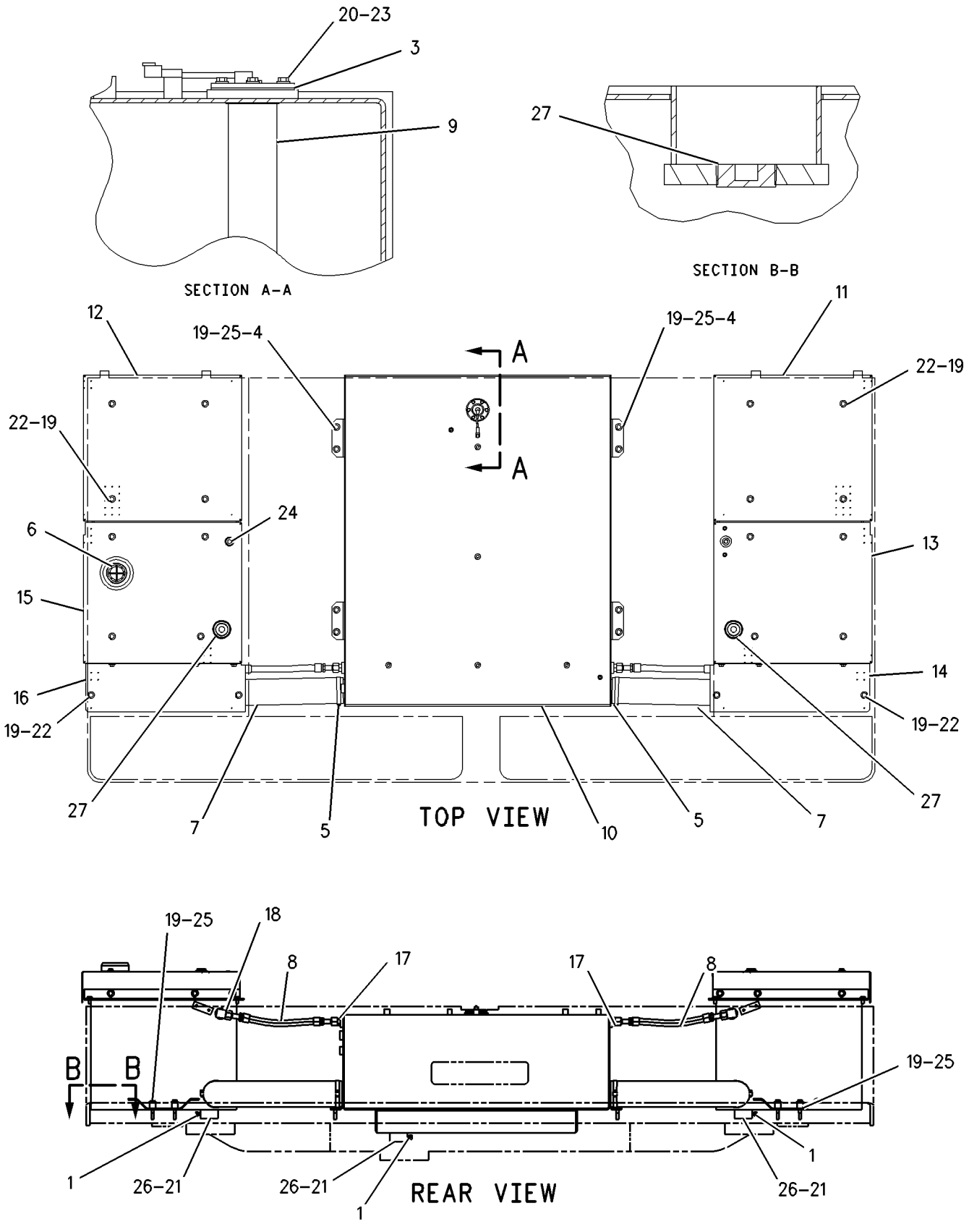

GRAPHIC #1 g00729092

156-5930 TANK GP-FUEL

S/N: 7HR1-290
PART OF 156-5929 TANK GP-FUEL
ALSO AN ATTACHMENT

SMCS-1273 **i01206453**

NOTE	PART NUMBER	QTY	PART NAME 1 2 3 4 5 6 (PRODUCT LEVEL)	SEE PAGE
	112-0847	1	TANK AS-FUEL (CENTER)	
	156-5931	1	TANK AS-FUEL (LH)	
	156-5932	1	TANK AS-FUEL (RH)	

3E-6328 ALARM GP

S/N: 7HR1-UP
24 VOLT
PART OF 112-5764 PANEL GP-INSTRUMENT

SMCS-7406, 7407 **i01473874**

NOTE	REF NO	GRAPHIC REF	PART NUMBER	QTY	PART NAME 1 2 3 4 5 6 (PRODUCT LEVEL)	SEE PAGE
	1	1	**102-8802**	1	KIT-RECEPTACLE (2 PIN)	
					(INCLUDES RECEPTACLE AS & WEDGE)	
	2	1	**186-3735**	2	PIN-CONNECTOR	
	3	1	**3E-3365**	1	WEDGE-RECEPTACLE LOCK (2 PIN)	

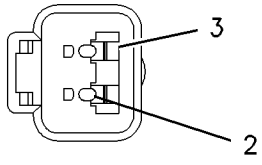

VIEW A–A

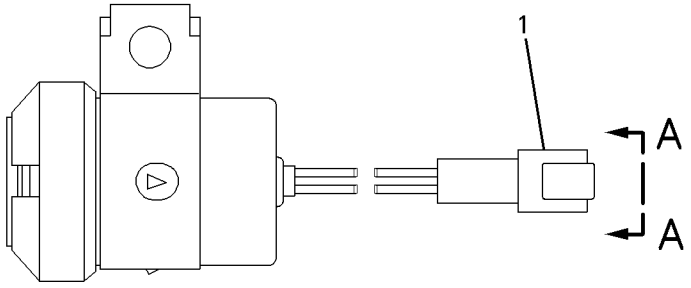

GRAPHIC #1 g00667776

9X-7803 ALTERNATOR GP-CHARGING*R

S/N: 2GR1-UP
24 VOLT, 100 AMP
PART OF 107-8762 ENGINE AR

SMCS-1405 **i01541437**

NOTE	REF NO	GRAPHIC REF	PART NUMBER	QTY	PART NAME 1 2 3 4 5 6 (PRODUCT LEVEL)	SEE PAGE
	1	1	**8T-4205**	2	WASHER-HARD (7.2X14.5X2MM THK)	
	2	1	**9X-2500**	4	SCREW-HEX FLANGE (10-24 X 38.1MM)	
	3	1	**6V-8187**	1	NUT (1/4-28 THD)	
	4	1	**5S-7349**	1	BOLT (1/4-20X0.5 IN)	
	5	1	**9L-6770**	1	CAP	
	6	1	**9N-0943**	1	PLUG-BEARING WELL	
	7	1	**5P-3418**	1	BEARING-ROLLER	
	8	1	**5P-3419**	1	RACE-BEARING INNER	
	9	1	**9L-6776**	1	RECTIFIER AS	
	10	1	**6N-1944**	1	DIODE AS	
	11	1	**3T-6354**	1	REGULATOR AS (24 VOLT) (ALTERNATOR)	
	12	1	**105-3763**	1	CAPACITOR AS-ALTERNATOR	
	13	1	**5P-7807**	1	BALL BEARING	
	14	1	**100-6531**	1	FAN-ALTERNATOR	
	15	1	**2K-4821**	1	LOCKNUT	
	16	1	**9S-2009**	4	SCREW-HEAD (10-24 X 3.625 IN)	
	17	1	**6N-1872**	2	SCREW AS (8-32 X 1.25 IN)	
	18	1	**7N-9023**	1	SCREW AS (8-32 X 26.9MM)	
	19	1	**106-7689**	1	CONNECTOR-ALTERNATOR	
	20	1	**106-7690**	1	CONNECTOR-ALTERNATOR	
	21	1	**9S-2544**	2	SCREW-HEX HEAD (8-32X11.13MM)	
	22	1	**100-6532**	1	COLLAR-ALTERNATOR	
	23	1	**2L-8075**	3	TERMINAL (14-16 GA)	
	24	1	**7N-9021**	2	SCREW AS	
	25	1	**9S-2302**	1	ROTOR AS	
	26	1	**9N-0942**	1	PLATE-COVER	
	27	1	**9N-3388**	5	LOCKSCREW	
	28	1	**106-7687**	1	HOUSING AS-ALTERNATOR	
	29	1	**2P-5616**	1	FRAME-DRIVE END	
	30	1	**8T-9762**	1	STATOR AS	
	31	1	**106-7688**	1	COIL AS-ALTERNATOR	
	32	1	**9S-2390**	1	RETAINER	
	33	1	**030-9612**	4	SCREW-FORMING (10-24X.5 IN)	
	34	1	**7F-7621**	1	WASHER (0.635X1.25X0.09 IN THK)	
	35	1	**8T-0328**	2	WASHER-HARD (5.5X10X1MM THK)	
	36	1	**1H-3244**	2	LOCKWASHER (6.64X11.91X.65MM THK)	
	37	1	**9B-7233**	2	LOCKWASHER	
					AVAILABLE REPAIR KIT(S):	
			9S-2013	1	KIT-RELAY TERMINAL (ALTERNATOR)	
					(INCLUDES BUSHING, WASHERS, NUT AS, & STUD)	
			105-3764	1	KIT-ALTERNATOR TERMINAL	
					(INCLUDES TERMINAL AS, INSULATOR, BUSHING, WASHER, NUTS & LOCKWASHERS)	

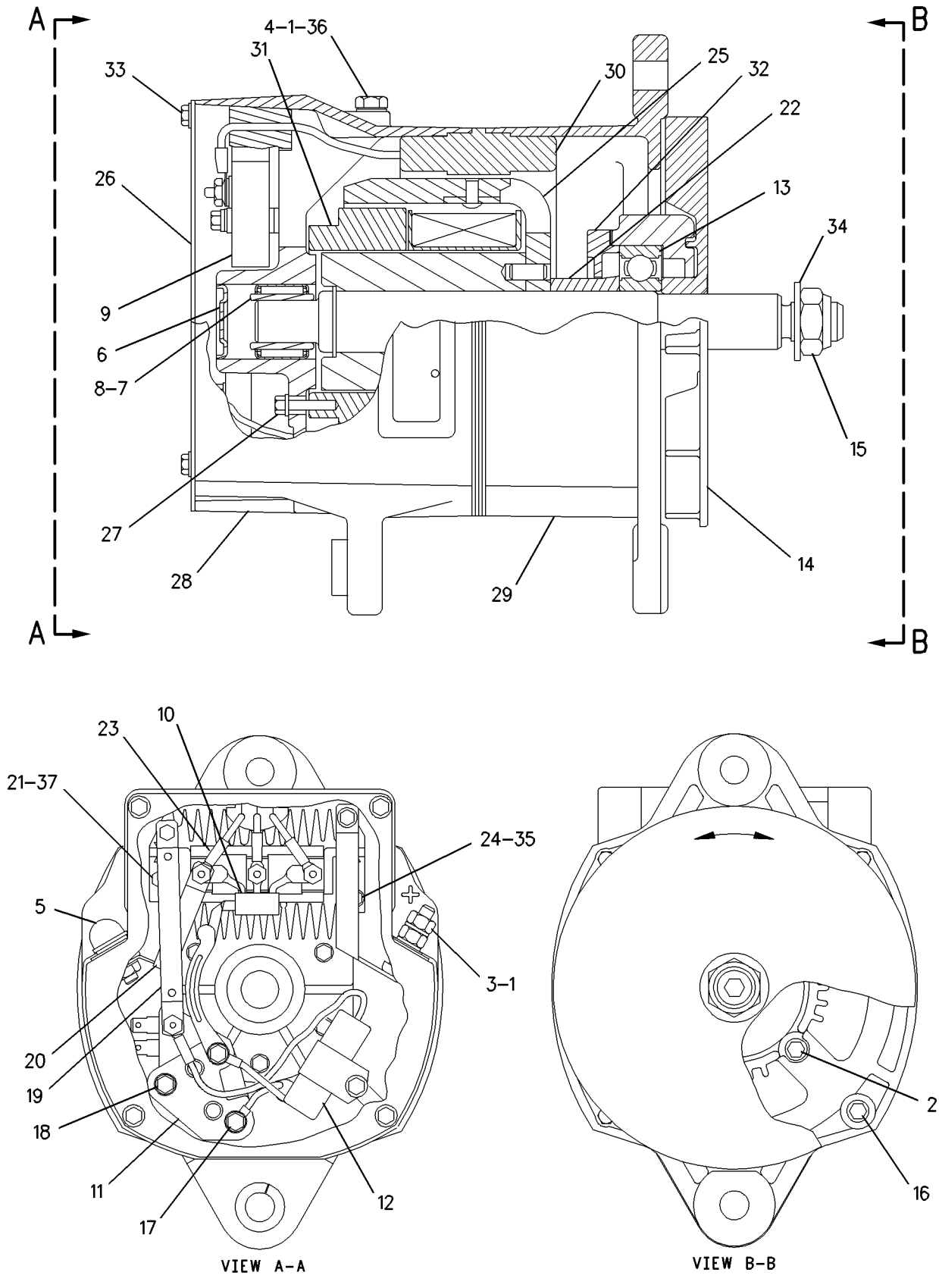

GRAPHIC #1

g00741720

ELECTRICAL AND STARTING SYSTEM

109-6895 BATTERY & WIRING GP

S/N: 7HR1-UP

PART OF 109-6821 ELECTRICAL AR

SMCS-1401, 1408 **i01380677**

NOTE	REF NO	GRAPHIC REF	PART NUMBER	QTY	PART NAME 1 2 3 4 5 6 (PRODUCT LEVEL)	SEE PAGE
	1	1	**9M-8406**	6	CLIP	
M	2	1	**8T-4137**	4	BOLT (M10X1.5X20MM)	
	3	1	**8T-4121**	4	WASHER-HARD (11X21X2.5MM THK)	
	4	1	**115-5590**	1	CABLE AS	
E		1	**5P-0761**		CABLE (00GA) (100CM)	
		1	**8N-1725**	1	COVER-TERMINAL (RED)	
		1	**9X-9120**	1	BOOT	
		1	**9X-9825**	1	TERMINAL-CABLE	
		1	**1M-6119**	1	BOLT-BATTERY TERMINAL (5/16-18X1.375 IN)	
		1	**1M-6120**	1	NUT-BATTERY TERMINAL (5/16-18 THD)	
	5	1	**115-5593**	1	CABLE AS	
		1	**1S-7252**	1	TERMINAL-RING (FOR 3/8IN BOLT)	
E		1	**5P-0747**		CABLE (00GA) (119CM)	
		1	**7N-5274**	1	COVER-TERMINAL (BLACK)	
		1	**1M-6119**	1	BOLT-BATTERY TERMINAL (5/16-18X1.375 IN)	
		1	**1M-6120**	1	NUT-BATTERY TERMINAL (5/16-18 THD)	
	6	1	**115-5595**	1	CABLE AS	
		1	**1S-7251**	1	TERMINAL-RING (FOR 1/2 IN BOLT)	
		1	**1S-7252**	1	TERMINAL-RING (FOR 3/8IN BOLT)	
		1	**5P-0747**		CABLE (00GA) (76CM)	
	7	1	**115-5592**	1	CABLE AS	
		1	**1S-7252**	1	TERMINAL-RING (FOR 3/8IN BOLT)	
E		1	**5P-0747**		CABLE (00GA) (70CM)	
		1	**6T-0465**	1	COVER-TERMINAL (BLACK)	
		1	**9G-0003**	1	COVER-TERMINAL (BLACK/LH NEG)	
		1	**1M-6119**	1	BOLT-BATTERY TERMINAL (5/16-18X1.375 IN)	
		1	**1M-6120**	1	NUT-BATTERY TERMINAL (5/16-18 THD)	
	8	1	**9X-9730**	4	BATTERY (12 VOLT/DRY)	
	9	1	**9U-1598**	4	FRAME AS	
	10	1	**118-1277**	2	CABLE AS	
					(EACH INCLUDES)	
E		1	**5P-0761**		CABLE (00GA) (20CM)	
		1	**9G-0003**	1	COVER-TERMINAL (BLACK/LH NEG)	
		1	**9G-0004**	1	COVER-TERMINAL (RED/RH POS)	
		1	**1M-6119**	1	BOLT-BATTERY TERMINAL (5/16-18X1.375 IN)	
		1	**1M-6120**	1	NUT-BATTERY TERMINAL (5/16-18 THD)	
	11	1	**8S-2634**	1	COVER AS	
	12	1	**121-7848**	2	PLATE	
M	13	1	**8T-4908**	4	BOLT (M8X1.25X25MM)	
	14	1	**8T-4224**	4	WASHER-HARD (8.8X16X2MM THK)	
	15	1	**115-5586**	1	RECEPTACLE AS-AUXILIARY START	
		1	**1S-7251**	2	TERMINAL-RING (FOR 1/2 IN BOLT)	
E		1	**5P-0747**		CABLE (00GA) (85CM)	
E		1	**5P-0761**		CABLE (00GA) (85CM)	
	16	1	**115-5591**	1	CABLE AS	
		1	**1S-7251**	1	TERMINAL-RING (FOR 1/2 IN BOLT)	
E		1	**5P-0761**		CABLE (00GA) (44CM)	
		1	**8N-0869**	1	COVER-TERMINAL (RED)	
		1	**8N-1725**	1	COVER-TERMINAL (RED)	
		1	**1M-6119**	1	BOLT-BATTERY TERMINAL (5/16-18X1.375 IN)	
		1	**1M-6120**	1	NUT-BATTERY TERMINAL (5/16-18 THD)	
	17	2	**9M-8406**	1	CLIP	
M	18	2	**8T-4137**	2	BOLT (M10X1.5X20MM)	
	19	2	**8T-4121**	5	WASHER-HARD (11X21X2.5MM THK)	
	20	2	**8C-6358**	2	JUNCTION BLOCK AS	
	21	2	**7F-0560**	12	WASHER (2.57MM THK)	

109-6895 **BATTERY & WIRING GP** ***(contd.)*** **i01380677**

NOTE	REF NO	GRAPHIC REF	PART NUMBER	QTY	PART NAME 1 2 3 4 5 6 (PRODUCT LEVEL)	SEE PAGE
	22	2	**6V-8188**	12	NUT (1/2-13 THD)	
Y	23	2	**7N-0719**	1	SWITCH GP-DISCONNECT (BATTERY)	365
	24	2	**3E-8320**	1	PLATE-INSTRUCTION (BATTERY)	
M	25	2	**8T-4244**	2	NUT (M12X1.75 THD)	
	26	2	**8T-4223**	2	WASHER-HARD (13.5X25.5X3MM THK)	
	27	2	**9U-1399**	4	ROD	
M	28	2	**8T-0389**	8	LOCKNUT (M10X1.5 THD)	
M	29	2	**8T-4186**	1	BOLT (M10X1.50X40MM)	
	30	2	**115-5594**	1	CABLE AS	
		2	**5P-2600**	2	RING-TERMINAL (FOR 1/2IN BOLT)	
E		2	**8T-5357**		CABLE (000 GA)(RED) (250CM)	
		2	**9X-4519**	2	BOOT	
	31	2	**115-5597**	1	CABLE AS	
		2	**1S-7251**	2	TERMINAL-RING (FOR 1/2 IN BOLT)	
E		2	**5P-0761**		CABLE (00GA) (52CM)	
		2	**8N-0869**	2	COVER-TERMINAL (RED)	
M	32	2	**8T-4136**	4	BOLT (M10X1.5X25MM)	
	33	2	**7X-7729**	12	WASHER (11X25X3MM THK)	
	34	2	**115-5598**	1	CABLE AS	
		2	**1S-7251**	2	TERMINAL-RING (FOR 1/2 IN BOLT)	
E		2	**5P-0747**		CABLE (00GA) (74CM)	
	35	2	**115-5596**	1	CABLE AS	
		2	**1S-7251**	2	TERMINAL-RING (FOR 1/2 IN BOLT)	
E		2	**5P-0761**		CABLE (00GA) (63CM)	
		2	**8N-0869**	2	COVER-TERMINAL (RED)	
	36	2	**6S-1061**	1	CABLE AS-BATTERY	
		2	**1S-7251**	2	TERMINAL-RING (FOR 1/2 IN BOLT)	
	37	2	**128-3763**	1	BRACKET	
	38	2	**8M-2773**	4	CLIP (17.46MM ID)	
	39	2	**9M-4594**	1	SPACER (.406X.875X.75 IN THK)	
	40	2	**9B-7237**	1	BOLT (3/8-16X1.25 IN)	

E-ORDER BY THE CENTIMETER
M-METRIC PART
Y-SEPARATE ILLUSTRATION

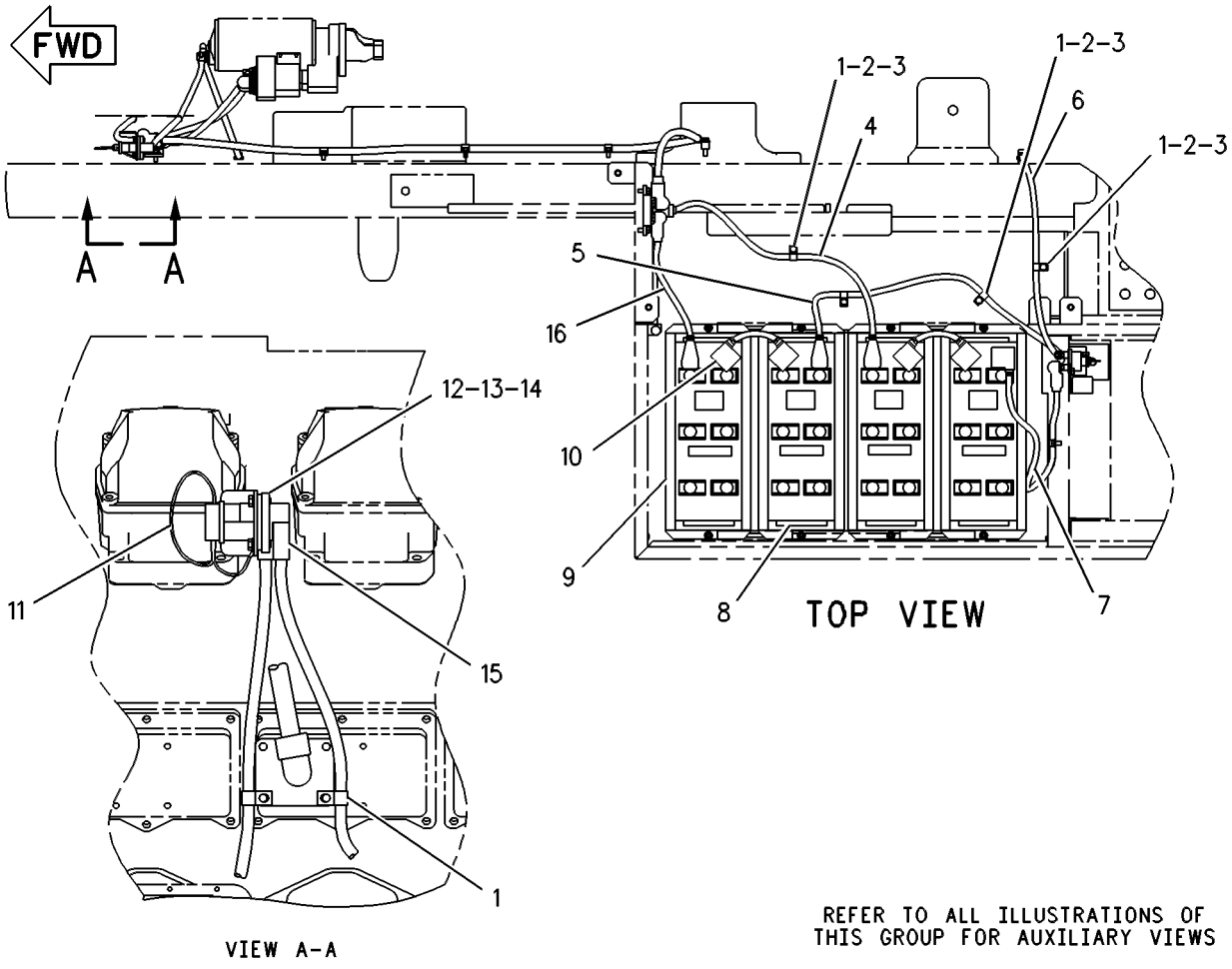

GRAPHIC #1

g00255164

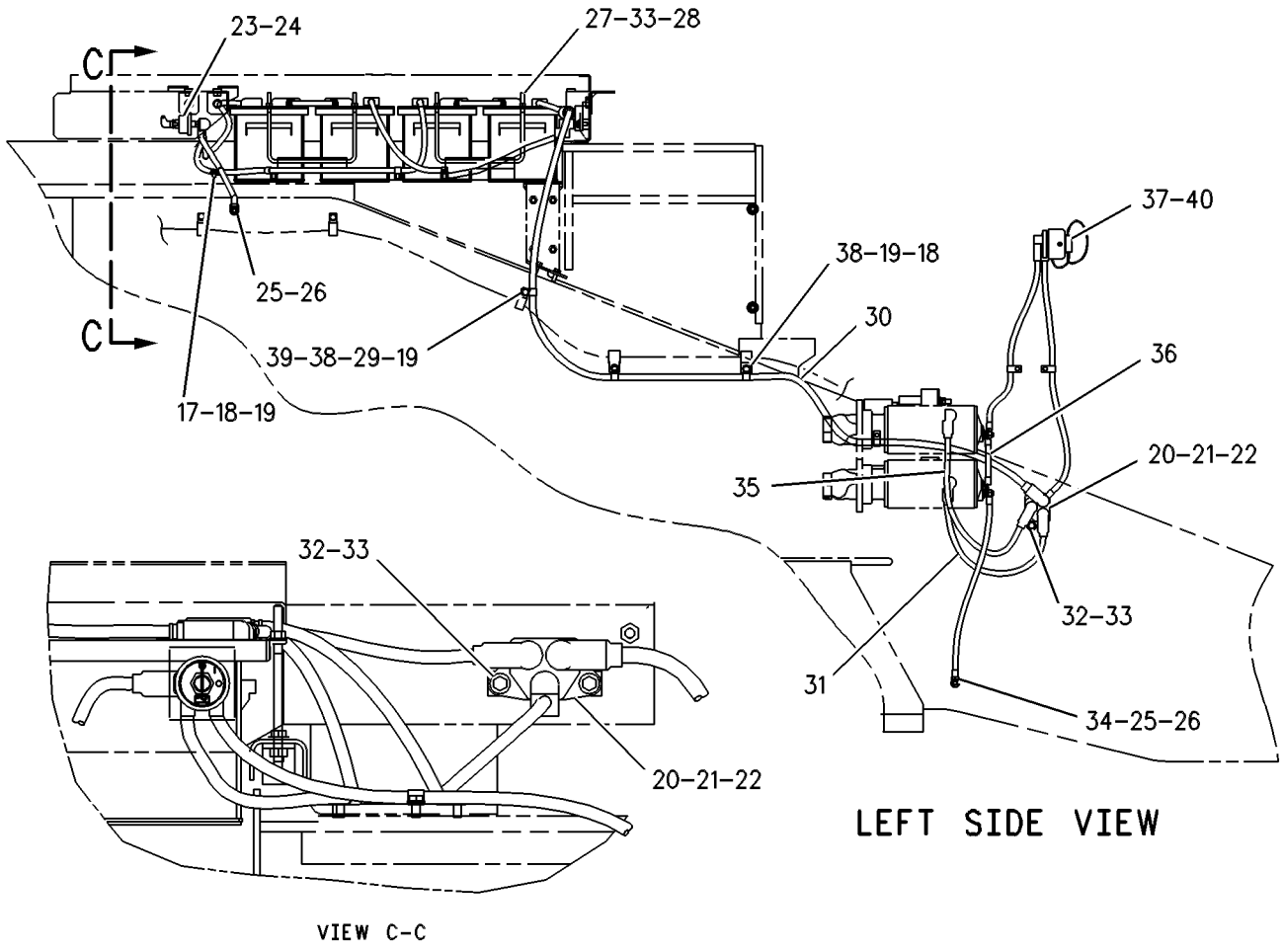

GRAPHIC #2

g00327155

126-0182 BUFFER GP-SENSOR

S/N: 7HR1-UP
FUEL LEVEL
PART OF 109-6864 WIRING GP-BUMPER
ALSO AN ATTACHMENT

SMCS-1408 **i01329581**

NOTE	REF NO	GRAPHIC REF	PART NUMBER	QTY	PART NAME 1 2 3 4 5 6 (PRODUCT LEVEL)	SEE PAGE
	1	1	**8T-8730**	2	SOCKET-CONNECTOR	
BE	2	1	**9X-1813**		SLEEVE	
J	3	1	**102-8803**	1	KIT-RECEPTACLE (3 PIN)	
					(INCLUDES RECEPTACLE AS & PART MAKRED J)	
J	4	1	**3E-3371**	1	WEDGE-RECEPTACLE LOCK	
	5	1	**8T-8729**	3	PIN-CONNECTOR	
	6	1	**155-2270**	1	KIT-CONNECTING PLUG (2 PIN)	
					(INCLUDES PLUG AS & WEDGE)	
	7	1	**3E-3362**	1	WEDGE-PLUG LOCK	

B-USE AS REQUIRED
E-ORDER BY THE CENTIMETER
J-KIT MARKED J INCLUDES PART MARKED J

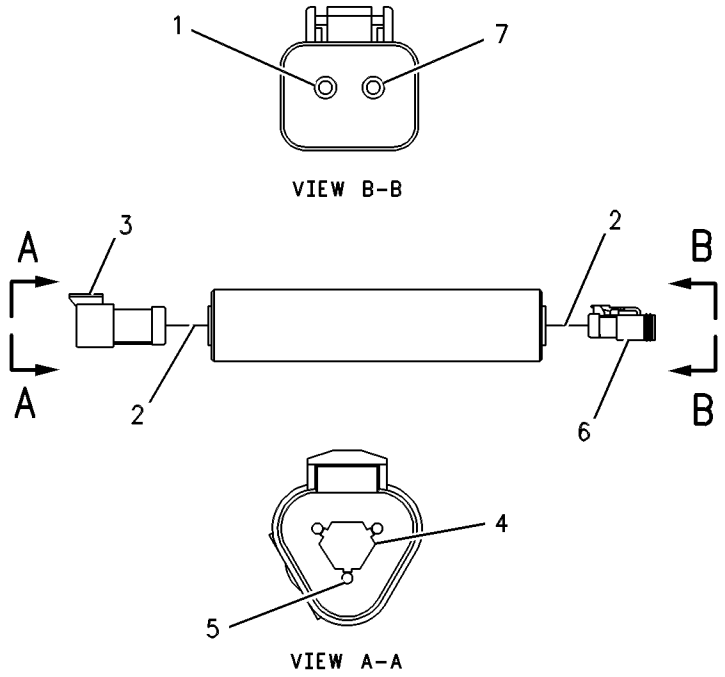

GRAPHIC #1 g00255089

112-6005 CONTROL & MTG GP-ENGINE ELEK

S/N: 2GR1-UP
PART OF 107-8762 ENGINE AR
TYPE 1

SMCS-1901 **i00948162**

NOTE	REF NO	GRAPHIC REF	PART NUMBER	QTY	PART NAME 1 2 3 4 5 6 (PRODUCT LEVEL)	SEE PAGE
	1	1	**5P-8245**	4	WASHER (3MM THK)	
	2	1	**6I-1418**	4	SPACER	
	3	1	**8T-9655**	8	MOUNT	
	4	1	**9N-0869**	4	WASHER (2MM THK)	
	5	1	**112-4387**	1	ELBOW	
	6	1	**112-6006**	1	PLATE AS	
Y	7	1	*132-8900*	1	CONTROL GP-ENGINE ELECTRONIC	249
	8	1	**0V-0375**	4	BOLT (1/2-13X3.25IN)	
	9	1	**1B-9575**	4	BOLT (5/16-18X1.75IN)	
	10	1	**9M-1974**	1	WASHER-HARD (2MM THK)	
	11	1	**153-7487**	1	ELBOW	

Y-SEPARATE ILLUSTRATION

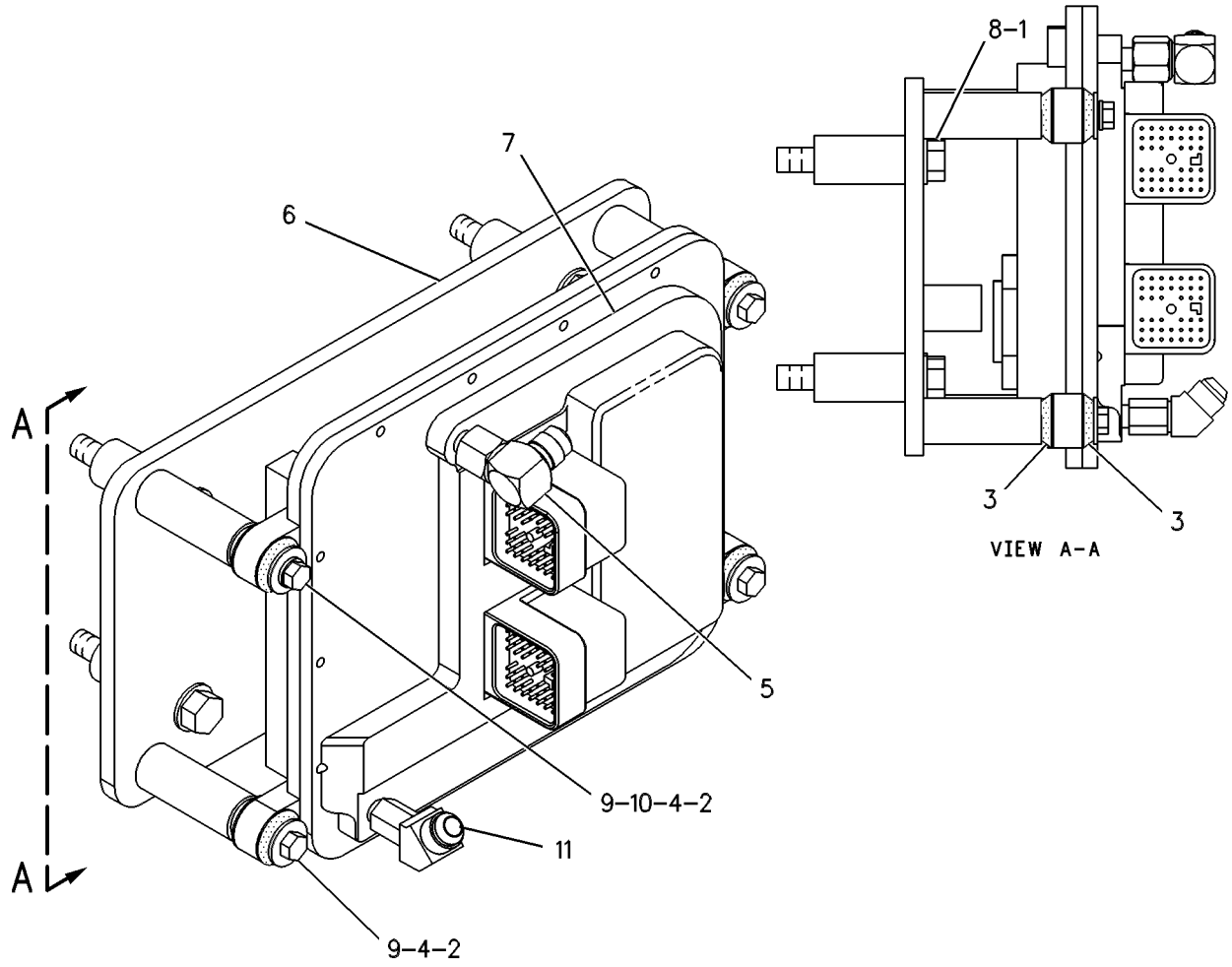

GRAPHIC #1 g00396605

112-6005 CONTROL & MTG GP-ENGINE ELEK

S/N: 2GR1-UP
PART OF 107-8762 ENGINE AR
TYPE 2

SMCS-1901 **i00948141**

NOTE	REF NO	GRAPHIC REF	PART NUMBER	QTY	PART NAME 1 2 3 4 5 6 (PRODUCT LEVEL)	SEE PAGE
	1	1	**5P-8245**	4	WASHER (3MM THK)	
	2	1	**6I-1418**	4	SPACER	
	3	1	**8T-9655**	8	MOUNT	
	4	1	**9N-0869**	4	WASHER (2MM THK)	
	5	1	**112-4387**	1	ELBOW	
	6	1	**112-6006**	1	PLATE AS	
YC	7	1	*132-8900*	1	CONTROL GP-ENGINE ELECTRONIC	249
	8	1	**0V-0375**	4	BOLT (1/2-13X3.25IN)	
	9	1	**1B-9575**	4	BOLT (5/16-18X1.75IN)	
	10	1	**9M-1974**	1	WASHER-HARD (2MM THK)	
	11	1	**153-7487**	1	ELBOW	

C-CHANGE FROM PREVIOUS TYPE
Y-SEPARATE ILLUSTRATION

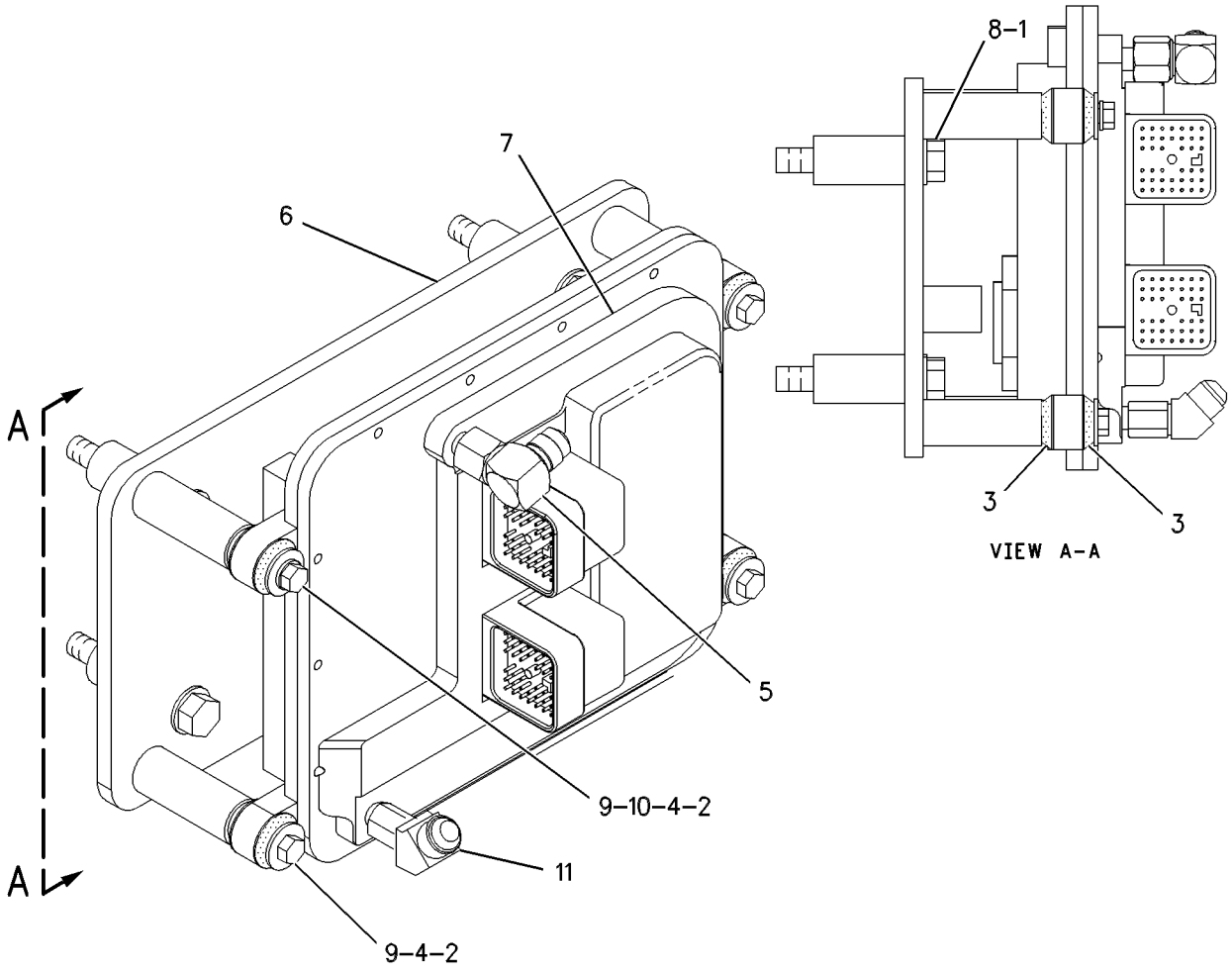

GRAPHIC #1 g00395237

139-6029 CONTROL GP-ENG RATINGS ELEK

S/N: 2GR1-UP

FIELD INSTALLATION

SMCS-1902, 7620 **i00747621**

NOTE	REF NO	GRAPHIC REF	PART NUMBER	QTY	PART NAME 1 2 3 4 5 6 (PRODUCT LEVEL)	SEE PAGE
	1	1	**3E-9199**	1	LABEL-MARKING	

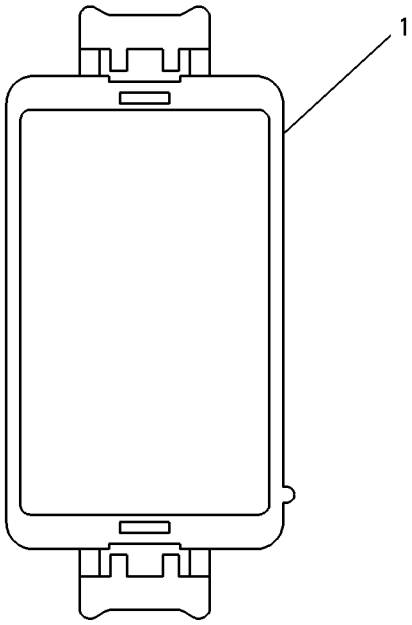

GRAPHIC #1 g00114582

150-1196 CONTROL GP-ENG RATINGS ELEK

S/N: 2GR1-UP

FIELD REPLACEMENT FOR 116-4197—PAGE 259

FIELD INSTALLATION

SMCS-1902, 7620 **i00748980**

NOTE	REF NO	GRAPHIC REF	PART NUMBER	QTY	PART NAME 1 2 3 4 5 6 (PRODUCT LEVEL)	SEE PAGE
	1	1	**3E-9199**	1	LABEL-MARKING	

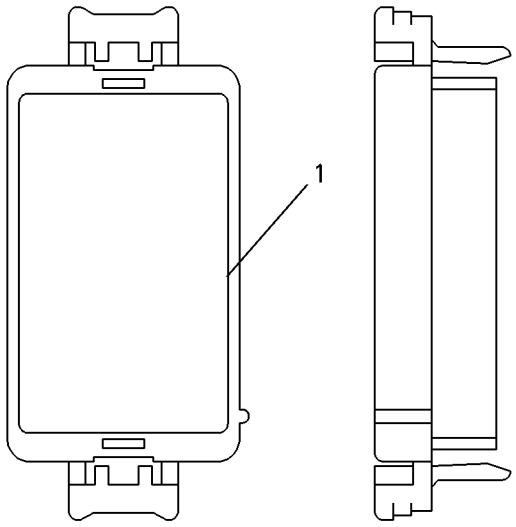

GRAPHIC #1 g00083728

163-7213 CONTROL GP-ENG RATINGS ELEK

S/N: 2GR1-UP

FIELD REPLACEMENT FOR 116-4197—PAGE 259

SMCS-1902, 7620 **i01041576**

NOTE	REF NO	GRAPHIC REF	PART NUMBER	QTY	PART NAME 1 2 3 4 5 6 (PRODUCT LEVEL)	SEE PAGE
					(NO SERVICED PARTS)	

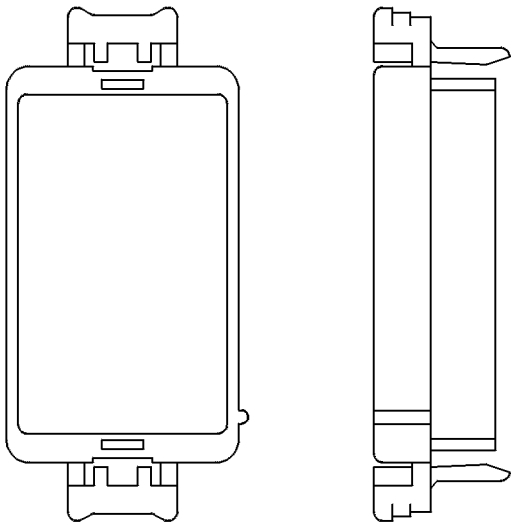

GRAPHIC #1 g00084524

175-3318 CONTROL GP-ENG RATINGS ELEK

S/N: 2GR1-UP

FIELD REPLACEMENT FOR 116-4197—PAGE 259

SMCS-1902, 7620 **i01207146**

NOTE	REF NO	GRAPHIC REF	PART NUMBER	QTY	PART NAME 1 2 3 4 5 6 (PRODUCT LEVEL)	SEE PAGE
					(NO SERVICED PARTS)	

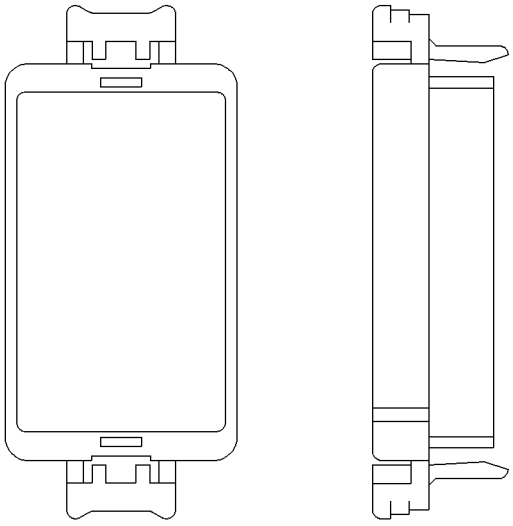

GRAPHIC #1 g00339514

193-4246 CONTROL GP-ENG RATINGS ELEK

S/N: 2GR1-UP

FIELD REPLACEMENT FOR 116-4197—PAGE 259

SMCS-1902, 7620 **i01382700**

NOTE	REF NO	GRAPHIC REF	PART NUMBER	QTY	PART NAME 1 2 3 4 5 6 (PRODUCT LEVEL)	SEE PAGE
					(NO SERVICED PARTS)	

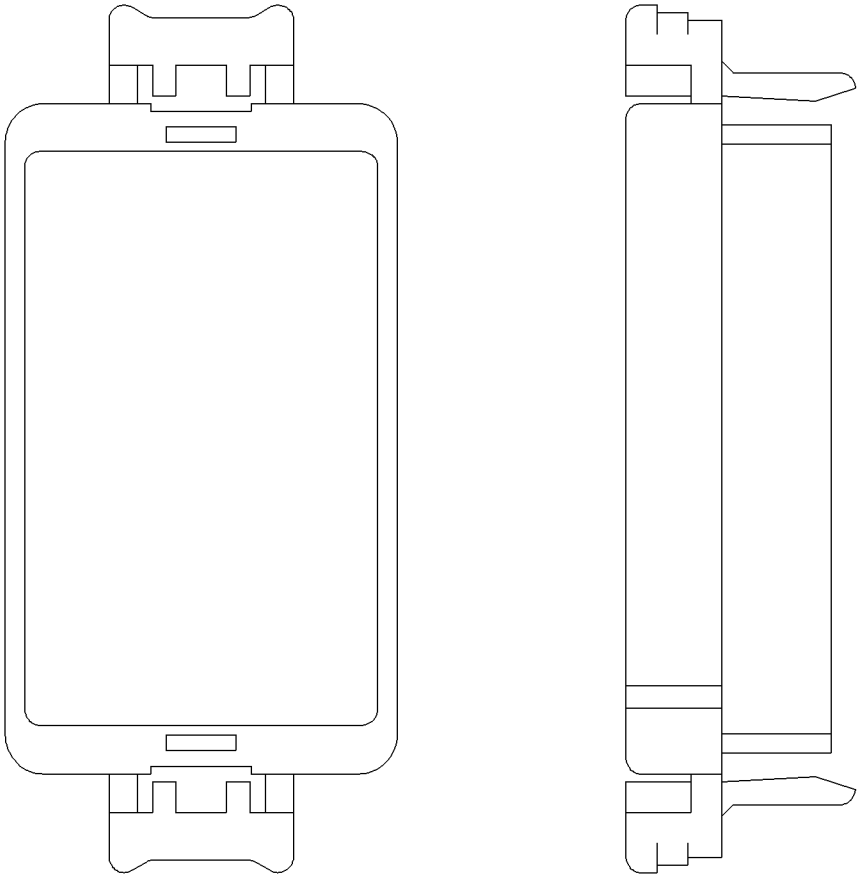

GRAPHIC #1 g00700529

130-7481 CONTROL GP-ENGINE ELECTRONIC

S/N: 2GR1-2282

PART OF 132-8900 CONTROL GP-ENGINE ELECTRONIC

SMCS-1901 **i01420995**

NOTE	REF NO	GRAPHIC REF	PART NUMBER	QTY	PART NAME 1 2 3 4 5 6 (PRODUCT LEVEL)	SEE PAGE
	1	1	**3E-9199**	1	FILM	
	2	1	**6V-1179**	1	SEAL-O-RING (76.62MM ID)	
	3	1	**8S-8158**	1	SEAL-WIRE	
	4	1	**2H-2615**	4	WASHER (.219X.41X.0312 IN THK)	
	5	1	**7X-6315**	1	STRAP-GROUNDING	

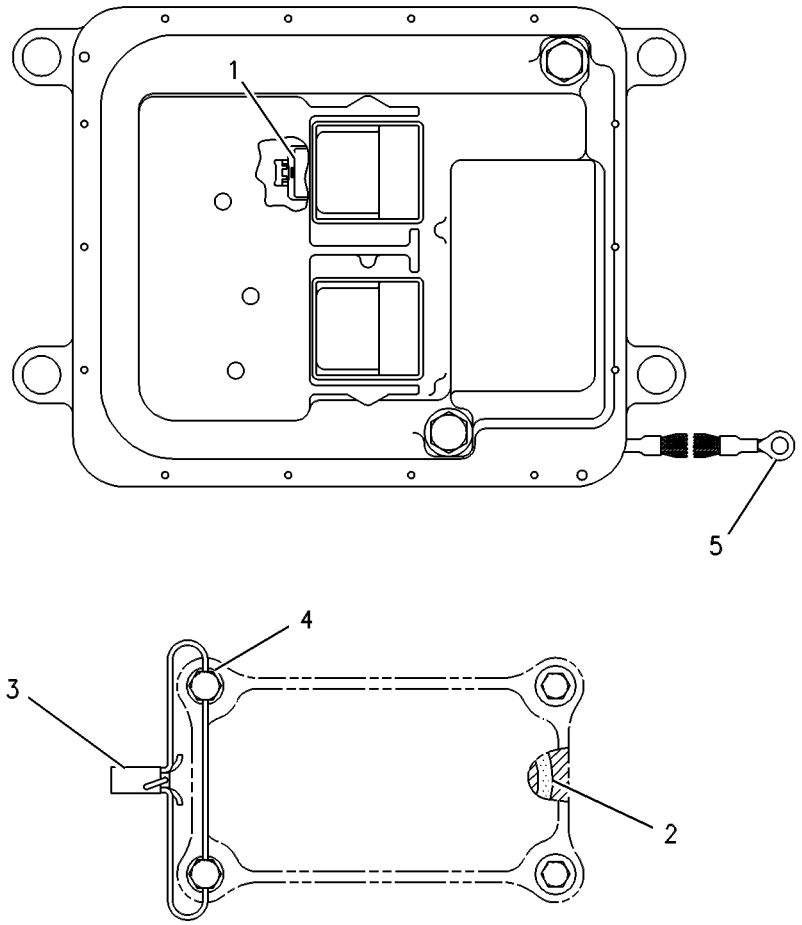

GRAPHIC #1 g00260093

ELECTRICAL AND STARTING SYSTEM

132-8900 CONTROL GP-ENGINE ELECTRONIC

S/N: 2GR1-2282

PART OF 112-6005 CONTROL & MTG GP-ENGINE ELEK

SMCS-1901 **i01055518**

NOTE	REF NO	GRAPHIC REF	PART NUMBER	QTY	PART NAME 1 2 3 4 5 6 (PRODUCT LEVEL)	SEE PAGE
Y	1	1	**130-7481**	1	CONTROL GP-ENGINE ELECTRONIC	248

Y-SEPARATE ILLUSTRATION

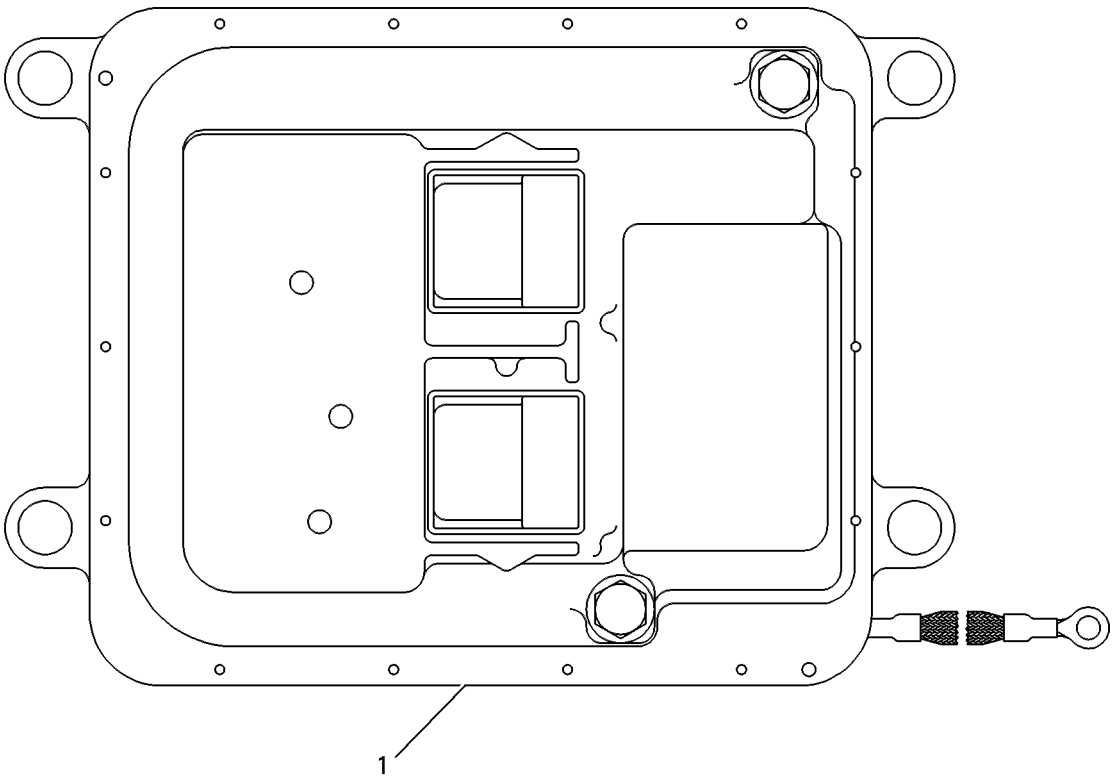

GRAPHIC #1 g00260096

132-8900 CONTROL GP-ENGINE ELECTRONIC

S/N: 2GR2283-UP

PART OF 112-6005 CONTROL & MTG GP-ENGINE ELEK

SMCS-1901 **i01267784**

NOTE	REF NO	GRAPHIC REF	PART NUMBER	QTY	PART NAME 1 2 3 4 5 6 (PRODUCT LEVEL)	SEE PAGE
CY	1	1	**176-7503**	1	CONTROL GP-ENGINE ELECTRONIC	251

C-CHANGE FROM PREVIOUS TYPE
Y-SEPARATE ILLUSTRATION

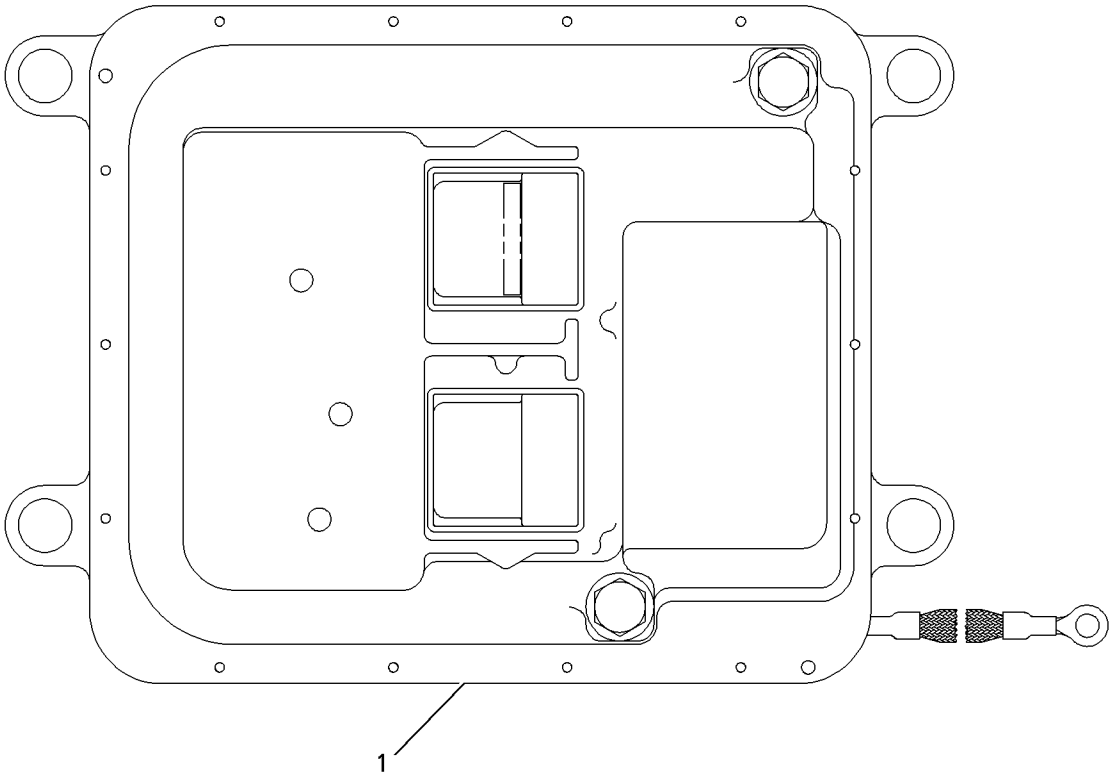

GRAPHIC #1 g00673713

176-7503 CONTROL GP-ENGINE ELECTRONIC

S/N: 2GR2283-UP

PART OF 132-8900 CONTROL GP-ENGINE ELECTRONIC

SMCS-1901 **i01241649**

NOTE	REF NO	GRAPHIC REF	PART NUMBER	QTY	PART NAME 1 2 3 4 5 6 (PRODUCT LEVEL)	SEE PAGE
	2	1	**111-8411**	1	COVER	
	3	1	**6V-1179**	1	SEAL-O-RING (76.62MM ID)	
	4	1	**8S-8158**	1	SEAL-WIRE	
D	5	1	**8C-8418**		LOCKWIRE (BULK) (20CM)	
M	6	1	**102-4087**	4	BOLT	
	7	1	**2H-2615**	4	WASHER	
	8	1	**126-7574**	1	SCREW-PAN HEAD (SELF LOCKING)	
	9	1	**7X-6315**	1	STRAP-GROUNDING	
					AVAILABLE REPAIR KIT(S):	
M			**6V-6703**	2	KIT-RETAINING BOLT	
					(INCLUDES BOLT, SEALS AND RINGS)	

D-ORDER BY THE METER
M-METRIC PART

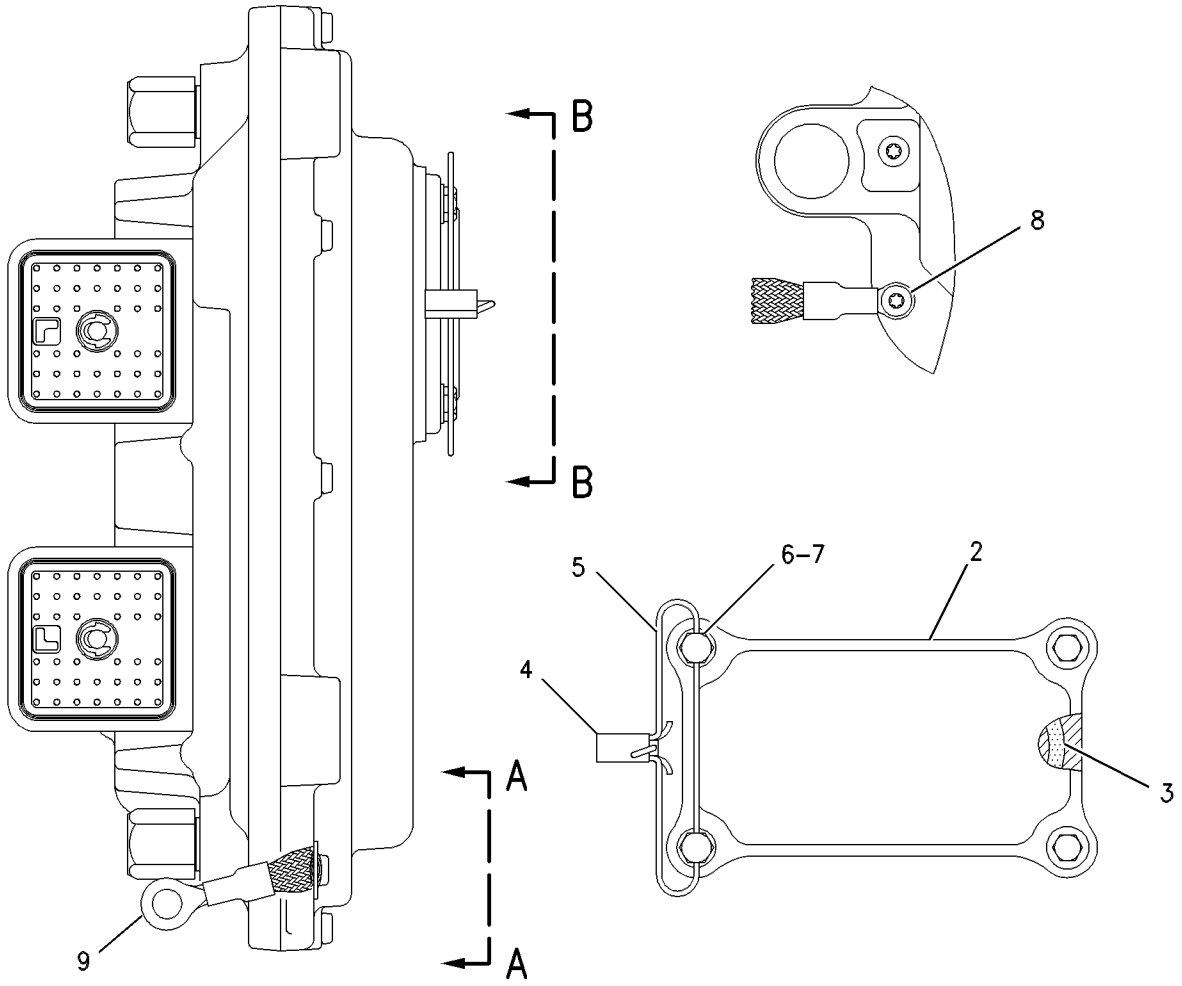

GRAPHIC #1 g00670644

130-5131 CONTROL GP-UNPROGRAMMED–
VIDS/VIMS MAIN MODULE*R
S/N: 7HR1-283

PART OF 109-6897 WIRING GP-VIDS MONITOR, 131-4377 WIRING GP-VIMS MONITOR

AN ATTACHMENT

SMCS-7610 **i01153899**

NOTE	REF NO	GRAPHIC REF	PART NUMBER	QTY	PART NAME 1 2 3 4 5 6 (PRODUCT LEVEL)	SEE PAGE
	1	1	**132-8520**	1	FILM-IDENTIFICATION	
F			**101-1785**	1	BATTERY (CLOCK)	
F			**8C-3078**	1	SEAL-O-RING (45.69MM ID)	

F-NOT SHOWN

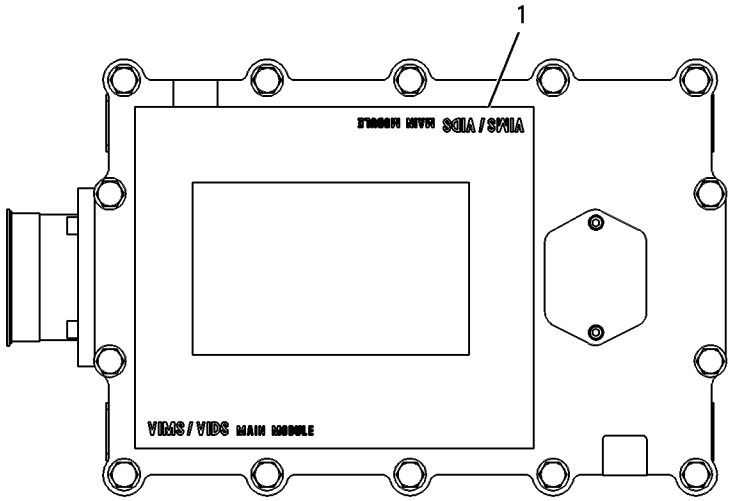

GRAPHIC #1 g00268786

142-3363 CONTROL GP-UNPROGRAMMED–POWER TRAIN

S/N: 7HR1-283

PART OF 109-6897 WIRING GP-VIDS MONITOR, 131-4377 WIRING GP-VIMS MONITOR AN ATTACHMENT

SMCS-7610 **i01206409**

NOTE	REF NO	GRAPHIC REF	PART NUMBER	QTY	PART NAME 1 2 3 4 5 6 (PRODUCT LEVEL)	SEE PAGE
	1	1	**7X-6315**	1	STRAP-GROUNDING	
	2	1	**101-0852**	1	SCREW-PAN HEAD	
M	3	1	**6V-6703**	2	KIT-RETAINING BOLT	
					(EACH INCLUDES BOLT, RING, AND SEALS)	
					FOR SOFTWARE, SEE ELECTRONICS GP	

M-METRIC PART

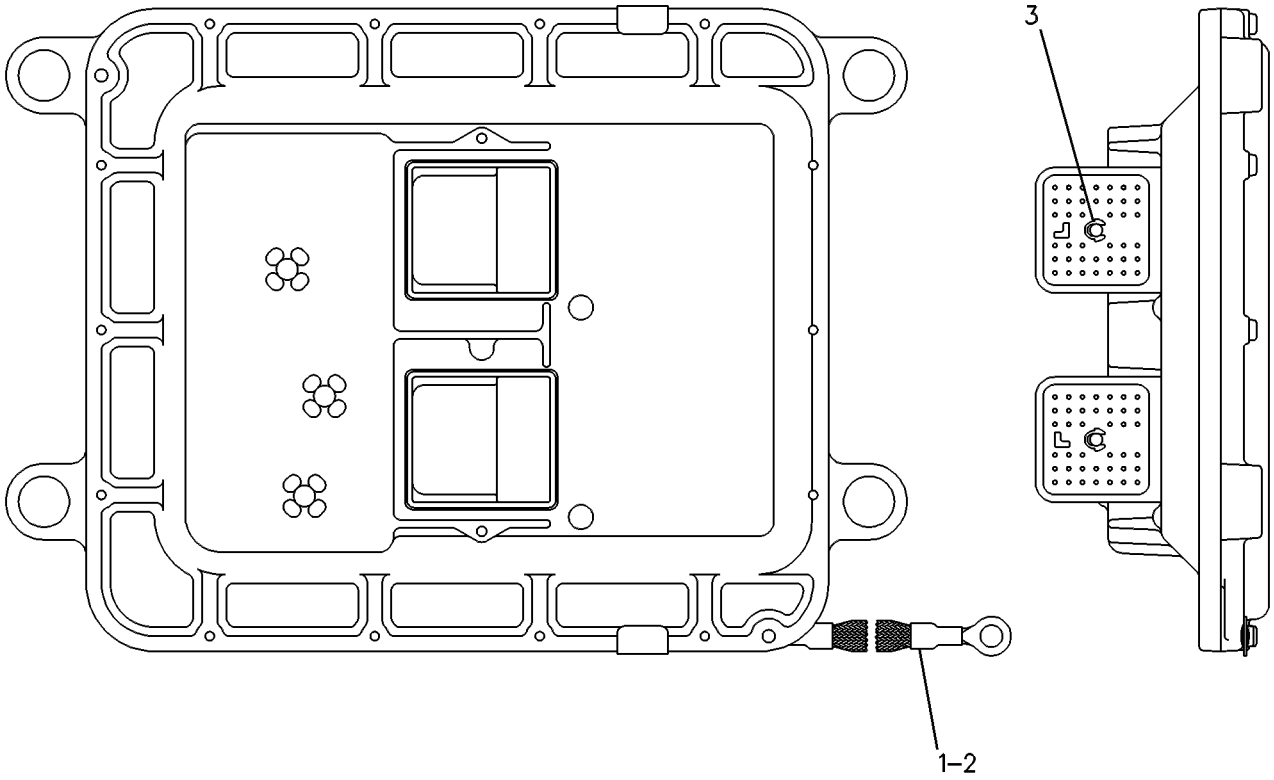

GRAPHIC #1 g00087166

142-3371 CONTROL GP-UNPROGRAMMED–IMPLEMENT

S/N: 7HR1-283

PART OF 109-6897 WIRING GP-VIDS MONITOR, 131-4377 WIRING GP-VIMS MONITOR

AN ATTACHMENT

SMCS-7610 **i01178638**

NOTE	REF NO	GRAPHIC REF	PART NUMBER	QTY	PART NAME 1 2 3 4 5 6 (PRODUCT LEVEL)	SEE PAGE
	1	1	**7X-6315**	1	STRAP-GROUNDING	
	2	1	**101-0852**	1	SCREW-PAN HEAD	
M	3	1	**6V-6703**	2	KIT-RETAINING BOLT	
					(EACH INCLUDES BOLT, RING, AND SEALS)	
					FOR SOFTWARE, SEE ELECTRONICS GP	

M-METRIC PART

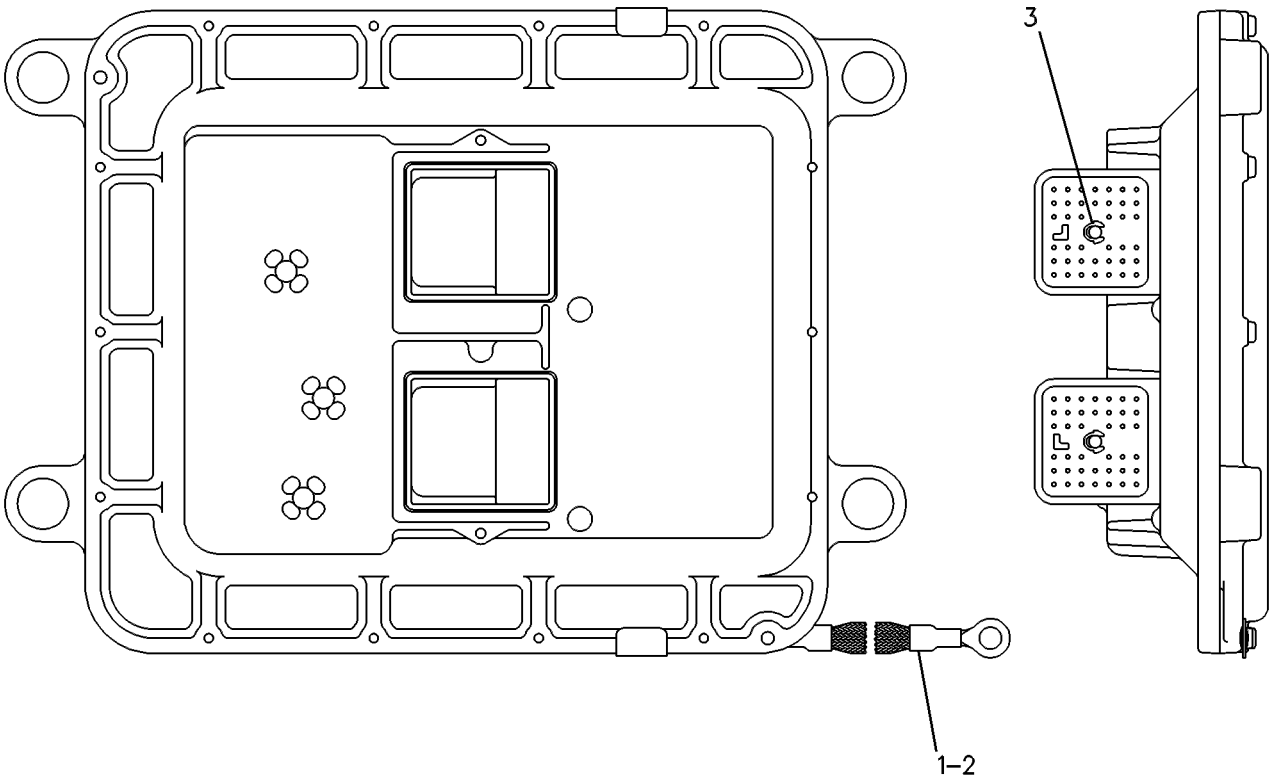

GRAPHIC #1 g00087166

160-1758 CONTROL GP-UNPROGRAMMED–POWER TRAIN

S/N: 7HR1-UP
POWER TRAIN
PART OF 168-4358 WIRING GP-VIDS MONITOR, 168-4359 WIRING GP-VIMS MONITOR
AN ATTACHMENT

SMCS-7610 **i01178642**

NOTE	REF NO	GRAPHIC REF	PART NUMBER	QTY	PART NAME 1 2 3 4 5 6 (PRODUCT LEVEL)	SEE PAGE
	1	1	**7X-6315**	1	STRAP-GROUNDING	
	2	1	**101-0852**	1	SCREW-PAN HEAD	
M	3	1	**6V-6703**	2	KIT-RETAINING BOLT	
					(EACH INCLUDES BOLT, RING, AND SEALS)	
					FOR SOFTWARE, SEE ELECTRONICS GP	

M-METRIC PART

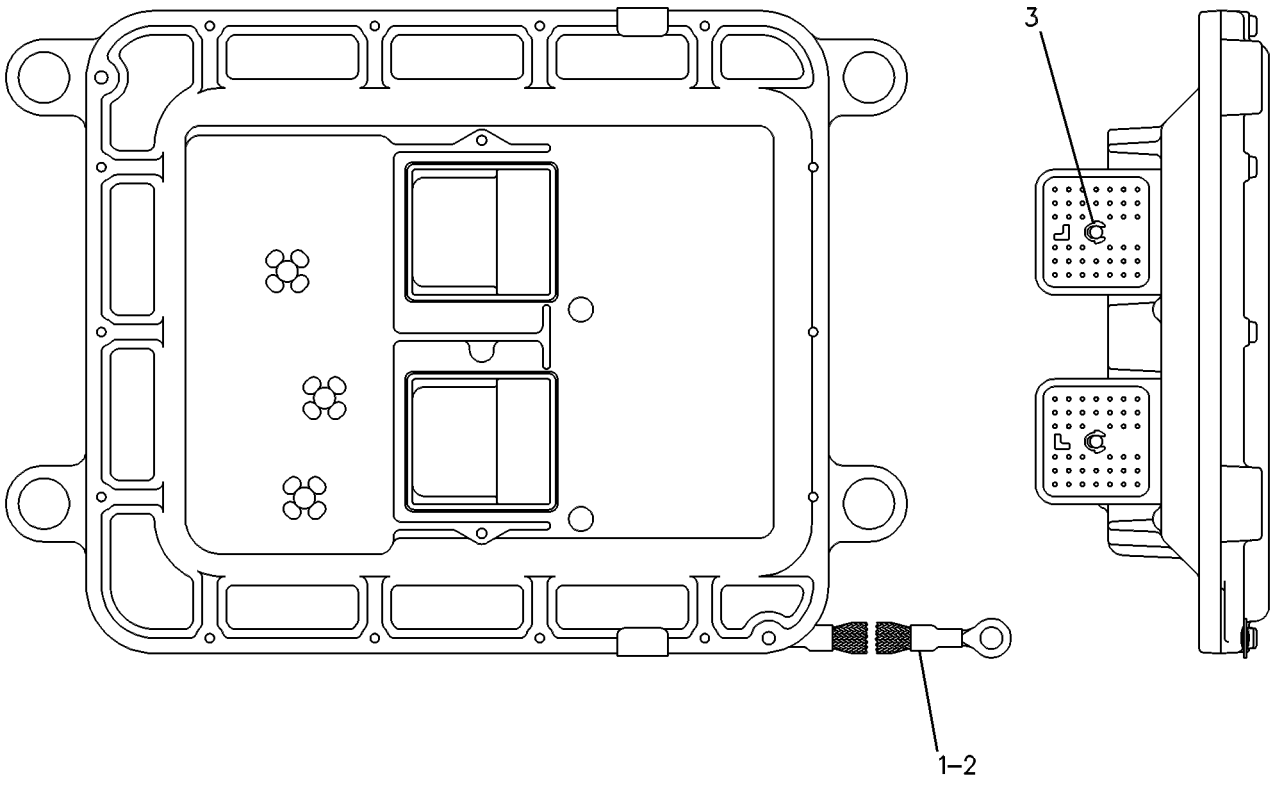

GRAPHIC #1 g00087166

160-1759 CONTROL GP-UNPROGRAMMED–IMPLEMENT

S/N: 7HR1-UP

PART OF 168-4358 WIRING GP-VIDS MONITOR, 168-4359 WIRING GP-VIMS MONITOR AN ATTACHMENT

SMCS-7610 **i01416811**

NOTE	REF NO	GRAPHIC REF	PART NUMBER	QTY	PART NAME 1 2 3 4 5 6 (PRODUCT LEVEL)	SEE PAGE
	1	1	**7X-6315**	1	STRAP-GROUNDING	
	2	1	**101-0852**	1	SCREW-PAN HEAD (NO 8 X 3/8 IN)	
M	3	1	**6V-6703**	2	KIT-RETAINING BOLT	
					(EACH INCLUDES BOLT, RING, AND SEALS)	
					FOR SOFTWARE, SEE ELECTRONICS GP	

M-METRIC PART

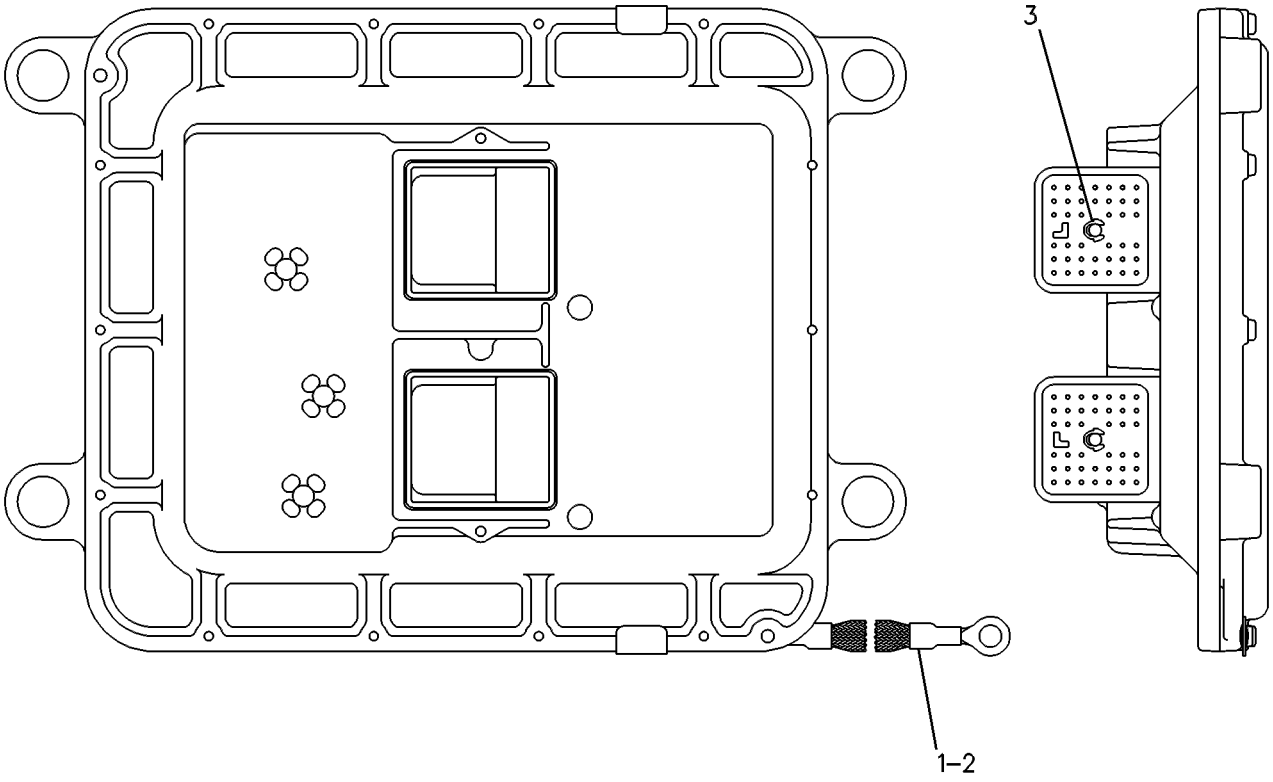

GRAPHIC #1 g00087166

165-8682 CONTROL GP-UNPROGRAMMED–VIDS/VIMS MAIN MODULE

S/N: 7HR1-UP

PART OF 168-4358 WIRING GP-VIDS MONITOR, 168-4359 WIRING GP-VIMS MONITOR AN ATTACHMENT

SMCS-7610 **i01140428**

NOTE	REF NO	GRAPHIC REF	PART NUMBER	QTY	PART NAME 1 2 3 4 5 6 (PRODUCT LEVEL)	SEE PAGE
	1	1	**132-8520**	1	FILM-IDENTIFICATION (VIMS/VIDS MAIN MODULE)	
F		1	**101-1785**	1	BATTERY (CLOCK)	
F		1	**8C-3078**	1	SEAL-O-RING (45.69MM ID)	

F-NOT SHOWN

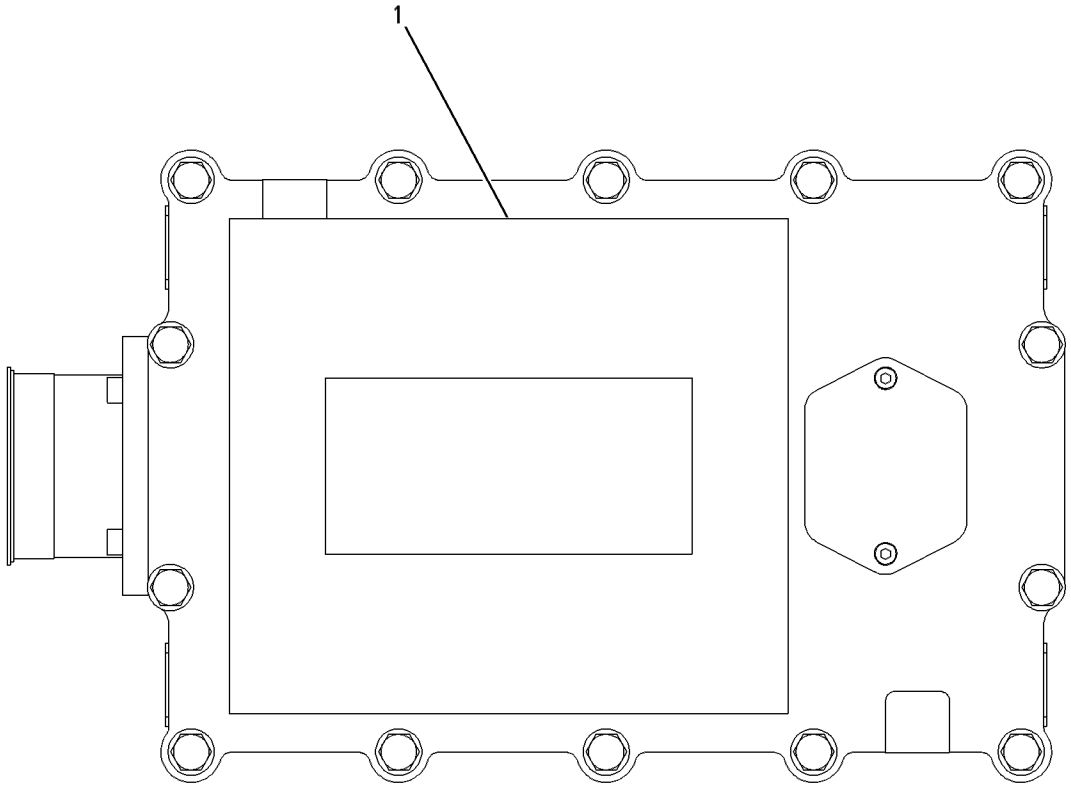

GRAPHIC #1 g00604115

ELECTRICAL AND STARTING SYSTEM

109-6821 ELECTRICAL AR

S/N: 7HR1-UP

PART OF 109-6815 COMMON AR

SMCS-1408, 1429, 7402, 7406 **i01216915**

NOTE	PART NUMBER	QTY	PART NAME 1 2 3 4 5 6 (PRODUCT LEVEL)	SEE PAGE
Y	*109-6895*	1	BATTERY & WIRING GP	236
Y	*133-1626*	1	ELECTRONICS GP-IMPLEMENT	260
Y	*133-1627*	1	ELECTRONICS GP-POWER TRAIN	289
Y	*137-2501*	1	FASTENER GP-ELECTRONICS	290
Y	*109-6906*	1	HORN GP-ELECTRIC	1302
			—OR—	
Y	*114-5188*	1	HORN GP-ELECTRIC	1303
Y	*109-6907*	1	KICKOUT & POSITIONER GP (LIFT)	976
Y	*8R-5529*	1	LIGHTING GP-FLOOD	310
Y	*109-6900*	1	LIGHTING GP-FRONT	312
Y	*109-6902*	1	LIGHTING GP-REAR	314
Y	*8R-5645*	1	LIGHTING GP-STOP	316
Y	*109-6904*	1	WARNING GP-BACKUP	373
Y	*109-6864*	1	WIRING GP-BUMPER	374
			S/N: 7HR1-290	
Y	*109-6894*	1	WIRING GP-FRONT	402
Y	*109-6899*	1	WIRING GP-MACHINE	406
Y	*109-6893*	1	WIRING GP-POWER TRAIN	416
Y	*109-6898*	1	WIRING GP-REAR	436

Y-SEPARATE ILLUSTRATION

116-4197 ELECTRONICS GP-ENGINE RATINGS

S/N: 2GR580-UP

PART OF 107-8762 ENGINE AR

FIELD REPLACEMENT ORDER 163-7213—PAGE 245, 175-3318—PAGE 246, 193-4246—PAGE 247

SMCS-7620 **i01185282**

NOTE	REF NO	GRAPHIC REF	PART NUMBER	QTY	PART NAME 1 2 3 4 5 6 (PRODUCT LEVEL)	SEE PAGE
					(NO SERVICED PARTS)	

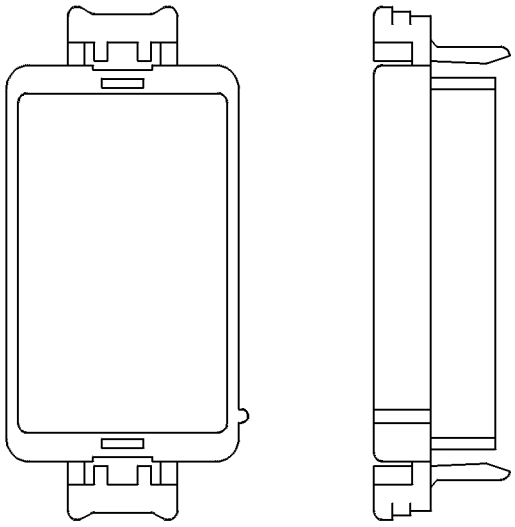

GRAPHIC #1 g00084524

ELECTRICAL AND STARTING SYSTEM

133-1626 ELECTRONICS GP-IMPLEMENT

S/N: 7HR1-UP

PART OF 109-6821 ELECTRICAL AR

SMCS-5701, 7620 **i01207011**

NOTE	PART NUMBER	QTY	PART NAME 1 2 3 4 5 6 (PRODUCT LEVEL)	SEE PAGE
	134-3379	1	FILM-INFORMATION	
			(NOT SERVICED SEPARATELY-FACTORY INSTALLED)	
	166-2309	1	SOFTWARE GP-IMPLEMENT	
			NOTE: 168-5069 SERVICE GP-IMPLEMENT IS AVAILABLE	
			NOTE: THIS ELECTRONICS GP CONTAINS SOFTWARE FOR CONTROL GP-UNPROGRAMMED (IMPLEMENT)	

133-1628 ELECTRONICS GP-MONITOR

S/N: 7HR1-UP
VIDS-ENGLISH/SPANISH
AN ATTACHMENT

SMCS-7490, 7601, 7603, 7620 **i01015015**

NOTE	PART NUMBER	QTY	PART NAME 1 2 3 4 5 6 (PRODUCT LEVEL)	SEE PAGE
	134-3379	1	FILM-INFORMATION	
			(NOT SERVICED SEPARATELY-FACTORY INSTALLED)	
	153-3641	1	SOFTWARE GP-VIDS (ENGLISH/SPANISH)	
	151-1293	1	SOFTWARE GP-SOURCE-9.5X	
			NOTE: 153-3660 SERVICE GP-VIDS/VIMS MAIN IS AVAILABLE	
			NOTE:THIS ELECTRONICS GP CONTAINS SOFTWARE FOR CONTROL GP-VIDS/VIMS ELEK (MAIN MODULE)	

133-1630 ELECTRONICS GP-MONITOR

S/N: 7HR1-UP
VIMS-ENGLISH/SPANISH
AN ATTACHMENT

SMCS-7490, 7601, 7603, 7620 **i01023181**

NOTE	PART NUMBER	QTY	PART NAME 1 2 3 4 5 6 (PRODUCT LEVEL)	SEE PAGE
	134-3379	1	FILM-INFORMATION	
			(NOT SERVICED SEPARATELY-FACTORY INSTALLED)	
	153-3674	1	SOFTWARE GP-VIMS (ENGLISH/SPANISH)	
	151-1293	1	SOFTWARE GP-SOURCE-9.5X	
			NOTE:THIS ELECTRONICS GP CONTAINS SOFTWARE FOR CONTROL GP-VIDS/VIMS ELEK (MAIN MODULE)	

140-7235 ELECTRONICS GP-MONITOR

S/N: 7HR1-UP
VIDS-ENGLISH/GERMAN
AN ATTACHMENT

SMCS-7490, 7601, 7603, 7620 **i01238992**

NOTE	PART NUMBER	QTY	PART NAME 1 2 3 4 5 6 (PRODUCT LEVEL)	SEE PAGE
	134-3379	1	FILM-INFORMATION	
			(NOT SERVICED SEPARATELY-FACTORY INSTALLED)	
	153-3642	1	SOFTWARE GP-VIDS (ENGLISH/GERMAN)	
	151-1293	1	SOFTWARE GP-MONITOR (VIDS/VIMS 9.5X SOURCE)	
			NOTE: 153-3661 SERVICE GP - MONITOR VIDS MAIN IS AVAILABLE	
			NOTE: THIS ELECTRONICS GP CONTAINS SOFTWARE FOR CONTROL GP-VIDS/VIMS ELEK (MAIN MODULE)	

140-7236 ELECTRONICS GP-MONITOR

S/N: 7HR1-UP
VIDS-ENGLISH/RUSSIAN
AN ATTACHMENT

SMCS-7490, 7601, 7603, 7620 **i01238996**

NOTE	PART NUMBER	QTY	PART NAME 1 2 3 4 5 6 (PRODUCT LEVEL)	SEE PAGE
	134-3379	1	FILM-INFORMATION	
			(NOT SERVICED SEPARATELY-FACTORY INSTALLED)	
	153-3643	1	SOFTWARE GP-VIDS (ENGLISH/RUSSIAN)	
	151-1293	1	SOFTWARE GP-MONITOR (VIDS/VIMS 9.5X SOURCE)	
			NOTE:153-3662 SERVICE GP- MONITOR VIDS MAIN IS AVAILABLE	
			NOTE:THIS ELECTRONICS GP CONTAINS SOFTWARE FOR CONTROL GP-VIDS/VIMS ELEK (MAIN MODULE)	

140-7237 ELECTRONICS GP-MONITOR

S/N: 7HR1-UP
VIDS-ENGLISH/DANISH
AN ATTACHMENT

SMCS-7490, 7601, 7603, 7620 **i01238998**

NOTE	PART NUMBER	QTY	PART NAME 1 2 3 4 5 6 (PRODUCT LEVEL)	SEE PAGE
	134-3379	1	FILM-INFORMATION	
			(NOT SERVICED SEPARATELY-FACTORY INSTALLED)	
	153-3644	1	SOFTWARE GP-VIDS (ENGLISH/DANISH)	
	151-1293	1	SOFTWARE GP-MONITOR (VIDS/VIMS 9.5X SOURCE)	
			NOTE:153-3663 SERVICE GP- MONITOR VIDS MAIN IS AVAILABLE	
			NOTE:THIS ELECTRONICS GP CONTAINS SOFTWARE FOR CONTROL GP-VIDS/VIMS ELEK (MAIN MODULE)	

140-7238 ELECTRONICS GP-MONITOR

S/N: 7HR1-UP
VIDS-ENGLISH/GREEK
AN ATTACHMENT

SMCS-7490, 7601, 7603, 7620 **i01239001**

NOTE	PART NUMBER	QTY	PART NAME 1 2 3 4 5 6 (PRODUCT LEVEL)	SEE PAGE
	134-3379	1	FILM-INFORMATION	
			(NOT SERVICED SEPARATELY-FACTORY INSTALLED)	
	153-3645	1	SOFTWARE GP-VIDS (ENGLISH/GREEK)	
	151-1293	1	SOFTWARE GP-MONITOR (VIDS/VIMS 9.5X SOURCE)	
			NOTE:153-3664 SERVICE GP-MONITOR VIDS MAIN IS AVAILABLE	
			NOTE:THIS ELECTRONICS GP CONTAINS SOFTWARE FOR CONTROL GP-VIDS/VIMS ELEK (MAIN MODULE)	

140-7239 ELECTRONICS GP-MONITOR

S/N: 7HR1-UP
VIDS-ENGLISH/DUTCH
AN ATTACHMENT

SMCS-7490, 7601, 7603, 7620 **i01239004**

NOTE	PART NUMBER	QTY	PART NAME 1 2 3 4 5 6 (PRODUCT LEVEL)	SEE PAGE
	134-3379	1	FILM-INFORMATION	
			(NOT SERVICED SEPARATELY-FACTORY INSTALLED)	
	153-3646	1	SOFTWARE GP-VIDS (ENGLISH/DUTCH)	
	151-1293	1	SOFTWARE GP-MONITOR (VIDS/VIMS 9.5X SOURCE)	
			NOTE:153-3665 SERVICE GP-MONITOR VIDS MAIN IS AVAILABLE	
			NOTE:THIS ELECTRONICS GP CONTAINS SOFTWARE FOR CONTROL GP-VIDS/VIMS ELEK (MAIN MODULE)	

140-7240 ELECTRONICS GP-MONITOR

S/N: 7HR1-UP
VIDS-ENGLISH/ITALIAN
AN ATTACHMENT

SMCS-7490, 7601, 7603, 7620 **i01239005**

NOTE	PART NUMBER	QTY	PART NAME 1 2 3 4 5 6 (PRODUCT LEVEL)	SEE PAGE
	134-3379	1	FILM-INFORMATION	
			(NOT SERVICED SEPARATELY-FACTORY INSTALLED)	
	153-3648	1	SOFTWARE GP-VIDS (ENGLISH/ITALIAN)	
	151-1293	1	SOFTWARE GP-MONITOR (VIDS/VIMS 9.5X SOURCE)	
			NOTE:153-3666 SERVICE GP-MONITOR VIDS MAIN IS AVAILABLE	
			NOTE:THIS ELECTRONICS GP CONTAINS SOFTWARE FOR CONTROL GP VIDS/VIMS ELEK (MAIN MODULE)	

140-7241 ELECTRONICS GP-MONITOR

S/N: 7HR1-UP
VIDS-ENGLISH/FRENCH
AN ATTACHMENT

SMCS-7490, 7601, 7603, 7620 **i01239010**

NOTE	PART NUMBER	QTY	PART NAME 1 2 3 4 5 6 (PRODUCT LEVEL)	SEE PAGE
	134-3379	1	FILM-INFORMATION	
			(NOT SERVICED SEPARATELY-FACTORY INSTALLED)	
	153-3650	1	SOFTWARE GP-VIDS (ENGLISH/FRENCH)	
	151-1293	1	SOFTWARE GP-MONITOR (VIDS/VIMS 9.5X SOURCE)	
			NOTE:153-3667 SERVICE GP-MONITOR VIDS MAIN IS AVAILABLE	
			NOTE:THIS ELECTRONICS GP CONTAINS SOFTWARE FOR CONTROL GP-VIDS/VIMS ELEK (MAIN MODULE)	

140-7242 ELECTRONICS GP-MONITOR

S/N: 7HR1-UP
VIDS-ENGLISH/PORTUGESE
AN ATTACHMENT

SMCS-7490, 7601, 7603, 7620 **i01239014**

NOTE	PART NUMBER	QTY	PART NAME 1 2 3 4 5 6 (PRODUCT LEVEL)	SEE PAGE
	134-3379	1	FILM-INFORMATION	
			(NOT SERVICED SEPARATELY-FACTORY INSTALLED)	
	153-3651	1	SOFTWARE GP-VIDS (ENGLISH/PORTUGUESE)	
	151-1293	1	SOFTWARE GP-MONITOR (VIDS/VIMS 9.5X SOURCE)	
			NOTE:153-3668 SERVICE GP-MONITOR VIDS MAIN IS AVAILABLE	
			NOTE:THIS ELECTRONICS GP CONTAINS SOFTWARE FOR CONTROL GP VIDS/VIMS ELEK (MAIN MODULE)	

140-7243 ELECTRONICS GP-MONITOR

S/N: 7HR1-UP
VIDS-ENGLISH/SWEDISH
AN ATTACHMENT

SMCS-7490, 7601, 7603, 7620 **i01239015**

NOTE	PART NUMBER	QTY	PART NAME 1 2 3 4 5 6 (PRODUCT LEVEL)	SEE PAGE
	134-3379	1	FILM-INFORMATION	
			(NOT SERVICED SEPARATELY-FACTORY INSTALLED)	
	153-3654	1	SOFTWARE GP-VIDS (ENGLISH/SWEDISH)	
	151-1293	1	SOFTWARE GP-MONITOR (VIDS/VIMS 9.5X SOURCE)	
			NOTE:153-3669 SERVICE GP-MONITOR VIDS MAIN IS AVAILABLE	
			NOTE:THIS ELECTRONICS GP CONTAINS SOFTWARE FOR CONTROL GP-VIDS/VIMS ELEK (MAIN MODULE)	

140-7244 ELECTRONICS GP-MONITOR

S/N: 7HR1-UP
VIDS-ENGLISH/CZECH
AN ATTACHMENT

SMCS-7490, 7601, 7603, 7620 **i01239019**

NOTE	PART NUMBER	QTY	PART NAME 1 2 3 4 5 6 (PRODUCT LEVEL)	SEE PAGE
	134-3379	1	FILM-INFORMATION	
			(NOT SERVICED SEPARATELY-FACTORY INSTALLED)	
	153-3655	1	SOFTWARE GP-VIDS (ENGLISH/CZECHOSLOVAKIAN)	
	151-1293	1	SOFTWARE GP-MONITOR (VIDS/VIMS 9.5X SOURCE)	
			NOTE:153-3670 SERVICE GP-MONITOR VIDS MAIN IS AVAILABLE	
			NOTE:THIS ELECTRONICS GP CONTAINS SOFTWARE FOR CONTROL GP-VIDS/VIMS ELEK (MAIN MODULE)	

140-7245 ELECTRONICS GP-MONITOR

S/N: 7HR1-UP
VIDS-ENGLISH/NORWEGIAN
AN ATTACHMENT

SMCS-7490, 7601, 7603, 7620 **i01239023**

NOTE	PART NUMBER	QTY	PART NAME 1 2 3 4 5 6 (PRODUCT LEVEL)	SEE PAGE
	134-3379	1	FILM-INFORMATION	
			(NOT SERVICED SEPARATELY-FACTORY INSTALLED)	
	153-3656	1	SOFTWARE GP-VIDS (ENGLISH/NORWEGIAN)	
	151-1293	1	SOFTWARE GP-MONITOR (VIDS/VIMS 9.5X SOURCE)	
			NOTE:153-3671 SERVICE GP-MONITOR VIDS MAIN IS AVAILABLE	
			NOTE:THIS ELECTRONICS GP CONTAINS SOFTWARE FOR CONTROL GP-VIDS/VIMS ELEK (MAIN MODULE)	

140-7246 ELECTRONICS GP-MONITOR

S/N: 7HR1-UP
VIDS-ENGLISH/FINNISH
AN ATTACHMENT

SMCS-7490, 7601, 7603, 7620 **i01239026**

NOTE	PART NUMBER	QTY	PART NAME 1 2 3 4 5 6 (PRODUCT LEVEL)	SEE PAGE
	134-3379	1	FILM-INFORMATION	
			(NOT SERVICED SEPARATELY-FACTORY INSTALLED)	
	153-3657	1	SOFTWARE GP-VIDS (ENGLISH/FINNISH)	
	151-1293	1	SOFTWARE GP-MONITOR (VIDS/VIMS 9.5X SOURCE)	
			NOTE:153-3672 SERVICE GP-MONITOR VIDS MAIN IS AVAILABLE	
			NOTE:THIS ELECTRONICS GP CONTAINS SOFTWARE FOR CONTROL GP-VIDS/VIMS ELEK (MAIN MODULE)	

140-7247 ELECTRONICS GP-MONITOR

S/N: 7HR1-UP
VIDS-ENGLISH/ICELANDIC
AN ATTACHMENT

SMCS-7490, 7601, 7603, 7620 **i01239028**

NOTE	PART NUMBER	QTY	PART NAME 1 2 3 4 5 6 (PRODUCT LEVEL)	SEE PAGE
	134-3379	1	FILM-INFORMATION	
			(NOT SERVICED SEPARATELY-FACTORY INSTALLED)	
	153-3658	1	SOFTWARE GP-VIDS (ENGLISH/ICELANDIC)	
	151-1293	1	SOFTWARE GP-MONITOR (VIDS/VIMS 9.5X SOURCE)	
			NOTE:153-3673 SERVICE GP-MONITOR VIDS MAIN IS AVAILABLE	
			NOTE:THIS ELECTRONICS GP CONTAINS SOFTWARE FOR CONTROL GP-VIDS/VIMS ELEK (MAIN MODULE)	

140-7248 ELECTRONICS GP-MONITOR

S/N: 7HR1-UP
VIMS-ENGLISH/GERMAN
AN ATTACHMENT

SMCS-7490, 7601, 7603, 7620 **i01012700**

NOTE	PART NUMBER	QTY	PART NAME 1 2 3 4 5 6 (PRODUCT LEVEL)	SEE PAGE
	134-3379	1	FILM-INFORMATION	
			(NOT SERVICED SEPARATELY-FACTORY INSTALLED)	
	153-3675	1	SOFTWARE GP-VIMS (ENGLISH/GERMAN)	
	151-1293	1	SOFTWARE GP-SOURCE-9.5X	
			NOTE:THIS ELECTRONICS GP CONTAINS SOFTWARE FOR CONTROL GP-VIDS/VIMS ELEK (MAIN MODULE)	

140-7249 ELECTRONICS GP-MONITOR

S/N: 7HR1-UP
VIMS-ENGLISH/RUSSIAN
AN ATTACHMENT

SMCS-7490, 7601, 7603, 7620 **i01191463**

NOTE	PART NUMBER	QTY	PART NAME 1 2 3 4 5 6 (PRODUCT LEVEL)	SEE PAGE
	134-3379	1	FILM-INFORMATION	
			(NOT SERVICED SEPARATELY-FACTORY INSTALLED)	
	151-1293	1	SOFTWARE GP-MONITOR (VIDS/VIMS 9.5X SOURCE)	
	153-3676	1	SOFTWARE GP-VIMS (ENGLISH/RUSSIAN)	
			NOTE: THIS ELECTRONICS GP CONTAINS SOFTWARE FOR CONTROL GP-VIDS/VIMS ELEK (MAIN MODULE)	

140-7250 ELECTRONICS GP-MONITOR

S/N: 7HR1-UP
VIMS-ENGLISH/DANISH
AN ATTACHMENT

SMCS-7490, 7601, 7603, 7620 **i01191472**

NOTE	PART NUMBER	QTY	PART NAME 1 2 3 4 5 6 (PRODUCT LEVEL)	SEE PAGE
	134-3379	1	FILM-INFORMATION	
			(NOT SERVICED SEPARATELY-FACTORY INSTALLED)	
	151-1293	1	SOFTWARE GP-MONITOR (VIDS/VIMS 9.5X SOURCE)	
	153-3677	1	SOFTWARE GP-VIMS (ENGLISH/DANISH)	
			NOTE: THIS ELECTRONICS GP CONTAINS SOFTWARE FOR CONTROL GP-VIDS/VIMS ELEK (MAIN MODULE)	

140-7251 ELECTRONICS GP-MONITOR

S/N: 7HR1-UP
VIMS-ENGLISH/GREEK
AN ATTACHMENT

SMCS-7490, 7601, 7603, 7620 **i01012840**

NOTE	PART NUMBER	QTY	PART NAME 1 2 3 4 5 6 (PRODUCT LEVEL)	SEE PAGE
	134-3379	1	FILM-INFORMATION	
			(NOT SERVICED SEPARATELY-FACTORY INSTALLED)	
	153-3678	1	SOFTWARE GP-VIMS (ENGLISH/GREEK)	
	151-1293	1	SOFTWARE GP-SOURCE-9.5X	
			NOTE:THIS ELECTRONICS GP CONTAINS SOFTWARE FOR CONTROL GP-VIDS/VIMS ELEK (MAIN MODULE)	

140-7252 ELECTRONICS GP-MONITOR

S/N: 7HR1-UP
VIMS-ENGLISH/DUTCH
AN ATTACHMENT

SMCS-7490, 7601, 7603, 7620 **i01012896**

NOTE	PART NUMBER	QTY	PART NAME 1 2 3 4 5 6 (PRODUCT LEVEL)	SEE PAGE
	134-3379	1	FILM-INFORMATION	
			(NOT SERVICED SEPARATELY-FACTORY INSTALLED)	
	153-3679	1	SOFTWARE GP-VIMS (ENGLISH/DUTCH)	
	151-1293	1	SOFTWARE GP-SOURCE-9.5X	
			NOTE:THIS ELECTRONICS GP CONTAINS SOFTWARE FOR CONTROL GP-VIDS/VIMS ELEK (MAIN MODULE)	

ELECTRICAL AND STARTING SYSTEM

140-7253 ELECTRONICS GP-MONITOR

S/N: 7HR1-UP
VIMS-ENGLISH/ITALIAN
AN ATTACHMENT

SMCS-7490, 7601, 7603, 7620 **i01012954**

NOTE	PART NUMBER	QTY	PART NAME 1 2 3 4 5 6 (PRODUCT LEVEL)	SEE PAGE
	134-3379	1	FILM-INFORMATION	
			(NOT SERVICED SEPARATELY-FACTORY INSTALLED)	
	153-3680	1	SOFTWARE GP-VIMS (ENGLISH/ITALIAN)	
	151-1293	1	SOFTWARE GP-SOURCE-9.5X	
			NOTE:THIS ELECTRONICS GP CONTAINS SOFTWARE FOR CONTROL GP-VIDS/VIMS ELEK (MAIN MODULE)	

140-7254 ELECTRONICS GP-MONITOR

S/N: 7HR1-UP
VIMS-ENGLISH/FRENCH
AN ATTACHMENT

SMCS-7490, 7601, 7603, 7620 **i01012963**

NOTE	PART NUMBER	QTY	PART NAME 1 2 3 4 5 6 (PRODUCT LEVEL)	SEE PAGE
	134-3379	1	FILM-INFORMATION	
			(NOT SERVICED SEPARATELY-FACTORY INSTALLED)	
	153-3682	1	SOFTWARE GP-VIMS (ENGLISH/FRENCH)	
	151-1293	1	SOFTWARE GP-SOURCE-9.5X	
			NOTE:THIS ELECTRONICS GP CONTAINS SOFTWARE FOR CONTROL GP-VIDS/VIMS ELEK (MAIN MODULE)	

140-7255 ELECTRONICS GP-MONITOR

S/N: 7HR1-UP
VIMS-ENGLISH/PORTUGESE
AN ATTACHMENT

SMCS-7490, 7601, 7603, 7620 **i01013029**

NOTE	PART NUMBER	QTY	PART NAME 1 2 3 4 5 6 (PRODUCT LEVEL)	SEE PAGE
	134-3379	1	FILM-INFORMATION	
			(NOT SERVICED SEPARATELY-FACTORY INSTALLED)	
	153-3685	1	SOFTWARE GP-VIMS (ENGLISH/PORTUGUESE)	
	151-1293	1	SOFTWARE GP-SOURCE-9.5X	
			NOTE:THIS ELECTRONICS GP CONTAINS SOFTWARE FOR CONTROL GP-VIDS/VIMS ELEK (MAIN MODULE)	

140-7256 ELECTRONICS GP-MONITOR

S/N: 7HR1-UP
VIMS-ENGLISH/SWEDISH
AN ATTACHMENT

SMCS-7490, 7601, 7603, 7620 **i01013038**

NOTE	PART NUMBER	QTY	PART NAME 1 2 3 4 5 6 (PRODUCT LEVEL)	SEE PAGE
	134-3379	1	FILM-INFORMATION	
			(NOT SERVICED SEPARATELY-FACTORY INSTALLED)	
	153-3686	1	SOFTWARE GP-VIMS (ENGLISH/SWEDISH)	
	151-1293	1	SOFTWARE GP-SOURCE-9.5X	
			NOTE:THIS ELECTRONICS GP CONTAINS SOFTWARE FOR CONTROL GP-VIDS/VIMS ELEK (MAIN MODULE)	

140-7257 ELECTRONICS GP-MONITOR

S/N: 7HR1-UP
VIMS-ENGLISH/CZECH
AN ATTACHMENT

SMCS-7490, 7601, 7603, 7620 **i01013092**

NOTE	PART NUMBER	QTY	PART NAME 1 2 3 4 5 6 (PRODUCT LEVEL)	SEE PAGE
	134-3379	1	FILM-INFORMATION	
			(NOT SERVICED SEPARATELY-FACTORY INSTALLED)	
	153-3688	1	SOFTWARE GP-VIMS (ENGLISH/CZECHOSLOVAKIAN)	
	151-1293	1	SOFTWARE GP-SOURCE-9.5X	
			NOTE:THIS ELECTRONICS GP CONTAINS SOFTWARE FOR CONTROL GP-VIDS/VIMS ELEK (MAIN MODULE)	

140-7258 ELECTRONICS GP-MONITOR

S/N: 7HR1-UP
VIMS-ENGLISH/NORWEGIAN
AN ATTACHMENT

SMCS-7490, 7601, 7603, 7620 **i01013149**

NOTE	PART NUMBER	QTY	PART NAME 1 2 3 4 5 6 (PRODUCT LEVEL)	SEE PAGE
	134-3379	1	FILM-INFORMATION	
			(NOT SERVICED SEPARATELY-FACTORY INSTALLED)	
	153-3689	1	SOFTWARE GP-VIMS (ENGLISH/NORWEGIAN)	
	151-1293	1	SOFTWARE GP-SOURCE-9.5X	
			NOTE:THIS ELECTRONICS GP CONTAINS SOFTWARE FOR CONTROL GP-VIDS/VIMS ELEK (MAIN MODULE)	

140-7259 ELECTRONICS GP-MONITOR

S/N: 7HR1-UP
VIMS-ENGLISH/FINNISH
AN ATTACHMENT

SMCS-7490, 7601, 7603, 7620 **i01013201**

NOTE	PART NUMBER	QTY	PART NAME 1 2 3 4 5 6 (PRODUCT LEVEL)	SEE PAGE
	134-3379	1	FILM-INFORMATION	
			(NOT SERVICED SEPARATELY-FACTORY INSTALLED)	
	153-3690	1	SOFTWARE GP-VIMS (ENGLISH/FINNISH)	
	151-1293	1	SOFTWARE GP-SOURCE-9.5X	
			NOTE:THIS ELECTRONICS GP CONTAINS SOFTWARE FOR CONTROL GP-VIDS/VIMS ELEK (MAIN MODULE)	

140-7260 ELECTRONICS GP-MONITOR

S/N: 7HR1-UP
VIMS-ENGLISH/ICELANDIC
AN ATTACHMENT

SMCS-7490, 7601, 7603, 7620 **i01013207**

NOTE	PART NUMBER	QTY	PART NAME 1 2 3 4 5 6 (PRODUCT LEVEL)	SEE PAGE
	134-3379	1	FILM-INFORMATION	
			(NOT SERVICED SEPARATELY-FACTORY INSTALLED)	
	153-3691	1	SOFTWARE GP-VIMS (ENGLISH/ICELANDIC)	
	151-1293	1	SOFTWARE GP-SOURCE-9.5X	
			NOTE:THIS ELECTRONICS GP CONTAINS SOFTWARE FOR CONTROL GP-VIDS/VIMS ELEK (MAIN MODULE)	

133-1627 ELECTRONICS GP-POWER TRAIN

S/N: 7HR1-UP

PART OF 109-6821 ELECTRICAL AR

SMCS-4808, 7620 **i01207017**

NOTE	PART NUMBER	QTY	PART NAME 1 2 3 4 5 6 (PRODUCT LEVEL)	SEE PAGE
	134-3379	1	FILM-INFORMATION	
			(NOT SERVICED SEPARATELY-FACTORY INSTALLED)	
	161-6826	1	SOFTWARE GP-POWER TRAIN	
			NOTE: 168-5070 SERVICE GP-POWER TRAIN IS AVAILABLE	
			NOTE: THIS ELECTRONICS GP CONTAINS SOFTWARE FOR CONTROL GP-UNPROGRAMMED (POWER TRAIN)	

137-2501 FASTENER GP-ELECTRONICS

S/N: 7HR1-UP

PART OF 109-6821 ELECTRICAL AR

SMCS-7553 **i00747532**

NOTE	REF NO	GRAPHIC REF	PART NUMBER	QTY	PART NAME 1 2 3 4 5 6 (PRODUCT LEVEL)	SEE PAGE
M	1	1	**8T-4183**	2	BOLT (M12X1.75X40MM)	
	2	1	**8T-4223**	7	WASHER-HARD (3MM THK)	
M	3	1	**8T-4139**	3	BOLT (M12X1.75X30MM)	
M	4	1	**8T-4244**	2	NUT (M12X1.75 THD)	
	5	1	**8R-6359**	1	STRAP AS	

M-METRIC PART

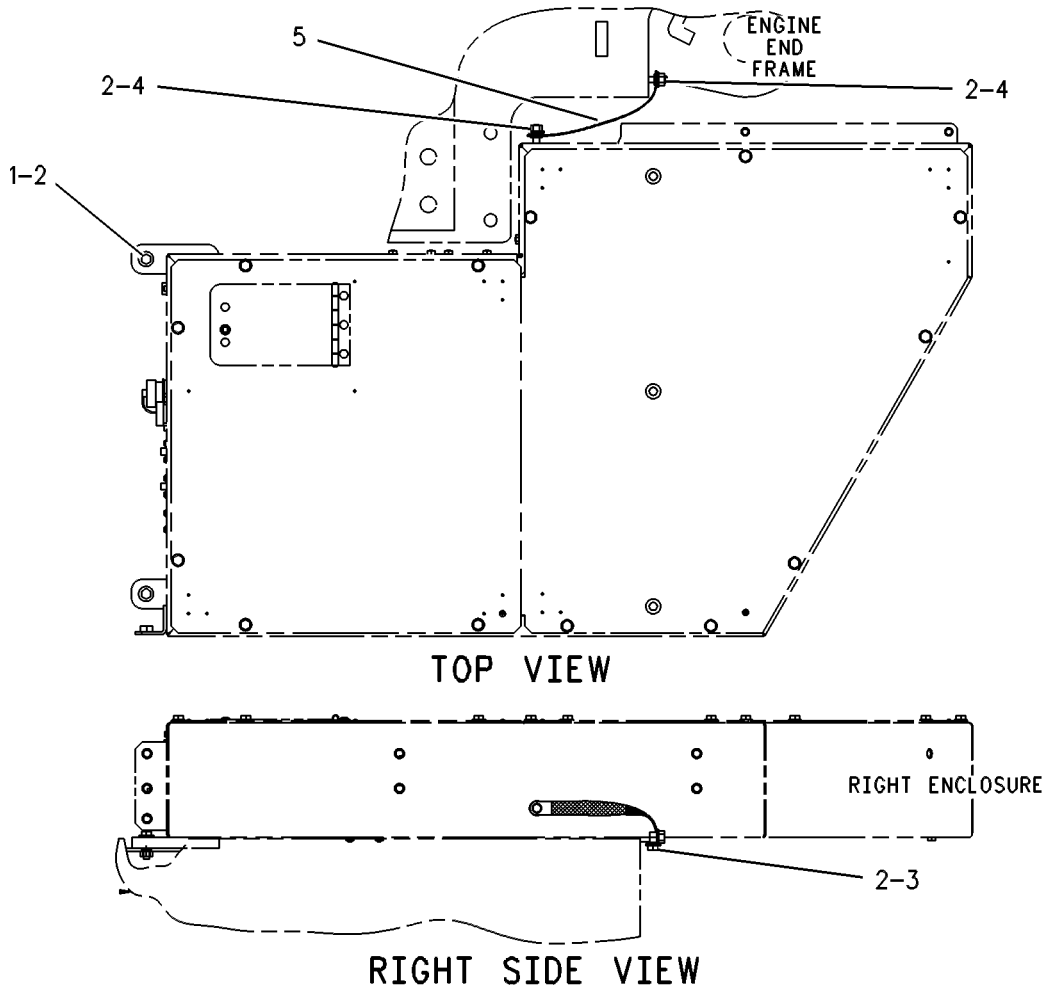

GRAPHIC #1 g00271910

132-1492 HEATER AR-FUEL

S/N: 7HR1-290

CANNOT BE USED WITH 131-1244 FUEL AR-CONVENTIONAL FILL, 132-1491 FUEL AR-FAST FILL, 131-8141 FUEL AR-FAST FILL AN ATTACHMENT

SMCS-1296 **i01167811**

NOTE	PART NUMBER	QTY	PART NAME 1 2 3 4 5 6 (PRODUCT LEVEL)	SEE PAGE
M	**8T-4192**	20	BOLT (M12X1.75X25MM)	
	9G-9981	1	BREATHER	
	123-6305	1	CAP AS-FUEL TANK	
	5B-1309	1	COUPLING-PIPE	
	163-9374	1	GUARD	
Y	*109-6883*	1	HEATER GP-FUEL	294
	6V-0678	1	NIPPLE-PIPE	
	163-6592	1	SHEET AS-LH	
	163-6590	1	SHEET AS-RH	
	163-6593	1	SHEET-LH	
	163-6591	1	SHEET-RH	
	5P-1076	20	WASHER-HARD (4MM THK)	

M-METRIC PART
Y-SEPARATE ILLUSTRATION

132-1492 HEATER AR-FUEL

S/N: 7HR291-UP

CANNOT BE USED WITH 131-1244 FUEL AR-CONVENTIONAL FILL, 132-1491 FUEL AR-FAST FILL, 131-8141 FUEL AR-FAST FILL AN ATTACHMENT

SMCS-1296 **i01167807**

NOTE	REF NO	GRAPHIC REF	PART NUMBER	QTY	PART NAME 1 2 3 4 5 6 (PRODUCT LEVEL)	SEE PAGE
	1	1	**5P-8502**	1	PADLOCK GP	
A		1	**5P-8500**	1	KEY	
A		1	**8Y-6364**	1	SLEEVE	
Y	2	1	*109-6883*	1	HEATER GP-FUEL	294
	3	1	**123-6305**	1	CAP AS-FUEL TANK	
	4	1	**163-9374**	1	GUARD	
	5	1	**168-0393**	2	PLATE	
	6	1	**5B-1309**	1	COUPLING-PIPE	
	7	1	**5P-1076**	2	WASHER-HARD (4MM THK)	
	8	1	**6V-0678**	1	NIPPLE-PIPE	
	9	1	**7X-7729**	8	WASHER (3MM THK)	
M	10	1	**8T-4192**	2	BOLT (M12X1.75X25MM)	
M	11	1	**8T-4195**	8	BOLT (M10X1.50X30MM)	
	12	1	**9G-9981**	1	BREATHER	

A-NOT PART OF THIS GROUP
M-METRIC PART
Y-SEPARATE ILLUSTRATION

132-1492 **HEATER AR-FUEL** ***(contd.)*** **i01167807**

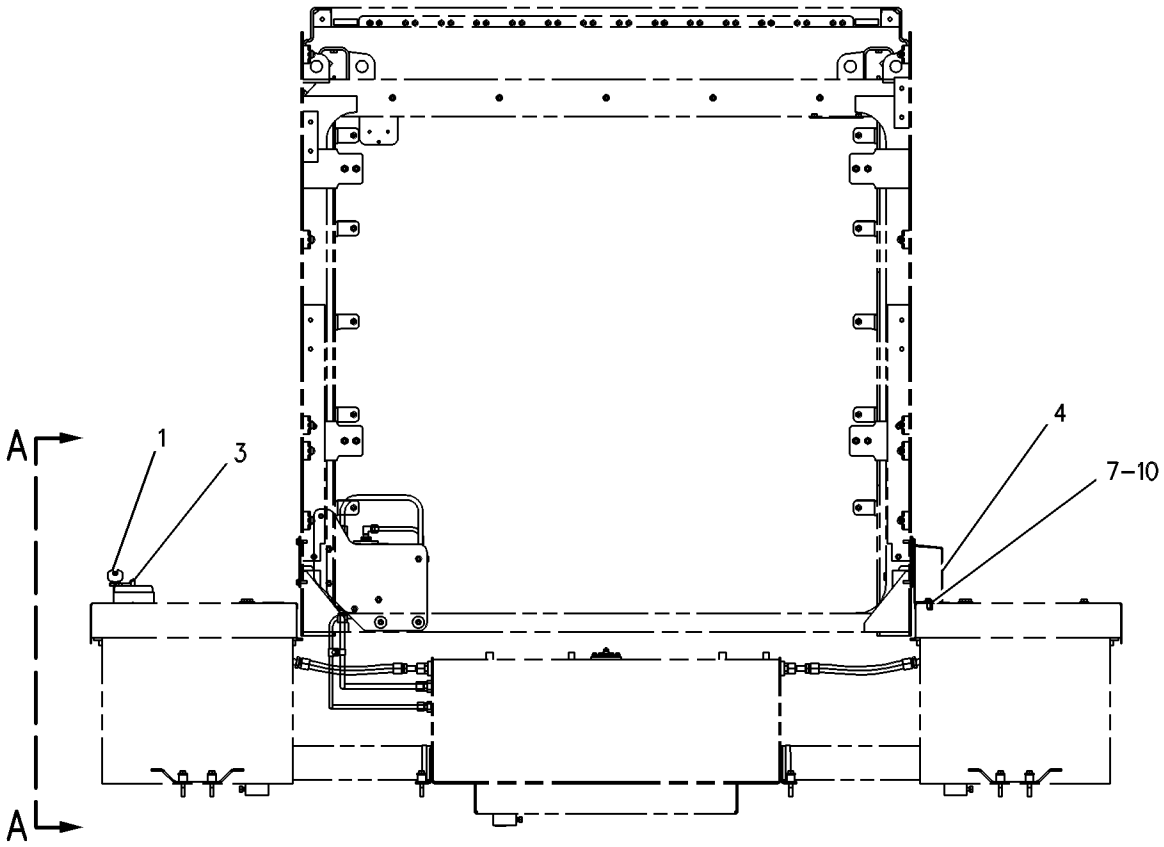

REAR VIEW

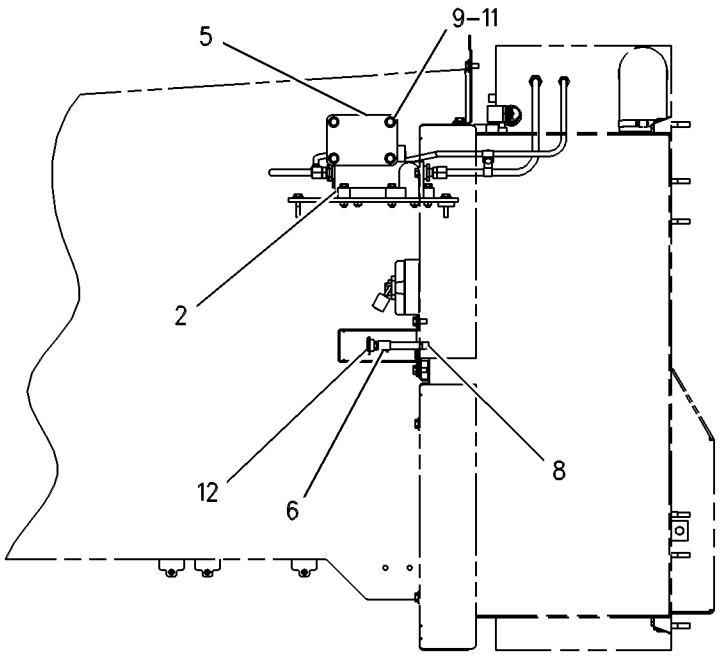

SECTION A-A

GRAPHIC #1 g00623725

109-6883 HEATER GP-FUEL

S/N: 7HR1-UP

PART OF 131-8141 FUEL AR-FAST FILL, 132-1492 HEATER AR-FUEL

AN ATTACHMENT

SMCS-1296 **i01099381**

NOTE	REF NO	GRAPHIC REF	PART NUMBER	QTY	PART NAME 1 2 3 4 5 6 (PRODUCT LEVEL)	SEE PAGE
	1	1	**116-8137**	1	TUBE AS	
	2	1	**116-8227**	1	TUBE AS	
Y	3	1	*130-6383*	1	HEATER GP-FUEL	296
	4	1	*148-8315*	1	CONNECTOR AS	
		1	**2M-9780**	1	SEAL-O-RING (19.18MM ID)	
		1	**6V-8642**	1	CONNECTOR	
		1	**7J-9108**	1	SEAL-O-RING (15.72MM ID)	
	5	1	*148-8340*	1	CONNECTOR AS	
		1	**3K-0360**	1	SEAL-O-RING (16.36MM ID)	
		1	**6V-8398**	1	SEAL-O-RING (12.47MM ID)	
		1	**6V-8639**	1	CONNECTOR-SEAL	
	6	1	**5P-9299**	1	CLIP (12.7MM ID)	
	7	1	**6K-8178**	1	CLIP (15.88MM ID)	
	8	1	**6V-8398**	1	SEAL-O-RING (12.47MM ID)	
	9	1	**7J-9108**	1	SEAL-O-RING (15.72MM ID)	
	10	1	**7X-7729**	3	WASHER (3MM THK)	
	11	1	**8T-4121**	2	WASHER (2.5MM THK)	
M	12	1	**8T-4133**	1	NUT (M10X1.50 THD)	
M	13	1	**8T-4185**	3	BOLT (M10X1.5X50MM)	
M	14	1	**8T-4195**	1	BOLT (M10X1.50X30MM)	

M-METRIC PART
Y-SEPARATE ILLUSTRATION

109-6883 **HEATER GP-FUEL** ***(contd.)*** **i01099381**

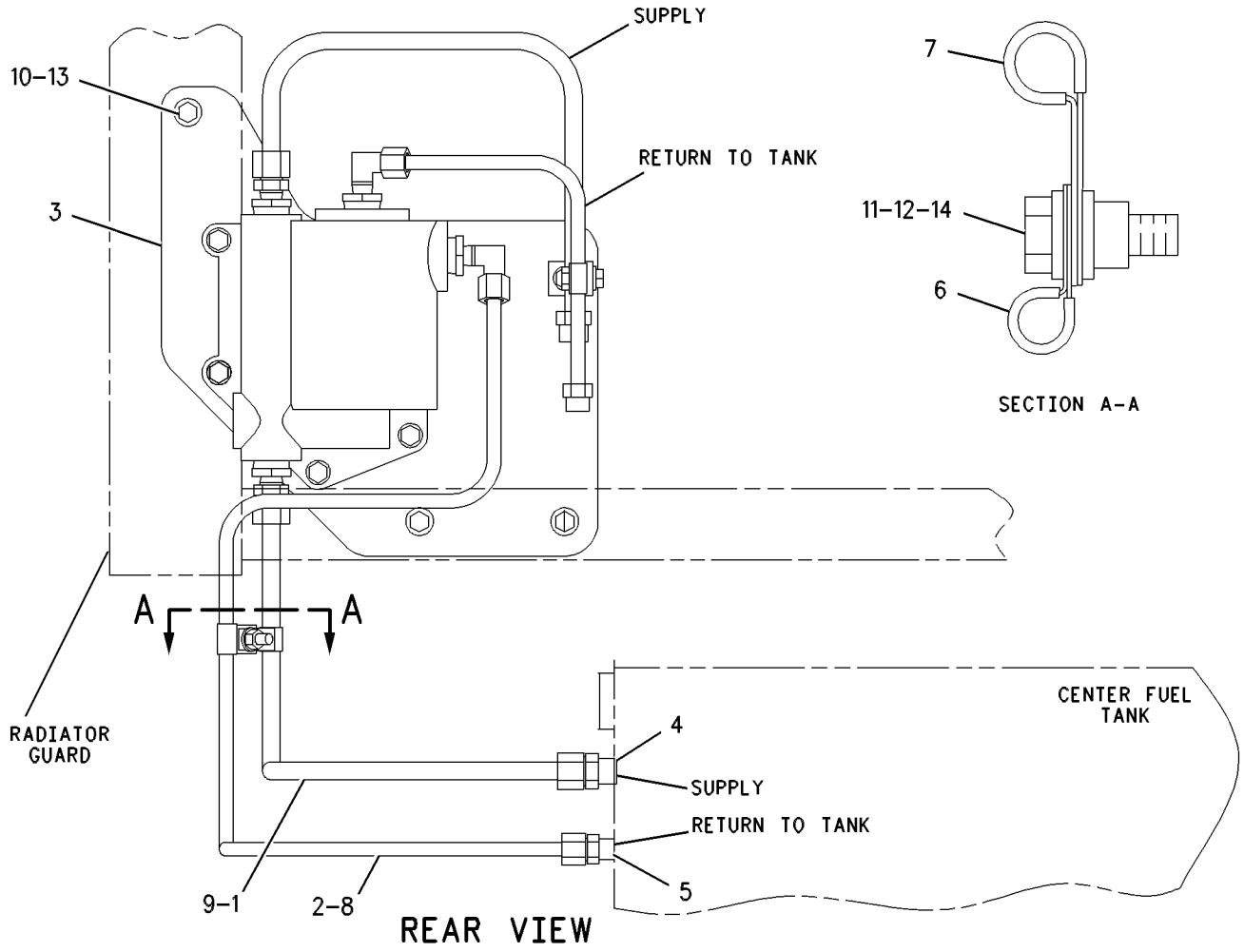

GRAPHIC #1

g00578219

130-6383 HEATER GP-FUEL

S/N: 7HR1-UP
PART OF 109-6883 HEATER GP-FUEL
AN ATTACHMENT

SMCS-1296 **i00746427**

NOTE	REF NO	GRAPHIC REF	PART NUMBER	QTY	PART NAME 1 2 3 4 5 6 (PRODUCT LEVEL)	SEE PAGE
	1	1	**2T-1922**	2	ELBOW	
	2	1	**7W-5300**	1	HEATER-FUEL	
	3	1	**8C-6873**	2	CONNECTOR	
	4	1	**9X-9365**	1	BRACKET-LAMP	
	5	1	**117-2847**	1	PLATE AS	
M		1	**8T-3490**	5	NUT-WELD (M10X1.5 THD)	
	6	1	**117-4636**	1	TUBE AS	
	7	1	**127-9730**	1	TUBE AS	
	8	1	**061-9593**	4	BUSHING-REDUCER	
	9	1	**5P-9299**	1	CLIP (12.7MM ID)	
	10	1	**6V-8398**	1	SEAL-O-RING (12.47MM ID)	
	11	1	**7J-9108**	1	SEAL-O-RING (15.72MM ID)	
	12	1	**8T-4121**	7	WASHER (2.5MM THK)	
M	13	1	**8T-4133**	1	NUT (M10X1.50 THD)	
M	14	1	**8T-4185**	4	BOLT (M10X1.50X50MM)	
M	15	1	**8T-4195**	2	BOLT (M10X1.50X30MM)	
	16	1	**9M-8406**	1	CLIP (15.8MM ID)	

M-METRIC PART

130-6383 **HEATER GP-FUEL** ***(contd.)*** **i00746427**

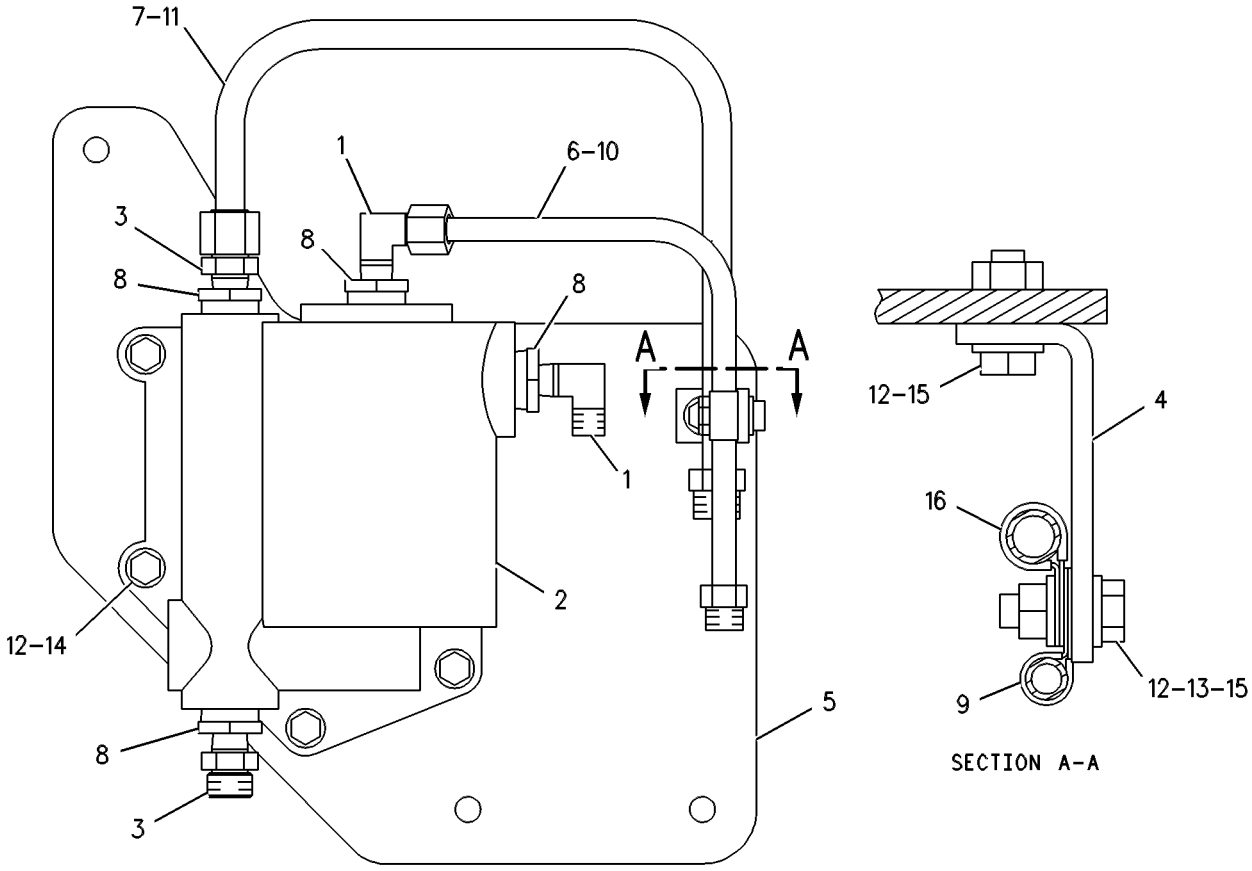

GRAPHIC #1 g00122280

7W-8154 HEATER GP-JACKET WATER

S/N: 7HR1-UP
120 VOLT
AN ATTACHMENT

SMCS-1383 **i01289077**

NOTE	REF NO	GRAPHIC REF	PART NUMBER	QTY	PART NAME 1 2 3 4 5 6 (PRODUCT LEVEL)	SEE PAGE
	1	1	**9G-6655**	2	ELEMENT AS-JACKET WATER HEATER (120 VOLT, 1500 WATT)	
	2	1	**9N-5253**	2	CORD AS-HEATER	
	3	1	**6N-1604**	2	CAP AS-DUST	

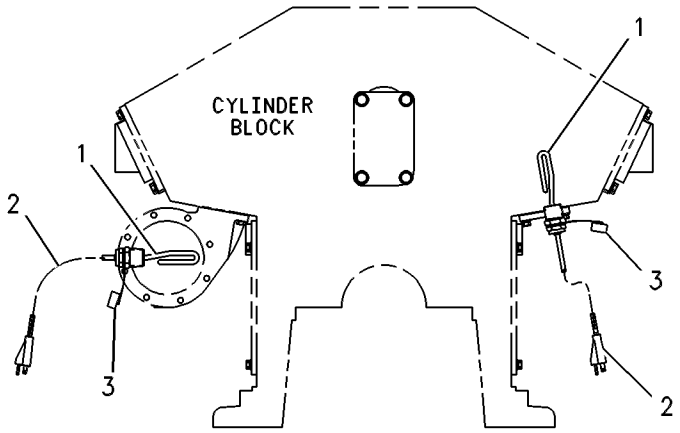

FRONT VIEW

GRAPHIC #1 g00087996

7W-8155 HEATER GP-JACKET WATER

S/N: 7HR1-UP
240 VOLT
AN ATTACHMENT

SMCS-1383 **i01289080**

NOTE	REF NO	GRAPHIC REF	PART NUMBER	QTY	PART NAME 1 2 3 4 5 6 (PRODUCT LEVEL)	SEE PAGE
	1	1	**6T-3764**	2	ELEMENT AS-JACKET WATER HEATER (240 VOLT, 1500 WATT)	
	2	1	**4N-8227**	2	CORD AS-HEATER	
	3	1	**6N-1604**	2	CAP AS-DUST	

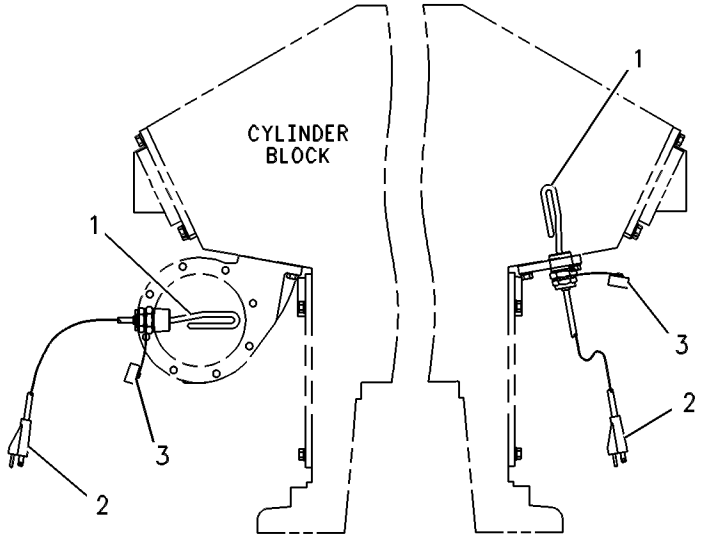

FRONT VIEW

GRAPHIC #1 g00106470

3E-6389 LAMP GP-DOME

S/N: 7HR1-UP
24 VOLT. WITH SWITCH
PART OF 123-7023 CAB GP

SMCS-1433 **i01536342**

NOTE	REF NO	GRAPHIC REF	PART NUMBER	QTY	PART NAME 1 2 3 4 5 6 (PRODUCT LEVEL)	SEE PAGE
	1	1	**7N-9943**	1	LAMP (28 VOLT) (DOME)	
	2	1	**102-8803**	1	KIT-RECEPTACLE (3 PIN) (DOME LAMP)	
					(INCLUDES RECEPTACLE AS & WEDGE)	
	3	1	**3E-3371**	1	WEDGE-RECEPTACLE LOCK (3 PIN)	
	4	1	**8T-8729**	3	PIN-CONNECTOR	
	5	1	**7T-0020**	1	LENS-DOME LAMP	

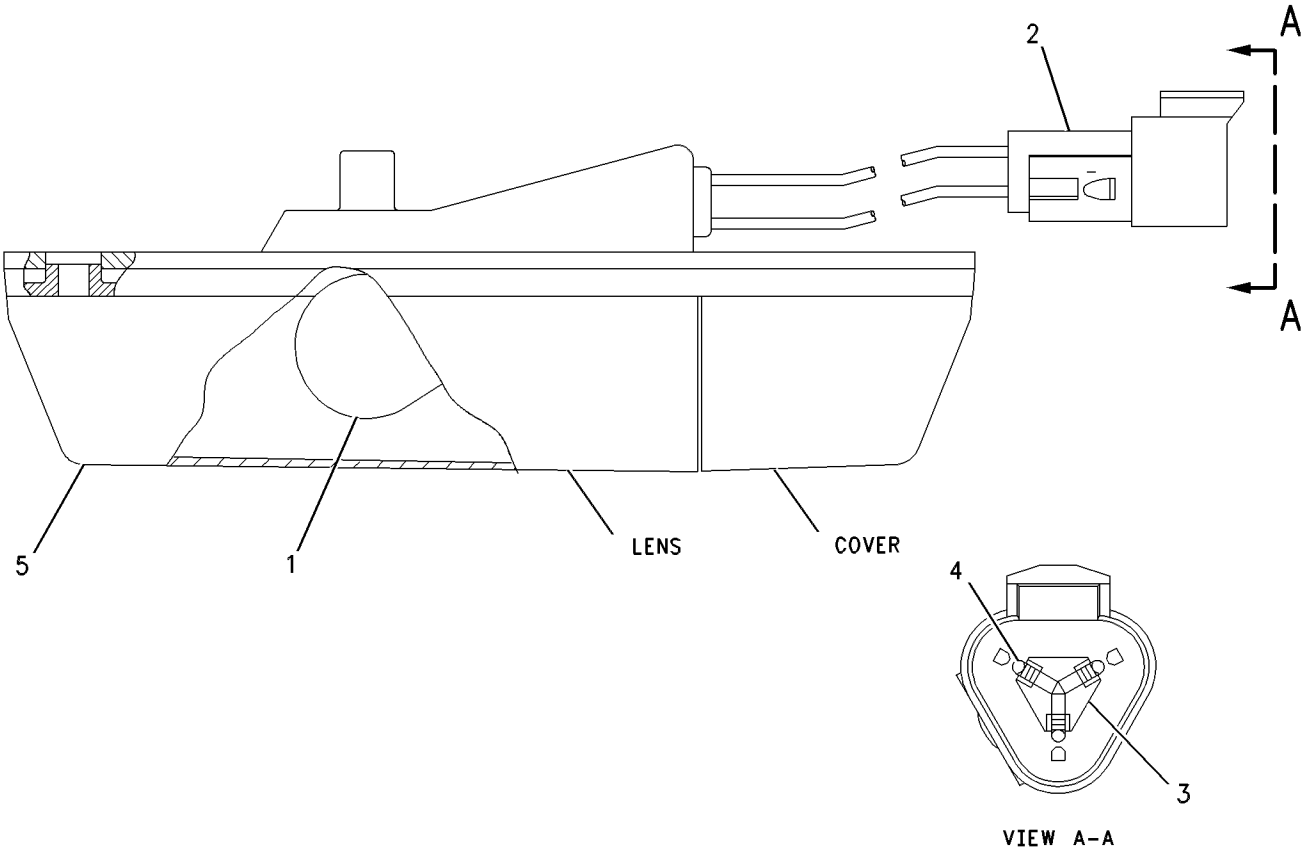

GRAPHIC #1 g00647928

9X-1439 LAMP GP-FLOOD

S/N: 7HR1-UP
24 VOLT, VERTICAL
PART OF 109-6902 LIGHTING GP-REAR
FIELD REPLACEMENT ORDER 162-3294—PAGE 304, 1-165-0699 KIT-MOUNTING BRACKET, 1-155-2270 KIT-CONNECTING PLUG, 2-8T-8730 SOCKET-CONNECTOR. FIELD REPLACEMENT FOR 9X-6775—PAGE 303: FOR 9X-6774—PAGE 302

SMCS-1429, 1434 **i01538325**

NOTE	REF NO	GRAPHIC REF	PART NUMBER	QTY	PART NAME 1 2 3 4 5 6 (PRODUCT LEVEL)	SEE PAGE
	1	1	**9X-4244**	4	SCREW	
	2	1	**9X-4174**	1	LENS AS (FLOODLIGHT)	
		1	**9X-4243**	1	SEAL	
M	3	1	**8T-0337**	2	SCREW-MACHINE (M4X0.7X12MM)	
	4	1	**9X-3455**	1	BODY AS-LAMP	
		1	**8T-4121**	1	WASHER-HARD (11X21X2.5MM THK)	
M		1	**8T-4133**	1	NUT (M10X1.5 THD)	
	5	1	**9X-3463**	1	LAMP (24 VOLT)(65 WATT)	

M-METRIC PART

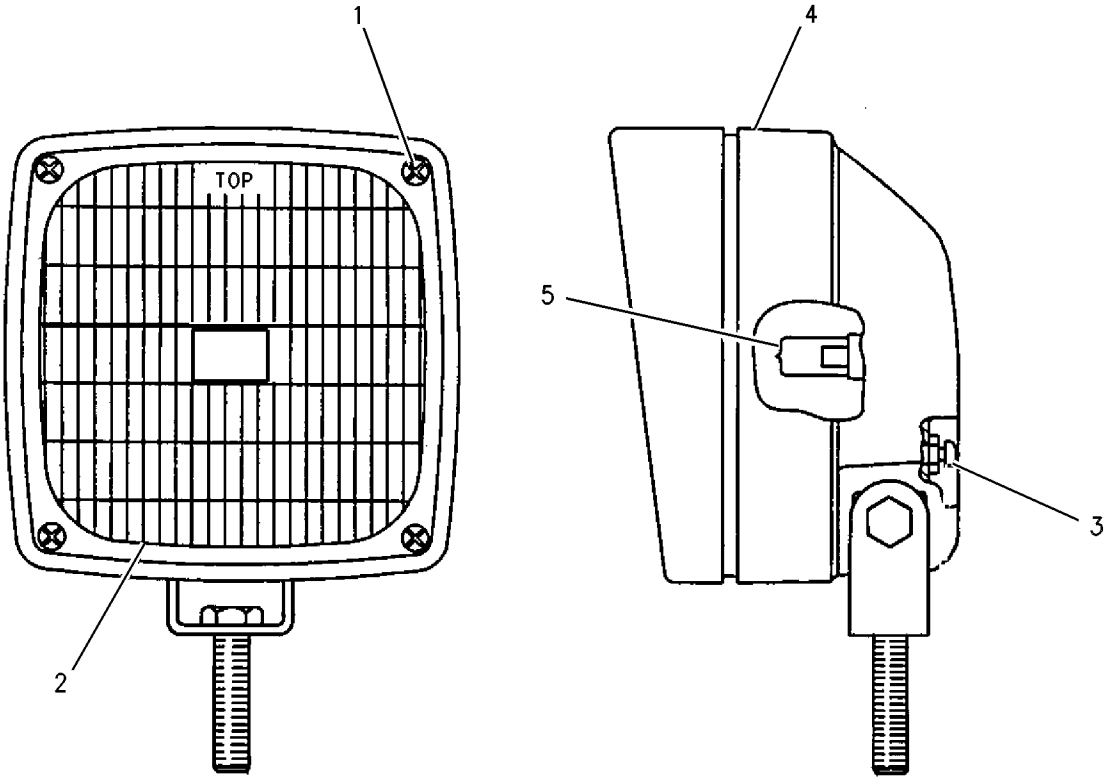

GRAPHIC #1 g00484284

9X-6774 LAMP GP-FLOOD

S/N: 7HR1-UP

PART OF 8R-5529 LIGHTING GP-FLOOD, 109-6900 LIGHTING GP-FRONT

FIELD REPLACEMENT ORDER 9X-1439—PAGE 301, 1-8T-4133 NUT, 1-8T-4121 WASHER

SMCS-1429, 1434 **i01229087**

NOTE	REF NO	GRAPHIC REF	PART NUMBER	QTY	PART NAME 1 2 3 4 5 6 (PRODUCT LEVEL)	SEE PAGE
	1	1	**9X-4244**	4	SCREW	
	2	1	**9X-4174**	1	LENS AS-FLOODLIGHT	
		1	**9X-4243**	1	SEAL	
M	3	1	**8T-0337**	2	SCREW-MACHINE (M4X0.7X12MM)	
	4	1	**9X-3455**	1	BODY AS-LAMP	
		1	**8T-4121**	1	WASHER-HARD (2.5MM THK)	
M		1	**8T-4133**	1	NUT (M10X1.50 THD)	
	5	1	**9X-3463**	1	LAMP (24 VOLT)(65 WATTS)	

M-METRIC PART

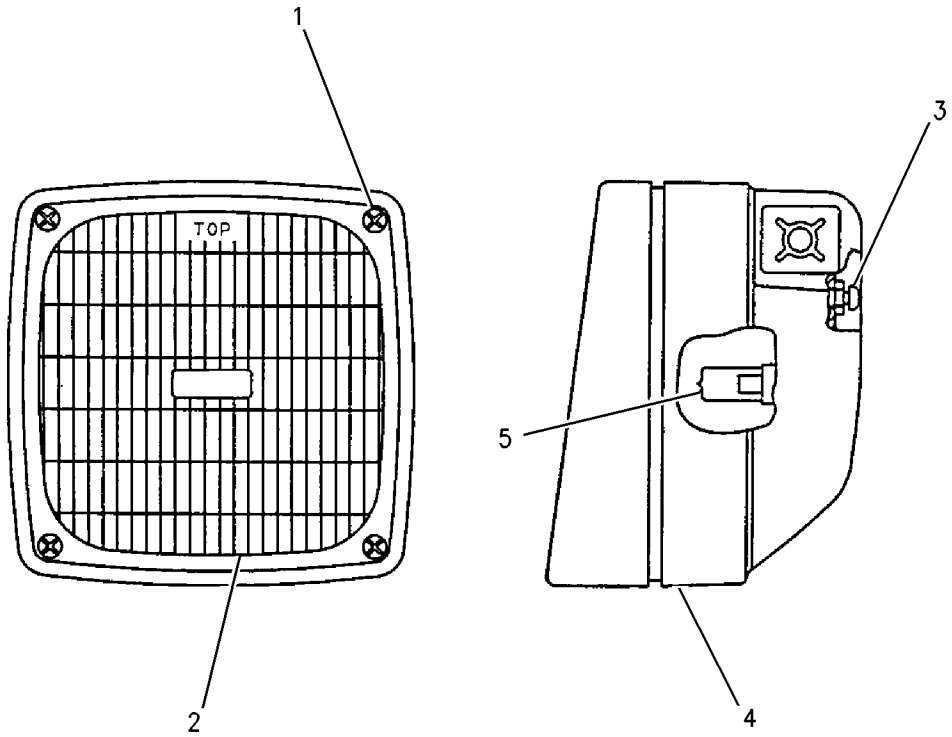

GRAPHIC #1 g00657999

9X-6775 LAMP GP-FLOOD

S/N: 7HR1-UP
24 VOLT. VERTICAL
PART OF 109-6900 LIGHTING GP-FRONT, 109-6902 LIGHTING GP-REAR
FIELD REPLACEMENT ORDER 9X-1439—PAGE 301, 1-8T-4121 WASHER-HARD, 1-8T-4133 NUT, 162-3294—PAGE 304, 2-8T-8730 SOCKET-CONNECTOR, 1-155-2270 KIT-CONNECTING PLUG, 1-165-0699 KIT-MOUNTING BRACKET

SMCS-1429, 1434 **i01521310**

NOTE	REF NO	GRAPHIC REF	PART NUMBER	QTY	PART NAME 1 2 3 4 5 6 (PRODUCT LEVEL)	SEE PAGE
	1	1	**9X-4244**	4	SCREW	
	2	1	**9X-4174**	1	LENS AS	
		1	**9X-4243**	1	SEAL	
M	3	1	**8T-0337**	2	SCREW-MACHINE (M4X0.7X12MM)	
	4	1	**9X-3455**	1	BODY AS-LAMP	
		1	**8T-4121**	1	WASHER-HARD (11X21X2.5MM THK)	
M		1	**8T-4133**	1	NUT (M10X1.5 THD)	
	5	1	**9X-3463**	1	LAMP (24 VOLT)(65 WATT)	

M-METRIC PART

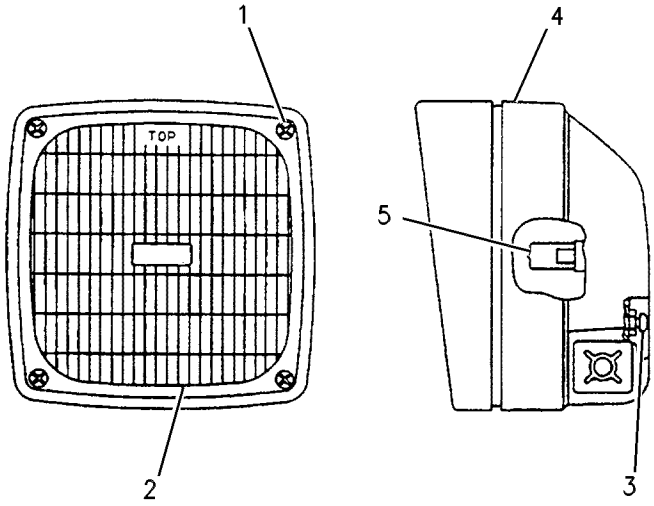

GRAPHIC #1 g00088698

162-3294 LAMP GP-FLOOD

S/N: 7HR1-UP

24 VOLT. VERTICAL, PROVIDES OPTIONAL FIELD REPLACEMENT LAMP GP THAT OFFERS SUPERIOR SEALING AND VIBRATION CHARACTERISTICS

FIELD REPLACEMENT FOR 9X-6775—PAGE 303: FOR 9X-1439—PAGE 301

SMCS-1429, 1434 **i01540221**

NOTE	REF NO	GRAPHIC REF	PART NUMBER	QTY	PART NAME 1 2 3 4 5 6 (PRODUCT LEVEL)	SEE PAGE
	1	1	**9X-3463**	1	LAMP (24 VOLT)(65 WATT)	
	2	1	**162-5372**	1	BODY AS-LAMP	
	3	1	**158-0248**	1	LENS AS (FLOODLIGHT)	
	4	1	**158-0252**	1	BEZEL	
	5	1	**188-8849**	2	CLAMP	
	6	1	**186-3735**	2	PIN-CONNECTOR	
J	7	1	**3E-3365**	1	WEDGE-RECEPTACLE LOCK (2 PIN)	
J	8	1	**102-8802**	1	KIT-RECEPTACLE (2 PIN) (FLOODLAMP)	
					(INCLUDES RECEPTACLE AS & PART MARKED J)	

J-KIT MARKED J SERVICES PART MARKED J

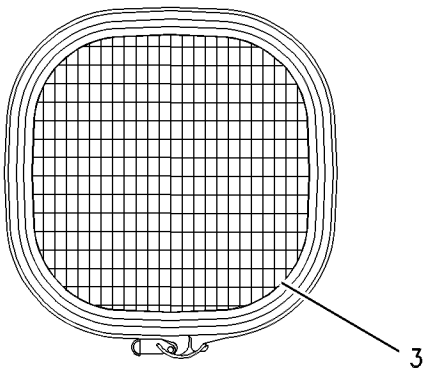

FRONT VIEW

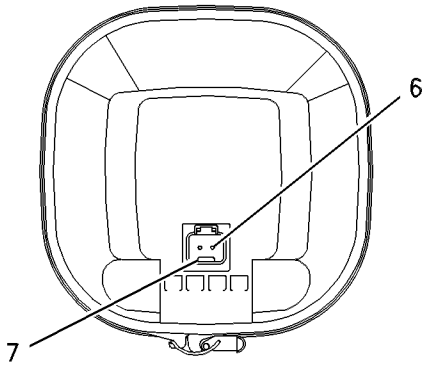

REAR VIEW

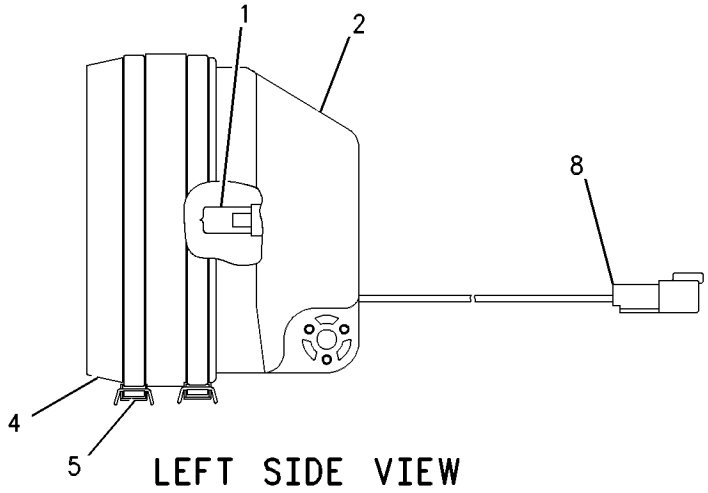

LEFT SIDE VIEW

GRAPHIC #1 g00510980

9X-7165 LAMP GP-HEAD—LOW BEAM

S/N: 7HR1-UP
24 VOLT. VERTICAL
PART OF 109-6900 LIGHTING GP-FRONT
FIELD REPLACEMENT ORDER 8T-4121 WASHER, 8T-4133 NUT

SMCS-1429 **i01538331**

NOTE	REF NO	GRAPHIC REF	PART NUMBER	QTY	PART NAME 1 2 3 4 5 6 (PRODUCT LEVEL)	SEE PAGE
	1	1	**9X-4244**	4	SCREW	
	2	1	**9X-7798**	1	LENS AS (HEADLIGHT) (LOW BEAM)	
		1	**9X-4243**	1	SEAL	
M	3	1	**8T-0337**	2	SCREW-MACHINE (M4X0.7X12MM)	
	4	1	**9X-3455**	1	BODY AS-LAMP	
	5	1	**9X-3463**	1	LAMP (24 VOLT)(65 WATT) (HEAD)	

M-METRIC PART

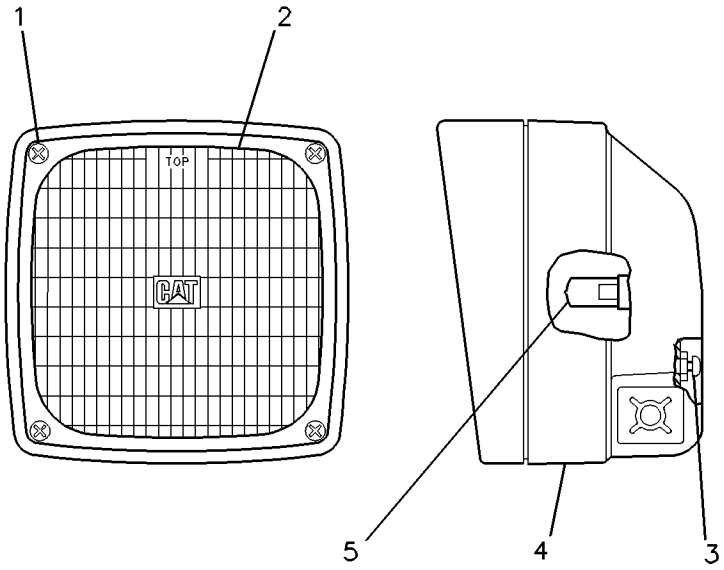

GRAPHIC #1 g00082780

3E-6467 LAMP GP-SIGNAL

S/N: 7HR1-99999
24 VOLT. INCLUDES STOP/TAIL FUNCTION
PART OF 8R-5645 LIGHTING GP-STOP

SMCS-1430 **i01301719**

NOTE	REF NO	GRAPHIC REF	PART NUMBER	QTY	PART NAME 1 2 3 4 5 6 (PRODUCT LEVEL)	SEE PAGE
	1	1	**9X-3064**	1	LENS-RED	
	2	1	**9X-4492**	1	LAMP	
	3	1	**102-8803**	1	KIT-RECEPTACLE (3 PIN)	
					(INCLUDES RECEPTACLE AS AND WEDGE)	
	4	1	**3E-3371**	1	WEDGE-RECEPTACLE LOCK	
	5	1	**8T-8729**	3	PIN-CONNECTOR	
FM		1	**5C-2890**	3	NUT (M6X1.00 THD)	
F		1	**8T-4205**	3	WASHER-HARD (2MM THK)	

F-NOT SHOWN
M-METRIC PART

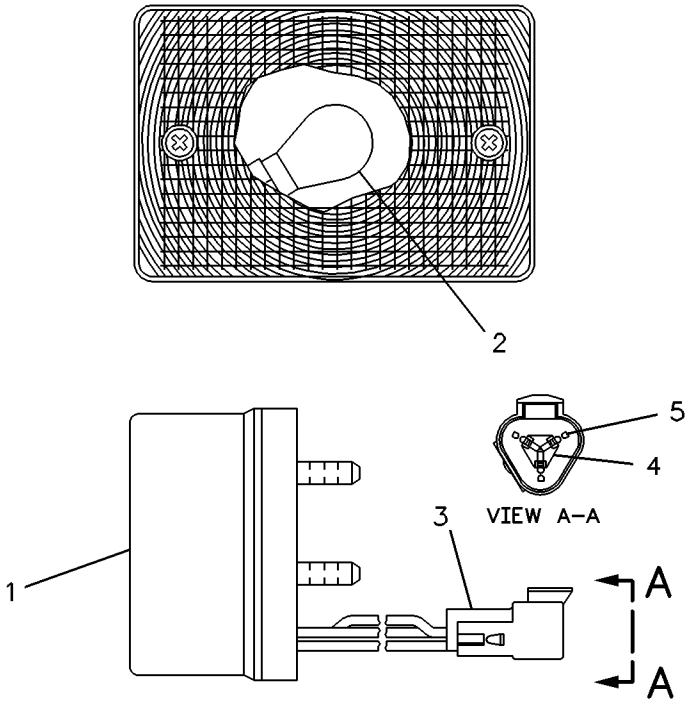

GRAPHIC #1 g00083144

130-3453 LAMP GP-SIGNAL–STOP/TAIL

S/N: 7HR1-UP
24 VOLT
PART OF 8R-5645 LIGHTING GP-STOP

SMCS-1430 **i01445613**

NOTE	REF NO	GRAPHIC REF	PART NUMBER	QTY	PART NAME 1 2 3 4 5 6 (PRODUCT LEVEL)	SEE PAGE
	1	1	**9X-3064**	1	LENS-RED	
	2	1	**9X-4493**	1	LAMP (24 VOLT)	
	3	1	**102-8803**	1	KIT-RECEPTACLE (3 PIN)	
					(INCLUDES RECEPTACLE AS AND WEDGE)	
	4	1	**3E-3371**	1	WEDGE-RECEPTACLE LOCK (3 PIN)	
	5	1	**8T-8729**	3	PIN-CONNECTOR	

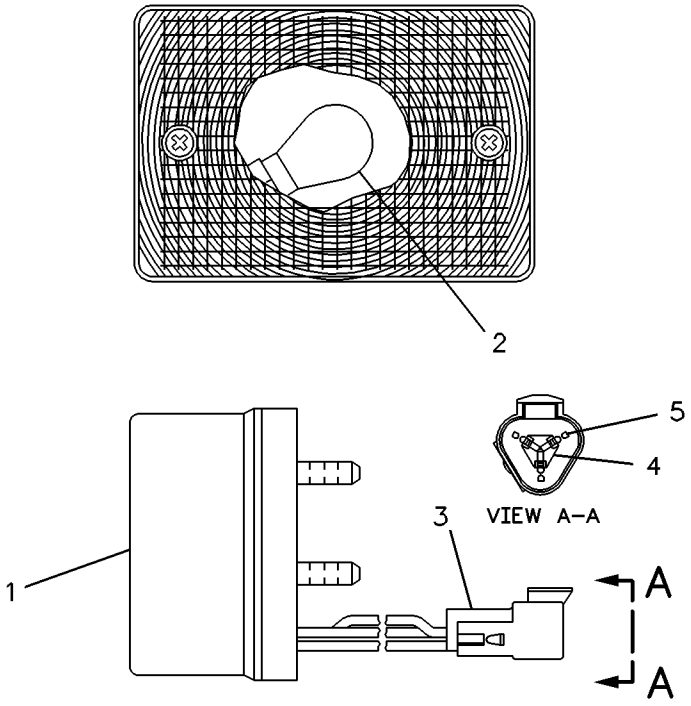

GRAPHIC #1 g00083144

135-0426 LAMP GP-SIGNAL–STOP/TAIL

S/N: 7HR1-UP
24 VOLT
PART OF 8R-5645 LIGHTING GP-STOP

SMCS-1430 **i01473987**

NOTE	REF NO	GRAPHIC REF	PART NUMBER	QTY	PART NAME 1 2 3 4 5 6 (PRODUCT LEVEL)	SEE PAGE
	1	1	**102-8803**	1	KIT-RECEPTACLE (3 PIN)	
					(INCLUDES RECEPTACLE AS & WEDGE)	
	2	1	**3E-3371**	1	WEDGE-RECEPTACLE LOCK (3 PIN)	
	3	1	**186-3735**	3	PIN-CONNECTOR	

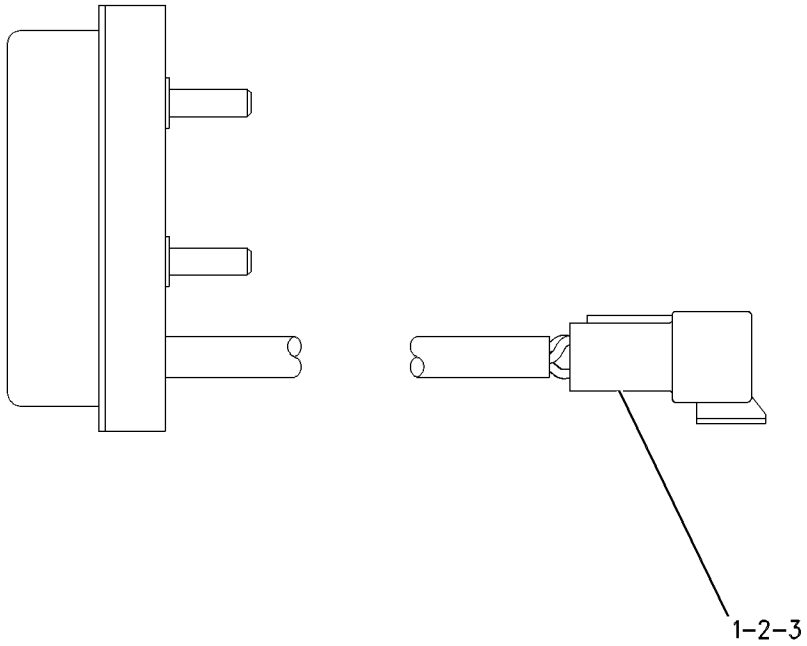

GRAPHIC #1 g00305543

125-6794 LAMP GP-VIMS SERVICE INDICATOR

S/N: 7HR1-UP
24 VOLT
PART OF 112-4191 WIRING GP-VIMS
AN ATTACHMENT

SMCS-7601 **i01191478**

NOTE	REF NO	GRAPHIC REF	PART NUMBER	QTY	PART NAME 1 2 3 4 5 6 (PRODUCT LEVEL)	SEE PAGE
	1	1	**3E-3365**	1	WEDGE-RECEPTACLE LOCK	
	2	1	**8T-8729**	2	PIN-CONNECTOR	
	3	1	**107-2283**	1	LENS-BLUE	
	4	1	**9X-4493**	1	LAMP (24 VOLT)	
	5	1	**102-8802**	1	KIT-RECEPTACLE (2 PIN)	
					(INCLUDES WEDGE)	
FM		1	**5C-2890**	3	NUT (M6X1.00 THD)	
F		1	**8T-4205**	3	WASHER-HARD (2MM THK)	

F-NOT SHOWN
M-METRIC PART

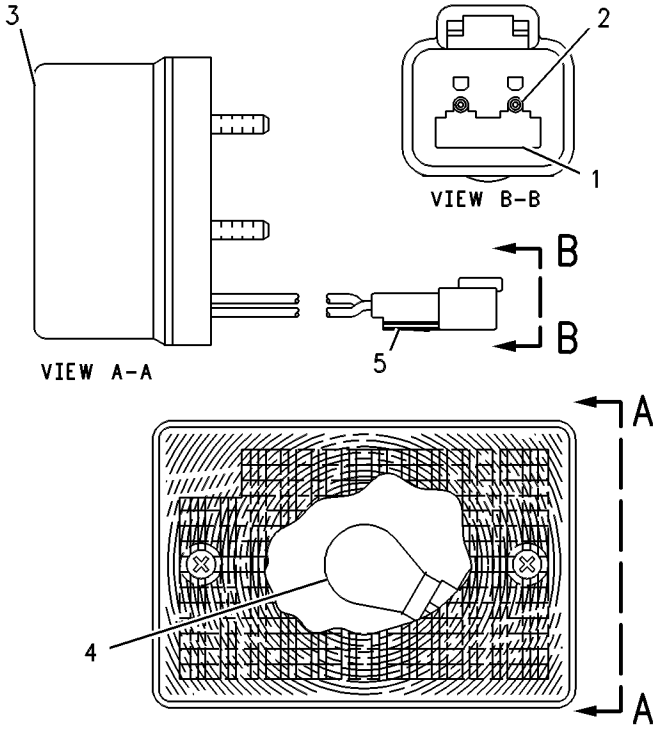

GRAPHIC #1 g00258538

8R-5529 LIGHTING GP-FLOOD

S/N: 7HR1-UP
4 LAMP
PART OF 109-6821 ELECTRICAL AR

SMCS-1429, 1434 **i00680668**

NOTE	REF NO	GRAPHIC REF	PART NUMBER	QTY	PART NAME 1 2 3 4 5 6 (PRODUCT LEVEL)	SEE PAGE
	1	1	**4E-6997**	1	HARNESS AS	
	2	1	**3S-2093**	18	STRAP-CABLE (1.75IN DIA)	
Y	3	1	*9X-6774*	4	LAMP GP-FLOOD	302
	4	1	**9R-3852**	4	BRACKET	
M	5	1	**8T-4137**	8	BOLT (M10X1.50X20MM)	
M	6	1	**8T-6912**	4	BOLT (M8X1.50X50MM)	
M		1	**5C-7261**	4	NUT (M8X1.25 THD)	
	7	1	**4E-9625**	1	BRACKET AS-RH	
		1	**9U-0833**	1	BRACKET AS-LH	
					(EACH BRACKET AS INCLUDES)	
		1	**7T-1099**	1	LINK	

M-METRIC PART
Y-SEPARATE ILLUSTRATION

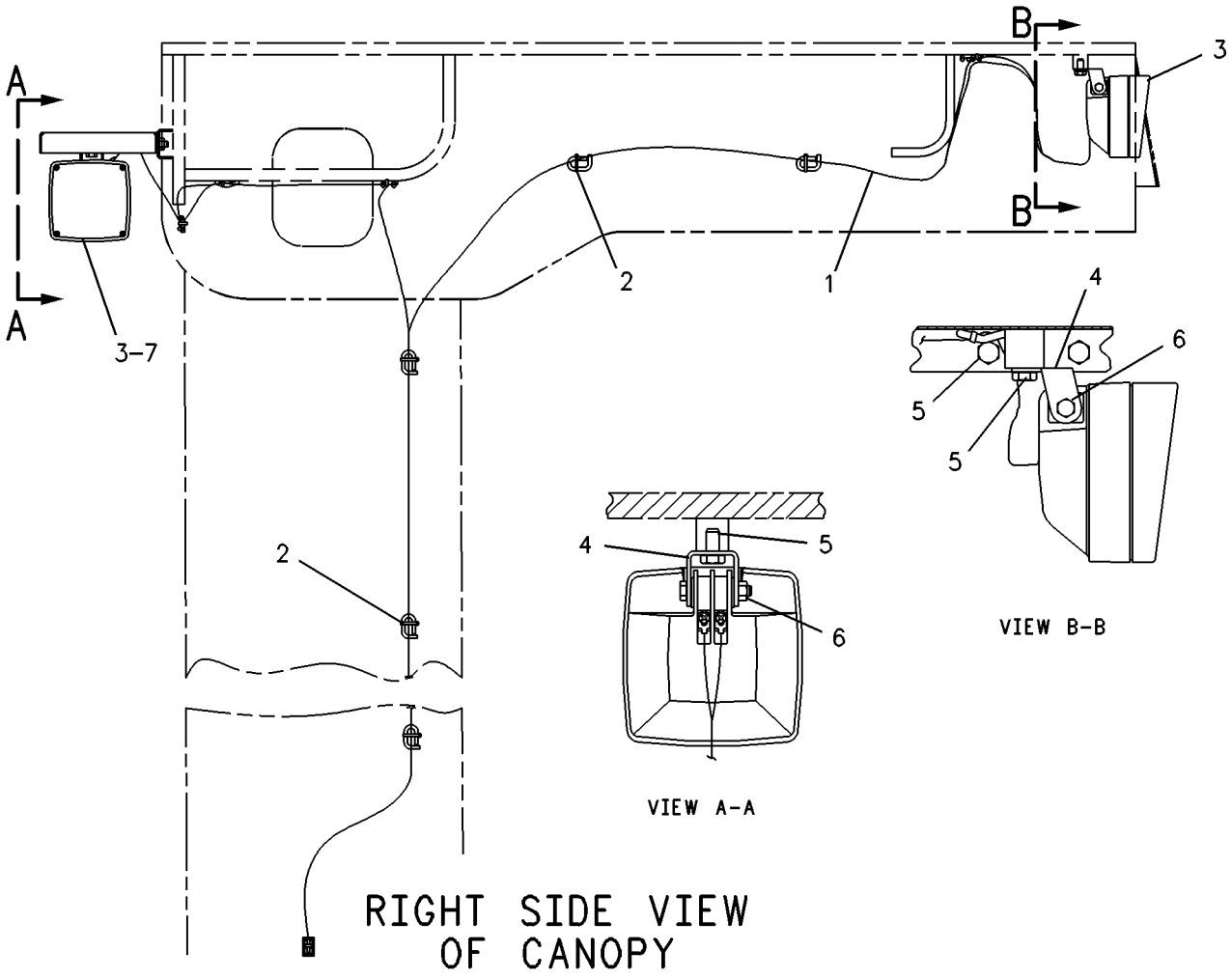

GRAPHIC #1 g00119831

MEMORANDA

109-6900 LIGHTING GP-FRONT

S/N: 7HR1-UP

5 LAMP

PART OF 109-6821 ELECTRICAL AR

SMCS-1429, 1434 **i01541492**

NOTE	REF NO	GRAPHIC REF	PART NUMBER	QTY	PART NAME 1 2 3 4 5 6 (PRODUCT LEVEL)	SEE PAGE
Y	1	1	*9X-7165*	2	LAMP GP-HEAD (LOW BEAM)	305
Y	2	1	*9X-6775*	2	LAMP GP-FLOOD (24 VOLT)(VERTICAL)	303
	3	1	**103-5914**	5	BRACKET AS	
					(EACH INCLUDES)	
M		1	**8T-3490**	1	NUT-WELD (M10X1.5 THD)	
M	4	1	**8T-6912**	5	BOLT (M8X1.25X50MM)	
	5	1	**8T-4224**	10	WASHER-HARD (8.8X16X2MM THK)	
M	6	1	**5C-7261**	5	NUT (M8X1.25 THD)	
M	7	1	**8T-4137**	12	BOLT (M10X1.5X20MM)	
	8	1	**8T-4121**	14	WASHER-HARD (11X21X2.5MM THK)	
	9	1	**101-2974**	2	GUARD AS	
					(EACH INCLUDES)	
		1	**1F-0750**	2	NUT-WELD (3/8-16 THD)	
	10	1	**9W-4361**	8	MOUNT	
	11	1	**6V-8801**	16	NUT (3/8-16 THD)	
	12	1	**5P-1075**	16	WASHER-HARD (10.2X22.5X3MM THK)	
	13	1	**115-5605**	2	HARNESS AS-LIGHTING (FRONT FLOOD-FENDER)	
		1	**155-2271**	1	KIT-CONNECTING PLUG (4 PIN)	
					(INCLUDES PLUG AS & WEDGE)	
	14	1	**6K-8178**	2	CLIP	
	15	1	**5M-3062**	2	BOLT (3/8-16X0.75 IN)	
	16	1	**4D-7794**	6	CLIP	
	17	1	**125-9541**	2	SUPPORT AS	
	18	1	**137-5109**	2	GROMMET-SPLIT	
	19	1	**125-8532**	1	HARNESS AS-LIGHTING (FRONT FLOOD-LOADER FRAME)	
		1	**5P-6459**	2	GROMMET	
		1	**155-2270**	2	KIT-CONNECTING PLUG (2 PIN)	
					(EACH KIT-CONNECTING PLUG INCLUDES PLUG AS & WEDGE)	
	20	1	**8J-3415**	2	GROMMET	
	21	1	**2H-9524**	2	GROMMET	
	22	1	**103-8518**	1	WIRE AS	
	23	1	**9F-7716**	2	CLIP	
M	24	1	**8T-4179**	2	BOLT (M12X1.75X20MM)	
	25	1	**8T-4223**	6	WASHER-HARD (13.5X25.5X3MM THK)	
	26	1	**125-6530**	1	COVER AS	
Y	27	1	*9X-6774*	1	LAMP GP-FLOOD (24 VOLT)(SUSPENDED)	302
M	28	1	**7X-2548**	4	BOLT (M12X1.75X16MM)	
	29	1	**9U-2277**	1	CLIP AS	
	30	1	**125-8531**	2	HARNESS AS-LIGHTING (FRAME)	
		1	**102-8804**	2	KIT-RECEPTACLE (4 PIN)	
					(EACH KIT-RECEPTACLE INCLUDES RECEPTACLE AS & WEDGE)	
M	31	1	**8T-4186**	8	BOLT (M10X1.5X40MM)	
	32	1	**033-8248**	2	CLIP	
	33	1	**6V-3265**	4	CLIP	
	34	1	**7X-7729**	8	WASHER (11X25X3MM THK)	

M-METRIC PART
Y-SEPARATE ILLUSTRATION

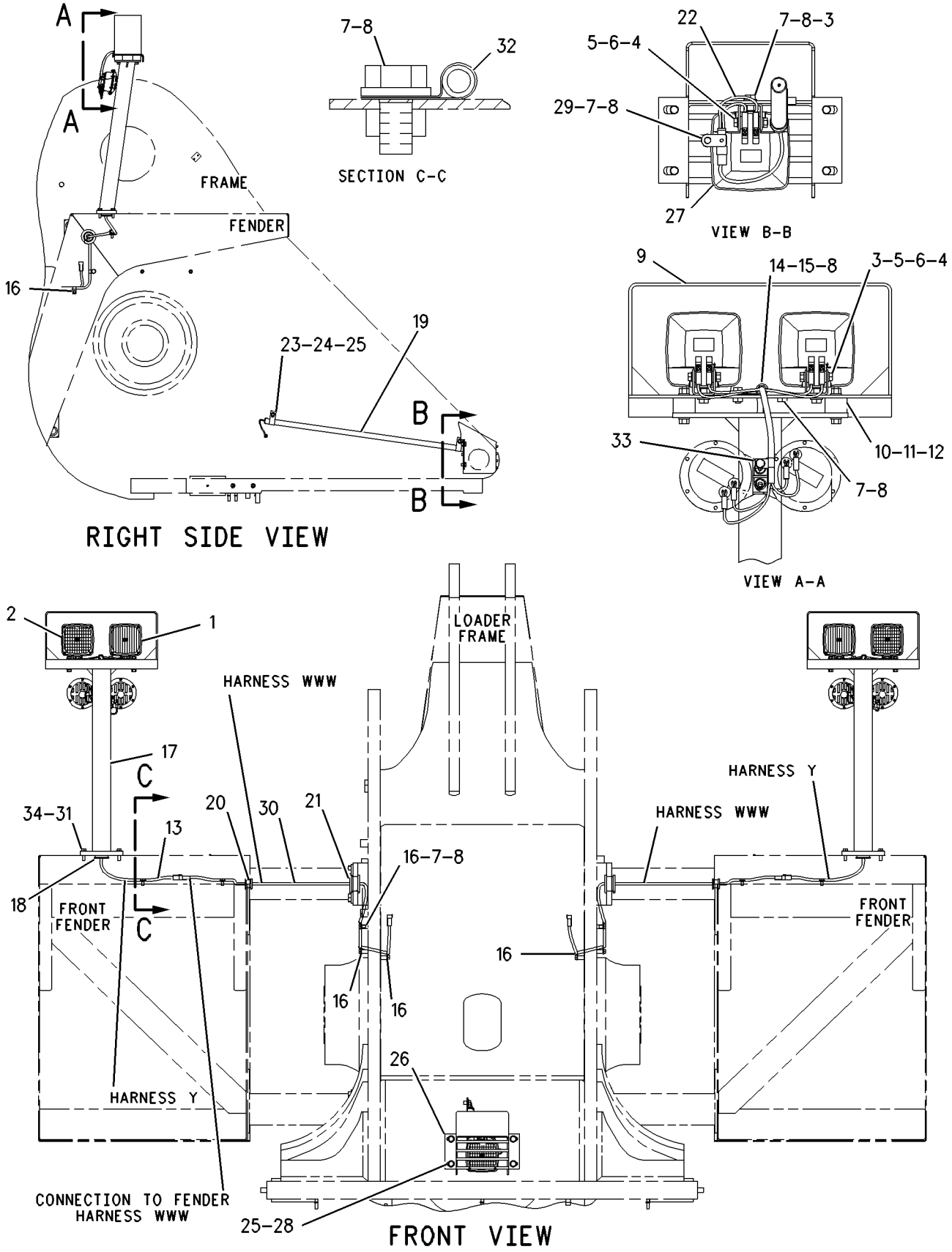

GRAPHIC #1 g00801387

109-6902 LIGHTING GP-REAR

S/N: 7HR1-UP

4 LAMP

PART OF 109-6821 ELECTRICAL AR

SMCS-1434 **i01541511**

NOTE	REF NO	GRAPHIC REF	PART NUMBER	QTY	PART NAME 1 2 3 4 5 6 (PRODUCT LEVEL)	SEE PAGE
Y	1	1	**9X-1439**	2	LAMP GP-FLOOD	301
M	2	1	**8T-4133**	2	NUT (M10X1.5 THD)	
	3	1	**8T-4121**	8	WASHER-HARD (11X21X2.5MM THK)	
Y	4	1	*9X-6775*	2	LAMP GP-FLOOD (24 VOLT)(VERTICAL)	303
	5	1	**103-5914**	2	BRACKET AS	
					(EACH INCLUDES)	
M		1	**8T-3490**	1	NUT-WELD (M10X1.5 THD)	
M	6	1	**8T-6912**	2	BOLT (M8X1.25X50MM)	
	7	1	**8T-4224**	4	WASHER-HARD (8.8X16X2MM THK)	
M	8	1	**5C-7261**	2	NUT (M8X1.25 THD)	
M	9	1	**8T-4137**	6	BOLT (M10X1.5X20MM)	
	10	1	**8R-7102**	2	BRACKET AS	
					(EACH INCLUDES)	
M		1	**6V-9632**	1	NUT-WELD (M6X1 THD)	
	11	1	**2V-3216**	2	CLIP	
M	12	1	**5C-9553**	2	BOLT (M6X1X16MM)	
	13	1	**9X-8256**	2	WASHER (6.6X12X2MM THK)	
	14	1	**5P-8439**	2	GROMMET	
	15	1	**115-5609**	1	HARNESS AS-LIGHTING (REAR FLOOD)	
		1	**155-2270**	1	KIT-CONNECTING PLUG (2 PIN)	
					(INCLUDES PLUG AS & WEDGE)	
	16	1	**3S-2093**	6	STRAP-CABLE	

M-METRIC PART
Y-SEPARATE ILLUSTRATION

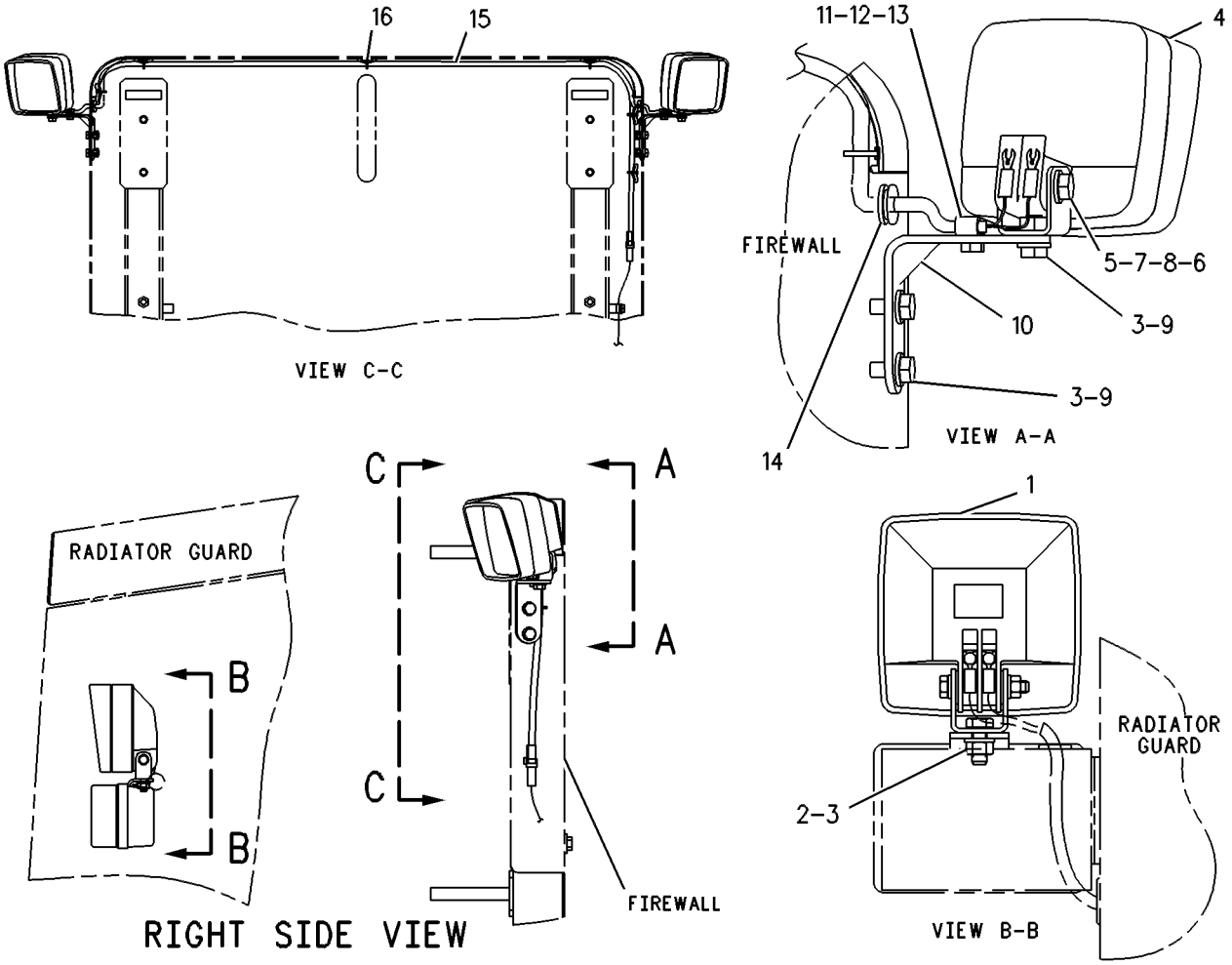

GRAPHIC #1 g00262816

8R-5645 LIGHTING GP-STOP

S/N: 7HR1-UP
PART OF 109-6821 ELECTRICAL AR
TYPE 1

SMCS-1432 **i01327269**

NOTE	REF NO	GRAPHIC REF	PART NUMBER	QTY	PART NAME 1 2 3 4 5 6 (PRODUCT LEVEL)	SEE PAGE
M	1	1	**5C-2890**	6	NUT (M6X1.00 THD)	
		1	**8T-4205**	6	WASHER-HARD (2MM THK)	
	2	1	**4E-9925**	1	COVER-LH	
M	3	1	**4E-7497**	4	SPACER (M6X1 THD)	
M	4	1	**8T-6411**	4	SCREW-MACHINE (M6X1X12MM)	
M	5	1	**8T-4195**	4	BOLT (M10X1.50X30MM)	
		1	**8T-4121**	4	WASHER-HARD (2.5MM THK)	
	6	1	**4E-8975**	1	BRACKET	
Y	7	1	**3E-6467**	2	LAMP GP-SIGNAL (STOP/TAIL)	306
	8	1	**4E-9924**	1	COVER-RH	
	9	1	**4E-8976**	1	BRACKET	

M-METRIC PART
Y-SEPARATE ILLUSTRATION

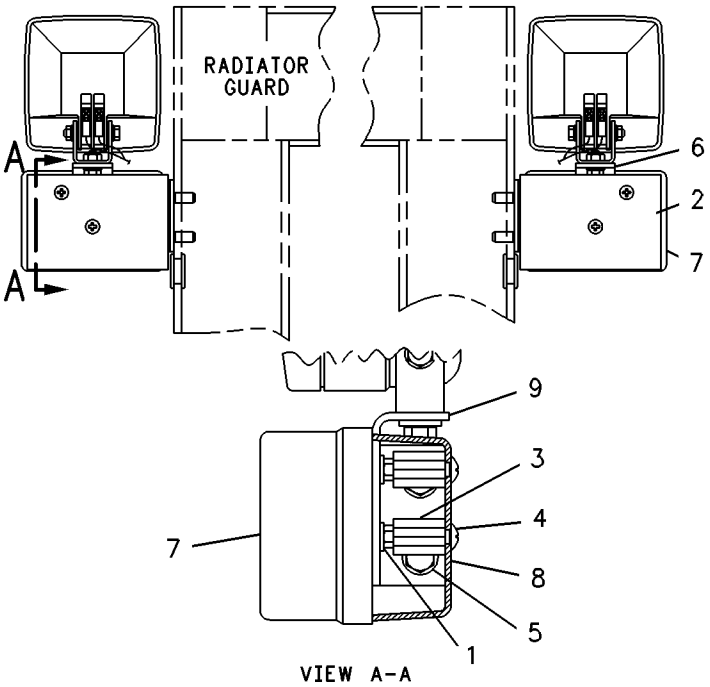

GRAPHIC #1 g00119794

8R-5645 LIGHTING GP-STOP

S/N: 7HR1-UP
PART OF 109-6821 ELECTRICAL AR
TYPE 2

SMCS-1432 **i01421339**

NOTE	REF NO	GRAPHIC REF	PART NUMBER	QTY	PART NAME 1 2 3 4 5 6 (PRODUCT LEVEL)	SEE PAGE
M	1	1	**5C-2890**	6	NUT (M6X1 THD)	
		1	**8T-4205**	6	WASHER-HARD (7.2X14.5X2MM THK)	
	2	1	**4E-9925**	1	COVER-LH	
M	3	1	**4E-7497**	4	SPACER (M6X1 THD)	
M	4	1	**8T-6411**	4	SCREW-MACHINE (M6X1X12MM)	
M	5	1	**8T-4195**	4	BOLT (M10X1.5X30MM)	
		1	**8T-4121**	4	WASHER-HARD (11X21X2.5MM THK)	
	6	1	**4E-8975**	1	BRACKET	
CY	7	1	**130-3453**	2	LAMP GP-SIGNAL (STOP/TAIL)	307
	8	1	**4E-9924**	1	COVER-RH	
	9	1	**4E-8976**	1	BRACKET	

C-CHANGE FROM PREVIOUS TYPE
M-METRIC PART
Y-SEPARATE ILLUSTRATION

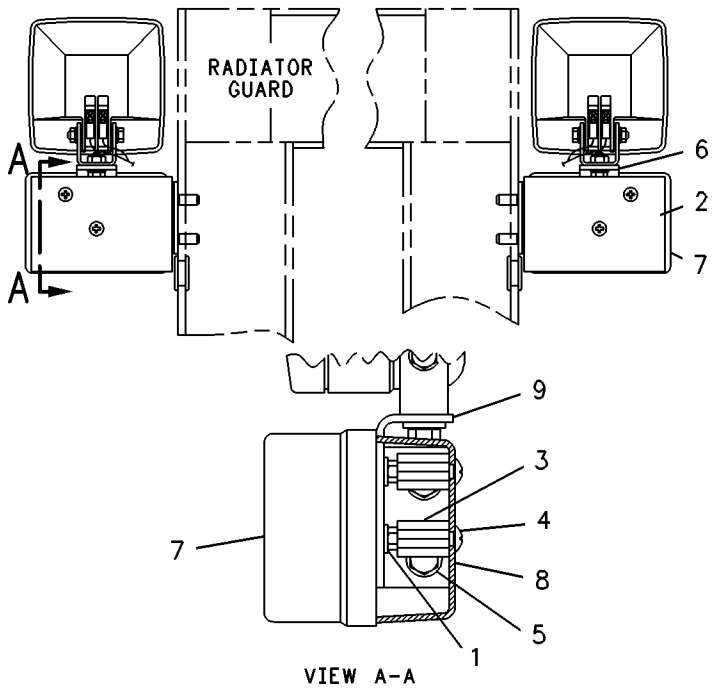

GRAPHIC #1 g00119794

8R-5645 LIGHTING GP-STOP

S/N: 7HR1-UP
PART OF 109-6821 ELECTRICAL AR
TYPE 3

SMCS-1432 **i01491922**

NOTE	REF NO	GRAPHIC REF	PART NUMBER	QTY	PART NAME 1 2 3 4 5 6 (PRODUCT LEVEL)	SEE PAGE
M	1	1	**5C-2890**	6	NUT (M6X1 THD)	
	2	1	**4E-9925**	1	COVER-LH	
M	3	1	**4E-7497**	4	SPACER (M6X1 THD)	
M	4	1	**8T-6411**	4	SCREW-MACHINE (M6X1X12MM)	
M	5	1	**8T-4195**	4	BOLT (M10X1.5X30MM)	
		1	**8T-4121**	4	WASHER-HARD (11X21X2.5MM THK)	
	6	1	**4E-8975**	1	BRACKET	
CY	7	1	**135-0426**	2	LAMP GP-SIGNAL (STOP/TAIL)	308
	8	1	**4E-9924**	1	COVER-RH	
	9	1	**4E-8976**	1	BRACKET	

C-CHANGE FROM PREVIOUS TYPE
M-METRIC PART
Y-SEPARATE ILLUSTRATION

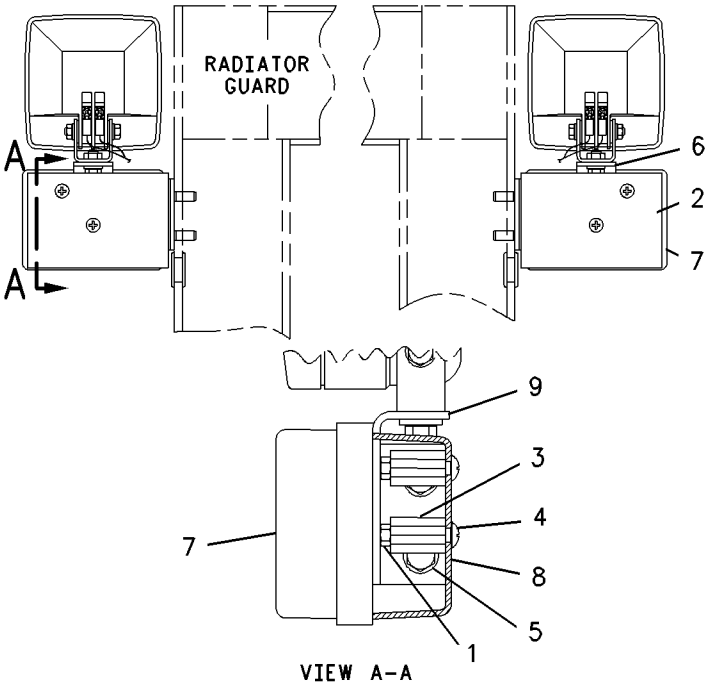

GRAPHIC #1 g00776857

144-7172 MODULE GP-VIDS/VIMS INTERFACE

S/N: 7HR1-UP

PART OF 109-6897, 168-4358 WIRING GP-VIDS MONITOR, 131-4377, 168-4359 WIRING GP-VIMS MONITOR

AN ATTACHMENT

SMCS-7601, 7603 **i01445678**

NOTE	REF NO	GRAPHIC REF	PART NUMBER	QTY	PART NAME 1 2 3 4 5 6 (PRODUCT LEVEL)	SEE PAGE
	1	1	**9X-9747**	1	FILM-IDENTIFICATION (VIDS/VIMS)(INTERFACE MODULE)	

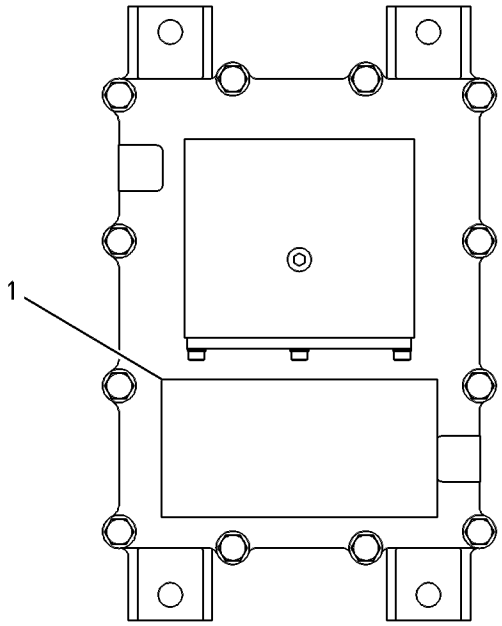

GRAPHIC #1 g00272622

109-4367 SENSOR GP-EXHAUST TEMPERATURE

S/N: 2GR1-1716

PART OF 112-6045 WIRING GP-ENGINE

SMCS-1919 **i01421004**

NOTE	REF NO	GRAPHIC REF	PART NUMBER	QTY	PART NAME 1 2 3 4 5 6 (PRODUCT LEVEL)	SEE PAGE
E	1	1	**9X-1813**		SLEEVE (31CM)	
	2	1	**186-3735**	3	PIN-CONNECTOR	
	3	1	**3E-3371**	1	WEDGE-RECEPTACLE LOCK (3 PIN)	
					AVAILABLE REPAIR KIT(S):	
			102-8803	1	KIT-RECEPTACLE (3 PIN)	
					(INCLUDES RECEPTACLE AS & WEDGE)	

E-ORDER BY THE CENTIMETER

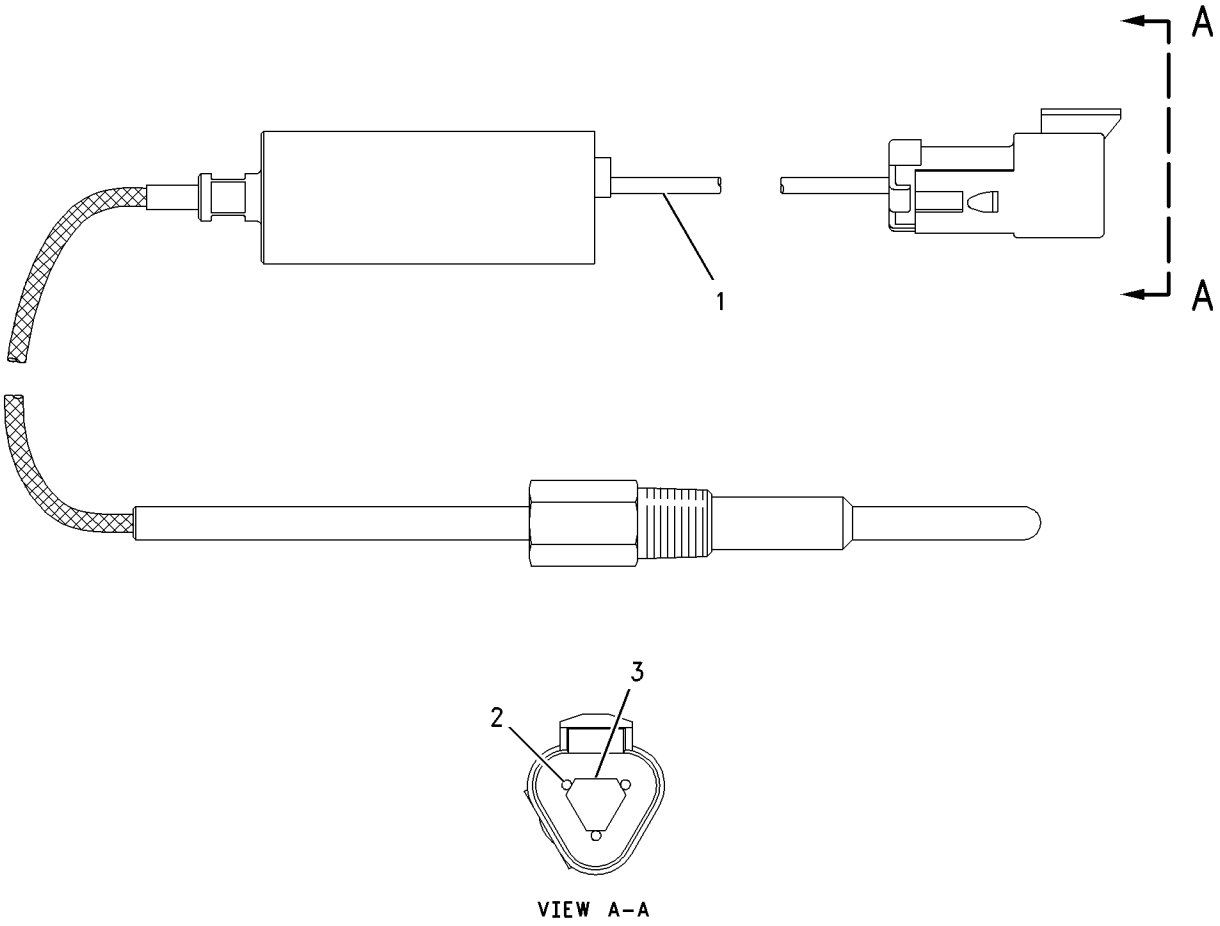

GRAPHIC #1 g00713640

9X-5592 SENSOR GP-POSITION–TC IMPELLER CLUTCH

S/N: 7HR1-UP

PART OF 112-2273 CONTROL GP-FOOT BRAKE

SMCS-1408, 4269, 5702, 5736, 7494 **i01346169**

NOTE	REF NO	GRAPHIC REF	PART NUMBER	QTY	PART NAME 1 2 3 4 5 6 (PRODUCT LEVEL)	SEE PAGE
	1	1	**102-8803**	1	KIT-RECEPTACLE (3 PIN)	
					(INCLUDES RECEPTACLE AS & WEDGE)	
	2	1	**8T-8729**	3	PIN-CONNECTOR	

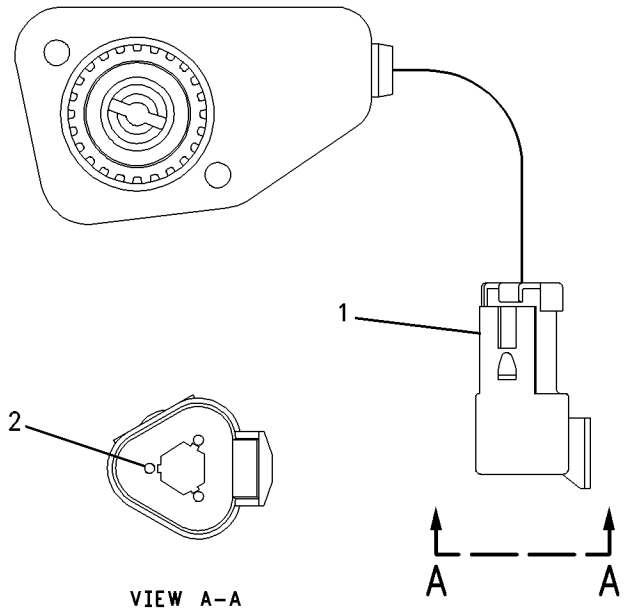

GRAPHIC #1 g00711014

106-4437 SENSOR GP-POSITION–CONTROL LEVER

S/N: 7HR1-289
SPRINGLESS
PART OF 118-7644 CONTROL GP-HYD ELECTRONIC

SMCS-1408, 4269, 5702, 5736, 7494 **i01318690**

NOTE	REF NO	GRAPHIC REF	PART NUMBER	QTY	PART NAME 1 2 3 4 5 6 (PRODUCT LEVEL)	SEE PAGE
Z	1	1		1	SENSOR AS-POSITION (CONTROL LEVER)	
	2	1	**102-8803**	1	KIT-RECEPTACLE (3 PIN)	
					(INCLUDES RECEPTACLE AS AND WEDGE)	
	3	1	**8T-8729**	3	PIN-CONNECTOR	

Z-NOT SERVICED SEPARATELY

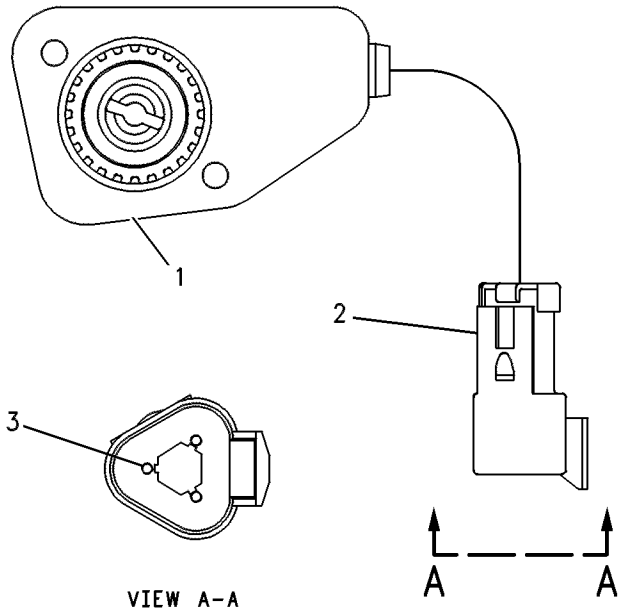

GRAPHIC #1 g00084342

121-0284 SENSOR GP-POSITION–TILT LINKAGE

S/N: 7HR1-UP

PART OF 109-6907, 130-7382, 131-1276 KICKOUT & POSITIONER GP

ALSO AN ATTACHMENT

SMCS-1408, 4269, 5702, 5736, 7494 **i01406860**

NOTE	REF NO	GRAPHIC REF	PART NUMBER	QTY	PART NAME 1 2 3 4 5 6 (PRODUCT LEVEL)	SEE PAGE
Z	1	1			SENSOR AS-POSITION	
	2	1	**102-8803**	1	KIT-RECEPTACLE (3 PIN)	
					(INCLUDES RECEPTACLE AS & WEDGE)	
	3	1	**8T-8729**	3	PIN-CONNECTOR	

Z-NOT SERVICED SEPARATELY

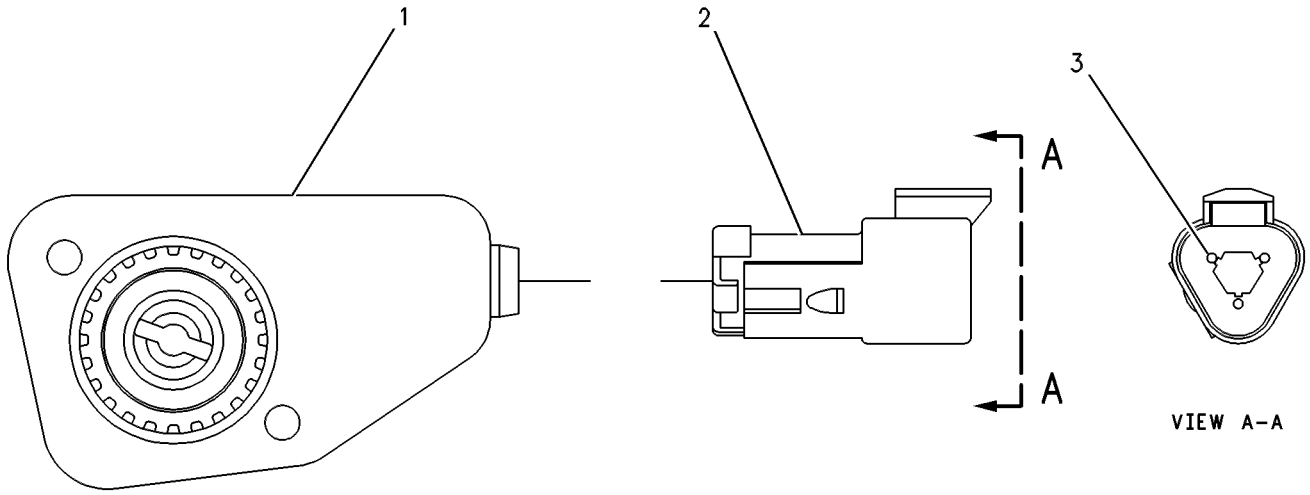

TOP VIEW

GRAPHIC #1 g00086066

147-1680 SENSOR GP-POSITION–TC IMPELLER CLUTCH

S/N: 7HR1-UP
ROTARY
PART OF 112-2273 CONTROL GP-FOOT BRAKE

SMCS-1408, 4269, 5702, 5736, 7494 **i01346290**

NOTE	REF NO	GRAPHIC REF	PART NUMBER	QTY	PART NAME 1 2 3 4 5 6 (PRODUCT LEVEL)	SEE PAGE
	1	1	**102-8803**	1	KIT-RECEPTACLE (3 PIN)	
					(INCLUDES RECEPTACLE AS & WEDGE)	
	2	1	**8T-8729**	3	PIN-CONNECTOR	

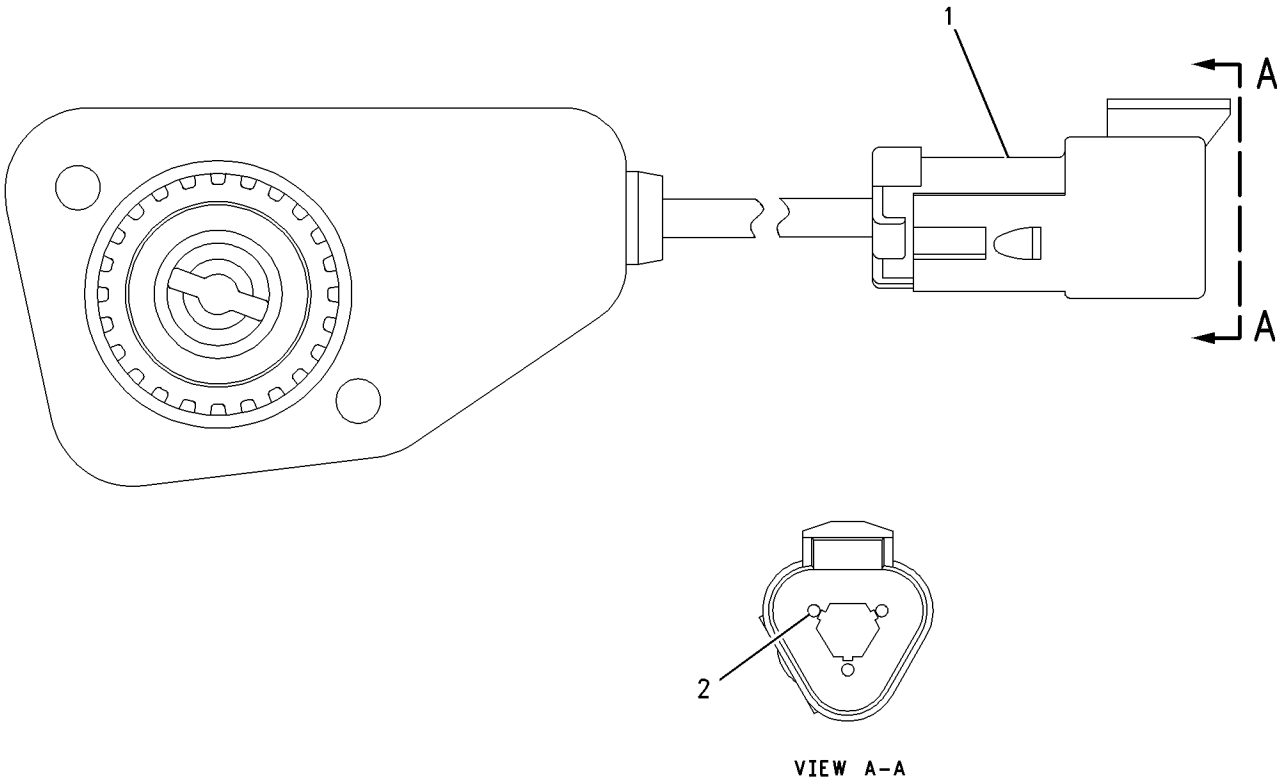

VIEW A-A

GRAPHIC #1 g00711081

161-8904 SENSOR GP-POSITION

S/N: 7HR1-UP

PART OF 109-6907, 130-7382, 131-1276 KICKOUT & POSITIONER GP

ALSO AN ATTACHMENT

SMCS-1408, 4269, 5702, 5736, 7494 **i01524794**

NOTE	REF NO	GRAPHIC REF	PART NUMBER	QTY	PART NAME 1 2 3 4 5 6 (PRODUCT LEVEL)	SEE PAGE
Z	1	1		1	SENSOR AS-POSITION	
	2	1	**102-8803**	1	KIT-RECEPTACLE (3 PIN)	
					(INCLUDES RECEPTACLE AS AND WEDGE)	
	3	1	**8T-8729**	3	PIN-CONNECTOR	
	4	1	**3E-3371**	1	WEDGE-RECEPTACLE LOCK (3 PIN)	
E	5	1	**9X-1813**	13	SLEEVE (13CM)	

E-ORDER BY THE CENTIMETER
Z-NOT SERVICED SEPARATELY

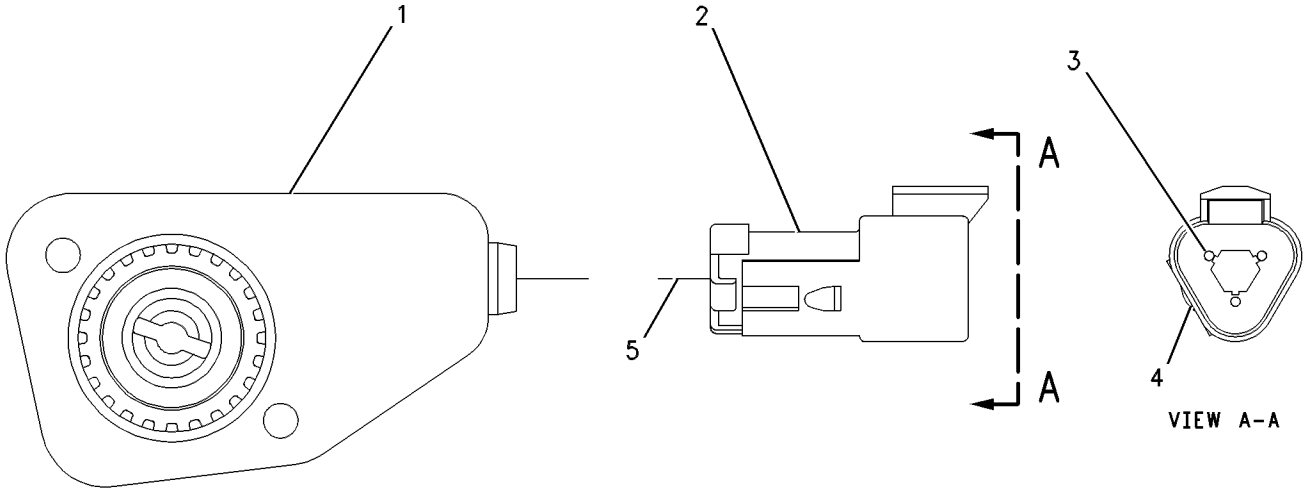

TOP VIEW

GRAPHIC #1 g00543657

161-8979 SENSOR GP-POSITION–CONTROL LEVER

S/N: 7HR290-UP
SPRINGLESS
PART OF 118-7644, 170-4751 CONTROL GP-HYD ELECTRONIC

SMCS-1408, 4269, 5702, 5736, 7494 **i01216799**

NOTE	REF NO	GRAPHIC REF	PART NUMBER	QTY	PART NAME 1 2 3 4 5 6 (PRODUCT LEVEL)	SEE PAGE
	1	1	**102-8803**	1	KIT-RECEPTACLE (3 PIN)	
					(INCLUDES RECEPTACLE AS & WEDGE)	
	2	1	**8T-8729**	3	PIN-CONNECTOR	
	3	1	**3E-3371**	1	WEDGE-RECEPTACLE LOCK	

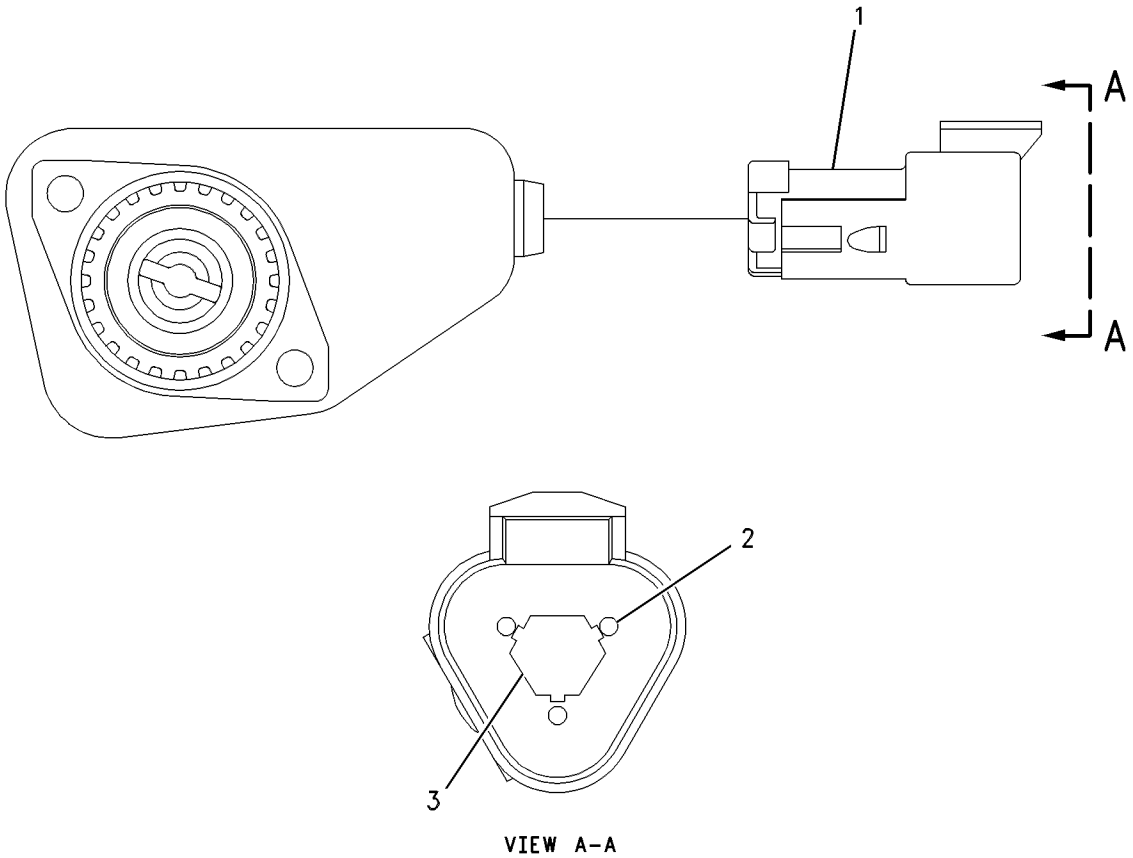

GRAPHIC #1 g00550816

176-1602 SENSOR GP-POSITION

S/N: 7HR1-UP
ROTARY, PROVIDES PEDAL MOUNTED CONTROL
PART OF 113-4799 PEDAL GP-GOVERNOR

SMCS-1408, 4269, 5702, 5736, 7494 **i01380708**

NOTE	REF NO	GRAPHIC REF	PART NUMBER	QTY	PART NAME 1 2 3 4 5 6 (PRODUCT LEVEL)	SEE PAGE
	1	1	**102-8803**	1	KIT-RECEPTACLE (3 PIN)	
					(INCLUDES RECEPTACLE AS AND WEDGE)	
	2	1	**3E-3371**	1	WEDGE-RECEPTACLE LOCK	
	3	1	**8T-8729**	3	PIN-CONNECTOR	

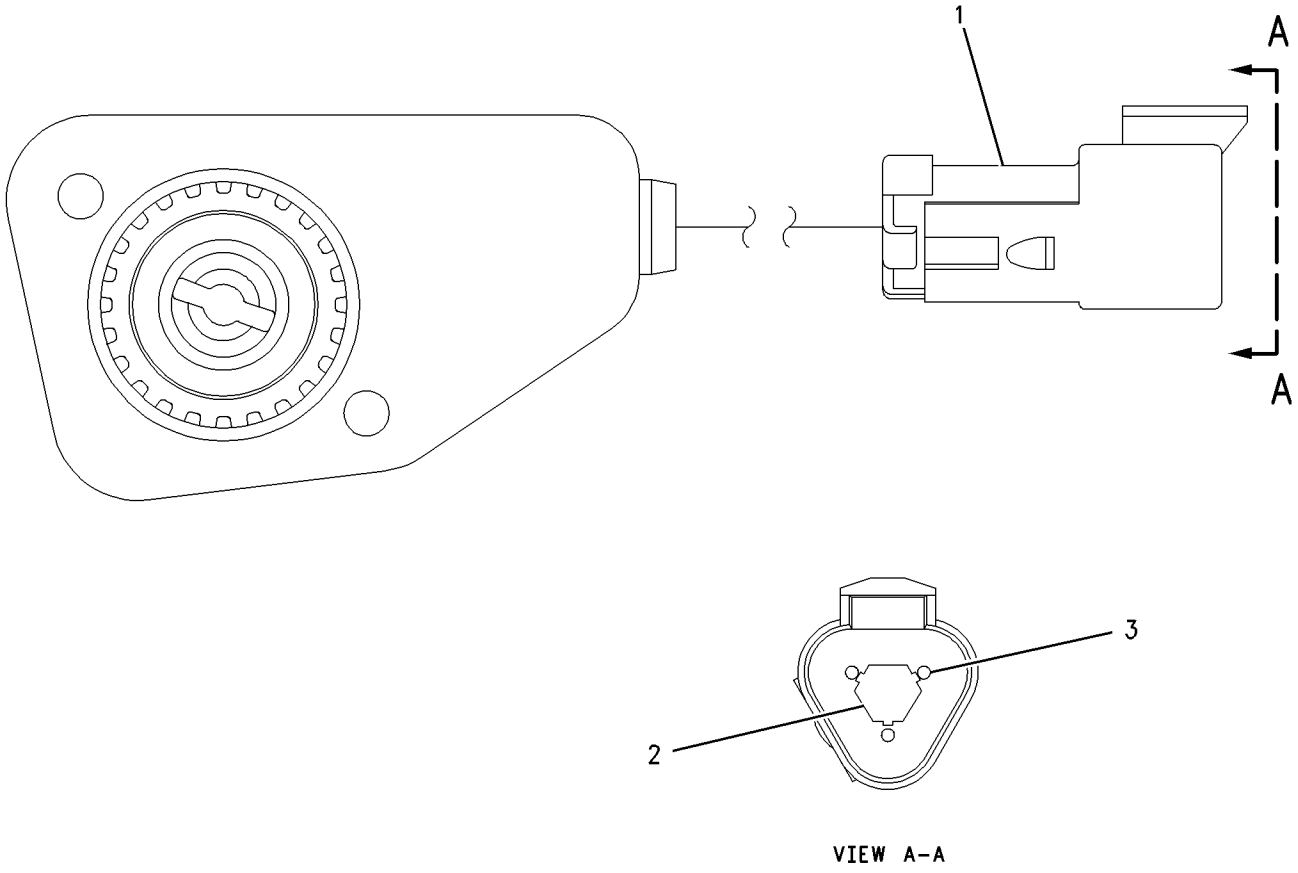

VIEW A-A

GRAPHIC #1 g00729116

103-6092 SENSOR GP-PRESSURE–ENGINE OIL

S/N: 2GR1-1297

PART OF 112-6045 WIRING GP-ENGINE

SMCS-7494 **i01335681**

NOTE	REF NO	GRAPHIC REF	PART NUMBER	QTY	PART NAME 1 2 3 4 5 6 (PRODUCT LEVEL)	SEE PAGE
E	1	1	**9X-1813**		SLEEVE (34CM)	
	2	1	**102-8808**	1	KIT-CONNECTING PLUG (3 PIN)	
					(INCLUDES PLUG AS AND WEDGE)	
		1	**102-8813**	1	SEAL-INTERFACE	
	3	1	**8T-8730**	3	SOCKET-CONNECTOR	
	4	1	**3E-3368**	1	WEDGE-PLUG LOCK	

E-ORDER BY THE CENTIMETER

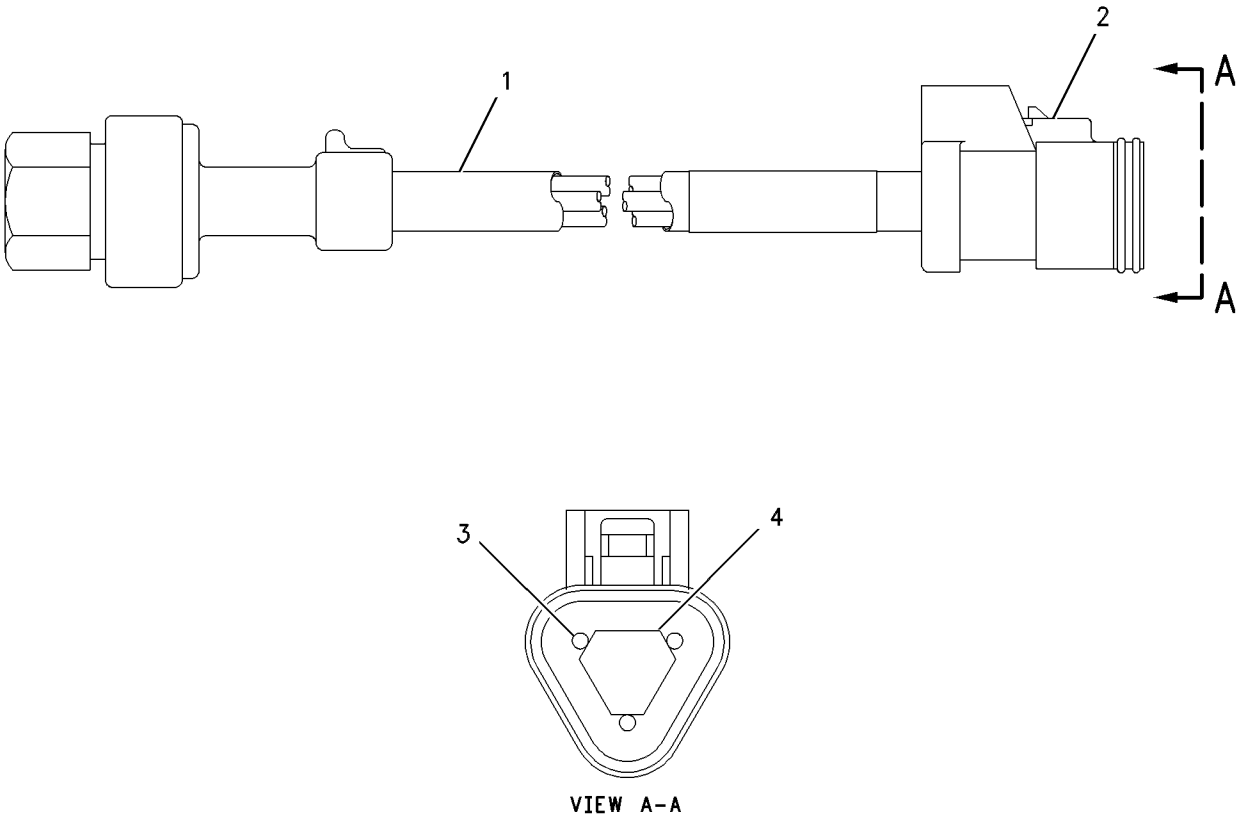

GRAPHIC #1 g00625717

103-6093 SENSOR GP-PRESSURE

S/N: 2GR1-1297
PART OF 112-6045 WIRING GP-ENGINE
FIELD REPLACEMENT ORDER 161-9926—PAGE 340

SMCS-7494 **i01335682**

NOTE	REF NO	GRAPHIC REF	PART NUMBER	QTY	PART NAME 1 2 3 4 5 6 (PRODUCT LEVEL)	SEE PAGE
E	1	1	**9X-1813**		SLEEVE (34CM)	
	2	1	**155-2260**	1	KIT-CONNECTING PLUG (3 PIN)	
					(INCLUDES PLUG AS & WEDGE)	
	3	1	**8T-8730**	3	SOCKET-CONNECTOR	
BE	4	1	**150-7989**		TUBE	

B-USE AS REQUIRED
E-ORDER BY THE CENTIMETER

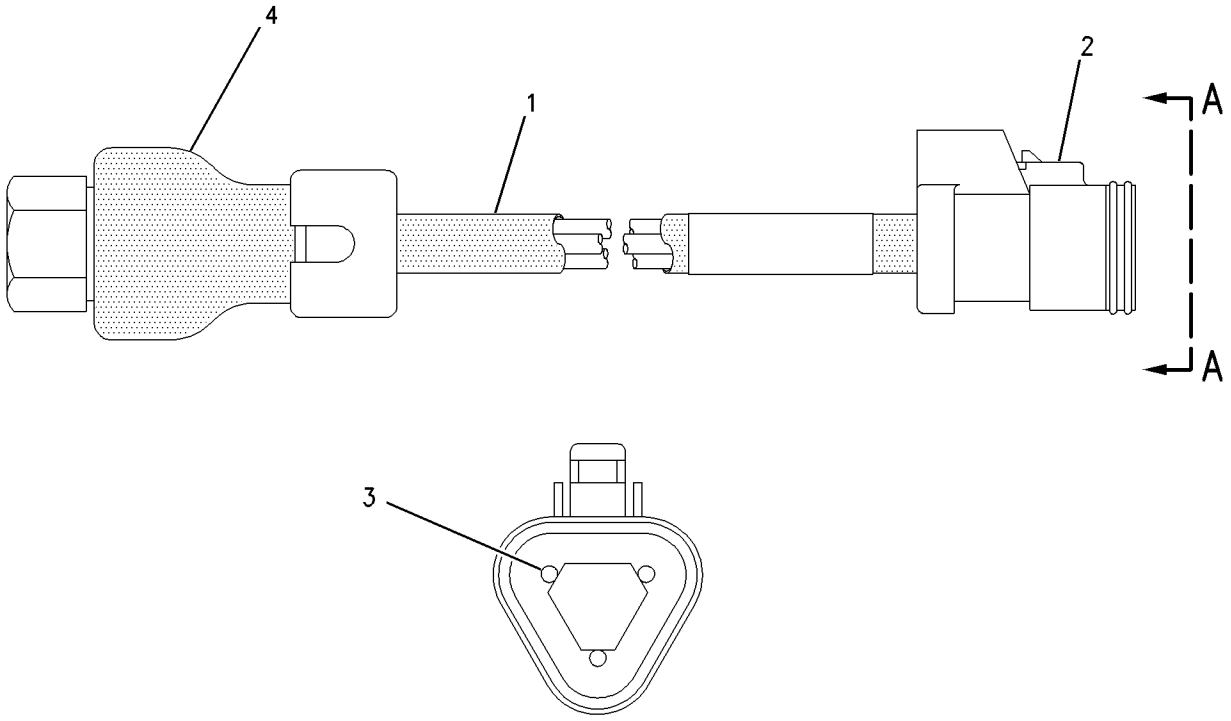

VIEW A-A

GRAPHIC #1 g00629905

112-9779 SENSOR GP-PRESSURE–BRAKE OIL

S/N: 7HR1-UP
PART OF 131-8156 WIRING GP-CAB
AN ATTACHMENT

SMCS-7494 **i01463922**

NOTE	REF NO	GRAPHIC REF	PART NUMBER	QTY	PART NAME 1 2 3 4 5 6 (PRODUCT LEVEL)	SEE PAGE
BE	1	1	**9X-1813**		SLEEVE	
	2	1	*104-2921*	1	PLUG AS-CONNECTOR	
		1	**102-8813**	1	SEAL-INTERFACE	
	3	1	**3E-3368**	1	WEDGE-PLUG LOCK	

B-USE AS REQUIRED
E-ORDER BY THE CENTIMETER

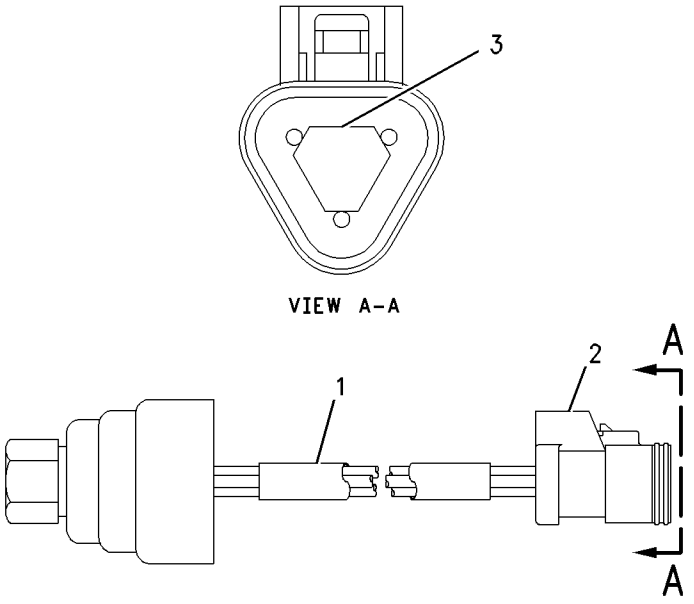

GRAPHIC #1 g00767116

112-9781 SENSOR GP-PRESSURE–STEERING PILOT OIL

S/N: 7HR1-UP
PART OF 112-4191 WIRING GP-VIMS
AN ATTACHMENT

SMCS-7494 **i01478556**

NOTE	REF NO	GRAPHIC REF	PART NUMBER	QTY	PART NAME 1 2 3 4 5 6 (PRODUCT LEVEL)	SEE PAGE
E	1	1	**9X-1813**		SLEEVE (14CM)	
	2	1	**102-8803**	1	KIT-RECEPTACLE (3 PIN)	
					(INCLUDES WEDGE)	
	3	1	**3E-3371**	1	WEDGE-RECEPTACLE LOCK (3 PIN)	
	4	1	**180-9339**	3	PIN-CONNECTOR	

E-ORDER BY THE CENTIMETER

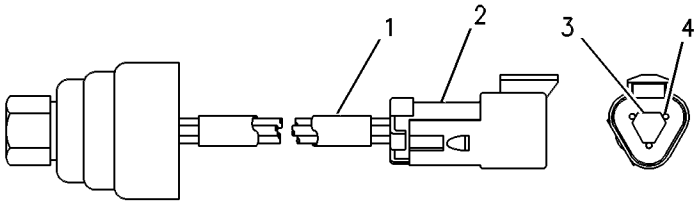

GRAPHIC #1 g00249805

124-4672 SENSOR GP-PRESSURE–LIFT CYLINDER HEAD END OIL

S/N: 7HR1-UP
PART OF 112-4191 WIRING GP-VIMS
AN ATTACHMENT

SMCS-7494 **i01303551**

NOTE	REF NO	GRAPHIC REF	PART NUMBER	QTY	PART NAME 1 2 3 4 5 6 (PRODUCT LEVEL)	SEE PAGE
	1	1	**7T-7370**	1	SEAL-SECURITY	
E	2	1	**9X-1813**		SLEEVE (16CM)	
	3	1	**102-8803**	1	KIT-RECEPTACLE (3 PIN)	
					(INCLUDES RECEPTACLE AS AND WEDGE)	
	4	1	**8T-8729**	3	PIN-CONNECTOR	
	5	1	**3E-3371**	1	WEDGE-RECEPTACLE LOCK	

E-ORDER BY THE CENTIMETER

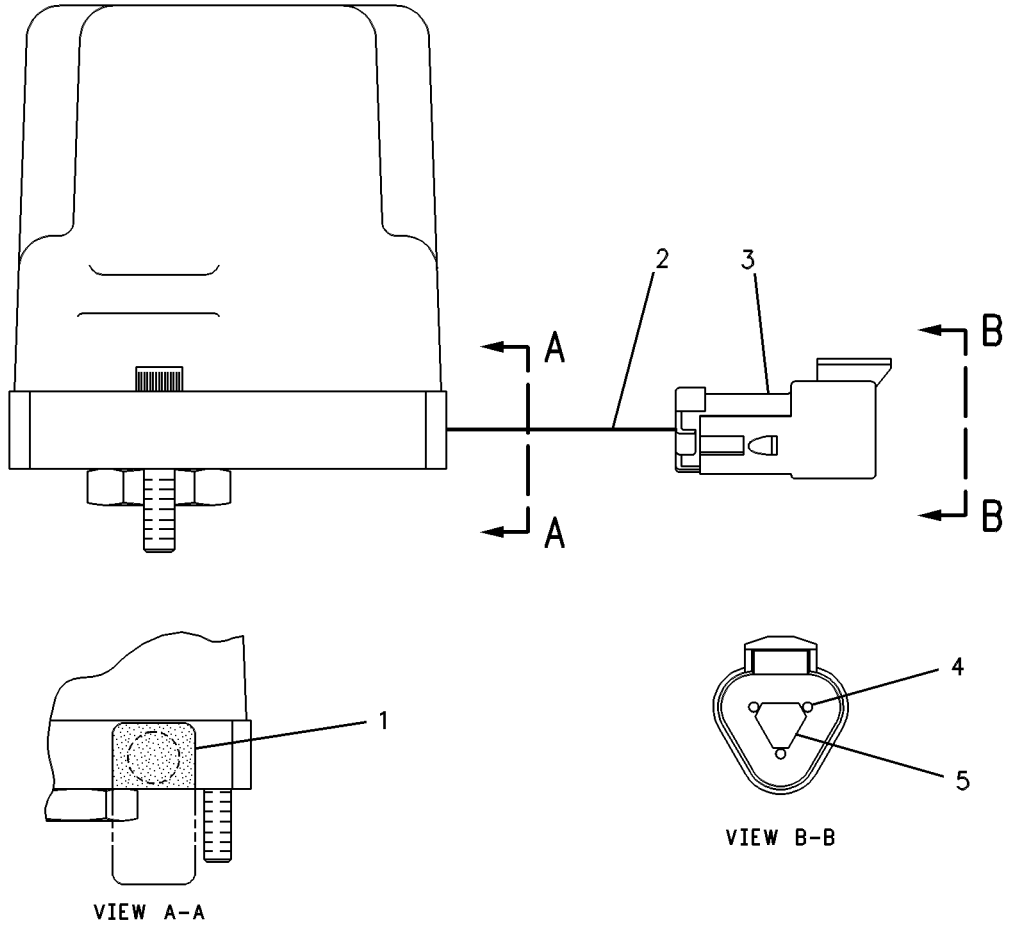

GRAPHIC #1 g00109035

133-3917 SENSOR GP-PRESSURE–TORQUE CONVERTER OIL

S/N: 7HR1-UP
PART OF 112-4191 WIRING GP-VIMS
AN ATTACHMENT

SMCS-7494 **i01191492**

NOTE	REF NO	GRAPHIC REF	PART NUMBER	QTY	PART NAME 1 2 3 4 5 6 (PRODUCT LEVEL)	SEE PAGE
E	1	1	**9X-1813**		SLEEVE (14 CM)	
	2	1	**102-8803**	1	KIT-RECEPTACLE (3 PIN)	
					(INCLUDES WEDGE)	
	3	1	**3E-3371**	1	WEDGE-RECEPTACLE LOCK	
	4	1	**8T-8729**	3	PIN-CONNECTOR	

E-ORDER BY THE CENTIMETER

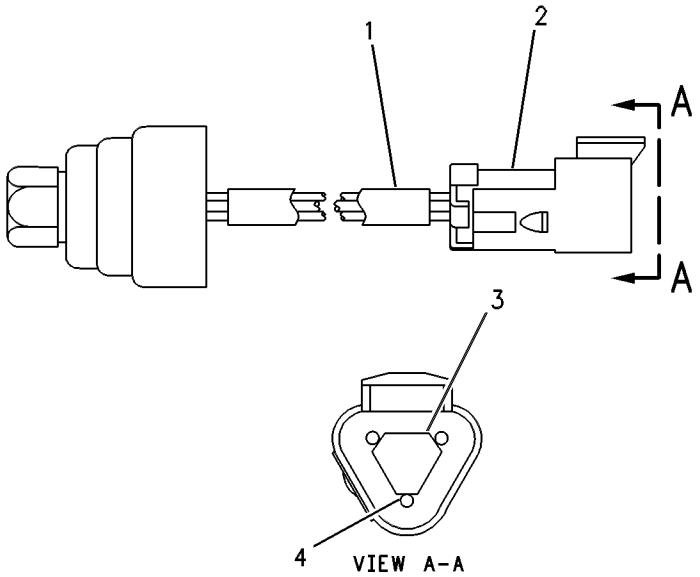

GRAPHIC #1 g00106517

140-3540 SENSOR GP-PRESSURE–FAN PUMP OIL

S/N: 7HR1-UP

PART OF 109-6893 WIRING GP-POWER TRAIN

FIELD REPLACEMENT ORDER 167-1709–PAGE 343

SMCS-7494 **i01302765**

NOTE	REF NO	GRAPHIC REF	PART NUMBER	QTY	PART NAME 1 2 3 4 5 6 (PRODUCT LEVEL)	SEE PAGE
E	1	1	**9X-1813**		SLEEVE (34CM)	
	2	1	**102-8808**	1	KIT-CONNECTING PLUG (3 PIN)	
					(INCLUDES PLUG AS & WEDGE)	
		1	**102-8813**	1	SEAL-INTERFACE	
	3	1	**8T-8730**	3	SOCKET-CONNECTOR	
	4	1	**3E-3368**	1	WEDGE-PLUG LOCK	

E-ORDER BY THE CENTIMETER

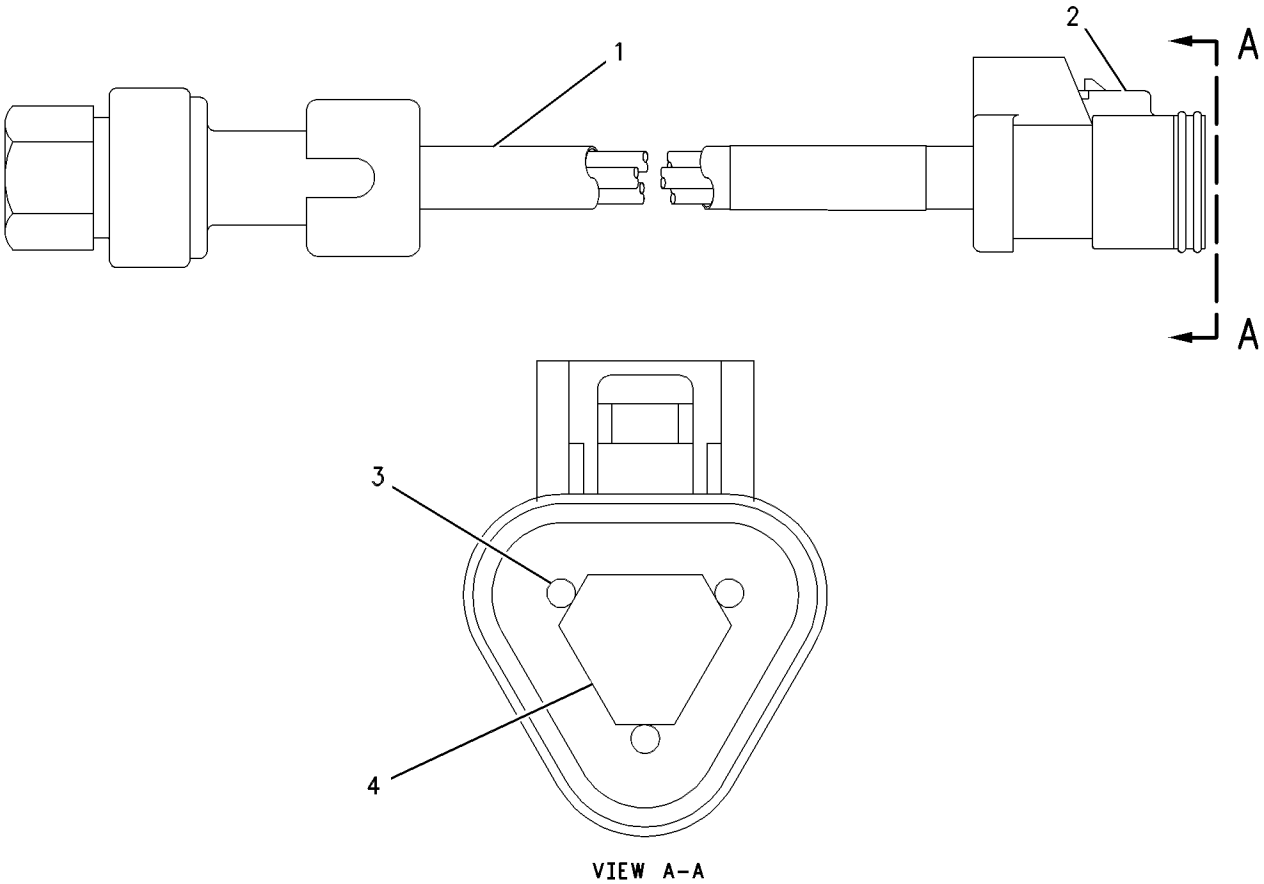

VIEW A-A

GRAPHIC #1 g00286885

143-9176 SENSOR GP-PRESSURE–IMPLEMENT PUMP OIL

S/N: 7HR1-UP

PART OF 109-6899 WIRING GP-MACHINE, 112-4191 WIRING GP-VIMS

ALSO AN ATTACHMENT

SMCS-7494 **i00952866**

NOTE	REF NO	GRAPHIC REF	PART NUMBER	QTY	PART NAME 1 2 3 4 5 6 (PRODUCT LEVEL)	SEE PAGE
B	2	1	**9X-1813**		SLEEVE	
	3	1	**102-8813**	1	SEAL-INTERFACE	
	4	1	**8T-8730**	3	SOCKET-CONNECTOR	
	5	1	**3E-3368**	1	WEDGE-PLUG LOCK	
E	6	1	**8T-2225**		TUBE (3CM)	

B-USE AS REQUIRED
E-ORDER BY THE CENTIMETER

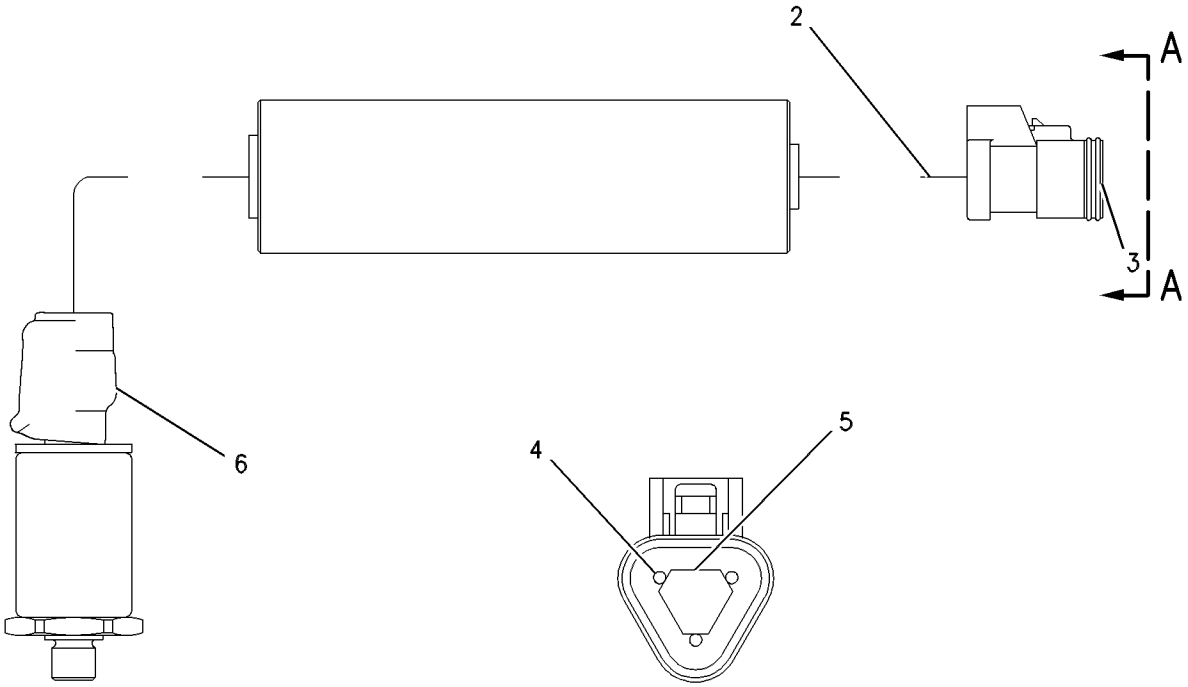

VIEW A-A

GRAPHIC #1 g00495044

143-9694 SENSOR GP-PRESSURE–TURBO OUTLET

S/N: 2GR1298-1880

PART OF 112-6045 WIRING GP-ENGINE

SMCS-7494 **i01421005**

NOTE	REF NO	GRAPHIC REF	PART NUMBER	QTY	PART NAME 1 2 3 4 5 6 (PRODUCT LEVEL)	SEE PAGE
E	1	1	**9X-1813**		SLEEVE (34CM)	
	2	1	**155-2260**	1	KIT-CONNECTING PLUG (3 PIN)	
					(INCLUDES PLUG AS & WEDGE)	
	3	1	**8T-8730**	3	SOCKET-CONNECTOR	
	4	1	**3E-3368**	1	WEDGE-PLUG LOCK	

E-ORDER BY THE CENTIMETER

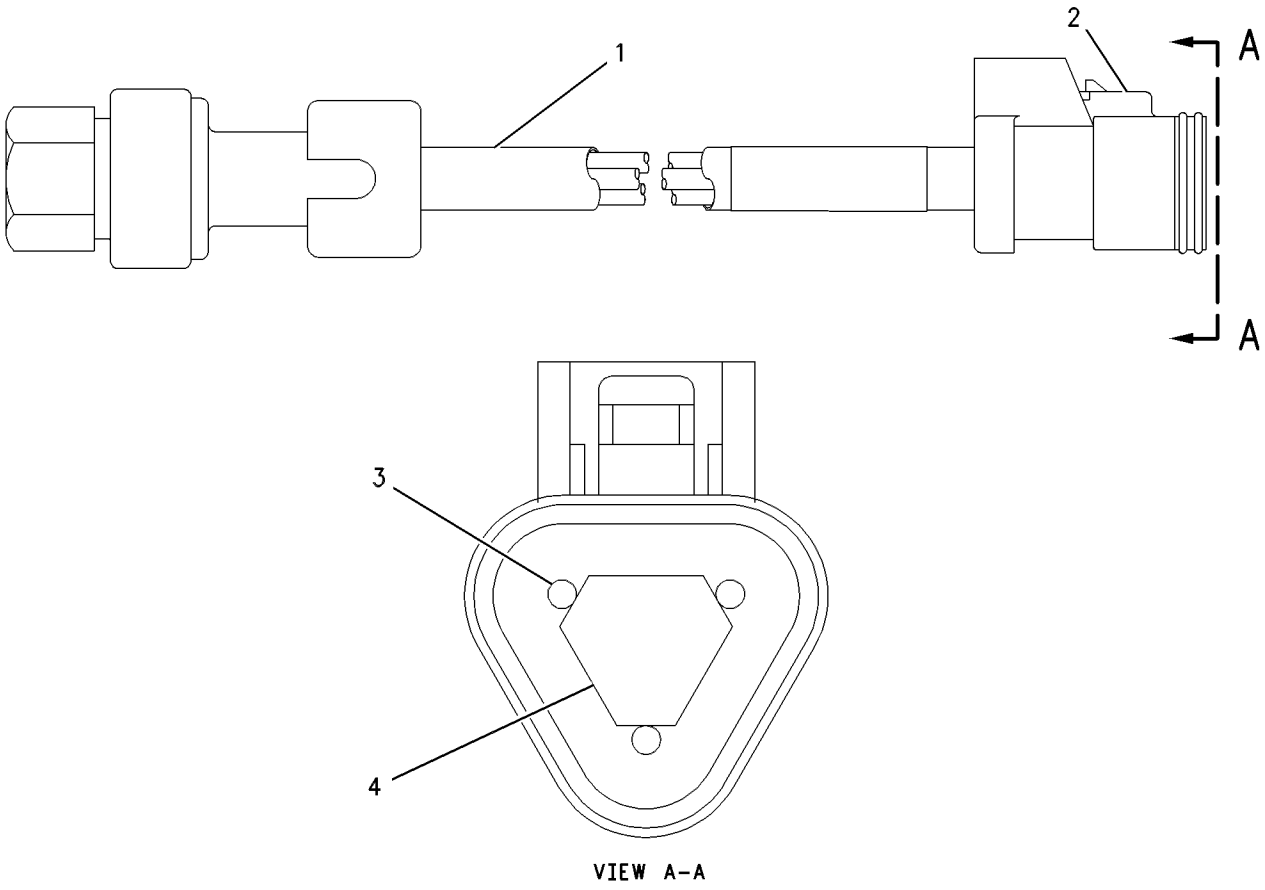

GRAPHIC #1 g00286885

143-9695 SENSOR GP-PRESSURE–ENGINE OIL

S/N: 2GR1298-1880

PART OF 112-6045 WIRING GP-ENGINE

SMCS-7494 **i01421009**

NOTE	REF NO	GRAPHIC REF	PART NUMBER	QTY	PART NAME 1 2 3 4 5 6 (PRODUCT LEVEL)	SEE PAGE
E	1	1	**9X-1813**		SLEEVE	
	2	1	**155-2260**	1	KIT-CONNECTING PLUG (3 PIN)	
					(INCLUDES PLUG AS & WEDGE)	
	3	1	**8T-8730**	3	SOCKET-CONNECTOR	
	4	1	**3E-3368**	1	WEDGE-PLUG LOCK	

E-ORDER BY THE CENTIMETER

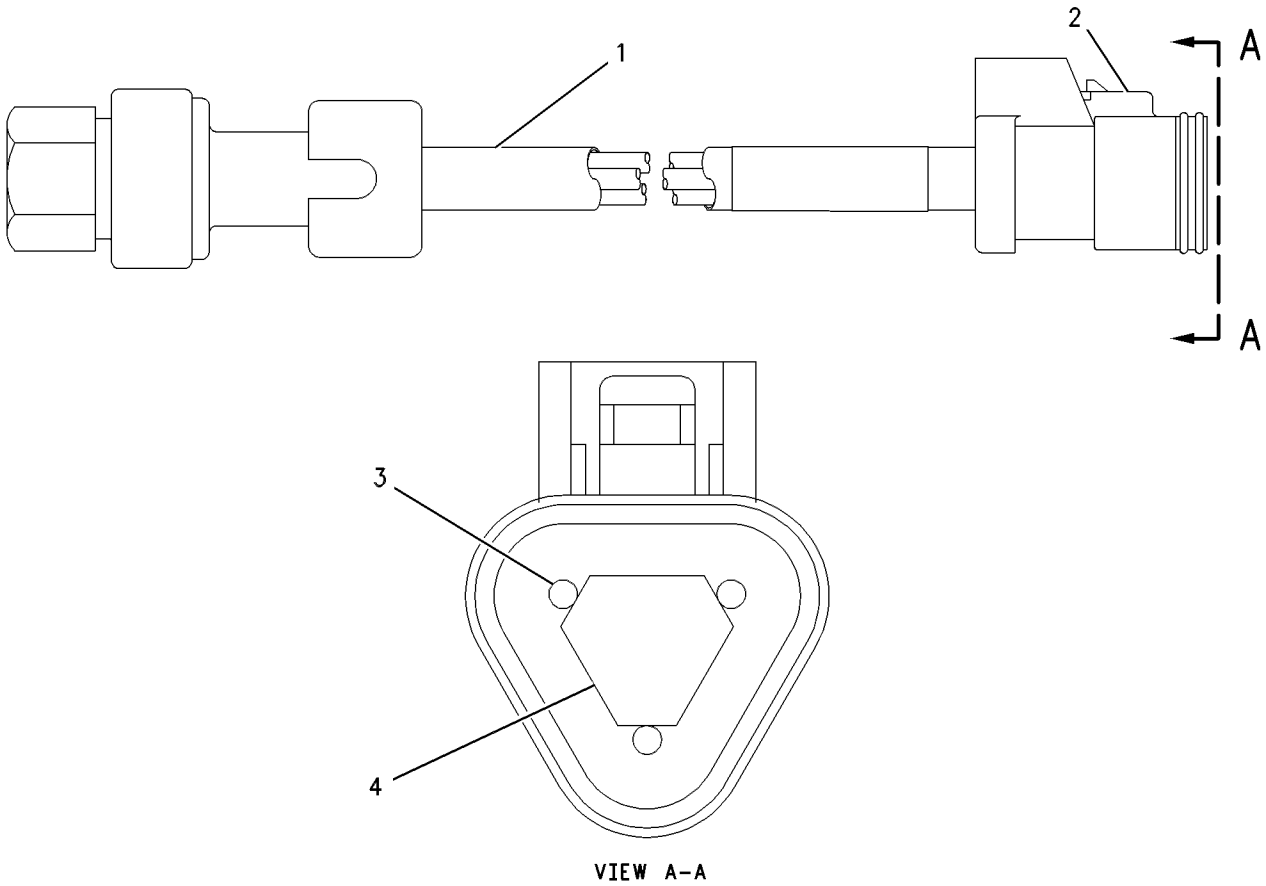

VIEW A-A

GRAPHIC #1 g00286885

143-9696 SENSOR GP-PRESSURE

S/N: 2GR1298-1880

PART OF 112-6045 WIRING GP-ENGINE

SMCS-7494 **i01421010**

NOTE	REF NO	GRAPHIC REF	PART NUMBER	QTY	PART NAME 1 2 3 4 5 6 (PRODUCT LEVEL)	SEE PAGE
BE	1	1	**9X-1813**		SLEEVE	
	2	1	**155-2260**	1	KIT-CONNECTING PLUG (3 PIN)	
					(INCLUDES PLUG AS & WEDGE)	
	3	1	**102-8813**	1	SEAL-INTERFACE	
	4	1	**3E-3368**	1	WEDGE-PLUG LOCK	
BE	5	1	**150-7989**		TUBE	
	6	1	**8T-8730**	3	SOCKET-CONNECTOR	

B-USE AS REQUIRED
E-ORDER BY THE CENTIMETER

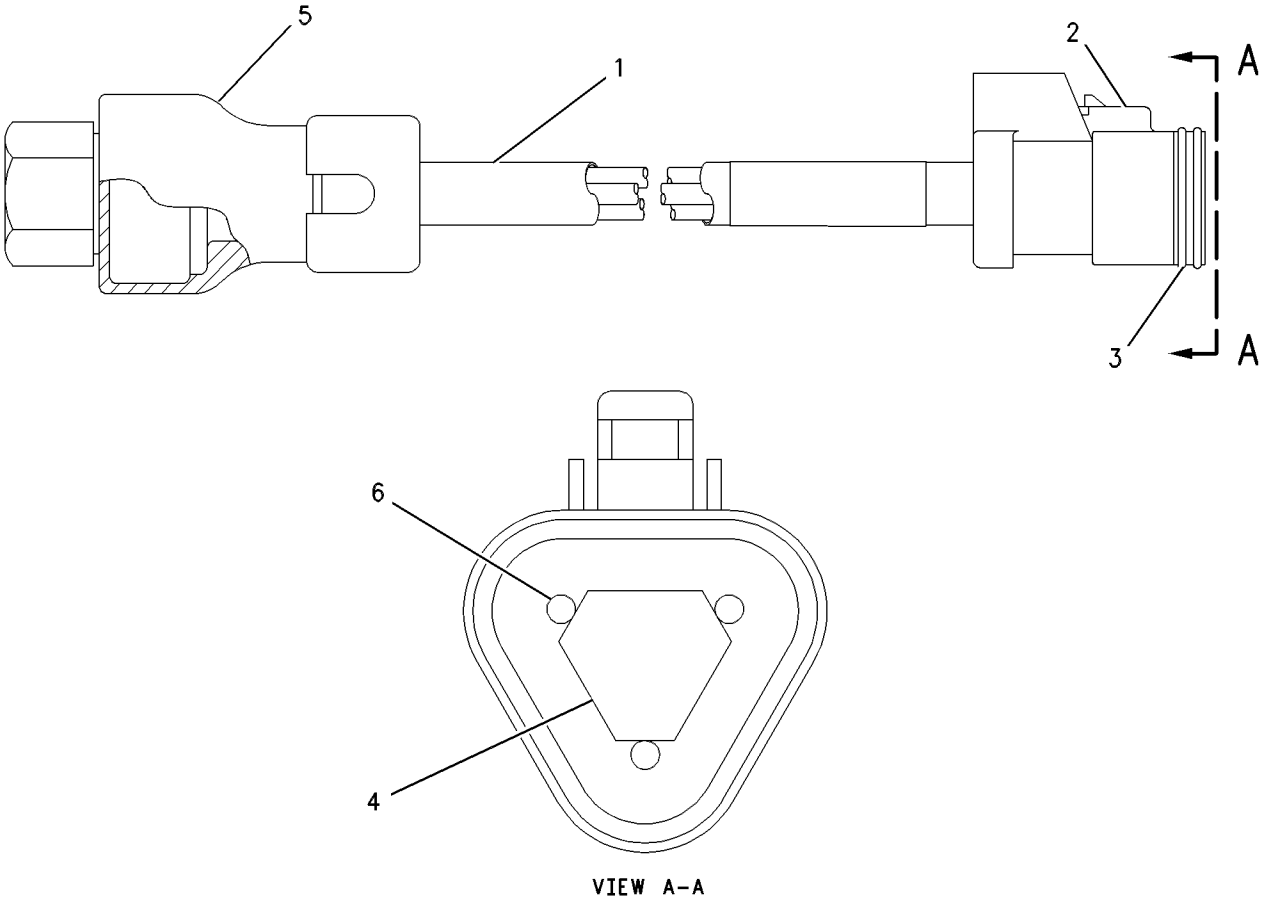

GRAPHIC #1 g00636435

145-2362 SENSOR GP-PRESSURE–OIL

S/N: 7HR1-UP
PART OF 112-4191 WIRING GP-VIMS
AN ATTACHMENT

SMCS-7494 **i01367836**

NOTE	REF NO	GRAPHIC REF	PART NUMBER	QTY	PART NAME 1 2 3 4 5 6 (PRODUCT LEVEL)	SEE PAGE
E	1	1	**9X-1813**		SLEEVE (31CM)	
	2	1	**102-8803**	1	KIT-RECEPTACLE (3 PIN)	
					(INCLUDES RECEPTACLE AS. AND WEDGE)	
	3	1	**3E-3371**	1	WEDGE-RECEPTACLE LOCK	
	4	1	**9X-3401**	3	PIN-CONNECTOR	

E-ORDER BY THE CENTIMETER

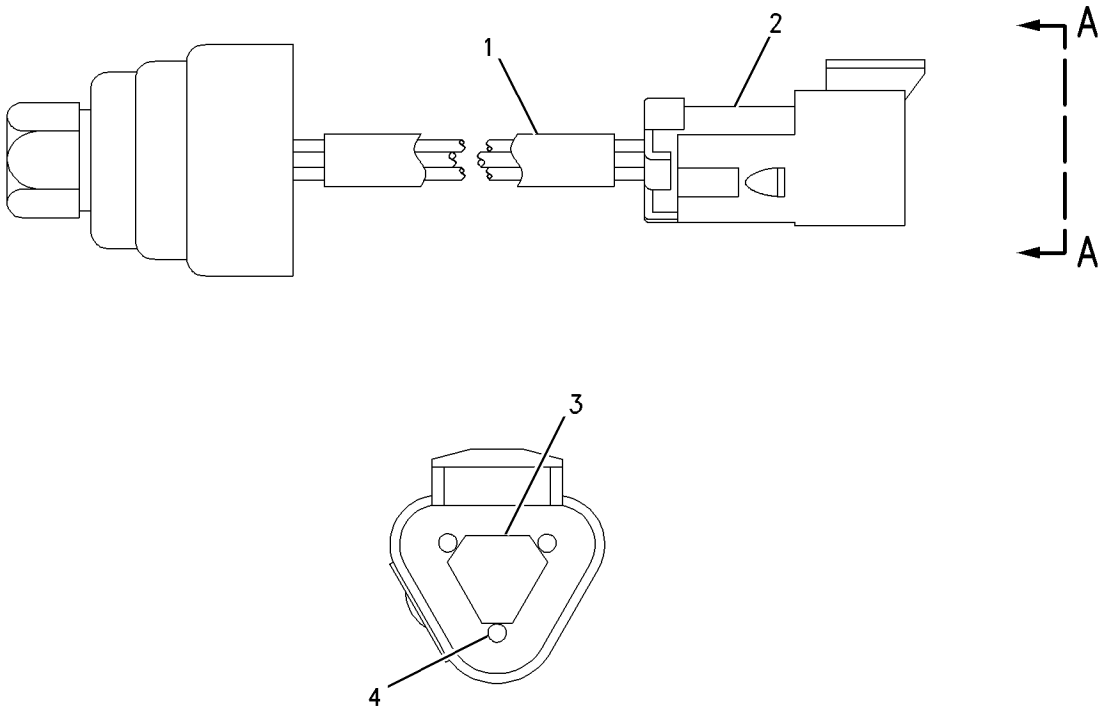

VIEW A-A

GRAPHIC #1 g00707687

161-9926 SENSOR GP-PRESSURE

S/N: 2GR1881-UP
PART OF 112-6045 WIRING GP-ENGINE
FIELD REPLACEMENT FOR 103-6093—PAGE 329

SMCS-7494 **i01365690**

NOTE	REF NO	GRAPHIC REF	PART NUMBER	QTY	PART NAME 1 2 3 4 5 6 (PRODUCT LEVEL)	SEE PAGE
E	1	1	**9X-1813**		SLEEVE (34CM)	
	2	1	**155-2260**	1	KIT-CONNECTING PLUG (3 PIN)	
					(INCLUDES PLUG AS & WEDGE)	
	3	1	**9X-3402**	1	SOCKET-CONNECTOR	
					(FOR 16-18 GA WIRE)	
					—OR—	
		1	**126-1768**	1	SOCKET-CONNECTOR	
					(FOR 14 GA WIRE)	
	4	1	**3E-3368**	1	WEDGE-PLUG LOCK	

E-ORDER BY THE CENTIMETER

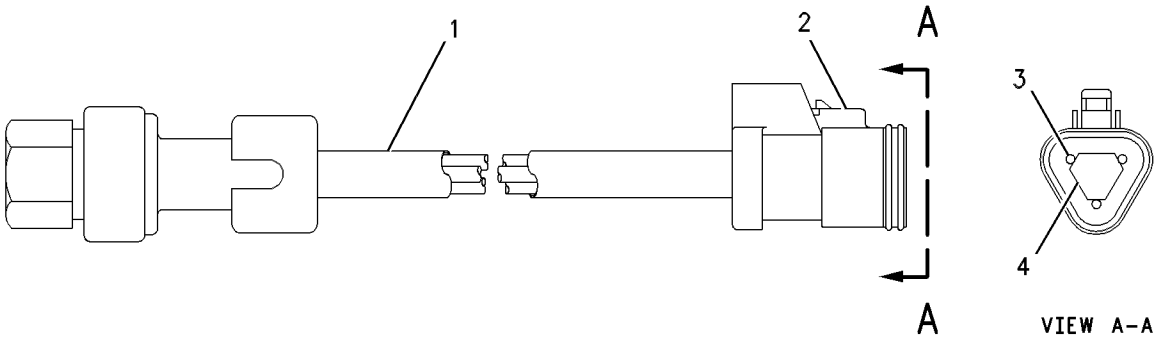

GRAPHIC #1 g00513129

161-9929 SENSOR GP-PRESSURE–TURBO OUTLET

S/N: 2GR1881-UP

PART OF 112-6045 WIRING GP-ENGINE

FIELD REPLACEMENT ORDER 194-6724–PAGE 344

SMCS-7494 **i01447612**

NOTE	REF NO	GRAPHIC REF	PART NUMBER	QTY	PART NAME 1 2 3 4 5 6 (PRODUCT LEVEL)	SEE PAGE
E	1	1	**138-3094**		SLEEVE (34CM)	
	2	1	**155-2260**	1	KIT-CONNECTING PLUG (3 PIN)	
					(INCLUDES PLUG AS AND WEDGE)	
	3	1	**8T-8730**	3	SOCKET-CONNECTOR	
	4	1	**3E-3368**	1	WEDGE-PLUG LOCK	

E-ORDER BY THE CENTIMETER

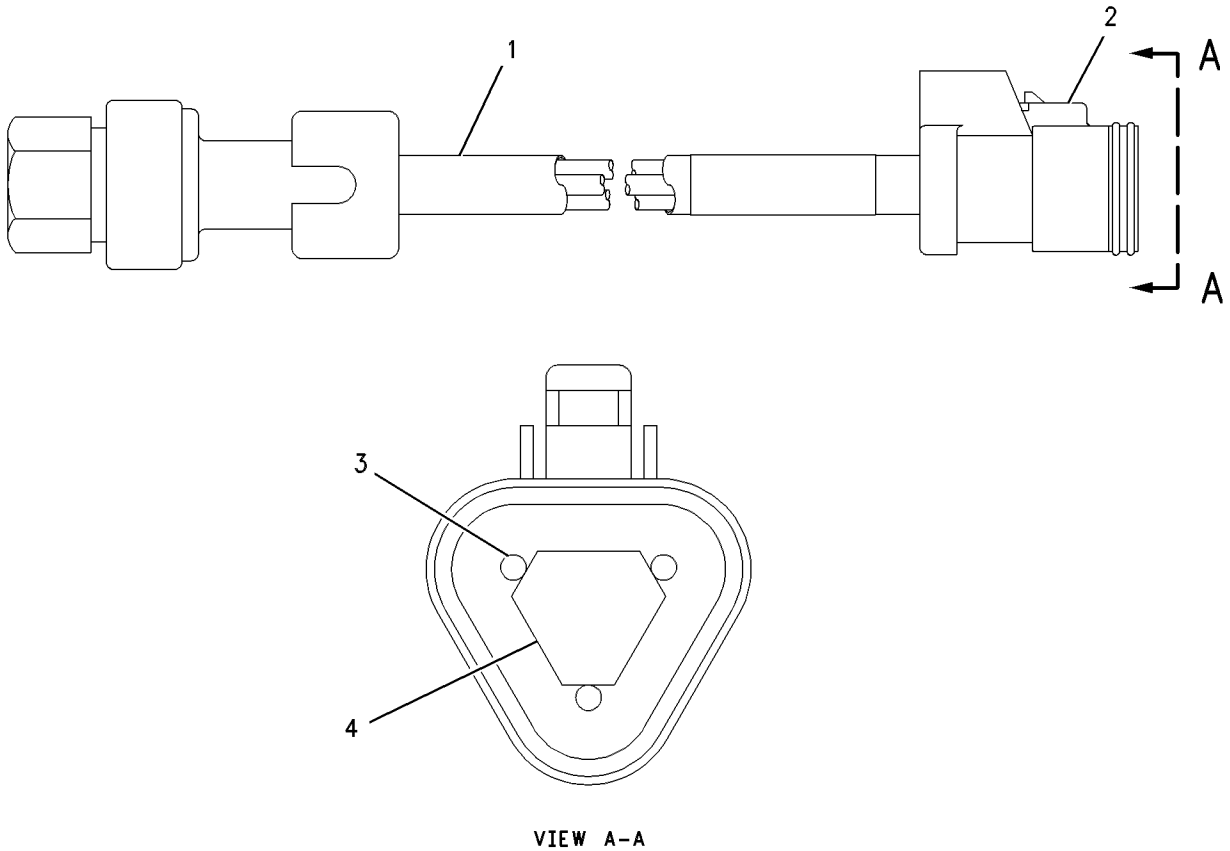

VIEW A-A

GRAPHIC #1 g00468388

161-9931 SENSOR GP-PRESSURE–ENGINE OIL

S/N: 2GR1881-UP
PART OF 112-6045 WIRING GP-ENGINE
FIELD REPLACEMENT ORDER 194-6725–PAGE 345

SMCS-7494 **i01521137**

NOTE	REF NO	GRAPHIC REF	PART NUMBER	QTY	PART NAME 1 2 3 4 5 6 (PRODUCT LEVEL)	SEE PAGE
BE	1	1	**9X-1813**		SLEEVE	
	2	1	**155-2260**	1	KIT-CONNECTING PLUG (3 PIN)	
					(INCLUDES PLUG AS & WEDGE)	
	3	1	**102-8813**	1	SEAL-INTERFACE	
	4	1	**186-3736**	3	SOCKET-CONNECTOR	
	5	1	**3E-3368**	1	WEDGE-PLUG LOCK	

B-USE AS REQUIRED
E-ORDER BY THE CENTIMETER

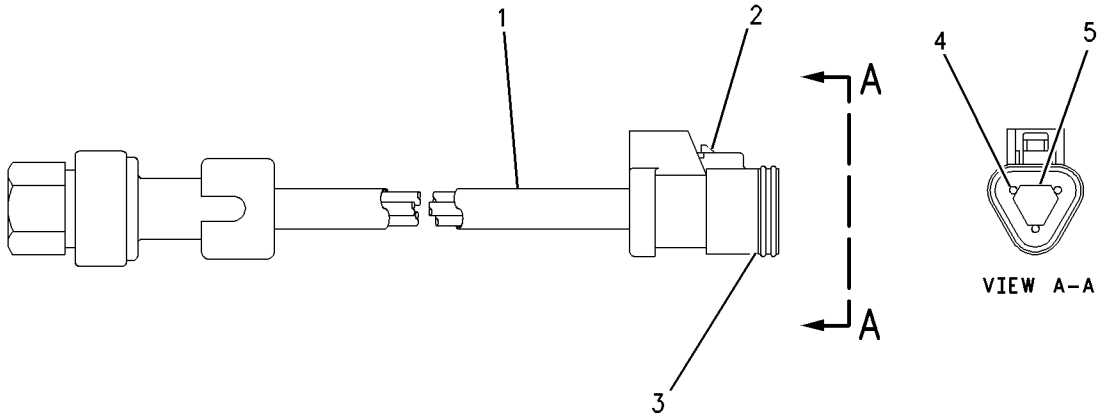

GRAPHIC #1 g00715453

167-1709 SENSOR GP-PRESSURE

S/N: 7HR1-UP
PART OF 109-6893 WIRING GP-POWER TRAIN
FIELD REPLACEMENT FOR 140-3540—PAGE 334

SMCS-7494 **i01382140**

NOTE	REF NO	GRAPHIC REF	PART NUMBER	QTY	PART NAME 1 2 3 4 5 6 (PRODUCT LEVEL)	SEE PAGE
BE	1	1	**9X-1813**		SLEEVE	
	2	1	**155-2260**	1	KIT-CONNECTING PLUG (3 PIN)	
					(INCLUDES PLUG AS AND WEDGE)	
	3	1	**9X-3402**	3	SOCKET-CONNECTOR	
	4	1	**3E-3368**	1	WEDGE-PLUG LOCK	

B-USE AS REQUIRED
E-ORDER BY THE CENTIMETER

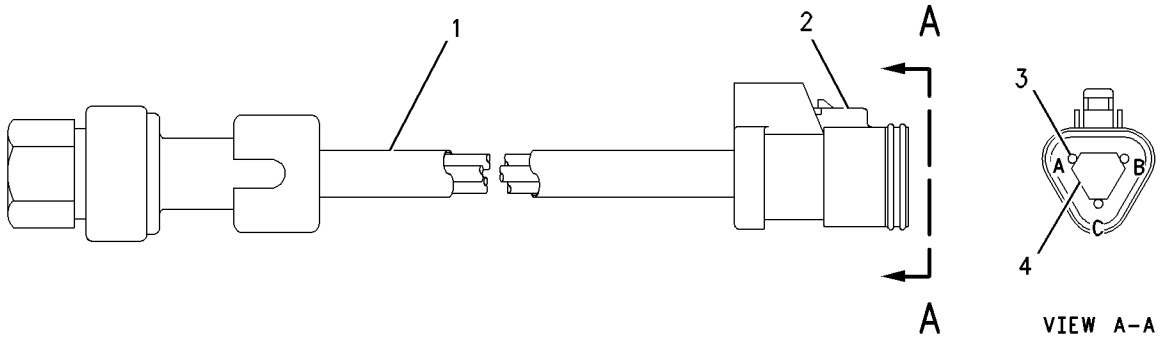

GRAPHIC #1 g00709976

194-6724 SENSOR GP-PRESSURE

S/N: 2GR1881-UP

FIELD REPLACEMENT FOR 161-9929—PAGE 341

SMCS-7494 **i01447698**

NOTE	REF NO	GRAPHIC REF	PART NUMBER	QTY	PART NAME 1 2 3 4 5 6 (PRODUCT LEVEL)	SEE PAGE
E	1	1	**138-3094**		SLEEVE (34CM)	
	2	1	**155-2260**	1	KIT-CONNECTING PLUG (3 PIN)	
					(INCLUDES PLUG AS AND WEDGE)	
	3	1	**180-9340**	3	SOCKET-CONNECTOR	
	4	1	**3E-3368**	1	WEDGE-PLUG LOCK	

E-ORDER BY THE CENTIMETER

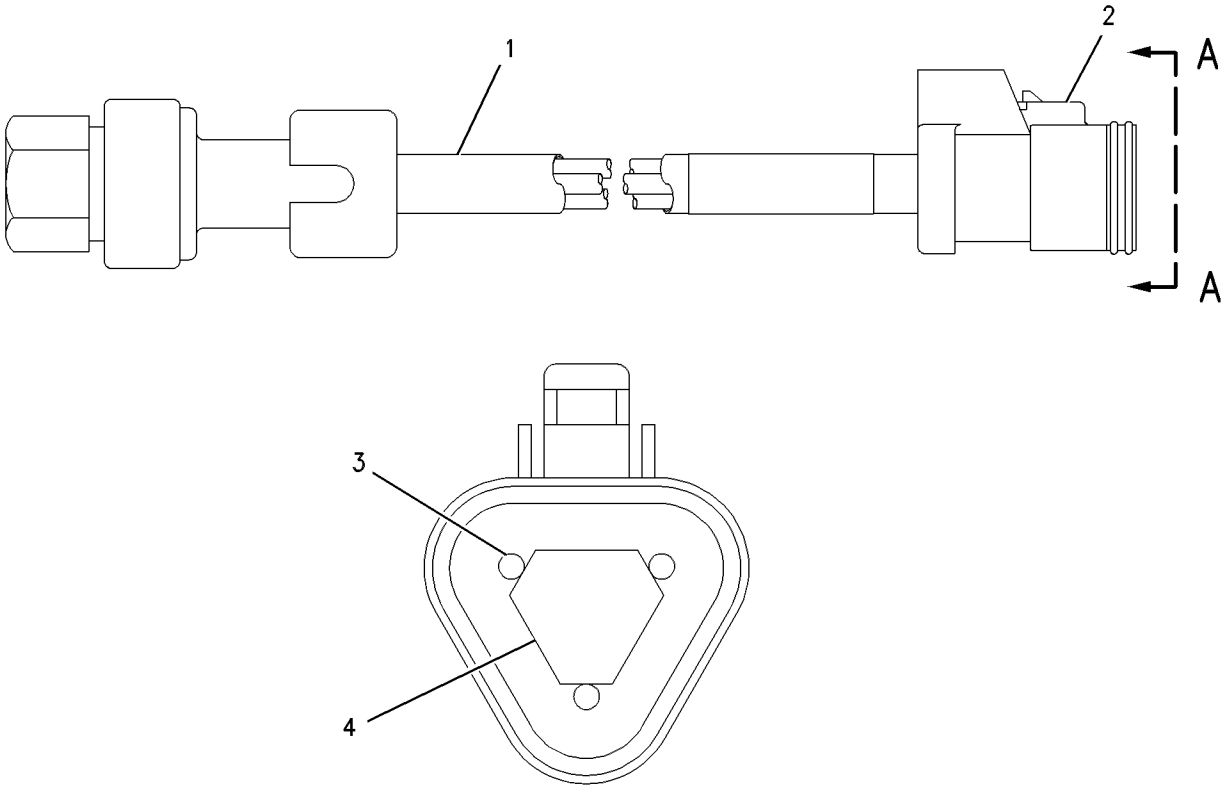

VIEW A-A

GRAPHIC #1 g00468388

194-6725 SENSOR GP-PRESSURE

S/N: 2GR1881-UP
OIL FILTERED/OIL UNFILTERED
FIELD REPLACEMENT FOR 161-9931—PAGE 342

SMCS-7494 **i01532648**

NOTE	REF NO	GRAPHIC REF	PART NUMBER	QTY	PART NAME 1 2 3 4 5 6 (PRODUCT LEVEL)	SEE PAGE
B	1	1	**9X-1813**		SLEEVE	
	2	1	**155-2260**	1	KIT-CONNECTING PLUG (3 PIN)	
					(INCLUDES PLUG AS & WEDGE)	
	3	1	**102-8813**	1	SEAL-INTERFACE	
	4	1	**180-9340**	3	SOCKET-CONNECTOR	
	5	1	**3E-3368**	1	WEDGE-PLUG LOCK	

B-USE AS REQUIRED

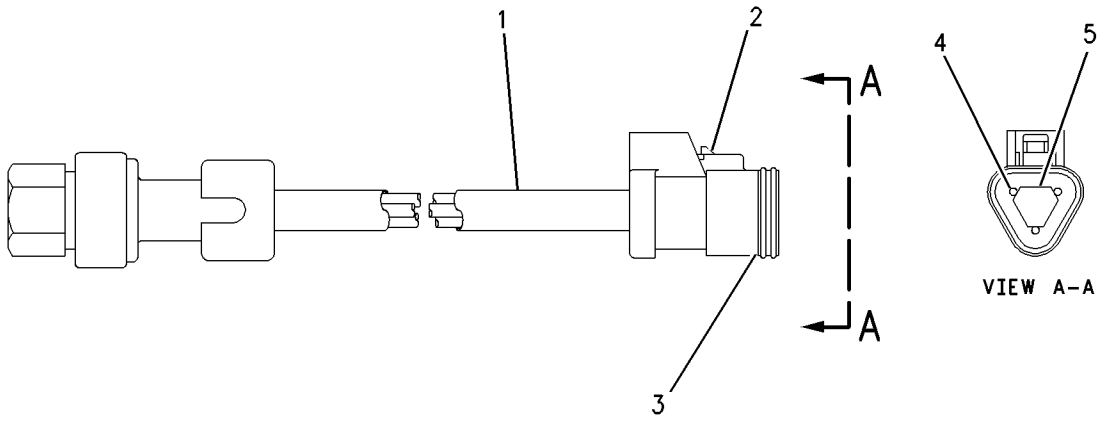

GRAPHIC #1 g00715453

127-1008 SENSOR GP-SPEED–ENGINE SPEED/TIMING–
ENGINE SPEED/TIMING
S/N: 2GR1-1297
PART OF 112-6045 WIRING GP-ENGINE
FIELD REPLACEMENT ORDER 129-6628–PAGE 347

SMCS-1907, 1912, 4803, 7493 **i01426326**

NOTE	REF NO	GRAPHIC REF	PART NUMBER	QTY	PART NAME 1 2 3 4 5 6 (PRODUCT LEVEL)	SEE PAGE
E	1	1	**9X-1813**		SLEEVE (31CM)	
	2	1	**102-8808**	1	KIT-CONNECTING PLUG (3 PIN)	
					(INCLUDES PLUG AS & WEDGE)	
	3	1	**3E-3368**	1	WEDGE-PLUG LOCK	
	4	1	**8T-8730**	3	SOCKET-CONNECTOR	
	5	1	**8L-2786**	1	SEAL-O-RING (16.36MM ID)	
	6	1	**102-8813**	1	SEAL-INTERFACE	

E-ORDER BY THE CENTIMETER

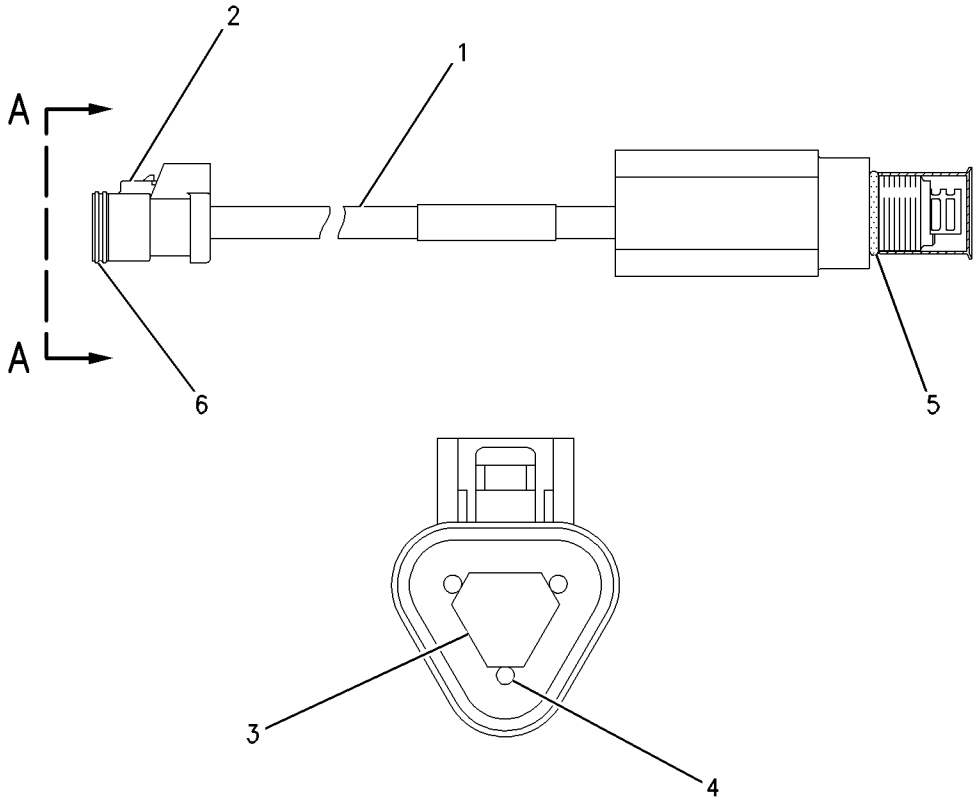

VIEW A-A

GRAPHIC #1 g00644813

129-6628 SENSOR GP-SPEED–ENGINE SPEED/TIMING–
ENGINE SPEED/TIMING
S/N: 2GR1-UP
PART OF 112-6045 WIRING GP-ENGINE
FIELD REPLACEMENT FOR 127-1008–PAGE 346
ALSO FIELD INSTALLATION

SMCS-1907, 1912, 4803, 7493 **i01352955**

NOTE	REF NO	GRAPHIC REF	PART NUMBER	QTY	PART NAME 1 2 3 4 5 6 (PRODUCT LEVEL)	SEE PAGE
E	1	1	**9X-1813**		SLEEVE (31CM)	
	2	1	**155-2260**	1	KIT-CONNECTING PLUG (3 PIN)	
					(INCLUDES PLUG AS. & WEDGE)	
	3	1	**102-8813**	1	SEAL-INTERFACE	
	4	1	**3E-3368**	1	WEDGE-PLUG LOCK	
	5	1	**8T-8730**	3	SOCKET-CONNECTOR	
	6	1	**8L-2786**	1	SEAL-O-RING (16.36MM ID)	

E-ORDER BY THE CENTIMETER

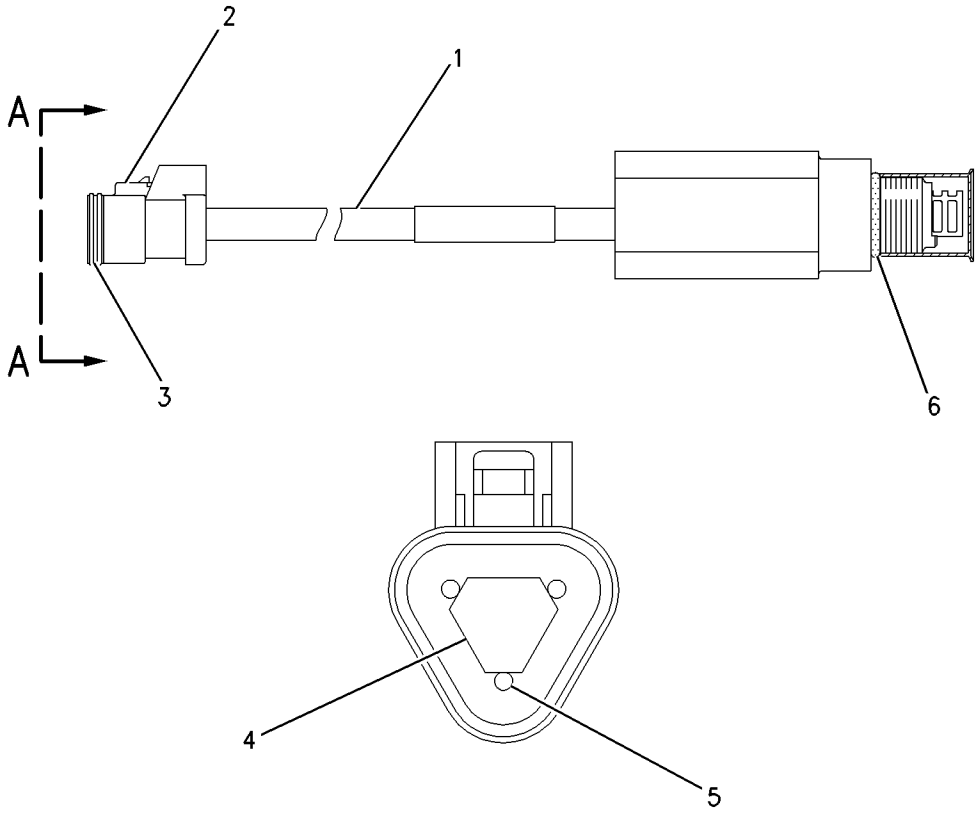

VIEW A–A

GRAPHIC #1 g00714038

183-5011 SENSOR GP-SPEED

S/N: 7HR1-UP
MAGNETIC-HIGH OUTPUT
PART OF 109-6893 WIRING GP-POWER TRAIN

SMCS-1907, 1912, 4803, 7493 **i01426330**

NOTE	REF NO	GRAPHIC REF	PART NUMBER	QTY	PART NAME 1 2 3 4 5 6 (PRODUCT LEVEL)	SEE PAGE
	1	1	**171-5349**	1	STRAP-MARKER	
	2	1	**102-8802**	1	KIT-RECEPTACLE (2 PIN)	
					(INCLUDES RECEPTACLE AS & WEDGE)	
	3	1	**8T-8729**	2	PIN-CONNECTOR	
	4	1	**3E-3365**	1	WEDGE-RECEPTACLE LOCK (2 PIN)	
E	5	1	**9X-1813**		SLEEVE (14CM)	

E-ORDER BY THE CENTIMETER

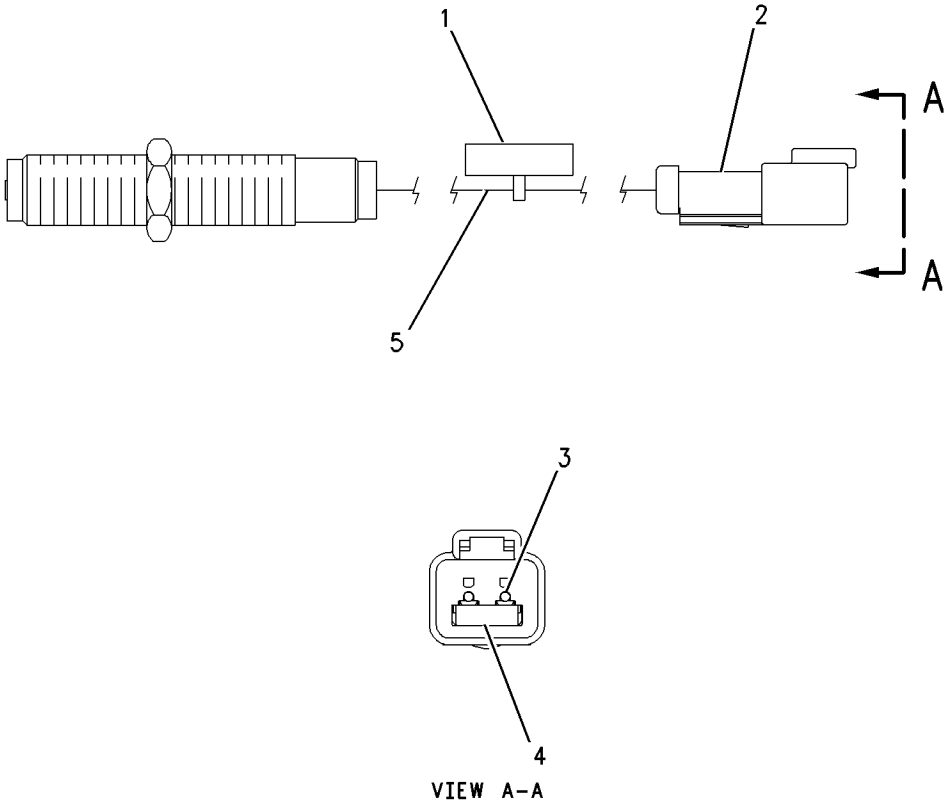

GRAPHIC #1 g00690327

193-2550 SENSOR GP-SPEED

S/N: 7HR1-UP

PART OF 109-6893 WIRING GP-POWER TRAIN

SMCS-1907, 1912, 4803, 7493 **i01397109**

NOTE	REF NO	GRAPHIC REF	PART NUMBER	QTY	PART NAME 1 2 3 4 5 6 (PRODUCT LEVEL)	SEE PAGE
	1	1	**171-5349**	1	STRAP-MARKER	
	2	1	**102-8802**	1	KIT-RECEPTACLE (2 PIN)	
					(INCLUDES RECEPTACLE AS & WEDGE)	
	3	1	**8T-8729**	2	PIN-CONNECTOR	
	4	1	**3E-3365**	1	WEDGE-RECEPTACLE LOCK (2 PIN)	
E	5	1	**9X-1813**		SLEEVE (14CM)	

E-ORDER BY THE CENTIMETER

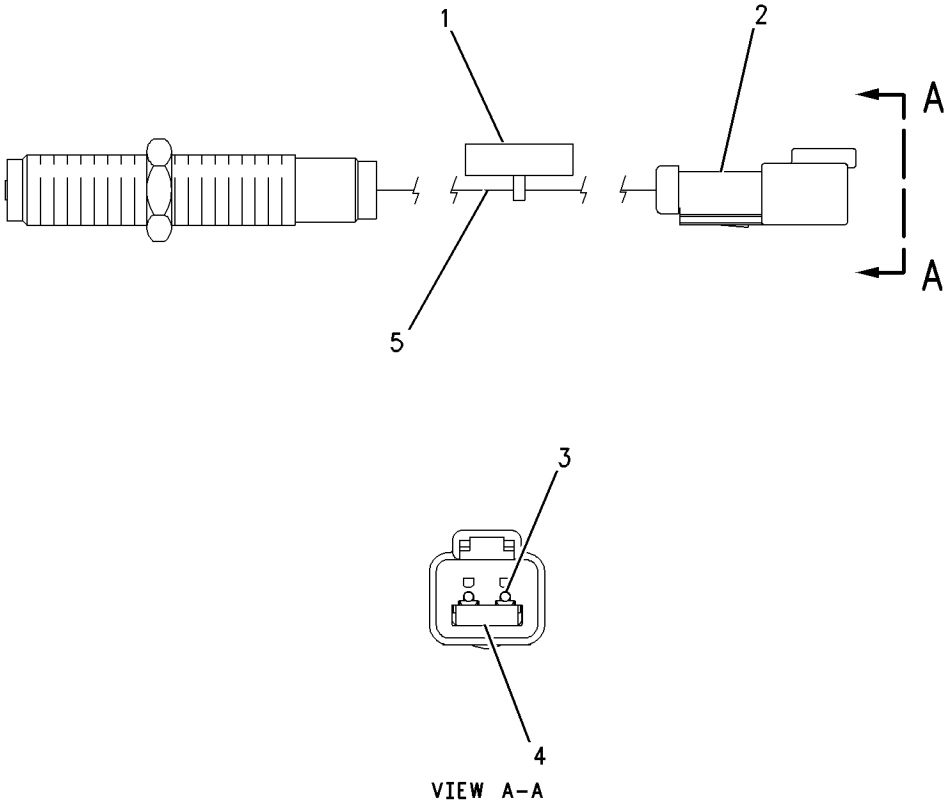

GRAPHIC #1 g00690327

100-3055 SENSOR GP-TEMPERATURE

S/N: 7HR1-UP
8 VOLT. PULSE WIDTH MODULATION
PART OF 109-6894 WIRING GP-FRONT, 109-6899 WIRING GP-MACHINE, 109-6893 WIRING GP-POWER TRAIN

SMCS-1408, 1906, 1921, 1922, 301T, 429T, 509T **i01372337**

NOTE	REF NO	GRAPHIC REF	PART NUMBER	QTY	PART NAME 1 2 3 4 5 6 (PRODUCT LEVEL)	SEE PAGE
Z	1	1		1	CONTROL AS-ELECTRONIC	
	2	1	**8T-8729**	3	PIN-CONNECTOR	
	3	1	**8T-8732**	1	RECEPTACLE-CONNECTOR	
E	4	1	**9X-1813**		SLEEVE (33CM)	

E-ORDER BY THE CENTIMETER
Z-NOT SERVICED SEPARATELY

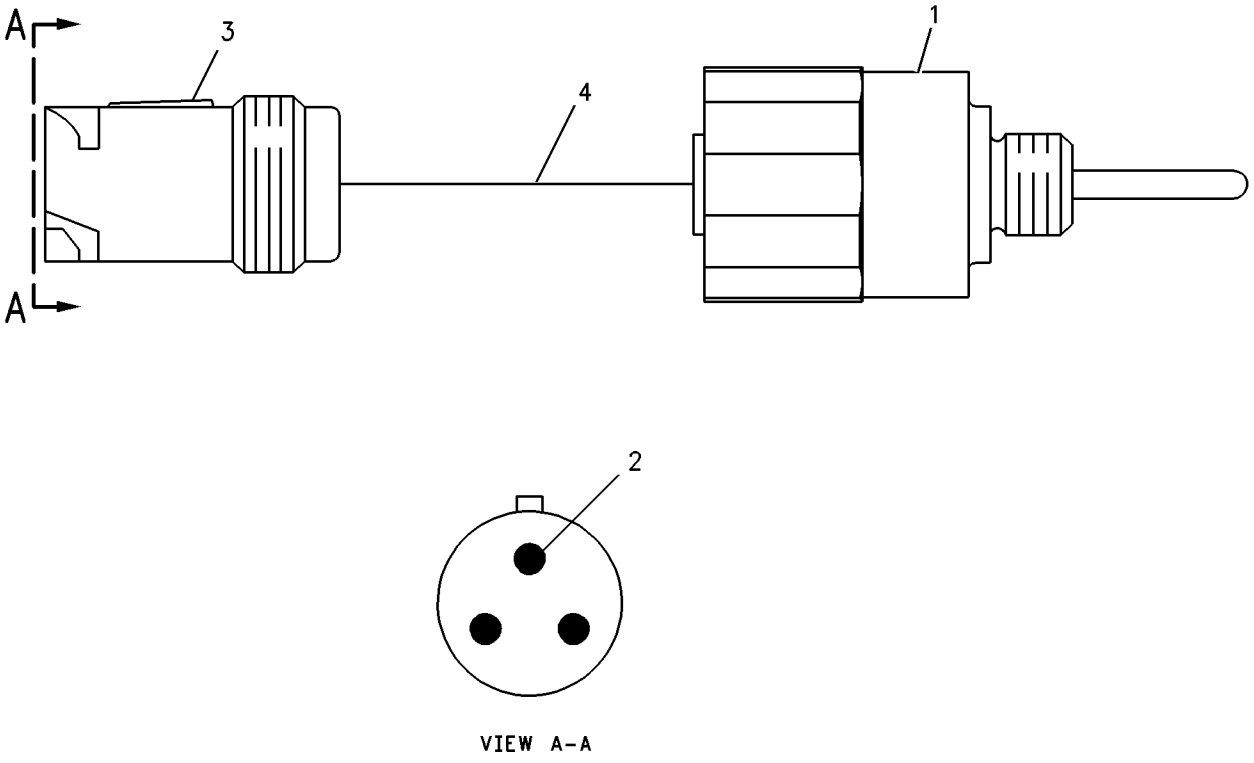

VIEW A-A

GRAPHIC #1 g00681631

109-6911 STARTING AID GP-ETHER

S/N: 7HR1-UP

PART OF 109-6819 CHASSIS AR

SMCS-1456 **i00744634**

NOTE	REF NO	GRAPHIC REF	PART NUMBER	QTY	PART NAME 1 2 3 4 5 6 (PRODUCT LEVEL)	SEE PAGE
	1	1	**3S-2093**	4	STRAP-CABLE (1.75IN DIA)	
	2	1	**9U-2277**	1	CLIP AS	
	3	1	**123-8853**	1	HARNESS AS	
Y	4	1	*130-3591*	1	STARTING AID GP-ETHER	352
M	5	1	**5C-7261**	1	NUT (M8X1.25 THD)	
	6	1	**5P-4116**	1	WASHER (2MM THK)	
M	7	1	**8T-4189**	4	BOLT (M8X1.25X20MM)	
	8	1	**8T-4224**	4	WASHER-HARD (2MM THK)	

M-METRIC PART
Y-SEPARATE ILLUSTRATION

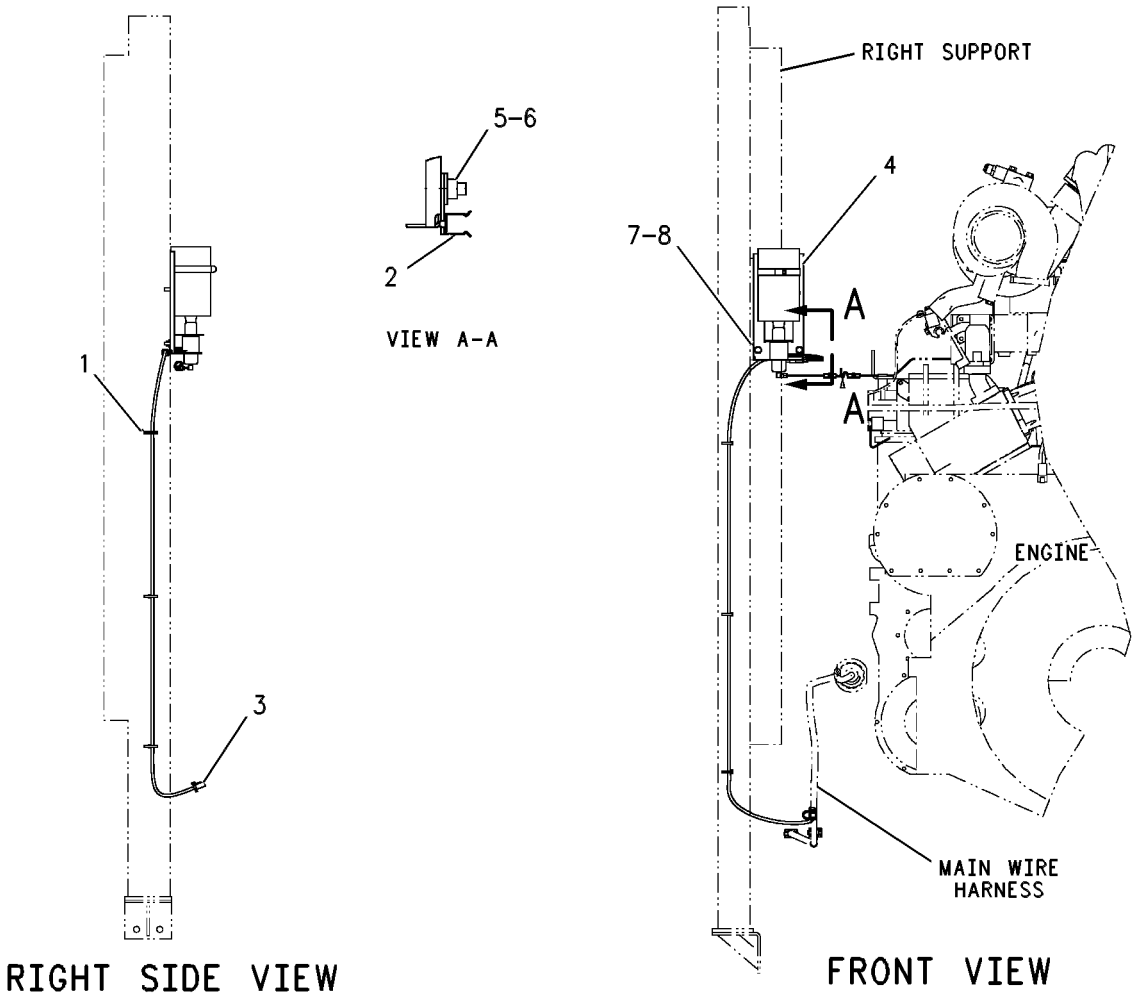

GRAPHIC #1 g00268626

130-3591 STARTING AID GP-ETHER

S/N: 7HR1-UP

PART OF 109-6911 STARTING AID GP-ETHER

SMCS-1456 **i01185300**

NOTE	REF NO	GRAPHIC REF	PART NUMBER	QTY	PART NAME 1 2 3 4 5 6 (PRODUCT LEVEL)	SEE PAGE
	1	1	**5P-0598**	1	CLAMP	
	2	1	**7N-0140**	1	TUBE AS-COIL	
	3	1	**160-8765**	1	FITTING AS	
		1	**160-8761**	1	FILTER-ETHER	
	4	1	**123-8773**	1	VALVE AS-ETHER	
		1	**8T-8729**	2	PIN-CONNECTOR	
		1	**9X-7138**	1	FILTER & GASKET AS	
		1	**102-8802**	1	KIT-RECEPTACLE (2 PIN)	
					(INCLUDES WEDGE)	
	5	1	**125-2258**	1	TUBE	
A		1	**7X-1062**	1	CYLINDER AS-ETHER	

A-NOT PART OF THIS GROUP

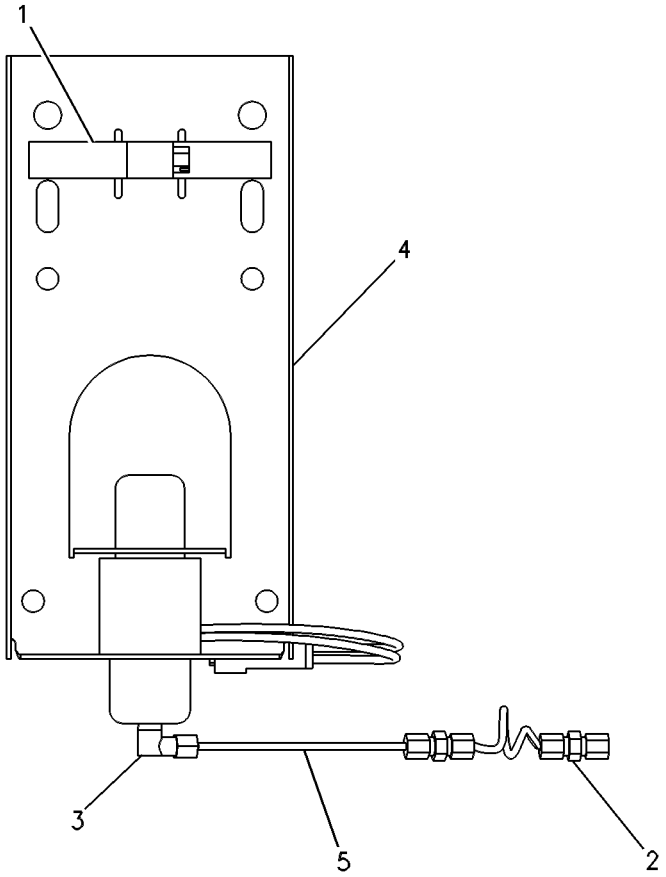

GRAPHIC #1 g00268625

136-6338 STARTING AID GP-ETHER

S/N: 2GR580-UP

PART OF 107-8762 ENGINE AR

SMCS-1456 **i00749654**

NOTE	REF NO	GRAPHIC REF	PART NUMBER	QTY	PART NAME 1 2 3 4 5 6 (PRODUCT LEVEL)	SEE PAGE
	1	1	**5P-6313**	3	NUT-FLARELESS	
	2	1	**5P-6314**	3	SLEEVE-FLARELESS	
	3	1	**7X-1078**	2	NOZZLE AS-ETHER	
	4	1	**8C-9006**	1	TEE-UNION	
	5	1	**125-2257**	2	TUBE	
	6	1	**125-2259**	1	TUBE	
	7	1	**0S-0509**	1	BOLT (3/8-16X.75IN)	
	8	1	**5M-2894**	1	WASHER (2.5MM THK)	
	9	1	**6V-2686**	5	CLIP (3.18MM ID)	

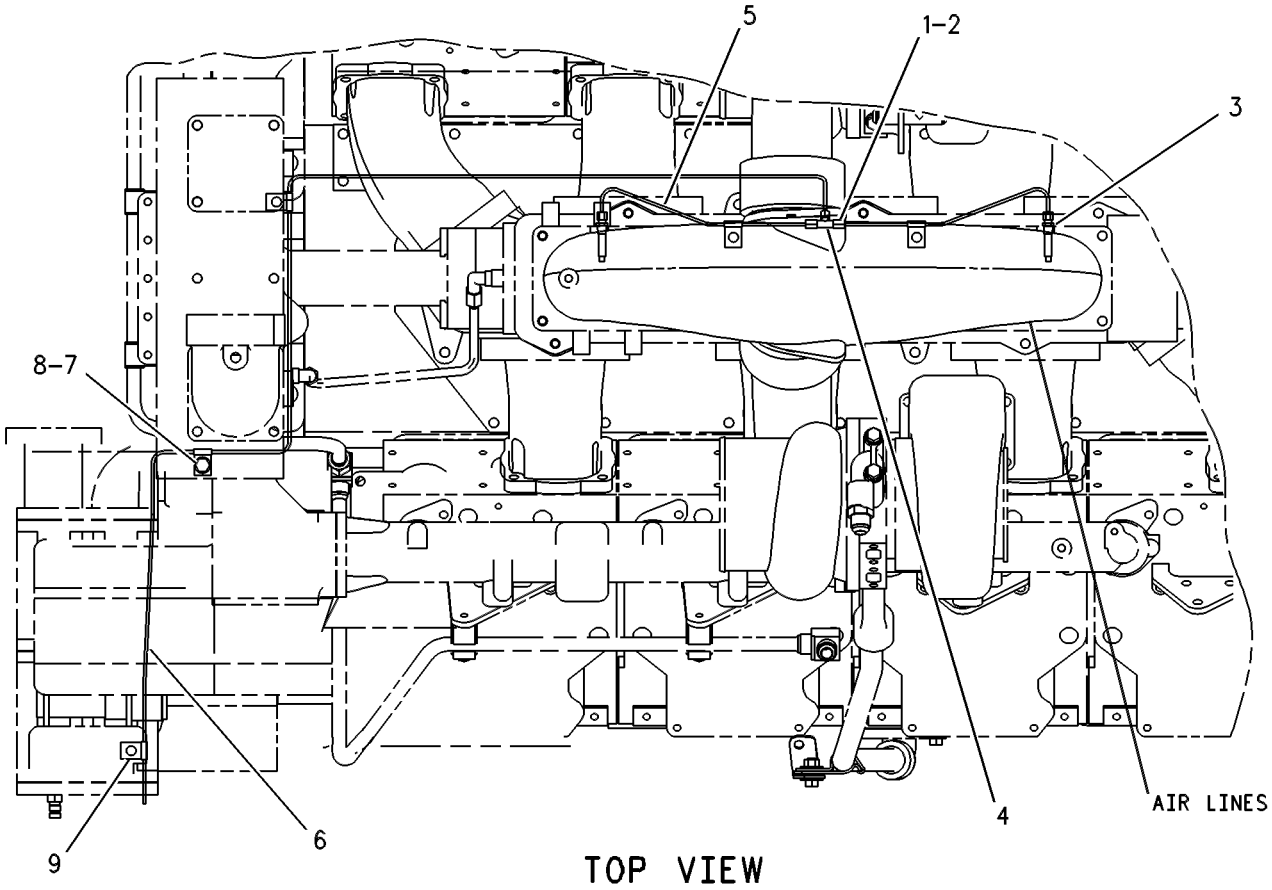

GRAPHIC #1 g00273245

1W-6363 STARTING MOTOR GP-ELECTRIC

S/N: 2GR1-UP
24 VOLT
PART OF 107-8762 ENGINE AR

SMCS-1453, 1454, 1465, 1467 **i00095755**

NOTE	REF NO	GRAPHIC REF	PART NUMBER	QTY	PART NAME 1 2 3 4 5 6 (PRODUCT LEVEL)	SEE PAGE
Y	1	1	*6V-0889*	2	STARTING MOTOR GP-ELECTRIC	360
	2	1	**7J-8902**	6	BOLT-12 POINT HEAD	
	3	1	**7N-6494**	2	GASKET	
C	4	1	**8R-5846**	1	CABLE AS	
		1	**1S-7251**	2	TERMINAL (FOR 1/2IN BOLT)	
E		1	**5P-0747**		CABLE (00 GA) (30 CM)	
C	5	1	**8T-9383**	2	BOLT (1/2-13X0.75IN)	
C		1	**8T-4223**	2	WASHER-HARD (3MM THK)	

C-CHANGE FROM PREVIOUS TYPE
E-ORDER BY THE CENTIMETER
Y-SEPARATE ILLUSTRATION

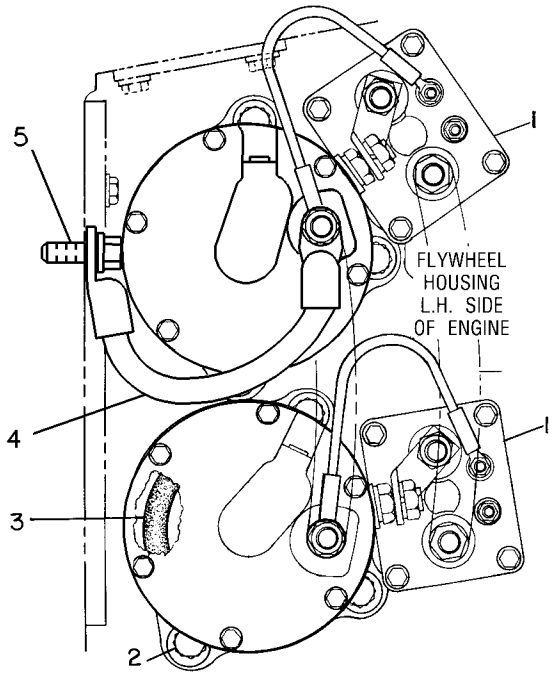

GRAPHIC #1 g00082902

MEMORANDA

ELECTRICAL AND STARTING SYSTEM

6V-0513 STARTING MOTOR GP-ELECTRIC*R

S/N: 2GR1-UP

FIELD REPLACEMENT FOR 6V-0889—PAGE 360

SMCS-1453, 1454, 1465, 1467 **i01446641**

NOTE	REF NO	GRAPHIC REF	PART NUMBER	QTY	PART NAME 1 2 3 4 5 6 (PRODUCT LEVEL)	SEE PAGE
	1	1	**036-9823**	13	BOLT	
	2	1	**3L-3380**	1	BUSHING-TERMINAL	
	3	1	**3T-3418**	1	FRAME AS-END	
	4	1	**3T-3423**	1	CUP	
	5	1	**9G-4101**	1	BUSHING-END	
	6	1	**3T-3424**	1	PLUG-FELT	
	7	1	**7M-0327**	1	WASHER-THRUST (17.40X25.4X1.6MM THK)	
	8	1	**7M-8651**	1	ARMATURE AS	
	9	1	**7M-0324**	1	COIL AS-FIELD	
	10	1	**9H-3757**	2	WASHER (0.516X1X0.094 IN THK)	
	11	1	**7X-0562**	6	WASHER-HARD (13.5X19X0.8MM THK)	
	12	1	**6V-8188**	6	NUT (1/2-13 THD)	
	13	1	**7M-0326**	1	CONNECTOR	
	14	1	**8T-4205**	4	WASHER-HARD (7.2X14.5X2MM THK)	
	15	1	**125-6533**	1	SOLENOID AS	
		1	**3R-8801**	1	CLAMP-BOOT	
	16	1	**6V-1322**	4	BOLT (1/4-20X0.375 IN)	
	17	1	**4M-1831**	4	PLUG-LEVER HOUSING	
	18	1	**7L-2894**	4	GASKET	
	19	1	**3F-0379**	12	SCREW-POLE SHOE	
	20	1	**7M-0325**	1	INSULATOR-COIL	
	21	1	**7F-3488**	6	SHOE-POLE	
	22	1	**1S-7446**	3	SCREW-MACHINE (8-32X0.437 THD)	
	23	1	**3T-9524**	6	BRUSH AS	
	24	1	**9S-2544**	6	SCREW-HEX HEAD (8-32X11.13MM)	
	25	1	**3T-9525**	1	PLATE AS-BRUSH	
	26	1	**6T-0371**	1	INSULATOR	
	27	1	**5P-6298**	12	SCREW-MACHINE (10-32X0.5 IN)	
		1	**9F-5599**	12	LOCKWASHER	
	28	1	**7F-3525**	6	WASHER-BUSHING	
	29	1	**6T-0372**	1	PLATE	
	30	1	**3T-4709**	3	PLATE	
	31	1	**2L-6679**	3	PLATE-INSULATOR	
	32	1	**3T-4710**	3	PLATE	
	33	1	**6T-0363**	6	HOLDER AS-BRUSH	
					(EACH INCLUDES)	
	34	1	**3T-9494**	1	SPRING-BRUSH	
	35	1	**2D-6392**	1	SEAL-O-RING (6.07MM ID)	
	36	1	**2J-8163**	2	SEAL-O-RING (117.07MM ID)	
	37	1	**7F-3491**	2	WASHER (0.516X1X0.094 IN THK)	
	38	1	**3R-8801**	1	CLAMP-BOOT	
	39	1	**6N-3826**	1	DRIVE AS-MOTOR	
	40	1	**1H-2629**	3	STRIP-INSULATION	
	41	1	**3T-3422**	1	WIRE AS	
	42	1	**9M-7606**	1	PLUNGER AS	
	43	1	**036-9821**	1	WASHER	
	44	1	**4M-1829**	1	BOOT-RUBBER	
	45	1	**4M-1828**	1	RETAINER-SPRING	
	46	1	**9M-7609**	1	SPRING	
	47	1	**1H-1023**	1	SEAL-O-RING (9.25MM ID)	
	48	1	**3E-7771**	1	HOUSING AS	
	49	1	**3T-3424**	2	PLUG-FELT	
	50	1	**3T-3423**	2	CUP	
	51	1	**1M-9968**	1	BUSHING	
	52	1	**2F-6678**	1	SEAL-LIP	
	53	1	**4L-2729**	1	WASHER (0.844X1.9X0.188 IN THK)	

6V-0513 STARTING MOTOR GP-ELECTRIC *(contd.)* i01446641

NOTE	REF NO	GRAPHIC REF	PART NUMBER	QTY	PART NAME 1 2 3 4 5 6 (PRODUCT LEVEL)	SEE PAGE
	54	1	**4M-1854**	1	SHAFT-LEVER	
	55	1	**2H-3429**	2	RING-RETAINING	
	56	1	**4M-1853**	1	LEVER AS-SHIFT	
	57	1	**5M-3034**	1	LOCKNUT	
	58	1	**1M-9971**	1	SPACER	
	59	1	**4M-1827**	1	RETAINER-SPRING	
	60	1	**8C-3089**	1	SEAL-O-RING (82.22MM ID)	
	61	1	**3E-7768**	1	HOUSING AS	
	62	1	**4M-1896**	1	BUSHING-TERMINAL	
	63	1	**8C-9660**	3	WASHER (4.6X7.9X0.8MM THK)	
	64	1	**3T-9494**	6	SPRING-BRUSH	
	65	1	**5J-5314**	5	BOLT (5/16-18X1.5 IN)	
J	66	1	**3N-3763**	1	KIT-TERMINAL	
JZ		1		1	INSULATOR	
JZ	67	1		1	BUSHING	
JZ	68	1		1	BUSHING	
JZ	69	1		1	WASHER	
	70	1	**7X-3373**	1	BOLT (5/16-18X0.88 IN)	
	71	1	**6N-3279**	1	INSULATOR	
	72	1	**4B-2049**	6	NUT (10-32 THD)	
	73	1	**8T-0328**	10	WASHER-HARD (5.5X10X1MM THK)	
	74	1	**8F-1434**	2	LOCKWASHER	
B	75	1	**3T-3434**	6	PLUG	
	76	1	**6T-0362**	1	INSULATOR	
	77	1	**045-4065**	4	SCREW-MACHINE (10-32X0.75 IN)	
	78	1	**125-6535**	1	COVER-STARTING MOTOR	
	79	1	**125-6536**	1	TERMINAL AS	
	80	1	**7T-9123**	1	GASKET-PLATE	

B-USE AS REQUIRED
J-KIT MARKED J INCLUDES PART(S) MARKED J
Z-NOT SERVICED SEPARATELY

6V-0513 STARTING MOTOR GP-ELECTRIC *(contd.)* i01446641

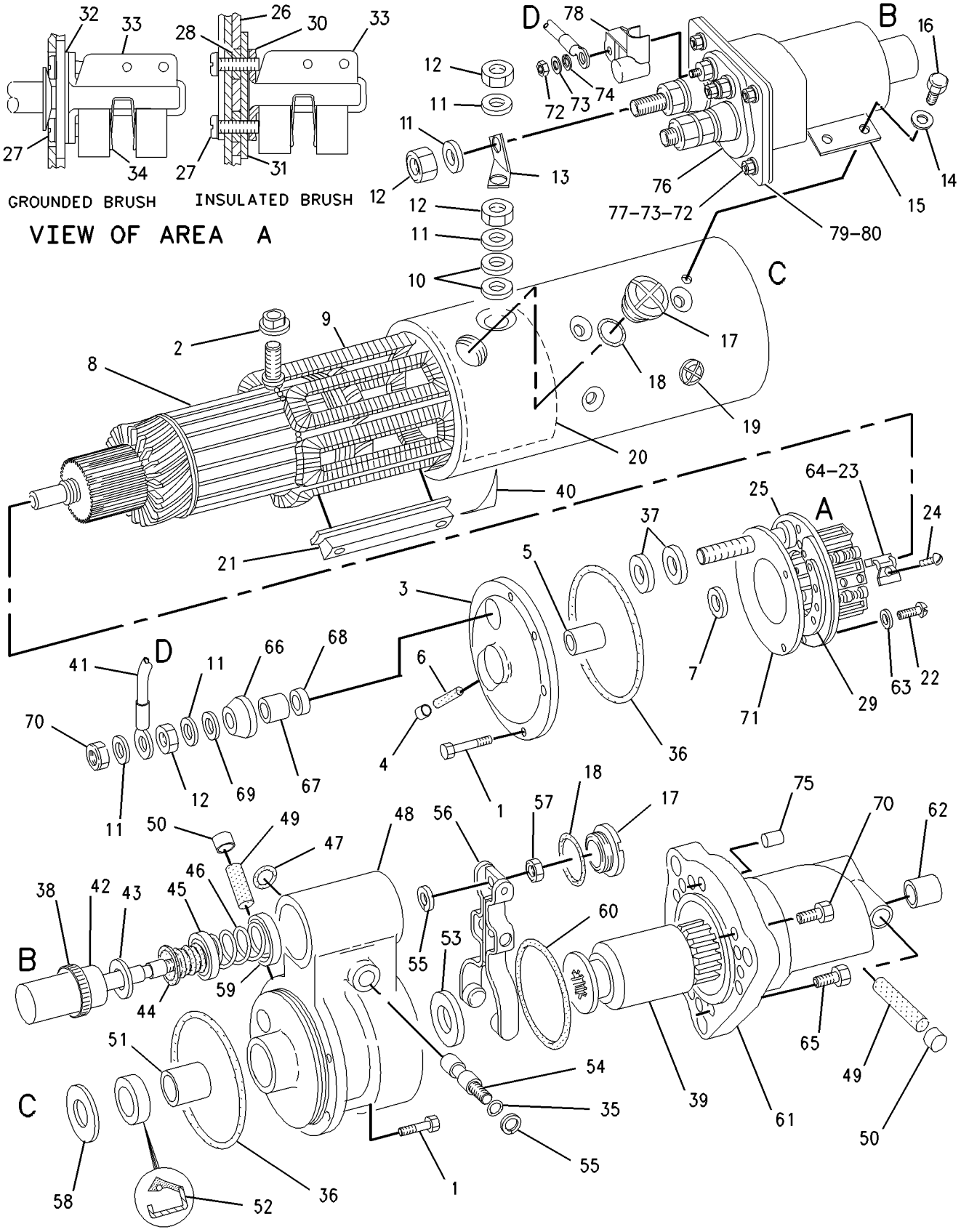

GRAPHIC #1 g00673263

MEMORANDA

ELECTRICAL AND STARTING SYSTEM

6V-0889 STARTING MOTOR GP-ELECTRIC

S/N: 2GR1-UP

PART OF 1W-6363 STARTING MOTOR GP-ELECTRIC

FIELD REPLACEMENT ORDER 6V-0513—PAGE 356

SMCS-1453, 1454, 1465, 1467 **i01421015**

NOTE	REF NO	GRAPHIC REF	PART NUMBER	QTY	PART NAME 1 2 3 4 5 6 (PRODUCT LEVEL)	SEE PAGE
	1	1	**036-9823**	13	BOLT	
	2	1	**3L-3380**	1	BUSHING-TERMINAL	
	3	1	**3T-3418**	1	FRAME AS-END	
	4	1	**3T-3423**	1	CUP	
	5	1	**9G-4101**	1	BUSHING-END	
	6	1	**3T-3424**	1	PLUG-FELT	
	7	1	**7M-0327**	1	WASHER-THRUST (17.40X25.4X1.6MM THK)	
	8	1	**7M-8651**	1	ARMATURE AS	
	9	1	**7M-0324**	1	COIL AS-FIELD	
	10	1	**9H-3757**	2	WASHER (.516X1X.094 IN THK)	
	11	1	**7X-0562**	6	WASHER-HARD (13.5X19X0.8MM THK)	
	12	1	**6V-8188**	6	NUT (1/2-13 THD)	
	13	1	**7M-0326**	1	CONNECTOR	
	14	1	**8T-4205**	4	WASHER-HARD (7.2X14.5X2MM THK)	
C	15	1	**125-6533**	1	SOLENOID AS	
C		1	**3R-8801**	1	CLAMP-BOOT	
	16	1	**6V-1322**	4	BOLT (1/4-20X.375 IN)	
	17	1	**4M-1831**	4	PLUG-LEVER HOUSING	
	18	1	**7L-2894**	4	GASKET	
	19	1	**3F-0379**	12	SCREW-POLE SHOE	
	20	1	**7M-0325**	1	INSULATOR-COIL	
	21	1	**7F-3488**	6	SHOE-POLE	
	22	1	**1S-7446**	3	SCREW-MACHINE (8-32X0.437 THD)	
	23	1	**3T-9524**	6	BRUSH AS	
C	24	1	**9S-2544**	9	SCREW-HEX HEAD (8-32 X 11.13MM)	
	25	1	**3T-9525**	1	PLATE AS-BRUSH	
	26	1	**6T-0371**	1	INSULATOR	
	27	1	**3T-4711**	12	SCREW AS	
		1	**9F-5599**	12	LOCKWASHER	
	28	1	**7F-3525**	6	WASHER-BUSHING	
	29	1	**6T-0372**	1	PLATE	
	30	1	**3T-4709**	3	PLATE	
	31	1	**2L-6679**	3	PLATE-INSULATOR	
	32	1	**3T-4710**	3	PLATE	
	33	1	**6T-0363**	6	HOLDER AS-BRUSH	
	34	1	**3T-9494**	1	SPRING-BRUSH	
	35	1	**2D-6392**	1	SEAL-O-RING (6.07MM ID)	
	36	1	**2J-8163**	2	SEAL-O-RING (117.07MM ID)	
	37	1	**7F-3491**	2	WASHER (.516X1X.094 IN THK)	
	38	1	**3R-8801**	1	CLAMP-BOOT	
	39	1	**6N-3826**	1	DRIVE AS-MOTOR	
	40	1	**1H-2629**	3	STRIP-INSULATION	
	41	1	**3T-3422**	1	WIRE AS	
	42	1	**9M-7606**	1	PLUNGER AS	
	43	1	**036-9821**	1	WASHER	
	44	1	**4M-1829**	1	BOOT-RUBBER	
	45	1	**4M-1828**	1	RETAINER-SPRING	
	46	1	**9M-7609**	1	SPRING	
	47	1	**1H-1023**	1	SEAL-O-RING (9.25MM ID)	
	48	1	**3E-7771**	1	HOUSING AS	
	49	1	**3T-3424**	2	PLUG-FELT	
	50	1	**3T-3423**	2	CUP	
	51	1	**1M-9968**	1	BUSHING	
	52	1	**2F-6678**	1	SEAL-LIP	
	53	1	**4L-2729**	1	WASHER (.844X1.9X.188 IN THK)	

6V-0889 **STARTING MOTOR GP-ELECTRIC** *(contd.)* **i01421015**

NOTE	REF NO	GRAPHIC REF	PART NUMBER	QTY	PART NAME 1 2 3 4 5 6 (PRODUCT LEVEL)	SEE PAGE
	54	1	**4M-1854**	1	SHAFT-LEVER	
	55	1	**2H-3429**	2	RING-RETAINING	
	56	1	**4M-1853**	1	LEVER AS-SHIFT	
	57	1	**5M-3034**	1	LOCKNUT (5/16-24 THD)	
	58	1	**1M-9971**	1	SPACER	
	59	1	**4M-1827**	1	RETAINER-SPRING	
	60	1	**8C-3089**	1	SEAL-O-RING (82.22MM ID)	
	61	1	**3E-7768**	1	HOUSING AS	
	62	1	**4M-1896**	1	BUSHING-TERMINAL	
	63	1	**8C-9660**	3	WASHER (4.6X7.9X.8MM THK)	
	64	1	**3T-9494**	6	SPRING-BRUSH	
	65	1	**5J-5314**	5	BOLT (5/16-18X1.5 IN)	
	66	1	**3N-3763**	1	KIT-TERMINAL	
					(INCLUDES INSULATOR, BUSHINGS, & WASHER)	
	70	1	**7X-3373**	1	BOLT (5/16-18X.88 IN)	
	71	1	**6N-3279**	1	INSULATOR	
	72	1	**4B-2049**	6	NUT (10-32 THD)	
	73	1	**8T-0328**	10	WASHER-HARD (5.5X10X1MM THK)	
	74	1	**8F-1434**	2	LOCKWASHER	
B	75	1	**3T-3434**	6	PLUG	
	76	1	**6T-0362**	1	INSULATOR	
	77	1	**045-4065**	4	SCREW-MACHINE (10-32X.75 IN)	
C	78	1	**125-6535**	1	COVER-STARTING MOTOR	
	79	1	**125-6536**	1	TERMINAL AS	
	80	1	**7T-9123**	1	GASKET-PLATE	

B-USE AS REQUIRED
C-CHANGE FROM PREVIOUS TYPE

6V-0889 **STARTING MOTOR GP-ELECTRIC** *(contd.)* **i01421015**

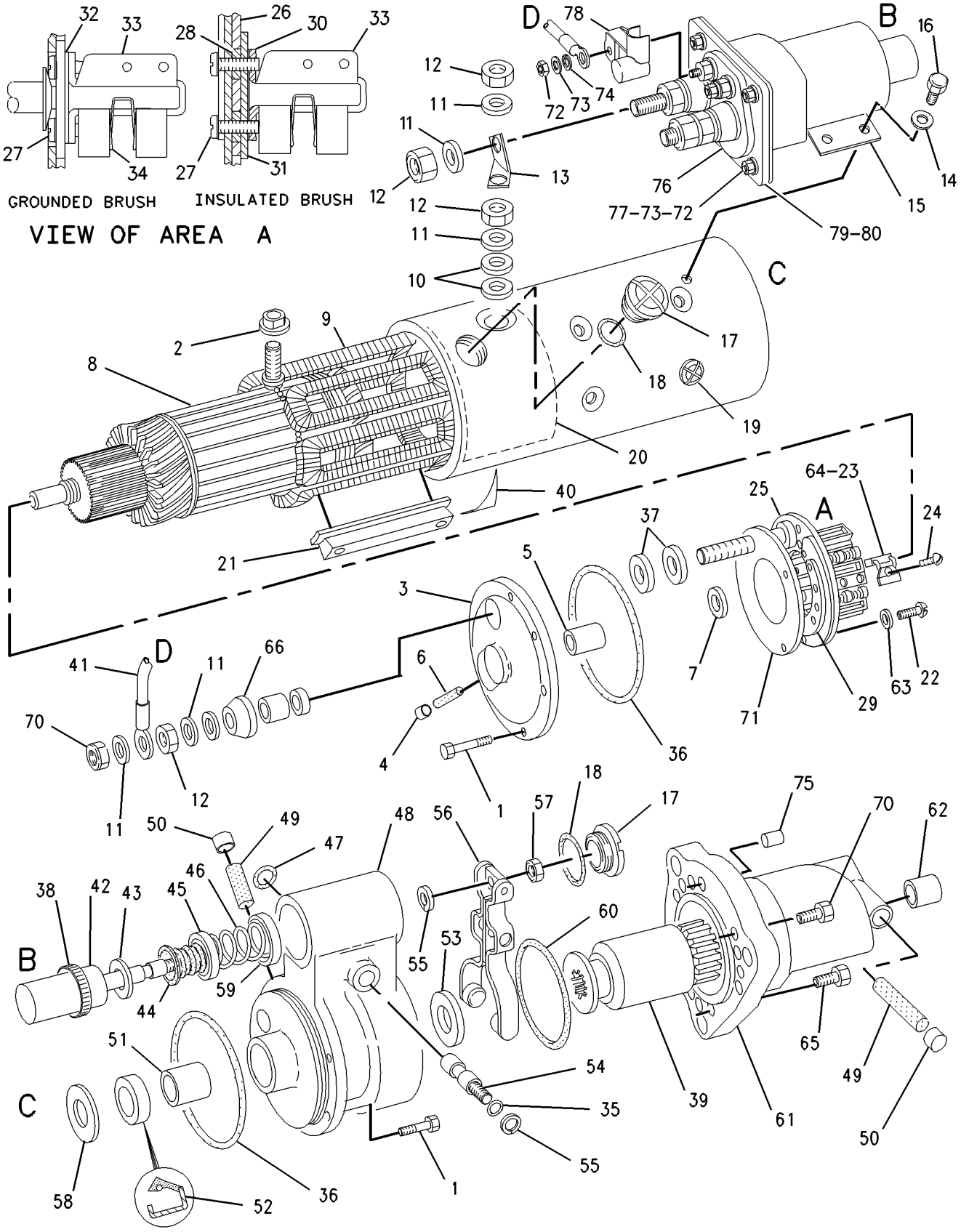

GRAPHIC #1 g00634893

9X-7781 SWITCH GP-BYPASS

S/N: 7HR1-UP

PART OF 109-6899 WIRING GP-MACHINE

FIELD REPLACEMENT ORDER 2-8T-8730 SOCKET-CONNECTOR, 1-155-2270 KIT-CONNECTING PLUG

SMCS-1408, 1435 **i01449522**

NOTE	REF NO	GRAPHIC REF	PART NUMBER	QTY	PART NAME 1 2 3 4 5 6 (PRODUCT LEVEL)	SEE PAGE
	1	1	**4B-4863**	2	WASHER (4.7X11X1.2MM THK)	
	2	1	**9W-1461**	2	WASHER (4.42X10.29X1.19MM THK)	
	3	1	**3D-2824**	1	SEAL-O-RING	
	4	1	**8J-2283**	2	RING-SNAP	
	5	1	**9X-8071**	1	SPRING	
	6	1	**5P-9262**	4	SEAL-O-RING	
	7	1	**4B-2043**	2	NUT (8-32 THD)	
	8	1	**9X-6551**	1	WASHER (14.9X18.5X0.8MM THK)	

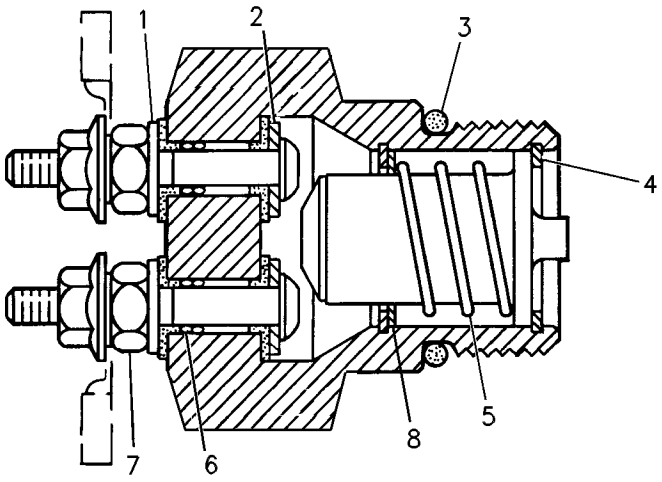

GRAPHIC #1 g00086264

183-3862 SWITCH GP-COOLANT FLOW

S/N: 2GR2334-UP

PART OF 112-6045 WIRING GP-ENGINE

SMCS-1438 **i01293929**

NOTE	REF NO	GRAPHIC REF	PART NUMBER	QTY	PART NAME 1 2 3 4 5 6 (PRODUCT LEVEL)	SEE PAGE
	4	1	**102-8802**	1	KIT-RECEPTACLE (2 PIN)	
					INCLUDES RECEPTACLE AS AND WEDGE	
	5	1	**3E-3365**	1	WEDGE-RECEPTACLE LOCK (2 PIN)	
	6	1	**186-3735**	2	PIN-CONNECTOR	

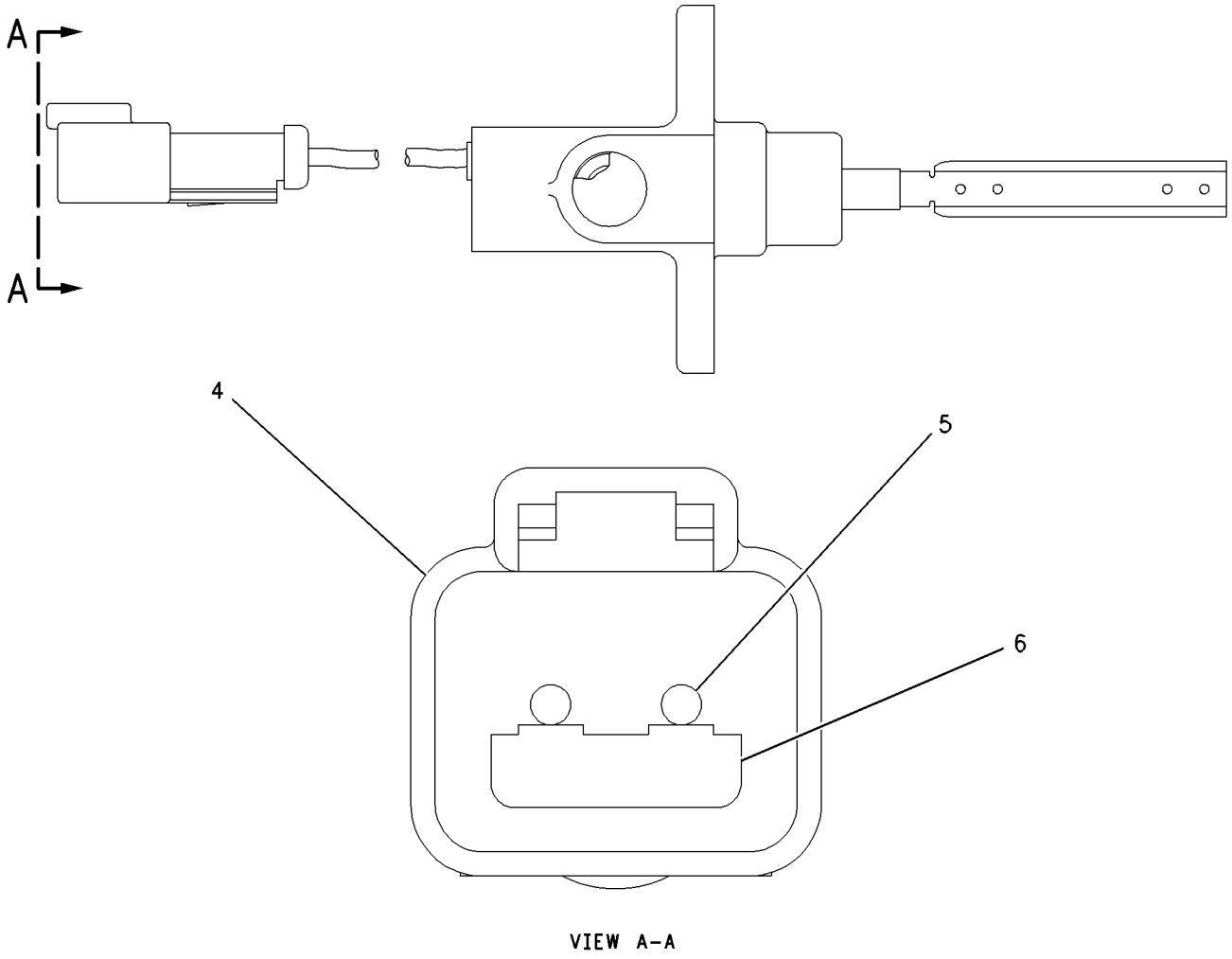

VIEW A-A

GRAPHIC #1 g00688823

7N-0719 SWITCH GP-DISCONNECT

S/N: 7HR1-UP

PART OF 109-6895 BATTERY & WIRING GP

SMCS-1411 **i01289277**

NOTE	REF NO	GRAPHIC REF	PART NUMBER	QTY	PART NAME 1 2 3 4 5 6 (PRODUCT LEVEL)	SEE PAGE
	1	1	**8H-5306**	1	KEY (BATTERY DISCONNECT)	
	2	1	**8H-5303**	1	NUT (3/4-16-2A THD)	
	3	1	**2H-3922**	2	LOCKWASHER (19.9X31.3X1.3MM THK)	
	4	1	**9F-5644**	2	LOCKWASHER (9.93X17.3X.9MM THK)	
	5	1	**6F-7045**	2	NUT-FULL (3/8X24 THD)	

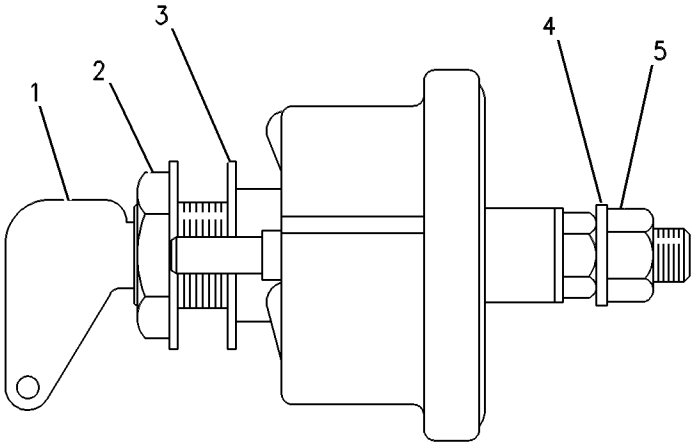

GRAPHIC #1 g00117885

138-3672 SWITCH GP-FLOW–COOLANT

S/N: 2GR1-2333

PART OF 112-6045 WIRING GP-ENGINE

SMCS-1435 **i01329637**

NOTE	REF NO	GRAPHIC REF	PART NUMBER	QTY	PART NAME 1 2 3 4 5 6 (PRODUCT LEVEL)	SEE PAGE
J	1	1	**102-8802**	1	KIT-RECEPTACLE (2 PIN)	
					(INCLUDES RECEPTACLE AS & PART MARKED J)	
	2	1	**8T-8729**	2	PIN-CONNECTOR	
J	3	1	**3E-3365**	1	WEDGE-RECEPTACLE LOCK (2 PIN)	

J-KIT MARKED J INCLUDES PART MARKED J

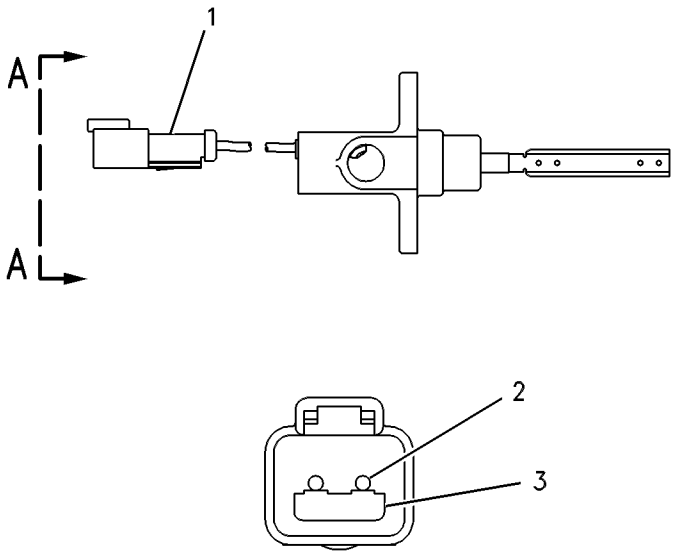

VIEW A-A

GRAPHIC #1 g00272621

123-2993 SWITCH GP-LIQUID LEVEL

S/N: 7HR1-UP
PART OF 112-4191 WIRING GP-VIMS
AN ATTACHMENT

SMCS-7422 **i01487728**

NOTE	REF NO	GRAPHIC REF	PART NUMBER	QTY	PART NAME 1 2 3 4 5 6 (PRODUCT LEVEL)	SEE PAGE
	1	1	**102-8802**	1	KIT-RECEPTACLE (2 PIN)	
					(INCLUDES RECEPTACLE AS & WEDGE)	
	2	1	**186-3735**	2	PIN-CONNECTOR	
	3	1	**3E-3365**	1	WEDGE-RECEPTACLE LOCK (2 PIN)	

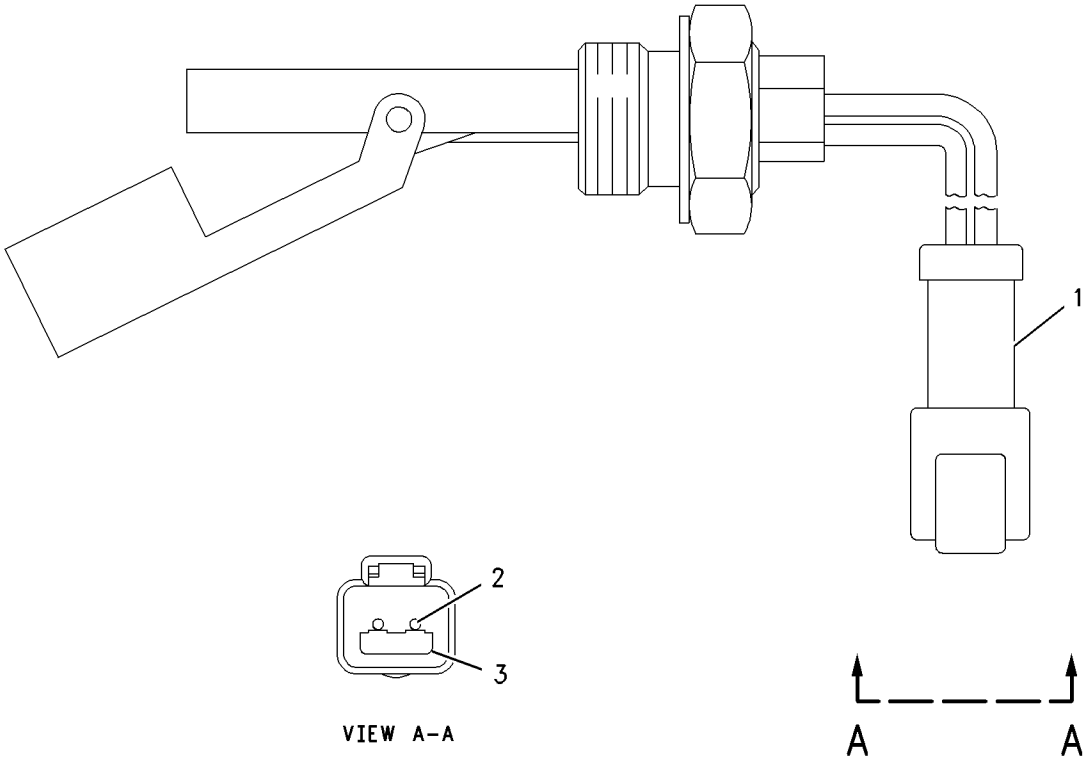

GRAPHIC #1 g00677314

3E-0075 SWITCH GP-MAGNETIC

S/N: 7HR1-UP
24 VOLT
PART OF 109-6897, 168-4358 WIRING GP-VIDS MONITOR, 131-4377, 168-4359 WIRING GP-VIMS MONITOR
AN ATTACHMENT

SMCS-7499 **i01506857**

NOTE	REF NO	GRAPHIC REF	PART NUMBER	QTY	PART NAME 1 2 3 4 5 6 (PRODUCT LEVEL)	SEE PAGE
	1	1	**102-8802**	1	KIT-RECEPTACLE (2 PIN)	
					(INCLUDES RECEPTACLE AS AND WEDGE)	

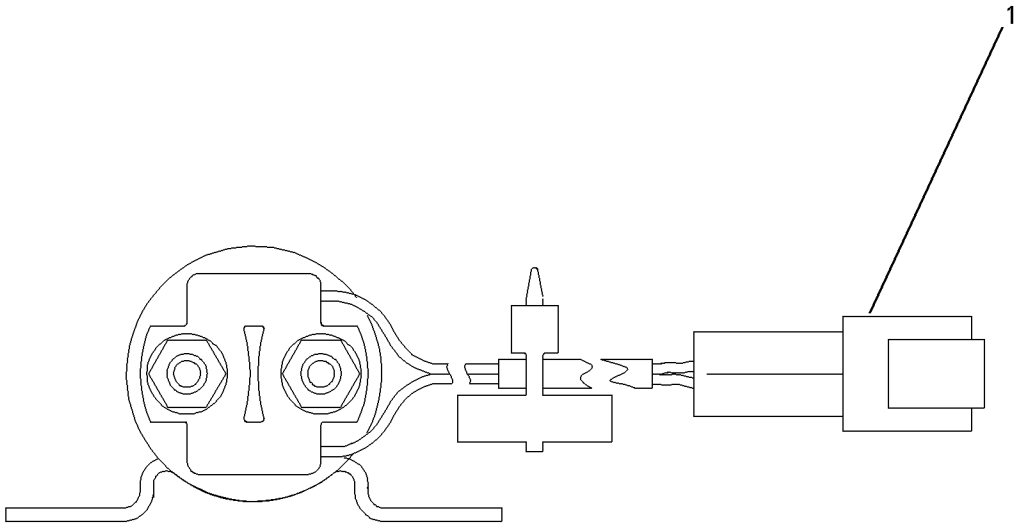

GRAPHIC #1 g00782300

132-3612 SWITCH GP-ROCKER–TC LOCKUP

S/N: 7HR1-UP
PART OF 109-6886 TORQUE CONVERTER AR-LOCKUP
AN ATTACHMENT

SMCS-5741, 7332 **i01270116**

NOTE	REF NO	GRAPHIC REF	PART NUMBER	QTY	PART NAME 1 2 3 4 5 6 (PRODUCT LEVEL)	SEE PAGE
	1	1	**180-2549**	1	SWITCH AS-ROCKER	
					AVAILABLE REPAIR KIT(S):	
			126-1711	1	KIT-LAMP CONVERSION (24V)	

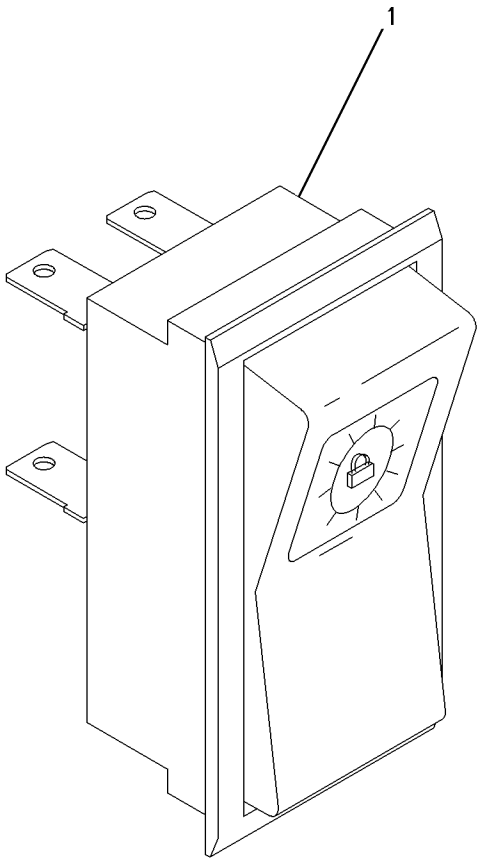

GRAPHIC #1 g00678921

9G-7641 SWITCH GP-START

S/N: 7HR1-UP

PART OF 112-5765 PANEL GP-INSTRUMENT, 132-4825 WIRING GP-SHUTOFF

ALSO AN ATTACHMENT

SMCS-1416 **i01449535**

NOTE	REF NO	GRAPHIC REF	PART NUMBER	QTY	PART NAME 1 2 3 4 5 6 (PRODUCT LEVEL)	SEE PAGE
	1	1	**6V-8362**	4	SCREW-MACHINE (8-32X0.31 IN)	
	2	1	**9B-7233**	4	LOCKWASHER	
	3	1	**7T-6799**	1	NUT-MOUNTING	

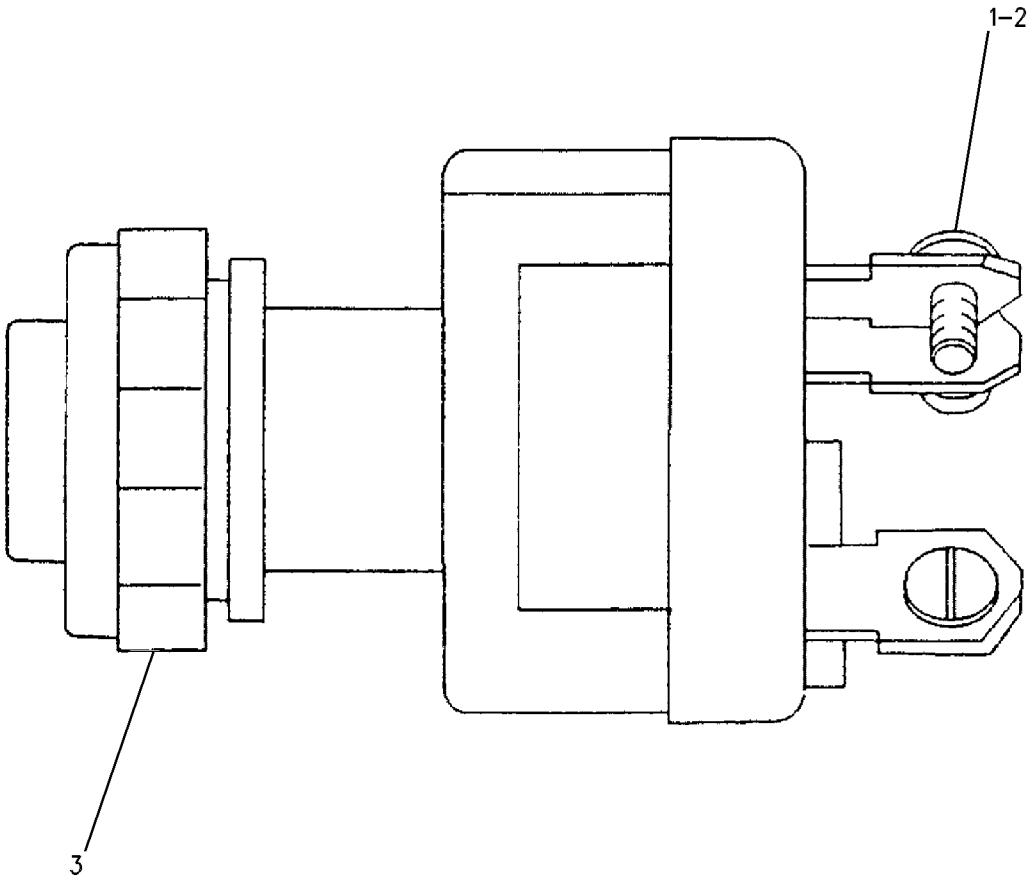

GRAPHIC #1 g00606018

3E-0155 SWITCH GP-WIPER

S/N: 7HR1-UP
24 VOLT. INTERMITTENT
PART OF 112-5765 PANEL GP-INSTRUMENT

SMCS-7332 **i01303559**

NOTE	REF NO	GRAPHIC REF	PART NUMBER	QTY	PART NAME 1 2 3 4 5 6 (PRODUCT LEVEL)	SEE PAGE
C	1	1	**102-8806**	1	KIT-RECEPTACLE (8 PIN)	
					(INCLUDES RECEPTACLE AS AND WEDGE)	
	2	1	**7T-9302**	1	KNOB-WIPER SWITCH	
		1	**014-0816**	1	SETSCREW	
	3	1	**8T-8737**	1	PLUG-SEAL	
	4	1	**3E-3389**	1	WEDGE-RECEPTACLE LOCK	
C	5	1	**8T-8729**	3	PIN-CONNECTOR	
	6	1	**6V-8369**	1	NUT (7/16-28 THD)	
	7	1	**2H-3920**	1	LOCKWASHER (11.38MM ID)	
C	8	1	**9W-0852**	4	PIN-CONNECTOR	

C-CHANGE FROM PREVIOUS TYPE

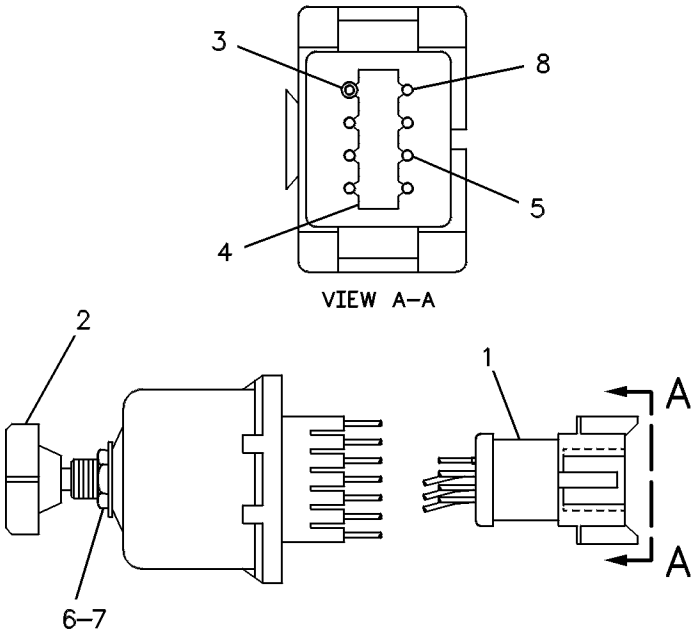

GRAPHIC #1 g00120668

7E-8098 THERMOCOUPLE GP

S/N: 2GR1-2692

PART OF 107-8762 ENGINE AR

SMCS-7498 **i00095543**

NOTE	REF NO	GRAPHIC REF	PART NUMBER	QTY	PART NAME 1 2 3 4 5 6 (PRODUCT LEVEL)	SEE PAGE
	1	1	**7E-6830**	1	THERMOCOUPLE	
	2	1	**6K-8179**	1	CLIP (4.76MM ID)	
	3	1	**5N-2126**	1	ADAPTER	

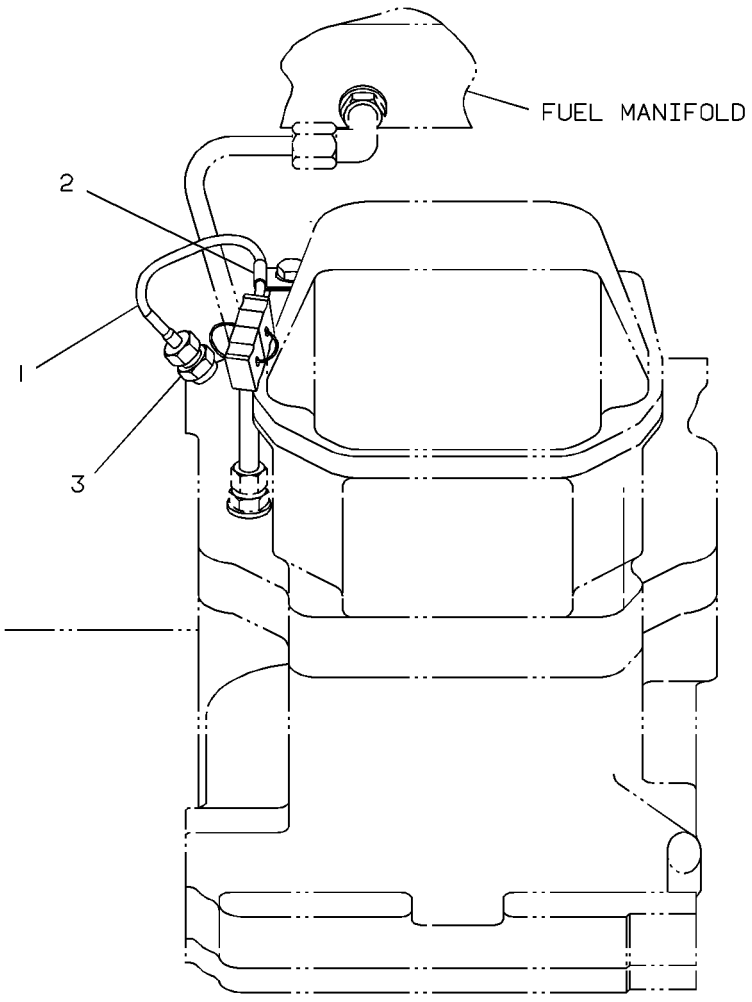

GRAPHIC #1 g00082360

109-6904 WARNING GP-BACKUP

S/N: 7HR1-UP

PART OF 109-6821 ELECTRICAL AR

SMCS-7406 **i01495606**

NOTE	REF NO	GRAPHIC REF	PART NUMBER	QTY	PART NAME 1 2 3 4 5 6 (PRODUCT LEVEL)	SEE PAGE
	1	1	**123-6449**	1	ALARM AS-BACKUP	
		1	**3E-3365**	1	WEDGE-RECEPTACLE LOCK (2 PIN)	
		1	**102-8802**	1	KIT-RECEPTACLE (2 PIN)	
					(INCLUDES RECEPTACLE AS AND WEDGE)	
D		1	**5P-5677**		WIRE (18 GA) (.6M)	
		1	**8T-8729**	2	PIN-CONNECTOR	
JM	2	1	**8T-4198**	2	BOLT (M10X1.5X100MM)	
J	3	1	**8T-4121**	2	WASHER-HARD (11X21X2.5MM THK)	
J	4	1	**9U-2277**	1	CLIP AS	
L	5	1	**5P-9085**	1	CLIP	
LM	6	1	**8T-4137**	1	BOLT (M10X1.5X20MM)	
L	7	1	**8T-4121**	1	WASHER-HARD (11X21X2.5MM THK)	
N	8	1	**9X-6772**	1	STRAP-CABLE	

D-ORDER BY THE METER
J-FOR USE WITH 992G & 854G ONLY
L-FOR USE WITH 988G & 834G ONLY
M-METRIC PART
N-FOR USE WITH 844 & 990 ONLY

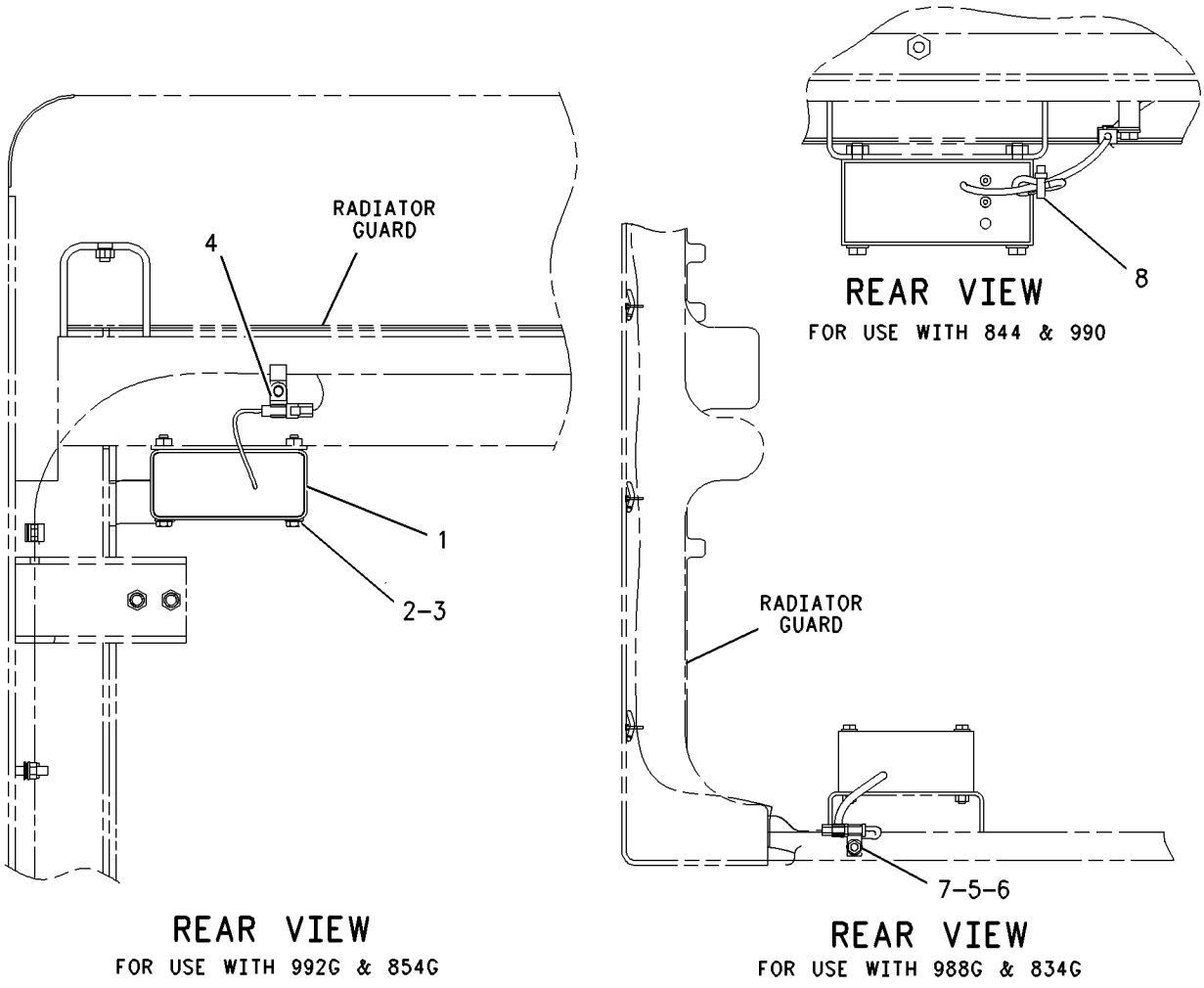

GRAPHIC #1 g00776469

109-6864 WIRING GP-BUMPER

S/N: 7HR1-UP

PART OF 169-9053, 169-9054, 169-9055, 169-9056 BUMPER AR-REAR, 109-6821 ELECTRICAL AR

ALSO AN ATTACHMENT

SMCS-1408 **i01541586**

NOTE	REF NO	GRAPHIC REF	PART NUMBER	QTY	PART NAME 1 2 3 4 5 6 (PRODUCT LEVEL)	SEE PAGE
	1	1	**115-5599**	1	HARNESS AS-BUMPER	
		1	**102-8805**	1	KIT-RECEPTACLE (6 PIN)	
					(INCLUDES RECEPTACLE AS & WEDGE)	
		1	**8T-8737**	7	PLUG-SEAL	
		1	**155-2260**	1	KIT-CONNECTING PLUG (3 PIN)	
		1	**155-2270**	1	KIT-CONNECTING PLUG (2 PIN)	
		1	**155-2255**	1	KIT-CONNECTING PLUG (12 PIN)	
		1	**155-2274**	1	KIT-CONNECTING PLUG (6 PIN)	
					(EACH KIT-CONNECTING PLUG INCLUDES PLUG AS & WEDGE)	
		1	**3S-2093**	1	STRAP-CABLE	
	2	1	**127-9323**	1	BRACKET AS	
M	3	1	**8T-3490**	1	NUT-WELD (M10X1.5 THD)	
M	4	1	**8T-4137**	11	BOLT (M10X1.5X20MM)	
	5	1	**8T-4121**	12	WASHER-HARD (11X21X2.5MM THK)	
	6	1	**115-3073**	1	CLIP AS-CONNECTING	
	7	1	**9U-2277**	1	CLIP AS	
		1	**8C-3334**	1	RIVET-TUBULAR	
	8	1	**4K-8864**	5	CLIP	
	9	1	**4K-8302**	3	CLIP	
M	10	1	**8T-4179**	5	BOLT (M12X1.75X20MM)	
	11	1	**8T-4223**	5	WASHER-HARD (13.5X25.5X3MM THK)	
	12	1	**2T-3019**	1	CLIP	
	13	1	**119-4604**	1	CLIP AS-CONNECTING	
Y	14	1	**126-0182**	1	BUFFER GP-SENSOR (FUEL LEVEL)	240
	15	1	**0A-3721**	1	CLIP (33MM ID)	
	16	1	**8M-2772**	1	CLIP	
M	17	1	**8T-4136**	1	BOLT (M10X1.5X25MM)	
	18	1	**9X-7449**	1	GROMMET	

M-METRIC PART
Y-SEPARATE ILLUSTRATION

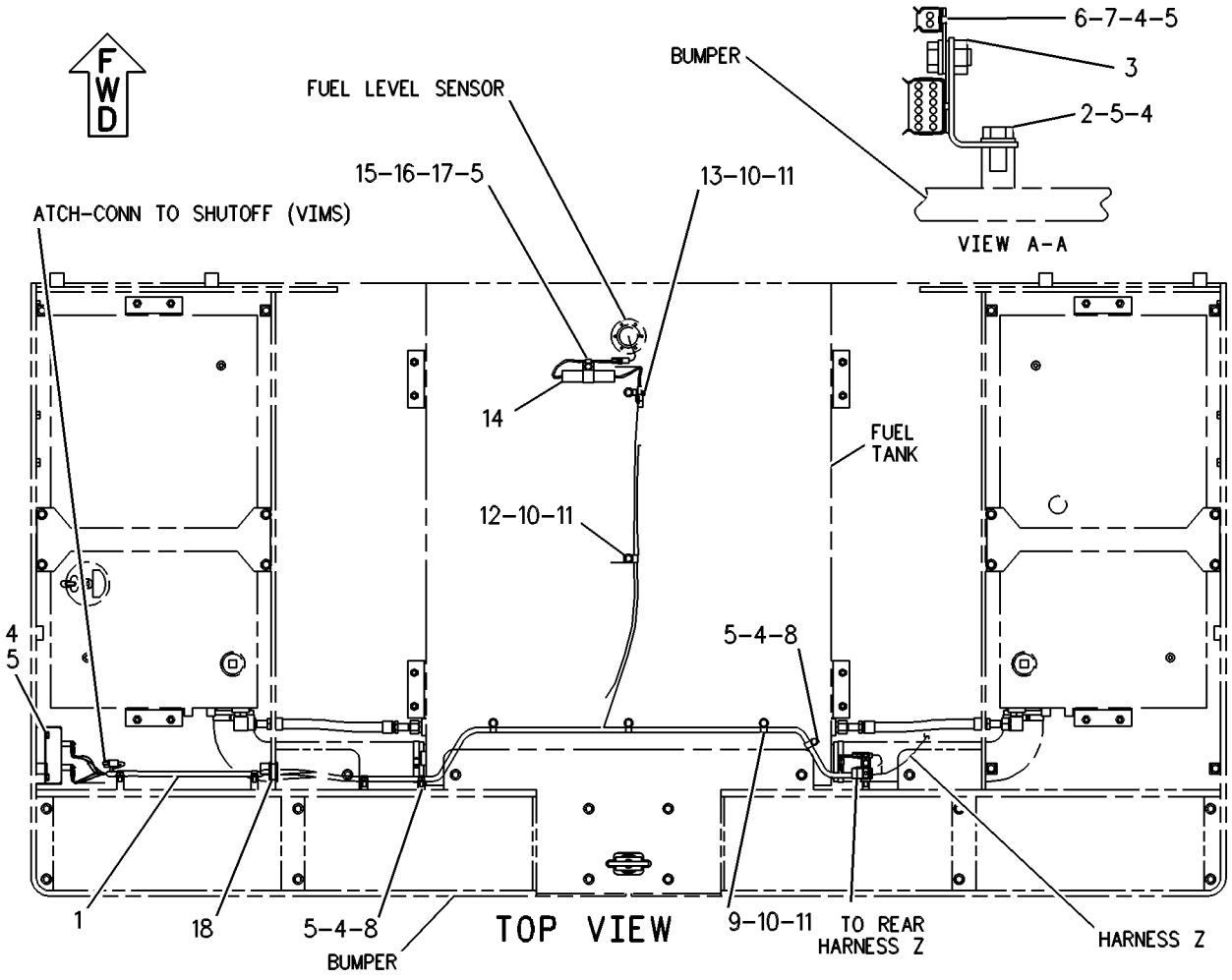

GRAPHIC #1 g00263206

ELECTRICAL AND STARTING SYSTEM

112-5766 WIRING GP-CAB

S/N: 7HR1-UP

PART OF 130-6906, 171-7047 CAB AR

SMCS-1408, 7301 **i01292716**

NOTE	REF NO	GRAPHIC REF	PART NUMBER	QTY	PART NAME 1 2 3 4 5 6 (PRODUCT LEVEL)	SEE PAGE
	1	1	**9U-4990**	1	GASKET	
	2	1	**9U-4989**	1	PLATE	
	3	1	**6V-2687**	8	SCREW-PAN HEAD (10-24X1IN)	
M	4	1	**8T-4200**	4	BOLT (M8X1.25X16MM)	
	5	1	**8T-4224**	4	WASHER-HARD (8.8X16X2MM THK)	
	6	1	**8M-2770**	1	CLIP (12.7MM ID) (SLOT)	
	7	1	**8T-4121**	2	WASHER-HARD (2.5MM THK)	
M	8	1	**8T-4137**	1	BOLT (M10X1.50X20MM)	
	9	1	**8X-5802**	1	STRAP AS-GROUND	
	10	1	**8T-4223**	3	WASHER-HARD (3MM THK)	
M	11	1	**8T-4244**	3	NUT (M12X1.75 THD)	
	12	1	**7C-4354**	2	CLIP (25.40MM ID)	
M	13	1	**8T-4133**	1	NUT (M10X1.50 THD)	
	14	1	**126-9174**	1	GASKET	
	15	1	**126-9173**	1	PLATE	
	16	1	**3S-2093**	2	STRAP-CABLE (1.75IN DIA)	
	17	1	**9W-2111**	1	LAMP (28 VOLT)	
	18	1	**7K-1181**	2	STRAP-CABLE (4IN DIA)	
	19	1	**7N-5876**	11	LAMP-MINIATURE (28 VOLT)	
	20	1	**124-3719**	1	PLATE	
	21	1	**124-3720**	1	GASKET	
	22	1	**145-6621**	1	PLATE	
	23	1	**145-6620**	1	GASKET	
	24	2	**8M-2770**	2	CLIP (12.7MM ID) (SLOT)	
	25	2	**8T-4121**	7	WASHER-HARD (2.5MM THK)	
M	26	2	**8T-4137**	5	BOLT (M10X1.50X20MM)	
	27	2	**7C-4354**	1	CLIP (25.40MM ID)	
	28	2	**177-3538**	1	HARNESS AS	
	29	2	**3S-2093**	28	STRAP-CABLE (1.75IN DIA)	
M	30	2	**8T-4195**	1	BOLT (M10X1.50X30MM)	
	31	2	**4S-4455**	1	CLIP (31.75MM ID)	
	32	2	**177-3537**	1	HARNESS AS	
	33	2	**155-4816**	1	HARNESS AS	
M	34	2	**8T-4191**	1	BOLT (M10X1.50X16MM)	
	35	2	**9X-8250**	1	CLIP (SLOT)	
	36	2	**175-3244**	1	SWITCH AS-PRESSURE (REAR BRAKE ACCUMULATOR)	
		2	**102-8803**	1	KIT-RECEPTACLE (3 PIN)	
					(INCLUDES WEDGE)	
		2	**3E-3371**	1	WEDGE-RECEPTACLE LOCK	
		2	**8T-8729**	3	PIN-CONNECTOR	
	37	2	**3J-1907**	2	SEAL-O-RING (11.89MM ID)	
	38	2	**2S-1647**	3	GROMMET	
	39	2	**124-2970**	1	HARNESS AS	
	40	2	**9M-8406**	6	CLIP (15.8MM ID) (SLOT)	
	41	2	**175-3244**	1	SWITCH AS-PRESSURE (FRONT BRAKE ACCUMULATOR)	
		2	**102-8803**	1	KIT-RECEPTACLE (3 PIN)	
					(INCLUDES WEDGE)	
		2	**3E-3371**	1	WEDGE-RECEPTACLE LOCK	
		2	**8T-8729**	3	PIN-CONNECTOR	
	42	2	**8T-4224**	4	WASHER-HARD (8.8X16X2MM THK)	
M	43	2	**8T-4189**	4	BOLT (M8X1.25X20MM)	
	44	2	**9D-3767**	1	PLUG-BUTTON	
	45	2	**7D-1553**	1	CLIP (47.62MM ID)	

M-METRIC PART

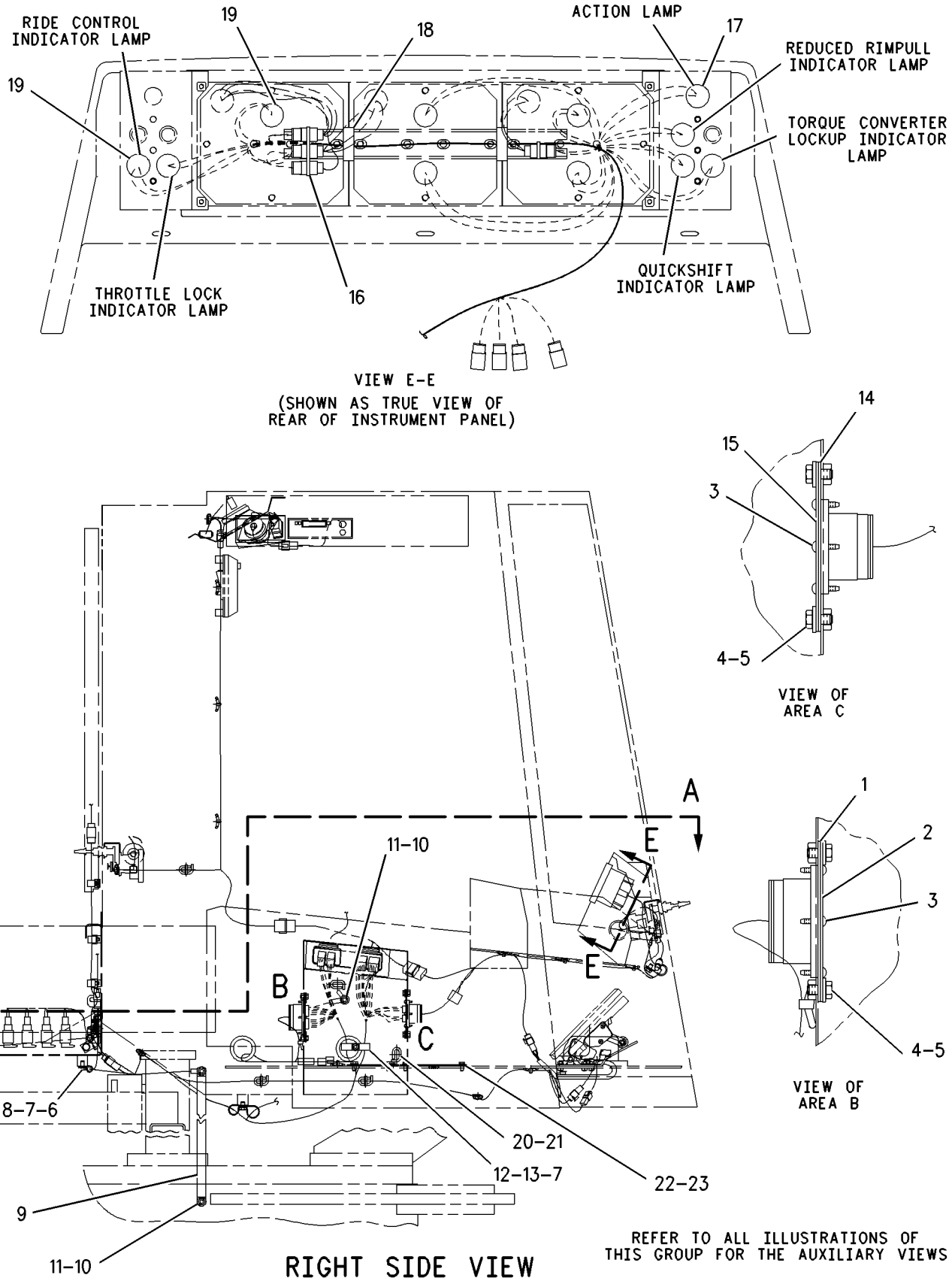

GRAPHIC #1 g00684901

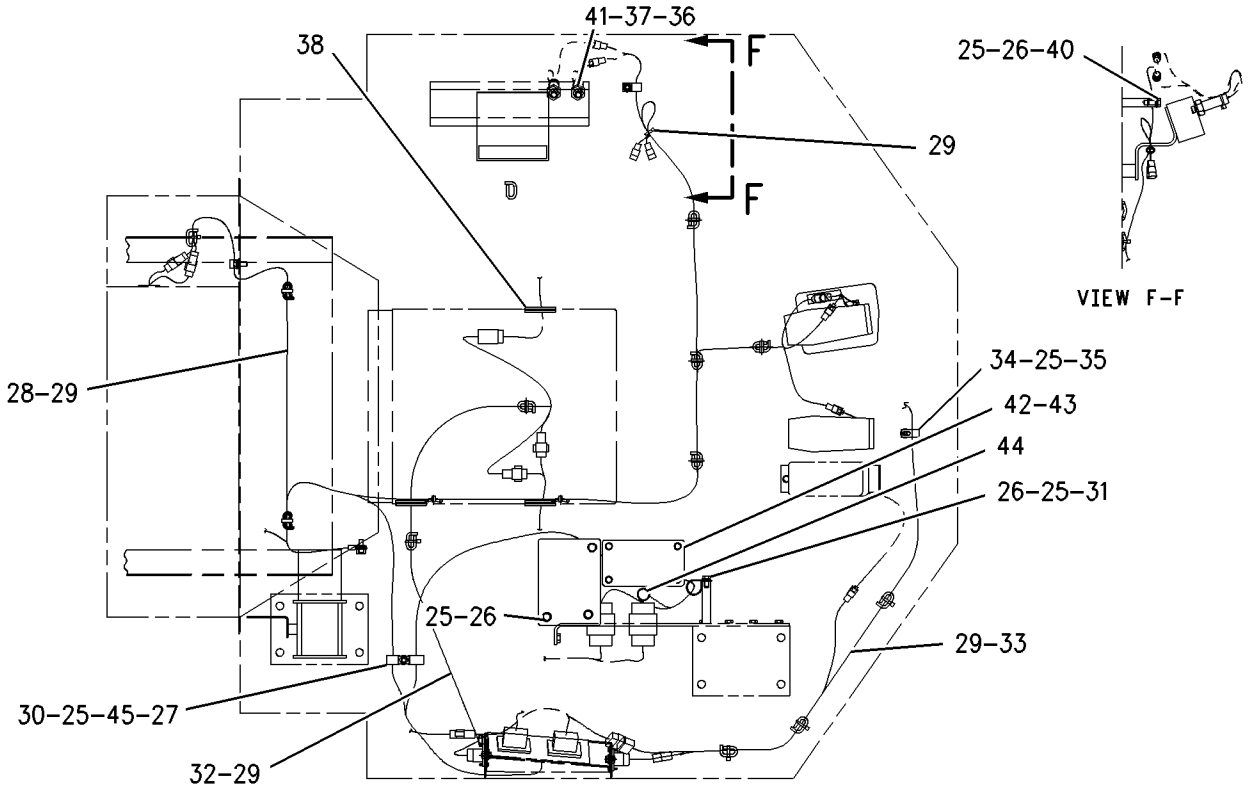

SECTION A-A
GRAPHIC 1

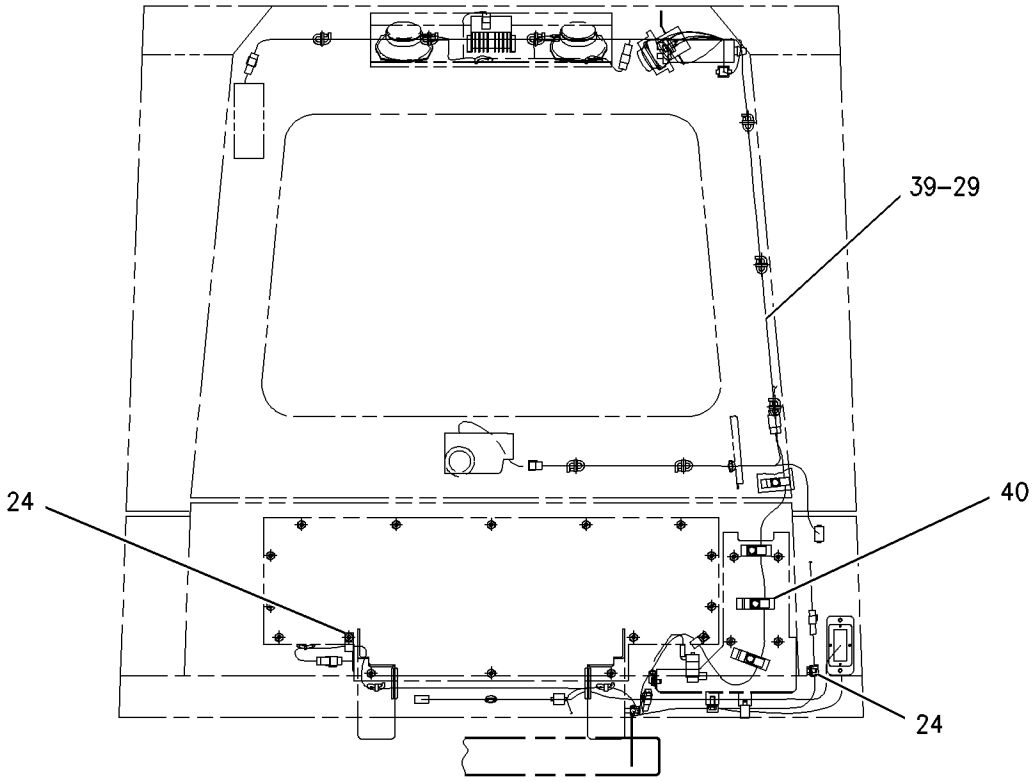

REFER TO ALL ILLUSTRATIONS OF THIS GROUP FOR AUXILIARY VIEWS

REAR VIEW

GRAPHIC #2

g00681779

MEMORANDA

131-8156 WIRING GP-CAB

S/N: 7HR1-UP
PART OF 131-8155 VIMS AR
AN ATTACHMENT

SMCS-1408, 7301 **i01509802**

NOTE	REF NO	GRAPHIC REF	PART NUMBER	QTY	PART NAME 1 2 3 4 5 6 (PRODUCT LEVEL)	SEE PAGE
	1	1	**5S-4245**	4	SCREW-MACHINE (4-40X0.5IN)	
	2	1	**6V-9497**	4	WASHER-HARD (0.5MM THK)	
	3	1	**6B-4540**	4	NUT (4-40 THD)	
	4	1	**130-6253**	1	HARNESS AS	
	5	1	**109-0366**	1	FILM-INSTRUCTION (TELEMETRY)	
Y	6	1	**112-9779**	2	SENSOR GP-PRESSURE (BRAKE OIL)	330
	7	1	**9X-0261**	2	ADAPTER	
	8	1	**3J-1907**	4	SEAL-O-RING	
	9	1	**3J-7354**	2	SEAL-O-RING	
	10	1	**3E-7410**	2	TEE-O-RING	
	11	1	**188-3984**	1	SWITCH AS-PUSH (PAYLOAD CONTROL STORE)	
		1	**3K-0835**	1	NUT (5/8-24 THD)	
		1	**6F-0253**	1	LOCKWASHER	
		1	**3E-3371**	1	WEDGE-RECEPTACLE LOCK (3 PIN)	
		1	**186-3735**	3	PIN-CONNECTOR	
		1	**102-8803**	1	KIT-RECEPTACLE (3 PIN)	
					(INCLUDES RECEPTACLE AS & WEDGE)	

Y-SEPARATE ILLUSTRATION

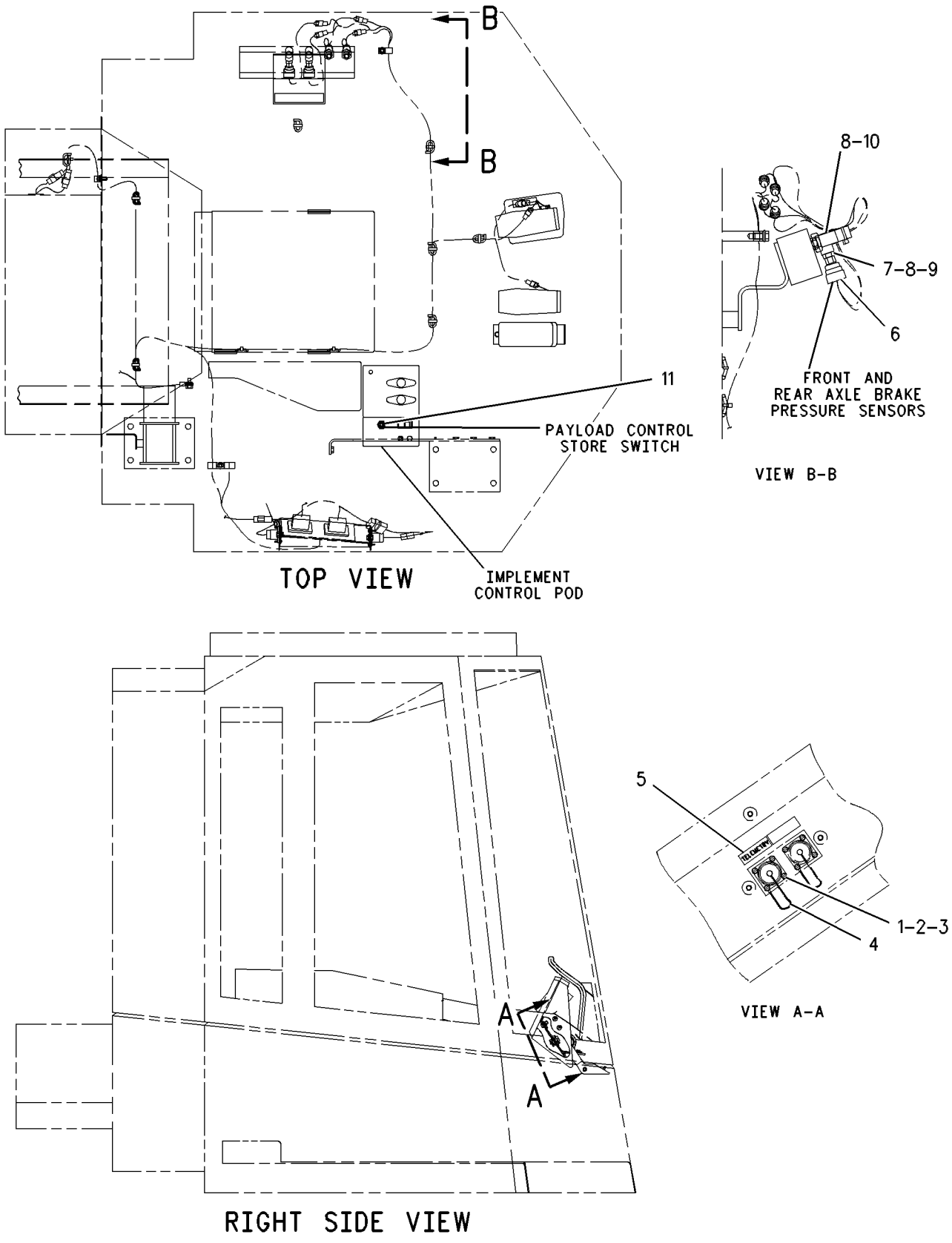

GRAPHIC #1 g00291695

ELECTRICAL AND STARTING SYSTEM

112-6045 WIRING GP-ENGINE

S/N: 2GR1-1297

PART OF 107-8762 ENGINE AR

SMCS-1403, 1408 **i01202501**

NOTE	REF NO	GRAPHIC REF	PART NUMBER	QTY	PART NAME 1 2 3 4 5 6 (PRODUCT LEVEL)	SEE PAGE
	1	1	**124-0289**	2	CLIP (25.4MM ID)	
	2	1	**0S-0509**	15	BOLT (3/8-16X.75IN)	
	3	1,2	**5M-2894**	29	WASHER (2.5MM THK)	
	4	1,2	**9S-8752**	5	NUT (3/8-16 THD)	
	5	1,2	**4P-8134**	36	CLIP (10.5MM ID)	
	6	1,2	**9X-6772**	67	STRAP-CABLE	
	7	1	**9N-1909**	1	BRACKET	
Y	8	1	**109-4367**	2	SENSOR GP-EXHAUST TEMPERATURE (LH/RH TURBO)	320
	9	1	**8L-2786**	1	SEAL-O-RING (16.36MM ID)	
Y	10	1	*127-1008*	1	SENSOR GP-SPEED (ENGINE SPEED TIMING)	346
	11	1	**5P-8245**	2	WASHER-HARD (3MM THK)	
	12	1	**0S-1620**	1	BOLT (1/2-13X.75IN)	
	13	1	**3K-6905**	1	VALVE-BREATHER	
	14	1,2	**6V-5048**	12	SEAL-O-RING (8.92MM ID)	
	15	1	**9X-0263**	1	ADAPTER	
Y	16A	1	**103-6093**	1	SENSOR GP-PRESSURE (CRANKCASE)	329
Y	16B	1	**103-6093**	1	SENSOR GP-PRESSURE (ATMOSPHERE)	329
Y	16C	2	**103-6093**	1	SENSOR GP-PRESSURE (RH TURBO INLET)	329
Y	16D	2	**103-6093**	1	SENSOR GP-PRESSURE (LH TURBO INLET)	329
	17	1,2	**0S-1594**	3	BOLT (3/8-16X1 IN)	
	18	1	**9L-9132**	2	WASHER (2.5MM THK)	
	19	1	**6V-1889**	1	CLIP (28.58MM ID)	
	20	1	**7N-2256**	1	PLATE	
	21	1	**6H-1717**	1	BOLT (1/2-13X1.125IN)	
	22	1	**6W-6672**	2	SPACER (38MM THK)	
	23	1	**117-0067**	1	ELBOW (90 DEGREE)	
	24	1,2	**4P-7581**	12	CLIP (10.5MM ID)	
	25	1	**120-4351**	1	PLATE	
	26	1	**7E-6016**	1	GASKET	
	27	1	**7E-5326**	1	COVER	
	28	1	**8T-6767**	2	PLUG-PIPE (3/8-18 NPTF THD)	
	29	1	**3K-0360**	1	SEAL-O-RING (16.36MM ID)	
	30	1	**102-2240**	1	SENSOR GP-TEMPERATURE (COOLANT)	
		1	**3E-3371**	1	WEDGE-RECEPTACLE LOCK	
		1	**8T-8729**	3	PIN-CONNECTOR	
E		1	**9X-1813**		SLEEVE (31CM)	
	31	1	**7W-6492**	1	PLUG-PIPE (1/2-14 NPTF THD)	
	32	2	**4P-7428**	3	CLIP (13.5MM ID)	
	33	1,2	**3H-7654**	8	WASHER (3MM THK)	
	34	2	**0S-1621**	2	BOLT (1/2-13X1IN)	
	35	2	**1F-7958**	2	NUT-FULL (1/2-13 THD)	
	36	2	**5V-6949**	1	STRIP	
	37	2	**2A-1531**	3	BOLT (1/2-13X6.5IN)	
	38	2	**117-0069**	1	BLOCK-SENSOR MOUNTING	
	39	2	**9X-0262**	3	ADAPTER	
	40	2	**103-6091**	1	SENSOR GP-PRESSURE (TURBO OUTLET)	
		2	**3E-3368**	1	WEDGE-PLUG LOCK	
		2	**8T-8730**	3	SOCKET-CONNECTOR	
E		2	**9X-1813**		SLEEVE (34CM)	
	41	2	**8D-9059**	1	BRACKET	
	42	2	**114-5333**	1	SWITCH AS-PRESSURE (REFRIGERANT)	
		2	**3E-3365**	1	WEDGE-RECEPTACLE LOCK	
		2	**8T-8729**	2	PIN-CONNECTOR	
	43	1,2	**9U-2277**	5	CLIP AS (10.5MM ID)	
	44	2	**8M-2771**	1	CLIP (6.35MM ID)	
	45	2	**4P-7429**	2	CLIP (13.5MM ID)	

112-6045 **WIRING GP-ENGINE** *(contd.)* **i01202501**

NOTE	REF NO	GRAPHIC REF	PART NUMBER	QTY	PART NAME 1 2 3 4 5 6 (PRODUCT LEVEL)	SEE PAGE
	46	1,2	**0S-1588**	5	BOLT (3/8-16X1.25IN)	
	47	2	**0T-0102**	2	BOLT (3/8-16X0.625IN)	
	48	2	**121-5729**	1	ELBOW	
	49	2	**117-0068**	1	HOSE AS	
	50	2	**030-7946**	1	ELBOW (7/16-20 STR THD)	
	51	1	**4N-3841**	1	GASKET	
Y	52	1	**138-3672**	1	SWITCH GP-FLOW (COOLANT)	366
	53	1	**9M-1974**	2	WASHER-HARD (2MM THK)	
	54	1	**2B-2695**	2	BOLT (5/16-18X.875IN)	
	55	1	**6T-2723**	1	BRACKET	
	56	1	**4E-0718**	1	WIRE AS	
	57	1	**2H-3855**	1	BOLT (1/2-13X.875IN)	
	58	1	**4B-4281**	1	WASHER (2.5MM THK)	
	59	1	**6V-2455**	1	SENSOR GP-SPEED (ENGINE)	
	60	1	**9X-0435**	1	ADAPTER	
Y	61	1	**103-6092**	1	SENSOR GP-PRESSURE (ENGINE OIL)	328
	62	1	**0S-1619**	2	BOLT (3/8-16X3.0IN)	
	63	1	**6K-8179**	1	CLIP (4.76MM ID)	
	64	1	**112-6046**	1	HARNESS AS-WIRING	

E-ORDER BY THE CENTIMETER
Y-SEPARATE ILLUSTRATION

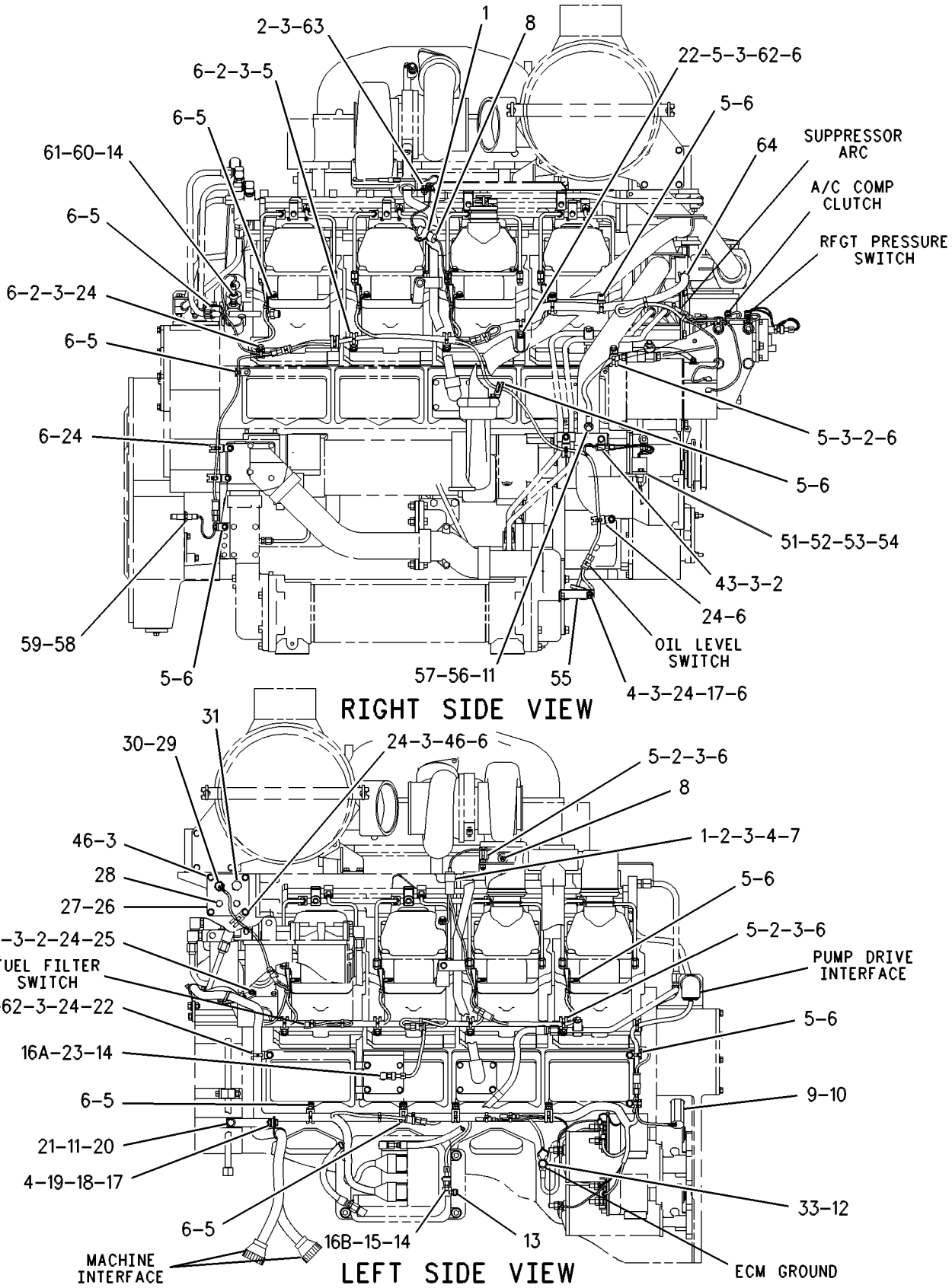

GRAPHIC #1 g00640375

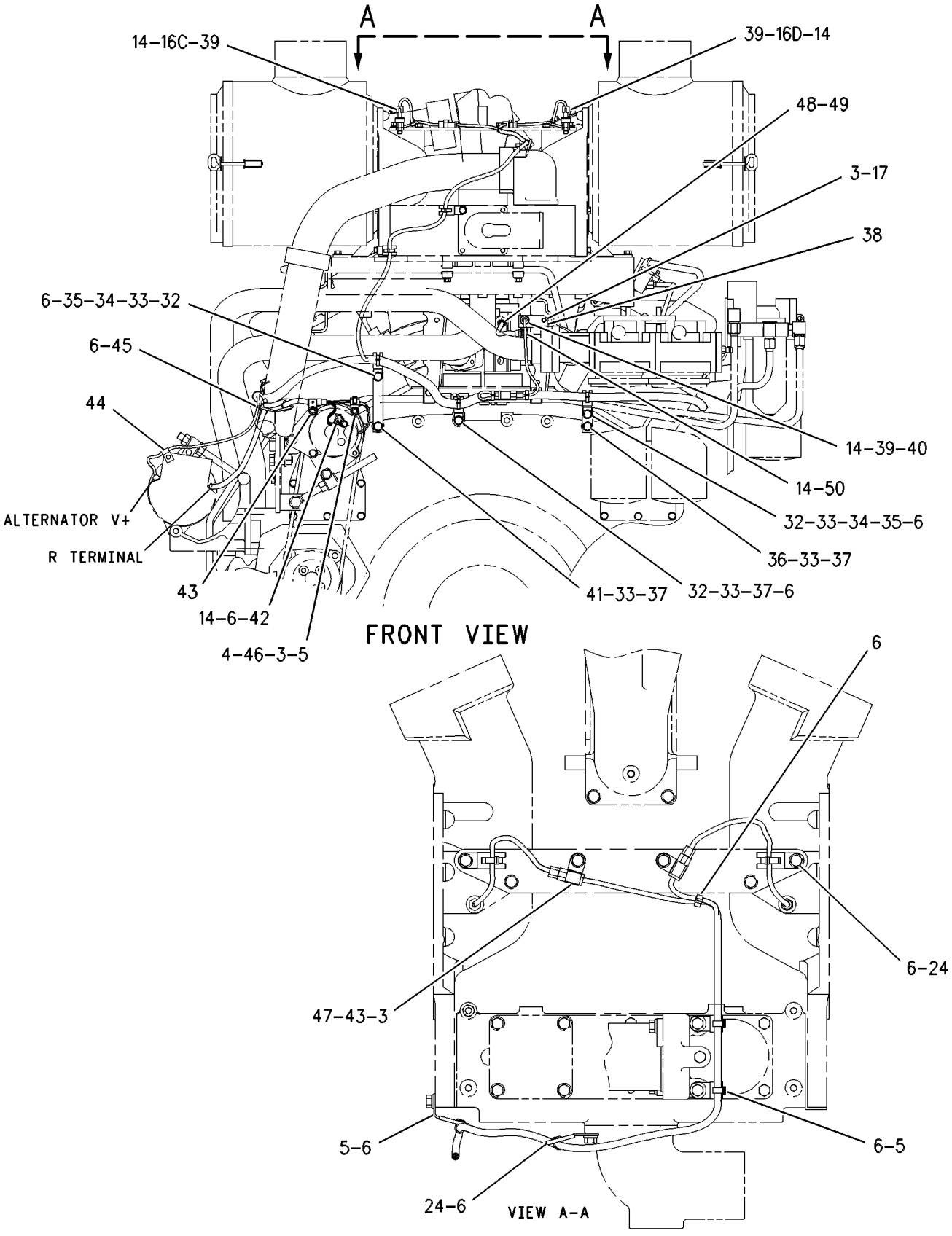

GRAPHIC #2

g00640376

112-6045 WIRING GP-ENGINE

S/N: 2GR1298-1716

PART OF 107-8762 ENGINE AR

SMCS-1403, 1408 **i01197784**

NOTE	REF NO	GRAPHIC REF	PART NUMBER	QTY	PART NAME 1 2 3 4 5 6 (PRODUCT LEVEL)	SEE PAGE
	1	1	**124-0289**	2	CLIP (25.4MM ID)	
	2	1	**0S-0509**	16	BOLT (3/8-16X.75IN)	
	3	1,2	**5M-2894**	32	WASHER (2.5MM THK)	
	4	1,2	**9S-8752**	5	NUT (3/8-16 THD)	
	5	1,2	**4P-8134**	43	CLIP (10.5MM ID)	
	6	1,2	**9X-6772**	92	STRAP-CABLE	
	7	1	**9N-1909**	1	BRACKET	
Y	8	1	**109-4367**	2	SENSOR GP-EXHAUST TEMPERATURE (LH / RH TURBO)	320
	9	1	**8L-2786**	1	SEAL-O-RING (16.36MM ID)	
Y	10	1	**129-6628**	1	SENSOR GP-SPEED (ENGINE SPEED/TIMING)	347
	11	1	**5P-8245**	2	WASHER-HARD (3MM THK)	
	12	1	**153-7485**	1	WIRE AS-ALTERNATOR GROUND	
	13	1	**3K-6905**	1	VALVE-BREATHER	
	14	1,2	**6V-5048**	12	SEAL-O-RING (8.92MM ID)	
	15	1	**9X-0263**	1	ADAPTER	
Y	16	2	**143-9696**	2	SENSOR GP-PRESSURE (RH/LH TURBO INLET)	338
	17	1,2	**0S-1594**	5	BOLT (3/8-16X1 IN)	
	18	1	**9L-9132**	2	WASHER (2.5MM THK)	
	19	1	**6V-1889**	1	CLIP (28.58MM ID)	
	20	1	**7N-2256**	1	PLATE	
	21	1	**6H-1717**	1	BOLT (1/2-13X1.125IN)	
	22	1	**6W-6672**	2	SPACER (38MM THK)	
	23	1	**117-0067**	1	ELBOW (90 DEGREE)	
	24	1,2	**4P-7581**	16	CLIP (10.5MM ID)	
	25	1	**120-4351**	2	PLATE	
	26	1	**7E-6016**	1	GASKET	
	27	1	**7E-5326**	1	COVER	
	28	1	**8T-6767**	2	PLUG-PIPE (3/8-18 NPTF THD)	
	29	1	**3K-0360**	1	SEAL-O-RING (16.36MM ID)	
	30	1	**102-2240**	1	SENSOR GP-TEMPERATURE (COOLANT)	
	31	1	**7W-6492**	1	PLUG-PIPE (1/2-14 NPTF THD)	
	32	2	**4P-7428**	5	CLIP (13.5MM ID)	
	33	1,2	**3H-7654**	8	WASHER (3MM THK)	
	34	2	**0S-1621**	2	BOLT (1/2-13X1IN)	
	35	2	**1F-7958**	2	NUT-FULL (1/2-13 THD)	
	36	2	**5V-6949**	1	STRIP	
	37	2	**2A-1531**	4	BOLT (1/2-13X6.5IN)	
	38	2	**117-0069**	1	BLOCK-SENSOR MOUNTING	
	39	2	**9X-0262**	3	ADAPTER	
Y	40	2	**143-9694**	1	SENSOR GP-PRESSURE (TURBO OUTLET)	336
	41	2	**8D-9059**	1	BRACKET	
	42	2	**114-5333**	1	SWITCH AS-PRESSURE (REFRIGERANT)	
	43	2	**9U-2277**	2	CLIP AS (10.5MM ID)	
	44	2	**8M-2771**	1	CLIP (6.35MM ID)	
	45	1,2	**4P-7429**	5	CLIP (13.5MM ID)	
	46	1,2	**0S-1588**	5	BOLT (3/8-16X1.25IN)	
	47	2	**0T-0102**	2	BOLT (3/8-16X0.625IN)	
	48	2	**121-5729**	1	ELBOW	
	49	2	**117-0068**	1	HOSE AS	
	50	2	**030-7946**	1	ELBOW (7/16-20 STR THD)	
	51	1	**4N-3841**	1	GASKET	
Y	52	1	**138-3672**	1	SWITCH GP-FLOW (COOLANT)	366
	53	1	**9M-1974**	2	WASHER-HARD (2MM THK)	
	54	1	**2B-2695**	2	BOLT (5/16-18X.875IN)	
	55	1	**6T-2723**	1	BRACKET	
	56	1	**1B-9575**	1	BOLT (5/16-18X1.75IN)	

112-6045 **WIRING GP-ENGINE** ***(contd.)*** **i01197784**

NOTE	REF NO	GRAPHIC REF	PART NUMBER	QTY	PART NAME 1 2 3 4 5 6 (PRODUCT LEVEL)	SEE PAGE
	57	1	**2H-3855**	1	BOLT (1/2-13X.875IN)	
	58	1	**4B-4281**	1	WASHER (2.5MM THK)	
	59	1	**6V-2455**	1	SENSOR GP-SPEED (ENGINE)	
	60	1	**9X-0435**	1	ADAPTER	
Y	61	1	**143-9695**	1	SENSOR GP-PRESSURE (ENGINE OIL)	337
	62	1	**0S-1619**	2	BOLT (3/8-16X3.0IN)	
	63	1	**3E-4352**	1	WASHER-HARD (2.5MM THK)	
	64	1	**152-0996**	1	HARNESS AS-WIRING	
	65	1	**0S-1620**	1	BOLT (1/2-13X.75IN)	
Y	66	1	**143-9696**	1	SENSOR GP-PRESSURE (CRANKCASE)	338
Y	67	1	**143-9696**	1	SENSOR GP-PRESSURE (ATMOSPHERE)	338

Y-SEPARATE ILLUSTRATION

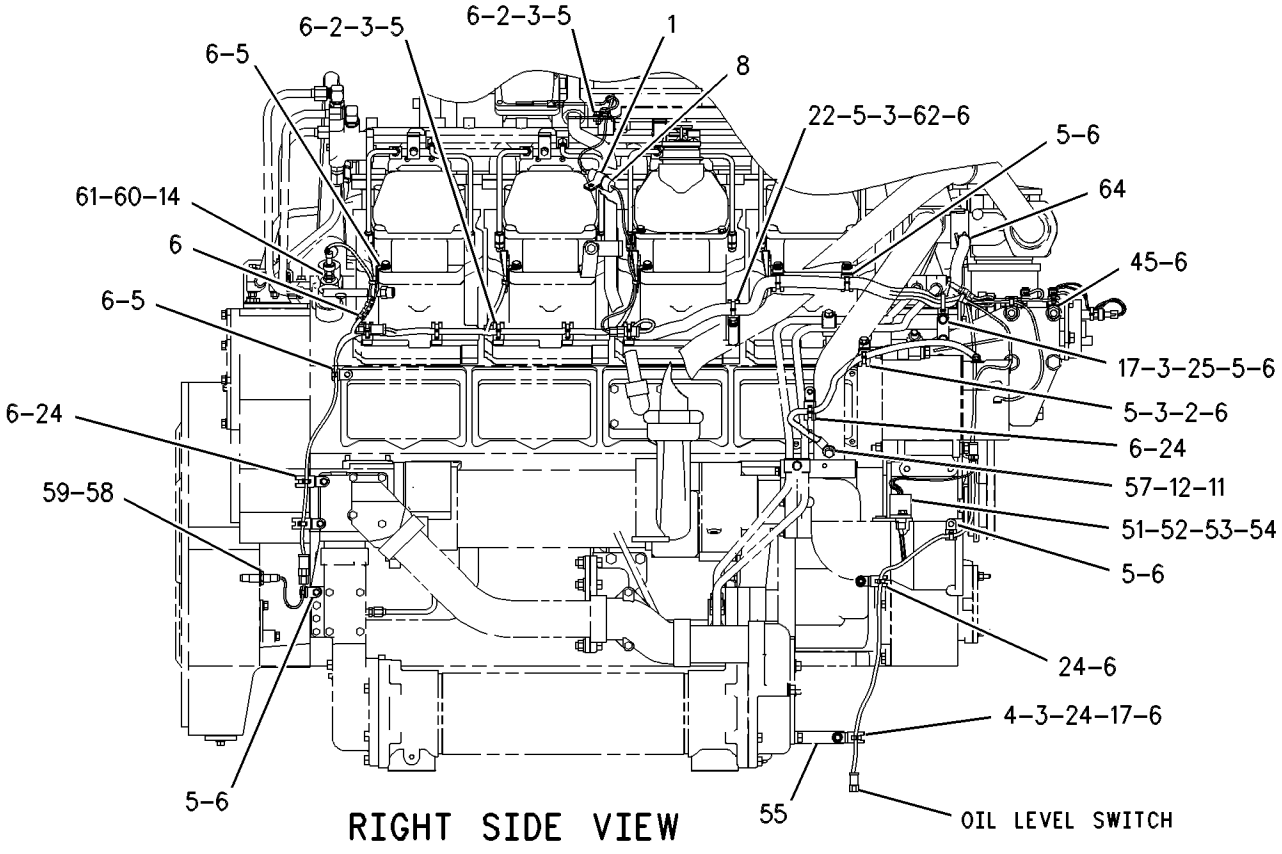

RIGHT SIDE VIEW

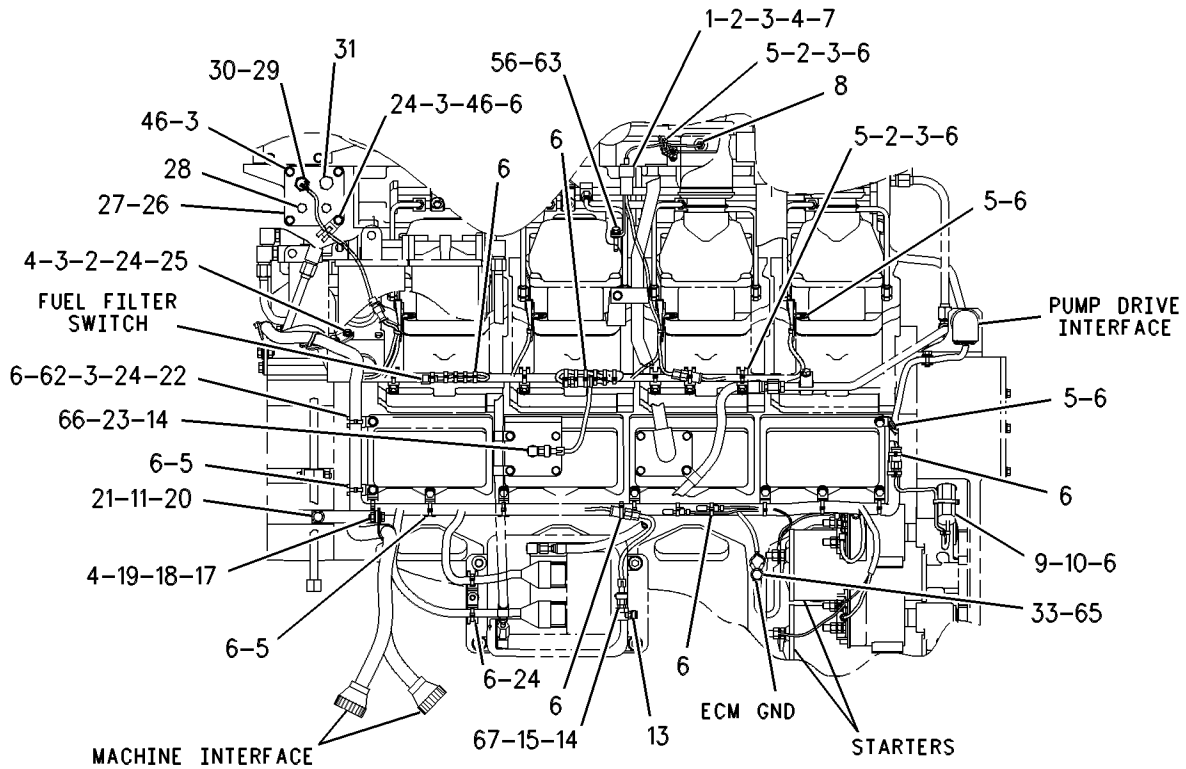

LEFT SIDE VIEW

GRAPHIC #1 g00393800

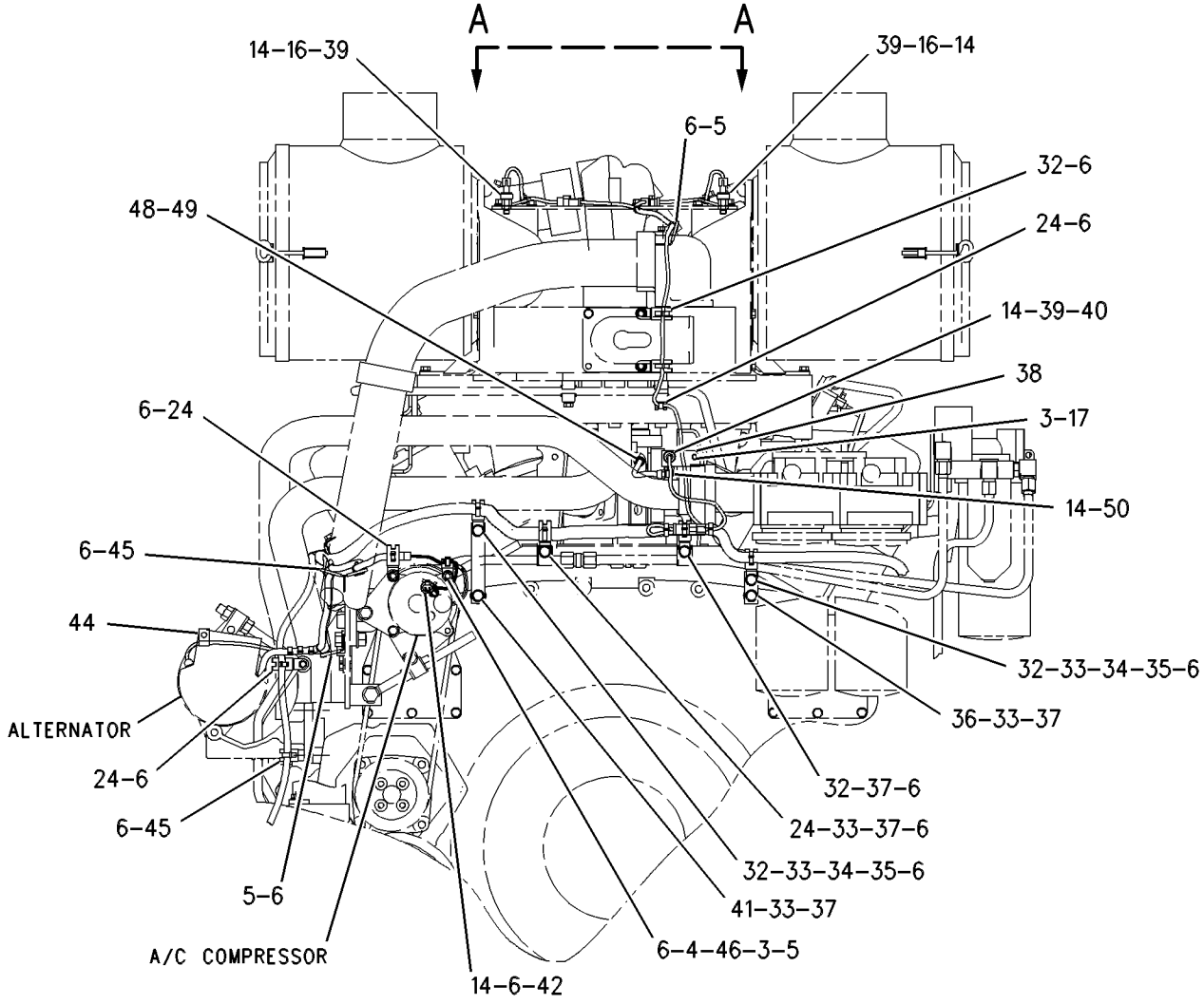

FRONT VIEW

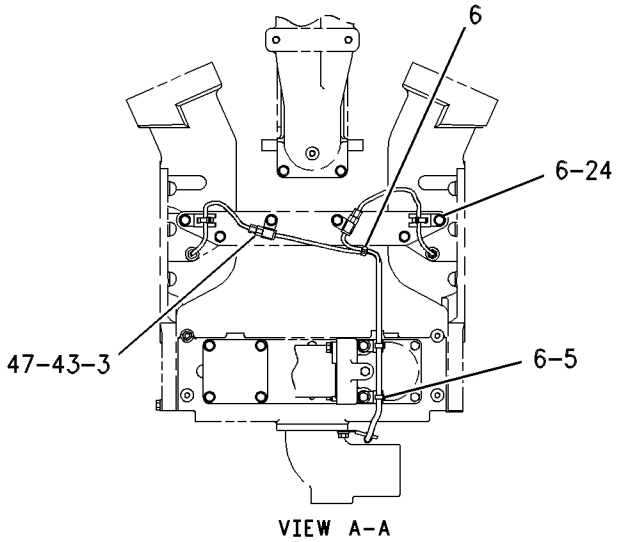

VIEW A-A

GRAPHIC #2 g00393805

ELECTRICAL AND STARTING SYSTEM

112-6045 WIRING GP-ENGINE

S/N: 2GR1717-1880

PART OF 107-8762 ENGINE AR

SMCS-1403, 1408 **i01197795**

NOTE	REF NO	GRAPHIC REF	PART NUMBER	QTY	PART NAME 1 2 3 4 5 6 (PRODUCT LEVEL)	SEE PAGE
	1	1	**124-0289**	2	CLIP (25.4MM ID)	
	2	1	**0S-0509**	16	BOLT (3/8-16X.75IN)	
	3	1,2	**5M-2894**	33	WASHER (2.5MM THK)	
	4	1,2	**9S-8752**	4	NUT (3/8-16 THD)	
	5	1,2	**4P-8134**	44	CLIP (10.5MM ID)	
	6	1,2	**9X-6772**	93	STRAP-CABLE	
	7	1	**1A-5183**	1	BOLT (3/8-16X4.75IN)	
	8	1	**163-7882**	2	SENSOR GP-EXHAUST TEMPERATURE (LH/RH TURBO)	
		1	**3E-3371**	1	WEDGE-RECEPTACLE LOCK	
		1	**102-8803**	1	KIT-RECEPTACLE (3 PIN)	
					(INCLUDES WEDGE)	
		1	**8T-8729**	3	PIN-CONNECTOR	
		1	**9X-1813**		SLEEVE (31CM)	
	9	1	**8L-2786**	1	SEAL-O-RING (16.36MM ID)	
Y	10	1	**129-6628**	1	SENSOR GP-SPEED (ENGINE SPEED/TIMING)	347
	11	1	**5P-8245**	2	WASHER-HARD (3MM THK)	
	12	1	**153-7485**	1	WIRE AS-ALTERNATOR GROUND	
	13	1	**3K-6905**	1	VALVE-BREATHER	
	14	1,2	**6V-5048**	12	SEAL-O-RING (8.92MM ID)	
	15	1	**9X-0263**	1	ADAPTER	
Y	16	2	**143-9696**	2	SENSOR GP-PRESSURE (RH/LH TURBO INLET)	338
	17	1,2	**0S-1594**	6	BOLT (3/8-16X1 IN)	
	18	1	**9L-9132**	2	WASHER (2.5MM THK)	
	19	1	**6V-1889**	1	CLIP (28.58MM ID)	
	20	1	**7N-2256**	1	PLATE	
	21	1	**6H-1717**	1	BOLT (1/2-13X1.125IN)	
	22	1	**6W-6672**	2	SPACER (38MM THK)	
	23	1	**117-0067**	1	ELBOW (90 DEGREE)	
	24	1,2	**4P-7581**	16	CLIP (10.5MM ID)	
	25	1	**120-4351**	2	PLATE	
	26	1	**7E-6016**	1	GASKET	
	27	1	**7E-5326**	1	COVER	
	28	1	**8T-6767**	2	PLUG-PIPE (3/8-18 NPTF THD)	
	29	1	**3K-0360**	1	SEAL-O-RING (16.36MM ID)	
	30	1	**102-2240**	1	SENSOR GP-TEMPERATURE (COOLANT)	
	31	1	**7W-6492**	1	PLUG-PIPE (1/2-14 NPTF THD)	
	32	2	**4P-7428**	5	CLIP (13.5MM ID)	
	33	1,2	**3H-7654**	8	WASHER (3MM THK)	
	34	2	**0S-1621**	2	BOLT (1/2-13X1IN)	
	35	2	**1F-7958**	2	NUT-FULL (1/2-13 THD)	
	36	2	**5V-6949**	1	STRIP	
	37	2	**2A-1531**	4	BOLT (1/2-13X6.5IN)	
	38	2	**117-0069**	1	BLOCK-SENSOR MOUNTING	
	39	2	**9X-0262**	3	ADAPTER	
Y	40	2	**143-9694**	1	SENSOR GP-PRESSURE (TURBO OUTLET)	336
	41	2	**8D-9059**	1	BRACKET	
	42	2	**114-5333**	1	SWITCH AS-PRESSURE (REFRIGERANT)	
	43	2	**9U-2277**	2	CLIP AS (10.5MM ID)	
	44	2	**8M-2771**	1	CLIP (6.35MM ID)	
	45	1,2	**4P-7429**	5	CLIP (13.5MM ID)	
	46	1,2	**0S-1588**	5	BOLT (3/8-16X1.25IN)	
	47	2	**0T-0102**	2	BOLT (3/8-16X0.625IN)	
	48	2	**121-5729**	1	ELBOW	
	49	2	**117-0068**	1	HOSE AS	
	50	2	**030-7946**	1	ELBOW (7/16-20 STR THD)	
	51	1	**4N-3841**	1	GASKET	

112-6045 **WIRING GP-ENGINE** ***(contd.)*** **i01197795**

NOTE	REF NO	GRAPHIC REF	PART NUMBER	QTY	PART NAME 1 2 3 4 5 6 (PRODUCT LEVEL)	SEE PAGE
Y	52	1	**138-3672**	1	SWITCH GP-FLOW (COOLANT)	366
	53	1	**9M-1974**	2	WASHER-HARD (2MM THK)	
	54	1	**2B-2695**	2	BOLT (5/16-18X.875IN)	
	55	1	**6T-2723**	1	BRACKET	
	57	1	**2H-3855**	1	BOLT (1/2-13X.875IN)	
	58	1	**4B-4281**	1	WASHER (2.5MM THK)	
	59	1	**6V-2455**	1	SENSOR GP-SPEED (ENGINE)	
	60	1	**9X-0435**	1	ADAPTER	
Y	61	1	**143-9695**	1	SENSOR GP-PRESSURE (ENGINE OIL)	337
	62	1	**0S-1619**	2	BOLT (3/8-16X3.0IN)	
	64	1	**152-0996**	1	HARNESS AS-WIRING	
	65	1	**0S-1620**	1	BOLT (1/2-13X.75IN)	
Y	66	1	**143-9696**	1	SENSOR GP-PRESSURE (CRANKCASE)	338
Y	67	1	**143-9696**	1	SENSOR GP-PRESSURE (ATMOSPHERE)	338

Y-SEPARATE ILLUSTRATION

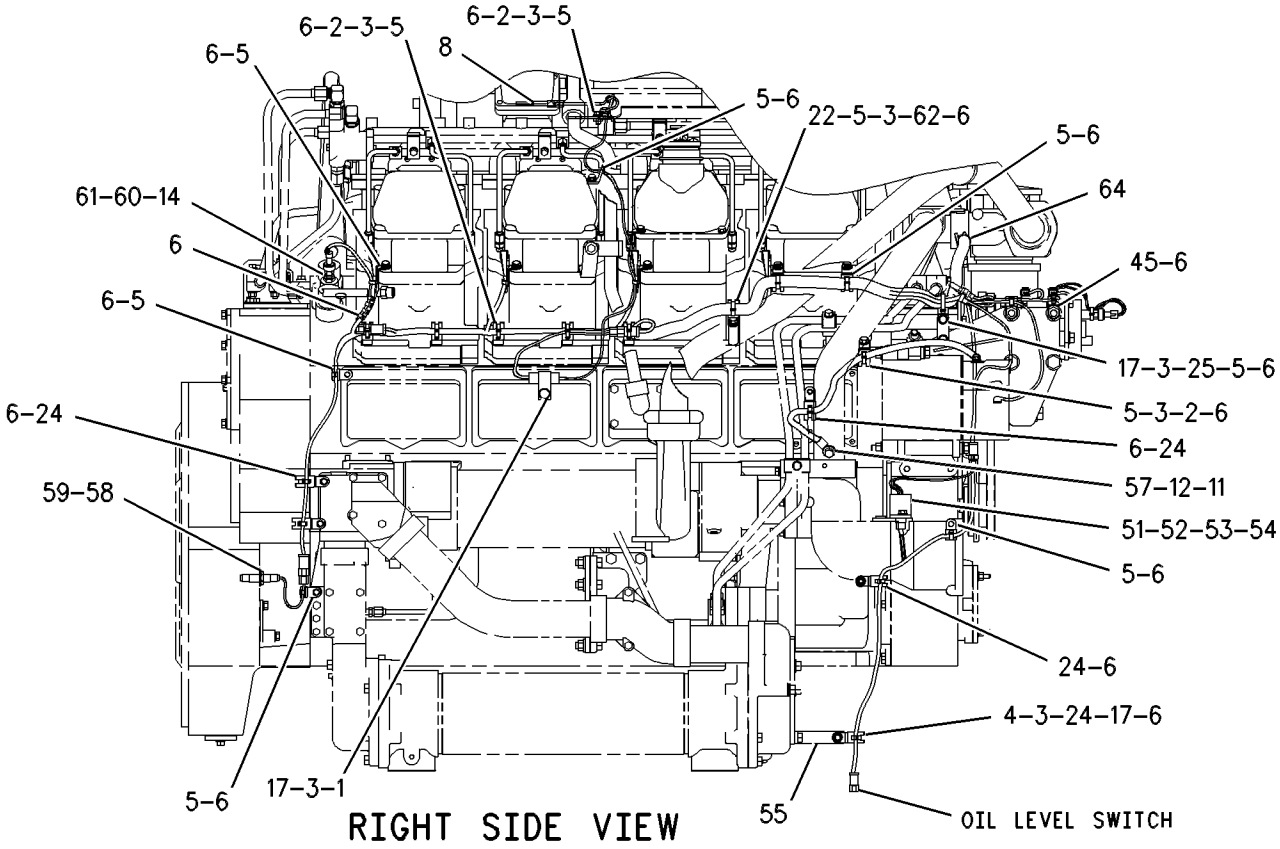

RIGHT SIDE VIEW

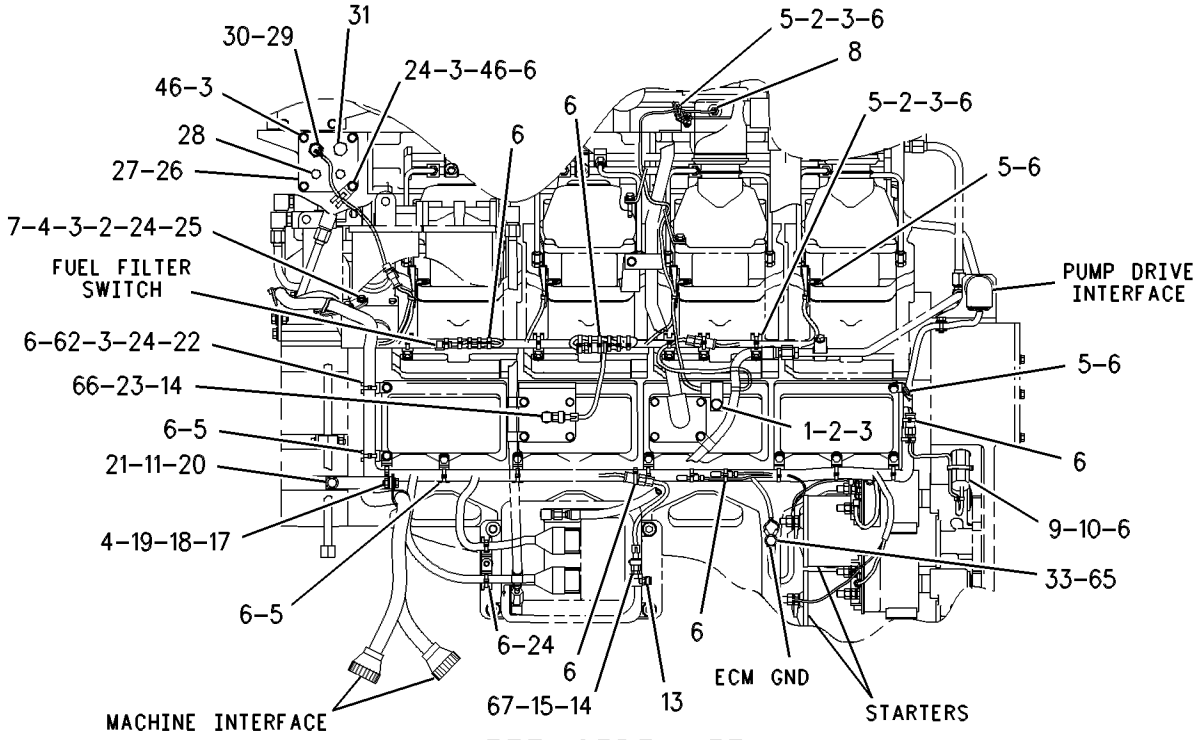

LEFT SIDE VIEW

GRAPHIC #1 g00535720

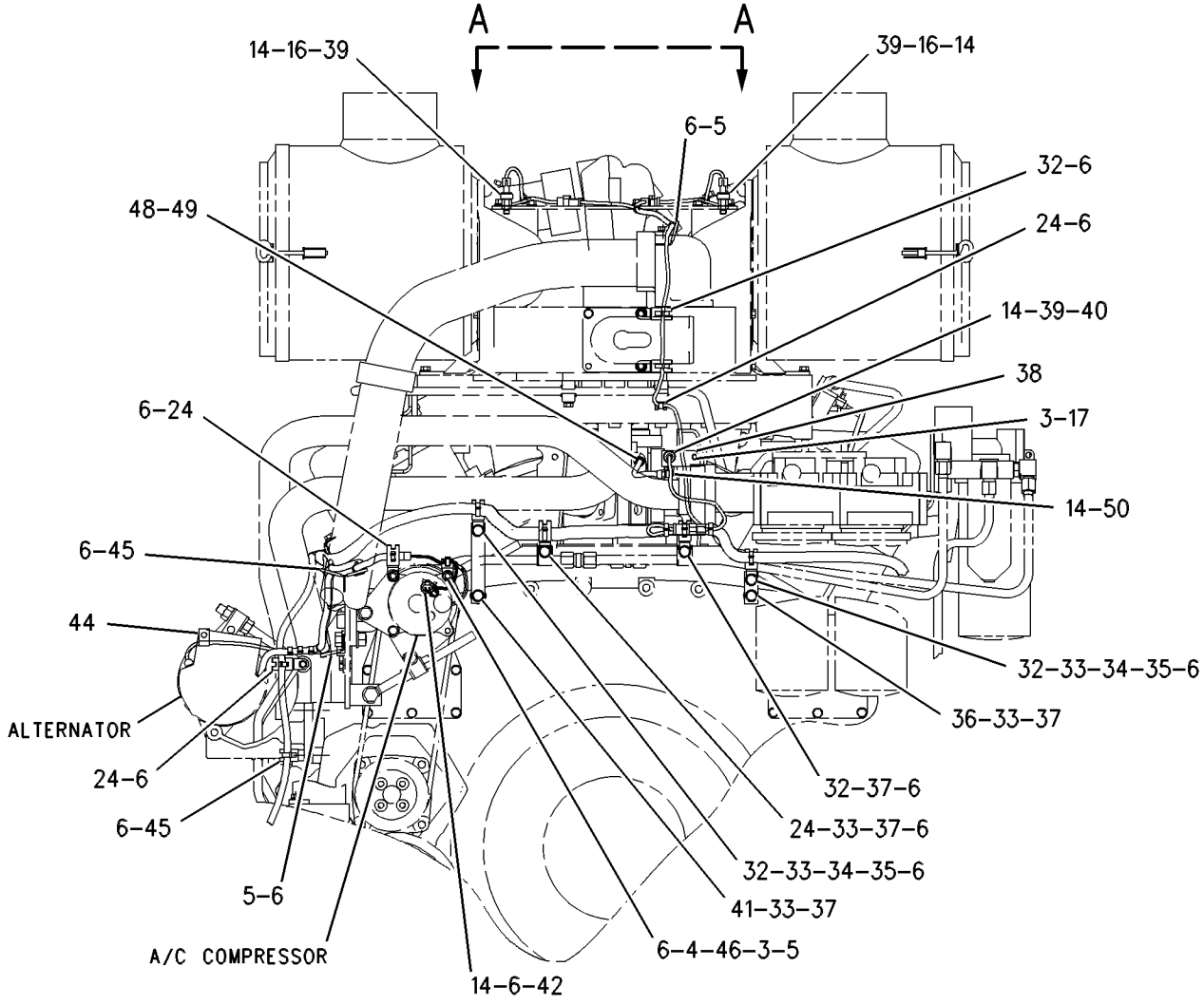

FRONT VIEW

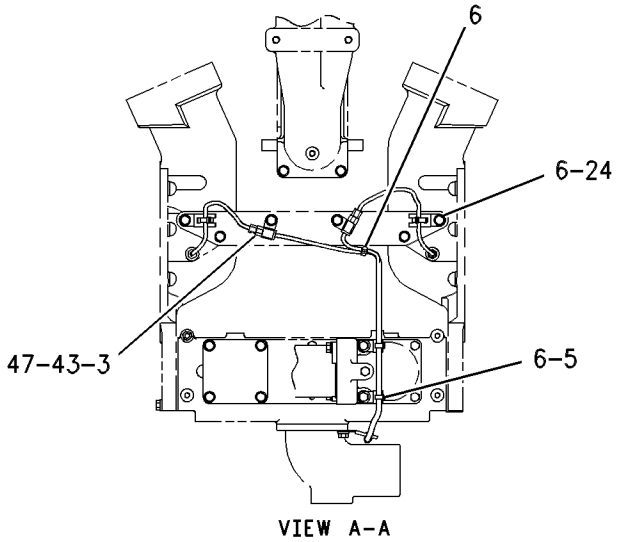

VIEW A-A

GRAPHIC #2 g00535721

112-6045 WIRING GP-ENGINE

S/N: 2GR1881-2333

PART OF 107-8762 ENGINE AR

SMCS-1403, 1408 **i01202504**

NOTE	REF NO	GRAPHIC REF	PART NUMBER	QTY	PART NAME 1 2 3 4 5 6 (PRODUCT LEVEL)	SEE PAGE
	1	1	**124-0289**	2	CLIP (25.4MM ID)	
	2	1	**0S-0509**	16	BOLT (3/8-16X.75IN)	
	3	1,2	**5M-2894**	34	WASHER (2.5MM THK)	
	4	1,2	**9S-8752**	4	NUT (3/8-16 THD)	
	5	1,2	**4P-8134**	49	CLIP (10.5MM ID)	
	6	1,2	**9X-6772**	98	STRAP-CABLE	
	7	1	**163-7882**	2	SENSOR GP-EXHAUST TEMPERATURE (LH/RH TURBO)	
Y	8	2	**161-9929**	1	SENSOR GP-PRESSURE (TURBO OUTLET)	341
	9	1	**8L-2786**	1	SEAL-O-RING (16.36MM ID)	
Y	10	1	**129-6628**	1	SENSOR GP-SPEED (ENGINE SPEED/TIMING)	347
	11	1	**5P-8245**	2	WASHER-HARD (3MM THK)	
	12	1	**153-7485**	1	WIRE AS-ALTERNATOR GROUND	
	13	1	**3K-6905**	1	VALVE-BREATHER	
	14	1,2	**6V-5048**	12	SEAL-O-RING (8.92MM ID)	
	15	1	**9X-0263**	1	ADAPTER	
Y	16	2	**161-9926**	2	SENSOR GP-PRESSURE (TURBO INLET)	340
Y	16A	1	**161-9926**	1	SENSOR GP-PRESSURE (ATMOSPHERE)	340
Y	16B	1	**161-9926**	1	SENSOR GP-PRESSURE (CRANKCASE)	340
	17	1,2	**0S-1594**	5	BOLT (3/8-16X1 IN)	
	18	1	**9L-9132**	2	WASHER (2.5MM THK)	
	19	1	**6V-1889**	1	CLIP (28.58MM ID)	
	20	1	**7N-2256**	1	PLATE	
	21	1	**6H-1717**	1	BOLT (1/2-13X1.125IN)	
	22	1	**6W-6672**	2	SPACER (38MM THK)	
	23	1	**117-0067**	1	ELBOW (90 DEGREE)	
	24	1,2	**4P-7581**	16	CLIP (10.5MM ID)	
	25	1	**120-4351**	2	PLATE	
	26	1	**7E-6016**	1	GASKET	
	27	1	**7E-5326**	1	COVER	
	28	1	**8T-6767**	2	PLUG-PIPE (3/8-18 NPTF THD)	
	29	1	**3K-0360**	1	SEAL-O-RING (16.36MM ID)	
	30	1	**102-2240**	1	SENSOR GP-TEMPERATURE (COOLANT)	
		1	**102-8803**	1	KIT-RECEPTACLE (3 PIN)	
					(INCLUDES WEDGE)	
		1	**3E-3371**	1	WEDGE-RECEPTACLE LOCK	
		1	**8T-8729**	3	PIN-CONNECTOR	
E		1	**9X-1813**		SLEEVE (31CM)	
	31	1	**7W-6492**	1	PLUG-PIPE (1/2-14 NPTF THD)	
	32	2	**4P-7428**	5	CLIP (13.5MM ID)	
	33	1,2	**3H-7654**	8	WASHER (3MM THK)	
	34	2	**0S-1621**	2	BOLT (1/2-13X1IN)	
	35	2	**1F-7958**	2	NUT-FULL (1/2-13 THD)	
	36	2	**167-9579**	1	STRIP	
	37	2	**2A-1531**	4	BOLT (1/2-13X6.5IN)	
	38	2	**117-0069**	1	BLOCK-SENSOR MOUNTING	
	39	2	**9X-0262**	3	ADAPTER	
Y	40	1	**161-9931**	1	SENSOR GP-PRESSURE (ENGINE OIL)	342
	41	2	**8D-9059**	1	BRACKET	
	42	2	**114-5333**	1	SWITCH AS-PRESSURE (REFRIGERANT)	
		2	**102-8802**	1	KIT-RECEPTACLE (2 PIN)	
					(INCLUDES WEDGE)	
		2	**3E-3365**	1	WEDGE-RECEPTACLE LOCK	
		2	**8T-8729**	2	PIN-CONNECTOR	
	43	2	**9U-2277**	2	CLIP AS (10.5MM ID)	
	44	2	**8M-2771**	1	CLIP (6.35MM ID)	
	45	1,2	**4P-7429**	5	CLIP (13.5MM ID)	

112-6045 **WIRING GP-ENGINE** *(contd.)* **i01202504**

NOTE	REF NO	GRAPHIC REF	PART NUMBER	QTY	PART NAME 1 2 3 4 5 6 (PRODUCT LEVEL)	SEE PAGE
	46	1,2	**0S-1588**	5	BOLT (3/8-16X1.25IN)	
	47	2	**0T-0102**	2	BOLT (3/8-16X0.625IN)	
	48	2	**121-5729**	1	ELBOW	
	49	2	**117-0068**	1	HOSE AS	
	50	2	**030-7946**	1	ELBOW (7/16-20 STR THD)	
	51	1	**4N-3841**	1	GASKET	
Y	52	1	**138-3672**	1	SWITCH GP-FLOW (COOLANT)	366
	53	1	**9M-1974**	2	WASHER-HARD (2MM THK)	
	54	1	**2B-2695**	2	BOLT (5/16-18X.875IN)	
	55	1	**6T-2723**	1	BRACKET	
	56	2	**7E-4227**	1	CAP	
	57	1	**2H-3855**	1	BOLT (1/2-13X.875IN)	
	58	1	**4B-4281**	1	WASHER (2.5MM THK)	
	59	1	**6V-2455**	1	SENSOR GP-SPEED (TIMING CALIBRATION)	
		1	**3E-3365**	1	WEDGE-RECEPTACLE LOCK	
		1	**8T-8729**	2	PIN-CONNECTOR	
E		1	**9X-1386**		SLEEVE (14CM)	
		1	**102-8802**	1	KIT-RECEPTACLE (2 PIN)	
					(INCLUDES WEDGE)	
	60	1	**9X-0435**	1	ADAPTER	
	61	1	**1A-2029**	2	BOLT (3/8-16X1.125IN)	
	62	1	**0S-1619**	2	BOLT (3/8-16X3.0IN)	
	64	1	**152-0996**	1	HARNESS AS-WIRING	
	65	1	**0S-1620**	1	BOLT (1/2-13X.75IN)	
	66	1	**1A-5183**	1	BOLT (3/8-16X4.75IN)	

E-ORDER BY THE CENTIMETER
Y-SEPARATE ILLUSTRATION

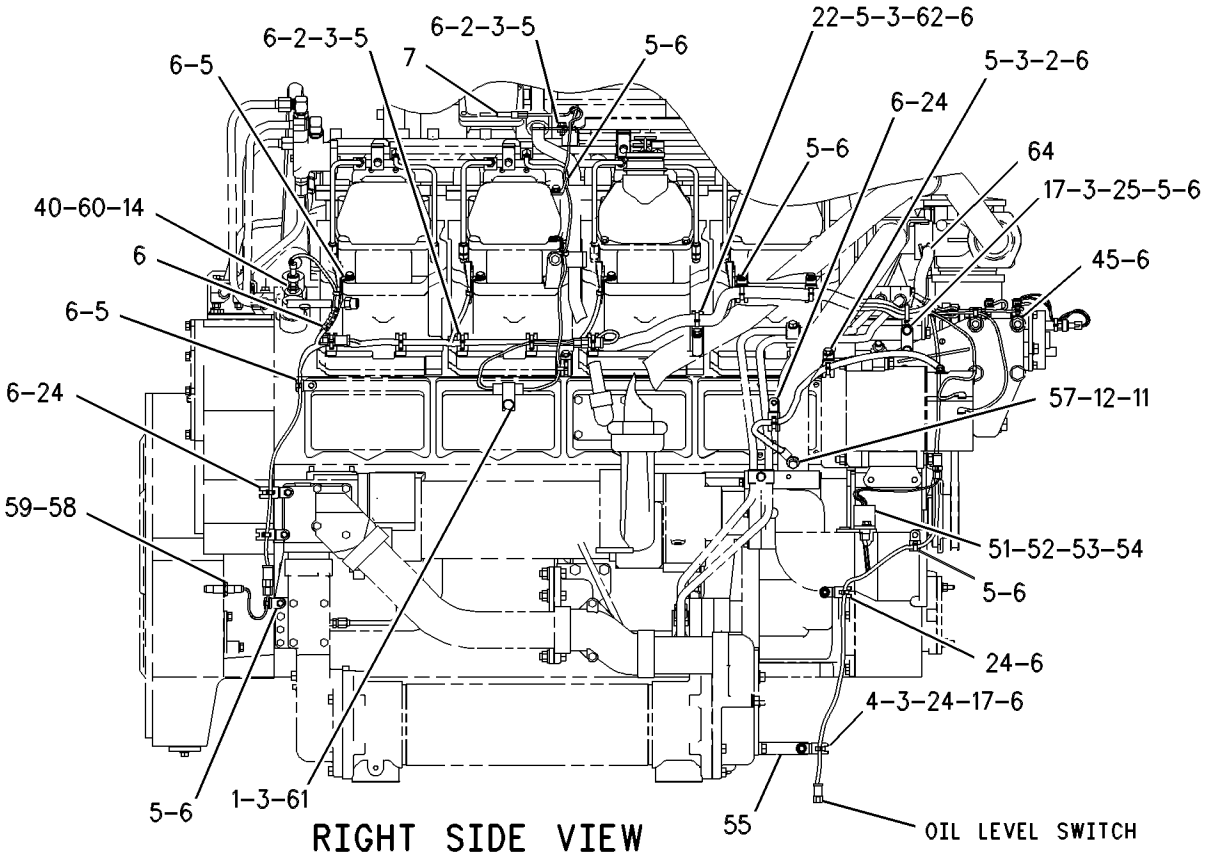

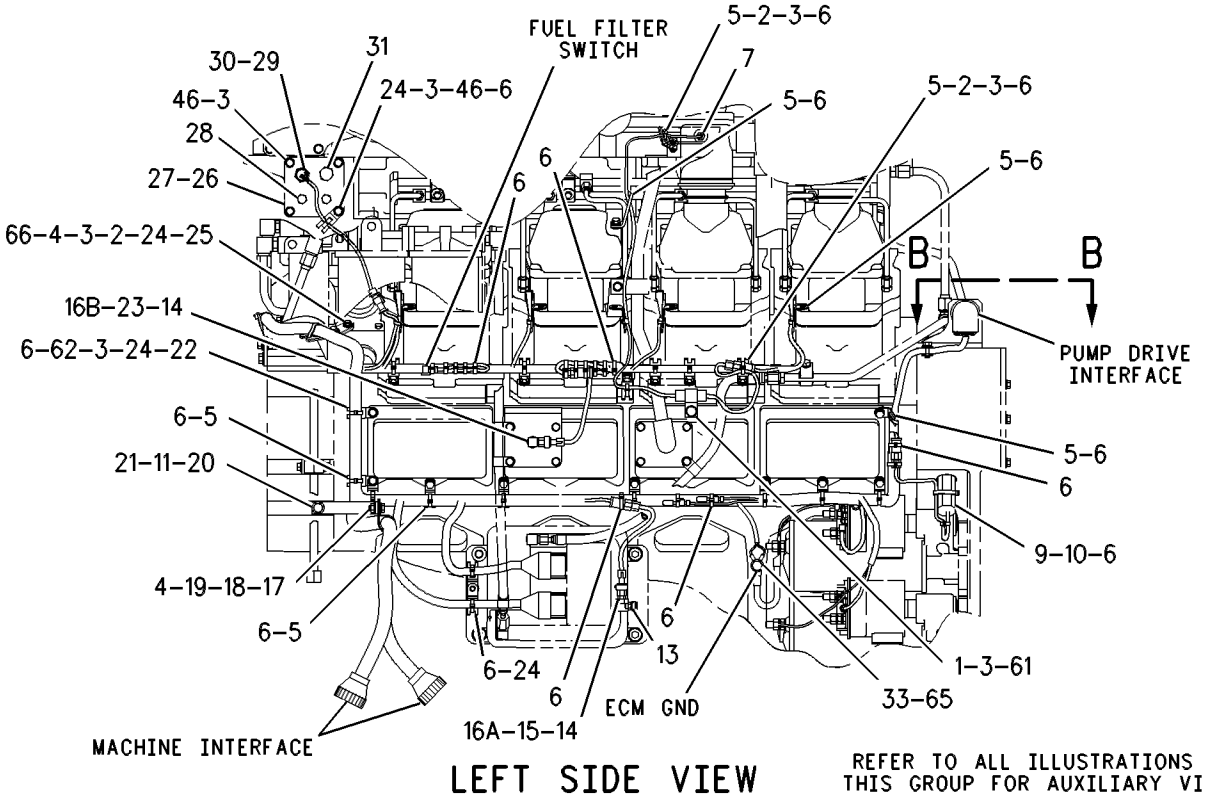

GRAPHIC #1 g00630355

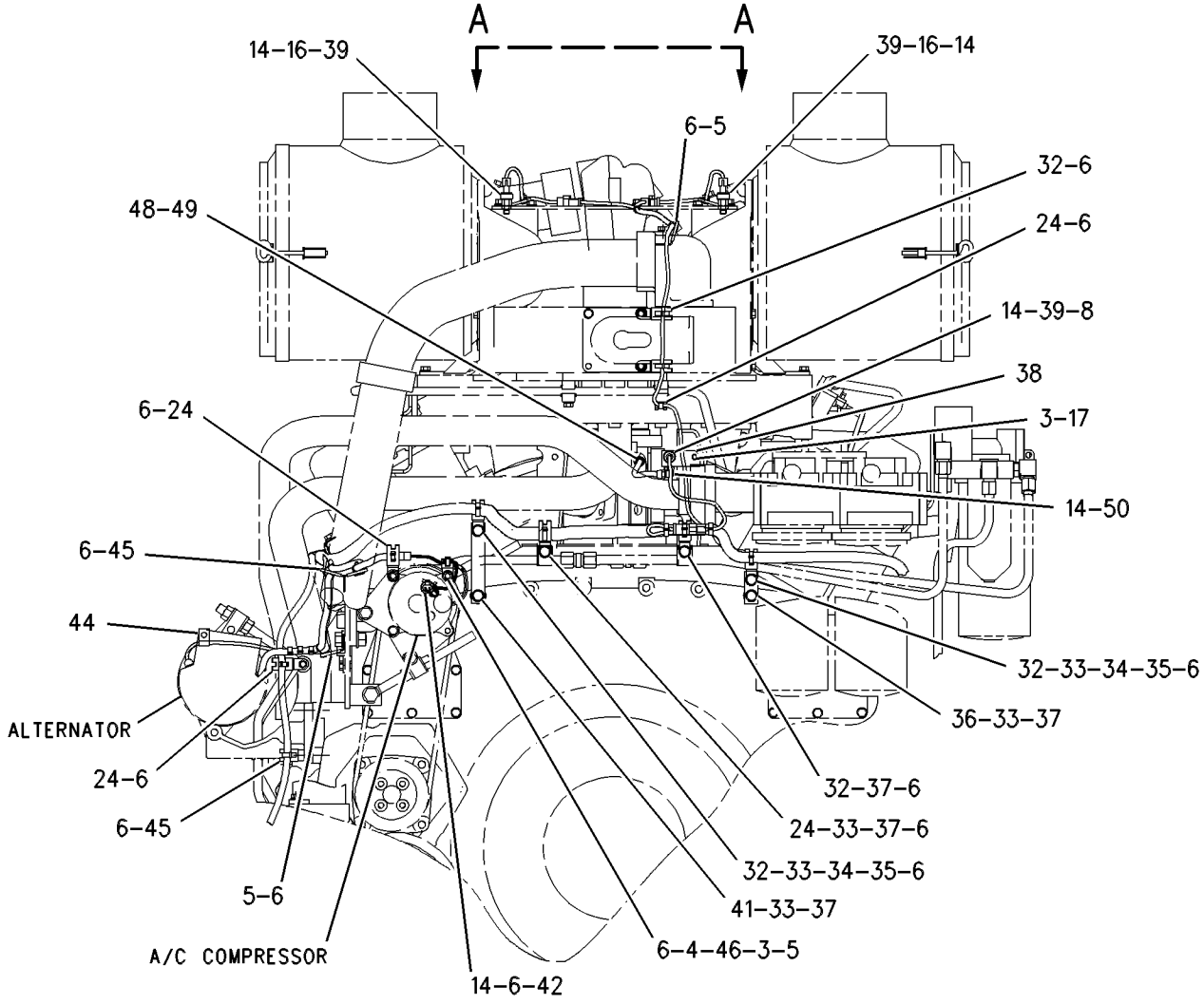

FRONT VIEW

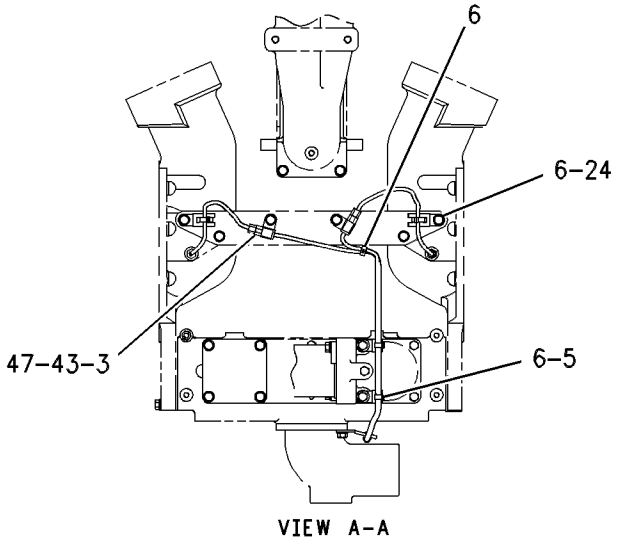

VIEW A-A

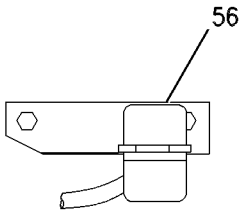

VIEW B-B

GRAPHIC #2

g00581593

112-6045 WIRING GP-ENGINE

S/N: 2GR2334-UP

PART OF 107-8762 ENGINE AR

SMCS-1403, 1408 **i01293918**

NOTE	REF NO	GRAPHIC REF	PART NUMBER	QTY	PART NAME 1 2 3 4 5 6 (PRODUCT LEVEL)	SEE PAGE
	1	1	**124-0289**	2	CLIP (25.4MM ID)	
	2	1	**0S-0509**	16	BOLT (3/8-16X.75IN)	
	3	1,2	**5M-2894**	34	WASHER (2.5MM THK)	
	4	1,2	**9S-8752**	4	NUT (3/8-16 THD)	
	5	1,2	**4P-8134**	49	CLIP (SLOT)	
	6	1,2	**9X-6772**	98	STRAP-CABLE (1.97IN DIA)	
	7	1	**163-7882**	1	SENSOR GP-EXHAUST TEMPERATURE (RH TURBO)	
	7A	1	**163-7882**	1	SENSOR GP-EXHAUST TEMPERATURE (LH TURBO)	
Y	8	2	**161-9929**	1	SENSOR GP-PRESSURE (TURBO OUTLET)	341
	9	1	**8L-2786**	1	SEAL-O-RING (16.36MM ID)	
Y	10	1	**129-6628**	1	SENSOR GP-SPEED (ENGINE SPEED/TIMING)	347
	11	1	**5P-8245**	2	WASHER-HARD (3MM THK)	
	12	1	**153-7485**	1	WIRE AS-ALTERNATOR GROUND	
	13	1	**3K-6905**	1	VALVE-BREATHER	
	14	1,2	**6V-5048**	12	SEAL-O-RING (8.92MM ID)	
	15	1	**9X-0263**	1	ADAPTER	
Y	16	2	**161-9926**	1	SENSOR GP-PRESSURE (RIGHT TURBO INLET)	340
Y	16A	2	**161-9926**	1	SENSOR GP-PRESSURE (LEFT TURBO INLET)	340
Y	16B	1	**161-9926**	1	SENSOR GP-PRESSURE (ATMOSPHERE)	340
Y	16C	1	**161-9926**	1	SENSOR GP-PRESSURE (CRANKCASE)	340
	17	1,2	**0S-1594**	5	BOLT (3/8-16X1 IN)	
	18	1	**9L-9132**	2	WASHER (2.5MM THK)	
	19	1	**6V-1889**	1	CLIP (28.58MM ID)	
	20	1	**7N-2256**	1	PLATE	
	21	1	**6H-1717**	1	BOLT (1/2-13X1.125IN)	
	22	1	**6W-6672**	2	SPACER (38MM THK)	
	23	1	**117-0067**	1	ELBOW (90 DEGREE)	
	24	1,2	**4P-7581**	16	CLIP (10.5MM ID)	
	25	1	**120-4351**	2	PLATE	
	26	1	**7E-6016**	1	GASKET	
	27	1	**7E-5326**	1	COVER	
	28	1	**8T-6767**	2	PLUG-PIPE (3/8-18 NPTF THD)	
	29	1	**3K-0360**	1	SEAL-O-RING (16.36MM ID)	
	30	1	**102-2240**	1	SENSOR GP-TEMPERATURE (COOLANT)	
		1	**102-8803**	1	KIT-RECEPTACLE (3 PIN)	
					(INCLUDES RECEPTACLE AS AND WEDGE)	
		1	**3E-3371**	1	WEDGE-RECEPTACLE LOCK	
		1	**8T-8729**	3	PIN-CONNECTOR	
E		1	**9X-1813**		SLEEVE (31CM)	
	31	1	**7W-6492**	1	PLUG-PIPE (1/2-14 NPTF THD)	
	32	2	**4P-7428**	5	CLIP (13.5MM ID)	
	33	1,2	**3H-7654**	8	WASHER (3MM THK)	
	34	2	**0S-1621**	2	BOLT (1/2-13X1IN)	
	35	2	**1F-7958**	2	NUT-FULL (1/2-13 THD)	
	36	2	**167-9579**	1	STRIP	
	37	2	**2A-1531**	4	BOLT (1/2-13X6.5IN)	
	38	2	**117-0069**	1	BLOCK-SENSOR MOUNTING	
	39	2	**9X-0262**	3	ADAPTER	
Y	40	1	**161-9931**	1	SENSOR GP-PRESSURE (ENGINE OIL)	342
	41	2	**8D-9059**	1	BRACKET	
	42	2	**114-5333**	1	SWITCH AS-PRESSURE (REFRIGERANT)	
		2	**102-8802**	1	KIT-RECEPTACLE (2 PIN)	
					(INCLUDES RECEPTACLE AS AND WEDGE)	
		2	**3E-3365**	1	WEDGE-RECEPTACLE LOCK (2 PIN)	
		2	**8T-8729**	2	PIN-CONNECTOR	
	43	2	**9U-2277**	2	CLIP AS (10.5MM ID)	

112-6045 **WIRING GP-ENGINE** ***(contd.)*** **i01293918**

NOTE	REF NO	GRAPHIC REF	PART NUMBER	QTY	PART NAME 1 2 3 4 5 6 (PRODUCT LEVEL)	SEE PAGE
	44	2	**8M-2771**	1	CLIP (6.35MM ID)	
	45	1,2	**4P-7429**	5	CLIP (13.5MM ID)	
	46	1,2	**0S-1588**	5	BOLT (3/8-16X1.25 IN)	
	47	2	**0T-0102**	2	BOLT (3/8-16X0.625IN)	
	48	2	**121-5729**	1	ELBOW	
	49	2	**117-0068**	1	HOSE AS	
	50	2	**030-7946**	1	ELBOW (7/16-20 STR THD)	
	51	1	**4N-3841**	1	GASKET	
CY	52	1	**183-3862**	1	SWITCH GP-COOLANT FLOW (COOLANT)	364
	53	1	**9M-1974**	2	WASHER-HARD (2MM THK)	
	54	1	**2B-2695**	2	BOLT (5/16-18X.875 IN)	
	55	1	**6T-2723**	1	BRACKET	
	56	2	**7E-4227**	1	CAP	
	57	1	**2H-3855**	1	BOLT (1/2-13X.875IN)	
	58	1	**4B-4281**	1	WASHER (2.5MM THK)	
	59	1	**6V-2455**	1	SENSOR GP-SPEED (TIMING CALIBRATION)	
		1	**3E-3365**	1	WEDGE-RECEPTACLE LOCK (2 PIN)	
		1	**8T-8729**	2	PIN-CONNECTOR	
E		1	**9X-1386**		SLEEVE (14CM)	
		1	**102-8802**	1	KIT-RECEPTACLE (2 PIN)	
					(INCLUDES RECEPTACLE AS AND WEDGE)	
	60	1	**9X-0435**	1	ADAPTER	
	61	1	**1A-2029**	2	BOLT (3/8-16X1.125IN)	
	62	1	**0S-1619**	2	BOLT (3/8-16X3.0IN)	
	64	1	**152-0996**	1	HARNESS AS-WIRING	
	65	1	**0S-1620**	1	BOLT (1/2-13X.75IN)	
	66	1	**1A-5183**	1	BOLT (3/8-16X4.75IN)	

C-CHANGE FROM PREVIOUS TYPE
E-ORDER BY THE CENTIMETER
Y-SEPARATE ILLUSTRATION

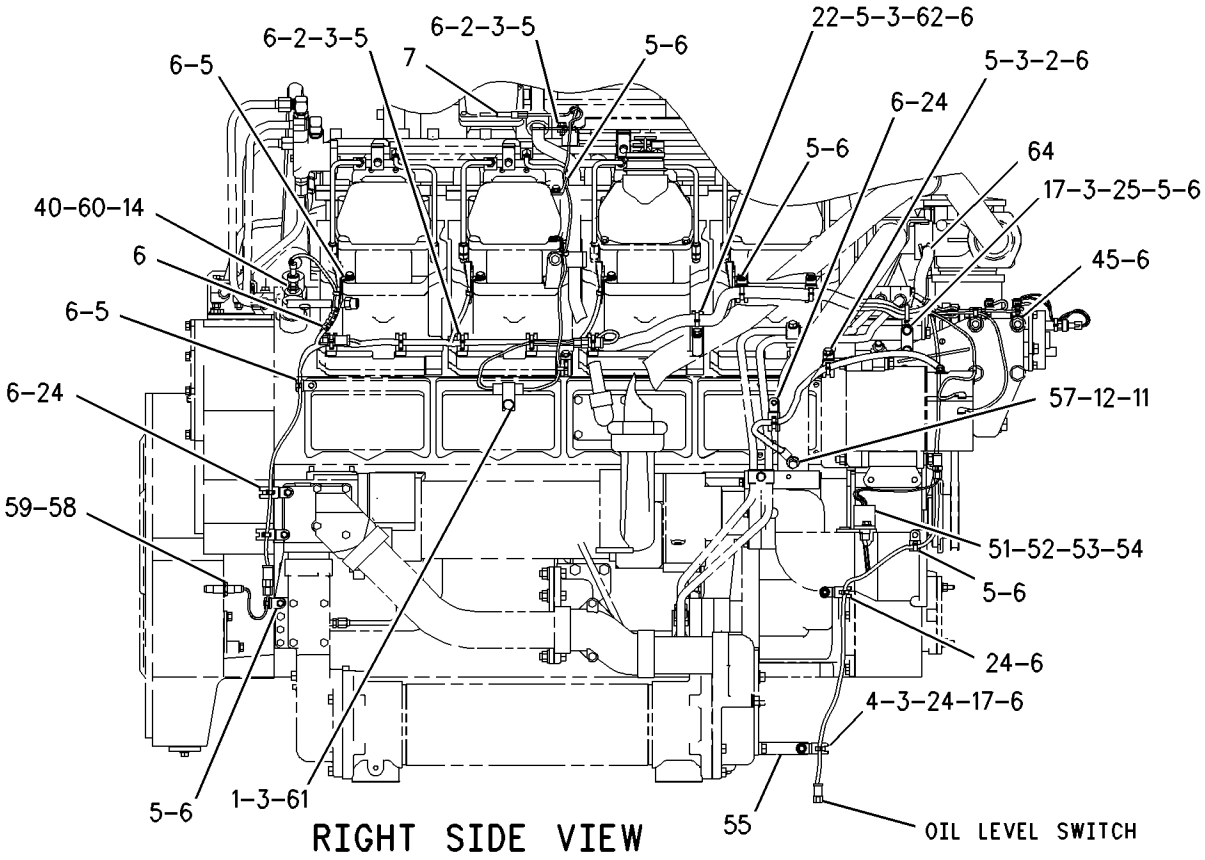

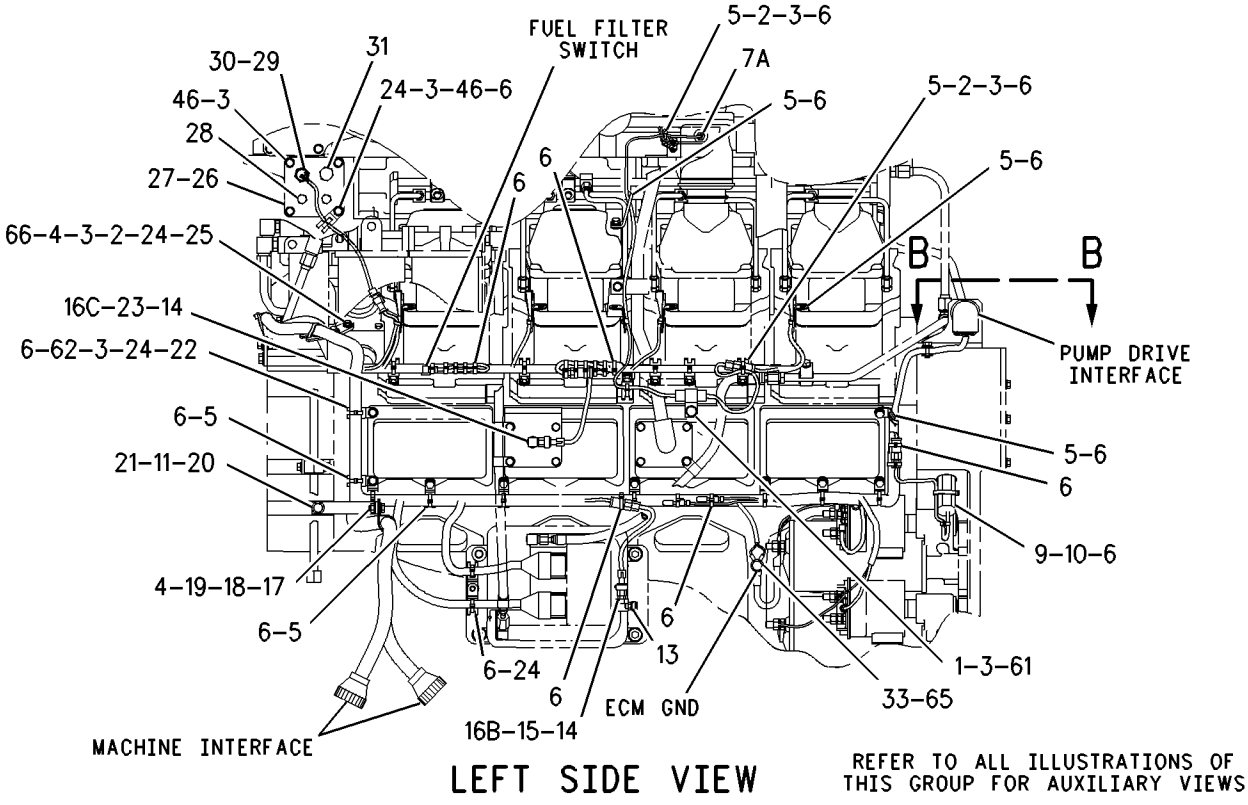

GRAPHIC #1 g00687936

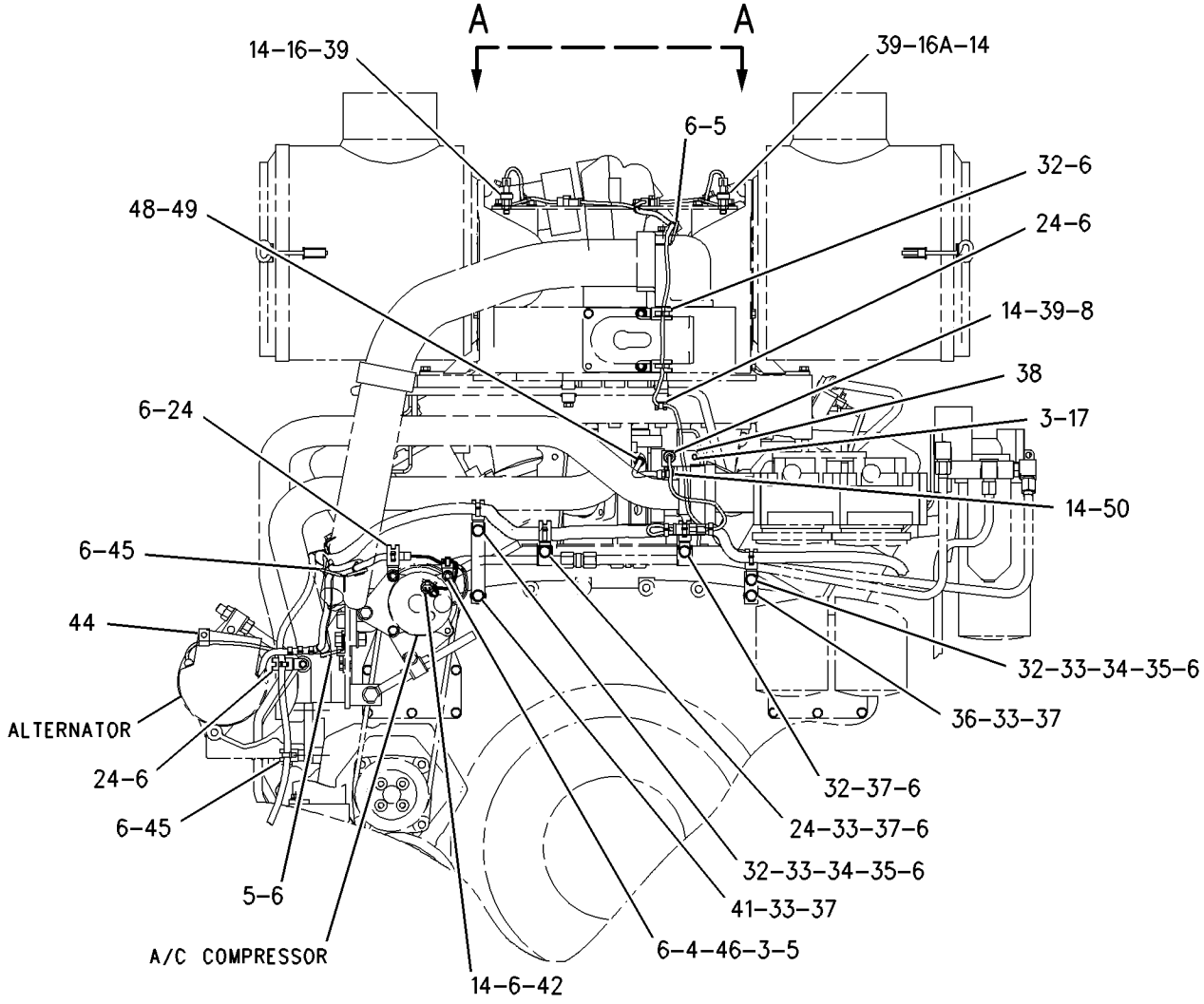

FRONT VIEW

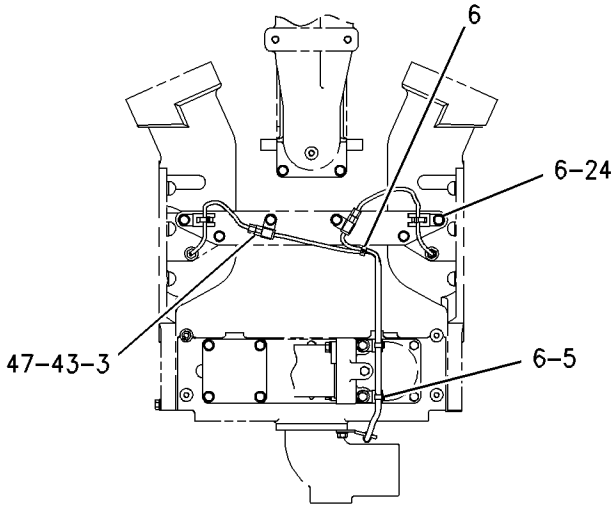

VIEW A-A

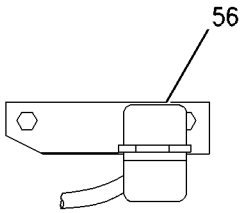

VIEW B-B

GRAPHIC #2

g00688078

109-6894 WIRING GP-FRONT

S/N: 7HR1-UP

PART OF 109-6821 ELECTRICAL AR

SMCS-5734 **i01541527**

NOTE	REF NO	GRAPHIC REF	PART NUMBER	QTY	PART NAME 1 2 3 4 5 6 (PRODUCT LEVEL)	SEE PAGE
	1	1	**115-5600**	1	HARNESS AS-FRONT CHASSIS (MAIN)	
		1	**8T-8737**	17	PLUG-SEAL	
		1	**155-2270**	1	KIT-CONNECTING PLUG (2 PIN)	
		1	**155-2271**	3	KIT-CONNECTING PLUG (4 PIN)	
		1	**155-2255**	1	KIT-CONNECTING PLUG (12 PIN)	
		1	**155-2260**	4	KIT-CONNECTING PLUG (3 PIN)	
					(EACH KIT-CONNECTING PLUG INCLUDES PLUG AS & WEDGE)	
		1	**3S-2093**	3	STRAP-CABLE	
		1	**102-8801**	2	KIT-RECEPTACLE (12 PIN)	
		1	**102-8802**	2	KIT-RECEPTACLE (2 PIN)	
		1	**102-8803**	4	KIT-RECEPTACLE (3 PIN)	
		1	**102-8804**	1	KIT-RECEPTACLE (4 PIN)	
					(EACH KIT-RECEPTACLE INCLUDES RECEPTACLE AS & WEDGE)	
	2	1,2	**7K-1181**	3	STRAP-CABLE	
	3	1	**6D-4246**	2	CLIP	
M	4	1,2	**8T-4137**	36	BOLT (M10X1.5X20MM)	
	5	1,2	**8T-4121**	36	WASHER-HARD (11X21X2.5MM THK)	
	6	1	**5V-6152**	4	CLAMP	
	7	1	**5V-6153**	2	PLATE-COVER	
M	8	1	**8T-6974**	4	BOLT (M6X1X80MM)	
	9	1	**9X-8256**	4	WASHER (6.6X12X2MM THK)	
	10	1	**117-6172**	1	BRACKET AS	
M		1	**6V-9632**	2	NUT-WELD (M6X1 THD)	
	11	2	**033-8248**	11	CLIP	
	12	1,2	**5P-9085**	10	CLIP	
	13	1,2	**115-3070**	3	CLIP AS-CONNECT	
	14	2	**115-5610**	1	HARNESS AS-SENSOR (FRONT AXLE OIL)	
		1	**8T-8737**	1	PLUG-SEAL	
		1	**8T-8731**	1	PLUG-CONNECTOR	
		1	**102-8804**	1	KIT-RECEPTACLE (4 PIN)	
	15	2	**9X-3495**	1	CLIP AS	
Y	16	2	**100-3055**	1	SENSOR GP-TEMPERATURE (FRONT AXLE OIL)	350
	17	2	**3J-1907**	1	SEAL-O-RING	
	18	1,2	**8M-2770**	9	CLIP	
	19	2	**7G-7053**	1	GROMMET	
	20	1,2	**115-3069**	2	CLIP AS-CONNECTOR	
	21	1	**4K-8864**	1	CLIP	

M-METRIC PART
Y-SEPARATE ILLUSTRATION

ITEM NO.	HARNESS & CABLE ROUTING INDEX
1	AAA-HARNESS AS-FROM MAIN CHASSIS HARNESS R TO FRONT FRAME
14	T-HARNESS AS-FROM FRONT HARNESS AAA TO FRONT AXLE TEMP SENSOR

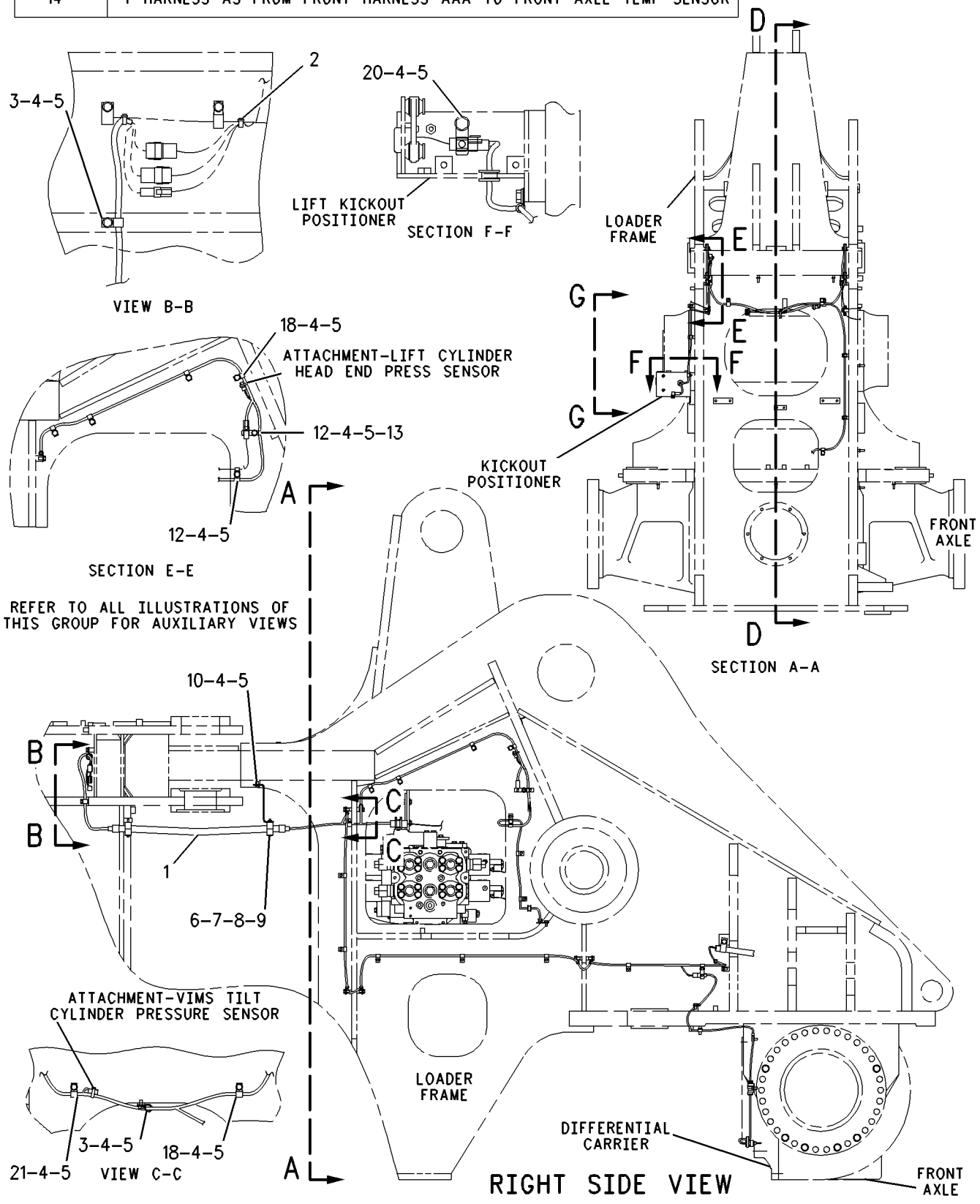

GRAPHIC #1 g00685295

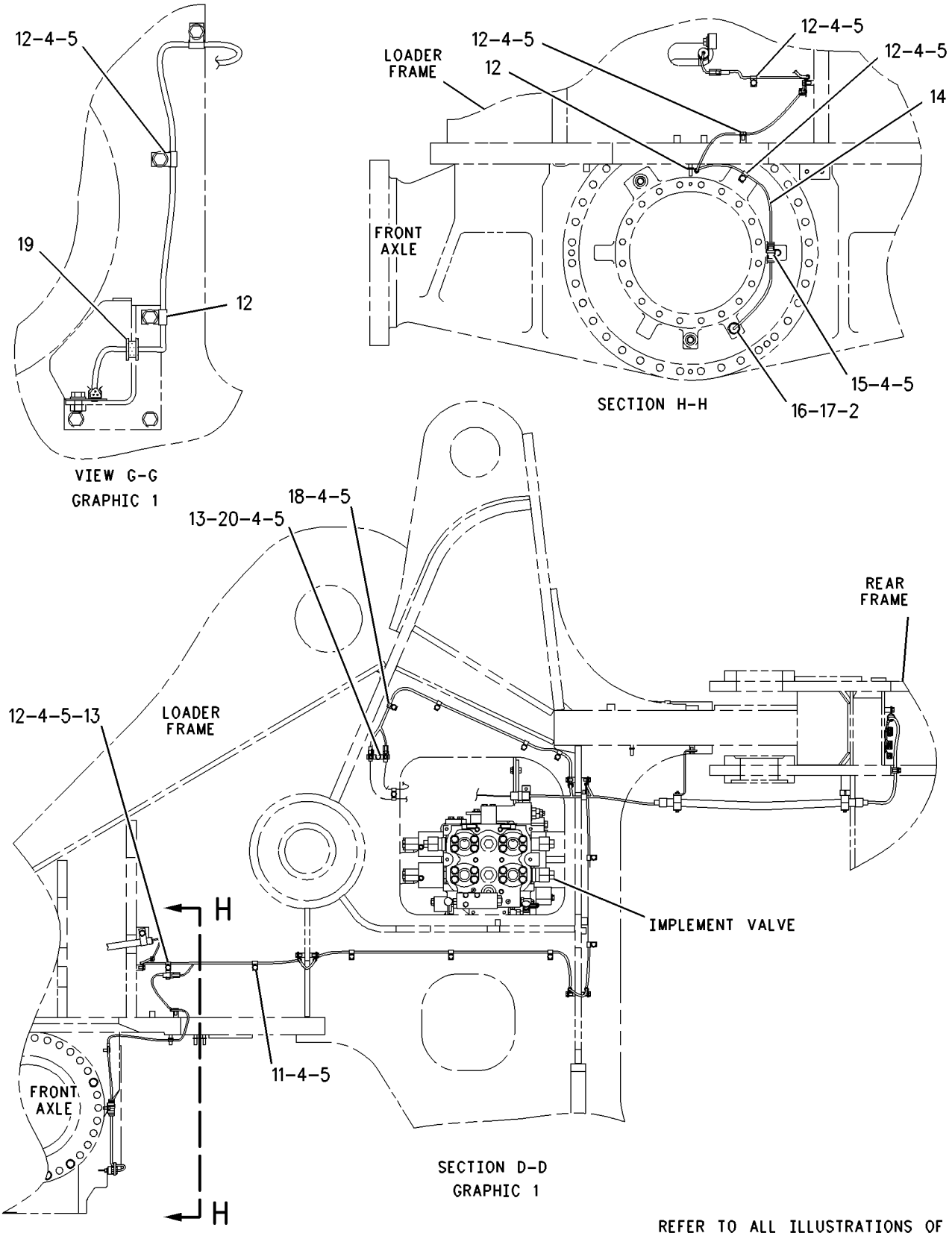

GRAPHIC #2

g00684322

MEMORANDA

109-6899 WIRING GP-MACHINE

S/N: 7HR1-316

PART OF 109-6821 ELECTRICAL AR

SMCS-1408 **i01541597**

NOTE	REF NO	GRAPHIC REF	PART NUMBER	QTY	PART NAME 1 2 3 4 5 6 (PRODUCT LEVEL)	SEE PAGE
	1	1	**115-5606**	1	HARNESS AS-REAR CHASSIS (MAIN)	
		1	**7G-7917**	44	PLUG-SEAL	
		1	**7G-7919**	6	PLUG-SEAL	
		1	**7G-7918**	8	PLUG-SEAL	
		1	**7G-7920**	3	PLUG-SEAL	
		1	**8T-8737**	16	PLUG-SEAL	
		1	**3T-3412**	2	PLUG AS-CONNECTOR (1)	
		1	**8N-1520**	1	PLUG AS-CONNECTOR (12 PIN)	
		1	**8N-1514**	2	PLUG AS-CONNECTOR (37 PIN)	
		1	**8N-1518**	1	PLUG AS-CONNECTOR (25 PIN)	
		1	**155-2270**	3	KIT-CONNECTING PLUG (2 PIN)	
		1	**155-2260**	5	KIT-CONNECTING PLUG (3 PIN)	
		1	**155-2271**	3	KIT-CONNECTING PLUG (4 PIN)	
		1	**155-2255**	2	KIT-CONNECTING PLUG (12 PIN)	
					(EACH KIT-CONNECTING PLUG INCLUDES PLUG AS & WEDGE)	
		1	**8N-1519**	1	RECEPTACLE AS	
		1	**8N-1513**	2	RECEPTACLE AS	
		1	**3T-3410**	1	RECEPTACLE AS (37 PIN)	
		1	**8N-1517**	1	RECEPTACLE AS (25 PIN)	
		1	**8N-1515**	1	RECEPTACLE AS	
					(EACH RECEPTACLE AS INCLUDES)	
		1	**8N-1522**	1	NUT (2 1/4-16 THD)	
		1	**102-8801**	2	KIT-RECEPTACLE (12 PIN)	
		1	**102-8806**	1	KIT-RECEPTACLE (8 PIN)	
		1	**102-8803**	4	KIT-RECEPTACLE (3 PIN)	
		1	**102-8802**	2	KIT-RECEPTACLE (2 PIN)	
					(EACH KIT-RECEPTACLE INCLUDES RECEPTACLE AS & WEDGE)	
		1	**7K-1181**	2	STRAP-CABLE	
		1	**3S-2093**	8	STRAP-CABLE	
		1	**8N-1521**	12	BELL AS-END	
	2	2,3	**7D-1553**	3	CLIP	
M	3	1,2,3	**8T-4137**	53	BOLT (M10X1.5X20MM)	
	4	1,2,3	**8T-4121**	62	WASHER-HARD (11X21X2.5MM THK)	
	5	1,2,3	**3S-2093**	6	STRAP-CABLE	
	6	1,2,3	**5P-9085**	15	CLIP	
	7	1	**1S-0994**	3	CLIP	
M	8	1,2,3	**8T-4136**	8	BOLT (M10X1.5X25MM)	
	9	1,2	**3S-8665**	2	CLIP	
	10	2	**128-3762**	1	BRACKET AS	
M		2	**8T-3490**	1	NUT-WELD (M10X1.5 THD)	
	11	2	**6V-1889**	1	CLIP	
	12	2,3	**8M-2770**	6	CLIP	
	13	3	**7D-7233**	5	CLIP	
	14	3	**125-2705**	1	PLATE AS	
M		3	**8T-3490**	1	NUT-WELD (M10X1.5 THD)	
	15	1,3	**9U-2277**	3	CLIP AS	
	16	3	**7N-3718**	2	CLIP	
	17	2,3	**4D-7794**	10	CLIP	
	18	2,3	**7K-1181**	8	STRAP-CABLE	
	19	3	**4D-7388**	4	CLIP	
	20	3	**115-5611**	1	HARNESS AS-SENSOR (REAR AXLE OIL TEMPERATURE)	
		1	**8T-8737**	1	PLUG-SEAL	
		1	**8T-8731**	1	PLUG-CONNECTOR	

109-6899 **WIRING GP-MACHINE** ***(contd.)*** **i01541597**

NOTE	REF NO	GRAPHIC REF	PART NUMBER	QTY	PART NAME 1 2 3 4 5 6 (PRODUCT LEVEL)	SEE PAGE
		1	**102-8804**	1	KIT-RECEPTACLE (4 PIN)	
					(INCLUDES RECEPTACLE AS & WEDGE)	
	21	3	**119-7839**	1	BRACKET-RH	
	22	2	**115-5607**	1	HARNESS AS-HYDRAULIC TANK (HYDRAULIC OIL TEMP & LEVEL)	
		2	**8T-8731**	1	PLUG-CONNECTOR	
		2	**8T-8737**	3	PLUG-SEAL	
		2	**155-2270**	1	KIT-CONNECTING PLUG (2 PIN)	
					(INCLUDES PLUG AS & WEDGE)	
		2	**3S-2093**	1	STRAP-CABLE	
		2	**102-8802**	1	KIT-RECEPTACLE (2 PIN)	
		2	**102-8805**	1	KIT-RECEPTACLE (6 PIN)	
					(EACH KIT-RECEPTACLE INCLUDES RECEPTACLE AS & WEDGE)	
Y	23A	2	**100-3055**	1	SENSOR GP-TEMPERATURE (REAR AXLE OIL)	350
Y	23B	2	**100-3055**	1	SENSOR GP-TEMPERATURE (STEERING OIL)	350
Y	23C	2	**100-3055**	1	SENSOR GP-TEMPERATURE (HYDRAULIC OIL)	350
	24	2	**3J-1907**	4	SEAL-O-RING	
	25	2	**9X-3495**	3	CLIP AS	
	26	2	**115-5608**	1	HARNESS AS-HYDRAULIC TANK (STEERING OIL TEMP & LEVEL)	
		2	**8T-8737**	3	PLUG-SEAL	
		2	**8T-8731**	1	PLUG-CONNECTOR	
		2	**155-2270**	1	KIT-CONNECTING PLUG (2 PIN)	
					(INCLUDES PLUG AS & WEDGE)	
		2	**3S-2093**	1	STRAP-CABLE	
		2	**102-8805**	1	KIT-RECEPTACLE (6 PIN)	
		2	**102-8802**	1	KIT-RECEPTACLE (2 PIN)	
					(EACH KIT-RECEPTACLE INCLUDES RECEPTACLE AS & WEDGE)	
	27	3	**8M-2773**	2	CLIP	
	28	3	**9M-8406**	1	CLIP	
Y	29	1	**9X-7781**	2	SWITCH GP-BYPASS (TRANSMISSION OIL FILTER)	363
	30	1	**3D-2824**	2	SEAL-O-RING	
	31	1	**3T-9549**	2	ADAPTER	
	32	1	**2S-4078**	2	SEAL-O-RING	
	33	3	**115-3071**	2	CLIP AS-CONNECTOR (6 PIN)	
	34	1	**6V-2383**	2	CLIP	
Y	35	3	**143-9176**	1	SENSOR GP-PRESSURE (IMPLEMENT PUMP OIL)	335
	36	3	**0A-3721**	1	CLIP	
	37	3	**115-3069**	1	CLIP AS-CONNECTOR	
	38	3	**7J-0204**	1	SEAL-O-RING	
	39	3	**136-0853**	1	ADAPTER-STRAIGHT THREAD	
	40	3	**8T-7529**	1	CLIP	

M-METRIC PART
Y-SEPARATE ILLUSTRATION

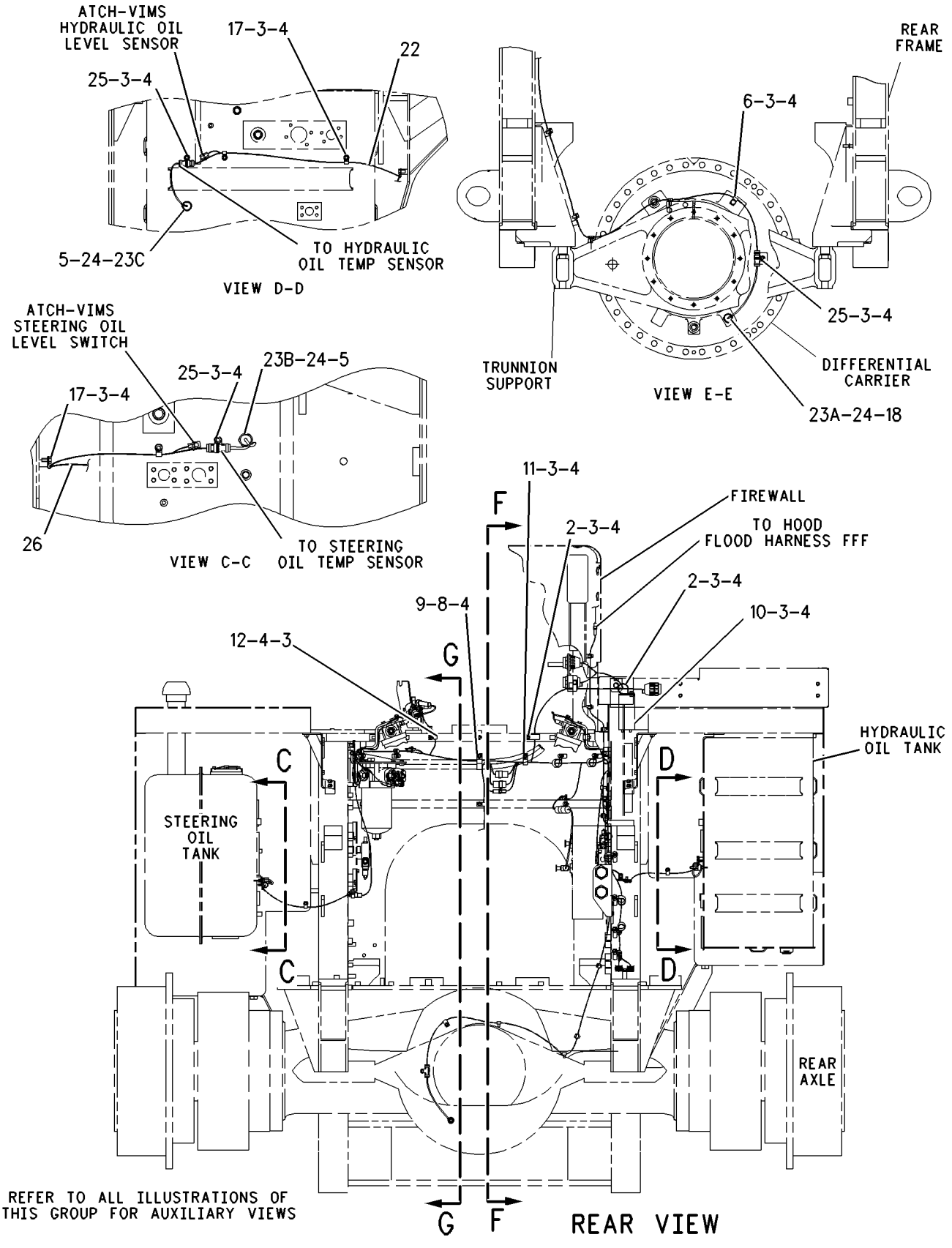

GRAPHIC #1 g00801355

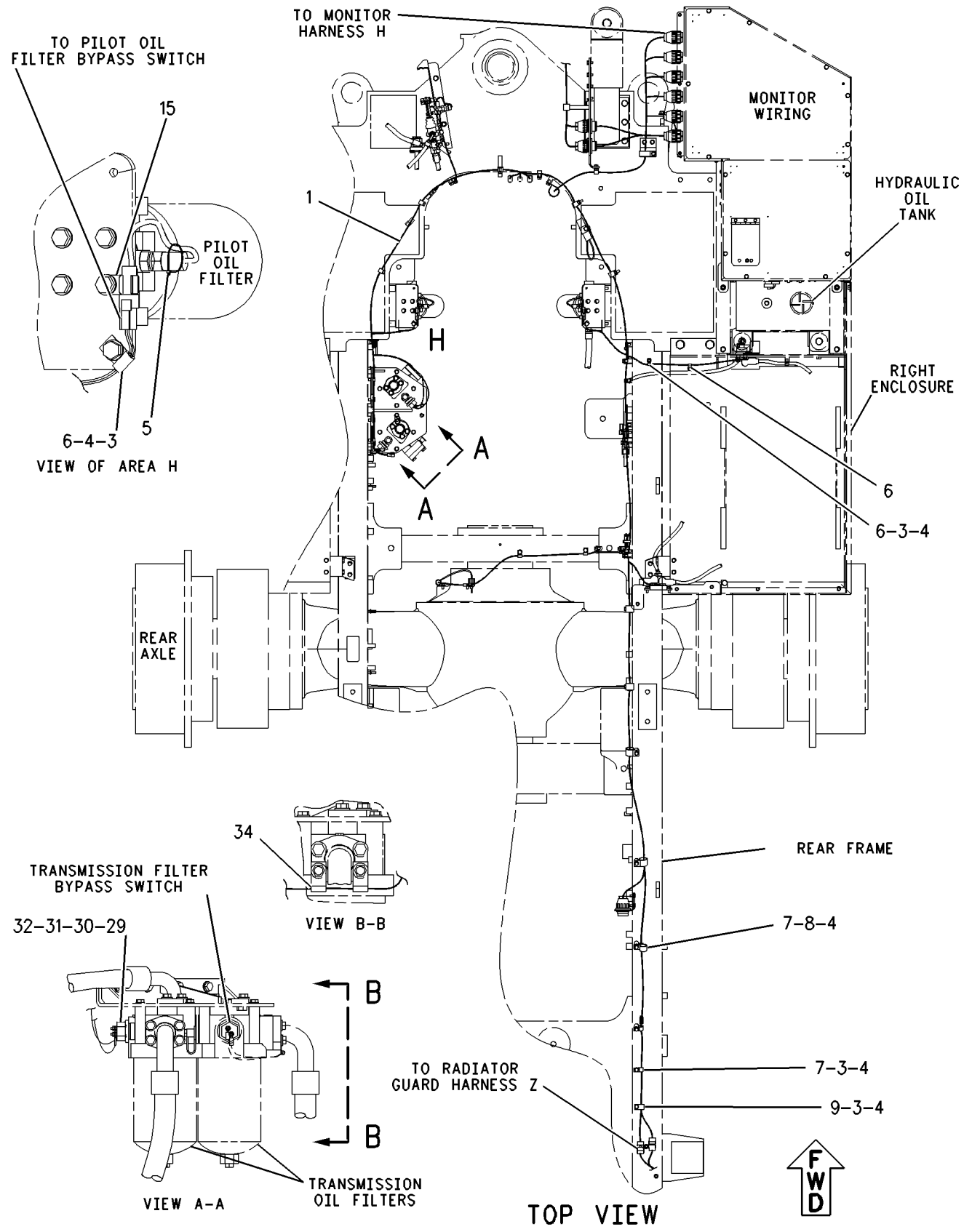

GRAPHIC #2

g00801359

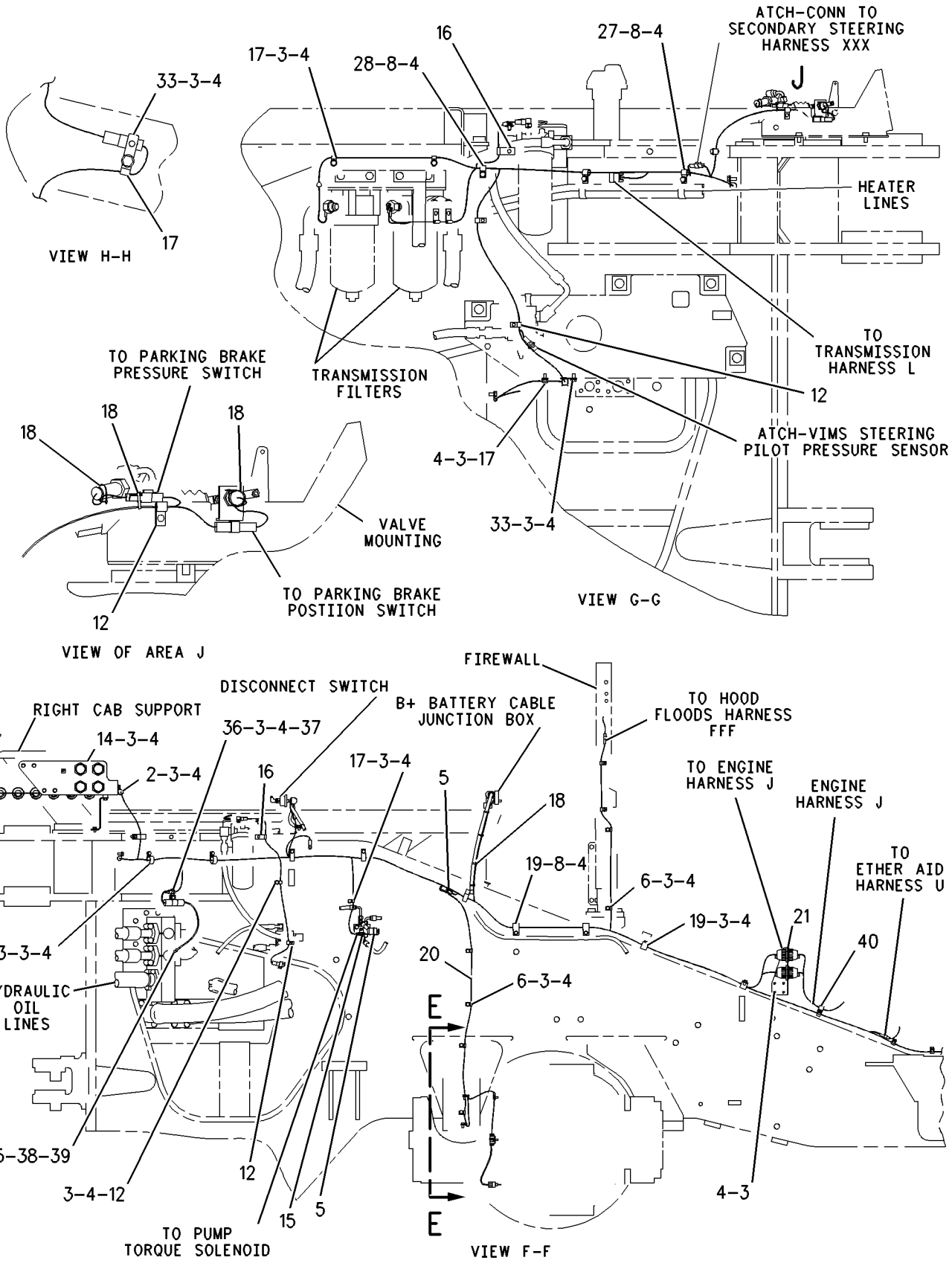

GRAPHIC #3 g00801362

MEMORANDA

109-6899 WIRING GP-MACHINE

S/N: 7HR317-UP

PART OF 109-6821 ELECTRICAL AR

SMCS-1408 **i01542467**

NOTE	REF NO	GRAPHIC REF	PART NUMBER	QTY	PART NAME 1 2 3 4 5 6 (PRODUCT LEVEL)	SEE PAGE
	1	1	**115-5606**	1	HARNESS AS-REAR CHASSIS (MAIN)	
	2	2,3	**7D-1553**	3	CLIP	
M	3	1,2,3	**8T-4137**	53	BOLT (M10X1.5X20MM)	
	4	1,2,3	**8T-4121**	62	WASHER-HARD (11X21X2.5MM THK)	
	5	1,2,3	**3S-2093**	6	STRAP-CABLE	
	6	1,2,3	**5P-9085**	15	CLIP	
	7	1	**1S-0994**	3	CLIP	
M	8	1,2,3	**8T-4136**	8	BOLT (M10X1.5X25MM)	
	9	1,2	**3S-8665**	2	CLIP	
C	10	2	**167-2154**	1	BRACKET AS	
M		2	**8T-3490**	1	NUT-WELD (M10X1.5 THD)	
	11	2	**6V-1889**	1	CLIP	
	12	2,3	**8M-2770**	6	CLIP	
	13	3	**7D-7233**	5	CLIP	
	14	3	**125-2705**	1	PLATE AS	
M		3	**8T-3490**	1	NUT-WELD (M10X1.5 THD)	
	15	1,3	**9U-2277**	3	CLIP AS	
	16	3	**7N-3718**	2	CLIP	
	17	2,3	**4D-7794**	10	CLIP	
	18	2,3	**7K-1181**	8	STRAP-CABLE	
	19	3	**4D-7388**	4	CLIP	
	20	3	**115-5611**	1	HARNESS AS-SENSOR (REAR AXLE OIL TEMPERATURE)	
	21	3	**119-7839**	1	BRACKET-RH	
	22	2	**115-5607**	1	HARNESS AS-HYDRAULIC TANK (HYDRAULIC OIL TEMP & LEVEL)	
Y	23A	2	**100-3055**	1	SENSOR GP-TEMPERATURE (REAR AXLE OIL)	350
Y	23B	2	**100-3055**	1	SENSOR GP-TEMPERATURE (STEERING OIL)	350
Y	23C	2	**100-3055**	1	SENSOR GP-TEMPERATURE (HYDRAULIC OIL)	350
	24	2	**3J-1907**	4	SEAL-O-RING	
	25	2	**9X-3495**	3	CLIP AS	
	26	2	**115-5608**	1	HARNESS AS-HYDRAULIC TANK (STEERING OIL TEMP & LEVEL)	
	27	3	**8M-2773**	2	CLIP	
	28	3	**9M-8406**	1	CLIP	
Y	29	1	**9X-7781**	2	SWITCH GP-BYPASS (TRANSMISSION OIL FILTER)	363
	30	1	**3D-2824**	2	SEAL-O-RING	
	31	1	**3T-9549**	2	ADAPTER	
	32	1	**2S-4078**	2	SEAL-O-RING	
	33	3	**115-3071**	2	CLIP AS-CONNECTOR (6 PIN)	
	34	1	**6V-2383**	2	CLIP	
Y	35	3	**143-9176**	1	SENSOR GP-PRESSURE (IMPLEMENT PUMP OIL)	335
	36	3	**0A-3721**	1	CLIP	
	37	3	**115-3069**	1	CLIP AS-CONNECTOR	
	38	3	**7J-0204**	1	SEAL-O-RING	
	39	3	**136-0853**	1	ADAPTER-STRAIGHT THREAD	
	40	3	**8T-7529**	1	CLIP	

C-CHANGE FROM PREVIOUS TYPE
M-METRIC PART
Y-SEPARATE ILLUSTRATION

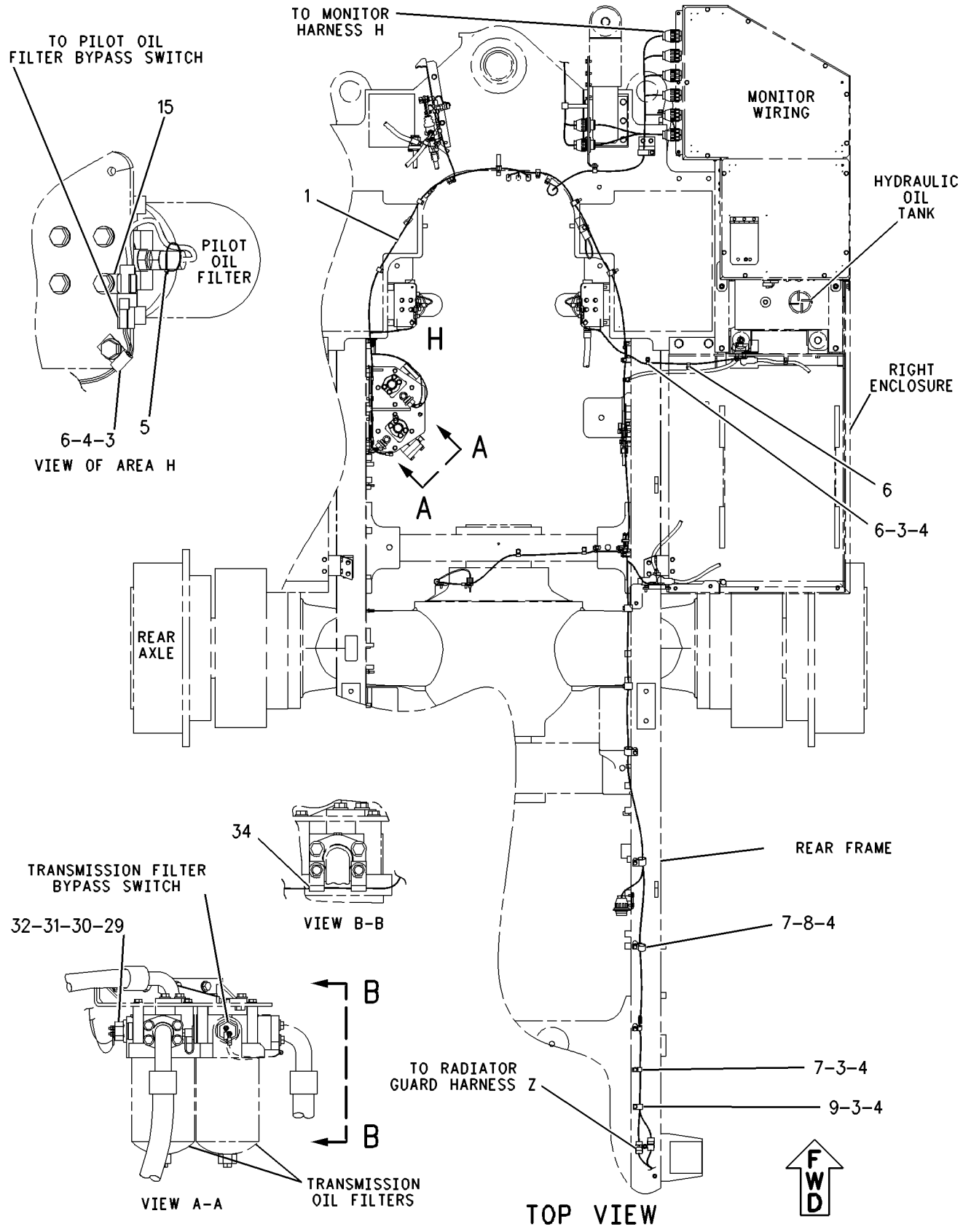

GRAPHIC #1 g00801352

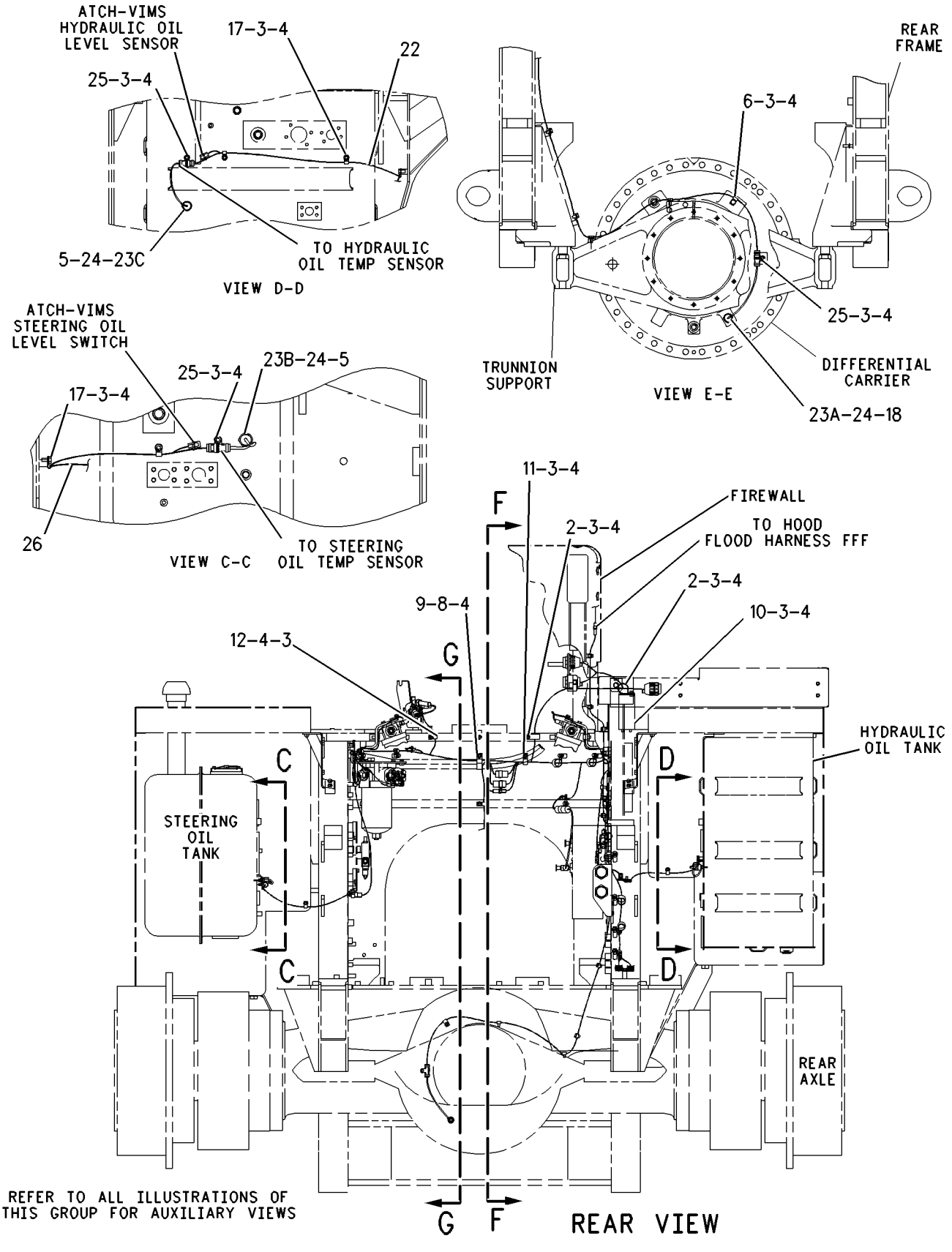

GRAPHIC #2 g00801368

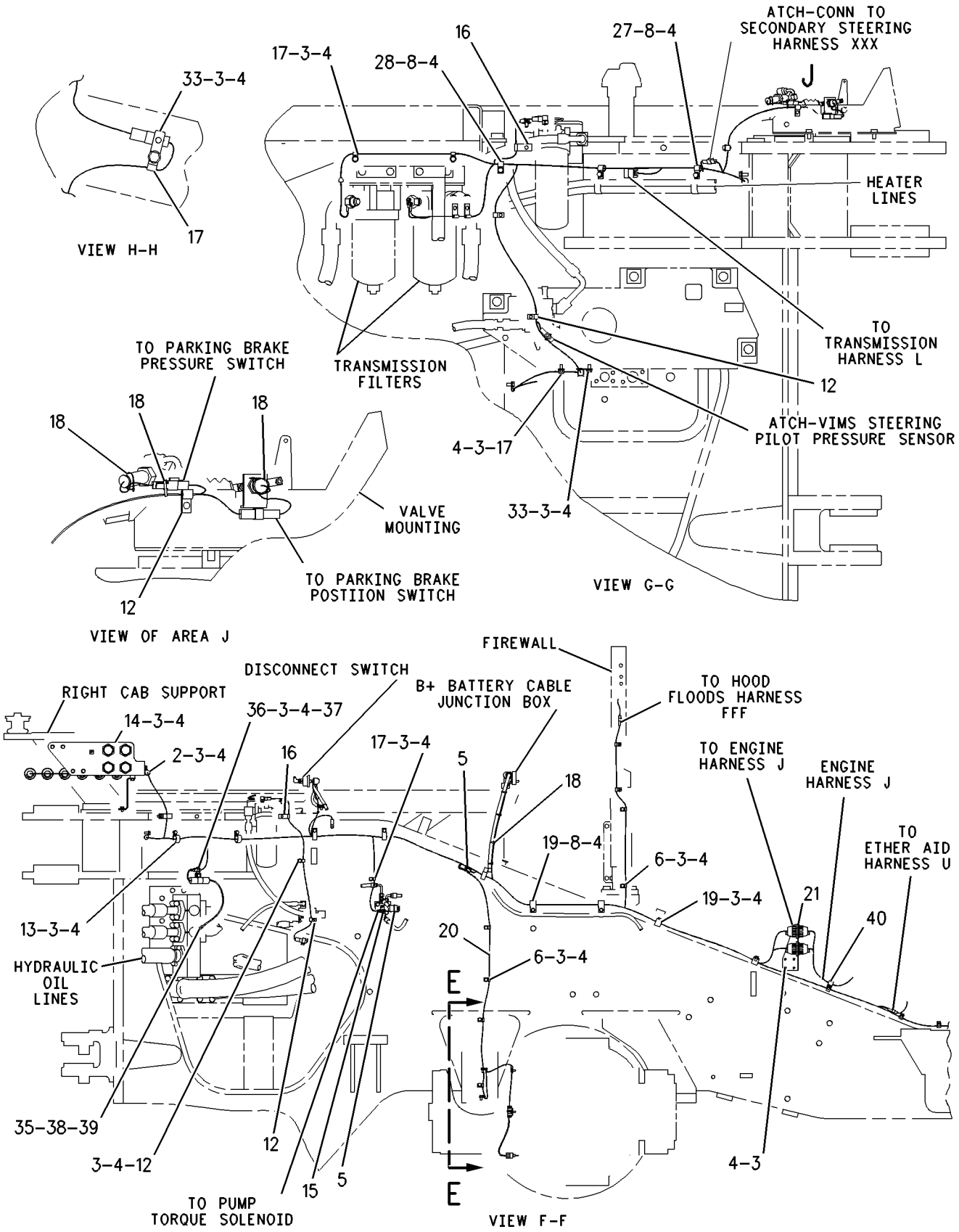

GRAPHIC #3 g00801372

109-6893 WIRING GP-POWER TRAIN

S/N: 7HR1-UP
PART OF 109-6821 ELECTRICAL AR
TYPE 1

SMCS-1634 **i01542696**

NOTE	REF NO	GRAPHIC REF	PART NUMBER	QTY	PART NAME 1 2 3 4 5 6 (PRODUCT LEVEL)	SEE PAGE
	1	1	**115-5602**	1	HARNESS AS-TRANSMISSION (CLUTCH SOL & SPEED SENSORS)	
		1	**155-2265**	1	KIT-CONNECTING PLUG (8 PIN)	
		1	**155-2270**	1	KIT-CONNECTING PLUG (2 PIN)	
					(EACH KIT-CONNECTING PLUG INCLUDES PLUG AS & WEDGE)	
		1	**6D-5256**	1	PLUG AS	
	2	1	**9X-6772**	6	STRAP-CABLE	
	3	1	**8M-2770**	3	CLIP	
M	4	1	**8T-4137**	3	BOLT (M10X1.5X20MM)	
	5	1	**8T-4121**	5	WASHER-HARD (11X21X2.5MM THK)	
	6	1	**033-8248**	1	CLIP	
	7	1	**6D-3479**	1	CLIP	
	8	1	**125-2706**	1	PLATE AS	
M		1	**8T-3490**	1	NUT-WELD (M10X1.5 THD)	
	9	1	**7N-3718**	3	CLIP	
	10	1	**115-5579**	1	CLIP AS-CONNECT	
	11	1	**3E-8848**	1	SENSOR GP-SPEED (TRANSMISSION OUTPUT)	
	12	1	**115-5603**	1	HARNESS AS-TORQUE CONVERTER (SENSORS, SOLENOIDS & HYD FAN)	
		1	**3T-0203**	1	PLUG AS-CONNECTOR (20 PIN)	
		1	**8T-8731**	1	PLUG-CONNECTOR	
		1	**8T-8737**	12	PLUG-SEAL	
		1	**7G-7917**	1	PLUG-SEAL	
		1	**155-2270**	2	KIT-CONNECTING PLUG (2 PIN)	
		1	**155-2260**	3	KIT-CONNECTING PLUG (3 PIN)	
					(EACH KIT-CONNECTING PLUG INCLUDES PLUG AS & WEDGE)	
		1	**102-8803**	3	KIT-RECEPTACLE (3 PIN)	
		1	**102-8802**	1	KIT-RECEPTACLE (2 PIN)	
					(EACH KIT-RECEPTACLE INCLUDES RECEPTACLE AS & WEDGE)	
		1	**8N-1535**	1	BELL AS-END	
		1	**8T-8667**	1	CONNECTOR AS	
		1	**3S-2093**	3	STRAP-CABLE	
	13	1	**6D-4246**	2	CLIP	
	14	1	**136-0853**	1	ADAPTER-STRAIGHT THREAD	
	15	1	**3J-1907**	3	SEAL-O-RING	
Y	16	1	**140-3540**	1	SENSOR GP-PRESSURE (FAN PUMP OIL)	334
	17	1	**7J-0204**	1	SEAL-O-RING	
	18	1	**9U-2277**	1	CLIP AS	
	19	1	**8C-7528**	3	CLIP	
	20	1	**144-0178**	1	SENSOR GP-SPEED (TC OUTPUT)	
	21	1	**3K-0360**	1	SEAL-O-RING	
	22	1	**115-3069**	3	CLIP AS-CONNECTOR	
	23	1	**9X-3495**	1	CLIP AS	
Y	24	1	**100-3055**	1	SENSOR GP-TEMPERATURE (TC OIL)	350
	25	1	**4D-7794**	1	CLIP	
	26	1	**6V-3965**	1	FITTING	
	27	1	**6V-0852**	2	CAP-DUST	
	28	1	**125-8797**	1	CLIP (SLOT)	
Y	29	1	**129-6303**	1	VALVE GP-MODULATING (TC IMPELLER CLUTCH)	656
	30	1	**6D-7889**	1	SEAL-O-RING	
M	31	1	**8T-6869**	2	BOLT (M8X1.25X60MM)	
	32	1	**8T-4224**	2	WASHER-HARD (8.8X16X2MM THK)	
	33	1	**125-8534**	1	PLATE AS	

109-6893 **WIRING GP-POWER TRAIN** ***(contd.)*** **i01542696**

NOTE	REF NO	GRAPHIC REF	PART NUMBER	QTY	PART NAME 1 2 3 4 5 6 (PRODUCT LEVEL)	SEE PAGE
M		1	**8T-3490**	1	NUT-WELD (M10X1.5 THD)	
	34	1	**9B-7237**	1	BOLT (3/8-16X1.25 IN)	
M	35	1	**8T-4136**	1	BOLT (M10X1.5X25MM)	
	36	1	**5P-9085**	2	CLIP	
	37	1	**7X-0772**	1	WASHER-HARD (10.2X25.5X2.5MM THK)	
	38	1	**8T-4223**	2	WASHER-HARD (13.5X25.5X3MM THK)	

M-METRIC PART
Y-SEPARATE ILLUSTRATION

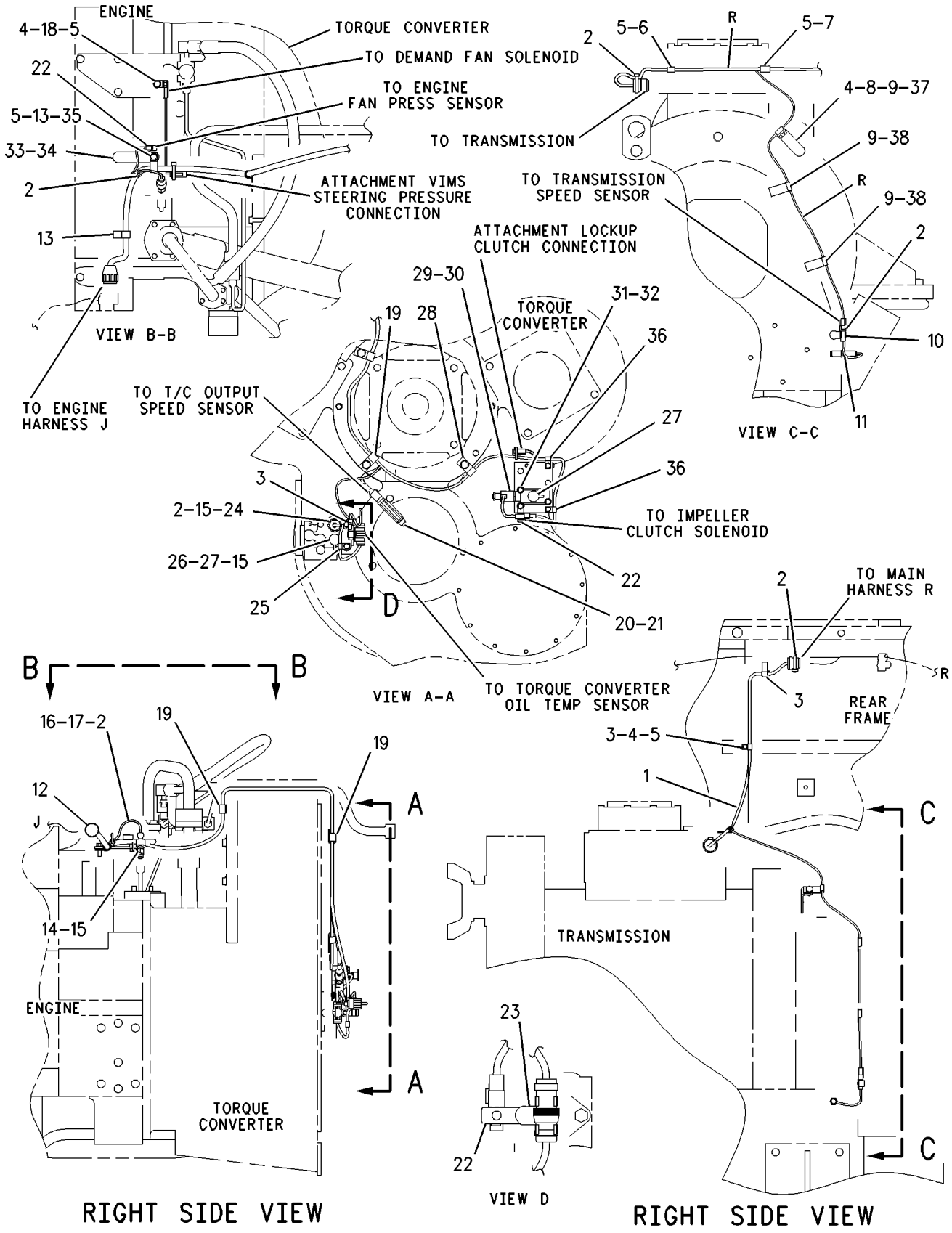

GRAPHIC #1

g00801762

MEMORANDA

ELECTRICAL AND STARTING SYSTEM

109-6893 WIRING GP-POWER TRAIN

S/N: 7HR1-UP
PART OF 109-6821 ELECTRICAL AR
TYPE 2

SMCS-1634 **i01543039**

NOTE	REF NO	GRAPHIC REF	PART NUMBER	QTY	PART NAME 1 2 3 4 5 6 (PRODUCT LEVEL)	SEE PAGE
	1	1	**115-5602**	1	HARNESS AS-TRANSMISSION (CLUTCH SOL & SPEED SENSORS)	
		1	**155-2265**	1	KIT-CONNECTING PLUG (8 PIN)	
		1	**155-2270**	1	KIT-CONNECTING PLUG (2 PIN)	
					(EACH KIT-CONNECTING PLUG INCLUDES PLUG AS & WEDGE)	
		1	**6D-5256**	1	PLUG AS	
	2	1	**9X-6772**	6	STRAP-CABLE	
	3	1	**8M-2770**	3	CLIP	
M	4	1	**8T-4137**	3	BOLT (M10X1.5X20MM)	
	5	1	**8T-4121**	5	WASHER-HARD (11X21X2.5MM THK)	
	6	1	**033-8248**	1	CLIP	
	7	1	**6D-3479**	1	CLIP	
	8	1	**125-2706**	1	PLATE AS	
M		1	**8T-3490**	1	NUT-WELD (M10X1.5 THD)	
	9	1	**7N-3718**	3	CLIP	
	10	1	**115-5579**	1	CLIP AS-CONNECT	
	11	1	**3E-8848**	1	SENSOR GP-SPEED (TRANSMISSION OUTPUT)	
	12	1	**115-5603**	1	HARNESS AS-TORQUE CONVERTER (SENSORS, SOLENOIDS & HYD FAN)	
		1	**3T-0203**	1	PLUG AS-CONNECTOR (20 PIN)	
		1	**8T-8731**	1	PLUG-CONNECTOR	
		1	**8T-8737**	12	PLUG-SEAL	
		1	**7G-7917**	1	PLUG-SEAL	
		1	**155-2270**	2	KIT-CONNECTING PLUG (2 PIN)	
		1	**155-2260**	3	KIT-CONNECTING PLUG (3 PIN)	
					(EACH KIT-CONNECTING PLUG INCLUDES PLUG AS & WEDGE)	
		1	**102-8803**	3	KIT-RECEPTACLE (3 PIN)	
		1	**102-8802**	1	KIT-RECEPTACLE (2 PIN)	
					(EACH KIT-RECEPTACLE INCLUDES RECEPTACLE AS & WEDGE)	
		1	**8N-1535**	1	BELL AS-END	
		1	**8T-8667**	1	CONNECTOR AS	
		1	**3S-2093**	3	STRAP-CABLE	
	13	1	**6D-4246**	2	CLIP	
	14	1	**136-0853**	1	ADAPTER-STRAIGHT THREAD	
	15	1	**3J-1907**	3	SEAL-O-RING	
CY	16	1	**140-3540**	1	SENSOR GP-PRESSURE (FAN PUMP OIL)	334
	17	1	**7J-0204**	1	SEAL-O-RING	
	18	1	**9U-2277**	1	CLIP AS	
	19	1	**8C-7528**	3	CLIP	
	20	1	**144-0178**	1	SENSOR GP-SPEED (TC OUTPUT)	
	21	1	**3K-0360**	1	SEAL-O-RING	
	22	1	**115-3069**	3	CLIP AS-CONNECTOR	
	23	1	**9X-3495**	1	CLIP AS	
Y	24	1	**100-3055**	1	SENSOR GP-TEMPERATURE (TC OIL)	350
C	25	1	**4D-7794**	2	CLIP	
	26	1	**6V-3965**	1	FITTING	
	27	1	**6V-0852**	2	CAP-DUST	
	28	1	**125-8797**	1	CLIP (SLOT)	
Y	29	1	**129-6303**	1	VALVE GP-MODULATING (TC IMPELLER CLUTCH)	656
	30	1	**8S-0768**	1	SEAL-O-RING	
M	31	1	**8T-6869**	2	BOLT (M8X1.25X60MM)	
	32	1	**8T-4224**	2	WASHER-HARD (8.8X16X2MM THK)	
	33	1	**125-8534**	1	PLATE AS	

109-6893 **WIRING GP-POWER TRAIN** ***(contd.)*** **i01543039**

NOTE	REF NO	GRAPHIC REF	PART NUMBER	QTY	PART NAME 1 2 3 4 5 6 (PRODUCT LEVEL)	SEE PAGE
M		1	**8T-3490**	1	NUT-WELD (M10X1.5 THD)	
	34	1	**9B-7237**	1	BOLT (3/8-16X1.25 IN)	
M	35	1	**8T-4136**	1	BOLT (M10X1.5X25MM)	
C	36	1	**5P-9085**	1	CLIP	
	37	1	**7X-0772**	1	WASHER-HARD (10.2X25.5X2.5MM THK)	
	38	1	**8T-4223**	2	WASHER-HARD (13.5X25.5X3MM THK)	

C-CHANGE FROM PREVIOUS TYPE
M-METRIC PART
Y-SEPARATE ILLUSTRATION

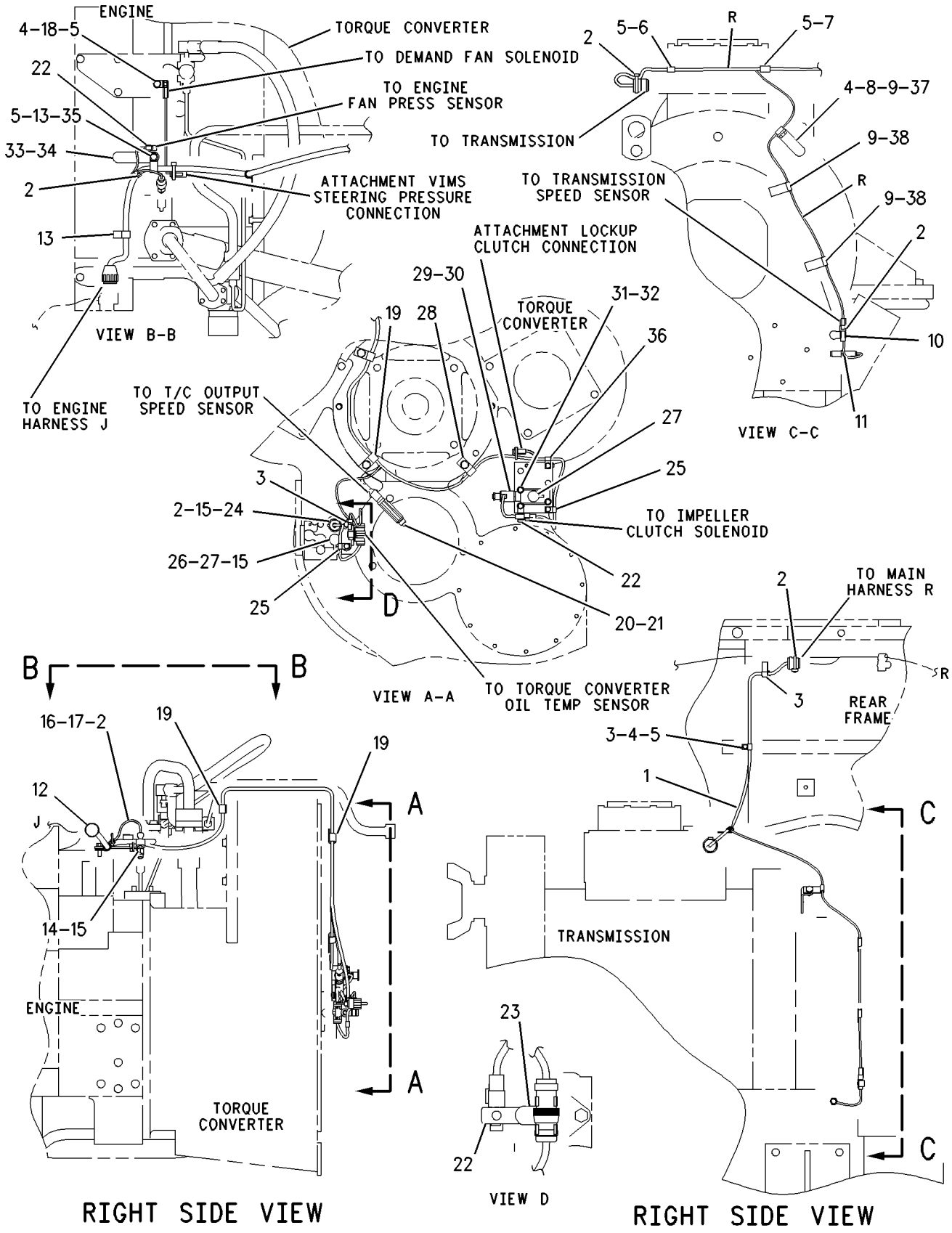

GRAPHIC #1

g00801763

MEMORANDA

109-6893 WIRING GP-POWER TRAIN

S/N: 7HR1-UP
PART OF 109-6821 ELECTRICAL AR
TYPE 3

SMCS-1634 **i01543042**

NOTE	REF NO	GRAPHIC REF	PART NUMBER	QTY	PART NAME 1 2 3 4 5 6 (PRODUCT LEVEL)	SEE PAGE
	1	1	**115-5602**	1	HARNESS AS-TRANSMISSION (CLUTCH SOL & SPEED SENSORS)	
		1	**155-2265**	1	KIT-CONNECTING PLUG (8 PIN)	
		1	**155-2270**	1	KIT-CONNECTING PLUG (2 PIN)	
					(EACH KIT-CONNECTING PLUG INCLUDES PLUG AS & WEDGE)	
		1	**6D-5256**	1	PLUG AS	
	2	1	**9X-6772**	6	STRAP-CABLE	
	3	1	**8M-2770**	3	CLIP	
M	4	1	**8T-4137**	3	BOLT (M10X1.5X20MM)	
	5	1	**8T-4121**	5	WASHER-HARD (11X21X2.5MM THK)	
	6	1	**033-8248**	1	CLIP	
	7	1	**6D-3479**	1	CLIP	
	8	1	**125-2706**	1	PLATE AS	
M		1	**8T-3490**	1	NUT-WELD (M10X1.5 THD)	
	9	1	**7N-3718**	3	CLIP	
	10	1	**115-5579**	1	CLIP AS-CONNECT	
CY	11	1	**183-5011**	1	SENSOR GP-SPEED (TRANSMISSION OUTPUT)	348
	12	1	**115-5603**	1	HARNESS AS-TORQUE CONVERTER (SENSORS, SOLENOIDS & HYD FAN)	
		1	**3T-0203**	1	PLUG AS-CONNECTOR (20 PIN)	
		1	**8T-8731**	1	PLUG-CONNECTOR	
		1	**8T-8737**	12	PLUG-SEAL	
		1	**7G-7917**	1	PLUG-SEAL	
		1	**155-2270**	2	KIT-CONNECTING PLUG (2 PIN)	
		1	**155-2260**	3	KIT-CONNECTING PLUG (3 PIN)	
					(EACH KIT-CONNECTING PLUG INCLUDES PLUG AS & WEDGE)	
		1	**102-8803**	3	KIT-RECEPTACLE (3 PIN)	
		1	**102-8802**	1	KIT-RECEPTACLE (2 PIN)	
					(EACH KIT-RECEPTACLE INCLUDES RECEPTACLE AS & WEDGE)	
		1	**8N-1535**	1	BELL AS-END	
		1	**8T-8667**	1	CONNECTOR AS	
		1	**3S-2093**	3	STRAP-CABLE	
	13	1	**6D-4246**	2	CLIP	
	14	1	**136-0853**	1	ADAPTER-STRAIGHT THREAD	
	15	1	**3J-1907**	3	SEAL-O-RING	
Y	16	1	**140-3540**	1	SENSOR GP-PRESSURE (FAN PUMP OIL)	334
	17	1	**7J-0204**	1	SEAL-O-RING	
	18	1	**9U-2277**	1	CLIP AS	
	19	1	**8C-7528**	3	CLIP	
	20	1	**144-0178**	1	SENSOR GP-SPEED (TC OUTPUT)	
	21	1	**3K-0360**	1	SEAL-O-RING	
	22	1	**115-3069**	3	CLIP AS-CONNECTOR	
	23	1	**9X-3495**	1	CLIP AS	
Y	24	1	**100-3055**	1	SENSOR GP-TEMPERATURE (TC OIL)	350
	25	1	**4D-7794**	2	CLIP	
	26	1	**6V-3965**	1	FITTING	
	27	1	**6V-0852**	2	CAP-DUST	
	28	1	**125-8797**	1	CLIP (SLOT)	
Y	29	1	**129-6303**	1	VALVE GP-MODULATING (TC IMPELLER CLUTCH)	656
	30	1	**6D-7889**	1	SEAL-O-RING	
M	31	1	**8T-6869**	2	BOLT (M8X1.25X60MM)	
	32	1	**8T-4224**	2	WASHER-HARD (8.8X16X2MM THK)	
	33	1	**125-8534**	1	PLATE AS	

109-6893 **WIRING GP-POWER TRAIN** ***(contd.)*** **i01543042**

NOTE	REF NO	GRAPHIC REF	PART NUMBER	QTY	PART NAME 1 2 3 4 5 6 (PRODUCT LEVEL)	SEE PAGE
M		1	**8T-3490**	1	NUT-WELD (M10X1.5 THD)	
	34	1	**9B-7237**	1	BOLT (3/8-16X1.25 IN)	
M	35	1	**8T-4136**	1	BOLT (M10X1.5X25MM)	
	36	1	**5P-9085**	1	CLIP	
	37	1	**7X-0772**	1	WASHER-HARD (10.2X25.5X2.5MM THK)	
	38	1	**8T-4223**	2	WASHER-HARD (13.5X25.5X3MM THK)	

C-CHANGE FROM PREVIOUS TYPE
M-METRIC PART
Y-SEPARATE ILLUSTRATION

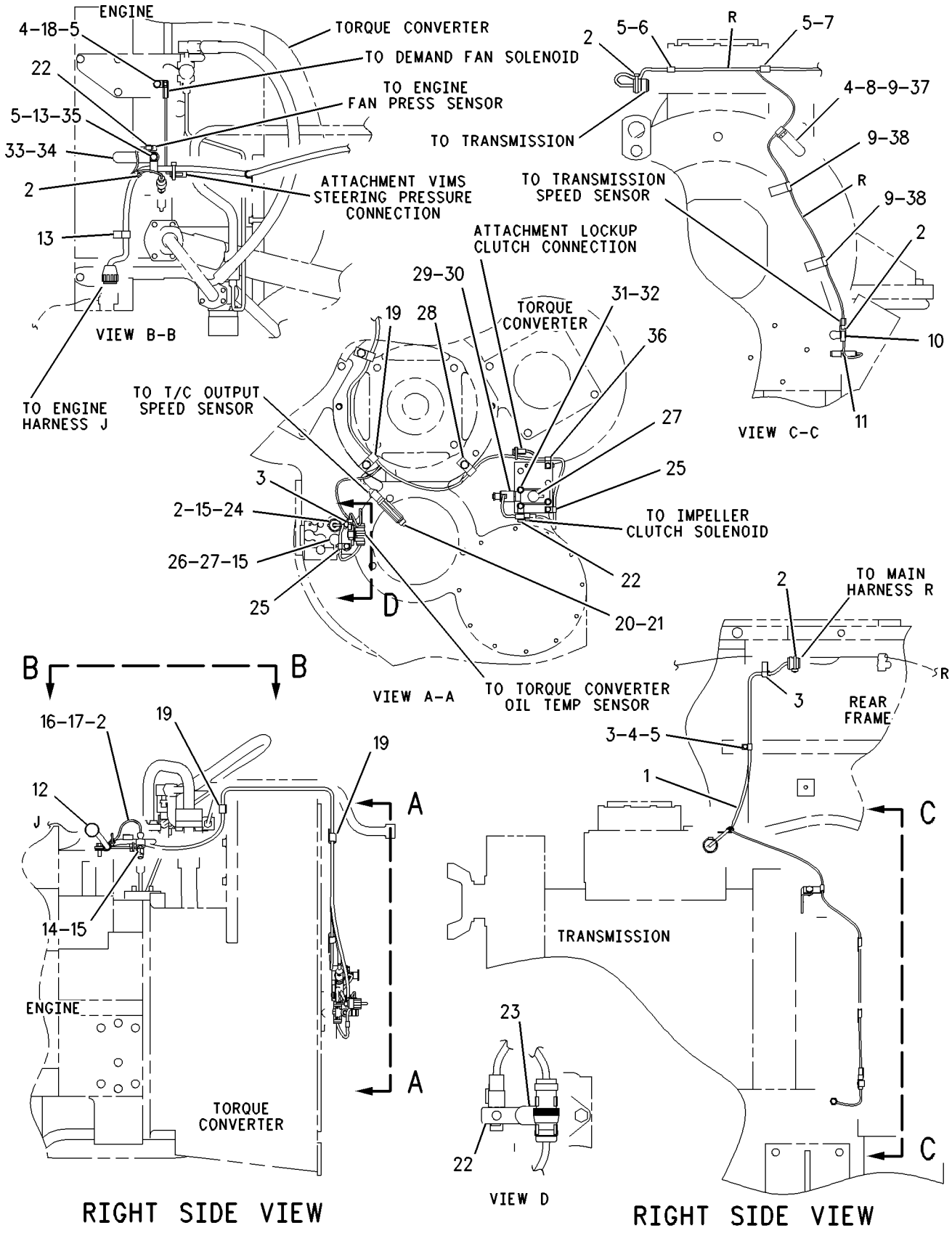

GRAPHIC #1 g00801766

MEMORANDA

ELECTRICAL AND STARTING SYSTEM

109-6893 WIRING GP-POWER TRAIN

S/N: 7HR1-UP
PART OF 109-6821 ELECTRICAL AR
TYPE 4

SMCS-1634 **i01543047**

NOTE	REF NO	GRAPHIC REF	PART NUMBER	QTY	PART NAME 1 2 3 4 5 6 (PRODUCT LEVEL)	SEE PAGE
	1	1	**115-5602**	1	HARNESS AS-TRANSMISSION (CLUTCH SOL & SPEED SENSORS)	
		1	**155-2265**	1	KIT-CONNECTING PLUG (8 PIN)	
		1	**155-2270**	1	KIT-CONNECTING PLUG (2 PIN)	
					(EACH KIT-CONNECTING PLUG INCLUDES PLUG AS & WEDGE)	
		1	**6D-5256**	1	PLUG AS	
	2	1	**9X-6772**	6	STRAP-CABLE	
	3	1	**8M-2770**	3	CLIP	
M	4	1	**8T-4137**	3	BOLT (M10X1.5X20MM)	
	5	1	**8T-4121**	5	WASHER-HARD (11X21X2.5MM THK)	
	6	1	**033-8248**	1	CLIP	
	7	1	**6D-3479**	1	CLIP	
	8	1	**125-2706**	1	PLATE AS	
M		1	**8T-3490**	1	NUT-WELD (M10X1.5 THD)	
	9	1	**7N-3718**	3	CLIP	
	10	1	**115-5579**	1	CLIP AS-CONNECT	
CY	11	1	**183-5011**	1	SENSOR GP-SPEED (TRANSMISSION OUTPUT)	348
	12	1	**115-5603**	1	HARNESS AS-TORQUE CONVERTER (SENSORS, SOLENOIDS & HYD FAN)	
		1	**3T-0203**	1	PLUG AS-CONNECTOR (20 PIN)	
		1	**8T-8731**	1	PLUG-CONNECTOR	
		1	**8T-8737**	12	PLUG-SEAL	
		1	**7G-7917**	1	PLUG-SEAL	
		1	**155-2270**	2	KIT-CONNECTING PLUG (2 PIN)	
		1	**155-2260**	3	KIT-CONNECTING PLUG (3 PIN)	
					(EACH KIT-CONNECTING PLUG INCLUDES PLUG AS & WEDGE)	
		1	**102-8803**	3	KIT-RECEPTACLE (3 PIN)	
		1	**102-8802**	1	KIT-RECEPTACLE (2 PIN)	
					(EACH KIT-RECEPTACLE INCLUDES RECEPTACLE AS & WEDGE)	
		1	**8N-1535**	1	BELL AS-END	
		1	**8T-8667**	1	CONNECTOR AS	
		1	**3S-2093**	3	STRAP-CABLE	
	13	1	**6D-4246**	2	CLIP	
	14	1	**136-0853**	1	ADAPTER-STRAIGHT THREAD	
	15	1	**3J-1907**	3	SEAL-O-RING	
Y	16	1	**167-1709**	1	SENSOR GP-PRESSURE (FAN PUMP OIL)	343
	17	1	**7J-0204**	1	SEAL-O-RING	
	18	1	**9U-2277**	1	CLIP AS	
	19	1	**8C-7528**	3	CLIP	
	20	1	**144-0178**	1	SENSOR GP-SPEED (TC OUTPUT)	
	21	1	**3K-0360**	1	SEAL-O-RING	
	22	1	**115-3069**	3	CLIP AS-CONNECTOR	
	23	1	**9X-3495**	1	CLIP AS	
Y	24	1	**100-3055**	1	SENSOR GP-TEMPERATURE (TC OIL)	350
	25	1	**4D-7794**	2	CLIP	
	26	1	**6V-3965**	1	FITTING	
	27	1	**6V-0852**	2	CAP-DUST	
	28	1	**125-8797**	1	CLIP (SLOT)	
Y	29	1	**129-6303**	1	VALVE GP-MODULATING (TC IMPELLER CLUTCH)	656
	30	1	**6D-7889**	1	SEAL-O-RING	
M	31	1	**8T-6869**	2	BOLT (M8X1.25X60MM)	
	32	1	**8T-4224**	2	WASHER-HARD (8.8X16X2MM THK)	
	33	1	**125-8534**	1	PLATE AS	

109-6893 **WIRING GP-POWER TRAIN** ***(contd.)*** **i01543047**

NOTE	REF NO	GRAPHIC REF	PART NUMBER	QTY	PART NAME 1 2 3 4 5 6 (PRODUCT LEVEL)	SEE PAGE
M		1	**8T-3490**	1	NUT-WELD (M10X1.5 THD)	
	34	1	**9B-7237**	1	BOLT (3/8-16X1.25 IN)	
M	35	1	**8T-4136**	1	BOLT (M10X1.5X25MM)	
	36	1	**5P-9085**	1	CLIP	
	37	1	**7X-0772**	1	WASHER-HARD (10.2X25.5X2.5MM THK)	
	38	1	**8T-4223**	2	WASHER-HARD (13.5X25.5X3MM THK)	

C-CHANGE FROM PREVIOUS TYPE
M-METRIC PART
Y-SEPARATE ILLUSTRATION

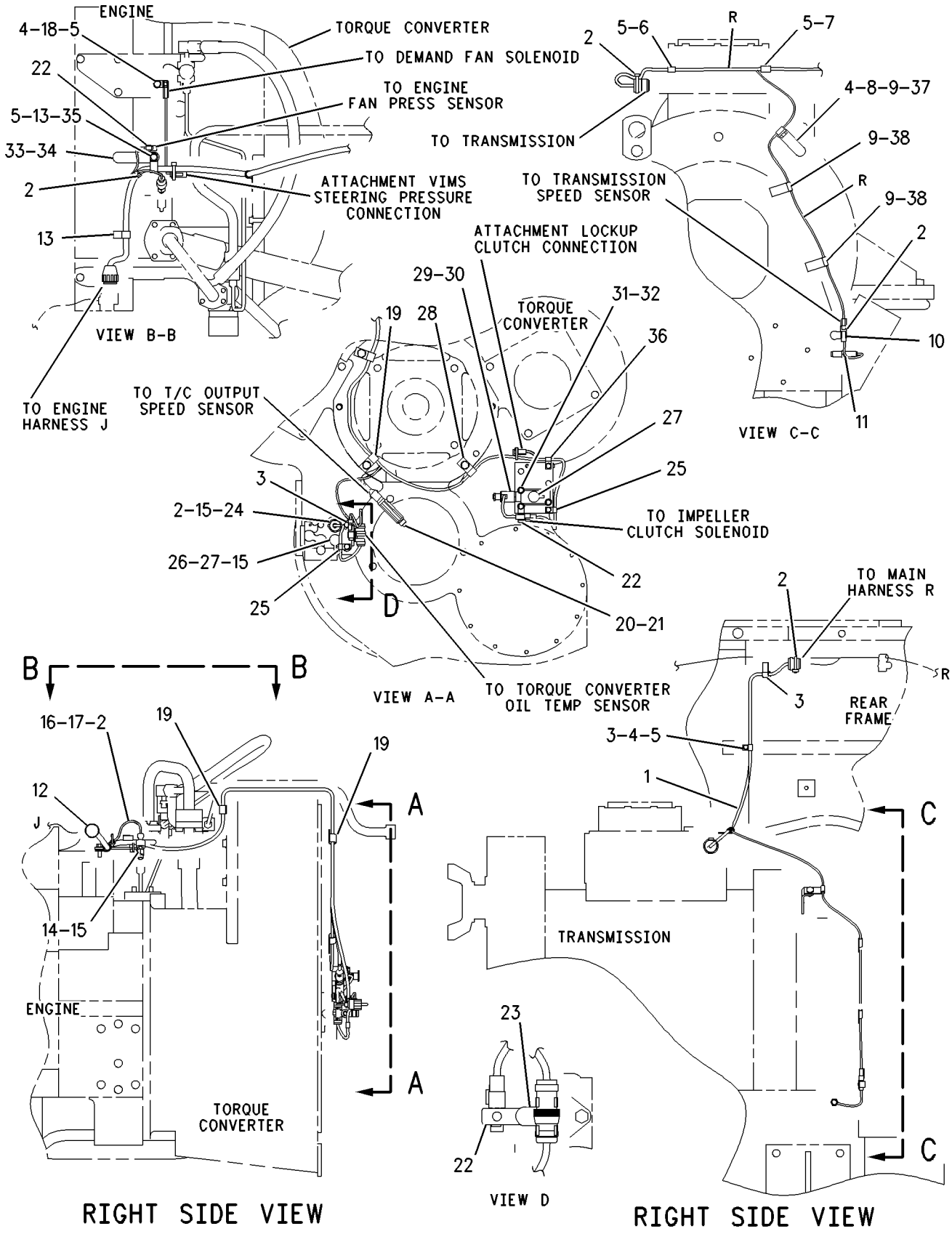

GRAPHIC #1

g00801772

MEMORANDA

109-6893 WIRING GP-POWER TRAIN

S/N: 7HR1-UP
PART OF 109-6821 ELECTRICAL AR
TYPE 5

SMCS-1634 **i01543050**

NOTE	REF NO	GRAPHIC REF	PART NUMBER	QTY	PART NAME 1 2 3 4 5 6 (PRODUCT LEVEL)	SEE PAGE
	1	1	**115-5602**	1	HARNESS AS-TRANSMISSION (CLUTCH SOL & SPEED SENSORS)	
		1	**155-2265**	1	KIT-CONNECTING PLUG (8 PIN)	
		1	**155-2270**	1	KIT-CONNECTING PLUG (2 PIN)	
					(EACH KIT-CONNECTING PLUG INCLUDES PLUG AS & WEDGE)	
		1	**6D-5256**	1	PLUG AS	
	2	1	**9X-6772**	6	STRAP-CABLE	
	3	1	**8M-2770**	3	CLIP	
M	4	1	**8T-4137**	3	BOLT (M10X1.5X20MM)	
	5	1	**8T-4121**	5	WASHER-HARD (11X21X2.5MM THK)	
	6	1	**033-8248**	1	CLIP	
	7	1	**6D-3479**	1	CLIP	
	8	1	**125-2706**	1	PLATE AS	
M		1	**8T-3490**	1	NUT-WELD (M10X1.5 THD)	
	9	1	**7N-3718**	3	CLIP	
	10	1	**115-5579**	1	CLIP AS-CONNECT	
CY	11	1	**193-2550**	1	SENSOR GP-SPEED (TRANSMISSION OUTPUT)	349
	12	1	**115-5603**	1	HARNESS AS-TORQUE CONVERTER (SENSORS, SOLENOIDS & HYD FAN)	
		1	**3T-0203**	1	PLUG AS-CONNECTOR (20 PIN)	
		1	**8T-8731**	1	PLUG-CONNECTOR	
		1	**8T-8737**	12	PLUG-SEAL	
		1	**7G-7917**	1	PLUG-SEAL	
		1	**155-2270**	2	KIT-CONNECTING PLUG (2 PIN)	
		1	**155-2260**	3	KIT-CONNECTING PLUG (3 PIN)	
					(EACH KIT-CONNECTING PLUG INCLUDES PLUG AS & WEDGE)	
		1	**102-8803**	3	KIT-RECEPTACLE (3 PIN)	
		1	**102-8802**	1	KIT-RECEPTACLE (2 PIN)	
					(EACH KIT-RECEPTACLE INCLUDES RECEPTACLE AS & WEDGE)	
		1	**8N-1535**	1	BELL AS-END	
		1	**8T-8667**	1	CONNECTOR AS	
		1	**3S-2093**	3	STRAP-CABLE	
		1	**155-2270**	2	KIT-CONNECTING PLUG (2 PIN)	
					(INCLUDES PLUG AS AND WEDGE)	
		1	**155-2260**	2	KIT-CONNECTING PLUG (3 PIN)	
					(INCLUDES PLUG AS AND WEDGE)	
		1	**102-8803**	3	KIT-RECEPTACLE (3 PIN)	
					(INCLUDES RECEPTACLE AS AND WEDGE)	
	13	1	**6D-4246**	2	CLIP	
	14	1	**136-0853**	1	ADAPTER-STRAIGHT THREAD	
	15	1	**3J-1907**	3	SEAL-O-RING	
Y	16	1	**167-1709**	1	SENSOR GP-PRESSURE (FAN PUMP OIL)	343
	17	1	**7J-0204**	1	SEAL-O-RING	
	18	1	**9U-2277**	1	CLIP AS	
	19	1	**8C-7528**	3	CLIP	
	20	1	**144-0178**	1	SENSOR GP-SPEED (TC OUTPUT)	
	21	1	**3K-0360**	1	SEAL-O-RING	
	22	1	**115-3069**	3	CLIP AS-CONNECTOR	
	23	1	**9X-3495**	1	CLIP AS	
Y	24	1	**100-3055**	1	SENSOR GP-TEMPERATURE (TC OIL)	350
	25	1	**4D-7794**	2	CLIP	
	26	1	**6V-3965**	1	FITTING	
	27	1	**6V-0852**	2	CAP-DUST	

109-6893 **WIRING GP-POWER TRAIN** ***(contd.)*** **i01543050**

NOTE	REF NO	GRAPHIC REF	PART NUMBER	QTY	PART NAME 1 2 3 4 5 6 (PRODUCT LEVEL)	SEE PAGE
	28	1	**125-8797**	1	CLIP (SLOT)	
Y	29	1	**129-6303**	1	VALVE GP-MODULATING (TC IMPELLER CLUTCH)	656
	30	1	**6D-7889**	1	SEAL-O-RING	
M	31	1	**8T-6869**	2	BOLT (M8X1.25X60MM)	
	32	1	**8T-4224**	2	WASHER-HARD (8.8X16X2MM THK)	
	33	1	**125-8534**	1	PLATE AS	
M		1	**8T-3490**	1	NUT-WELD (M10X1.5 THD)	
	34	1	**9B-7237**	1	BOLT (3/8-16X1.25 IN)	
M	35	1	**8T-4136**	1	BOLT (M10X1.5X25MM)	
	36	1	**5P-9085**	1	CLIP	
	37	1	**7X-0772**	1	WASHER-HARD (10.2X25.5X2.5MM THK)	
	38	1	**8T-4223**	2	WASHER-HARD (13.5X25.5X3MM THK)	

C-CHANGE FROM PREVIOUS TYPE
M-METRIC PART
Y-SEPARATE ILLUSTRATION

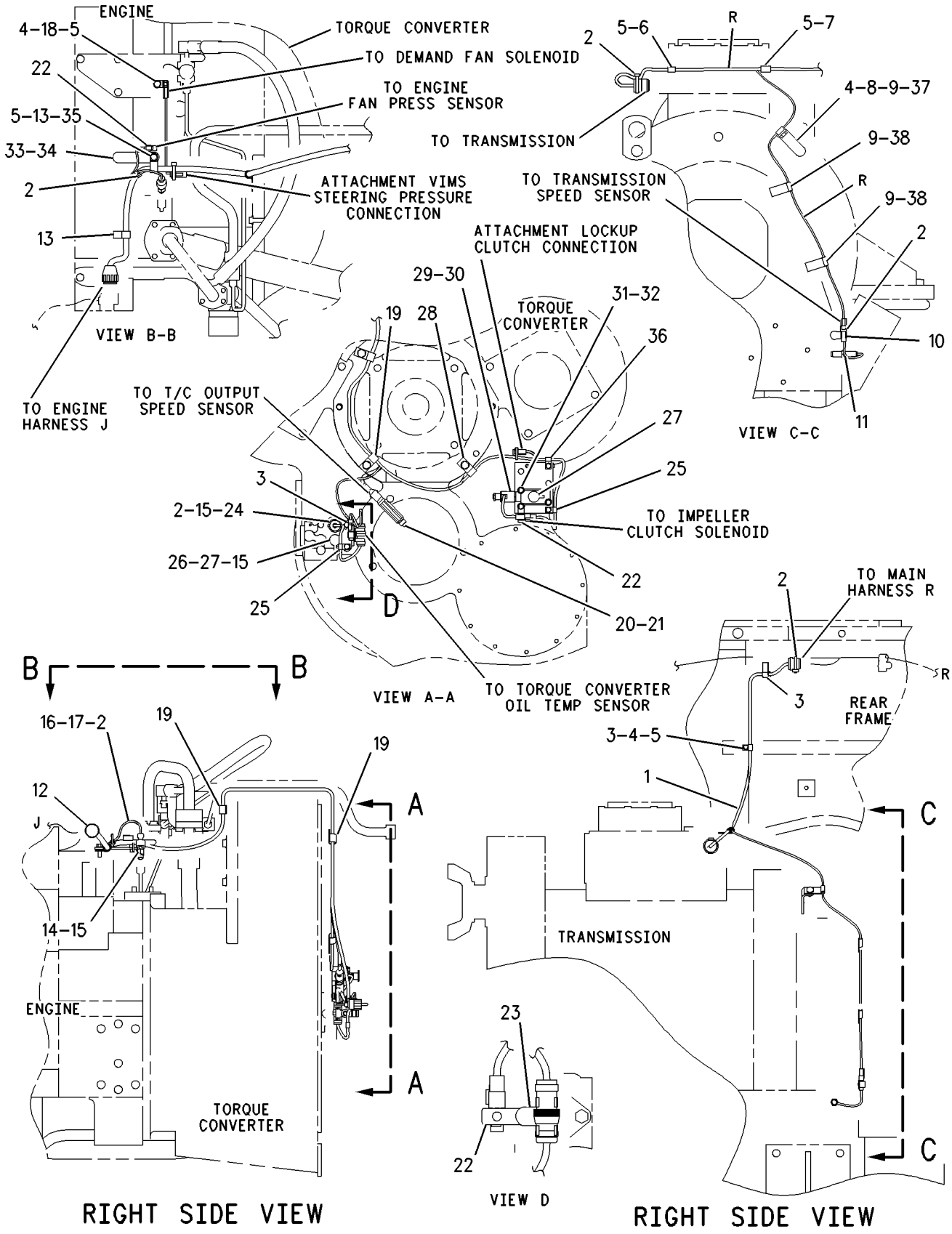

GRAPHIC #1 g00801777

MEMORANDA

109-6898 WIRING GP-REAR

S/N: 7HR1-UP

PART OF 109-6821 ELECTRICAL AR

SMCS-1408 **i01543068**

NOTE	REF NO	GRAPHIC REF	PART NUMBER	QTY	PART NAME 1 2 3 4 5 6 (PRODUCT LEVEL)	SEE PAGE
	1	1	**033-8248**	1	CLIP	
	2	1	**8T-4121**	9	WASHER-HARD (11X21X2.5MM THK)	
M	3	1	**8T-4133**	2	NUT (M10X1.5 THD)	
	4	1	**3S-2093**	2	STRAP-CABLE	
	5	1	**115-5604**	1	HARNESS AS-LIGHTING (REAR)	
		1	**8T-8737**	51	PLUG-SEAL	
		1	**155-2260**	2	KIT-CONNECTING PLUG (3 PIN)	
		1	**155-2270**	2	KIT-CONNECTING PLUG (2 PIN)	
		1	**155-2255**	1	KIT-CONNECTING PLUG (12 PIN)	
					(EACH KIT-CONNECTING PLUG INCLUES PLUG AS & WEDGE)	
		1	**102-8801**	2	KIT-RECEPTACLE (12 PIN)	
		1	**102-8802**	2	KIT-RECEPTACLE (2 PIN)	
					(EACH KIT-RECEPTACLE INCLUDES RECEPTACLE AS & WEDGE)	
		1	**3S-2093**		STRAP-CABLE	
	6	1	**4K-8864**	5	CLIP	
	7	1	**9X-7344**	2	GROMMET	
	8	1	**7X-4780**	2	GROMMET	
	9	1	**8M-2773**	1	CLIP	
	10	1	**9X-6772**	5	STRAP-CABLE	
M	11	1	**8T-4137**	7	BOLT (M10X1.5X20MM)	
	12	1	**6D-4246**	5	CLIP	
	13	1	**115-3073**	2	CLIP AS-CONNECTING	
	14	1	**9M-8406**	1	CLIP	

M-METRIC PART

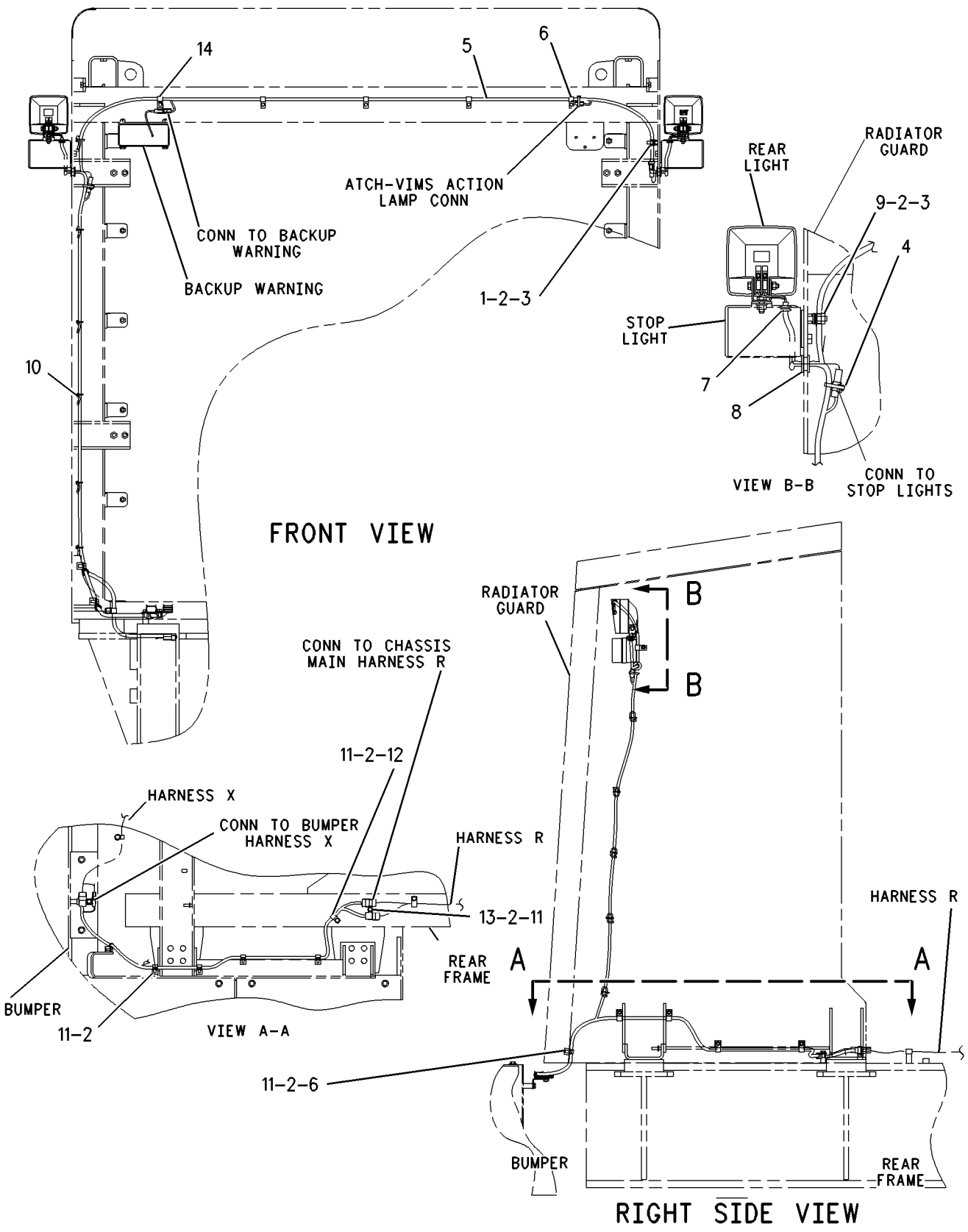

GRAPHIC #1

g00801750

132-4824 WIRING GP-SHUTOFF–GROUND LEVEL

S/N: 7HR1-UP
VIDS
PART OF 169-9053, 169-9055 BUMPER AR-REAR, 131-8153 VIDS AR
AN ATTACHMENT

SMCS-1408 **i01132335**

NOTE	REF NO	GRAPHIC REF	PART NUMBER	QTY	PART NAME 1 2 3 4 5 6 (PRODUCT LEVEL)	SEE PAGE
	1	1	**124-7649**	1	PLATE-IDENTIFICATION	
	2	1	**4D-1836**	2	SWITCH-TOGGLE (STAIRWAY ACCESS LIGHTS)	
					(GROUND LEVEL ENGINE SHUTDOWN)	
	3	1	**3E-5169**	1	GUARD-SWITCH	
	4	1	**119-7837**	1	PLATE	

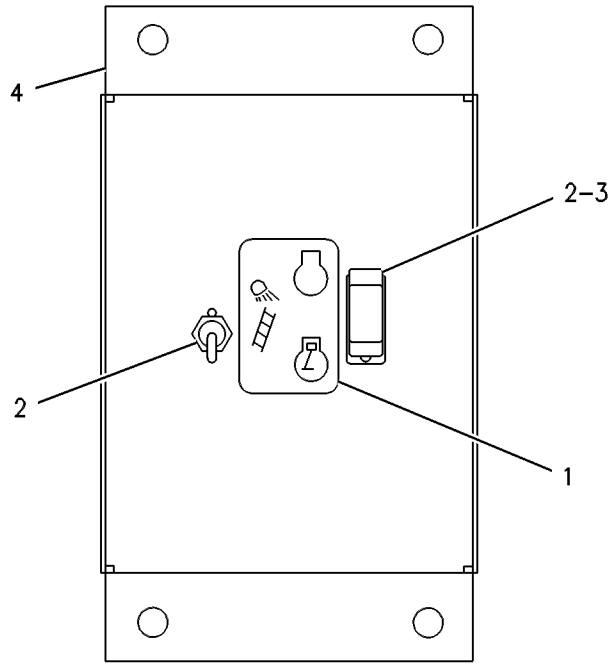

GRAPHIC #1 g00258595

132-4825 WIRING GP-SHUTOFF–VIMS

S/N: 7HR1-UP

PART OF 169-9054, 169-9056 BUMPER AR-REAR, 131-8155 VIMS AR

AN ATTACHMENT

SMCS-1408 **i01197468**

NOTE	REF NO	GRAPHIC REF	PART NUMBER	QTY	PART NAME 1 2 3 4 5 6 (PRODUCT LEVEL)	SEE PAGE
	1	1	**115-1510**	1	PLATE	
	2	1	**4D-1836**	1	SWITCH-TOGGLE (GROUND LEVEL ENGINE SHUTDOWN)	
	3	1	**4D-1836**	1	SWITCH-TOGGLE (STAIRWAY ACCESS LIGHTS)	
	4	1	**3E-5169**	1	GUARD-SWITCH	
Y	5	1	**9G-7641**	1	SWITCH GP-START (VIMS SERVICE KEY)	370
	6	1	**115-5613**	1	HARNESS AS	
	7	1	**5S-4245**	4	SCREW-MACHINE (4-40X0.5IN)	
	8	1	**6V-9497**	4	WASHER-HARD (0.5MM THK)	
	9	1	**6B-4540**	4	NUT (4-40X.75 IN)	
	10	1	**3E-5165**	1	CAP AS-PROTECTION	
	11	1	**124-7651**	1	PLATE-IDENTIFICATION	
	12	1	**124-7649**	1	PLATE-IDENTIFICATION	

Y-SEPARATE ILLUSTRATION

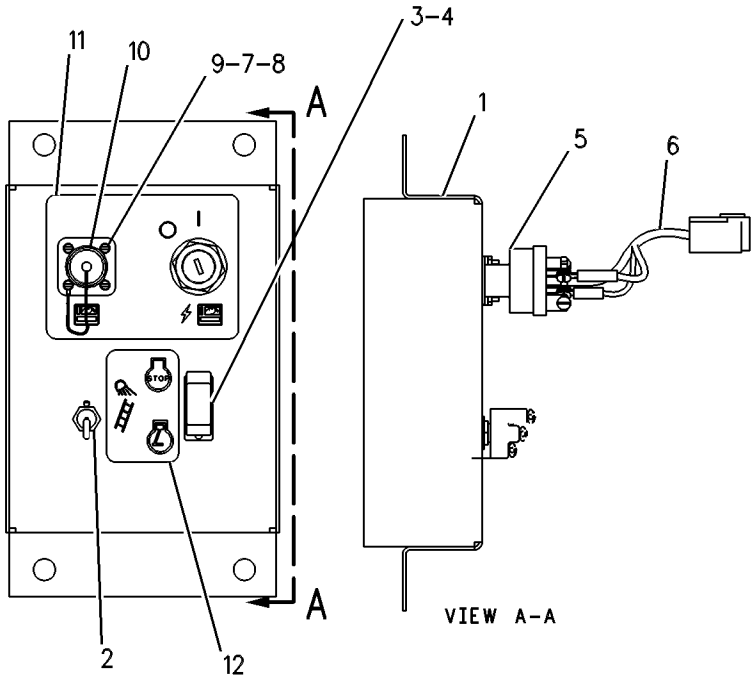

GRAPHIC #1 g00263257

ELECTRICAL AND STARTING SYSTEM

109-6897 WIRING GP-VIDS MONITOR

S/N: 7HR1-278
PART OF 131-8153 VIDS AR
AN ATTACHMENT

SMCS-1408, 7601 **i01197474**

NOTE	REF NO	GRAPHIC REF	PART NUMBER	QTY	PART NAME 1 2 3 4 5 6 (PRODUCT LEVEL)	SEE PAGE
	1	1	**112-1756**	1	ENCLOSURE AS	
M		1	**6V-9632**	11	NUT-WELD (M6X1 THD)	
		1	**151-0961**	2	BOSS	
M		1	**8T-3490**	16	NUT-WELD (M10X1.5 THD)	
M		1	**8T-3597**	15	NUT-WELD (M12X1.75 THD)	
M		1	**8T-3635**	4	STUD (M12X1.75X34.93MM)	
		1	**095-2887**	2	PLATE	
	2	1,2	**8T-4223**	3	WASHER-HARD (3MM THK)	
	3	1	**112-1757**	1	COVER AS	
		1	**6V-2370**	5	RIVET-POP	
	4	1	**112-1758**	1	COVER AS	
M	5	1	**8T-4137**	13	BOLT (M10X1.50X20MM)	
	6	1,2	**8T-4121**	19	WASHER (2.5MM THK)	
Y	7	2	**142-3363**	1	CONTROL GP-UNPROGRAMMED (POWER TRAIN)	253
	8	2	**104-5612**	2	BAR	
	9	2	**4L-6454**	4	BOLT (3/8-16X1 IN)	
	10	2	**8T-4896**	4	WASHER-HARD (2.5MM THK)	
	11	2,3	**8T-9655**	32	MOUNT	
	12	2	**8T-9658**	8	SPACER (12.7MM THK)	
M	13	2	**099-3649**	8	BOLT (M8X40MM)	
	14	2,3	**9N-0869**	16	WASHER-HARD (2MM THK)	
Y	15	2	**144-7172**	1	MODULE GP-VIDS/VIMS INTERFACE	319
M	16	2	**8T-4136**	4	BOLT (M10X1.50X25MM)	
	17	2	**4P-8134**	1	CLIP (10.5MM ID)	
	18	2	**9X-6772**	4	STRAP-CABLE	
Y	19	2	**142-3371**	1	CONTROL GP-UNPROGRAMMED (IMPLEMENT)	254
	20	3	**6I-1418**	8	SPACER (28.7MM THK)	
M	21	3	**7X-0818**	8	BOLT (M8X1.25X45MM)	
YR	22	2	*130-5131*	1	CONTROL GP-UNPROGRAMMED (VIDS/VIMS MAIN MODULE)	252
	23	2	**115-1496**	1	TUBE	
M	24	2	**9X-2042**	13	SCREW-TRUSS HEAD (M6X1.0X12MM)	
M	25	1,2	**8T-4244**	3	NUT (M12X1.75 THD)	
	26	2	**3E-5239**	2	RELAY AS (24 VOLT)	
	27	1	**107-3727**	4	SCREW-PAN HEAD	
	28	1,3	**4B-4274**	10	WASHER (1.2MM THK)	
	29	2	**4K-5122**	15	HOLDER AS-FUSE	
		2	**139-0178**	1	CAP-FUSE HOLDER	
	30	2	**3K-8782**	8	FUSE (10 AMP)	
	31	2	**8M-8948**	4	FUSE (15 AMP)	
	32	2	**8M-0456**	1	FUSE (20 AMP)	
	33	2	**115-1494**	1	PLATE AS	
	34	2	**115-3038**	1	FILM-IDENTIFICATION	
	35	2	**033-8248**	2	CLIP (11.11MM ID)	
M	36	2	**8T-4191**	2	BOLT (M10X1.50X16MM)	
	37	2	**124-6704**	1	RESISTOR AS	
	38	2	**3T-0376**	1	SWITCH AS-MAGNETIC (FLOOD LAMP RELAY)	
		2	**4F-2294**	2	NUT-JAM (5/16-24 THD)	
		2	**6V-8186**	2	NUT-FULL (5/16-24 THD)	
		2	**6V-8378**	2	NUT (10-32 THD)	
	39	3	**6B-4540**	4	NUT (4-40X.75 IN)	
	40	3	**6V-9497**	4	WASHER-HARD (0.5MM THK)	
	41	3	**115-1495**	1	PLATE	
	42	3	**4B-2049**	4	NUT (10-32 THD)	
	43	3	**3E-7294**	2	CIRCUIT BREAKER AS (105 AMP) (ALTERNATOR & MAIN)	
	44	3	**7V-9275**	1	STRAP	

109-6897 **WIRING GP-VIDS MONITOR** ***(contd.)*** **i01197474**

NOTE	REF NO	GRAPHIC REF	PART NUMBER	QTY	PART NAME 1 2 3 4 5 6 (PRODUCT LEVEL)	SEE PAGE
	45	3	**6T-3642**	1	CIRCUIT BREAKER AS (10 AMP) (KEY START)	
	46	3	**6T-3643**	1	CIRCUIT BREAKER AS (15 AMP) (ENGINE ECM)	
	47	3	**3T-2662**	1	CIRCUIT BREAKER AS (15 AMP) (RUNNING LAMPS)	
	48	3	**3D-9799**	6	SCREW-MACHINE (8-32X.875IN)	
	49	3	**4B-4863**	6	WASHER (1.2MM THK)	
	50	3	**115-9346**	1	PLATE-IDENTIFICATION	
	51	3	**8C-6354**	1	CAP-RECEPTACLE	
	52	3	**4B-1237**	4	SCREW-MACHINE	
	53	3	**115-9347**	1	FILM-IDENTIFICATION	
	54	3	**122-8450**	1	FILM-INSTRUCTION	
	55	3	**4B-1240**	4	SCREW-MACHINE (10-32X1IN)	
	56	3	**114-0931**	1	FILM-IDENTIFICATION	
	57	3	**9G-4360**	1	CAP-CONNECTOR	
	58	3	**5S-4245**	4	SCREW-MACHINE (4-40X0.5IN)	
	59	2	**7I-3652**	1	STRIP	
	60	2,3	**9X-8256**	3	WASHER (2MM THK)	
Y	61	2	**3E-0075**	2	SWITCH GP-MAGNETIC	368
	62	3	**5P-4115**	2	WASHER (2MM THK)	
M	63	3	**5C-2890**	2	NUT (M6X1.00 THD)	
M	64	3	**8T-4138**	2	BOLT (M6X1.0X20MM)	
	65	3	**9G-8451**	1	BLOCK AS	
		3	**1H-3244**	1	LOCKWASHER (NO.14)	
		3	**4B-4276**	2	WASHER (1.6MM THK)	
		3	**4L-7124**	1	BOLT (1/4-20X1.25IN)	
		3	**6V-8185**	2	NUT (1/4-20 THD)	
	66	3	**112-1761**	2	HARNESS AS	
	67	2	**112-1760**	1	WIRE AS	
	68	2	**112-1762**	1	HARNESS AS	
	69	2	**115-3039**	1	HARNESS AS	
	70	2	**130-7239**	1	HARNESS AS	
	71	2	**106-8704**	2	SUPPRESSOR AS-ARC	
	72	2	**130-7240**	1	HARNESS AS	
	73	2	**7K-1181**	17	STRAP-CABLE (4IN DIA)	
	74	2	**108-7696**	2	BAR	
	75	2	**132-8519**	1	FILM-IDENTIFICATION	
	76	2	**3T-0376**	1	SWITCH AS-MAGNETIC (MAIN POWER RELAY)	
		2	**4F-2294**	2	NUT-JAM (5/16-24 THD)	
		2	**6V-8186**	2	NUT-FULL (5/16-24 THD)	
		2	**6V-8378**	2	NUT (10-32 THD)	

M-METRIC PART
R-REMFG PART MAY BE AVAILABLE
Y-SEPARATE ILLUSTRATION

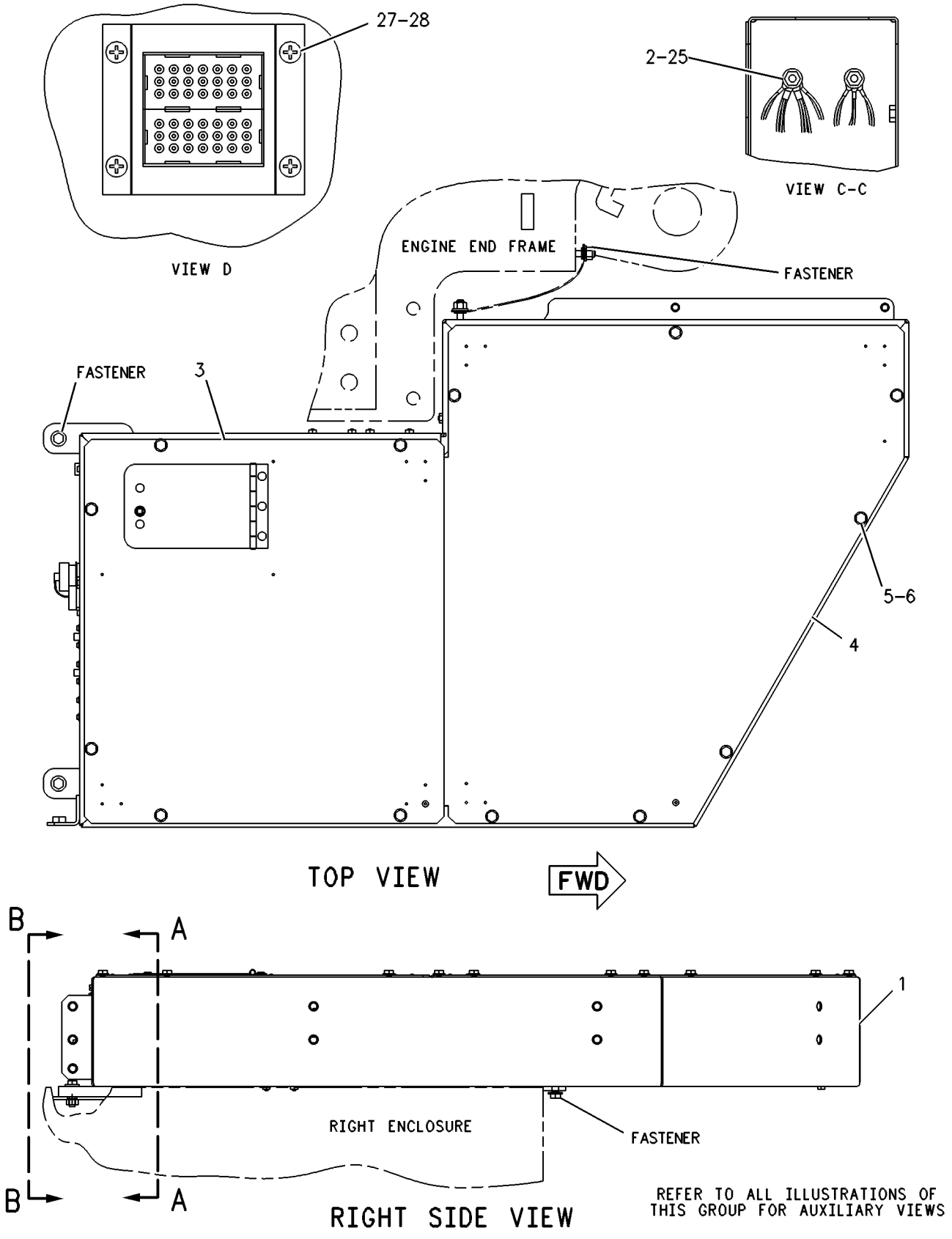

GRAPHIC #1 g00267249

109-6897 **WIRING GP-VIDS MONITOR** *(contd.)* **i01197474**

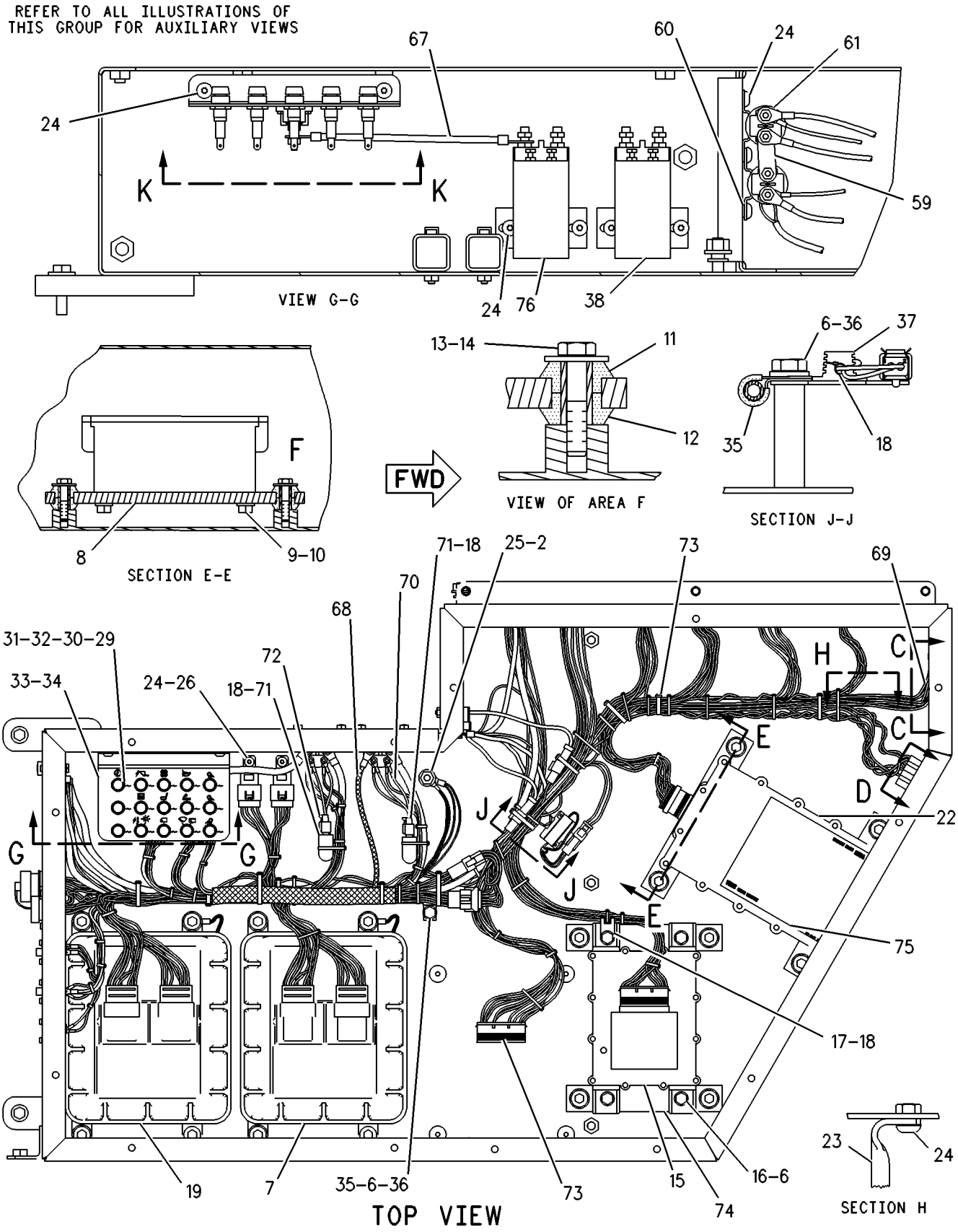

GRAPHIC #2 g00267250

109-6897 **WIRING GP-VIDS MONITOR** ***(contd.)*** **i01197474**

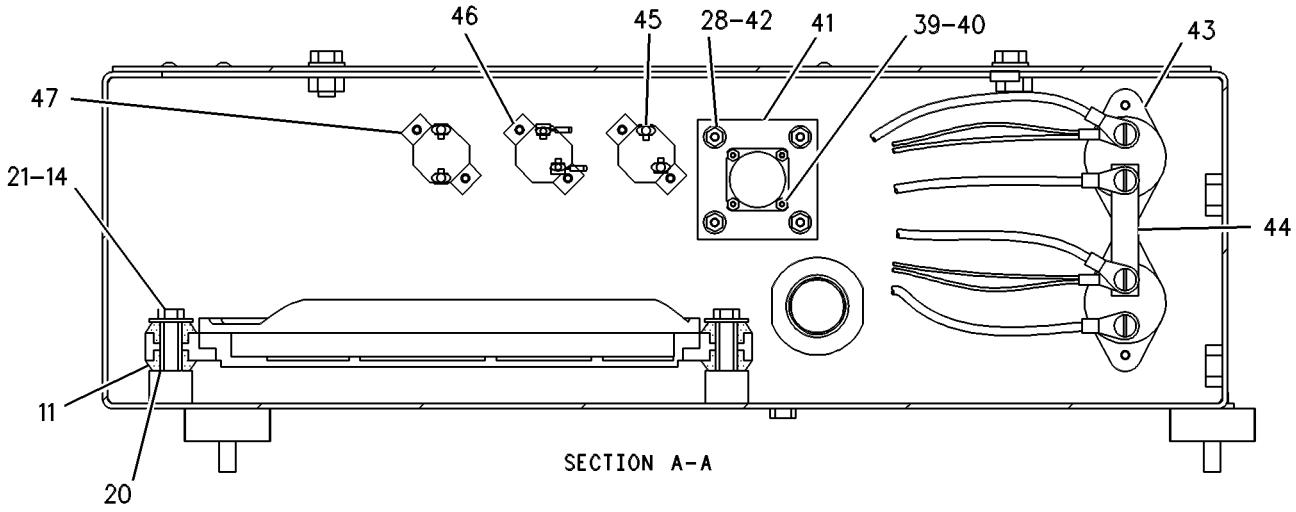

SECTION A-A

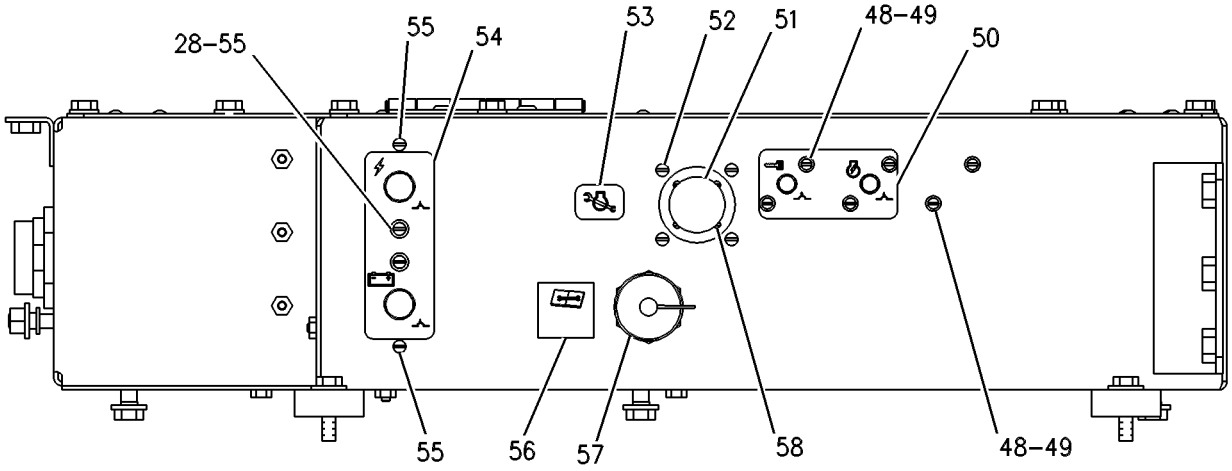

VIEW B-B

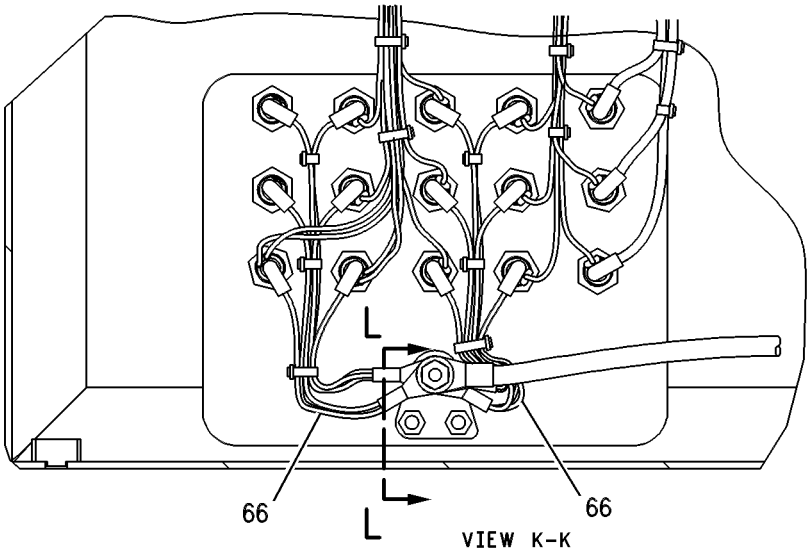

VIEW K-K

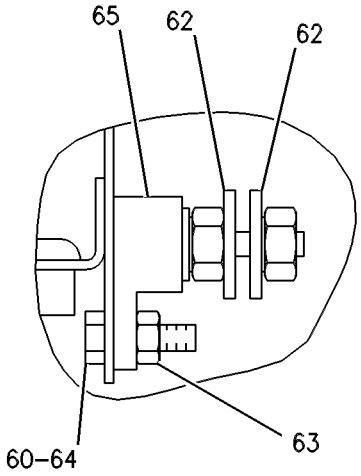

VIEW L-L

GRAPHIC #3 g00267377

MEMORANDA

168-4358 WIRING GP-VIDS MONITOR

S/N: 7HR1-UP

PART OF 170-8463 LIFT AR-HIGH, 170-2472 LIFT AR-STANDARD, 131-8153 VIDS AR AN ATTACHMENT

SMCS-1408, 7601 **i01207026**

NOTE	REF NO	GRAPHIC REF	PART NUMBER	QTY	PART NAME 1 2 3 4 5 6 (PRODUCT LEVEL)	SEE PAGE
	1	1	**112-1756**	1	ENCLOSURE AS	
	2	2	**8T-4223**	3	WASHER-HARD (3MM THK)	
	3	1	**112-1757**	1	COVER AS	
		1	**1V-6755**	1	LATCH AS	
		1	**6V-2370**	5	RIVET-POP	
	4	1	**112-1758**	1	COVER AS	
M	5	1	**8T-4137**	13	BOLT (M10X1.50X20MM)	
	6	1,2,3	**8T-4121**	19	WASHER-HARD (2.5MM THK)	
Y	7	2	**160-1758**	1	CONTROL GP-UNPROGRAMMED (POWER TRAIN)	255
	8	2	**104-5612**	2	BAR	
	9	2	**4L-6454**	4	BOLT (3/8-16X1 IN)	
	10	2	**8T-4896**	4	WASHER-HARD (2.5MM THK)	
	11	1,2	**8T-9655**	32	MOUNT	
	12	2	**8T-9658**	8	SPACER (12.7MM THK)	
M	13	2	**099-3649**	8	BOLT (M8X40MM)	
	14	1,2	**9N-0869**	16	WASHER-HARD (2MM THK)	
Y	15	2	**144-7172**	1	MODULE GP-VIDS/VIMS INTERFACE	319
M	16	2	**8T-4136**	4	BOLT (M10X1.50X25MM)	
	17	2	**4P-8134**	1	CLIP (10.5MM ID)	
	18	2,3	**9X-6772**	4	STRAP-CABLE	
Y	19	2	**160-1759**	1	CONTROL GP-UNPROGRAMMED (IMPLEMENT)	256
	20	1	**6I-1418**	8	SPACER (28.7MM THK)	
M	21	1	**7X-0818**	8	BOLT (M8X1.25X45MM)	
Y	22	2	**165-8682**	1	CONTROL GP-UNPROGRAMMED (VIDS/VIMS MAIN MODULE)	257
	23	2	**115-1496**	1	TUBE	
M	24	2	**9X-2042**	13	SCREW-TRUSS HEAD (M6X1.0X12MM)	
M	25	2	**8T-4244**	3	NUT (M12X1.75 THD)	
	26	2	**3E-5239**	2	RELAY AS (24 VOLT)	
	27	2	**107-3727**	4	SCREW-PAN HEAD	
	28	1,2,3	**4B-4274**	10	WASHER (1.2MM THK)	
	29	2	**4K-5122**	15	HOLDER AS-FUSE	
					(EACH INCLUDES)	
		2	**139-0178**	1	CAP-FUSE HOLDER	
	30	2	**3K-8782**	8	FUSE (10 AMP)	
	31	2	**8M-8948**	4	FUSE (15 AMP)	
	32	2	**8M-0456**	1	FUSE (20 AMP)	
	33	2	**115-1494**	1	PLATE AS	
	34	2	**115-3038**	1	FILM-IDENTIFICATION	
	35	2,3	**033-8248**	2	CLIP (11.11MM ID)	
M	36	2,3	**8T-4191**	2	BOLT (M10X1.50X16MM)	
	37	3	**124-6704**	1	RESISTOR AS	
		3	**102-8802**	1	KIT-RECEPTACLE (2 PIN)	
					(INCLUDES WEDGE)	
		3	**3E-3365**	1	WEDGE-RECEPTACLE LOCK	
D		3	**5P-5623**		WIRE (16 GA) (.4M)	
		3	**5P-6008**	1	TUBE (6.35MM ID)	
		3	**8C-3334**	1	RIVET-TUBULAR	
		3	**8T-8729**	2	PIN-CONNECTOR	
	38	2	**165-4026**	2	SWITCH AS-MAGNETIC	
					(MAIN & FLOODLAMP RELAYS)	
					(EACH INCLUDES)	
		2	**4F-2294**	2	NUT-JAM (5/16-24 THD)	
		2	**6V-8186**	2	NUT-FULL (5/16-24 THD)	
		2	**6V-8378**	2	NUT (10-32 THD)	
	39	1	**6B-4540**	4	NUT (4-40X.75 IN)	

168-4358 **WIRING GP-VIDS MONITOR** *(contd.)* **i01207026**

NOTE	REF NO	GRAPHIC REF	PART NUMBER	QTY	PART NAME 1 2 3 4 5 6 (PRODUCT LEVEL)	SEE PAGE
	40	1	**6V-9497**	4	WASHER-HARD (0.5MM THK)	
	41	1	**115-1495**	1	PLATE	
	42	1	**4B-2049**	4	NUT (10-32 THD)	
	43	3	**3E-7294**	2	CIRCUIT BREAKER AS (105 AMP) (ALTERNATOR-MAIN)	
					(EACH INCLUDES)	
		3	**1H-3244**	2	LOCKWASHER (NO.14)	
		3	**6V-8187**	2	NUT (1/4-28 THD)	
		3	**8T-4205**	2	WASHER-HARD (2MM THK)	
	44	3	**7V-9275**	1	STRAP	
	45	3	**6T-3642**	1	CIRCUIT BREAKER AS (10 AMP) (KEY START)	
		3	**6V-8376**	2	SCREW-MACHINE (8-32X.25IN)	
		3	**9B-7233**	2	LOCKWASHER (NO.8)	
	46	3	**6T-3643**	1	CIRCUIT BREAKER AS (15 AMP) (ENGINE ECM)	
		3	**6V-8376**	2	SCREW-MACHINE (8-32X.25IN)	
		3	**9B-7233**	2	LOCKWASHER (NO.8)	
	47	3	**3T-2662**	1	CIRCUIT BREAKER AS (15 AMP) (RUNNING LAMPS)	
		3	**6V-8376**	2	SCREW-MACHINE (8-32X.25IN)	
		3	**9B-7233**	2	LOCKWASHER (NO.8)	
	48	3	**3D-9799**	6	SCREW-MACHINE (8-32X.875IN)	
	49	3	**4B-4863**	6	WASHER (1.2MM THK)	
	50	3	**115-9346**	1	PLATE-IDENTIFICATION	
	51	3	**8C-6354**	1	CAP-RECEPTACLE	
	52	3	**4B-1237**	4	SCREW-MACHINE	
	53	3	**115-9347**	1	FILM-IDENTIFICATION	
	54	3	**122-8450**	1	FILM-INSTRUCTION	
	55	3	**4B-1240**	4	SCREW-MACHINE (10-32X1IN)	
	56	3	**114-0931**	1	FILM-IDENTIFICATION	
	57	3	**9G-4360**	1	CAP-CONNECTOR	
	58	3	**5S-4245**	4	SCREW-MACHINE (4-40X0.5IN)	
	59	2	**7I-3652**	1	STRIP	
	60	2,3	**9X-8256**	3	WASHER (2MM THK)	
Y	61	2	**3E-0075**	2	SWITCH GP-MAGNETIC (START RELAYS)	368
	62	3	**5P-4115**	2	WASHER (2MM THK)	
M	63	3	**5C-2890**	2	NUT (M6X1.00 THD)	
M	64	3	**8T-4138**	2	BOLT (M6X1.0X20MM)	
	65	3	**9G-8451**	1	BLOCK AS	
		3	**1H-3244**	1	LOCKWASHER (NO.14)	
		3	**4B-4276**	2	WASHER (1.6MM THK)	
		3	**4L-7124**	1	BOLT (1/4-20X1.25IN)	
		3	**6V-8185**	2	NUT (1/4-20 THD)	
	66	3	**112-1761**	2	HARNESS AS	
	67	2	**112-1760**	1	WIRE AS	
	68	2	**112-1762**	1	HARNESS AS	
	69	2	**168-4357**	1	HARNESS AS	
	70	2	**130-7239**	1	HARNESS AS	
	71	2	**106-8704**	2	SUPPRESSOR AS-ARC	
					(EACH INCLUDES)	
		2	**102-8802**	1	KIT-RECEPTACLE (2 PIN)	
					(INCLUDES WEDGE)	
		2	**3E-3365**	1	WEDGE-RECEPTACLE LOCK	
		2	**8T-8729**	2	PIN-CONNECTOR	
	72	2	**130-7240**	1	HARNESS AS	
	73	2	**7K-1181**	17	STRAP-CABLE (4IN DIA)	
	74	2	**108-7696**	2	BAR	
	75	2	**132-8520**	1	FILM-IDENTIFICATION	

D-ORDER BY THE METER
M-METRIC PART
Y-SEPARATE ILLUSTRATION

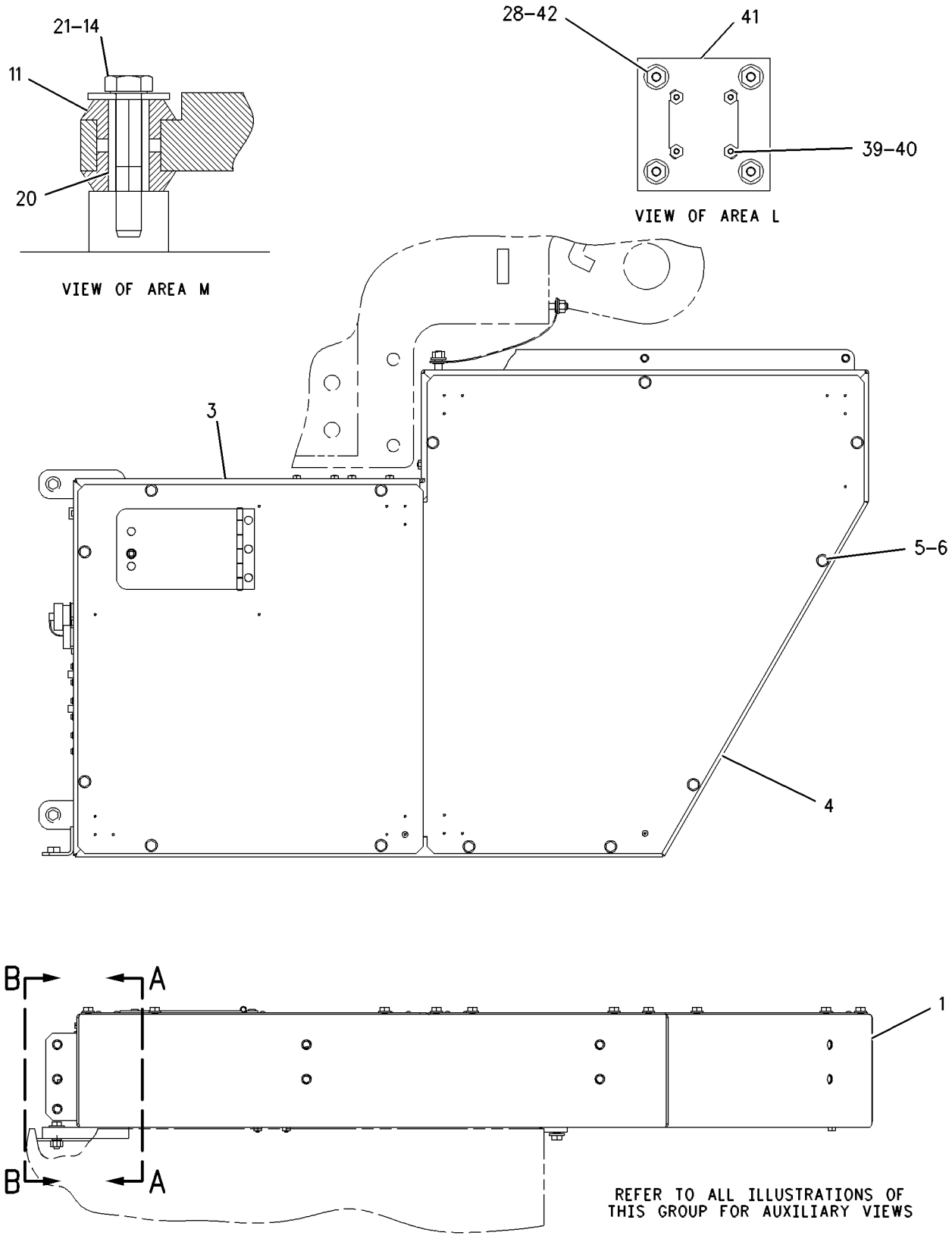

GRAPHIC #1 g00542920

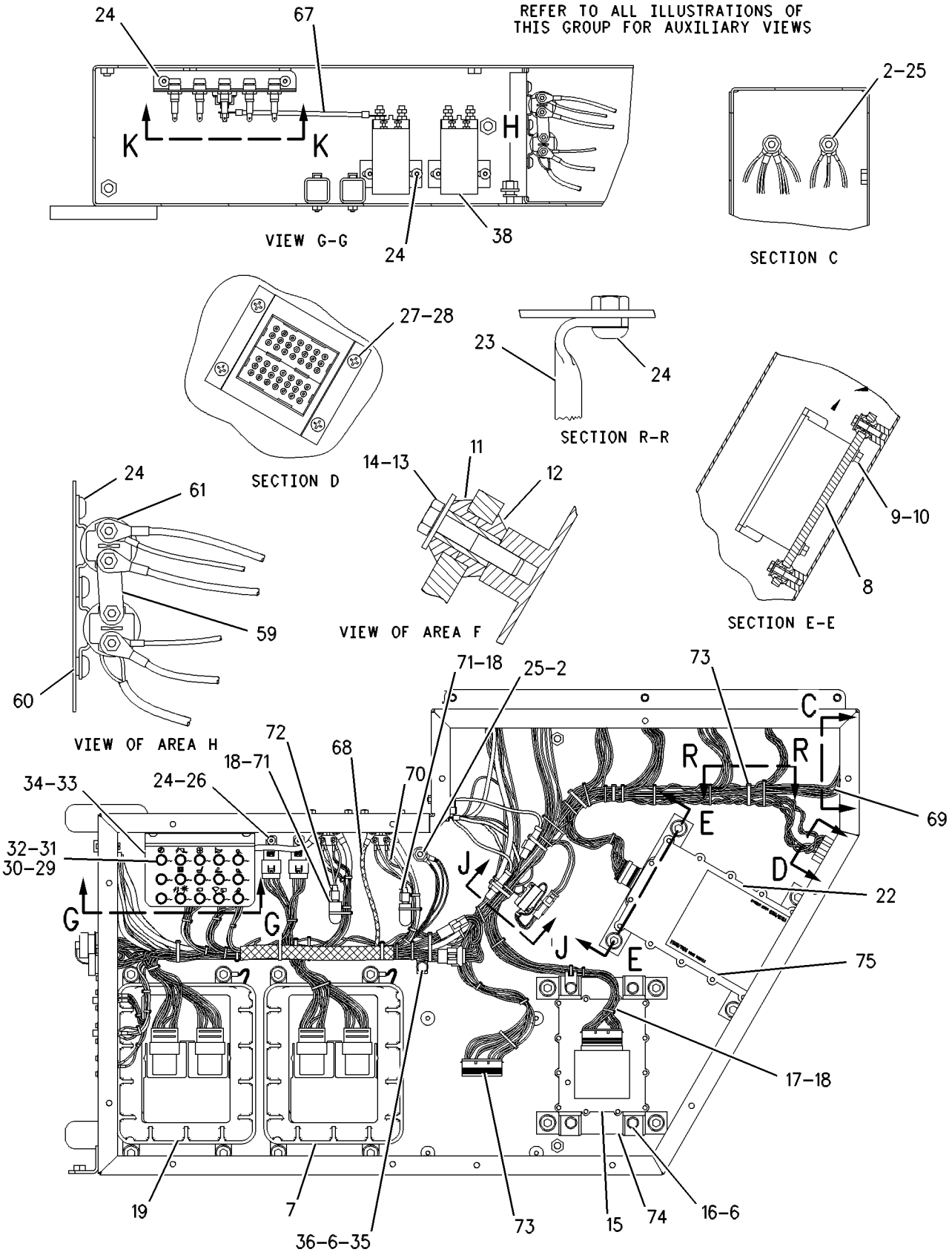

GRAPHIC #2

g00542943

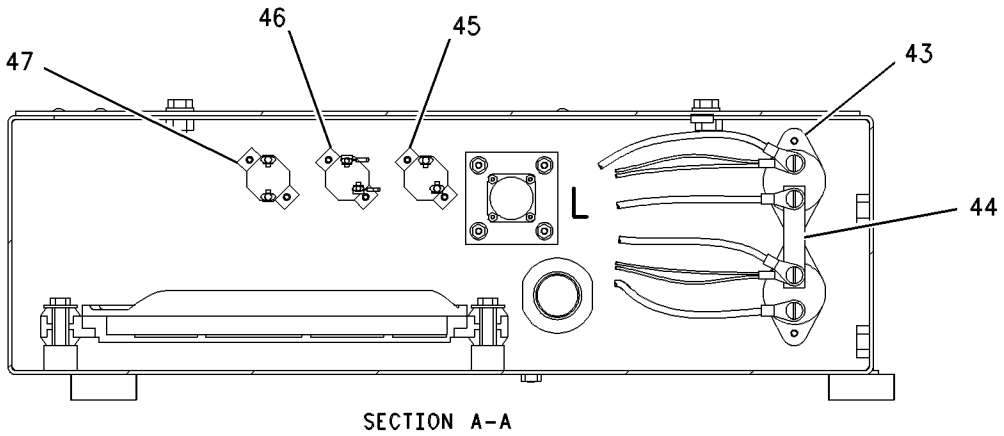

SECTION A-A

REFER TO ALL ILLUSTRATIONS OF
THIS GROUP FOR AUXILIARY VIEWS

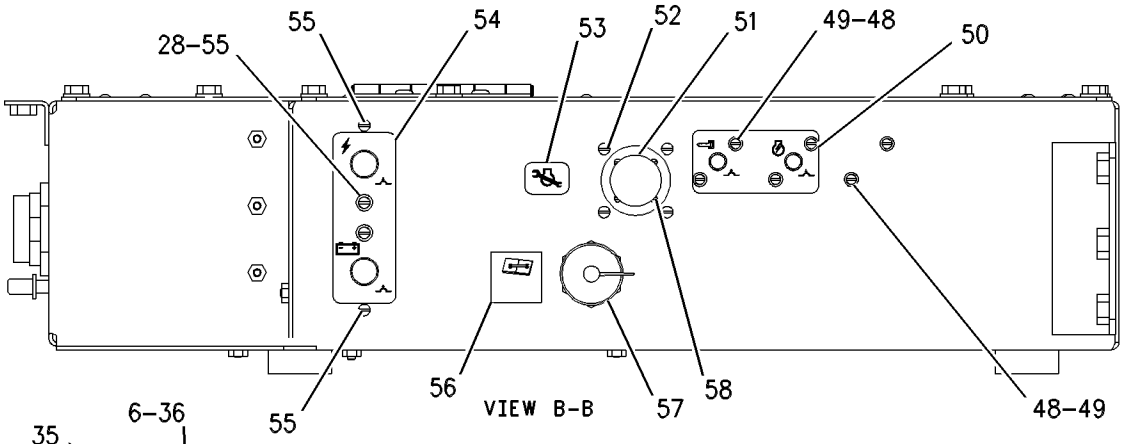

VIEW B-B

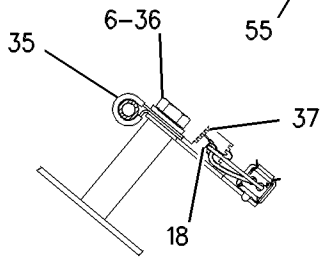

SECTION J-J

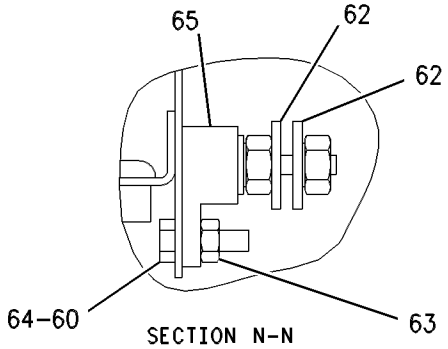

SECTION N-N

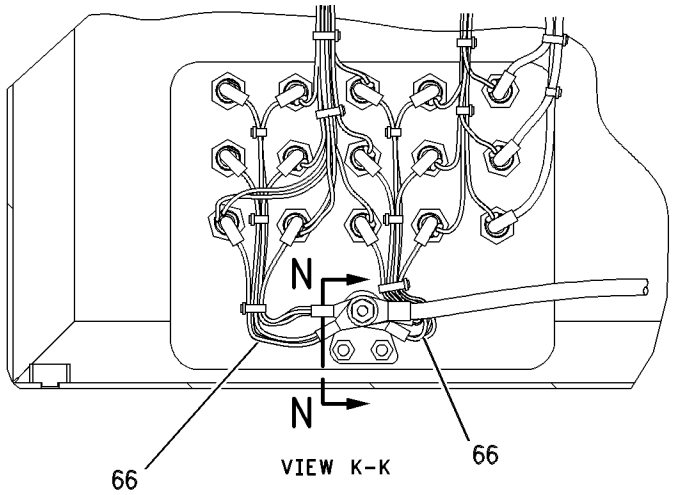

VIEW K-K

GRAPHIC #3

g00542947

MEMORANDA

112-4191 WIRING GP-VIMS

S/N: 7HR1-UP
PART OF 131-8155 VIMS AR
AN ATTACHMENT
TYPE 1

SMCS-1408 **i01346338**

NOTE	REF NO	GRAPHIC REF	PART NUMBER	QTY	PART NAME 1 2 3 4 5 6 (PRODUCT LEVEL)	SEE PAGE
Y	1A	1	**112-9781**	1	SENSOR GP-PRESSURE (TRANSMISSION PUMP OIL)	331
Y	1B	2	**112-9781**	1	SENSOR GP-PRESSURE (IMPLEMENT PILOT OIL)	331
Y	1C	2	**112-9781**	1	SENSOR GP-PRESSURE (STEERING PILOT OIL)	331
	2	1	**9X-0262**	1	ADAPTER (7/16-20-2A THD BOTH ENDS)	
	3	1,2,3	**3J-7354**	5	SEAL-O-RING (8.92MM ID)	
	4	1,2,3	**115-3069**	5	CLIP AS-CONNECTOR	
	5	1,2	**9X-6772**	14	STRAP-CABLE (1.97 IN DIA)	
	6	2,3	**9X-0261**	3	ADAPTER (19.05MM HEX)	
	7	1,2,3	**3J-1907**	7	SEAL-O-RING (11.89MM ID)	
	8	1,2,3	**9U-2277**	4	CLIP AS (10.5MM ID)	
Y	9	1	**125-6794**	1	LAMP GP-VIMS SERVICE INDICATOR	309
M	10	1	**8T-4134**	3	NUT (M6X1 THD)	
	11	1	**8T-4205**	3	WASHER-HARD (2MM THK)	
Y	12A	2	**123-2993**	1	SWITCH GP-LIQUID LEVEL (STEERING/BRAKE HYD TANK)	367
Y	12B	2	**123-2993**	1	SWITCH GP-LIQUID LEVEL (HYDRAULIC TANK)	367
Y	12C	3	**123-2993**	1	SWITCH GP-LIQUID LEVEL (ENGINE OIL)	367
	13	1,2,3	**2M-9780**	4	SEAL-O-RING (19.18MM ID)	
M	14	1,2,3	**8T-4137**	5	BOLT (M10X1.50X20MM)	
	15	1,2,3	**8T-4121**	6	WASHER-HARD (2.5MM THK)	
	16	3	**3E-7410**	1	TEE-O-RING	
Y	17	3	**133-3917**	1	SENSOR GP-PRESSURE (TC OIL)	333
	18	3	**8J-8197**	2	CLIP (23.8MM ID)	
	19	1	**127-4667**	1	STRIP AS	
	20	3	**122-2222**	1	ADAPTER	
	21	3	**6V-8397**	3	SEAL-O-RING (9.27MM ID)	
	22	3	**6V-8636**	1	CONNECTOR-SEAL	
Y	23	3	**124-4672**	1	SENSOR GP-PRESSURE (LIFT CYLINDER HEAD END OIL)	332
	24	3	**126-5939**	1	PLATE AS	
M		3	**8T-3490**	2	NUT-WELD (M10X1.5 THD)	
		3	**9F-6445**	2	NUT-WELD (1/4-20 THD)	
M	25	3	**8T-4192**	2	BOLT (M12X1.75X25MM)	
	26	1,3	**8T-4223**	3	WASHER-HARD (3MM THK)	
	27	1	**4P-7581**	1	CLIP (10.5MM ID)	
	28	1	**8M-2772**	1	CLIP (6.35MM ID)	
	29	1	**116-9933**	1	SWITCH AS-PRESSURE (FUEL FILTER)	
		1	**8T-8729**	10	PIN-CONNECTOR	
E		1	**9X-1813**		SLEEVE (40CM)	
	30	1	**4P-7582**	1	CLIP (26.0MM ID)	
Y	31	1	**143-9176**	1	SENSOR GP-PRESSURE (STEERING MAIN PUMP OIL)	335
	32	1	**0A-3721**	1	CLIP	
M	33	1	**8T-4179**	1	BOLT (M12X1.75X20MM)	
	34	1	**6V-0484**	1	ADAPTER-O-RING	
I	35	3	**165-4487**	1	HOSE AS	
	36	1	**129-8089**	1	HARNESS AS	
	37	3	**134-8297**	1	BRACKET AS	
M		3	**8T-3490**	1	NUT-WELD (M10X1.5 THD)	
	38	1	**136-0853**	1	ADAPTER-STRAIGHT THREAD	
	39	1	**9X-6165**	1	WASHER (2.5MM THK)	
	40	1	**7J-0204**	1	SEAL-O-RING (7.65MM ID)	

E-ORDER BY THE CENTIMETER
I-SEE HOSE FABRICATION GUIDE
M-METRIC PART
Y-SEPARATE ILLUSTRATION

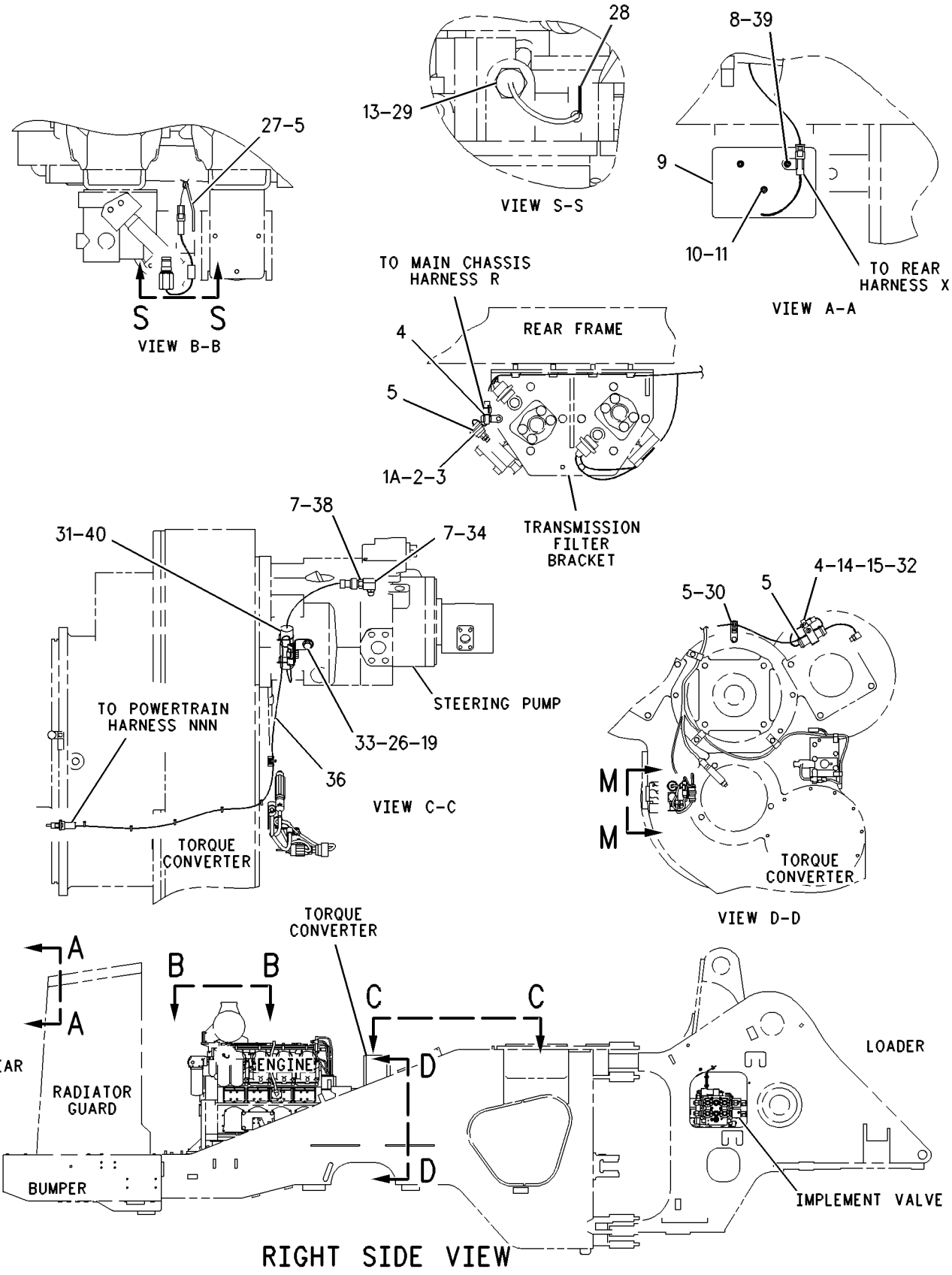

GRAPHIC #1 g00640465

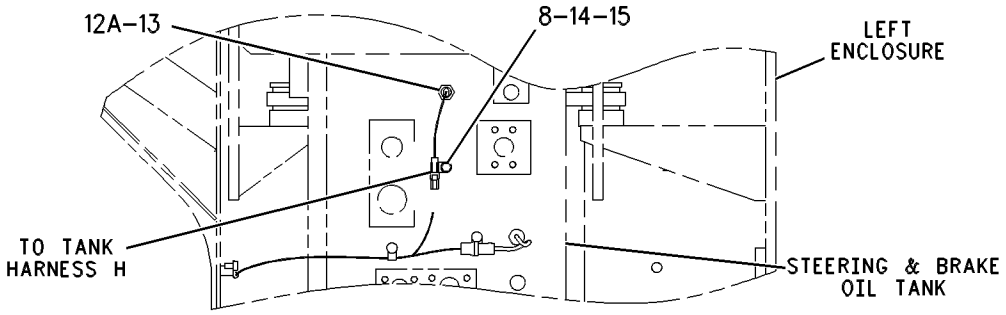

VIEW L-L

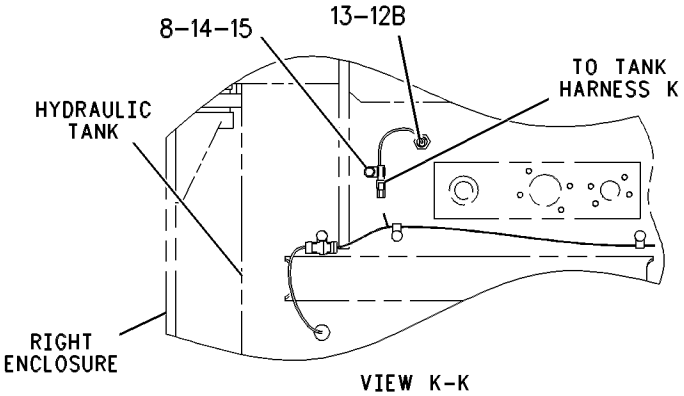

VIEW K-K

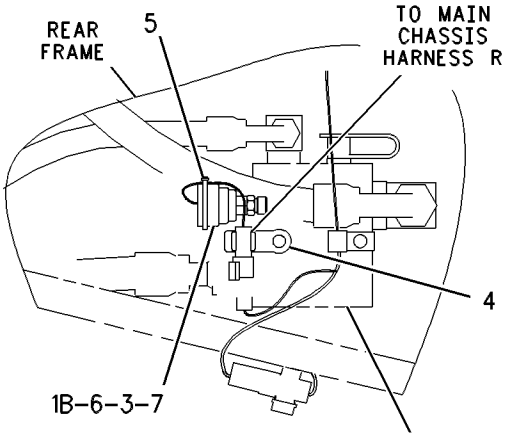

VIEW J-J

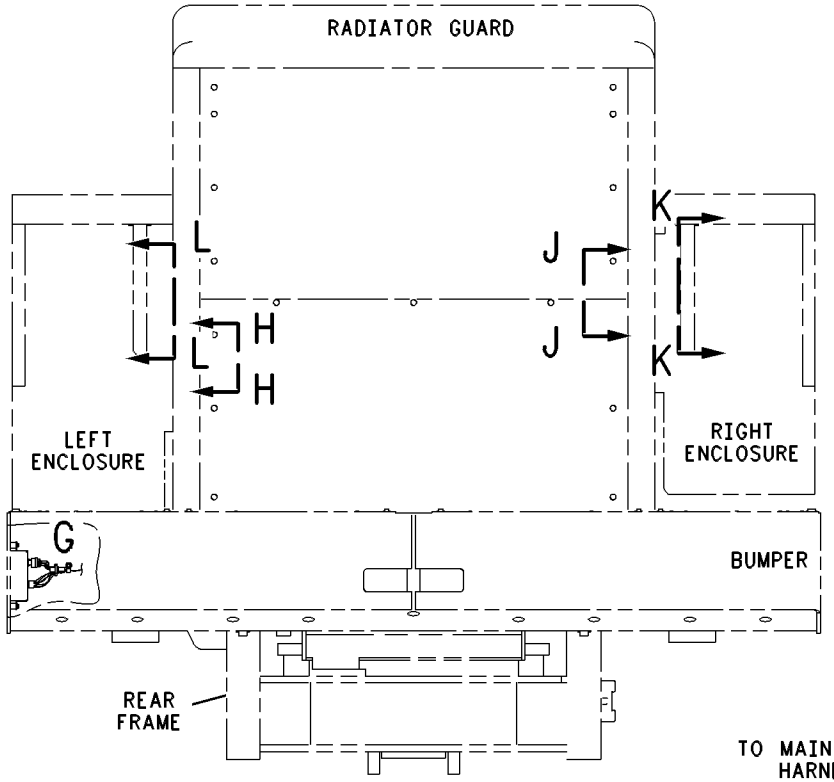

REAR VIEW

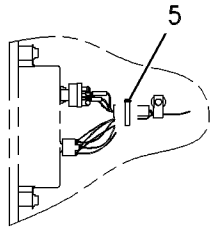

VIEW OF AREA G

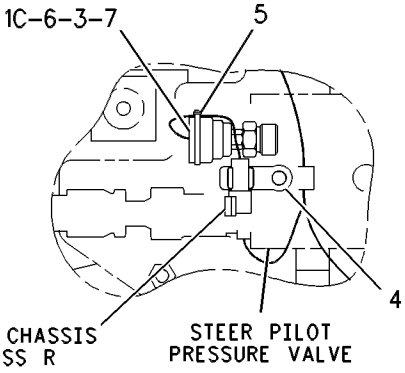

VIEW H-H

GRAPHIC #2 g00640466

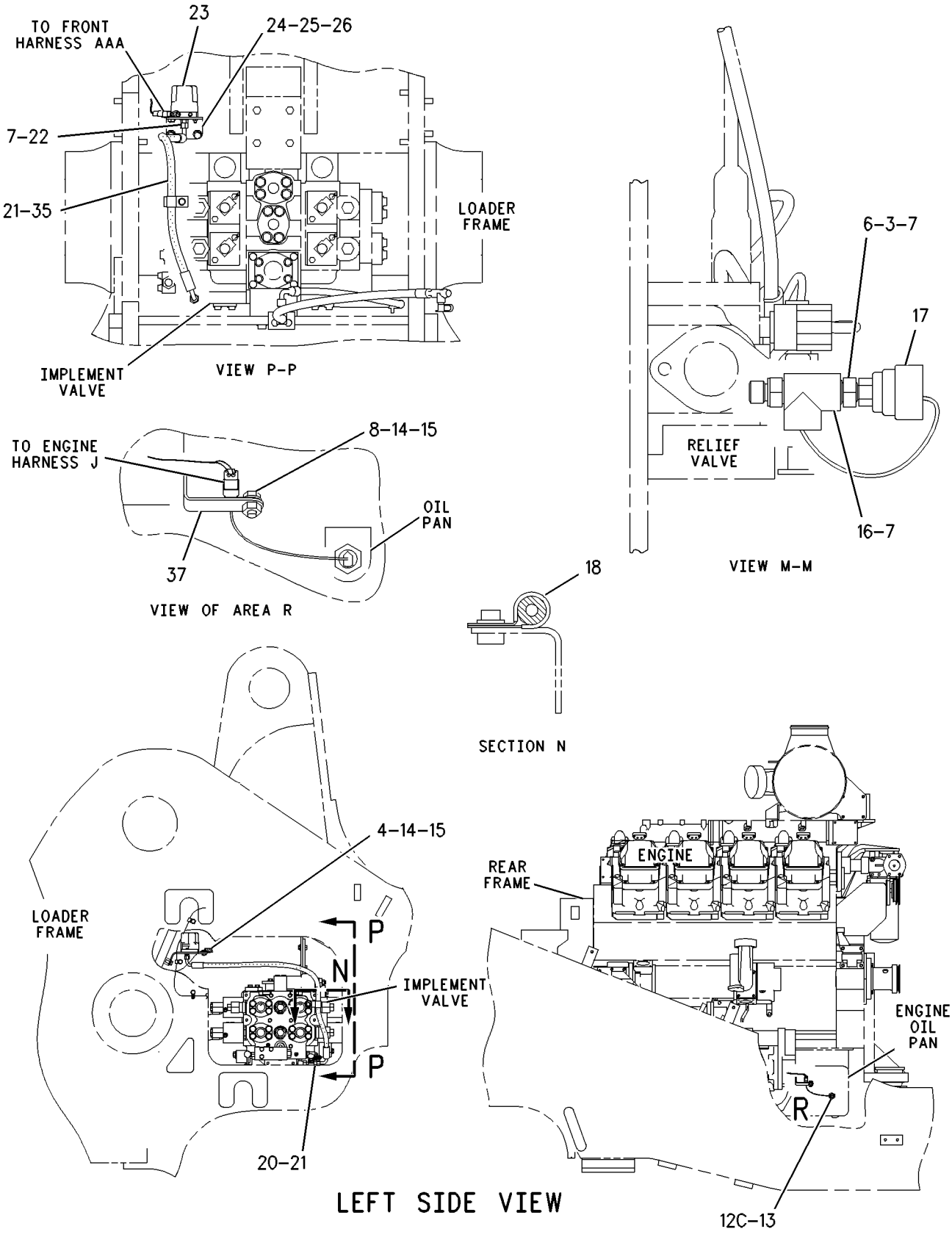

GRAPHIC #3 g00630879

112-4191 WIRING GP-VIMS

S/N: 7HR1-UP
PART OF 131-8155 VIMS AR
AN ATTACHMENT
TYPE 2

SMCS-1408 **i01505826**

NOTE	REF NO	GRAPHIC REF	PART NUMBER	QTY	PART NAME 1 2 3 4 5 6 (PRODUCT LEVEL)	SEE PAGE
Y	1A	1	**112-9781**	1	SENSOR GP-PRESSURE (TRANSMISSION PUMP OIL)	331
Y	1B	2	**112-9781**	1	SENSOR GP-PRESSURE (IMPLEMENT PILOT OIL)	331
Y	1C	2	**112-9781**	1	SENSOR GP-PRESSURE (STEERING PILOT OIL)	331
	2	1	**9X-0262**	1	ADAPTER	
	3	1,2,3	**3J-7354**	5	SEAL-O-RING	
	4	1,2,3	**115-3069**	5	CLIP AS-CONNECTOR	
	5	1,2	**9X-6772**	14	STRAP-CABLE	
	6	2,3	**9X-0261**	3	ADAPTER	
	7	1,2,3	**3J-1907**	7	SEAL-O-RING	
	8	1,2,3	**9U-2277**	4	CLIP AS	
Y	9	1	**125-6794**	1	LAMP GP-VIMS SERVICE INDICATOR	309
M	10	1	**8T-4134**	3	NUT (M6X1 THD)	
	11	1	**8T-4205**	3	WASHER-HARD (7.2X14.5X2MM THK)	
Y	12A	2	**123-2993**	1	SWITCH GP-LIQUID LEVEL (STEERING/BRAKE HYD TANK)	367
Y	12B	2	**123-2993**	1	SWITCH GP-LIQUID LEVEL (HYDRAULIC TANK)	367
Y	12C	3	**123-2993**	1	SWITCH GP-LIQUID LEVEL (ENGINE OIL)	367
	13	1,2,3	**2M-9780**	4	SEAL-O-RING	
M	14	1,2,3	**8T-4137**	5	BOLT (M10X1.5X20MM)	
	15	1,2,3	**8T-4121**	6	WASHER-HARD (11X21X2.5MM THK)	
	16	3	**3E-7410**	1	TEE-O-RING	
CY	17	3	**145-2362**	1	SENSOR GP-PRESSURE (TC OIL)	339
	18	3	**8J-8197**	2	CLIP	
	19	1	**127-4667**	1	STRIP AS	
	20	3	**122-2222**	1	ADAPTER	
	21	3	**6V-8397**	3	SEAL-O-RING	
	22	3	**6V-8636**	1	CONNECTOR	
Y	23	3	**124-4672**	1	SENSOR GP-PRESSURE (LIFT CYLINDER HEAD END OIL)	332
	24	3	**126-5939**	1	PLATE AS	
M		3	**8T-3490**	2	NUT-WELD (M10X1.5 THD)	
		3	**9F-6445**	2	NUT-WELD (1/4-20 THD)	
M	25	3	**8T-4192**	2	BOLT (M12X1.75X25MM)	
	26	1,3	**8T-4223**	3	WASHER-HARD (13.5X25.5X3MM THK)	
	27	1	**4P-7581**	1	CLIP	
	28	1	**8M-2772**	1	CLIP	
	29	1	**116-9933**	1	SWITCH AS-PRESSURE (FUEL FILTER)	
		1	**8T-8729**	10	PIN-CONNECTOR	
E		1	**9X-1813**		SLEEVE (40CM)	
	30	1	**4P-7582**	1	CLIP	
Y	31	1	**143-9176**	1	SENSOR GP-PRESSURE (STEERING MAIN PUMP OIL)	335
	32	1	**0A-3721**	1	CLIP	
M	33	1	**8T-4179**	1	BOLT (M12X1.75X20MM)	
	34	1	**6V-0484**	1	ADAPTER-O-RING	
I	35	3	**165-4487**	1	HOSE AS	
	36	1	**129-8089**	1	HARNESS AS	
	37	3	**134-8297**	1	BRACKET AS	
M		3	**8T-3490**	1	NUT-WELD (M10X1.5 THD)	
	38	1	**136-0853**	1	ADAPTER-STRAIGHT THREAD	
	39	1	**9X-6165**	1	WASHER (6.5X22X2.5MM THK)	
	40	1	**7J-0204**	1	SEAL-O-RING	

C-CHANGE FROM PREVIOUS TYPE
E-ORDER BY THE CENTIMETER
I-SEE HOSE FABRICATION GUIDE
M-METRIC PART
Y-SEPARATE ILLUSTRATION

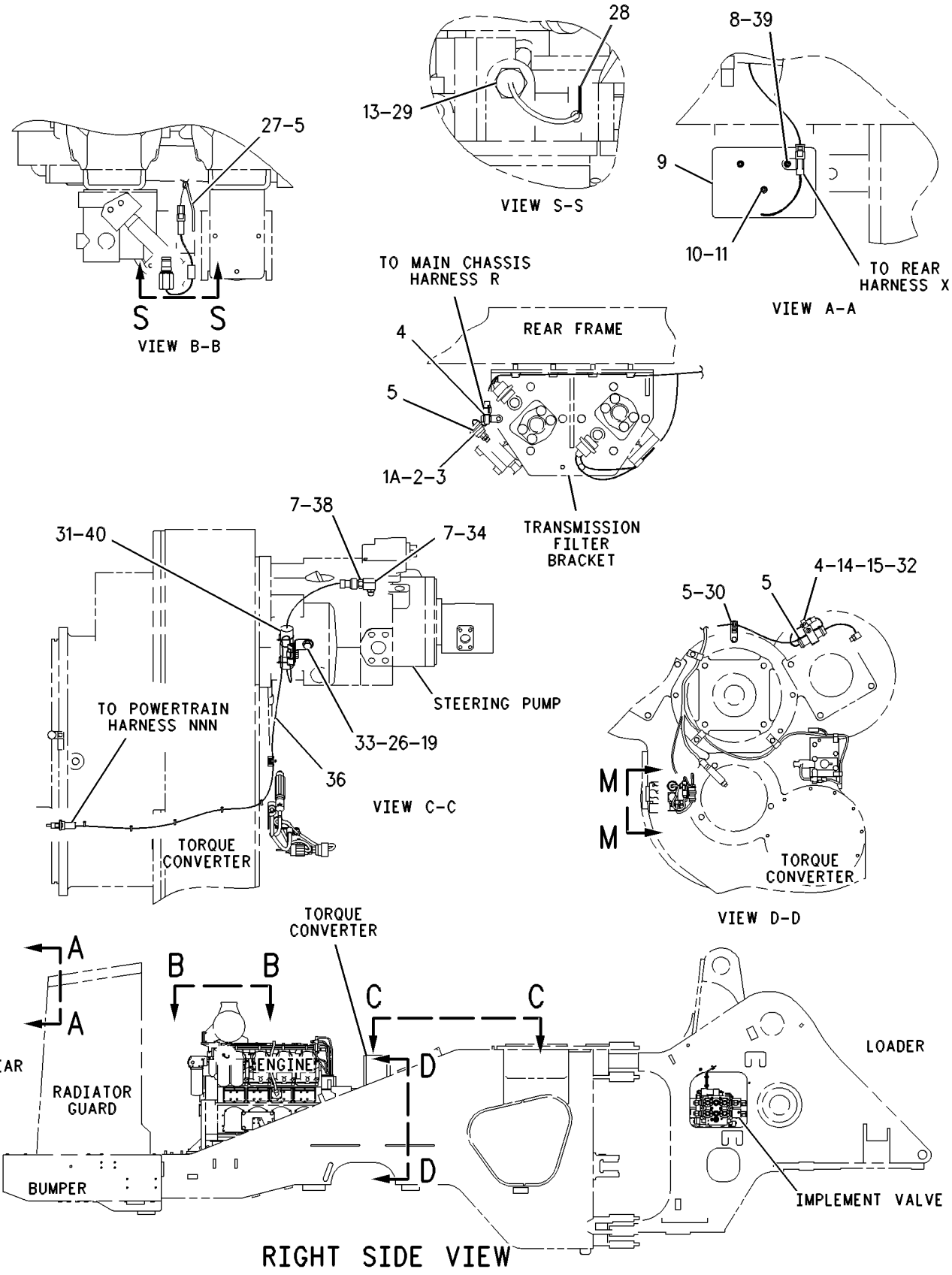

GRAPHIC #1 g00640465

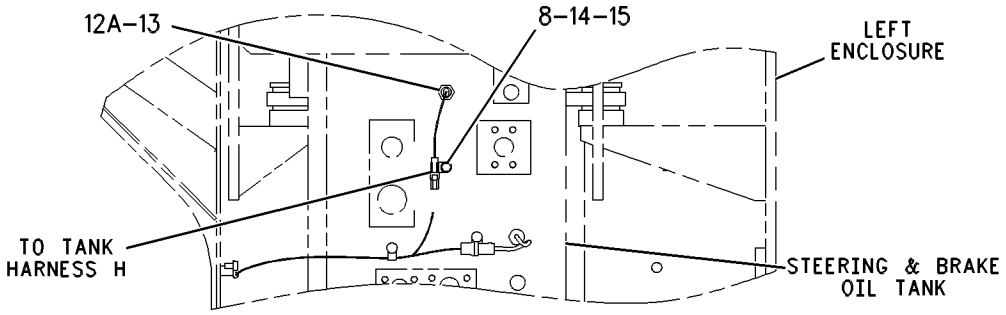

VIEW L-L

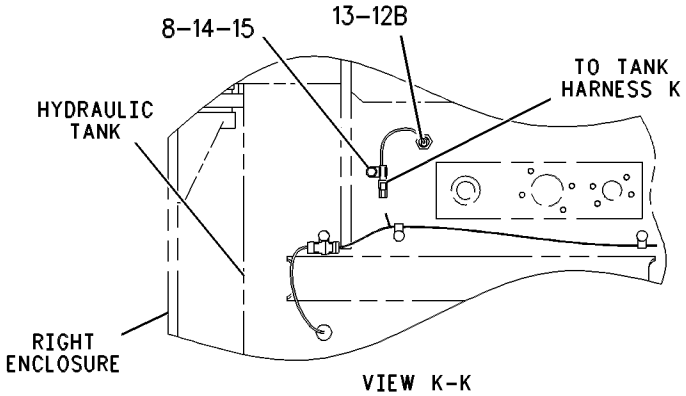

VIEW K-K

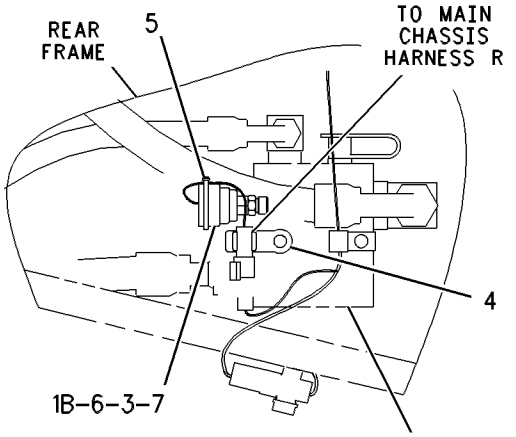

VIEW J-J

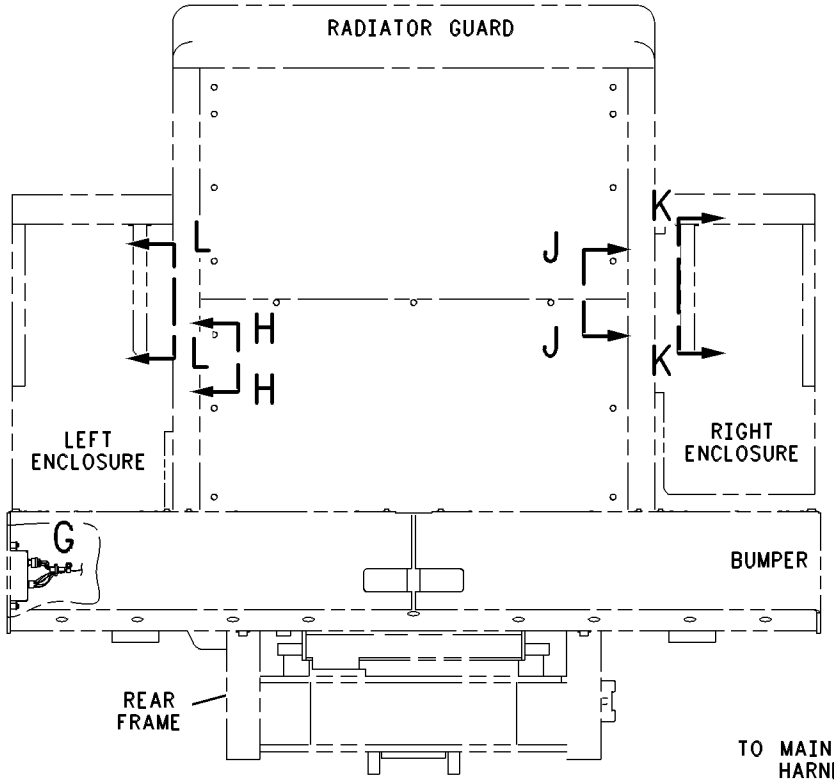

REAR VIEW

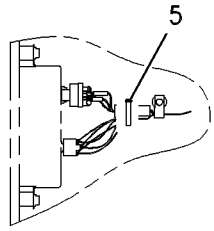

VIEW OF AREA G

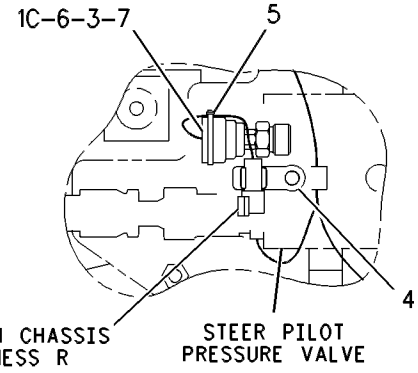

VIEW H-H

GRAPHIC #2 g00640466

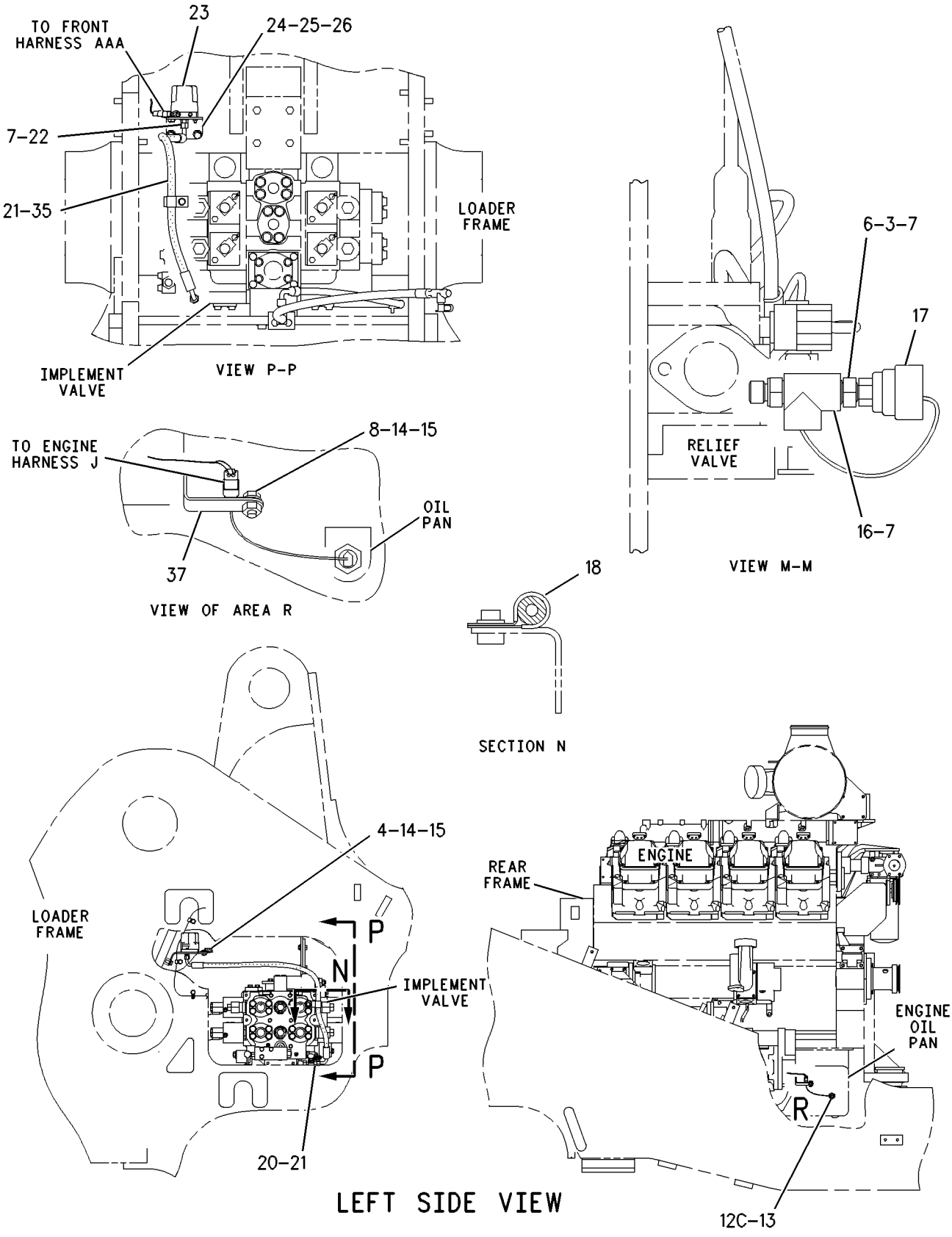

GRAPHIC #3 g00630879

131-4377 WIRING GP-VIMS MONITOR

S/N: 7HR1-283
PART OF 131-8155 VIMS AR
AN ATTACHMENT

SMCS-1408, 7601 **i01197483**

NOTE	REF NO	GRAPHIC REF	PART NUMBER	QTY	PART NAME 1 2 3 4 5 6 (PRODUCT LEVEL)	SEE PAGE
	1	1	**112-1756**	1	ENCLOSURE AS	
M		1	**6V-9632**	11	NUT-WELD (M6X1 THD)	
M		1	**7X-0751**	2	BOSS-WELD	
M		1	**8T-3490**	16	NUT-WELD (M10X1.5 THD)	
M		1	**8T-3597**	15	NUT-WELD (M12X1.75 THD)	
M		1	**8T-3635**	4	STUD (M12X1.75X34.93MM)	
		1	**095-2887**	2	PLATE	
	2	2	**132-8520**	1	FILM-IDENTIFICATION	
	3	1,2	**8T-4223**	3	WASHER-HARD (3MM THK)	
	4	2	**108-7696**	4	BAR	
	5	1	**112-1757**	1	COVER AS	
		1	**1V-6755**	1	LATCH AS	
		1	**6V-2370**	5	RIVET-POP	
	6	1	**112-1758**	1	COVER AS	
M	7	1	**8T-4137**	13	BOLT (M10X1.50X20MM)	
	8	1,2	**8T-4121**	23	WASHER (2.5MM THK)	
YR	9	2	*130-5131*	1	CONTROL GP-UNPROGRAMMED (VIDS/VIMS MAIN MODULE)	252
	10	2	**104-5612**	2	BAR	
	11	2	**4L-6454**	4	BOLT (3/8-16X1 IN)	
	12	2	**8T-4896**	4	WASHER-HARD (2.5MM THK)	
	13	2,3	**8T-9655**	40	MOUNT	
	14	2	**8T-9658**	12	SPACER (12.7MM THK)	
M	15	2	**099-3649**	12	BOLT (M8X40MM)	
	16	2,3	**9N-0869**	20	WASHER-HARD (2MM THK)	
Y	17	2	**144-7172**	2	MODULE GP-VIDS/VIMS INTERFACE	319
M	18	2	**8T-4136**	8	BOLT (M10X1.50X25MM)	
	19	2	**4P-8134**	2	CLIP (10.5MM ID)	
	20	2	**9X-6772**	5	STRAP-CABLE	
CY	21	2	**142-3371**	1	CONTROL GP-UNPROGRAMMED (IMPLEMENT)	254
	22	3	**6I-1418**	8	SPACER (28.7MM THK)	
M	23	3	**7X-0818**	8	BOLT (M8X1.25X45MM)	
CY	24	2	**142-3363**	1	CONTROL GP-UNPROGRAMMED (POWER TRAIN)	253
	25	2	**115-1496**	1	TUBE	
M	26	2	**9X-2042**	13	SCREW-TRUSS HEAD (M6X1.0X12MM)	
M	27	1,2	**8T-4244**	3	NUT (M12X1.75 THD)	
	28	2	**3E-5239**	2	RELAY AS (24 VOLT)	
	29	1	**107-3727**	4	SCREW-PAN HEAD	
	30	1,3	**4B-4274**	10	WASHER (1.2MM THK)	
	31	2	**4K-5122**	15	HOLDER AS-FUSE	
					(EACH INCLUDES)	
		2	**7N-2867**	1	CAP-FUSE HOLDER	
	32	2	**3K-8782**	8	FUSE (10 AMP)	
	33	2	**8M-8948**	4	FUSE (15 AMP)	
	34	2	**8M-0456**	1	FUSE (20 AMP)	
	35	2	**115-1494**	1	PLATE AS	
	36	2	**115-3038**	1	FILM-IDENTIFICATION	
	37	2	**033-8248**	2	CLIP (11.11MM ID)	
M	38	2	**8T-4191**	2	BOLT (M10X1.50X16MM)	
	39	2	**124-6704**	1	RESISTOR AS	
	40A	2	**3T-0376**	1	SWITCH AS-MAGNETIC (MAIN POWER RELAY)	
	40B	2	**3T-0376**	1	SWITCH AS-MAGNETIC (FLOODLAMP RELAY)	
					(EACH INCLUDES)	
		2	**4F-2294**	2	NUT-JAM (5/16-24 THD)	
		2	**6V-8186**	2	NUT-FULL (5/16-24 THD)	
		2	**6V-8378**	2	NUT (10-32 THD)	

131-4377 **WIRING GP-VIMS MONITOR** ***(contd.)*** **i01197483**

NOTE	REF NO	GRAPHIC REF	PART NUMBER	QTY	PART NAME 1 2 3 4 5 6 (PRODUCT LEVEL)	SEE PAGE
	41	3	**6B-4540**	4	NUT (4-40X.75 IN)	
	42	3	**6V-9497**	4	WASHER-HARD (0.5MM THK)	
	43	3	**115-1495**	1	PLATE	
	44	3	**4B-2049**	4	NUT (10-32 THD)	
	45	3	**3E-7294**	2	CIRCUIT BREAKER AS (105 AMP) (ALTERNATOR)	
					(EACH INCLUDES)	
		3	**1H-3244**	3	LOCKWASHER (NO.14)	
		3	**6V-8365**	2	SCREW-MACHINE (1/4-28X.5IN)	
	46	3	**7V-9275**	1	STRAP	
	47	3	**6T-3642**	1	CIRCUIT BREAKER AS (10 AMP) (KEY START)	
		3	**6V-8376**	2	SCREW-MACHINE (8-32X.25IN)	
		3	**9B-7233**	2	LOCKWASHER (NO.8)	
	48	3	**6T-3643**	1	CIRCUIT BREAKER AS (15 AMP) (ENGINE ECM)	
		3	**6V-8376**	2	SCREW-MACHINE (8-32X.25IN)	
		3	**9B-7233**	2	LOCKWASHER (NO.8)	
	49	3	**3T-2662**	1	CIRCUIT BREAKER AS (15 AMP) (RUNNING LAMPS)	
		3	**6V-8376**	2	SCREW-MACHINE (8-32X.25IN)	
		3	**9B-7233**	2	LOCKWASHER (NO.8)	
	50	3	**3D-9799**	6	SCREW-MACHINE (8-32X.875IN)	
	51	3	**4B-4863**	6	WASHER (1.2MM THK)	
	52	3	**115-9346**	1	PLATE-IDENTIFICATION	
	53	3	**8C-6354**	1	CAP-RECEPTACLE	
	54	3	**4B-1237**	4	SCREW-MACHINE	
	55	3	**115-9347**	1	FILM-IDENTIFICATION	
	56	3	**122-8450**	1	FILM-INSTRUCTION	
	57	3	**4B-1240**	4	SCREW-MACHINE (10-32X1IN)	
	58	3	**114-0931**	1	FILM-IDENTIFICATION	
	59	3	**9G-4360**	1	CAP-CONNECTOR	
	60	3	**5S-4245**	4	SCREW-MACHINE (4-40X0.5IN)	
	61	2	**7I-3652**	1	STRIP	
	62	2,3	**9X-8256**	3	WASHER (2MM THK)	
Y	63	2	**3E-0075**	2	SWITCH GP-MAGNETIC (START RELAY)	368
	64	3	**5P-4115**	2	WASHER (2MM THK)	
M	65	3	**5C-2890**	2	NUT (M6X1.00 THD)	
M	66	3	**8T-4138**	2	BOLT (M6X1.0X20MM)	
	67	3	**9G-8451**	1	BLOCK AS	
		3	**1H-3244**	1	LOCKWASHER (NO.14)	
		3	**4B-4276**	2	WASHER (1.6MM THK)	
		3	**4L-7124**	1	BOLT (1/4-20X1.25IN)	
		3	**6V-8185**	2	NUT (1/4-20 THD)	
	68	3	**112-1761**	2	HARNESS AS	
	69	2	**112-1760**	1	WIRE AS	
	70	2	**112-1762**	1	HARNESS AS	
	71	2	**115-3039**	1	HARNESS AS	
	72	2	**130-7239**	1	HARNESS AS	
	73	2	**106-8704**	2	SUPPRESSOR AS-ARC	
		2	**102-8802**	1	KIT-RECEPTACLE (2 PIN)	
					(INCLUDES WEDGE)	
		2	**3E-3365**	1	WEDGE-RECEPTACLE LOCK	
		2	**8T-8729**	2	PIN-CONNECTOR	
	74	2	**130-7240**	1	HARNESS AS	
	75	2	**7K-1181**	15	STRAP-CABLE (4IN DIA)	

C-CHANGE FROM PREVIOUS TYPE
M-METRIC PART
R-REMFG PART MAY BE AVAILABLE
Y-SEPARATE ILLUSTRATION

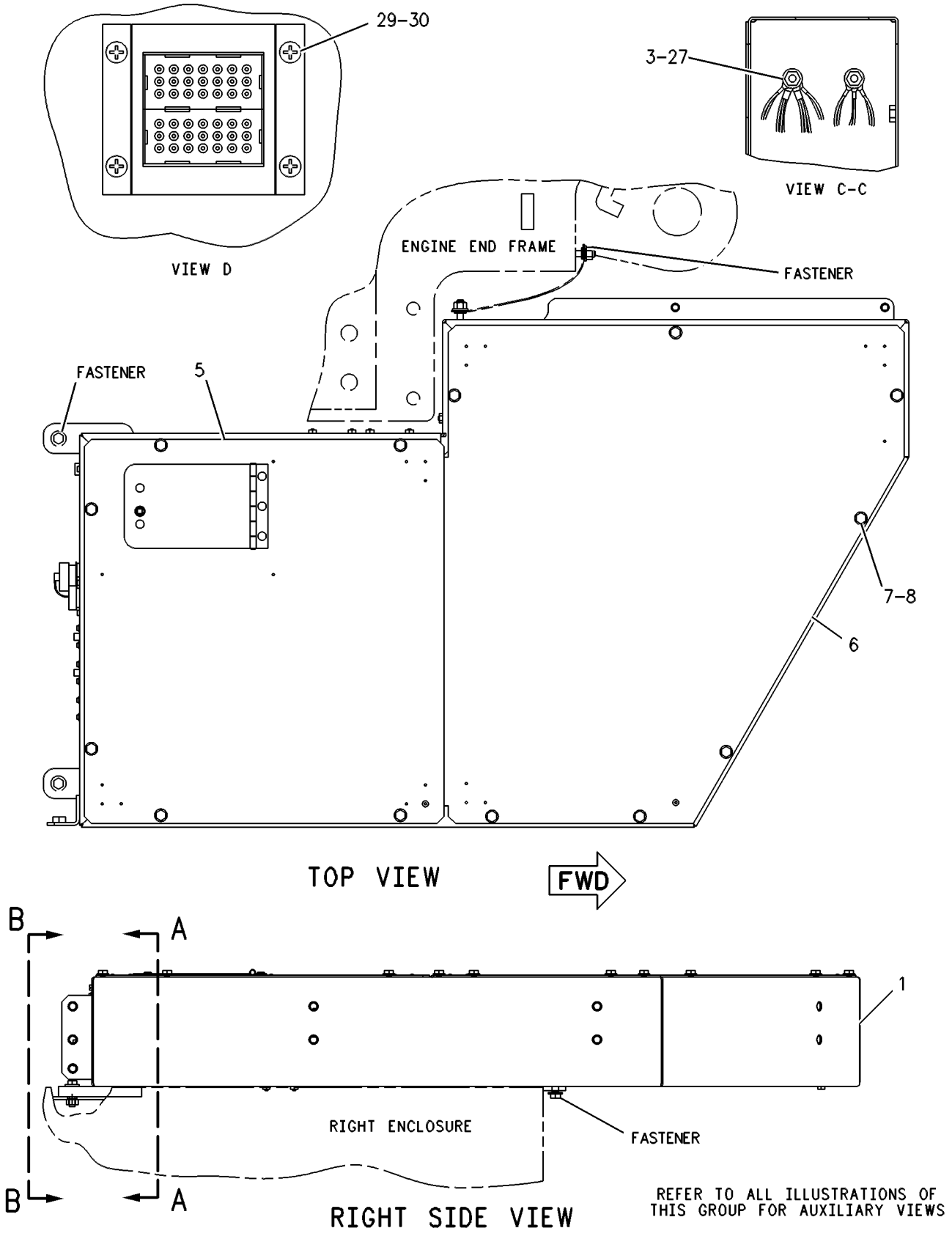

GRAPHIC #1 g00267359

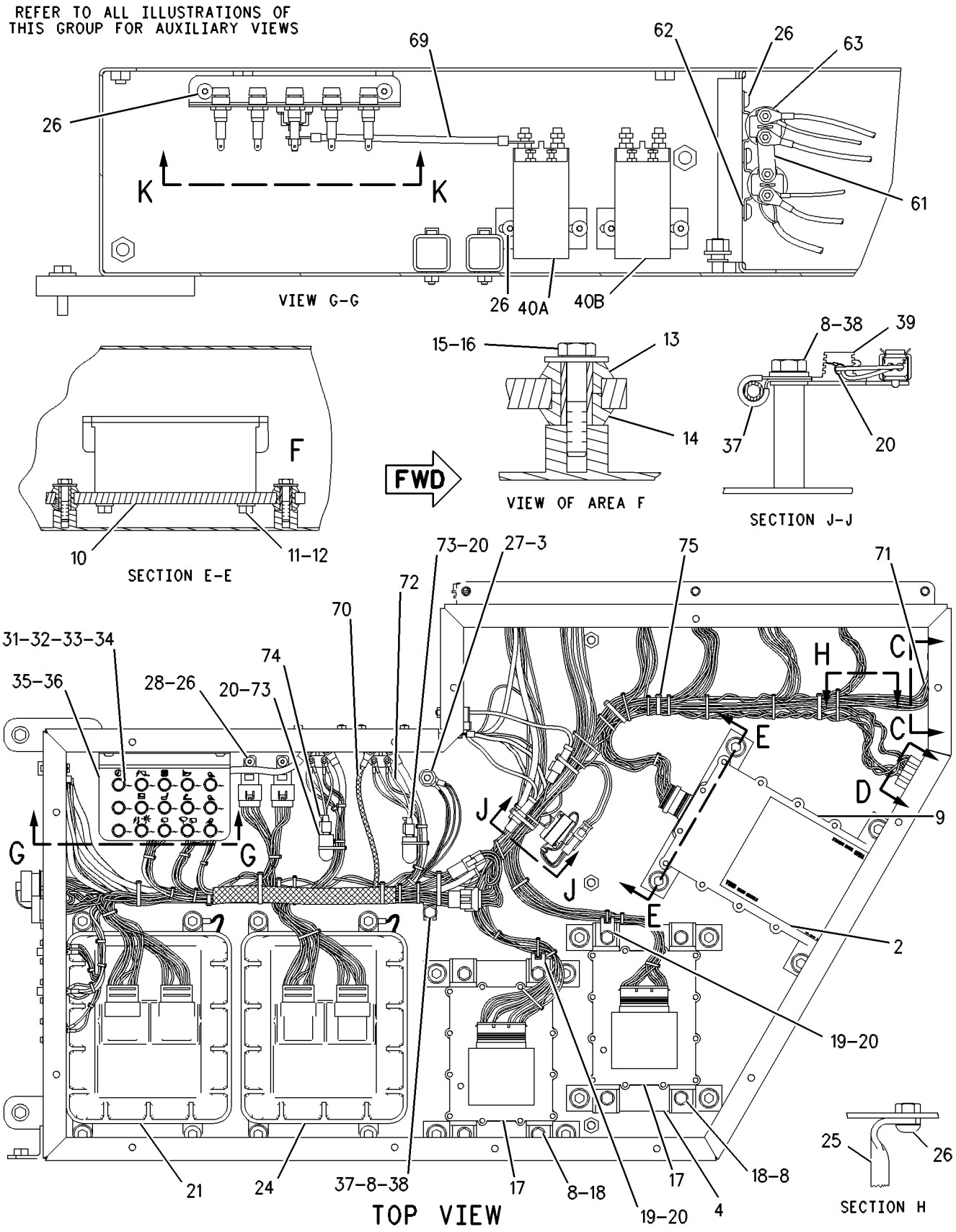

GRAPHIC #2 g00640458

131-4377 **WIRING GP-VIMS MONITOR** ***(contd.)*** **i01197483**

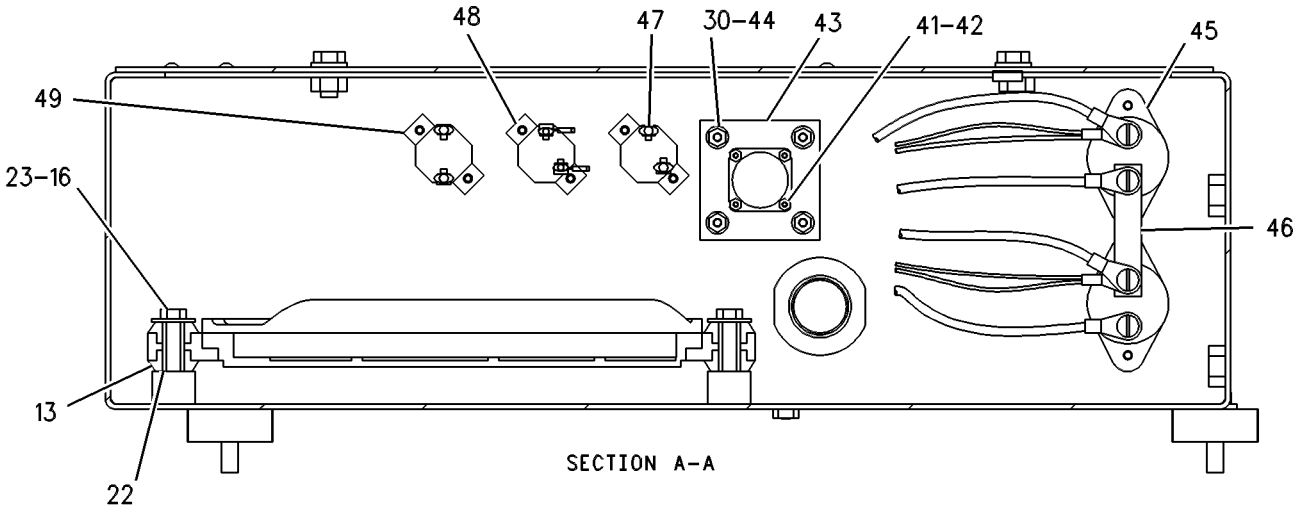

SECTION A-A

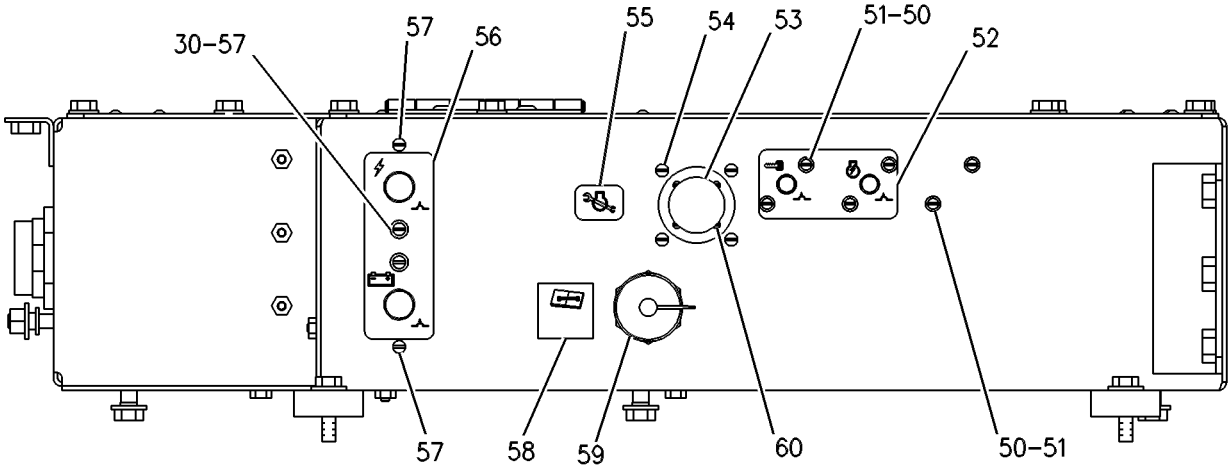

VIEW B-B

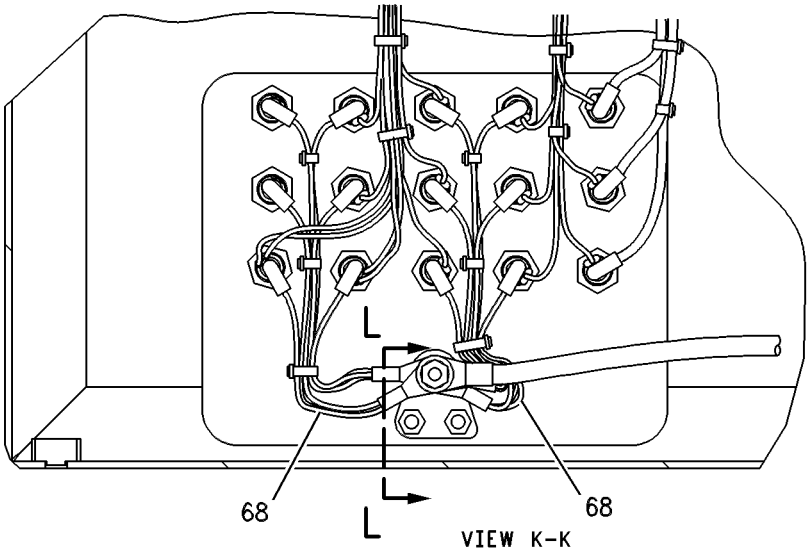

VIEW K-K

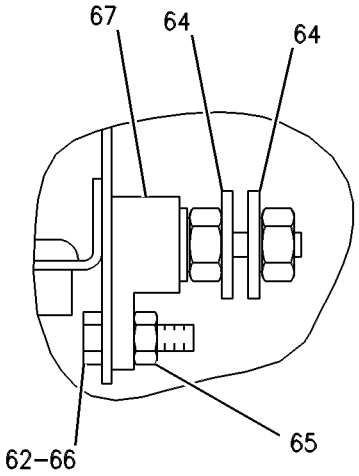

VIEW L-L

GRAPHIC #3 g00259107

MEMORANDA

168-4359 WIRING GP-VIMS MONITOR

S/N: 7HR284-UP
PART OF 131-8155 VIMS AR
AN ATTACHMENT

SMCS-1408, 7601 **i01197834**

NOTE	REF NO	GRAPHIC REF	PART NUMBER	QTY	PART NAME 1 2 3 4 5 6 (PRODUCT LEVEL)	SEE PAGE
	1	1	**112-1756**	1	ENCLOSURE AS	
M		1	**6V-9632**	11	NUT-WELD (M6X1 THD)	
M		1	**7X-0751**	2	BOSS-WELD	
M		1	**8T-3490**	16	NUT-WELD (M10X1.5 THD)	
M		1	**8T-3597**	15	NUT-WELD (M12X1.75 THD)	
M		1	**8T-3635**	4	STUD (M12X1.75X34.93MM)	
		1	**095-2887**	2	PLATE	
	2	2	**132-8520**	1	FILM-IDENTIFICATION	
	3	1,2	**8T-4223**	3	WASHER-HARD (3MM THK)	
	4	2	**108-7696**	4	BAR	
	5	1	**112-1757**	1	COVER AS	
		1	**1V-6755**	1	LATCH AS	
		1	**6V-2370**	5	RIVET-POP	
	6	1	**112-1758**	1	COVER AS	
M	7	1	**8T-4137**	13	BOLT (M10X1.50X20MM)	
	8	1,2	**8T-4121**	23	WASHER (2.5MM THK)	
Y	9	2	**165-8682**	1	CONTROL GP-UNPROGRAMMED (VIDS/VIMS MAIN MODULE)	257
	10	2	**104-5612**	2	BAR	
	11	2	**4L-6454**	4	BOLT (3/8-16X1 IN)	
	12	2	**8T-4896**	4	WASHER-HARD (2.5MM THK)	
	13	2,3	**8T-9655**	40	MOUNT	
	14	2	**8T-9658**	12	SPACER (12.7MM THK)	
M	15	2	**099-3649**	12	BOLT (M8X40MM)	
	16	2,3	**9N-0869**	20	WASHER-HARD (2MM THK)	
Y	17	2	**144-7172**	2	MODULE GP-VIDS/VIMS INTERFACE	319
M	18	2	**8T-4136**	8	BOLT (M10X1.50X25MM)	
	19	2	**4P-8134**	2	CLIP (10.5MM ID)	
	20	2	**9X-6772**	5	STRAP-CABLE	
Y	21	2	**160-1759**	1	CONTROL GP-UNPROGRAMMED (IMPLEMENT)	256
	22	3	**6I-1418**	8	SPACER (28.7MM THK)	
M	23	3	**7X-0818**	8	BOLT (M8X1.25X45MM)	
Y	24	2	**160-1758**	1	CONTROL GP-UNPROGRAMMED (POWER TRAIN)	255
	25	2	**115-1496**	1	TUBE	
M	26	2	**9X-2042**	13	SCREW-TRUSS HEAD (M6X1.0X12MM)	
M	27	1,2	**8T-4244**	3	NUT (M12X1.75 THD)	
	28	2	**3E-5239**	2	RELAY AS (24 VOLT)	
	29	1	**107-3727**	4	SCREW-PAN HEAD	
	30	1,3	**4B-4274**	10	WASHER (1.2MM THK)	
	31	2	**4K-5122**	15	HOLDER AS-FUSE	
					(EACH INCLUDES)	
		2	**7N-2867**	1	CAP-FUSE HOLDER	
	32	2	**3K-8782**	8	FUSE (10 AMP)	
	33	2	**8M-8948**	4	FUSE (15 AMP)	
	34	2	**8M-0456**	1	FUSE (20 AMP)	
	35	2	**115-1494**	1	PLATE AS	
	36	2	**115-3038**	1	FILM-IDENTIFICATION	
	37	2	**033-8248**	2	CLIP (11.11MM ID)	
M	38	2	**8T-4191**	2	BOLT (M10X1.50X16MM)	
	39	2	**124-6704**	1	RESISTOR AS	
	40A	2	**165-4026**	1	SWITCH AS-MAGNETIC (MAIN POWER RELAY)	
	40B	2	**165-4026**	1	SWITCH AS-MAGNETIC (FLOODLAMP RELAY)	
					(EACH INCLUDES)	
		2	**4F-2294**	2	NUT-JAM (5/16-24 THD)	
		2	**6V-8186**	2	NUT-FULL (5/16-24 THD)	
		2	**6V-8378**	2	NUT (10-32 THD)	

168-4359 **WIRING GP-VIMS MONITOR** *(contd.)* **i01197834**

NOTE	REF NO	GRAPHIC REF	PART NUMBER	QTY	PART NAME 1 2 3 4 5 6 (PRODUCT LEVEL)	SEE PAGE
	41	3	**6B-4540**	4	NUT (4-40X.75 IN)	
	42	3	**6V-9497**	4	WASHER-HARD (0.5MM THK)	
	43	3	**115-1495**	1	PLATE	
	44	3	**4B-2049**	4	NUT (10-32 THD)	
	45	3	**3E-7294**	1	CIRCUIT BREAKER AS (105 AMP) (MAIN)	
		3	**8T-4205**	2	WASHER-HARD (2MM THK)	
		3	**1H-3244**	2	LOCKWASHER (NO.14)	
		3	**6V-8187**	2	NUT (1/4-28 THD)	
	45A	3	**3E-7294**	1	CIRCUIT BREAKER AS (105 AMP) (ALTERNATOR)	
		3	**8T-4205**	2	WASHER-HARD (2MM THK)	
		3	**1H-3244**	2	LOCKWASHER (NO.14)	
		3	**6V-8187**	2	NUT (1/4-28 THD)	
	46	3	**7V-9275**	1	STRAP	
	47	3	**6T-3642**	1	CIRCUIT BREAKER AS (10 AMP) (KEY START)	
		3	**6V-8376**	2	SCREW-MACHINE (8-32X.25IN)	
		3	**9B-7233**	2	LOCKWASHER (NO.8)	
	48	3	**6T-3643**	1	CIRCUIT BREAKER AS (15 AMP) (ENGINE ECM)	
		3	**6V-8376**	2	SCREW-MACHINE (8-32X.25IN)	
		3	**9B-7233**	2	LOCKWASHER (NO.8)	
	49	3	**3T-2662**	1	CIRCUIT BREAKER AS (15 AMP) (RUNNING LAMPS)	
		3	**6V-8376**	2	SCREW-MACHINE (8-32X.25IN)	
		3	**9B-7233**	2	LOCKWASHER (NO.8)	
	50	3	**3D-9799**	6	SCREW-MACHINE (8-32X.875IN)	
	51	3	**4B-4863**	6	WASHER (1.2MM THK)	
	52	3	**115-9346**	1	PLATE-IDENTIFICATION	
	53	3	**8C-6354**	1	CAP-RECEPTACLE	
	54	3	**4B-1237**	4	SCREW-MACHINE	
	55	3	**115-9347**	1	FILM-IDENTIFICATION	
	56	3	**122-8450**	1	FILM-INSTRUCTION	
	57	3	**4B-1240**	4	SCREW-MACHINE (10-32X1IN)	
	58	3	**114-0931**	1	FILM-IDENTIFICATION	
	59	3	**9G-4360**	1	CAP-CONNECTOR	
	60	3	**5S-4245**	4	SCREW-MACHINE (4-40X0.5IN)	
	61	2	**7I-3652**	1	STRIP	
	62	2,3	**9X-8256**	3	WASHER (2MM THK)	
Y	63	2	**3E-0075**	2	SWITCH GP-MAGNETIC (START RELAY)	368
	64	3	**5P-4115**	2	WASHER (2MM THK)	
M	65	3	**5C-2890**	2	NUT (M6X1.00 THD)	
M	66	3	**8T-4138**	2	BOLT (M6X1.0X20MM)	
	67	3	**9G-8451**	1	BLOCK AS	
		3	**1H-3244**	1	LOCKWASHER (NO.14)	
		3	**4B-4276**	2	WASHER (1.6MM THK)	
		3	**4L-7124**	1	BOLT (1/4-20X1.25IN)	
		3	**6V-8185**	2	NUT (1/4-20 THD)	
	68	3	**112-1761**	2	HARNESS AS	
	69	2	**112-1760**	1	WIRE AS	
	70	2	**112-1762**	1	HARNESS AS	
	71	2	**168-4357**	1	HARNESS AS	
	72	2	**130-7239**	1	HARNESS AS	
	73	2	**106-8704**	2	SUPPRESSOR AS-ARC	
					(EACH INCLUDES)	
		2	**102-8802**	1	KIT-RECEPTACLE (2 PIN)	
					(INCLUDES WEDGE)	
		2	**3E-3365**	1	WEDGE-RECEPTACLE LOCK	
		2	**8T-8729**	2	PIN-CONNECTOR	
	74	2	**130-7240**	1	HARNESS AS	
	75	2	**7K-1181**	15	STRAP-CABLE (4IN DIA)	

M-METRIC PART
Y-SEPARATE ILLUSTRATION

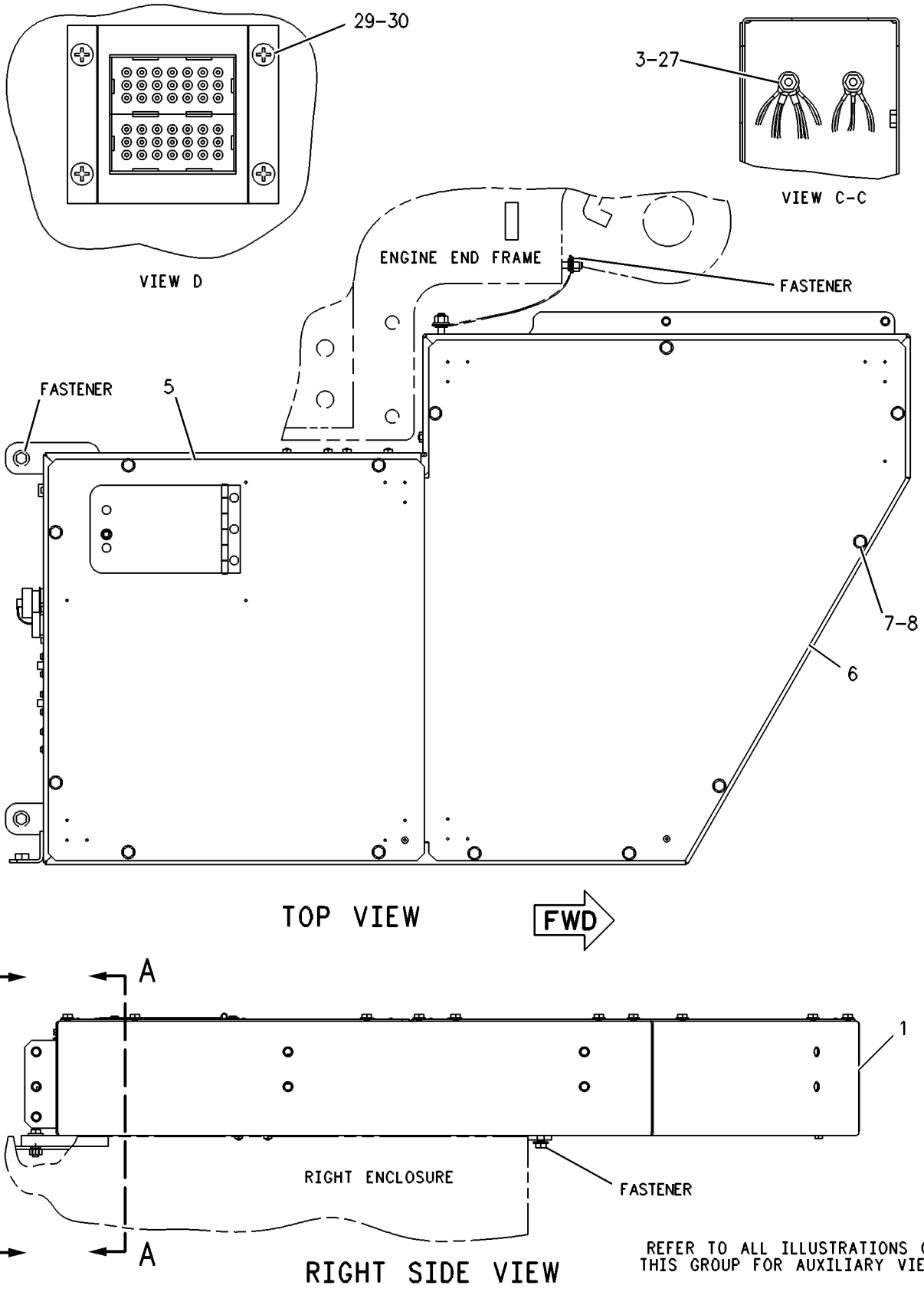

GRAPHIC #1 g00267359

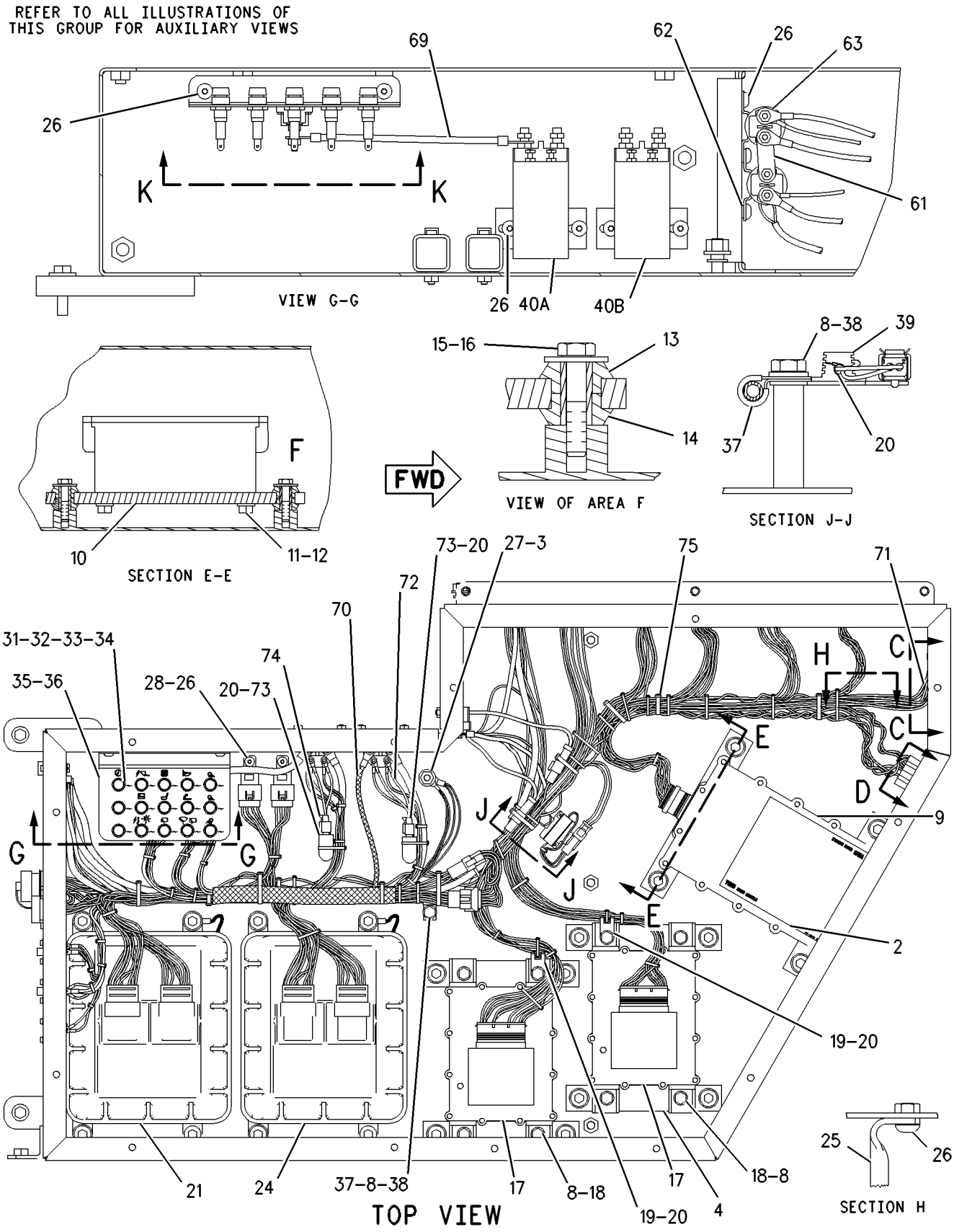

GRAPHIC #2 g00640462

168-4359 **WIRING GP-VIMS MONITOR** ***(contd.)*** **i01197834**

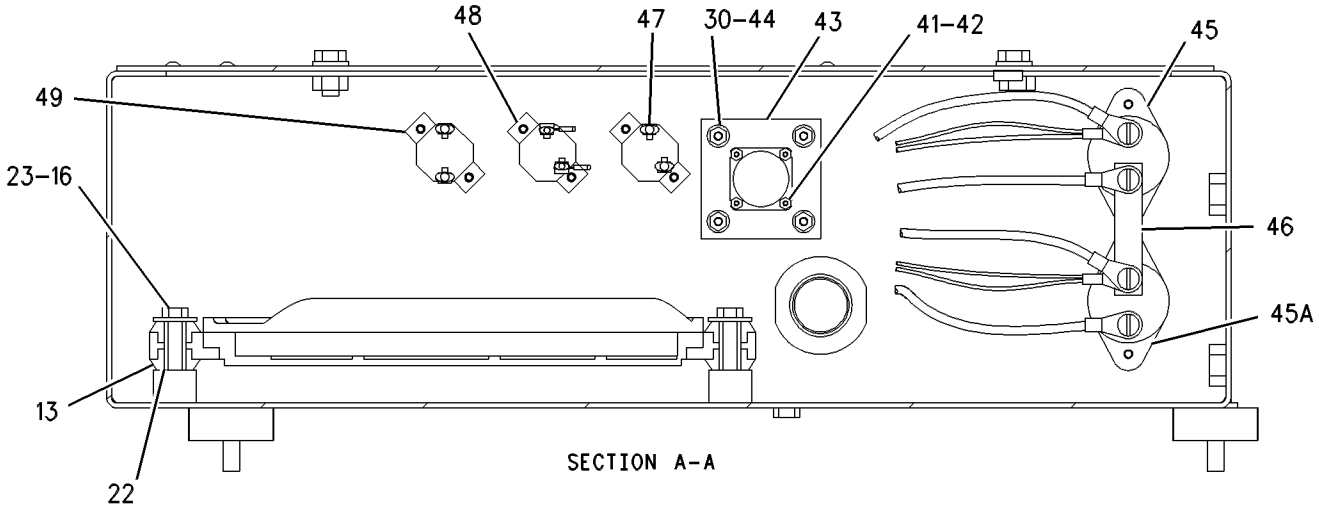

SECTION A-A

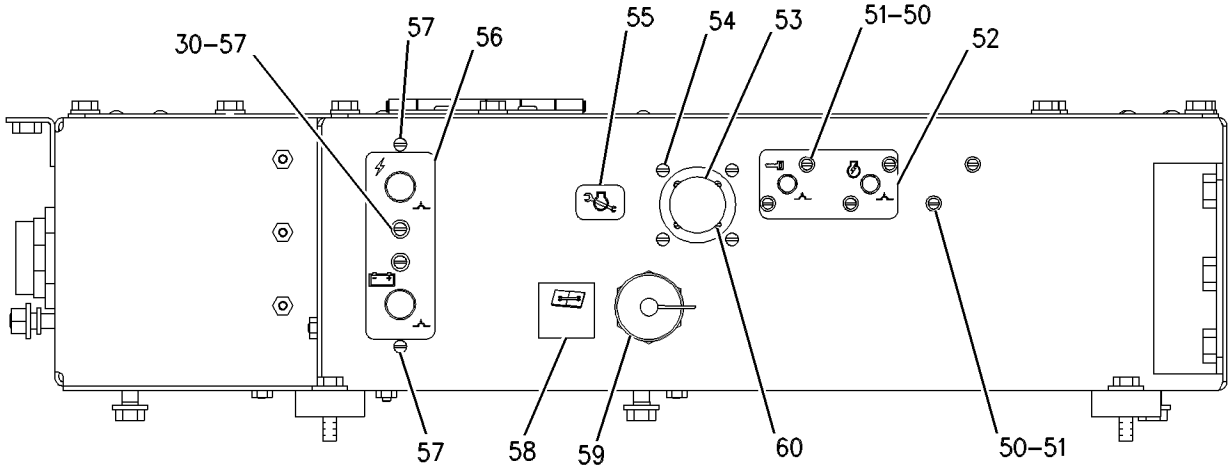

VIEW B-B

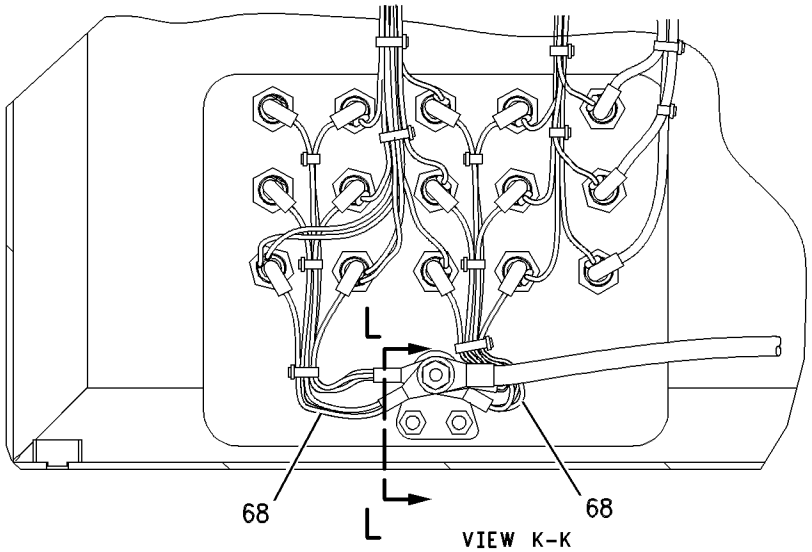

VIEW K-K

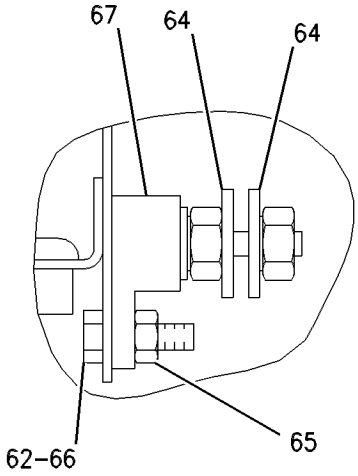

VIEW L-L

GRAPHIC #3 g00558086

107-0703 AXLE AR-FIXED

S/N: 7HR1-UP

PART OF 109-6822 POWER TRAIN AR

SMCS-3013, 3278 **i01054857**

NOTE	PART NUMBER	QTY	PART NAME 1 2 3 4 5 6 (PRODUCT LEVEL)	SEE PAGE
Y	*107-0700*	1	AXLE GP-FIXED	474
Y	*118-9704*	1	DIFFERENTIAL & BEVEL GEAR GP	522
Y	*112-2166*	2	WHEEL GP-FINAL DRIVE & BRAKE	670
			—OR—	
Y	**169-6898**	2	WHEEL & FINAL DRIVE GP	671

Y-SEPARATE ILLUSTRATION

107-0702 AXLE AR-OSCILLATING

S/N: 7HR1-UP

PART OF 109-6822 POWER TRAIN AR

SMCS-3013, 3278 **i01054859**

NOTE	PART NUMBER	QTY	PART NAME 1 2 3 4 5 6 (PRODUCT LEVEL)	SEE PAGE
Y	*107-0699*	1	AXLE GP-OSCILLATING	476
Y	*118-9704*	1	DIFFERENTIAL & BEVEL GEAR GP	522
Y	*112-2166*	2	WHEEL GP-FINAL DRIVE & BRAKE	670
			—OR—	
Y	**169-6898**	2	WHEEL & FINAL DRIVE GP	671

Y-SEPARATE ILLUSTRATION

MEMORANDA

107-0700 AXLE GP-FIXED

S/N: 7HR1-UP

PART OF 107-0703 AXLE AR-FIXED

SMCS-3278 **i01380723**

NOTE	REF NO	GRAPHIC REF	PART NUMBER	QTY	PART NAME 1 2 3 4 5 6 (PRODUCT LEVEL)	SEE PAGE
	1	1	**107-0696**	2	SHAFT-AXLE	
	2	1	**113-1747**	1	HOUSING AS	
		1	**1V-6137**	2	DOWEL	
	3	1	**104-7006**	12	DOWEL-HOLLOW (35.0 ODX45.0MM OAL)	
	4	1	**9S-4181**	1	PLUG-STRAIGHT THREAD (1-5/16-12 THD)	
	5	1	**7M-8485**	2	SEAL-O-RING (29.74MM ID)	
	6	1	**5P-4484**	1	PLUG-MAGNETIC	
	7	1	**2K-9062**	1	PIN-SPRING	
	8	1	**9X-8896**	8	BOLT (1-8X4IN)	
	9	1	**9M-2828**	68	WASHER-HARD (8.0MM THK)	
	10	1	**2J-3507**	60	NUT-FULL (1-8 THD)	

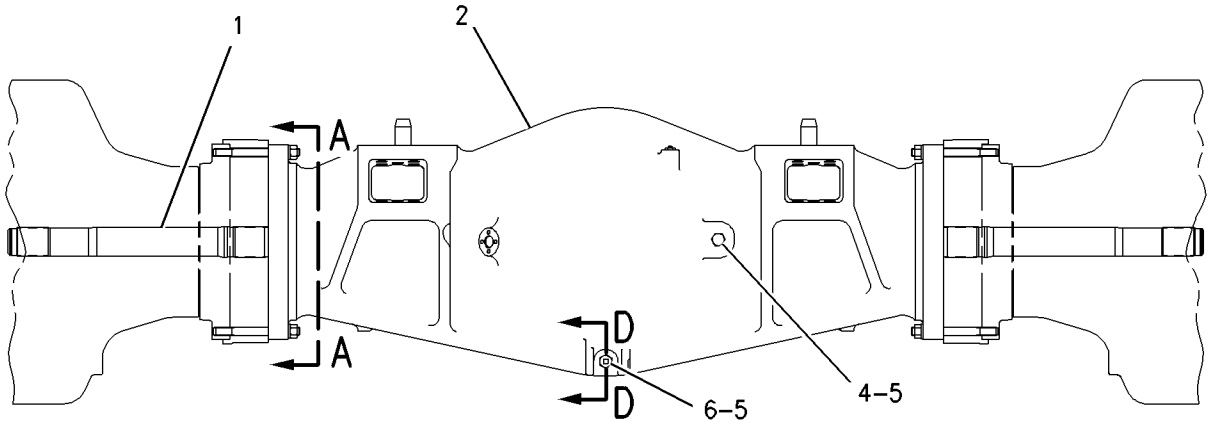

FRONT VIEW

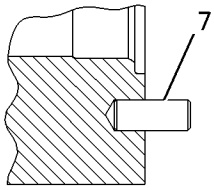

SECTION D-D

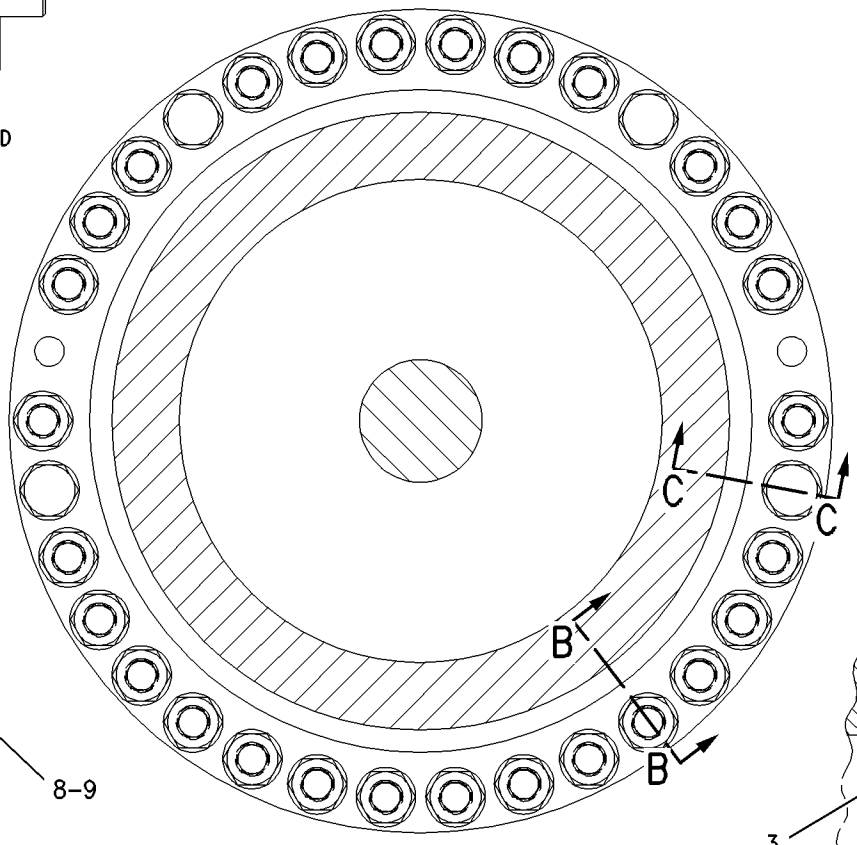

SECTION A-A

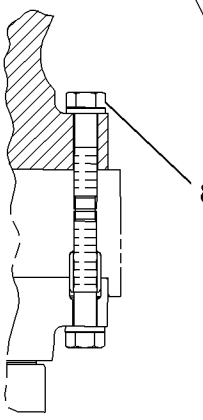

SECTION C-C

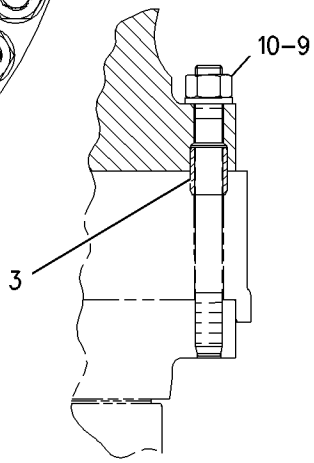

SECTION B-B

GRAPHIC #1

g00729136

107-0699 AXLE GP-OSCILLATING

S/N: 7HR1-UP

PART OF 107-0702 AXLE AR-OSCILLATING

SMCS-3278 **i01243469**

NOTE	REF NO	GRAPHIC REF	PART NUMBER	QTY	PART NAME 1 2 3 4 5 6 (PRODUCT LEVEL)	SEE PAGE
	1	1	**1K-6853**	2	FITTING	
	2	1	**113-5115**	1	SUPPORT-TRUNNION	
	3	1	**9S-4181**	1	PLUG-STRAIGHT THREAD (1-5/16-12 THD)	
	4	1	**7M-8485**	2	SEAL-O-RING (29.74MM ID)	
	5	1	**113-5122**	2	DOWEL	
	6	1	**113-7765**	1	HOUSING AS	
	7	1	**6M-1622**	2	DOWEL (1.494 ODX3.69IN OAL)	
	8	1	**107-0696**	2	SHAFT-AXLE	
	9	1	**6W-6368**	1	SUPPORT-TRUNNION	
	10	1	**1D-4608**	16	BOLT (3/4-10X2.75IN)	
		1	**2S-0115**	16	WASHER-HARD (5MM THK)	
	11	1	**5P-4484**	1	PLUG-MAGNETIC	
	12	1	**2V-2757**	1	COVER	
	13	2	**9M-2828**	68	WASHER-HARD (8.0MM THK)	
	14	2	**2S-0115**	12	WASHER-HARD (5MM THK)	
	15	2	**4V-4884**	3	SEAL-O-RING (326MM ID)	
	16	2	**5P-2861**	1	SEAL-O-RING (316.87MM ID)	
	17	2	**4B-4550**	1	FITTING-RELIEF (1/8-27 PTF)	
	18	2	**1A-1460**	12	BOLT (1/2-13X2IN)	
	19	2	**2M-0849**	12	WASHER-HARD (5MM THK)	
	20	2	**2V-2761**	1	RETAINER-BEARING	
	21	2	**175-6364**	1	BEARING-SLEEVE	
	22	2	**2K-9062**	1	PIN-SPRING	
	23	2	**1V-8254**	1	COVER-DIFFERENTIAL	
	24	2	**1D-4626**	16	BOLT (7/8-9X2.75IN)	
	25	2	**9H-1031**	16	WASHER-HARD (6.0MM THK)	
	26	2	**175-6365**	1	BEARING-SLEEVE	
	27	2	**4V-4885**	2	BEARING-THRUST	
	28	2	**2V-2755**	1	PLATE-THRUST	
	29	2	**3B-2968**	12	BOLT (3/4-10X3.5IN)	
	30	2	**104-7006**	8	DOWEL-HOLLOW (35.0 ODX45.0MM OAL)	
	31	2	**2J-3507**	60	NUT-FULL (1-8 THD)	
	32	2	**9X-8896**	8	BOLT (1-8X4IN)	
B	33	2	**6V-6640**		SEALANT	

B-USE AS REQUIRED

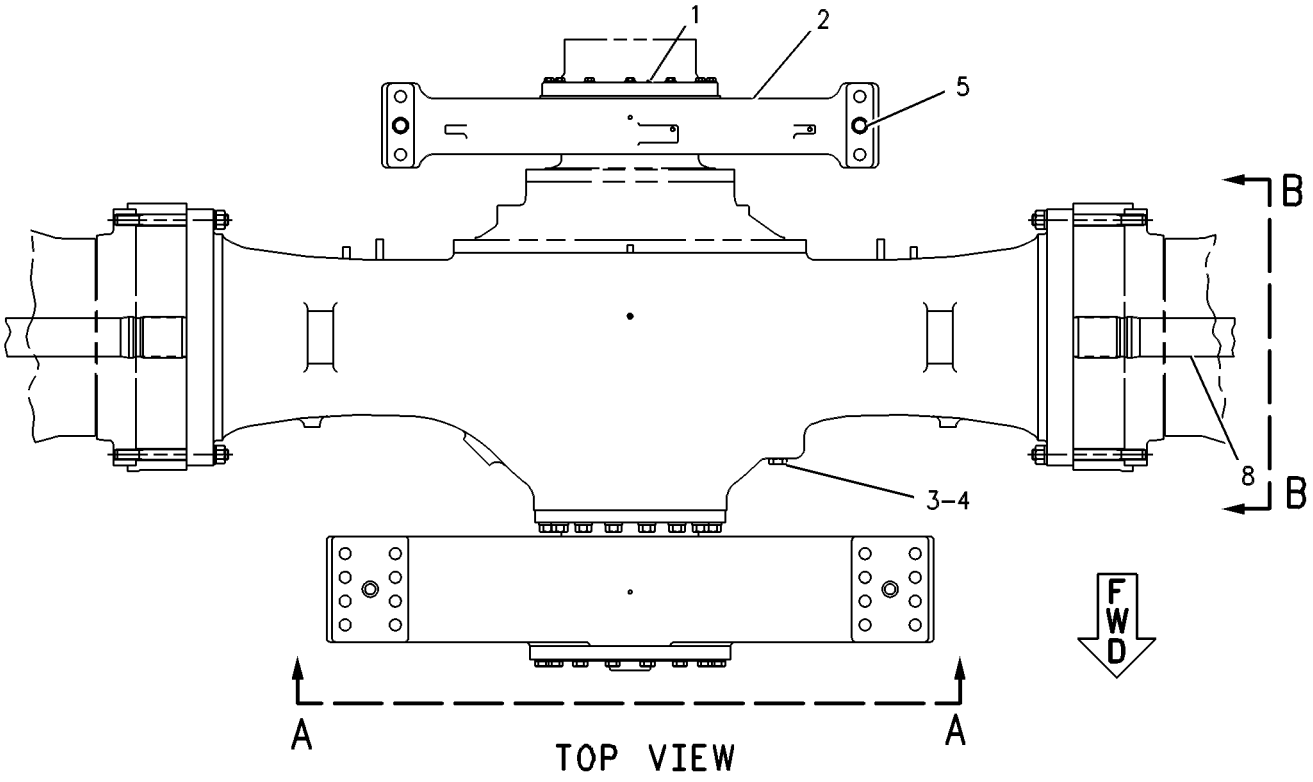

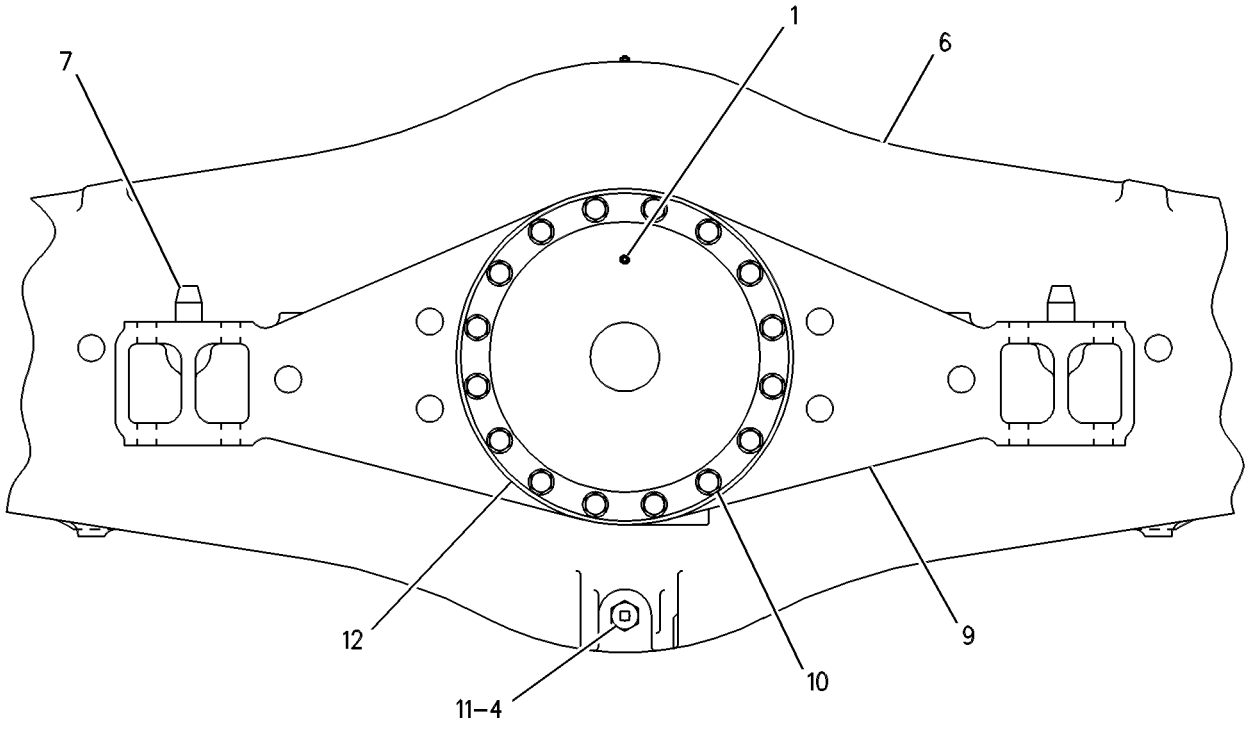

VIEW A-A

REFER TO ALL ILLUSTRATIONS OF
THIS GROUP FOR AUXILIARY VIEWS

GRAPHIC #1 g00333433

107-0699 **AXLE GP-OSCILLATING** *(contd.)* **i01243469**

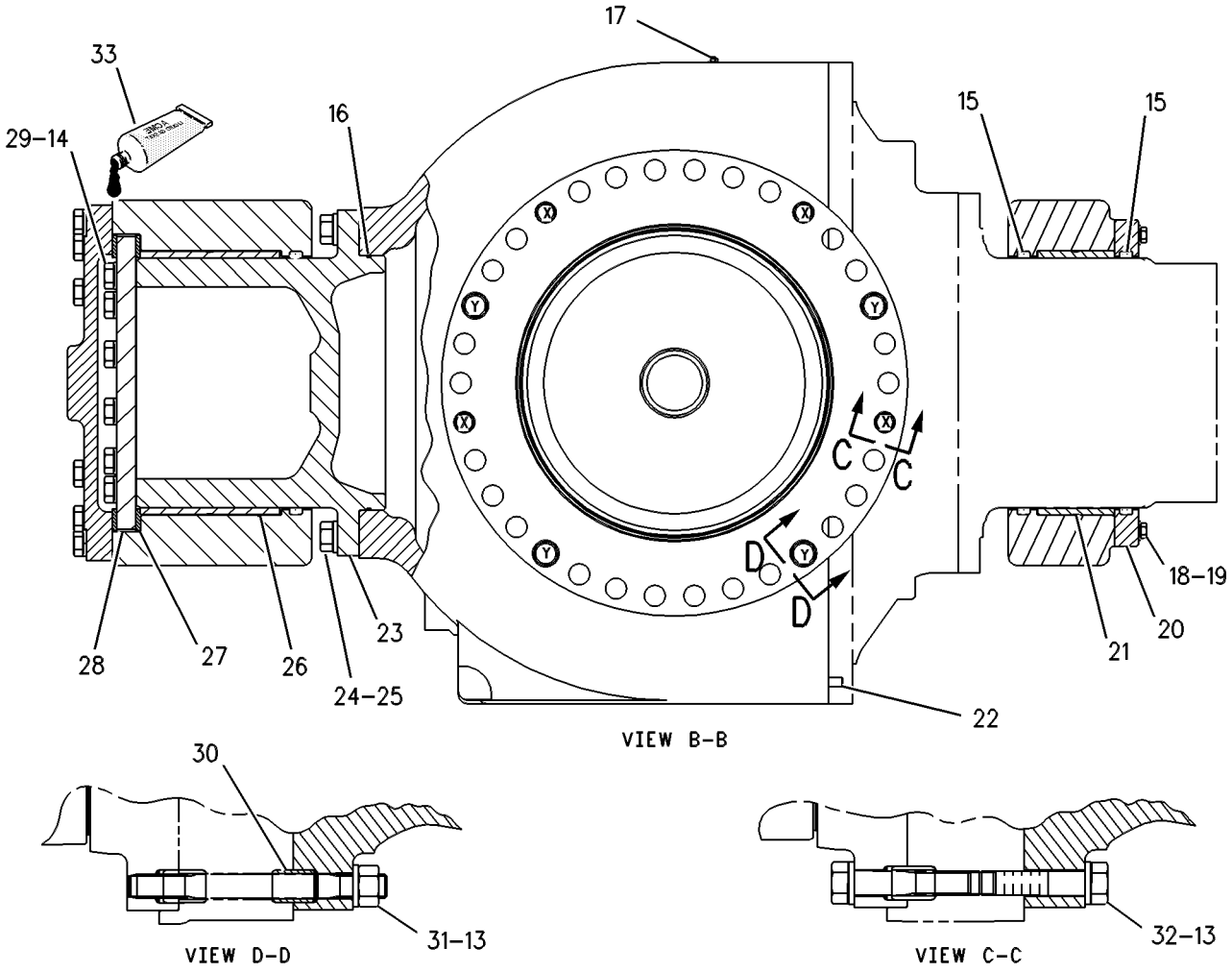

GRAPHIC #2

g00343694

134-5247 BLOCK GP-HYDRAULIC—AXLE OIL COOLER

S/N: 7HR1-UP

PART OF 112-4206 COOLER GP-AXLE OIL

SMCS-3016 **i01158675**

NOTE	REF NO	GRAPHIC REF	PART NUMBER	QTY	PART NAME 1 2 3 4 5 6 (PRODUCT LEVEL)	SEE PAGE
	1	1	**154-1924**	1	MANIFOLD	
	2	1	**6V-8639**	1	CONNECTOR-SEAL	
		1	**6V-8398**	1	SEAL-O-RING (16.03MM ID)	
		1	**3K-0360**	1	SEAL-O-RING (16.36MM ID)	
	3	1	**6V-9851**	1	ELBOW-90 DEGREE SWIVEL (13/16-16 THD)	
		1	**6V-8398**	1	SEAL-O-RING (16.03MM ID)	
	4	1	**6V-9873**	1	CONNECTOR	
		1	**6V-8398**	1	SEAL-O-RING (16.03MM ID)	
		1	**3J-1907**	1	SEAL-O-RING (11.89MM ID)	
	5	1	**1P-4577**	2	FLANGE-HALF	
	6	1	**8T-4121**	4	WASHER (2.5MM THK)	
M	7	1	**8T-4196**	4	BOLT (M10X1.50X35MM)	

M-METRIC PART

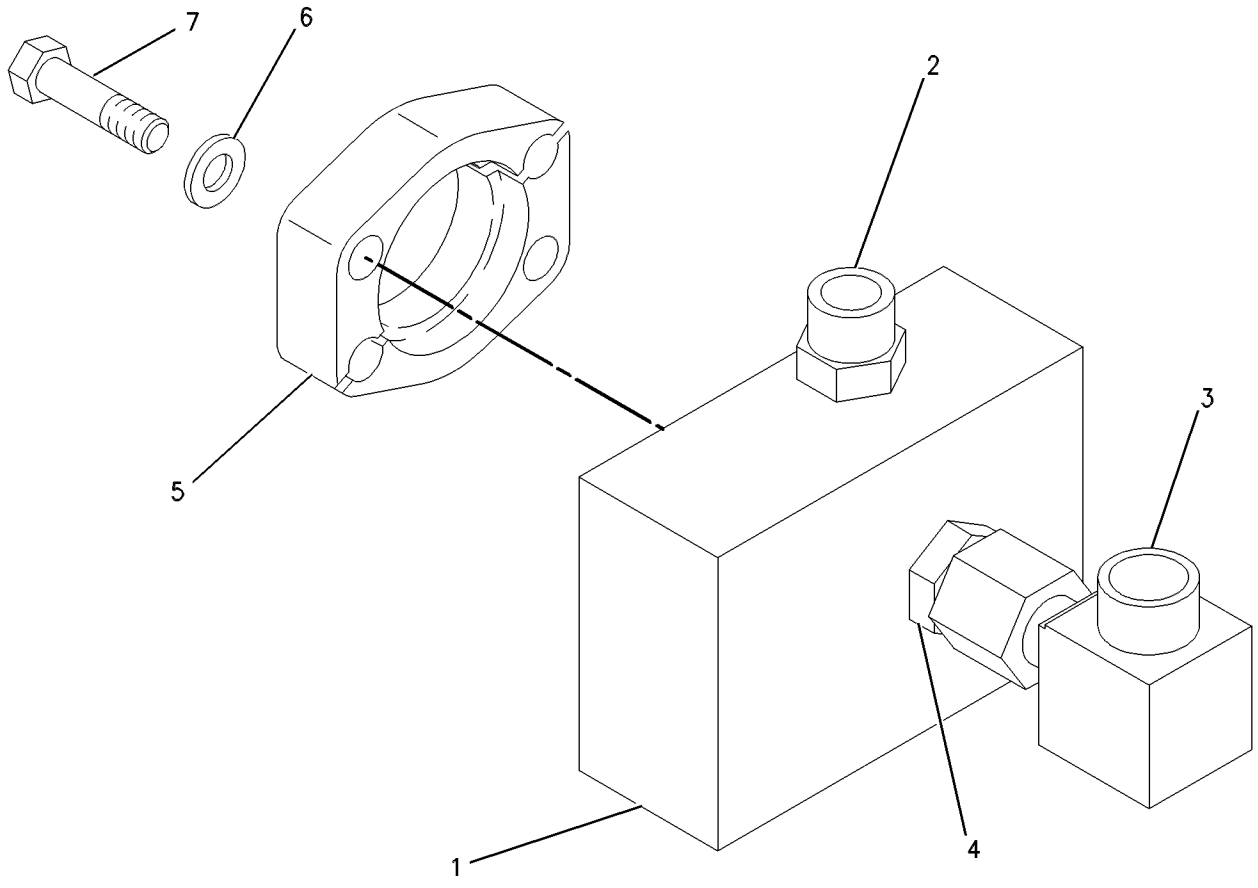

GRAPHIC #1 g00616134

134-5248 BLOCK GP-HYDRAULIC—AXLE OIL COOLER

S/N: 7HR1-UP

PART OF 112-4206 COOLER GP-AXLE OIL

SMCS-3016 **i01158647**

NOTE	REF NO	GRAPHIC REF	PART NUMBER	QTY	PART NAME 1 2 3 4 5 6 (PRODUCT LEVEL)	SEE PAGE
M	1	1	**8T-4196**	4	BOLT (M10X1.50X35MM)	
	2	1	**3K-0360**	1	SEAL-O-RING (16.36MM ID)	
	3	1	**8C-3370**	1	CONNECTOR	
	4	1	**153-9056**	1	MANIFOLD	
	5	1	**1P-4577**	2	FLANGE-HALF	
	6	1	**6V-8625**	1	ELBOW-90 DEGREE (3/4-16 THD)	
		1	**6V-8398**	1	SEAL-O-RING (16.03MM ID)	
		1	**3K-0360**	1	SEAL-O-RING (16.36MM ID)	
	7	1	**8T-4121**	4	WASHER (2.5MM THK)	

M-METRIC PART

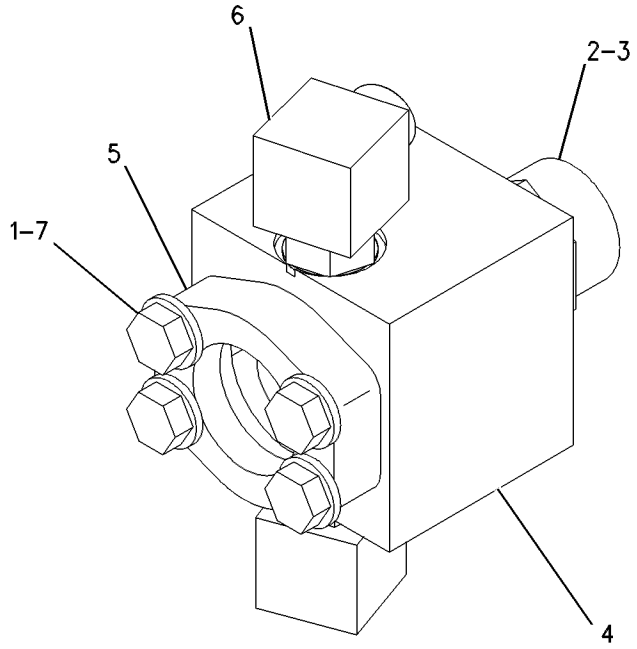

GRAPHIC #1 g00616126

MEMORANDA

6Y-6967 CASE & PARTS GP-PLANETARY

S/N: 9BX1-UP

PART OF 6Y-6965 TRANSMISSION AR

SMCS-3064 **i00758875**

NOTE	REF NO	GRAPHIC REF	PART NUMBER	QTY	PART NAME 1 2 3 4 5 6 (PRODUCT LEVEL)	SEE PAGE
	1	1	**116-2012**	1	CASE AS-TRANS	
		1	**6I-8490**	1	TUBE	
		1	**7M-5839**	2	PLUG-CUP (17.78MM ID)	
	2	1	**0S-1608**	10	BOLT (3/8-16X3.75IN)	
	3	1	**0T-0065**	3	BOLT (3/8-16X3.5IN)	
	4	1	**5M-2894**	7	WASHER (2.5MM THK)	
	5	1	**8M-4992**	2	SEAL-O-RING (40.87MM ID)	
	6	1	**9S-1018**	12	WASHER (.84MM THK)	
	7	1	**3S-0004**	6	WASHER (2.29MM THK)	
	8	1	**0L-1351**	14	BOLT (3/8-16X.875IN)	
	9	1	**8E-4929**	1	GASKET	
	10	1	**8E-4928**	1	COVER	
	11	1	**132-9877**	2	ADAPTER	
	12	1	**8M-8157**	4	SEAL (9.19MM ID)	
	13	1	**132-9875**	1	COVER AS	
		1	**1F-0750**	6	NUT-WELD (3/8-16 THD)	
		1	**132-9876**	6	ADAPTER	
	14	1	**8E-7249**	1	GASKET	
	15	1	**9X-8885**	19	BOLT (3/4-10X2.25IN)	
	16	1	**5P-8248**	23	WASHER-HARD (3.5MM THK)	
	17	1	**9X-8889**	4	BOLT (3/4-10X3.5IN)	
	18	1	**2P-8421**	2	ADAPTER-O-RING	
	19	1	**3D-2824**	1	SEAL-O-RING (23.47MM ID)	
	20	1	**6V-0852**	4	CAP-DUST	
	21	1	**6V-3965**	4	NIPPLE AS	
	22	1	**124-8149**	1	MANIFOLD	
	23	1	**3J-1907**	6	SEAL-O-RING (11.89MM ID)	
	24	1	**4K-1388**	2	SEAL-O-RING (26.59MM ID)	
	25	1	**8E-7253**	2	SLEEVE	
	26	1	**8E-1717**	2	ADAPTER	

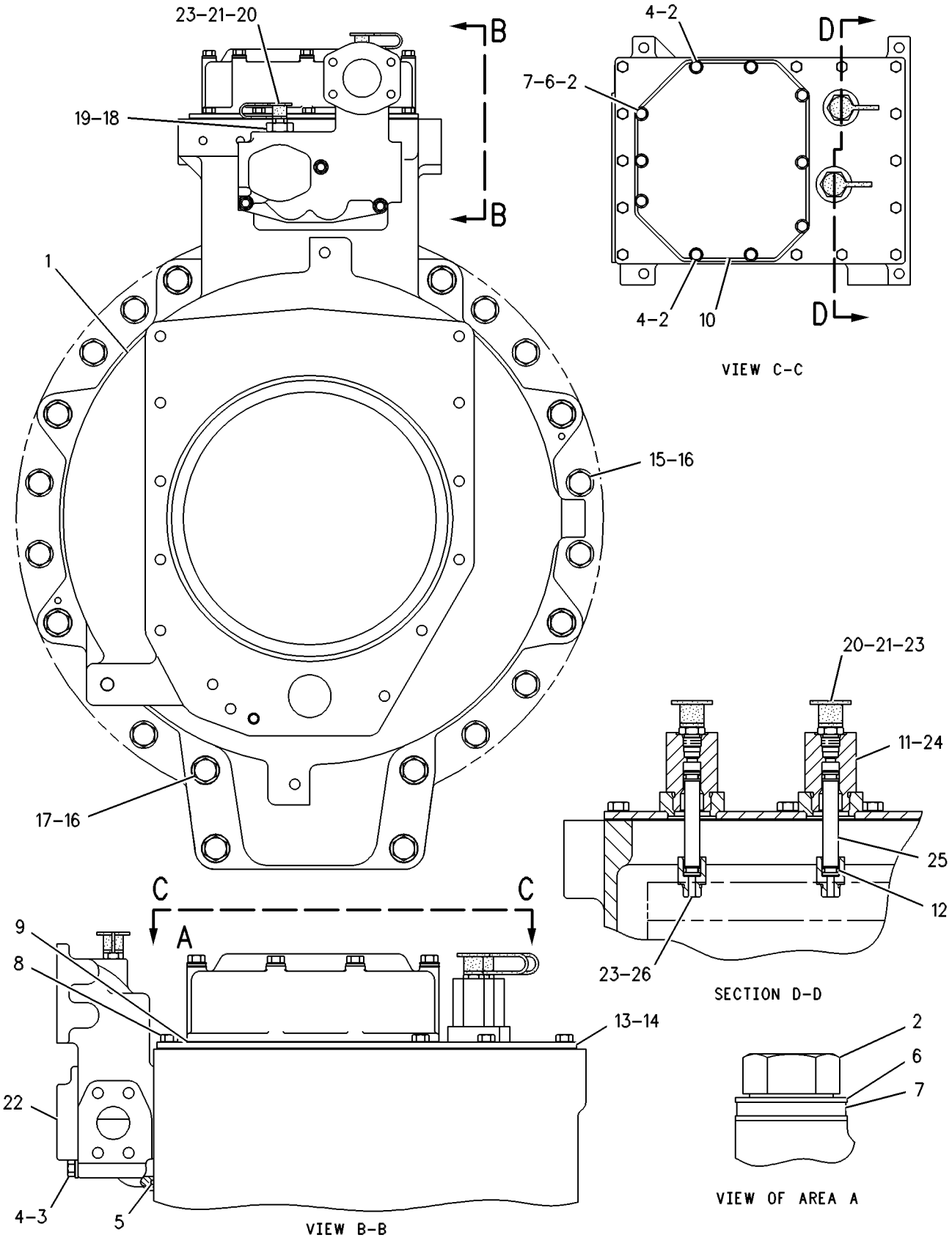

GRAPHIC #1

g00272400

4E-8413 CONTROL GP-STIC

S/N: 7HR1-233

PART OF 130-6906 CAB AR

SMCS-3033 **i00174457**

NOTE	REF NO	GRAPHIC REF	PART NUMBER	QTY	PART NAME 1 2 3 4 5 6 (PRODUCT LEVEL)	SEE PAGE
CY	1	1	*136-1155*	1	CONTROL GP-STIC	487
M	2	1	**8T-4138**	4	BOLT (M6X1.0X20MM)	
	3	1	**4E-7520**	1	BASE	
M	4	1	**8T-0723**	2	SETSCREW-SOCKET	
M	5	1	**6V-7687**	1	LOCKNUT (M12X1.75 THD)	
	6	1	**4E-7628**	1	COVER	
M	7	1	**8T-0269**	4	BOLT-SOCKET HEAD (M16X1X20MM)	
	8	1	**4E-7627**	1	HOUSING	

C-CHANGE FROM PREVIOUS TYPE
M-METRIC PART
Y-SEPARATE ILLUSTRATION

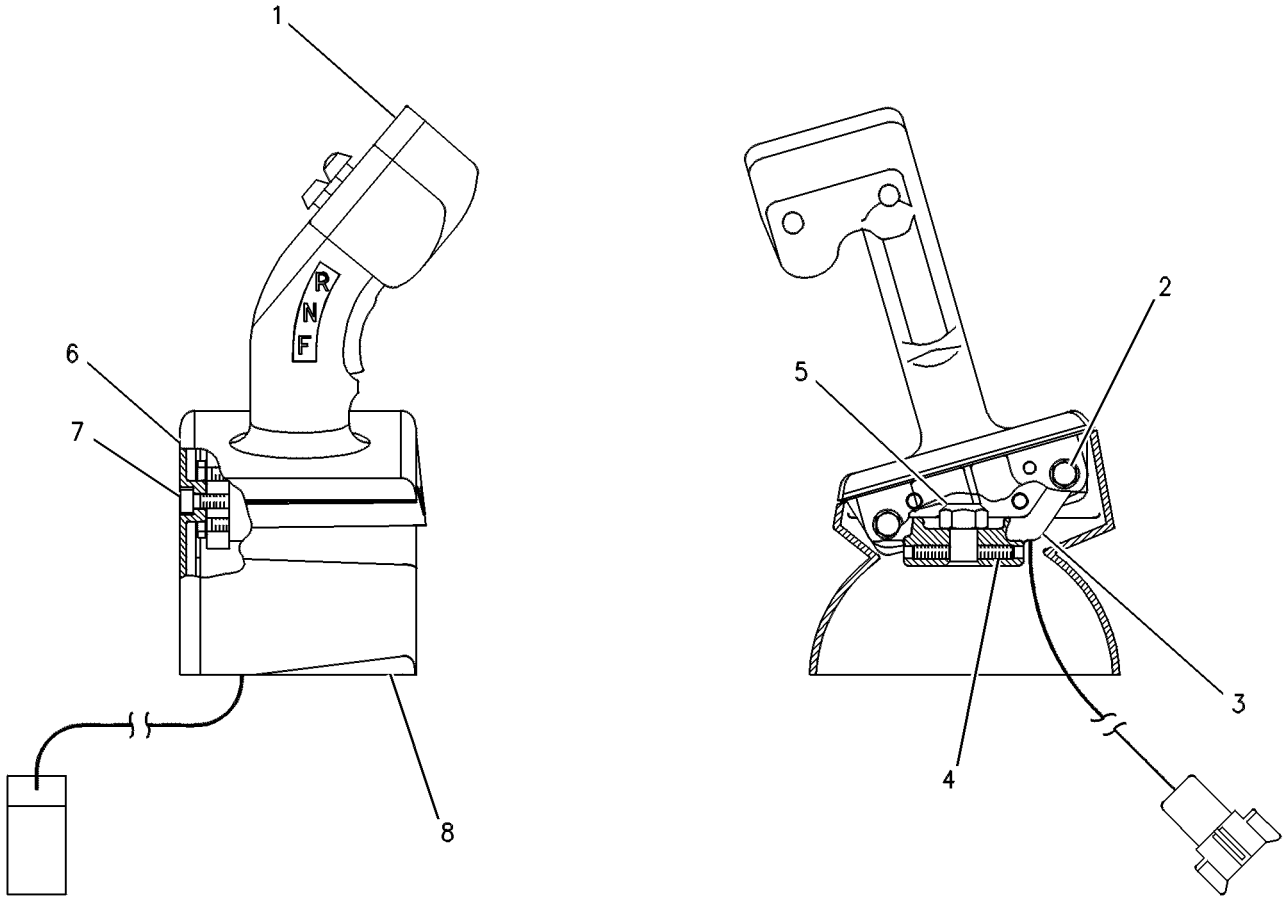

GRAPHIC #1 g00120734

4E-8413 CONTROL GP-STIC

S/N: 7HR234-381

PART OF 130-6906, 171-7047 CAB AR

SMCS-3033 **i00967699**

NOTE	REF NO	GRAPHIC REF	PART NUMBER	QTY	PART NAME 1 2 3 4 5 6 (PRODUCT LEVEL)	SEE PAGE
CY	1	1	**159-8661**	1	CONTROL GP-STIC	488
M	2	1	**8T-4138**	4	BOLT (M6X1.0X20MM)	
	3	1	**4E-7520**	1	BASE	
M	4	1	**8T-0723**	2	SETSCREW-SOCKET	
	5	1	**6V-7587**	1	WIRE-ELECTRICAL	
	6	1	**4E-7628**	1	COVER	
M	7	1	**8T-0269**	4	BOLT-SOCKET HEAD (M16X1X20MM)	
	8	1	**4E-7627**	1	HOUSING	

C-CHANGE FROM PREVIOUS TYPE
M-METRIC PART
Y-SEPARATE ILLUSTRATION

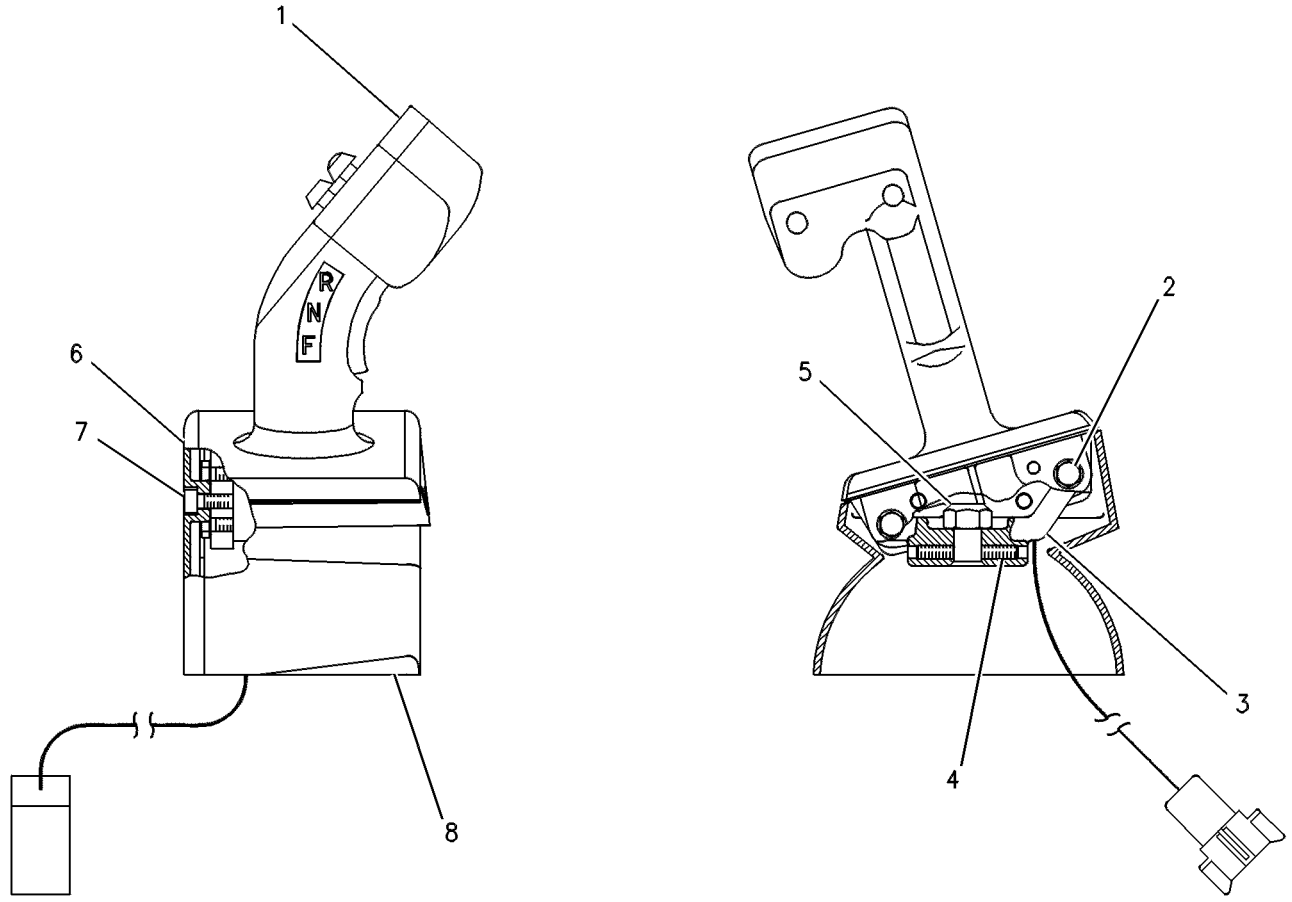

GRAPHIC #1 g00120734

4E-8413 CONTROL GP-STIC

S/N: 7HR382-UP

PART OF 171-7047 CAB AR

SMCS-3033 **i01220908**

NOTE	REF NO	GRAPHIC REF	PART NUMBER	QTY	PART NAME 1 2 3 4 5 6 (PRODUCT LEVEL)	SEE PAGE
Y	1	1	**177-4113**	1	CONTROL GP-STIC	490
M	2	1	**8T-4138**	4	BOLT (M6X1.0X20MM)	
	3	1	**4E-7520**	1	BASE	
M	4	1	**8T-0723**	2	SETSCREW-SOCKET	
	5	1	**6V-7587**	1	WIRE-ELECTRICAL	
	6	1	**4E-7628**	1	COVER	
M	7	1	**8T-0269**	4	BOLT-SOCKET HEAD (M6X1X20MM)	
	8	1	**4E-7627**	1	HOUSING	

M-METRIC PART
Y-SEPARATE ILLUSTRATION

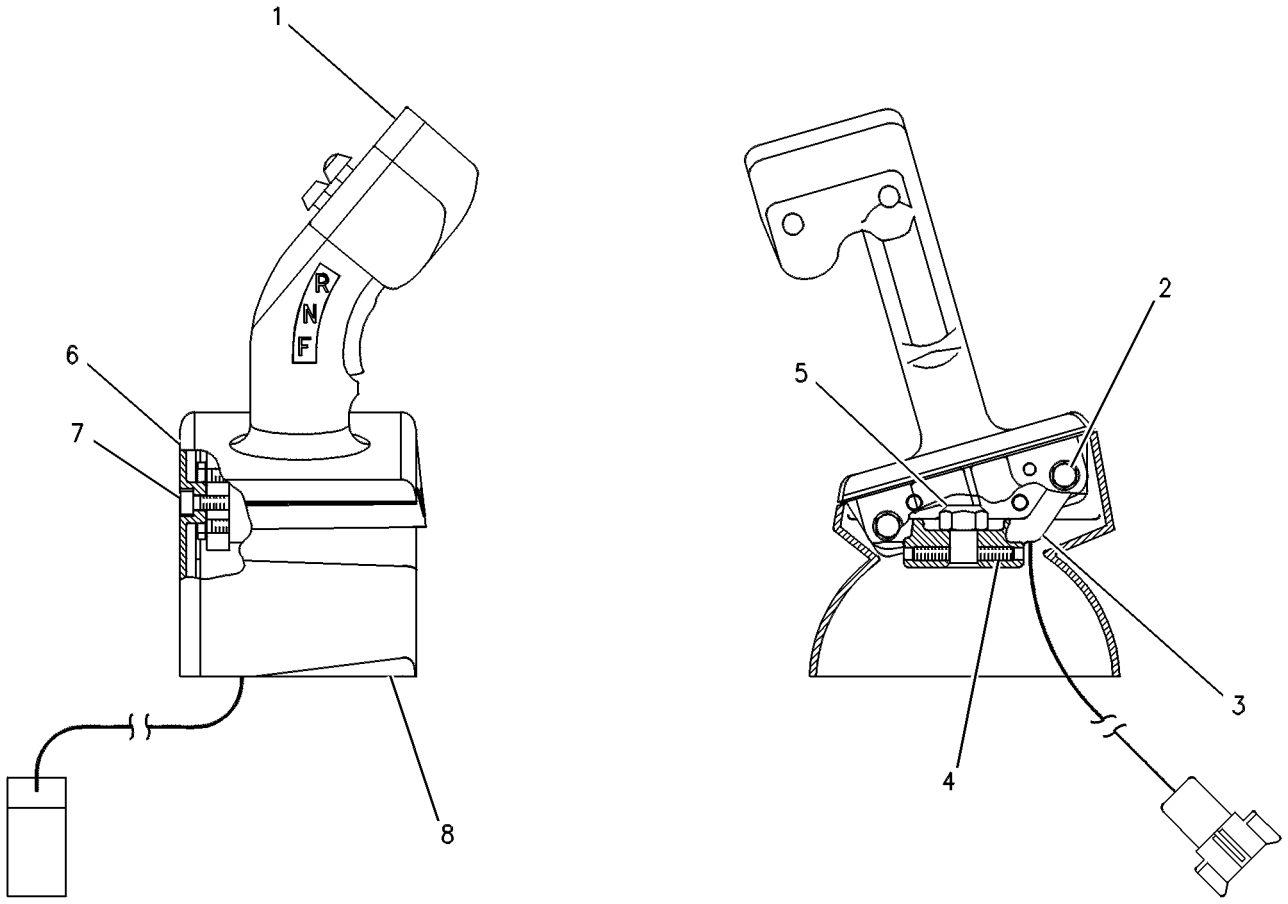

GRAPHIC #1 g00120734

136-1155 CONTROL GP-STIC

S/N: 7HR1-233

PART OF 4E-8413 CONTROL GP-STIC

SMCS-3033 **i01334381**

NOTE	REF NO	GRAPHIC REF	PART NUMBER	QTY	PART NAME 1 2 3 4 5 6 (PRODUCT LEVEL)	SEE PAGE
	1	1	**3E-3387**	1	RECEPTACLE AS	
	2	1	**3E-3389**	1	WEDGE-RECEPTACLE LOCK	
	3	1	**8T-8729**	8	PIN-CONNECTOR	
	4	1	**102-8806**	1	KIT-RECEPTACLE (8 PIN)	
					(INCLUDES RECEPTACLE AS & WEDGE)	
	5	1	**105-9073**	1	GRIP	
	6	1	**136-1153**	1	CAP AS	
		1	**102-8806**	1	KIT-RECEPTACLE (8 PIN)	
					(INCLUDES RECEPTACLE AS & WEDGE)	
	7	1	**105-8029**	1	ACTUATOR	
M	8	1	**7Y-3173**	2	SCREW-BUTTON HEAD (M4X0.70X12MM)	
	9	1	**8C-7508**	2	LOCKWASHER	
	10	1	**8C-9660**	2	WASHER (0.8MM THK)	
	11	1	**106-3923**	1	BUTTON-DOWNSHIFT	
	12	1	**106-3924**	1	BUTTON-UPSHIFT	

M-METRIC PART

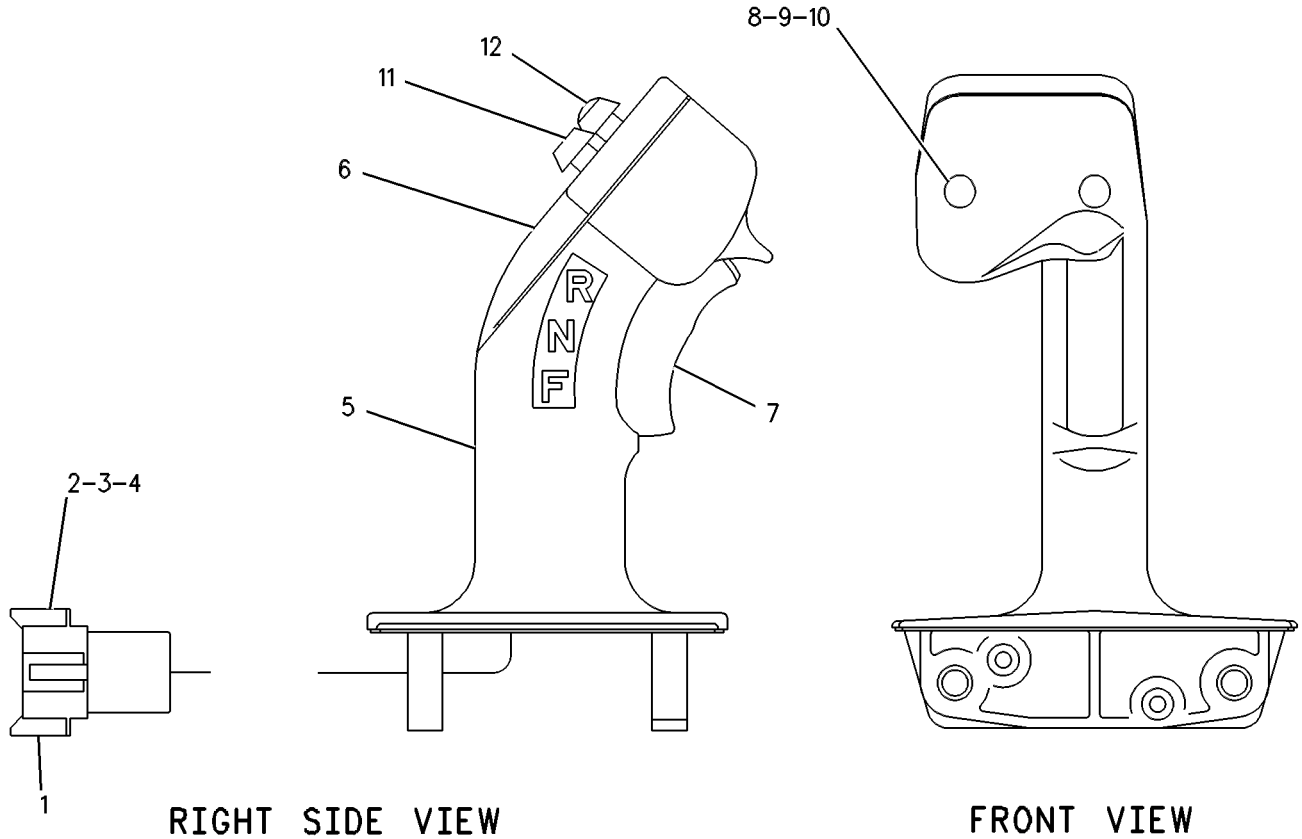

GRAPHIC #1 g00122152

159-8661 CONTROL GP-STIC

S/N: 7HR234-381

PART OF 4E-8413 CONTROL GP-STIC

FIELD REPLACEMENT ORDER 177-4113–PAGE 490

SMCS-3033 **i01334383**

NOTE	REF NO	GRAPHIC REF	PART NUMBER	QTY	PART NAME 1 2 3 4 5 6 (PRODUCT LEVEL)	SEE PAGE
	1	1	**160-3518**	1	KIT-RECEPTACLE (8 PIN)	
					(INCLUDES RECEPTACLE AS & WEDGE)	
L	2	1	**159-8662**	1	CAP AS	
	2A	1	**159-8663**	1	SWITCH AS-ROCKER (TRANSMISSION DIRECTION)	
		1	**5S-4246**	2	LOCKWASHER (NO.4-INT)	
		1	**6V-9497**	2	WASHER-HARD (0.5MM THK)	
		1	**8T-8729**	3	PIN-CONNECTOR	
		1	**9X-8917**	2	SCREW-MACHINE	
		1	**105-8029**	1	ACTUATOR	
	2B	1	**159-8665**	1	SWITCH AS (TRANSMISSION UPSHIFT)	
	2C	1	**159-8664**	1	SWITCH AS (TRANSMISSION DOWNSHIFT)	
					(EACH SWITCH AS INCLUDES)	
		1	**3K-0835**	1	NUT	
		1	**6F-0253**	1	LOCKWASHER (16.26MM ID)	
		1	**8T-8729**	2	PIN-CONNECTOR	
	3	1	**3E-3389**	1	WEDGE-RECEPTACLE LOCK	
	4	1	**105-9073**	1	GRIP	
M	5	1	**7Y-3173**	2	SCREW-BUTTON HEAD (M4X0.70X12MM)	
	6	1	**8C-7508**	2	LOCKWASHER	
	7	1	**8C-9660**	2	WASHER (0.8MM THK)	
					AVAILABLE REPAIR KIT(S):	
L			**160-3518**	1	KIT-RECEPTACLE (8 PIN)	
					(INCLUDES RECEPTACLE AS & WEDGE)	

L-KIT MARKED L IS AVAILABLE FOR PART(S) MARKED L
M-METRIC PART

159-8661 CONTROL GP-STIC *(contd.)* **i01334383**

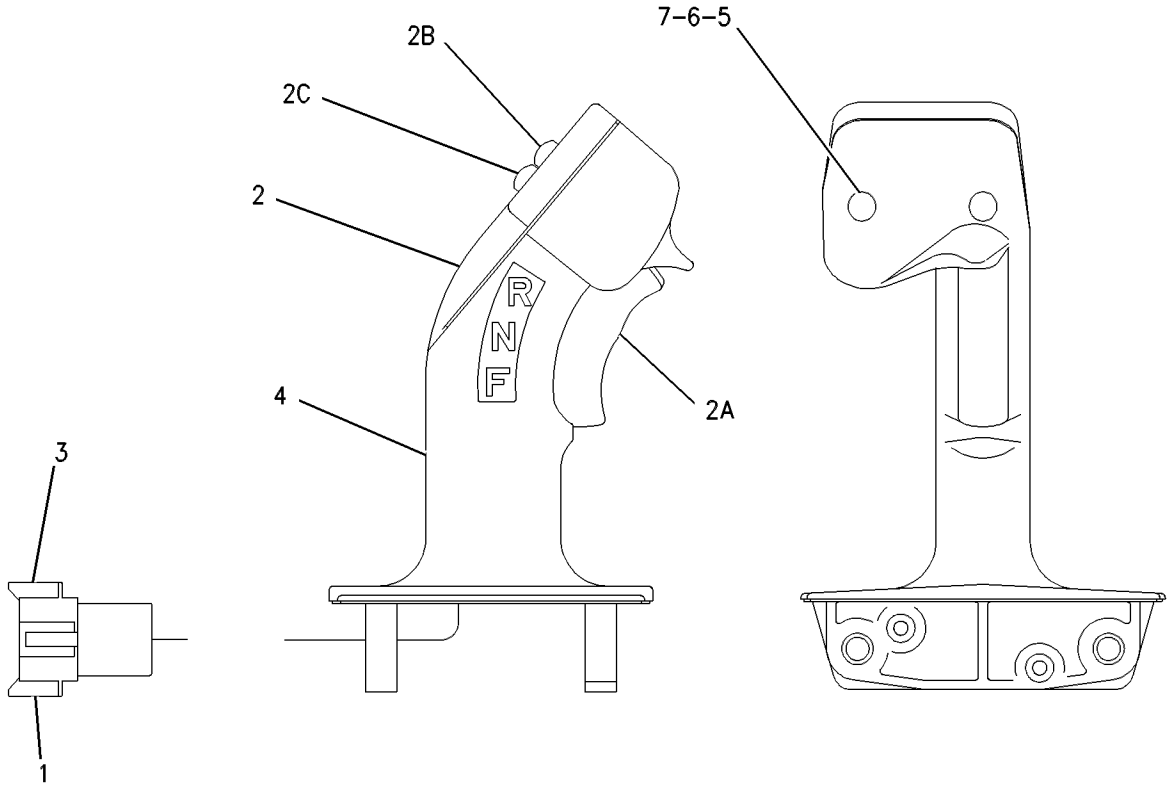

GRAPHIC #1 g00624842

177-4113 CONTROL GP-STIC

S/N: 7HR382-UP

PART OF 4E-8413 CONTROL GP-STIC

FIELD REPLACEMENT FOR 159-8661—PAGE 488

SMCS-3033 **i01512086**

NOTE	REF NO	GRAPHIC REF	PART NUMBER	QTY	PART NAME 1 2 3 4 5 6 (PRODUCT LEVEL)	SEE PAGE
	1	1	**160-3518**	1	KIT-RECEPTACLE (8 PIN)	
	2	1	**177-4112**	1	CAP AS	
	2A	1	**177-2374**	1	SWITCH AS-ROCKER (TRANSMISSION DIRECTION)	
		1	**5S-4246**	2	LOCKWASHER	
		1	**8T-8729**	3	PIN-CONNECTOR	
		1	**9X-8917**	2	SCREW-MACHINE	
		1	**096-5962**	2	WASHER-HARD (3.4X7X0.8MM THK)	
		1	**105-8029**	1	ACTUATOR	
	2B	1	**159-8665**	1	SWITCH AS (TRANSMISSION UPSHIFT)	
	2C	1	**159-8664**	1	SWITCH AS (TRANSMISSION DOWNSHIFT)	
					(EACH SWITCH AS INCLUDES)	
		1	**3K-0835**	1	NUT (5/8-24 THD)	
		1	**6F-0253**	1	LOCKWASHER	
		1	**8T-8729**	2	PIN-CONNECTOR	
	3	1	**3E-3389**	1	WEDGE-RECEPTACLE LOCK	
	4	1	**105-9073**	1	GRIP	
M	5	1	**7Y-3173**	2	SCREW-BUTTON HEAD (M4X0.7X12MM)	
	6	1	**8C-7508**	2	LOCKWASHER	
	7	1	**8C-9660**	2	WASHER (4.6X7.9X0.8MM THK)	

M-METRIC PART

177-4113 CONTROL GP-STIC *(contd.)* **i01512086**

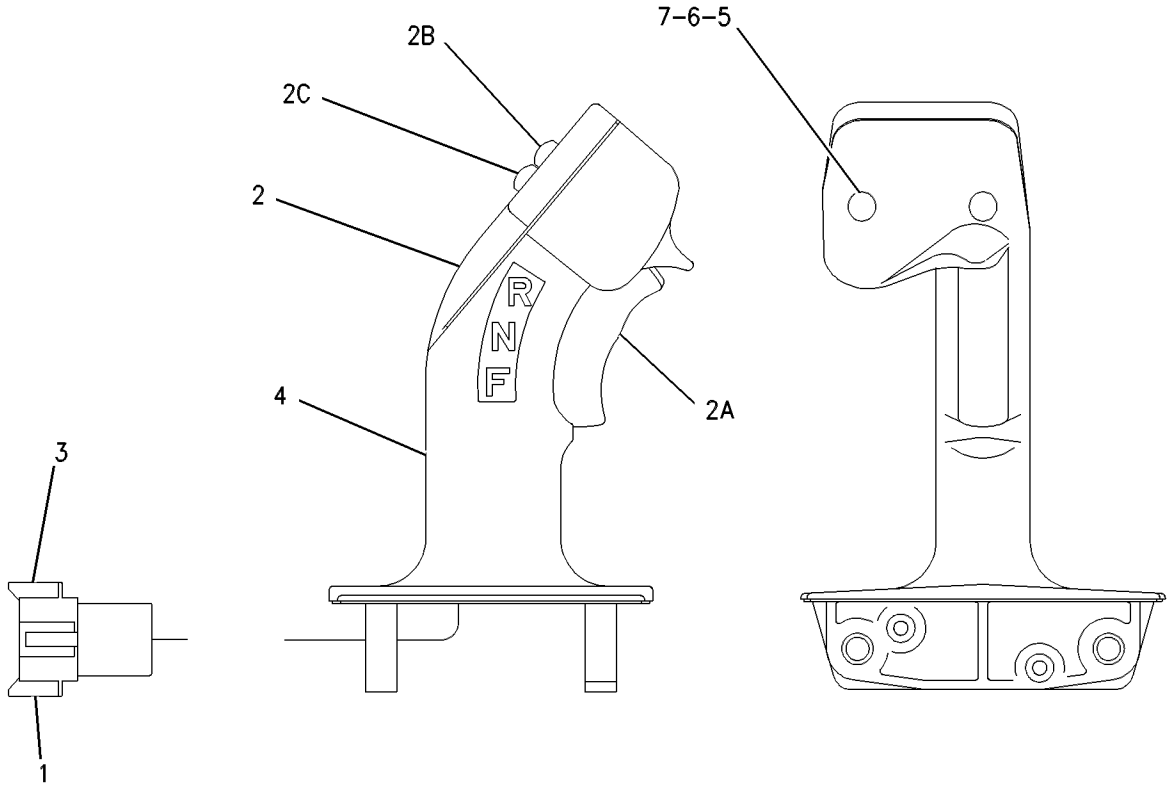

GRAPHIC #1 g00624842

117-5858 CONTROL GP-TRANSMISSION HYD

S/N: 9BX1-UP

PART OF 6Y-6965 TRANSMISSION AR

SMCS-3073, 3167 **i01197488**

NOTE	REF NO	GRAPHIC REF	PART NUMBER	QTY	PART NAME 1 2 3 4 5 6 (PRODUCT LEVEL)	SEE PAGE
Y	1	1	*117-5859*	1	VALVE GP-TRANSMISSION CONTROL	666
	2	1	**6B-1557**	4	BOLT (3/8-16X7.5IN)	
	3	1	**5M-2894**	4	WASHER (2.5MM THK)	
	4	1	**6P-4977**	2	SLEEVE	
	5	1	**8M-4432**	4	SEAL-O-RING (26.57MM ID)	
	6	1	**141-8466**	1	RETAINER	
	7	1	**8L-5922**	1	BOLT-LOCKING (5/16-18X.563IN)	
	8	1	**104-6729**	1	RETAINER	
	9	1	**104-6730**	1	GASKET	
	10	1	**1A-2029**	2	BOLT (3/8-16X1.125IN)	

Y-SEPARATE ILLUSTRATION

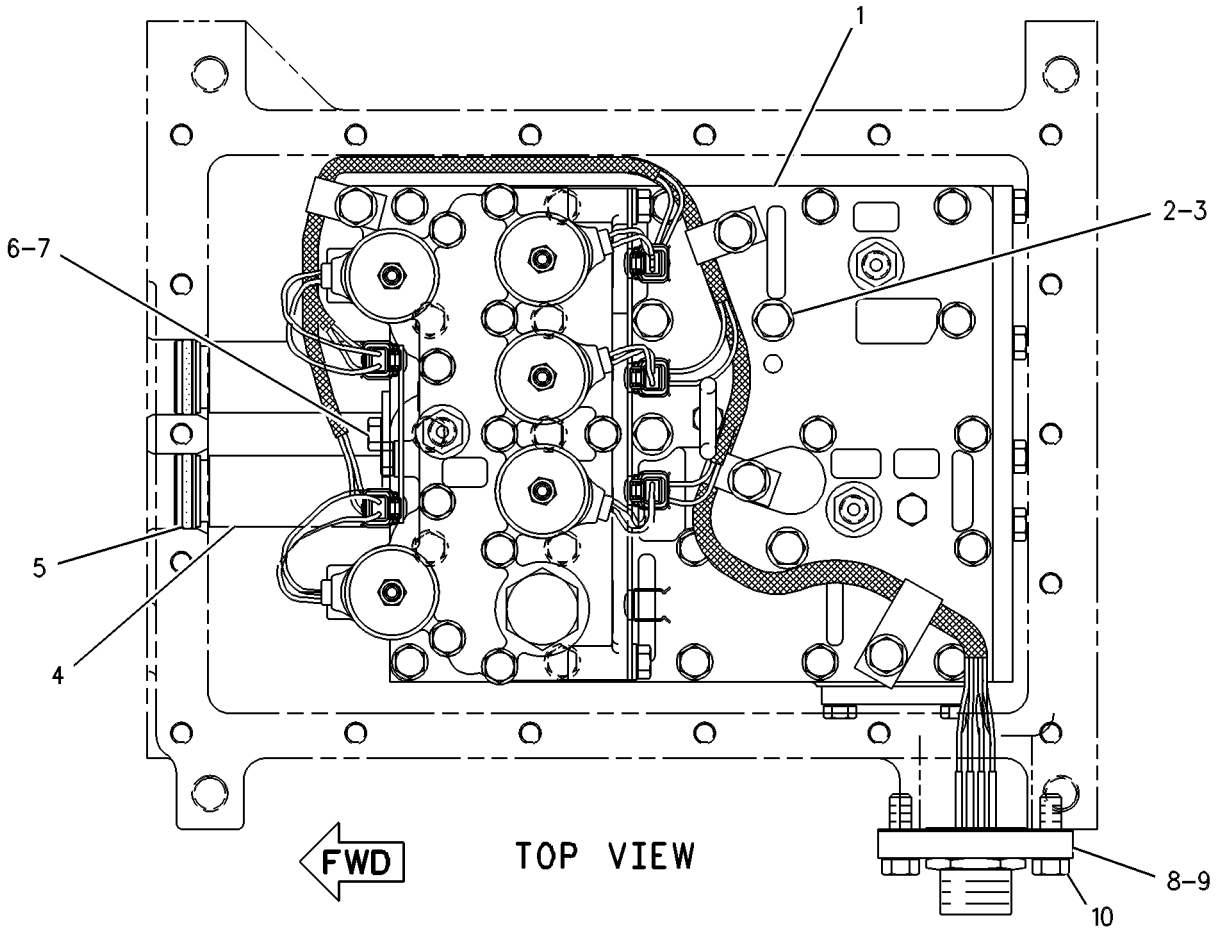

GRAPHIC #1 g00256095

MEMORANDA

POWER TRAIN

112-4206 COOLER GP-AXLE OIL

S/N: 7HR1-168

PART OF 109-6820 HYDRAULIC AR

SMCS-1365 **i01197491**

NOTE	REF NO	GRAPHIC REF	PART NUMBER	QTY	PART NAME 1 2 3 4 5 6 (PRODUCT LEVEL)	SEE PAGE
	1	1	**1P-3703**	4	SEAL-RECTANGULAR (31.86MM ID)	
	2	1	**3D-2824**	4	SEAL-O-RING (23.47MM ID)	
	3	2	**3K-0360**	4	SEAL-O-RING (16.36MM ID)	
	4	1,2	**4J-0520**	13	SEAL-O-RING (32.92MM ID)	
	5	2	**5E-8771**	1	SEAL-O-RING (120.32MM ID)	
	6	1,2	**5K-9090**	15	SEAL-O-RING (23.52MM ID)	
	7	2	**6D-1004**	1	GASKET	
	8	2	**1V-7750**	2	SPACER	
	9	1,2	**6K-5535**	8	CLIP	
	10	1,2	**6K-5536**	8	BRACKET	
	11	2	**5P-8249**	2	WASHER-HARD (4.0MM THK)	
	12	2	**6V-8397**	12	SEAL-O-RING (9.27MM ID)	
	13	2	**6V-8398**	1	SEAL-O-RING (12.47MM ID)	
	14	1,2	**6V-8714**	3	CONNECTOR-SEAL	
	15	2	**6V-8716**	3	CONNECTOR-SEAL	
	16	2	**6V-8946**	1	REDUCER AS	
	17	1,2	**6V-9746**	9	SEAL-O-RING (18.94MM ID)	
	18	2	**7G-3833**	2	CLIP (TAB)	
	19	2	**7G-3834**	2	CLIP (SLOT)	
	20	1,2	**7M-8485**	8	SEAL-O-RING (29.74MM ID)	
	21	2	**8C-3174**	2	GROMMET	
	22	2	**101-2815**	2	TUBE	
	23	1	**115-4831**	1	CORE AS-OIL COOLER	
	24	2	**115-6329**	1	PLATE	
Y	25	2	**133-7621**	1	PUMP GP-GEAR (AXLE OIL COOLER)	590
	26	2	**7X-0390**	2	BOLT (7/8-9X5IN)	
	27	1	**115-9927**	1	PLATE	
	28	1	**116-4086**	1	TUBE AS	
	29	1	**116-4087**	1	TUBE AS	
	30	1	**116-4088**	1	TUBE AS	
	31	1	**116-4090**	1	TUBE AS	
I	32	2	**116-6761**	2	HOSE AS	
I	33	1	**117-6717**	1	HOSE AS	
I	34	2	**117-6719**	1	HOSE AS	
	35	1	**117-6723**	1	TUBE AS	
	36	1	**117-6724**	1	TUBE AS	
	37	2	**117-7118**	1	SHAFT	
	38	2	**117-7119**	1	ADAPTER	
I	39	1	**117-9097**	1	HOSE AS	
I	40	1	**117-9370**	1	HOSE AS	
I	41	2	**117-9371**	1	HOSE AS	
I	42	2	**117-9372**	1	HOSE AS	
I	43	1	**117-9547**	1	HOSE AS	
	44	2	**117-9548**	1	TUBE AS	
	45	2	**117-9549**	1	TUBE AS	
	46	2	**118-0630**	1	TUBE AS	
	47	2	**118-0631**	1	TUBE AS	
I	48	2	**118-0678**	1	HOSE AS	
I	49	2	**118-0679**	1	HOSE AS	
	50	2	**118-0683**	1	BRACKET AS	
M		2	**8T-3490**	3	NUT-WELD (M10X1.5 THD)	
M		2	**8T-3597**	2	NUT-WELD (M12X1.75 THD)	
I	51	2	**118-5198**	1	HOSE AS	
	52	2	**125-3538**	1	TUBE AS	
	53	2	**125-3540**	1	TUBE AS	
	54	2	**125-3541**	1	TUBE AS	

112-4206 COOLER GP-AXLE OIL *(contd.)* i01197491

NOTE	REF NO	GRAPHIC REF	PART NUMBER	QTY	PART NAME 1 2 3 4 5 6 (PRODUCT LEVEL)	SEE PAGE
	55	2	**125-3542**	1	TUBE AS	
	56	1	**125-5838**	1	TUBE AS	
	57	2	**131-6687**	1	TUBE AS	
Y	58	2	*134-5247*	1	BLOCK GP-HYDRAULIC (AXLE OIL COOLER)	479
Y	59	2	*134-5248*	1	BLOCK GP-HYDRAULIC (AXLE OIL COOLER)	480
	60	1	**053-0558**	1	CLAMP	
	61	1,2	**1P-4577**	22	FLANGE-HALF	
	62	2	**1S-0724**	1	CLIP (25.4MM IN)	
	63	2	**1S-1476**	2	CLIP (25.4MM ID)	
	64	2	**4L-6459**	2	BOLT (3/8-16X2.5IN)	
	65	2	**5P-7464**	2	CLIP (SLOT)	
	66	2	**5P-7465**	2	CLIP (TAB)	
	67	2	**5P-9297**	3	CLIP (9.52MM ID)	
	68	2	**6V-7359**	2	GROMMET	
	69	1,2	**6V-8635**	4	CONNECTOR-SEAL	
	70	2	**6V-8723**	4	ELBOW-90 DEGREE (3/4-16 THD)	
	71	1	**6V-9004**	1	ELBOW-45 DEGREE (1 1/16-12 THD)	
	72	1	**6V-9007**	1	ELBOW-90 DEGREE (1 1/16-12 THD)	
	73	2	**6V-9853**	3	ELBOW-SWIVEL (1 3/16-12 THD)	
	74	1,2	**6V-9854**	3	ELBOW-SWIVEL (1 7/16-12 THD)	
	75	1	**7D-7233**	2	CLIP	
	76	2	**7H-7055**	3	CLIP (9.52MM ID)	
M	77	2	**7X-2550**	2	BOLT (M12X1.75X110MM)	
	78	2	**8C-8988**	4	ELBOW-45 DEGREE SWIVEL	
	79	1,2	**8T-4121**	68	WASHER (2.5MM THK)	
M	80	2	**8T-4137**	4	BOLT (M10X1.50X20MM)	
M	81	1,2	**8T-4139**	15	BOLT (M12X1.75X30MM)	
M	82	2	**8T-4179**	1	BOLT (M12X1.75X20MM)	
M	83	2	**8T-4183**	2	BOLT (M12X1.75X40 MM)	
M	84	1	**8T-4185**	8	BOLT (M10X1.5X50MM)	
M	85	2	**8T-4648**	2	BOLT (M12X1.75X70MM)	
M	86	1	**8T-4194**	3	BOLT (M12X1.75X50MM)	
M	87	2	**8T-4195**	2	BOLT (M10X1.50X30MM)	
M	88	1,2	**8T-4196**	44	BOLT (M10X1.50X35MM)	
	89	1,2	**8T-4223**	27	WASHER-HARD (3MM THK)	
M	90	2	**8T-4910**	2	BOLT (M12X1.75X60MM)	
M	91	1	**8T-6466**	8	BOLT (M10X1.50X60MM)	
	92	2	**8T-4149**	1	ELBOW-45 DEGREE (1 5/16-12 THD)	

I-SEE HOSE FABRICATION GUIDE
M-METRIC PART
Y-SEPARATE ILLUSTRATION

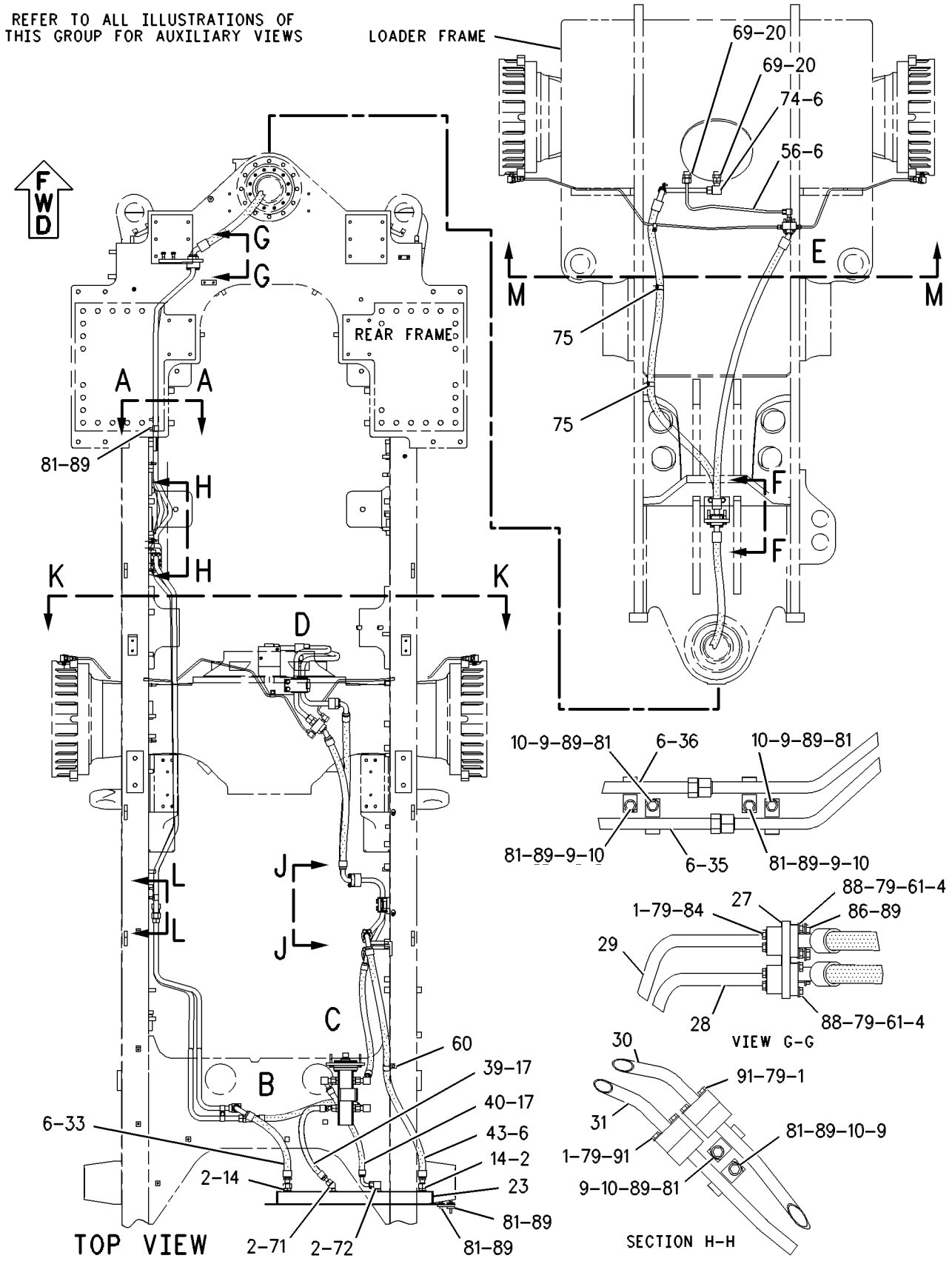

GRAPHIC #1 g00291635

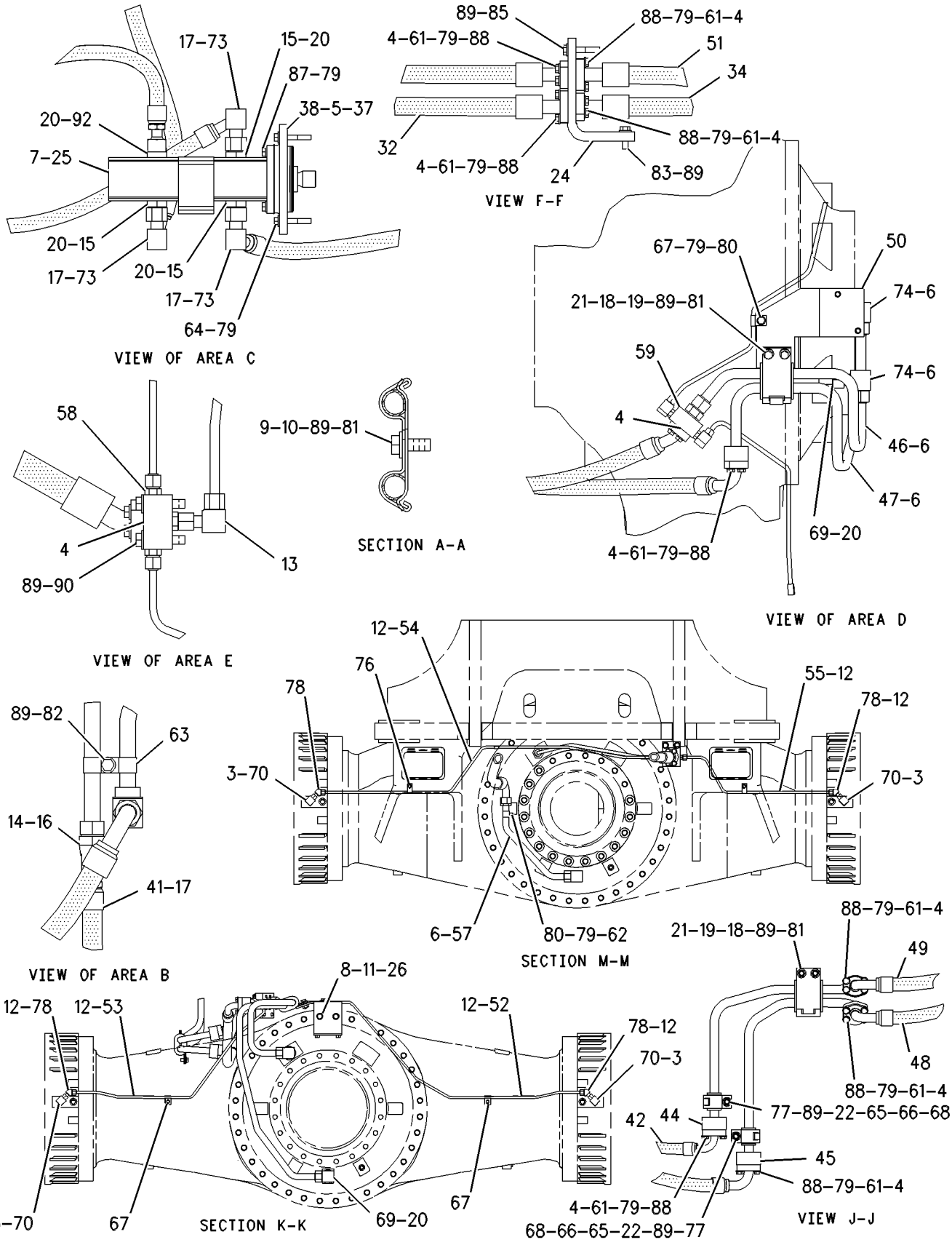

GRAPHIC #2

g00291636

POWER TRAIN

112-4206 COOLER GP-AXLE OIL

S/N: 7HR169-310

PART OF 109-6820 HYDRAULIC AR

SMCS-1365 **i01197496**

NOTE	REF NO	GRAPHIC REF	PART NUMBER	QTY	PART NAME 1 2 3 4 5 6 (PRODUCT LEVEL)	SEE PAGE
	1	1	**1P-3703**	4	SEAL-RECTANGULAR (31.86MM ID)	
	2	1	**3D-2824**	4	SEAL-O-RING (23.47MM ID)	
	3	2	**3K-0360**	4	SEAL-O-RING (16.36MM ID)	
	4	1,2	**4J-0520**	13	SEAL-O-RING (32.92MM ID)	
	5	2	**5E-8771**	1	SEAL-O-RING (120.32MM ID)	
C	6	1,2	**5K-9090**	19	SEAL-O-RING (23.52MM ID)	
	7	2	**6D-1004**	1	GASKET	
	8	2	**1V-7750**	2	SPACER	
	9	1,2	**6K-5535**	8	CLIP	
	10	1,2	**6K-5536**	8	BRACKET	
	11	2	**5P-8249**	2	WASHER-HARD (4.0MM THK)	
C	13	2	**6V-8398**	13	SEAL-O-RING (12.47MM ID)	
	14	1	**6V-8714**	2	CONNECTOR-SEAL	
C	15	2	**6V-8716**	1	CONNECTOR-SEAL	
C	17	1,2	**6V-9746**	5	SEAL-O-RING (18.94MM ID)	
	18	2	**7G-3833**	2	CLIP (TAB)	
	19	2	**7G-3834**	2	CLIP (SLOT)	
	20	1,2	**7M-8485**	8	SEAL-O-RING (29.74MM ID)	
	21	2	**8C-3174**	2	GROMMET	
	22	2	**101-2815**	2	TUBE	
	23	1	**115-4831**	1	CORE AS-OIL COOLER	
	24	2	**115-6329**	1	PLATE	
Y	25	2	**133-7621**	1	PUMP GP-GEAR (AXLE OIL COOLER)	590
	26	2	**7X-0390**	2	BOLT (7/8-9X5IN)	
	27	1	**115-9927**	1	PLATE	
	28	1	**116-4086**	1	TUBE AS	
	29	1	**116-4087**	1	TUBE AS	
	30	1	**116-4088**	1	TUBE AS	
	31	1	**116-4090**	1	TUBE AS	
I	32	2	**116-6761**	2	HOSE AS	
I	33	1	**117-6717**	1	HOSE AS	
I	34	2	**117-6719**	1	HOSE AS	
	35	1	**117-6723**	1	TUBE AS	
	36	1	**117-6724**	1	TUBE AS	
	37	2	**117-7118**	1	SHAFT	
	38	2	**117-7119**	1	ADAPTER	
I	39	1	**117-9097**	1	HOSE AS	
I	40	1	**117-9370**	1	HOSE AS	
CI	41	2	**154-4992**	1	HOSE AS	
CI	42	2	**154-4993**	1	HOSE AS	
I	43	1	**117-9547**	1	HOSE AS	
	44	2	**117-9548**	1	TUBE AS	
	45	2	**117-9549**	1	TUBE AS	
	46	2	**118-0630**	1	TUBE AS	
	47	2	**118-0631**	1	TUBE AS	
I	48	2	**118-0678**	1	HOSE AS	
I	49	2	**118-0679**	1	HOSE AS	
	50	2	**118-0683**	1	BRACKET AS	
M		2	**8T-3490**	3	NUT-WELD (M10X1.5 THD)	
M		2	**8T-3597**	2	NUT-WELD (M12X1.75 THD)	
I	51	2	**118-5198**	1	HOSE AS	
C	52	2	**152-8280**	1	TUBE AS	
C	53	2	**152-8279**	1	TUBE AS	
C	54	2	**152-8278**	1	TUBE AS	
C	55	2	**152-8277**	1	TUBE AS	
	56	1	**125-5838**	1	TUBE AS	

112-4206 COOLER GP-AXLE OIL *(contd.)* i01197496

NOTE	REF NO	GRAPHIC REF	PART NUMBER	QTY	PART NAME 1 2 3 4 5 6 (PRODUCT LEVEL)	SEE PAGE
	57	2	**131-6687**	1	TUBE AS	
Y	58	2	*134-5247*	1	BLOCK GP-HYDRAULIC (AXLE OIL COOLER)	479
Y	59	2	*134-5248*	1	BLOCK GP-HYDRAULIC (AXLE OIL COOLER)	480
	60	1	**053-0558**	1	CLAMP	
	61	1,2	**1P-4577**	22	FLANGE-HALF	
	62	2	**1S-0724**	1	CLIP (25.4MM IN)	
	63	2	**1S-1476**	2	CLIP (25.4MM ID)	
	64	2	**4L-6459**	2	BOLT (3/8-16X2.5IN)	
	65	2	**5P-7464**	2	CLIP (SLOT)	
	66	2	**5P-7465**	2	CLIP (TAB)	
C	67	2	**5P-9299**	3	CLIP (12.7MM ID)	
	68	2	**6V-7359**	2	GROMMET	
C	69	1,2	**6V-8635**	6	CONNECTOR-SEAL	
	70	2	**6V-8625**	4	ELBOW-90 DEGREE (3/4-16 THD)	
	71	1	**6V-9004**	1	ELBOW-45 DEGREE (1 1/16-12 THD)	
	72	1	**6V-9007**	1	ELBOW-90 DEGREE (1 1/16-12 THD)	
C	73	2	**6V-9853**	1	ELBOW-SWIVEL (1 3/16-12 THD)	
C	74	1,2	**6V-9854**	5	ELBOW-SWIVEL (1 7/16-12 THD)	
	75	1	**7D-7233**	2	CLIP	
C	76	2	**1B-3057**	3	CLIP (12.7MM ID)	
M	77	2	**7X-2550**	2	BOLT (M12X1.75X110MM)	
C	78	2	**8C-8989**	4	ELBOW (45 DEG)	
	79	1,2	**8T-4121**	68	WASHER (2.5MM THK)	
M	80	2	**8T-4137**	4	BOLT (M10X1.50X20MM)	
M	81	1,2	**8T-4139**	15	BOLT (M12X1.75X30MM)	
M	82	2	**8T-4179**	1	BOLT (M12X1.75X20MM)	
M	83	2	**8T-4183**	2	BOLT (M12X1.75X40 MM)	
M	84	1	**8T-4185**	8	BOLT (M10X1.5X50MM)	
M	85	2	**8T-4648**	2	BOLT (M12X1.75X70MM)	
M	86	1	**8T-4194**	3	BOLT (M12X1.75X50MM)	
M	87	2	**8T-4195**	2	BOLT (M10X1.50X30MM)	
M	88	1,2	**8T-4196**	44	BOLT (M10X1.50X35MM)	
	89	1,2	**8T-4223**	27	WASHER-HARD (3MM THK)	
M	90	2	**8T-4910**	2	BOLT (M12X1.75X60MM)	
M	91	1	**8T-6466**	8	BOLT (M10X1.50X60MM)	
	92	2	**8T-4149**	1	ELBOW-45 DEGREE (1 5/16-12 THD)	

C-CHANGE FROM PREVIOUS TYPE
I-SEE HOSE FABRICATION GUIDE
M-METRIC PART
Y-SEPARATE ILLUSTRATION

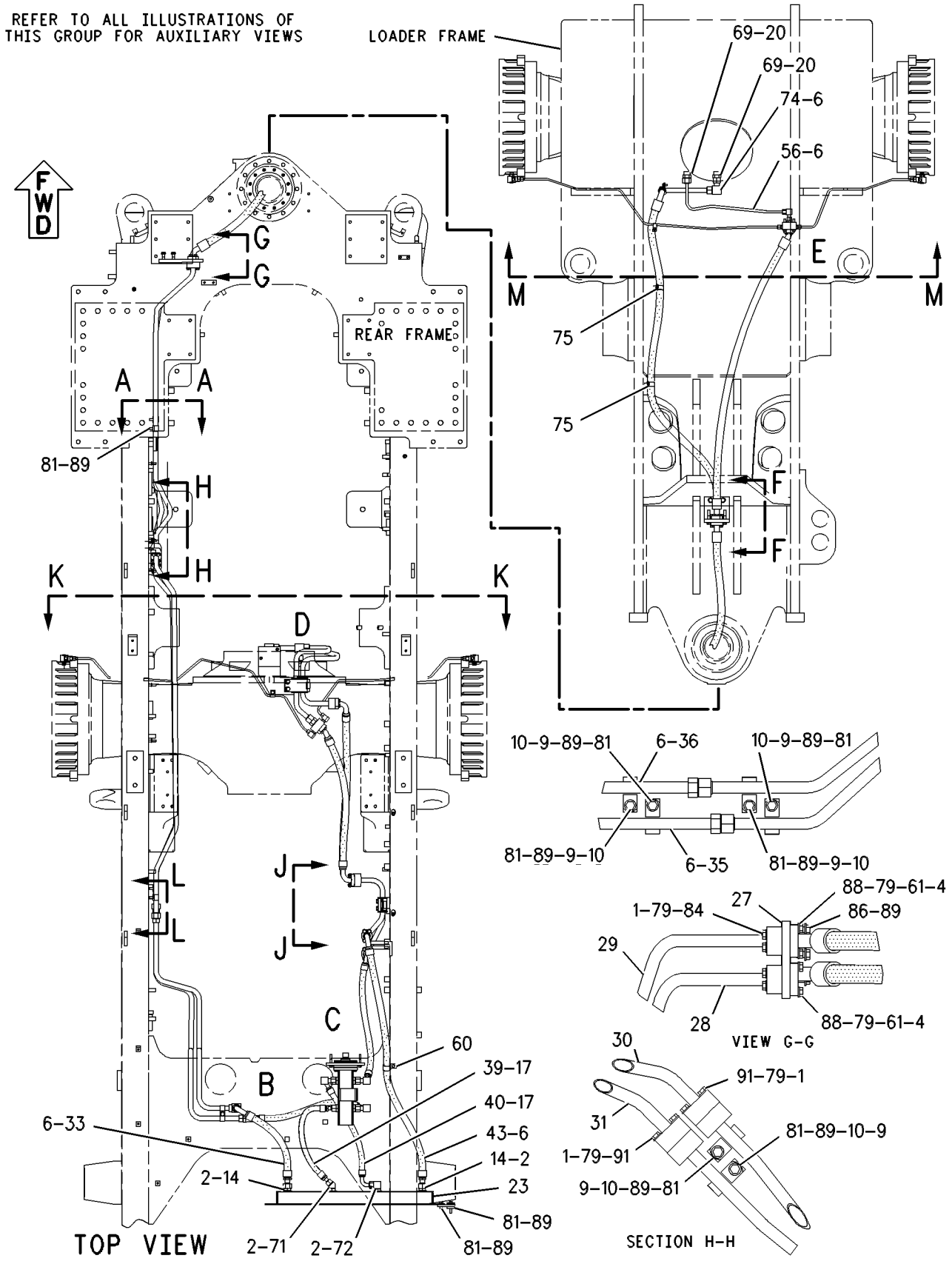

GRAPHIC #1 g00291635

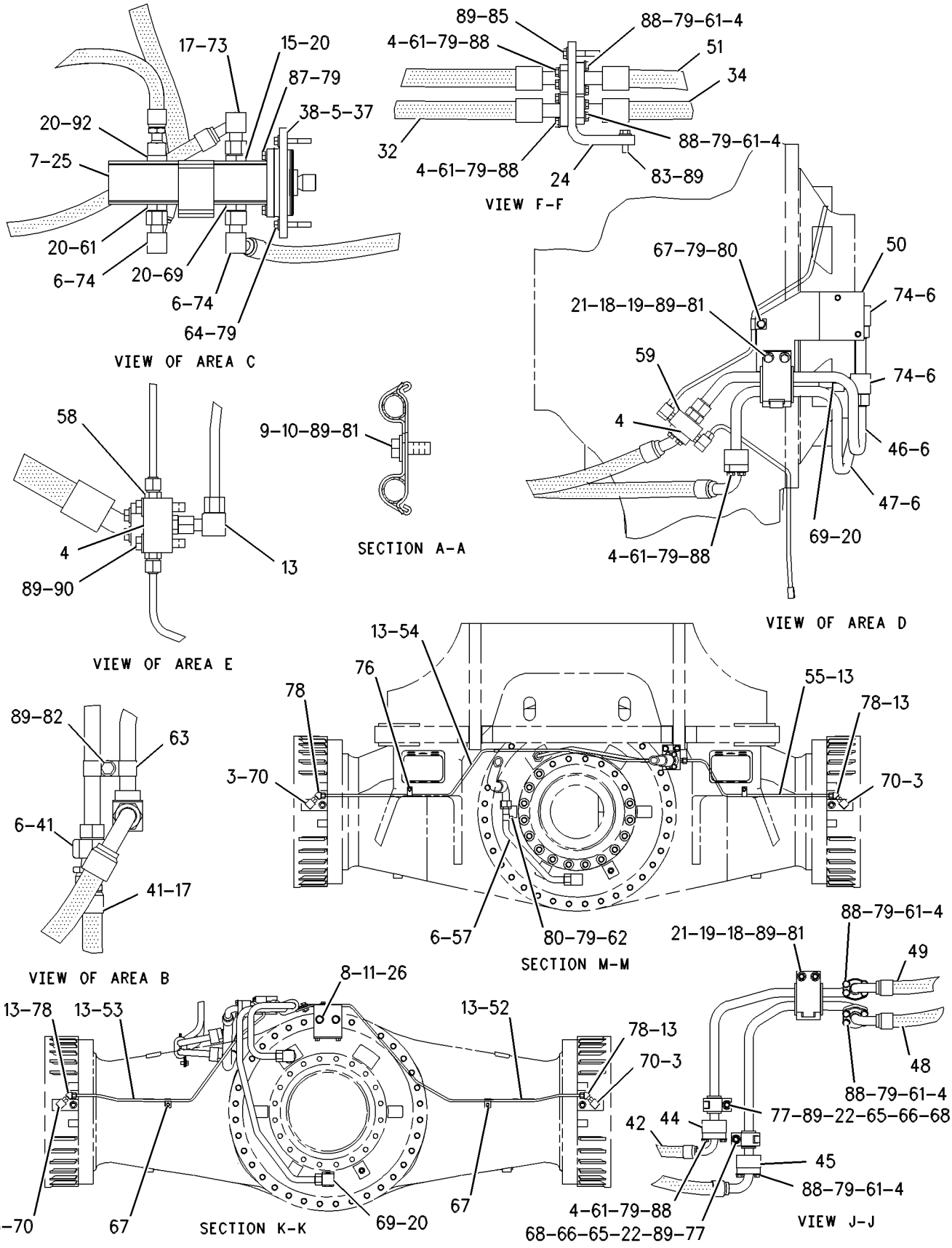

GRAPHIC #2

g00534500

POWER TRAIN

112-4206 COOLER GP-AXLE OIL

S/N: 7HR311-397

PART OF 109-6820 HYDRAULIC AR

SMCS-1365 **i01380731**

NOTE	REF NO	GRAPHIC REF	PART NUMBER	QTY	PART NAME 1 2 3 4 5 6 (PRODUCT LEVEL)	SEE PAGE
	1	1	**1P-3703**	4	SEAL-RECTANGULAR (31.86MM ID)	
	2	1	*148-8317*	2	CONNECTOR AS	
					(EACH INCLUDES)	
		1	**6V-8714**	1	CONNECTOR	
		1	**5K-9090**	1	SEAL-O-RING (23.52MM ID)	
		1	**3D-2824**	1	SEAL-O-RING (23.47MM ID)	
	3	2	*148-8357*	1	ELBOW AS	
		2	**6V-9008**	1	ELBOW-90 DEGREE	
		2	**5K-9090**	1	SEAL-O-RING (23.52MM ID)	
		2	**7M-8485**	1	SEAL-O-RING (29.74MM ID)	
	4	1,2	**4J-0520**	13	SEAL-O-RING (32.92MM ID)	
	5	2	**5E-8771**	1	SEAL-O-RING (120.32MM ID)	
	6	1,2	**5K-9090**	6	SEAL-O-RING (23.52MM ID)	
	7	2	**6D-1004**	1	GASKET	
	8	2	**1V-7750**	2	SPACER	
	9	1,2	**6K-5535**	8	CLIP	
	10	1,2	**6K-5536**	8	BRACKET	
	11	2	**5P-8249**	2	WASHER-HARD (24X41.5X4MM THK)	
	13	1,2	**6V-8398**	5	SEAL-O-RING (12.47MM ID)	
	14	2	*148-8364*	4	ELBOW AS	
					(EACH INCLUDES)	
		2	**6V-8625**	1	ELBOW-90 DEGREE	
		2	**3K-0360**	1	SEAL-O-RING (16.36MM ID)	
		2	**6V-8398**	1	SEAL-O-RING (12.47MM ID)	
CI	15	2	**173-9741**	1	HOSE AS	
C	16	3	**173-9725**	1	BRACKET	
C	17	3	**173-9724**	1	BRACKET	
	18	2	**7G-3833**	2	CLIP (TAB)	
	19	2	**7G-3834**	2	CLIP (SLOT)	
	20	1	**7M-8485**	1	SEAL-O-RING (29.74MM ID)	
	21	2	**8C-3174**	2	GROMMET	
	22	2	**101-2815**	2	TUBE	
	23	1	**115-4831**	1	CORE AS-OIL COOLER	
	24	2	**115-6329**	1	PLATE	
Y	25	2	**133-7621**	1	PUMP GP-GEAR (AXLE OIL COOLER)	590
	26	2	**7X-0390**	2	BOLT (7/8-9X5IN)	
	27	1	**115-9927**	1	PLATE	
	28	1	**116-4086**	1	TUBE AS	
	29	1	**116-4087**	1	TUBE AS	
	30	1	**116-4088**	1	TUBE AS	
	31	1	**116-4090**	1	TUBE AS	
I	32	2	**116-6761**	2	HOSE AS	
I	33	1	**117-6717**	1	HOSE AS	
I	34	2	**117-6719**	1	HOSE AS	
	35	1	**117-6723**	1	TUBE AS	
	36	1	**117-6724**	1	TUBE AS	
	37	2	**117-7118**	1	SHAFT	
	38	2	**117-7119**	1	ADAPTER	
CI	39	1	**173-9721**	1	HOSE AS	
CI	40	1	**1Q-5317**	1	HOSE AS	
I	41	2	**154-4992**	1	HOSE AS	
C	42	2	**173-9720**	1	HOSE AS	
I	43	1	**117-9547**	1	HOSE AS	
C	44	2	**174-0114**	1	TUBE AS	
	45	2	**117-9549**	1	TUBE AS	
	46	2	**118-0630**	1	TUBE AS	

112-4206 COOLER GP-AXLE OIL *(contd.)* i01380731

NOTE	REF NO	GRAPHIC REF	PART NUMBER	QTY	PART NAME 1 2 3 4 5 6 (PRODUCT LEVEL)	SEE PAGE
	47	2	**118-0631**	1	TUBE AS	
I	48	2	**118-0678**	1	HOSE AS	
I	49	2	**118-0679**	1	HOSE AS	
	50	2	**118-0683**	1	BRACKET AS	
M		2	**8T-3490**	3	NUT-WELD (M10X1.5 THD)	
M		2	**8T-3597**	2	NUT-WELD (M12X1.75 THD)	
I	51	2	**118-5198**	1	HOSE AS	
	52	2	**152-8280**	1	TUBE AS	
	53	2	**152-8279**	1	TUBE AS	
	54	2	**176-7539**	1	TUBE AS	
	55	2	**176-7112**	1	TUBE AS	
	56	2	**176-7263**	1	TUBE AS	
	57	2	**131-6687**	1	TUBE AS	
Y	58	2	*134-5247*	1	BLOCK GP-HYDRAULIC (AXLE OIL COOLER)	479
Y	59	2	*134-5248*	1	BLOCK GP-HYDRAULIC (AXLE OIL COOLER)	480
	60	1	**053-0558**	1	CLAMP	
	61	1,2	**1P-4577**	22	FLANGE-HALF	
	62	2	**1S-0724**	1	CLIP (25.4MM IN)	
	63	2	**1S-1476**	2	CLIP (25.4MM ID)	
	64	2	**4L-6459**	2	BOLT (3/8-16X2.5 IN)	
	65	2	**5P-7464**	2	CLIP (SLOT)	
	66	2	**5P-7465**	2	CLIP (TAB)	
	67	2	**5P-9299**	3	CLIP	
	68	2	**6V-7359**	2	GROMMET	
	69	1	**9X-8408**	1	CONNECTOR	
	70	1,2	*148-8352*	4	ELBOW AS	
					(EACH INCLUDES)	
		1,2	**6V-9854**	1	ELBOW-SWIVEL	
		1,2	**5K-9090**	1	SEAL-O-RING (23.52MM ID)	
CY	71	3	**166-4647**	2	FILTER GP-OIL (AXLE OIL COOLER)	540
C	72	1	*153-6237*	2	ELBOW AS	
					(EACH INCLUDES)	
		1	**3D-2824**	1	SEAL-O-RING (23.47MM ID)	
		1	**6V-9004**	1	ELBOW-45 DEGREE	
		1	**6V-9746**	1	SEAL-O-RING (18.94MM ID)	
C	73	3	*148-8392*	2	ELBOW AS	
					(EACH INCLUDES)	
		3	**6V-9746**	1	SEAL-O-RING (18.94MM ID)	
		3	**6V-9853**	1	ELBOW-SWIVEL	
	74	1,2	*148-8335*	4	CONNECTOR AS	
					(EACH INCLUDES)	
		1,2	**6V-8635**	1	CONNECTOR	
		1,2	**5K-9090**	1	SEAL-O-RING (23.52MM ID)	
		1,2	**7M-8485**	1	SEAL-O-RING (29.74MM ID)	
	75	1	**7D-7233**	2	CLIP	
	76	2	**1B-3057**	3	CLIP (12.7MM ID)	
M	77	2	**7X-2550**	2	BOLT (M12X1.75X110MM)	
	78	2	**8C-8989**	4	ELBOW (45 DEGREE)	
C	79	1,2,3	**8T-4121**	80	WASHER-HARD (11X21X2.5MM THK)	
CM	80	1,2,3	**8T-4137**	12	BOLT (M10X1.5X20MM)	
CM	81	1,2,3	**8T-4139**	17	BOLT (M12X1.75X30MM)	
M	82	2	**8T-4179**	1	BOLT (M12X1.75X20MM)	
M	83	2	**8T-4183**	2	BOLT (M12X1.75X40 MM)	
M	84	1	**8T-4185**	8	BOLT (M10X1.5X50MM)	
M	85	2	**8T-4648**	2	BOLT (M12X1.75X70MM)	
M	86	1	**8T-4194**	3	BOLT (M12X1.75X50MM)	
CM	87	2,3	**8T-4195**	3	BOLT (M10X1.5X30MM)	
M	88	1,2	**8T-4196**	44	BOLT (M10X1.50X35MM)	
C	89	1,2,3	**8T-4223**	29	WASHER-HARD (13.5X25.5X3MM THK)	

112-4206 **COOLER GP-AXLE OIL** *(contd.)* **i01380731**

NOTE	REF NO	GRAPHIC REF	PART NUMBER	QTY	PART NAME 1 2 3 4 5 6 (PRODUCT LEVEL)	SEE PAGE
M	90	2	**8T-4910**	2	BOLT (M12X1.75X60MM)	
M	91	1	**8T-6466**	8	BOLT (M10X1.50X60MM)	
C	92	2	*150-4049*	1	ELBOW AS	
		2	**6V-9746**	1	SEAL-O-RING (18.94MM ID)	
		2	**7M-8485**	1	SEAL-O-RING (29.74MM ID)	
		2	**8T-4149**	1	ELBOW-45 DEGREE	
C	93	2,3	*148-8360*	4	ELBOW AS	
					(EACH INCLUDES)	
		2,3	**6V-9182**	1	ELBOW-90 DEGREE	
		2,3	**6V-9746**	1	SEAL-O-RING (18.94MM ID)	
		2,3	**7M-8485**	1	SEAL-O-RING (29.74MM ID)	
C	94	3	*148-8339*	1	CONNECTOR AS	
		3	**6V-8716**	1	CONNECTOR	
		3	**6V-9746**	1	SEAL-O-RING (18.94MM ID)	
		3	**7M-8485**	1	SEAL-O-RING (29.74MM ID)	
C	95	3	**5P-7854**	1	CLIP	
C	96	3	**6V-1889**	1	CLIP	
CM	97	3	**8T-4133**	1	NUT (M10X1.5 THD)	
CM	98	3	**8T-4136**	2	BOLT (M10X1.5X25MM)	
CI	99	3	**148-3348**	1	HOSE AS	

C-CHANGE FROM PREVIOUS TYPE
I-SEE HOSE FABRICATION GUIDE
M-METRIC PART
Y-SEPARATE ILLUSTRATION

112-4206 **COOLER GP-AXLE OIL** *(contd.)* **i01380731**

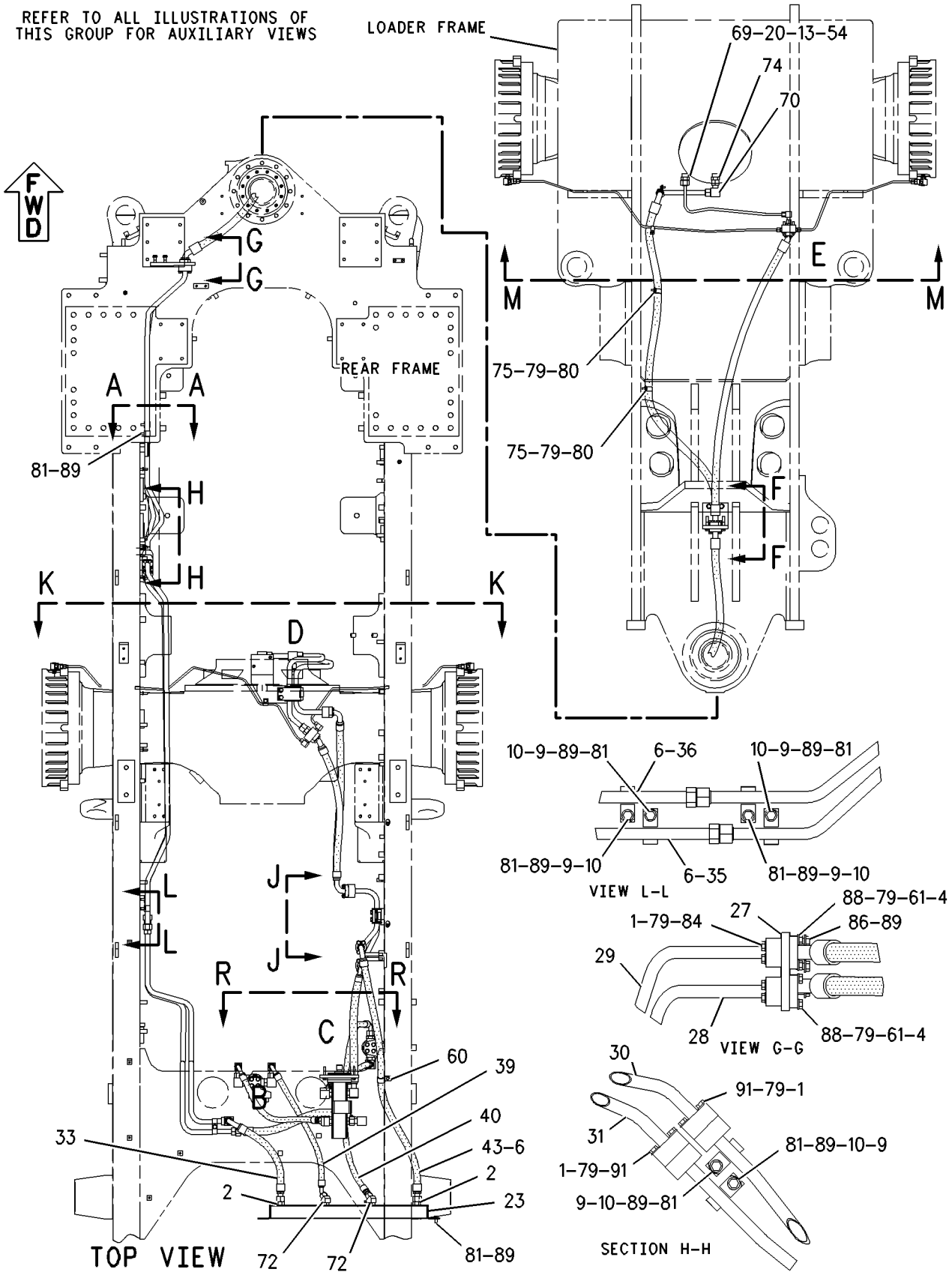

GRAPHIC #1 g00729139

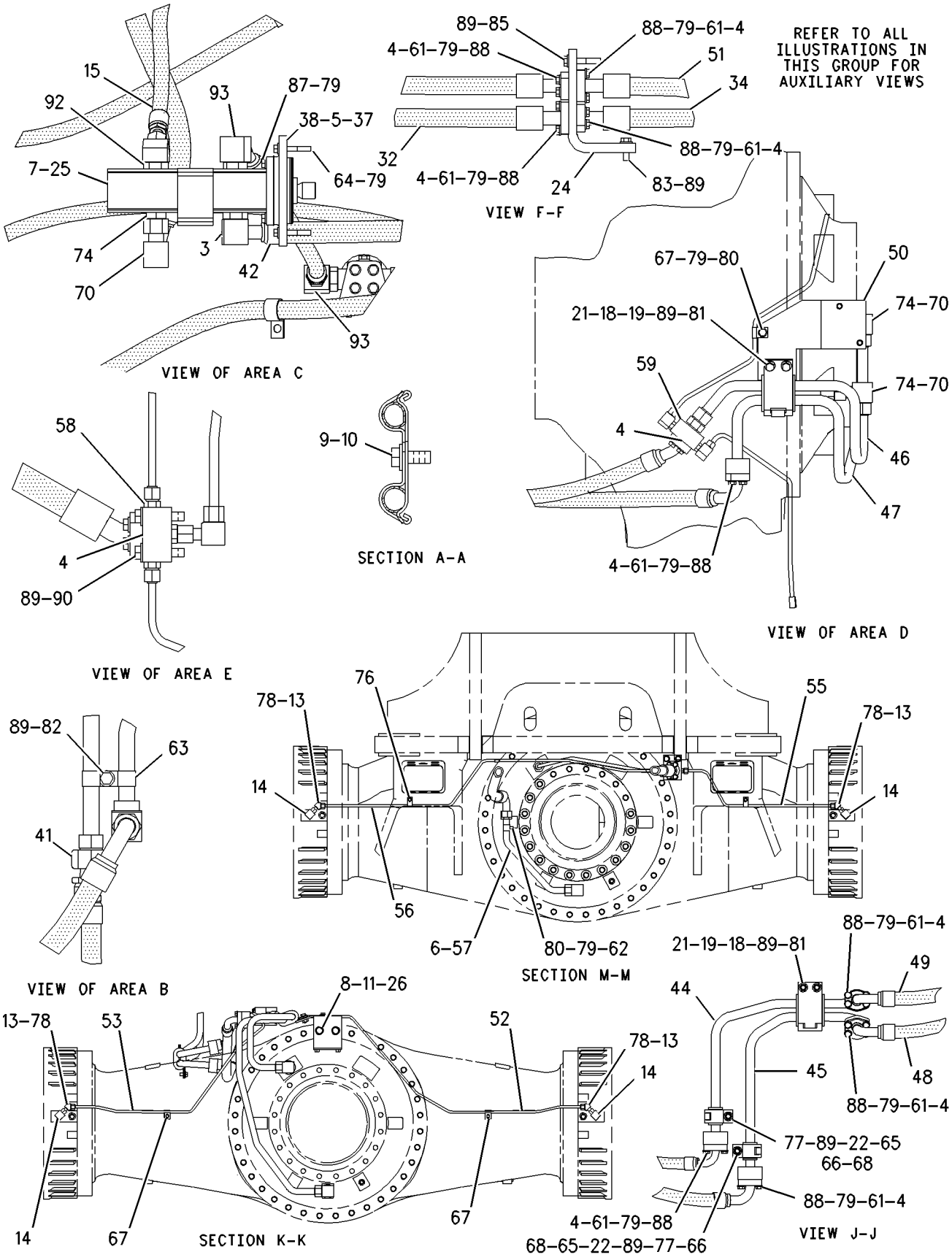

GRAPHIC #2 g00729141

112-4206 **COOLER GP-AXLE OIL** ***(contd.)*** **i01380731**

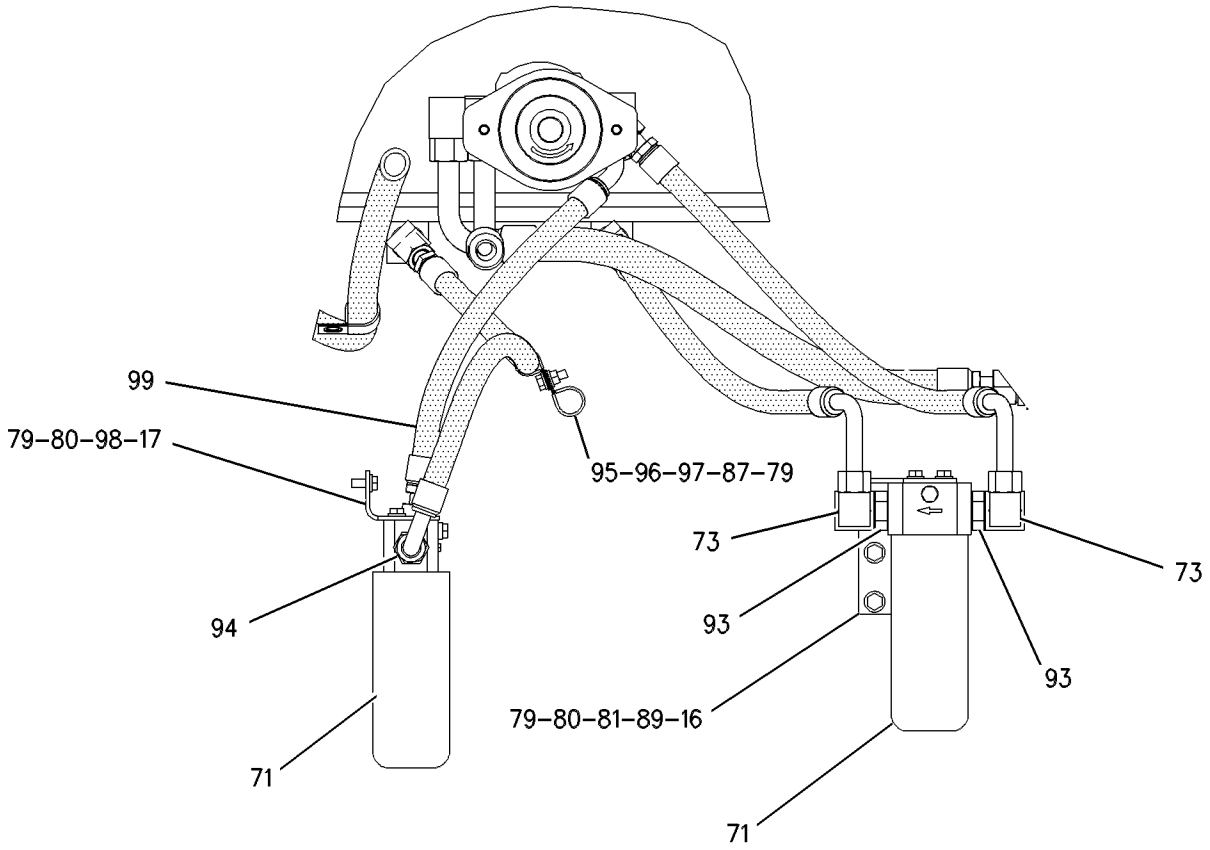

SECTION R-R

GRAPHIC #3 g00582532

112-4206 COOLER GP-AXLE OIL

S/N: 7HR398-UP
PART OF 109-6820 HYDRAULIC AR
TYPE 1

SMCS-1365 **i01395771**

NOTE	REF NO	GRAPHIC REF	PART NUMBER	QTY	PART NAME 1 2 3 4 5 6 (PRODUCT LEVEL)	SEE PAGE
	1	1	**1P-3703**	4	SEAL-RECTANGULAR (31.86MM ID)	
	2	1	*148-8317*	2	CONNECTOR AS	
					(EACH INCLUDES)	
		1	**6V-8714**	1	CONNECTOR	
		1	**5K-9090**	1	SEAL-O-RING (23.52MM ID)	
		1	**3D-2824**	1	SEAL-O-RING (23.47MM ID)	
	3	2	*148-8357*	1	ELBOW AS	
		2	**6V-9008**	1	ELBOW	
		2	**5K-9090**	1	SEAL-O-RING (23.52MM ID)	
		2	**7M-8485**	1	SEAL-O-RING (29.74MM ID)	
	4	1,2	**4J-0520**	13	SEAL-O-RING (32.92MM ID)	
	5	2	**5E-8771**	1	SEAL-O-RING (120.32MM ID)	
	6	1,2	**5K-9090**	6	SEAL-O-RING (23.52MM ID)	
	7	2	**6D-1004**	1	GASKET	
	8	2	**1V-7750**	2	SPACER	
	9	1,2	**6K-5535**	8	CLIP	
	10	1,2	**6K-5536**	8	BRACKET	
	11	2	**5P-8249**	2	WASHER-HARD (24X41.5X4MM THK)	
	13	1,2	**6V-8398**	5	SEAL-O-RING (12.47MM ID)	
	14	2	*148-8364*	4	ELBOW AS	
					(EACH INCLUDES)	
		2	**6V-8625**	1	ELBOW	
		2	**3K-0360**	1	SEAL-O-RING (16.36MM ID)	
		2	**6V-8398**	1	SEAL-O-RING (12.47MM ID)	
I	15	2	**173-9741**	1	HOSE AS	
	16	3	**173-9725**	1	BRACKET	
	17	3	**173-9724**	1	BRACKET	
	18	2	**7G-3833**	2	CLIP (TAB)	
	19	2	**7G-3834**	2	CLIP (SLOT)	
	20	1	**7M-8485**	1	SEAL-O-RING (29.74MM ID)	
	21	2	**8C-3174**	2	GROMMET	
	22	2	**101-2815**	2	TUBE	
	23	1	**115-4831**	1	CORE AS-OIL COOLER	
	24	2	**115-6329**	1	PLATE	
Y	25	2	**133-7621**	1	PUMP GP-GEAR (AXLE OIL COOLER)	590
	26	2	**7X-0390**	2	BOLT (7/8-9X5IN)	
	27	1	**115-9927**	1	PLATE	
	28	1	**116-4086**	1	TUBE AS	
	29	1	**116-4087**	1	TUBE AS	
	30	1	**116-4088**	1	TUBE AS	
	31	1	**116-4090**	1	TUBE AS	
I	32	2	**116-6761**	2	HOSE AS	
I	33	1	**117-6717**	1	HOSE AS	
I	34	2	**117-6719**	1	HOSE AS	
	35	1	**117-6723**	1	TUBE AS	
	36	1	**117-6724**	1	TUBE AS	
	37	2	**117-7118**	1	SHAFT	
	38	2	**117-7119**	1	ADAPTER	
I	39	1	**173-9721**	1	HOSE AS	
CI	40	1	**171-5364**	1	HOSE AS	
I	41	2	**154-4992**	1	HOSE AS	
	42	2	**173-9720**	1	HOSE AS	
I	43	1	**117-9547**	1	HOSE AS	
	44	2	**174-0114**	1	TUBE AS	
	45	2	**117-9549**	1	TUBE AS	

112-4206 COOLER GP-AXLE OIL *(contd.)* i01395771

NOTE	REF NO	GRAPHIC REF	PART NUMBER	QTY	PART NAME 1 2 3 4 5 6 (PRODUCT LEVEL)	SEE PAGE
	46	2	**118-0630**	1	TUBE AS	
	47	2	**118-0631**	1	TUBE AS	
I	48	2	**118-0678**	1	HOSE AS	
I	49	2	**118-0679**	1	HOSE AS	
	50	2	**118-0683**	1	BRACKET AS	
M		2	**8T-3490**	3	NUT-WELD (M10X1.5 THD)	
M		2	**8T-3597**	2	NUT-WELD (M12X1.75 THD)	
I	51	2	**118-5198**	1	HOSE AS	
	52	2	**152-8280**	1	TUBE AS	
	53	2	**152-8279**	1	TUBE AS	
	54	1	**176-7539**	1	TUBE AS	
	55	2	**176-7112**	1	TUBE AS	
	56	2	**176-7263**	1	TUBE AS	
	57	2	**131-6687**	1	TUBE AS	
Y	58	2	*134-5247*	1	BLOCK GP-HYDRAULIC (AXLE OIL COOLER)	479
Y	59	2	*134-5248*	1	BLOCK GP-HYDRAULIC (AXLE OIL COOLER)	480
	60	1	**053-0558**	1	CLAMP	
	61	1,2	**1P-4577**	22	FLANGE-HALF	
	62	2	**1S-0724**	1	CLIP (25.4MM IN)	
	63	2	**1S-1476**	2	CLIP (25.4MM ID)	
	64	2	**4L-6459**	2	BOLT (3/8-16X2.5 IN)	
	65	2	**5P-7464**	2	CLIP (SLOT)	
	66	2	**5P-7465**	2	CLIP (TAB)	
	67	2	**5P-9299**	3	CLIP	
	68	2	**6V-7359**	2	GROMMET	
	69	1	**9X-8408**	1	CONNECTOR	
	70	1,2	*148-8352*	4	ELBOW AS	
					(EACH INCLUDES)	
		1,2	**6V-9854**	1	ELBOW-SWIVEL	
		1,2	**5K-9090**	1	SEAL-O-RING (23.52MM ID)	
CY	71	3	**183-6194**	2	FILTER GP-OIL (AXLE OIL COOLER)	541
	72	1	*153-6237*	2	ELBOW AS	
					(EACH INCLUDES)	
		1	**3D-2824**	1	SEAL-O-RING (23.47MM ID)	
		1	**6V-9004**	1	ELBOW	
		1	**6V-9746**	1	SEAL-O-RING (18.94MM ID)	
	73	3	*148-8392*	2	ELBOW AS	
					(EACH INCLUDES)	
		3	**6V-9746**	1	SEAL-O-RING (18.94MM ID)	
		3	**6V-9853**	1	ELBOW-SWIVEL	
	74	1,2	*148-8335*	4	CONNECTOR AS	
					(EACH INCLUDES)	
		1,2	**6V-8635**	1	CONNECTOR	
		1,2	**5K-9090**	1	SEAL-O-RING (23.52MM ID)	
		1,2	**7M-8485**	1	SEAL-O-RING (29.74MM ID)	
	75	1	**7D-7233**	2	CLIP	
	76	2	**1B-3057**	3	CLIP (12.7MM ID)	
M	77	2	**7X-2550**	2	BOLT (M12X1.75X110MM)	
	78	2	**8C-8989**	4	ELBOW (45 DEGREE)	
C	79	1,2,3	**8T-4121**	81	WASHER-HARD (11X21X2.5MM THK)	
M	80	1,2,3	**8T-4137**	15	BOLT (M10X1.5X20MM)	
M	81	1,2,3	**8T-4139**	17	BOLT (M12X1.75X30MM)	
M	82	2	**8T-4179**	1	BOLT (M12X1.75X20MM)	
M	83	2	**8T-4183**	2	BOLT (M12X1.75X40 MM)	
M	84	1	**8T-4185**	8	BOLT (M10X1.5X50MM)	
M	85	2	**8T-4648**	2	BOLT (M12X1.75X70MM)	
M	86	1	**8T-4194**	3	BOLT (M12X1.75X50MM)	
CM	87	2	**8T-4195**	2	BOLT (M10X1.5X30MM)	
M	88	1,2	**8T-4196**	44	BOLT (M10X1.50X35MM)	

112-4206 **COOLER GP-AXLE OIL** *(contd.)* **i01395771**

NOTE	REF NO	GRAPHIC REF	PART NUMBER	QTY	PART NAME 1 2 3 4 5 6 (PRODUCT LEVEL)	SEE PAGE
	89	1,2,3	**8T-4223**	26	WASHER-HARD (13.5X25.5X3MM THK)	
M	90	2	**8T-4910**	2	BOLT (M12X1.75X60MM)	
M	91	1	**8T-6466**	8	BOLT (M10X1.50X60MM)	
	92	2	*150-4049*	1	ELBOW AS	
		2	**6V-9746**	1	SEAL-O-RING (18.94MM ID)	
		2	**7M-8485**	1	SEAL-O-RING (29.74MM ID)	
		2	**8T-4149**	1	ELBOW	
	93	2,3	*148-8360*	4	ELBOW AS	
					(EACH INCLUDES)	
		2,3	**6V-9182**	1	ELBOW	
		2,3	**6V-9746**	1	SEAL-O-RING (18.94MM ID)	
		2,3	**7M-8485**	1	SEAL-O-RING (29.74MM ID)	
C	94	3	*148-8360*	1	ELBOW AS	
		3	**6V-9182**	1	ELBOW	
		3	**6V-9746**	1	SEAL-O-RING (18.94MM ID)	
		3	**7M-8485**	1	SEAL-O-RING (29.74MM ID)	
C	95	3	**3P-2404**	1	CLIP	
C	96	3	**180-8905**	1	BRACKET AS	
CM	98	3	**8T-4136**	2	BOLT (M10X1.5X25MM)	
CI	99	3	**117-9097**	1	HOSE AS	
	100	1	**5P-1076**	3	WASHER-HARD (13.5X30X4MM THK)	

C-CHANGE FROM PREVIOUS TYPE
I-SEE HOSE FABRICATION GUIDE
M-METRIC PART
Y-SEPARATE ILLUSTRATION

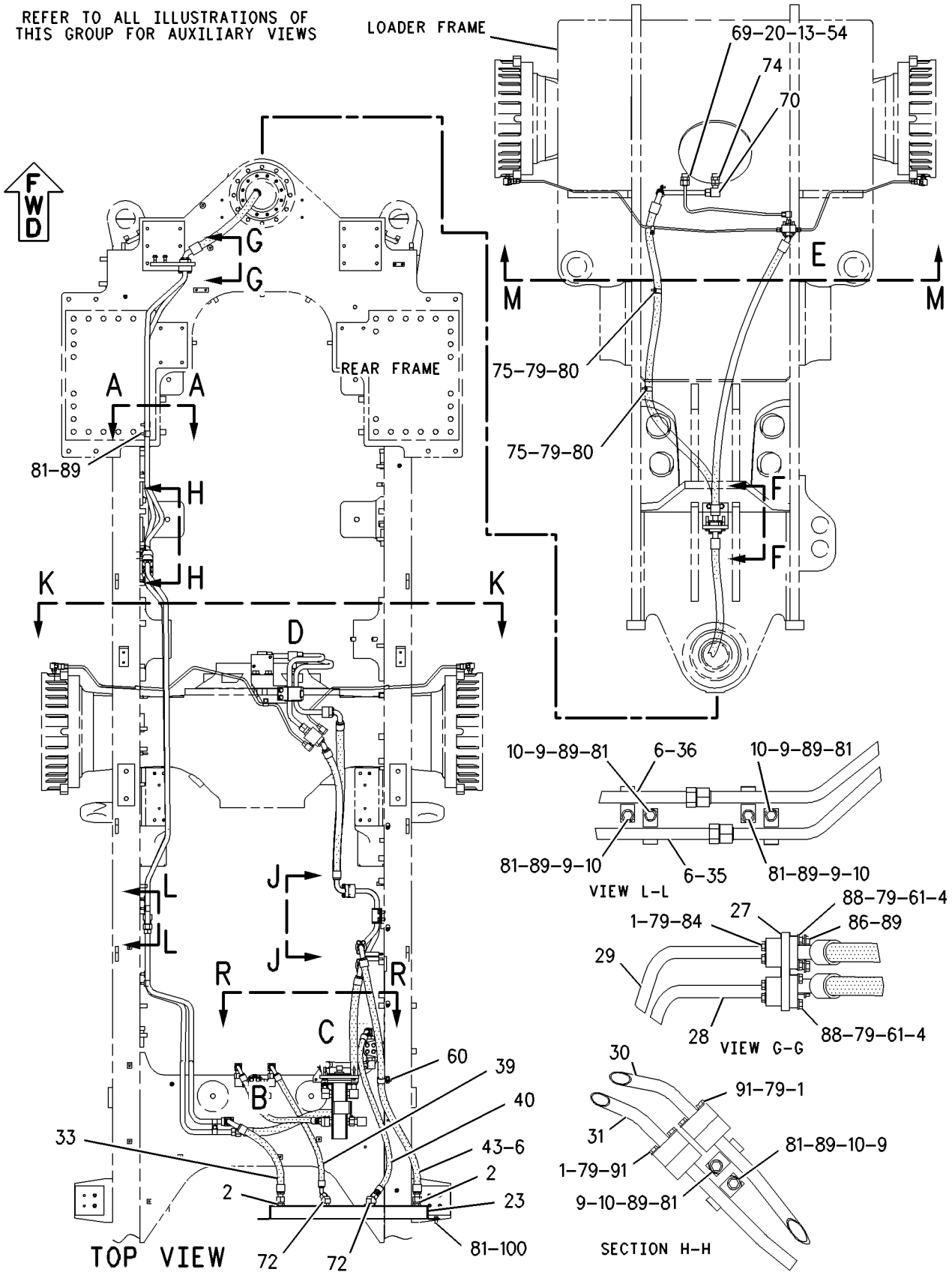

GRAPHIC #1 g00735514

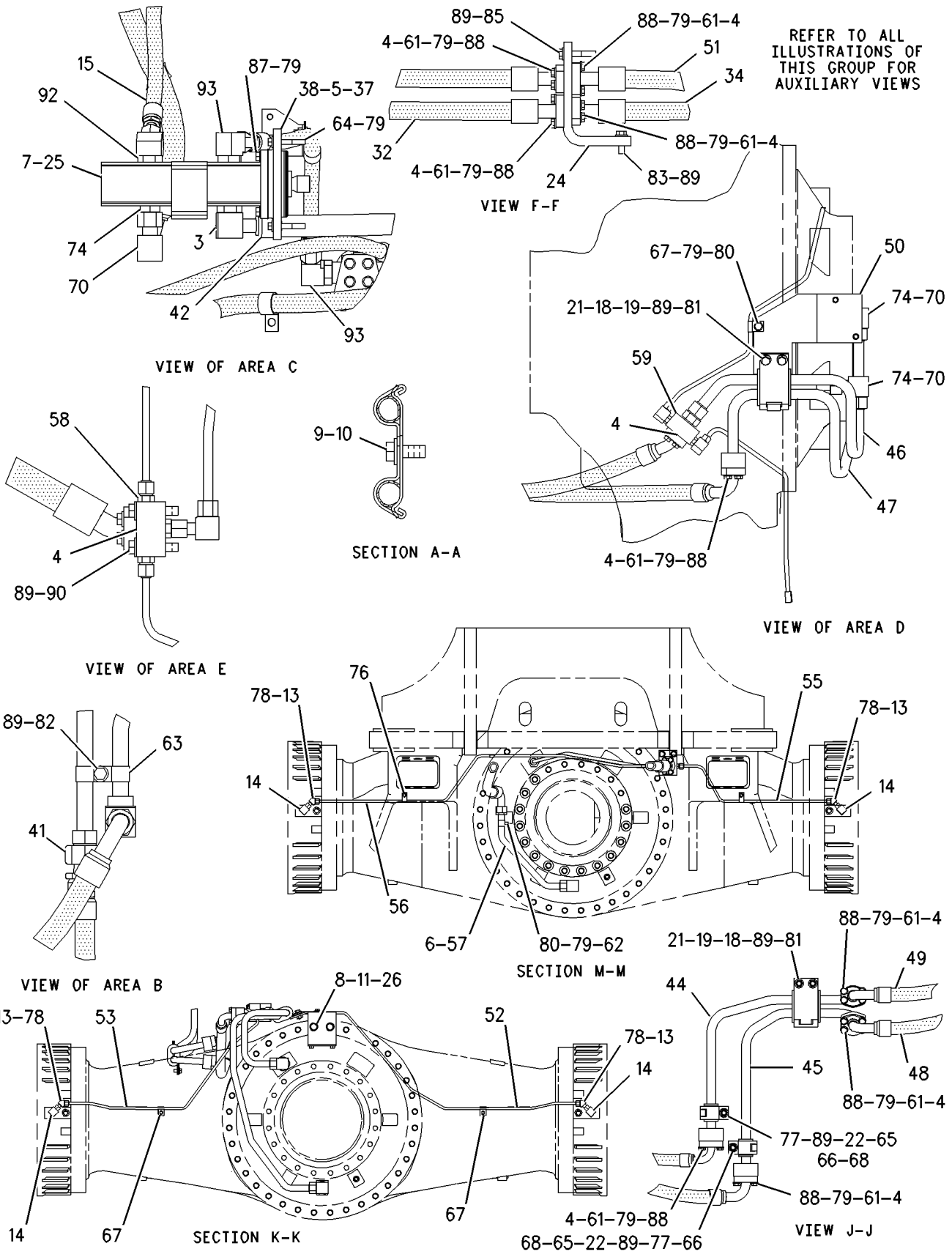

GRAPHIC #2 g00729146

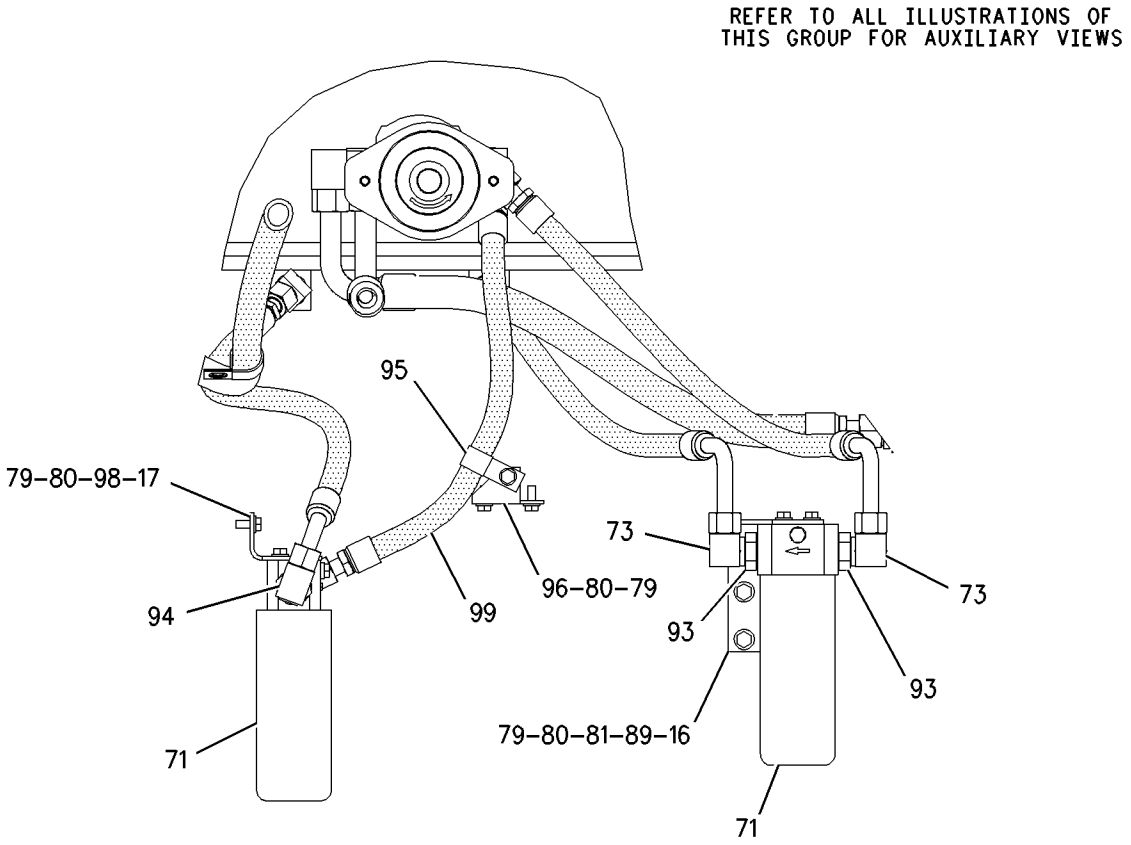

SECTION R–R

GRAPHIC #3

g00729149

112-4206 COOLER GP-AXLE OIL

S/N: 7HR398-UP
PART OF 109-6820 HYDRAULIC AR
TYPE 2

SMCS-1365 **i01504500**

NOTE	REF NO	GRAPHIC REF	PART NUMBER	QTY	PART NAME 1 2 3 4 5 6 (PRODUCT LEVEL)	SEE PAGE
	1	1	**1P-3703**	4	SEAL-RECTANGULAR	
	2	1	*148-8317*	2	CONNECTOR GP	
					(EACH INCLUDES)	
		1	**6V-8714**	1	CONNECTOR	
		1	**5K-9090**	1	SEAL-O-RING	
		1	**3D-2824**	1	SEAL-O-RING	
	3	2	*148-8357*	1	ELBOW GP	
		2	**6V-9008**	1	ELBOW	
		2	**5K-9090**	1	SEAL-O-RING	
		2	**7M-8485**	1	SEAL-O-RING	
	4	1,2	**4J-0520**	13	SEAL-O-RING	
	5	2	**5E-8771**	1	SEAL-O-RING (120.32MM ID)	
	6	1,2	**5K-9090**	6	SEAL-O-RING	
	7	2	**6D-1004**	1	GASKET	
	8	2	**1V-7750**	2	SPACER	
	9	1,2	**6K-5535**	8	CLIP	
	10	1,2	**6K-5536**	8	BRACKET	
	11	2	**5P-8249**	2	WASHER-HARD (24X41.5X4MM THK)	
M	12	1	**8T-4956**	2	BOLT (M12X1.75X35MM)	
	13	1,2	**6V-8398**	5	SEAL-O-RING	
	14	2	*148-8364*	4	ELBOW GP	
					(EACH INCLUDES)	
		2	**6V-8625**	1	ELBOW	
		2	**3K-0360**	1	SEAL-O-RING	
		2	**6V-8398**	1	SEAL-O-RING	
I	15	2	**173-9741**	1	HOSE AS	
	16	3	**173-9725**	1	BRACKET	
	17	3	**173-9724**	1	BRACKET	
	18	2	**7G-3833**	2	CLIP (TAB)	
	19	2	**7G-3834**	2	CLIP (SLOT)	
	20	1	**7M-8485**	1	SEAL-O-RING	
	21	2	**8C-3174**	2	GROMMET	
	22	2	**101-2815**	2	TUBE	
	23	1	**115-4831**	1	CORE AS-OIL COOLER	
	24	2	**115-6329**	1	PLATE	
Y	25	2	**133-7621**	1	PUMP GP-GEAR (AXLE OIL COOLER)	590
	26	2	**7X-0390**	2	BOLT (7/8-9X5 IN)	
	27	1	**115-9927**	1	PLATE	
C	28	1	**201-9552**	1	TUBE AS	
C	29	1	**201-9788**	1	TUBE AS	
C	30	1	**201-9097**	1	TUBE AS	
C	31	1	**201-9093**	1	TUBE AS	
I	32	2	**116-6761**	2	HOSE AS	
I	33	1	**117-6717**	1	HOSE AS	
I	34	2	**117-6719**	1	HOSE AS	
	35	1	**117-6723**	1	TUBE AS	
	36	1	**117-6724**	1	TUBE AS	
	37	2	**117-7118**	1	SHAFT	
	38	2	**117-7119**	1	ADAPTER	
I	39	1	**173-9721**	1	HOSE AS	
CI	40	1	**171-5364**	1	HOSE AS	
I	41	2	**154-4992**	1	HOSE AS	
	42	2	**173-9720**	1	HOSE AS	
I	43	1	**117-9547**	1	HOSE AS	
	44	2	**174-0114**	1	TUBE AS	

112-4206 COOLER GP-AXLE OIL *(contd.)* i01504500

NOTE	REF NO	GRAPHIC REF	PART NUMBER	QTY	PART NAME 1 2 3 4 5 6 (PRODUCT LEVEL)	SEE PAGE
	45	2	**117-9549**	1	TUBE AS	
	46	2	**118-0630**	1	TUBE AS	
	47	2	**118-0631**	1	TUBE AS	
I	48	2	**118-0678**	1	HOSE AS	
I	49	2	**118-0679**	1	HOSE AS	
	50	2	**118-0683**	1	BRACKET AS	
M		2	**8T-3490**	3	NUT-WELD (M10X1.5 THD)	
M		2	**8T-3597**	2	NUT-WELD (M12X1.75 THD)	
I	51	2	**118-5198**	1	HOSE AS	
	52	2	**152-8280**	1	TUBE AS	
	53	2	**152-8279**	1	TUBE AS	
	54	1	**176-7539**	1	TUBE AS	
	55	2	**176-7112**	1	TUBE AS	
	56	2	**176-7263**	1	TUBE AS	
	57	2	**131-6687**	1	TUBE AS	
Y	58	2	*134-5247*	1	BLOCK GP-HYDRAULIC (AXLE OIL COOLER)	479
Y	59	2	*134-5248*	1	BLOCK GP-HYDRAULIC (AXLE OIL COOLER)	480
	60	1	**053-0558**	1	CLAMP	
	61	1,2	**1P-4577**	22	FLANGE-HALF	
	62	2	**1S-0724**	1	CLIP (25.4MM IN)	
	63	2	**1S-1476**	2	CLIP (25.4MM ID)	
	64	2	**4L-6459**	2	BOLT (3/8-16X2.5 IN)	
	65	2	**5P-7464**	2	CLIP (SLOT)	
	66	2	**5P-7465**	2	CLIP (TAB)	
	67	2	**5P-9299**	3	CLIP	
	68	2	**6V-7359**	2	GROMMET	
	69	1	**9X-8408**	1	CONNECTOR	
	70	1,2	*148-8352*	4	ELBOW GP	
					(EACH INCLUDES)	
		1,2	**6V-9854**	1	ELBOW-SWIVEL	
		1,2	**5K-9090**	1	SEAL-O-RING	
CY	71	3	**183-6194**	2	FILTER GP-OIL (AXLE OIL COOLER)	541
	72	1	*153-6237*	2	ELBOW GP	
					(EACH INCLUDES)	
		1	**3D-2824**	1	SEAL-O-RING	
		1	**6V-9004**	1	ELBOW	
		1	**6V-9746**	1	SEAL-O-RING	
	73	3	*148-8392*	2	ELBOW GP	
					(EACH INCLUDES)	
		3	**6V-9746**	1	SEAL-O-RING	
		3	**6V-9853**	1	ELBOW-SWIVEL	
	74	1,2	*148-8335*	4	CONNECTOR GP	
					(EACH INCLUDES)	
		1,2	**6V-8635**	1	CONNECTOR	
		1,2	**5K-9090**	1	SEAL-O-RING	
		1,2	**7M-8485**	1	SEAL-O-RING	
	75	1	**7D-7233**	2	CLIP	
	76	2	**1B-3057**	3	CLIP	
M	77	2	**7X-2550**	2	BOLT (M12X1.75X110MM)	
	78	2	**8C-8989**	4	ELBOW	
C	79	1,2,3	**8T-4121**	81	WASHER-HARD (11X21X2.5MM THK)	
M	80	1,2,3	**8T-4137**	15	BOLT (M10X1.5X20MM)	
M	81	1,2,3	**8T-4139**	15	BOLT (M12X1.75X30MM)	
M	82	2	**8T-4179**	1	BOLT (M12X1.75X20MM)	
M	83	2	**8T-4183**	2	BOLT (M12X1.75X40 MM)	
M	84	1	**8T-4185**	8	BOLT (M10X1.5X50MM)	
M	85	2	**8T-4648**	2	BOLT (M12X1.75X70MM)	
M	86	1	**8T-4194**	3	BOLT (M12X1.75X50MM)	
CM	87	2	**8T-4195**	2	BOLT (M10X1.5X30MM)	

112-4206 **COOLER GP-AXLE OIL** *(contd.)* **i01504500**

NOTE	REF NO	GRAPHIC REF	PART NUMBER	QTY	PART NAME 1 2 3 4 5 6 (PRODUCT LEVEL)	SEE PAGE
M	88	1,2	**8T-4196**	44	BOLT (M10X1.5X35MM)	
	89	1,2,3	**8T-4223**	26	WASHER-HARD (13.5X25.5X3MM THK)	
M	90	2	**8T-4910**	2	BOLT (M12X1.75X60MM)	
M	91	1	**8T-6466**	8	BOLT (M10X1.50X60MM)	
	92	2	*150-4049*	1	ELBOW GP	
		2	**6V-9746**	1	SEAL-O-RING	
		2	**7M-8485**	1	SEAL-O-RING	
		2	**8T-4149**	1	ELBOW	
	93	2,3	*148-8360*	5	ELBOW GP	
					(EACH INCLUDES)	
		2,3	**6V-9182**	1	ELBOW	
		2,3	**6V-9746**	1	SEAL-O-RING	
		2,3	**7M-8485**	1	SEAL-O-RING	
C	95	3	**3P-2404**	1	CLIP	
C	96	3	**180-8905**	1	BRACKET AS	
	97	1	**4E-1303**	2	SPACER	
CM	98	3	**8T-4136**	2	BOLT (M10X1.5X25MM)	
CI	99	3	**117-9097**	1	HOSE AS	
	100	1	**5P-1076**	3	WASHER-HARD (13.5X30X4MM THK)	

C-CHANGE FROM PREVIOUS TYPE
I-SEE HOSE FABRICATION GUIDE
M-METRIC PART
Y-SEPARATE ILLUSTRATION

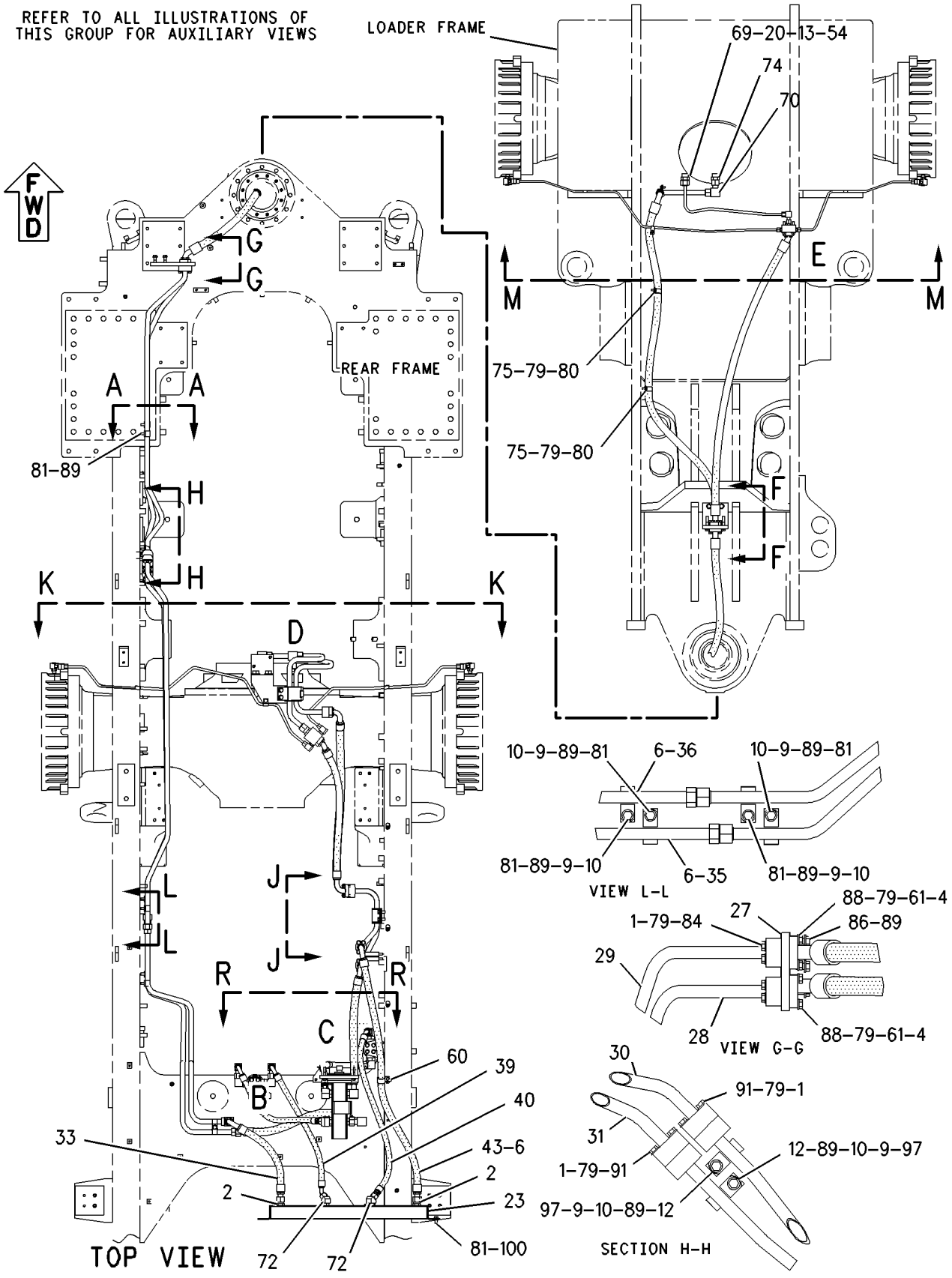

GRAPHIC #1 g00784891

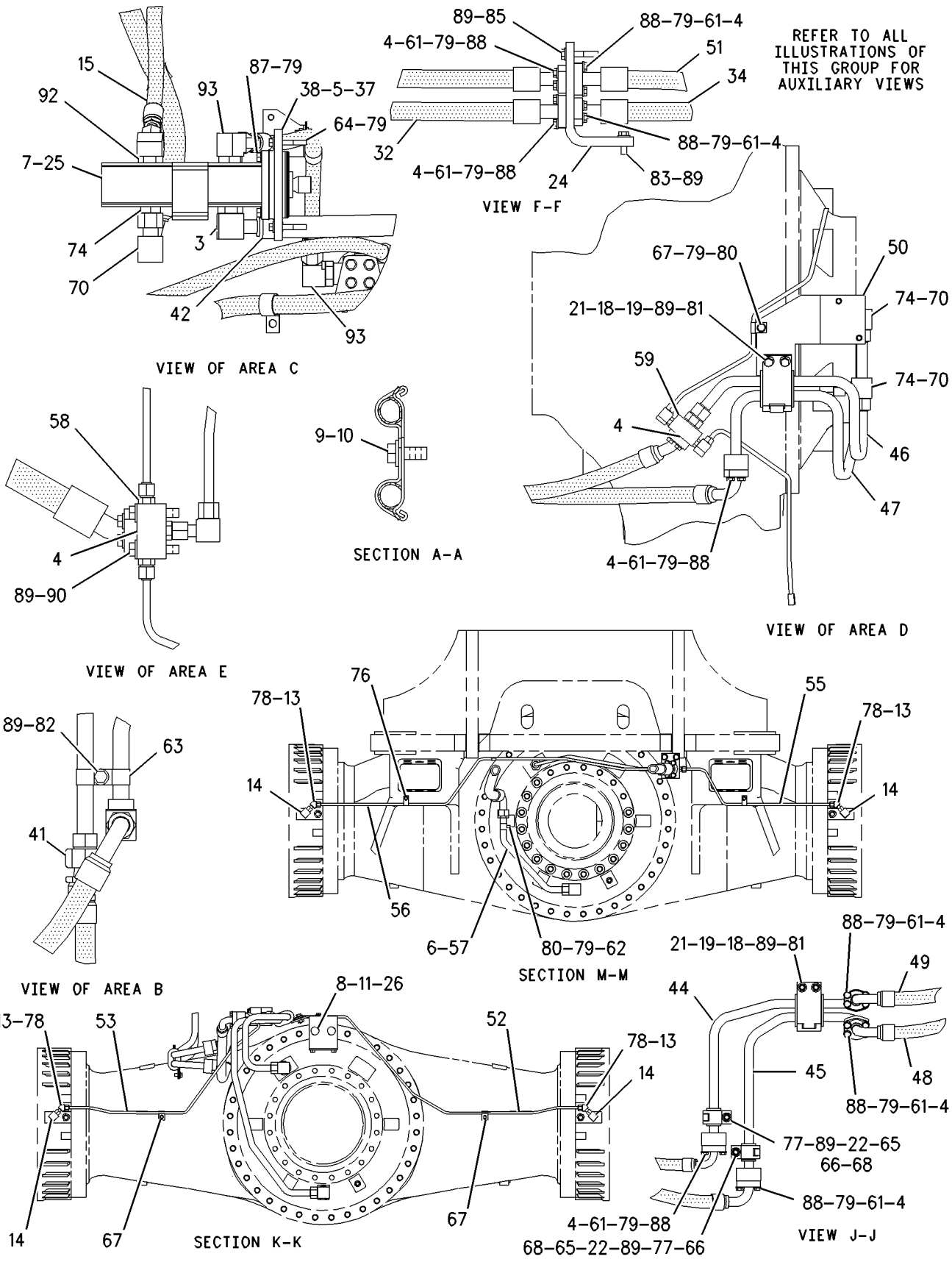

GRAPHIC #2 g00784923

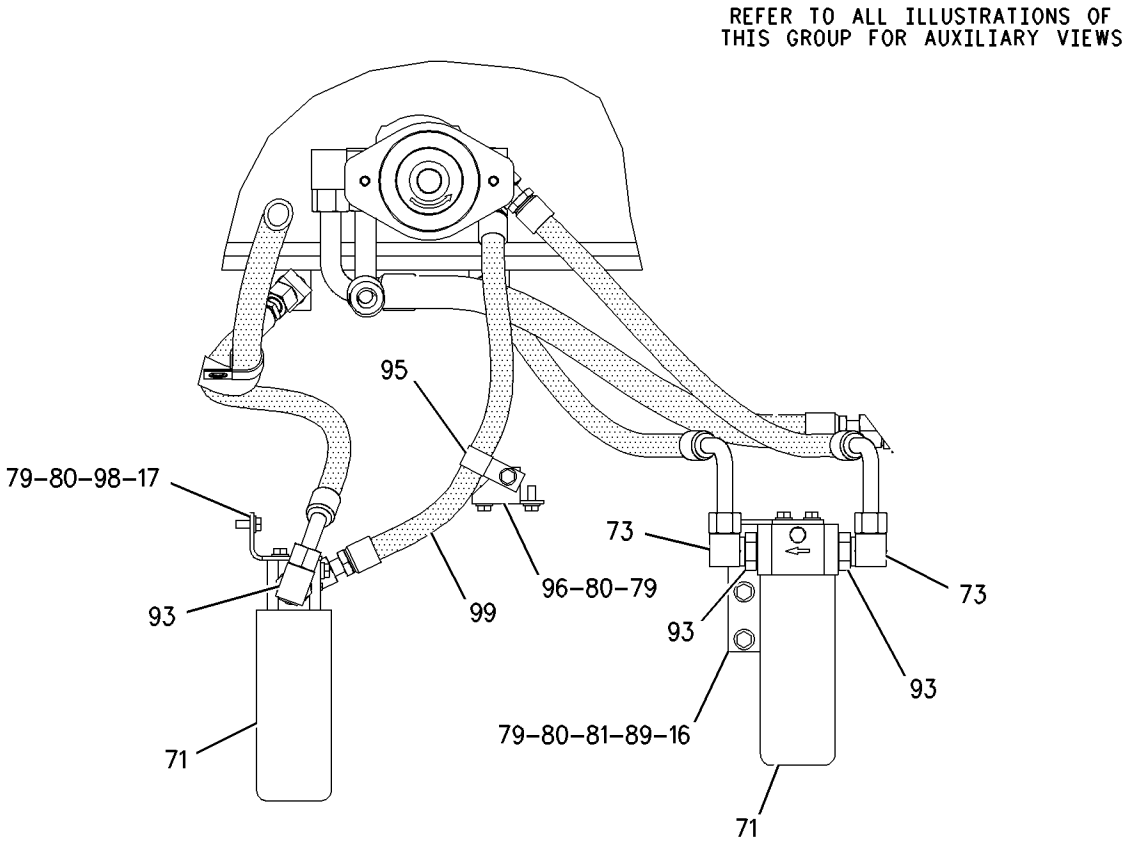

SECTION R–R

GRAPHIC #3 g00784924

126-3654 COVER GP-SHIPPING

S/N: 9BX1-UP

PART OF 6Y-6965 TRANSMISSION AR

SMCS-3064 **i01197503**

NOTE	REF NO	GRAPHIC REF	PART NUMBER	QTY	PART NAME 1 2 3 4 5 6 (PRODUCT LEVEL)	SEE PAGE
M	1	1	**6A-5591**	28	BOLT (M12X1.75X25MM)	
	2	1	**7J-0402**	2	COVER	
	3	1	**3J-6933**	2	GASKET	
	4	1	**7J-0401**	1	COVER	
	5	1	**7H-1495**	1	GASKET	
	6	1	**9P-4331**	1	COVER	
	7	1	**3J-5553**	2	GASKET	
	8	1	**0S-0509**	2	BOLT (3/8-16X.75IN)	
	9	1	**9S-4191**	2	PLUG-O-RING (9/16-18 THD)	
	10	1	**3J-1907**	2	SEAL-O-RING (11.89MM ID)	
	11	1	**1S-3730**	2	COVER	
M	12	1	**6V-6317**	4	BOLT (M10X20MM)	
	13	1	**8X-6166**	2	COVER	
	14	1	**8E-7366**	2	GASKET	
	15	1	**3D-2992**	1	SEAL (26.64MM ID)	
	16	1	**3E-4046**	1	PLUG	
	17	1	**5M-4454**	1	SEAL-O-RING (329.56MM ID)	
	18	1	**150-3384**	1	COVER-SHIPPING	
M	19	1	**6V-5844**	10	BOLT (M16X2.0X35MM)	
	20	1	**5P-8247**	10	WASHER-HARD (3.5MM THK)	
	21	1	**2P-1294**	1	PLUG-SEAL	
M	22	1	**8T-4191**	2	BOLT (M10X1.50X16MM)	
	23	1	**5M-3154**	1	COVER	
	24	1	**1S-6595**	1	GASKET	
	25	1	**4K-1657**	1	GASKET	
	26	1	**6D-0692**	1	SEAL-O-RING (367.89MM ID)	

M-METRIC PART

126-3654 **COVER GP-SHIPPING** *(contd.)* **i01197503**

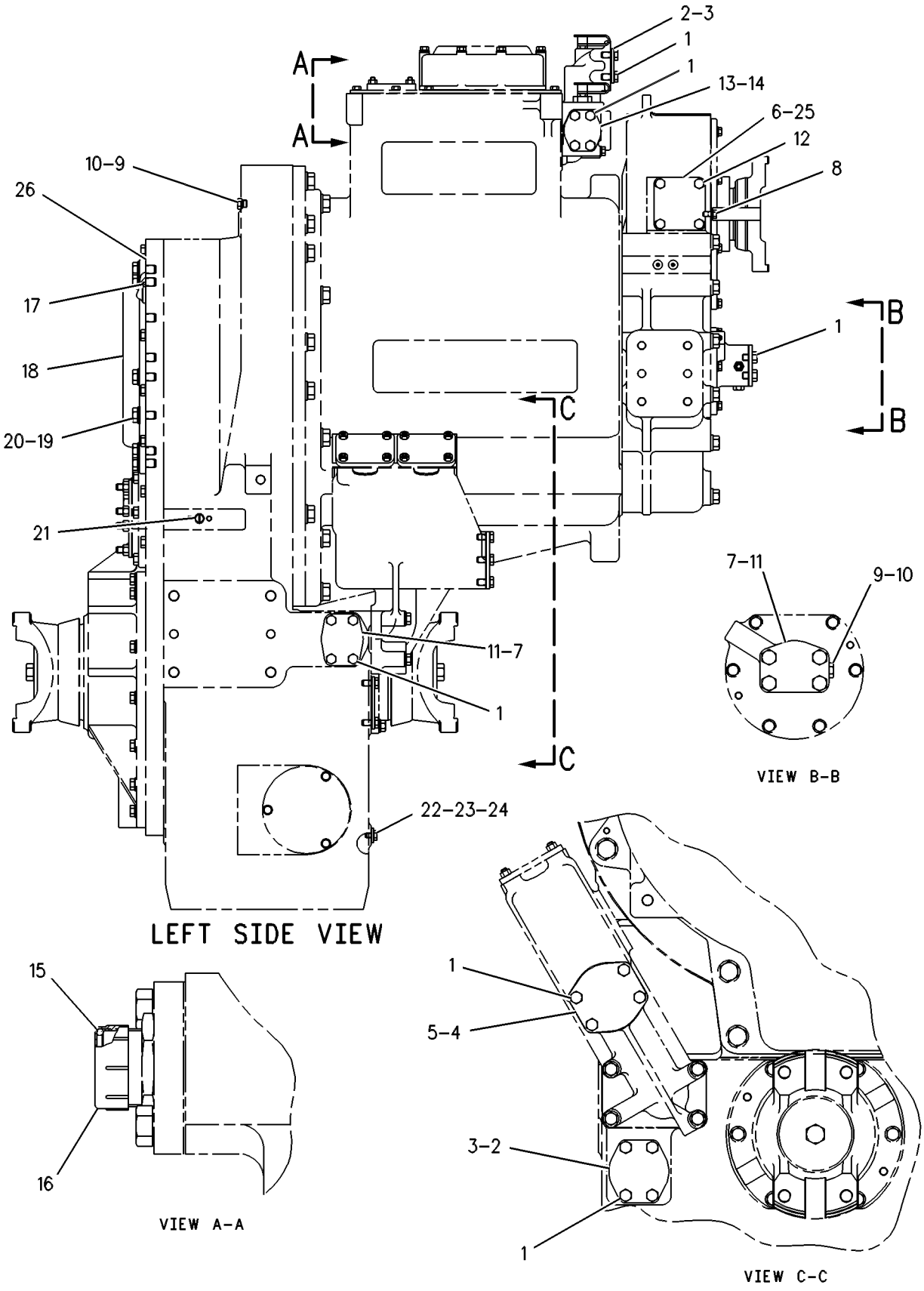

GRAPHIC #1 g00269787

118-9704 DIFFERENTIAL & BEVEL GEAR GP

S/N: 7HR1-UP

PART OF 107-0703 AXLE AR-FIXED, 107-0702 AXLE AR-OSCILLATING

SMCS-3258 **i01241551**

NOTE	REF NO	GRAPHIC REF	PART NUMBER	QTY	PART NAME 1 2 3 4 5 6 (PRODUCT LEVEL)	SEE PAGE
Y	1	1	**129-6793**	1	DIFFERENTIAL & BEVEL GEAR GP	524
	2	1	**171-6803**	1	YOKE AS	
	3	1	**132-0348**	1	CUP-DUST	
	4	1	**132-1183**	1	RING-RETAINING	
	5	1	**171-6804**	1	GUARD-DIRT	
	6	1	**2J-8163**	1	SEAL-O-RING (117.07MM ID)	

Y-SEPARATE ILLUSTRATION

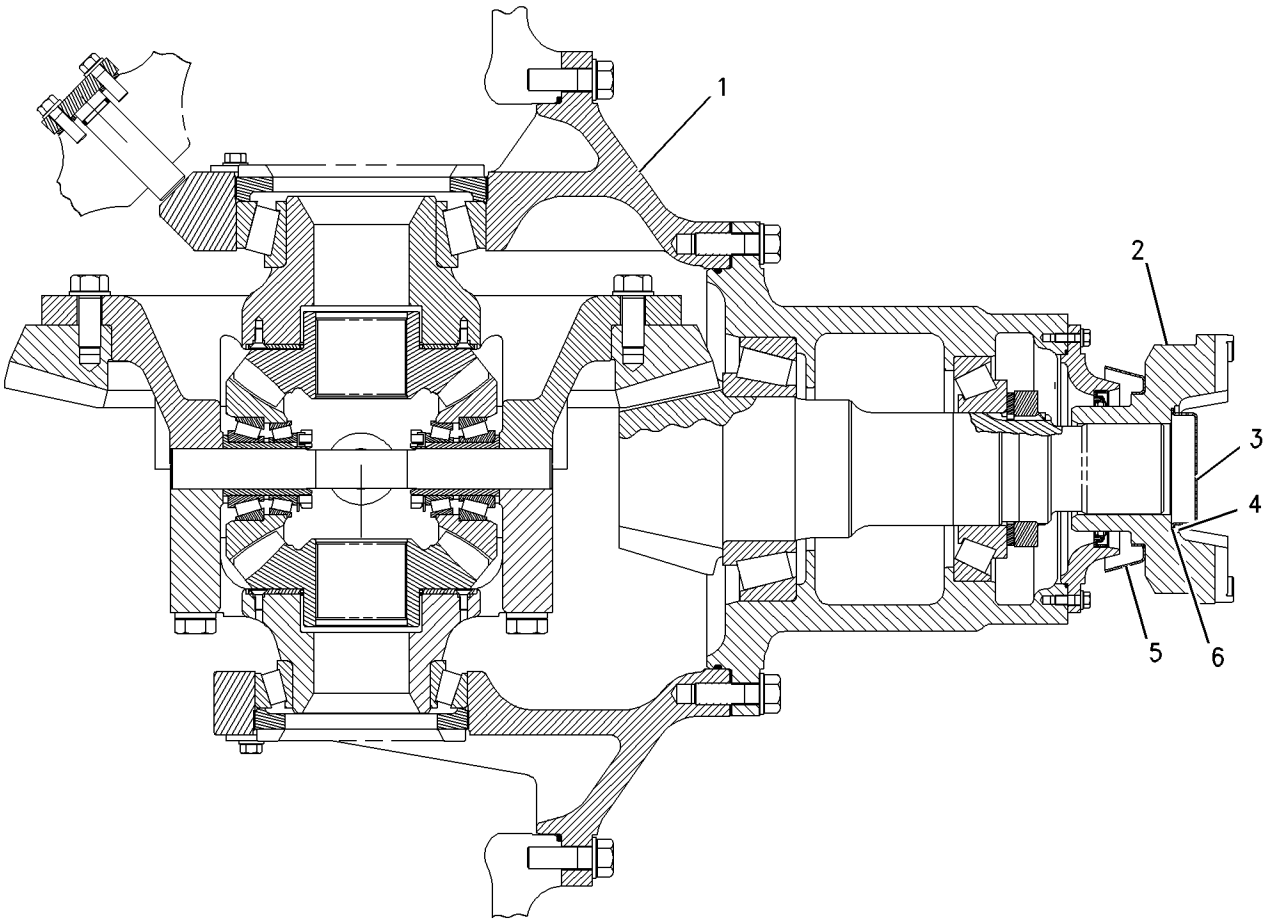

GRAPHIC #1 g00665263

MEMORANDA

POWER TRAIN

129-6793 DIFFERENTIAL & BEVEL GEAR GP

S/N: 7HR1-UP

PART OF 118-9704 DIFFERENTIAL & BEVEL GEAR GP

SMCS-3258 **i01197505**

NOTE	REF NO	GRAPHIC REF	PART NUMBER	QTY	PART NAME 1 2 3 4 5 6 (PRODUCT LEVEL)	SEE PAGE
	1	1	**8F-6230**	1	SEAL-O-RING (228.19MM ID)	
	2	1	**034-3557**	6	BOLT-LOCKING (3/8-16X1.125IN)	
	3	1	**5M-2894**	6	WASHER (2.5MM THK)	
	4	1	**141-8572**	1	HOUSING-PINION	
	5	1	**5P-7843**	1	CUP-ROLLER BEARING	
	6	1	**8F-1610**	1	CONE-ROLLER BEARING	
	7	1	**1D-4626**	56	BOLT (7/8-9X2.75IN)	
	8	1	**5P-8249**	94	WASHER-HARD (4.0MM THK)	
	9	1	**2M-3340**	1	SEAL-O-RING (380.36MM ID)	
	10	1	**119-6019**	1	CARRIER AS-DIFFERENTIAL	
	11	1	**4K-0684**	4	WASHER-HARD (6MM THK)	
	12	1	**6V-2624**	4	BOLT (1 1/4-7X7IN)	
	13	1	**7V-9514**	4	SLEEVE	
Z	14	1		2	CAP	
	15	1	**9K-4454**	2	LOCK	
	16	1	**1M-6573**	1	CUP-ROLLER BEARING (204.793MM ID)	
	17	1	**9M-2744**	1	CONE-ROLLER BEARING (139.70MM ID)	
YC	18	1	**120-0550**	1	DIFFERENTIAL GP	526
	19	1	**100-7418**	1	GEAR-BEVEL (53 TEETH)	
	20	1	**6F-7035**	36	BOLT (7/8-14X2.25IN)	
	21	1	**6W-8401**	1	PIN	
	22	1	**0S-1587**	4	BOLT (1/2-13X1.75IN)	
	23	1	**5V-5670**	1	COVER	
B	24	1	**5V-5669**	1	SHIM PACK (INCLUDES 15 SHIMS)	
	25	1	**2H-3932**	1	SEAL (28.17MM ID)	
	26	1	**126-8181**	1	CONE-ROLLER BEARING (152.40MM ID)	
	27	1	**126-8182**	1	CUP-ROLLER BEARING (236.38MM ID)	
	28	1	**6W-8400**	1	NUT-ADJUSTMENT	
B	29	1	**1V-2718**	1	SHIM PACK (INCLUDES 20 SHIMS)	
	30	1	**5P-8043**	1	CONE-ROLLER BEARING	
	31	1	**5P-8044**	1	CUP-ROLLER BEARING	
	32	1	**141-8570**	1	WASHER	
	33	1	**9C-5276**	1	NUT-STAKE	
	34	1	**141-8571**	1	RETAINER-SEAL	
	35	1	**133-4296**	1	SEAL-LIP TYPE (127.00MM ID)	
	36	1	**9S-1351**	2	BOLT (7/8-9X5IN)	
	37	1	**9S-9334**	2	PLUG (1 5/16-12 THD)	
	38	1	**7M-8485**	2	SEAL-O-RING (29.74MM ID)	
	39	1	**9S-8004**	1	PLUG-O-RING (9/16-18 THD)	
	40	1	**3J-1907**	1	SEAL-O-RING (11.89MM ID)	
	41	1	**1V-7750**	2	SPACER	
	42	1	**2D-6506**	1	SEAL-O-RING (736.60MM ID)	
	43	1	**6W-8399**	1	NUT-ADJUSTMENT	
	44	1	**5K-8454**	2	BOLT (1/2-13X1.12 IN)	
	45	1	**5P-8245**	6	WASHER-HARD (3MM THK)	
	46	1	**129-6425**	1	SHAFT-PINION	
B	47	1	**1U-8846**	1	SEALANT (6ML)(GASKET MAKER)	

B-USE AS REQUIRED
C-CHANGE FROM PREVIOUS TYPE
Y-SEPARATE ILLUSTRATION
Z-NOT SERVICED SEPARATELY

129-6793 DIFFERENTIAL & BEVEL GEAR GP *(contd.)* i01197505

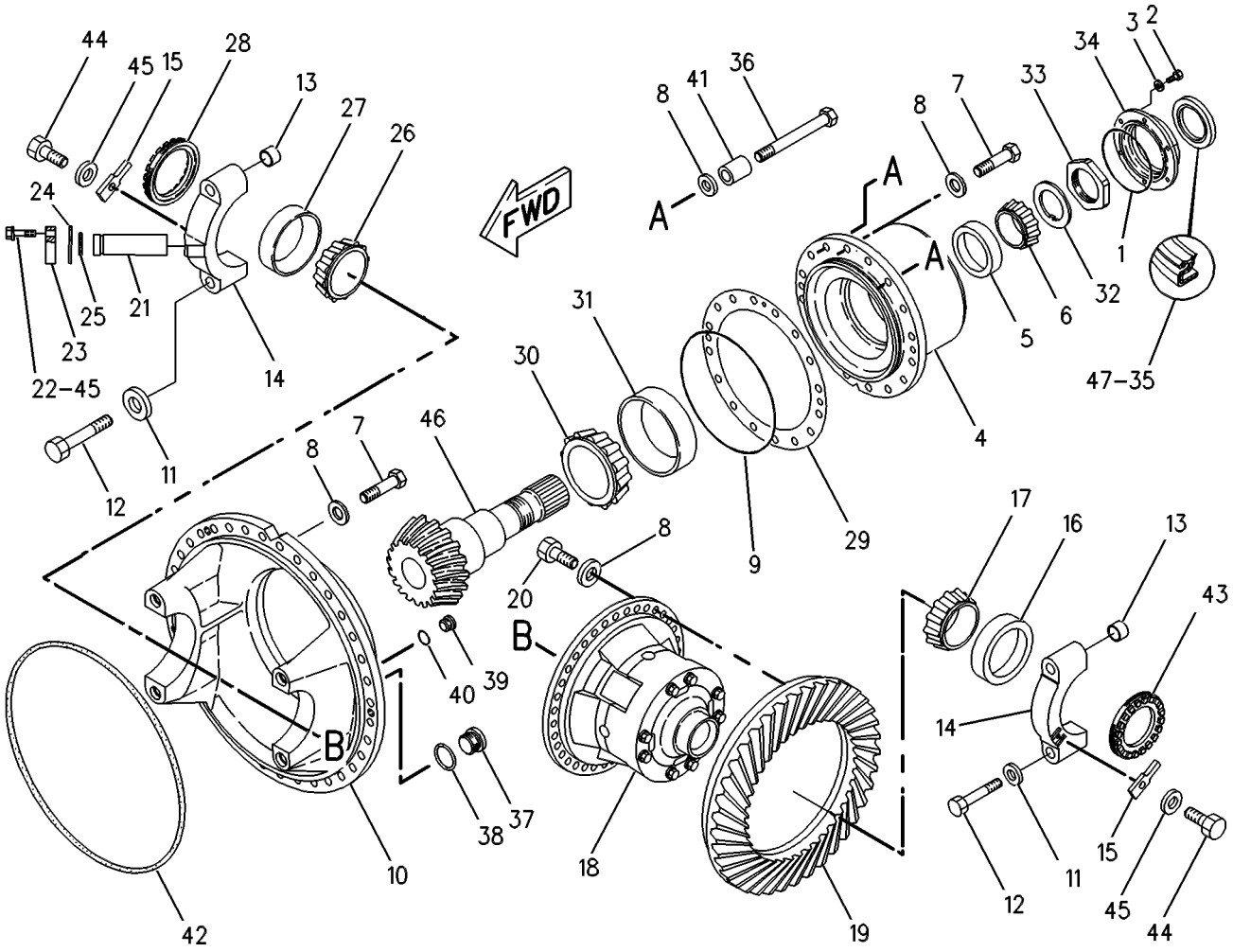

GRAPHIC #1 g00267131

120-0550 DIFFERENTIAL GP

S/N: 7HR1-UP

PART OF 129-6793 DIFFERENTIAL & BEVEL GEAR GP

SMCS-3258 **i01395814**

NOTE	REF NO	GRAPHIC REF	PART NUMBER	QTY	PART NAME 1 2 3 4 5 6 (PRODUCT LEVEL)	SEE PAGE
	1	1	**120-0551**	1	CASE AS-DIFFERENTIAL	
Z	1A	1		1	CASE-DIFFERENTIAL	
Z	1B	1		1	CASE-DIFFERENTIAL	
M	1C	1	**6V-8198**	8	BOLT (M24X3.0X200MM)	
	1D	1	**9H-1031**	8	WASHER-HARD (24X41.5X6MM THK)	
	2	1	**9U-3295**	2	WASHER-GEAR THRUST	
M	3	1	**8C-7562**	4	SCREW-FLAT HEAD (M8X1.25X20.0MM)	
	4	1	**5T-5185**	4	PINION	
	5	1	**6W-8259**	2	GEAR-DIFFERENTIAL BEVEL (20 TEETH)	
	6	1	**4D-7534**	4	BEARING AS-ROLLER	
	7	1	**4D-7536**	4	LOCK-NUT	
	8	1	**9V-4373**	4	RETAINER	
	9	1	**2F-9064**	4	NUT (2-1/8-12 THD)	
	10	1	**9V-9840**	1	SPIDER	

M-METRIC PART
Z-NOT SERVICED SEPARATELY

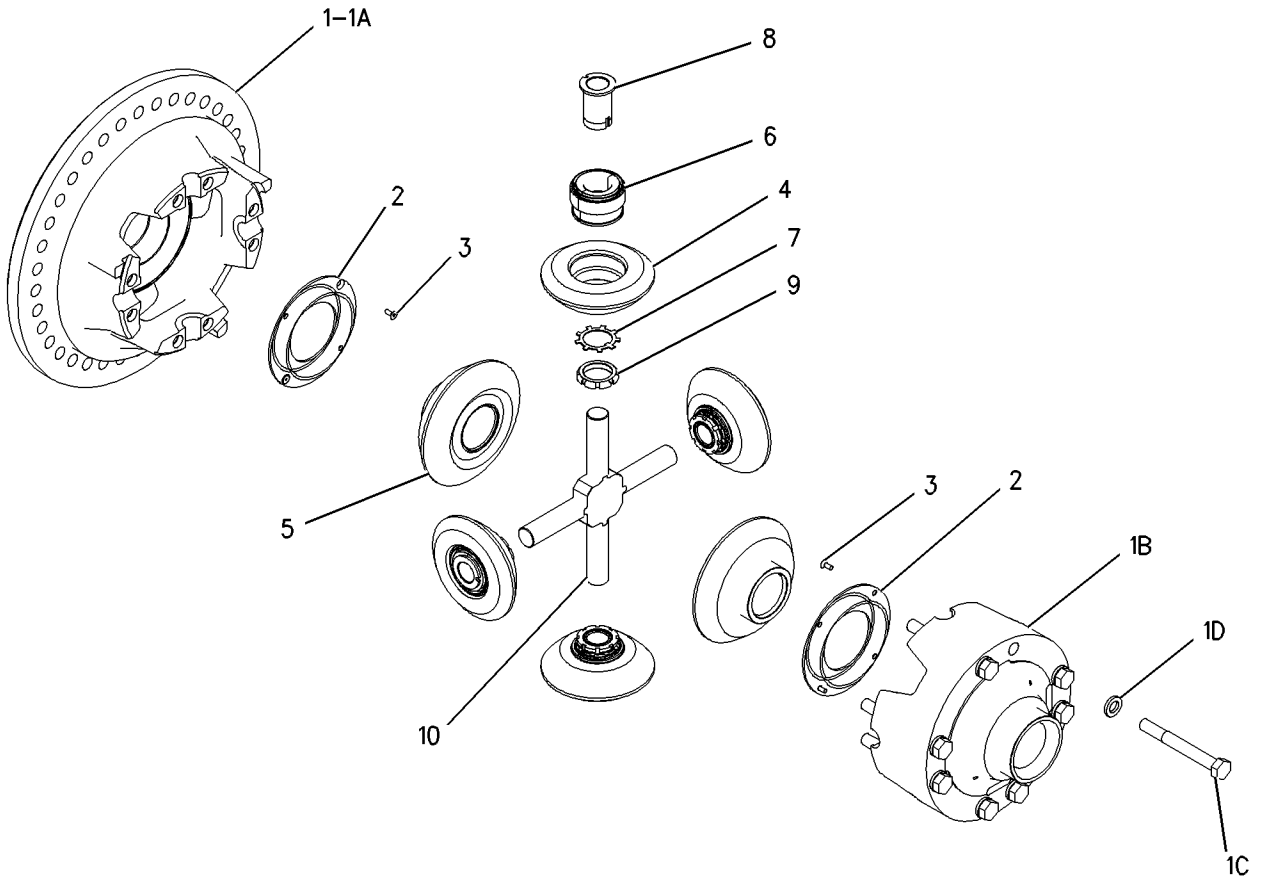

GRAPHIC #1 g00737811

133-8650 FILLER GP-POWER TRAIN OIL

S/N: 7HR1-UP

PART OF 109-6910 LINES GP-POWER TRAIN OIL

SMCS-3005, 3081 **i01056947**

NOTE	REF NO	GRAPHIC REF	PART NUMBER	QTY	PART NAME 1 2 3 4 5 6 (PRODUCT LEVEL)	SEE PAGE
Y	1	1	*1N-4296*	1	PROTECTION GP-VANDALISM	1448
	2	1	**7S-1801**	1	ANCHOR-CHAIN	
	3	1	**124-2444**	1	TUBE AS	
	4	1	**1P-4579**	2	FLANGE-HALF	
M	5	1	**8T-4183**	4	BOLT (M12X1.75X40MM)	
	6	1	**8T-4223**	4	WASHER-HARD (3MM THK)	

M-METRIC PART
Y-SEPARATE ILLUSTRATION

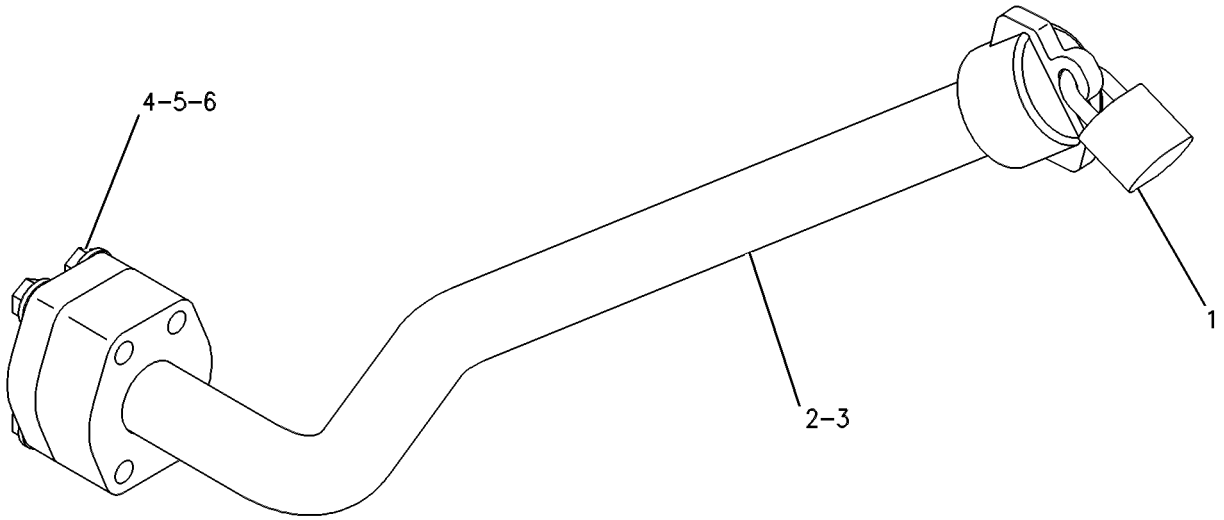

GRAPHIC #1 g00345197

198-0258 FILLER GP-POWER TRAIN OIL

S/N: 7HR1-UP

PART OF 109-6910 LINES GP-POWER TRAIN OIL

SMCS-3005, 3081 **i01469340**

NOTE	REF NO	GRAPHIC REF	PART NUMBER	QTY	PART NAME 1 2 3 4 5 6 (PRODUCT LEVEL)	SEE PAGE
Y	1	1	*1N-4296*	1	PROTECTION GP-VANDALISM	1448
	2	1	**7S-1801**	1	ANCHOR-CHAIN	
	3	1	**198-0249**	1	TUBE AS	
	4	1	**1P-4579**	2	FLANGE-HALF	
M	5	1	**8T-4183**	4	BOLT (M12X1.75X40 MM)	
	6	1	**8T-4223**	4	WASHER-HARD (13.5X25.5X3MM THK)	

M-METRIC PART
Y-SEPARATE ILLUSTRATION

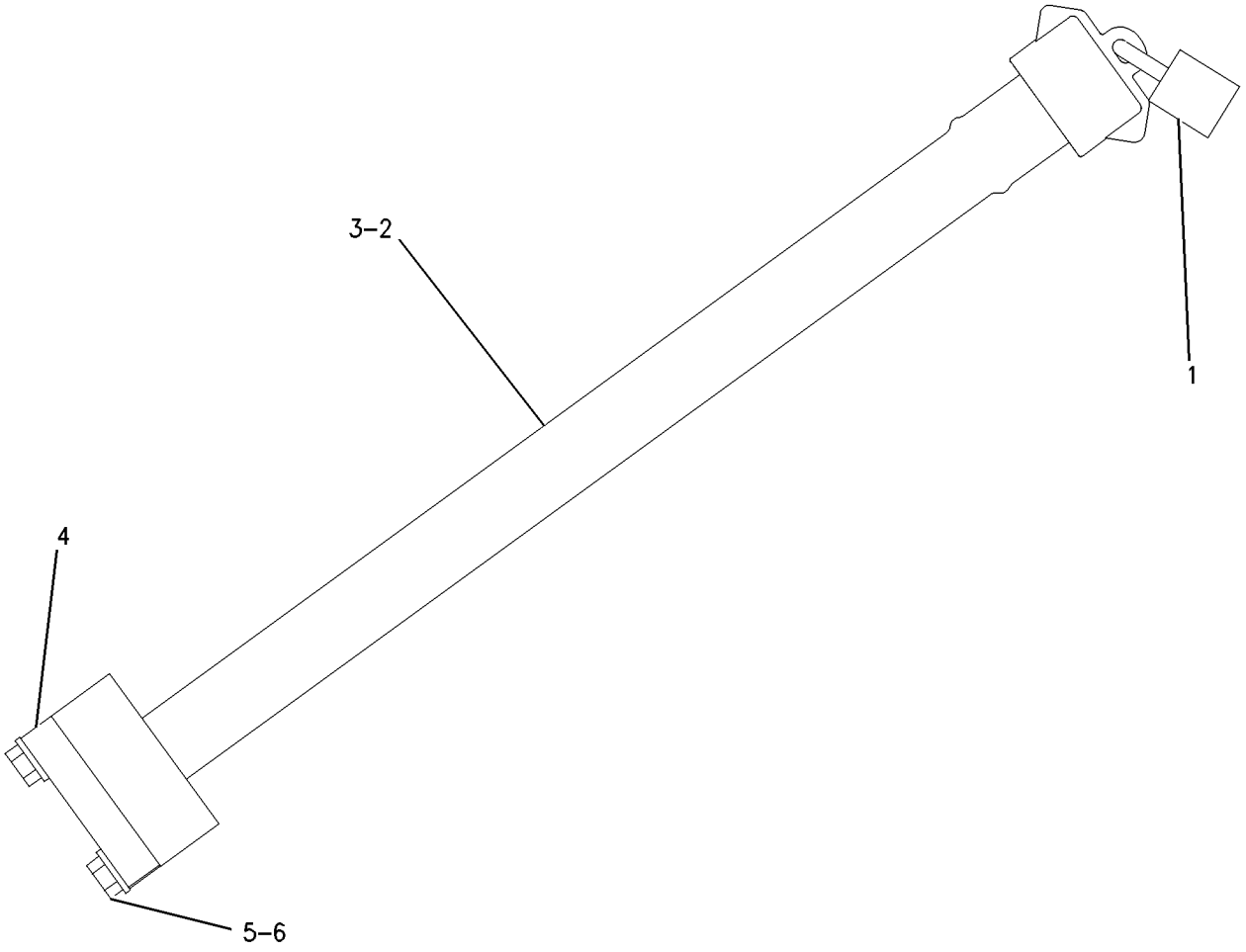

GRAPHIC #1 g00767774

MEMORANDA

133-8651 FILTER & MTG GP-POWER TRAIN

S/N: 7HR1-253

PART OF 109-6910 LINES GP-POWER TRAIN OIL

SMCS-3004, 3067 **i01239739**

NOTE	REF NO	GRAPHIC REF	PART NUMBER	QTY	PART NAME 1 2 3 4 5 6 (PRODUCT LEVEL)	SEE PAGE
	1	1	**6V-0852**	1	CAP-DUST	
	2	1	**6V-3965**	1	FITTING AS	
Y	3	1	*133-1297*	2	FILTER GP-OIL (POWER TRAIN)	538
	4	1	**115-7778**	1	BRACKET AS	
M		1	**8T-3490**	1	NUT-WELD (M10X1.5 THD)	
M		1	**8T-3597**	1	NUT-WELD (M12X1.75 THD)	
	5	1	**117-0977**	1	ADAPTER	
	6	1	**1P-4579**	8	FLANGE-HALF	
	7	1	**3J-1907**	4	SEAL-O-RING (11.89MM ID)	
	8	1	**3J-7354**	2	SEAL-O-RING (8.92MM ID)	
	9	1	**4J-0524**	1	SEAL-O-RING (47.22MM ID)	
	10	1	**8T-4121**	8	WASHER-HARD (2.5MM THK)	
M	11	1	**8T-4136**	8	BOLT (M10X1.50X25MM)	
M	12	1	**8T-4183**	12	BOLT (M12X1.75X40 MM)	
	13	1	**8T-4223**	16	WASHER-HARD (3MM THK)	
M	14	1	**8T-4648**	4	BOLT (M12X1.75X70MM)	
	15	1	**9S-4182**	1	PLUG (7/16-20 THD)	
	16	1	**3E-7410**	1	TEE-O-RING	
	17	1	**5P-9617**	1	ADAPTER (9/16-18-2A TO 7/16-20-2B THD)	
	18	1	**8C-3446**	1	VALVE-FLUID SAMPLING	
	19	1	**6V-0484**	1	ADAPTER-O-RING	
	20	1	**8C-3447**	1	CAP-DUST	

M-METRIC PART
Y-SEPARATE ILLUSTRATION

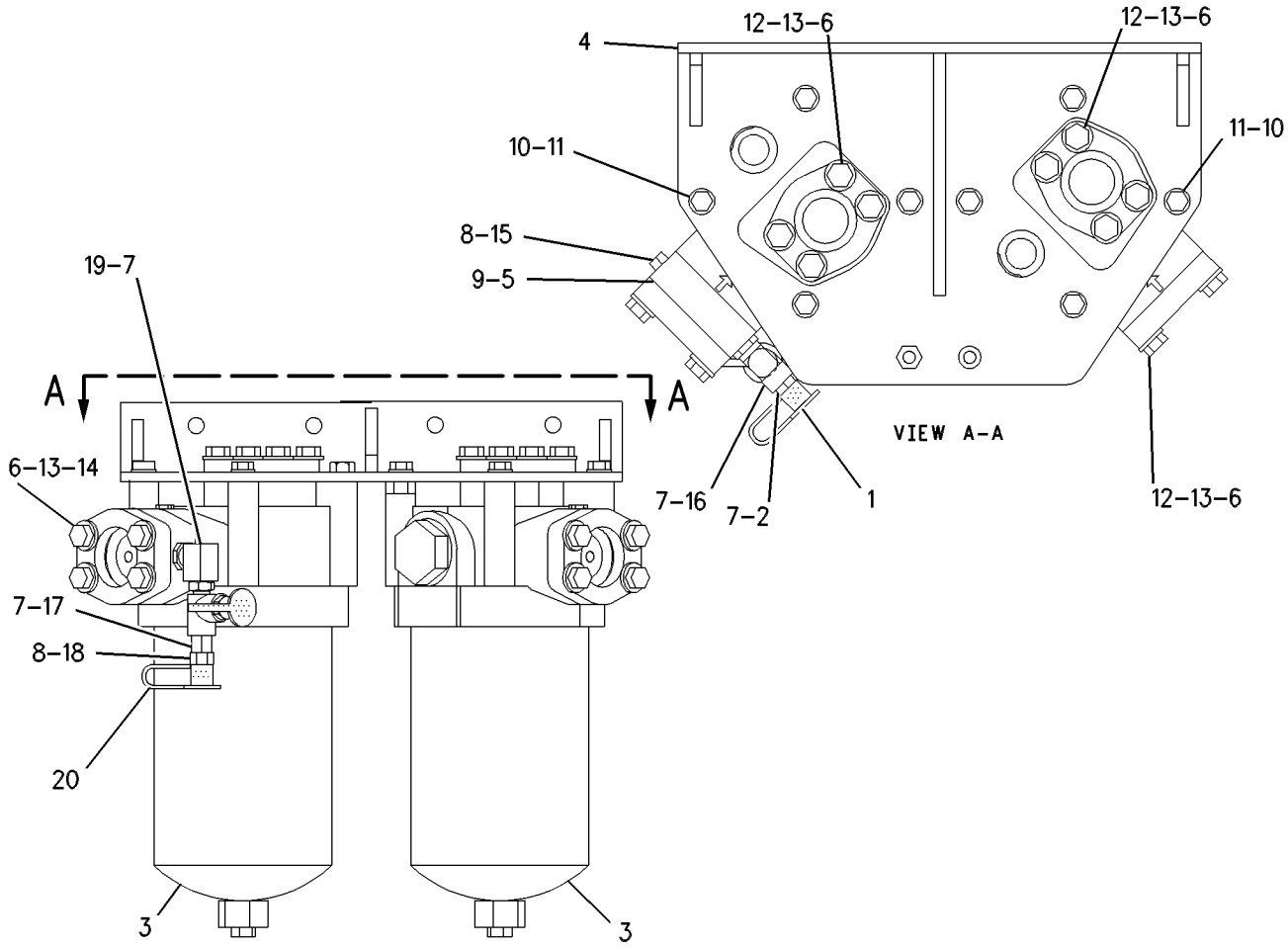

GRAPHIC #1

g00286141

133-8651 FILTER & MTG GP-POWER TRAIN

S/N: 7HR254-UP

PART OF 109-6910 LINES GP-POWER TRAIN OIL

SMCS-3004, 3067 **i01239740**

NOTE	REF NO	GRAPHIC REF	PART NUMBER	QTY	PART NAME 1 2 3 4 5 6 (PRODUCT LEVEL)	SEE PAGE
	1	1	**3E-7410**	1	TEE-O-RING	
	2	1	**6V-0484**	1	ADAPTER-O-RING	
	3	1	**6V-0852**	1	CAP-DUST	
	4	1	**6V-3965**	1	FITTING AS	
	5	1	**8C-3446**	1	VALVE-FLUID SAMPLING	
	6	1	**8C-3447**	1	CAP-DUST	
	7	1	**117-0977**	1	ADAPTER	
	8	1	**171-1577**	1	BRACKET AS	
	8A	1	**9R-2613**	3	BOSS (M10X25MM)	
CY	9	1	*165-8429*	2	FILTER GP-OIL (POWER TRAIN)	539
	10	1	**1P-4579**	8	FLANGE-HALF	
	11	1	**3J-1907**	4	SEAL-O-RING (11.89MM ID)	
	12	1	**3J-7354**	2	SEAL-O-RING (8.92MM ID)	
	13	1	**4J-0524**	1	SEAL-O-RING (47.22MM ID)	
	14	1	**5P-9617**	1	ADAPTER (9/16-18-2A TO 7/16-20-2B THD)	
	15	1	**8T-4121**	8	WASHER-HARD (2.5MM THK)	
M	16	1	**8T-4136**	8	BOLT (M10X1.50X25MM)	
M	17	1	**8T-4183**	12	BOLT (M12X1.75X40 MM)	
	18	1	**8T-4223**	16	WASHER-HARD (3MM THK)	
M	19	1	**8T-4648**	4	BOLT (M12X1.75X70MM)	
	20	1	**9S-4182**	1	PLUG (7/16-20 THD)	

C-CHANGE FROM PREVIOUS TYPE
M-METRIC PART
Y-SEPARATE ILLUSTRATION

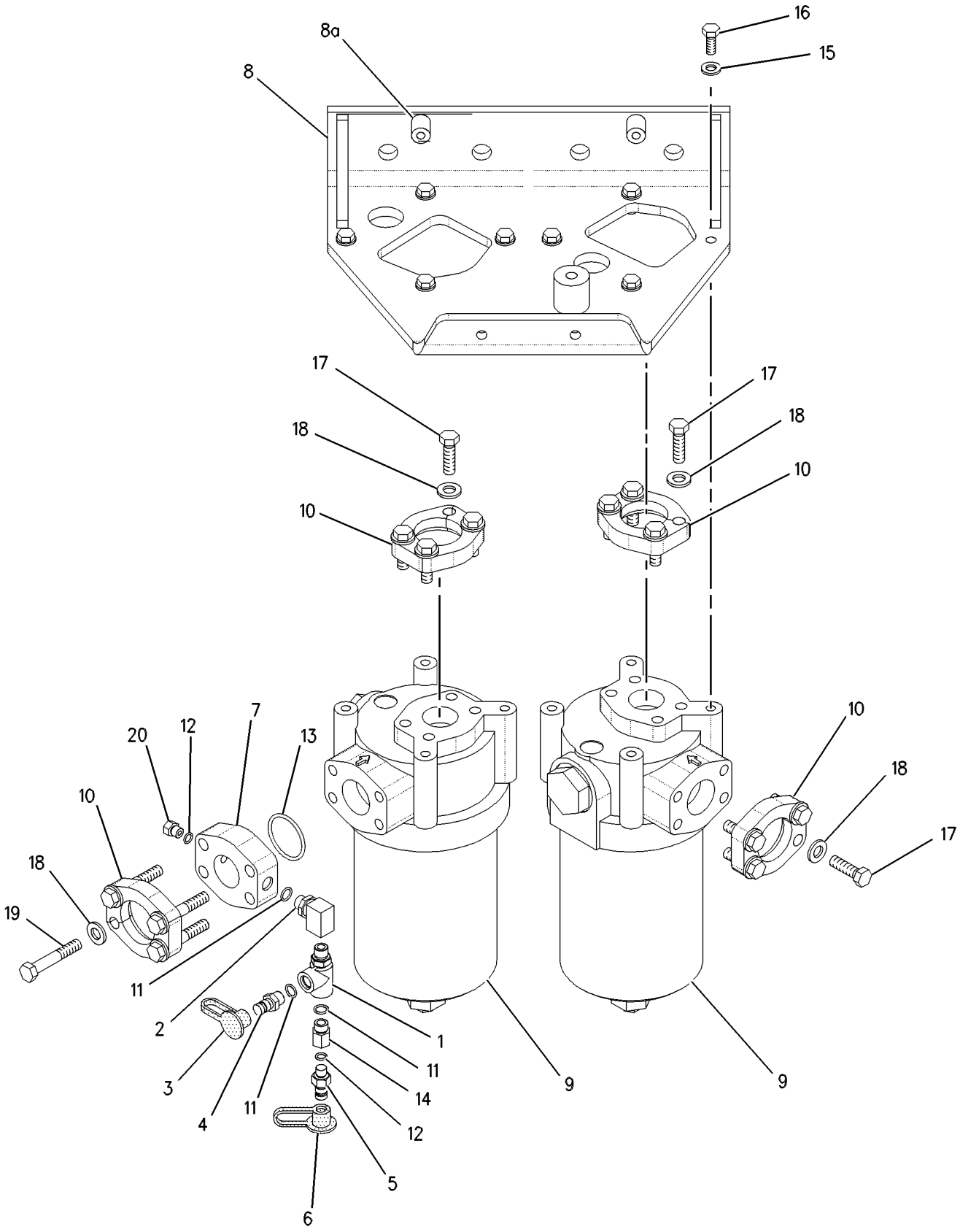

GRAPHIC #1 g00584469

196-1246 FILTER & MTG GP-POWER TRAIN

S/N: 7HR1-UP

PART OF 109-6910 LINES GP-POWER TRAIN OIL

SMCS-3004, 3067 **i01540581**

NOTE	REF NO	GRAPHIC REF	PART NUMBER	QTY	PART NAME 1 2 3 4 5 6 (PRODUCT LEVEL)	SEE PAGE
	1	1	**3E-7410**	1	TEE-O-RING	
	2	1	**6V-0852**	1	CAP-DUST	
	3	1	**8C-3447**	1	CAP-DUST	
	4	1	*150-3065*	1	ADAPTER GP	
		1	**6V-0484**	1	ADAPTER-O-RING	
		1	**3J-1907**	1	SEAL-O-RING	
	5	1	*164-5567*	1	FITTING GP	
		1	**6V-3965**	1	FITTING	
		1	**3J-1907**	1	SEAL-O-RING	
	6	1	**195-8074**	1	SUPPORT AS	
M		1	**8T-3597**	7	NUT-WELD (M12X1.75 THD)	
		1	**9R-2613**	2	BOSS (M10X1.5X25MM)	
	7	1	**196-1199**	2	BRACKET	
	8	1	**202-9728**	1	ADAPTER	
Y	9	1	*133-1295*	2	FILTER GP-OIL	536
	10	1	*148-8305*	1	ADAPTER AS	
		1	**5P-9617**	1	ADAPTER	
		1	**3J-1907**	1	SEAL-O-RING	
	11	1	*155-3624*	3	PLUG GP	
					(EACH INCLUDES)	
		1	**9S-4182**	1	PLUG-O-RING	
		1	**3J-7354**	1	SEAL-O-RING	
	12	1	**1P-4579**	8	FLANGE-HALF	
	13	1	**3J-1907**	1	SEAL-O-RING	
	14	1	**3J-7354**	1	SEAL-O-RING	
	15	1	**4J-0524**	1	SEAL-O-RING	
	16	1	**8C-3446**	1	VALVE AS-FLUID SAMPLING	
	17	1	**8T-4121**	4	WASHER-HARD (11X21X2.5MM THK)	
M	18	1	**8T-4137**	4	BOLT (M10X1.5X20MM)	
M	19	1	**8T-4139**	2	BOLT (M12X1.75X30MM)	
M	20	1	**8T-4183**	12	BOLT (M12X1.75X40MM)	
	21	1	**8T-4223**	18	WASHER-HARD (13.5X25.5X3MM THK)	
M	22	1	**8T-4648**	4	BOLT (M12X1.75X70MM)	

M-METRIC PART
Y-SEPARATE ILLUSTRATION

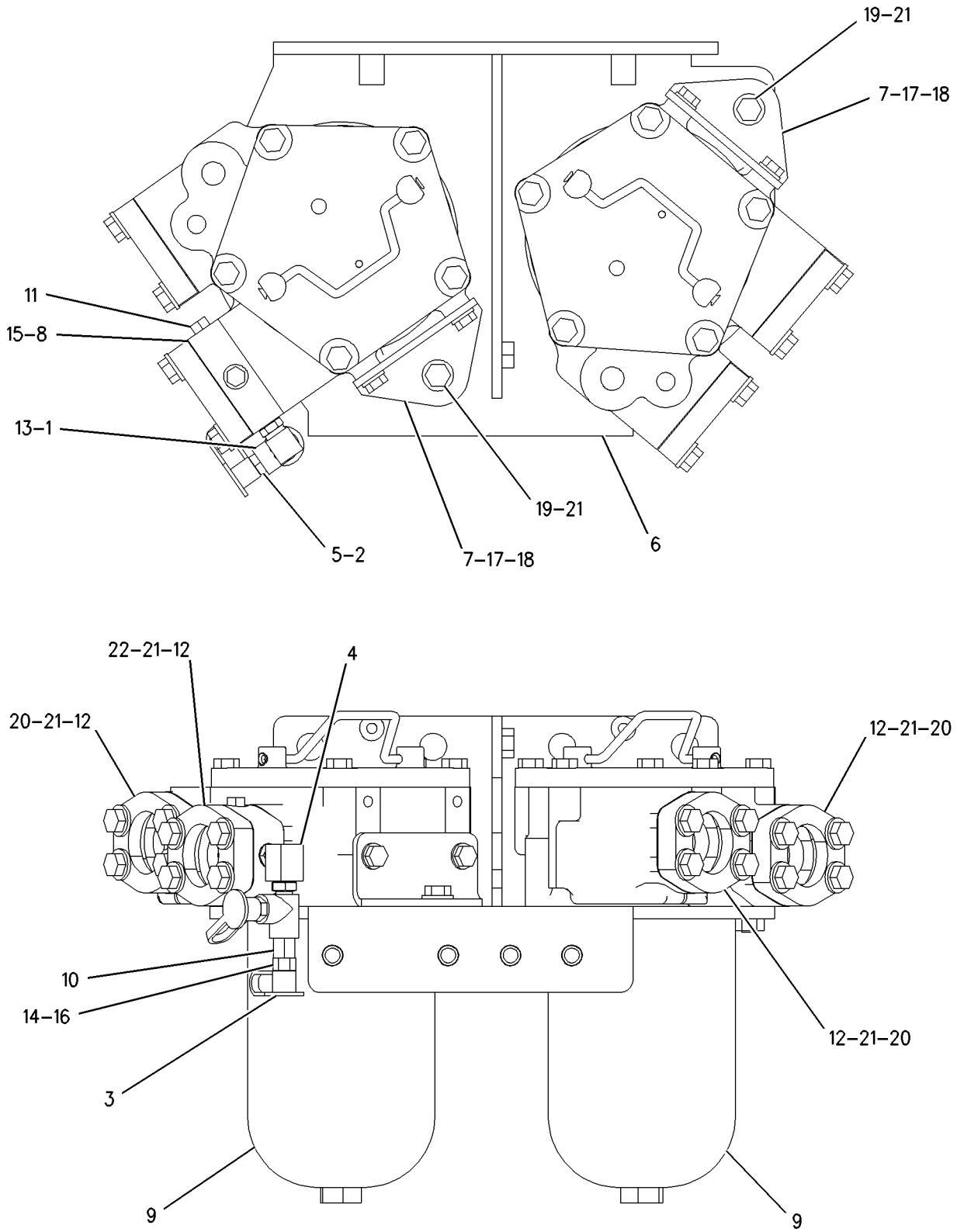

GRAPHIC #1

g00801370

133-1295 FILTER GP-OIL

S/N: 7HR1-UP

PART OF 196-1246 FILTER & MTG GP-POWER TRAIN

SMCS-3004, 3067 **i01533441**

NOTE	REF NO	GRAPHIC REF	PART NUMBER	QTY	PART NAME 1 2 3 4 5 6 (PRODUCT LEVEL)	SEE PAGE
M	1	1	**8T-4956**	5	BOLT (M12X1.75X35MM)	
	2	1	**9S-4191**	1	PLUG-STRAIGHT THREAD	
	3	1	**3J-1907**	1	SEAL-O-RING	
	4	1	**133-1276**	1	COVER AS	
		1	**133-8528**	1	STUD-TAPERLOCK	
	5	1	**2K-4472**	1	SEAL-O-RING	
	6	1	**6D-9157**	1	SEAL-O-RING	
	7	1	**202-9702**	1	HOUSING AS-FILTER	
	8	1	**132-8876**	1	FILTER ELEMENT AS-OIL (HYDRAULIC)	
	9	1	**4L-4986**	1	LOCKNUT	
	10	1	**9S-4183**	1	PLUG	
	11	1	**3D-2824**	2	SEAL-O-RING	
	12	1	**133-1299**	1	RETAINER	
	13	1	**133-2199**	1	SPRING	
	14	1	**6T-9222**	1	SPOOL	
	15	1	**9S-8008**	1	PLUG-O-RING	
	16	1	**9S-4182**	1	PLUG-O-RING	
	17	1	**3J-7354**	1	SEAL-O-RING	
	18	1	**9S-8005**	1	PLUG	
	19	1	**3K-0360**	1	SEAL-O-RING	

M-METRIC PART

133-1295 **FILTER GP-OIL** *(contd.)* **i01533441**

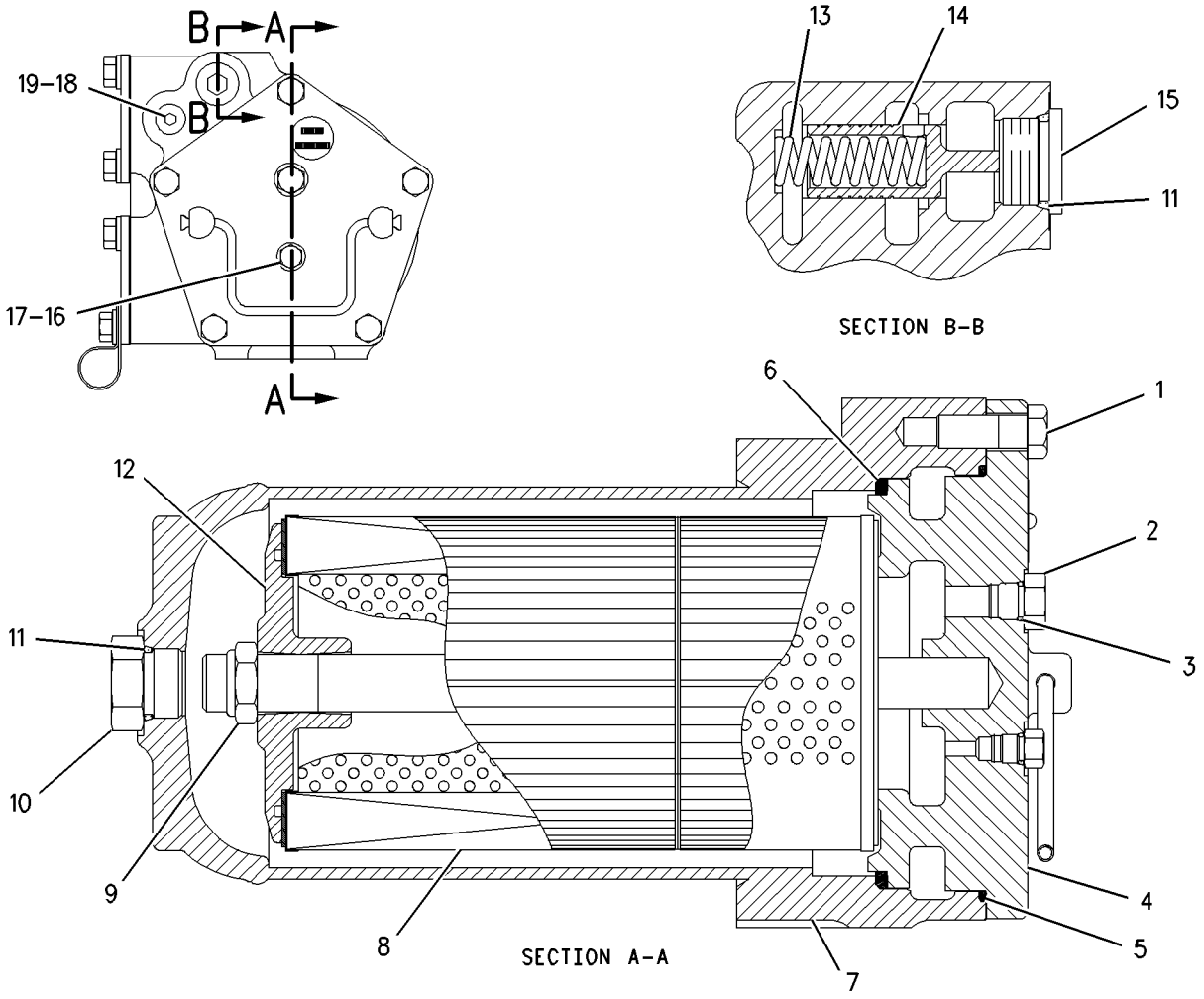

GRAPHIC #1 g00796085

133-1297 FILTER GP-OIL–POWER TRAIN

S/N: 7HR1-253
WITH HOUSING
PART OF 133-8651 FILTER & MTG GP-POWER TRAIN

SMCS-3004, 3067 **i01199848**

NOTE	REF NO	GRAPHIC REF	PART NUMBER	QTY	PART NAME 1 2 3 4 5 6 (PRODUCT LEVEL)	SEE PAGE
	1	1	**8E-0456**	1	BASE-TMSN OIL FILTER	
	2	1	**7G-4998**	1	SPOOL-BYPASS	
	3	1	**133-2198**	1	SPRING (INNER)	
	4	1	**5P-3620**	1	SEAL-O-RING (148.59MM ID)	
	5	1	**132-8876**	1	FILTER ELEMENT AS-HYDRAULIC (POWER TRAIN)	
	6	1	**133-1279**	1	HOUSING AS-OIL FILTER	
	7	1	**8M-6393**	1	RING-RETAINING	
	8	1	**133-1298**	1	RETAINER	
	9	1	**3S-8652**	1	SPRING	
	10	1	**9S-4191**	2	PLUG-O-RING (9/16-18 THD)	
	11	1	**3J-1907**	2	SEAL-O-RING (11.89MM ID)	
	12	1	**7M-1297**	1	SPRING (OUTER)	

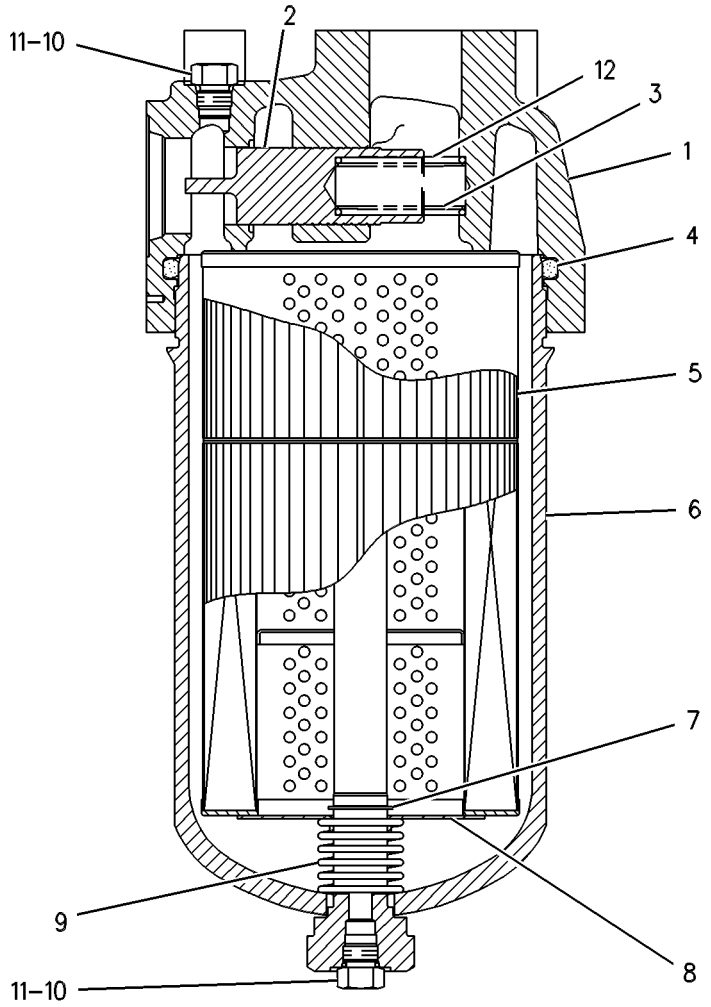

GRAPHIC #1 g00274255

165-8429 FILTER GP-OIL—POWER TRAIN

S/N: 7HR254-UP
WITH HOUSING
PART OF 133-8651 FILTER & MTG GP-POWER TRAIN

SMCS-3004, 3067 **i01124106**

NOTE	REF NO	GRAPHIC REF	PART NUMBER	QTY	PART NAME 1 2 3 4 5 6 (PRODUCT LEVEL)	SEE PAGE
	1	1	**8E-0456**	1	BASE-TMSN OIL FILTER	
	2	1	**5P-3620**	1	SEAL-O-RING (148.59MM ID)	
	3	1	**132-8876**	1	ELEMENT-FILTER (POWERTRAIN)	
	4	1	**133-1279**	1	HOUSING AS-OIL FILTER	
	5	1	**8M-6393**	1	RING-RETAINING	
	6	1	**165-8079**	1	RETAINER	
	7	1	**9S-4191**	2	PLUG-O-RING (9/16-18 THD)	
	8	1	**3J-1907**	2	SEAL-O-RING (11.89MM ID)	
	9	1	**3S-8652**	1	SPRING	
	10	1	**7G-4998**	1	SPOOL-BYPASS	
	11	1	**133-2198**	1	SPRING	
	12	1	**7M-1297**	1	SPRING	

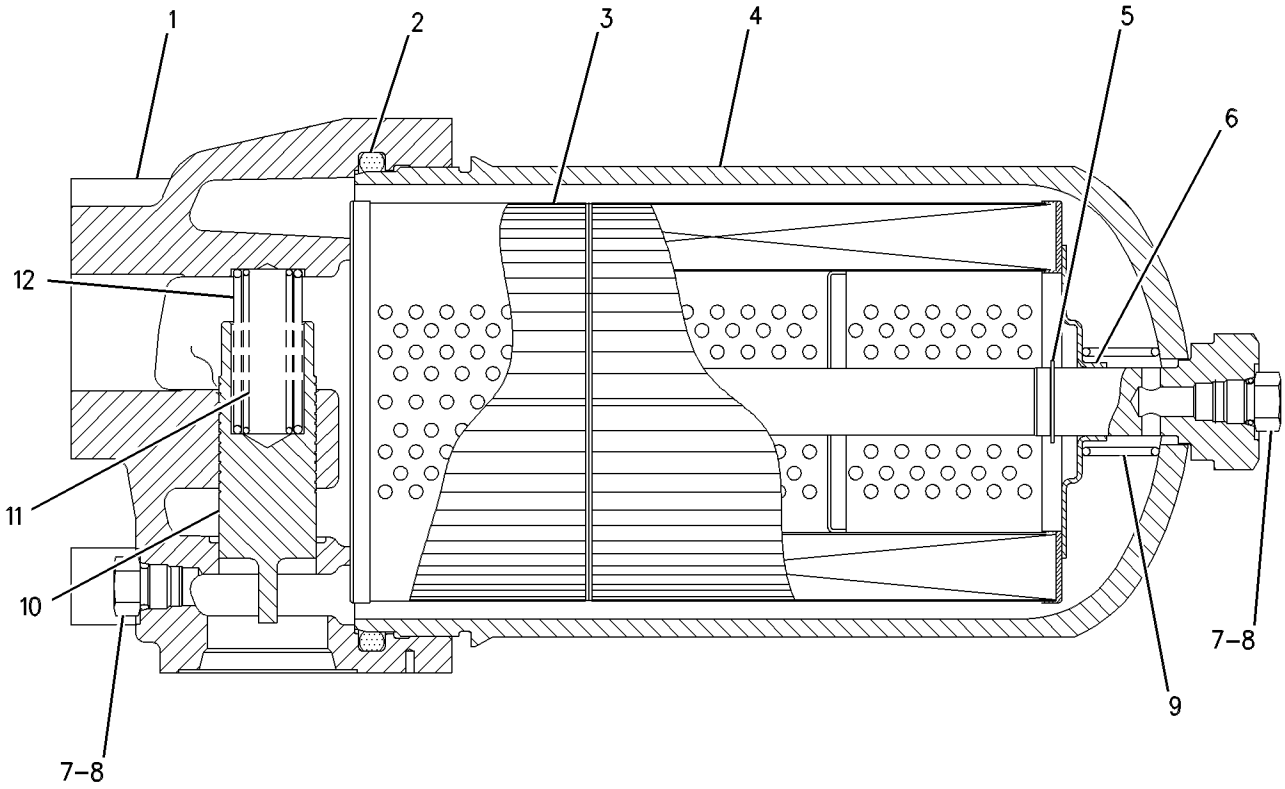

GRAPHIC #1 g00535795

166-4647 FILTER GP-OIL

S/N: 7HR1-UP

PART OF 109-6875 CONTROL GP-SERVICE BRAKE, 112-4206 COOLER GP-AXLE OIL, 174-9328 FILTER & LINES GP-BRAKE, 174-8217, 174-8218 FILTER & LINES GP-STEERING, 109-6867 LINES GP-HYDRAULIC, 109-6872 LINES GP-HYDRAULIC FAN
ALSO AN ATTACHMENT

SMCS-3004, 3067, 5068 **i01140418**

NOTE	REF NO	GRAPHIC REF	PART NUMBER	QTY	PART NAME 1 2 3 4 5 6 (PRODUCT LEVEL)	SEE PAGE
	1	1	**1G-8878**	1	FILTER	
	2	1	**164-6709**	1	PLUG AS-HYDRAULIC	

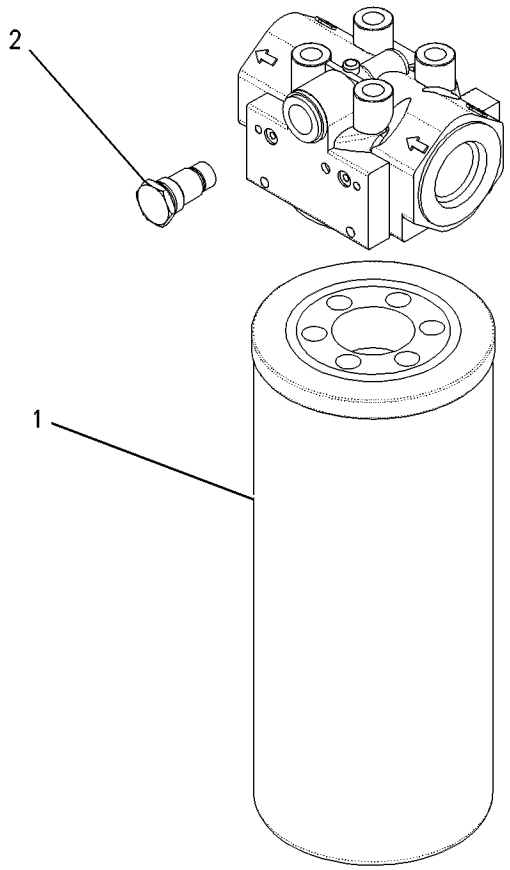

GRAPHIC #1 g00545272

183-6194 FILTER GP-OIL–AXLE OIL COOLER

S/N: 7HR398-UP

PART OF 112-4206 COOLER GP-AXLE OIL

SMCS-3004, 3067 **i01243679**

NOTE	REF NO	GRAPHIC REF	PART NUMBER	QTY	PART NAME 1 2 3 4 5 6 (PRODUCT LEVEL)	SEE PAGE
	1	1	**1G-8878**	1	FILTER AS-HYDRAULIC	
	2	1	**164-6709**	1	PLUG AS-HYDRAULIC	

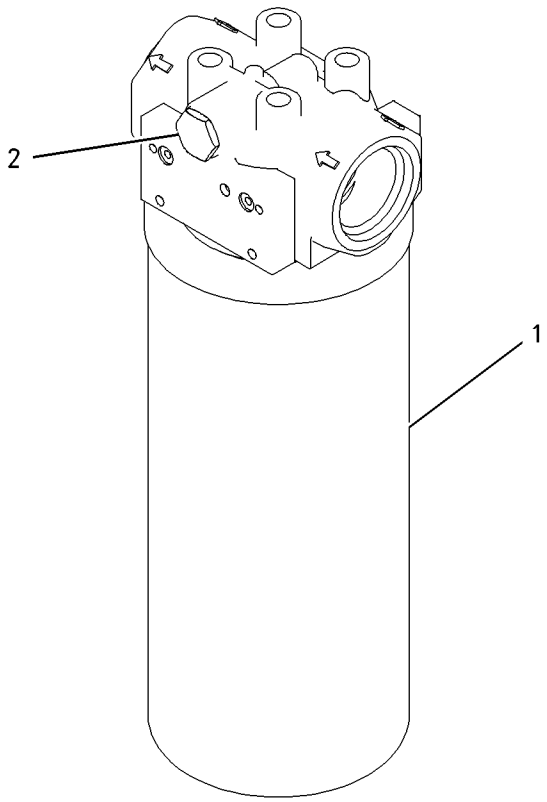

GRAPHIC #1 g00667341

133-8649 GAUGE GP-LIQUID LEVEL

S/N: 7HR1-UP

PART OF 109-6910 LINES GP-POWER TRAIN OIL

SMCS-7479 **i01112437**

NOTE	REF NO	GRAPHIC REF	PART NUMBER	QTY	PART NAME 1 2 3 4 5 6 (PRODUCT LEVEL)	SEE PAGE
	1	1	**124-0665**	1	GAUGE-LIQUID LEVEL	
	2	1	**124-0689**	2	ADAPTER	
	3	1	**124-2413**	1	PLATE	
	4	1	**6V-8397**	1	SEAL-O-RING (9.27MM ID)	
	5	1	**6V-9168**	2	NUT (11/16-16 THD)	

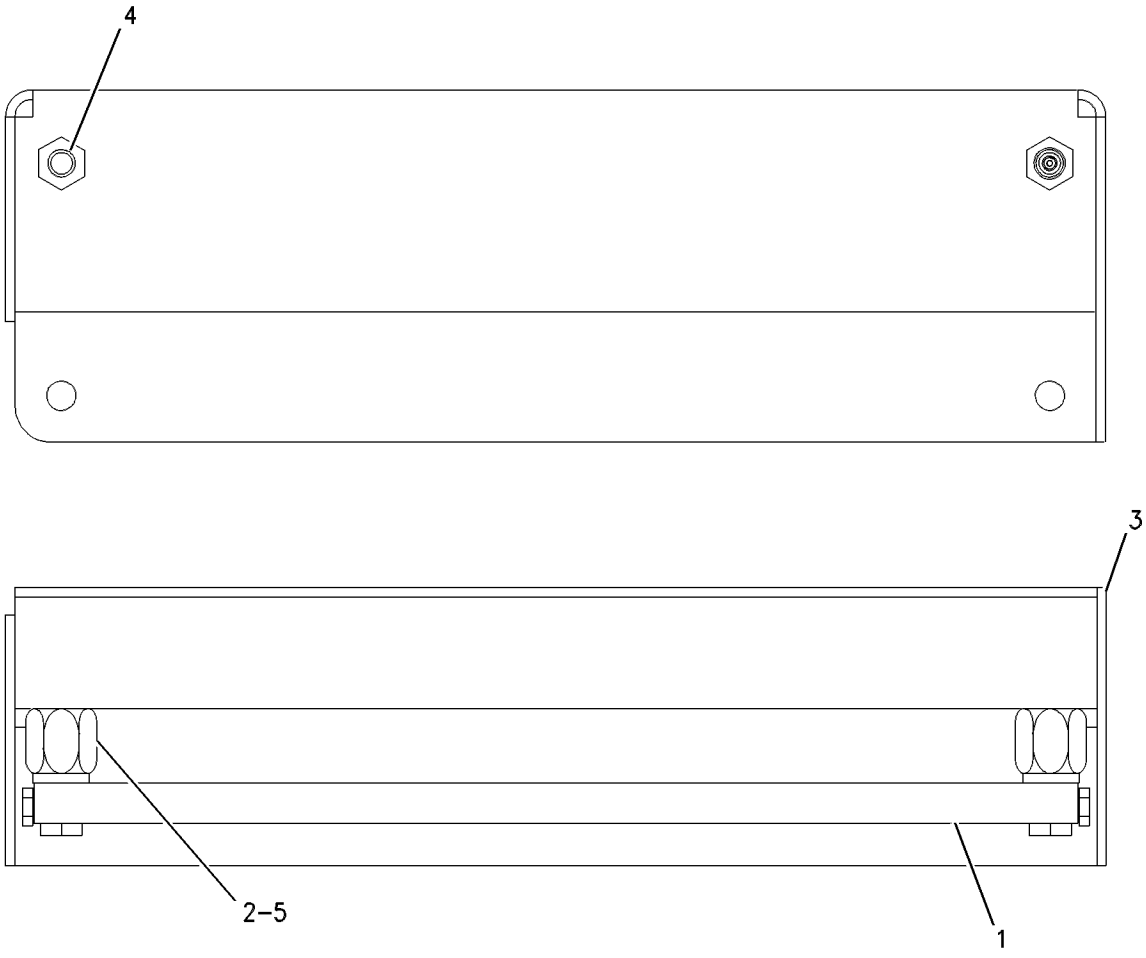

GRAPHIC #1 g00599381

MEMORANDA

6Y-6969 GEAR & CASE GP-OUTPUT TRANSFER

S/N: 9BX1-UP

PART OF 6Y-6965 TRANSMISSION AR

SMCS-3002, 3075, 3159 **i01509541**

NOTE	REF NO	GRAPHIC REF	PART NUMBER	QTY	PART NAME 1 2 3 4 5 6 (PRODUCT LEVEL)	SEE PAGE
	1	2	**115-9460**	1	CASE AS	
		2	**2S-7010**	1	CLIP	
		2	**5K-9107**	1	BOLT-LOCKING (3/8-16X0.75 IN)	
		2	**5M-2894**	1	WASHER-HARD (10.2X18.5X2.5MM THK)	
		2	**6I-8055**	1	TUBE	
		2	**6I-8491**	1	TUBE	
		2	**7M-5839**	1	PLUG-CUP (17.78MM ID)	
		2	**1A-1460**	5	BOLT (1/2-13X2 IN)	
		2	**8E-5117**	1	COVER-TRANSFER GEAR	
		2	**8M-8659**	2	DOWEL	
B	2	2	**6P-4213**	1	SHIM PACK (INCLUDES 15 SHIMS)	
	3	2	**5S-3618**	4	LOCK	
	4	2	**1A-2029**	8	BOLT (3/8-16X1.125 IN)	
	5	2	**6P-3313**	1	CAGE-BEARING	
	6	2	**174-1527**	1	BEARING AS	
	7	2	**6I-9790**	4	DAMPER-BOLT	
	8	2	**8E-5920**	1	LOCK SET	
	9	2	**5F-3999**	1	SEAL-O-RING	
	10	2	**8E-5055**	1	COVER-IDLER SHAFT	
	11	2	**8M-8997**	2	SEAL-O-RING	
	12	2	**8F-4225**	2	BOLT (3/4-10X10IN)	
	13	2	**5P-8248**	2	WASHER-HARD (20X36.5X3.5MM THK)	
	14	2	**0S-1585**	11	BOLT (1/2-13X1.50 IN)	
	15	1,2	**5P-8245**	39	WASHER-HARD (13.5X25.5X3MM THK)	
	16	2	**140-7448**	1	CAGE-BEARING	
	17	2	**140-7447**	1	RETAINER	
	18	2	**153-1229**	2	YOKE AS	
					(EACH INCLUDES)	
		2	**8R-9312**	1	GUARD-DIRT	
	19	2	**1A-3103**	2	BOLT (3/4-16X3.75IN)	
	20	2	**2V-2076**	2	RETAINER	
	21	2	**3F-5920**	2	CUP-ROLLER BEARING	
	22	2	**4M-1552**	2	CONE-ROLLER BEARING	
	23	2	**8E-7003**	1	SPACER	
	24	2	**7X-1548**	1	SEAL	
	25	2	**9S-4191**	1	PLUG-STRAIGHT THREAD	
	26	2	**3J-1907**	1	SEAL-O-RING	
	27	2	**2J-0157**	2	SEAL-O-RING	
	28	2	**8E-5056**	1	GEAR-OUTPUT (84 TEETH)	
	29	2	**4B-2363**	1	PLUG-DRAIN (1-1/2-12 THD)	
	30	2	**6F-4868**	1	GASKET	
	31	1	**0S-1594**	6	BOLT (3/8-16X1 IN)	
	32	1	**5M-2894**	6	WASHER-HARD (10.2X18.5X2.5MM THK)	
	33	2	**8E-5050**	1	SHAFT-TRANSFER	
	34	2	**5P-3603**	1	RING	
	35	2	**5L-5773**	1	RACE-INNER	
	36	2	**4L-9564**	3	SEAL-O-RING	
	37	2	**173-7715**	2	SEAL-LIP TYPE	
	38	2	**8E-5070**	1	CAGE-BEARING	
	39	2	**5L-5772**	1	RACE & ROLLER AS	
	40	1	**2N-7007**	1	GASKET	
	41	1	**9U-3238**	1	COVER	
	42	2	**114-9114**	1	SHAFT-IDLER	
	43	2	**8E-5052**	1	GEAR-IDLER (53 TEETH)	
	44	2	**3E-3212**	1	RING-RETAINING	
M	45	1	**6V-8149**	4	NUT (M12X1.75 THD)	

6Y-6969 GEAR & CASE GP-OUTPUT TRANSFER *(contd.)* i01509541

NOTE	REF NO	GRAPHIC REF	PART NUMBER	QTY	PART NAME 1 2 3 4 5 6 (PRODUCT LEVEL)	SEE PAGE
	46	2	**1P-4696**	2	CONE-ROLLER BEARING	
	47	2	**1P-4695**	2	CUP-ROLLER BEARING	
	48	2	**8E-5051**	1	GEAR-INPUT (52 TEETH)	
	49	2	**9S-8752**	8	NUT-FULL (3/8-16 THD)	
	50	2	**8P-3251**	2	COVER AS	
					(EACH INCLUDES)	
		2	**7B-3028**	2	SCREW-DRIVE (NO 4X3/16 IN)	
		2	**7S-2962**	1	WASHER-SPRING	
	51	2	**8H-7521**	2	SEAL-O-RING	
	52	2	**9W-5531**	2	TUBE AS	
	53	2	**3S-3875**	2	SCREEN-SUCTION	
	54	2	**115-1816**	1	HOUSING AS	
		2	**2M-1538**	8	STUD-TAPERLOCK	
	55	2	**0S-1587**	12	BOLT (1/2-13X1.75 IN)	
	56	2	**9X-8875**	4	BOLT (1/2-13X3.5 IN)	
	57	1	**8E-6678**	1	GEAR-PUMP (45 TEETH)	
	58	1	**5F-3144**	1	SEAL-O-RING	
B	59	1	**8E-6830**	1	SHIM PACK (INCLUDES 14 SHIMS)	
	60	1	**8E-5641**	1	CAGE AS	
M		1	**141-9481**	4	STUD-TAPERLOCK	
	61	1	**7K-8877**	2	CONE-ROLLER BEARING	
	62	1	**0S-1595**	4	BOLT (1/2-13X1.25 IN)	
	63	1	**7K-8876**	2	CUP-ROLLER BEARING	
	64	1	**3F-5792**	2	SEAL-O-RING	
	65	1	**8S-0617**	2	COVER	
	66	1	**1A-1460**	6	BOLT (1/2-13X2 IN)	
	67	1	**7X-0326**	12	BOLT (1/2-13X3 IN)	
B	68	1,2	**6V-6640**		SEALANT (GASKET MAKER)	
	69	1	**6T-7061**	2	EYE-LIFTING	
	70	1	**0S-1566**	2	BOLT (5/8-11X1.5 IN)	
	71	1	**9X-8873**	3	BOLT (1/2-13X2.25 IN)	

B-USE AS REQUIRED
M-METRIC PART

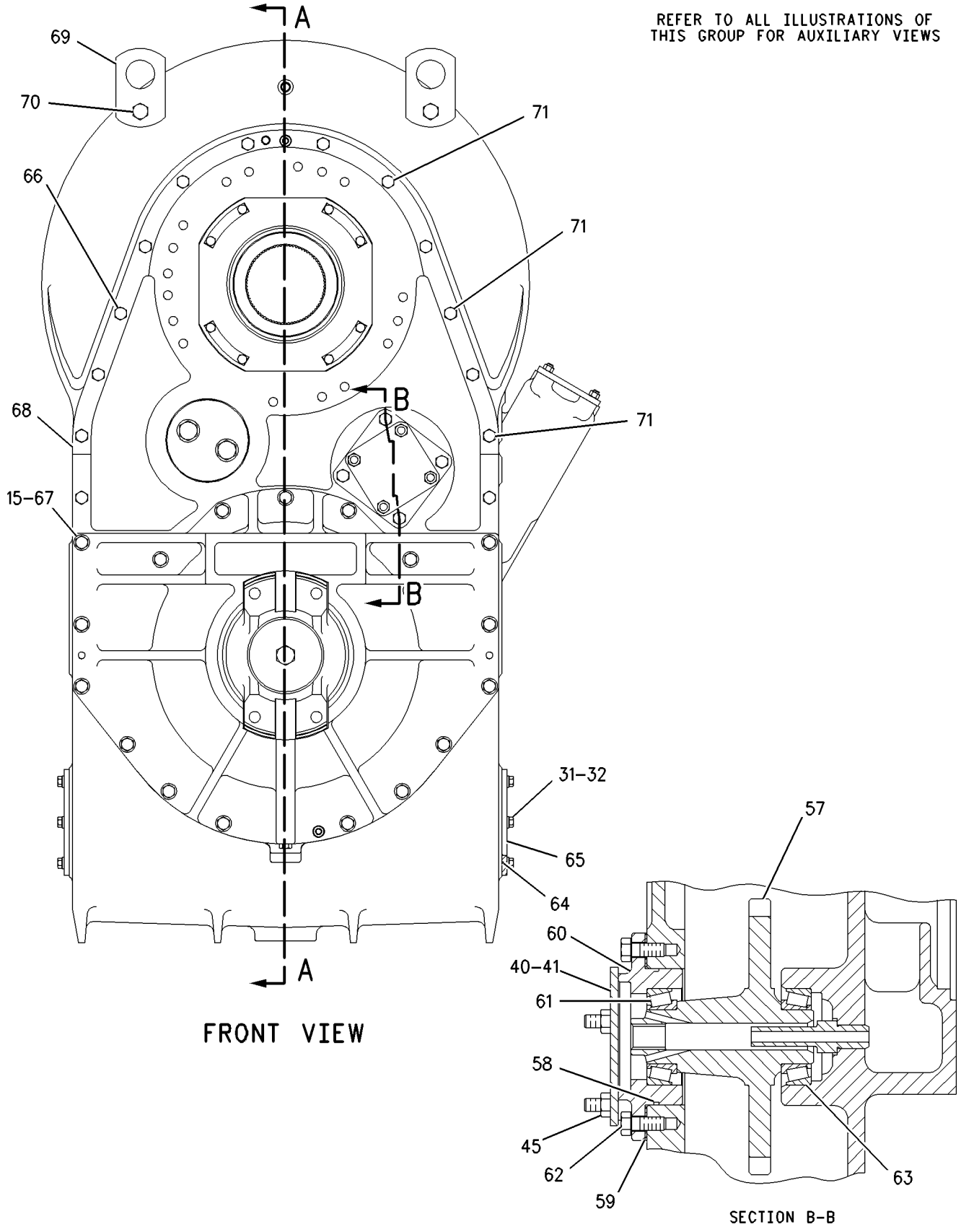

GRAPHIC #1

g00745089

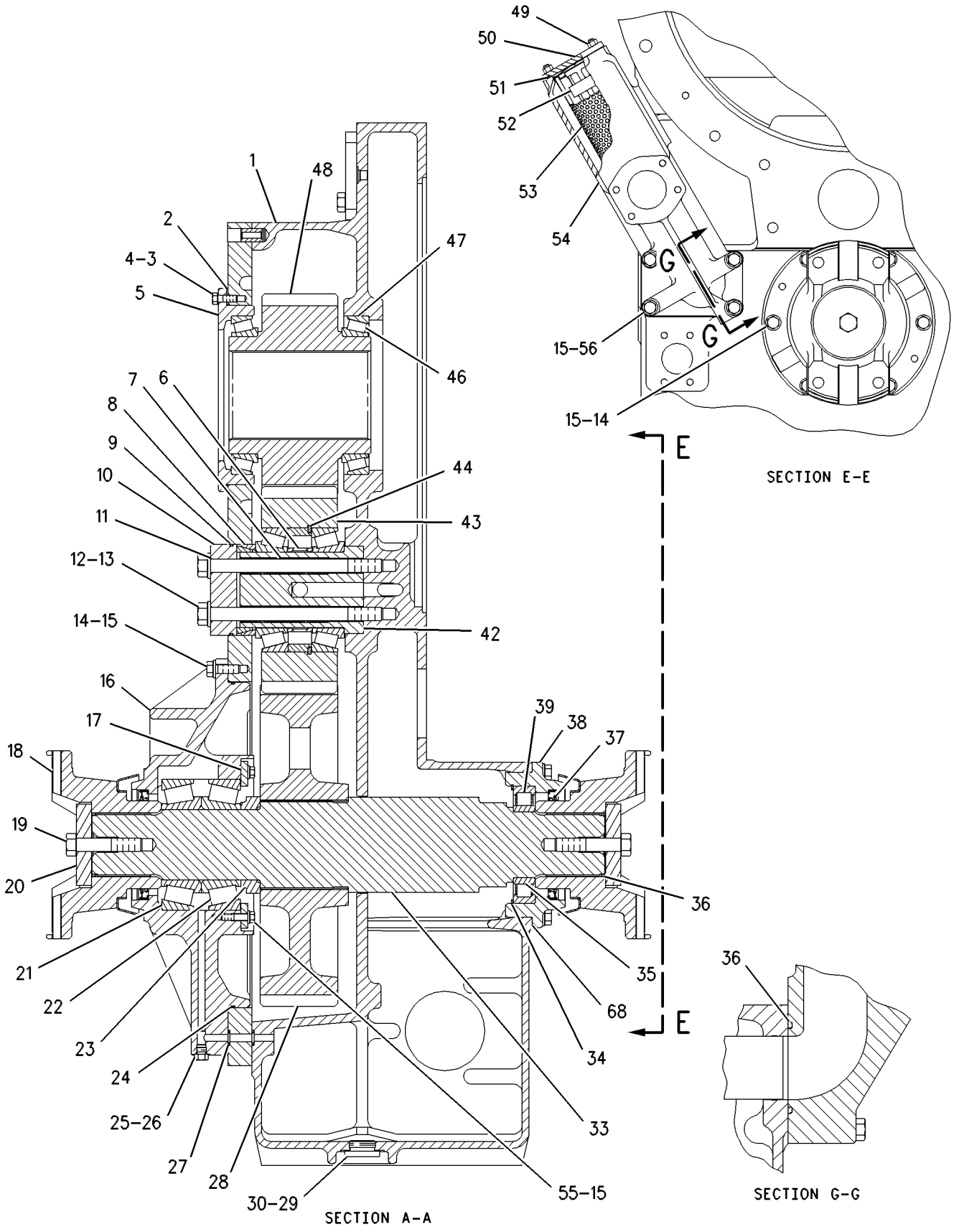

GRAPHIC #2

g00597397

6Y-6968 GEAR GP-INPUT TRANSFER

S/N: 9BX1-UP

PART OF 6Y-6965 TRANSMISSION AR

SMCS-3159 **i01417075**

NOTE	REF NO	GRAPHIC REF	PART NUMBER	QTY	PART NAME 1 2 3 4 5 6 (PRODUCT LEVEL)	SEE PAGE
	1	1	**162-9969**	1	YOKE AS	
		1	**2H-3934**	1	SEAL-O-RING (98.02MM ID)	
		1	**8K-2692**	1	RING-RETAINING	
	2	1	**140-2802**	1	CAGE AS	
		1	**8T-5089**	1	PIN-SPRING	
	3	1	**1A-2029**	22	BOLT (3/8-16X1.125 IN)	
	4	1	**5M-2894**	14	WASHER-HARD (10.2X18.5X2.5MM THK)	
B	5	1	**112-8633**	2	SHIM PACK (INCLUDES 11 SHIMS)	
	6	1	**5P-2861**	1	SEAL-O-RING (316.87MM ID)	
	7	1	**113-5313**	1	CASE AS-INPUT TRANSFER	
		1	**2D-6642**	2	BALL	
		1	**9M-4007**	1	DOWEL	
	8	1	**109-7389**	1	GEAR-INPUT (56 TEETH)	
	9	1	**6I-8860**	2	CUP-ROLLER BEARING	
	10	1	**6I-8849**	2	CONE-ROLLER BEARING	
	11	1	**6V-1175**	1	SEAL-O-RING (354.97MM ID)	
	12	1	**110-8403**	1	CAGE-BEARING	
	13	1	**6V-1179**	1	SEAL-O-RING (76.62MM ID)	
	14	1	**109-7390**	1	GEAR-OUTPUT (51 TEETH)	
	15	1	**1P-4693**	2	CUP-ROLLER BEARING	
	16	1	**1P-4694**	2	CONE-ROLLER BEARING	
	17	1	**9S-4191**	1	PLUG-O-RING	
	18	1	**3J-1907**	4	SEAL-O-RING (11.89MM ID)	
	19	1	**111-6261**	1	MANIFOLD-LUBRICATION OIL	
	20	1	**4S-5898**	1	SEAL-O-RING (126.59MM ID)	
	21	1	**6M-6853**	1	TEE-O-RING	
	22	1	**112-9646**	1	TUBE AS	
	23	1	**3B-8453**	1	SEAL-O-RING (18.42MM ID)	
	24	1	**1B-7709**	12	BOLT (5/8-11X8 IN)	
	25	1	**5P-8247**	12	WASHER-HARD (17X32X3.5MM THK)	
	26	1	**030-7947**	2	ELBOW	
	27	1	**112-9645**	1	TUBE AS	
	28	1	**8C-3075**	1	SEAL-LIP	

B-USE AS REQUIRED

6Y-6968 **GEAR GP-INPUT TRANSFER** *(contd.)* **i01417075**

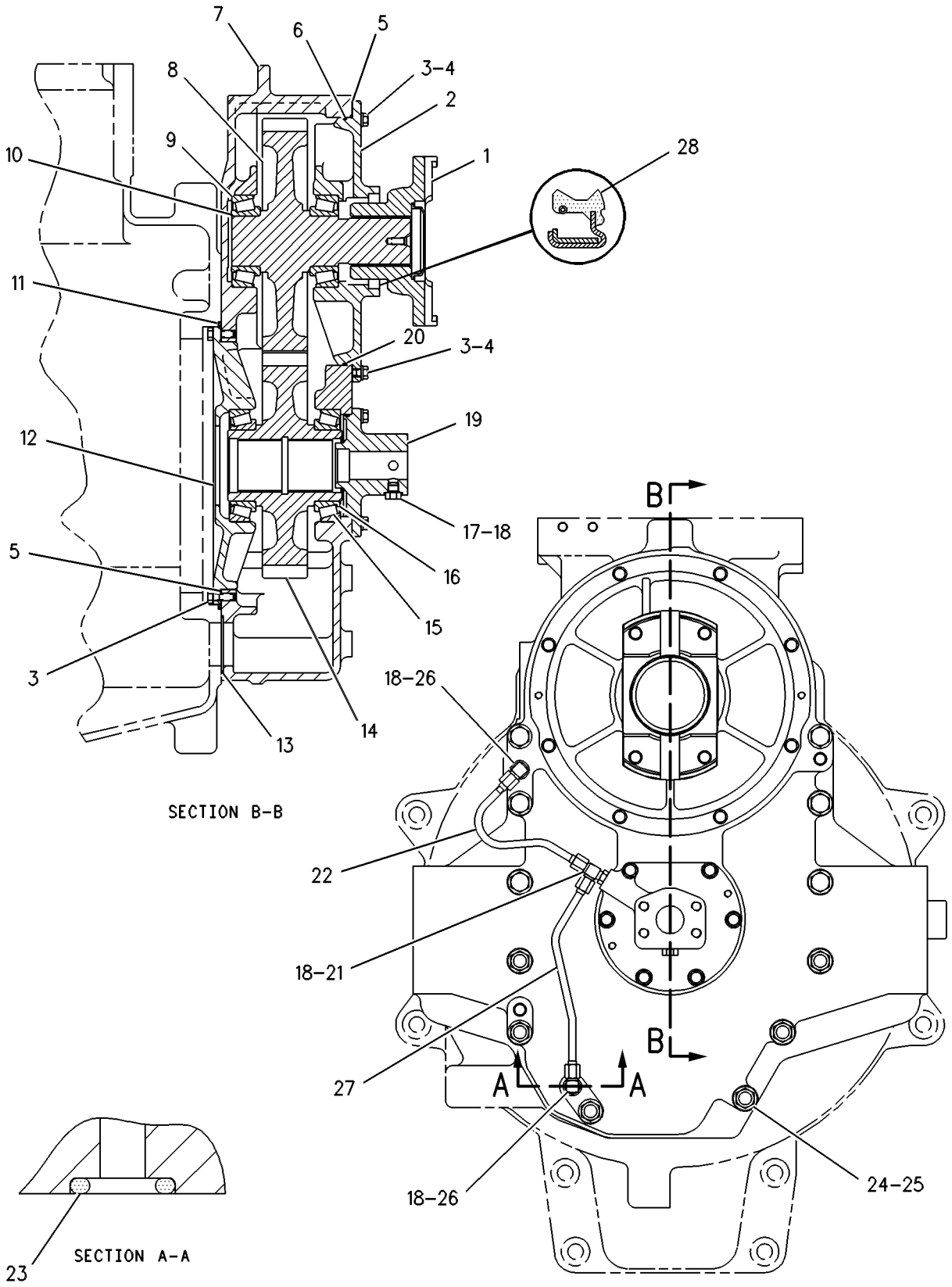

GRAPHIC #1 g00263130

128-7742 KIT-TRANSMISSION BEARING

S/N: 7HR1-UP

FIELD INSTALLATION

SMCS-3064 **i01523842**

NOTE	PART NUMBER	QTY	PART NAME 1 2 3 4 5 6 (PRODUCT LEVEL)	SEE PAGE
	5P-1669	1	BALL BEARING	
	5P-6727	1	BALL BEARING	
	148-6559	1	BALL BEARING	
	174-1527	1	BEARING AS	
	5M-7925	4	BEARING-ROLLER	
	1T-0766	2	BEARING-SLEEVE	
	187-1367	2	BEARING-SPECIAL BALL	
	1P-4694	2	CONE-ROLLER BEARING	
	1P-4696	2	CONE-ROLLER BEARING	
	6I-8849	2	CONE-ROLLER BEARING	
	7K-8877	2	CONE-ROLLER BEARING	
	132-6597	2	CONE-SPECIAL	
	1P-4693	2	CUP-ROLLER BEARING	
	1P-4695	2	CUP-ROLLER BEARING	
	6I-8860	2	CUP-ROLLER BEARING	
	7K-8876	2	CUP-ROLLER BEARING	
	132-6598	2	CUP-SPECIAL	
	8E-8310	8	DISC-THRUST	
	8E-8316	24	DISC-THRUST	
	4S-8537	3	DOWEL	
	4S-8541	3	DOWEL	
	9M-2001	1	DOWEL	
	2H-9445	8	PIN-SPRING	
	8T-5089	1	PIN-SPRING	
	3S-2708	5	PIN-SPRING	
	7M-5130	1	PIN-SPRING	
	5L-5772	1	RACE & ROLLER AS	
	5L-5773	1	RACE-INNER	
	6F-0155	2	RING-METAL SEAL	
	3S-8035	2	RING-SEAL	
	7S-7018	1	RING-SEAL METAL	
	1S-9110	8	ROLLER AS	
	1P-3958	8	ROLLER AS-SPECIAL	

136-5709 LINES GP-AXLE VENT

S/N: 7HR1-UP

PART OF 109-6822 POWER TRAIN AR

SMCS-3260 **i00747527**

NOTE	REF NO	GRAPHIC REF	PART NUMBER	QTY	PART NAME 1 2 3 4 5 6 (PRODUCT LEVEL)	SEE PAGE
	1	1	**4B-4550**	1	FITTING-RELIEF (1/8-27 PTF)	
	2	1	**8T-4128**	1	ADAPTER-ORFS	
	3	1	**136-5198**	1	TUBE AS	
	4	1	**2M-9780**	1	SEAL-O-RING (19.18MM ID)	
	5	1	**3J-1907**	1	SEAL-O-RING (11.89MM ID)	
	6	1	**4J-5477**	2	SEAL-O-RING (8.61MM ID)	
	7	1	**5P-1404**	1	ADAPTER-O-RING	
	8	1	**6V-8641**	1	CONNECTOR-SEAL	
	9	1	**7M-8322**	1	CLIP (6.32MM ID)	
	10	1	**8T-4121**	1	WASHER (2.5MM THK)	
M	11	1	**8T-4137**	1	BOLT (M10X1.50X20MM)	

M-METRIC PART

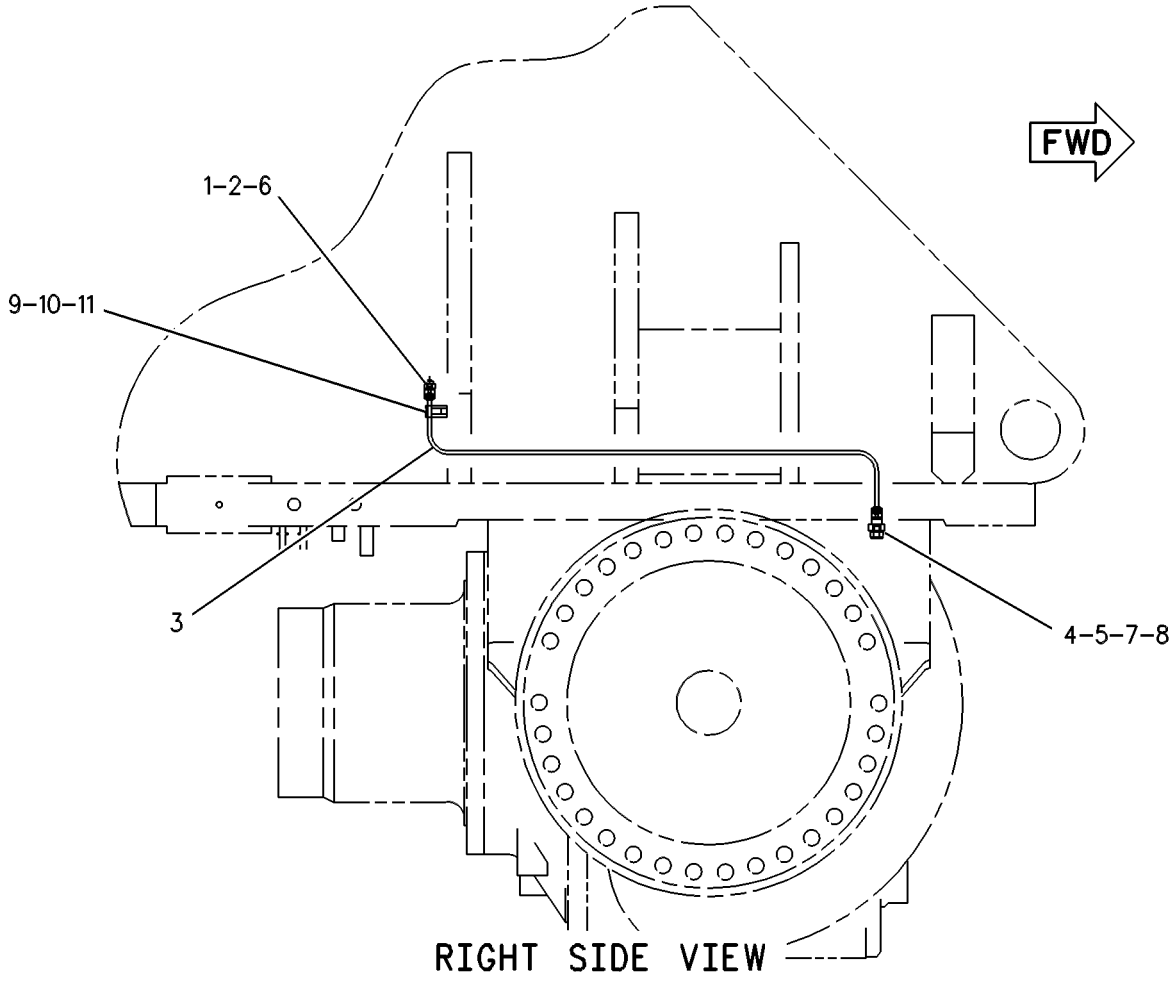

GRAPHIC #1 g00271848

109-6910 LINES GP-POWER TRAIN OIL

S/N: 7HR1-UP

PART OF 109-6822 POWER TRAIN AR

TYPE 1

SMCS-3016 **i01300620**

NOTE	REF NO	GRAPHIC REF	PART NUMBER	QTY	PART NAME 1 2 3 4 5 6 (PRODUCT LEVEL)	SEE PAGE
	1	2	**1P-3704**	1	SEAL-RECTANGULAR (38.2MM ID)	
	2	1	**2N-8998**	1	BRACKET	
	3	2	**2T-3019**	1	CLIP (9.50MM ID)	
	4	2	**5P-1076**	2	WASHER-HARD (4MM THK)	
Y	5	2	**6I-8563**	1	VALVE GP-TORQUE CONV PRIORITY	664
	6	1	**6V-8397**	4	SEAL-O-RING (9.27MM ID)	
	7	2	**7M-8485**	1	SEAL-O-RING (29.74MM ID)	
Y	8	2	**8E-9727**	1	VALVE GP-RELIEF (TORQUE CONVERTER OUTLET)	658
	9	1	**8X-8340**	1	BRACKET	
I	10	1	**143-2529**	1	HOSE AS	
Y	11	2	*113-7428*	1	PUMP GP-TRANSMISSION	591
	12	2	**115-9544**	1	MANIFOLD	
	13	1	**115-9776**	1	HOSE AS	
I	14	1	**115-9777**	1	HOSE AS	
I	15	1	**158-4241**	1	HOSE AS	
I	16	1	**115-9779**	1	HOSE AS	
I	17	1	**115-9780**	1	HOSE AS	
I	18	2	**115-9781**	1	HOSE AS	
I	19	2	**115-9783**	1	HOSE AS	
I	20	1	**115-9784**	1	HOSE AS	
I	21	1	**115-9785**	1	HOSE AS	
I	22	2	**117-6645**	1	HOSE AS	
I	23	2	**124-2421**	1	HOSE AS	
	24	2	**101-2815**	2	TUBE	
I	25	2	**125-0810**	1	HOSE AS	
Y	26	1	*133-8649*	1	GAUGE GP-LIQUID LEVEL (POWER TRAIN OIL)	542
Y	27	2	*133-8650*	1	FILLER GP-POWER TRAIN OIL	527
Y	28	1	*133-8651*	1	FILTER & MTG GP-POWER TRAIN	530
	29	1	**6K-8178**	3	CLIP (15.88MM ID)	
	30	1	**1P-4578**	2	FLANGE-HALF	
	31	1,2	**1P-4579**	8	FLANGE-HALF	
	32	1,2	**1P-4582**	14	FLANGE-HALF	
	33	1	**1P-4584**	2	FLANGE-HALF	
	34	1	**1P-4585**	2	FLANGE-HALF	
	35	2	**1S-6420**	2	CLIP (17.46MM ID)	
	36	1	**2H-6338**	1	SEAL-O-RING (85.32MM ID)	
	37	1	**3J-1907**	4	SEAL-O-RING (11.89MM ID)	
	38	1,2	**4J-0522**	4	SEAL-O-RING (37.69MM ID)	
	39	1,2	**4J-0524**	9	SEAL-O-RING (47.22MM ID)	
	40	1,2	**4J-0527**	7	SEAL-O-RING (56.74MM ID)	
	41	1	**5P-2566**	8	BOLT (1/2-13X1.50 IN)	
	42	1	**5P-7470**	2	CLIP (SLOT)	
	43	1	**5P-7471**	2	CLIP (TAB)	
	44	1	**5P-7703**	2	GROMMET	
	45	1	**6J-2680**	1	SEAL-O-RING (69.44MM ID)	
	46	1,2	**6V-0397**	6	FLANGE-HALF	
	47	1	**6V-8724**	3	ELBOW-90 DEGREE (9/16-18 THD)	
I	48	1	**143-2934**	1	HOSE AS	
	49	2	**7S-8920**	2	CLIP (SLOT)	
	50	2	**7S-8921**	2	CLIP (TAB)	
M	51	2	**7X-2549**	6	BOLT (M12X1.75X100MM)	
	52	1	**8S-0948**	1	CLIP (20.64MM ID)	
	53	2	**8M-4443**	1	SEAL (44.04MM ID)	
	54	2	**8M-4986**	1	SEAL-O-RING (37.69MM ID)	
	55	2	**8M-5127**	1	SEAL-O-RING (10.77MM ID)	

109-6910 **LINES GP-POWER TRAIN OIL** *(contd.)* **i01300620**

NOTE	REF NO	GRAPHIC REF	PART NUMBER	QTY	PART NAME 1 2 3 4 5 6 (PRODUCT LEVEL)	SEE PAGE
	56	2	**8M-5254**	1	SEAL-O-RING (31.34MM ID)	
	57	2	**8M-8157**	1	SEAL (9.19MM ID)	
	58	1,2	**8T-4121**	13	WASHER-HARD (2.5MM THK)	
M	59	2	**8T-4139**	4	BOLT (M12X1.75X30MM)	
	60	2	**6V-9807**	2	UNION (M16X2.0X60MM)	
M	61	2	**8T-4178**	4	BOLT (M10X1.5X90MM)	
M	62	1,2	**8T-4183**	48	BOLT (M12X1.75X40 MM)	
M	63	1	**7X-2553**	4	BOLT (M16X2.0X40MM)	
M	64	1	**8T-4193**	4	BOLT (M16X2.0X50MM)	
M	65	1	**8T-4194**	4	BOLT (M12X1.75X50MM)	
M	66	1	**8T-4195**	2	BOLT (M10X1.50X30MM)	
M	67	1	**8T-4196**	4	BOLT (M10X1.50X35MM)	
M	68	2	**8T-4198**	4	BOLT (M10X1.50X100MM)	
	69	1,2	**8T-4223**	74	WASHER-HARD (3MM THK)	
M	70	1	**8T-4244**	2	NUT (M12X1.75 THD)	
M	71	1	**8T-4956**	2	BOLT (M12X1.75X35MM)	
	72	2	**9S-4181**	1	PLUG-STRAIGHT THREAD (1-5/16-12 THD)	
	73	1	**9X-8257**	4	WASHER (3.50MM THK)	
	74	1	**5P-2369**	1	CLIP (44.45MM ID)	
M	75	1	**8T-4133**	1	NUT (M10X1.50 THD)	
	76	1	**6V-0852**	1	CAP-DUST	
	77	1	**6V-3965**	1	FITTING AS	
	78	1	**7X-0517**	4	WASHER-HARD (2.5MM THICK)	

I-SEE HOSE FABRICATION GUIDE
M-METRIC PART
Y-SEPARATE ILLUSTRATION

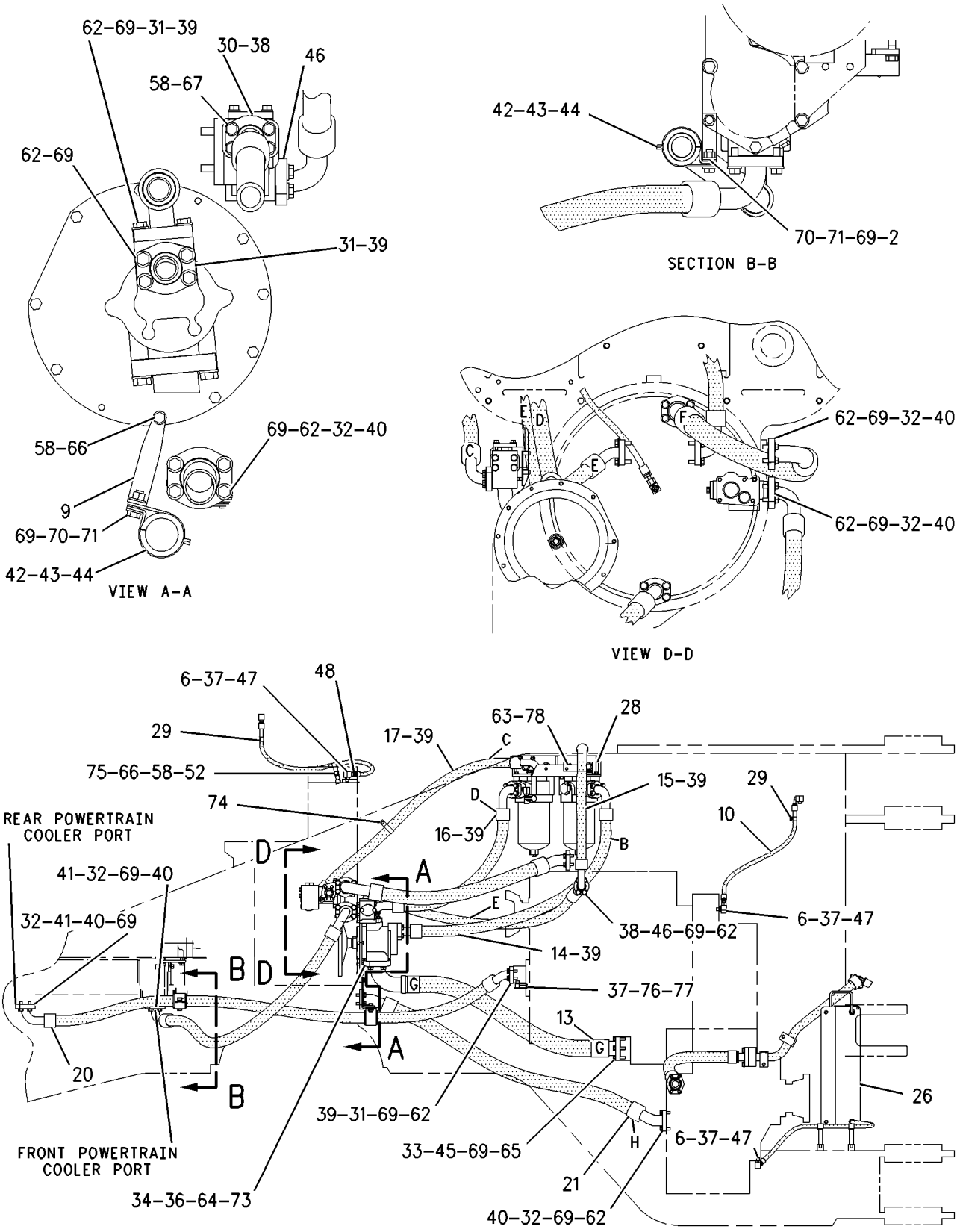

GRAPHIC #1 g00634691

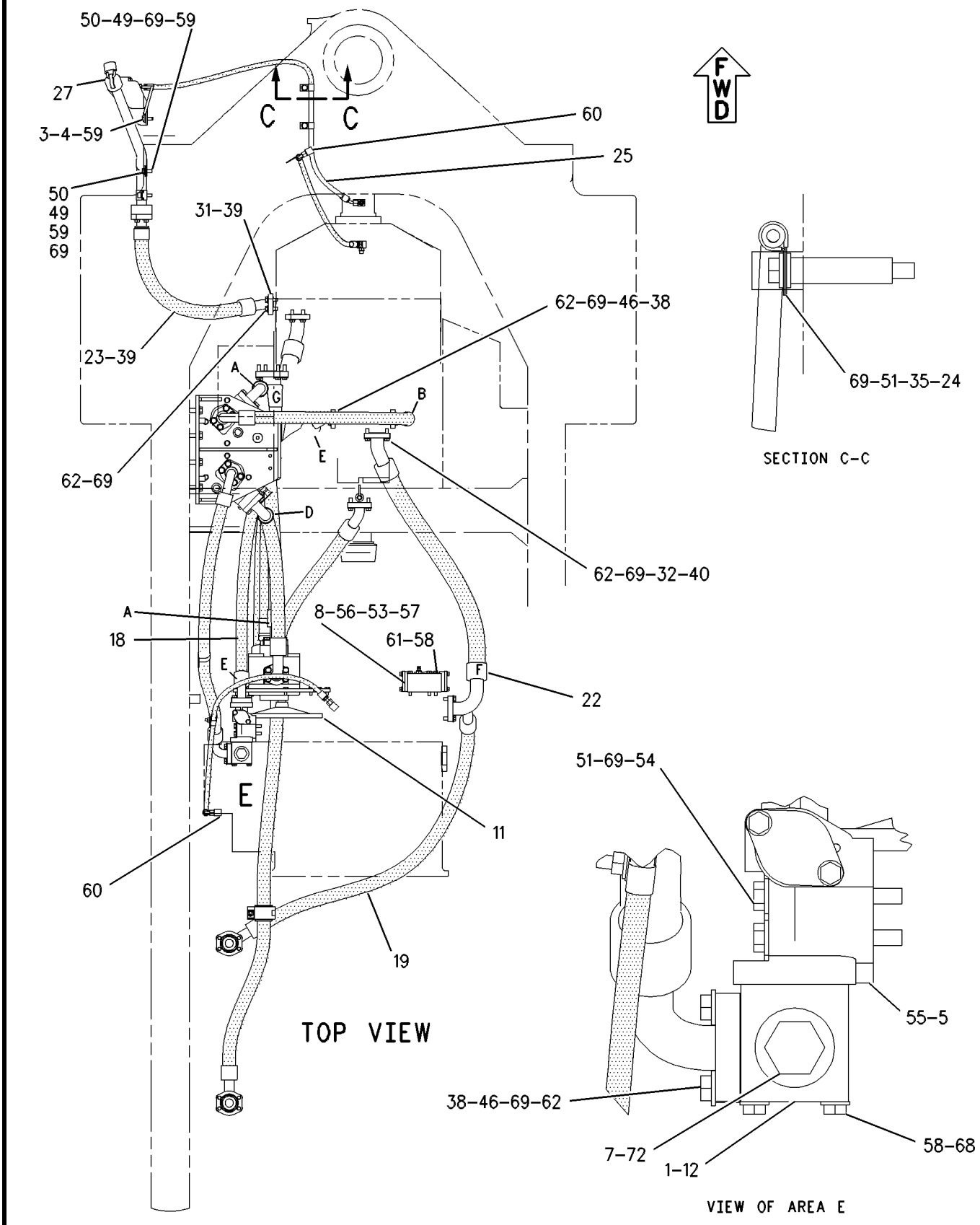

GRAPHIC #2

g00586565

109-6910 LINES GP-POWER TRAIN OIL

S/N: 7HR1-UP
PART OF 109-6822 POWER TRAIN AR
TYPE 2

SMCS-3016 **i01300674**

NOTE	REF NO	GRAPHIC REF	PART NUMBER	QTY	PART NAME 1 2 3 4 5 6 (PRODUCT LEVEL)	SEE PAGE
	1	2	**1P-3704**	1	SEAL-RECTANGULAR (38.2MM ID)	
	2	1	**2N-8998**	1	BRACKET	
C	3	1	**174-3469**	1	BRACKET AS	
	4	2	**5P-1076**	2	WASHER-HARD (4MM THK)	
Y	5	2	**6I-8563**	1	VALVE GP-TORQUE CONV PRIORITY	664
C	6	2	**6V-8397**	1	SEAL-O-RING (9.27MM ID)	
	7	2	**7M-8485**	1	SEAL-O-RING (29.74MM ID)	
Y	8	2	**8E-9727**	1	VALVE GP-RELIEF (TORQUE CONVERTER OUTLET)	658
	9	1	**8X-8340**	1	BRACKET	
CI	10	1	**165-9770**	1	HOSE AS	
Y	11	2	*113-7428*	1	PUMP GP-TRANSMISSION	591
	12	2	**115-9544**	1	MANIFOLD	
	13	1	**115-9776**	1	HOSE AS	
I	14	1	**115-9777**	1	HOSE AS	
I	15	1	**158-4241**	1	HOSE AS	
I	16	1	**115-9779**	1	HOSE AS	
I	17	1	**115-9780**	1	HOSE AS	
I	18	2	**115-9781**	1	HOSE AS	
I	19	2	**176-7678**	1	HOSE AS	
I	20	1	**115-9784**	1	HOSE AS	
I	21	1	**115-9785**	1	HOSE AS	
I	22	2	**117-6645**	1	HOSE AS	
I	23	2	**124-2421**	1	HOSE AS	
	24	2	**101-2815**	2	TUBE	
I	25	2	**125-0810**	1	HOSE AS	
Y	26	1	*133-8649*	1	GAUGE GP-LIQUID LEVEL (POWER TRAIN OIL)	542
Y	27	2	*133-8650*	1	FILLER GP-POWER TRAIN OIL	527
Y	28	1	*133-8651*	1	FILTER & MTG GP-POWER TRAIN	530
CI	29	1	**160-4001**	1	HOSE AS	
	30	1	**1P-4578**	2	FLANGE-HALF	
	31	1,2	**1P-4579**	8	FLANGE-HALF	
	32	1,2	**1P-4582**	14	FLANGE-HALF	
	33	1	**1P-4584**	2	FLANGE-HALF	
	34	1	**1P-4585**	2	FLANGE-HALF	
	35	2	**1S-6420**	2	CLIP (17.46MM ID)	
	36	1	**2H-6338**	1	SEAL-O-RING (85.32MM ID)	
C	37	1	**3J-1907**	1	SEAL-O-RING (11.89MM ID)	
	38	1,2	**4J-0522**	4	SEAL-O-RING (37.69MM ID)	
	39	1,2	**4J-0524**	9	SEAL-O-RING (47.22MM ID)	
	40	1,2	**4J-0527**	7	SEAL-O-RING (56.74MM ID)	
	41	1	**5P-2566**	8	BOLT (1/2-13X1.50 IN)	
	42	1	**5P-7470**	2	CLIP (SLOT)	
	43	1	**5P-7471**	2	CLIP (TAB)	
	44	1	**5P-7703**	2	GROMMET	
	45	1	**6J-2680**	1	SEAL-O-RING (69.44MM ID)	
	46	1,2	**6V-0397**	6	FLANGE-HALF	
C	47	1	*148-8353*	4	ELBOW AS	
					(EACH INCLUDES)	
		1	**3J-1907**	1	SEAL-O-RING (11.89MM ID)	
		1	**6V-8397**	1	SEAL-O-RING (9.27MM ID)	
		1	**6V-9001**	1	ELBOW-45 DEGREE (9/16-18 THD)	
CI	48	1	**170-1219**	1	HOSE AS	
	49	2	**7S-8920**	2	CLIP (SLOT)	
	50	2	**7S-8921**	2	CLIP (TAB)	
M	51	2	**7X-2549**	6	BOLT (M12X1.75X100MM)	

109-6910 **LINES GP-POWER TRAIN OIL** ***(contd.)*** **i01300674**

NOTE	REF NO	GRAPHIC REF	PART NUMBER	QTY	PART NAME 1 2 3 4 5 6 (PRODUCT LEVEL)	SEE PAGE
	52	1	**8S-0948**	1	CLIP (20.64MM ID)	
	53	2	**8M-4443**	1	SEAL (44.04MM ID)	
	54	2	**8M-4986**	1	SEAL-O-RING (37.69MM ID)	
	55	2	**8M-5127**	1	SEAL-O-RING (10.77MM ID)	
	56	2	**8M-5254**	1	SEAL-O-RING (31.34MM ID)	
	57	2	**8M-8157**	1	SEAL (9.19MM ID)	
	58	1,2	**8T-4121**	13	WASHER-HARD (2.5MM THK)	
CM	59	1,2	**8T-4139**	5	BOLT (M12X1.75X30MM)	
C	60	1	**4H-6112**	3	BREATHER	
M	61	2	**8T-4178**	4	BOLT (M10X1.5X90MM)	
M	62	1,2	**8T-4183**	48	BOLT (M12X1.75X40 MM)	
M	63	1	**7X-2553**	4	BOLT (M16X2.0X40MM)	
M	64	1	**8T-4193**	4	BOLT (M16X2.0X50MM)	
M	65	1	**8T-4194**	4	BOLT (M12X1.75X50MM)	
M	66	1	**8T-4195**	2	BOLT (M10X1.50X30MM)	
M	67	1	**8T-4196**	4	BOLT (M10X1.50X35MM)	
M	68	2	**8T-4198**	4	BOLT (M10X1.50X100MM)	
C	69	1,2	**8T-4223**	76	WASHER-HARD (3MM THK)	
M	70	1	**8T-4244**	2	NUT (M12X1.75 THD)	
M	71	1	**8T-4956**	2	BOLT (M12X1.75X35MM)	
	72	2	**9S-4181**	1	PLUG-STRAIGHT THREAD (1-5/16-12 THD)	
	73	1	**9X-8257**	4	WASHER (3.50MM THK)	
	74	1	**5P-2369**	1	CLIP (44.45MM ID)	
M	75	1	**8T-4133**	1	NUT (M10X1.50 THD)	
	76	1	**6V-0852**	1	CAP-DUST	
	77	1	**6V-3965**	1	FITTING AS	
	78	1	**7X-0517**	4	WASHER-HARD (2.5MM THICK)	
CM	79	1	**8T-4910**	3	BOLT (M12X1.75X60MM)	

C-CHANGE FROM PREVIOUS TYPE
I-SEE HOSE FABRICATION GUIDE
M-METRIC PART
Y-SEPARATE ILLUSTRATION

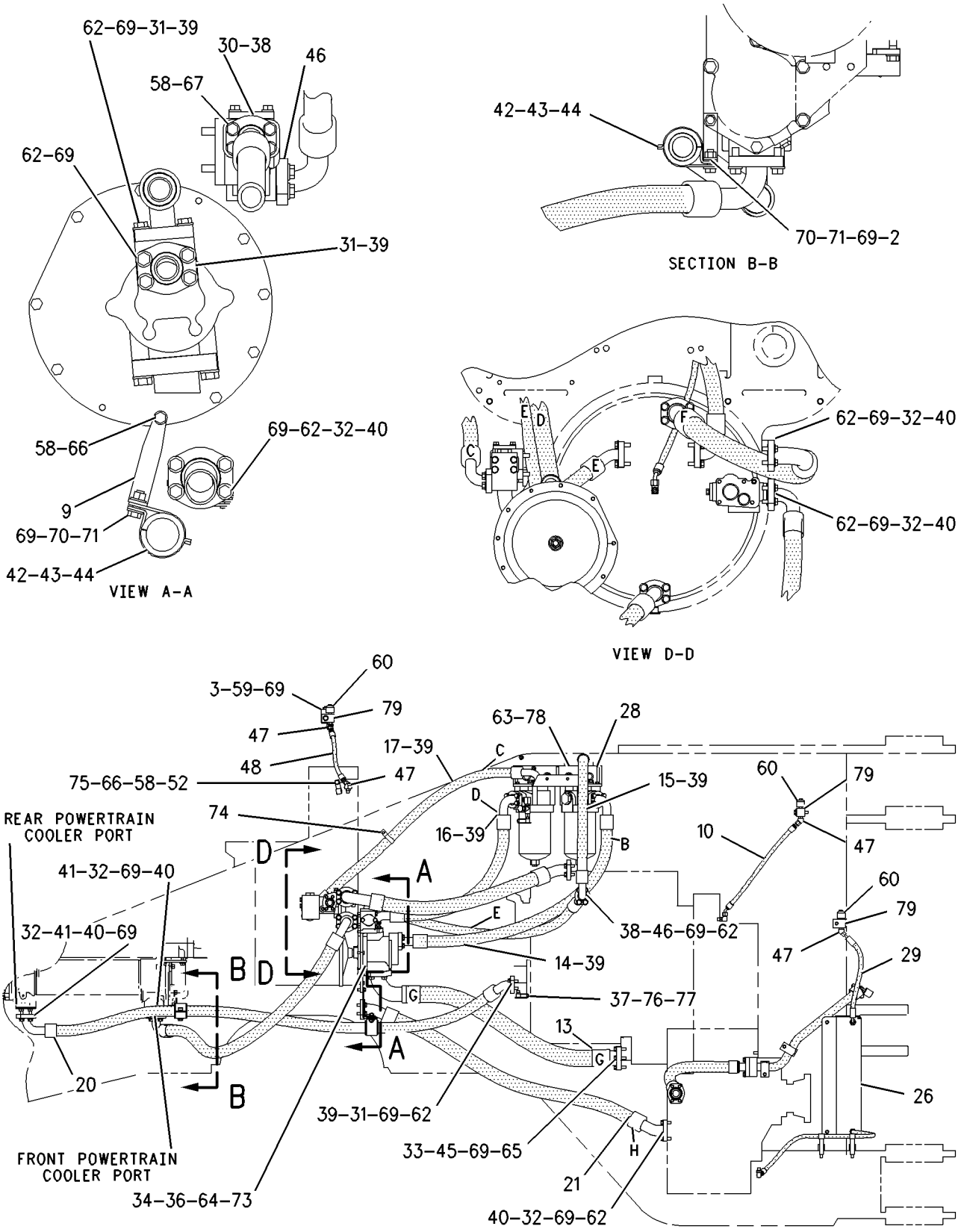

GRAPHIC #1 g00634702

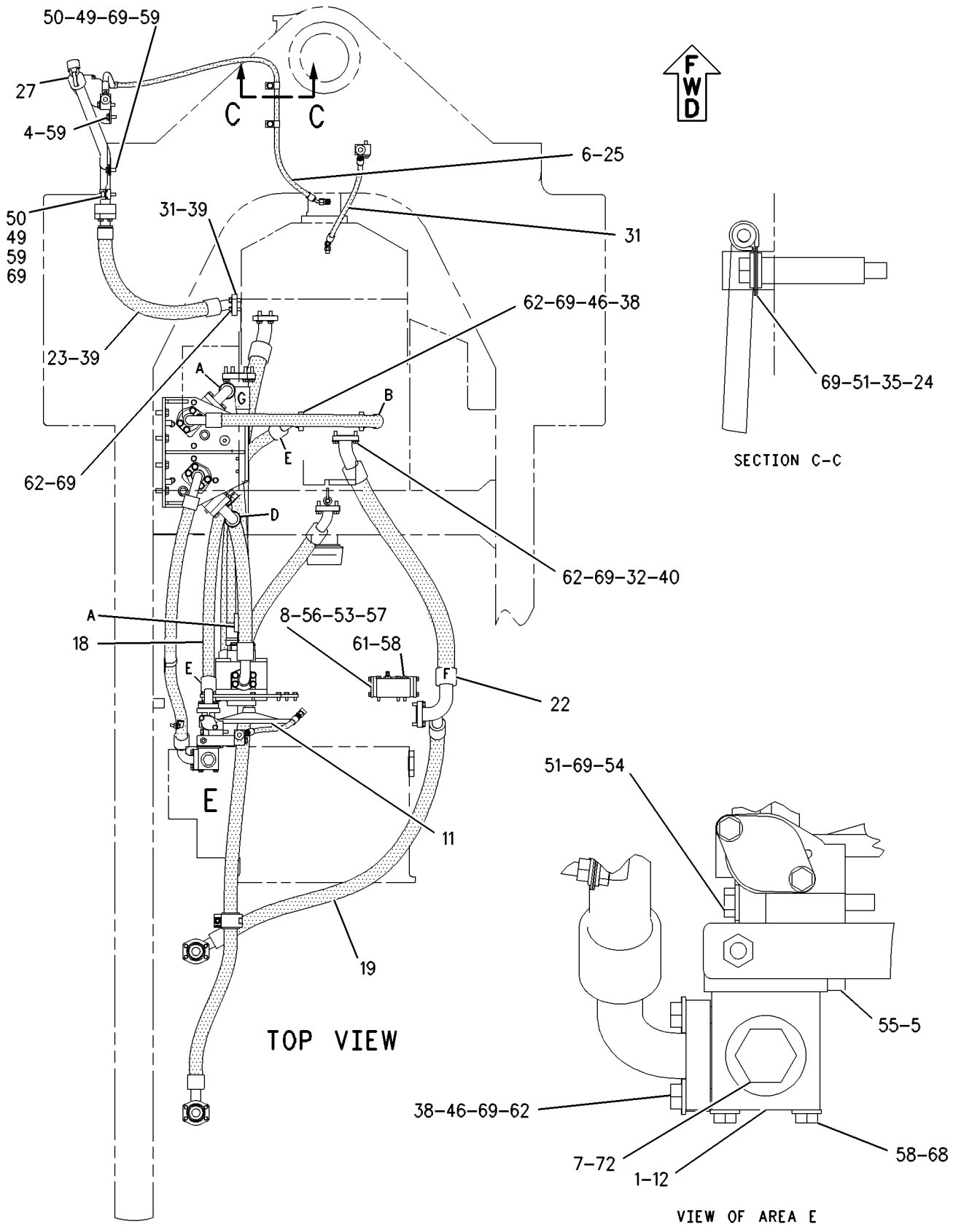

GRAPHIC #2

g00601366

POWER TRAIN

109-6910 LINES GP-POWER TRAIN OIL

S/N: 7HR1-UP
PART OF 109-6822 POWER TRAIN AR
TYPE 3

SMCS-3016 **i01469308**

NOTE	REF NO	GRAPHIC REF	PART NUMBER	QTY	PART NAME 1 2 3 4 5 6 (PRODUCT LEVEL)	SEE PAGE
	1	2	**1P-3704**	1	SEAL-RECTANGULAR	
	2	1	**2N-8998**	1	BRACKET	
	3	1	**174-3469**	1	BRACKET AS	
	4	2	**5P-1076**	4	WASHER-HARD (13.5X30X4MM THK)	
Y	5	2	**6I-8563**	1	VALVE GP-TORQUE CONV PRIORITY	664
	6	2	**6V-8397**	1	SEAL-O-RING	
	7	2	**7M-8485**	1	SEAL-O-RING	
Y	8	2	**8E-9727**	1	VALVE GP-RELIEF (TORQUE CONVERTER OUTLET)	658
	9	1	**8X-8340**	1	BRACKET	
I	10	1	**165-9770**	1	HOSE AS	
Y	11	2	*113-7428*	1	PUMP GP-TRANSMISSION	591
	12	2	**115-9544**	1	MANIFOLD	
	13	1	**115-9776**	1	HOSE AS	
I	14	1	**115-9777**	1	HOSE AS	
I	15	1	**158-4241**	1	HOSE AS	
I	16	1	**115-9779**	1	HOSE AS	
I	17	1	**115-9780**	1	HOSE AS	
I	18	2	**115-9781**	1	HOSE AS	
I	19	2	**176-7678**	1	HOSE AS	
I	20	1	**115-9784**	1	HOSE AS	
I	21	1	**115-9785**	1	HOSE AS	
I	22	2	**117-6645**	1	HOSE AS	
C	23	2	**198-0318**	1	HOSE AS	
	24	2	**101-2815**	2	TUBE	
I	25	2	**125-0810**	1	HOSE AS	
Y	26	1	*133-8649*	1	GAUGE GP-LIQUID LEVEL (POWER TRAIN OIL)	542
CY	27	2	*198-0258*	1	FILLER GP-POWER TRAIN OIL	528
Y	28	1	*133-8651*	1	FILTER & MTG GP-POWER TRAIN	530
I	29	1	**160-4001**	1	HOSE AS	
	30	1	**1P-4578**	2	FLANGE-HALF	
	31	1,2	**1P-4579**	8	FLANGE-HALF	
	32	1,2	**1P-4582**	14	FLANGE-HALF	
	33	1	**1P-4584**	2	FLANGE-HALF	
	34	1	**1P-4585**	2	FLANGE-HALF	
	35	2	**1S-6420**	2	CLIP	
	36	1	**2H-6338**	1	SEAL-O-RING	
	37	1	**3J-1907**	1	SEAL-O-RING	
	38	1,2	**4J-0522**	4	SEAL-O-RING	
	39	1,2	**4J-0524**	9	SEAL-O-RING	
	40	1,2	**4J-0527**	7	SEAL-O-RING	
	41	1	**5P-2566**	8	BOLT (1/2-13X1.5 IN)	
	42	1	**5P-7470**	2	CLIP (SLOT)	
	43	1	**5P-7471**	2	CLIP (TAB)	
	44	1	**5P-7703**	2	GROMMET	
	45	1	**6J-2680**	1	SEAL-O-RING	
	46	1,2	**6V-0397**	6	FLANGE-HALF	
	47	1	*148-8353*	4	ELBOW GP	
					(EACH INCLUDES)	
		1	**3J-1907**	1	SEAL-O-RING	
		1	**6V-8397**	1	SEAL-O-RING	
		1	**6V-9001**	1	ELBOW	
I	48	1	**170-1219**	1	HOSE AS	
	49	2	**7S-8920**	2	CLIP (SLOT)	
	50	2	**7S-8921**	2	CLIP (TAB)	
M	51	2	**7X-2549**	6	BOLT (M12X1.75X100MM)	

109-6910 **LINES GP-POWER TRAIN OIL** *(contd.)* **i01469308**

NOTE	REF NO	GRAPHIC REF	PART NUMBER	QTY	PART NAME 1 2 3 4 5 6 (PRODUCT LEVEL)	SEE PAGE
	52	1	**8S-0948**	1	CLIP	
	53	2	**8M-4443**	1	SEAL-O-RING	
	54	2	**8M-4986**	1	SEAL-O-RING	
	55	2	**8M-5127**	1	SEAL-O-RING	
	56	2	**8M-5254**	1	SEAL-O-RING	
	57	2	**8M-8157**	1	SEAL-O-RING	
	58	1,2	**8T-4121**	13	WASHER-HARD (11X21X2.5MM THK)	
M	59	1,2	**8T-4139**	5	BOLT (M12X1.75X30MM)	
	60	1	**4H-6112**	3	BREATHER	
M	61	2	**8T-4178**	4	BOLT (M10X1.5X90MM)	
M	62	1,2	**8T-4183**	48	BOLT (M12X1.75X40 MM)	
M	63	1	**7X-2553**	4	BOLT (M16X2X40MM)	
M	64	1	**8T-4193**	4	BOLT (M16X2X50MM)	
M	65	1	**8T-4194**	4	BOLT (M12X1.75X50MM)	
M	66	1	**8T-4195**	2	BOLT (M10X1.5X30MM)	
M	67	1	**8T-4196**	4	BOLT (M10X1.5X35MM)	
M	68	2	**8T-4198**	4	BOLT (M10X1.5X100MM)	
C	69	1,2	**8T-4223**	76	WASHER-HARD (13.5X25.5X3MM THK)	
M	70	1	**8T-4244**	2	NUT (M12X1.75 THD)	
M	71	1	**8T-4956**	2	BOLT (M12X1.75X35MM)	
	72	2	**9S-4181**	1	PLUG-STRAIGHT THREAD	
	73	1	**9X-8257**	4	WASHER (17.5X30X3.5MM THK)	
	74	1	**5P-2369**	1	CLIP	
M	75	1	**8T-4133**	1	NUT (M10X1.5 THD)	
	76	1	**6V-0852**	1	CAP-DUST	
	77	1	**6V-3965**	1	FITTING AS (QUICK DISCONNECT)	
	78	1	**7X-0517**	4	WASHER-HARD (17X38X2.5MM THICK)	
M	79	1	**8T-4910**	3	BOLT (M12X1.75X60MM)	

C-CHANGE FROM PREVIOUS TYPE
I-SEE HOSE FABRICATION GUIDE
M-METRIC PART
Y-SEPARATE ILLUSTRATION

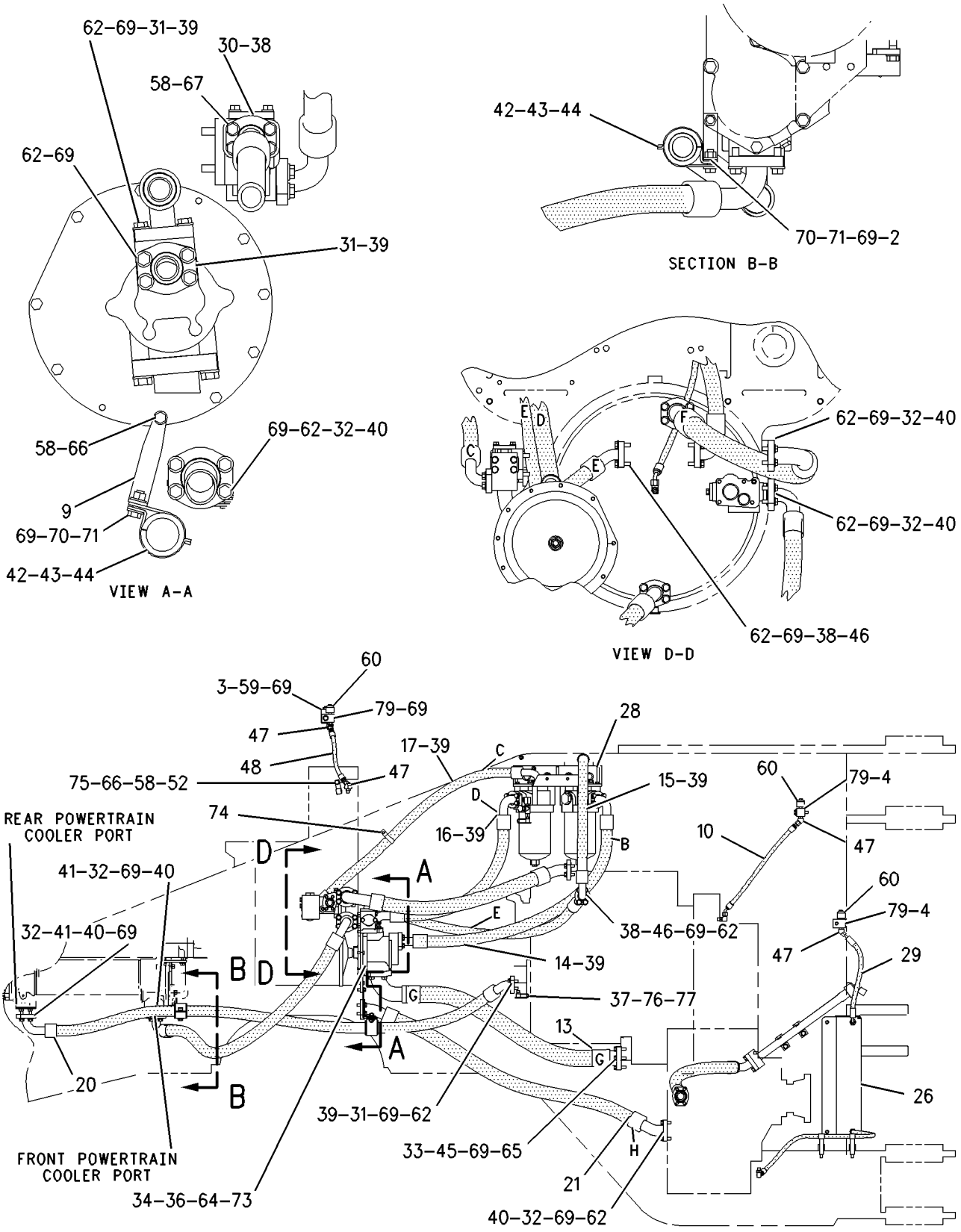

GRAPHIC #1 g00782370

109-6910 **LINES GP-POWER TRAIN OIL** *(contd.)* **i01469308**

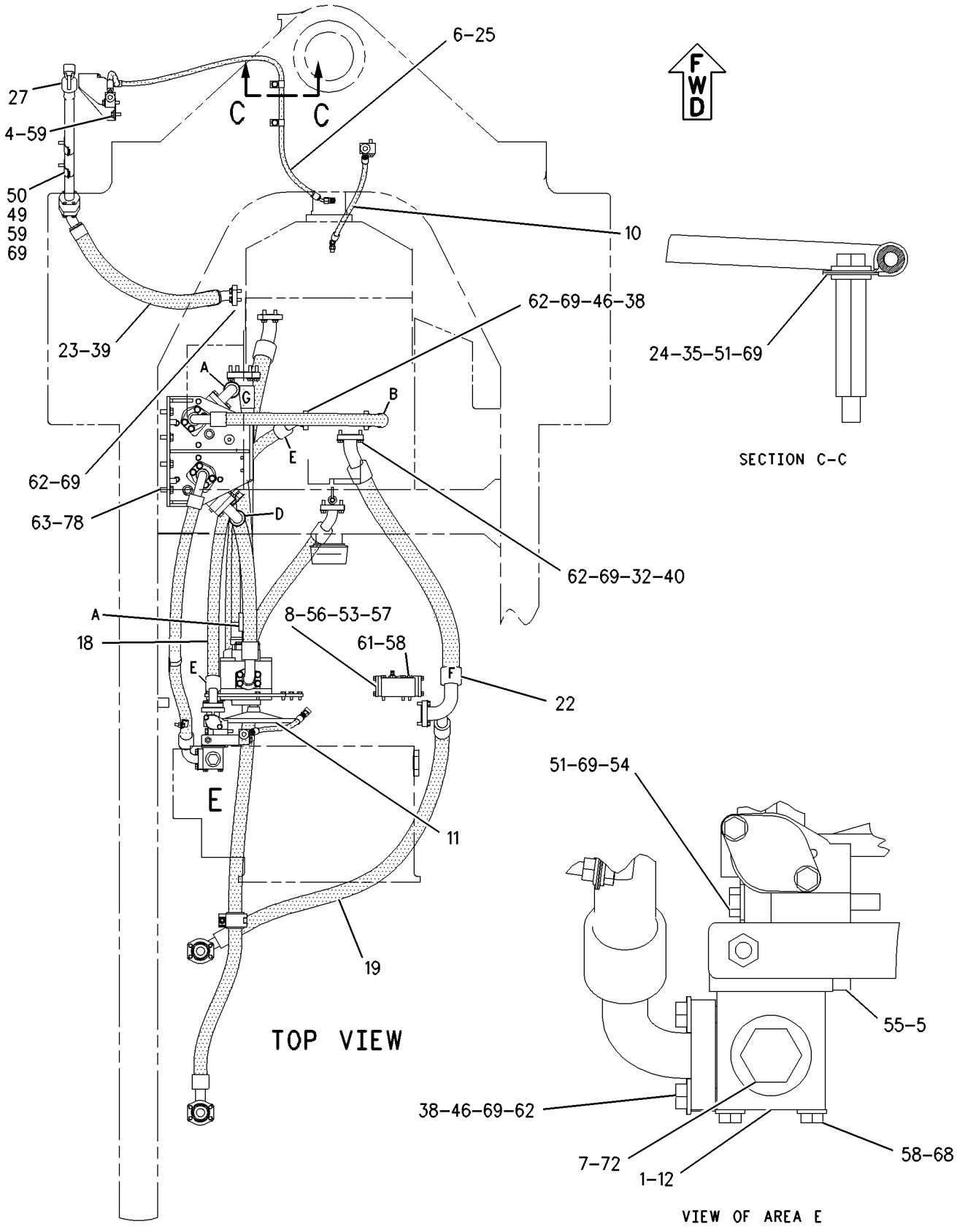

GRAPHIC #2 g00782380

POWER TRAIN

109-6910 LINES GP-POWER TRAIN OIL

S/N: 7HR1-UP

PART OF 109-6822 POWER TRAIN AR

TYPE 4

SMCS-3016 **i01540583**

NOTE	REF NO	GRAPHIC REF	PART NUMBER	QTY	PART NAME 1 2 3 4 5 6 (PRODUCT LEVEL)	SEE PAGE
	1	2	**1P-3704**	1	SEAL-RECTANGULAR	
	2	1	**2N-8998**	1	BRACKET	
	3	1	**174-3469**	1	BRACKET AS	
	4	2	**5P-1076**	4	WASHER-HARD (13.5X30X4MM THK)	
Y	5	2	**6I-8563**	1	VALVE GP-TORQUE CONV PRIORITY	664
	6	2	**6V-8397**	1	SEAL-O-RING	
	7	2	**7M-8485**	1	SEAL-O-RING	
Y	8	2	**8E-9727**	1	VALVE GP-RELIEF (TORQUE CONVERTER OUTLET)	658
	9	1	**8X-8340**	1	BRACKET	
I	10	1	**165-9770**	1	HOSE AS	
Y	11	2	*113-7428*	1	PUMP GP-TRANSMISSION	591
	12	2	**115-9544**	1	MANIFOLD	
	13	1	**115-9776**	1	HOSE AS	
CI	14	1	**196-1940**	1	HOSE AS	
CI	15	1	**196-1311**	1	HOSE AS	
CI	16	1	**196-2261**	1	HOSE AS	
CI	17	1	**196-1259**	1	HOSE AS	
I	18	2	**115-9781**	1	HOSE AS	
I	19	2	**176-7678**	1	HOSE AS	
I	20	1	**115-9784**	1	HOSE AS	
I	21	1	**115-9785**	1	HOSE AS	
I	22	2	**117-6645**	1	HOSE AS	
I	23	2	**198-0318**	1	HOSE AS	
	24	2	**101-2815**	2	TUBE	
I	25	2	**125-0810**	1	HOSE AS	
Y	26	1	*133-8649*	1	GAUGE GP-LIQUID LEVEL (POWER TRAIN OIL)	542
Y	27	2	*198-0258*	1	FILLER GP-POWER TRAIN OIL	528
CY	28	1	*196-1246*	1	FILTER & MTG GP-POWER TRAIN	534
I	29	1	**160-4001**	1	HOSE AS	
	30	1	**1P-4578**	2	FLANGE-HALF	
	31	1,2	**1P-4579**	8	FLANGE-HALF	
	32	1,2	**1P-4582**	14	FLANGE-HALF	
	33	1	**1P-4584**	2	FLANGE-HALF	
	34	1	**1P-4585**	2	FLANGE-HALF	
	35	2	**1S-6420**	2	CLIP	
	36	1	**2H-6338**	1	SEAL-O-RING	
	38	1,2	**4J-0522**	4	SEAL-O-RING	
	39	1,2	**4J-0524**	9	SEAL-O-RING	
	40	1,2	**4J-0527**	7	SEAL-O-RING	
	41	1	**5P-2566**	8	BOLT (1/2-13X1.5 IN)	
	42	1	**5P-7470**	2	CLIP (SLOT)	
	43	1	**5P-7471**	2	CLIP (TAB)	
	44	1	**5P-7703**	2	GROMMET	
	45	1	**6J-2680**	1	SEAL-O-RING	
	46	1,2	**6V-0397**	6	FLANGE-HALF	
	47	1	*148-8353*	4	ELBOW GP	
					(EACH INCLUDES)	
		1	**3J-1907**	1	SEAL-O-RING	
		1	**6V-8397**	1	SEAL-O-RING	
		1	**6V-9001**	1	ELBOW	
I	48	1	**170-1219**	1	HOSE AS	
	49	2	**7S-8920**	2	CLIP (SLOT)	
	50	2	**7S-8921**	2	CLIP (TAB)	
M	51	2	**7X-2549**	6	BOLT (M12X1.75X100MM)	
	52	1	**8S-0948**	1	CLIP	

109-6910 **LINES GP-POWER TRAIN OIL** ***(contd.)*** **i01540583**

NOTE	REF NO	GRAPHIC REF	PART NUMBER	QTY	PART NAME 1 2 3 4 5 6 (PRODUCT LEVEL)	SEE PAGE
	53	2	**8M-4443**	1	SEAL-O-RING	
	54	2	**8M-4986**	1	SEAL-O-RING	
	55	2	**8M-5127**	1	SEAL-O-RING	
	56	2	**8M-5254**	1	SEAL-O-RING	
	57	2	**8M-8157**	1	SEAL-O-RING	
	58	1,2	**8T-4121**	13	WASHER-HARD (11X21X2.5MM THK)	
M	59	1,2	**8T-4139**	5	BOLT (M12X1.75X30MM)	
	60	1	**4H-6112**	3	BREATHER	
M	61	2	**8T-4178**	4	BOLT (M10X1.5X90MM)	
M	62	1,2	**8T-4183**	48	BOLT (M12X1.75X40MM)	
M	63	1	**7X-2553**	4	BOLT (M16X2X40MM)	
M	64	1	**8T-4193**	4	BOLT (M16X2X50MM)	
M	65	1	**8T-4194**	4	BOLT (M12X1.75X50MM)	
M	66	1	**8T-4195**	2	BOLT (M10X1.5X30MM)	
M	67	1	**8T-4196**	4	BOLT (M10X1.5X35MM)	
M	68	2	**8T-4198**	4	BOLT (M10X1.5X100MM)	
	69	1,2	**8T-4223**	76	WASHER-HARD (13.5X25.5X3MM THK)	
M	70	1	**8T-4244**	2	NUT (M12X1.75 THD)	
M	71	1	**8T-4956**	2	BOLT (M12X1.75X35MM)	
	72	2	**9S-4181**	1	PLUG-STRAIGHT THREAD	
	73	1	**9X-8257**	4	WASHER (17.5X30X3.5MM THK)	
	74	1	**5P-2369**	1	CLIP	
M	75	1	**8T-4133**	1	NUT (M10X1.5 THD)	
	76	1	**6V-0852**	1	CAP-DUST	
C	77	1	*164-5567*	1	FITTING GP	
		1	**6V-3965**	1	FITTING	
		1	**3J-1907**	1	SEAL-O-RING	
	78	1	**7X-0517**	4	WASHER-HARD (17X38X2.5MM THICK)	
M	79	1	**8T-4910**	3	BOLT (M12X1.75X60MM)	

C-CHANGE FROM PREVIOUS TYPE
I-SEE HOSE FABRICATION GUIDE
M-METRIC PART
Y-SEPARATE ILLUSTRATION

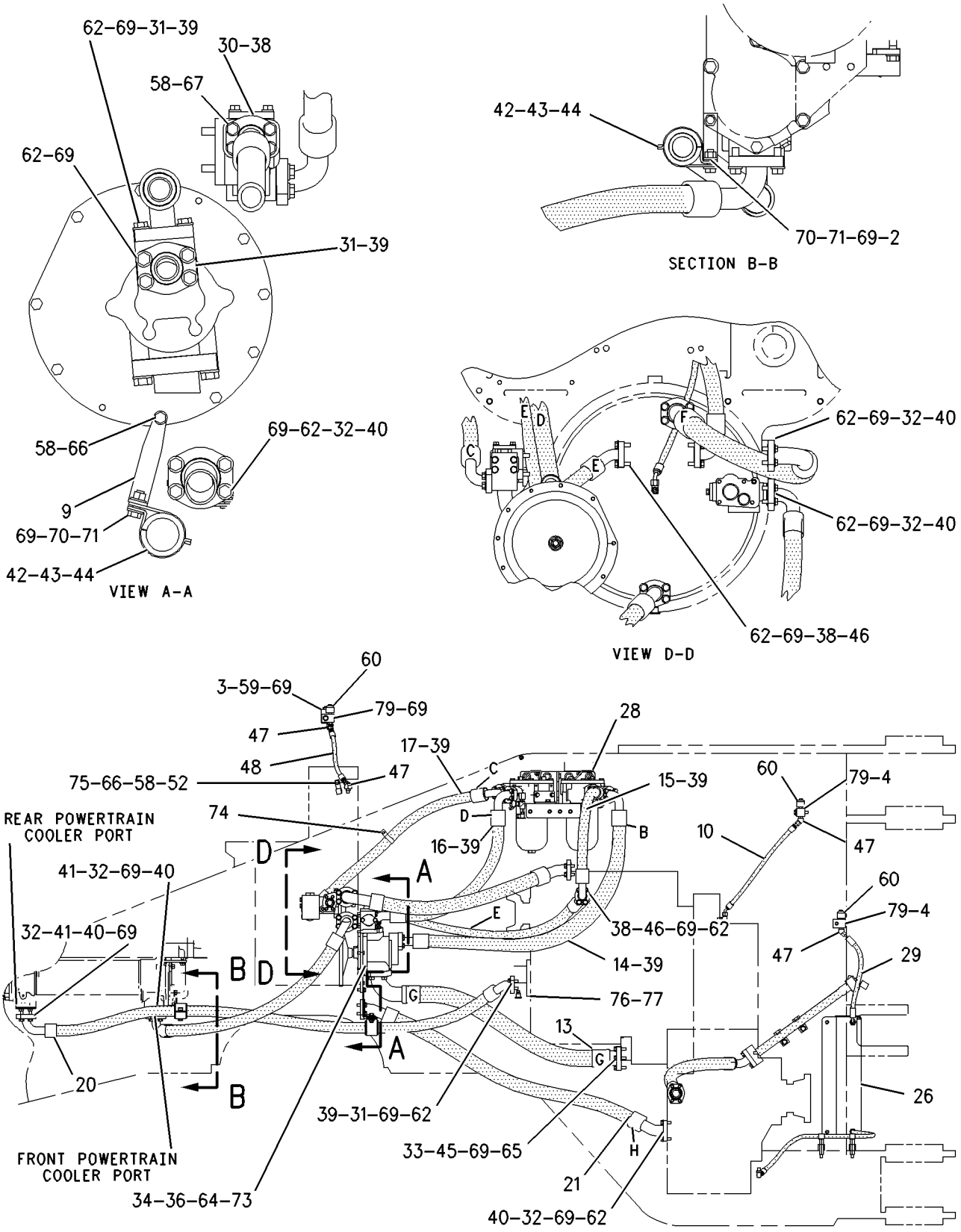

GRAPHIC #1 g00801218

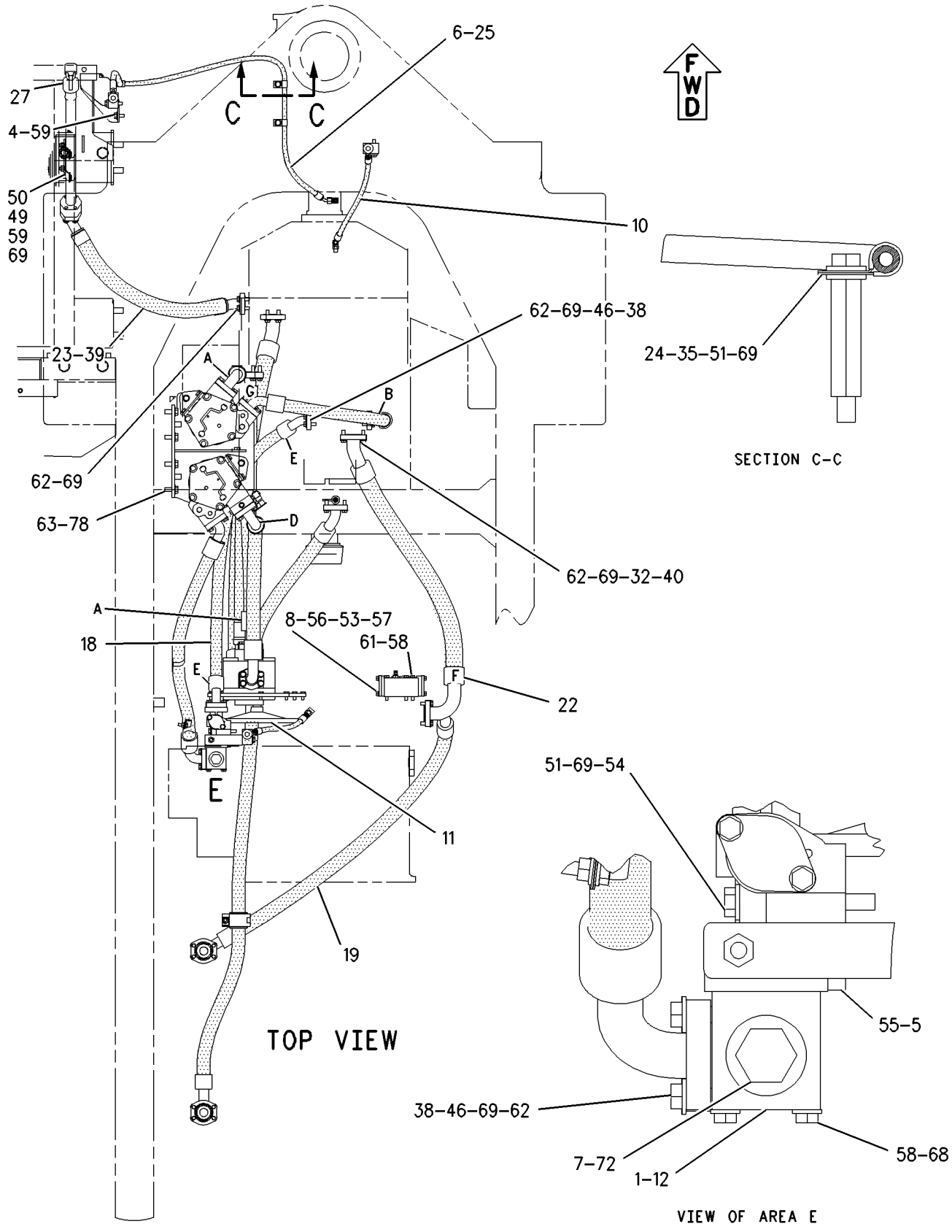

GRAPHIC #2

g00801219

9U-4979 LOCK GP-STIC CONTROL

S/N: 7HR1-297

PART OF 130-6906 CAB AR

SMCS-3034 **i01448253**

NOTE	REF NO	GRAPHIC REF	PART NUMBER	QTY	PART NAME 1 2 3 4 5 6 (PRODUCT LEVEL)	SEE PAGE
	1	1	**9V-1820**	4	SPACER	
C	2	1	**145-8952**	1	PLATE AS	
	3	1	**9U-4765**	1	GUARD AS	
	4	1	**4L-7049**	2	NUT	
	5	1	**8T-8614**	1	LOCK RING	
M	6	1	**5C-9553**	2	BOLT (M6X1X16MM)	
	7	1	**8C-3442**	1	SPRING-COIL	
	8	1	**4E-8557**	1	SHAFT AS	
C	9	1	**144-7765**	1	LEVER AS	
M	10	1	**8T-4133**	3	NUT (M10X1.5 THD)	
	11	1	**188-2048**	1	KNOB	
	12	1	**3S-2093**	1	STRAP-CABLE	
C	13	1	**8T-4224**	6	WASHER-HARD (8.8X16X2MM THK)	
	14	1	**4E-8561**	1	CAM	
	15	1	**4E-8560**	2	KEY-SQUARE	
	16	1	**151-6427**	2	BEARING	
	17	1	**6L-8598**	2	RING-RETAINING	
	18	1	**148-6530**	1	PLATE AS	
M		1	**6V-9632**	4	NUT-WELD (M6X1 THD)	
M	19	1	**6V-5220**	2	BOLT (M8X1.25X65MM)	
	20	1	**108-8160**	1	SWITCH AS-LIMIT (STIC CONTROL LOCK)	
		1	**3E-3377**	1	WEDGE-RECEPTACLE LOCK	
		1	**8T-8729**	4	PIN-CONNECTOR	
E		1	**9X-1386**		SLEEVE (19 CM)	
		1	**102-8804**	1	KIT-RECEPTACLE (4 PIN)	
					(INCLUDES RECEPTACLE AS & WEDGE)	
M	21	1	**8T-4177**	1	BOLT (M8X1.25X90MM)	
	22	1	**4D-7794**	1	CLIP	
	23	1	**2V-4387**	1	SPACER (.406X1X.91 IN THK)	
M	24	1	**9X-2045**	4	SCREW-TRUSS HEAD (M6X1X20MM)	
CM	25	1	**5C-7261**	2	NUT (M8X1.25 THD)	
C	26	1	**145-8951**	1	PLATE AS	

C-CHANGE FROM PREVIOUS TYPE
E-ORDER BY THE CENTIMETER
M-METRIC PART

9U-4979 **LOCK GP-STIC CONTROL** ***(contd.)*** **i01448253**

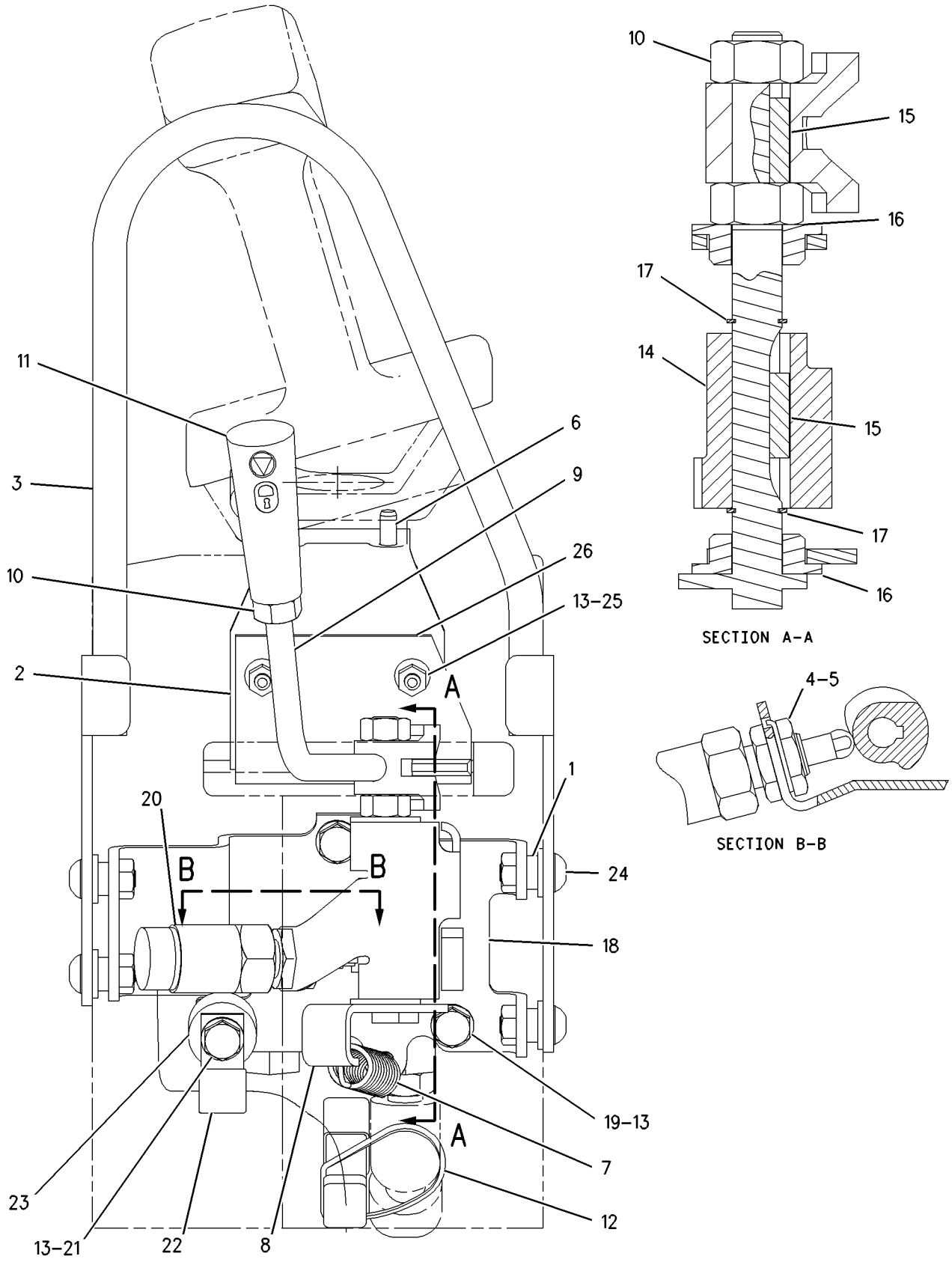

GRAPHIC #1

g00758280

166-5211 LOCK GP-STIC CONTROL

S/N: 7HR298-UP
PART OF 171-7047 CAB AR
TYPE 1

SMCS-3034 **i01429915**

NOTE	REF NO	GRAPHIC REF	PART NUMBER	QTY	PART NAME 1 2 3 4 5 6 (PRODUCT LEVEL)	SEE PAGE
	1	1	**2V-4387**	1	SPACER (.406X1X.91 IN THK)	
	2	1	**3S-2093**	1	STRAP-CABLE	
	3	1	**4E-8557**	1	SHAFT AS	
	4	1	**4E-8561**	1	CAM	
	5	1	**188-2048**	1	KNOB	
	6	1	**6L-8598**	2	RING-RETAINING	
	7	1	**8C-3442**	1	SPRING-COIL	
M	8	1	**5C-7423**	4	SCREW (M6X1X16MM)	
	9	1	**144-7765**	1	LEVER AS	
	10	1	**145-8951**	1	PLATE AS	
	11	1	**145-8952**	1	PLATE AS	
M		1	**3E-6908**	2	STUD-WELD (M8X1.25X20MM)	
	12	1	**151-6427**	2	BEARING	
	13	1	**170-0456**	1	GUARD AS	
	14	1	**170-0670**	1	PLATE AS	
	15	1	**171-3759**	1	SWITCH AS-LIMIT (STIC CONTROL LOCK)	
	16	1	**1P-7326**	2	WASHER (1.52MM THK)	
	17	1	**4D-7794**	1	CLIP	
	18	1	**4E-8560**	2	KEY-SQUARE	
M	19	1	**5C-7261**	2	NUT (M8X1.25 THD)	
M	20	1	**5C-9553**	2	BOLT (M6X1X16MM)	
M	21	1	**6V-5220**	2	BOLT (M8X1.25X65MM)	
M	22	1	**6V-9505**	2	SCREW-MACHINE (M6X1X20MM)	
M	23	1	**8T-4133**	3	NUT (M10X1.5 THD)	
M	24	1	**8T-4177**	1	BOLT (M8X1.25X90MM)	
	25	1	**8T-4224**	6	WASHER-HARD (8.8X16X2MM THK)	

M-METRIC PART

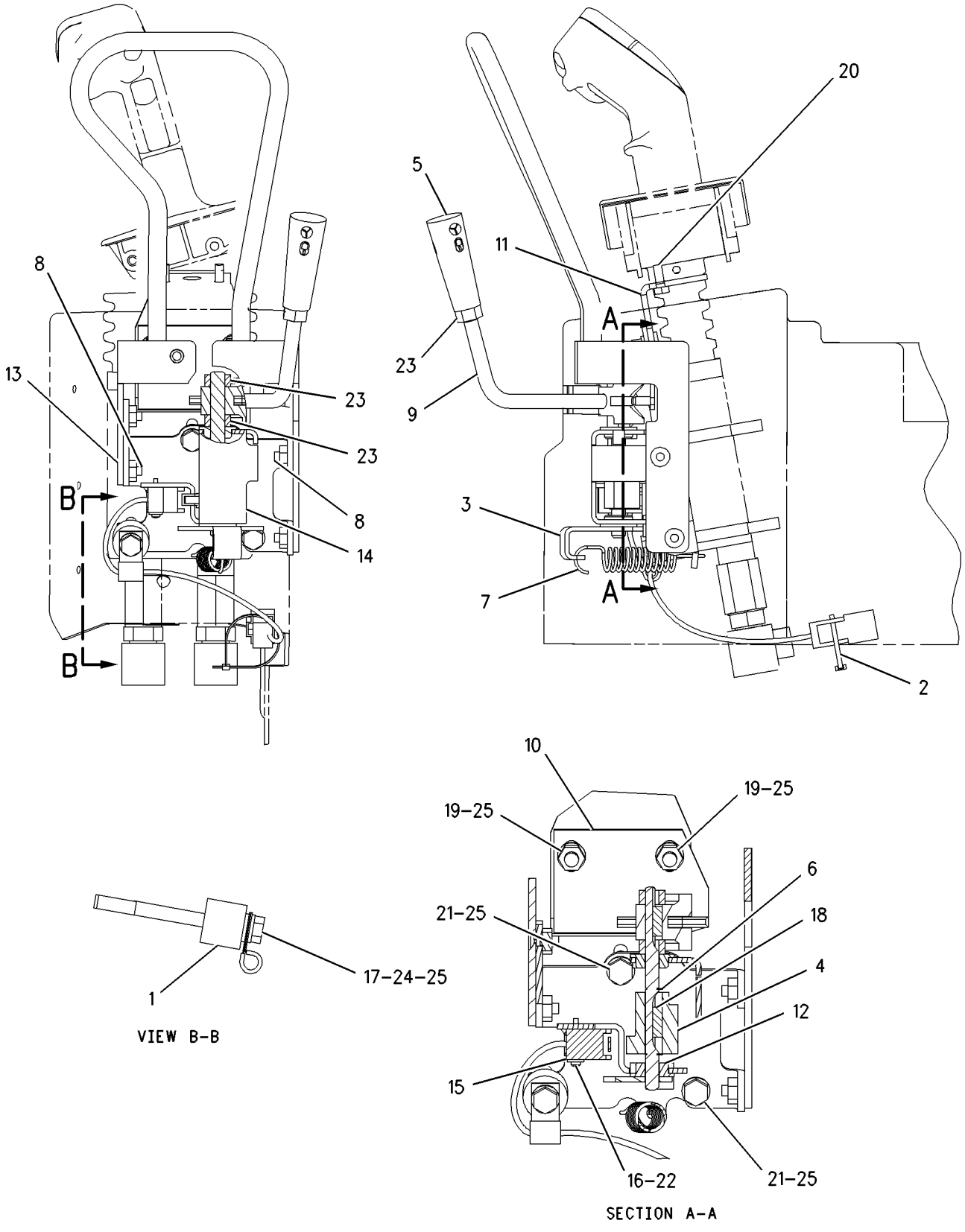

GRAPHIC #1 g00749031

166-5211 LOCK GP-STIC CONTROL

S/N: 7HR298-UP
PART OF 171-7047 CAB AR
TYPE 2

SMCS-3034 **i01505811**

NOTE	REF NO	GRAPHIC REF	PART NUMBER	QTY	PART NAME 1 2 3 4 5 6 (PRODUCT LEVEL)	SEE PAGE
	1	1	**2V-4387**	1	SPACER (.406X1X.91 IN THK)	
	2	1	**3S-2093**	1	STRAP-CABLE	
	3	1	**4E-8557**	1	SHAFT AS	
	4	1	**4E-8561**	1	CAM	
	5	1	**188-2048**	1	KNOB	
	6	1	**6L-8598**	2	RING-RETAINING	
	7	1	**8C-3442**	1	SPRING-COIL	
M	8	1	**5C-7423**	4	SCREW (M6X1X16MM)	
C	9	1	**144-7766**	1	LEVER AS-STIC STEER LOCK	
	10	1	**145-8951**	1	PLATE AS	
	11	1	**145-8952**	1	PLATE AS	
M		1	**3E-6908**	2	STUD-WELD (M8X1.25X20MM)	
	12	1	**151-6427**	2	BEARING	
	13	1	**170-0456**	1	GUARD AS	
	14	1	**204-3611**	1	PLATE AS	
	15	1	**171-3759**	1	SWITCH AS-LIMIT (STIC CONTROL LOCK)	
	16	1	**1P-7326**	2	WASHER	
	17	1	**4D-7794**	1	CLIP	
	18	1	**4E-8560**	2	KEY-SQUARE	
M	19	1	**5C-7261**	2	NUT (M8X1.25 THD)	
M	20	1	**5C-9553**	2	BOLT (M6X1X16MM)	
M	21	1	**6V-5220**	2	BOLT (M8X1.25X65MM)	
M	22	1	**6V-9505**	2	SCREW-MACHINE (M6X1X20MM)	
M	23	1	**8T-4133**	3	NUT (M10X1.5 THD)	
M	24	1	**8T-4177**	1	BOLT (M8X1.25X90MM)	
	25	1	**8T-4224**	6	WASHER-HARD (8.8X16X2MM THK)	

C-CHANGE FROM PREVIOUS TYPE
M-METRIC PART

166-5211 **LOCK GP-STIC CONTROL** *(contd.)* **i01505811**

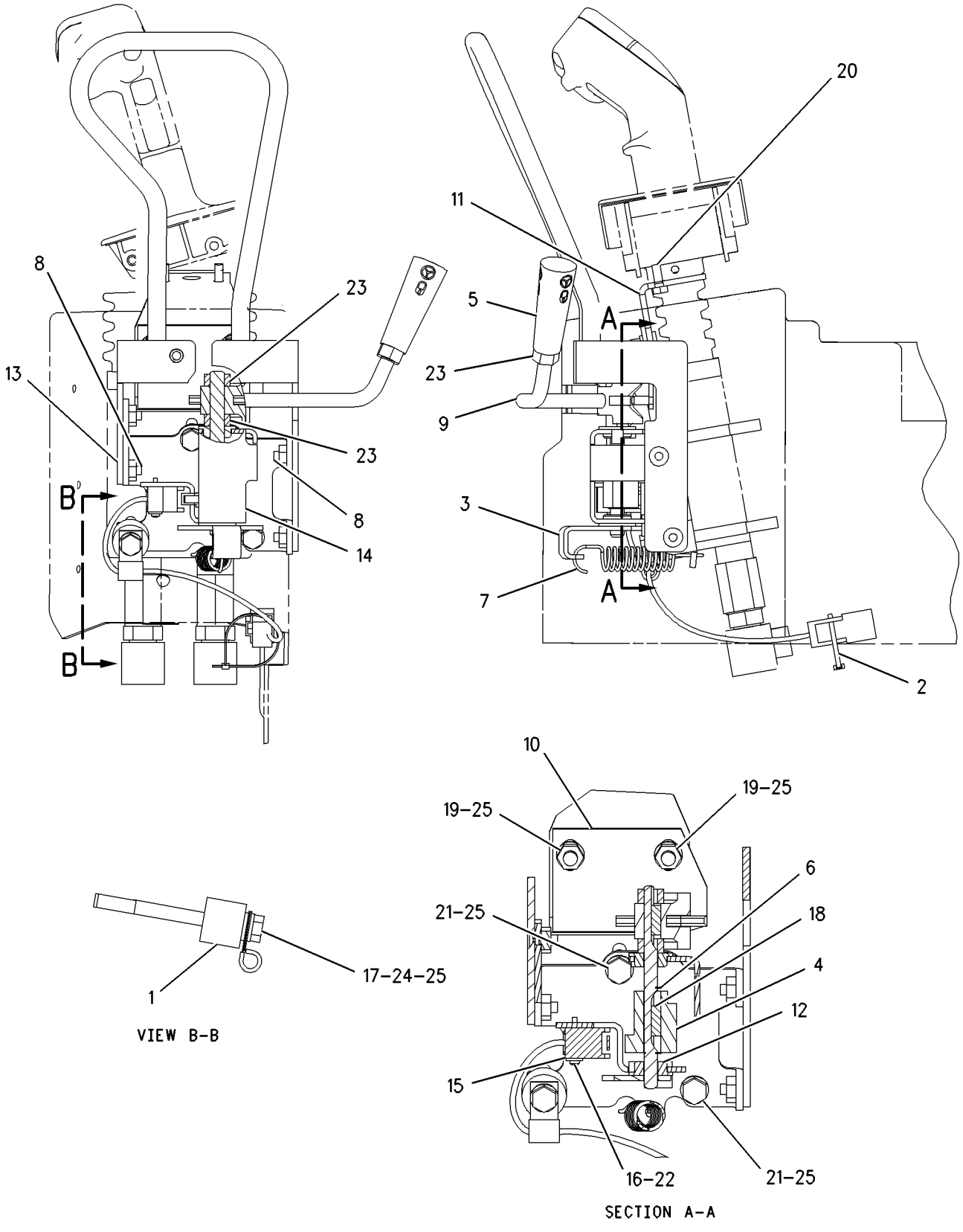

GRAPHIC #1 g00785295

118-9732 MOUNTING GP-AXLE

S/N: 7HR1-UP

PART OF 109-6822 POWER TRAIN AR

SMCS-3268, 3278 **i00746099**

NOTE	REF NO	GRAPHIC REF	PART NUMBER	QTY	PART NAME 1 2 3 4 5 6 (PRODUCT LEVEL)	SEE PAGE
	1	1	**6V-1734**	20	BOLT (1 1/8-7X14IN)	
	2	1	**4K-0684**	40	WASHER-HARD (6MM THK)	
	3	1	**3K-9770**	20	NUT-FULL (1-1/4-7 THD)	
	4	1	**1D-4647**	16	BOLT (1-8X9.5IN)	
	5	1	**9M-2828**	22	WASHER-HARD (8.0MM THK)	
	6	1	**142-7074**	6	BOLT-HEX HEAD	

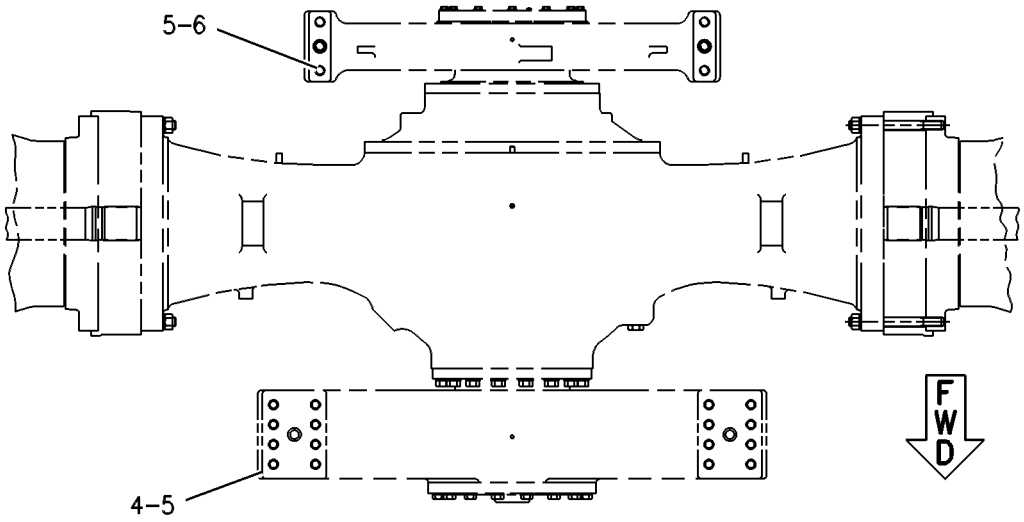

TOP VIEW

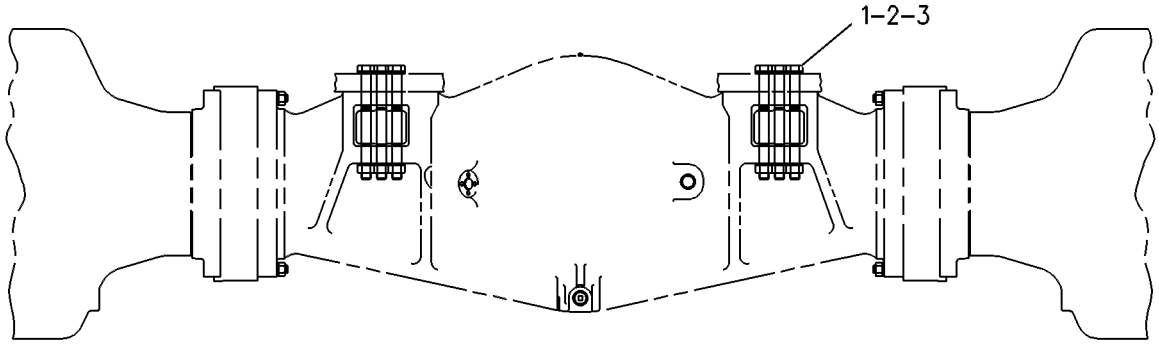

FRONT VIEW

GRAPHIC #1 g00256247

127-2967 MOUNTING GP-RIM

S/N: 7HR1-UP
PART OF 127-2966 RIM AR
AN ATTACHMENT

SMCS-4202, 4209 **i00746383**

NOTE	PART NUMBER	QTY	PART NAME 1 2 3 4 5 6 (PRODUCT LEVEL)	SEE PAGE
	9X-8898	46	BOLT	
	2J-3507	2	NUT-FULL (1-8 THD)	
	138-8698	2	ROD	
	5P-8250	48	WASHER (5.0MM THK)	

109-6869 MOUNTING GP-TORQUE CONVERTER

S/N: 7HR1-UP

PART OF 109-6822 POWER TRAIN AR

SMCS-3101 **i01057759**

NOTE	PART NUMBER	QTY	PART NAME 1 2 3 4 5 6 (PRODUCT LEVEL)	SEE PAGE
	7X-0346	16	BOLT (5/8-11X2IN)	
	8T-4122	16	WASHER (3.5MM THK)	

MEMORANDA

POWER TRAIN

6Y-6966 PLANETARY GP-TRANSMISSION

S/N: 9BX1-569

PART OF 6Y-6965 TRANSMISSION AR

SMCS-3160 **i01197509**

NOTE	REF NO	GRAPHIC REF	PART NUMBER	QTY	PART NAME 1 2 3 4 5 6 (PRODUCT LEVEL)	SEE PAGE
	1	1	**7S-7018**	1	RING-SEAL METAL	
	2	1	**8E-7184**	1	SHAFT AS-INPUT	
		1	**9M-2001**	1	DOWEL	
	3	1	**7G-7741**	1	PLATE-END	
R	4	1	**3P-7584**	13	PLATE-CLUTCH	
	5	1	**8E-0985**	17	DISC AS-CLUTCH	
	6	1	**3P-7613**	1	RING-SEAL	
	7	1	**0S-1594**	8	BOLT (3/8-16X1 IN)	
		1	**4M-5397**	4	LOCK-NUT	
	8	1	**123-4934**	1	HOUSING-CLUTCH	
	9	1	**133-3780**	1	HOUSING AS	
		1	**4D-8148**	4	DOWEL (1.26IN LG)	
	10	1	**1N-5410**	1	RING-RETAINING	
	11	1	**8P-5839**	1	HOUSING-CLUTCH	
	12	1	**8E-5061**	1	HOUSING AS-SUPPORT	
		1	**4D-8148**	2	DOWEL (1.26IN LG)	
		1	**8B-6375**	1	DOWEL (31.75MM LG)	
	13	1	**5D-6428**	2	SEAL-O-RING (608.08MM ID)	
	14	1	**9S-8010**	1	PLUG-O-RING (1 5/8-12 THD)	
		1	**2S-4078**	1	SEAL-O-RING (37.46MM ID)	
	15	1	**6Y-7260**	1	SHAFT AS-OUTPUT	
		1	**4S-8537**	1	DOWEL	
	16	1	**1T-0766**	2	BEARING-SLEEVE	
	17	1	**8F-6230**	2	SEAL-O-RING (228.19MM ID)	
	18	1	**123-4881**	1	PISTON-CLUTCH	
		1	**9G-9558**	1	RING-SEAL	
	19	2	**7G-7742**	1	PISTON-CLUTCH	
	20	2	**8P-7246**	1	GEAR AS-SUN (38 TEETH)	
		2	**4S-8537**	1	DOWEL	
	21	2	**4M-1708**	1	RING	
	22	2	**7G-7745**	2	PISTON-CLUTCH	
		2	**8P-6292**	2	RING-SEAL	
	23	2	**3P-7564**	1	GEAR-SUN (47 TEETH)	
	24	2	**3P-7006**	1	CARRIER-PLANETARY	
	25	2	**6Y-7269**	1	HOUSING AS-ROTATION	
		2	**7M-8480**	2	DOWEL (14.1MM OD X 31.75MM LONG)	
		2	**7M-5130**	1	PIN (6.35MM DIA)	
	26	2	**9G-0647**	1	CARRIER-RING	
	27	2	**4S-8541**	1	DOWEL	
	28	2	**6I-9790**	17	DAMPER-BOLT	
	29	2	**7G-9922**	2	RING-SEAL	
	30	2	**6V-6458**	1	RING-RETAINING	
	31	2	**3E-4371**	1	RING-RETAINING	
	32	2	**5P-1669**	1	BALL BEARING	
	33	2	**9S-8008**	2	PLUG-O-RING (1 1/16-12 THD)	
		2	**3D-2824**	2	SEAL-O-RING (23.47MM ID)	
	34	2	**1B-2524**	12	PIN	
	35	2	**3P-7566**	12	SPRING	
	36	2	**3P-7832**	6	DOWEL	
	37	2	**3P-7558**	4	SHAFT AS-PLANETARY	
					(EACH INCLUDES)	
		2	**3S-0036**	1	PLUG-CORE	
	38	2	**7G-3467**	4	GEAR-PLANETARY (20 TEETH)	
		2	**5M-7925**	4	BEARING-ROLLER	
	39	2	**8E-8310**	8	DISC-THRUST	
	40	2	**9H-5537**	24	SPRING	

NOTE	REF NO	GRAPHIC REF	PART NUMBER	QTY	PART NAME 1 2 3 4 5 6 (PRODUCT LEVEL)	SEE PAGE
	41	2	**3S-2708**	5	PIN-SPRING	
	42	2	**0S-0509**	8	BOLT (3/8-16X.75IN)	
		2	**5S-5880**	4	LOCK-NUT	
		2	**3P-7601**	4	PLATE-LOCKING	
	43	2	**3P-7576**	6	DOWEL	
	44	2	**105-9639**	4	SHAFT-PLANETARY	
	45	2	**5P-6727**	1	BALL BEARING	
	46	2	**5P-5296**	1	RING-RETAINING	
	47	2	**3K-2559**	1	RING-RETAINING	
	48	2	**5P-6726**	1	RING-RETAINING (132.82MM ID)	
	49	2	**8E-7898**	1	BALL BEARING	
	50	2	**8P-3133**	1	HUB	
	51	2	**7B-3235**	7	BOLT (1/2-13X1.375IN)	
		2	**5P-8245**	7	WASHER-HARD (3MM THK)	
	52	2	**9U-9498**	1	CAGE-BEARING	
	53	2	**6Y-5877**	1	PISTON-CLUTCH	
	54	2	**3P-7570**	1	RING-SEAL (EXTERNAL)	
	55	2	**8P-9569**	1	RING-SEAL (INTERNAL)	
	56	3	**8P-6302**	1	PILOT-TRANSMISSION	
	57	3	**8P-3134**	1	GEAR-SUN (28 TEETH)	
	58	3	**3S-8035**	2	RING-SEAL	
	59	3	**5P-4904**	2	BALL BEARING	
		3	**6V-6458**	2	RING-RETAINING	
	60	3	**3P-7149**	1	CAGE-BEARING	
	61	3	**9W-9143**	1	GEAR-COUPLING (80 TEETH)	
	62	3	**8P-6225**	1	GEAR-RING (101 TEETH)	
	63	3	**5P-1670**	17	BOLT (3/4-10X18.5 IN)	
		3	**2S-0115**	17	WASHER-HARD (5MM THK)	
	64	3	**7G-7744**	1	HOUSING AS-CLUTCH	
		3	**4D-8148**	1	DOWEL (1.26IN LG)	
	65	3	**5P-6651**	1	RING-RETAINING	
	66	3	**8P-6222**	1	GEAR-RING (101 TEETH)	
	67	3	**105-9788**	1	CARRIER-PLANETARY	
	68	3	**3P-7563**	1	GEAR-SUN (38 TEETH)	
	69	3	**3P-7586**	1	GEAR-RING (101 TEETH)	
	70	3	**3P-7575**	1	GEAR-RING (101 TEETH)	
R	71	3	**3P-7447**	4	PLATE-CLUTCH	
	72	3	**6Y-7220**	5	DISC-FRICTION	
	73	3	**1D-4569**	12	BOLT (1/2-13X4.25IN)	
		3	**1T-0808**	12	WASHER (0.09IN THK)	
	74	3	**8P-7243**	1	CARRIER-RING	
		3	**6F-0155**	2	RING-METAL SEAL	
	75	3	**7G-3470**	8	GEAR-PLANETARY (22 TEETH)	
	76	3	**8E-8316**	24	DISC-THRUST	
	77	3	**1P-3958**	8	ROLLER AS-SPECIAL	
	78	3	**4M-5016**	24	SPRING	
	79	3	**2S-8924**	12	PIN	
	80	3	**3P-7612**	4	RING-SEAL	
	81	3	**7G-3468**	4	GEAR-PLANETARY (26 TEETH)	
	82	3	**1S-9110**	8	ROLLER AS	
	83	3	**116-1459**	1	CARRIER AS	
		3	**4S-8541**	1	DOWEL	
	84	3	**2H-9445**	8	PIN-SPRING	
	85	3	**8P-7242**	4	SHAFT AS-PLANETARY	
					(EACH INCLUDES)	
		3	**2A-3746**	4	PLUG-CUP	
	86	3	**0S-1590**	6	BOLT (3/8-16X2 IN)	
		3	**5M-2894**	6	WASHER (2.5MM THK)	
	87	3	**5H-5672**	2	SEAL-O-RING (133.66MM ID)	

6Y-6966 **PLANETARY GP-TRANSMISSION** *(contd.)* **i01197509**

NOTE	REF NO	GRAPHIC REF	PART NUMBER	QTY	PART NAME 1 2 3 4 5 6 (PRODUCT LEVEL)	SEE PAGE
	88	3	**3B-8453**	2	SEAL-O-RING (18.42MM ID)	
R-REMFG PART MAY BE AVAILABLE						

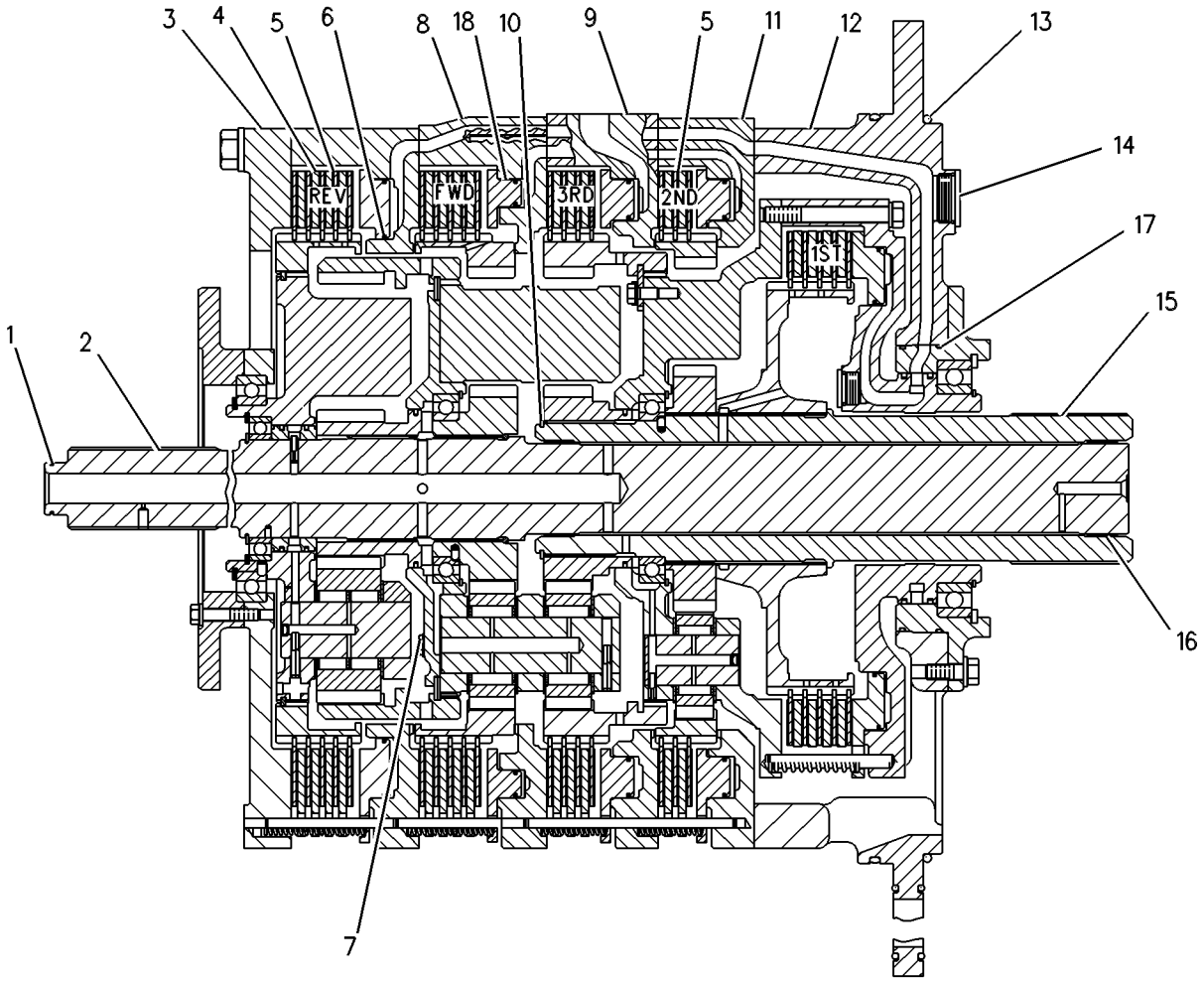

GRAPHIC #1 g00293113

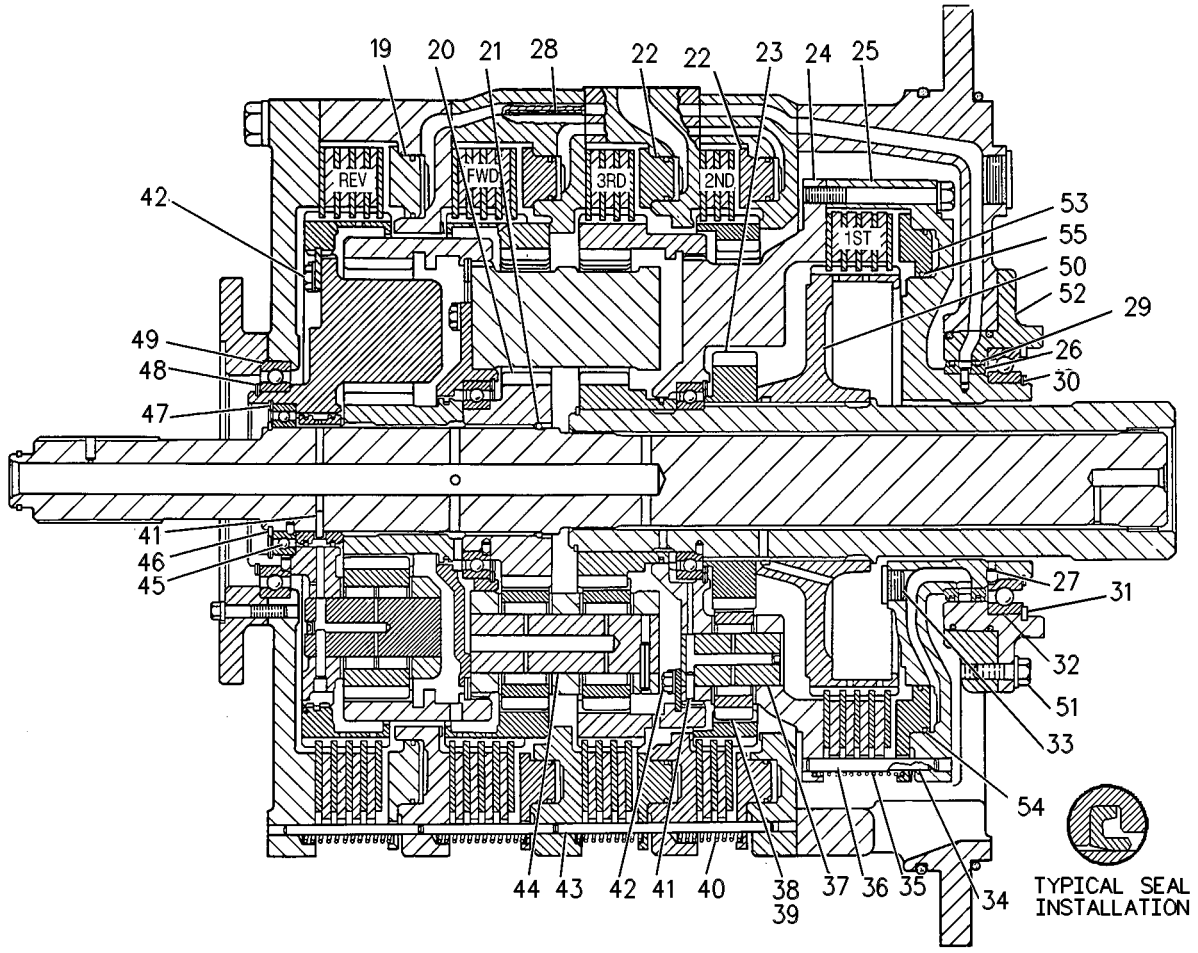

GRAPHIC #2 g00374683

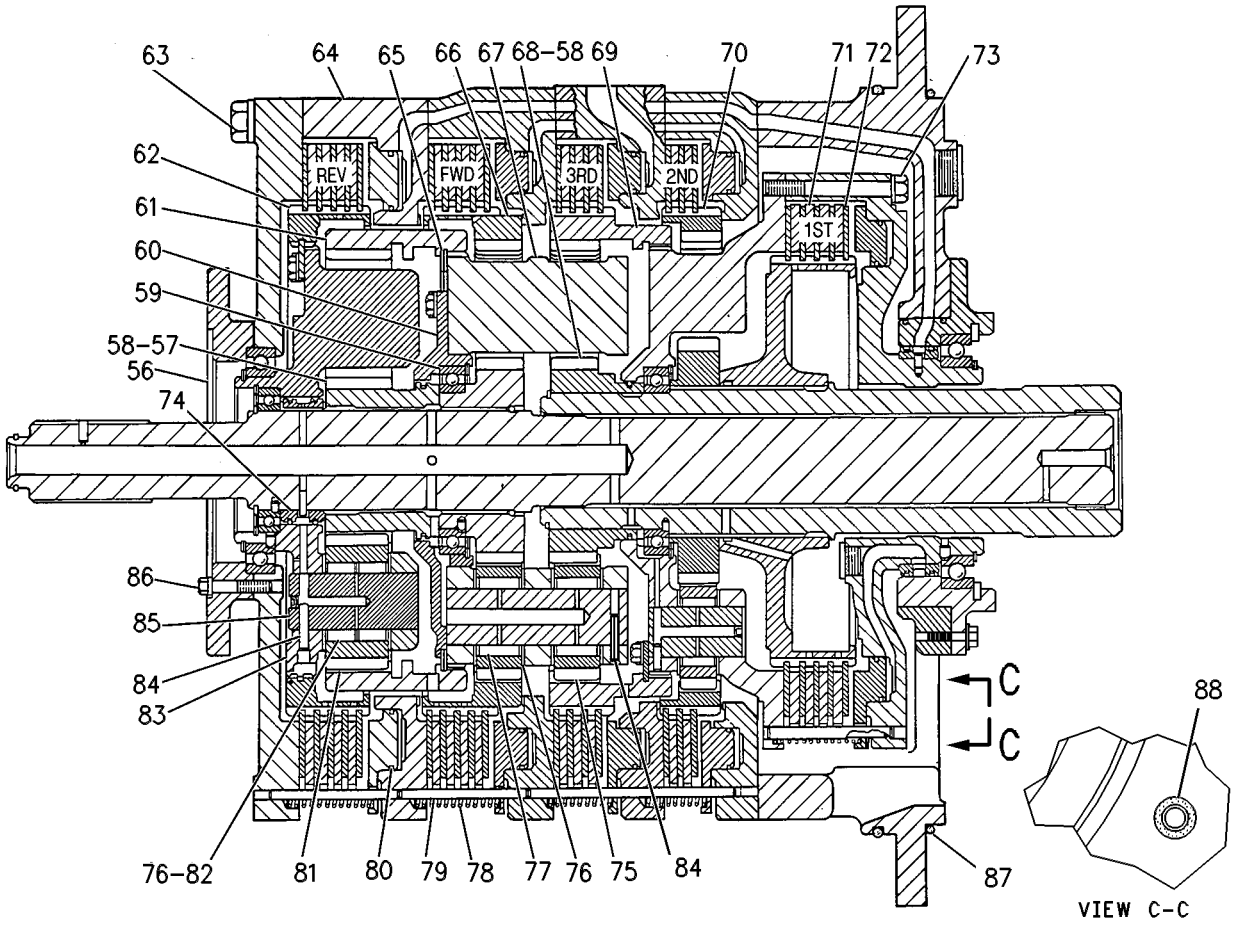

GRAPHIC #3

g00374684

MEMORANDA

6Y-6966 PLANETARY GP-TRANSMISSION

S/N: 9BX570-UP

PART OF 6Y-6965 TRANSMISSION AR

SMCS-3160 **i01338992**

NOTE	REF NO	GRAPHIC REF	PART NUMBER	QTY	PART NAME 1 2 3 4 5 6 (PRODUCT LEVEL)	SEE PAGE
	1	1	**7S-7018**	1	RING-SEAL METAL	
	2	1	**8E-7184**	1	SHAFT AS-INPUT	
		1	**9M-2001**	1	DOWEL	
	3	1	**7G-7741**	1	PLATE-END	
R	4	1	**3P-7584**	13	PLATE-CLUTCH	
	5	1	**8E-0985**	17	DISC AS-CLUTCH	
	6	1	**3P-7613**	1	RING-SEAL	
	7	1	**0S-1594**	8	BOLT (3/8-16X1 IN)	
		1	**4M-5397**	4	LOCK-NUT	
	8	1	**123-4934**	1	HOUSING-CLUTCH	
	9	1	**133-3780**	1	HOUSING AS	
		1	**4D-8148**	4	DOWEL	
	10	1	**1N-5410**	1	RING-RETAINING	
	11	1	**8P-5839**	1	HOUSING-CLUTCH	
	12	1	**8E-5061**	1	HOUSING AS-SUPPORT	
		1	**4D-8148**	2	DOWEL	
		1	**8B-6375**	1	DOWEL (57.2MM LG X 12.5 DIA)	
	13	1	**5D-6428**	2	SEAL-O-RING (608.08MM ID)	
	14	1	**9S-8010**	1	PLUG-O-RING (1 5/8-12 THD)	
		1	**2S-4078**	1	SEAL-O-RING (37.46MM ID)	
	15	1	**6Y-7260**	1	SHAFT AS-OUTPUT	
		1	**4S-8537**	1	DOWEL	
	16	1	**1T-0766**	2	BEARING-SLEEVE	
	17	1	**8F-6230**	2	SEAL-O-RING (228.19MM ID)	
	18	1	**175-2620**	1	PISTON-CLUTCH	
		1	**9G-9558**	1	RING-SEAL	
	19	2	**175-2621**	1	PISTON-CLUTCH	
	20	2	**8P-7246**	1	GEAR AS-SUN (38 TEETH)	
		2	**4S-8537**	1	DOWEL	
	21	2	**4M-1708**	1	RING	
	22	2	**7G-7745**	2	PISTON-CLUTCH	
		2	**8P-6292**	2	RING-SEAL	
	23	2	**3P-7564**	1	GEAR-SUN (47 TEETH)	
	24	2	**3P-7006**	1	CARRIER-PLANETARY	
	25	2	**6Y-7269**	1	HOUSING AS-ROTATION	
		2	**7M-8480**	2	DOWEL	
		2	**7M-5130**	1	PIN-SPRING	
		2	**9G-0647**	1	CARRIER-RING	
		2	**4S-8541**	1	DOWEL	
	26	2	**3P-7570**	1	RING-SEAL (EXTERNAL)	
	27	2	**8P-9569**	1	RING-SEAL (INTERNAL)	
	28	2	**6I-9790**	17	DAMPER-BOLT	
	29	2	**148-9643**	2	RING-SEAL	
	30	2	**6V-6458**	3	RING-RETAINING	
	31	2	**3E-4371**	1	RING-RETAINING	
	32	2	**5P-1669**	1	BALL BEARING	
	33	2	**9S-8008**	2	PLUG-O-RING (1 1/16-12 THD)	
		2	**3D-2824**	2	SEAL-O-RING (23.47MM ID)	
	34	2	**1B-2524**	12	PIN	
	35	2	**3P-7566**	12	SPRING	
	36	2	**3P-7832**	6	DOWEL	
	37	2	**3P-7558**	4	SHAFT AS-PLANETARY	
					(EACH INCLUDES)	
		2	**3S-0036**	1	PLUG-CORE	
	38	2	**7G-3467**	4	GEAR-PLANETARY (20 TEETH)	
		2	**5M-7925**	4	BEARING-ROLLER	

6Y-6966 PLANETARY GP-TRANSMISSION *(contd.)* i01338992

NOTE	REF NO	GRAPHIC REF	PART NUMBER	QTY	PART NAME 1 2 3 4 5 6 (PRODUCT LEVEL)	SEE PAGE
	39	2	**8E-8310**	8	DISC-THRUST	
	40	2	**9H-5537**	24	SPRING	
	41	2	**3S-2708**	5	PIN-SPRING	
C	42	2	**0S-0509**	4	BOLT (3/8-16X.75 IN)	
C		2	**5S-5880**	2	LOCK-NUT	
C		2	**3P-7601**	2	PLATE-LOCKING	
	43	2	**3P-7576**	6	DOWEL	
	44	2	**105-9639**	4	SHAFT-PLANETARY	
	45	2	**5P-6727**	1	BALL BEARING	
	46	2	**5P-5296**	1	RING-RETAINING	
	47	2	**3K-2559**	1	RING-RETAINING	
	48	2	**5P-6726**	1	RING-RETAINING (132.82MM ID)	
	49	2	**148-6559**	1	BALL BEARING	
	50	2	**8P-3133**	1	HUB	
	51	2	**7B-3235**	7	BOLT (1/2-13X1.375 IN)	
		2	**5P-8245**	7	WASHER-HARD (3MM THK)	
	52	2	**9U-9498**	1	CAGE-BEARING	
	53	2	**6Y-5877**	1	PISTON-CLUTCH	
	54	3	**8P-6302**	1	PILOT-TRANSMISSION	
	55	3	**8P-3134**	1	GEAR-SUN (28 TEETH)	
	56	3	**3S-8035**	2	RING-SEAL	
	57	3	**187-1367**	2	BEARING-SPECIAL BALL	
	58	3	**3P-7149**	1	CAGE-BEARING	
	59	3	**9W-9143**	1	GEAR-COUPLING (80 TEETH)	
C	60	3	**115-0761**	1	CARRIER AS	
	61	3	**5P-1670**	17	BOLT (3/4-10X18.5 IN)	
		3	**2S-0115**	17	WASHER-HARD (5MM THK)	
	62	3	**7G-7744**	1	HOUSING AS-CLUTCH	
		3	**4D-8148**	1	DOWEL	
	63	3	**5P-6651**	1	RING-RETAINING	
	64	3	**8P-6222**	1	GEAR-RING (101 TEETH)	
	65	3	**105-9788**	1	CARRIER-PLANETARY	
	66	3	**3P-7563**	1	GEAR-SUN (38 TEETH)	
	67	3	**3P-7586**	1	GEAR-RING (101 TEETH)	
	68	3	**3P-7575**	1	GEAR-RING (101 TEETH)	
R	69	3	**3P-7447**	4	PLATE-CLUTCH	
	70	3	**169-7055**	5	DISC-CLUTCH	
	71	3	**1D-4569**	12	BOLT (1/2-13X4.25 IN)	
		3	**1T-0808**	12	WASHER (0.09IN THK)	
	72	3	**8P-7243**	1	CARRIER-RING	
		3	**6F-0155**	2	RING-METAL SEAL	
	73	3	**7G-3470**	8	GEAR-PLANETARY (22 TEETH)	
	74	3	**8E-8316**	24	DISC-THRUST	
	75	3	**1P-3958**	8	ROLLER AS-SPECIAL	
	76	3	**4M-5016**	24	SPRING	
	77	3	**2S-8924**	12	PIN	
	78	3	**3P-7612**	4	RING-SEAL	
	79	3	**7G-3468**	4	GEAR-PLANETARY (26 TEETH)	
	80	3	**1S-9110**	8	ROLLER AS	
	82	3	**2H-9445**	8	PIN-SPRING	
	83	3	**8P-7242**	4	SHAFT AS-PLANETARY	
					(EACH INCLUDES)	
		3	**2A-3746**	4	PLUG-CUP	
	84	3	**0S-1590**	6	BOLT (3/8-16X2 IN)	
		3	**5M-2894**	6	WASHER-HARD (2.5MM THK)	
	85	3	**5H-5672**	2	SEAL-O-RING (133.66MM ID)	
	86	3	**3B-8453**	2	SEAL-O-RING (18.42MM ID)	
C	87	3	**115-0764**	1	RING-LOCK	
C	88	3	**115-0762**	1	GEAR-COUPLING (101 TEETH)	

C-CHANGE FROM PREVIOUS TYPE
R-REMFG PART MAY BE AVAILABLE

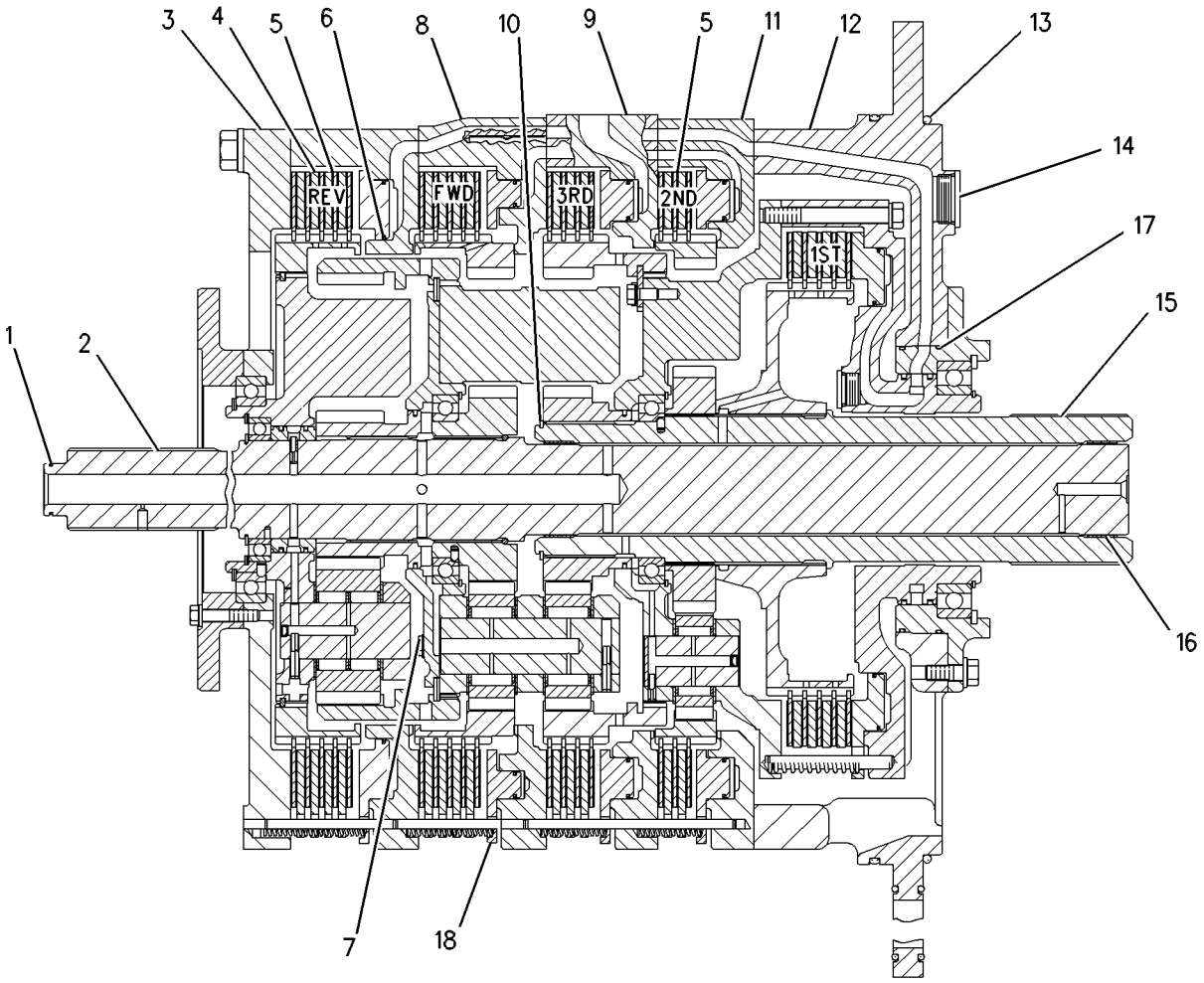

GRAPHIC #1 g00608814

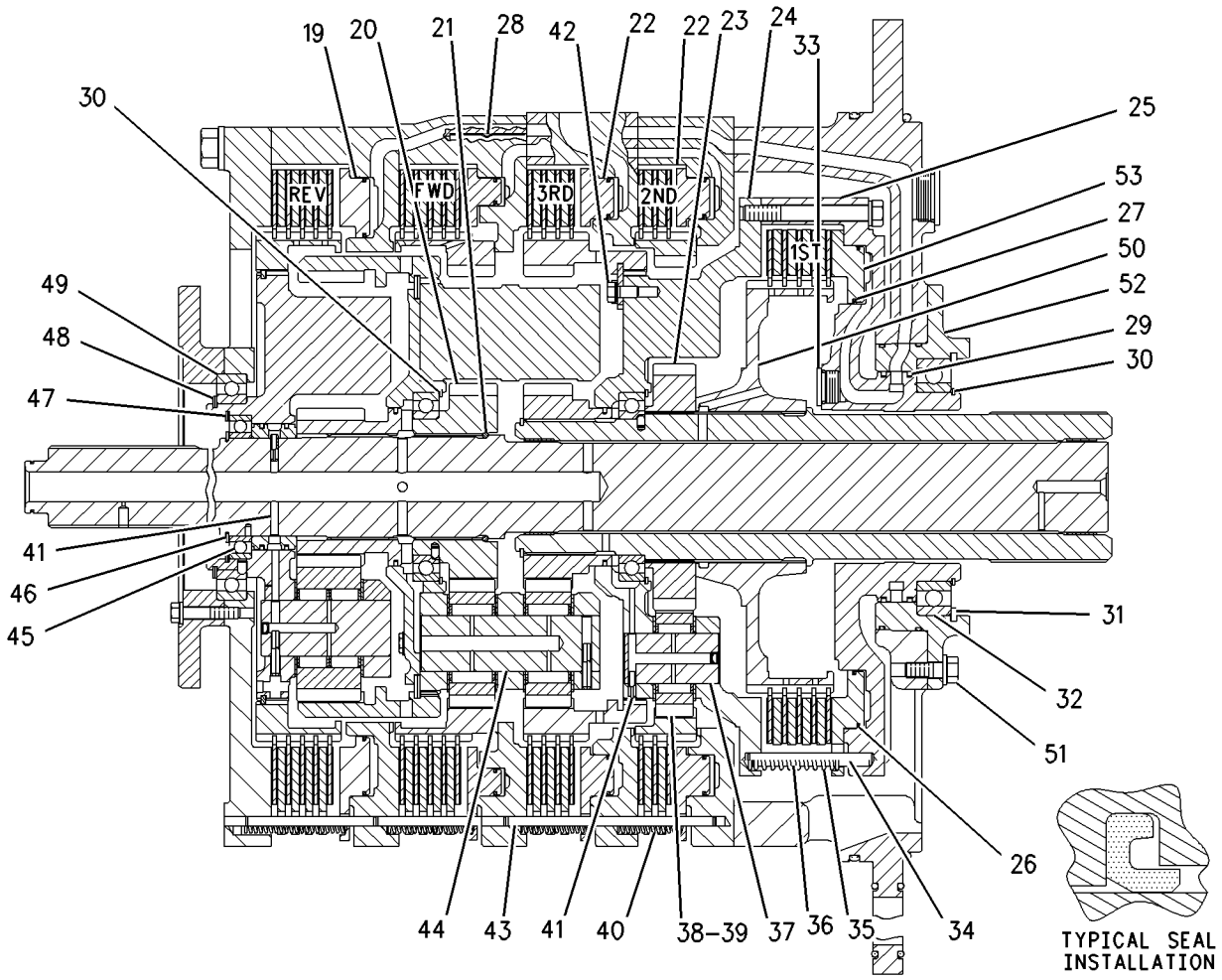

GRAPHIC #2

g00712298

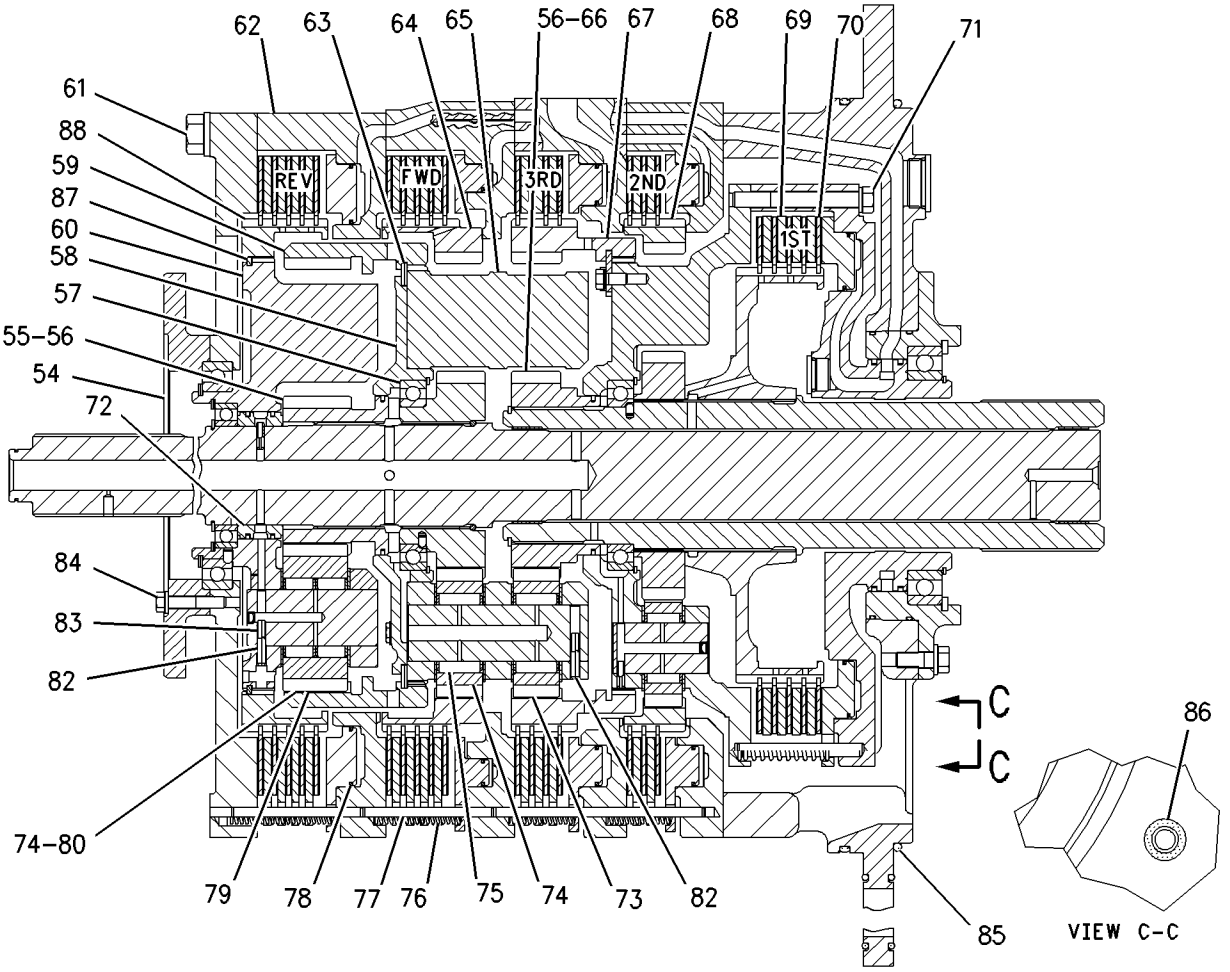

GRAPHIC #3 g00712300

109-6822 POWER TRAIN AR

S/N: 7HR1-UP

PART OF 109-6815 COMMON AR

SMCS-3000 **i01355394**

NOTE	PART NUMBER	QTY	PART NAME 1 2 3 4 5 6 (PRODUCT LEVEL)	SEE PAGE
Y	*107-0703*	1	AXLE AR-FIXED	471
Y	*107-0702*	1	AXLE AR-OSCILLATING	472
Y	*8R-5518*	1	BRAKE GP-PARKING	758
			—OR—	
Y	*170-4618*	1	BRAKE GP-PARKING	760
Y	*136-5709*	1	LINES GP-AXLE VENT	551
Y	*109-6910*	1	LINES GP-POWER TRAIN OIL	552
Y	*118-9732*	1	MOUNTING GP-AXLE	574
Y	*109-6869*	1	MOUNTING GP-TORQUE CONVERTER	576
Y	*112-5452*	1	SHAFT GP-DRIVE	596
Y	*112-5449*	1	SHAFT GP-INPUT DRIVE	600
Y	**6Y-6965**	1	TRANSMISSION AR	647

Y-SEPARATE ILLUSTRATION

133-7621 PUMP GP-GEAR–AXLE OIL COOLER

S/N: 7HR1-UP

PART OF 112-4206 COOLER GP-AXLE OIL

SMCS-3066, 5073 **i01243715**

NOTE	PART NUMBER	QTY	PART NAME 1 2 3 4 5 6 (PRODUCT LEVEL)	SEE PAGE
	139-2287	1	KIT-RELIEF VALVE	
	139-1501	1	KIT-SEAL	

113-7428 PUMP GP-TRANSMISSION

S/N: 7HR1-UP

PART OF 109-6910 LINES GP-POWER TRAIN OIL

SMCS-3066 **i01056959**

NOTE	REF NO	GRAPHIC REF	PART NUMBER	QTY	PART NAME 1 2 3 4 5 6 (PRODUCT LEVEL)	SEE PAGE
	1	1	**115-2054**	1	GEAR-OIL PUMP DRIVE (57 TEETH)	
	2	1	**2K-0337**	1	LOCKNUT (3/4-16 THD)	
	3	1	**4S-9134**	1	WASHER-HARD (3.0MM THK)	
	4	1	**1B-8714**	1	KEY-WOODRUFF	
	5	1	**6Y-9347**	1	GASKET	
Y	6	1	**143-8377**	1	PUMP GP-TRANSMISSION	592
M	7	1	**8T-4136**	11	BOLT (M10X1.50X25MM)	

M-METRIC PART
Y-SEPARATE ILLUSTRATION

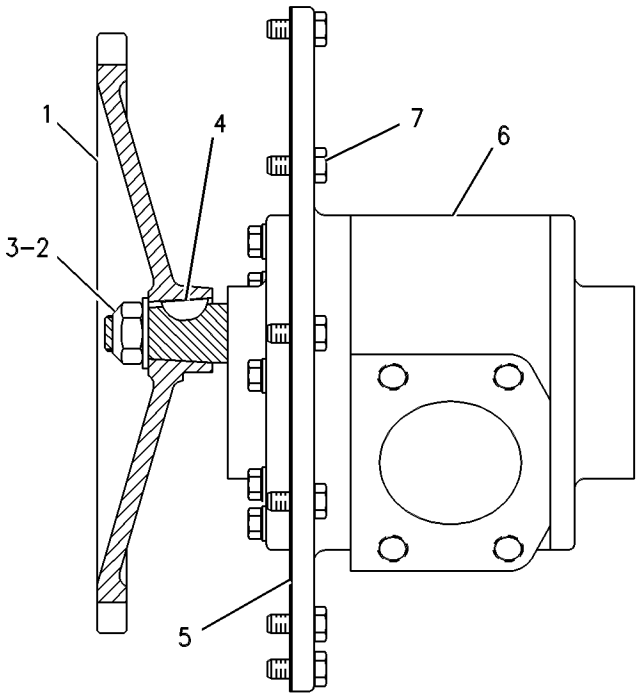

GRAPHIC #1 g00256163

143-8377 PUMP GP-TRANSMISSION

S/N: 7HR1-UP

PART OF 113-7428 PUMP GP-TRANSMISSION

SMCS-3066 **i01030434**

NOTE	REF NO	GRAPHIC REF	PART NUMBER	QTY	PART NAME 1 2 3 4 5 6 (PRODUCT LEVEL)	SEE PAGE
	1	1	**115-7077**	1	GEAR AS-OIL PUMP (8 TEETH)	
	2	1	**1B-8736**	1	KEY-WOODRUFF	
	3	1	**115-2053**	1	BODY AS-OILPUMP	
	4	1	**8M-8489**	4	DOWEL (12.54MM DIA)	
	5	1	**115-2052**	1	BODY AS-OIL PUMP	
	6	1	**1M-3909**	2	BEARING-SLEEVE	
	7	1	**8M-8489**	2	DOWEL (12.54MM DIA)	
	8	1	**6Y-9816**	1	MANIFOLD AS-PUMP	
	9	1	**5M-3320**	2	BEARING	
M	10	1	**8T-5005**	2	BOLT (M10X1.50X70MM)	
	11	1	**144-3004**	1	GEAR AS-OIL PUMP (8 TEETH)	
	12	1	**2B-9373**	1	KEY-WOODRUFF (.75X.25IN)	
	13	1	**143-8378**	1	COVER AS-OIL PUMP	
	14	1	**131-0167**	2	BEARING-SLEEVE	
	15	1	**2D-8009**	3	SEAL-O-RING (142.47MM ID)	
	16	1	**1B-8736**	1	KEY-WOODRUFF	
	17	1	**4D-2212**	2	GEAR-OIL PUMP (12 TEETH)	
	18	1	**3S-0004**	6	WASHER (2.29MM THK)	
M	19	1	**7X-2546**	4	BOLT (M10X1.50X180MM)	

M-METRIC PART

143-8377 PUMP GP-TRANSMISSION *(contd.)* i01030434

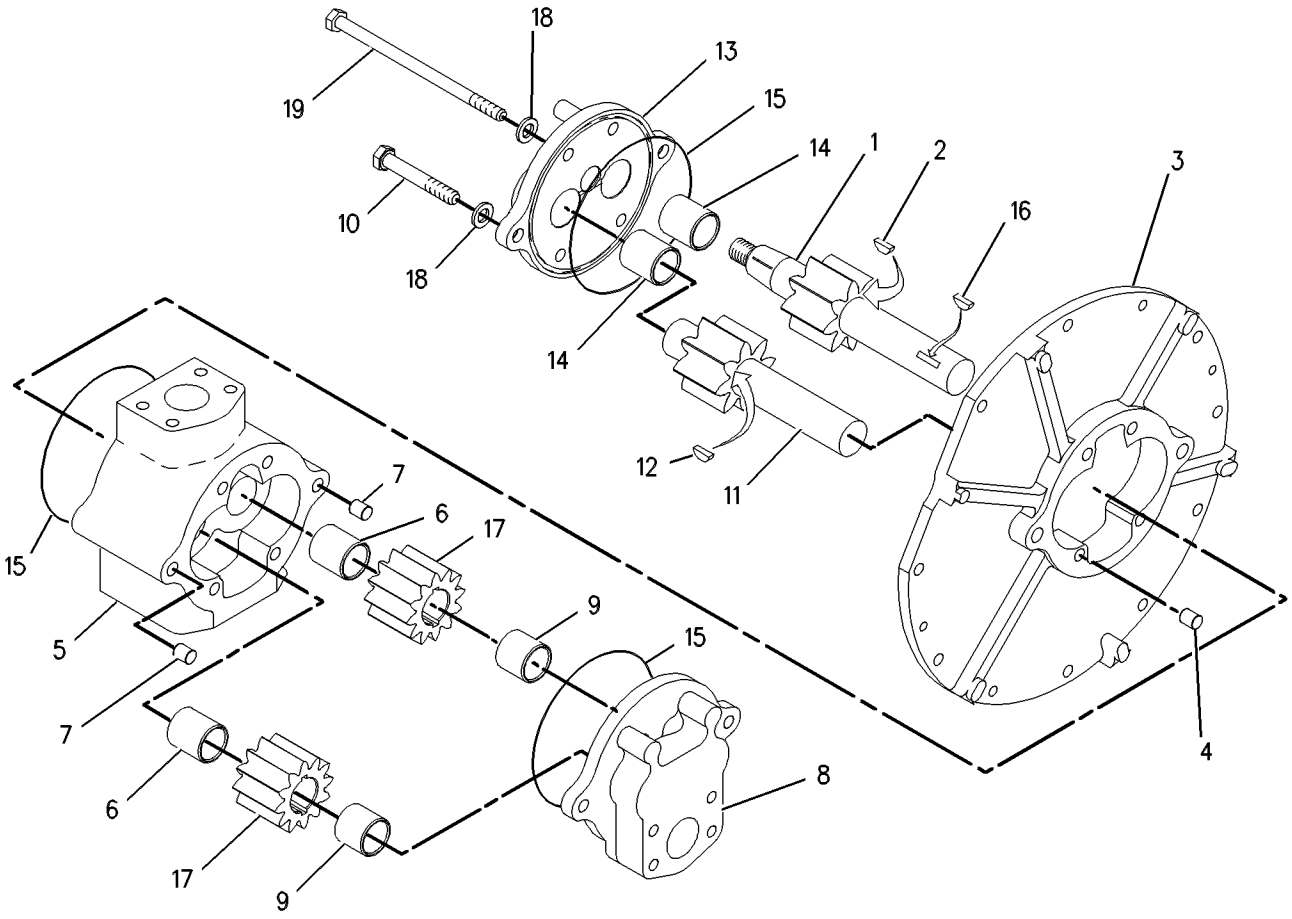

GRAPHIC #1 g00530629

127-2966 RIM AR

S/N: 7HR1-UP
36 X 45
PART OF 127-2964, 136-0871, 136-0872, 136-0883, 136-7334, 147-9632, 148-3460, 150-1882, 165-6171, 165-6175, 170-7326, 170-8004, 183-3872 TIRE & RIM AR
AN ATTACHMENT

SMCS-4209 **i00746382**

NOTE	PART NUMBER	QTY	PART NAME 1 2 3 4 5 6 (PRODUCT LEVEL)	SEE PAGE
Y	*127-2967*	1	MOUNTING GP-RIM	575
Y	*112-5727*	4	RIM GP-DEMOUNTABLE	595

Y-SEPARATE ILLUSTRATION

112-5727 RIM GP-DEMOUNTABLE

S/N: 7HR1-UP
PART OF 127-2966 RIM AR
AN ATTACHMENT

SMCS-4209 **i01358953**

NOTE	REF NO	GRAPHIC REF	PART NUMBER	QTY	PART NAME 1 2 3 4 5 6 (PRODUCT LEVEL)	SEE PAGE
	1	1	**112-5728**	1	RIM AS	
	2	1	**190-6404**	1	BAND-BEAD SEAT	
	3	1	**3V-2695**	1	SEAL-O-RING (41.12 IN ID)	
	4	1	**125-9530**	2	FLANGE	
	5	1	**8X-5271**	1	KEY-DRIVER	
	6	1	**8X-1091**	1	LOCKRING	
	8	1	**5T-9797**	1	VALVE GP-TIRE	
	9	1	**6F-3930**	1	CORE-VALVE	
	10	1	**6J-3134**	1	SEAL (7.59MM ID)	
	11	1	**9K-7951**	1	CAP-VALVE (2.0IN THK)	
	12	1	**2D-2508**	1	GROMMET	
	13	1	**5T-9866**	1	LOCKNUT (11/16-24 THD)	

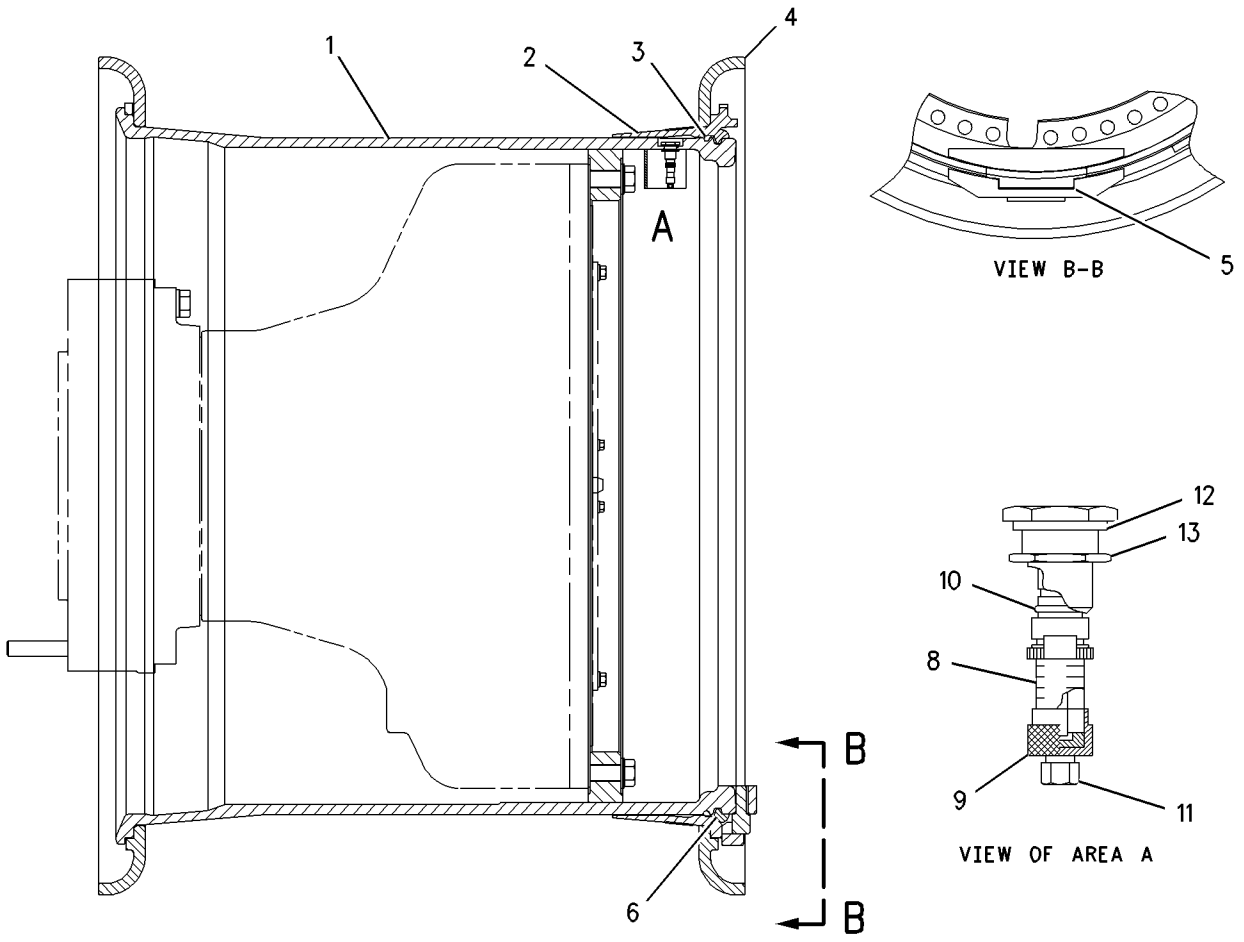

GRAPHIC #1 g00666513

112-5452 SHAFT GP-DRIVE

S/N: 7HR1-UP
PART OF 109-6822 POWER TRAIN AR
TYPE 1

SMCS-3253 **i01197529**

NOTE	REF NO	GRAPHIC REF	PART NUMBER	QTY	PART NAME 1 2 3 4 5 6 (PRODUCT LEVEL)	SEE PAGE
	1	1	**1V-0061**	1	RETAINER-BEARING	
	2	1	**4E-4377**	1	CAGE-BEARING	
	3	1	**1H-8278**	1	SEAL-O-RING (196.44MM ID)	
M	4	1	**6V-8004**	6	BOLT (M12X1.75X120MM)	
	5	1	**5P-3087**	2	CUP-ROLLER BEARING	
	6	1	**6K-2430**	2	SEAL-LIP (127MM ID)	
	7	1	**2V-2072**	1	GUARD	
	8	1	**5P-8245**	18	WASHER-HARD (3MM THK)	
M	9	1	**6V-8149**	6	NUT (M12X1.75 THD)	
M	10	1	**6V-8675**	6	BOLT (M12X1.75X35MM)	
	11	1	**5P-3088**	2	CONE-ROLLER BEARING	
M	12	1	**9X-6480**	20	BOLT (M20X2.5X90 MM)	
	13	1	**4L-9564**	1	SEAL-O-RING (81.92MM ID)	
M	14	1	**112-3927**	1	BOLT (M20X2.5X90MM)	
	15	1	**8R-8513**	1	RETAINER	
Y	16	1	**130-2372**	1	UNIVERSAL JOINT GP	649
Y	17	1	**146-4250**	1	SLIP JOINT GP	601
Y	18	1	**130-2374**	1	UNIVERSAL JOINT GP	650
	19	1	**2V-2077**	1	SPACER	
	20	1	**112-5460**	1	YOKE AS	
		1	**8R-9312**	1	GUARD-DIRT	

M-METRIC PART
Y-SEPARATE ILLUSTRATION

112-5452 **SHAFT GP-DRIVE** ***(contd.)*** **i01197529**

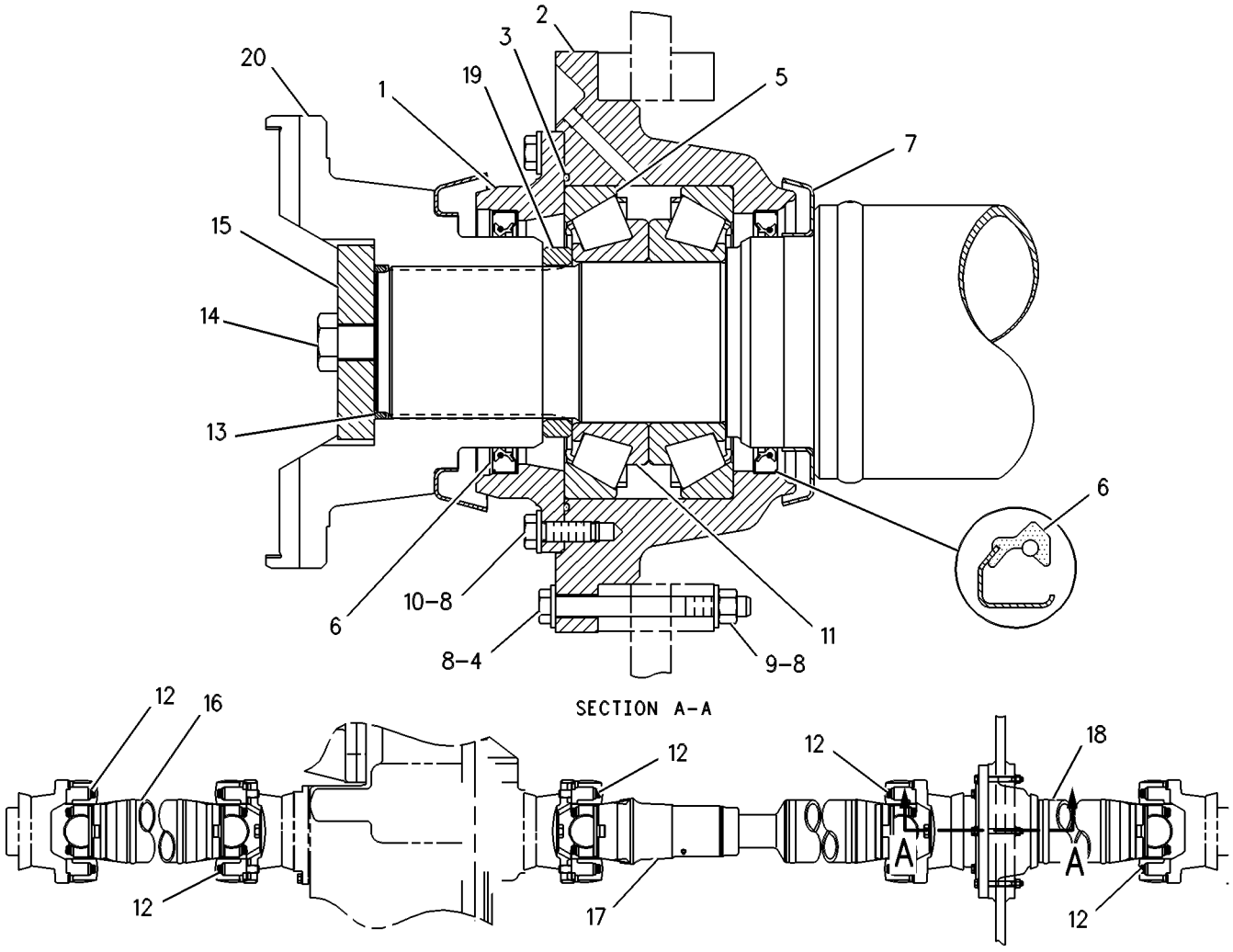

GRAPHIC #1 g00274137

112-5452 SHAFT GP-DRIVE

S/N: 7HR1-UP
PART OF 109-6822 POWER TRAIN AR
TYPE 2

SMCS-3253 **i01197531**

NOTE	REF NO	GRAPHIC REF	PART NUMBER	QTY	PART NAME 1 2 3 4 5 6 (PRODUCT LEVEL)	SEE PAGE
	1	1	**1V-0061**	1	RETAINER-BEARING	
	2	1	**4E-4377**	1	CAGE-BEARING	
	3	1	**1H-8278**	1	SEAL-O-RING (196.44MM ID)	
M	4	1	**6V-8004**	6	BOLT (M12X1.75X120MM)	
	5	1	**5P-3087**	2	CUP-ROLLER BEARING	
	6	1	**6K-2430**	2	SEAL-LIP (127MM ID)	
	7	1	**2V-2072**	1	GUARD	
	8	1	**5P-8245**	18	WASHER-HARD (3MM THK)	
M	9	1	**6V-8149**	6	NUT (M12X1.75 THD)	
M	10	1	**6V-8675**	6	BOLT (M12X1.75X35MM)	
	11	1	**5P-3088**	2	CONE-ROLLER BEARING	
M	12	1	**9X-6480**	20	BOLT (M20X2.5X90 MM)	
	13	1	**4L-9564**	1	SEAL-O-RING (81.92MM ID)	
M	14	1	**112-3927**	1	BOLT (M20X2.5X90MM)	
	15	1	**8R-8513**	1	RETAINER	
Y	16	1	**130-2372**	1	UNIVERSAL JOINT GP	649
CY	17	1	**168-1916**	1	SLIP JOINT GP	602
Y	18	1	**130-2374**	1	UNIVERSAL JOINT GP	650
	19	1	**2V-2077**	1	SPACER	
	20	1	**112-5460**	1	YOKE AS	
		1	**8R-9312**	1	GUARD-DIRT	
	21	1	**3B-8489**	1	FITTING-GREASE (1/8-27 THD)	

C-CHANGE FROM PREVIOUS TYPE
M-METRIC PART
Y-SEPARATE ILLUSTRATION

112-5452 **SHAFT GP-DRIVE** *(contd.)* **i01197531**

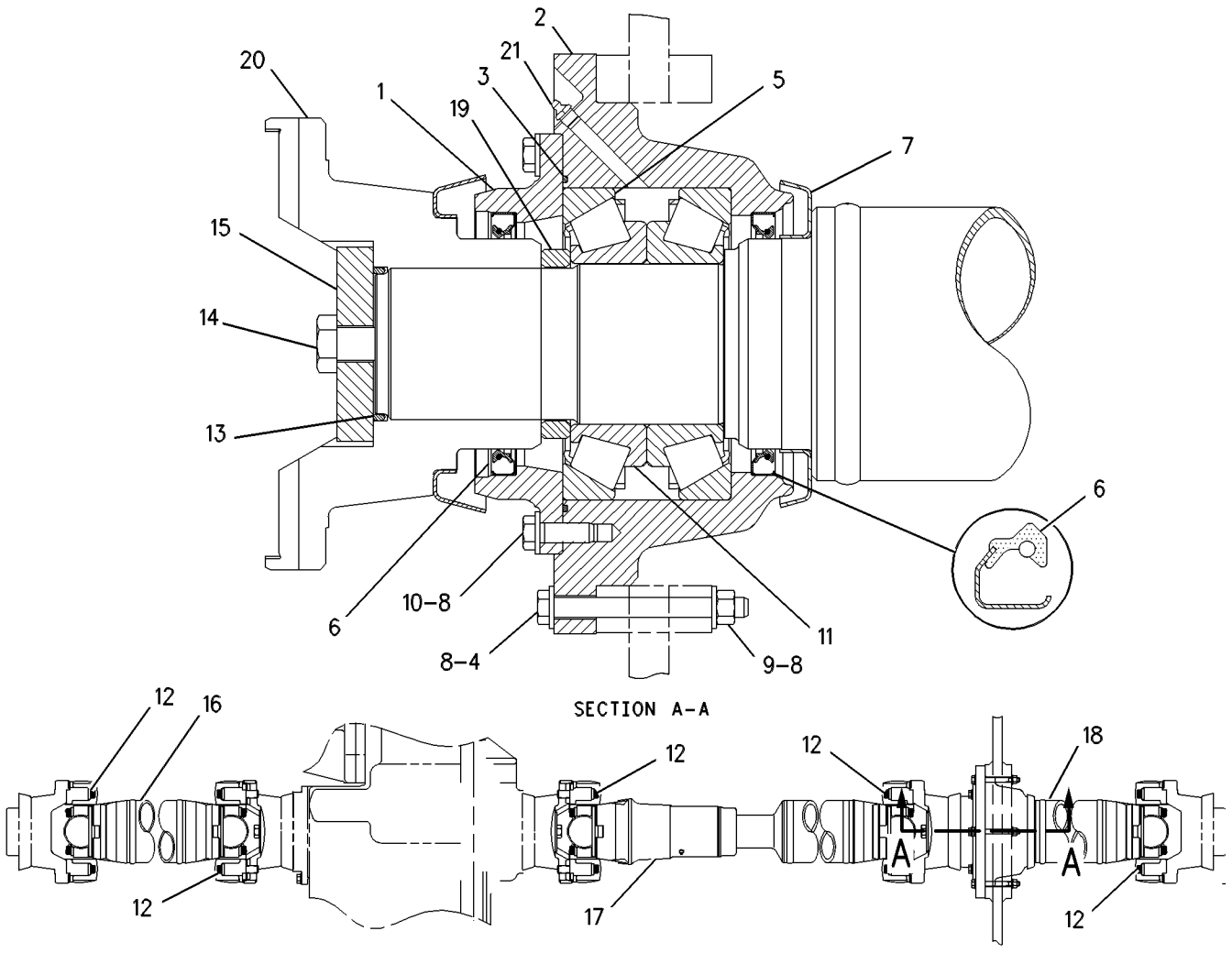

GRAPHIC #1 g00629375

112-5449 SHAFT GP-INPUT DRIVE

S/N: 7HR1-UP

PART OF 109-6822 POWER TRAIN AR

SMCS-3253 **i01158623**

NOTE	REF NO	GRAPHIC REF	PART NUMBER	QTY	PART NAME 1 2 3 4 5 6 (PRODUCT LEVEL)	SEE PAGE
Y	1	1	**112-5450**	1	UNIVERSAL JOINT GP	648
M	2	1	**8T-0281**	8	BOLT (M16X2.0X80MM)	

M-METRIC PART
Y-SEPARATE ILLUSTRATION

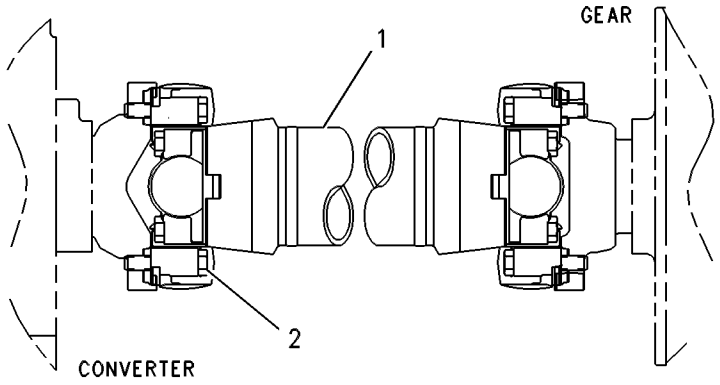

GRAPHIC #1 g00256192

146-4250 SLIP JOINT GP

S/N: 7HR1-UP

PART OF 112-5452 SHAFT GP-DRIVE

SMCS-3251 **i01056964**

NOTE	REF NO	GRAPHIC REF	PART NUMBER	QTY	PART NAME 1 2 3 4 5 6 (PRODUCT LEVEL)	SEE PAGE
	1	1	**146-4251**	1	SHAFT AS	
		1	**1K-6853**	1	FITTING	
		1	**5M-6214**	1	PLUG-PIPE (1/8-27 THD)	
Y	2	1	**8R-7036**	2	SPIDER & BEARING GP	603
M	3	1	**9X-6480**	8	BOLT (M20X2.5X90 MM)	
					AVAILABLE REPAIR KIT(S):	
			5T-9482	1	KIT-SEAL	
					(INCLUDES SEAL, WASHERS AND STUFFING CAP)	

M-METRIC PART
Y-SEPARATE ILLUSTRATION

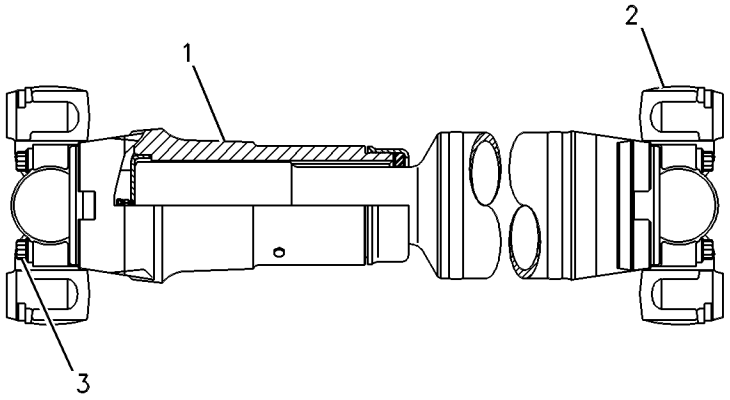

GRAPHIC #1 g00274178

168-1916 SLIP JOINT GP

S/N: 7HR1-UP

PART OF 112-5452 SHAFT GP-DRIVE

SMCS-3251 **i01141459**

NOTE	REF NO	GRAPHIC REF	PART NUMBER	QTY	PART NAME 1 2 3 4 5 6 (PRODUCT LEVEL)	SEE PAGE
	1	1	**146-4251**	1	SHAFT AS	
	1A	1	**1K-6853**	1	FITTING	
	1B	1	**5M-6214**	1	PLUG-PIPE (1/8-27 THD)	
	1C	1	**5P-6414**	1	RING-RETAINING (125.4MM OD)	
	1D	1	**5T-9482**	1	KIT-SEAL	
	1E	1	**132-1183**	1	RING-RETAINING	
	1F	1	**168-1917**	1	CUP-DUST	
Y	2	1	**8R-7036**	2	SPIDER & BEARING GP	603
M	3	1	**9X-6480**	8	BOLT (M20X2.5X90 MM)	

M-METRIC PART
Y-SEPARATE ILLUSTRATION

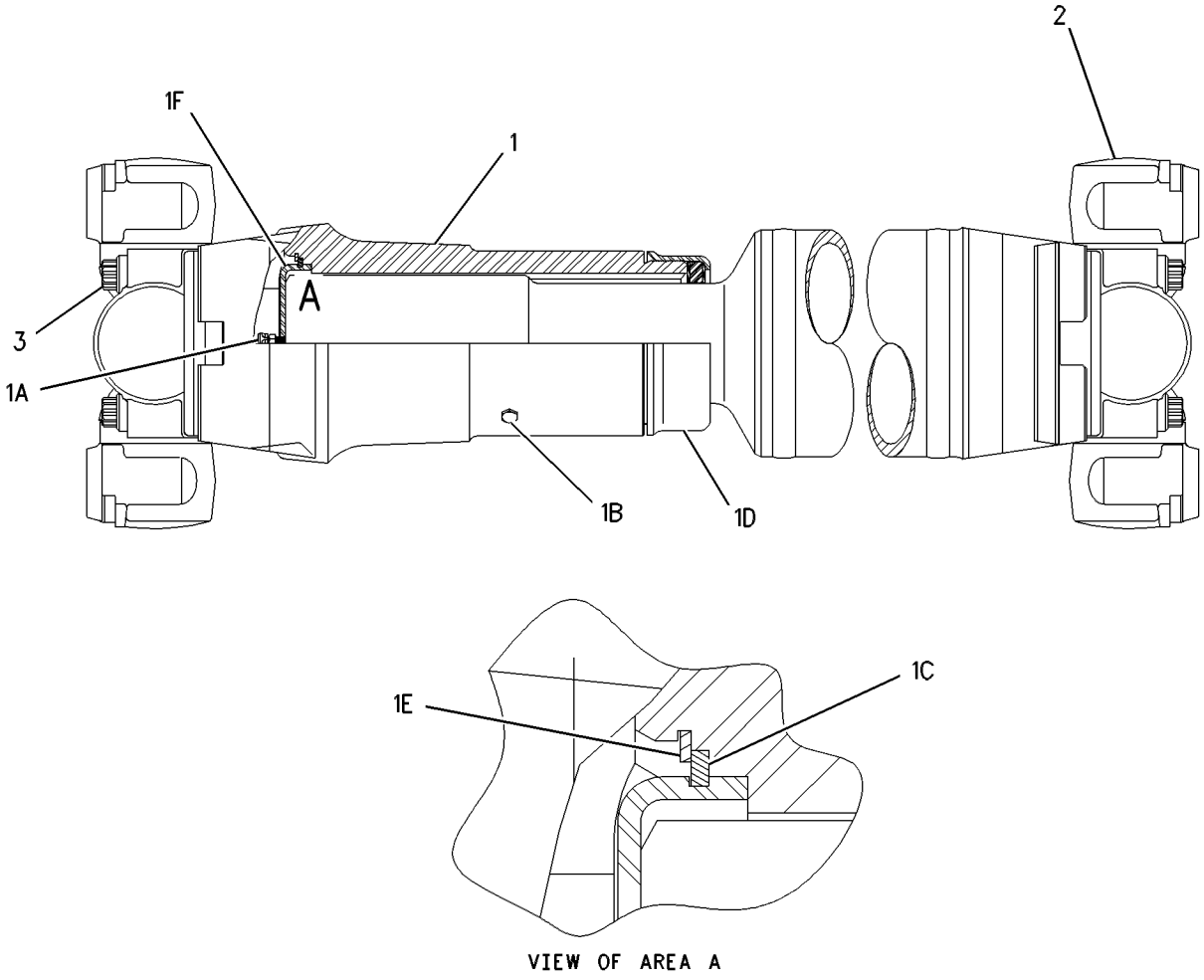

GRAPHIC #1 g00551886

8R-7036 SPIDER & BEARING GP

S/N: 7HR1-UP

PART OF 146-4250, 168-1916 SLIP JOINT GP

SMCS-3251, 3253 **i01105694**

NOTE	PART NUMBER	QTY	PART NAME 1 2 3 4 5 6 (PRODUCT LEVEL)	SEE PAGE
	8R-7034	1	SPIDER & BEARING GP	
			—OR—	
	8X-0432	1	SPIDER & BEARING GP	

POWER TRAIN

109-6861 SUPPORT GP-TRANSMISSION

S/N: 7HR1-UP

PART OF 109-6819 CHASSIS AR

SMCS-3030 **i00743426**

NOTE	REF NO	GRAPHIC REF	PART NUMBER	QTY	PART NAME 1 2 3 4 5 6 (PRODUCT LEVEL)	SEE PAGE
	1	1	**4E-9716**	2	BRACKET AS-MOUNTING	
					(EACH INCLUDES)	
		1	**8B-6349**	2	DOWEL	
	2	1	**6Y-9980**	6	MOUNT AS	
	3	1	**7Y-1030**	2	SUPPORT AS	
	4	1	**9W-7385**	6	SLEEVE	
	5	1	**9W-7388**	6	WASHER (12.0MM THK)	
	6	1	**112-6192**	2	BRACKET AS-MOUNTING	
					(EACH INCLUDES)	
		1	**8B-6349**	2	DOWEL	
M	7	1	**7X-2465**	2	BOLT (M24X3.0X180MM)	
	8	1	**8T-4123**	8	WASHER-PLATED (3.5MM THK)	
	9	1	**8T-4167**	8	WASHER (4.0MM THK)	
M	10	1	**8T-4193**	8	BOLT (M16X2.0X50MM)	
M	11	1	**8T-4649**	4	BOLT (M24X3X140MM)	
M	12	1	**8T-6430**	8	BOLT (M20X2.5X50MM)	
	13	1	**9X-8257**	8	WASHER (3.50MM THK)	

M-METRIC PART

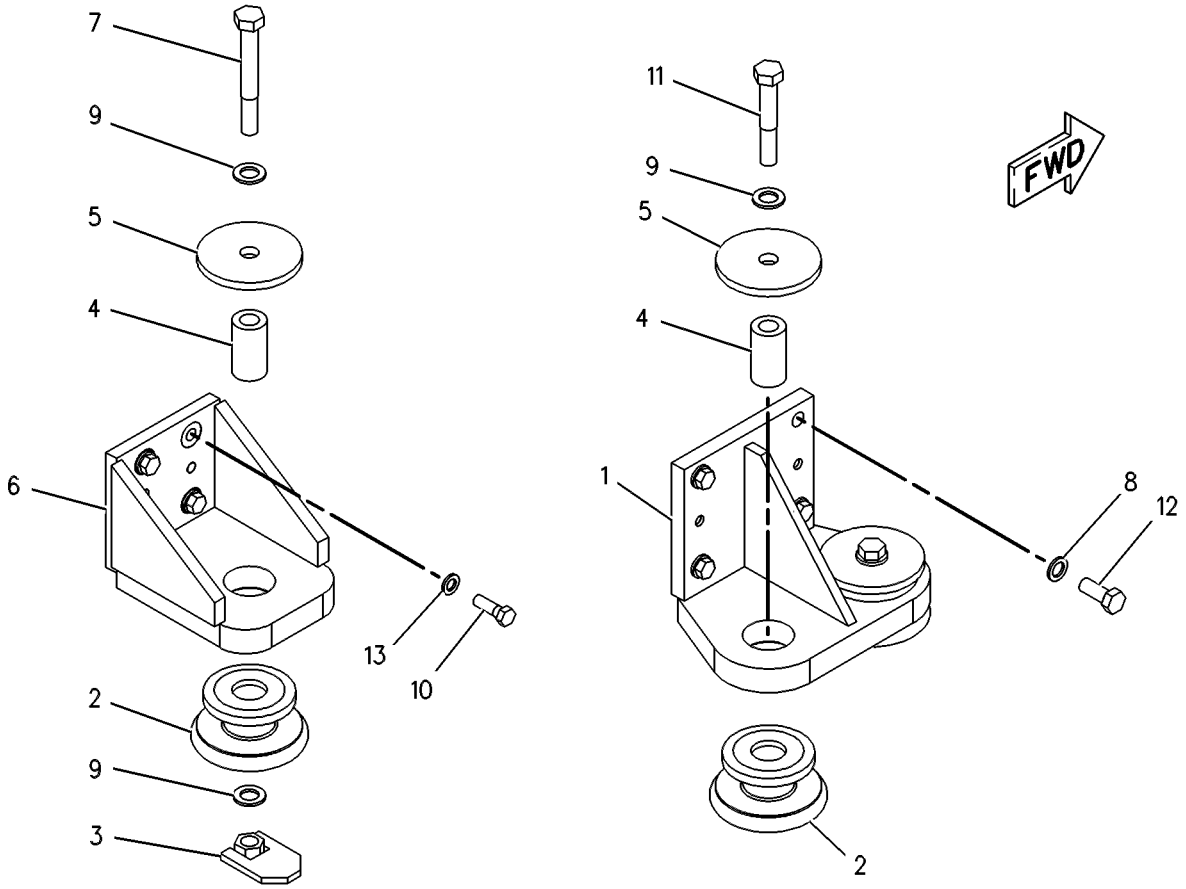

GRAPHIC #1 g00254868

POWER TRAIN

127-2964 TIRE & RIM AR

S/N: 7HR1-UP

AN ATTACHMENT

SMCS-4202 **i00804040**

NOTE	PART NUMBER	QTY	PART NAME 1 2 3 4 5 6 (PRODUCT LEVEL)	SEE PAGE
Y	*127-2966*	1	RIM AR	594

Y-SEPARATE ILLUSTRATION

POWER TRAIN

136-0871 TIRE & RIM AR

S/N: 7HR1-UP

AN ATTACHMENT

SMCS-4202 **i00747448**

NOTE	PART NUMBER	QTY	PART NAME 1 2 3 4 5 6 (PRODUCT LEVEL)	SEE PAGE
Y	*127-2966*	1	RIM AR	594

Y-SEPARATE ILLUSTRATION

136-0872 TIRE & RIM AR

S/N: 7HR1-UP
AN ATTACHMENT

SMCS-4202 **i00747464**

NOTE	PART NUMBER	QTY	PART NAME 1 2 3 4 5 6 (PRODUCT LEVEL)	SEE PAGE
Y	*127-2966*	1	RIM AR	594

Y-SEPARATE ILLUSTRATION

POWER TRAIN

136-0883 TIRE & RIM AR

S/N: 7HR1-UP

AN ATTACHMENT

SMCS-4202 **i00747467**

NOTE	PART NUMBER	QTY	PART NAME 1 2 3 4 5 6 (PRODUCT LEVEL)	SEE PAGE
Y	*127-2966*	1	RIM AR	594

Y-SEPARATE ILLUSTRATION

136-7334 TIRE & RIM AR

S/N: 7HR1-UP
AN ATTACHMENT

SMCS-4202 **i00747529**

NOTE	PART NUMBER	QTY	PART NAME 1 2 3 4 5 6 (PRODUCT LEVEL)	SEE PAGE
Y	*127-2966*	1	RIM AR	594

Y-SEPARATE ILLUSTRATION

147-9632 TIRE & RIM AR

S/N: 7HR1-UP
45/65-45 58 PR L-5
AN ATTACHMENT

SMCS-4202 **i00748214**

NOTE	PART NUMBER	QTY	PART NAME 1 2 3 4 5 6 (PRODUCT LEVEL)	SEE PAGE
Y	*127-2966*	1	RIM AR	594

Y-SEPARATE ILLUSTRATION

POWER TRAIN

148-3460 TIRE & RIM AR

S/N: 7HR1-UP

AN ATTACHMENT

SMCS-4202 **i00748258**

NOTE	PART NUMBER	QTY	PART NAME 1 2 3 4 5 6 (PRODUCT LEVEL)	SEE PAGE
Y	*127-2966*	1	RIM AR	594

Y-SEPARATE ILLUSTRATION

150-1882 TIRE & RIM AR

S/N: 7HR1-UP
45/65-45 46 PR L5S
AN ATTACHMENT

SMCS-4202 **i00818153**

NOTE	PART NUMBER	QTY	PART NAME 1 2 3 4 5 6 (PRODUCT LEVEL)	SEE PAGE
Y	*127-2966*	1	RIM AR	594

Y-SEPARATE ILLUSTRATION

165-6171 TIRE & RIM AR

S/N: 7HR1-UP
AN ATTACHMENT

SMCS-4202 **i01130047**

NOTE	PART NUMBER	QTY	PART NAME 1 2 3 4 5 6 (PRODUCT LEVEL)	SEE PAGE
Y	*127-2966*	1	RIM AR	594

Y-SEPARATE ILLUSTRATION

POWER TRAIN

165-6175 TIRE & RIM AR

S/N: 7HR1-UP

AN ATTACHMENT

SMCS-4202 **i01130051**

NOTE	PART NUMBER	QTY	PART NAME 1 2 3 4 5 6 (PRODUCT LEVEL)	SEE PAGE
Y	*127-2966*	1	RIM AR	594

Y-SEPARATE ILLUSTRATION

170-7326 TIRE & RIM AR

S/N: 7HR1-UP
AN ATTACHMENT

SMCS-4202 **i01130045**

NOTE	PART NUMBER	QTY	PART NAME 1 2 3 4 5 6 (PRODUCT LEVEL)	SEE PAGE
Y	*127-2966*	1	RIM AR	594

Y-SEPARATE ILLUSTRATION

POWER TRAIN

170-8004 TIRE & RIM AR

S/N: 7HR1-UP

AN ATTACHMENT

SMCS-4202 **i01130041**

NOTE	PART NUMBER	QTY	PART NAME 1 2 3 4 5 6 (PRODUCT LEVEL)	SEE PAGE
Y	*127-2966*	1	RIM AR	594

Y-SEPARATE ILLUSTRATION

183-3872 TIRE & RIM AR

S/N: 7HR1-UP
45/65R45*L-5
AN ATTACHMENT

SMCS-4202 **i01207165**

NOTE	PART NUMBER	QTY	PART NAME 1 2 3 4 5 6 (PRODUCT LEVEL)	SEE PAGE
Y	*127-2966*	1	RIM AR	594

Y-SEPARATE ILLUSTRATION

109-0171 TORQUE CONVERTER & HOUSING GP

S/N: 7HR1-UP
PART OF 147-1055 TORQUE CONVERTER AR
AN ATTACHMENT
TYPE 1

SMCS-3101, 3105 **i01197535**

NOTE	REF NO	GRAPHIC REF	PART NUMBER	QTY	PART NAME 1 2 3 4 5 6 (PRODUCT LEVEL)	SEE PAGE
Y	1	2	*109-0170*	1	TORQUE CONVERTER GP	632
	2	2	**109-0169**	1	HOUSING AS-TORQUE CONVERTER	
		2	**1F-1006**	2	DOWEL	
		2	**4B-9784**	5	BALL	
	3	2	**3P-1155**	1	SEAL-O-RING (24.99MM ID)	
	4	2	**9H-6832**	1	SEAL-O-RING (633.48MM ID)	
	5	2	**7T-4083**	1	RING	
	6	2	**110-2136**	1	GEAR-IDLER (66 TEETH)	
	7	2	**5P-3723**	6	CONE-ROLLER BEARING	
	8	2	**6D-7690**	6	CUP-ROLLER BEARING	
M	9	2	**8T-4193**	21	BOLT (M16X2.0X50MM)	
	10	2	**9X-8257**	23	WASHER (3.50MM THK)	
	11	2	**110-0288**	1	ADAPTER-SPLINE	
	12	2	**7X-2495**	2	RING-RETAINING	
	13	2	**5P-8211**	2	SEAL-O-RING (50.39MM ID)	
B	14	2	**111-4486**	3	SHIM PACK (INCL 10 SHIMS)	
	15	2	**109-9940**	2	ADAPTER-PUMP	
	16	2	**110-2137**	2	GEAR-PUMP DRIVE (66 TEETH)	
	17	2	**8J-6815**	3	PLUG-ORIFICE	
	18	2	**1M-3003**	3	SEAL-LIP	
	19	2	**109-8980**	1	ADAPTER-PUMP	
M	20	2	**7X-2563**	11	BOLT (M20X2.5X60MM)	
	21	2	**8T-4123**	11	WASHER-PLATED (3.5MM THK)	
	22	2	**6V-2406**	1	SEAL-O-RING (317.91MM ID)	
	23	2	**5P-9035**	1	SEAL-O-RING (307.57MM ID)	
	24	1	**6T-1740**	1	ORIFICE	
	25	1	**3D-2824**	1	SEAL-O-RING (23.47MM ID)	
	26	2	**2M-3340**	4	SEAL-O-RING (380.36MM ID)	
M	27	2	**7X-2553**	2	BOLT (M16X2.0X40MM)	
	28	2	**110-0289**	1	ADAPTER-SPLINE	
	29	2	**5F-3999**	1	SEAL-O-RING (123.42MM ID)	
	30	2	**110-0045**	1	ADAPTER-PUMP	
	31	1	**6V-0852**	1	CAP-DUST	
	32	1	**6V-3965**	1	FITTING AS	
	33	1	**3J-1907**	4	SEAL-O-RING (11.89MM ID)	
M	34	1	**7X-0818**	4	BOLT (M8X1.25X45MM)	
	35	1	**8T-4224**	6	WASHER-HARD (2MM THK)	
	36	1	**126-3883**	1	COVER	
M	37	1	**8T-4908**	2	BOLT (M8X1.25X25MM)	
	38	1	**9S-4191**	3	PLUG-O-RING (9/16-18 THD)	
	39	1	**7F-8607**	5	SEAL-O-RING (18.72MM ID)	
	40	1	**111-0810**	1	MANIFOLD	
	41	1	**9S-4181**	2	PLUG-STRAIGHT THREAD (1-5/16-12 THD)	
	42	1	**7M-8485**	2	SEAL-O-RING (29.74MM ID)	
	43	1	**8S-0768**	1	SEAL-O-RING (61.59MM ID)	

B-USE AS REQUIRED
M-METRIC PART
Y-SEPARATE ILLUSTRATION

109-0171 TORQUE CONVERTER & HOUSING GP *(contd.)* i01197535

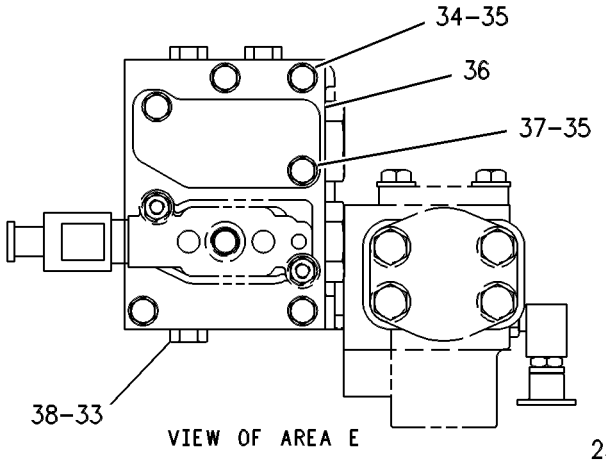

VIEW OF AREA E

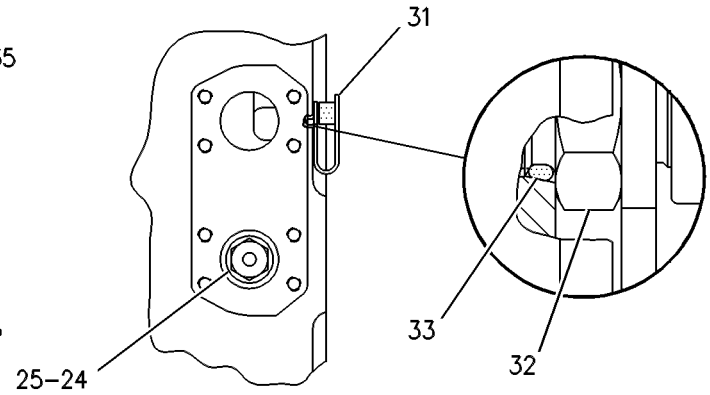

VIEW C-C

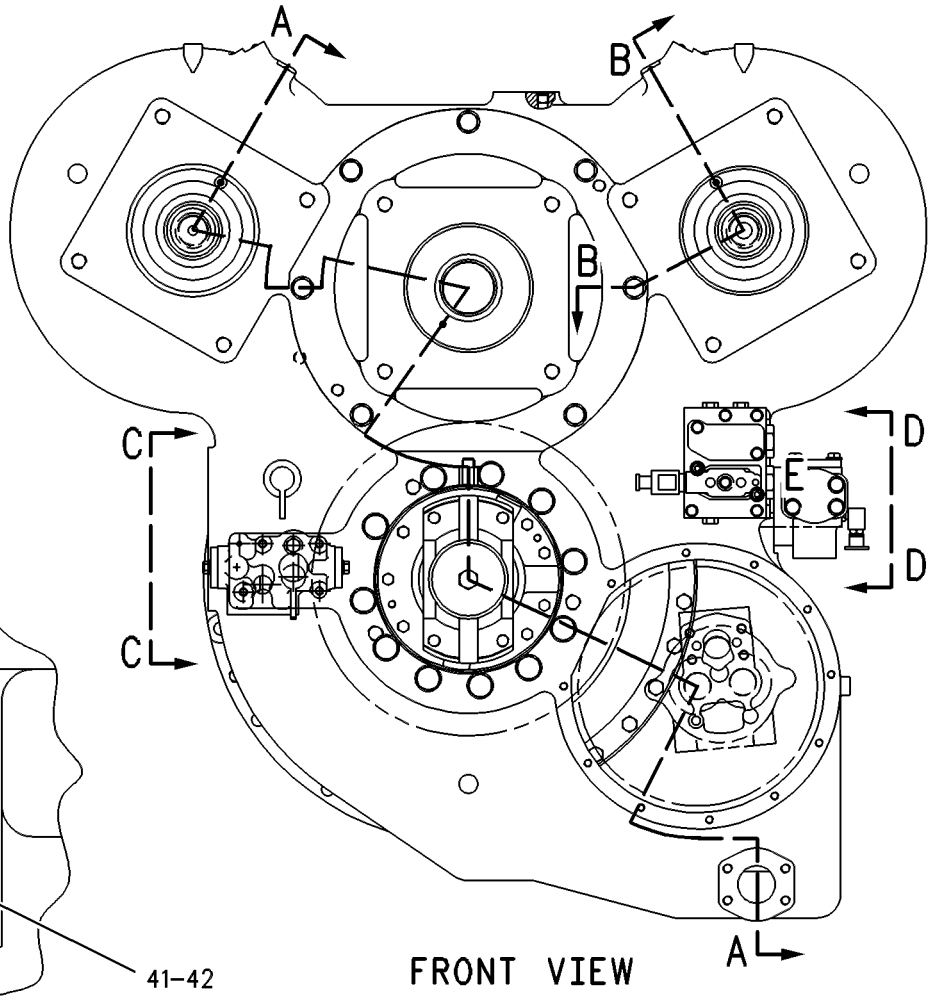

FRONT VIEW

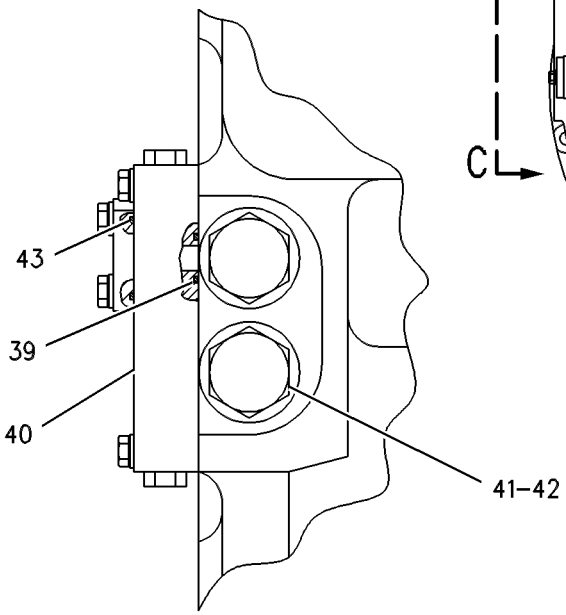

VIEW D-D

REFER TO ALL ILLUSTRATIONS OF THIS GROUP FOR AUXILIARY VIEWS

GRAPHIC #1

g00256293

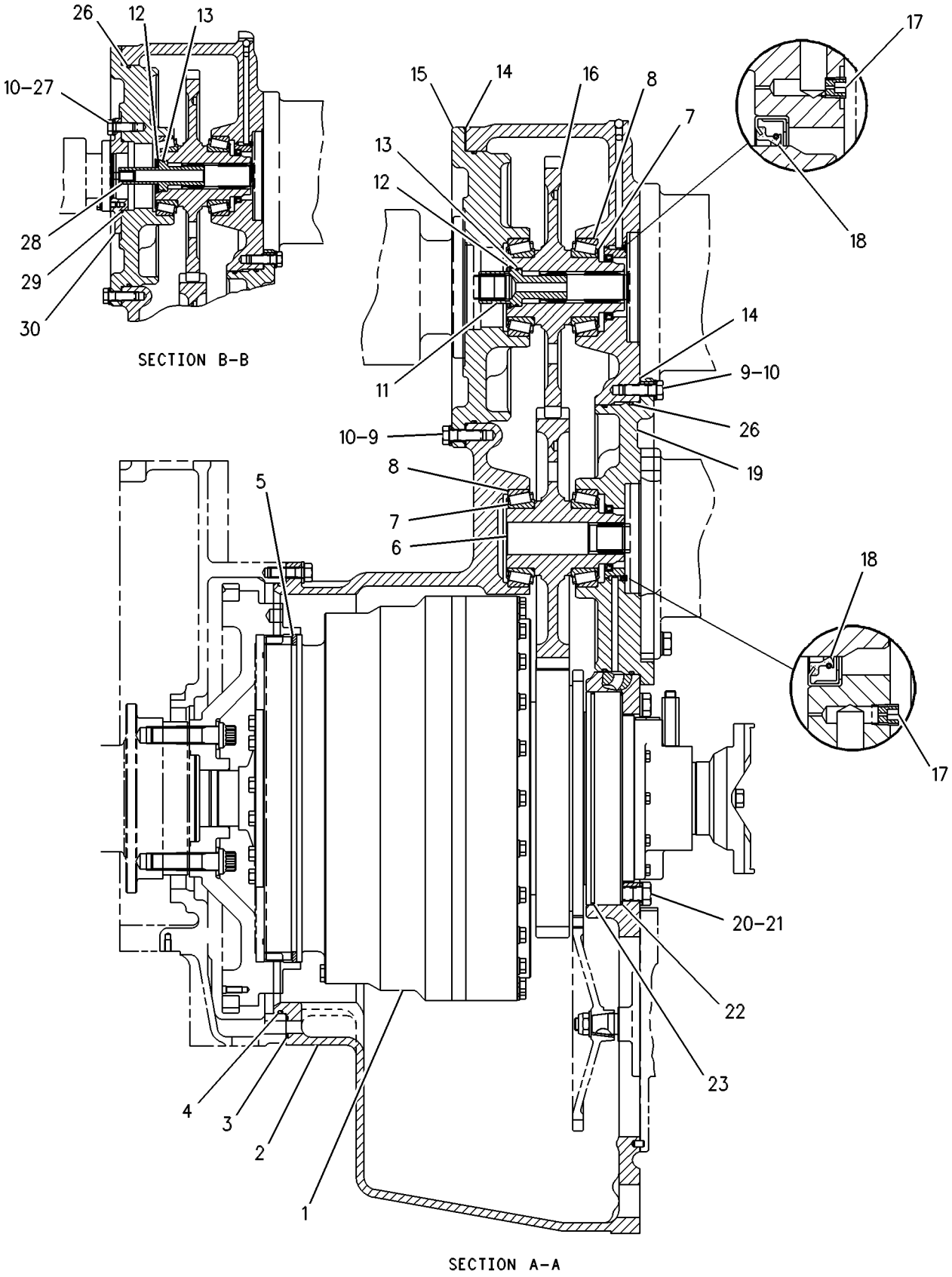

GRAPHIC #2 g00256424

MEMORANDA

109-0171 TORQUE CONVERTER & HOUSING GP

S/N: 7HR1-UP
PART OF 147-1055 TORQUE CONVERTER AR
AN ATTACHMENT
TYPE 2

SMCS-3101, 3105 **i01197538**

NOTE	REF NO	GRAPHIC REF	PART NUMBER	QTY	PART NAME 1 2 3 4 5 6 (PRODUCT LEVEL)	SEE PAGE
YC	1	2	**155-5294**	1	TORQUE CONVERTER GP	636
	2	2	**109-0169**	1	HOUSING AS-TORQUE CONVERTER	
		2	**1F-1006**	2	DOWEL	
		2	**4B-9784**	5	BALL	
	3	2	**3P-1155**	1	SEAL-O-RING (24.99MM ID)	
	4	2	**9H-6832**	1	SEAL-O-RING (633.48MM ID)	
	5	2	**7T-4083**	1	RING	
	6	2	**110-2136**	1	GEAR-IDLER (66 TEETH)	
	7	2	**5P-3723**	6	CONE-ROLLER BEARING	
	8	2	**6D-7690**	6	CUP-ROLLER BEARING	
M	9	2	**8T-4193**	21	BOLT (M16X2.0X50MM)	
	10	2	**9X-8257**	23	WASHER (3.50MM THK)	
	11	2	**110-0288**	1	ADAPTER-SPLINE	
	12	2	**7X-2495**	2	RING-RETAINING	
	13	2	**5P-8211**	2	SEAL-O-RING (50.39MM ID)	
B	14	2	**111-4486**	3	SHIM PACK (INCL 10 SHIMS)	
	15	2	**109-9940**	2	ADAPTER-PUMP	
	16	2	**110-2137**	2	GEAR-PUMP DRIVE (66 TEETH)	
	17	2	**8J-6815**	3	PLUG-ORIFICE	
	18	2	**1M-3003**	3	SEAL-LIP	
	19	2	**109-8980**	1	ADAPTER-PUMP	
M	20	2	**7X-2563**	11	BOLT (M20X2.5X60MM)	
	21	2	**8T-4123**	11	WASHER-PLATED (3.5MM THK)	
	22	2	**6V-2406**	1	SEAL-O-RING (317.91MM ID)	
	23	2	**5P-9035**	1	SEAL-O-RING (307.57MM ID)	
	24	1	**6T-1740**	1	ORIFICE	
	25	1	**3D-2824**	1	SEAL-O-RING (23.47MM ID)	
	26	2	**2M-3340**	4	SEAL-O-RING (380.36MM ID)	
M	27	2	**7X-2553**	2	BOLT (M16X2.0X40MM)	
	28	2	**110-0289**	1	ADAPTER-SPLINE	
	29	2	**5F-3999**	1	SEAL-O-RING (123.42MM ID)	
	30	2	**110-0045**	1	ADAPTER-PUMP	
	31	1	**6V-0852**	1	CAP-DUST	
	32	1	**6V-3965**	1	FITTING AS	
	33	1	**3J-1907**	4	SEAL-O-RING (11.89MM ID)	
M	34	1	**7X-0818**	4	BOLT (M8X1.25X45MM)	
	35	1	**8T-4224**	6	WASHER-HARD (2MM THK)	
	36	1	**126-3883**	1	COVER	
M	37	1	**8T-4908**	2	BOLT (M8X1.25X25MM)	
	38	1	**9S-4191**	3	PLUG-O-RING (9/16-18 THD)	
	39	1	**7F-8607**	5	SEAL-O-RING (18.72MM ID)	
	40	1	**111-0810**	1	MANIFOLD	
	41	1	**9S-4181**	2	PLUG-STRAIGHT THREAD (1-5/16-12 THD)	
	42	1	**7M-8485**	2	SEAL-O-RING (29.74MM ID)	
	43	1	**8S-0768**	1	SEAL-O-RING (61.59MM ID)	

B-USE AS REQUIRED
C-CHANGE FROM PREVIOUS TYPE
M-METRIC PART
Y-SEPARATE ILLUSTRATION

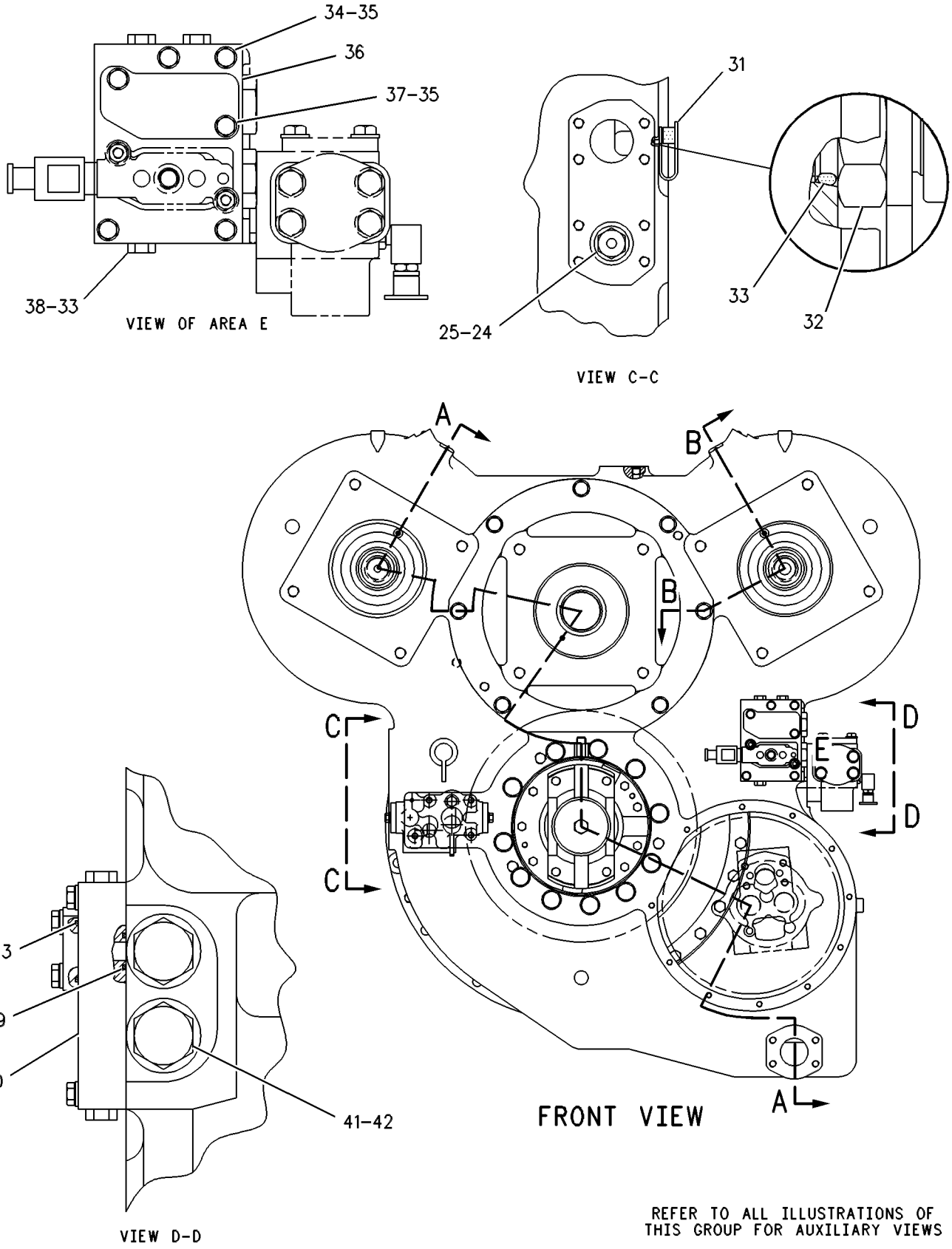

GRAPHIC #1

g00256293

109-0171 TORQUE CONVERTER & HOUSING GP *(contd.)* i01197538

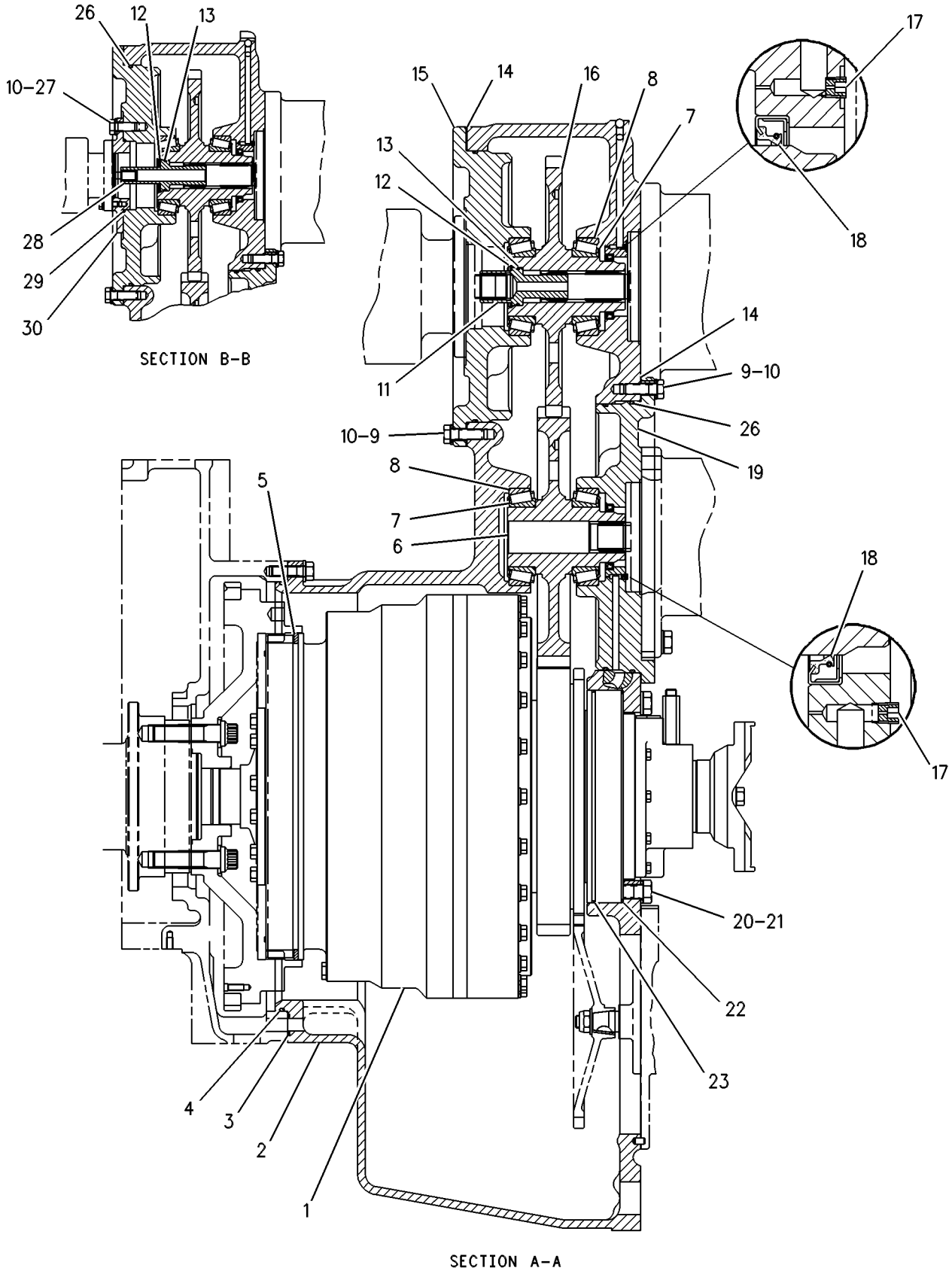

GRAPHIC #2 g00256424

MEMORANDA

123-6259 TORQUE CONVERTER & HOUSING GP–LOCKUP

S/N: 7HR1-UP
PART OF 109-6886 TORQUE CONVERTER AR-LOCKUP
AN ATTACHMENT
TYPE 1

SMCS-3101, 3105 **i01197539**

NOTE	REF NO	GRAPHIC REF	PART NUMBER	QTY	PART NAME 1 2 3 4 5 6 (PRODUCT LEVEL)	SEE PAGE
Y	1	1	**123-6258**	1	TORQUE CONVERTER GP-LOCKUP	640
	2	1	**109-0169**	1	HOUSING AS-TORQUE CONVERTER	
		1	**1F-1006**	2	DOWEL	
		1	**4B-9784**	5	BALL	
	3	1	**3P-1155**	1	SEAL-O-RING (24.99MM ID)	
	4	1	**9H-6832**	1	SEAL-O-RING (633.48MM ID)	
	5	1	**7T-4083**	1	RING	
	6	1	**110-2136**	1	GEAR-IDLER (66 TEETH)	
	7	1	**5P-3723**	6	CONE-ROLLER BEARING	
	8	1	**6D-7690**	6	CUP-ROLLER BEARING	
M	9	1	**8T-4193**	21	BOLT (M16X2.0X50MM)	
	10	1	**9X-8257**	23	WASHER (3.50MM THK)	
	11	1	**110-0288**	1	ADAPTER-SPLINE	
	12	1	**7X-2495**	2	RING-RETAINING	
	13	1	**5P-8211**	2	SEAL-O-RING (50.39MM ID)	
B	14	1	**111-4486**	3	SHIM PACK (INCL 10 SHIMS)	
	15	1	**109-9940**	2	ADAPTER-PUMP	
	16	1	**110-2137**	2	GEAR-PUMP DRIVE (66 TEETH)	
	17	1	**8J-6815**	3	PLUG-ORIFICE	
	18	1	**1M-3003**	3	SEAL-LIP	
	19	1	**109-8980**	1	ADAPTER-PUMP	
M	20	1	**7X-2563**	11	BOLT (M20X2.5X60MM)	
	21	1	**8T-4123**	11	WASHER-PLATED (3.5MM THK)	
	22	1	**6V-2406**	1	SEAL-O-RING (OUTSIDE)	
	23	1	**5P-9035**	1	SEAL-O-RING (INSIDE)	
	24	1	**6T-1740**	1	ORIFICE	
	25	1	**3D-2824**	1	SEAL-O-RING (23.47MM ID)	
	26	1	**2M-3340**	4	SEAL-O-RING (380.36MM ID)	
M	27	1	**7X-2553**	2	BOLT (M16X2.0X40MM)	
	28	1	**110-0289**	1	ADAPTER-SPLINE	
	29	1	**5F-3999**	1	SEAL-O-RING (123.42MM ID)	
	30	1	**110-0045**	1	ADAPTER-PUMP	
	31	1	**6V-0852**	1	CAP-DUST	
	32	1	**6V-3965**	1	FITTING AS	
	33	1	**3J-1907**	4	SEAL-O-RING (11.89MM ID)	
M	34	1	**7X-0818**	4	BOLT (M8X1.25X45MM)	
	35	1	**8T-4224**	4	WASHER-HARD (2MM THK)	
	36	1	**9S-4181**	2	PLUG-STRAIGHT THREAD (1-5/16-12 THD)	
	37	1	**7M-8485**	2	SEAL-O-RING (29.74MM ID)	
	38	1	**7F-8607**	5	SEAL-O-RING (18.72MM ID)	
	39	1	**9S-4191**	3	PLUG-O-RING (9/16-18 THD)	
	40	1	**111-0810**	1	MANIFOLD	

B-USE AS REQUIRED
M-METRIC PART
Y-SEPARATE ILLUSTRATION

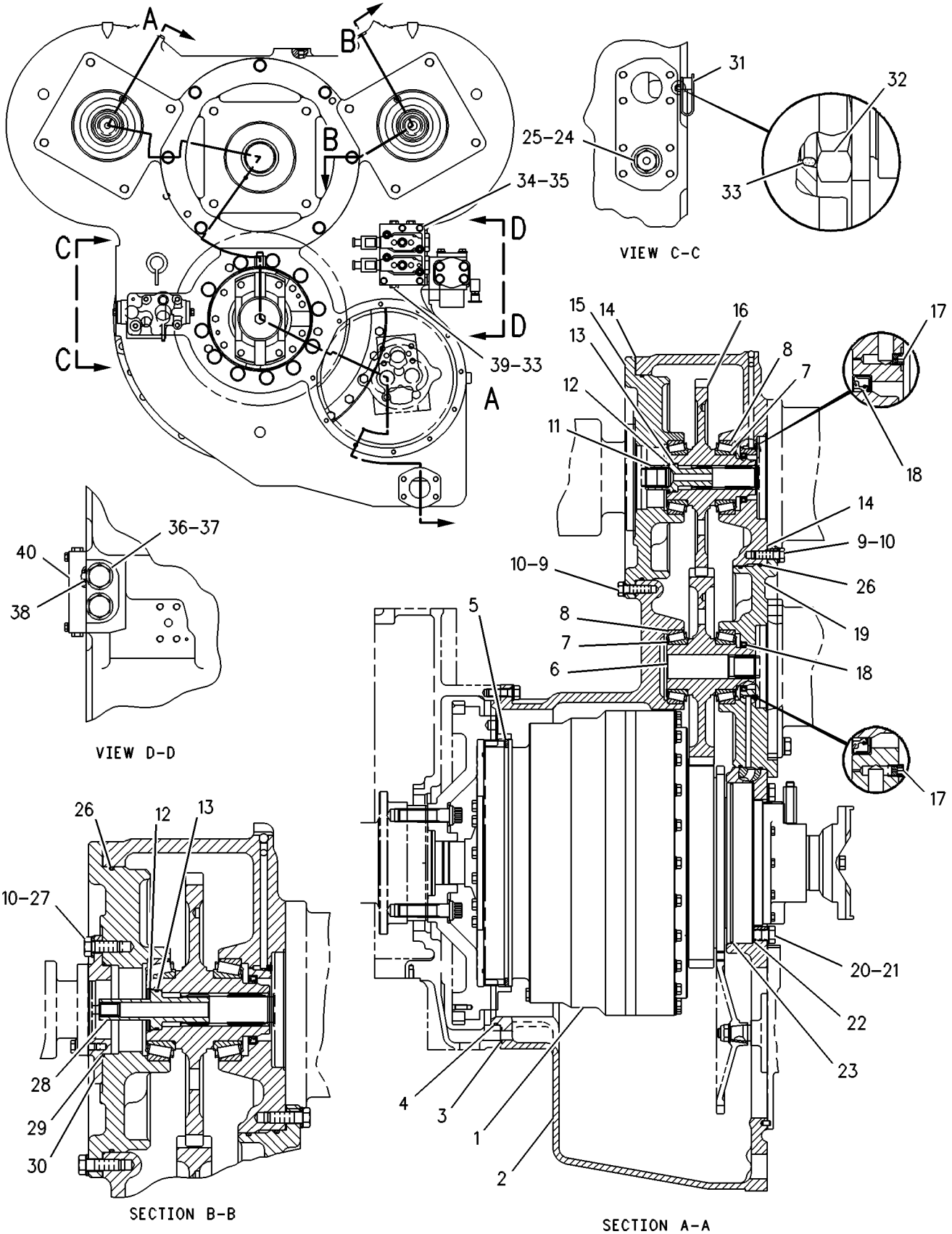

GRAPHIC #1 g00256382

123-6259 TORQUE CONVERTER & HOUSING GP–LOCKUP

S/N: 7HR1-UP
PART OF 109-6886 TORQUE CONVERTER AR-LOCKUP
AN ATTACHMENT
TYPE 2

SMCS-3101, 3105 **i01197544**

NOTE	REF NO	GRAPHIC REF	PART NUMBER	QTY	PART NAME 1 2 3 4 5 6 (PRODUCT LEVEL)	SEE PAGE
YC	1	1	**155-5295**	1	TORQUE CONVERTER GP-LOCKUP	644
	2	1	**109-0169**	1	HOUSING AS-TORQUE CONVERTER	
		1	**1F-1006**	2	DOWEL	
		1	**4B-9784**	5	BALL	
	3	1	**3P-1155**	1	SEAL-O-RING (24.99MM ID)	
	4	1	**9H-6832**	1	SEAL-O-RING (633.48MM ID)	
	5	1	**7T-4083**	1	RING	
	6	1	**110-2136**	1	GEAR-IDLER (66 TEETH)	
	7	1	**5P-3723**	6	CONE-ROLLER BEARING	
	8	1	**6D-7690**	6	CUP-ROLLER BEARING	
M	9	1	**8T-4193**	21	BOLT (M16X2.0X50MM)	
	10	1	**9X-8257**	23	WASHER (3.50MM THK)	
	11	1	**110-0288**	1	ADAPTER-SPLINE	
	12	1	**7X-2495**	2	RING-RETAINING	
	13	1	**5P-8211**	2	SEAL-O-RING (50.39MM ID)	
B	14	1	**111-4486**	3	SHIM PACK (INCL 10 SHIMS)	
	15	1	**109-9940**	2	ADAPTER-PUMP	
	16	1	**110-2137**	2	GEAR-PUMP DRIVE (66 TEETH)	
	17	1	**8J-6815**	3	PLUG-ORIFICE	
	18	1	**1M-3003**	3	SEAL-LIP	
	19	1	**109-8980**	1	ADAPTER-PUMP	
M	20	1	**7X-2563**	11	BOLT (M20X2.5X60MM)	
	21	1	**8T-4123**	11	WASHER-PLATED (3.5MM THK)	
	22	1	**6V-2406**	1	SEAL-O-RING (OUTSIDE)	
	23	1	**5P-9035**	1	SEAL-O-RING (INSIDE)	
	24	1	**6T-1740**	1	ORIFICE	
	25	1	**3D-2824**	1	SEAL-O-RING (23.47MM ID)	
	26	1	**2M-3340**	4	SEAL-O-RING (380.36MM ID)	
M	27	1	**7X-2553**	2	BOLT (M16X2.0X40MM)	
	28	1	**110-0289**	1	ADAPTER-SPLINE	
	29	1	**5F-3999**	1	SEAL-O-RING (123.42MM ID)	
	30	1	**110-0045**	1	ADAPTER-PUMP	
	31	1	**6V-0852**	1	CAP-DUST	
	32	1	**6V-3965**	1	FITTING AS	
	33	1	**3J-1907**	4	SEAL-O-RING (11.89MM ID)	
M	34	1	**7X-0818**	4	BOLT (M8X1.25X45MM)	
	35	1	**8T-4224**	4	WASHER-HARD (2MM THK)	
	36	1	**9S-4181**	2	PLUG-STRAIGHT THREAD (1-5/16-12 THD)	
	37	1	**7M-8485**	2	SEAL-O-RING (29.74MM ID)	
	38	1	**7F-8607**	5	SEAL-O-RING (18.72MM ID)	
	39	1	**9S-4191**	3	PLUG-O-RING (9/16-18 THD)	
	40	1	**111-0810**	1	MANIFOLD	

B-USE AS REQUIRED
C-CHANGE FROM PREVIOUS TYPE
M-METRIC PART
Y-SEPARATE ILLUSTRATION

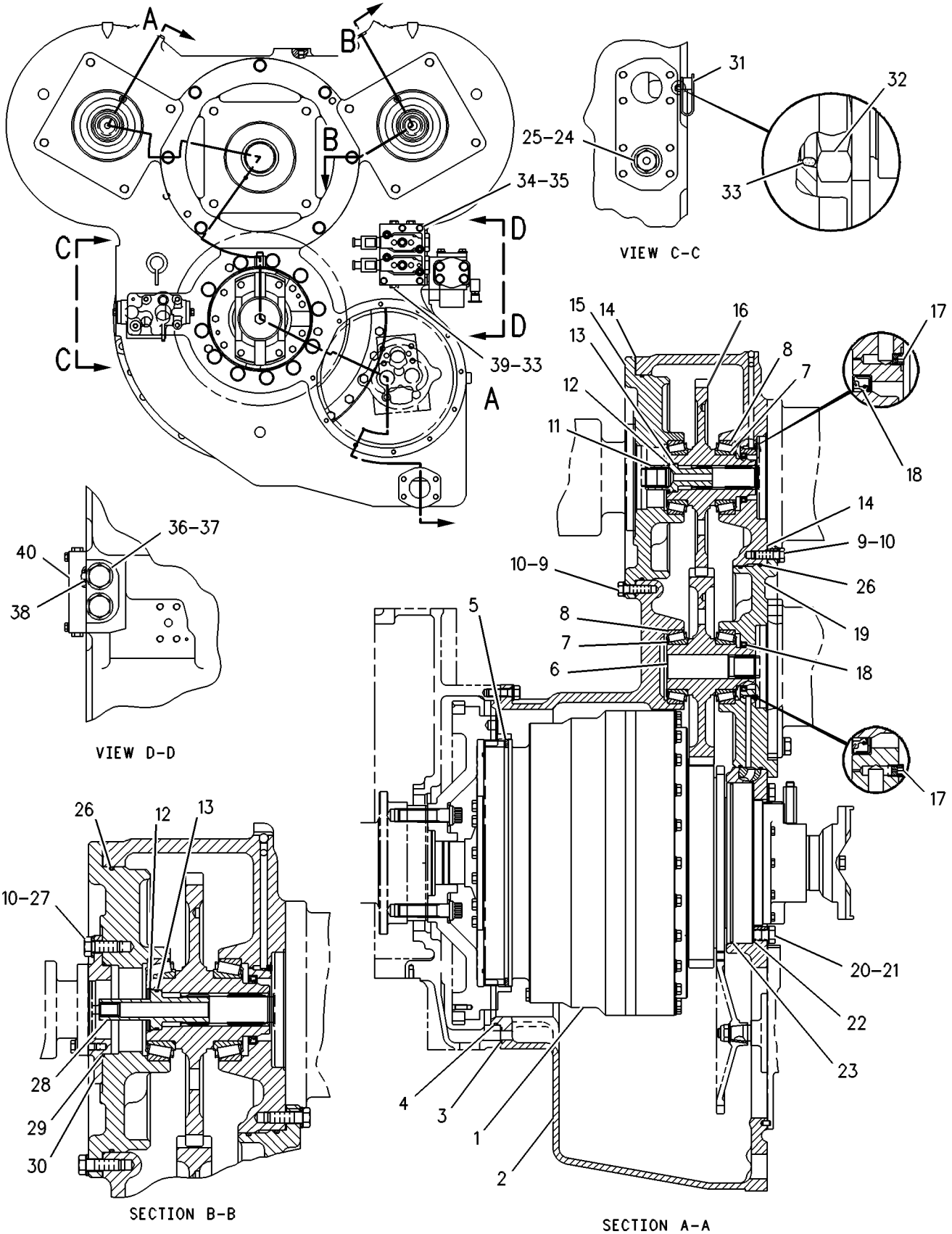

GRAPHIC #1 g00256382

147-1055 TORQUE CONVERTER AR

S/N: 7HR1-UP

CANNOT BE USED WITH 109-6886 TORQUE CONVERTER AR-LOCKUP

AN ATTACHMENT

SMCS-3101 **i01157550**

NOTE	PART NUMBER	QTY	PART NAME 1 2 3 4 5 6 (PRODUCT LEVEL)	SEE PAGE
Y	**109-0171**	1	TORQUE CONVERTER & HOUSING GP	618

Y-SEPARATE ILLUSTRATION

109-6886 TORQUE CONVERTER AR-LOCKUP

S/N: 7HR1-UP
AN ATTACHMENT

SMCS-3101 **i01239377**

NOTE	PART NUMBER	QTY	PART NAME 1 2 3 4 5 6 (PRODUCT LEVEL)	SEE PAGE
Y	*132-3612*	1	SWITCH GP-ROCKER (TORQUE CONVERTER LOCKUP)	369
Y	*123-6259*	1	TORQUE CONVERTER & HOUSING GP	626
Y	*112-4811*	1	VALVE & MTG GP-LOCKUP CLUTCH	651

Y-SEPARATE ILLUSTRATION

POWER TRAIN

109-0170 TORQUE CONVERTER GP

S/N: 3ZT1-UP

PART OF 109-0171 TORQUE CONVERTER & HOUSING GP

AN ATTACHMENT

SMCS-3101 **i01197547**

NOTE	REF NO	GRAPHIC REF	PART NUMBER	QTY	PART NAME 1 2 3 4 5 6 (PRODUCT LEVEL)	SEE PAGE
	1	1	**110-2144**	1	HOUSING-CLUTCH	
	2	1	**110-8849**	1	HUB AS-TURBINE	
		1	**1T-1253**	1	BEARING-SLEEVE	
		1	**4L-3395**	4	DOWEL	
	3	1	**141-0408**	1	PILOT-FLYWHEEL	
	4	1	**3L-1824**	1	BALL BEARING	
	5	1	**1T-1248**	1	SLEEVE-WEAR	
	6	1	**128-1663**	2	RING-SEAL	
	7	1	**8T-4896**	11	WASHER-HARD (2.5MM THK)	
	8	1	**141-0409**	1	PLATE-RETAINER	
	9	1	**141-0410**	1	WASHER-SPRING	
	10	1	**1T-1365**	1	CARRIER-RING	
	11	1	**1T-1259**	1	RING-SNAP (EXTERNAL)	
	12	1	**0S-1595**	12	BOLT (1/2-13X1.25IN)	
	13	1	**3D-4603**	1	PLUG-PIPE (1/16-27 NPTF THD)	
	14	1	**1T-1646**	2	PLATE-SIDE	
	15	1	**5P-4055**	1	BEARING-THRUST	
	16	1	**3P-9497**	1	PLUG-ORIFICE (7/16-27 THD)	
	17	1	**9S-4185**	2	PLUG-O-RING (3/4-16 THD)	
	18	1	**8L-2786**	2	SEAL-O-RING (16.36MM ID)	
	19	1	**109-2721**	1	TURBINE-CONVERTER	
	20	1	**4K-5175**	20	BOLT-12 POINT HEAD (1/2-13X1.5IN)	
	21	1	**111-1275**	1	PLATE-CLAMP	
	22	1	**1T-1232**	2	RING-RETAINING	
	23	1	**110-8847**	1	STATOR-CONVERTER	
	24	1	**1T-1566**	1	BEARING-THRUST	
	25	1	**109-3482**	1	IMPELLER-CONVERTER	
	26	1	**1T-2044**	8	PIN-THRUST RACE	
	27	1	**110-2145**	1	PLATE-CLUTCH BACKING	
	28	1	**143-7233**	1	HOUSING-CLUTCH	
	29	1	**6Y-7198**	2	PLATE-CLUTCH	
	30	1	**6I-8597**	3	DISC-FRICTION	
	31	1	**123-5255**	1	PISTON-CLUTCH	
	32	1	**9X-8876**	30	BOLT (1/2-13X4.75 IN)	
	33	1	**5P-8245**	42	WASHER-HARD (3MM THK)	
	34	1	**110-8844**	1	ADAPTER AS-CLUTCH	
		1	**3B-2225**	2	DOWEL	
		1	**110-8839**	1	BEARING-SLEEVE	
	35	1	**9S-9739**	12	BOLT (1/2-13X2.7IN)	
	36	1	**110-8850**	1	HUB-IMPELLER	
	37	1	**6Y-8167**	1	WASHER-THRUST	
	38	1	**110-2135**	1	GEAR-DRIVE (71 TEETH)	
	39	1	**110-8852**	3	RING-SEAL	
	40	1	**141-8387**	1	CARRIER-RING	
	41	1	**2H-2255**	1	DOWEL	
	42	1	**124-6348**	1	RACE-ROLLER	
	43	1	**110-2138**	1	GEAR-DRIVE (69 TEETH)	
	44	1	**5P-6408**	1	BEARING-INNER	
	45	1	**141-8205**	1	CARRIER-SUPPORT	
	46	1	**110-2142**	1	RETAINER-BEARING	
	47	1	**9B-7237**	11	BOLT (3/8-16X1.25IN)	
	48	1	**8M-2031**	1	BALL BEARING	
	49	1	**6Y-6370**	2	RING-SEAL	
	50	1	**1T-1821**	1	CARRIER-RING	
	51	1	**9X-4605**	1	SEAL-LIP	

109-0170 **TORQUE CONVERTER GP** *(contd.)* **i01197547**

NOTE	REF NO	GRAPHIC REF	PART NUMBER	QTY	PART NAME 1 2 3 4 5 6 (PRODUCT LEVEL)	SEE PAGE
	52	1	**110-2141**	1	YOKE	
	53	1	**7X-0349**	1	BOLT (5/8-11X3 IN)	
	54	1	**3P-1669**	1	RETAINER (SHAFT)	
	55	1	**5H-2824**	1	SEAL-O-RING (75.56MM ID)	
	56	1	**110-2140**	1	ROTOR-SENSOR	
	57	1	**7L-3385**	1	SEAL-O-RING (23.47MM ID)	
	58	1	**9S-8008**	1	PLUG-O-RING (1 1/16-12 THD)	
	59	1	**1T-1925**	1	GASKET (FLAT)	
	60	1	**1T-1209**	1	CARRIER-RING (SEAL)	
	61	1	**110-2133**	1	SHAFT-OUTPUT	
	62	1	**9X-8883**	12	BOLT (5/8-11X2.75IN)	
	63	1	**113-5945**	2	RING-SEAL	
	64	1	**7S-6892**	1	RING-SEAL	
	65	1	**122-9978**	1	RING-SEAL	
	66	1	**110-8853**	1	CARRIER-STATOR	
	67	1	**110-8840**	2	PLATE-THRUST	
	68	1	**9X-8873**	3	BOLT (1/2-13X2.25IN)	
	69	1	**6V-0387**	1	PLUG-PIPE (1/2 NPF)	
	70	1	**130-3639**	1	SLEEVE	
	71	1	**130-3640**	1	RACE-THRUST	
	72	1	**1T-2042**	1	SLEEVE	
	73	1	**1T-2043**	1	RACE-THRUST	

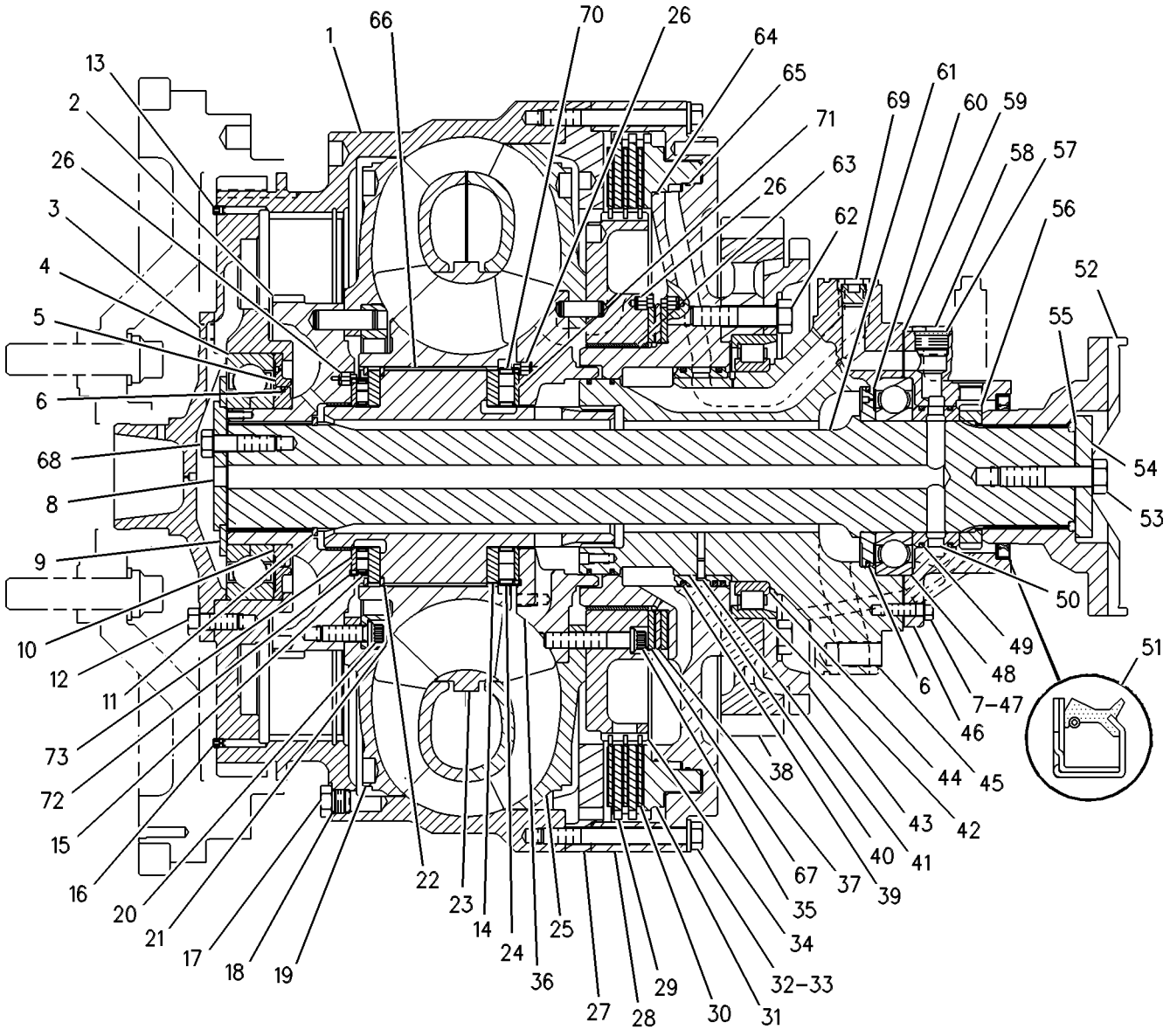

GRAPHIC #1 g00272146

MEMORANDA

POWER TRAIN

155-5294 TORQUE CONVERTER GP

S/N: 3ZT1-UP

PART OF 109-0171 TORQUE CONVERTER & HOUSING GP

AN ATTACHMENT

SMCS-3101 **i01357944**

NOTE	REF NO	GRAPHIC REF	PART NUMBER	QTY	PART NAME 1 2 3 4 5 6 (PRODUCT LEVEL)	SEE PAGE
	1	1	**110-2144**	1	HOUSING-CLUTCH	
	2	1	**110-8849**	1	HUB AS-TURBINE	
		1	**1T-1253**	1	BEARING-SLEEVE	
		1	**4L-3395**	4	DOWEL	
	3	1	**141-0409**	1	PLATE-RETAINER	
	4	1	**3L-1824**	1	BALL BEARING	
	5	1	**1T-1248**	1	SLEEVE-WEAR	
	6	1	**128-1663**	2	RING-SEAL	
	7	1	**9X-8873**	3	BOLT (1/2-13X2.25IN)	
	8	1	**141-0408**	1	PILOT-FLYWHEEL	
	9	1	**141-0410**	1	WASHER-SPRING	
	10	1	**1T-1365**	1	CARRIER-RING	
	11	1	**188-2595**	1	RING-SNAP	
	12	1	**0S-1595**	12	BOLT (1/2-13X1.25 IN)	
	13	1	**3D-4603**	1	PLUG-PIPE (1/16-27 NPTF THD)	
	14	1	**1T-1646**	2	PLATE-SIDE	
	15	1	**5P-4055**	1	BEARING-THRUST	
	16	1	**3P-9497**	1	PLUG-ORIFICE (7/16-27 THD)	
	17	1	**9S-4185**	2	PLUG-O-RING (3/4-16 THD)	
	18	1	**8L-2786**	2	SEAL-O-RING (16.36MM ID)	
	19	1	**109-2721**	1	TURBINE-CONVERTER	
	20	1	**4K-5175**	20	BOLT-12 POINT HEAD (1/2-13X1.5IN)	
	21	1	**111-1275**	1	PLATE-CLAMP	
	22	1	**1T-1232**	2	RING-RETAINING	
	23	1	**110-8847**	1	STATOR-CONVERTER	
	24	1	**1T-1566**	1	BEARING-THRUST	
	25	1	**109-3482**	1	IMPELLER-CONVERTER	
	26	1	**8T-4896**	11	WASHER-HARD (10.2X18.5X2.5MM THK)	
	27	1	**110-2145**	1	PLATE-CLUTCH BACKING	
	28	1	**155-6189**	1	HOUSING AS	
		1	**155-5716**	2	DOWEL	
	29	1	**6Y-7198**	2	PLATE-CLUTCH	
	30	1	**6I-8597**	3	DISC-FRICTION	
	31	1	**123-5255**	1	PISTON-CLUTCH	
	32	1	**9X-8876**	30	BOLT (1/2-13X4.75 IN)	
	33	1	**5P-8245**	42	WASHER-HARD (3MM THK)	
	34	1	**155-5293**	1	ADAPTER AS-CLUTCH	
		1	**3B-2225**	2	DOWEL	
		1	**110-8839**	1	BEARING-SLEEVE	
		1	**155-5716**	4	DOWEL	
	35	1	**9S-9739**	12	BOLT (1/2-13X2.7IN)	
	36	1	**155-5715**	2	PLATE-THRUST	
	37	1	**6Y-8167**	1	WASHER-THRUST	
	38	1	**110-2135**	1	GEAR-DRIVE (71 TEETH)	
	39	1	**110-8852**	3	RING-SEAL	
	40	1	**141-8205**	1	CARRIER-SUPPORT	
	41	1	**2H-2255**	1	DOWEL	
	42	1	**124-6348**	1	RACE-ROLLER	
	43	1	**110-2138**	1	GEAR-DRIVE (69 TEETH)	
	44	1	**5P-6408**	1	BEARING-INNER	
	45	1	**141-8387**	1	CARRIER-RING	
	46	1	**110-2142**	1	RETAINER-BEARING	
	47	1	**9B-7237**	11	BOLT (3/8-16X1.25 IN)	
	48	1	**8M-2031**	1	BALL BEARING	
	49	1	**6Y-6370**	2	RING-SEAL	

155-5294 TORQUE CONVERTER GP *(contd.)* i01357944

NOTE	REF NO	GRAPHIC REF	PART NUMBER	QTY	PART NAME 1 2 3 4 5 6 (PRODUCT LEVEL)	SEE PAGE
	50	1	**1T-1821**	1	CARRIER-RING	
	51	1	**9X-4605**	1	SEAL-LIP	
	52	1	**110-2141**	1	YOKE	
	53	1	**7X-0349**	1	BOLT (5/8-11X3 IN)	
	54	1	**3P-1669**	1	RETAINER (SHAFT)	
	55	1	**5H-2824**	1	SEAL-O-RING (75.56MM ID)	
	56	1	**110-2140**	1	ROTOR-SENSOR	
	57	1	**7L-3385**	1	SEAL-O-RING (23.47MM ID)	
	58	1	**9S-8008**	1	PLUG-O-RING (1 1/16-12 THD)	
	59	1	**1T-1925**	1	GASKET (FLAT)	
	60	1	**1T-1209**	1	CARRIER-RING (SEAL)	
	61	1	**110-2133**	1	SHAFT-OUTPUT	
	62	1	**9X-8883**	12	BOLT (5/8-11X2.75IN)	
	63	1	**113-5945**	2	RING-SEAL	
	64	1	**7S-6892**	1	RING-SEAL	
	65	1	**122-9978**	1	RING-SEAL	
	66	1	**110-8853**	1	CARRIER-STATOR	
	67	1	**6V-0387**	1	PLUG-PIPE (1/2 NPF)	
	68	1	**130-3639**	1	SLEEVE	
	69	1	**130-3640**	1	RACE-THRUST	
	70	1	**1T-2042**	1	SLEEVE	
	71	1	**1T-2043**	1	RACE-THRUST	
	72	1	**110-8850**	1	HUB-IMPELLER	

155-5294 TORQUE CONVERTER GP *(contd.)* i01357944

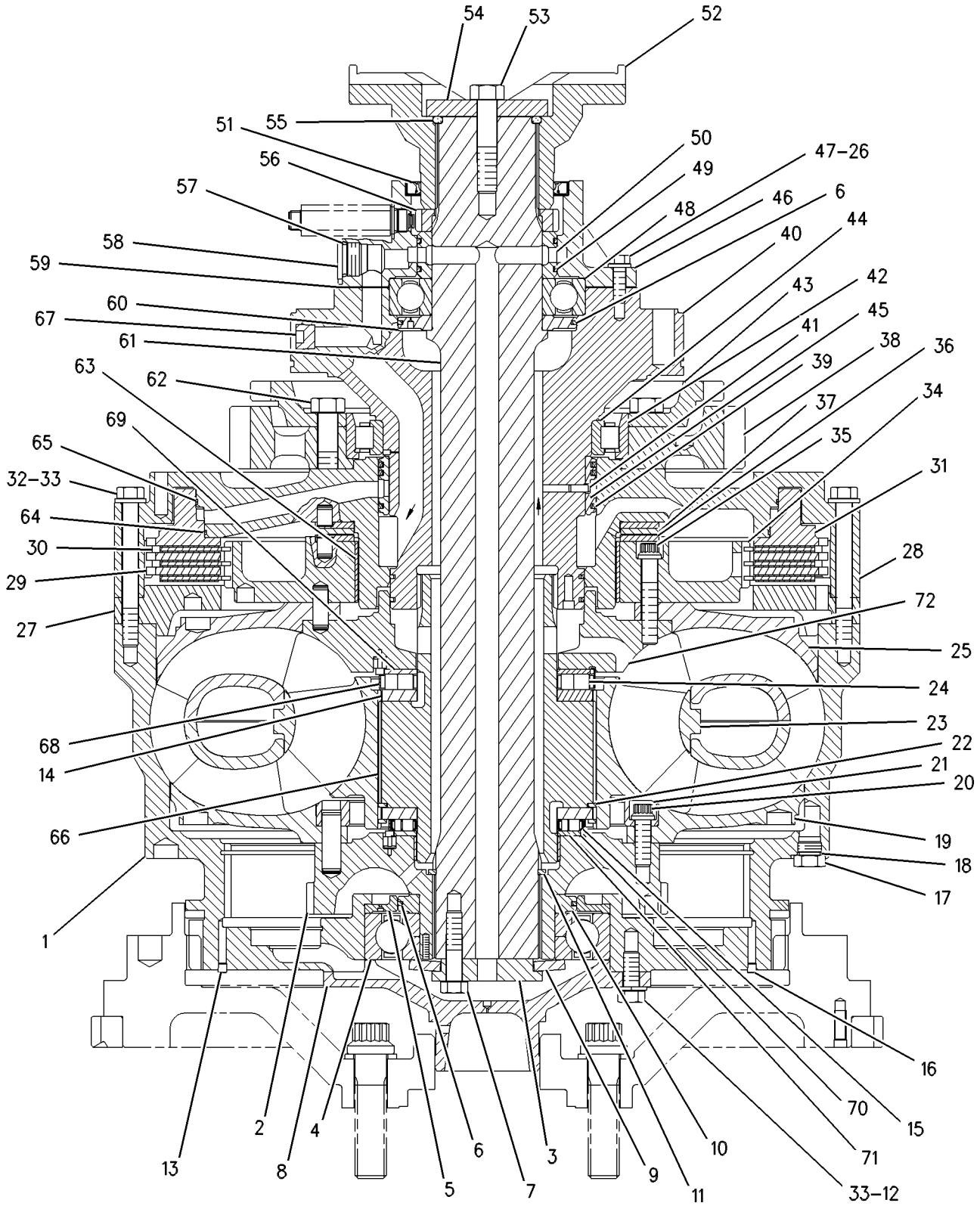

GRAPHIC #1 g00329025

MEMORANDA

POWER TRAIN

123-6258 TORQUE CONVERTER GP-LOCKUP

S/N: 4CT1-UP

PART OF 123-6259 TORQUE CONVERTER & HOUSING GP

AN ATTACHMENT

SMCS-3101 **i01197553**

NOTE	REF NO	GRAPHIC REF	PART NUMBER	QTY	PART NAME 1 2 3 4 5 6 (PRODUCT LEVEL)	SEE PAGE
	1	1	**110-2144**	1	HOUSING-CLUTCH	
	2	1	**0S-0509**	12	BOLT (3/8-16X.75IN)	
	3	1	**1T-1244**	4	WASHER-SPLIT	
	4	1	**1T-1898**	1	PLATE-BACKING	
	5	1	**1T-1897**	1	PLATE-CLUTCH	
	6	1	**8E-8328**	2	DISC-FRICTION	
	7	1	**8E-4295**	1	PISTON-CLUTCH	
	8	1	**3S-0142**	1	RING-SEAL	
	9	1	**110-8849**	1	HUB AS-TURBINE	
		1	**1T-1253**	1	BEARING-SLEEVE	
		1	**4L-3395**	4	DOWEL	
	10	1	**3S-1282**	1	RING-SEAL	
	11	1	**141-0408**	1	PILOT-FLYWHEEL	
	12	1	**3L-1824**	1	BALL BEARING	
	13	1	**1T-1248**	1	SLEEVE-WEAR	
	14	1	**128-1663**	2	RING-SEAL	
	15	1	**9X-8873**	3	BOLT (1/2-13X2.25IN)	
	16	1	**141-0409**	1	PLATE-RETAINER	
	17	1	**141-0410**	1	WASHER-SPRING	
	18	1	**1T-1365**	1	CARRIER-RING	
	19	1	**1T-1259**	1	RING-SNAP (EXTERNAL)	
	20	1	**0S-1595**	12	BOLT (1/2-13X1.25IN)	
	21	1	**3D-4603**	1	PLUG-PIPE (1/16-27 NPTF THD)	
	22	1	**1T-1646**	2	PLATE-SIDE	
	23	1	**5P-4055**	1	BEARING-THRUST	
	24	1	**3P-9497**	1	PLUG-ORIFICE (7/16-27 THD)	
	25	1	**9S-4185**	2	PLUG-O-RING (3/4-16 THD)	
	26	1	**8L-2786**	2	SEAL-O-RING (16.36MM ID)	
	27	1	**109-2721**	1	TURBINE-CONVERTER	
	28	1	**4K-5175**	20	BOLT-12 POINT HEAD (1/2-13X1.5IN)	
	29	1	**111-1275**	1	PLATE-CLAMP	
	30	1	**1T-1232**	2	RING-RETAINING	
	31	1	**110-8847**	1	STATOR-CONVERTER	
	32	1	**1T-1566**	1	BEARING-THRUST	
	33	1	**109-3482**	1	IMPELLER-CONVERTER	
	34	1	**110-8850**	1	HUB-IMPELLER	
	35	1	**110-2145**	1	PLATE-CLUTCH BACKING	
	36	1	**143-7233**	1	HOUSING-CLUTCH	
	37	1	**6Y-7198**	2	PLATE-CLUTCH	
	38	1	**6I-8597**	3	DISC-FRICTION	
	39	1	**123-5255**	1	PISTON-CLUTCH	
	40	1	**9X-8876**	30	BOLT (1/2-13X4.75 IN)	
	41	1	**5P-8245**	42	WASHER-HARD (3MM THK)	
	42	1	**110-8844**	1	ADAPTER AS-CLUTCH	
		1	**3B-2225**	2	DOWEL	
		1	**110-8839**	1	BEARING-SLEEVE	
	43	1	**9S-9739**	12	BOLT (1/2-13X2.7IN)	
	44	1	**130-3640**	1	RACE-THRUST	
	45	1	**6Y-8167**	1	WASHER-THRUST	
	46	1	**110-2135**	1	GEAR-DRIVE (71 TEETH)	
	47	1	**110-8852**	3	RING-SEAL	
	48	1	**141-8387**	1	CARRIER-RING	
	49	1	**2H-2255**	1	DOWEL	
	50	1	**124-6348**	1	RACE-ROLLER	
	51	1	**110-2138**	1	GEAR-DRIVE (69 TEETH)	

123-6258 TORQUE CONVERTER GP-LOCKUP *(contd.)* i01197553

NOTE	REF NO	GRAPHIC REF	PART NUMBER	QTY	PART NAME 1 2 3 4 5 6 (PRODUCT LEVEL)	SEE PAGE
	52	1	**5P-6408**	1	BEARING-INNER	
	53	1	**141-8205**	1	CARRIER-SUPPORT	
	54	1	**110-2142**	1	RETAINER-BEARING	
	55	1	**9B-7237**	11	BOLT (3/8-16X1.25IN)	
	56	1	**8M-2031**	1	BALL BEARING	
	57	1	**6Y-6370**	2	RING-SEAL	
	58	1	**1T-1821**	1	CARRIER-RING	
	59	1	**9X-4605**	1	SEAL-LIP	
	60	1	**110-2141**	1	YOKE	
	61	1	**7X-0349**	1	BOLT (5/8-11X3 IN)	
	62	1	**3P-1669**	1	RETAINER (SHAFT)	
	63	1	**5H-2824**	1	SEAL-O-RING (75.56MM ID)	
	64	1	**110-2140**	1	ROTOR-SENSOR	
	65	1	**7L-3385**	1	SEAL-O-RING (23.47MM ID)	
	66	1	**9S-8008**	1	PLUG-O-RING (1 1/16-12 THD)	
	67	1	**1T-1925**	1	GASKET (FLAT)	
	68	1	**1T-1209**	1	CARRIER-RING (SEAL)	
	69	1	**110-2133**	1	SHAFT-OUTPUT	
	70	1	**9X-8883**	12	BOLT (5/8-11X2.75IN)	
	71	1	**113-5945**	2	RING-SEAL	
	72	1	**7S-6892**	1	RING-SEAL	
	73	1	**122-9978**	1	RING-SEAL	
	74	1	**1T-1235**	1	CAM-FREEWHEEL (69 TEETH)	
B	75	1	**1T-1643**	3	SHIM	
B	76	1	**1T-1251**	5	SHIM	
	77	1	**141-5950**	1	CAGE-ROLLER	
	78	1	**1T-1257**	2	SPRING	
	79	1	**1T-1754**	22	ROLLER-FREEWHEEL	
	80	1	**1T-1855**	1	RACE-FREEWHEEL	
	81	1	**0S-1618**	6	BOLT (5/16-18X1.0IN)	
	82	1	**1T-1254**	2	WASHER-SPLIT	
	83	1	**1T-2044**	8	PIN-THRUST RACE	
	84	1	**1T-2043**	1	RACE-THRUST	
	85	1	**1T-2042**	1	SLEEVE	
	86	1	**130-3639**	1	SLEEVE	
	87	1	**110-8840**	2	PLATE-THRUST	
	88	1	**8T-4896**	11	WASHER-HARD (2.5MM THK)	

B-USE AS REQUIRED

123-6258 TORQUE CONVERTER GP-LOCKUP *(contd.)* i01197553

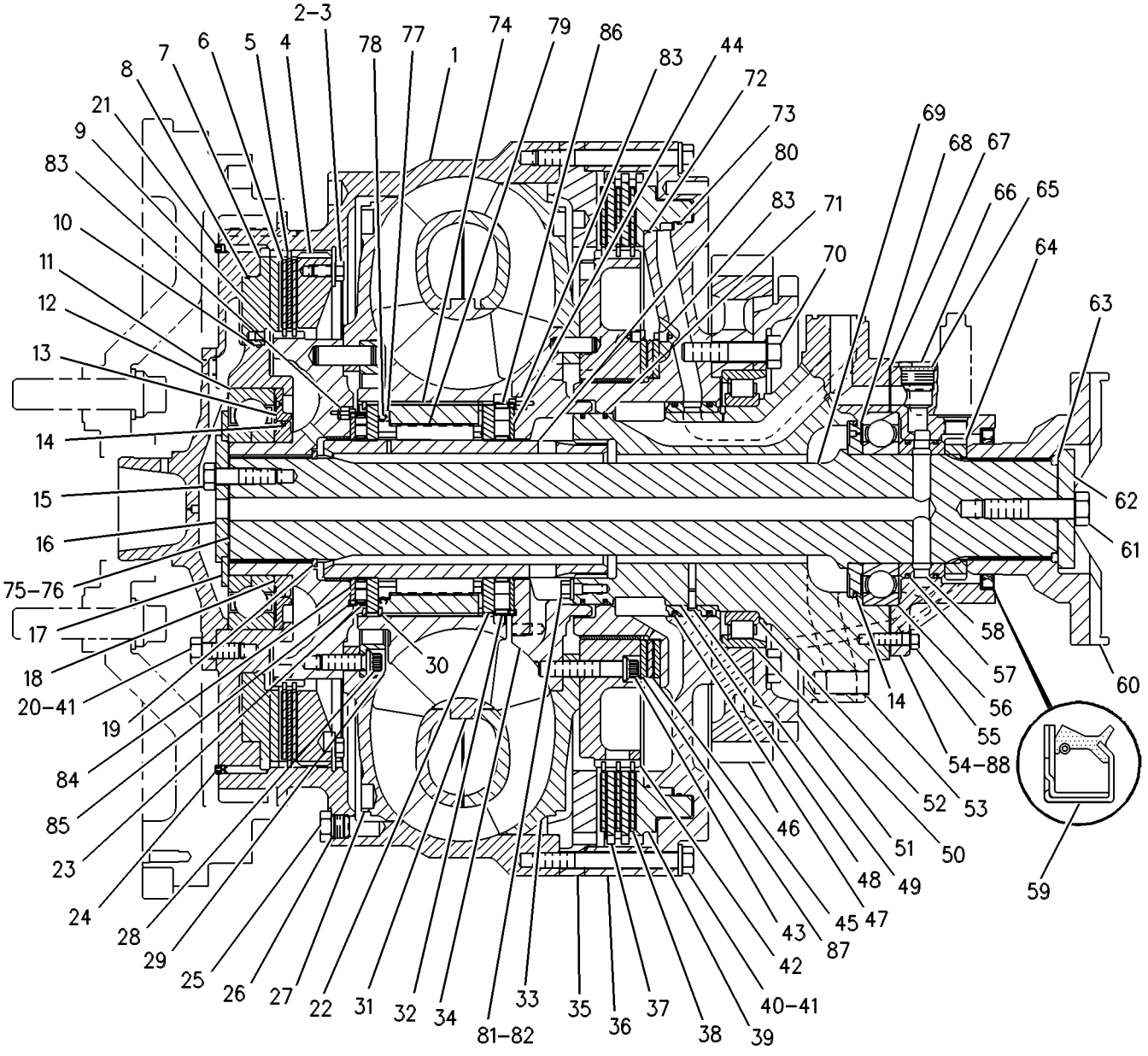

GRAPHIC #1 g00272122

MEMORANDA

POWER TRAIN

155-5295 TORQUE CONVERTER GP-LOCKUP

S/N: 4CT1-UP

PART OF 123-6259 TORQUE CONVERTER & HOUSING GP

AN ATTACHMENT

SMCS-3101 **i01357952**

NOTE	REF NO	GRAPHIC REF	PART NUMBER	QTY	PART NAME 1 2 3 4 5 6 (PRODUCT LEVEL)	SEE PAGE
	1	1	**110-2144**	1	HOUSING-CLUTCH	
	2	1	**0S-0509**	12	BOLT (3/8-16X.75 IN)	
	3	1	**1T-1244**	4	WASHER-SPLIT	
	4	1	**1T-1898**	1	PLATE-BACKING	
	5	1	**1T-1897**	1	PLATE-CLUTCH	
	6	1	**8E-8328**	2	DISC-FRICTION	
	7	1	**8E-4295**	1	PISTON-CLUTCH	
	8	1	**3S-0142**	1	RING-SEAL	
	9	1	**110-8849**	1	HUB AS-TURBINE	
		1	**1T-1253**	1	BEARING-SLEEVE	
		1	**4L-3395**	4	DOWEL	
	10	1	**3S-1282**	1	RING-SEAL	
	11	1	**141-0408**	1	PILOT-FLYWHEEL	
	12	1	**3L-1824**	1	BALL BEARING	
	13	1	**1T-1248**	1	SLEEVE-WEAR	
	14	1	**128-1663**	2	RING-SEAL	
	15	1	**9X-8873**	3	BOLT (1/2-13X2.25IN)	
	16	1	**141-0409**	1	PLATE-RETAINER	
	17	1	**141-0410**	1	WASHER-SPRING	
	18	1	**1T-1365**	1	CARRIER-RING	
	19	1	**188-2595**	1	RING-SNAP	
	20	1	**0S-1595**	12	BOLT (1/2-13X1.25 IN)	
	21	1	**3D-4603**	1	PLUG-PIPE (1/16-27 NPTF THD)	
	22	1	**1T-1646**	2	PLATE-SIDE	
	23	1	**5P-4055**	1	BEARING-THRUST	
	24	1	**3P-9497**	1	PLUG-ORIFICE (7/16-27 THD)	
	25	1	**9S-4185**	2	PLUG-O-RING (3/4-16 THD)	
	26	1	**8L-2786**	2	SEAL-O-RING (16.36MM ID)	
	27	1	**109-2721**	1	TURBINE-CONVERTER	
	28	1	**4K-5175**	20	BOLT-12 POINT HEAD (1/2-13X1.5IN)	
	29	1	**111-1275**	1	PLATE-CLAMP	
	30	1	**1T-1232**	2	RING-RETAINING	
	31	1	**110-8847**	1	STATOR-CONVERTER	
	32	1	**1T-1566**	1	BEARING-THRUST	
	33	1	**109-3482**	1	IMPELLER-CONVERTER	
	34	1	**110-8850**	1	HUB-IMPELLER	
	35	1	**110-2145**	1	PLATE-CLUTCH BACKING	
	36	1	**155-6189**	1	HOUSING AS	
		1	**155-5716**		DOWEL	
	37	1	**6Y-7198**	2	PLATE-CLUTCH	
	38	1	**6I-8597**	3	DISC-FRICTION	
	39	1	**123-5255**	1	PISTON-CLUTCH	
	40	1	**9X-8876**	30	BOLT (1/2-13X4.75 IN)	
	41	1	**5P-8245**	42	WASHER-HARD (3MM THK)	
	42	1	**155-5293**	1	ADAPTER AS-CLUTCH	
		1	**155-5716**	4	DOWEL	
		1	**3B-2225**	2	DOWEL	
		1	**110-8839**	1	BEARING-SLEEVE	
	43	1	**9S-9739**	12	BOLT (1/2-13X2.7IN)	
	44	1	**155-5715**	2	PLATE-THRUST	
	45	1	**6Y-8167**	1	WASHER-THRUST	
	46	1	**110-2135**	1	GEAR-DRIVE (71 TEETH)	
	47	1	**110-8852**	3	RING-SEAL	
	48	1	**141-8387**	1	CARRIER-RING	
	49	1	**2H-2255**	1	DOWEL	

155-5295 TORQUE CONVERTER GP-LOCKUP *(contd.)* i01357952

NOTE	REF NO	GRAPHIC REF	PART NUMBER	QTY	PART NAME 1 2 3 4 5 6 (PRODUCT LEVEL)	SEE PAGE
	50	1	**124-6348**	1	RACE-ROLLER	
	51	1	**110-2138**	1	GEAR-DRIVE (69 TEETH)	
	52	1	**5P-6408**	1	BEARING-INNER	
	53	1	**141-8205**	1	CARRIER-SUPPORT	
	54	1	**110-2142**	1	RETAINER-BEARING	
	55	1	**9B-7237**	11	BOLT (3/8-16X1.25 IN)	
	56	1	**8M-2031**	1	BALL BEARING	
	57	1	**6Y-6370**	2	RING-SEAL	
	58	1	**1T-1821**	1	CARRIER-RING	
	59	1	**9X-4605**	1	SEAL-LIP	
	60	1	**110-2141**	1	YOKE	
	61	1	**7X-0349**	1	BOLT (5/8-11X3 IN)	
	62	1	**3P-1669**	1	RETAINER (SHAFT)	
	63	1	**5H-2824**	1	SEAL-O-RING (75.56MM ID)	
	64	1	**110-2140**	1	ROTOR-SENSOR	
	65	1	**7L-3385**	1	SEAL-O-RING (23.47MM ID)	
	66	1	**9S-8008**	1	PLUG-O-RING (1 1/16-12 THD)	
	67	1	**1T-1925**	1	GASKET (FLAT)	
	68	1	**1T-1209**	1	CARRIER-RING (SEAL)	
	69	1	**110-2133**	1	SHAFT-OUTPUT	
	70	1	**9X-8883**	12	BOLT (5/8-11X2.75IN)	
	71	1	**113-5945**	2	RING-SEAL	
	72	1	**7S-6892**	1	RING-SEAL	
	73	1	**122-9978**	1	RING-SEAL	
	74	1	**1T-1235**	1	CAM-FREEWHEEL	
	75	1	**141-5950**	1	CAGE-ROLLER	
	76	1	**1T-1257**	2	SPRING	
	77	1	**1T-1754**	22	ROLLER-FREEWHEEL	
	78	1	**1T-1855**	1	RACE-FREEWHEEL	
	79	1	**0S-1618**	6	BOLT (5/16-18X1.0 IN)	
	80	1	**1T-1254**	2	WASHER-SPLIT	
	81	1	**130-3640**	1	RACE-THRUST (5/16-18X.875IN)	
	82	1	**1T-2043**	1	RACE-THRUST	
	83	1	**1T-2042**	1	SLEEVE	
	84	1	**130-3639**	1	SLEEVE	
	85	1	**8T-4896**	11	WASHER-HARD (10.2X18.5X2.5MM THK)	

155-5295 TORQUE CONVERTER GP-LOCKUP *(contd.)* i01357952

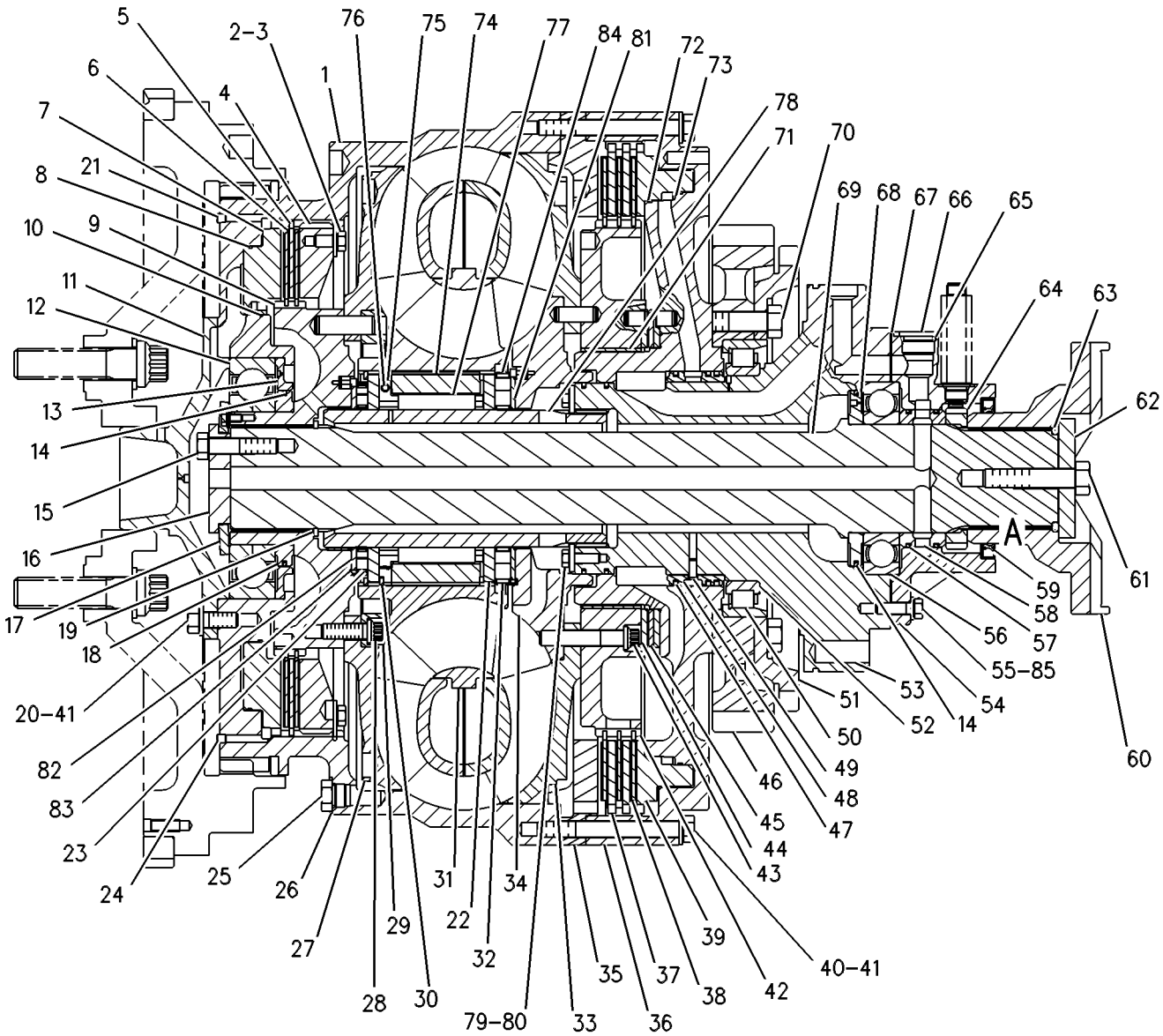

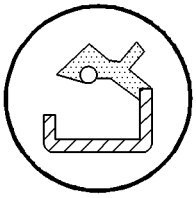

VIEW OF AREA A

GRAPHIC #1 g00330614

6Y-6965 TRANSMISSION AR

S/N: 9BX1-UP

PART OF 109-6822 POWER TRAIN AR

SMCS-3030 **i00748998**

NOTE	PART NUMBER	QTY	PART NAME 1 2 3 4 5 6 (PRODUCT LEVEL)	SEE PAGE
Y	*6Y-6967*	1	CASE & PARTS GP-PLANETARY	482
Y	*117-5858*	1	CONTROL GP-TRANSMISSION HYD	492
Y	*126-3654*	1	COVER GP-SHIPPING	520
Y	*6Y-6969*	1	GEAR & CASE GP-OUTPUT TRANSFER	544
Y	*6Y-6968*	1	GEAR GP-INPUT TRANSFER	548
Y	*6Y-6966*	1	PLANETARY GP	578

Y-SEPARATE ILLUSTRATION

112-5450 UNIVERSAL JOINT GP

S/N: 7HR1-UP

PART OF 112-5449 SHAFT GP-INPUT DRIVE

SMCS-3251, 3253 **i00745100**

NOTE	REF NO	GRAPHIC REF	PART NUMBER	QTY	PART NAME 1 2 3 4 5 6 (PRODUCT LEVEL)	SEE PAGE
	1	1	**106-0933**	2	SPIDER & BEARING GP	
	2	1	**112-5451**	1	SHAFT	
M	3	1	**8T-0281**	8	BOLT (M16X2.0X80MM)	

M-METRIC PART

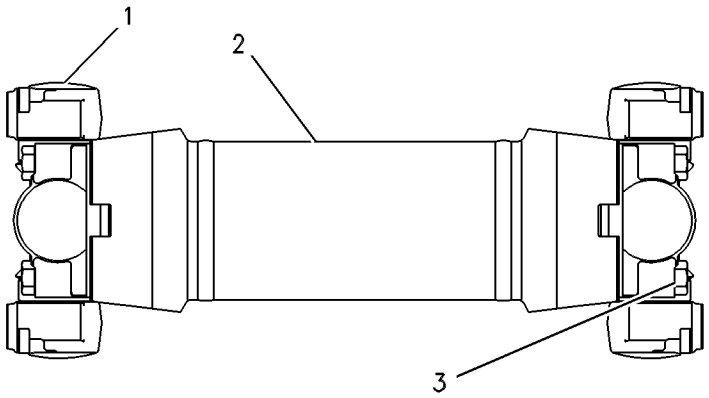

GRAPHIC #1 g00256197

130-2372 UNIVERSAL JOINT GP

S/N: 7HR1-UP

PART OF 112-5452 SHAFT GP-DRIVE

SMCS-3251, 3253 **i00746386**

NOTE	REF NO	GRAPHIC REF	PART NUMBER	QTY	PART NAME 1 2 3 4 5 6 (PRODUCT LEVEL)	SEE PAGE
	1	1	**8X-0432**	2	SPIDER & BEARING GP	
	2	1	**130-2375**	1	SHAFT	
M	3	1	**9X-6480**	8	BOLT (M20X2.5X90 MM)	

M-METRIC PART

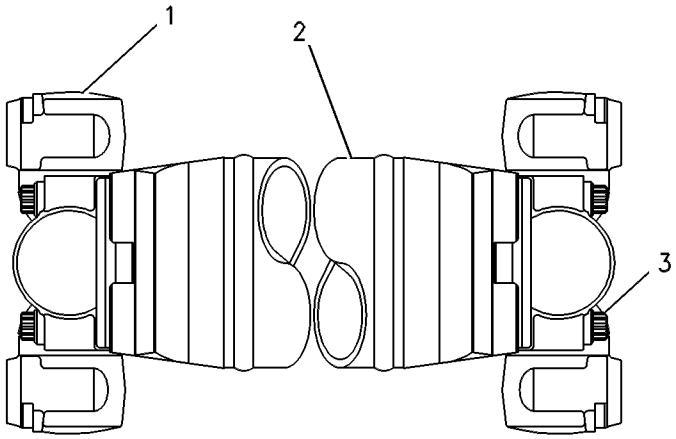

GRAPHIC #1 g00256213

POWER TRAIN

130-2374 UNIVERSAL JOINT GP

S/N: 7HR1-UP

PART OF 112-5452 SHAFT GP-DRIVE

SMCS-3251, 3253 **i00746388**

NOTE	REF NO	GRAPHIC REF	PART NUMBER	QTY	PART NAME 1 2 3 4 5 6 (PRODUCT LEVEL)	SEE PAGE
	1	1	**8X-0432**	1	SPIDER & BEARING GP	
M	2	1	**9X-6480**	4	BOLT (M20X2.5X90 MM)	
	3	1	**130-2373**	1	SHAFT	

M-METRIC PART

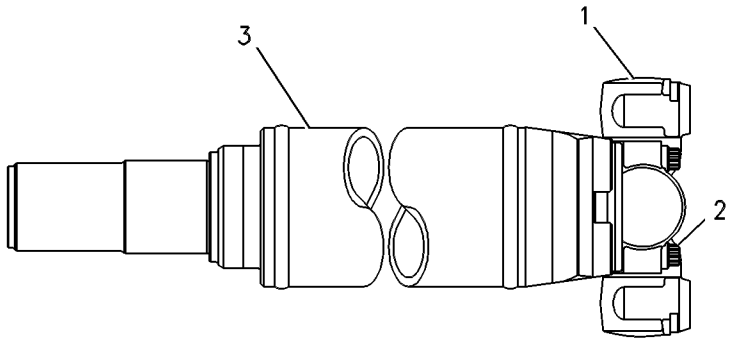

GRAPHIC #1 g00256214

112-4811 VALVE & MTG GP-LOCKUP CLUTCH

S/N: 7HR1-397
PART OF 109-6886 TORQUE CONVERTER AR-LOCKUP
AN ATTACHMENT

SMCS-3124 **i01241539**

NOTE	REF NO	GRAPHIC REF	PART NUMBER	QTY	PART NAME 1 2 3 4 5 6 (PRODUCT LEVEL)	SEE PAGE
M	1	1	**8T-6869**	2	BOLT (M8X1.25X60MM)	
	2	1	**8T-4224**	2	WASHER-HARD (8.8X16X2MM THK)	
Y	3	1	**121-4298**	1	VALVE GP-MODULATING (TC LOCKUP CLUTCH)	654
	4	1	**6D-7889**	1	SEAL-O-RING (61.6MM ID)	
	5	1	**6V-0852**	1	CAP-DUST	
	6	1	**9U-2277**	1	CLIP AS (10.5MM ID)	

M-METRIC PART
Y-SEPARATE ILLUSTRATION

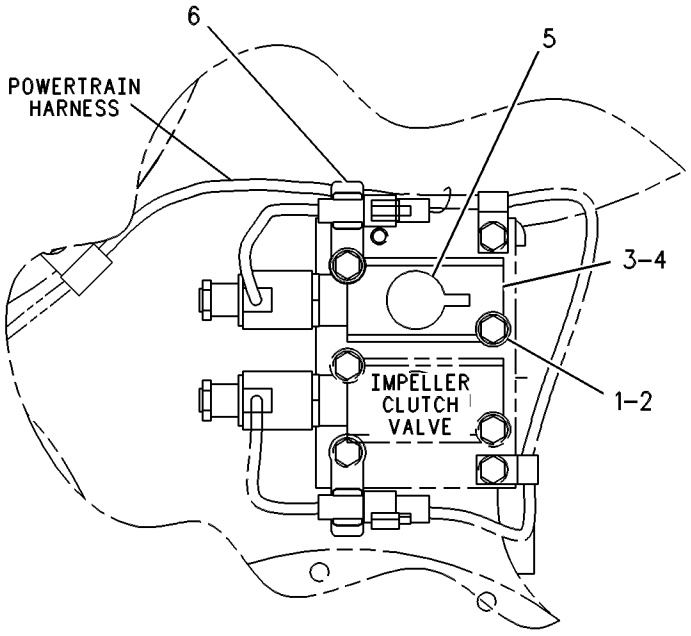

FRONT VIEW

GRAPHIC #1 g00258557

112-4811 VALVE & MTG GP-LOCKUP CLUTCH

S/N: 7HR398-UP
PART OF 109-6886 TORQUE CONVERTER AR-LOCKUP
AN ATTACHMENT

SMCS-3124 **i01518967**

NOTE	REF NO	GRAPHIC REF	PART NUMBER	QTY	PART NAME 1 2 3 4 5 6 (PRODUCT LEVEL)	SEE PAGE
M	1	1	**8T-6869**	2	BOLT (M8X1.25X60MM)	
	2	1	**8T-4224**	2	WASHER-HARD (8.8X16X2MM THK)	
CY	3	1	**183-2047**	1	VALVE GP-MODULATING (TC LOCKUP CLUTCH)	657
	4	1	**6D-7889**	1	SEAL-O-RING	
	5	1	**6V-0852**	1	CAP-DUST	
	6	1	**9U-2277**	1	CLIP AS	

C-CHANGE FROM PREVIOUS TYPE
M-METRIC PART
Y-SEPARATE ILLUSTRATION

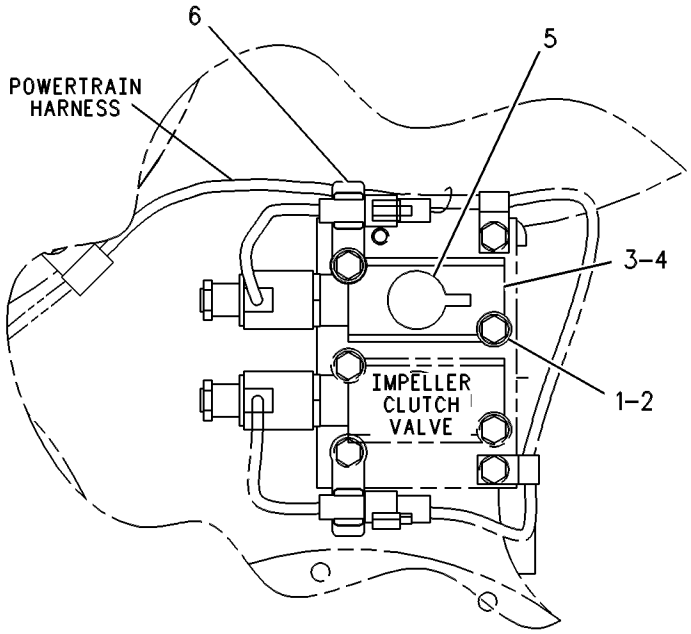

FRONT VIEW

GRAPHIC #1 g00258557

121-0357 VALVE GP-MODULATING—TC LOCKUP CLUTCH

S/N: 7HR1-UP

PART OF 121-4298, 183-2047 VALVE GP-MODULATING

AN ATTACHMENT

SMCS-3139 **i01197908**

NOTE	REF NO	GRAPHIC REF	PART NUMBER	QTY	PART NAME 1 2 3 4 5 6 (PRODUCT LEVEL)	SEE PAGE
	1	1	**8E-3095**	1	BODY	
	2	1	**112-5282**	1	SEAL-O-RING (16.36MM ID)	
	3	1	**117-2983**	1	SEAL-O-RING (13.34MM ID)	
	4	1	**116-1254**	1	SPOOL AS	
	5	1	**118-3731**	1	SPRING	
	6	1	**121-0358**	1	CARTRIDGE AS	
	7	1	**5P-7538**	1	BALL	

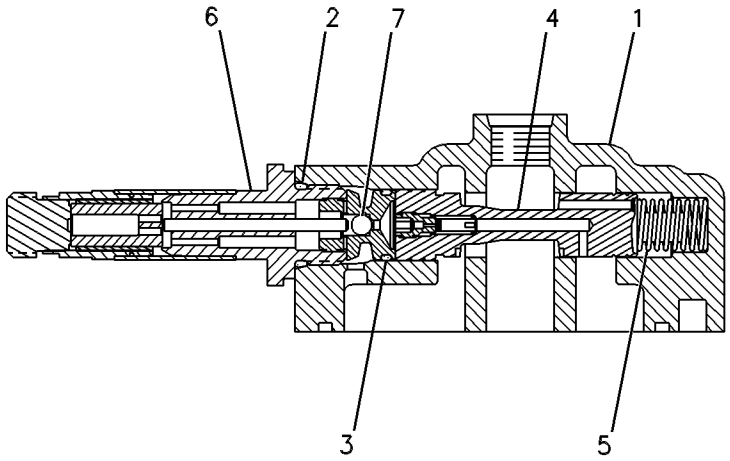

GRAPHIC #1 g00086284

121-4298 VALVE GP-MODULATING–TC LOCKUP CLUTCH

S/N: 7HR1-397

PART OF 112-4811 VALVE & MTG GP-LOCKUP CLUTCH

AN ATTACHMENT

SMCS-3139 **i01513114**

NOTE	REF NO	GRAPHIC REF	PART NUMBER	QTY	PART NAME 1 2 3 4 5 6 (PRODUCT LEVEL)	SEE PAGE
	1	1	**176-0394**	1	NUT-LOCKING	
	2	1	**122-4974**	1	SPACER	
	3	1	**156-6173**	1	COIL AS	
		1	**1S-9593**	2	STRAP-CABLE	
		1	**3E-3365**	1	WEDGE-RECEPTACLE LOCK (2 PIN)	
		1	**102-8802**	1	KIT-RECEPTACLE (2 PIN)	
					(INCLUDES RECEPTACLE AS AND WEDGE)	
		1	**8T-8729**	2	PIN-CONNECTOR	
Y	4	1	**121-0357**	1	VALVE GP-MODULATING (TC LOCKUP CLUTCH)	653
	5	1	**6V-3965**	1	FITTING AS (QUICK DISCONNECT)	
	6	1	**3J-1907**	1	SEAL-O-RING	

Y-SEPARATE ILLUSTRATION

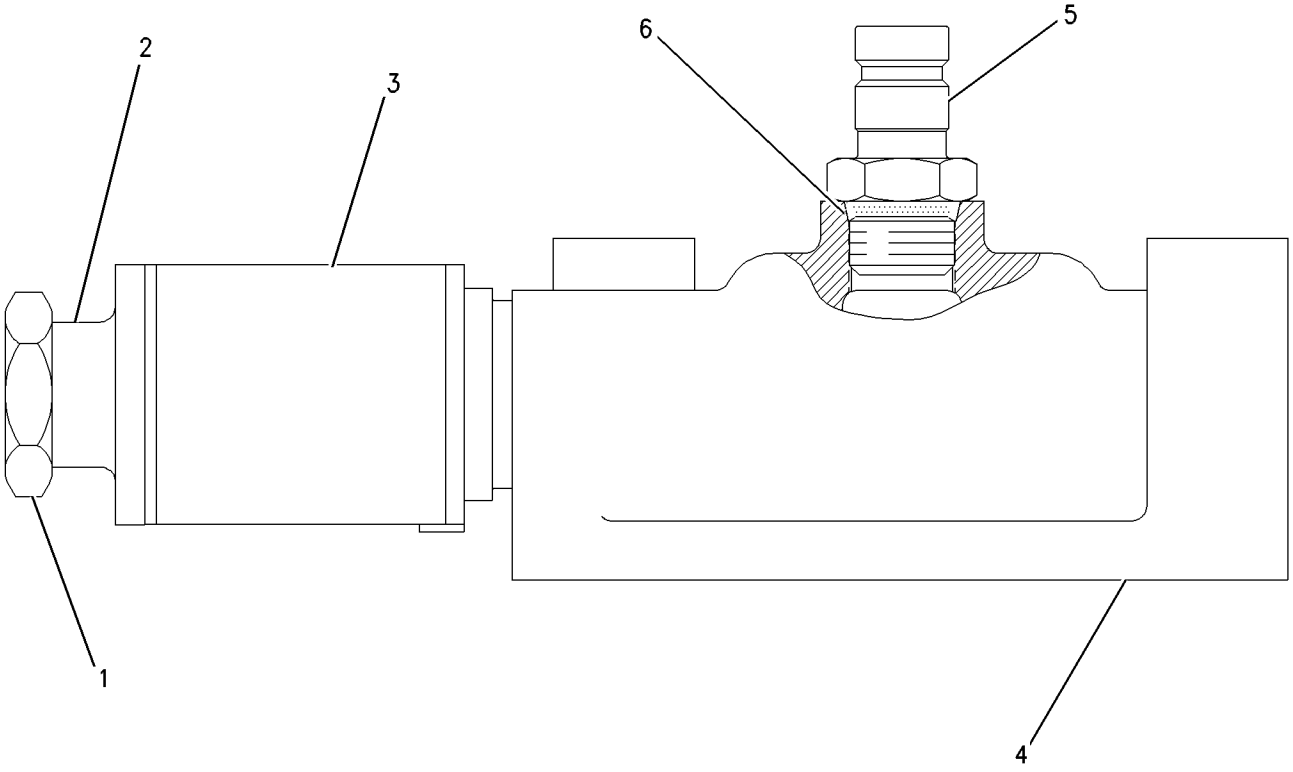

GRAPHIC #1 g00660675

129-6302 VALVE GP-MODULATING—TC IMPELLER CLUTCH

S/N: 7HR1-UP

PART OF 129-6303 VALVE GP-MODULATING

SMCS-3139 **i01493363**

NOTE	REF NO	GRAPHIC REF	PART NUMBER	QTY	PART NAME 1 2 3 4 5 6 (PRODUCT LEVEL)	SEE PAGE
	1	1	**5P-7538**	1	BALL	
	2	1	**112-5282**	1	SEAL-O-RING	
	3	1	**117-2983**	1	SEAL-O-RING	
	4	1	**116-1254**	1	SPOOL AS	
	5	1	**118-3731**	1	SPRING	
	7	1	**6V-3965**	1	FITTING AS (QUICK DISCONNECT)	
	8	1	**3J-1907**	1	SEAL-O-RING	
	9	1	**6B-6863**	1	PIN-SPRING	
	10	1	**156-6182**	1	COIL AS	
		1	**102-8803**	1	KIT-RECEPTACLE (3 PIN)	
					(INCLUDES RECEPTACLE AS AND WEDGE)	
		1	**1S-9593**	2	STRAP-CABLE	
		1	**3E-3371**	1	WEDGE-RECEPTACLE LOCK (3 PIN)	
		1	**8T-8729**	2	PIN-CONNECTOR	
		1	**8T-8737**	1	PLUG-SEAL	
	11	1	**127-7497**	1	WASHER	
	12	1	**3E-1812**	1	NUT-RETAINER	

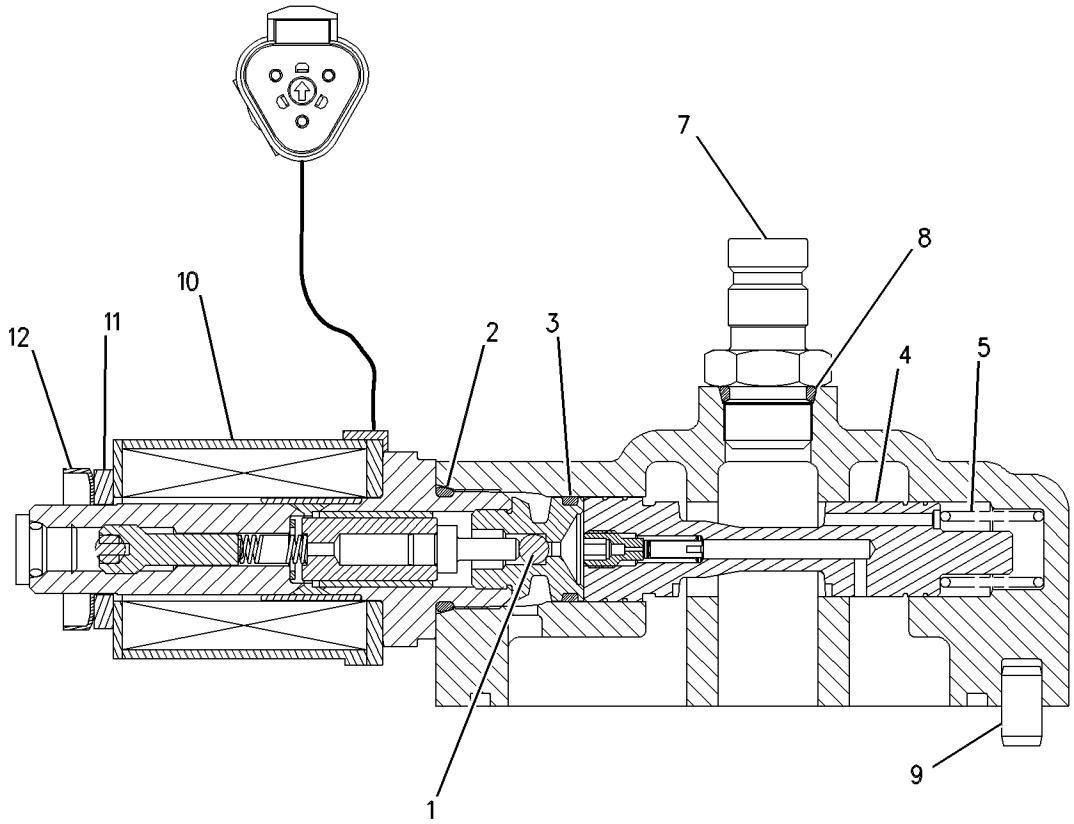

GRAPHIC #1 g00573257

129-6303 VALVE GP-MODULATING–TC IMPELLER CLUTCH

S/N: 7HR1-UP

PART OF 109-6893 WIRING GP-POWER TRAIN

SMCS-3139 **i01141461**

NOTE	REF NO	GRAPHIC REF	PART NUMBER	QTY	PART NAME 1 2 3 4 5 6 (PRODUCT LEVEL)	SEE PAGE
Y	1	1	*129-6302*	1	VALVE GP-MODULATING (TC IMPELLER CLUTCH)	655
	2	1	**5P-7812**	1	SEAL-O-RING (6.07MM ID)	
	3	1	**9S-8001**	1	PLUG-O-RING (5/16-24 THD)	
	4	1	**5P-7538**	1	BALL	

Y-SEPARATE ILLUSTRATION

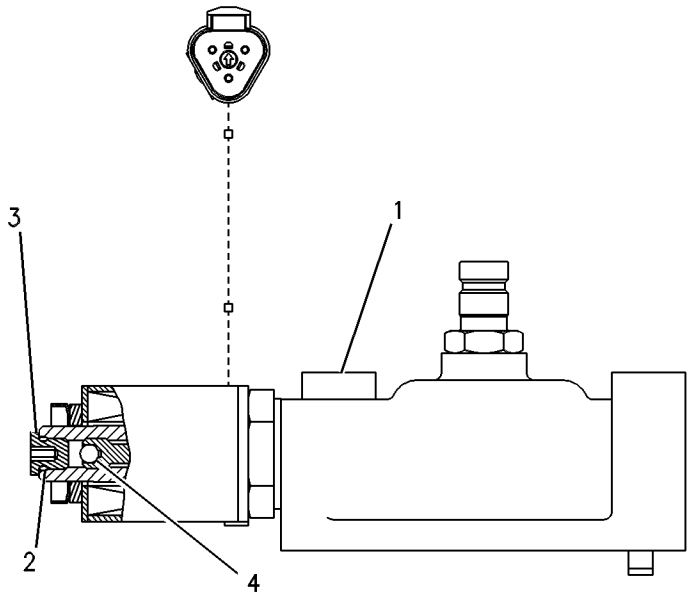

GRAPHIC #1 g00271719

183-2047 VALVE GP-MODULATING–TC LOCKUP CLUTCH

S/N: 7HR398-UP

PART OF 112-4811 VALVE & MTG GP-LOCKUP CLUTCH

AN ATTACHMENT

SMCS-3139 **i01513112**

NOTE	REF NO	GRAPHIC REF	PART NUMBER	QTY	PART NAME 1 2 3 4 5 6 (PRODUCT LEVEL)	SEE PAGE
	1	1	**176-0394**	1	NUT-LOCKING	
	2	1	**122-4974**	1	SPACER	
	3	1	**156-6173**	1	COIL AS	
		1	**1S-9593**	2	STRAP-CABLE	
		1	**3E-3365**	1	WEDGE-RECEPTACLE LOCK (2 PIN)	
		1	**102-8802**	1	KIT-RECEPTACLE (2 PIN)	
					(INCLUDES WEDGE)	
		1	**8T-8729**	2	PIN-CONNECTOR	
Y	4	1	*121-0357*	1	VALVE GP-MODULATING (TC LOCKUP CLUTCH)	653
	5	1	**6V-3965**	1	FITTING AS (QUICK DISCONNECT)	
	6	1	**3J-1907**	1	SEAL-O-RING	

Y-SEPARATE ILLUSTRATION

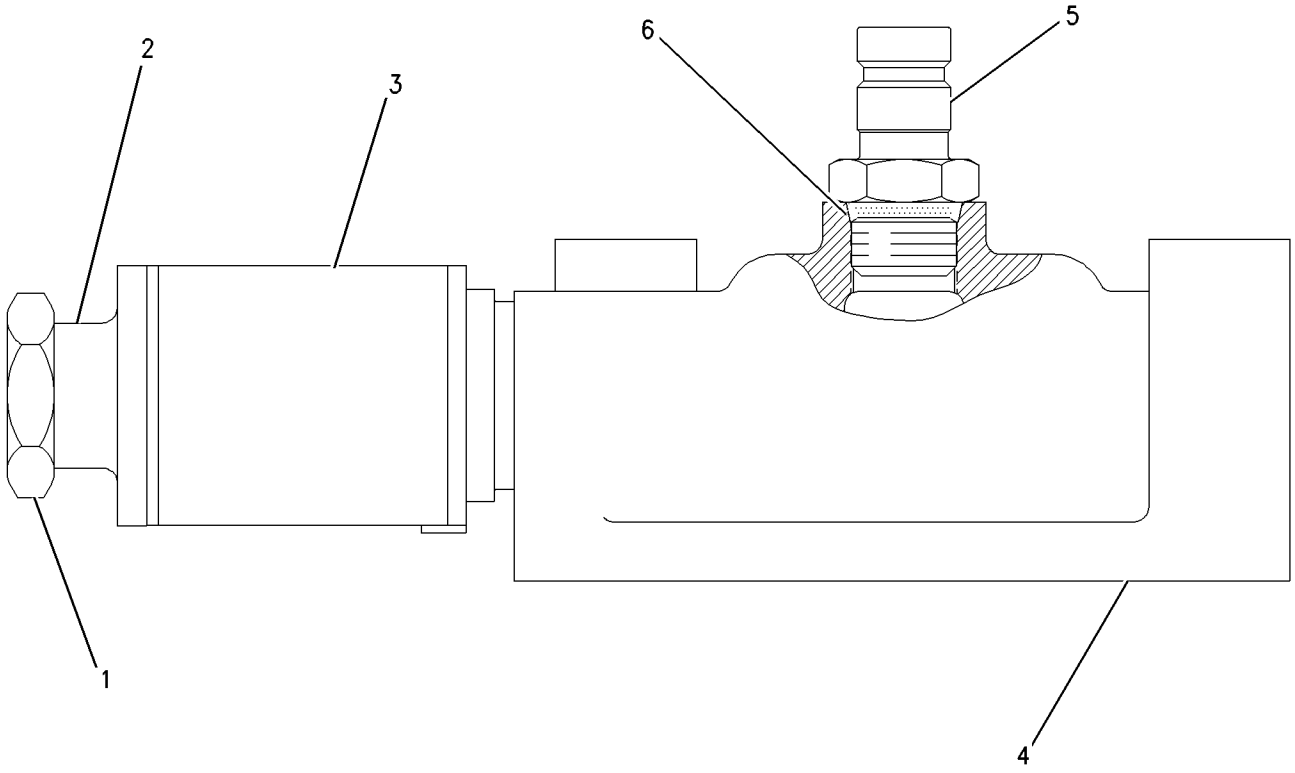

GRAPHIC #1 g00660675

8E-9727 VALVE GP-RELIEF–TORQUE CONVERTER OUTLET

S/N: 7HR1-UP

PART OF 109-6910 LINES GP-POWER TRAIN OIL

SMCS-3133, 3182, 3210, 3213 **i01289434**

NOTE	REF NO	GRAPHIC REF	PART NUMBER	QTY	PART NAME 1 2 3 4 5 6 (PRODUCT LEVEL)	SEE PAGE
	1	1	**4M-8239**	2	COVER	
	2	1	**8M-4986**	2	SEAL-O-RING (37.69MM ID)	
	3	1	**2P-4538**	1	SPOOL AS-RELIEF	
	4	1	**5M-9548**	1	SPRING	
	5	1	**1L-3162**	1	RING-RETAINING	
		1	**8M-2537**	1	RETAINER	
	6	1	**9M-4313**	1	POPPET	
	7	1	**6V-3965**	1	FITTING AS	
		1	**3J-1907**	1	SEAL-O-RING (11.89MM ID)	
	8	1	**2P-5711**	1	SPRING	
B	9	1	**5M-9623**	3	SPACER (0.9MM THK)	
B		1	**5M-9624**	1	SPACER (0.25MM THK)	
	10	1	**0S-1594**	4	BOLT (3/8-16X1 IN)	
		1	**5M-2894**	4	WASHER (2.5MM THK)	
	11	1	**6V-0852**	1	CAP-DUST	

B-USE AS REQUIRED

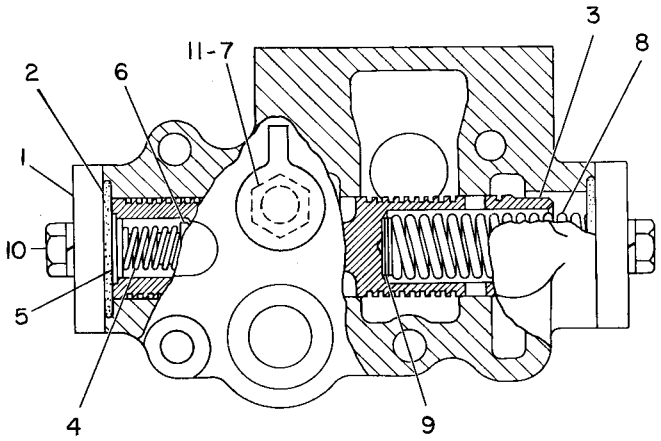

GRAPHIC #1 g00082116

8E-6398 VALVE GP-SELECTOR—TRANSMISSION

S/N: 9BX1-UP

PART OF 117-5859 VALVE GP-TRANSMISSION CONTROL

SMCS-3157 **i00173409**

NOTE	REF NO	GRAPHIC REF	PART NUMBER	QTY	PART NAME 1 2 3 4 5 6 (PRODUCT LEVEL)	SEE PAGE
	1	1	**8E-6255**	1	MANIFOLD-BOTTOM	
	2	1	**2S-4872**	1	STOP	
	3	1	**6Y-0725**	1	SPOOL-SELECTOR	
	4	1	**6Y-0726**	2	RETAINER	
	5	1	**6I-9519**	1	SPRING	
	6	1	**6Y-0729**	1	STOP	
	7	1	**7S-6997**	1	COVER	
	8	1	**2B-2695**	2	BOLT (5/16-18X.875IN)	
	9	1	**5P-6261**	1	RING-RETAINING	
	10	1	**8H-9189**	1	DOWEL	
	11	1	**6J-2419**	1	SEAL-O-RING (36.17MM ID)	

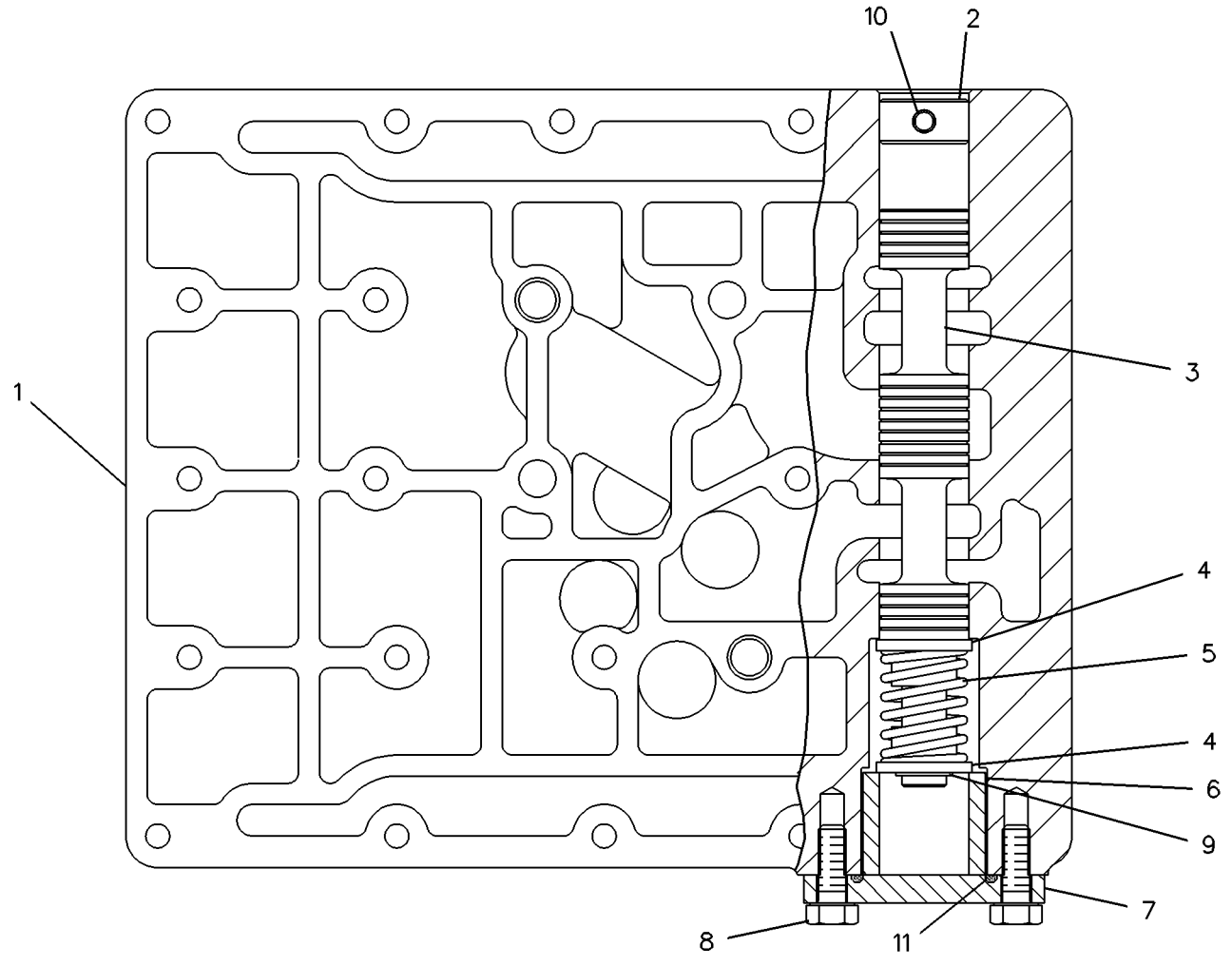

GRAPHIC #1 g00119290

117-5860 VALVE GP-SELECTOR & PRESS CONT—TRANSMISSION

S/N: 9BX1-UP

PART OF 117-5859 VALVE GP-TRANSMISSION CONTROL

SMCS-3083 **i00990017**

NOTE	REF NO	GRAPHIC REF	PART NUMBER	QTY	PART NAME 1 2 3 4 5 6 (PRODUCT LEVEL)	SEE PAGE
	1	1	**8P-9296**	2	ORIFICE-PLUG	
	2	1	**6Y-0728**	1	COVER	
	3	1	**2B-2695**	5	BOLT (5/16-18X.875IN)	
	4	1	**9W-9830**	1	ORIFICE-SCREEN	
	5	1	**6P-4978**	1	SPRING	
	6	1	**5H-8853**	1	SEAL-O-RING (9.3MM ID)	
	7	1	**6P-4940**	1	STOP	
	8	1	**9W-5567**	1	SPOOL AS-RELIEF	
		1	**3D-8317**	1	RING-RETAINING	
		1	**4B-9880**	1	BALL	
		1	**4M-2381**	1	SPRING	
		1	**8M-1013**	1	RETAINER	
	9	1	**9W-5568**	1	SLUG	
	10	1	**6Y-0724**	1	SPOOL-SPEED SELECTOR	
	11	1	**7G-4842**	1	SPRING	
	12	1	**9P-3041**	1	SPRING	
	13	1	**6Y-0726**	4	RETAINER	
	14	1	**6I-9519**	2	SPRING	
	15	1	**6Y-0727**	2	STOP	
	16	1	**4J-0521**	2	SEAL-O-RING (34.52MM ID)	
	17	1	**6P-4943**	1	SPOOL-RATIO	
	18	1	**6F-6673**	2	SEAL-O-RING (31.34MM ID)	
	19	1	**8E-6433**	1	SPOOL-DIFFERENTIAL	
B	20	1	**5M-9622**	1	SPACER (1.6MM THK)	
B	21	1	**5M-9623**	1	SPACER (0.9MM THK)	
B	22	1	**5M-9624**	3	SPACER (0.25MM THK)	
	23	1	**6P-9785**	1	SPRING	
	24	1	**3P-8485**	1	RING-RETAINING	
	25	1	**6P-9786**	1	RETAINER	
	26	1	**6P-9784**	1	SPRING	
	27	1	**6P-9783**	1	SPRING	
	28	1	**8E-3026**	1	PISTON-LOAD	
	29	1	**2S-4872**	1	STOP	
	30	1	**5P-6261**	2	RING-RETAINING	
	31	1	**6Y-0725**	1	SPOOL-SELECTOR	
	32	1	**5S-7816**	1	SLUG	
	33	1	**2S-0696**	2	DOWEL	
	34	1	**6Y-0744**	1	STOP	
	35	1	**106-0554**	1	BODY	

B-USE AS REQUIRED

117-5860 VALVE GP-SELECTOR & PRESS CONT *(contd.)* i00990017

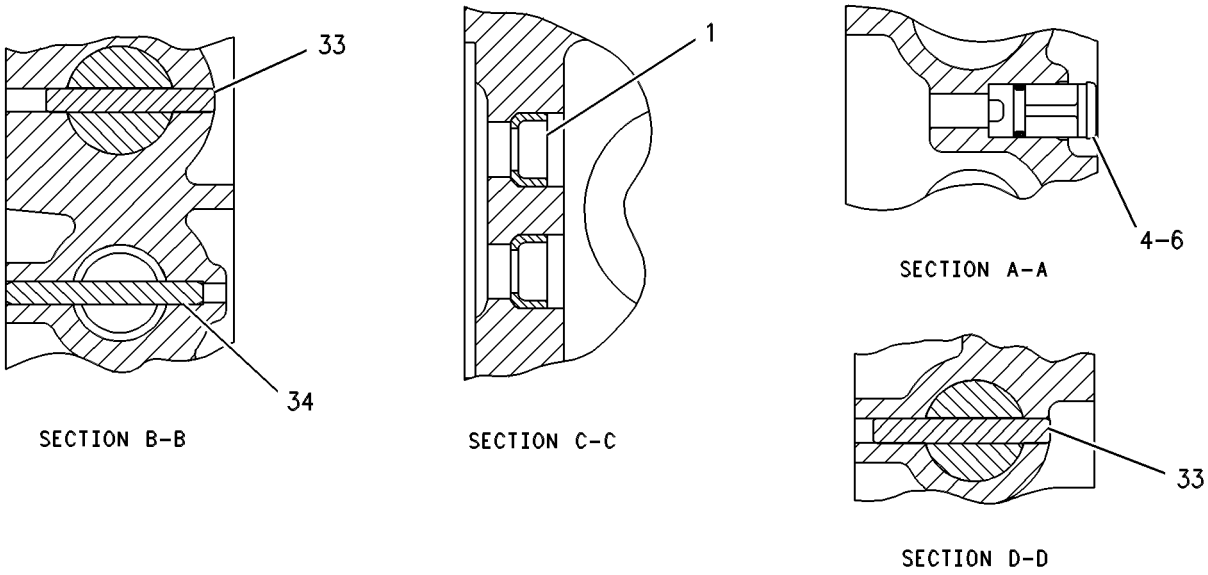

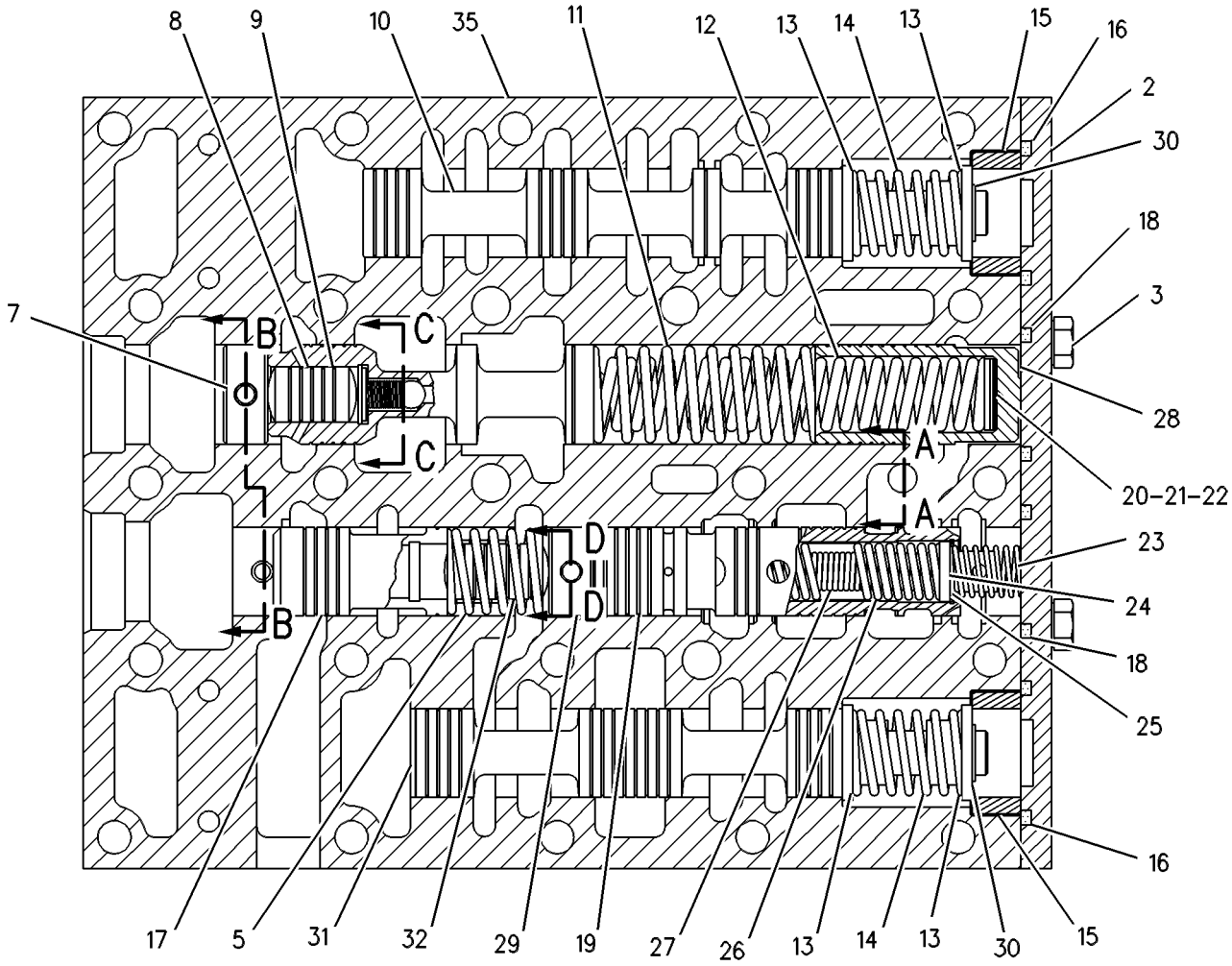

GRAPHIC #1 g00256106

147-5399 VALVE GP-SOLENOID

S/N: 9BX1-UP
12 VOLT DC
PART OF 117-5859 VALVE GP-TRANSMISSION CONTROL

SMCS-3174, 4804, 4805, 5479 **i01482358**

NOTE	REF NO	GRAPHIC REF	PART NUMBER	QTY	PART NAME 1 2 3 4 5 6 (PRODUCT LEVEL)	SEE PAGE
	1	1	**107-8611**	1	CARTRIDGE AS	
		1	**111-0343**	1	LOCKNUT	
		1	**149-5628**	1	WASHER (1.2MM THK)	
	2	1	*118-8182*	1	COIL AS	
		1	**1S-9593**	2	STRAP-CABLE	
		1	**3E-3362**	1	WEDGE-PLUG LOCK (2 PIN)	
		1	**155-2270**	1	KIT-CONNECTING PLUG (2 PIN)	
					(INCLUDES PLUG AS AND WEDGE)	
	3	1	**149-5628**	1	WASHER (1.2MM THK)	
	4	1	**111-0343**	1	LOCKNUT	

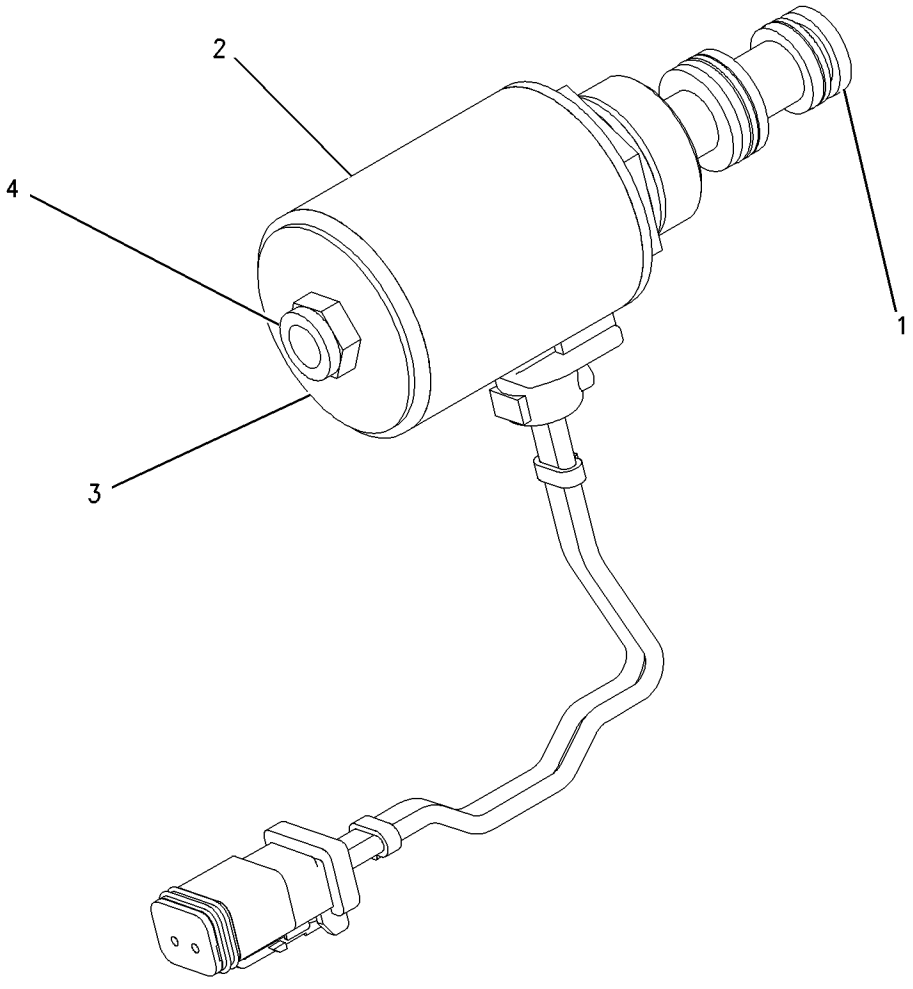

GRAPHIC #1 g00747733

MEMORANDA

6I-8563 VALVE GP-TORQUE CONV PRIORITY

S/N: 7HR1-UP

PART OF 109-6910 LINES GP-POWER TRAIN OIL

SMCS-3180 **i01197566**

NOTE	REF NO	GRAPHIC REF	PART NUMBER	QTY	PART NAME 1 2 3 4 5 6 (PRODUCT LEVEL)	SEE PAGE
	1	1	**0S-1594**	2	BOLT (3/8-16X1 IN)	
		1	**5M-2894**	2	WASHER (2.5MM THK)	
	2	1	**6I-8564**	1	BODY AS-VALVE	
		1	**2D-6642**	2	BALL	
	3	1	**3P-4053**	1	SPRING	
	4	1	**2S-9750**	1	COVER	
	5	1	**8M-5249**	1	SEAL-O-RING (34.52MM ID)	
	6	1	**2M-7041**	1	SLUG	
	7	1	**1P-9699**	1	STOP	
	8	1	**8H-9513**	1	DOWEL	
	9	1	**8M-4446**	1	SEAL-O-RING (23.39MM ID)	
	10	1	**5S-4437**	1	SPOOL AS	
	11	1	**4M-2381**	1	SPRING	
		1	**4B-9880**	1	BALL	
	12	1	**3D-8317**	1	RING-RETAINING	
		1	**8M-1013**	1	RETAINER	
	13	1	**5M-9624**	6	SPACER (0.25MM THK)	
	14	1	**6V-3965**	1	FITTING AS	
C	15	1	**3J-1907**	2	SEAL-O-RING (11.89MM ID)	
C	16	1	**6V-0852**	1	CAP-DUST	
C	17	1	**6V-0484**	1	ADAPTER-O-RING	

C-CHANGE FROM PREVIOUS TYPE

6I-8563 VALVE GP-TORQUE CONV PRIORITY *(contd.)* i01197566

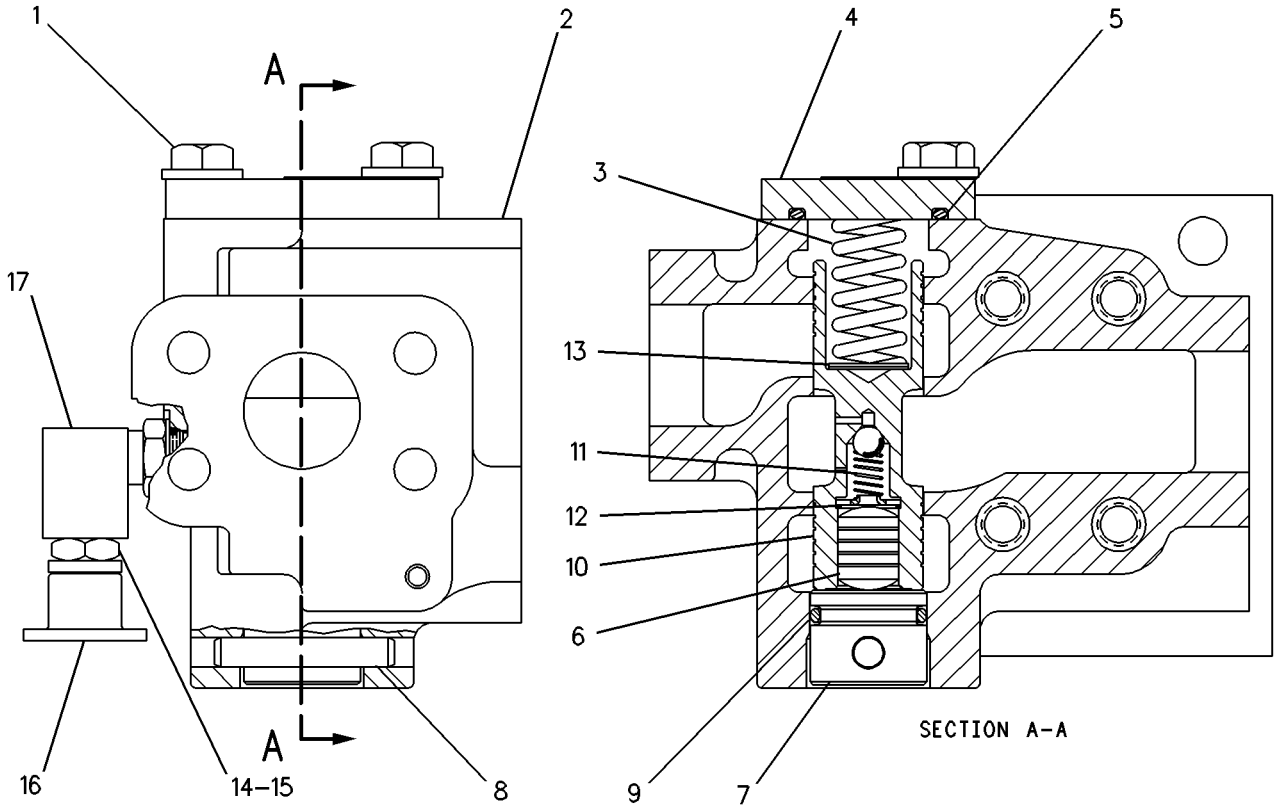

GRAPHIC #1 g00083662

117-5859 VALVE GP-TRANSMISSION CONTROL

S/N: 9BX1-UP

PART OF 117-5858 CONTROL GP-TRANSMISSION HYD

SMCS-3073, 3167 **i01469082**

NOTE	REF NO	GRAPHIC REF	PART NUMBER	QTY	PART NAME 1 2 3 4 5 6 (PRODUCT LEVEL)	SEE PAGE
Y	1	1	**8E-6398**	1	VALVE GP-SELECTOR (TRANSMISSION)	659
	2	1	**8E-4320**	1	PLATE	
Y	3	1	**117-5860**	1	VALVE GP-SELECTOR & PRESS CONT (TRANSMISSION)	660
	4	1	**106-0553**	1	MANIFOLD-TOP	
	5	1	**8E-4387**	1	MANIFOLD	
	6	1	**8E-7841**	1	CLIP AS-CONNECTING	
	7	1	**2B-2695**	3	BOLT (5/16-18X0.875 IN)	
	8	1	**9M-1974**	34	WASHER-HARD (8.8X16X2MM THK)	
	9	1	**1D-4540**	10	BOLT (5/16-18X2.75 IN)	
	10	1	**5L-1761**	21	BOLT (5/16-18X5.5 IN)	
	11	1	**9S-8007**	12	PLUG-O-RING	
	12	1	**7J-0204**	13	SEAL-O-RING	
Y	13	1	**147-5399**	5	VALVE GP-SOLENOID (TRANSMISSION CLUTCH)	662
	14	1	**104-6728**	1	HARNESS AS-TRANSMISSION (CONTROL VALVE)	
		1	**102-8802**	5	KIT-RECEPTACLE (2 PIN)	
					(EACH KIT-RECEPTACLE INCLUDES RECEPTACLE AS & WEDGE)	
	15	1	**8E-7842**	1	CLIP AS-CONNECTING	
	16	1	**6V-3965**	3	FITTING AS (QUICK DISCONNECT)	
	17	1	**0S-1588**	4	BOLT (3/8-16X1.25 IN)	
	18	1	**3J-1907**	3	SEAL-O-RING	
	19	1	**128-4111**	1	SCREEN	
	20	1	**1L-5081**	4	SPACER (0.41X0.75X0.56 IN THK)	
	21	1	**5M-2894**	4	WASHER-HARD (10.2X18.5X2.5MM THK)	
	22	1	**5S-0003**	1	NUT (5/16-18 THD)	
	23	1	**8M-2772**	4	CLIP	
	24	1	**1P-7404**	1	EYEBOLT	
	25	1	**6Y-0789**	1	PLUG	
	26	1	**3D-2824**	1	SEAL-O-RING	
	27	1	**3P-0647**	1	SEAL-O-RING	
	28	1	**1N-5999**	1	PLUG	

Y-SEPARATE ILLUSTRATION

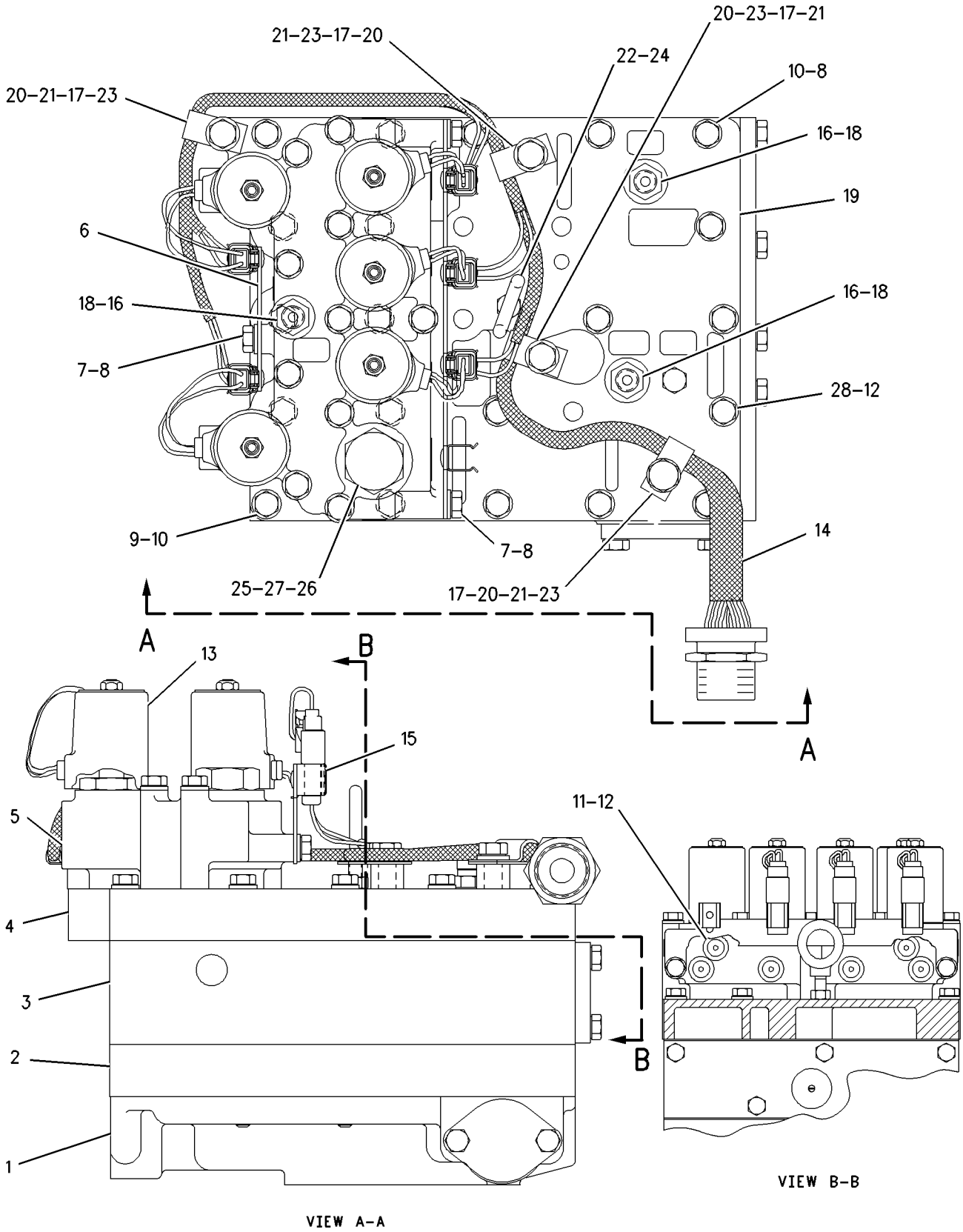

GRAPHIC #1

g00729153

POWER TRAIN

107-0701 WHEEL & FINAL DRIVE GP

S/N: 7HR1-UP

PART OF 112-2166, 169-6898 WHEEL GP-FINAL DRIVE & BRAKE

SMCS-4001, 4051 **i01517913**

NOTE	REF NO	GRAPHIC REF	PART NUMBER	QTY	PART NAME 1 2 3 4 5 6 (PRODUCT LEVEL)	SEE PAGE
R	1	1	**131-1296**	1	SPINDLE	
	2	1	**195-3495**	1	SEAL GP-DUO-CONE	
	3	1	**126-5859**	1	CONE-TAPERED	
	4	1	**126-5860**	1	CUP-TAPERED	
	5	1	**107-0692**	1	WHEEL	
	6	1	**111-9177**	1	SPACER	
	7	1	**142-7073**	4	BOLT-SOCKET HEAD	
	8	1	**8T-8917**	9	BOLT (1/2-13X1.25 IN)	
	9	1	**8T-4223**	9	WASHER-HARD (13.5X25.5X3MM THK)	
	10	1	**6W-1140**	6	WASHER-THRUST	
	11	1	**127-9504**	3	GEAR-PLANET (34 TEETH)	
B	12	1	**107-0695**	1	SHIM PACK (INCLUDES 16 SHIMS) (INCLUDES 16)	
	13	1	**107-0687**	1	GEAR-SUN (57 TEETH)	
	14	1	**191-6265**	20	BOLT	
	15	1	**112-2165**	1	COVER AS	
B		1	**1U-8846**		SEALANT-GASKET (6ML)	
		1	**8T-4896**	4	WASHER-HARD (10.2X18.5X2.5MM THK)	
		1	**034-3557**	4	BOLT-LOCKING (3/8-16X1.125 IN)	
		1	**107-0704**	1	PLATE	
	16	1	**9H-6832**	1	SEAL-O-RING	
	17	1	**127-9799**	1	CARRIER-PLANETARY	
	18	1	**111-1503**	1	SEAL-O-RING	
	19	1	**5K-7696**	1	PLUG	
	20	1	**3J-1907**	1	SEAL-O-RING	
	21	1	**107-0689**	1	GEAR-RING (87 TEETH)	
	22	1	**107-0691**	1	HUB	
	23	1	**111-7759**	1	RETAINER	
	24	1	**111-0897**	1	CONE-ROLLER BEARING	
	25	1	**111-0898**	1	CUP-ROLLER BEARING	
	26	1	**107-0698**	1	RING-RETAINING	
	27	1	**034-4160**	6	BOLT-LOCKING (5/16-18X1 IN)	
	28	1	**8E-9571**	6	WASHER-HARD (8.8X16.0X7.0MM THK)	
	29	1	**108-1554**	3	BEARING-SLEEVE	
	30	1	**6T-5545**	3	DOWEL	
	31	1	**107-0705**	3	SHAFT-PLANETARY	
	32	1	**6V-0439**	1	PLUG-MAGNETIC (1 5/8-12 THD)	
	33	1	**2S-4078**	1	SEAL-O-RING	
	34	1	**1V-6659**	1	RING-RETAINING	
	35	1	**6V-1746**	2	DOWEL	

B-USE AS REQUIRED
R-REMFG PART MAY BE AVAILABLE

107-0701 WHEEL & FINAL DRIVE GP *(contd.)* i01517913

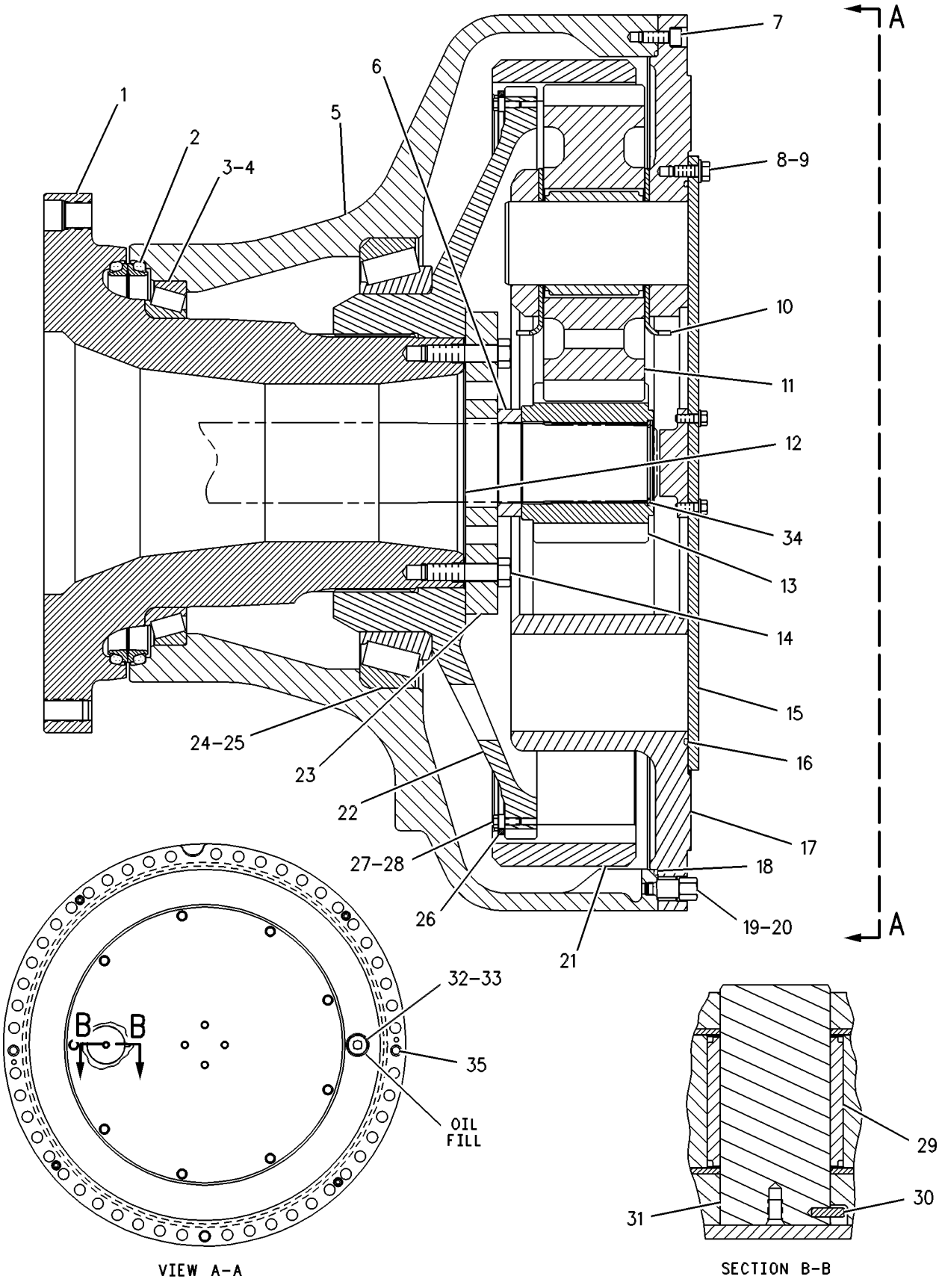

GRAPHIC #1 g00259308

112-2166 WHEEL GP-FINAL DRIVE & BRAKE

S/N: 7HR1-UP

PART OF 107-0703 AXLE AR-FIXED, 107-0702 AXLE AR-OSCILLATING

SMCS-4001 **i01057005**

NOTE	REF NO	GRAPHIC REF	PART NUMBER	QTY	PART NAME 1 2 3 4 5 6 (PRODUCT LEVEL)	SEE PAGE
Y	1	1	*112-0874*	1	BRAKE GP-SERVICE	762
Y	2	1	**107-0701**	1	WHEEL & FINAL DRIVE GP	668
	3	1	**1D-4642**	4	BOLT (1-8X5IN)	
	4	1	**9M-2828**	4	WASHER-HARD (8.0MM THK)	
	5	1	**112-2470**	30	STUD-TAPERLOCK	

Y-SEPARATE ILLUSTRATION

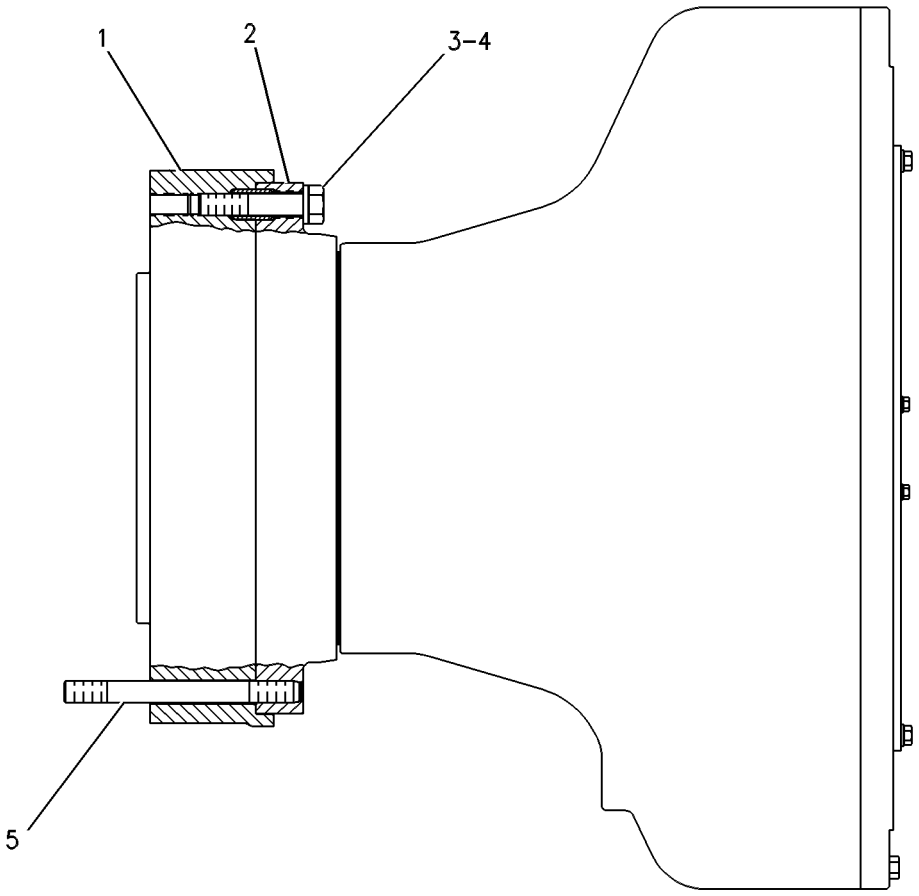

GRAPHIC #1 g00256123

169-6898 WHEEL GP-FINAL DRIVE & BRAKE

S/N: 7HR1-UP

PART OF 107-0703 AXLE AR-FIXED, 107-0702 AXLE AR-OSCILLATING

SMCS-4001 **i01159133**

NOTE	REF NO	GRAPHIC REF	PART NUMBER	QTY	PART NAME 1 2 3 4 5 6 (PRODUCT LEVEL)	SEE PAGE
Y	1	1	*164-0935*	1	BRAKE GP-SERVICE	764
Y	2	1	**107-0701**	1	WHEEL & FINAL DRIVE GP	668
	3	1	**1D-4642**	4	BOLT (1-8X5IN)	
	4	1	**9M-2828**	4	WASHER-HARD (8.0MM THK)	
	5	1	**112-2470**	30	STUD-TAPERLOCK	

Y-SEPARATE ILLUSTRATION

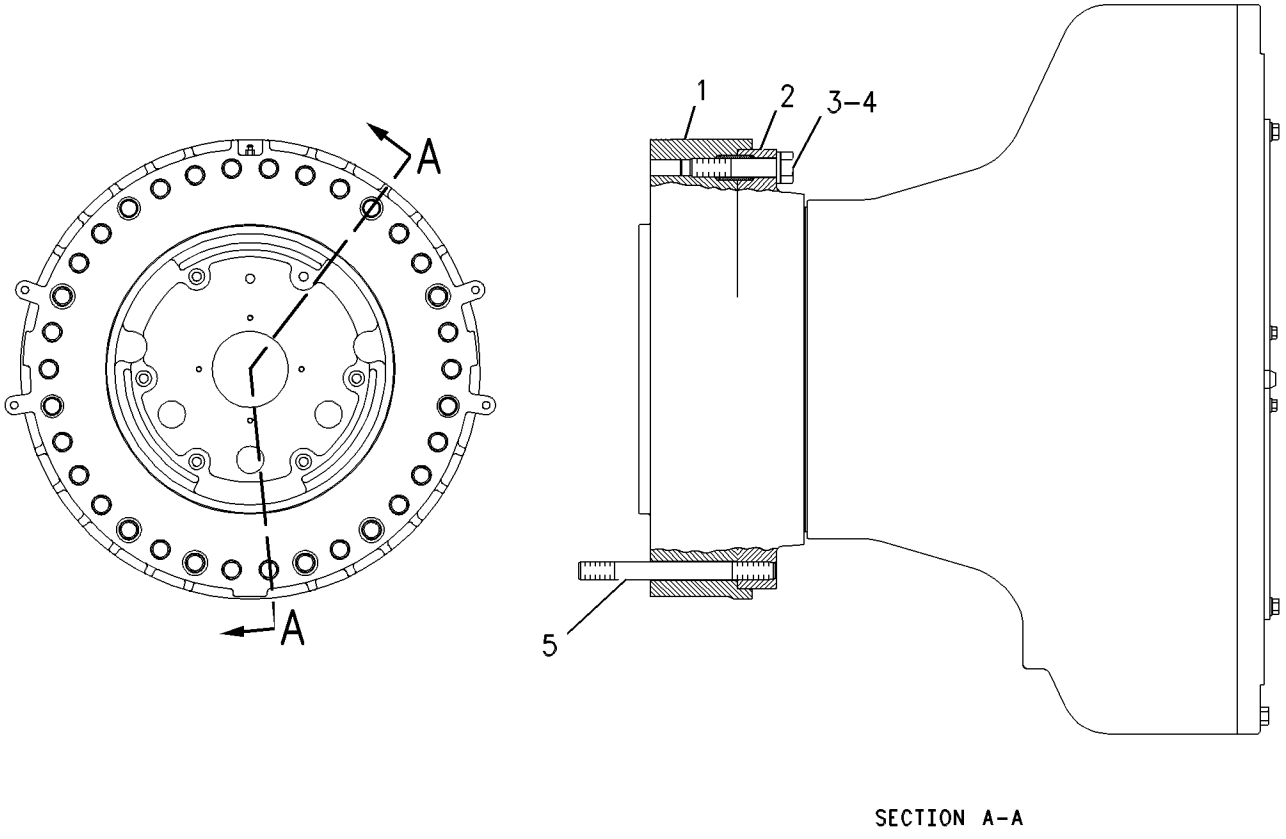

SECTION A-A

GRAPHIC #1 g00554395

MEMORANDA

169-9053 BUMPER AR-REAR

S/N: 7HR1-UP
FOR MACHINES WITH VIDS
PART OF 170-2472 LIFT AR-STANDARD
AN ATTACHMENT

SMCS-7156 **i01067973**

NOTE	PART NUMBER	QTY	PART NAME 1 2 3 4 5 6 (PRODUCT LEVEL)	SEE PAGE
	138-6342	1	BUMPER AS-REAR	
M	**8T-3597**	12	NUT-WELD (M12X1.75 THD)	
	9R-2613	3	BOSS (M10X1.5X25.0MM)	
Y	*156-5929*	1	TANK GP-FUEL	228
Y	*109-6864*	1	WIRING GP-BUMPER	374
Y	*132-4824*	1	WIRING GP-SHUTOFF	438

M-METRIC PART
Y-SEPARATE ILLUSTRATION

169-9054 BUMPER AR-REAR

S/N: 7HR1-UP
FOR MACHINES WITH VIMS
PART OF 170-8022 LIFT AR-STANDARD
AN ATTACHMENT

SMCS-7156 **i01198110**

NOTE	PART NUMBER	QTY	PART NAME 1 2 3 4 5 6 (PRODUCT LEVEL)	SEE PAGE
	138-6342	1	BUMPER AS-REAR (STANDARD LIFT)	
M	**8T-3597**	12	NUT-WELD (M12X1.75 THD)	
	9R-2613	3	BOSS (M10X25MM)	
Y	*156-5929*	1	TANK GP-FUEL	228
Y	*109-6864*	1	WIRING GP-BUMPER	374
Y	*132-4825*	1	WIRING GP-SHUTOFF	439

M-METRIC PART
Y-SEPARATE ILLUSTRATION

169-9055 BUMPER AR-REAR

S/N: 7HR1-UP
FOR MACHINES WITH HIGH LIFT AND VIDS
PART OF 170-8463 LIFT AR-HIGH
AN ATTACHMENT

SMCS-7156 **i01198112**

NOTE	PART NUMBER	QTY	PART NAME 1 2 3 4 5 6 (PRODUCT LEVEL)	SEE PAGE
	138-2986	1	BUMPER AS-REAR (HIGH LIFT)	
	132-3111	2	COUNTERWEIGHT AS	
M	**8T-3597**	12	NUT-WELD (M12X1.75 THD)	
	9R-2613	3	BOSS (M10X25MM)	
Y	*156-5929*	1	TANK GP-FUEL	228
Y	*109-6864*	1	WIRING GP-BUMPER	374
Y	*132-4824*	1	WIRING GP-SHUTOFF	438

M-METRIC PART
Y-SEPARATE ILLUSTRATION

169-9056 BUMPER AR-REAR

S/N: 7HR1-UP
FOR MACHINES WITH HIGH LIFT & VIMS
PART OF 170-8544 LIFT AR-HIGH
AN ATTACHMENT

SMCS-7156 **i01198113**

NOTE	PART NUMBER	QTY	PART NAME 1 2 3 4 5 6 (PRODUCT LEVEL)	SEE PAGE
	138-2986	1	BUMPER AS-REAR (HIGH LIFT)	
	132-3111	2	COUNTERWEIGHT AS	
M	**8T-3597**	12	NUT-WELD (M12X1.75 THD)	
	9R-2613	3	BOSS (M10X25MM)	
Y	*156-5929*	1	TANK GP-FUEL	228
Y	*109-6864*	1	WIRING GP-BUMPER	374
Y	*132-4825*	1	WIRING GP-SHUTOFF	439

M-METRIC PART
Y-SEPARATE ILLUSTRATION

FRAME AND BODY

109-6848 BUMPER GP-REAR

S/N: 7HR1-UP
PART OF 131-1255, 148-7909 LIFT AR-STANDARD
AN ATTACHMENT

SMCS-7156 **i01198116**

NOTE	REF NO	GRAPHIC REF	PART NUMBER	QTY	PART NAME 1 2 3 4 5 6 (PRODUCT LEVEL)	SEE PAGE
M	1	1	**8T-5878**	16	BOLT (M24X3X80MM)	
	2	1	**6M-1622**	2	DOWEL (1.494 ODX3.69IN OAL)	
	3	1	**7X-0616**	16	WASHER-HARD (6MM THK)	
	4	1	**138-6342**	1	BUMPER AS-REAR (STANDARD LIFT)	
M		1	**8T-3597**	12	NUT-WELD (M12X1.75 THD)	
		1	**9R-2613**	3	BOSS (M10X25MM)	
		1	**6V-1635**	16	RIVET-POP	
	5	1	**115-4552**	2	SUPPORT	
M	6	1	**8T-4183**	20	BOLT (M12X1.75X40 MM)	
	7	1	**124-3040**	2	PLATE AS	
	8	1	**124-3080**	2	COVER	
Y	9	1	*131-8125*	1	DRAWBAR GP	679
	10	1	**5P-1076**	20	WASHER-HARD (4MM THK)	
B	11	1	**2G-6741**	2	PLATE	

B-USE AS REQUIRED
M-METRIC PART
Y-SEPARATE ILLUSTRATION

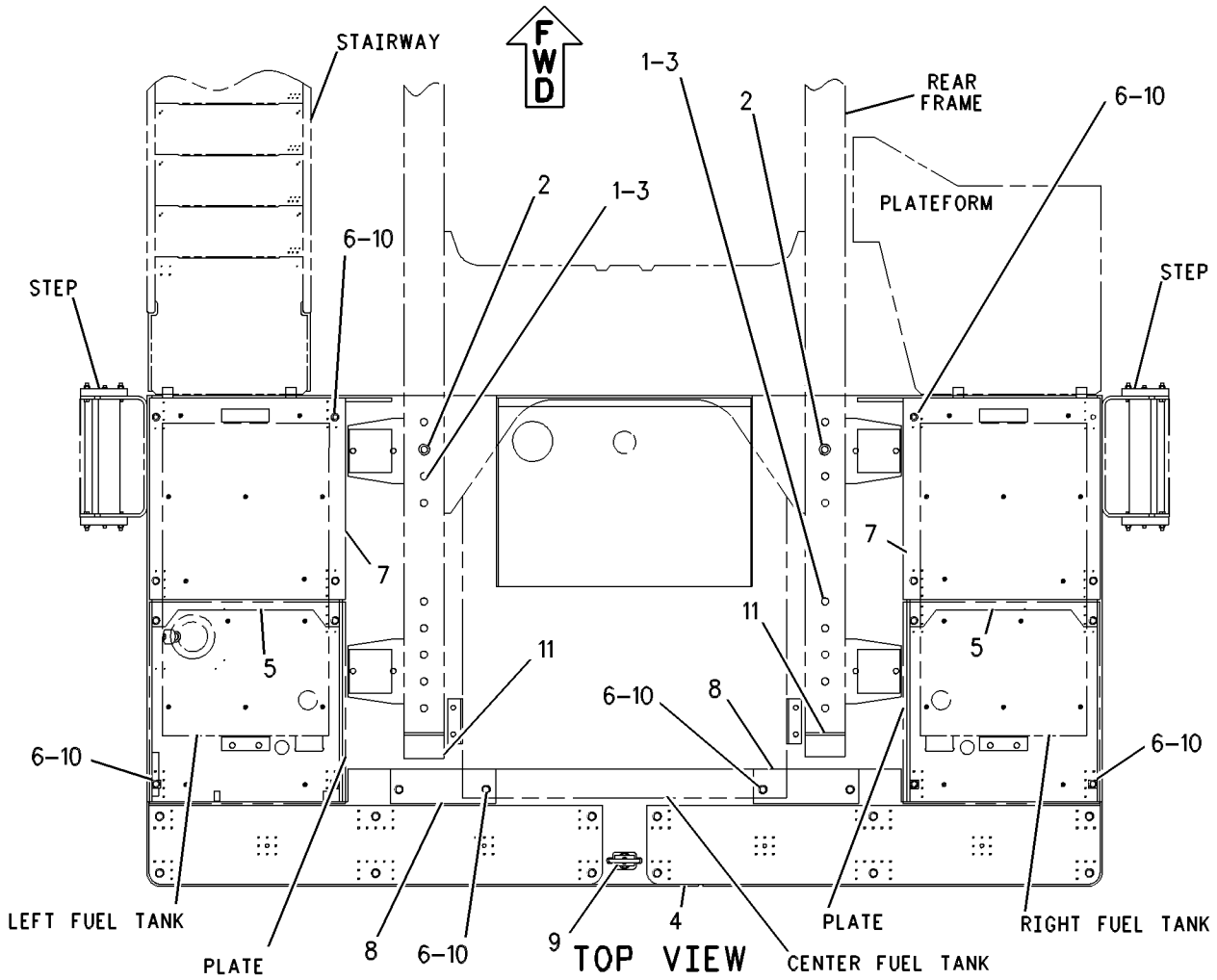

GRAPHIC #1 g00384513

138-6345 BUMPER GP-REAR

S/N: 7HR1-UP
PART OF 112-4201, 148-7910 LIFT AR-HIGH
AN ATTACHMENT

SMCS-7156 **i01198121**

NOTE	REF NO	GRAPHIC REF	PART NUMBER	QTY	PART NAME 1 2 3 4 5 6 (PRODUCT LEVEL)	SEE PAGE
	1	1	**6M-1622**	2	DOWEL (1.494 ODX3.69IN OAL)	
B	2	1	**2G-6741**	2	PLATE	
	4	1	**124-3080**	2	COVER	
Y	5	1	*131-8125*	1	DRAWBAR GP	679
	6	1	**138-2986**	1	BUMPER AS-REAR (HIGH LIFT)	
		1	**132-3111**	2	COUNTERWEIGHT AS	
M		1	**8T-3597**	12	NUT-WELD (M12X1.75 THD)	
		1	**9R-2613**	3	BOSS (M10X25MM)	
		1	**6V-1635**	16	RIVET-POP	
	7	1	**5P-1076**	4	WASHER-HARD (4MM THK)	
	8	1	**7X-0616**	16	WASHER-HARD (6MM THK)	
M	9	1	**8T-4183**	4	BOLT (M12X1.75X40 MM)	
M	10	1	**8T-5878**	16	BOLT (M24X3X80MM)	

B-USE AS REQUIRED
M-METRIC PART
Y-SEPARATE ILLUSTRATION

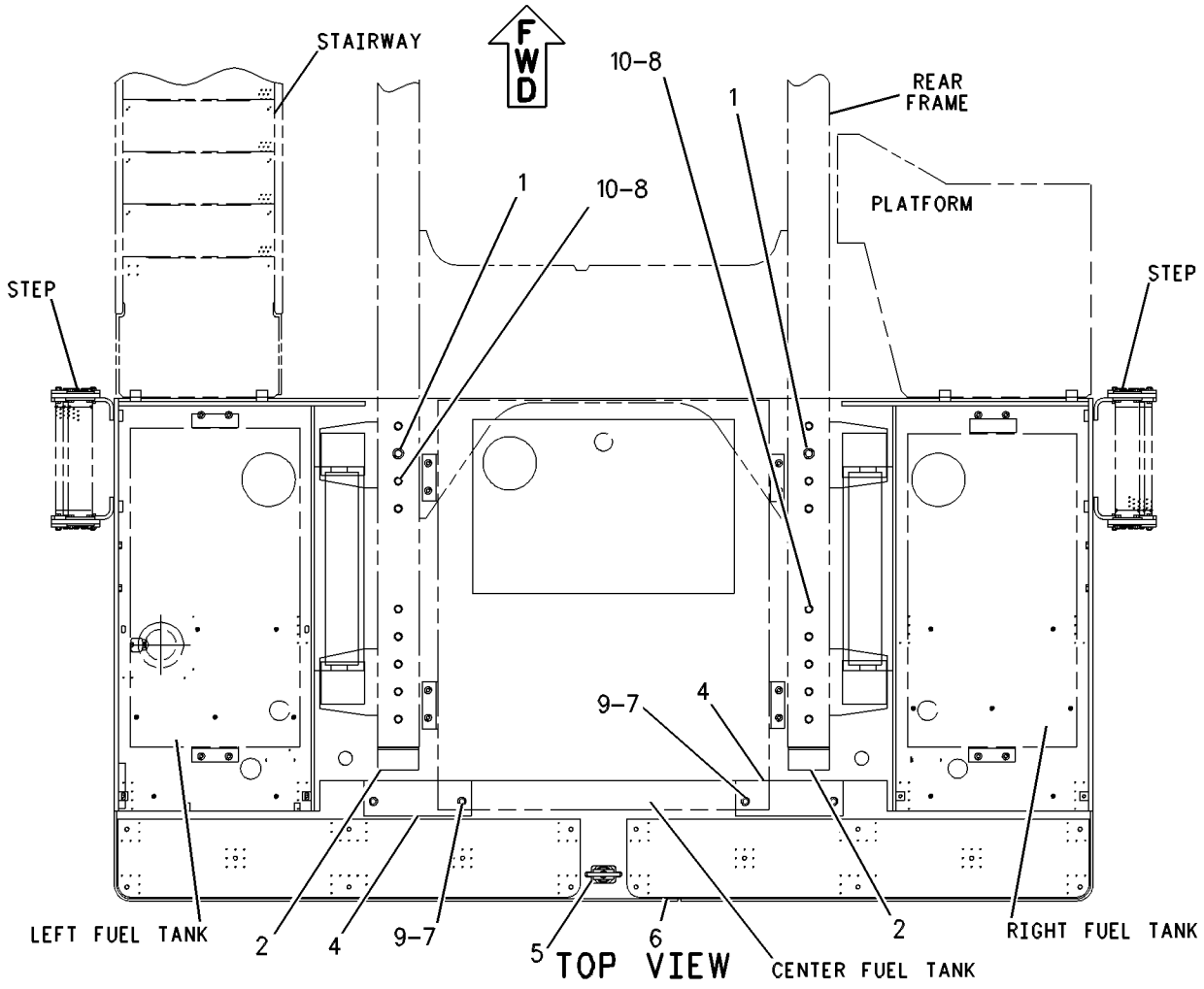

GRAPHIC #1 g00526970

131-8125 DRAWBAR GP

S/N: 7HR291-UP

PART OF 109-6848, 138-6345 BUMPER GP-REAR, 170-1931 MOUNTING GP-BUMPER

ALSO AN ATTACHMENT

SMCS-7105, 7119 **i00746572**

NOTE	REF NO	GRAPHIC REF	PART NUMBER	QTY	PART NAME 1 2 3 4 5 6 (PRODUCT LEVEL)	SEE PAGE
	1	1	**1V-0134**	1	PIN	
	2	1	**6V-8188**	1	NUT (1/2-13 THD)	
	3	1	**4V-1074**	1	PLATE	
	4	1	**117-0307**	1	HANDLE AS	
	5	1	**8T-4223**	1	WASHER-HARD (3MM THK)	

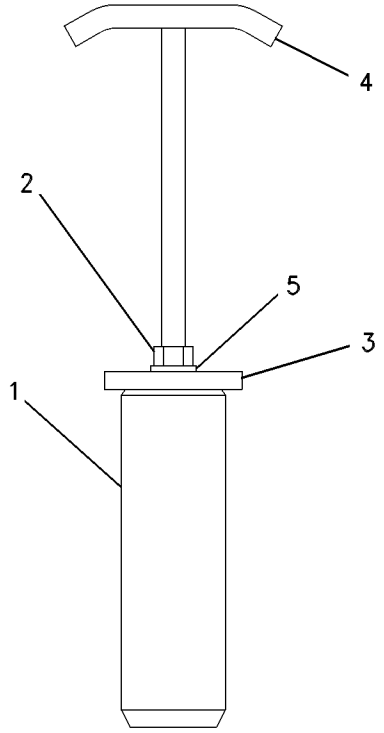

GRAPHIC #1 g00295887

109-6847 ENCLOSURE GP-HYDRAULIC TANK

S/N: 7HR1-316

PART OF 109-6819 CHASSIS AR

SMCS-5056 **i01089898**

NOTE	REF NO	GRAPHIC REF	PART NUMBER	QTY	PART NAME 1 2 3 4 5 6 (PRODUCT LEVEL)	SEE PAGE
	1	1	**113-5071**	1	ENCLOSURE AS	
	2	1	**114-6478**	1	SUPPORT AS	
	3	1	**114-8170**	2	CHANNEL AS	
	4	1	**118-9447**	1	BRACKET AS-RH	
M	5	1	**7X-2575**	6	BOLT (M24X3X60MM)	
M	6	1	**8T-4139**	8	BOLT (M12X1.75X30MM)	
	7	1	**8T-4167**	8	WASHER (4.0MM THK)	
	8	1	**8T-4223**	8	WASHER-HARD (3MM THK)	
M	9	1	**8T-5379**	2	BOLT (M24X3.0X50MM)	

M-METRIC PART

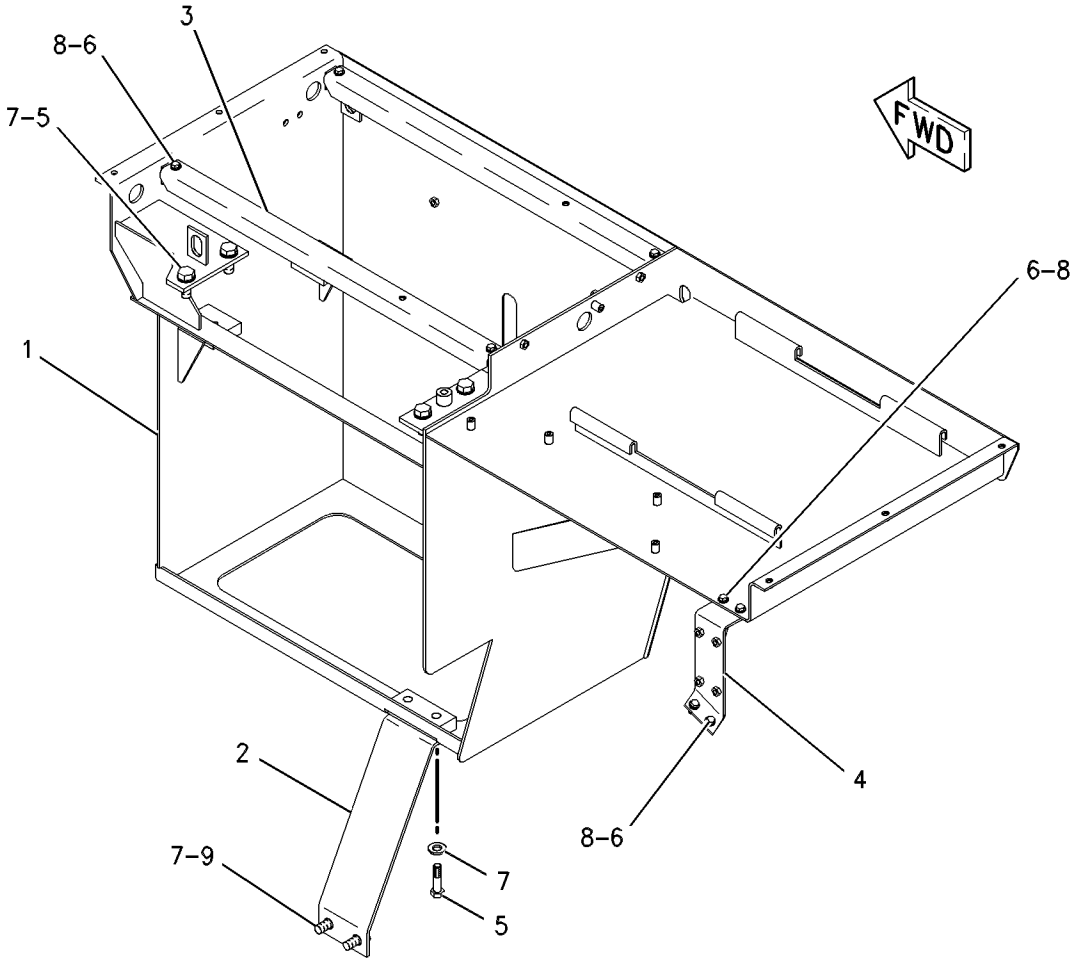

GRAPHIC #1 g00550966

FRAME AND BODY

109-6847 ENCLOSURE GP-HYDRAULIC TANK

S/N: 7HR317-UP
PART OF 109-6819 CHASSIS AR
TYPE 1

SMCS-5056 **i01265173**

NOTE	REF NO	GRAPHIC REF	PART NUMBER	QTY	PART NAME 1 2 3 4 5 6 (PRODUCT LEVEL)	SEE PAGE
C	1	1	**153-9765**	1	ENCLOSURE AS-RH	
	2	1	**114-6478**	1	SUPPORT AS	
	3	1	**114-8170**	2	CHANNEL AS	
	4	1	**118-9447**	1	BRACKET AS-RH	
M	5	1	**7X-2575**	6	BOLT (M24X3X60MM)	
M	6	1	**8T-4139**	12	BOLT (M12X1.75X30MM)	
	7	1	**8T-4167**	8	WASHER (4.0MM THK)	
	8	1	**8T-4223**	8	WASHER-HARD (3MM THK)	
M	9	1	**8T-5379**	2	BOLT (M24X3.0X50MM)	
	10	1	**5P-1076**	4	WASHER-HARD (4MM THK)	
	11	1	**168-1793**	1	BRACKET AS	

C-CHANGE FROM PREVIOUS TYPE
M-METRIC PART

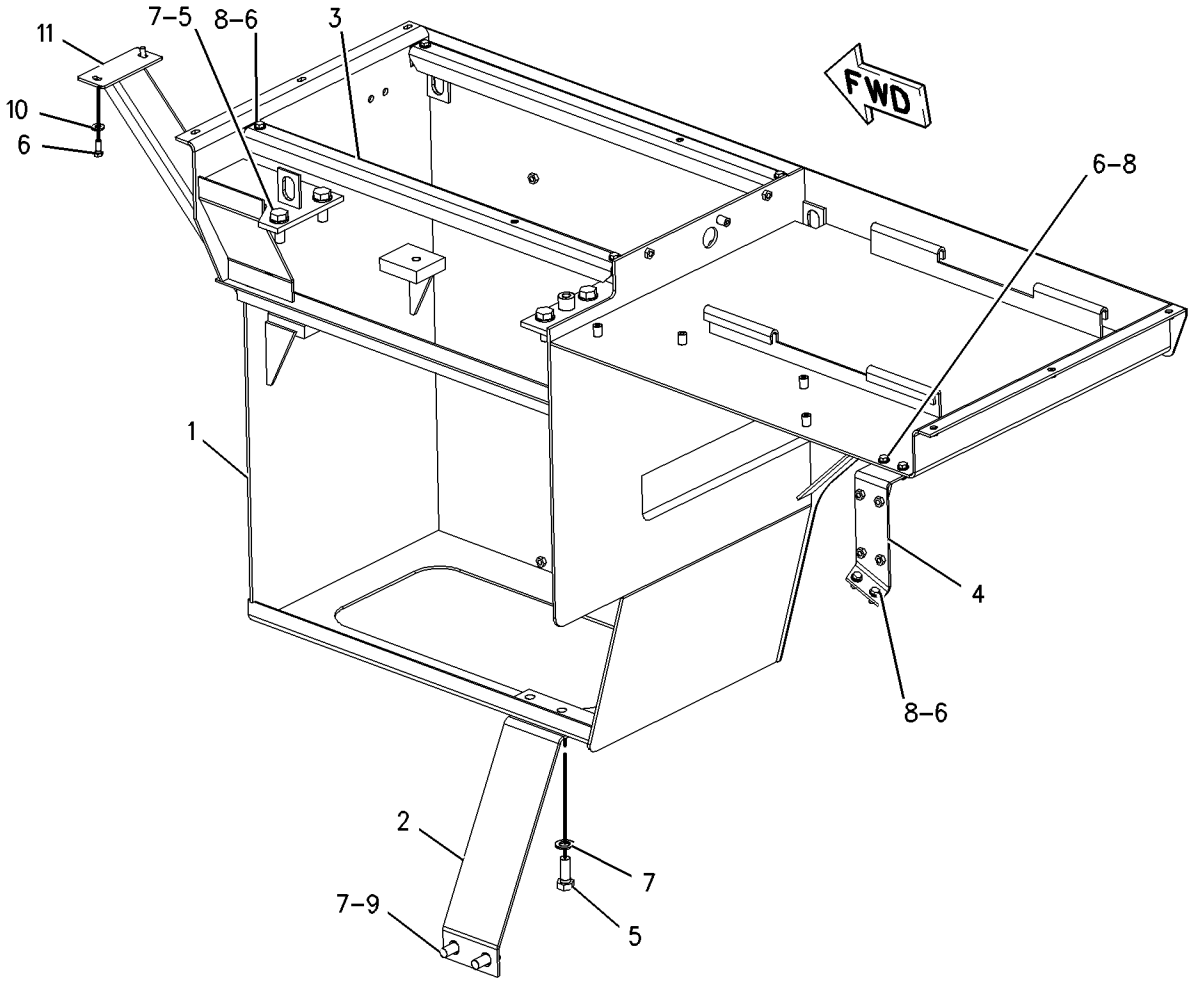

GRAPHIC #1 g00672894

109-6847 ENCLOSURE GP-HYDRAULIC TANK

S/N: 7HR317-UP
PART OF 109-6819 CHASSIS AR
TYPE 2

SMCS-5056 **i01469271**

NOTE	REF NO	GRAPHIC REF	PART NUMBER	QTY	PART NAME 1 2 3 4 5 6 (PRODUCT LEVEL)	SEE PAGE
	1	1	**153-9765**	1	ENCLOSURE AS-RH	
C	2	1	**196-4225**	1	BRACKET AS	
	3	1	**114-8170**	2	CHANNEL AS	
	4	1	**118-9447**	1	BRACKET AS-RH	
C	5	1	**196-9655**	1	BRACKET AS	
M	6	1	**8T-4139**	12	BOLT (M12X1.75X30MM)	
C	7	1	**8T-4167**	4	WASHER-HARD (26X44X4MM THK)	
	8	1	**8T-4223**	8	WASHER-HARD (13.5X25.5X3MM THK)	
CM	9	1	**7X-2576**	20	BOLT (M24X3X70MM)	
	10	1	**5P-1076**	4	WASHER-HARD (13.5X30X4MM THK)	
	11	1	**168-1793**	1	BRACKET AS	
C	12	1	**150-1280**	16	WASHER-HARD (26X44X22MM THK)	

C-CHANGE FROM PREVIOUS TYPE
M-METRIC PART

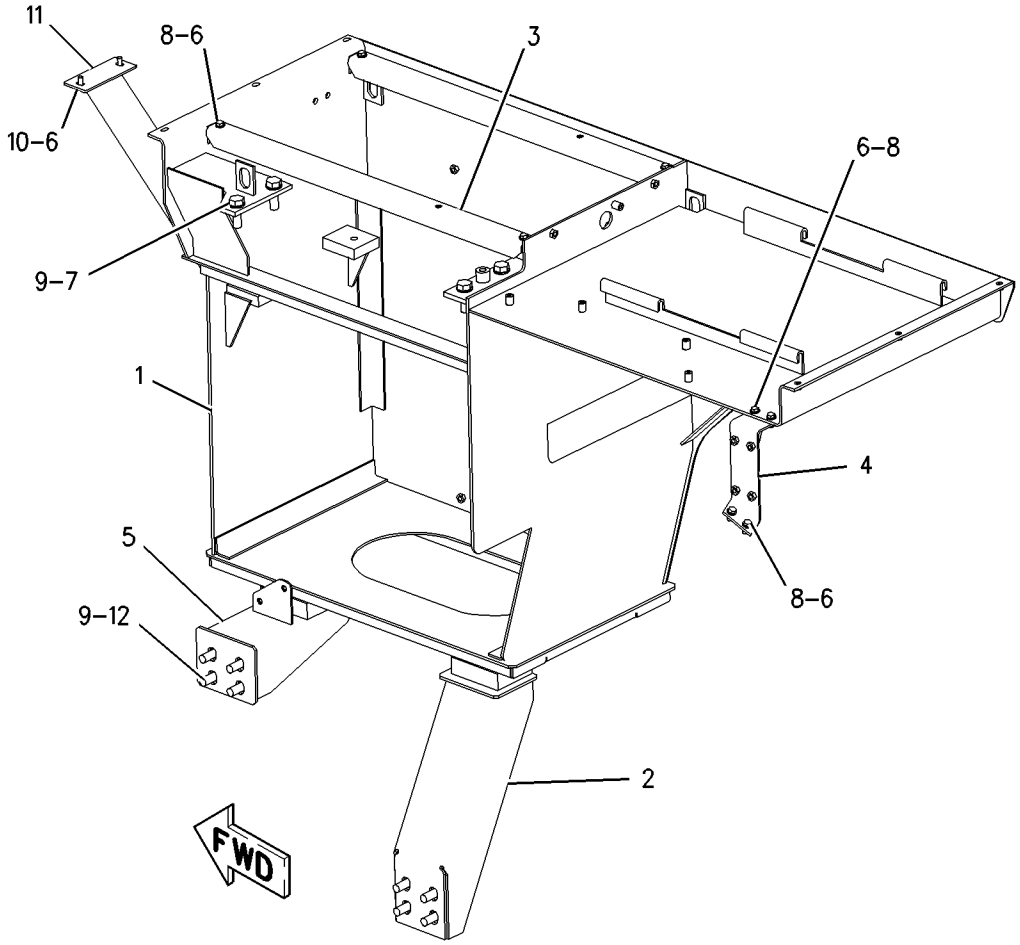

GRAPHIC #1 g00781295

FRAME AND BODY

109-6908 ENCLOSURE GP-HYDRAULIC TANK

S/N: 7HR1-316

PART OF 109-6819 CHASSIS AR

SMCS-5056 **i01089921**

NOTE	REF NO	GRAPHIC REF	PART NUMBER	QTY	PART NAME 1 2 3 4 5 6 (PRODUCT LEVEL)	SEE PAGE
	1	1	**114-6478**	1	SUPPORT AS	
	2	1	**115-4789**	1	ENCLOSURE AS	
	3	1	**118-9446**	1	BRACKET AS-LH	
M		1	**8T-3597**	6	NUT-WELD (M12X1.75 THD)	
M	4	1	**7X-2576**	4	BOLT (M24X3X70MM)	
M	5	1	**8T-4139**	4	BOLT (M12X1.75X30MM)	
	6	1	**8T-4167**	8	WASHER (4.0MM THK)	
	7	1	**8T-4123**	4	WASHER-PLATED (3.5MM THK)	
M	8	1	**8T-5379**	4	BOLT (M24X3.0X50MM)	

M-METRIC PART

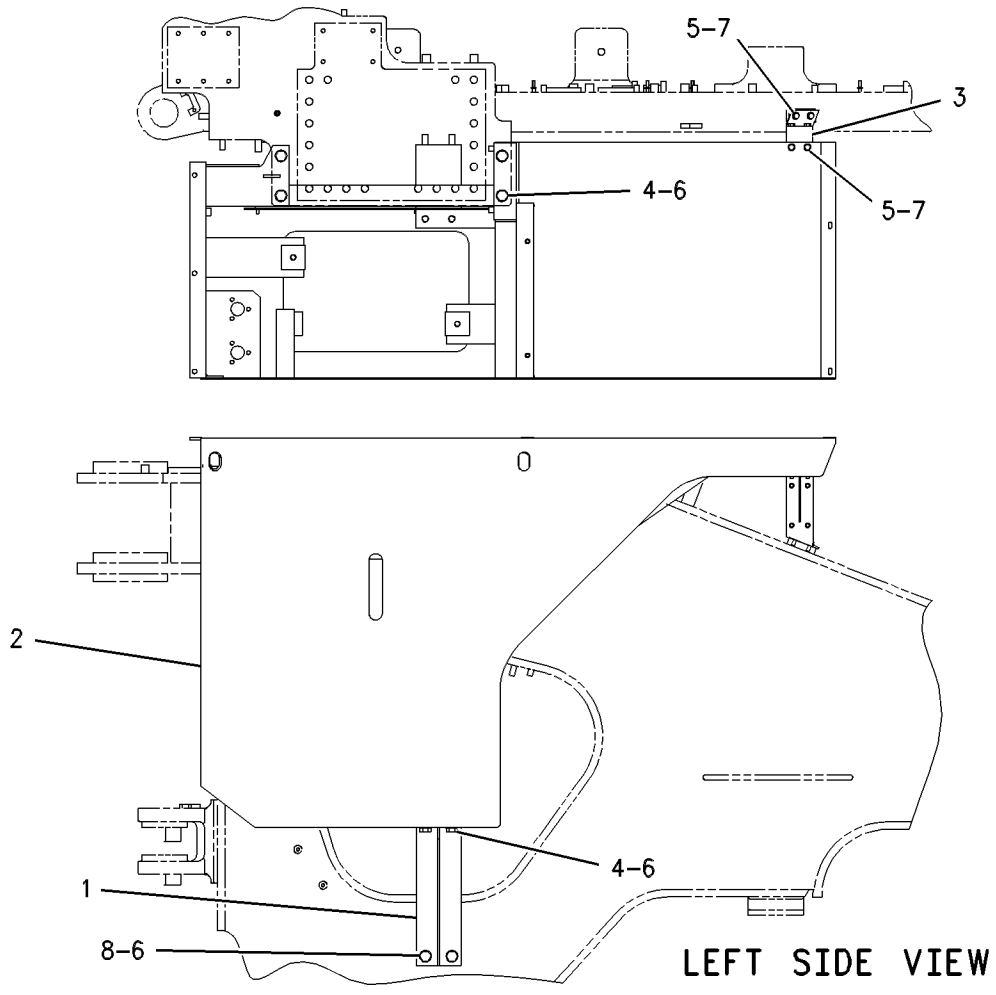

GRAPHIC #1 g00554633

109-6908 ENCLOSURE GP-HYDRAULIC TANK

S/N: 7HR317-UP
PART OF 109-6819 CHASSIS AR
TYPE 1

SMCS-5056 **i01089933**

NOTE	REF NO	GRAPHIC REF	PART NUMBER	QTY	PART NAME 1 2 3 4 5 6 (PRODUCT LEVEL)	SEE PAGE
	1	1	**114-6478**	1	SUPPORT AS	
C	2	1	**153-9766**	1	ENCLOSURE AS-LH	
	3	1	**118-9446**	1	BRACKET AS-LH	
M		1	**8T-3597**	6	NUT-WELD (M12X1.75 THD)	
M	4	1	**7X-2576**	4	BOLT (M24X3X70MM)	
M	5	1	**8T-4139**	4	BOLT (M12X1.75X30MM)	
	6	1	**8T-4167**	8	WASHER (4.0MM THK)	
	7	1	**8T-4123**	4	WASHER-PLATED (3.5MM THK)	
M	8	1	**8T-5379**	4	BOLT (M24X3.0X50MM)	

C-CHANGE FROM PREVIOUS TYPE
M-METRIC PART

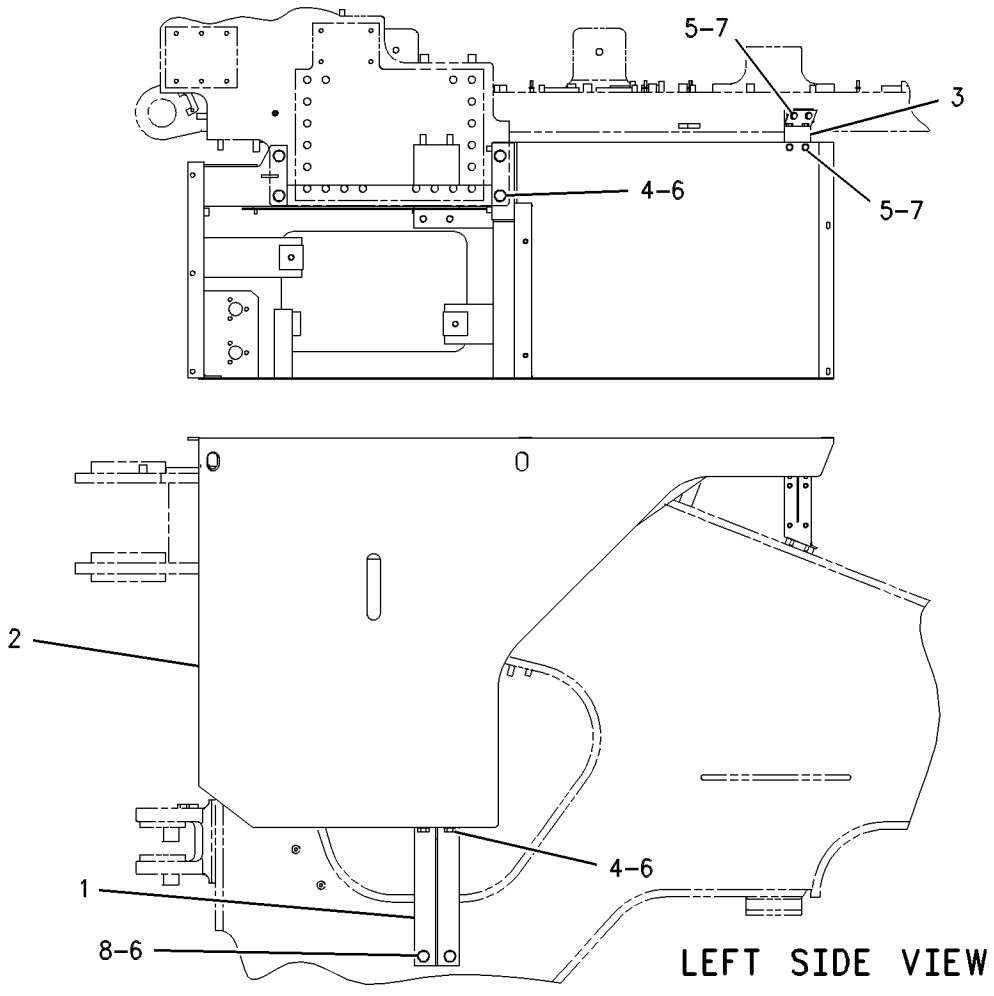

GRAPHIC #1 g00554633

FRAME AND BODY

109-6908 ENCLOSURE GP-HYDRAULIC TANK

S/N: 7HR317-UP
PART OF 109-6819 CHASSIS AR
TYPE 2

SMCS-5056 **i01469293**

NOTE	REF NO	GRAPHIC REF	PART NUMBER	QTY	PART NAME 1 2 3 4 5 6 (PRODUCT LEVEL)	SEE PAGE
C	1	1	**196-4225**	1	BRACKET AS	
	2	1	**153-9766**	1	ENCLOSURE AS-LH	
	3	1	**118-9446**	1	BRACKET AS-LH	
M		1	**8T-3597**	6	NUT-WELD (M12X1.75 THD)	
CM	4	1	**7X-2576**	20	BOLT (M24X3X70MM)	
M	5	1	**8T-4139**	4	BOLT (M12X1.75X30MM)	
C	6	1	**8T-4167**	8	WASHER-HARD (26X44X4MM THK)	
	7	1	**8T-4123**	4	WASHER-PLATED (22X35X3.5MM THK)	
C	8	1	**196-9655**	1	BRACKET AS	
C	9	1	**150-1280**	16	WASHER-HARD (26X44X22MM THK)	

C-CHANGE FROM PREVIOUS TYPE
M-METRIC PART

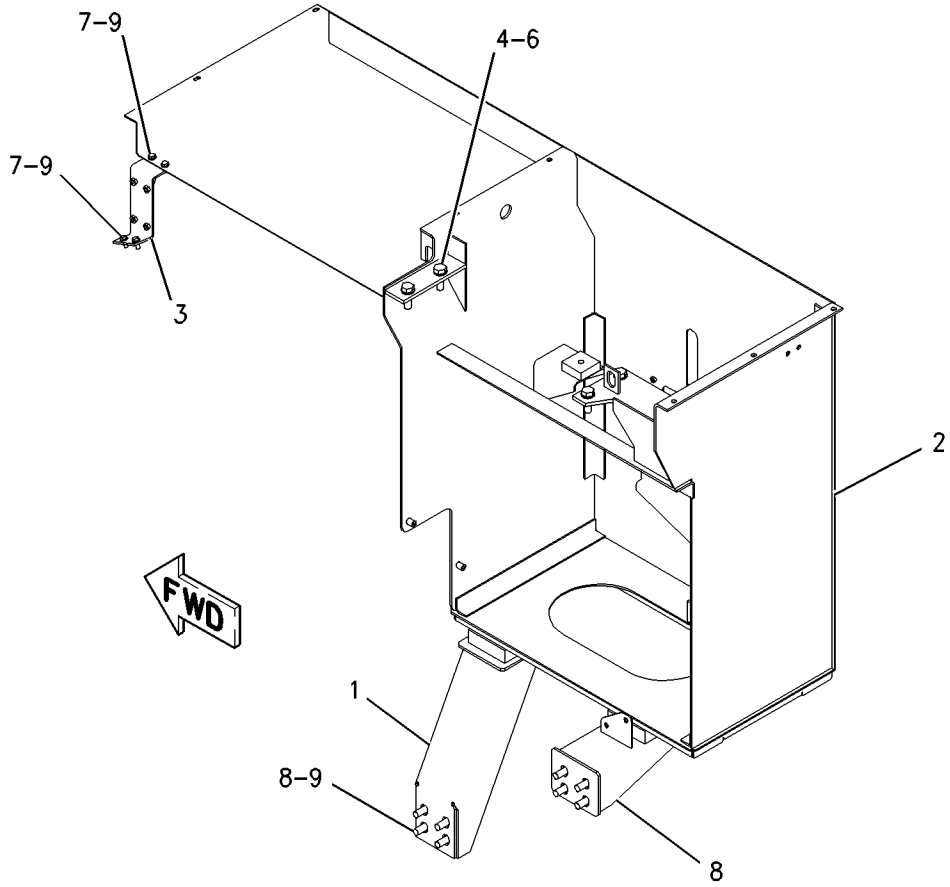

GRAPHIC #1 g00781288

109-6908 ENCLOSURE GP-HYDRAULIC TANK

S/N: 7HR317-UP
PART OF 109-6819 CHASSIS AR
TYPE 3

SMCS-5056 **i01504475**

NOTE	REF NO	GRAPHIC REF	PART NUMBER	QTY	PART NAME 1 2 3 4 5 6 (PRODUCT LEVEL)	SEE PAGE
	1	1	**118-9446**	1	BRACKET AS-LH	
M		1	**8T-3597**	6	NUT-WELD (M12X1.75 THD)	
	2	1	**196-4225**	1	BRACKET AS	
	3	1	**196-9655**	1	BRACKET AS	
CY	4	1	*201-4768*	1	ENCLOSURE GP-HYDRAULIC TANK (LH)	688
	5	1	**150-1280**	12	WASHER-HARD (26X44X22MM THK)	
M	6	1	**7X-2576**	16	BOLT (M24X3X70MM)	
	7	1	**8T-1482**	4	WASHER-HARD (26X50X8MM THK)	
M	8	1	**8T-4139**	4	BOLT (M12X1.75X30MM)	
	9	1	**8T-4167**	8	WASHER-HARD (26X44X4MM THK)	
	10	1	**8T-4223**	4	WASHER-HARD (13.5X25.5X3MM THK)	
M	11	1	**8T-5379**	4	BOLT (M24X3.0X50MM)	

C-CHANGE FROM PREVIOUS TYPE
M-METRIC PART
Y-SEPARATE ILLUSTRATION

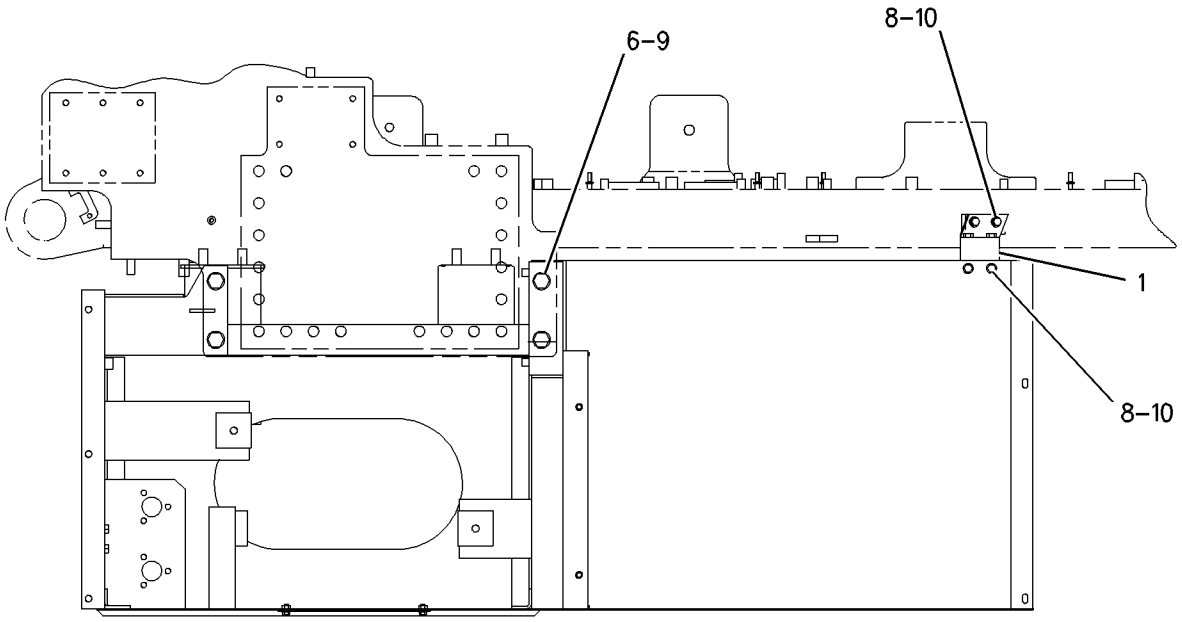

TOP VIEW

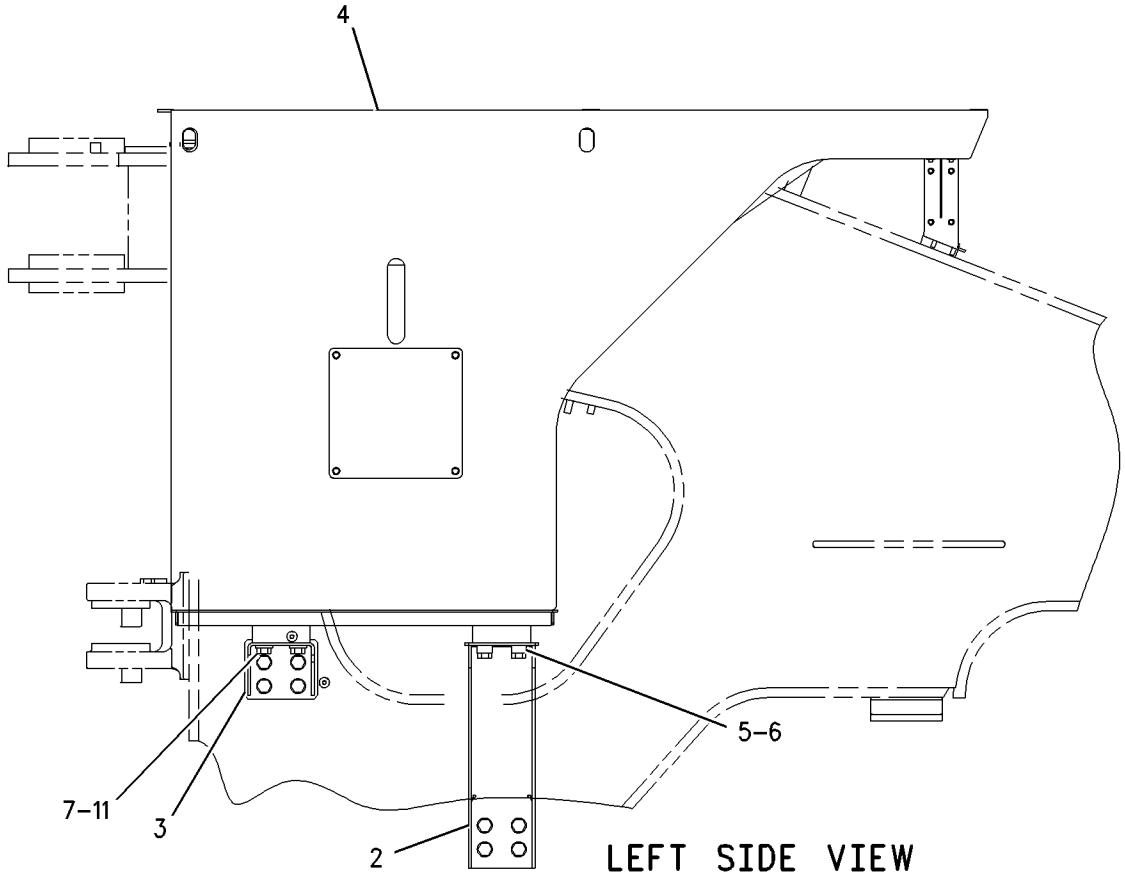

LEFT SIDE VIEW

GRAPHIC #1

g00782366

201-4768 ENCLOSURE GP-HYDRAULIC TANK

S/N: 7HR317-UP

LH

PART OF 109-6908 ENCLOSURE GP-HYDRAULIC TANK

SMCS-5056 **i01504476**

NOTE	REF NO	GRAPHIC REF	PART NUMBER	QTY	PART NAME 1 2 3 4 5 6 (PRODUCT LEVEL)	SEE PAGE
	1	1	**201-4748**	1	COVER	
	2	1	**201-4750**	1	ENCLOSURE AS	
	3	1	**8T-4121**	4	WASHER-HARD (11X21X2.5MM THK)	
M	4	1	**8T-4137**	4	BOLT (M10X1.5X20MM)	

M-METRIC PART

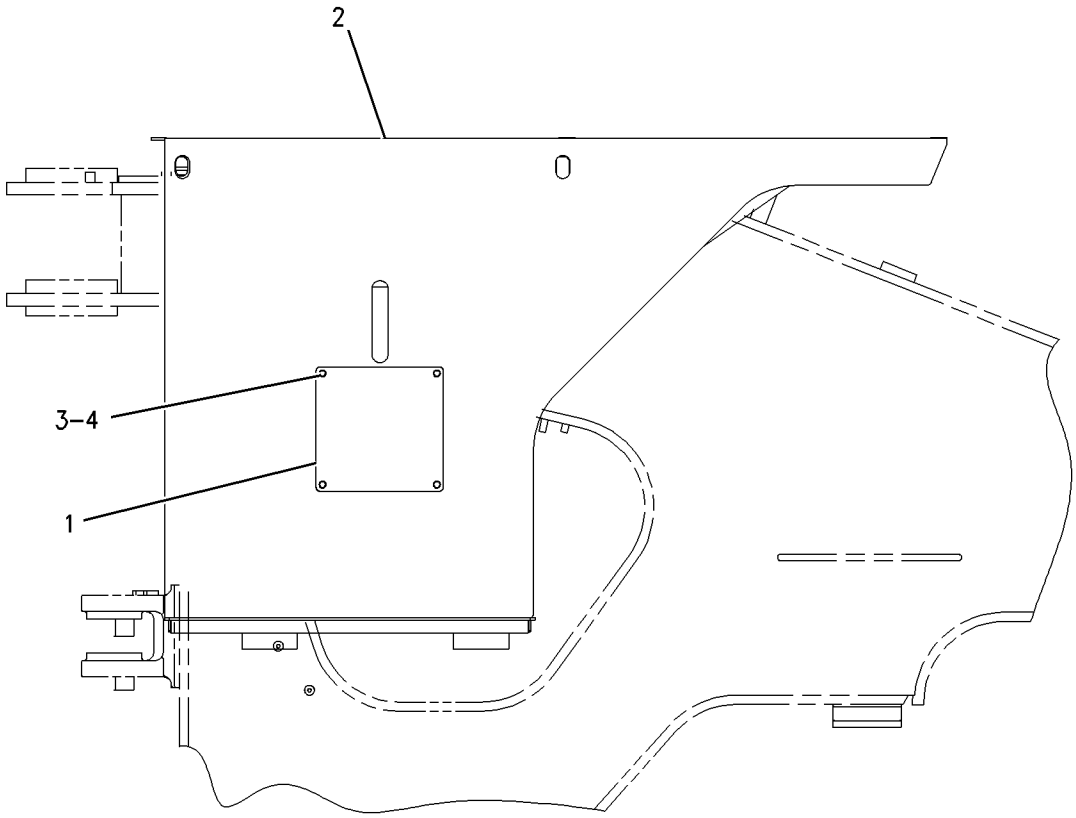

LEFT SIDE VIEW

GRAPHIC #1 g00782227

FRAME AND BODY

109-6845 FENDER GP-FRONT

S/N: 7HR1-UP

PART OF 109-6819 CHASSIS AR

SMCS-7252 **i00743332**

NOTE	REF NO	GRAPHIC REF	PART NUMBER	QTY	PART NAME 1 2 3 4 5 6 (PRODUCT LEVEL)	SEE PAGE
	1	1	**125-5478**	1	FENDER AS-RH	
M		1	**8T-3490**	6	NUT-WELD (M10X1.5 THD)	
	2	1	**125-5479**	1	FENDER AS-LH	
M		1	**8T-3490**	6	NUT-WELD (M10X1.5 THD)	
M	3	1	**7X-2563**	16	BOLT (M20X2.5X60MM)	
	4	1	**8T-5439**	16	WASHER (6.0MM THK)	

M-METRIC PART

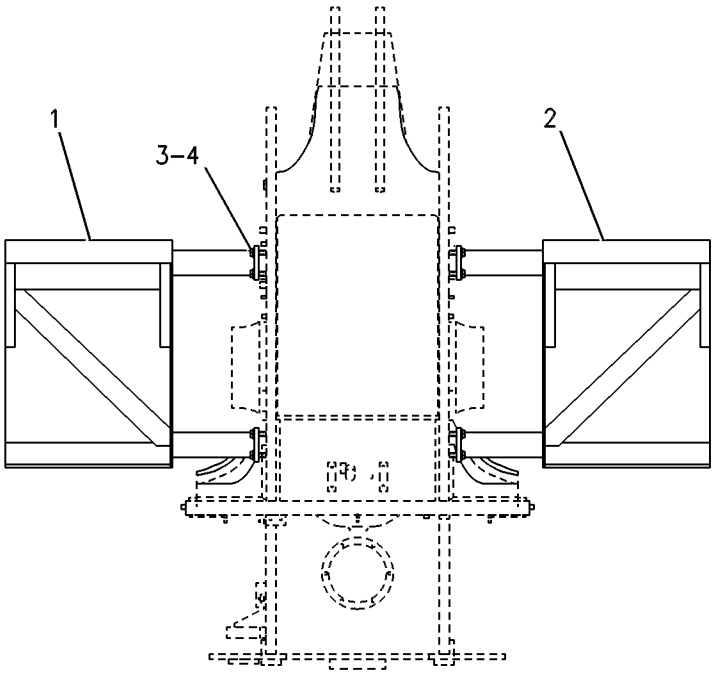

FRONT VIEW

GRAPHIC #1 g00259376

FRAME AND BODY

109-6846 FIREWALL GP

S/N: 7HR1-UP

PART OF 109-6819 CHASSIS AR

SMCS-7262 **i01058747**

NOTE	REF NO	GRAPHIC REF	PART NUMBER	QTY	PART NAME 1 2 3 4 5 6 (PRODUCT LEVEL)	SEE PAGE
	1	1	**5P-1076**	2	WASHER-HARD (4MM THK)	
	2	1	**7X-7729**	4	WASHER (3MM THK)	
	3	1	**112-4836**	1	POST AS-LH	
M		1	**8T-3490**	3	NUT-WELD (M10X1.5 THD)	
M		1	**8T-3597**	4	NUT-WELD (M12X1.75 THD)	
	4	1	**113-6005**	1	SUPPORT AS	
M		1	**8T-3490**	4	NUT-WELD (M10X1.5 THD)	
M		1	**8T-3597**	6	NUT-WELD (M12X1.75 THD)	
	5	1	**114-6434**	1	SUPPORT AS	
M		1	**8T-3597**	8	NUT-WELD (M12X1.75 THD)	
	6	1	**115-8189**	1	POST AS-RH	
M		1	**8T-3490**	3	NUT-WELD (M10X1.5 THD)	
M		1	**8T-3597**	4	NUT-WELD (M12X1.75 THD)	
		1	**9R-2613**	2	BOSS (M10X1.5X25.0MM)	
	7	1	**6K-8180**	1	GROMMET	
	8	1	**116-2345**	2	POST AS	
					(EACH INCLUDES)	
M		1	**8T-3597**	7	NUT-WELD (M12X1.75 THD)	
		1	**9R-2613**	2	BOSS (M10X1.5X25.0MM)	
	9	1	**118-0473**	1	SHEET AS	
		1	**6B-4594**	24	RIVET (4.85MM DIA)	
	10	1	**118-1710**	1	PANEL AS	
		1	**7T-1099**	6	LINK	
M		1	**8T-3490**	4	NUT-WELD (M10X1.5 THD)	
	11	1	**122-5970**	2	COVER	
	12	1	**124-3014**	2	ANGLE AS	
					(EACH INCLUDES)	
M		1	**8T-3597**	2	NUT-WELD (M12X1.75 THD)	
M	13	1	**7X-2576**	4	BOLT (M24X3X70MM)	
	14	1	**8T-4121**	6	WASHER (2.5MM THK)	
M	15	1	**8T-4136**	6	BOLT (M10X1.50X25MM)	
M	16	1	**8T-4139**	15	BOLT (M12X1.75X30MM)	
	17	1	**8T-4167**	4	WASHER (4.0MM THK)	
M	18	1	**8T-4195**	4	BOLT (M10X1.50X30MM)	
	19	1	**8T-4223**	15	WASHER-HARD (3MM THK)	
M	20	1	**8T-4956**	2	BOLT (M12X1.75X35MM)	

M-METRIC PART

109-6846 **FIREWALL GP** ***(contd.)*** **i01058747**

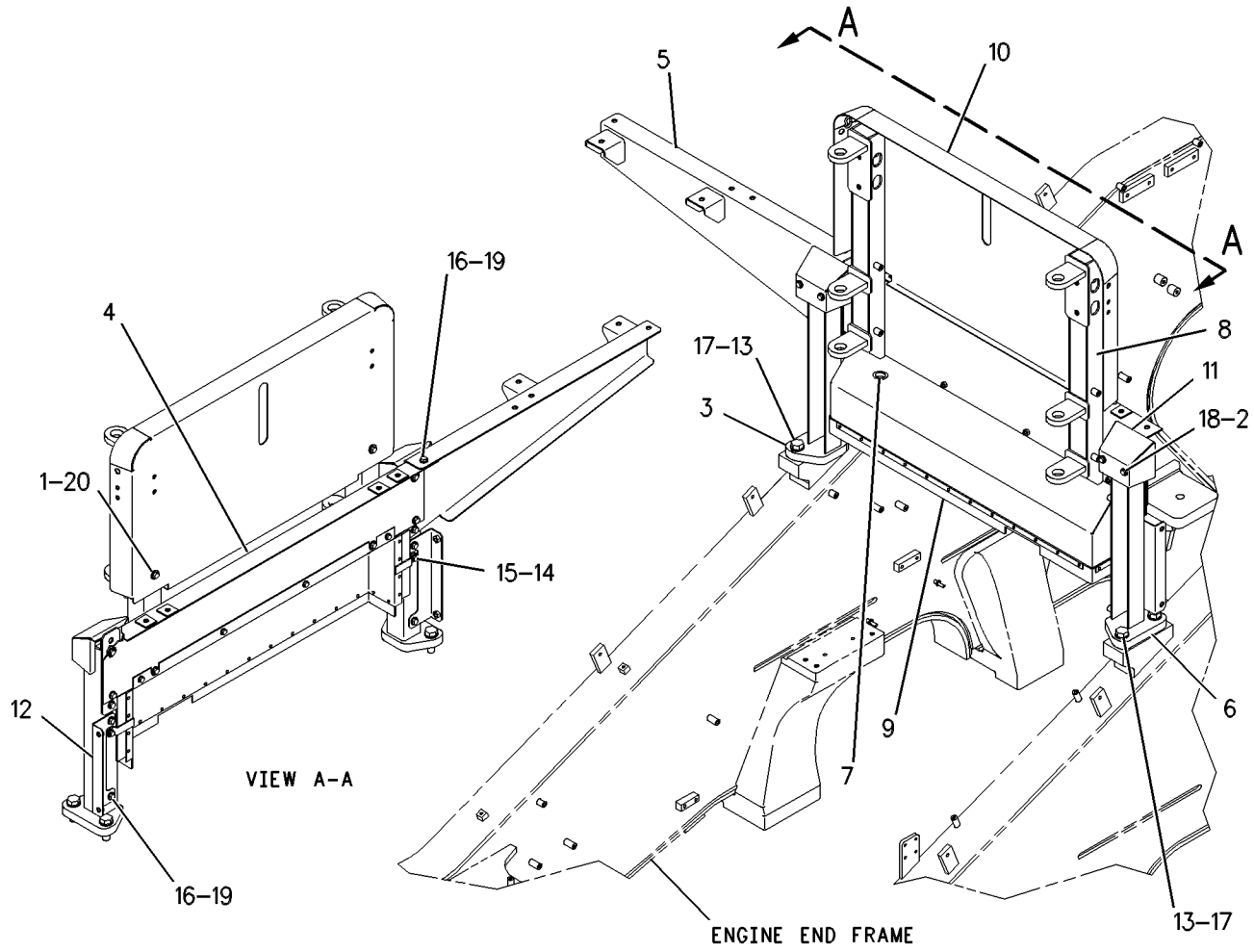

GRAPHIC #1 g00550076

109-6835 FRAME AS-LOADER

S/N: 7HR1-UP
PART OF 109-6819 CHASSIS AR, 145-3377 FRAME AS-LOADER
ALSO AN ATTACHMENT
TYPE 1

SMCS-7054 **i01178287**

NOTE	REF NO	GRAPHIC REF	PART NUMBER	QTY	PART NAME 1 2 3 4 5 6 (PRODUCT LEVEL)	SEE PAGE
	1	1	**6E-0804**	2	BEARING-SLEEVE	
M	2	1	**8T-3851**	36	BOSS-WELD (M10X1.5X30MM OAL)	
	3	1	**9C-6809**	1	BLOCK	
	4	1	**9R-2613**	11	BOSS (M10X25MM)	
	5	1	**9U-0585**	1	RETAINER	
M	6	1	**110-2023**	10	STUD-WELD (M10X1.5X25 MM)	
	7	1	**132-8574**	2	BEARING	
	8	1	**153-1853**	1	SPACER	
	9	1	*164-4180*	2	PLUG AS	
					(EACH INCLUDES)	
		1	**7M-8485**	1	SEAL-O-RING (29.74MM ID)	
		1	**9S-4181**	1	PLUG-STRAIGHT THREAD (1-5/16-12 THD)	
	10	1	**9U-0853**	1	BAR	
	11	1	**177-3203**	1	BAR	

M-METRIC PART

109-6835 FRAME AS-LOADER *(contd.)* **i01178287**

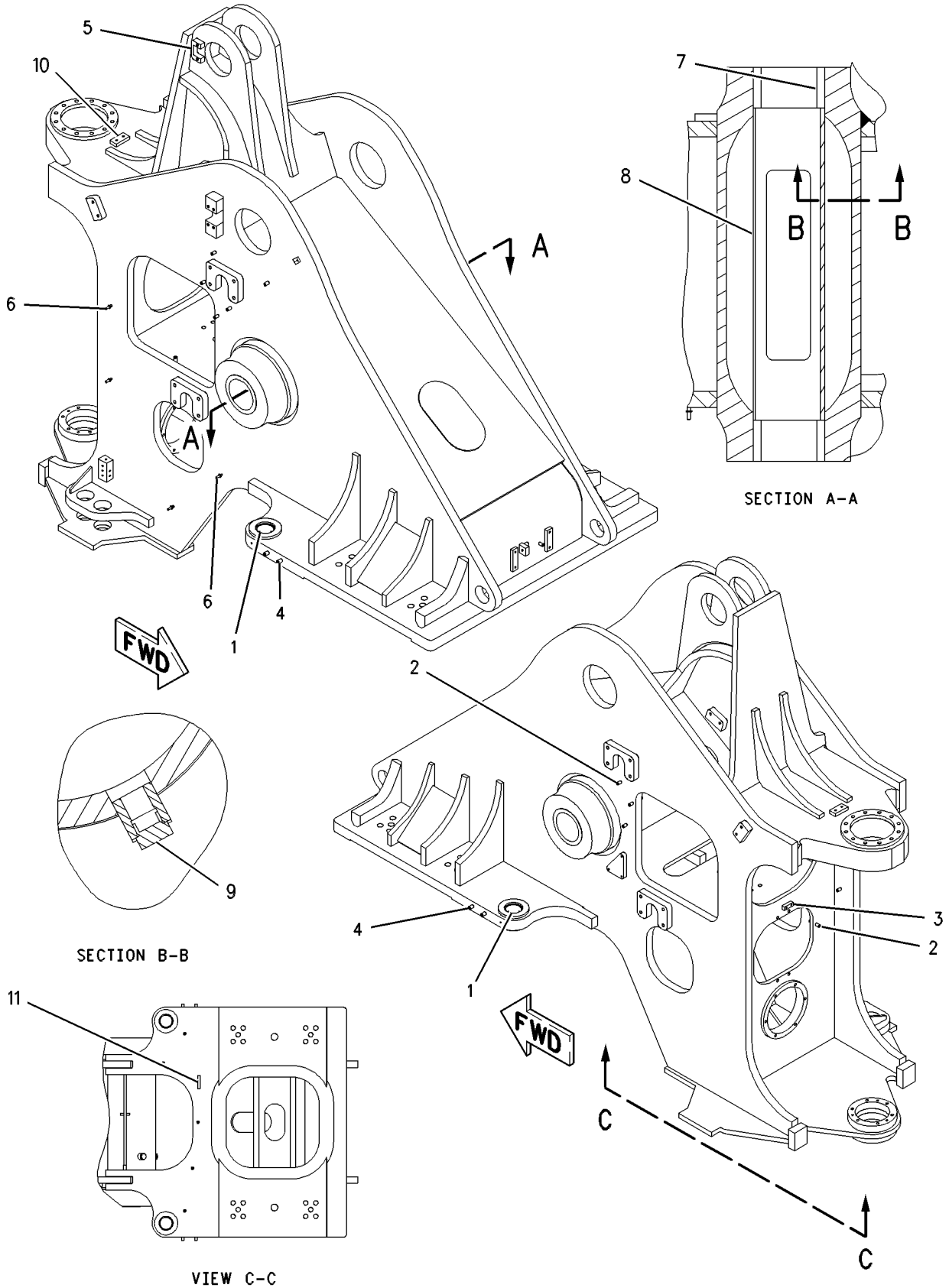

GRAPHIC #1 g00631606

109-6835 FRAME AS-L0ADER

S/N: 7HR1-UP
PART OF 109-6819 CHASSIS AR, 145-3377 FRAME AS-L0ADER
ALSO AN ATTACHMENT
TYPE 2

SMCS-7054 **i01478629**

NOTE	REF NO	GRAPHIC REF	PART NUMBER	QTY	PART NAME 1 2 3 4 5 6 (PRODUCT LEVEL)	SEE PAGE
	1	1	**6E-0804**	2	BEARING-SLEEVE	
M	2	1	**8T-3851**	36	BOSS-WELD (M10X1.5MM)	
	3	1	**9C-6809**	1	BLOCK	
	4	1	**9R-2613**	11	BOSS (M10X25MM)	
	5	1	**9U-0585**	1	RETAINER	
M	6	1	**110-2023**	10	STUD-WELD (M10X1.5X25 MM)	
	7	1	**132-8574**	2	BEARING	
	8	1	**153-1853**	1	SPACER	
	9	1	*164-4180*	1	PLUG GP	
					(EACH INCLUDES)	
		1	**7M-8485**	1	SEAL-O-RING	
		1	**9S-4181**	1	PLUG-STRAIGHT THREAD	
	10	1	**9U-0853**	1	BAR	
	11	1	**177-3203**	1	BAR	
C	12	1	**199-5515**	1	BLOCK	
	13	1	**201-7313**	1	FITTING AS	
	14	1	**201-7924**	1	CAP-DUST	
	15	1	**3K-0360**	2	SEAL-O-RING	
	16	1	**5P-5777**	1	ADAPTER-O-RING	
	17	1	**6V-0467**	1	CONNECTOR	
	18	1	**7M-8485**	1	SEAL-O-RING	

C-CHANGE FROM PREVIOUS TYPE
M-METRIC PART

109-6835 FRAME AS-LOADER *(contd.)* i01478629

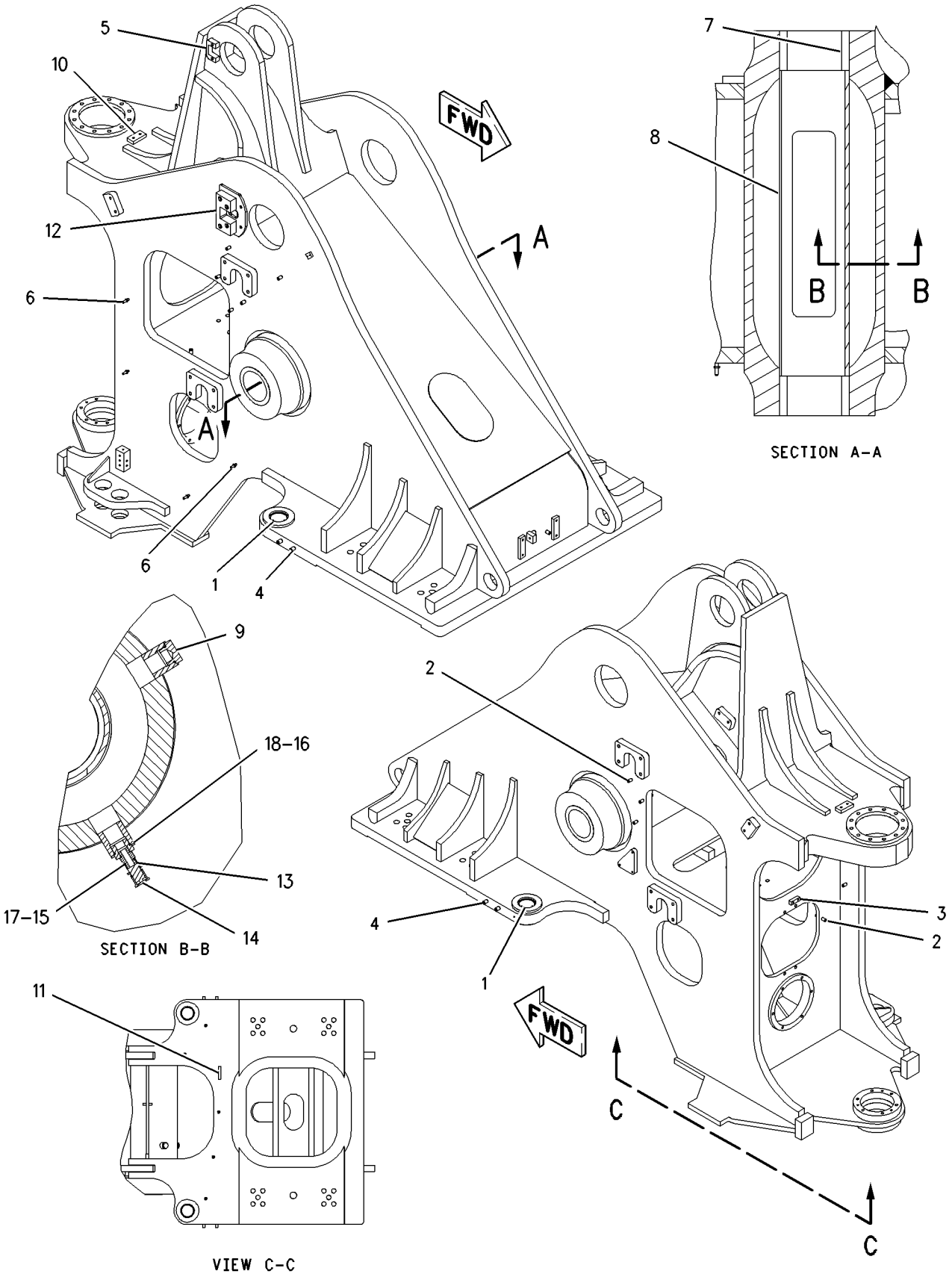

GRAPHIC #1 g00781308

109-6835 FRAME AS-L0ADER

S/N: 7HR1-UP
PART OF 109-6819 CHASSIS AR, 145-3377 FRAME AS-L0ADER
ALSO AN ATTACHMENT
TYPE 3

SMCS-7054 **i01505835**

NOTE	REF NO	GRAPHIC REF	PART NUMBER	QTY	PART NAME 1 2 3 4 5 6 (PRODUCT LEVEL)	SEE PAGE
	1	1	**6E-0804**	2	BEARING-SLEEVE	
M	2	1	**8T-3851**	36	BOSS-WELD (M10X1.5MM)	
	3	1	**9C-6809**	1	BLOCK	
	4	1	**9R-2613**	11	BOSS (M10X25MM)	
	5	1	**9U-0585**	1	RETAINER	
M	6	1	**110-2023**	10	STUD-WELD (M10X1.5X25 MM)	
	7	1	**132-8574**	2	BEARING	
	8	1	**153-1853**	1	SPACER	
	9	1	*164-4180*	1	PLUG GP	
					(EACH INCLUDES)	
		1	**7M-8485**	1	SEAL-O-RING	
		1	**9S-4181**	1	PLUG-STRAIGHT THREAD	
	10	1	**9U-0853**	1	BAR	
	11	1	**177-3203**	1	BAR	
C	12	1	**199-5515**	1	BLOCK	
	13	1	**203-5537**	1	VALVE GP	
		1	**201-7924**	1	CAP-DUST	
		1	**3K-0360**	2	SEAL-O-RING	
		1	**6V-0467**	1	CONNECTOR	
		1	**201-7313**	1	FITTING AS	

C-CHANGE FROM PREVIOUS TYPE
M-METRIC PART

109-6835 FRAME AS-LOADER *(contd.)* i01505835

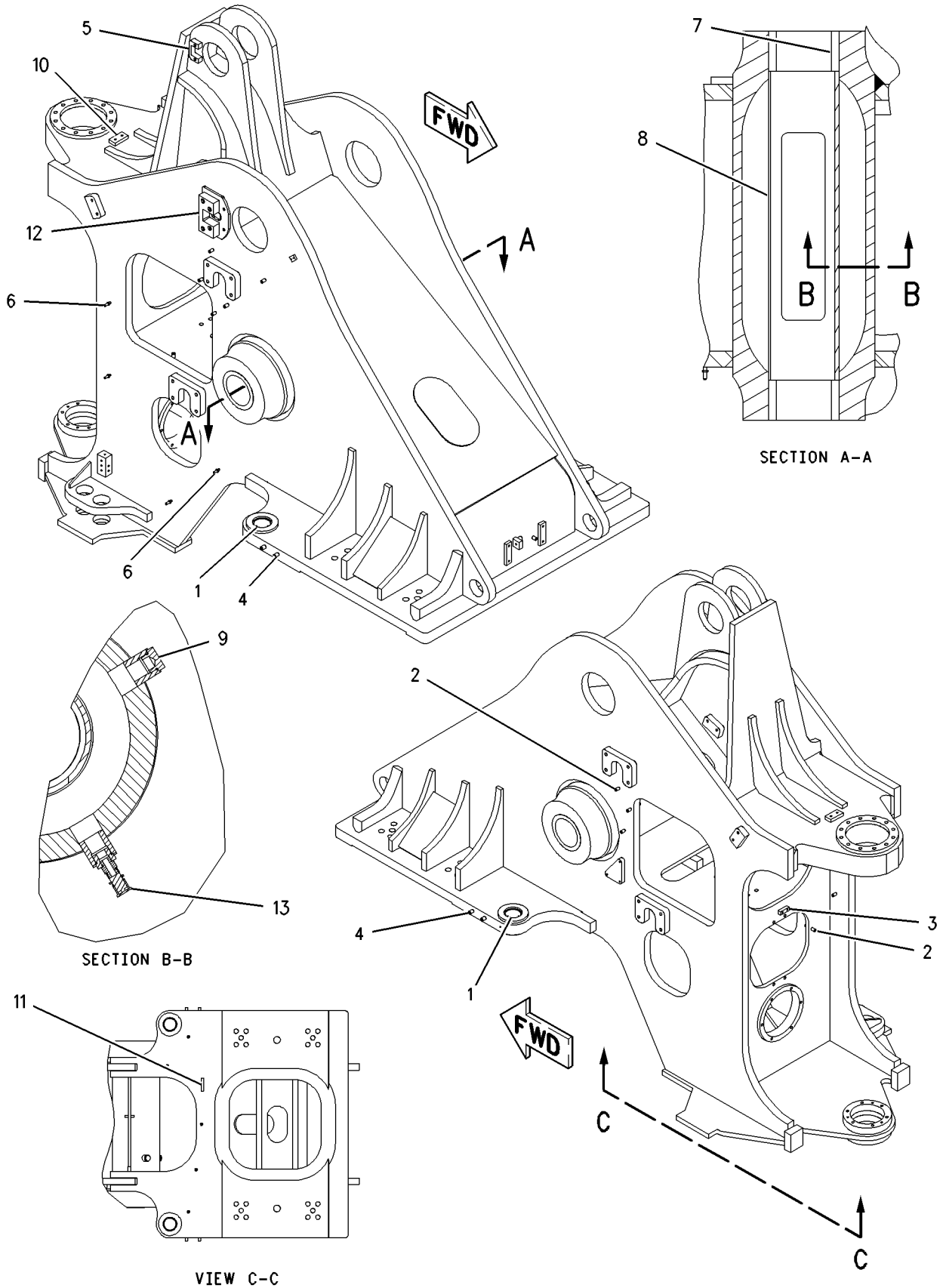

GRAPHIC #1 g00785715

FRAME AND BODY

145-3377 FRAME AS-LOADER

S/N: 7HR46-UP
PART OF 146-5764 FRAME GP-LOADER
AN ATTACHMENT

SMCS-7054 **i01055740**

NOTE	REF NO	GRAPHIC REF	PART NUMBER	QTY	PART NAME 1 2 3 4 5 6 (PRODUCT LEVEL)	SEE PAGE
M	1	1	**8T-3851**	2	BOSS-WELD (M10X1.5X30MM OAL)	
	2	1	**9C-7863**	1	BLOCK	
Y	3	1	**109-6835**	1	FRAME AS-LOADER	692

M-METRIC PART
Y-SEPARATE ILLUSTRATION

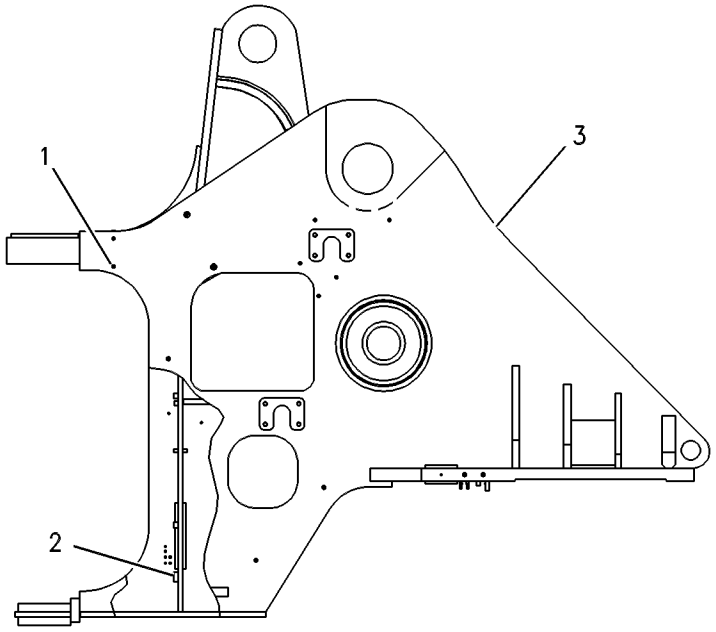

RIGHT SIDE VIEW

GRAPHIC #1 g00273637

FRAME AND BODY

109-6834 FRAME AS-REAR

S/N: 7HR1-UP

PART OF 109-6819 CHASSIS AR

SMCS-7051 **i01185359**

NOTE	REF NO	GRAPHIC REF	PART NUMBER	QTY	PART NAME 1 2 3 4 5 6 (PRODUCT LEVEL)	SEE PAGE
	1	1	**4E-8079**	2	RETAINER	
	2	1	**4I-6289**	1	PLATE	
	3	1	**9T-5663**	4	BLOCK	
	4	1	**140-7770**	2	BRACKET AS	
					(EACH INCLUDES)	
		1	**4E-8078**	2	BEARING-SLEEVE	
M	5	1	**8T-3635**	4	STUD (M12X1.75X34.93MM)	
	6	1	**9R-2613**	20	BOSS (M10X25MM)	
M	7	1	**110-2023**	6	STUD-WELD (M10X1.5X25 MM)	
	8	1	**9T-6943**	2	BLOCK	

M-METRIC PART

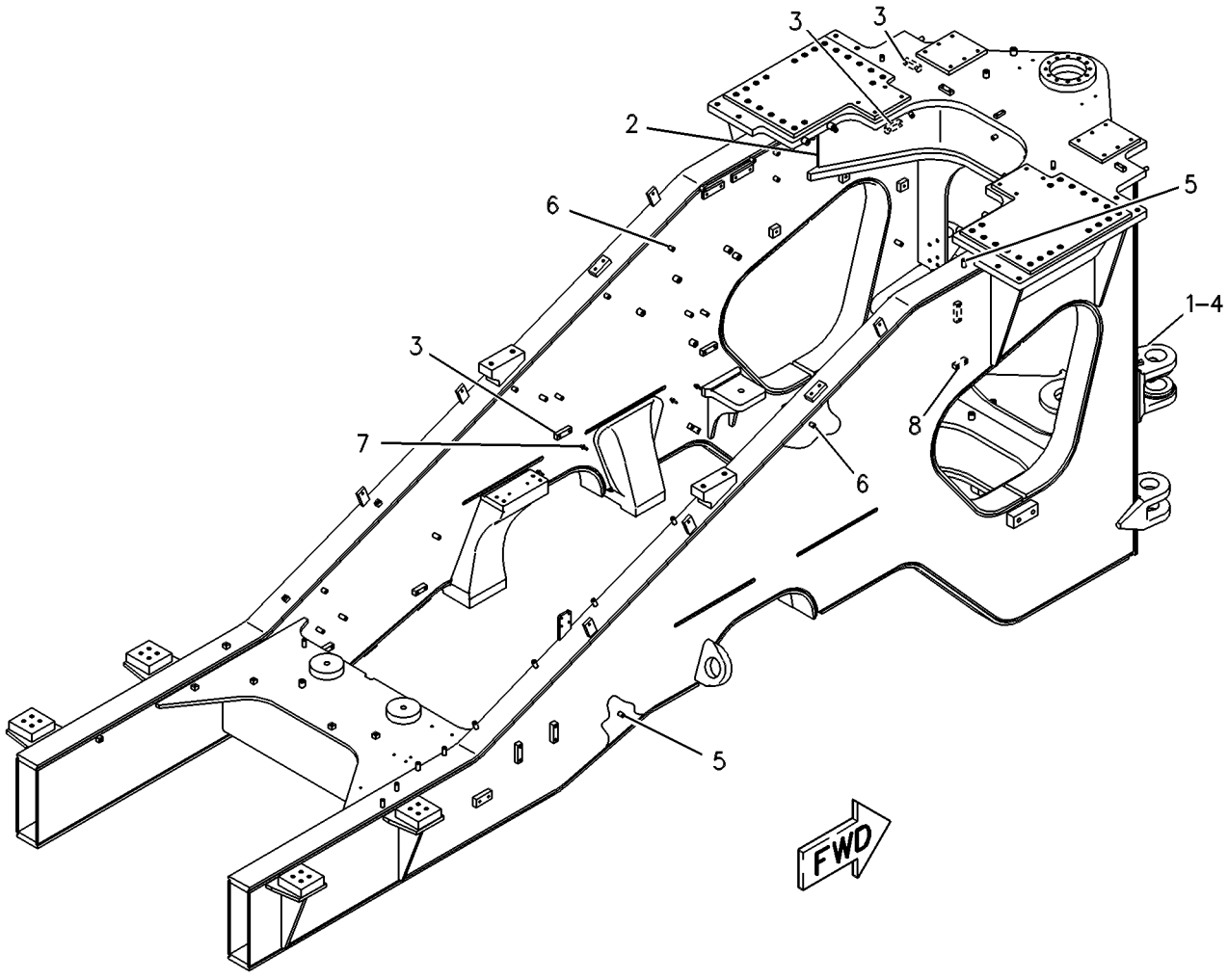

GRAPHIC #1 g00289666

FRAME AND BODY

167-7460 FRAME AS-REAR

S/N: 7HR317-UP

PART OF 109-6819 CHASSIS AR

SMCS-7051 **i01519328**

NOTE	REF NO	GRAPHIC REF	PART NUMBER	QTY	PART NAME 1 2 3 4 5 6 (PRODUCT LEVEL)	SEE PAGE
	1	1	**4E-8079**	2	RETAINER	
M	2	1	**8T-3635**	4	STUD (M12X1.75X34.93MM)	
	3	1	**8X-4719**	4	BAR	
	4	1	**9C-4935**	1	PLATE	
	5	1	**9C-7863**	4	BLOCK	
	6	1	**9R-2613**	35	BOSS (M10X25MM)	
	7	1	**9T-5663**	4	BLOCK	
	8	1	**9T-6943**	2	BLOCK	
M	9	1	**110-2023**	6	STUD-WELD (M10X1.5X25 MM)	
	10	1	**140-7770**	2	BRACKET AS	
					(EACH INCLUDES)	
	10A	1	**4E-8078**	2	BEARING-SLEEVE	

M-METRIC PART

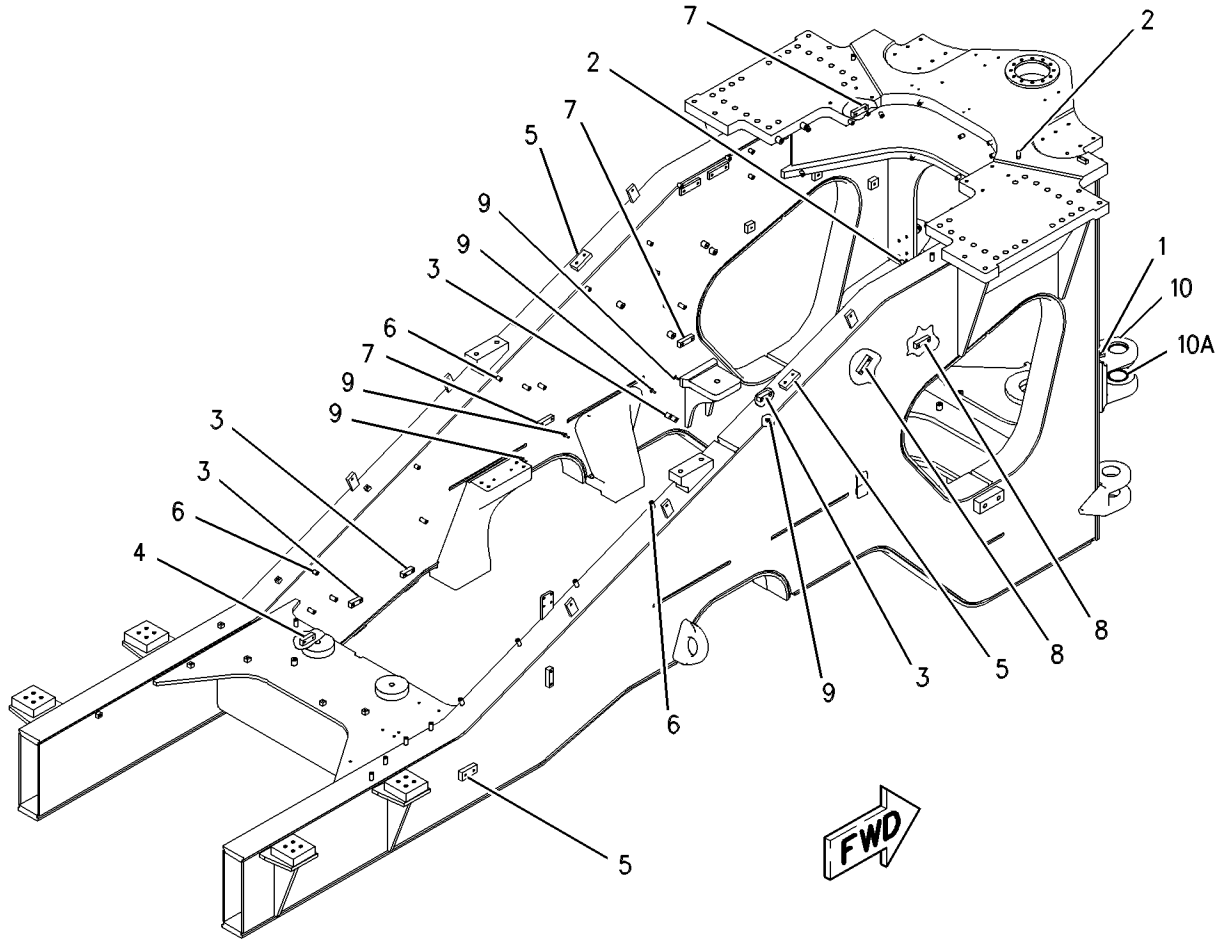

GRAPHIC #1 g00555496

146-5764 FRAME GP-LOADER

S/N: 7HR46-UP
PART OF 132-3301 CONTROL AR-RIDE
AN ATTACHMENT

SMCS-7054 **i01055741**

NOTE	PART NUMBER	QTY	PART NAME 1 2 3 4 5 6 (PRODUCT LEVEL)	SEE PAGE
Y	**145-3377**	1	FRAME AS-LOADER	698

Y-SEPARATE ILLUSTRATION

144-6222 GUARD GP-CRANKCASE

S/N: 7HR1-UP
AN ATTACHMENT

SMCS-7151 **i01388733**

NOTE	REF NO	GRAPHIC REF	PART NUMBER	QTY	PART NAME 1 2 3 4 5 6 (PRODUCT LEVEL)	SEE PAGE
	1	1	**179-6824**	2	GUARD	
	2	1	**145-7226**	1	GUARD AS	
		1	**1K-6932**	2	PIN	
	3	1	**185-9956**	2	PLATE	
M	4	1	**100-4982**	12	BOLT	
	5	1	**7X-0595**	16	WASHER-HARD (8.0MM THK)	
M	6	1	**7X-2553**	4	BOLT (M16X2X40MM)	

M-METRIC PART

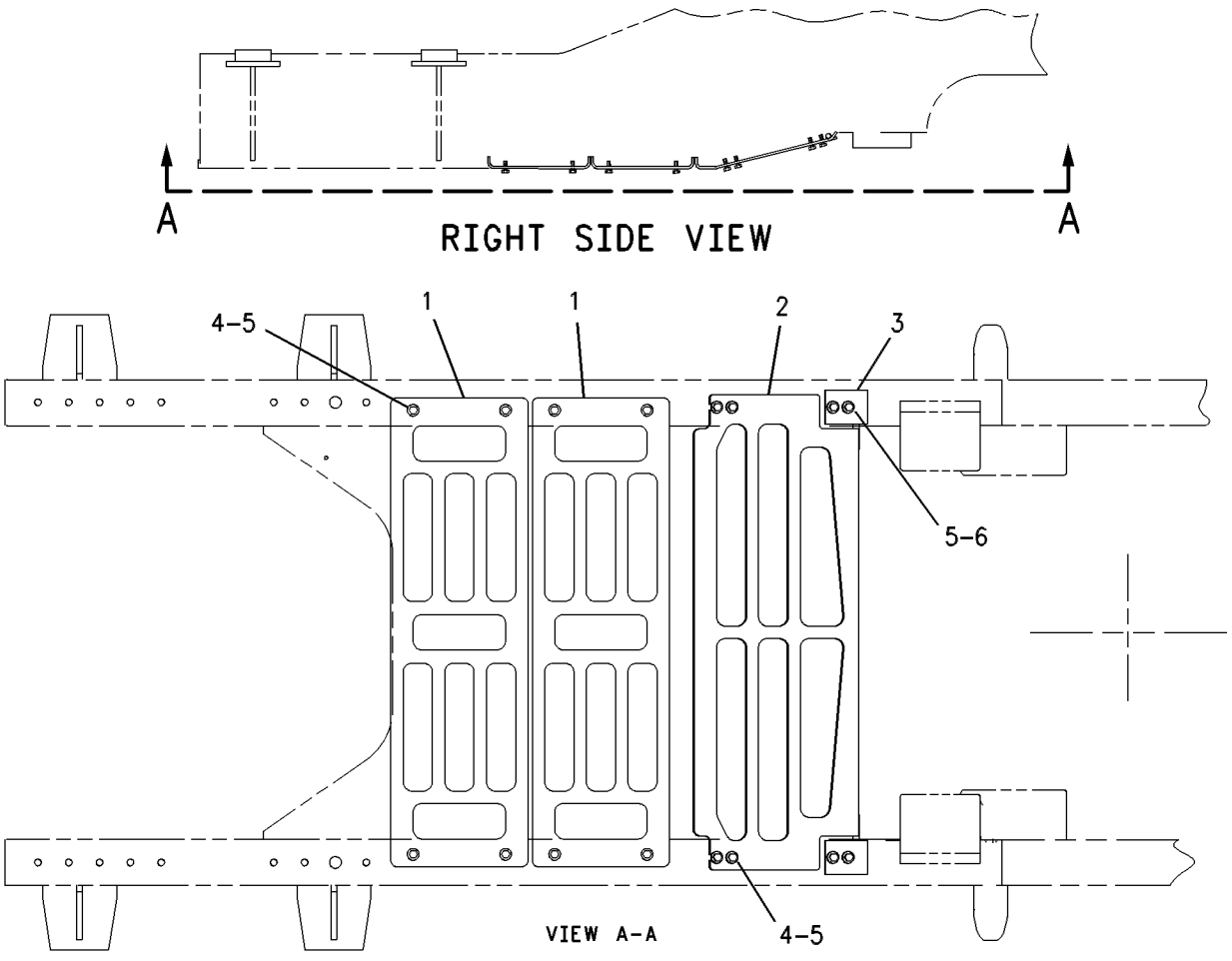

GRAPHIC #1 g00631451

FRAME AND BODY

109-6856 GUARD GP-POWER TRAIN

S/N: 7HR1-UP

PART OF 109-6819 CHASSIS AR

SMCS-7153 **i01185361**

NOTE	REF NO	GRAPHIC REF	PART NUMBER	QTY	PART NAME 1 2 3 4 5 6 (PRODUCT LEVEL)	SEE PAGE
	1	1	**7T-3264**	2	SPACER	
	2	1	**7Y-0336**	3	SPACER	
	3	1	**8V-1715**	4	SPACER	
M	4	1	**8T-6430**	4	BOLT (M20X2.5X50MM)	
M	5	1	**8T-4141**	2	BOLT (M20X2.5X70MM)	
	6	1	**116-8716**	1	GUARD AS	
	7	1	**125-0052**	1	PLATE AS	
M		1	**8T-3490**	1	NUT-WELD (M10X1.5 THD)	
	8	1	**137-3566**	2	PLATE	
	9	1	**8T-4123**	2	WASHER-PLATED (3.5MM THK)	
	10	1	**7X-0387**	3	BOLT (7/8-9X4IN)	

M-METRIC PART

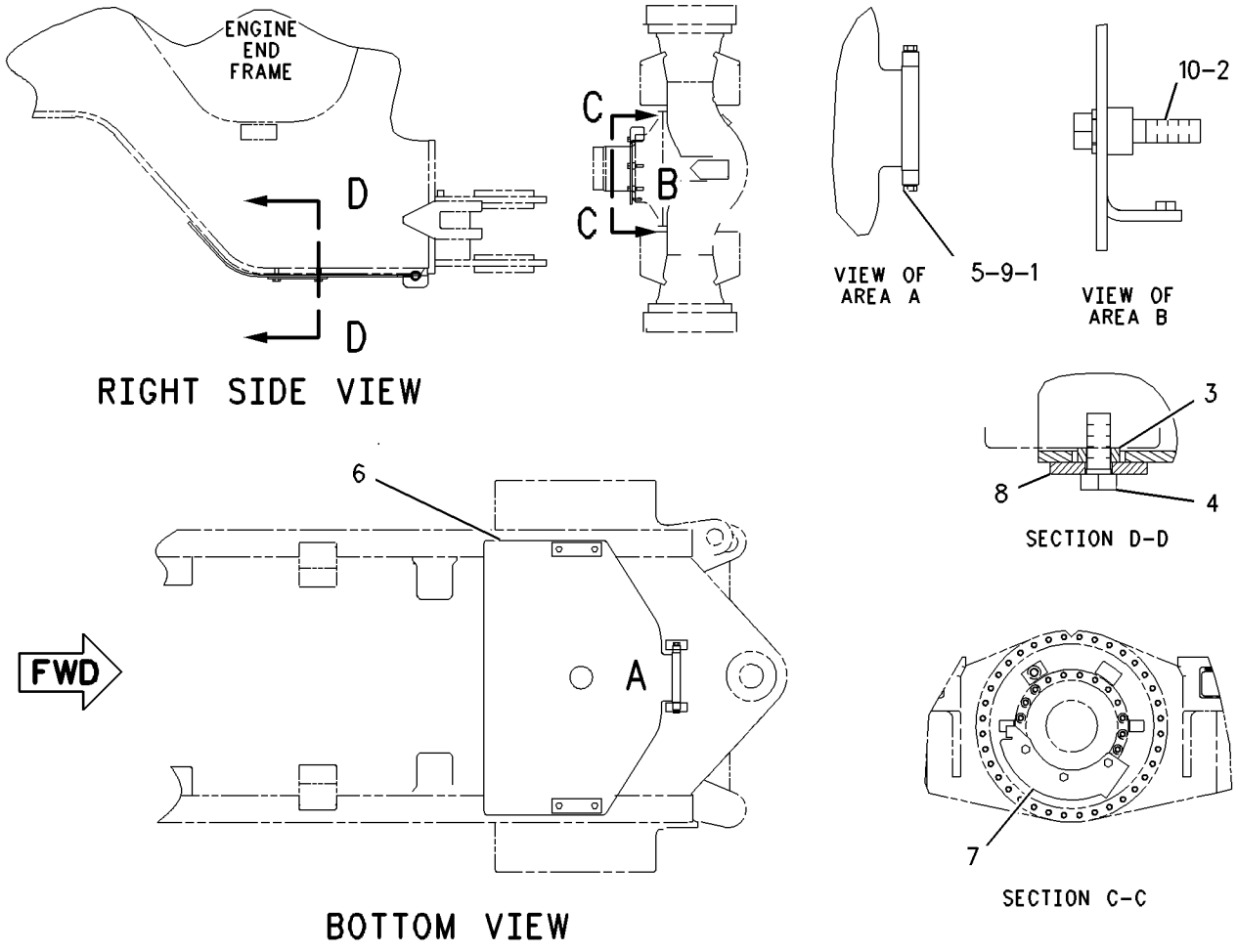

GRAPHIC #1 g00634720

109-6843 GUARD GP-RADIATOR

S/N: 7HR1-294

PART OF 109-6819 CHASSIS AR

SMCS-7155 **i01027949**

NOTE	REF NO	GRAPHIC REF	PART NUMBER	QTY	PART NAME 1 2 3 4 5 6 (PRODUCT LEVEL)	SEE PAGE
	1	1	**6S-6646**	6	PIN	
	2	1	**112-7237**	1	GUARD AS	
	3	1	**112-7242**	1	COVER AS	
	4	1	**112-7243**	1	GRILL AS (TOP)	
	5	1	**112-7244**	1	GRILL (BOTTOM)	
	6	1	**160-2503**	2	BRACKET AS	
	7	1	**164-6351**	4	ROD	
	8	1	**164-6352**	1	PLATE	
	9	1	**5P-1076**	8	WASHER-HARD (4MM THK)	
M	10	1	**6V-7687**	2	LOCKNUT (M12X1.75 THD)	
	11	1	**7X-7660**	6	END-YOKE ROD	
	12	1	**7X-7729**	21	WASHER (3MM THK)	
	13	1	**8B-1419**	6	PIN-CLEVIS	
	14	1	**8T-4123**	16	WASHER-PLATED (3.5MM THK)	
M	15	1	**8T-4186**	4	BOLT (M10X1.50X40MM)	
M	16	1	**8T-4195**	17	BOLT (M10X1.50X30MM)	
M	17	1	**8T-4244**	8	NUT (M12X1.75 THD)	
M	18	1	**8T-4956**	4	BOLT (M12X1.75X35MM)	
M	19	1	**8T-5460**	16	BOLT (M20X2.5X40MM)	

M-METRIC PART

109-6843 **GUARD GP-RADIATOR** *(contd.)* **i01027949**

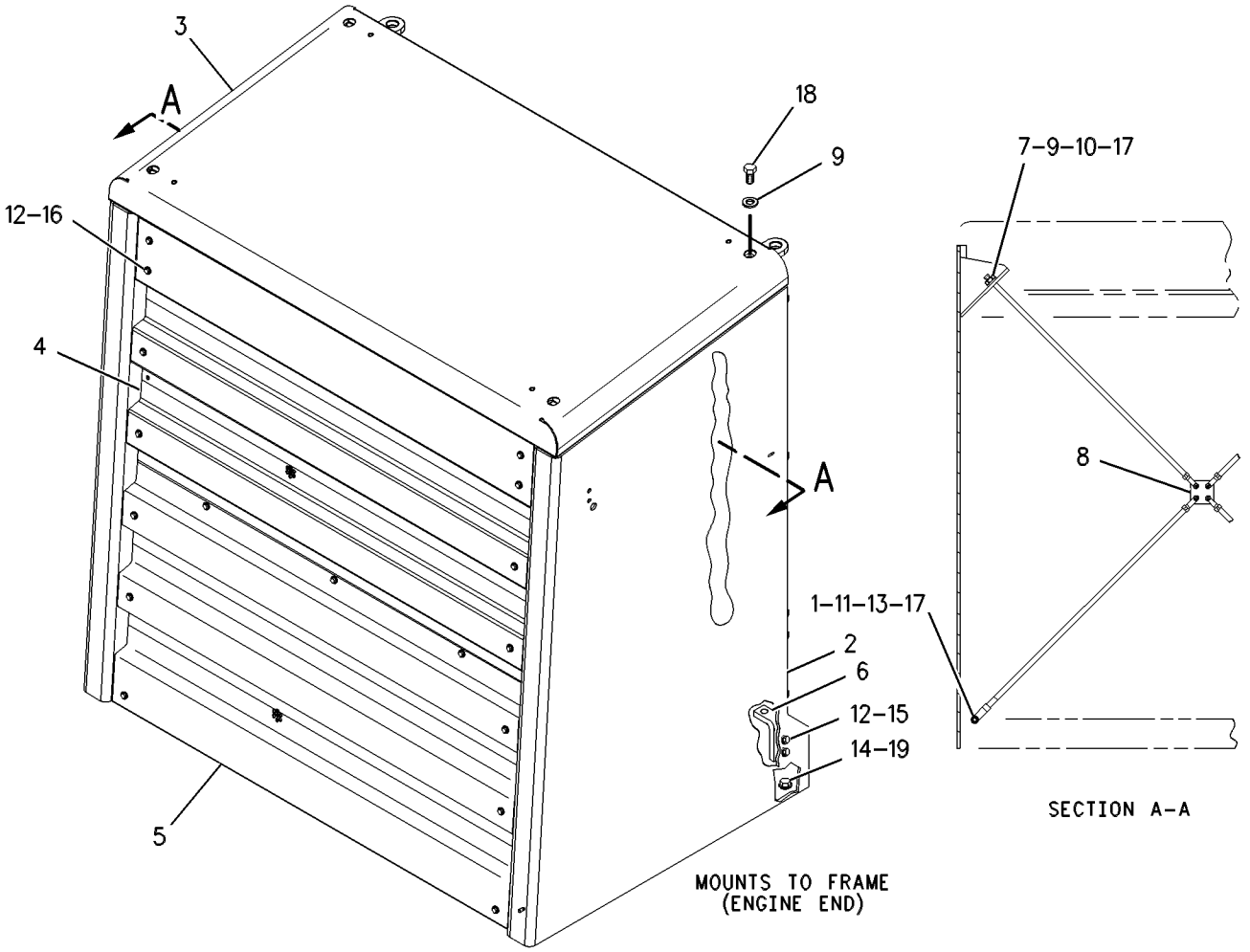

GRAPHIC #1 g00554525

FRAME AND BODY

109-6843 GUARD GP-RADIATOR

S/N: 7HR295-UP

PART OF 109-6819 CHASSIS AR

SMCS-7155 **i01488518**

NOTE	REF NO	GRAPHIC REF	PART NUMBER	QTY	PART NAME 1 2 3 4 5 6 (PRODUCT LEVEL)	SEE PAGE
C	2	1	**194-0948**	1	GUARD AS	
	3	1	**112-7242**	1	COVER AS	
	4	1	**112-7243**	1	GRILL AS (TOP)	
	5	1	**112-7244**	1	GRILL (BOTTOM)	
	6	1	**160-2503**	2	BRACKET AS	
C	9	1	**5P-1076**	4	WASHER-HARD (13.5X30X4MM THK)	
	12	1	**7X-7729**	21	WASHER (11X25X3MM THK)	
	14	1	**8T-4123**	16	WASHER-PLATED (22X35X3.5MM THK)	
M	15	1	**8T-4186**	4	BOLT (M10X1.5X40MM)	
M	16	1	**8T-4195**	17	BOLT (M10X1.5X30MM)	
M	18	1	**8T-4956**	4	BOLT (M12X1.75X35MM)	
M	19	1	**8T-5460**	16	BOLT (M20X2.5X40MM)	

C-CHANGE FROM PREVIOUS TYPE
M-METRIC PART

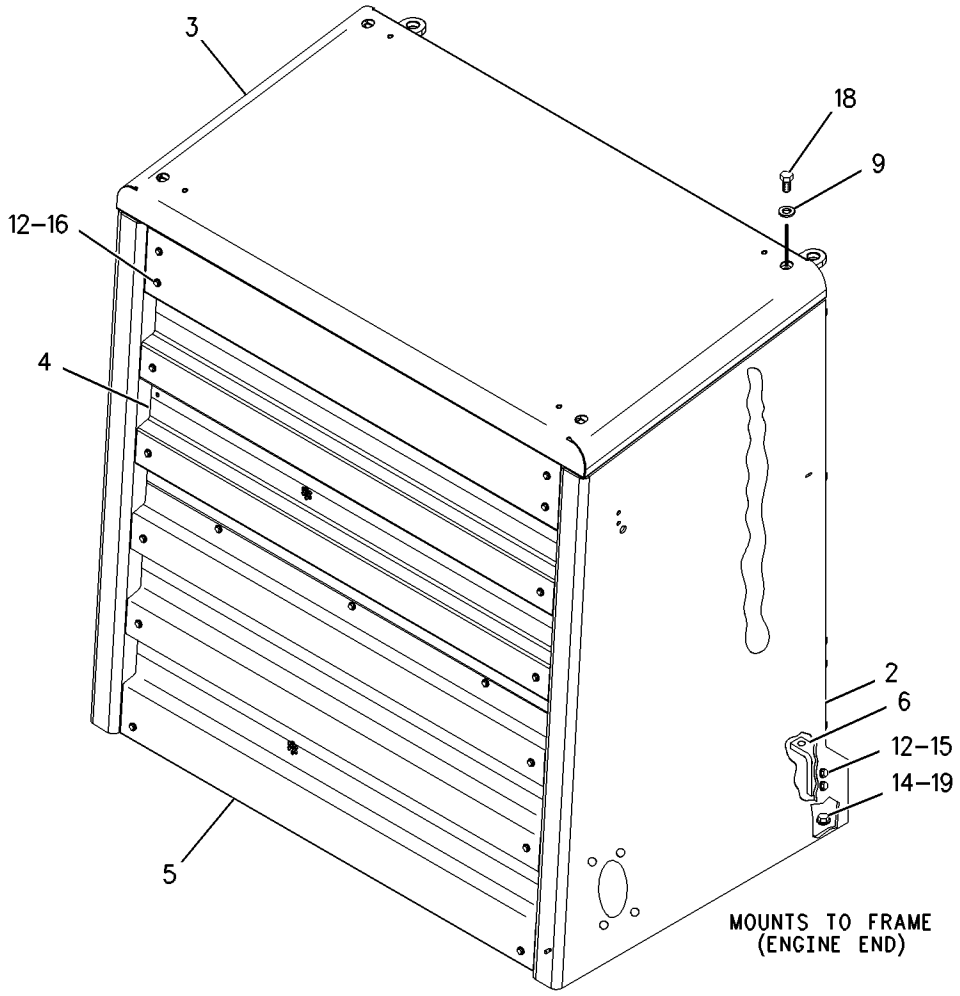

GRAPHIC #1 g00773470

MEMORANDA

FRAME AND BODY

8R-5637 HITCH GP-ARTICULATING

S/N: 7HR1-UP

PART OF 109-6819 CHASSIS AR

SMCS-7057, 7100 **i01251876**

NOTE	REF NO	GRAPHIC REF	PART NUMBER	QTY	PART NAME 1 2 3 4 5 6 (PRODUCT LEVEL)	SEE PAGE
M	1	1	**6C-5303**	12	BOLT (M16X2X200MM)	
	2	1	**8T-4122**	28	WASHER (3.5MM THK)	
B	3	1	**4E-8157**	2	SHIM PACK (INCL 26 SHIMS)	
	4	1	**4E-8153**	1	PLATE	
B	5	1	**117-0292**	1	SHIM PACK (INCL 26 SHIMS)	
	6	1	**4E-8154**	1	CAP-UPPER	
	7	1	**4B-4550**	2	FITTING-RELIEF (1/8-27 PTF)	
	8	1	**4E-8155**	1	CAP-LOWER	
	9	1	**148-5652**	1	PLATE	
	10	1	**4E-8158**	1	PIN	
	11	1	**4E-8160**	1	CAP-UPPER	
	12	1	**4E-8161**	1	CAP-LOWER	
	13	1	**174-1485**	1	PLATE	
M	14	1	**8T-7338**	8	BOLT (M16X2.0X45MM)	
	15	1	**5P-2673**	2	SEAL-LIP	
	16	1	**5F-1248**	2	CONE-ROLLER BEARING	
	17	1	**5D-7449**	2	CUP-ROLLER BEARING	
M	18	1	**8T-7930**	6	BOLT (M12X1.75X160MM)	
	19	1	**8T-4223**	9	WASHER-HARD (3MM THK)	
B	20	1	**4E-8162**	1	SHIM PACK (INCLUDES 26 SHIMS)	
M	21	1	**106-4175**	12	BOLT	
		1	**8T-4123**	12	WASHER-PLATED (3.5MM THK)	
M	22	1	**8T-4956**	3	BOLT (M12X1.75X35MM)	
	23	1	**1V-8443**	1	SPACER	
	24	1	**5P-9609**	2	SEAL-LIP	
	25	1	**1B-6577**	2	CONE-ROLLER BEARING	
	26	1	**2J-2152**	2	CUP-ROLLER BEARING	
B	27	1	**4E-8156**	1	SHIM PACK (INCLUDES 26 SHIMS)	
	28	1	**087-3533**	1	CAP	
M	29	1	**6V-3303**	12	BOLT (M16X2.0X60MM)	
	30	1	**4E-8152**	1	PIN	
AB		1	**5P-0960**		GREASE-CARTRIDGE (MOLYBDENUM GREASE)	
AB		1	**5P-3931**		COMPOUND-ANTI-SEIZE	
	31	1	**8G-5258**	4	SPACER (20MM THK)	
	32	1	**7X-0583**	4	WASHER-HARD (5MM THK)	

A-NOT PART OF THIS GROUP
B-USE AS REQUIRED
M-METRIC PART

8R-5637 **HITCH GP-ARTICULATING** ***(contd.)*** **i01251876**

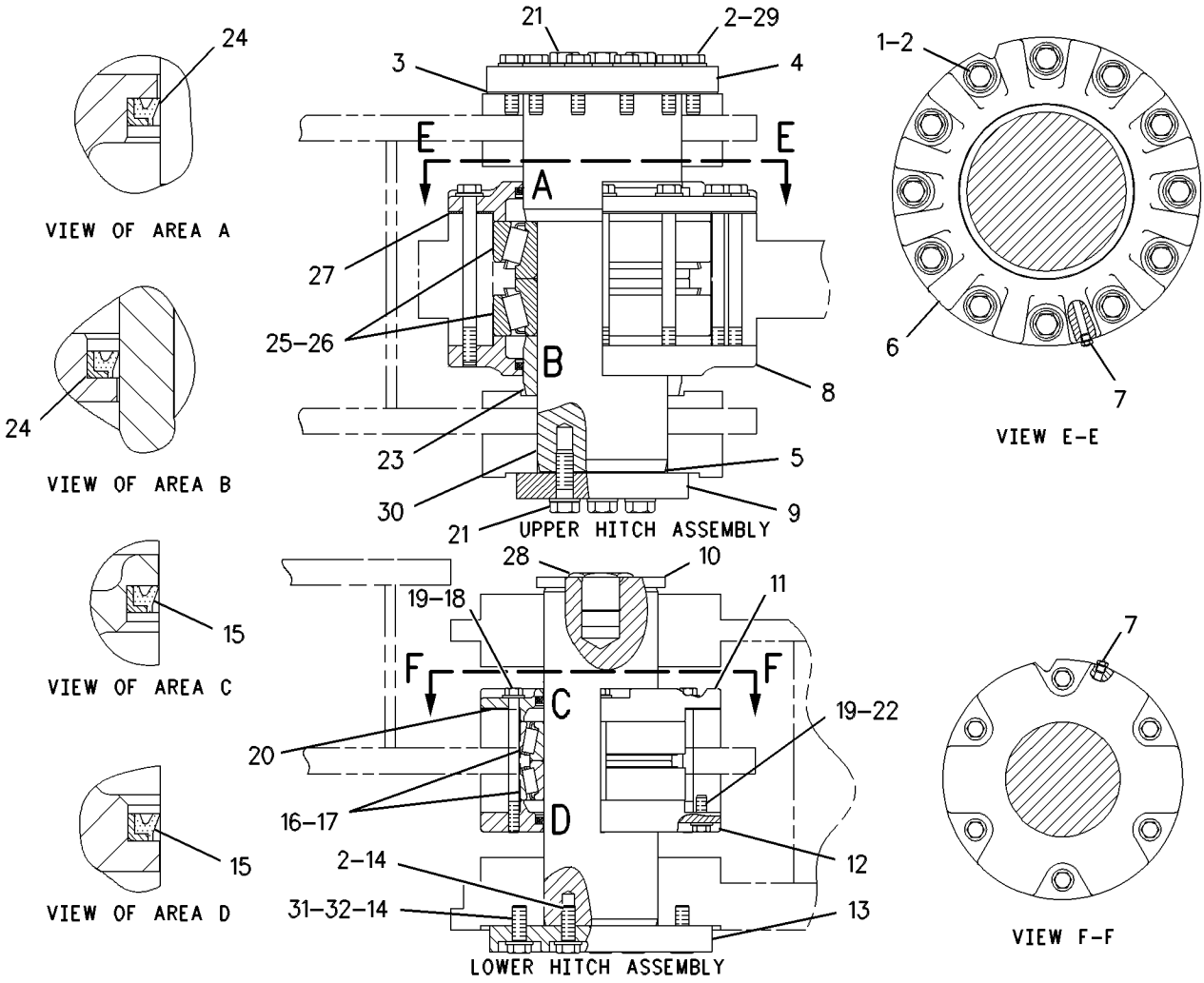

GRAPHIC #1 g00589913

FRAME AND BODY

109-6842 HOOD & GUARD GP

S/N: 7HR1-98

PART OF 109-6819 CHASSIS AR

SMCS-7251 **i01371235**

NOTE	REF NO	GRAPHIC REF	PART NUMBER	QTY	PART NAME 1 2 3 4 5 6 (PRODUCT LEVEL)	SEE PAGE
	1	2	**4H-1225**	24	WASHER (6.0MM THK)	
	2	2	**5R-5927**	8	WASHER (65MM OD)	
	3	1	**5V-3854**	8	BUMPER	
	4	1,2	**6S-6251**	6	MOUNT	
	5	1	**8C-4427**	2	PLUNGER-LATCH	
	6	1	**8C-4428**	2	SOCKET-LATCH	
	7	2	**8G-0841**	8	MOUNTING	
	8	1	**6N-0508**	20	SPACER (40.64MM THK)	
	9	2	**115-1342**	1	SHIELD AS-BOTTOM	
BD		2	**6V-2496**		SEAL (5.6M)	
	10	2	**115-1343**	1	SHIELD AS-TOP	
BD		2	**6V-2496**		SEAL (3.5M)	
	11	1	**115-1344**	1	PANEL AS-LH	
		1	**1V-8732**	1	HANDLE	
	12	1	**115-1345**	1	PANEL AS-RH	
		1	**1V-8732**	1	HANDLE	
	13	1	**115-1346**	1	RAIL AS-LH	
		1	**7T-1099**	5	LINK	
M		1	**8T-3490**	7	NUT-WELD (M10X1.5 THD)	
	14	1	**115-1347**	1	GRILL AS-TOP	
	15	1	**115-1348**	1	PANEL AS-HOOD-FRONT	
		1	**8C-3468**	1	LOCK AS-CYLINDER	
		1	**7F-9223**	1	LOCKWASHER (0.91MM THK)	
		1	**8T-5004**	2	SCREW-MACHINE (1/4-28X0.375 IN)	
		1	**124-8098**	1	LATCH AS	
		1	**125-8176**	1	CAM-LATCH	
	16	1	**115-1349**	1	RAIL AS-RH	
		1	**7T-1099**	5	LINK	
M		1	**8T-3490**	10	NUT-WELD (M10X1.5 THD)	
	17	1	**115-1350**	2	GRILL AS-SIDE (UPPER)	
					(EACH INCLUDES)	
		1	**8R-7858**	6	CLAMP	
	18	1	**116-0312**	2	GRILL AS-SIDE (LOWER)	
					(EACH INCLUDES)	
		1	**8R-7858**	4	CLAMP	
	19	1	**116-0313**	1	PANEL AS-HOOD-REAR	
		1	**9R-5271**	1	BOSS (M10X1.5X25MM)	
M		1	**8T-3490**	12	NUT-WELD (M10X1.5 THD)	
	20	1	**116-0316**	1	SUPPORT AS-RH	
		1	**7T-1099**	3	LINK	
M		1	**8T-3490**	19	NUT-WELD (M10X1.5 THD)	
M		1	**8T-3597**	6	NUT-WELD (M12X1.75 THD)	
M		1	**8T-3612**	3	NUT-WELD (M8X1.25 THD)	
	21	1	**116-0318**	1	SUPPORT AS-LH	
M		1	**8T-3490**	19	NUT-WELD (M10X1.5 THD)	
M		1	**8T-3597**	6	NUT-WELD (M12X1.75 THD)	
	22	1	**116-0320**	2	BRACKET AS-SUPPORT	
	23	1	**116-0324**	1	DOOR AS-RH	
		1	**6V-2370**	4	RIVET-POP	
		1	**9X-2299**	1	LATCH-HANDLE	
	24	1	**117-9396**	1	SUPPORT AS-LH	
M		1	**8T-3490**	2	NUT-WELD (M10X1.5 THD)	
M		1	**8T-3597**	2	NUT-WELD (M12X1.75 THD)	
		1	**9R-5271**	1	BOSS (M10X1.5X25MM)	
	25	1	**117-9397**	1	SUPPORT AS-RH	
M		1	**8T-3490**	2	NUT-WELD (M10X1.5 THD)	

109-6842 **HOOD & GUARD GP** *(contd.)* **i01371235**

NOTE	REF NO	GRAPHIC REF	PART NUMBER	QTY	PART NAME 1 2 3 4 5 6 (PRODUCT LEVEL)	SEE PAGE
M		1	**8T-3597**	2	NUT-WELD (M12X1.75 THD)	
	26	1	**117-9398**	1	DOOR AS-LH	
		1	**6V-2370**	4	RIVET-POP	
		1	**9X-2299**	1	LATCH-HANDLE	
	27	1	**126-3220**	1	PANEL-FLOOR-LH	
	28	1	**126-3221**	1	PANEL-FLOOR-RH	
	29	2	**126-3222**	1	PANEL AS-FLOOR	
M		2	**8T-3490**	2	NUT-WELD (M10X1.5 THD)	
	30	2	**126-3223**	1	PANEL AS-FLOOR-LH	
M		2	**8T-3490**	4	NUT-WELD (M10X1.5 THD)	
	31	2	**126-5785**	1	PANEL AS-FLOOR-RH	
M		2	**8T-3490**	4	NUT-WELD (M10X1.5 THD)	
	32	1	**126-5786**	1	CHANNEL AS	
M		1	**8T-3490**	7	NUT-WELD (M10X1.5 THD)	
Y	33	1	*131-7808*	1	PANEL GP-HOOD (SIDE)	750
	34	1	**4M-0061**	2	BOLT (5/16-18X.750 IN)	
	35	1,2	**5P-1076**	22	WASHER-HARD (13.5X30X4MM THK)	
	36	1	**5P-4115**	2	WASHER (2MM THK)	
	37	1	**5P-4116**	2	WASHER (2MM THK)	
	38	1	**6V-8185**	2	NUT (1/4-20 THD)	
	39	2	**139-3310**	2	STRIP	
	40	1,2	**7X-0590**	6	WASHER-HARD (6.0MM THK)	
	41	1,2	**7X-7729**	79	WASHER (3MM THK)	
D	42	2	**5P-5931**		SEAL (.9 M)	
M	43	1	**8T-4139**	16	BOLT (M12X1.75X30MM)	
M	44	1,2	**8T-4910**	6	BOLT (M12X1.75X60MM)	
M	45	1,2	**8T-4195**	83	BOLT (M10X1.50X30MM)	
	46	2	**8T-4226**	24	WASHER-PLATED (3MM THK)	
	47	2	**8T-4223**	4	WASHER-HARD (3.0MM THK)	
M	48	1,2	**6V-7687**	10	LOCKNUT (M12X1.75 THD)	
M	49	1	**8T-5005**	20	BOLT (M10X1.50X70MM)	
M	50	2	**8T-6868**	8	BOLT (M12X1.75X80MM)	
	51	1	**8T-8908**	2	BOLT (1/4-20X1 IN)	
BE	52	1	**5P-7211**		SEAL	
	53	2	**139-3309**	1	BAFFLE	

B-USE AS REQUIRED
D-ORDER BY THE METER
E-ORDER BY THE CENTIMETER
M-METRIC PART
Y-SEPARATE ILLUSTRATION

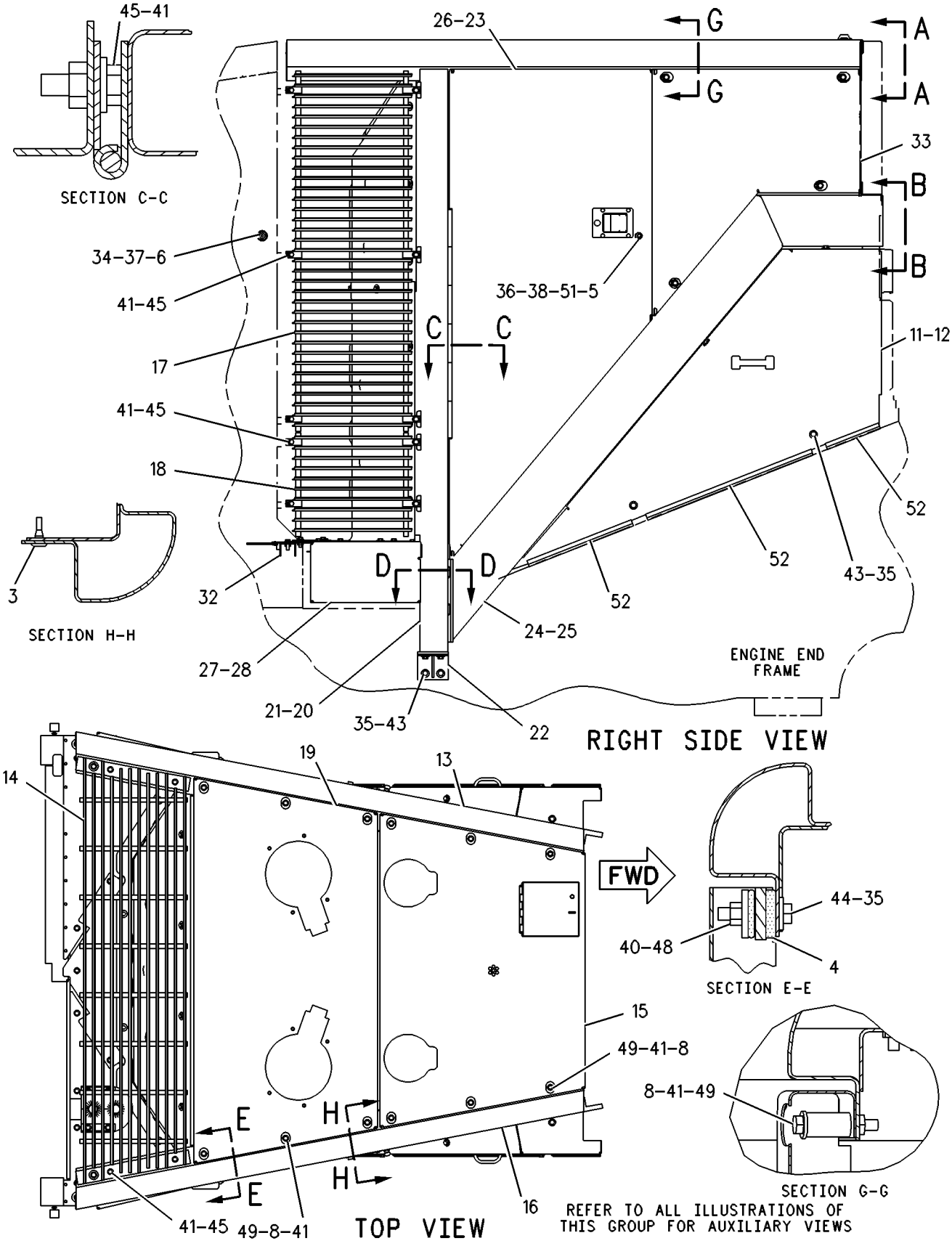

GRAPHIC #1 g00271982

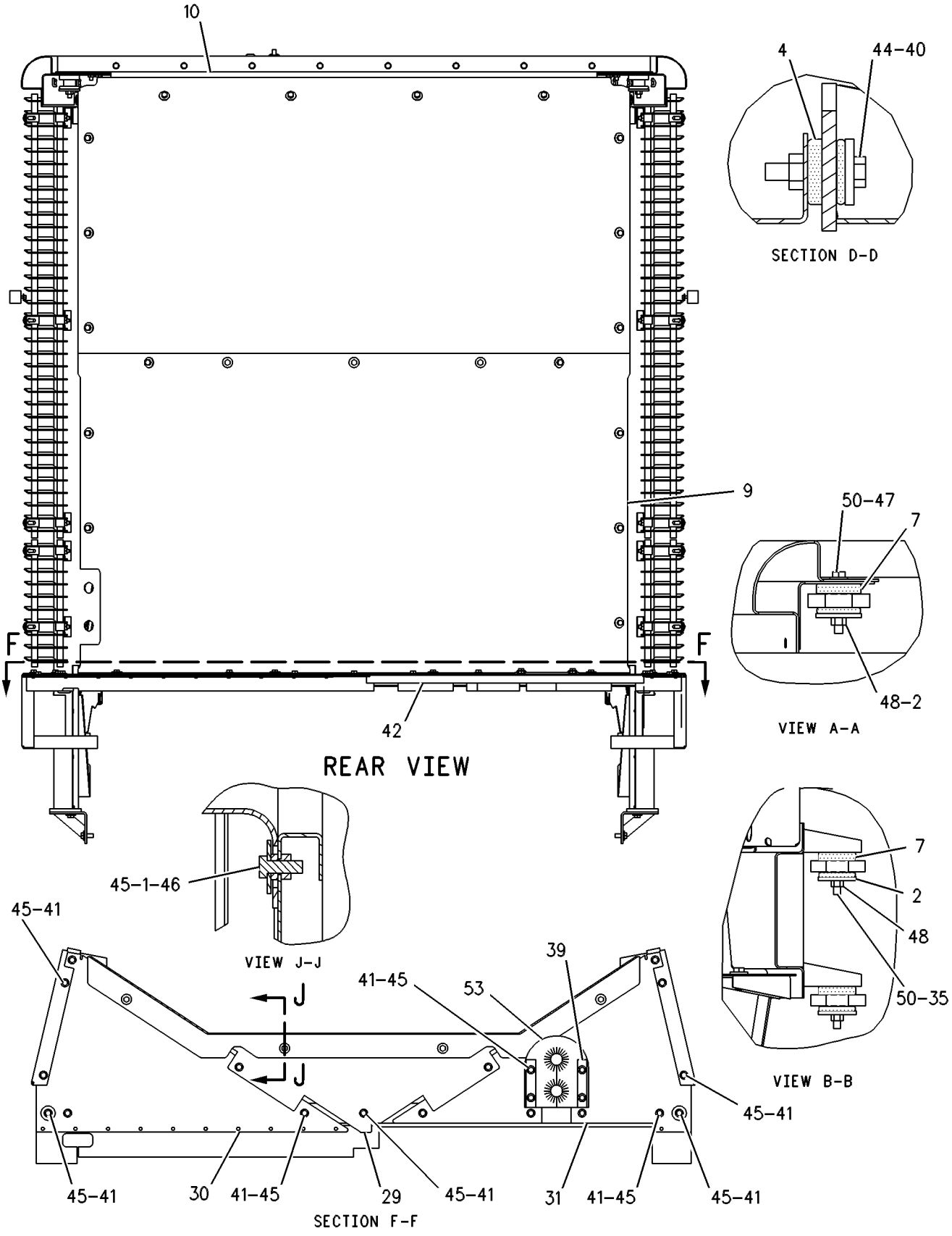

GRAPHIC #2 g00271983

FRAME AND BODY

109-6842 HOOD & GUARD GP

S/N: 7HR99-UP
PART OF 109-6819 CHASSIS AR
TYPE 1

SMCS-7251 **i01371241**

NOTE	REF NO	GRAPHIC REF	PART NUMBER	QTY	PART NAME 1 2 3 4 5 6 (PRODUCT LEVEL)	SEE PAGE
C	1	2	**4H-1225**	19	WASHER (6.0MM THK)	
	2	2	**5R-5927**	8	WASHER (65MM OD)	
	3	1	**5V-3854**	8	BUMPER	
	4	1,2	**6S-6251**	6	MOUNT	
	5	1	**8C-4427**	2	PLUNGER-LATCH	
	6	1	**8C-4428**	2	SOCKET-LATCH	
	7	2	**8G-0841**	8	MOUNTING	
C	8	1	**6N-0508**	12	SPACER (40.64MM THK)	
	9	2	**115-1342**	1	SHIELD AS-BOTTOM	
BD		2	**6V-2496**		SEAL (5.6M)	
	10	2	**115-1343**	1	SHIELD AS-TOP	
BD		2	**6V-2496**		SEAL (3.5M)	
	11	1	**115-1344**	1	PANEL AS-LH	
		1	**1V-8732**	1	HANDLE	
	12	1	**115-1345**	1	PANEL AS-RH	
		1	**1V-8732**	1	HANDLE	
	13	1	**115-1346**	1	RAIL AS-LH	
		1	**7T-1099**	5	LINK	
M		1	**8T-3490**	7	NUT-WELD (M10X1.5 THD)	
	14	1	**115-1347**	1	GRILL AS-TOP	
	15	1	**115-1348**	1	PANEL AS-HOOD-FRONT	
		1	**8C-3468**	1	LOCK AS-CYLINDER	
		1	**7F-9223**	1	LOCKWASHER (0.91MM THK)	
		1	**8T-5004**	2	SCREW-MACHINE (1/4-28X0.375 IN)	
		1	**124-8098**	1	LATCH AS	
		1	**125-8176**	1	CAM-LATCH	
	16	1	**115-1349**	1	RAIL AS-RH	
		1	**7T-1099**	5	LINK	
M		1	**8T-3490**	10	NUT-WELD (M10X1.5 THD)	
	17	1	**115-1350**	2	GRILL AS-SIDE (UPPER)	
					(EACH INCLUDES)	
		1	**8R-7858**	6	CLAMP	
	18	1	**116-0312**	2	GRILL AS-SIDE (LOWER)	
					(EACH INCLUDES)	
		1	**8R-7858**	4	CLAMP	
	19	1	**116-0313**	1	PANEL AS-HOOD-REAR	
		1	**9R-5271**	1	BOSS (M10X1.5X25MM)	
M		1	**8T-3490**	12	NUT-WELD (M10X1.5 THD)	
	20	1	**116-0316**	1	SUPPORT AS-RH	
		1	**7T-1099**	3	LINK	
M		1	**8T-3490**	19	NUT-WELD (M10X1.5 THD)	
M		1	**8T-3597**	6	NUT-WELD (M12X1.75 THD)	
M		1	**8T-3612**	3	NUT-WELD (M8X1.25 THD)	
	21	1	**116-0318**	1	SUPPORT AS-LH	
M		1	**8T-3490**	19	NUT-WELD (M10X1.5 THD)	
M		1	**8T-3597**	6	NUT-WELD (M12X1.75 THD)	
	22	1	**116-0320**	2	BRACKET AS-SUPPORT	
	23	1	**116-0324**	1	DOOR AS-RH	
		1	**6V-2370**	4	RIVET-POP	
		1	**9X-2299**	1	LATCH-HANDLE	
C	24	1	**147-7742**	1	SUPPORT AS -LH	
M		1	**8T-3490**	2	NUT-WELD (M10X1.5 THD)	
M		1	**8T-3597**	2	NUT-WELD (M12X1.75 THD)	
		1	**9R-5271**	1	BOSS (M10X1.5X25MM)	
C	25	1	**147-7743**	1	SUPPORT AS -RH	

109-6842 **HOOD & GUARD GP** *(contd.)* **i01371241**

NOTE	REF NO	GRAPHIC REF	PART NUMBER	QTY	PART NAME 1 2 3 4 5 6 (PRODUCT LEVEL)	SEE PAGE
M		1	**8T-3490**	2	NUT-WELD (M10X1.5 THD)	
M		1	**8T-3597**	2	NUT-WELD (M12X1.75 THD)	
	26	1	**117-9398**	1	DOOR AS-LH	
		1	**6V-2370**	4	RIVET-POP	
		1	**9X-2299**	1	LATCH-HANDLE	
	27	1	**126-3220**	1	PANEL-FLOOR-LH	
	28	1	**126-3221**	1	PANEL-FLOOR-RH	
	29	2	**126-3222**	1	PANEL AS-FLOOR	
M		2	**8T-3490**	2	NUT-WELD (M10X1.5 THD)	
	30	2	**126-3223**	1	PANEL AS-FLOOR-LH	
M		2	**8T-3490**	4	NUT-WELD (M10X1.5 THD)	
	31	2	**126-5785**	1	PANEL AS-FLOOR-RH	
M		2	**8T-3490**	4	NUT-WELD (M10X1.5 THD)	
	32	1	**126-5786**	1	CHANNEL AS	
M		1	**8T-3490**	7	NUT-WELD (M10X1.5 THD)	
Y	33	1	*131-7808*	1	PANEL GP-HOOD (SIDE)	750
	34	1	**4M-0061**	2	BOLT (5/16-18X.750 IN)	
	35	1,2	**5P-1076**	22	WASHER-HARD (13.5X30X4MM THK)	
	36	1	**5P-4115**	2	WASHER (2MM THK)	
	37	1	**5P-4116**	2	WASHER (2MM THK)	
	38	1	**6V-8185**	2	NUT (1/4-20 THD)	
C	39	1	**8T-4222**	8	WASHER-PLATED (2.5MM THK)	
	40	1,2	**7X-0590**	6	WASHER-HARD (6.0MM THK)	
C	41	1,2	**7X-7729**	67	WASHER (3MM THK)	
CD	42	2	**5P-5923**		SEAL (.9M)	
M	43	1	**8T-4139**	16	BOLT (M12X1.75X30MM)	
M	44	1,2	**8T-4910**	6	BOLT (M12X1.75X60MM)	
CM	45	1,2	**8T-4195**	79	BOLT (M10X1.50X30MM)	
	46	2	**8T-4226**	24	WASHER-PLATED (3MM THK)	
	47	2	**8T-4223**	4	WASHER-HARD (3.0MM THK)	
M	48	1,2	**6V-7687**	10	LOCKNUT (M12X1.75 THD)	
CM	49	1	**8T-5005**	12	BOLT (M10X1.50X70MM)	
M	50	2	**8T-6868**	8	BOLT (M12X1.75X80MM)	
	51	1	**8T-8908**	2	BOLT (1/4-20X1 IN)	
BD	52	1	**5P-7211**		SEAL	
CM	53	1	**8T-4185**	1	BOLT (M10X1.5X50MM)	
D	54	1,2	**6V-2496**		SEAL (3.6M)	

B-USE AS REQUIRED
C-CHANGE FROM PREVIOUS TYPE
D-ORDER BY THE METER
M-METRIC PART
Y-SEPARATE ILLUSTRATION

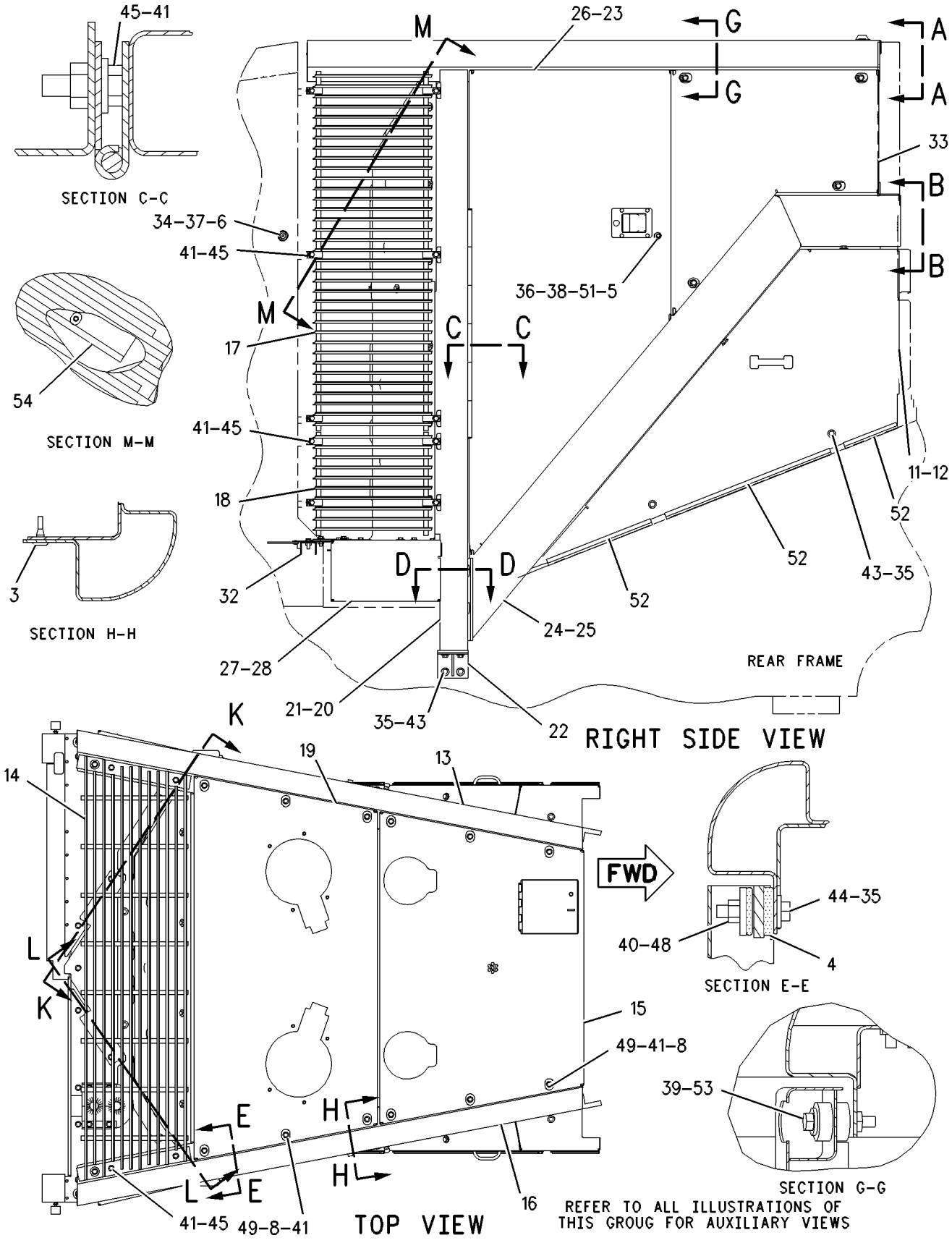

GRAPHIC #1 g00393217

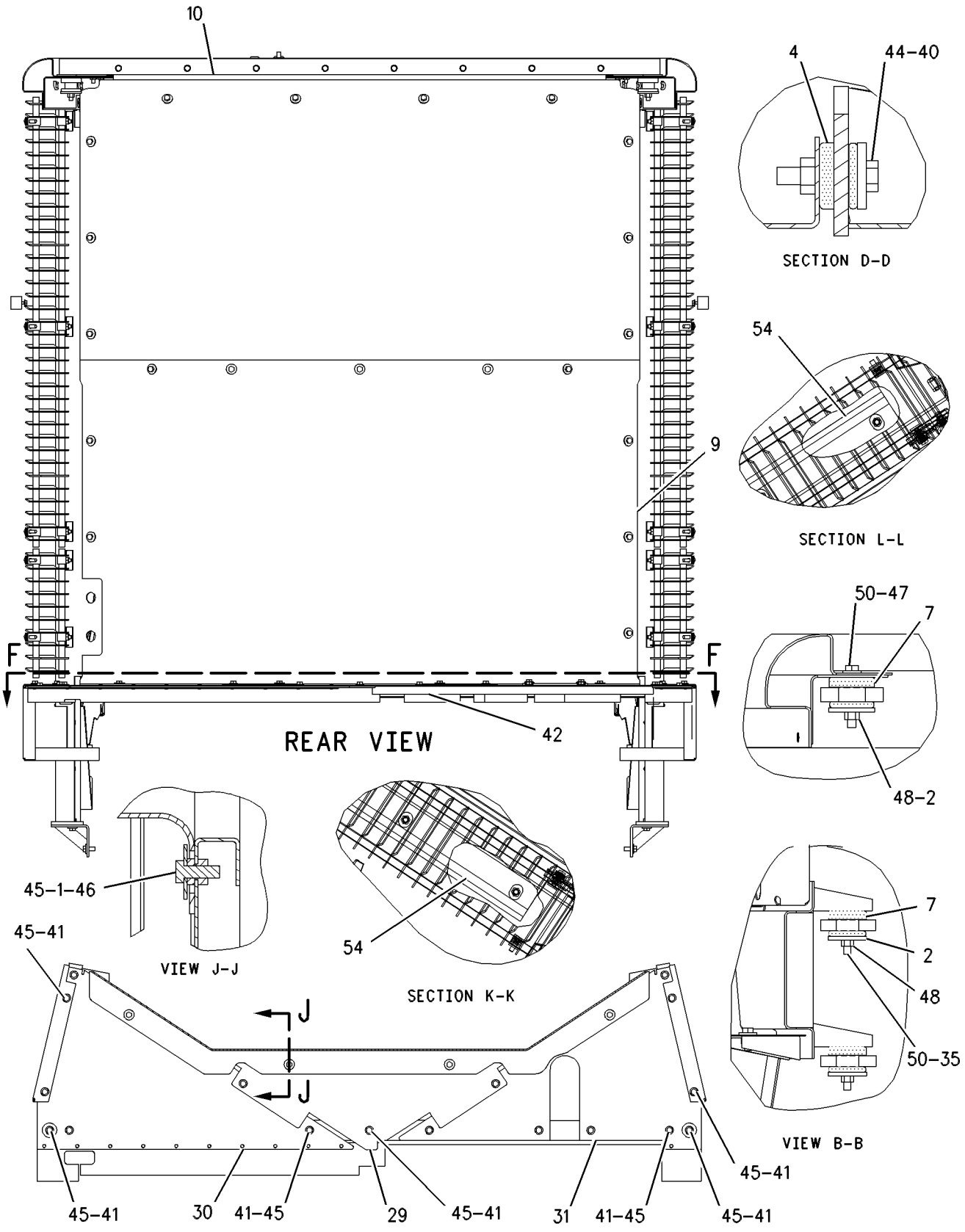

GRAPHIC #2

g00393218

FRAME AND BODY

109-6842 HOOD & GUARD GP

S/N: 7HR99-UP
PART OF 109-6819 CHASSIS AR
TYPE 2

SMCS-7251 **i01371249**

NOTE	REF NO	GRAPHIC REF	PART NUMBER	QTY	PART NAME 1 2 3 4 5 6 (PRODUCT LEVEL)	SEE PAGE
	1	2	**4H-1225**	19	WASHER (6.0MM THK)	
C	2	1	**5P-8502**	2	PADLOCK GP	
					(EACH INCLUDES)	
A		1	**5P-8500**	1	KEY	
A		1	**8Y-6364**	1	SLEEVE	
	3	2	**5R-5927**	8	WASHER (65MM OD)	
	4	2	**5V-3854**	8	BUMPER	
	5	1	**6N-0508**	12	SPACER (40.64MM THK)	
	6	2	**6S-6251**	6	MOUNT	
M	7	1	**8T-4186**	10	BOLT (M10X1.50X40MM)	
	8	2	**8G-0841**	8	MOUNTING	
	9	2	**8T-4226**	24	WASHER-PLATED (3MM THK)	
C	10	1	**8Y-5743**	2	SOCKET-LATCH	
	11	2	**115-1342**	1	SHIELD AS-BOTTOM	
D		2	**6V-2496**		SEAL (5.6M)	
	12	2	**115-1343**	1	SHIELD AS-TOP	
D		2	**6V-2496**		SEAL (3.5M)	
		2	**9R-2613**	1	BOSS (M10X25MM)	
	13	1	**115-1344**	1	PANEL AS-LH	
	14	1	**115-1345**	1	PANEL AS-RH	
					(EACH PANEL ASSEMBLY INCLUDES	
		1	**1V-8732**	1	HANDLE	
	15	1	**115-1346**	1	RAIL AS-LH	
M		1	**8T-3490**	10	NUT-WELD (M10X1.5 THD)	
		1	**9R-2613**	2	BOSS (M10X25MM)	
	16	1	**115-1347**	1	GRILL AS-TOP	
	17	1	**115-1348**	1	PANEL AS-HOOD-FRONT	
		1	**8C-3468**	1	LOCK AS-CYLINDER	
		1	**7F-9223**	1	LOCKWASHER (0.91MM THK)	
		1	**8T-5004**	2	SCREW-MACHINE (1/4-28X0.375 IN)	
		1	**124-8098**	1	LATCH AS	
		1	**125-8176**	1	CAM-LATCH	
	18	1	**115-1349**	1	RAIL AS-RH	
M		1	**8T-3490**	11	NUT-WELD (M10X1.5 THD)	
		1	**9R-2613**	2	BOSS (M10X25MM)	
	19	1	**115-1350**	2	GRILL AS-SIDE (UPPER)	
					(EACH INCLUDES)	
		1	**8R-7858**	6	CLAMP	
	20	1	**116-0312**	2	GRILL AS-SIDE (LOWER)	
					(EACH INCLUDES)	
		1	**8R-7858**	4	CLAMP	
	21	1	**116-0313**	1	PANEL AS-HOOD-REAR	
M		1	**8T-3490**	12	NUT-WELD (M10X1.5 THD)	
		1	**9R-5271**	1	BOSS (M10X1.5X25MM)	
	22	1	**116-0316**	1	SUPPORT AS-RH	
		1	**7T-1099**	3	LINK	
M		1	**8T-3490**	19	NUT-WELD (M10X1.5 THD)	
M		1	**8T-3597**	4	NUT-WELD (M12X1.75 THD)	
M		1	**8T-3612**	3	NUT-WELD (M8X1.25 THD)	
	23	1	**116-0318**	1	SUPPORT AS-LH	
M		1	**8T-3490**	19	NUT-WELD (M10X1.5 THD)	
M		1	**8T-3597**	4	NUT-WELD (M12X1.75 THD)	
	24	1	**116-0320**	2	BRACKET AS-SUPPORT	
	25	1	**126-3220**	1	PANEL-FLOOR-LH	
	26	1	**126-3221**	1	PANEL-FLOOR-RH	

109-6842 **HOOD & GUARD GP** *(contd.)* **i01371249**

NOTE	REF NO	GRAPHIC REF	PART NUMBER	QTY	PART NAME 1 2 3 4 5 6 (PRODUCT LEVEL)	SEE PAGE
	27	2	**126-3222**	1	PANEL AS-FLOOR	
M		2	**8T-3490**	2	NUT-WELD (M10X1.5 THD)	
	28	2	**126-3223**	1	PANEL AS-FLOOR-LH	
M		2	**8T-3490**	4	NUT-WELD (M10X1.5 THD)	
	29	2	**126-5785**	1	PANEL AS-FLOOR-RH	
M		2	**8T-3490**	4	NUT-WELD (M10X1.5 THD)	
	30	1	**126-5786**	1	CHANNEL AS	
M		1	**8T-3490**	7	NUT-WELD (M10X1.5 THD)	
Y	31	1	*131-7808*	1	PANEL GP-HOOD (SIDE)	750
	32	1	**147-7742**	1	SUPPORT AS -LH	
M		1	**8T-3490**	2	NUT-WELD (M10X1.5 THD)	
M		1	**8T-3597**	2	NUT-WELD (M12X1.75 THD)	
		1	**9R-5271**	3	BOSS (M10X1.5X25MM)	
	33	1	**147-7743**	1	SUPPORT AS -RH	
M		1	**8T-3490**	2	NUT-WELD (M10X1.5 THD)	
M		1	**8T-3597**	2	NUT-WELD (M12X1.75 THD)	
CY	34	1	*160-1545*	1	DOOR GP-SIDE	1292
D	35	2	**6V-2496**		SEAL (3.6M)	
	36	1,2	**5P-1076**	22	WASHER-HARD (13.5X30X4MM THK)	
C	37	1	**5P-4115**	2	WASHER (2MM THK)	
CM	38	1	**5C-9553**	2	BOLT (M6X1.0X16MM)	
M	39	2	**6V-7687**	10	LOCKNUT (M12X1.75 THD)	
	40	2	**7X-0590**	6	WASHER-HARD (6.0MM THK)	
	41	1,2	**7X-7729**	67	WASHER (3MM THK)	
M	42	1	**8T-4139**	16	BOLT (M12X1.75X30MM)	
M	43	2	**8T-4185**	8	BOLT (M10X1.5X50MM)	
M	44	1,2	**8T-4195**	69	BOLT (M10X1.50X30MM)	
	45	2	**8T-4222**	8	WASHER-PLATED (2.5MM THK)	
	46	2	**8T-4223**	4	WASHER-HARD (3.0MM THK)	
M	47	2	**8T-4910**	6	BOLT (M12X1.75X60MM)	
M	48	1	**8T-5005**	12	BOLT (M10X1.50X70MM)	
M	49	2	**8T-6868**	8	BOLT (M12X1.75X80MM)	
D	50	1	**5P-7211**		SEAL (2.7 M)	
CD	51	2	**5P-5923**		SEAL (.9 M)	

A-NOT PART OF THIS GROUP
C-CHANGE FROM PREVIOUS TYPE
D-ORDER BY THE METER
M-METRIC PART
Y-SEPARATE ILLUSTRATION

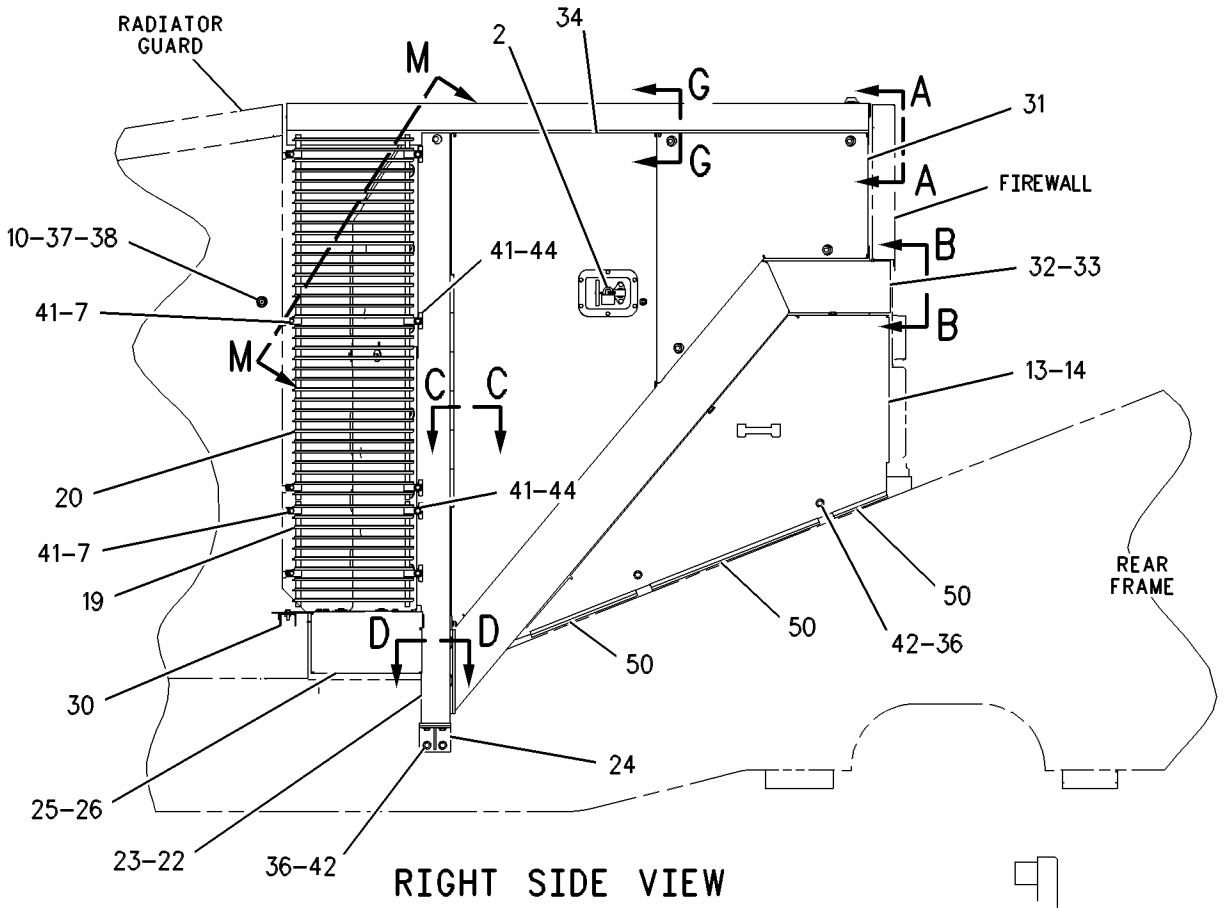

RIGHT SIDE VIEW

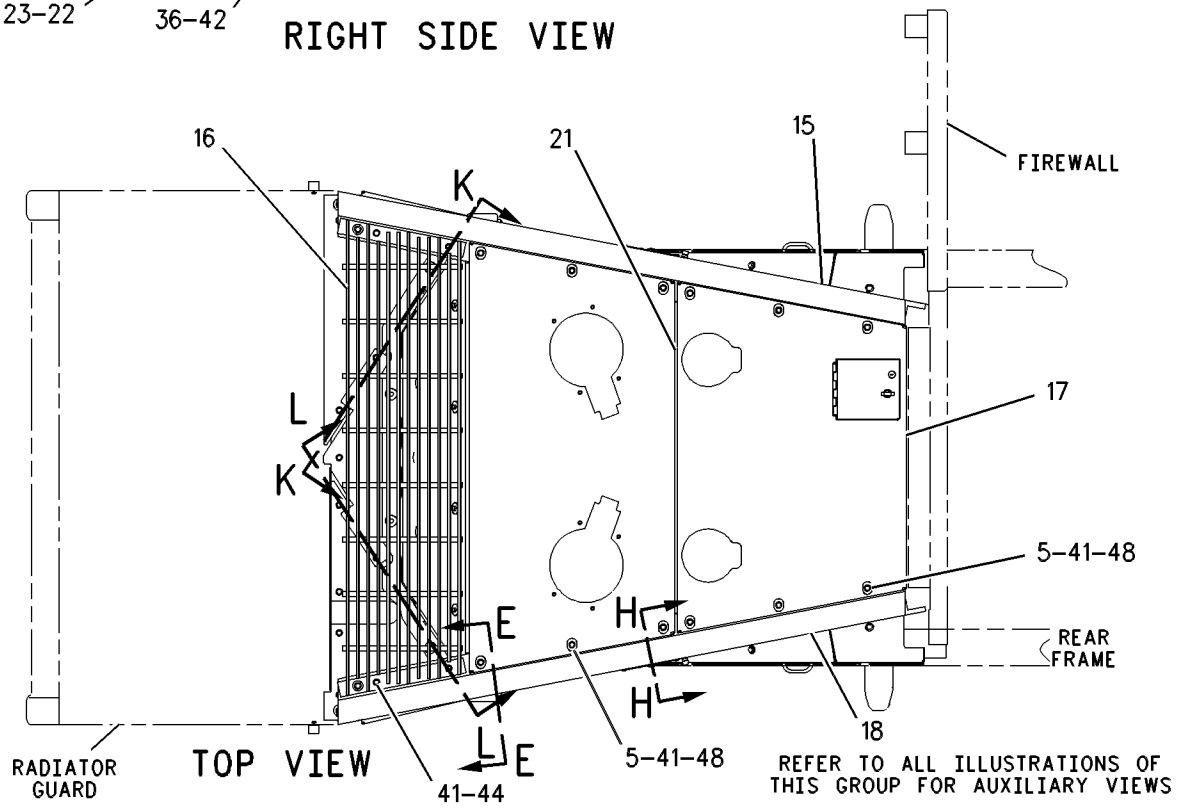

TOP VIEW

REFER TO ALL ILLUSTRATIONS OF THIS GROUP FOR AUXILIARY VIEWS

GRAPHIC #1

g00531435

109-6842 **HOOD & GUARD GP** *(contd.)* **i01371249**

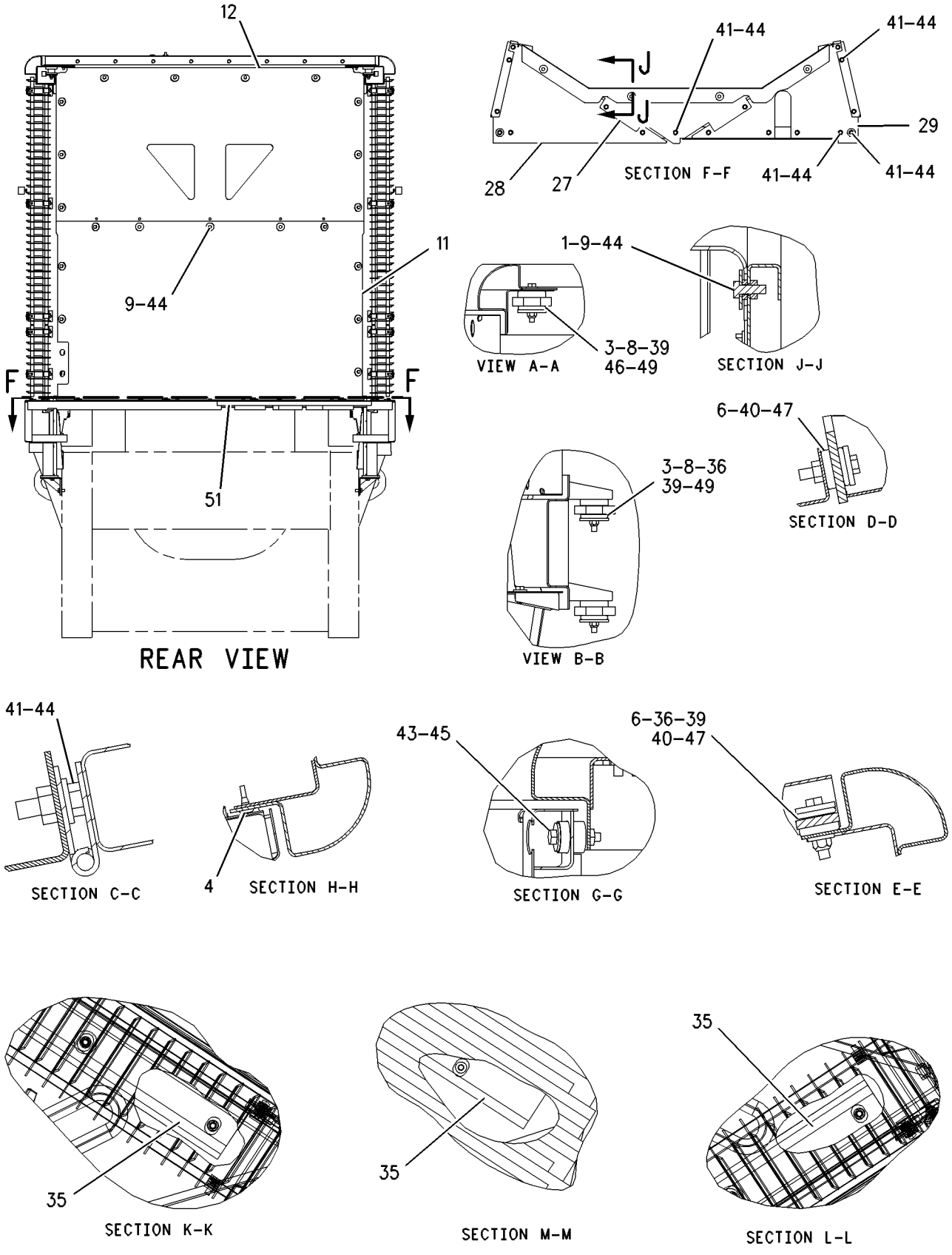

GRAPHIC #2 g00531436

FRAME AND BODY

109-6842 HOOD & GUARD GP

S/N: 7HR99-341

PART OF 109-6819 CHASSIS AR

SMCS-7251 **i01371258**

NOTE	REF NO	GRAPHIC REF	PART NUMBER	QTY	PART NAME 1 2 3 4 5 6 (PRODUCT LEVEL)	SEE PAGE
	1	2	**4H-1225**	19	WASHER (6.0MM THK)	
C	2	1	**5P-8502**	2	PADLOCK GP	
					(EACH INCLUDES)	
A		1	**5P-8500**	1	KEY	
A		1	**8Y-6364**	1	SLEEVE	
	3	2	**5R-5927**	8	WASHER (65MM OD)	
	4	2	**5V-3854**	8	BUMPER	
C	5	2	**6B-6205**	12	SPACER (1-9/32IN THK)	
	6	2	**6S-6251**	6	MOUNT	
M	7	1	**8T-4186**	10	BOLT (M10X1.50X40MM)	
	8	2	**8G-0841**	8	MOUNTING	
	9	2	**8T-4226**	24	WASHER-PLATED (3MM THK)	
C	10	1	**8Y-5743**	2	SOCKET-LATCH	
	11	2	**115-1342**	1	SHIELD AS-BOTTOM	
D		2	**6V-2496**		SEAL (5.6M)	
C	12	2	**169-5929**	1	SHIELD AS-TOP	
		2	**9R-2613**	1	BOSS (M10X25MM)	
	13	1	**115-1344**	1	PANEL AS-LH	
	14	1	**115-1345**	1	PANEL AS-RH	
					(EACH PANEL AS INCLUDES	
		1	**1V-8732**	1	HANDLE	
	15	1	**115-1346**	1	RAIL AS-LH	
M		1	**8T-3490**	10	NUT-WELD (M10X1.5 THD)	
		1	**9R-2613**	2	BOSS (M10X25MM)	
	16	1	**115-1347**	1	GRILL AS-TOP	
C	17	1	**159-2789**	1	PANEL AS-HOOD (FRONT)	
		1	**8C-3468**	1	LOCK AS-CYLINDER	
		1	**7F-9223**	1	LOCKWASHER (0.91MM THK)	
		1	**8T-5004**	2	SCREW-MACHINE (1/4-28X0.375 IN)	
		1	**124-8098**	1	LATCH AS	
		1	**125-8176**	1	CAM-LATCH	
	18	1	**115-1349**	1	RAIL AS-RH	
M		1	**8T-3490**	11	NUT-WELD (M10X1.5 THD)	
		1	**9R-2613**	2	BOSS (M10X25MM)	
	19	1	**115-1350**	2	GRILL AS-SIDE (UPPER)	
					(EACH INCLUDES)	
		1	**8R-7858**	6	CLAMP	
	20	1	**116-0312**	2	GRILL AS-SIDE (LOWER)	
					(EACH INCLUDES)	
		1	**8R-7858**	4	CLAMP	
C	21	1	**159-2790**	1	PANEL AS-HOOD (REAR)	
M		1	**8T-3490**	12	NUT-WELD (M10X1.5 THD)	
		1	**9R-5271**	1	BOSS (M10X1.5X25MM)	
	22	1	**116-0316**	1	SUPPORT AS-RH	
		1	**7T-1099**	3	LINK	
M		1	**8T-3490**	19	NUT-WELD (M10X1.5 THD)	
M		1	**8T-3597**	4	NUT-WELD (M12X1.75 THD)	
M		1	**8T-3612**	3	NUT-WELD (M8X1.25 THD)	
	23	1	**116-0318**	1	SUPPORT AS-LH	
M		1	**8T-3490**	19	NUT-WELD (M10X1.5 THD)	
M		1	**8T-3597**	4	NUT-WELD (M12X1.75 THD)	
	24	1	**116-0320**	2	BRACKET AS-SUPPORT	
	25	1	**126-3220**	1	PANEL-FLOOR-LH	
	26	1	**126-3221**	1	PANEL-FLOOR-RH	
	27	2	**126-3222**	1	PANEL AS-FLOOR	
M		2	**8T-3490**	2	NUT-WELD (M10X1.5 THD)	

109-6842 **HOOD & GUARD GP** *(contd.)* **i01371258**

NOTE	REF NO	GRAPHIC REF	PART NUMBER	QTY	PART NAME 1 2 3 4 5 6 (PRODUCT LEVEL)	SEE PAGE
	28	2	**126-3223**	1	PANEL AS-FLOOR-LH	
M		2	**8T-3490**	4	NUT-WELD (M10X1.5 THD)	
	29	2	**126-5785**	1	PANEL AS-FLOOR-RH	
M		2	**8T-3490**	4	NUT-WELD (M10X1.5 THD)	
	30	1	**126-5786**	1	CHANNEL AS	
M		1	**8T-3490**	7	NUT-WELD (M10X1.5 THD)	
Y	31	1	*131-7808*	1	PANEL GP-HOOD (SIDE)	750
	32	1	**147-7742**	1	SUPPORT AS -LH	
M		1	**8T-3490**	2	NUT-WELD (M10X1.5 THD)	
M		1	**8T-3597**	2	NUT-WELD (M12X1.75 THD)	
		1	**9R-5271**	3	BOSS (M10X1.5X25MM)	
	33	1	**147-7743**	1	SUPPORT AS -RH	
M		1	**8T-3490**	2	NUT-WELD (M10X1.5 THD)	
M		1	**8T-3597**	2	NUT-WELD (M12X1.75 THD)	
CY	34	1	*160-1545*	1	DOOR GP-SIDE	1292
D	35	2	**6V-2496**		SEAL (3.6M)	
C	36	1,2	**5P-1076**	30	WASHER-HARD (13.5X30X4MM THK)	
C	37	1	**5P-4115**	2	WASHER (2MM THK)	
CM	38	1	**5C-9553**	2	BOLT (M6X1.0X16MM)	
M	39	2	**6V-7687**	10	LOCKNUT (M12X1.75 THD)	
	40	2	**7X-0590**	6	WASHER-HARD (6.0MM THK)	
	41	1,2	**7X-7729**	67	WASHER (3MM THK)	
M	42	1	**8T-4139**	16	BOLT (M12X1.75X30MM)	
M	43	2	**8T-4185**	8	BOLT (M10X1.5X50MM)	
M	44	1,2	**8T-4195**	69	BOLT (M10X1.50X30MM)	
	45	2	**8T-4222**	8	WASHER-PLATED (2.5MM THK)	
	46	2	**8T-4223**	4	WASHER-HARD (3.0MM THK)	
M	47	2	**8T-4910**	6	BOLT (M12X1.75X60MM)	
CM	48	2	**8T-6466**	12	BOLT (M10X1.50X60MM)	
M	49	2	**8T-6868**	8	BOLT (M12X1.75X80MM)	
D	50	1	**5P-7211**		SEAL (2.7M)	
CD	51	2	**5P-5923**		SEAL (.9M)	
C	52	2	**8T-4121**	1	WASHER-HARD (11X21X2.5MM THK)	
CM	53	2	**8T-4137**	1	BOLT (M10X1.5X20MM)	
CM	54	2	**8T-4194**	8	BOLT (M12X1.75X50MM)	
C	55	2	**159-2791**	2	STACK AS-EXHAUST	
C	56	1	**159-2792**	1	INSULATION-LH	
C	57	1	**159-2793**	1	INSULATION-RH	
C	58	2	**159-8965**	1	STRIP	

A-NOT PART OF THIS GROUP
C-CHANGE FROM PREVIOUS TYPE
D-ORDER BY THE METER
M-METRIC PART
Y-SEPARATE ILLUSTRATION

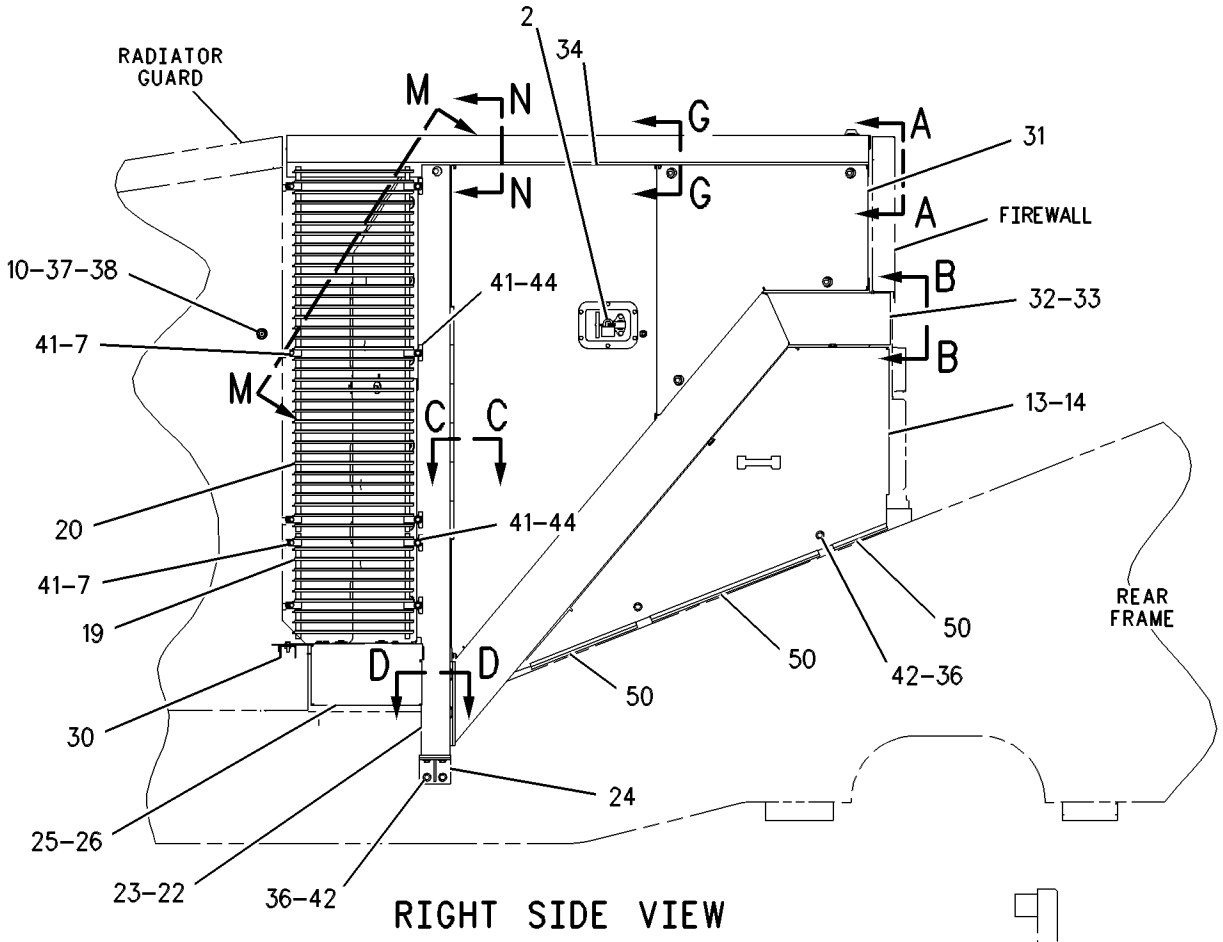

RIGHT SIDE VIEW

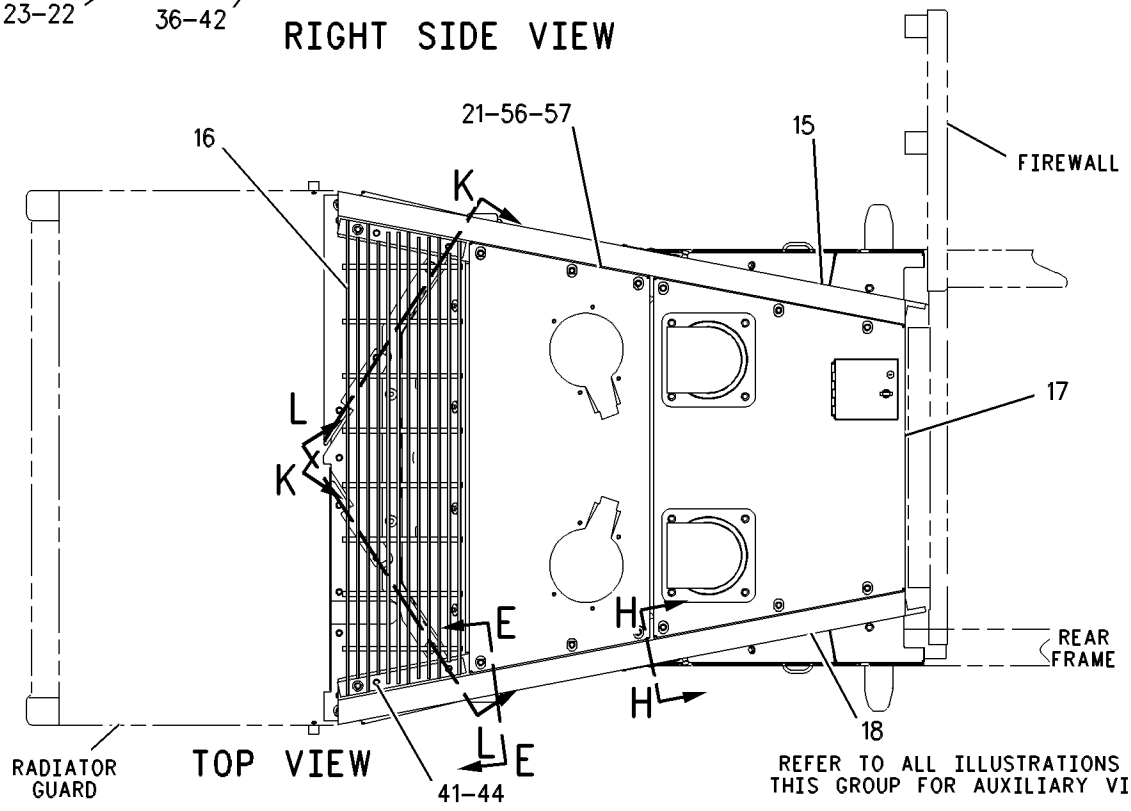

TOP VIEW

REFER TO ALL ILLUSTRATIONS OF THIS GROUP FOR AUXILIARY VIEWS

GRAPHIC #1 g00582855

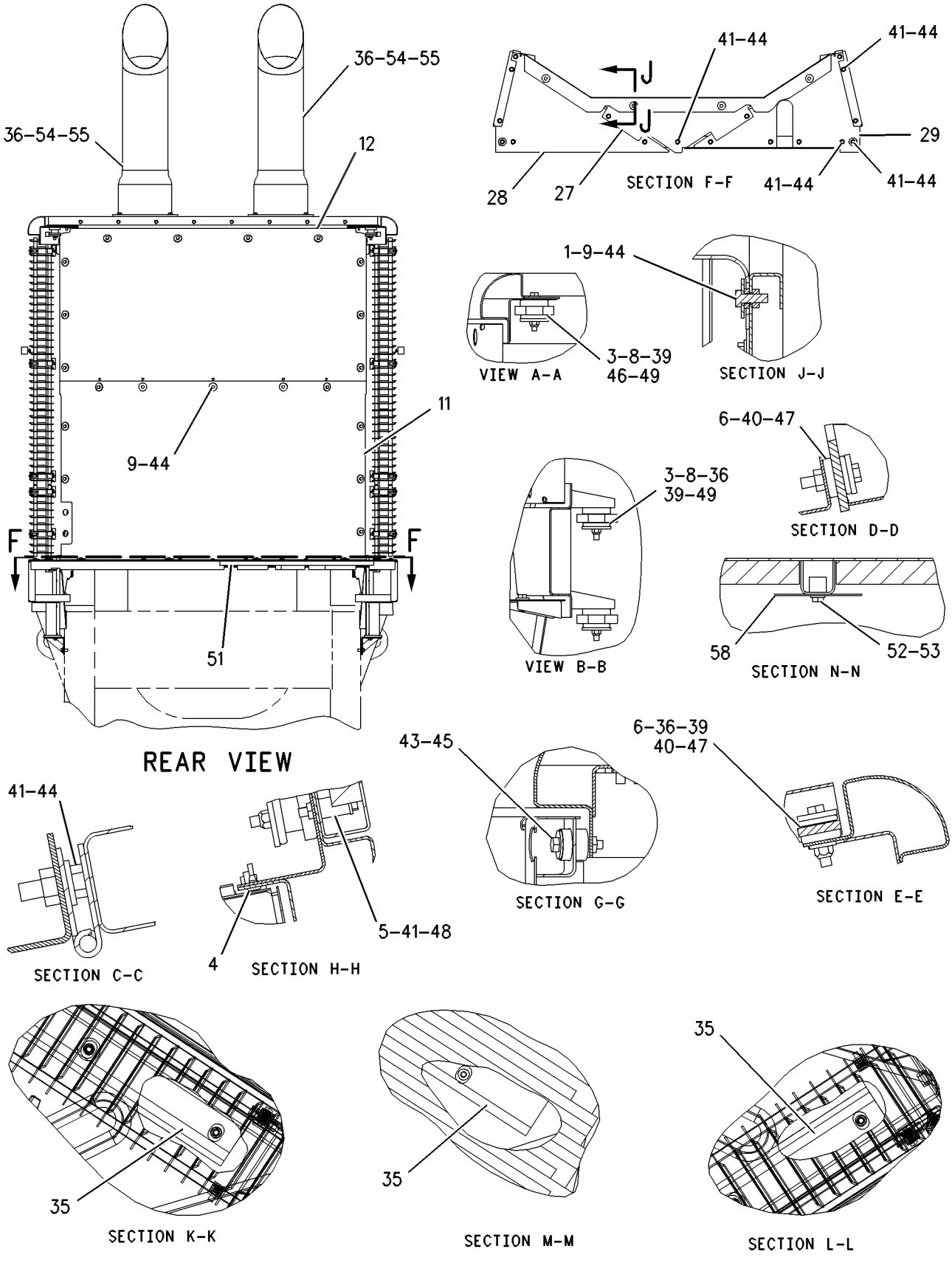

GRAPHIC #2

g00582856

FRAME AND BODY

109-6842 HOOD & GUARD GP

S/N: 7HR342-UP

PART OF 109-6819 CHASSIS AR

SMCS-7251 **i01371263**

NOTE	REF NO	GRAPHIC REF	PART NUMBER	QTY	PART NAME 1 2 3 4 5 6 (PRODUCT LEVEL)	SEE PAGE
	1	2	**4H-1225**	19	WASHER (6.0MM THK)	
	2	1	**5P-8502**	2	PADLOCK GP	
					(EACH INCLUDES)	
A		1	**5P-8500**	1	KEY	
A		1	**8Y-6364**	1	SLEEVE	
	3	2	**5R-5927**	8	WASHER (65MM OD)	
C	4	2	**5V-3854**	6	BUMPER	
	5	2	**6B-6205**	12	SPACER (1-9/32IN THK)	
	6	2	**6S-6251**	6	MOUNT	
M	7	1	**8T-4186**	10	BOLT (M10X1.50X40MM)	
	8	2	**8G-0841**	8	MOUNTING	
	9	2	**8T-4226**	24	WASHER-PLATED (3MM THK)	
	10	1	**8Y-5743**	2	SOCKET-LATCH	
	11	2	**115-1342**	1	SHIELD AS-BOTTOM	
D		2	**6V-2496**		SEAL (5.6M)	
	12	2	**169-5929**	1	SHIELD AS-TOP	
		2	**9R-2613**	1	BOSS (M10X25MM)	
	13	1	**115-1344**	1	PANEL AS-LH	
	14	1	**115-1345**	1	PANEL AS-RH	
					(EACH PANEL AS INCLUDES	
		1	**1V-8732**	1	HANDLE	
	15	1	**115-1346**	1	RAIL AS-LH	
M		1	**8T-3490**	10	NUT-WELD (M10X1.5 THD)	
		1	**9R-2613**	2	BOSS (M10X25MM)	
	16	1	**115-1347**	1	GRILL AS-TOP	
CY	17	1	*174-6050*	1	PANEL GP-TOP (FRONT)	751
	18	1	**115-1349**	1	RAIL AS-RH	
M		1	**8T-3490**	11	NUT-WELD (M10X1.5 THD)	
		1	**9R-2613**	2	BOSS (M10X25MM)	
	19	1	**115-1350**	2	GRILL AS-SIDE (UPPER)	
					(EACH INCLUDES)	
		1	**8R-7858**	6	CLAMP	
	20	1	**116-0312**	2	GRILL AS-SIDE (LOWER)	
					(EACH INCLUDES)	
		1	**8R-7858**	4	CLAMP	
	21	1	**159-2790**	1	PANEL AS-HOOD (REAR)	
M		1	**8T-3490**	12	NUT-WELD (M10X1.5 THD)	
		1	**9R-5271**	1	BOSS (M10X1.5X25MM)	
	22	1	**116-0316**	1	SUPPORT AS-RH	
		1	**7T-1099**	3	LINK	
M		1	**8T-3490**	19	NUT-WELD (M10X1.5 THD)	
M		1	**8T-3597**	4	NUT-WELD (M12X1.75 THD)	
M		1	**8T-3612**	3	NUT-WELD (M8X1.25 THD)	
	23	1	**116-0318**	1	SUPPORT AS-LH	
M		1	**8T-3490**	19	NUT-WELD (M10X1.5 THD)	
M		1	**8T-3597**	4	NUT-WELD (M12X1.75 THD)	
	24	1	**116-0320**	2	BRACKET AS-SUPPORT	
	25	1	**126-3220**	1	PANEL-FLOOR-LH	
	26	1	**126-3221**	1	PANEL-FLOOR-RH	
	27	2	**126-3222**	1	PANEL AS-FLOOR	
M		2	**8T-3490**	2	NUT-WELD (M10X1.5 THD)	
	28	2	**126-3223**	1	PANEL AS-FLOOR-LH	
M		2	**8T-3490**	4	NUT-WELD (M10X1.5 THD)	
	29	2	**126-5785**	1	PANEL AS-FLOOR-RH	
M		2	**8T-3490**	4	NUT-WELD (M10X1.5 THD)	
	30	1	**126-5786**	1	CHANNEL AS	

109-6842 **HOOD & GUARD GP** *(contd.)* **i01371263**

NOTE	REF NO	GRAPHIC REF	PART NUMBER	QTY	PART NAME 1 2 3 4 5 6 (PRODUCT LEVEL)	SEE PAGE
M		1	**8T-3490**	7	NUT-WELD (M10X1.5 THD)	
Y	31	1	*131-7808*	1	PANEL GP-HOOD (SIDE)	750
	32	1	**147-7742**	1	SUPPORT AS -LH	
M		1	**8T-3490**	2	NUT-WELD (M10X1.5 THD)	
M		1	**8T-3597**	2	NUT-WELD (M12X1.75 THD)	
		1	**9R-5271**	3	BOSS (M10X1.5X25MM)	
	33	1	**147-7743**	1	SUPPORT AS -RH	
M		1	**8T-3490**	2	NUT-WELD (M10X1.5 THD)	
M		1	**8T-3597**	2	NUT-WELD (M12X1.75 THD)	
Y	34	1	*160-1545*	1	DOOR GP-SIDE	1292
D	35	2	**6V-2496**		SEAL (3.6M)	
	36	1,2	**5P-1076**	30	WASHER-HARD (13.5X30X4MM THK)	
	37	1	**5P-4115**	2	WASHER (2MM THK)	
M	38	1	**5C-9553**	2	BOLT (M6X1.0X16MM)	
M	39	2	**6V-7687**	10	LOCKNUT (M12X1.75 THD)	
	40	2	**7X-0590**	6	WASHER-HARD (6.0MM THK)	
	41	1,2	**7X-7729**	67	WASHER (3MM THK)	
M	42	1	**8T-4139**	16	BOLT (M12X1.75X30MM)	
M	43	2	**8T-4185**	8	BOLT (M10X1.5X50MM)	
M	44	1,2	**8T-4195**	69	BOLT (M10X1.50X30MM)	
	45	2	**8T-4222**	8	WASHER-PLATED (2.5MM THK)	
	46	2	**8T-4223**	4	WASHER-HARD (3.0MM THK)	
M	47	2	**8T-4910**	6	BOLT (M12X1.75X60MM)	
M	48	2	**8T-6466**	12	BOLT (M10X1.50X60MM)	
M	49	2	**8T-6868**	8	BOLT (M12X1.75X80MM)	
D	50	1	**5P-7211**		SEAL (2.7M)	
D	51	2	**5P-5923**		SEAL (.9M)	
	52	2	**8T-4121**	1	WASHER-HARD (11X21X2.5MM THK)	
M	53	2	**8T-4137**	1	BOLT (M10X1.5X20MM)	
CM	54	2	**8T-4183**	8	BOLT (M12X1.75X40 MM)	
	55	2	**159-2791**	2	STACK AS-EXHAUST	
	56	1	**159-2792**	1	INSULATION-LH	
	57	1	**159-2793**	1	INSULATION-RH	
	58	2	**159-8965**	1	STRIP	

A-NOT PART OF THIS GROUP
C-CHANGE FROM PREVIOUS TYPE
D-ORDER BY THE METER
M-METRIC PART
Y-SEPARATE ILLUSTRATION

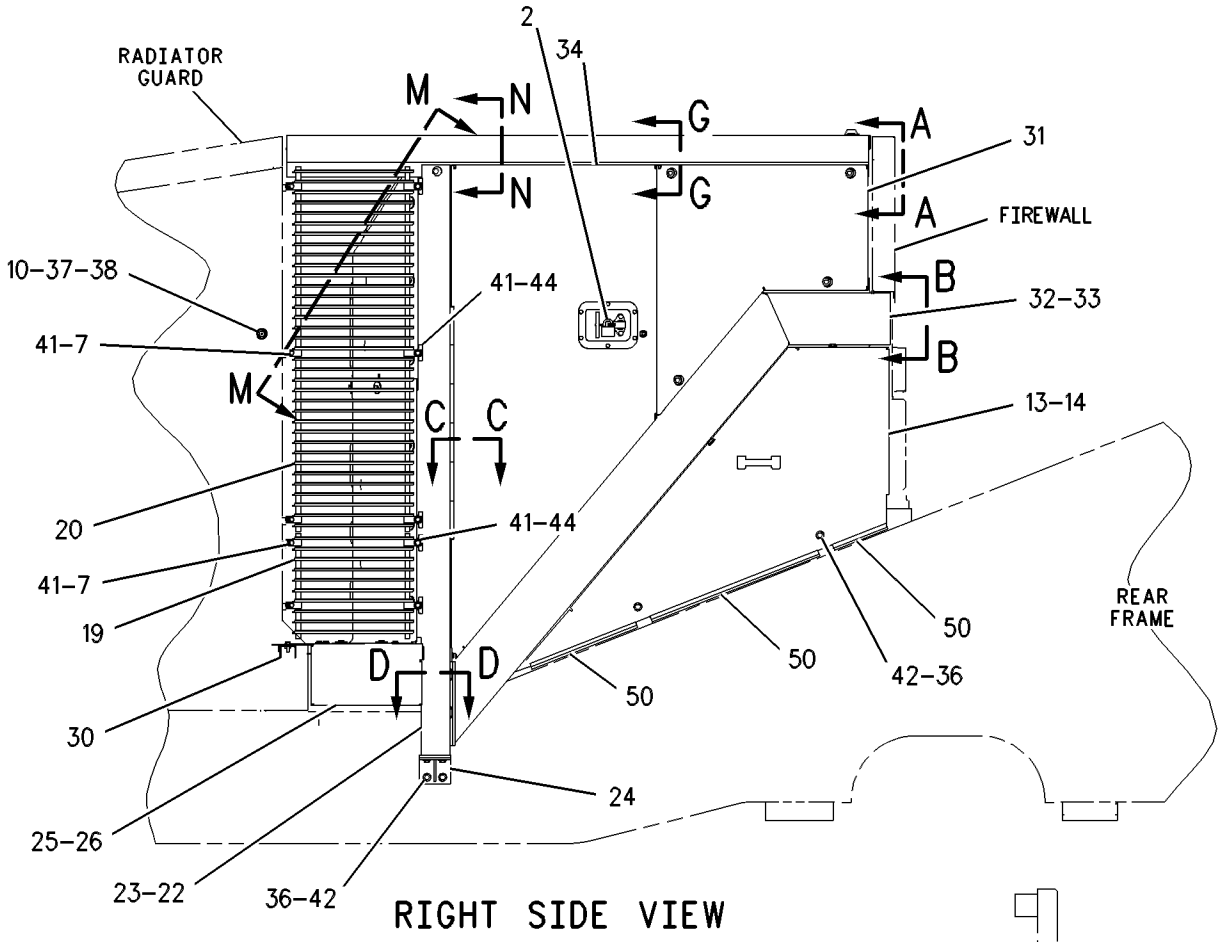

RIGHT SIDE VIEW

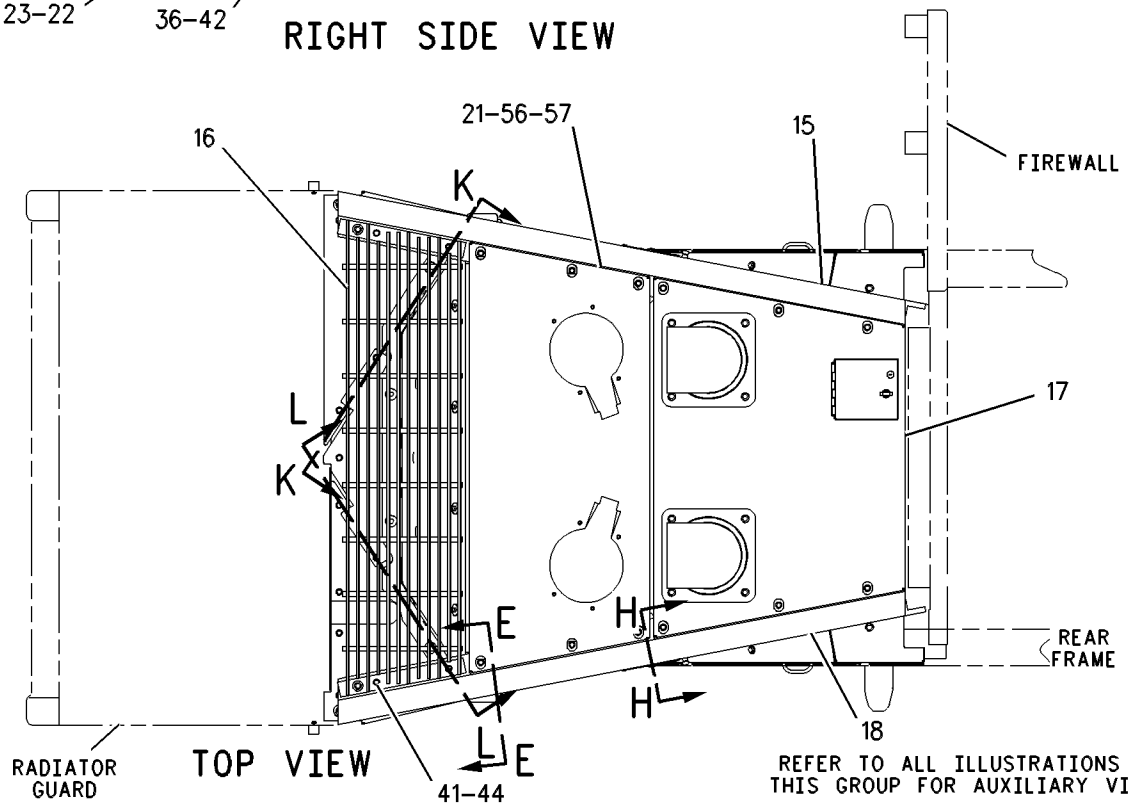

TOP VIEW

REFER TO ALL ILLUSTRATIONS OF THIS GROUP FOR AUXILIARY VIEWS

GRAPHIC #1 g00605847

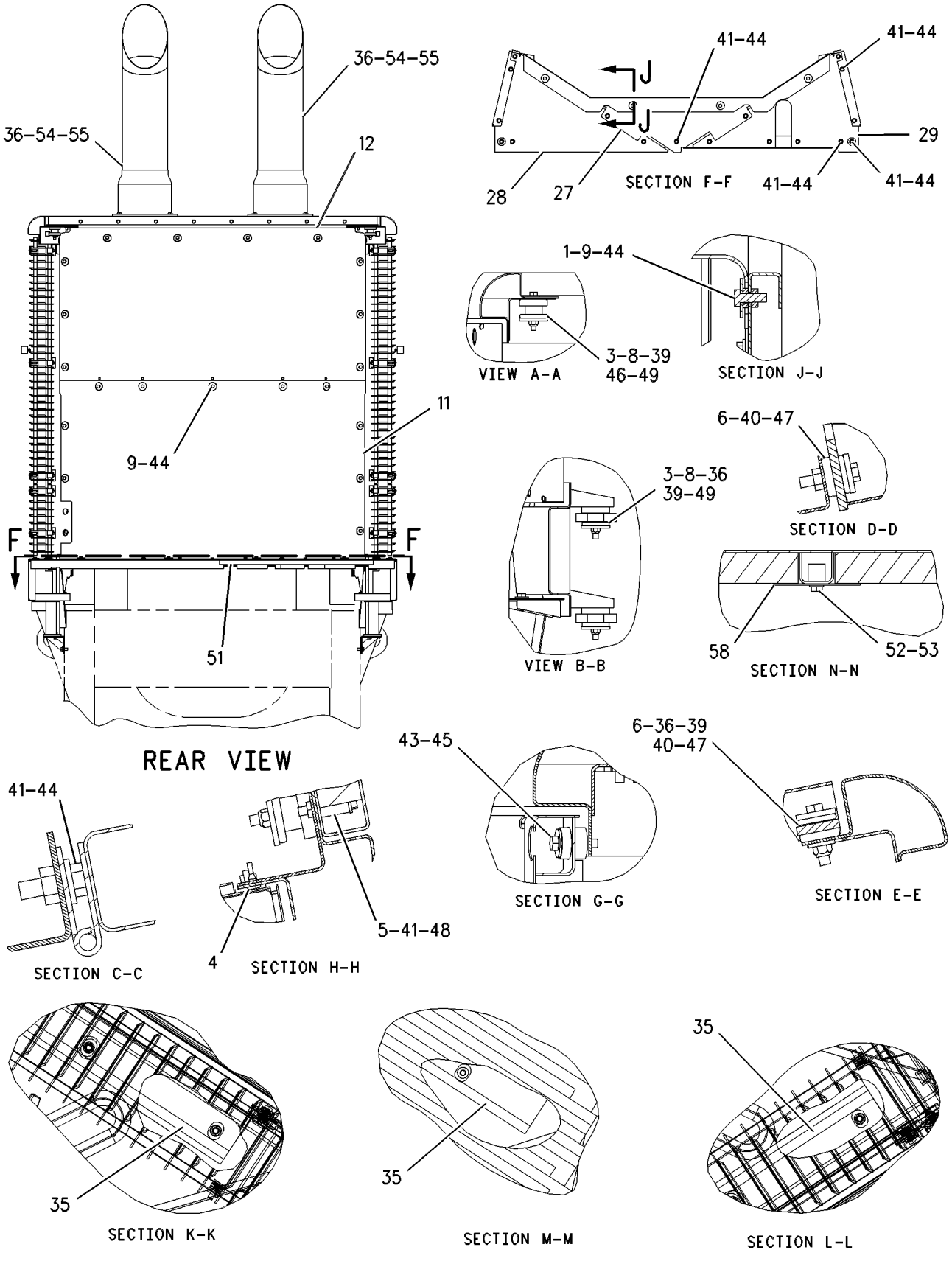

GRAPHIC #2 g00605843

FRAME AND BODY

109-6851 LADDER GP

S/N: 7HR1-265

PART OF 109-6819 CHASSIS AR

SMCS-7254 **i01191564**

NOTE	REF NO	GRAPHIC REF	PART NUMBER	QTY	PART NAME 1 2 3 4 5 6 (PRODUCT LEVEL)	SEE PAGE
	1	1	**4E-8852**	2	HANDLE-RH	
	2	1	**4E-8892**	2	HANDLE-LH	
	3	2	**4S-8875**	2	SPACER	
	4	2	**7T-8331**	2	MOUNTING	
	5	1	**112-4556**	1	STEP AS	
M		1	**8T-3597**	14	NUT-WELD (M12X1.75 THD)	
	6	2	**154-5235**	1	HANDHOLD AS	
	7	1	**112-7300**	1	LADDER AS	
	8	1	**116-0059**	1	HANDHOLD AS	
	9	1	**116-0060**	1	HANDHOLD AS	
	10	1	**116-0061**	1	HANDHOLD AS	
M	11	2	**8T-4133**	2	NUT (M10X1.50 THD)	
	12	2	**160-1017**	1	HANDHOLD AS	
	13	1	**154-1980**	1	HANDHOLD AS	
		1	**6B-8085**	1	SNAP-CHAIN	
		1	**106-6434**	1	CHAIN-LINK	
	14	2	**139-2810**	1	PLATE AS	
	15	1	**118-8606**	1	HANDLE	
	16	1	**122-5967**	1	HANDHOLD AS	
	17	2	**122-5968**	2	BRACKET AS	
					(EACH INCLUDES)	
M		2	**8T-3597**	1	NUT-WELD (M12X1.75 THD)	
	18	2	**128-6757**	1	STEP AS-LH	
	19	2	**128-6758**	1	STEP AS-RH	
Y	20	1	*135-8640*	2	STEP GP	752
	21	1,2	**5P-1076**	68	WASHER-HARD (4MM THK)	
	22	2	**7X-0590**	2	WASHER-HARD (6.0MM THK)	
M	23	2	**7X-2553**	4	BOLT (M16X2.0X40MM)	
	24	1,2	**7X-7729**	8	WASHER (3MM THK)	
	25	2	**8T-4121**	4	WASHER (2.5MM THK)	
M	26	2	**8T-4139**	4	BOLT (M12X1.75X30MM)	
M	27	1	**8T-4183**	48	BOLT (M12X1.75X40 MM)	
M	28	1	**8T-4194**	20	BOLT (M12X1.75X50MM)	
M	29	1,2	**8T-4195**	10	BOLT (M10X1.50X30MM)	
M	30	2	**8T-4910**	4	BOLT (M12X1.75X60MM)	
	31	2	**7X-0515**	4	WASHER (5MM THK)	

M-METRIC PART
Y-SEPARATE ILLUSTRATION

109-6851 **LADDER GP** ***(contd.)*** **i01191564**

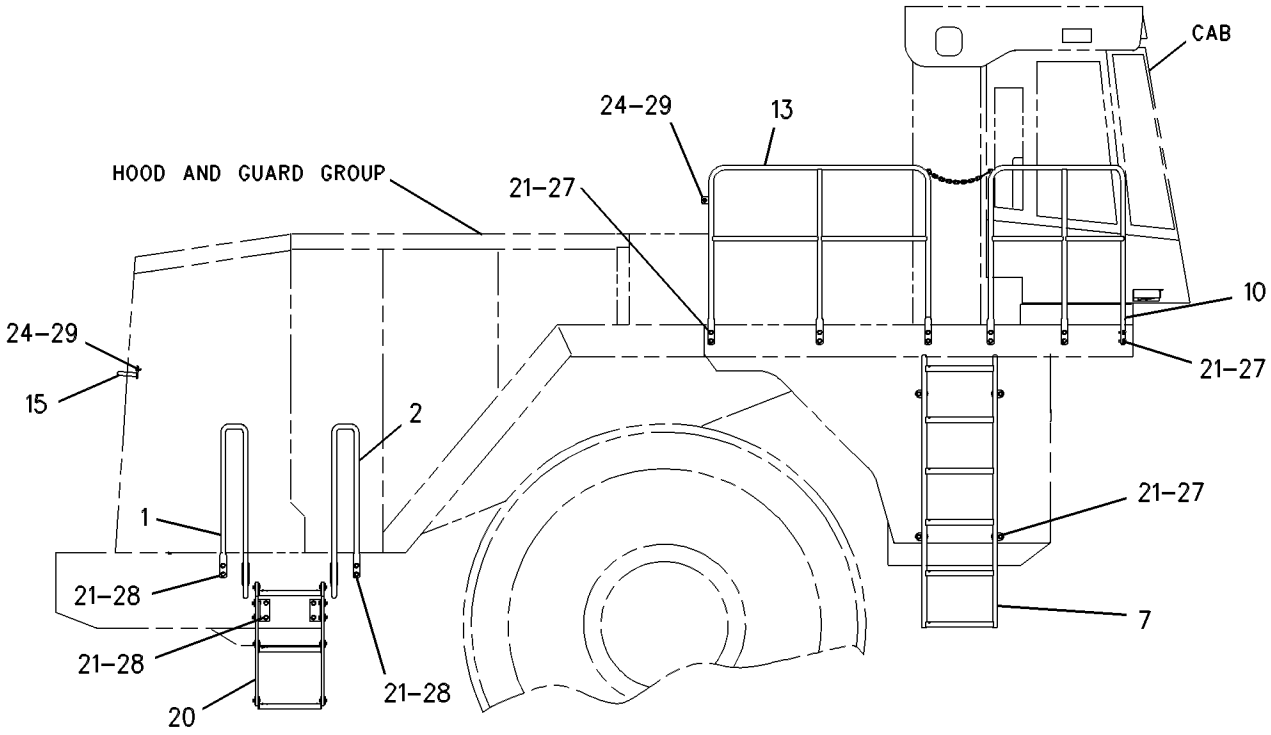

RIGHT SIDE VIEW

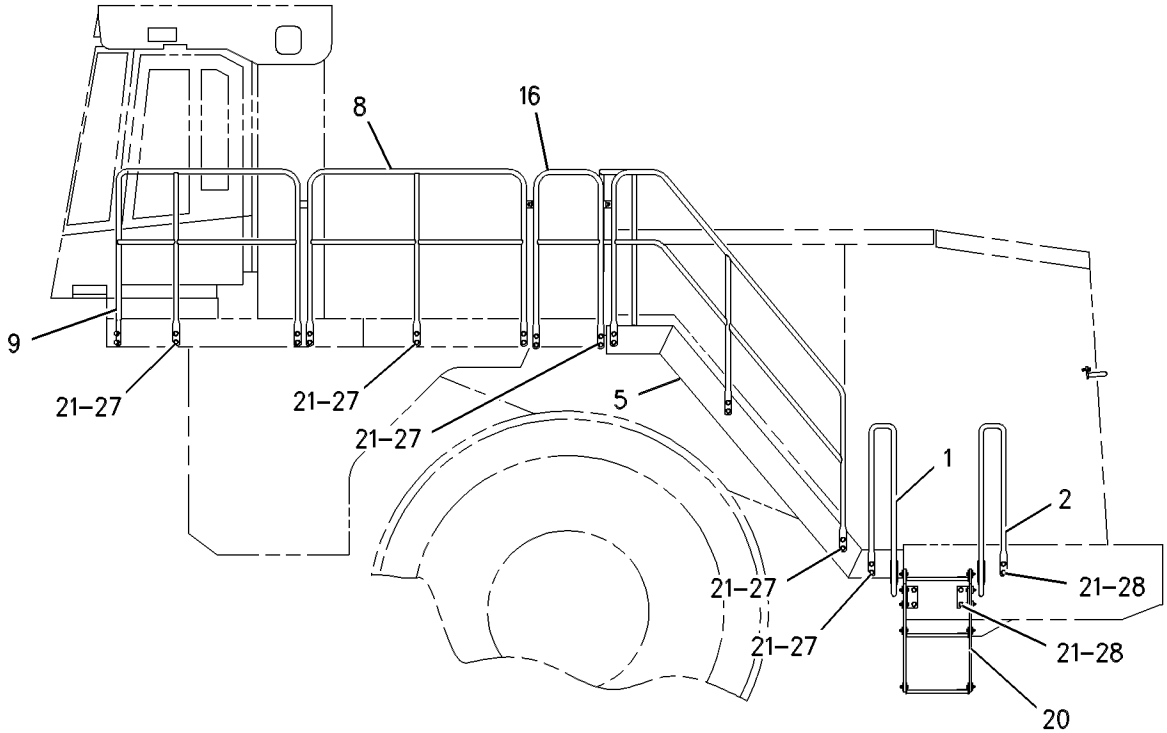

LEFT SIDE VIEW

GRAPHIC #1 g00363998

109-6851 **LADDER GP** ***(contd.)*** **i01191564**

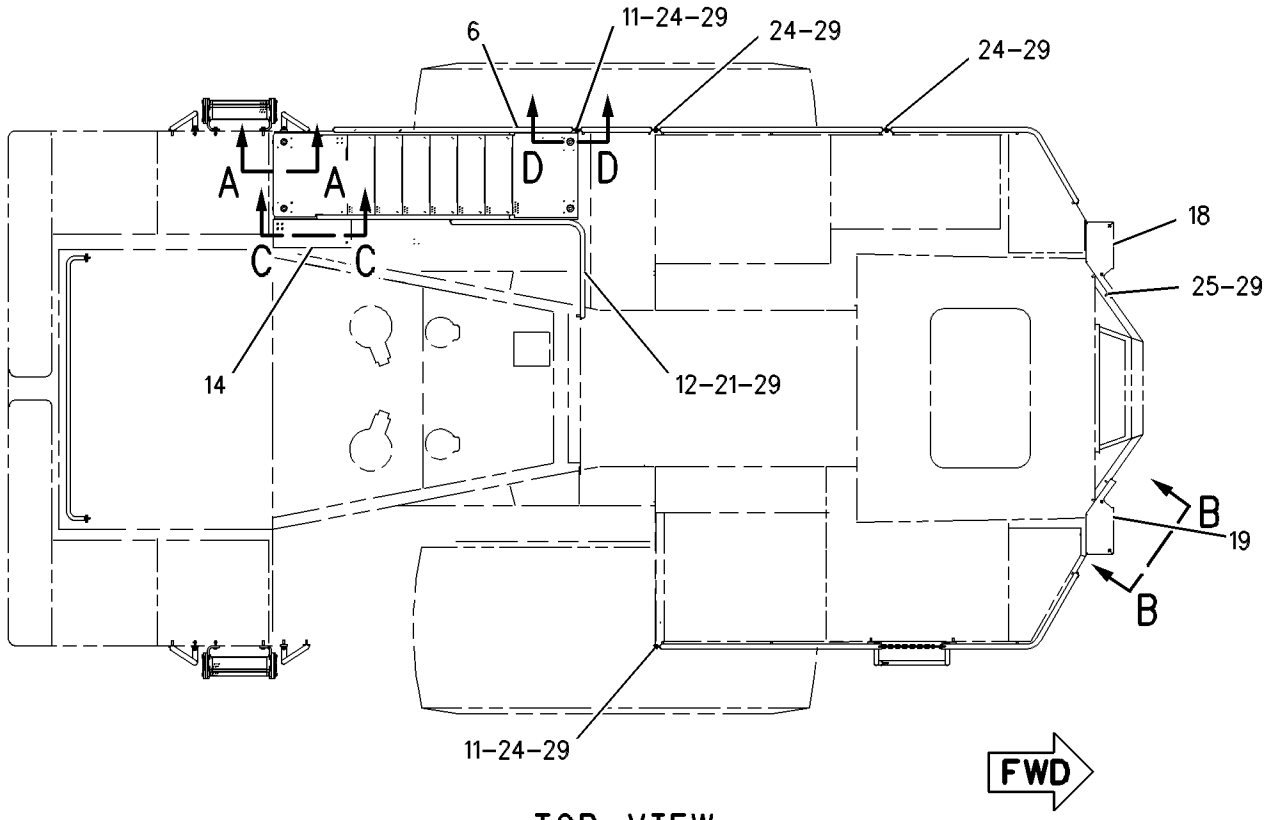

TOP VIEW

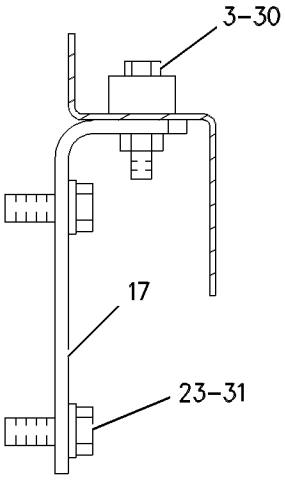

SECTION A-A

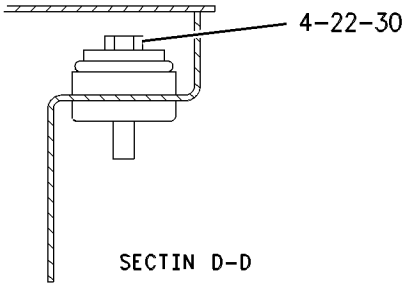

SECTIN D-D

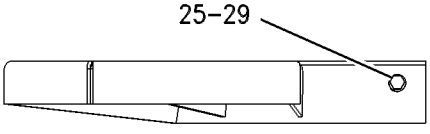

VIEW B-B

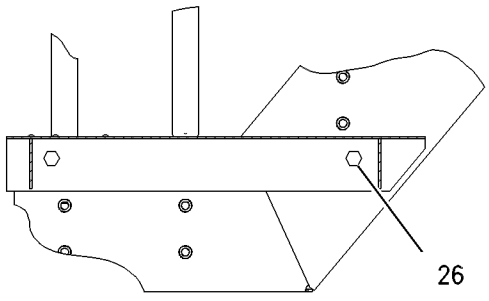

VIEW C-C

GRAPHIC #2 g00364153

MEMORANDA

109-6851 LADDER GP

S/N: 7HR266-UP

PART OF 109-6819 CHASSIS AR

SMCS-7254 **i01400388**

NOTE	REF NO	GRAPHIC REF	PART NUMBER	QTY	PART NAME 1 2 3 4 5 6 (PRODUCT LEVEL)	SEE PAGE
	1	1	**164-5920**	2	HANDLE-LH	
	2	1	**164-5919**	2	HANDLE-RH	
	3	2	**4S-8875**	2	SPACER (22.63MM THK)	
	4	2	**7T-8331**	2	MOUNTING	
	5	1	**156-5923**	1	STAIR AS	
M		1	**8T-3597**	26	NUT-WELD (M12X1.75 THD)	
	6	2	**192-6208**	1	HANDHOLD AS	
	7	1	**112-7300**	1	LADDER AS	
	8	1	**192-6162**	1	HANDHOLD AS	
	9	1	**192-6145**	1	HANDHOLD AS	
	10	1	**192-6257**	1	HANDHOLD AS	
M	11	2	**8T-4133**	4	NUT (M10X1.5 THD)	
	12	2	**160-1017**	1	HANDHOLD AS	
	13	1	**192-6258**	1	HANDHOLD AS	
		1	**6B-8085**	1	SNAP-CHAIN	
		1	**106-6434**	1	CHAIN-LINK	
	14	2	**160-7569**	1	PLATE AS-LH	
	15	1	**118-8606**	1	HANDLE	
	16	1	**186-3715**	1	HANDHOLD AS	
	17	2	**122-5968**	2	BRACKET AS	
					(EACH INCLUDES)	
M		2	**8T-3597**	1	NUT-WELD (M12X1.75 THD)	
M	18	1	**8T-4139**	34	BOLT (M12X1.75X30MM)	
	19	1	**8T-4223**	34	WASHER-HARD (13.5X25.5X3MM THK)	
Y	20	1	*135-8640*	2	STEP GP	752
	21	1,2	**5P-1076**	34	WASHER-HARD (13.5X30X4MM THK)	
	22	2	**7X-0590**	2	WASHER-HARD (13.5X44.5X6MM THK)	
M	23	2	**7X-2553**	4	BOLT (M16X2X40MM)	
	24	1,2	**7X-7729**	10	WASHER (11X25X3MM THK)	
M	27	1,2	**8T-4183**	20	BOLT (M12X1.75X40 MM)	
M	28	1	**8T-4194**	16	BOLT (M12X1.75X50MM)	
M	29	1,2	**8T-4195**	6	BOLT (M10X1.5X30MM)	
M	30	2	**8T-4910**	4	BOLT (M12X1.75X60MM)	
	31	2	**7X-0515**	4	WASHER-HARD (17X35X5MM THK)	

M-METRIC PART
Y-SEPARATE ILLUSTRATION

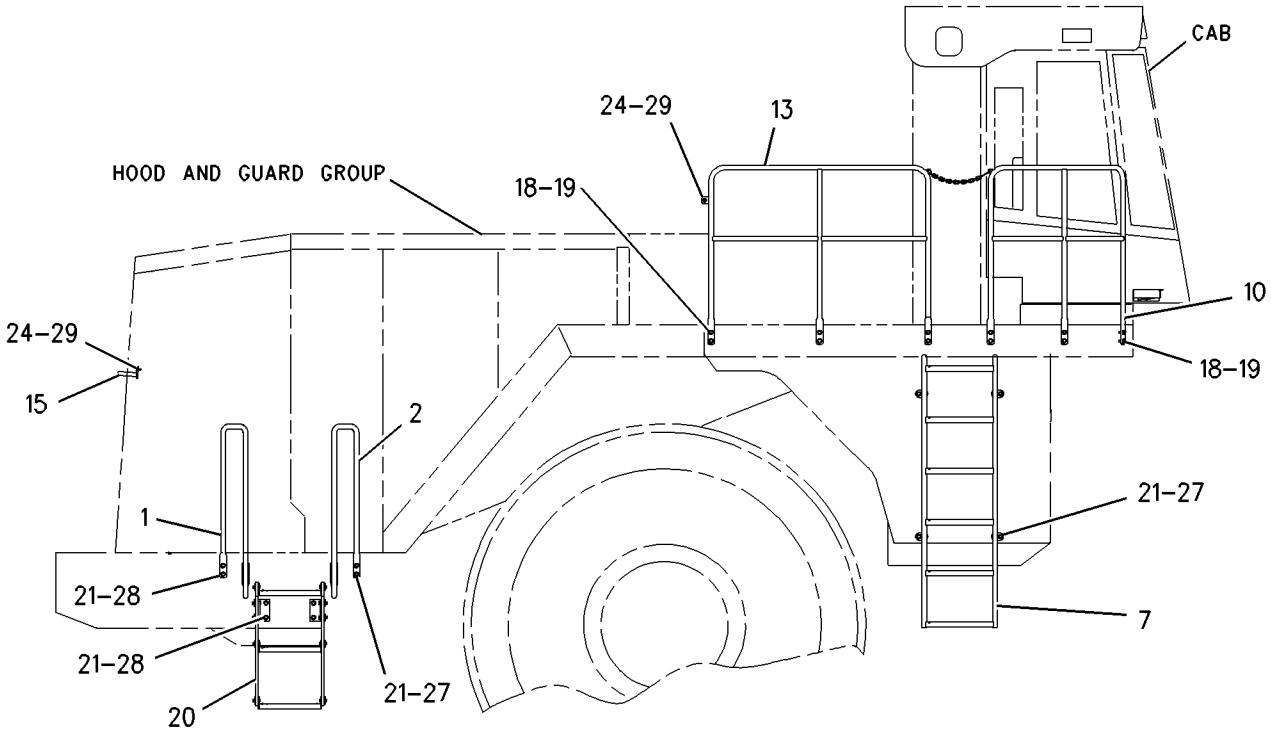

RIGHT SIDE VIEW

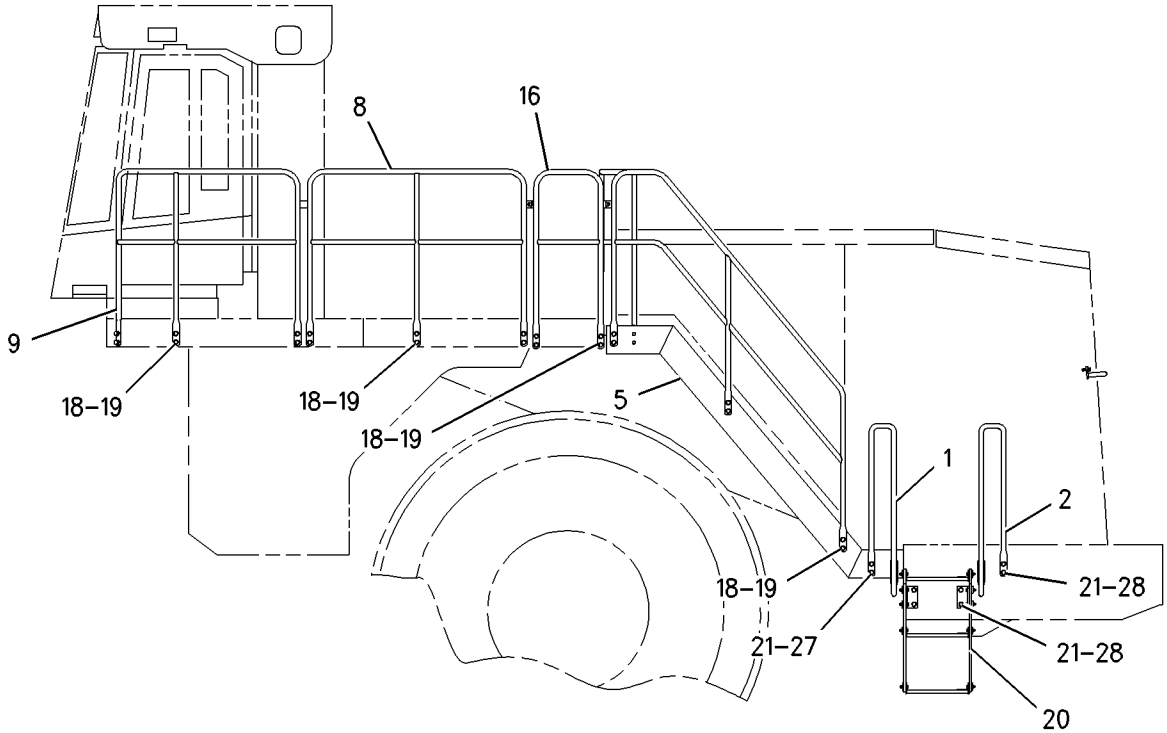

LEFT SIDE VIEW

GRAPHIC #1 g00688995

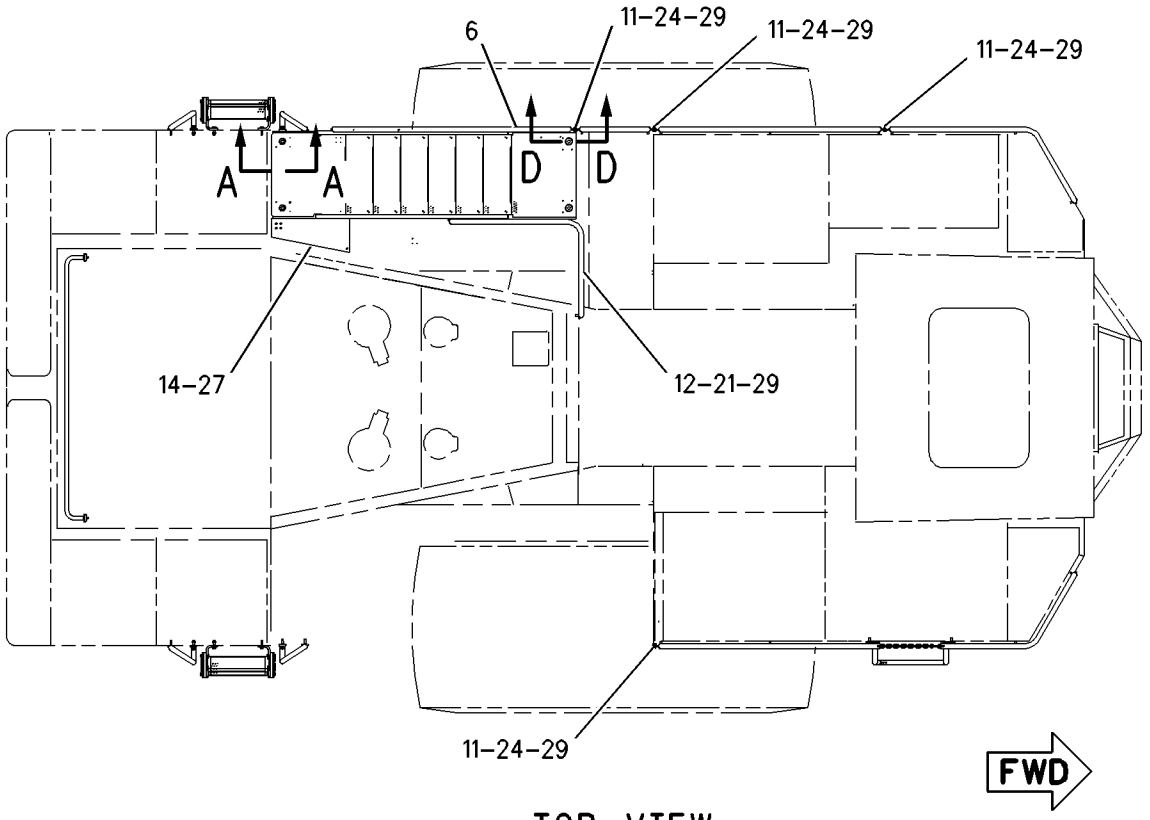

TOP VIEW

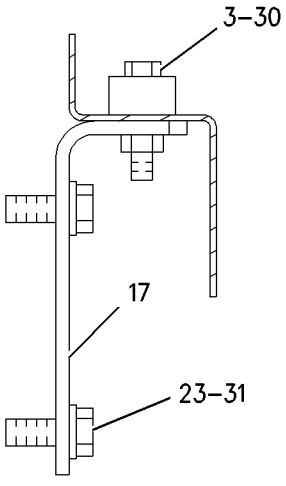

SECTION A-A

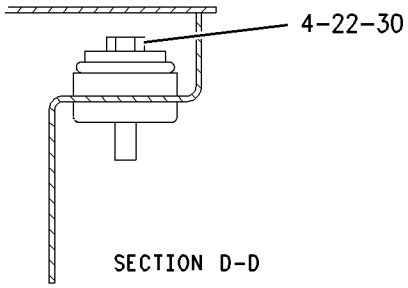

SECTION D-D

GRAPHIC #2 g00729250

MEMORANDA

160-0291 LADDER GP

S/N: 7HR266-UP

FOR USE WITH 156-5929 TANK GP-FUEL. CANNOT BE USED WITH 153-9051 LADDER GP, 109-6849 TANK GP-FUEL, 153-9050 HANDHOLD GP

AN ATTACHMENT

SMCS-7254 **i01299826**

NOTE	REF NO	GRAPHIC REF	PART NUMBER	QTY	PART NAME 1 2 3 4 5 6 (PRODUCT LEVEL)	SEE PAGE
	1	1	**4S-8875**	2	SPACER	
	2	1	**7T-8331**	2	MOUNTING	
	3	1	**113-6062**	1	PANEL AS	
M		1	**8T-3597**	4	NUT-WELD (M12X1.75 THD)	
	4	1	**116-3870**	1	PANEL AS	
	5	1	**186-3715**	1	HANDHOLD AS	
	6	1	**122-5968**	2	BRACKET AS	
					(EACH INCLUDES)	
M		1	**8T-3597**	1	NUT-WELD (M12X1.75 THD)	
	7	1	**153-9052**	1	SUPPORT AS	
M		1	**8T-3597**	7	NUT-WELD (M12X1.75 THD)	
	8	1	**186-3298**	1	HANDHOLD AS	
	9	1	**155-5285**	1	BRACKET AS	
M		1	**8T-3597**	3	NUT-WELD (M12X1.75 THD)	
	10	1	**156-5923**	1	STAIR AS	
M		1	**8T-3597**	26	NUT-WELD (M12X1.75 THD)	
	11	1	**160-0290**	1	PLATE AS-RH	
	12	1	**160-1830**	1	HANDHOLD AS	
	13	1	**5P-1076**	16	WASHER-HARD (4MM THK)	
	14	1	**7X-0515**	4	WASHER (5MM THK)	
	15	1	**7X-0590**	4	WASHER-HARD (6.0MM THK)	
M	16	1	**7X-2553**	4	BOLT (M16X2.0X40MM)	
	17	1	**7X-7729**	2	WASHER (3MM THK)	
M	18	1	**8T-4133**	1	NUT (M10X1.50 THD)	
M	19	1	**8T-4139**	20	BOLT (M12X1.75X30MM)	
M	20	1	**8T-4183**	6	BOLT (M12X1.75X40 MM)	
M	21	1	**8T-4195**	1	BOLT (M10X1.50X30MM)	
	22	1	**8T-4223**	12	WASHER-HARD (3MM THK)	
M	23	1	**8T-4910**	14	BOLT (M12X1.75X60MM)	
	24	1	**177-0316**	1	PANEL AS-RH	

M-METRIC PART

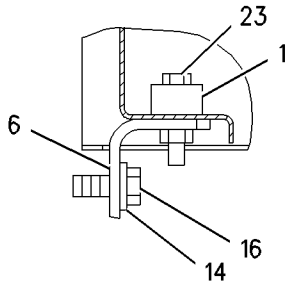

SECTION A-A

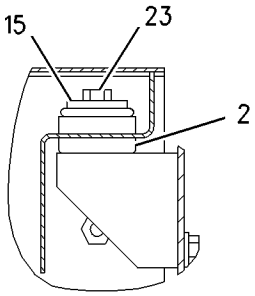

SECTION B-B

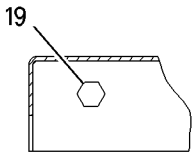

SECTION C-C

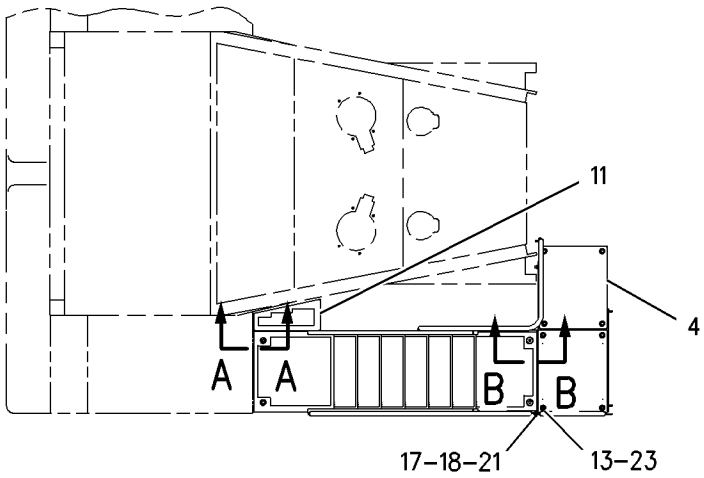

TOP VIEW

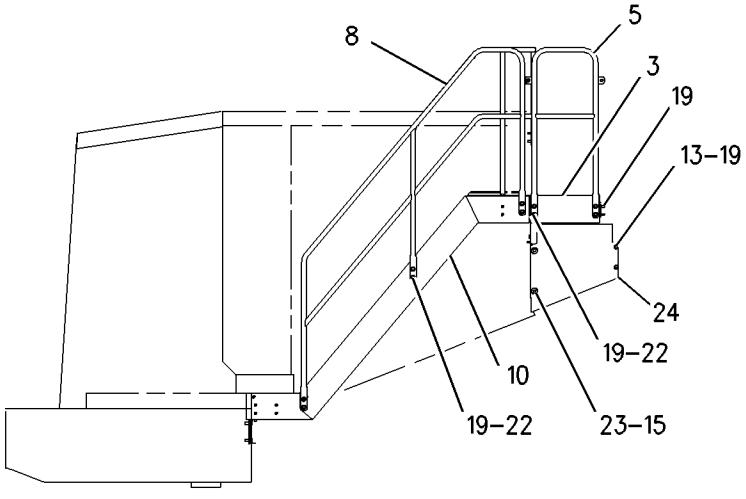

RIGHT SIDE VIEW

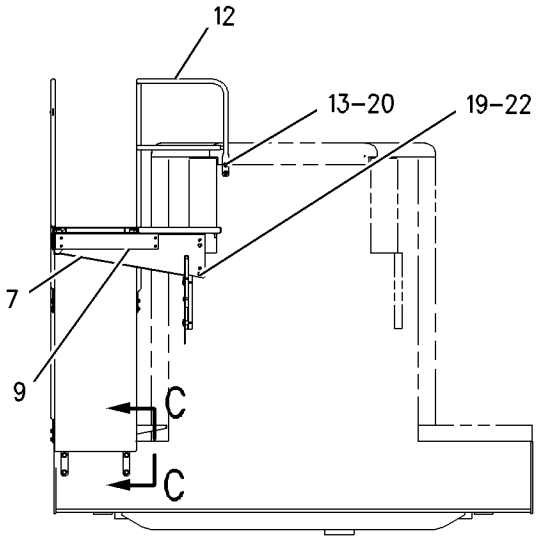

FRONT VIEW

GRAPHIC #1

g00688828

109-6860 LINES GP-GREASE

S/N: 7HR1-UP

PART OF 109-6819 CHASSIS AR

SMCS-7510 **i01380896**

NOTE	REF NO	GRAPHIC REF	PART NUMBER	QTY	PART NAME 1 2 3 4 5 6 (PRODUCT LEVEL)	SEE PAGE
	1	1	**3B-8489**	6	FITTING-GREASE	
	2	1	**4B-8440**	2	FITTING-HYDRAULIC (67.5 DEG)	
	3	1	**5K-9242**	6	UNION-FLARED	
	4	1	**5K-9243**	5	ELBOW-FLARED (90 DEGREES)	
	5	1	**6L-3616**	5	CONNECTOR-FLARED	
	6	1	**7X-7729**	4	WASHER (11X25X3MM THK)	
	7	1	**8T-4121**	16	WASHER-HARD (11X21X2.5MM THK)	
	8	1	**127-2931**	1	TUBE AS	
	9	1	**127-2932**	1	TUBE AS	
	10	1	**127-2933**	1	TUBE AS	
	11	1	**127-2934**	1	TUBE AS	
	12	1	**127-2935**	1	TUBE AS	
	13	1	**127-7474**	1	PLATE	
	14	1	**127-7475**	1	PLATE	
	15	1	**127-7499**	1	TUBE AS	
	16	1	**127-7500**	1	TUBE AS	
	17	1	**127-7501**	1	TUBE AS	
	18	1	**127-7502**	1	TUBE AS	
	19	1	**127-7503**	1	TUBE AS	
	20	1	**127-8537**	1	TUBE AS	
	21	1	**8M-2772**	22	CLIP	
M	22	1	**8T-4133**	16	NUT (M10X1.5 THD)	
M	23	1	**8T-4137**	4	BOLT (M10X1.5X20MM)	

M-METRIC PART

109-6860 **LINES GP-GREASE** *(contd.)* **i01380896**

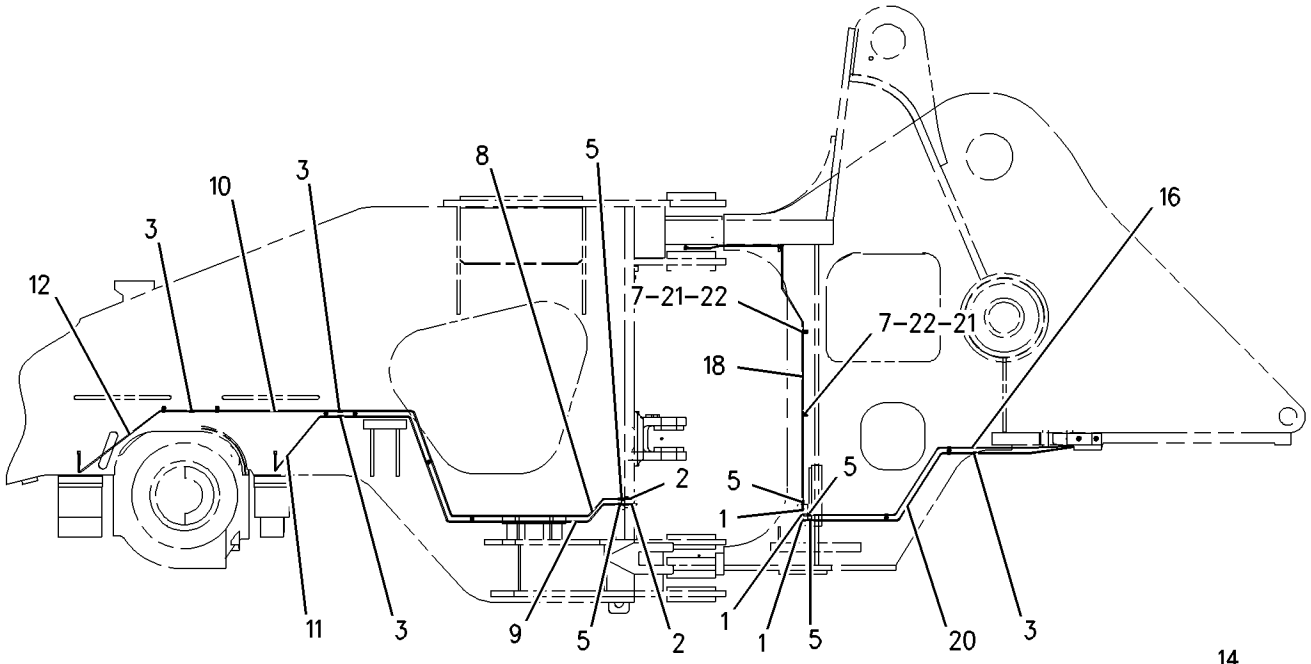

RIGHT SIDE VIEW

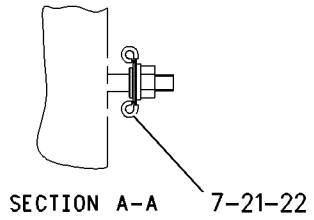

SECTION A-A

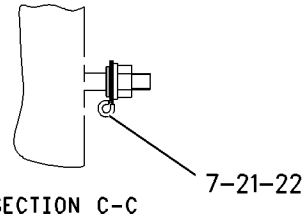

SECTION C-C

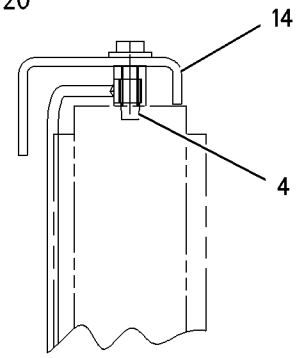

SECTION B-B

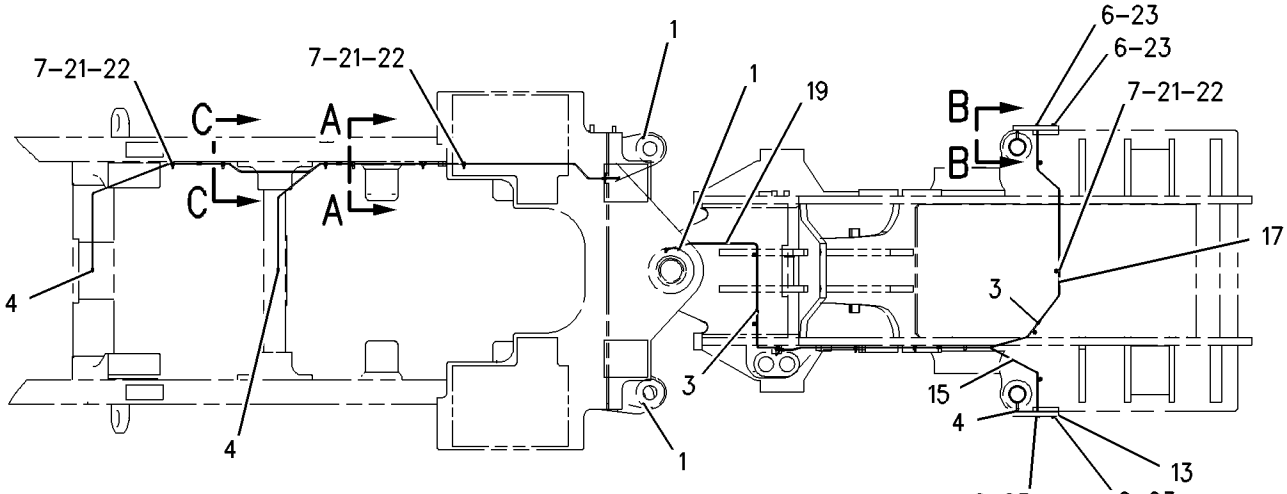

TOP VIEW

GRAPHIC #1 g00729256

FRAME AND BODY

162-7507 LINES GP-GREASE

S/N: 7HR1-UP
PART OF 109-6890, 131-1251 CONTROL GP-BUCKET
AN ATTACHMENT

SMCS-7510 **i01067867**

NOTE	REF NO	GRAPHIC REF	PART NUMBER	QTY	PART NAME 1 2 3 4 5 6 (PRODUCT LEVEL)	SEE PAGE
	1	2	**3B-8489**	5	FITTING-GREASE (1/8-27 THD)	
	2	2	**6L-3616**	6	CONNECTOR-FLARED	
	3	1	**7D-6608**	1	HOSE AS	
	4	2	**8L-5008**	1	ELBOW-PIPE	
	5	2	**162-4053**	1	TUBE AS	
	6	2	**162-4054**	1	TUBE AS	
	7	2	**162-4055**	1	TUBE AS	
	8	2	**8B-4884**	1	ELBOW (1/8-27 THD)	
	9	1,2	**8M-2772**	10	CLIP (6.35MM ID)	
	10	1,2	**8T-4121**	8	WASHER (2.5MM THK)	
M	11	1,2	**8T-4137**	7	BOLT (M10X1.50X20MM)	

M-METRIC PART

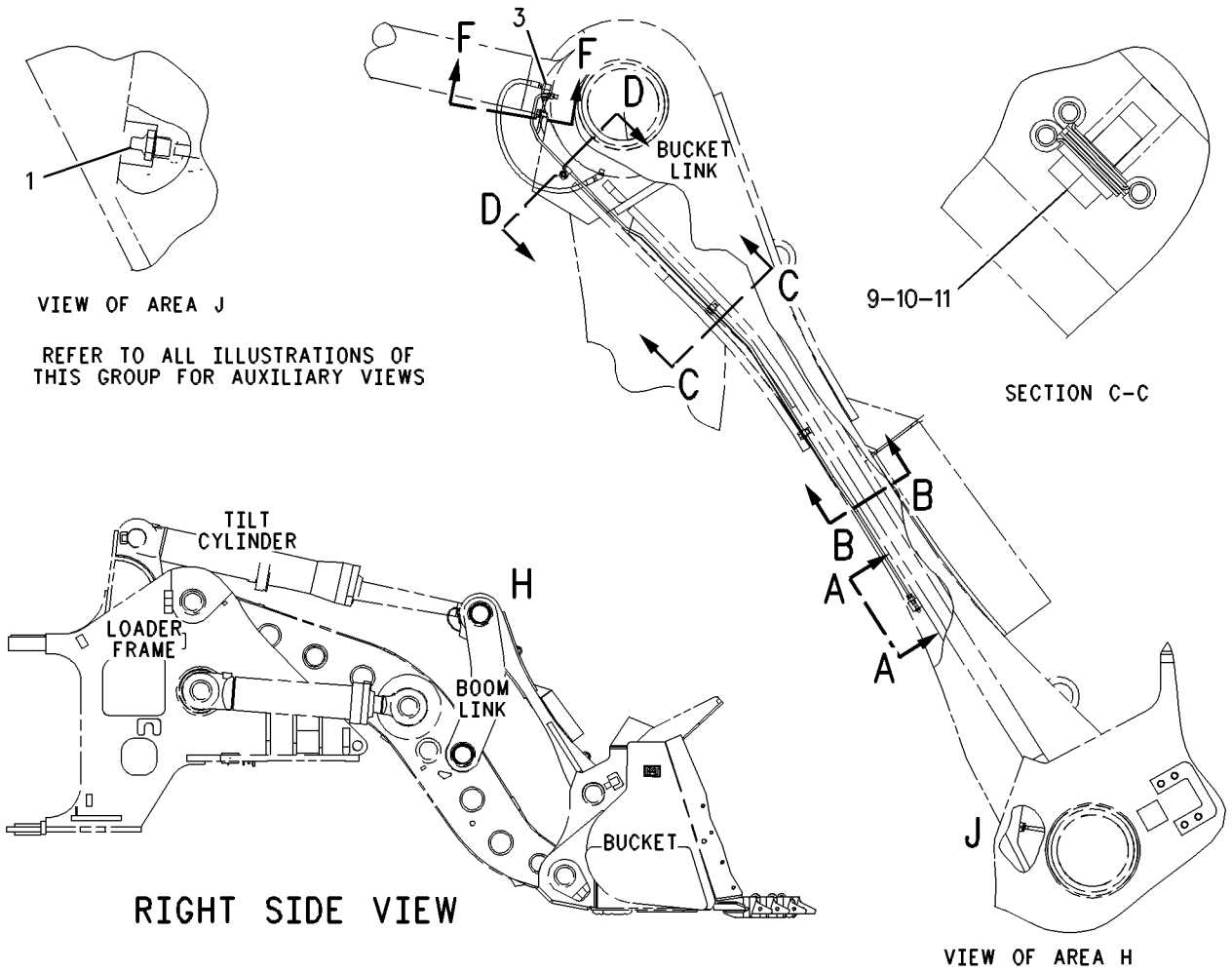

GRAPHIC #1 g00578057

162-7507 **LINES GP-GREASE** ***(contd.)*** **i01067867**

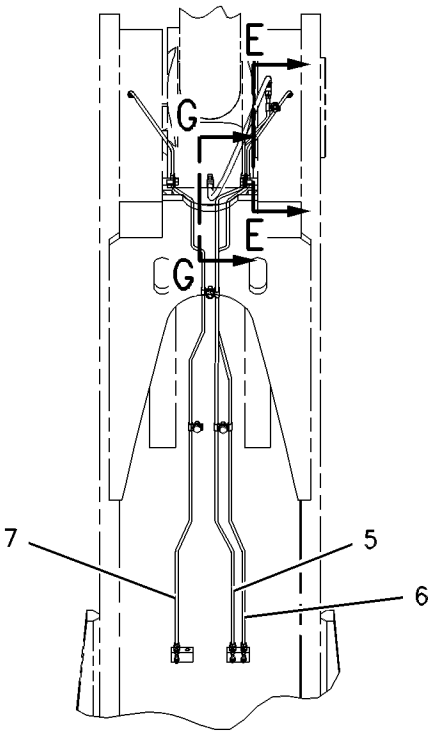

REAR VIEW

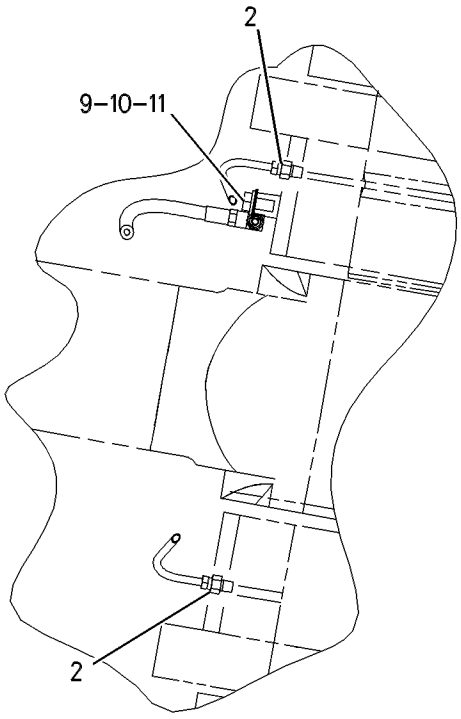

SECTION F-F

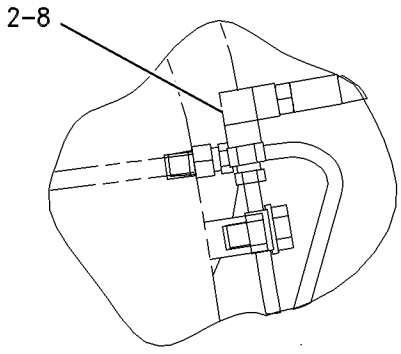

SECTION E-E

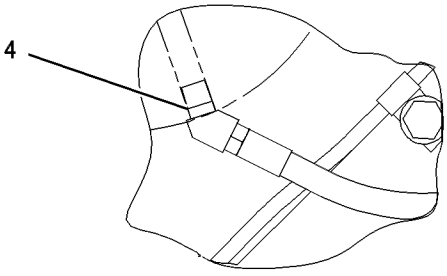

SECTION G-G

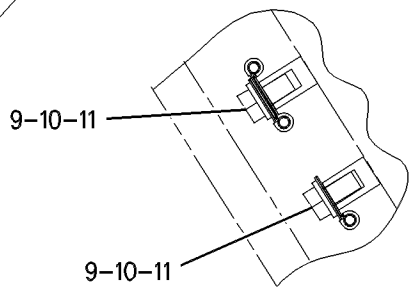

SECTION B-B

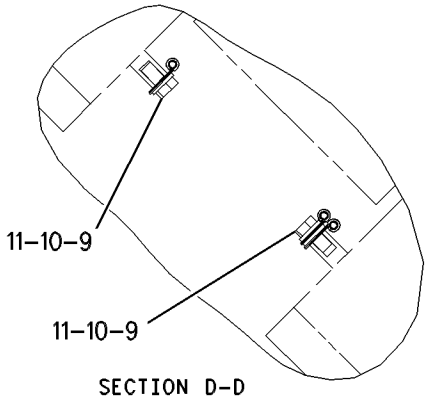

SECTION D-D

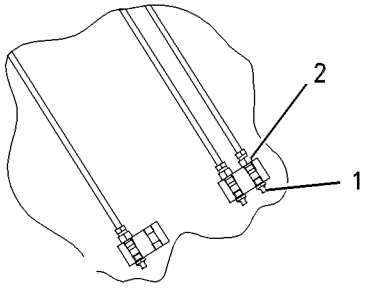

VIEW A-A

GRAPHIC #2 g00578058

FRAME AND BODY

162-7508 LINES GP-GREASE

S/N: 7HR1-UP
PART OF 109-6890 CONTROL GP-BUCKET
AN ATTACHMENT

SMCS-7510 **i01380915**

NOTE	REF NO	GRAPHIC REF	PART NUMBER	QTY	PART NAME 1 2 3 4 5 6 (PRODUCT LEVEL)	SEE PAGE
	1	1	**3B-8489**	3	FITTING-GREASE	
	2	1,2	**6L-3616**	6	CONNECTOR-FLARED	
	3	2	**7D-6608**	1	HOSE AS	
	4	2	**8L-5008**	1	ELBOW-PIPE (45 DEG)	
	5	2	**161-5820**	1	TUBE AS	
	6	1	**161-5821**	1	TUBE AS	
	7	2	**161-5822**	1	TUBE AS	
	8	2	**3B-6493**	1	ELBOW-PIPE (45 DEGREE)	
	9	1,2	**8M-2772**	6	CLIP	
	10	1,2	**8T-4121**	5	WASHER-HARD (11X21X2.5MM THK)	
M	11	1,2	**8T-4137**	5	BOLT (M10X1.5X20MM)	

M-METRIC PART

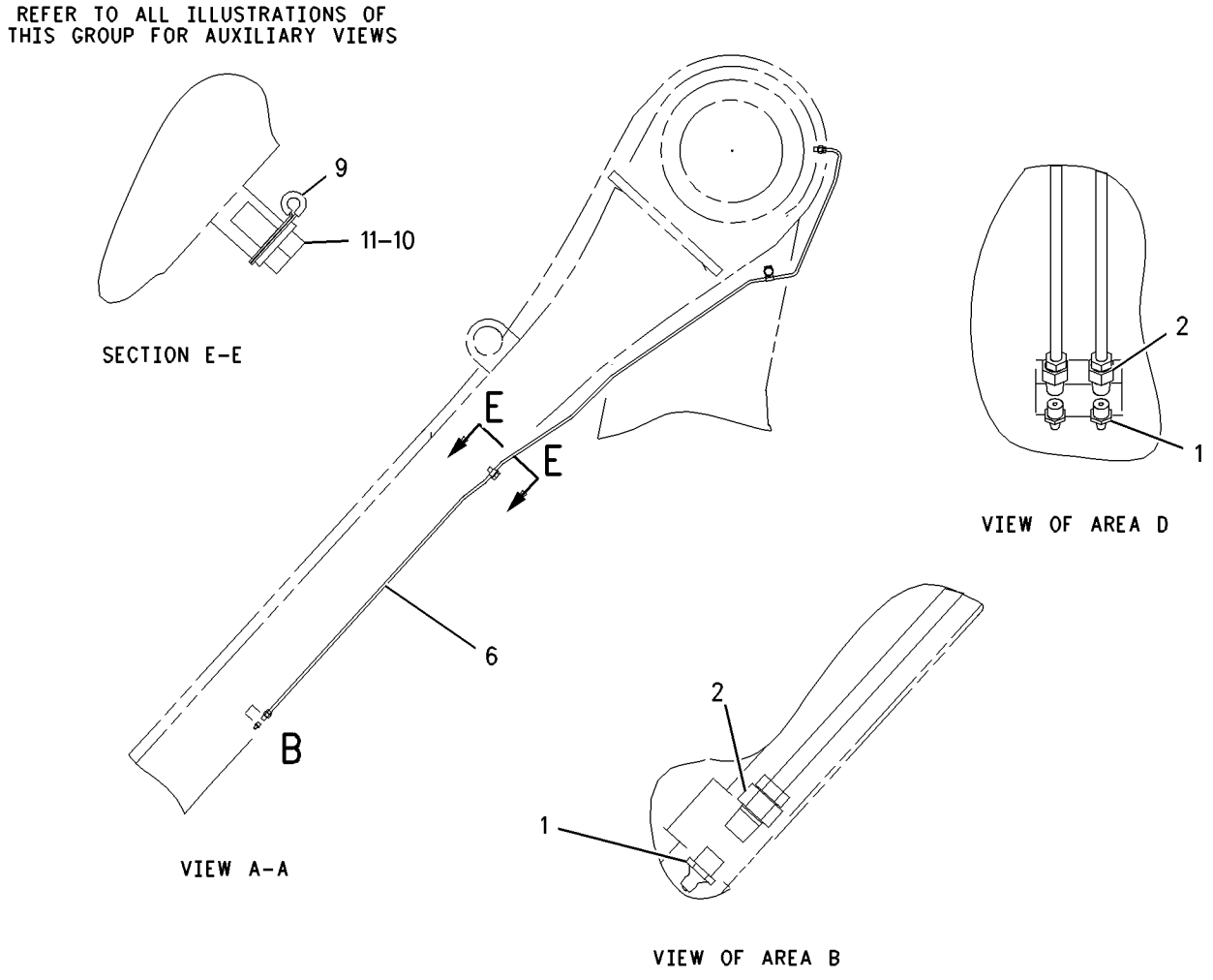

GRAPHIC #1 g00729265

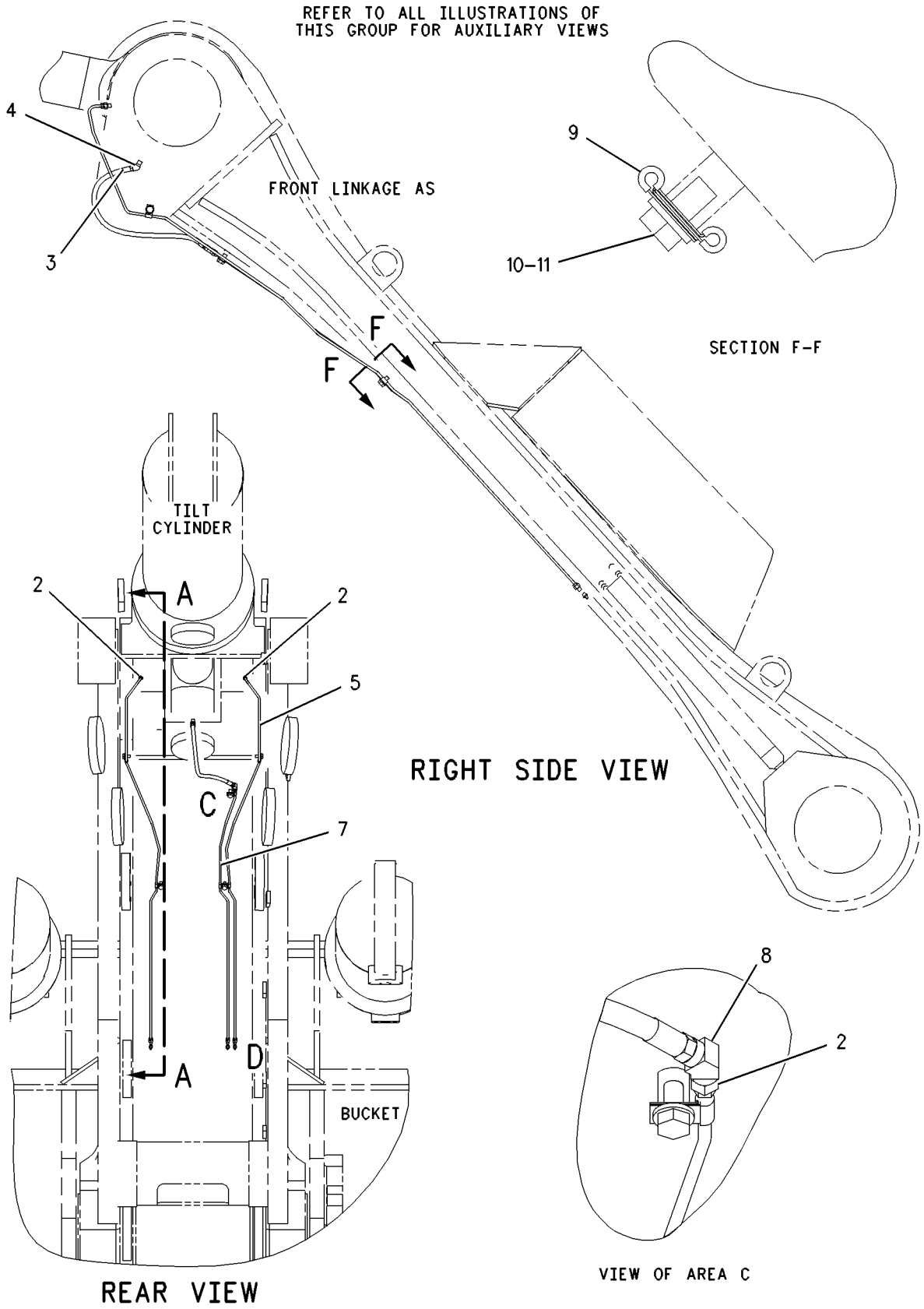

GRAPHIC #2

g00534285

109-6839 LINK GP-STEERING FRAME LOCK

S/N: 7HR1-UP

PART OF 109-6819 CHASSIS AR

SMCS-7506 **i00738093**

NOTE	REF NO	GRAPHIC REF	PART NUMBER	QTY	PART NAME 1 2 3 4 5 6 (PRODUCT LEVEL)	SEE PAGE
	1	1	**124-3819**	1	LINK	
	2	1	**124-3820**	2	PIN	
	3	1	**1J-2919**	2	COTTER	

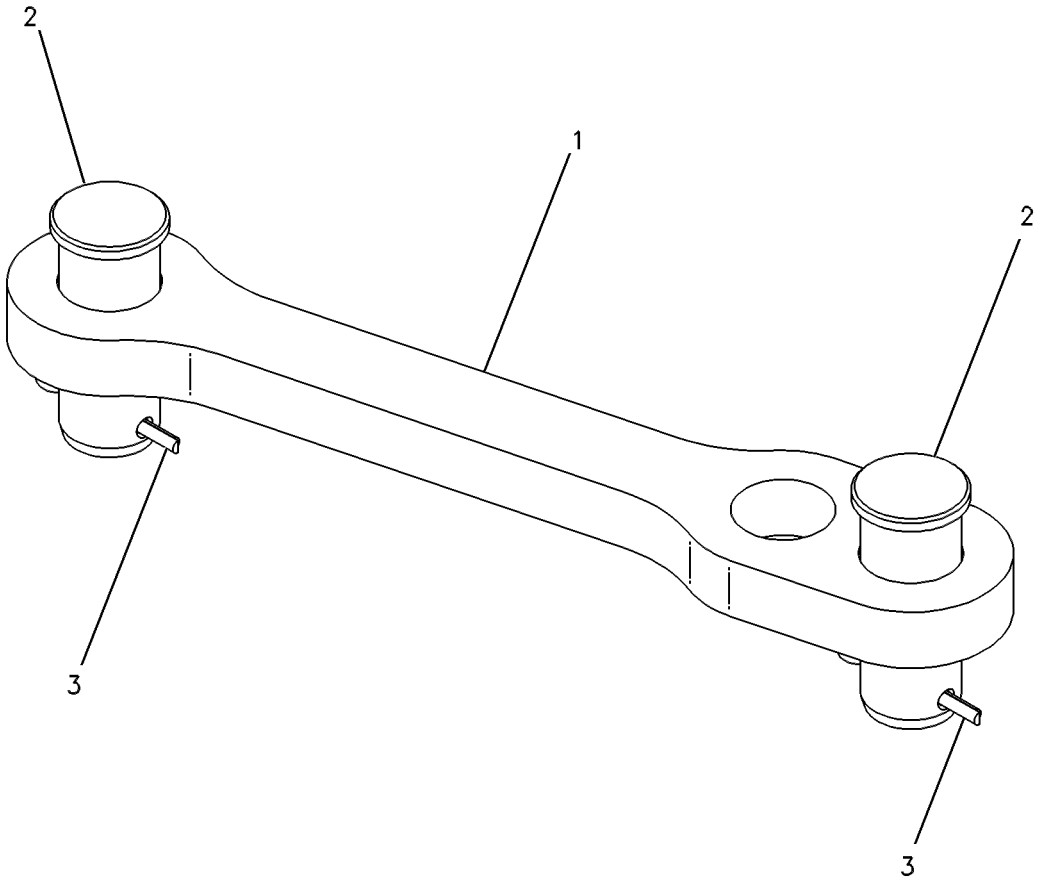

GRAPHIC #1 g00255024

MEMORANDA

170-1931 MOUNTING GP-BUMPER

S/N: 7HR291-UP

PART OF 109-6819 CHASSIS AR

SMCS-7156 **i01191571**

NOTE	REF NO	GRAPHIC REF	PART NUMBER	QTY	PART NAME 1 2 3 4 5 6 (PRODUCT LEVEL)	SEE PAGE
	1	1	**2G-6741**	2	PLATE	
	2	1	**5P-8502**	1	PADLOCK GP	
A		1	**5P-8500**	1	KEY	
A		1	**8Y-6364**	1	SLEEVE	
M	3	1	**8T-5878**	16	BOLT (M24X3X80MM)	
	4	1	**7X-0616**	16	WASHER-HARD (6MM THK)	
	5	1	**124-3080**	2	COVER	
Y	6	1	*131-8125*	1	DRAWBAR GP	679
	7	1	**5P-1076**	4	WASHER-HARD (4MM THK)	
	8	1	**6M-1622**	2	DOWEL (1.494 ODX3.69IN OAL)	
M	9	1	**8T-4183**	4	BOLT (M12X1.75X40 MM)	

A-NOT PART OF THIS GROUP
M-METRIC PART
Y-SEPARATE ILLUSTRATION

170-1931 MOUNTING GP-BUMPER *(contd.)* **i01191571**

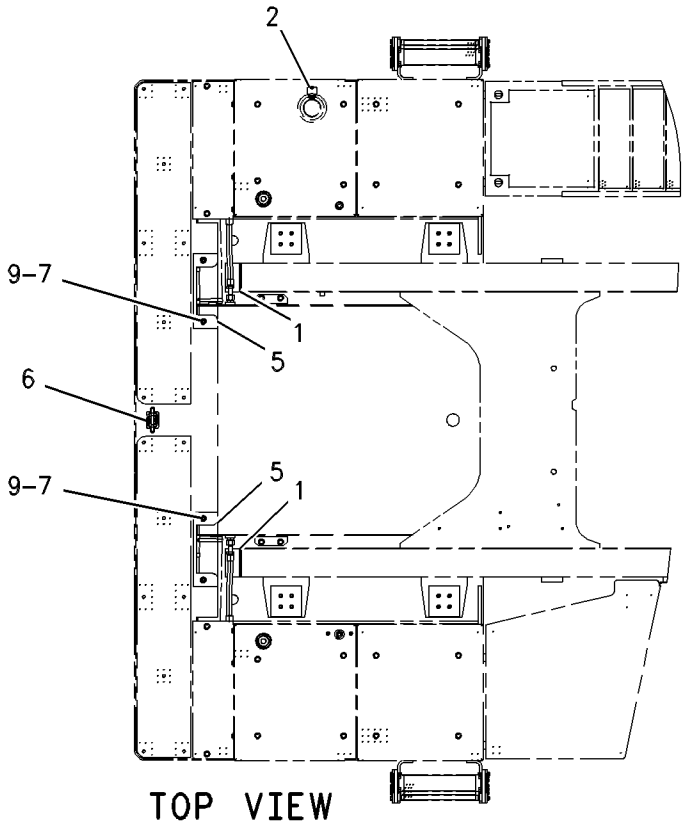

TOP VIEW

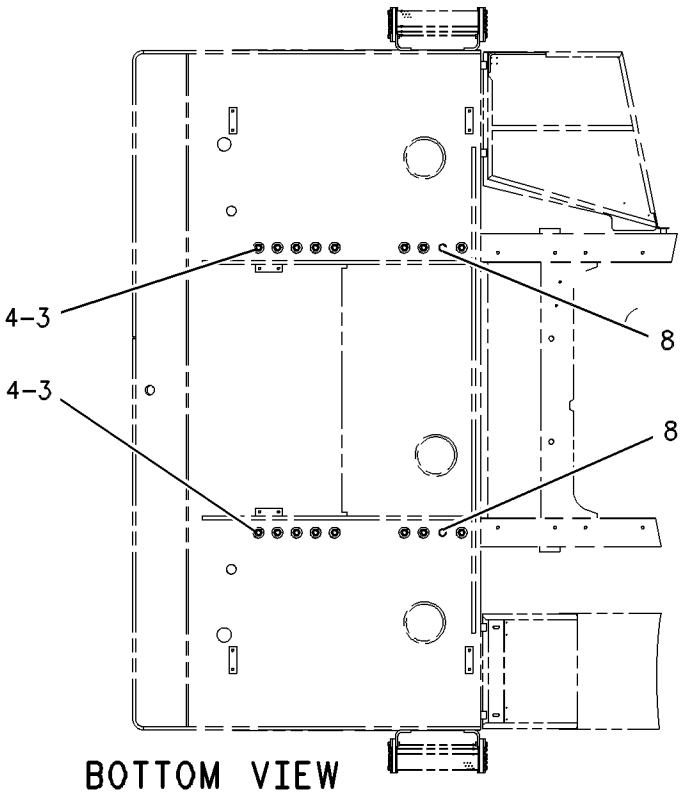

BOTTOM VIEW

GRAPHIC #1 g00554328

131-7808 PANEL GP-HOOD–SIDE

S/N: 7HR1-UP

PART OF 109-6842 HOOD & GUARD GP

SMCS-7251 **i01141499**

NOTE	REF NO	GRAPHIC REF	PART NUMBER	QTY	PART NAME 1 2 3 4 5 6 (PRODUCT LEVEL)	SEE PAGE
	1	1	**160-1024**	2	PLATE	
	2	1	**160-1051**	1	PANEL AS-LH	
	3	1	**160-1052**	1	PANEL AS-RH	
	4	1	**7X-7729**	4	WASHER (3MM THK)	
M	5	1	**8T-4133**	4	NUT (M10X1.50 THD)	

M-METRIC PART

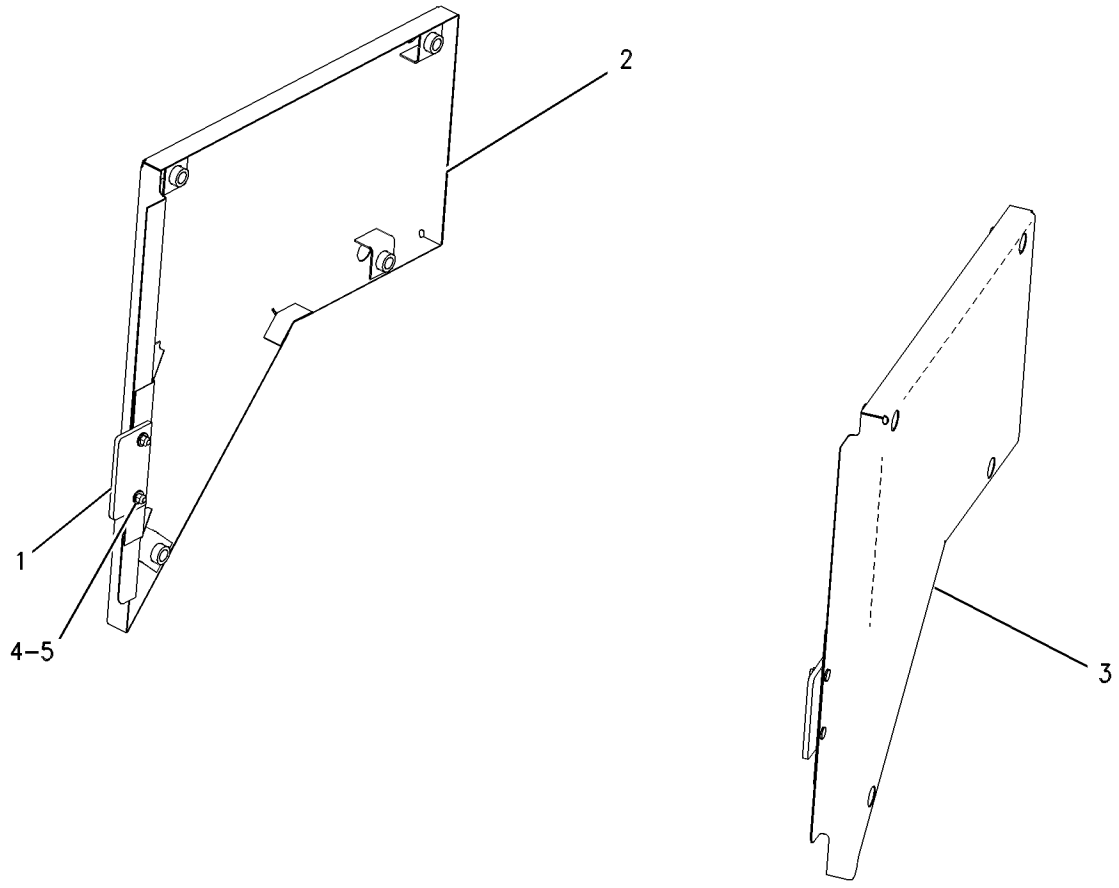

GRAPHIC #1 g00548066

FRAME AND BODY

174-6050 PANEL GP-TOP

S/N: 7HR99-UP

PART OF 109-6842 HOOD & GUARD GP

SMCS-7251 **i01218216**

NOTE	REF NO	GRAPHIC REF	PART NUMBER	QTY	PART NAME 1 2 3 4 5 6 (PRODUCT LEVEL)	SEE PAGE
	1	1	**8C-3468**	1	LOCK AS-CYLINDER	
		1	**7F-9223**	1	LOCKWASHER (0.91MM THK)	
		1	**8T-5004**	1	SCREW-MACHINE (1/4-28X0.375IN)	
	2	1	**174-6381**	1	LATCH AS	
	3	1	**125-8176**	1	CAM-LATCH	
	4	1	**159-2789**	1	PANEL AS-HOOD	

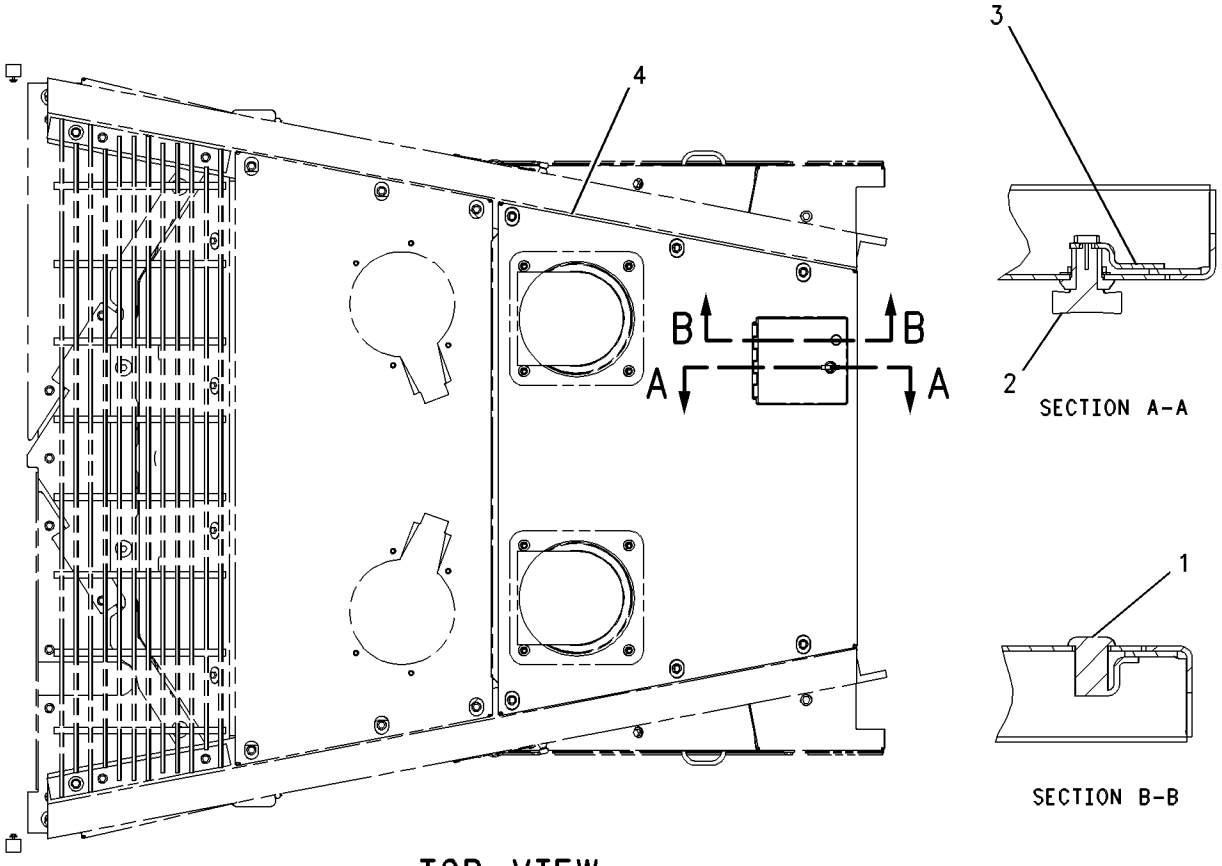

GRAPHIC #1 g00651511

FRAME AND BODY

135-8640 STEP GP

S/N: 7HR1-UP

PART OF 109-6851 LADDER GP

SMCS-7254 **i00947110**

NOTE	REF NO	GRAPHIC REF	PART NUMBER	QTY	PART NAME 1 2 3 4 5 6 (PRODUCT LEVEL)	SEE PAGE
	1	1	**4V-9803**	6	PLATE	
	2	1	**134-2552**	3	STEP AS	
	3	1	**112-4558**	4	PLATE	
	4	1	**135-5154**	2	BRACKET	
M	5	1	**8T-4184**	12	BOLT (M12X1.75X45MM)	
M	6	1	**6V-7687**	20	LOCKNUT (M12X1.75 THD)	
M	7	1	**8T-4194**	8	BOLT (M12X1.75X50MM)	
	8	1	**136-4789**	2	BELT	

M-METRIC PART

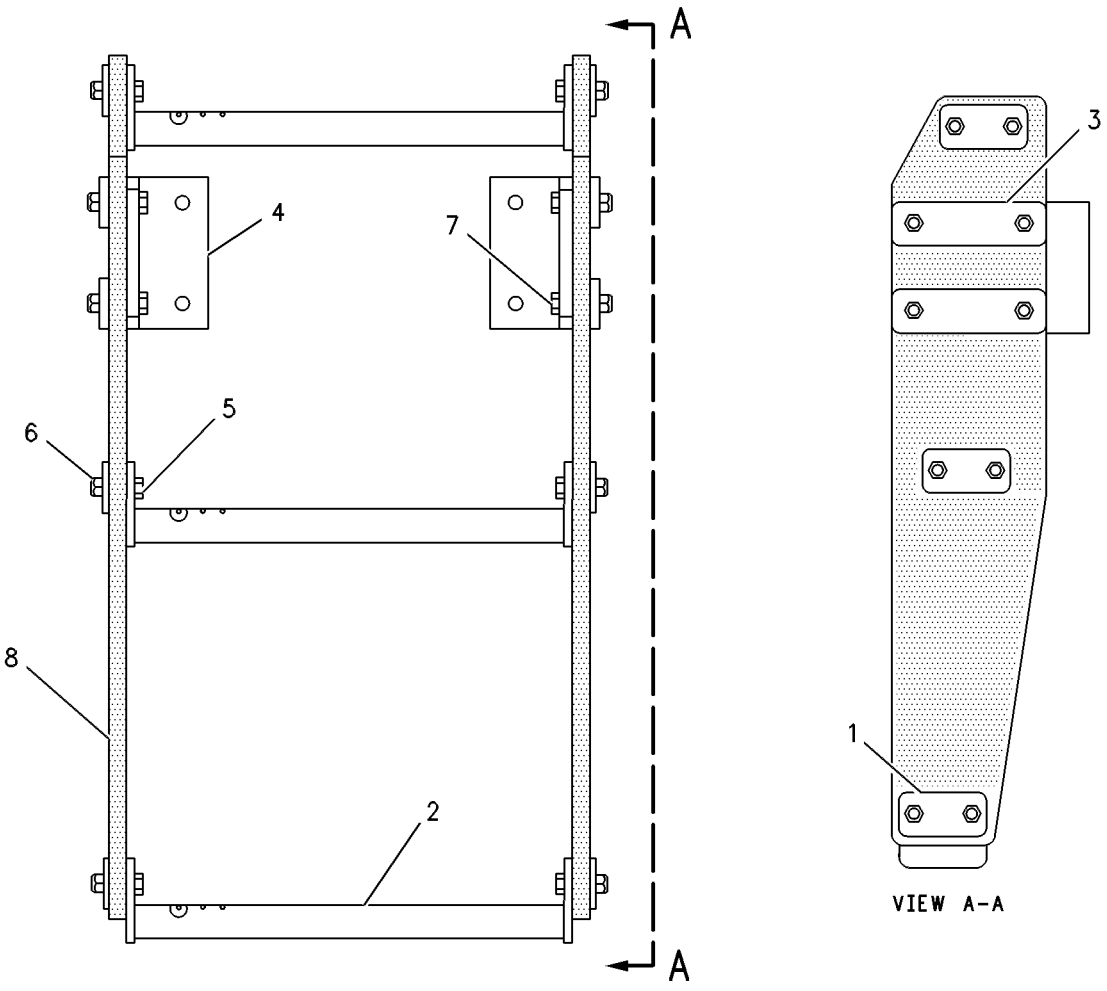

GRAPHIC #1 g00271766

135-3103 SUPPORT GP-AIR INLET

S/N: 2GR1750-UP

PART OF 112-6067 AIR CLEANER GP

SMCS-1087 **i01204754**

NOTE	REF NO	GRAPHIC REF	PART NUMBER	QTY	PART NAME 1 2 3 4 5 6 (PRODUCT LEVEL)	SEE PAGE
	1	1	**7M-1674**	1	ELEMENT-FILTER	
	2	1	**112-6042**	1	SUPPORT-AIR CLEANER	

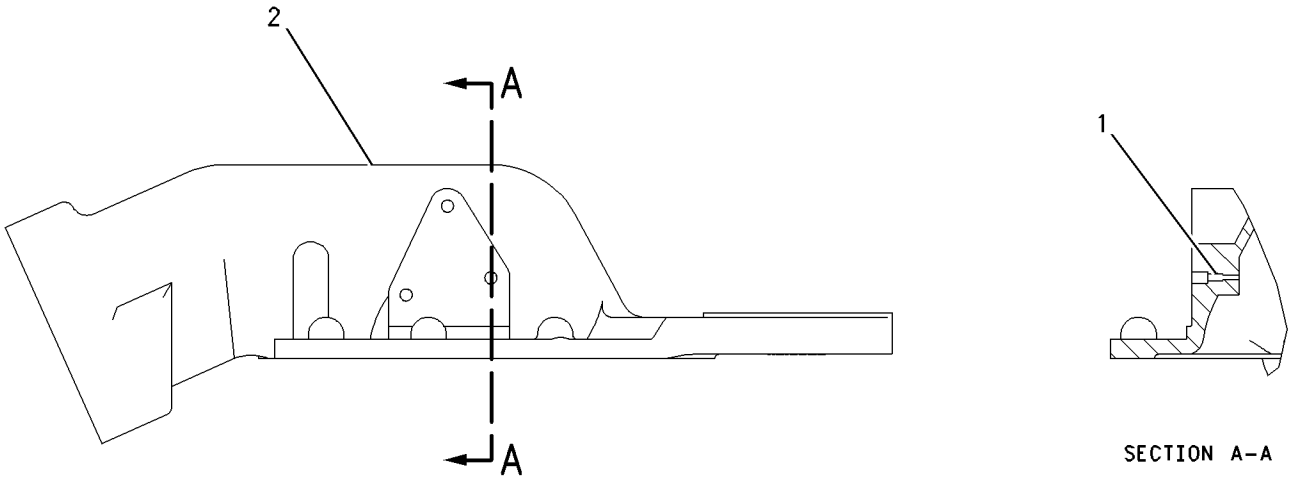

GRAPHIC #1 g00657573

135-3104 SUPPORT GP-AIR INLET

S/N: 2GR1750-UP
LEFT HAND
PART OF 112-6067 AIR CLEANER GP

SMCS-1087 **i01204805**

NOTE	REF NO	GRAPHIC REF	PART NUMBER	QTY	PART NAME 1 2 3 4 5 6 (PRODUCT LEVEL)	SEE PAGE
	1	1	**7M-1674**	1	ELEMENT-FILTER	
	2	1	**112-6041**	1	SUPPORT-AIR CLEANER	

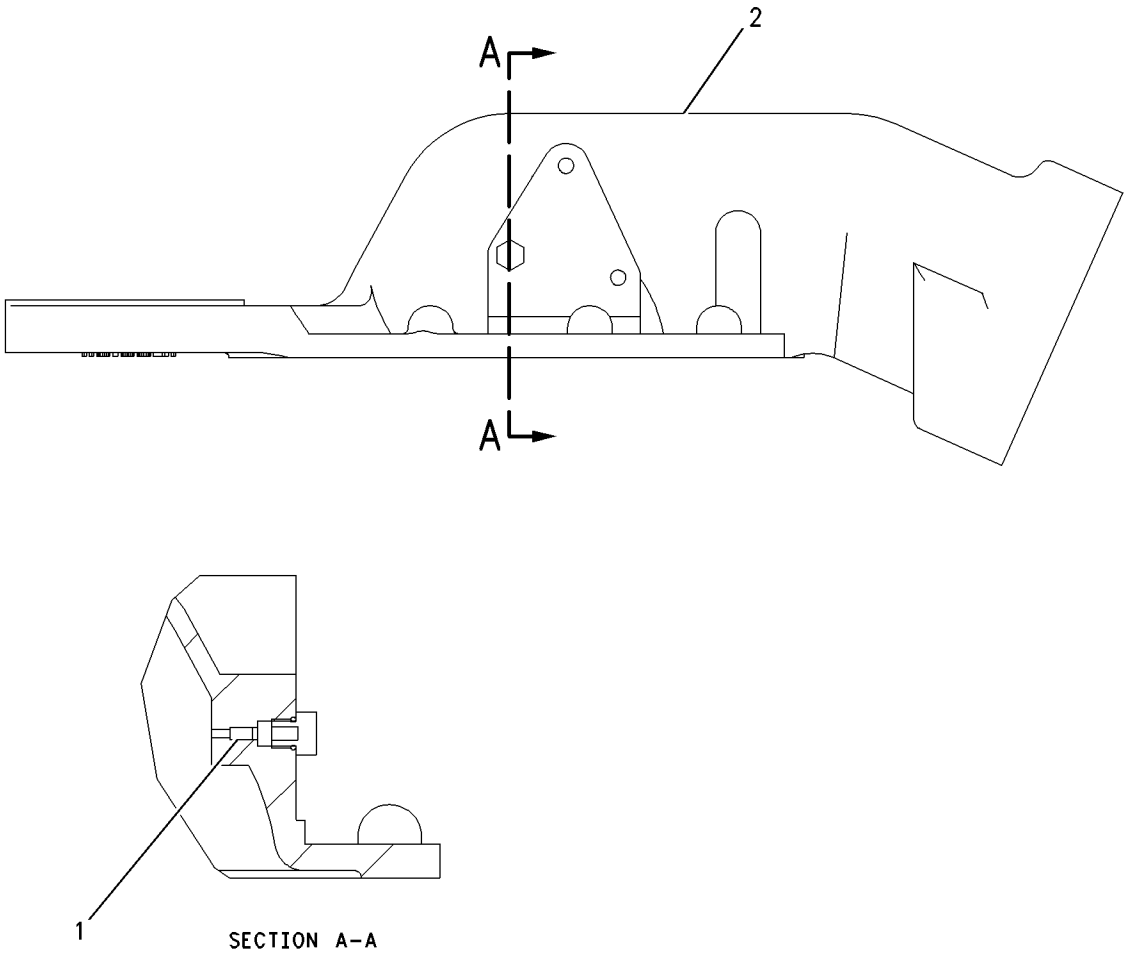

GRAPHIC #1 g00644999

135-5883 ACCUMULATOR GP-BRAKE

S/N: 7HR1-UP
PART OF 109-6875 CONTROL GP-SERVICE BRAKE
FIELD REPLACEMENT ORDER 144-8519 ACCUMULATOR GP

SMCS-4263 **i00747440**

NOTE	REF NO	GRAPHIC REF	PART NUMBER	QTY	PART NAME 1 2 3 4 5 6 (PRODUCT LEVEL)	SEE PAGE
	1	1	**069-2535**	1	VALVE-GAS	
	2	1	**111-9110**	1	PROTECTOR-GAS VALVE	
	3	1	**135-7123**	1	PISTON	
	4	1	**1J-9671**	1	SEAL-O-RING (10.52MM ID)	
	5	1	**5M-3062**	2	BOLT (3/8-16X.750IN)	
	6	1	**8R-2972**	1	KIT-SEAL	

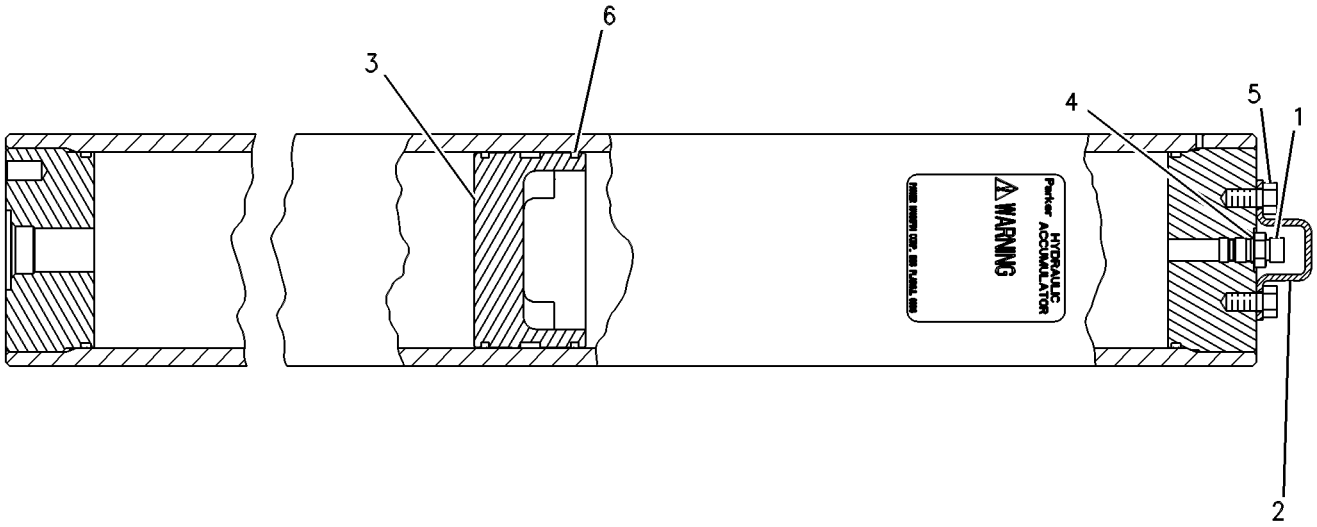

GRAPHIC #1 g00293100

144-8519 ACCUMULATOR GP-BRAKE

S/N: 7HR1-UP

FIELD REPLACEMENT FOR 135-5883 ACCUMULATOR GP-BRAKE

FIELD INSTALLATION

SMCS-4263 **i00748072**

NOTE	REF NO	GRAPHIC REF	PART NUMBER	QTY	PART NAME 1 2 3 4 5 6 (PRODUCT LEVEL)	SEE PAGE
	1	1	**069-2535**	1	VALVE-GAS	
	2	1	**111-9110**	1	PROTECTOR-GAS VALVE	
	3	1	**135-7123**	1	PISTON	
	4	1	**1J-9671**	1	SEAL-O-RING (10.52MM ID)	
	5	1	**5M-3062**	2	BOLT (3/8-16X.750IN)	
	6	1	**8R-2972**	1	KIT-SEAL	

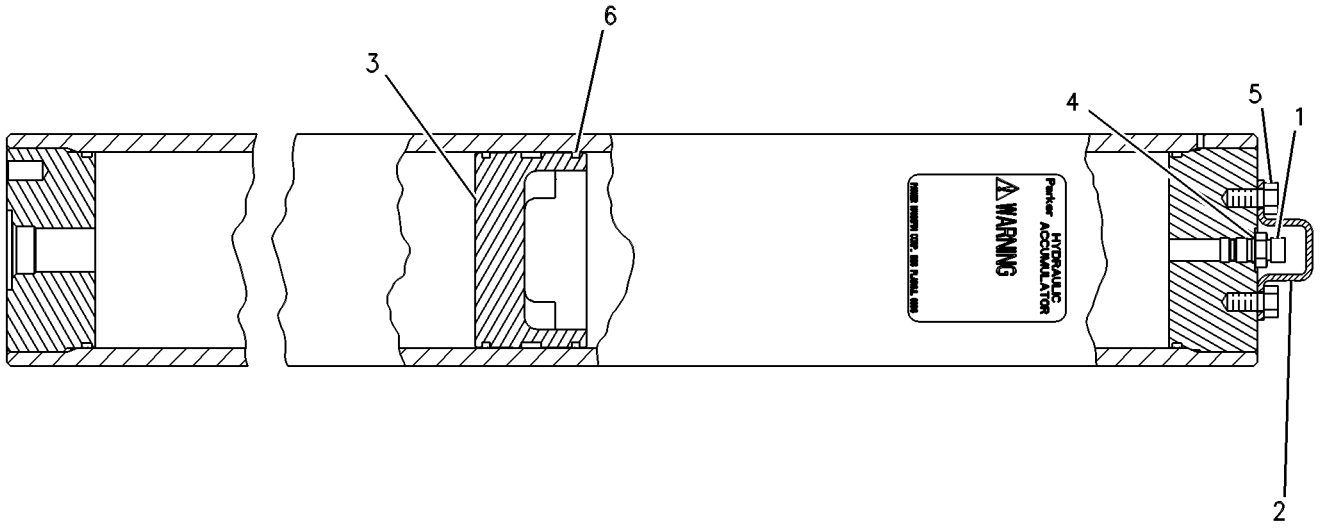

GRAPHIC #1 g00293101

MEMORANDA

BRAKING SYSTEM

8R-5518 BRAKE GP-PARKING

S/N: 7HR1-UP

PART OF 109-6822 POWER TRAIN AR

SMCS-4267 **i01358837**

NOTE	REF NO	GRAPHIC REF	PART NUMBER	QTY	PART NAME 1 2 3 4 5 6 (PRODUCT LEVEL)	SEE PAGE
	1	1	**146-3748**	1	CAGE AS-BEARING	
		1	**8S-0490**	4	SHAFT-OIL PUMP	
	2	1	**4E-8593**	1	SHAFT-BRAKE	
	3	1	**3K-2518**	1	BALL BEARING	
	4	1	**3K-2556**	1	RING-RETAINING	
	5	1	**144-3927**	1	SEAL-LIP TYPE	
	6	1	**7V-5231**	1	HUB	
	7	1	**2H-2665**	1	SEAL-O-RING (62.87MM ID)	
	8	1	**3S-1262**	1	RETAINER	
M	9	1	**6V-5696**	1	BOLT (M12X1.75X80MM)	
B	10	1	**6V-6640**		SEALANT	
	11	1	**1V-8279**	7	DISC AS-BRAKE	
	12	1	**4E-7519**	6	PLATE-CLUTCH	
	13	1	**162-9733**	1	PLATE	
	14	1	**7S-3997**	9	SPRING	
	15	1	**5V-7652**	6	SPACER	
M	16	1	**7X-2549**	6	BOLT (M12X1.75X100MM)	
	17	1	**8T-4223**	9	WASHER-HARD (3MM THK)	
	18	1	**4E-6500**	1	HOUSING-BRAKE	
	19	1	**4E-8583**	3	PISTON	
	20	1	**7S-4001**	3	SEAL-O-RING (56.52MM ID)	
	21	1	**7K-9204**	3	SEAL-LIP (57.15MM ID)	
M	22	1	**8T-6385**	17	BOLT (M16X2.0X180MM)	
	23	1	**9X-8257**	19	WASHER (3.50MM THK)	
	24	1	**4E-8540**	1	PLATE-RETAINING	
M	25	1	**8T-4139**	3	BOLT (M12X1.75X30MM)	
	26	1	**5H-3701**	1	SCREW-PURGE	
	27	1	**7S-4002**	1	PLATE-WARNING	
	28	1	**4B-4158**	4	SCREW-DRIVE (3/16 X 1/4 IN)	
M	29	1	**7X-2557**	2	BOLT (M16X2.0X140MM)	

B-USE AS REQUIRED
M-METRIC PART

8R-5518 **BRAKE GP-PARKING** *(contd.)* **i01358837**

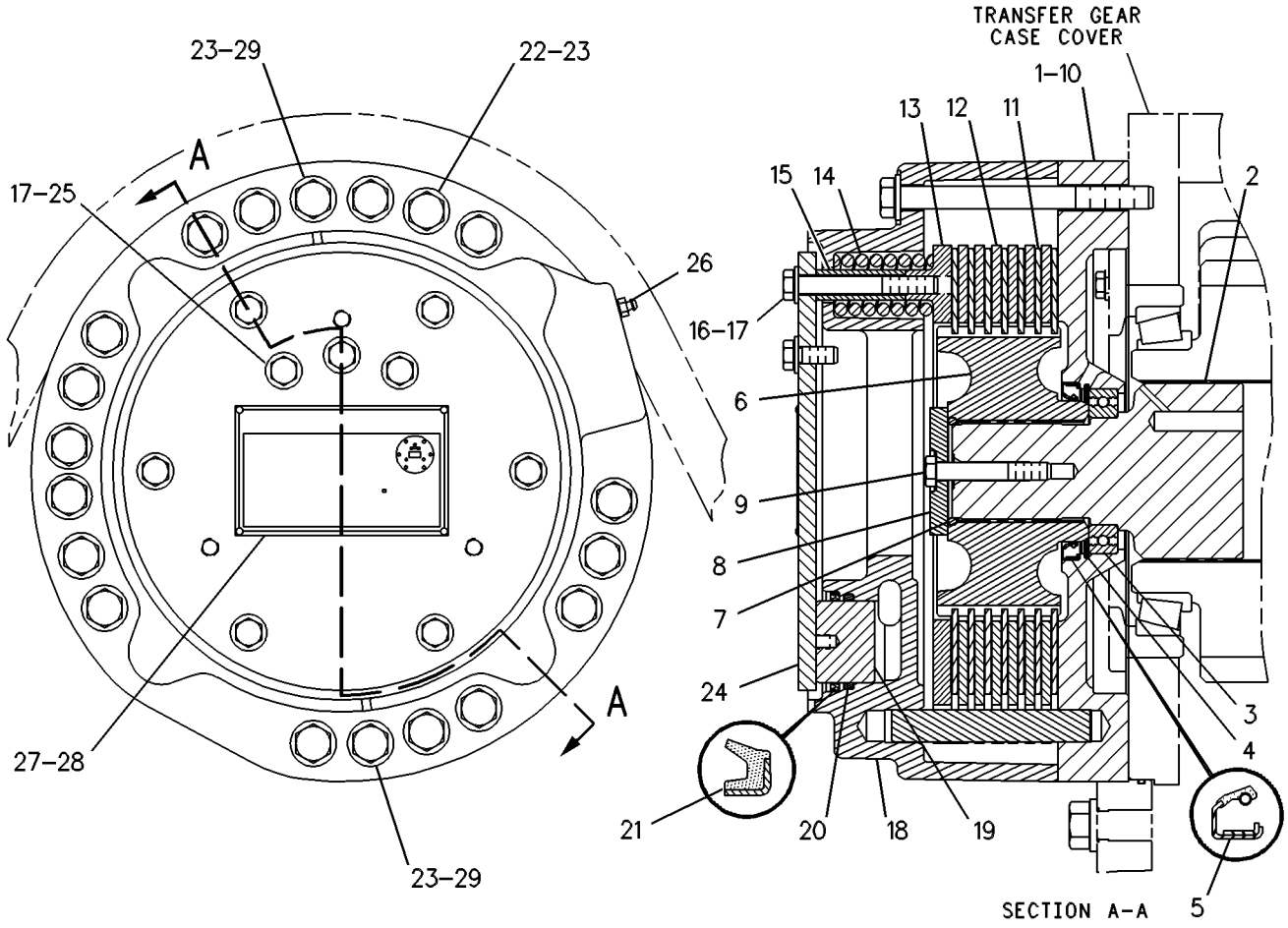

GRAPHIC #1 g00122173

BRAKING SYSTEM

170-4618 BRAKE GP-PARKING

S/N: 7HR1-UP

PART OF 109-6822 POWER TRAIN AR

SMCS-4267 **i01512966**

NOTE	REF NO	GRAPHIC REF	PART NUMBER	QTY	PART NAME 1 2 3 4 5 6 (PRODUCT LEVEL)	SEE PAGE
	1	1	**1V-8279**	7	DISC AS-BRAKE	
	2	1	**3S-1262**	1	RETAINER	
	3	1	**4B-4158**	4	SCREW-DRIVE (3/16X0.25 IN)	
	4	1	**4E-8540**	1	PLATE-RETAINING	
	5	1	**201-1425**	3	PISTON	
	6	1	**4E-8593**	1	SHAFT-BRAKE	
	7	1	**5H-3701**	1	SCREW-PURGE	
	8	1	**7S-4002**	1	PLATE-WARNING	
	9	1	**7V-5231**	1	HUB	
	10	1	**146-3748**	1	CAGE AS-BEARING	
		1	**8S-0490**	4	SHAFT-OIL PUMP	
	11	1	**162-9733**	1	PLATE	
	12	1	**201-1426**	1	HOUSING-BRAKE	
	13	1	**169-4670**	9	SPRING	
	14	1	**201-1424**	6	SPACER	
	15	1	**170-6712**	3	RING-BACKUP	
	16	1	**171-1391**	3	SEAL	
	17	1	**172-0844**	6	PLATE-CLUTCH	
	18	1	**177-1483**	1	SEAL-LIP TYPE	
	19	1	**2H-2665**	1	SEAL-O-RING	
	20	1	**3K-2518**	1	BALL BEARING	
	21	1	**3K-2556**	1	RING-RETAINING	
M	22	1	**6V-5696**	1	BOLT (M12X1.75X80MM)	
	23	1	**7K-9204**	3	SEAL-LIP	
M	24	1	**7X-2558**	2	BOLT (M16X2.0X150MM)	
M	25	1	**8T-4139**	3	BOLT (M12X1.75X30MM)	
	26	1	**8T-4223**	9	WASHER-HARD (13.5X25.5X3MM THK)	
M	27	1	**8T-5001**	6	BOLT (M12X1.75X130MM)	
M	28	1	**8T-6385**	17	BOLT (M16X2X180MM)	
	29	1	**9X-8257**	19	WASHER (17.5X30X3.5MM THK)	
B	30	1	**6V-6640**		SEALANT	

B-USE AS REQUIRED
M-METRIC PART

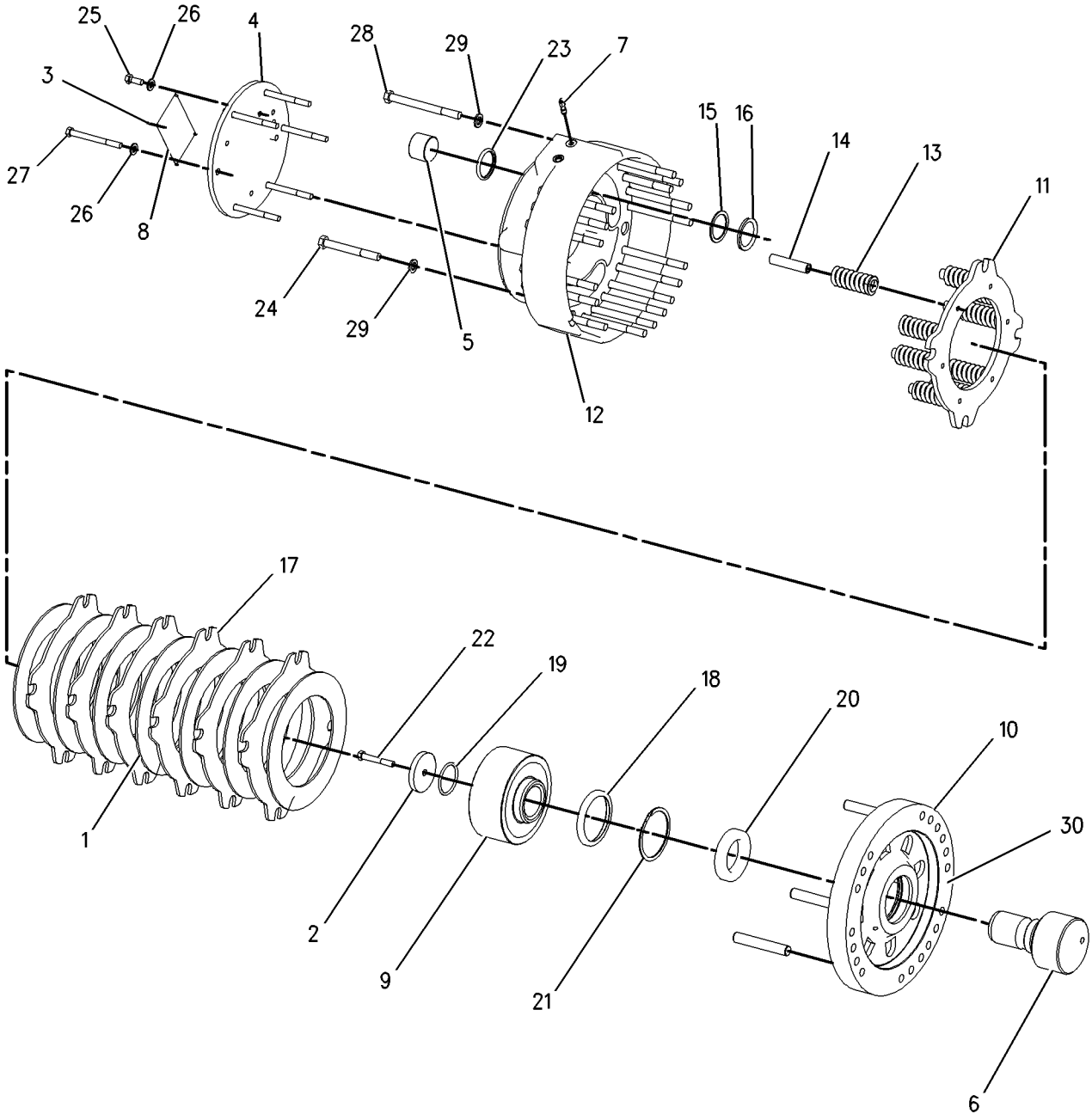

GRAPHIC #1 g00719163

BRAKING SYSTEM

112-0874 BRAKE GP-SERVICE

S/N: 7HR1-UP

PART OF 112-2166 WHEEL GP-FINAL DRIVE & BRAKE

SMCS-4251 **i01198146**

NOTE	REF NO	GRAPHIC REF	PART NUMBER	QTY	PART NAME 1 2 3 4 5 6 (PRODUCT LEVEL)	SEE PAGE
	1	1	**5H-3701**	1	SCREW-PURGE	
	2	1	**8V-3609**	6	SPRING-RETRACTOR	
	3	1	**7V-8346**	6	SPRING-GUIDE	
	4	1	**6M-9155**	6	PIN	
	5	1	**9S-8005**	4	PLUG-O-RING (3/4-16 THD)	
	6	1	**3K-0360**	4	SEAL-O-RING (16.36MM ID)	
	7	1	**9U-1734**	1	PISTON	
	8	1	**132-6532**	1	HUB	
	9	1	**9U-1741**	1	RING-RETAINING	
	10	1	**131-1295**	1	ANCHOR-BRAKE	
	11	1	**115-5658**	1	SEAL	
	12	1	**5M-6200**	1	SEAL-O-RING (405.30MM ID)	
	13	1	**9M-5892**	1	SEAL-O-RING (514.65MM ID)	
	14	1	**9U-1742**	1	SEAL-O-RING (328.00MM ID)	
	15	1	**9U-1738**	4	DISC-FRICTION	
	16	1	**9U-1739**	5	PLATE-OUTER	
	17	1	**104-7006**	8	DOWEL-HOLLOW (35.0 ODX45.0MM OAL)	
	18	1	**133-0992**	1	WASHER-THRUST	
M	19	1	**8C-7562**	4	SCREW-FLAT HEAD (M8X1.25X20.0MM)	

M-METRIC PART

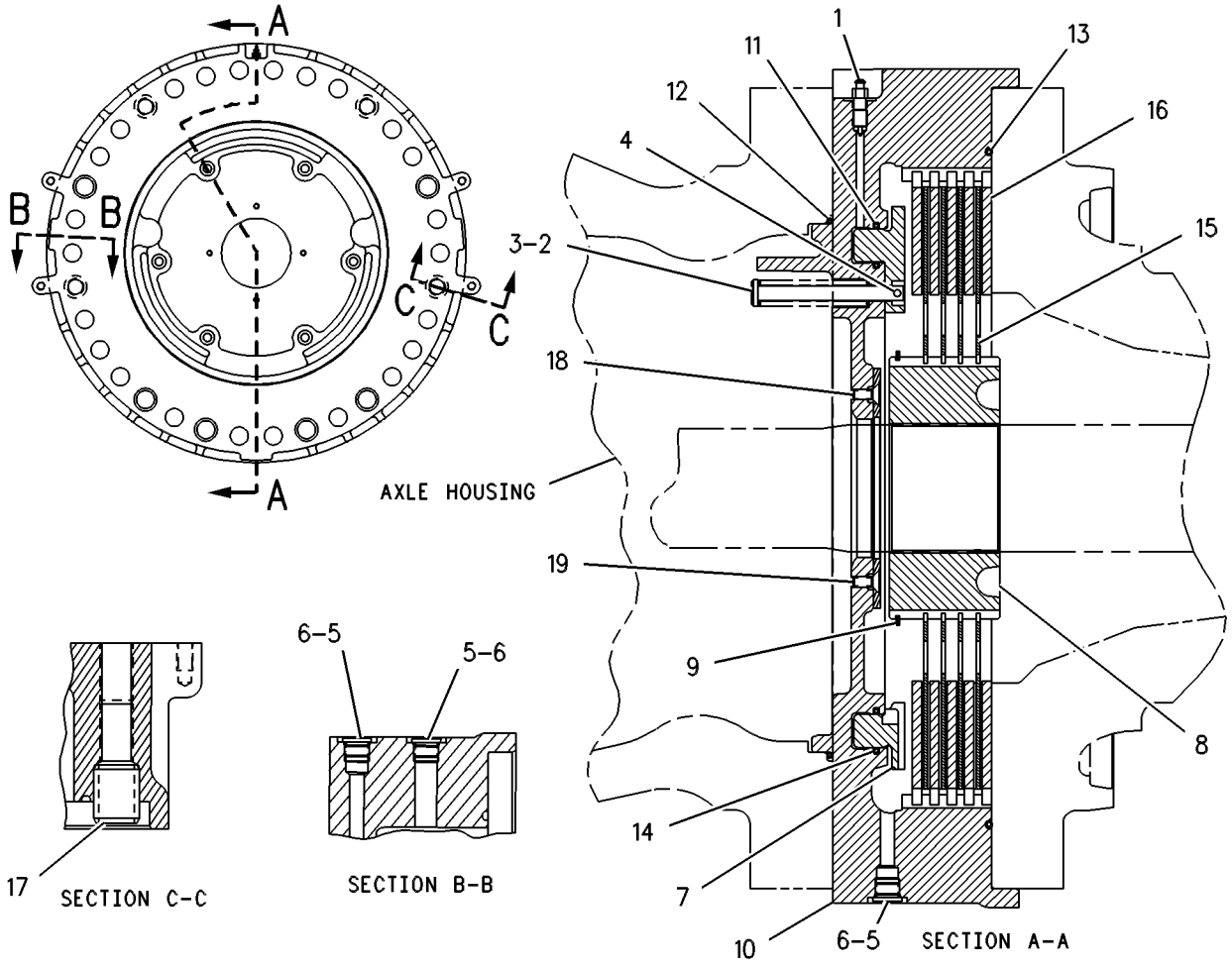

GRAPHIC #1 g00257153

164-0935 BRAKE GP-SERVICE

S/N: 7HR1-UP

PART OF 169-6898 WHEEL GP-FINAL DRIVE & BRAKE

SMCS-4251 **i01198152**

NOTE	REF NO	GRAPHIC REF	PART NUMBER	QTY	PART NAME 1 2 3 4 5 6 (PRODUCT LEVEL)	SEE PAGE
	1	1	**5H-3701**	1	SCREW-PURGE	
	2	1	**8V-3609**	6	SPRING-RETRACTOR	
	3	1	**7V-8346**	6	SPRING-GUIDE	
	4	1	**6M-9155**	6	PIN	
	5	1	**9S-8005**	4	PLUG-O-RING (3/4-16 THD)	
	6	1	**3K-0360**	4	SEAL-O-RING (16.36MM ID)	
	7	1	**9U-1734**	1	PISTON	
	8	1	**132-6532**	1	HUB	
	9	1	**9U-1741**	1	RING-RETAINING	
	10	1	**164-0912**	1	ANCHOR-BRAKE	
	11	1	**115-5658**	1	SEAL	
	12	1	**5M-6200**	1	SEAL-O-RING (405.30MM ID)	
	13	1	**9M-5892**	1	SEAL-O-RING (514.65MM ID)	
	14	1	**9U-1742**	1	SEAL-O-RING (328.00MM ID)	
	15	1	**9U-1738**	4	DISC-FRICTION	
	16	1	**9U-1739**	5	PLATE-OUTER	
	17	1	**104-7006**	8	DOWEL-HOLLOW (35.0 ODX45.0MM OAL)	
	18	1	**133-0992**	1	WASHER-THRUST	
M	19	1	**8C-7562**	4	SCREW-FLAT HEAD (M8X1.25X20.0MM)	

M-METRIC PART

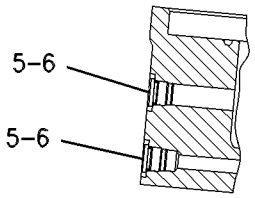

SECTION B–B

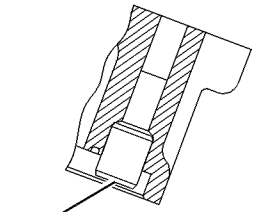

SECTION C–C

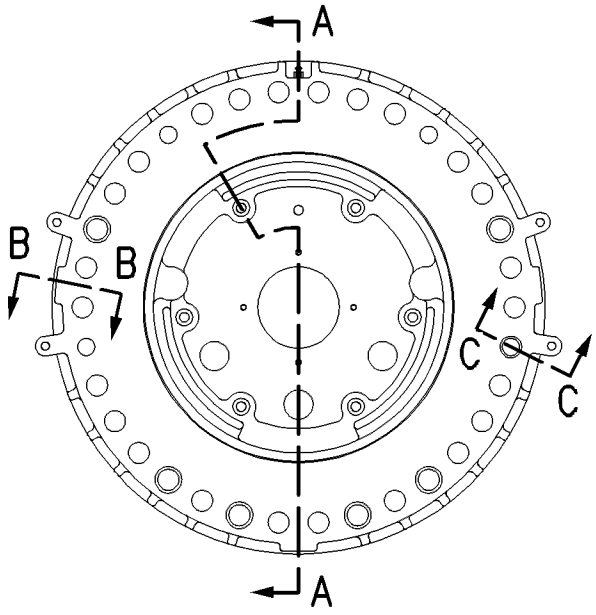

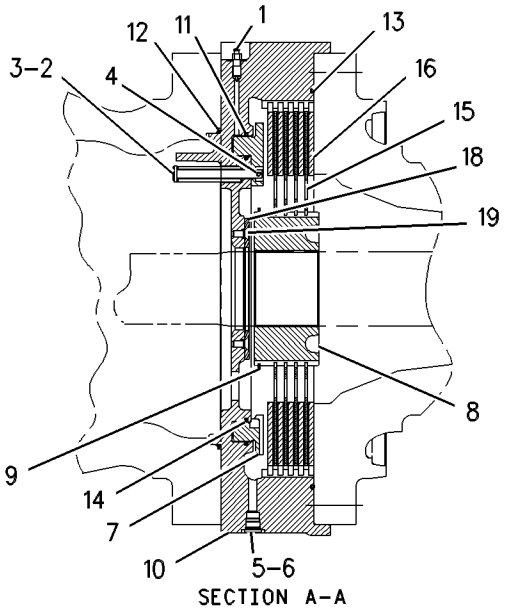

SECTION A–A

GRAPHIC #1

g00554323

BRAKING SYSTEM

112-2273 CONTROL GP-FOOT BRAKE

S/N: 7HR1-UP

PART OF 130-6906, 171-7047 CAB AR

SMCS-4269 **i01541152**

NOTE	REF NO	GRAPHIC REF	PART NUMBER	QTY	PART NAME 1 2 3 4 5 6 (PRODUCT LEVEL)	SEE PAGE
	1	1	**3B-4502**	5	LOCKWASHER (NO. 10)	
	2	1	**3E-5520**	1	SWITCH AS-LIMIT (STOP LAMP)	
	3	1	**4B-4274**	2	WASHER (5.5X13X1.2MM THK)	
	4	1	**4E-0649**	2	PAD	
	5	1	**4E-8952**	1	PLATE	
	6	1	**4E-8953**	1	PIN	
	7	1	**4E-8954**	2	PEDAL	
	8	1	**4E-8955**	2	SPRING	
	9	1	**4E-8957**	1	GROMMET	
	10	1	**4E-9663**	1	ROLLER	
	11	1	**4E-9664**	2	PIN	
	12	1	**4E-9665**	2	BEARING	
	13	1	**4E-9667**	1	ROLLER	
	14	1	**4E-9668**	1	PIN	
	15	1	**4E-9669**	2	BEARING	
	16	1	**4E-9967**	1	HARNESS AS-BRAKE (STOP LIGHT SWITCH)	
		1	**155-2270**	1	KIT-CONNECTING PLUG (2 PIN)	
					(INCLUDES PLUG AS & WEDGE)	
	17	1	**5M-6755**	3	SCREW-MACHINE (NO10X.562 IN)	
M	18	1	**6V-2313**	2	BOLT (M5X0.8X30MM)	
M	19	1	**6V-8672**	2	SCREW-MACHINE (M2.5X0.45X16)	
M	20	1	**8C-7531**	2	SETSCREW-SOCKET (M6X1X12MM)	
	21	1	**8S-2225**	2	SEAL-LIP	
M	22	1	**8T-6693**	5	SCREW-MACHINE (M5X0.8X16MM)	
	23	1	**9U-2176**	1	BASE AS	
		1	**9S-1307**	2	DOWEL	
	24	1	**9U-2178**	1	SHAFT	
	25	1	**9U-2179**	2	WASHER	
Y	26	1	*9X-5592*	1	SENSOR GP-POSITION (TC IMPELLER CLUTCH)	321
	27	1	**009-3101**	10	RING-RETAINING	
	28	1	**112-2276**	1	HARNESS AS-BRAKE (RIGHT FOOT BRAKE BASE)	
		1	**127-4988**	1	SWITCH AS-LIMIT	
		1	**124-5811**	1	GROMMET AS	
		1	**7S-1201**	1	SCREW-MACHINE (8-32X0.375 IN)	
		1	**155-2260**	1	KIT-CONNECTING PLUG (3 PIN)	
					(INCLUDES PLUG AS & WEDGE)	
M	29	1	**125-3295**	2	SCREW-PAN HEAD (M2.5X0.45X12MM)	
	30	1	**128-0606**	1	COVER	
	31	1	**128-0607**	1	SEAL	
	32	1	**128-0610**	1	BASE AS	
		1	**9S-1307**	2	DOWEL	
	33	1	**129-7673**	1	VALVE GP-BRAKE CONTROL (SERVICE)	
		1	**4E-5542**	1	BOOT-VALVE PISTON	
	34	1	**129-7674**	1	ROLLER	
	35	1	**132-3915**	1	SHAFT AS	
M	36	1	**5C-7261**	2	NUT (M8X1.25 THD)	
M	37	1	**6V-7743**	6	LOCKNUT (M6X1 THD)	
M	38	1	**8T-4189**	2	BOLT (M8X1.25X20MM)	
	39	1	**8T-4223**	2	WASHER-HARD (13.5X25.5X3MM THK)	
M	40	1	**8T-4956**	2	BOLT (M12X1.75X35MM)	
M	41	1	**8T-7547**	7	BOLT (M8X1.25X30MM)	

M-METRIC PART
Y-SEPARATE ILLUSTRATION

112-2273 CONTROL GP-FOOT BRAKE *(contd.)* i01541152

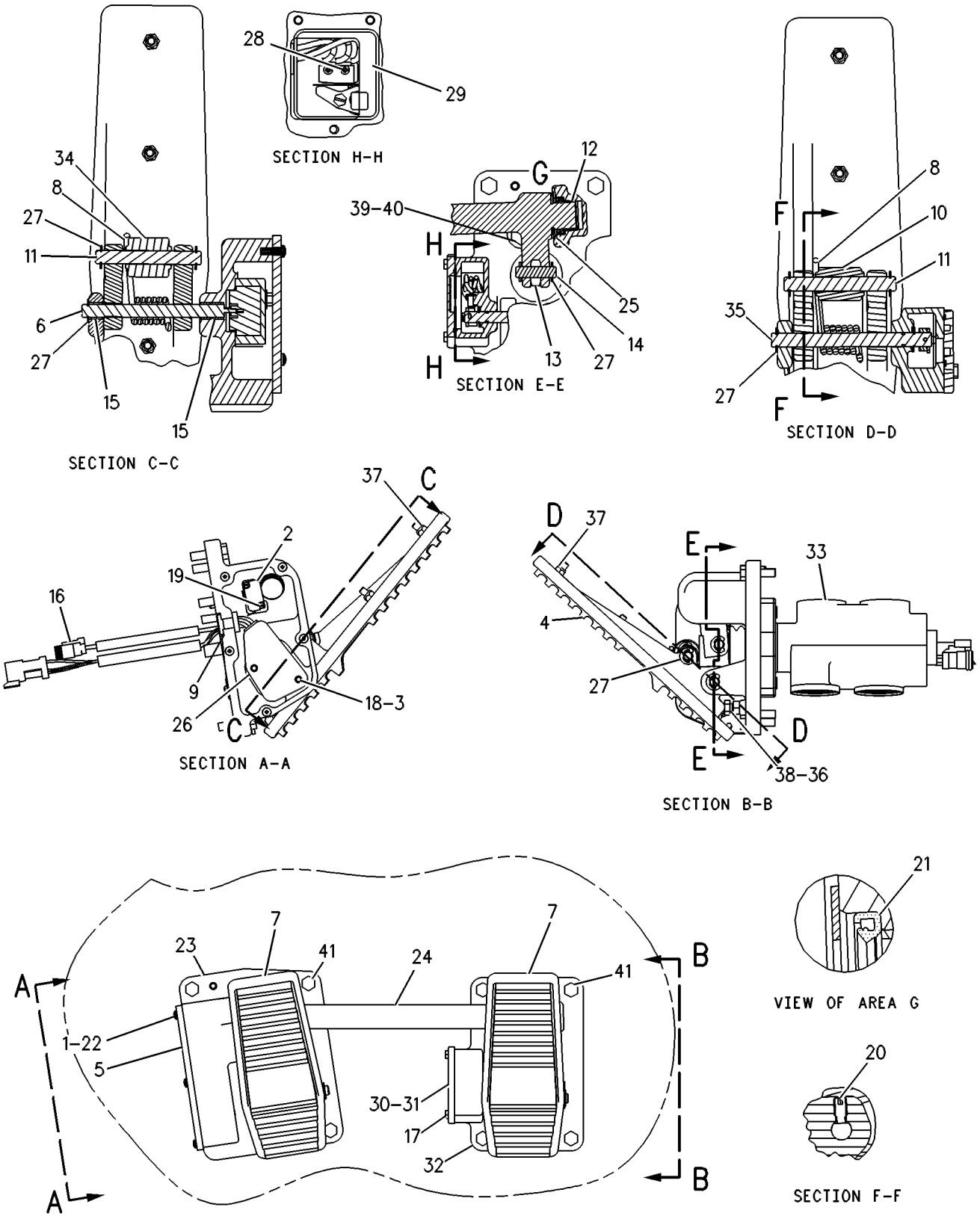

GRAPHIC #1 g00273950

BRAKING SYSTEM

112-2273 CONTROL GP-FOOT BRAKE

S/N: 7HR298-UP

PART OF 171-7047 CAB AR

SMCS-4269 **i01541153**

NOTE	REF NO	GRAPHIC REF	PART NUMBER	QTY	PART NAME 1 2 3 4 5 6 (PRODUCT LEVEL)	SEE PAGE
	1	1	**3B-4502**	5	LOCKWASHER (NO. 10)	
	2	1	**3E-5520**	1	SWITCH AS-LIMIT (STOP LAMP)	
	3	1	**4B-4274**	2	WASHER (5.5X13X1.2MM THK)	
	4	1	**4E-0649**	2	PAD	
	5	1	**4E-8952**	1	PLATE	
	6	1	**4E-8953**	1	PIN	
	7	1	**4E-8954**	2	PEDAL	
	8	1	**4E-8955**	2	SPRING	
	9	1	**4E-8957**	1	GROMMET	
	10	1	**4E-9663**	1	ROLLER	
	11	1	**4E-9664**	2	PIN	
	12	1	**4E-9665**	2	BEARING	
	13	1	**4E-9667**	1	ROLLER	
	14	1	**4E-9668**	1	PIN	
	15	1	**4E-9669**	2	BEARING	
	16	1	**4E-9967**	1	HARNESS AS-BRAKE (STOP LIGHT SWITCH)	
		1	**155-2270**	1	KIT-CONNECTING PLUG (2 PIN)	
					(INCLUDES PLUG AS & WEDGE)	
	17	1	**5M-6755**	3	SCREW-MACHINE (NO10X.562 IN)	
M	18	1	**6V-2313**	2	BOLT (M5X0.8X30MM)	
M	19	1	**6V-8672**	2	SCREW-MACHINE (M2.5X0.45X16)	
M	20	1	**8C-7531**	2	SETSCREW-SOCKET (M6X1X12MM)	
	21	1	**8S-2225**	2	SEAL-LIP	
M	22	1	**8T-6693**	5	SCREW-MACHINE (M5X0.8X16MM)	
	23	1	**9U-2176**	1	BASE AS	
		1	**9S-1307**	2	DOWEL	
	24	1	**9U-2178**	1	SHAFT	
	25	1	**9U-2179**	2	WASHER	
CY	26	1	**147-1680**	1	SENSOR GP-POSITION (TC IMPELLER CLUTCH)	324
	27	1	**009-3101**	10	RING-RETAINING	
	28	1	**112-2276**	1	HARNESS AS-BRAKE	
		1	**127-4988**	1	SWITCH AS-LIMIT	
		1	**124-5811**	1	GROMMET AS	
		1	**7S-1201**	1	SCREW-MACHINE (8-32X0.375 IN)	
		1	**155-2260**	1	KIT-CONNECTING PLUG (3 PIN)	
					(INCLUDES PLUG AS & WEDGE)	
M	29	1	**125-3295**	2	SCREW-PAN HEAD (M2.5X0.45X12MM)	
	30	1	**128-0606**	1	COVER	
	31	1	**128-0607**	1	SEAL	
	32	1	**128-0610**	1	BASE AS	
		1	**9S-1307**	2	DOWEL	
J	33	1	**129-7673**	1	VALVE GP-BRAKE CONTROL (SERVICE)	
	34	1	**129-7674**	1	ROLLER	
	35	1	**132-3915**	1	SHAFT AS	
M	36	1	**5C-7261**	2	NUT (M8X1.25 THD)	
M	37	1	**6V-7743**	6	LOCKNUT (M6X1 THD)	
M	38	1	**8T-4189**	2	BOLT (M8X1.25X20MM)	
	39	1	**8T-4223**	2	WASHER-HARD (13.5X25.5X3MM THK)	
M	40	1	**8T-4956**	2	BOLT (M12X1.75X35MM)	
M	41	1	**8T-7547**	7	BOLT (M8X1.25X30MM)	
					AVAILABLE REPAIR KIT(S):	
J			**201-4814**	1	KIT-SEAL	
					(INCLUDES 3 O-RINGS, 2 SEALS, WASHER, QUAD RING, BOOT & CUP)	

112-2273 CONTROL GP-FOOT BRAKE *(contd.)* i01541153

C-CHANGE FROM PREVIOUS TYPE
J-PART MARKED J INCLUDES KIT MARKED J
M-METRIC PART
Y-SEPARATE ILLUSTRATION

112-2273 CONTROL GP-FOOT BRAKE *(contd.)* i01541153

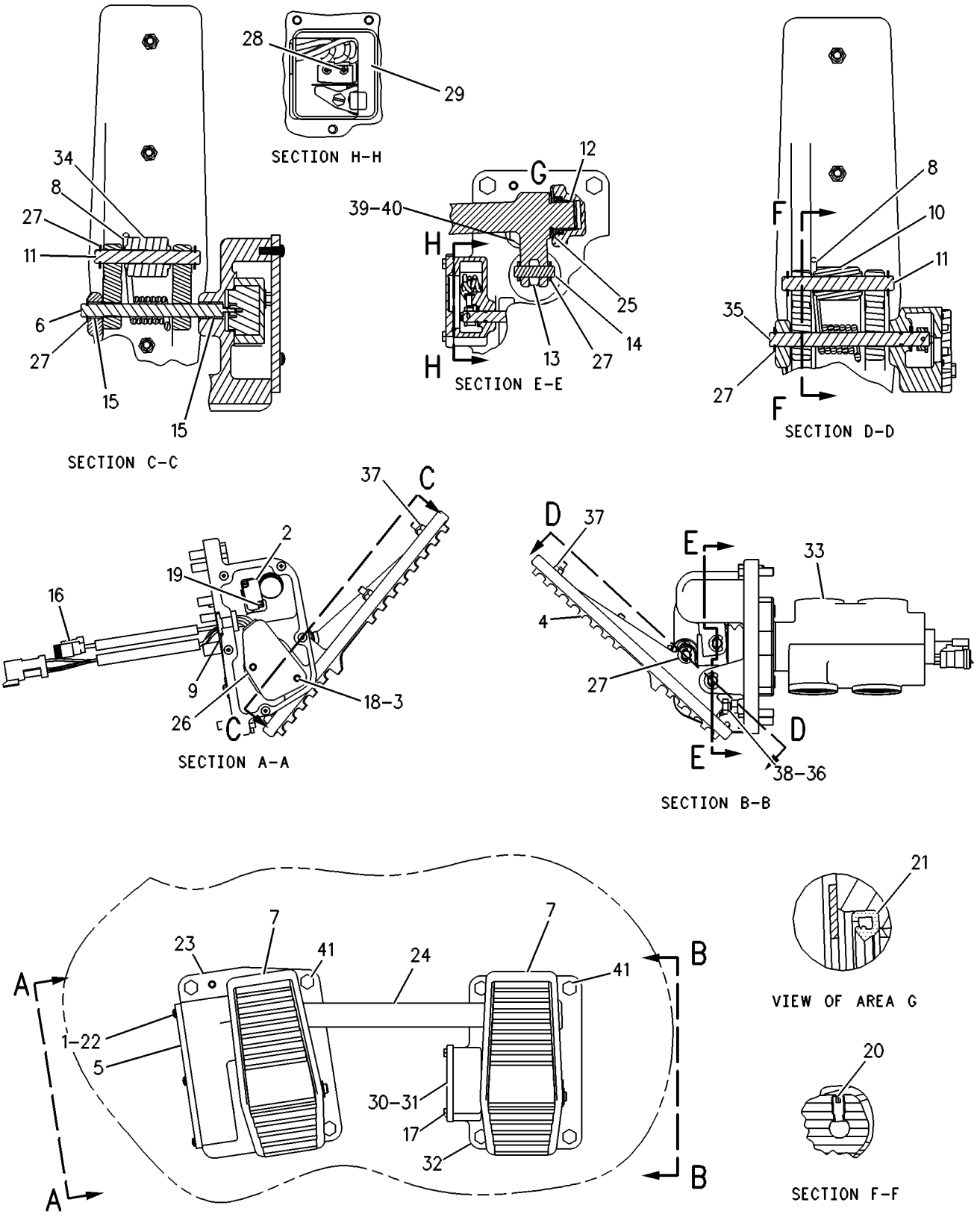

GRAPHIC #1 g00273950

BRAKING SYSTEM

4E-6401 CONTROL GP-PARKING BRAKE

S/N: 7HR1-UP

PART OF 130-6906, 171-7047 CAB AR

SMCS-4282, 4284 **i01057763**

NOTE	REF NO	GRAPHIC REF	PART NUMBER	QTY	PART NAME 1 2 3 4 5 6 (PRODUCT LEVEL)	SEE PAGE
	1	1	**122-1671**	1	KNOB	
M	2	1	**5C-2874**	1	NUT (M5X.8 THD)	
	3	1	**3E-6367**	1	CABLE AS	
M	4	1	**5C-2890**	1	NUT (M6X1.00 THD)	
	5	1	**096-0067**	1	PIN-CLEVIS	
	6	1	**5B-9192**	1	COTTER	
	7	1	**9U-0830**	1	END-YOKE ROD	
	8	1	**3S-2093**	2	STRAP-CABLE (1.75IN DIA)	
	9	1	**9U-0178**	1	BRACKET	
	10	1	**9U-0200**	1	BLOCK	
M	11	1	**5C-7261**	2	NUT (M8X1.25 THD)	
		1	**8T-4224**	2	WASHER-HARD (2MM THK)	

M-METRIC PART

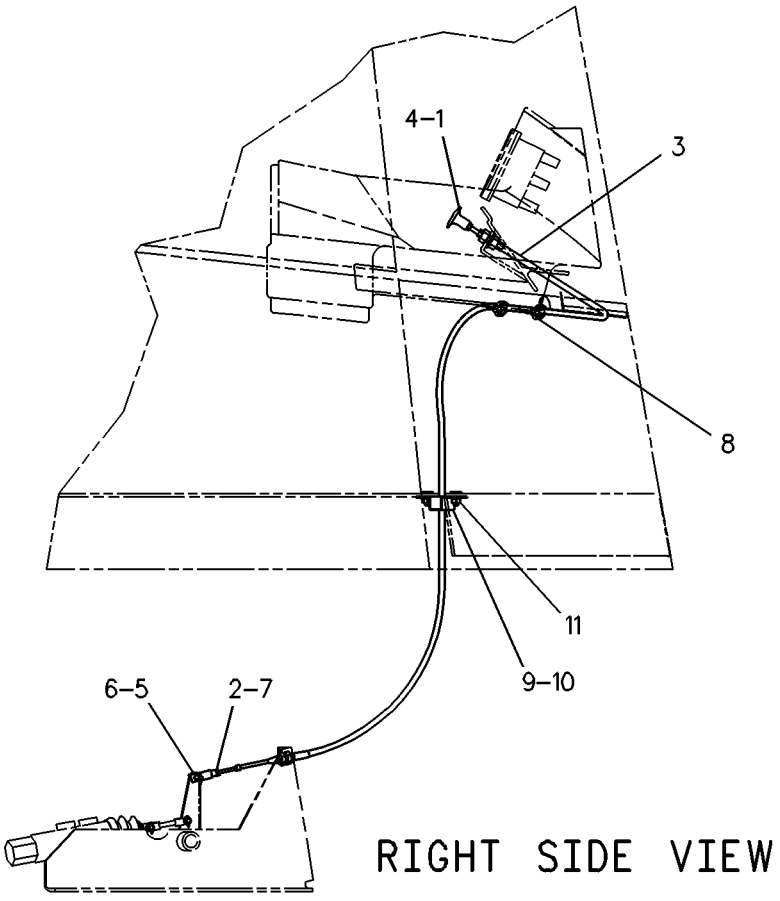

GRAPHIC #1 g00119781

BRAKING SYSTEM

109-6875 CONTROL GP-SERVICE BRAKE

S/N: 7HR1-246, 248-252, 254-256, 258-260, 262-264, 266-268, 271

PART OF 109-6820 HYDRAULIC AR

SMCS-4257, 4258, 4265, 4269, 4280 **i01208432**

NOTE	REF NO	GRAPHIC REF	PART NUMBER	QTY	PART NAME 1 2 3 4 5 6 (PRODUCT LEVEL)	SEE PAGE
	1	1	**3D-2824**	2	SEAL-O-RING (23.47MM ID)	
	2	1	**3J-1907**	1	SEAL-O-RING (11.89MM ID)	
	3	1	**4J-5267**	3	SEAL-O-RING (24.99MM ID)	
	4	1	**5K-9090**	2	SEAL-O-RING (23.52MM ID)	
	5	1	**6V-8397**	2	SEAL-O-RING (9.27MM ID)	
	6	1	**6V-9746**	7	SEAL-O-RING (18.94MM ID)	
	7	1	**9X-8250**	1	CLIP (SLOT)	
	8	1	**8T-0078**	1	CONNECTOR	
	9	1	**116-4091**	1	TUBE AS	
I	10	1	**116-6763**	1	HOSE AS	
I	11	1	**116-6764**	1	HOSE AS	
I	12	1	**116-6765**	1	HOSE AS	
I	13	1	**155-5281**	2	HOSE AS	
	14	1	**116-9345**	2	HOSE AS	
	15	1	**116-9347**	1	HOSE AS	
	16	1	**4B-9302**	1	CLIP (15.88MM ID)	
	17	1	**4D-7388**	1	CLIP (34.92MM ID)	
	18	1	**4S-4455**	1	CLIP (31.75MM ID)	
	19	1	**5K-9660**	4	CLIP	
	20	1	**7D-7233**	1	CLIP	
	21	1	**5P-7462**	1	CLIP (SLOT)	
	22	1	**5P-7463**	1	CLIP (TAB)	
	23	1	**5P-7464**	2	CLIP (SLOT)	
	24	1	**5P-7465**	2	CLIP (TAB)	
	25	1	**5P-7468**	2	CLIP (SLOT)	
	26	1	**5P-7469**	2	CLIP (TAB)	
	27	1	**5P-8444**	2	GROMMET	
	28	1	**6V-0683**	1	GROMMET	
	29	1	**6V-1249**	2	GROMMET (22.00MM OD)	
	30	1	**6V-8637**	1	CONNECTOR-SEAL	
	31	1	**6V-8636**	1	CONNECTOR	
	32	1	**8C-3205**	6	FLANGE-HALF	
	33	1	**8S-0948**	1	CLIP (20.64MM ID)	
	34	1	**8T-4121**	27	WASHER-HARD (2.5MM THK)	
M	35	1	**8T-4136**	6	BOLT (M10X1.50X25MM)	
M	36	1	**8T-4137**	4	BOLT (M10X1.50X20MM)	
M	37	1	**8T-4139**	4	BOLT (M12X1.75X30MM)	
M	38	1	**8T-4136**	4	BOLT (M10X1.50X25MM)	
M	39	1	**8T-4196**	8	BOLT (M10X1.50X35MM)	
	40	1	**8T-4223**	4	WASHER-HARD (3MM THK)	
M	41	2	**8T-6466**	4	BOLT (M10X1.50X60MM)	
	42	2	**2M-9780**	4	SEAL-O-RING (19.18MM ID)	
	43	2	**3J-1907**	2	SEAL-O-RING (11.89MM ID)	
	44	2	**3K-0360**	4	SEAL-O-RING (16.36MM ID)	
	45	2	**4J-0520**	2	SEAL-O-RING (32.92MM ID)	
	46	2	**6V-0852**	2	CAP-DUST	
	47	2	**6V-3965**	2	FITTING AS	
	48	2	**6V-8722**	4	ELBOW-FACE SEAL	
	49	2	**7J-9108**	8	SEAL-O-RING (15.72MM ID)	
	50	2	**7X-7729**	4	WASHER (3MM THK)	
	51	2	**115-2516**	2	BLOCK	
	52	2	**117-6722**	1	TUBE AS	
	53	2	**117-6725**	1	TUBE AS	
	54	2	**117-6726**	1	TUBE AS	
	55	2	**117-6727**	1	TUBE AS	
	56	2	**118-5041**	1	TUBE AS	

109-6875 **CONTROL GP-SERVICE BRAKE** ***(contd.)*** **i01208432**

NOTE	REF NO	GRAPHIC REF	PART NUMBER	QTY	PART NAME 1 2 3 4 5 6 (PRODUCT LEVEL)	SEE PAGE
	57	2	**124-1875**	1	GUARD AS-RH	
	58	2	**124-1880**	1	GUARD AS-RH	
	59	2	**124-2472**	1	GUARD AS-LH	
	60	2	**4B-9302**	1	CLIP (15.88MM ID)	
	61	2	**6V-9746**	1	SEAL-O-RING (18.94MM ID)	
	62	2	**6V-8626**	2	ELBOW-90 DEGREE (7/8-14 THD)	
	63	2	**6V-8642**	2	CONNECTOR	
	64	2	**7M-8798**	2	CLIP	
	65	2	**128-1970**	1	GUARD AS-LH	
	66	2	**8C-3206**	4	FLANGE-HALF	
	67	2	**8F-8513**	1	CLIP	
	68	2	**8T-4121**	14	WASHER-HARD (2.5MM THK)	
M	69	2	**8T-4136**	1	BOLT (M10X1.50X25MM)	
M	70	2	**8T-4137**	3	BOLT (M10X1.50X20MM)	
M	71	2	**8T-4179**	4	BOLT (M12X1.75X20MM)	
M	72	2	**8T-4192**	8	BOLT (M12X1.75X25MM)	
M	73	2	**8T-4196**	8	BOLT (M10X1.50X35MM)	
	74	2	**8T-4223**	8	WASHER-HARD (3MM THK)	
	75	3	**3D-2824**	4	SEAL-O-RING (23.47MM ID)	
	76	3	**3J-1907**	3	SEAL-O-RING (11.89MM ID)	
	77	3	**3K-0360**	4	SEAL-O-RING (16.36MM ID)	
	78	3	**4K-1388**	1	SEAL-O-RING (26.59MM ID)	
	79	3	**5K-9090**	2	SEAL-O-RING (23.52MM ID)	
	80	3	**6D-1004**	1	GASKET	
	81	3	**6V-1722**	1	ADAPTER-O-RING	
	82	3	**6V-8397**	4	SEAL-O-RING (9.27MM ID)	
	83	3	**8V-8398**	9	TUBE AS	
	84	3	**6V-8942**	2	REDUCER-O-RING	
	85	3	**6V-9746**	16	SEAL-O-RING (18.94MM ID)	
	86	3	**7M-8485**	1	SEAL-O-RING (29.74MM ID)	
	87	3	**8T-6453**	1	CONNECTOR-O-RING (1-3/16-12 THD)	
	88	3	**6V-9839**	2	TEE	
I	89	3	**8W-2948**	1	HOSE AS	
I	90	3	**9R-4638**	1	HOSE AS	
	91	3	**9S-4191**	1	PLUG-O-RING (9/16-18 THD)	
	92	3	**135-7896**	1	CLAMP AS	
I	93	3	**9U-3430**	1	HOSE AS	
Y	94	3	**135-5883**	2	ACCUMULATOR GP-BRAKE	755
Y	95	3	**102-4226**	1	PUMP GP-PISTON (BRAKE)	802
	96	3	**104-7108**	2	VALVE GP-CHECK (BRAKE ACCUMULATOR)	
	97	3	**114-2399**	1	HOSE AS	
	98	3	**116-9331**	1	JUNCTION BLOCK	
I	99	3	**136-0025**	1	HOSE AS	
I	100	3	**136-0026**	1	HOSE AS	
	101	3	**6V-8637**	2	CONNECTOR-SEAL	
	102	3	**6V-9851**	1	ELBOW-90 DEGREE SWIVEL (13/16-16 THD)	
	103	3	**116-9353**	1	PLATE	
	104	3	**117-5992**	1	BRACKET	
	105	3	**127-4667**	1	STRIP AS	
Y	106	3	**133-3699**	1	VALVE & MTG GP-BRAKE CONTROL (PARKING)	808
	107	3	**2P-1293**	4	LOCKNUT-BULKHEAD (1 3/16-12 THD)	
	108	3	**6V-1889**	2	CLIP (28.58MM ID)	
	109	3	**6V-8625**	2	ELBOW-90 DEGREE (3/4-16 THD)	
	110	3	**6V-8636**	1	CONNECTOR	
	111	3	**6V-8997**	4	UNION	
	112	3	**6V-9001**	1	ELBOW-45 DEGREE (9/16-18 THD)	
	113	3	**6V-9853**	3	ELBOW-SWIVEL (1 3/16-12 THD)	
	114	3	**8S-0948**	1	CLIP (20.64MM ID)	
	115	3	**8T-4121**	5	WASHER-HARD (2.5MM THK)	

109-6875 **CONTROL GP-SERVICE BRAKE** *(contd.)* **i01208432**

NOTE	REF NO	GRAPHIC REF	PART NUMBER	QTY	PART NAME 1 2 3 4 5 6 (PRODUCT LEVEL)	SEE PAGE
I	116	3	**2A-7227**	2	HOSE AS	
M	117	3	**8T-4137**	5	BOLT (M10X1.50X20MM)	
M	118	3	**8T-4139**	3	BOLT (M12X1.75X30MM)	
M	119	3	**8T-4183**	2	BOLT (M12X1.75X40 MM)	
M	120	3	**8T-4185**	2	BOLT (M10X1.5X50MM)	
M	121	3	**8T-4192**	8	BOLT (M12X1.75X25MM)	
M	122	3	**8T-4195**	2	BOLT (M10X1.50X30MM)	
	123	3	**8T-4223**	19	WASHER-HARD (3MM THK)	
M	124	3	**8T-4244**	2	NUT (M12X1.75 THD)	
	125	3	**8T-6684**	1	ELBOW-90 DEGREE (1 1/16-12 THD)	
	126	3	**8T-8899**	1	ELBOW-45 DEGREE	
	127	3	**6V-8556**	2	NUT (1 3/16-12 THD)	
	128	3	**6V-9008**	1	ELBOW-90 DEGREE (1 5/16-12 THD)	
	129	3	**9T-6005**	1	VALVE GP-CHECK (BRAKE PISTON PUMP)	
	130	3	**6V-9002**	1	ELBOW-45 DEGREE (3/4-16 THD)	
	131	3	**5P-7854**	2	CLIP (31.8MM ID)	

I-SEE HOSE FABRICATION GUIDE
M-METRIC PART
Y-SEPARATE ILLUSTRATION

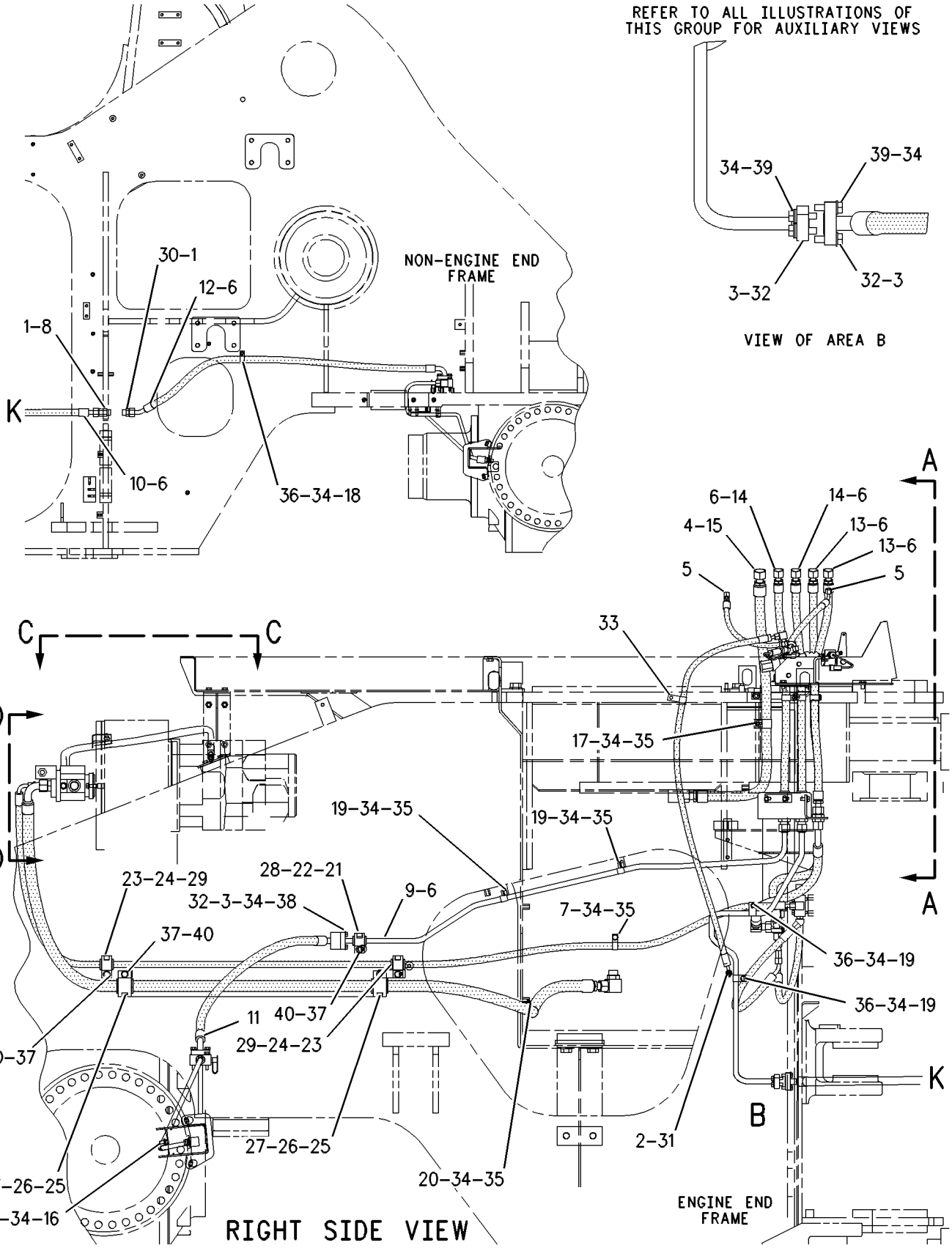

GRAPHIC #1 g00291521

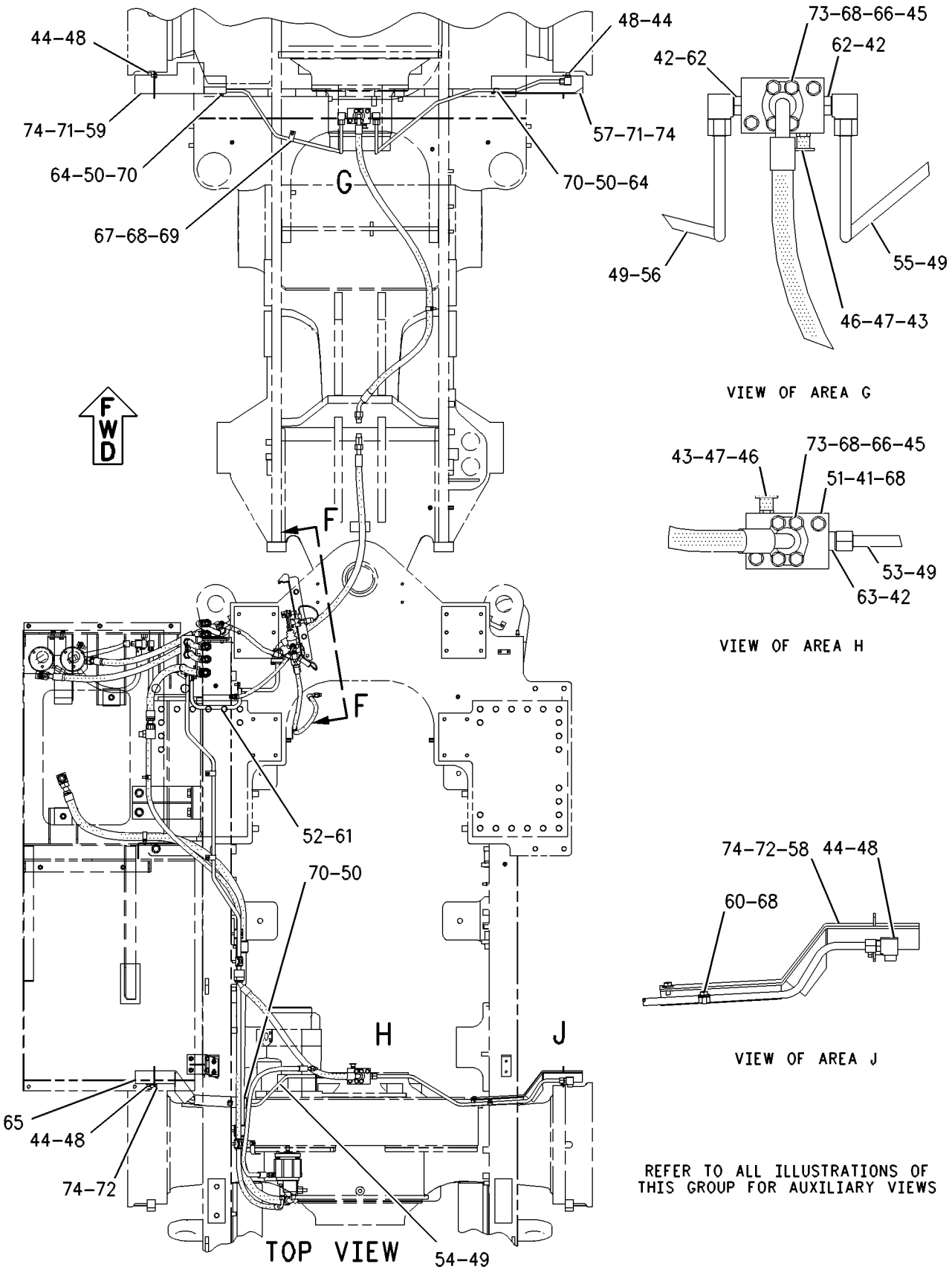

GRAPHIC #2 g00344312

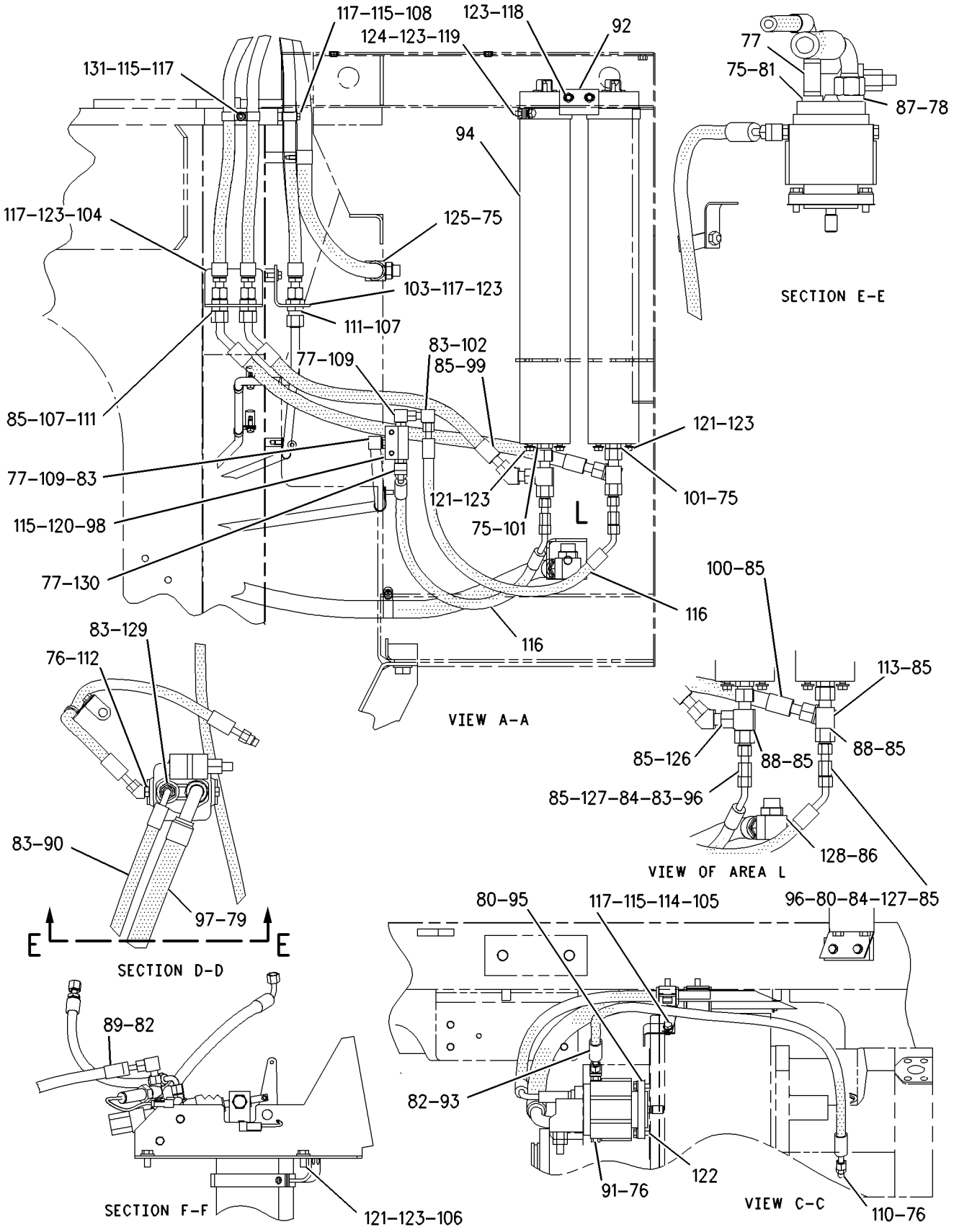

GRAPHIC #3

g00634735

BRAKING SYSTEM

109-6875 CONTROL GP-SERVICE BRAKE

S/N: 7HR247, 253, 257, 261, 265, 269-270, 272-310

PART OF 109-6820 HYDRAULIC AR

SMCS-4257, 4258, 4265, 4269, 4280 **i01207864**

NOTE	REF NO	GRAPHIC REF	PART NUMBER	QTY	PART NAME 1 2 3 4 5 6 (PRODUCT LEVEL)	SEE PAGE
	1	1	**3D-2824**	2	SEAL-O-RING (23.47MM ID)	
	2	1	**3J-1907**	1	SEAL-O-RING (11.89MM ID)	
	3	1	**4J-5267**	3	SEAL-O-RING (24.99MM ID)	
	4	1	**5K-9090**	2	SEAL-O-RING (23.52MM ID)	
	5	1	**6V-8397**	2	SEAL-O-RING (9.27MM ID)	
	6	1	**6V-9746**	7	SEAL-O-RING (18.94MM ID)	
	7	1	**9X-8250**	1	CLIP (SLOT)	
	8	1	**8T-0078**	1	CONNECTOR	
	9	1	**116-4091**	1	TUBE AS	
I	10	1	**116-6763**	1	HOSE AS	
I	11	1	**116-6764**	1	HOSE AS	
I	12	1	**116-6765**	1	HOSE AS	
I	13	1	**155-5281**	2	HOSE AS	
	14	1	**116-9345**	2	HOSE AS	
	15	1	**116-9347**	1	HOSE AS	
	16	1	**4B-9302**	1	CLIP (15.88MM ID)	
	17	1	**4D-7388**	1	CLIP (34.92MM ID)	
	18	1	**4S-4455**	1	CLIP (31.75MM ID)	
	19	1	**5K-9660**	4	CLIP	
	20	1	**7D-7233**	1	CLIP	
	21	1	**5P-7462**	1	CLIP (SLOT)	
	22	1	**5P-7463**	1	CLIP (TAB)	
	23	1	**5P-7464**	2	CLIP (SLOT)	
	24	1	**5P-7465**	2	CLIP (TAB)	
	25	1	**5P-7468**	2	CLIP (SLOT)	
	26	1	**5P-7469**	2	CLIP (TAB)	
	27	1	**5P-8444**	2	GROMMET	
	28	1	**6V-0683**	1	GROMMET	
	29	1	**6V-1249**	2	GROMMET (22.00MM OD)	
	30	1	**6V-8637**	1	CONNECTOR-SEAL	
	31	1	**6V-8636**	1	CONNECTOR	
	32	1	**8C-3205**	6	FLANGE-HALF	
	33	1	**8S-0948**	1	CLIP (20.64MM ID)	
	34	1	**8T-4121**	27	WASHER-HARD (2.5MM THK)	
M	35	1	**8T-4136**	6	BOLT (M10X1.50X25MM)	
M	36	1	**8T-4137**	4	BOLT (M10X1.50X20MM)	
M	37	1	**8T-4139**	4	BOLT (M12X1.75X30MM)	
M	38	1	**8T-4136**	4	BOLT (M10X1.50X25MM)	
M	39	1	**8T-4196**	8	BOLT (M10X1.50X35MM)	
	40	1	**8T-4223**	4	WASHER-HARD (3MM THK)	
M	41	2	**8T-6466**	4	BOLT (M10X1.50X60MM)	
	42	2	**2M-9780**	4	SEAL-O-RING (19.18MM ID)	
	43	2	**3J-1907**	2	SEAL-O-RING (11.89MM ID)	
	44	2	**3K-0360**	4	SEAL-O-RING (16.36MM ID)	
	45	2	**4J-0520**	2	SEAL-O-RING (32.92MM ID)	
	46	2	**6V-0852**	2	CAP-DUST	
	47	2	**6V-3965**	2	FITTING AS	
	48	2	**6V-8722**	4	ELBOW-FACE SEAL	
	49	2	**7J-9108**	8	SEAL-O-RING (15.72MM ID)	
	50	2	**7X-7729**	4	WASHER (3MM THK)	
	51	2	**115-2516**	2	BLOCK	
	52	2	**117-6722**	1	TUBE AS	
	53	2	**117-6725**	1	TUBE AS	
	54	2	**117-6726**	1	TUBE AS	
	55	2	**117-6727**	1	TUBE AS	
	56	2	**118-5041**	1	TUBE AS	

109-6875 **CONTROL GP-SERVICE BRAKE** *(contd.)* **i01207864**

NOTE	REF NO	GRAPHIC REF	PART NUMBER	QTY	PART NAME 1 2 3 4 5 6 (PRODUCT LEVEL)	SEE PAGE
	57	2	**124-1875**	1	GUARD AS-RH	
	58	2	**124-1880**	1	GUARD AS-RH	
	59	2	**124-2472**	1	GUARD AS-LH	
	60	2	**4B-9302**	1	CLIP (15.88MM ID)	
	61	2	**6V-9746**	1	SEAL-O-RING (18.94MM ID)	
	62	2	**6V-8626**	2	ELBOW-90 DEGREE (7/8-14 THD)	
	63	2	**6V-8642**	2	CONNECTOR	
	64	2	**7M-8798**	2	CLIP	
	65	2	**128-1970**	1	GUARD AS-LH	
	66	2	**8C-3206**	4	FLANGE-HALF	
	67	2	**8F-8513**	1	CLIP	
	68	2	**8T-4121**	14	WASHER-HARD (2.5MM THK)	
M	69	2	**8T-4136**	1	BOLT (M10X1.50X25MM)	
M	70	2	**8T-4137**	3	BOLT (M10X1.50X20MM)	
M	71	2	**8T-4179**	4	BOLT (M12X1.75X20MM)	
M	72	2	**8T-4192**	8	BOLT (M12X1.75X25MM)	
M	73	2	**8T-4196**	8	BOLT (M10X1.50X35MM)	
	74	2	**8T-4223**	8	WASHER-HARD (3MM THK)	
	75	3	**3D-2824**	4	SEAL-O-RING (23.47MM ID)	
	76	3	**3J-1907**	3	SEAL-O-RING (11.89MM ID)	
	77	3	**3K-0360**	4	SEAL-O-RING (16.36MM ID)	
	78	3	**4K-1388**	1	SEAL-O-RING (26.59MM ID)	
	79	3	**5K-9090**	2	SEAL-O-RING (23.52MM ID)	
	80	3	**6D-1004**	1	GASKET	
	81	3	**6V-1722**	1	ADAPTER-O-RING	
	82	3	**6V-8397**	4	SEAL-O-RING (9.27MM ID)	
	83	3	**8V-8398**	9	TUBE AS	
	84	3	**6V-8942**	2	REDUCER-O-RING	
	85	3	**6V-9746**	16	SEAL-O-RING (18.94MM ID)	
	86	3	**7M-8485**	1	SEAL-O-RING (29.74MM ID)	
	87	3	**8T-6453**	1	CONNECTOR-O-RING (1-3/16-12 THD)	
	88	3	**6V-9839**	2	TEE	
I	89	3	**8W-2948**	1	HOSE AS	
I	90	3	**9R-4638**	1	HOSE AS	
	91	3	**9S-4191**	1	PLUG-O-RING (9/16-18 THD)	
	92	3	**135-7896**	1	CLAMP AS	
I	93	3	**9U-3430**	1	HOSE AS	
Y	94	3	**135-5883**	2	ACCUMULATOR GP-BRAKE	755
CY	95	3	**164-5486**	1	PUMP GP-PISTON (BRAKE)	804
	96	3	**104-7108**	2	VALVE GP-CHECK (BRAKE ACCUMULATOR)	
	97	3	**114-2399**	1	HOSE AS	
	98	3	**116-9331**	1	JUNCTION BLOCK	
I	99	3	**136-0025**	1	HOSE AS	
I	100	3	**136-0026**	1	HOSE AS	
	101	3	**6V-8637**	2	CONNECTOR-SEAL	
	102	3	**6V-9851**	1	ELBOW-90 DEGREE SWIVEL (13/16-16 THD)	
	103	3	**116-9353**	1	PLATE	
	104	3	**117-5992**	1	BRACKET	
	105	3	**127-4667**	1	STRIP AS	
Y	106	3	**133-3699**	1	VALVE & MTG GP-BRAKE CONTROL (PARKING)	808
	107	3	**2P-1293**	4	LOCKNUT-BULKHEAD (1 3/16-12 THD)	
	108	3	**6V-1889**	2	CLIP (28.58MM ID)	
	109	3	**6V-8625**	2	ELBOW-90 DEGREE (3/4-16 THD)	
	110	3	**6V-8636**	1	CONNECTOR	
	111	3	**6V-8997**	4	UNION	
	112	3	**6V-9001**	1	ELBOW-45 DEGREE (9/16-18 THD)	
	113	3	**6V-9853**	3	ELBOW-SWIVEL (1 3/16-12 THD)	
	114	3	**8S-0948**	1	CLIP (20.64MM ID)	
	115	3	**8T-4121**	5	WASHER-HARD (2.5MM THK)	

109-6875 **CONTROL GP-SERVICE BRAKE** *(contd.)* **i01207864**

NOTE	REF NO	GRAPHIC REF	PART NUMBER	QTY	PART NAME 1 2 3 4 5 6 (PRODUCT LEVEL)	SEE PAGE
I	116	3	**2A-7227**	2	HOSE AS	
M	117	3	**8T-4137**	5	BOLT (M10X1.50X20MM)	
M	118	3	**8T-4139**	3	BOLT (M12X1.75X30MM)	
M	119	3	**8T-4183**	2	BOLT (M12X1.75X40 MM)	
M	120	3	**8T-4185**	2	BOLT (M10X1.5X50MM)	
M	121	3	**8T-4192**	8	BOLT (M12X1.75X25MM)	
M	122	3	**8T-4195**	2	BOLT (M10X1.50X30MM)	
	123	3	**8T-4223**	19	WASHER-HARD (3MM THK)	
M	124	3	**8T-4244**	2	NUT (M12X1.75 THD)	
	125	3	**8T-6684**	1	ELBOW-90 DEGREE (1 1/16-12 THD)	
	126	3	**8T-8899**	1	ELBOW-45 DEGREE	
	127	3	**6V-8556**	2	NUT (1 3/16-12 THD)	
	128	3	**6V-9008**	1	ELBOW-90 DEGREE (1 5/16-12 THD)	
	129	3	**9T-6005**	1	VALVE GP-CHECK (BRAKE PISTON PUMP)	
	130	3	**6V-9002**	1	ELBOW-45 DEGREE (3/4-16 THD)	
	131	3	**5P-7854**	2	CLIP (31.8MM ID)	

C-CHANGE FROM PREVIOUS TYPE
I-SEE HOSE FABRICATION GUIDE
M-METRIC PART
Y-SEPARATE ILLUSTRATION

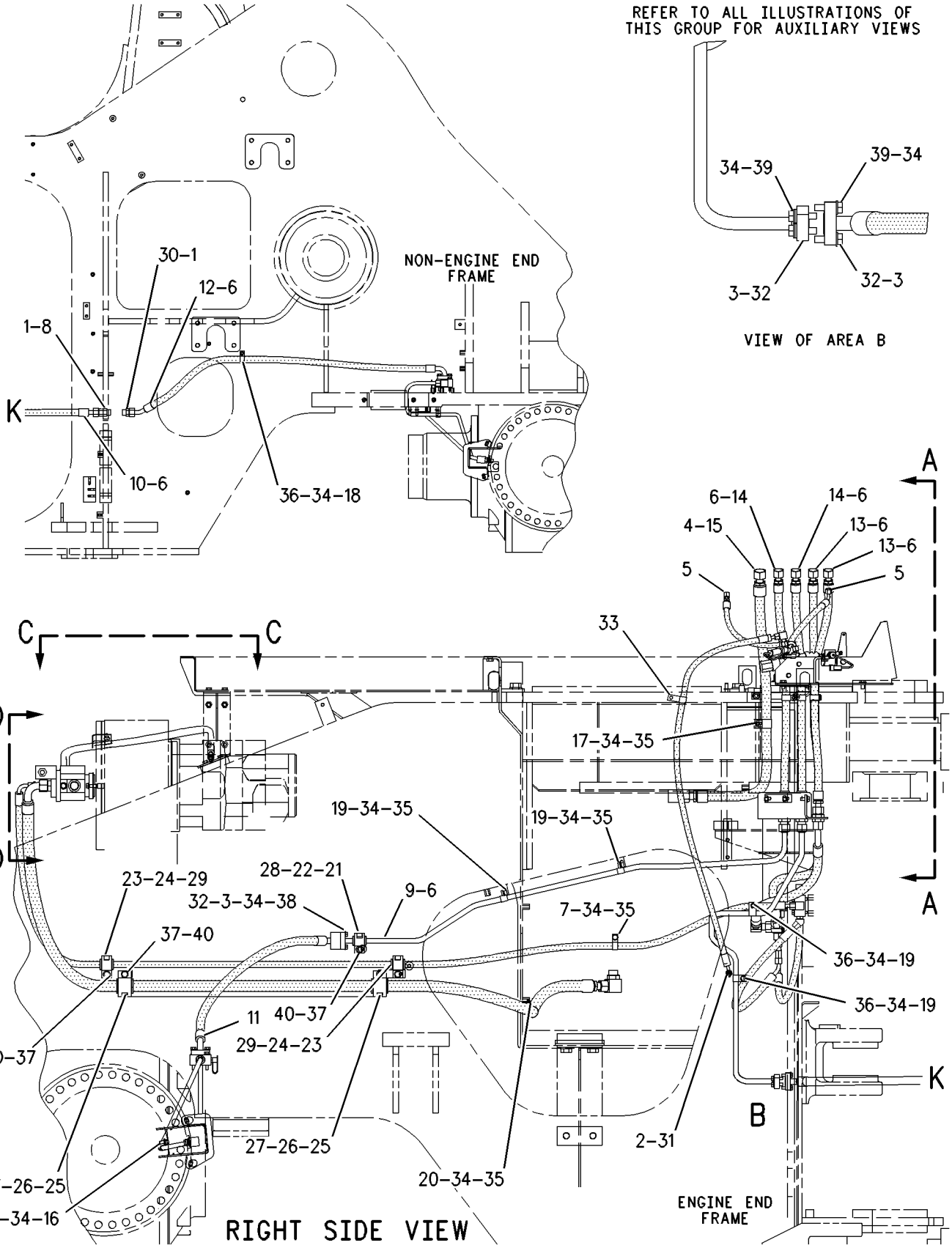

GRAPHIC #1 g00291521

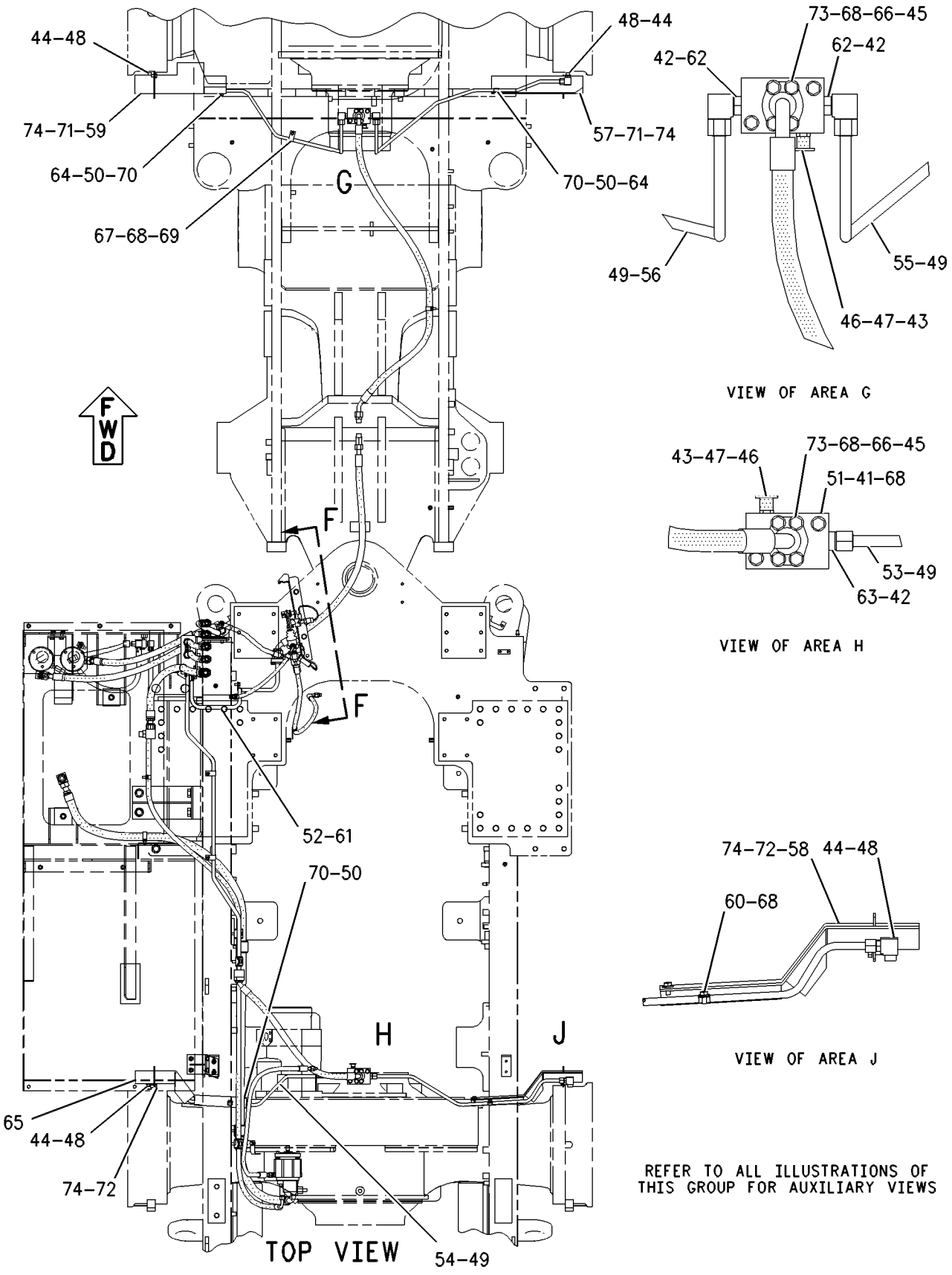

GRAPHIC #2 g00344312

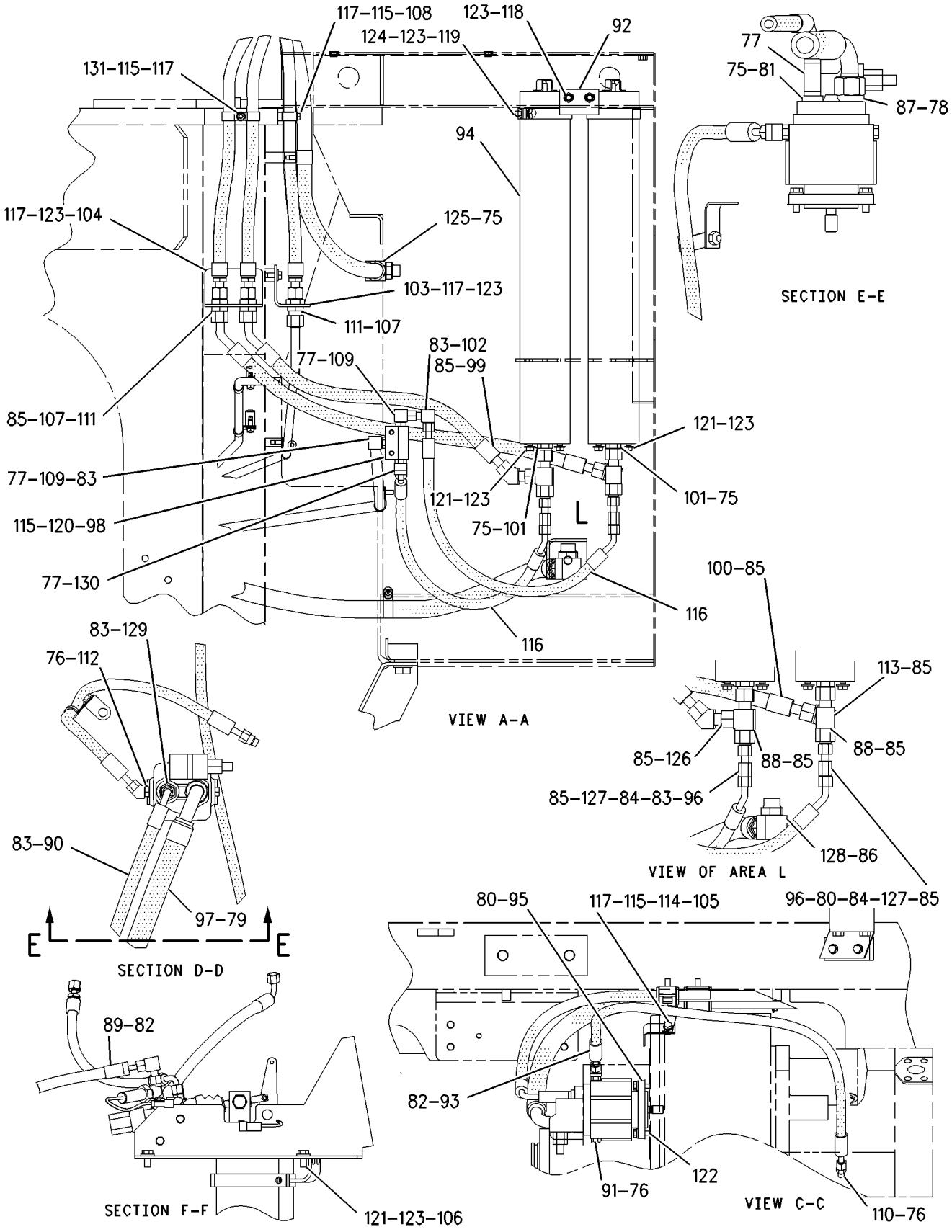

GRAPHIC #3

g00634735

BRAKING SYSTEM

109-6875 CONTROL GP-SERVICE BRAKE

S/N: 7HR311-339

PART OF 109-6820 HYDRAULIC AR

SMCS-4257, 4258, 4265, 4269, 4280 **i01206509**

NOTE	REF NO	GRAPHIC REF	PART NUMBER	QTY	PART NAME 1 2 3 4 5 6 (PRODUCT LEVEL)	SEE PAGE
I	1	3	**2A-7227**	2	HOSE AS	
	2	3	**3K-0360**	1	SEAL-O-RING (16.36MM ID)	
	3	2	**4J-0520**	2	SEAL-O-RING (32.92MM ID)	
	4	1	**4J-5267**	3	SEAL-O-RING (24.99MM ID)	
	5	3	**5K-9090**	1	SEAL-O-RING (23.52MM ID)	
	6	3	**6D-1004**	1	GASKET	
	7	2	**6V-0852**	2	CAP-DUST	
	8	1	**6V-8397**	2	SEAL-O-RING (9.27MM ID)	
	9	1,3	**6V-8398**	3	SEAL-O-RING (12.47MM ID)	
	10	1,3	**6V-9746**	6	SEAL-O-RING (18.94MM ID)	
	11	1	**8T-0078**	1	CONNECTOR	
I	12	1	**8W-2948**	1	HOSE AS	
I	13	3	**9R-4638**	1	HOSE AS	
	14	3	**9T-6005**	1	VALVE GP-CHECK (BRAKE PISTON PUMP)	
	15	3	**104-7108**	2	VALVE GP-CHECK (BRAKE ACCUMULATOR)	
	16	3	**114-2399**	1	HOSE AS	
	17	2	**115-2516**	2	BLOCK	
	18	1	**116-4091**	1	TUBE AS	
I	19	1	**116-6763**	1	HOSE AS	
I	20	1	**116-6764**	1	HOSE AS	
I	21	1	**116-6765**	1	HOSE AS	
	22	3	**116-9331**	1	JUNCTION BLOCK	
	23	1	**116-9345**	2	HOSE AS	
	24	1	**116-9347**	1	HOSE AS	
	25	3	**116-9353**	1	PLATE	
	26	3	**117-5992**	1	BRACKET	
	27	2	**117-6722**	1	TUBE AS	
	28	2	**117-6725**	1	TUBE AS	
	29	2	**117-6726**	1	TUBE AS	
	30	2	**117-6727**	1	TUBE AS	
	31	2	**118-5041**	1	TUBE AS	
	32	2	**124-1875**	1	GUARD AS-RH	
	33	2	**124-1880**	1	GUARD AS-RH	
	34	2	**124-2472**	1	GUARD AS-LH	
	35	3	**127-4667**	1	STRIP AS	
M		3	**8T-3490**	1	NUT-WELD (M10X1.5 THD)	
	36	2	**128-1970**	1	GUARD AS-LH	
Y	37	3	**133-3699**	1	VALVE & MTG GP-BRAKE CONTROL (PARKING)	808
Y	38	3	**135-5883**	2	ACCUMULATOR GP-BRAKE	755
	39	3	**135-7896**	1	CLAMP AS	
I	40	3	**136-0025**	1	HOSE AS	
I	41	3	**136-0026**	1	HOSE AS	
I	42	1	**155-5281**	2	HOSE AS	
Y	43	3	**164-5486**	1	PUMP GP-PISTON (BRAKE)	804
	44	2	*164-5567*	2	FITTING AS	
					(EACH INCLUDES)	
		2	**3J-1907**	1	SEAL-O-RING (11.89MM ID)	
		2	**6V-3965**	1	FITTING AS	
Y	45	1	**166-4647**	1	FILTER GP-OIL (BRAKE CASE DRAIN)	540
	46	3	**168-6355**	1	BRACKET	
I	47	3	**171-2014**	1	HOSE AS	
I	48	3	**171-2015**	1	HOSE AS	
	49	2	*148-8315*	2	CONNECTOR AS	
					(EACH INCLUDES)	
		2	**2M-9780**	1	SEAL-O-RING (19.18MM ID)	
		2	**6V-8642**	1	CONNECTOR	

109-6875 CONTROL GP-SERVICE BRAKE *(contd.)* i01206509

NOTE	REF NO	GRAPHIC REF	PART NUMBER	QTY	PART NAME 1 2 3 4 5 6 (PRODUCT LEVEL)	SEE PAGE
		2	**7J-9108**	1	SEAL-O-RING (15.72MM ID)	
	50	1,3	*148-8327*	3	CONNECTOR AS	
					(EACH INCLUDES)	
		1,3	**3D-2824**	1	SEAL-O-RING (23.47MM ID)	
		1,3	**6V-8637**	1	CONNECTOR-SEAL	
		1,3	**6V-9746**	1	SEAL-O-RING (18.94MM ID)	
	51	3	*148-8329*	1	CONNECTOR AS	
		3	**4K-1388**		SEAL-O-RING (26.59MM ID)	
		3	**5K-9090**	1	SEAL-O-RING (23.52MM ID)	
		3	**8T-6453**	1	CONNECTOR-O-RING (1-3/16-12 THD)	
	52	1	*148-8336*	1	CONNECTOR AS	
		1	**3J-1907**	1	SEAL-O-RING (11.89MM ID)	
		1	**6V-8397**	1	SEAL-O-RING (9.27MM ID)	
		1	**6V-8636**	1	CONNECTOR	
	53	3	*148-8353*	1	ELBOW AS	
		3	**3J-1907**	1	SEAL-O-RING (11.89MM ID)	
		3	**6V-8397**	1	SEAL-O-RING (9.27MM ID)	
		3	**6V-9001**	1	ELBOW-45 DEGREE (9/16-18 THD)	
	54	3	*148-8354*	1	ELBOW AS	
		3	**3K-0360**	1	SEAL-O-RING (16.36MM ID)	
		3	**6V-8398**	1	SEAL-O-RING (12.47MM ID)	
		3	**6V-9002**	1	ELBOW-45 DEGREE (3/4-16 THD)	
	55	3	*148-8357*	1	ELBOW AS	
		3	**5K-9090**	1	SEAL-O-RING (23.52MM ID)	
		3	**6V-9008**	1	ELBOW-90 DEGREE (1 5/16-12 THD)	
		3	**7M-8485**	1	SEAL-O-RING (29.74MM ID)	
	56	3	*148-8360*	1	ELBOW AS	
		3	**6V-9182**	1	ELBOW (FACE SEAL)	
		3	**6V-9746**	1	SEAL-O-RING (18.94MM ID)	
		3	**7M-8485**	1	SEAL-O-RING (29.74MM ID)	
	57	3	*148-8362*	1	ELBOW AS	
		3	**3D-2824**	1	SEAL-O-RING (23.47MM ID)	
		3	**5K-9090**	1	SEAL-O-RING (23.52MM ID)	
		3	**8T-6684**	1	ELBOW-90 DEGREE (1 1/16-12 THD)	
	58	3	*148-8364*	2	ELBOW AS	
					(EACH INCLUDES)	
		3	**3K-0360**	1	SEAL-O-RING (16.36MM ID)	
		3	**6V-8398**	1	SEAL-O-RING (12.47MM ID)	
		3	**6V-8625**	1	ELBOW-90 DEGREE (3/4-16 THD)	
	59	3	*148-8370*	1	ELBOW AS	
		3	**6V-8398**	1	SEAL-O-RING (12.47MM ID)	
		3	**6V-9851**	1	ELBOW-90 DEGREE SWIVEL (13/16-16 THD)	
	60	2	*148-8390*	2	ELBOW AS	
					(EACH INCLUDES)	
		2	**2M-9780**	1	SEAL-O-RING (19.18MM ID)	
		2	**6V-8626**	1	ELBOW-90 DEGREE (7/8-14 THD)	
		2	**7J-9108**	1	SEAL-O-RING (15.72MM ID)	
	61	3	*148-8392*	1	ELBOW AS	
		3	**6V-9746**	1	SEAL-O-RING (18.94MM ID)	
		3	**6V-9853**	1	ELBOW-SWIVEL (1 3/16-12 THD)	
	62	3	*148-8407*	1	PLUG AS	
		3	**3J-1907**	1	SEAL-O-RING (11.89MM ID)	
		3	**9S-4191**	1	PLUG-O-RING (9/16-18 THD)	
	63	3	*148-8418*	2	REDUCER AS-O-RING	
					(EACH INCLUDES)	
		3	**6V-8398**	1	SEAL-O-RING (12.47MM ID)	
		3	**6V-8942**	1	REDUCER-O-RING	
	64	3	*148-8449*	2	TEE AS-SWIVEL	
					(EACH INCLUDES)	

109-6875 **CONTROL GP-SERVICE BRAKE** *(contd.)* **i01206509**

NOTE	REF NO	GRAPHIC REF	PART NUMBER	QTY	PART NAME 1 2 3 4 5 6 (PRODUCT LEVEL)	SEE PAGE
		3	**6V-9746**	2	SEAL-O-RING (18.94MM ID)	
		3	**6V-9839**	1	TEE	
	65	3	*148-8455*	4	UNION AS-ORFS	
					(EACH INCLUDES)	
		3	**6V-8997**	1	UNION	
		3	**6V-9746**	2	SEAL-O-RING (18.94MM ID)	
	66	3	*150-3028*	1	ELBOW AS	
		3	**3D-2824**	1	SEAL-O-RING (23.47MM ID)	
		3	*6V-8397*	1	SEAL-O-RING (9.27MM ID)	
		3	**6V-9343**	1	ELBOW	
	67	2	*150-4048*	4	ELBOW AS	
					(EACH INCLUDES)	
		2	**3K-0360**	1	SEAL-O-RING (16.36MM ID)	
		2	**6V-8722**	1	ELBOW-FACE SEAL	
		2	**7J-9108**	1	SEAL-O-RING (15.72MM ID)	
	68	3	**2P-1293**	4	LOCKNUT-BULKHEAD (1 3/16-12 THD)	
	69	1,3	**3D-2824**	2	SEAL-O-RING (23.47MM ID)	
	70	2,3	**4B-9302**	2	CLIP (15.88MM ID)	
	71	1	**4D-7388**	1	CLIP (34.92MM ID)	
	72	1	**4S-4455**	1	CLIP (31.75MM ID)	
	73	1	**5K-9660**	4	CLIP	
	74	1	**5P-7462**	1	CLIP (SLOT)	
	75	1	**5P-7463**	1	CLIP (TAB)	
	76	1	**5P-7464**	2	CLIP (SLOT)	
	77	1	**5P-7465**	2	CLIP (TAB)	
	78	1	**5P-7468**	2	CLIP (SLOT)	
	79	1	**5P-7469**	2	CLIP (TAB)	
	80	3	**5P-7854**	2	CLIP (31.8MM ID)	
	81	1	**5P-8444**	2	GROMMET	
	82	3	**6V-0301**	1	ADAPTER-STRAIGHT THREAD	
	83	1	**6V-0683**	1	GROMMET	
	84	1	**6V-1249**	2	GROMMET (22.00MM OD)	
	85	3	**6V-1722**	1	ADAPTER-O-RING	
	86	3	**6V-1889**	2	CLIP (28.58MM ID)	
	87	3	**6V-8556**	2	NUT (1 3/16-12 THD)	
	88	1	**7D-7233**	1	CLIP	
	89	3	**7M-8485**	1	SEAL-O-RING (29.74MM ID)	
	90	2	**7M-8798**	2	CLIP	
	91	2,3	**7X-7729**	10	WASHER (3MM THK)	
	92	1	**8C-3205**	6	FLANGE-HALF	
	93	2	**8C-3206**	4	FLANGE-HALF	
	94	2	**8F-8513**	1	CLIP	
	95	1,3	**8S-0948**	2	CLIP (20.64MM ID)	
	96	1,2,3	**8T-4121**	42	WASHER-HARD (2.5MM THK)	
M	97	1,2,3	**8T-4136**	11	BOLT (M10X1.50X25MM)	
M	98	1,2,3	**8T-4137**	13	BOLT (M10X1.50X20MM)	
M	99	1,3	**8T-4139**	7	BOLT (M12X1.75X30MM)	
M	100	2	**8T-4179**	4	BOLT (M12X1.75X20MM)	
M	101	3	**8T-4183**	2	BOLT (M12X1.75X40 MM)	
M	102	3	**8T-4185**	2	BOLT (M10X1.5X50MM)	
M	103	1	**8T-4186**	4	BOLT (M10X1.50X40MM)	
M	104	2,3	**8T-4192**	16	BOLT (M12X1.75X25MM)	
M	105	3	**8T-4195**	2	BOLT (M10X1.50X30MM)	
M	106	1,2	**8T-4196**	16	BOLT (M10X1.50X35MM)	
	107	1,2,3	**8T-4223**	31	WASHER-HARD (3MM THK)	
M	108	3	**8T-4244**	2	NUT (M12X1.75 THD)	
M	109	2	**8T-6466**	4	BOLT (M10X1.50X60MM)	
	110	3	**8T-8899**	1	ELBOW-45 DEGREE	
	111	1	**9X-8250**	1	CLIP (SLOT)	

I-SEE HOSE FABRICATION GUIDE
M-METRIC PART
Y-SEPARATE ILLUSTRATION

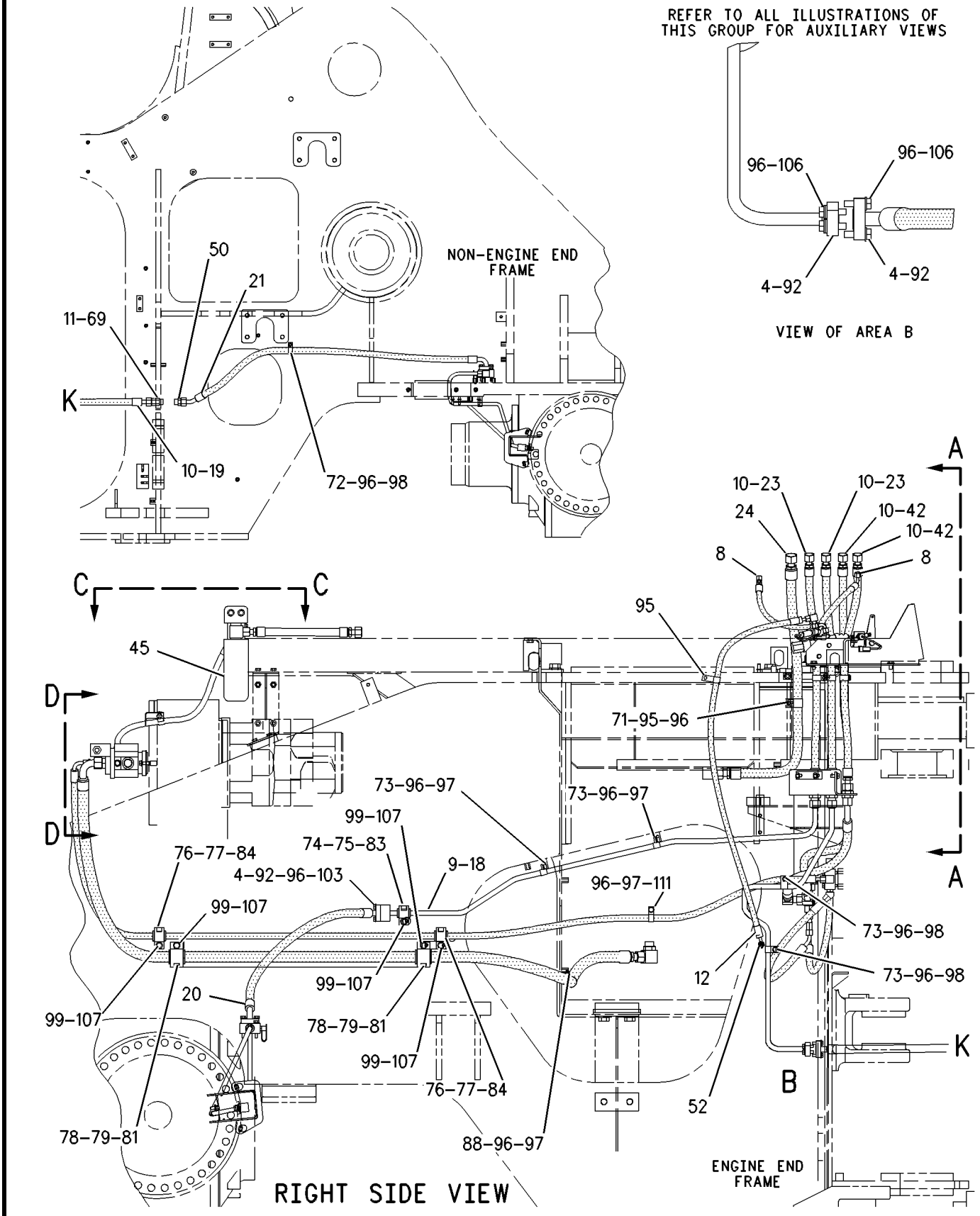

GRAPHIC #1 g00601665

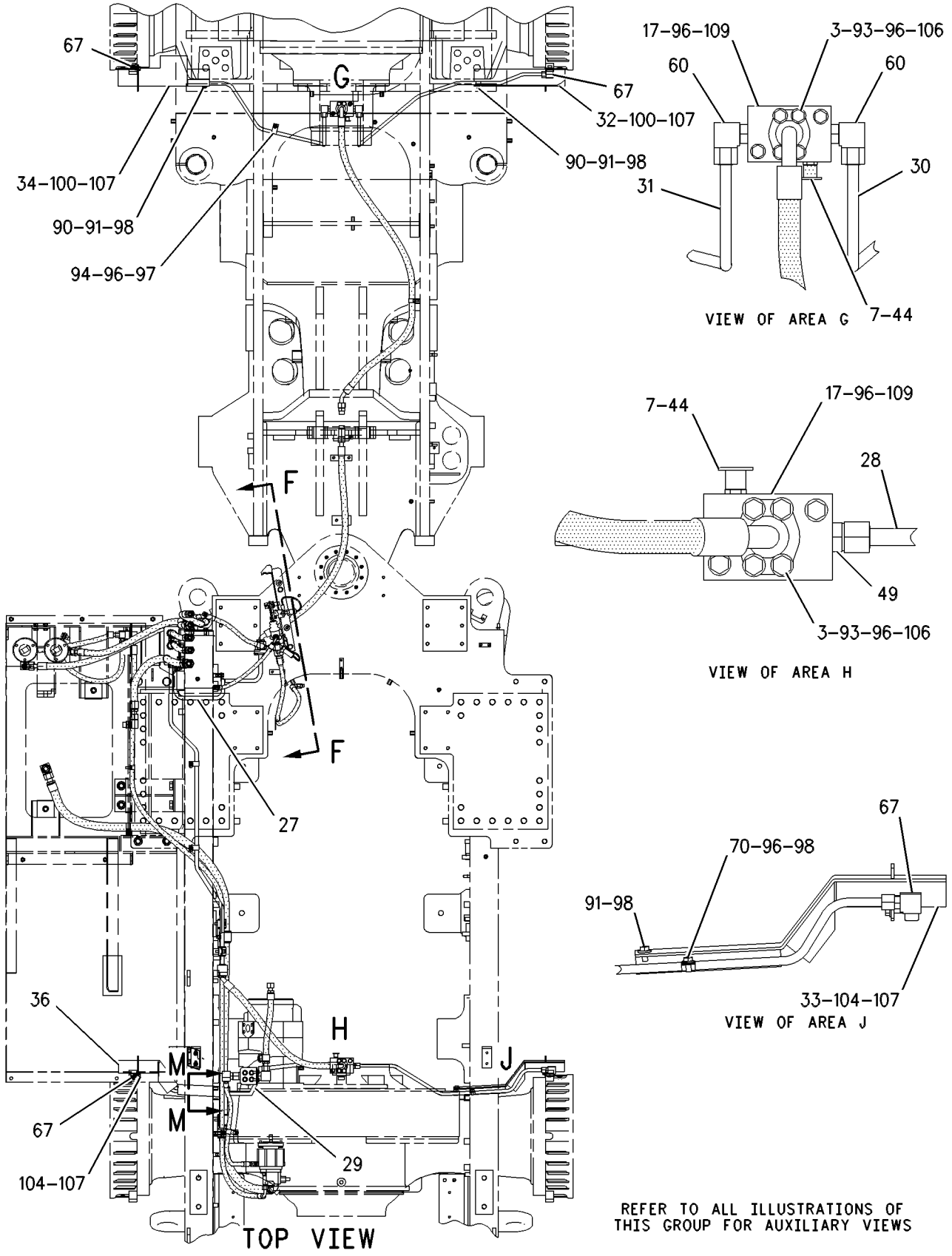

GRAPHIC #2 g00601667

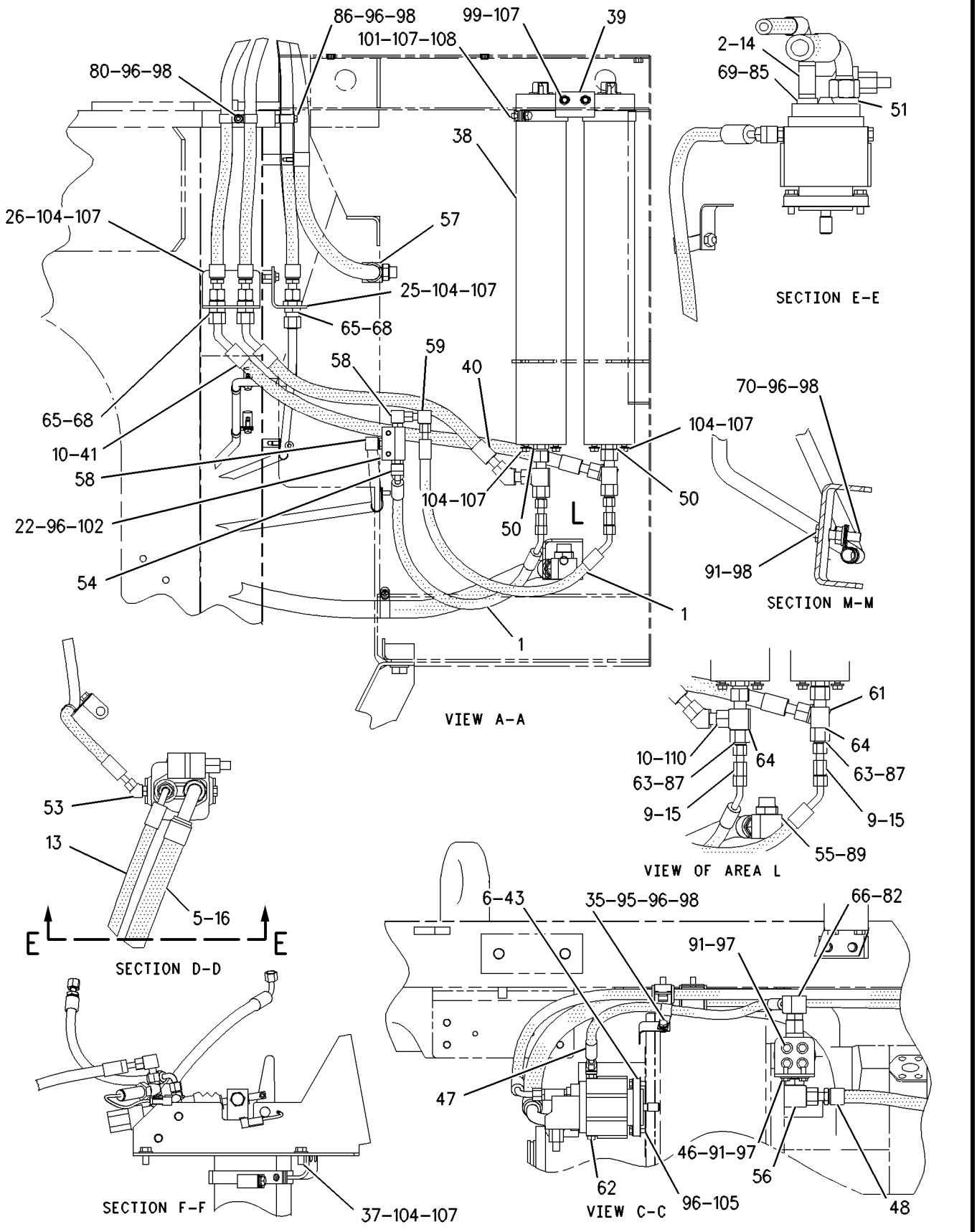

GRAPHIC #3

g00601668

MEMORANDA

BRAKING SYSTEM

109-6875 CONTROL GP-SERVICE BRAKE

S/N: 7HR340-UP

PART OF 109-6820 HYDRAULIC AR

SMCS-4257, 4258, 4265, 4269, 4280 **i01206513**

NOTE	REF NO	GRAPHIC REF	PART NUMBER	QTY	PART NAME 1 2 3 4 5 6 (PRODUCT LEVEL)	SEE PAGE
	1	2	**1F-1609**	8	SPACER	
I	2	3	**2A-7227**	2	HOSE AS	
	3	3	**3K-0360**	1	SEAL-O-RING (16.36MM ID)	
	4	2	**4J-0520**	2	SEAL-O-RING (32.92MM ID)	
	5	1	**4J-5267**	3	SEAL-O-RING (24.99MM ID)	
	6	3	**5K-9090**	1	SEAL-O-RING (23.52MM ID)	
	7	3	**6D-1004**	1	GASKET	
	8	2	**6V-0852**	2	CAP-DUST	
	9	1	**6V-8397**	2	SEAL-O-RING (9.27MM ID)	
	10	1,3	**6V-8398**	3	SEAL-O-RING (12.47MM ID)	
	11	1,3	**6V-9746**	6	SEAL-O-RING (18.94MM ID)	
	12	1	**8T-0078**	1	CONNECTOR	
I	13	1	*8W-2948*	1	HOSE AS	
I	14	3	**9R-4638**	1	HOSE AS	
	15	3	**9T-6005**	1	VALVE GP-CHECK (BRAKE PISTON PUMP)	
	16	3	**104-7108**	2	VALVE GP-CHECK (BRAKE ACCUMULATOR)	
	17	3	**114-2399**	1	HOSE AS	
	18	2	**115-2516**	2	BLOCK	
	19	1	**116-4091**	1	TUBE AS	
I	20	1	**116-6763**	1	HOSE AS	
I	21	1	**116-6764**	1	HOSE AS	
I	22	1	**116-6765**	1	HOSE AS	
	23	3	**116-9331**	1	JUNCTION BLOCK	
	24	1	**116-9345**	2	HOSE AS	
	25	1	**116-9347**	1	HOSE AS	
	26	3	**116-9353**	1	PLATE	
	27	3	**117-5992**	1	BRACKET	
	28	2	**117-6722**	1	TUBE AS	
	29	2	**117-6725**	1	TUBE AS	
	30	2	**117-6726**	1	TUBE AS	
	31	2	**117-6727**	1	TUBE AS	
	32	2	**118-5041**	1	TUBE AS	
	33	2	**124-1875**	1	GUARD AS-RH	
	34	2	**124-1880**	1	GUARD AS-RH	
	35	2	**124-2472**	1	GUARD AS-LH	
	36	3	**127-4667**	1	STRIP AS	
	37	2	**128-1970**	1	GUARD AS-LH	
Y	38	3	**133-3699**	1	VALVE & MTG GP-BRAKE CONTROL (PARKING)	808
Y	39	3	**135-5883**	2	ACCUMULATOR GP-BRAKE	755
	40	3	**135-7896**	1	CLAMP AS	
I	41	3	**136-0025**	1	HOSE AS	
I	42	3	**136-0026**	1	HOSE AS	
I	43	1	**155-5281**	2	HOSE AS	
CY	44	3	**164-5486**	1	PUMP GP-PISTON (BRAKE)	804
	45	2	*164-5567*	2	FITTING AS	
					(EACH INCLUDES)	
		2	**3J-1907**	1	SEAL-O-RING (11.89MM ID)	
		2	**6V-3965**	1	FITTING AS	
I	46	3	**171-2014**	1	HOSE AS	
Y	47	1	*174-9328*	1	FILTER & LINES GP-BRAKE (CASE DRAIN)	798
	48	2	*148-8315*	2	CONNECTOR AS	
					(EACH INCLUDES)	
		2	**2M-9780**	1	SEAL-O-RING (19.18MM ID)	
		2	**6V-8642**	1	CONNECTOR	
		2	**7J-9108**	1	SEAL-O-RING (15.72MM ID)	

109-6875 **CONTROL GP-SERVICE BRAKE** ***(contd.)*** **i01206513**

NOTE	REF NO	GRAPHIC REF	PART NUMBER	QTY	PART NAME 1 2 3 4 5 6 (PRODUCT LEVEL)	SEE PAGE
	49	1,3	*148-8327*	3	CONNECTOR AS	
					(EACH INCLUDES)	
		1,3	**3D-2824**	1	SEAL-O-RING (23.47MM ID)	
		1,3	**6V-8637**	1	CONNECTOR-SEAL	
		1,3	**6V-9746**	1	SEAL-O-RING (18.94MM ID)	
	50	3	*148-8329*	1	CONNECTOR AS	
		3	**4K-1388**	1	SEAL-O-RING (26.59MM ID)	
		3	**5K-9090**	1	SEAL-O-RING (23.52MM ID)	
		3	**8T-6453**	1	CONNECTOR-O-RING (1-3/16-12 THD)	
	51	1	*148-8336*	1	CONNECTOR AS	
		1	**3J-1907**	1	SEAL-O-RING (11.89MM ID)	
		1	**6V-8397**	1	SEAL-O-RING (9.27MM ID)	
		1	**6V-8636**	1	CONNECTOR	
	52	3	*148-8353*	1	ELBOW AS	
		3	**3J-1907**	1	SEAL-O-RING (11.89MM ID)	
		3	**6V-8397**	1	SEAL-O-RING (9.27MM ID)	
		3	**6V-9001**	1	ELBOW-45 DEGREE (9/16-18 THD)	
	53	3	*148-8354*	1	ELBOW AS	
		3	**3K-0360**	1	SEAL-O-RING (16.36MM ID)	
		3	**6V-8398**	1	SEAL-O-RING (12.47MM ID)	
		3	**6V-9002**	1	ELBOW-45 DEGREE (3/4-16 THD)	
	54	3	*148-8357*	1	ELBOW AS	
		3	**5K-9090**	1	SEAL-O-RING (23.52MM ID)	
		3	**6V-9008**	1	ELBOW-90 DEGREE (1 5/16-12 THD)	
		3	**7M-8485**	1	SEAL-O-RING (29.74MM ID)	
	55	3	*148-8362*	1	ELBOW AS	
		3	**3D-2824**	1	SEAL-O-RING (23.47MM ID)	
		3	**5K-9090**	1	SEAL-O-RING (23.52MM ID)	
		3	**8T-6684**	1	ELBOW-90 DEGREE (1 1/16-12 THD)	
	56	3	*148-8364*	2	ELBOW AS	
					(EACH INCLUDES)	
		3	**3K-0360**	1	SEAL-O-RING (16.36MM ID)	
		3	**6V-8398**	1	SEAL-O-RING (12.47MM ID)	
		3	**6V-8625**	1	ELBOW-90 DEGREE (3/4-16 THD)	
	57	3	*148-8370*	1	ELBOW AS	
		3	**6V-8398**	1	SEAL-O-RING (12.47MM ID)	
		3	**6V-9851**	1	ELBOW-90 DEGREE SWIVEL (13/16-16 THD)	
	58	2	*148-8390*	2	ELBOW AS	
					(EACH INCLUDES)	
		2	**2M-9780**	1	SEAL-O-RING (19.18MM ID)	
		2	**7J-9108**	1	SEAL-O-RING (15.72MM ID)	
		2	**6V-8626**	1	ELBOW-90 DEGREE (7/8-14 THD)	
	59	3	*148-8392*	1	ELBOW AS	
		3	**6V-9746**	1	SEAL-O-RING (18.94MM ID)	
		3	**6V-9853**	1	ELBOW-SWIVEL (1 3/16-12 THD)	
	60	3	*148-8407*	1	PLUG AS	
		3	**3J-1907**	1	SEAL-O-RING (11.89MM ID)	
		3	**9S-4191**	1	PLUG-O-RING (9/16-18 THD)	
	61	3	*148-8418*	2	REDUCER AS-O-RING	
					(EACH INCLUDES)	
		3	**6V-8398**	1	SEAL-O-RING (12.47MM ID)	
		3	**6V-8942**	1	REDUCER-O-RING	
	62	3	*148-8449*	2	TEE AS-SWIVEL	
					(EACH INCLUDES)	
		3	**6V-9746**	1	SEAL-O-RING (18.94MM ID)	
		3	**6V-9839**	1	TEE	
	63	3	*148-8455*	4	UNION AS-ORFS	
					(EACH INCLUDES)	
		3	**6V-8997**	1	UNION	

109-6875 CONTROL GP-SERVICE BRAKE *(contd.)* i01206513

NOTE	REF NO	GRAPHIC REF	PART NUMBER	QTY	PART NAME 1 2 3 4 5 6 (PRODUCT LEVEL)	SEE PAGE
		3	**6V-9746**	2	SEAL-O-RING (18.94MM ID)	
	64	2	*150-4048*	4	ELBOW AS	
					(EACH INCLUDES)	
		2	**3K-0360**	1	SEAL-O-RING (16.36MM ID)	
		2	**6V-8722**	1	ELBOW-FACE SEAL	
		2	**7J-9108**	1	SEAL-O-RING (15.72MM ID)	
	65	3	**2P-1293**	4	LOCKNUT-BULKHEAD (1 3/16-12 THD)	
	66	1,3	**3D-2824**	2	SEAL-O-RING (23.47MM ID)	
	67	2,3	**4B-9302**	2	CLIP (15.88MM ID)	
	68	1	**4D-7388**	1	CLIP (34.92MM ID)	
	69	1	**4S-4455**	1	CLIP (31.75MM ID)	
	70	1	**5K-9660**	4	CLIP	
	71	1	**5P-7462**	1	CLIP (SLOT)	
	72	1	**5P-7463**	1	CLIP (TAB)	
	73	1	**5P-7464**	2	CLIP (SLOT)	
	74	1	**5P-7465**	2	CLIP (TAB)	
	75	1	**5P-7468**	2	CLIP (SLOT)	
	76	1	**5P-7469**	2	CLIP (TAB)	
	77	3	**5P-7854**	2	CLIP (31.8MM ID)	
	78	1	**5P-8444**	2	GROMMET	
	79	1	**6V-0683**	1	GROMMET	
	80	1	**6V-1249**	2	GROMMET (22.00MM OD)	
	81	3	**6V-1722**	1	ADAPTER-O-RING	
	82	3	**6V-1889**	2	CLIP (28.58MM ID)	
	83	3	**6V-8556**	2	NUT (1 3/16-12 THD)	
	84	1	**7D-7233**	1	CLIP	
	85	2	**7M-8798**	2	CLIP	
	86	2,3	**7X-7729**	4	WASHER (3MM THK)	
	87	1	**8C-3205**	6	FLANGE-HALF	
	88	2	**8C-3206**	4	FLANGE-HALF	
	89	2	**8F-8513**	1	CLIP	
	90	1,3	**8S-0948**	2	CLIP (20.64MM ID)	
	91	1,2,3	**8T-4121**	48	WASHER-HARD (2.5MM THK)	
M	92	1,2,3	**8T-4136**	7	BOLT (M10X1.50X25MM)	
M	93	1,2,3	**8T-4137**	13	BOLT (M10X1.50X20MM)	
M	94	1,3	**8T-4139**	7	BOLT (M12X1.75X30MM)	
M	95	3	**8T-4183**	2	BOLT (M12X1.75X40 MM)	
M	96	3	**8T-4185**	2	BOLT (M10X1.5X50MM)	
M	97	1	**8T-4186**	4	BOLT (M10X1.50X40MM)	
M	98	3	**8T-4192**	12	BOLT (M12X1.75X25MM)	
M	99	3	**8T-4195**	2	BOLT (M10X1.50X30MM)	
M	100	1,2	**8T-4196**	16	BOLT (M10X1.50X35MM)	
	101	1,2,3	**8T-4223**	31	WASHER-HARD (3MM THK)	
M	102	3	**8T-4244**	2	NUT (M12X1.75 THD)	
M	103	2	**8T-4910**	8	BOLT (M12X1.75X60MM)	
M	104	2	**8T-6466**	4	BOLT (M10X1.50X60MM)	
	105	3	**8T-8899**	1	ELBOW-45 DEGREE	
	106	1	**9X-8250**	1	CLIP (SLOT)	

C-CHANGE FROM PREVIOUS TYPE
I-SEE HOSE FABRICATION GUIDE
M-METRIC PART
Y-SEPARATE ILLUSTRATION

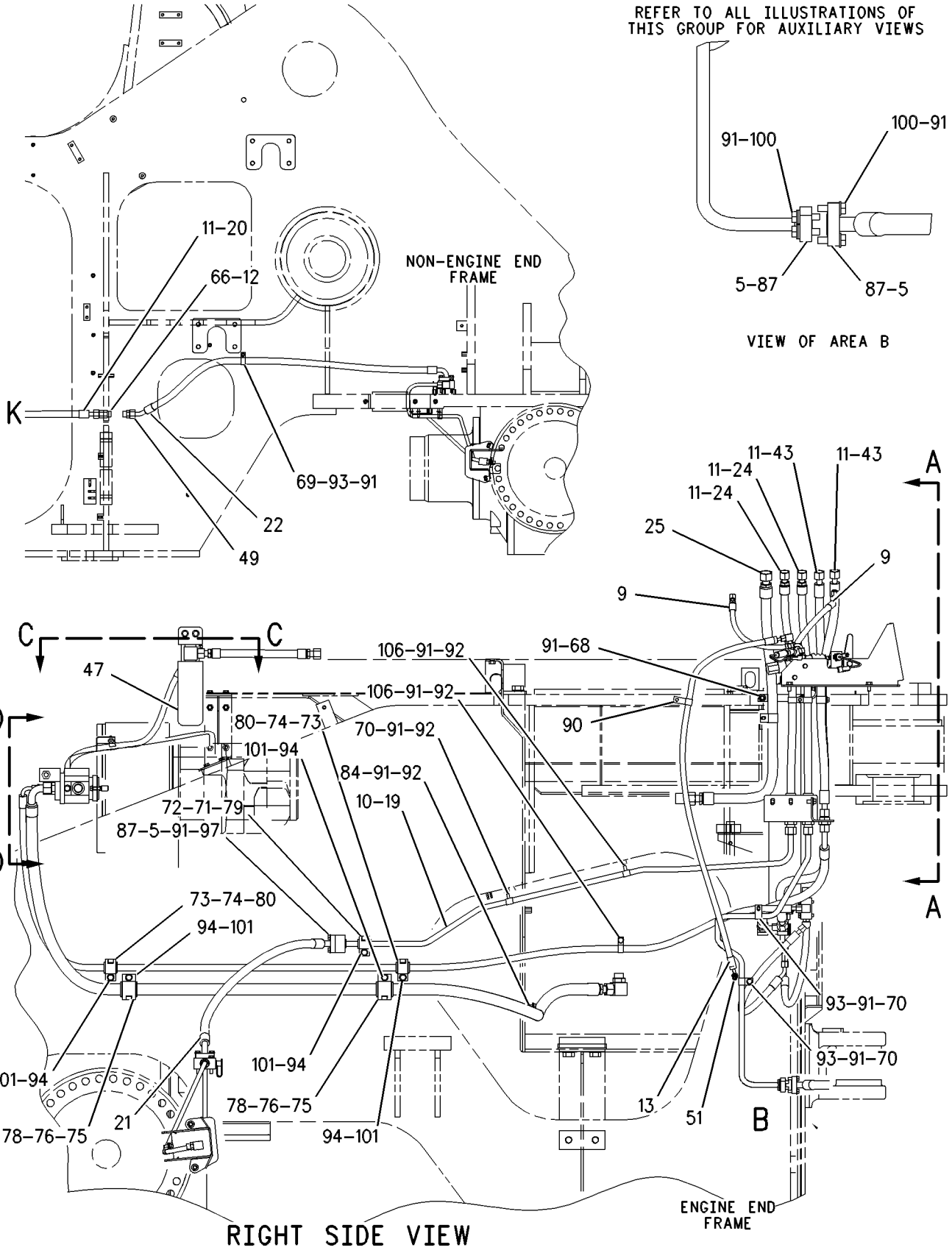

GRAPHIC #1 g00597487

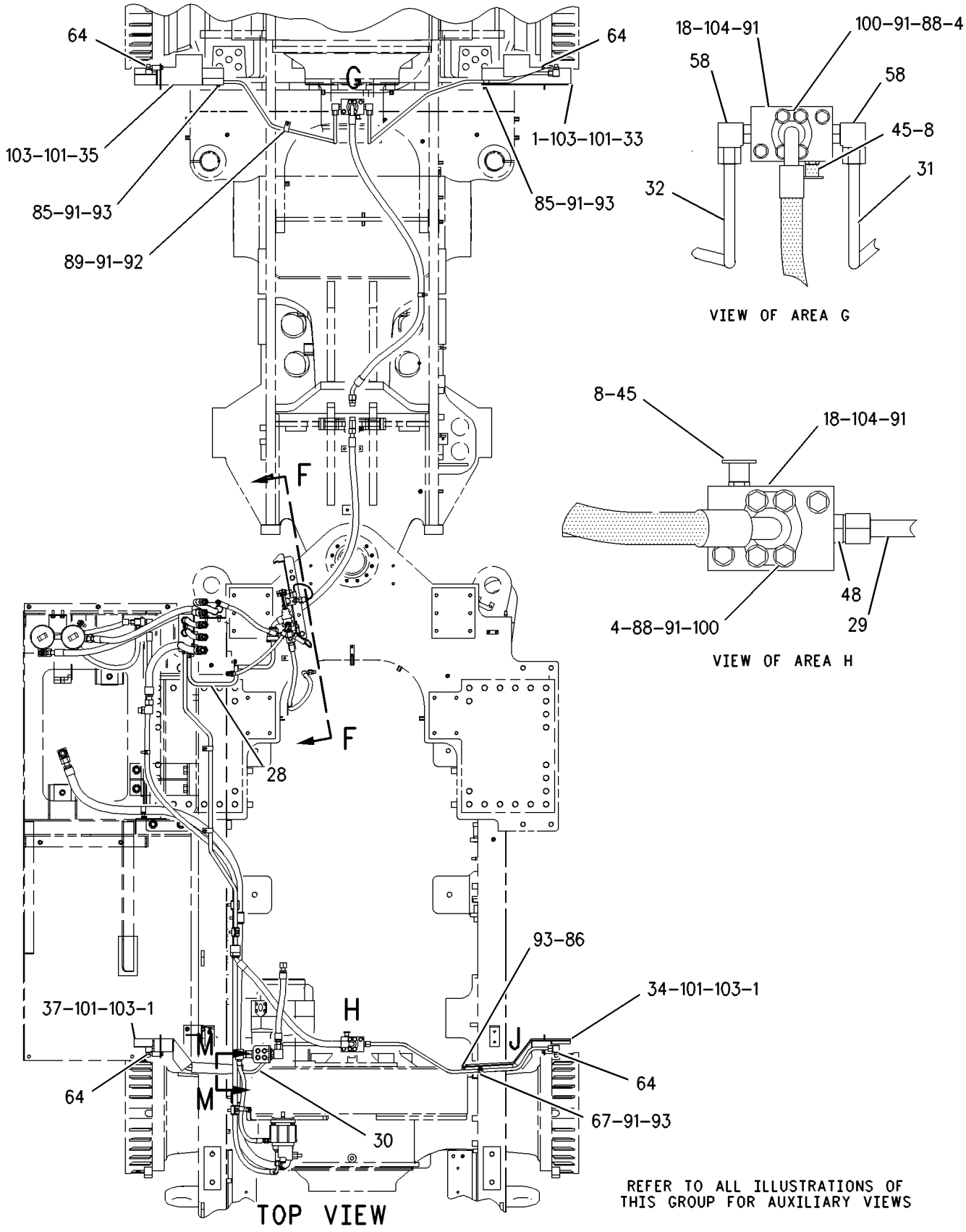

GRAPHIC #2 g00597488

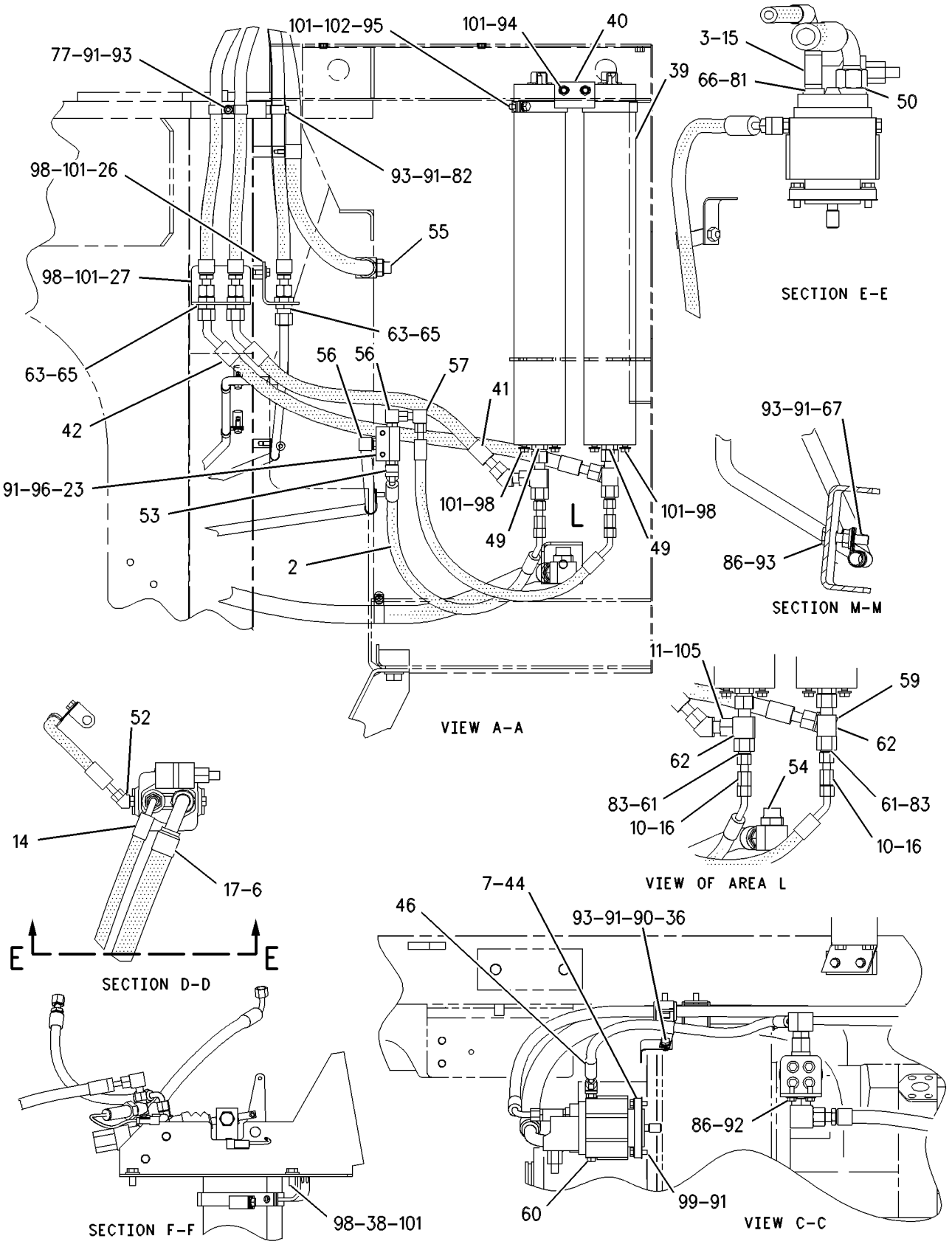

GRAPHIC #3

g00597489

BRAKING SYSTEM

174-9328 FILTER & LINES GP-BRAKE—CASE DRAIN

S/N: 7HR340-UP

PART OF 109-6875 CONTROL GP-SERVICE BRAKE

SMCS-4257, 4295 **i01198177**

NOTE	REF NO	GRAPHIC REF	PART NUMBER	QTY	PART NAME 1 2 3 4 5 6 (PRODUCT LEVEL)	SEE PAGE
Y	1	1	**166-4647**	1	FILTER GP-OIL (BRAKE CASE DRAIN)	540
	2	1	**168-6355**	1	BRACKET	
I	3	1	**171-2015**	1	HOSE AS	
	4	1	*148-8360*	1	ELBOW AS	
		1	**6V-9182**	1	ELBOW (FACE SEAL)	
		1	**6V-9746**	1	SEAL-O-RING (18.94MM ID)	
		1	**7M-8485**	1	SEAL-O-RING (29.74MM ID)	
	5	1	*150-3028*	1	ELBOW AS	
		1	**3D-2824**	1	SEAL-O-RING (23.47MM ID)	
		1	**6V-8397**	1	SEAL-O-RING (9.27MM ID)	
		1	**6V-9343**	1	ELBOW	
	6	1	**6V-0301**	1	ADAPTER-STRAIGHT THREAD	
	7	1	**7M-8485**	1	SEAL-O-RING (29.74MM ID)	
	8	1	**7X-7729**	4	WASHER (3MM THK)	
M	9	1	**8T-4136**	4	BOLT (M10X1.50X25MM)	

I-SEE HOSE FABRICATION GUIDE
M-METRIC PART
Y-SEPARATE ILLUSTRATION

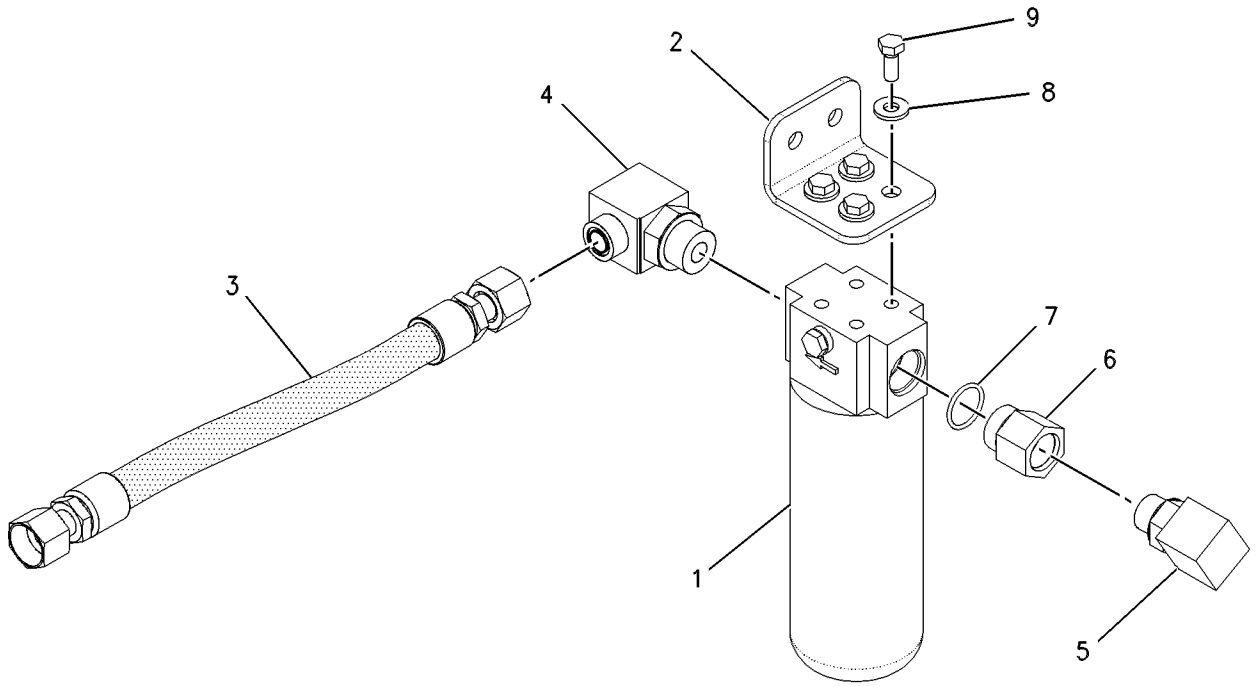

GRAPHIC #1 g00595237

MEMORANDA

BRAKING SYSTEM

132-2131 LINES GP-SERVICE BRAKE

S/N: 7HR1-UP

PART OF 109-6820 HYDRAULIC AR

SMCS-4257 **i01251144**

NOTE	REF NO	GRAPHIC REF	PART NUMBER	QTY	PART NAME 1 2 3 4 5 6 (PRODUCT LEVEL)	SEE PAGE
	1	1	**3D-2824**	10	SEAL-O-RING (23.47MM ID)	
	2	1	**3E-2310**	1	TEE	
	3	1	**3J-1907**	7	SEAL-O-RING (11.89MM ID)	
	4	1	**3K-0360**	1	SEAL-O-RING (16.36MM ID)	
	5	1	**4W-1758**	1	SPACER	
	6	1	**5P-5777**	1	ADAPTER-O-RING	
	7	1	**6E-5444**	1	VALVE GP-CHECK (BRAKE MANIFOLD)	
	8	1	**6V-0852**	4	CAP-DUST	
	9	1	**6V-3965**	4	FITTING AS	
	10	1	**6V-8398**	2	SEAL-O-RING (12.47MM ID)	
	11	1	**6V-8716**	4	CONNECTOR-SEAL	
	12	1	**6V-8936**	1	REDUCER AS	
	13	1	**6V-9182**	1	ELBOW (FACE SEAL)	
	14	1	**6V-9746**	16	SEAL-O-RING (18.94MM ID)	
	15	1	**7M-8485**	8	SEAL-O-RING (29.74MM ID)	
	16	1	**8T-0249**	1	ELBOW-SWIVEL	
	17	1	**8T-4149**	1	ELBOW-45 DEGREE (1 5/16-12 THD)	
	18	1	**9S-8004**	2	PLUG-O-RING (9/16-18 THD)	
	19	1	**115-8035**	1	MANIFOLD-BRAKE	
	20	1	**116-9352**	1	BRACKET AS	
M		1	**8T-3597**	3	NUT-WELD (M12X1.75 THD)	
	21	1	**124-1866**	1	HOSE AS	
	22	1	**124-1868**	1	HOSE AS	
	23	1	**124-1870**	1	HOSE AS	
	24	1	**124-1871**	1	HOSE AS	
I	25	1	**155-5282**	1	HOSE AS	
I	26	1	**155-5283**	1	HOSE AS	
	27	1	**6V-1889**	6	CLIP (28.58MM ID)	
	28	1	**6V-8637**	6	CONNECTOR-SEAL	
	29	1	**6V-9007**	4	ELBOW-90 DEGREE (1 1/16-12 THD)	
	30	1	**6V-9008**	1	ELBOW-90 DEGREE (1 5/16-12 THD)	
	31	1	**6V-9853**	1	ELBOW-SWIVEL (1 3/16-12 THD)	
	32	1	**8T-4121**	2	WASHER-HARD (2.5MM THK)	
M	33	1	**8T-4136**	1	BOLT (M10X1.50X25MM)	
M	34	1	**8T-4176**	3	BOLT (M12X1.75X90MM)	
	35	1	**8T-4223**	6	WASHER-HARD (3MM THK)	
M	36	1	**8T-4956**	3	BOLT (M12X1.75X35MM)	
M	37	1	**8T-5005**	1	BOLT (M10X1.50X70MM)	
	38	1	**8T-8899**	3	ELBOW-45 DEGREE	

I-SEE HOSE FABRICATION GUIDE
M-METRIC PART

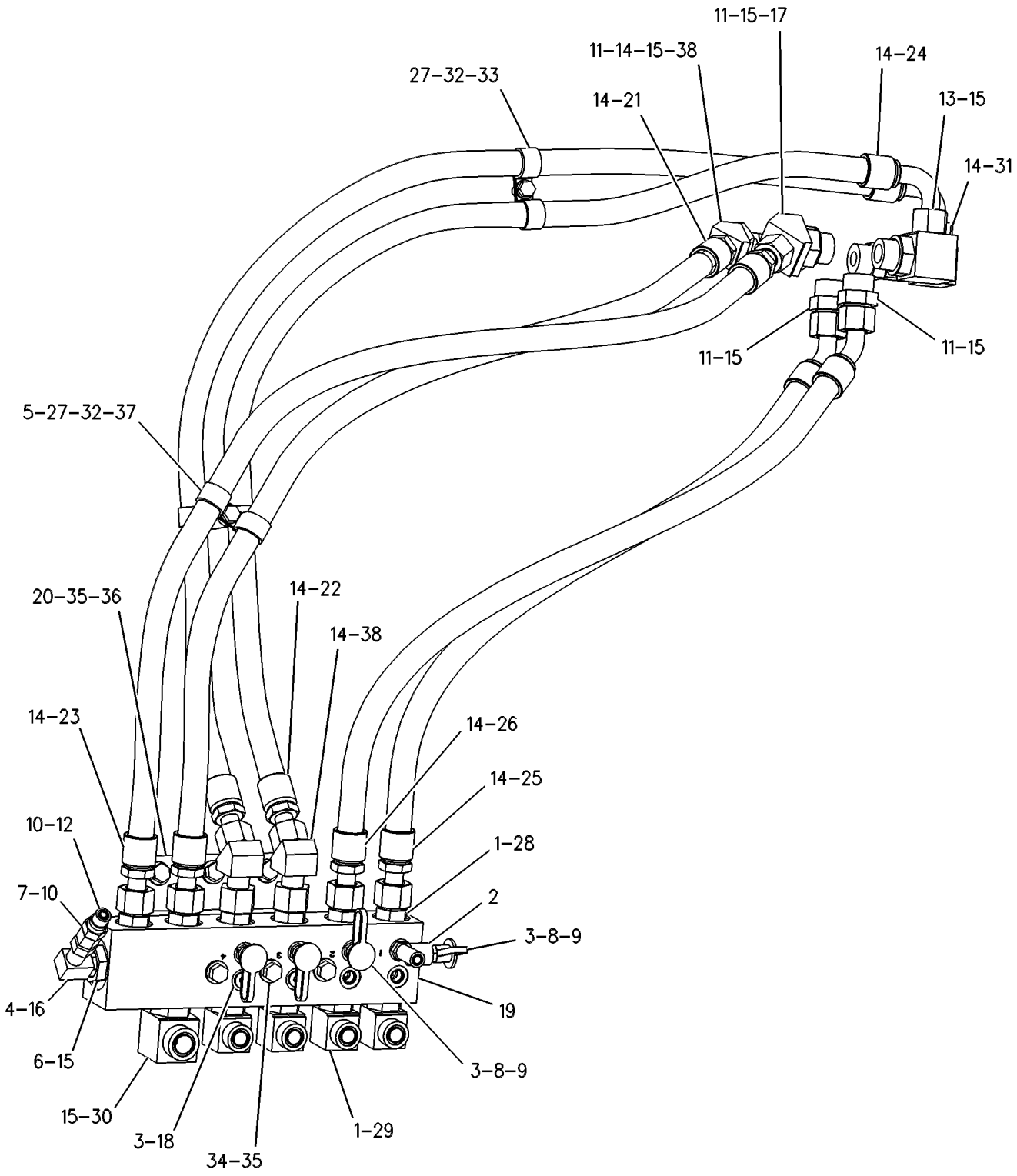

GRAPHIC #1 g00271622

102-4226 PUMP GP-PISTON—BRAKE

S/N: 7HR1-UP

PART OF 109-6875 CONTROL GP-SERVICE BRAKE

SMCS-4268, 4306, 5070 **i01142232**

NOTE	REF NO	GRAPHIC REF	PART NUMBER	QTY	PART NAME 1 2 3 4 5 6 (PRODUCT LEVEL)	SEE PAGE
	1	1	**3G-3721**	4	SCREW	
J	2	1	**2D-6392**	1	SEAL-O-RING (6.07MM ID)	
	3	1	**4T-1905**	1	PISTON-CONTROL	
	4	1	**4T-1908**	1	SWASHPLATE	
	5	1	**6V-5341**	1	PIN-SPRING	
	6	1	**4T-1907**	1	BUTTON-PIVOT	
	7	1	**4T-1906**	1	COLLAR-SPRING	
	8	1	**4T-1916**	1	SPRING	
	9	1	**1S-8560**	2	RACE-THRUST BEARING	
	10	1	**5L-1100**	1	BEARING-THRUST	
J	11	1	**101-9613**	1	SEAL-SHAFT	
J	12	1	**2R-1230**	1	RING-RETAINING	
	13	1	**104-5967**	1	SHAFT-PUMP	
J	14	1	**001-5600**	2	RING-SNAP	
	15	1	**4T-1915**	1	WASHER	
J	16	1	**3E-6747**	2	SEAL-O-RING (32.99MM ID)	
	17	1	**4T-1897**	2	RACE-INNER	
	18	1	**104-5060**	1	HOUSING AS-PUMP	
	19	1	**4L-6944**	1	BEARING-NEEDLE	
J	20	1	**4T-1902**	1	GASKET	
	21	1	**1B-7182**	4	BOLT (5/16-18X1.25IN)	
J	22	1	**8N-7294**	2	RETAINER-PIN	
Y	23	1	**4T-1909**	1	VALVE GP-PRESSURE COMPENSATOR (BRAKE)	811
J	24	1	**3G-7426**	1	GASKET	
	25	1	**4T-1904**	1	PLATE AS	
		1	**107-3203**	1	PIN-GUIDE	
	26	1	**7F-7983**	1	BEARING-NEEDLE	
	27	1	**4T-1901**	2	COVER-TRUNNION	
	28	1	**4F-2926**	2	BEARING-NEEDLE	
Y	29	1	**9T-4219**	1	ROTATING GP-PUMP	805
					AVAILABLE REPAIR KIT(S):	
J			**104-5061**	1	KIT-PUMP SEAL	

J-KIT MARKED J INCLUDES PART(S) MARKED J
Y-SEPARATE ILLUSTRATION

102-4226 PUMP GP-PISTON *(contd.)* **i01142232**

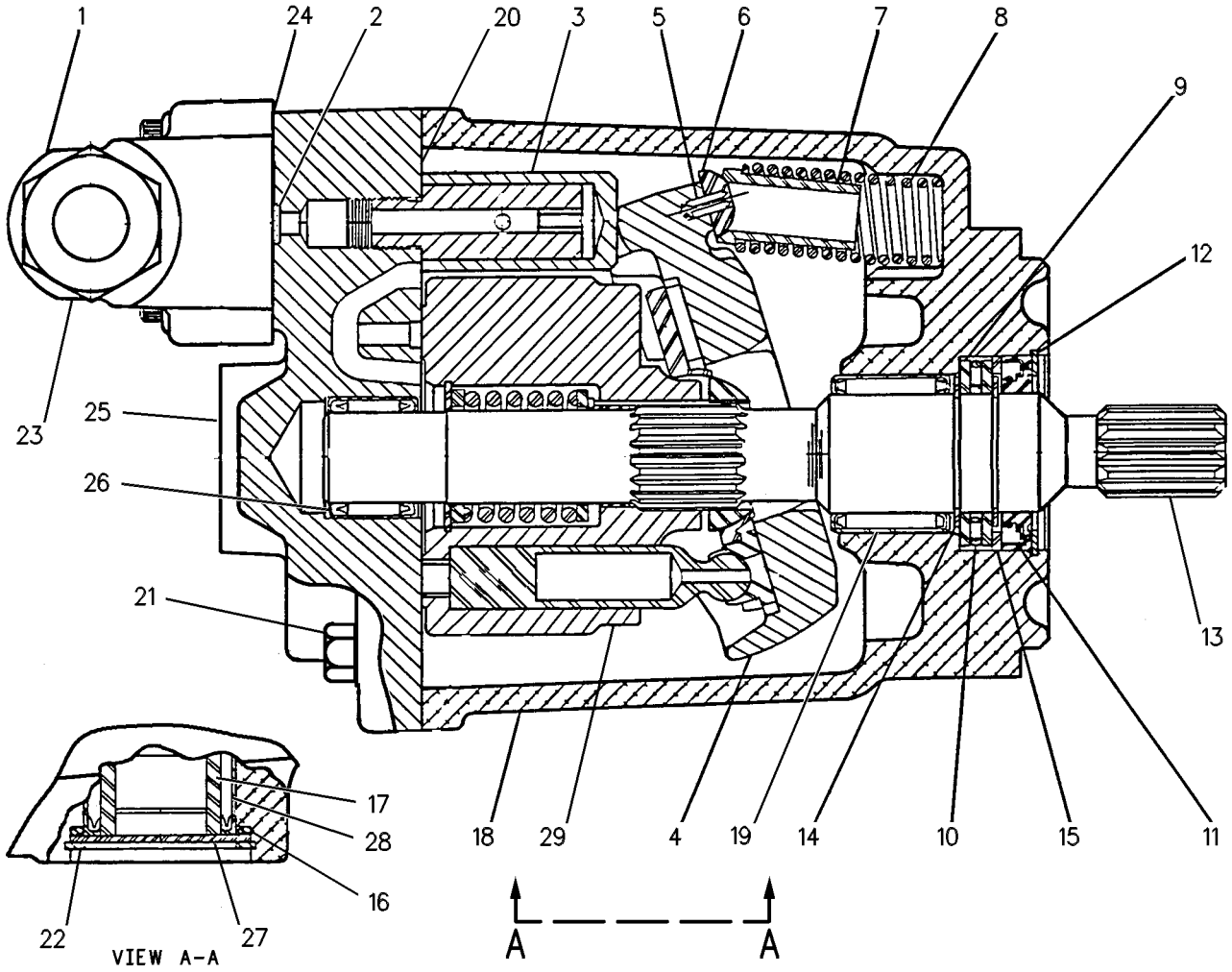

GRAPHIC #1 g00084240

164-5486 PUMP GP-PISTON–BRAKE

S/N: 7HR1-UP

PART OF 109-6875 CONTROL GP-SERVICE BRAKE

SMCS-4268, 4306, 5070 **i01142235**

NOTE	PART NUMBER	QTY	PART NAME 1 2 3 4 5 6 (PRODUCT LEVEL)	SEE PAGE
	4F-2926	2	BEARING-NEEDLE	
	5L-1100	1	BEARING-THRUST	
	1B-7182	4	BOLT (5/16-18X1.25IN)	
	4T-1907	1	BUTTON-PIVOT	
	4T-1906	1	COLLAR-SPRING	
	4T-1901	2	COVER-TRUNNION	
	3G-7426	1	GASKET	
	4T-1902	1	GASKET	
	104-5060	1	HOUSING AS-PUMP	
	4L-6944	1	BEARING-NEEDLE	
	104-5061	1	KIT-PUMP SEAL	
	6V-5341	1	PIN-SPRING	
	4T-1905	1	PISTON-CONTROL	
	4T-1904	1	PLATE AS	
	7F-7983	1	BEARING-NEEDLE	
	107-3203	1	PIN-GUIDE	
	9S-4191	1	PLUG-O-RING (9/16-18 THD)	
	4T-1897	2	RACE-INNER	
	1S-8560	2	RACE-THRUST BEARING	
	8N-7294	2	RETAINER-PIN	
	2R-1230	1	RING-RETAINING	
	001-5600	2	RING-SNAP	
Y	**9T-4219**	1	ROTATING GP-PUMP	805
	3G-3721	4	SCREW	
	2D-6392	1	SEAL-O-RING (6.07MM ID)	
	3E-6747	2	SEAL-O-RING (32.99MM ID)	
	3J-1907	1	SEAL-O-RING (11.89MM ID)	
	101-9613	1	SEAL-SHAFT	
	104-5967	1	SHAFT-PUMP	
	4T-1916	1	SPRING	
	4T-1908	1	SWASHPLATE	
Y	**4T-1909**	1	VALVE GP-PRESSURE COMPENSATOR (BRAKE)	811
	4T-1915	1	WASHER	

Y-SEPARATE ILLUSTRATION

9T-4219 ROTATING GP-PUMP

S/N: 7HR1-UP

PART OF 102-4226, 164-5486 PUMP GP-PISTON

SMCS-5070 **i01294601**

NOTE	REF NO	GRAPHIC REF	PART NUMBER	QTY	PART NAME 1 2 3 4 5 6 (PRODUCT LEVEL)	SEE PAGE
	1	1	**8J-6273**	1	RING-RETAINING	
	2	1	**9T-4538**	2	WASHER	
	3	1	**9T-4539**	1	RETAINER	
	4	1	**9T-4541**	1	SPRING	
	5	1	**9T-4537**	3	PIN	
	6	1	**9T-4540**	1	PLATE-RETRACTION	
	7	1	**9T-4536**	1	WASHER-SPHERICAL	

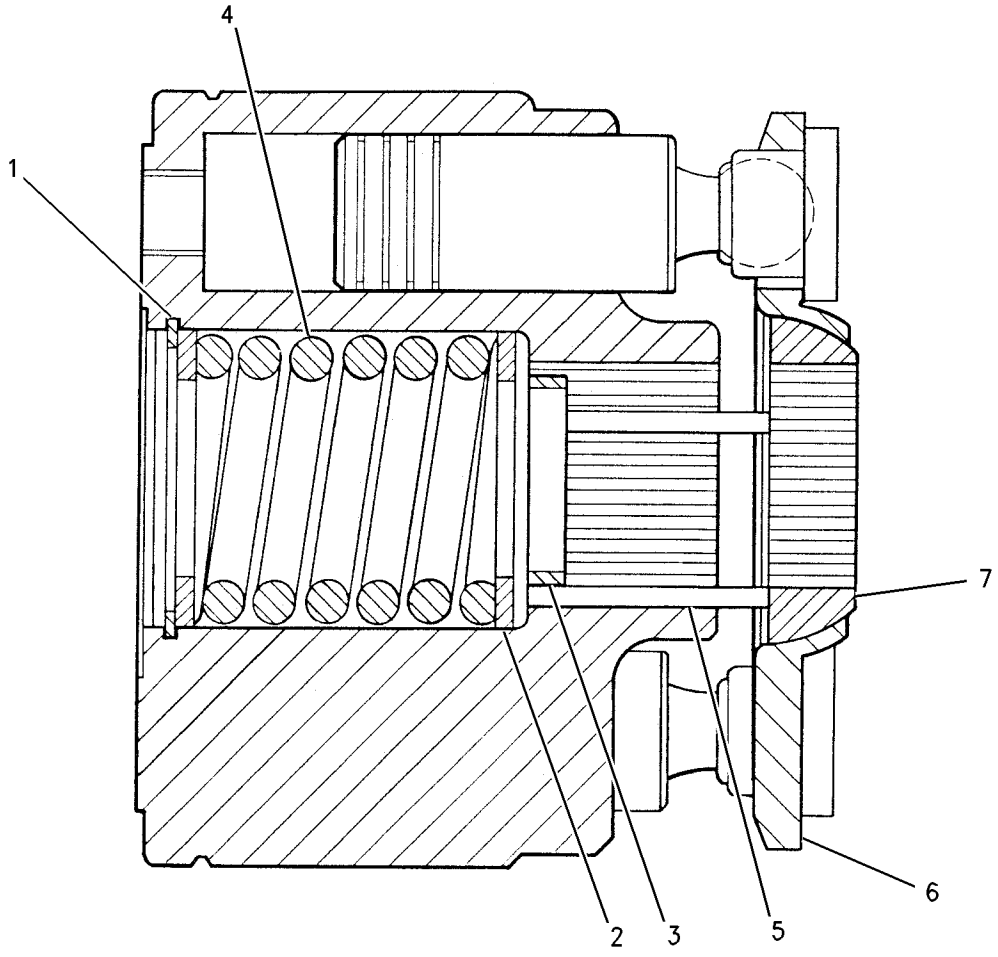

GRAPHIC #1 g00686049

BRAKING SYSTEM

145-3203 ROTATING GP-PUMP

S/N: 7HR1-UP

PART OF 141-1462, 141-1463 PUMP GP-PISTON

SMCS-5070 **i01461374**

NOTE	REF NO	GRAPHIC REF	PART NUMBER	QTY	PART NAME 1 2 3 4 5 6 (PRODUCT LEVEL)	SEE PAGE
	1	1	**4I-5956**	1	COVER	
M	2	1	**8T-0267**	4	BOLT-SOCKET HEAD (M6X1X12MM)	
	3	1	**4I-5957**	4	RING	
	4	1	**124-9849**	2	SEAL-SHAFT	
	5	1	**6I-6979**	1	FLANGE	
	6	1	**102-0743**	1	SWASHPLATE	
	7	1	**6E-3845**	1	PLATE-RETAINING	
	8	1	**6E-3846**	1	RETAINER-BALL	
M	9	1	**8T-8442**	4	BOLT-SOCKET HEAD (M6X1X30MM)	
	10	1	**6E-3840**	2	ROD	
	11	1	**6V-1902**	1	SEAL-O-RING	
	12	1	**5H-3252**	1	SEAL-O-RING	
	13	1	**6E-1033**	1	SPRING SET-CUP	
B	14	1	**6E-3841**	1	SHIM (1.2MM THK)	
	15	1	**111-9913**	1	PISTON AS	
	16	1	**141-2376**	1	SHAFT	
	17	1	**135-8868**	1	BARREL AS-PUMP	
	18	1	**6E-3847**	2	RETAINER-SEGMENT	
	19	1	**095-7948**	1	RING-RETAINING	
	20	1	**102-0746**	1	BEARING AS	
	21	1	**102-0740**	1	BEARING	
	22	1	**108-3566**	1	SEAL-O-RING	
	23	1	**6E-1574**	2	PIN	
	24	1	**1G-4312**	2	PIN-SPRING	
B	25	1	**6E-3842**	1	SHIM (1.0MM THK)	
B	26	1	**6E-3843**	1	SHIM (.8MM THK)	
B	27	1	**6E-3844**	1	SHIM (.6MM THK)	

B-USE AS REQUIRED
M-METRIC PART

145-3203 ROTATING GP-PUMP ***(contd.)*** **i01461374**

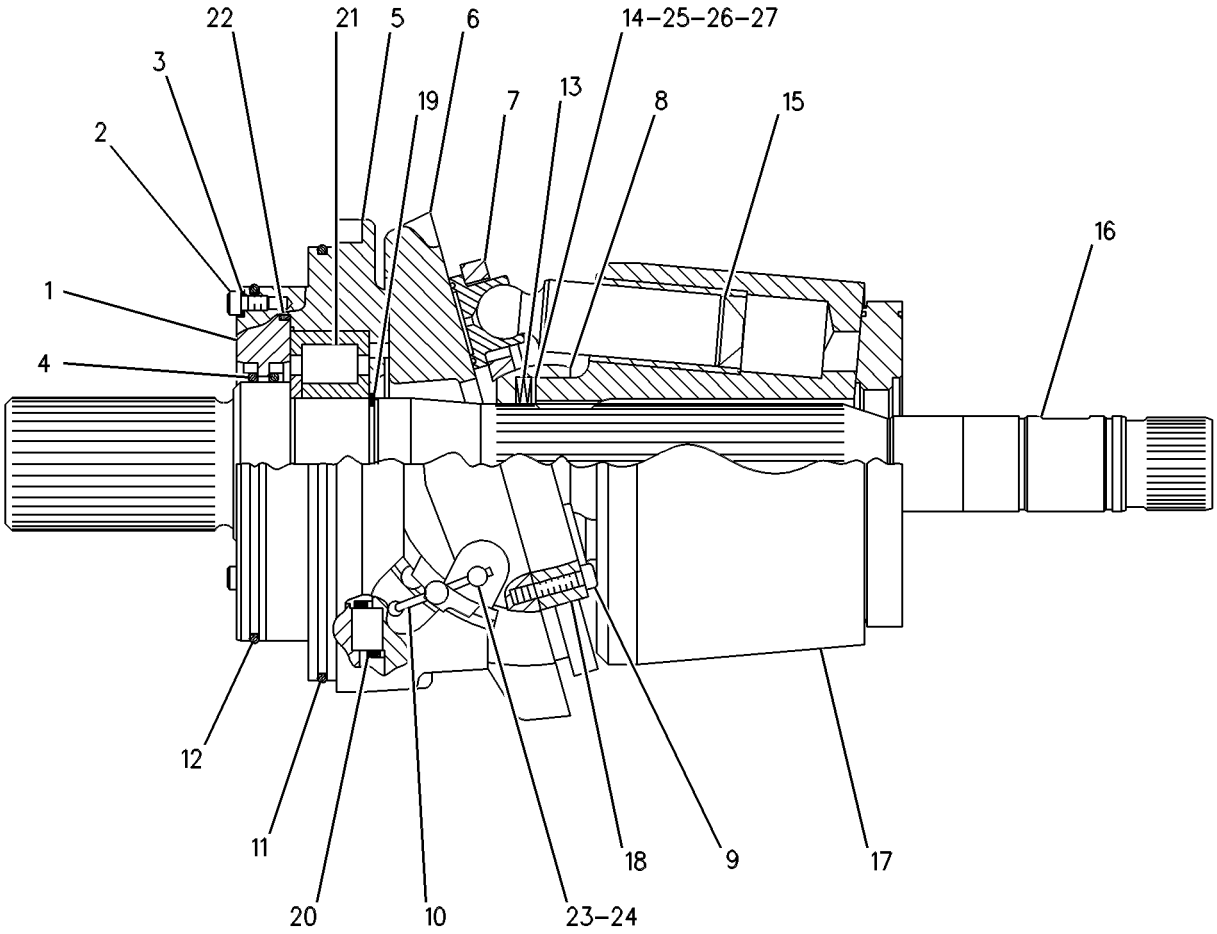

GRAPHIC #1 g00271333

BRAKING SYSTEM

133-3699 VALVE & MTG GP-BRAKE CONTROL—PARKING

S/N: 7HR1-UP

PART OF 109-6875 CONTROL GP-SERVICE BRAKE

SMCS-4265 **i01431244**

NOTE	REF NO	GRAPHIC REF	PART NUMBER	QTY	PART NAME 1 2 3 4 5 6 (PRODUCT LEVEL)	SEE PAGE
	1	1	**1A-4790**	4	WASHER (16.7X31.8X1.6MM THK)	
I	2	1	**2T-2161**	1	HOSE AS	
	3	1	**2V-7859**	1	BEARING	
	4	1	**3B-4607**	1	COTTER	
	5	1	**3E-2310**	1	TEE	
	6	1	**3J-1907**	2	SEAL-O-RING (11.89MM ID)	
	7	1	**4B-2913**	1	PIN-CLEVIS	
	8	1	**4V-1541**	1	COLLAR	
	9	1	**5P-6724**	1	BEARING-ROLLER	
	11	1	**7I-4078**	1	LEVER AS	
I	12	1	**8E-9733**	1	HOSE AS	
	13	1	**8T-0741**	2	SEAL-LIP	
Y	14	1	**100-8941**	1	VALVE GP-BRAKE CONTROL (PARKING)	810
	15	1	**103-3587**	1	BRACKET AS	
	16	1	**104-5887**	1	BLOCK AS	
	17	1	**104-5888**	1	STRIP	
M	18	1	**5C-2890**	4	NUT (M6X1 THD)	
	19	1	**6V-8636**	1	CONNECTOR	
	20	1	**6V-9001**	1	ELBOW	
	21	1	**6V-9850**	1	ELBOW-SWIVEL	
M	22	1	**8T-4189**	2	BOLT (M8X1.25X20MM)	
	23	1	**8T-4224**	2	WASHER-HARD (8.8X16X2MM THK)	
M	24	1	**8T-4971**	2	BOLT (M6X1X30MM)	
	25	1	**3E-5181**	1	SWITCH AS-LIMIT (PARKING BRAKE)	
		1	**3E-3377**	1	WEDGE-RECEPTACLE LOCK	
		1	**8T-8729**	4	PIN-CONNECTOR	
E		1	**9X-1386**		SLEEVE (9CM)	
		1	**102-8804**	1	KIT-RECEPTACLE (4 PIN)	
					(INCLUDES WEDGE)	
	26	1	**174-4312**	1	SWITCH AS-PRESSURE (PARKING BRAKE OIL)	
		1	**3E-3371**	1	WEDGE-RECEPTACLE LOCK (3 PIN)	
		1	**186-3735**	3	PIN-CONNECTOR	
		1	**102-8803**	1	KIT-RECEPTACLE (3 PIN)	
					(INCLUDES RECEPTACLE AS & WEDGE)	
	27	1	**5B-2183**	1	NUT-JAM (9/16-18 THD)	

E-ORDER BY THE CENTIMETER
I-SEE HOSE FABRICATION GUIDE
M-METRIC PART
Y-SEPARATE ILLUSTRATION

133-3699 VALVE & MTG GP-BRAKE CONTROL *(contd.)* i01431244

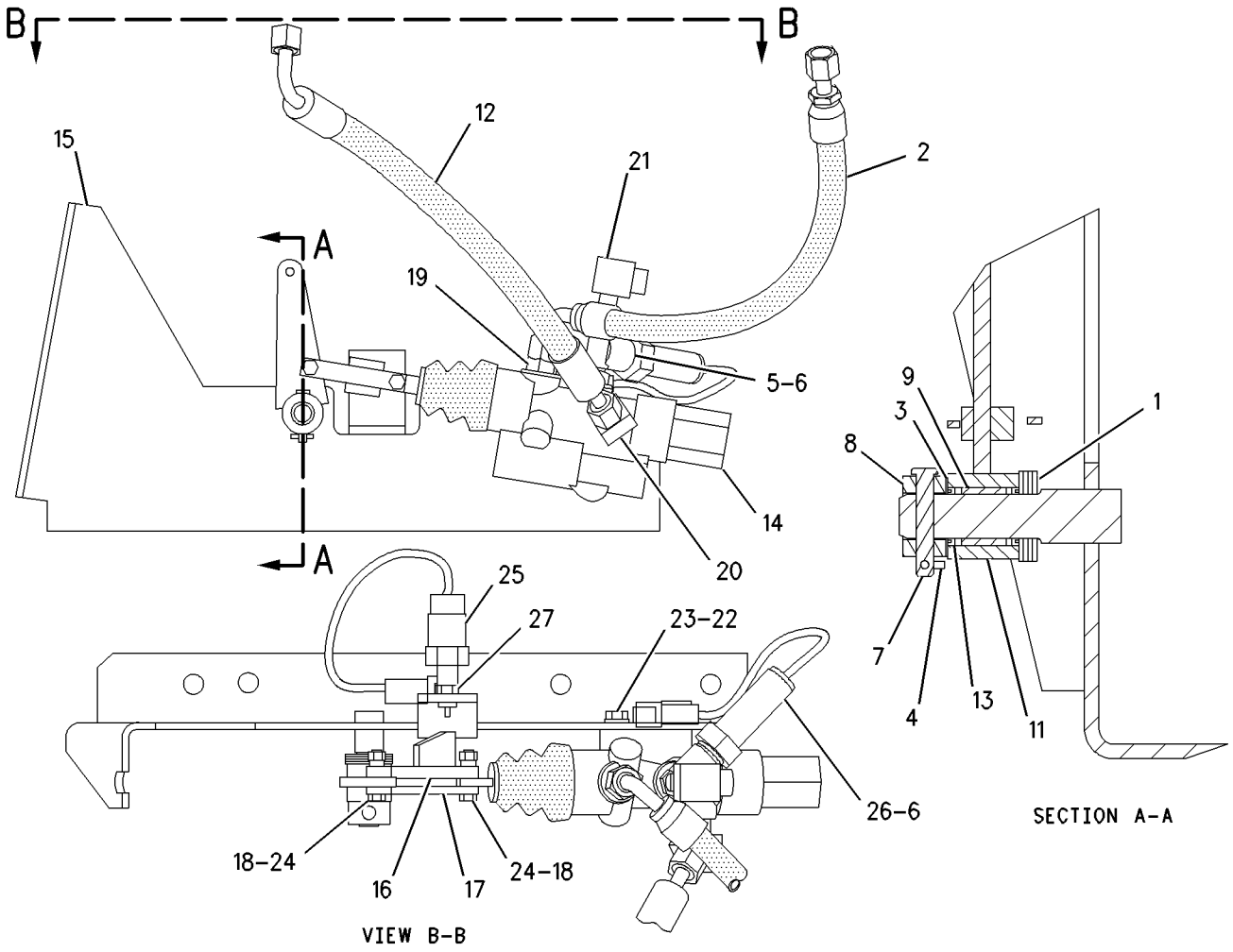

GRAPHIC #1 g00749851

100-8941 VALVE GP-BRAKE CONTROL–PARKING

S/N: 7HR1-UP

PART OF 133-3699 VALVE & MTG GP-BRAKE CONTROL

SMCS-4265, 4282 **i00172680**

NOTE	REF NO	GRAPHIC REF	PART NUMBER	QTY	PART NAME 1 2 3 4 5 6 (PRODUCT LEVEL)	SEE PAGE
	1	1	**9S-8001**	5	PLUG-O-RING (5/16-24 THD)	
	2	1	**9S-8004**	2	PLUG-O-RING (9/16-18 THD)	
	3	1	**9S-8006**	1	PLUG-O-RING (7/8-14 THD)	
	4	1	**2M-9780**	1	SEAL-O-RING (19.18MM ID)	
	5	1	**3J-1907**	2	SEAL-O-RING (11.89MM ID)	
	6	1	**4J-7533**	5	SEAL-O-RING (6.07MM ID)	
	7	1	**4E-5551**	1	BOOT-ACTUATION ROD	
					AVAILABLE REPAIR KIT(S):	
			101-7034		KIT-SEAL	

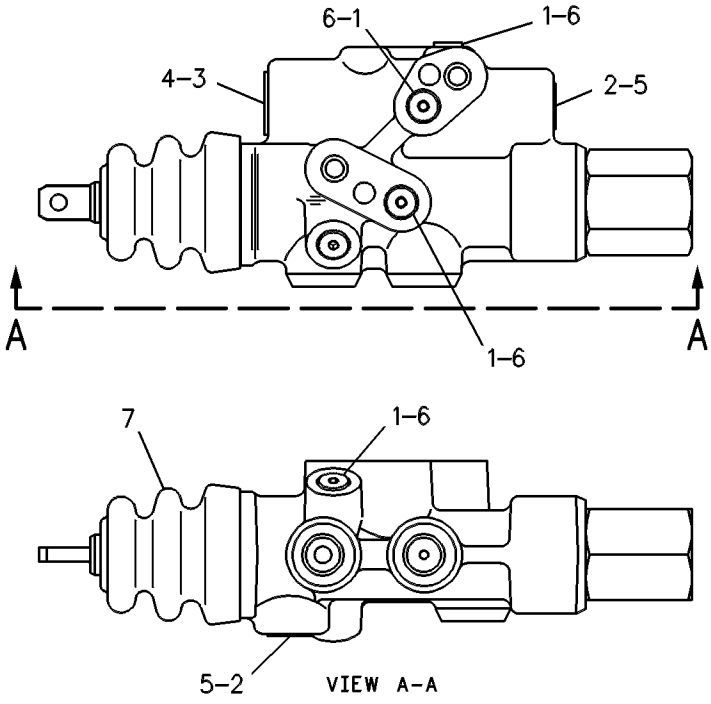

GRAPHIC #1 g00119975

4T-1909 VALVE GP-PRESSURE COMPENSATOR–BRAKE

S/N: 7HR1-UP

PART OF 102-4226, 164-5486 PUMP GP-PISTON

SMCS-5086 **i01142185**

NOTE	REF NO	GRAPHIC REF	PART NUMBER	QTY	PART NAME 1 2 3 4 5 6 (PRODUCT LEVEL)	SEE PAGE
	1	1	**9S-8007**	1	PLUG-O-RING (3/8-24 THD)	
	2	1	**4T-1910**	1	CAP	
	3	1	**5P-8356**	1	SEAL-O-RING (21.89MM ID)	
	4	1	**3G-5423**	1	SPRING	
	5	1	**4T-1911**	1	CAP-SPRING	
	6	1	**3P-0647**	1	SEAL-O-RING (13.94MM ID)	
	7	1	**6F-0612**	1	NUT-JAM (1/4-28 THD)	
	8	1	**4T-1914**	1	SETSCREW-HEX SOCKET	
	9	1	**9T-4226**	1	CAP	
	10	1	**4T-1913**	1	CAP-SPRING	
	11	1	**7J-0204**	1	SEAL-O-RING (7.65MM ID)	

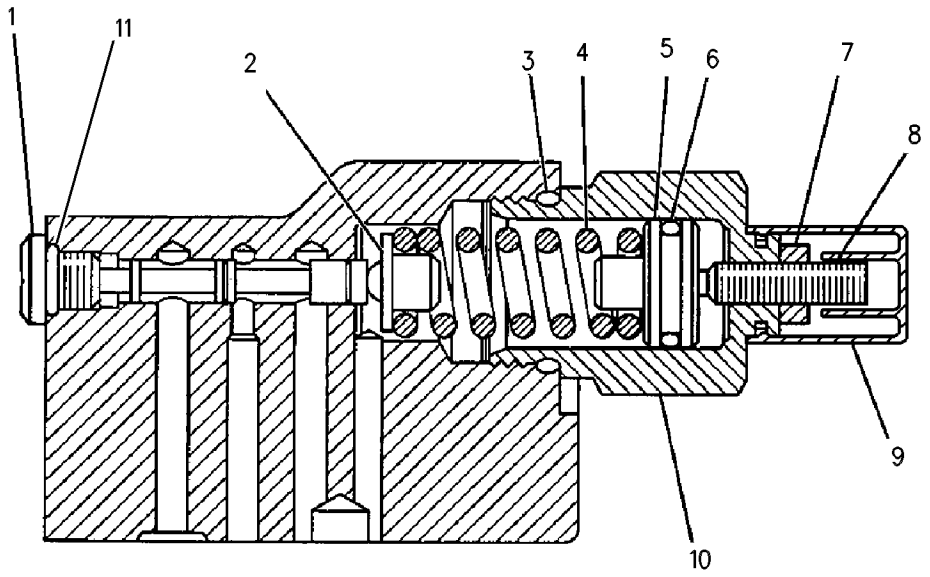

GRAPHIC #1 g00605683

STEERING SYSTEM

4I-5968 ACTUATOR GP-PISTON PUMP

S/N: 7HR1-UP

PART OF 107-6440 VALVE GP-PRESS & FLOW CMPNSTR, 136-0041 VALVE GP-PUMP CONTROL

SMCS-5078 **i01140420**

NOTE	REF NO	GRAPHIC REF	PART NUMBER	QTY	PART NAME 1 2 3 4 5 6 (PRODUCT LEVEL)	SEE PAGE
	1	1	**4I-7696**	1	BUSHING	
	2	1	**107-6592**	1	SUPPORT	
	3	1	**4I-7698**	1	PIN	
	4	1	**4I-7699**	1	ROLLER	
	5	1	**4I-7700**	2	WASHER	
	6	1	**4I-7701**	1	SPRING	

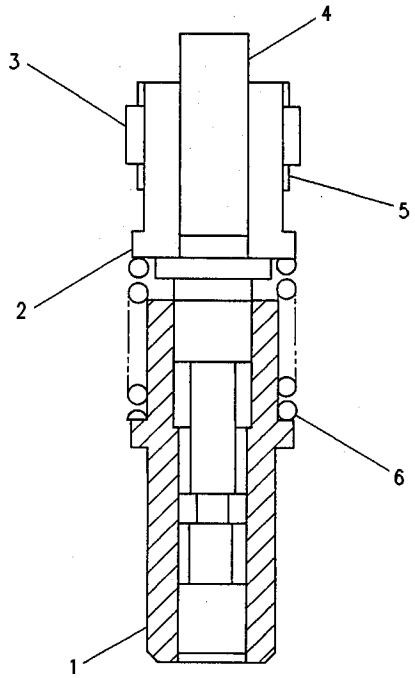

GRAPHIC #1 g00083740

4I-7693 ACTUATOR GP-PISTON PUMP

S/N: 7HR1-UP

PART OF 141-1462, 141-1463 PUMP GP-PISTON

SMCS-5078 **i00112809**

NOTE	REF NO	GRAPHIC REF	PART NUMBER	QTY	PART NAME 1 2 3 4 5 6 (PRODUCT LEVEL)	SEE PAGE
	1	1	**6E-3867**	1	ROD-ACTUATOR	
	2	1	**4I-7711**	1	PISTON	
	3	1	**6E-3869**	1	SPRING	

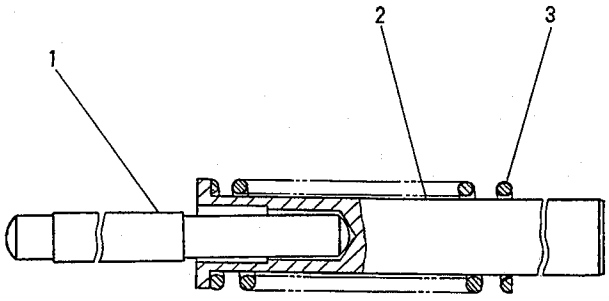

GRAPHIC #1 g00083736

6E-1025 ACTUATOR GP-PISTON PUMP

S/N: 7HR1-UP

PART OF 141-1462, 141-1463 PUMP GP-PISTON

SMCS-5070, 5078 **i01019095**

NOTE	REF NO	GRAPHIC REF	PART NUMBER	QTY	PART NAME 1 2 3 4 5 6 (PRODUCT LEVEL)	SEE PAGE
	1	1	**6E-3867**	1	ROD-ACTUATOR	
	2	1	**6E-3868**	1	PISTON-ACTUATOR	
	3	1	**6E-3869**	1	SPRING	

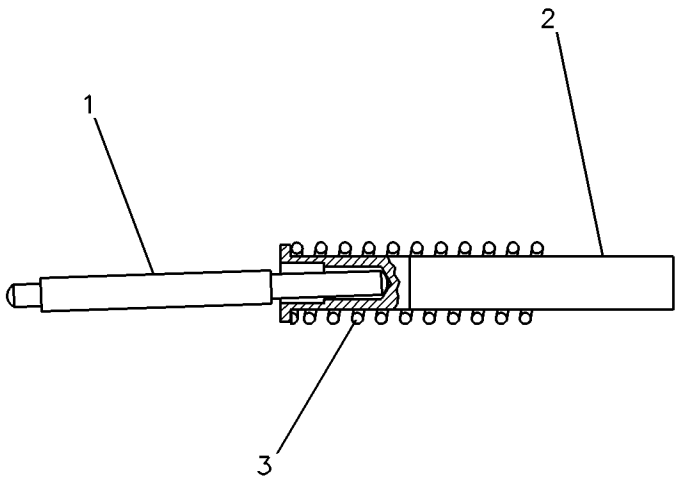

GRAPHIC #1 g00082762

6E-1026 ACTUATOR GP-PISTON PUMP

S/N: 7HR1-UP

PART OF 141-1462, 141-1463 PUMP GP-PISTON

SMCS-5078 **i00576154**

NOTE	REF NO	GRAPHIC REF	PART NUMBER	QTY	PART NAME 1 2 3 4 5 6 (PRODUCT LEVEL)	SEE PAGE
	1	1	**6E-3872**	1	SPRING	
	2	1	**6E-3870**	1	PISTON-ACTUATOR	
B	3	1	**6E-3871**	1	ROD (185.0MM LG)	
B	4	1	**145-3321**	1	ROD (184.7MM LG)	
B	5	1	**145-3322**	1	ROD (184.9MM LG)	
B	6	1	**145-3323**	1	ROD (184.6MM LG)	
B	7	1	**145-3324**	1	ROD (184.8MM LG)	

B-USE AS REQUIRED

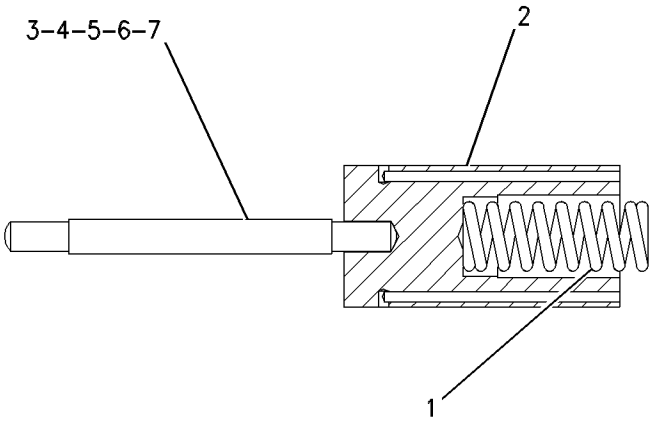

GRAPHIC #1 g00280704

133-7106 BLOCK GP-HYDRAULIC—STEERING

S/N: 7HR1-UP

PART OF 109-6884 LINES GP-STEERING NEUTRALIZER

SMCS-4304 **i01185423**

NOTE	REF NO	GRAPHIC REF	PART NUMBER	QTY	PART NAME 1 2 3 4 5 6 (PRODUCT LEVEL)	SEE PAGE
	1	1	**116-4798**	1	ANGLE AS	
M		1	**8T-3490**	2	NUT-WELD (M10X1.5 THD)	
	2	1	**116-9331**	1	JUNCTION BLOCK	
	3	1	*148-8340*	1	CONNECTOR AS	
		1	**6V-8639**	1	CONNECTOR-SEAL	
		1	**6V-8398**	1	SEAL-O-RING (12.47MM ID)	
		1	**3K-0360**	1	SEAL-O-RING (16.36MM ID)	
	4	1	*148-8363*	1	ELBOW AS	
		1	**6V-9876**	1	ELBOW-ORFS (3/4-16 THD)	
		1	**6V-8397**	1	SEAL-O-RING (9.27MM ID)	
		1	**3K-0360**	1	SEAL-O-RING (16.36MM ID)	
	5	1	*148-8433*	1	TEE AS-ORFS (1 1/16-12 THD)	
		1	**6V-9836**	1	TEE-SWIVEL	
		1	**6V-8397**	2	SEAL-O-RING (9.27MM ID)	
	6	1	**8T-4121**	2	WASHER (2.5MM THK)	
M	7	1	**8T-6466**	2	BOLT (M10X1.50X60MM)	

M-METRIC PART

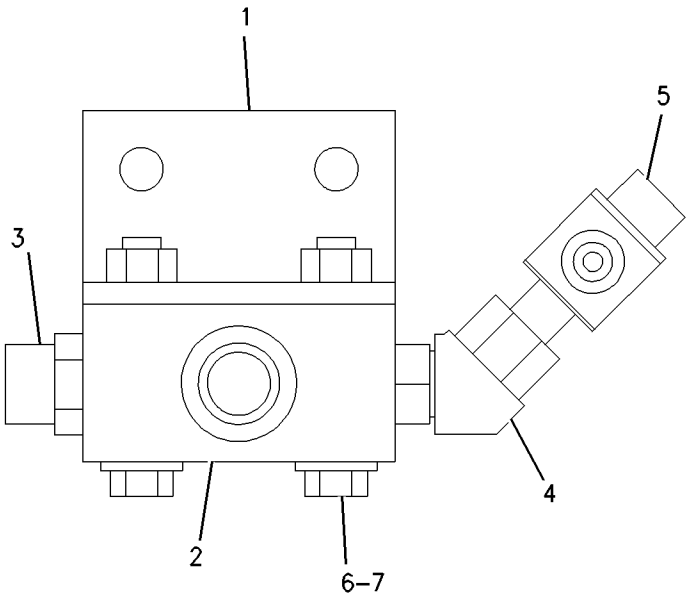

GRAPHIC #1 g00634755

STEERING SYSTEM

6E-1023 CONTROL GP-PUMP

S/N: 7HR1-UP

PART OF 141-1462, 141-1463 PUMP GP-PISTON

SMCS-3222, 5070 **i01269042**

NOTE	REF NO	GRAPHIC REF	PART NUMBER	QTY	PART NAME 1 2 3 4 5 6 (PRODUCT LEVEL)	SEE PAGE
	1	1	**6E-3874**	1	BEARING	
	2	1	**5H-4909**	1	SEAL-O-RING (253.59MM ID)	
	3	1	**6E-3875**	1	HEAD-PUMP	
	4	1	**6E-3873**	1	PLUG-ORIFICE	
	5	1	**9T-3941**	5	PLUG-BREAK OFF	
	6	1	**6E-3866**	1	SEAT-VALVE	
M	7	1	**9X-8480**	4	BOLT-HEX HEAD (M24X3X110MM)	
	8	1	**9S-8004**	1	PLUG-O-RING (9/16-18 THD)	
	9	1	**3J-1907**	1	SEAL-O-RING (11.89MM ID)	
	10	1	**8C-3338**	1	DOWEL	
	11	1	**7X-2906**	2	PIN	
	12	1	**087-4772**	1	PLUG-HEX	

M-METRIC PART

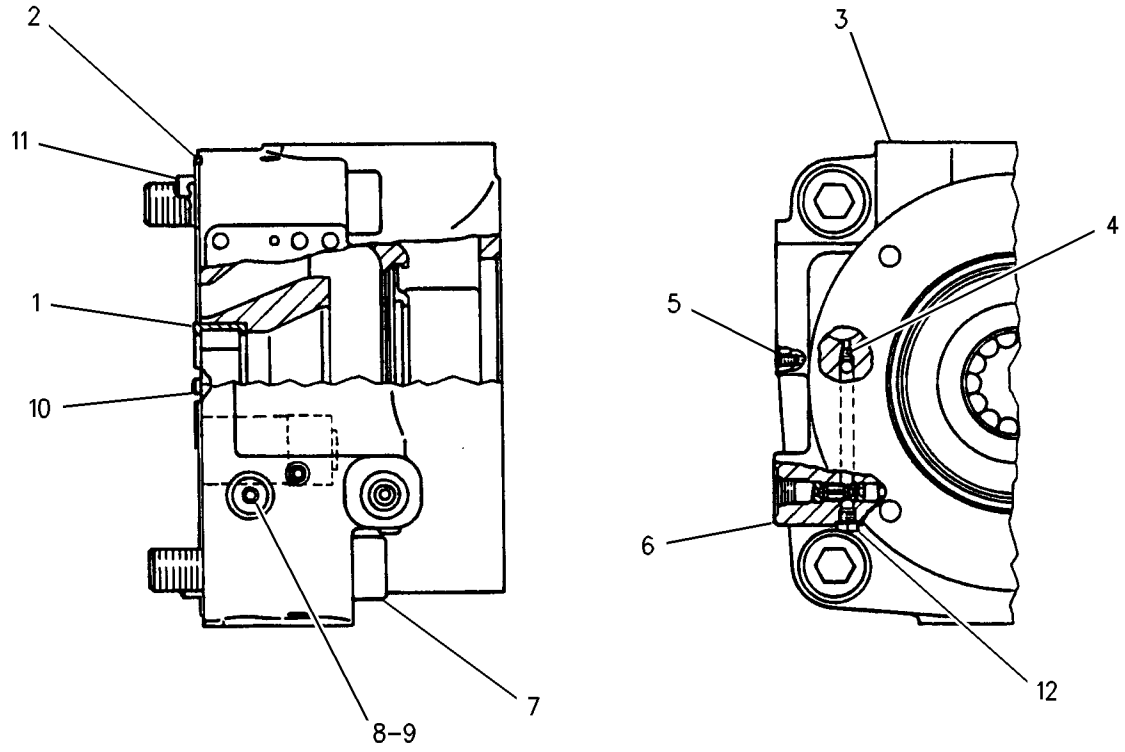

GRAPHIC #1 g00674251

STEERING SYSTEM

147-1737 CONTROL GP-STEERING

S/N: 7HR1-297

PART OF 130-6906 CAB AR

SMCS-4304, 4309, 4310, 4338 **i01541157**

NOTE	REF NO	GRAPHIC REF	PART NUMBER	QTY	PART NAME 1 2 3 4 5 6 (PRODUCT LEVEL)	SEE PAGE
M	1	1	**8T-4908**	4	BOLT (M8X1.25X25MM)	
	2	1	**8T-4224**	4	WASHER-HARD (8.8X16X2MM THK)	
	3	1	**4E-3426**	2	BRACKET AS	
					(EACH INCLUDES)	
M		1	**6V-9632**	2	NUT-WELD (M6X1 THD)	
M		1	**8T-3490**	1	NUT-WELD (M10X1.5 THD)	
		1	**9C-8895**	2	BOSS	
I	4	1	**4E-6867**	2	HOSE AS	
	5	1	**6V-8398**	8	SEAL-O-RING	
	6	1	**3K-0360**	12	SEAL-O-RING	
	7	1	**136-3607**	2	ELBOW	
I	8	1	**098-6814**	2	HOSE AS	
Y	9	1	**143-2855**	1	VALVE GP-PILOT	887
	10	1	**6V-8625**	2	ELBOW	
	11	1	**4E-3441**	1	PAD	
	12	1	**4E-3439**	1	MANIFOLD	
M	13	1	**8T-4195**	3	BOLT (M10X1.5X30MM)	
	14	1	**8T-4121**	7	WASHER-HARD (11X21X2.5MM THK)	
	15	1	**6V-8639**	5	CONNECTOR	
M	16	1	**8T-4191**	4	BOLT (M10X1.5X16MM)	
	17	1	**102-0496**	2	PLATE	
BD	18	1	**5P-6120**	1	TRIM-EDGE	
	19	1	**3S-2093**	9	STRAP-CABLE	
	20	1	**124-2971**	1	HARNESS AS-STEERING (STIC CONTROL)	
		1	**8T-8737**	2	PLUG-SEAL	
		1	**155-2271**	1	KIT-CONNECTING PLUG (4 PIN)	
		1	**155-2265**	1	KIT-CONNECTING PLUG (8 PIN)	
					(EACH KIT-CONNECTING INCLUDES PLUG AS & WEDGE)	
		1	**102-8801**	1	KIT-RECEPTACLE (12 PIN)	
					(INCLUDES RECEPTACLE AS & WEDGE)	
	21	1	**6V-8634**	3	CONNECTOR	

B-USE AS REQUIRED
D-ORDER BY THE METER
I-SEE HOSE FABRICATION GUIDE
M-METRIC PART
Y-SEPARATE ILLUSTRATION

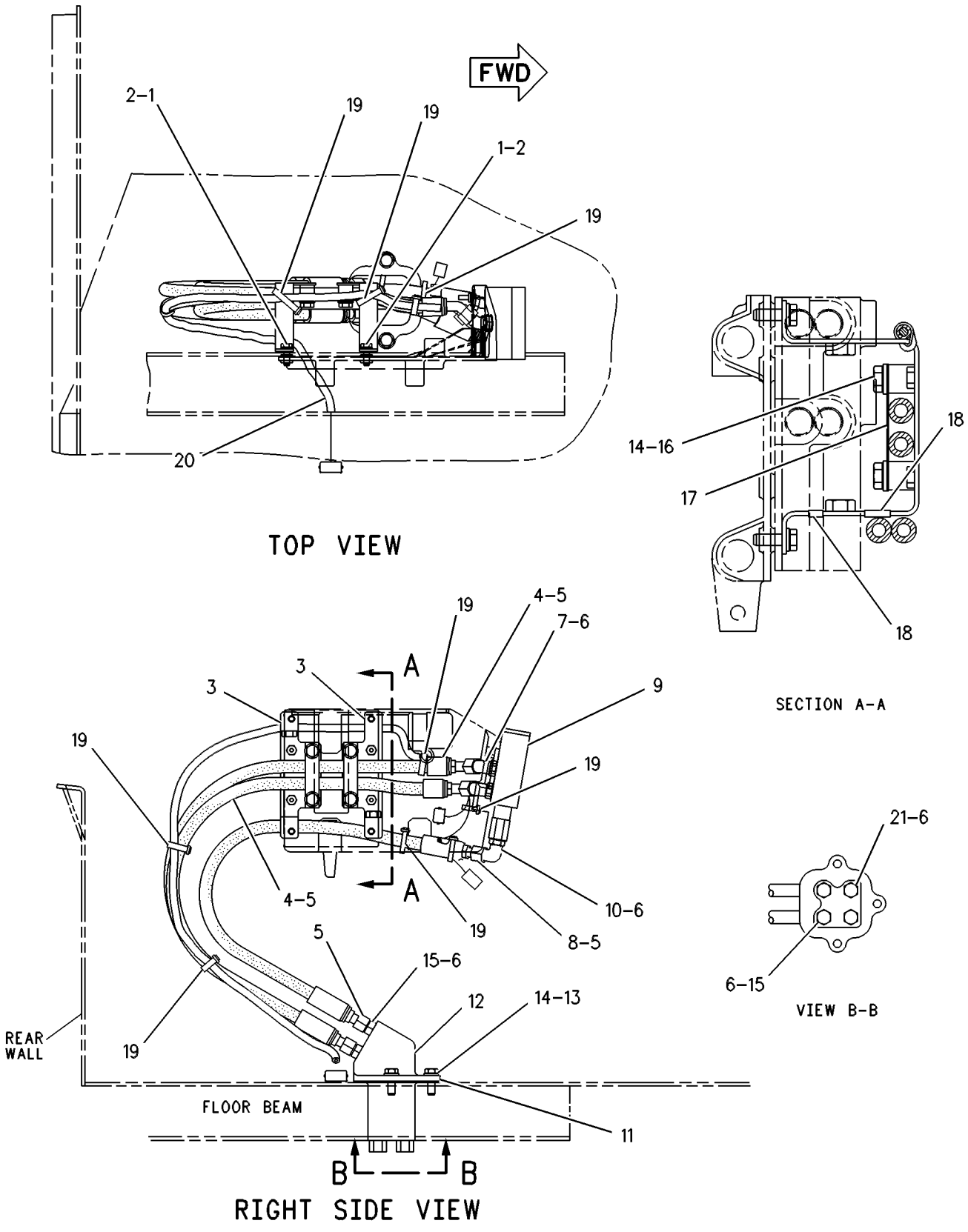

GRAPHIC #1 g00278035

STEERING SYSTEM

166-5210 CONTROL GP-STEERING

S/N: 7HR298-UP

PART OF 171-7047 CAB AR

SMCS-4304, 4309, 4310, 4338 **i01509657**

NOTE	REF NO	GRAPHIC REF	PART NUMBER	QTY	PART NAME 1 2 3 4 5 6 (PRODUCT LEVEL)	SEE PAGE
	1	1	**3S-2093**	3	STRAP-CABLE	
	2	1	**4E-3439**	1	MANIFOLD	
	3	1	**4E-3441**	1	PAD	
I	4	1	**4E-6867**	2	HOSE AS	
I	5	1	**098-6814**	2	HOSE AS	
	6	1	**124-2971**	1	HARNESS AS-STEERING (STIC CONTROL)	
		1	**8T-8737**	2	PLUG-SEAL	
		1	**155-2271**	1	KIT-CONNECTING PLUG (4 PIN)	
		1	**155-2265**	1	KIT-CONNECTING PLUG (8 PIN)	
					(EACH KIT-CONNECTING INCLUDES PLUG AS & WEDGE)	
		1	**102-8801**	1	KIT-RECEPTACLE (12 PIN)	
					(INCLUDES RECEPTACLE AS & WEDGE)	
Y	7	1	**143-2855**	1	VALVE GP-PILOT (STEERING)	887
	8	1	**136-3607**	2	ELBOW	
	9	1	**3K-0360**	12	SEAL-O-RING	
	10	1	**6D-4247**	2	CLIP	
	11	1	**6V-8398**	8	SEAL-O-RING	
	12	1	**6V-8625**	2	ELBOW	
	13	1	**6V-8634**	3	CONNECTOR	
	14	1	**6V-8639**	5	CONNECTOR	
	15	1	**8T-4121**	5	WASHER-HARD (11X21X2.5MM THK)	
M	16	1	**8T-4136**	2	BOLT (M10X1.5X25MM)	
M	17	1	**8T-4195**	3	BOLT (M10X1.5X30MM)	
	18	1	**163-8811**	8	CLAMP	
G	19	1	**160-2243**		SLEEVE-ABRASION (37.01IN EACH)	
G	20	1	**160-2243**		SLEEVE-ABRASION (35.83IN EACH)	

G-ORDER BY THE INCH
I-SEE HOSE FABRICATION GUIDE
M-METRIC PART
Y-SEPARATE ILLUSTRATION

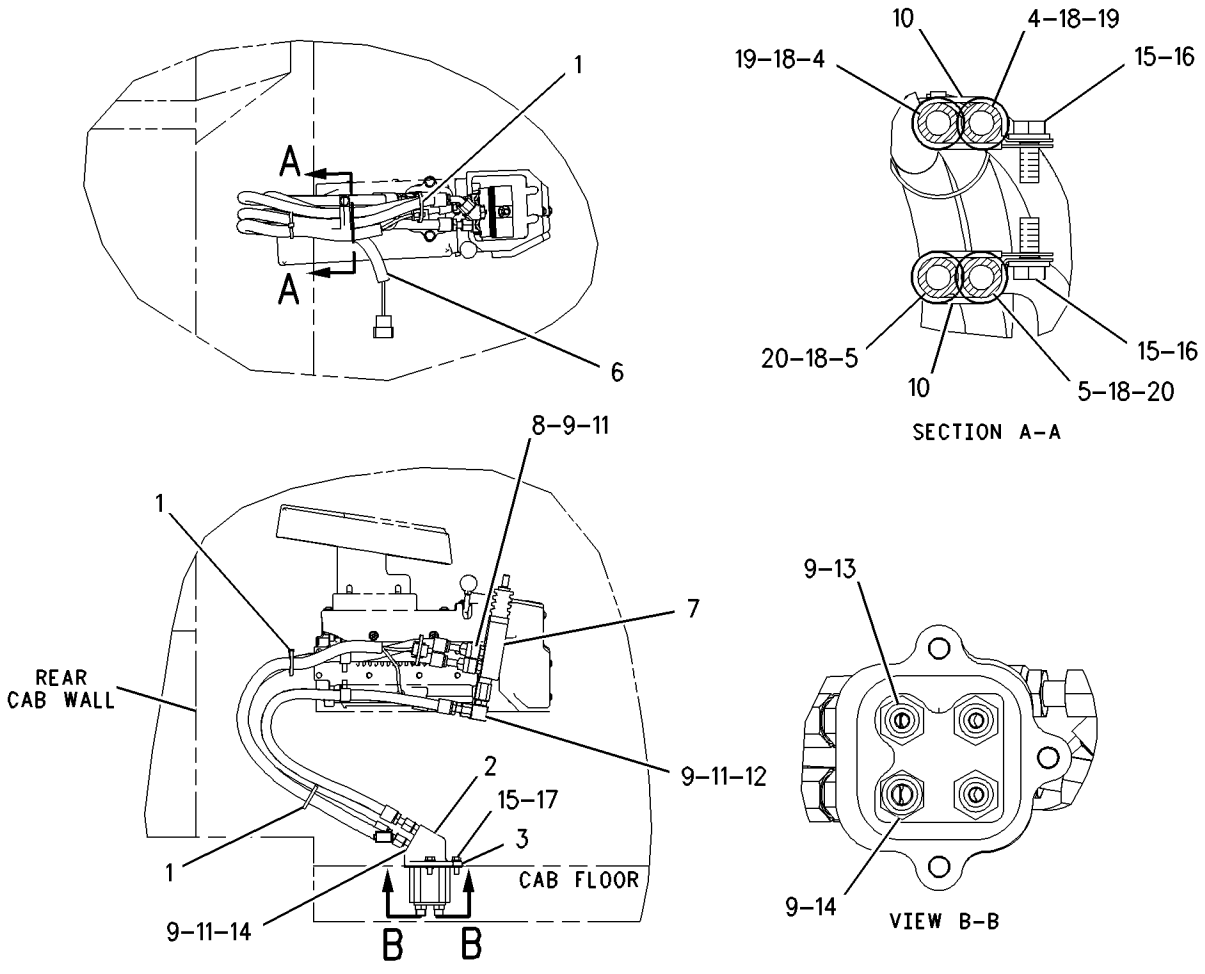

GRAPHIC #1 g00783975

STEERING SYSTEM

109-6882 CYLINDER & MTG GP-STEERING

S/N: 7HR1-UP

PART OF 109-6820 HYDRAULIC AR

SMCS-4303 **i01055882**

NOTE	REF NO	GRAPHIC REF	PART NUMBER	QTY	PART NAME 1 2 3 4 5 6 (PRODUCT LEVEL)	SEE PAGE
	1	1	**4E-8080**	4	PIN AS	
	2	1	**7X-4803**	8	SEAL-LIP	
Y	3	1	**112-8208**	2	CYLINDER GP-STEERING	824
	4	1	**115-9863**	2	RETAINER	
M	5	1	**8T-4184**	4	BOLT (M12X1.75X45MM)	
M	6	1	**8T-4192**	4	BOLT (M12X1.75X25MM)	
	7	1	**8T-4223**	8	WASHER-HARD (3MM THK)	

M-METRIC PART
Y-SEPARATE ILLUSTRATION

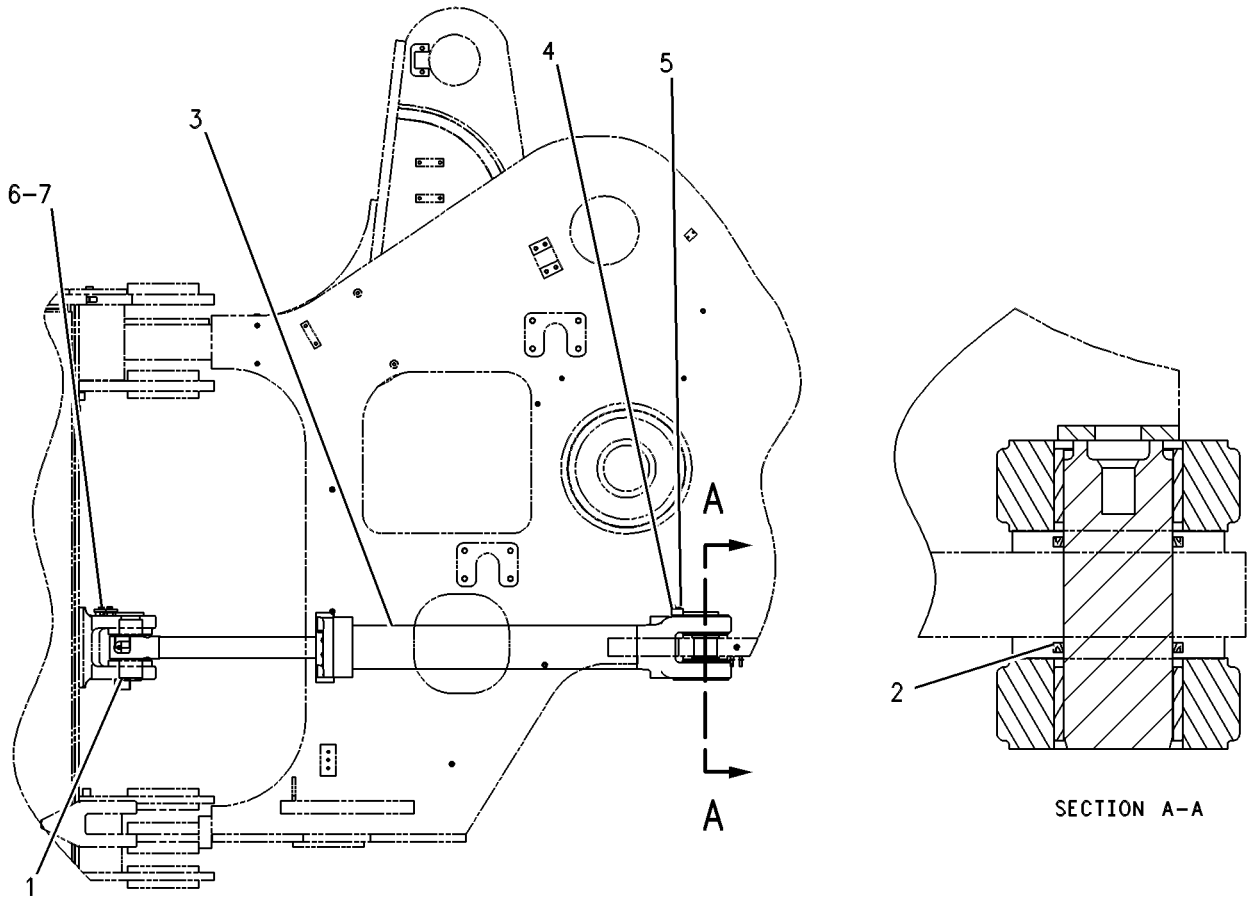

RIGHT SIDE VIEW

GRAPHIC #1 g00281746

MEMORANDA

112-8208 CYLINDER GP-STEERING

S/N: 7HR1-UP

PART OF 109-6882 CYLINDER & MTG GP-STEERING

SMCS-4303 **i01509689**

NOTE	REF NO	GRAPHIC REF	PART NUMBER	QTY	PART NAME 1 2 3 4 5 6 (PRODUCT LEVEL)	SEE PAGE
R	1	1	**113-4388**	1	CYLINDER AS	
		1	**4E-8078**	2	BEARING-SLEEVE	
	2	1	**3J-6899**	1	LOCKNUT	
	3	1	**4J-4606**	1	RING-WEAR	
	4	1	**4T-5173**	1	SEAL	
	5	1	**6E-1249**	1	PISTON	
	6	1	**8J-1688**	1	SEAL-O-RING	
	7	1	**8J-1689**	1	RING-BACKUP	
	8	1	**8T-8376**	1	SEAL-HEAD	
	9	1	**162-0284**	1	HEAD	
R	10	1	**113-4391**	1	ROD AS	
		1	**6E-0804**	1	BEARING-SLEEVE	
	11	1	**167-2471**	1	SEAL-WIPER	
	12	1	**167-2320**	1	SEAL-U-CUP	
	13	1	**167-2209**	1	SEAL AS-BUFFER	
	14	1	**8C-9101**	1	RING-WEAR	
M	15	1	**8T-0667**	2	BOLT (M24X3X100MM)	
M	16	1	**173-9779**	6	BOLT-HEX HEAD (M24X3.0X80MM)	
	17	1	**6V-8237**	8	WASHER (26X44X4MM THK)	

M-METRIC PART
R-REMFG PART MAY BE AVAILABLE

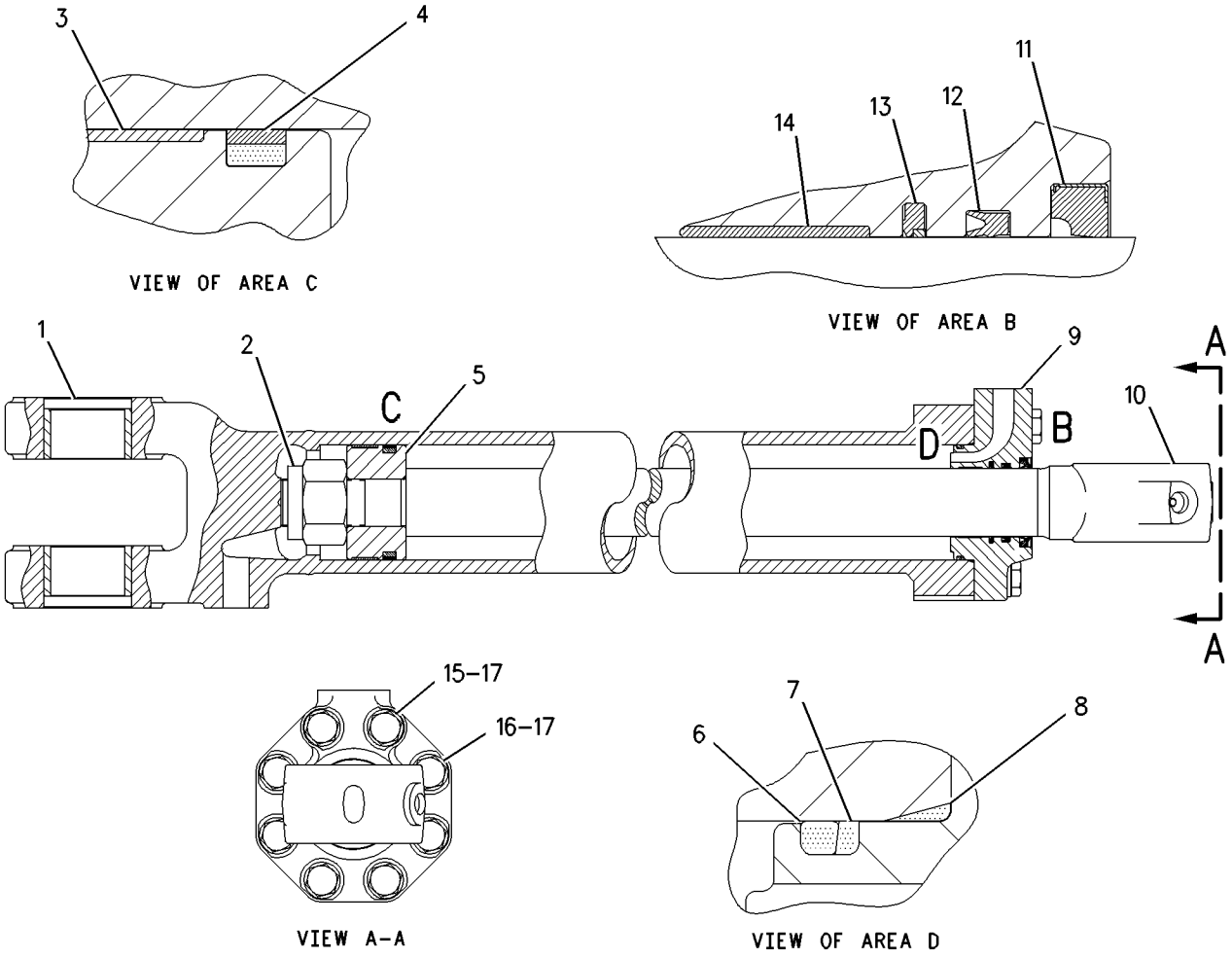

GRAPHIC #1 g00783951

174-8217 FILTER & LINES GP-STEERING–

PRIMARY STEERING CASE DRAIN

S/N: 7HR1-UP

PART OF 131-8143 STEERING AR

AN ATTACHMENT

SMCS-4304, 5068 **i01198193**

NOTE	REF NO	GRAPHIC REF	PART NUMBER	QTY	PART NAME 1 2 3 4 5 6 (PRODUCT LEVEL)	SEE PAGE
Y	1	1	**166-4647**	1	FILTER GP-OIL (PRIMARY STEERING CASE DRAIN)	540
	2	1	**168-6355**	1	BRACKET	
	3	1	**6V-9182**	1	ELBOW (FACE SEAL)	
	3A	1	**6V-9746**	1	SEAL-O-RING (18.94MM ID)	
	3B	1	**7M-8485**	1	SEAL-O-RING (29.74MM ID)	
	4	1	**3D-2824**	1	SEAL-O-RING (23.47MM ID)	
	5	1	**6V-0301**	1	ADAPTER-STRAIGHT THREAD	
	6	1	**6V-8777**	1	TEE-FACE SEAL	
	7	1	**6V-9746**	2	SEAL-O-RING (18.94MM ID)	
	8	1	**7M-8485**	1	SEAL-O-RING (29.74MM ID)	
	9	1	**7X-7729**	4	WASHER (3MM THK)	
M	10	1	**8T-4136**	4	BOLT (M10X1.50X25MM)	

M-METRIC PART
Y-SEPARATE ILLUSTRATION

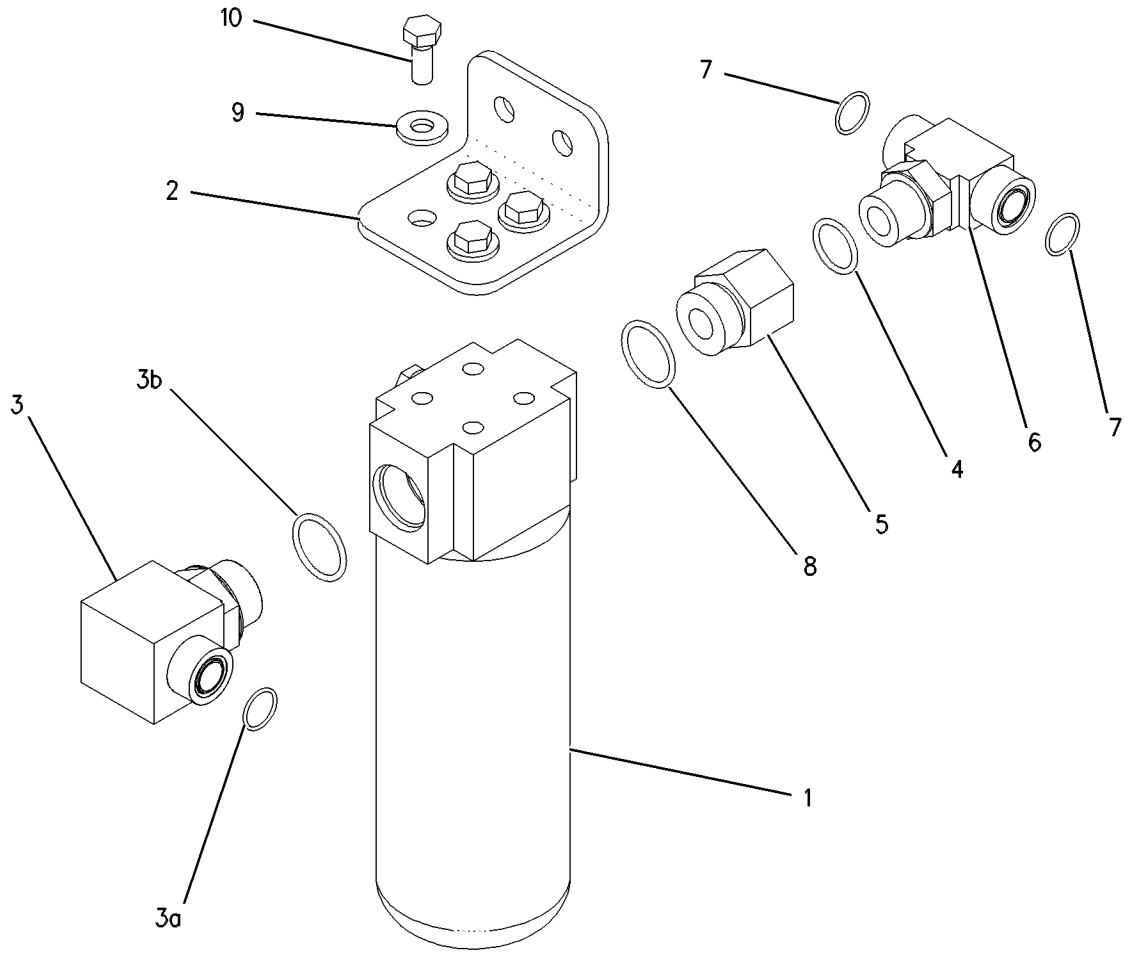

GRAPHIC #1 g00602972

174-8218 FILTER & LINES GP-STEERING–
SECONDARY STEERING CASE DRAIN
S/N: 7HR309-UP
PART OF 112-4189 LINES GP-SECONDARY STEERING
AN ATTACHMENT

SMCS-4304, 5068 **i01198196**

NOTE	REF NO	GRAPHIC REF	PART NUMBER	QTY	PART NAME 1 2 3 4 5 6 (PRODUCT LEVEL)	SEE PAGE
Y	1	1	**166-4647**	1	FILTER GP-OIL (SECONDARY STEERING CASE DRAIN)	540
	2	1	**168-6355**	1	BRACKET	
	3	1	**3D-2824**	2	SEAL-O-RING (23.47MM ID)	
	4	1	**6V-0301**	2	ADAPTER-STRAIGHT THREAD	
	5	1	**6V-8777**	2	TEE-FACE SEAL	
	6	1	**6V-9746**	4	SEAL-O-RING (18.94MM ID)	
	7	1	**7M-8485**	2	SEAL-O-RING (29.74MM ID)	
	8	1	**7X-7729**	4	WASHER (3MM THK)	
M	9	1	**8T-4136**	4	BOLT (M10X1.50X25MM)	

M-METRIC PART
Y-SEPARATE ILLUSTRATION

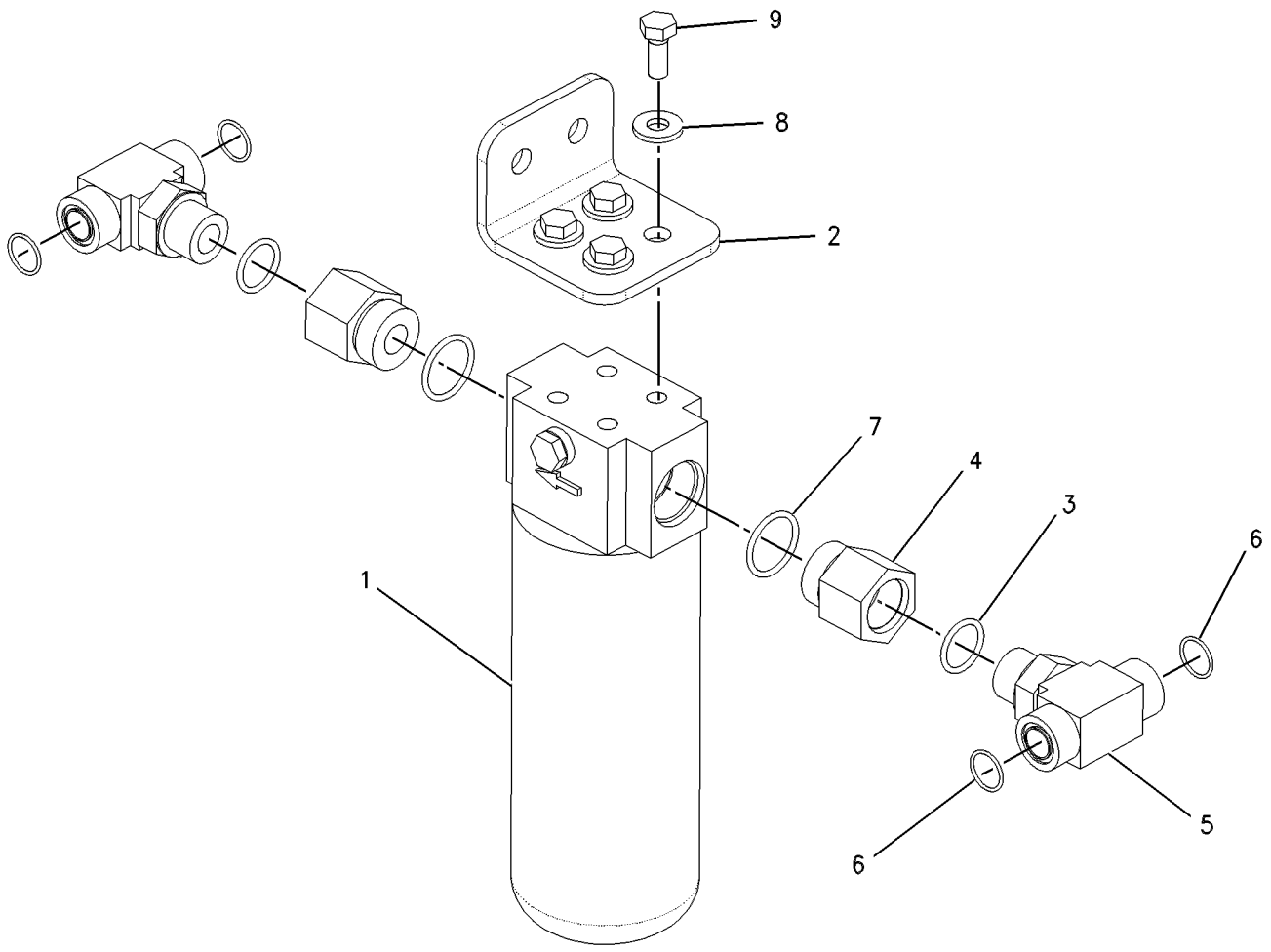

GRAPHIC #1 g00595277

115-2129 FILTER GP-OIL

S/N: 7HR1-UP

PART OF 109-6867 LINES GP-HYDRAULIC, 109-6873 LINES GP-STEERING OIL COOLER

SMCS-5068 **i01493073**

NOTE	REF NO	GRAPHIC REF	PART NUMBER	QTY	PART NAME 1 2 3 4 5 6 (PRODUCT LEVEL)	SEE PAGE
	1	1	**126-1817**	1	FILTER AS-OIL	
	2	1	**117-7773**	1	SWITCH AS-PRESSURE (HYD FILTER BYPASS)	
		1	**3E-3365**	1	WEDGE-RECEPTACLE LOCK (2 PIN)	
		1	**102-8802**	1	KIT-RECEPTACLE (2 PIN)	
					(INCLUDES RECEPTACLE AS AND WEDGE)	
		1	**8T-8729**	2	PIN-CONNECTOR	
E		1	**9X-1813**		SLEEVE (14CM)	
	3	1	**3J-1907**	1	SEAL-O-RING	
	4	1	**5F-9144**	1	SEAL-O-RING	

E-ORDER BY THE CENTIMETER

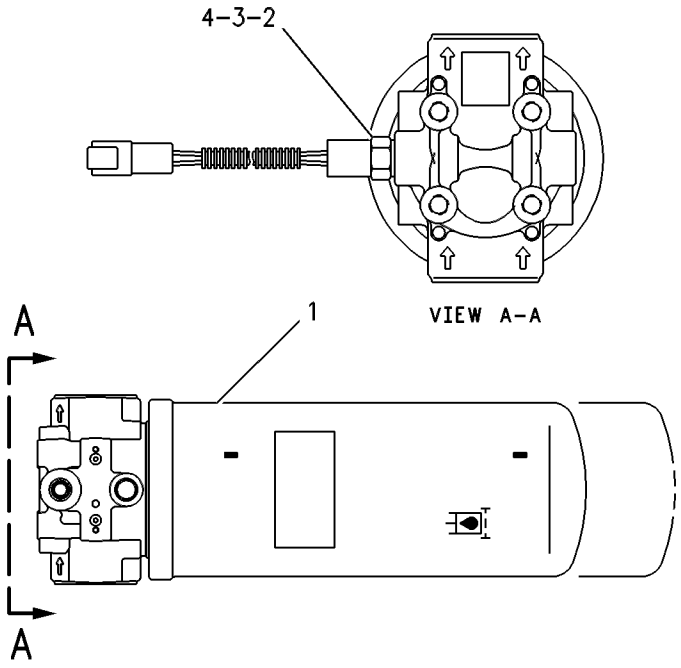

GRAPHIC #1 g00255748

MEMORANDA

STEERING SYSTEM

112-4189 LINES GP-SECONDARY STEERING

S/N: 7HR1-308
AN ATTACHMENT

SMCS-4304 **i01541158**

NOTE	REF NO	GRAPHIC REF	PART NUMBER	QTY	PART NAME 1 2 3 4 5 6 (PRODUCT LEVEL)	SEE PAGE
	1	1	**6V-3965**	1	FITTING	
	2	1	**2N-7007**	1	GASKET	
I	3	1	**2T-1660**	1	HOSE AS	
	4	1	**3E-6450**	1	SWITCH AS-PRESSURE (PRIMARY STEERING)	
		1	**3E-3371**	1	WEDGE-RECEPTACLE LOCK (3 PIN)	
		1	**102-8803**	1	KIT-RECEPTACLE (3 PIN)	
					(INCLUDES WEDGE)	
		1	**8T-8729**	3	PIN-CONNECTOR	
	5	1	**3J-1907**	5	SEAL-O-RING	
	6	1	**3K-0360**	4	SEAL-O-RING	
	7	1	**3N-6118**	1	BRACKET	
	8	1	**3S-2093**	2	STRAP-CABLE	
	9	1	**4D-7794**	1	CLIP	
	10	1	**4E-0289**	1	ELBOW	
	11	1	**4J-0524**	2	SEAL-O-RING	
	12	1	**4J-5477**	2	SEAL-O-RING	
Y	13	1	**6E-3078**	1	VALVE GP-SELECTOR & PRESS CONT (STEERING)	901
	14	1	**6V-8398**	5	SEAL-O-RING	
	15	1	**6V-8627**	1	ELBOW	
	16	1	**8C-3309**	1	TEE	
Y	17	1	**101-4007**	1	PUMP GP-GEAR (SECONDARY STEERING)	862
Y	18	1	**112-4597**	1	VALVE GP-STEERING (WITH SECONDARY STEERING)	904
	19	1	**115-3069**	1	CLIP AS-CONNECTOR	
	20	1	**115-5612**	1	HARNESS AS-STEERING (SECONDARY)	
		1	**155-2267**	1	PLUG AS-CONNECTOR (3 PIN)	
		1	**102-8803**	1	KIT-RECEPTACLE (3 PIN)	
					(INCLUDES RECEPTACLE AS & WEDGE)	
I	21	1	**116-3800**	1	HOSE AS	
I	22	1	**116-3801**	1	HOSE AS	
I	23	1	**118-8076**	1	HOSE AS	
	24	1	**127-4259**	1	TUBE AS	
	25	1	**1P-4577**	4	FLANGE-HALF	
	26	1	**1P-4579**	4	FLANGE-HALF	
	27	1	**1S-0994**	1	CLIP	
	28	1	**4J-0520**	2	SEAL-O-RING	
	29	1	**5P-8874**	1	ADAPTER	
	30	1	**6V-8639**	2	CONNECTOR	
	31	1	**6V-8782**	1	TEE-FACE SEAL	
	32	1	**6V-9851**	1	ELBOW	
	33	1	**8T-4121**	18	WASHER-HARD (11X21X2.5MM THK)	
M	34	1	**8T-4133**	1	NUT (M10X1.5 THD)	
M	35	1	**8T-4137**	1	BOLT (M10X1.5X20MM)	
M	36	1	**8T-4172**	2	BOLT (M10X1.50X80MM)	
M	37	1	**8T-4184**	8	BOLT (M12X1.75X45MM)	
M	38	1	**8T-4185**	2	BOLT (M10X1.5X50MM)	
M	39	1	**8T-4195**	4	BOLT (M10X1.5X30MM)	
M	40	1	**8T-4196**	8	BOLT (M10X1.5X35MM)	
	41	1	**8T-4223**	15	WASHER-HARD (13.5X25.5X3MM THK)	
M	42	1	**8T-4244**	4	NUT (M12X1.75 THD)	
	43	1	**8T-6876**	1	ELBOW	
	44	1	**6V-0852**	1	CAP-DUST	
	45	1	**4J-0519**	1	SEAL-O-RING	
M	46	1	**8T-5041**	3	BOLT (M12X1.75X120MM)	

I-SEE HOSE FABRICATION GUIDE
M-METRIC PART
Y-SEPARATE ILLUSTRATION

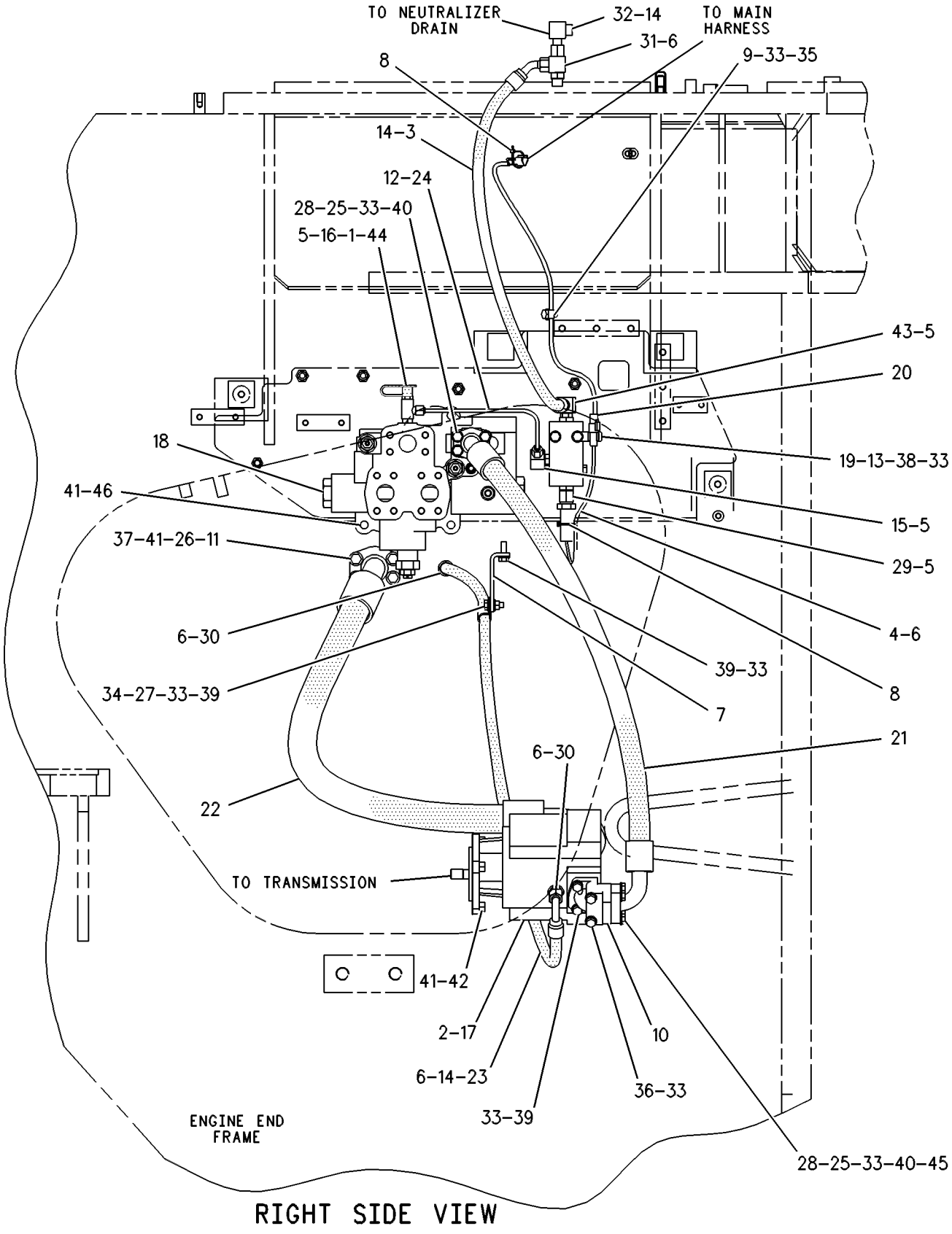

GRAPHIC #1 g00290643

STEERING SYSTEM

112-4189 LINES GP-SECONDARY STEERING

S/N: 7HR309-UP
AN ATTACHMENT
TYPE 1

SMCS-4304 **i01541160**

NOTE	REF NO	GRAPHIC REF	PART NUMBER	QTY	PART NAME 1 2 3 4 5 6 (PRODUCT LEVEL)	SEE PAGE
	1	1	**2N-7007**	1	GASKET	
I	2	1	**2T-1660**	1	HOSE AS	
	3	1	**3E-6450**	1	SWITCH AS-PRESSURE (PRIMARY STEERING)	
		1	**3E-3371**	1	WEDGE-RECEPTACLE LOCK (3 PIN)	
		1	**102-8803**	1	KIT-RECEPTACLE (3 PIN)	
					(INCLUDES WEDGE)	
		1	**8T-8729**	3	PIN-CONNECTOR	
C	4	1	**3J-1907**	1	SEAL-O-RING	
C	5	1	**3K-0360**	1	SEAL-O-RING	
C	6	1	**3N-6118**	2	BRACKET	
	7	1	**4D-7794**	1	CLIP	
	8	1	**4E-0289**	1	ELBOW	
C	9	1	**4J-5477**	1	SEAL-O-RING	
Y	10	1	**6E-3078**	1	VALVE GP-SELECTOR & PRESS CONT (STEERING)	901
	11	1	**6V-0852**	1	CAP-DUST	
	12	1	**8C-3309**	1	TEE	
Y	13	1	**101-4007**	1	PUMP GP-GEAR (SECONDARY STEERING)	862
Y	14	1	**112-4597**	1	VALVE GP-STEERING (WITH SECONDARY STEERING)	904
	15	1	**115-3069**	1	CLIP AS-CONNECTOR	
	16	1	**115-5612**	1	HARNESS AS-STEERING (SECONDARY)	
		1	**155-2267**	1	PLUG AS-CONNECTOR (3 PIN)	
		1	**102-8803**	1	KIT-RECEPTACLE (3 PIN)	
					(INCLUDES RECEPTACLE AS & WEDGE)	
I	17	1	**116-3800**	1	HOSE AS	
I	18	1	**116-3801**	1	HOSE AS	
	19	1	**127-4259**	1	TUBE AS	
C	20	1	*164-5567*	1	FITTING GP	
		1	**3J-1907**	1	SEAL-O-RING	
		1	**6V-3965**	1	FITTING	
CI	21	1	**170-6687**	1	HOSE AS	
C	22	1	*148-8307*	1	ADAPTER GP	
		1	**3J-1907**	1	SEAL-O-RING	
		1	**5P-8874**	1	ADAPTER	
C	23	1	*148-8340*	1	CONNECTOR GP	
		1	**3K-0360**	1	SEAL-O-RING	
		1	**6V-8398**	1	SEAL-O-RING	
		1	**6V-8639**	1	CONNECTOR	
C	24	1	*148-8365*	1	ELBOW GP	
		1	**3J-1907**	1	SEAL-O-RING	
		1	**6V-8398**	1	SEAL-O-RING	
		1	**8T-6876**	1	ELBOW	
C	25	1	*148-8368*	1	ELBOW GP	
		1	**3J-1907**	1	SEAL-O-RING	
		1	**4J-5477**	1	SEAL-O-RING	
		1	**6V-8627**	1	ELBOW	
C	26	1	*148-8370*	1	ELBOW GP	
		1	**6V-8398**	1	SEAL-O-RING	
		1	**6V-9851**	1	ELBOW	
C	27	1	*148-8428*	1	TEE GP	
		1	**3K-0360**	1	SEAL-O-RING	
		1	**6V-8398**	2	SEAL-O-RING	
		1	**6V-8782**	1	TEE-FACE SEAL	
	28	1	**1P-4577**	4	FLANGE-HALF	
	29	1	**1P-4579**	4	FLANGE-HALF	
C	30	1	**1S-0994**	2	CLIP	

112-4189 LINES GP-SECONDARY STEERING *(contd.)* i01541160

NOTE	REF NO	GRAPHIC REF	PART NUMBER	QTY	PART NAME 1 2 3 4 5 6 (PRODUCT LEVEL)	SEE PAGE
C	31	1	**1S-1015**	2	CLIP	
C	32	1	**3D-2824**	1	SEAL-O-RING	
	33	1	**4J-0519**	1	SEAL-O-RING	
	34	1	**4J-0520**	2	SEAL-O-RING	
	35	1	**4J-0524**	2	SEAL-O-RING	
C	36	1	**6V-0301**	1	ADAPTER-STRAIGHT THREAD	
C	37	1	**6V-8777**	1	TEE-FACE SEAL	
C	38	1	**6V-9746**	2	SEAL-O-RING	
C	39	1	**7M-8485**	1	SEAL-O-RING	
C	40	1	**8T-4121**	22	WASHER-HARD (11X21X2.5MM THK)	
CM	41	1	**8T-4133**	2	NUT (M10X1.5 THD)	
CM	42	1	**8T-4137**	2	BOLT (M10X1.5X20MM)	
M	43	1	**8T-4172**	2	BOLT (M10X1.50X80MM)	
M	44	1	**8T-4184**	8	BOLT (M12X1.75X45MM)	
M	45	1	**8T-4185**	2	BOLT (M10X1.5X50MM)	
CM	46	1	**8T-4195**	6	BOLT (M10X1.5X30MM)	
M	47	1	**8T-4196**	8	BOLT (M10X1.5X35MM)	
C	48	1	**8T-4223**	11	WASHER-HARD (13.5X25.5X3MM THK)	
M	49	1	**8T-4244**	4	NUT (M12X1.75 THD)	
M	50	1	**8T-5041**	3	BOLT (M12X1.75X120MM)	
C	51	1	**9X-6772**	2	STRAP-CABLE	

C-CHANGE FROM PREVIOUS TYPE
I-SEE HOSE FABRICATION GUIDE
M-METRIC PART
Y-SEPARATE ILLUSTRATION

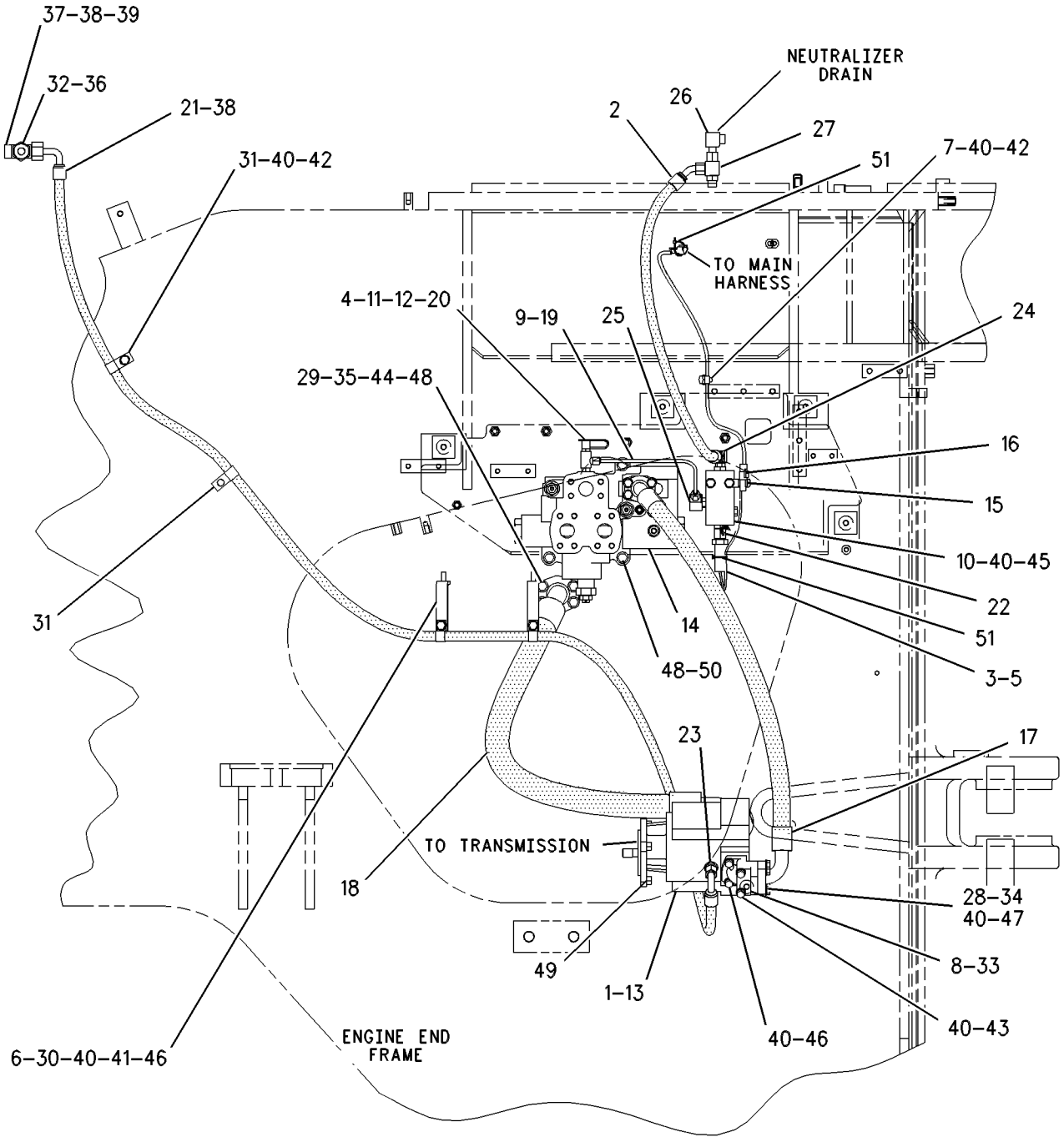

RIGHT SIDE VIEW

GRAPHIC #1 g00584175

MEMORANDA

STEERING SYSTEM

112-4189 LINES GP-SECONDARY STEERING

S/N: 7HR309-UP
AN ATTACHMENT
TYPE 2

SMCS-4304 **i01541162**

NOTE	REF NO	GRAPHIC REF	PART NUMBER	QTY	PART NAME 1 2 3 4 5 6 (PRODUCT LEVEL)	SEE PAGE
	1	1	**2N-7007**	1	GASKET	
I	2	1	**2T-1660**	1	HOSE AS	
	3	1	**3E-6450**	1	SWITCH AS-PRESSURE (PRIMARY STEERING)	
		1	**3E-3371**	1	WEDGE-RECEPTACLE LOCK (3 PIN)	
		1	**102-8803**	1	KIT-RECEPTACLE (3 PIN)	
					(INCLUDES WEDGE)	
		1	**8T-8729**	3	PIN-CONNECTOR	
C	4	1	**3J-1907**	1	SEAL-O-RING	
C	5	1	**3K-0360**	1	SEAL-O-RING	
C	6	1	**3N-6118**	3	BRACKET	
	7	2	**4D-7794**	1	CLIP	
	8	1	**4E-0289**	1	ELBOW	
C	9	1	**4J-5477**	1	SEAL-O-RING	
Y	10	1	**6E-3078**	1	VALVE GP-SELECTOR & PRESS CONT (STEERING)	901
	11	1	**6V-0852**	1	CAP-DUST	
	12	1	**8C-3309**	1	TEE	
Y	13	1	**101-4007**	1	PUMP GP-GEAR (SECONDARY STEERING)	862
Y	14	1	**112-4597**	1	VALVE GP-STEERING (WITH SECONDARY STEERING)	904
	15	1	**115-3069**	1	CLIP AS-CONNECTOR	
	16	1	**115-5612**	1	HARNESS AS-STEERING (SECONDARY)	
		1	**155-2267**	1	PLUG AS-CONNECTOR (3 PIN)	
		1	**102-8803**	1	KIT-RECEPTACLE (3 PIN)	
					(INCLUDES RECEPTACLE AS & WEDGE)	
I	17	1	**116-3800**	1	HOSE AS	
I	18	2	**116-3801**	1	HOSE AS	
	19	1	**127-4259**	1	TUBE AS	
C	20	1	*164-5567*	1	FITTING GP	
		1	**3J-1907**	1	SEAL-O-RING	
		1	**6V-3965**	1	FITTING	
CI	21	1	**170-6687**	1	HOSE AS	
Y	22	1	*174-8218*	1	FILTER & LINES GP-STEERING (SECONDARY CASE DRAIN)	827
C	23	1	*148-8307*	1	ADAPTER GP	
		1	**5P-8874**	1	ADAPTER	
		1	**3J-1907**	1	SEAL-O-RING	
	24	1	*148-8346*	1	ELBOW GP	
		1	**8T-1686**	1	ELBOW	
		1	**3K-0360**	1	SEAL-O-RING	
		1	**6V-8398**	1	SEAL-O-RING	
C	25	1	*148-8365*	1	ELBOW GP	
		1	**8T-6876**	1	ELBOW	
		1	**3J-1907**	1	SEAL-O-RING	
		1	**6V-8398**	1	SEAL-O-RING	
C	26	1	*148-8368*	1	ELBOW GP	
		1	**6V-8627**	1	ELBOW	
		1	**3J-1907**	1	SEAL-O-RING	
		1	**4J-5477**	1	SEAL-O-RING	
C	27	1	*148-8370*	1	ELBOW GP	
		1	**6V-9851**	1	ELBOW	
		1	**6V-8398**	1	SEAL-O-RING	
C	28	1	*148-8428*	1	TEE GP	
		1	**6V-8782**	1	TEE-FACE SEAL	
		1	**3K-0360**	1	SEAL-O-RING	
		1	**6V-8398**	2	SEAL-O-RING	
	29	2	**1P-4577**	4	FLANGE-HALF	
	30	2	**1P-4579**	4	FLANGE-HALF	

112-4189 LINES GP-SECONDARY STEERING *(contd.)*

i01541162

NOTE	REF NO	GRAPHIC REF	PART NUMBER	QTY	PART NAME 1 2 3 4 5 6 (PRODUCT LEVEL)	SEE PAGE
C	31	1	**1S-0994**	3	CLIP	
C	32	1	**1S-1015**	1	CLIP	
	33	1	**4J-0519**	1	SEAL-O-RING	
	34	2	**4J-0520**	2	SEAL-O-RING	
	35	2	**4J-0524**	2	SEAL-O-RING	
	36	1	**7X-7729**	2	WASHER (11X25X3MM THK)	
C	37	1,2	**8T-4121**	23	WASHER-HARD (11X21X2.5MM THK)	
CM	38	1	**8T-4133**	3	NUT (M10X1.5 THD)	
M	39	1	**8T-4136**	2	BOLT (M10X1.5X25MM)	
CM	40	2	**8T-4137**	1	BOLT (M10X1.5X20MM)	
M	41	1	**8T-4172**	2	BOLT (M10X1.50X80MM)	
M	42	2	**8T-4184**	8	BOLT (M12X1.75X45MM)	
M	43	1	**8T-4185**	2	BOLT (M10X1.5X50MM)	
CM	44	1	**8T-4195**	7	BOLT (M10X1.5X30MM)	
M	45	2	**8T-4196**	8	BOLT (M10X1.5X35MM)	
C	46	1,2	**8T-4223**	11	WASHER-HARD (13.5X25.5X3MM THK)	
M	47	1	**8T-4244**	4	NUT (M12X1.75 THD)	
M	48	1	**8T-5041**	3	BOLT (M12X1.75X120MM)	
C	49	1	**9X-6772**	2	STRAP-CABLE	

C-CHANGE FROM PREVIOUS TYPE
I-SEE HOSE FABRICATION GUIDE
M-METRIC PART
Y-SEPARATE ILLUSTRATION

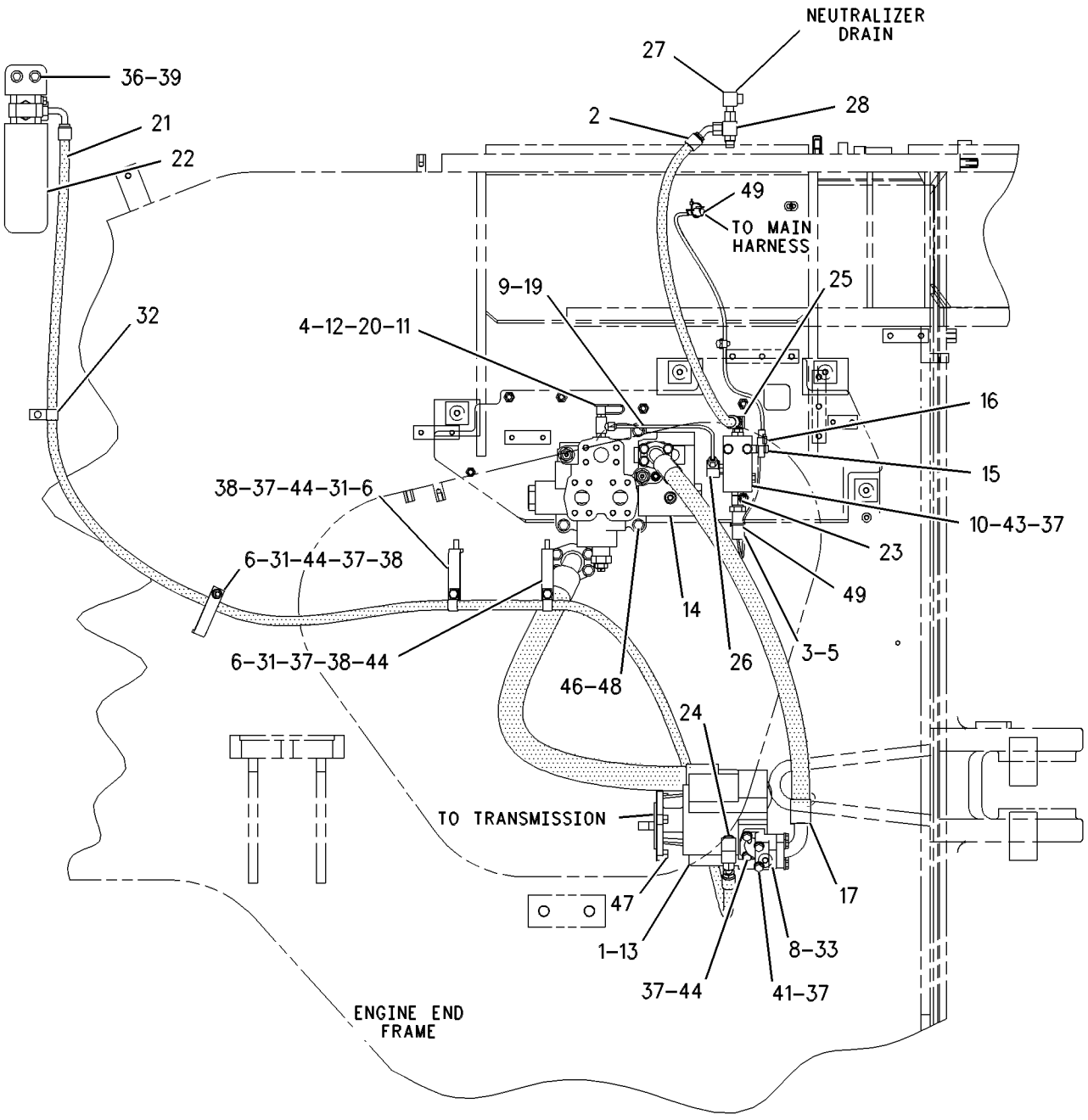

RIGHT SIDE VIEW

GRAPHIC #1 g00597782

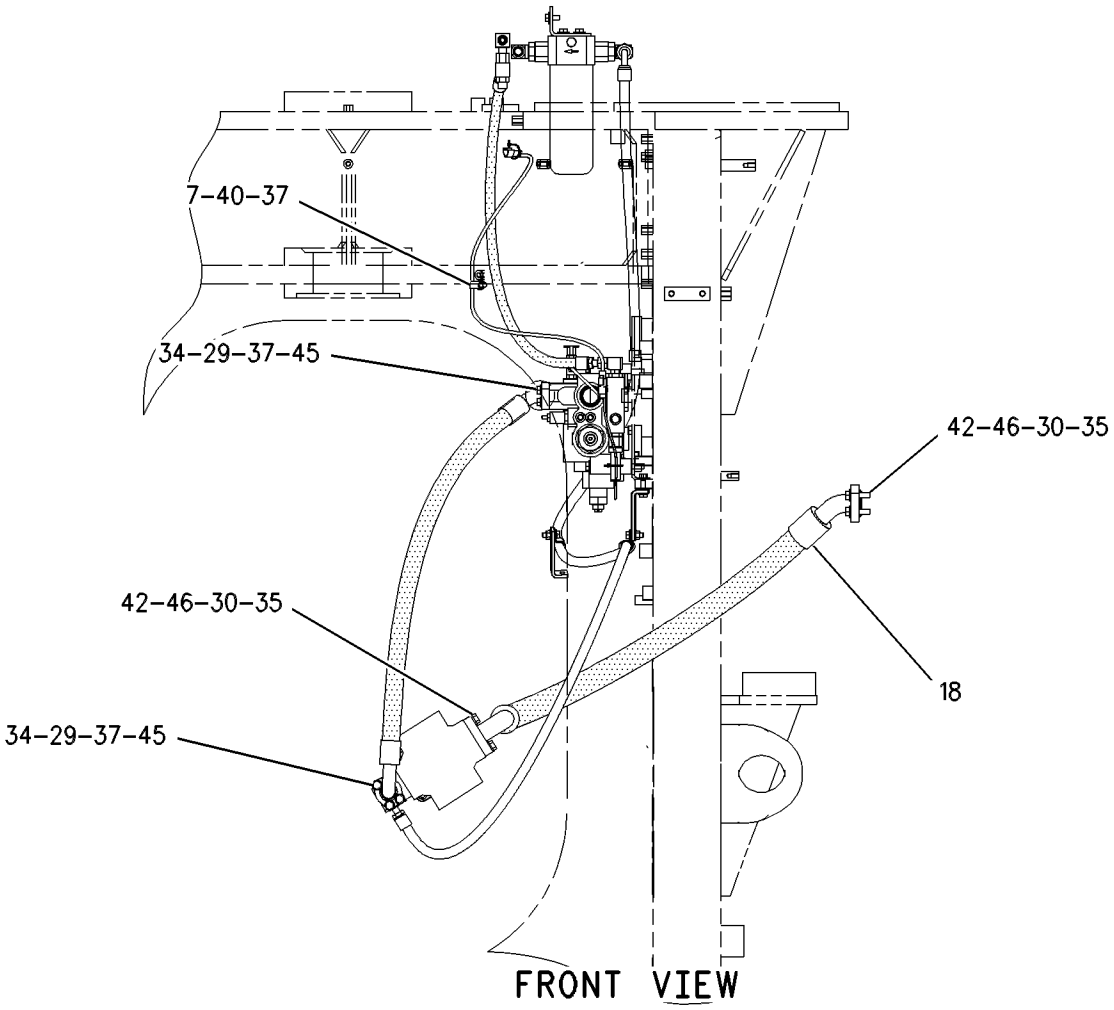

GRAPHIC #2 g00597806

STEERING SYSTEM

109-6868 LINES GP-STEERING

S/N: 7HR1-331

PART OF 109-6820 HYDRAULIC AR

SMCS-4304 **i01368637**

NOTE	REF NO	GRAPHIC REF	PART NUMBER	QTY	PART NAME 1 2 3 4 5 6 (PRODUCT LEVEL)	SEE PAGE
	1	2	**1P-3703**	2	SEAL-RECTANGULAR (31.86MM ID)	
	2	1,2	**1P-3704**	15	SEAL-RECTANGULAR (38.2MM ID)	
	3	2	**1P-3705**	2	SEAL-RECTANGULAR (44.7MM ID)	
	4	1	**2T-3019**	2	CLIP	
M	5	1	**8T-6466**	1	BOLT (M10X1.50X60MM)	
	6	2	**3J-1907**	1	SEAL-O-RING (11.89MM ID)	
	7	1	**4H-9105**	1	SEAL-O-RING	
	8	1	**4J-0524**	2	SEAL-O-RING (47.22MM ID)	
	9	2	**6V-0852**	2	CAP-DUST	
	10	1	**8T-7529**	2	CLIP	
	11	1	**7I-0009**	2	CLAMP-HALF	
	12	1	**7I-0008**	1	GROMMET	
	13	2	**164-5567**	2	FITTING AS	
	14	1,2	**6V-8397**	3	SEAL-O-RING (9.27MM ID)	
	15	1,2	**9X-8257**	14	WASHER (3.5MM THK)	
	16	1	**7G-8839**	4	SPACER (6MM THK)	
	17	2	**7K-1401**	1	CLIP	
	18	2	**7K-1402**	1	BRACKET	
I	19	1	**171-2016**	1	HOSE AS	
	20	1	**7T-8331**	4	MOUNTING	
	21	1	**148-8360**	1	ELBOW AS	
	22	2	**9T-3096**	1	VALVE GP-CHECK (STEERING PILOT)	
Y	23	1	**141-1463**	1	PUMP GP-PISTON (STEERING)	866
	24	1	**194-0569**	1	HOSE AS	
I	25	1	**114-9074**	1	HOSE AS	
I	26	1	**115-4692**	1	HOSE AS	
I	27	1	**115-4693**	2	HOSE AS	
	28	1	**115-4696**	1	MANIFOLD	
	29	1	**115-9926**	1	PLATE	
	30	1	**116-2886**	1	PLATE AS	
M		1	**8T-3490**	8	NUT-WELD (M10X1.5 THD)	
M		1	**8T-3597**	6	NUT-WELD (M12X1.75 THD)	
		1	**9T-6943**	1	BLOCK	
I	31	1	**116-3797**	2	HOSE AS	
I	32	1	**116-3798**	1	HOSE AS	
I	33	1	**116-3799**	1	HOSE AS	
I	34	1	**116-3802**	1	HOSE AS	
	35	2	**116-4084**	1	TUBE AS	
I	36	1	**142-8165**	1	HOSE AS	
	37	2	**116-6184**	1	TUBE AS	
I	38	1	**116-6760**	1	HOSE AS	
I	39	1	**171-2017**	1	HOSE AS	
	40	1	**125-4269**	1	BRACKET AS	
M		1	**8T-3490**	1	NUT-WELD (M10X1.5 THD)	
I	41	1	**136-8292**	1	HOSE AS	
	42	1	**1P-4579**	4	FLANGE-HALF	
	43	1,2	**1P-5767**	30	FLANGE-HALF	
	44	1	**1P-7016**	2	FLANGE-HALF	
	45	1	**1P-7017**	2	FLANGE-HALF	
	46	1	**1H-8128**	1	SEAL-O-RING (94.84MM ID)	
	47	2	**5P-8077**	2	FLANGE-HALF	
	48	1	**6D-4636**	2	CLIP	
	49	1	**6F-4718**	1	SEAL-O-RING (164.69MM ID)	
	50	2	**6V-0400**	4	FLANGE-HALF	
	51	1	*148-8336*	1	CONNECTOR AS	
		1	**6V-8636**	1	CONNECTOR	

109-6868 **LINES GP-STEERING** ***(contd.)*** **i01368637**

NOTE	REF NO	GRAPHIC REF	PART NUMBER	QTY	PART NAME 1 2 3 4 5 6 (PRODUCT LEVEL)	SEE PAGE
		1	**3J-1907**	1	SEAL-O-RING (11.89MM ID)	
		1	**6V-8397**	1	SEAL-O-RING (9.27MM ID)	
	52	1	**148-8327**	1	CONNECTOR AS	
	53	2	**148-8378**	1	ELBOW AS	
M	54	1	**7X-2563**	4	BOLT (M20X2.5X60MM)	
	55	1	**8T-4121**	3	WASHER-HARD (11X21X2.5MM THK)	
	56	1	**8T-4123**	4	WASHER-PLATED (3.5MM THK)	
M	57	1,2	**8T-4139**	5	BOLT (M12X1.75X30MM)	
M	58	1,2	**8T-4140**	8	BOLT (M16X2.0X60MM)	
M	59	1	**8T-4184**	8	BOLT (M12X1.75X45MM)	
M	60	1	**8T-4193**	4	BOLT (M16X2X50MM)	
M	61	1,2	**8T-4194**	74	BOLT (M12X1.75X50MM)	
M	62	1	**8T-4195**	4	BOLT (M10X1.5X30MM)	
	63	1,2	**8T-4223**	93	WASHER-HARD (13.5X25.5X3MM THK)	
M	64	1,2	**8T-4910**	8	BOLT (M12X1.75X60MM)	
	65	1	**9V-9116**	1	SPACER (16.5MM THK)	

I-SEE HOSE FABRICATION GUIDE
M-METRIC PART
Y-SEPARATE ILLUSTRATION

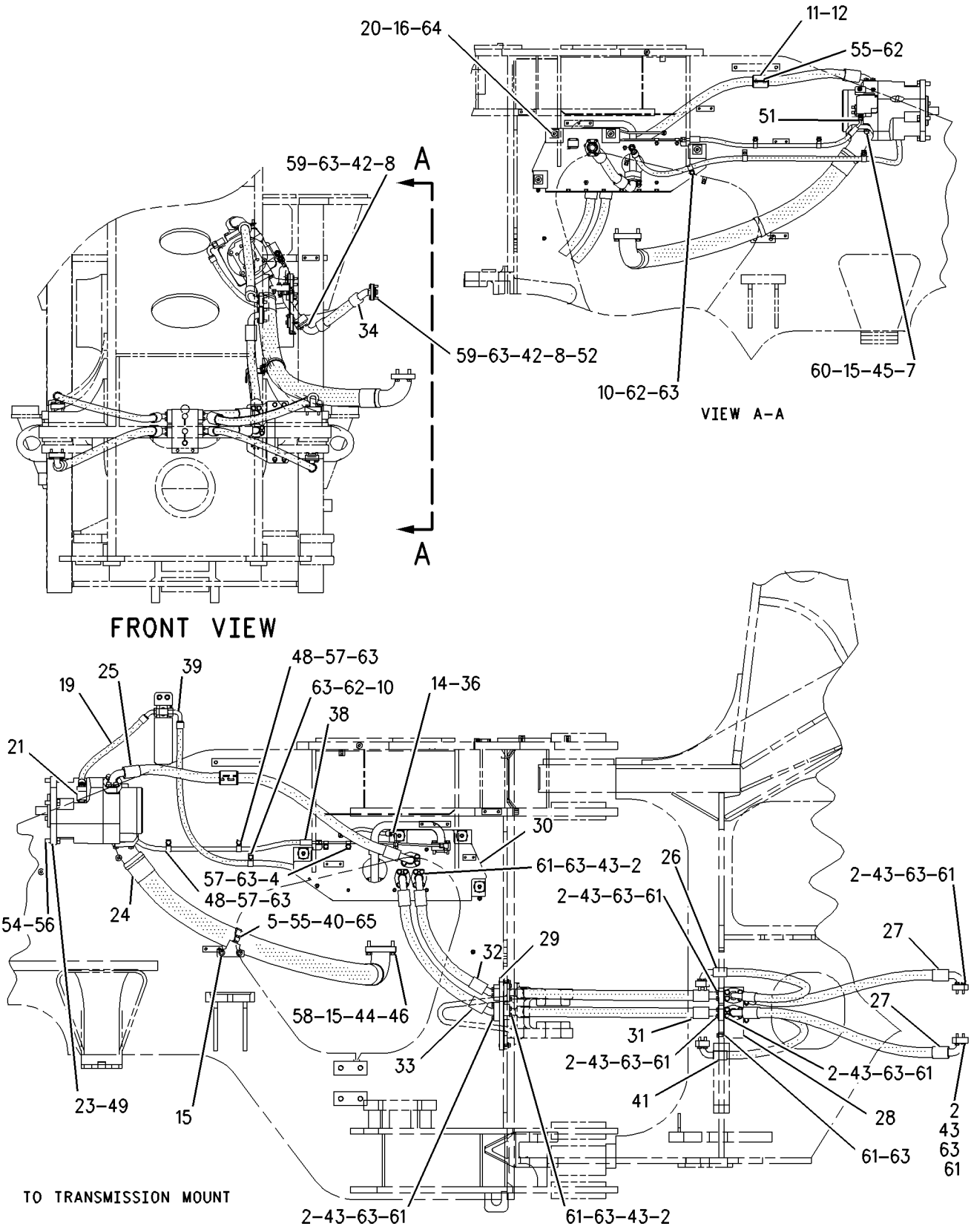

GRAPHIC #1 g00726330

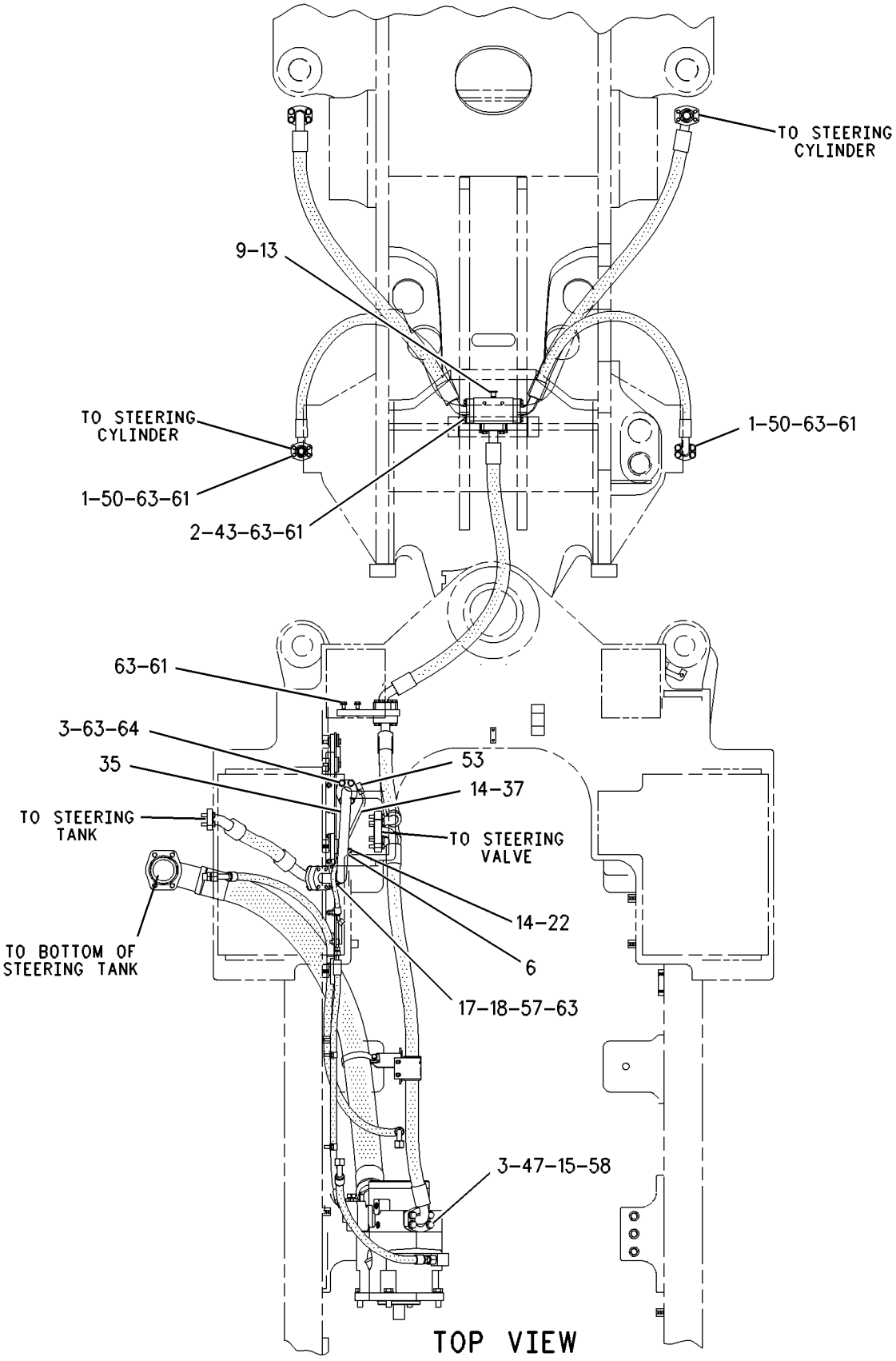

GRAPHIC #2 g00582548

163-6504 LINES GP-STEERING

S/N: 7HR332-UP
PART OF 109-6820 HYDRAULIC AR
TYPE 1

SMCS-4304 **i01121194**

NOTE	REF NO	GRAPHIC REF	PART NUMBER	QTY	PART NAME 1 2 3 4 5 6 (PRODUCT LEVEL)	SEE PAGE
	1	1	**171-1479**	1	HOSE AS	
	2	1	**171-2564**	1	PLATE AS	
	3	1	**1P-3704**	1	SEAL-RECTANGULAR (38.2MM ID)	
	4	1	**1P-3705**	1	SEAL-RECTANGULAR (44.7MM ID)	
	5	1	**7I-0008**	1	GROMMET	
	6	1	**7I-0009**	2	CLAMP-HALF	
	7	1	**8T-4121**	4	WASHER (2.5MM THK)	
M	8	1	**8T-4196**	4	BOLT (M10X1.50X35MM)	

M-METRIC PART

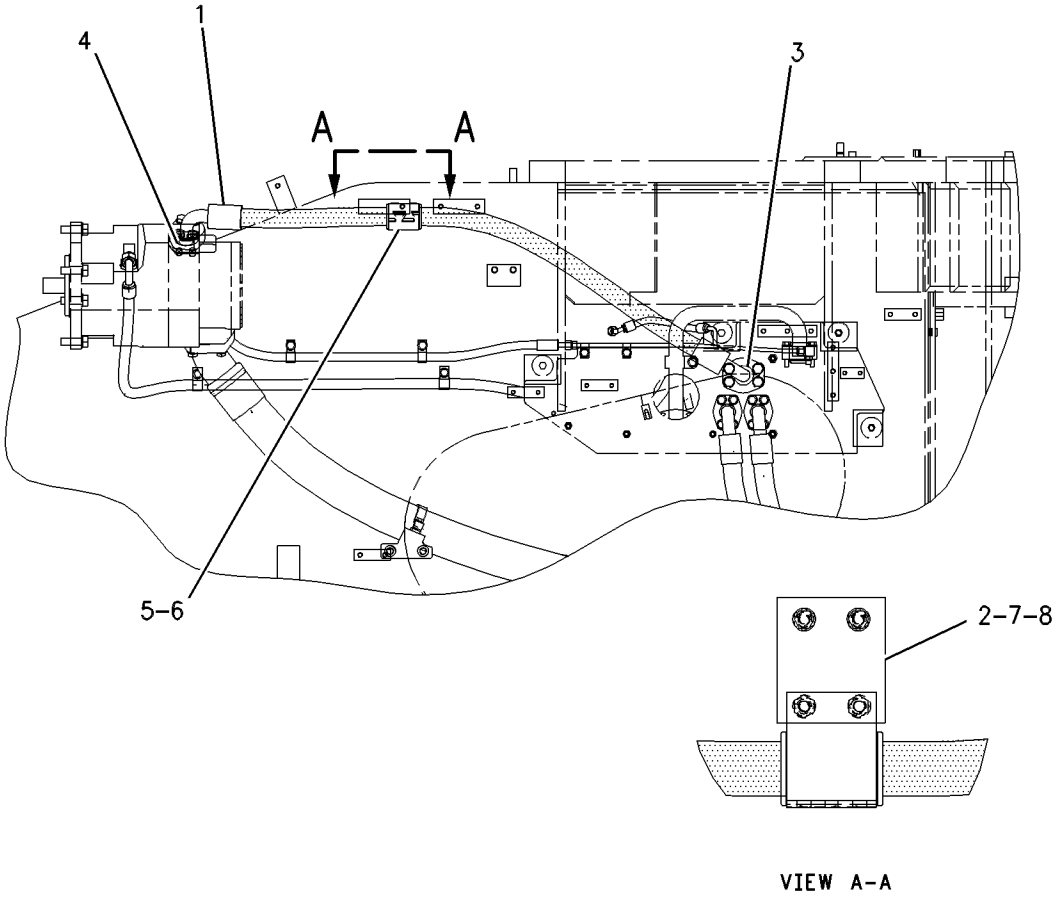

GRAPHIC #1 g00603184

STEERING SYSTEM

163-6504 LINES GP-STEERING

S/N: 7HR332-UP
PART OF 109-6820 HYDRAULIC AR
TYPE 2

SMCS-4304 **i01540592**

NOTE	REF NO	GRAPHIC REF	PART NUMBER	QTY	PART NAME 1 2 3 4 5 6 (PRODUCT LEVEL)	SEE PAGE
C	1	1	**196-1815**	1	BRACKET AS	
M		1	**8T-3597**	2	NUT-WELD (M12X1.75 THD)	
CI	2	1	**196-2359**	1	HOSE AS	
	3	1	**1P-3704**	1	SEAL-RECTANGULAR (38.2MM ID)	
	4	1	**1P-3705**	1	SEAL-RECTANGULAR (44.7MM ID)	
	5	1	**7I-0008**	1	GROMMET	
	6	1	**7I-0009**	2	CLAMP-HALF	
C	7	1	**8T-4223**	4	WASHER-HARD (13.5X25.5X3MM THK)	
CM	8	1	**8T-4956**	4	BOLT (M12X1.75X35MM)	

C-CHANGE FROM PREVIOUS TYPE
I-SEE HOSE FABRICATION GUIDE
M-METRIC PART

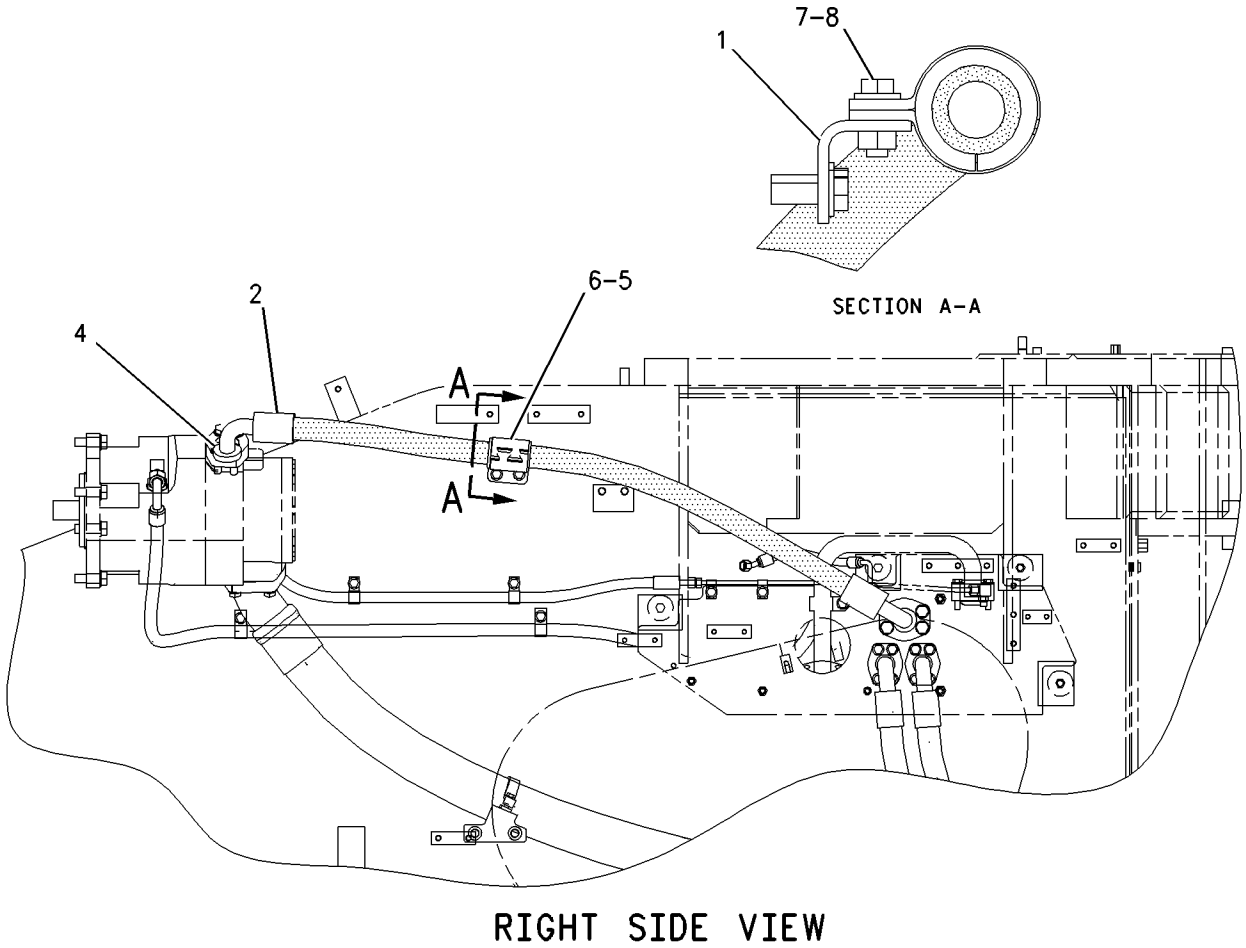

RIGHT SIDE VIEW

GRAPHIC #1 g00802483

STEERING SYSTEM

163-6562 LINES GP-STEERING

S/N: 7HR332-UP

PART OF 109-6820 HYDRAULIC AR

SMCS-4304 **i01369496**

NOTE	REF NO	GRAPHIC REF	PART NUMBER	QTY	PART NAME 1 2 3 4 5 6 (PRODUCT LEVEL)	SEE PAGE
	1	1	**1P-3703**	2	SEAL-RECTANGULAR (31.86MM ID)	
	2	1	**1P-3704**	14	SEAL-RECTANGULAR (38.2MM ID)	
	3	1	**1P-3705**	1	SEAL-RECTANGULAR (44.7MM ID)	
	4	1	**2T-3019**	2	CLIP (9.50MM ID)	
	5	1	**3J-1907**	3	SEAL-O-RING (11.89MM ID)	
	6	2	**4H-9105**	1	SEAL-O-RING	
	7	2	**4J-0524**	2	SEAL-O-RING (47.22MM ID)	
	8	1	**6V-0852**	2	CAP-DUST	
	9	1	**6V-3965**	2	FITTING AS	
	10	1	**6V-8397**	3	SEAL-O-RING (9.27MM ID)	
	11	2	**7G-8839**	4	SPACER (6MM THK)	
	12	2	**7K-1401**	1	CLIP	
	13	2	**7K-1402**	1	BRACKET	
	14	2	**7T-8331**	4	MOUNTING	
	15	1	**9T-3096**	1	VALVE GP-CHECK (STEERING PILOT)	
	16	1	**194-0569**	1	HOSE AS (LABELED A)	
I	17	1	**115-4692**	1	HOSE AS (LABELED B)	
I	18	1	**115-4693**	2	HOSE AS (LABELED C & D)	
	19	1	**115-4696**	1	MANIFOLD	
	20	1	**115-9926**	1	PLATE	
	21	1	**116-2886**	1	PLATE AS	
M		1	**8T-3490**	8	NUT-WELD (M10X1.5 THD)	
M		1	**8T-3597**	6	NUT-WELD (M12X1.75 THD)	
		1	**9T-6943**	1	BLOCK	
I	22	1	**116-3797**	2	HOSE AS (LABELED E & F)	
I	23	1	**116-3798**	1	HOSE AS (LABELED G)	
I	24	1	**116-3799**	1	HOSE AS (LABELED H)	
I	25	2	**116-3802**	1	HOSE AS (LABELED J)	
	26	1	**116-4084**	1	TUBE AS (LABELED K)	
	27	1	**116-6184**	1	TUBE AS (LABELED L)	
I	28	1	**116-6760**	1	HOSE AS (LABELED M)	
	29	1	**125-4269**	1	BRACKET AS	
M		1	**8T-3490**	1	NUT-WELD (M10X1.5 THD)	
I	30	1	**136-8292**	1	HOSE AS (LABELED N)	
Y	31	1	**141-1463**	1	PUMP GP-PISTON (STEERING)	866
I	32	1	**142-8165**	1	HOSE AS (LABELED P)	
I	33	1	**171-2016**	1	HOSE AS (LABELED R)	
I	34	1	**171-2017**	1	HOSE AS (LABELED S)	
	35	1	*148-8327*	1	CONNECTOR AS	
		1	**3D-2824**	1	SEAL-O-RING (23.47MM ID)	
		1	**6V-8637**	1	CONNECTOR	
		1	**6V-9746**	1	SEAL-O-RING (18.94MM ID)	
	36	2	*148-8336*	1	CONNECTOR AS	
		2	**3J-1907**	1	SEAL-O-RING (11.89MM ID)	
		2	**6V-8397**	1	SEAL-O-RING (9.27MM ID)	
		2	**6V-8636**	1	CONNECTOR	
	37	1	*148-8360*	1	ELBOW AS	
		1	**6V-9182**	1	ELBOW-90 DEGREE	
		1	**6V-9746**	1	SEAL-O-RING (18.94MM ID)	
		1	**7M-8485**	1	SEAL-O-RING (29.74MM ID)	
	38	1	*148-8378*	1	ELBOW AS	
		1	**3J-1907**	1	SEAL-O-RING (11.89MM ID)	
		1	**6V-8397**	1	SEAL-O-RING (9.27MM ID)	
		1	**6V-8724**	1	ELBOW-90 DEGREE	
	39	1	**1H-8128**	1	SEAL-O-RING (94.84MM ID)	
		1	**5K-1770**	1	SEAL-O-RING (94.84MM ID)	

163-6562 **LINES GP-STEERING** *(contd.)* **i01369496**

NOTE	REF NO	GRAPHIC REF	PART NUMBER	QTY	PART NAME 1 2 3 4 5 6 (PRODUCT LEVEL)	SEE PAGE
	40	2	**1P-4579**	4	FLANGE-HALF	
	41	1	**1P-5767**	30	FLANGE-HALF	
	42	1	**1P-7016**	2	FLANGE-HALF	
	43	2	**1P-7017**	2	FLANGE-HALF	
	44	1	**5P-8077**	2	FLANGE-HALF	
	45	1	**6D-4636**	2	CLIP	
	46	1	**6F-4718**	1	SEAL-O-RING (164.69MM ID)	
	47	1	**6V-0400**	4	FLANGE-HALF	
M	48	1	**7X-2563**	4	BOLT (M20X2.5X60MM)	
	49	1	**8T-4121**	1	WASHER-HARD (11X21X2.5MM THK)	
	50	1	**8T-4123**	4	WASHER-PLATED (3.5MM THK)	
M	51	1,2	**8T-4139**	6	BOLT (M12X1.75X30MM)	
M	52	1	**8T-4140**	8	BOLT (M16X2.0X60MM)	
M	53	2	**8T-4184**	8	BOLT (M12X1.75X45MM)	
M	54	2	**8T-4193**	4	BOLT (M16X2X50MM)	
M	55	1	**8T-4194**	74	BOLT (M12X1.75X50MM)	
M	56	2	**8T-4195**	1	BOLT (M10X1.5X30MM)	
	57	1,2	**8T-4223**	93	WASHER-HARD (13.5X25.5X3MM THK)	
M	58	1,2	**8T-4910**	8	BOLT (M12X1.75X60MM)	
M	59	1	**8T-6466**	1	BOLT (M10X1.50X60MM)	
	60	1,2	**8T-7529**	2	CLIP	
	61	1,2	**9X-8257**	14	WASHER (3.5MM THK)	
	62	1	**9V-9116**	1	SPACER (16.5MM THK)	

I-SEE HOSE FABRICATION GUIDE
M-METRIC PART
Y-SEPARATE ILLUSTRATION

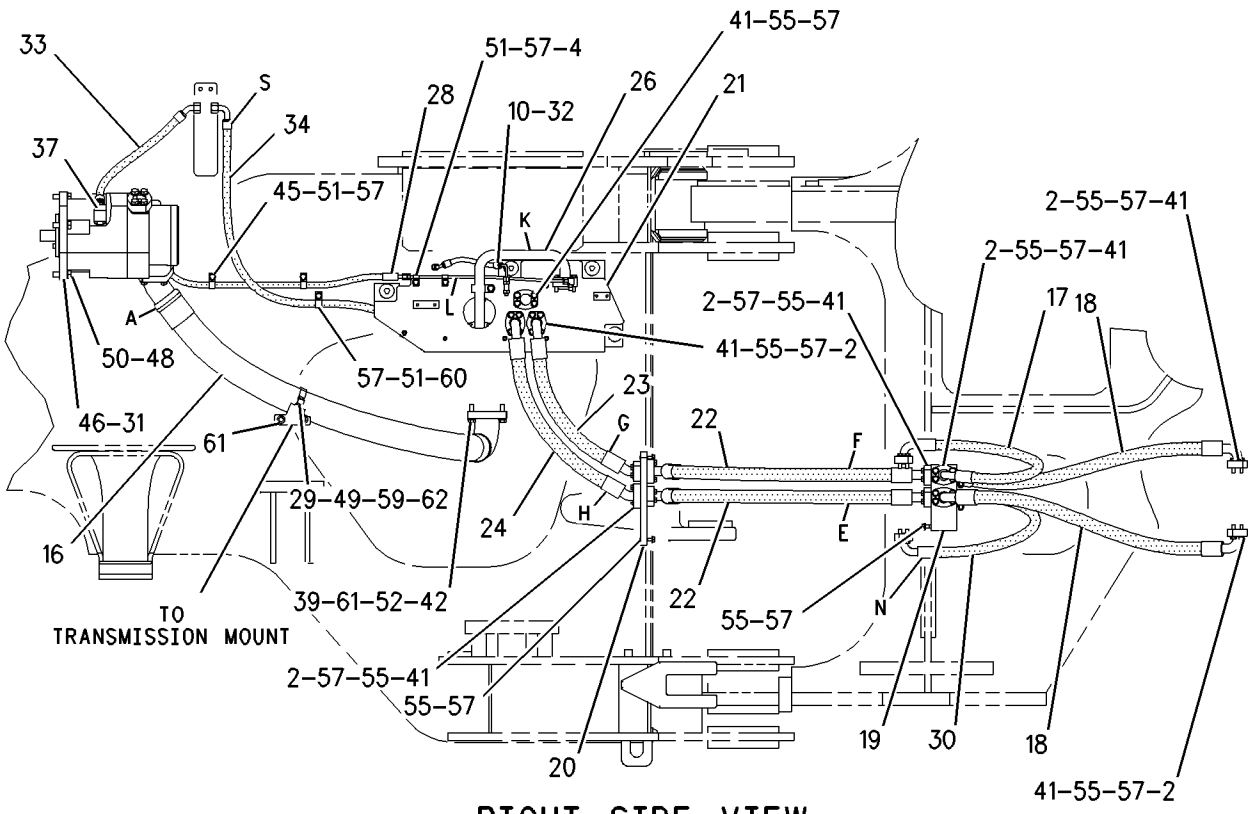

RIGHT SIDE VIEW

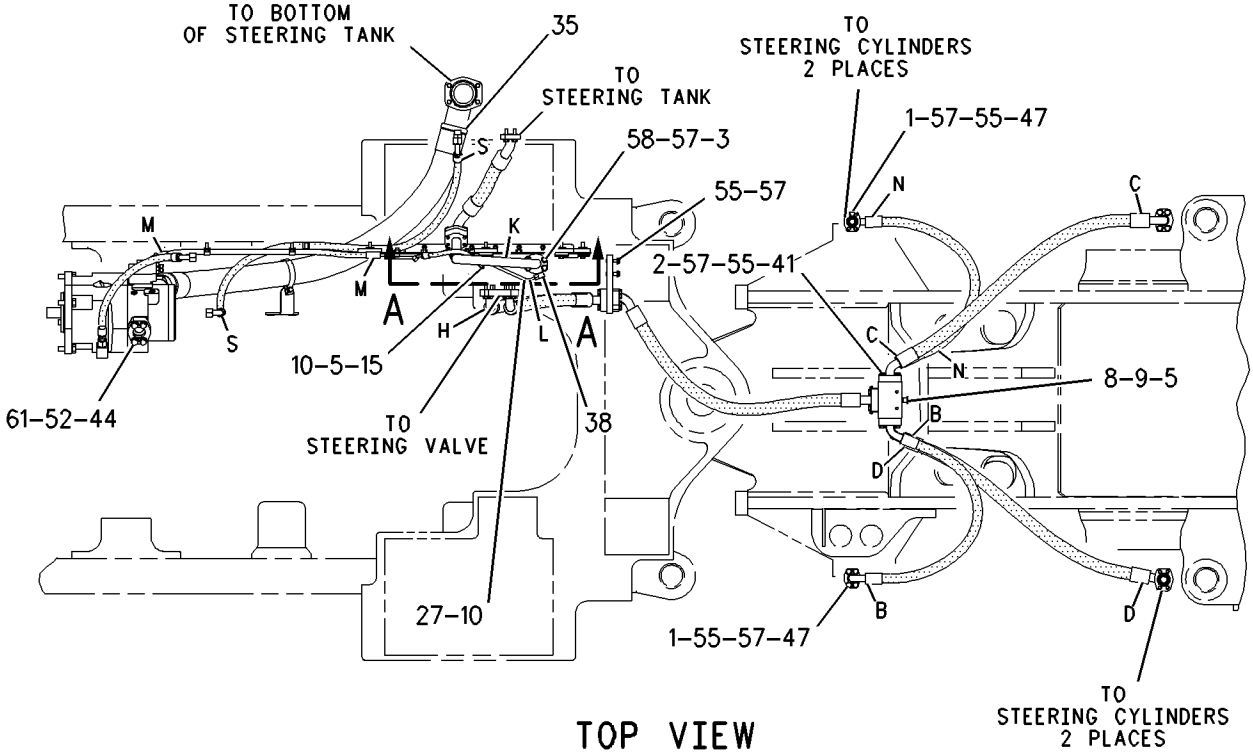

TOP VIEW

REFER TO ALL ILLUSTRATIONS OF
THIS GROUP FOR AUXILIARY VIEWS

GRAPHIC #1 g00724706

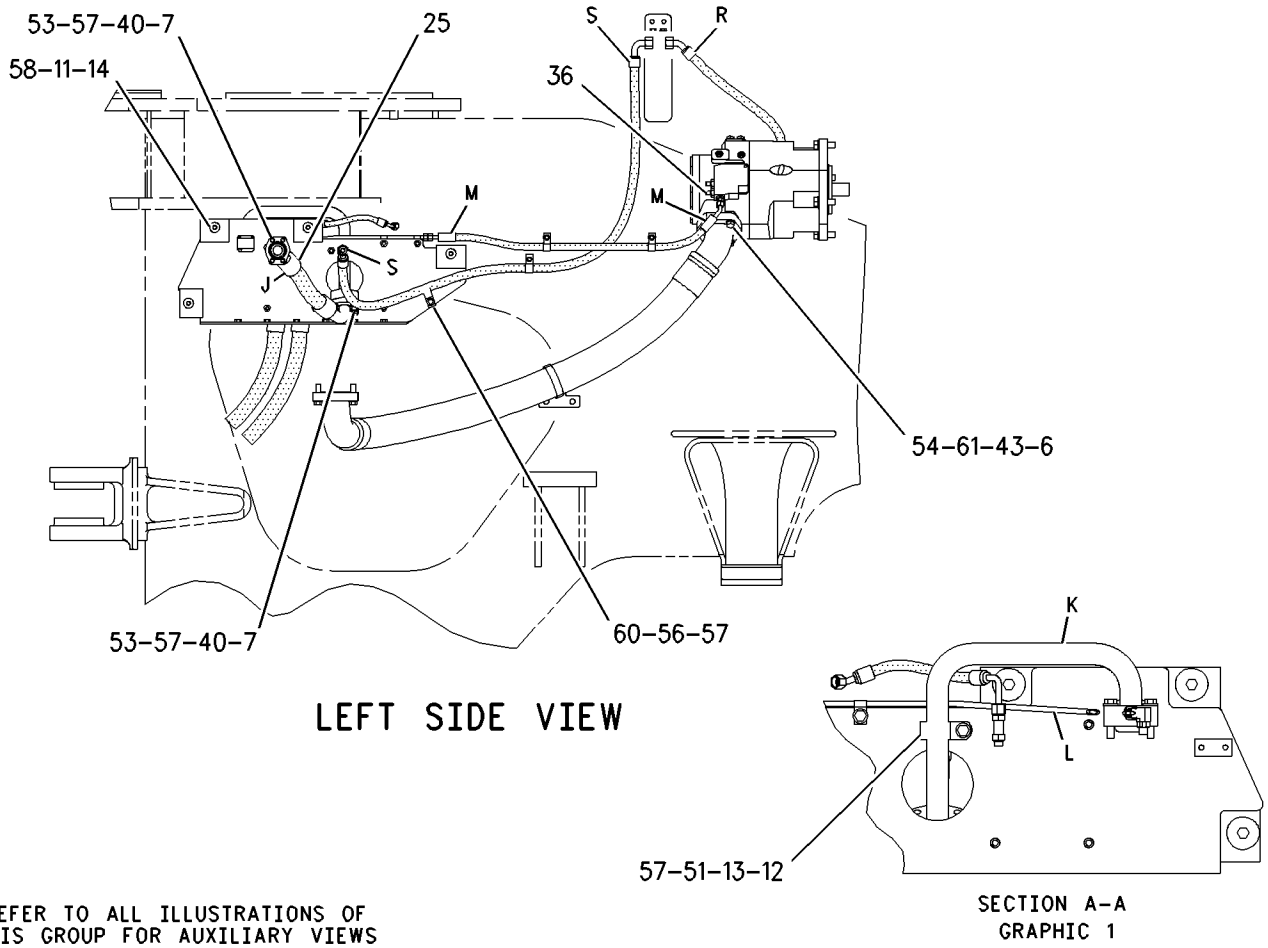

REFER TO ALL ILLUSTRATIONS OF THIS GROUP FOR AUXILIARY VIEWS

GRAPHIC #2

g00724711

STEERING SYSTEM

109-6884 LINES GP-STEERING NEUTRALIZER

S/N: 7HR1-316

PART OF 109-6820 HYDRAULIC AR

SMCS-4304, 4330 **i01252130**

NOTE	REF NO	GRAPHIC REF	PART NUMBER	QTY	PART NAME 1 2 3 4 5 6 (PRODUCT LEVEL)	SEE PAGE
	1	1	**3K-0360**	3	SEAL-O-RING (16.36MM ID)	
	2	1	**6V-8397**	13	SEAL-O-RING (9.27MM ID)	
	3	1	**6V-8398**	5	SEAL-O-RING (12.47MM ID)	
I	4	1	**8W-5090**	1	HOSE AS	
I	5	1	**8X-9227**	1	HOSE AS	
I	6	1	**103-1739**	1	HOSE AS	
	7	1	**8T-4224**	2	WASHER-HARD (8.8X16X2MM THK)	
	8	1	**116-9330**	1	TUBE AS	
I	9	1	**116-9332**	1	HOSE AS	
M	10	1	**8T-6869**	2	BOLT (M8X1.25X60MM)	
I	11	1	**128-4859**	1	HOSE AS	
Y	12	1	*133-7104*	1	VALVE GP-CHECK (STEERING QUAD)	879
Y	13	1	*133-7105*	1	VALVE & MTG GP-STEERING NEUT	876
Y	14	1	*133-7106*	1	BLOCK GP-HYDRAULIC (STEERING)	816
Y	15	1	*133-7107*	1	STOP GP-STEERING	874
	16	1	**5K-8451**	1	CLIP (15.88MM ID)	
	17	1	**5P-9299**	2	CLIP (12.7MM ID)	
	18	1	**6V-8625**	1	ELBOW-90 DEGREE (3/4-16 THD)	
	19	1	**6V-8723**	2	ELBOW-90 DEGREE (3/4-16 THD)	
	20	1	**6V-9850**	1	ELBOW-SWIVEL (11/16-16 THD)	
	21	1	**8M-2773**	1	CLIP (17.46MM ID)	
	22	1	**8T-4121**	4	WASHER-HARD (2.5MM THK)	
M	23	1	**8T-4137**	4	BOLT (M10X1.50X20MM)	
M	24	1	**8T-4139**	6	BOLT (M12X1.75X30MM)	
	25	1	**8T-4223**	6	WASHER-HARD (3MM THK)	

I-SEE HOSE FABRICATION GUIDE
M-METRIC PART
Y-SEPARATE ILLUSTRATION

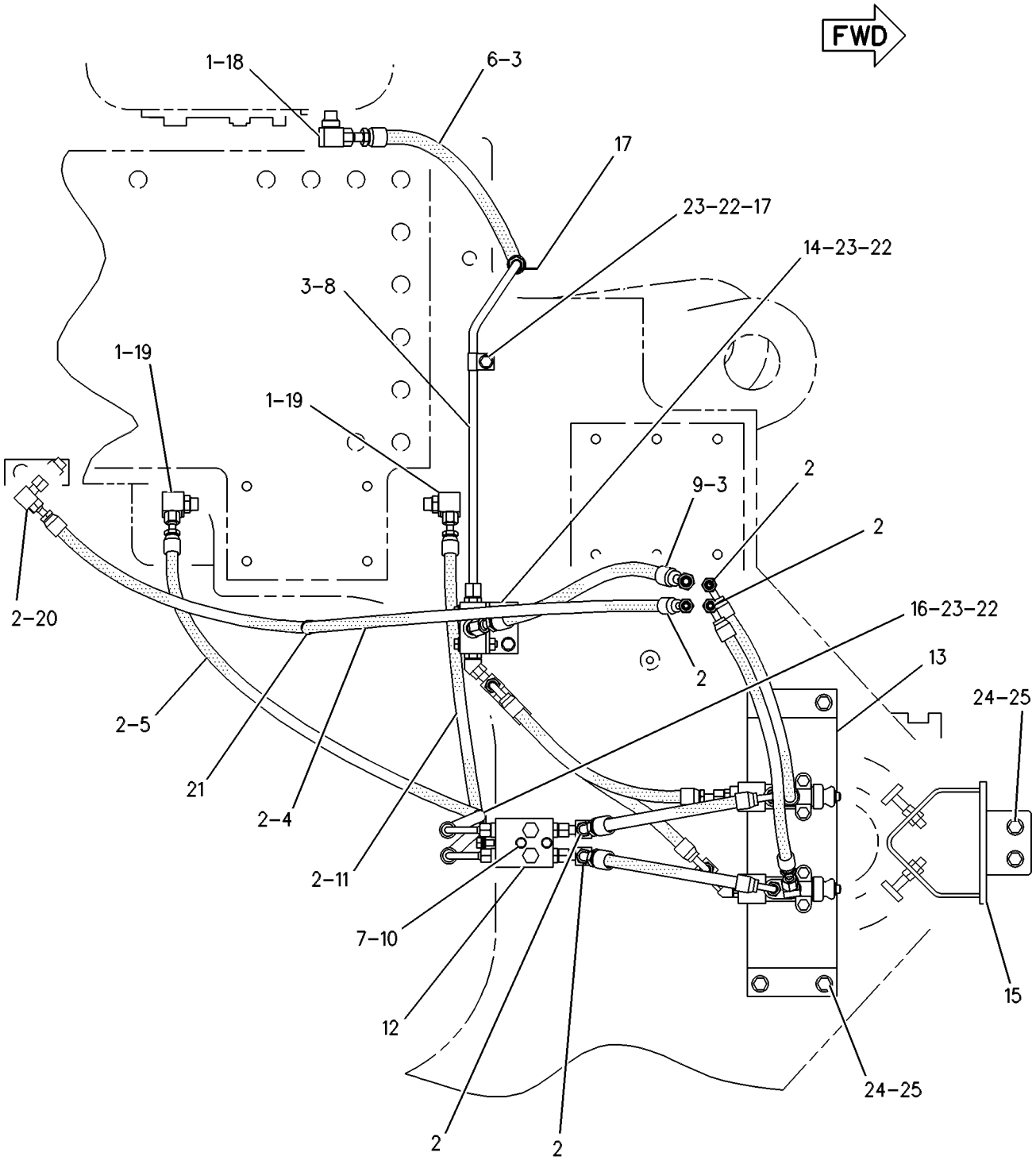

TOP VIEW

GRAPHIC #1 g00273936

STEERING SYSTEM

109-6884 LINES GP-STEERING NEUTRALIZER

S/N: 7HR317-UP

PART OF 109-6820 HYDRAULIC AR

SMCS-4304, 4330 **i01281988**

NOTE	REF NO	GRAPHIC REF	PART NUMBER	QTY	PART NAME 1 2 3 4 5 6 (PRODUCT LEVEL)	SEE PAGE
	1	1	**6V-8397**	3	SEAL-O-RING (9.27MM ID)	
	2	1	**6V-8398**	3	SEAL-O-RING (12.47MM ID)	
I	3	1	**8W-5090**	1	HOSE AS	
I	4	1	**8X-9227**	1	HOSE AS	
I	5	1	**103-1739**	1	HOSE AS	
	6	1	**116-9330**	1	TUBE AS	
I	7	1	**116-9332**	1	HOSE AS	
I	8	1	**128-4859**	1	HOSE AS	
Y	9	1	*133-7104*	1	VALVE GP-CHECK (STEERING QUAD)	879
Y	10	1	*133-7105*	1	VALVE & MTG GP-STEERING NEUT	876
Y	11	1	*133-7106*	1	BLOCK GP-HYDRAULIC (STEERING)	816
Y	12	1	*133-7107*	1	STOP GP-STEERING	874
	13	1	*148-8364*	1	ELBOW AS	
		1	**3K-0360**	1	SEAL-O-RING (16.36MM ID)	
		1	**6V-8398**	1	SEAL-O-RING (12.47MM ID)	
		1	**6V-8625**	1	ELBOW-90 DEGREE (3/4-16 THD)	
	14	1	*148-8367*	1	ELBOW AS	
		1	**6V-8397**	1	SEAL-O-RING (9.27MM ID)	
		1	**6V-9850**	1	ELBOW-SWIVEL (11/16-16 THD)	
	15	1	*148-8374*	2	ELBOW AS	
					(EACH INCLUDES)	
		1	**3K-0360**	1	SEAL-O-RING (16.36MM ID)	
		1	**6V-8397**	1	SEAL-O-RING (9.27MM ID)	
		1	**6V-8723**	1	ELBOW-90 DEGREE (3/4-16 THD)	
	16	1	**5K-8451**	1	CLIP (15.88MM ID)	
	17	1	**5P-9299**	2	CLIP (12.7MM ID)	
	18	1	**8M-2773**	1	CLIP (17.46MM ID)	
	19	1	**8T-4121**	5	WASHER-HARD (2.5MM THK)	
M	20	1	**8T-4137**	5	BOLT (M10X1.50X20MM)	
M	21	1	**8T-4139**	6	BOLT (M12X1.75X30MM)	
	22	1	**8T-4223**	6	WASHER-HARD (3MM THK)	
	23	1	**8T-4224**	2	WASHER-HARD (8.8X16X2MM THK)	
M	24	1	**8T-6869**	2	BOLT (M8X1.25X60MM)	

I-SEE HOSE FABRICATION GUIDE
M-METRIC PART
Y-SEPARATE ILLUSTRATION

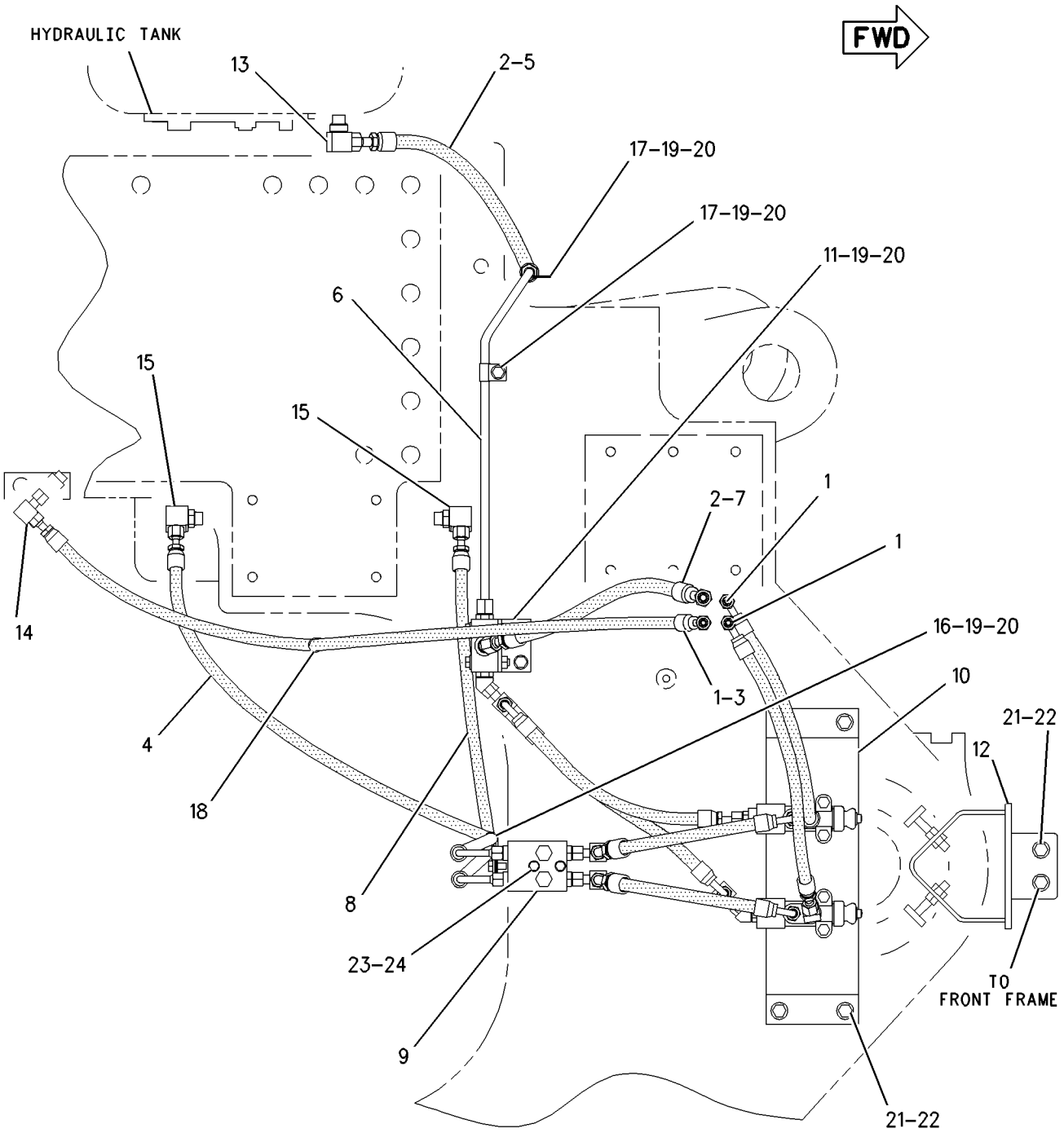

TOP VIEW

GRAPHIC #1

g00683866

STEERING SYSTEM

109-6873 LINES GP-STEERING OIL COOLER

S/N: 7HR1-UP
PART OF 109-6820 HYDRAULIC AR
TYPE 1

SMCS-4304, 4346 **i01206545**

NOTE	REF NO	GRAPHIC REF	PART NUMBER	QTY	PART NAME 1 2 3 4 5 6 (PRODUCT LEVEL)	SEE PAGE
I	1	1	**2T-2428**	1	HOSE AS	
	2	1,2	**3D-2824**	4	SEAL-O-RING (23.47MM ID)	
	3	2	**3J-1907**	4	SEAL-O-RING (11.89MM ID)	
	4	1	**3J-7354**	1	SEAL-O-RING (8.92MM ID)	
	5	2	**3N-6118**	1	BRACKET	
I	6	1	**3W-6958**	1	HOSE AS	
I	7	1	**4Y-5301**	1	HOSE AS	
	8	2	**9X-2488**	1	CLAMP-HOSE	
	9	1,2	**5K-9090**	3	SEAL-O-RING (23.52MM ID)	
	10	2	**5P-1046**	1	CONNECTOR	
	11	2	**6E-1454**	1	VALVE GP-CHECK (COOLER BYPASS)	
	12	2	**6V-0852**	1	CAP-DUST	
	13	2	**6V-3965**	1	FITTING AS	
	14	2	**6V-8397**	1	SEAL-O-RING (9.27MM ID)	
	15	2	**6V-8784**	1	TEE-FACE SEAL	
	16	1,2	**6V-9746**	17	SEAL-O-RING (18.94MM ID)	
	17	2	**7L-6463**	1	SPACER	
	18	1,2	**7M-8485**	4	SEAL-O-RING (29.74MM ID)	
	19	1	**8C-3446**	1	VALVE-FLUID SAMPLING	
I	20	2	**8R-2014**	1	HOSE AS	
	21	2	**8R-7723**	1	ADAPTER	
	22	2	**8T-0083**	1	TEE-UNION	
	23	2	**8T-6907**	1	VALVE-BALL	
I	24	1	**9C-2403**	1	HOSE AS	
	25	2	**9T-3096**	1	VALVE GP-CHECK (STEERING PILOT)	
I	26	1	**114-2932**	1	HOSE AS	
Y	27	2	**114-4672**	1	VALVE GP-RELIEF (PILOT)	897
Y	28	2	**115-2129**	1	FILTER GP-OIL (STEERING PILOT)	828
	29	2	**115-4940**	1	PLATE	
I	30	1	**171-2830**	1	HOSE AS	
	31	1	**116-6182**	1	TUBE AS	
I	32	2	**116-6759**	1	HOSE AS	
I	33	2	**117-6715**	1	HOSE AS	
I	34	2	**117-6716**	1	HOSE AS	
	35	1	**117-6720**	2	TUBE AS	
	36	1	**117-6721**	1	TUBE AS	
	37	2	**117-7734**	1	TEE-O-RING	
Y	38	2	**136-3965**	1	PUMP GP-GEAR (STEERING PILOT)	864
BG	39	2	**9X-2349**		HOSE	
	40	2	**1P-4579**	4	FLANGE-HALF	
	41	1	**2P-1293**	2	LOCKNUT-BULKHEAD (1 3/16-12 THD)	
	42	2	**4J-0520**	2	SEAL-O-RING (32.92MM ID)	
	43	2	**4J-0524**	2	SEAL-O-RING (47.22MM ID)	
	44	2	**4S-1962**	1	CLIP (25.4MM ID)	
	45	1	**5K-9660**	8	CLIP	
	46	1	**5P-7468**	1	CLIP (SLOT)	
	47	1	**5P-7469**	1	CLIP (TAB)	
	48	2	**6V-3378**	1	CLIP	
	49	1	**6V-4349**	1	GROMMET	
	50	1	**6V-8635**	1	CONNECTOR-SEAL	
	51	1	**6V-8997**	2	UNION	
	52	2	**6V-9004**	1	ELBOW-45 DEGREE (1 1/16-12 THD)	
	53	1	**6V-9007**	2	ELBOW-90 DEGREE (1 1/16-12 THD)	
	54	1	**6V-9008**	1	ELBOW-90 DEGREE (1 5/16-12 THD)	
	55	2	**6V-9843**	1	TEE (SWIVEL)	

109-6873 **LINES GP-STEERING OIL COOLER** *(contd.)* **i01206545**

NOTE	REF NO	GRAPHIC REF	PART NUMBER	QTY	PART NAME 1 2 3 4 5 6 (PRODUCT LEVEL)	SEE PAGE
	56	2	**8C-3206**	2	FLANGE-HALF	
	57	1,2	**8T-4121**	24	WASHER-HARD (2.5MM THK)	
M	58	2	**8T-4133**	1	NUT (M10X1.50 THD)	
M	59	2	**8T-4139**	5	BOLT (M12X1.75X30MM)	
M	60	1,2	**8T-4183**	5	BOLT (M12X1.75X40 MM)	
M	61	2	**8T-4184**	4	BOLT (M12X1.75X45MM)	
M	62	1,2	**8T-4195**	12	BOLT (M10X1.50X30MM)	
M	63	2	**8T-5005**	4	BOLT (M10X1.50X70MM)	
	64	1,2	**8T-4223**	14	WASHER-HARD (3MM THK)	
M	65	2	**8T-6466**	2	BOLT (M10X1.50X60MM)	
M	66	2	**8T-6685**	1	BOLT (M10X1.50X110MM)	
	67	1	**8C-3451**	1	CAP-DUST	

B-USE AS REQUIRED
G-ORDER BY THE INCH
I-SEE HOSE FABRICATION GUIDE
M-METRIC PART
Y-SEPARATE ILLUSTRATION

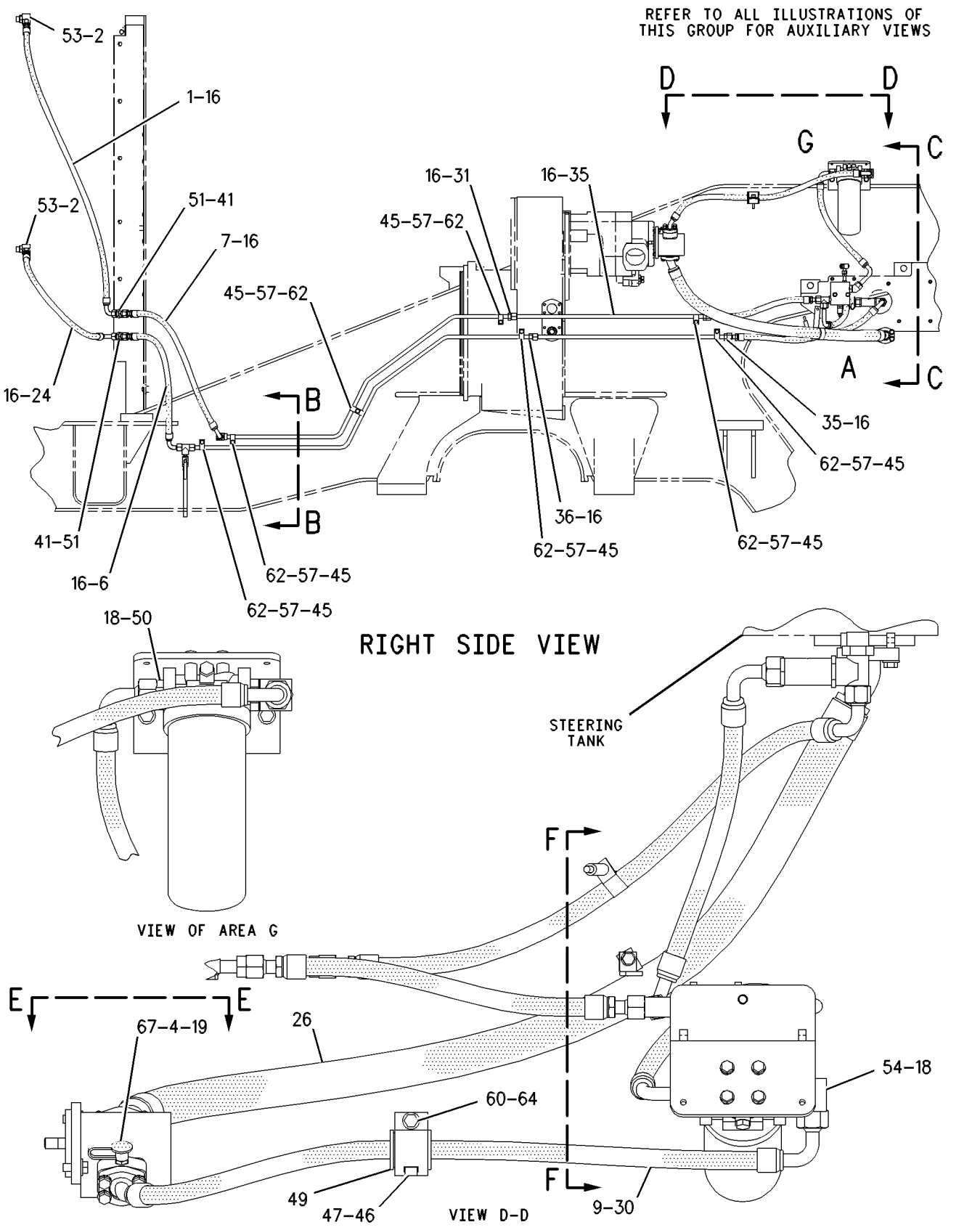

GRAPHIC #1 g00282059

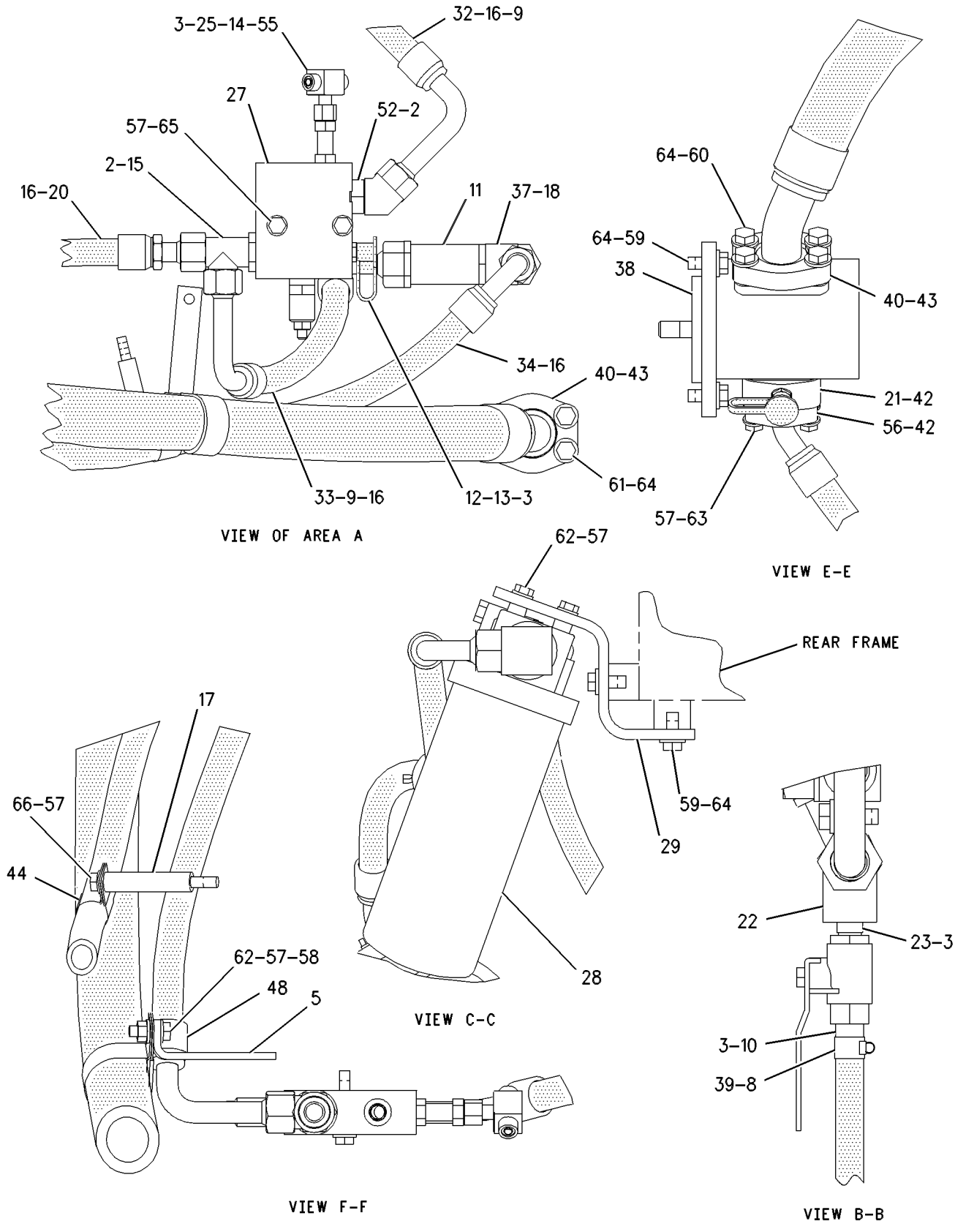

GRAPHIC #2 g00645776

STEERING SYSTEM

109-6873 LINES GP-STEERING OIL COOLER

S/N: 7HR1-UP
PART OF 109-6820 HYDRAULIC AR
TYPE 2

SMCS-4304, 4346 **i01540522**

NOTE	REF NO	GRAPHIC REF	PART NUMBER	QTY	PART NAME 1 2 3 4 5 6 (PRODUCT LEVEL)	SEE PAGE
I	1	1	**2T-2428**	1	HOSE AS	
	2	1	**160-8708**	1	BRACKET AS	
	3	2	**3J-1907**	1	SEAL-O-RING	
	4	1	**3J-7354**	1	SEAL-O-RING	
	5	2	**3N-6118**	1	BRACKET	
I	6	1	**3W-6958**	1	HOSE AS	
I	7	1	**4Y-5301**	1	HOSE AS	
	8	2	**9X-2488**	1	CLAMP-HOSE	
	10	2	*164-5562*	1	CONNECTOR GP	
		2	**3J-1907**	1	SEAL-O-RING	
		2	**5P-1046**	1	CONNECTOR	
Y	11	2	*185-9357*	1	VALVE GP-CHECK (COOLER BYPASS)	882
	12	2	**6V-0852**	1	CAP-DUST	
	13	2	*164-5567*	1	FITTING GP	
		2	**3J-1907**	1	SEAL-O-RING	
		2	**6V-3965**	1	FITTING	
	15	2	*164-5574*	1	TEE GP	
		2	**3D-2824**	1	SEAL-O-RING	
		2	**6V-8784**	1	TEE-FACE SEAL	
		2	**6V-9746**	2	SEAL-O-RING	
	16	1,2	**6V-9746**	6	SEAL-O-RING	
	17	2	**7L-6463**	1	SPACER (3.16 IN THK)	
	18	1,2	**7M-8485**	1	SEAL-O-RING	
	19	1	**8C-3446**	1	VALVE AS-FLUID SAMPLING	
I	20	2	**8R-2014**	1	HOSE AS	
	21	2	**8R-7723**	1	ADAPTER	
	22	2	*153-6261*	1	TEE AS	
		2	**6V-9746**	2	SEAL-O-RING	
		2	**8T-0083**	1	TEE-UNION	
	23	2	**8T-6907**	1	VALVE-BALL	
I	24	1	**9C-2403**	1	HOSE AS	
	25	2	**164-7474**	1	VALVE GP-CHECK (STEERING PILOT)	
I	26	1	**114-2932**	1	HOSE AS	
Y	27	2	**114-4672**	1	VALVE GP-RELIEF (PILOT)	897
Y	28	2	**115-2129**	1	FILTER GP-OIL (STEERING PILOT)	828
	29	2	**115-4940**	1	PLATE	
I	30	1	**196-1901**	1	HOSE AS	
	31	1	**116-6182**	1	TUBE AS	
I	32	2	**116-6759**	1	HOSE AS	
I	33	2	**117-6715**	1	HOSE AS	
I	34	2	**117-6716**	1	HOSE AS	
	35	1	**117-6720**	2	TUBE AS	
	36	1	**117-6721**	1	TUBE AS	
	37	2	**117-7734**	1	TEE-O-RING	
Y	38	2	**136-3965**	1	PUMP GP-GEAR (STEERING PILOT)	864
BG	39	2	**9X-2349**		HOSE	
	40	2	**1P-4579**	4	FLANGE-HALF	
	41	1	**2P-1293**	2	LOCKNUT-BULKHEAD (1 3/16-12 THD)	
	42	2	**4J-0520**	2	SEAL-O-RING	
	43	2	**4J-0524**	2	SEAL-O-RING	
	44	2	**4S-1962**	1	CLIP	
	45	1	**5K-9660**	8	CLIP	
	46	1	**5P-7468**	1	CLIP (SLOT)	
	47	1	**5P-7469**	1	CLIP (TAB)	
	48	2	**6V-3378**	1	CLIP	

109-6873 LINES GP-STEERING OIL COOLER *(contd.)* i01540522

NOTE	REF NO	GRAPHIC REF	PART NUMBER	QTY	PART NAME 1 2 3 4 5 6 (PRODUCT LEVEL)	SEE PAGE
	49	1	**6V-4349**	1	GROMMET	
	50	1	*148-8335*	1	CONNECTOR GP	
		1	**5K-9090**	1	SEAL-O-RING	
		1	**6V-8635**	1	CONNECTOR	
		1	**7M-8485**	1	SEAL-O-RING	
	51	1	*148-8455*	2	UNION GP	
					(EACH INCLUDES)	
		1	**6V-8997**	1	UNION	
		1	**6V-9746**	2	SEAL-O-RING	
	52	2	*153-6237*	1	ELBOW GP	
		2	**3D-2824**	1	SEAL-O-RING	
		2	**6V-9004**	1	ELBOW	
		2	**6V-9746**	1	SEAL-O-RING	
	53	1	*148-8347*	2	ELBOW GP	
					(EACH INCLUDES)	
		1	**3D-2824**	1	SEAL-O-RING	
		1	**6V-9007**	1	ELBOW	
		1	**6V-9746**	1	SEAL-O-RING	
	54	1	*148-8357*	1	ELBOW GP	
		1	**5K-9090**	1	SEAL-O-RING	
		1	**6V-9008**	1	ELBOW	
		1	**7M-8485**	1	SEAL-O-RING	
	55	2	*148-8434*	1	TEE AS-ORFS	
		2	**6V-8397**	2	SEAL-O-RING	
		2	**6V-9843**	1	TEE-SWIVEL	
	56	2	**8C-3206**	2	FLANGE-HALF	
	57	1,2	**8T-4121**	24	WASHER-HARD (11X21X2.5MM THK)	
M	58	2	**8T-4133**	1	NUT (M10X1.5 THD)	
M	59	2	**8T-4139**	7	BOLT (M12X1.75X30MM)	
M	60	1,2	**8T-4183**	1	BOLT (M12X1.75X40MM)	
M	61	2	**8T-4184**	4	BOLT (M12X1.75X45MM)	
M	62	1,2	**8T-4195**	12	BOLT (M10X1.5X30MM)	
M	63	2	**8T-5005**	4	BOLT (M10X1.50X70MM)	
	64	1,2	**8T-4223**	15	WASHER-HARD (13.5X25.5X3MM THK)	
M	65	2	**8T-6466**	2	BOLT (M10X1.50X60MM)	
M	66	2	**8T-6685**	1	BOLT (M10X1.50X110MM)	
	67	1	**8C-3451**	1	CAP-DUST	

B-USE AS REQUIRED
G-ORDER BY THE INCH
I-SEE HOSE FABRICATION GUIDE
M-METRIC PART
Y-SEPARATE ILLUSTRATION

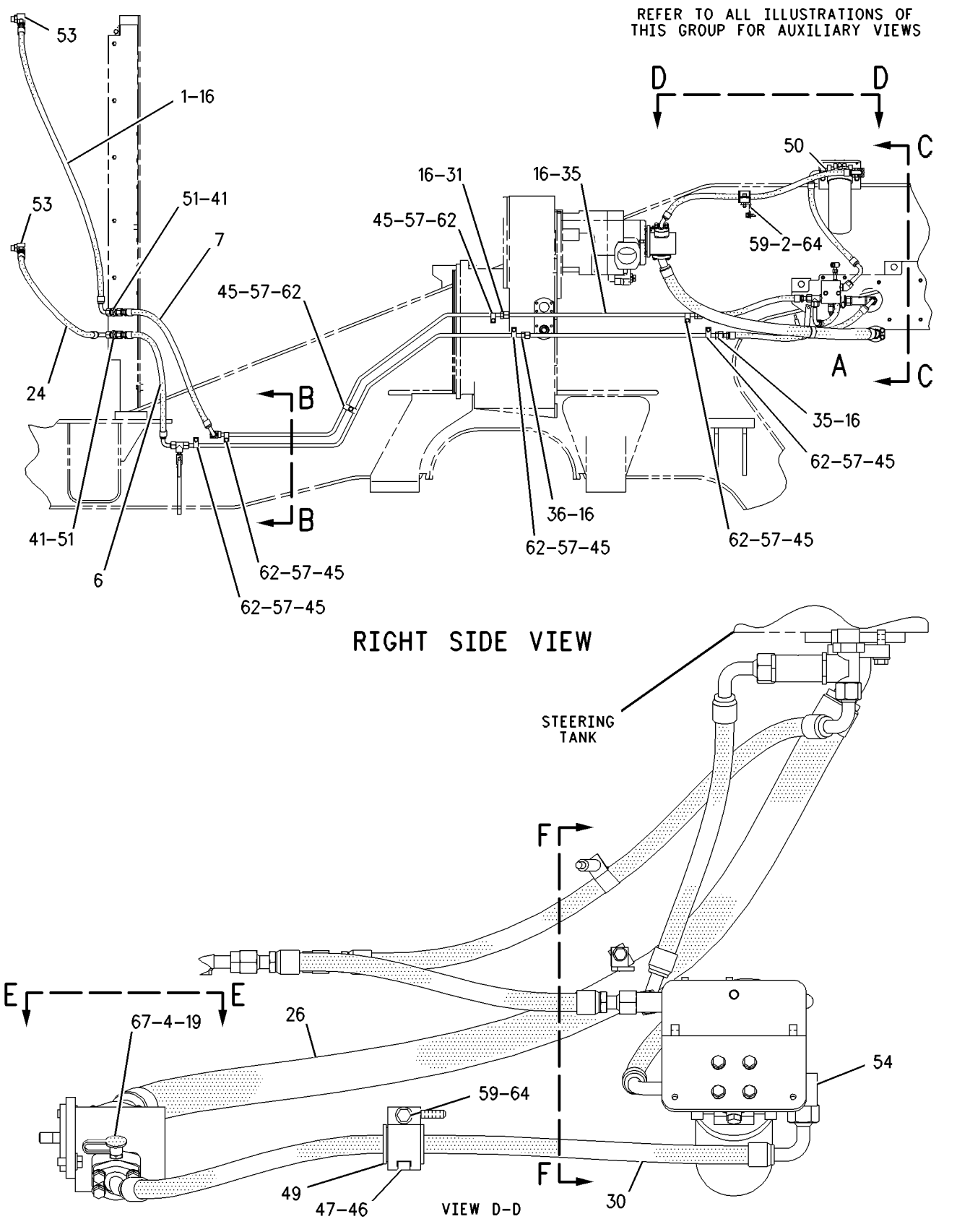

GRAPHIC #1 g00801974

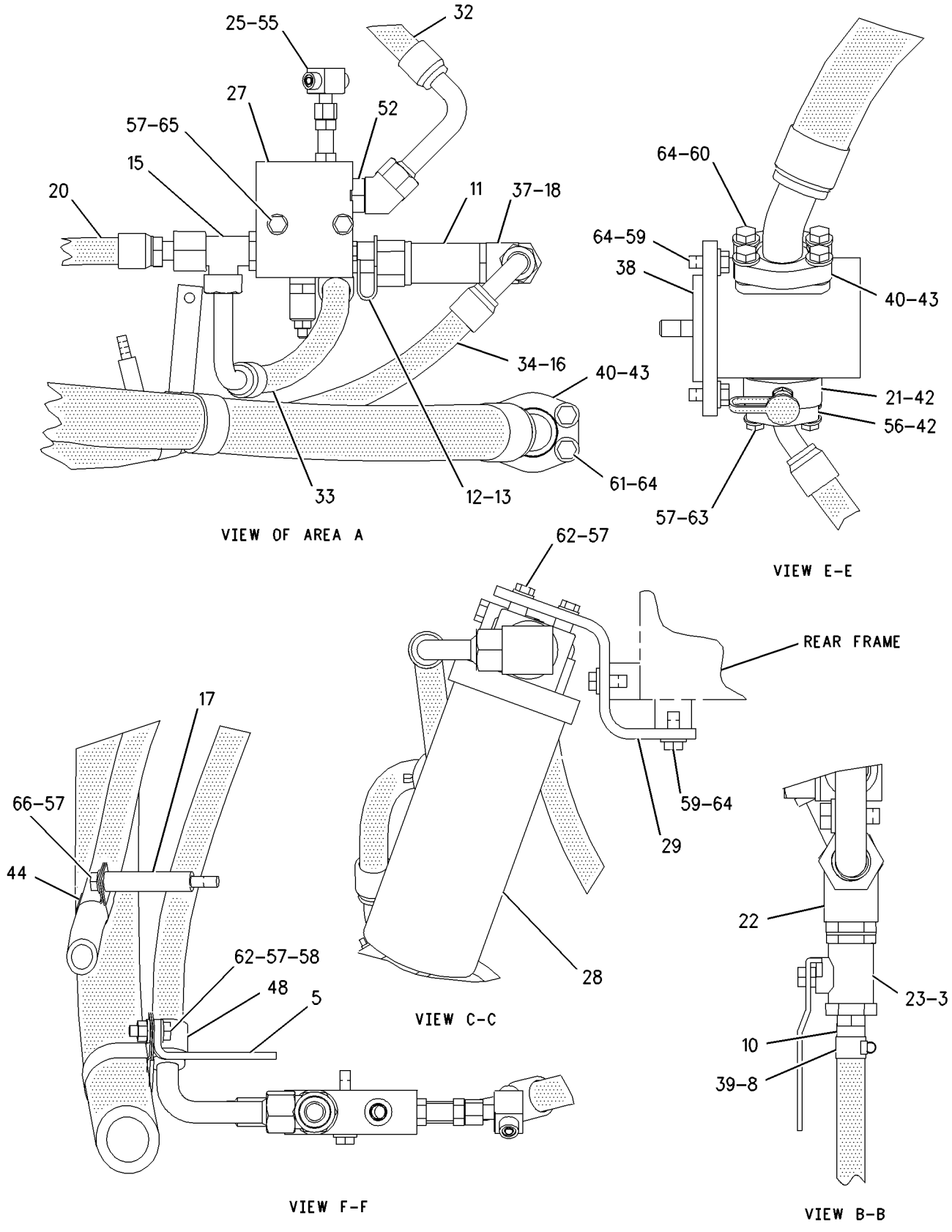

GRAPHIC #2

g00801976

101-4007 PUMP GP-GEAR–SECONDARY STEERING

S/N: 7HR1-UP

PART OF 112-4189 LINES GP-SECONDARY STEERING

AN ATTACHMENT

SMCS-4268, 4306, 5073 **i00791343**

NOTE	REF NO	GRAPHIC REF	PART NUMBER	QTY	PART NAME 1 2 3 4 5 6 (PRODUCT LEVEL)	SEE PAGE
	1	1	**107-2885**	1	BODY AS	
	2	1	**107-2894**	1	FLANGE AS	
	3	1	**107-2892**	1	SHAFT-DRIVE	
	4	1	**4T-8761**	1	GEAR-IDLER (8 TEETH)	
	5	1	**4T-9298**	4	BUSHING-TERMINAL	
	6	1	**107-2887**	2	PISTON	
	7	1	**107-2886**	1	SPACER	
	8	1	**107-2890**	1	BODY-VALVE	
	9	1	**077-4639**	2	PLATE-ISOLATION	
	10	1	**077-4643**	2	PLATE-ISOLATION	
	11	1	**107-2884**	2	PLATE-ISOLATION	
	12	1	**6J-2386**	2	DOWEL	
	13	1	**107-2889**	2	SPACER	
	14	1	**107-2891**	2	PISTON	
	15	1	**107-2888**	2	SPRING	
	16	1	**107-2893**	2	SPRING	
	17	1	**0S-1595**	8	BOLT (1/2-13X1.25IN)	
	18	1	**1B-2886**	6	BOLT (1/2-13X3.75IN)	
	19	1	**5P-7213**	14	WASHER-HARD (2MM THK)	
	20	1	**008-3214**	1	RING-RETAINING	
	21	1	**6E-2943**	1	PLUG	
	22	1	**8T-4657**	2	SEAL-LIP (22.22MM ID)	
					AVAILABLE REPAIR KIT(S):	
			107-2895	1	KIT-SEAL	

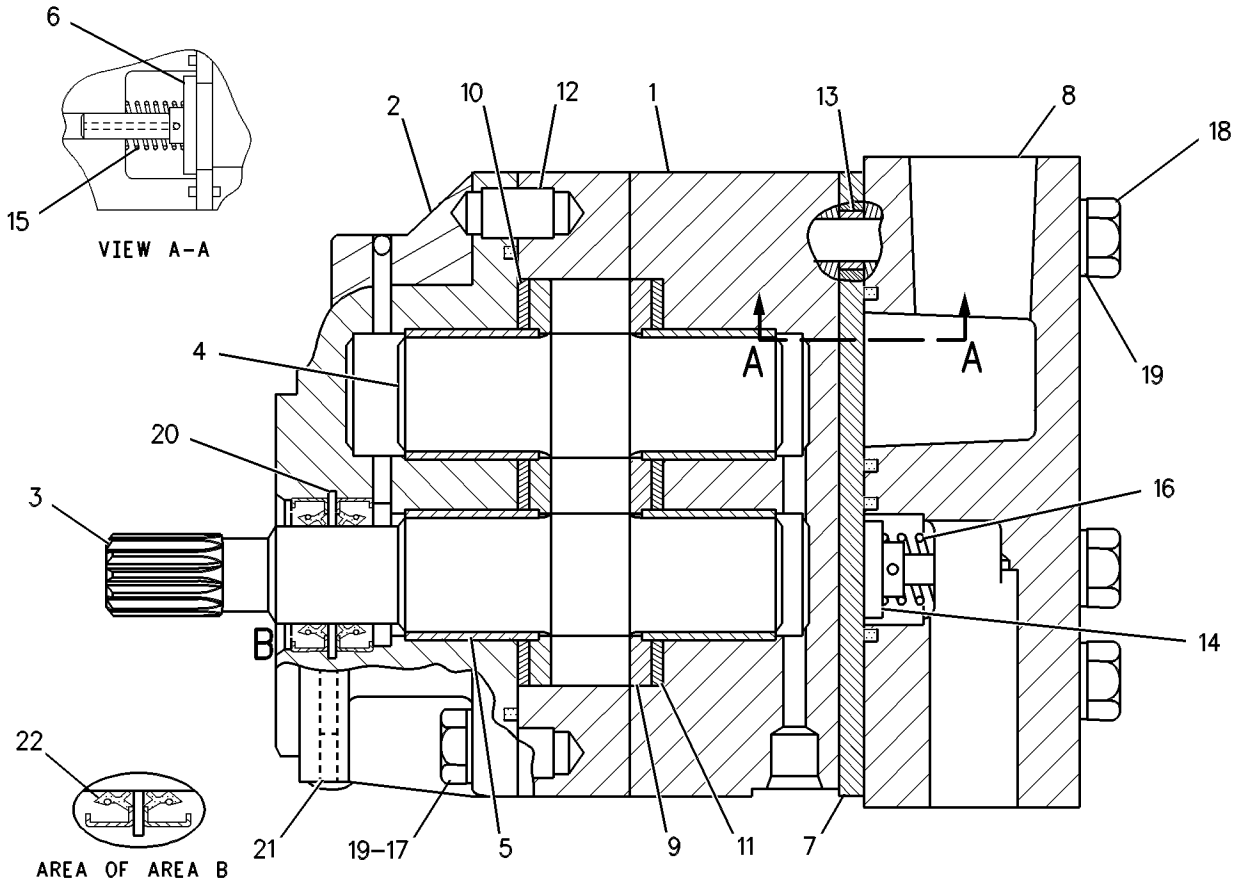

GRAPHIC #1 g00368937

STEERING SYSTEM

136-3965 PUMP GP-GEAR–STEERING & IMPLEMENT PILOT

S/N: 7HR1-UP

PART OF 109-6867 LINES GP-HYDRAULIC, 109-6873 LINES GP-STEERING OIL COOLER

SMCS-4268, 4306, 5073, 5084, 5085 **i00747471**

NOTE	REF NO	GRAPHIC REF	PART NUMBER	QTY	PART NAME 1 2 3 4 5 6 (PRODUCT LEVEL)	SEE PAGE
	1	1	**135-3490**	1	COVER	
M	2	1	**8T-5412**	4	BOLT (M12X1.75X140MM)	
	3	1	**135-3489**	1	KIT-SEAL	
	4	1	**109-1641**	1	RING-SNAP	
	5	1	**099-3095**	2	DOWEL	
	6	1	**136-3842**	1	FLANGE	

M-METRIC PART

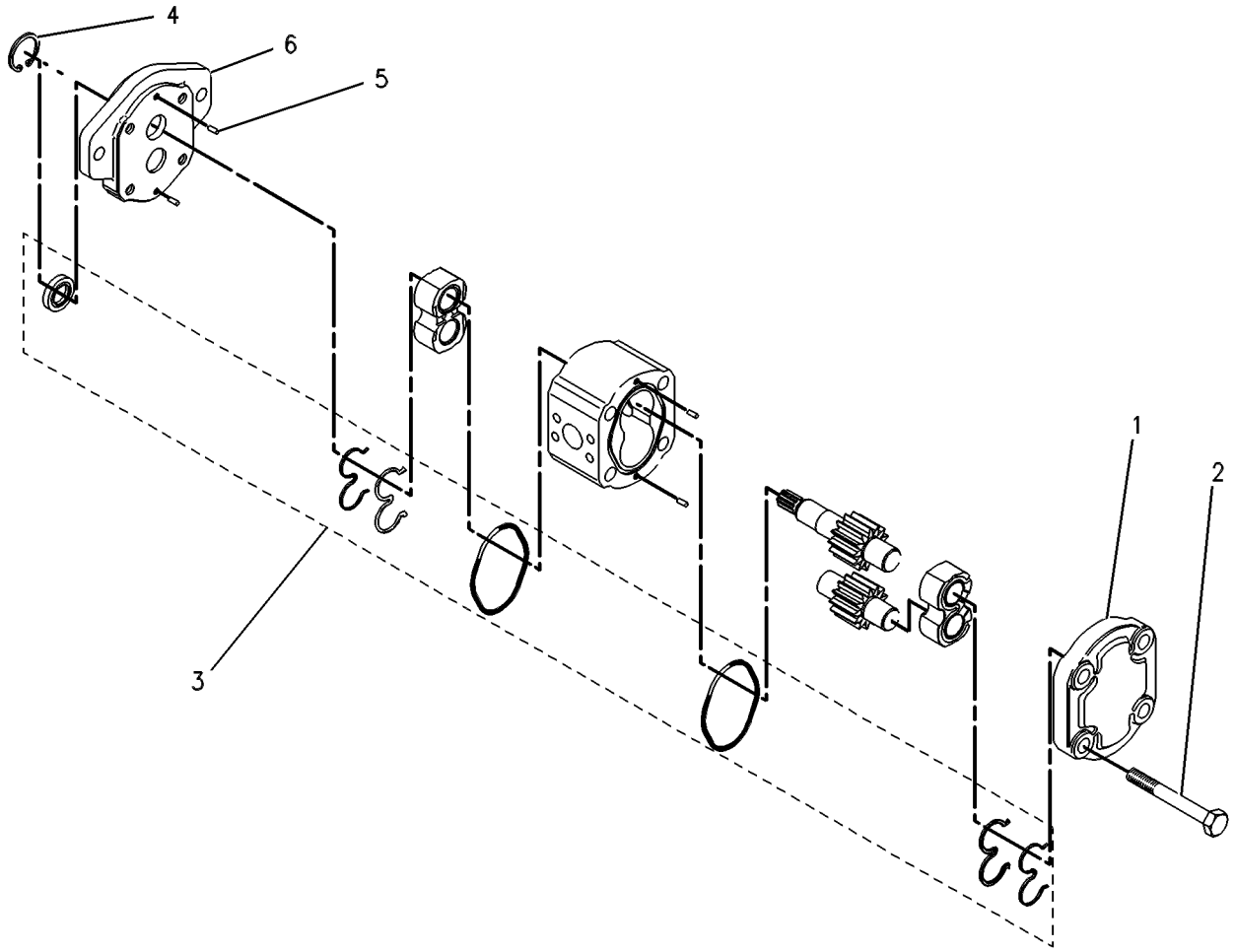

GRAPHIC #1 g00263919

MEMORANDA

STEERING SYSTEM

141-1463 PUMP GP-PISTON—STEERING

S/N: 7HR1-UP
PART OF 109-6868 LINES GP-STEERING
TYPE 1

SMCS-4268, 4306, 5070 **i01056872**

NOTE	REF NO	GRAPHIC REF	PART NUMBER	QTY	PART NAME 1 2 3 4 5 6 (PRODUCT LEVEL)	SEE PAGE
	1	1	**6V-7951**	1	DOWEL	
	2	1	**137-1365**	1	HOUSING	
M	3	1	**9X-8482**	1	SETSCREW-SOCKET (M12X1.75X70MM)	
	4	1	**6E-3283**	4	LOCKNUT (M12X1.75MM THD)	
	5	1	**9S-9334**	1	PLUG (1 5/16-12 THD)	
Y	6	1	**4I-7693**	1	ACTUATOR GP-PISTON PUMP	813
Y	7	1	**107-6440**	1	VALVE GP-PRESS & FLOW CMPNSTR	892
	8	1	**9S-8004**	1	PLUG-O-RING (9/16-18 THD)	
	9	1	**3J-1907**	1	SEAL-O-RING (11.89MM ID)	
	10	1	**7M-8485**	1	SEAL-O-RING (29.74MM ID)	
	11	1	**6E-1030**	1	SEAL-DISC	
	12	1	**7X-2910**	1	RING-RETAINING	
M	13	1	**8T-4944**	4	BOLT-SOCKET HEAD (M16X2X40MM)	
	14	1	**3K-0715**	1	SEAL-O-RING (101.27MM ID)	
	15	1	**135-9991**	1	COUPLING	
	16	1	**2H-3935**	1	SEAL-O-RING (136.12MM ID)	
	17	1	**145-3204**	1	FLANGE	
	18	1	**096-8058**	2	RING-RETAINING	
B	19	1	**6E-3334**	1	SHIM (0.1MM THK)	
B	20	1	**6E-3335**	1	SHIM (0.2MM THK)	
B	21	1	**6E-3336**	1	SHIM (1.0MM THK)	
	22	1	**6E-1029**	1	IMPELLER	
	23	1	**6E-3333**	1	KEY	
Y	24	1	**6E-1023**	1	CONTROL GP-PUMP	817
Y	25	1	**6E-1026**	1	ACTUATOR GP-PISTON PUMP	815
Y	26	1	**145-3203**	1	ROTATING GP-PUMP	806
M	27	1	**9X-8483**	1	SETSCREW-SOCKET (M12X1.75X80MM)	
M	28	1	**9X-6153**	1	BOLT (M6X1X10MM)	

B-USE AS REQUIRED
M-METRIC PART
Y-SEPARATE ILLUSTRATION

141-1463 PUMP GP-PISTON *(contd.)* **i01056872**

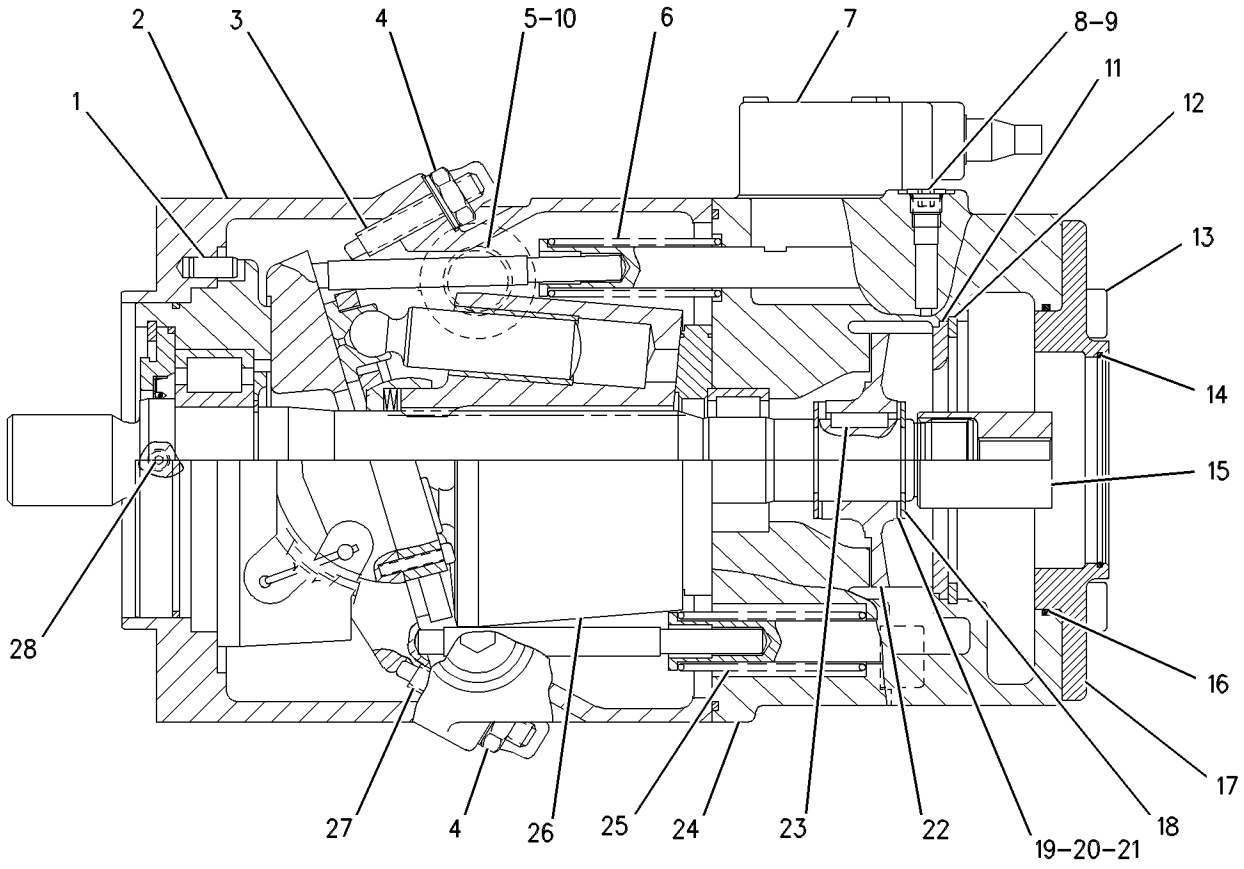

GRAPHIC #1 g00288646

141-1463 PUMP GP-PISTON–STEERING

S/N: 7HR1-UP
PART OF 163-6562 LINES GP-STEERING
TYPE 2

SMCS-4268, 4306, 5070 **i01056913**

NOTE	REF NO	GRAPHIC REF	PART NUMBER	QTY	PART NAME 1 2 3 4 5 6 (PRODUCT LEVEL)	SEE PAGE
	1	1	**6V-7951**	1	DOWEL	
	2	1	**137-1365**	1	HOUSING	
M	3	1	**9X-8482**	1	SETSCREW-SOCKET (M12X1.75X70MM)	
	4	1	**6E-3283**	4	LOCKNUT (M12X1.75MM THD)	
	5	1	**9S-9334**	1	PLUG (1 5/16-12 THD)	
YC	6	1	**6E-1025**	1	ACTUATOR GP-PISTON PUMP	814
Y	7	1	**107-6440**	1	VALVE GP-PRESS & FLOW CMPNSTR	892
	8	1	**9S-8004**	1	PLUG-O-RING (9/16-18 THD)	
	9	1	**3J-1907**	1	SEAL-O-RING (11.89MM ID)	
	10	1	**7M-8485**	1	SEAL-O-RING (29.74MM ID)	
	11	1	**6E-1030**	1	SEAL-DISC	
	12	1	**7X-2910**	1	RING-RETAINING	
M	13	1	**8T-4944**	4	BOLT-SOCKET HEAD (M16X2X40MM)	
	14	1	**3K-0715**	1	SEAL-O-RING (101.27MM ID)	
	15	1	**135-9991**	1	COUPLING	
	16	1	**2H-3935**	1	SEAL-O-RING (136.12MM ID)	
	17	1	**145-3204**	1	FLANGE	
	18	1	**096-8058**	2	RING-RETAINING	
B	19	1	**6E-3334**	1	SHIM (0.1MM THK)	
B	20	1	**6E-3335**	1	SHIM (0.2MM THK)	
B	21	1	**6E-3336**	1	SHIM (1.0MM THK)	
	22	1	**6E-1029**	1	IMPELLER	
	23	1	**6E-3333**	1	KEY	
Y	24	1	**6E-1023**	1	CONTROL GP-PUMP	817
Y	25	1	**6E-1026**	1	ACTUATOR GP-PISTON PUMP	815
Y	26	1	**145-3203**	1	ROTATING GP-PUMP	806
M	27	1	**9X-8483**	1	SETSCREW-SOCKET (M12X1.75X80MM)	
M	28	1	**9X-6153**	1	BOLT (M6X1X10MM)	

B-USE AS REQUIRED
C-CHANGE FROM PREVIOUS TYPE
M-METRIC PART
Y-SEPARATE ILLUSTRATION

141-1463 PUMP GP-PISTON *(contd.)* **i01056913**

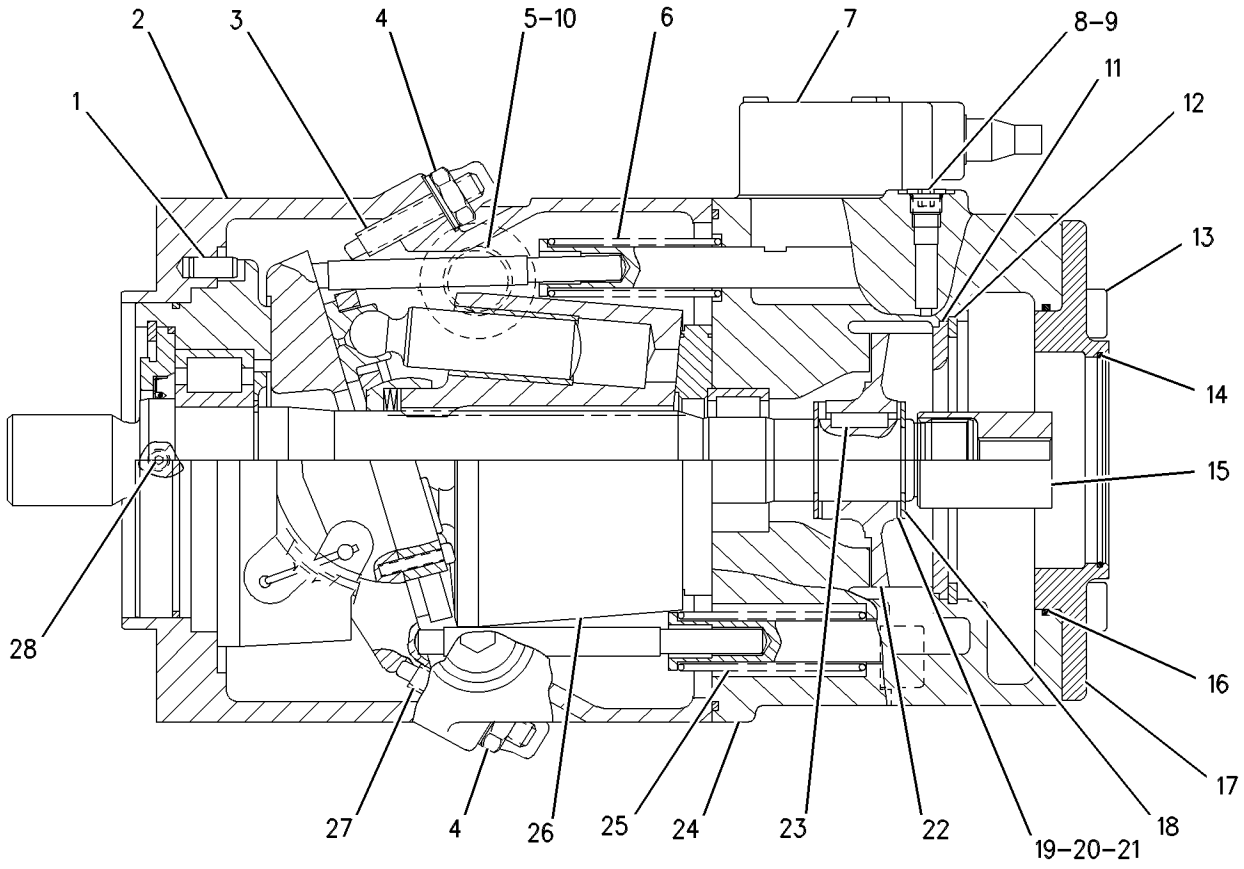

GRAPHIC #1 g00288646

STEERING SYSTEM

141-1463 PUMP GP-PISTON—STEERING

S/N: 7HR1-UP
PART OF 163-6562 LINES GP-STEERING
TYPE 3

SMCS-4268, 4306, 5070 **i01309767**

NOTE	REF NO	GRAPHIC REF	PART NUMBER	QTY	PART NAME 1 2 3 4 5 6 (PRODUCT LEVEL)	SEE PAGE
	1	1	**6V-7951**	1	DOWEL	
	2	1	**137-1365**	1	HOUSING	
M	3	1	**9X-8482**	1	SETSCREW-SOCKET (M12X1.75X70MM)	
	4	1	**6E-3283**	4	LOCKNUT (M12X1.75MM THD)	
	5	1	**9S-9334**	1	PLUG (1 5/16-12 THD)	
YC	6	1	**6E-1025**	1	ACTUATOR GP-PISTON PUMP	814
Y	7	1	**6E-1024**	1	VALVE GP-PRESS & FLOW CMPNSTR	890
	8	1	**9S-8004**	1	PLUG-O-RING (9/16-18 THD)	
	9	1	**3J-1907**	1	SEAL-O-RING (11.89MM ID)	
	10	1	**7M-8485**	1	SEAL-O-RING (29.74MM ID)	
	11	1	**6E-1030**	1	SEAL-DISC	
	12	1	**7X-2910**	1	RING-RETAINING	
M	13	1	**8T-4944**	4	BOLT-SOCKET HEAD (M16X2X40MM)	
	14	1	**3K-0715**	1	SEAL-O-RING (101.27MM ID)	
	15	1	**135-9991**	1	COUPLING	
	16	1	**2H-3935**	1	SEAL-O-RING (136.12MM ID)	
	17	1	**145-3204**	1	FLANGE	
	18	1	**096-8058**	2	RING-RETAINING	
B	19	1	**6E-3334**	1	SHIM (0.1MM THK)	
B	20	1	**6E-3335**	1	SHIM (0.2MM THK)	
B	21	1	**6E-3336**	1	SHIM (1.0MM THK)	
	22	1	**6E-1029**	1	IMPELLER	
	23	1	**6E-3333**	1	KEY	
Y	24	1	**6E-1023**	1	CONTROL GP-PUMP	817
Y	25	1	**6E-1026**	1	ACTUATOR GP-PISTON PUMP	815
Y	26	1	**145-3203**	1	ROTATING GP-PUMP	806
M	27	1	**9X-8483**	1	SETSCREW-SOCKET (M12X1.75X80MM)	
M	28	1	**9X-6153**	1	BOLT (M6X1X10MM)	

B-USE AS REQUIRED
C-CHANGE FROM PREVIOUS TYPE
M-METRIC PART
Y-SEPARATE ILLUSTRATION

141-1463 PUMP GP-PISTON *(contd.)* **i01309767**

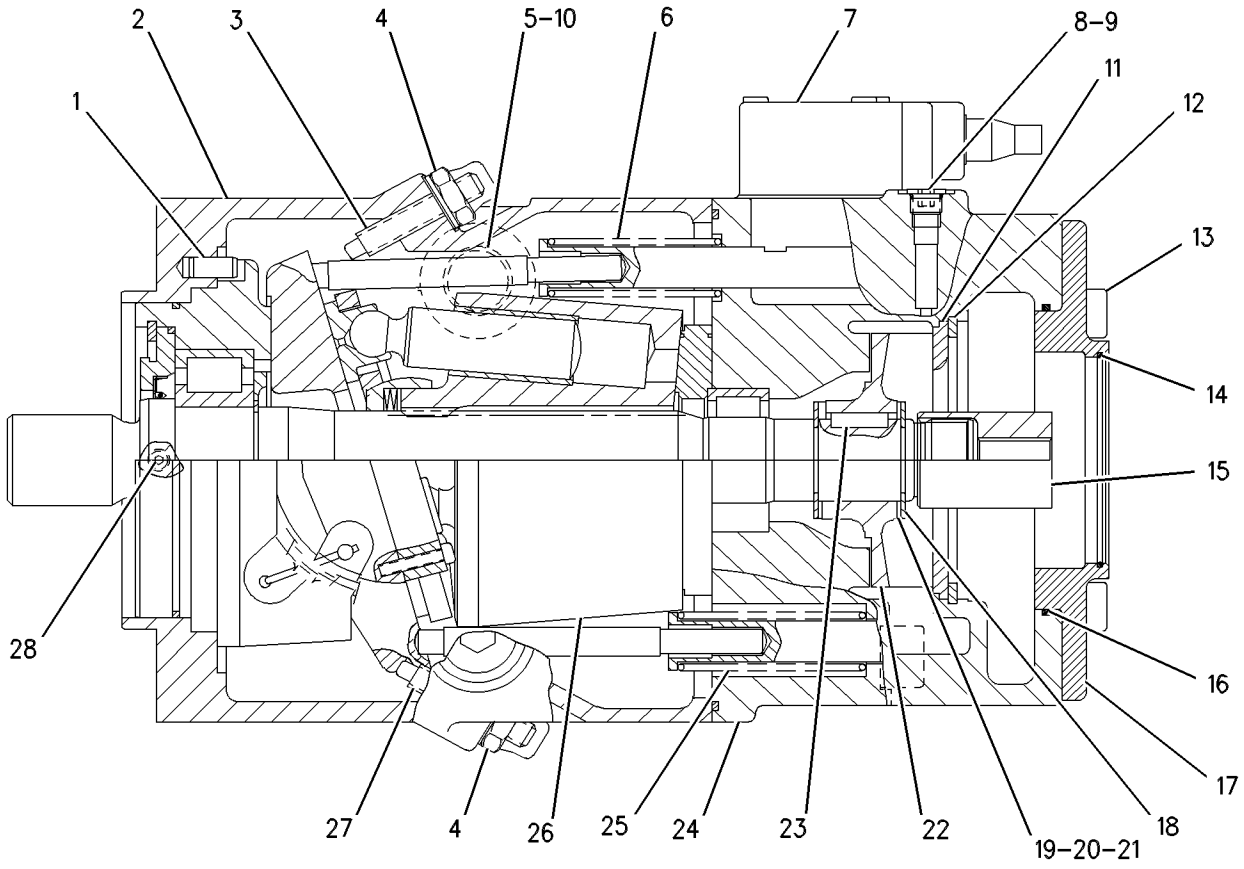

GRAPHIC #1 g00288646

STEERING SYSTEM

131-8143 STEERING AR

S/N: 7HR1-UP
AN ATTACHMENT
TYPE 1

SMCS-4300 **i01074002**

NOTE	REF NO	GRAPHIC REF	PART NUMBER	QTY	PART NAME 1 2 3 4 5 6 (PRODUCT LEVEL)	SEE PAGE
	1	1	**3J-1907**	1	SEAL-O-RING (11.89MM ID)	
	2	1	**6V-0852**	1	CAP-DUST	
	3	1	**6V-3965**	1	NIPPLE AS	
Y	4	1	**126-1357**	1	VALVE GP-STEERING	912
	5	1	*148-8354*	1	ELBOW AS	
		1	**3K-0360**	1	SEAL-O-RING (16.36MM ID)	
		1	**6V-8398**	1	SEAL-O-RING (12.47MM ID)	
		1	**6V-9002**	1	ELBOW-45 DEGREE (3/4-16 THD)	
	6	1	*148-8360*	1	ELBOW AS	
		1	**6V-9182**	1	ELBOW (FACE SEAL)	
		1	**6V-9746**	1	SEAL-O-RING (18.94MM ID)	
		1	**7M-8485**	1	SEAL-O-RING (29.74MM ID)	
	7	1	**8T-4223**	3	WASHER-HARD (3MM THK)	
M	8	1	**8T-5041**	3	BOLT (M12X1.75X120MM)	

M-METRIC PART
Y-SEPARATE ILLUSTRATION

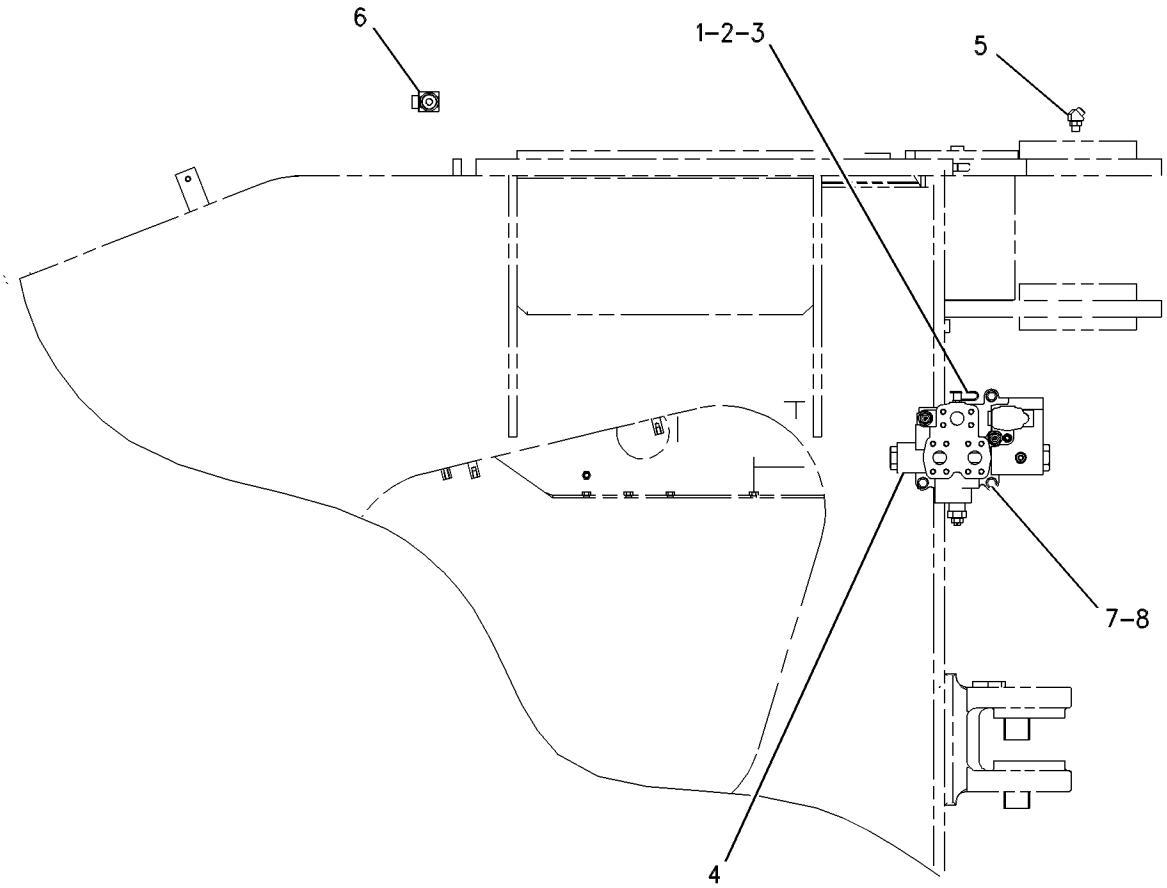

GRAPHIC #1 g00600505

STEERING SYSTEM

131-8143 STEERING AR

S/N: 7HR1-UP
AN ATTACHMENT
TYPE 2

SMCS-4300 **i01198239**

NOTE	REF NO	GRAPHIC REF	PART NUMBER	QTY	PART NAME 1 2 3 4 5 6 (PRODUCT LEVEL)	SEE PAGE
	1	1	**3J-1907**	1	SEAL-O-RING (11.89MM ID)	
	2	1	**6V-0852**	1	CAP-DUST	
	3	1	**6V-3965**	1	FITTING AS	
Y	4	1	**126-1357**	1	VALVE GP-STEERING	912
CY	5	1	*174-8217*	1	FILTER & LINES GP-STEERING (PRIMARY CASE DRAIN)	826
	6	1	*148-8354*	1	ELBOW AS	
		1	**3K-0360**	1	SEAL-O-RING (16.36MM ID)	
		1	**6V-8398**	1	SEAL-O-RING (12.47MM ID)	
		1	**6V-9002**	1	ELBOW-45 DEGREE (3/4-16 THD)	
C	7	1	**7X-7729**	2	WASHER (3MM THK)	
CM	8	1	**8T-4136**	2	BOLT (M10X1.50X25MM)	
	9	1	**8T-4223**	3	WASHER-HARD (3MM THK)	
M	10	1	**8T-5041**	3	BOLT (M12X1.75X120MM)	

C-CHANGE FROM PREVIOUS TYPE
M-METRIC PART
Y-SEPARATE ILLUSTRATION

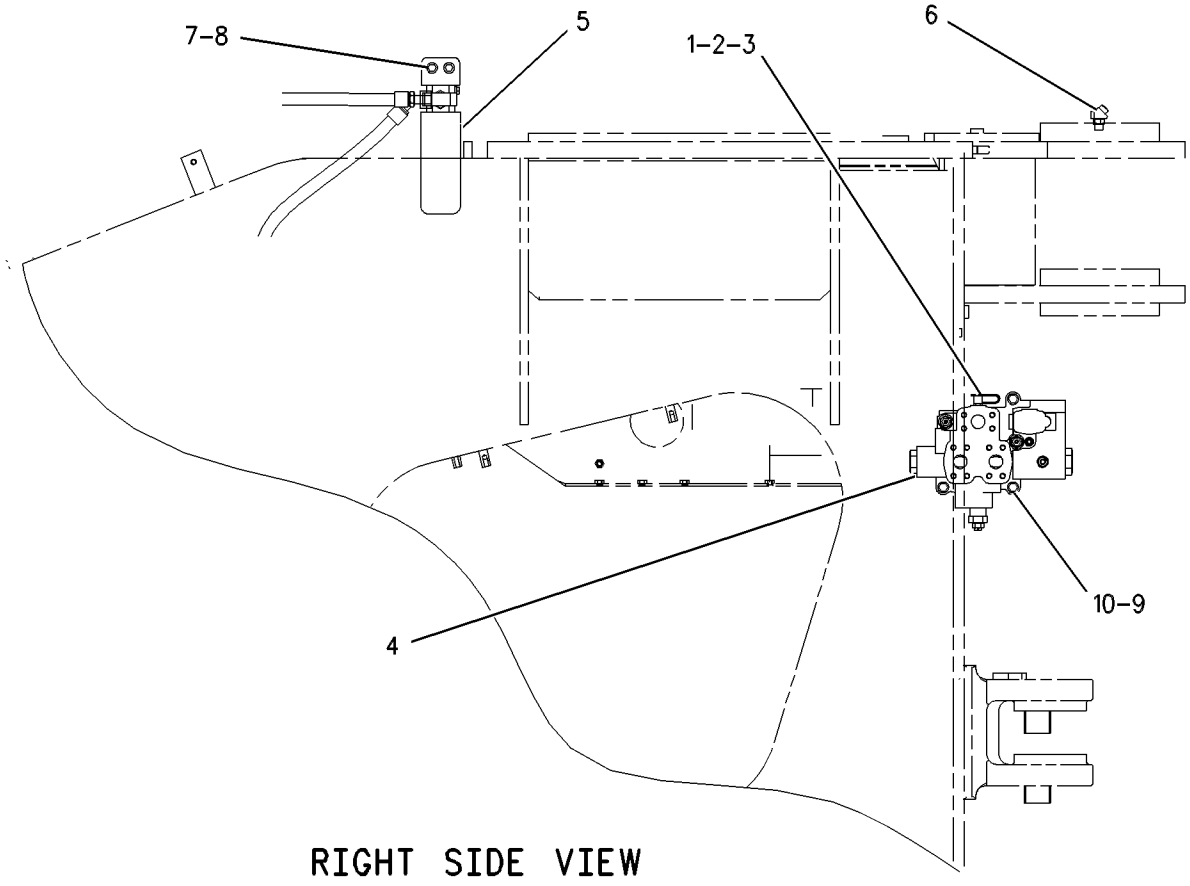

RIGHT SIDE VIEW

GRAPHIC #1 g00605854

STEERING SYSTEM

133-7107 STOP GP-STEERING

S/N: 7HR1-UP

PART OF 109-6884 LINES GP-STEERING NEUTRALIZER

SMCS-7188 **i01084993**

NOTE	REF NO	GRAPHIC REF	PART NUMBER	QTY	PART NAME 1 2 3 4 5 6 (PRODUCT LEVEL)	SEE PAGE
	1	1	**8X-3467**	2	STUD AS	
	2	1	**126-3890**	1	PLATE AS	
M	3	1	**8T-3597**	2	NUT-WELD (M12X1.75 THD)	
M	4	1	**8T-4244**	2	NUT (M12X1.75 THD)	

M-METRIC PART

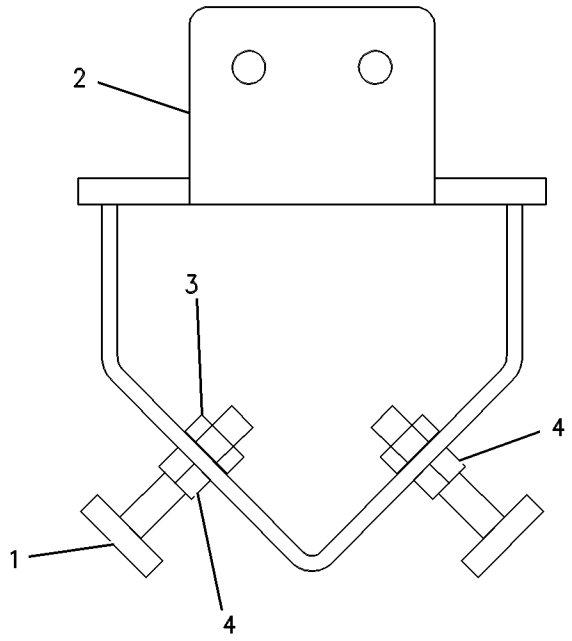

GRAPHIC #1 g00258607

MEMORANDA

133-7105 VALVE & MTG GP-STEERING NEUT

S/N: 7HR1-UP

PART OF 109-6884 LINES GP-STEERING NEUTRALIZER

SMCS-4330 **i01381020**

NOTE	REF NO	GRAPHIC REF	PART NUMBER	QTY	PART NAME 1 2 3 4 5 6 (PRODUCT LEVEL)	SEE PAGE
I	1	1	**9U-4149**	1	HOSE AS	
	2	1	**116-4797**	1	BRACKET AS	
I	3	1	**116-9333**	1	HOSE AS	
I	4	1	**146-5616**	2	HOSE AS	
I	5	1	**146-5652**	1	HOSE AS	
I	6	1	**146-5664**	1	HOSE AS	
Y	7	1	**146-7571**	2	VALVE GP-STEERING NEUTRALIZER	919
	8	1	*148-8336*	5	CONNECTOR AS	
					(EACH INCLUDES)	
		1	**6V-8636**	1	CONNECTOR	
		1	**6V-8397**	1	SEAL-O-RING (9.27MM ID)	
		1	**3J-1907**	1	SEAL-O-RING (11.89MM ID)	
	9	1	*148-8353*	1	ELBOW AS	
		1	**6V-9001**	1	ELBOW	
		1	**6V-8397**	1	SEAL-O-RING (9.27MM ID)	
		1	**3J-1907**	1	SEAL-O-RING (11.89MM ID)	
	10	1	*148-8371*	1	ELBOW AS	
		1	**8C-8988**	1	ELBOW-45 DEGREE SWIVEL	
		1	**6V-8397**	1	SEAL-O-RING (9.27MM ID)	
M	11	1	**8T-6466**	4	BOLT (M10X1.50X60MM)	

I-SEE HOSE FABRICATION GUIDE
M-METRIC PART
Y-SEPARATE ILLUSTRATION

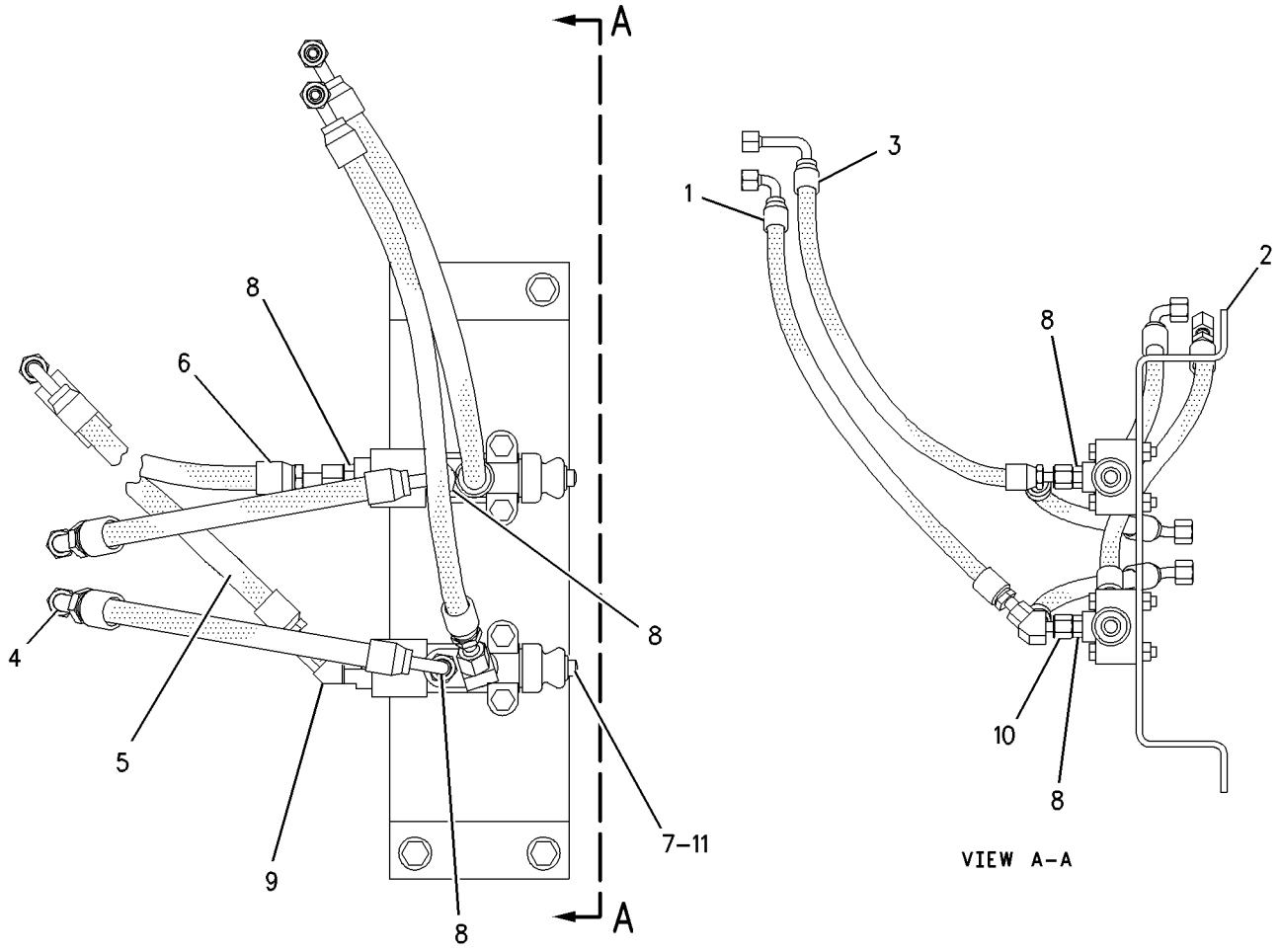

GRAPHIC #1

g00729324

111-7775 VALVE GP-CHECK–STEERING QUAD

S/N: 7HR1-UP

PART OF 133-7104 VALVE GP-CHECK

SMCS-4275, 5067 **i01432551**

NOTE	REF NO	GRAPHIC REF	PART NUMBER	QTY	PART NAME 1 2 3 4 5 6 (PRODUCT LEVEL)	SEE PAGE
Y	1	1	**176-9369**	2	VALVE GP-CHECK (STEERING)	880
Y	2	1	**176-9371**	2	VALVE GP-CHECK (STEERING)	881

Y-SEPARATE ILLUSTRATION

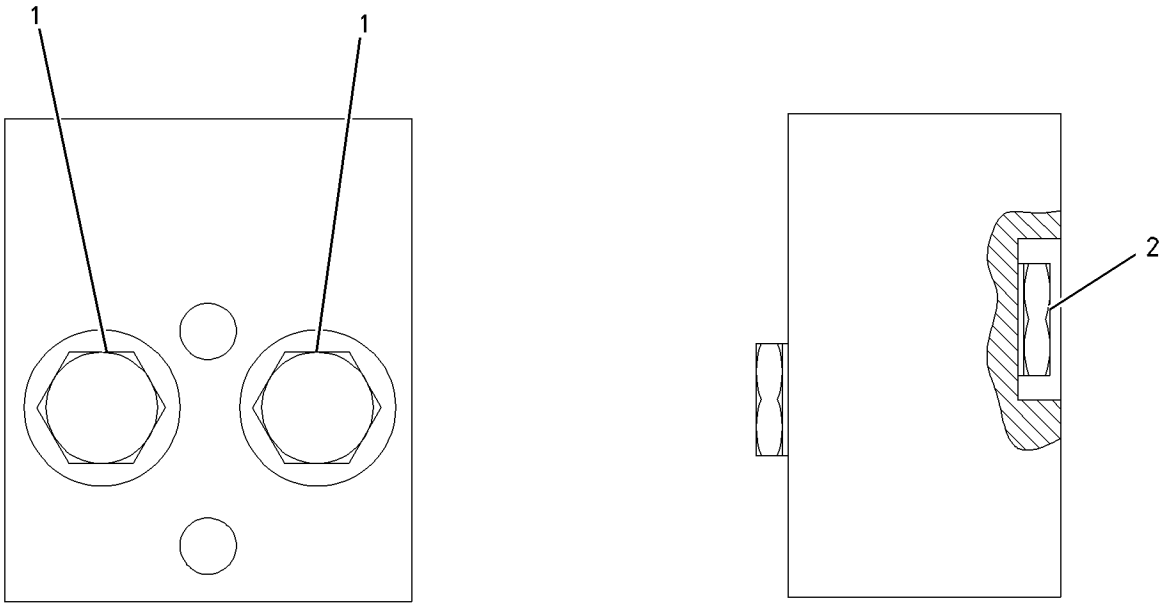

GRAPHIC #1 g00707411

133-7104 VALVE GP-CHECK–STEERING QUAD

S/N: 7HR1-UP

PART OF 109-6884 LINES GP-STEERING NEUTRALIZER

SMCS-4275, 5067 **i01337503**

NOTE	REF NO	GRAPHIC REF	PART NUMBER	QTY	PART NAME 1 2 3 4 5 6 (PRODUCT LEVEL)	SEE PAGE
Y	1	1	**111-7775**	1	VALVE GP-CHECK (STEERING QUAD)	878
	2	1	*148-8318*	4	CONNECTOR AS	
					(EACH INCLUDES)	
		1	**6V-8634**	1	CONNECTOR-SEAL (ORFS 11/16-16; PORT 9/16-18)	
		1	**6V-8397**	1	SEAL-O-RING (9.27MM ID)	
		1	**3K-0360**	1	SEAL-O-RING (16.36MM ID)	
	3	1	*148-8367*	2	ELBOW AS	
					(EACH INCLUDES)	
		1	**6V-9850**	1	ELBOW-SWIVEL (90 DEG)	
		1	**6V-8397**	1	SEAL-O-RING (9.27MM ID)	

Y-SEPARATE ILLUSTRATION

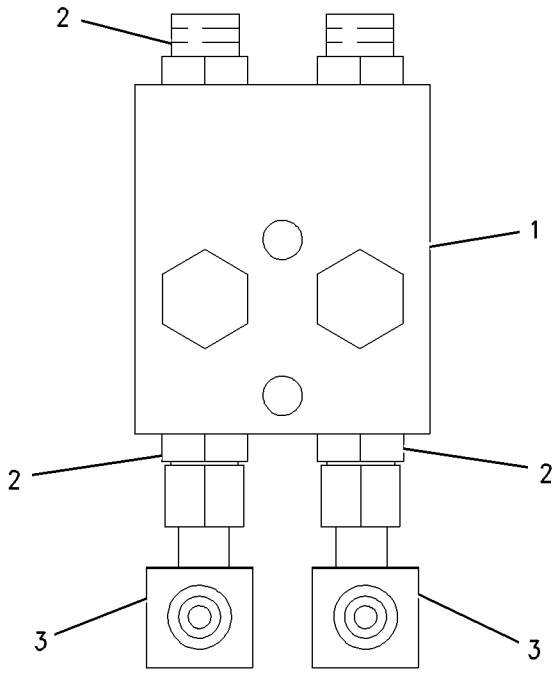

GRAPHIC #1 g00637919

STEERING SYSTEM

176-9369 VALVE GP-CHECK

S/N: 7HR1-UP

PART OF 111-7775 VALVE GP-CHECK

SMCS-4275, 5067 **i01432567**

NOTE	REF NO	GRAPHIC REF	PART NUMBER	QTY	PART NAME 1 2 3 4 5 6 (PRODUCT LEVEL)	SEE PAGE
	1	1	**3K-0360**	1	SEAL-O-RING (16.36MM ID)	
	2	1	**161-6154**	1	SEAL-O-RING (9.25MM ID)	
	3	1	**6E-0381**	1	RING-BACKUP (9.715MM ID)	

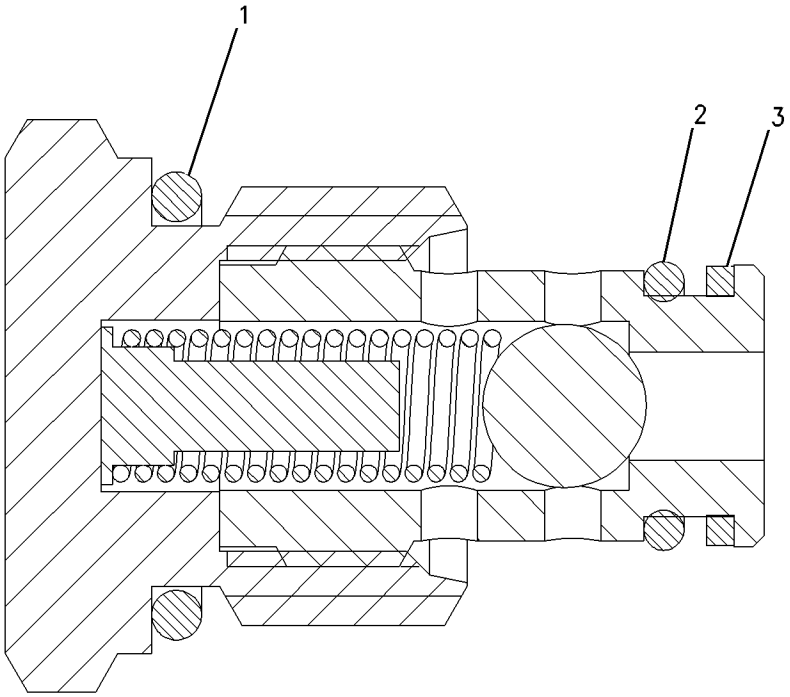

GRAPHIC #1 g00707403

STEERING SYSTEM

176-9371 VALVE GP-CHECK

S/N: 7HR1-UP

PART OF 111-7775 VALVE GP-CHECK

SMCS-4275, 5067 **i01432553**

NOTE	REF NO	GRAPHIC REF	PART NUMBER	QTY	PART NAME 1 2 3 4 5 6 (PRODUCT LEVEL)	SEE PAGE
	1	1	**3K-0360**	1	SEAL-O-RING (16.36MM ID)	
	2	1	**161-6154**	1	SEAL-O-RING (9.25MM ID)	
	3	1	**6E-0381**	1	RING-BACKUP (9.715MM ID)	

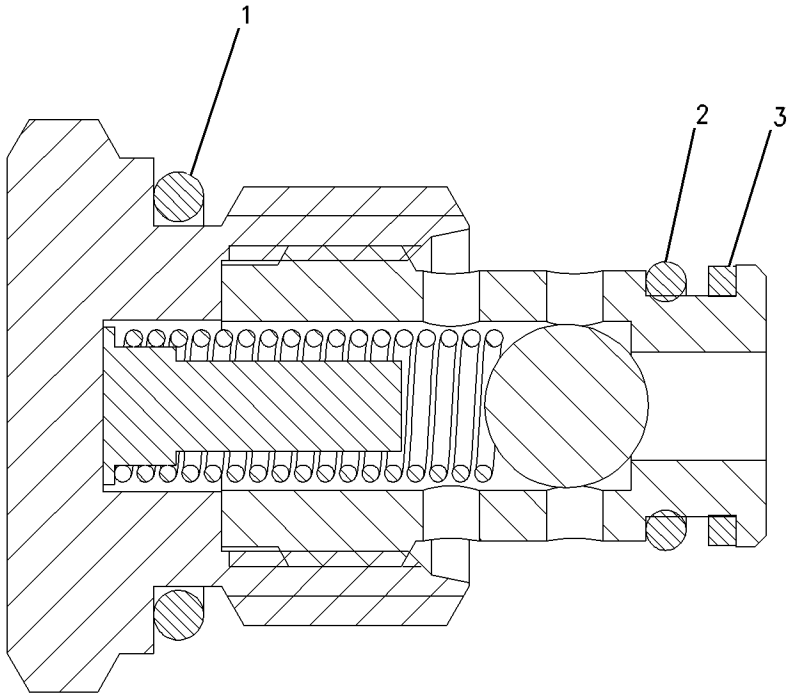

GRAPHIC #1 g00707403

STEERING SYSTEM

185-9357 VALVE GP-CHECK

S/N: 7HR1-UP

PART OF 109-6873 LINES GP-STEERING OIL COOLER

SMCS-4275, 5067 **i01299521**

NOTE	REF NO	GRAPHIC REF	PART NUMBER	QTY	PART NAME 1 2 3 4 5 6 (PRODUCT LEVEL)	SEE PAGE
	1	1	**6E-1454**	1	VALVE GP-CHECK (STEERING)	
	2	1	**5K-9090**	1	SEAL-O-RING (23.52MM ID)	
	3	1	**7M-8485**	1	SEAL-O-RING (29.74MM ID)	

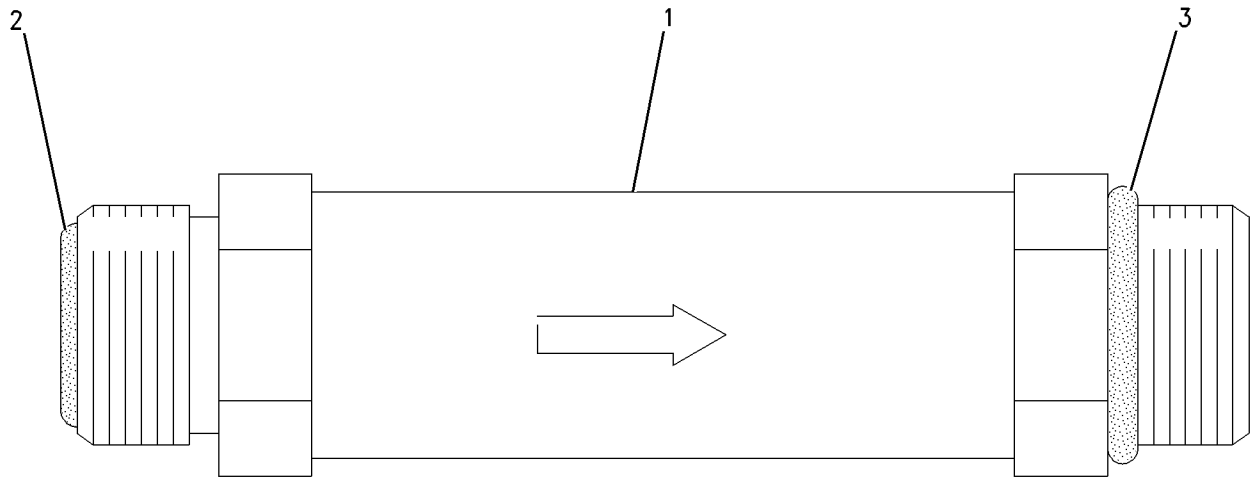

GRAPHIC #1 g00703639

STEERING SYSTEM

4I-6283 VALVE GP-FLOW COMPENSATOR

S/N: 7HR1-UP

PART OF 107-6440 VALVE GP-PRESS & FLOW CMPNSTR

SMCS-4337, 5086 **i01407912**

NOTE	REF NO	GRAPHIC REF	PART NUMBER	QTY	PART NAME 1 2 3 4 5 6 (PRODUCT LEVEL)	SEE PAGE
	1	1	**105-7426**	1	PISTON	
	2	1	**107-6594**	1	SPRING (MARGIN)	
	3	1	**6V-3922**	1	SEAL-O-RING (18.72MM ID)	
	4	1	**6E-5582**	1	PLUG	
	5	1	**6E-5583**	1	SETSCREW	
	6	1	**6E-1607**	1	LOCKNUT-SEALING	
	7	1	**107-6595**	1	SPRING	
	8	1	**107-6593**	2	RETAINER	

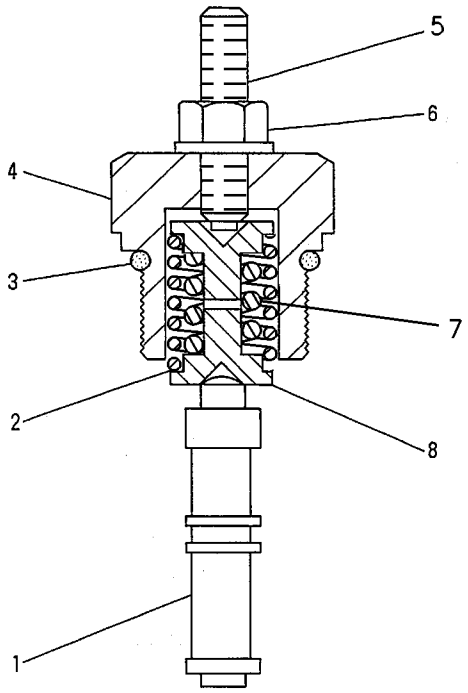

GRAPHIC #1 g00083738

5I-8521 VALVE GP-FLOW COMPENSATOR

S/N: 7HR1-UP

PART OF 107-6440 VALVE GP-PRESS & FLOW CMPNSTR

SMCS-4337, 5086 **i00112522**

NOTE	REF NO	GRAPHIC REF	PART NUMBER	QTY	PART NAME 1 2 3 4 5 6 (PRODUCT LEVEL)	SEE PAGE
	1	1	**9T-3931**	1	PLUG-HEX	
	2	1	**6V-3922**	1	SEAL-O-RING (18.72MM ID)	
	3	1	**5I-8522**	1	BUSHING	
	4	1	**5I-8523**	1	VALVE	

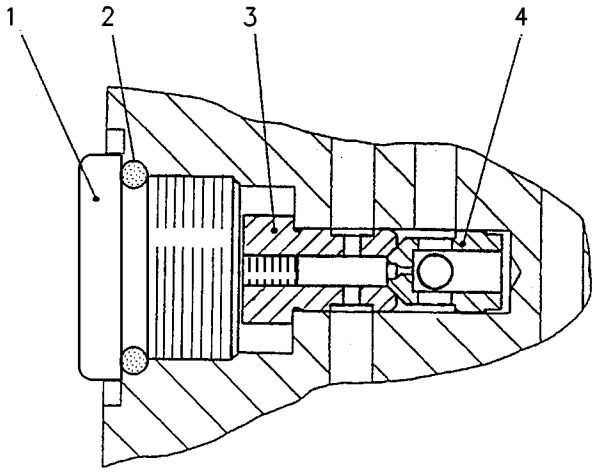

GRAPHIC #1 g00083742

6E-3850 VALVE GP-FLOW COMPENSATOR

S/N: 7HR1-UP

PART OF 6E-1024 VALVE GP-PRESS & FLOW CMPNSTR

SMCS-4337, 5086 **i00103595**

NOTE	REF NO	GRAPHIC REF	PART NUMBER	QTY	PART NAME 1 2 3 4 5 6 (PRODUCT LEVEL)	SEE PAGE
	1	1	**6E-5582**	1	PLUG	
	2	1	**6E-5583**	1	SETSCREW	
	3	1	**6E-1607**	1	LOCKNUT-SEALING	
	4	1	**6E-3855**	1	SPRING	
	5	1	**6E-3852**	2	RETAINER-SPRING	
	6	1	**6E-3851**	1	PISTON	
	7	1	**6E-3854**	1	SPRING	
	8	1	**7L-9061**	1	SEAL-O-RING (18.72MM ID)	

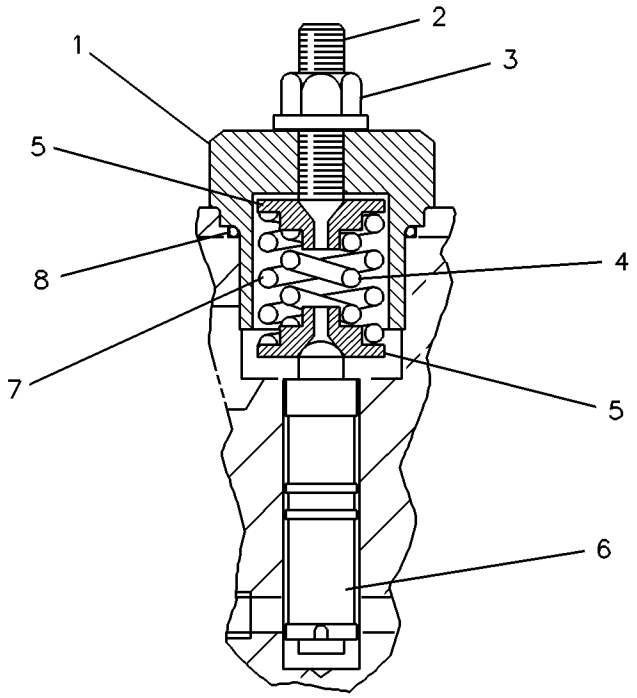

GRAPHIC #1 g00082862

107-6451 VALVE GP-FLOW COMPENSATOR

S/N: 7HR1-UP

PART OF 107-6440 VALVE GP-PRESS & FLOW CMPNSTR

SMCS-4337, 5086 **i00621122**

NOTE	REF NO	GRAPHIC REF	PART NUMBER	QTY	PART NAME 1 2 3 4 5 6 (PRODUCT LEVEL)	SEE PAGE
	1	1	**4I-7705**	1	SPOOL	
	2	1	**107-6441**	1	PIN	
	3	1	**6V-3922**	1	SEAL-O-RING (18.72MM ID)	
	4	1	**4I-7707**	1	PLUG	
	5	1	**095-1750**	1	SEAL-O-RING (10.82MM ID)	
	6	1	**4I-7708**	1	CONNECTOR	
	7	1	**099-5845**	1	PLUG-HEX	
	8	1	**4I-7709**	1	FITTING	
	9	1	**4I-7710**	1	PISTON	
	10	1	**3J-1907**	1	SEAL-O-RING (11.89MM ID)	

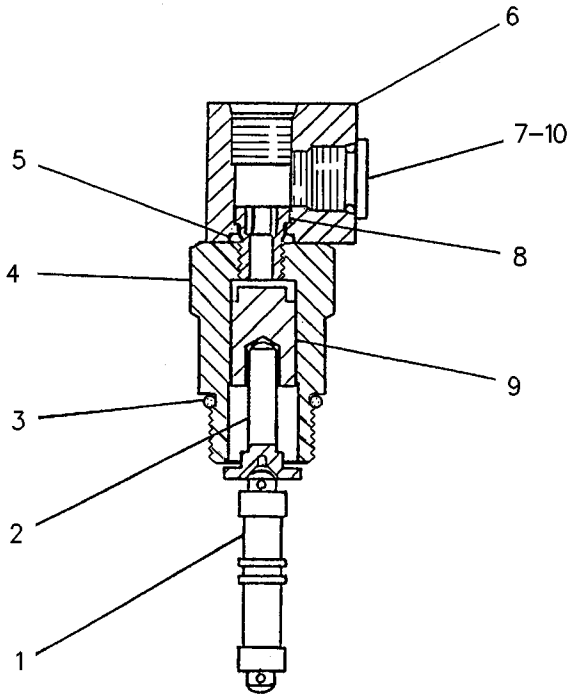

GRAPHIC #1 g00231333

STEERING SYSTEM

143-2855 VALVE GP-PILOT–STEERING

S/N: 7HR1-UP

PART OF 147-1737, 166-5210 CONTROL GP-STEERING

SMCS-4342 **i01433656**

NOTE	REF NO	GRAPHIC REF	PART NUMBER	QTY	PART NAME 1 2 3 4 5 6 (PRODUCT LEVEL)	SEE PAGE
	1	1	**104-4272**	1	BOOT	
	2	1	**104-4273**	1	CLAMP-BOOT	
	3	1	**104-4256**	1	BRACKET	
	4	1	**104-4255**	1	HANDLE	
	5	1	**104-4270**	2	LINK-CONNECTING	
	6	1	**9F-6641**	1	BOLT (5/16-18X1.25 IN)	
	7	1	**104-4274**	1	SPACER	
	8	1	**104-4271**	1	DOWEL	
	9	1	**8M-6802**	2	SCREW-HEX SOCKET	
Y	10	1	**147-1238**	2	VALVE GP-PILOT CARTRIDGE	889
Y	16	1	**147-1237**	2	VALVE GP-PILOT CARTRIDGE	888

Y-SEPARATE ILLUSTRATION

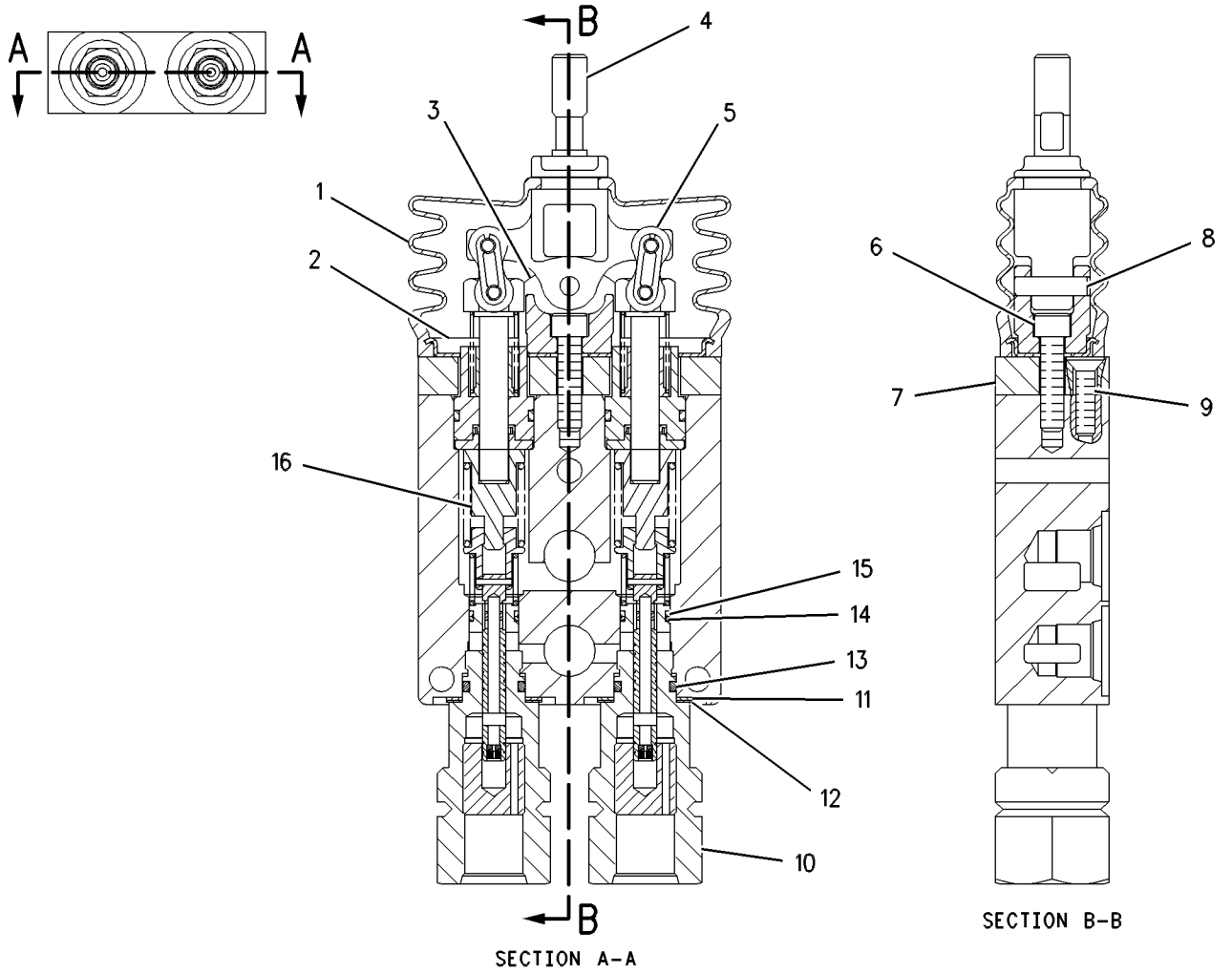

GRAPHIC #1 g00376452

STEERING SYSTEM

147-1237 VALVE GP-PILOT CARTRIDGE

S/N: 7HR1-UP

PART OF 143-2855 VALVE GP-PILOT

SMCS-4342 **i01433284**

NOTE	REF NO	GRAPHIC REF	PART NUMBER	QTY	PART NAME 1 2 3 4 5 6 (PRODUCT LEVEL)	SEE PAGE
	1	1	**103-7410**	1	PLUNGER	
J	2	1	**5P-8356**	1	SEAL-O-RING (21.89MM ID)	
J	3	1	**147-3061**	1	SEAL-SPOOL	
	4	1	**6E-0763**	1	RETAINER	
	5	1	**103-7407**	1	SPRING	
	6	1	**6E-3769**	1	PIN	
	7	1	**6E-3767**	1	SPRING	
					AVAILABLE REPAIR KIT(S):	
J				1	KIT-PLUNGER SEAL	

J-REPAIR KIT(S) MARKED J SERVICES PART(S) MARKED J

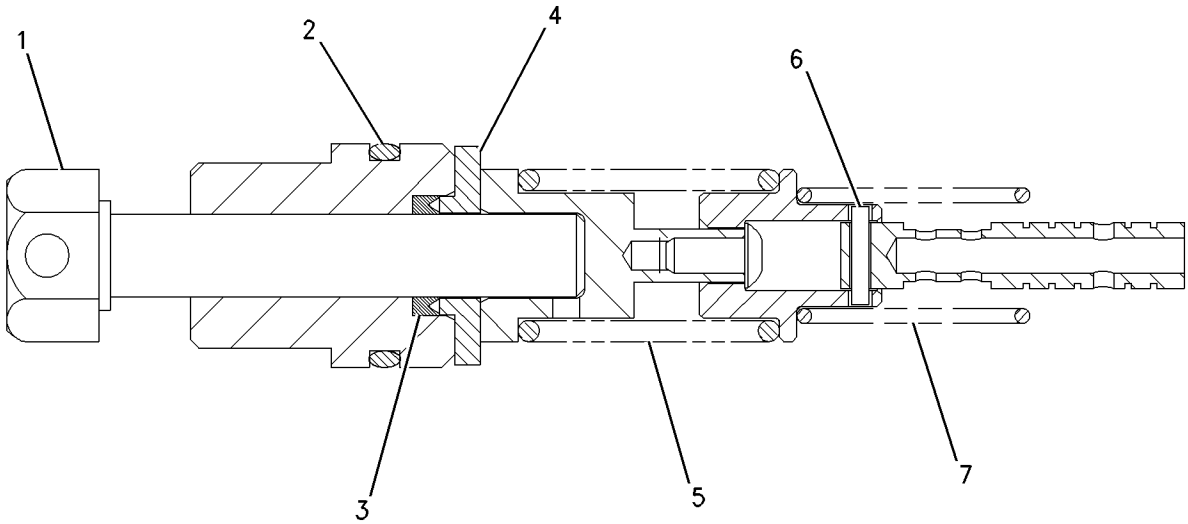

GRAPHIC #1 g00751333

147-1238 VALVE GP-PILOT CARTRIDGE

S/N: 7HR1-UP

PART OF 143-2855 VALVE GP-PILOT

SMCS-4342 **i01512081**

NOTE	REF NO	GRAPHIC REF	PART NUMBER	QTY	PART NAME 1 2 3 4 5 6 (PRODUCT LEVEL)	SEE PAGE
B	1	1	**103-6318**	1	SHIM	
	2	1	**095-1519**	1	SEAL-O-RING	
	3	1	**6V-5758**	1	SEAL-O-RING	
	4	1	**6E-0770**	1	RING-BACKUP	
B	5	1	**103-6319**	1	SHIM	

B-USE AS REQUIRED

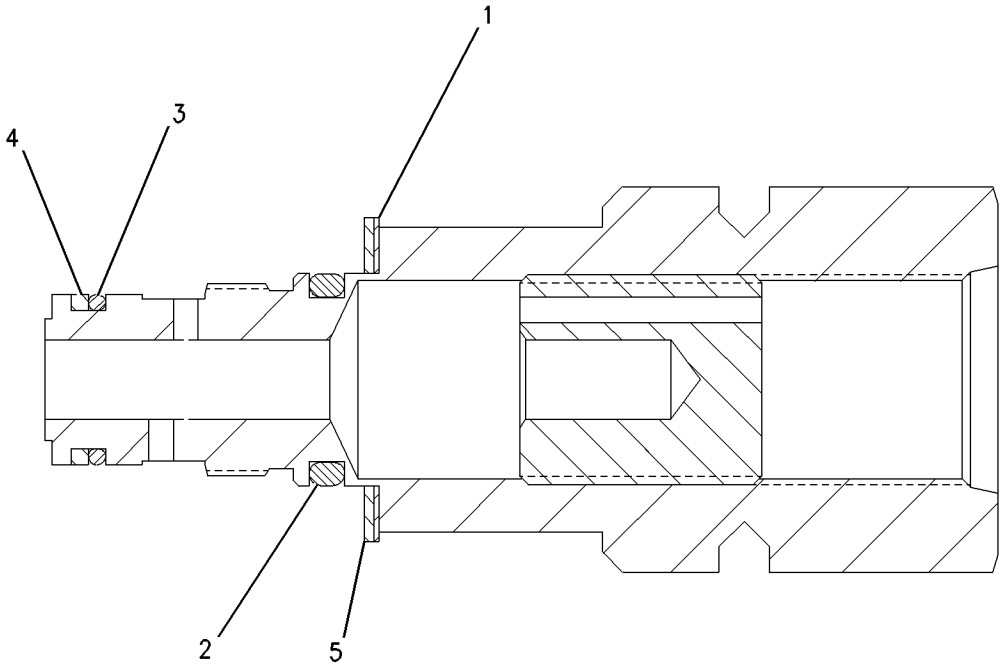

GRAPHIC #1 g00751167

STEERING SYSTEM

6E-1024 VALVE GP-PRESS & FLOW CMPNSTR

S/N: 7HR1-UP

PART OF 141-1463 PUMP GP-PISTON

SMCS-4337, 5086 **i00103562**

NOTE	REF NO	GRAPHIC REF	PART NUMBER	QTY	PART NAME 1 2 3 4 5 6 (PRODUCT LEVEL)	SEE PAGE
M	1	1	**6V-5195**	5	BOLT-SOCKET HEAD (M8X1.25X50 MM)	
	2	1	**9X-7676**	3	SEAL-O-RING	
	3	1	**005-8593**	1	SEAL-O-RING (52.07MM ID)	
	4	1	**6E-3856**	1	HOUSING	
	5	1	**9T-3940**	5	PLUG-BREAK OFF	
Y	6	1	**6E-3850**	1	VALVE GP-FLOW COMPENSATOR	885
Y	7	1	**6E-3857**	1	VALVE GP-PRESSURE COMPENSATOR	894
	8	1	**7X-0794**	2	PIN	

M-METRIC PART
Y-SEPARATE ILLUSTRATION

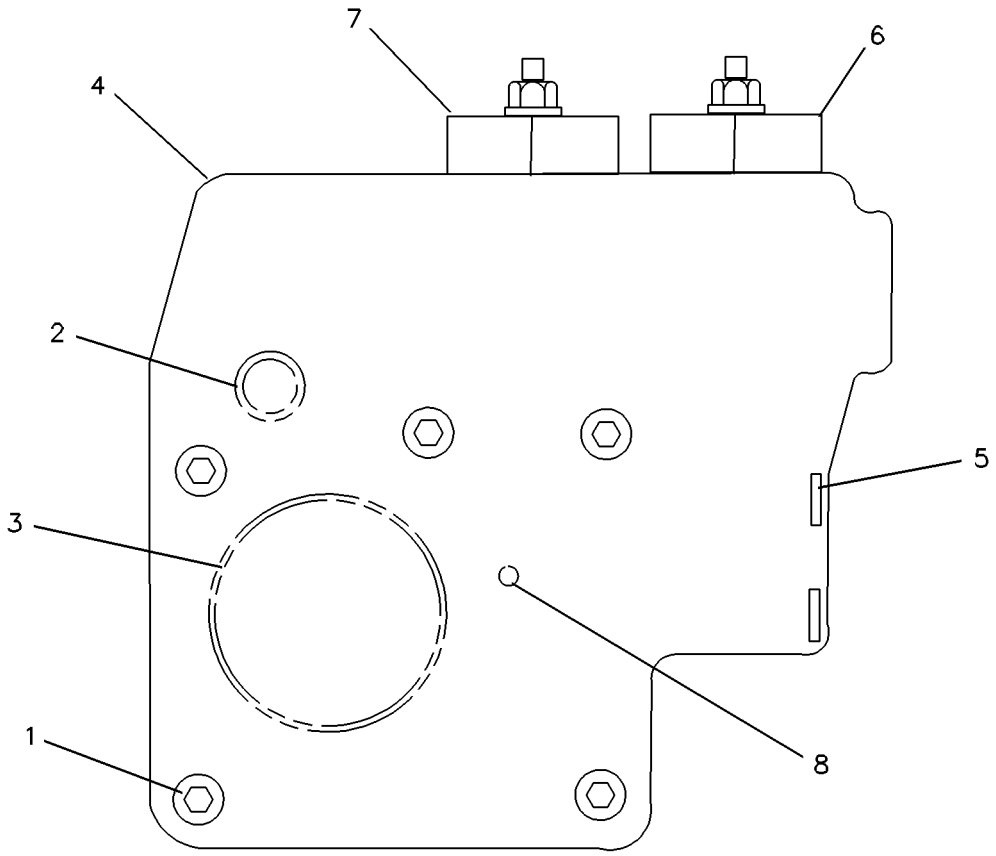

GRAPHIC #1 g00082760

MEMORANDA

STEERING SYSTEM

107-6440 VALVE GP-PRESS & FLOW CMPNSTR

S/N: 7HR1-UP

PART OF 141-1463 PUMP GP-PISTON

SMCS-4337, 5086 **i01498465**

NOTE	REF NO	GRAPHIC REF	PART NUMBER	QTY	PART NAME 1 2 3 4 5 6 (PRODUCT LEVEL)	SEE PAGE
M	1	1	**3E-8025**	5	BOLT-HEX SOCKET (M8X1.25X50MM)	
	2	1	**107-6591**	1	LEVER	
	3	1	**102-0749**	1	HOUSING	
	4	1	**5P-5874**	3	SEAL-O-RING	
	5	1	**005-8593**	1	SEAL-O-RING	
	6	1	**7X-0794**	2	PIN (ROLL)	
Y	7	1	**4I-5968**	1	ACTUATOR GP-PISTON PUMP	812
	8	1	**4I-5969**	1	SPRING	
	9	1	**4I-5984**	1	RETAINER	
	10	1	**4J-9535**	1	SEAL (11.11MM ID)	
	11	1	**6I-6792**	1	PLUG	
	12	1	**9T-3853**	1	LOCKNUT	
	13	1	**4I-5986**	1	SETSCREW	
	14	1	**9T-3940**	7	PLUG-BREAK OFF	
	15	1	**2D-6392**	1	SEAL-O-RING	
Y	16	1	**4I-6283**	1	VALVE GP-FLOW COMPENSATOR (LOAD SENSING CONTROL)	883
Y	17	1	**5I-8521**	1	VALVE GP-FLOW COMPENSATOR (SLOW RETURN CHECK)	884
	18	1	**4I-5663**	1	RING-RETAINING	
Y	19	1	**107-6451**	1	VALVE GP-FLOW COMPENSATOR (HORSEPOWER CONTROL)	886
	20	1	**4I-7690**	1	BUSHING	
	21	1	**4I-7691**	1	PIN	
	22	1	**6E-3866**	1	SEAT-VALVE	
	23	1	**107-6442**	1	PLUG	
	24	1	**4J-5309**	1	SEAL-O-RING	
	25	1	**107-6443**	1	WASHER	
M	26	1	**6E-1607**	1	LOCKNUT-SEALING	

M-METRIC PART
Y-SEPARATE ILLUSTRATION

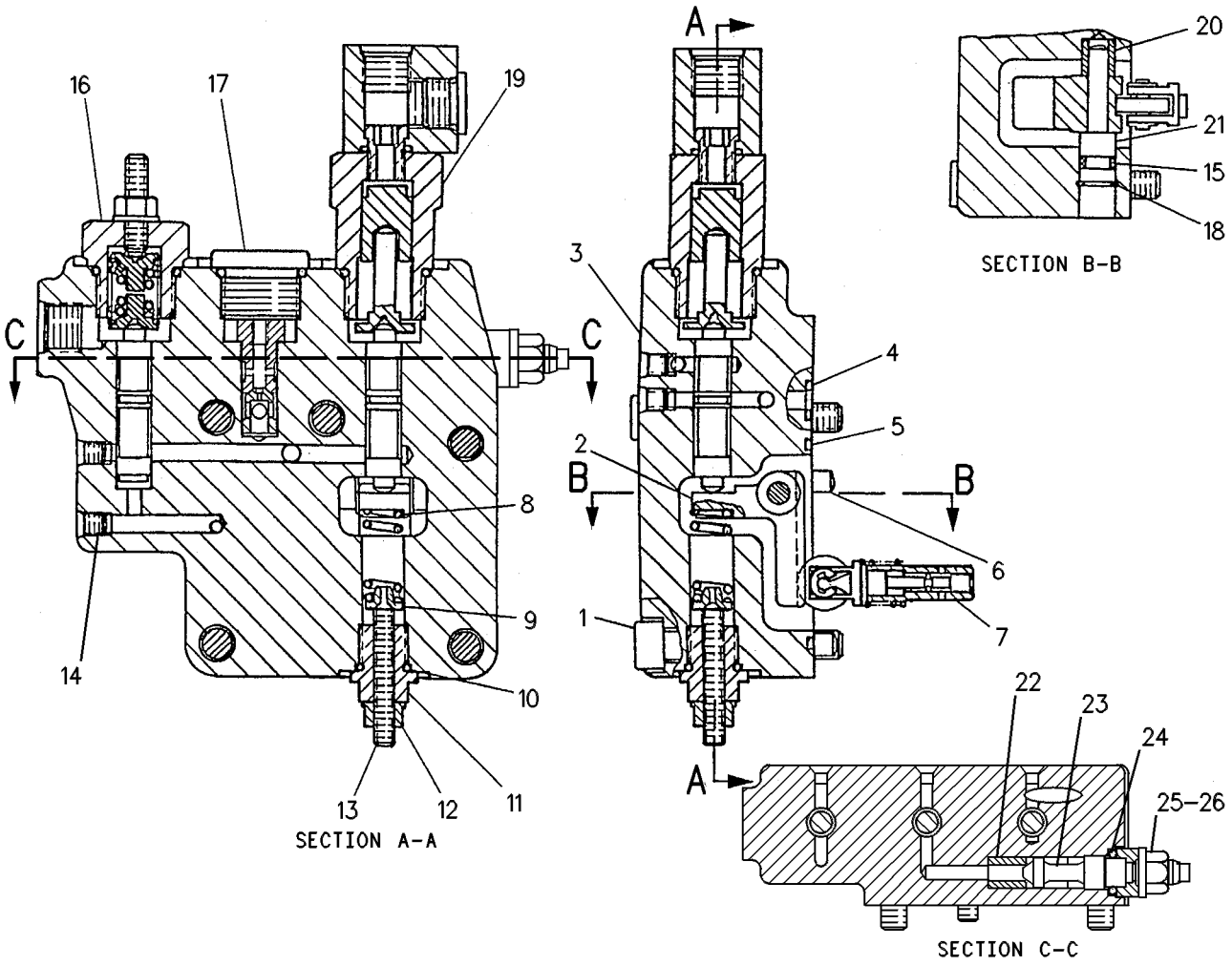

GRAPHIC #1 g00084280

STEERING SYSTEM

6E-3857 VALVE GP-PRESSURE COMPENSATOR

S/N: 7HR1-UP

PART OF 6E-1024 VALVE GP-PRESS & FLOW CMPNSTR

SMCS-5086 **i00103598**

NOTE	REF NO	GRAPHIC REF	PART NUMBER	QTY	PART NAME 1 2 3 4 5 6 (PRODUCT LEVEL)	SEE PAGE
	1	1	**7L-9061**	1	SEAL-O-RING (18.72MM ID)	
	2	1	**6E-5582**	1	PLUG	
	3	1	**6E-1607**	1	LOCKNUT-SEALING	
	4	1	**6E-5583**	1	SETSCREW	
	5	1	**6E-3861**	2	RETAINER-SPRING	
	6	1	**6E-3859**	1	PISTON	
	7	1	**6E-3858**	1	SPRING	

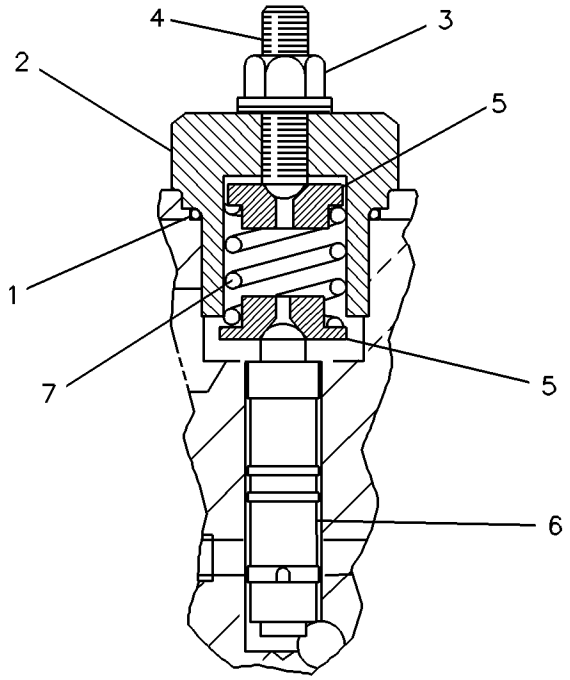

GRAPHIC #1 g00082870

6E-3986 VALVE GP-RELIEF–SECONDARY STEERING

S/N: 7HR1-UP
PART OF 112-4597 VALVE GP-STEERING
AN ATTACHMENT

SMCS-4322, 5069, 7428 **i00174407**

NOTE	REF NO	GRAPHIC REF	PART NUMBER	QTY	PART NAME 1 2 3 4 5 6 (PRODUCT LEVEL)	SEE PAGE
	1	1	**7X-4776**	2	RING-BACKUP	
	2	1	**8C-3097**	1	SEAL-O-RING (13.1MM ID)	
	3	1	**3K-0360**	1	SEAL-O-RING (16.36MM ID)	
					AVAILABLE REPAIR KIT(S):	
			6E-4753	1	KIT-SEAL	

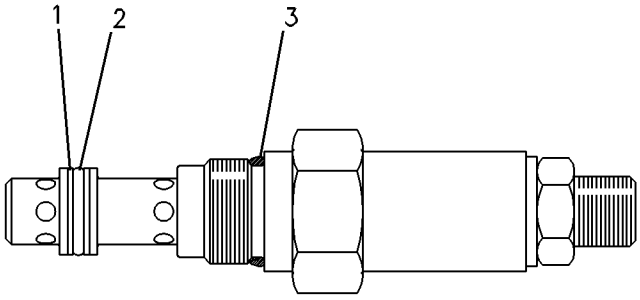

GRAPHIC #1 g00119845

100-4335 VALVE GP-RELIEF–PUMP BACKUP

S/N: 7HR1-UP

PART OF 112-4597, 126-1357 VALVE GP-STEERING

AN ATTACHMENT

SMCS-4322, 5069, 7428 **i01230224**

NOTE	REF NO	GRAPHIC REF	PART NUMBER	QTY	PART NAME 1 2 3 4 5 6 (PRODUCT LEVEL)	SEE PAGE
	1	1	**7M-8485**	2	SEAL-O-RING (29.74MM ID)	
	2	1	**4J-0522**	1	SEAL-O-RING (37.69MM ID)	
	3	1	**4T-2770**	1	SPRING	
	4	1	**3K-0360**	1	SEAL-O-RING (16.36MM ID)	
	5	1	**4Y-5812**	1	PLATE	
	6	1	**6E-5510**	1	RETAINER AS	
	7	1	**9X-6395**	1	NUT-ORFS (3/4-16 THD)	
	8	1	**6E-1127**	1	CAP	
	9	1	**8J-0331**	1	VALVE	
	10	1	**6E-6138**	1	VALVE GP-RELIEF	
		1	**8H-3532**	1	SPRING-VALVE	
	11	1	**7B-5684**	1	PIN	

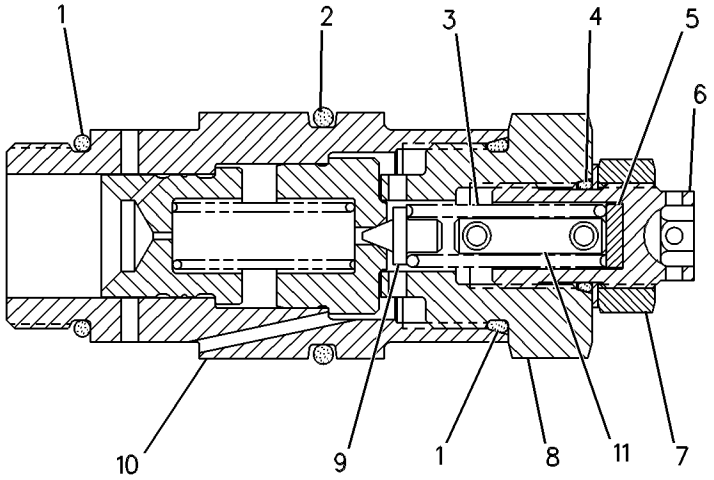

GRAPHIC #1 g00121100

114-4672 VALVE GP-RELIEF–PILOT

S/N: 7HR1-UP

PART OF 109-6873 LINES GP-STEERING OIL COOLER, 133-7455 VALVE & MTG GP-PILOT RELIEF

TYPE 1

SMCS-4322, 5069, 7428 **i00768641**

NOTE	REF NO	GRAPHIC REF	PART NUMBER	QTY	PART NAME 1 2 3 4 5 6 (PRODUCT LEVEL)	SEE PAGE
	1	1	**114-4673**	1	MANIFOLD	
	2	1	**6E-6293**	1	VALVE GP-RELIEF	
		1	**6E-3583**	1	KIT-SEAL	
	3	1	**9S-4191**	1	PLUG-O-RING (9/16-18 THD)	
	4	1	**3J-1907**	1	SEAL-O-RING (11.89MM ID)	

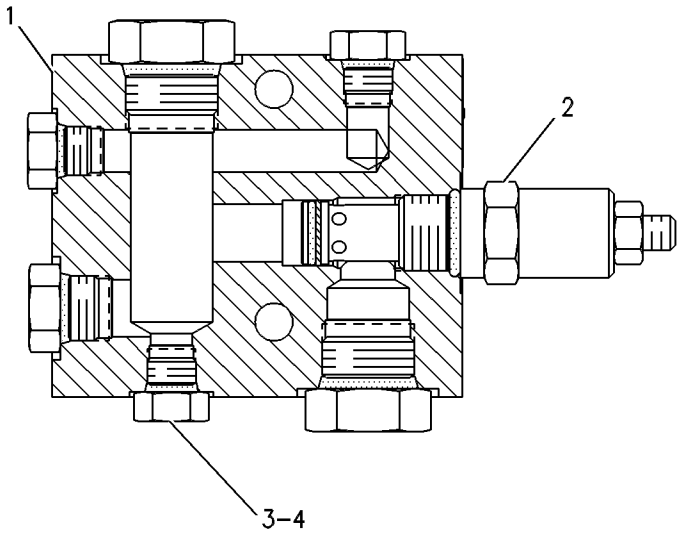

GRAPHIC #1 g00255798

114-4672 VALVE GP-RELIEF–PILOT

S/N: 7HR1-UP

PART OF 109-6873 LINES GP-STEERING OIL COOLER, 133-7455 VALVE & MTG GP-PILOT RELIEF

TYPE 2

SMCS-4322, 5069, 7428 **i00745330**

NOTE	REF NO	GRAPHIC REF	PART NUMBER	QTY	PART NAME 1 2 3 4 5 6 (PRODUCT LEVEL)	SEE PAGE
C	1	1	**138-3815**	1	MANIFOLD	
	2	1	**3J-1907**	1	SEAL-O-RING (11.89MM ID)	
	3	1	**9S-4191**	1	PLUG-O-RING (9/16-18 THD)	
C	4	1	**139-3544**	1	VALVE GP-RELIEF	
	5	1	**6V-6923**	1	RING-BACKUP (13.16MM ID)	
	6	1	**033-6033**	1	SEAL-O-RING (12.42MM ID)	
	7	1	**2M-9780**	1	SEAL-O-RING (19.18MM ID)	

C-CHANGE FROM PREVIOUS TYPE

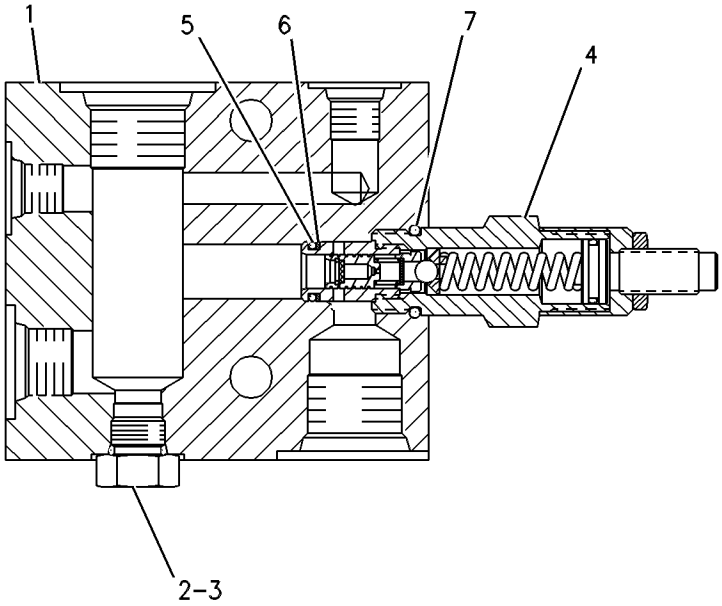

GRAPHIC #1 g00272669

114-4672 VALVE GP-RELIEF–PILOT

S/N: 7HR1-UP

PART OF 109-6873 LINES GP-STEERING OIL COOLER, 133-7455 VALVE & MTG GP-PILOT RELIEF

TYPE 3

SMCS-4322, 5069, 7428 **i01178485**

NOTE	REF NO	GRAPHIC REF	PART NUMBER	QTY	PART NAME 1 2 3 4 5 6 (PRODUCT LEVEL)	SEE PAGE
	1	1	**138-3815**	1	MANIFOLD	
	2	1	**3J-1907**	1	SEAL-O-RING (11.89MM ID)	
	3	1	**9S-4191**	1	PLUG-O-RING (9/16-18 THD)	
Y	4	1	**156-4253**	1	VALVE GP-RELIEF (PILOT)	900

Y-SEPARATE ILLUSTRATION

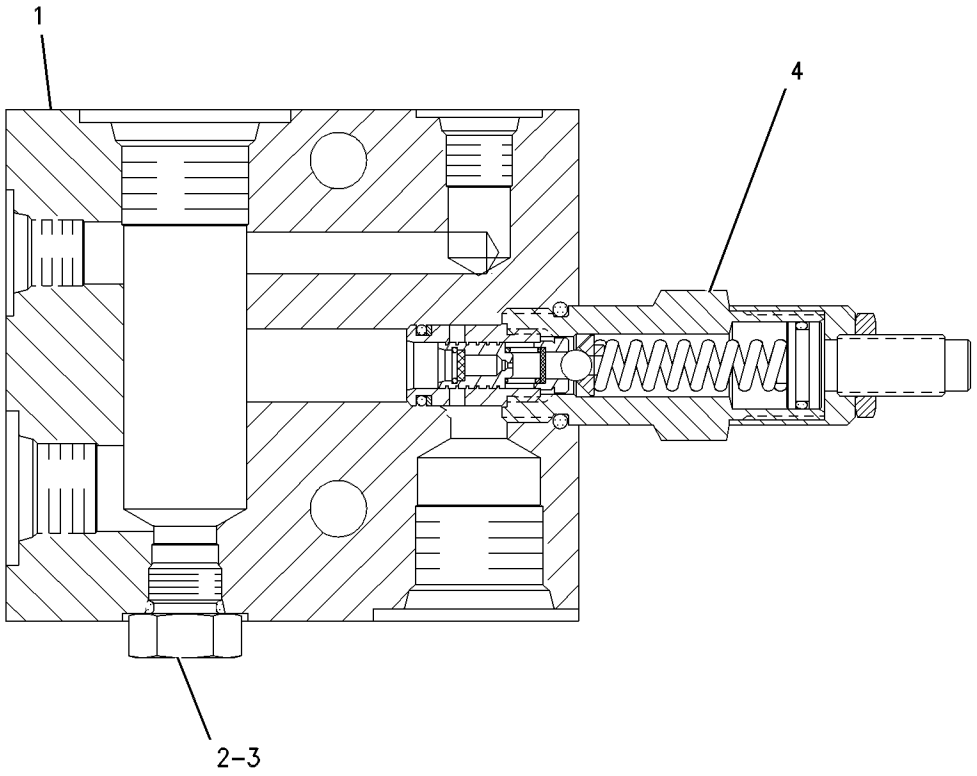

GRAPHIC #1 g00371672

STEERING SYSTEM

156-4253 VALVE GP-RELIEF

S/N: 7HR1-UP

PART OF 114-4672 VALVE GP-RELIEF

SMCS-1314, 1370, 4322, 5069, 7428 **i00765905**

NOTE	REF NO	GRAPHIC REF	PART NUMBER	QTY	PART NAME 1 2 3 4 5 6 (PRODUCT LEVEL)	SEE PAGE
	1	1	**6V-6923**	1	RING-BACKUP (13.16MM ID)	
	2	1	**033-6033**	1	SEAL-O-RING (12.42MM ID)	
	3	1	**2M-9780**	1	SEAL-O-RING (19.18MM ID)	

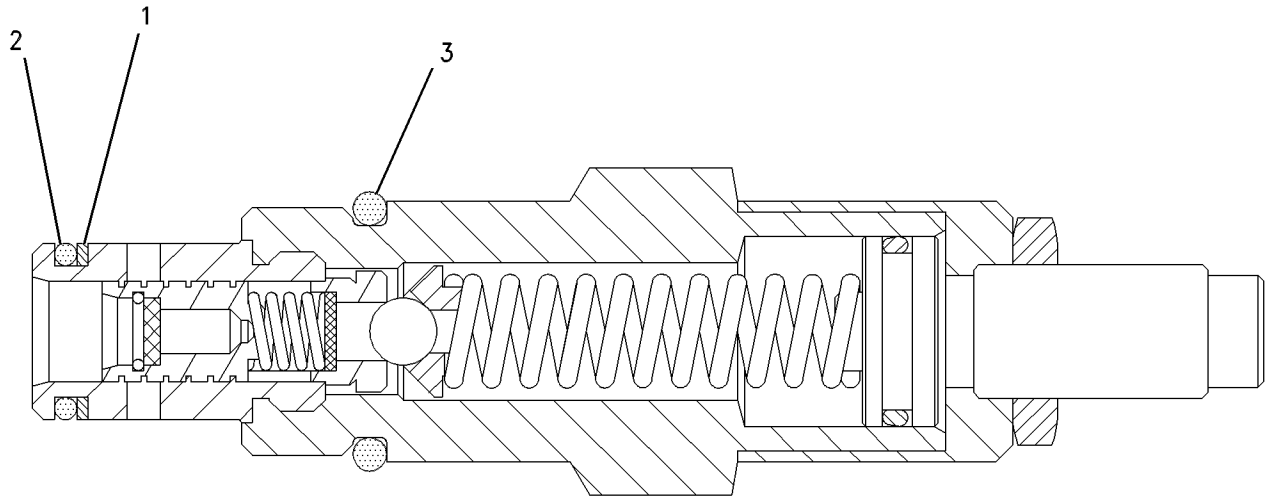

GRAPHIC #1 g00356997

6E-3078 VALVE GP-SELECTOR & PRESS CONT–STEERING

S/N: 7HR1-UP

PART OF 112-4189 LINES GP-SECONDARY STEERING

AN ATTACHMENT

SMCS-4349 **i01327202**

NOTE	REF NO	GRAPHIC REF	PART NUMBER	QTY	PART NAME 1 2 3 4 5 6 (PRODUCT LEVEL)	SEE PAGE
	1	1	**7S-8553**	1	SPRING	
B	2	1	**5S-7001**	2	SPACER (.91MM THK)	
B		1	**5S-7018**	3	SPACER (.25MM THK)	
	3	1	**108-3866**	2	ADAPTER	
		1	**2M-9780**	2	SEAL-O-RING (19.18MM ID)	

B-USE AS REQUIRED

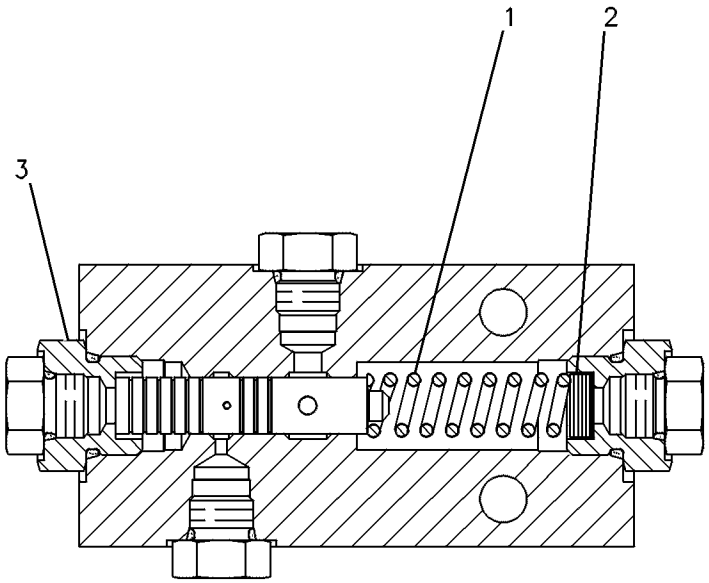

GRAPHIC #1 g00085052

4T-1860 VALVE GP-SHUTTLE

S/N: 7HR1-UP
PART OF 112-4597, 126-1357 VALVE GP-STEERING
AN ATTACHMENT

SMCS-5079 **i01492721**

NOTE	REF NO	GRAPHIC REF	PART NUMBER	QTY	PART NAME 1 2 3 4 5 6 (PRODUCT LEVEL)	SEE PAGE
Z	1	1		1	SEAT	
	2	1	**1M-6718**	1	BALL	
Z	3	1		1	VALVE	
	4	1	**8C-3085**	1	SEAL-O-RING	
	5	1	**6V-5586**	1	SEAL-O-RING	
	6	1	**3J-1907**	1	SEAL-O-RING	
	7	1	**4T-5070**	2	RING-BACKUP	
	8	1	**4T-5071**	2	RING-BACKUP	

Z-NOT SERVICED SEPARATELY

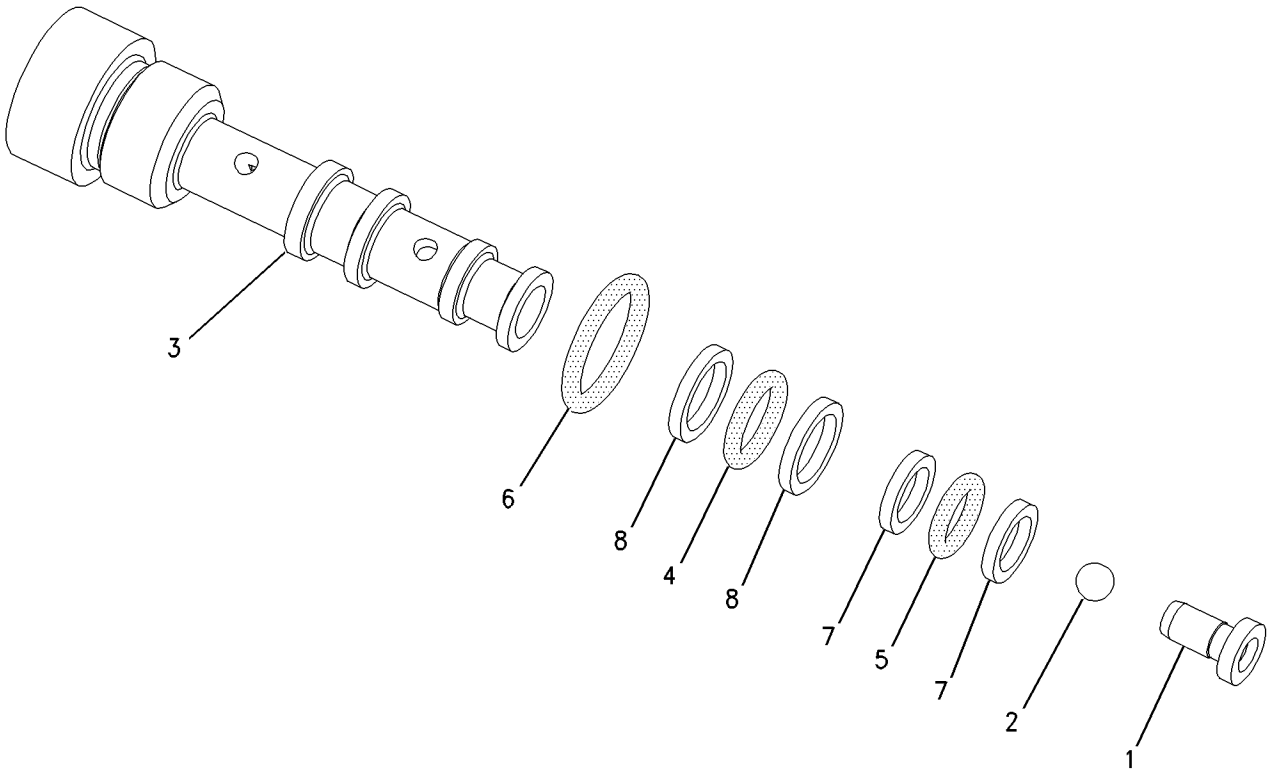

GRAPHIC #1 g00775006

MEMORANDA

STEERING SYSTEM

112-4597 VALVE GP-STEERING—WITH SECONDARY STEERING

S/N: 7HR1-UP
PART OF 112-4189 LINES GP-SECONDARY STEERING
AN ATTACHMENT
TYPE 1

SMCS-4307 **i01142245**

NOTE	REF NO	GRAPHIC REF	PART NUMBER	QTY	PART NAME 1 2 3 4 5 6 (PRODUCT LEVEL)	SEE PAGE
	1	1	**6E-3780**	1	VALVE	
	2	1	**5J-3419**	1	SPRING	
	3	1	**2S-4078**	3	SEAL-O-RING (37.46MM ID)	
J	4	2	**2U-7345**	1	VALVE-DIVERTER	
	5	1	**7S-8491**	1	SPRING	
	6	1	**8T-4121**	4	WASHER (2.5MM THK)	
	7	1	**1P-4579**	2	FLANGE-HALF	
	8	1	**8T-4223**	16	WASHER-HARD (3MM THK)	
M	9	1	**8T-4183**	4	BOLT (M12X1.75X40 THD)	
	10	1	**9S-4191**	3	PLUG-O-RING (9/16-18 THD)	
L	11	1	**6E-4286**	1	VALVE GP-PRESSURE REDUCING	
Y	12	1	**100-4335**	1	VALVE GP-RELIEF (PUMP BACKUP)	896
	13	2	**9S-8008**	3	PLUG-O-RING (1 1/16-12 THD)	
	14	2	**3D-2824**	3	SEAL-O-RING (23.47MM ID)	
	15	2	**4B-9782**	2	BALL (9.52MM DIA)	
	16	2	**2S-2596**	2	SPRING (8.4MM OD)	
	17	2	**7J-1089**	2	PLUG-O-RING	
		2	**7M-5130**	2	PIN (6.35MM DIA)	
	18	1,2	**3J-1907**	5	SEAL-O-RING (11.89MM ID)	
	19	1	**6E-4513**	1	ADAPTER-O-RING	
	20	1	**1P-5767**	6	FLANGE-HALF	
M	21	1	**8T-4196**	4	BOLT (M10X1.50X35MM)	
	22	1	**6E-4514**	1	ADAPTER-O-RING	
	23	1	**6K-6307**	1	SEAL-O-RING (43.69MM ID)	
Y	24	2	**4T-1860**	1	VALVE GP-SHUTTLE (RESOLVER)	902
N	25	2	**6E-3985**	1	VALVE GP-RELIEF (STEERING CYLINDER CROSSOVER)	
	26	1	**9S-8010**	1	PLUG-O-RING (1 5/8-12 THD)	
B	27	1	**4J-8224**	5	SHIM (.254MM THK)	
B	28	1	**5J-4776**	1	SHIM (.127MM THK)	
	29	1	**7J-2927**	1	WASHER (0.156 MM THK)	
	30	1	**4J-8634**	1	RETAINER-SPRING	
	31	1	**3K-6113**	1	WASHER-HARD (3MM THK)	
	32	1	**6E-4499**	1	SPRING (INNER)	
	33	1	**6E-4500**	1	SPRING (OUTER)	
M	34	1	**8T-2223**	1	BOLT-SOCKET HEAD (M10X1.5X45MM)	
	35	1	**6E-3775**	1	RETAINER	
M	36	1	**8T-4194**	12	BOLT (M12X1.75X50MM)	
	37	1,2	**3J-7354**	18	SEAL-O-RING (8.92MM ID)	
	38	1,2	**9S-8002**	18	PLUG-O-RING (7/16-20 THD)	
	39	2	**1T-0936**	2	PLUG-PIPE (1/16-27 THD)	
	40	1	**7J-7423**	1	VALVE	
	41	1	**1U-0323**	1	PLUG AS	
		1	**1U-0322**	1	BEARING-SLEEVE	
Y	42	1	**6E-3986**	1	VALVE GP-RELIEF (SECONDARY STEERING)	895
	43	1	**8C-3206**	2	FLANGE-HALF	
					AVAILABLE REPAIR KIT(S):	
J			**2U-7354**	1	KIT-SEAL	
L			**6E-4287**	1	KIT-SEAL	
N			**6E-4288**	1	KIT-SEAL	

112-4597 VALVE GP-STEERING *(contd.)* i01142245

B-USE AS REQUIRED
J-REPAIR KIT MARKED J IS AVAILABLE FOR PART MARKED J
L-REPAIR KIT MARKED L IS AVAILABLE FOR PART MARKED L
M-METRIC PART
N-REPAIR KIT MARKED N IS AVAILABLE FOR PART MARKED N
Y-SEPARATE ILLUSTRATION

112-4597 VALVE GP-STEERING *(contd.)* i01142245

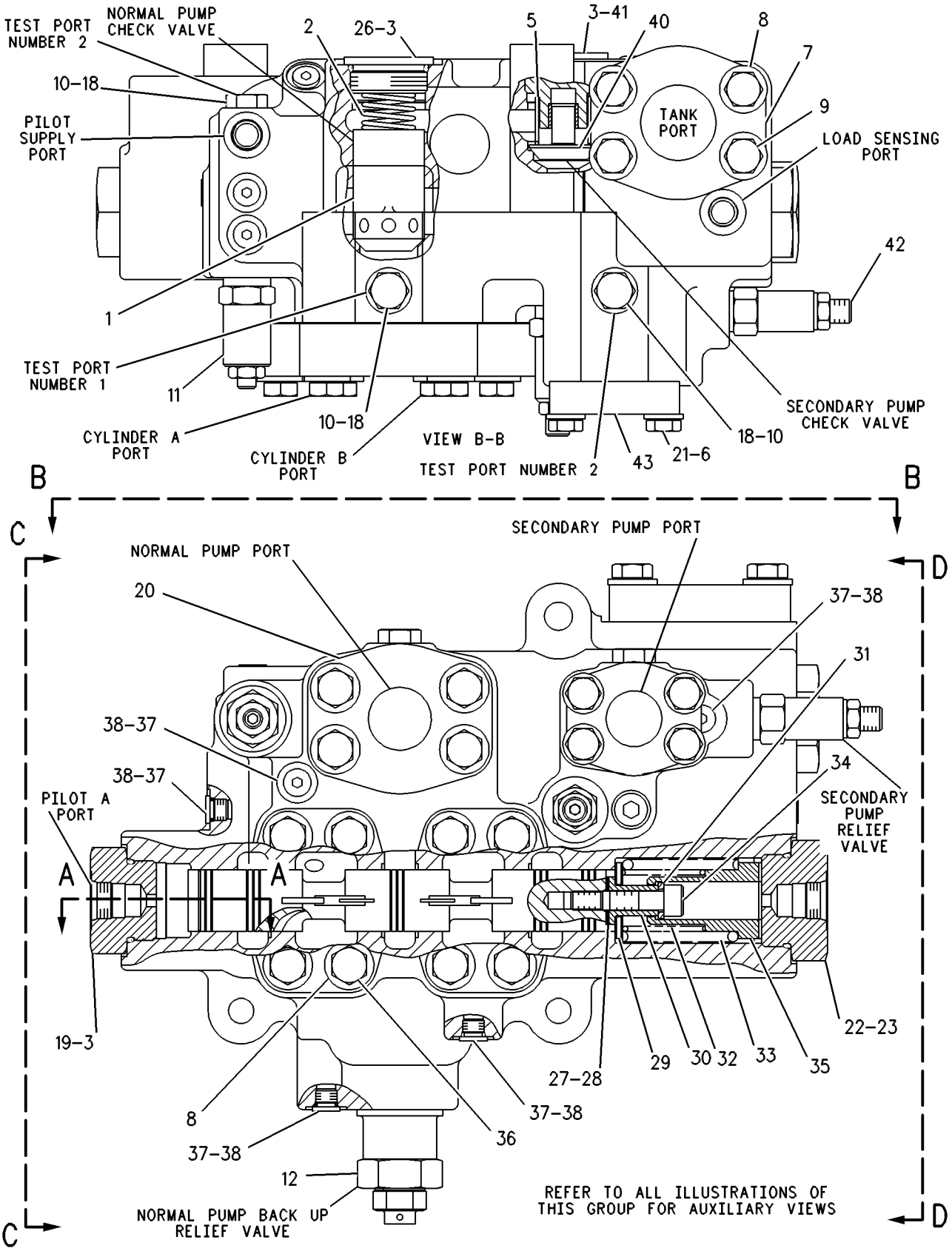

GRAPHIC #1 g00258825

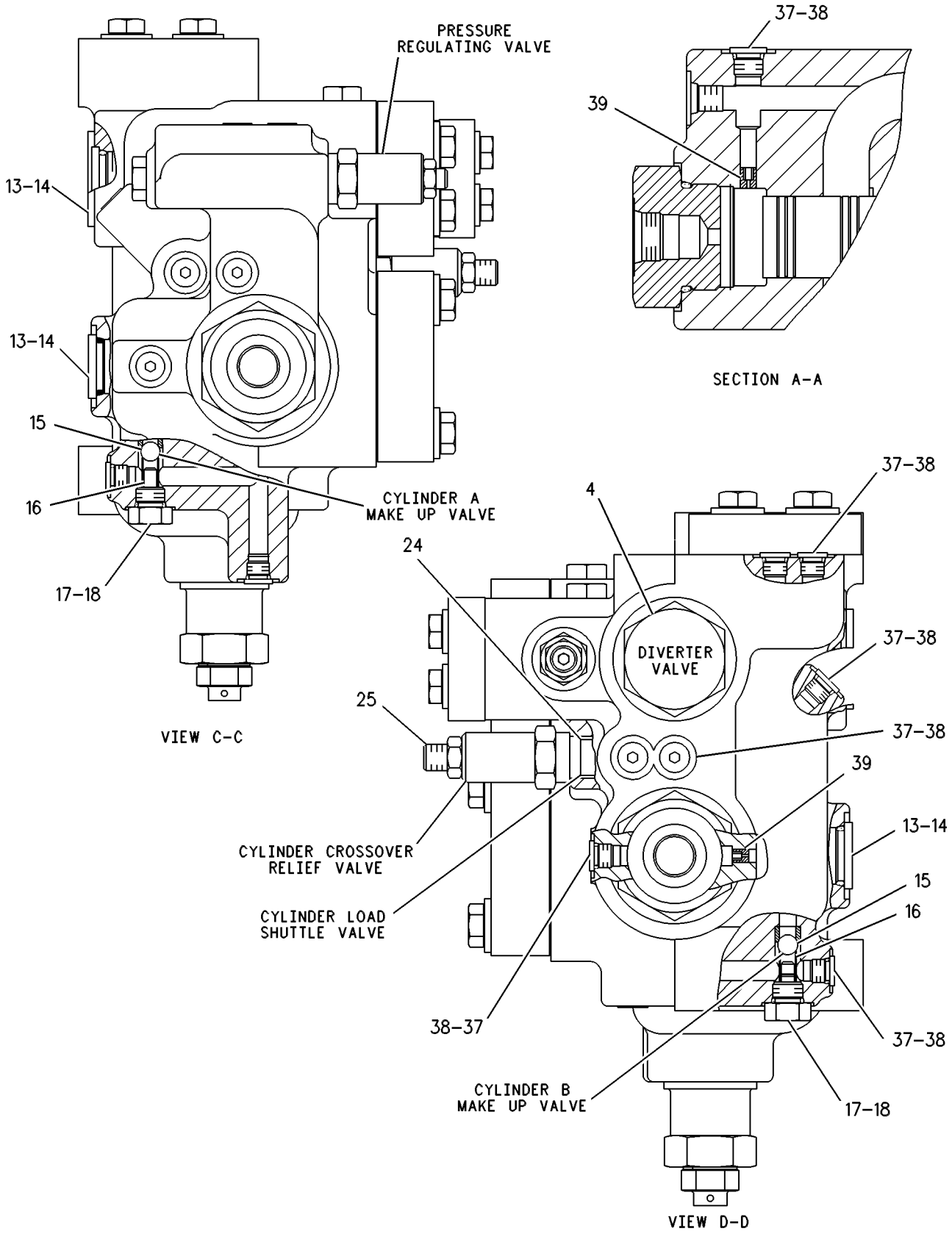

GRAPHIC #2 g00258826

STEERING SYSTEM

112-4597 VALVE GP-STEERING—WITH SECONDARY STEERING

S/N: 7HR1-UP
PART OF 112-4189 LINES GP-SECONDARY STEERING
AN ATTACHMENT
TYPE 2

SMCS-4307 **i01185417**

NOTE	REF NO	GRAPHIC REF	PART NUMBER	QTY	PART NAME 1 2 3 4 5 6 (PRODUCT LEVEL)	SEE PAGE
	1	1	**6E-3780**	1	VALVE	
	2	1	**5J-3419**	1	SPRING	
	3	1	**2S-4078**	3	SEAL-O-RING (37.46MM ID)	
J	4	2	**2U-7345**	1	VALVE-DIVERTER	
	5	1	**7S-8491**	1	SPRING	
	6	1	**8T-4121**	4	WASHER (2.5MM THK)	
	7	1	**1P-4579**	2	FLANGE-HALF	
	8	1	**8T-4223**	16	WASHER-HARD (3MM THK)	
M	9	1	**8T-4183**	4	BOLT (M12X1.75X40 THD)	
	10	1	**9S-4191**	3	PLUG-O-RING (9/16-18 THD)	
L	11	1	**6E-4286**	1	VALVE GP-PRESSURE REDUCING	
Y	12	1	**100-4335**	1	VALVE GP-RELIEF (PUMP BACKUP)	896
	13	2	**9S-8008**	3	PLUG-O-RING (1 1/16-12 THD)	
	14	2	**3D-2824**	3	SEAL-O-RING (23.47MM ID)	
	15	2	**4B-9782**	2	BALL (9.52MM DIA)	
	16	2	**2S-2596**	2	SPRING (8.4MM OD)	
	17	2	**7J-1089**	2	PLUG-O-RING	
		2	**7M-5130**	2	PIN (6.35MM DIA)	
	18	1,2	**3J-1907**	5	SEAL-O-RING (11.89MM ID)	
	19	1	**6E-4513**	1	ADAPTER-O-RING	
	20	1	**1P-5767**	6	FLANGE-HALF	
M	21	1	**8T-4196**	4	BOLT (M10X1.50X35MM)	
	22	1	**6E-4514**	1	ADAPTER-O-RING	
	23	1	**6K-6307**	1	SEAL-O-RING (43.69MM ID)	
Y	24	2	**4T-1860**	1	VALVE GP-SHUTTLE (RESOLVER)	902
N	25	2	**6E-3985**	1	VALVE GP-RELIEF (STEERING CYLINDER CROSSOVER)	
	26	1	**9S-8010**	1	PLUG-O-RING (1 5/8-12 THD)	
B	27	1	**4J-8224**	5	SHIM (.254MM THK)	
B	28	1	**5J-4776**	1	SHIM (.127MM THK)	
	29	1	**7J-2927**	1	WASHER (0.156 MM THK)	
	30	1	**4J-8634**	1	RETAINER-SPRING	
	31	1	**3K-6113**	1	WASHER-HARD (3MM THK)	
	32	1	**6E-4499**	1	SPRING (INNER)	
	33	1	**6E-4500**	1	SPRING (OUTER)	
M	34	1	**8T-2223**	1	BOLT-SOCKET HEAD (M10X1.5X45MM)	
	35	1	**6E-3775**	1	RETAINER	
M	36	1	**8T-4194**	12	BOLT (M12X1.75X50MM)	
C	37	1,2	**3J-7354**	17	SEAL-O-RING (8.92MM ID)	
C	38	1,2	**9S-8002**	17	PLUG-O-RING (7/16-20 THD)	
	39	2	**1T-0936**	2	PLUG-PIPE (1/16-27 THD)	
	40	1	**7J-7423**	1	VALVE	
	41	1	**1U-0323**	1	PLUG AS	
		1	**1U-0322**	1	BEARING-SLEEVE	
Y	42	1	**6E-3986**	1	VALVE GP-RELIEF (SECONDARY STEERING)	895
	43	1	**8C-3206**	2	FLANGE-HALF	
					AVAILABLE REPAIR KIT(S):	
J			**2U-7354**	1	KIT-SEAL	
L			**6E-4287**	1	KIT-SEAL	
N			**6E-4288**	1	KIT-SEAL	

112-4597 VALVE GP-STEERING *(contd.)* i01185417

B-USE AS REQUIRED
C-CHANGE FROM PREVIOUS TYPE
J-REPAIR KIT MARKED J IS AVAILABLE FOR PART MARKED J
L-REPAIR KIT MARKED L IS AVAILABLE FOR PART MARKED L
M-METRIC PART
N-REPAIR KIT MARKED N IS AVAILABLE FOR PART MARKED N
Y-SEPARATE ILLUSTRATION

112-4597 VALVE GP-STEERING *(contd.)* i01185417

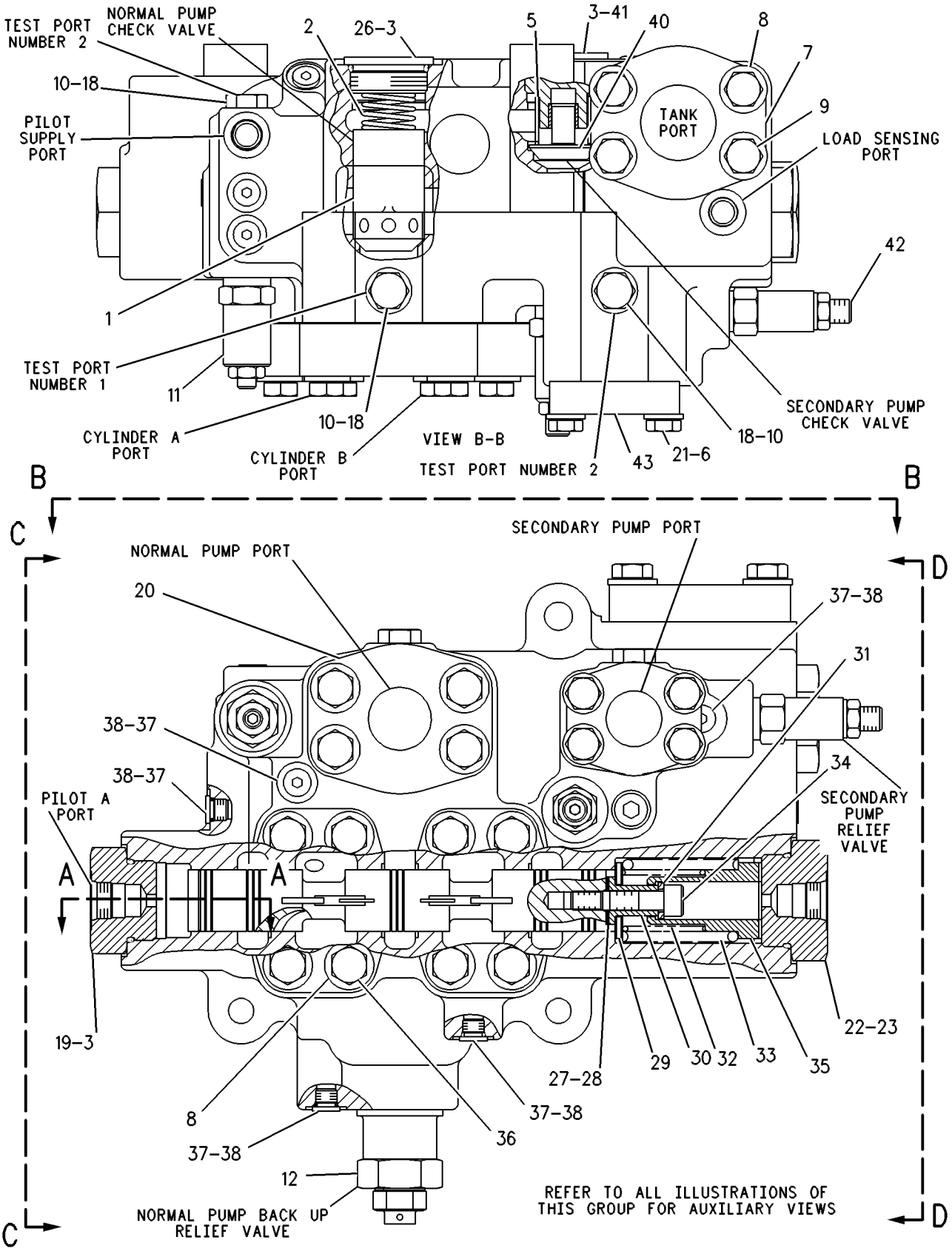

GRAPHIC #1 g00258825

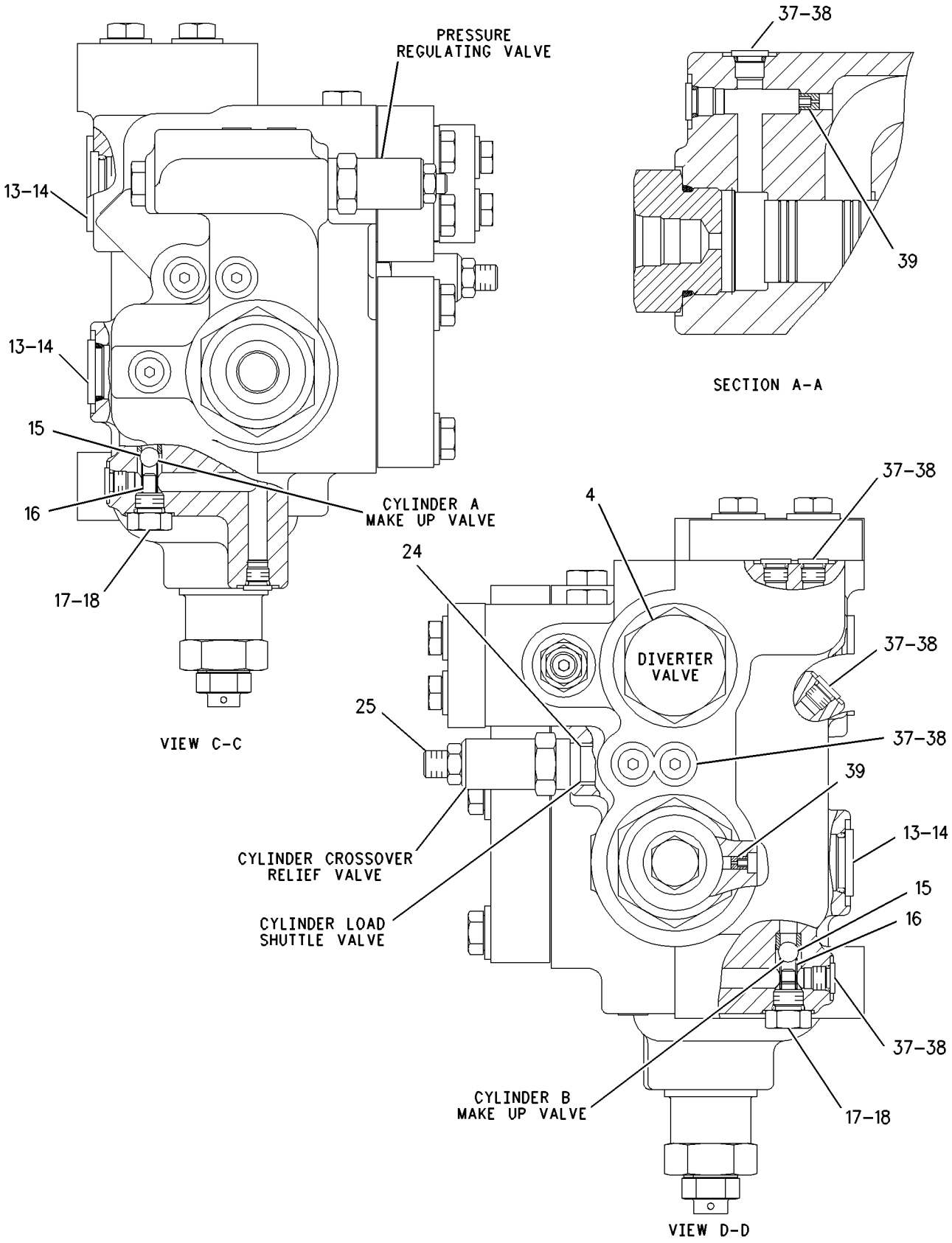

GRAPHIC #2 g00634752

STEERING SYSTEM

126-1357 VALVE GP-STEERING

S/N: 7HR1-UP
PART OF 131-8143 STEERING AR
AN ATTACHMENT
TYPE 1

SMCS-4307 **i01198317**

NOTE	REF NO	GRAPHIC REF	PART NUMBER	QTY	PART NAME 1 2 3 4 5 6 (PRODUCT LEVEL)	SEE PAGE
	1	2	**1T-0936**	2	PLUG-PIPE (1/16-27 THD)	
	2	1	**9S-8010**	2	PLUG-O-RING (1 5/8-12 THD)	
	3	1	**2S-4078**	3	SEAL-O-RING (37.46MM ID)	
	4	2	**102-1450**	1	PLUG GP	
	5	1,2	**9S-8002**	17	PLUG-O-RING (7/16-20 THD)	
	6	1,2	**3J-7354**	17	SEAL-O-RING (8.92MM ID)	
	7	1	**1P-4579**	2	FLANGE-HALF	
	8	1	**8T-4223**	16	WASHER-HARD (3MM THK)	
M	9	1	**8T-4183**	4	BOLT (M12X1.75X40 MM)	
	10	1	**9S-4191**	2	PLUG-O-RING (9/16-18 THD)	
	11	1	**6E-4286**	1	VALVE GP-PRESSURE REDUCING (STEERING)	
		1	**6E-4287**	1	KIT-SEAL	
Y	12	1	**100-4335**	1	VALVE GP-RELIEF (PUMP BACKUP)	896
	13	2	**9S-8008**	3	PLUG-O-RING (1 1/16-12 THD)	
	14	2	**3D-2824**	3	SEAL-O-RING (23.47MM ID)	
	15	2	**4B-9782**	2	BALL (9.52MM DIA)	
	16	2	**2S-2596**	2	SPRING (8.4MM OD)	
	17	2	**7J-1089**	2	PLUG-O-RING	
		2	**7M-5130**	2	PIN (6.35MM DIA)	
	18	1,2	**3J-1907**	4	SEAL-O-RING (11.89MM ID)	
	19	1	**6E-4513**	1	ADAPTER-O-RING	
	20	1	**1P-5767**	6	FLANGE-HALF	
M	21	1	**8T-4194**	12	BOLT (M12X1.75X50MM)	
	22	1	**6E-4514**	1	ADAPTER-O-RING	
	23	1	**6K-6307**	1	SEAL-O-RING (43.69MM ID)	
Y	24	2	**4T-1860**	1	VALVE GP-SHUTTLE (RESOLVER)	902
	25	2	**6E-3985**	1	VALVE GP-RELIEF (STEERING CYLINDER CROSSOVER)	
		2	**6E-4288**	1	KIT-SEAL	
	26	1	**6E-3775**	1	RETAINER	
B	27	1	**4J-8224**	5	SHIM (.254MM THK)	
B	28	1	**5J-4776**	1	SHIM (.127MM THK)	
	29	1	**7J-2927**	1	WASHER (0.156 MM THK)	
	30	1	**4J-8634**	1	RETAINER-SPRING	
	31	1	**3K-6113**	1	WASHER-HARD (3MM THK)	
	32	1	**6E-4499**	1	SPRING (INNER)	
	33	1	**6E-4500**	1	SPRING (OUTER)	
M	34	1	**8T-2223**	1	BOLT-SOCKET HEAD (M10X1.5X45MM)	

B-USE AS REQUIRED
M-METRIC PART
Y-SEPARATE ILLUSTRATION

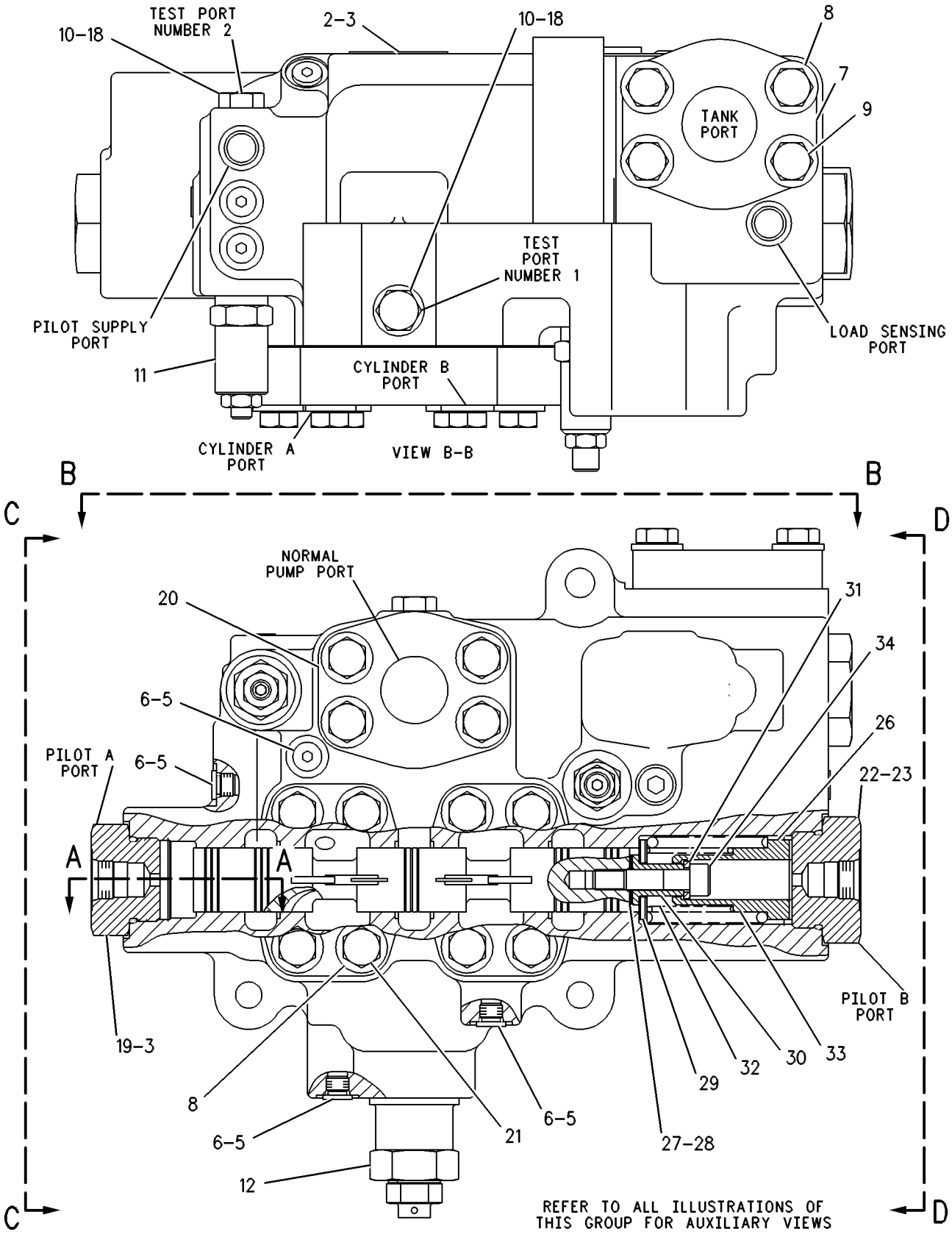

GRAPHIC #1 g00258794

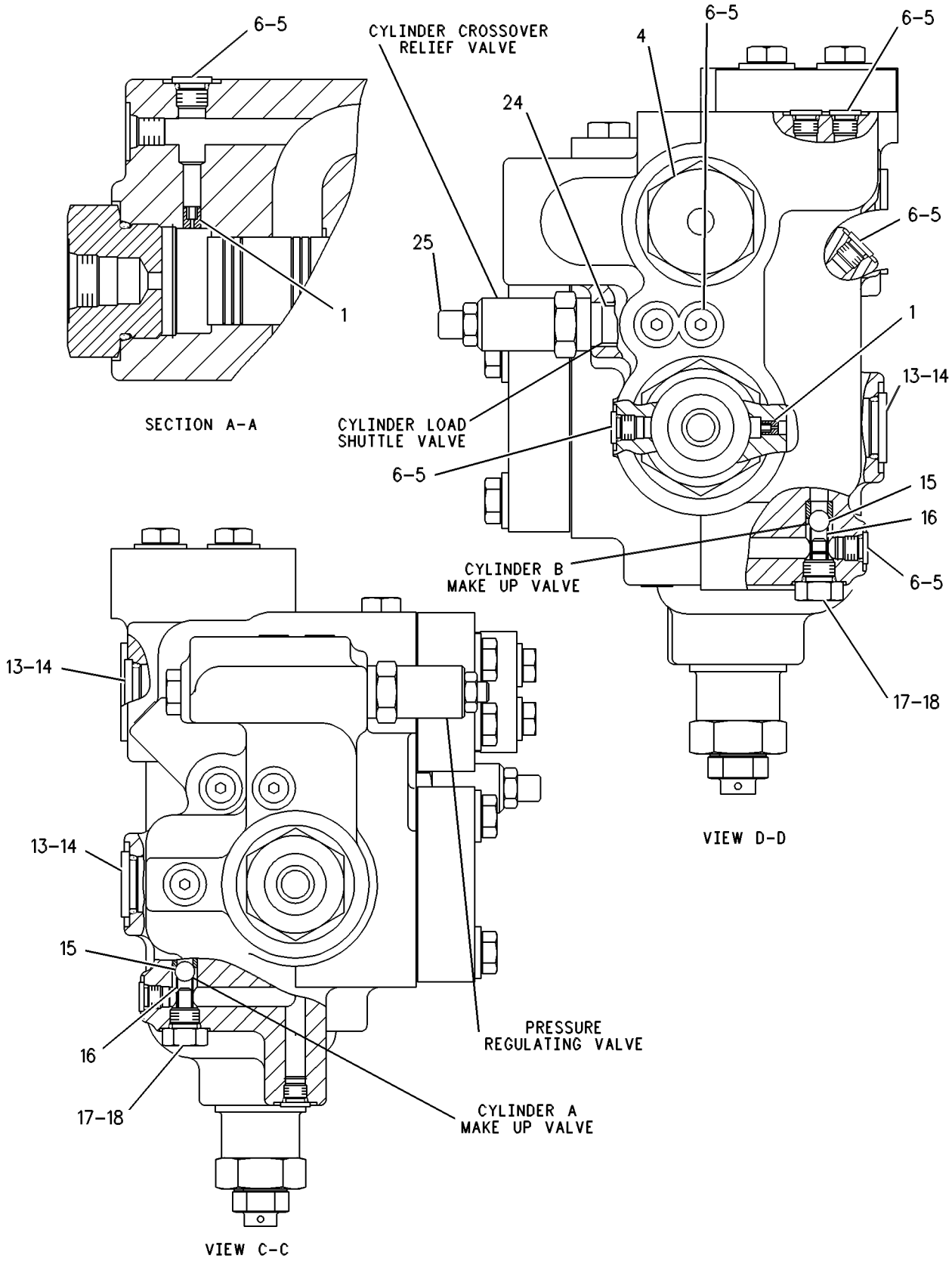

GRAPHIC #2 g00258795

MEMORANDA

STEERING SYSTEM

126-1357 VALVE GP-STEERING

S/N: 7HR1-UP
PART OF 131-8143 STEERING AR
AN ATTACHMENT
TYPE 2

SMCS-4307 **i01198318**

NOTE	REF NO	GRAPHIC REF	PART NUMBER	QTY	PART NAME 1 2 3 4 5 6 (PRODUCT LEVEL)	SEE PAGE
	1	2	**1T-0936**	2	PLUG-PIPE (1/16-27 THD)	
	2	1	**9S-8010**	2	PLUG-O-RING (1 5/8-12 THD)	
	3	1	**2S-4078**	3	SEAL-O-RING (37.46MM ID)	
	4	2	**102-1450**	1	PLUG GP	
C	5	1,2	**9S-8002**	16	PLUG-O-RING (7/16-20 THD)	
C	6	1,2	**3J-7354**	16	SEAL-O-RING (8.92MM ID)	
	7	1	**1P-4579**	2	FLANGE-HALF	
	8	1	**8T-4223**	16	WASHER-HARD (3MM THK)	
M	9	1	**8T-4183**	4	BOLT (M12X1.75X40 MM)	
	10	1	**9S-4191**	2	PLUG-O-RING (9/16-18 THD)	
	11	1	**6E-4286**	1	VALVE GP-PRESSURE REDUCING (STEERING)	
		1	**6E-4287**	1	KIT-SEAL	
Y	12	1	**100-4335**	1	VALVE GP-RELIEF (PUMP BACKUP)	896
	13	2	**9S-8008**	3	PLUG-O-RING (1 1/16-12 THD)	
	14	2	**3D-2824**	3	SEAL-O-RING (23.47MM ID)	
	15	2	**4B-9782**	2	BALL (9.52MM DIA)	
	16	2	**2S-2596**	2	SPRING (8.4MM OD)	
	17	2	**7J-1089**	2	PLUG-O-RING	
		2	**7M-5130**	2	PIN (6.35MM DIA)	
	18	1,2	**3J-1907**	4	SEAL-O-RING (11.89MM ID)	
	19	1	**6E-4513**	1	ADAPTER-O-RING	
	20	1	**1P-5767**	6	FLANGE-HALF	
M	21	1	**8T-4194**	12	BOLT (M12X1.75X50MM)	
	22	1	**6E-4514**	1	ADAPTER-O-RING	
	23	1	**6K-6307**	1	SEAL-O-RING (43.69MM ID)	
Y	24	2	**4T-1860**	1	VALVE GP-SHUTTLE (RESOLVER)	902
	25	2	**6E-3985**	1	VALVE GP-RELIEF (STEERING CYLINDER CROSSOVER)	
		2	**6E-4288**	1	KIT-SEAL	
	26	1	**6E-3775**	1	RETAINER	
B	27	1	**4J-8224**	5	SHIM (.254MM THK)	
B	28	1	**5J-4776**	1	SHIM (.127MM THK)	
	29	1	**7J-2927**	1	WASHER (0.156 MM THK)	
	30	1	**4J-8634**	1	RETAINER-SPRING	
	31	1	**3K-6113**	1	WASHER-HARD (3MM THK)	
	32	1	**6E-4499**	1	SPRING (INNER)	
	33	1	**6E-4500**	1	SPRING (OUTER)	
M	34	1	**8T-2223**	1	BOLT-SOCKET HEAD (M10X1.5X45MM)	

B-USE AS REQUIRED
C-CHANGE FROM PREVIOUS TYPE
M-METRIC PART
Y-SEPARATE ILLUSTRATION

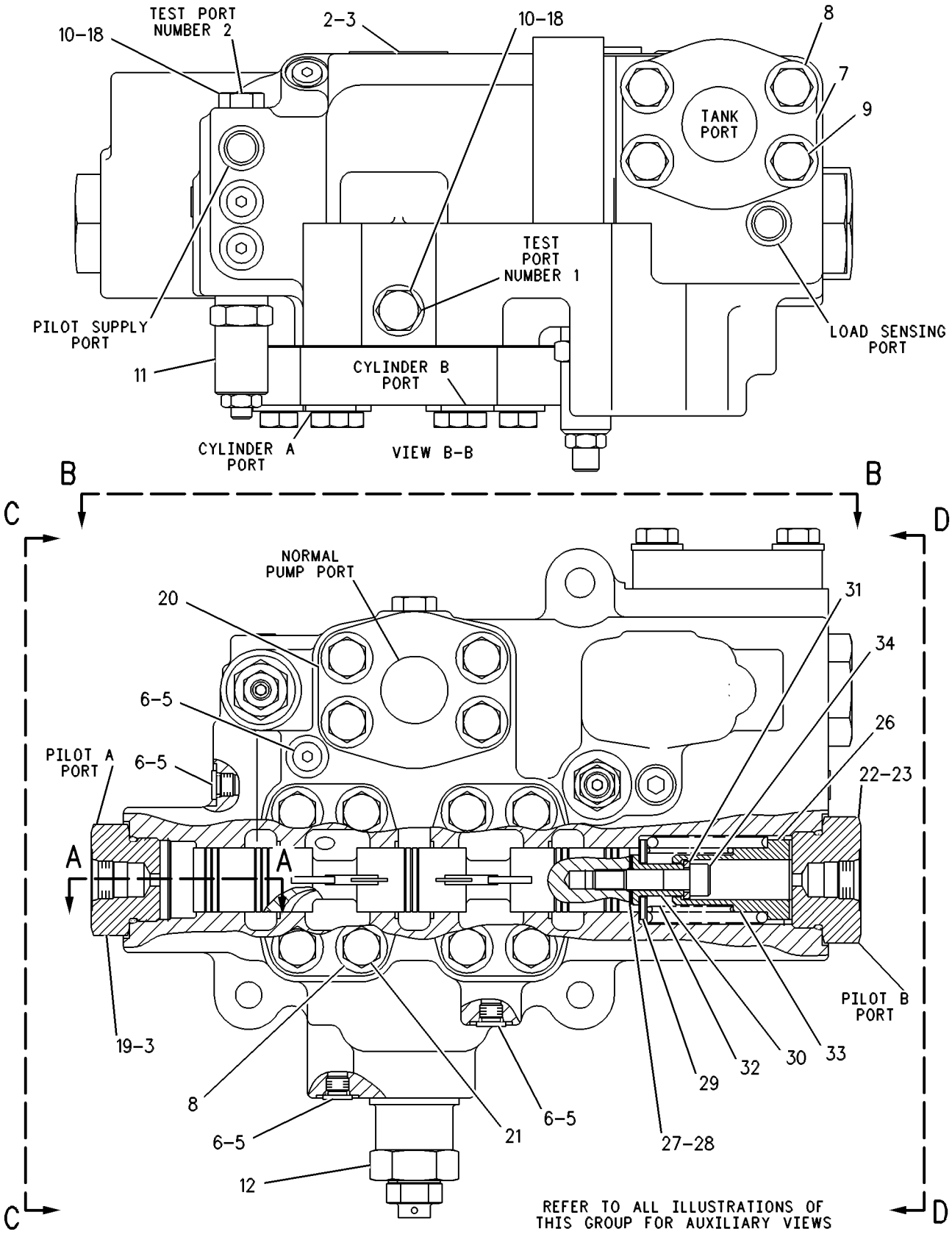

GRAPHIC #1 g00258794

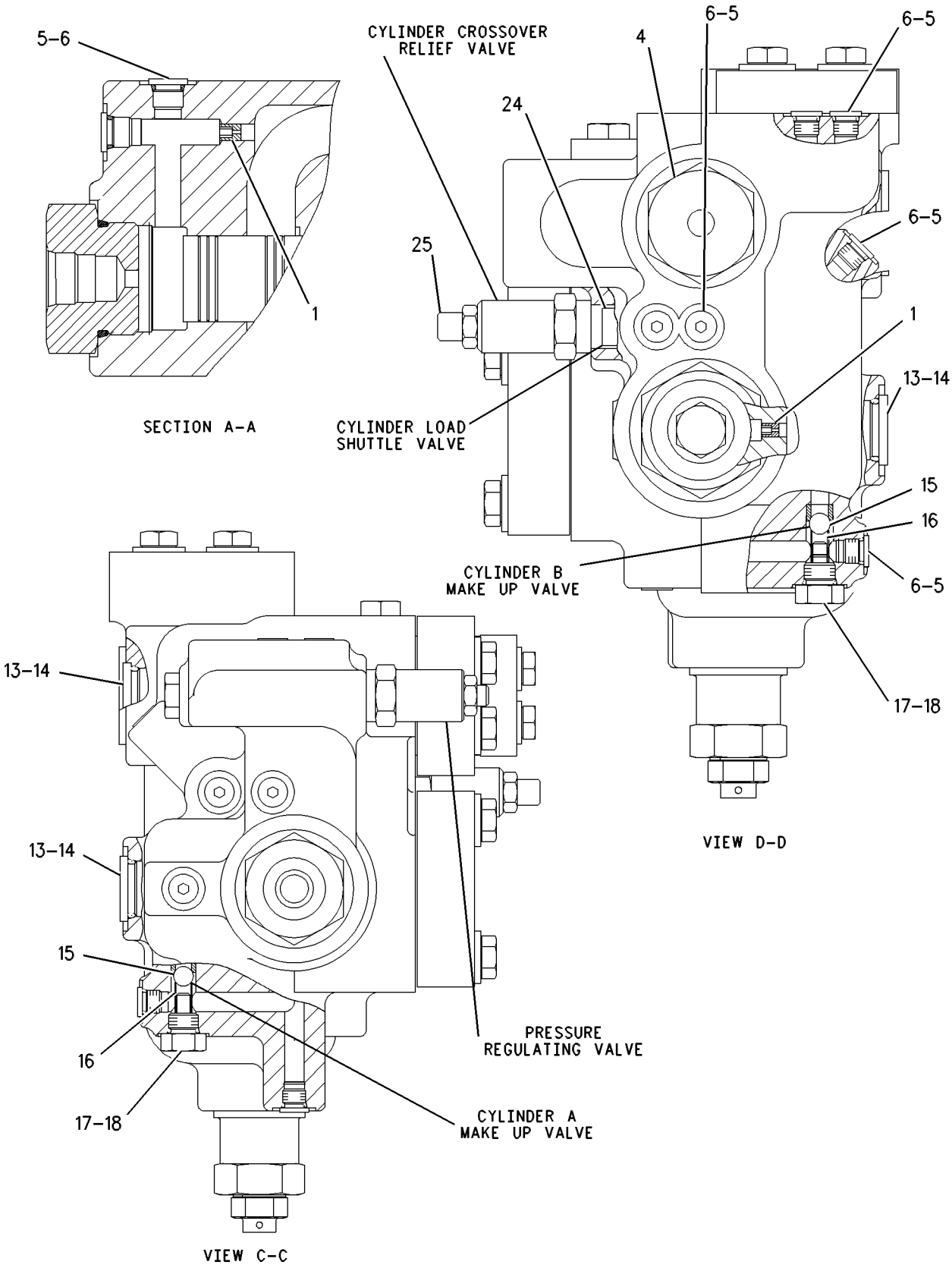

GRAPHIC #2 g00532045

146-7571 VALVE GP-STEERING NEUTRALIZER

S/N: 7HR1-UP

PART OF 133-7105 VALVE & MTG GP-STEERING NEUT

SMCS-4330 **i01006057**

NOTE	REF NO	GRAPHIC REF	PART NUMBER	QTY	PART NAME 1 2 3 4 5 6 (PRODUCT LEVEL)	SEE PAGE
	1	1	**3D-2824**	1	SEAL-O-RING (23.47MM ID)	
	2	1	**6J-4568**	1	BOOT	
	3	1	**5F-9035**	1	SPRING	
	4	1	**135-0349**	1	SEAL	

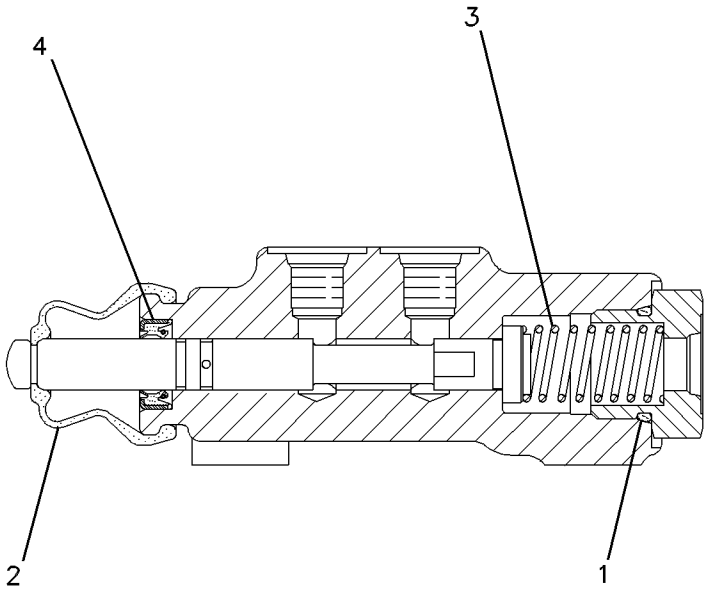

GRAPHIC #1 g00494093

6E-4185 ACCUMULATOR GP-RIDE CONTROL

S/N: 7HR1-UP
PART OF 112-4812 CONTROL & LINES GP-RIDE
AN ATTACHMENT

SMCS-5077, 5081 **i01438325**

NOTE	REF NO	GRAPHIC REF	PART NUMBER	QTY	PART NAME 1 2 3 4 5 6 (PRODUCT LEVEL)	SEE PAGE
	1	1	**6E-4186**	1	ACCUMULATOR AS	
	2	1	**7J-5311**	1	PLATE-WARNING (HIGH PRESSURE CYLINDER)	
	3	1	**8T-6376**	1	PLATE-HYDRAULIC ACCUMULATOR	
	4	1	**6E-4188**	1	COVER	
	5	1	**175-3184**	1	VALVE GP	
		1	**6J-0368**	1	CAP	
		1	**175-3185**	1	CORE	
	6	1	**114-3361**	1	SEAL-O-RING (17.17MM ID)	
	7	1	**6E-5868**	1	HEAD	
	8	1	**2J-3961**	3	RING-BACKUP	
	9	1	**5H-6734**	3	SEAL-O-RING (113.89MM ID)	
	10	1	**8T-8390**	1	RING-WEAR	
	11	1	**174-2415**	1	SEAL AS	
	12	1	**168-2466**	1	PISTON	
	13	1	**157-1681**	1	PLATE-WARING	
	14	1	**6V-1193**	1	SCREW-HEX SOCKET (3/8-16X.625 IN)	
	15	1	**6E-6245**	1	SLEEVE	

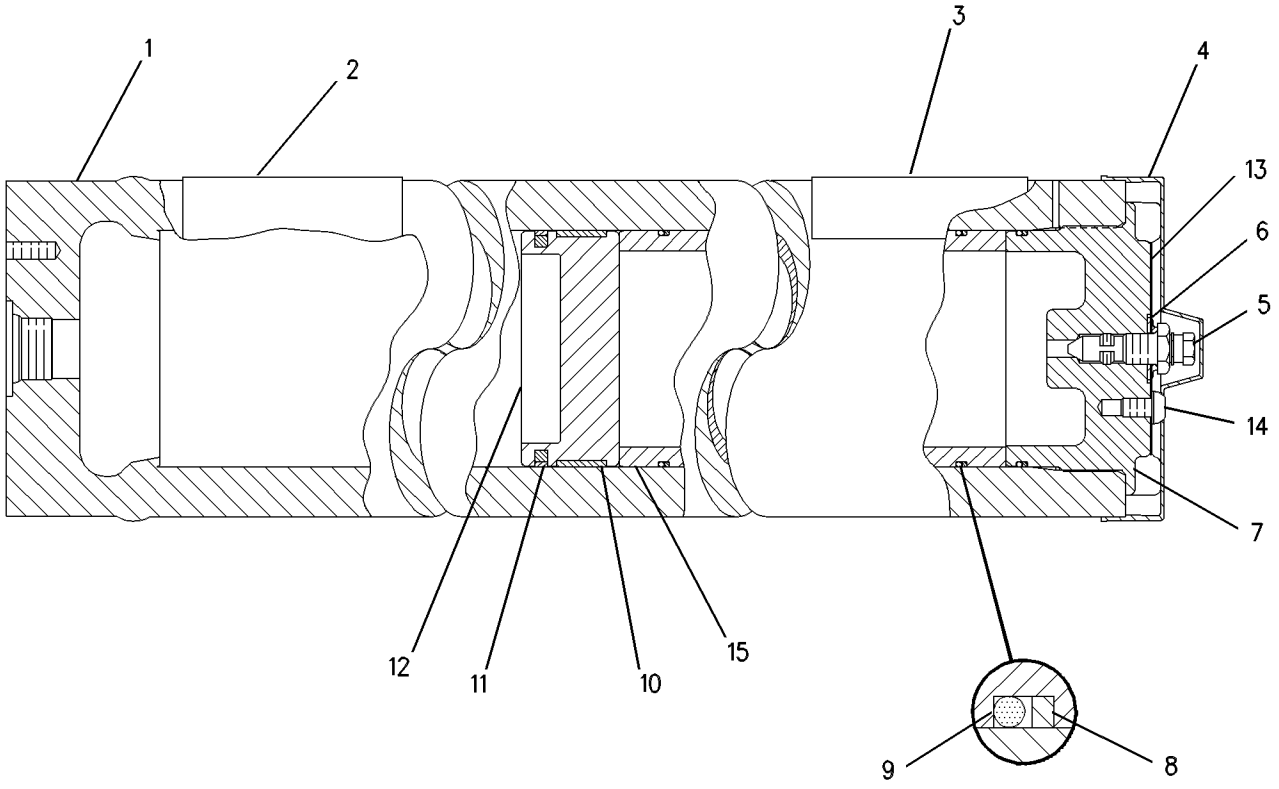

GRAPHIC #1 g00579748

HYDRAULIC SYSTEM

118-5081 ACTUATOR GP-PILOT CONTROL

S/N: 7HR1-UP

PART OF 177-8863, 177-8864 VALVE GP-CONTROL

SMCS-5078 **i01350264**

NOTE	REF NO	GRAPHIC REF	PART NUMBER	QTY	PART NAME 1 2 3 4 5 6 (PRODUCT LEVEL)	SEE PAGE
	2	1	**077-3241**	1	SEAL-O-RING (26.70MM ID)	
	3	1	**112-5874**	1	SOLENOID AS-PROPORTIONAL (HOIST)	
J	3A	1	**102-8802**	1	KIT-RECEPTACLE (2 PIN)	
J		1	**3E-3365**	1	WEDGE-RECEPTACLE LOCK (2 PIN)	
		1	**8T-8729**	2	PIN-CONNECTOR	
	3B	1	**1S-9593**	2	STRAP-CABLE (0.62IN DIA)	
M	3C	1	**129-3174**	4	BOLT-SOCKET HEAD (M4X.7X60MM)	
	4	1	**1H-5728**	1	SEAL-O-RING (63MM ID)	
	5	1	**2D-6648**	1	RING-RETAINING	
	6	1	**3J-1907**	3	SEAL-O-RING (11.89MM ID)	
	7	1	**5H-6005**	2	SEAL-O-RING (10.77MM ID)	
	8	1	**9S-8004**	3	PLUG-O-RING (9/16-18 THD)	

J-KIT MARKED J INCLUDES PART MARKED J
M-METRIC PART

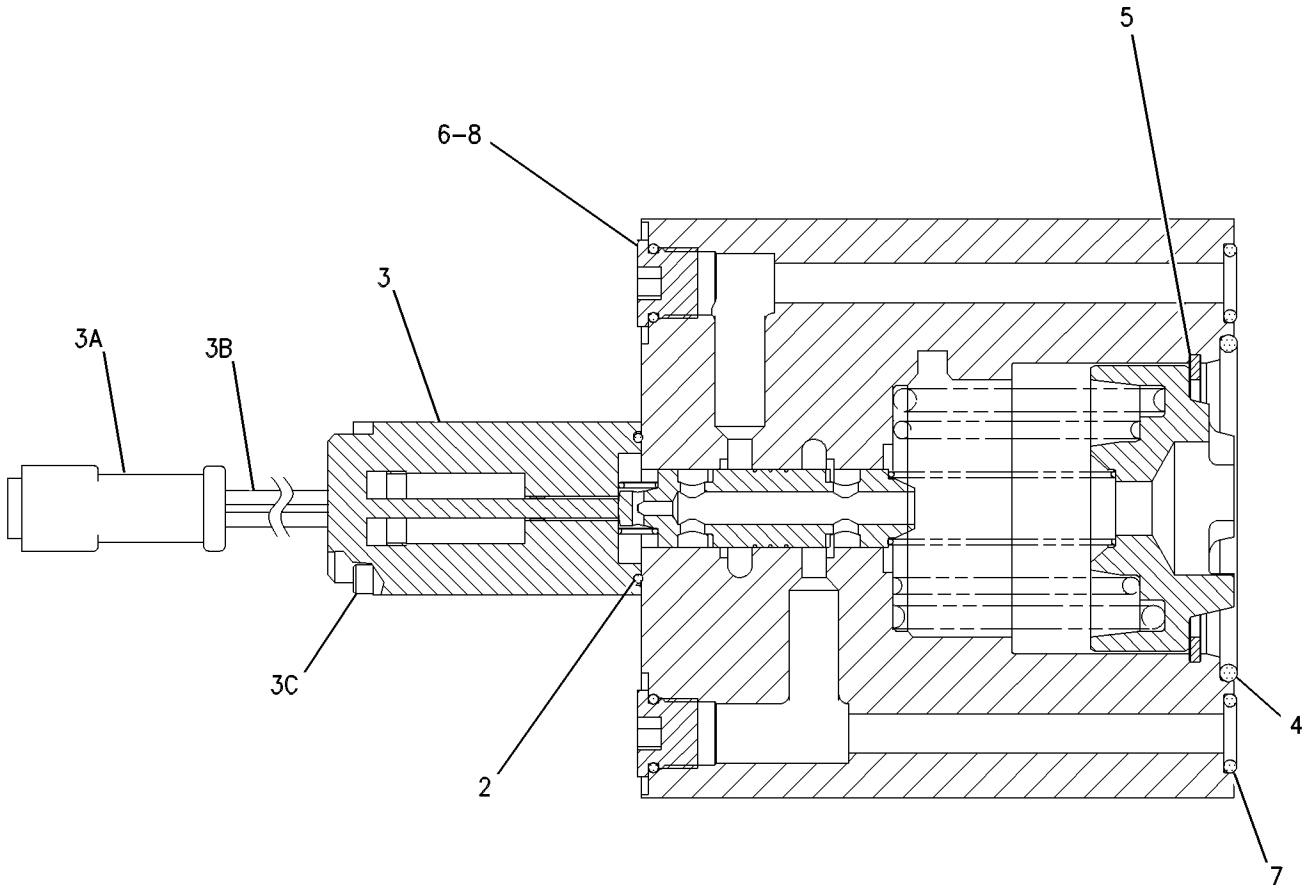

GRAPHIC #1 g00629588

HYDRAULIC SYSTEM

112-4812 CONTROL & LINES GP-RIDE

S/N: 7HR1-UP
PART OF 132-3301 CONTROL AR-RIDE
AN ATTACHMENT
TYPE 1

SMCS-5004 **i01540172**

NOTE	REF NO	GRAPHIC REF	PART NUMBER	QTY	PART NAME 1 2 3 4 5 6 (PRODUCT LEVEL)	SEE PAGE
	1	1,2	**1P-3705**	9	SEAL-RECTANGULAR	
	2	1	**1P-3706**	4	SEAL (54.5MM ID)	
	3	2	**3J-1907**	1	SEAL-O-RING	
	4	1	**6V-8398**	1	SEAL-O-RING	
	5	1	**3S-2093**	2	STRAP-CABLE	
	6	1	**4E-8829**	2	CLAMP AS	
	7	1,2	**5K-9090**	6	SEAL-O-RING	
	8	2	**9X-8257**	8	WASHER (17.5X30X3.5MM THK)	
Y	9	1	**6E-4185**	2	ACCUMULATOR GP-RIDE CONTROL	920
	10	1,2	**6V-8397**	2	SEAL-O-RING	
	11	1	**6V-8782**	1	TEE-FACE SEAL	
	12	2	**2T-3019**	2	CLIP	
	13	1,2	**7M-8485**	5	SEAL-O-RING	
	14	1	**7Y-4038**	4	CLAMP-HALF	
M	15	1	**8T-6383**	8	BOLT (M16X2X200MM)	
Y	16	1	**9T-9552**	1	VALVE GP-RIDE CONTROL	1096
	17	1	**9U-2277**	1	CLIP AS	
	18	1	**116-6750**	1	BRACKET	
	19	1	**118-5616**	1	MANIFOLD	
	20	1	**126-2807**	1	HARNESS AS-RIDE CONTROL	
		1	**155-2270**	2	KIT-CONNECTING PLUG (2 PIN)	
					(EACH KIT-CONNECTING PLUG INCLUDES PLUG AS & WEDGE)	
I	21	1	**145-0053**	1	HOSE AS	
	22	2	**144-0838**	2	PLATE AS	
					(EACH INCLUDES)	
M		2	**8T-3597**	2	NUT-WELD (M12X1.75 THD)	
	23	1	**126-3726**	1	TUBE AS	
	24	1	**126-3727**	1	TUBE AS	
	25	1	**126-3728**	1	TUBE AS	
	26	1	**126-3729**	1	TUBE AS	
	27	1	**126-3730**	1	TUBE AS	
	28	2	**126-3731**	1	TUBE AS	
I	29	2	**126-3732**	1	HOSE AS	
I	30	2	**126-3733**	1	HOSE AS	
I	31	2	**126-3734**	1	HOSE AS	
I	32	2	**126-3735**	1	HOSE AS	
	33	1	**126-3736**	2	MANIFOLD	
	34	2	**126-3738**	2	PLATE AS	
					(EACH INCLUDES)	
M		2	**8T-3597**	2	NUT-WELD (M12X1.75 THD)	
	35	2	**126-3739**	1	PLATE	
	36	1	**126-3740**	2	PLATE	
	37	1	**128-2866**	1	PLATE AS	
M		1	**8T-3597**	1	NUT-WELD (M12X1.75 THD)	
	38	2	**1S-6420**	2	CLIP	
	39	1	**4J-0520**	1	SEAL-O-RING	
	40	1	**5P-7468**	1	CLIP (SLOT)	
	41	1	**5P-7469**	1	CLIP (TAB)	
	42	1,2	**5P-9085**	4	CLIP (7.94MM ID)	
	43	1,2	**6V-8635**	5	CONNECTOR	
	44	2	**6V-8724**	1	ELBOW	
M	45	2	**7X-2475**	8	BOLT (M16X2X130MM)	
	46	1	**8C-3206**	2	FLANGE-HALF	

112-4812 **CONTROL & LINES GP-RIDE** *(contd.)* **i01540172**

NOTE	REF NO	GRAPHIC REF	PART NUMBER	QTY	PART NAME 1 2 3 4 5 6 (PRODUCT LEVEL)	SEE PAGE
	47	1,2	**8T-4121**	15	WASHER-HARD (11X21X2.5MM THK)	
M	48	1,2	**8T-4136**	8	BOLT (M10X1.5X25MM)	
M	49	2	**8T-4137**	3	BOLT (M10X1.5X20MM)	
M	50	1,2	**8T-4139**	17	BOLT (M12X1.75X30MM)	
M	51	1	**8T-4183**	8	BOLT (M12X1.75X40MM)	
M	52	1	**8T-4196**	4	BOLT (M10X1.5X35MM)	
	53	1,2	**8T-4223**	25	WASHER-HARD (13.5X25.5X3MM THK)	
M	54	1	**8T-4244**	2	NUT (M12X1.75 THD)	
M	55	1	**8T-4648**	8	BOLT (M12X1.75X70MM)	
M	56	1	**7X-2554**	1	BOLT (M16X2X70MM)	
M	57	1,2	**8T-4956**	6	BOLT (M12X1.75X35MM)	
	58	1	**8T-7087**	1	GROMMET	
	59	2	**6K-5535**	2	CLIP	
	60	1,2	**5P-1076**	4	WASHER-HARD (13.5X30X4MM THK)	
	61	2	**6K-5536**	2	BRACKET	

I-SEE HOSE FABRICATION GUIDE
M-METRIC PART
Y-SEPARATE ILLUSTRATION

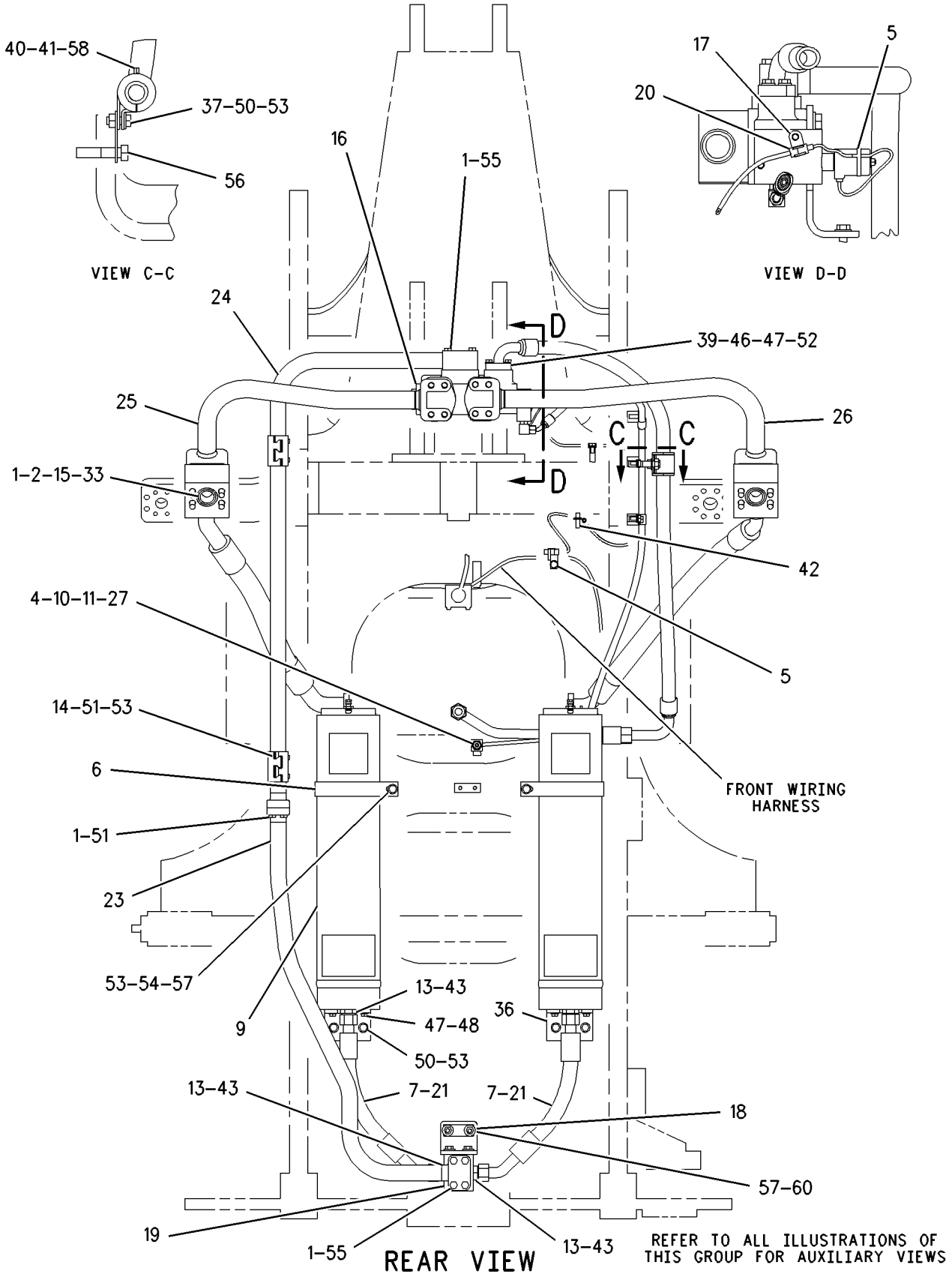

GRAPHIC #1 g00729334

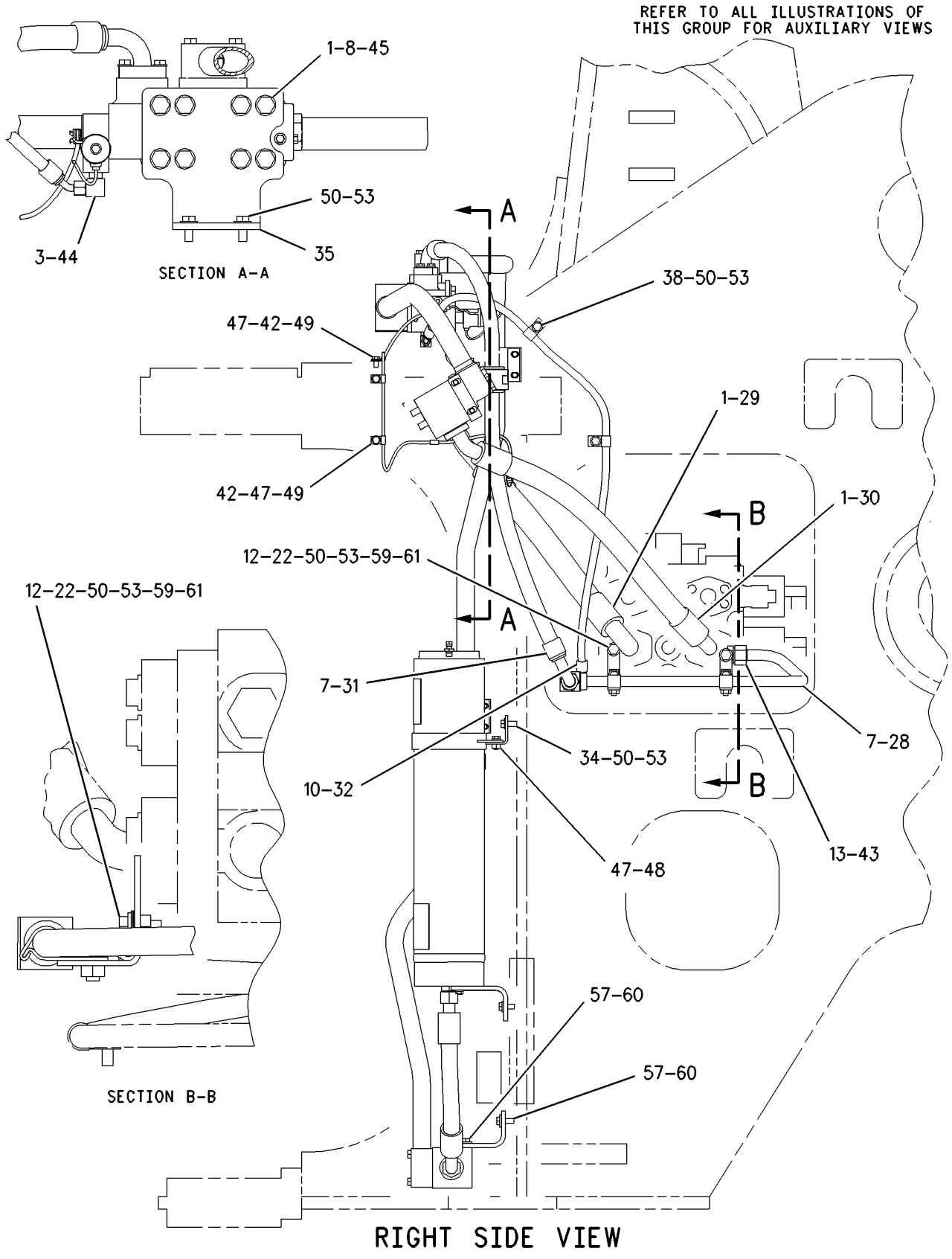

GRAPHIC #2

g00729339

HYDRAULIC SYSTEM

112-4812 CONTROL & LINES GP-RIDE

S/N: 7HR1-UP
PART OF 132-3301 CONTROL AR-RIDE
AN ATTACHMENT
TYPE 2

SMCS-5004 **i01540173**

NOTE	REF NO	GRAPHIC REF	PART NUMBER	QTY	PART NAME 1 2 3 4 5 6 (PRODUCT LEVEL)	SEE PAGE
	1	1,2	**1P-3705**	9	SEAL-RECTANGULAR	
	2	1	**1P-3706**	4	SEAL (54.5MM ID)	
	5	1	**3S-2093**	2	STRAP-CABLE	
	6	1	**174-9670**	2	CLAMP AS	
	7	2	**5K-9090**	1	SEAL-O-RING	
	8	2	**9X-8257**	8	WASHER (17.5X30X3.5MM THK)	
	9	1	**175-1296**	2	ACCUMULATOR	
					(EACH INCLUDES)	
		1	**158-2336**	1	VALVE-GAS	
		1	**170-0494**	1	KIT-SEAL	
	10	2	**6V-8397**	1	SEAL-O-RING	
	11	1	**148-8428**	1	TEE GP	
		1	**6V-8782**	1	TEE-FACE SEAL	
		1	**3K-0360**	1	SEAL-O-RING	
		1	**6V-8398**	2	SEAL-O-RING	
	12	2	**2T-3019**	2	CLIP	
	14	1	**7Y-4038**	4	CLAMP-HALF	
M	15	1	**8T-6383**	8	BOLT (M16X2X200MM)	
Y	16	1	**9T-9552**	1	VALVE GP-RIDE CONTROL	1096
	17	1	**9U-2277**	1	CLIP AS	
	18	1	**116-6750**	1	BRACKET	
	19	1	**118-5616**	1	MANIFOLD	
	20	1	**126-2807**	1	HARNESS AS-RIDE CONTROL	
		1	**155-2270**	2	KIT-CONNECTING PLUG (2 PIN)	
					(EACH KIT-CONNECTING PLUG INCLUDES PLUG AS & WEDGE)	
I	21	1	**145-0053**	2	HOSE AS	
	22	2	**144-0838**	2	PLATE AS	
					(EACH INCLUDES)	
M		2	**8T-3597**	2	NUT-WELD (M12X1.75 THD)	
	23	1	**126-3726**	1	TUBE AS	
	24	1	**126-3727**	1	TUBE AS	
	25	1	**126-3728**	1	TUBE AS	
	26	1	**126-3729**	1	TUBE AS	
	27	1	**126-3730**	1	TUBE AS	
	28	2	**126-3731**	1	TUBE AS	
I	29	2	**126-3732**	1	HOSE AS	
I	30	2	**126-3733**	1	HOSE AS	
I	31	2	**126-3734**	1	HOSE AS	
I	32	2	**126-3735**	1	HOSE AS	
	33	1	**126-3736**	2	MANIFOLD	
	34	2	**126-3738**	2	PLATE AS	
					(EACH INCLUDES)	
M		2	**8T-3597**	2	NUT-WELD (M12X1.75 THD)	
	35	2	**126-3739**	1	PLATE	
	36	1	**175-3589**	2	BRACKET	
	37	1	**128-2866**	1	PLATE AS	
M		1	**8T-3597**	1	NUT-WELD (M12X1.75 THD)	
	38	2	**1S-6420**	2	CLIP	
	39	1	**4J-0520**	1	SEAL-O-RING	
	40	1	**5P-7468**	1	CLIP (SLOT)	
	41	1	**5P-7469**	1	CLIP (TAB)	
	42	1,2	**5P-9085**	4	CLIP (7.94MM ID)	

112-4812 **CONTROL & LINES GP-RIDE** *(contd.)* **i01540173**

NOTE	REF NO	GRAPHIC REF	PART NUMBER	QTY	PART NAME 1 2 3 4 5 6 (PRODUCT LEVEL)	SEE PAGE
	43	1,2	**148-8335**	5	CONNECTOR GP	
					(EACH INCLUDES)	
		1,2	**6V-8635**	1	CONNECTOR	
		1,2	**5K-9090**	1	SEAL-O-RING	
		1,2	**7M-8485**	1	SEAL-O-RING	
	44	2	**148-8378**	1	ELBOW GP	
		2	**6V-8724**	1	ELBOW	
		2	**3J-1907**	1	SEAL-O-RING	
		2	**6V-8397**	1	SEAL-O-RING	
M	45	2	**7X-2475**	8	BOLT (M16X2X130MM)	
	46	1	**8C-3206**	2	FLANGE-HALF	
	47	1,2	**8T-4121**	13	WASHER-HARD (11X21X2.5MM THK)	
M	48	1,2	**8T-4136**	6	BOLT (M10X1.5X25MM)	
M	49	2	**8T-4137**	3	BOLT (M10X1.5X20MM)	
M	50	1,2	**8T-4139**	21	BOLT (M12X1.75X30MM)	
M	51	1	**8T-4183**	8	BOLT (M12X1.75X40MM)	
M	52	1	**8T-4196**	4	BOLT (M10X1.5X35MM)	
	53	1,2	**8T-4223**	29	WASHER-HARD (13.5X25.5X3MM THK)	
M	54	1	**8T-4244**	2	NUT (M12X1.75 THD)	
M	55	1	**8T-4648**	8	BOLT (M12X1.75X70MM)	
M	56	1	**7X-2554**	1	BOLT (M16X2X70MM)	
M	57	1,2	**8T-4956**	6	BOLT (M12X1.75X35MM)	
	58	1	**8T-7087**	1	GROMMET	
	59	2	**6K-5535**	2	CLIP	
	60	1,2	**5P-1076**	4	WASHER-HARD (13.5X30X4MM THK)	
	61	2	**6K-5536**	2	BRACKET	

I-SEE HOSE FABRICATION GUIDE
M-METRIC PART
Y-SEPARATE ILLUSTRATION

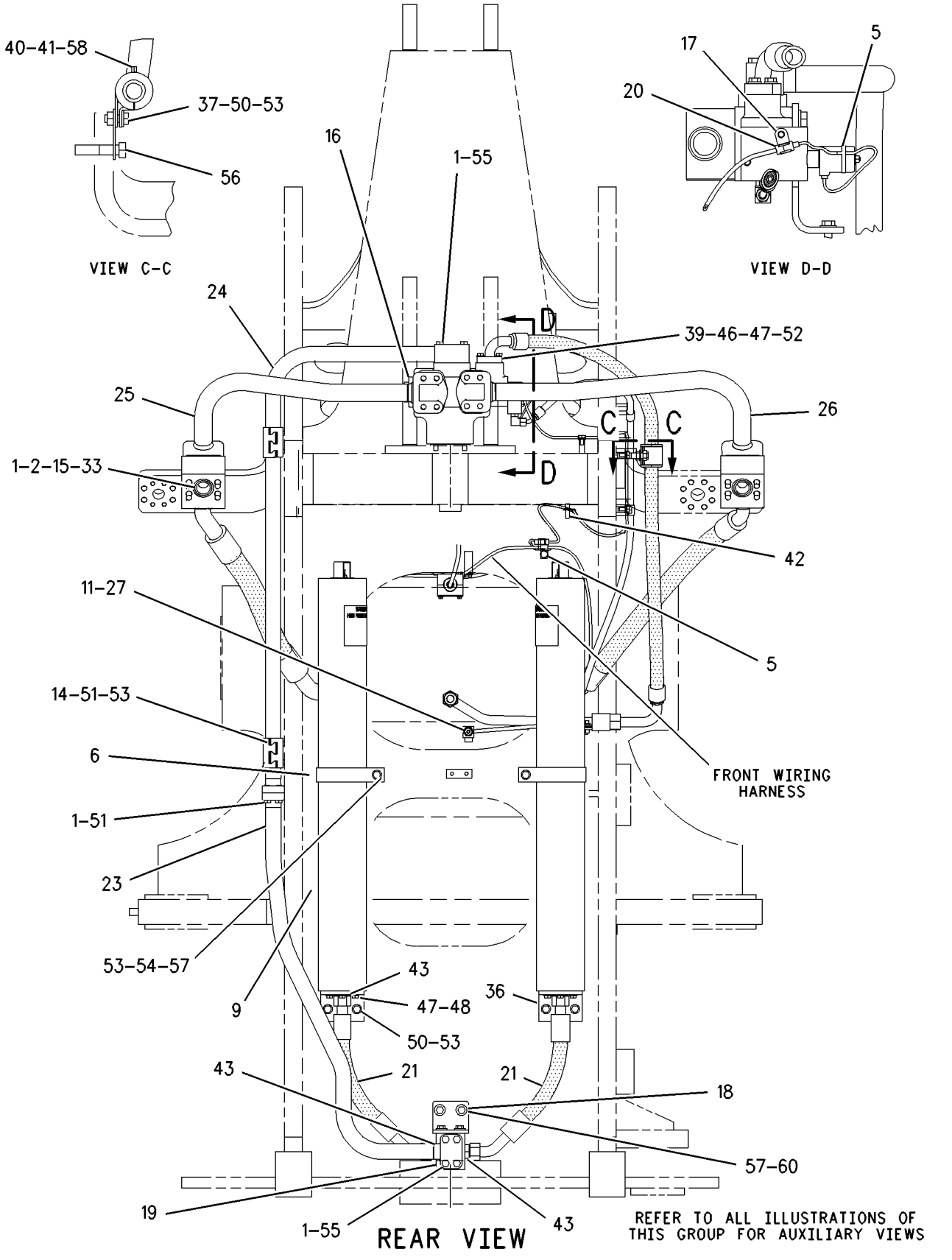

GRAPHIC #1 g00729360

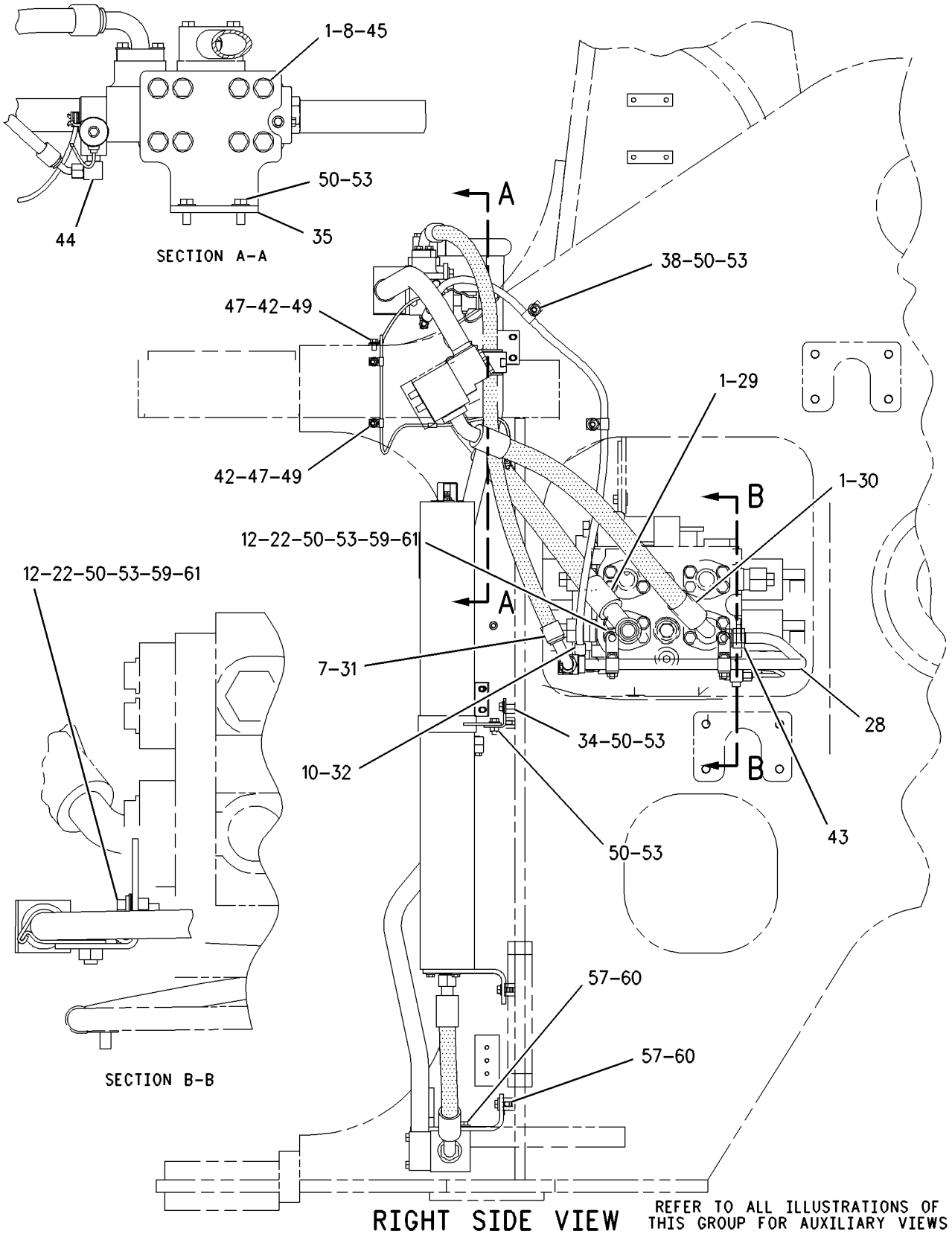

GRAPHIC #2

g00729365

HYDRAULIC SYSTEM

132-3301 CONTROL AR-RIDE

S/N: 7HR1-UP
AN ATTACHMENT

SMCS-5051, 5057, 5077 **i01432775**

NOTE	PART NUMBER	QTY	PART NAME 1 2 3 4 5 6 (PRODUCT LEVEL)	SEE PAGE
Y	*112-4812*	1	CONTROL & LINES GP-RIDE	922
Y	*146-5764*	1	FRAME GP-LOADER	701
	132-3613	1	SWITCH GP-RIDE CONTROL	
	127-4979	1	SWITCH AS-ROCKER (RIDE CONTROL)	
	3E-8780	1	ACTUATOR-ROCKER	

Y-SEPARATE ILLUSTRATION

MEMORANDA

HYDRAULIC SYSTEM

118-7644 CONTROL GP-HYD ELECTRONIC

S/N: 7HR1-78

PART OF 130-6906 CAB AR

SMCS-5702 **i01540176**

NOTE	REF NO	GRAPHIC REF	PART NUMBER	QTY	PART NAME 1 2 3 4 5 6 (PRODUCT LEVEL)	SEE PAGE
	1	1	**2M-4009**	1	PLUG-BUTTON	
	2	1	**3E-5239**	1	RELAY AS (24 VOLT)	
	3	1	**3E-9366**	3	COIL-DETENT (CONTROL LEVER)	
M	4	2	**5C-2874**	4	NUT (M5X.8 THD)	
	5	2	**8L-8413**	10	STRAP-CABLE	
	6	2	**8T-0328**	8	WASHER-HARD (5.5X10X1MM THK)	
	7	2	**8V-2671**	1	SPACER	
	8	1,2	**9X-2026**	9	WASHER (6.5X17X1MM THK)	
M	9	1,2	**9X-2042**	14	SCREW-TRUSS HEAD (M6X1X12MM)	
	10	2	**139-1378**	4	BEARING	
	11	2	**106-1582**	1	HOUSING	
	12	2	**106-1583**	2	ROD	
	13	2	**106-1584**	2	SPACER	
	14	1	**139-1377**	2	LEVER-CONTROL	
Y	15	2	**106-4437**	2	SENSOR GP-POSITION (SPRINGLESS) (CONTROL LEVER)	322
	16	1	**114-0420**	1	SWITCH AS-PUSH (HORN)	
	17	2	**114-4244**	2	PLATE	
	18	2	**114-4247**	3	BRACKET AS	
	19	1	**127-4983**	1	SWITCH AS (REDUCED/MAX RIMPULL)	
		1	**123-6380**	1	ACTUATOR-ROCKER	
		1	**126-1711**	2	KIT-LAMP CONVERSION (24V)	
	20	2	**122-9870**	2	SPRING	
	21	2	**105-3372**	1	SPRING	
	22	1	**116-4503**	1	SWITCH AS-ROCKER (24 VOLT)(ILLUMINATED) (IMPLEMENT LOCKOUT)	
		1	**116-4501**	1	ACTUATOR-ROCKER	
		1	**126-1711**	2	KIT-LAMP CONVERSION (24V)	
	23	2	**124-0792**	1	HARNESS AS-HYD ELEK CONTROL (KICKOUT & POSITIONER CONN)	
		2	**155-2270**	3	KIT-CONNECTING PLUG (2 PIN)	
		2	**102-8808**	1	KIT-CONNECTING PLUG (3 PIN)	
					(EACH KIT-CONNECTING PLUG INCLUDES PLUG AS & WEDGE)	
		2	**102-8801**	1	KIT-RECEPTACLE (12 PIN)	
					(INCLUDES RECEPTACLE AS & WEDGE)	
	24	2	**129-1999**	1	HARNESS AS-HYD ELEK CONTROL (CONSOLE SWITCHES)	
		2	**102-8803**	1	KIT-RECEPTACLE (3 PIN)	
		2	**102-8806**	1	KIT-RECEPTACLE (8 PIN)	
					(EACH KIT-RECEPTACLE INCLUDES RECEPTACLE AS & WEDGE)	
		2	**102-8808**	1	KIT-CONNECTING PLUG (3 PIN)	
		2	**102-8809**	1	KIT-CONNECTING PLUG (4 PIN)	
		2	**102-8811**	1	KIT-CONNECTING PLUG (8 PIN)	
					(EACH KIT-CONNECTING PLUG INCLUDES PLUG AS & WEDGE)	
		2	**3S-2093**	8	STRAP-CABLE	
		2	**8T-8737**	2	PLUG-SEAL	
		2	**9X-1054**	1	PLUG AS-CONNECTOR (4 PIN)	
					(INCLUDES PLUG AS & WEDGE)	
	25	1	**129-2973**	1	SWITCH AS-PUSH (THROTTLE LOCK SET)	
		1	**3E-3371**	1	WEDGE-RECEPTACLE LOCK (3 PIN)	
		1	**8T-8729**	3	PIN-CONNECTOR	
		1	**102-8803**	1	KIT-RECEPTACLE (3 PIN)	
					(INCLUDES WEDGE)	
	26	2	**130-1340**	1	BRACKET AS	
M		2	**6V-9632**	6	NUT-WELD (M6X1 THD)	
	27	1	**130-1341**	1	COVER AS	

118-7644 CONTROL GP-HYD ELECTRONIC *(contd.)* i01540176

NOTE	REF NO	GRAPHIC REF	PART NUMBER	QTY	PART NAME 1 2 3 4 5 6 (PRODUCT LEVEL)	SEE PAGE
M		1	**6V-9632**	3	NUT-WELD (M6X1 THD)	
	28	1	**130-1342**	1	COVER	
	29	1	**130-1343**	1	GUARD AS	
M		1	**6V-9632**	6	NUT-WELD (M6X1 THD)	
	30	1	**130-7918**	1	FILM-IDENTIFICATION	
	31	1	**130-7919**	1	FILM-IDENTIFICATION	
	32	1	**131-0453**	1	SWITCH AS-PUSH (THROTTLE LOCK RESUME)	
		1	**3E-3368**	1	WEDGE-PLUG LOCK	
		1	**8T-8730**	3	SOCKET-CONNECTOR	
		1	**102-8808**	1	KIT-CONNECTING PLUG (3 PIN)	
					(INCLUDES WEDGE)	
M	33	1	**5C-2890**	2	NUT (M6X1 THD)	
M	34	2	**6V-7743**	3	LOCKNUT (M6X1 THD)	
	35	1	**8M-2771**	2	CLIP	
M	36	1	**6V-7357**	4	BOLT (M6X1.0X25MM)	
	37	1	**8T-4205**	2	WASHER-HARD (7.2X14.5X2MM THK)	
M	38	1,2	**8T-4970**	9	BOLT (M6X1X14MM)	
	39	1	**133-7215**	2	DEFLECTOR	

M-METRIC PART
Y-SEPARATE ILLUSTRATION

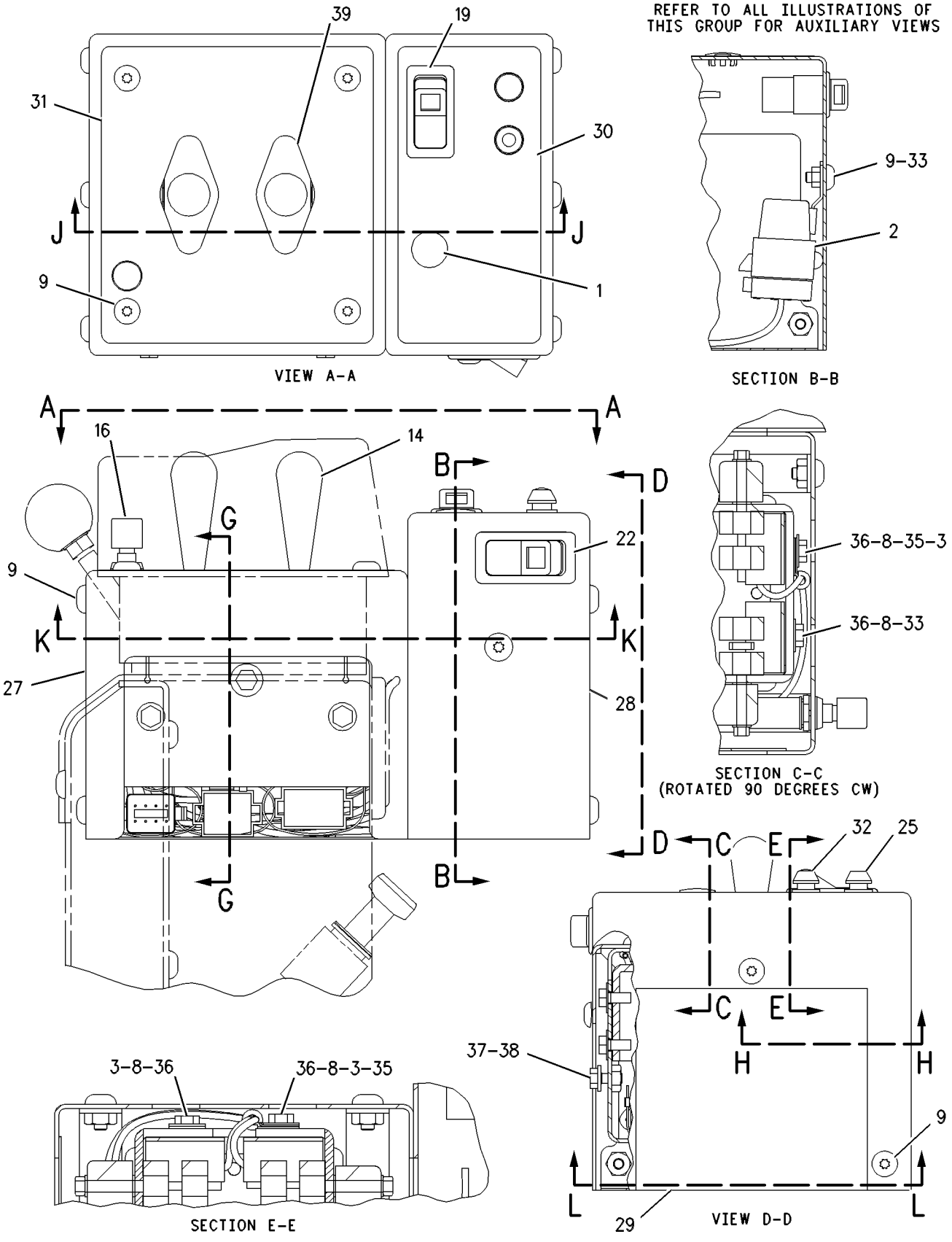

GRAPHIC #1

g00534491

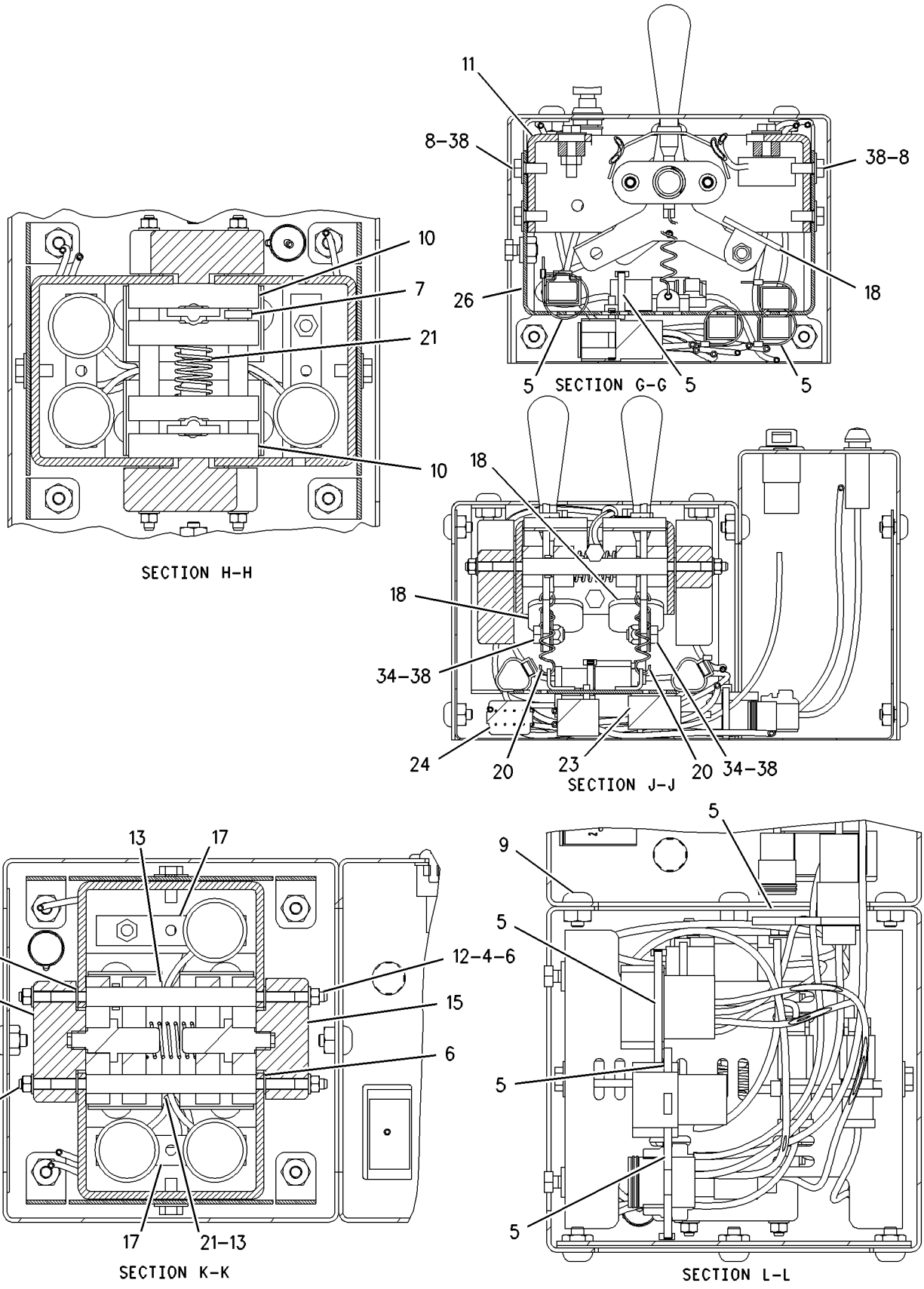

GRAPHIC #2

g00637913

HYDRAULIC SYSTEM

118-7644 CONTROL GP-HYD ELECTRONIC

S/N: 7HR79-289

PART OF 130-6906 CAB AR

SMCS-5702 **i01540179**

NOTE	REF NO	GRAPHIC REF	PART NUMBER	QTY	PART NAME 1 2 3 4 5 6 (PRODUCT LEVEL)	SEE PAGE
	1	1	**2M-4009**	1	PLUG-BUTTON	
	2	1	**3E-5239**	1	RELAY AS (24 VOLT)	
C	3	1	**147-2577**	3	COIL AS-DETENT (CONTROL LEVER)	
					(EACH INCLUDES)	
		1	**1S-9593**	2	STRAP-CABLE	
		1	**102-8802**	1	KIT-RECEPTACLE (2 PIN)	
					(INCLUDES WEDGE)	
		1	**3E-3365**	1	WEDGE-RECEPTACLE LOCK (2 PIN)	
		1	**8T-8729**	2	PIN-CONNECTOR	
M	4	2	**5C-2874**	4	NUT (M5X.8 THD)	
	5	2	**8L-8413**	10	STRAP-CABLE	
	6	2	**8T-0328**	8	WASHER-HARD (5.5X10X1MM THK)	
CM	7	1,2	**8T-4971**	1	BOLT (M6X1X30MM)	
	8	1,2	**9X-2026**	9	WASHER (6.5X17X1MM THK)	
M	9	1,2	**9X-2042**	14	SCREW-TRUSS HEAD (M6X1X12MM)	
	10	2	**139-1378**	4	BEARING	
	11	2	**106-1582**	1	HOUSING	
	12	2	**106-1583**	2	ROD	
	13	2	**106-1584**	2	SPACER	
C	14	1	**149-3949**	2	LEVER-CONTROL	
Y	15	2	**106-4437**	2	SENSOR GP-POSITION (SPRINGLESS) (CONTROL LEVER)	322
	16	1	**114-0420**	1	SWITCH AS-PUSH (HORN)	
	17	2	**114-4244**	2	PLATE	
C	18	2	**114-4247**	4	BRACKET AS	
	19	1	**127-4983**	1	SWITCH AS (REDUCED/MAX RIMPULL)	
		1	**123-6380**	1	ACTUATOR-ROCKER	
		1	**126-1711**	2	KIT-LAMP CONVERSION (24V)	
	20	2	**163-8119**	2	SPRING	
	21	2	**105-3372**	1	SPRING	
	22	1	**116-4503**	1	SWITCH AS-ROCKER (24 VOLT)(ILLUMINATED) (IMPLEMENT LOCKOUT)	
		1	**116-4501**	1	ACTUATOR-ROCKER	
		1	**126-1711**	2	KIT-LAMP CONVERSION (24V)	
	23	2	**124-0792**	1	HARNESS AS-HYD ELEK CONTROL (KICKOUT & POSITIONER CONN)	
		2	**3E-3361**	3	PLUG AS-CONNECTOR	
					(EACH INCLUDES RECEPTACLE AS & WEDGE)	
		2	**102-8808**	1	KIT-CONNECTING PLUG (3 PIN)	
					(INCLUDES PLUG AS & WEDGE)	
		2	**102-8801**		KIT-RECEPTACLE (12 PIN)	
					(INCLUDES RECEPTACLE AS & WEDGE)	
	24	2	**129-1999**	1	HARNESS AS-HYD ELEK CONTROL (CONSOLE SWITCHES)	
		2	**102-8803**	1	KIT-RECEPTACLE (3 PIN)	
		2	**102-8806**	1	KIT-RECEPTACLE (8 PIN)	
					(EACH KIT-RECEPTACLE INCLUDES RECEPTACLE AS & WEDGE)	
		2	**102-8808**	1	KIT-CONNECTING PLUG (3 PIN)	
		2	**102-8809**	1	KIT-CONNECTING PLUG (4 PIN)	
		2	**102-8811**	1	KIT-CONNECTING PLUG (8 PIN)	
					(EACH KIT-CONNECTING PLUG INCLUDES PLUG AS & WEDGE)	
		2	**3S-2093**	8	STRAP-CABLE	
		2	**8T-8737**	2	PLUG-SEAL	
		2	**9X-1054**	1	PLUG AS-CONNECTOR (4 PIN)	
					(INCLUDES PLUG AS & WEDGE)	
	25	1	**129-2973**	1	SWITCH AS-PUSH (THROTTLE LOCK SET)	
		1	**3E-3371**	1	WEDGE-RECEPTACLE LOCK (3 PIN)	

118-7644 CONTROL GP-HYD ELECTRONIC *(contd.)* i01540179

NOTE	REF NO	GRAPHIC REF	PART NUMBER	QTY	PART NAME 1 2 3 4 5 6 (PRODUCT LEVEL)	SEE PAGE
		1	**8T-8729**	3	PIN-CONNECTOR	
		1	**102-8803**	1	KIT-RECEPTACLE (3 PIN)	
					(INCLUDES WEDGE)	
	26	2	**130-1340**	1	BRACKET AS	
M		2	**6V-9632**	6	NUT-WELD (M6X1 THD)	
	27	1	**130-1341**	1	COVER AS	
M		1	**6V-9632**	3	NUT-WELD (M6X1 THD)	
	28	1	**130-1342**	1	COVER	
	29	1	**130-1343**	1	GUARD AS	
M		1	**6V-9632**	6	NUT-WELD (M6X1 THD)	
	30	1	**130-7918**	1	FILM-IDENTIFICATION	
	31	1	**130-7919**	1	FILM-IDENTIFICATION	
	32	1	**131-0453**	1	SWITCH AS-PUSH (THROTTLE LOCK RESUME)	
		1	**3E-3368**	1	WEDGE-PLUG LOCK	
		1	**8T-8730**	3	SOCKET-CONNECTOR	
		1	**102-8808**	1	KIT-CONNECTING PLUG (3 PIN)	
					(INCLUDES WEDGE)	
M	33	1	**5C-2890**	2	NUT (M6X1 THD)	
CM	34	2	**6V-7743**	4	LOCKNUT (M6X1 THD)	
	35	1	**8M-2771**	2	CLIP	
CM	36	1	**6V-7357**	3	BOLT (M6X1.0X25MM)	
	37	1	**8T-4205**	2	WASHER-HARD (7.2X14.5X2MM THK)	
CM	38	1,2	**8T-4970**	10	BOLT (M6X1X14MM)	
	39	1	**133-7215**	2	DEFLECTOR	

C-CHANGE FROM PREVIOUS TYPE
M-METRIC PART
Y-SEPARATE ILLUSTRATION

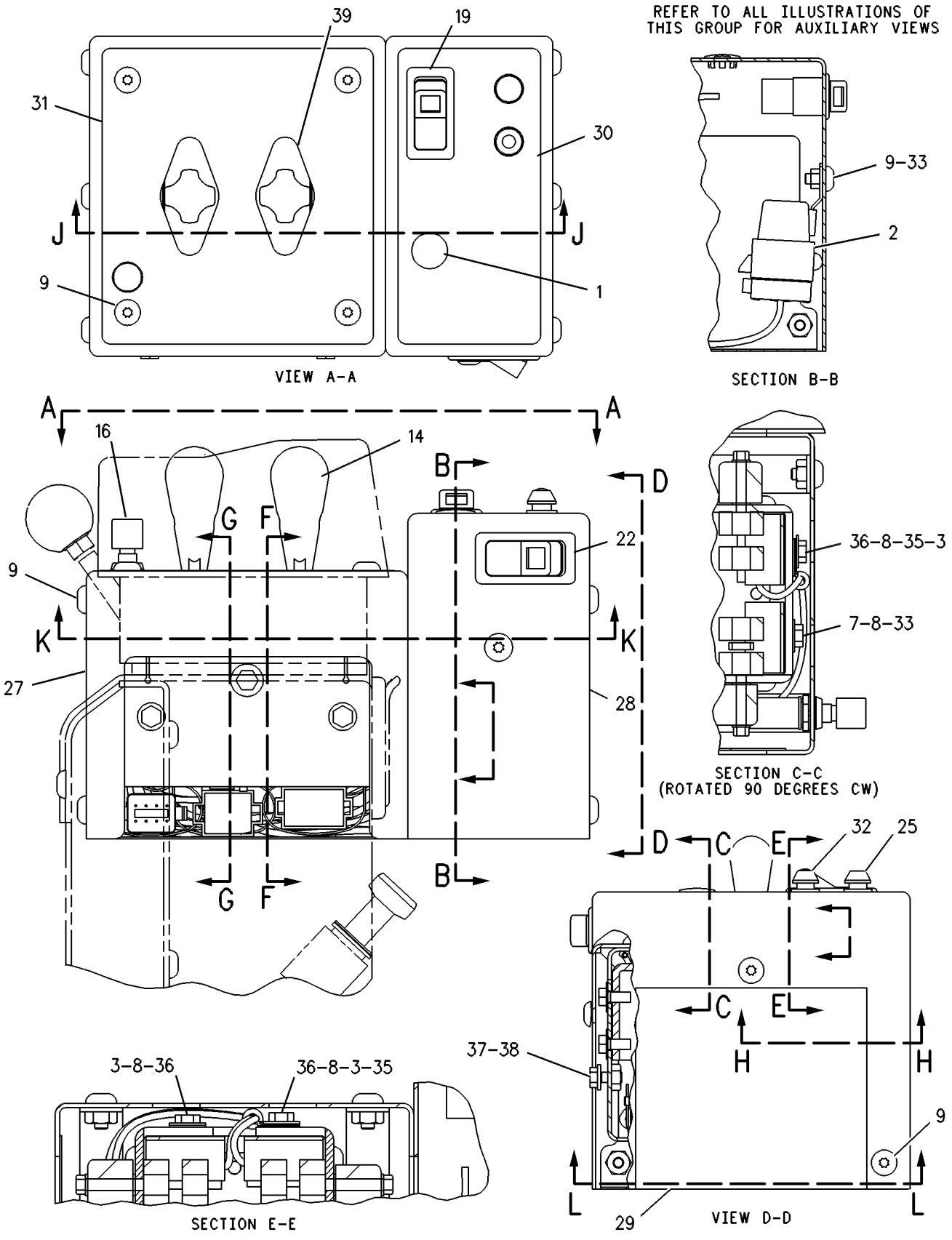

GRAPHIC #1 g00295003

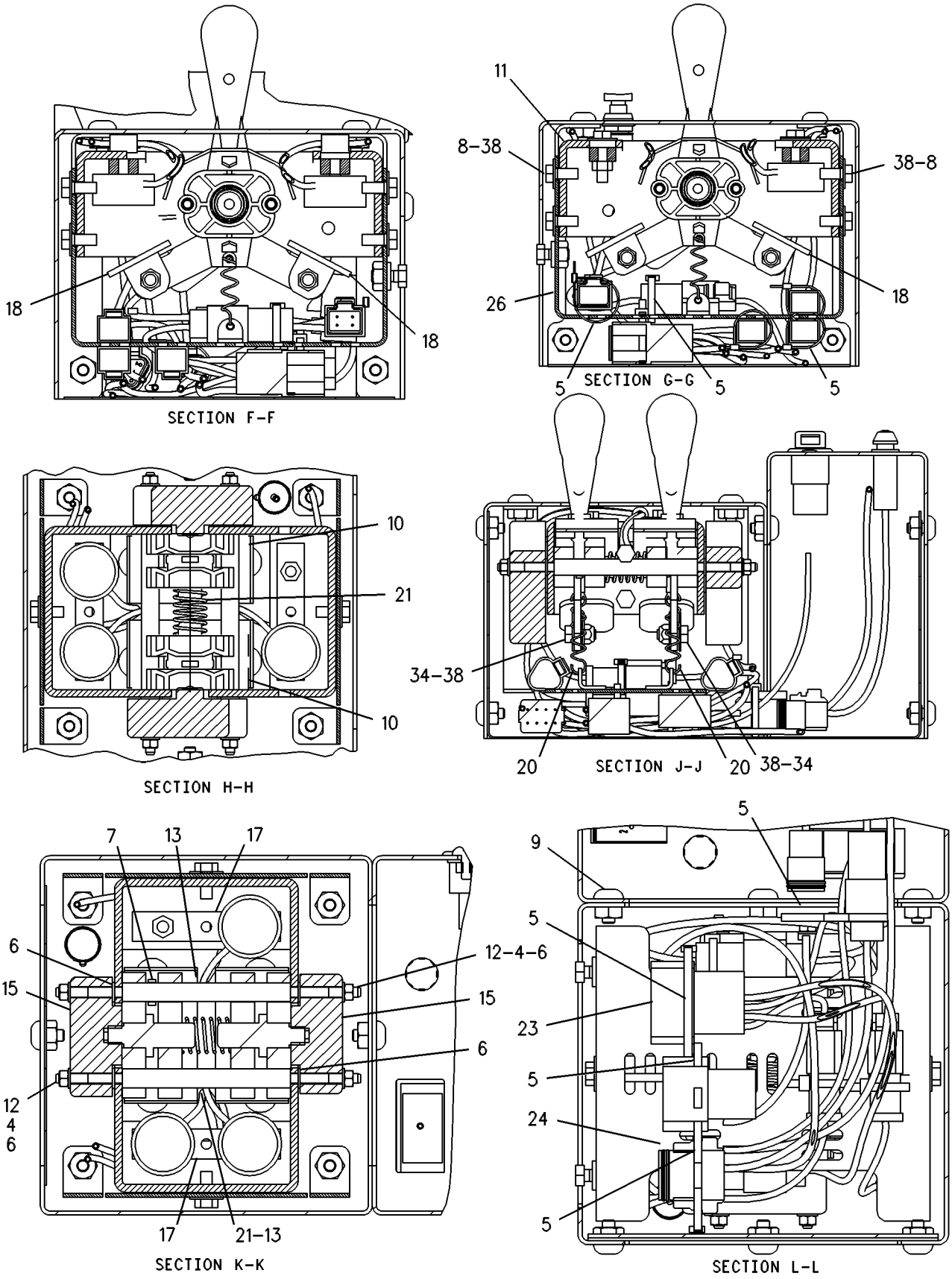

GRAPHIC #2 g00295004

HYDRAULIC SYSTEM

118-7644 CONTROL GP-HYD ELECTRONIC

S/N: 7HR290-297

PART OF 130-6906 CAB AR

SMCS-5702 **i01540182**

NOTE	REF NO	GRAPHIC REF	PART NUMBER	QTY	PART NAME 1 2 3 4 5 6 (PRODUCT LEVEL)	SEE PAGE
	1	1	**2M-4009**	1	PLUG-BUTTON	
	2	1	**3E-5239**	1	RELAY AS (24 VOLT)	
	3	1	**147-2577**	3	COIL AS-DETENT (CONTROL LEVER)	
					(EACH INCLUDES)	
		1	**1S-9593**	2	STRAP-CABLE	
		1	**102-8802**	1	KIT-RECEPTACLE (2 PIN)	
					(INCLUDES WEDGE)	
		1	**3E-3365**	1	WEDGE-RECEPTACLE LOCK (2 PIN)	
		1	**8T-8729**	2	PIN-CONNECTOR	
M	4	2	**5C-2874**	4	NUT (M5X.8 THD)	
	5	2	**8L-8413**	10	STRAP-CABLE	
	6	2	**8T-0328**	8	WASHER-HARD (5.5X10X1MM THK)	
M	7	1	**8T-4971**	1	BOLT (M6X1X30MM)	
	8	1,2	**9X-2026**	9	WASHER (6.5X17X1MM THK)	
M	9	1,2	**9X-2042**	14	SCREW-TRUSS HEAD (M6X1X12MM)	
	10	2	**139-1378**	4	BEARING	
	11	2	**106-1582**	1	HOUSING	
	12	2	**106-1583**	2	ROD	
	13	2	**106-1584**	2	SPACER	
	14	1	**149-3949**	2	LEVER-CONTROL	
CY	15	2	**161-8979**	2	SENSOR GP-POSITION (SPRINGLESS) (CONTROL LEVER)	326
	16	1	**114-0420**	1	SWITCH AS-PUSH (HORN)	
	17	2	**114-4244**	2	PLATE	
	18	2	**114-4247**	4	BRACKET AS	
	19	1	**127-4983**	1	SWITCH AS (REDUCED/MAX RIMPULL)	
		1	**123-6380**	1	ACTUATOR-ROCKER	
		1	**126-1711**	2	KIT-LAMP CONVERSION (24V)	
	20	2	**163-8119**	2	SPRING	
	21	2	**105-3372**	1	SPRING	
	22	1	**116-4503**	1	SWITCH AS-ROCKER (24 VOLT)(ILLUMINATED) (IMPLEMENT LOCKOUT)	
		1	**116-4501**	1	ACTUATOR-ROCKER	
		1	**126-1711**	2	KIT-LAMP CONVERSION (24V)	
	23	2	**124-0792**	1	HARNESS AS-HYD ELEK CONTROL (KICKOUT & POSITIONER CONN)	
		2	**155-2270**	3	KIT-CONNECTING PLUG (2 PIN)	
		2	**102-8808**	1	KIT-CONNECTING PLUG (3 PIN)	
					(EACH KIT-CONNECTING PLUG INCLUDES PLUG AS & WEDGE)	
		2	**102-8801**	1	KIT-RECEPTACLE (12 PIN)	
					(INCLUDES RECEPTACLE AS & WEDGE)	
	24	2	**129-1999**	1	HARNESS AS-HYD ELEK CONTROL (CONSOLE SWITCHES)	
		2	**102-8803**	1	KIT-RECEPTACLE (3 PIN)	
		2	**102-8806**	1	KIT-RECEPTACLE (8 PIN)	
					(EACH KIT-RECEPTACLE INCLUDES RECEPTACLE AS & WEDGE)	
		2	**102-8808**	1	KIT-CONNECTING PLUG (3 PIN)	
		2	**102-8809**	1	KIT-CONNECTING PLUG (4 PIN)	
		2	**102-8811**	1	KIT-CONNECTING PLUG (8 PIN)	
					(EACH KIT-CONNECTING PLUG INCLUDES PLUG AS & WEDGE)	
		2	**3S-2093**	8	STRAP-CABLE	
		2	**8T-8737**	2	PLUG-SEAL	
		2	**9X-1054**	1	PLUG AS-CONNECTOR (4 PIN)	
					(INCLUDES PLUG AS & WEDGE)	
	25	1	**188-3984**	1	SWITCH AS-PUSH (THROTTLE LOCK SET)	
		1	**3E-3371**	1	WEDGE-RECEPTACLE LOCK (3 PIN)	

118-7644 CONTROL GP-HYD ELECTRONIC *(contd.)* i01540182

NOTE	REF NO	GRAPHIC REF	PART NUMBER	QTY	PART NAME 1 2 3 4 5 6 (PRODUCT LEVEL)	SEE PAGE
		1	**3K-0835**	1	NUT (5/8-24 THD)	
		1	**6F-0253**	1	LOCKWASHER	
		1	**102-8803**	1	KIT-RECEPTACLE (3 PIN)	
					(INCLUDES RECEPTACLE AS & WEDGE)	
		1	**186-3735**	3	PIN-CONNECTOR	
	26	2	**130-1340**	1	BRACKET AS	
M		2	**6V-9632**	6	NUT-WELD (M6X1 THD)	
	27	1	**130-1341**	1	COVER AS	
M		1	**6V-9632**	3	NUT-WELD (M6X1 THD)	
	28	1	**130-1342**	1	COVER	
	29	1	**130-1343**	1	GUARD AS	
M		1	**6V-9632**	6	NUT-WELD (M6X1 THD)	
	30	1	**130-7918**	1	FILM-IDENTIFICATION	
	31	1	**130-7919**	1	FILM-IDENTIFICATION	
	32	1	**188-3983**	1	SWITCH AS-PUSH (THROTTLE LOCK RESUME)	
		1	**3K-0835**	1	NUT (5/8-24 THD)	
		1	**6F-0253**	1	LOCKWASHER	
		1	**155-2260**	1	KIT-CONNECTING PLUG (3 PIN)	
					(INCLUDES PLUG AS AND WEDGE)	
		1	**155-2276**	1	WEDGE-PLUG LOCK	
		1	**186-3736**	3	SOCKET-CONNECTOR	
M	33	1	**5C-2890**	2	NUT (M6X1 THD)	
M	34	2	**6V-7743**	4	LOCKNUT (M6X1 THD)	
	35	1	**8M-2771**	2	CLIP	
M	36	1	**6V-7357**	3	BOLT (M6X1.0X25MM)	
	37	1	**8T-4205**	2	WASHER-HARD (7.2X14.5X2MM THK)	
M	38	1,2	**8T-4970**	10	BOLT (M6X1X14MM)	
	39	2	**133-7215**	2	DEFLECTOR	

C-CHANGE FROM PREVIOUS TYPE
M-METRIC PART
Y-SEPARATE ILLUSTRATION

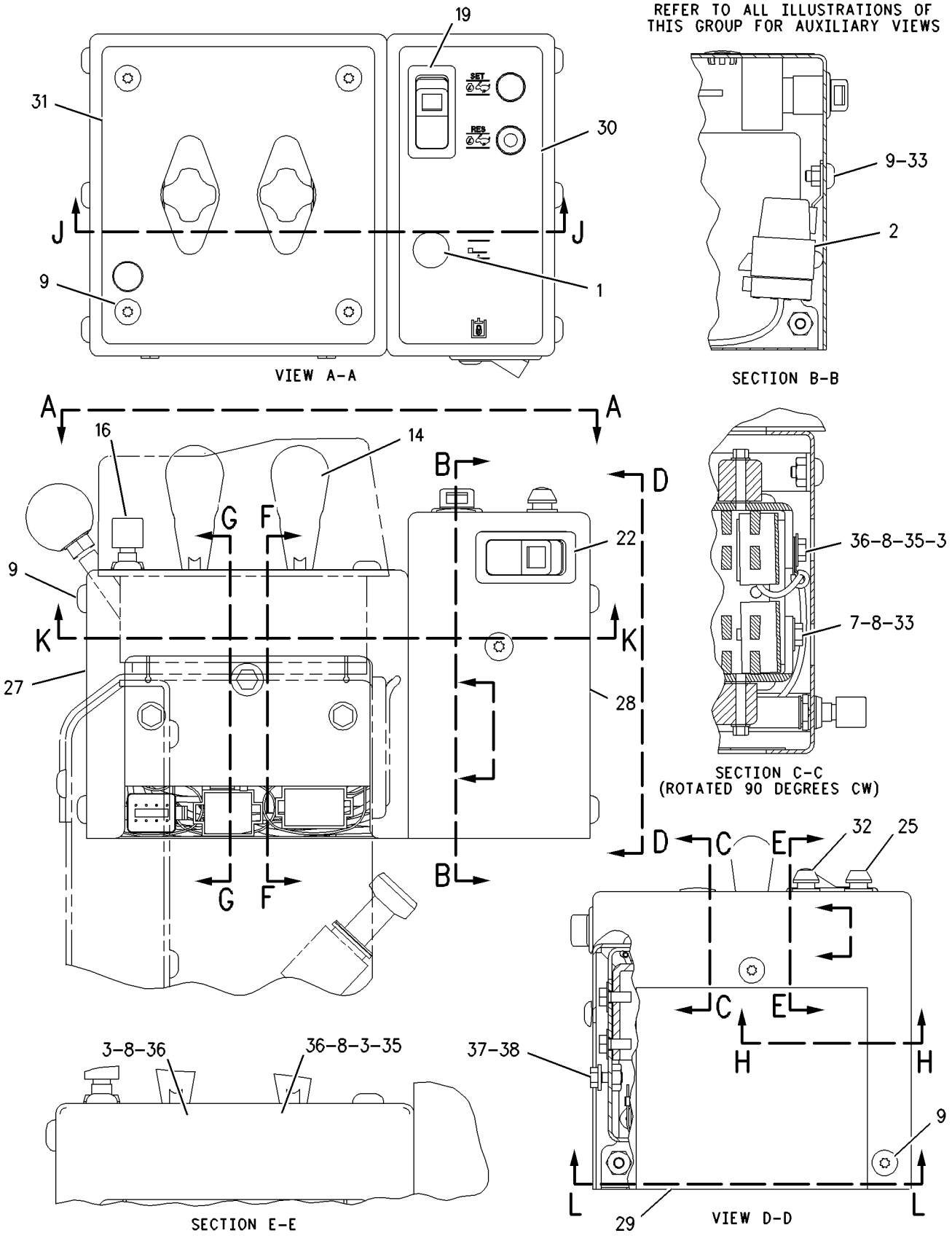

GRAPHIC #1 g00747121

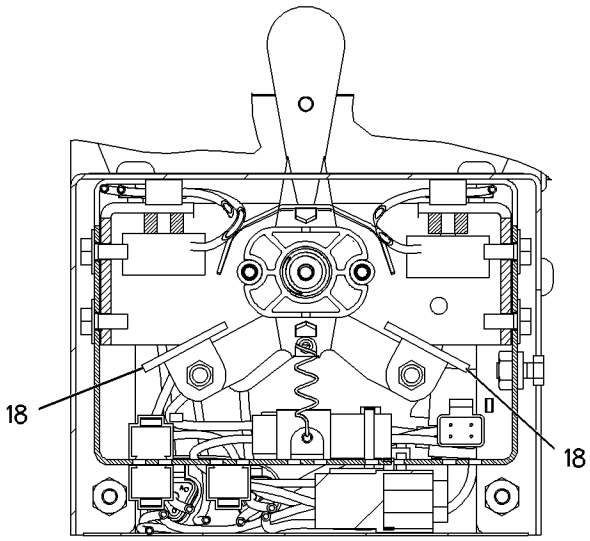

SECTION F-F

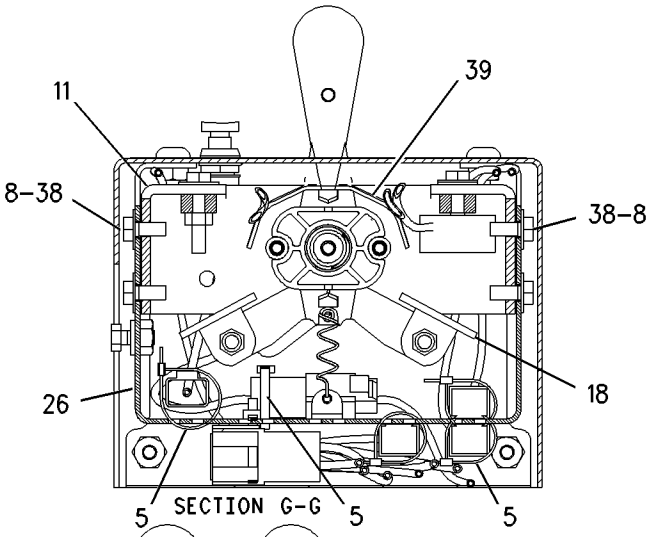

SECTION G-G

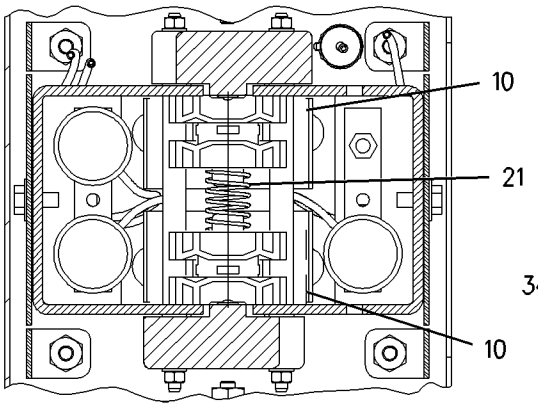

SECTION H-H

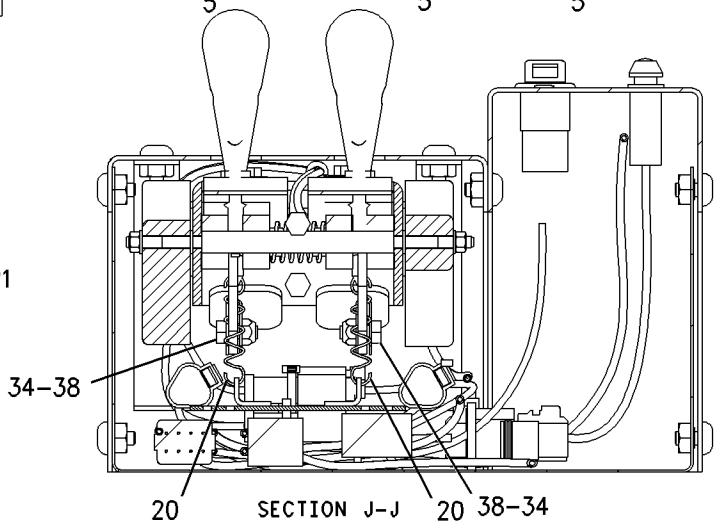

SECTION J-J

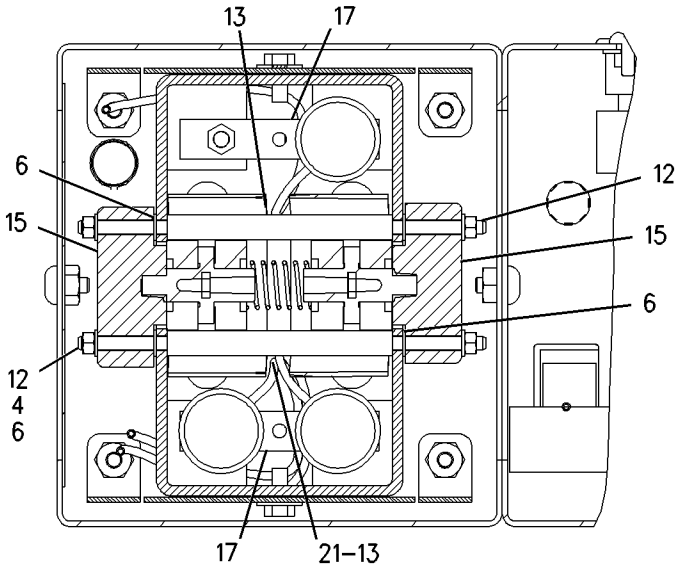

SECTION K-K

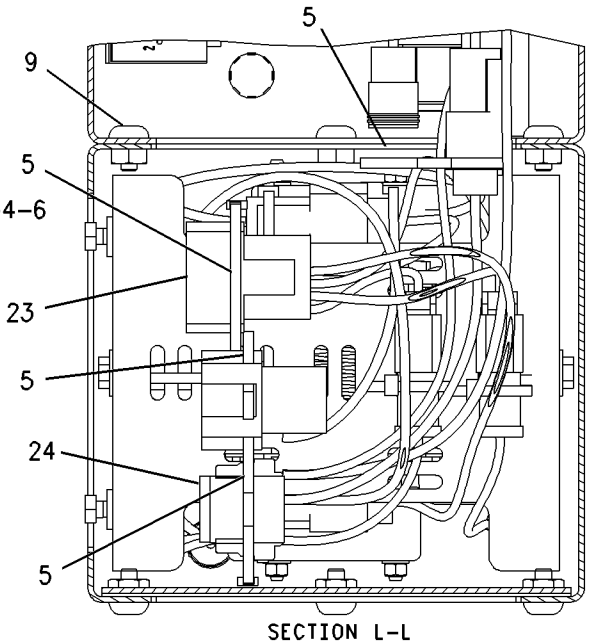

SECTION L-L

GRAPHIC #2

g00747122

HYDRAULIC SYSTEM

170-4751 CONTROL GP-HYD ELECTRONIC

S/N: 7HR298-UP
PART OF 171-7047 CAB AR
TYPE 1

SMCS-5702 **i01541263**

NOTE	REF NO	GRAPHIC REF	PART NUMBER	QTY	PART NAME 1 2 3 4 5 6 (PRODUCT LEVEL)	SEE PAGE
	1	1	**2M-4009**	1	PLUG-BUTTON	
	2	2	**3E-3377**	1	WEDGE-RECEPTACLE LOCK	
	3	2	**3E-5239**	1	RELAY AS (24 VOLT)	
M	4	2,3	**5C-2874**	4	NUT (M5X.8 THD)	
	5	2	**8L-8413**	11	STRAP-CABLE	
	6	3	**8T-0328**	8	WASHER-HARD (5.5X10X1MM THK)	
	7	1,2	**9X-2026**	10	WASHER (6.5X17X1MM THK)	
M	8	1	**9X-2042**	10	SCREW-TRUSS HEAD (M6X1X12MM)	
	9	3	**105-3372**	1	SPRING	
	10	2	**106-1582**	1	HOUSING	
	11	3	**106-1583**	2	ROD	
	12	3	**106-1584**	2	SPACER	
	13	3	**114-4244**	2	PLATE	
	14	2	**114-4247**	4	BRACKET AS	
	15	2	**124-0792**	1	HARNESS AS-HYD ELEK CONTROL (KICKOUT & POSITIONER CONN)	
		2	**3S-2093**	5	STRAP-CABLE	
		2	**102-8801**	1	KIT-RECEPTACLE (12 PIN)	
					(INCLUDES WEDGE AND RECEPTACLE AS)	
		2	**155-2270**	1	KIT-CONNECTING PLUG (2 PIN)	
		2	**155-2260**	1	KIT-CONNECTING PLUG (3 PIN)	
					(EACH KIT INCLUDES WEDGE AND PLUG AS)	
	16	2	**129-1999**	1	HARNESS AS-HYD ELEK CONTROL (CONSOLE SWITCHES)	
		2	**155-2260**	1	KIT-CONNECTING PLUG (3 PIN)	
					(INCLUDES PLUG AS AND WEDGE)	
		2	**102-8803**	1	KIT-RECEPTACLE (3 PIN)	
					(INCLUDES RECEPTACLE AS AND WEDGE)	
		2	**155-2271**	1	KIT-CONNECTING PLUG (4 PIN)	
					(INCLUDES PLUG AS AND WEDGE)	
		2	**155-2265**	1	KIT-CONNECTING PLUG (8 PIN)	
					(INCLUDES PLUG AS AND WEDGE)	
		2	**102-8806**	1	KIT-RECEPTACLE (8 PIN)	
					(INCLUDES RECEPTACLE AS AND WEDGE)	
		2	**3E-7996**	2	PLUG-CONNECTOR	
		2	**3S-2093**	8	STRAP-CABLE	
		2	**8T-8737**	2	PLUG-SEAL	
		2	**9X-1054**	1	PLUG AS-CONNECTOR (4 PIN)	
	17	1	**188-3984**	1	SWITCH AS-PUSH (THROTTLE LOCK SET)	
		1	**3E-3371**	1	WEDGE-RECEPTACLE LOCK (3 PIN)	
		1	**3K-0835**	1	NUT (5/8-24 THD)	
		1	**6F-0253**	1	LOCKWASHER	
		1	**102-8803**	1	KIT-RECEPTACLE (3 PIN)	
					(INCLUDES RECEPTACLE AS AND WEDGE)	
		1	**186-3735**	3	PIN-CONNECTOR	
	18	1	**188-3983**	1	SWITCH AS-PUSH (THROTTLE LOCK RESUME)	
		1	**3E-3371**	1	WEDGE-RECEPTACLE LOCK (3 PIN)	
		1	**3K-0835**	1	NUT (5/8-24 THD)	
		1	**6F-0253**	1	LOCKWASHER	
		1	**102-8803**	1	KIT-RECEPTACLE (3 PIN)	
					(INCLUDES RECEPTACLE AS AND WEDGE)	
		1	**186-3735**	3	PIN-CONNECTOR	
	19	2	**133-7215**	2	DEFLECTOR	
	20	3	**139-1378**	4	BEARING	
	21	3	**147-2577**	3	COIL AS-DETENT (CONTROL LEVER)	
					(EACH INCLUDES)	

170-4751 CONTROL GP-HYD ELECTRONIC *(contd.)* i01541263

NOTE	REF NO	GRAPHIC REF	PART NUMBER	QTY	PART NAME 1 2 3 4 5 6 (PRODUCT LEVEL)	SEE PAGE
		3	**1S-9593**	2	STRAP-CABLE	
		3	**102-8802**	1	KIT-RECEPTACLE (2 PIN)	
					(INCLUDES WEDGE)	
		3	**3E-3365**	1	WEDGE-RECEPTACLE LOCK (2 PIN)	
		3	**8T-8729**	2	PIN-CONNECTOR	
	22	2	**149-3949**	2	LEVER-CONTROL	
Y	23	3	**161-8979**	2	SENSOR GP-POSITION (SPRINGLESS) (CONTROL LEVER)	326
	24	2	**163-8119**	2	SPRING	
	25	1	**166-4804**	1	COVER AS	
M		1	**6V-9632**	2	NUT-WELD (M6X1 THD)	
	26	1	**166-4805**	1	GUARD AS	
M		1	**6V-9632**	1	NUT-WELD (M6X1 THD)	
	27	1	**170-0970**	1	CUSHION AS	
	28	1	**170-0980**	1	BRACKET	
	29	1	**170-1821**	1	SWITCH AS-PUSH BUTTON (HORN)	
		1	**6F-0253**	1	LOCKWASHER	
		1	**8T-8729**	2	PIN-CONNECTOR	
		1	**172-3511**	1	NUT (5/8-24 THD)	
	30	1	**170-7096**	1	GUARD AS	
M		1	**6V-9632**	3	NUT-WELD (M6X1 THD)	
	31	2	**171-1055**	1	BRACKET AS	
M		2	**6V-9632**	5	NUT-WELD (M6X1 THD)	
	32	1	**171-1147**	1	FILM-IDENTIFICATION	
	33	1	**180-2559**	1	SWITCH AS-ROCKER (REDUCED/MAX RIMPULL)	
	34	1	**180-2562**	1	SWITCH AS-ROCKER (IMPLEMENT LOCKOUT)	
	35	2	**102-8804**	1	KIT-RECEPTACLE (4 PIN)	
					(INCLUDES WEDGE)	
M	36	1	**5C-2890**	1	NUT (M6X1 THD)	
	37	2	**6V-3341**	1	GROMMET	
M	38	1	**6V-7357**	3	BOLT (M6X1.0X25MM)	
M	39	2	**6V-7743**	4	LOCKNUT (M6X1 THD)	
M	40	2	**7X-2619**	1	BOLT (M6X1.0X20MM)	
	41	1	**8M-2771**	2	CLIP	
M	42	2	**8T-4970**	8	BOLT (M6X1X14MM)	
M	43	1	**8T-4971**	1	BOLT (M6X1X30MM)	
	44	2	**8T-8737**	2	PLUG-SEAL	
M	45	2	**9X-2044**	4	SCREW-TRUSS HEAD (M6X1X16MM)	

M-METRIC PART
Y-SEPARATE ILLUSTRATION

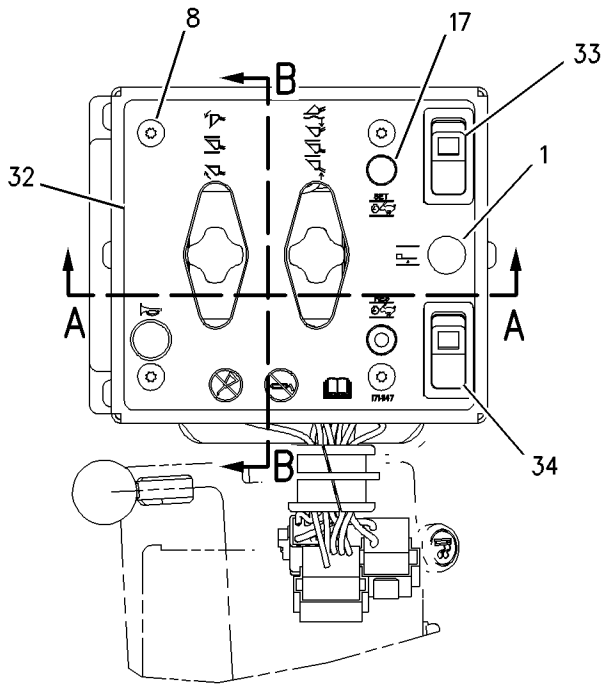

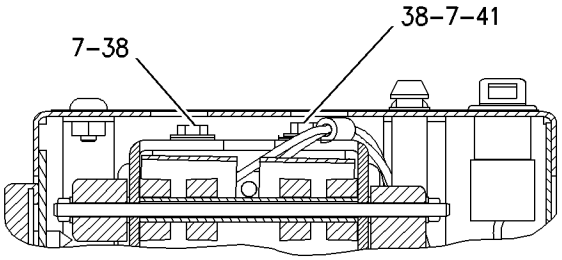

SECTION F-F

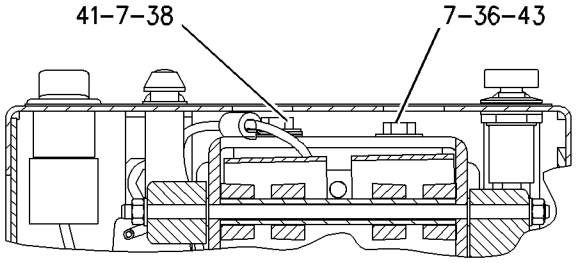

SECTION E-E

REFER TO ALL ILLUSTRATIONS OF
THIS GROUP FOR AUXILIARY VIEWS

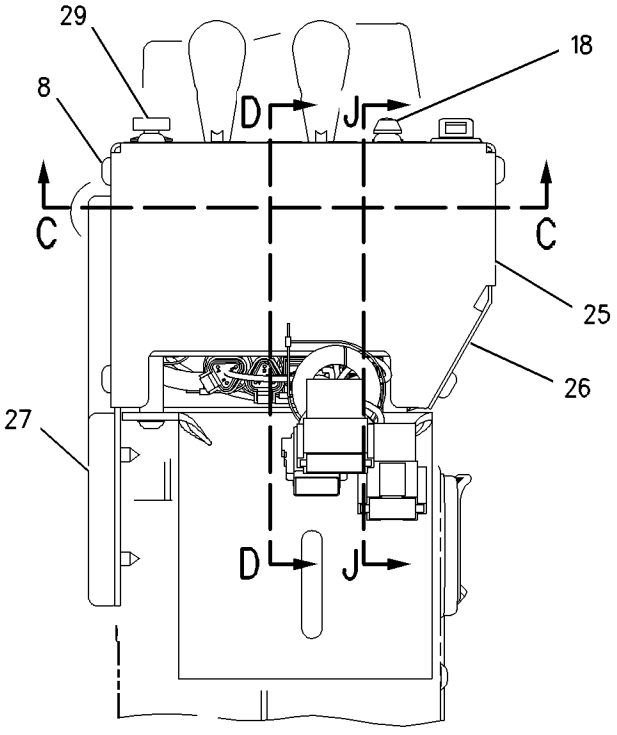

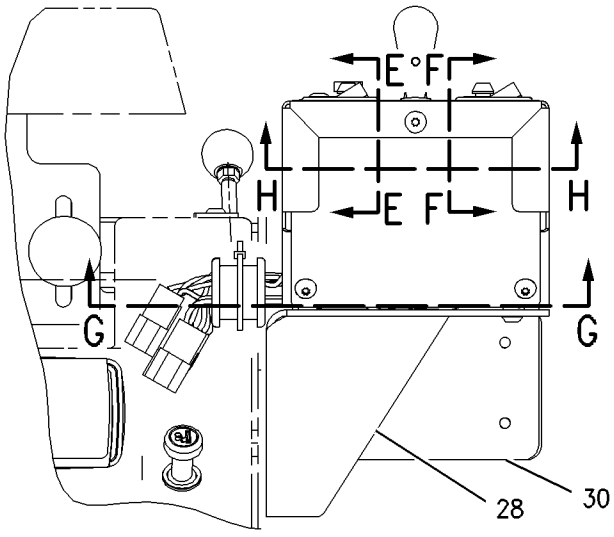

GRAPHIC #1 g00729376

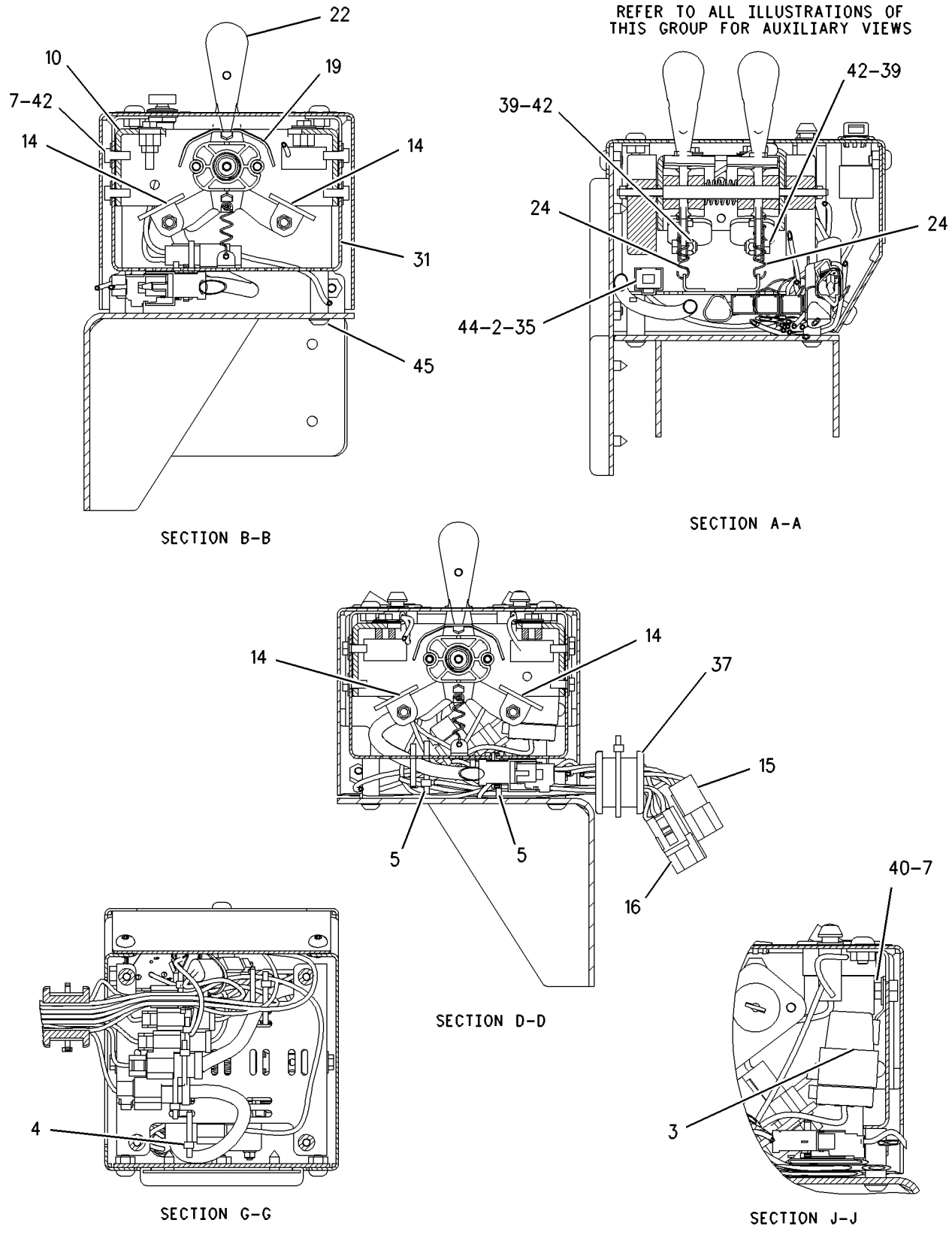

GRAPHIC #2 g00729386

REFER TO ALL ILLUSTRATIONS OF
THIS GROUP FOR AUXILIARY VIEWS

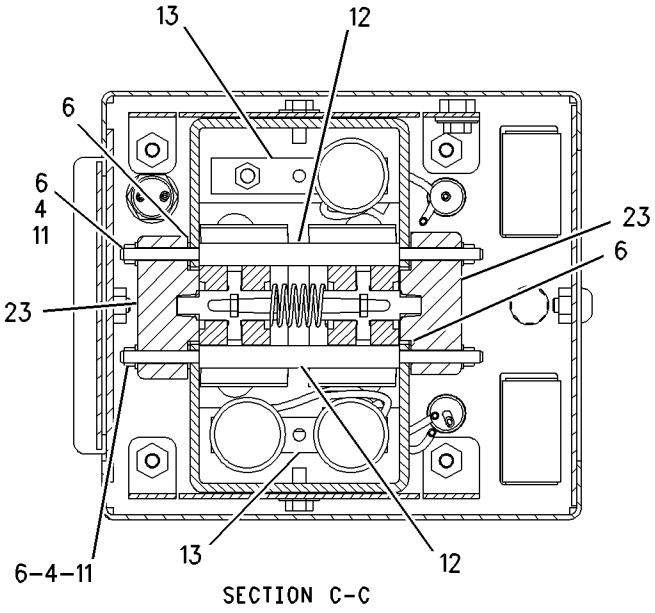

SECTION C-C

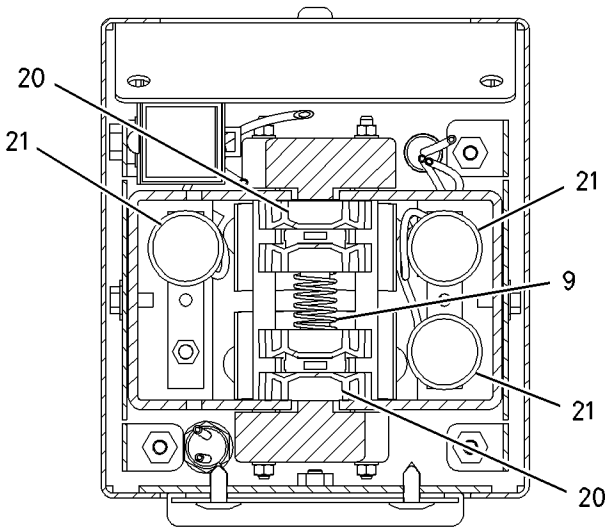

SECTION H-H

GRAPHIC #3

g00729390

MEMORANDA

HYDRAULIC SYSTEM

170-4751 CONTROL GP-HYD ELECTRONIC

S/N: 7HR298-UP
PART OF 171-7047 CAB AR
TYPE 2

SMCS-5702 **i01541266**

NOTE	REF NO	GRAPHIC REF	PART NUMBER	QTY	PART NAME 1 2 3 4 5 6 (PRODUCT LEVEL)	SEE PAGE
	1	1	**2M-4009**	1	PLUG-BUTTON	
	2	2	**3E-3377**	1	WEDGE-RECEPTACLE LOCK	
	3	2	**3E-5239**	1	RELAY AS (24 VOLT)	
M	4	2,3	**5C-2874**	4	NUT (M5X.8 THD)	
	5	2	**8L-8413**	11	STRAP-CABLE	
	6	3	**8T-0328**	8	WASHER-HARD (5.5X10X1MM THK)	
	7	1,2	**9X-2026**	10	WASHER (6.5X17X1MM THK)	
M	8	1	**9X-2042**	10	SCREW-TRUSS HEAD (M6X1X12MM)	
	9	3	**105-3372**	1	SPRING	
	10	2	**106-1582**	1	HOUSING	
	11	3	**106-1583**	2	ROD	
	12	3	**106-1584**	2	SPACER	
	13	3	**114-4244**	2	PLATE	
	14	2	**114-4247**	4	BRACKET AS	
	15	2	**124-0792**	1	HARNESS AS-HYD ELEK CONTROL (KICKOUT & POSITIONER CONN)	
		2	**3S-2093**	5	STRAP-CABLE	
		2	**102-8801**	1	KIT-RECEPTACLE (12 PIN)	
					(INCLUDES WEDGE AND RECEPTACLE AS)	
		2	**155-2270**	1	KIT-CONNECTING PLUG (2 PIN)	
		2	**155-2260**	1	KIT-CONNECTING PLUG (3 PIN)	
					(EACH KIT INCLUDES WEDGE AND PLUG AS)	
C	16	2	**198-1891**	1	HARNESS AS-CONSOLE (HYDRAULIC CONTROL)	
		2	**155-2260**	1	KIT-CONNECTING PLUG (3 PIN)	
					(INCLUDES PLUG AS AND WEDGE)	
		2	**102-8803**	1	KIT-RECEPTACLE (3 PIN)	
					(INCLUDES RECEPTACLE AS AND WEDGE)	
		2	**155-2271**	1	KIT-CONNECTING PLUG (4 PIN)	
					(INCLUDES PLUG AS AND WEDGE)	
		2	**155-2265**	1	KIT-CONNECTING PLUG (8 PIN)	
					(INCLUDES PLUG AS AND WEDGE)	
		2	**102-8806**	1	KIT-RECEPTACLE (8 PIN)	
					(INCLUDES RECEPTACLE AS AND WEDGE)	
		2	**3E-7996**	2	PLUG-CONNECTOR	
		2	**3S-2093**	8	STRAP-CABLE	
		2	**8T-8737**	2	PLUG-SEAL	
		2	**9X-1054**	1	PLUG AS-CONNECTOR (4 PIN)	
	17	1	**188-3984**	1	SWITCH AS-PUSH (THROTTLE LOCK SET)	
		1	**3E-3371**	1	WEDGE-RECEPTACLE LOCK (3 PIN)	
		1	**3K-0835**	1	NUT (5/8-24 THD)	
		1	**6F-0253**	1	LOCKWASHER	
		1	**102-8803**	1	KIT-RECEPTACLE (3 PIN)	
					(INCLUDES RECEPTACLE AS AND WEDGE)	
		1	**186-3735**	3	PIN-CONNECTOR	
	18	1	**188-3983**	1	SWITCH AS-PUSH (THROTTLE LOCK RESUME)	
		1	**3E-3371**	1	WEDGE-RECEPTACLE LOCK (3 PIN)	
		1	**3K-0835**	1	NUT (5/8-24 THD)	
		1	**6F-0253**	1	LOCKWASHER	
		1	**102-8803**	1	KIT-RECEPTACLE (3 PIN)	
					(INCLUDES RECEPTACLE AS AND WEDGE)	
		1	**186-3735**	3	PIN-CONNECTOR	
	19	2	**133-7215**	2	DEFLECTOR	
	20	3	**139-1378**	4	BEARING	
	21	3	**147-2577**	3	COIL AS-DETENT (CONTROL LEVER)	
					(EACH INCLUDES)	

170-4751 CONTROL GP-HYD ELECTRONIC *(contd.)* i01541266

NOTE	REF NO	GRAPHIC REF	PART NUMBER	QTY	PART NAME 1 2 3 4 5 6 (PRODUCT LEVEL)	SEE PAGE
		3	**1S-9593**	2	STRAP-CABLE	
		3	**102-8802**	1	KIT-RECEPTACLE (2 PIN)	
					(INCLUDES WEDGE)	
		3	**3E-3365**	1	WEDGE-RECEPTACLE LOCK (2 PIN)	
		3	**8T-8729**	2	PIN-CONNECTOR	
	22	2	**149-3949**	2	LEVER-CONTROL	
Y	23	3	**161-8979**	2	SENSOR GP-POSITION (SPRINGLESS) (CONTROL LEVER)	326
	24	2	**163-8119**	2	SPRING	
	25	1	**166-4804**	1	COVER AS	
M		1	**6V-9632**	2	NUT-WELD (M6X1 THD)	
	26	1	**166-4805**	1	GUARD AS	
M		1	**6V-9632**	1	NUT-WELD (M6X1 THD)	
	27	1	**170-0970**	1	CUSHION AS	
	28	1	**170-0980**	1	BRACKET	
	29	1	**170-1821**	1	SWITCH AS-PUSH BUTTON (HORN)	
		1	**6F-0253**	1	LOCKWASHER	
		1	**8T-8729**	2	PIN-CONNECTOR	
		1	**172-3511**	1	NUT (5/8-24 THD)	
	30	1	**170-7096**	1	GUARD AS	
M		1	**6V-9632**	3	NUT-WELD (M6X1 THD)	
	31	2	**171-1055**	1	BRACKET AS	
M		2	**6V-9632**	5	NUT-WELD (M6X1 THD)	
	32	1	**171-1147**	1	FILM-IDENTIFICATION	
	33	1	**180-2559**	1	SWITCH AS-ROCKER (REDUCED/MAX RIMPULL)	
	34	1	**180-2562**	1	SWITCH AS-ROCKER (IMPLEMENT LOCKOUT)	
	35	2	**102-8804**	1	KIT-RECEPTACLE (4 PIN)	
					(INCLUDES WEDGE)	
M	36	1	**5C-2890**	1	NUT (M6X1 THD)	
	37	2	**6V-3341**	1	GROMMET	
M	38	1	**6V-7357**	3	BOLT (M6X1.0X25MM)	
M	39	2	**6V-7743**	4	LOCKNUT (M6X1 THD)	
M	40	2	**7X-2619**	1	BOLT (M6X1.0X20MM)	
	41	1	**8M-2771**	2	CLIP	
M	42	2	**8T-4970**	8	BOLT (M6X1X14MM)	
M	43	1	**8T-4971**	1	BOLT (M6X1X30MM)	
	44	2	**8T-8737**	2	PLUG-SEAL	
M	45	2	**9X-2044**	4	SCREW-TRUSS HEAD (M6X1X16MM)	

C-CHANGE FROM PREVIOUS TYPE
M-METRIC PART
Y-SEPARATE ILLUSTRATION

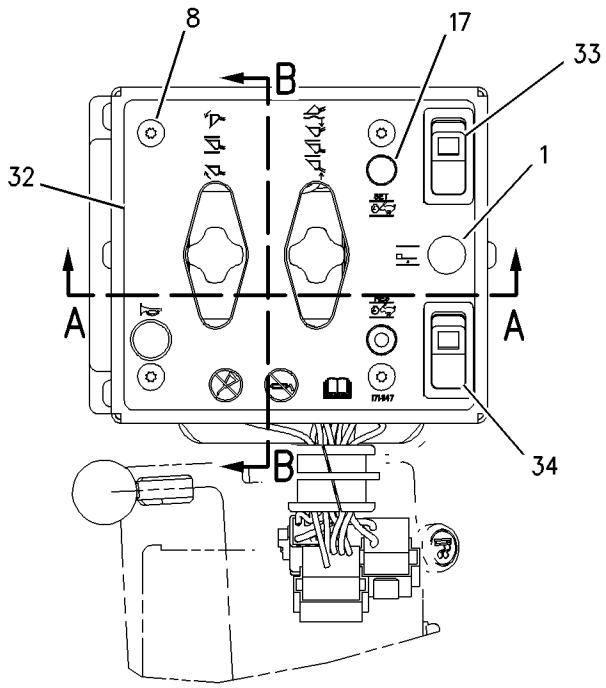

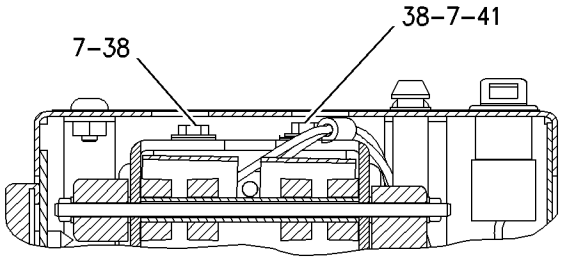

SECTION F-F

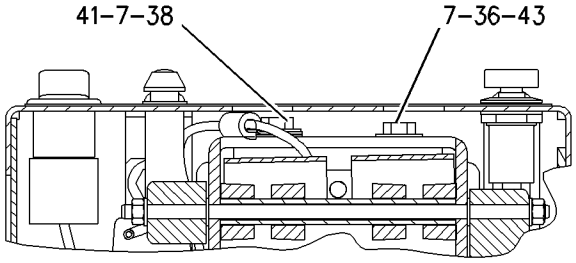

SECTION E-E

REFER TO ALL ILLUSTRATIONS OF
THIS GROUP FOR AUXILIARY VIEWS

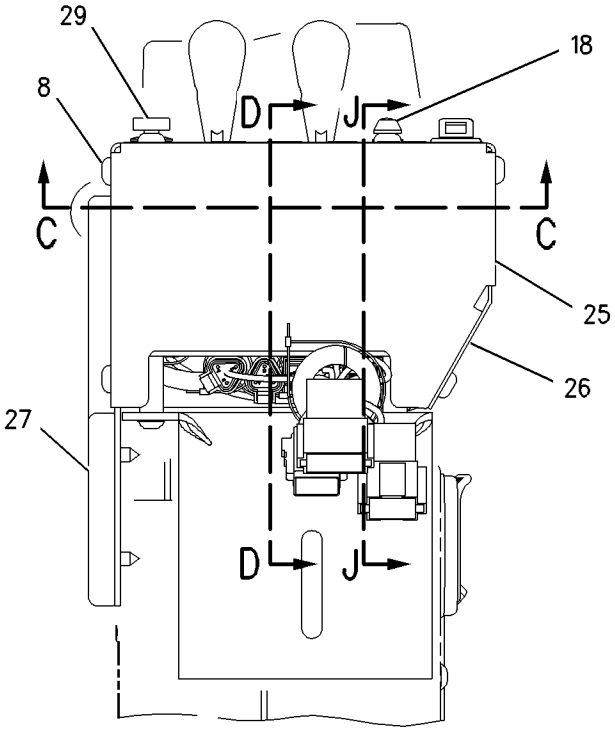

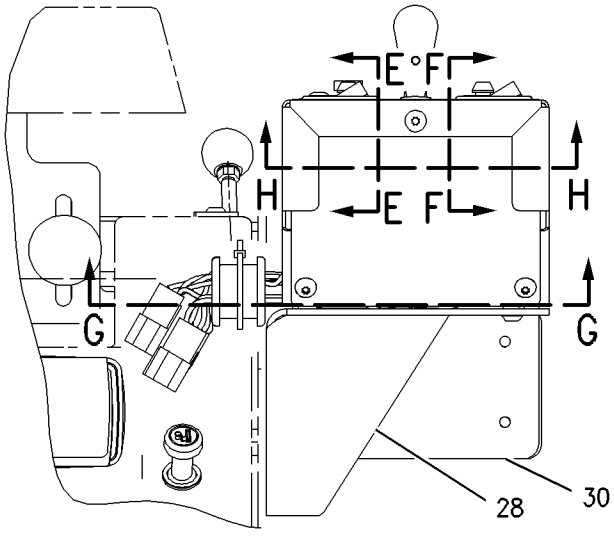

GRAPHIC #1 g00729376

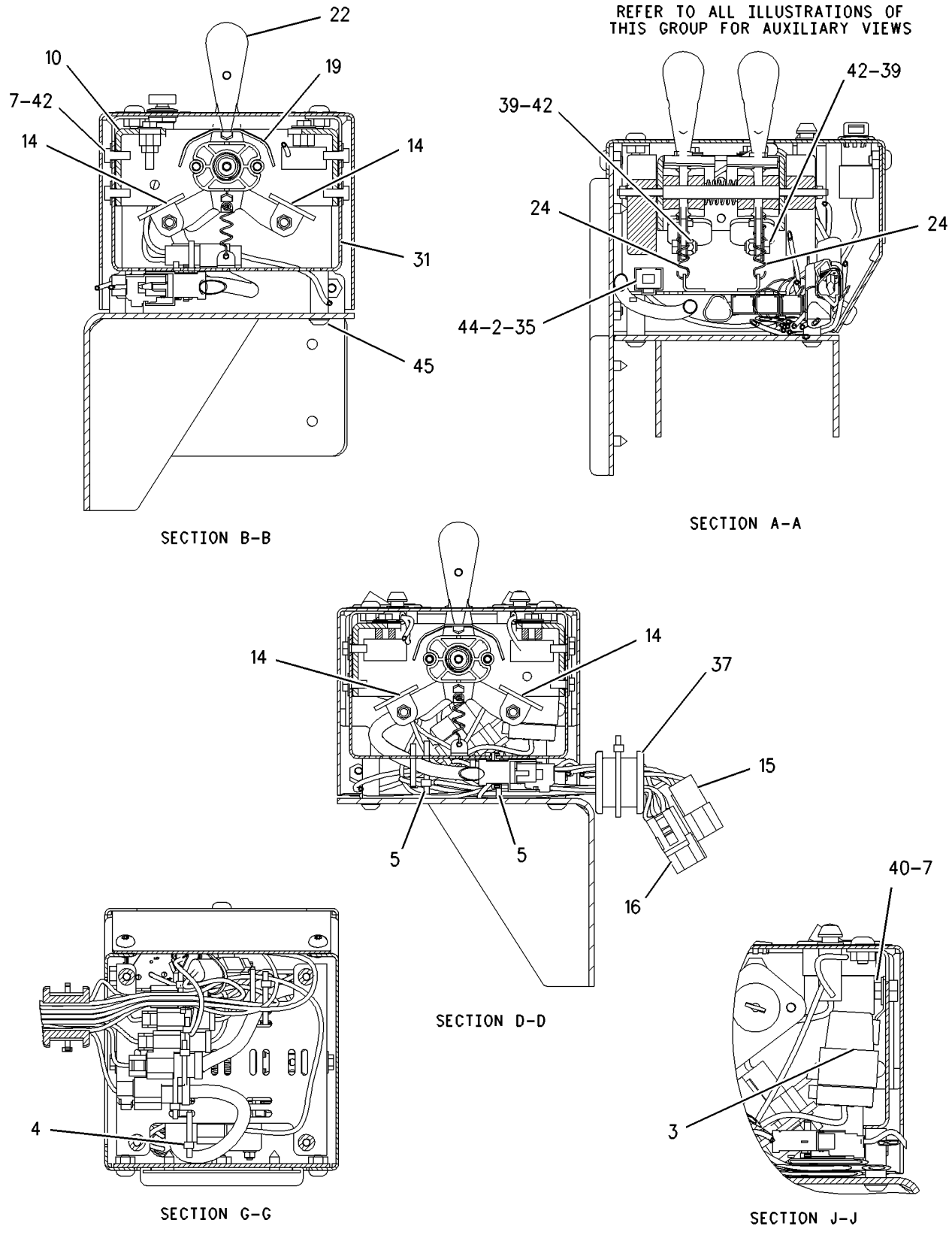

GRAPHIC #2 g00729386

REFER TO ALL ILLUSTRATIONS OF
THIS GROUP FOR AUXILIARY VIEWS

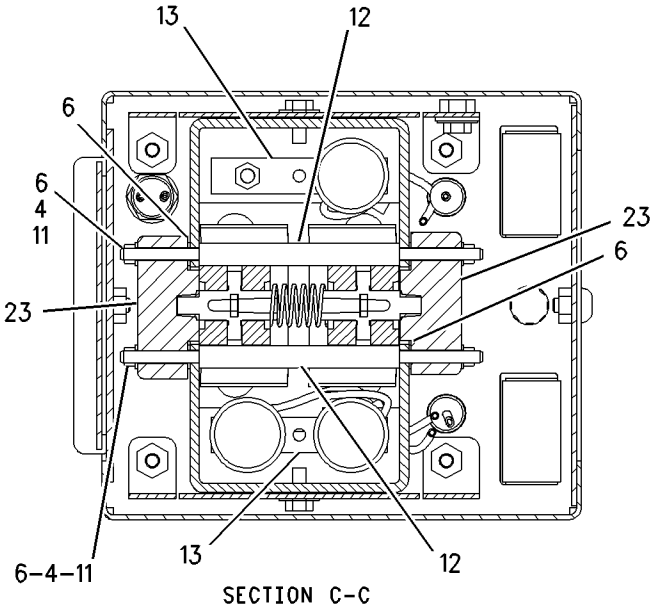

SECTION C-C

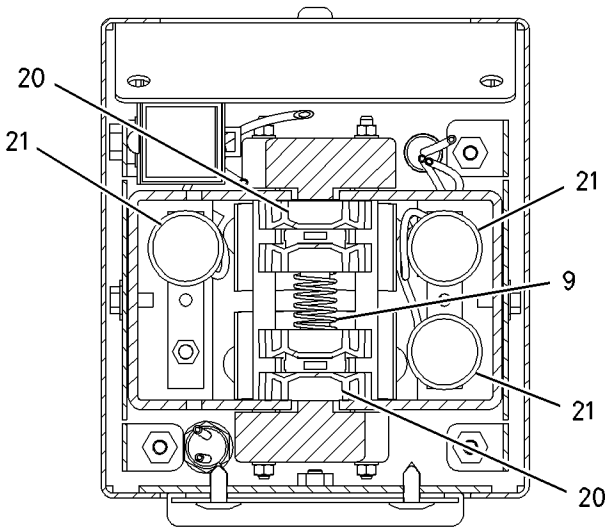

SECTION H-H

GRAPHIC #3

g00729390

MEMORANDA

HYDRAULIC SYSTEM

110-8686 COOLER GP-HYDRAULIC OIL

S/N: 7HR1-UP

PART OF 109-6819 CHASSIS AR

SMCS-1374 **i01395713**

NOTE	REF NO	GRAPHIC REF	PART NUMBER	QTY	PART NAME 1 2 3 4 5 6 (PRODUCT LEVEL)	SEE PAGE
	1	1	**1M-6298**	8	CLAMP-MOUNTING	
	2	1	**1P-5411**	4	SLEEVE	
	3	1	**1P-5412**	8	BUSHING-TERMINAL	
	4	1	**3H-8726**	4	MOUNT AS	
	5	1	**113-8208**	1	FRAME AS	
	6	1	**190-5429**	4	PLATE	
	7	1	**190-7624**	1	CORE AS-HYDRAULIC OIL COOLER	
	8	1	**190-7625**	1	CORE AS-STEERING OIL COOLER	
	9	1	**1W-5040**	4	WASHER-RETAINING	
	10	1	**5P-1076**	4	WASHER-HARD (13.5X30X4MM THK)	
	11	1	**7X-0550**	8	WASHER-HARD (13.5X32X5MM THK)	
	12	1	**7X-0590**	4	WASHER-HARD (13.5X44.5X6MM THK)	
	13	1	**7X-7729**	8	WASHER (11X25X3MM THK)	
	14	1	**8T-4121**	8	WASHER-HARD (11X21X2.5MM THK)	
M	15	1	**8T-4172**	8	BOLT (M10X1.50X80MM)	
M	16	1	**8T-4186**	8	BOLT (M10X1.5X40MM)	
M	17	1	**8T-4194**	4	BOLT (M12X1.75X50MM)	
M	18	1	**8T-4244**	8	NUT (M12X1.75 THD)	
M	19	1	**8T-6868**	4	BOLT (M12X1.75X80MM)	

M-METRIC PART

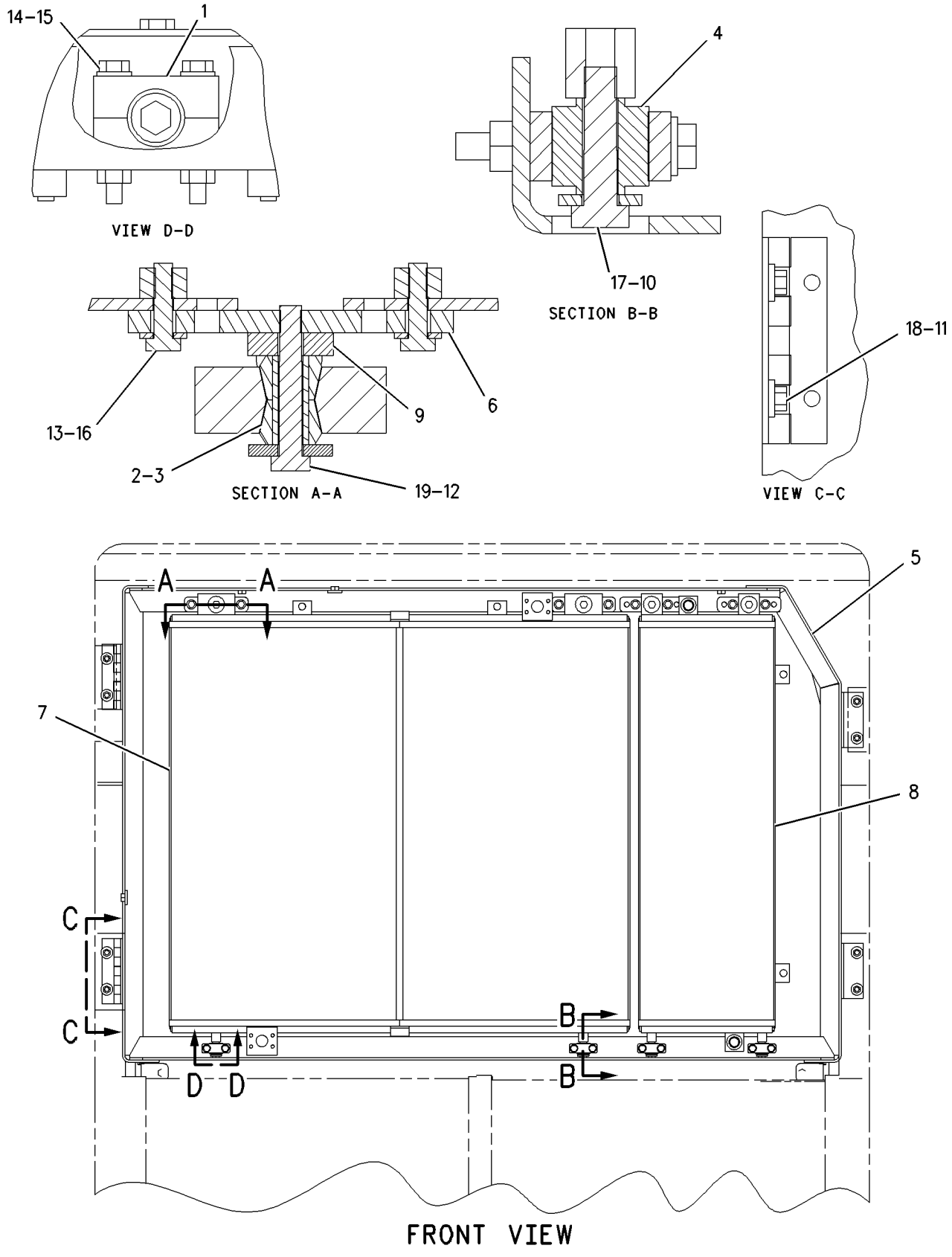

GRAPHIC #1

g00740678

HYDRAULIC SYSTEM

194-0949 COOLER GP-HYDRAULIC OIL

S/N: 7HR1-UP

PART OF 109-6819 CHASSIS AR

SMCS-1374 **i01388430**

NOTE	REF NO	GRAPHIC REF	PART NUMBER	QTY	PART NAME 1 2 3 4 5 6 (PRODUCT LEVEL)	SEE PAGE
	1	1	**1M-6298**	8	CLAMP-MOUNTING	
	2	1	**1P-5411**	4	SLEEVE	
	3	1	**1P-5412**	8	BUSHING-TERMINAL	
	4	1	**3H-8726**	4	MOUNT AS	
	5	1	**190-5429**	4	PLATE	
	6	1	**190-7624**	1	CORE AS-HYDRAULIC OIL COOLER	
	7	1	**190-7625**	1	CORE AS-STEERING OIL COOLER	
	8	1	**1W-5040**	4	WASHER-RETAINING	
	9	1	**5P-1076**	4	WASHER-HARD (13.5X30X4MM THK)	
	10	1	**7X-0590**	4	WASHER-HARD (13.5X44.5X6MM THK)	
	11	1	**7X-7729**	8	WASHER (11X25X3MM THK)	
	12	1	**8T-4121**	8	WASHER-HARD (11X21X2.5MM THK)	
M	13	1	**8T-4172**	8	BOLT (M10X1.50X80MM)	
M	14	1	**8T-4186**	8	BOLT (M10X1.5X40MM)	
M	15	1	**8T-4194**	4	BOLT (M12X1.75X50MM)	
M	16	1	**8T-6868**	4	BOLT (M12X1.75X80MM)	

M-METRIC PART

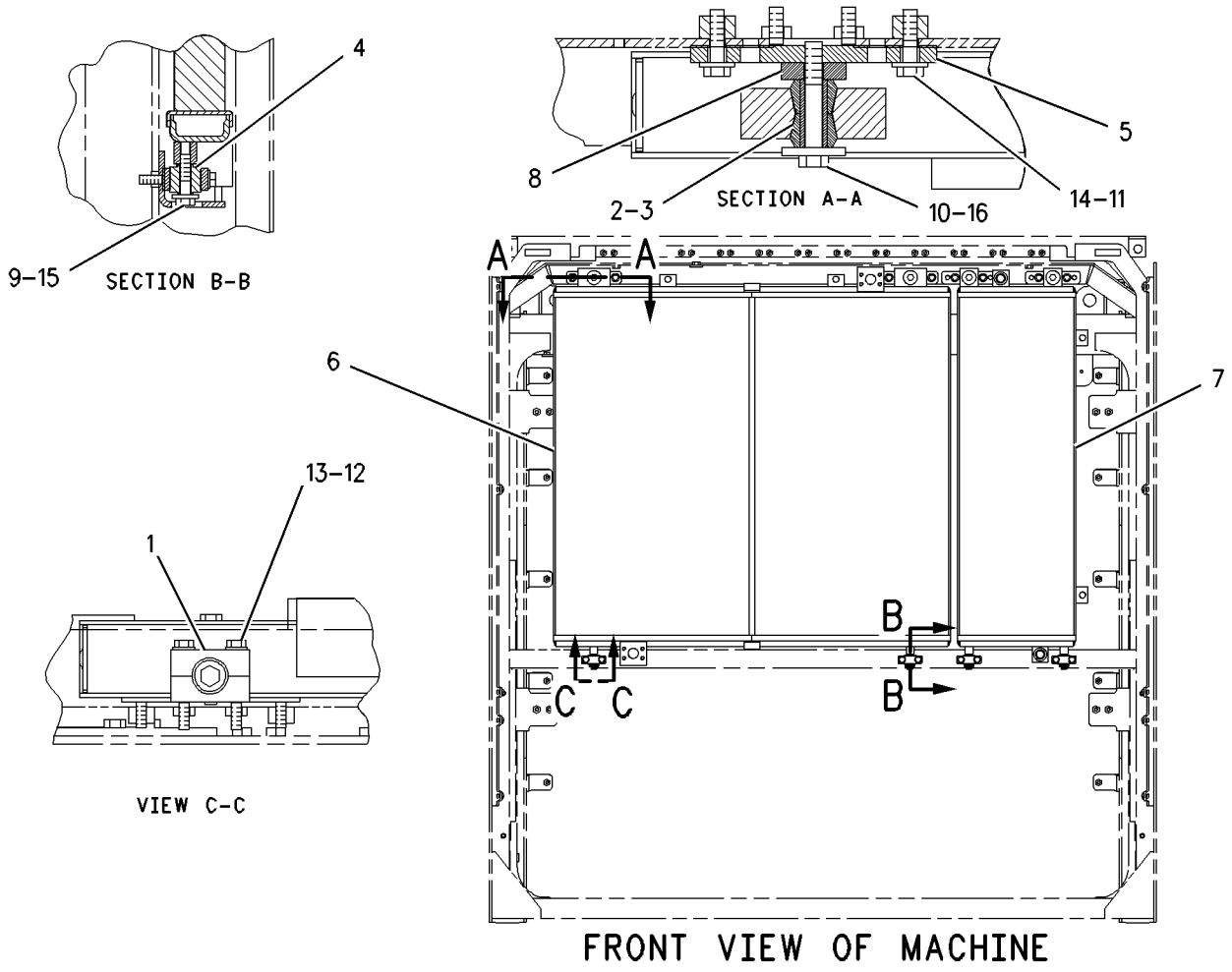

GRAPHIC #1 g00731816

6G-8390 COVER GP-HYDRAULIC TANK CAP

S/N: 7HR1-UP

PART OF 109-6887 TANK & MTG GP-HYDRAULIC

SMCS-5056, 7315 **i01540609**

NOTE	REF NO	GRAPHIC REF	PART NUMBER	QTY	PART NAME 1 2 3 4 5 6 (PRODUCT LEVEL)	SEE PAGE
	1	1	**1M-8649**	1	RING-RETAINING	
	2	1	**5D-1901**	1	WASHER (4.19X4.95X0.105 IN THK)	
	3	1	**5P-8502**	1	PADLOCK GP	
		1	**5P-8500**	1	KEY	
		1	**8Y-6364**	1	SLEEVE	
	4	1	**1L-5072**	1	DOWEL	
	5	1	**9M-7394**	1	LEVER (LOCKING)	
	6	1	**116-4681**	1	COVER-HYDRAULIC CAP	

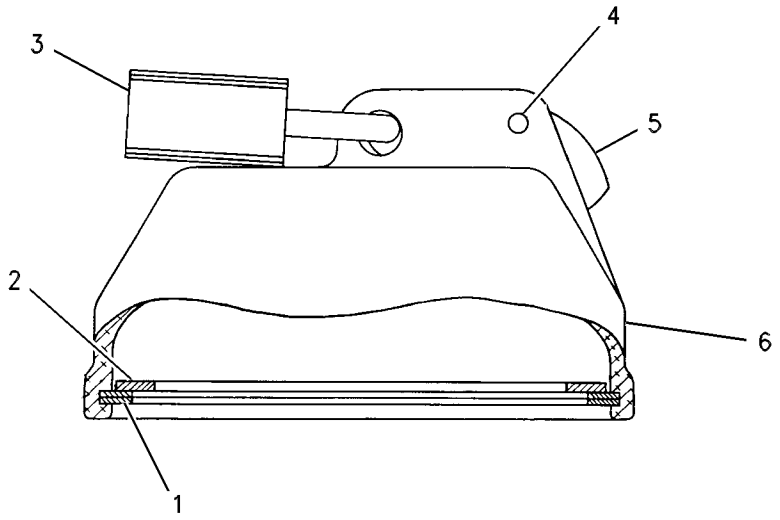

GRAPHIC #1 g00523850

112-8209 CYLINDER GP-LIFT–LH

S/N: 7HR1-UP
279.4MM (10.99 IN.) BORE X 1173MM (46.18 IN.) STROKE
PART OF 109-6870 LINES GP-LIFT CYLINDER

SMCS-5102 **i01198320**

NOTE	REF NO	GRAPHIC REF	PART NUMBER	QTY	PART NAME 1 2 3 4 5 6 (PRODUCT LEVEL)	SEE PAGE
R	1	1	**112-9823**	1	CYLINDER AS	
		1	**146-1616**	1	BEARING	
	2	1	**9X-6018**	1	LOCKNUT	
	3	1	**108-0124**	1	RING	
	4	1	**108-0125**	1	SEAL AS	
	5	1	**146-2616**	1	PISTON	
	6	1	**109-5702**	1	SEAL-O-RING (266.06MM ID)	
	7	1	**108-0129**	1	RING-BACKUP	
	8	1	**109-5717**	1	SEAL-HEAD	
	9	1	**112-9833**	1	HEAD	
R	10	1	**112-9827**	1	ROD AS	
		1	**146-1616**	1	BEARING	
	11	1	**8C-9136**	1	SEAL-LIP	
	12	1	**6J-1700**	1	SEAL-U-CUP	
	13	1	**8C-9130**	1	SEAL AS	
	14	1	**8T-6749**	1	RING-WEAR	
M	15	1	**8T-0668**	11	BOLT (M24X3.0X110MM)	
	16	1	**6V-8237**	11	WASHER (4.0MM THK)	
M	17	1	**6V-5215**	4	BOLT (M8X1.25X16MM)	
	18	1	**7S-6369**	4	WASHER (4.8MM THK)	
					AVAILABLE REPAIR KIT(S):	
			157-0289	1	KIT-SEAL	

M-METRIC PART
R-REMFG PART MAY BE AVAILABLE

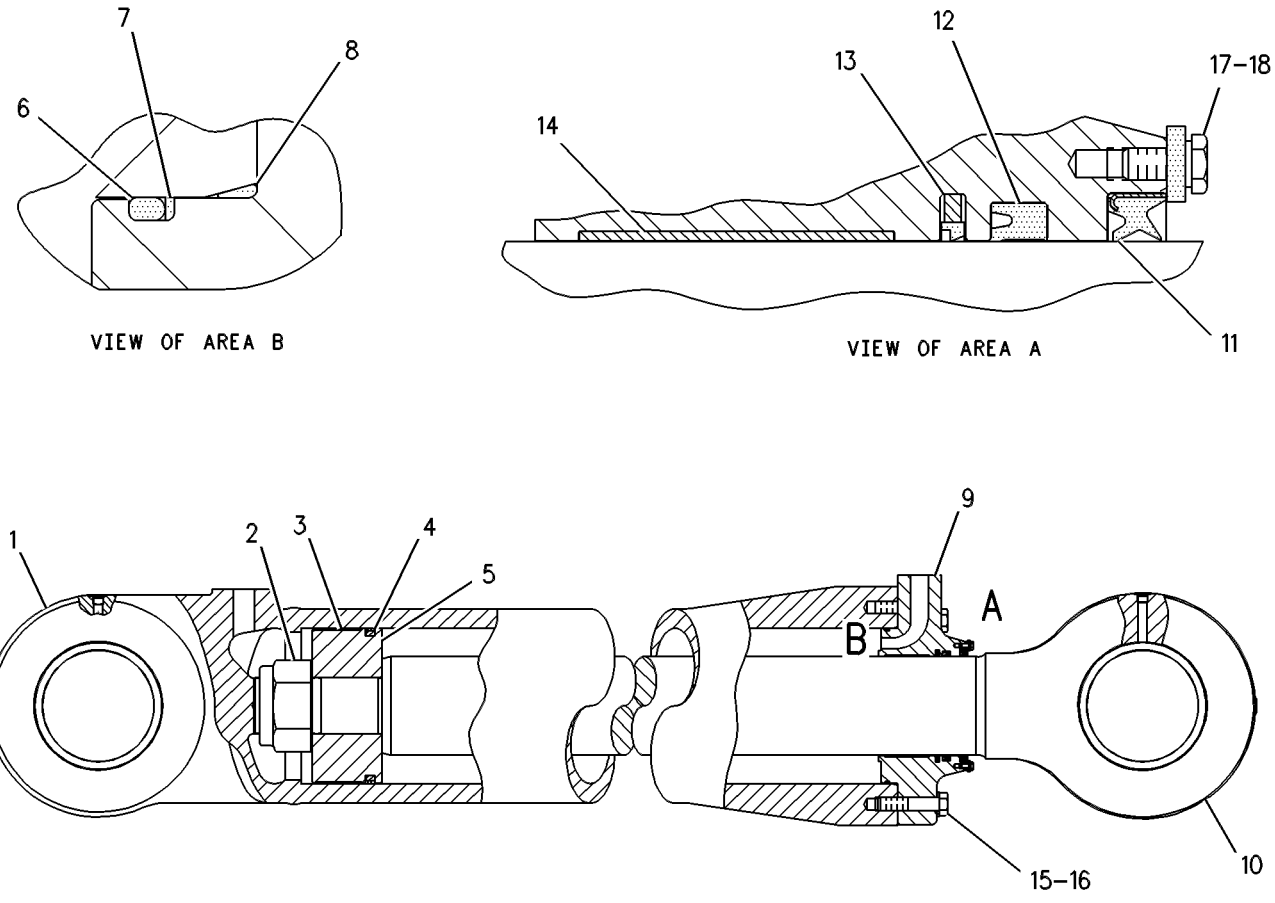

GRAPHIC #1 g00255619

HYDRAULIC SYSTEM

112-8209 CYLINDER GP-LIFT–LH

S/N: 7HR1-231
279.4MM (10.99 IN.) BORE X 1173MM (46.18 IN.) STROKE
PART OF 109-6870 LINES GP-LIFT CYLINDER

SMCS-5102 **i01198323**

NOTE	REF NO	GRAPHIC REF	PART NUMBER	QTY	PART NAME 1 2 3 4 5 6 (PRODUCT LEVEL)	SEE PAGE
R	1	1	**112-9823**	1	CYLINDER AS	
		1	**146-1616**	1	BEARING	
	2	1	**9X-6018**	1	LOCKNUT	
	3	1	**108-0124**	1	RING	
	4	1	**108-0125**	1	SEAL AS	
	5	1	**146-2616**	1	PISTON	
	6	1	**109-5702**	1	SEAL-O-RING (266.06MM ID)	
	7	1	**108-0129**	1	RING-BACKUP	
	8	1	**109-5717**	1	SEAL-HEAD	
	9	1	**155-8162**	1	HEAD	
R	10	1	**112-9827**	1	ROD AS	
		1	**146-1616**	1	BEARING	
	11	1	**155-6747**	1	SEAL-LIP TYPE	
	12	1	**6J-1700**	1	SEAL-U-CUP	
	13	1	**135-1995**	1	SEAL-BUFFER	
	14	1	**8T-6749**	1	RING-WEAR	
M	15	1	**8T-0668**	11	BOLT (M24X3.0X110MM)	
	16	1	**6V-8237**	11	WASHER (4.0MM THK)	
					AVAILABLE REPAIR KIT(S):	
			159-7532	1	KIT-SEAL	

M-METRIC PART
R-REMFG PART MAY BE AVAILABLE

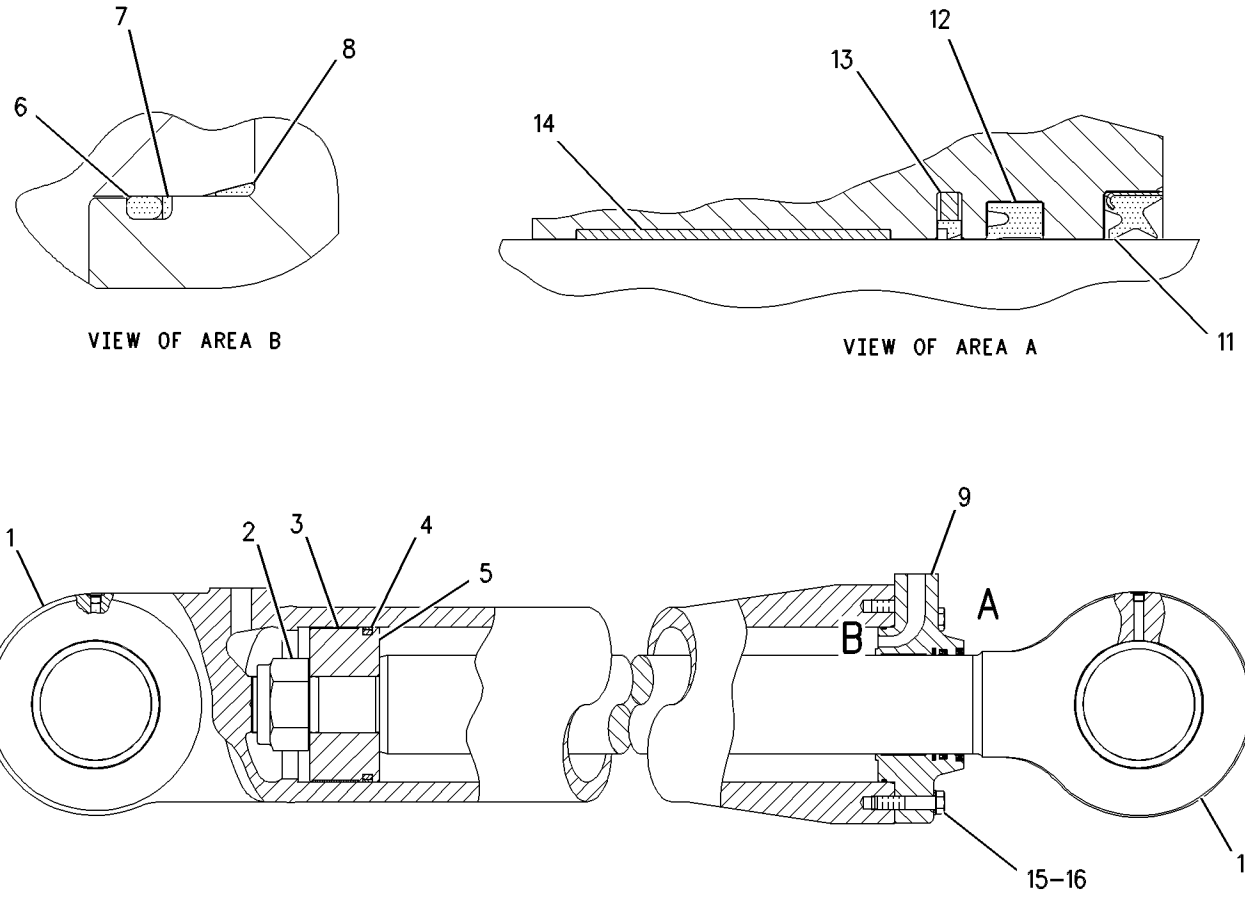

GRAPHIC #1

g00460236

HYDRAULIC SYSTEM

136-7880 CYLINDER GP-LIFT–RH

S/N: 7HR1-231
279.4MM (10.99 IN.) BORE X 1173MM (46.18 IN.) STROKE
PART OF 109-6870 LINES GP-LIFT CYLINDER
TYPE 1

SMCS-5102 **i01192470**

NOTE	REF NO	GRAPHIC REF	PART NUMBER	QTY	PART NAME 1 2 3 4 5 6 (PRODUCT LEVEL)	SEE PAGE
R	1	1	**136-7879**	1	CYLINDER AS-RH	
		1	**146-1616**	1	BEARING	
	2	1	**9X-6018**	1	LOCKNUT (4-12-2B THD)	
	3	1	**108-0124**	1	RING	
	4	1	**108-0125**	1	SEAL AS	
C	5	1	**146-2616**	1	PISTON	
	6	1	**109-5702**	1	SEAL-O-RING (266.06MM ID) (266.06MM ID)	
	7	1	**108-0129**	1	RING-BACKUP	
	8	1	**109-5717**	1	SEAL-HEAD	
	9	1	**112-9833**	1	HEAD	
R	10	1	**112-9827**	1	ROD AS	
		1	**146-1616**	1	BEARING	
	11	1	**8C-9136**	1	SEAL-LIP	
	12	1	**6J-1700**	1	SEAL-U-CUP	
	13	1	**8C-9130**	1	SEAL AS	
	14	1	**8T-6749**	1	RING-WEAR	
M	15	1	**8T-0668**	11	BOLT (M24X3.0X110MM)	
	16	1	**6V-8237**	11	WASHER (4.0MM THK)	
M	17	1	**6V-5215**	4	BOLT (M8X1.25X16MM)	
	18	1	**7S-6369**	4	WASHER (4.8MM THK)	
					AVAILABLE REPAIR KIT(S):	
			157-0289	1	KIT-SEAL	

C-CHANGE FROM PREVIOUS TYPE
M-METRIC PART
R-REMFG PART MAY BE AVAILABLE

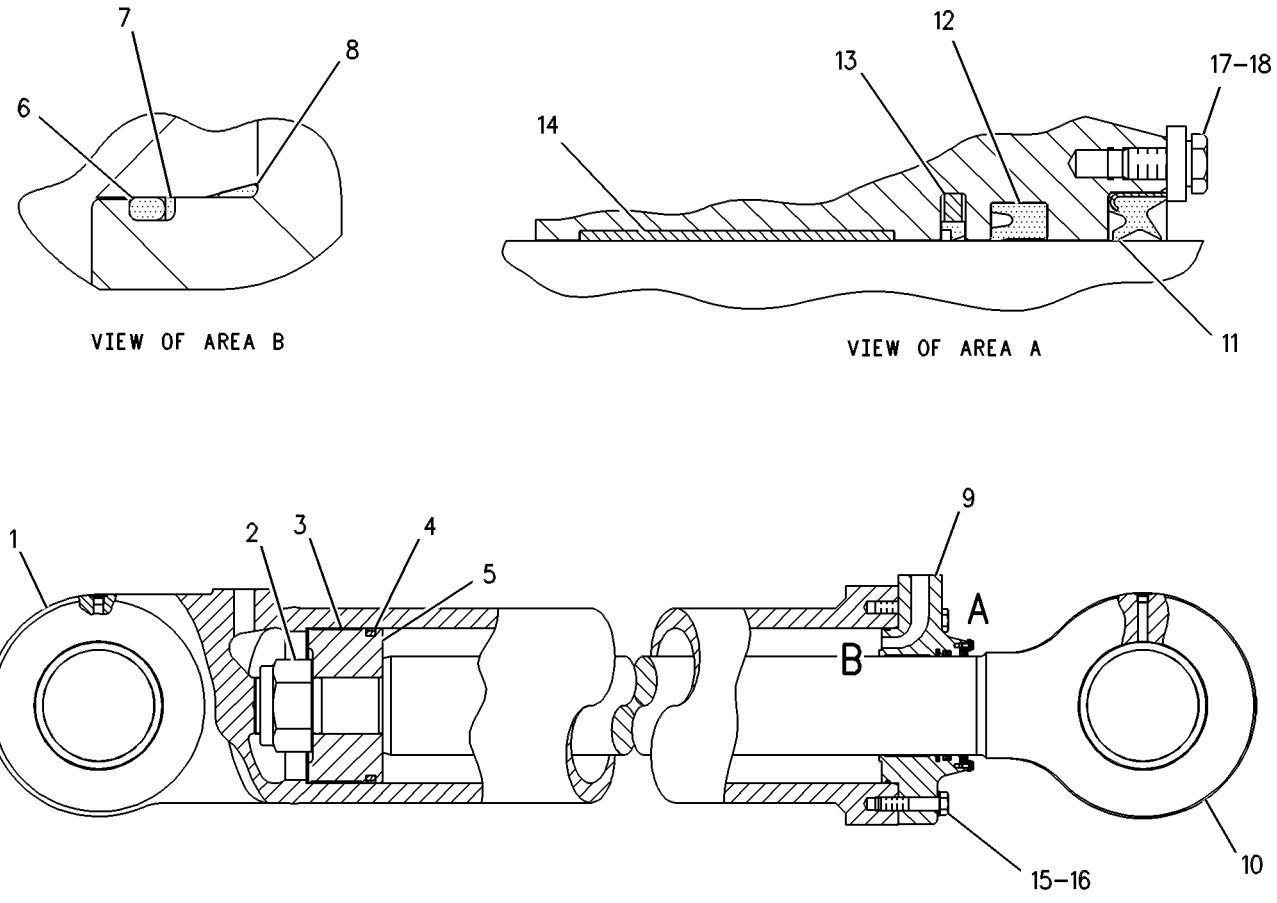

GRAPHIC #1 g00273772

136-7880 CYLINDER GP-LIFT–RH

S/N: 7HR1-231
279.4MM (10.99 IN.) BORE X 1173MM (46.18 IN.) STROKE
PART OF 109-6870 LINES GP-LIFT CYLINDER
TYPE 2

SMCS-5102 **i00899423**

NOTE	REF NO	GRAPHIC REF	PART NUMBER	QTY	PART NAME 1 2 3 4 5 6 (PRODUCT LEVEL)	SEE PAGE
	1	1	**136-7879**	1	CYLINDER AS-RH	
		1	**146-1616**	1	BEARING	
	2	1	**9X-6018**	1	LOCKNUT (4-12-2B THD)	
	3	1	**108-0124**	1	RING	
	4	1	**108-0125**	1	SEAL AS	
	5	1	**146-2616**	1	PISTON	
	6	1	**109-5702**	1	SEAL-O-RING (266.06MM ID)	
	7	1	**108-0129**	1	RING-BACKUP	
	8	1	**109-5717**	1	SEAL-HEAD	
C	9	1	**155-8162**	1	HEAD	
	10	1	**112-9827**	1	ROD AS	
		1	**146-1616**	1	BEARING	
C	11	1	**155-6747**	1	SEAL-LIP TYPE	
	12	1	**6J-1700**	1	SEAL-U-CUP	
C	13	1	**135-1955**	1	ROD	
	14	1	**8T-6749**	1	RING-WEAR	
M	15	1	**8T-0668**	11	BOLT (M24X3.0X110MM)	
	16	1	**6V-8237**	11	WASHER (4.0MM THK)	
					AVAILABLE REPAIR KIT(S):	
C			**159-7532**	1	KIT-SEAL	

C-CHANGE FROM PREVIOUS TYPE
M-METRIC PART

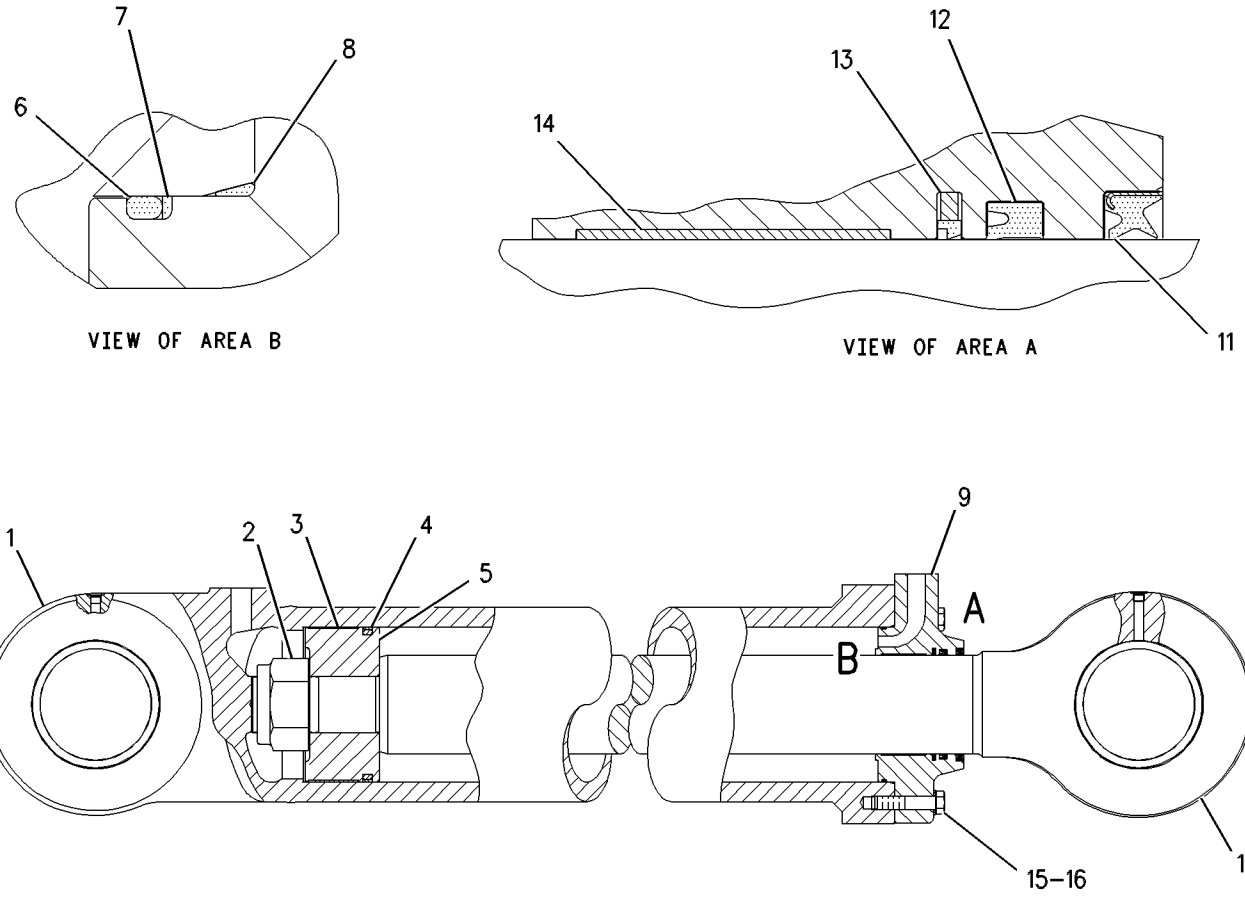

GRAPHIC #1 g00460590

162-1522 CYLINDER GP-LIFT–RH

S/N: 7HR232-UP
279.4MM (11IN) BORE X 1173MM (46.18IN) STROKE
PART OF 109-6870 LINES GP-LIFT CYLINDER

SMCS-5102 **i01380849**

NOTE	REF NO	GRAPHIC REF	PART NUMBER	QTY	PART NAME 1 2 3 4 5 6 (PRODUCT LEVEL)	SEE PAGE
	1	1	**108-0124**	1	RING	
	2	1	**174-0344**	1	SEAL AS	
	3	1	**108-0129**	1	RING-BACKUP	
	4	1	**109-5702**	1	SEAL-O-RING (266.06MM ID)	
	5	1	**109-5717**	1	SEAL-HEAD	
R	6	1	**112-9827**	1	ROD AS	
	6A	1	**146-1616**	1	BEARING	
	7	1	**167-2233**	1	SEAL AS	
	8	1	**146-2616**	1	PISTON	
	9	1	**167-2500**	1	SEAL-WIPER	
	10	1	**155-8162**	1	HEAD	
R	11	1	**162-1524**	1	CYLINDER AS	
	11A	1	**146-1616**	1	BEARING	
	12	1	**167-2352**	1	SEAL-U-CUP	
	13	1	**6V-8237**	11	WASHER (4.0MM THK)	
M	14	1	**8T-0668**	11	BOLT (M24X3.0X110MM)	
	15	1	**8T-6749**	1	RING-WEAR	
	16	1	**9X-6018**	1	LOCKNUT	
	17	1	**157-6961**	2	RING-BACKUP	

M-METRIC PART
R-REMFG PART MAY BE AVAILABLE

162-1522 CYLINDER GP-LIFT *(contd.)* **i01380849**

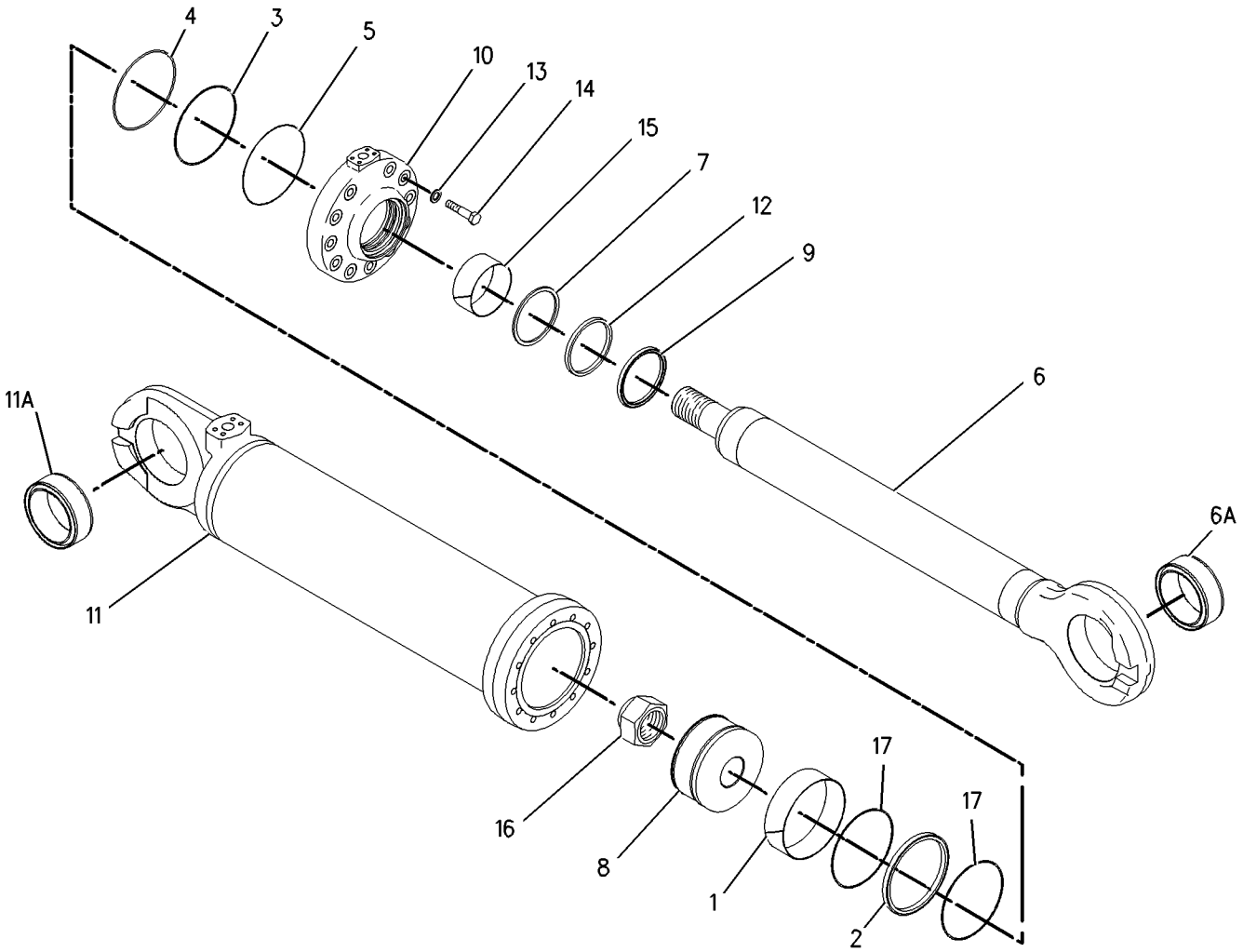

GRAPHIC #1 g00731283

162-1523 CYLINDER GP-LIFT–LH

S/N: 7HR232-UP
279.4MM (11 IN.) BORE X 1173MM (46.18 IN.) STROKE
PART OF 109-6870 LINES GP-LIFT CYLINDER

SMCS-5102 **i01380854**

NOTE	REF NO	GRAPHIC REF	PART NUMBER	QTY	PART NAME 1 2 3 4 5 6 (PRODUCT LEVEL)	SEE PAGE
R	1	1	**162-1525**	1	CYLINDER AS-LH	
	2	1	**108-0124**	1	RING	
	3	1	**174-0344**	1	SEAL AS	
	4	1	**108-0129**	1	RING-BACKUP	
	5	1	**109-5702**	1	SEAL-O-RING (266.06MM ID)	
	6	1	**109-5717**	1	SEAL-HEAD	
R	7	1	**112-9827**	1	ROD AS	
		1	**146-1616**	1	BEARING	
	8	1	**167-2233**	1	SEAL AS	
	9	1	**146-2616**	1	PISTON	
	10	1	**167-2500**	1	SEAL-WIPER	
	11	1	**155-8162**	1	HEAD	
	12	1	**167-2352**	1	SEAL-U-CUP	
	13	1	**6V-8237**	11	WASHER (4.0MM THK)	
M	14	1	**8T-0668**	11	BOLT (M24X3.0X110MM)	
	15	1	**8T-6749**	1	RING-WEAR	
	16	1	**9X-6018**	1	LOCKNUT	
	17	1	**157-6961**	2	RING-BACKUP	

M-METRIC PART
R-REMFG PART MAY BE AVAILABLE

162-1523 CYLINDER GP-LIFT *(contd.)* i01380854

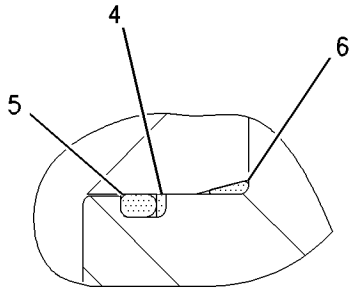

VIEW OF AREA B

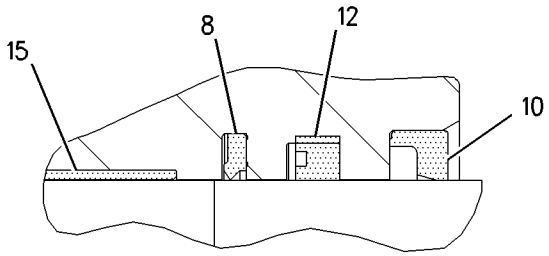

VIEW OF AREA A

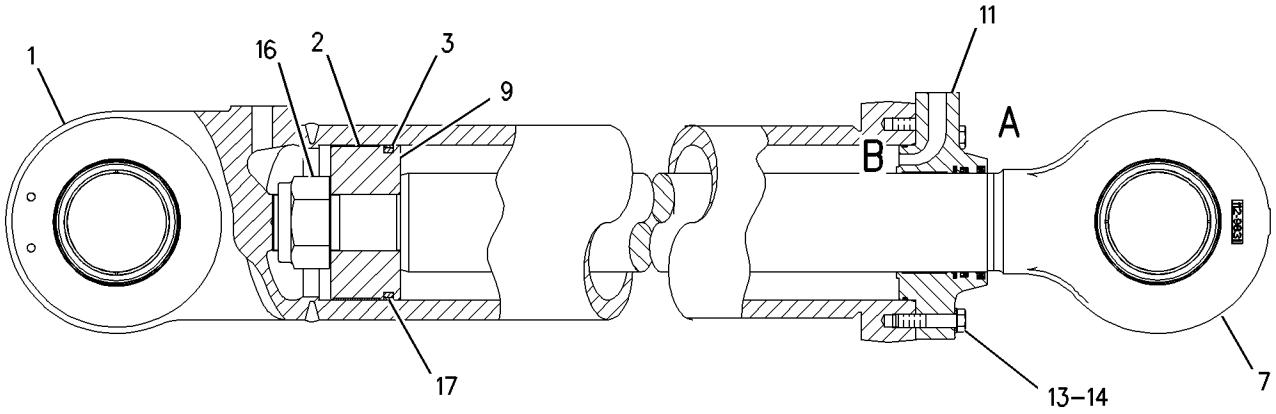

GRAPHIC #1 g00730841

167-7996 CYLINDER GP-TILT

S/N: 7HR1-UP
279.4MM (10.99.) BORE X 1816MM (71.50 IN.) STROKE
PART OF 109-6871 LINES GP-TILT CYLINDER

SMCS-5104 **i01464934**

NOTE	REF NO	GRAPHIC REF	PART NUMBER	QTY	PART NAME 1 2 3 4 5 6 (PRODUCT LEVEL)	SEE PAGE
R	1	1	**112-4283**	1	CYLINDER AS	
		1	**125-2563**	2	BEARING	
		1	**125-2586**	1	SPACER	
	2	1	**9X-6018**	1	LOCKNUT	
	3	1	**108-0124**	1	RING	
	4	1	**174-0344**	1	SEAL AS	
	5	1	**112-4291**	1	PISTON	
	6	1	**109-5702**	1	SEAL-O-RING	
	7	1	**108-0129**	1	RING-BACKUP	
	8	1	**109-5717**	1	SEAL-HEAD	
	9	1	**155-8161**	1	HEAD	
R	10	1	**167-7997**	1	ROD AS	
		1	**161-5811**	1	BEARING	
	11	1	**167-2493**	1	SEAL-WIPER	
	12	1	**167-2344**	1	SEAL-U-CUP	
	13	1	**167-2225**	1	SEAL AS-BUFFER	
	14	1	**8J-9917**	1	RING-WEAR	
M	15	1	**8T-0369**	10	BOLT (M30X3.5X120MM)	
	16	1	**9X-8399**	10	WASHER (33X56X6MM THK)	
	17	1	**157-6961**	2	RING-BACKUP	

M-METRIC PART
R-REMFG PART MAY BE AVAILABLE

167-7996 CYLINDER GP-TILT *(contd.)* i01464934

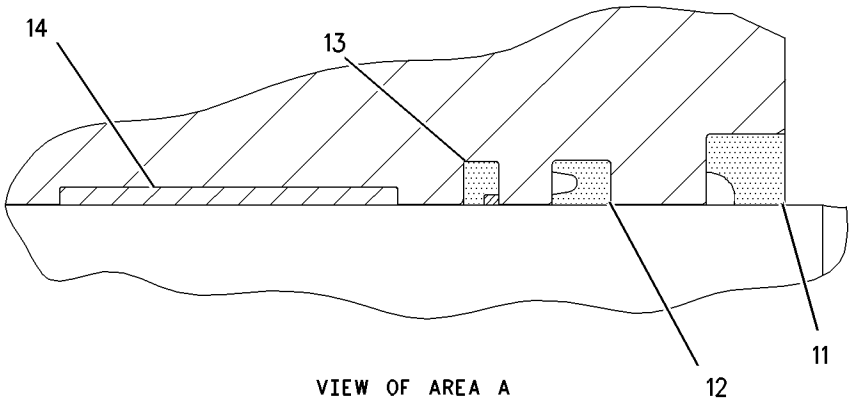

VIEW OF AREA A

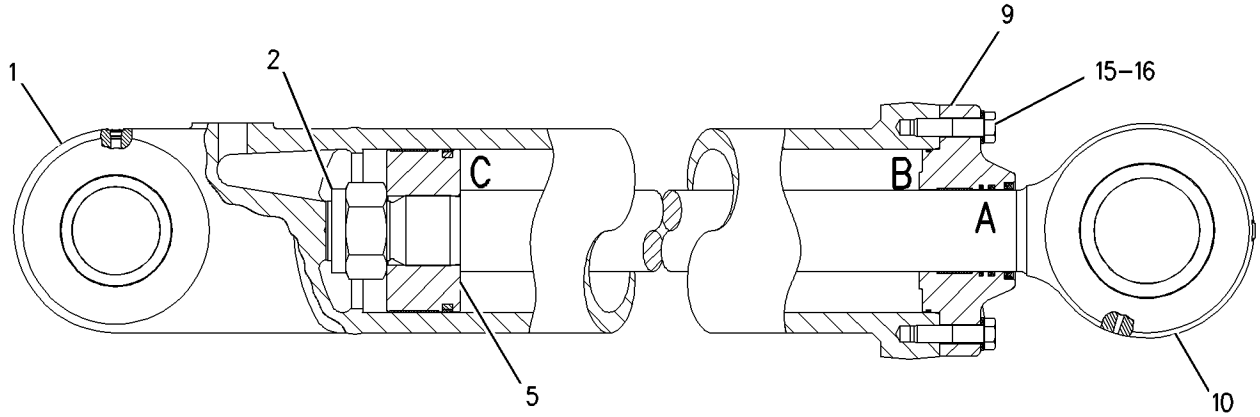

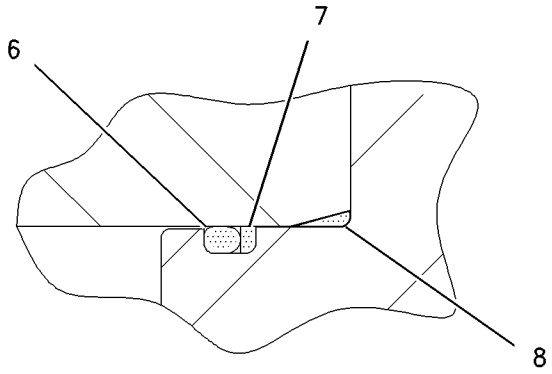

VIEW OF AREA B

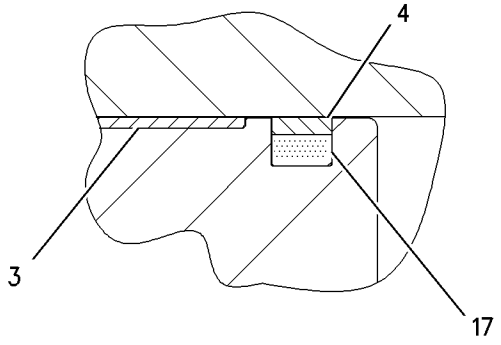

VIEW OF AREA C

GRAPHIC #1 g00765298

HYDRAULIC SYSTEM

109-6820 HYDRAULIC AR

S/N: 7HR1-UP

PART OF 109-6815 COMMON AR

SMCS-5051 **i01138579**

NOTE	PART NUMBER	QTY	PART NAME 1 2 3 4 5 6 (PRODUCT LEVEL)	SEE PAGE
Y	*109-6875*	1	CONTROL GP-SERVICE BRAKE	772
Y	*112-4206*	1	COOLER GP-AXLE OIL	494
Y	*109-6882*	1	CYLINDER & MTG GP-STEERING	822
Y	*109-6867*	1	LINES GP-HYDRAULIC	996
Y	*109-6872*	1	LINES GP-HYDRAULIC FAN	1008
Y	*109-6873*	1	LINES GP-HYDRAULIC OIL COOLER	854
Y	*109-6870*	1	LINES GP-LIFT CYLINDER	1026
Y	*132-2131*	1	LINES GP-SERVICE BRAKE	800
Y	*109-6868*	1	LINES GP-STEERING	840
			S/N: 7HR1-331	
Y	*163-6504*	1	LINES GP-STEERING	844
			S/N: 7HR332-UP	
Y	*163-6562*	1	LINES GP-STEERING	846
			S/N: 7HR332-UP	
Y	*109-6884*	1	LINES GP-STEERING NEUTRALIZER	850
Y	*109-6871*	1	LINES GP-TILT CYLINDER	1032
Y	*109-6887*	1	TANK & MTG GP-HYDRAULIC	1051
Y	*109-6888*	1	TANK & MTG GP-HYDRAULIC	1052
Y	*109-6858*	1	VALVE & MTG GP-MAIN CONTROL	1064

Y-SEPARATE ILLUSTRATION

MEMORANDA

HYDRAULIC SYSTEM

109-6907 KICKOUT & POSITIONER GP—LIFT

S/N: 7HR1-UP
PART OF 109-6821 ELECTRICAL AR
TYPE 1

SMCS-5109, 5112 **i01216919**

NOTE	REF NO	GRAPHIC REF	PART NUMBER	QTY	PART NAME 1 2 3 4 5 6 (PRODUCT LEVEL)	SEE PAGE
	1	1	**159-9875**	1	SPRING	
	2	1	**2H-3429**	1	RING-RETAINING	
	3	1	**2L-6726**	2	RING-RETAINING	
	4	1	**4B-4274**	4	WASHER (1.2MM THK)	
	5	1	**4E-2250**	2	HOUSING	
	6	1	**4E-2453**	2	SHAFT-GOVERNOR CONTROL	
	7	1	**4N-9467**	1	BEARING	
	8	1	**6D-3025**	3	BALL BEARING	
M	9	1	**6V-2313**	2	BOLT (M5X0.8X30MM)	
	10	1	**8C-5607**	6	MOUNT	
	11	1	**8C-5608**	3	SPACER (25.4MM THK)	
M	12	1	**8T-0288**	2	BOLT (M5X0.8X12MM)	
	13	1	**9X-6165**	3	WASHER (2.5MM THK)	
Y	14	1	**121-0284**	1	SENSOR GP-POSITION (LIFT)	323
	15	1	**126-8456**	1	PLATE AS	
M		1	**6V-9632**	2	NUT-WELD (M6X1 THD)	
M		1	**8T-3490**	3	NUT-WELD (M10X1.5 THD)	
		1	**097-6341**	2	BLOCK	
	16	1	**145-8863**	1	PLATE	
	17	1	**160-1825**	1	PLATE	
	18	1	**160-8254**	1	BRACKET AS	
M		1	**6V-9632**	1	NUT-WELD (M6X1 THD)	
	19	1	**126-8463**	2	LEVER	
	20	1	**146-3770**	1	GUARD	
	21	1	**146-3769**	1	GUARD AS	
M		1	**8T-3490**	1	NUT-WELD (M10X1.5 THD)	
M	22	1	**5C-2890**	4	NUT (M6X1.00 THD)	
	23	1	**8T-4121**	10	WASHER-HARD (2.5MM THK)	
M	24	1	**8T-4136**	2	BOLT (M10X1.50X25MM)	
M	25	1	**8T-4137**	8	BOLT (M10X1.50X20MM)	
M	26	1	**8T-4138**	2	BOLT (M6X1.0X20MM)	
	27	1	**8T-4224**	1	WASHER-HARD (2MM THK)	
M	28	1	**8T-7547**	1	BOLT (M8X1.25X30MM)	
	29	1	**9B-7237**	1	BOLT (3/8-16X1.25IN)	
M	30	1	**9X-2480**	3	BOLT (M6X1.0X45MM)	
	31	1	**9X-8256**	5	WASHER (2MM THK)	
	32	1	**160-3866**	1	ROLLER-CAM	
	33	1	**105-1766**	1	SPACER	
M	34	1	**8C-8451**	1	BOLT (M6X1.0X40MM)	
	35	1	**9X-2026**	1	WASHER (1MM THK)	
	36	1	**161-7056**	1	SPACER	

M-METRIC PART
Y-SEPARATE ILLUSTRATION

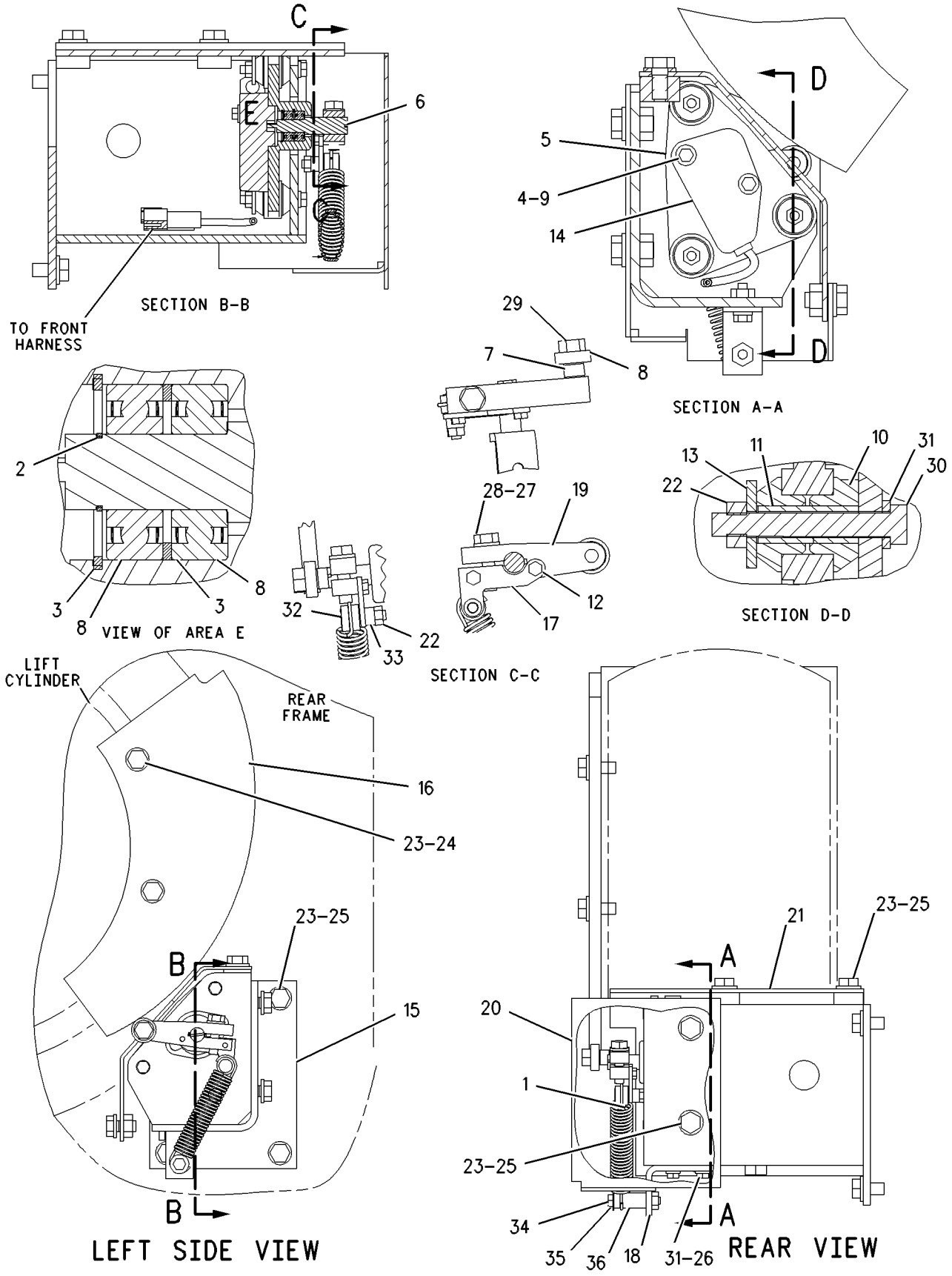

GRAPHIC #1

g00529897

HYDRAULIC SYSTEM

109-6907 KICKOUT & POSITIONER GP–LIFT

S/N: 7HR1-UP
PART OF 109-6821 ELECTRICAL AR
TYPE 2

SMCS-5109, 5112 **i01516677**

NOTE	REF NO	GRAPHIC REF	PART NUMBER	QTY	PART NAME 1 2 3 4 5 6 (PRODUCT LEVEL)	SEE PAGE
	1	1	**159-9875**	1	SPRING	
	2	1	**2H-3429**	1	RING-RETAINING	
	3	1	**2L-6726**	2	RING-RETAINING	
	4	1	**4B-4274**	4	WASHER (5.5X13X1.2MM THK)	
	5	1	**4E-2250**	2	HOUSING	
	6	1	**4E-2453**	2	SHAFT-GOVERNOR CONTROL	
	7	1	**4N-9467**	1	BEARING	
	8	1	**6D-3025**	3	BALL BEARING	
M	9	1	**6V-2313**	2	BOLT (M5X0.8X30MM)	
	10	1	**8C-5607**	6	MOUNT (ISOLATION)	
	11	1	**8C-5608**	3	SPACER (6.5X9.5X25.4MM THK)	
M	12	1	**8T-0288**	2	BOLT (M5X0.8X12MM)	
	13	1	**9X-6165**	3	WASHER (6.5X22X2.5MM THK)	
CY	14	1	**161-8904**	1	SENSOR GP-POSITION (LIFT)	325
	15	1	**126-8456**	1	PLATE AS	
M		1	**6V-9632**	2	NUT-WELD (M6X1 THD)	
M		1	**8T-3490**	3	NUT-WELD (M10X1.5 THD)	
		1	**097-6341**	2	BLOCK	
	16	1	**145-8863**	1	PLATE	
	17	1	**160-1825**	1	PLATE	
	18	1	**160-8254**	1	BRACKET AS	
M		1	**6V-9632**	1	NUT-WELD (M6X1 THD)	
	19	1	**126-8463**	2	LEVER	
	20	1	**146-3770**	1	GUARD	
	21	1	**146-3769**	1	GUARD AS	
M		1	**8T-3490**	1	NUT-WELD (M10X1.5 THD)	
M	22	1	**5C-2890**	4	NUT (M6X1 THD)	
	23	1	**8T-4121**	10	WASHER-HARD (11X21X2.5MM THK)	
M	24	1	**8T-4136**	2	BOLT (M10X1.5X25MM)	
M	25	1	**8T-4137**	8	BOLT (M10X1.5X20MM)	
M	26	1	**8T-4138**	2	BOLT (M6X1X20MM)	
	27	1	**8T-4224**	1	WASHER-HARD (8.8X16X2MM THK)	
M	28	1	**8T-4908**	1	BOLT (M8X1.25X25MM)	
	29	1	**9B-7237**	1	BOLT (3/8-16X1.25 IN)	
M	30	1	**9X-2480**	3	BOLT (M6X1.0X45MM)	
	31	1	**9X-8256**	5	WASHER (6.6X12X2MM THK)	
	32	1	**160-3866**	1	ROLLER-CAM	
	33	1	**105-1766**	1	SPACER	
M	34	1	**8C-8451**	1	BOLT (M6X1X40MM)	
	35	1	**9X-2026**	1	WASHER (6.5X17X1MM THK)	
	36	1	**161-7056**	1	SPACER	

C-CHANGE FROM PREVIOUS TYPE
M-METRIC PART
Y-SEPARATE ILLUSTRATION

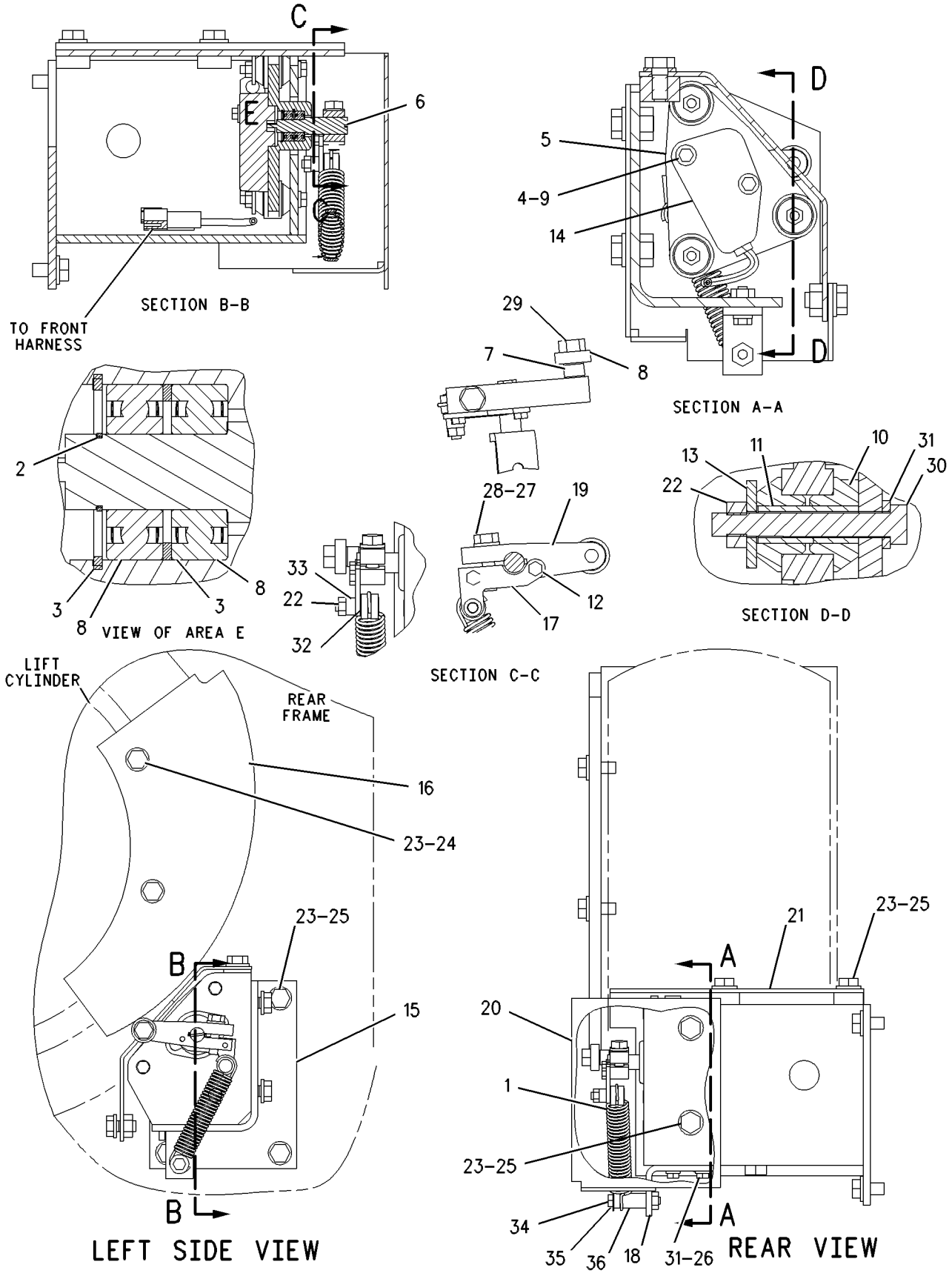

GRAPHIC #1

g00533359

HYDRAULIC SYSTEM

130-7382 KICKOUT & POSITIONER GP—TILT

S/N: 7HR1-123, 125-217, 219-231, 233, 235-237
HIGH LIFT
PART OF 112-4201, 148-7910 LIFT AR-HIGH
AN ATTACHMENT

SMCS-5109, 5112 **i01540183**

NOTE	REF NO	GRAPHIC REF	PART NUMBER	QTY	PART NAME 1 2 3 4 5 6 (PRODUCT LEVEL)	SEE PAGE
	1	1	**159-9875**	1	SPRING	
	2	1	**2H-3429**	1	RING-RETAINING	
	3	1	**2L-6726**	2	RING-RETAINING	
	4	1	**4B-4274**	2	WASHER (5.5X13X1.2MM THK)	
	5	1	**4E-2250**	1	HOUSING	
	6	1	**4E-2453**	1	SHAFT-GOVERNOR CONTROL	
	7	1	**106-4158**	1	SPACER-STUD	
	8	1	**4V-1939**	14	CLAMP	
	9	1	**5V-6439**	7	PLATE	
	10	1	**6D-3025**	3	BALL BEARING	
M	11	1	**6V-2313**	2	BOLT (M5X0.8X30MM)	
	12	1	**7G-7053**	1	GROMMET	
	13	1	**7K-1181**	1	STRAP-CABLE	
	14	1	**8C-5607**	6	MOUNT (ISOLATION)	
	15	1	**8C-5608**	3	SPACER (6.5X9.5X25.4MM THK)	
M	16	1	**8T-0288**	2	BOLT (M5X0.8X12MM)	
	17	1	**9X-6165**	3	WASHER (6.5X22X2.5MM THK)	
	18	1	**101-9759**	3	SPACER	
	19	1	**115-5601**	1	HARNESS AS-SENSOR (KICKOUT & POSITIONER)	
		1	**155-2260**	2	KIT-CONNECTING PLUG (3 PIN)	
					(EACH KIT-CONNECTING PLUG INCLUDES PLUG AS & WEDGE)	
	20	1	**118-2865**	1	BRACKET	
Y	21	1	**121-0284**	1	SENSOR GP-POSITION (TILT)	323
	22	1	**126-8457**	1	PLATE AS	
M		1	**6V-9632**	2	NUT-WELD (M6X1 THD)	
M		1	**8T-3490**	2	NUT-WELD (M10X1.5 THD)	
	23	1	**160-1825**	1	PLATE	
	24	1	**160-1829**	1	PLATE AS	
	25	1	**126-8463**	1	LEVER	
	26	1	**160-5842**	1	GUARD	
	27	1	**161-7397**	1	PLATE	
	28	1	**159-3549**	1	GUARD AS	
	29	1	**4S-5719**	3	SPACER (10.31X25X12.7MM THK)	
M	30	1	**5C-2890**	4	NUT (M6X1 THD)	
	31	1	**5P-9085**	6	CLIP	
	32	1	**7X-7729**	2	WASHER (11X25X3MM THK)	
	33	1	**8T-4121**	13	WASHER-HARD (11X21X2.5MM THK)	
M	34	1	**8T-4137**	10	BOLT (M10X1.5X20MM)	
M	35	1	**8T-4138**	2	BOLT (M6X1X20MM)	
M	36	1	**8T-4186**	2	BOLT (M10X1.5X40MM)	
	37	1	**8T-4224**	4	WASHER-HARD (8.8X16X2MM THK)	
M	38	1	**8T-6869**	3	BOLT (M8X1.25X60MM)	
M	39	1	**8T-7547**	1	BOLT (M8X1.25X30MM)	
	40	1	**5S-7382**	1	BOLT (3/8-16X1.375 IN)	
M	41	1	**9X-2480**	17	BOLT (M6X1.0X45MM)	
	42	1	**9X-8256**	19	WASHER (6.6X12X2MM THK)	
	43	1	**155-0048**	1	GUARD AS	
	44	1	**3E-9411**	3	WASHER-HARD (6MM THK)	
M	45	1	**8T-7338**	3	BOLT (M16X2.0X45MM)	
M	46	1	**8T-4182**	3	BOLT (M10X1.5X45MM)	
M	47	1	**8C-8451**	1	BOLT (M6X1X40MM)	
	48	1	**9X-2026**	1	WASHER (6.5X17X1MM THK)	
	49	1	**105-1766**	1	SPACER	

130-7382 **KICKOUT & POSITIONER GP** ***(contd.)*** **i01540183**

NOTE	REF NO	GRAPHIC REF	PART NUMBER	QTY	PART NAME 1 2 3 4 5 6 (PRODUCT LEVEL)	SEE PAGE
	50	1	**160-3866**	1	ROLLER-CAM	
	51	1	**161-7056**	1	SPACER	

M-METRIC PART
Y-SEPARATE ILLUSTRATION

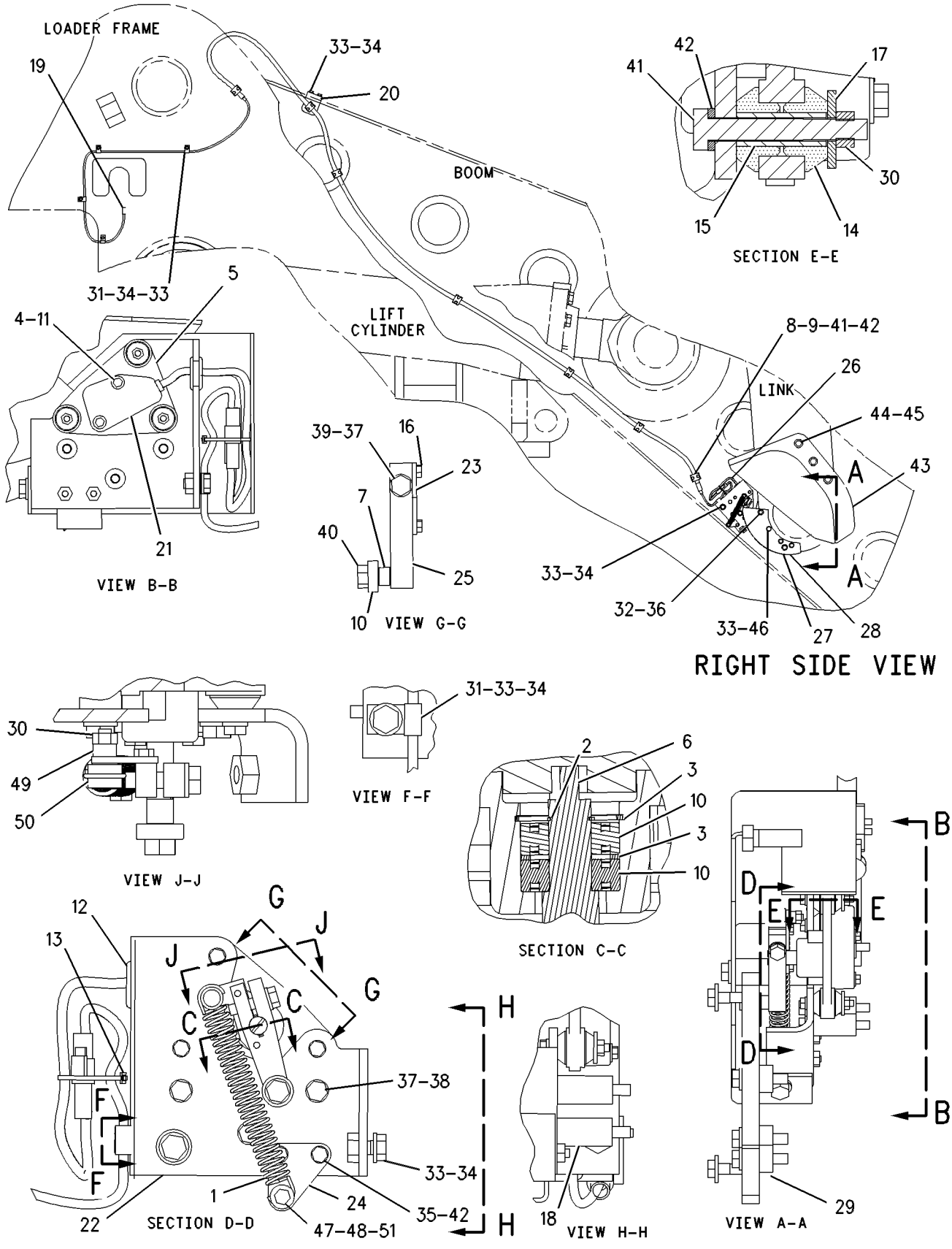

GRAPHIC #1

g00531940

MEMORANDA

HYDRAULIC SYSTEM

130-7382 KICKOUT & POSITIONER GP—TILT

S/N: 7HR1-UP
HIGH LIFT
PART OF 112-4201, 148-7910, 170-8463, 170-8544 LIFT AR-HIGH
AN ATTACHMENT

SMCS-5109, 5112 **i01540184**

NOTE	REF NO	GRAPHIC REF	PART NUMBER	QTY	PART NAME 1 2 3 4 5 6 (PRODUCT LEVEL)	SEE PAGE
	1	1	**176-2447**	1	SPRING	
	2	1	**2H-3429**	1	RING-RETAINING	
	3	1	**2L-6726**	2	RING-RETAINING	
	4	1	**4B-4274**	2	WASHER (5.5X13X1.2MM THK)	
	5	1	**4E-2250**	1	HOUSING	
	6	1	**4E-2453**	1	SHAFT-GOVERNOR CONTROL	
	7	1	**106-4158**	1	SPACER-STUD	
	8	1	**4V-1939**	14	CLAMP	
	9	1	**5V-6439**	7	PLATE	
	10	1	**6D-3025**	3	BALL BEARING	
M	11	1	**6V-2313**	2	BOLT (M5X0.8X30MM)	
	12	1	**7G-7053**	1	GROMMET	
	13	1	**7K-1181**	1	STRAP-CABLE	
	14	1	**8C-5607**	6	MOUNT (ISOLATION)	
	15	1	**8C-5608**	3	SPACER (6.5X9.5X25.4MM THK)	
M	16	1	**8T-0288**	2	BOLT (M5X0.8X12MM)	
	17	1	**9X-6165**	3	WASHER (6.5X22X2.5MM THK)	
	18	1	**101-9759**	3	SPACER	
	19	1	**115-5601**	1	HARNESS AS-SENSOR (KICKOUT & POSITIONER)	
		1	**155-2260**	2	KIT-CONNECTING PLUG (3 PIN)	
					(EACH KIT-CONNECTING PLUG INCLUDES PLUG AS & WEDGE)	
	20	1	**118-2865**	1	BRACKET	
Y	21	1	**161-8904**	1	SENSOR GP-POSITION (TILT)	325
	22	1	**176-4162**	1	PLATE AS	
M		1	**6V-9632**	1	NUT-WELD (M6X1 THD)	
M		1	**8T-3490**	2	NUT-WELD (M10X1.5 THD)	
		1	**9R-1733**	1	BOSS	
	23	1	**160-1825**	1	PLATE	
	25	1	**126-8463**	1	LEVER	
	26	1	**160-5842**	1	GUARD	
	27	1	**161-7397**	1	PLATE	
	28	1	**159-3549**	1	GUARD AS	
	29	1	**4S-5719**	3	SPACER (10.31X25X12.7MM THK)	
M	30	1	**5C-2890**	4	NUT (M6X1 THD)	
	31	1	**5P-9085**	6	CLIP	
	32	1	**7X-7729**	2	WASHER (11X25X3MM THK)	
	33	1	**8T-4121**	13	WASHER-HARD (11X21X2.5MM THK)	
M	34	1	**8T-4137**	10	BOLT (M10X1.5X20MM)	
M	36	1	**8T-4186**	2	BOLT (M10X1.5X40MM)	
	37	1	**8T-4224**	4	WASHER-HARD (8.8X16X2MM THK)	
M	38	1	**8T-6869**	3	BOLT (M8X1.25X60MM)	
M	39	1	**8T-4908**	1	BOLT (M8X1.25X25MM)	
	40	1	**5S-7382**	1	BOLT (3/8-16X1.375 IN)	
M	41	1	**9X-2480**	18	BOLT (M6X1.0X45MM)	
	42	1	**9X-8256**	17	WASHER (6.6X12X2MM THK)	
	43	1	**155-0048**	1	GUARD AS	
	44	1	**3E-9411**	3	WASHER-HARD (6MM THK)	
M	45	1	**8T-7338**	3	BOLT (M16X2.0X45MM)	
M	46	1	**8T-4182**	3	BOLT (M10X1.5X45MM)	
	48	1	**9X-2026**	1	WASHER (6.5X17X1MM THK)	
	49	1	**105-1766**	1	SPACER	
	50	1	**160-3866**	1	ROLLER-CAM	
	51	1	**176-2446**	1	SPACER	

M-METRIC PART
Y-SEPARATE ILLUSTRATION

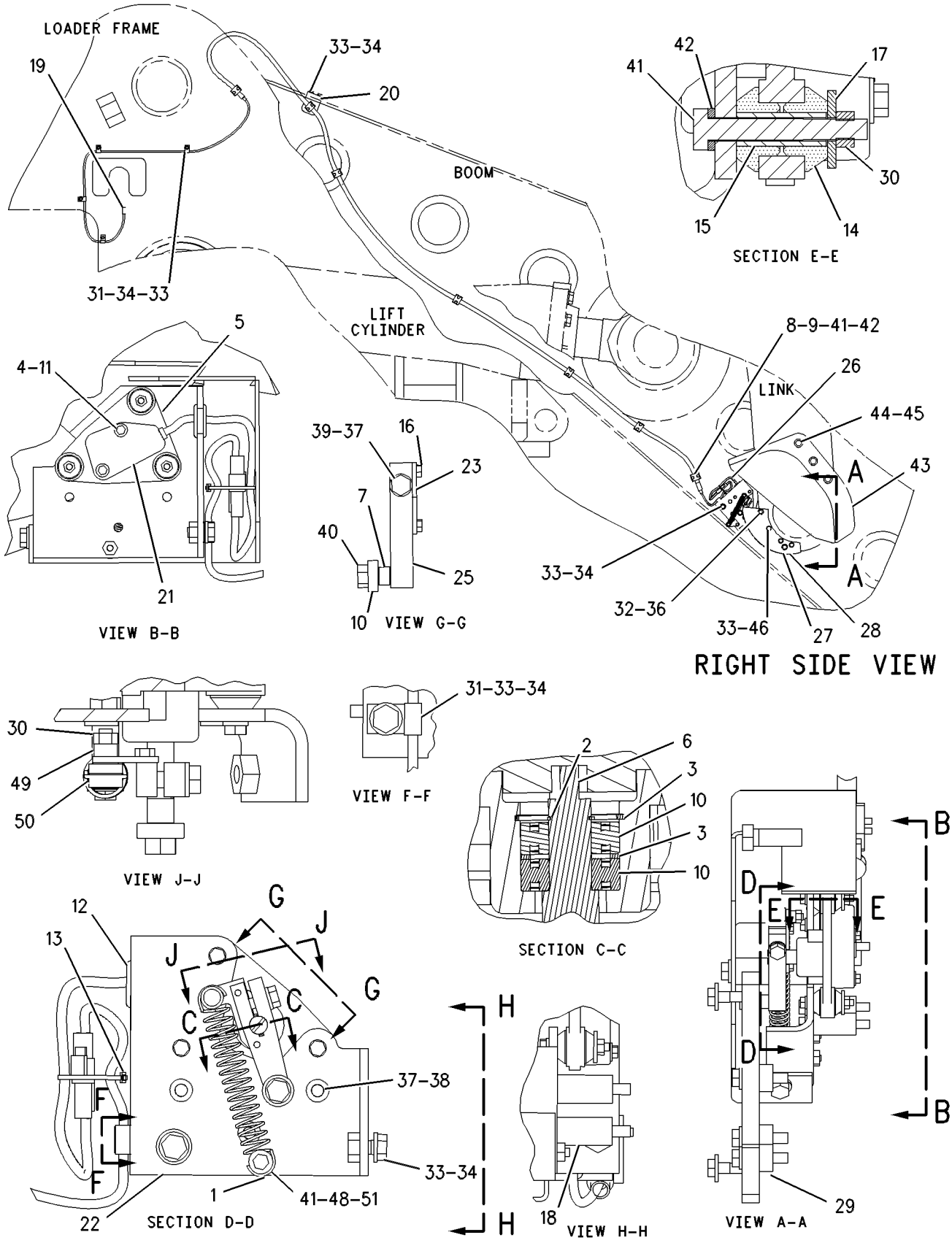

GRAPHIC #1 g00651688

MEMORANDA

HYDRAULIC SYSTEM

131-1276 KICKOUT & POSITIONER GP—TILT

S/N: 7HR1-224, 226-229, 231-232, 234, 238
STANDARD LIFT
PART OF 131-1255, 148-7909 LIFT AR-STANDARD
AN ATTACHMENT

SMCS-5109, 5112 **i01541340**

NOTE	REF NO	GRAPHIC REF	PART NUMBER	QTY	PART NAME 1 2 3 4 5 6 (PRODUCT LEVEL)	SEE PAGE
	1	1	**159-9875**	1	SPRING	
	2	1	**2H-3429**	1	RING-RETAINING	
	3	1	**2L-6726**	2	RING-RETAINING	
	4	1	**4B-4274**	2	WASHER (5.5X13X1.2MM THK)	
	5	1	**4E-2250**	1	HOUSING	
	6	1	**4E-2453**	1	SHAFT-GOVERNOR CONTROL	
	7	1	**106-4158**	1	SPACER-STUD	
	8	1	**4V-1939**	14	CLAMP	
	9	1	**5V-6439**	7	PLATE	
	10	1	**6D-3025**	3	BALL BEARING	
M	11	1	**6V-2313**	2	BOLT (M5X0.8X30MM)	
	12	1	**7G-7053**	1	GROMMET	
	13	1	**7K-1181**	1	STRAP-CABLE	
	14	1	**8C-5607**	6	MOUNT (ISOLATION)	
	15	1	**8C-5608**	3	SPACER (6.5X9.5X25.4MM THK)	
M	16	1	**8T-0288**	2	BOLT (M5X0.8X12MM)	
	17	1	**9X-6165**	3	WASHER (6.5X22X2.5MM THK)	
	18	1	**115-5601**	1	HARNESS AS-SENSOR (KICKOUT & POSITIONER)	
		1	**155-2260**	2	KIT-CONNECTING PLUG (3 PIN)	
					(EACH KIT-CONNECTING PLUG INCLUDES PLUG AS & WEDGE)	
	19	1	**118-2865**	1	BRACKET	
Y	20	1	**121-0284**	1	SENSOR GP-POSITION (TILT)	323
	21	1	**126-8457**	1	PLATE AS	
M		1	**6V-9632**	2	NUT-WELD (M6X1 THD)	
M		1	**8T-3490**	2	NUT-WELD (M10X1.5 THD)	
	22	1	**161-7396**	1	PLATE AS	
	23	1	**160-1825**	1	PLATE	
	24	1	**160-1828**	1	PLATE AS	
M		1	**6V-9632**	1	NUT-WELD (M6X1 THD)	
	25	1	**126-8463**	1	LEVER	
	26	1	**160-5842**	1	GUARD	
	27	1	**161-7398**	1	GUARD AS	
	28	1	**129-4162**	3	SPACER	
M	29	1	**5C-2890**	4	NUT (M6X1 THD)	
	30	1	**5P-9085**	5	CLIP (7.94MM ID)	
	31	1	**7X-7729**	2	WASHER (11X25X3MM THK)	
	32	1	**8T-4121**	12	WASHER-HARD (11X21X2.5MM THK)	
M	33	1	**8T-4136**	2	BOLT (M10X1.5X25MM)	
M	34	1	**8T-4137**	9	BOLT (M10X1.5X20MM)	
M	35	1	**8T-4138**	2	BOLT (M6X1X20MM)	
	36	1	**8T-4224**	4	WASHER-HARD (8.8X16X2MM THK)	
M	37	1	**8T-6869**	3	BOLT (M8X1.25X60MM)	
M	38	1	**8T-7547**	1	BOLT (M8X1.25X30MM)	
	39	1	**5S-7382**	1	BOLT (3/8-16X1.375 IN)	
M	40	1	**9X-2480**	17	BOLT (M6X1.0X45MM)	
	41	1	**9X-8256**	19	WASHER (6.6X12X2MM THK)	
	42	1	**160-7583**	1	GUARD AS	
M	43	1	**8T-7338**	3	BOLT (M16X2.0X45MM)	
	44	1	**3E-9411**	3	WASHER-HARD (6MM THK)	
M	45	1	**8T-4195**	3	BOLT (M10X1.5X30MM)	
	46	1	**161-7056**	1	SPACER	
	47	1	**160-3866**	1	ROLLER-CAM	
	48	1	**105-1766**	1	SPACER	

131-1276 **KICKOUT & POSITIONER GP** ***(contd.)*** **i01541340**

NOTE	REF NO	GRAPHIC REF	PART NUMBER	QTY	PART NAME 1 2 3 4 5 6 (PRODUCT LEVEL)	SEE PAGE
	49	1	**9X-2026**	1	WASHER (6.5X17X1MM THK)	
M	50	1	**8C-8451**	1	BOLT (M6X1X40MM)	

M-METRIC PART
Y-SEPARATE ILLUSTRATION

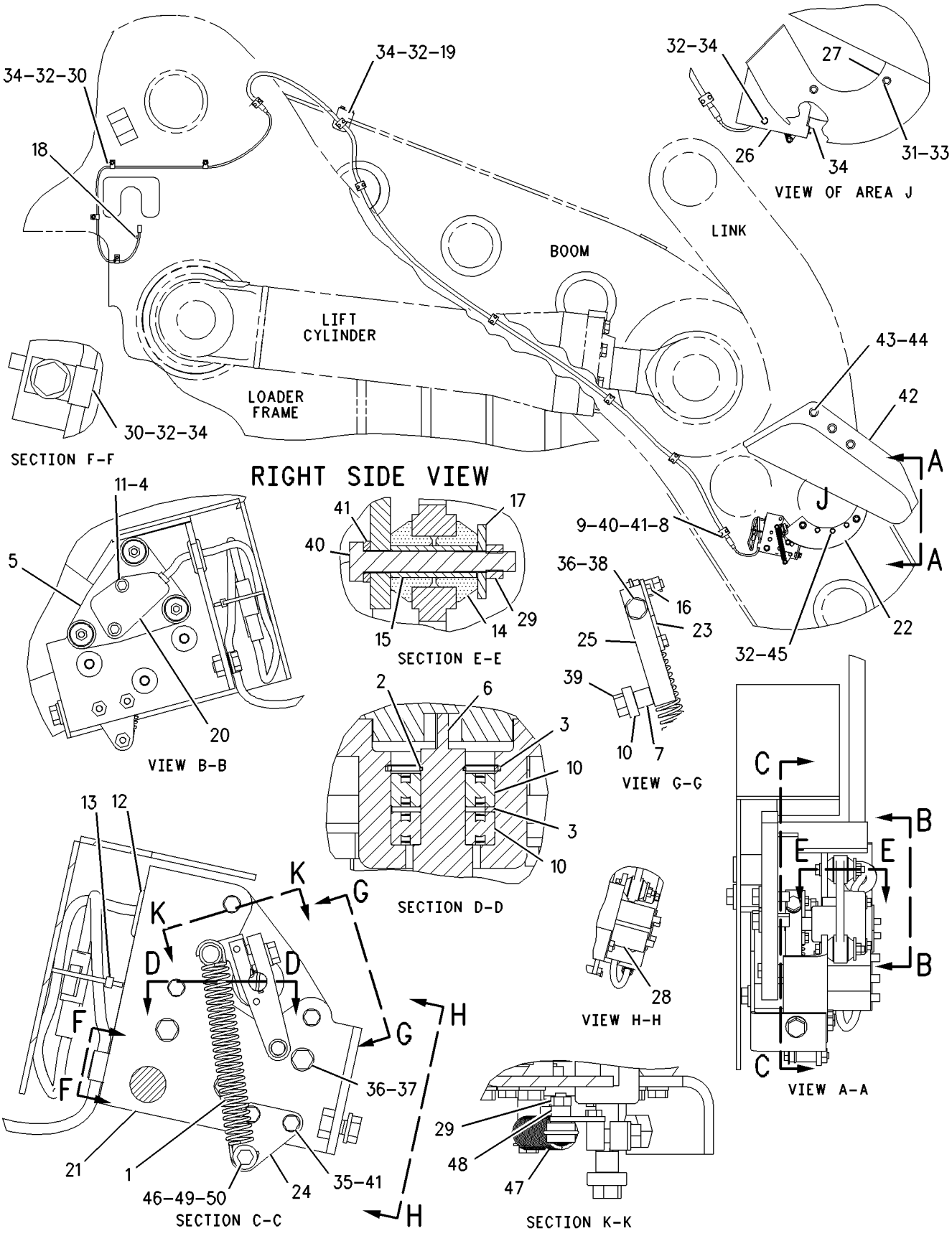

GRAPHIC #1

g00637612

MEMORANDA

HYDRAULIC SYSTEM

131-1276 KICKOUT & POSITIONER GP—TILT

S/N: 7HR1-UP
STANDARD LIFT
PART OF 131-1255, 148-7909, 170-2472, 170-8022 LIFT AR-STANDARD
AN ATTACHMENT

SMCS-5109, 5112 **i01541344**

NOTE	REF NO	GRAPHIC REF	PART NUMBER	QTY	PART NAME 1 2 3 4 5 6 (PRODUCT LEVEL)	SEE PAGE
	1	1	**176-2447**	1	SPRING	
	2	1	**2H-3429**	1	RING-RETAINING	
	3	1	**2L-6726**	2	RING-RETAINING	
	4	1	**4B-4274**	2	WASHER (5.5X13X1.2MM THK)	
	5	1	**4E-2250**	1	HOUSING	
	6	1	**4E-2453**	1	SHAFT-GOVERNOR CONTROL	
	7	1	**106-4158**	1	SPACER-STUD	
	8	1	**4V-1939**	14	CLAMP	
	9	1	**5V-6439**	7	PLATE	
	10	1	**6D-3025**	3	BALL BEARING	
M	11	1	**6V-2313**	2	BOLT (M5X0.8X30MM)	
	12	1	**7G-7053**	1	GROMMET	
	13	1	**7K-1181**	1	STRAP-CABLE	
	14	1	**8C-5607**	6	MOUNT (ISOLATION)	
	15	1	**8C-5608**	3	SPACER (6.5X9.5X25.4MM THK)	
M	16	1	**8T-0288**	2	BOLT (M5X0.8X12MM)	
	17	1	**9X-6165**	3	WASHER (6.5X22X2.5MM THK)	
	18	1	**115-5601**	1	HARNESS AS-SENSOR (KICKOUT & POSITIONER)	
		1	**155-2260**	2	KIT-CONNECTING PLUG (3 PIN)	
					(EACH KIT-CONNECTING PLUG INCLUDES PLUG AS & WEDGE)	
	19	1	**118-2865**	1	BRACKET	
CY	20	1	**161-8904**	1	SENSOR GP-POSITION (TILT)	325
	21	1	**176-4162**	1	PLATE AS	
M		1	**6V-9632**	1	NUT-WELD (M6X1 THD)	
M		1	**8T-3490**	2	NUT-WELD (M10X1.5 THD)	
		1	**9R-1733**	1	BOSS	
	22	1	**161-7396**	1	PLATE AS	
	23	1	**160-1825**	1	PLATE	
	25	1	**126-8463**	1	LEVER	
	26	1	**160-5842**	1	GUARD	
	27	1	**161-7398**	1	GUARD AS	
	28	1	**129-4162**	3	SPACER	
M	29	1	**5C-2890**	4	NUT (M6X1 THD)	
	30	1	**5P-9085**	5	CLIP	
	31	1	**7X-7729**	2	WASHER (11X25X3MM THK)	
	32	1	**8T-4121**	12	WASHER-HARD (11X21X2.5MM THK)	
M	33	1	**8T-4136**	2	BOLT (M10X1.5X25MM)	
M	34	1	**8T-4137**	9	BOLT (M10X1.5X20MM)	
	36	1	**8T-4224**	4	WASHER-HARD (8.8X16X2MM THK)	
M	37	1	**8T-6869**	3	BOLT (M8X1.25X60MM)	
M	38	1	**8T-4908**	1	BOLT (M8X1.25X25MM)	
	39	1	**5S-7382**	1	BOLT (3/8-16X1.375 IN)	
M	40	1	**9X-2480**	18	BOLT (M6X1.0X45MM)	
	41	1	**9X-8256**	17	WASHER (6.6X12X2MM THK)	
	42	1	**160-7583**	1	GUARD AS	
M	43	1	**8T-7338**	3	BOLT (M16X2.0X45MM)	
	44	1	**3E-9411**	3	WASHER-HARD (6MM THK)	
M	45	1	**8T-4195**	3	BOLT (M10X1.5X30MM)	
	46	1	**176-2446**	1	SPACER	
	47	1	**160-3866**	1	ROLLER-CAM	
	48	1	**105-1766**	1	SPACER	
	49	1	**9X-2026**	1	WASHER (6.5X17X1MM THK)	

C-CHANGE FROM PREVIOUS TYPE
M-METRIC PART
Y-SEPARATE ILLUSTRATION

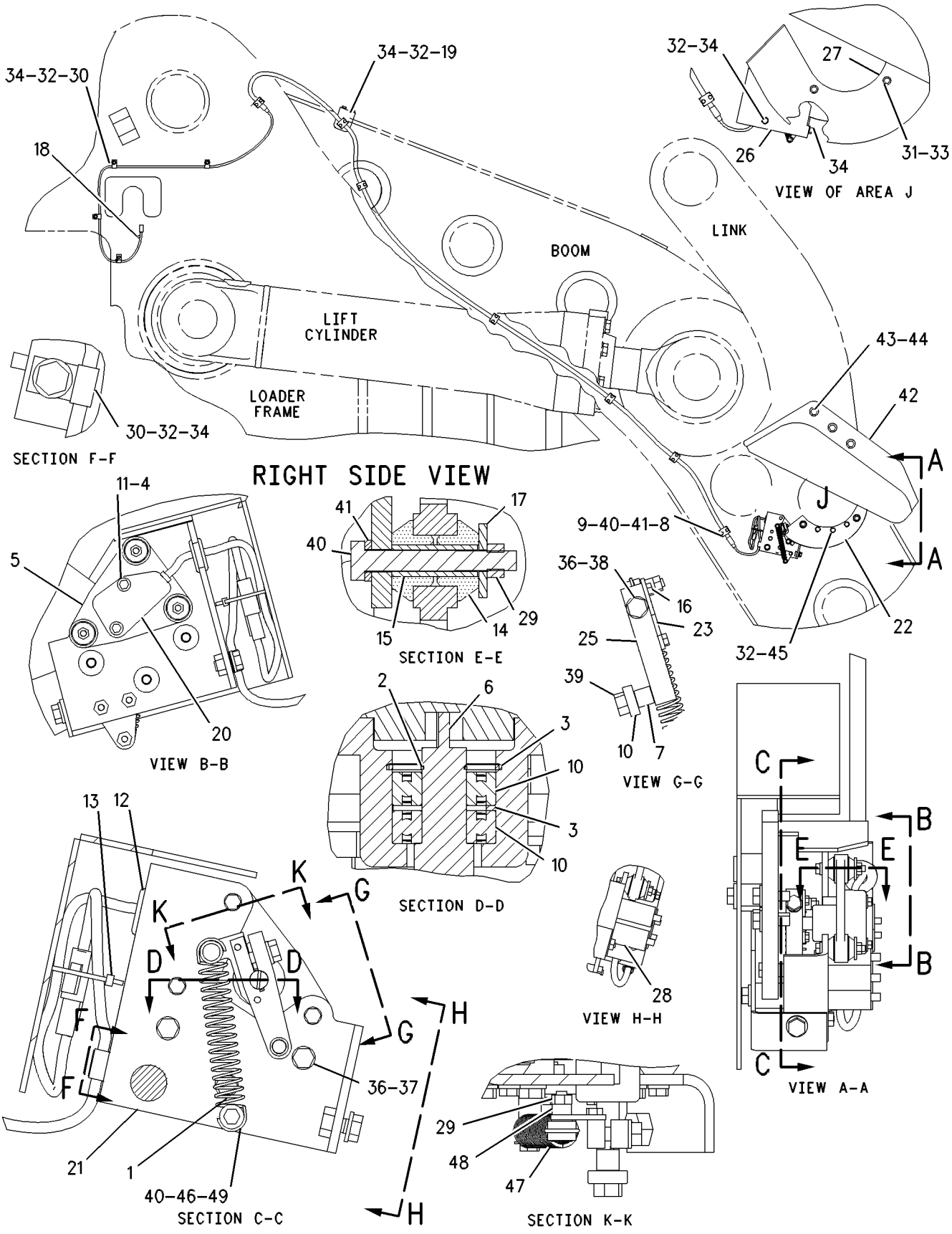

GRAPHIC #1 g00651765

MEMORANDA

HYDRAULIC SYSTEM

109-6867 LINES GP-HYDRAULIC

S/N: 7HR1-UP
PART OF 109-6820 HYDRAULIC AR
TYPE 1

SMCS-5057 **i01198328**

NOTE	REF NO	GRAPHIC REF	PART NUMBER	QTY	PART NAME 1 2 3 4 5 6 (PRODUCT LEVEL)	SEE PAGE
	1	1	**3E-9411**	4	WASHER-HARD (6MM THK)	
	2	1,2	**1P-3705**	7	SEAL-RECTANGULAR (44.7MM ID)	
	3	2	**2S-4078**	2	SEAL-O-RING (37.46MM ID)	
	4	2	**3D-2824**	1	SEAL-O-RING (23.47MM ID)	
	5	2	**3E-7410**	1	TEE-O-RING	
	6	1,2	**3J-1907**	5	SEAL-O-RING (11.89MM ID)	
	7	1	**144-8531**	1	BRACKET AS	
		1	**9R-2613**	2	BOSS (M10X25MM)	
	8	2	**3K-0360**	1	SEAL-O-RING (16.36MM ID)	
I	9	1	**4E-3447**	1	HOSE AS	
	10	1	**4H-9105**	1	SEAL-O-RING (110.72MM ID)	
M	11	1	**8T-4244**	2	NUT (M12X1.75 THD)	
	12	1,2	**5K-9090**	8	SEAL-O-RING (23.52MM ID)	
	13	2	**6V-0852**	2	CAP-DUST	
	14	2	**6V-3965**	2	FITTING AS	
	15	1,2	**6V-8397**	4	SEAL-O-RING (9.27MM ID)	
	16	1,2	**6V-8398**	3	SEAL-O-RING (12.47MM ID)	
	17	2	**6V-8714**	1	CONNECTOR-SEAL	
	18	2	**6V-8716**	1	CONNECTOR-SEAL	
	19	1,2	**6V-9182**	2	ELBOW (FACE SEAL)	
	20	2	**6V-9746**	5	SEAL-O-RING (18.94MM ID)	
	21	1,2	**7M-8485**	5	SEAL-O-RING (29.74MM ID)	
M	22	1	**7X-2553**	2	BOLT (M16X2.0X40MM)	
	23	2	**8C-6515**	1	TEE	
I	24	2	**8E-9975**	1	HOSE AS-ORFS	
	25	2	**8J-5914**	2	PLUG-O-RING (9/16-18 THD)	
	26	1	**5P-7464**	1	CLIP (SLOT)	
I	27	1	**8X-9922**	1	HOSE AS	
M	28	2	**099-0169**	4	BOLT	
	29	2	**104-7108**	1	VALVE GP-CHECK (IMPLEMENT PILOT)	
Y	30	2	**112-5381**	1	PUMP GP-PISTON (IMPLEMENT FIXED DISPLACEMENT)	1036
Y	31	2	**141-1462**	1	PUMP GP-PISTON (IMPLEMENT VAR DISPLACEMENT)	1040
	32	2	**113-9502**	1	MANIFOLD	
	33	1	**113-9503**	1	BRACKET	
Y	34	2	**115-2129**	1	FILTER GP-OIL (IMPLEMENT PILOT)	828
	35	2	**115-4834**	1	HOSE AS	
	36	1	**115-4839**	1	HOSE AS	
I	37	1	**115-4902**	1	HOSE AS	
I	38	1	**115-4903**	1	HOSE AS	
	39	2	**115-4940**	1	PLATE	
	40	1	**115-5638**	1	HOSE AS	
	41	2	**115-5639**	1	HOSE AS	
I	42	1	**115-5694**	2	HOSE AS	
I	43	1	**116-0701**	1	HOSE AS	
I	44	2	**116-0704**	1	HOSE AS	
I	45	2	**116-1935**	1	HOSE AS	
I	47	2	**143-3189**	2	HOSE AS	
	48	2	**6V-9847**	1	TEE-SWIVEL	
I	49	2	**119-5699**	1	HOSE AS	
M	50	1	**8T-4186**		BOLT (M10X1.50X40MM)	
I	51	1	**131-2949**	1	HOSE AS	
Y	52	1	*133-7455*	1	VALVE & MTG GP-PILOT RELIEF	1067
Y	53	2	*133-7456*	1	VALVE & MTG GP-VARIABLE PUMP	1069
M	54	2	**8T-6430**	4	BOLT (M20X2.5X50MM)	
	55	1	**1P-4579**	2	FLANGE-HALF	

109-6867 **LINES GP-HYDRAULIC** *(contd.)* **i01198328**

NOTE	REF NO	GRAPHIC REF	PART NUMBER	QTY	PART NAME 1 2 3 4 5 6 (PRODUCT LEVEL)	SEE PAGE
	56	1,2	**1P-4584**	6	FLANGE-HALF	
	57	1,2	**1P-7016**	6	FLANGE-HALF	
	58	1	**1P-7017**	2	FLANGE-HALF	
	59	1,2	**1H-8128**	3	SEAL-O-RING (94.84MM ID)	
	60	1	**4J-0524**	1	SEAL-O-RING (47.22MM ID)	
	61	2	**5P-1076**	6	WASHER-HARD (4MM THK)	
	62	1	**5P-7470**	1	CLIP (SLOT)	
	63	1	**5P-7471**	1	CLIP (TAB)	
	64	1	**5P-7703**	1	GROMMET	
	65	2	**5P-8077**	10	FLANGE-HALF	
M	66	1	**8T-4194**	1	BOLT (M12X1.75X50MM)	
	67	2	**6F-4718**	2	SEAL-O-RING (164.69MM ID)	
	68	1,2	**6J-2680**	4	SEAL-O-RING (69.44MM ID)	
	69	1	**6V-1572**	2	CLIP (SLOT)	
		1	**6V-1573**	2	CLIP (TAB)	
M	70	2	**8T-6466**	2	BOLT (M10X1.50X60MM)	
	71	1	**6V-1574**	2	GROMMET (56MM ID)	
	72	1	**6V-1867**	1	CLIP (SLOT)	
		1	**6V-1868**	1	CLIP (TAB)	
	73	1,2	**9X-8257**	36	WASHER (3.50MM THK)	
	74	2	**6V-8636**	1	CONNECTOR	
	75	1	**6V-8724**	1	ELBOW (9/16-18 THD)	
	76	2	**6V-9002**	1	ELBOW-45 DEGREE (3/4-16 THD)	
	77	1	**6V-9005**	1	ELBOW-45 DEGREE	
	78	2	**6V-9854**	1	ELBOW-SWIVEL (1 7/16-12 THD)	
M	79	2	**7X-2563**	4	BOLT (M20X2.5X60MM)	
M	80	1	**8T-4956**	1	BOLT (M12X1.75X35MM)	
	81	1,2	**8T-4121**	10	WASHER (2.5MM THK)	
	82	2	**8T-4123**	8	WASHER-PLATED (3.5MM THK)	
	83	1	**6V-1249**	1	GROMMET (22.00MM OD)	
M	84	1	**8T-4139**	5	BOLT (M12X1.75X30MM)	
M	85	1,2	**8T-4140**	28	BOLT (M16X2.0X60MM)	
	86	1	**5P-7465**	1	CLIP (TAB)	
M	87	2	**8T-4182**	2	BOLT (M10X1.5X45MM)	
M	88	1,2	**8T-4183**	16	BOLT (M12X1.75X40 MM)	
M	89	1,2	**8T-4184**	12	BOLT (M12X1.75X45MM)	
M	90	1	**8T-4193**	4	BOLT (M16X2.0X50MM)	
M	91	1	**8T-4195**	4	BOLT (M10X1.50X30MM)	
	92	1,2	**8T-4223**	31	WASHER-HARD (3MM THK)	
E	93	1	**5P-5923**		SEAL (20CM)	
	94	3	**1P-3703**	1	SEAL-RECTANGULAR (31.86MM ID)	
	95	3	**1P-3705**	1	SEAL-RECTANGULAR (44.7MM ID)	
	96	3	**3J-7354**	1	SEAL-O-RING (8.92MM ID)	
	97	3	**4J-0520**	1	SEAL-O-RING (32.92MM ID)	
	98	3	**8C-3451**	1	CAP-DUST	
	99	3	**6V-8397**	2	SEAL-O-RING (9.27MM ID)	
	100	3	**8C-3446**	1	VALVE-FLUID SAMPLING	
	101	3	**8R-7723**	1	ADAPTER	
M	102	3	**099-0169**	4	BOLT	
I	103	3	**117-4666**	1	HOSE AS	
Y	104	3	**136-3965**	1	PUMP GP-GEAR (STEERING & IMPLEMENT PILOT)	864
	105	3	**1P-4579**	2	FLANGE-HALF	
	106	3	**4J-0524**	1	SEAL-O-RING (47.22MM ID)	
	107	3	**5P-8077**	2	FLANGE-HALF	
	108	3	**9X-8257**	4	WASHER (3.50MM THK)	
	109	3	**8C-3206**	2	FLANGE-HALF	
	110	3	**8T-4121**	8	WASHER (2.5MM THK)	
M	111	3	**8T-4183**	4	BOLT (M12X1.75X40 MM)	
	112	3	**8T-4223**	4	WASHER-HARD (3MM THK)	

109-6867 **LINES GP-HYDRAULIC** *(contd.)* **i01198328**

NOTE	REF NO	GRAPHIC REF	PART NUMBER	QTY	PART NAME 1 2 3 4 5 6 (PRODUCT LEVEL)	SEE PAGE
M	113	3	**8T-5005**	4	BOLT (M10X1.50X70MM)	

E-ORDER BY THE CENTIMETER
I-SEE HOSE FABRICATION GUIDE
M-METRIC PART
Y-SEPARATE ILLUSTRATION

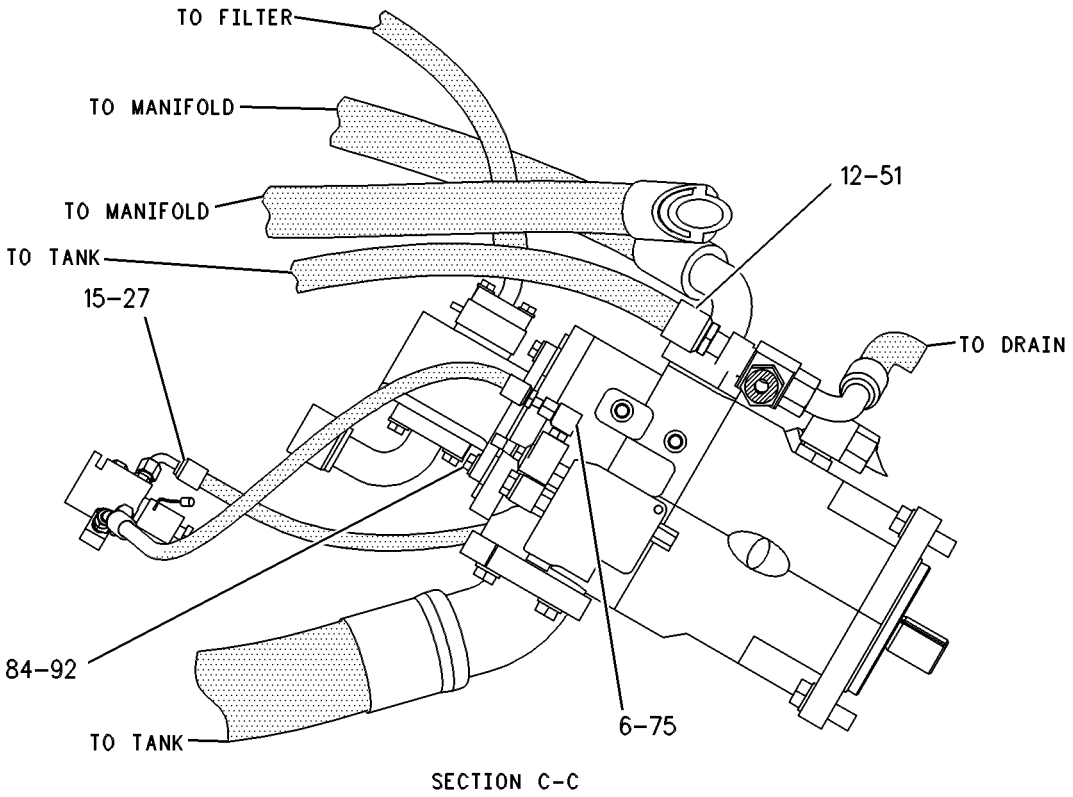

SECTION C-C

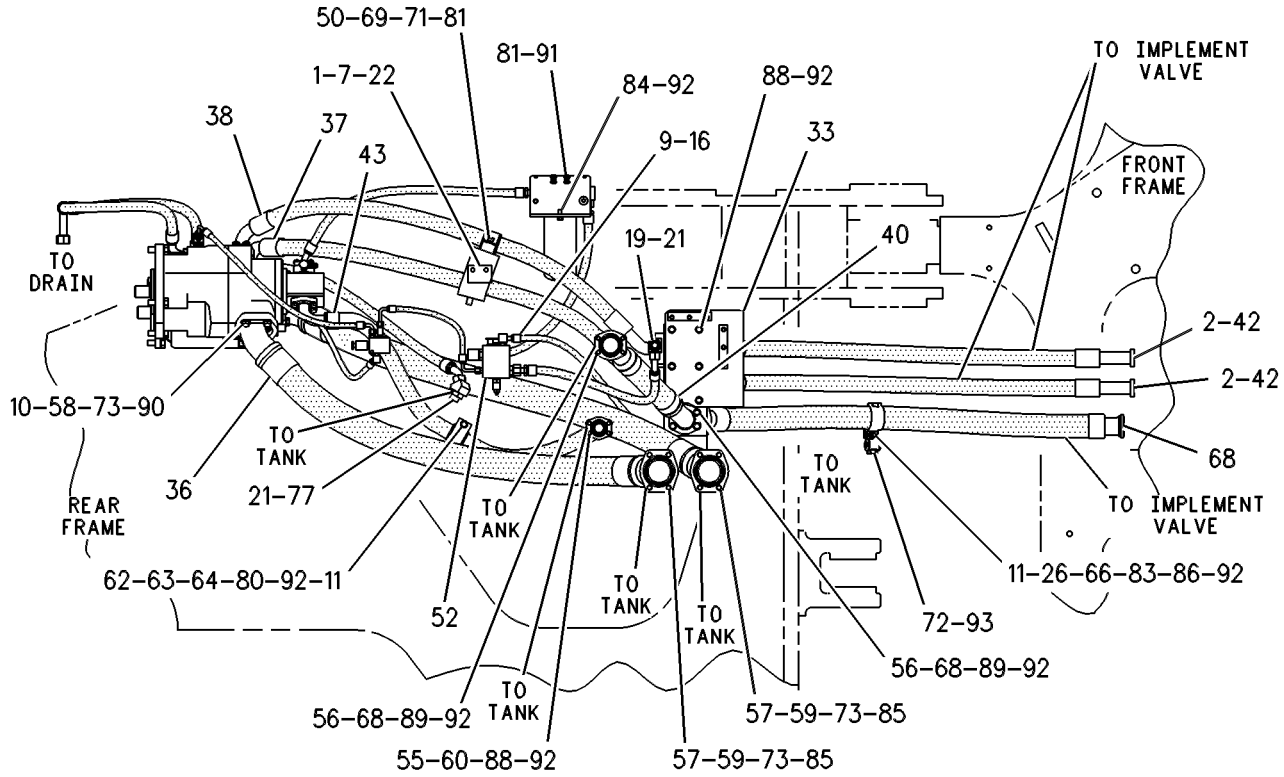

RIGHT SIDE VIEW

GRAPHIC #1 g00289389

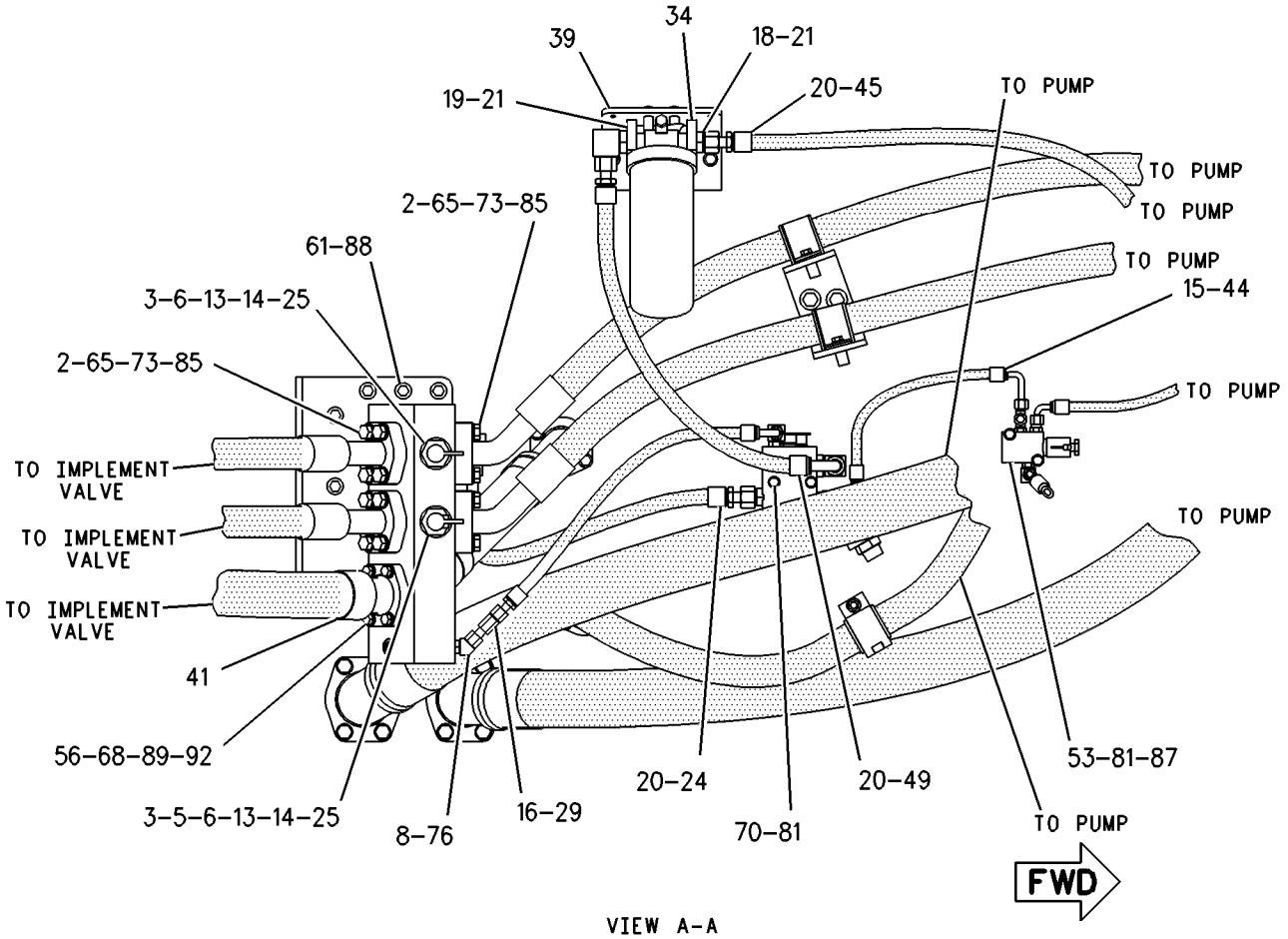

VIEW A-A

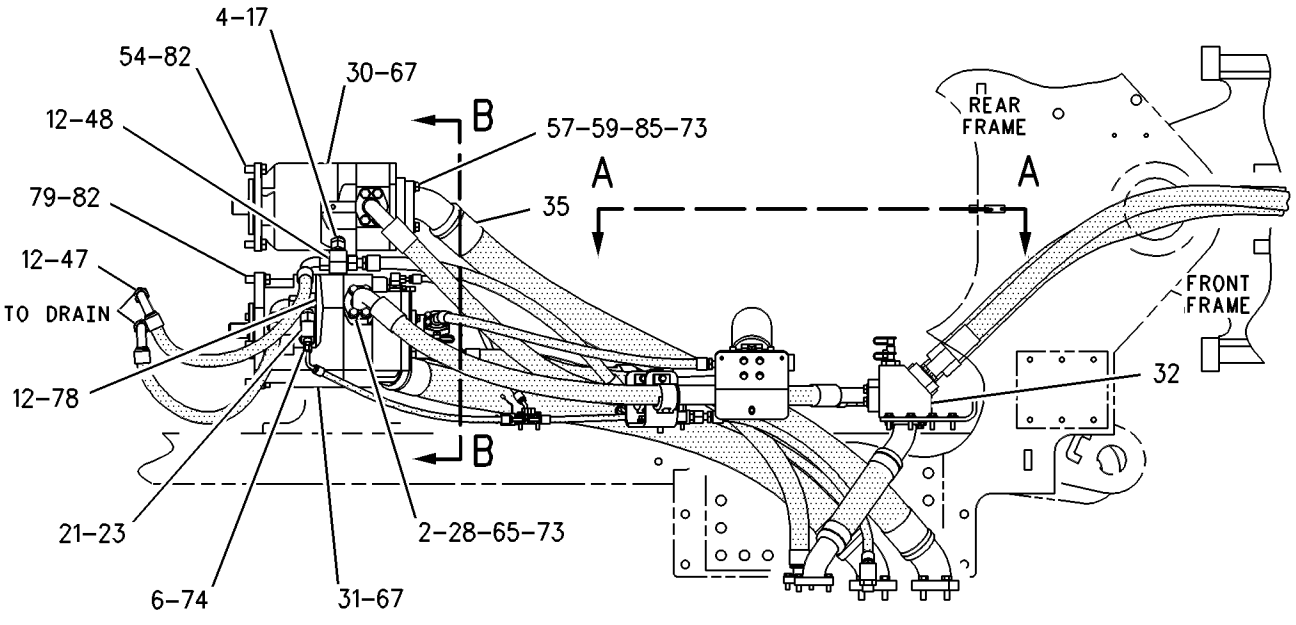

TOP VIEW

REFER TO ALL ILLUSTRATIONS OF THIS GROUP FOR AUXILIARY VIEWS

GRAPHIC #2

g00637885

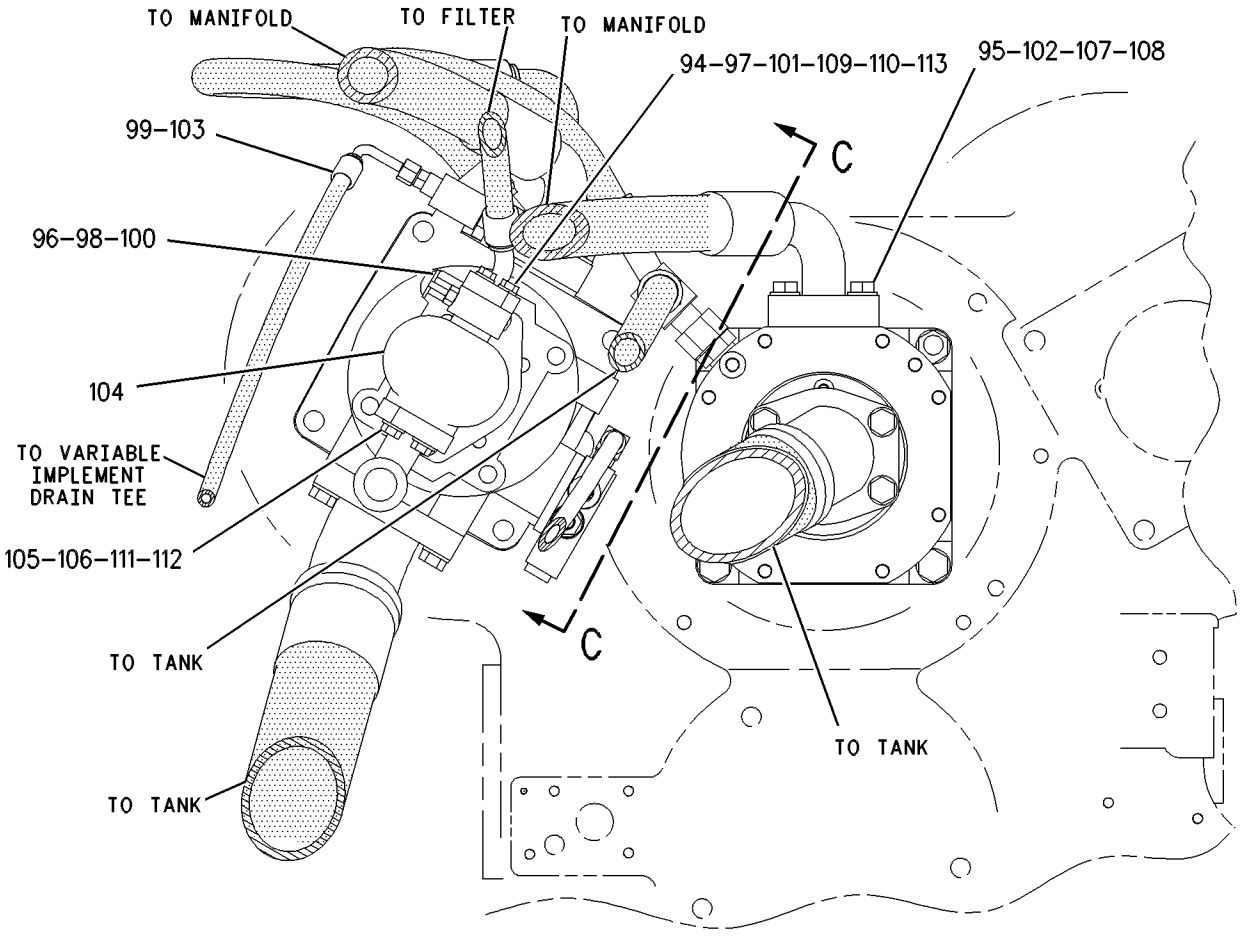

REFER TO ALL ILLUSTRATIONS OF THIS GROUP FOR AUXILIARY VIEWS

SECTION B-B

GRAPHIC #3

g00340372

HYDRAULIC SYSTEM

109-6867 LINES GP-HYDRAULIC

S/N: 7HR1-UP
PART OF 109-6820 HYDRAULIC AR
TYPE 2

SMCS-5057 **i01198330**

NOTE	REF NO	GRAPHIC REF	PART NUMBER	QTY	PART NAME 1 2 3 4 5 6 (PRODUCT LEVEL)	SEE PAGE
	1	1	**3E-9411**	4	WASHER-HARD (6MM THK)	
	2	1,2,3	**1P-3705**	8	SEAL-RECTANGULAR (44.7MM ID)	
	3	2	**2S-4078**	2	SEAL-O-RING (37.46MM ID)	
C	4	1	**7X-7729**	12	WASHER (3MM THK)	
	5	2	**3E-7410**	1	TEE-O-RING	
	6	2	**3J-1907**	1	SEAL-O-RING (11.89MM ID)	
	7	1	**144-8531**	1	BRACKET AS	
		1	**9R-2613**	2	BOSS (M10X25MM)	
CM	8	1	**8T-4136**	12	BOLT (M10X1.50X25MM)	
I	9	1	**4E-3447**	1	HOSE AS	
	10	1	**4H-9105**	1	SEAL-O-RING (110.72MM ID)	
M	11	1	**8T-4244**	2	NUT (M12X1.75 THD)	
	12	2	**5K-9090**	1	SEAL-O-RING (23.52MM ID)	
	13	2	**6V-0852**	2	CAP-DUST	
C	14	2	*164-5567*	2	FITTING AS	
					(EACH INCLUDES)	
		2	**6V-3965**	1	FITTING AS	
		2	**3J-1907**	1	SEAL-O-RING (11.89MM ID)	
C	15	1	*148-8335*	1	CONNECTOR AS	
		1	**6V-8635**	1	CONNECTOR-SEAL	
		1	**5K-9090**	1	SEAL-O-RING (23.52MM ID)	
		1	**7M-8485**	1	SEAL-O-RING (29.74MM ID)	
C	16	2	**6V-8398**	1	SEAL-O-RING (12.47MM ID)	
C	17	1,3	*148-8357*	3	ELBOW AS	
					(EACH INCLUDES)	
		1,3	**6V-9008**	1	ELBOW-90 DEGREE (1 5/16-12 THD)	
		1,3	**5K-9090**	1	SEAL-O-RING (23.52MM ID)	
		1,3	**7M-8485**	1	SEAL-O-RING (29.74MM ID)	
C	18	2	*148-8339*	1	CONNECTOR AS	
		2	**6V-8716**	1	CONNECTOR-SEAL	
		2	**6V-9746**	1	SEAL-O-RING (18.94MM ID)	
		2	**7M-8485**	1	SEAL-O-RING (29.74MM ID)	
C	19	2	*148-8360*	1	ELBOW AS	
		2	**6V-9182**	1	ELBOW (FACE SEAL)	
		2	**6V-9746**	1	SEAL-O-RING (18.94MM ID)	
		2	**7M-8485**	1	SEAL-O-RING (29.74MM ID)	
C	20	3	*148-8362*	1	ELBOW AS	
		3	**8T-6684**	1	ELBOW-90 DEGREE (1 1/16-12 THD)	
		3	**3D-2824**	1	SEAL-O-RING (23.47MM ID)	
		3	**5K-9090**	1	SEAL-O-RING (23.52MM ID)	
C	21	3	*148-8429*	1	TEE AS-ORFS	
		3	**6V-9840**	1	TEE-SWIVEL	
		3	**5K-9090**	2	SEAL-O-RING (23.52MM ID)	
M	22	1	**7X-2553**	2	BOLT (M16X2.0X40MM)	
	23	2	**8C-6515**	1	TEE	
I	24	2	**8E-9975**	1	HOSE AS-ORFS	
	25	2	**8J-5914**	2	PLUG-O-RING (9/16-18 THD)	
	26	2	**148-8442**	1	TEE AS-ORFS	
		2	**6V-9746**	2	SEAL-O-RING (18.94MM ID)	
		2	**7M-8485**	1	SEAL-O-RING (29.74MM ID)	
		2	**8T-1685**	1	TEE	
I	27	1	**8X-9922**	1	HOSE AS	
M	28	2,3	**099-0169**	8	BOLT	
	29	2	**104-7108**	1	VALVE GP-CHECK (IMPLEMENT PILOT)	
Y	30	2	**112-5381**	1	PUMP GP-PISTON (IMPLEMENT FIXED DISPLACEMENT)	1036

109-6867 **LINES GP-HYDRAULIC** *(contd.)* **i01198330**

NOTE	REF NO	GRAPHIC REF	PART NUMBER	QTY	PART NAME 1 2 3 4 5 6 (PRODUCT LEVEL)	SEE PAGE
Y	31	2	**141-1462**	1	PUMP GP-PISTON (IMPLEMENT VAR DISPLACEMENT)	1040
	32	2	**113-9502**	1	MANIFOLD	
	33	1	**113-9503**	1	BRACKET	
Y	34	2	**115-2129**	1	FILTER GP-OIL (IMPLEMENT PILOT)	828
	35	2	**115-4834**	1	HOSE AS	
	36	1	**115-4839**	1	HOSE AS	
I	37	1	**115-4902**	1	HOSE AS	
I	38	1	**115-4903**	1	HOSE AS	
	39	2	**115-4940**	1	PLATE	
	40	1	**115-5638**	1	HOSE AS	
	41	2	**115-5639**	1	HOSE AS	
I	42	1	**115-5694**	2	HOSE AS	
I	43	1	**116-0701**	1	HOSE AS	
I	44	2	**116-0704**	1	HOSE AS	
I	45	2	**116-1935**	1	HOSE AS	
B	46	1	**5P-5923**		SEAL	
CY	47	3	**166-4647**	2	FILTER GP-OIL (HYDRAULIC CASE DRAIN)	540
C	48	1	**168-6355**	2	BRACKET	
I	49	2	**119-5699**	1	HOSE AS	
M	50	1	**8T-4186**	2	BOLT (M10X1.50X40MM)	
CI	51	2	**171-2007**	1	HOSE AS	
Y	52	1	*133-7455*	1	VALVE & MTG GP-PILOT RELIEF	1067
Y	53	1	*133-7456*	1	VALVE & MTG GP-VARIABLE PUMP	1069
M	54	2	**8T-6430**	4	BOLT (M20X2.5X50MM)	
	55	1,3	**1P-4579**	4	FLANGE-HALF	
	56	1,2	**1P-4584**	6	FLANGE-HALF	
	57	1,2	**1P-7016**	6	FLANGE-HALF	
	58	1	**1P-7017**	2	FLANGE-HALF	
	59	1,2	**1H-8128**	3	SEAL-O-RING (94.84MM ID)	
	60	1,3	**4J-0524**	2	SEAL-O-RING (47.22MM ID)	
	61	2	**5P-1076**	6	WASHER-HARD (4MM THK)	
	62	1	**5P-7470**	1	CLIP (SLOT)	
	63	1	**5P-7471**	1	CLIP (TAB)	
	64	1	**5P-7703**	1	GROMMET	
	65	2,3	**5P-8077**	12	FLANGE-HALF	
M	66	1	**8T-4194**	1	BOLT (M12X1.75X50MM)	
	67	2	**6F-4718**	2	SEAL-O-RING (164.69MM ID)	
	68	1,2	**6J-2680**	4	SEAL-O-RING (69.44MM ID)	
	69	1	**6V-1572**	2	CLIP (SLOT)	
		1	**6V-1573**	2	CLIP (TAB)	
M	70	2	**8T-6466**	2	BOLT (M10X1.50X60MM)	
	71	1	**6V-1574**	2	GROMMET (56MM ID)	
	72	1	**6V-1867**	1	CLIP (SLOT)	
		1	**6V-1868**	1	CLIP (TAB)	
	73	1,2,3	**9X-8257**	40	WASHER (3.50MM THK)	
C	74	1,2	*148-8336*	1	CONNECTOR AS	
		1,2	**6V-8636**	1	CONNECTOR	
		1,2	**3J-1907**	1	SEAL-O-RING (11.89MM ID)	
		1,2	**6V-8397**	1	SEAL-O-RING (9.27MM ID)	
C	75	1	*148-8378*	1	ELBOW AS	
		1	**6V-8724**	1	ELBOW (9/16-18 THD)	
		1	**3J-1907**	1	SEAL-O-RING (11.89MM ID)	
		1	**6V-8397**	1	SEAL-O-RING (9.27MM ID)	
C	76	2	*148-8354*	1	ELBOW AS	
		2	**6V-9002**	1	ELBOW-45 DEGREE (3/4-16 THD)	
		2	**3K-0360**	1	SEAL-O-RING (16.36MM ID)	
		2	**6V-8398**	1	SEAL-O-RING (12.47MM ID)	
C	77	1	*148-8355*	1	ELBOW AS	
		1	**6V-9005**	1	ELBOW-45 DEGREE	

109-6867 **LINES GP-HYDRAULIC** *(contd.)* **i01198330**

NOTE	REF NO	GRAPHIC REF	PART NUMBER	QTY	PART NAME 1 2 3 4 5 6 (PRODUCT LEVEL)	SEE PAGE
		1	**5K-9090**	1	SEAL-O-RING (23.52MM ID)	
		1	**7M-8485**	1	SEAL-O-RING (29.74MM ID)	
C	78	1,2	*148-8352*	1	ELBOW AS	
		1,2	**6V-9854**	1	ELBOW-SWIVEL (1 7/16-12 THD)	
		1,2	**5K-9090**	1	SEAL-O-RING (23.52MM ID)	
M	79	2	**7X-2563**	4	BOLT (M20X2.5X60MM)	
M	80	1	**8T-4956**	1	BOLT (M12X1.75X35MM)	
	81	1,2,3	**8T-4121**	18	WASHER (2.5MM THK)	
	82	2	**8T-4123**	8	WASHER-PLATED (3.5MM THK)	
M	83	3	**8T-5005**	4	BOLT (M10X1.50X70MM)	
M	84	1	**8T-4139**	5	BOLT (M12X1.75X30MM)	
M	85	1,2	**8T-4140**	28	BOLT (M16X2.0X60MM)	
	86	2	**7M-8485**	1	SEAL-O-RING (29.74MM ID)	
M	87	1	**8T-4182**	2	BOLT (M10X1.5X45MM)	
M	88	1,2,3	**8T-4183**	20	BOLT (M12X1.75X40 MM)	
M	89	1,2	**8T-4184**	12	BOLT (M12X1.75X45MM)	
M	90	1	**8T-4193**	4	BOLT (M16X2.0X50MM)	
M	91	1	**8T-4195**	4	BOLT (M10X1.50X30MM)	
	92	1,2,3	**8T-4223**	35	WASHER-HARD (3MM THK)	
E	93	1	**5P-5923**		SEAL (20CM)	
	94	3	**1P-3703**	1	SEAL-RECTANGULAR (31.86MM ID)	
CI	95	2	**171-2008**	1	HOSE AS	
	96	3	**3J-7354**	1	SEAL-O-RING (8.92MM ID)	
	97	3	**4J-0520**	1	SEAL-O-RING (32.92MM ID)	
	98	3	**8C-3451**	1	CAP-DUST	
	99	3	**8C-3206**	2	FLANGE-HALF	
	100	3	**8C-3446**	1	VALVE-FLUID SAMPLING	
	101	3	**8R-7723**	1	ADAPTER	
CI	102	1	**171-2009**	1	HOSE AS	
I	103	3	**117-4666**	1	HOSE AS	
Y	104	3	**136-3965**	1	PUMP GP-GEAR (IMPLEMENT PILOT)	864
CI	105	2	**171-2012**	1	HOSE AS	
CI	106	2	**171-2013**	1	HOSE AS	

B-USE AS REQUIRED
C-CHANGE FROM PREVIOUS TYPE
E-ORDER BY THE CENTIMETER
I-SEE HOSE FABRICATION GUIDE
M-METRIC PART
Y-SEPARATE ILLUSTRATION

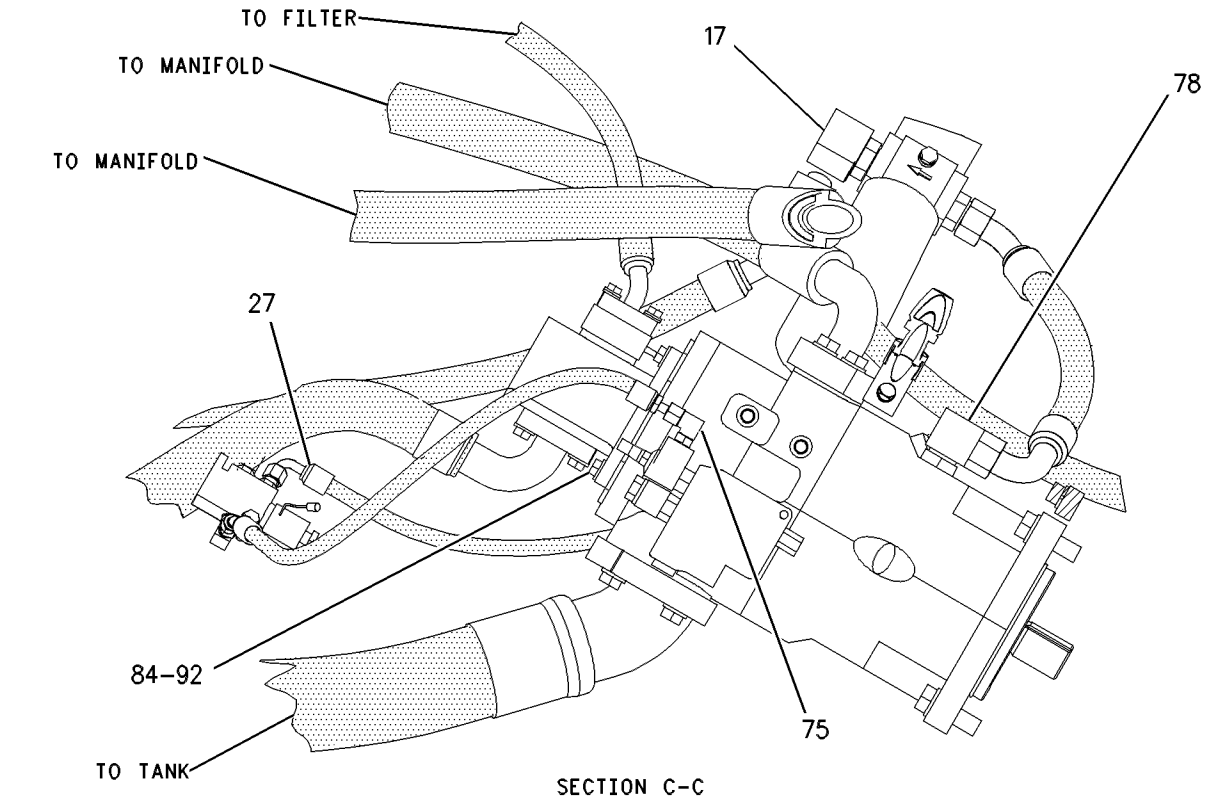

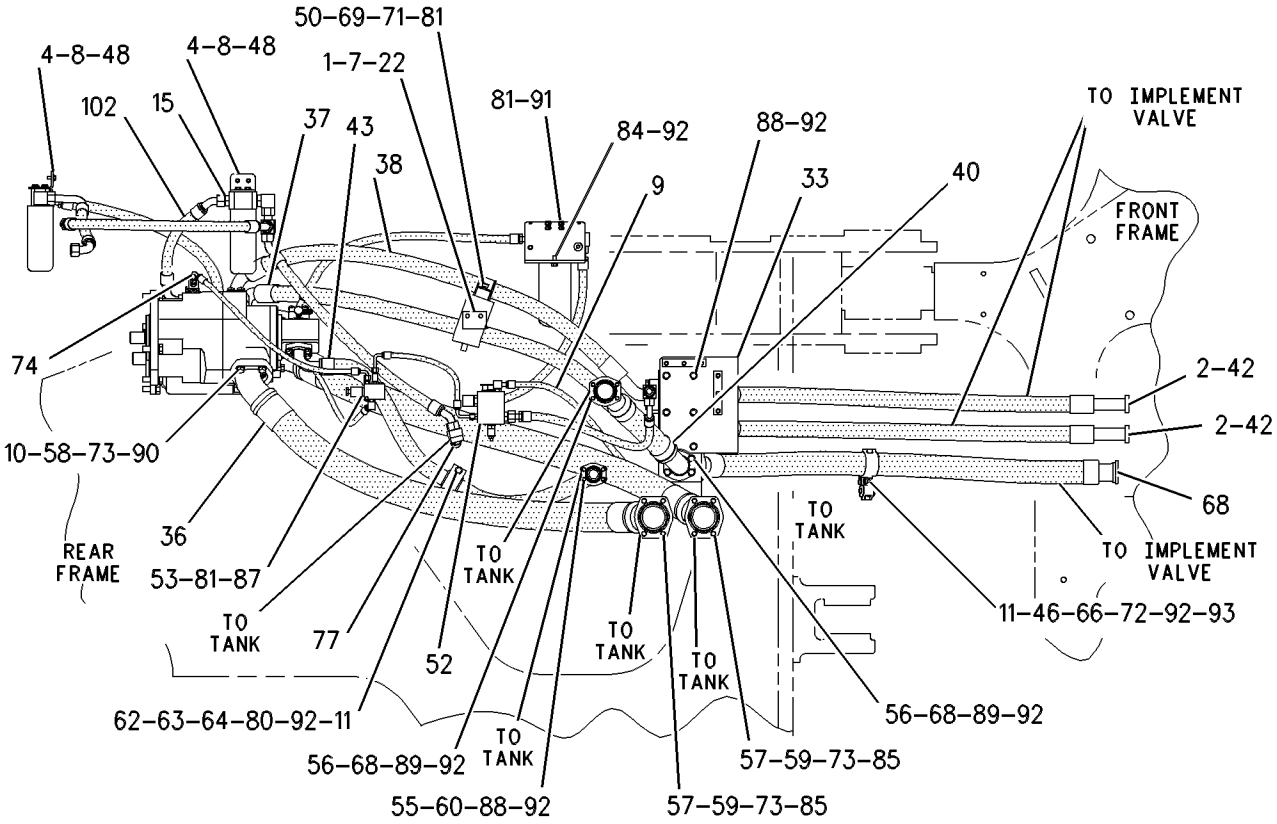

RIGHT SIDE VIEW

GRAPHIC #1 g00610456

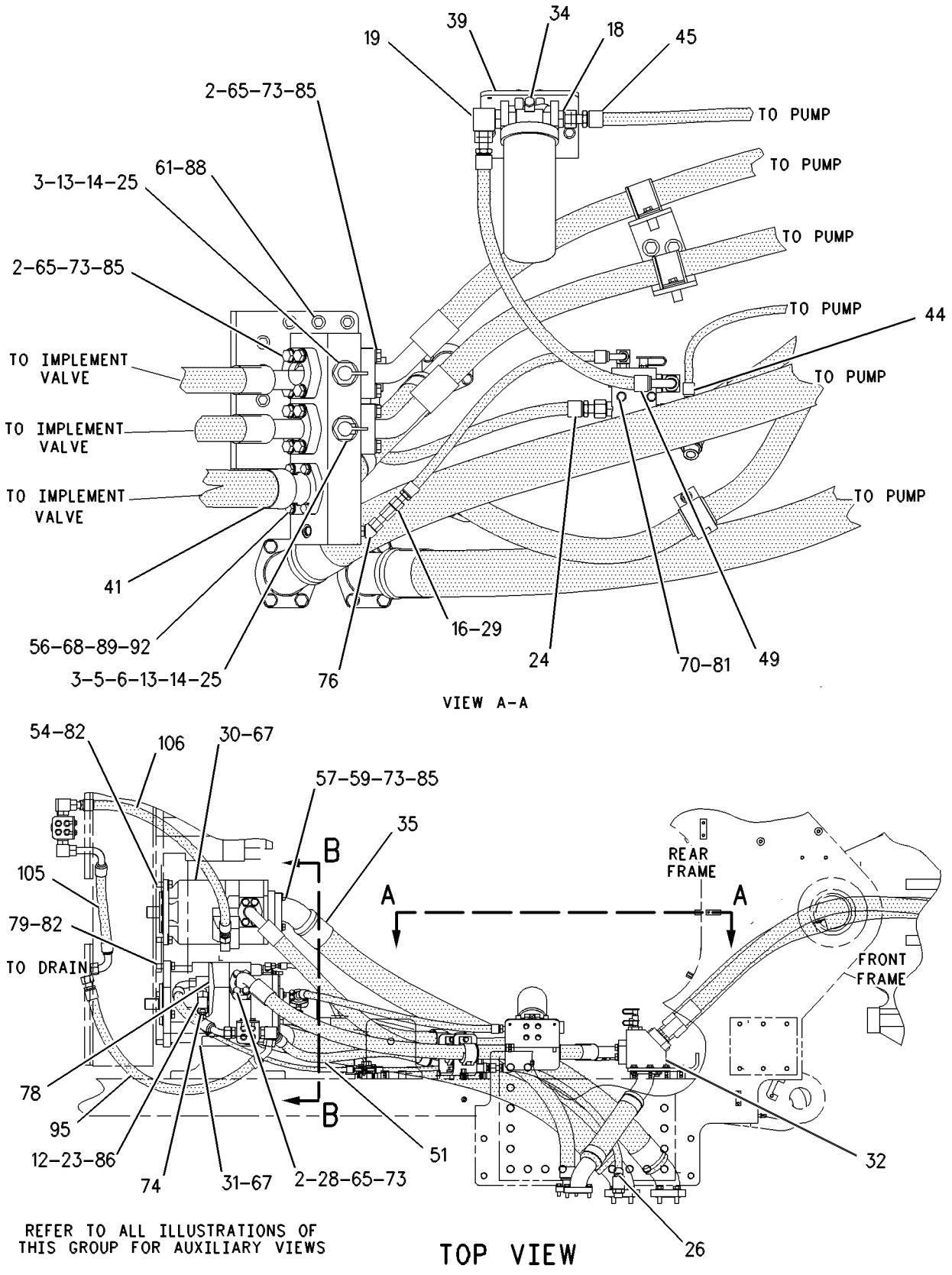

GRAPHIC #2 g00610459

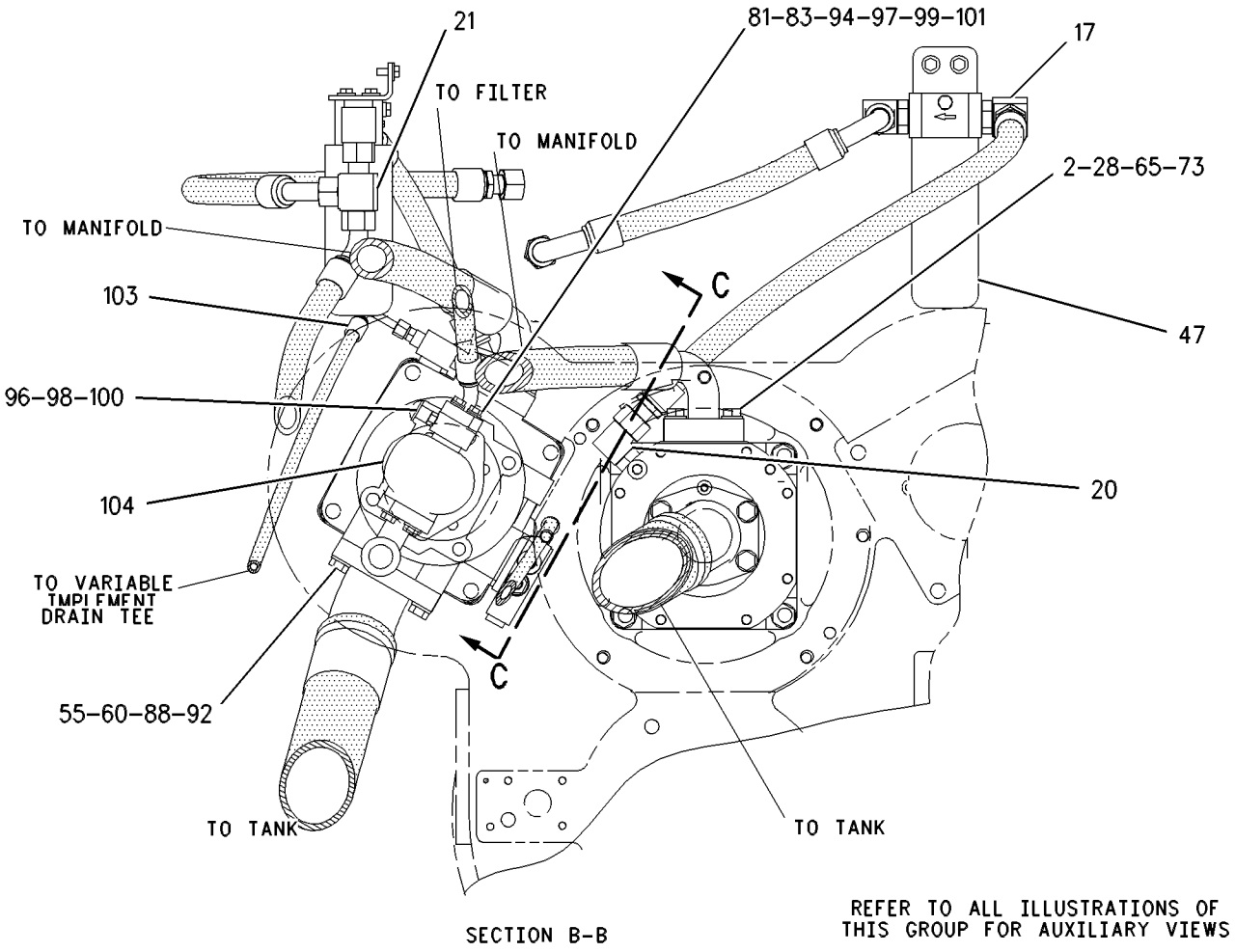

GRAPHIC #3

g00610461

HYDRAULIC SYSTEM

109-6872 LINES GP-HYDRAULIC FAN

S/N: 7HR1-302

PART OF 109-6820 HYDRAULIC AR

SMCS-1386, 1387, 5057 **i01198334**

NOTE	REF NO	GRAPHIC REF	PART NUMBER	QTY	PART NAME 1 2 3 4 5 6 (PRODUCT LEVEL)	SEE PAGE
	1	1,2	**1P-3704**	3	SEAL-RECTANGULAR (38.2MM ID)	
	2	1,2	**1P-3705**	3	SEAL-RECTANGULAR (44.7MM ID)	
	3	1,2	**2M-9780**	2	SEAL-O-RING (19.18MM ID)	
	4	1	**2W-5331**	1	BRACKET	
	5	2	**3J-1907**	5	SEAL-O-RING (11.89MM ID)	
	6	1	**4L-9337**	3	BOLT (3/8-16X1.5IN)	
	7	1	**6V-9854**	1	ELBOW-SWIVEL (1 7/16-12 THD)	
	8	1,2	**5K-9090**	3	SEAL-O-RING (23.52MM ID)	
	9	2	**5P-1046**	1	CONNECTOR	
	10	1	**6E-1454**	1	VALVE GP-CHECK (COOLER BYPASS)	
Y	11	1	**6E-4576**	1	MOTOR GP-PISTON (FAN DRIVE)	1034
	12	2	**6V-0852**	1	CAP-DUST	
		2	**6V-3965**	1	FITTING AS	
M	13	1,2	**8T-4193**	4	BOLT (M16X2.0X50MM)	
M	14	1	**8T-7058**	8	BOLT-SOCKET HEAD (M12X1.75X140MM)	
	15	2	**8T-5389**	1	ELBOW	
	16	2	**6V-8926**	1	ADAPTER	
	17	2	**6V-9746**	3	SEAL-O-RING (18.94MM ID)	
	18	1,2	**7M-8485**	4	SEAL-O-RING (29.74MM ID)	
	19	2	**7X-2459**	1	TEE	
	20	2	**7X-3392**	8	WASHER-HARD (3MM THK)	
M	21	1	**8T-6868**	4	BOLT (M12X1.75X80MM)	
	22	2	**8T-3312**	1	TEE	
	23	2	**8T-6907**	1	VALVE-BALL	
	24	2	**8T-7876**	1	SEAL-O-RING (8.2MM ID)	
	25	2	**9S-4181**	1	PLUG-STRAIGHT THREAD (1-5/16-12 THD)	
	26	1,2	**9S-4190**	1	PLUG-O-RING (7/16-20 THD)	
	27	1	**9U-1381**	2	MANIFOLD	
Y	28	1	*101-9012*	1	VALVE GP-MAKEUP (PREVENTS FAN MOTOR CAVITATION)	1085
	29	2	**107-0586**	1	ELBOW	
M	30	1,2	**8T-4956**	4	BOLT (M12X1.75X35MM)	
	31	2	**6V-8397**	1	SEAL-O-RING (9.27MM ID)	
	32	1	**115-5324**	1	HOSE AS	
	33	1	**115-7796**	1	TUBE AS	
I	34	1	**115-8168**	1	HOSE AS	
	35	1	**115-8170**	1	TUBE AS	
	36	2	**116-4450**	1	TUBE AS	
	37	2	**116-4451**	1	TUBE AS	
	38	2	**116-4453**	1	TUBE AS	
	39	2	**116-4454**	1	TUBE AS	
	40	2	**116-4455**	1	TUBE AS	
I	41	1	**116-8741**	1	HOSE AS	
I	42	1	**116-8742**	1	HOSE AS	
I	43	2	**116-9604**	1	HOSE AS	
I	44	2	**116-9605**	1	HOSE AS	
I	45	2	**156-1041**	1	HOSE AS	
M	46	1,2	**8T-4910**	12	BOLT (M12X1.75X60MM)	
M	47	2	**8T-4648**	4	BOLT (M12X1.75X70MM)	
	48	2	**117-0973**	1	BRACKET AS	
M		2	**8T-3597**	2	NUT-WELD (M12X1.75 THD)	
I	49	1	**117-3412**	1	HOSE AS	
	50	2	**117-4714**	1	TUBE AS	
	51	1,2	**8T-4223**	94	WASHER-HARD (3MM THK)	
M	52	1,2	**8T-4196**	8	BOLT (M10X1.50X35MM)	
	53	2	**118-7138**	1	MANIFOLD	
	54	1	**118-8589**	1	TUBE AS	

109-6872 LINES GP-HYDRAULIC FAN *(contd.)* i01198334

NOTE	REF NO	GRAPHIC REF	PART NUMBER	QTY	PART NAME 1 2 3 4 5 6 (PRODUCT LEVEL)	SEE PAGE
	55	2	**122-8502**	1	PLATE AS	
M		2	**8T-3597**	5	NUT-WELD (M12X1.75 THD)	
	56	2	**6V-9008**	1	ELBOW-90 DEGREE (1 5/16-12 THD)	
M	57	1,2	**8T-4184**	5	BOLT (M12X1.75X45MM)	
	58	1	**130-8157**	1	HOSE	
		1	**9X-2488**	1	CLAMP-HOSE	
	59	1	**1P-4579**	4	FLANGE-HALF	
	60	1	**1P-4584**	4	FLANGE-HALF	
	61	1	**1S-6420**	1	CLIP (17.46MM ID)	
	62	1,2	**4J-0522**	11	SEAL-O-RING (37.69MM ID)	
	63	1	**4J-0524**	2	SEAL-O-RING (47.22MM ID)	
	64	1	**4J-5573**	2	SEAL-O-RING (40.87MM ID)	
	65	2	**5P-7462**	2	CLIP (SLOT)	
		2	**5P-7463**	2	CLIP (TAB)	
M	66	1,2	**8T-4183**	45	BOLT (M12X1.75X40 MM)	
	67	1,2	**5P-7468**	15	CLIP (SLOT)	
		1,2	**5P-7469**	15	CLIP (TAB)	
	68	1,2	**9X-8257**	4	WASHER (3.50MM THK)	
	69	1,2	**5P-7470**	4	CLIP (SLOT)	
		1,2	**5P-7471**	4	CLIP (TAB)	
		1,2	**5P-8182**	4	GROMMET	
M	70	1,2	**8T-4139**	20	BOLT (M12X1.75X30MM)	
M	71	2	**7X-2549**	4	BOLT (M12X1.75X100MM)	
	72	1	**6J-2680**	2	SEAL-O-RING (69.44MM ID)	
	73	1,2	**6V-0397**	22	FLANGE-HALF	
	74	2	**6V-0683**	2	GROMMET	
	75	1	**6V-1867**	1	CLIP (SLOT)	
		1	**6V-1868**	1	CLIP (TAB)	
	76	1,2	**8T-4121**	11	WASHER (2.5MM THK)	
	77	1,2	**6V-1874**	14	GROMMET	
	78	2	**6V-4349**	1	GROMMET	
	79	3	**2M-9780**	2	SEAL-O-RING (19.18MM ID)	
	80	3	**8T-6684**	1	ELBOW-90 DEGREE (1 1/16-12 THD)	
	81	3	**5F-3106**	1	SEAL-O-RING (126.59MM ID)	
	82	3	**5K-9090**	2	SEAL-O-RING (23.52MM ID)	
M	83	3	**8T-4192**	1	BOLT (M12X1.75X25MM)	
	84	3	**6V-9840**	1	TEE-SWIVEL	
	85	3	**6V-8397**	1	SEAL-O-RING (9.27MM ID)	
	86	3	**6V-9746**	2	SEAL-O-RING (18.94MM ID)	
I	87	3	**8E-9734**	1	HOSE AS	
Y	88	3	**112-7913**	1	PUMP GP-PISTON (FAN DRIVE)	1038
	89	3	**6V-8724**	1	ELBOW (9/16-18 THD)	
Y	90	3	*147-6632*	1	VALVE & MTG GP-HYDRAULIC FAN	1062
	91	3	**5P-8112**	1	GROMMET	
	92	3	**5P-7467**	1	CLIP (TAB)	
	93	3	**9X-8257**	1	WASHER (3.50MM THK)	
	94	3	**5P-7466**	1	CLIP (SLOT)	
	95	3	**134-0317**	1	BRACKET	
	96	3	**5P-1404**	1	ADAPTER-O-RING (STRAIGHT THREAD)	
	97	3	**5P-1042**	1	ADAPTER-O-RING	
M	98	3	**8T-4183**	4	BOLT (M12X1.75X40 MM)	
	99	3	**8T-4223**	5	WASHER-HARD (3MM THK)	
	100	3	**3D-2824**	1	SEAL-O-RING (23.47MM ID)	
	101	3	**3J-1907**	1	SEAL-O-RING (11.89MM ID)	
	102	3	**6V-9854**	1	ELBOW-SWIVEL (1 7/16-12 THD)	

I-SEE HOSE FABRICATION GUIDE
M-METRIC PART
Y-SEPARATE ILLUSTRATION

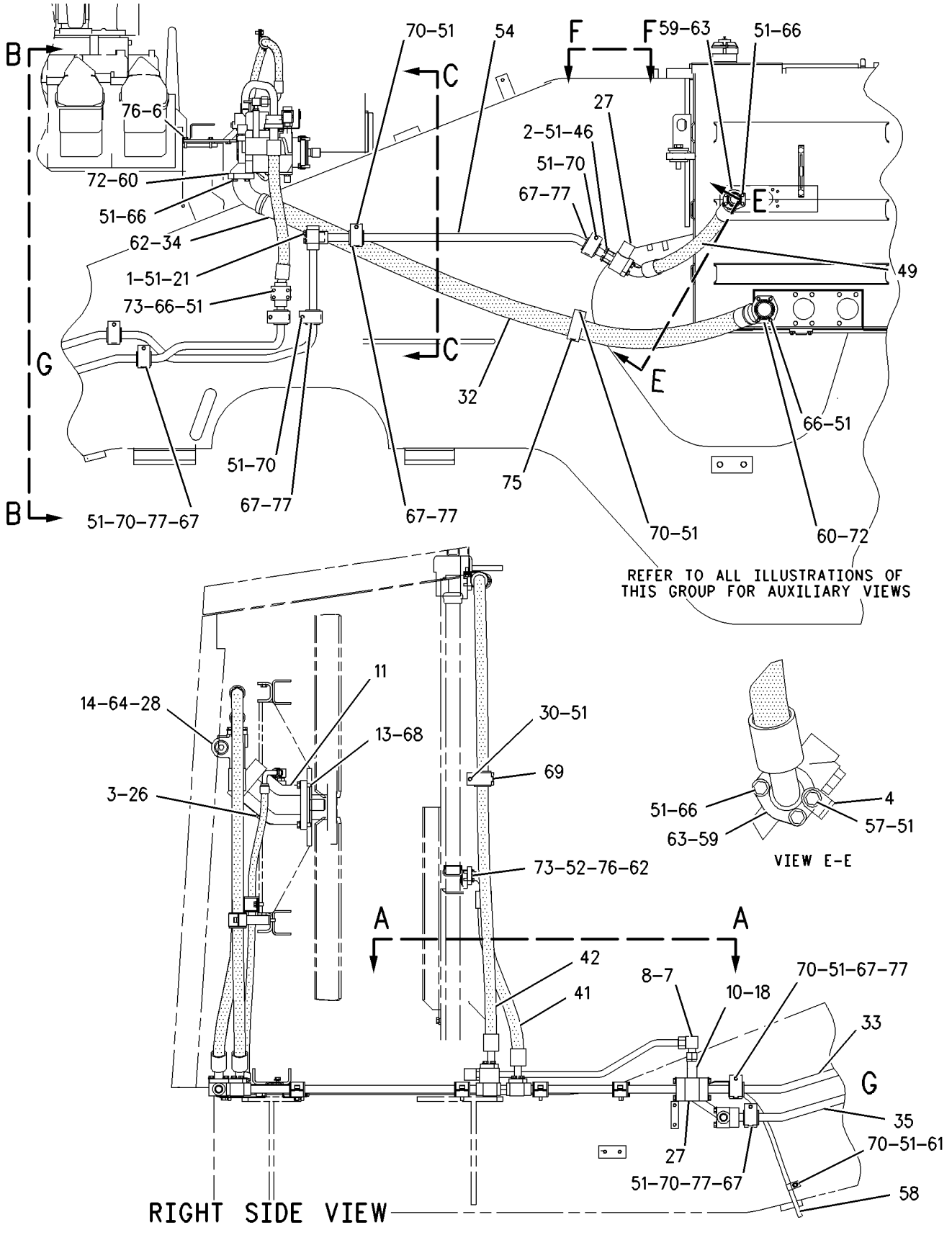

GRAPHIC #1 g00634768

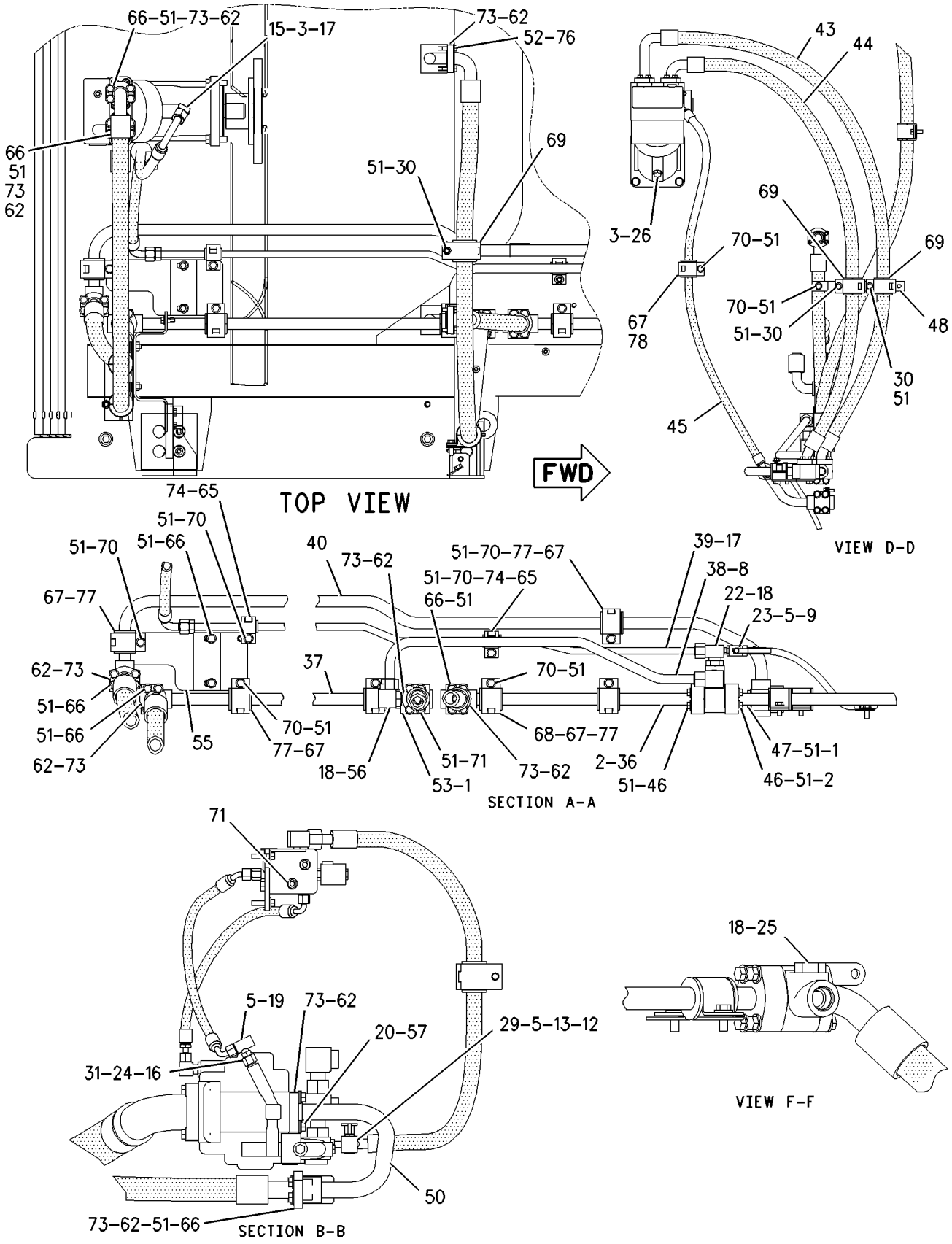

GRAPHIC #2 g00634769

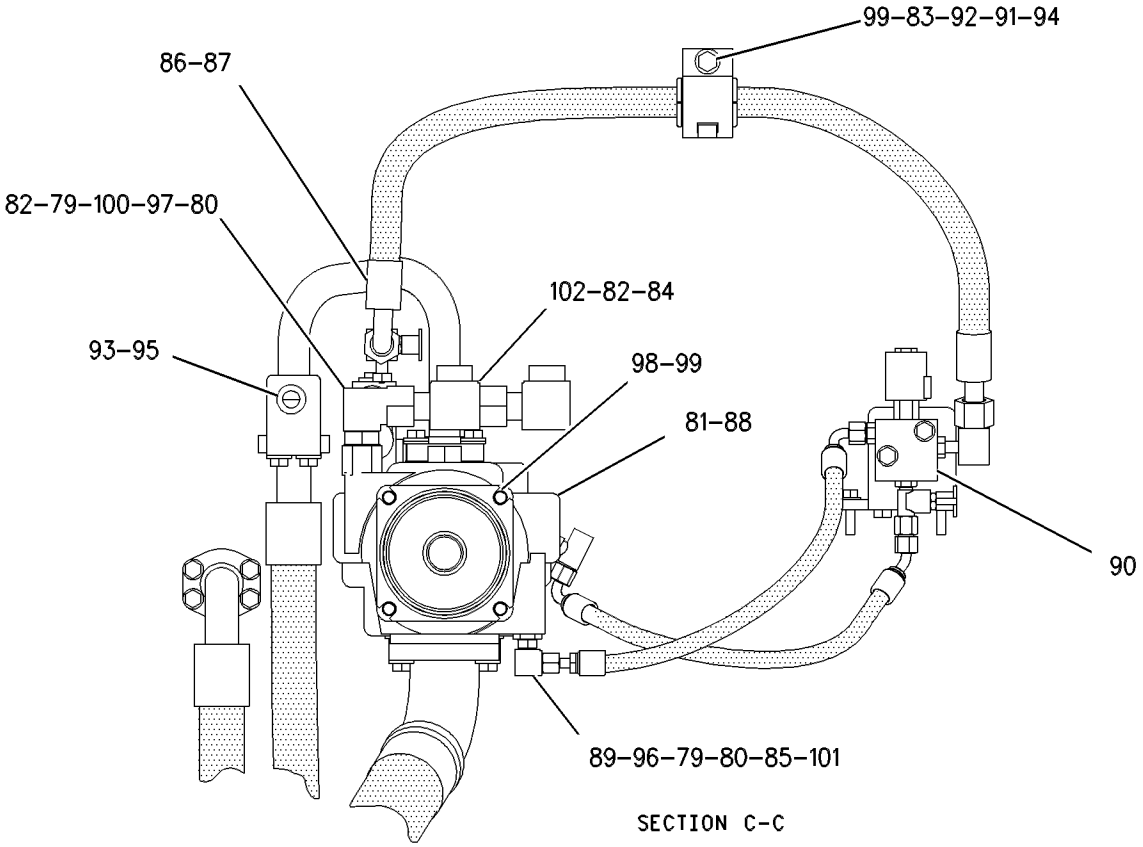

GRAPHIC #3

g00407060

MEMORANDA

HYDRAULIC SYSTEM

109-6872 LINES GP-HYDRAULIC FAN

S/N: 7HR303-310

PART OF 109-6820 HYDRAULIC AR

SMCS-1386, 1387, 5057 **i01198338**

NOTE	REF NO	GRAPHIC REF	PART NUMBER	QTY	PART NAME 1 2 3 4 5 6 (PRODUCT LEVEL)	SEE PAGE
	1	1,2	**1P-3704**	3	SEAL-RECTANGULAR (38.2MM ID)	
	2	1,2	**1P-3705**	3	SEAL-RECTANGULAR (44.7MM ID)	
	3	1,2	**2M-9780**	2	SEAL-O-RING (19.18MM ID)	
	4	1	**2W-5331**	1	BRACKET	
	5	2	**3J-1907**	5	SEAL-O-RING (11.89MM ID)	
	6	1	**4L-9337**	3	BOLT (3/8-16X1.5IN)	
	7	1	**6V-9854**	1	ELBOW-SWIVEL (1 7/16-12 THD)	
	8	1,2	**5K-9090**	3	SEAL-O-RING (23.52MM ID)	
	9	2	**5P-1046**	1	CONNECTOR	
	10	1	**6E-1454**	1	VALVE GP-CHECK (COOLER BYPASS)	
CY	11	1	**159-7166**	1	MOTOR GP-PISTON (FAN DRIVE)	1035
	12	2	**6V-0852**	1	CAP-DUST	
		2	**6V-3965**	1	FITTING AS	
M	13	1,2	**8T-4193**	4	BOLT (M16X2.0X50MM)	
M	14	1	**8T-7058**	8	BOLT-SOCKET HEAD (M12X1.75X140MM)	
	15	2	**8T-5389**	1	ELBOW	
	16	2	**6V-8926**	1	ADAPTER	
	17	2	**6V-9746**	3	SEAL-O-RING (18.94MM ID)	
	18	1,2	**7M-8485**	4	SEAL-O-RING (29.74MM ID)	
	19	2	**7X-2459**	1	TEE	
	20	2	**7X-3392**	8	WASHER-HARD (3MM THK)	
M	21	1	**8T-6868**	4	BOLT (M12X1.75X80MM)	
	22	2	**8T-3312**	1	TEE	
	23	2	**8T-6907**	1	VALVE-BALL	
	24	2	**8T-7876**	1	SEAL-O-RING (8.2MM ID)	
	25	2	**9S-4181**	1	PLUG-STRAIGHT THREAD (1-5/16-12 THD)	
	26	1,2	**9S-4190**	1	PLUG-O-RING (7/16-20 THD)	
	27	1	**9U-1381**	2	MANIFOLD	
Y	28	1	*101-9012*	1	VALVE GP-MAKEUP (PREVENTS FAN MOTOR CAVITATION)	1085
	29	2	**107-0586**	1	ELBOW	
M	30	1,2	**8T-4956**	4	BOLT (M12X1.75X35MM)	
	31	2	**6V-8397**	1	SEAL-O-RING (9.27MM ID)	
	32	1	**115-5324**	1	HOSE AS	
	33	1	**115-7796**	1	TUBE AS	
I	34	1	**115-8168**	1	HOSE AS	
	35	1	**115-8170**	1	TUBE AS	
	36	2	**116-4450**	1	TUBE AS	
	37	2	**116-4451**	1	TUBE AS	
	38	2	**116-4453**	1	TUBE AS	
	39	2	**116-4454**	1	TUBE AS	
	40	2	**116-4455**	1	TUBE AS	
I	41	1	**116-8741**	1	HOSE AS	
I	42	1	**116-8742**	1	HOSE AS	
I	43	2	**116-9604**	1	HOSE AS	
I	44	2	**116-9605**	1	HOSE AS	
I	45	2	**156-1041**	1	HOSE AS	
M	46	1,2	**8T-4910**	12	BOLT (M12X1.75X60MM)	
M	47	2	**8T-4648**	4	BOLT (M12X1.75X70MM)	
	48	2	**117-0973**	1	BRACKET AS	
M		2	**8T-3597**	2	NUT-WELD (M12X1.75 THD)	
I	49	1	**117-3412**	1	HOSE AS	
	50	2	**117-4714**	1	TUBE AS	
	51	1,2	**8T-4223**	94	WASHER-HARD (3MM THK)	
M	52	1,2	**8T-4196**	8	BOLT (M10X1.50X35MM)	
	53	2	**118-7138**	1	MANIFOLD	
	54	1	**118-8589**	1	TUBE AS	

109-6872 LINES GP-HYDRAULIC FAN *(contd.)* i01198338

NOTE	REF NO	GRAPHIC REF	PART NUMBER	QTY	PART NAME 1 2 3 4 5 6 (PRODUCT LEVEL)	SEE PAGE
	55	2	**122-8502**	1	PLATE AS	
M		2	**8T-3597**	5	NUT-WELD (M12X1.75 THD)	
	56	2	**6V-9008**	1	ELBOW-90 DEGREE (1 5/16-12 THD)	
M	57	1,2	**8T-4184**	5	BOLT (M12X1.75X45MM)	
	58	1	**130-8157**	1	HOSE	
		1	**9X-2488**	1	CLAMP-HOSE	
	59	1	**1P-4579**	4	FLANGE-HALF	
	60	1	**1P-4584**	4	FLANGE-HALF	
	61	1	**1S-6420**	1	CLIP (17.46MM ID)	
	62	1,2	**4J-0522**	11	SEAL-O-RING (37.69MM ID)	
	63	1	**4J-0524**	2	SEAL-O-RING (47.22MM ID)	
	64	1	**4J-5573**	2	SEAL-O-RING (40.87MM ID)	
	65	2	**5P-7462**	2	CLIP (SLOT)	
		2	**5P-7463**	2	CLIP (TAB)	
M	66	1,2	**8T-4183**	45	BOLT (M12X1.75X40 MM)	
	67	1,2	**5P-7468**	15	CLIP (SLOT)	
		1,2	**5P-7469**	15	CLIP (TAB)	
	68	1,2	**9X-8257**	4	WASHER (3.50MM THK)	
	69	1,2	**5P-7470**	4	CLIP (SLOT)	
		1,2	**5P-7471**	4	CLIP (TAB)	
		1,2	**5P-8182**	4	GROMMET	
M	70	1,2	**8T-4139**	20	BOLT (M12X1.75X30MM)	
M	71	2	**7X-2549**	4	BOLT (M12X1.75X100MM)	
	72	1	**6J-2680**	2	SEAL-O-RING (69.44MM ID)	
	73	1,2	**6V-0397**	22	FLANGE-HALF	
	74	2	**6V-0683**	2	GROMMET	
	75	1	**6V-1867**	1	CLIP (SLOT)	
		1	**6V-1868**	1	CLIP (TAB)	
	76	1,2	**8T-4121**	11	WASHER (2.5MM THK)	
	77	1,2	**6V-1874**	14	GROMMET	
	78	2	**6V-4349**	1	GROMMET	
	79	3	**2M-9780**	2	SEAL-O-RING (19.18MM ID)	
	80	3	**8T-6684**	1	ELBOW-90 DEGREE (1 1/16-12 THD)	
	81	3	**5F-3106**	1	SEAL-O-RING (126.59MM ID)	
	82	3	**5K-9090**	2	SEAL-O-RING (23.52MM ID)	
M	83	3	**8T-4192**	1	BOLT (M12X1.75X25MM)	
	84	3	**6V-9840**	1	TEE-SWIVEL	
	85	3	**6V-8397**	1	SEAL-O-RING (9.27MM ID)	
	86	3	**6V-9746**	2	SEAL-O-RING (18.94MM ID)	
I	87	3	**8E-9734**	1	HOSE AS	
Y	88	3	**112-7913**	1	PUMP GP-PISTON (FAN DRIVE)	1038
	89	3	**6V-8724**	1	ELBOW (9/16-18 THD)	
Y	90	3	*147-6632*	1	VALVE & MTG GP-HYDRAULIC FAN	1062
	91	3	**5P-8112**	1	GROMMET	
	92	3	**5P-7467**	1	CLIP (TAB)	
	93	3	**9X-8257**	1	WASHER (3.50MM THK)	
	94	3	**5P-7466**	1	CLIP (SLOT)	
	95	3	**134-0317**	1	BRACKET	
	96	3	**5P-1404**	1	ADAPTER-O-RING (STRAIGHT THREAD)	
	97	3	**5P-1042**	1	ADAPTER-O-RING	
M	98	3	**8T-4183**	4	BOLT (M12X1.75X40 MM)	
	99	3	**8T-4223**	5	WASHER-HARD (3MM THK)	
	100	3	**3D-2824**	1	SEAL-O-RING (23.47MM ID)	
	101	3	**3J-1907**	1	SEAL-O-RING (11.89MM ID)	
	102	3	**6V-9854**	1	ELBOW-SWIVEL (1 7/16-12 THD)	

C-CHANGE FROM PREVIOUS TYPE
I-SEE HOSE FABRICATION GUIDE
M-METRIC PART
Y-SEPARATE ILLUSTRATION

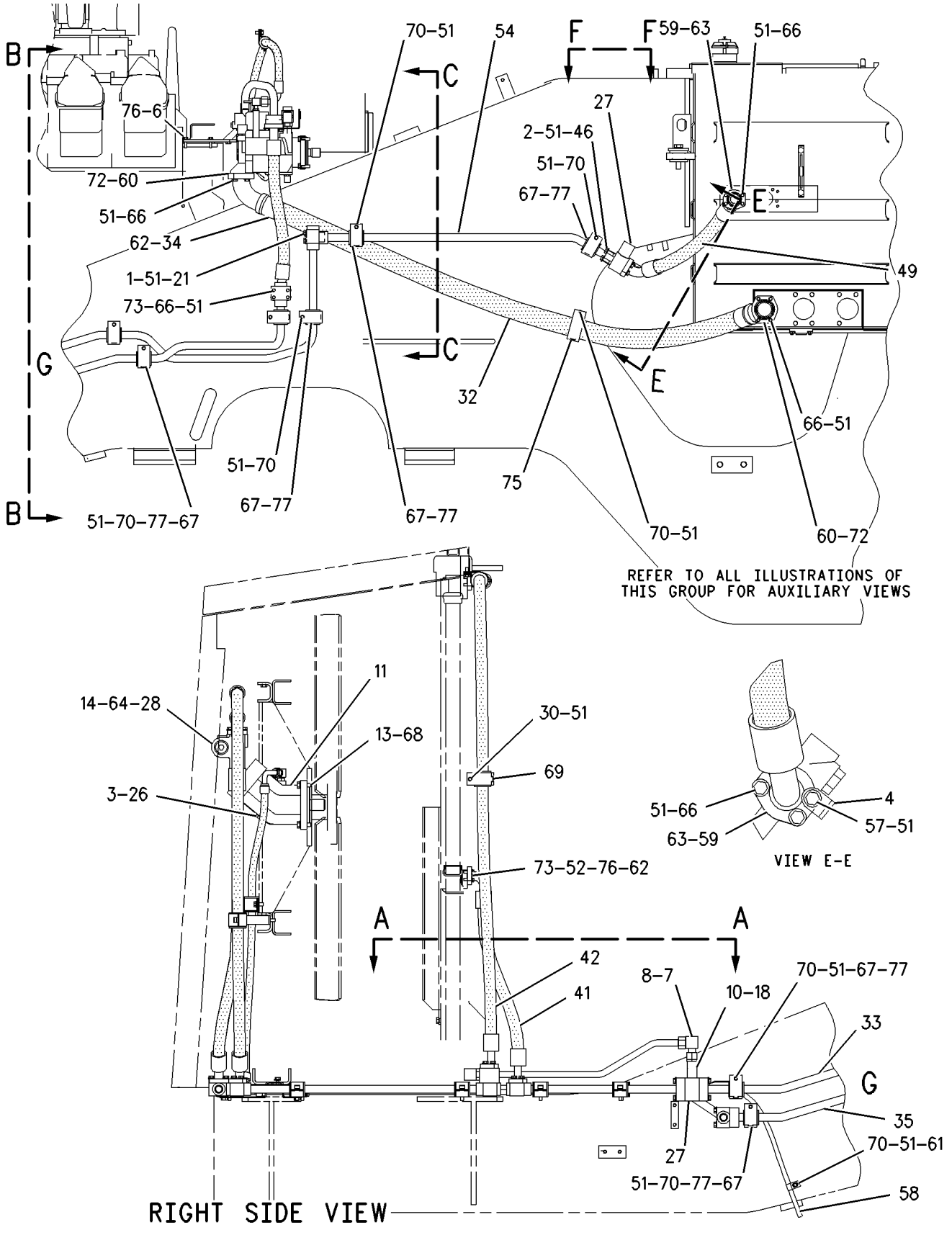

GRAPHIC #1 g00634768

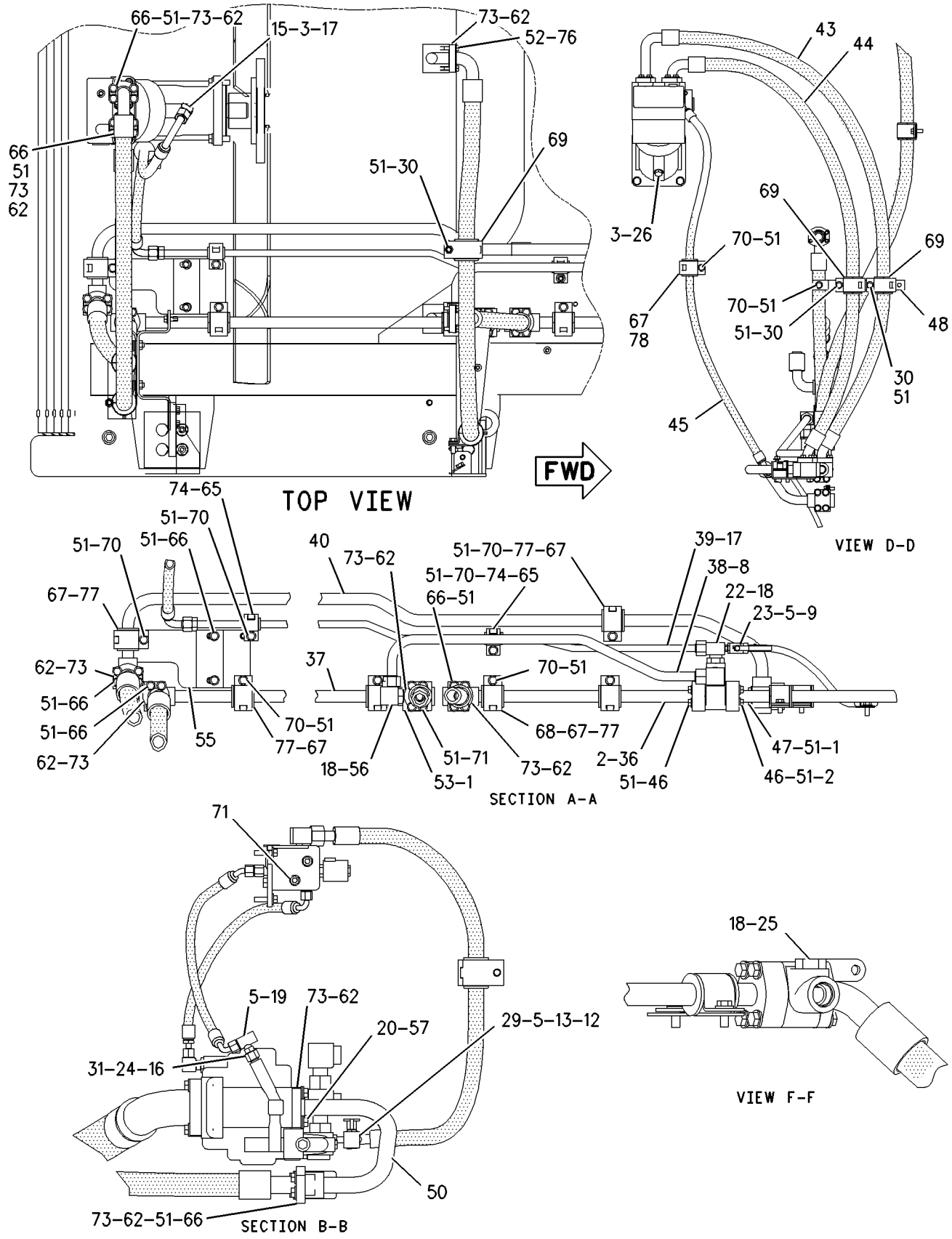

GRAPHIC #2 g00634769

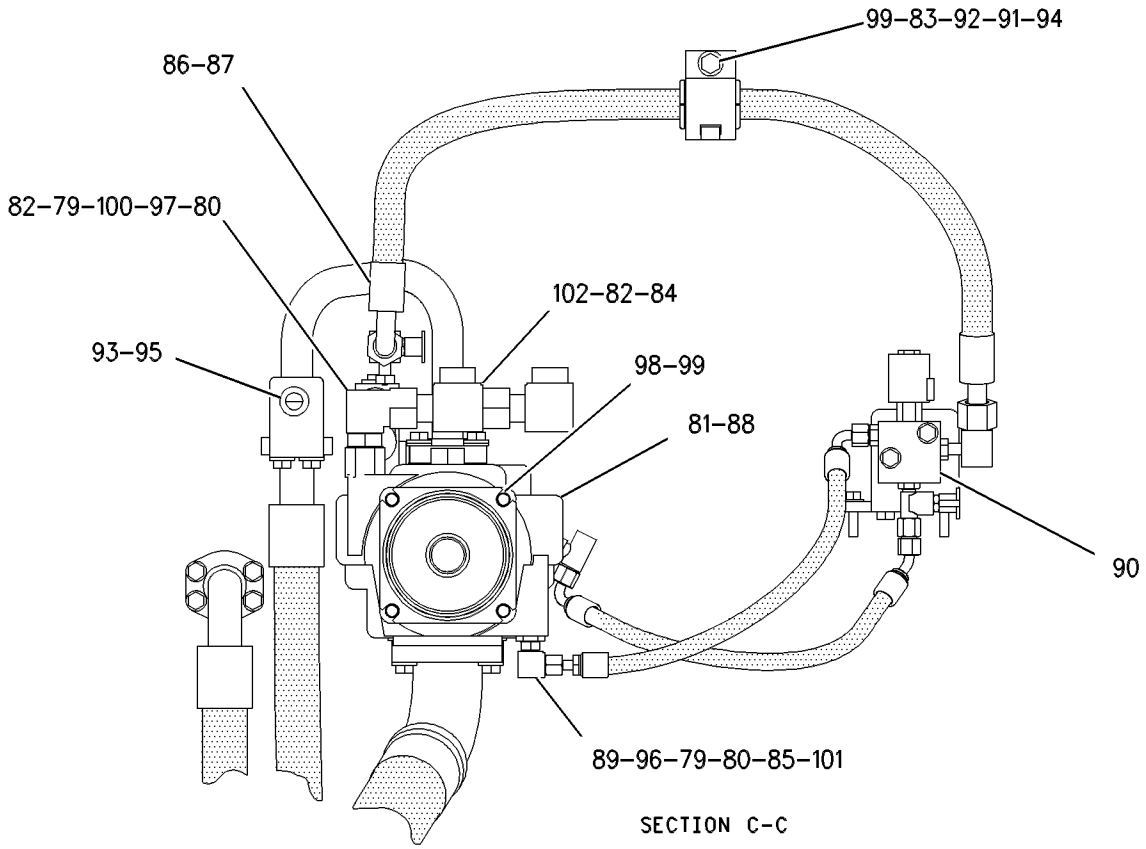

GRAPHIC #3

g00407060

MEMORANDA

HYDRAULIC SYSTEM

109-6872 LINES GP-HYDRAULIC FAN

S/N: 7HR311-UP

PART OF 109-6820 HYDRAULIC AR

SMCS-1386, 1387, 5057 **i01303589**

NOTE	REF NO	GRAPHIC REF	PART NUMBER	QTY	PART NAME 1 2 3 4 5 6 (PRODUCT LEVEL)	SEE PAGE
	1	2,3	**1P-3704**	3	SEAL-RECTANGULAR (38.2MM ID)	
	2	1,2	**1P-3705**	3	SEAL-RECTANGULAR (44.7MM ID)	
	3	2,3	**2M-9780**	2	SEAL-O-RING (19.18MM ID)	
	5	2,3	**3J-1907**	4	SEAL-O-RING (11.89MM ID)	
	6	3	**5F-3106**	1	SEAL-O-RING (126.59MM ID)	
	7	1,3	**5K-9090**	23	SEAL-O-RING (23.52MM ID)	
	8	2	**5P-1046**	1	CONNECTOR	
	9	1	**6E-1454**	1	VALVE GP-CHECK (COOLER BYPASS)	
	10	3	**6V-0852**	1	CAP-DUST	
	11	3	**6V-8397**	1	SEAL-O-RING (9.27MM ID)	
	12	2,3	**6V-9746**	4	SEAL-O-RING (18.94MM ID)	
	13	1,2,3	**7M-8485**	3	SEAL-O-RING (29.74MM ID)	
	14	3	**7X-2459**	1	TEE	
	15	3	**7X-3392**	8	WASHER-HARD (3MM THK)	
I	16	3	**8E-9734**	1	HOSE AS	
	17	3	**8T-1674**	1	TEE	
	18	2	**8T-3312**	1	TEE	
	19	2	**8T-6907**	1	VALVE-BALL	
	20	2	**9S-4190**	1	PLUG-O-RING (7/16-20 THD)	
	21	1	**9U-1381**	2	MANIFOLD	
	22	2	**5D-1026**	1	CLAMP-HOSE	
Y	23	1	*101-9012*	1	VALVE GP-MAKEUP	1085
					(PREVENTS FAN MOTOR CAVITATION)	
	24	3	**107-0586**	1	ELBOW	
Y	25	3	**112-7913**	1	PUMP GP-PISTON (FAN DRIVE)	1038
	26	1	**115-5324**	1	HOSE AS	
	27	1	**115-7796**	1	TUBE AS	
I	28	3	**115-8168**	1	HOSE AS	
	29	1	**115-8170**	1	TUBE AS	
	30	2	**116-4450**	1	TUBE AS	
	31	2	**116-4451**	1	TUBE AS	
	32	2	**116-4453**	1	TUBE AS	
	33	2	**116-4454**	1	TUBE AS	
	34	2	**116-4455**	1	TUBE AS	
I	35	1	**116-8741**	1	HOSE AS	
I	36	1	**116-8742**	1	HOSE AS	
I	37	2	**116-9604**	1	HOSE AS	
I	38	2	**116-9605**	1	HOSE AS	
	39	2	**117-0973**	1	BRACKET AS	
I	40	1	**117-3412**	1	HOSE AS	
	41	3	**117-4714**	1	TUBE AS	
	42	2	**118-7138**	1	MANIFOLD	
	43	1	**118-8589**	1	TUBE AS	
	44	2	**122-8502**	1	PLATE AS	
	45	2	**130-8157**	1	HOSE	
	46	3	**134-0317**	1	BRACKET	
Y	47	3	*147-6632*	1	VALVE & MTG GP-HYDRAULIC FAN	1062
CY	48	1	**159-7166**	1	MOTOR GP-PISTON (FAN DRIVE)	1035
	49	2	**163-4583**	1	BRACKET	
I	50	2	**164-0349**		HOSE AS	
I	51	2	**164-0351**	1	HOSE AS	
	52	3	*164-5567*	1	FITTING AS	
		3	**3J-1907**	1	SEAL-O-RING (11.89MM ID)	
		3	**6V-3965**	1	FITTING AS	
	53	3	**164-5576**	1	ADAPTER AS	
Y	54A	2	**166-4647**	1	FILTER GP-OIL (FAN DRIVE MOTOR CASE DRAIN)	540

109-6872 **LINES GP-HYDRAULIC FAN** *(contd.)* **i01303589**

NOTE	REF NO	GRAPHIC REF	PART NUMBER	QTY	PART NAME 1 2 3 4 5 6 (PRODUCT LEVEL)	SEE PAGE
Y	54B	3	**166-4647**	1	FILTER GP-OIL (FAN DRIVE PUMP CASE DRAIN)	540
	55	3	**168-6355**	1	BRACKET	
I	56	3	**171-2010**	1	HOSE AS	
	57	1,3	*148-8352*	2	ELBOW AS	
					(EACH INCLUDES)	
		1,3	**5K-9090**	1	SEAL-O-RING (23.52MM ID)	
		1,3	**6V-9854**	1	ELBOW-SWIVEL (1 7/16-12 THD)	
	58	2,3	*148-8357*	2	ELBOW AS	
					(EACH INCLUDES)	
		2,3	**5K-9090**	1	SEAL-O-RING (23.52MM ID)	
		2,3	**6V-9008**	1	ELBOW-90 DEGREE (1 5/16-12 THD)	
		2,3	**7M-8485**	1	SEAL-O-RING (29.74MM ID)	
	59	2	*148-8360*	2	ELBOW AS	
					(EACH INCLUDES)	
		2	**6V-9182**	1	ELBOW (FACE SEAL)	
		2	**6V-9746**	1	SEAL-O-RING (18.94MM ID)	
		2	**7M-8485**	1	SEAL-O-RING (29.74MM ID)	
	60	3	*148-8362*	1	ELBOW AS	
		3	**3D-2824**	1	SEAL-O-RING (23.47MM ID)	
K		3	**5K-9090**	1	SEAL-O-RING (23.52MM ID)	
		3	**8T-6684**	1	ELBOW-90 DEGREE (1 1/16-12 THD)	
	61	3	*148-8378*	1	ELBOW AS	
		3	**3D-2824**	1	SEAL-O-RING (23.47MM ID)	
		3	**5K-9090**	1	SEAL-O-RING (23.52MM ID)	
		3	**8T-6684**	1	ELBOW-90 DEGREE (1 1/16-12 THD)	
	62	3	*148-8410*	1	PLUG AS-STO	
		3	**2M-9780**	1	SEAL-O-RING (19.18MM ID)	
		3	**9S-4190**	1	PLUG-O-RING (7/16-20 THD)	
	63	3	*148-8429*	1	TEE AS-ORFS	
		3	**5K-9090**	2	SEAL-O-RING (23.52MM ID)	
		3	**6V-9840**	1	TEE-SWIVEL	
	64	2	*153-6244*	1	ELBOW AS	
		2	**8T-5389**	1	ELBOW	
		2	**2M-9780**	1	SEAL-O-RING (19.18MM ID)	
		2	**6V-9746**	1	SEAL-O-RING (18.94MM ID)	
	65	1	*164-4180*	1	PLUG AS	
		1	**7M-8485**	1	SEAL-O-RING (29.74MM ID)	
		1	**9S-4181**	1	PLUG-STRAIGHT THREAD (1-5/16-12 THD)	
	66	1	**1P-4579**	4	FLANGE-HALF	
	67	1,3	**1P-4584**	4	FLANGE-HALF	
	68	1	**1S-6420**	1	CLIP (17.46MM ID)	
	69	1,2,3	**4J-0522**	11	SEAL-O-RING (37.69MM ID)	
	70	1	**4J-0524**	2	SEAL-O-RING (47.22MM ID)	
	71	1	**4J-5573**	2	SEAL-O-RING (40.87MM ID)	
	72	1	**4L-9337**	3	BOLT (3/8-16X1.5 IN)	
	73	3	**5P-1042**	1	ADAPTER-O-RING	
	74	2	**5P-1076**	2	WASHER-HARD (4MM THK)	
	75	2	**5P-7462**	2	CLIP (SLOT)	
	76	2	**5P-7463**	2	CLIP (TAB)	
	77	3	**5P-7466**	1	CLIP (SLOT)	
	78	3	**5P-7467**	1	CLIP (TAB)	
	79	1,2,3	**5P-7468**	14	CLIP (SLOT)	
	80	1,2,3	**5P-7469**	15	CLIP (TAB)	
	81	1,2	**5P-7470**	4	CLIP (SLOT)	
	82	1,2	**5P-7471**	4	CLIP (TAB)	
	83	3	**5P-8112**	1	GROMMET	
	84	1,2	**5P-8182**	4	GROMMET	
	85	1,3	**6J-2680**	2	SEAL-O-RING (69.44MM ID)	
	86	1,2,3	**6V-0397**	22	FLANGE-HALF	

109-6872 **LINES GP-HYDRAULIC FAN** *(contd.)* **i01303589**

NOTE	REF NO	GRAPHIC REF	PART NUMBER	QTY	PART NAME 1 2 3 4 5 6 (PRODUCT LEVEL)	SEE PAGE
	87	2	**6V-0683**	2	GROMMET	
	88	1	**6V-1867**	1	CLIP (SLOT)	
	89	1	**6V-1868**	1	CLIP (TAB)	
	90	1,2,3	**6V-1874**	14	GROMMET	
M	91	2	**7X-2549**	4	BOLT (M12X1.75X100MM)	
	92	2,3	**7X-7729**	10	WASHER (3MM THK)	
	93	1,2	**8T-4121**	11	WASHER-HARD (2.5MM THK)	
M	94	2,3	**8T-4136**	10	BOLT (M10X1.50X25MM)	
M	95	1,2,3	**8T-4139**	19	BOLT (M12X1.75X30MM)	
M	96	1,2,3	**8T-4183**	51	BOLT (M12X1.75X40 MM)	
M	97	1,3	**8T-4184**	5	BOLT (M12X1.75X45MM)	
M	98	3	**8T-4192**	1	BOLT (M12X1.75X25MM)	
M	99	1	**8T-4193**	4	BOLT (M16X2.0X50MM)	
M	100	1,2	**8T-4196**	8	BOLT (M10X1.50X35MM)	
	101	1,2,3	**8T-4223**	98	WASHER-HARD (3MM THK)	
M	102	2	**8T-4648**	4	BOLT (M12X1.75X70MM)	
M	103	1,2	**8T-4910**	12	BOLT (M12X1.75X60MM)	
M	104	1,2	**8T-4956**	4	BOLT (M12X1.75X35MM)	
M	105	3	**8T-6868**	4	BOLT (M12X1.75X80MM)	
M	106	1	**8T-7058**	8	BOLT-SOCKET HEAD (M12X1.75X140MM)	
	107	1,3	**9X-8257**	5	WASHER (3.50MM THK)	

C-CHANGE FROM PREVIOUS TYPE
I-SEE HOSE FABRICATION GUIDE
K-SEE MAST AR OR LIFT GP
M-METRIC PART
Y-SEPARATE ILLUSTRATION

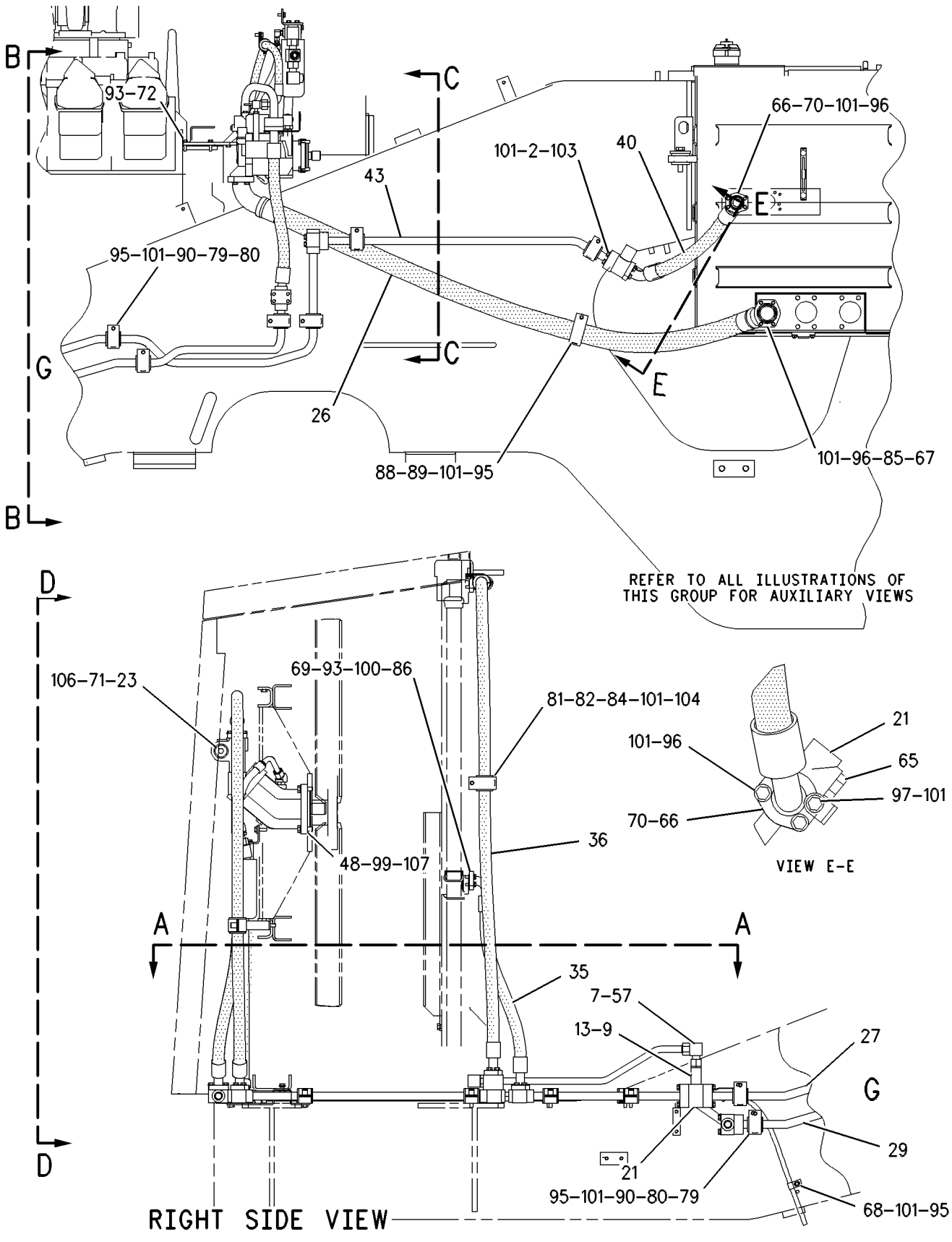

GRAPHIC #1 g00600843

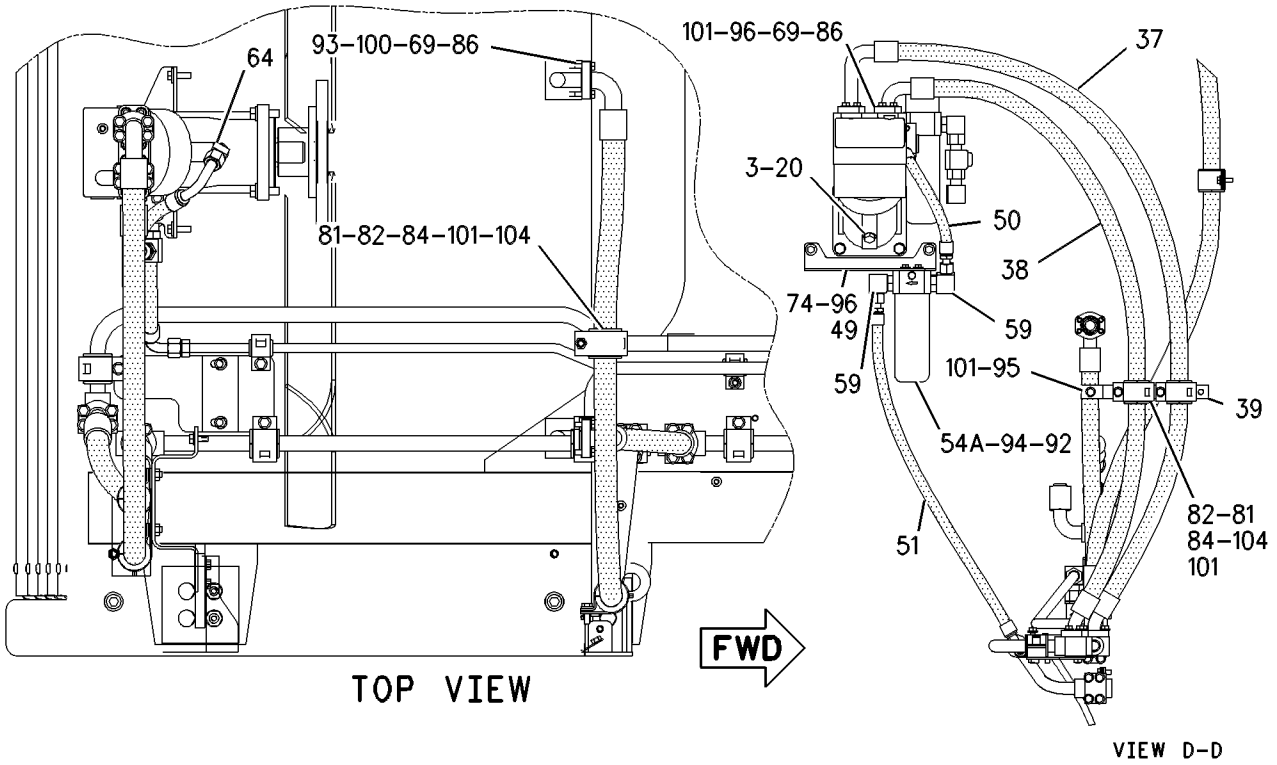

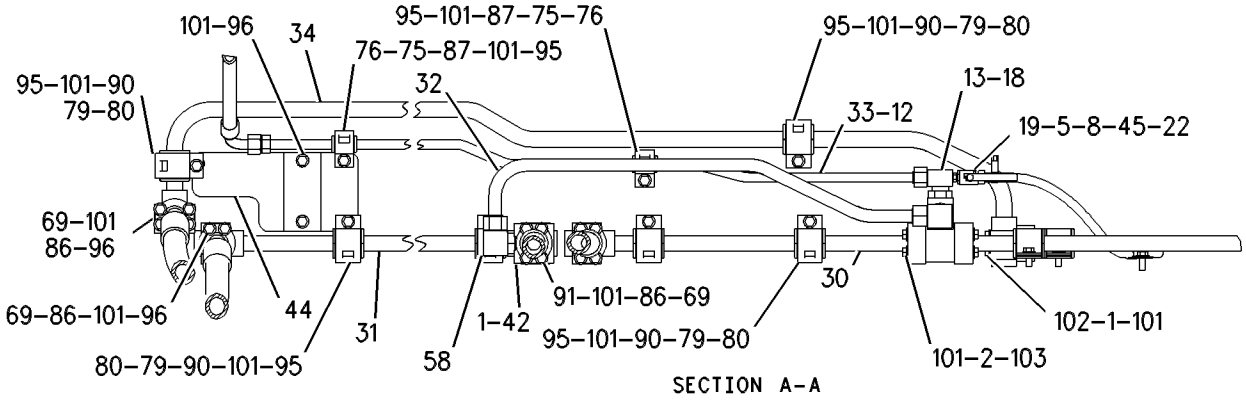

GRAPHIC #2

g00640875

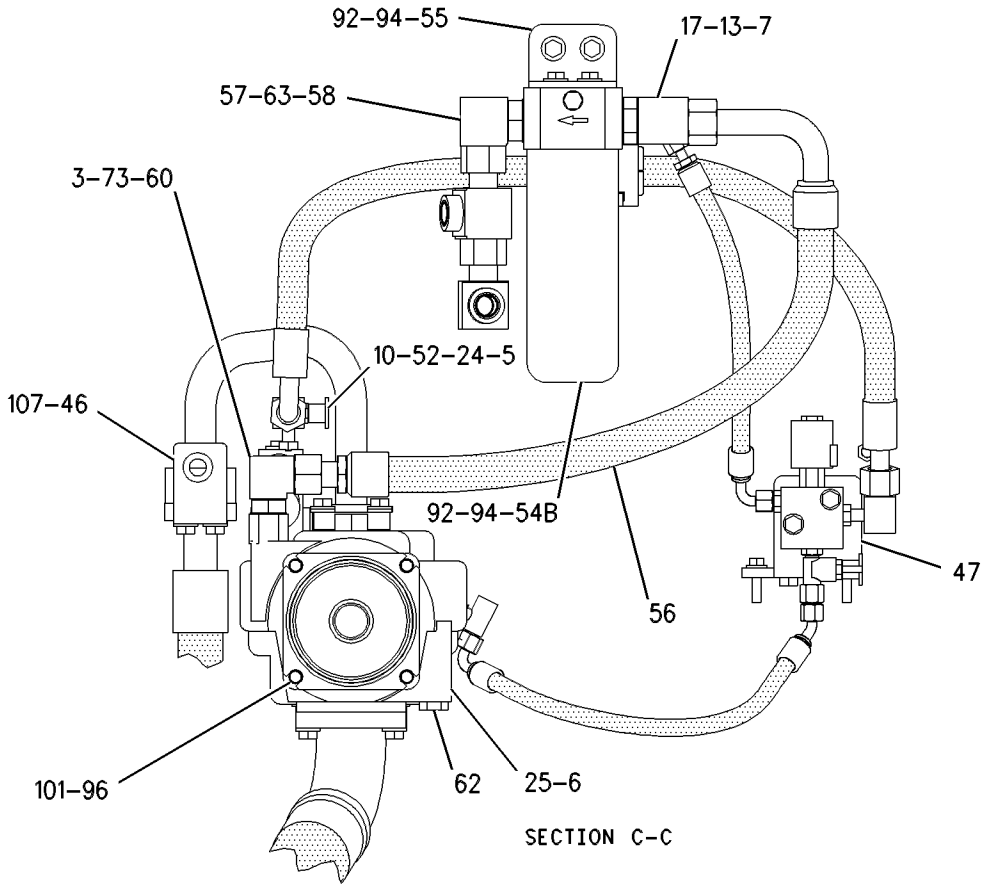

SECTION C-C

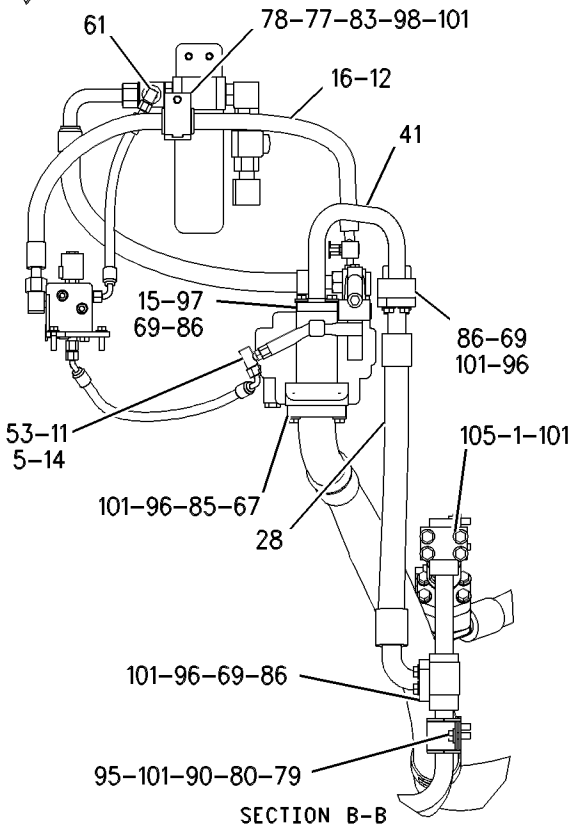

SECTION B-B

GRAPHIC #3 g00640877

HYDRAULIC SYSTEM

109-6870 LINES GP-LIFT CYLINDER

S/N: 7HR1-231

PART OF 109-6820 HYDRAULIC AR

SMCS-5057, 5102 **i01175289**

NOTE	REF NO	GRAPHIC REF	PART NUMBER	QTY	PART NAME 1 2 3 4 5 6 (PRODUCT LEVEL)	SEE PAGE
	1	1	**1P-3704**	8	SEAL-RECTANGULAR (38.2MM ID)	
	2	1	**1P-3705**	8	SEAL-RECTANGULAR (44.7MM ID)	
	3	1	**3E-9411**	4	WASHER-HARD (6MM THK)	
Y	4	1	*112-8209*	1	CYLINDER GP-LIFT (LH)	960
I	5	1	**125-6704**	1	HOSE AS	
I	6	1	**125-6706**	2	HOSE AS	
I	7	1	**125-6707**	2	HOSE AS	
I	8	1	**125-6708**	2	HOSE AS	
	9	1	**125-6709**	2	PLATE AS	
	10	1	**125-6710**	2	PLATE	
I	11	1	**125-6781**	1	HOSE AS	
	12	1	**1P-5767**	16	FLANGE-HALF	
	13	1	**5P-8077**	12	FLANGE-HALF	
M	14	1	**7X-2555**	8	BOLT (M16X2.0X80MM)	
M	15	1	**8T-4140**	20	BOLT (M16X2.0X60MM)	
M	16	1	**8T-4184**	24	BOLT (M12X1.75X45MM)	
M	17	1	**8T-4194**	8	BOLT (M12X1.75X50MM)	
	18	1	**8T-4223**	32	WASHER-HARD (3MM THK)	
	19	1	**9X-8257**	24	WASHER (3.50MM THK)	
	20	1	**1P-3706**	2	SEAL (57.9MM ID)	
Y	21	1	*136-7880*	1	CYLINDER GP-LIFT (RH)	964

I-SEE HOSE FABRICATION GUIDE
M-METRIC PART
Y-SEPARATE ILLUSTRATION

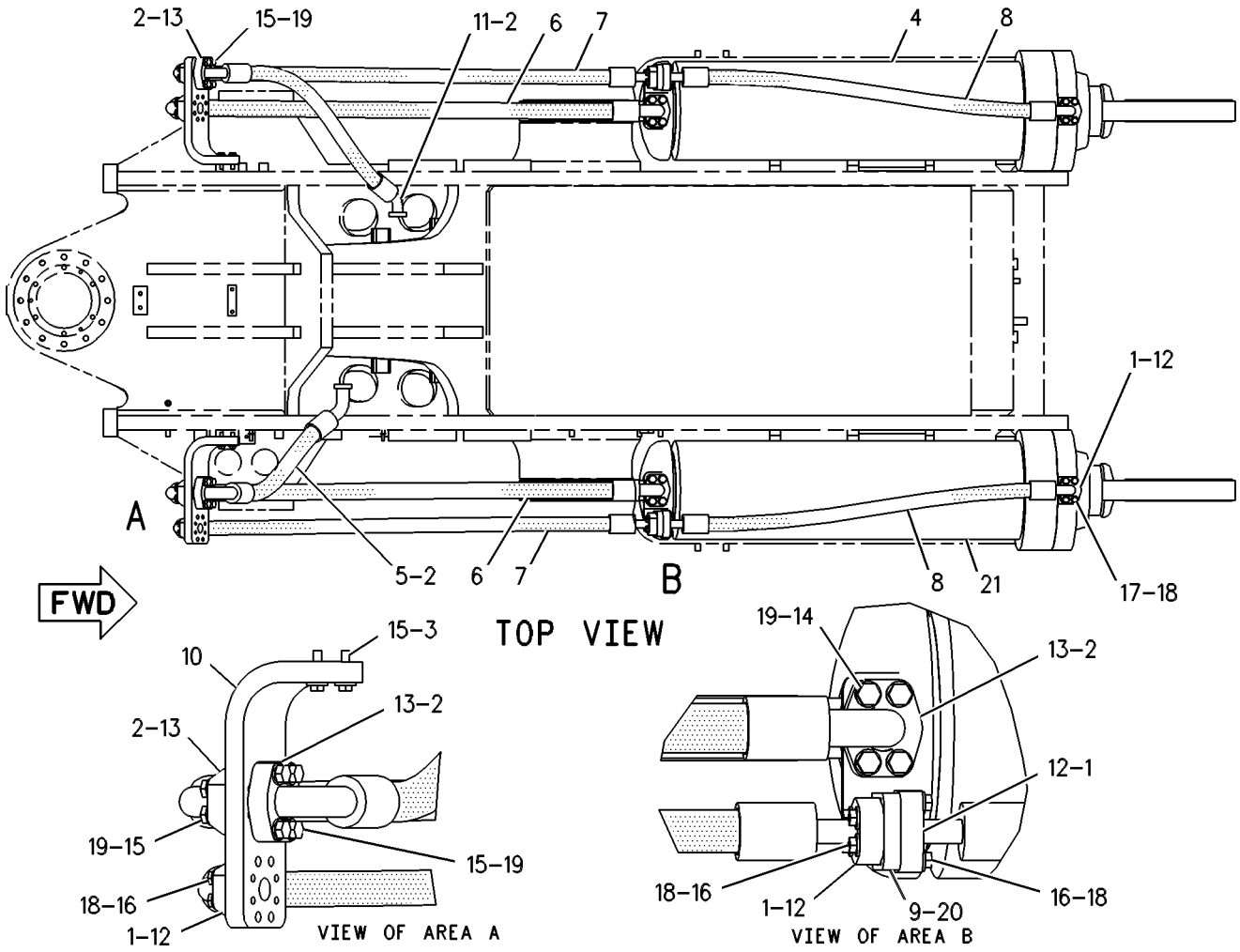

GRAPHIC #1 g00271663

HYDRAULIC SYSTEM

109-6870 LINES GP-LIFT CYLINDER

S/N: 7HR232-UP

PART OF 109-6820 HYDRAULIC AR

SMCS-5057, 5102 **i01175291**

NOTE	REF NO	GRAPHIC REF	PART NUMBER	QTY	PART NAME 1 2 3 4 5 6 (PRODUCT LEVEL)	SEE PAGE
	1	1	**1P-3704**	8	SEAL-RECTANGULAR (38.2MM ID)	
	2	1	**1P-3705**	8	SEAL-RECTANGULAR (44.7MM ID)	
	3	1	**3E-9411**	4	WASHER-HARD (6MM THK)	
CY	4	1	**162-1523**	1	CYLINDER GP-LIFT (LH)	970
I	5	1	**125-6704**	1	HOSE AS	
I	6	1	**125-6706**	2	HOSE AS	
I	7	1	**125-6707**	2	HOSE AS	
I	8	1	**125-6708**	2	HOSE AS	
	9	1	**125-6709**	2	PLATE AS	
	10	1	**125-6710**	2	PLATE	
I	11	1	**125-6781**	1	HOSE AS	
	12	1	**1P-5767**	16	FLANGE-HALF	
	13	1	**5P-8077**	12	FLANGE-HALF	
M	14	1	**7X-2555**	8	BOLT (M16X2.0X80MM)	
M	15	1	**8T-4140**	20	BOLT (M16X2.0X60MM)	
M	16	1	**8T-4184**	24	BOLT (M12X1.75X45MM)	
M	17	1	**8T-4194**	8	BOLT (M12X1.75X50MM)	
	18	1	**8T-4223**	32	WASHER-HARD (3MM THK)	
	19	1	**9X-8257**	24	WASHER (3.50MM THK)	
	20	1	**1P-3706**	2	SEAL (57.9MM ID)	
CY	21	1	**162-1522**	1	CYLINDER GP-LIFT (RH)	968

C-CHANGE FROM PREVIOUS TYPE
I-SEE HOSE FABRICATION GUIDE
M-METRIC PART
Y-SEPARATE ILLUSTRATION

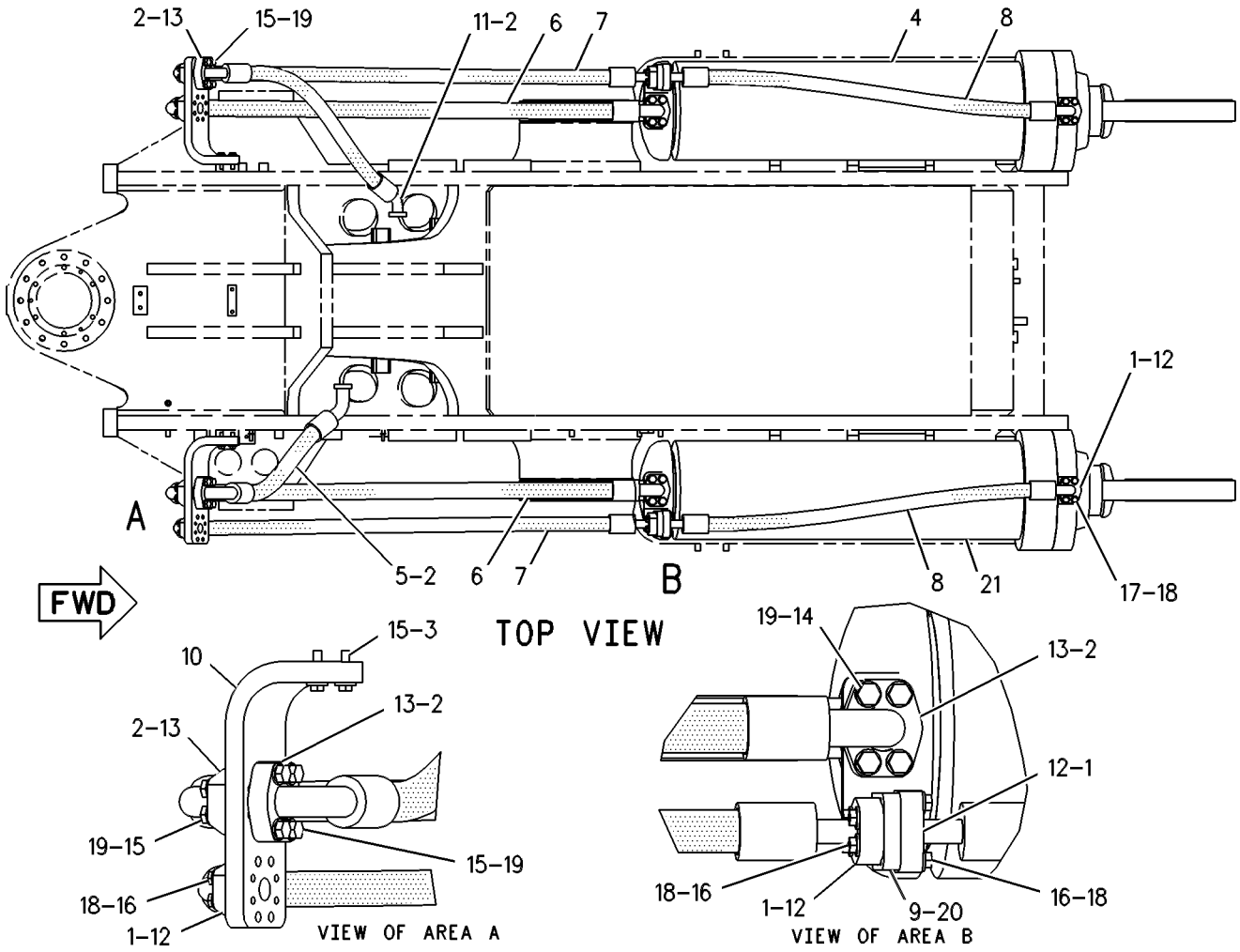

GRAPHIC #1 g00271663

HYDRAULIC SYSTEM

131-8147 LINES GP-LIFT CYLINDER

S/N: 7HR1-UP
AN ATTACHMENT

SMCS-5057, 5102 **i00746599**

NOTE	REF NO	GRAPHIC REF	PART NUMBER	QTY	PART NAME 1 2 3 4 5 6 (PRODUCT LEVEL)	SEE PAGE
	1	1	**1P-3705**	4	SEAL-RECTANGULAR (44.7MM ID)	
I	2	1	**125-6705**	1	HOSE AS	
I	3	1	**125-6782**	1	HOSE AS	
	4	1	**5P-8077**	4	FLANGE-HALF	
M	5	1	**8T-4140**	8	BOLT (M16X2.0X60MM)	
	6	1	**9X-8257**	8	WASHER (3.50MM THK)	

I-SEE HOSE FABRICATION GUIDE
M-METRIC PART

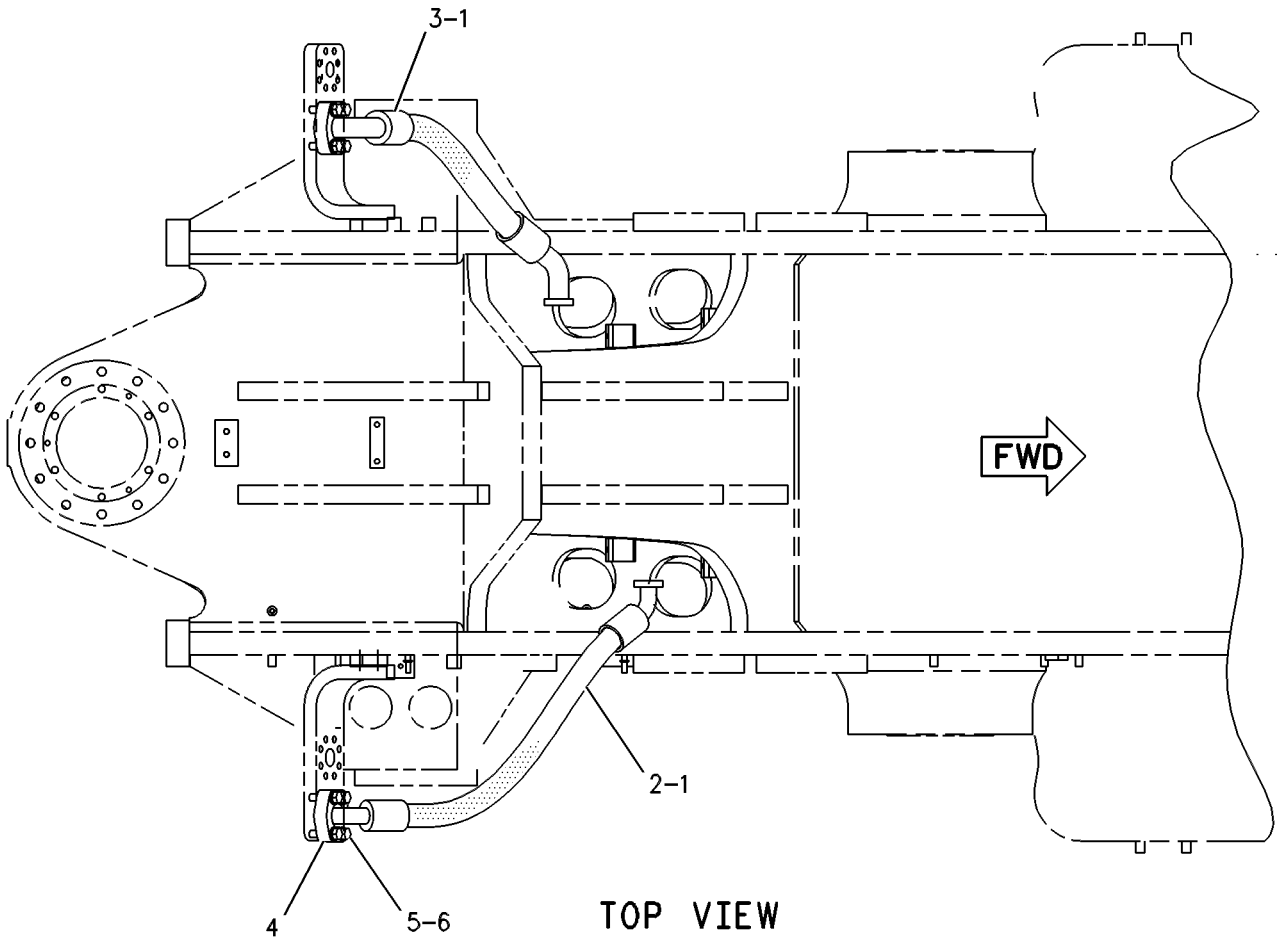

GRAPHIC #1 g00255889

MEMORANDA

HYDRAULIC SYSTEM

109-6871 LINES GP-TILT CYLINDER

S/N: 7HR1-UP

PART OF 109-6820 HYDRAULIC AR

SMCS-5057, 5104 **i01424419**

NOTE	REF NO	GRAPHIC REF	PART NUMBER	QTY	PART NAME 1 2 3 4 5 6 (PRODUCT LEVEL)	SEE PAGE
	1	1	**1P-3704**	2	SEAL-RECTANGULAR	
	2	1	**1P-3705**	8	SEAL-RECTANGULAR	
	3	1	**1P-3709**	1	SEAL-RECTANGULAR	
	4	1	**6V-1572**	2	CLIP (SLOT)	
	5	1	**7Y-4038**	4	CLAMP-HALF	
Y	6	1	**167-7996**	1	CYLINDER GP-TILT	972
	7	1	**147-3104**	1	TUBE AS	
	8	1	**147-3105**	1	TUBE AS	
	9	1	**124-9820**	1	BRACKET AS	
M		1	**8T-3490**	2	NUT-WELD (M10X1.5 THD)	
	10	1	**125-1071**	1	ROD	
	11	1	**128-1545**	1	MANIFOLD	
	12	1	**128-6320**	2	GUARD	
	13	1	**128-6321**	1	PLATE	
	14	1	**142-4985**	2	TUBE AS	
	15	1	**147-3106**	1	TUBE AS	
	16	1	**147-3107**	1	TUBE AS	
C	17	1	**165-4597**	2	CABLE AS	
	18	1	**1P-5767**	4	FLANGE-HALF	
	19	1	**3E-9411**	4	WASHER-HARD (6MM THK)	
	20	1	**5P-1076**	2	WASHER-HARD (13.5X30X4MM THK)	
	21	1	**5P-8077**	12	FLANGE-HALF	
	22	1	**6V-1875**	2	GROMMET (48MM ID)	
M	23	1	**7X-2553**	4	BOLT (M16X2X40MM)	
M	24	1	**8C-8478**	4	BOLT (M20X2.5X140MM)	
	25	1	**8T-4123**	4	WASHER-PLATED (22X35X3.5MM THK)	
M	26	1	**8T-4140**	24	BOLT (M16X2X60MM)	
CM	27	1	**6V-7744**	2	LOCKNUT (M10X1.50 THD)	
M	28	1	**8T-4194**	12	BOLT (M12X1.75X50MM)	
M	29	1	**8T-4199**	1	BOLT (M8X1.25X12MM)	
C	30	1	**8T-4223**	22	WASHER-HARD (13.5X25.5X3MM THK)	
	31	1	**8T-4224**	1	WASHER-HARD (8.8X16X2MM THK)	
CM	32	1	**8T-4244**	2	NUT (M12X1.75 THD)	
M	33	1	**8T-4648**	8	BOLT (M12X1.75X70MM)	
CM	34	1	**8T-4956**	10	BOLT (M12X1.75X35MM)	
	35	1	**9X-8257**	40	WASHER (17.5X30X3.5MM THK)	
	36	1	**147-3108**	1	BRACKET AS	
	37	1	**147-3109**	1	BRACKET AS	
	38	1	**147-3110**	2	PLATE	
I	39	1	**147-3111**	2	HOSE AS	
I	40	1	**147-3112**	2	HOSE AS	
	41	1	**103-1303**	8	CLAMP-HALF	
M	42	1	**8T-4173**	16	BOLT (M16X2.0X110MM)	
	43	1	**7D-1649**	12	WASHER-HARD (13.5X32X5MM THK)	
	44	1	**1P-3706**	4	SEAL (54.5MM ID)	
CM	45	1	**8T-4184**	2	BOLT (M12X1.75X45MM)	
	46	1	**6V-1573**	2	CLIP (TAB)	
	47	1	**8T-4121**	10	WASHER-HARD (11X21X2.5MM THK)	
M	48	1	**8T-4186**	2	BOLT (M10X1.5X40MM)	

C-CHANGE FROM PREVIOUS TYPE
I-SEE HOSE FABRICATION GUIDE
M-METRIC PART
Y-SEPARATE ILLUSTRATION

109-6871 LINES GP-TILT CYLINDER *(contd.)* i01424419

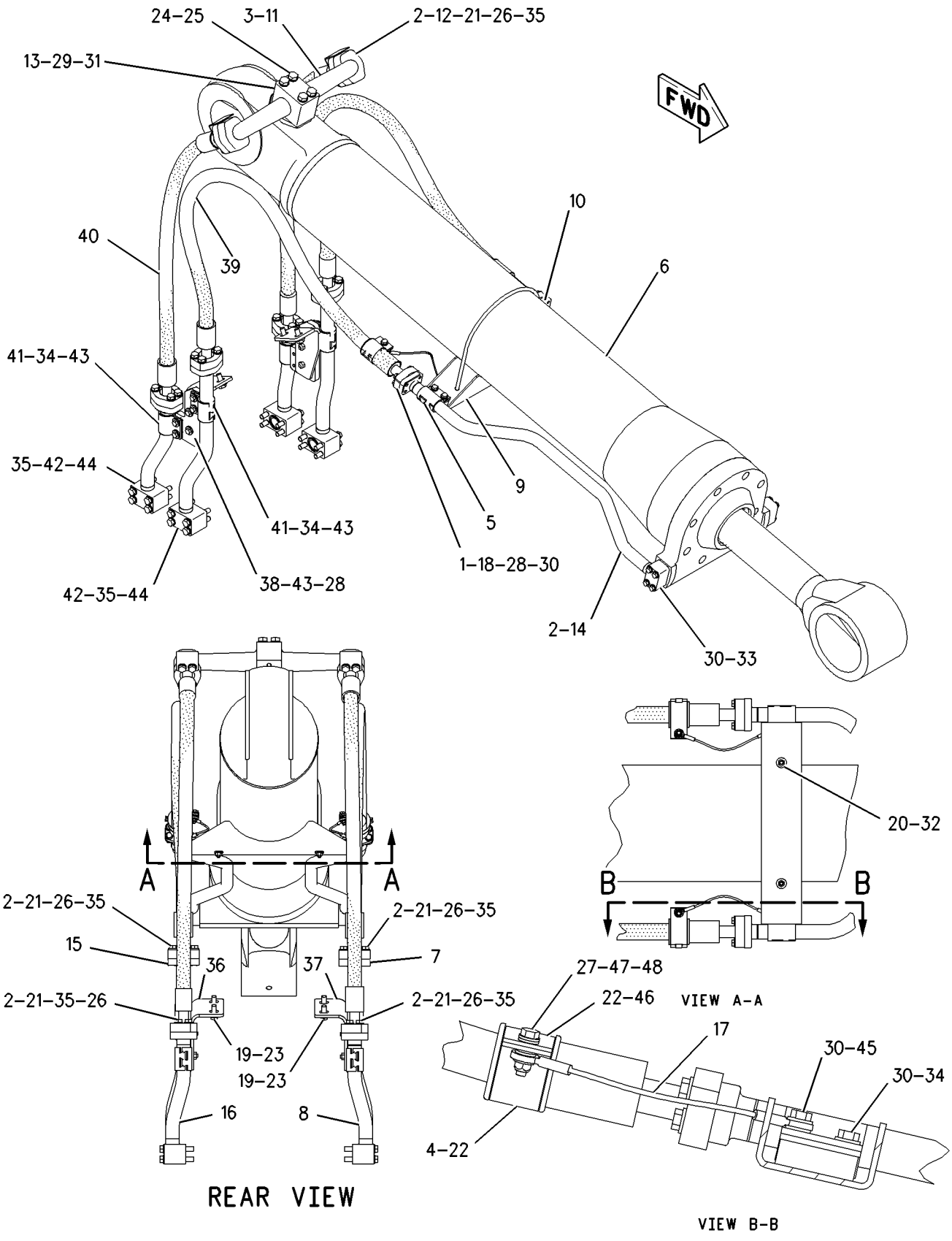

GRAPHIC #1 g00687788

HYDRAULIC SYSTEM

6E-4576 MOTOR GP-PISTON–FAN DRIVE

S/N: 7HR1-UP

PART OF 109-6872 LINES GP-HYDRAULIC FAN

SMCS-5058 **i01057770**

NOTE	REF NO	GRAPHIC REF	PART NUMBER	QTY	PART NAME 1 2 3 4 5 6 (PRODUCT LEVEL)	SEE PAGE
Y	1	1	**106-1255**	1	ROTATING GP-MOTOR	1044
	2	1	**6E-1682**	1	HOUSING	
	3	1	**9S-8006**	1	PLUG-O-RING (7/8-14 THD)	
	4	1	**2M-9780**	1	SEAL-O-RING (19.18MM ID)	
M	5	1	**8T-6594**	6	BOLT-SOCKET HEAD (M16X2X35MM)	
	6	1	**6E-1684**	6	LOCKWASHER	
	7	1	**9X-6497**	1	DOWEL	
	8	1	**8T-9527**	1	SEAL-O-RING (110.72MM ID)	
	9	1	**111-9266**	1	HEAD	

M-METRIC PART
Y-SEPARATE ILLUSTRATION

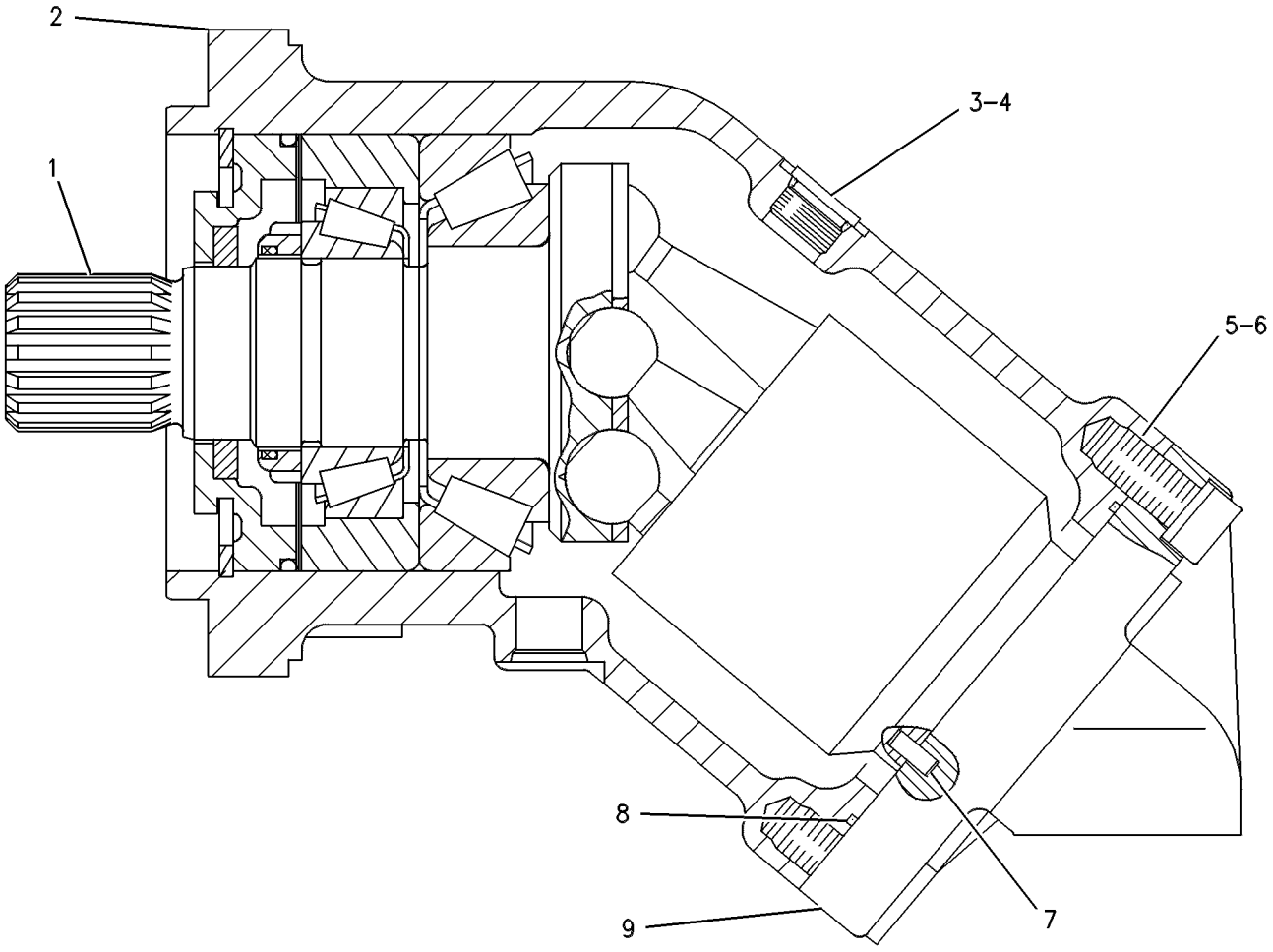

GRAPHIC #1 g00120628

159-7166 MOTOR GP-PISTON–FAN DRIVE

S/N: 7HR1-UP

PART OF 109-6872 LINES GP-HYDRAULIC FAN

SMCS-5058 **i01225045**

NOTE	REF NO	GRAPHIC REF	PART NUMBER	QTY	PART NAME 1 2 3 4 5 6 (PRODUCT LEVEL)	SEE PAGE
	1	1	**9X-6497**	1	DOWEL	
M	2	1	**130-1673**	6	BOLT-SOCKET HEAD	
	3	1	**111-9266**	1	HEAD	
	4	1	**8T-9527**	1	SEAL-O-RING (110.72MM ID)	
	5	1	**6E-1682**	1	HOUSING	
	6	1	**2M-9780**	1	SEAL-O-RING (19.18MM ID)	
	7	1	**9S-8006**	1	PLUG-O-RING (7/8-14 THD)	
Y	8	1	**178-4005**	1	ROTATING GP-MOTOR	1046

M-METRIC PART
Y-SEPARATE ILLUSTRATION

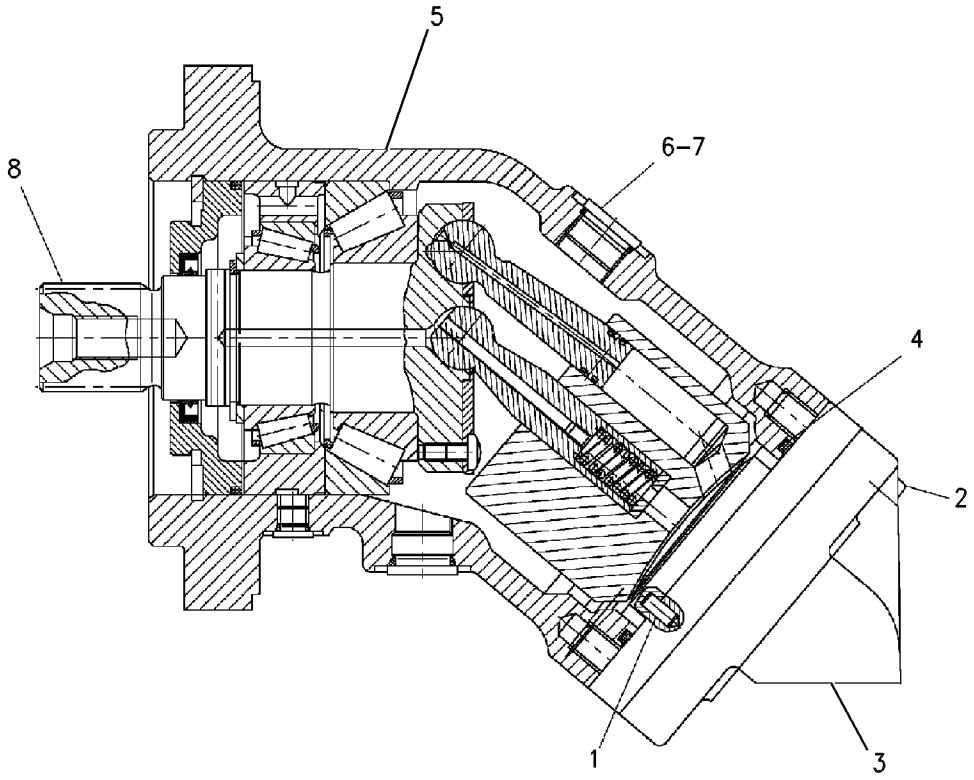

GRAPHIC #1 g00661371

HYDRAULIC SYSTEM

112-5381 PUMP GP-PISTON—IMPLEMENT, FIXED DISPLACEMENT

S/N: 7HR1-UP

PART OF 109-6867 LINES GP-HYDRAULIC

SMCS-5070 **i01216706**

NOTE	REF NO	GRAPHIC REF	PART NUMBER	QTY	PART NAME 1 2 3 4 5 6 (PRODUCT LEVEL)	SEE PAGE
	1	1	**1D-4572**	10	BOLT (1/2-13X5.5IN)	
	2	1	**5P-8245**	10	WASHER-HARD (3MM THK)	
	3	1	**112-5383**	1	COVER	
	4	1	**7J-9017**	1	SEAL	
	5	1	**5B-5821**	3	DOWEL	
	6	1	**6E-1332**	1	PLATE	
	7	1	**3G-1716**	1	GASKET	
	8	1	**112-5382**	1	BODY	
R	9	1	**9J-8667**	1	BARREL AS	
	10	1	**1K-6985**	1	RING-RETAINING	
	11	1	**8J-2043**	1	SPRING	
	12	1	**8J-0237**	2	SPACER-SPRING	
	13	1	**034-4160**	8	BOLT-LOCKING (5/16-18X1.0IN)	
	14	1	**9M-1974**	8	WASHER-HARD (2MM THK)	
	15	1	**3G-5750**	2	BEARING-PLATE	
B	16	1	**8J-0218**	6	SHIM (.127MM THK)	
B	17	1	**8J-0217**	4	SHIM (.051MM THK)	
	18	1	**4T-7023**	1	PLATE-RETRACTION	
	19	1	**3G-4779**	1	PLATE-WEAR	
	20	1	**3G-2349**	1	CAMSHAFT	
	21	1	**1S-9292**	1	DOWEL	
	22	1	**7J-8894**	1	CUP-ROLLER BEARING	
	23	1	**7J-8893**	1	CONE-ROLLER BEARING	
	24	1	**3G-1718**	1	RETAINER-SEAL	
	25	1	**6D-7889**	2	SEAL-O-RING (61.6MM ID)	
	26	1	**3G-1719**	1	SHAFT-GOVERNOR CONTROL	
	27	1	**1U-1655**	2	SEAL-LIP	
	28	1	**4B-3835**	3	BOLT-HEAD	
	29	1	**4B-5167**	3	WASHER (3.26MM THK)	
	30	1	**5F-3144**	2	SEAL-O-RING (120.24MM ID)	
R	31	1	**4T-3122**	9	PISTON AS	
	32	1	**1A-2223**	2	DOWEL	
	33	1	**3P-1210**	1	CONE-ROLLER BEARING	
	34	1	**8J-0412**	1	CUP-ROLLER BEARING	
B	35	1	**2J-2866**	5	SHIM (0.12MM THK)	
	36	1	**112-5384**	1	HEAD-PUMP	
	37	1	**9J-1192**	1	IMPELLER	
	38	1	**4F-7388**	1	SEAL-O-RING (215.26MM ID)	
	39	1	**4T-9380**	1	INSERT	
	40	1	**159-8522**	1	LOCKNUT	
	41	1	**1B-8708**	1	KEY-WOODRUFF	
	42	1	**6E-2943**	1	PLUG	
	43	1	**4B-4158**	4	SCREW-DRIVE	
	44	1	**8J-0101**	1	PLATE	
B	45	1	**6E-5572**	2	SHIM (0.30MM THK)	
B	46	1	**6E-5741**	2	SHIM (0.12MM THK)	

B-USE AS REQUIRED
R-REMFG PART MAY BE AVAILABLE

112-5381 PUMP GP-PISTON *(contd.)* **i01216706**

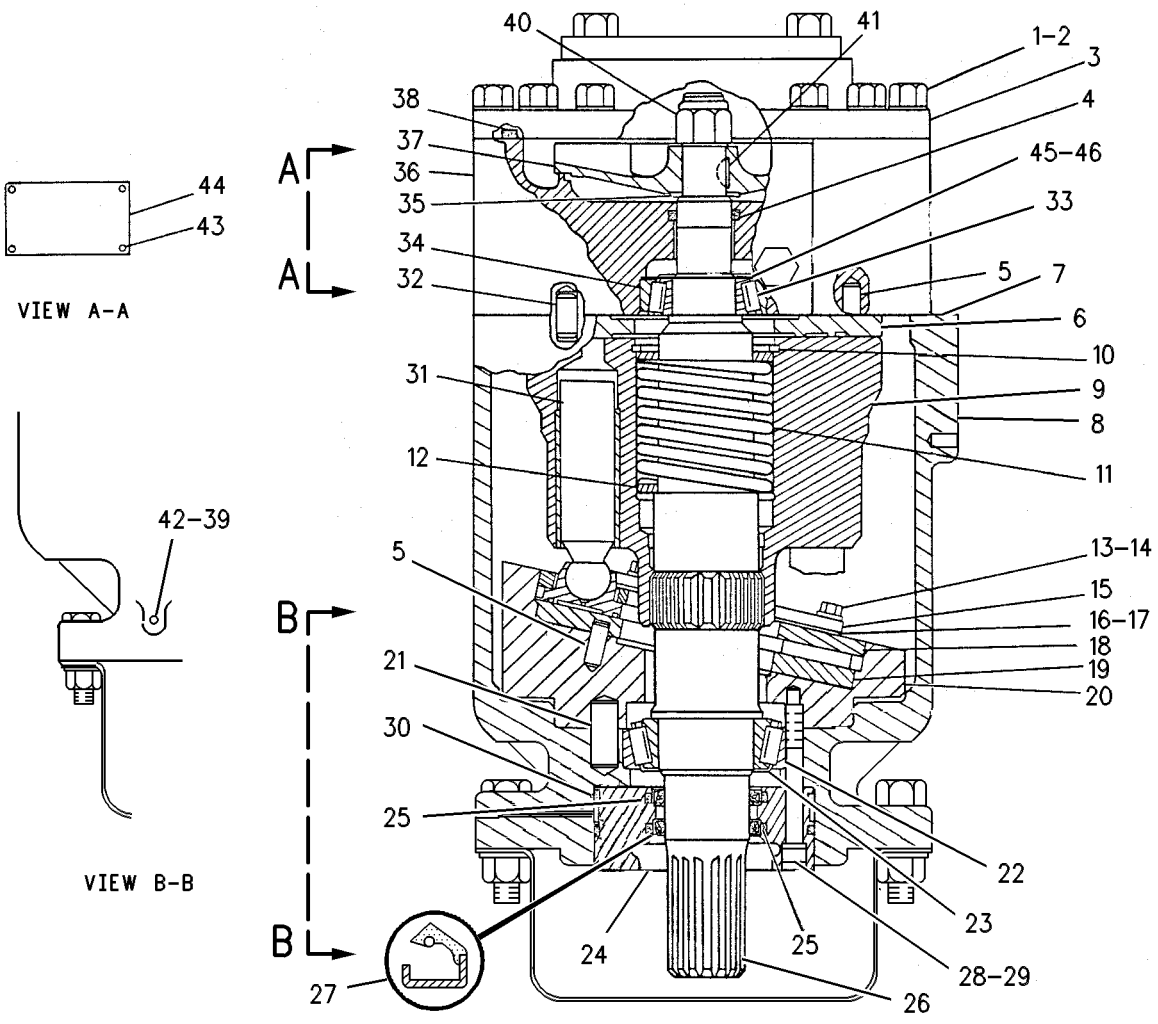

GRAPHIC #1 g00255563

HYDRAULIC SYSTEM

112-7913 PUMP GP-PISTON—FAN DRIVE

S/N: 7HR1-UP

PART OF 109-6872 LINES GP-HYDRAULIC FAN

SMCS-5070 **i01198369**

NOTE	REF NO	GRAPHIC REF	PART NUMBER	QTY	PART NAME 1 2 3 4 5 6 (PRODUCT LEVEL)	SEE PAGE
	1	1	**6E-4224**	1	PLUG-SWASHPLATE	
	2	1	**033-6036**	1	SEAL-O-RING (23.47MM ID)	
	3	1	**100-3402**	1	BEARING-SWASH	
	4	1	**100-3405**	1	BEARING-SWASH	
M	5	1	**6V-8837**	3	BOLT (M6X1X16 MM)	
	6	1	**4F-4097**	1	SEAL-O-RING (94.92MM ID)	
M	7	1	**3E-4302**	2	SCREW-FLAT HEAD (M4X0.7X10.0MM)	
	8	1	**100-3404**	1	COVER-TRUNNION	
	9	1	**9T-1636**	1	SEAT	
	10	1	**9T-1710**	1	POPPET	
	11	1	**9T-1699**	1	SPRING	
	12	1	**100-3403**	1	HEAD-PUMP	
B	13	1	**6E-1436**	1	KIT-SHAFT SHIM (17 SHIMS)	
	14	1	**6Y-4280**	1	CONE-ROLLER BEARING	
	15	1	**7T-9755**	1	CUP-ROLLER BEARING	
	16	1	**117-1908**	1	PLATE-VALVE	
	17	1	**3E-7417**	2	PLUG (M10X1 THD)	
	18	1	**8T-7876**	2	SEAL-O-RING (8.2MM ID)	
	19	1	**7L-9061**	2	SEAL-O-RING (18.72MM ID)	
	20	1	**100-3413**	1	GASKET	
Y	21	1	**102-2064**	1	ROTATING GP-PUMP	1048
	22	1	**100-3409**	1	SPRING-BIAS	
	23	1	**100-3408**	1	KIT-BIAS PISTON	
	24	1	**002-1212**	1	CUP-ROLLER BEARING	
	25	1	**2F-8509**	1	CONE-ROLLER BEARING	
	26	1	**117-1909**	1	SHAFT-PUMP	
	27	1	**117-1910**	1	HOUSING-PUMP	
	28	1	**006-8663**	2	RING	
	29	1	**8T-4750**	2	SEAL-LIP (RUBBER)	
Y	30	1	**100-3416**	1	SWASHPLATE GP	1049
	31	1	**100-3415**	1	KIT-CONTROL PISTON	
	32	1	**9T-1652**	1	PIN	
M	33	1	**6V-8336**	1	BOLT (M12X1.75X70MM)	
M	34	1	**6V-7673**	4	BOLT (M12X1.75X50MM)	
M	35	1	**8T-0372**	1	BOLT (M12X1.75X90MM)	
M	36	1	**6V-8337**	4	BOLT-SOCKET HEAD (M8X1.25X35MM)	
Y	37	1	**110-6952**	1	VALVE GP-PRESS & FLOW CMPNSTR	1086
	38	1	**9S-4190**	1	PLUG-O-RING (7/16-20 THD)	
	39	1	**033-6027**	1	SEAL-O-RING (19.18MM ID)	
	40	1	**095-0888**	2	PIN-SPRING	
	41	1	**8T-5039**	3	SEAL-O-RING (10.77MM ID)	
	42	1	**6E-2943**	1	PLUG	

B-USE AS REQUIRED
M-METRIC PART
Y-SEPARATE ILLUSTRATION

112-7913 PUMP GP-PISTON *(contd.)* **i01198369**

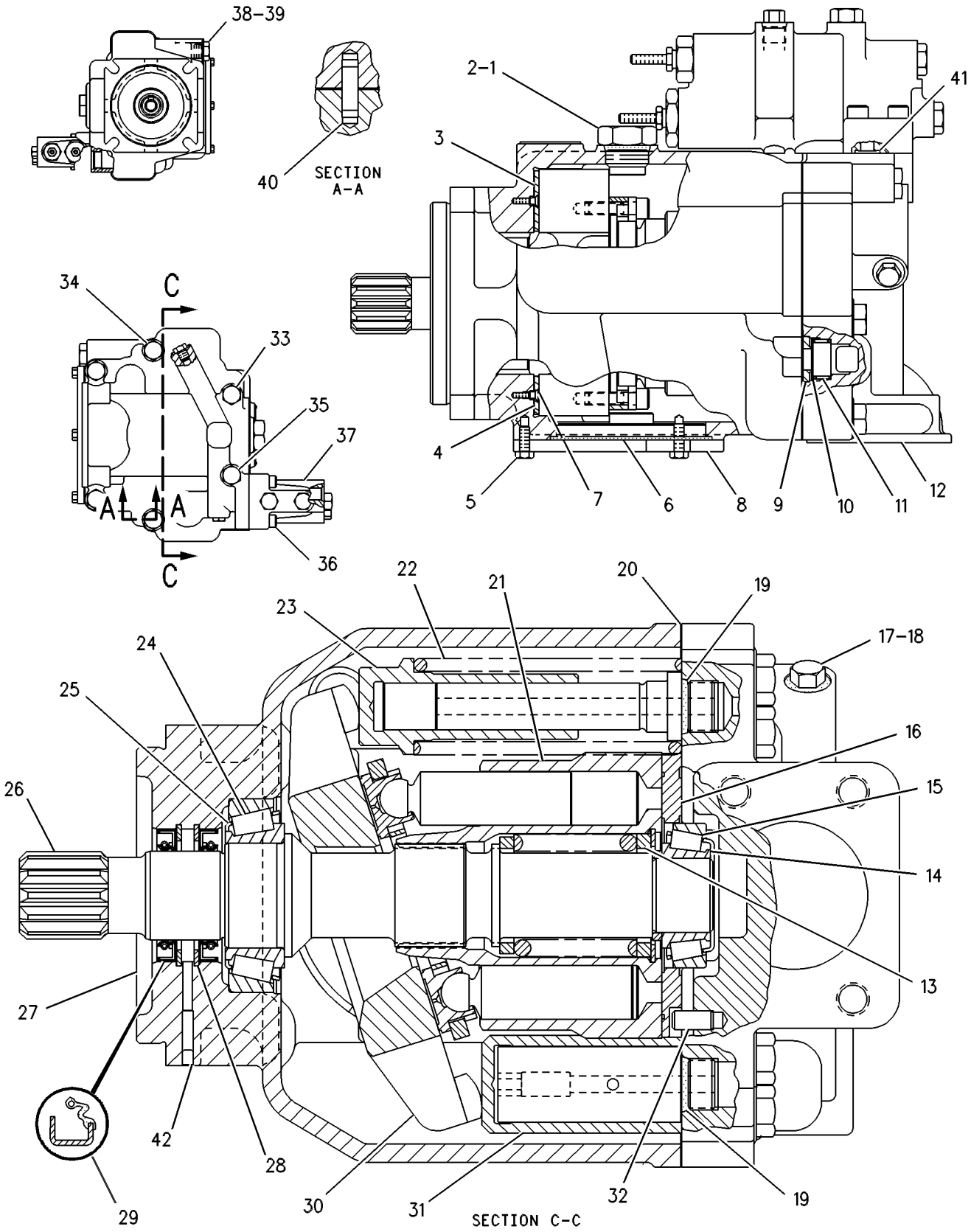

GRAPHIC #1 g00255749

HYDRAULIC SYSTEM

141-1462 PUMP GP-PISTON—IMPLEMENT, VAR DISPLACEMENT

S/N: 7HR1-UP

PART OF 109-6867 LINES GP-HYDRAULIC

TYPE 1

SMCS-5070 **i01057009**

NOTE	REF NO	GRAPHIC REF	PART NUMBER	QTY	PART NAME 1 2 3 4 5 6 (PRODUCT LEVEL)	SEE PAGE
	1	1	**6V-7951**	1	DOWEL	
	2	1	**137-1365**	1	HOUSING	
M	3	1	**9X-8482**	1	SETSCREW-SOCKET (M12X1.75X70MM)	
	4	1	**6E-3283**	2	LOCKNUT (M12X1.75MM THD)	
	5	1	**9S-9334**	1	PLUG (1 5/16-12 THD)	
	6	1	**7M-8485**	1	SEAL-O-RING (29.74MM ID)	
Y	7	1	**4I-7693**	1	ACTUATOR GP-PISTON PUMP	813
Y	8	1	**6E-1025**	1	ACTUATOR GP-PISTON PUMP	814
	9	1	**9S-8004**	1	PLUG-O-RING (9/16-18 THD)	
	10	1	**3J-1907**	1	SEAL-O-RING (11.89MM ID)	
	11	1	**6E-1030**	1	SEAL-DISC	
	12	1	**7X-2910**	1	RING-RETAINING	
	13	1	**6E-3333**	1	KEY	
M	14	1	**8T-4944**	4	BOLT-SOCKET HEAD (M16X2X40MM)	
	15	1	**2H-3935**	1	SEAL-O-RING (136.12MM ID)	
	16	1	**3K-0715**	1	SEAL-O-RING (101.27MM ID)	
	17	1	**135-9991**	1	COUPLING	
	18	1	**145-3204**	1	FLANGE	
	19	1	**096-8058**	2	RING-RETAINING	
B	20	1	**6E-3334**	1	SHIM (0.1MM THK)	
B	21	1	**6E-3335**	1	SHIM (0.2MM THK)	
B	22	1	**6E-3336**	1	SHIM (1.0MM THK)	
	23	1	**6E-1029**	1	IMPELLER	
Y	24	1	**6E-1023**	1	CONTROL GP-PUMP	817
Y	25	1	**6E-1026**	1	ACTUATOR GP-PISTON PUMP	815
Y	26	1	**145-3203**	1	ROTATING GP-PUMP	806
M	27	1	**9X-8483**	1	SETSCREW-SOCKET (M12X1.75X80MM)	
M	28	1	**9X-6153**	1	BOLT (M6X1X10MM)	

B-USE AS REQUIRED
M-METRIC PART
Y-SEPARATE ILLUSTRATION

141-1462 PUMP GP-PISTON ***(contd.)*** **i01057009**

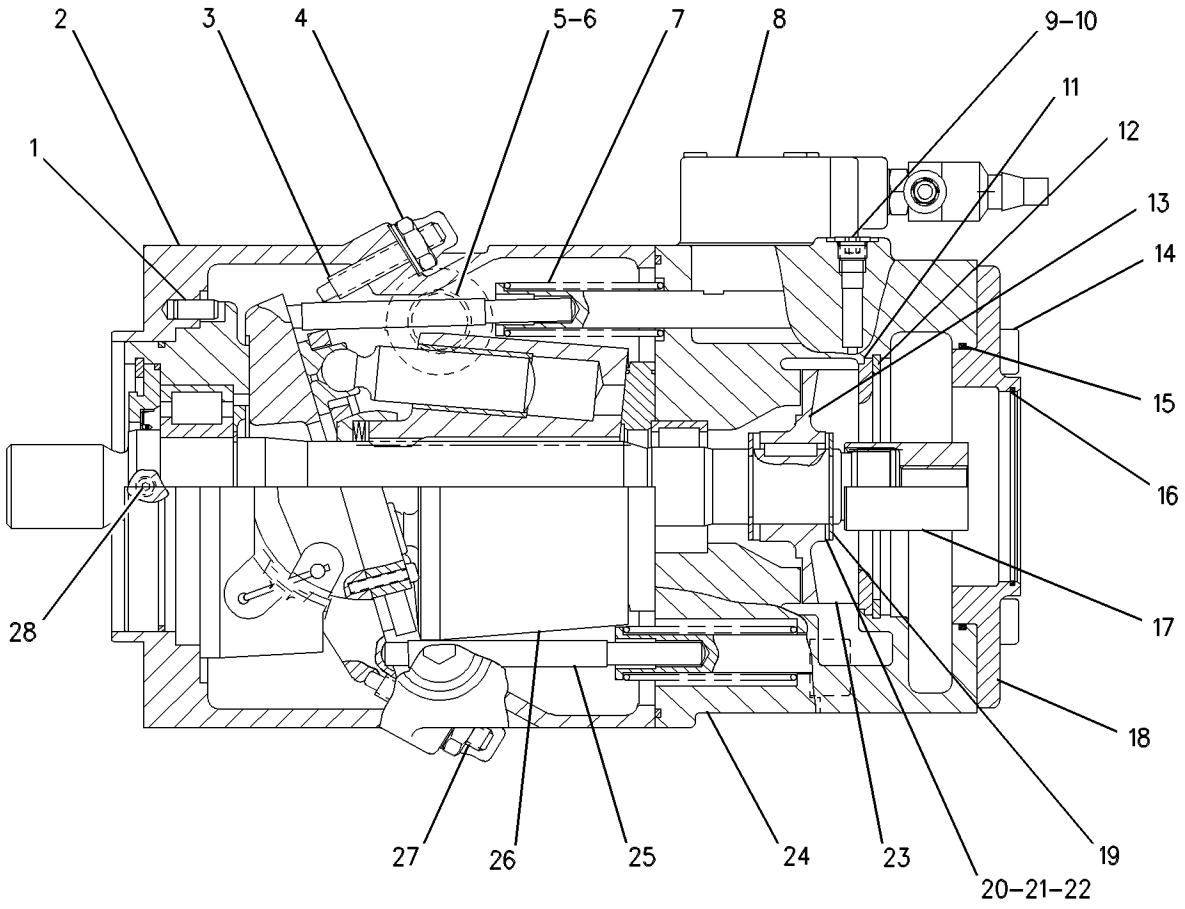

GRAPHIC #1 g00288645

HYDRAULIC SYSTEM

141-1462 PUMP GP-PISTON—IMPLEMENT, VAR DISPLACEMENT

S/N: 7HR1-UP

PART OF 109-6867 LINES GP-HYDRAULIC

TYPE 2

SMCS-5070 **i01057011**

NOTE	REF NO	GRAPHIC REF	PART NUMBER	QTY	PART NAME 1 2 3 4 5 6 (PRODUCT LEVEL)	SEE PAGE
	1	1	**6V-7951**	1	DOWEL	
	2	1	**137-1365**	1	HOUSING	
M	3	1	**9X-8482**	1	SETSCREW-SOCKET (M12X1.75X70MM)	
	4	1	**6E-3283**	2	LOCKNUT (M12X1.75MM THD)	
	5	1	**9S-9334**	1	PLUG (1 5/16-12 THD)	
	6	1	**7M-8485**	1	SEAL-O-RING (29.74MM ID)	
Y	7	1	**4I-7693**	1	ACTUATOR GP-PISTON PUMP	813
Y	8	1	**136-0041**	1	VALVE GP-PRESS & TOR LMTR CONT	1088
	9	1	**9S-8004**	1	PLUG-O-RING (9/16-18 THD)	
	10	1	**3J-1907**	1	SEAL-O-RING (11.89MM ID)	
	11	1	**6E-1030**	1	SEAL-DISC	
	12	1	**7X-2910**	1	RING-RETAINING	
	13	1	**6E-3333**	1	KEY	
M	14	1	**8T-4944**	4	BOLT-SOCKET HEAD (M16X2X40MM)	
	15	1	**2H-3935**	1	SEAL-O-RING (136.12MM ID)	
	16	1	**3K-0715**	1	SEAL-O-RING (101.27MM ID)	
	17	1	**135-9991**	1	COUPLING	
	18	1	**145-3204**	1	FLANGE	
	19	1	**096-8058**	2	RING-RETAINING	
B	20	1	**6E-3334**	1	SHIM (0.1MM THK)	
B	21	1	**6E-3335**	1	SHIM (0.2MM THK)	
B	22	1	**6E-3336**	1	SHIM (1.0MM THK)	
	23	1	**6E-1029**	1	IMPELLER	
Y	24	1	**6E-1023**	1	CONTROL GP-PUMP	817
Y	25	1	**6E-1026**	1	ACTUATOR GP-PISTON PUMP	815
Y	26	1	**145-3203**	1	ROTATING GP-PUMP	806
M	27	1	**9X-8483**	1	SETSCREW-SOCKET (M12X1.75X80MM)	
M	28	1	**9X-6153**	1	BOLT (M6X1X10MM)	

B-USE AS REQUIRED
M-METRIC PART
Y-SEPARATE ILLUSTRATION

141-1462 PUMP GP-PISTON ***(contd.)*** **i01057011**

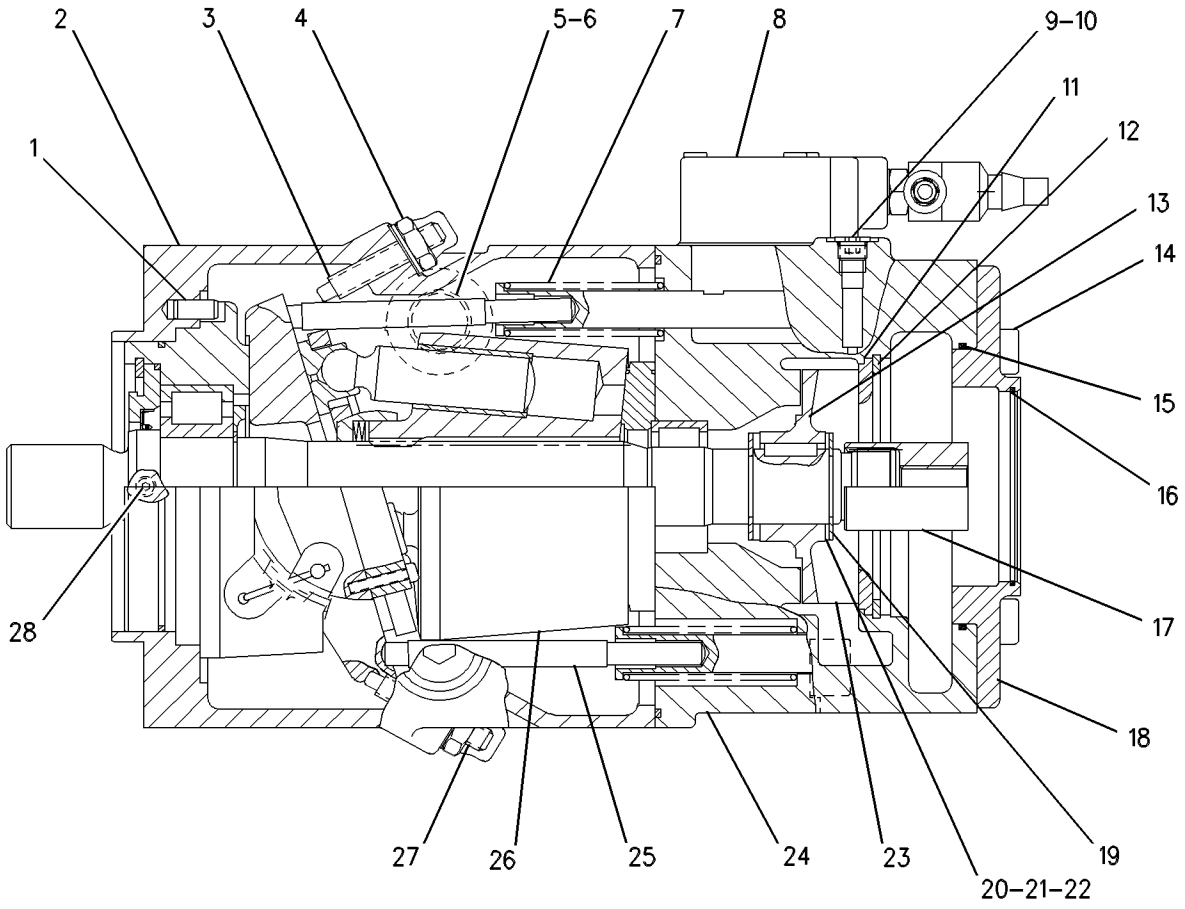

GRAPHIC #1 g00288645

HYDRAULIC SYSTEM

106-1255 ROTATING GP-MOTOR

S/N: 7HR1-UP

PART OF 6E-4576 MOTOR GP-PISTON

SMCS-5058 **i01075002**

NOTE	REF NO	GRAPHIC REF	PART NUMBER	QTY	PART NAME 1 2 3 4 5 6 (PRODUCT LEVEL)	SEE PAGE
	1	1	**165-6974**	7	PISTON AS	
					(EACH INCLUDES)	
	1A	1	**9T-3745**	2	RING	
	2	1	**9X-6574**	1	RING-RETAINING	
	3	1	**6E-1685**	1	SHAFT-DRIVE	
	4	1	**111-9265**	1	PLATE	
	6	1	**6V-7351**	1	SEAL-O-RING	
	7	1	**9T-3368**	4	SPRING-BELLEVILLE	
	8	1	**6E-1696**	1	PIN-CENTER	
	9	1	**106-1259**	1	BARREL	
	10	1	**122-9799**	1	PLATE-PORT	
B	11	1	**6E-1704**	2	SHIM (.2MM THK)	
B	12	1	**6E-1705**	1	SHIM (.3MM THK)	
	13	1	**6E-1687**	1	COVER-FRONT	
	14	1	**6E-1693**	1	SEAL-SHAFT	
B	15	1	**6E-1698**	1	SPACER	
B	16	1	**6E-1699**	1	SPACER	
B	17	1	**6E-1702**	1	SPACER	
B	18	1	**6E-1703**	1	SPACER	
	19	1	**6E-1688**	1	DISC	
	20	1	**6E-1701**	7	SCREW	
	21	1	**6E-1691**	1	BEARING AS	
	22	1	**6E-1686**	1	RING-BEARING HOUSING	
	23	1	**6E-1692**	1	BEARING AS	
	24	1	**6E-1690**	1	NUT-BEARING	

B-USE AS REQUIRED

106-1255 ROTATING GP-MOTOR *(contd.)* i01075002

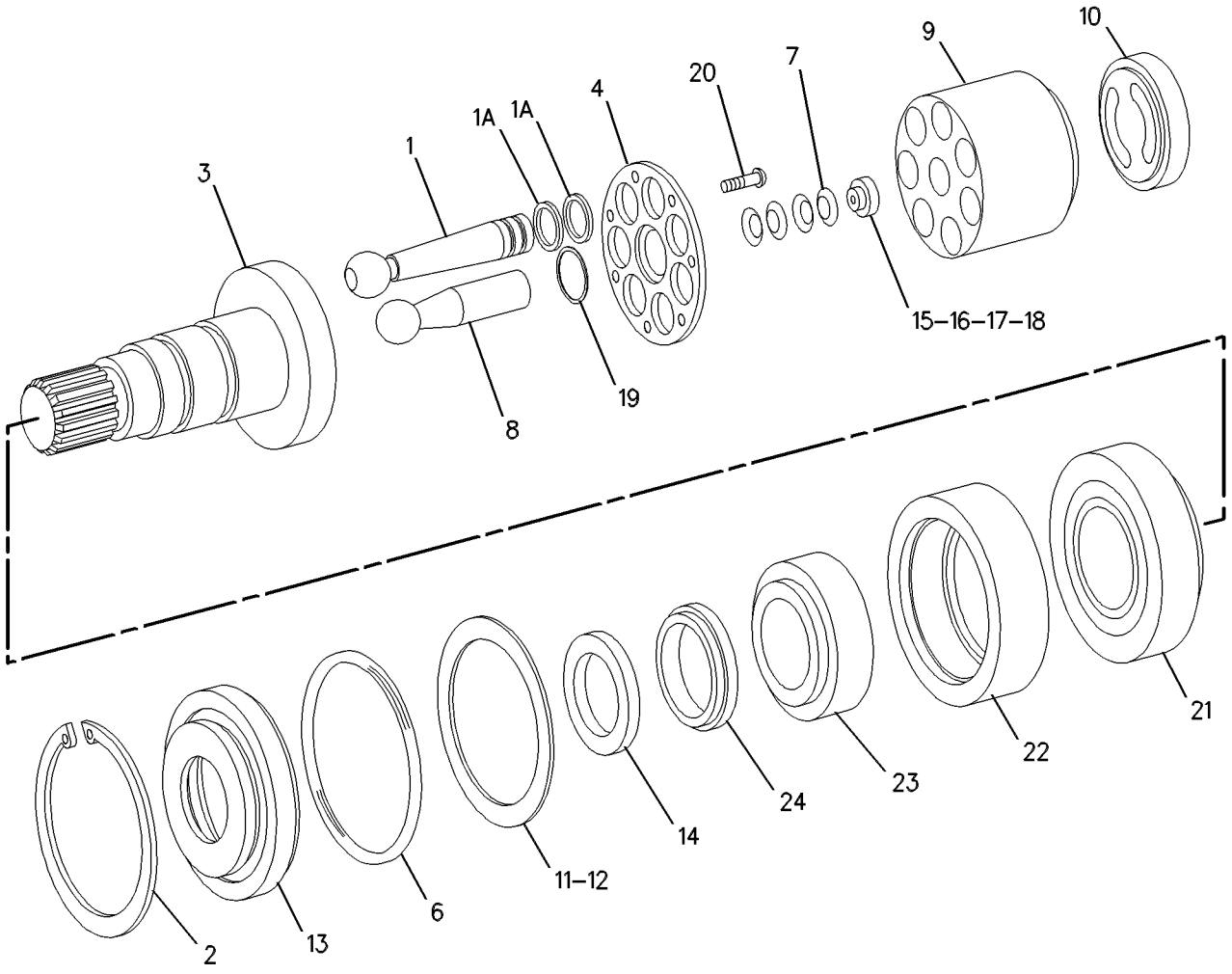

GRAPHIC #1 g00563091

HYDRAULIC SYSTEM

178-4005 ROTATING GP-MOTOR

S/N: 7HR1-UP

PART OF 159-7166 MOTOR GP-PISTON

SMCS-5058 **i01253675**

NOTE	REF NO	GRAPHIC REF	PART NUMBER	QTY	PART NAME 1 2 3 4 5 6 (PRODUCT LEVEL)	SEE PAGE
	1	1	**178-3995**	1	SHAFT AS	
		1	**171-5995**	1	KIT-BEARING	
	2	1	**6E-1687**	1	COVER-FRONT	
	3	1	**9X-6574**	1	RING-RETAINING	
	4	1	**124-9913**	1	SEAL-SHAFT	
	5	1	**6V-7351**	1	SEAL-O-RING (132.94MM ID)	
B	6	1	**6E-1704**	1	SHIM (.2MM THK)	
B	7	1	**6E-1705**	1	SHIM (.3MM THK)	
	8	1	**180-2436**	1	BARREL	
	9	1	**122-9799**	1	PLATE-PORT	
	10	1	**178-3997**	1	PIN	
	11	1	**165-6974**	7	PISTON AS	
					(EACH INCLUDES)	
		1	**9T-3745**	2	RING	
	12	1	**6E-1688**	1	DISC	
B	13	1	**124-9935**	1	SHIM (3.80MM THK)	
B	14	1	**124-9936**	1	SHIM (3.90MM THK)	
B	15	1	**124-9937**	1	SHIM (4.00MM THK)	
B	16	1	**124-9934**	1	SHIM (3.70MM THK)	
B	17	1	**124-9933**	1	SHIM (3.60MM THK)	
B	18	1	**124-9932**	1	SHIM (3.50MM THK)	
	19	1	**178-3998**	1	SPRING	
	20	1	**111-9265**	1	PLATE	
	21	1	**113-4418**	7	SCREW	

B-USE AS REQUIRED

178-4005 ROTATING GP-MOTOR *(contd.)* **i01253675**

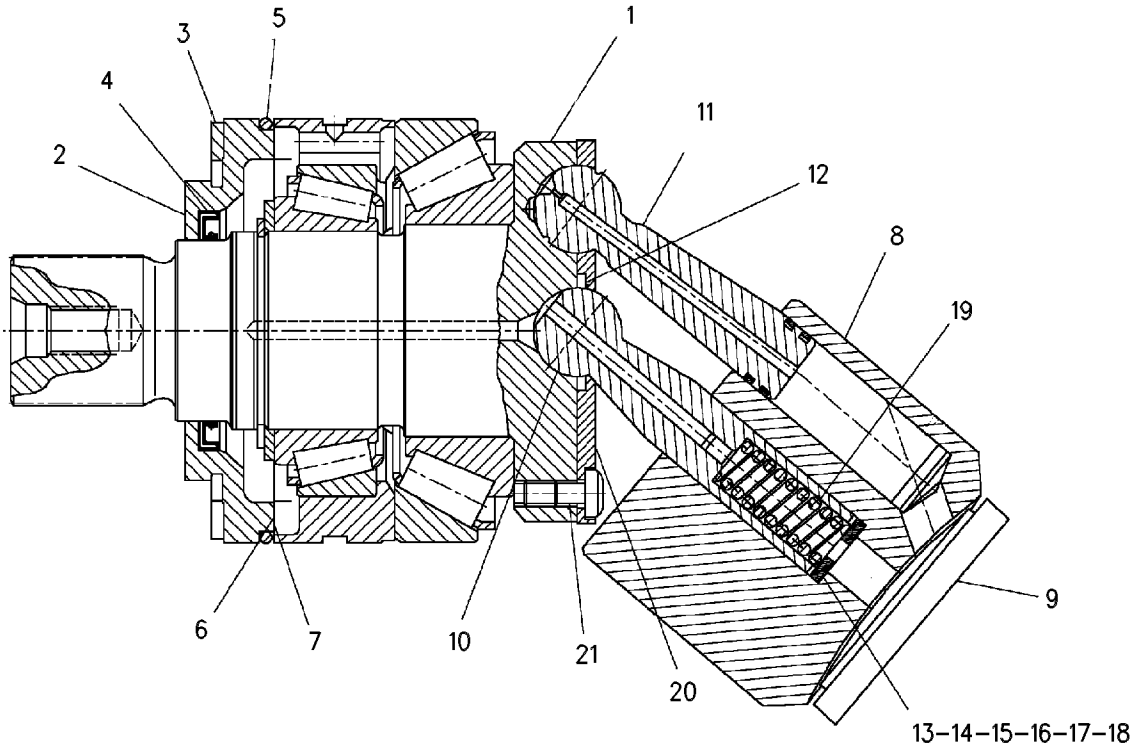

GRAPHIC #1 g00661398

HYDRAULIC SYSTEM

102-2064 ROTATING GP-PUMP

S/N: 7HR1-UP

PART OF 112-7913 PUMP GP-PISTON

SMCS-5070 **i00573157**

NOTE	REF NO	GRAPHIC REF	PART NUMBER	QTY	PART NAME 1 2 3 4 5 6 (PRODUCT LEVEL)	SEE PAGE
	1	1	**102-2061**	1	BARREL-CYLINDER	
	2	1	**3J-8500**	1	RING-RETAINING	
	3	1	**9T-7769**	1	GUIDE-OUTER	
M	4	1	**6V-5192**	4	BOLT-SOCKET HEAD (M8X1.25X30MM)	
	5	1	**100-3410**	2	PLATE	
	6	1	**100-3411**	2	PLATE-SPACER	
	7	1	**102-2062**	9	PISTON AS-PUMP	
	8	1	**102-2063**	1	PLATE-RETRACTION	
	9	1	**9T-7773**	1	GUIDE-INNER	
	10	1	**9T-7771**	1	SPRING	

M-METRIC PART

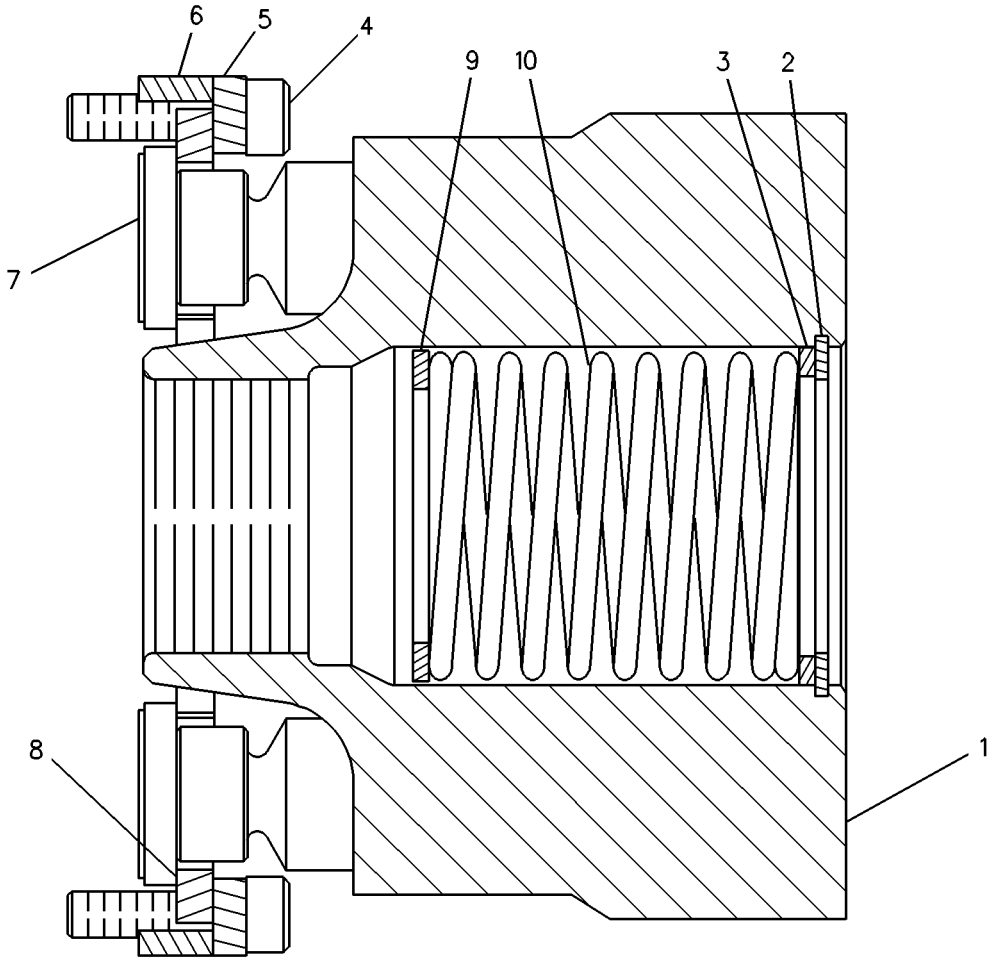

GRAPHIC #1 g00229086

100-3416 SWASHPLATE GP

S/N: 7HR1-UP

PART OF 112-7913 PUMP GP-PISTON

FIELD REPLACEMENT ORDER 169-3290—PAGE 1050

SMCS-5070 **i00107546**

NOTE	REF NO	GRAPHIC REF	PART NUMBER	QTY	PART NAME 1 2 3 4 5 6 (PRODUCT LEVEL)	SEE PAGE
	1	1	**139-0532**	2	BLOCK-STOP	
	2	1	**8F-7219**	2	SEAL-O-RING (4.47MM ID)	

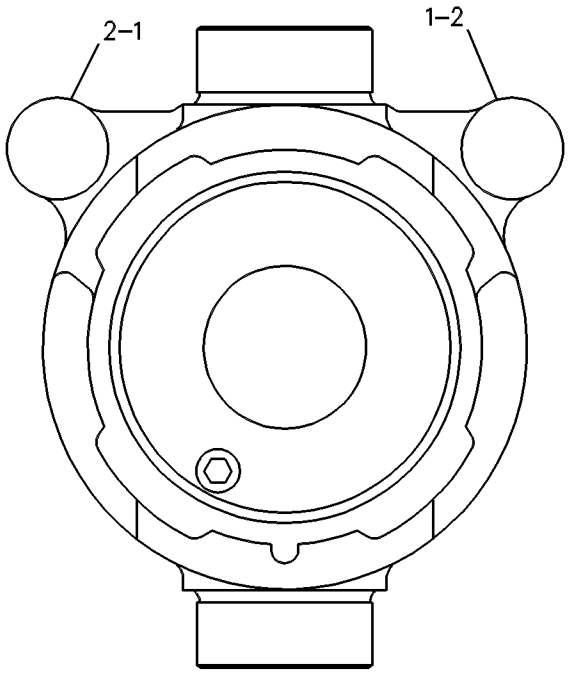

GRAPHIC #1 g00088794

HYDRAULIC SYSTEM

169-3290 SWASHPLATE GP

S/N: 7HR1-UP

FIELD REPLACEMENT FOR 100-3416—PAGE 1049

SMCS-5070 **i01067918**

NOTE	PART NUMBER	QTY	PART NAME 1 2 3 4 5 6 (PRODUCT LEVEL)	SEE PAGE
	1H-3937	2	PIN	
	167-1801	2	STOP-SWASHPLATE	

HYDRAULIC SYSTEM

109-6887 TANK & MTG GP-HYDRAULIC

S/N: 7HR1-UP

PART OF 109-6820 HYDRAULIC AR

SMCS-5056, 5068 **i01141562**

NOTE	REF NO	GRAPHIC REF	PART NUMBER	QTY	PART NAME 1 2 3 4 5 6 (PRODUCT LEVEL)	SEE PAGE
	1	1	**3D-2824**	1	SEAL-O-RING (23.47MM ID)	
Y	2	1	*6G-8390*	1	COVER GP-HYDRAULIC TANK CAP	959
	3	1	**6T-1698**	6	MOUNTING	
	4	1	**7Y-6371**	3	WASHER	
	5	1	**8T-4123**	3	WASHER-PLATED (3.5MM THK)	
	6	1	**133-1963**	1	VALVE-BREAKER	
Y	7	1	**112-4592**	1	TANK GP-HYDRAULIC (STEERING & BRAKE)	1054
M	8	1	**7X-2564**	3	BOLT (M20X2.5X90MM)	

M-METRIC PART
Y-SEPARATE ILLUSTRATION

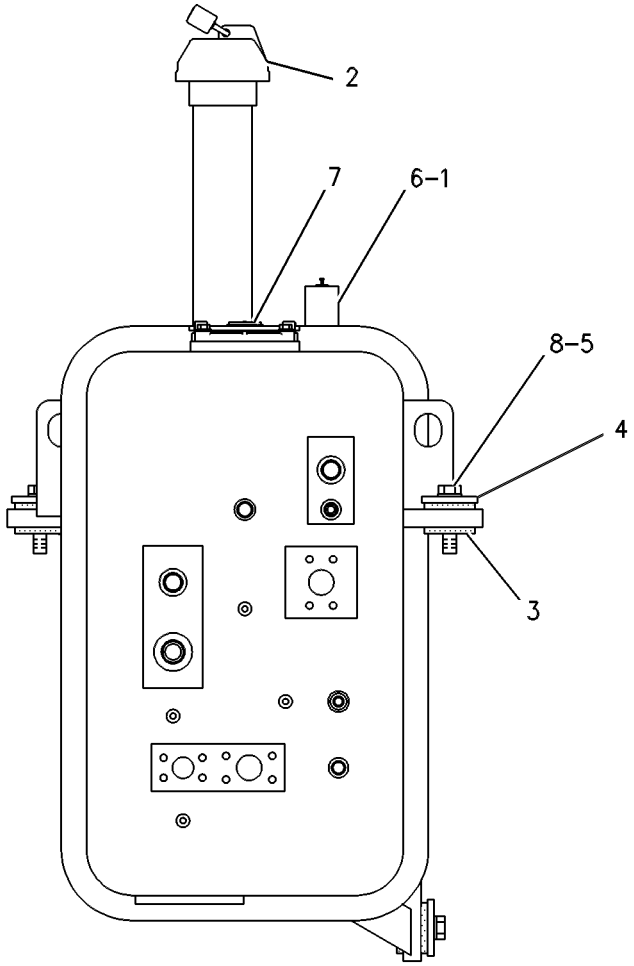

RIGHT SIDE VIEW

GRAPHIC #1 g00255763

HYDRAULIC SYSTEM

109-6888 TANK & MTG GP-HYDRAULIC

S/N: 7HR1-UP

PART OF 109-6820 HYDRAULIC AR

SMCS-5056, 5068 **i01057042**

NOTE	REF NO	GRAPHIC REF	PART NUMBER	QTY	PART NAME 1 2 3 4 5 6 (PRODUCT LEVEL)	SEE PAGE
	1	1	**3D-2824**	1	SEAL-O-RING (23.47MM ID)	
	2	1	**6T-1698**	8	MOUNTING	
	3	1	**7Y-6371**	4	WASHER	
	4	1	**8T-4123**	4	WASHER-PLATED (3.5MM THK)	
	5	1	**133-1963**	1	VALVE-BREAKER	
Y	6	1	**139-2763**	1	TANK GP-HYDRAULIC	1058
M	7	1	**7X-2564**	4	BOLT (M20X2.5X90MM)	

M-METRIC PART
Y-SEPARATE ILLUSTRATION

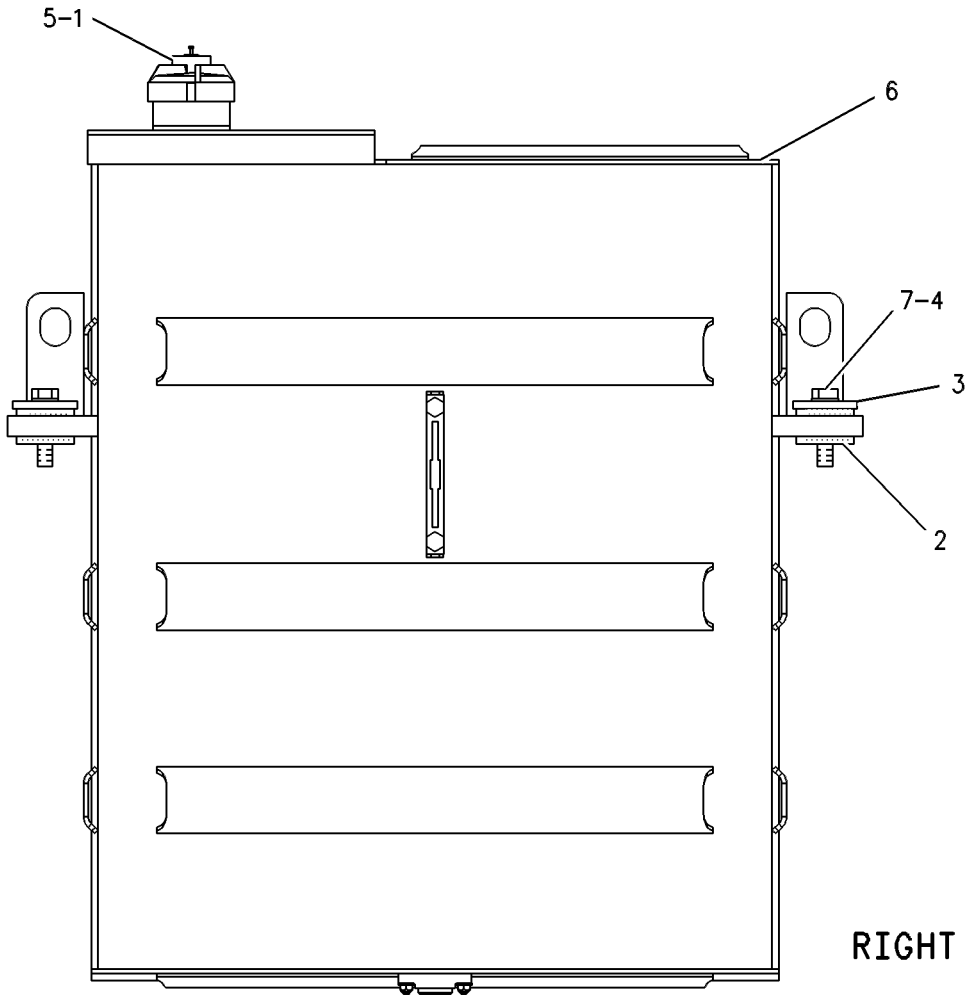

RIGHT SIDE VIEW

GRAPHIC #1 g00255800

MEMORANDA

HYDRAULIC SYSTEM

112-4592 TANK GP-HYDRAULIC–STEERING & BRAKE

S/N: 7HR1-UP

PART OF 109-6887 TANK & MTG GP-HYDRAULIC

SMCS-5056 **i01198370**

NOTE	REF NO	GRAPHIC REF	PART NUMBER	QTY	PART NAME 1 2 3 4 5 6 (PRODUCT LEVEL)	SEE PAGE
	1	1	**112-7915**	1	COVER AS	
		1	**6B-6684**	2	NUT-FULL (1/2X20 THD)	
		1	**7J-5225**	1	FITTING (1 1/16X12 THD)	
M		1	**8T-4219**	2	STUD-WELD (M10X1.5X17.5MM)	
		1	**3D-6681**	1	FITTING-FILLER	
	2	1	**112-7917**	1	TANK AS	
		1	**5J-3306**	1	FITTING	
		1	**6J-4022**	1	FITTING (7/8X14 THD)	
		1	**7J-5544**	1	FITTING (3/4X16 THD)	
M		1	**8T-3851**	4	BOSS-WELD (M10X1.5X30MM OAL)	
BD	3	1	**5P-9119**		SEALANT (ADHESIVE BACKED)	
	4	1	**118-8693**	2	SCREEN	
M	5	1	**6V-8455**	8	BOLT (M10X1.5X16MM)	
	6	1,2	**8J-8782**	1	BODY-DRAIN VALVE	
	7	1,2	**6V-5839**	7	WASHER (2.5MM THK)	
M	8	1,2	**6V-7744**	74	LOCKNUT (M10X1.50 THD)	
	9	1	**8T-3298**	1	SEAL-RECTANGULAR (51.7MM ID)	
	10	1	**9J-7031**	1	PLUG-DRAIN	
	11	1	**5M-2057**	1	SEAL-O-RING (34.59MM ID)	
	12	1	**8J-8783**	1	VALVE	
	13	1	**7B-3039**	1	SPRING	
	14	1	**1U-2827**	1	GUIDE-VALVE	
	15	1	**3D-6678**	1	STRAINER AS	
	16	1	**7B-2805**	1	LOCKRING	
	17	1	**4J-3815**	1	GASKET	
	18	1	**4J-3816**	1	PLATE	
	19	1	**1L-5072**	1	DOWEL	
	20	1	**9M-7394**	1	LEVER	
	21	2	**6E-4729**	1	BAFFLE AS	
M		2	**6V-3822**	1	BOLT (M10X1.5X35MM)	
	22	2	**9T-9227**	1	SCREEN AS	
	23	2	**9T-9226**	1	PLATE	
	24	2	**4J-0527**	1	SEAL-O-RING (56.74MM ID)	
M	25	2	**6V-8097**	4	BOLT (M12X1.75X30MM)	
	26	2	**6E-4922**	1	STRAINER AS	
M		2	**6V-3822**	1	BOLT (M10X1.5X35MM)	
	27	2	**7J-2656**	1	SCREEN GP	
	28	2	**4T-8698**	1	WASHER (3.5MM THK)	
	29	2	**1H-9696**	1	SEAL-O-RING (44.0MM ID)	
M	30	2	**6V-7732**	2	BOLT (M10X1.5X25MM)	
M	31	2	**6V-4248**	70	BOLT (M10X1.50X25MM)	
	32	2	**5H-6733**	1	SEAL-O-RING (139.07MM ID)	
	33	2	**9T-4872**	1	COVER AS	
	34	2	**2S-4078**	1	SEAL-O-RING (37.46MM ID)	
	35	2	**9S-8010**	1	PLUG-O-RING (1 5/8-12 THD)	
M	36	2	**6V-1820**	4	BOLT (M10X1.50X30MM)	
	37	2	**6E-6550**	1	GAUGE AS-LIQUID LEVEL	
		2	**8F-3469**	4	SEAL-O-RING (15.54MM ID)	
		2	**121-7958**	2	BOLT-MOUNTING	
	38	1	**1P-4579**	2	FLANGE-HALF	
	39	1	**8T-4223**	4	WASHER-HARD (3MM THK)	
M	40	1	**8T-4183**	4	BOLT (M12X1.75X40 MM)	
	41	1	**5D-1902**	1	COVER-HYDRAULIC CAP	
	42	1	**5D-1901**	1	WASHER (0.105MM THK)	
	43	1	**1M-8649**	1	RING-RETAINING	
	44	1	**4J-3754**	1	CAP-FILLER	

112-4592 TANK GP-HYDRAULIC *(contd.)* i01198370

NOTE	REF NO	GRAPHIC REF	PART NUMBER	QTY	PART NAME 1 2 3 4 5 6 (PRODUCT LEVEL)	SEE PAGE
	45	1	**8T-2275**	1	BALL	

B-USE AS REQUIRED
D-ORDER BY THE METER
M-METRIC PART

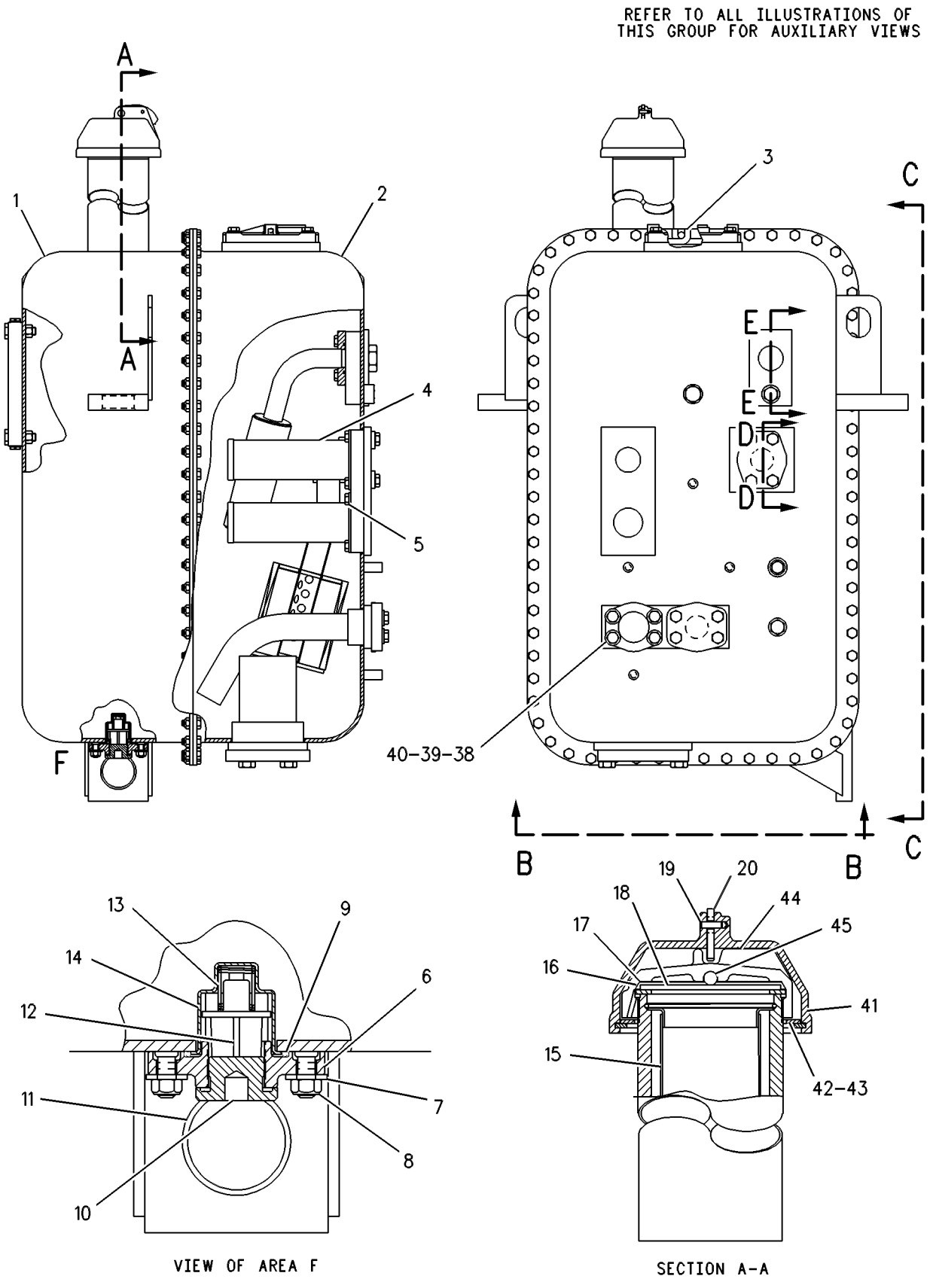

GRAPHIC #1

g00255774

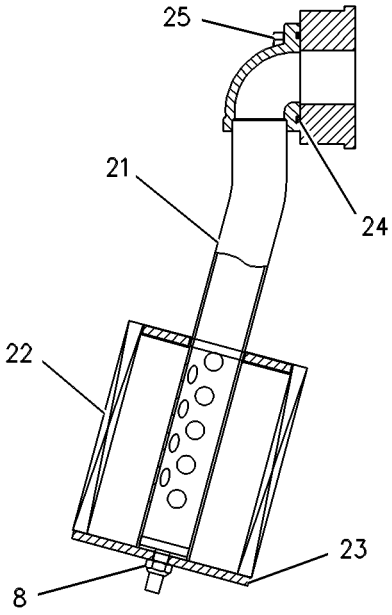

SECTION D-D

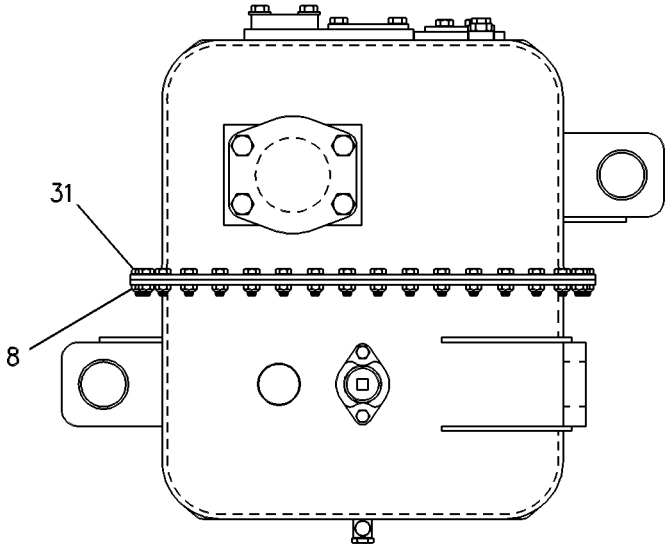

VIEW B-B

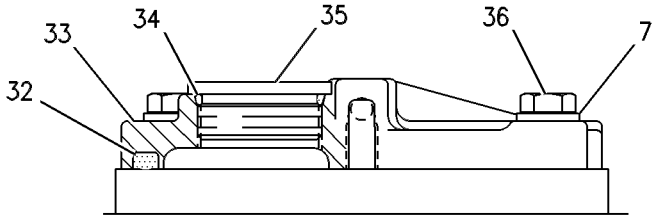

VIEW OF AREA G

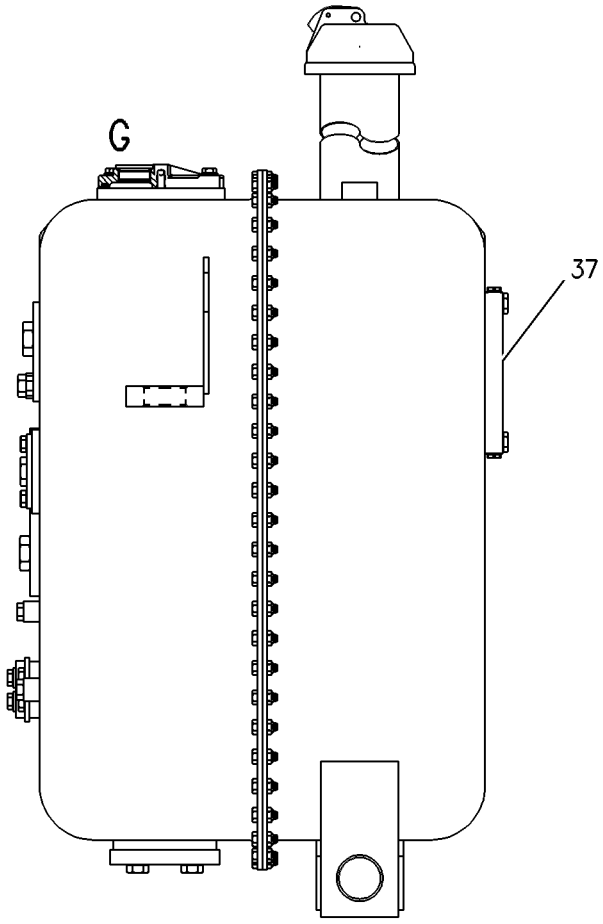

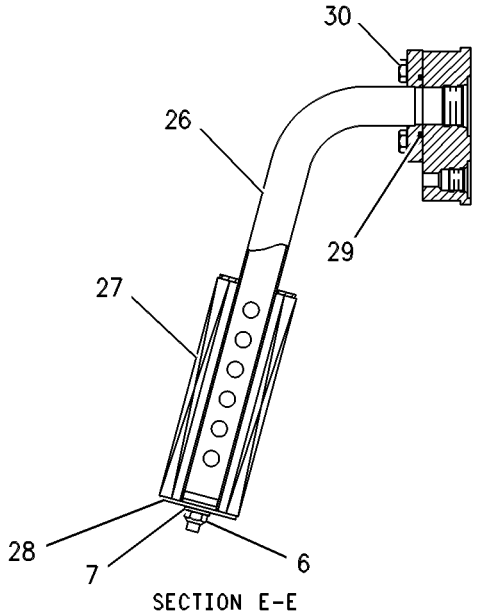

SECTION E-E

VIEW C-C

GRAPHIC #2

g00255775

HYDRAULIC SYSTEM

139-2763 TANK GP-HYDRAULIC

S/N: 7HR1-UP

PART OF 109-6888 TANK & MTG GP-HYDRAULIC

SMCS-5056 **i01198371**

NOTE	REF NO	GRAPHIC REF	PART NUMBER	QTY	PART NAME 1 2 3 4 5 6 (PRODUCT LEVEL)	SEE PAGE
	1	1	**115-5258**	1	COVER AS	
		1	**7J-5225**	1	FITTING (1 1/16X12 THD)	
	2	1	**139-2764**	1	TANK AS-HYDRAULIC	
M	3	1	**6V-4248**	48	BOLT (M10X1.50X25MM)	
BD	4	1	**5P-9119**		SEALANT (ADHESIVE BACKED)	
	5	1	**1H-7339**	1	SEAL-O-RING (75.79MM ID)	
M	6	1	**8T-0722**	4	BOLT-LOCKING (M10X1.5X30MM)	
	7	1	**9T-9227**	4	SCREEN AS	
M	8	1	**6V-7744**	5	LOCKNUT (M10X1.50 THD)	
	9	1	**1H-9696**	2	SEAL-O-RING (44.0MM ID)	
	10	1	**6E-5098**	2	BAFFLE AS	
					(EACH INCLUDES)	
		1	**1H-9689**	1	FLANGE	
		1	**6E-5102**	1	PLATE	
M		1	**6V-3822**	1	BOLT (M10X1.5X35MM)	
	11	1	**6E-5101**	3	PLATE	
M	12	1	**6V-7611**	4	BOLT (M12X1.75X40MM)	
	13	1	**8J-8782**	1	BODY-DRAIN VALVE	
	14	1	**8T-3298**	1	SEAL-RECTANGULAR (51.7MM ID)	
	15	1	**8J-8783**	1	VALVE	
	16	1	**1U-2827**	1	GUIDE-VALVE	
	17	1	**7B-3039**	1	SPRING	
	18	1	**9J-7031**	1	PLUG-DRAIN	
	19	1	**5M-2057**	1	SEAL-O-RING (34.59MM ID)	
	20	1	**6E-6550**	1	GAUGE AS-LIQUID LEVEL	
		1	**8F-3469**	4	SEAL-O-RING (15.54MM ID)	
		1	**121-7958**	2	BOLT-MOUNTING	
	21	1	**4J-3754**	1	CAP-FILLER	
	22	1	**7B-2805**	1	LOCKRING	
	23	1	**8T-2275**	1	BALL	
	24	1	**4J-3816**	1	PLATE	
	25	1	**3D-6678**	1	STRAINER AS	
	26	1	**4J-3815**	1	GASKET	
	27	1	**115-5875**	1	BAFFLE AS	
M		1	**6V-3822**	1	BOLT (M10X1.5X35MM)	
	28	1	**6V-5839**	2	WASHER (2.5MM THK)	
M	29	1	**8T-4183**	4	BOLT (M12X1.75X40 MM)	
	30	1	**1P-4579**	2	FLANGE-HALF	
	31	1	**8T-4223**	4	WASHER-HARD (3MM THK)	

B-USE AS REQUIRED
D-ORDER BY THE METER
M-METRIC PART

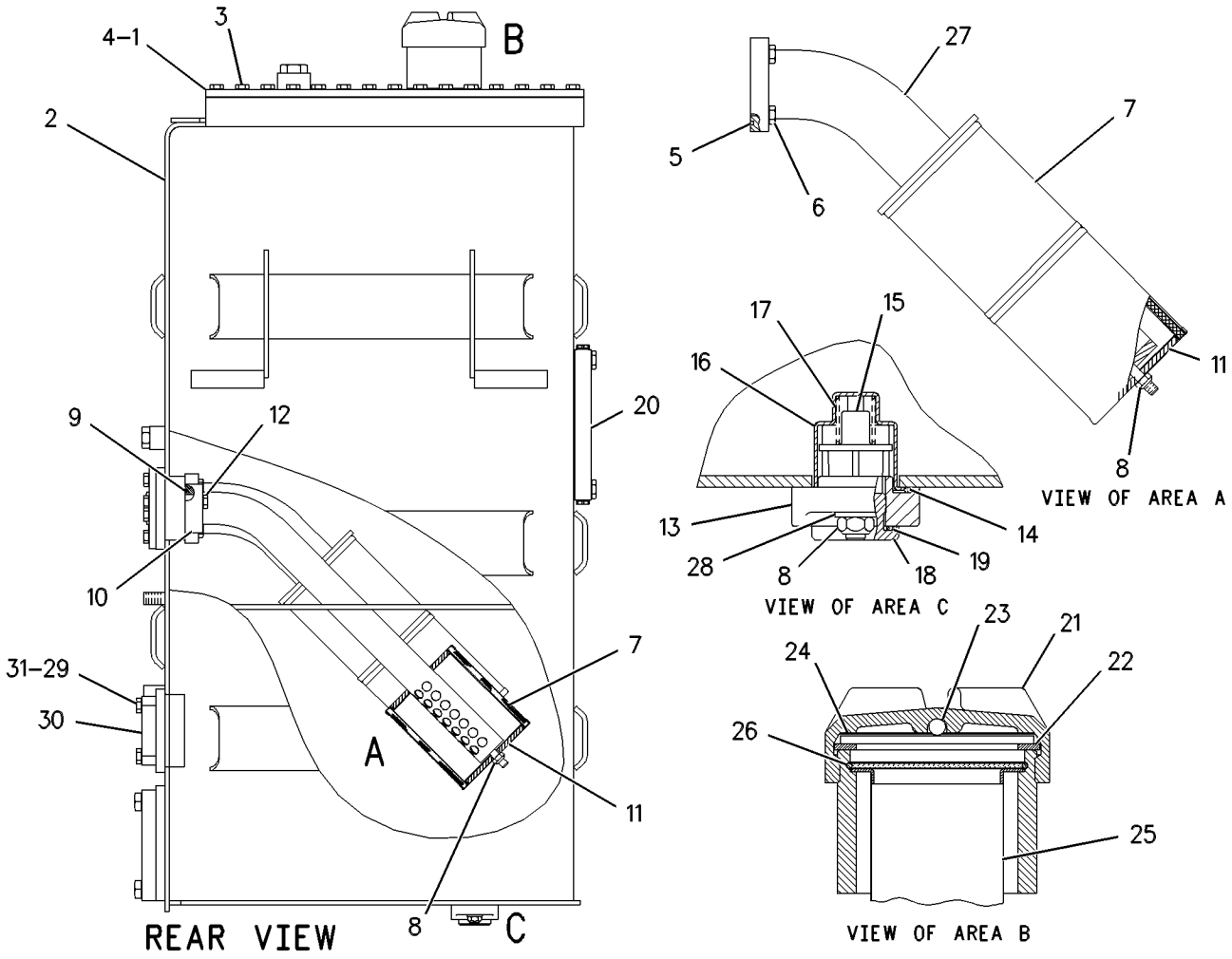

GRAPHIC #1 g00290137

125-3716 VALVE & MTG GP-FAN SPEED CONT

S/N: 7HR46-UP

PART OF 147-6632 VALVE & MTG GP-HYDRAULIC FAN

SMCS-5137, 5479 **i01174346**

NOTE	REF NO	GRAPHIC REF	PART NUMBER	QTY	PART NAME 1 2 3 4 5 6 (PRODUCT LEVEL)	SEE PAGE
Y	1	1	**127-0272**	1	VALVE GP-SOLENOID (FAN SPEED)	1099
	2	1	**3E-3584**	1	MANIFOLD	
					AVAILABLE REPAIR KIT(S):	
			100-4318	1	KIT-SEAL	

Y-SEPARATE ILLUSTRATION

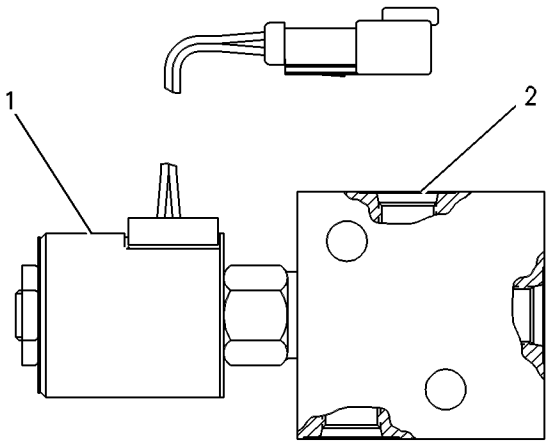

GRAPHIC #1 g00086958

MEMORANDA

HYDRAULIC SYSTEM

147-6632 VALVE & MTG GP-HYDRAULIC FAN

S/N: 7HR46-UP

PART OF 109-6872 LINES GP-HYDRAULIC FAN

SMCS-5051, 5137, 5479 **i01395794**

NOTE	REF NO	GRAPHIC REF	PART NUMBER	QTY	PART NAME 1 2 3 4 5 6 (PRODUCT LEVEL)	SEE PAGE
	1	1	**3E-2310**	1	TEE	
	2	1	**3J-1907**	2	SEAL-O-RING (11.89MM ID)	
	3	1	**6V-0852**	1	CAP-DUST	
	4	1	*164-5567*	1	FITTING GP (QUICK DISCONNECT)	
		1	**6V-3965**	1	FITTING AS (QUICK DISCONNECT)	
		1	**3J-1907**	1	SEAL-O-RING (11.89MM ID)	
	5	1	**6V-8397**	2	SEAL-O-RING (9.27MM ID)	
I	6	1	**171-2011**	1	HOSE AS	
	7	1	**113-9504**	1	BRACKET AS	
M		1	**8T-3490**	1	NUT-WELD (M10X1.5 THD)	
Y	8	1	**125-3716**	1	VALVE & MTG GP-FAN SPEED CONT	1060
	9	1	**127-9015**	1	ELBOW	
	10	1	**196-4797**	1	SCREEN AS	
I	11	1	**140-7952**	1	HOSE AS	
	12	1	*148-8336*	1	CONNECTOR AS	
		1	**6V-8636**	1	CONNECTOR	
		1	**3J-1907**	1	SEAL-O-RING (11.89MM ID)	
		1	**6V-8397**	1	SEAL-O-RING (9.27MM ID)	
	13	1	**8T-4121**	4	WASHER-HARD (11X21X2.5MM THK)	
M	14	1	**8T-4133**	2	NUT (M10X1.5 THD)	
M	15	1	**8T-4185**	2	BOLT (M10X1.5X50MM)	

I-SEE HOSE FABRICATION GUIDE
M-METRIC PART
Y-SEPARATE ILLUSTRATION

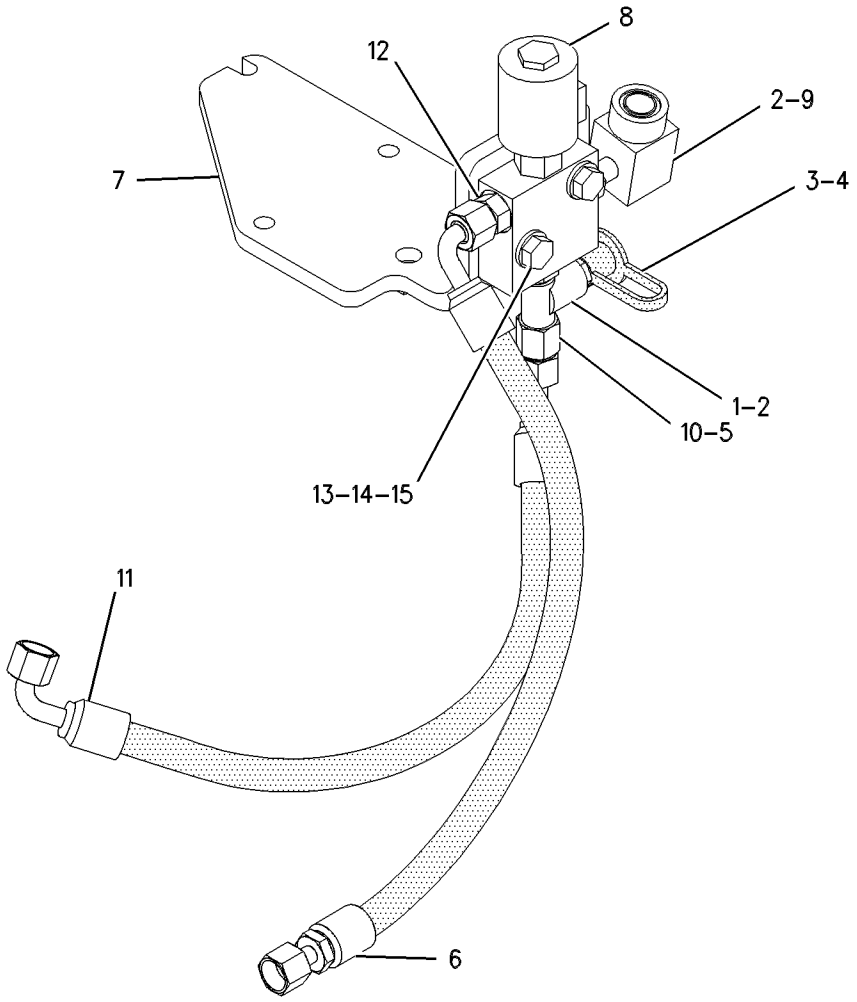

GRAPHIC #1 g00574283

HYDRAULIC SYSTEM

109-6858 VALVE & MTG GP-MAIN CONTROL

S/N: 7HR1-UP

PART OF 109-6820 HYDRAULIC AR

SMCS-5051 **i01386567**

NOTE	REF NO	GRAPHIC REF	PART NUMBER	QTY	PART NAME 1 2 3 4 5 6 (PRODUCT LEVEL)	SEE PAGE
	1	1	**3J-1907**	1	SEAL-O-RING (11.89MM ID)	
	2	1	**9X-8257**	4	WASHER (17.5X30X3.5MM THK)	
	3	1	**3K-0360**	1	SEAL-O-RING (16.36MM ID)	
	4	1	**5P-1076**	11	WASHER-HARD (13.5X30X4MM THK)	
M	5	1	**8T-4956**	11	BOLT (M12X1.75X35MM)	
	6	1	**6V-0852**	1	CAP-DUST	
	7	1	**6V-3965**	1	FITTING AS	
M	8	1	**8T-4193**	4	BOLT (M16X2X50MM)	
	9	1	**6V-8398**	1	SEAL-O-RING (12.47MM ID)	
M	10	1	**8T-4137**	3	BOLT (M10X1.5X20MM)	
	11	1	**8T-6338**	1	TEE-O-RING PORT	
	12	1	**8T-4121**	3	WASHER-HARD (11X21X2.5MM THK)	
I	13	1	**177-9841**	1	HOSE AS	
Y	14	1	**177-9108**	1	VALVE GP-MAIN CONTROL	1082
I	15	1	**177-9840**	1	HOSE AS	
	16	1	**125-5933**	1	BRACKET	
	17	1	**125-5934**	1	BRACKET AS	
	18	1	**177-9851**	1	BRACKET	
	18A	1	**112-1817**	1	VALVE-BALL	
M	18B	1	**7Y-3173**	4	SCREW-BUTTON HEAD (M4X0.70X12MM)	
	18C	1	**4B-4274**	4	WASHER (5.5X13X1.2MM THK)	
	18D	1	*148-8444*	2	TEE AS-ORFS	
					(EACH INCLUDES)	
		1	**6V-9837**	1	TEE-SWIVEL	
		1	**6V-8398**	2	SEAL-O-RING (12.47MM ID)	
	18E	1	*150-4043*	2	CONNECTOR AS	
					(EACH INCLUDES)	
		1	**6V-9873**	1	CONNECTOR	
		1	**3J-1907**	1	SEAL-O-RING (11.89MM ID)	
		1	**6V-8398**	1	SEAL-O-RING (12.47MM ID)	
	19	1	**1S-0994**	1	CLIP (20.64MM ID)	
	20	1	*148-8364*	1	ELBOW AS	
		1	**6V-8625**	1	ELBOW-90 DEGREE	
		1	**6V-8398**	1	SEAL-O-RING (12.47MM ID)	
		1	**6V-8625**	1	ELBOW-90 DEGREE	
	21	1	*148-8370*	1	ELBOW AS	
		1	**6V-9851**	1	ELBOW-90 DEGREE SWIVEL	
		1	**6V-8398**	1	SEAL-O-RING (12.47MM ID)	
	22	1	**6V-9169**	1	NUT-BULKHEAD (13/16-16 THD)	
I	23	1	**177-7842**	1	HOSE AS	
I	24	1	**177-7581**	1	HOSE AS	
	25	1	**177-7542**	1	PLATE	
I	26	1	**176-5751**	1	HOSE AS	
I	27	1	**176-5698**	1	HOSE AS	
	28	1	*148-8435*	1	FITTING AS	
		1	**6V-8781**	1	TEE-FACE SEAL	
		1	**6V-8397**	2	SEAL-O-RING (9.27MM ID)	
		1	**3J-1907**	1	SEAL-O-RING (11.89MM ID)	
	29	1	*148-8380*	1	ELBOW AS	
		1	**6V-8988**	1	ELBOW-45 DEGREE BULKHEAD	
		1	**6V-8398**	2	SEAL-O-RING (12.47MM ID)	
	30	1	*148-8338*	1	CONNECTOR AS	
		1	**8T-0075**	1	CONNECTOR	
		1	**6V-8397**	1	SEAL-O-RING (9.27MM ID)	
		1	**3J-1907**	1	SEAL-O-RING (11.89MM ID)	
	31	1	**6V-1249**	2	GROMMET	

109-6858 VALVE & MTG GP-MAIN CONTROL *(contd.)* i01386567

NOTE	REF NO	GRAPHIC REF	PART NUMBER	QTY	PART NAME 1 2 3 4 5 6 (PRODUCT LEVEL)	SEE PAGE
	32	1	**5P-7465**	2	CLIP (TAB)	
	33	1	**5P-7464**	2	CLIP (SLOT)	

I-SEE HOSE FABRICATION GUIDE
M-METRIC PART
Y-SEPARATE ILLUSTRATION

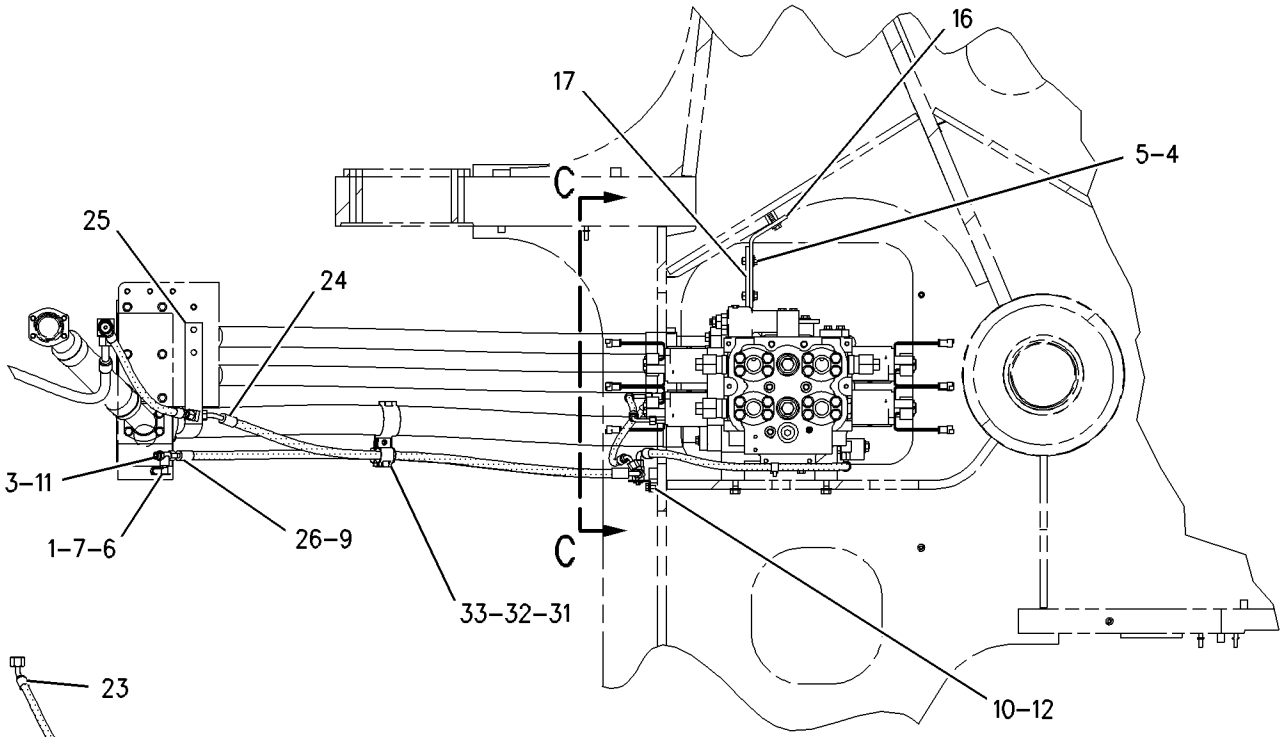

RIGHT SIDE VIEW

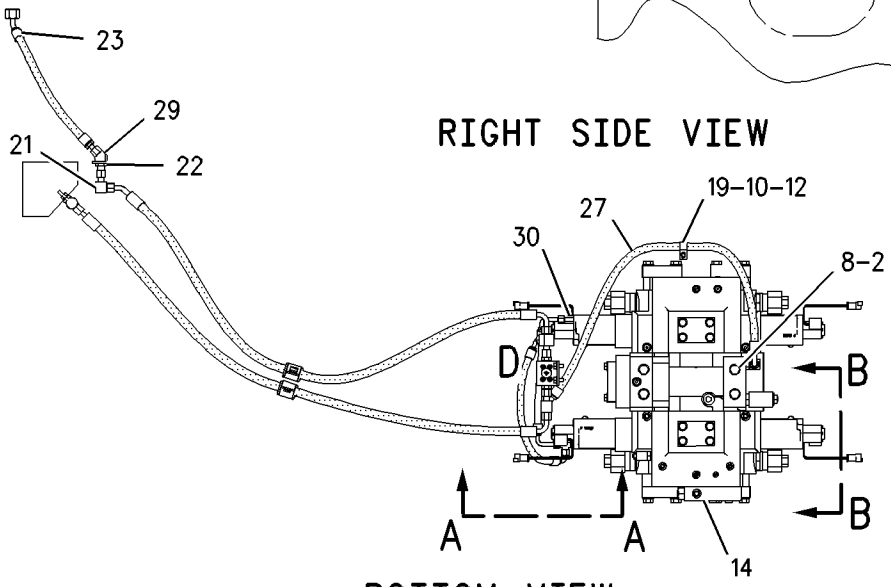

BOTTOM VIEW

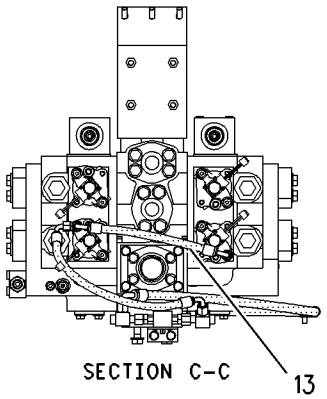

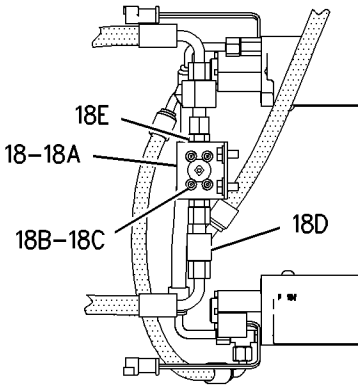

VIEW OF AREA D

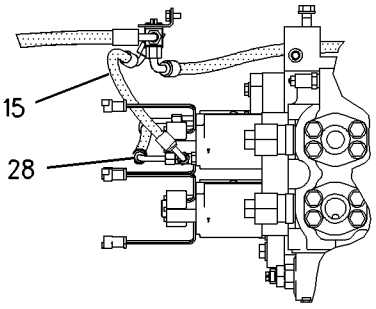

SECTION A-A

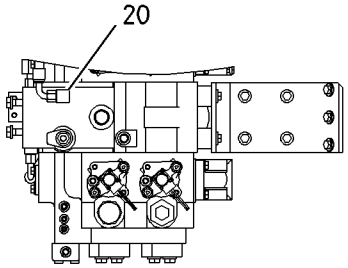

VIEW B-B

GRAPHIC #1 g00730840

HYDRAULIC SYSTEM

133-7455 VALVE & MTG GP-PILOT RELIEF

S/N: 7HR1-UP
PART OF 109-6867 LINES GP-HYDRAULIC
TYPE 1

SMCS-5072 **i01142272**

NOTE	REF NO	GRAPHIC REF	PART NUMBER	QTY	PART NAME 1 2 3 4 5 6 (PRODUCT LEVEL)	SEE PAGE
	1	1	**3D-2824**	2	SEAL-O-RING (23.47MM ID)	
	2	1	**3J-1907**	2	SEAL-O-RING (11.89MM ID)	
	3	1	**3K-0360**	1	SEAL-O-RING (16.36MM ID)	
	4	1	**6V-0852**	1	CAP-DUST	
	5	1	**6V-3965**	1	NIPPLE AS	
Y	6	1	**114-4672**	1	VALVE GP-RELIEF (PILOT)	897
	7	1	**6V-8625**	1	ELBOW-90 DEGREE (3/4-16 THD)	
	8	1	**6V-8636**	1	CONNECTOR	
	9	1	**6V-8637**	1	CONNECTOR-SEAL	
	10	1	**6V-9007**	1	ELBOW-90 DEGREE (1 1/16-12 THD)	

Y-SEPARATE ILLUSTRATION

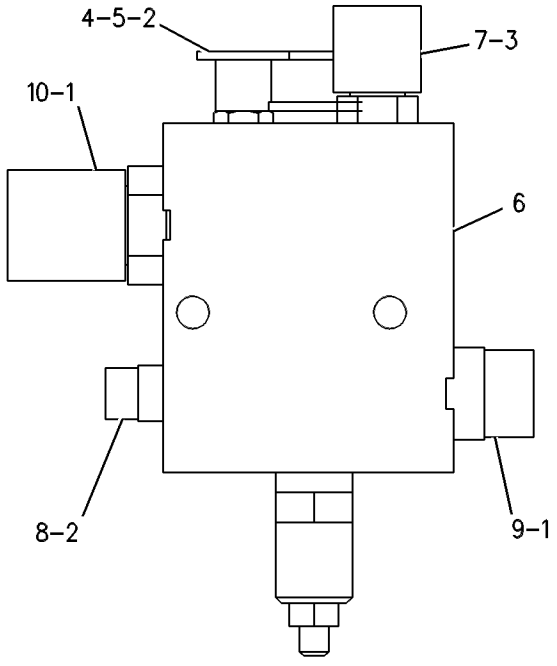

GRAPHIC #1 g00259384

HYDRAULIC SYSTEM

133-7455 VALVE & MTG GP-PILOT RELIEF

S/N: 7HR1-UP
PART OF 109-6867 LINES GP-HYDRAULIC
TYPE 2

SMCS-5072 **i01142274**

NOTE	REF NO	GRAPHIC REF	PART NUMBER	QTY	PART NAME 1 2 3 4 5 6 (PRODUCT LEVEL)	SEE PAGE
	1	1	**6V-0852**	1	CAP-DUST	
Y	2	1	**114-4672**	1	VALVE GP-RELIEF (PILOT)	897
C	3	1	*148-8336*	1	CONNECTOR AS	
		1	**6V-8636**	1	CONNECTOR	
		1	**3J-1907**	1	SEAL-O-RING (11.89MM ID)	
		1	**6V-8397**	1	SEAL-O-RING (9.27MM ID)	

C-CHANGE FROM PREVIOUS TYPE
Y-SEPARATE ILLUSTRATION

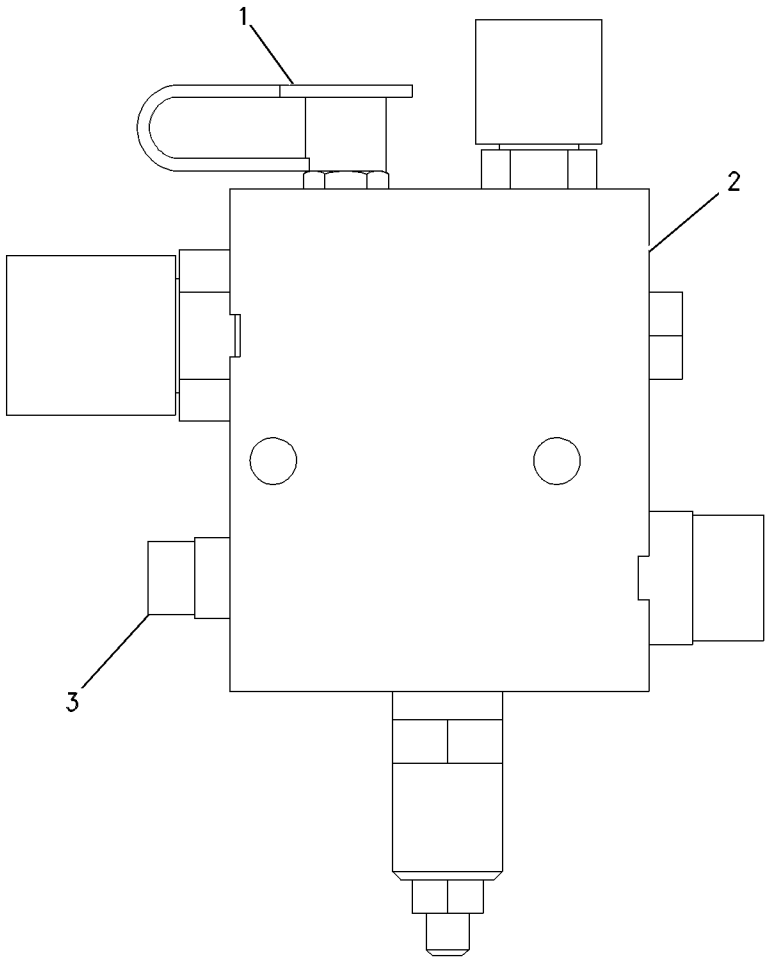

GRAPHIC #1 g00585731

HYDRAULIC SYSTEM

133-7456 VALVE & MTG GP-VARIABLE PUMP

S/N: 7HR1-UP
PART OF 109-6867 LINES GP-HYDRAULIC
TYPE 1

SMCS-5117 **i01241510**

NOTE	REF NO	GRAPHIC REF	PART NUMBER	QTY	PART NAME 1 2 3 4 5 6 (PRODUCT LEVEL)	SEE PAGE
	1	1	**3J-1907**	3	SEAL-O-RING (11.89MM ID)	
	2	1	**6V-8781**	1	TEE-FACE SEAL	
Y	3	1	**119-8994**	1	VALVE GP-SOLENOID & MANIFOLD	1102
					(VARIABLE DISPLACEMENT PUMP)	
	4	1	**6V-8636**	1	CONNECTOR-SEAL (ORFS 11/16-16; PORT 9/16-18)	
	5	1	**6V-8724**	1	ELBOW (9/16-18 THD)	
	6	1	**6V-8397**	1	SEAL-O-RING (9.27MM ID)	
	7	1	**6V-9829**	1	CAP AS (11/16-16 THD)	

Y-SEPARATE ILLUSTRATION

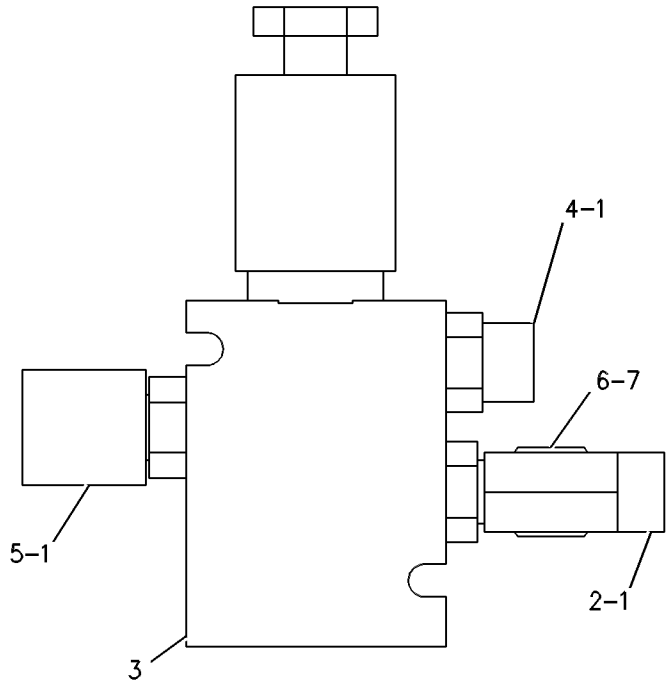

GRAPHIC #1 g00273768

HYDRAULIC SYSTEM

133-7456 VALVE & MTG GP-VARIABLE PUMP

S/N: 7HR1-UP

PART OF 109-6867 LINES GP-HYDRAULIC

TYPE 2

SMCS-5117 **i01241511**

NOTE	REF NO	GRAPHIC REF	PART NUMBER	QTY	PART NAME 1 2 3 4 5 6 (PRODUCT LEVEL)	SEE PAGE
	1	1	*148-8435*	1	TEE AS-ORFS	
		1	**3J-1907**	1	SEAL-O-RING (11.89MM ID)	
		1	**6V-8397**	2	SEAL-O-RING (9.27MM ID)	
		1	**6V-8781**	1	TEE-FACE SEAL	
Y	2	1	**119-8994**	1	VALVE GP-SOLENOID & MANIFOLD	1102
					(VARIABLE DISPLACEMENT PUMP)	
	3	1	*148-8336*	1	CONNECTOR AS	
		1	**3J-1907**	1	SEAL-O-RING (11.89MM ID)	
		1	**6V-8397**	1	SEAL-O-RING (9.27MM ID)	
		1	**6V-8636**	1	CONNECTOR-SEAL (ORFS 11/16-16; PORT 9/16-18)	
	4	1	**6V-9829**	1	CAP AS (11/16-16 THD)	
	5	1	*148-8378*	1	ELBOW AS	
		1	**3J-1907**	1	SEAL-O-RING (11.89MM ID)	
		1	**6V-8397**	1	SEAL-O-RING (9.27MM ID)	
		1	**6V-8724**	1	ELBOW (9/16-18 THD)	

Y-SEPARATE ILLUSTRATION

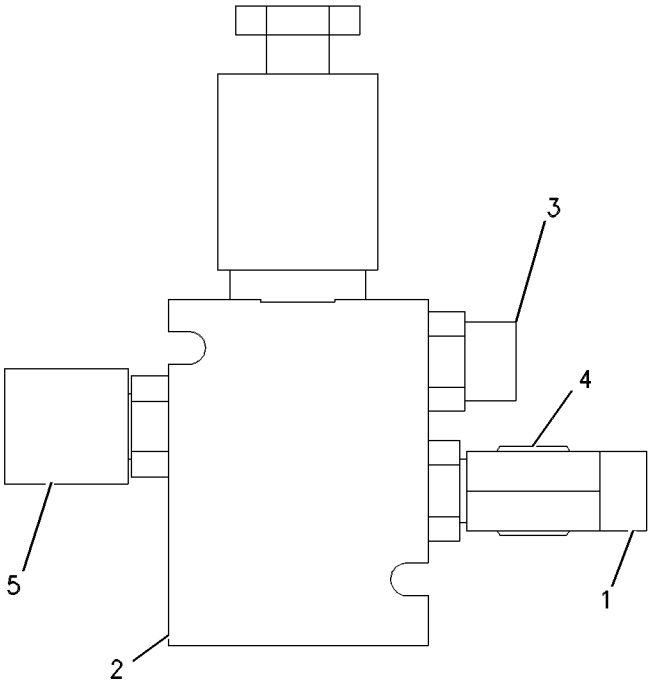

GRAPHIC #1 g00580912

HYDRAULIC SYSTEM

4T-5896 VALVE GP-CHECK

S/N: 7HR1-UP

PART OF 177-8863 VALVE GP-CONTROL

SMCS-5067 **i01397205**

NOTE	REF NO	GRAPHIC REF	PART NUMBER	QTY	PART NAME 1 2 3 4 5 6 (PRODUCT LEVEL)	SEE PAGE
	1	1	**5H-1472**	1	BALL	
	2	1	**9G-0278**	1	SPRING	
	3	1	**3J-1907**	1	SEAL-O-RING (11.89MM ID)	
	4	1	**4T-5071**	1	RING-BACKUP	
	5	1	**8C-3085**	1	SEAL-O-RING (7.65MM ID)	
	6	1	**8L-6565**	1	PIN-SPRING	

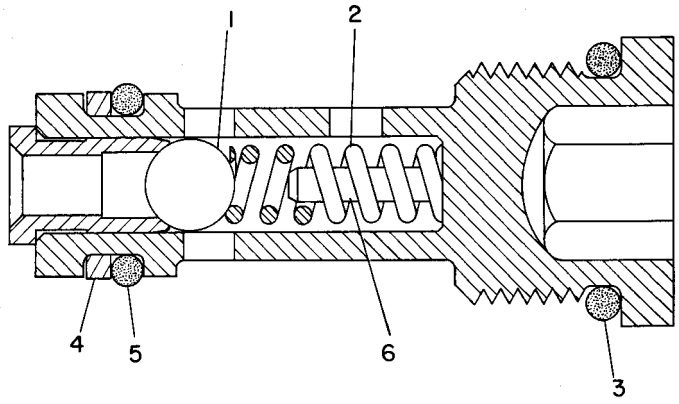

GRAPHIC #1 g00124639

HYDRAULIC SYSTEM

177-8863 VALVE GP-CONTROL–LEFT

S/N: 7HR1-UP

PART OF 177-9108 VALVE GP-MAIN CONTROL

SMCS-5051 **i01429885**

NOTE	REF NO	GRAPHIC REF	PART NUMBER	QTY	PART NAME 1 2 3 4 5 6 (PRODUCT LEVEL)	SEE PAGE
M	1	1	**8T-6466**	3	BOLT (M10X1.50X60MM)	
	2	1,3	**6V-5759**	3	SEAL-O-RING (10.69MM ID)	
	3	1,3	**4J-5309**	2	SEAL-O-RING (9.19MM ID)	
	4	3	**9S-8004**	1	PLUG	
	5	1,2,3	**9S-4182**	8	PLUG-O-RING	
	6	1,2,3	**3J-1907**	13	SEAL-O-RING (11.89MM ID)	
	7	3	**6E-2140**	1	RETAINER AS	
	8	3	**7D-8508**	1	NUT-FULL	
	9	3	**2M-9780**	1	SEAL-O-RING (19.18MM ID)	
	10	1	**2J-2668**	1	COVER	
	11	3	**9S-8002**	1	PLUG-O-RING	
	12	1,2,3	**3J-7354**	11	SEAL-O-RING (8.92MM ID)	
	13	3	**100-6732**	1	SPRING	
	14	3	**8T-4205**	1	WASHER-HARD (7.2X14.5X2MM THK)	
	15	1	**1P-3704**	1	SEAL-RECTANGULAR	
	16	1	**4J-0523**	1	SEAL-O-RING (44.04MM ID)	
M	17	1	**7X-2549**	6	BOLT (M12X1.75X100MM)	
	18	1	**112-5327**	1	MANIFOLD	
Y	19	1	**117-0159**	1	VALVE GP-RELIEF (LEFT)	1090
					(MAIN VALVE FOR FIXED DISPLACEMENT PUMP)	
Y	20	2	**117-0161**	1	VALVE GP-RELIEF (LINE, TILT CYL ROD END)	1092
	21	2	**102-4158**	2	PLUG AS	
					(EACH INCLUDES)	
		2	**3G-5003**	1	BEARING-SLEEVE	
	22	2	**2S-4078**	2	SEAL-O-RING (37.46MM ID)	
	23	2	**102-4156**	2	VALVE	
	24	2	**9L-9188**	2	SPRING-VALVE	
	25	2	**1H-5728**	6	SEAL-O-RING (63MM ID)	
	26	1	**9S-4180**	2	PLUG-O-RING	
Y	27	1	**118-5081**	4	ACTUATOR GP-PILOT CONTROL	921
Y	28	1	**4T-5896**	1	VALVE GP-CHECK	1071
	29	1	**9R-5008**	11	SPACER (3/8IN THK)	
	30	1	**4J-7533**	2	SEAL-O-RING (6.07MM ID)	
	31	2	**6E-4286**	1	VALVE GP-PRESSURE REDUCING	
		2	**6E-4287**	1	KIT-SEAL	
Y	32	2	**148-2341**	1	VALVE GP-SHUTTLE	1097
	33	3	**9S-9334**	1	PLUG (1 5/16-12 THD)	
	34	3	**7M-8485**	1	SEAL-O-RING (29.74MM ID)	
	35	3	**6E-1291**	1	VALVE	
	36	3	**7J-7852**	1	SPRING	
	37	1	**117-9341**	1	BODY	
Y	38	2	**117-0160**	1	VALVE GP-RELIEF (LINE, TILT CYL HEAD END)	1091
	39	2	**113-8263**	2	PISTON	
	40	1	**112-8244**	1	HOUSING	
	41	1	**1P-4579**	2	FLANGE-HALF	
M	42	1	**8T-4184**	4	BOLT (M12X1.75X45MM)	
	43	1,2	**8T-4223**	8	WASHER-HARD (13.5X25.5X3MM THK)	
M	44	2	**8T-4140**	16	BOLT (M16X2X60MM)	
	45	2	**8T-4122**	16	WASHER-HARD (17X32X3.5MM THK)	
	46	2	**5P-8077**	8	FLANGE-HALF	
M	47	1	**7X-2546**	4	BOLT (M10X1.50X180MM)	
	48	1,3	**6V-8397**	9	SEAL-O-RING (9.27MM ID)	
I	49	1	**9U-2289**	1	HOSE AS	
	50	1	**6V-9001**	1	ELBOW	
M	51	2	**8T-4139**	4	BOLT (M12X1.75X30MM)	
	52	3	**4J-5573**	2	SEAL-O-RING (40.87MM ID)	

177-8863 VALVE GP-CONTROL *(contd.)* i01429885

NOTE	REF NO	GRAPHIC REF	PART NUMBER	QTY	PART NAME 1 2 3 4 5 6 (PRODUCT LEVEL)	SEE PAGE
	53	3	**1P-3703**	2	SEAL-RECTANGULAR	
	54	3	**1H-8171**	2	SEAL-O-RING (20.2MM ID)	
M	55	1	**8T-5436**	4	BOLT (M10X1.50X130MM)	
Y	56	2	**129-8293**	1	VALVE GP-RELIEF (LINE, LIFT CYL ROD END)	1094
	57	1	**2J-6274**	4	SEAL-O-RING (9.12MM ID)	
	58	3	**8T-0075**	1	CONNECTOR	
	59	1	**8T-4121**	12	WASHER-HARD (11X21X2.5MM THK)	
	60	1,2	**9S-4191**	5	PLUG	
	61	3	**6V-9850**	1	ELBOW-SWIVEL	
	62	3	**5H-6005**	1	SEAL-O-RING (10.77MM ID)	
	63	1	**4J-0524**	1	SEAL-O-RING (47.22MM ID)	
	64	2	**3J-2903**	1	COVER	
	65	2	**4J-0527**	1	SEAL-O-RING (56.74MM ID)	
	66	1	**6V-0852**	3	CAP-DUST	
	67	1	**6V-3965**	3	FITTING AS (QUICK DISCONNECT)	
	68	1	**6V-9872**	1	CONNECTOR	
	69	3	**9G-4733**	1	TUBE	
	70	1	**8T-8902**	2	TEE	
	71	1,3	**6V-9829**	4	CAP AS	
	72	1	**6V-9200**	1	ELBOW	
Y	73	2	**125-9349**	1	VALVE GP-RELIEF (LINE, LIFT CYL HEAD END)	1093
	74	2	**100-6731**	1	STEM	
	75	1	**8L-6565**	4	PIN-SPRING	
	76	1	**4B-4158**	4	SCREW-DRIVE (3/16X.25 IN)	
	77	1	**8T-6757**	1	PLUG-PIPE	
	78	3	**6V-8781**	1	TEE-FACE SEAL	

I-SEE HOSE FABRICATION GUIDE
M-METRIC PART
Y-SEPARATE ILLUSTRATION

177-8863 VALVE GP-CONTROL *(contd.)*

i01429885

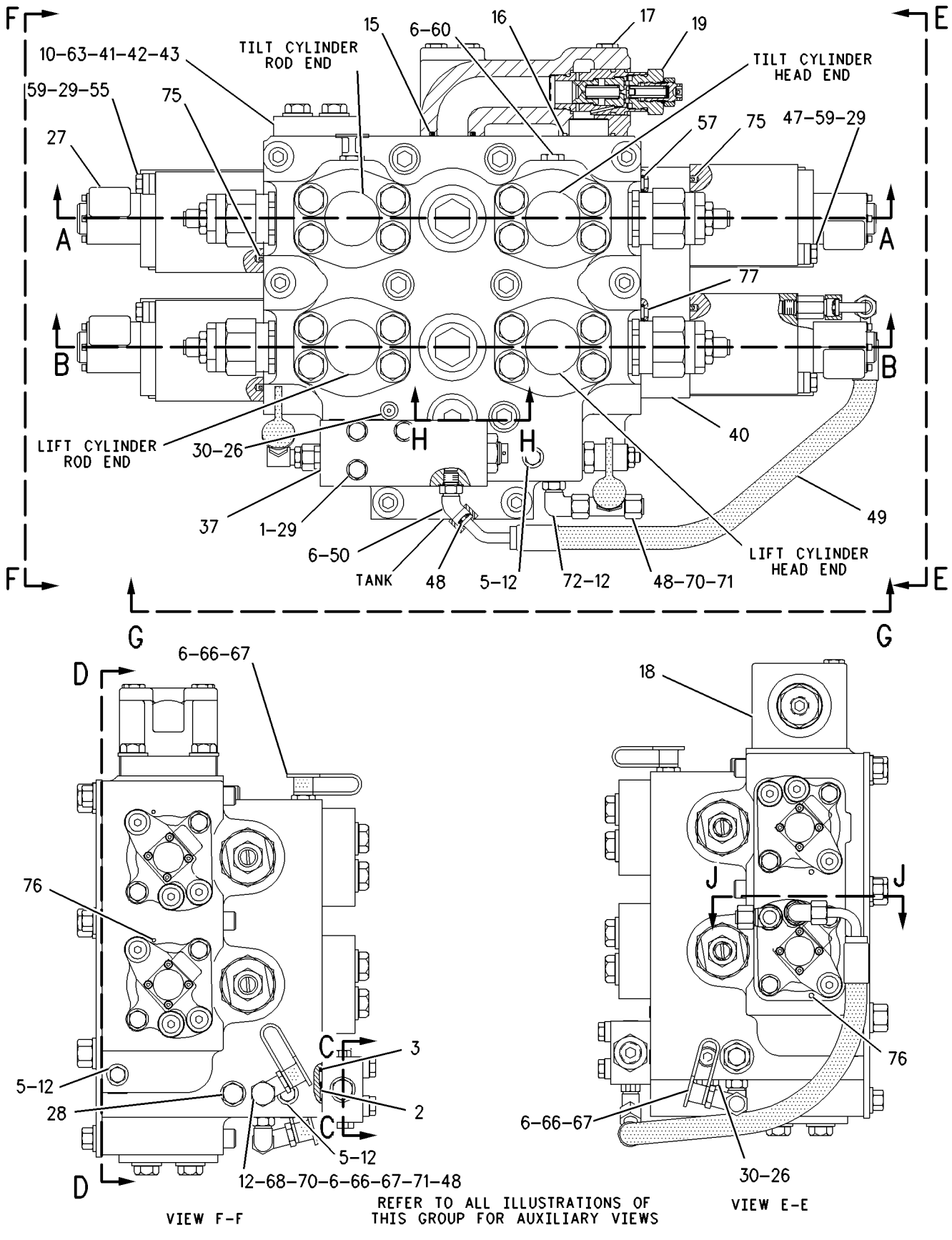

GRAPHIC #1

g00749025

177-8863 VALVE GP-CONTROL *(contd.)* **i01429885**

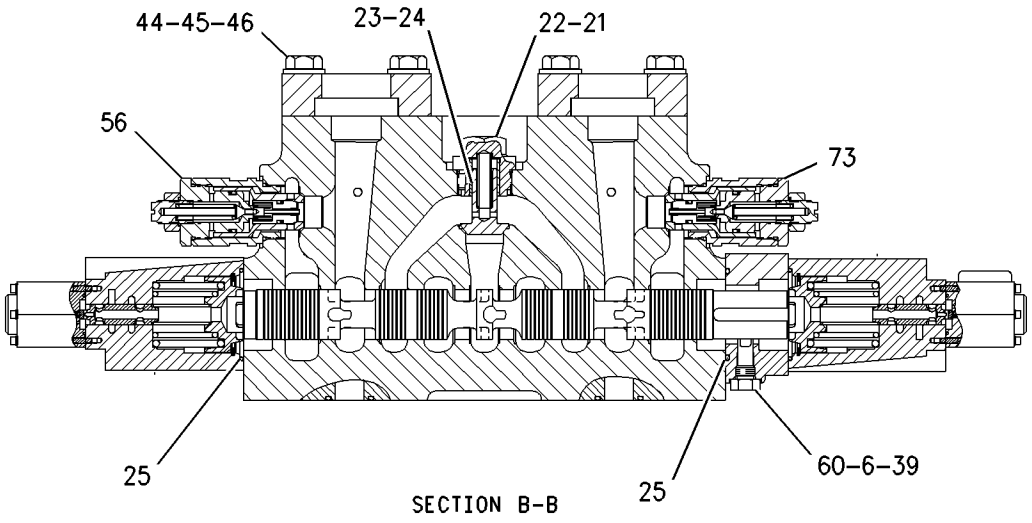

SECTION B-B

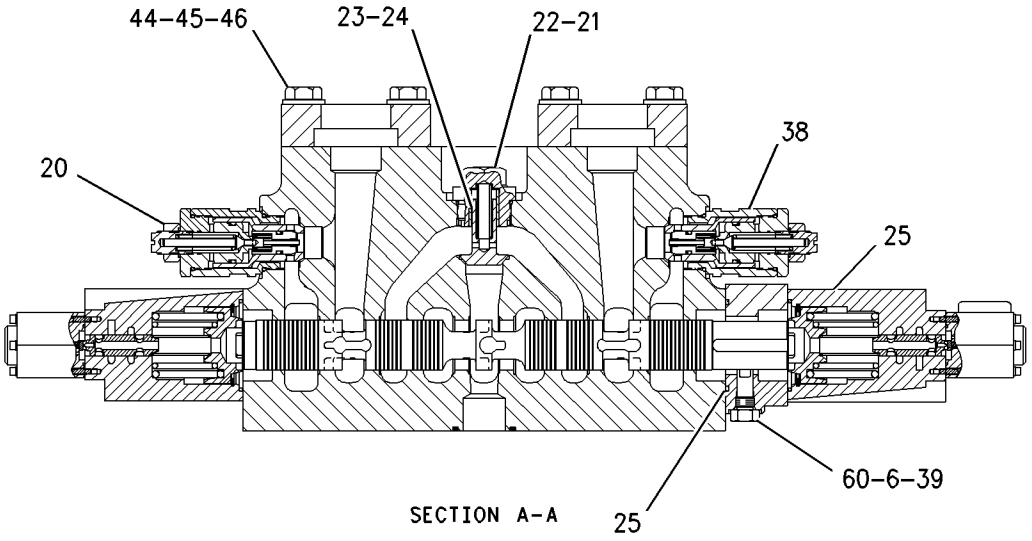

SECTION A-A

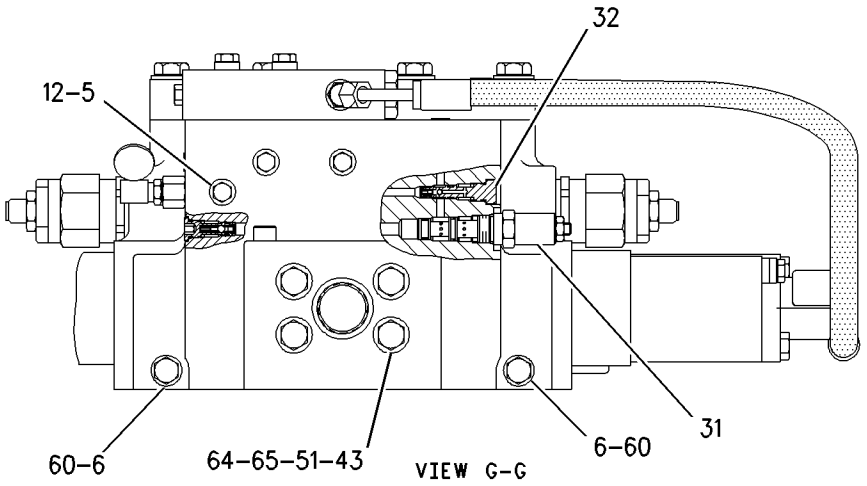

VIEW G-G

GRAPHIC #2 g00749023

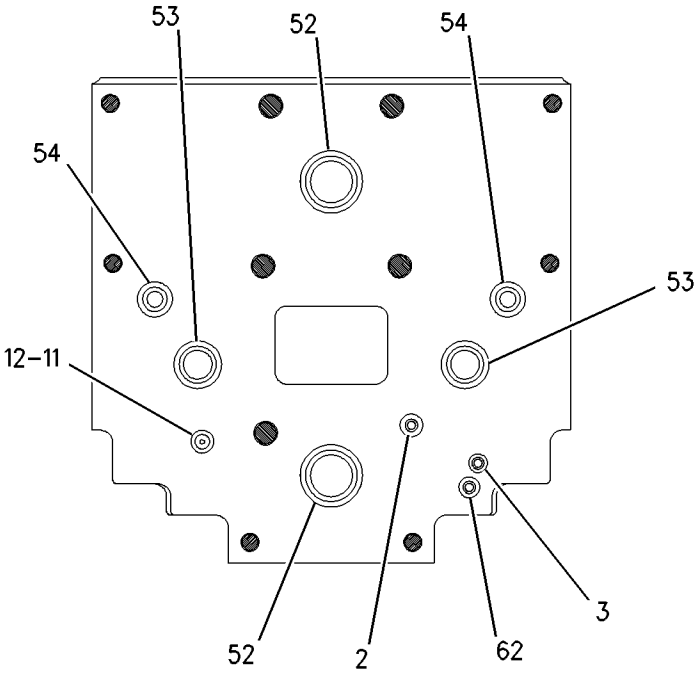

SECTION D-D

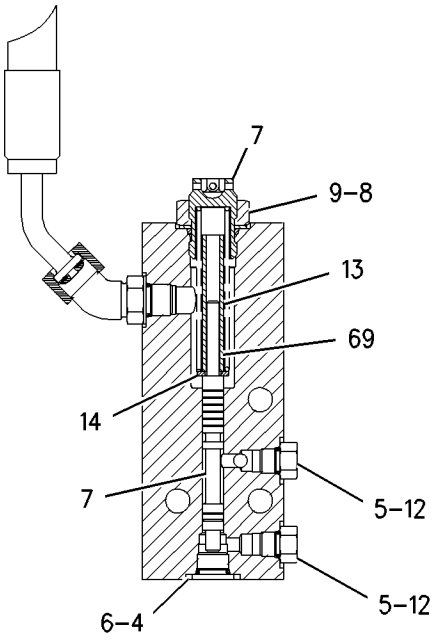

SECTION C-C
(ROTATED 90)

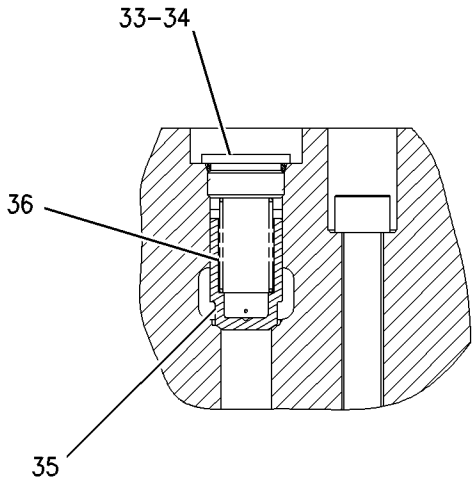

SECTION H-H

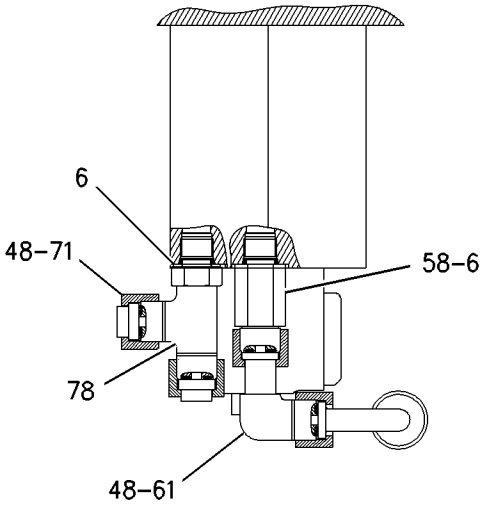

SECTION J-J

GRAPHIC #3 g00749062

MEMORANDA

HYDRAULIC SYSTEM

177-8864 VALVE GP-CONTROL—RIGHT

S/N: 7HR1-UP

PART OF 177-9108 VALVE GP-MAIN CONTROL

SMCS-5051 **i01420483**

NOTE	REF NO	GRAPHIC REF	PART NUMBER	QTY	PART NAME 1 2 3 4 5 6 (PRODUCT LEVEL)	SEE PAGE
Y	1	1	**118-5081**	4	ACTUATOR GP-PILOT CONTROL	921
	2	1	**9S-4182**	3	PLUG-O-RING	
	3	1	**3J-7354**	3	SEAL-O-RING (8.92MM ID)	
	4	1	**1P-3704**	1	SEAL-RECTANGULAR	
	5	1	**4J-0523**	1	SEAL-O-RING (44.04MM ID)	
M	6	1	**7X-2549**	6	BOLT (M12X1.75X100MM)	
	7	1	**112-5327**	1	MANIFOLD	
Y	8	1	**143-8912**	1	VALVE GP-RELIEF (RIGHT)	1095
					(BACKUP VALVE FOR VARIABLE DISPLACEMENT PUMP)	
	9	1,2	**107-9407**	2	VALVE GP-MAKEUP	
					(EACH INCLUDES)	
	9A	1,2	**2S-4078**	1	SEAL-O-RING (37.46MM ID)	
	9B	1,2	**5F-1678**	1	SEAL-O-RING (24.99MM ID)	
	9C	1,2	**6V-3922**	1	SEAL-O-RING (18.72MM ID)	
	9D	1,2	**9T-0118**	1	RING-BACKUP	
	10	1,2	**102-4158**	2	PLUG AS	
					(EACH INCLUDES)	
		1,2	**3G-5003**	1	BEARING-SLEEVE	
	11	1,2	**2S-4078**	2	SEAL-O-RING (37.46MM ID)	
	12	1,2	**102-4156**	2	VALVE	
	13	1,2	**9L-9188**	2	SPRING-VALVE	
	14	1,2	**1H-5728**	6	SEAL-O-RING (63MM ID)	
	15	1	**9S-4180**	1	PLUG-O-RING	
Y	16	1	**117-0160**	1	VALVE GP-RELIEF (LINE, TILT CYL HEAD END)	1091
	17	1	**1P-3703**	2	SEAL-RECTANGULAR	
	18	1	**4J-7533**	1	SEAL-O-RING (6.07MM ID)	
	19	1	**9S-9334**	1	PLUG (1 5/16-12 THD)	
	20	1	**7M-8485**	1	SEAL-O-RING (29.74MM ID)	
	21	1	**119-0913**	1	VALVE	
	22	1,2	**7J-7852**	1	SPRING	
M	23	1,2	**8T-5436**	4	BOLT (M10X1.50X130MM)	
	24	1,2	**9S-4191**	4	PLUG	
	25	1	**3J-1907**	4	SEAL-O-RING (11.89MM ID)	
	26	1	**112-8244**	1	HOUSING	
	27	1	**2J-6274**	4	SEAL-O-RING (9.12MM ID)	
	28	1,2	**113-8263**	2	PISTON	
	29	1,2	**1P-4579**	2	FLANGE-HALF	
M	30	1,2	**8T-4184**	4	BOLT (M12X1.75X45MM)	
	31	1	**8T-4223**	8	WASHER-HARD (13.5X25.5X3MM THK)	
M	32	1	**8T-4140**	16	BOLT (M16X2X60MM)	
	33	1	**8T-4122**	16	WASHER-HARD (17X32X3.5MM THK)	
	34	1	**5P-8077**	8	FLANGE-HALF	
M	35	1	**7X-2546**	4	BOLT (M10X1.50X180MM)	
	36	1	**9R-5008**	8	SPACER (3/8IN THK)	
M	37	1	**8T-4139**	4	BOLT (M12X1.75X30MM)	
	38	1	**8T-4121**	12	WASHER-HARD (11X21X2.5MM THK)	
	39	1	**6V-5759**	1	SEAL-O-RING (10.69MM ID)	
	40	1	**4J-5573**	2	SEAL-O-RING (40.87MM ID)	
	41	1	**1H-8171**	2	SEAL-O-RING (20.2MM ID)	
	42	1	**2J-2668**	1	COVER	
	43	1	**3J-2903**	1	COVER	
	44	1	**4J-0524**	1	SEAL-O-RING (47.22MM ID)	
	45	1	**4J-0527**	1	SEAL-O-RING (56.74MM ID)	
	46	1	**8L-6565**	4	PIN-SPRING	
	47	2	**4B-4158**	4	SCREW-DRIVE (3/16X.25 IN)	
	48	1	**8T-6757**	1	PLUG-PIPE	

177-8864 VALVE GP-CONTROL *(contd.)* i01420483

NOTE	REF NO	GRAPHIC REF	PART NUMBER	QTY	PART NAME 1 2 3 4 5 6 (PRODUCT LEVEL)	SEE PAGE
	49	2	**6E-3993**	1	PLUG AS	
		2	**2M-9780**	1	SEAL-O-RING (19.18MM ID)	
		2	**2S-4078**	1	SEAL-O-RING (37.46MM ID)	
		2	**148-0767**	1	RING-SPLIT (20.52MM ID)	

M-METRIC PART
Y-SEPARATE ILLUSTRATION

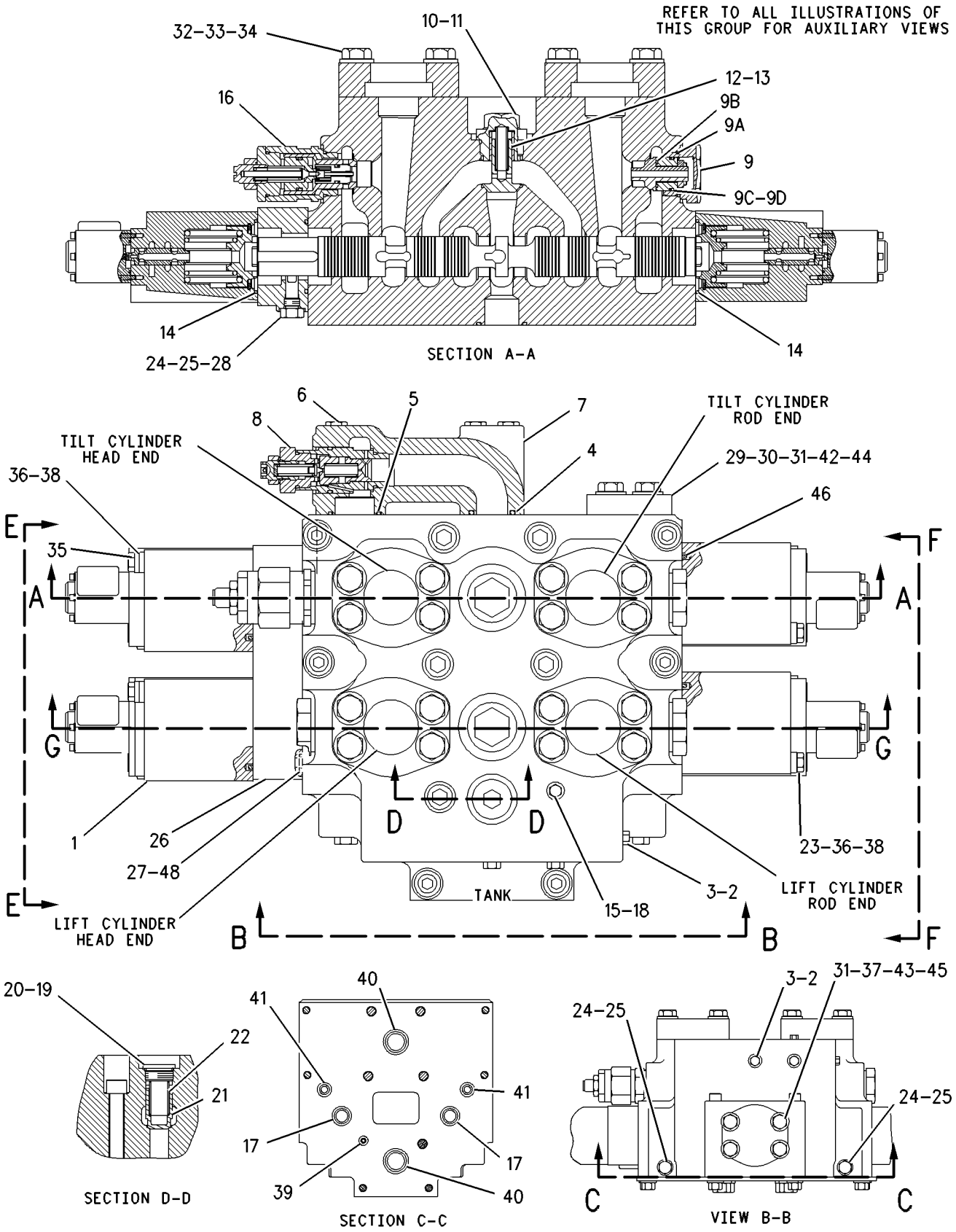

GRAPHIC #1 g00747798

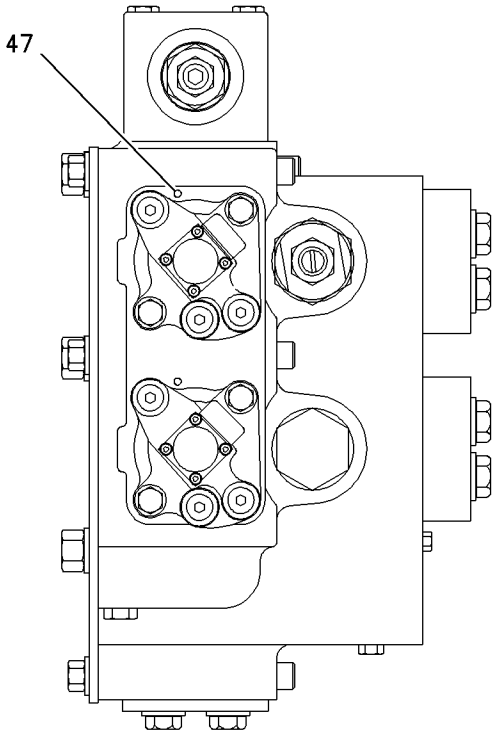

VIEW E-E
GRAPHIC 1

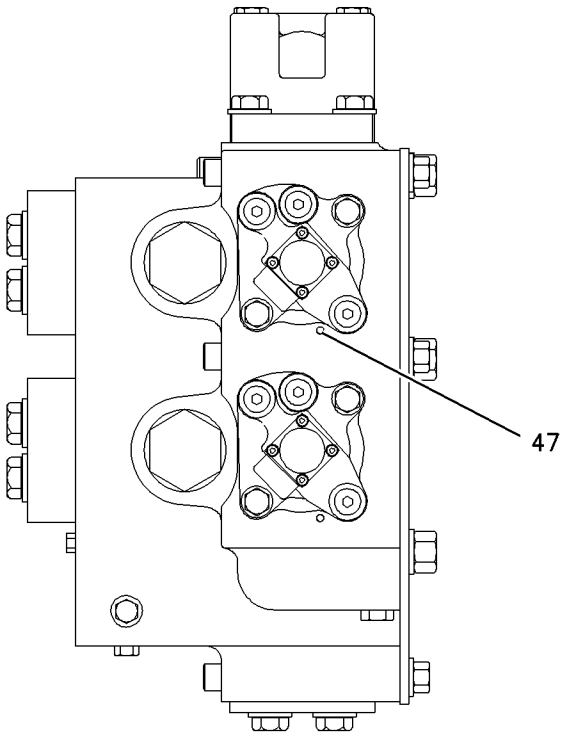

VIEW F-F
GRAPHIC 1

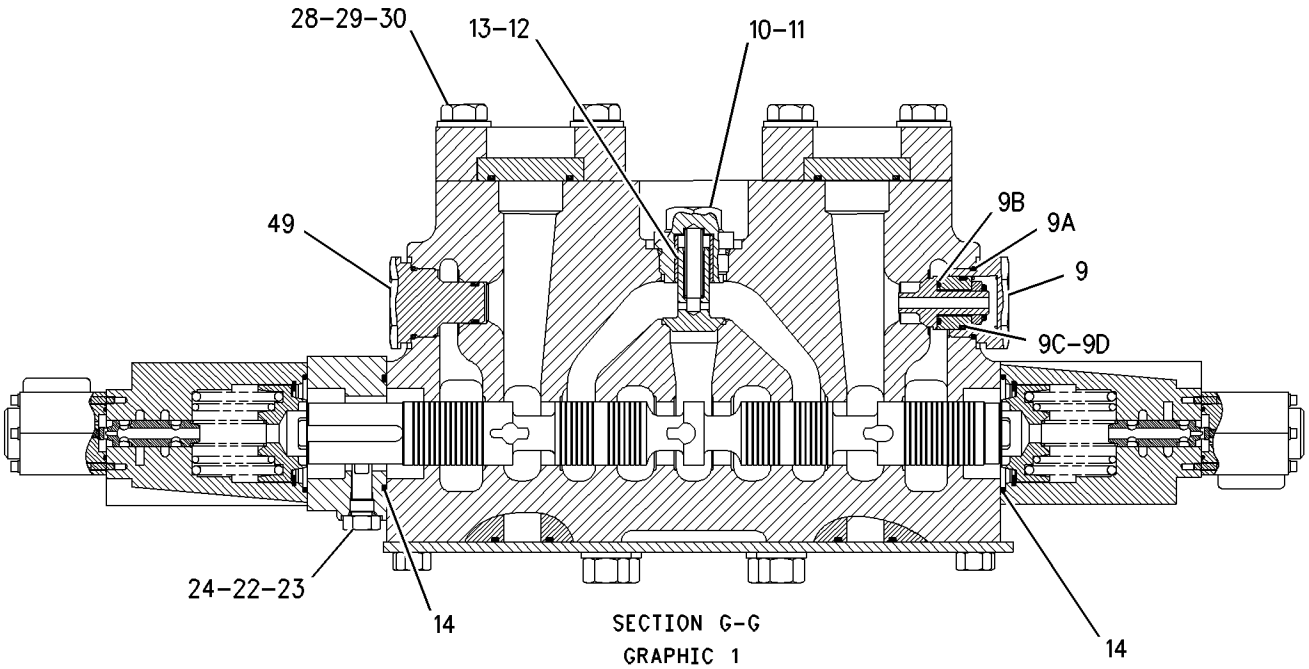

SECTION G-G
GRAPHIC 1

REFER TO ALL ILLUSTRATIONS OF
THIS GROUP FOR AUXILIARY VIEWS

GRAPHIC #2 g00747800

HYDRAULIC SYSTEM

177-9108 VALVE GP-MAIN CONTROL

S/N: 7HR1-UP

PART OF 109-6858 VALVE & MTG GP-MAIN CONTROL

SMCS-5051 **i01174215**

NOTE	REF NO	GRAPHIC REF	PART NUMBER	QTY	PART NAME 1 2 3 4 5 6 (PRODUCT LEVEL)	SEE PAGE
Y	1	1	**177-8864**	1	VALVE GP-CONTROL (RIGHT)	1078
Y	2	1	**177-8863**	1	VALVE GP-CONTROL (LEFT)	1072
	3	1	**112-2232**	1	MANIFOLD	
	4	2	**9S-4185**	2	PLUG-O-RING (3/4-16 THD)	
	5	2	**3K-0360**	2	SEAL-O-RING (16.36MM ID)	
	6	2	**9S-4181**	1	PLUG-STRAIGHT THREAD (1-5/16-12 THD)	
	7	2	**7M-8485**	1	SEAL-O-RING (29.74MM ID)	
	8	2	**1P-4584**	2	FLANGE-HALF	
	9	1,2	**4P-7581**	10	CLIP (10.5MM ID)	
Y	10	2	**149-2610**	1	VALVE GP-SOLENOID (PILOT PRESSURE SUPPLY)	1100
	11	2	**116-6129**	1	SPACER	
M	12	1	**095-0670**	4	BOLT (M12X1.75X45MM)	
M	13	1,2	**7X-2607**	12	BOLT-HEX HEAD (M12X1.75X130MM)	
	14	1,2	**8T-4223**	4	WASHER-HARD (3MM THK)	
M	15	1,2	**7Y-5243**	6	BOLT-SOCKET HEAD	
	16	2	**1H-8171**	1	SEAL-O-RING (20.22MM ID)	
	17	2	**5F-0149**	1	SEAL-O-RING (91.44MM ID)	
M	18	2	**8T-4184**	4	BOLT (M12X1.75X45MM)	
	19	1	**4P-7428**	1	CLIP (13.5MM ID)	
	20	2	**5P-8077**	4	FLANGE-HALF	
M	21	2	**8T-4140**	8	BOLT (M16X2.0X60MM)	
	22	2	**8T-4122**	8	WASHER (3.5MM THK)	
M	23	1,2	**096-0008**	4	BOLT-SOCKET HEAD	
	24	1,2	**4P-7582**	3	CLIP (26.0MM ID)	
	25	2	**3G-4005**	1	LINK	
	26	2	**117-7741**	1	HARNESS AS	
	27	1	**125-2706**	2	PLATE AS	
					(EACH INCLUDES)	
M		1	**8T-3490**	1	NUT-WELD (M10X1.5 THD)	
	28	1,2	**9U-2277**	9	CLIP AS (10.5MM ID)	
	29	1,2	**9X-6772**	15	STRAP-CABLE	
	30	2	**4P-7429**	1	CLIP (13.5MM ID)	
	31	1,2	**8T-4121**	3	WASHER (2.5MM THK)	
	32	2	**115-3073**	1	CLIP AS-CONNECTING	
M	33	1,2	**8T-4137**	3	BOLT (M10X1.50X20MM)	

M-METRIC PART
Y-SEPARATE ILLUSTRATION

177-9108 VALVE GP-MAIN CONTROL *(contd.)* i01174215

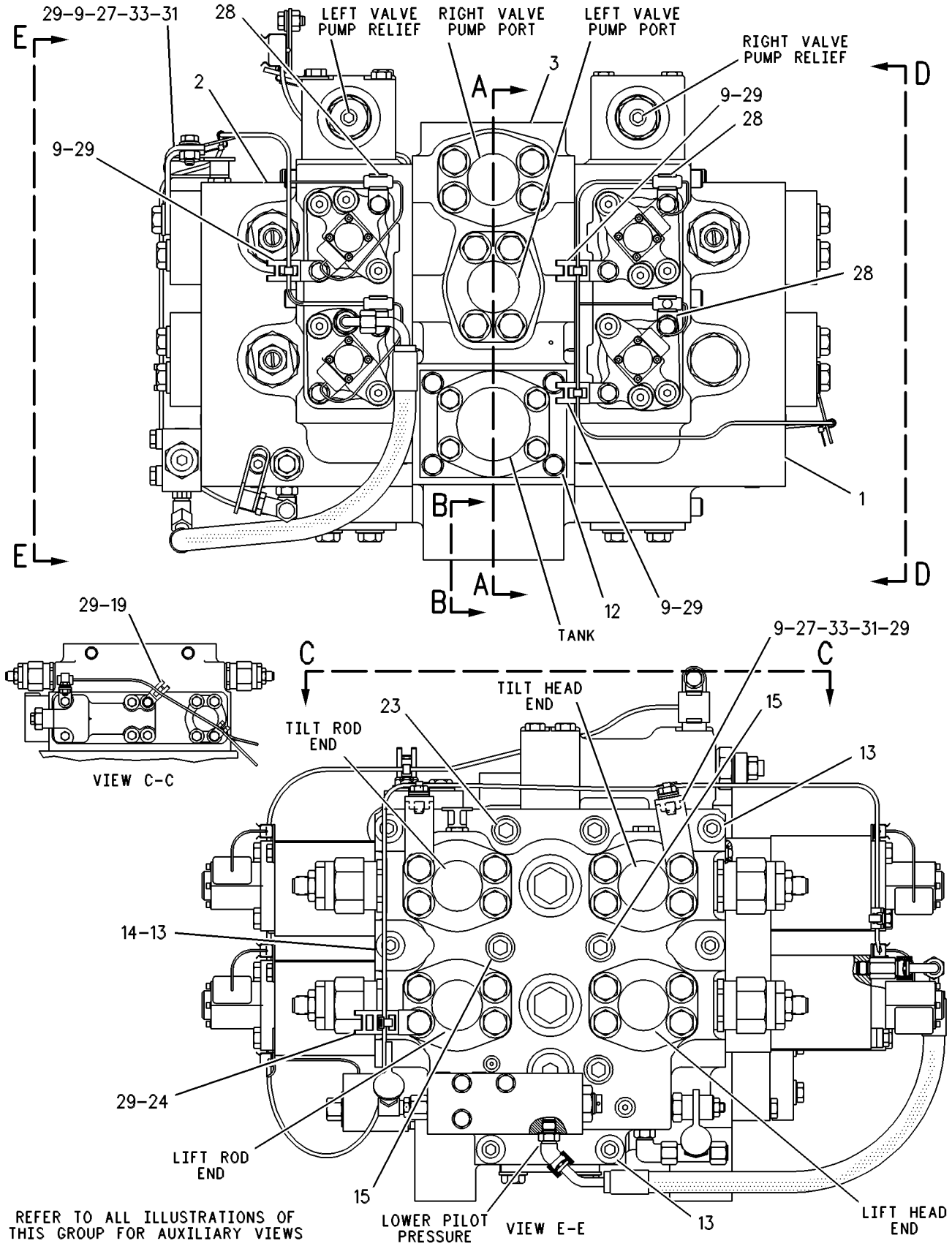

GRAPHIC #1 g00289059

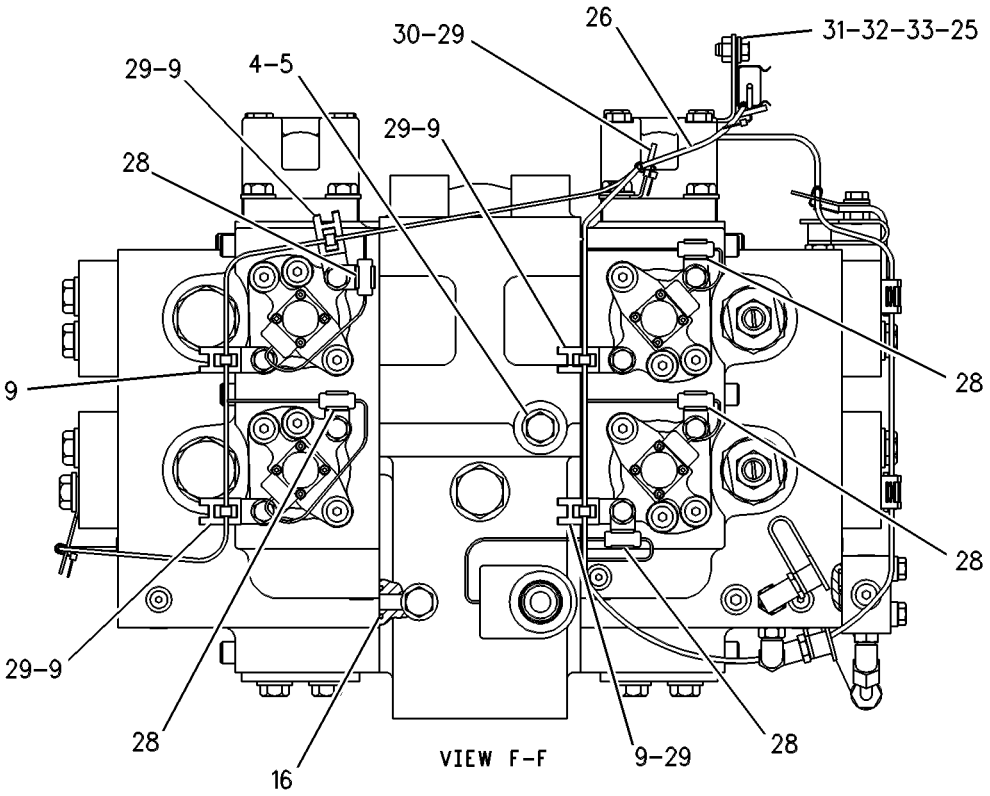

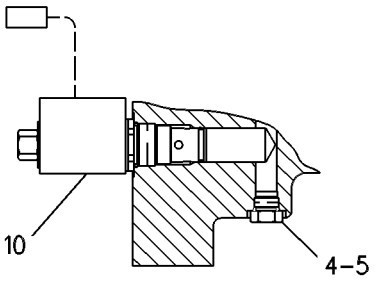

SECTION B-B

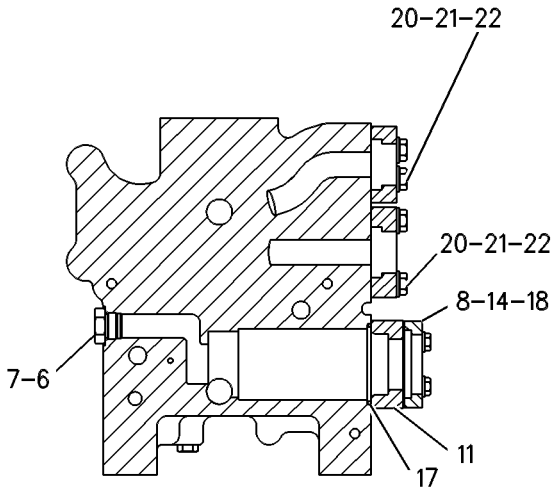

SECTION A-A

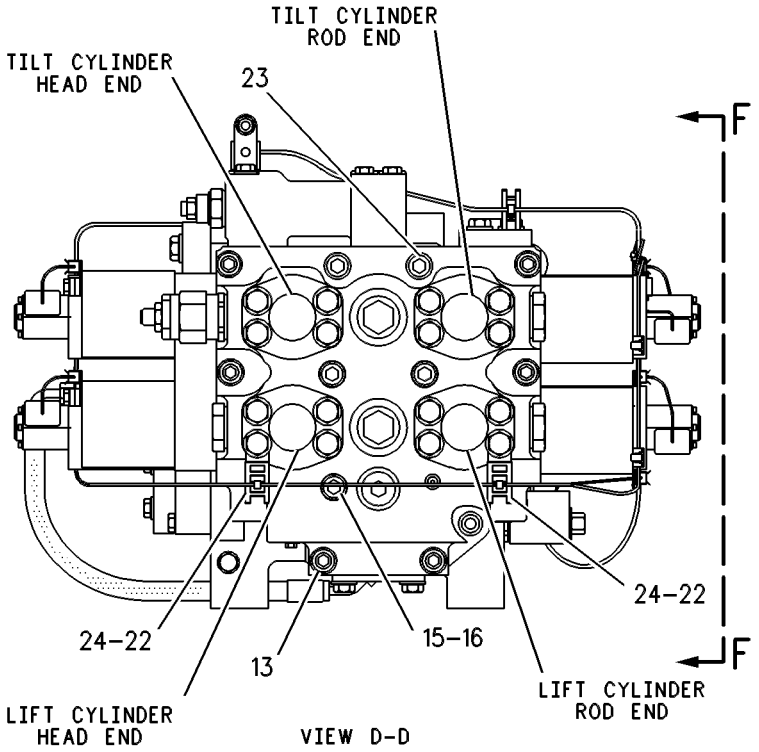

VIEW D-D

GRAPHIC #2 g00272334

HYDRAULIC SYSTEM

101-9012 VALVE GP-MAKEUP—FAN DRIVE

S/N: 7HR1-UP

PART OF 109-6872 LINES GP-HYDRAULIC FAN

SMCS-5080 **i00173903**

NOTE	REF NO	GRAPHIC REF	PART NUMBER	QTY	PART NAME 1 2 3 4 5 6 (PRODUCT LEVEL)	SEE PAGE
	1	1	**104-7376**	1	BODY	
	2	1	**1U-0323**	1	PLUG AS	
		1	**1U-0322**	1	BEARING-SLEEVE	
		1	**3G-2683**	1	PLUG-O-RING (1 5/8-12 THD)	
	3	1	**2S-4078**	1	SEAL-O-RING (37.46MM ID)	
	4	1	**7S-8491**	1	SPRING	
	5	1	**7J-7423**	1	VALVE	

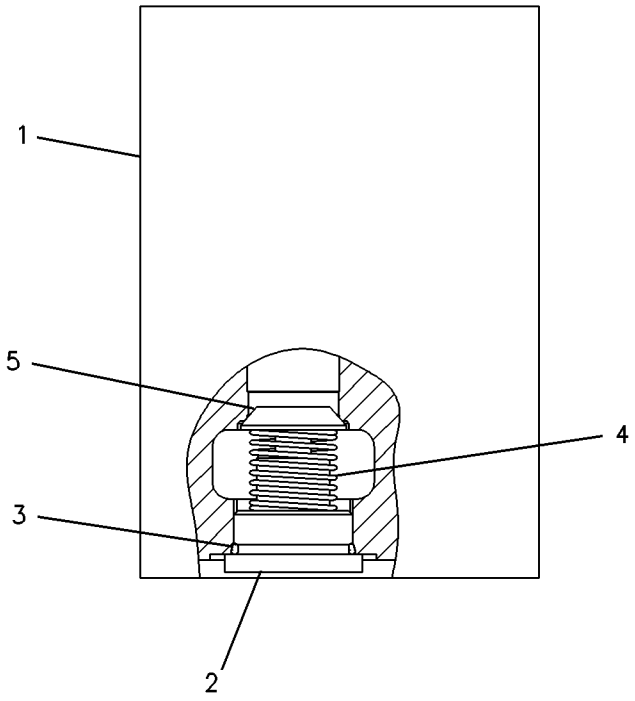

GRAPHIC #1 g00119799

HYDRAULIC SYSTEM

110-6952 VALVE GP-PRESS & FLOW CMPNSTR

S/N: 7HR1-UP

PART OF 112-7913 PUMP GP-PISTON

SMCS-5086 **i00112213**

NOTE	REF NO	GRAPHIC REF	PART NUMBER	QTY	PART NAME 1 2 3 4 5 6 (PRODUCT LEVEL)	SEE PAGE
	1	1	**9S-4191**	1	PLUG-O-RING (9/16-18 THD)	
	2	1	**3J-1907**	3	SEAL-O-RING (11.89MM ID)	
	3	1	**108-4815**	1	SPOOL-MARGIN	
	4	1	**9T-2186**	2	PLUG	
	5	1	**6E-4239**	1	SPOOL-CUTOFF	
	6	1	**6E-4230**	2	SPRING-GUIDE	
	7	1	**6E-4228**	1	SPRING-CUTOFF	
	8	1	**6E-6140**	1	PLUG-COMPENSATOR	
	9	1	**033-6036**	1	SEAL-O-RING (23.47MM ID)	
M	10	1	**9X-8914**	2	SETSCREW-SOCKET	
	11	1	**6E-6142**	1	PLUG-MARGIN	
	12	1	**033-6027**	1	SEAL-O-RING (19.18MM ID)	
	13	1	**9T-7750**	1	SPRING	
	14	1	**6E-4229**	1	BODY-COMPENSATOR	
	15	1	**9T-1857**	2	GUIDE	
	16	1	**6E-6141**	2	LOCKNUT-SEALING	

M-METRIC PART

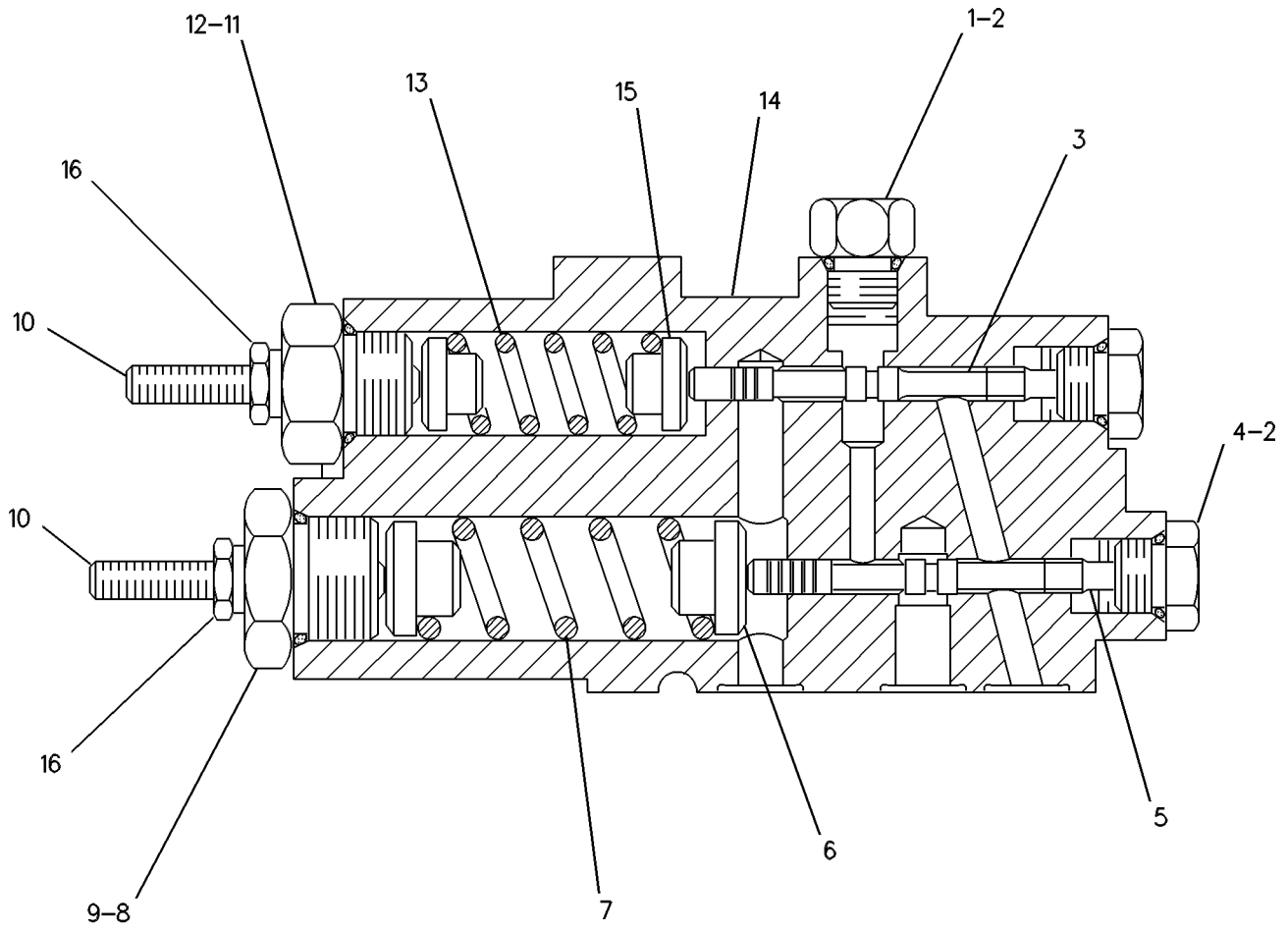

GRAPHIC #1 g00086368

HYDRAULIC SYSTEM

117-7496 VALVE GP-PRESSURE COMPENSATOR

S/N: 7HR1-UP

PART OF 136-0041 VALVE GP-PUMP CONTROL

SMCS-5086 **i01328160**

NOTE	REF NO	GRAPHIC REF	PART NUMBER	QTY	PART NAME 1 2 3 4 5 6 (PRODUCT LEVEL)	SEE PAGE
	1	1	**7L-9061**	1	SEAL-O-RING (18.72MM ID)	
	2	1	**6E-5582**	1	PLUG	
	3	1	**6E-1607**	1	LOCKNUT-SEALING	
	4	1	**117-7524**	1	SETSCREW	
	5	1	**6E-3861**	2	RETAINER-SPRING	
	6	1	**179-6921**	1	PISTON	
	7	1	**117-7522**	1	SPRING	

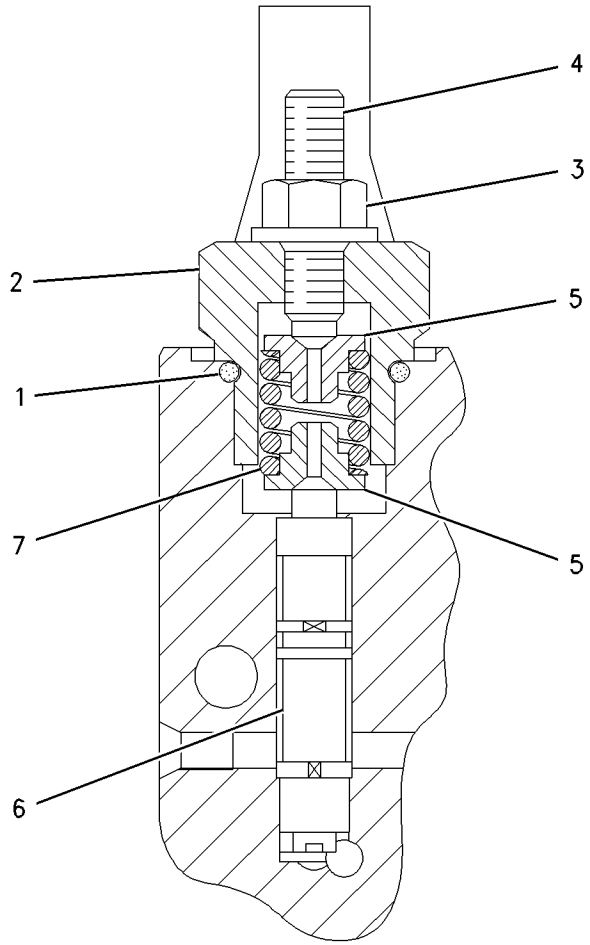

GRAPHIC #1 g00702879

HYDRAULIC SYSTEM

136-0041 VALVE GP-PUMP CONTROL—PRESS & TOR LMTR CONT

S/N: 7HR1-UP

PART OF 141-1462 PUMP GP-PISTON

SMCS-5455 **i01512922**

NOTE	REF NO	GRAPHIC REF	PART NUMBER	QTY	PART NAME 1 2 3 4 5 6 (PRODUCT LEVEL)	SEE PAGE
Y	1	1	**136-0047**	1	VALVE GP-TORQUE LIMITER CONT	1103
	2	1	**117-7495**	1	HOUSING	
	3	1	**5I-4282**	1	LEVER	
M	4	1	**6V-5195**	4	BOLT-SOCKET HEAD (M8X1.25X50 MM)	
	5	1	**9X-7676**	3	SEAL-O-RING	
	6	1	**005-8593**	1	SEAL-O-RING	
	7	1	**146-3493**	2	PIN	
Y	8	1	**4I-5968**	1	ACTUATOR GP-PISTON PUMP	812
	9	1	**4I-7690**	1	BUSHING	
	10	1	**4I-7691**	1	PIN	
	11	1	**4I-5663**	1	RING-RETAINING	
	12	1	**9S-8004**	1	PLUG	
	13	1	**3J-1907**	1	SEAL-O-RING	
	14	1	**9T-3931**	1	PLUG	
	15	1	**6V-3922**	1	SEAL-O-RING	
Y	16	1	**117-7496**	1	VALVE GP-PRESSURE COMPENSATOR	1087
	17	1	**136-0049**	1	SPOOL	
	18	1	**120-4394**	6	PLUG-BREAK OFF	
	19	1	**2D-6392**	1	SEAL-O-RING	

M-METRIC PART
Y-SEPARATE ILLUSTRATION

136-0041 VALVE GP-PUMP CONTROL *(contd.)* i01512922

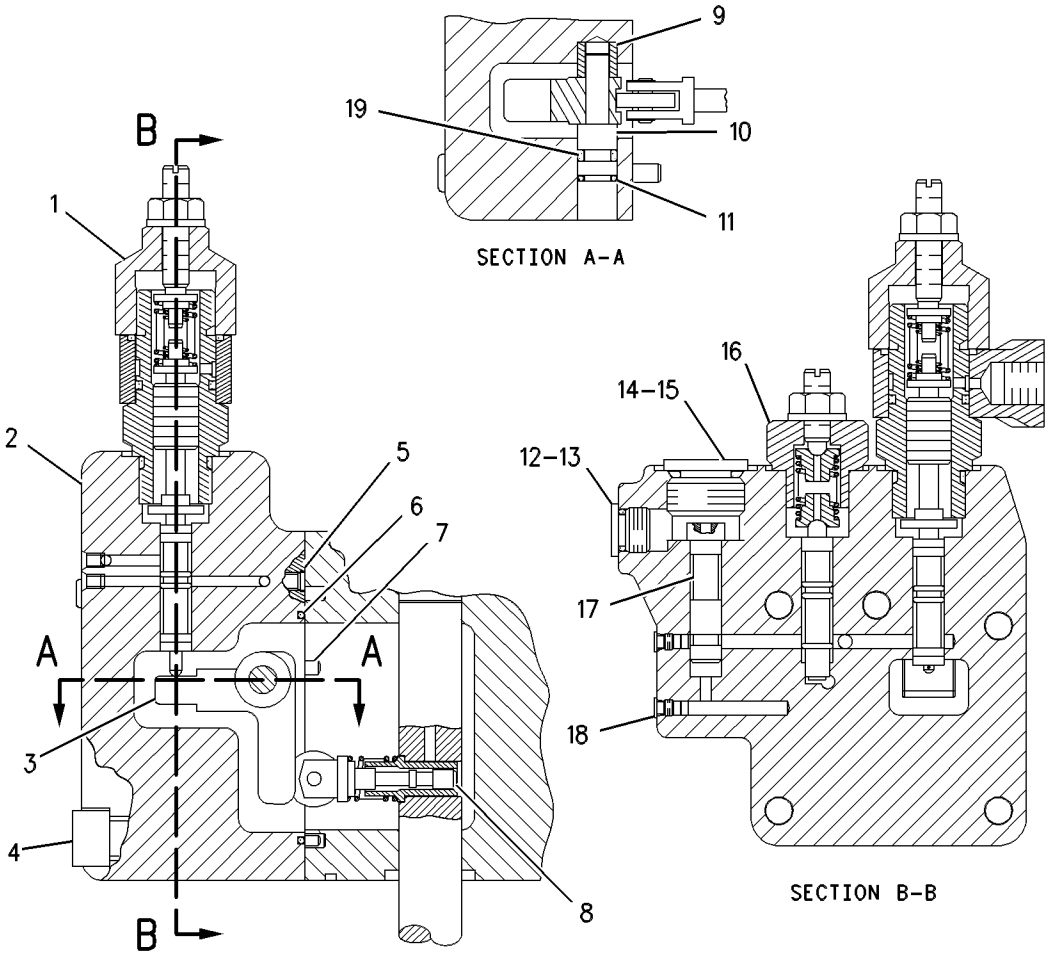

GRAPHIC #1 g00290801

HYDRAULIC SYSTEM

117-0159 VALVE GP-RELIEF–LEFT MAIN

S/N: 7HR1-UP

PART OF 177-8863 VALVE GP-CONTROL

SMCS-5069, 5117 **i01281855**

NOTE	REF NO	GRAPHIC REF	PART NUMBER	QTY	PART NAME 1 2 3 4 5 6 (PRODUCT LEVEL)	SEE PAGE
	1	1	**7M-8485**	2	SEAL-O-RING (29.74MM ID)	
	2	1	**4J-0522**	1	SEAL-O-RING (37.69MM ID)	
	3	1	**4T-2770**	1	SPRING	
	4	1	**3K-0360**	1	SEAL-O-RING (16.36MM ID)	
	5	1	**4Y-5812**	1	PLATE	
	6	1	**6E-5510**	1	RETAINER AS	
	7	1	**9X-6395**	1	NUT-ORFS (3/4-16 THD)	
	8	1	**6E-1127**	1	CAP	
	9	1	**8J-0331**	1	VALVE	
	10	1	**6E-6138**	1	VALVE GP-RELIEF	
		1	**8H-3532**	1	SPRING-VALVE	
	11	1	**185-7876**	1	DOWEL	

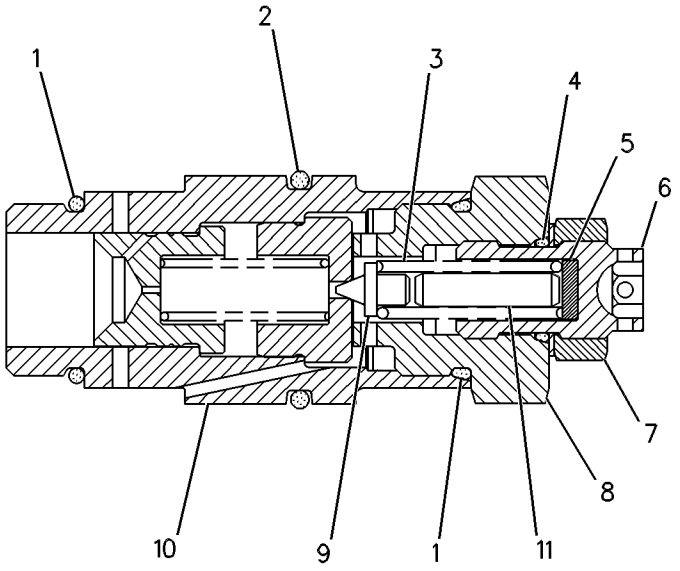

GRAPHIC #1 g00255864

117-0160 VALVE GP-RELIEF–LINE

S/N: 7HR1-UP

PART OF 177-8863, 177-8864 VALVE GP-CONTROL

SMCS-5069, 5117 **i01216639**

NOTE	REF NO	GRAPHIC REF	PART NUMBER	QTY	PART NAME 1 2 3 4 5 6 (PRODUCT LEVEL)	SEE PAGE
	1	1	**9T-9992**	1	RING-BACKUP	
	2	1	**8T-9522**	1	SEAL-O-RING (12.3MM ID)	
	3	1	**2S-4078**	2	SEAL-O-RING (37.46MM ID)	
	4	1	**3P-1155**	1	SEAL-O-RING (24.99MM ID)	
	5	1	**117-0775**	1	RING-BACKUP (24.92MM ID)	
	6	1	**2P-2975**	1	SEAL-O-RING (17.17MM ID)	

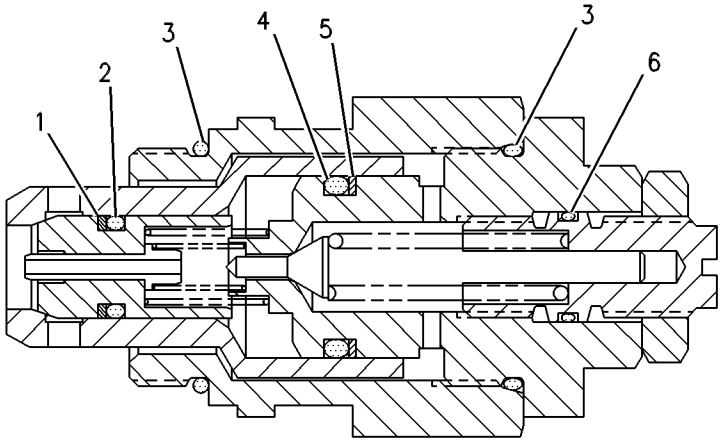

GRAPHIC #1 g00263227

HYDRAULIC SYSTEM

117-0161 VALVE GP-RELIEF–LINE

S/N: 7HR1-UP

PART OF 177-8863 VALVE GP-CONTROL

SMCS-5069, 5117 **i01216037**

NOTE	REF NO	GRAPHIC REF	PART NUMBER	QTY	PART NAME 1 2 3 4 5 6 (PRODUCT LEVEL)	SEE PAGE
	1	1	**9T-9992**	1	RING-BACKUP	
	2	1	**8T-9522**	1	SEAL-O-RING (12.3MM ID)	
	3	1	**2S-4078**	2	SEAL-O-RING (37.46MM ID)	
	4	1	**3P-1155**	1	SEAL-O-RING (24.99MM ID)	
	5	1	**117-0775**	1	RING-BACKUP (24.92MM ID)	
	6	1	**2P-2975**	1	SEAL-O-RING (17.17MM ID)	

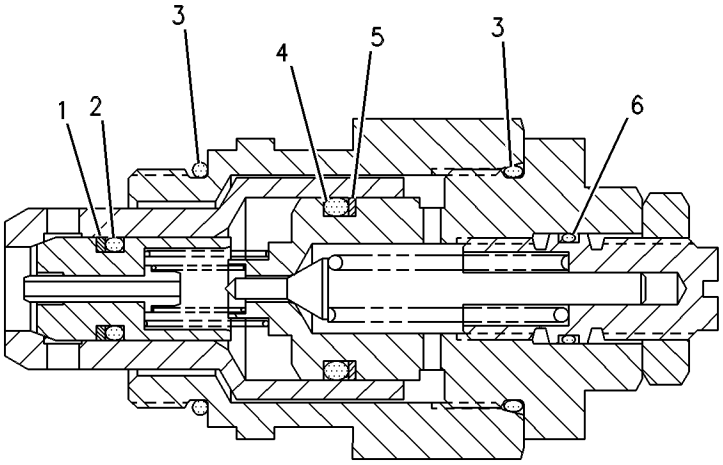

GRAPHIC #1 g00263240

HYDRAULIC SYSTEM

125-9349 VALVE GP-RELIEF–LINE

S/N: 7HR1-UP

PART OF 177-8863 VALVE GP-CONTROL

SMCS-5069, 5117 **i01213076**

NOTE	REF NO	GRAPHIC REF	PART NUMBER	QTY	PART NAME 1 2 3 4 5 6 (PRODUCT LEVEL)	SEE PAGE
	1	1	**9T-9992**	1	RING-BACKUP	
	2	1	**8T-9522**	1	SEAL-O-RING (12.3MM ID)	
	3	1	**2S-4078**	2	SEAL-O-RING (37.46MM ID)	
	4	1	**3P-1155**	1	SEAL-O-RING (24.99MM ID)	
	5	1	**117-0775**	1	RING-BACKUP (24.92MM ID)	
	6	1	**2P-2975**	1	SEAL-O-RING (17.17MM ID)	

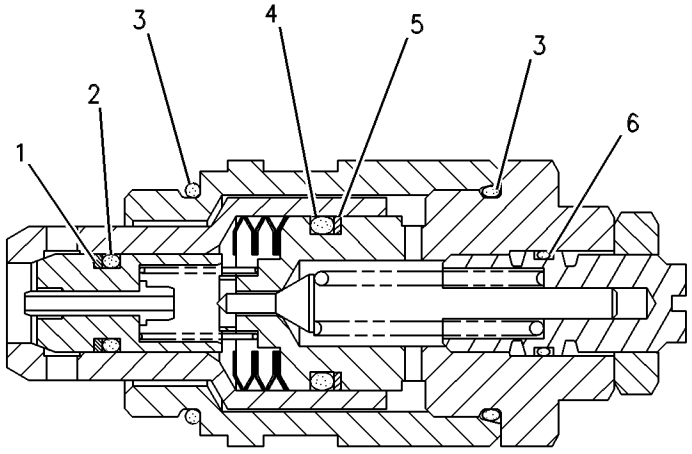

GRAPHIC #1 g00087846

HYDRAULIC SYSTEM

129-8293 VALVE GP-RELIEF–LINE

S/N: 7HR1-UP

PART OF 177-8863 VALVE GP-CONTROL

SMCS-5069, 5117 **i01213086**

NOTE	REF NO	GRAPHIC REF	PART NUMBER	QTY	PART NAME 1 2 3 4 5 6 (PRODUCT LEVEL)	SEE PAGE
	1	1	**9T-9992**	1	RING-BACKUP	
	2	1	**8T-9522**	1	SEAL-O-RING (12.3MM ID)	
	3	1	**2S-4078**	2	SEAL-O-RING (37.46MM ID)	
	4	1	**3P-1155**	1	SEAL-O-RING (24.99MM ID)	
	5	1	**117-0775**	1	RING-BACKUP (24.92MM ID)	
	6	1	**2P-2975**	1	SEAL-O-RING (17.17MM ID)	

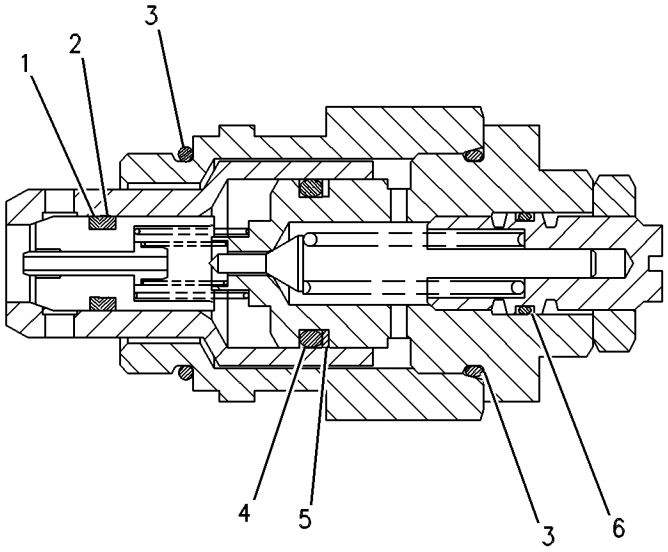

GRAPHIC #1 g00087348

143-8912 VALVE GP-RELIEF–RIGHT, BACKUP

S/N: 7HR1-UP

PART OF 177-8864 VALVE GP-CONTROL

SMCS-5069, 5117 **i01279526**

NOTE	REF NO	GRAPHIC REF	PART NUMBER	QTY	PART NAME 1 2 3 4 5 6 (PRODUCT LEVEL)	SEE PAGE
	1	1	**7M-8485**	2	SEAL-O-RING (29.74MM ID)	
	2	1	**4J-0522**	1	SEAL-O-RING (37.69MM ID)	
	3	1	**142-4286**	1	SPRING	
	4	1	**3K-0360**	1	SEAL-O-RING (16.36MM ID)	
	5	1	**4Y-5812**	1	PLATE	
	6	1	**6E-5510**	1	RETAINER AS	
	7	1	**9X-6395**	1	NUT-ORFS (3/4-16 THD)	
	8	1	**6E-1127**	1	CAP	
	9	1	**8J-0331**	1	VALVE	
	10	1	**6E-6138**	1	VALVE GP-RELIEF	
		1	**8H-3532**	1	SPRING-VALVE	
	11	1	**099-3047**	2	DOWEL	

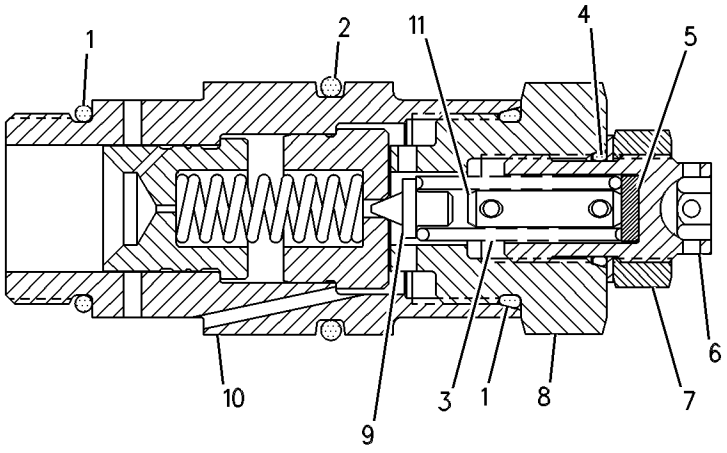

GRAPHIC #1 g00272348

HYDRAULIC SYSTEM

9T-9552 VALVE GP-RIDE CONTROL

S/N: 7HR1-UP
PART OF 112-4812 CONTROL & LINES GP-RIDE
AN ATTACHMENT

SMCS-5054 **i01178467**

NOTE	REF NO	GRAPHIC REF	PART NUMBER	QTY	PART NAME 1 2 3 4 5 6 (PRODUCT LEVEL)	SEE PAGE
	2	1	**4T-1701**	1	SPRING (21MM OD)	
	3	1	**4J-8998**	1	SEAL-O-RING (36.09MM ID)	
Y	4	1	**152-8340**	1	VALVE GP-SOLENOID (RIDE CONTROL)	1101
	5	1	**9S-4191**	3	PLUG-O-RING (9/16-18 THD)	
	6	1	**3J-1907**	3	SEAL-O-RING (11.89MM ID)	
M	7	1	**8T-4185**	2	BOLT (M10X1.5X50MM)	
	8	1	**6E-4759**	1	BODY	
	9	1	**6V-5555**	1	SEAL (7.52MM ID)	
	10	1	**9S-4180**	2	PLUG-O-RING (5/16-24 THD)	
	11	1	**4J-7533**	2	SEAL-O-RING (6.07MM ID)	
	12	1	**9S-6130**	1	PLUG-O-RING (1-5/8-12 THD)	
	13	1	**2S-4078**	1	SEAL-O-RING (37.46MM ID)	
	14	1	**1P-3705**	2	SEAL-RECTANGULAR (44.7MM ID)	
	15	1	**6E-3303**	1	STEM	

M-METRIC PART
Y-SEPARATE ILLUSTRATION

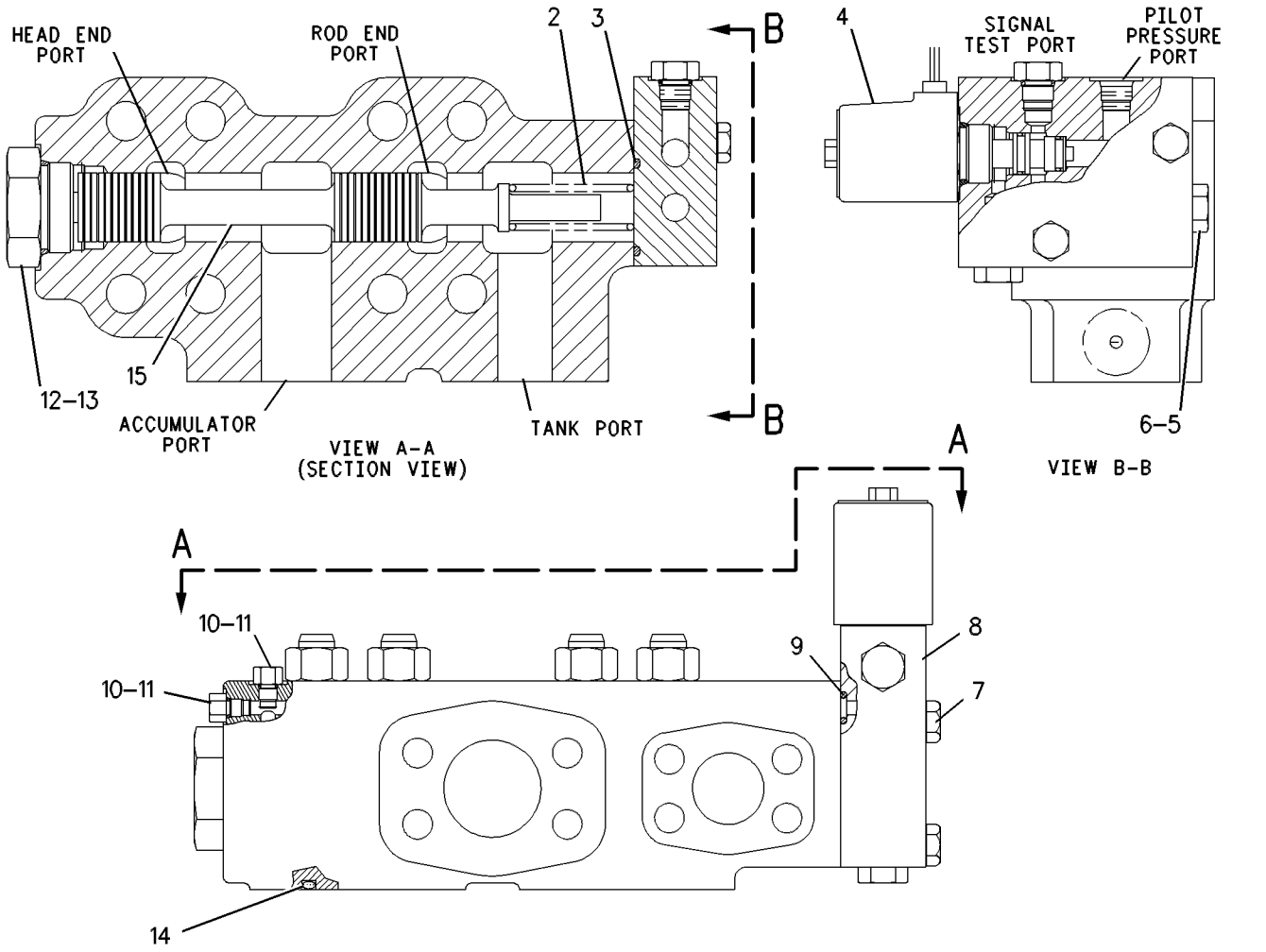

GRAPHIC #1 g00575080

HYDRAULIC SYSTEM

148-2341 VALVE GP-SHUTTLE

S/N: 7HR1-UP

PART OF 177-8863 VALVE GP-CONTROL

SMCS-5079 **i00757758**

NOTE	REF NO	GRAPHIC REF	PART NUMBER	QTY	PART NAME 1 2 3 4 5 6 (PRODUCT LEVEL)	SEE PAGE
	1	1	**1M-6718**	1	BALL	
	2	1	**147-6605**	2	RING-BACKUP	
	3	1	**6V-5324**	1	SEAL-O-RING (7.98MM ID)	
	4	1	**147-6603**	1	SEAL-O-RING	
	5	1	**3J-1907**	1	SEAL-O-RING (11.89MM ID)	
	6	1	**147-6604**	2	RING-BACKUP	

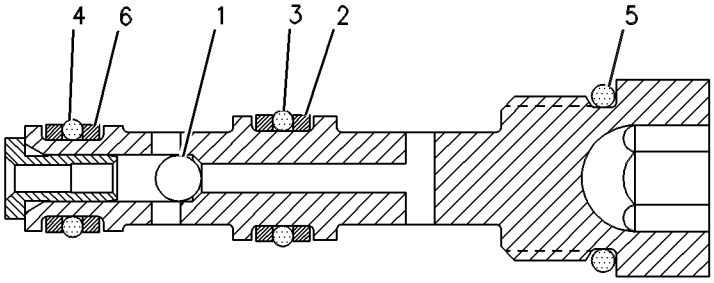

GRAPHIC #1 g00281743

122-4973 VALVE GP-SOLENOID–PUMP CONTROL

S/N: 7HR1-UP

PART OF 119-8994 VALVE GP-SOLENOID & MANIFOLD

SMCS-4805, 5132, 5479 **i01442785**

NOTE	REF NO	GRAPHIC REF	PART NUMBER	QTY	PART NAME 1 2 3 4 5 6 (PRODUCT LEVEL)	SEE PAGE
	1	1	**148-1947**	1	CARTRIDGE AS	
		1	**9X-7409**	1	SEAL-O-RING (10.82MM ID)	
		1	**8L-2786**	1	SEAL-O-RING (16.36MM ID)	
		1	**033-5879**	1	SEAL-O-RING (11.12MM ID)	
		1	**033-6033**	1	SEAL-O-RING (12.42MM ID)	
	2	1	**156-6173**	1	COIL AS	
		1	**1S-9593**	2	STRAP-CABLE	
		1	**102-8802**	1	KIT-RECEPTACLE (2 PIN)	
					(INCLUDES RECEPTACLE AS AND WEDGE)	
		1	**3E-3365**	1	WEDGE-RECEPTACLE LOCK (2 PIN)	
		1	**8T-8729**	2	PIN-CONNECTOR	
	3	1	**122-4974**	1	SPACER	
	4	1	**176-0394**	1	NUT-LOCKING (5/8)	
					AVAILABLE REPAIR KIT(S):	
			106-1522	1	KIT-SEAL (SOLENOID VALVE)	
					(INCLUDES SEAL-O-RINGS)	

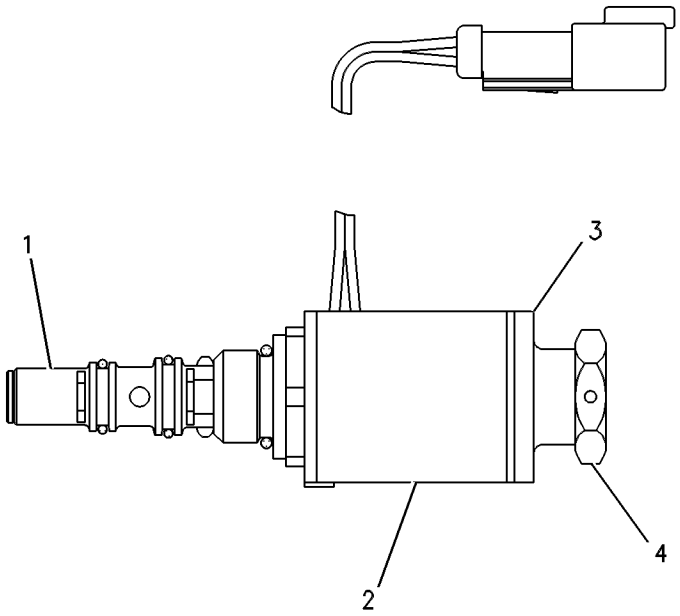

GRAPHIC #1 g00261309

127-0272 VALVE GP-SOLENOID—FAN CONTROL

S/N: 7HR1-UP

PART OF 125-3716 VALVE & MTG GP-FAN SPEED CONT

SMCS-4805, 5132, 5479 **i01498479**

NOTE	REF NO	GRAPHIC REF	PART NUMBER	QTY	PART NAME 1 2 3 4 5 6 (PRODUCT LEVEL)	SEE PAGE
	1	1	**127-0271**	1	COIL AS	
	2	1	**1S-9593**	2	STRAP-CABLE	
	3	1	**3E-3365**	1	WEDGE-RECEPTACLE LOCK (2 PIN)	
	4	1	**8T-8729**	2	PIN-CONNECTOR	
	5	1	**102-8802**	1	KIT-RECEPTACLE (2 PIN)	
					(INCLUDES WEDGE)	
	6	1	**8C-6711**	1	NUT-RETAINER	
					AVAILABLE REPAIR KIT(S):	
			100-4318	1	KIT-SEAL (RAD/HYD COOLING FAN PUMP SOL)	
					(INCLUDES RINGS & SEALS)	

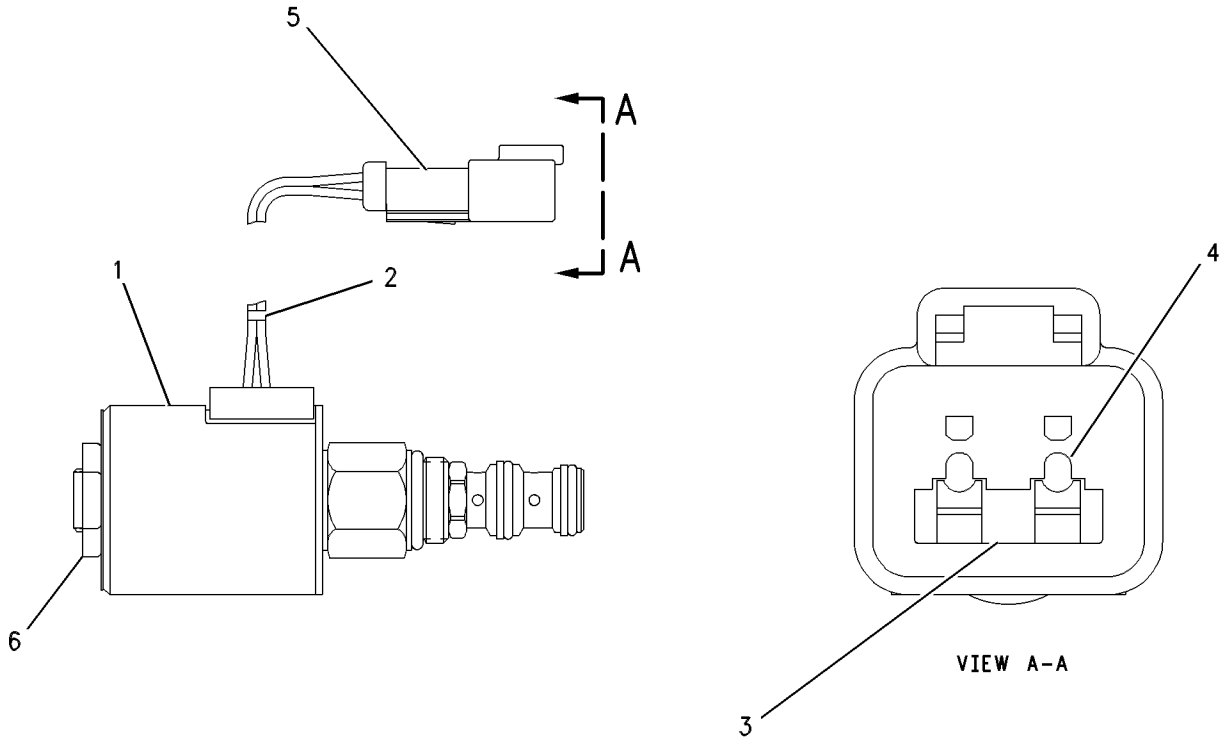

GRAPHIC #1 g00386633

149-2610 VALVE GP-SOLENOID–PILOT PRESSURE SUPPLY

S/N: 7HR1-UP
24 VOLT
PART OF 177-9108 VALVE GP-MAIN CONTROL

SMCS-4805, 5132, 5479 **i01370103**

NOTE	REF NO	GRAPHIC REF	PART NUMBER	QTY	PART NAME 1 2 3 4 5 6 (PRODUCT LEVEL)	SEE PAGE
	1	1	**149-2611**	1	CARTRIDGE AS	
		1	**8C-9987**	1	WASHER (2.5MM THK)	
	2	1	**111-0343**	1	LOCKNUT (5/16-18 THD)	
	3	1	**141-6787**	1	COIL AS	
		1	**1S-9593**	2	STRAP-CABLE (0.62IN DIA)	
		1	**3E-3365**	1	WEDGE-RECEPTACLE LOCK (2 PIN)	
		1	**8T-8729**	2	PIN-CONNECTOR	
		1	**102-8802**	2	KIT-RECEPTACLE (2 PIN)	
					(INCLUDES RECEPTACLE AS AND WEDGE)	
	4	1	**8C-9987**	1	WASHER (2.5MM THK)	
		1	**111-0343**	1	LOCKNUT (5/16-18 THD)	
					AVAILABLE REPAIR KIT(S):	
			3G-8175	1	KIT-SEAL	
					(INCLUDES O-RINGS & BACK-UP RINGS)	

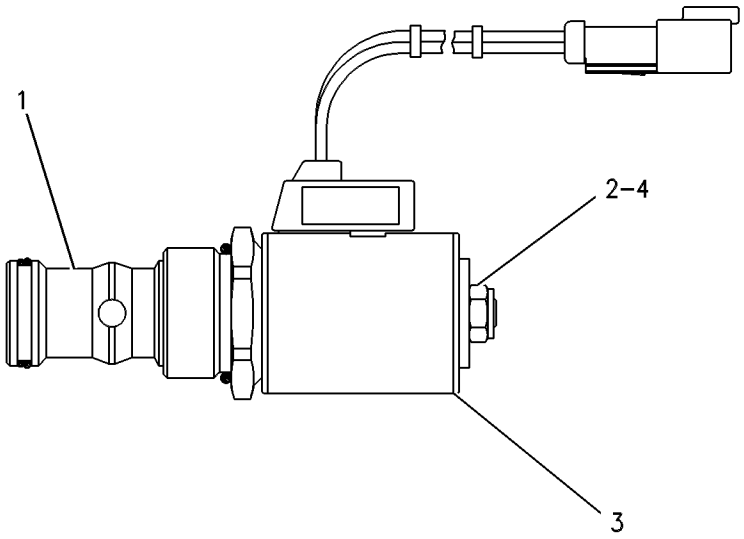

GRAPHIC #1 g00308949

HYDRAULIC SYSTEM

152-8340 VALVE GP-SOLENOID–RIDE CONTROL

S/N: 7HR1-UP
24 VOLTS DC
PART OF 9T-9552 VALVE GP-RIDE CONTROL
AN ATTACHMENT

SMCS-4805, 5132, 5479 **i01435977**

NOTE	REF NO	GRAPHIC REF	PART NUMBER	QTY	PART NAME 1 2 3 4 5 6 (PRODUCT LEVEL)	SEE PAGE
	1	1	**8C-9987**	1	WASHER (8.3X28X2.5MM THK)	
		1	**111-0343**	1	LOCKNUT	
	2	1	**152-8338**	1	CARTRIDGE AS	
		1	**8C-9987**	1	WASHER (8.3X28X2.5MM THK)	
		1	**111-0343**	1	LOCKNUT	
	4	1	**141-6787**	1	COIL AS	
		1	**186-3735**	2	PIN-CONNECTOR	
		1	**3E-3365**	1	WEDGE-RECEPTACLE LOCK (2 PIN)	
	5	1	**102-8802**	1	KIT-RECEPTACLE (2 PIN)	
					(INCLUDES RECEPTACLE AS & WEDGE)	
	6	1	**1S-9593**	2	STRAP-CABLE	
					AVAILABLE REPAIR KIT(S):	
			197-7701	1	KIT-SEAL	
					(INCLUDES 3-SEAL-O-RINGS, 2-RINGS-BACK UP)	

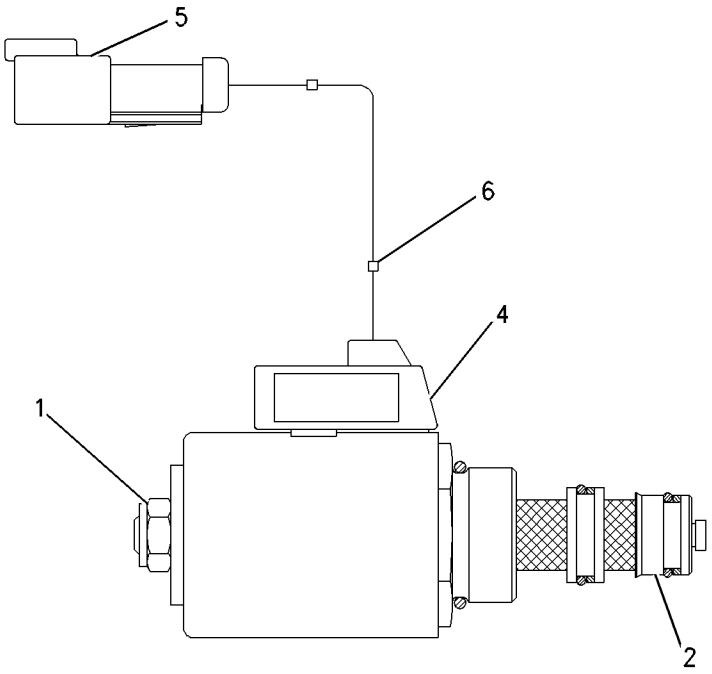

GRAPHIC #1 g00753658

119-8994 VALVE GP-SOLENOID & MANIFOLD–

VARIABLE DISPLACEMENT PUMP

S/N: 7HR1-UP

PART OF 133-7456 VALVE & MTG GP-VARIABLE PUMP

SMCS-4805, 5264, 5479 **i01408934**

NOTE	REF NO	GRAPHIC REF	PART NUMBER	QTY	PART NAME 1 2 3 4 5 6 (PRODUCT LEVEL)	SEE PAGE
	1	1	**121-5927**	1	MANIFOLD	
Y	2	1	**122-4973**	1	VALVE GP-SOLENOID	1098

Y-SEPARATE ILLUSTRATION

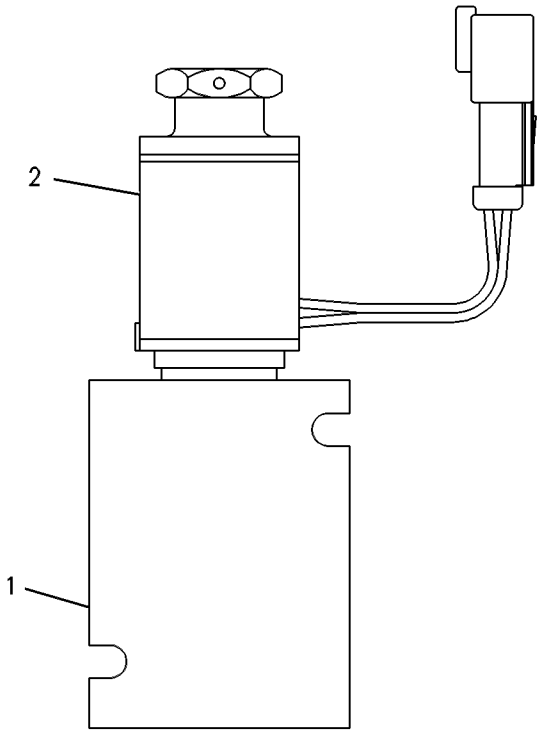

GRAPHIC #1 g00273945

136-0047 VALVE GP-TORQUE LIMITER CONT

S/N: 7HR1-UP

PART OF 136-0041 VALVE GP-PUMP CONTROL

SMCS-5117 **i00757755**

NOTE	REF NO	GRAPHIC REF	PART NUMBER	QTY	PART NAME 1 2 3 4 5 6 (PRODUCT LEVEL)	SEE PAGE
	1	1	**6E-1607**	1	LOCKNUT-SEALING	
	2	1	**117-7525**	1	SETSCREW	
	3	1	**136-0052**	2	RETAINER	
	4	1	**107-6594**	1	SPRING	
	5	1	**8T-9529**	1	SEAL-O-RING	
	6	1	**6V-6580**	1	SEAL-O-RING (20.35MM ID)	
	7	1	**6V-3922**	1	SEAL-O-RING (18.72MM ID)	
	8	1	**136-0054**	1	CAP	
	9	1	**6E-3855**	1	SPRING	
	10	1	**136-0053**	1	HOUSING	
	11	1	**136-0051**	1	PISTON	
	12	1	**107-6441**	1	PIN	
	13	1	**4I-7705**	1	SPOOL	

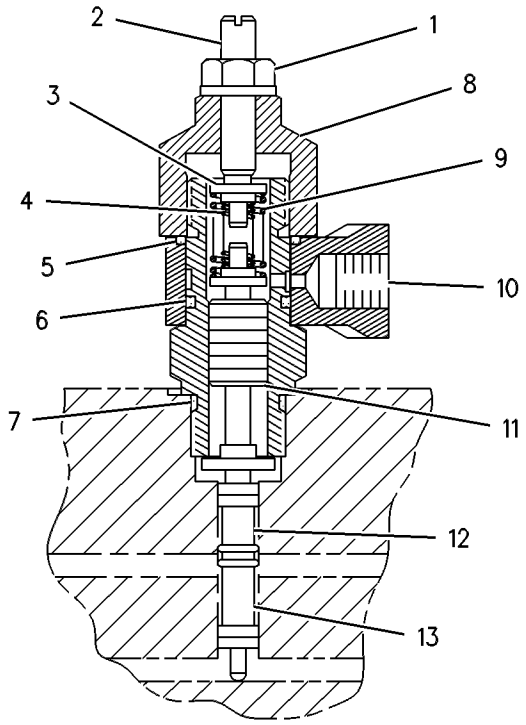

GRAPHIC #1 g00295000

109-6890 CONTROL GP-BUCKET

S/N: 7HR1-UP
PART OF 112-4201, 148-7910 LIFT AR-HIGH
AN ATTACHMENT
TYPE 1

SMCS-6107 **i00744369**

NOTE	REF NO	GRAPHIC REF	PART NUMBER	QTY	PART NAME 1 2 3 4 5 6 (PRODUCT LEVEL)	SEE PAGE
	1	1	**126-4270**	1	BOOM AS	
	2	1	**125-2562**	2	BEARING	
	3	1	**153-1855**	2	SPACER	
	4	1	**153-1854**	1	SPACER	
	5	1	**132-8574**	6	BEARING	
	6	1	**153-1853**	1	SPACER	
Y	7	1	*148-8164*	1	LINK GP-HIGH LIFT	1134
Y	8	1	*148-7169*	1	PIN & SEAL GP-LINKAGE	1142

Y-SEPARATE ILLUSTRATION

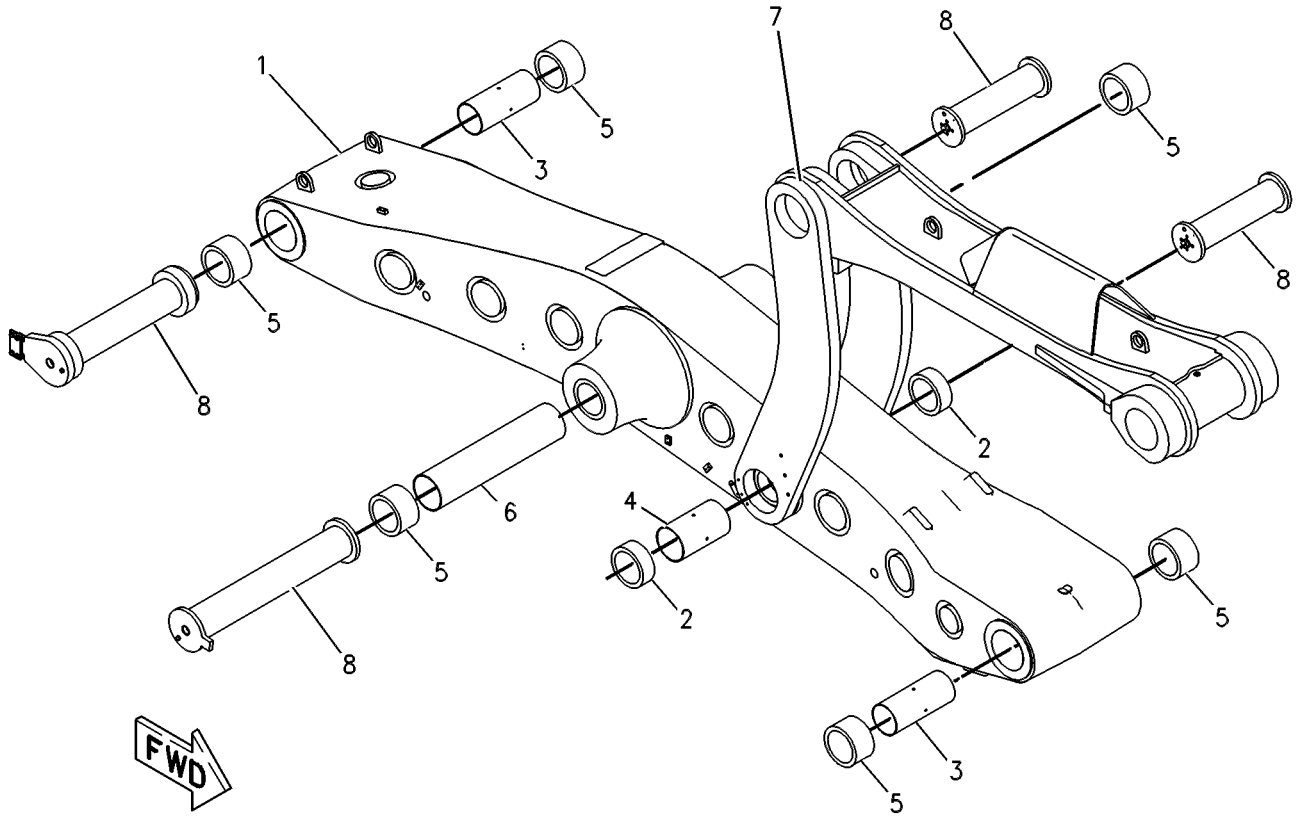

GRAPHIC #1 g00281730

109-6890 CONTROL GP-BUCKET

S/N: 7HR1-UP
PART OF 112-4201, 148-7910, 170-8463, 170-8544 LIFT AR-HIGH
AN ATTACHMENT
TYPE 2

SMCS-6107 **i01198372**

NOTE	REF NO	GRAPHIC REF	PART NUMBER	QTY	PART NAME 1 2 3 4 5 6 (PRODUCT LEVEL)	SEE PAGE
	1	1	**126-4270**	1	BOOM GP-LOADER (HIGH LIFT)	
	2	1	**125-2562**	2	BEARING	
	3	1	**153-1855**	2	SPACER	
	4	1	**153-1854**	1	SPACER	
	5	1	**132-8574**	6	BEARING	
	6	1	**153-1853**	1	SPACER	
C	7	1	**133-4221**	1	LINK AS-BOOM	
		1	**146-1616**	2	BEARING	
CY	8	1	*168-2580*	1	PIN & SEAL GP-LINKAGE	1148
C	9	1	**166-6812**	1	LINK AS-BOOM	
		1	**146-1616**	2	BEARING	
CY	10	1	**167-7588**	1	LINK GP-BUCKET (HIGH LIFT)	1130
CFY			*162-7508*	1	LINES GP-GREASE	744

C-CHANGE FROM PREVIOUS TYPE
F-NOT SHOWN
Y-SEPARATE ILLUSTRATION

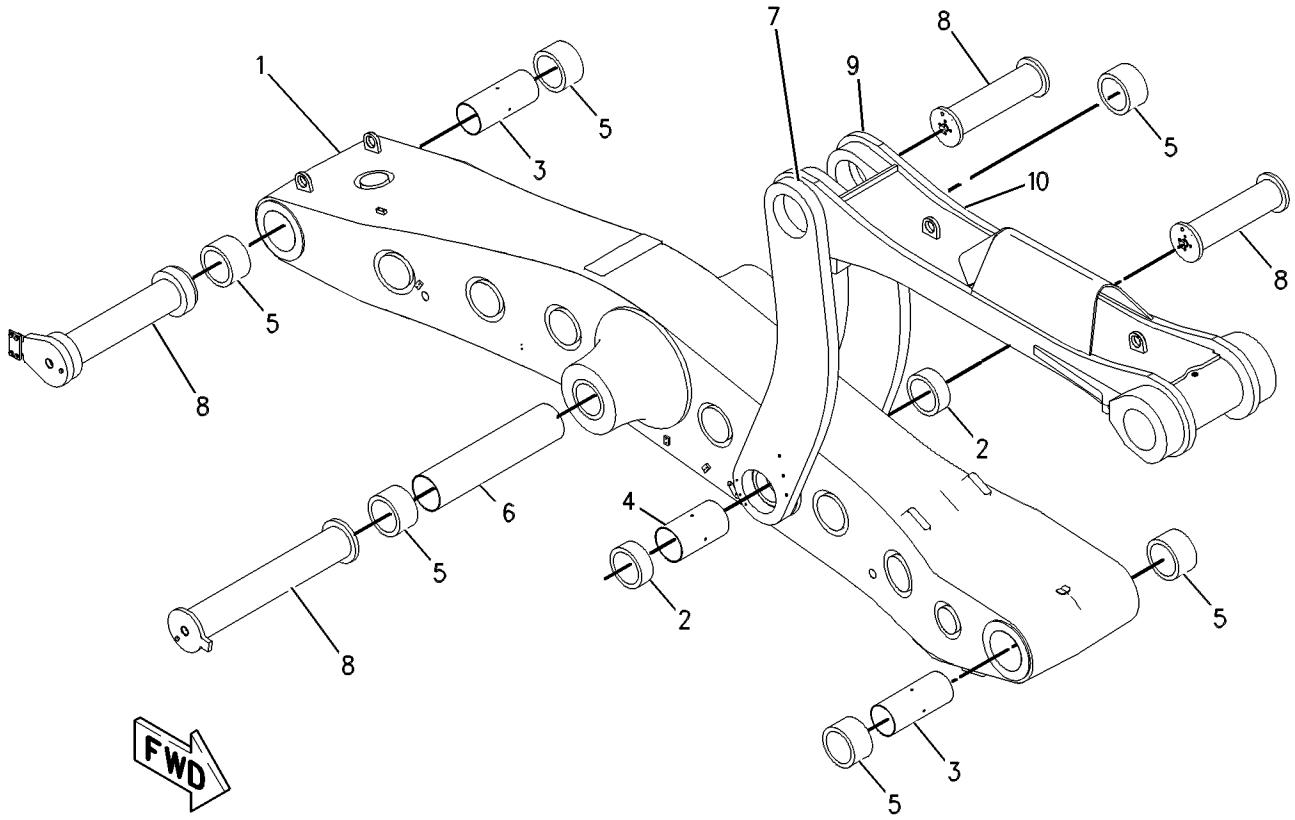

GRAPHIC #1 g00537004

109-6890 CONTROL GP-BUCKET

S/N: 7HR1-UP
PART OF 170-8463, 170-8544 LIFT AR-HIGH
AN ATTACHMENT
TYPE 3

SMCS-6107 **i01241514**

NOTE	REF NO	GRAPHIC REF	PART NUMBER	QTY	PART NAME 1 2 3 4 5 6 (PRODUCT LEVEL)	SEE PAGE
	1	1	**126-4270**	1	BOOM GP-LOADER (HIGH LIFT)	
	2	1	**125-2562**	2	BEARING	
	3	1	**153-1855**	2	SPACER	
	4	1	**153-1854**	1	SPACER	
	5	1	**132-8574**	6	BEARING	
	6	1	**153-1853**	1	SPACER	
	7	1	**133-4221**	1	LINK AS-BOOM	
		1	**146-1616**	2	BEARING	
Y	8	1	*168-2580*	1	PIN & SEAL GP-LINKAGE	1148
	9	1	**166-6812**	1	LINK AS-BOOM	
		1	**146-1616**	2	BEARING	
Y	10	1	**167-7588**	1	LINK GP-BUCKET (HIGH LIFT)	1130
CFY			*162-7507*	1	LINES GP-GREASE	742

C-CHANGE FROM PREVIOUS TYPE
F-NOT SHOWN
Y-SEPARATE ILLUSTRATION

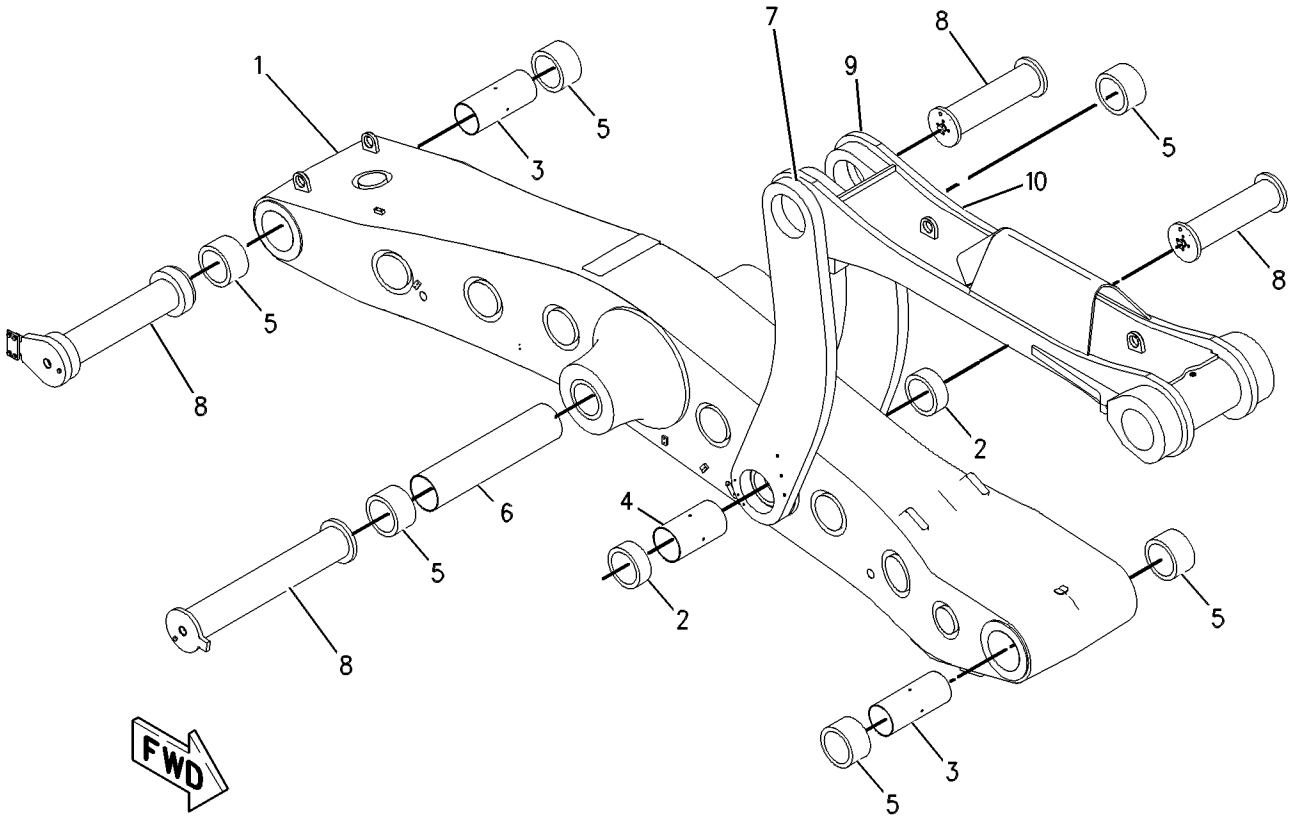

GRAPHIC #1 g00537004

MEMORANDA

109-6890 CONTROL GP-BUCKET

S/N: 7HR1-UP
PART OF 170-8463, 170-8544 LIFT AR-HIGH
AN ATTACHMENT
TYPE 4

SMCS-6107 **i01289646**

NOTE	REF NO	GRAPHIC REF	PART NUMBER	QTY	PART NAME 1 2 3 4 5 6 (PRODUCT LEVEL)	SEE PAGE
	1	1	**126-4270**	1	BOOM GP-LOADER (HIGH LIFT)	
	2	1	**125-2562**	2	BEARING	
	3	1	**153-1855**	2	SPACER	
	4	1	**153-1854**	1	SPACER	
	5	1	**132-8574**	6	BEARING	
	6	1	**153-1853**	1	SPACER	
	7	1	**133-4221**	1	LINK AS-BOOM	
		1	**146-1616**	2	BEARING	
Y	8	1	*168-2580*	1	PIN & SEAL GP-LINKAGE (CONTAINS FOUR PINS)	1148
	9	1	**166-6812**	1	LINK AS-BOOM	
		1	**146-1616**	2	BEARING	
Y	10	1	**163-6187**	1	LINK GP-BUCKET (HIGH LIFT)	1126
	11	1	**177-8787**	3	PLUG AS-OIL LEVEL (DIPSTICK) (SHORT)	
	12	1	**177-8788**	1	PLUG AS-OIL LEVEL (DIPSTICK) (LONG)	
CFY			*162-7507*	1	LINES GP-GREASE	742

C-CHANGE FROM PREVIOUS TYPE
F-NOT SHOWN
Y-SEPARATE ILLUSTRATION

109-6890 **CONTROL GP-BUCKET** ***(contd.)*** **i01289646**

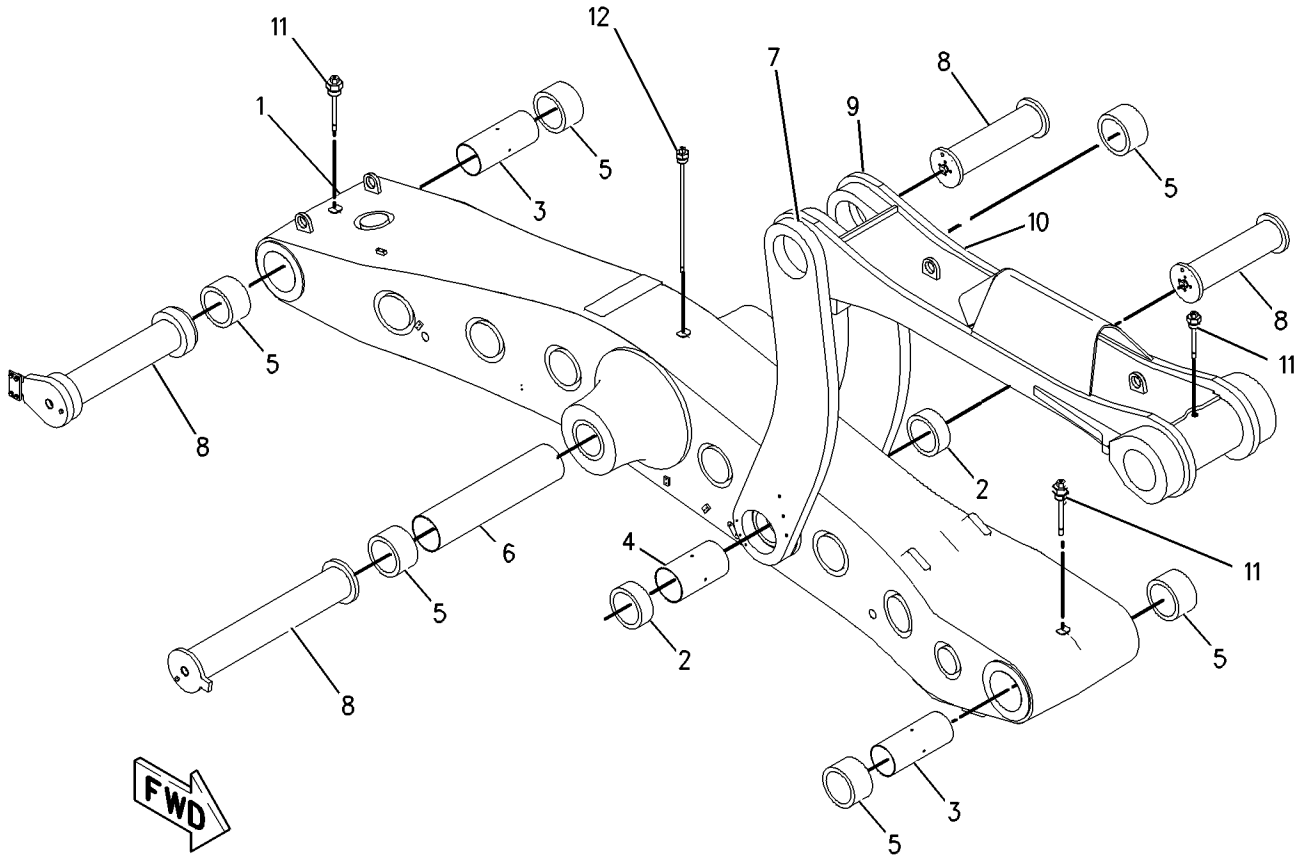

GRAPHIC #1 g00689783

109-6890 CONTROL GP-BUCKET

S/N: 7HR1-UP
PART OF 170-8463, 170-8544 LIFT AR-HIGH
AN ATTACHMENT
TYPE 5

SMCS-6107 **i01460829**

NOTE	REF NO	GRAPHIC REF	PART NUMBER	QTY	PART NAME 1 2 3 4 5 6 (PRODUCT LEVEL)	SEE PAGE
	1	1	**126-4270**	1	BOOM GP-LOADER (HIGH LIFT)	
	2	1	**125-2562**	2	BEARING	
	3	1	**153-1855**	2	SPACER	
	4	1	**153-1854**	1	SPACER	
	5	1	**132-8574**	6	BEARING	
	6	1	**153-1853**	1	SPACER	
	7	1	**133-4221**	1	LINK AS-BOOM	
		1	**146-1616**	2	BEARING	
Y	8	1	*168-2580*	1	PIN & SEAL GP-LINKAGE (CONTAINS FOUR PINS)	1148
	9	1	**166-6812**	1	LINK AS-BOOM	
		1	**146-1616**	2	BEARING	
Y	10	1	**163-6187**	1	LINK GP-BUCKET (HIGH LIFT)	1126
	11	1	**197-8234**	4	PLUG AS	
					(EACH INCLUDES)	
		1	**149-8220**	1	FITTING-RELIEF	
		1	**3K-0360**	1	SEAL-O-RING	
CFY			*162-7507*	1	LINES GP-GREASE	742

C-CHANGE FROM PREVIOUS TYPE
F-NOT SHOWN
Y-SEPARATE ILLUSTRATION

109-6890 **CONTROL GP-BUCKET** ***(contd.)*** **i01460829**

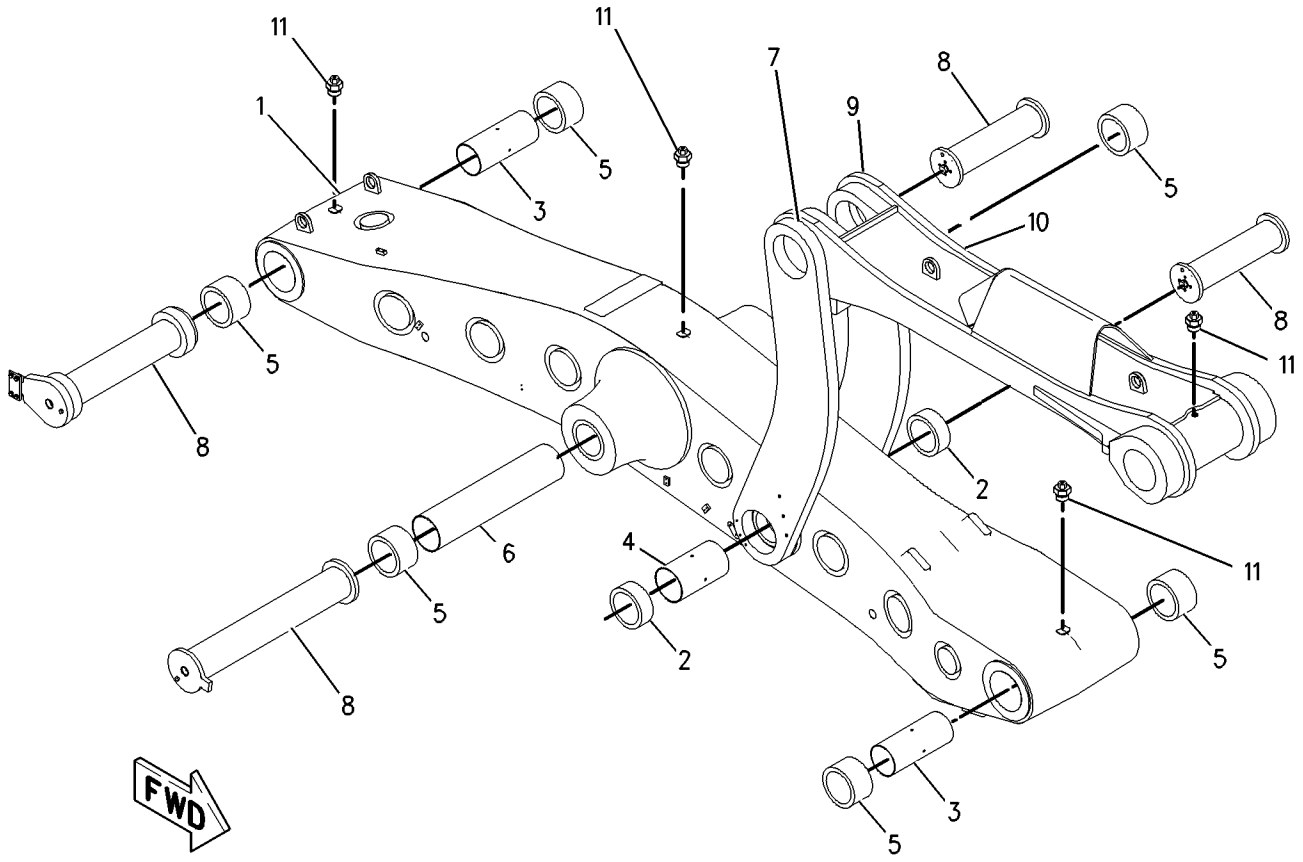

GRAPHIC #1 g00763584

131-1251 CONTROL GP-BUCKET

S/N: 7HR1-UP
PART OF 131-1255, 148-7909 LIFT AR-STANDARD
AN ATTACHMENT
TYPE 1

SMCS-6107 **i00746485**

NOTE	REF NO	GRAPHIC REF	PART NUMBER	QTY	PART NAME 1 2 3 4 5 6 (PRODUCT LEVEL)	SEE PAGE
	1	1	**125-7730**	1	BOOM AS	
	2	1	**125-2562**	2	BEARING	
	3	1	**153-1855**	2	SPACER	
	4	1	**153-1854**	1	SPACER	
	5	1	**153-1853**	1	SPACER	
	6	1	**132-8574**	6	BEARING	
Y	7	1	*148-8163*	1	LINK GP-STANDARD LIFT	1132
Y	8	1	*148-7169*	1	PIN & SEAL GP-LINKAGE	1142

Y-SEPARATE ILLUSTRATION

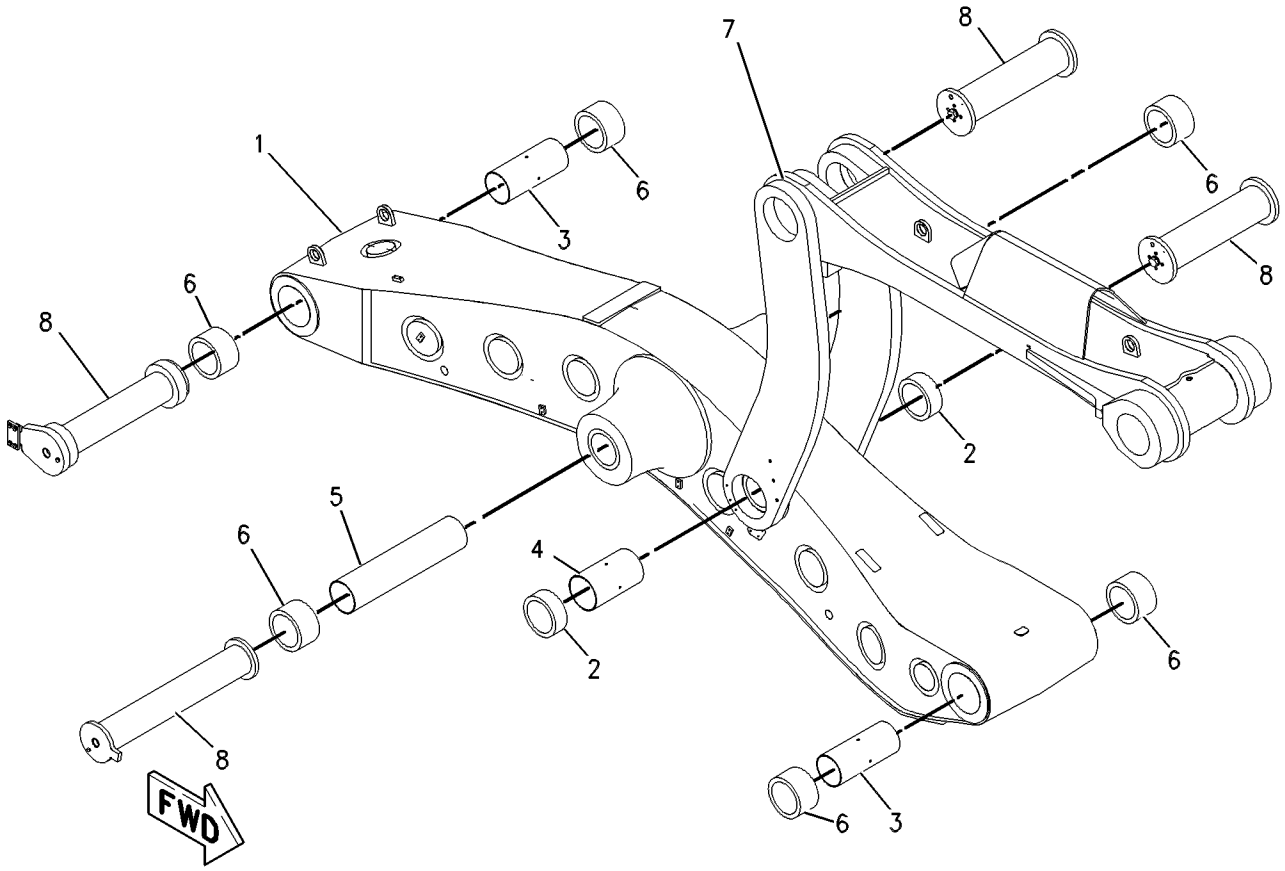

GRAPHIC #1 g00282050

131-1251 CONTROL GP-BUCKET

S/N: 7HR1-UP
PART OF 131-1255, 148-7909, 170-2472, 170-8022 LIFT AR-STANDARD
AN ATTACHMENT
TYPE 2

SMCS-6107 **i01057175**

NOTE	REF NO	GRAPHIC REF	PART NUMBER	QTY	PART NAME 1 2 3 4 5 6 (PRODUCT LEVEL)	SEE PAGE
	1	1	**125-7730**	1	BOOM AS	
	2	1	**125-2562**	2	BEARING	
	3	1	**153-1855**	2	SPACER	
	4	1	**153-1854**	1	SPACER	
	5	1	**153-1853**	1	SPACER	
	6	1	**132-8574**	6	BEARING	
C	7	1	**125-6365**	1	LINK AS-BOOM	
		1	**146-1616**	2	BEARING	
CY	8	1	*168-2580*	1	PIN & SEAL GP-LINKAGE	1148
C	9	1	**166-6811**	1	LINK AS-BOOM	
		1	**146-1616**	2	BEARING	
CY	10	1	**167-7587**	1	LINK AS-BUCKET	1128
CFY			*162-7507*	1	LINES GP-GREASE	742

C-CHANGE FROM PREVIOUS TYPE
F-NOT SHOWN
Y-SEPARATE ILLUSTRATION

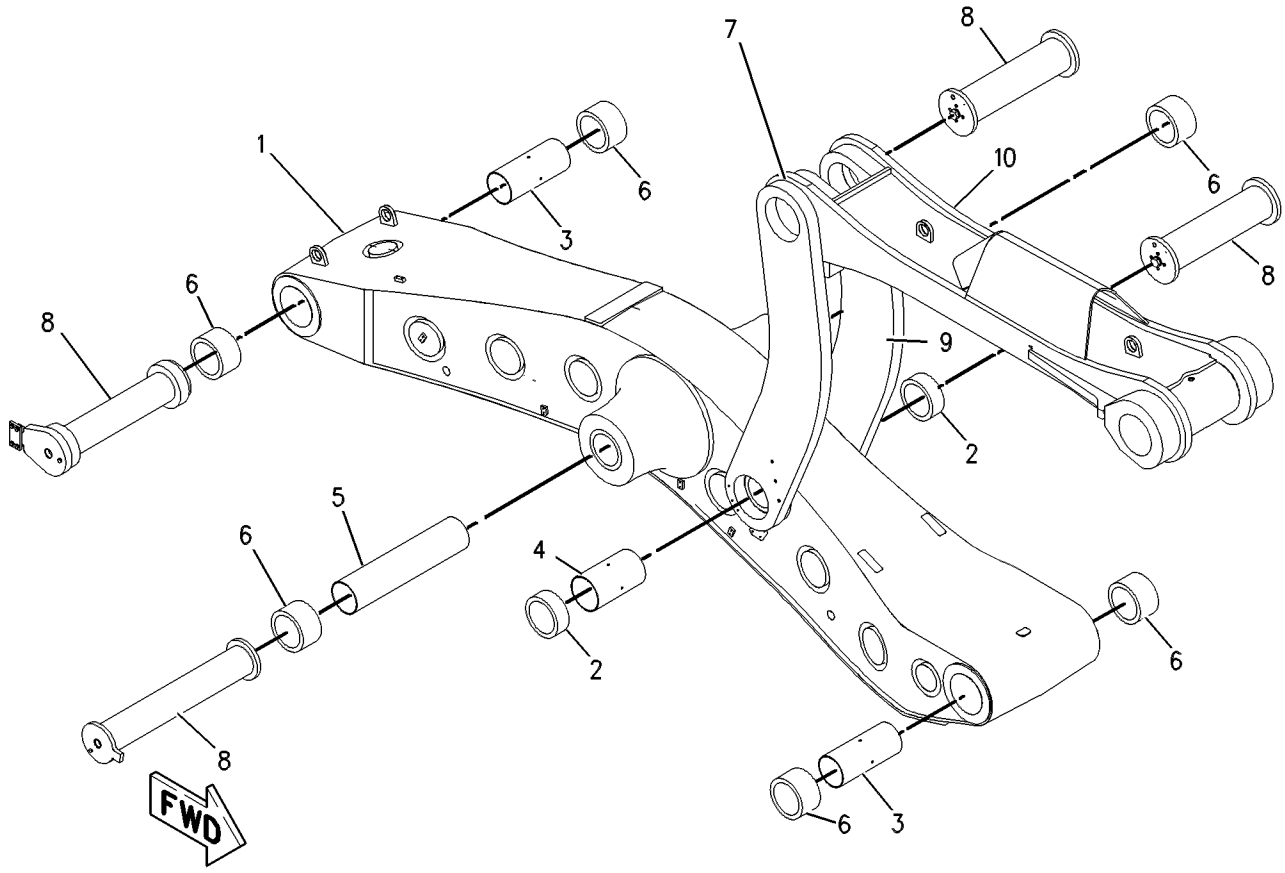

GRAPHIC #1 g00537098

131-1251 CONTROL GP-BUCKET

S/N: 7HR361-UP
PART OF 170-2472, 170-8022 LIFT AR-STANDARD
AN ATTACHMENT
TYPE 1

SMCS-6107 **i01289825**

NOTE	REF NO	GRAPHIC REF	PART NUMBER	QTY	PART NAME 1 2 3 4 5 6 (PRODUCT LEVEL)	SEE PAGE
	1	1	**125-7730**	1	BOOM GP-LOADER	
	2	1	**125-2562**	2	BEARING	
	3	1	**153-1855**	2	SPACER	
	4	1	**153-1854**	1	SPACER	
	5	1	**153-1853**	1	SPACER	
	6	1	**132-8574**	6	BEARING	
	7	1	**125-6365**	1	LINK AS-BOOM	
		1	**146-1616**	2	BEARING	
Y	8	1	*168-2580*	1	PIN & SEAL GP-LINKAGE (CONTAINS FOUR PINS)	1148
	9	1	**166-6811**	1	LINK AS-BOOM	
		1	**146-1616**	2	BEARING	
CY	10	1	**163-6188**	1	LINK GP-BUCKET	1127
C	11	1	**177-8788**	1	PLUG AS-OIL LEVEL (DIPSTICK) (LONG)	
		1	**3K-0360**	1	SEAL-O-RING (16.36MM ID)	
		1	**149-8220**	1	FITTING-RELIEF	
C	12	1	**177-8787**	4	PLUG AS-OIL LEVEL (DIPSTICK) (SHORT)	
					(EACH INCLUDES)	
		1	**3K-0360**	1	SEAL-O-RING (16.36MM ID)	
		1	**149-8220**	1	FITTING-RELIEF	
CFY			*162-7507*	1	LINES GP-GREASE	742

C-CHANGE FROM PREVIOUS TYPE
F-NOT SHOWN
Y-SEPARATE ILLUSTRATION

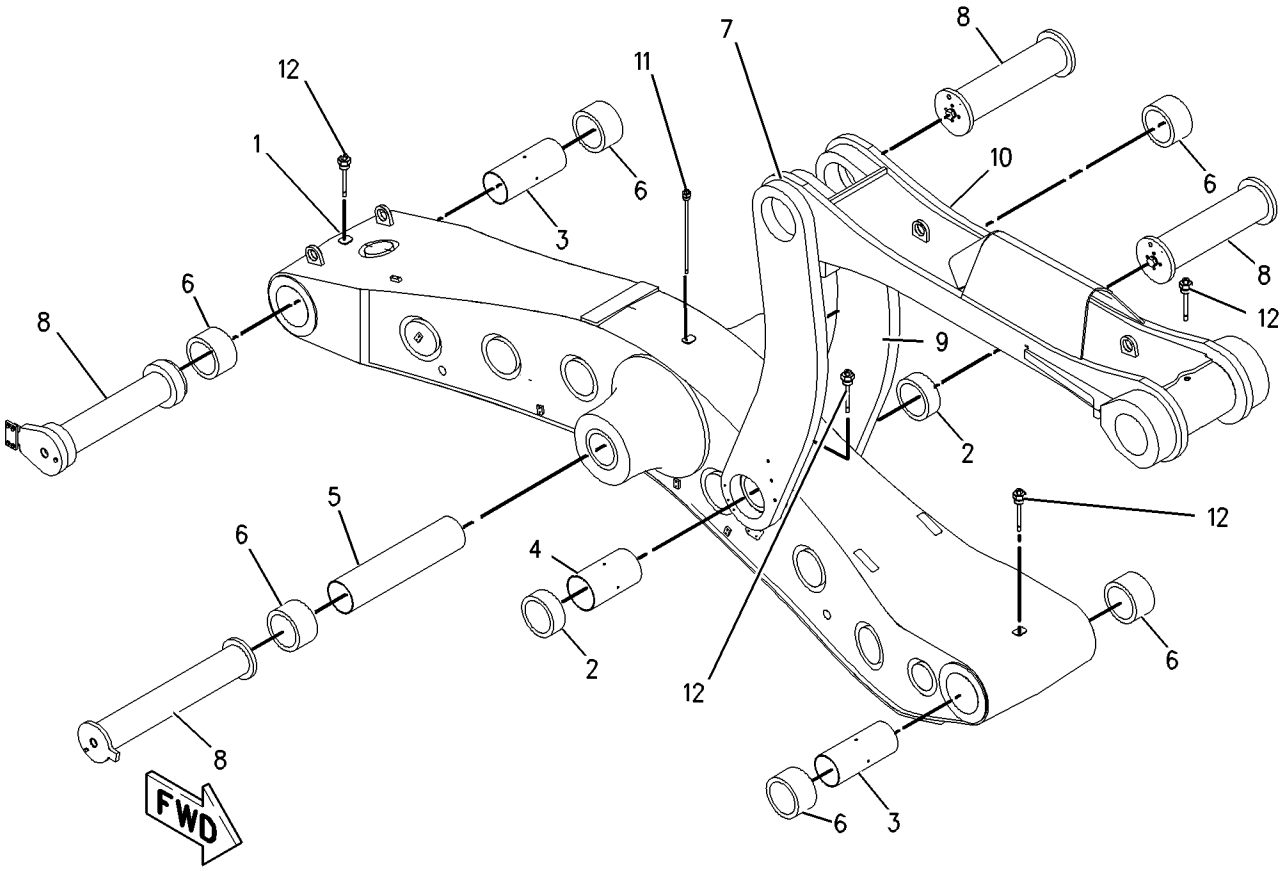

GRAPHIC #1 g00688531

131-1251 CONTROL GP-BUCKET

S/N: 7HR361-UP
PART OF 170-2472, 170-8022 LIFT AR-STANDARD
AN ATTACHMENT
TYPE 2

SMCS-6107 **i01461248**

NOTE	REF NO	GRAPHIC REF	PART NUMBER	QTY	PART NAME 1 2 3 4 5 6 (PRODUCT LEVEL)	SEE PAGE
	1	1	**125-7730**	1	BOOM GP-LOADER	
	2	1	**125-2562**	2	BEARING	
	3	1	**153-1855**	2	SPACER	
	4	1	**153-1854**	1	SPACER	
	6	1	**132-8574**	6	BEARING	
	7	1	**125-6365**	1	LINK AS-BOOM	
		1	**146-1616**	2	BEARING	
Y	8	1	*168-2580*	1	PIN & SEAL GP-LINKAGE (CONTAINS FOUR PINS)	1148
	9	1	**166-6811**	1	LINK AS-BOOM	
		1	**146-1616**	2	BEARING	
Y	10	1	**163-6188**	1	LINK GP-BUCKET	1127
C	11	1	**197-8234**	5	PLUG AS	
					(EACH INCLUDES)	
		1	**3K-0360**	1	SEAL-O-RING	
		1	**149-8220**	1	FITTING-RELIEF	
FY			*162-7507*	1	LINES GP-GREASE	742

C-CHANGE FROM PREVIOUS TYPE
F-NOT SHOWN
Y-SEPARATE ILLUSTRATION

131-1251 **CONTROL GP-BUCKET** *(contd.)* **i01461248**

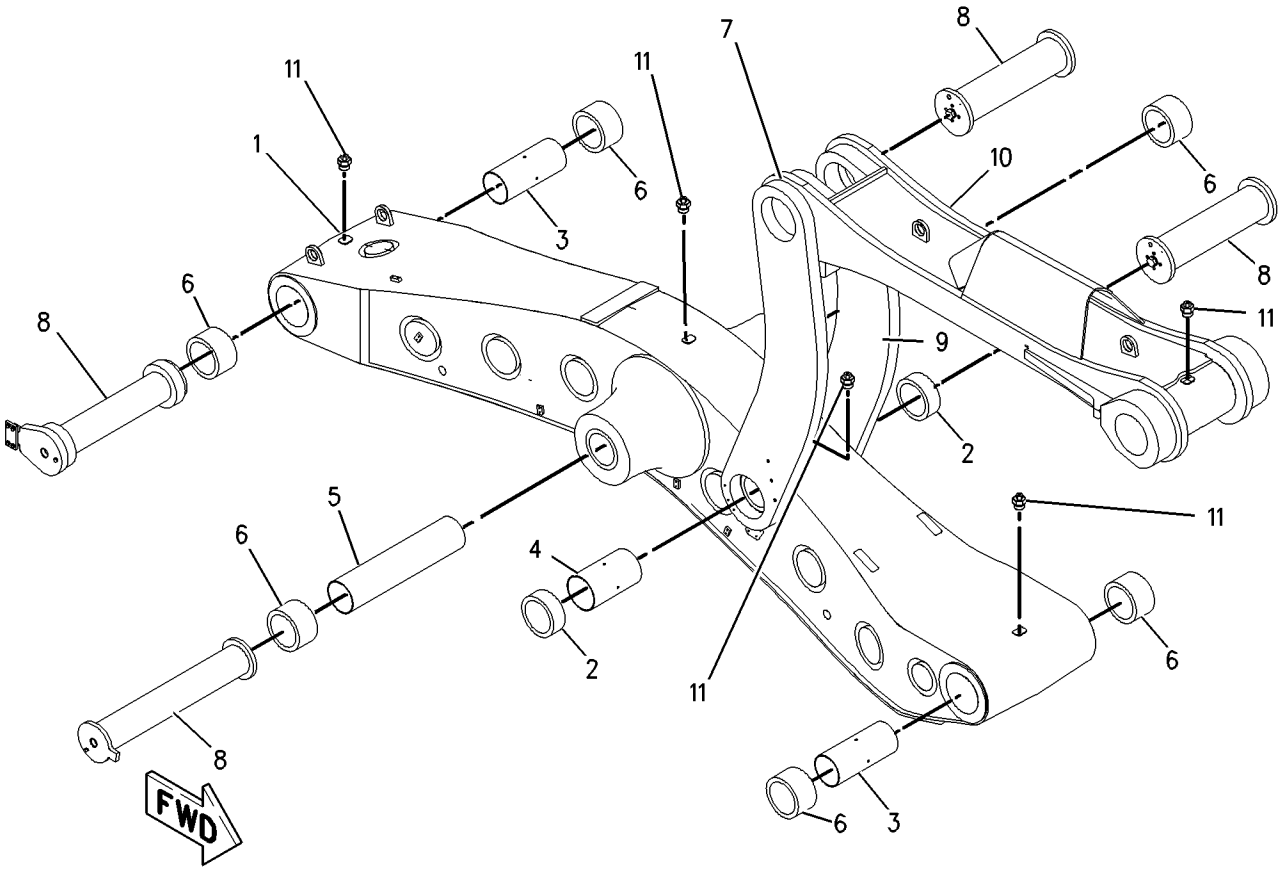

GRAPHIC #1 g00763776

112-4201 LIFT AR-HIGH—NON-INSTALLED

S/N: 7HR1-UP

CANNOT BE USED WITH 131-1255 LIFT AR, 148-7909 LIFT AR, 148-7910 LIFT AR-HIGH AN ATTACHMENT

SMCS-6000 **i00834781**

NOTE	PART NUMBER	QTY	PART NAME 1 2 3 4 5 6 (PRODUCT LEVEL)	SEE PAGE
Y	*138-6345*	1	BUMPER GP-REAR	678
Y	*109-6890*	1	CONTROL GP-BUCKET	1104
Y	*130-7382*	1	KICKOUT & POSITIONER GP	980

Y-SEPARATE ILLUSTRATION

148-7910 LIFT AR-HIGH—INSTALLED

S/N: 7HR1-UP

CANNOT BE USED WITH 131-1255 LIFT AR, 112-4201 LIFT AR-HIGH, 148-7909 LIFT AR AN ATTACHMENT

SMCS-6000 **i00748953**

NOTE	PART NUMBER	QTY	PART NAME 1 2 3 4 5 6 (PRODUCT LEVEL)	SEE PAGE
Y	*138-6345*	1	BUMPER GP-REAR	678
Y	*109-6890*	1	CONTROL GP-BUCKET	1104
Y	*130-7382*	1	KICKOUT & POSITIONER GP	980

Y-SEPARATE ILLUSTRATION

170-8463 LIFT AR-HIGH–VIDS

S/N: 7HR1-UP

CANNOT BE USED WITH 170-2472–PAGE 1124, 170-8022–PAGE 1125, 170-8544–PAGE 1121 AN ATTACHMENT

SMCS-6000 **i01068037**

NOTE	PART NUMBER	QTY	PART NAME 1 2 3 4 5 6 (PRODUCT LEVEL)	SEE PAGE
Y	*169-9055*	1	BUMPER AR	675
Y	*109-6890*	1	CONTROL GP-BUCKET	1104
Y	*130-7382*	1	KICKOUT & POSITIONER GP	980
Y	*168-4358*	1	WIRING GP-MONITOR	446

Y-SEPARATE ILLUSTRATION

170-8544 LIFT AR-HIGH–VIMS

S/N: 7HR1-UP

CANNOT BE USED WITH 170-8022–PAGE 1125, 170-8463–PAGE 1120

AN ATTACHMENT

SMCS-6000 **i01192129**

NOTE	PART NUMBER	QTY	PART NAME 1 2 3 4 5 6 (PRODUCT LEVEL)	SEE PAGE
Y	*169-9056*	1	BUMPER AR-REAR	676
Y	*109-6890*	1	CONTROL GP-BUCKET	1104
Y	*130-7382*	1	KICKOUT & POSITIONER GP	980
Y	*131-8155*	1	VIMS AR	1421

Y-SEPARATE ILLUSTRATION

IMPLEMENTS

131-1255 LIFT AR-STANDARD—NON-INSTALLED

S/N: 7HR1-UP

CANNOT BE USED WITH 112-4201 LIFT AR-HIGH, 148-7909 LIFT AR, 148-7910 LIFT AR-HIGH AN ATTACHMENT

SMCS-6000 **i01057199**

NOTE	PART NUMBER	QTY	PART NAME 1 2 3 4 5 6 (PRODUCT LEVEL)	SEE PAGE
Y	*109-6848*	1	BUMPER GP-REAR	677
Y	*131-1251*	1	CONTROL GP-BUCKET	1112
Y	*131-1276*	1	KICKOUT & POSITIONER GP	988

Y-SEPARATE ILLUSTRATION

148-7909 LIFT AR-STANDARD—INSTALLED

S/N: 7HR1-UP

CANNOT BE USED WITH 131-1255 LIFT AR, 112-4201 LIFT AR-HIGH, 148-7910 LIFT AR-HIGH AN ATTACHMENT

SMCS-6000 **i00896951**

NOTE	PART NUMBER	QTY	PART NAME 1 2 3 4 5 6 (PRODUCT LEVEL)	SEE PAGE
Y	*109-6848*	1	BUMPER GP-REAR	677
Y	*131-1251*	1	CONTROL GP-BUCKET	1112
Y	*131-1276*	1	KICKOUT & POSITIONER GP	988

Y-SEPARATE ILLUSTRATION

IMPLEMENTS

170-2472 LIFT AR-STANDARD–VIDS

S/N: 7HR291-UP

CANNOT BE USED WITH 170-2473 LIFT AR, 170-2474 LIFT AR-HIGH, 170-2475 LIFT AR-HIGH AN ATTACHMENT

SMCS-6000 **i01067861**

NOTE	PART NUMBER	QTY	PART NAME 1 2 3 4 5 6 (PRODUCT LEVEL)	SEE PAGE
Y	*169-9053*	1	BUMPER AR-REAR	673
Y	*131-1251*	1	CONTROL GP-BUCKET	1112
Y	*131-1276*	1	KICKOUT & POSITIONER GP	988
Y	*168-4358*	1	WIRING GP-MONITOR	446

Y-SEPARATE ILLUSTRATION

170-8022 LIFT AR-STANDARD–VIMS

S/N: 7HR1-UP

CANNOT BE USED WITH 170-2472–PAGE 1124, 170-8463–PAGE 1120, 170-8544–PAGE 1121 AN ATTACHMENT

SMCS-6000 **i01068035**

NOTE	PART NUMBER	QTY	PART NAME 1 2 3 4 5 6 (PRODUCT LEVEL)	SEE PAGE
Y	*169-9054*	1	BUMPER AR-REAR	674
Y	*131-1251*	1	CONTROL GP-BUCKET	1112
Y	*131-1276*	1	KICKOUT & POSITIONER GP	988
Y	*131-8155*	1	VIMS AR	1421

Y-SEPARATE ILLUSTRATION

163-6187 LINK GP-BUCKET

S/N: 7HR361-UP
HIGH LIFT
PART OF 109-6890 CONTROL GP-BUCKET
AN ATTACHMENT

SMCS-6513 **i01289561**

NOTE	REF NO	GRAPHIC REF	PART NUMBER	QTY	PART NAME 1 2 3 4 5 6 (PRODUCT LEVEL)	SEE PAGE
	1	1	**111-9758**	1	PLATE	
	2	1	*161-1609*	1	LINK AS	
	2A	1	**5K-5962**	2	BOSS	
M	2B	1	**8T-6462**	7	BOSS-WELD	
	2C	1	**164-3077**	2	PLATE	
	2D	1	**167-0729**	4	PLATE	
	2E	1	**167-0730**	1	PLATE	
	2F	1	**167-0731**	1	PLATE	
	3	1	**161-5808**	2	BEARING	
	4	1	**161-5809**	2	BEARING	
	5	1	**3K-0360**	2	SEAL-O-RING (16.36MM ID)	
	6	1	**9S-4185**	2	PLUG-O-RING (3/4-16 THD)	

M-METRIC PART

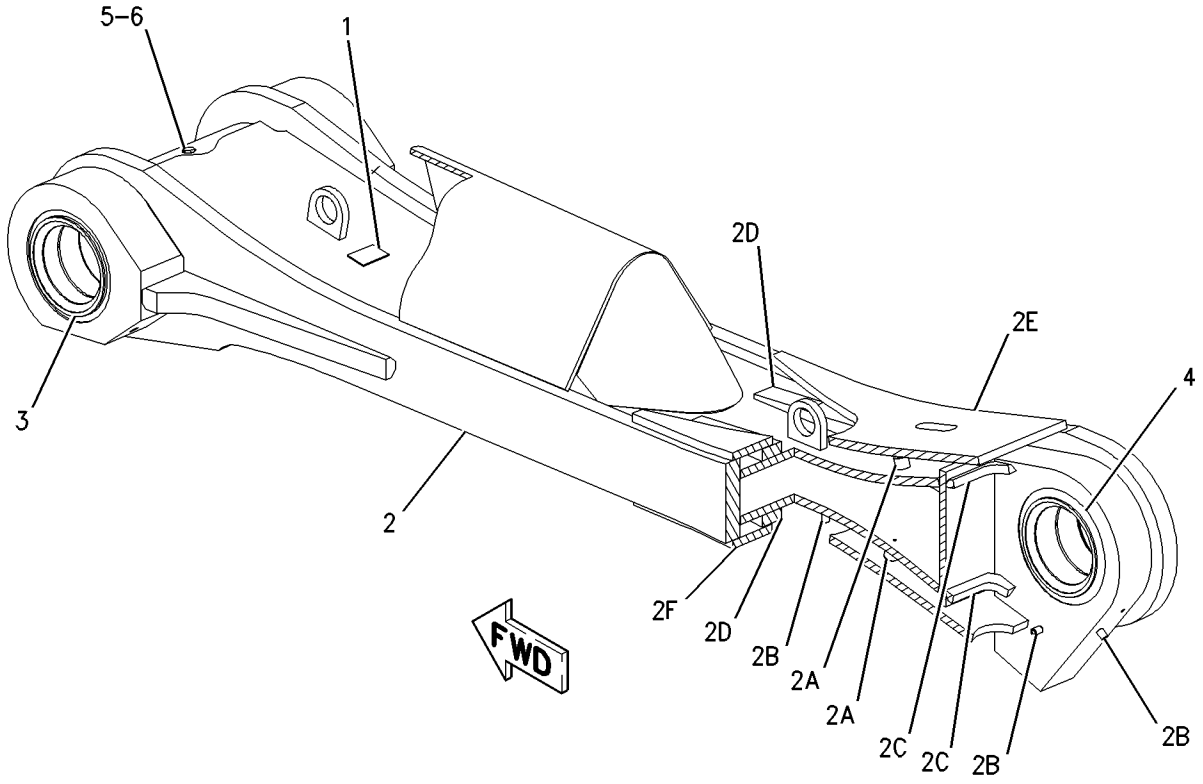

GRAPHIC #1 g00685829

163-6188 LINK GP-BUCKET

S/N: 7HR361-UP
PART OF 131-1251 CONTROL GP-BUCKET
AN ATTACHMENT

SMCS-6513 **i01187982**

NOTE	REF NO	GRAPHIC REF	PART NUMBER	QTY	PART NAME 1 2 3 4 5 6 (PRODUCT LEVEL)	SEE PAGE
	1	1	**111-9758**	1	PLATE	
	2	1	**5K-5962**	2	BOSS	
M	2A	1	**8T-6462**	7	BOSS-WELD	
	2B	1	**141-4776**	1	PLATE	
	2C	1	**141-4777**	1	PLATE	
	2D	1	**157-8957**	2	BLOCK	
	2E	1	**164-3077**	2	PLATE	
	2F	1	**167-0732**	1	PLATE	
	2G	1	**167-0733**	1	PLATE	
	2H	1	**167-0734**	4	PLATE	
	3	1	**161-5808**	2	BEARING	
	4	1	**161-5809**	2	BEARING	
	5	1	**3K-0360**	2	SEAL-O-RING (16.36MM ID)	
	6	1	**9S-4185**	2	PLUG-O-RING (3/4-16 THD)	

M-METRIC PART

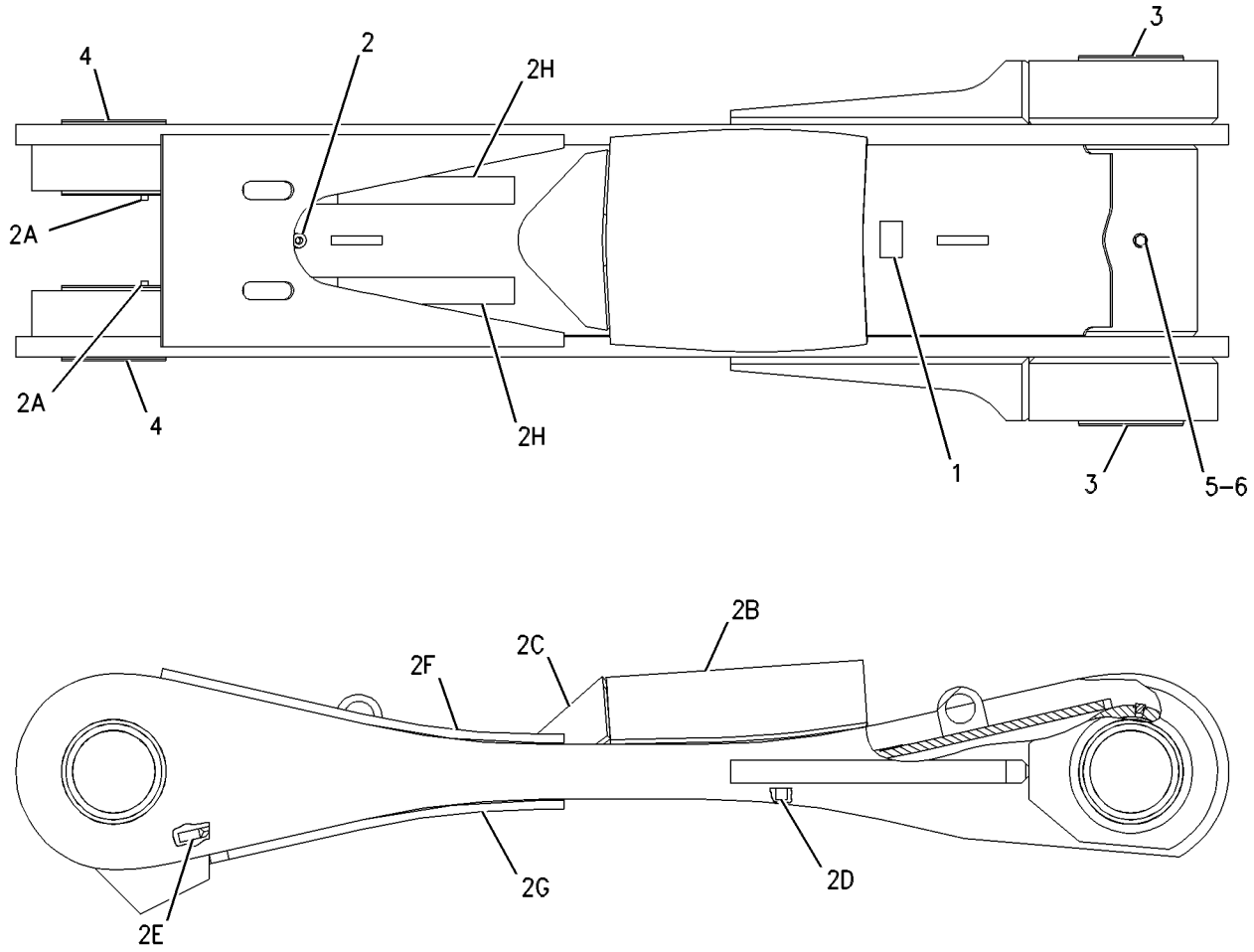

GRAPHIC #1 g00647991

167-7587 LINK GP-BUCKET

S/N: 7HR1-360
PART OF 131-1251 CONTROL GP-BUCKET
AN ATTACHMENT

SMCS-6513 **i01138918**

NOTE	REF NO	GRAPHIC REF	PART NUMBER	QTY	PART NAME 1 2 3 4 5 6 (PRODUCT LEVEL)	SEE PAGE
	1	1	**111-9758**	1	PLATE	
	2	1	**153-1855**	1	SPACER	
	3	1	**161-5808**	2	BEARING	
	4	1	**161-5809**	1	BEARING	
	5	1	**161-5810**	1	BEARING	
M	6	1	**8T-3851**	6	BOSS-WELD (M10X1.5X30MM OAL)	
	6A	1	**164-3077**	2	PLATE	
	6B	1	**167-0734**	4	PLATE	
	6C	1	**167-0732**	1	PLATE	
	6D	1	**167-0733**	1	PLATE	
	7	1	**3K-0360**	2	SEAL-O-RING (16.36MM ID)	
	8	1	**9S-8005**	2	PLUG-O-RING (3/4-16 THD)	

M-METRIC PART

167-7587 LINK GP-BUCKET *(contd.)* **i01138918**

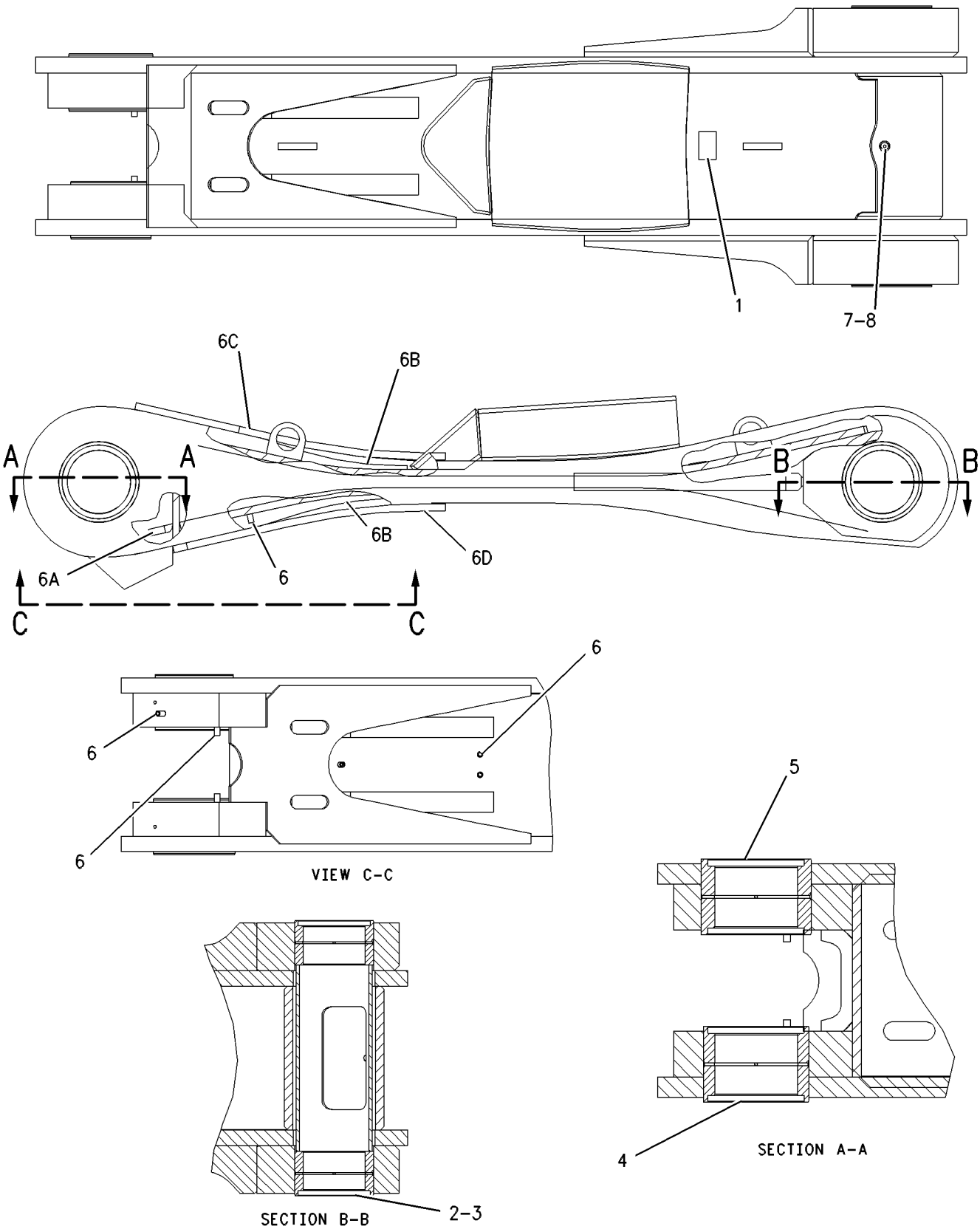

GRAPHIC #1 g00537651

167-7588 LINK GP-BUCKET

S/N: 7HR1-360
PART OF 109-6890 CONTROL GP-BUCKET
AN ATTACHMENT

SMCS-6513 **i01203432**

NOTE	REF NO	GRAPHIC REF	PART NUMBER	QTY	PART NAME 1 2 3 4 5 6 (PRODUCT LEVEL)	SEE PAGE
	1	1	**111-9758**	1	PLATE	
	2	1	**153-1855**	1	SPACER	
	3	1	**161-5808**	2	BEARING	
	4	1	**161-5809**	1	BEARING	
	5	1	**161-5810**	1	BEARING	
M	6	1	**8T-3851**	6	BOSS-WELD (M10X1.5X30MM OAL)	
	6A	1	**164-3077**	2	PLATE	
	6B	1	**167-0729**	4	PLATE	
	6C	1	**167-0730**	1	PLATE	
	6D	1	**167-0731**	1	PLATE	
	7	1	**3K-0360**	2	SEAL-O-RING (16.36MM ID)	
	8	1	**9S-8005**	2	PLUG-O-RING (3/4-16 THD)	

M-METRIC PART

167-7588 LINK GP-BUCKET *(contd.)* **i01203432**

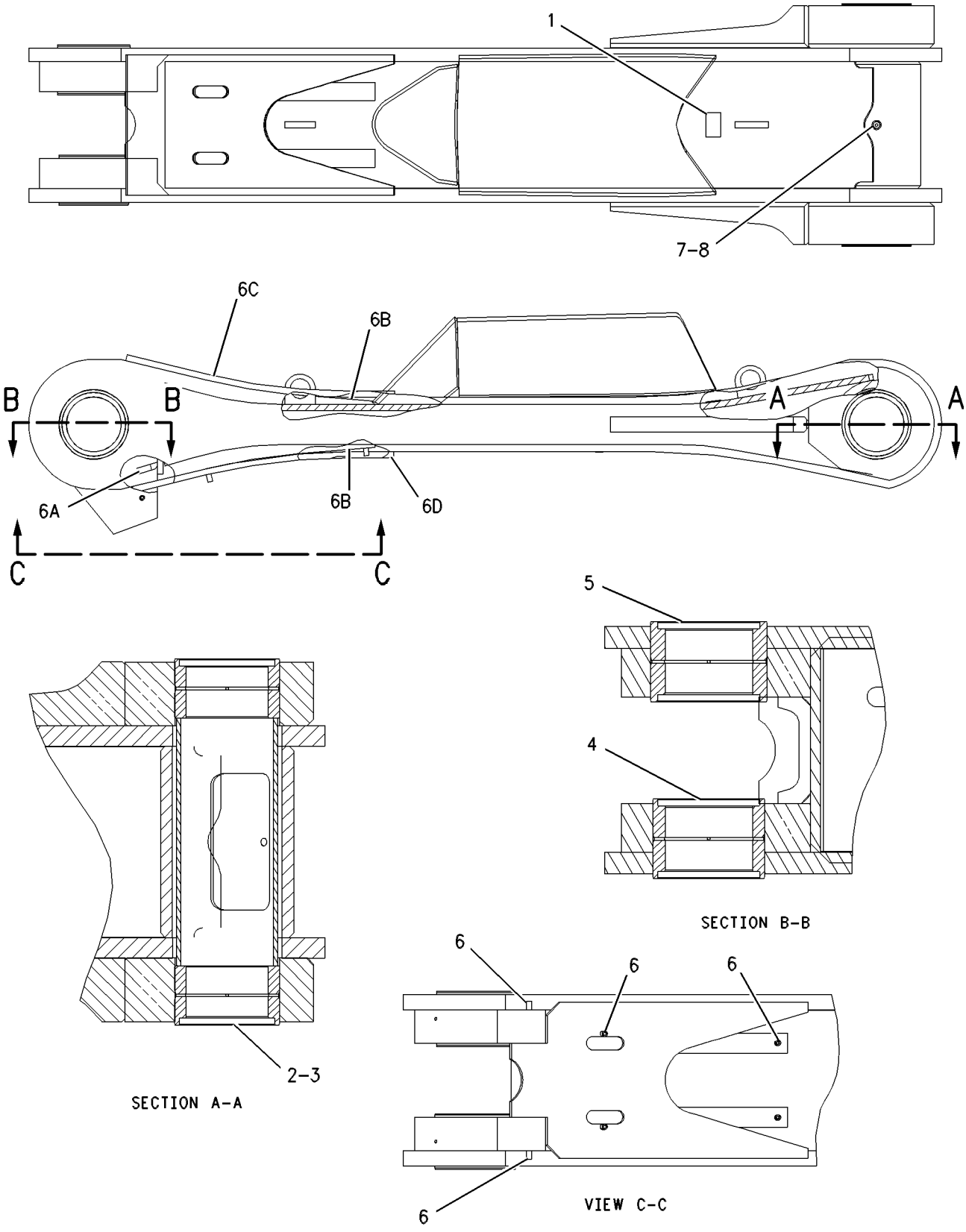

GRAPHIC #1 g00537653

148-8163 LINK GP-BUCKET & BOOM—STANDARD LIFT

S/N: 7HR1-UP
PART OF 131-1251 CONTROL GP-BUCKET
AN ATTACHMENT
TYPE 1

SMCS-6513 **i01153948**

NOTE	REF NO	GRAPHIC REF	PART NUMBER	QTY	PART NAME 1 2 3 4 5 6 (PRODUCT LEVEL)	SEE PAGE
	1	1	**125-1284**	1	LINK AS-BUCKET	
	2	1	**125-2568**	1	BEARING	
	3	1	**153-1855**	1	SPACER	
	4	1	**132-8574**	2	BEARING	
	5	1	**111-9758**	1	PLATE	
	6	1	**125-6365**	2	LINK AS-BOOM	
					(EACH INCLUDES)	
	7	1	**146-1616**	2	BEARING	

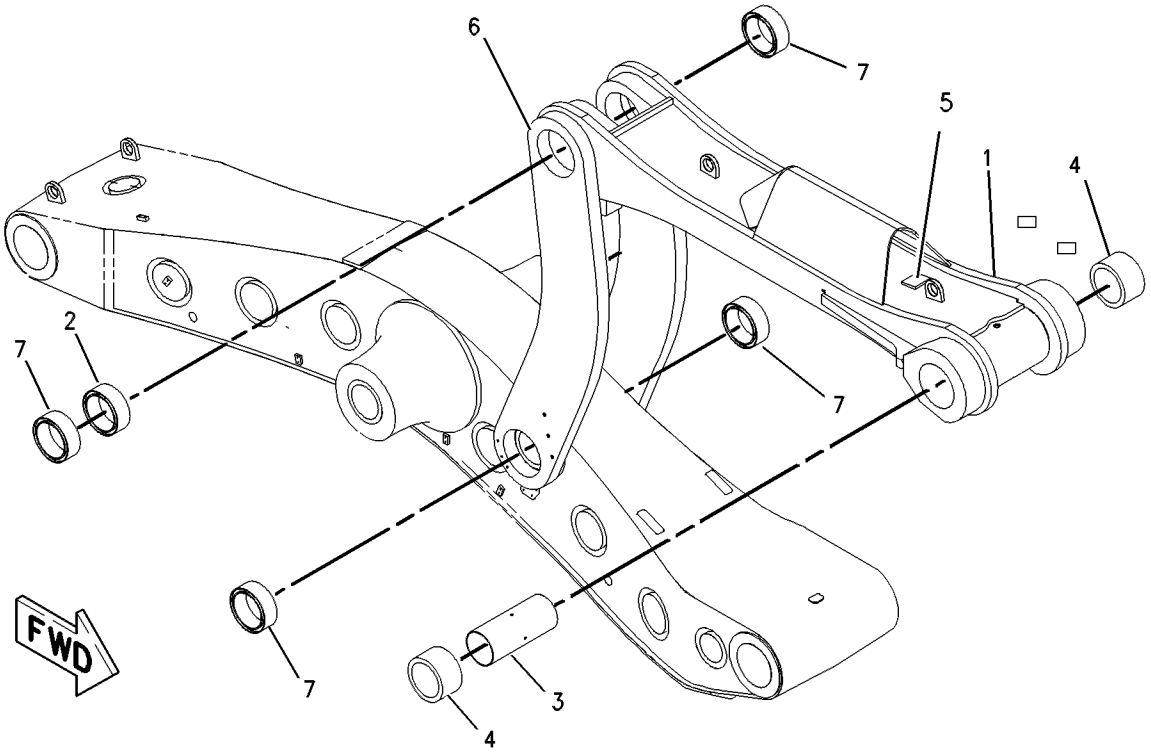

GRAPHIC #1 g00330587

148-8163 LINK GP-BUCKET & BOOM–STANDARD LIFT

S/N: 7HR1-UP
PART OF 131-1251 CONTROL GP-BUCKET
AN ATTACHMENT
TYPE 2

SMCS-6513 **i01192119**

NOTE	REF NO	GRAPHIC REF	PART NUMBER	QTY	PART NAME 1 2 3 4 5 6 (PRODUCT LEVEL)	SEE PAGE
	1	1	**125-1284**	1	LINK AS-BUCKET	
	2	1	**125-2568**	1	BEARING	
	3	1	**153-1855**	1	SPACER	
	4	1	**132-8574**	2	BEARING	
	5	1	**111-9758**	1	PLATE	
C	6	1	**125-6365**	1	LINK AS-BOOM (RH)	
C	8	1	**166-6811**	1	LINK AS-BOOM (LH)	
					(EACH LINK AS-BOOM INCLUDES)	
C	9	1	**146-1616**	2	BEARING	

C-CHANGE FROM PREVIOUS TYPE

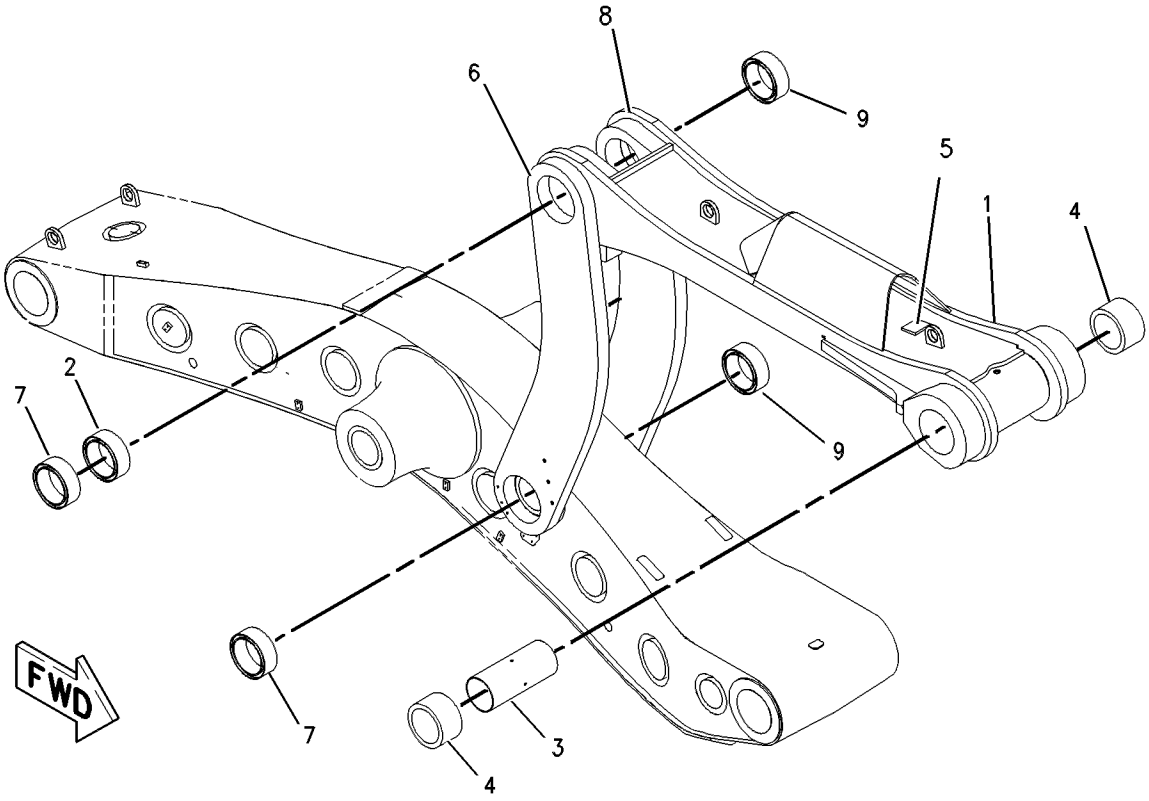

GRAPHIC #1 g00535432

148-8164 LINK GP-BUCKET & BOOM—HIGH LIFT

S/N: 7HR1-UP
PART OF 109-6890 CONTROL GP-BUCKET
AN ATTACHMENT
TYPE 1

SMCS-6513 **i01141591**

NOTE	REF NO	GRAPHIC REF	PART NUMBER	QTY	PART NAME 1 2 3 4 5 6 (PRODUCT LEVEL)	SEE PAGE
	1	1	**131-1571**	1	LINK AS-BUCKET	
	2	1	**3K-0360**	2	SEAL-O-RING (16.36MM ID)	
	3	1	**9S-8005**	2	PLUG-O-RING (3/4-16 THD)	
	4	1	**146-1617**	1	BEARING	
	5	1	**153-1855**	1	SPACER	
	6	1	**132-8574**	2	BEARING	
	7	1	**111-9758**	1	PLATE	
	8	1	**133-4221**	2	LINK AS-BOOM	
					(EACH INCLUDES)	
	9	1	**146-1616**	2	BEARING	

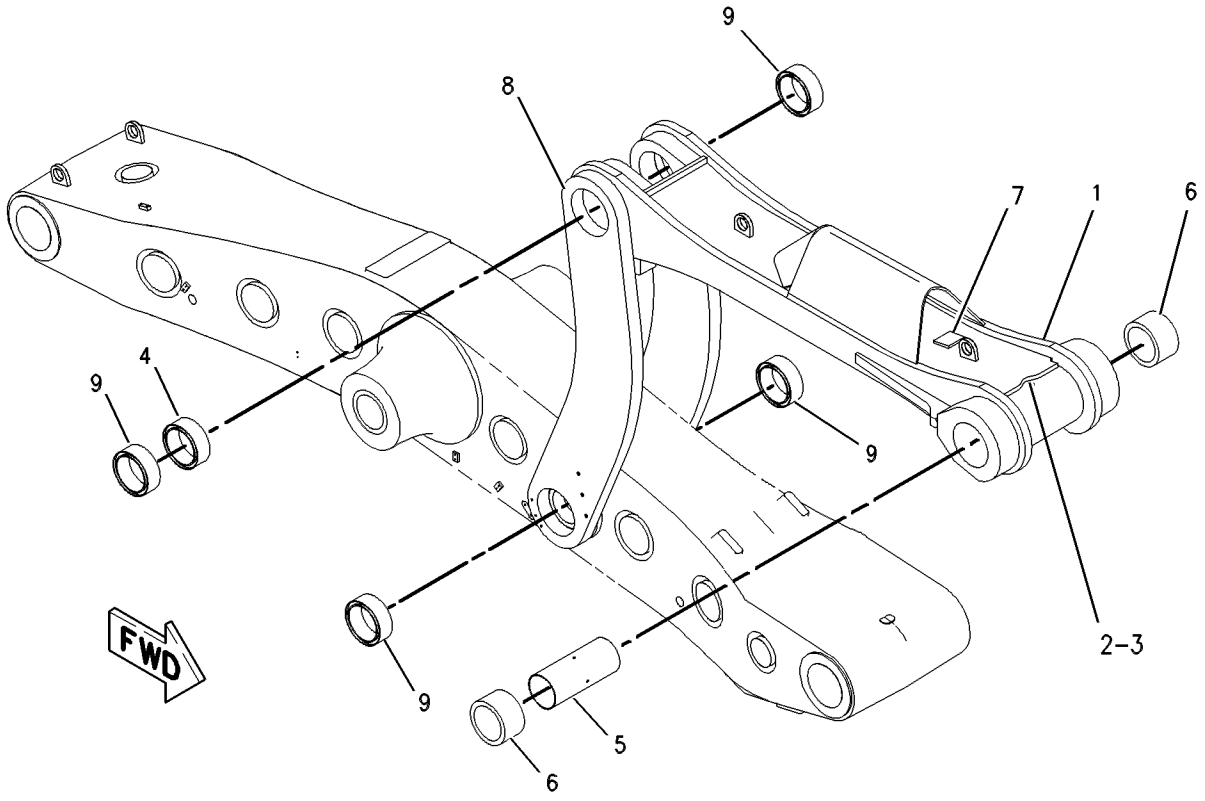

GRAPHIC #1 g00327055

148-8164 LINK GP-BUCKET & BOOM–HIGH LIFT

S/N: 7HR1-UP
PART OF 109-6890 CONTROL GP-BUCKET
AN ATTACHMENT
TYPE 2

SMCS-6513 **i01153978**

NOTE	REF NO	GRAPHIC REF	PART NUMBER	QTY	PART NAME 1 2 3 4 5 6 (PRODUCT LEVEL)	SEE PAGE
	1	1	**131-1571**	1	LINK AS-BUCKET	
	2	1	**3K-0360**	2	SEAL-O-RING (16.36MM ID)	
	3	1	**9S-8005**	2	PLUG-O-RING (3/4-16 THD)	
	4	1	**146-1617**	1	BEARING	
	5	1	**153-1855**	1	SPACER	
	6	1	**132-8574**	2	BEARING	
	7	1	**111-9758**	1	PLATE	
C	8	1	**133-4221**	1	LINK AS-BOOM	
C	9	1	**166-6812**	1	LINK AS-BOOM	
					(EACH LINK AS INCLUDES)	
	10	1	**146-1616**	2	BEARING	

C-CHANGE FROM PREVIOUS TYPE

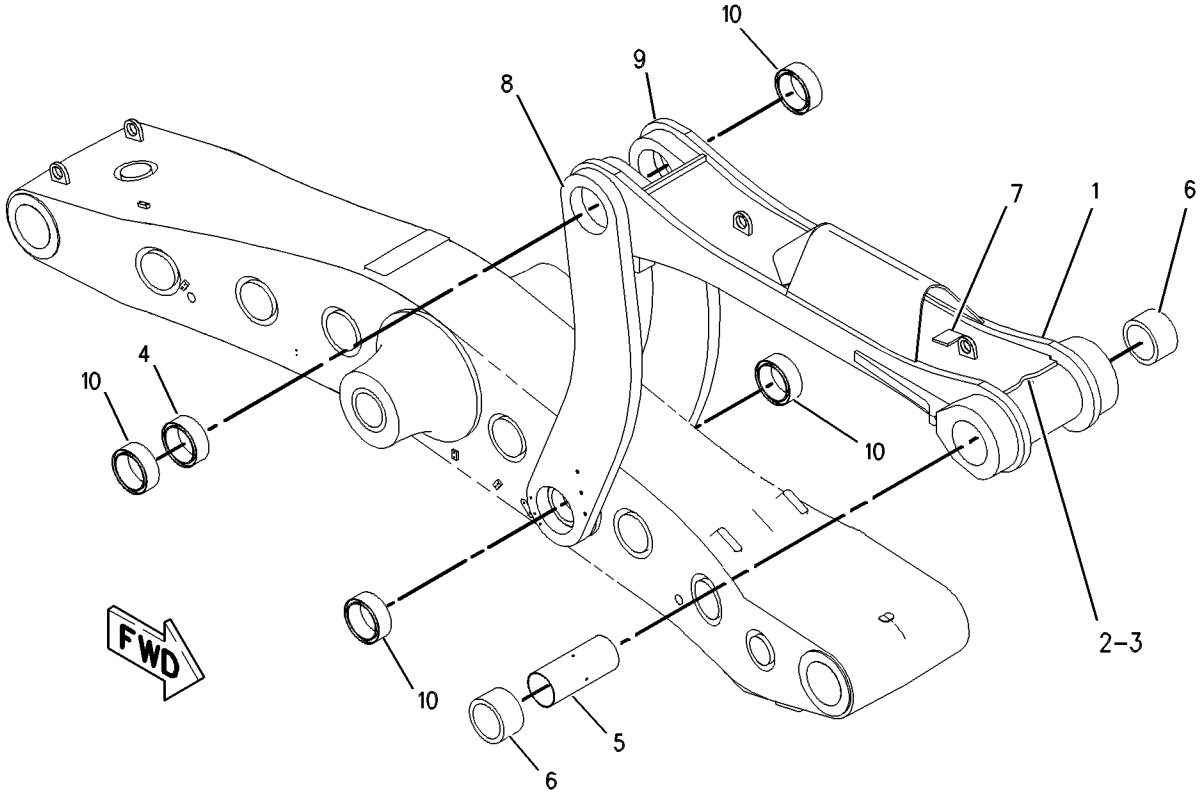

GRAPHIC #1 g00535459

109-6837 PIN & SEAL GP-LINKAGE

S/N: 7HR1-UP
FOR PINS G & Y
PART OF 109-6819 CHASSIS AR
TYPE 1

SMCS-6118 **i01175431**

NOTE	REF NO	GRAPHIC REF	PART NUMBER	QTY	PART NAME 1 2 3 4 5 6 (PRODUCT LEVEL)	SEE PAGE
	1	1	**1J-9671**	5	SEAL-O-RING (10.52MM ID)	
	2	1	**1R-1056**	4	SEAL AS	
	3	1	**143-9740**	4	SEAL AS	
	4	1	**3K-8460**	5	PLUG (1/2-20 THD)	
	5	1	**6V-5052**	1	SEAL-O-RING (104.14MM ID)	
	6	1	**6V-5103**	1	SEAL-O-RING (126.36MM ID)	
M	7	1	**7X-2552**	2	BOLT (M16X2.0X30MM)	
M	8	1	**7X-2583**	1	BOLT (M30X3.5X120MM)	
	9	1	**9X-8258**	1	WASHER (6MM THK)	
	10	1	**125-2596**	1	PIN AS (PIN G)	
	11	1	**144-8300**	1	PIN (PIN Y)	
	12	1	**132-9898**	1	PLATE AS	
		1	**1S-9292**	2	DOWEL	
	13	1	**162-8122**	2	COLLAR	
	14	1	**4E-5609**	1	PLATE	
	15	1	**5P-8247**	2	WASHER-HARD (3.5MM THK)	
	16	1	**145-5007**	1	PLATE AS	
M	17	1	**147-2001**	2	BOLT-HEX HEAD	
	18	1	**9X-8259**	2	WASHER (6MM THK)	
	19	1	**147-2383**	2	SPACER	
Y	20	1	*148-7168*	1	PIN & SEAL GP-LINKAGE	1140
	21	1	**145-6114**	1	PLATE AS	
		1	**1S-9292**	2	DOWEL	
	22	1	**161-8988**	1	PLATE	
	23	1	**5K-5959**	1	SEAL-O-RING (50.17MM ID)	

M-METRIC PART
Y-SEPARATE ILLUSTRATION

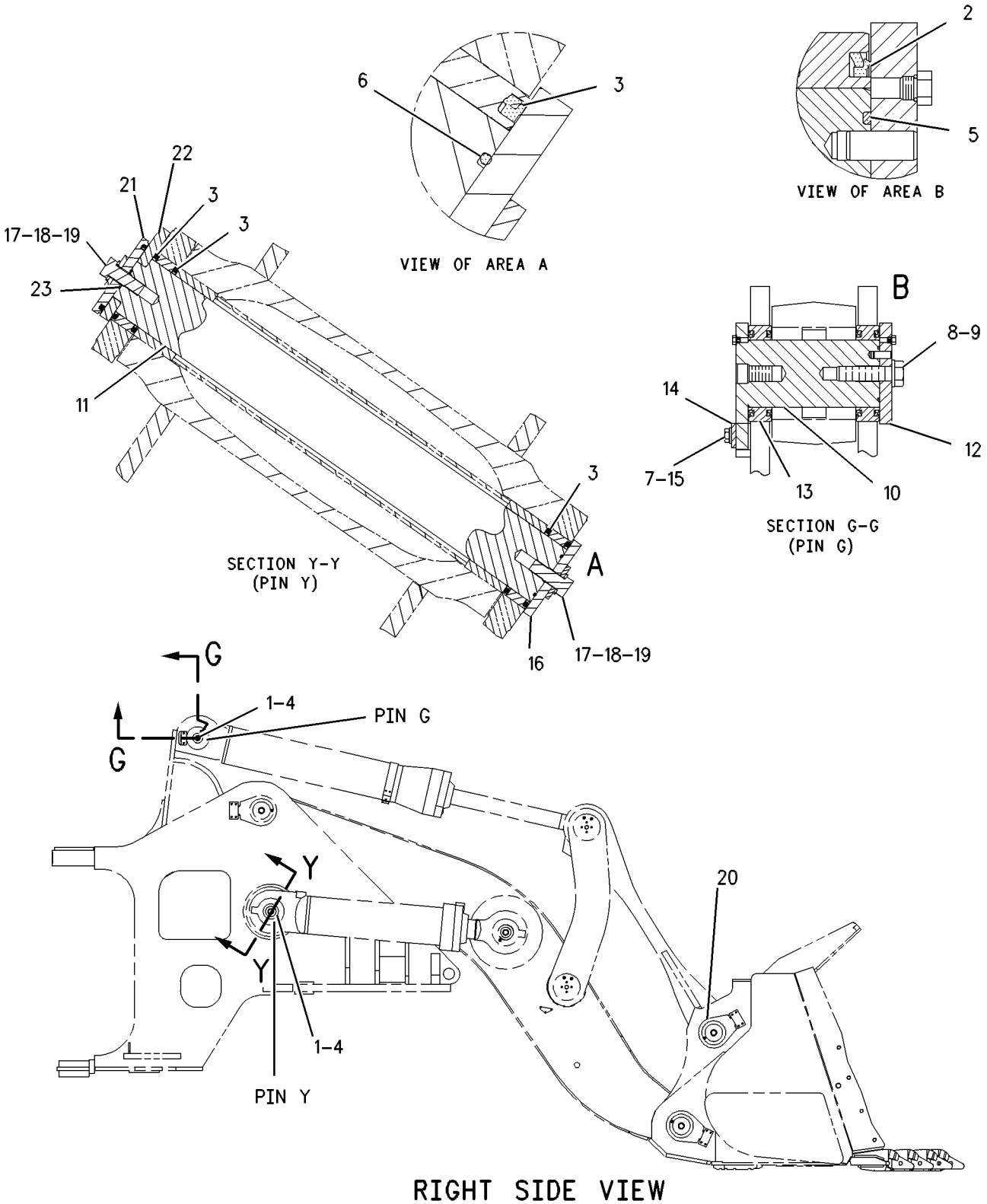

GRAPHIC #1 g00539956

109-6837 PIN & SEAL GP-LINKAGE

S/N: 7HR1-UP
FOR PINS G & Y
PART OF 109-6819 CHASSIS AR
TYPE 2

SMCS-6118 **i01044132**

NOTE	REF NO	GRAPHIC REF	PART NUMBER	QTY	PART NAME 1 2 3 4 5 6 (PRODUCT LEVEL)	SEE PAGE
	1	1	**1J-9671**	5	SEAL-O-RING (10.52MM ID)	
	2	1	**1R-1056**	4	SEAL AS	
	3	1	**143-9740**	5	SEAL AS	
	4	1	**3K-8460**	5	PLUG (1/2-20 THD)	
	5	1	**6V-5052**	1	SEAL-O-RING (104.14MM ID)	
	6	1	**6V-5103**	1	SEAL-O-RING (126.36MM ID)	
M	7	1	**7X-2552**	2	BOLT (M16X2.0X30MM)	
M	8	1	**7X-2583**	1	BOLT (M30X3.5X120MM)	
	9	1	**9X-8258**	1	WASHER (6MM THK)	
	10	1	**125-2596**	1	PIN AS (PIN G)	
	11	1	**144-8300**	1	PIN (PIN Y)	
	12	1	**132-9898**	1	PLATE AS	
		1	**1S-9292**	2	DOWEL	
	13	1	**162-8122**	2	COLLAR	
	14	1	**4E-5609**	1	PLATE	
	15	1	**5P-8247**	2	WASHER-HARD (3.5MM THK)	
	16	1	**145-5007**	1	PLATE AS	
M	17	1	**147-2001**	2	BOLT-HEX HEAD	
	18	1	**9X-8259**	2	WASHER (6MM THK)	
	19	1	**147-2383**	2	SPACER	
CY	20	1	*168-2579*	1	PIN & SEAL GP-LINKAGE	1146
	21	1	**145-6114**	1	PLATE AS	
		1	**1S-9292**	2	DOWEL	
	22	1	**161-8988**	1	PLATE	
	23	1	**5K-5959**	1	SEAL-O-RING (50.17MM ID)	

C-CHANGE FROM PREVIOUS TYPE
M-METRIC PART
Y-SEPARATE ILLUSTRATION

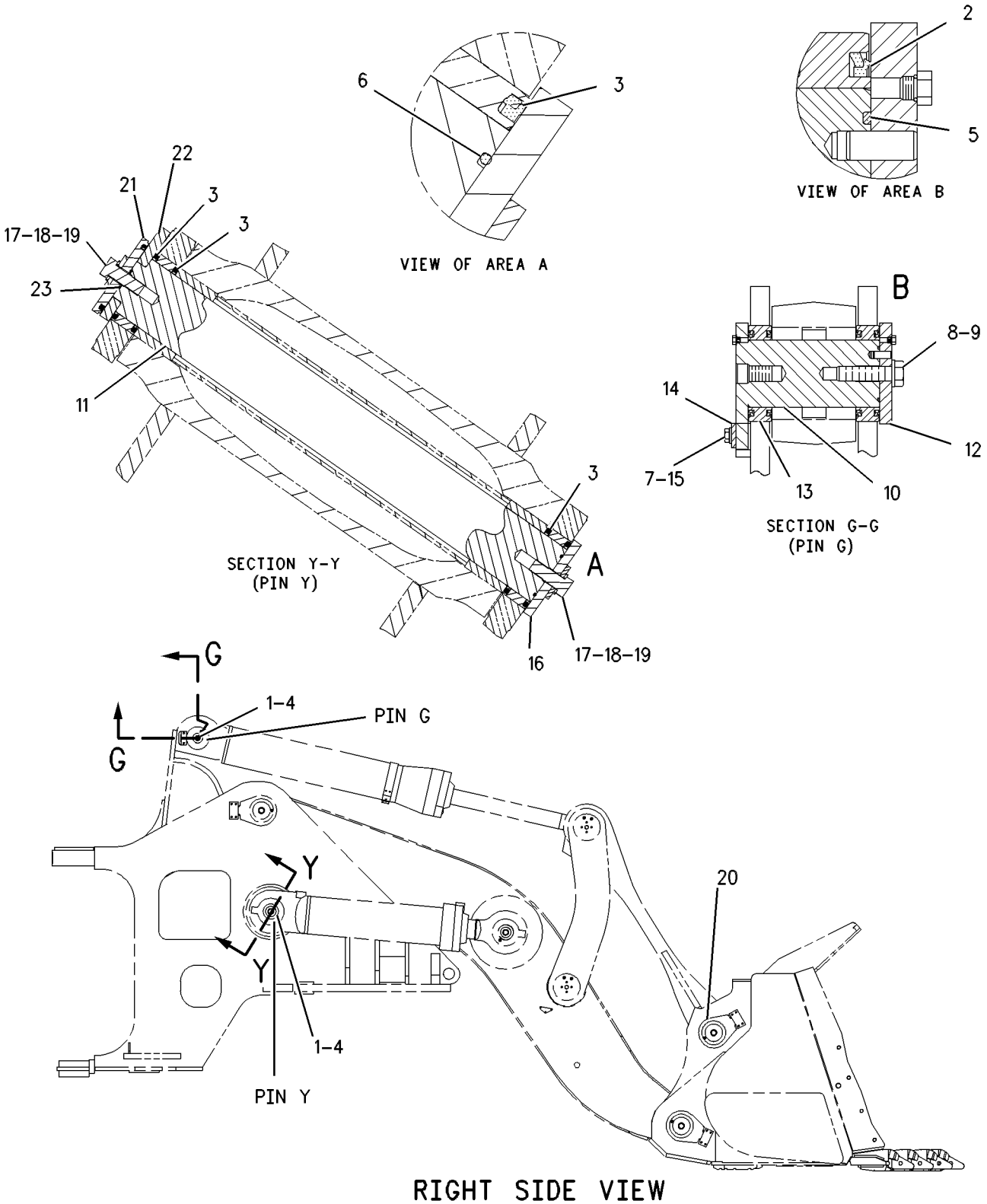

GRAPHIC #1 g00539956

148-7168 PIN & SEAL GP-LINKAGE

S/N: 7HR1-UP

PART OF 109-6837 PIN & SEAL GP-LINKAGE

SMCS-6118 **i01044031**

NOTE	REF NO	GRAPHIC REF	PART NUMBER	QTY	PART NAME 1 2 3 4 5 6 (PRODUCT LEVEL)	SEE PAGE
	1	1	**1J-9671**	6	SEAL-O-RING (10.52MM ID)	
	2	1	**143-9740**	8	SEAL AS	
	3	1	**3K-8460**	6	PLUG (1/2-20 THD)	
	4	1	**9X-8257**	8	WASHER (3.50MM THK)	
	5	1	**6V-5103**	2	SEAL-O-RING (126.36MM ID)	
M	6	1	**7X-2555**	8	BOLT (M16X2.0X80MM)	
	7	1	**165-5570**	2	PLATE	
	8	1	**159-2960**	4	COLLAR	
	9	1	**144-3563**	2	PIN AS (PINS B & C)	
	10	1	**145-5007**	2	PLATE AS	
					(EACH INCLUDES)	
		1	**1S-9292**	2	DOWEL	
M	11	1	**147-2001**	2	BOLT-HEX HEAD (M36X4X100MM)	
	12	1	**9X-8259**	2	WASHER (6MM THK)	
	13	1	**147-2383**	2	SPACER (12MM THK)	

M-METRIC PART

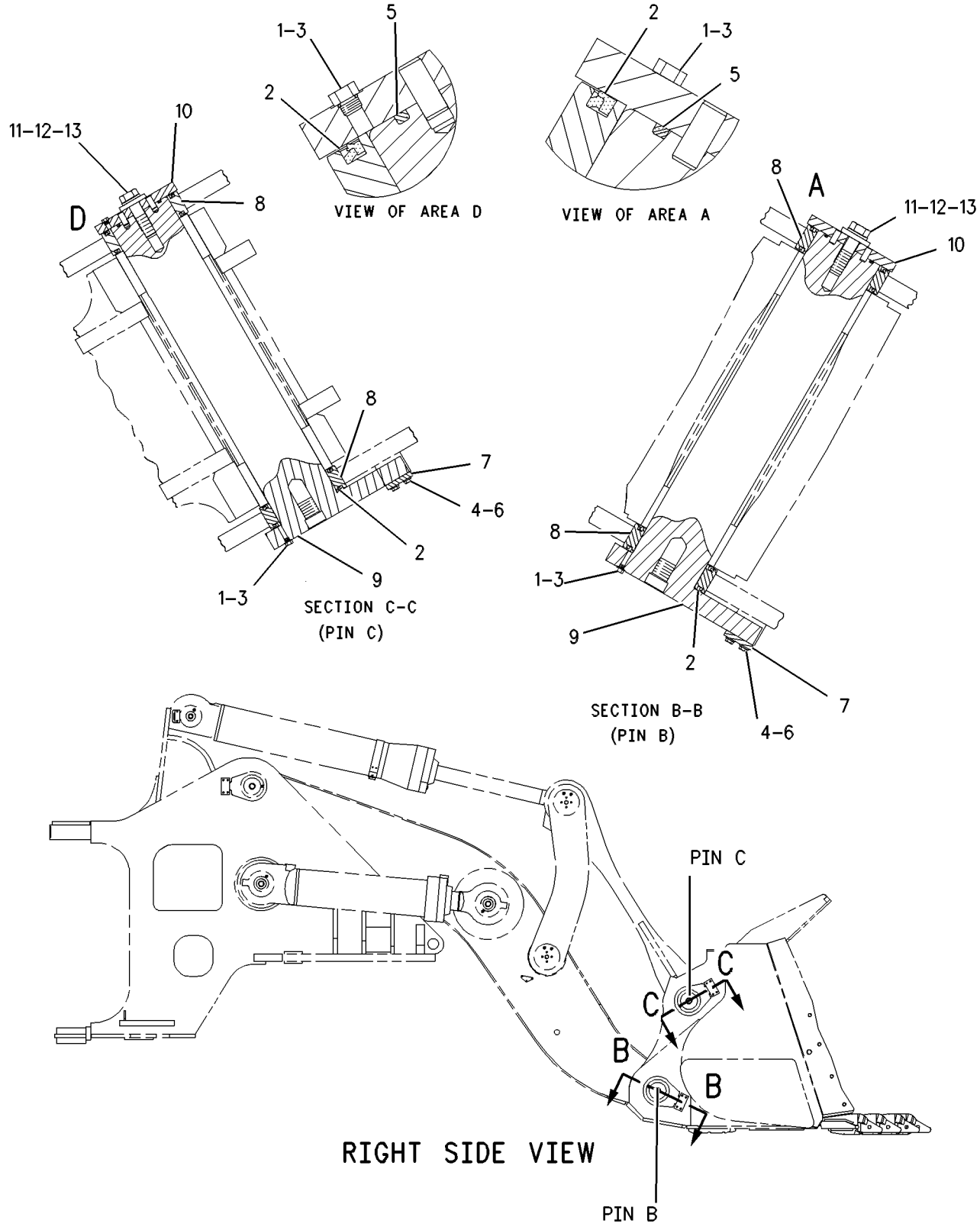

GRAPHIC #1 g00539945

148-7169 PIN & SEAL GP-LINKAGE

S/N: 7HR1-UP
PART OF 109-6890, 131-1251 CONTROL GP-BUCKET
AN ATTACHMENT

SMCS-6118 **i01541278**

NOTE	REF NO	GRAPHIC REF	PART NUMBER	QTY	PART NAME 1 2 3 4 5 6 (PRODUCT LEVEL)	SEE PAGE
	1	1	**4E-5609**	2	PLATE	
	2	1,2	**143-9740**	21	SEAL AS	
					(EACH INCLUDES)	
		1,2	**1R-1065**	1	RING-LOAD	
	3	2	**144-3563**	1	PIN AS (PIN A)	
	4	1,2	**145-5007**	4	PLATE AS	
	5	1,2	**145-6114**	3	PLATE AS	
					(EACH PLATE AS INCLUDES)	
		1,2	**1S-9292**	2	DOWEL	
	6	1,2	**147-2383**	7	SPACER (12MM THK)	
	7	1,2	**159-2961**	2	COLLAR	
	8	2	**161-7069**	2	PIN (PINS E & F)	
	9	1,2	**161-8988**	3	PLATE	
	10	2	**162-1551**	1	COLLAR	
	11	1	**165-5570**	1	PLATE	
	12	2	**144-8300**	1	PIN (PIN K)	
M	13	1,2	**147-2001**	7	BOLT-HEX HEAD (M36X4X100MM)	
	14	1,2	**1J-9671**	12	SEAL-O-RING	
	15	1,2	**3K-8460**	12	PLUG	
	16	1,2	**5K-5959**	3	SEAL-O-RING	
	17	1	**5P-8247**	4	WASHER-HARD (17X32X3.5MM THK)	
	18	1,2	**6V-5103**	4	SEAL-O-RING	
M	19	1	**7X-2555**	4	BOLT (M16X2X80MM)	
M	20	1	**8T-4193**	4	BOLT (M16X2X50MM)	
	21	1	**9X-8257**	4	WASHER (17.5X30X3.5MM THK)	
	22	1,2	**9X-8259**	7	WASHER (39X66X6MM THK)	

M-METRIC PART

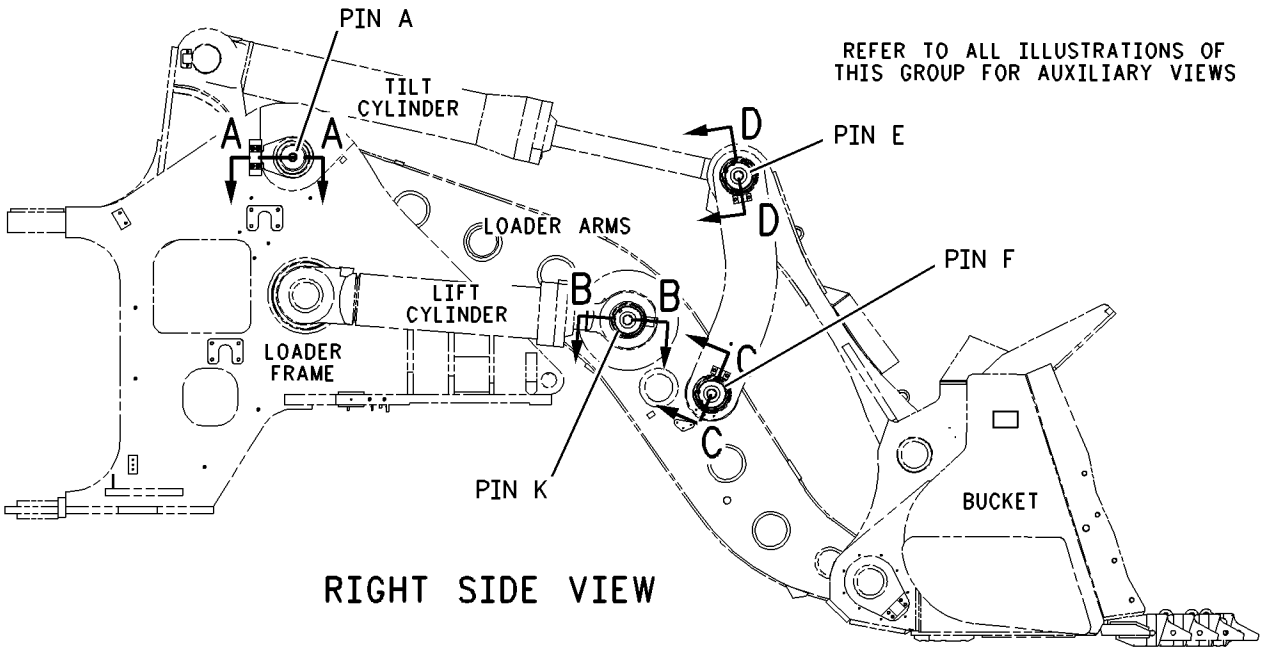

RIGHT SIDE VIEW

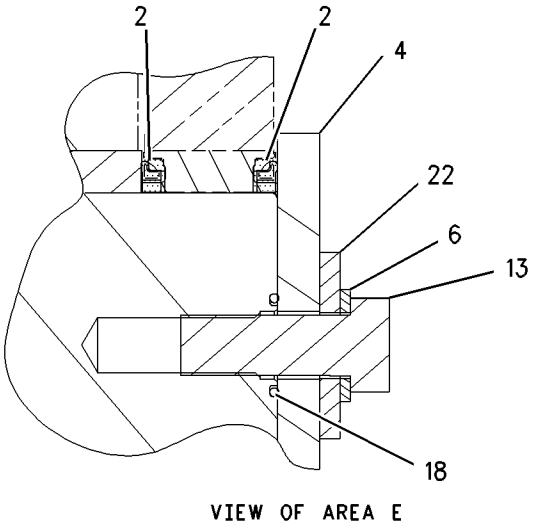

VIEW OF AREA E

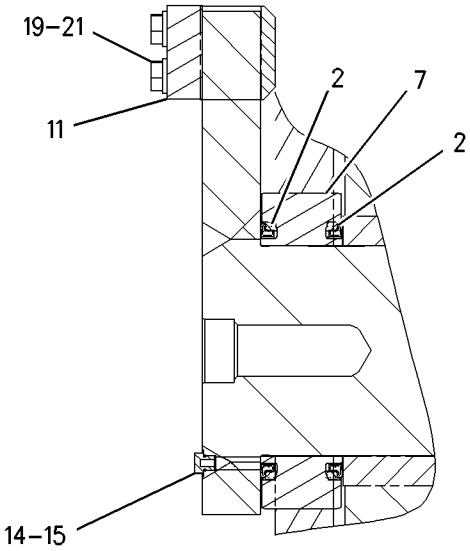

VIEW OF AREA G

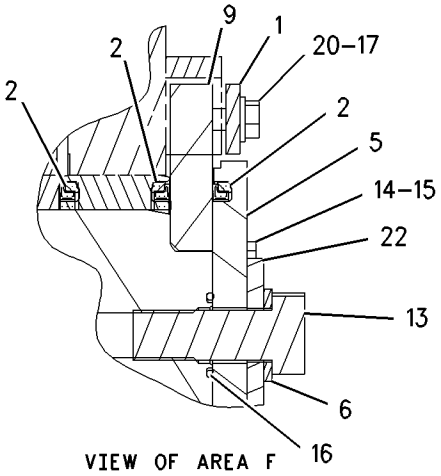

VIEW OF AREA F

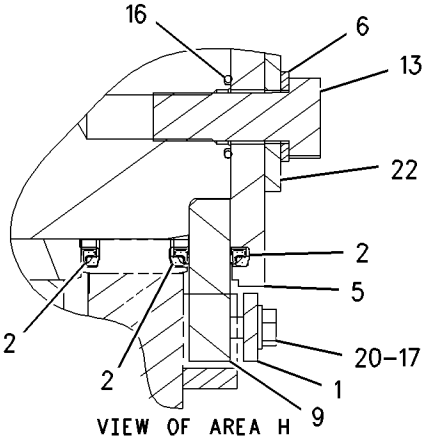

VIEW OF AREA H

GRAPHIC #1 g00800836

148-7169 **PIN & SEAL GP-LINKAGE** *(contd.)* **i01541278**

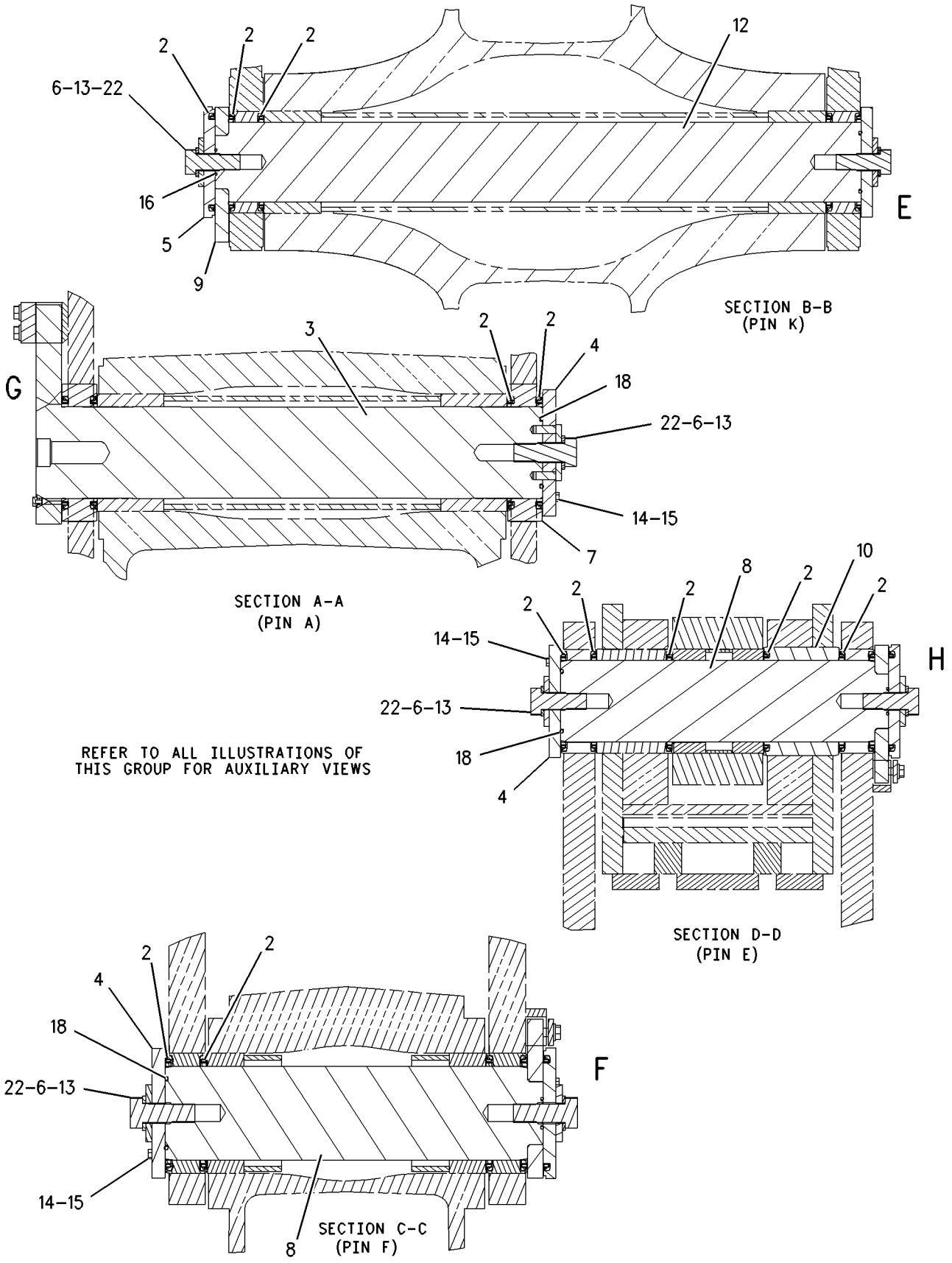

GRAPHIC #2 g00800839

MEMORANDA

168-2579 PIN & SEAL GP-LINKAGE

S/N: 7HR1-UP
FOR PINS B & C
PART OF 109-6837 PIN & SEAL GP-LINKAGE

SMCS-6118 **i01160930**

NOTE	REF NO	GRAPHIC REF	PART NUMBER	QTY	PART NAME 1 2 3 4 5 6 (PRODUCT LEVEL)	SEE PAGE
	1	1	*177-8785*	2	BEARING & SEAL GP	
					(EACH INCLUDES)	
		1	**143-9740**	2	SEAL AS	
		1	**159-2960**	1	COLLAR	
	2	1	**144-3563**	2	PIN AS (PINS B & C)	
	3	1	**145-5007**	1	PLATE AS	
		1	**1S-9292**	2	DOWEL	
	4	1	**147-2383**	2	SPACER	
	5	1	**159-2960**	2	COLLAR	
	6	1	**161-8990**	1	PLATE AS	
		1	**1S-9292**	2	DOWEL	
	7	1	**165-5570**	2	PLATE	
M	8	1	**147-2001**	2	BOLT-HEX HEAD	
	9	1	**1J-9671**	4	SEAL-O-RING (10.52MM ID)	
	10	1	**3K-8460**	4	PLUG (1/2-20 THD)	
	11	1	**6V-5103**	1	SEAL-O-RING (126.36MM ID)	
M	12	1	**7X-2554**	8	BOLT (M16X2X70MM)	
	13	1	**9X-8257**	8	WASHER (3.50MM THK)	
	14	1	**9X-8259**	2	WASHER (6MM THK)	

M-METRIC PART

168-2579 **PIN & SEAL GP-LINKAGE** ***(contd.)*** **i01160930**

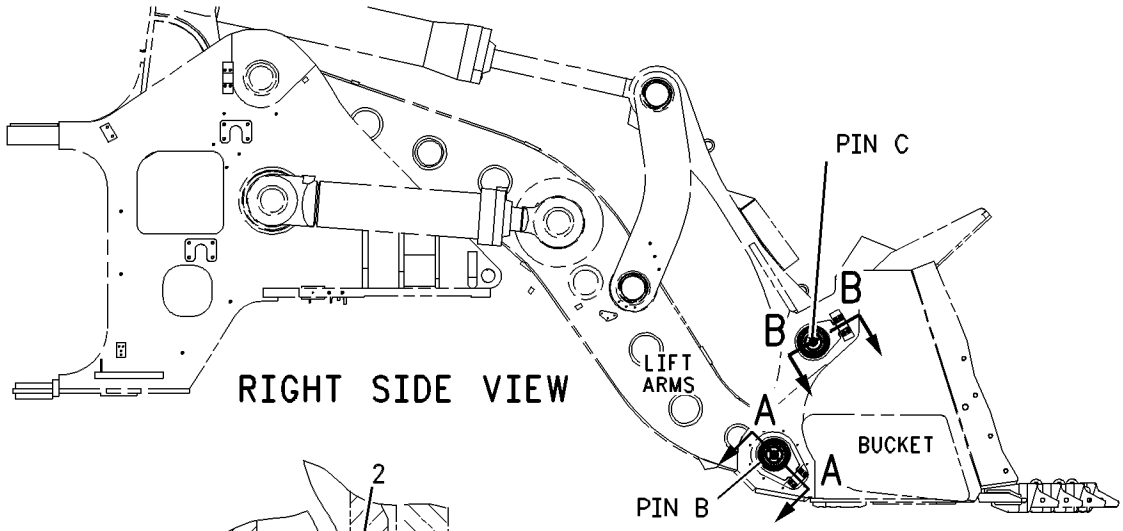

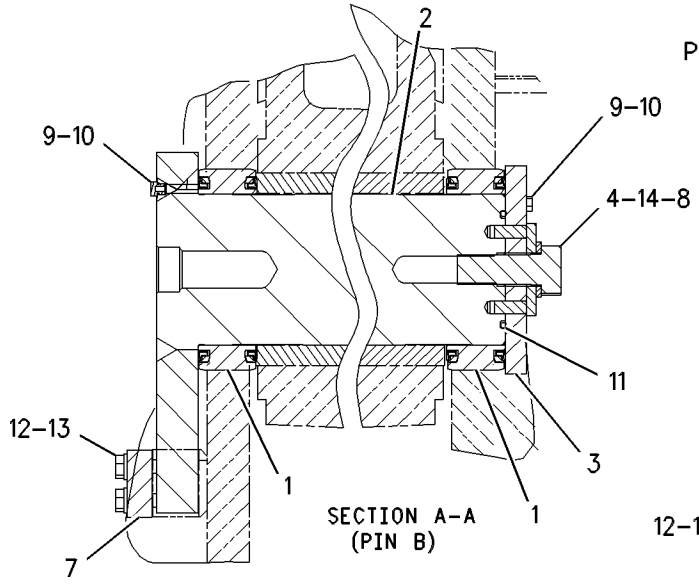

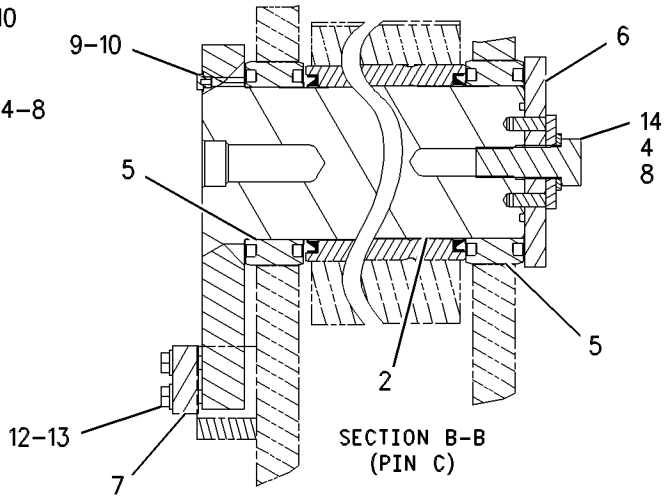

GRAPHIC #1

g00618008

168-2580 PIN & SEAL GP-LINKAGE

S/N: 7HR1-UP
FOR PINS A, E, F & K
PART OF 109-6890, 131-1251 CONTROL GP-BUCKET
AN ATTACHMENT
TYPE 1

SMCS-6118 **i01494920**

NOTE	REF NO	GRAPHIC REF	PART NUMBER	QTY	PART NAME 1 2 3 4 5 6 (PRODUCT LEVEL)	SEE PAGE
	1	1	**4E-5609**	2	PLATE	
	2	1,2	**143-9740**	14	SEAL AS	
					(EACH INCLUDES)	
		1,2	**1R-1065**	1	RING-LOAD	
	3	2	**144-3563**	1	PIN AS (PIN A)	
	4	1,2	**145-5007**	3	PLATE AS	
					(EACH INCLUDES)	
		1,2	**1S-9292**	2	DOWEL	
	5	1,2	**145-6114**	2	PLATE AS	
					(EACH INCLUDES)	
		1,2	**1S-9292**	2	DOWEL	
	6	1,2	**147-2383**	7	SPACER	
	7	2	**159-2961**	2	COLLAR	
	8	1,2	**160-5875**	8	SEAL-LIP TYPE	
	9	1	**161-7069**	2	PIN (PINS E & F)	
	10	1,2	**161-8988**	3	PLATE	
	11	1	**161-8990**	2	PLATE AS	
					(EACH INCLUDES)	
		1	**1S-9292**	2	DOWEL	
	12	2	**165-5570**	1	PLATE	
	13	2	**144-8300**	1	PIN (PIN K)	
M	14	1,2	**147-2001**	7	BOLT-HEX HEAD	
	15	1,2	**1J-9671**	9	SEAL-O-RING	
	16	1,2	**3K-8460**	9	PLUG	
	17	2	**5K-5959**	2	SEAL-O-RING	
	18	1	**5P-8247**	4	WASHER-HARD (17X32X3.5MM THK)	
	19	1,2	**6V-5103**	3	SEAL-O-RING	
M	20	2	**7X-2555**	4	BOLT (M16X2X80MM)	
M	21	1	**8T-4193**	4	BOLT (M16X2X50MM)	
	22	2	**9X-8257**	4	WASHER (17.5X30X3.5MM THK)	
	23	1,2	**9X-8259**	7	WASHER (39X66X6MM THK)	

M-METRIC PART

168-2580 **PIN & SEAL GP-LINKAGE** ***(contd.)*** **i01494920**

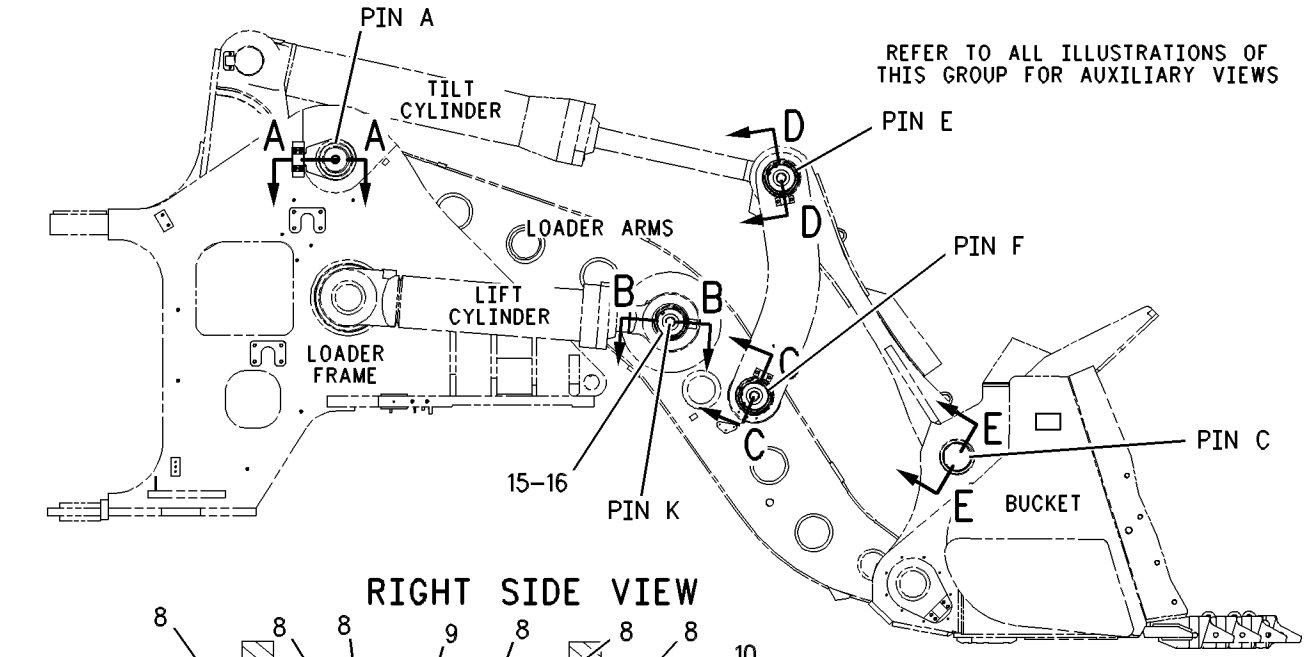

RIGHT SIDE VIEW

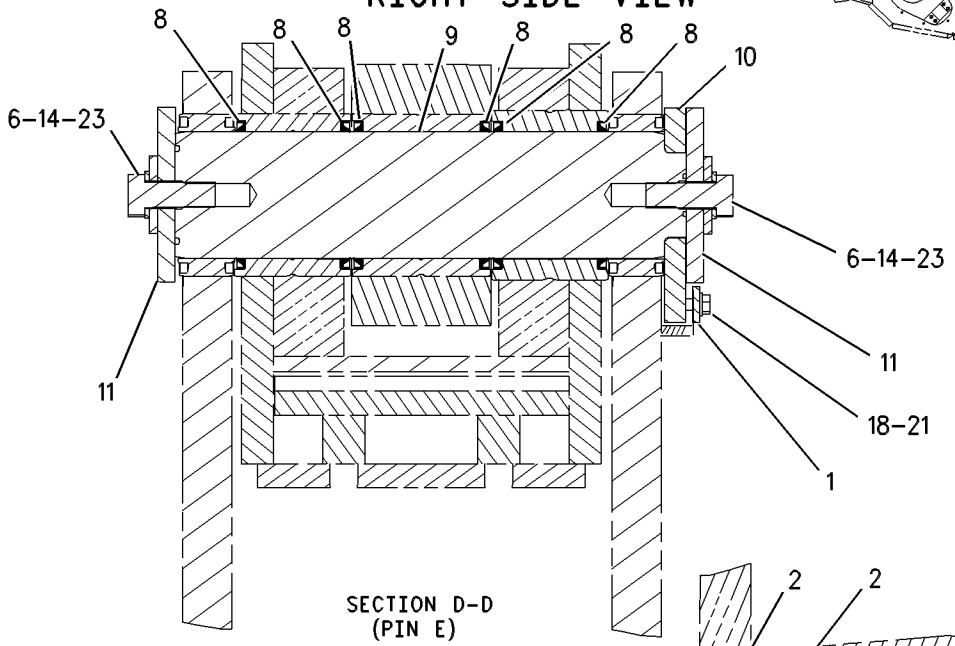

SECTION D-D
(PIN E)

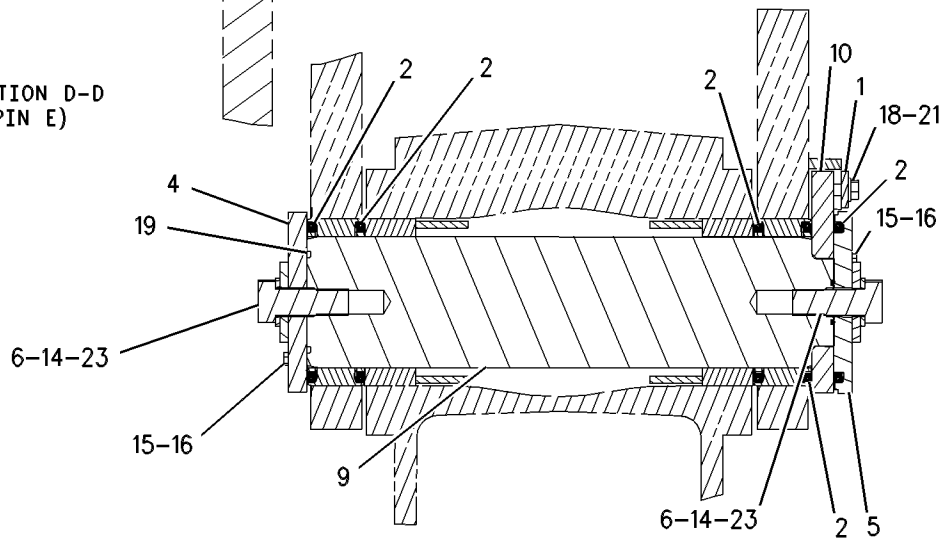

SECTION C-C
(PIN F)

GRAPHIC #1 g00540100

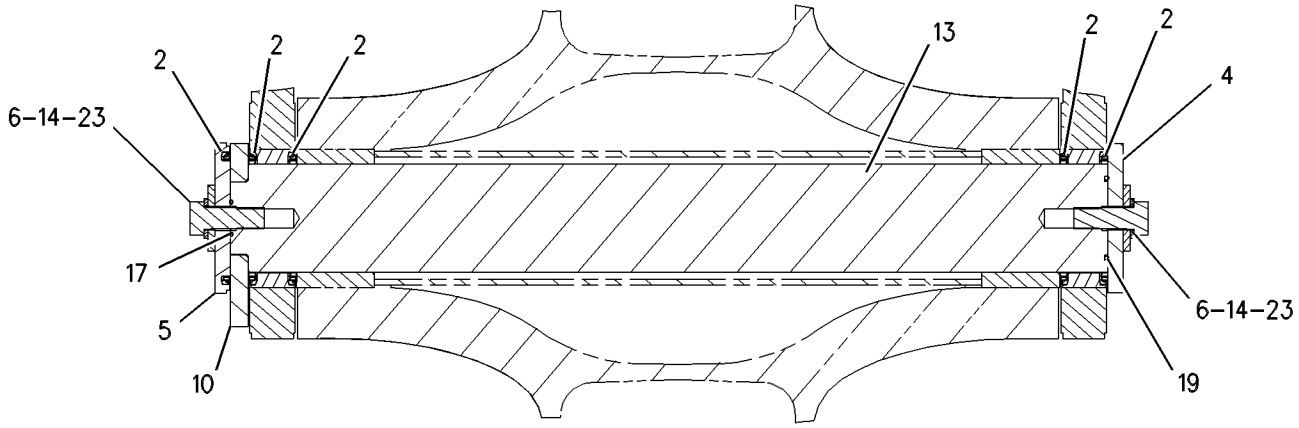

SECTION B-B
(PIN K)

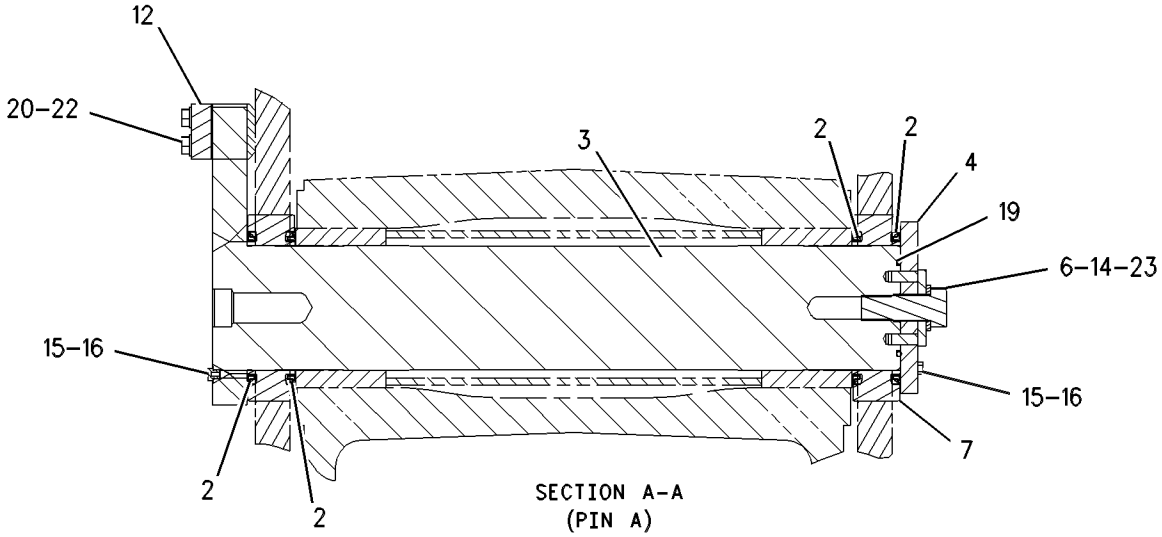

SECTION A-A
(PIN A)

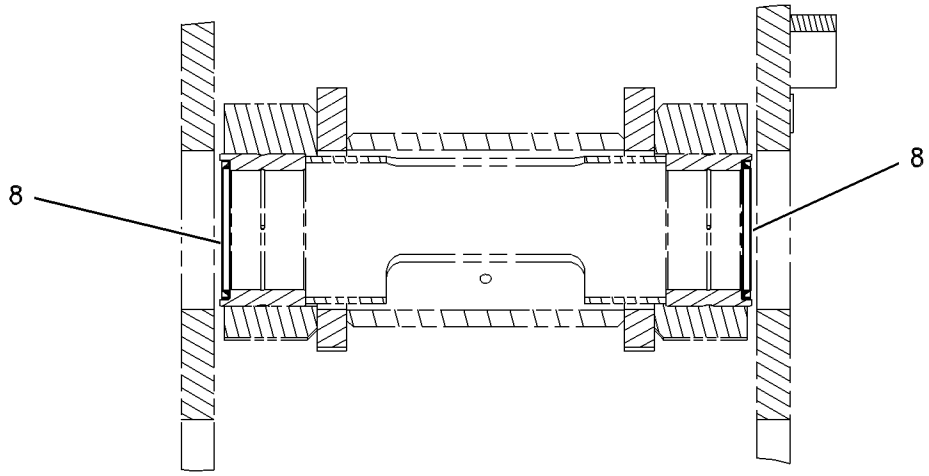

SECTION E-E
(PIN C)

GRAPHIC #2

g00622025

MEMORANDA

168-2580 PIN & SEAL GP-LINKAGE

S/N: 7HR1-UP
FOR PINS A, E, F & K
PART OF 109-6890, 131-1251 CONTROL GP-BUCKET
AN ATTACHMENT
TYPE 2

SMCS-6118 **i01494924**

NOTE	REF NO	GRAPHIC REF	PART NUMBER	QTY	PART NAME 1 2 3 4 5 6 (PRODUCT LEVEL)	SEE PAGE
	1	1	**4E-5609**	2	PLATE	
	2	1,2	**143-9740**	14	SEAL AS	
					(EACH INCLUDES)	
		1,2	**1R-1065**	1	RING-LOAD	
	3	2	**144-3563**	1	PIN AS (PIN A)	
	4	1,2	**145-5007**	3	PLATE AS	
					(EACH INCLUDES)	
		1,2	**1S-9292**	2	DOWEL	
	5	1,2	**145-6114**	2	PLATE AS	
					(EACH INCLUDES)	
		1,2	**1S-9292**	2	DOWEL	
	6	1,2	**147-2383**	7	SPACER	
	7	2	**159-2961**	2	COLLAR	
	8	1,2	**160-5875**	8	SEAL-LIP TYPE	
	9	1	**161-7069**	2	PIN (PINS E & F)	
	10	1,2	**161-8988**	3	PLATE	
	11	1	**161-8990**	2	PLATE AS	
					(EACH INCLUDES)	
		1	**1S-9292**	2	DOWEL	
C	12	2	**196-7313**	1	PLATE-RETAINER	
	13	2	**144-8300**	1	PIN (PIN K)	
M	14	1,2	**147-2001**	7	BOLT-HEX HEAD	
	15	1,2	**1J-9671**	9	SEAL-O-RING	
	16	1,2	**3K-8460**	9	PLUG	
	17	2	**5K-5959**	2	SEAL-O-RING	
	18	1	**5P-8247**	4	WASHER-HARD (17X32X3.5MM THK)	
	19	1,2	**6V-5103**	3	SEAL-O-RING	
CM	20	2	**7X-2576**	4	BOLT (M24X3X70MM)	
M	21	1	**8T-4193**	4	BOLT (M16X2X50MM)	
C	22	2	**8T-4167**	4	WASHER-HARD (26X44X4MM THK)	
	23	1,2	**9X-8259**	7	WASHER (39X66X6MM THK)	

C-CHANGE FROM PREVIOUS TYPE
M-METRIC PART

168-2580 **PIN & SEAL GP-LINKAGE** ***(contd.)*** **i01494924**

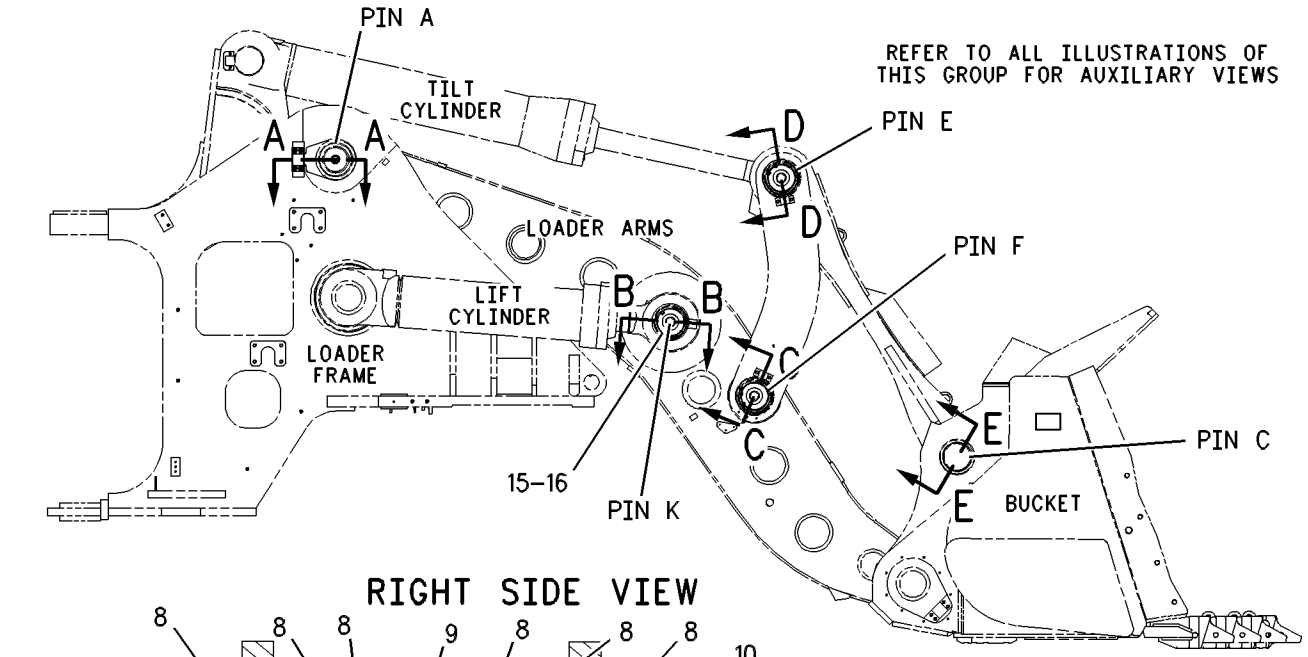

RIGHT SIDE VIEW

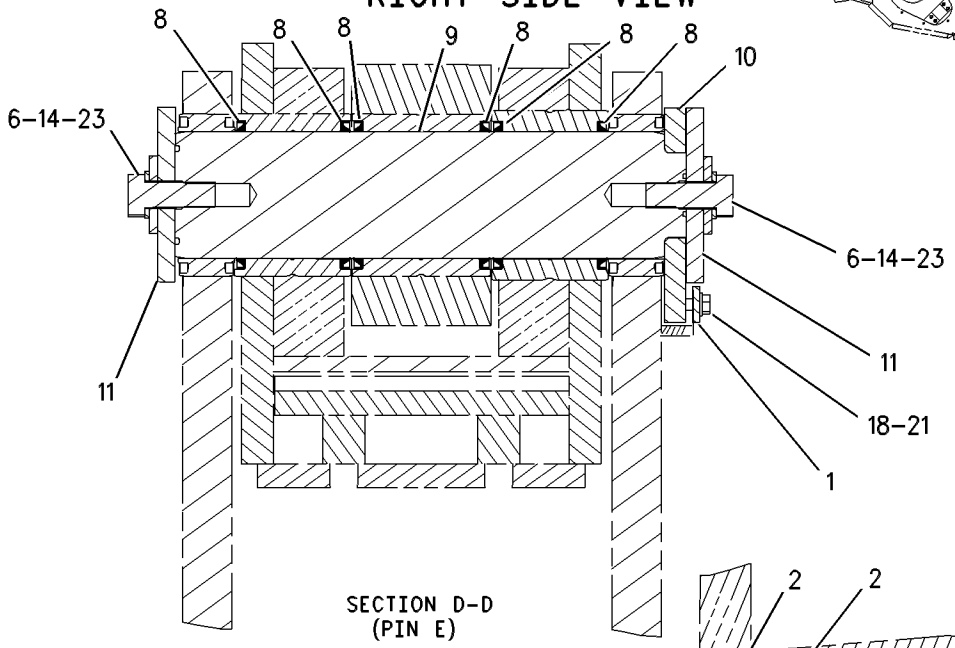

SECTION D-D
(PIN E)

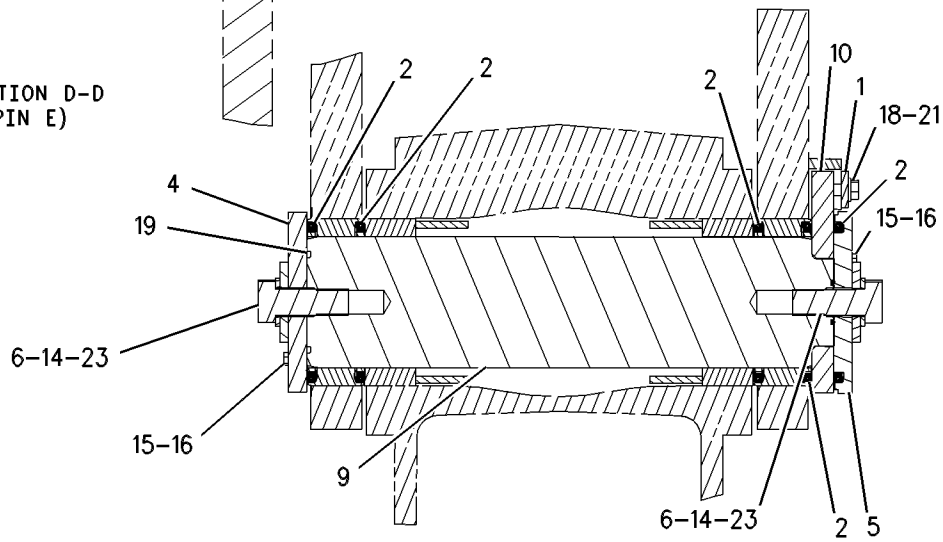

SECTION C-C
(PIN F)

GRAPHIC #1 g00540100

168-2580 **PIN & SEAL GP-LINKAGE** ***(contd.)*** **i01494924**

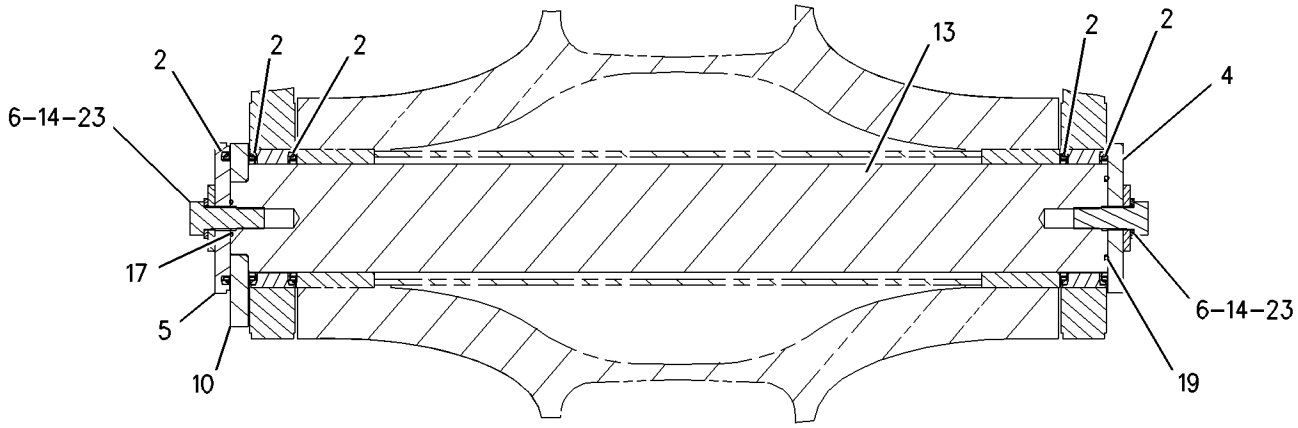

SECTION B-B
(PIN K)

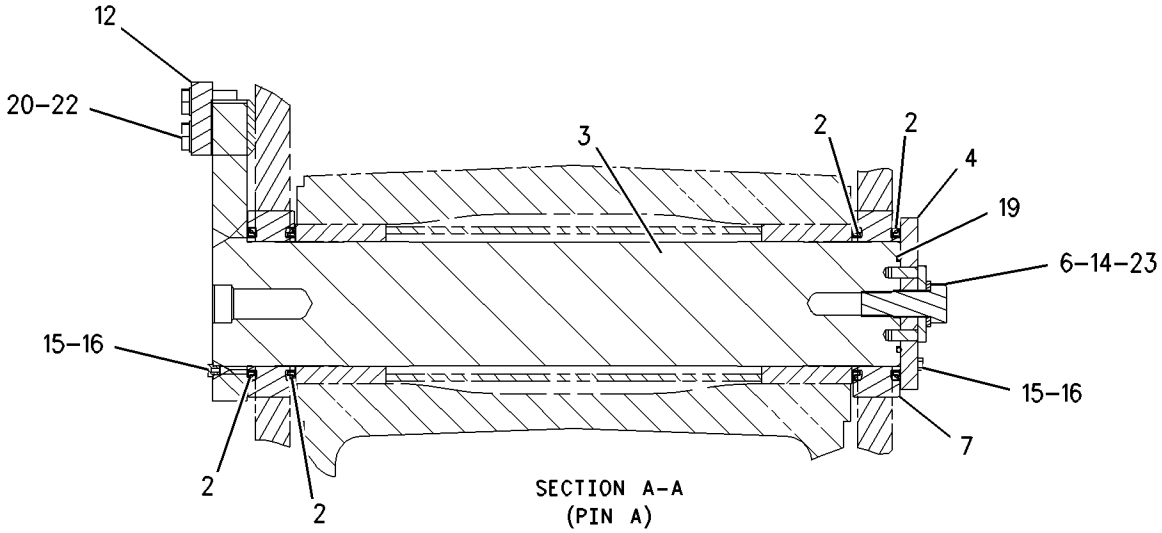

SECTION A-A
(PIN A)

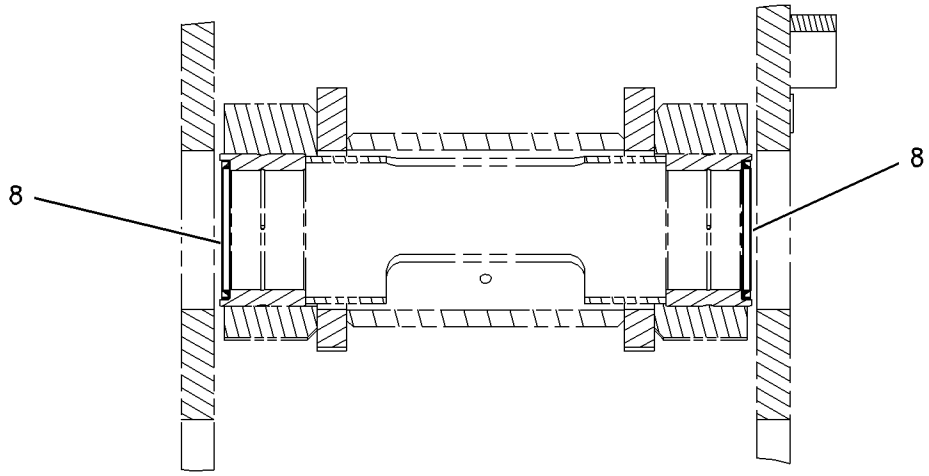

SECTION E-E
(PIN C)

GRAPHIC #2 g00763620

WORK TOOLS

119-8607 ADAPTER-CENTER

S/N: 7HR1-UP

AN ATTACHMENT

SMCS-6803 **i01192269**

NOTE	PART NUMBER	QTY	PART NAME 1 2 3 4 5 6 (PRODUCT LEVEL)	SEE PAGE
			(NO SERVICED PARTS)	

WORK TOOLS

138-6430 ADAPTER-CENTER

S/N: 7HR1-UP
TWO STRAP
AN ATTACHMENT

SMCS-6803 **i01192648**

NOTE	REF NO	GRAPHIC REF	PART NUMBER	QTY	PART NAME 1 2 3 4 5 6 (PRODUCT LEVEL)	SEE PAGE
					(NO SERVICED PARTS)	

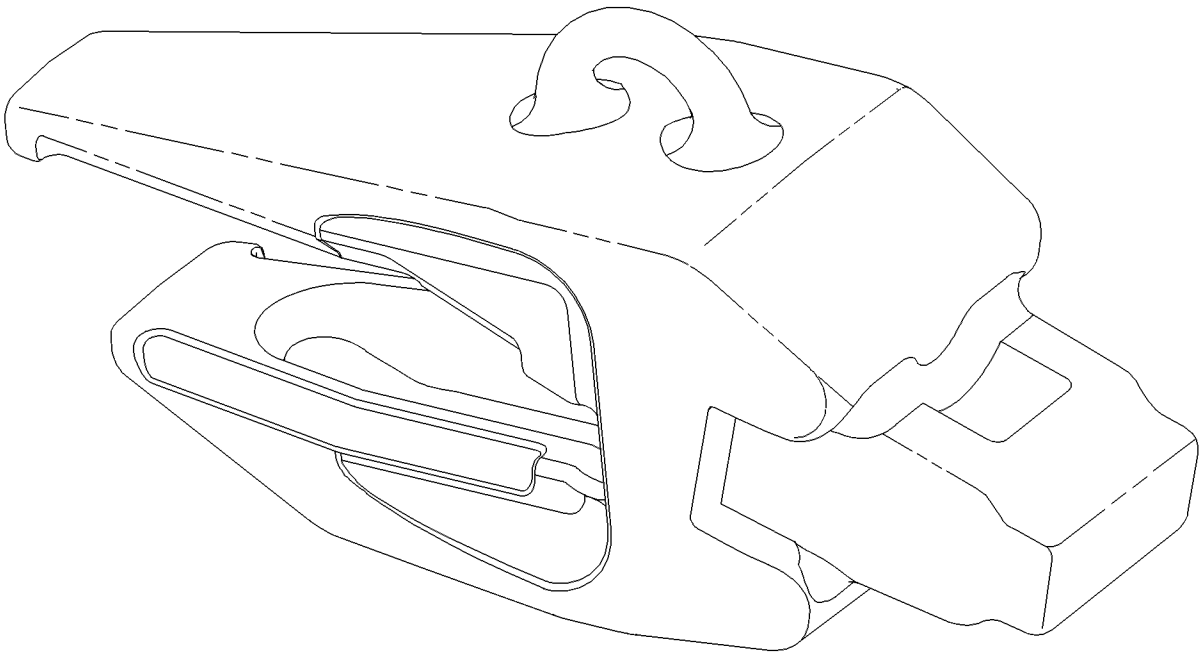

GRAPHIC #1 g00403005

WORK TOOLS

119-8608 ADAPTER-LH

S/N: 7HR1-UP

AN ATTACHMENT

SMCS-6803 **i01192262**

NOTE	PART NUMBER	QTY	PART NAME 1 2 3 4 5 6 (PRODUCT LEVEL)	SEE PAGE
			(NO SERVICED PARTS)	

WORK TOOLS

133-0708 ADAPTER-LH

S/N: 7HR1-UP
FOR USE WITH 70 MM THICK BASE EDGE
FIELD INSTALLATION

SMCS-6803 **i01192247**

NOTE	REF NO	GRAPHIC REF	PART NUMBER	QTY	PART NAME 1 2 3 4 5 6 (PRODUCT LEVEL)	SEE PAGE
					(NO SERVICED PARTS)	

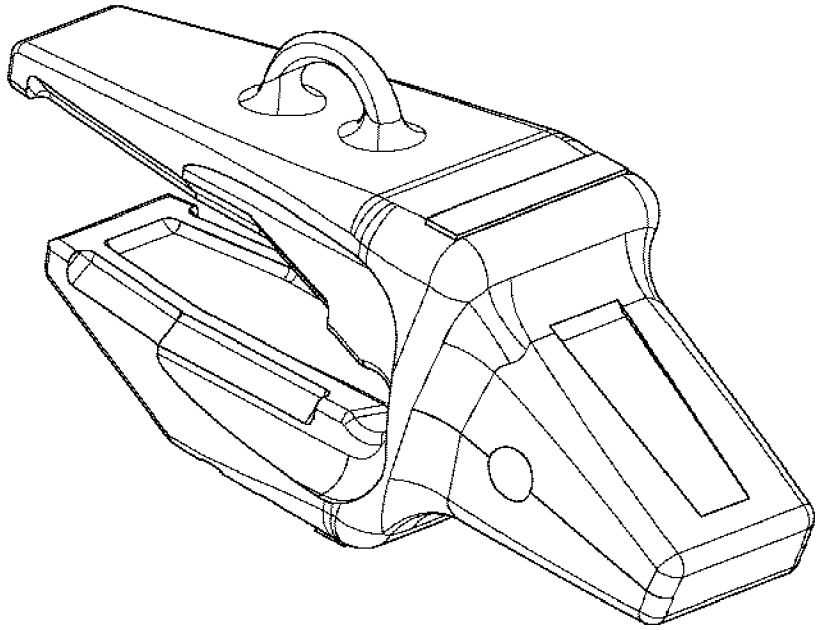

GRAPHIC #1 g00379774

WORK TOOLS

138-6432 ADAPTER-LH

S/N: 7HR1-UP
TWO STRAP (LH)
AN ATTACHMENT

SMCS-6803 **i01192644**

NOTE	REF NO	GRAPHIC REF	PART NUMBER	QTY	PART NAME 1 2 3 4 5 6 (PRODUCT LEVEL)	SEE PAGE
					(NO SERVICED PARTS)	

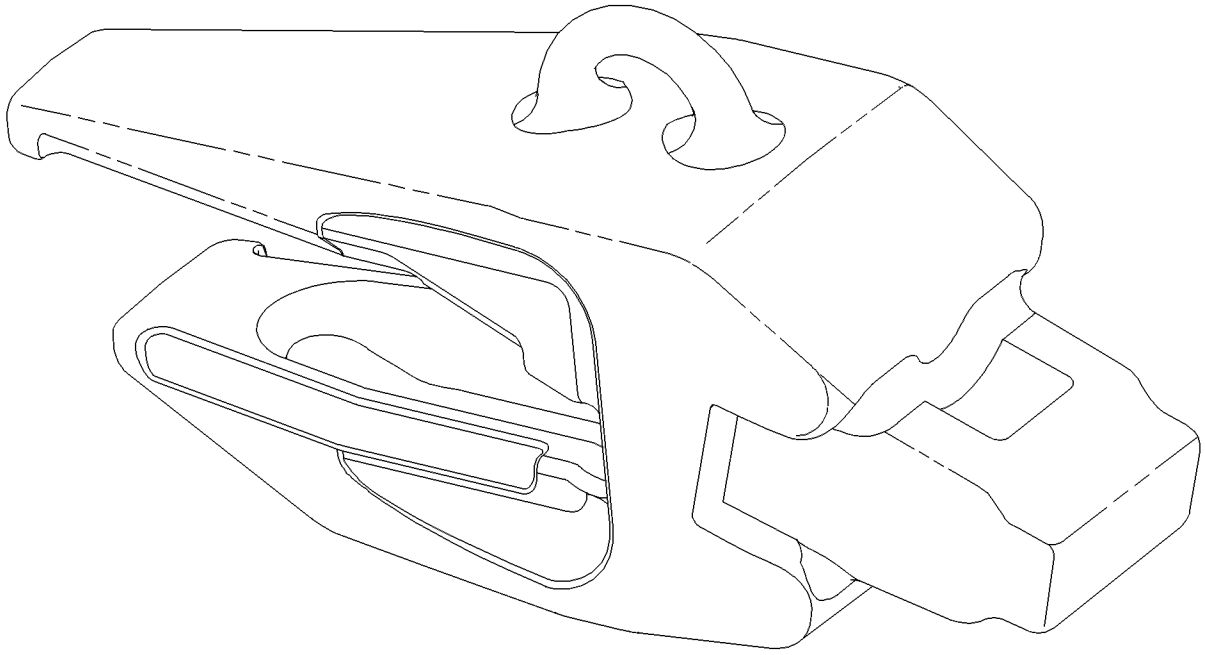

GRAPHIC #1 g00403444

WORK TOOLS

119-8609 ADAPTER-RH

S/N: 7HR1-UP

AN ATTACHMENT

SMCS-6803 **i01192239**

NOTE	PART NUMBER	QTY	PART NAME 1 2 3 4 5 6 (PRODUCT LEVEL)	SEE PAGE
			(NO SERVICED PARTS)	

WORK TOOLS

138-6431 ADAPTER-RH

S/N: 7HR1-UP
TWO STRAP (RH)
AN ATTACHMENT

SMCS-6803 **i01192647**

NOTE	REF NO	GRAPHIC REF	PART NUMBER	QTY	PART NAME 1 2 3 4 5 6 (PRODUCT LEVEL)	SEE PAGE
					(NO SERVICED PARTS)	

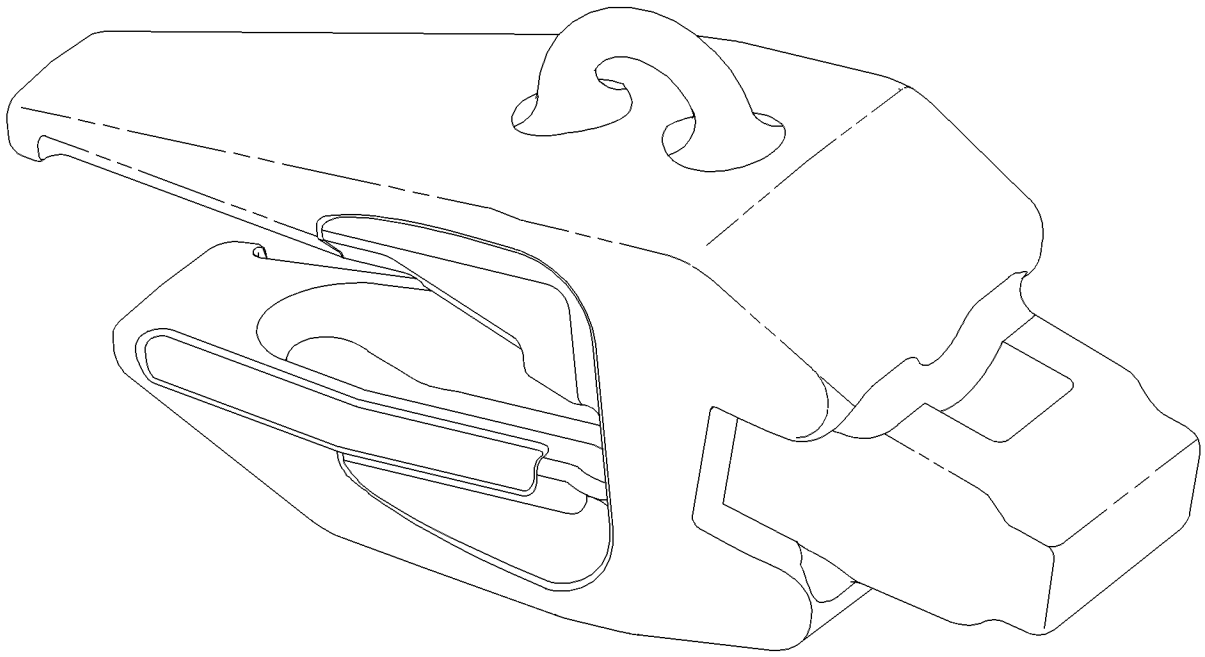

GRAPHIC #1 g00403443

WORK TOOLS

133-0707 ADAPTER-TIP

S/N: 7HR1-UP
FOR USE WITH 70 MM THICK BASE EDGE
FIELD INSTALLATION

SMCS-6803 **i01192232**

NOTE	REF NO	GRAPHIC REF	PART NUMBER	QTY	PART NAME 1 2 3 4 5 6 (PRODUCT LEVEL)	SEE PAGE
					(NO SERVICED PARTS)	

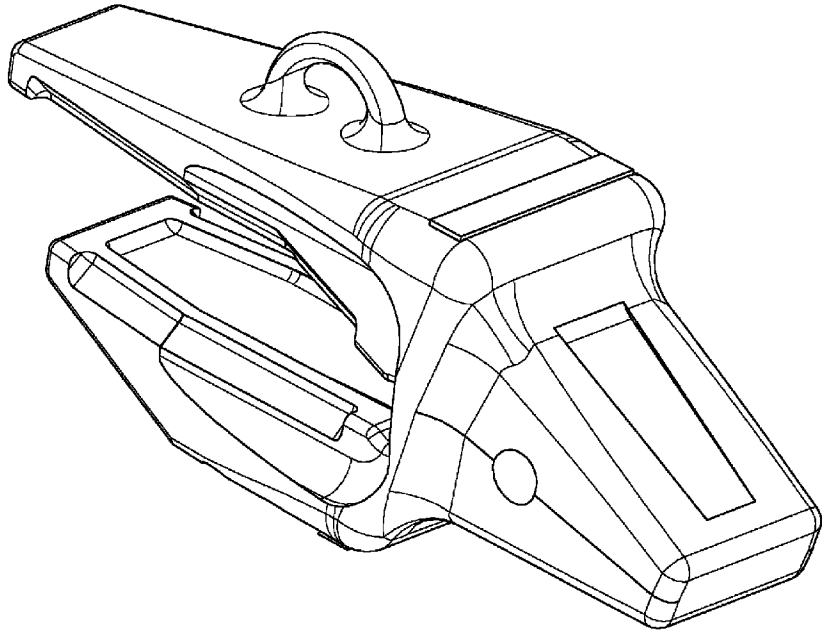

GRAPHIC #1 g00379773

WORK TOOLS

133-0709 ADAPTER-TIP

S/N: 7HR1-UP
FOR USE WITH 70 MM THICK BASE EDGE
FIELD INSTALLATION

SMCS-6803 **i01192227**

NOTE	REF NO	GRAPHIC REF	PART NUMBER	QTY	PART NAME 1 2 3 4 5 6 (PRODUCT LEVEL)	SEE PAGE
					(NO SERVICED PARTS)	

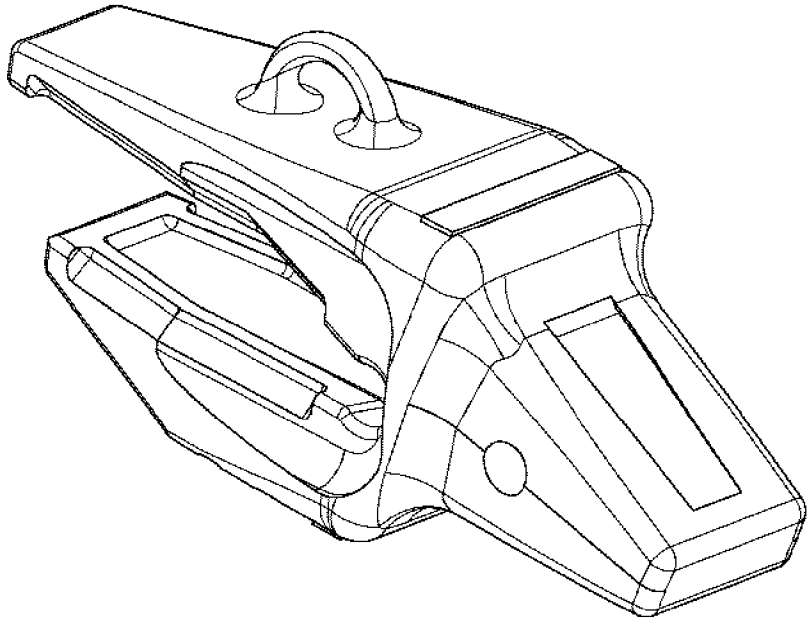

GRAPHIC #1 g00379792

WORK TOOLS

138-6460 ADAPTER-TIP

S/N: 7HR1-UP

AN ATTACHMENT

SMCS-6803 **i01193068**

NOTE	REF NO	GRAPHIC REF	PART NUMBER	QTY	PART NAME 1 2 3 4 5 6 (PRODUCT LEVEL)	SEE PAGE
					(NO SERVICED PARTS)	

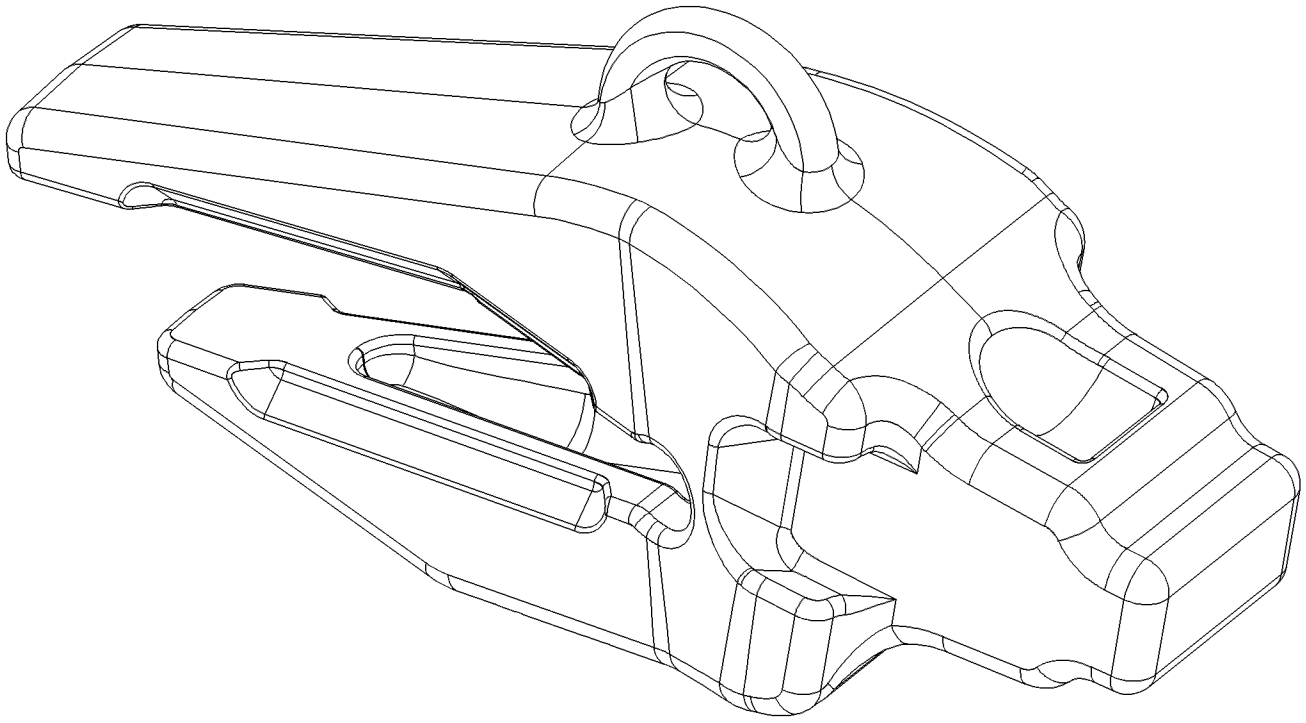

GRAPHIC #1 g00639541

WORK TOOLS

138-6461 ADAPTER-TIP

S/N: 7HR1-UP
TWO STRAP (RH)
FIELD INSTALLATION

SMCS-6803 **i01224315**

NOTE	REF NO	GRAPHIC REF	PART NUMBER	QTY	PART NAME 1 2 3 4 5 6 (PRODUCT LEVEL)	SEE PAGE
					(NO SERVICED PARTS)	

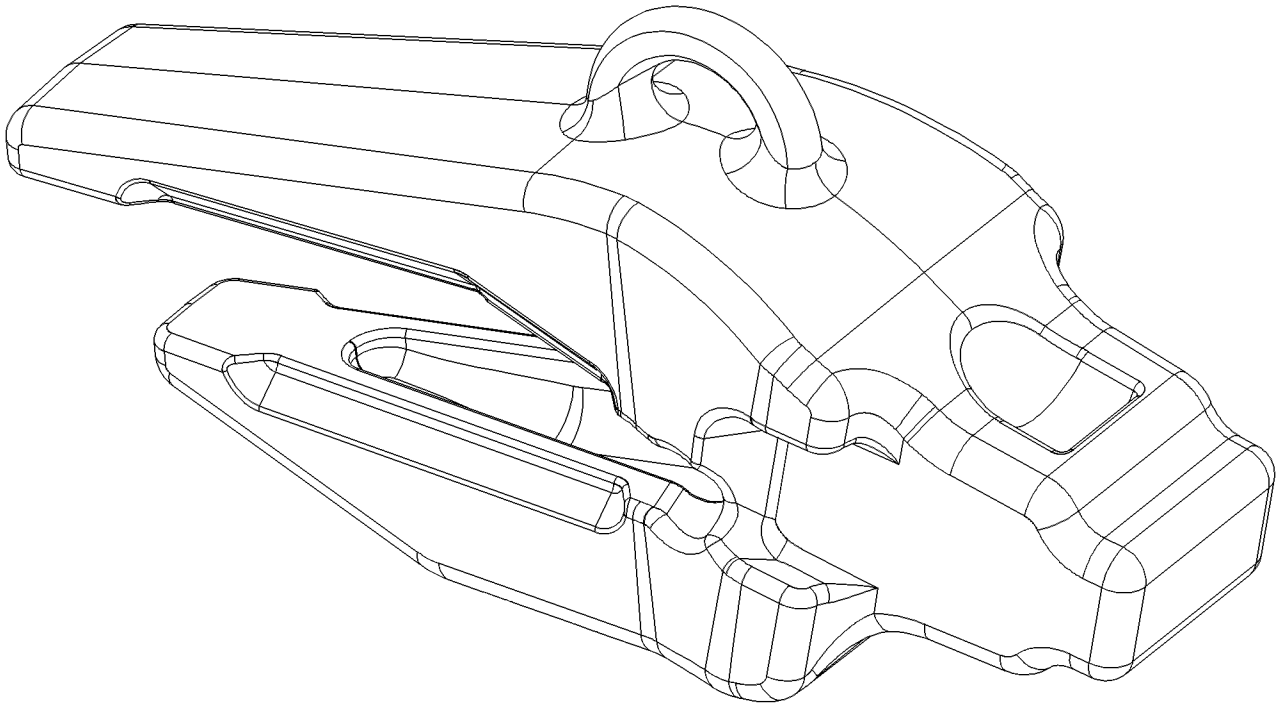

GRAPHIC #1 g00653632

WORK TOOLS

138-6462 ADAPTER-TIP

S/N: 7HR1-UP
TWO STRAP (LH)
FIELD INSTALLATION

SMCS-6803 **i01222886**

NOTE	REF NO	GRAPHIC REF	PART NUMBER	QTY	PART NAME 1 2 3 4 5 6 (PRODUCT LEVEL)	SEE PAGE
					(NO SERVICED PARTS)	

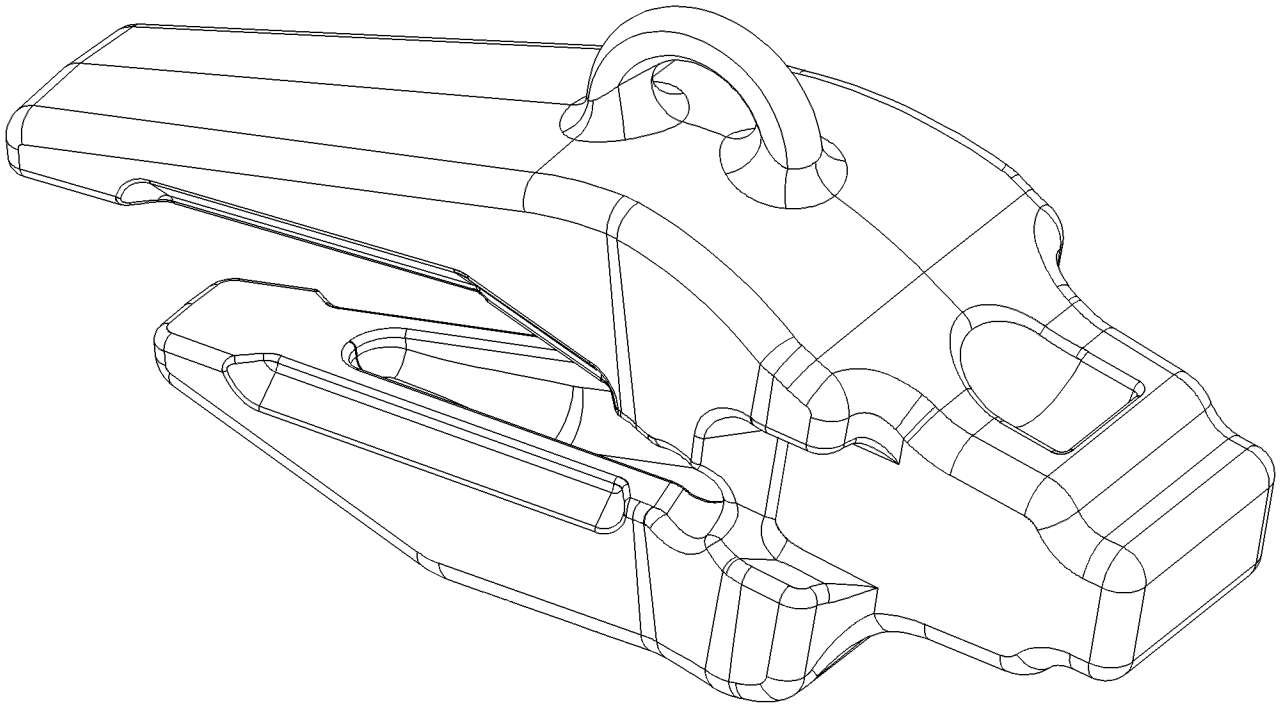

GRAPHIC #1 g00653632

WORK TOOLS

138-0030 BASE-WEAR PLATE

S/N: 7HR1-UP

FIELD INSTALLATION

SMCS-6120, 6820 **i00747597**

NOTE	PART NUMBER	QTY	PART NAME 1 2 3 4 5 6 (PRODUCT LEVEL)	SEE PAGE
			(BASE FOR MECHANICALLY ATTACHED WEAR PLATES)	

112-4195 BUCKET AS-ROCK

S/N: 7HR1-UP
11.5 CU M (15 CU YD). BOLT ON SEGMENTS
PART OF 112-4194, 155-4604, 155-4605 BUCKET GP-ROCK
AN ATTACHMENT

SMCS-6102 **i01432458**

NOTE	REF NO	GRAPHIC REF	PART NUMBER	QTY	PART NAME 1 2 3 4 5 6 (PRODUCT LEVEL)	SEE PAGE
	1	1	**142-6915**	1	PLATE	
	2	1	**142-6916**	1	PLATE	
	3	1	**112-9023**	1	PLATE	
	4	1	**112-9024**	1	PLATE	
	5	1	**142-6917**	2	PLATE	
	6	1	**142-5790**	1	EDGE AS	
	6A	1	**119-8604**	2	ADAPTER-CENTER	
	6B	1	**119-8606**	3	ADAPTER-LH	
	6C	1	**119-8605**	3	ADAPTER-RH	
	7	1	**112-8996**	2	BAR	
	8	1	**112-8998**	2	PLATE	
	9	1	**9U-3474**	1	PLATE	
	10	1	**160-6690**	1	RETAINER	
	11	1	**148-5348**	1	PLATE-WEAR	
	12	1	**197-0683**	1	BLOCK	
	13	1	**143-8435**	1	PLATE	
	14	1	**114-4813**	1	PLATE	
	15	1	**115-1548**	2	PLATE	
	16	1	**115-1549**	1	PLATE	

112-4195 BUCKET AS-ROCK *(contd.)* **i01432458**

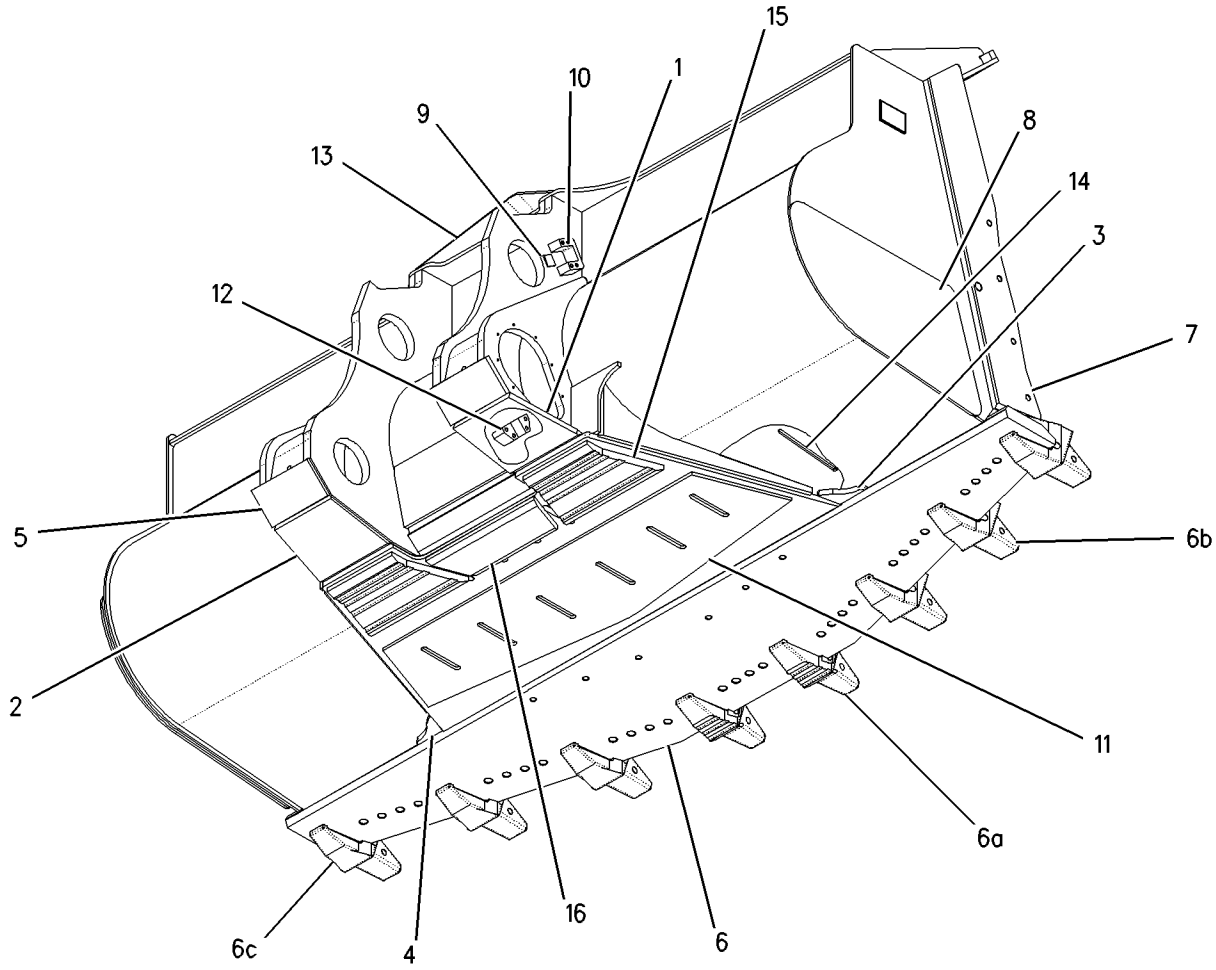

GRAPHIC #1 g00752733

112-4197 BUCKET AS-ROCK

S/N: 7HR1-UP
11.5 CU M (15 CU YD). WITH BOLT ON SEGMENTS
PART OF 112-4196 BUCKET GP-ROCK
AN ATTACHMENT

SMCS-6102 **i01432601**

NOTE	REF NO	GRAPHIC REF	PART NUMBER	QTY	PART NAME 1 2 3 4 5 6 (PRODUCT LEVEL)	SEE PAGE
	1	1	**134-5906**	2	BAR	
	2	1	**146-7600**	2	PLATE-WEAR	
	3	1	**142-6915**	1	PLATE	
	4	1	**112-9023**	1	PLATE (RH)	
	5	1	**112-9024**	1	PLATE (LH)	
	6	1	**142-6916**	1	PLATE	
	7	1	**107-6763**	1	EDGE AS-BASE	
	7A	1	**119-9604**	6	ADAPTER-CENTER	
	7B	1	**119-9605**	2	ADAPTER-CORNER	
	7C	1	**174-7927**	7	LUG-MOUNTING	
	8	1	**142-6917**	2	PLATE	
	9	1	**143-8435**	1	PLATE	
	10	1	**146-7599**	2	PLATE-WEAR	
	11	1	**148-5348**	1	PLATE-WEAR	
	12	1	**160-1427**	3	PLATE-WEAR	
	13	1	**197-0683**	1	BLOCK	
	14	1	**160-6690**	1	RETAINER	
	15	1	**146-7598**	2	PLATE-WEAR	
	16	1	**146-7597**	2	PLATE-WEAR	
	17	1	**9U-3474**	1	PLATE	
	18	1	**114-4813**	1	PLATE	
	19	1	**115-1548**	2	PLATE	
	20	1	**115-1549**	1	PLATE	

112-4197 BUCKET AS-ROCK *(contd.)* **i01432601**

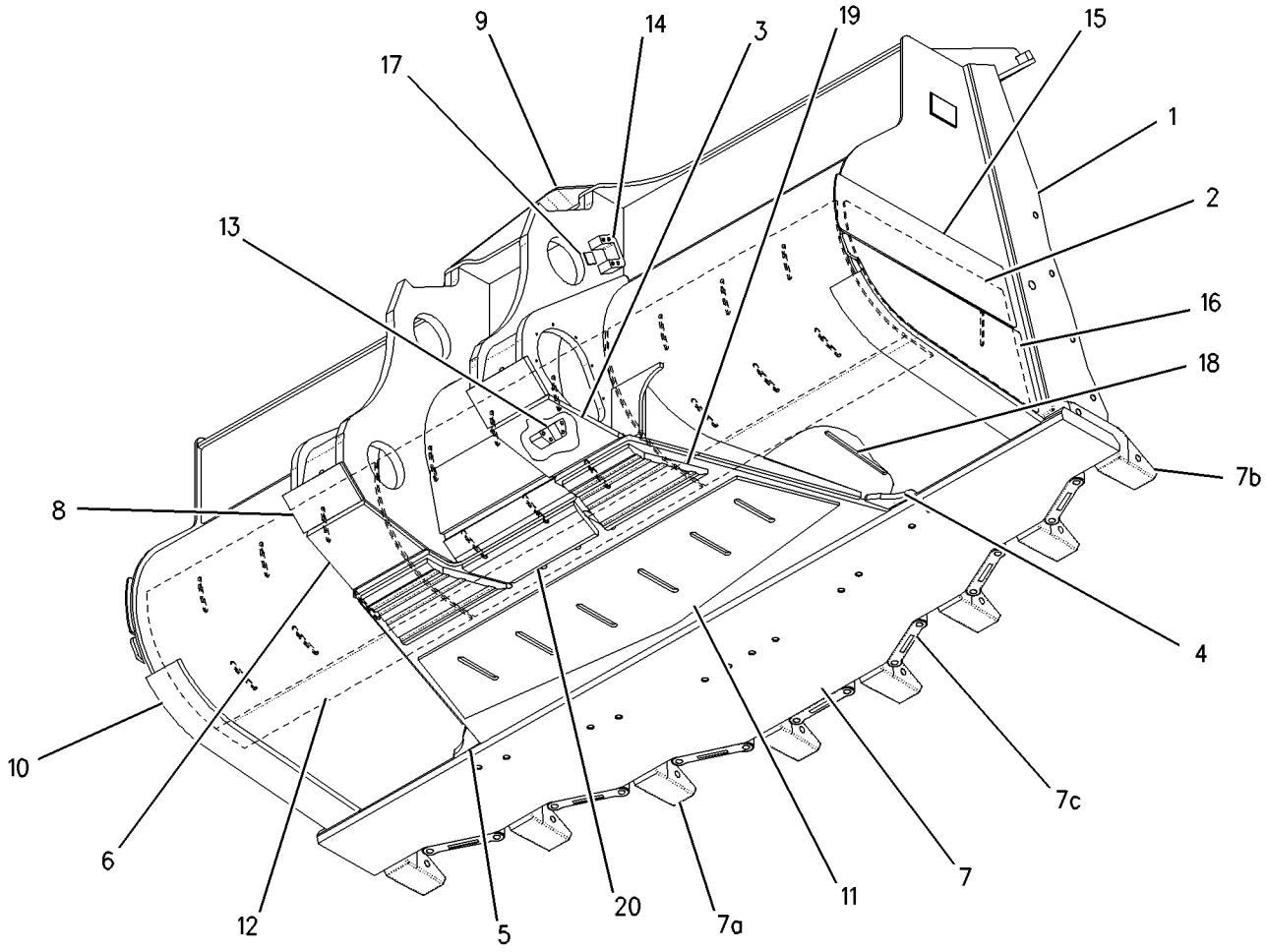

GRAPHIC #1 g00752764

WORK TOOLS

112-4199 BUCKET AS-ROCK

S/N: 7HR1-UP
11.5 CU M (15 CU YD). WITH BOLT ON SEGMENTS
PART OF 112-4198 BUCKET GP-ROCK
AN ATTACHMENT

SMCS-6102 **i01293524**

NOTE	REF NO	GRAPHIC REF	PART NUMBER	QTY	PART NAME 1 2 3 4 5 6 (PRODUCT LEVEL)	SEE PAGE
	1	1	**112-9023**	1	PLATE (RH)	
	2	1	**112-9024**	1	PLATE (LH)	
	3	1	**112-8996**	2	BAR	
	3A	1	**112-8998**	2	PLATE	
	4	1	**132-7091**	1	EDGE AS	
	5	1	**107-3554**	2	ADAPTER-TIP (CENTER)	
	6	1	**107-3555**	3	ADAPTER-TIP (LH)	
	7	1	**107-3556**	3	ADAPTER-TIP (RH)	
	8	1	**112-9031**	1	PLATE	
	9	1	**115-1548**	2	PLATE	
	10	1	**115-1549**	1	PLATE	
	11	1	**142-6915**	1	PLATE	
	12	1	**142-6916**	1	PLATE	
	13	1	**142-6917**	2	PLATE	
	14	1	**143-8435**	1	PLATE	

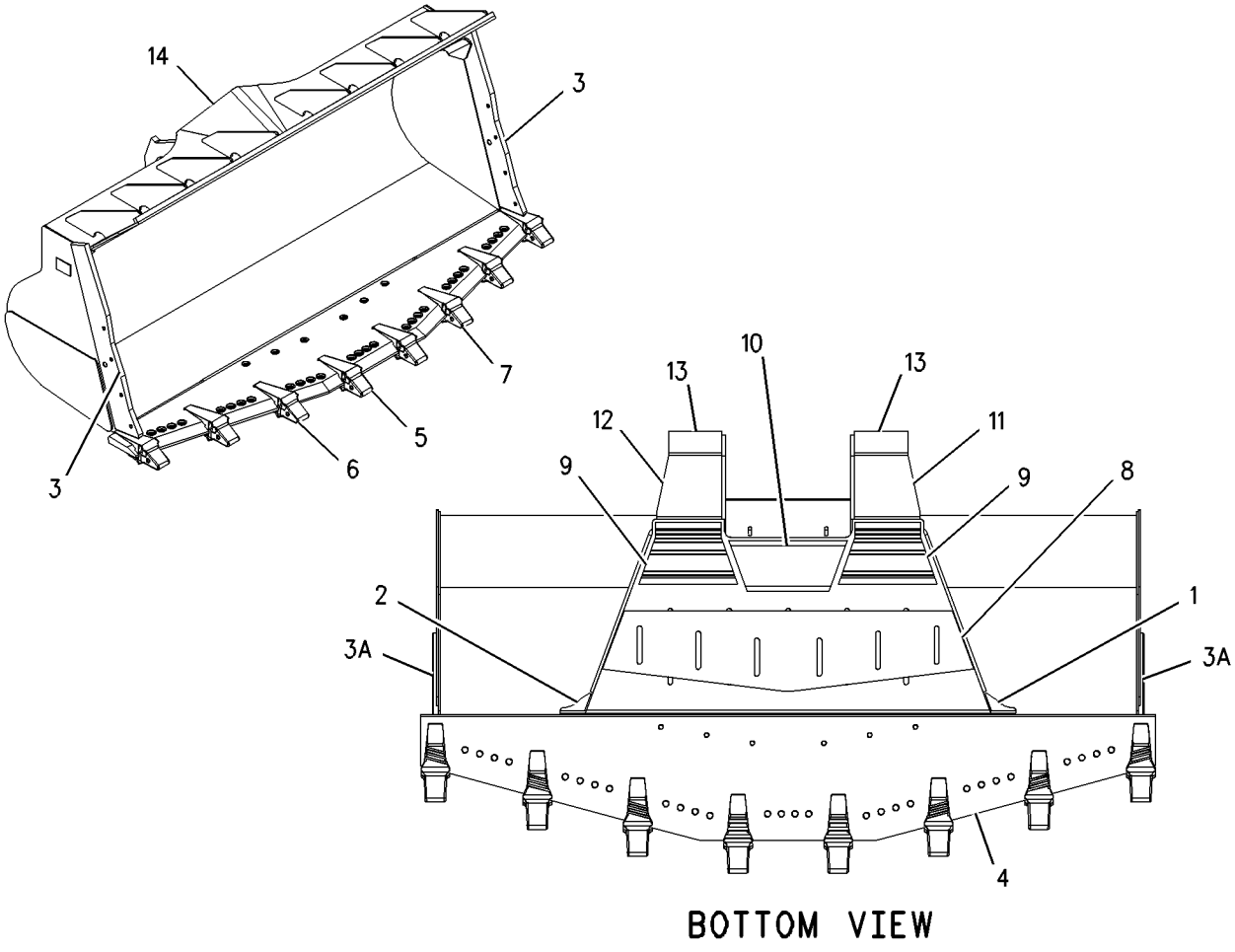

GRAPHIC #1 g00686892

MEMORANDA

WORK TOOLS

112-4202 BUCKET AS-ROCK

S/N: 7HR1-UP
12.3 CU M (16 CU YD). WITH BOLT ON SEGMENTS
PART OF 112-4200, 155-4606 BUCKET GP-ROCK
AN ATTACHMENT

SMCS-6102 **i01432615**

NOTE	REF NO	GRAPHIC REF	PART NUMBER	QTY	PART NAME 1 2 3 4 5 6 (PRODUCT LEVEL)	SEE PAGE
	1	1	**142-6915**	1	PLATE	
	2	1	**142-6916**	1	PLATE	
	3	1	**112-9023**	1	PLATE	
	4	1	**112-9024**	1	PLATE	
	5	1	**142-6917**	2	PLATE	
	6	1	**142-5790**	1	EDGE AS	
	6A	1	**119-8604**	2	ADAPTER-CENTER	
	6B	1	**119-8605**	3	ADAPTER-RH	
	6C	1	**119-8606**	3	ADAPTER-LH	
	7	1	**112-9005**	2	BAR	
	8	1	**112-8998**	2	PLATE	
	9	1	**9U-3474**	1	PLATE	
	10	1	**160-6690**	1	RETAINER	
	11	1	**148-5348**	1	PLATE-WEAR	
	12	1	**197-0683**	1	BLOCK	
	13	1	**143-8435**	1	PLATE	
	14	1	**114-4813**	1	PLATE	
	15	1	**115-1548**	2	PLATE	
	16	1	**115-1549**	1	PLATE	

112-4202 BUCKET AS-ROCK *(contd.)* **i01432615**

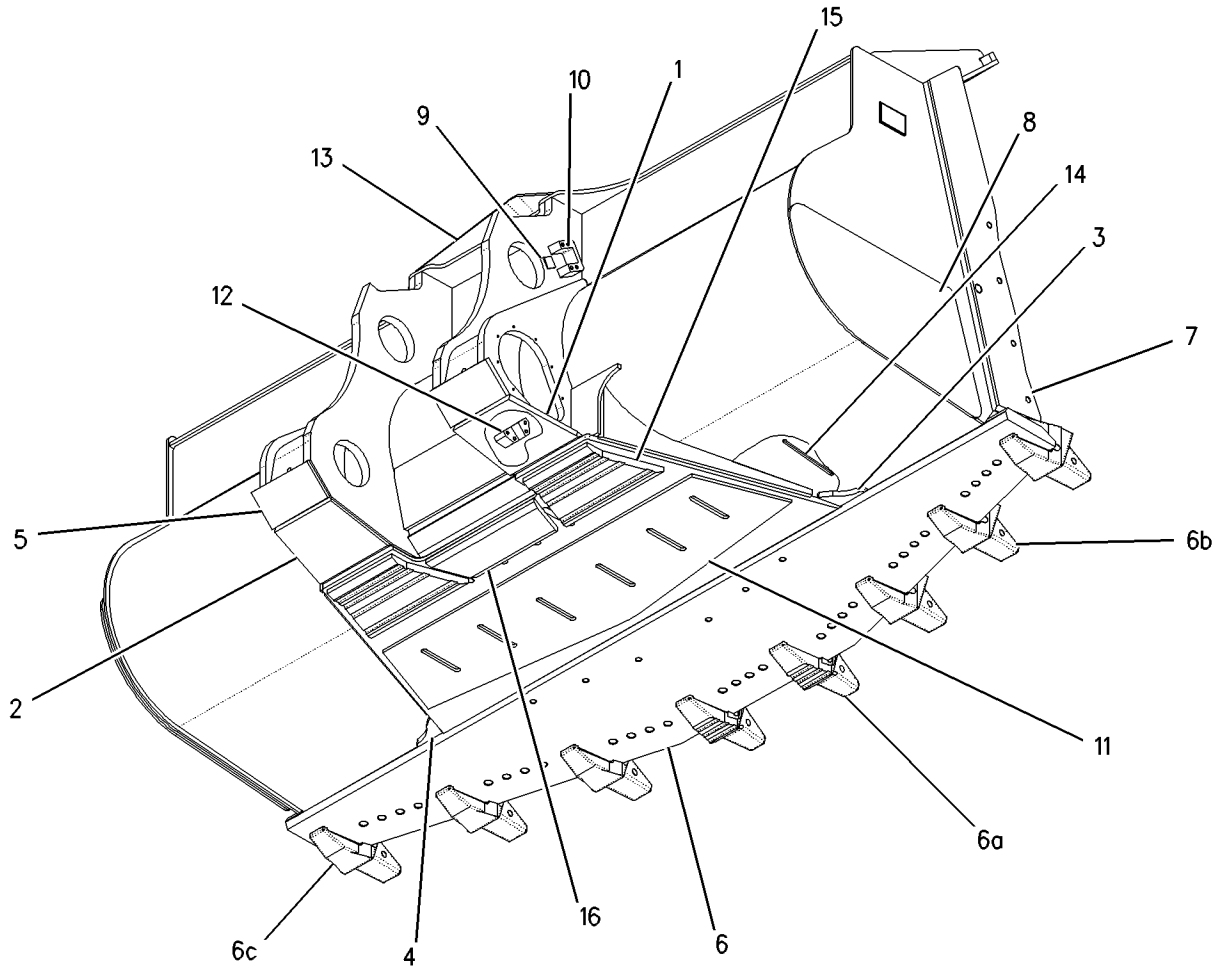

GRAPHIC #1 g00752767

146-7313 BUCKET AS-ROCK

S/N: 7HR1-UP
11.5 CU M (15 CU YD). WITH BOLT ON SEGMENTS
PART OF 148-1900 BUCKET GP-ROCK
AN ATTACHMENT

SMCS-6102 **i01432504**

NOTE	REF NO	GRAPHIC REF	PART NUMBER	QTY	PART NAME 1 2 3 4 5 6 (PRODUCT LEVEL)	SEE PAGE
	1	1	**112-9023**	1	PLATE	
	2	1	**112-9024**	1	PLATE	
	3	1	**115-1548**	2	PLATE	
	4	1	**115-1549**	1	PLATE	
	5	1	**142-6915**	1	PLATE	
	6	1	**142-6916**	1	PLATE	
	7	1	**142-6917**	2	PLATE	
	8	1	**143-8435**	1	PLATE	
	11	1	**146-7597**	2	PLATE-WEAR	
	12	1	**146-7598**	2	PLATE-WEAR	
	13	1	**146-7599**	2	PLATE-WEAR	
	15	1	**112-8996**	2	BAR	
	16	1	**146-7600**	2	PLATE-WEAR	
	20	1	**146-7613**	3	PLATE-WEAR	
	21	1	**146-8955**	1	EDGE AS	
	21A	1	**4T-4704**	2	ADAPTER-TIP (CENTER)	
	21B	1	**4T-4705**	3	ADAPTER-TIP (LH)	
	21C	1	**4T-4706**	3	ADAPTER-TIP (RH)	
	25	1	**146-9827**	1	PLATE-WEAR	
	26	1	**148-5348**	1	PLATE-WEAR	
	27	1	**152-4262**	2	PLATE-WEAR	
	28	1	**160-6690**	1	RETAINER	
	29	1	**9U-3474**	1	PLATE	
	30	1	**197-0683**	1	BLOCK	

146-7313 BUCKET AS-ROCK *(contd.)* **i01432504**

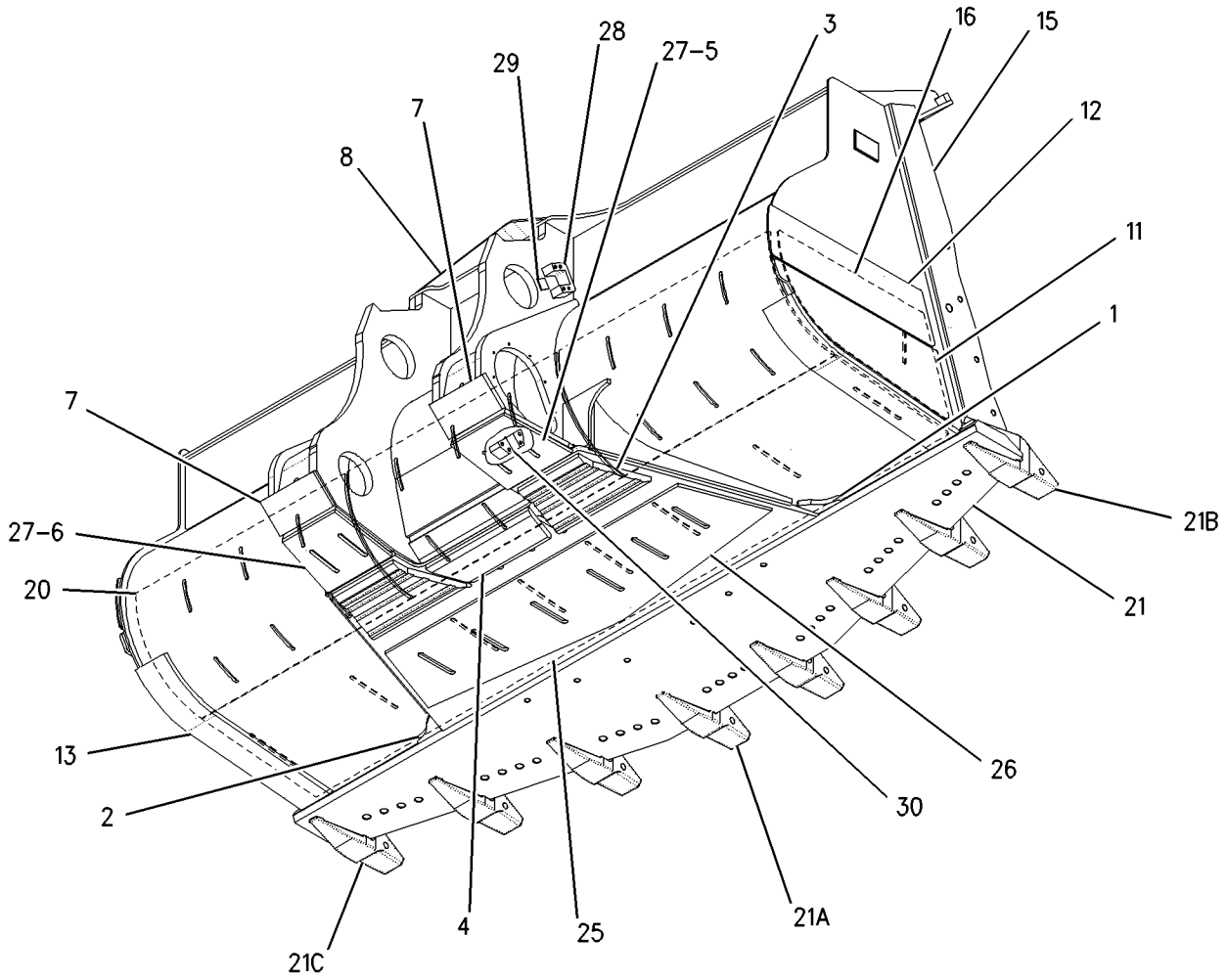

GRAPHIC #1 g00752744

153-5620 BUCKET AS-ROCK

S/N: 7HR1-UP
12.2 CU M (16.0 CU YD). WITH BOLT ON SEGMENTS
PART OF 154-4216 BUCKET GP-ROCK
AN ATTACHMENT

SMCS-6102 **i01432532**

NOTE	REF NO	GRAPHIC REF	PART NUMBER	QTY	PART NAME 1 2 3 4 5 6 (PRODUCT LEVEL)	SEE PAGE
	1	1	**112-9005**	2	BAR	
	2	1	**112-8998**	2	PLATE	
	3	1	**142-6915**	1	PLATE	
	4	1	**112-9023**	1	PLATE (RH)	
	5	1	**112-9024**	1	PLATE (LH)	
	6	1	**142-6916**	1	PLATE	
	7	1	**153-5621**	1	EDGE AS	
	8	1	**133-0705**	3	ADAPTER-RH	
	9	1	**133-0704**	2	ADAPTER	
	10	1	**133-0706**	3	ADAPTER-LH	
	11	1	**142-6917**	2	PLATE	
	12	1	**143-8435**	1	PLATE	
	14	1	**197-0683**	1	BLOCK	
	15	1	**160-6690**	1	RETAINER	
	16	1	**9U-3474**	1	PLATE	
	17	1	**114-4813**	1	PLATE	
	18	1	**115-1548**	2	PLATE	
	19	1	**115-1549**	1	PLATE	
	20	1	**148-5348**	1	PLATE-WEAR	

153-5620 BUCKET AS-ROCK *(contd.)* **i01432532**

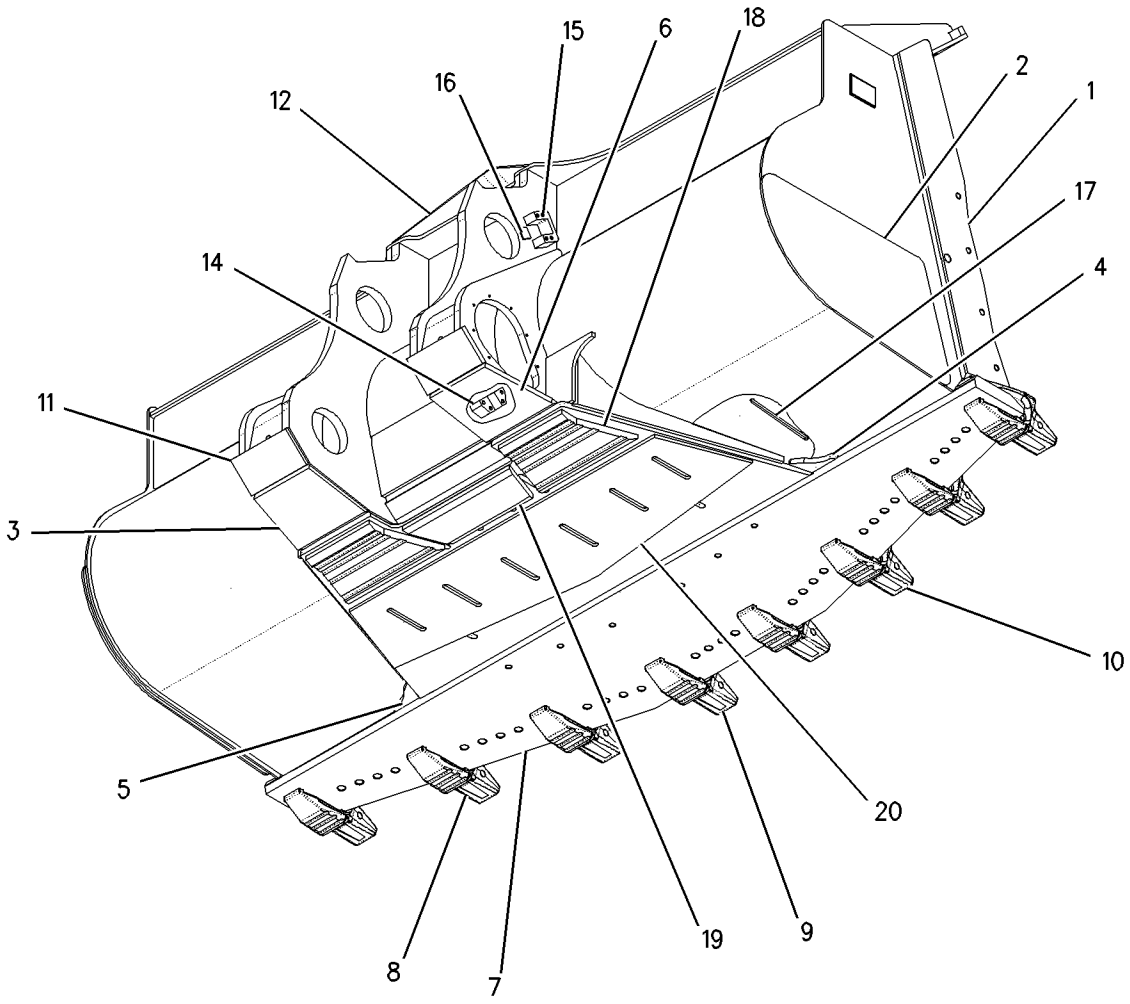

GRAPHIC #1 g00752750

160-7559 BUCKET AS-ROCK—IRON ORE

S/N: 7HR1-UP
10.0 CU M (13.08 CU YD)
PART OF 160-5195 BUCKET GP-ROCK
AN ATTACHMENT

SMCS-6102 **i01373795**

NOTE	REF NO	GRAPHIC REF	PART NUMBER	QTY	PART NAME 1 2 3 4 5 6 (PRODUCT LEVEL)	SEE PAGE
	1	1	**107-6763**	1	EDGE AS-BASE	
		1	**174-7927**	7	LUG-MOUNTING	
		1	**119-9604**	6	ADAPTER-CENTER	
		1	**119-9605**	2	ADAPTER-CORNER	
	2	1	**115-1548**	2	PLATE	
M	3	1	**8T-4139**	18	BOLT (M12X1.75X30MM)	
	4	1	**7X-0618**	18	WASHER-HARD (5MM THK)	
	5	1	**7F-4950**	18	WASHER	

M-METRIC PART

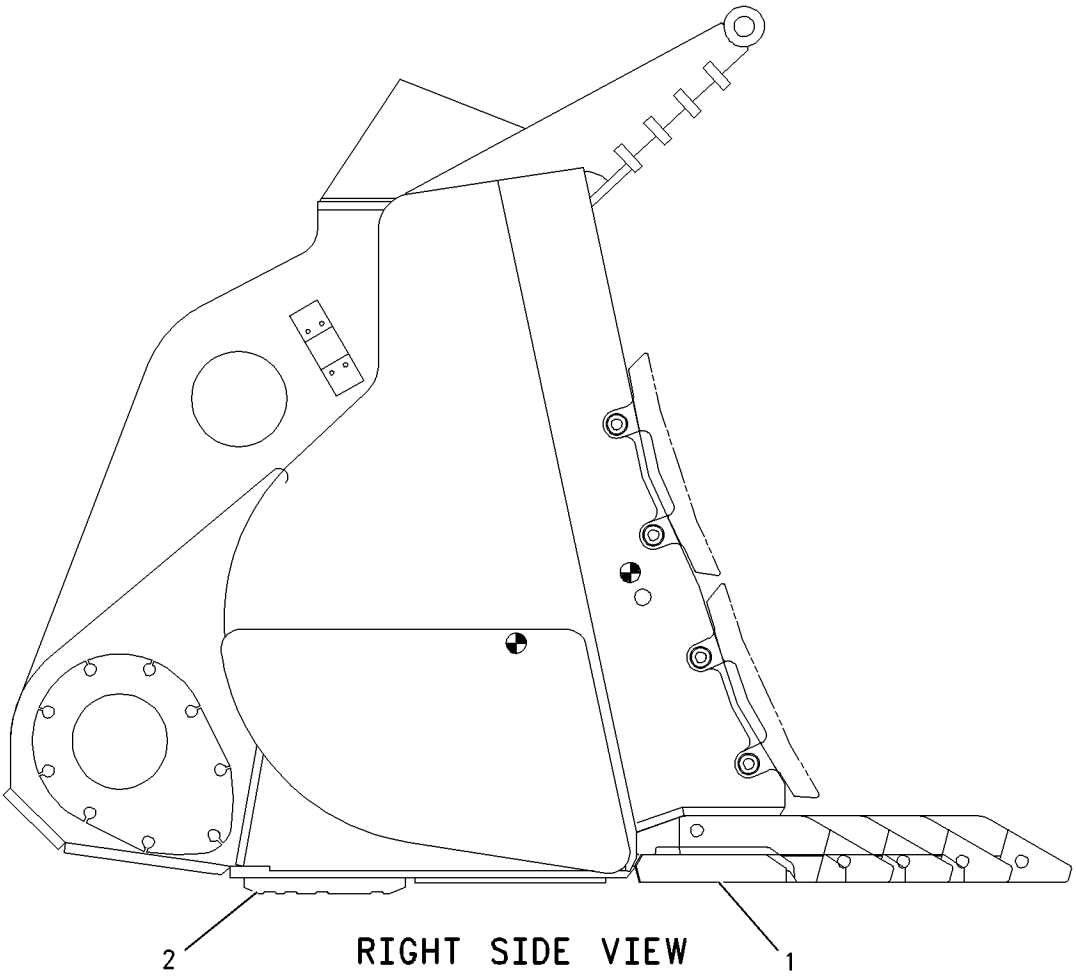

RIGHT SIDE VIEW

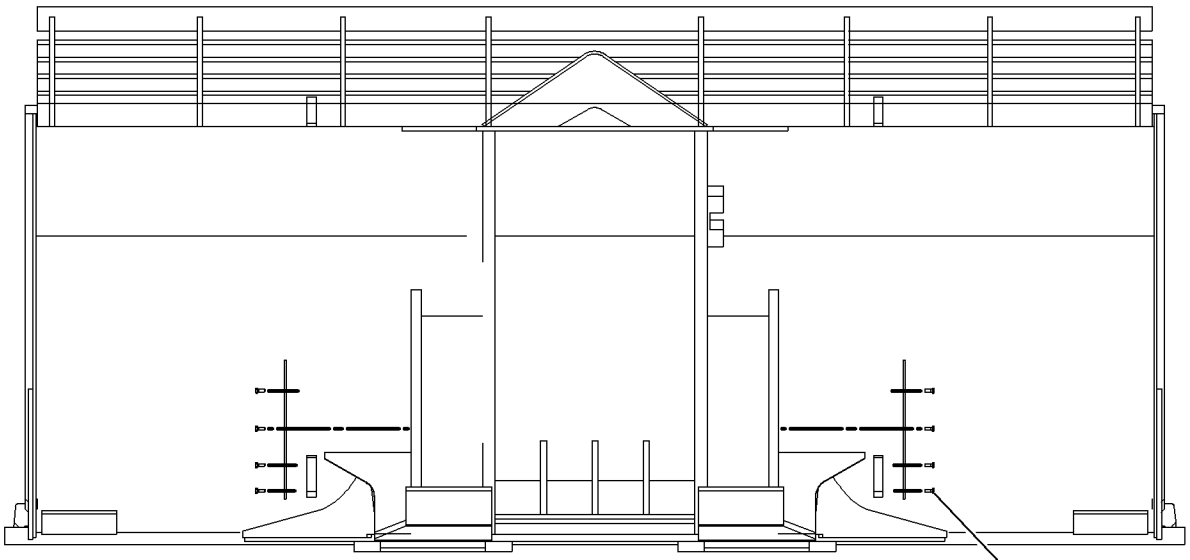

REAR VIEW

GRAPHIC #1

g00667515

WORK TOOLS

112-4194 BUCKET GP-ROCK

S/N: 7HR1-UP

AN ATTACHMENT

SMCS-6102 **i00834785**

NOTE	PART NUMBER	QTY	PART NAME 1 2 3 4 5 6 (PRODUCT LEVEL)	SEE PAGE
M	**8T-4139**	18	BOLT (M12X1.75X30MM)	
Y	**112-4195**	1	BUCKET AS-ROCK	1168
Y	*4T-6763*	1	EDGE GP-CUTTING	1195
	140-6533	2	PLATE	
	7F-4950	18	WASHER	
	7X-0618	18	WASHER-HARD (5.0MM THK)	

M-METRIC PART
Y-SEPARATE ILLUSTRATION

WORK TOOLS

112-4196 BUCKET GP-ROCK

S/N: 7HR1-UP
11.5 CU M (15 CU YD)
AN ATTACHMENT
TYPE 1

SMCS-6102 **i00834783**

NOTE	PART NUMBER	QTY	PART NAME 1 2 3 4 5 6 (PRODUCT LEVEL)	SEE PAGE
M	**8T-4139**	18	BOLT (M12X1.75X30MM)	
Y	**112-4197**	1	BUCKET AS-ROCK	1170
Y	*107-8558*	1	COVER GP-ADAPTER	1194
	140-6533	2	PLATE	
Y	*109-2670*	1	PLATE GP-WEAR	1202
Y	*107-8595*	1	PROTECTOR GP-EDGE	1205
Y	*101-3083*	1	PROTECTOR GP-SIDEBAR	1209
Y	*107-3346*	1	TIP GP	1211
	7F-4950	18	WASHER	
	7X-0618	18	WASHER-HARD (5.0MM THK)	

M-METRIC PART
Y-SEPARATE ILLUSTRATION

WORK TOOLS

112-4196 BUCKET GP-ROCK

S/N: 7HR1-UP
11.5 CU M (15 CU YD)
AN ATTACHMENT
TYPE 2

SMCS-6102 **i01432663**

NOTE	REF NO	GRAPHIC REF	PART NUMBER	QTY	PART NAME 1 2 3 4 5 6 (PRODUCT LEVEL)	SEE PAGE
	1	1	**7F-4950**	2	WASHER	
Y	2	1	*101-3083*	1	PROTECTOR GP-SIDEBAR	1209
Y	3	1	*107-8558*	1	COVER GP-ADAPTER	1194
Y	4	1	*107-8595*	1	PROTECTOR GP-EDGE	1205
Y	5	1	*109-2670*	1	PLATE GP-WEAR	1202
Y	6	1	**112-4197**	1	BUCKET AS-ROCK	1170
	7	1	**196-2239**	1	COVER AS-RH	
	8	1	**196-2393**	1	COVER AS-LH	
	9	1	**7X-0618**	2	WASHER-HARD (13.5X40X5MM THK)	
M	10	1	**8T-4139**	2	BOLT (M12X1.75X30MM)	

M-METRIC PART
Y-SEPARATE ILLUSTRATION

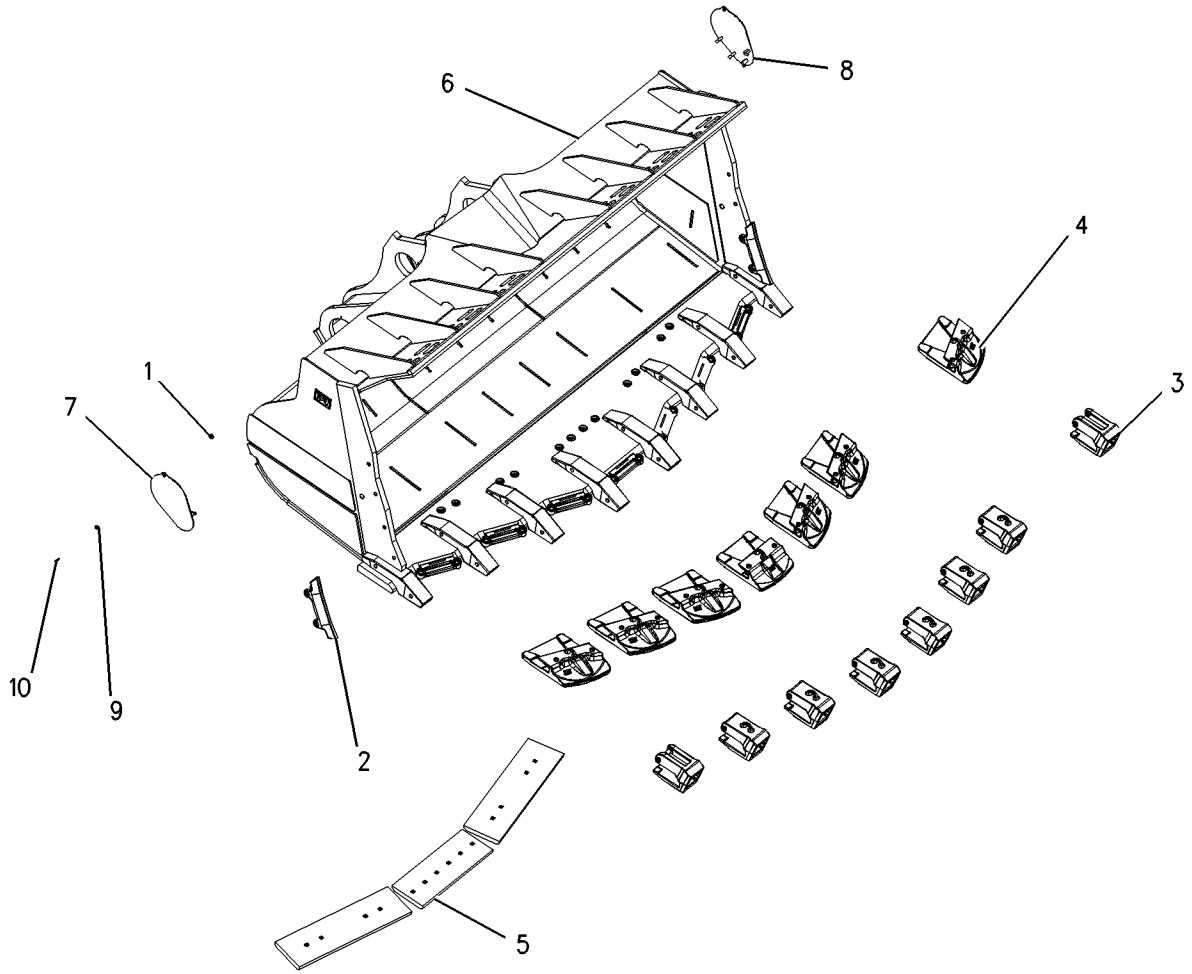

GRAPHIC #1 g00752860

WORK TOOLS

112-4198 BUCKET GP-ROCK

S/N: 7HR1-UP

AN ATTACHMENT

SMCS-6102 **i00834784**

NOTE	PART NUMBER	QTY	PART NAME 1 2 3 4 5 6 (PRODUCT LEVEL)	SEE PAGE
M	**8T-4139**	18	BOLT (M12X1.75X30MM)	
Y	**112-4199**	1	BUCKET AS-ROCK	1172
Y	*4T-6763*	1	EDGE GP-CUTTING	1195
	140-6533	2	PLATE	
	7F-4950	18	WASHER	
	7X-0618	18	WASHER-HARD (5.0MM THK)	

M-METRIC PART
Y-SEPARATE ILLUSTRATION

WORK TOOLS

112-4200 BUCKET GP-ROCK

S/N: 7HR1-UP
12.3 CU M (16 CU YD) BUCKET
AN ATTACHMENT

SMCS-6102 **i01057173**

NOTE	PART NUMBER	QTY	PART NAME 1 2 3 4 5 6 (PRODUCT LEVEL)	SEE PAGE
Y	**112-4202**	1	BUCKET AS-ROCK	1174
Y	*4T-6763*	1	EDGE GP-CUTTING	1195
M	**8T-4139**	18	BOLT (M12X1.75X30MM)	
	140-6533	1	PLATE	
	7F-4950	18	WASHER	
	7X-0618	18	WASHER-HARD (5.0MM THK)	

M-METRIC PART
Y-SEPARATE ILLUSTRATION

WORK TOOLS

148-1900 BUCKET GP-ROCK

S/N: 7HR1-UP
11.5 CU M (15 CU YD)
AN ATTACHMENT

SMCS-6102 **i01432486**

NOTE	REF NO	GRAPHIC REF	PART NUMBER	QTY	PART NAME 1 2 3 4 5 6 (PRODUCT LEVEL)	SEE PAGE
	1	1	**6Y-0311**	1	EDGE-CUTTING-LH	
	2	1	**6Y-0312**	1	EDGE-CUTTING-RH	
	3	1	**7F-4950**	2	WASHER	
Y	4	1	*101-3083*	2	PROTECTOR GP-SIDEBAR	1209
Y	5	1	*123-4392*	1	EDGE GP-SEGMENT	1200
Y	6	1	**146-7313**	1	BUCKET AS-ROCK	1176
	7	1	**196-2239**	1	COVER AS-RH	
	8	1	**196-2393**	1	COVER AS-LH	
	9	1	**2J-3507**	6	NUT-FULL (1-8 THD)	
	10	1	**5P-8136**	6	BOLT-PLOW	
	11	1	**5P-8250**	6	WASHER (28X49X5MM THK)	
	12	1	**7X-0618**	2	WASHER-HARD (13.5X40X5MM THK)	
M	13	1	**8T-4139**	2	BOLT (M12X1.75X30MM)	

M-METRIC PART
Y-SEPARATE ILLUSTRATION

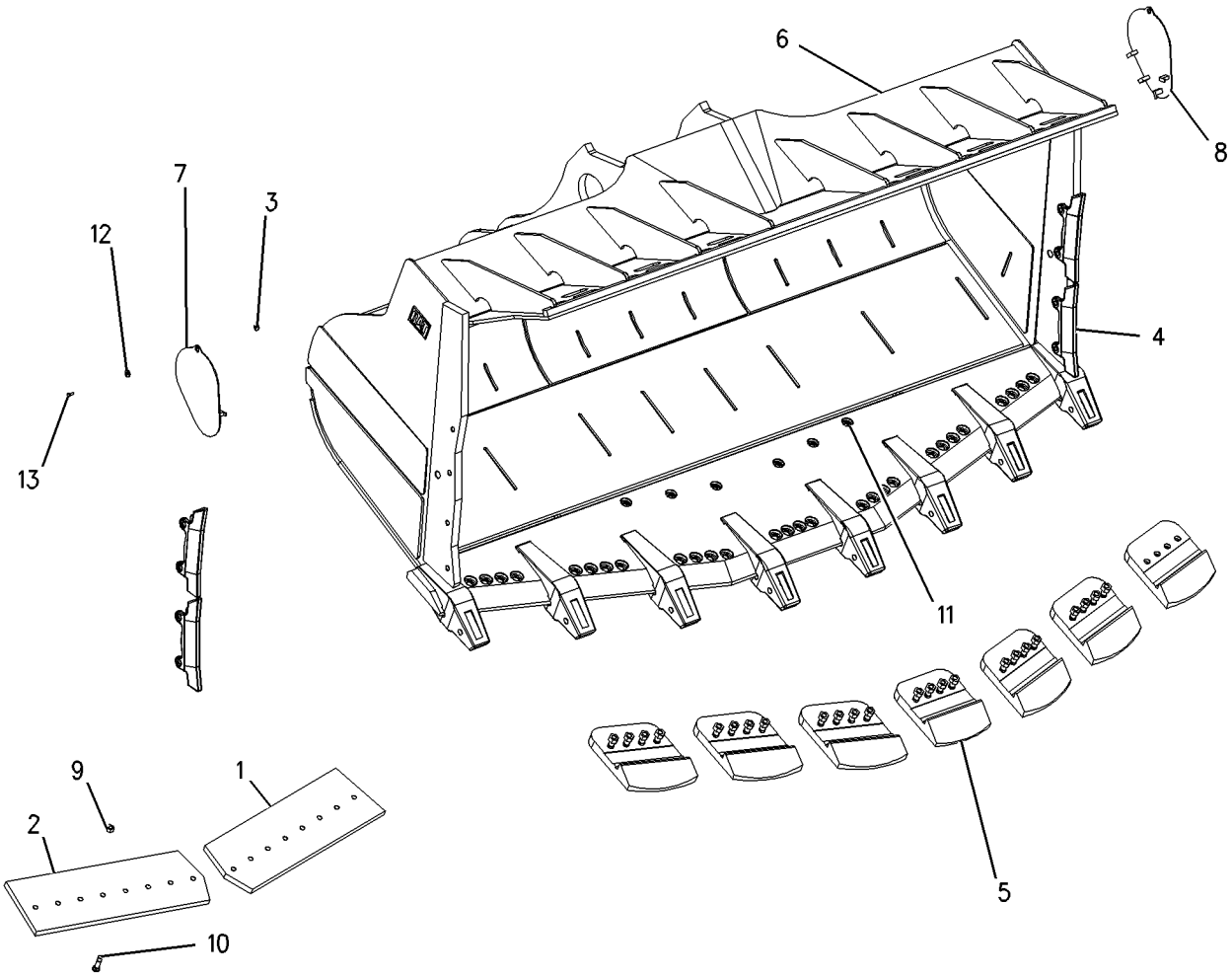

GRAPHIC #1 g00752843

WORK TOOLS

154-4216 BUCKET GP-ROCK

S/N: 7HR1-UP
12.1 CU M (16 CU YD)
AN ATTACHMENT

SMCS-6102 **i01432653**

NOTE	REF NO	GRAPHIC REF	PART NUMBER	QTY	PART NAME 1 2 3 4 5 6 (PRODUCT LEVEL)	SEE PAGE
	1	1	**7F-4950**	2	WASHER	
Y	2	1	**153-5620**	1	BUCKET AS-ROCK	1178
	3	1	**196-2239**	2	COVER AS-RH	
	4	1	**7X-0618**	2	WASHER-HARD (13.5X40X5MM THK)	
M	5	1	**8T-4139**	2	BOLT (M12X1.75X30MM)	
	6	1	**196-2393**	1	COVER AS-LH	

M-METRIC PART
Y-SEPARATE ILLUSTRATION

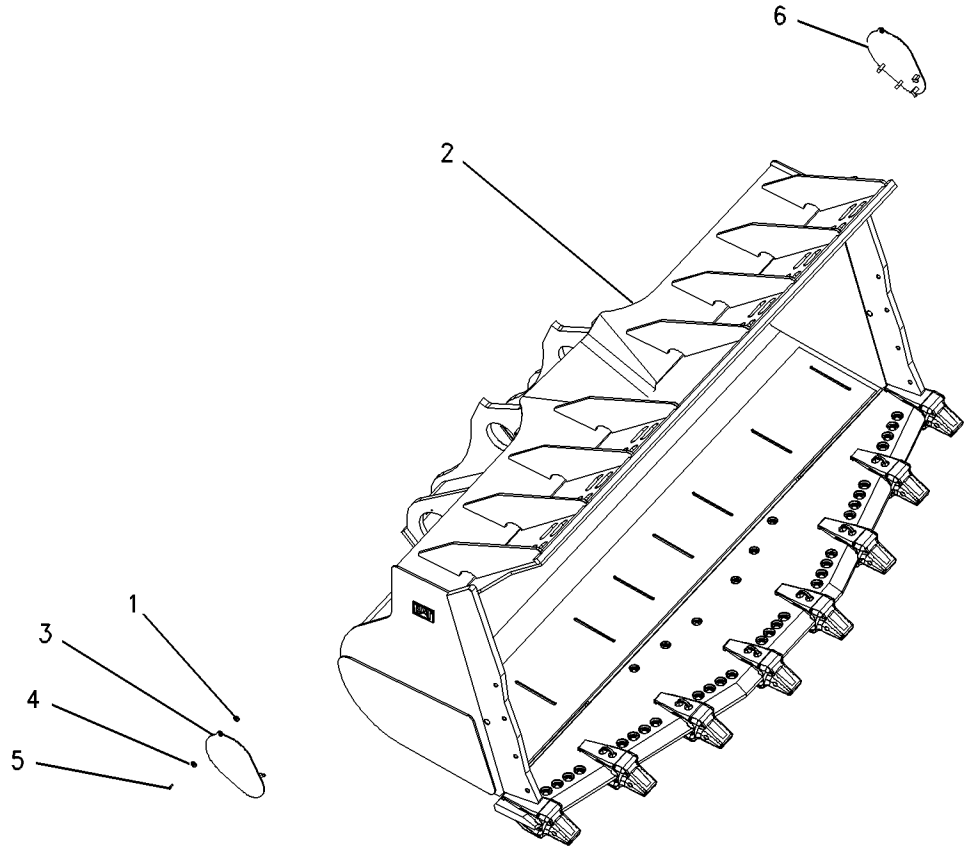

GRAPHIC #1 g00752840

155-4604 BUCKET GP-ROCK

S/N: 7HR1-UP
11.5 CU M (15 CU YD). WITH BOLT ON SEGMENTS
AN ATTACHMENT

SMCS-6102 **i01432641**

NOTE	REF NO	GRAPHIC REF	PART NUMBER	QTY	PART NAME 1 2 3 4 5 6 (PRODUCT LEVEL)	SEE PAGE
	1	1	**7F-4950**	2	WASHER	
Y	2	1	**112-4195**	1	BUCKET AS-ROCK	1168
	3	1	**196-2239**	1	COVER AS-RH	
	4	1	**7X-0618**	2	WASHER-HARD (13.5X40X5MM THK)	
M	5	1	**8T-4139**	2	BOLT (M12X1.75X30MM)	
	6	1	**196-2393**	1	COVER AS-LH	

M-METRIC PART
Y-SEPARATE ILLUSTRATION

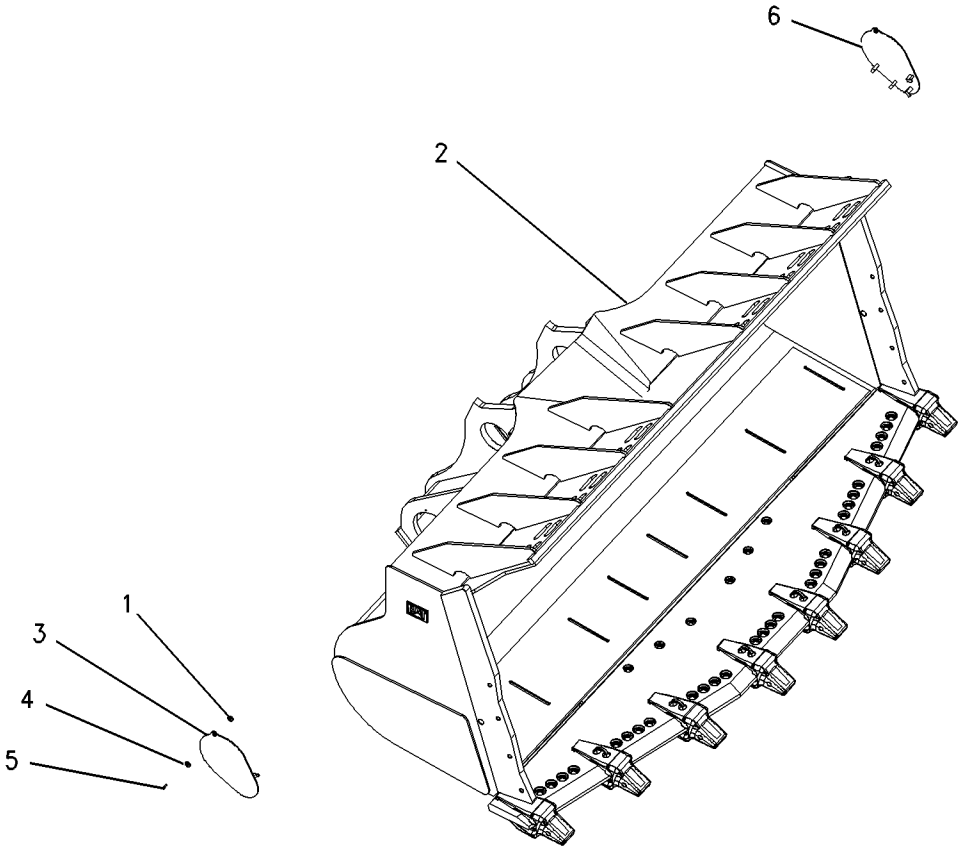

GRAPHIC #1 g00752840

WORK TOOLS

155-4605 BUCKET GP-ROCK

S/N: 7HR1-UP
11.5 CU M (15 CU YD). WITH BOLT ON SEGMENT
AN ATTACHMENT

SMCS-6102 **i01192137**

NOTE	PART NUMBER	QTY	PART NAME 1 2 3 4 5 6 (PRODUCT LEVEL)	SEE PAGE
M	**8T-4139**	8	BOLT (M12X1.75X30MM)	
Y	**112-4195**	1	BUCKET AS-ROCK	1168
	140-6533	2	PLATE	
	7F-4950	8	WASHER	
	7X-0618	8	WASHER-HARD (5MM THK)	

M-METRIC PART
Y-SEPARATE ILLUSTRATION

WORK TOOLS

155-4606 BUCKET GP-ROCK

S/N: 7HR1-UP
12.3 CU M (16 CU YD). WITH BOLT ON SEGEMENTS
AN ATTACHMENT

SMCS-6102 **i01432555**

NOTE	REF NO	GRAPHIC REF	PART NUMBER	QTY	PART NAME 1 2 3 4 5 6 (PRODUCT LEVEL)	SEE PAGE
	1	1	**7F-4950**	2	WASHER	
Y	2	1	**112-4202**	1	BUCKET AS-ROCK	1174
	3	1	**196-2239**	1	COVER AS-RH	
	4	1	**7X-0618**	2	WASHER-HARD (13.5X40X5MM THK)	
M	5	1	**8T-4139**	2	BOLT (M12X1.75X30MM)	
	6	1	**196-2393**	1	COVER AS-LH	

M-METRIC PART
Y-SEPARATE ILLUSTRATION

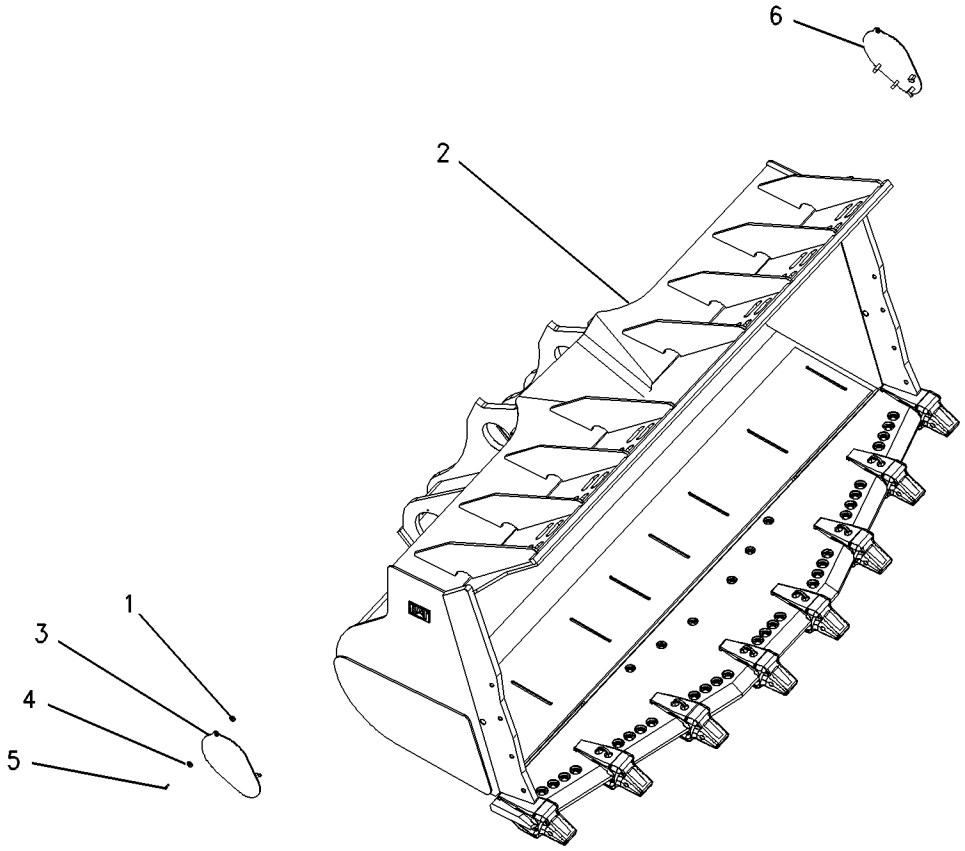

GRAPHIC #1 g00752840

160-5195 BUCKET GP-ROCK—IRON ORE

S/N: 7HR1-UP
10.0 CU M (13.08 CU YD)
AN ATTACHMENT

SMCS-6102 **i01186491**

NOTE	REF NO	GRAPHIC REF	PART NUMBER	QTY	PART NAME 1 2 3 4 5 6 (PRODUCT LEVEL)	SEE PAGE
Y	1	1	*160-7559*	1	BUCKET AS-ROCK	1180
	2	1	**1U-0740**	4	BIT-ROUTER	
	3	1	**133-0738**	8	PIN-G.E.T.	
	4	1	**107-8559**	8	RETAINER AS-G.E.T.	
	5	1	**133-0730**	1	PROTECTOR-EDGE	
	6	1	**133-0731**	3	PROTECTOR-EDGE	
	7	1	**133-0732**	3	PROTECTOR-EDGE	
	8	1	**135-9571**	14	PIN	
	9	1	**165-7237**	14	RETAINER AS	
	10	1	**167-0033**	6	COVER-ADAPTER	
	11	1	**167-0034**	2	COVER-ADAPTER	
	12	1	**113-9608**	16	PIN-G.E.T.	
	13	1	**113-9609**	16	RETAINER AS-G.E.T.	
	14	1	**100-6357**	1	PLATE-WEAR	
	15	1	**100-6356**	2	PLATE-WEAR	
	16	1	**8J-2928**	12	BOLT-PLOW	
	17	1	**2J-3507**	12	NUT-FULL (1-8 THD)	
	18	1	**5P-8250**	12	WASHER (5.0MM THK)	
Y	19	1	**107-8602**	8	TIP-BUCKET	1246

Y-SEPARATE ILLUSTRATION

160-5195 BUCKET GP-ROCK *(contd.)* i01186491

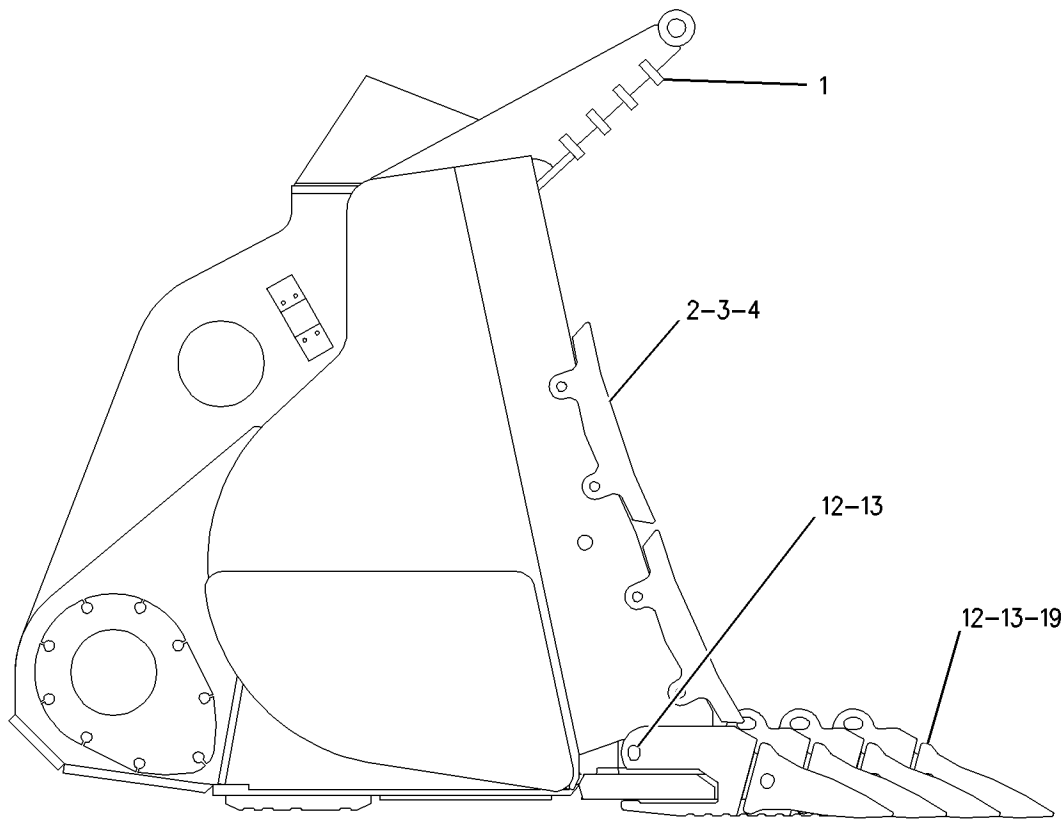

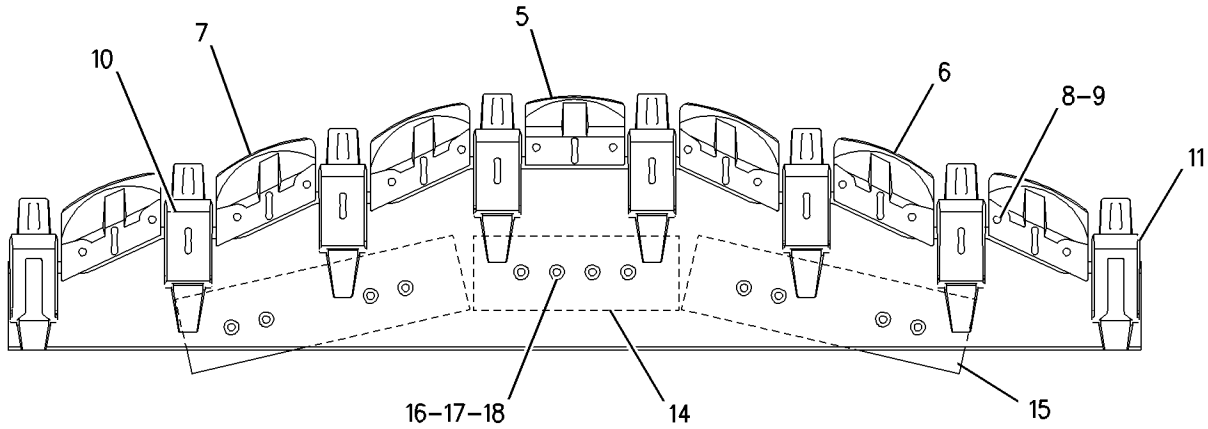

GRAPHIC #1 g00667474

WORK TOOLS

107-8558 COVER GP-ADAPTER

S/N: 7HR1-UP
PART OF 112-4196 BUCKET GP-ROCK
AN ATTACHMENT

SMCS-6803 **i01438151**

NOTE	REF NO	GRAPHIC REF	PART NUMBER	QTY	PART NAME 1 2 3 4 5 6 (PRODUCT LEVEL)	SEE PAGE
	1	1	**167-0033**	6	COVER-ADAPTER	
	2	1	**167-0034**	2	COVER-ADAPTER	
	3	1	**113-9608**	8	PIN-G.E.T.	
	4	1	**113-9609**	8	RETAINER AS-G.E.T.	

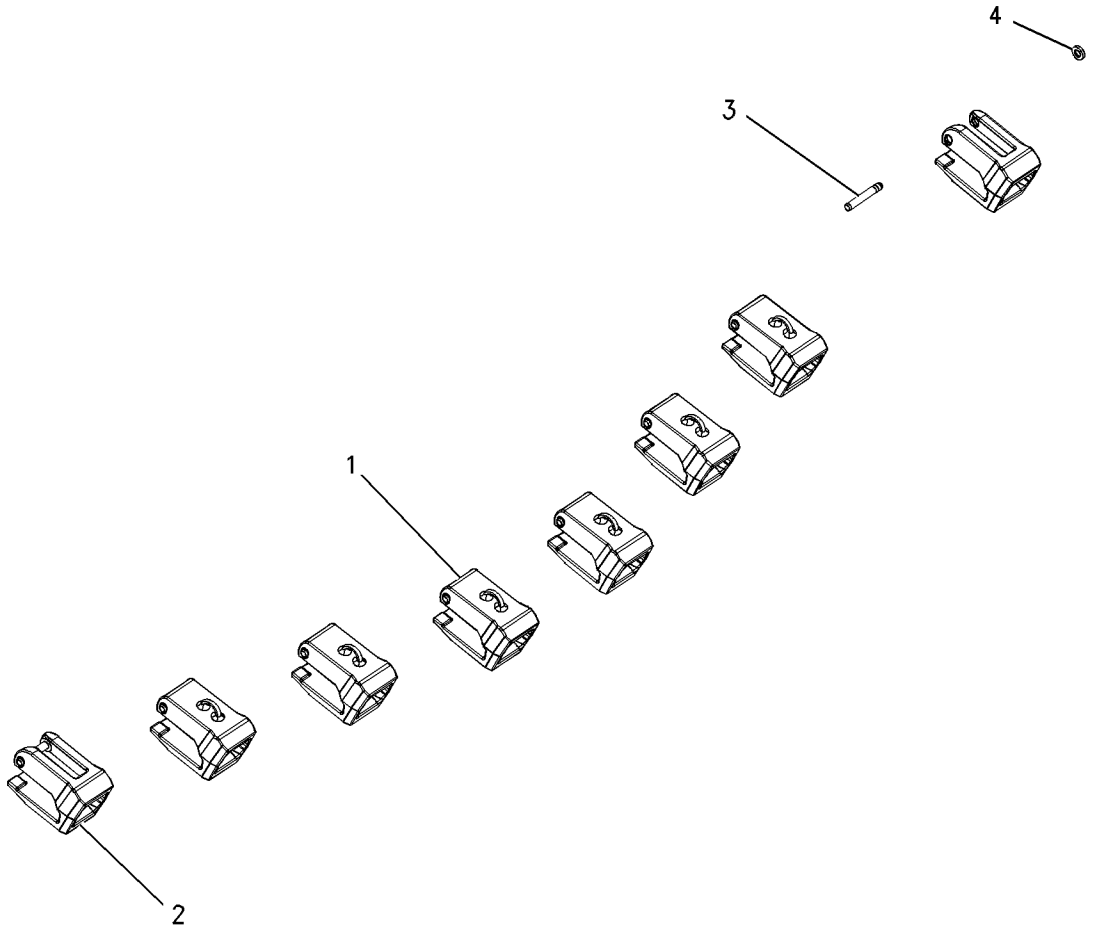

GRAPHIC #1 g00753576

WORK TOOLS

4T-6763 EDGE GP-CUTTING

S/N: 7HR1-UP

PART OF 112-4194, 112-4198, 112-4200 BUCKET GP-ROCK

AN ATTACHMENT

SMCS-6801 **i01365381**

NOTE	REF NO	GRAPHIC REF	PART NUMBER	QTY	PART NAME 1 2 3 4 5 6 (PRODUCT LEVEL)	SEE PAGE
	1	1	**4T-6761**	3	EDGE-SEGMENT (RH)	
Y	2	1	**4T-6760**	1	EDGE-SEGMENT (CENTER)	1201
	3	1	**4T-6762**	3	EDGE-SEGMENT (LH)	
C	4	1	**5P-8823**	28	BOLT-PLOW (1 1/4-7X4.13 IN)	
		1	**3K-9770**	28	NUT-FULL (1-1/4-7 THD)	

C-CHANGE FROM PREVIOUS TYPE
Y-SEPARATE ILLUSTRATION

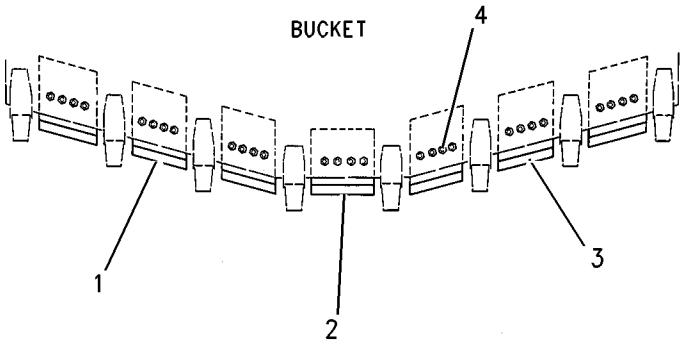

GRAPHIC #1 g00720386

WORK TOOLS

138-0864 EDGE GP-CUTTING

S/N: 7HR1-UP
SEGMENT A.R.M.
FIELD INSTALLATION

SMCS-6801 **i01098647**

NOTE	PART NUMBER	QTY	PART NAME 1 2 3 4 5 6 (PRODUCT LEVEL)	SEE PAGE
	5P-8823	28	BOLT-PLOW (1 1/4-7X4.13IN)	
	138-0861	1	EDGE-CUTTING (CENTER-A.R.M.)	
	138-0862	3	EDGE-CUTTING (RH-A.R.M.)	
	138-0863	3	EDGE-CUTTING (LH-A.R.M.)	
	3K-9770	28	NUT-FULL (1-1/4-7 THD)	

107-3529 EDGE GP-SEGMENT

S/N: 7HR1-UP

FOR USE WITH 101-3159 BUCKET GP-ROCK, 4E-8621 BUCKET GP-ROCK, 4E-8016 BUCKET GP-ROCK

AN ATTACHMENT

SMCS-6818 **i00816125**

NOTE	PART NUMBER	QTY	PART NAME 1 2 3 4 5 6 (PRODUCT LEVEL)	SEE PAGE
	5P-8823	28	BOLT-PLOW (1 1/4-7X105MM)	
	107-3530	1	EDGE-SEGMENT	
	107-3532	3	EDGE-SEGMENT-LH	
	107-3531	3	EDGE-SEGMENT-RH	
	3K-9770	28	NUT-FULL (1-1/4-7 THD)	

WORK TOOLS

107-6293 EDGE GP-SEGMENT

S/N: 7HR1-UP

AN ATTACHMENT

SMCS-6818 **i00737863**

NOTE	PART NUMBER	QTY	PART NAME 1 2 3 4 5 6 (PRODUCT LEVEL)	SEE PAGE
	5P-8823	28	BOLT-PLOW (1 1/4-7X105MM)	
	107-6294	1	EDGE-SEGMENT	
	107-6296	3	EDGE-SEGMENT-LH	
	107-6295	3	EDGE-SEGMENT-RH	
	3K-9770	28	NUT-FULL (1-1/4-7 THD)	

WORK TOOLS

109-2674 EDGE GP-SEGMENT

S/N: 7HR1-UP
BOLT-ON HALF-ARROW
FOR USE WITH 112-4194 BUCKET GP-ROCK
AN ATTACHMENT

SMCS-6818 **i00737957**

NOTE	PART NUMBER	QTY	PART NAME 1 2 3 4 5 6 (PRODUCT LEVEL)	SEE PAGE
	5P-8823	28	BOLT-PLOW (1 1/4-7X105MM)	
	109-2675	1	EDGE-SEGMENT	
	109-2677	3	EDGE-SEGMENT(LH)	
	109-2676	3	EDGE-SEGMENT(RH)	
	3K-9770	28	NUT-FULL (1-1/4-7 THD)	

WORK TOOLS

123-4392 EDGE GP-SEGMENT

S/N: 7HR1-UP
PART OF 148-1900 BUCKET GP-ROCK
AN ATTACHMENT

SMCS-6818 **i01440749**

NOTE	REF NO	GRAPHIC REF	PART NUMBER	QTY	PART NAME 1 2 3 4 5 6 (PRODUCT LEVEL)	SEE PAGE
	1	1	**119-9601**	3	EDGE-SEGMENT-RH	
	2	1	**119-9600**	1	EDGE-SEGMENT	
	3	1	**119-9602**	3	EDGE-SEGMENT-LH	
	4	1	**5P-8823**	28	BOLT-PLOW (1 1/4-7X4.13 IN)	
	5	1	**3K-9770**	28	NUT-FULL (1 1/4X7 THD)	

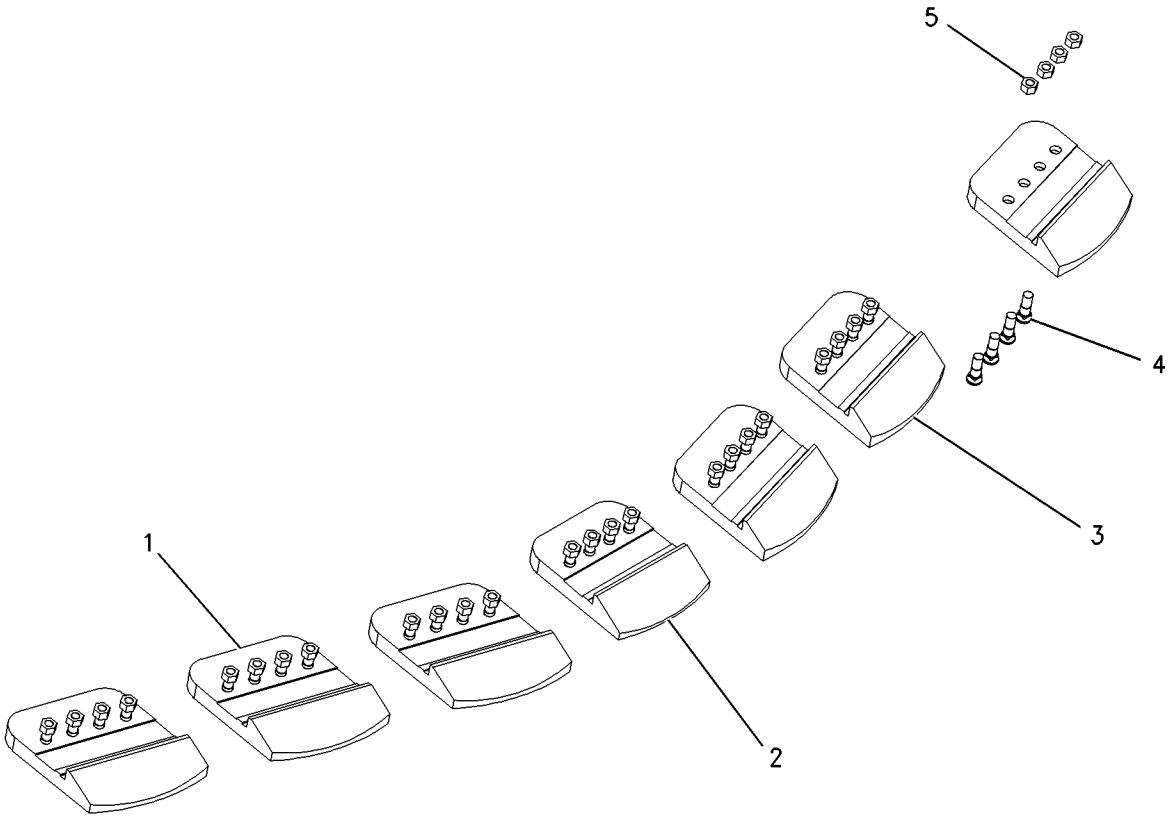

GRAPHIC #1 g00754599

WORK TOOLS

4T-6760 EDGE-SEGMENT

S/N: 7HR1-UP

PART OF 4T-6763 EDGE GP-CUTTING

FOR USE WITH BUCKET WHEN EQUIPPED WITH EITHER, 9V-3566 EDGE-CUTTING, 9V-3570 EDGE-CUTTING

AN ATTACHMENT

SMCS-6818 **i00341899**

NOTE	PART NUMBER	QTY	PART NAME 1 2 3 4 5 6 (PRODUCT LEVEL)	SEE PAGE
	4T-6762		EDGE-SEGMENT-LH	
	4T-6761		EDGE-SEGMENT-RH	

WORK TOOLS

109-2670 PLATE GP-WEAR

S/N: 7HR1-UP
PART OF 112-4196 BUCKET GP-ROCK
AN ATTACHMENT

SMCS-6120, 6820 **i01438162**

NOTE	REF NO	GRAPHIC REF	PART NUMBER	QTY	PART NAME 1 2 3 4 5 6 (PRODUCT LEVEL)	SEE PAGE
	1	1	**8J-2928**	12	BOLT-PLOW	
	2	1	**2J-3507**	12	NUT-FULL (1-8 THD)	
	3	1	**100-6357**	1	PLATE-WEAR	
	4	1	**100-6356**	2	PLATE-WEAR	
	5	1	**5P-8250**	12	WASHER (28X49X5MM THK)	

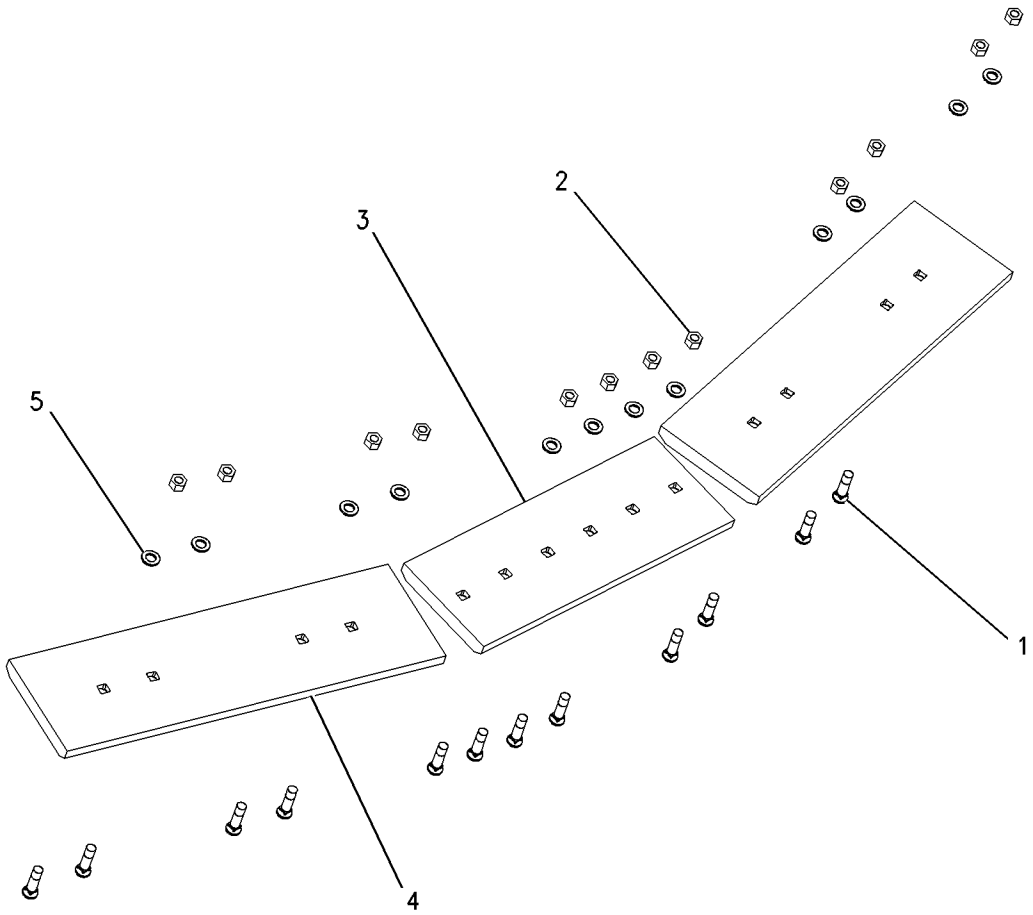

GRAPHIC #1 g00753626

WORK TOOLS

138-0032 PLATE-WEAR

S/N: 7HR1-UP
STANDARD
FIELD INSTALLATION

SMCS-6120, 6820 **i00747600**

NOTE	PART NUMBER	QTY	PART NAME 1 2 3 4 5 6 (PRODUCT LEVEL)	SEE PAGE
			(COVER FOR MECHANICALLY ATTACHED WEAR PLATES)	

WORK TOOLS

138-0033 PLATE-WEAR

S/N: 7HR1-UP
HEAVY DUTY
FIELD INSTALLATION

SMCS-6120, 6820 **i00747604**

NOTE	PART NUMBER	QTY	PART NAME 1 2 3 4 5 6 (PRODUCT LEVEL)	SEE PAGE
			(COVER FOR MECHANICALLY ATTACHED WEAR PLATES)	

107-8595 PROTECTOR GP-EDGE

S/N: 7HR1-UP
PART OF 112-4196 BUCKET GP-ROCK
FOR USE WITH 112-4196 BUCKET GP-ROCK
AN ATTACHMENT

SMCS-6120 **i01438154**

NOTE	REF NO	GRAPHIC REF	PART NUMBER	QTY	PART NAME 1 2 3 4 5 6 (PRODUCT LEVEL)	SEE PAGE
	1	1	**135-9571**	14	PIN	
	2	1	**133-0731**	3	PROTECTOR-EDGE (RH)	
	3	1	**133-0732**	3	PROTECTOR-EDGE (LH)	
	4	1	**133-0730**	1	PROTECTOR-EDGE (CENTER)	
	5	1	**165-7237**	14	RETAINER AS	

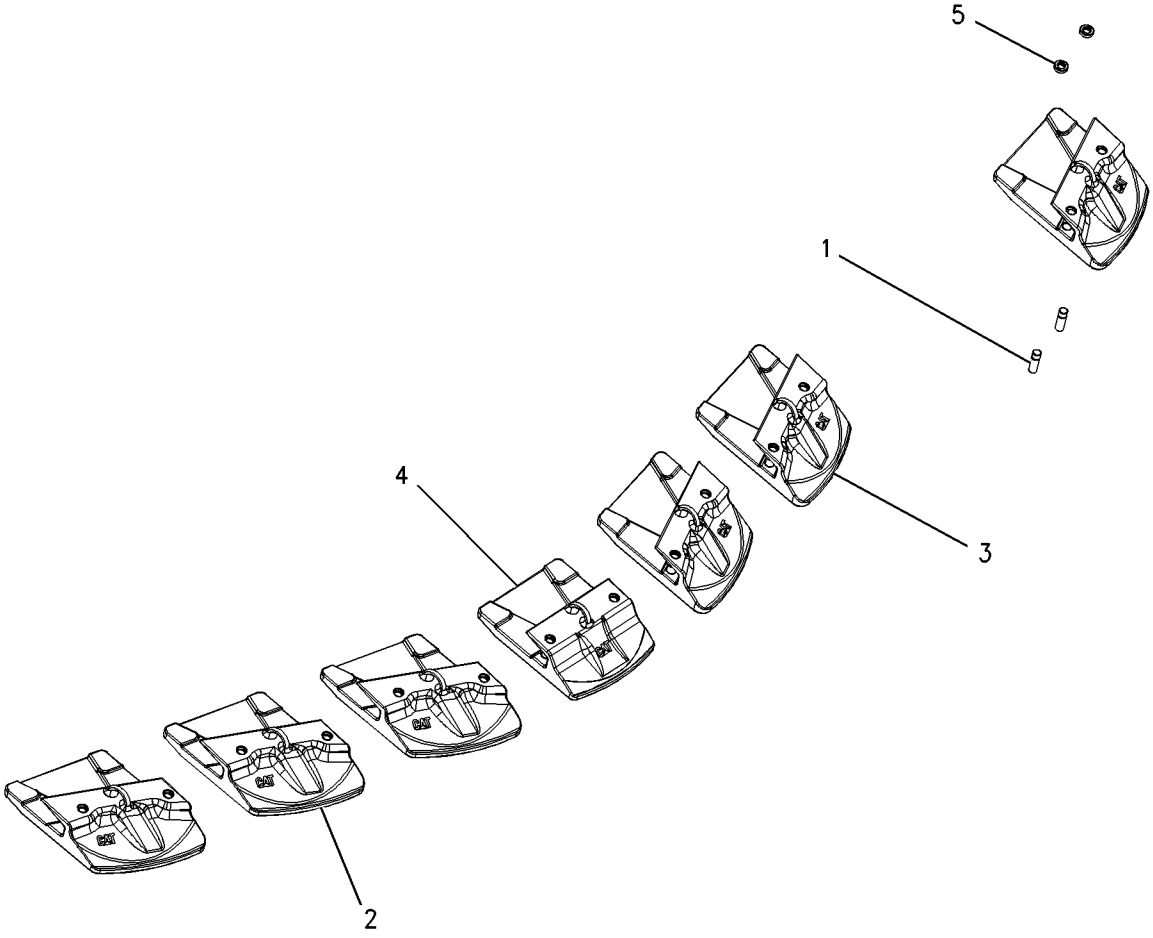

GRAPHIC #1 g00753619

WORK TOOLS

174-8021 PROTECTOR GP-EDGE

S/N: 7HR1-UP

FIELD INSTALLATION

SMCS-6120 **i01509840**

NOTE	PART NUMBER	QTY	PART NAME 1 2 3 4 5 6 (PRODUCT LEVEL)	SEE PAGE
	5P-8823	14	BOLT-PLOW (1 1/4-7X4.13 IN)	
	198-1092	14	BOLT-PLOW	
	5P-8362	14	NUT (1 1/4-7 THD)	
	3K-9770	28	NUT-FULL (1 1/4X7 THD)	
	189-5186	1	PLATE-WEAR	
	189-5187	3	PLATE-WEAR	
	189-5188	3	PLATE-WEAR	

WORK TOOLS

189-5189 PROTECTOR GP-EDGE

S/N: 7HR1-UP

FIELD INSTALLATION

SMCS-6120 **i01471444**

NOTE	PART NUMBER	QTY	PART NAME 1 2 3 4 5 6 (PRODUCT LEVEL)	SEE PAGE
	5P-8361	12	BOLT-PLOW (1 1/4-7X4.92 IN)	
	5P-8823	12	BOLT-PLOW (1 1/4-7X4.13 IN)	
	5P-8362	12	NUT (1 1/4-7 THD)	
	3K-9770	24	NUT-FULL (1 1/4X7 THD)	
	189-5186	2	PLATE-WEAR (CTR)	
	189-5187	2	PLATE-WEAR (RH)	
	189-5188	2	PLATE-WEAR (LH)	

WORK TOOLS

195-7094 PROTECTOR GP-EDGE

S/N: 7HR1-UP

AN ATTACHMENT

SMCS-6120 **i01526282**

NOTE	PART NUMBER	QTY	PART NAME 1 2 3 4 5 6 (PRODUCT LEVEL)	SEE PAGE
	5P-8823	14	BOLT-PLOW (1 1/4-7X4.13 IN)	
	198-1092	14	BOLT-PLOW	
	5P-8362	14	NUT (1 1/4-7 THD)	
	3K-9770	28	NUT-FULL (1 1/4X7 THD)	
	195-7096	1	PLATE-WEAR (CENTER)	
	195-7097	3	PLATE-WEAR (RH)	
	195-7098	3	PLATE-WEAR (LH)	

101-3083 PROTECTOR GP-SIDEBAR

S/N: 7HR1-UP
PART OF 112-4196, 148-1900 BUCKET GP-ROCK
FOR USE WITH 50MM (1.9 IN) THICK BUCKET SIDEBAR
AN ATTACHMENT

SMCS-6805, 6822 **i01438082**

NOTE	REF NO	GRAPHIC REF	PART NUMBER	QTY	PART NAME 1 2 3 4 5 6 (PRODUCT LEVEL)	SEE PAGE
	1	1	**1U-0740**	2	BIT-ROUTER	
	2	1	**133-0738**	4	PIN-G.E.T.	
	3	1	**107-8559**	4	RETAINER AS-G.E.T.	

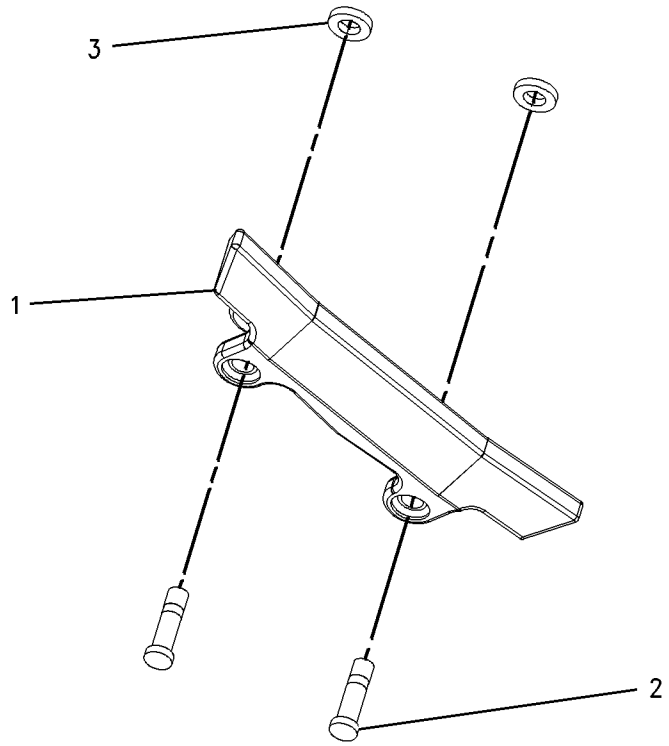

GRAPHIC #1 g00753388

WORK TOOLS

138-0006 RETAINER-G.E.T.

S/N: 7HR1-UP

FIELD INSTALLATION

SMCS-6805, 6822 **i00747535**

NOTE	PART NUMBER	QTY	PART NAME 1 2 3 4 5 6 (PRODUCT LEVEL)	SEE PAGE
			(RETAINER FOR MECHANICALLY ATTACHED WEAR PLATES)	

WORK TOOLS

107-3346 TIP GP

S/N: 7HR1-UP
PART OF 112-4196 BUCKET GP-ROCK
AN ATTACHMENT

SMCS-6805 **i01057773**

NOTE	PART NUMBER	QTY	PART NAME 1 2 3 4 5 6 (PRODUCT LEVEL)	SEE PAGE
Y	*6I-6417*	8	TIP GP-LONG	1224

Y-SEPARATE ILLUSTRATION

WORK TOOLS

107-8610 TIP GP

S/N: 7HR1-UP
HEAVY DUTY
AN ATTACHMENT

SMCS-6805 **i00737870**

NOTE	PART NUMBER	QTY	PART NAME 1 2 3 4 5 6 (PRODUCT LEVEL)	SEE PAGE
Y	*6I-6420*	8	TIP GP-ABRASION	1217

Y-SEPARATE ILLUSTRATION

WORK TOOLS

137-9673 TIP GP

S/N: 7HR1-UP

AN ATTACHMENT

SMCS-6805 **i00986899**

NOTE	PART NUMBER	QTY	PART NAME 1 2 3 4 5 6 (PRODUCT LEVEL)	SEE PAGE
	138-0913	1	RETAINER AS	
	138-0910	1	CAP-RETAINER	
	138-0911	1	PLUG-RETAINER	
	138-6438	1	TIP-PENETRATION	

WORK TOOLS

173-5356 TIP GP

S/N: 7HR1-UP
SHARP
AN ATTACHMENT

SMCS-6805 **i01241913**

NOTE	PART NUMBER	QTY	PART NAME 1 2 3 4 5 6 (PRODUCT LEVEL)	SEE PAGE
	138-0910	1	CAP-RETAINER	
	143-3082	1	PLUG-RETAINER	
	138-0700	1	RETAINER	
	171-1652	1	TIP-SHARP	

WORK TOOLS

173-5357 TIP GP

S/N: 7HR1-UP

AN ATTACHMENT

SMCS-6805 **i01242318**

NOTE	PART NUMBER	QTY	PART NAME 1 2 3 4 5 6 (PRODUCT LEVEL)	SEE PAGE
	138-0910	1	CAP-RETAINER	
	143-3082	1	PLUG-RETAINER	
	138-0700	1	RETAINER	
	171-1654	1	TIP-TWIN SHARP	

WORK TOOLS

187-0954 TIP GP

S/N: 7HR1-UP

AN ATTACHMENT

SMCS-6805 **i01256058**

NOTE	PART NUMBER	QTY	PART NAME 1 2 3 4 5 6 (PRODUCT LEVEL)	SEE PAGE
	113-4708	1	PIN-G.E.T.	
	113-4709	1	RETAINER AS-G.E.T.	
Y	**135-9700**	1	TIP-PENETRATION	1248

Y-SEPARATE ILLUSTRATION

6I-6420 TIP GP-ABRASION

S/N: 7HR1-UP
ABRASION HEAVY DUTY
PART OF 107-8610 TIP GP
FOR USE WITH STANDARD HOE & FRONT SHOVEL BUCKETS
AN ATTACHMENT

SMCS-6805 **i00554088**

NOTE	REF NO	GRAPHIC REF	PART NUMBER	QTY	PART NAME 1 2 3 4 5 6 (PRODUCT LEVEL)	SEE PAGE
	1	1	**6I-6603**	1	TIP-ABRASION	
	2	1	**113-9608**	1	PIN-G.E.T.	
	3	1	**113-9609**	1	RETAINER AS-G.E.T.	

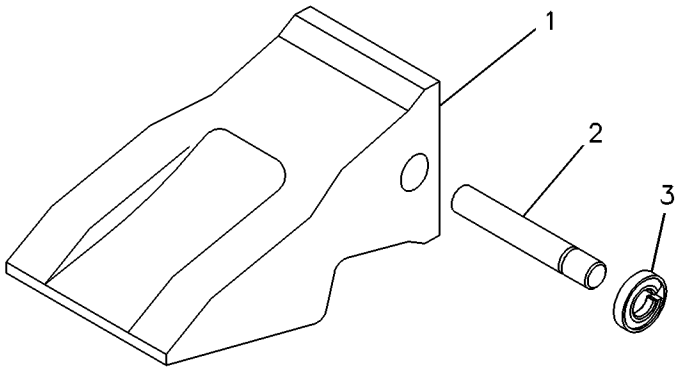

GRAPHIC #1 g00127389

WORK TOOLS

8E-3759 TIP GP-ABRASION

S/N: 7HR1-UP
HEAVY DUTY
AN ATTACHMENT

SMCS-6805 **i01306783**

NOTE	REF NO	GRAPHIC REF	PART NUMBER	QTY	PART NAME 1 2 3 4 5 6 (PRODUCT LEVEL)	SEE PAGE
	1	1	**6Y-2553**	1	TIP-ABRASION (HD)	
	2	1	**107-3378**	1	PIN-G.E.T.	
	3	1	**107-8559**	1	RETAINER AS-G.E.T.	

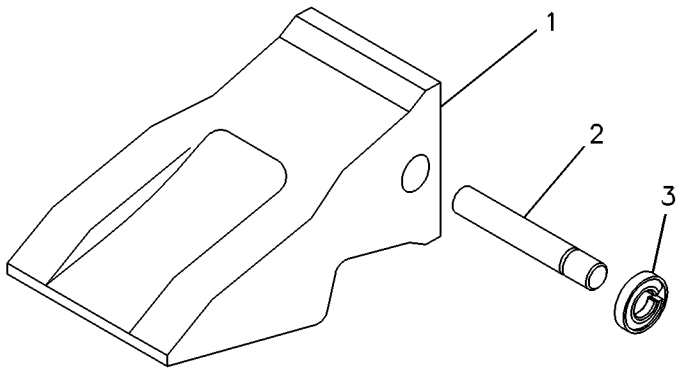

GRAPHIC #1 g00127389

WORK TOOLS

100-5589 TIP GP-ABRASION

S/N: 7HR1-UP
HEAVY DUTY
AN ATTACHMENT

SMCS-6805 **i00096271**

NOTE	REF NO	GRAPHIC REF	PART NUMBER	QTY	PART NAME 1 2 3 4 5 6 (PRODUCT LEVEL)	SEE PAGE
	1	1	**113-4709**	1	RETAINER AS-G.E.T.	
	2	1	**113-4708**	1	PIN-G.E.T.	
	3	1	**9U-9703**	1	TIP-ABRASION	

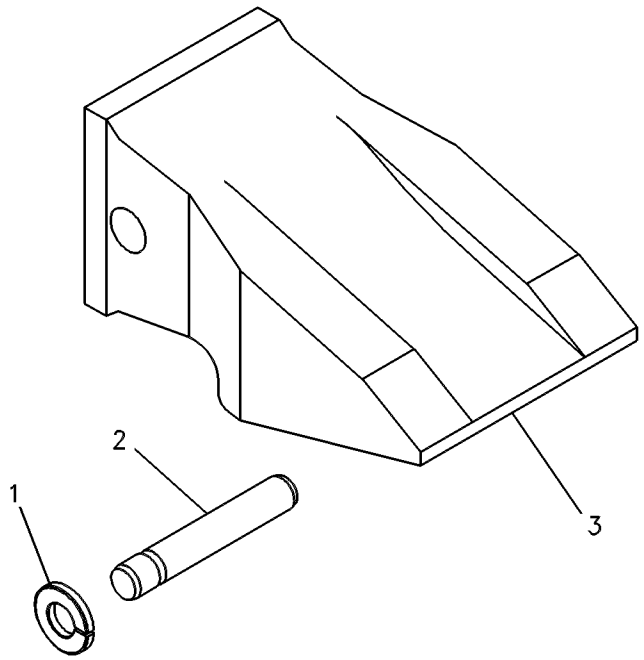

GRAPHIC #1 g00105130

WORK TOOLS

137-9674 TIP GP-ABRASION

S/N: 7HR1-UP

AN ATTACHMENT

SMCS-6805 **i00986902**

NOTE	PART NUMBER	QTY	PART NAME 1 2 3 4 5 6 (PRODUCT LEVEL)	SEE PAGE
	138-0913	1	RETAINER AS	
	138-0910	1	CAP-RETAINER	
	138-0911	1	PLUG-RETAINER	
	138-6439	1	TIP-ABRASION	

WORK TOOLS

170-1875 TIP GP-ABRASION

S/N: 7HR1-UP

AN ATTACHMENT

SMCS-6805 **i01509798**

NOTE	PART NUMBER	QTY	PART NAME 1 2 3 4 5 6 (PRODUCT LEVEL)	SEE PAGE
	138-0910	1	CAP-RETAINER	
	143-3082	1	PLUG-RETAINER	
	138-0700	1	RETAINER	
	143-3094	1	TIP-ABRASION HD	

WORK TOOLS

173-5355 TIP GP-ABRASION

S/N: 7HR1-UP

AN ATTACHMENT

SMCS-6805 **i01241908**

NOTE	PART NUMBER	QTY	PART NAME 1 2 3 4 5 6 (PRODUCT LEVEL)	SEE PAGE
	138-0910	1	CAP-RETAINER	
	143-3082	1	PLUG-RETAINER	
	138-0700	1	RETAINER	
	171-1657	1	TIP-ABRASION	

WORK TOOLS

6I-6314 TIP GP-LONG

S/N: 7HR1-UP
PART OF 107-3345 TIP GP-LONG
FOR USE WITH STANDARD HOE & FRONT SHOVEL BUCKETS
AN ATTACHMENT

SMCS-6805 **i01153989**

NOTE	REF NO	GRAPHIC REF	PART NUMBER	QTY	PART NAME 1 2 3 4 5 6 (PRODUCT LEVEL)	SEE PAGE
	1	1	**113-9608**	1	PIN-G.E.T.	
	2	1	**113-9609**	1	RETAINER AS-G.E.T.	
	3	1	**6I-6602**	1	TIP-LONG	

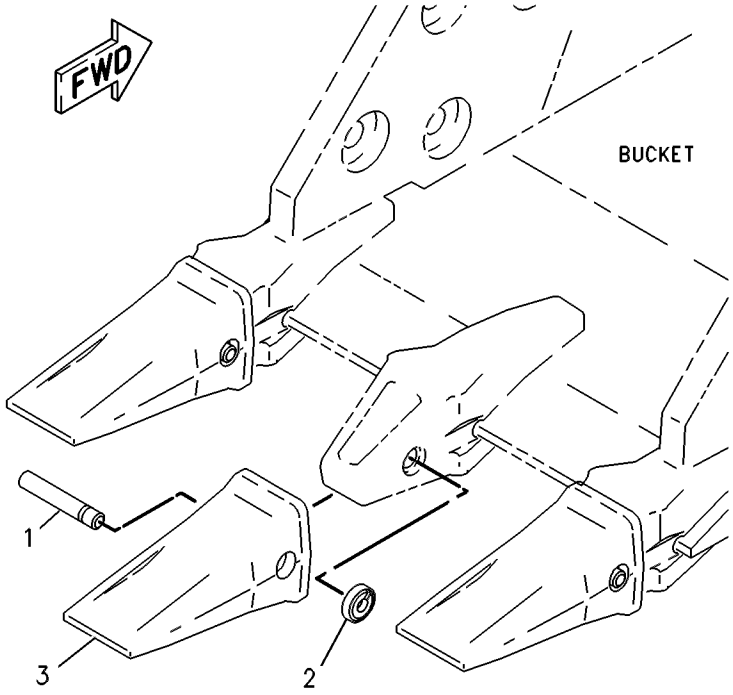

GRAPHIC #1 g00117668

WORK TOOLS

6I-6417 TIP GP-LONG

S/N: 7HR1-UP
HEAVY DUTY
PART OF 107-3346 TIP GP
AN ATTACHMENT

SMCS-6805 **i00554027**

NOTE	REF NO	GRAPHIC REF	PART NUMBER	QTY	PART NAME 1 2 3 4 5 6 (PRODUCT LEVEL)	SEE PAGE
	1	1	**113-9608**	1	PIN-G.E.T.	
	2	1	**113-9609**	1	RETAINER AS-G.E.T.	
	3	1	**7Y-0602**	1	TIP-LONG	

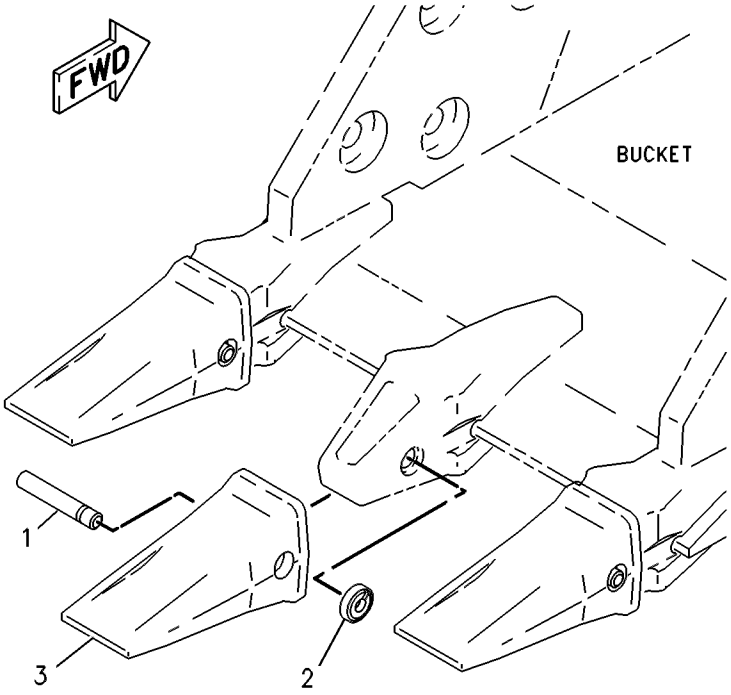

GRAPHIC #1 g00117668

WORK TOOLS

6Y-5373 TIP GP-LONG

S/N: 7HR1-UP
HEAVY DUTY
AN ATTACHMENT

SMCS-6805 **i01306791**

NOTE	REF NO	GRAPHIC REF	PART NUMBER	QTY	PART NAME 1 2 3 4 5 6 (PRODUCT LEVEL)	SEE PAGE
	1	1	**107-8559**	1	RETAINER AS-G.E.T.	
	2	1	**107-3378**	1	PIN-G.E.T.	
	3	1	**9N-4552**	1	TIP-LONG (HD)	

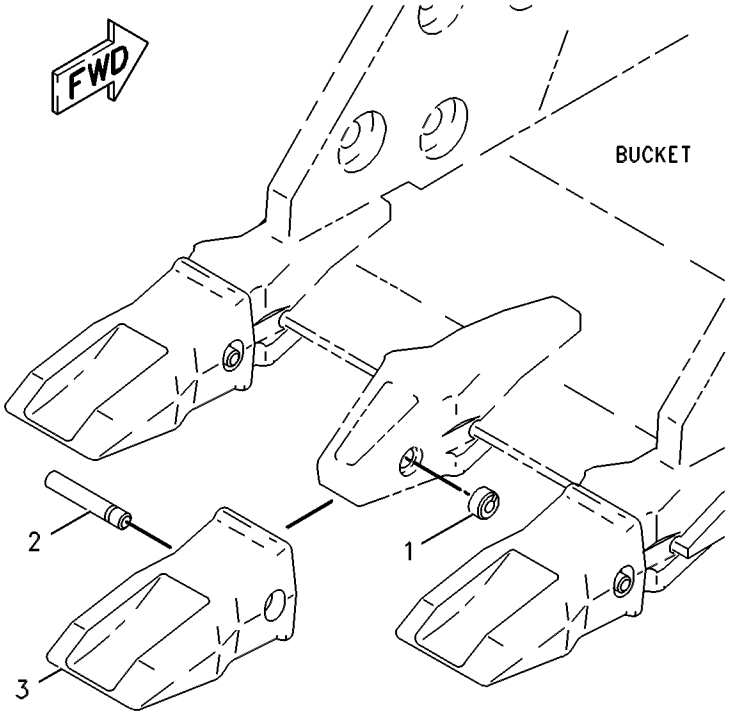

GRAPHIC #1 g00121857

WORK TOOLS

6Y-6354 TIP GP-LONG

S/N: 7HR1-UP
AN ATTACHMENT

SMCS-6805 **i00103611**

NOTE	REF NO	GRAPHIC REF	PART NUMBER	QTY	PART NAME 1 2 3 4 5 6 (PRODUCT LEVEL)	SEE PAGE
	1	1	**113-4709**	1	RETAINER AS-G.E.T.	
	2	1	**4T-4702**	1	TIP-LONG	
	3	1	**113-4708**	1	PIN-G.E.T.	

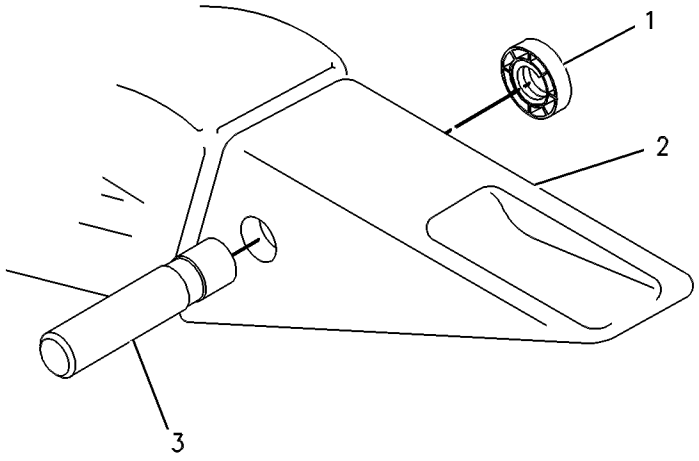

GRAPHIC #1 g00088580

WORK TOOLS

8J-9842 TIP GP-LONG

S/N: 7HR1-UP
J550. HEAVY DUTY, HORIZONAL PIN
AN ATTACHMENT

SMCS-6805 **i01096669**

NOTE	REF NO	GRAPHIC REF	PART NUMBER	QTY	PART NAME 1 2 3 4 5 6 (PRODUCT LEVEL)	SEE PAGE
	1	1	**107-3378**	1	PIN-G.E.T.	
	2	1	**107-8559**	1	RETAINER AS-G.E.T.	
	3	1	**9W-8552**	1	TIP-LONG (HD)	

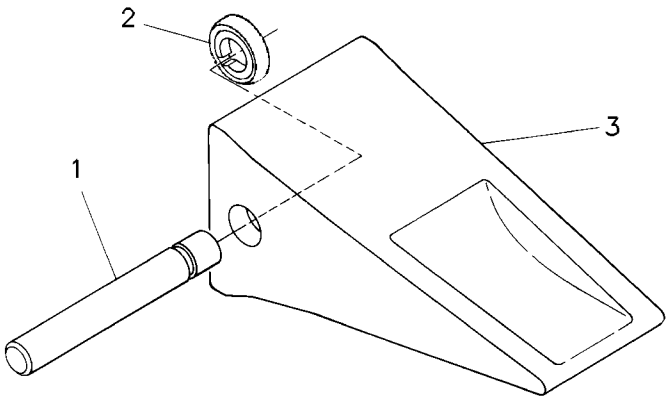

GRAPHIC #1 g00119069

WORK TOOLS

100-5588 TIP GP-LONG

S/N: 7HR1-UP
HEAVY DUTY
AN ATTACHMENT

SMCS-6805 **i00797287**

NOTE	REF NO	GRAPHIC REF	PART NUMBER	QTY	PART NAME 1 2 3 4 5 6 (PRODUCT LEVEL)	SEE PAGE
	1	1	**113-4709**	1	RETAINER AS-G.E.T.	
	2	1	**113-4708**	1	PIN-G.E.T.	
	3	1	**9U-9702**	1	TIP-LONG	

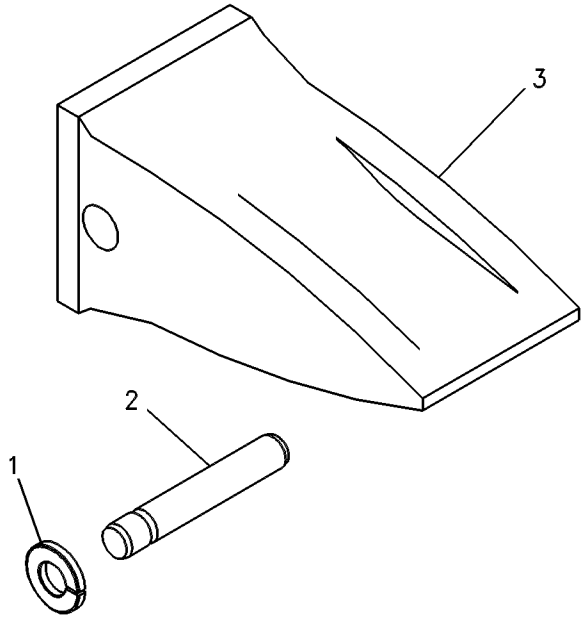

GRAPHIC #1 g00374839

WORK TOOLS

107-3345 TIP GP-LONG

S/N: 7HR1-UP

AN ATTACHMENT

SMCS-6805 **i00737860**

NOTE	PART NUMBER	QTY	PART NAME 1 2 3 4 5 6 (PRODUCT LEVEL)	SEE PAGE
Y	*6I-6314*	8	TIP GP-LONG	1223

Y-SEPARATE ILLUSTRATION

WORK TOOLS

137-9672 TIP GP-LONG

S/N: 7HR1-UP

AN ATTACHMENT

SMCS-6805 **i00991105**

NOTE	PART NUMBER	QTY	PART NAME 1 2 3 4 5 6 (PRODUCT LEVEL)	SEE PAGE
	138-0913	1	RETAINER AS	
	138-0910	1	CAP-RETAINER	
	138-0911	1	PLUG-RETAINER	
	138-6433	1	TIP-LONG	

WORK TOOLS

138-6530 TIP GP-LONG

S/N: 7HR1-UP

AN ATTACHMENT

SMCS-6805 **i01509787**

NOTE	PART NUMBER	QTY	PART NAME 1 2 3 4 5 6 (PRODUCT LEVEL)	SEE PAGE
	138-0910	1	CAP-RETAINER	
	143-3082	1	PLUG-RETAINER	
	138-0700	1	RETAINER	
	143-3098	1	TIP-HD LONG	

WORK TOOLS

173-5350 TIP GP-LONG

S/N: 7HR1-UP

AN ATTACHMENT

SMCS-6805 **i01241884**

NOTE	PART NUMBER	QTY	PART NAME 1 2 3 4 5 6 (PRODUCT LEVEL)	SEE PAGE
	138-0910	1	CAP-RETAINER	
	143-3082	1	PLUG-RETAINER	
	138-0700	1	RETAINER	
	171-1650	1	TIP-LONG	

WORK TOOLS

3G-3352 TIP GP-PENETRATION

S/N: 7HR1-UP
J550. HEAVY DUTY, HORIZONAL PIN
AN ATTACHMENT

SMCS-6805 **i01381663**

NOTE	REF NO	GRAPHIC REF	PART NUMBER	QTY	PART NAME 1 2 3 4 5 6 (PRODUCT LEVEL)	SEE PAGE
	1	1	**107-3378**	1	PIN-G.E.T.	
	2	1	**9W-8559**	1	TIP-PENETRATION (HD)	
	3	1	**107-8559**	1	RETAINER AS-G.E.T.	

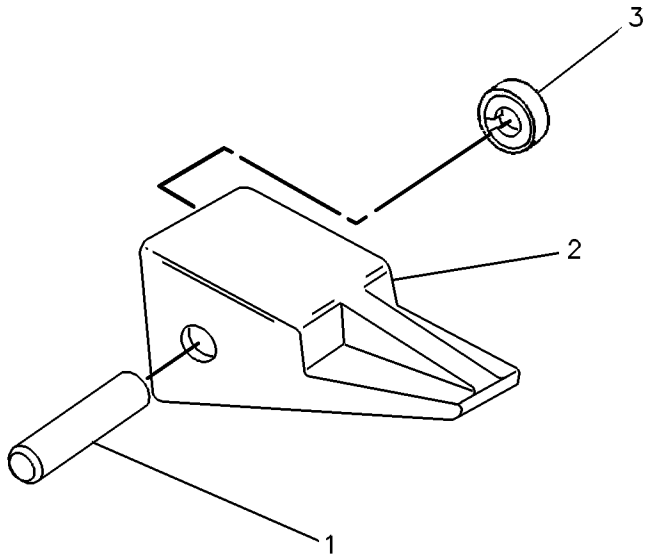

GRAPHIC #1 g00127126

6I-6423 TIP GP-PENETRATION

S/N: 7HR1-UP
PENETRATION
FOR USE WITH STANDARD HOE BUCKETS
AN ATTACHMENT

SMCS-6805 **i00591651**

NOTE	REF NO	GRAPHIC REF	PART NUMBER	QTY	PART NAME 1 2 3 4 5 6 (PRODUCT LEVEL)	SEE PAGE
	1	1	**6I-6608**	1	PIN-G.E.T.	
	2	1	**6I-6609**	1	RETAINER AS	
		1	**6I-6317**	1	HOLDER-RETAINER	
	3	1	**7I-7609**	1	TIP-PENETRATION	

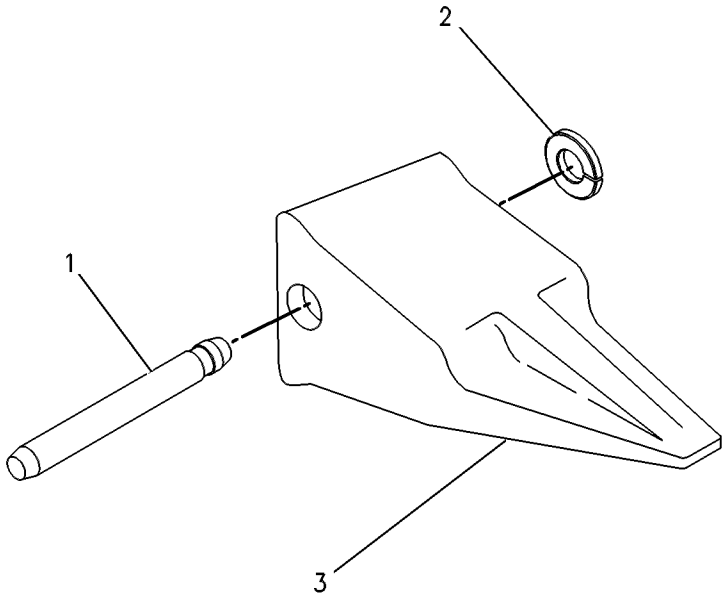

GRAPHIC #1 g00277159

6Y-6356 TIP GP-PENETRATION

S/N: 7HR1-UP

FOR USE WITH 126-3606 BUCKET & ADJUSTER GP, 127-8956 BUCKET & ADJUSTER GP, 133-8862 BUCKET & ADJUSTER GP, 135-3706 BUCKET & ADJUSTER GP AN ATTACHMENT

SMCS-6805 **i00103617**

NOTE	REF NO	GRAPHIC REF	PART NUMBER	QTY	PART NAME 1 2 3 4 5 6 (PRODUCT LEVEL)	SEE PAGE
	1	1	**113-4708**	1	PIN-G.E.T.	
	2	1	**4T-4709**	1	TIP-PENETRATION	
	3	1	**113-4709**	1	RETAINER AS-G.E.T.	

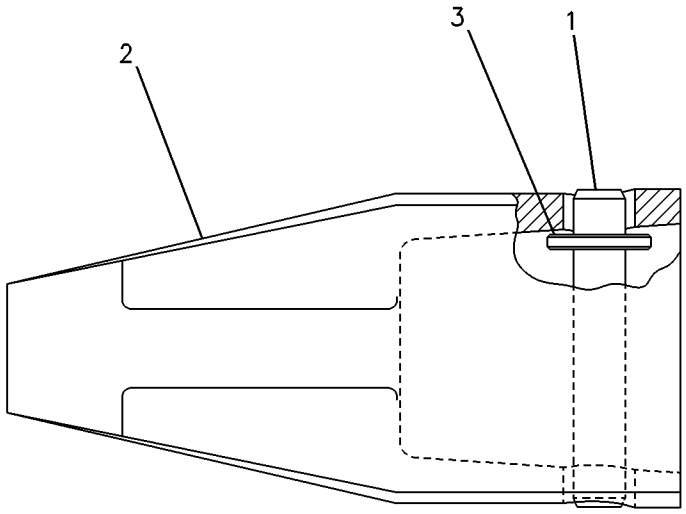

GRAPHIC #1 g00083680

WORK TOOLS

170-1870 TIP GP-PENETRATION

S/N: 7HR1-UP
HEAVY DUTY
AN ATTACHMENT

SMCS-6805 **i01431212**

NOTE	PART NUMBER	QTY	PART NAME 1 2 3 4 5 6 (PRODUCT LEVEL)	SEE PAGE
	138-0910	1	CAP-RETAINER	
	143-3082	1	PLUG-RETAINER	
	138-0700	1	RETAINER	
Y	**143-3092**	1	TIP-PENETRATION	1249

Y-SEPARATE ILLUSTRATION

WORK TOOLS

170-1872 TIP GP-PENETRATION

S/N: 7HR1-UP

AN ATTACHMENT

SMCS-6805 **i01509795**

NOTE	PART NUMBER	QTY	PART NAME 1 2 3 4 5 6 (PRODUCT LEVEL)	SEE PAGE
	138-0910	1	CAP-RETAINER	
	143-3082	1	PLUG-RETAINER	
	138-0700	1	RETAINER	
	143-3093	1	TIP-PENETRATION	

WORK TOOLS

170-7297 TIP GP-PENETRATION

S/N: 7HR1-UP
HEAVY DUTY
AN ATTACHMENT

SMCS-6805 **i01093011**

NOTE	PART NUMBER	QTY	PART NAME 1 2 3 4 5 6 (PRODUCT LEVEL)	SEE PAGE
	113-9608	1	PIN-G.E.T.	
	113-9609	1	RETAINER AS-G.E.T.	
	135-9600	1	TIP-PENETRATION	

WORK TOOLS

173-5352 TIP GP-PENETRATION

S/N: 7HR1-UP

AN ATTACHMENT

SMCS-6805 **i01241900**

NOTE	PART NUMBER	QTY	PART NAME 1 2 3 4 5 6 (PRODUCT LEVEL)	SEE PAGE
	138-0910	1	CAP-RETAINER	
	143-3082	1	PLUG-RETAINER	
	138-0700	1	RETAINER	
	171-1656	1	TIP-PENETRATION	

6I-6414 TIP GP-SHORT

S/N: 7HR1-UP
SHORT
PART OF 107-3321 TIP GP-SHORT
FOR USE WITH STANDARD HOE & FRONT SHOVEL BUCKETS
AN ATTACHMENT

SMCS-6805 **i01057774**

NOTE	REF NO	GRAPHIC REF	PART NUMBER	QTY	PART NAME 1 2 3 4 5 6 (PRODUCT LEVEL)	SEE PAGE
	1	1	**113-9608**	1	PIN-G.E.T.	
	2	1	**113-9609**	1	RETAINER AS-G.E.T.	
	3	1	**6I-6601**	1	TIP-SHORT	

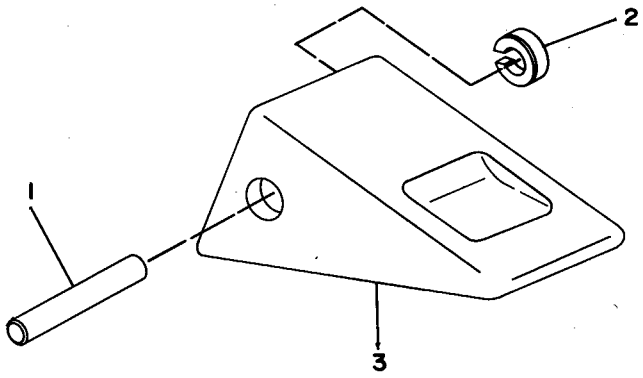

GRAPHIC #1 g00118345

WORK TOOLS

8J-9841 TIP GP-SHORT

S/N: 7HR1-UP
HEAVY DUTY
AN ATTACHMENT

SMCS-6805 **i01306821**

NOTE	REF NO	GRAPHIC REF	PART NUMBER	QTY	PART NAME 1 2 3 4 5 6 (PRODUCT LEVEL)	SEE PAGE
	1	1	**107-3378**	1	PIN-G.E.T.	
	2	1	**107-8559**	1	RETAINER AS-G.E.T.	
	3	1	**9W-8551**	1	TIP-SHORT (HD)	

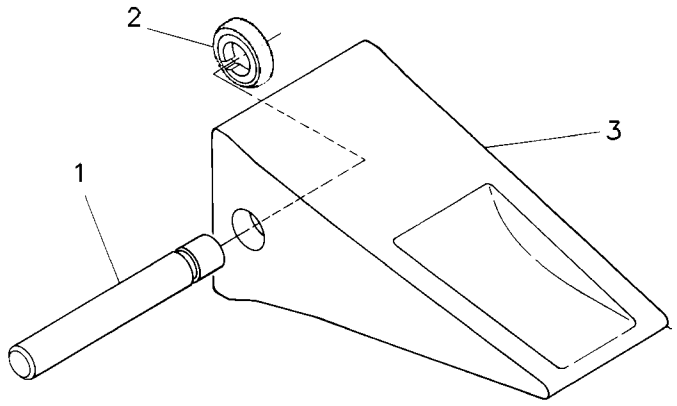

GRAPHIC #1 g00119070

WORK TOOLS

107-3321 TIP GP-SHORT

S/N: 7HR1-UP

AN ATTACHMENT

SMCS-6805 **i00737858**

NOTE	PART NUMBER	QTY	PART NAME 1 2 3 4 5 6 (PRODUCT LEVEL)	SEE PAGE
Y	*6I-6414*	8	TIP GP-SHORT	1240

Y-SEPARATE ILLUSTRATION

WORK TOOLS

137-9675 TIP GP-SHORT

S/N: 7HR1-UP

AN ATTACHMENT

SMCS-6805 **i00986945**

NOTE	PART NUMBER	QTY	PART NAME 1 2 3 4 5 6 (PRODUCT LEVEL)	SEE PAGE
	138-0913	1	RETAINER AS	
	138-0910	1	CAP-RETAINER	
	138-0911	1	PLUG-RETAINER	
	138-6437	1	TIP-SHORT	

WORK TOOLS

173-5351 TIP GP-SHORT

S/N: 7HR1-UP

AN ATTACHMENT

SMCS-6805 **i01241895**

NOTE	PART NUMBER	QTY	PART NAME 1 2 3 4 5 6 (PRODUCT LEVEL)	SEE PAGE
	138-0910	1	CAP-RETAINER	
	143-3082	1	PLUG-RETAINER	
	138-0700	1	RETAINER	
	171-1655	1	TIP-SHORT	

WORK TOOLS

173-6705 TIP GP-SHORT

S/N: 7HR1-UP

AN ATTACHMENT

SMCS-6805 **i01230726**

NOTE	PART NUMBER	QTY	PART NAME 1 2 3 4 5 6 (PRODUCT LEVEL)	SEE PAGE
	138-0910	1	CAP-RETAINER	
	143-3082	1	PLUG-RETAINER	
	138-0700	1	RETAINER	
	143-3097	1	TIP-SHORT	

WORK TOOLS

107-8602 TIP-BUCKET

S/N: 7HR1-UP
HEAVY DUTY
PART OF 160-5195 BUCKET GP-ROCK
AN ATTACHMENT AND FIELD INSTALLATION

SMCS-6805 **i01192099**

NOTE	PART NUMBER	QTY	PART NAME 1 2 3 4 5 6 (PRODUCT LEVEL)	SEE PAGE
			(NO SERVICED PARTS)	

WORK TOOLS

138-6433 TIP-LONG

S/N: 7HR1-UP

AN ATTACHMENT

SMCS-6805 **i01192086**

NOTE	REF NO	GRAPHIC REF	PART NUMBER	QTY	PART NAME 1 2 3 4 5 6 (PRODUCT LEVEL)	SEE PAGE
					(NO SERVICED PARTS)	

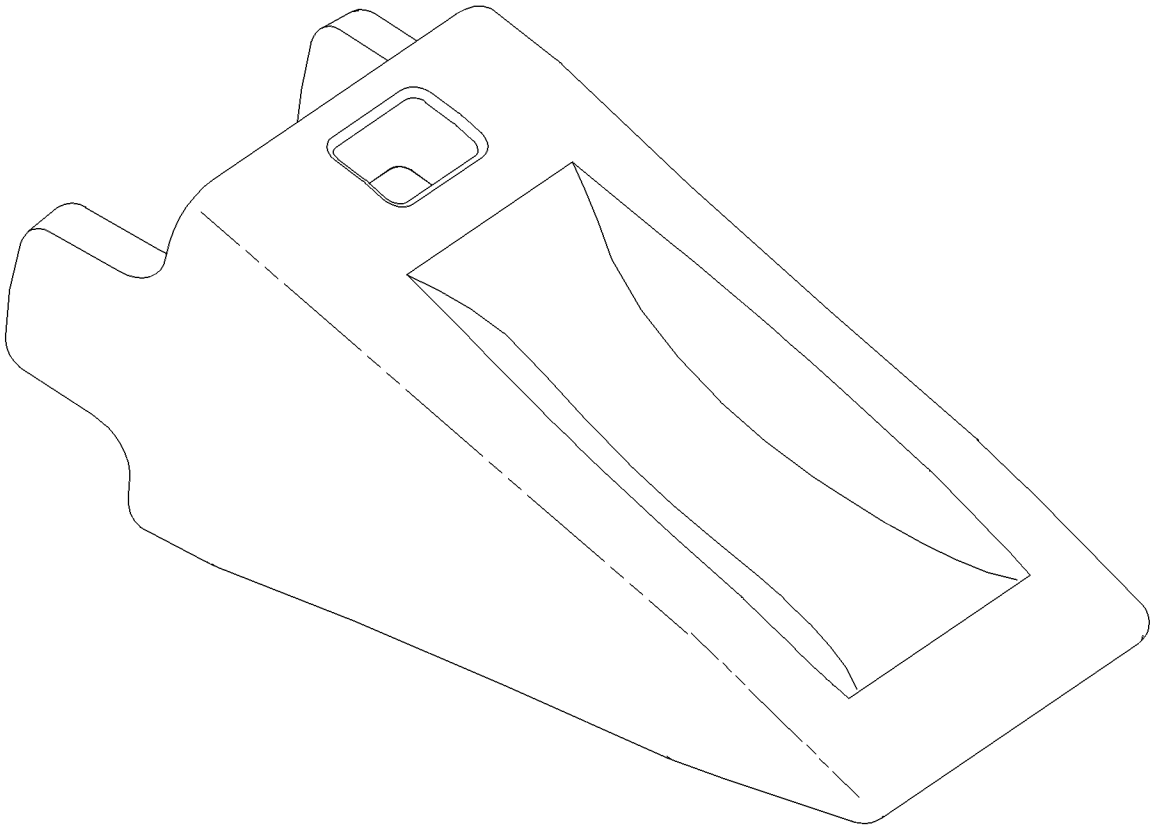

GRAPHIC #1 g00403453

WORK TOOLS

135-9700 TIP-PENETRATION

S/N: 7HR1-UP
PART OF 187-0954 TIP GP
AN ATTACHMENT

SMCS-6805 **i00849713**

NOTE	REF NO	GRAPHIC REF	PART NUMBER	QTY	PART NAME 1 2 3 4 5 6 (PRODUCT LEVEL)	SEE PAGE
					NO SERVICEABLE PARTS	

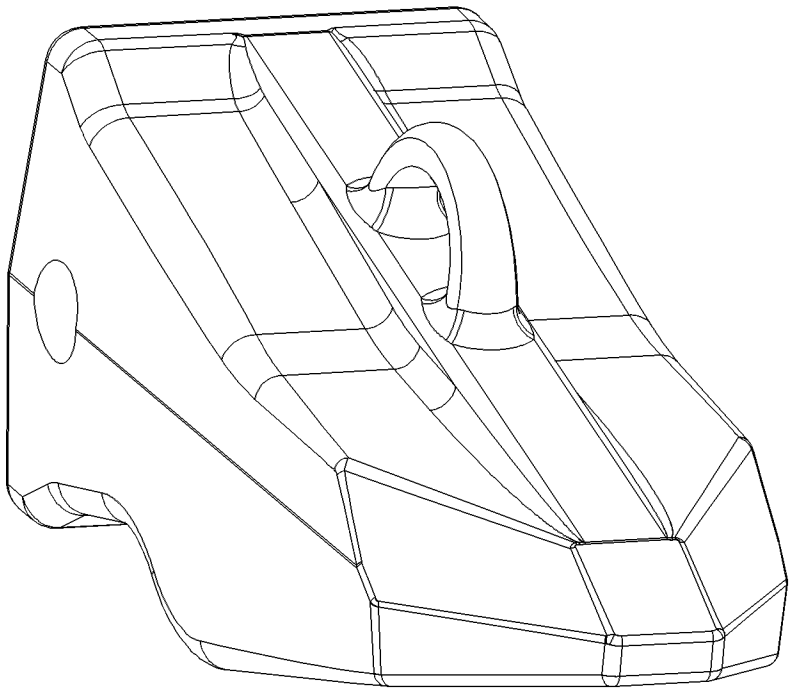

GRAPHIC #1 g00424881

WORK TOOLS

143-3092 TIP-PENETRATION

S/N: 7HR1-UP
PART OF 170-1870 TIP GP-PENETRATION
AN ATTACHMENT

SMCS-6805 **i01285412**

NOTE	REF NO	GRAPHIC REF	PART NUMBER	QTY	PART NAME 1 2 3 4 5 6 (PRODUCT LEVEL)	SEE PAGE
					(NO SERVICED PARTS)	

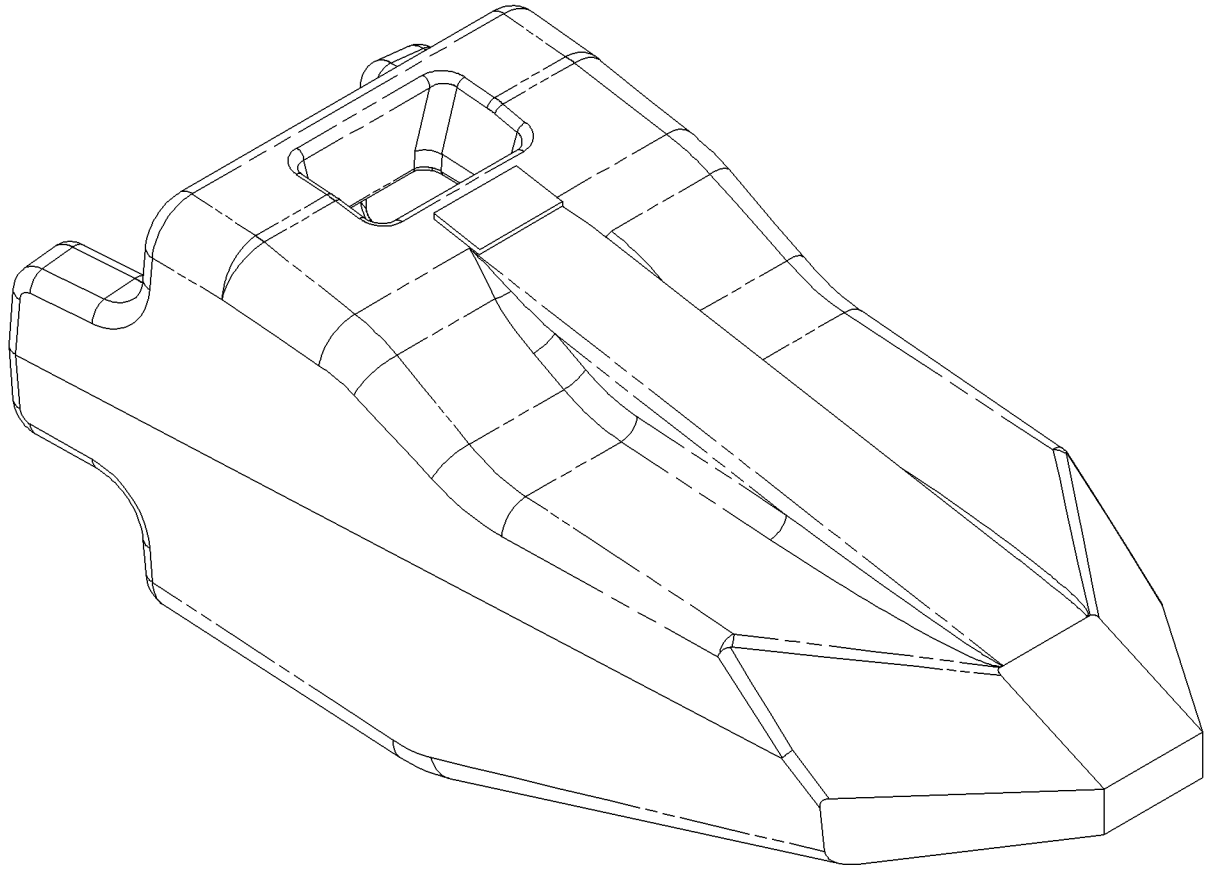

GRAPHIC #1 g00685909

OPERATOR STATION

130-3597 ACCUMULATOR & MTG GP-REFRIG

S/N: 7HR1-UP

PART OF 109-6863 LINES GP-AIR CONDITIONER

SMCS-7320 **i01437973**

NOTE	REF NO	GRAPHIC REF	PART NUMBER	QTY	PART NAME 1 2 3 4 5 6 (PRODUCT LEVEL)	SEE PAGE
	1	1	**3E-3535**	1	DRYER	
	2	1	**8S-6109**	1	CLIP (SLOT)	
	3	1	**116-6202**	2	BOOT	
	4	1	**169-0410**	1	BRACKET AS	
	5	1	**186-6189**	1	ACCUMULATOR-REFRIGERANT	
I	6	1	**194-5330**	1	HOSE AS	
	7	1	**5P-3929**	1	COUPLING AS-REFRIGERANT	
	8	1	**6V-4356**	1	CLIP (SLOT)	
	9	1	**6V-4357**	1	CLIP (TAB)	
	10	1	**7X-7729**	1	WASHER (11X25X3MM THK)	
	11	1	**8S-6110**	1	CLIP (TAB)	
	12	1	**8T-4121**	1	WASHER-HARD (11X21X2.5MM THK)	
M	13	1	**8T-4196**	2	BOLT (M10X1.5X35MM)	
	14	1	**9X-7383**	1	SEAL-O-RING (17.17MM ID)	
	15	1	**9X-7384**	1	SEAL-O-RING (26.7MM ID)	
D	16	1	**6V-2494**		SEAL (3M)	

D-ORDER BY THE METER
I-SEE HOSE FABRICATION GUIDE
M-METRIC PART

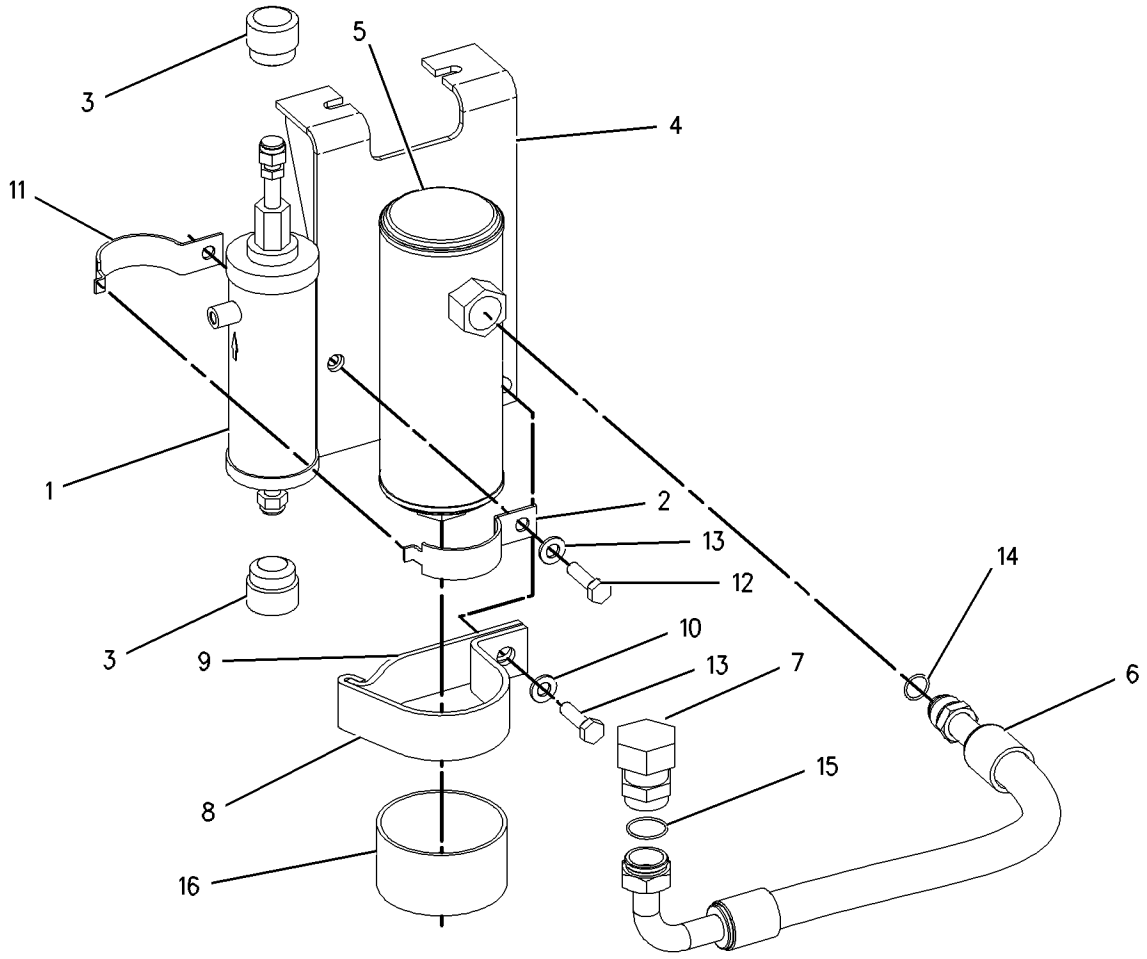

GRAPHIC #1 g00753344

OPERATOR STATION

142-8114 AIR CONDITIONER AR

S/N: 7HR1-UP

PART OF 130-6906, 171-7047 CAB AR

SMCS-7320 **i00747860**

NOTE	PART NUMBER	QTY	PART NAME 1 2 3 4 5 6 (PRODUCT LEVEL)	SEE PAGE
Y	**123-8576**	1	AIR CONDITIONER GP	1252
Y	**123-8714**	1	DUCT GP-AIR	1294
Y	*4E-9439*	1	FILTER GP-CAB AIR	1297

Y-SEPARATE ILLUSTRATION

OPERATOR STATION

123-8576 AIR CONDITIONER GP

S/N: 7HR1-UP

PART OF 142-8114 AIR CONDITIONER AR

SMCS-7320 **i01510892**

NOTE	REF NO	GRAPHIC REF	PART NUMBER	QTY	PART NAME 1 2 3 4 5 6 (PRODUCT LEVEL)	SEE PAGE
	1	1	**130-3307**	1	COIL AS-HEATER	
	2	1	**3E-6282**	1	COIL AS-EVAPORATOR	
	3	1	**174-1494**	1	MOTOR GP-ELECTRIC (27 VOLT)	
		1	**3E-3365**	1	WEDGE-RECEPTACLE LOCK (2 PIN)	
		1	**9W-0852**	2	PIN-CONNECTOR	
		1	**102-8802**	1	KIT-RECEPTACLE (2 PIN)	
					(INCLUDES RECEPTACLE AS AND WEDGE)	
	4	1	**8P-5141**	2	PLATE-ORIFICE	
	5	1	**3E-6280**	1	COVER	
	6	1	**3T-6774**	1	GROMMET	
E	7	1	**136-1953**		HOSE (48 CM)	
	8	1	**3E-6147**	1	INSULATION	
	9	1	**3E-7252**	1	INSULATION	
	10	1	**3E-7253**	2	INSULATION	
	11	1	**130-3590**	2	INSULATION	
	12	1	**3E-7255**	2	INSULATION	
	13	1	**3E-7256**	1	INSULATION	
	14	1	**3E-7257**	1	INSULATION	
E	15	1	**5P-5926**		SEAL (120 CM)	
	16	1	**3E-7258**	1	INSULATION	
E	17	1	**5P-5672**		SEAL (30 CM)	
	18	1	**5P-3945**	1	CAP	
	19	1	**5P-3950**	1	CAP	
	20	1	**9X-7381**	1	SEAL-O-RING	
	21	1	**9X-7383**	1	SEAL-O-RING	
	22	1	**9X-7384**	1	SEAL-O-RING	
	23	1	**3E-0400**	2	WHEEL-BLOWER	
E	24	1	**5P-7070**		INSULATION-STRIP (70 CM)	
	25	1	**5P-6670**	2	FILM-INSTRUCTION (WATER IN/WATER OUT)	
	26	1	**6P-8855**	2	SPACER (3.0IN THK)	
	27	1	**7K-3176**	1	COUPLING AS	
	28	1	**2H-3924**	2	LOCKWASHER	
	29	1	**5P-3928**	1	COUPLING AS-SEALING	
	30	1	**6V-1668**	2	WASHER (6.5X29.1X3MM THK)	
	31	1	**3E-6145**	1	TUBE AS	
	32	1	**3E-6144**	1	TUBE AS	
	33	1	**9X-7382**	1	SEAL-O-RING	
	34	1	**3S-2093**	3	STRAP-CABLE	
	35	1	**9X-2488**	4	CLAMP-HOSE	
M	36	1	**8T-4137**	16	BOLT (M10X1.5X20MM)	
	37	1	**8T-4121**	16	WASHER-HARD (11X21X2.5MM THK)	
M	38	1	**7X-0490**	1	BOLT (M6X200MM)	
M	39	1	**8T-4189**	3	BOLT (M8X1.25X20MM)	
	40	1	**5P-4116**	3	WASHER-HARD (8.8X20.5X2MM THK)	
	41	1	**6L-7159**	2	SCREW-MACHINE (8-32X.313 IN)	
	42	1	**3B-4501**	2	LOCKWASHER	
M	43	1	**6V-7728**	1	BOLT (M6X1.0X45MM)	
M	44	1	**6V-8837**	4	BOLT (M6X1X16 MM)	
	45	1	**8T-4205**	14	WASHER-HARD (7.2X14.5X2MM THK)	
	46	1	**2H-3925**	2	LOCKWASHER	
M	47	1	**5C-2890**	6	NUT (M6X1 THD)	
	48	1	**2D-6235**	5	LOCKNUT (1/4-20 THD)	
	49	1	**5B-6565**	2	NUT	
	50	1	**6V-9170**	2	NUT-BULKHEAD (1-14 THD)	
	51	1	**8C-4586**	2	CLAMP-MOTOR	
	52	1	**3E-5464**	1	SWITCH AS-THERMOSTAT	

123-8576 AIR CONDITIONER GP *(contd.)* i01510892

NOTE	REF NO	GRAPHIC REF	PART NUMBER	QTY	PART NAME 1 2 3 4 5 6 (PRODUCT LEVEL)	SEE PAGE
	53	1	**9G-1950**	1	RESISTOR	
	54	1	**127-6425**	1	HARNESS AS-AIR CONDITIONER	
		1	**3S-2093**	10	STRAP-CABLE	
		1	**6T-6505**	5	HOUSING-RECEPTACLE (BLADE)(POSITIVE LOCK)	
		1	**9P-2300**	3	GROMMET	
		1	**8T-8737**	4	PLUG-SEAL	
		1	**102-8810**	31	KIT-CONNECTING PLUG (6 PINS)	
		1	**155-2270**		KIT-CONNECTING PLUG (2 PIN)	
		1	**155-2271**	1	KIT-CONNECTING PLUG (4 PIN)	
					(EACH KIT-CONNECTING PLUG INCLUDES PLUG AS & WEDGE)	
		1	**102-8805**	1	KIT-RECEPTACLE (6 PIN)	
					(INCLUDES RECEPTACLE AS & WEDGE)	
	55	1	**130-3304**	1	CASE AS	
		1	**6K-3274**	4	PLATE-RIVET	
M		1	**6V-9632**	2	NUT-WELD (M6X1 THD)	
		1	**7T-1099**	4	LINK	
		1	**033-7291**	4	RIVET	
	56	1	**3E-6277**	1	HOUSING AS	
	57	1	**149-8203**	1	VALVE AS-WATER	
		1	**4B-4863**	4	WASHER (4.7X11X1.2MM THK)	
		1	**4M-6582**	1	SEAL-O-RING	
		1	**102-8805**	1	KIT-RECEPTACLE (6 PIN)	
					(INCLUDES RECEPTACLE AS AND WEDGE)	
		1	**124-0312**	4	SCREW-PAN HEAD	
M	58	1	**8T-4171**	2	BOLT (M6X1X12MM)	
	59	1	**149-8218**	1	CONTROL AS-BOARD	
		1	**8T-8737**	2	PLUG-SEAL	
		1	**9W-0844**	5	SOCKET-CONNECTION	
		1	**9W-0852**	5	PIN-CONNECTOR	
		1	**102-8810**	1	KIT-CONNECTING PLUG (6 PINS)	
					(INCLUDES PLUG AS AND WEDGE)	
		1	**102-8805**	1	KIT-RECEPTACLE (6 PIN)	
					(INCLUDES RECEPTACLE AS AND WEDGE)	
	60	1	**5P-4115**	4	WASHER-HARD (7.2X19X2MM THK)	
	61	1	**4M-6582**	1	SEAL-O-RING	
	62	1	**130-5685**	1	ANGLE	
E	63	1	**5P-5908**		SEAL (20 CM)	

E-ORDER BY THE CENTIMETER
M-METRIC PART

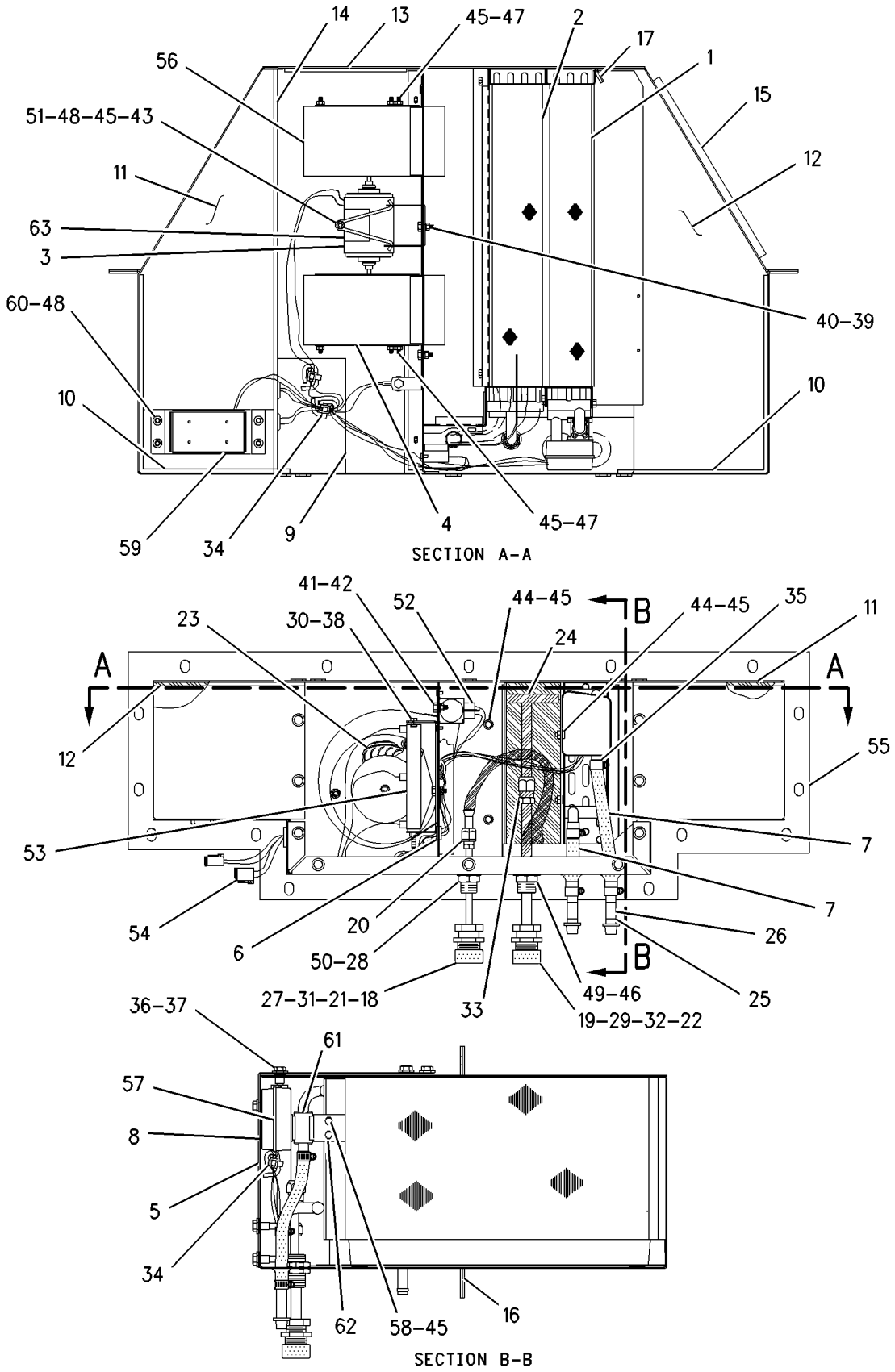

GRAPHIC #1 g00745976

MEMORANDA

OPERATOR STATION

123-8708 BOX GP-STORAGE

S/N: 7HR1-297

PART OF 130-6906 CAB AR

SMCS-7268 **i01510902**

NOTE	REF NO	GRAPHIC REF	PART NUMBER	QTY	PART NAME 1 2 3 4 5 6 (PRODUCT LEVEL)	SEE PAGE
	1	1	**123-8709**	1	COVER	
M	2	1	**9X-2043**	10	SCREW-TRUSS HEAD (M6X1X14MM)	
	3	1	**4E-8861**	1	PLATE AS	
	4	1	**4E-8865**	1	SHEET AS	
M		1	**6V-9632**	5	NUT-WELD (M6X1 THD)	
M	5	1	**8T-4189**	5	BOLT (M8X1.25X20MM)	
		1	**8T-4224**	5	WASHER-HARD (8.8X16X2MM THK)	
	6	1	**8Y-6336**	1	LATCH AS	
	7	1	**4E-8833**	1	SHEET	
M	8	1	**8T-4185**	3	BOLT (M10X1.5X50MM)	
	9	1	**8T-4121**	5	WASHER-HARD (11X21X2.5MM THK)	
	10	1	**4E-9771**	1	BOX AS	
M		1	**8T-3490**	2	NUT-WELD (M10X1.5 THD)	
	11	1	**8V-7010**	2	BUMPER	
	12	1	**3V-7689**	1	HANDLE AS	
	13	1	**4E-9767**	1	LID AS	
		1	**8R-9768**	1	HINGE	
M	14	1	**8T-4137**	2	BOLT (M10X1.5X20MM)	
	15	1	**4E-8857**	1	MAT	
	16	1	**106-9295**	1	LID AS	
	17	1	**6C-3680**	4	RIVET-POP	

M-METRIC PART

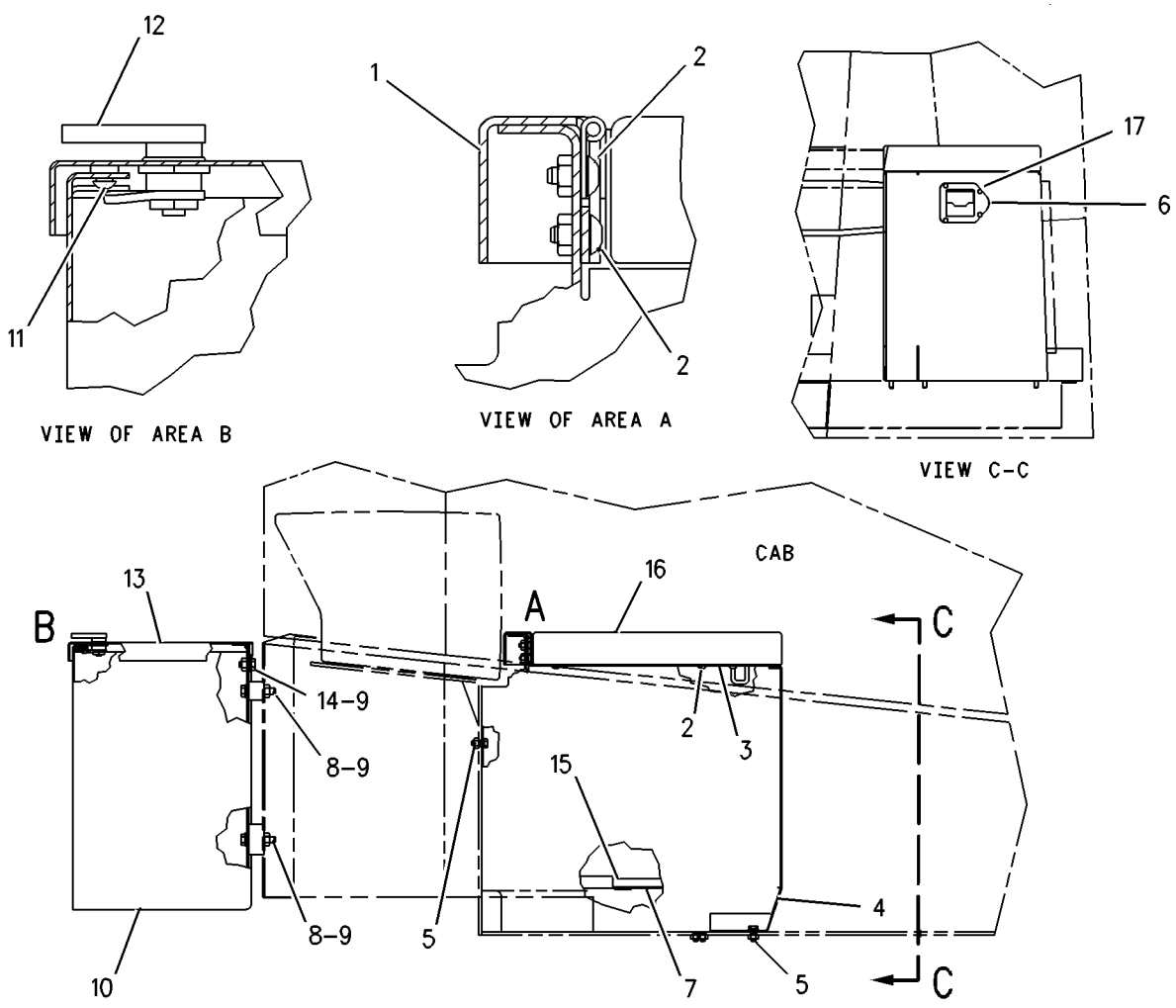

RIGHT SIDE VIEW

GRAPHIC #1 g00784338

OPERATOR STATION

170-1556 BOX GP-STORAGE

S/N: 7HR298-UP

PART OF 171-7047 CAB AR

SMCS-7268 **i01073016**

NOTE	REF NO	GRAPHIC REF	PART NUMBER	QTY	PART NAME 1 2 3 4 5 6 (PRODUCT LEVEL)	SEE PAGE
	1	1	**3V-7689**	1	HANDLE AS	
	2	1	**4E-9767**	1	LID AS	
		1	**8R-9768**	1	HINGE	
	3	1	**4E-9771**	1	BOX AS	
M		1	**8T-3490**	2	NUT-WELD (M10X1.5 THD)	
	4	1	**6C-3680**	4	RIVET-POP	
	5	1	**8Y-6336**	1	LATCH AS	
	6	1	**164-0424**	1	SHEET AS	
M		1	**6V-9632**	5	NUT-WELD (M6X1 THD)	
	7	1	**164-0427**	1	MAT	
	8	1	**164-0428**	1	PLATE AS	
	9	1	**164-0431**	1	SHEET	
	10	1	**169-8366**	1	LID AS	
	11	1	**170-1609**	1	COVER	
	12	1	**8T-4121**	5	WASHER (2.5MM THK)	
M	13	1	**8T-4137**	2	BOLT (M10X1.50X20MM)	
CM	14	1	**8T-4185**	3	BOLT (M10X1.5X50MM)	
M	15	1	**8T-4189**	5	BOLT (M8X1.25X20MM)	
	16	1	**8T-4224**	5	WASHER-HARD (2MM THK)	
	17	1	**8V-7010**	2	BUMPER	
M	18	1	**9X-2043**	10	SCREW-TRUSS HEAD (M6X1X14MM)	
M	19	1	**9X-2616**	1	SCREW-SOCKET (M8X1.25X16MM)	

C-CHANGE FROM PREVIOUS TYPE
M-METRIC PART

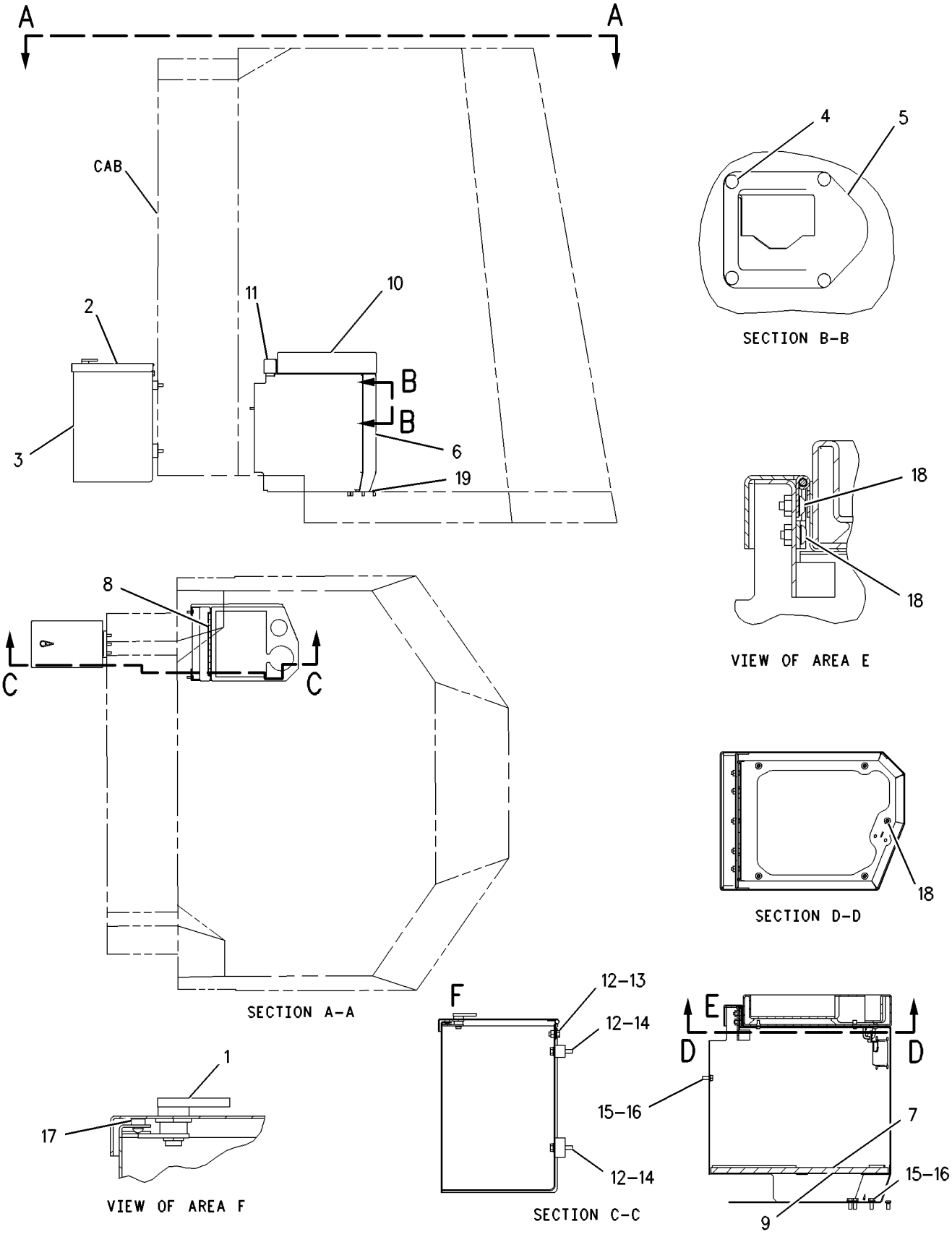

GRAPHIC #1

g00583363

OPERATOR STATION

123-7231 CAB & PLATFORM GP

S/N: 7HR1-UP

PART OF 130-6906, 171-7047 CAB AR

SMCS-7253, 7301 **i00733839**

NOTE	PART NUMBER	QTY	PART NAME 1 2 3 4 5 6 (PRODUCT LEVEL)	SEE PAGE
Y	**123-7024**	1	CAB GP	1266
Y	**123-8701**	1	DOOR GP-LH	1284
Y	*123-7025*	1	PLATFORM GP-OPERATOR	1357

Y-SEPARATE ILLUSTRATION

OPERATOR STATION

130-6906 CAB AR

S/N: 7HR1-297

PART OF 109-6866 OPERATOR AR

SMCS-7301 **i01539846**

NOTE	PART NUMBER	QTY	PART NAME 1 2 3 4 5 6 (PRODUCT LEVEL)	SEE PAGE
Y	*142-8114*	1	AIR CONDITIONER AR	1251
Y	*123-8708*	1	BOX GP-STORAGE	1256
Y	**123-7231**	1	CAB & PLATFORM GP	1260
Y	**112-2273**	1	CONTROL GP-FOOT BRAKE	766
Y	**118-7644**	1	CONTROL GP-HYD ELECTRONIC	932
Y	*4E-6401*	1	CONTROL GP-PARKING BRAKE	771
Y	*147-1737*	1	CONTROL GP-STEERING	818
Y	*4E-8413*	1	CONTROL GP-STIC	484
Y	*9U-2675*	1	INSTALLATION GP-RADIO	1306
Y	*4E-6409*	1	INSTALLATION GP-RADIO	1304
Y	*131-1126*	1	LATCH GP-CAB DOOR & WINDOW	1308
Y	*118-7642*	1	LINER GP-CAB	1312
Y	*9U-4979*	1	LOCK GP-STIC CONTROL	568
Y	*112-5765*	1	PANEL GP-INSTRUMENT (SIDE)	1346
Y	*112-5764*	1	PANEL GP-INSTRUMENT (FRONT)	1340
Y	*112-5763*	1	PEDAL GP-GOVERNOR	1349
Y	*148-2228*	1	SCREEN GP-SUN	1361
Y	*117-1410*	1	SEALING GP-GLASS	1362
Y	*123-8718*	1	SEAT GP-SUSPENSION	1383
Y	*131-0441*	1	SPRING GP-CAB DOOR	1388
Y	*118-7643*	1	SUPPORT GP-HYDRAULIC CONTROL	1390
Y	*123-8704*	1	SUPPORT GP-STEERING CONTROL	1402
Y	*8R-5535*	1	WIPER & WASHER GP-WINDOW	1424
Y	*112-5766*	1	WIRING GP-CAB	376

Y-SEPARATE ILLUSTRATION

OPERATOR STATION

171-7047 CAB AR

S/N: 7HR298-UP

PART OF 109-6866 OPERATOR AR

SMCS-7301 **i01539862**

NOTE	PART NUMBER	QTY	PART NAME 1 2 3 4 5 6 (PRODUCT LEVEL)	SEE PAGE
Y	*142-8114*	1	AIR CONDITIONER AR	1251
Y	*170-1556*	1	BOX GP-STORAGE	1258
Y	**123-7231**	1	CAB & PLATFORM GP	1260
Y	**112-2273**	1	CONTROL GP-FOOT BRAKE	766
Y	*170-4751*	1	CONTROL GP-HYD ELECTRONIC	944
Y	*4E-6401*	1	CONTROL GP-PARKING BRAKE	771
Y	*166-5210*	1	CONTROL GP-STEERING	820
Y	*4E-8413*	1	CONTROL GP-STIC	484
Y	*4E-6409*	1	INSTALLATION GP-RADIO	1304
Y	*9U-2675*	1	INSTALLATION GP-RADIO	1306
Y	*131-1126*	1	LATCH GP-CAB DOOR & WINDOW	1308
Y	*170-4752*	1	LINER GP-CAB	1316
Y	*166-5211*	1	LOCK GP-STIC CONTROL	570
Y	*112-5764*	1	PANEL GP-INSTRUMENT (FRONT)	1340
Y	*112-5765*	1	PANEL GP-INSTRUMENT (SIDE)	1346
Y	*112-5763*	1	PEDAL GP-GOVERNOR	1349
Y	*117-1410*	1	SEALING GP-GLASS	1362
Y	*171-8755*	1	SEAT GP-SUSPENSION	1385
			S/N: 7HR298-397	
Y	*185-9725*	1	SEAT GP-SUSPENSION	1386
			S/N: 7HR398-UP	
Y	*131-0441*	1	SPRING GP-CAB DOOR	1388
Y	*171-3898*	1	SUPPORT GP-HYDRAULIC CONTROL	1398
Y	*171-3899*	1	SUPPORT GP-SEAT	1401
Y	*171-3897*	1	SUPPORT GP-STEERING CONTROL	1406
Y	*8R-5535*	1	WIPER & WASHER GP-WINDOW	1424
Y	*131-0207*	1	WIPER & WASHER GP-WINDOW	1430
Y	*112-5766*	1	WIRING GP-CAB	376

Y-SEPARATE ILLUSTRATION

MEMORANDA

OPERATOR STATION

123-7023 CAB GP

S/N: 7HR1-UP

PART OF 109-6866 OPERATOR AR

SMCS-7301, 7325, 7335 **i01509550**

NOTE	REF NO	GRAPHIC REF	PART NUMBER	QTY	PART NAME 1 2 3 4 5 6 (PRODUCT LEVEL)	SEE PAGE
	1	1	**6V-8928**	1	HOOK-COAT	
M	2	1	**9X-2042**	4	SCREW-TRUSS HEAD (M6X1X12MM)	
M	3	1	**9X-1046**	3	SCREW (M4X0.7X18MM)	
Y	4	1	**3E-6389**	1	LAMP GP-DOME (24 VOLT)(WITH SWITCH)	300
	5	1	**4E-9640**	1	HANDLE	
	6	1	**8Y-6352**	3	LOUVER AS	
	7	1	**138-8630**	1	DUCT AS	
M		1	**8T-5027**	2	NUT (M6X1.0 THD)	
M		1	**9X-2045**	2	SCREW-TRUSS HEAD (M6X1X20MM)	
	8	1	**7T-4306**	2	LOUVER AS	
M	9	1	**8T-4191**	4	BOLT (M10X1.5X16MM)	
	10	1	**8T-4121**	28	WASHER-HARD (11X21X2.5MM THK)	
M	11	1	**8T-4196**	20	BOLT (M10X1.5X35MM)	
M	12	1	**8T-4183**	2	BOLT (M12X1.75X40 MM)	
	13	1	**8T-4223**	2	WASHER-HARD (13.5X25.5X3MM THK)	
	14	1	**205-3076**	1	COVER AS	
		1	**110-7524**	1	BUTTON	
		1	**205-3075**	1	COVER	
	15	1	**4E-7205**	1	SEAL	
M	16	1	**8T-4189**	4	BOLT (M8X1.25X20MM)	
	17	1	**8T-4896**	4	WASHER-HARD (10.2X18.5X2.5MM THK)	
	18	1	**123-8725**	1	INSULATION-RH	
	19	1	**123-8724**	1	INSULATION-LH	
	20	1	**123-8722**	1	DUCT AS	
		1	**7K-4201**	2	NUT-SPEED	
		1	**9N-1995**	4	RIVET-POP	
	21	1	**4E-7204**	1	COVER AS	
		1	**2R-2376**	2	WASHER-PANEL FASTENER	
		1	**7K-3262**	2	SCREW	
	22	1	**9U-2670**	1	HANDHOLD-RH	
	23	1	**9U-1301**	1	HANDHOLD-LH	
M	24	1	**8T-4133**	4	NUT (M10X1.5 THD)	
	25	1	**104-2091**	20	SCREW-FLAT HEAD (6-20X0.5 IN)	
	26	1	**8Y-6388**	10	LOUVER AS	
	27	1	**123-8721**	1	DUCT	
D	28	1	**8T-3392**		SEAL (5.9 M)	
D		1	**8T-3391**		CHANNEL (5.9 M)	
	29	1	**9X-8216**	1	FILTER-AIR	
	30	1	**4E-1411**	1	BUSHING-TERMINAL	
M	31	1	**9X-2045**	3	SCREW-TRUSS HEAD (M6X1X20MM)	
M	32	1	**8T-5027**	2	NUT (M6X1.0 THD)	
	33	1	**9U-2332**	1	ANTENNA AS-CB	
	34	1	**3S-2093**	3	STRAP-CABLE	
	35	1	**9U-2331**	1	ANTENNA AS	
	36	1	**9U-2330**	2	MOUNT-ANTENNA	
	37	1	**5L-6766**	1	PLUG (49.2MM DIA)	

D-ORDER BY THE METER
M-METRIC PART
Y-SEPARATE ILLUSTRATION

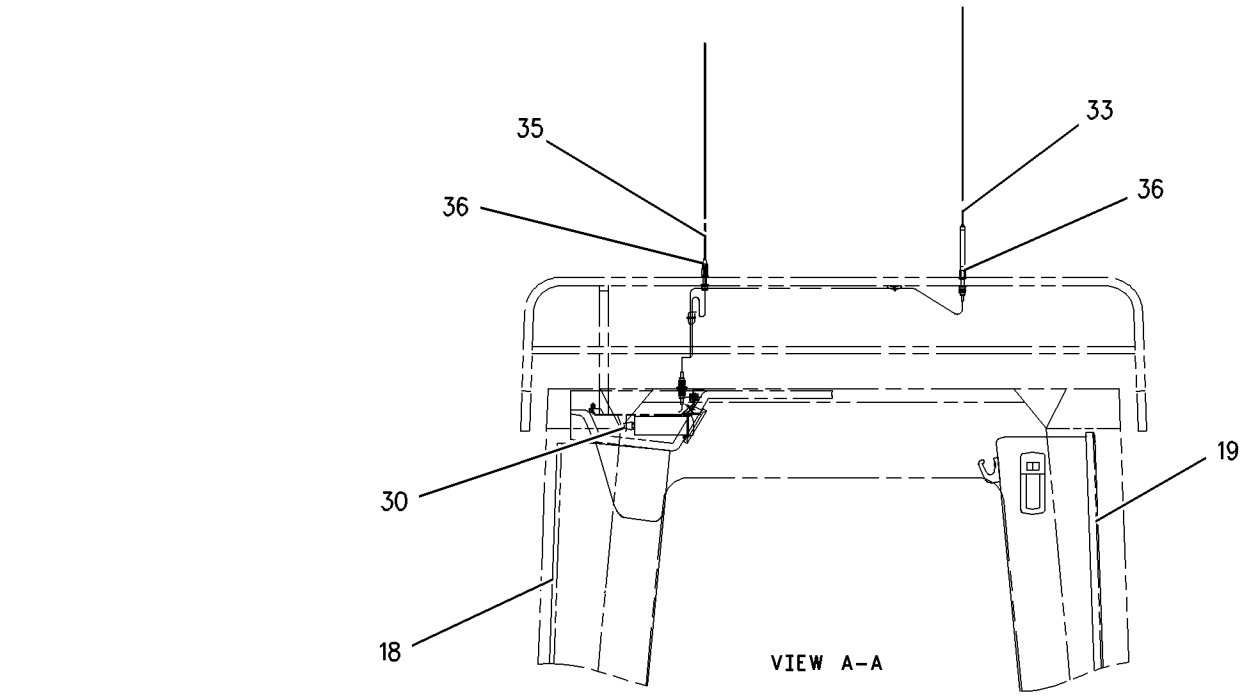

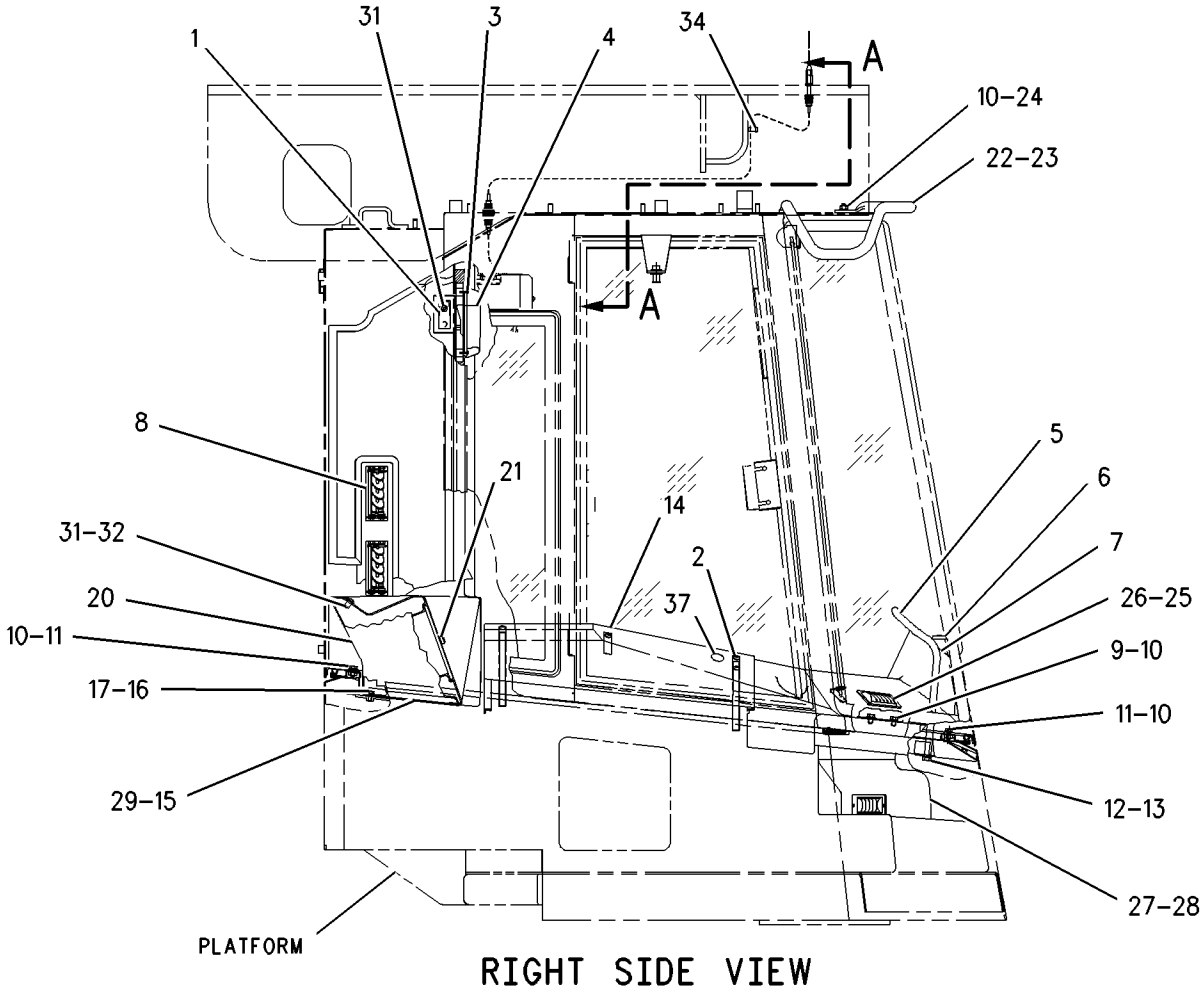

RIGHT SIDE VIEW

GRAPHIC #1

g00784125

OPERATOR STATION

123-7024 CAB GP

S/N: 7HR1-UP

PART OF 123-7231 CAB & PLATFORM GP

SMCS-7301, 7325, 7335 **i00189196**

NOTE	REF NO	GRAPHIC REF	PART NUMBER	QTY	PART NAME 1 2 3 4 5 6 (PRODUCT LEVEL)	SEE PAGE
	1	1	**123-7030**	1	CAB AS	
		1	**9R-2821**	2	BOSS	
M		1	**6V-9632**	8	NUT-WELD (M6X1 THD)	
M		1	**8T-3490**	15	NUT-WELD (M10X1.5 THD)	
		1	**7T-1099**	11	LINK	
M		1	**8T-5413**	12	STUD-WELD (M10X1.5X25MM OAL)	
		1	**9K-6882**	2	SPACER	
		1	**2R-1948**	2	RECEPTACLE	
	2	1	**123-3154**	1	GLASS	
	3	1	**115-8388**	1	GLASS	
	4	1	**108-1615**	2	HINGE-RH	
M	5	1	**6V-8210**	4	BOLT (M8X1.25X16 MM)	
	6	1	**8T-4224**	4	WASHER-HARD (2MM THK)	
	7	1	**4E-0339**	2	PIN	
	8	1	**8R-0739**	4	WASHER	
	9	1	**4E-7831**	1	WINDOW AS	
E		1	**3E-3000**		SEAL (333CM)	
		1	**4E-7830**	1	GLASS	
	10	1	**115-8391**	1	GLASS	
	11	1	**115-8390**	1	GLASS-LH	
	12	1	**115-8389**	1	GLASS-RH	

E-ORDER BY THE CENTIMETER
M-METRIC PART

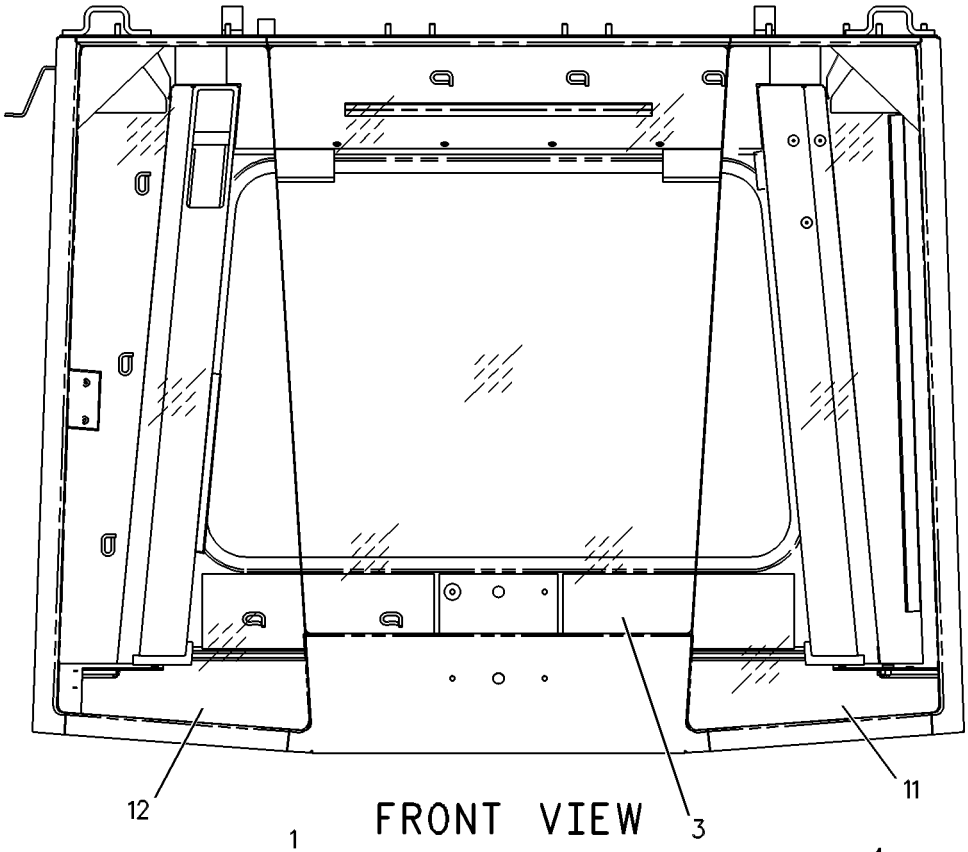

FRONT VIEW

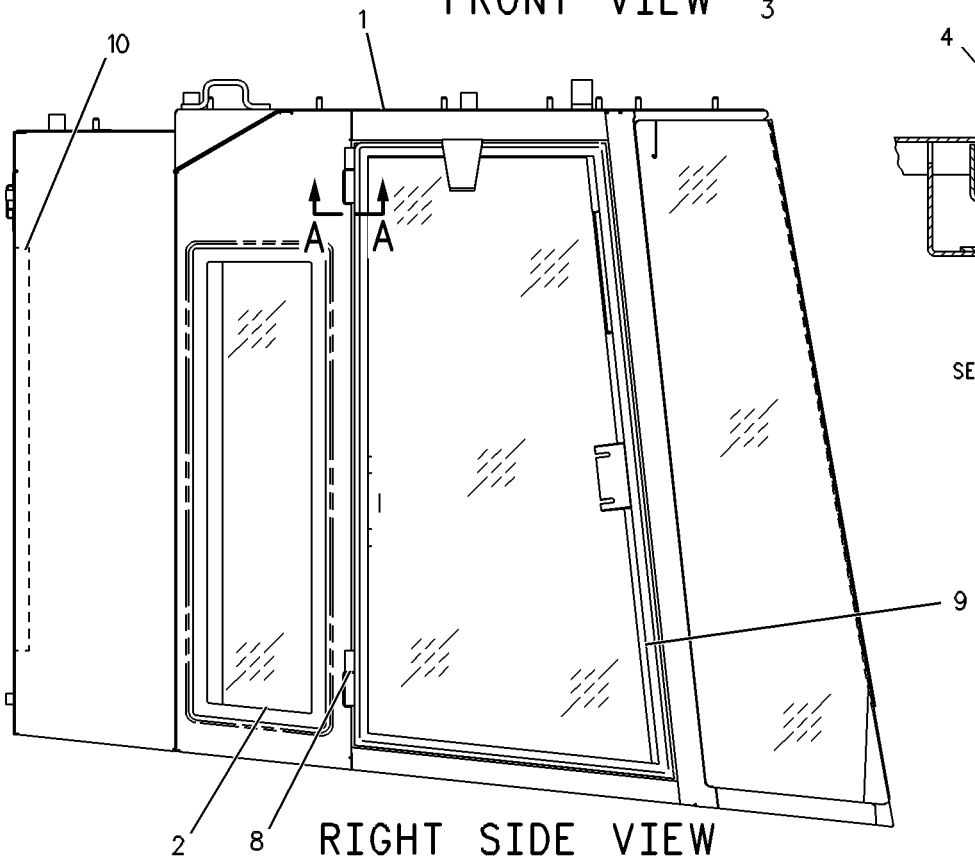

RIGHT SIDE VIEW

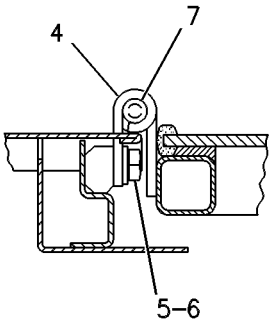

SECTION A-A

GRAPHIC #1

g00121429

OPERATOR STATION

112-6030 COMPRESSOR & MTG GP-REFRIG

S/N: 2GR1-1886
PART OF 107-8762 ENGINE AR
TYPE 1

SMCS-1802 **i01057267**

NOTE	REF NO	GRAPHIC REF	PART NUMBER	QTY	PART NAME 1 2 3 4 5 6 (PRODUCT LEVEL)	SEE PAGE
	1	1	**4S-5780**	1	ROD	
	2	1	**8S-5383**	1	BLOCK	
	3	1	**105-4283**	1	SUPPORT	
	4	1	**105-4284**	3	PLATE	
	5	1	**112-6031**	1	BRACKET AS	
	6	1	**112-6032**	1	SPACER	
	7	1	**112-6055**	1	V-BELT	
	8	1	**0S-1589**	4	BOLT (5/8-11X1.75IN)	
	9	1	**0S-1590**	2	BOLT (3/8-16X2IN)	
	10	1	**1A-2029**	3	BOLT (3/8-16X1.125IN)	
Y	11	1	**3E-1906**	1	COMPRESSOR GP-REFRIGERANT	1272
	12	1	**4K-0367**	4	NUT (5/8-11 THD)	
	13	1	**5P-2424**	1	BOLT (1/2-13X2.25IN)	
	14	1	**5P-8245**	2	WASHER (3MM THK)	
	15	1	**5P-8247**	8	WASHER-HARD (3.5MM THK)	
	16	1	**5S-7383**	3	BOLT (3/8-16X1.75IN)	
	17	1	**6V-8188**	2	NUT (1/2-13 THD)	
	18	1	**6V-8801**	5	NUT (3/8-16 THD)	
	19	1	**7X-0334**	1	BOLT (1/2-13X5IN)	
	20	1	**7X-0345**	1	BOLT (5/8-11X1.75IN)	
	21	1	**7X-0448**	2	NUT (5/8-11 THD)	
	22	1	**8T-4122**	3	WASHER (3.5MM THK)	
	23	1	**8T-4223**	5	WASHER-HARD (3MM THK)	
	24	1	**8T-4896**	10	WASHER-HARD (2.5MM THK)	

Y-SEPARATE ILLUSTRATION

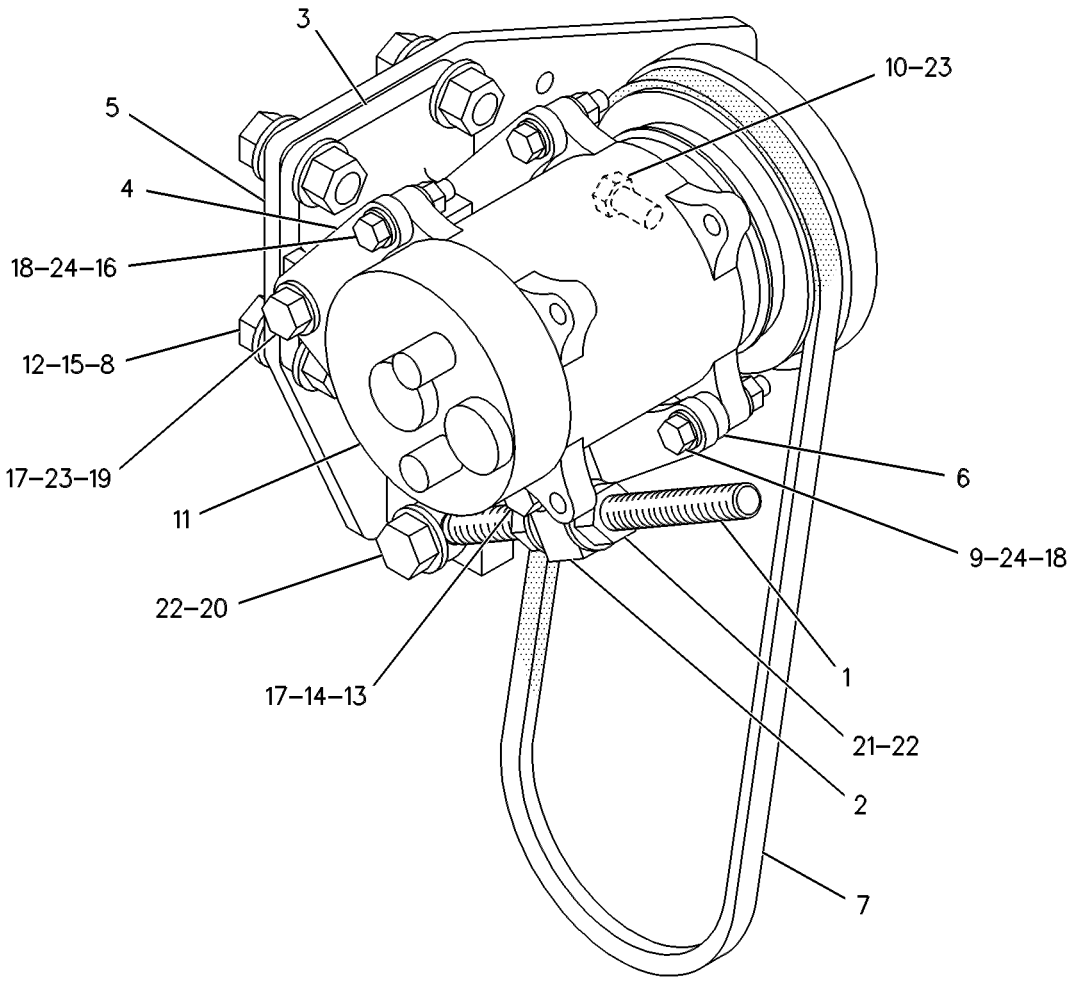

GRAPHIC #1

g00254146

OPERATOR STATION

112-6030 COMPRESSOR & MTG GP-REFRIG

S/N: 2GR1-1886
PART OF 107-8762 ENGINE AR
TYPE 2

SMCS-1802 **i01050855**

NOTE	REF NO	GRAPHIC REF	PART NUMBER	QTY	PART NAME 1 2 3 4 5 6 (PRODUCT LEVEL)	SEE PAGE
	1	1	**2B-0947**	1	BOLT (1/2-13X2.25IN)	
	2	1	**2H-6488**	1	BOLT (1/2-13X5IN)	
	3	1	**4S-5780**	1	ROD	
	4	1	**8N-9885**	1	GASKET-DRIVE HOUSING	
	5	1	**8S-5383**	1	BLOCK	
	6	1	**105-4284**	3	PLATE	
	7	1	**112-6032**	1	SPACER	
	8	1	**141-7138**	1	V-BELT	
Y	9	1	**141-9676**	1	COMPRESSOR GP-REFRIGERANT	1276
	10	1	**147-0777**	1	BRACKET AS	
	11	1	**0S-1571**	2	BOLT (3/8-16X1.75IN)	
	12	1	**0S-1588**	7	BOLT (3/8X1.25)	
	13	1	**0S-1589**	1	BOLT (5/8-11X1.75IN)	
	14	1	**0S-1591**	3	BOLT (3/8-16X1.5IN)	
	15	1	**1F-7958**	2	NUT-FULL (1/2-13 THD)	
	16	1	**4K-0367**	2	NUT (5/8-11 THD)	
	17	1	**5M-2894**	17	WASHER (2.5MM THK)	
	18	1	**5P-8245**	4	WASHER (3MM THK)	
	19	1	**5P-8247**	3	WASHER-HARD (3.5MM THK)	
	20	1	**9S-8752**	5	NUT (3/8-16 THD)	

Y-SEPARATE ILLUSTRATION

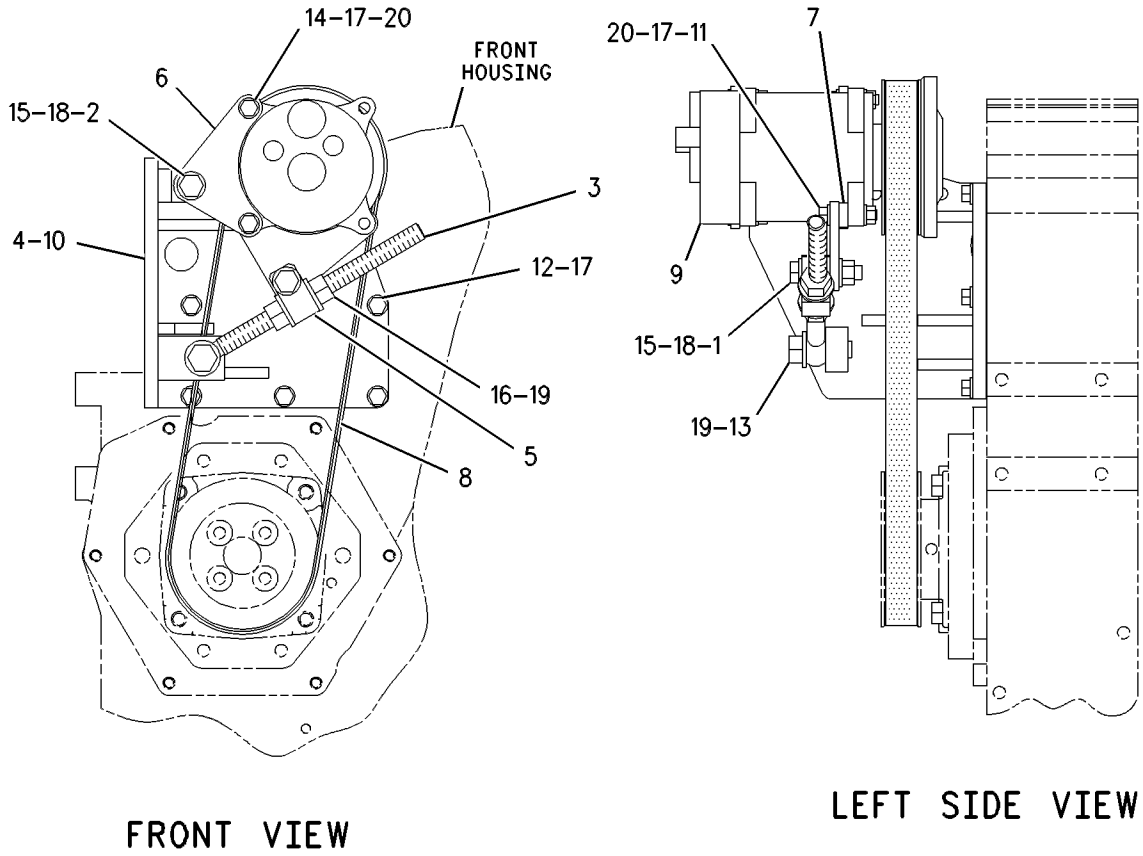

GRAPHIC #1

g00292925

OPERATOR STATION

3E-1906 COMPRESSOR GP-REFRIGERANT

S/N: 2GR1-UP
PART OF 112-6030 COMPRESSOR & MTG GP-REFRIG
FIELD REPLACEMENT FOR 134-3997—PAGE 1275
TYPE 1

SMCS-1802 **i01346645**

NOTE	REF NO	GRAPHIC REF	PART NUMBER	QTY	PART NAME 1 2 3 4 5 6 (PRODUCT LEVEL)	SEE PAGE
	1	1	**100-4512**	1	COIL AS	
		1	**9W-0852**	2	PIN-CONNECTOR	
		1	**102-8802**	1	KIT-RECEPTACLE (2 PIN)	
					(INCLUDES RECEPTACLE AS & WEDGE)	
Y	2	1	**101-1759**	1	COMPRESSOR GP-REFRIGERANT	1274
	3	1	**7T-4532**	1	PLUG AS	
	4	1	**9X-7385**	1	SEAL-O-RING (20.22MM ID)	

Y-SEPARATE ILLUSTRATION

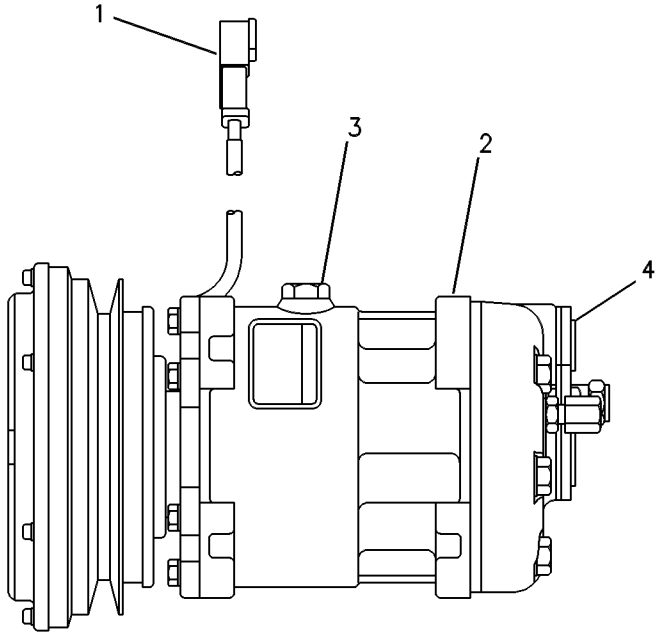

GRAPHIC #1 g00085812

3E-1906 COMPRESSOR GP-REFRIGERANT

S/N: 2GR1-UP
PART OF 112-6030 COMPRESSOR & MTG GP-REFRIG
FIELD REPLACEMENT FOR 134-3997—PAGE 1275
TYPE 2

SMCS-1802 **i01377893**

NOTE	REF NO	GRAPHIC REF	PART NUMBER	QTY	PART NAME 1 2 3 4 5 6 (PRODUCT LEVEL)	SEE PAGE
C	1	1	**134-3998**	1	COIL AS-24 VOLT	
		1	**9W-0852**	2	PIN-CONNECTOR	
		1	**102-8802**	1	KIT-RECEPTACLE (2 PIN)	
					(INCLUDES RECEPTACLE AS AND WEDGE)	
Y	2	1	**134-3997**	1	COMPRESSOR GP-REFRIGERANT	1275

C-CHANGE FROM PREVIOUS TYPE
Y-SEPARATE ILLUSTRATION

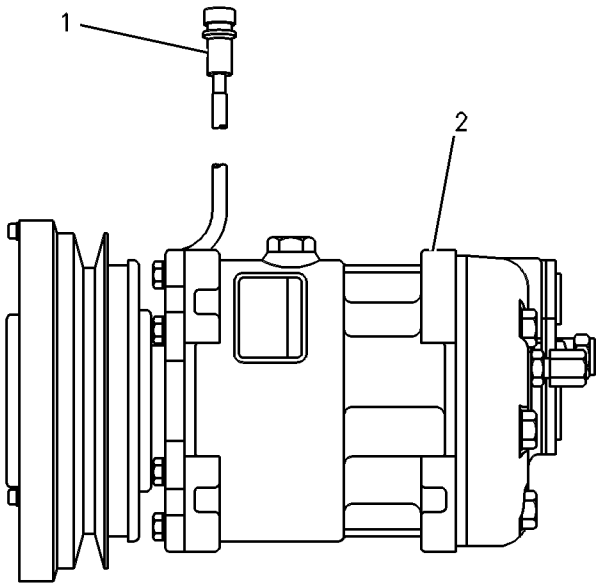

GRAPHIC #1 g00087586

OPERATOR STATION

101-1759 COMPRESSOR GP-REFRIGERANT

S/N: 2GR1-UP

PART OF 3E-1906 COMPRESSOR GP-REFRIGERANT

SMCS-1802 **i01252943**

NOTE	REF NO	GRAPHIC REF	PART NUMBER	QTY	PART NAME 1 2 3 4 5 6 (PRODUCT LEVEL)	SEE PAGE
	1	1	**102-0347**	1	COIL AS	
		1	**7N-7779**	1	SOCKET	
		1	**7N-7780**	1	PIN-CONNECTOR (BLADE)	
		1	**7N-9737**	1	HOUSING-PLUG	
	2	1	**7T-4532**	1	PLUG AS	
	3	1	**9X-7385**	2	SEAL-O-RING (20.22MM ID)	

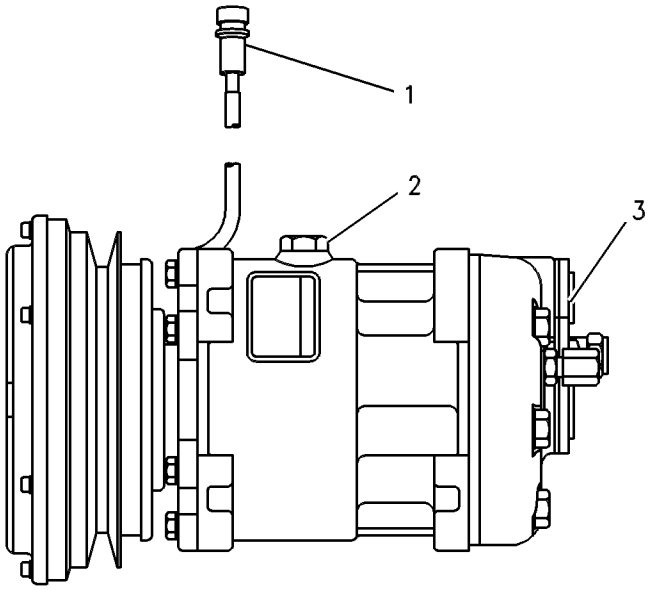

GRAPHIC #1 g00084624

OPERATOR STATION

134-3997 COMPRESSOR GP-REFRIGERANT

S/N: 2GR1-UP

PART OF 3E-1906 COMPRESSOR GP-REFRIGERANT

FIELD REPLACEMENT ORDER 3E-1906—PAGE 1272, 142-2387 HARNESS AS

SMCS-1802 **i01271404**

NOTE	REF NO	GRAPHIC REF	PART NUMBER	QTY	PART NAME 1 2 3 4 5 6 (PRODUCT LEVEL)	SEE PAGE
	1	1	**3E-3658**	1	COMPRESSOR AS	
	1A	1	**7T-4532**	1	PLUG AS	
	1B	1	**9X-7385**	2	SEAL-O-RING (20.22MM ID)	

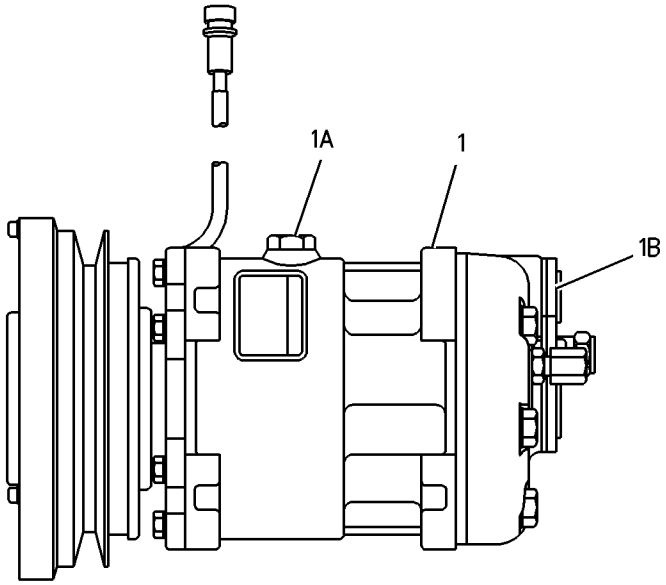

GRAPHIC #1 g00665686

OPERATOR STATION

141-9676 COMPRESSOR GP-REFRIGERANT

S/N: 2GR1-UP

PART OF 112-6030 COMPRESSOR & MTG GP-REFRIG, 170-1138 COMPRESSOR GP-REFRIGERANT

SMCS-1802 **i01352813**

NOTE	REF NO	GRAPHIC REF	PART NUMBER	QTY	PART NAME 1 2 3 4 5 6 (PRODUCT LEVEL)	SEE PAGE
	1	1	*3E-3658*	1	COMPRESSOR AS	
	1A	1	**7T-4532**	1	PLUG AS	
	1B	1	**9X-7385**	1	SEAL-O-RING (20.22MM ID)	
	2	1	**102-8802**	1	KIT-RECEPTACLE (2 PIN)	
					(INCLUDES RECEPTACLE AS AND WEDGE)	
	3	1	**114-3469**	1	VALVE AS-RELIEF	
		1	**9X-7378**	1	SEAL-O-RING (8.92MM ID)	

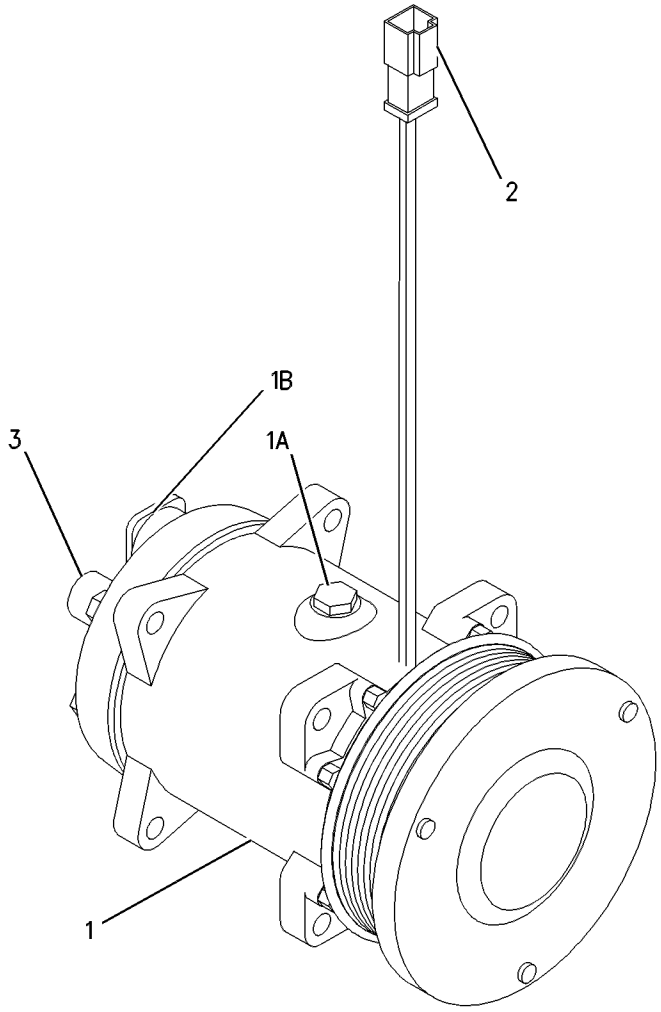

GRAPHIC #1 g00534601

MEMORANDA

OPERATOR STATION

170-1138 COMPRESSOR GP-REFRIGERANT

S/N: 2GR1887-2936

PART OF 107-8762 ENGINE AR

SMCS-1802 **i01317978**

NOTE	REF NO	GRAPHIC REF	PART NUMBER	QTY	PART NAME 1 2 3 4 5 6 (PRODUCT LEVEL)	SEE PAGE
	1	1	**8N-9885**	1	GASKET-DRIVE HOUSING	
	2	1	**105-4284**	4	PLATE	
	3	1	**112-6032**	2	SPACER (8MM THK)	
	4	1	**138-2514**	1	BELT TIGHTENER	
	5	1	**186-4195**	1	BELT	
Y	6	1	**141-9676**	1	COMPRESSOR GP-REFRIGERANT	1276
	7	1	**170-1135**	1	BRACKET AS	
	8	1	**170-1137**	1	BRACKET	
	9	1	**0S-1571**	4	BOLT (3/8-16X1.75IN)	
	10	1	**0S-1588**	5	BOLT (3/8-16X1.25 IN)	
	11	1	**0S-1590**	1	BOLT (3/8-16X2 IN)	
	12	1	**0S-1591**	2	BOLT (3/8-16X1.5 IN)	
	13	1	**0S-1619**	1	BOLT (3/8-16X3.0IN)	
	14	1	**3B-1915**	1	BOLT (3/8-16X1.375IN)	
	15	1	**5M-2894**	20	WASHER-HARD (2.5MM THK)	
	16	1	**6V-8188**	2	NUT (1/2-13 THD)	
	17	1	**7X-0334**	2	BOLT (1/2-13X5IN)	
	18	1	**8T-4223**	4	WASHER-HARD (3MM THK)	
	19	1	**9S-8752**	6	NUT-FULL (3/8-16 THD)	

Y-SEPARATE ILLUSTRATION

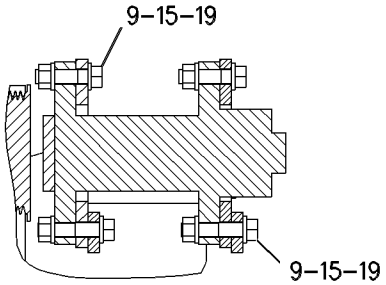

SECTION A-A

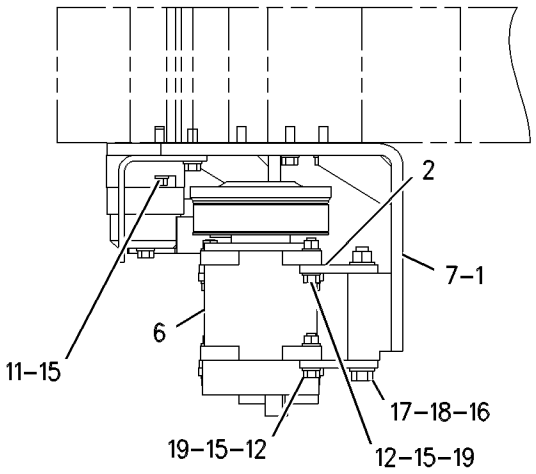

TOP VIEW

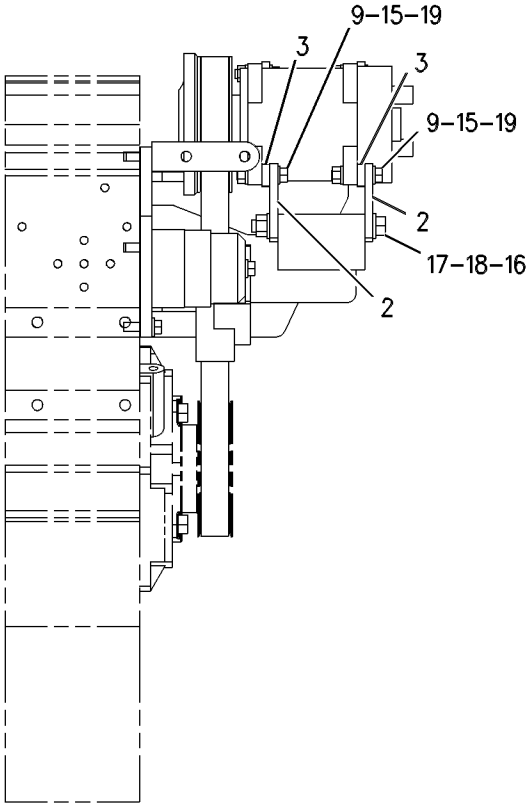

RIGHT SIDE VIEW

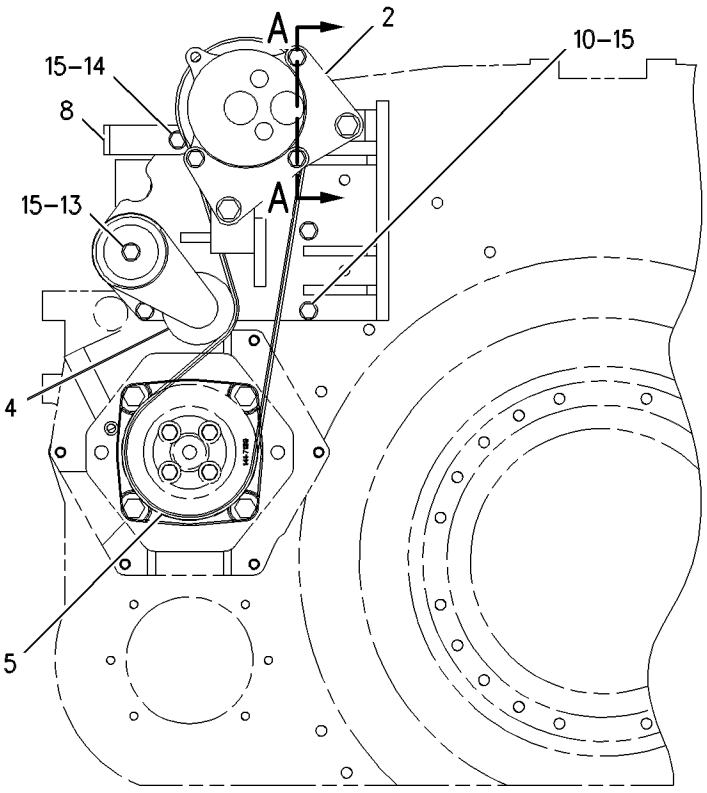

FRONT VIEW

GRAPHIC #1

g00615702

OPERATOR STATION

170-1138 COMPRESSOR GP-REFRIGERANT

S/N: 2GR2937-UP

PART OF 107-8762 ENGINE AR

SMCS-1802 **i01531354**

NOTE	REF NO	GRAPHIC REF	PART NUMBER	QTY	PART NAME 1 2 3 4 5 6 (PRODUCT LEVEL)	SEE PAGE
	1	1	**8N-9885**	1	GASKET-DRIVE HOUSING	
C	2	1	**133-3544**	1	BELT TIGHTENER	
Y	3	1	**141-9676**	1	COMPRESSOR GP-REFRIGERANT	1276
C	4	1	**144-5612**	1	IDLER AS	
		1	**6V-9027**	1	SEAL-O-RING	
		1	**144-5611**	1	PULLEY AS-IDLER	
M		1	**144-8122**	1	BOLT-SPECIAL (M10 X 1.5 X 65MM)	
		1	**144-8123**	1	SPACER	
		1	**145-2901**	1	COVER-DUST	
	5	1	**170-1137**	1	BRACKET	
	6	1	**186-4195**	1	BELT	
C	7	1	**187-4599**	1	SUPPORT	
C	8	1	**187-4600**	1	BRACKET	
C	9	1	**0S-1590**	2	BOLT (3/8-16X2 IN)	
C	10	1	**0S-1595**	1	BOLT (1/2-13X1.25 IN)	
	11	1	**0S-1619**	1	BOLT (3/8-16X3 IN)	
C	12	1	**1A-2029**	4	BOLT (3/8-16X1.125 IN)	
C	13	1	**1A-7669**	1	BOLT (1/2-13X7 IN)	
	14	1	**3B-1915**	1	BOLT (3/8-16X1.37 IN)	
	15	1	**5B-2638**	1	BOLT (3/8-16X5.25 IN)	
C	16	1	**5B-9603**	1	BOLT (3/8-16X5 IN)	
C	17	1	**5M-2894**	7	WASHER-HARD (10.2X18.5X2.5MM THK)	
C	18	1	**5P-8245**	5	WASHER-HARD (13.5X25.5X3MM THK)	
	19	1	**6K-8179**	2	CLIP	
	20	1	**8M-9024**	1	WASHER-HARD (10.2X22.5X5MM THK)	
C	21	1	**9S-8752**	2	NUT-FULL (3/8-16 THD)	
C	22	1	**9X-8877**	3	BOLT (1/2-13X5.0IN)	

C-CHANGE FROM PREVIOUS TYPE
M-METRIC PART
Y-SEPARATE ILLUSTRATION

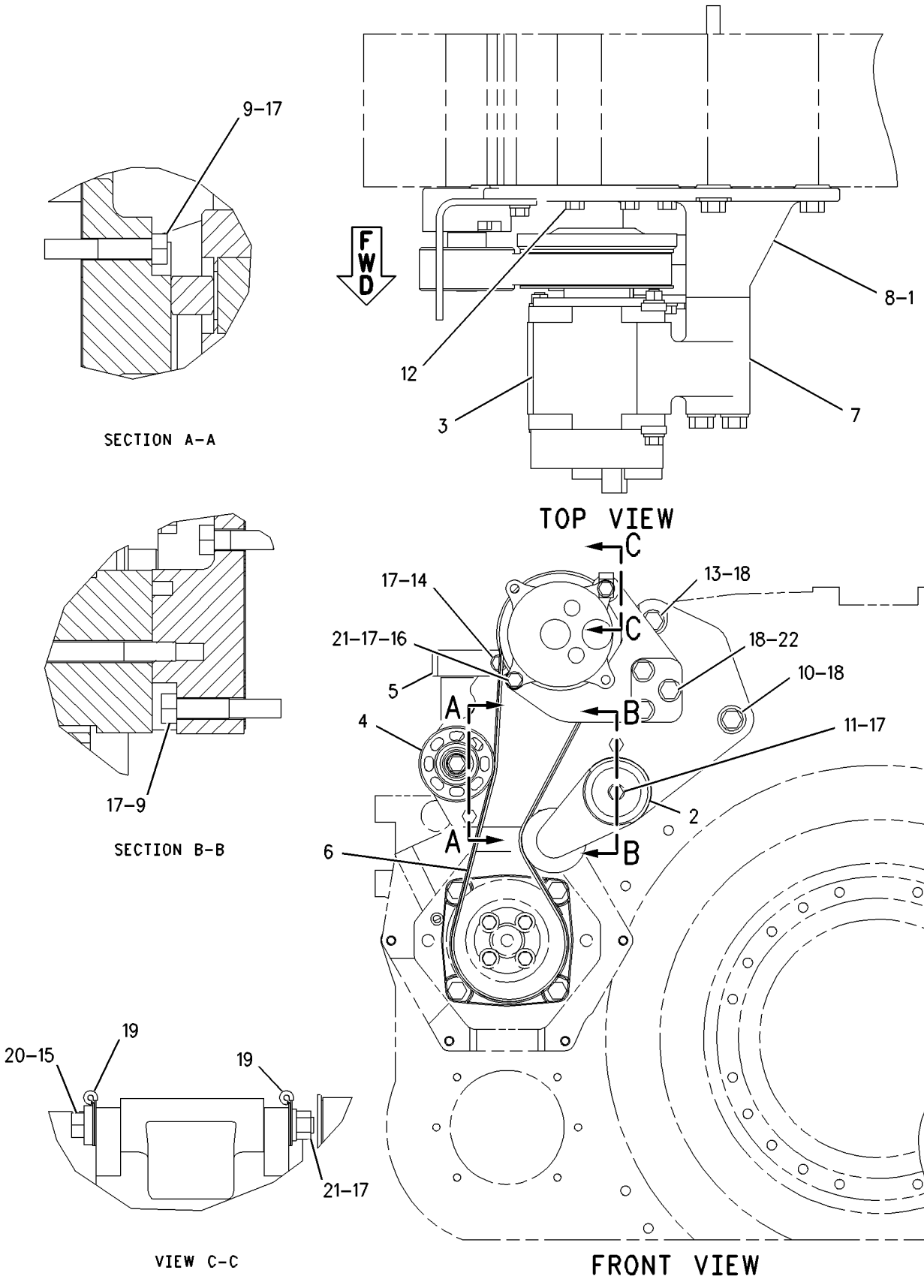

GRAPHIC #1

g00795104

OPERATOR STATION

110-8685 CONDENSER & MTG GP-REFRIGERANT

S/N: 7HR1-UP

PART OF 109-6819 CHASSIS AR

SMCS-1805 **i01400334**

NOTE	REF NO	GRAPHIC REF	PART NUMBER	QTY	PART NAME 1 2 3 4 5 6 (PRODUCT LEVEL)	SEE PAGE
	1	1	**7X-0590**	4	WASHER-HARD (13.5X44.5X6MM THK)	
	2	1	**6S-6251**	4	MOUNT	
	3	1	**190-7623**	1	CORE AS	
	4	1	**195-8092**	1	SUPPORT	
	5	1	**5P-1076**	6	WASHER-HARD (13.5X30X4MM THK)	
M	6	1	**8T-4956**	6	BOLT (M12X1.75X35MM)	
M	7	1	**8T-4910**	4	BOLT (M12X1.75X60MM)	
D	8	1	**5P-6903**		SEAL (2.0M)	

D-ORDER BY THE METER
M-METRIC PART

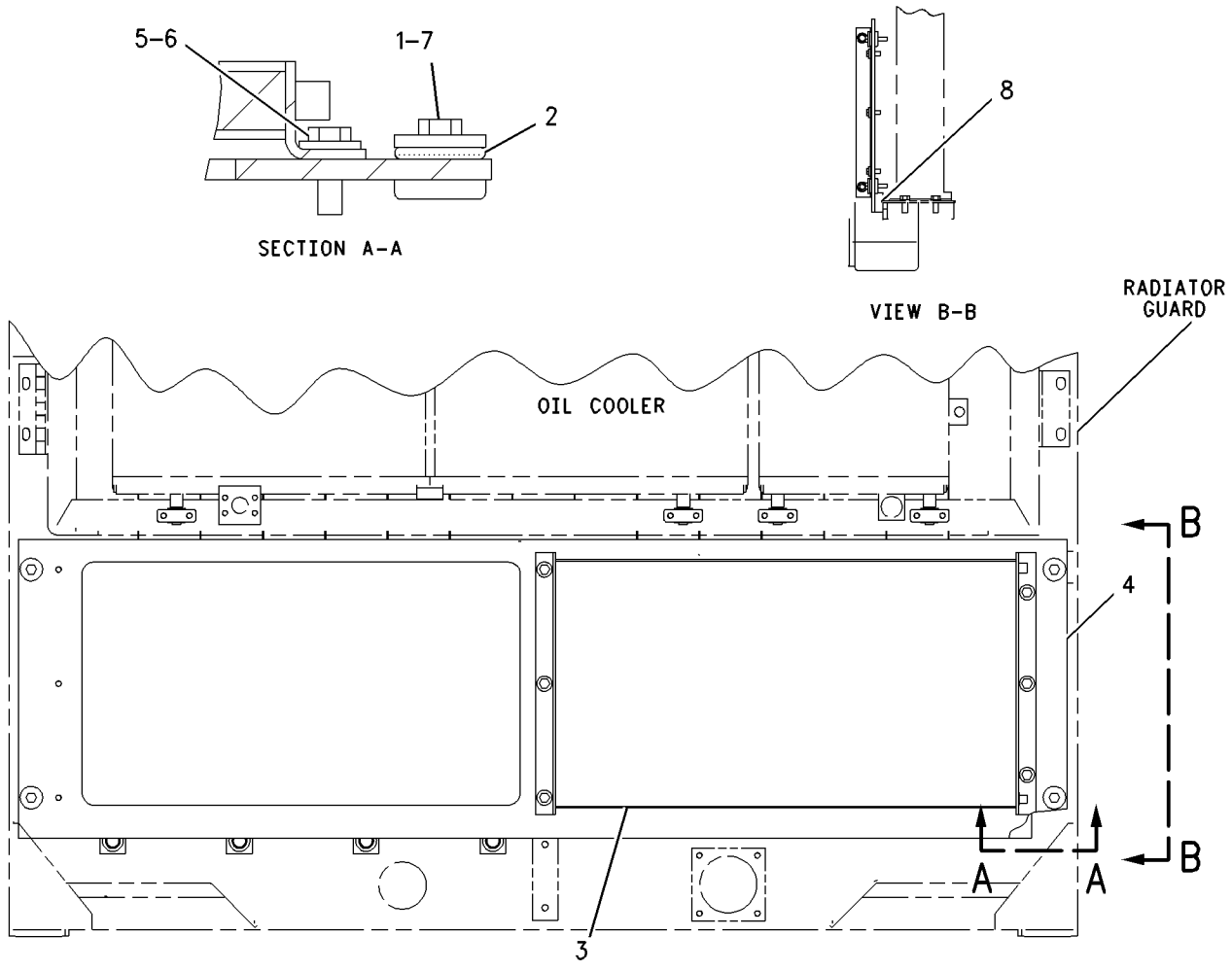

GRAPHIC #1 g00740038

OPERATOR STATION

130-6907 COVER GP-CAB

S/N: 7HR1-UP

PART OF 109-6866 OPERATOR AR

SMCS-7301 **i00187583**

NOTE	REF NO	GRAPHIC REF	PART NUMBER	QTY	PART NAME 1 2 3 4 5 6 (PRODUCT LEVEL)	SEE PAGE
	1	1	**4E-8984**	2	COVER AS	
	2	1	**4E-8996**	3	COVER	
	3	1	**4E-9056**	3	GASKET	
M	4	1	**5C-7261**	4	NUT (M8X1.25 THD)	
	5	1	**8T-4224**	12	WASHER-HARD (2MM THK)	
M	6	1	**8T-4200**	8	BOLT (M8X1.25X16MM)	
M	7	1	**9X-2045**	2	SCREW-TRUSS HEAD (M6X1X20MM)	

M-METRIC PART

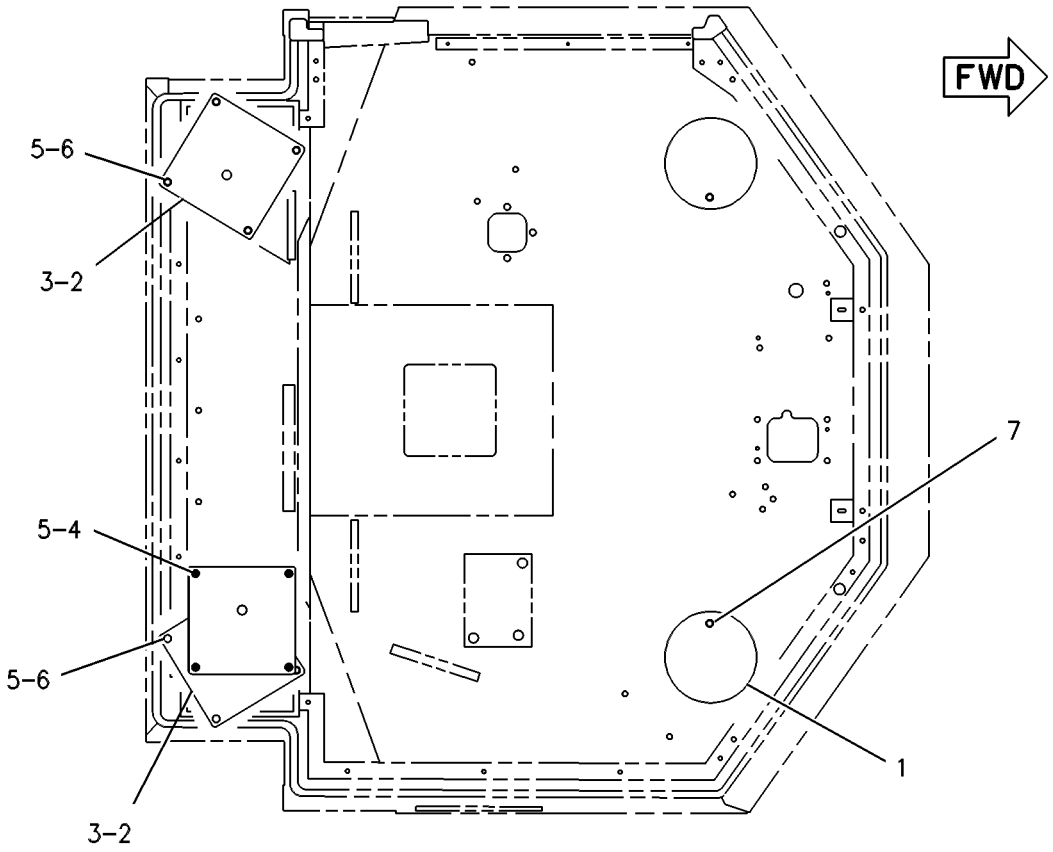

TOP VIEW

GRAPHIC #1 g00122737

OPERATOR STATION

123-8701 DOOR GP-LH

S/N: 7HR1-UP

PART OF 123-7231 CAB & PLATFORM GP

SMCS-7308 **i00637823**

NOTE	REF NO	GRAPHIC REF	PART NUMBER	QTY	PART NAME 1 2 3 4 5 6 (PRODUCT LEVEL)	SEE PAGE
M	1	1	**9X-2044**	4	SCREW-TRUSS HEAD (M6X1X16MM)	
	2	1	**4E-7449**	1	DOOR AS	
BE		1	**3E-3000**		SEAL	
		1	**4E-5718**	1	GLASS	
		1	**4E-5705**	1	HANDHOLD	
	3	1	**4E-7450**	2	HINGE AS	
	4	1	**4E-5720**	1	FRAME AS	
BE		1	**3E-3000**		SEAL	
		1	**4E-5719**	1	GLASS	
	5	1	**4E-5724**	2	WASHER	
	6	1	**4E-5722**	2	HINGE	
	7	1	**8T-4205**	4	WASHER-HARD (2MM THK)	
M	8	1	**8T-4196**	6	BOLT (M10X1.50X35MM)	
	9	1	**8T-4121**	12	WASHER (2.5MM THK)	
M	10	1	**8T-4137**	6	BOLT (M10X1.50X20MM)	

B-USE AS REQUIRED
E-ORDER BY THE CENTIMETER
M-METRIC PART

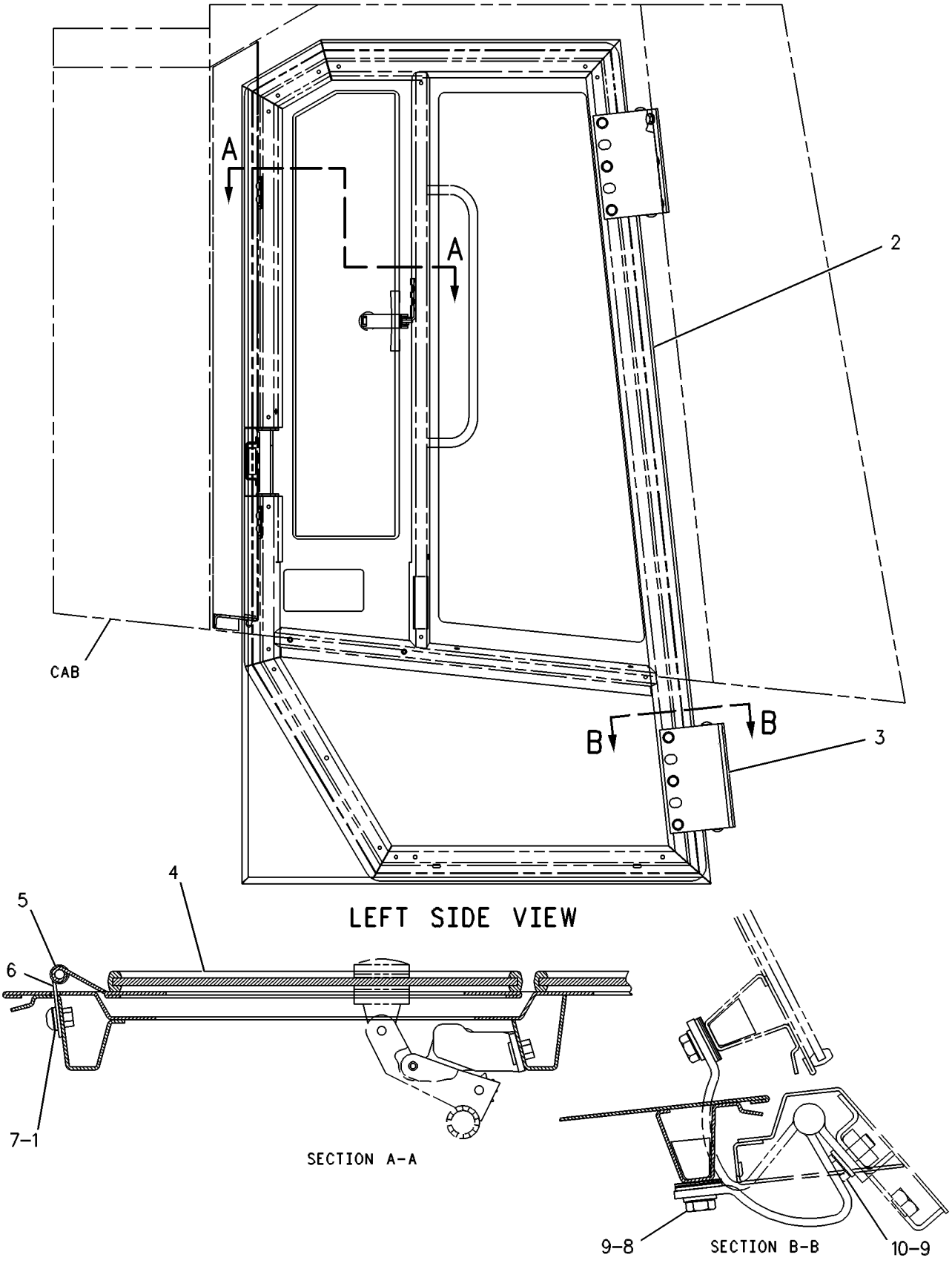

LEFT SIDE VIEW

GRAPHIC #1

g00276713

OPERATOR STATION

112-4837 DOOR GP-SIDE

S/N: 7HR1-UP
PART OF 109-6844 PLATFORM GP-OPERATOR
TYPE 1

SMCS-7273 **i01153996**

NOTE	REF NO	GRAPHIC REF	PART NUMBER	QTY	PART NAME 1 2 3 4 5 6 (PRODUCT LEVEL)	SEE PAGE
	1	1	**3B-4610**	2	COTTER	
	2	1	**4E-4450**	2	ROD AS	
					(EACH INCLUDES)	
		1	**8T-4121**	3	WASHER (2.5MM THK)	
	3	1	**7X-7729**	4	WASHER (3MM THK)	
	4	1	**9M-5884**	8	BUMPER	
	5	1	**9U-1169**	2	BRACKET	
	6	1	**112-4838**	1	FRAME AS	
M		1	**8T-3597**	12	NUT-WELD (M12X1.75 THD)	
	7	1	**113-6003**	2	DOOR AS	
					(EACH INCLUDES)	
		1	**6V-2370**	4	RIVET-POP	
		1	**9X-2299**	1	LATCH-HANDLE	
	8	1	**119-1151**	4	HINGE AS	
					(EACH INCUDES)	
M		1	**8T-3490**	6	NUT-WELD (M10X1.5 THD)	
	9	1	**8T-4121**	26	WASHER (2.5MM THK)	
M	10	1	**8T-4136**	28	BOLT (M10X1.50X25MM)	

M-METRIC PART

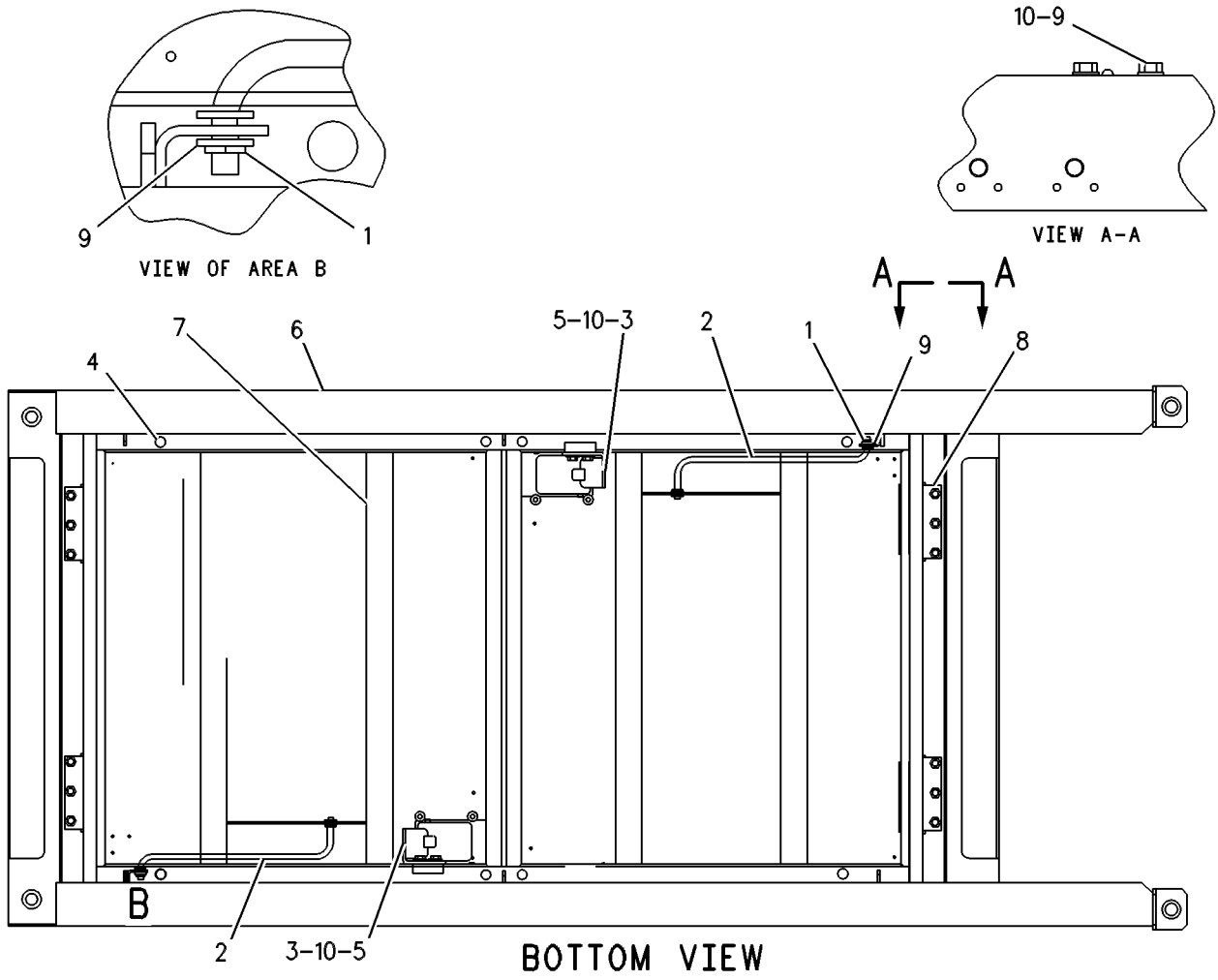

GRAPHIC #1 g00254972

OPERATOR STATION

112-4837 DOOR GP-SIDE

S/N: 7HR1-UP

PART OF 109-6844 PLATFORM GP-OPERATOR

TYPE 2

SMCS-7273 **i01075058**

NOTE	REF NO	GRAPHIC REF	PART NUMBER	QTY	PART NAME 1 2 3 4 5 6 (PRODUCT LEVEL)	SEE PAGE
	1	1	**3B-4610**	2	COTTER	
	2	1	**4E-4450**	2	ROD AS	
					(EACH INCLUDES)	
		1	**8T-4121**	3	WASHER (2.5MM THK)	
	3	1	**7X-7729**	4	WASHER (3MM THK)	
	4	1	**9M-5884**	8	BUMPER	
	5	1	**9U-1169**	2	BRACKET	
C	6	1	**171-5918**	1	FRAME AS	
	7	1	**113-6003**	2	DOOR AS	
					(EACH INCLUDES)	
		1	**6V-2370**	4	RIVET-POP	
		1	**9X-2299**	1	LATCH-HANDLE	
	8	1	**119-1151**	4	HINGE AS	
					(EACH INCUDES)	
M		1	**8T-3490**	6	NUT-WELD (M10X1.5 THD)	
	9	1	**8T-4121**	26	WASHER (2.5MM THK)	
M	10	1	**8T-4136**	28	BOLT (M10X1.50X25MM)	

C-CHANGE FROM PREVIOUS TYPE
M-METRIC PART

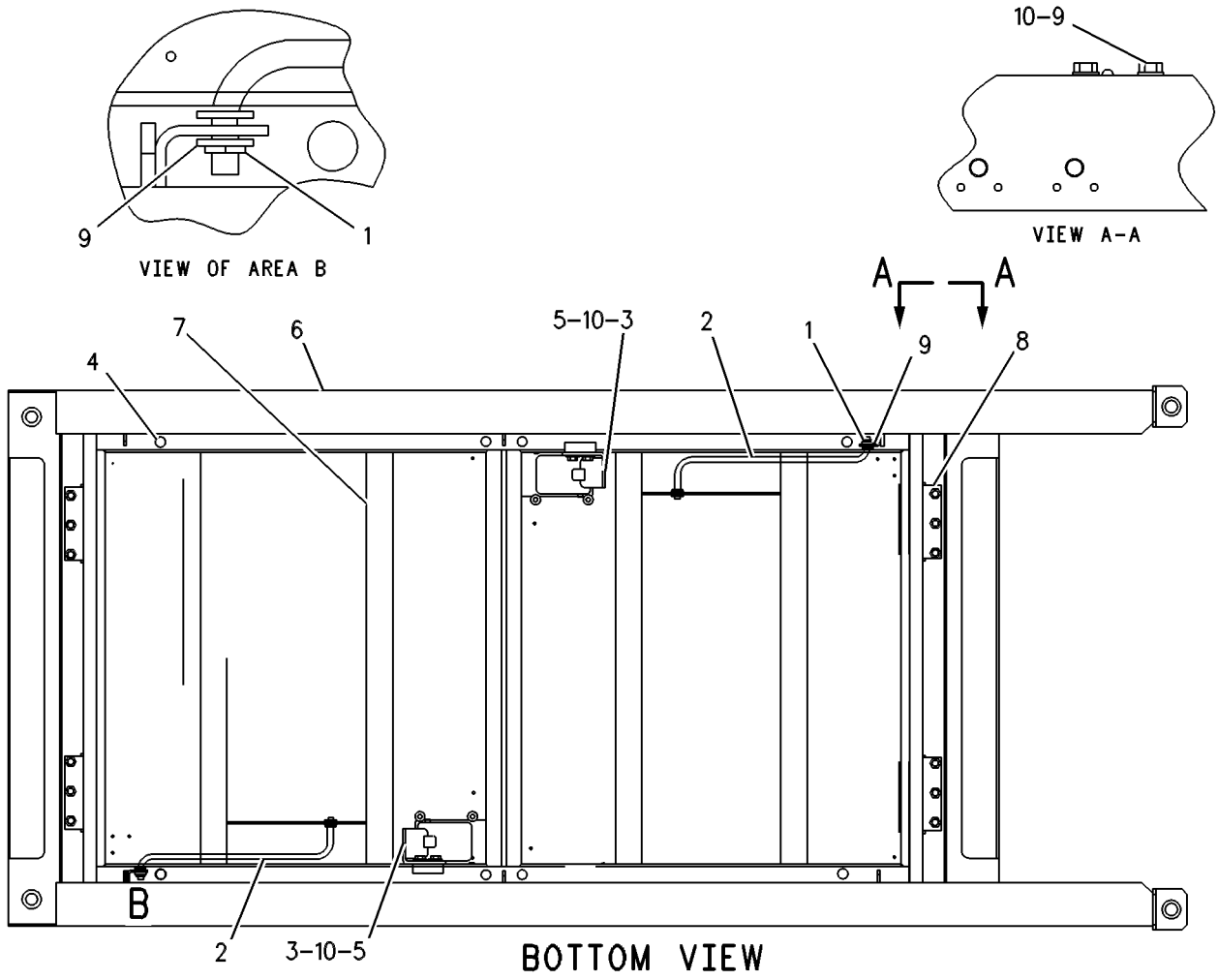

GRAPHIC #1 g00254972

OPERATOR STATION

130-3589 DOOR GP-SIDE

S/N: 7HR1-UP

PART OF 109-6844 PLATFORM GP-OPERATOR

SMCS-7273 **i01185461**

NOTE	REF NO	GRAPHIC REF	PART NUMBER	QTY	PART NAME 1 2 3 4 5 6 (PRODUCT LEVEL)	SEE PAGE
	1	1	**113-6063**	1	DOOR AS	
		1	**6V-2370**	4	RIVET-POP	
		1	**9X-2299**	1	LATCH-HANDLE	
	2	1	**114-0867**	1	DOOR AS	
		1	**6V-2370**	4	RIVET-POP	
		1	**9X-2299**	1	LATCH-HANDLE	
	3	1	**119-1151**	4	HINGE AS	
					(EACH INCLUDES)	
M		1	**8T-3490**	6	NUT-WELD (M10X1.5 THD)	
	4	1	**8T-4121**	12	WASHER (2.5MM THK)	
M	5	1	**8T-4136**	12	BOLT (M10X1.50X25MM)	

M-METRIC PART

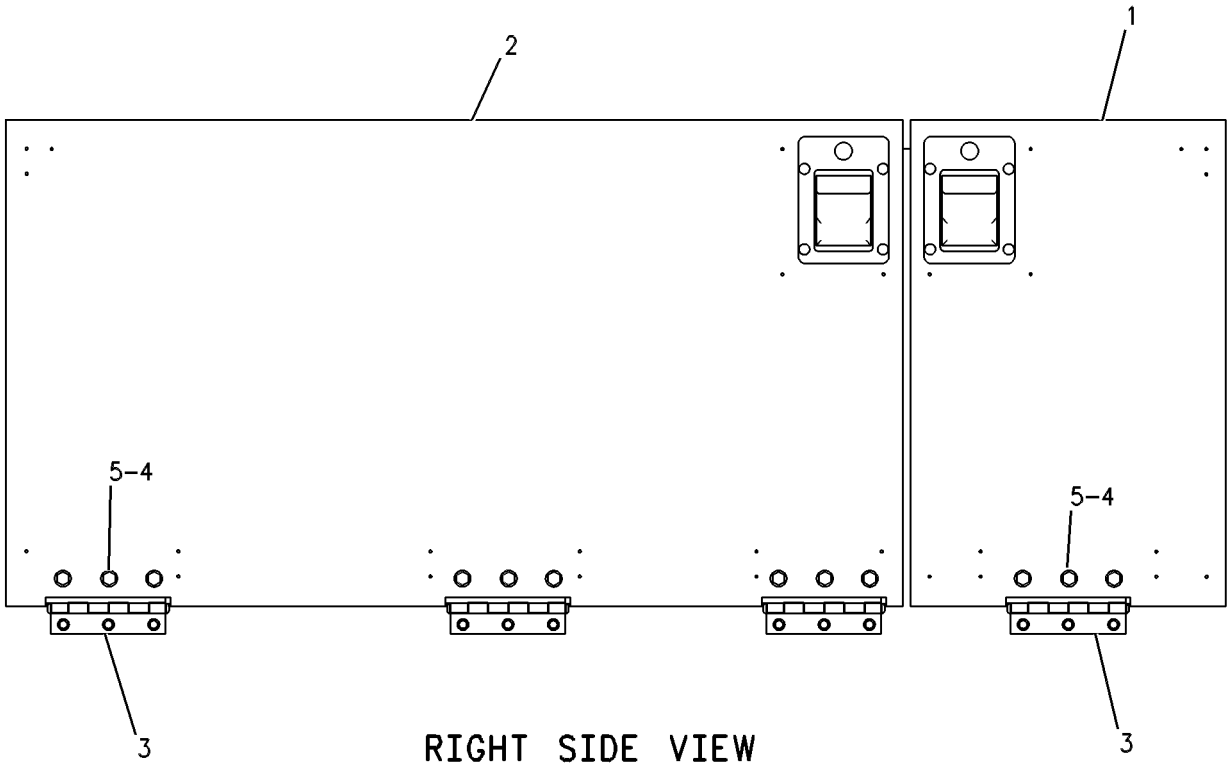

RIGHT SIDE VIEW

GRAPHIC #1 g00263375

MEMORANDA

OPERATOR STATION

160-1545 DOOR GP-SIDE

S/N: 7HR99-UP

PART OF 109-6842 HOOD & GUARD GP

SMCS-7273 **i01075782**

NOTE	REF NO	GRAPHIC REF	PART NUMBER	QTY	PART NAME 1 2 3 4 5 6 (PRODUCT LEVEL)	SEE PAGE
	2	1	**6V-2370**	12	RIVET-POP	
M	3	1	**139-6366**	4	NUT	
M	4	1	**8T-4195**	4	BOLT (M10X1.50X30MM)	
D	5	1	**5P-7483**		SEAL (1.6 M)	
	6	1	**160-1023**	2	PAWL	
	7	1	**160-1053**	1	DOOR AS-LH	
	8	1	**160-1054**	1	DOOR AS-RH	
M	9	1	**6V-7744**	4	LOCKNUT (M10X1.50 THD)	
	10	1	**7X-7729**	4	WASHER (3MM THK)	
	11	1	**160-6328**	2	LATCH AS	
					(EACH INCLUDES)	
	12	1	**6H-3956**	1	PIN	
	13	1	**7X-0766**	1	SPRING-LATCH	
	14	1	**8Y-3966**	1	WASHER (1.57MM THK)	
	15	1	**8Y-3998**	1	HANDLE-LATCH	
	16	1	**8Y-3999**	1	BRACKET-MOUNTING	
	17	1	**166-7209**	1	SHAFT	
M	18	1	**5C-2890**	2	NUT (M6X1.00 THD)	
	19	1	**5P-4115**	2	WASHER (2MM THK)	
M	20	1	**8T-4971**	2	BOLT (M6X1.0X30MM)	
	21	1	**9R-8538**	2	PLUNGER-LATCH	

D-ORDER BY THE METER
M-METRIC PART

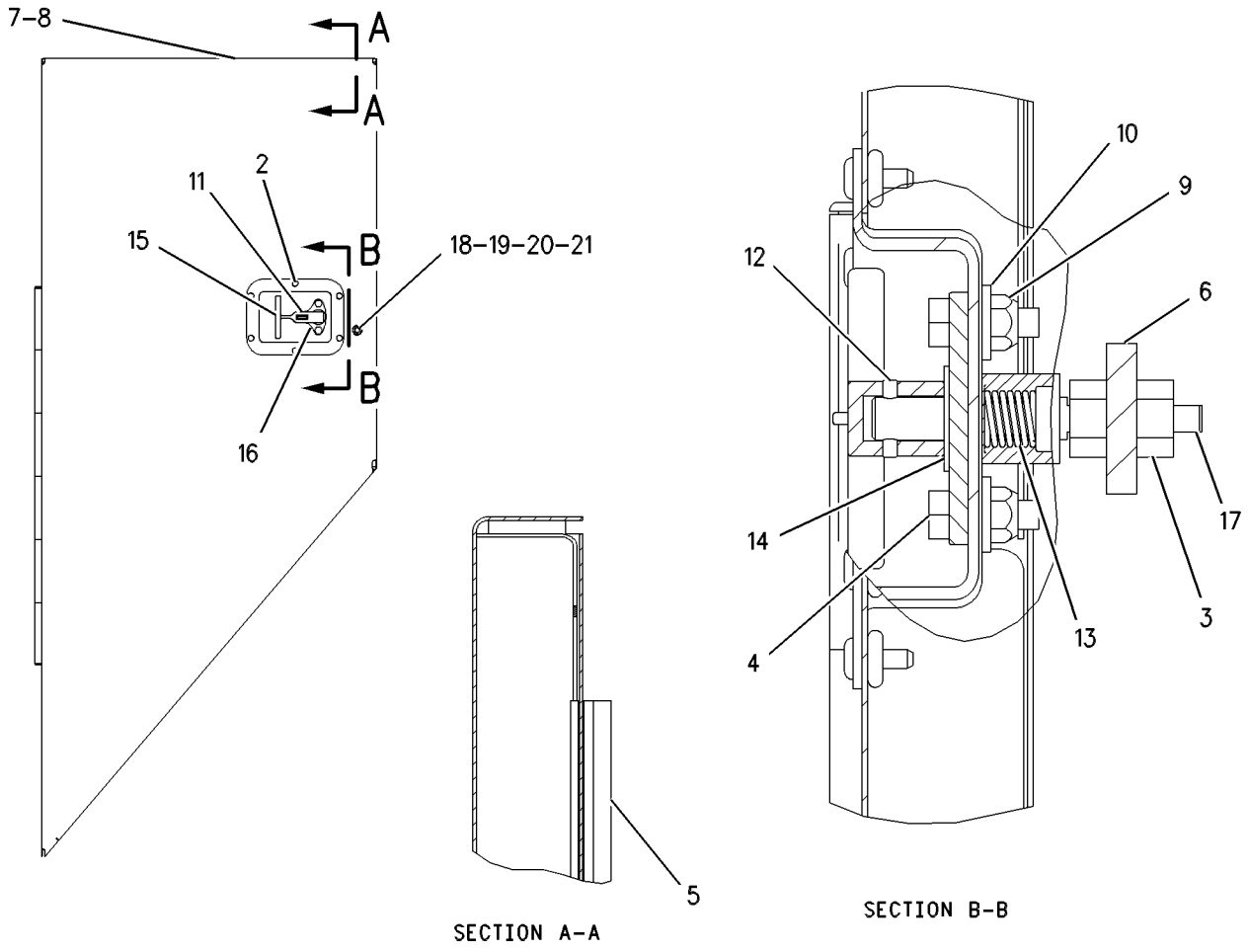

GRAPHIC #1

g00585786

OPERATOR STATION

123-8714 DUCT GP-AIR

S/N: 7HR1-UP

PART OF 142-8114 AIR CONDITIONER AR

SMCS-7304, 7320, 7337 **i01524543**

NOTE	REF NO	GRAPHIC REF	PART NUMBER	QTY	PART NAME 1 2 3 4 5 6 (PRODUCT LEVEL)	SEE PAGE
M	1	1	**8T-4191**	4	BOLT (M10X1.5X16MM)	
	2	1	**8T-4121**	18	WASHER-HARD (11X21X2.5MM THK)	
	3	1	**7T-4306**	2	LOUVER AS	
E	4	1	**8T-9005**		SEAL (440 CM)	
	5	1	**123-8715**	1	DUCT	
M	6	1	**8T-4189**	4	BOLT (M8X1.25X20MM)	
	7	1	**8R-0126**	4	WASHER	
	8	1	**123-8717**	1	DUCT	
	9	1	**123-8716**	1	DUCT	
	10	1	**4E-9152**	1	PLATE	
D	11	1	**5P-6129**		TUBE (.18 M)	
	12	1	**5D-1026**	1	CLAMP-HOSE	
M	13	1	**8T-4137**	16	BOLT (M10X1.5X20MM)	
D	14	1	**5P-5969**		SEAL (.13 M)	

D-ORDER BY THE METER
E-ORDER BY THE CENTIMETER
M-METRIC PART

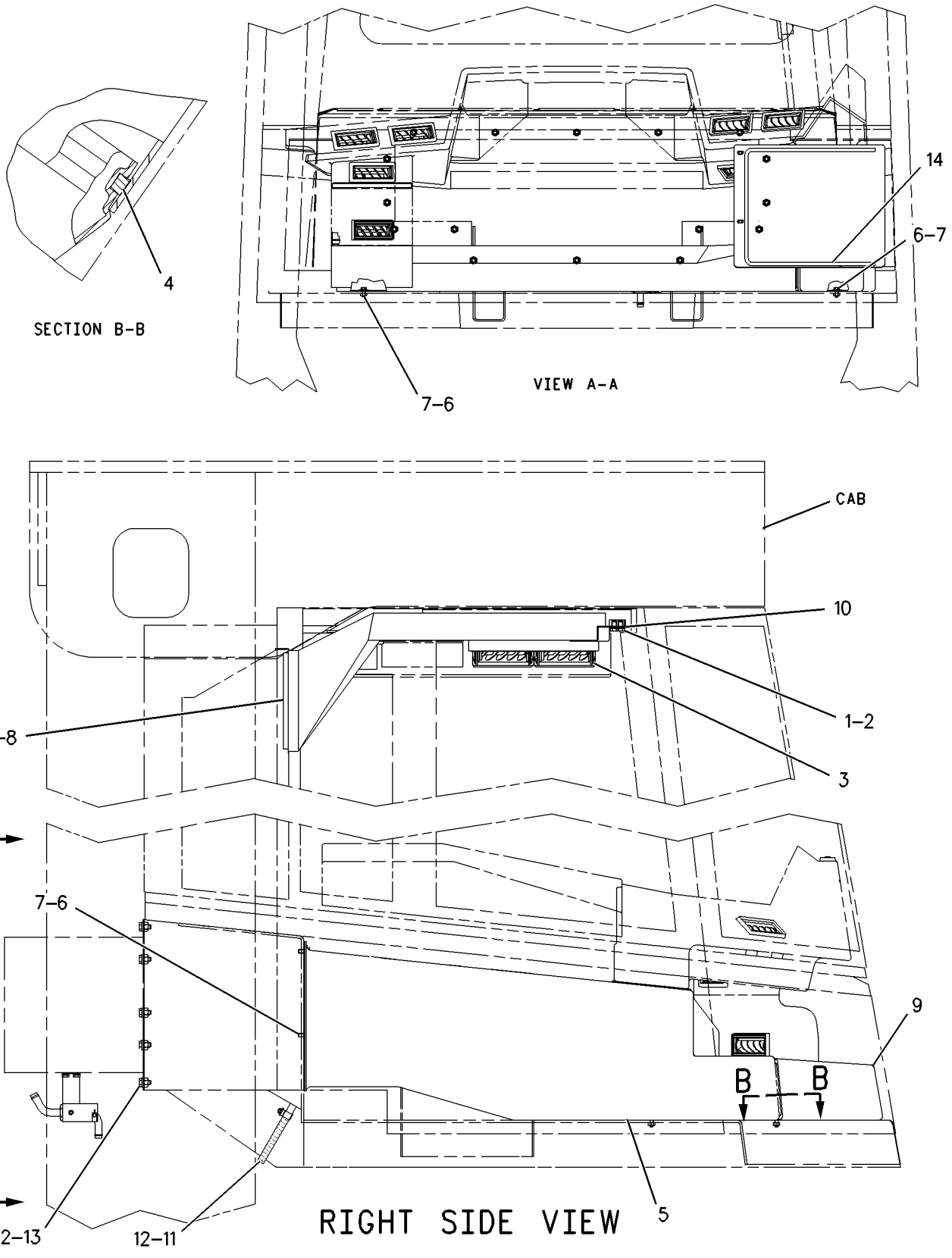

GRAPHIC #1 g00791981

OPERATOR STATION

8Y-6883 EXTENSION GP-BACKREST

S/N: 7HR1-UP
FABRIC
PART OF 124-7725, 171-8752 SEAT GP

SMCS-7312 **i01395720**

NOTE	REF NO	GRAPHIC REF	PART NUMBER	QTY	PART NAME 1 2 3 4 5 6 (PRODUCT LEVEL)	SEE PAGE
L	1	1	**8Y-5947**	2	FASTENER	
	2	1	**8Y-5877**	1	PAN AS-EXTENSION	
					AVAILABLE REPAIR KIT(S):	
L			**119-7130**	1	KIT-CUSHION (CLOTH BACKREST)	
					(INCLUDES CUSHION AS AND FASTNERS)	

L-KIT MARKED L INCLUDES PART MARKED L

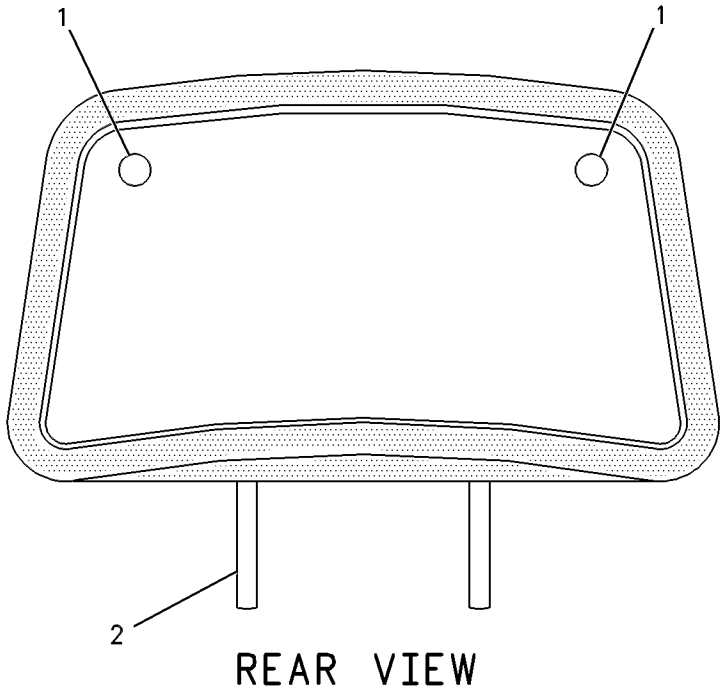

REAR VIEW

GRAPHIC #1 g00086580

OPERATOR STATION

4E-9439 FILTER GP-CAB AIR

S/N: 7HR1-203

PART OF 142-8114 AIR CONDITIONER AR

SMCS-7342 **i01057776**

NOTE	REF NO	GRAPHIC REF	PART NUMBER	QTY	PART NAME 1 2 3 4 5 6 (PRODUCT LEVEL)	SEE PAGE
M	1	1	**8T-4133**	4	NUT (M10X1.50 THD)	
		1	**8T-4121**	4	WASHER (2.5MM THK)	
BD	2	1	**6V-0352**		SEAL	
	3	1	**4E-7401**	1	DUCT AS-INLET	
M		1	**6V-9632**	4	NUT-WELD (M6X1 THD)	
M	4	1	**9X-2043**	4	SCREW-TRUSS HEAD (M6X1X14MM)	
	5	1	**4E-7414**	1	SHEET	
	6	1	**4E-7410**	1	DOOR AS	
		1	**4E-7412**	1	HINGE	
E		1	**3E-6602**		SEAL	
	7	1	**3V-7689**	2	HANDLE AS	
	8	1	**3W-3465**	2	SCREW	
		1	**2R-2376**	2	WASHER (0.8MM THK)	
	9	1	**9X-8216**	1	FILTER-AIR	

B-USE AS REQUIRED
D-ORDER BY THE METER
E-ORDER BY THE CENTIMETER
M-METRIC PART

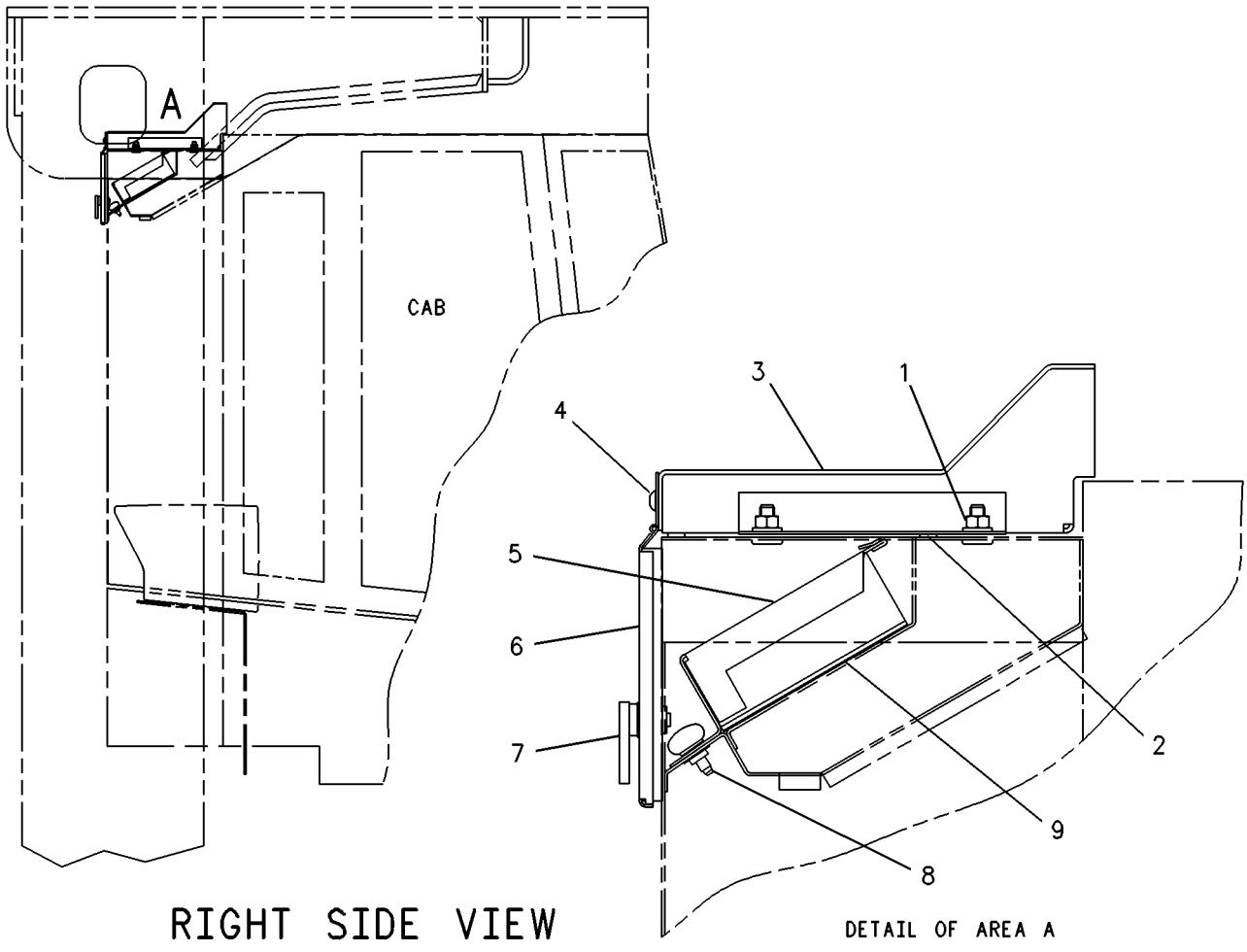

GRAPHIC #1 g00119784

OPERATOR STATION

4E-9439 FILTER GP-CAB AIR

S/N: 7HR203-UP

PART OF 142-8114 AIR CONDITIONER AR

SMCS-7342 **i01075174**

NOTE	REF NO	GRAPHIC REF	PART NUMBER	QTY	PART NAME 1 2 3 4 5 6 (PRODUCT LEVEL)	SEE PAGE
M	1	1	**8T-4133**	4	NUT (M10X1.50 THD)	
	2	1	**8T-4121**	4	WASHER (2.5MM THK)	
BD	3	1	**6V-0352**		SEAL	
C	4	1	**168-2562**	1	DUCT AS	
M		1	**6V-9632**	4	NUT-WELD (M6X1 THD)	
M	5	1	**9X-2043**	4	SCREW-TRUSS HEAD (M6X1X14MM)	
C	6	1	**160-2531**	1	FRAME-FILTER	
	7	1	**4E-7410**	1	DOOR AS	
		1	**4E-7412**	1	HINGE	
E		1	**3E-6602**		SEAL	
	8	1	**3V-7689**	2	HANDLE AS	
	9	1	**3W-3465**	2	SCREW	
	10	1	**2R-2376**	2	WASHER (0.8MM THK)	
	11	1	**9X-8216**	1	FILTER-AIR	
C	12	1	**6V-1668**	2	WASHER (3MM THK)	

B-USE AS REQUIRED
C-CHANGE FROM PREVIOUS TYPE
D-ORDER BY THE METER
E-ORDER BY THE CENTIMETER
M-METRIC PART

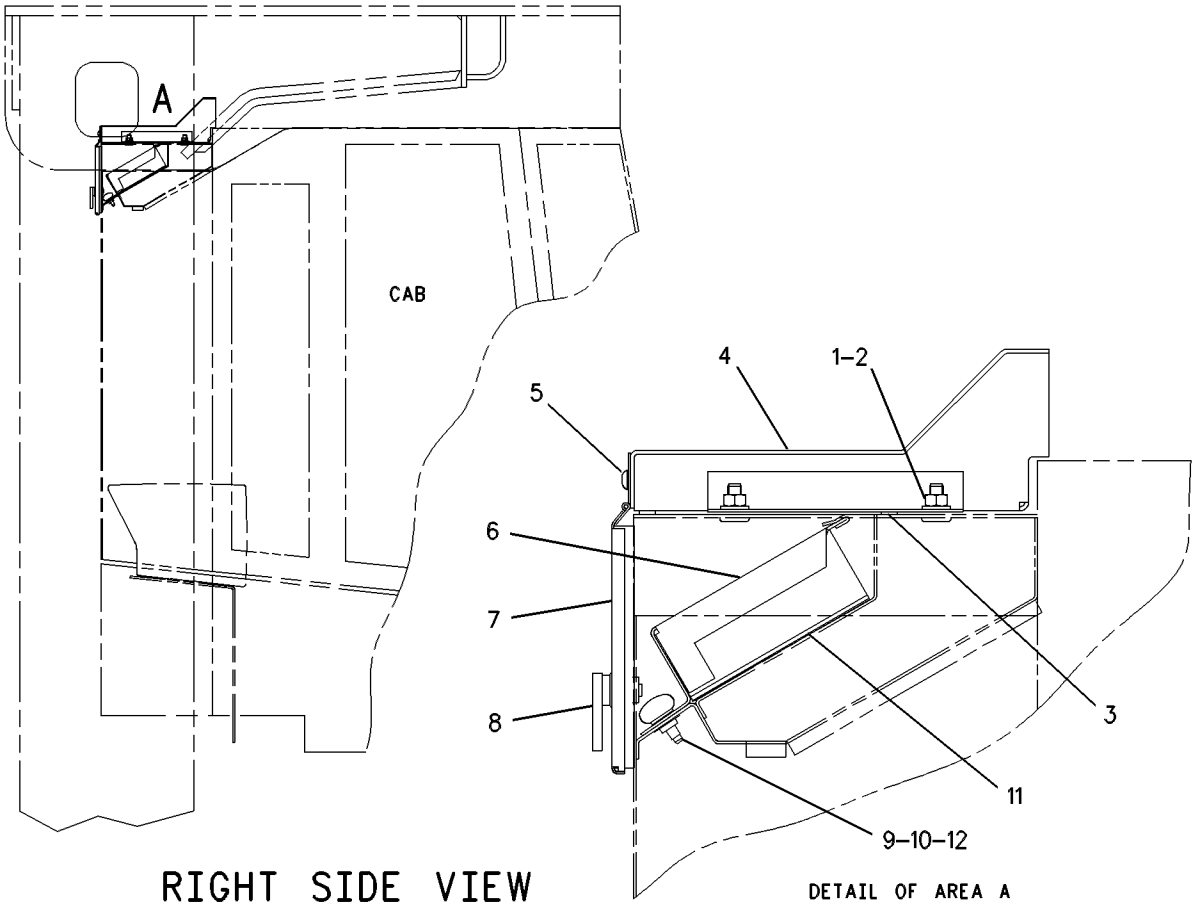

GRAPHIC #1 g00563640

OPERATOR STATION

153-9050 HANDHOLD GP

S/N: 7HR1-317
PART OF 109-6819 CHASSIS AR
CANNOT BE USED WITH 160-0291—PAGE 738
ALSO AN ATTACHMENT

SMCS-7256 **i01380775**

NOTE	REF NO	GRAPHIC REF	PART NUMBER	QTY	PART NAME 1 2 3 4 5 6 (PRODUCT LEVEL)	SEE PAGE
	1	1	**113-6029**	1	PANEL AS	
	2	1	**116-1440**	1	PLATE AS	
M		1	**8T-3597**	2	NUT-WELD (M12X1.75 THD)	
	3	1	**186-1654**	1	BRACKET AS	
	4	1	**163-7804**	1	SHEET AS	
M		1	**8T-3597**	4	NUT-WELD (M12X1.75 THD)	
	5	1	**192-7209**	1	HANDHOLD AS	
	6	1	**5P-1076**	11	WASHER-HARD (13.5X30X4MM THK)	
	7	1	**7X-0515**	3	WASHER (5MM THK)	
	8	1	**7X-0618**	1	WASHER-HARD (5MM THK)	
M	9	1	**7X-2553**	3	BOLT (M16X2X40MM)	
M	10	1	**8T-4139**	11	BOLT (M12X1.75X30MM)	
M	11	1	**8T-4183**	2	BOLT (M12X1.75X40 MM)	
	12	1	**8T-4223**	7	WASHER-HARD (13.5X25.5X3MM THK)	
M	13	1	**8T-4244**	1	NUT (M12X1.75 THD)	
M	14	1	**8T-4910**	6	BOLT (M12X1.75X60MM)	
	15	1	**7X-0590**	2	WASHER-HARD (6.0MM THK)	
	16	1	**124-3016**	1	PANEL AS-RH	

M-METRIC PART

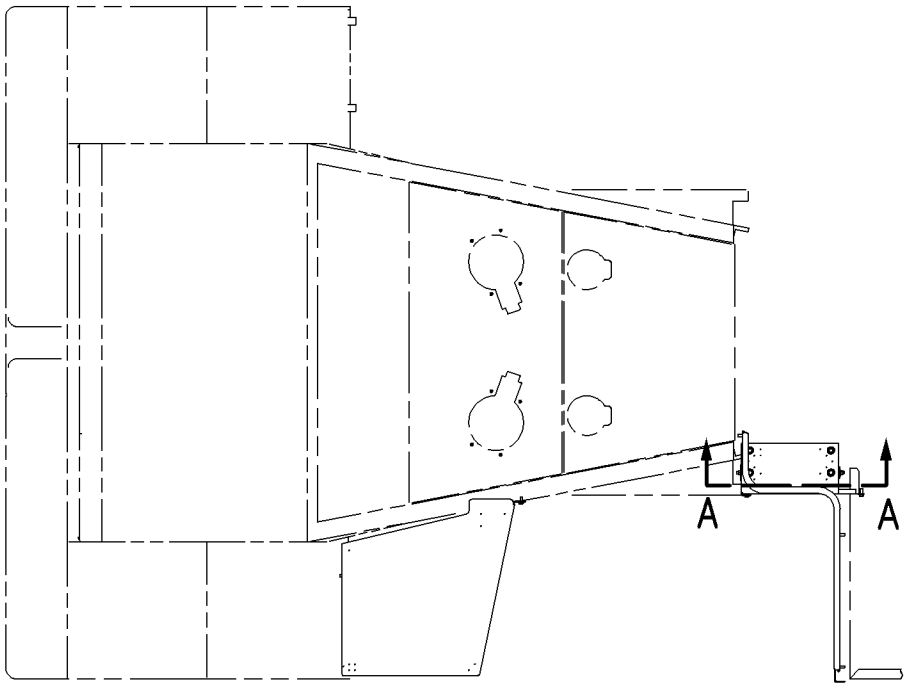

TOP VIEW

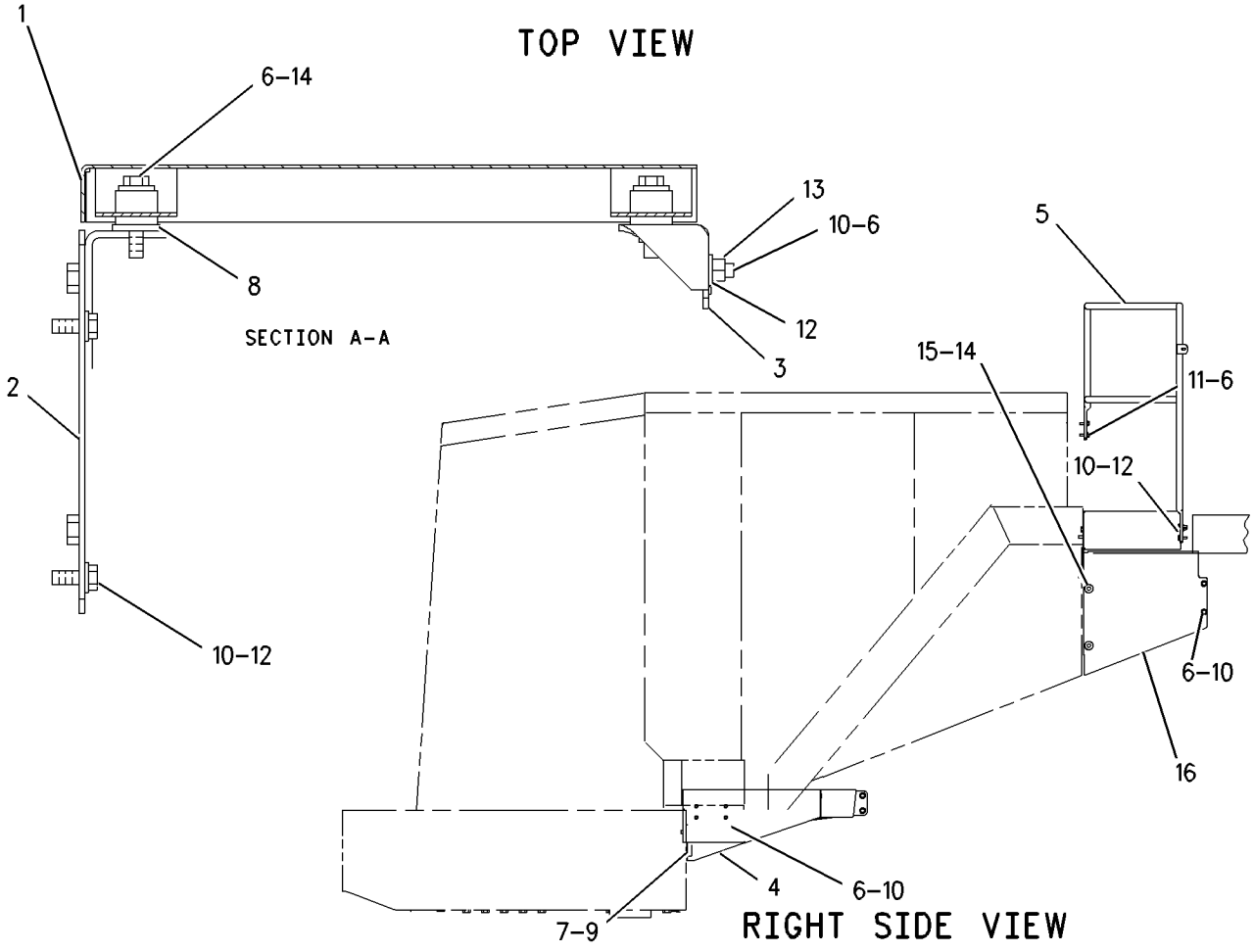

RIGHT SIDE VIEW

GRAPHIC #1

g00729163

OPERATOR STATION

109-6906 HORN GP-ELECTRIC

S/N: 7HR1-UP

PART OF 109-6821 ELECTRICAL AR

SMCS-7402 **i01192076**

NOTE	REF NO	GRAPHIC REF	PART NUMBER	QTY	PART NAME 1 2 3 4 5 6 (PRODUCT LEVEL)	SEE PAGE
	1	1	**3E-6322**	2	HORN AS	
	2	1	**3E-6323**	2	HORN AS	
					(EACH HORN AS INCLUDES)	
M		1	**5C-8312**	2	NUT (M4X0.7 THD)	
		1	**8F-1434**	2	LOCKWASHER (0.51MM THK)	
		1	**8T-0328**	2	WASHER-HARD (1MM THK)	
	3	1	**2M-6835**	2	PIPE	
M	4	1	**8T-6870**	2	BOLT (M8X70MM)	
	5	1	**8T-4224**	4	WASHER-HARD (2MM THK)	
M	6	1	**8T-4189**	2	BOLT (M8X1.25X20MM)	

M-METRIC PART

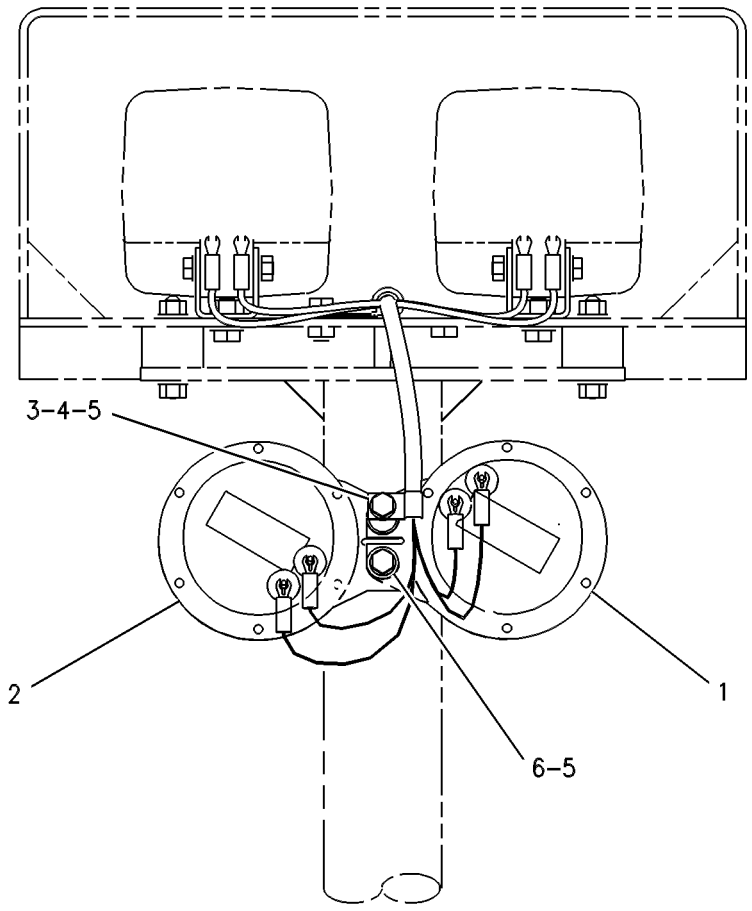

REAR VIEW

GRAPHIC #1 g00121585

OPERATOR STATION

114-5188 HORN GP-ELECTRIC

S/N: 7HR1-UP

PART OF 109-6821 ELECTRICAL AR

SMCS-7402 **i01157415**

NOTE	REF NO	GRAPHIC REF	PART NUMBER	QTY	PART NAME 1 2 3 4 5 6 (PRODUCT LEVEL)	SEE PAGE
	1	1	**7T-0969**	2	HORN AS (24 VOLT)	
	2	1	**7T-0970**	2	HORN AS (24 VOLT)	
					(EACH HORN AS INCLUDES)	
M		1	**8C-7581**	2	SCREW-MACHINE (M4X0.70X8MM)	
		1	**9B-7233**	2	LOCKWASHER (NO.8)	
		1	**096-6166**	2	WASHER-HARD (1MM THK)	
	3	1	**2M-6835**	2	PIPE	
M	4	1	**8T-6870**	2	BOLT (M8X70MM)	
	5	1	**8T-4224**	4	WASHER-HARD (2MM THK)	
M	6	1	**8T-6912**	2	BOLT (M8X1.50X50MM)	
	7	1	**1B-4971**	2	SPACER (25.4MM THK)	

M-METRIC PART

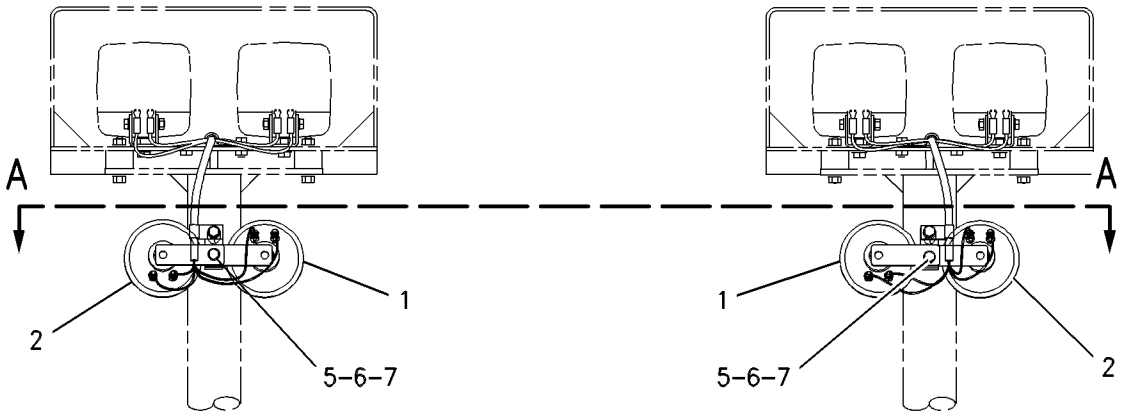

REAR VIEW

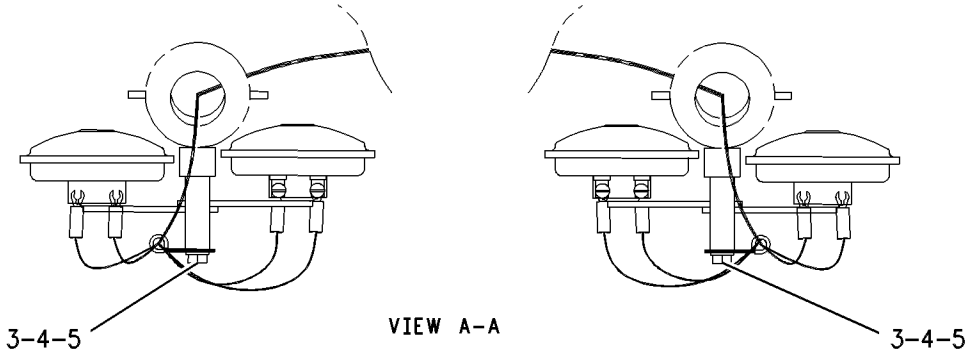

VIEW A-A

GRAPHIC #1 g00615294

OPERATOR STATION

4E-6409 INSTALLATION GP-RADIO

S/N: 7HR1-UP

PART OF 130-6906, 171-7047 CAB AR

SMCS-7338 **i01524563**

NOTE	REF NO	GRAPHIC REF	PART NUMBER	QTY	PART NAME 1 2 3 4 5 6 (PRODUCT LEVEL)	SEE PAGE
	1	1	**4E-8030**	1	BRACKET AS	
		1	**7T-1099**	2	LINK	
	2	1	**119-1733**	1	CONVERTER-POWER (24 VOLT TO 12 VOLT)	
M	3	1	**8T-4191**	8	BOLT (M10X1.5X16MM)	
		1	**8T-4121**	8	WASHER-HARD (11X21X2.5MM THK)	
	4	1	**3S-2093**	2	STRAP-CABLE	
	5	1	**6T-7695**	2	SPEAKER AS-RADIO	
	6	1	**6B-4196**	4	WASHER-THRUST	
	7	1	**030-9613**	2	SCREW-FORMING (10-24X0.37 IN)	
	8	1	**9U-8263**	1	COVER	
	9	1	**103-4840**	1	HARNESS AS-RADIO	
		1	**8L-8413**	7	STRAP-CABLE	
		1	**8T-8737**	3	PLUG-SEAL	
		1	**102-8810**	1	KIT-CONNECTING PLUG (6 PINS)	
					(INCLUDES PLUG AS & WEDGE)	
		1	**102-8801**	1	KIT-RECEPTACLE (12 PIN)	
					(INCLUDES RECEPTACLE AS & WEDGE)	
	10	1	**4E-8917**	1	PLATE AS	
M	11	1	**6V-9632**	6	NUT-WELD (M6X1 THD)	
	12	1	**1V-6341**	4	SEAL (30.15MM ID)	
	13	1	**9U-2327**	2	CONNECTOR	
	14	1	**4E-8035**	1	PANEL-TRIM	
M	15	1	**3E-6924**	6	SCREW-TRUSS HEAD	
	16	1	**4E-8038**	1	HANGER AS	
	17	1	**8Y-6335**	1	LAMP-MAP	
	18	1	**9U-2329**	1	CABLE AS-COAXIAL	
	19	1	**9U-2328**	1	CABLE AS-COAXIAL	
	20	1	**9X-4494**	1	LAMP	
	21	1	**4E-9151**	1	CLAMP	
	22	1	**3E-8766**	1	SWITCH AS (MAP LIGHT)	
		1	**3E-8785**	1	ACTUATOR-ROCKER	
		1	**126-1711**	1	KIT-LAMP CONVERSION (24V)	
M	23	1	**7Y-3173**	2	SCREW-BUTTON HEAD (M4X0.7X12MM)	
	24	1	**6V-2687**	8	SCREW-PAN HEAD (10-24X1IN)	

M-METRIC PART

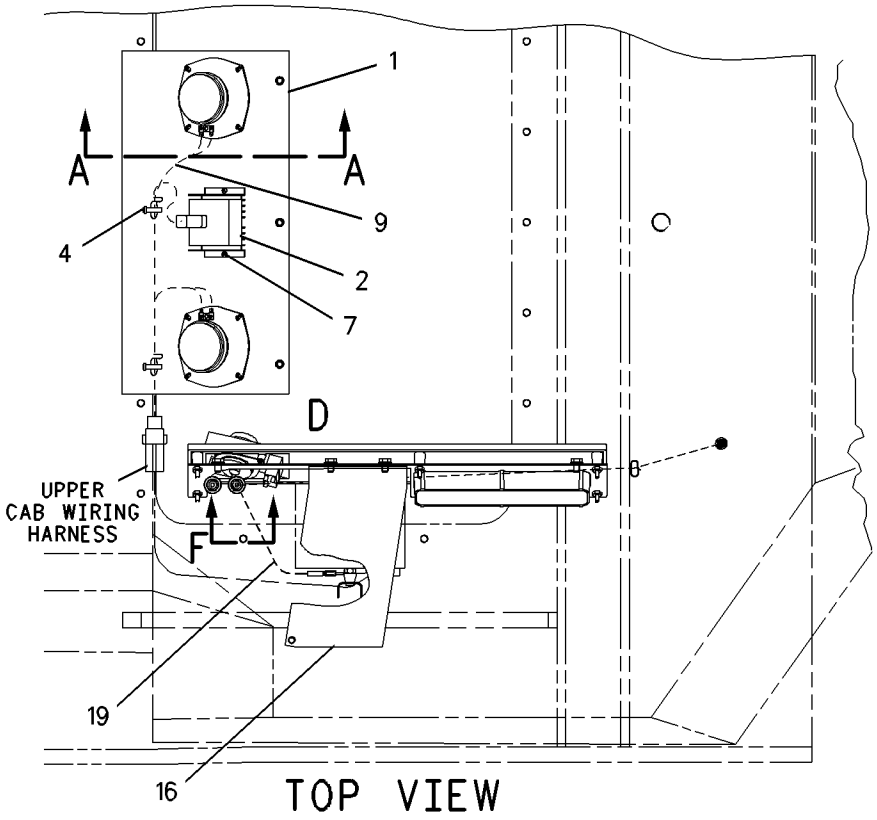

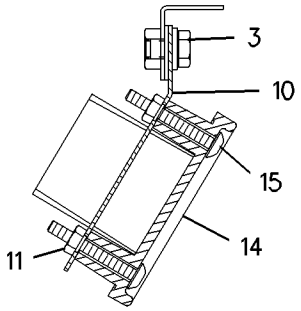

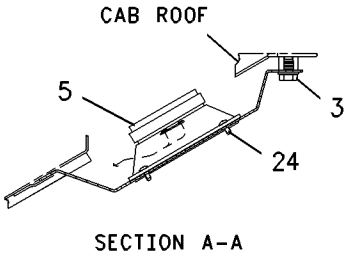

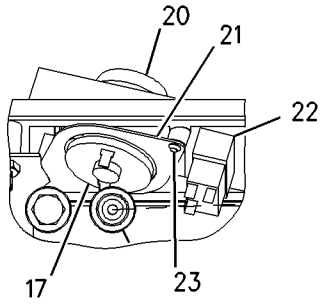

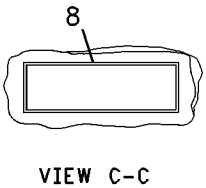

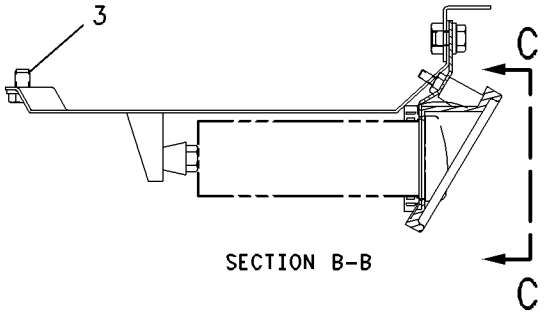

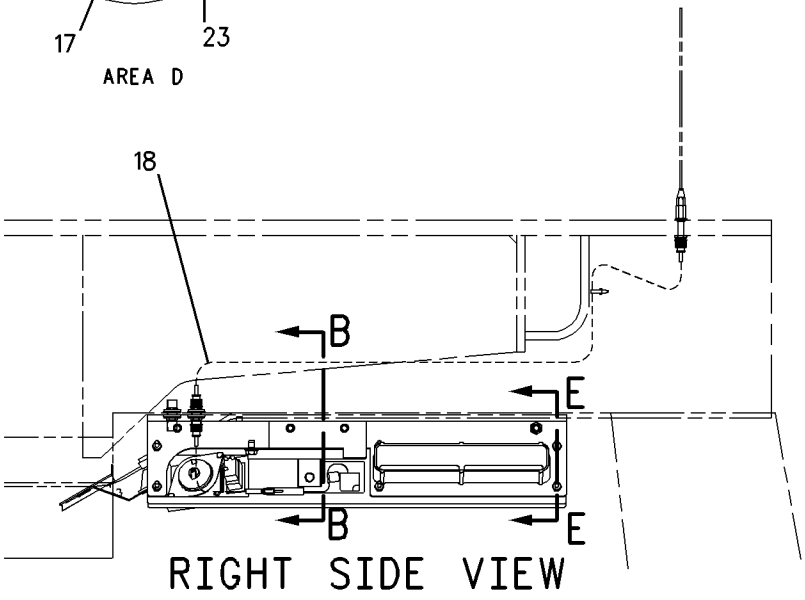

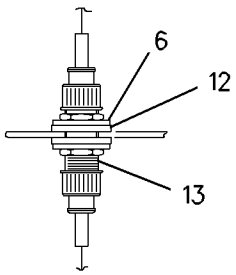

GRAPHIC #1 g00791988

OPERATOR STATION

9U-2675 INSTALLATION GP-RADIO

S/N: 7HR1-UP

PART OF 130-6906, 171-7047 CAB AR

SMCS-7338 **i01057777**

NOTE	REF NO	GRAPHIC REF	PART NUMBER	QTY	PART NAME 1 2 3 4 5 6 (PRODUCT LEVEL)	SEE PAGE
	1	1	**9U-2334**	1	CABLE AS-COAXIAL	
	2	1	**131-0722**	1	CABLE AS-COAXIAL	
	3	1	**7K-1181**	1	STRAP-CABLE (4.00IN DIA)	

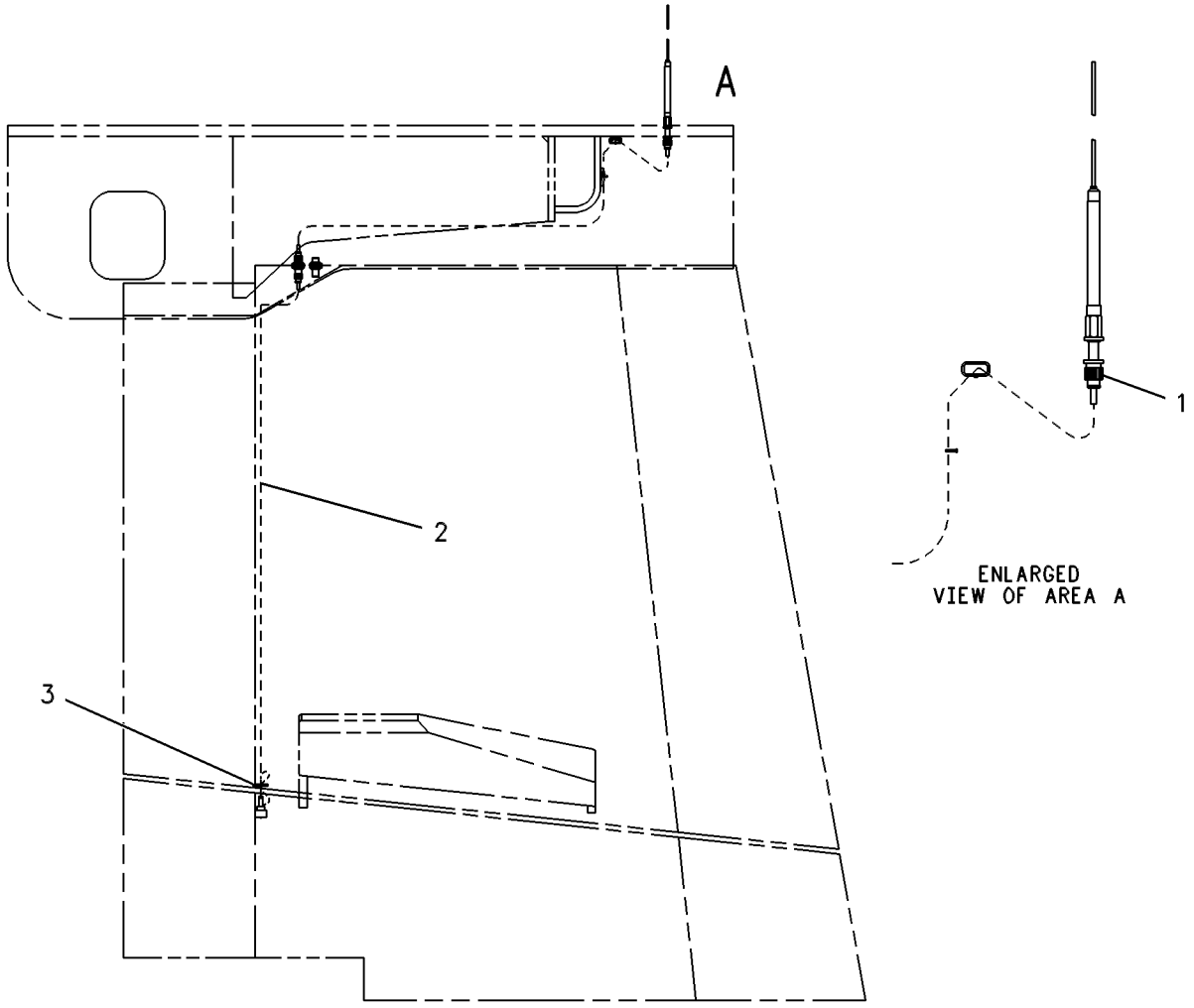

GRAPHIC #1 g00121415

MEMORANDA

OPERATOR STATION

131-1126 LATCH GP-CAB DOOR & WINDOW

S/N: 7HR1-UP

PART OF 130-6906, 171-7047 CAB AR

SMCS-7308, 7310 **i01185462**

NOTE	REF NO	GRAPHIC REF	PART NUMBER	QTY	PART NAME 1 2 3 4 5 6 (PRODUCT LEVEL)	SEE PAGE
M	1	1	**8C-3210**	1	BOLT (M6X1X16MM)	
M	2	2	**096-4884**	1	LOCKNUT (M12X1.75 THD)	
	3	2	**8T-4223**	1	WASHER-HARD (3MM THK)	
	4	2	**8T-4157**	1	STRIKER AS	
		2	**8T-4158**	1	WASHER	
	5	2	**4E-1384**	1	BUMPER-CONICAL	
M	6	2	**5C-7261**	2	NUT (M8X1.25 THD)	
	7	2	**4E-7839**	1	BRACKET AS	
M		2	**8T-3612**	1	NUT-WELD (M8X1.25 THD)	
M	8	1,2	**5C-9553**	9	BOLT (M6X1.0X16MM)	
	9	1,2	**8T-4205**	21	WASHER-HARD (2MM THK)	
	10	1	**4E-5726**	1	PLATE AS	
M		1	**6V-9632**	2	NUT-WELD (M6X1 THD)	
	11	1	**4E-5725**	1	PLATE	
M	12	1	**9X-2044**	8	SCREW-TRUSS HEAD (M6X1X16MM)	
E	13	1,2	**103-2554**		SEAL (1040CM)	
	14	1	**8Y-8294**	1	LATCH AS-WINDOW	
	15	1	**109-6945**	1	PIN-SPRING	
	16	2	**8Y-8320**	1	LATCH AS-DOOR	
M	17	1,2	**8T-4181**	8	BOLT (M6X1X20MM)	
	18	2	**8Y-8318**	1	LINK-CONNECTING	
	19	2	**6V-7636**	2	PIN AS-SPRING	
	20	2	**7X-2497**	1	HANDLE-DOOR	
	21	2	**8Y-8296**	1	HANDLE AS-PADDLE	
		2	**8Y-4501**	1	SPRING-HANDLE	
M	22	2	**6V-4298**	4	BOLT (M5X0.8X16MM)	
	23	2	**4B-4274**	4	WASHER (1.2MM THK)	
	24	2	**8T-4747**	2	BRACKET	
B	25	2	**8T-0318**	2	SHIM (0.8MM THK)	
	26	2	**4E-9536**	4	PLATE	
	27	2	**4E-7451**	2	PLATE	
	28	2	**4E-9537**	2	PLATE	
	29	1	**8T-4160**	1	HANDLE AS	
B	30	1	**8T-4745**	3	SHIM (1MM THK)	
M	31	1	**8T-4138**	2	BOLT (M6X1.0X20MM)	
	32	1	**6V-6885**	1	STRIKER-WINDOW	
B	33	1	**6W-3275**	2	SHIM (1.5MM THK)	
	34	1	**8Y-5748**	1	LATCH AS	
	35	2	**4E-7748**	1	BRACKET AS	
M		2	**6V-9632**	2	NUT-WELD (M6X1 THD)	
	36	2	**8Y-5749**	1	ROD AS-RELEASE	
M	37	2	**9X-2546**	2	BOLT (M6X1X20MM)	
M	38	2	**5C-2890**	2	NUT (M6X1.00 THD)	
	39	2	**7X-3310**	1	KNOB-BALL	
	40	2	**4E-7749**	1	COVER	
M	41	1	**9X-2045**	4	SCREW-TRUSS HEAD (M6X1X20MM)	
	42	2	**145-4484**	1	STRIKER	
	43	2	**7X-0546**	1	WASHER-HARD (2MM THK)	

B-USE AS REQUIRED
E-ORDER BY THE CENTIMETER
M-METRIC PART

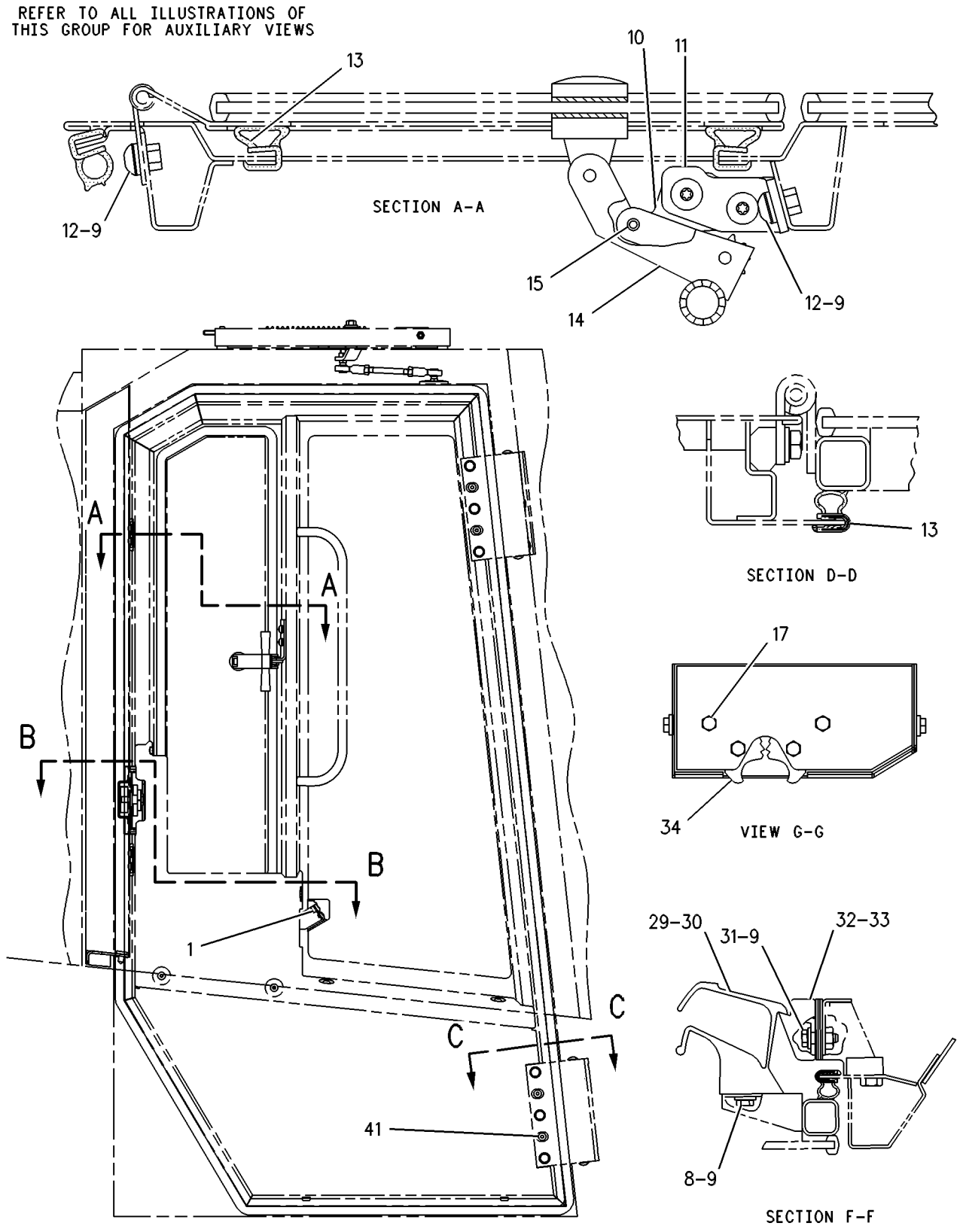

GRAPHIC #1 g00276744

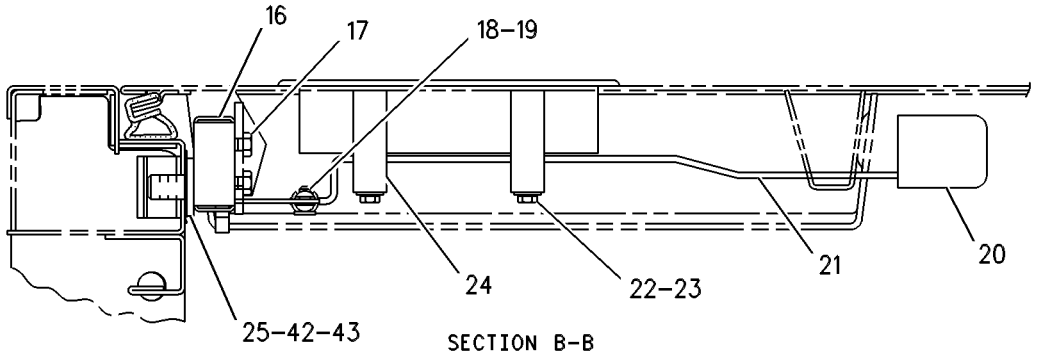

SECTION B-B

REFER TO ALL ILLUSTRATIONS OF
THIS GROUP FOR AUXILIARY VIEWS

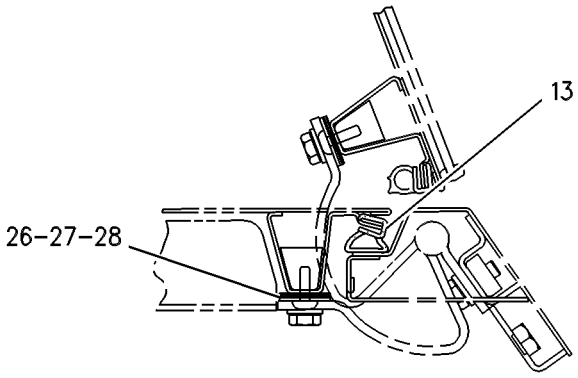

SECTION C-C

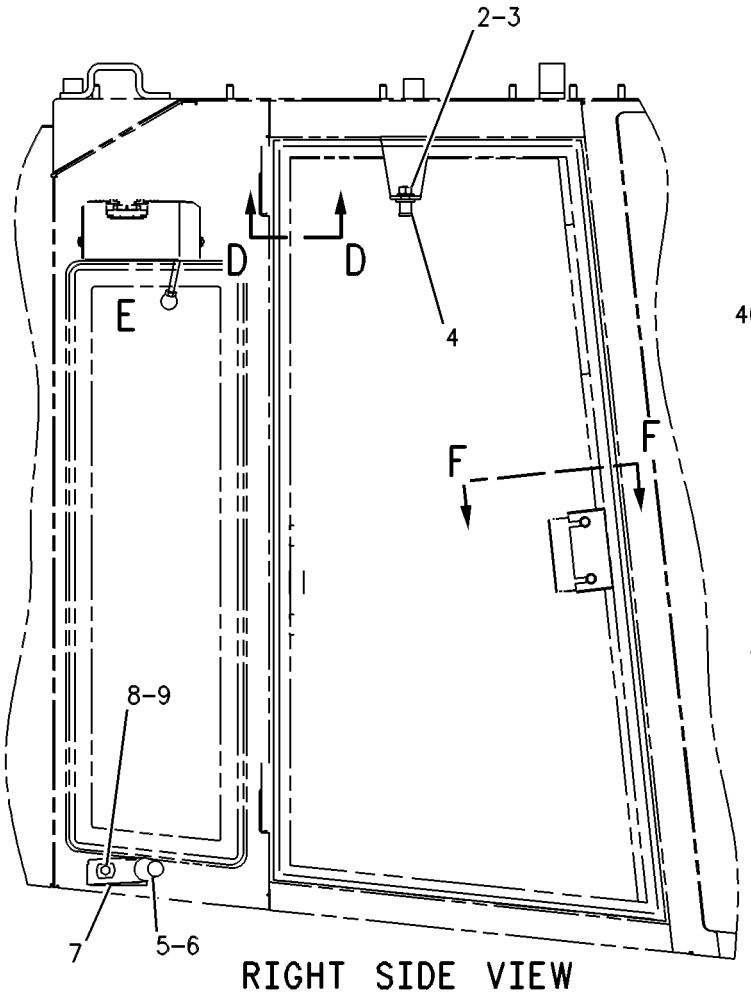

RIGHT SIDE VIEW

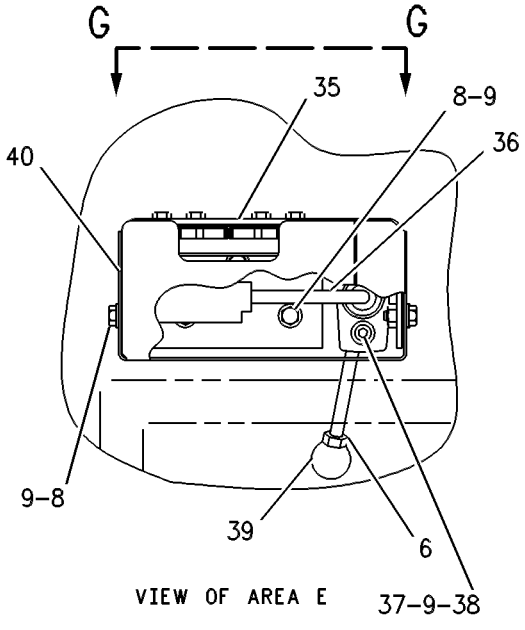

VIEW OF AREA E

GRAPHIC #2

g00276745

MEMORANDA

OPERATOR STATION

118-7642 LINER GP-CAB

S/N: 7HR1-297

PART OF 130-6906 CAB AR

SMCS-7329 **i01229342**

NOTE	REF NO	GRAPHIC REF	PART NUMBER	QTY	PART NAME 1 2 3 4 5 6 (PRODUCT LEVEL)	SEE PAGE
	1	2	**123-8696**	1	INSULATION	
E	2	2	**103-2554**		SEAL (.51CM)	
	3	2	**123-8719**	1	FLOOR MAT	
	4	1	**5P-0537**	9	WASHER (2MM THK)	
M	5	1	**5C-2890**	6	NUT (M6X1.00 THD)	
	6	2	**146-3095**	1	PANEL AS	
	7	1	**9U-1860**	2	BRACKET	
M	8	1	**7X-2533**	2	BOLT (M6X1X35MM)	
	9	2	**146-3096**	1	HEADLINER	
	10	2	**123-8690**	1	HEADLINER	
	11	2	**6V-2687**	2	SCREW-PAN HEAD (10-24X1IN)	
	12	2	**9U-0712**	1	STRIP	
	13	1	**123-8726**	1	INSULATION	
	14	1	**123-8687**	1	PANEL	
M	15	2	**9X-2042**	3	SCREW-TRUSS HEAD (M6X1.0X12MM)	
	16	1	**123-8685**	1	PANEL AS-TRIM	
	17	1	**9U-1866**	2	ANGLE	
M	18	1	**5C-9553**	5	BOLT (M6X1.0X16MM)	
	19	2	**8T-4205**	2	WASHER-HARD (2MM THK)	
	20	2	**9U-1217**	1	COVER	
	21	2	**8T-4121**	2	WASHER-HARD (2.5MM THK)	
M	22	2	**8T-4191**	2	BOLT (M10X1.50X16MM)	
	23	2	**4E-6508**	2	SEAL	
	24	2	**4E-6509**	1	SEAL	
	25	2	**4E-6510**	1	SEAL	
	26	1	**123-8703**	1	PANEL-TRIM	
M	27	1	**9X-2044**	6	SCREW-TRUSS HEAD (M6X1X16MM)	
	28	1	**123-8702**	1	PANEL AS-SOUND SUPPRESSION	
		1	**4E-8293**	3	FASTENER	
	29	1	**4E-9448**	1	HANGER AS	
	30	1	**9D-3767**	8	PLUG-BUTTON	
M	31	1	**9X-2041**	8	SCREW-TRUSS HEAD (M10X1.5X20MM)	
	32	1	**4E-9450**	1	HANGER AS	
M	33	2	**9X-2040**	4	SCREW-TRUSS HEAD (M10X1.5X25MM)	
	34	2	**146-2614**	3	BUTTON	

E-ORDER BY THE CENTIMETER
M-METRIC PART

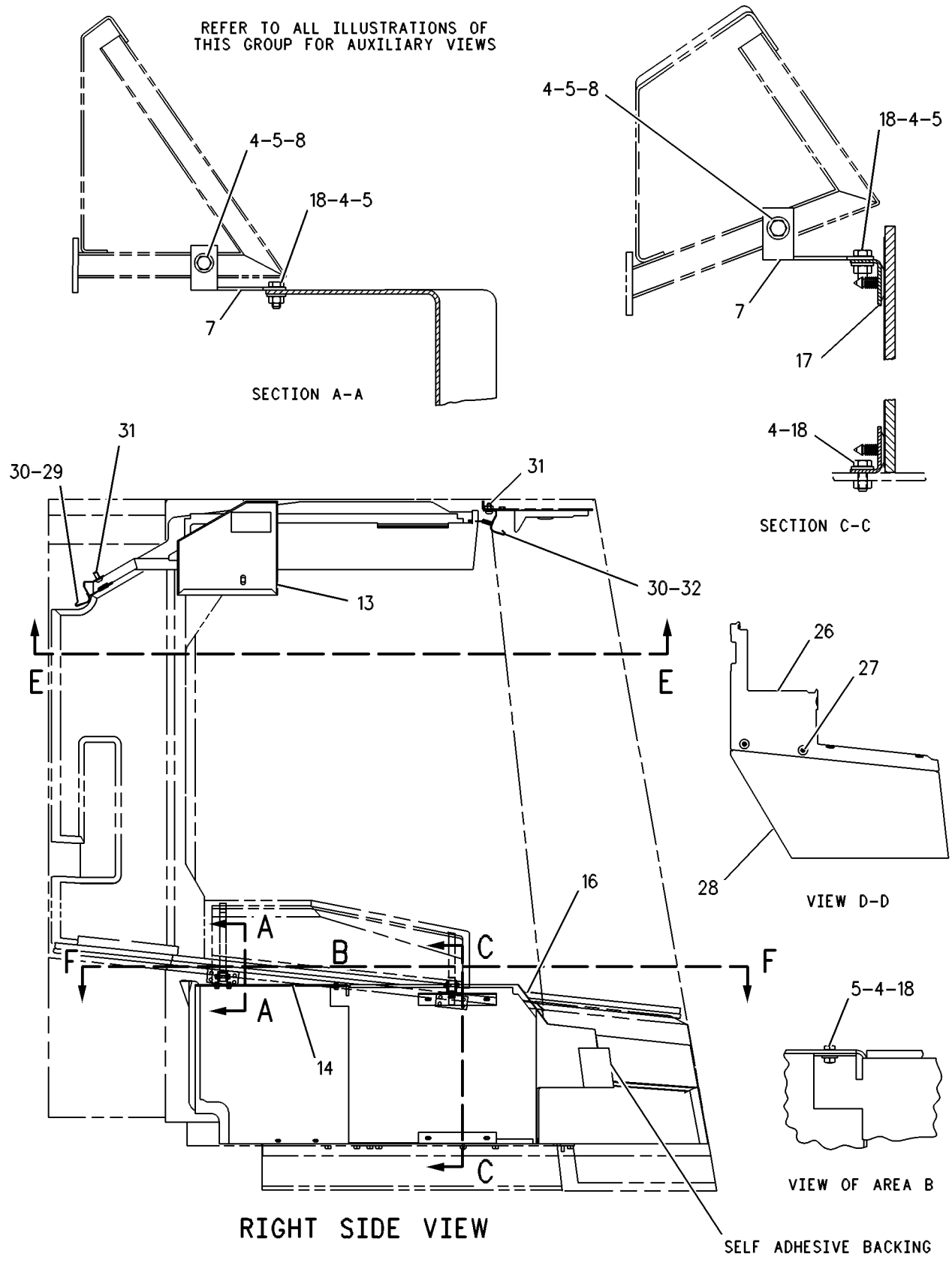

GRAPHIC #1 g00278966

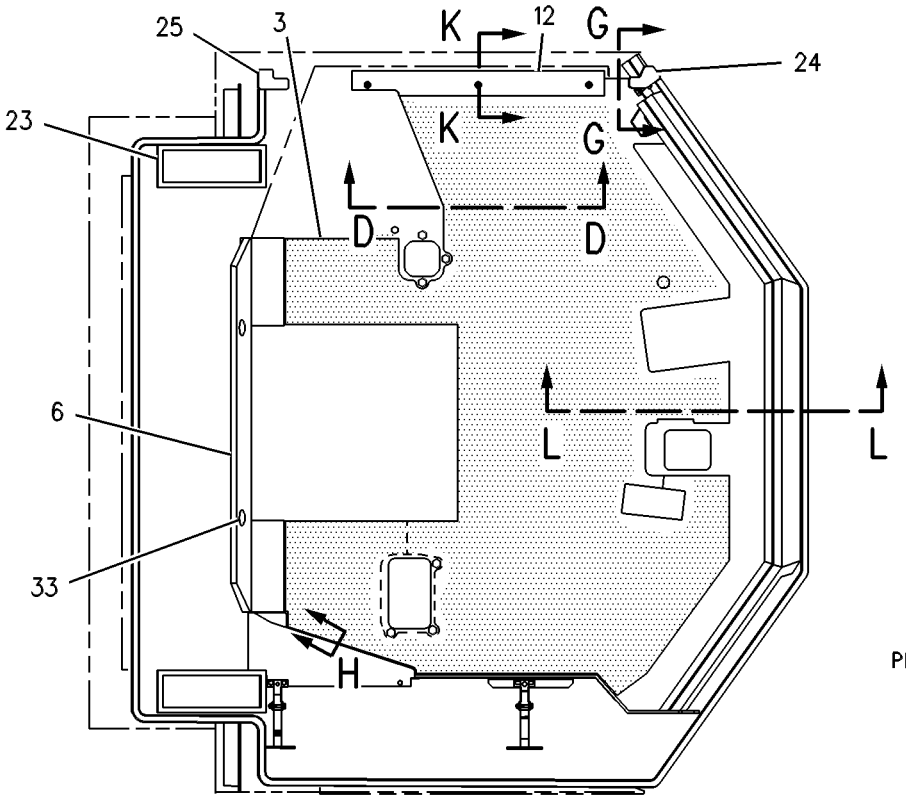

SECTION F-F

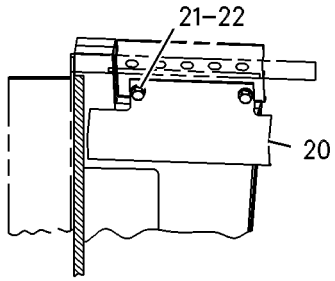

SECTION G-G

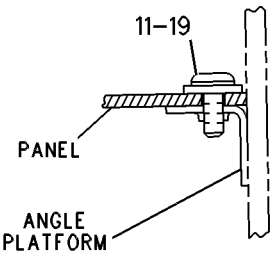

SECTION H

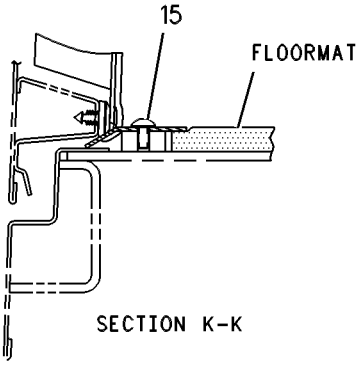

SECTION K-K

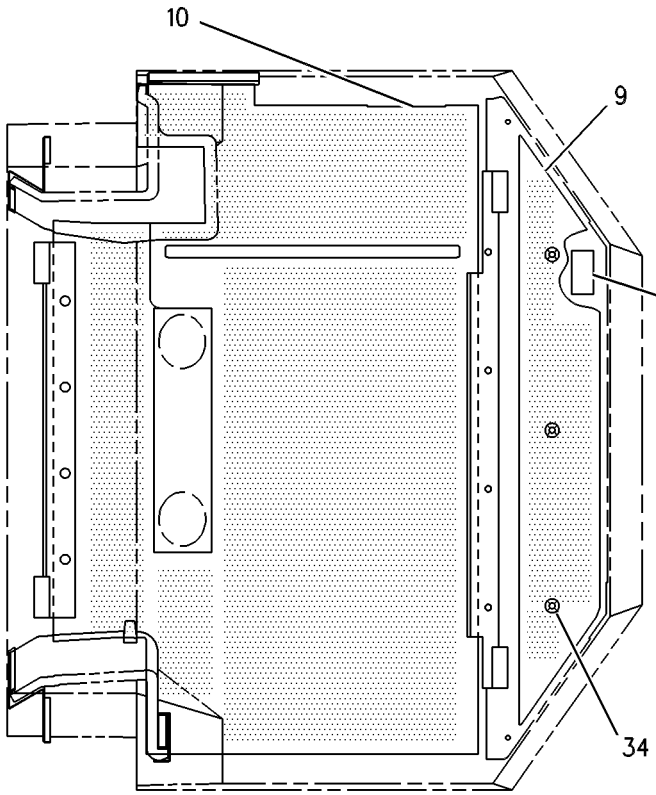

SECTION E-E

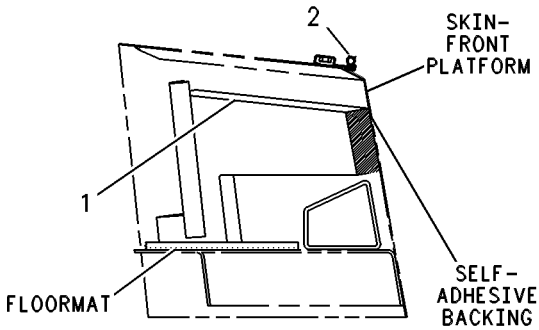

SECTION L-L

REFER TO ALL ILLUSTRATIONS OF THIS GROUP FOR AUXILIARY VIEWS

GRAPHIC #2 g00278967

MEMORANDA

OPERATOR STATION

170-4752 LINER GP-CAB

S/N: 7HR298-UP

PART OF 171-7047 CAB AR

SMCS-7329 **i01071959**

NOTE	REF NO	GRAPHIC REF	PART NUMBER	QTY	PART NAME 1 2 3 4 5 6 (PRODUCT LEVEL)	SEE PAGE
	1	2	**123-8696**	1	INSULATION	
E	2	2	**103-2554**		SEAL (510CM)	
	3	2	**171-5939**	1	FLOOR MAT	
	4	1	**5P-0537**	9	WASHER (2MM THK)	
M	5	1	**5C-2890**	6	NUT (M6X1.00 THD)	
	6	2	**146-3095**	1	PANEL AS	
	7	1	**9U-1860**	2	BRACKET	
M	8	1	**7X-2533**	2	BOLT (M6X1X35MM)	
	9	1	**146-3096**	1	HEADLINER	
	10	1	**123-8690**	1	HEADLINER	
	11	2	**6V-2687**	2	SCREW-PAN HEAD (10-24X1IN)	
	12	2	**9U-0712**	1	STRIP	
	13	1	**123-8726**	1	INSULATION	
	14	1	**123-8687**	1	PANEL	
M	15	2	**9X-2042**	3	SCREW-TRUSS HEAD (M6X1.0X12MM)	
	16	1	**123-8685**	1	PANEL AS-TRIM	
	17	1	**9U-1866**	2	ANGLE	
M	18	1	**5C-9553**	5	BOLT (M6X1.0X16MM)	
	19	2	**8T-4205**	2	WASHER-HARD (2MM THK)	
	20	2	**9U-1217**	1	COVER	
	21	2	**8T-4121**	2	WASHER (2.5MM THK)	
M	22	2	**8T-4191**	2	BOLT (M10X1.50X16MM)	
	23	2	**4E-6508**	2	SEAL	
	24	2	**4E-6509**	1	SEAL	
	25	2	**4E-6510**	1	SEAL	
	26	2	**123-8703**	1	PANEL-TRIM	
M	27	2	**9X-2044**	6	SCREW-TRUSS HEAD (M6X1X16MM)	
	28	2	**123-8702**	1	PANEL AS-SOUND SUPPRESSION	
		2	**4E-8293**	3	FASTENER	
	29	1	**4E-9448**	1	HANGER AS	
	30	1	**9D-3767**	8	PLUG-BUTTON	
M	31	1	**9X-2041**	8	SCREW-TRUSS HEAD (M10X1.5X20MM)	
	32	1	**4E-9450**	1	HANGER AS	
M	33	2	**9X-2040**	4	SCREW-TRUSS HEAD (M10X1.5X25MM)	
	34	1	**146-2614**	3	BUTTON	

E-ORDER BY THE CENTIMETER
M-METRIC PART

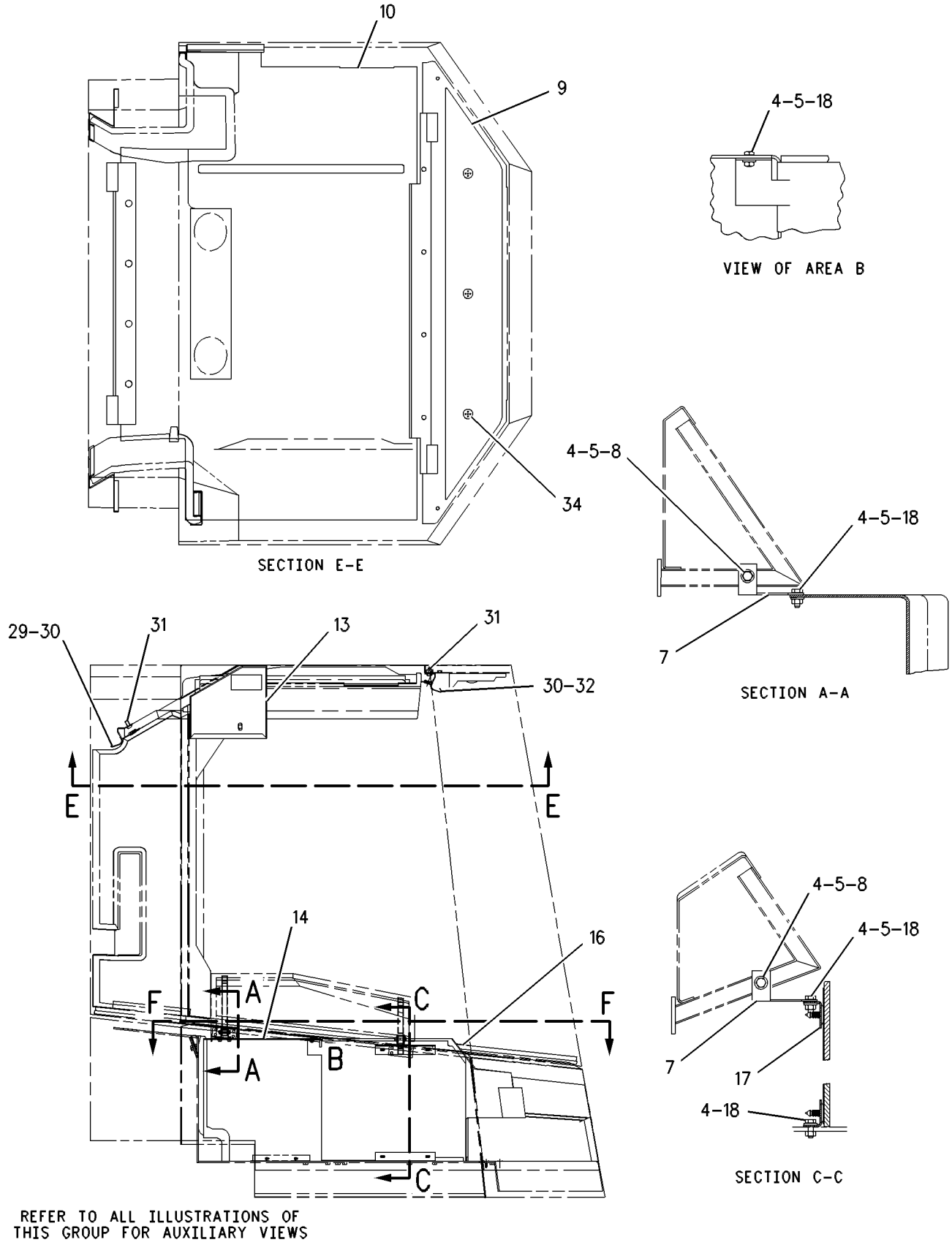

GRAPHIC #1 g00586485

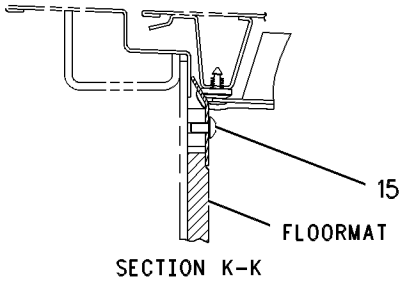

SECTION K-K

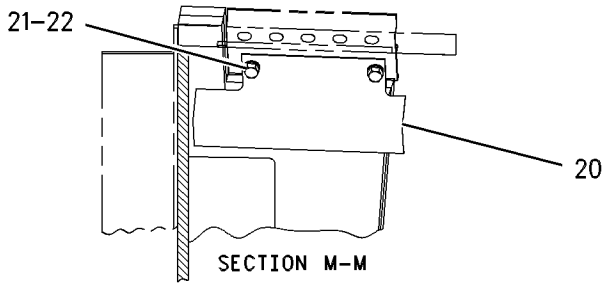

SECTION M-M

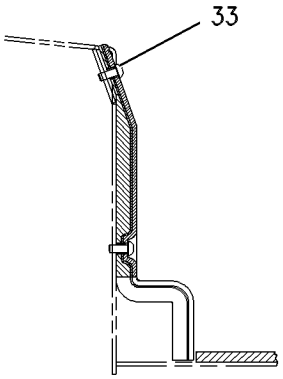

SECTION J-J

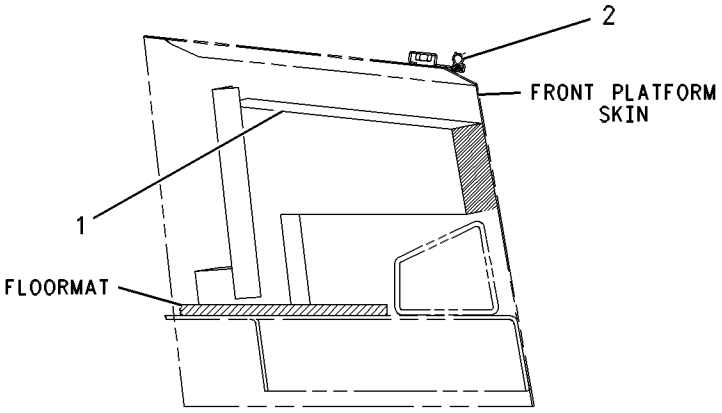

SECTION L-L

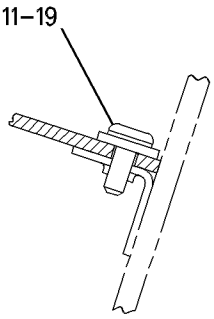

SECTION H-H

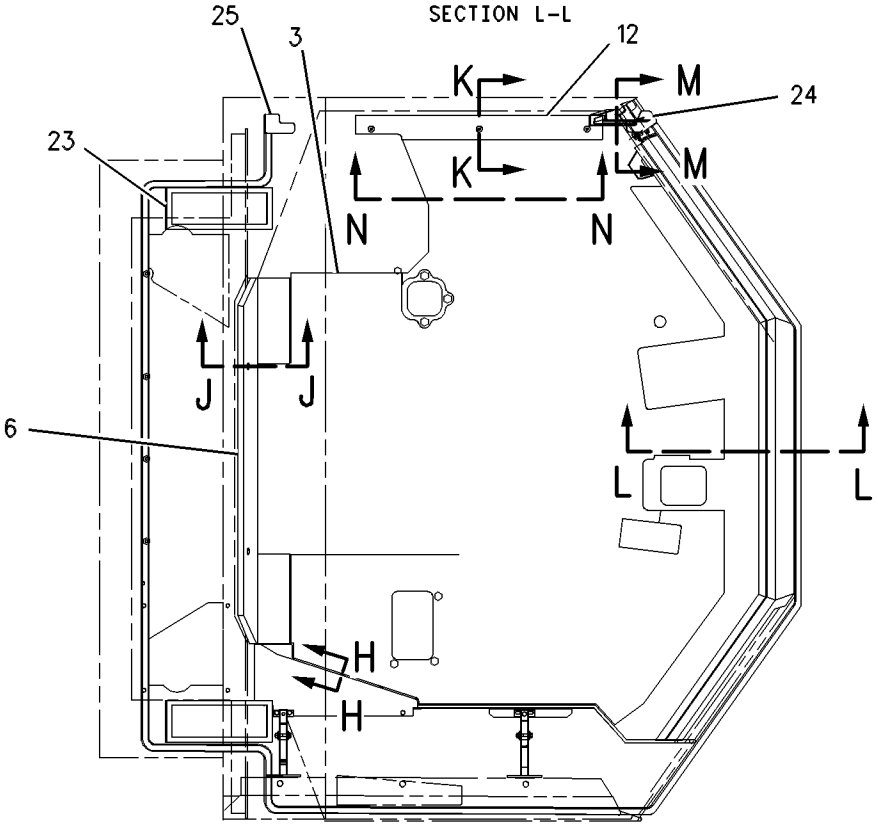

SECTION F-F

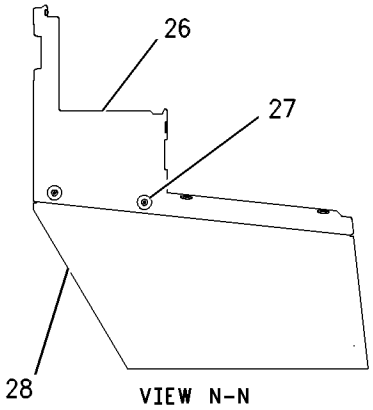

VIEW N-N

GRAPHIC #2

g00586489

MEMORANDA

OPERATOR STATION

109-6863 LINES GP-AIR CONDITIONER

S/N: 7HR1-UP

PART OF 109-6819 CHASSIS AR

SMCS-1808 **i01400511**

NOTE	REF NO	GRAPHIC REF	PART NUMBER	QTY	PART NAME 1 2 3 4 5 6 (PRODUCT LEVEL)	SEE PAGE
	1	1	**2M-6102**	1	PIPE	
	2	1	**3E-4054**	1	FITTING AS-AIR CONDITIONER	
		1	**3E-4051**	1	CAP-SEAL	
	3	1	**6D-2667**	8	CLIP	
	4	1	**8R-9137**	2	ANGLE	
	5	1	**8T-2561**	1	WASHER-HARD (10.5X28.5X5MM THK)	
	6	1	**8T-4121**	22	WASHER-HARD (11X21X2.5MM THK)	
	7	1	**9X-7380**	3	SEAL-O-RING (7.65MM ID)	
	8	1	**9X-7381**	2	SEAL-O-RING (10.82MM ID)	
	9	1	**9X-7382**	1	SEAL-O-RING (14.00MM ID)	
	10	1	**9X-7383**	2	SEAL-O-RING (17.17MM ID)	
	11	1	**103-6100**	2	COUPLER AS-QUICK	
I	12	1	**194-5329**	1	HOSE AS	
I	13	1	**194-5332**	1	HOSE AS	
I	14	1	**194-5331**	1	HOSE AS	
I	15	1	**126-3711**	1	HOSE AS	
Y	16	1	*130-3597*	1	ACCUMULATOR & MTG GP-REFRIG	1250
	17	1	**1P-6356**	1	PLATE	
	18	1	**3E-4053**	1	FITTING AS-AIR CONDITIONER	
		1	**3E-4052**	1	CAP-SEAL	
	19	1	**5P-3948**	1	COUPLING AS-REFRIGERANT	
	20	1	**6D-4246**	2	CLIP	
	21	1	**7X-0294**	1	BOLT (3/8-16X5 IN)	
M	22	1	**8T-4133**	3	NUT (M10X1.5 THD)	
M	23	1	**8T-4136**	15	BOLT (M10X1.5X25MM)	
M	24	1	**8T-4172**	1	BOLT (M10X1.50X80MM)	
M	25	1	**8T-6466**	1	BOLT (M10X1.50X60MM)	
	26	1	**9B-7237**	1	BOLT (3/8-16X1.25 IN)	
	27	1	**9M-8406**	2	CLIP	
	28	1	**6K-8178**	2	CLIP	
M	29	1	**8T-4186**	1	BOLT (M10X1.5X40MM)	
	30	1	**3H-3244**	1	SPACER (57.0MM THK)	
	31	1	**6V-1889**	2	CLIP	
	32	1	**1P-7009**	2	CLIP	
	33	1	**4D-7735**	1	CLIP (SLOT)	

I-SEE HOSE FABRICATION GUIDE
M-METRIC PART
Y-SEPARATE ILLUSTRATION

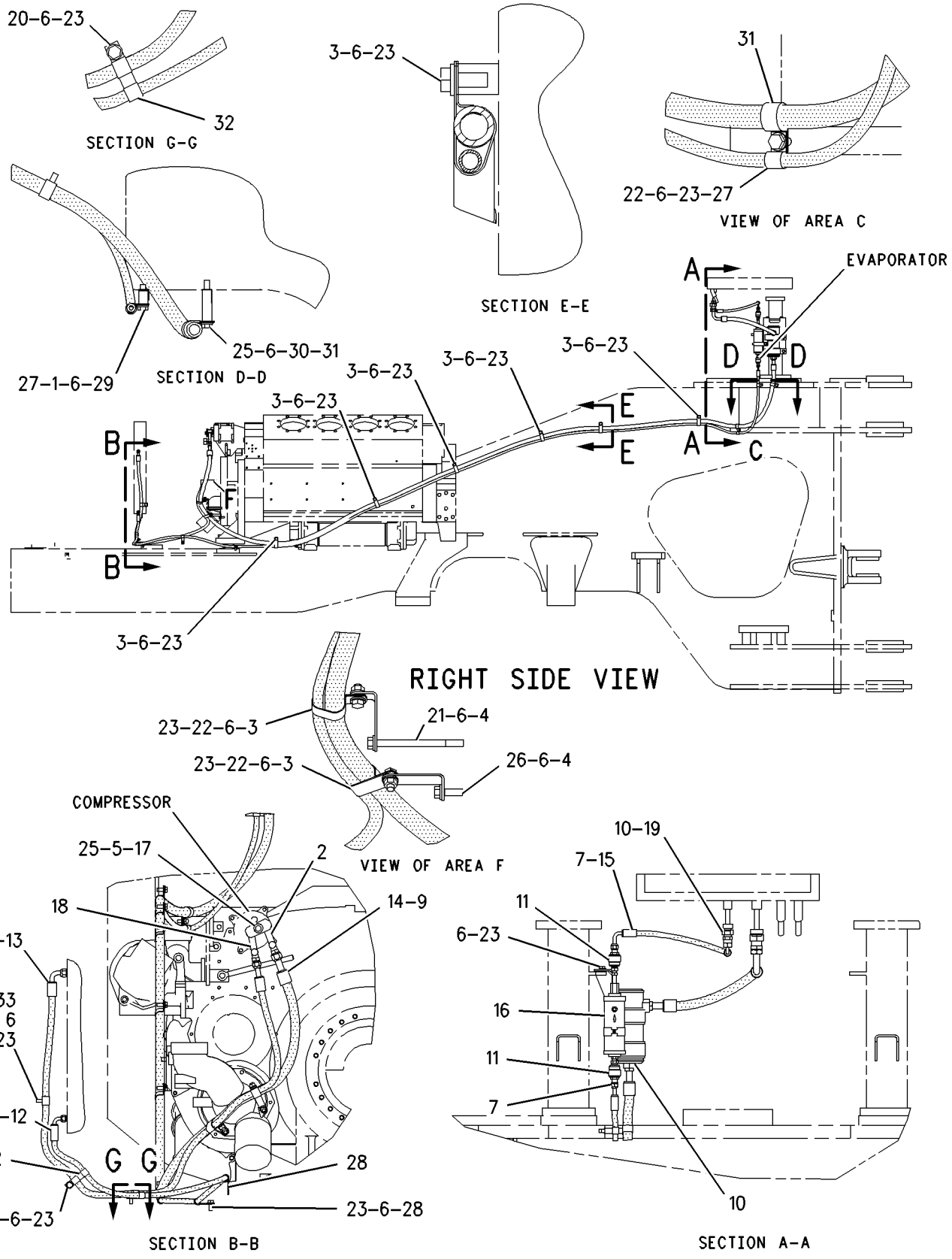

GRAPHIC #1

g00739834

OPERATOR STATION

109-6862 LINES GP-HEATER

S/N: 7HR1-UP

PART OF 109-6819 CHASSIS AR

SMCS-7304 **i01185463**

NOTE	REF NO	GRAPHIC REF	PART NUMBER	QTY	PART NAME 1 2 3 4 5 6 (PRODUCT LEVEL)	SEE PAGE
E	1	1	**5P-0767**		HOSE (1300CM)	
M	2	1	**8T-4136**	1	BOLT (M10X1.50X25MM)	
	3	1	**9X-2488**	4	CLAMP-HOSE	
	4	1	**5K-6875**	1	ADAPTER	
	5	1	**6D-1641**	10	CLIP (25.0MM ID)	
	6	1	**8F-8151**	1	VALVE-SHUTOFF	
	7	1	**8T-4121**	1	WASHER (2.5MM THK)	

E-ORDER BY THE CENTIMETER
M-METRIC PART

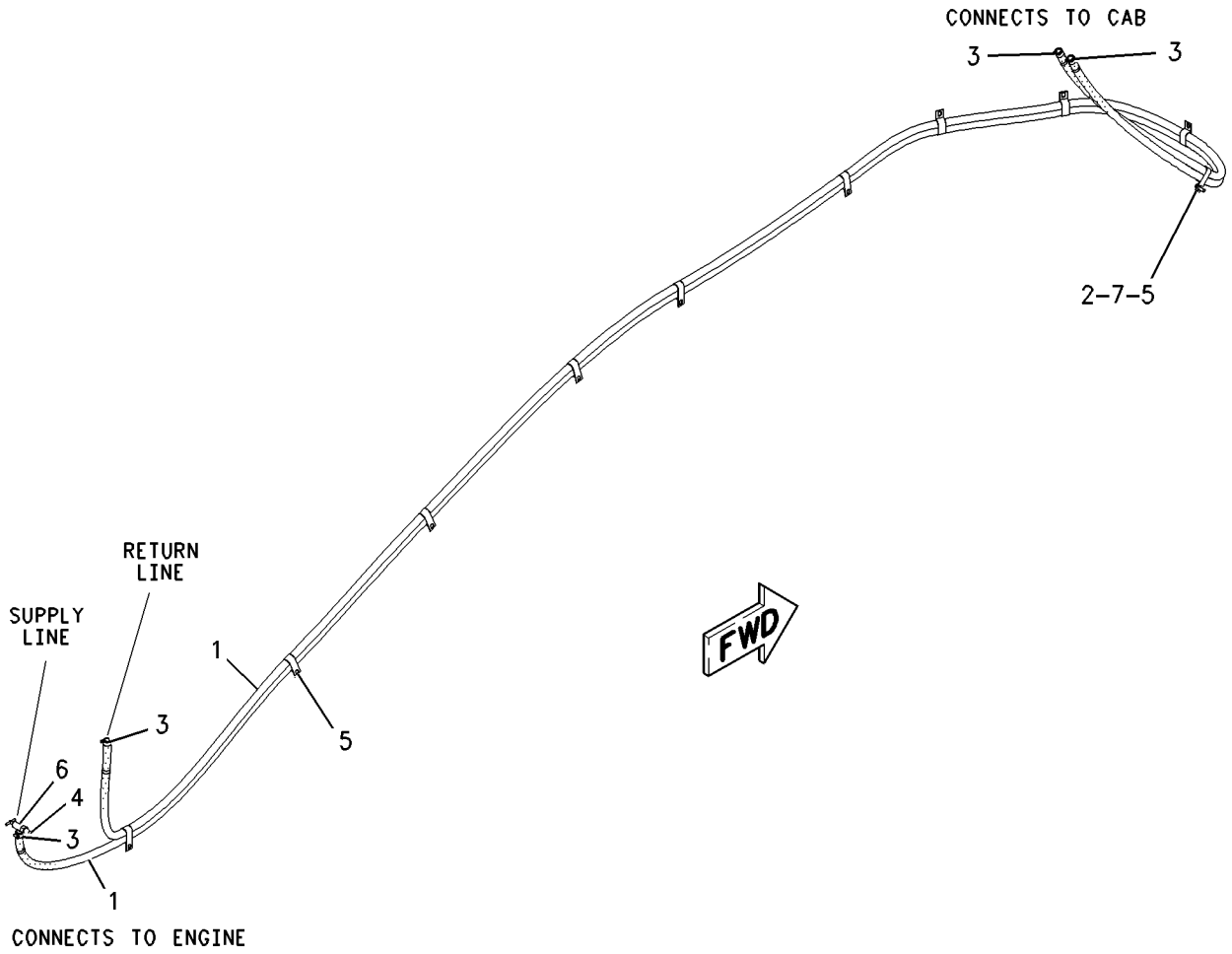

GRAPHIC #1 g00634787

OPERATOR STATION

106-4143 MIRROR GP

S/N: 7HR1-UP
PART OF 143-3604 MIRROR GP
AN ATTACHMENT

SMCS-7319 **i01057778**

NOTE	REF NO	GRAPHIC REF	PART NUMBER	QTY	PART NAME 1 2 3 4 5 6 (PRODUCT LEVEL)	SEE PAGE
	1	1	**6G-8829**	2	CLAMP	
M	2	1	**8T-4186**	4	BOLT (M10X1.50X40MM)	
	3	1	**8T-4121**	8	WASHER (2.5MM THK)	
M	4	1	**096-4883**	4	LOCKNUT (M10X1.50 THD)	
	5	1	**5P-6879**	1	MIRROR	
	6	1	**7U-1903**	1	SUPPORT-MIRROR	
	7	1	**7I-3722**	2	CLIP	

M-METRIC PART

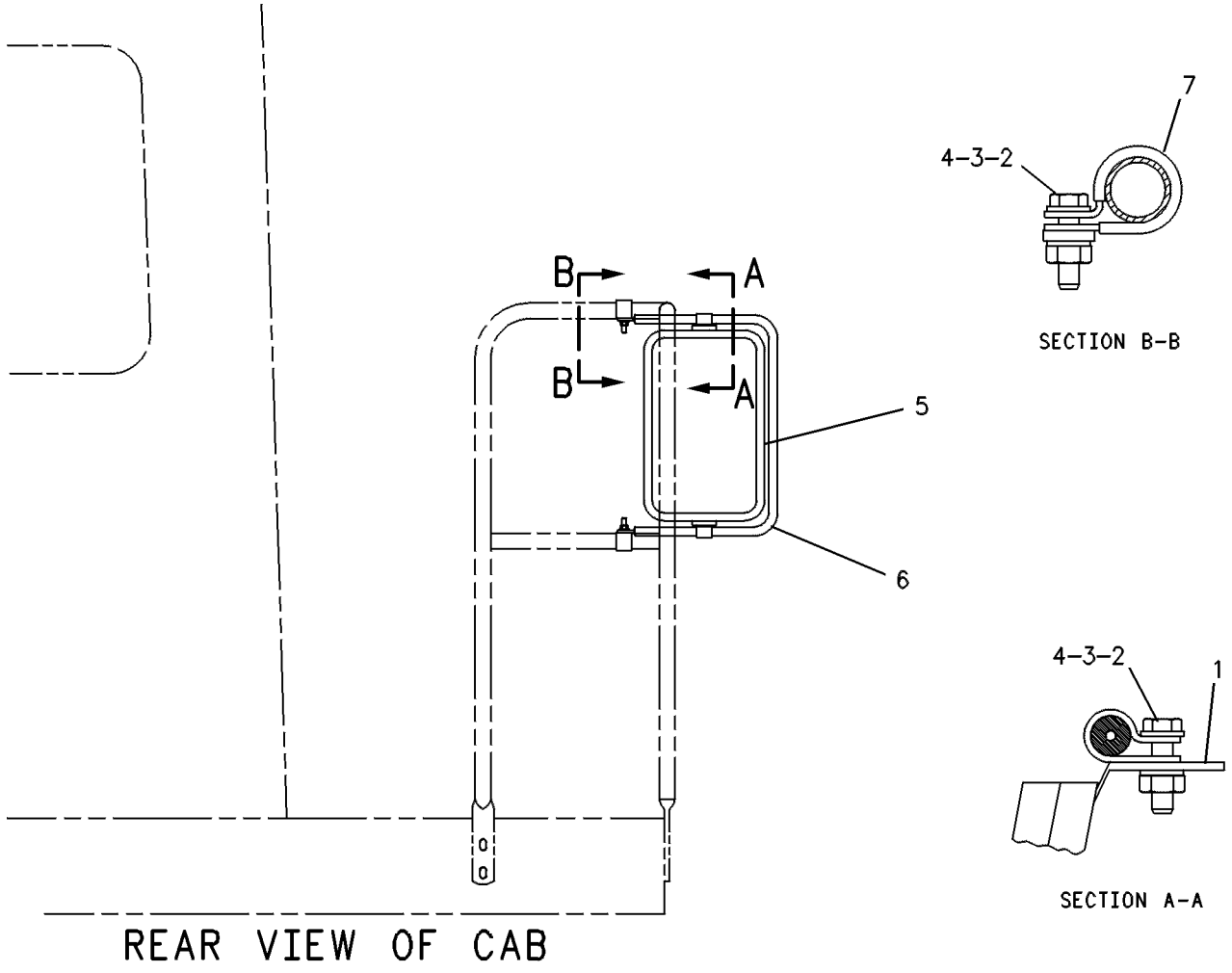

GRAPHIC #1 g00120110

OPERATOR STATION

143-3604 MIRROR GP

S/N: 7HR1-UP

AN ATTACHMENT

SMCS-7319 **i00747874**

NOTE	PART NUMBER	QTY	PART NAME 1 2 3 4 5 6 (PRODUCT LEVEL)	SEE PAGE
Y	*106-4143*	2	MIRROR GP	1323

Y-SEPARATE ILLUSTRATION

OPERATOR STATION

109-6885 MIRROR GP-REAR VIEW

S/N: 7HR1-UP

PART OF 109-6819 CHASSIS AR

SMCS-7319 **i01386708**

NOTE	REF NO	GRAPHIC REF	PART NUMBER	QTY	PART NAME 1 2 3 4 5 6 (PRODUCT LEVEL)	SEE PAGE
	1	1	**5P-1076**	8	WASHER-HARD (13.5X30X4MM THK)	
	2	1	**5P-6879**	2	MIRROR	
	3	1	**7X-7729**	12	WASHER (11X25X3MM THK)	
	4	1	**164-1990**	1	BRACKET AS-RH	
	5	1	**164-1991**	1	BRACKET AS-LH	
	6	1	**126-7222**	4	ANGLE	
M	7	1	**6V-7744**	4	LOCKNUT (M10X1.50 THD)	
M	8	1	**8T-4136**	8	BOLT (M10X1.5X25MM)	
M	9	1	**8T-4956**	8	BOLT (M12X1.75X35MM)	

M-METRIC PART

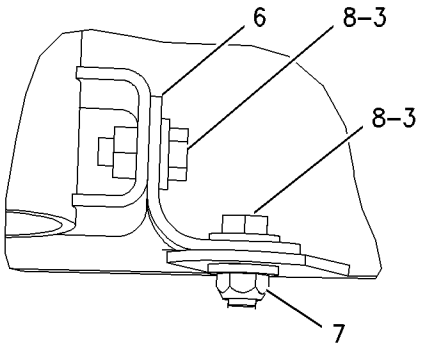

VIEW OF AREA A

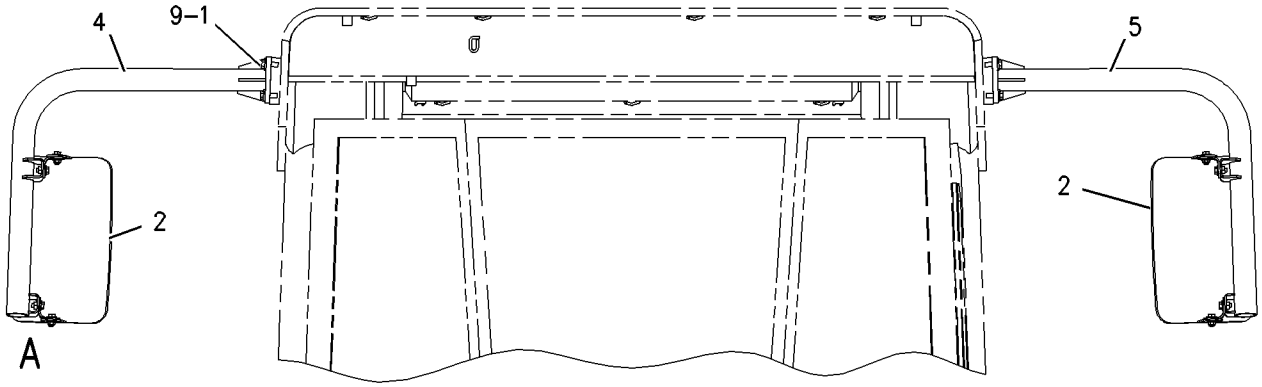

*XTR2

GRAPHIC #1 g00730875

OPERATOR STATION

133-1840 MODULE GP-MESSAGE CENTER

S/N: 7HR1-UP

PART OF 112-5764 PANEL GP-INSTRUMENT

SMCS-7601 **i01540631**

NOTE	REF NO	GRAPHIC REF	PART NUMBER	QTY	PART NAME 1 2 3 4 5 6 (PRODUCT LEVEL)	SEE PAGE
	1	1	**102-8805**	1	KIT-RECEPTACLE (6 PIN) (MESSAGE MODULE)	
					(INCLUDES WEDGE)	
	2	1	**3E-3383**	1	WEDGE-RECEPTACLE LOCK	
	3	1	**8T-8729**	6	PIN-CONNECTOR	

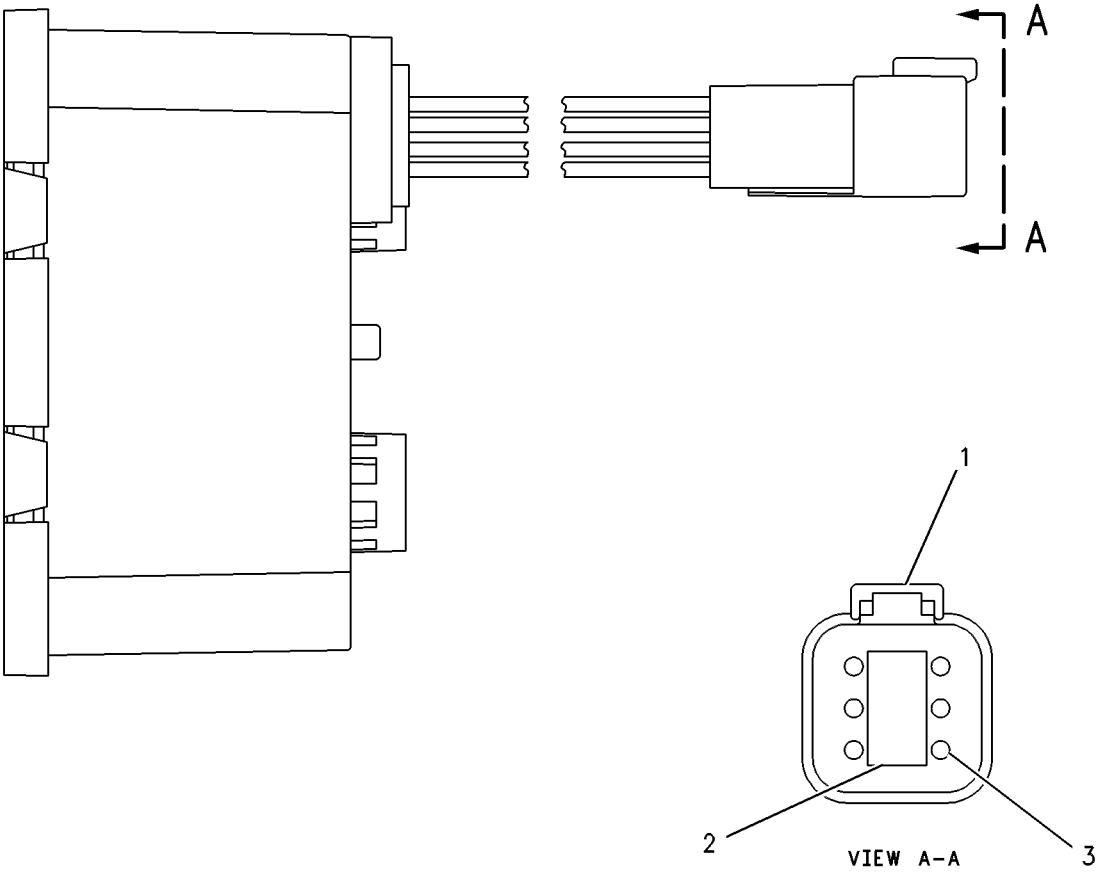

GRAPHIC #1 g00273483

OPERATOR STATION

149-2357 MODULE GP-MESSAGE CENTER

S/N: 7HR1-UP

PART OF 112-5764 PANEL GP-INSTRUMENT

SMCS-7601 **i01540632**

NOTE	REF NO	GRAPHIC REF	PART NUMBER	QTY	PART NAME 1 2 3 4 5 6 (PRODUCT LEVEL)	SEE PAGE
J	1	1	**102-8805**	1	KIT-RECEPTACLE (6 PIN) (MESSAGE MODULE)	
					(INCLUDES RECEPTACLE AS & PART MARKED J)	
	2	1	**8T-8729**	8	PIN-CONNECTOR	
J	3	1	**3E-3383**	1	WEDGE-RECEPTACLE LOCK	
L	4	1	**102-8802**	1	KIT-RECEPTACLE (2 PIN) (MESSAGE MODULE)	
					(INCLUDES RECEPTACLE AS & PART MARKED L)	
L	5	1	**3E-3365**	1	WEDGE-RECEPTACLE LOCK (2 PIN)	

J-KIT MARKED J SERVICES PART MARKED J
L-KIT MARKED L SERVICES PART MARKED L

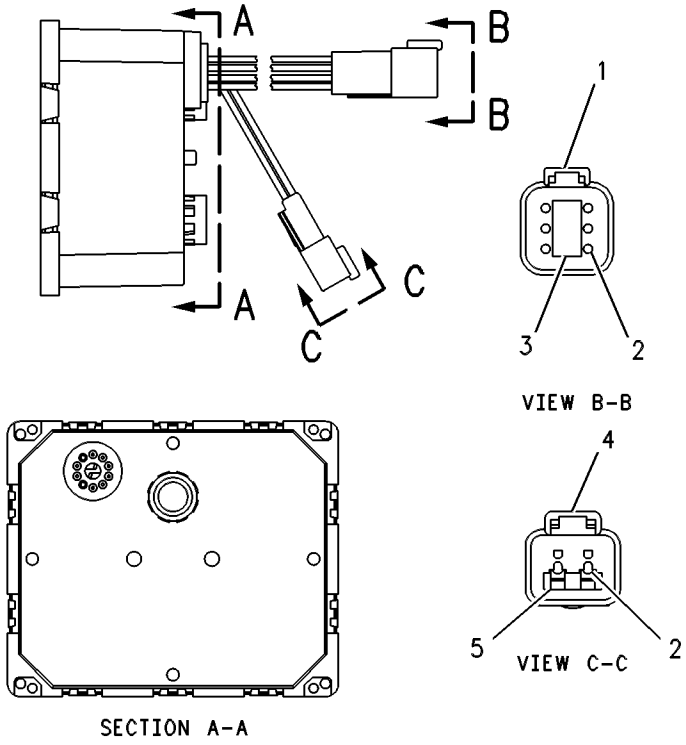

GRAPHIC #1 g00330556

OPERATOR STATION

149-3255 MODULE GP-MONITOR KEYPAD

S/N: 7HR1-UP

PART OF 112-5765 PANEL GP-INSTRUMENT

SMCS-7601 **i01185474**

NOTE	PART NUMBER	QTY	PART NAME 1 2 3 4 5 6 (PRODUCT LEVEL)	SEE PAGE
	102-8804	1	KIT-RECEPTACLE (4 PIN)	
			(INCLUDES WEDGE)	
	8T-8729	3	PIN-CONNECTOR	
	8T-8737	1	PLUG-SEAL	
	3E-3377	1	WEDGE-RECEPTACLE LOCK	

OPERATOR STATION

100-5895 MODULE GP-QUAD GAUGE

S/N: 7HR1-UP
PART OF 112-5764 PANEL GP-INSTRUMENT
FIELD REPLACEMENT ORDER 166-6928–PAGE 1330

SMCS-7451, 7490, 7601 **i01218980**

NOTE	REF NO	GRAPHIC REF	PART NUMBER	QTY	PART NAME 1 2 3 4 5 6 (PRODUCT LEVEL)	SEE PAGE
	1	1	**102-8805**	1	KIT-RECEPTACLE (6 PIN)	
					(INCLUDES RECEPTACLE AS & WEDGE)	
	2	1	**8T-8729**	6	PIN-CONNECTOR	
	3	1	**3E-3383**	1	WEDGE-RECEPTACLE LOCK	

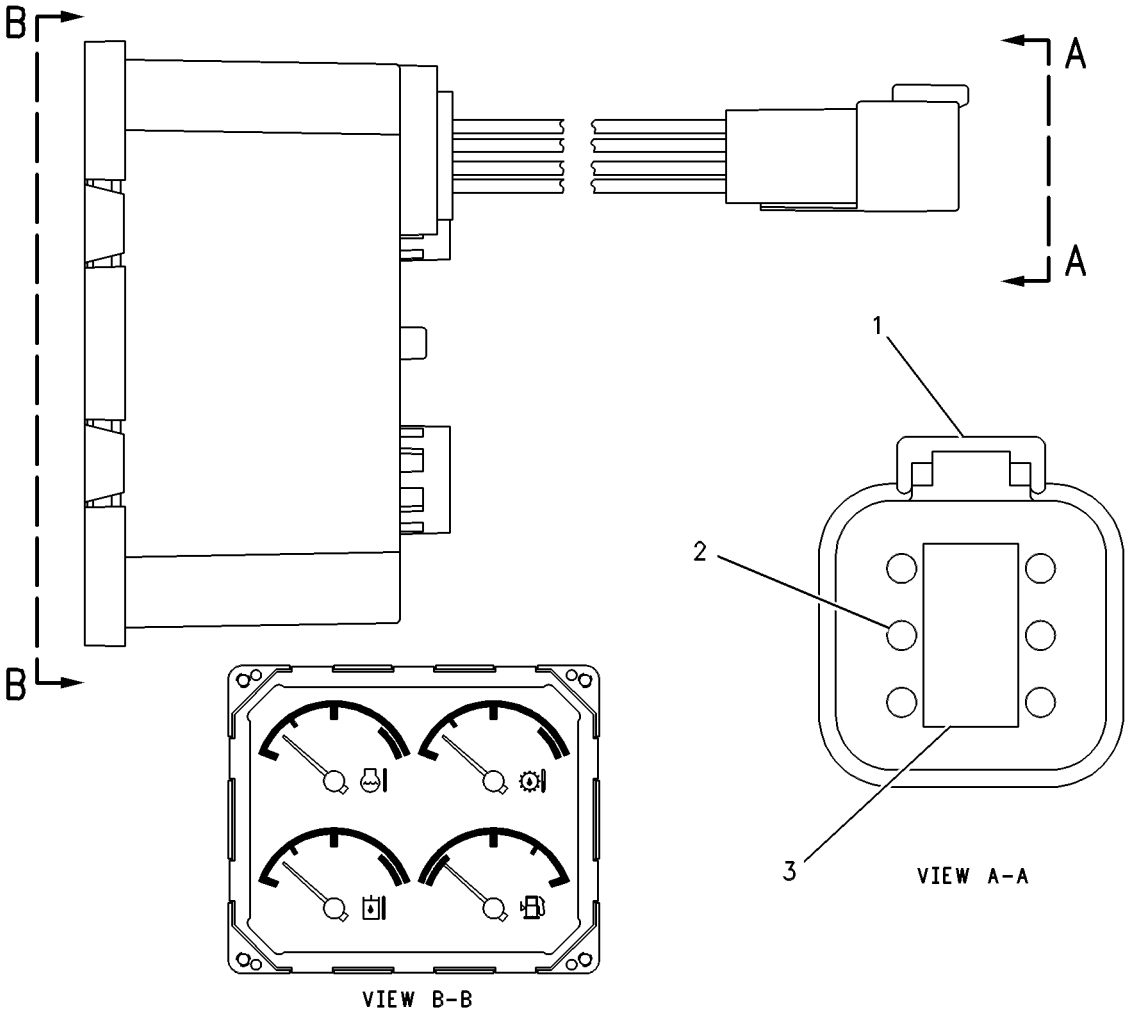

GRAPHIC #1 g00121830

166-6928 MODULE GP-QUAD GAUGE

S/N: 7HR298-UP
PART OF 112-5764 PANEL GP-INSTRUMENT
FIELD REPLACEMENT FOR 100-5895—PAGE 1329

SMCS-7451, 7490, 7601 **i01218984**

NOTE	REF NO	GRAPHIC REF	PART NUMBER	QTY	PART NAME 1 2 3 4 5 6 (PRODUCT LEVEL)	SEE PAGE
	1	1	**102-8805**	1	KIT-RECEPTACLE (6 PIN)	
					(INCLUDES RECEPTACLE AS & WEDGE)	
	2	1	**8T-8729**	6	PIN-CONNECTOR	

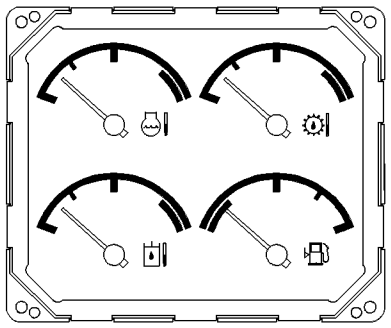

VIEW B-B

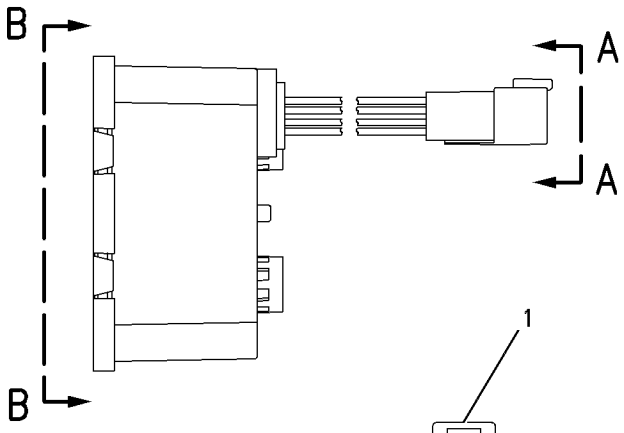

VIEW A-A

GRAPHIC #1 g00587276

155-5784 MOTOR GP-WINDOW WIPER–REAR

S/N: 7HR398-UP
24 VOLT
PART OF 8R-5535 WIPER & WASHER GP-WINDOW

SMCS-7305 **i01318238**

NOTE	REF NO	GRAPHIC REF	PART NUMBER	QTY	PART NAME 1 2 3 4 5 6 (PRODUCT LEVEL)	SEE PAGE
	1	1	**102-8805**	1	KIT-RECEPTACLE (6 PIN)	
					(INCLUDES RECEPTACLE AS & WEDGE)	
	2	1	**8T-8737**	1	PLUG-SEAL	
	3	1	**8T-8729**	5	PIN-CONNECTOR	

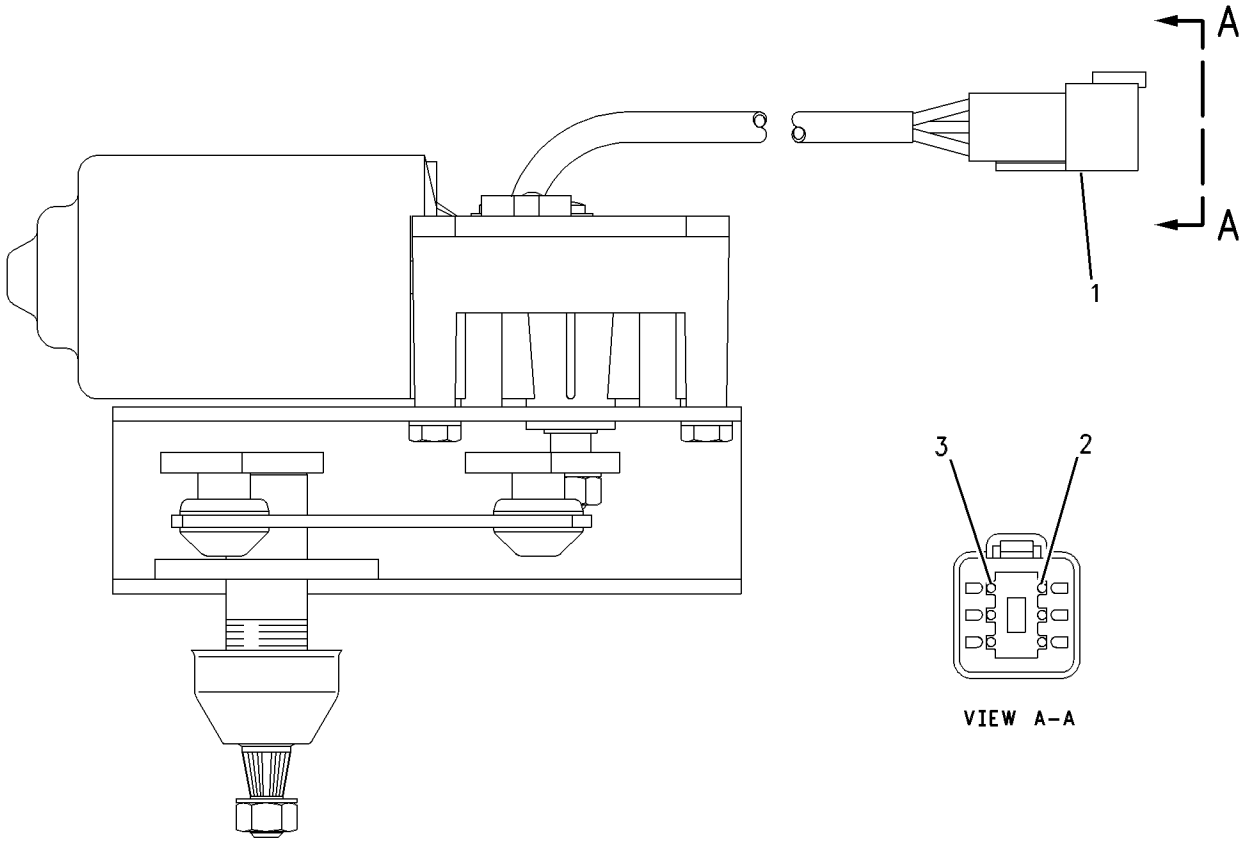

GRAPHIC #1 g00615271

OPERATOR STATION

109-6852 MOUNTING GP-PLATFORM

S/N: 7HR1-UP

PART OF 109-6819 CHASSIS AR

SMCS-7253 **i00743357**

NOTE	REF NO	GRAPHIC REF	PART NUMBER	QTY	PART NAME 1 2 3 4 5 6 (PRODUCT LEVEL)	SEE PAGE
	1	1	**9W-7385**	4	SLEEVE	
	2	1	**9W-7388**	6	WASHER (12.0MM THK)	
	3	1	**9W-9941**	4	MOUNT AS	
	4	1	**112-7057**	2	SUPPORT AS	
					(EACH INCLUDES)	
M		1	**8T-3597**	1	NUT-WELD (M12X1.75 THD)	
	5	1	**112-7058**	2	SUPPORT AS	
					(EACH INCLUDES)	
		1	**9C-4935**	2	PLATE	
M	6	1	**8T-4140**	20	BOLT (M16X2.0X60MM)	
	7	1	**8T-4167**	4	WASHER (4.0MM THK)	
M	8	1	**8T-4649**	4	BOLT (M24X3X140MM)	
	9	1	**9X-8257**	20	WASHER (3.50MM THK)	

M-METRIC PART

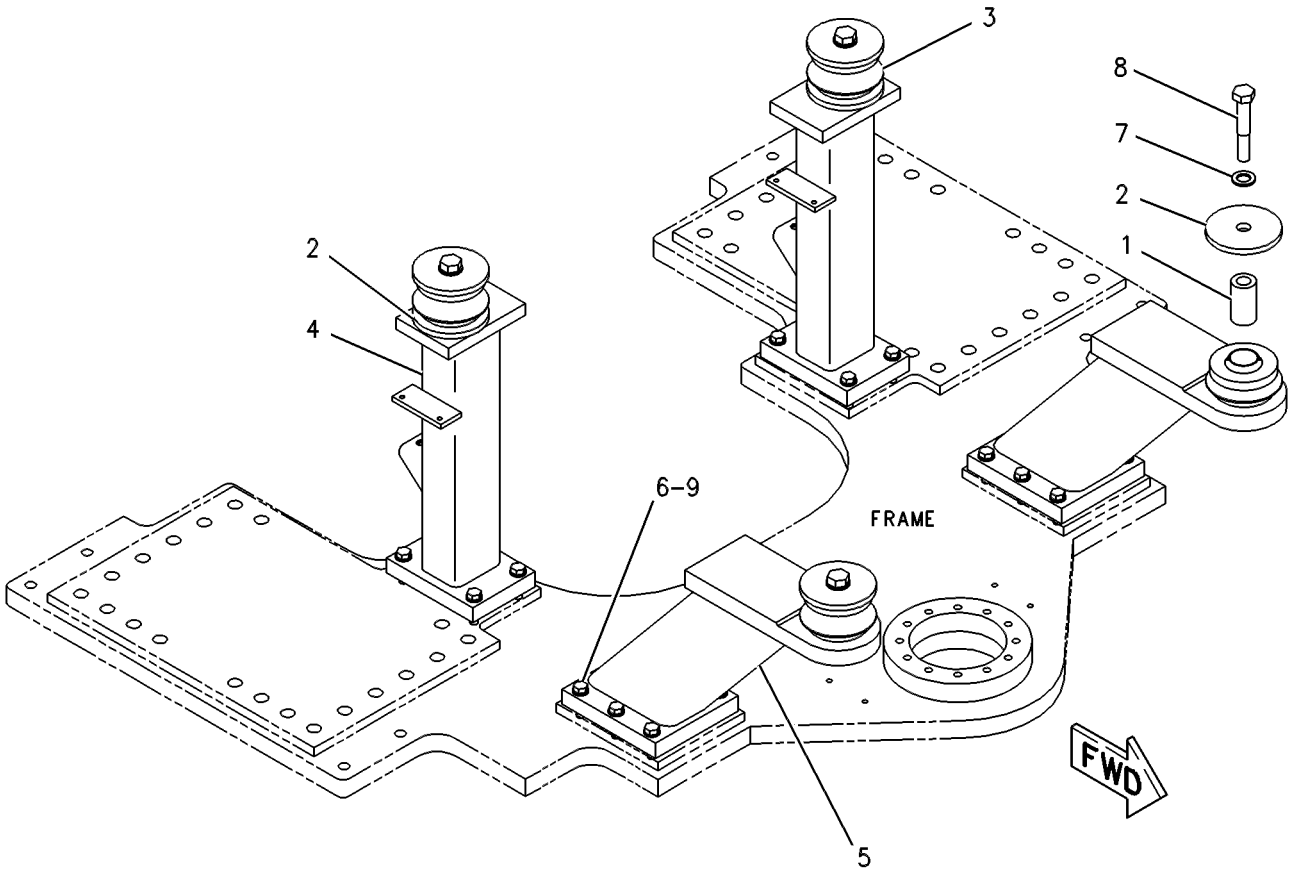

GRAPHIC #1 g00254864

OPERATOR STATION

109-6866 OPERATOR AR

S/N: 7HR1-UP

PART OF 109-6819 CHASSIS AR

SMCS-7301, 7325, 7335 **i01070591**

NOTE	PART NUMBER	QTY	PART NAME 1 2 3 4 5 6 (PRODUCT LEVEL)	SEE PAGE
Y	*130-6906*	1	CAB AR	1261
			S/N: 7HR1-297	
Y	*171-7047*	1	CAB AR	1262
			S/N: 7HR298-UP	
Y	*123-7023*	1	CAB GP	1264
Y	*130-6907*	1	COVER GP-CAB	1283

Y-SEPARATE ILLUSTRATION

OPERATOR STATION

178-7911 PAN GP-BACKREST

S/N: 7HR398-UP

PART OF 178-7910 SEAT GP

SMCS-7312 **i01264066**

NOTE	REF NO	GRAPHIC REF	PART NUMBER	QTY	PART NAME 1 2 3 4 5 6 (PRODUCT LEVEL)	SEE PAGE
	1	1	**164-4883**	1	KNOB-LUMBAR	
	2	1	**169-0651**	1	CUSHION AS	
	2A	1	**184-2300**	1	FILM	
	3	1	**178-7912**	1	PAN AS	
	3A	1	**4K-9429**	2	RIVET-POP	
	3B	1	**136-1543**	1	PLATE AS-LUMBAR	
	3C	1	**177-4930**	1	PAN AS-BACK	
	4	1	**8T-7566**	1	PIN-SPRING	

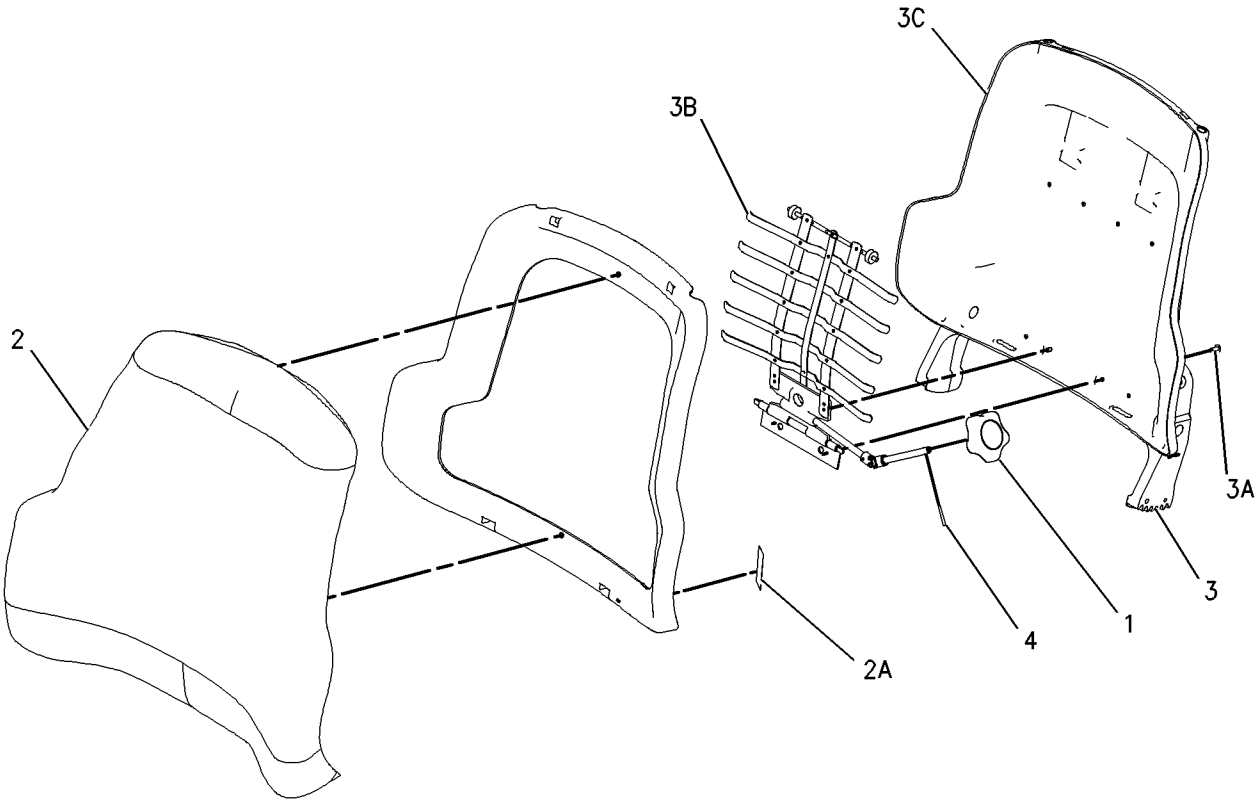

GRAPHIC #1 g00673318

MEMORANDA

OPERATOR STATION

8Y-5992 PAN GP-SEAT—BOTTOM

S/N: 7HR1-UP

PART OF 124-7726, 8Y-6882 SEAT GP

SMCS-7312 **i01395727**

NOTE	REF NO	GRAPHIC REF	PART NUMBER	QTY	PART NAME 1 2 3 4 5 6 (PRODUCT LEVEL)	SEE PAGE
	1	1	**8Y-5892**	1	PAN AS-SEAT (BOTTOM)	
JL	2	1	**3K-4897**	4	PIN-SPRING	
N	3	1	**9M-5733**	1	RIVET-POP (4.78MM DIA)	
N	4	1	**6V-2456**	2	RING-RETAINING	
JZ	5	1		1	ROD AS	
JLZ	6	1		2	SPRING	
LZ	7	1		1	ROD AS	
LZ	8	1		1	BUSHING-TERMINAL	
NZ	9	1		1	BRACKET	
NZ	10	1		1	CABLE AS	
NZ	11	1		1	PIN	
NZ	12	1		1	ADJUSTER AS	
					AVAILABLE REPAIR KIT(S):	
J			**8Y-5995**	1	KIT-SEAT TILT	
					(INCLUDES BUSHING & LOCKPIN)	
L			**8Y-5998**	1	KIT-BACK TILT	
					(INCLUDES BUSHING)	
N			**8Y-5999**	1	KIT-ADJUSTER (PAN BOTTOM)	

J-KIT(S) MARKED J INCLUDES PART(S) MARKED J
L-KIT(S) MARKED L INCLUDES PART(S) MARKED L
N-KIT(S) MARKED N INCLUDES PART(S) MARKED N
Z-NOT SERVICED SEPARATELY

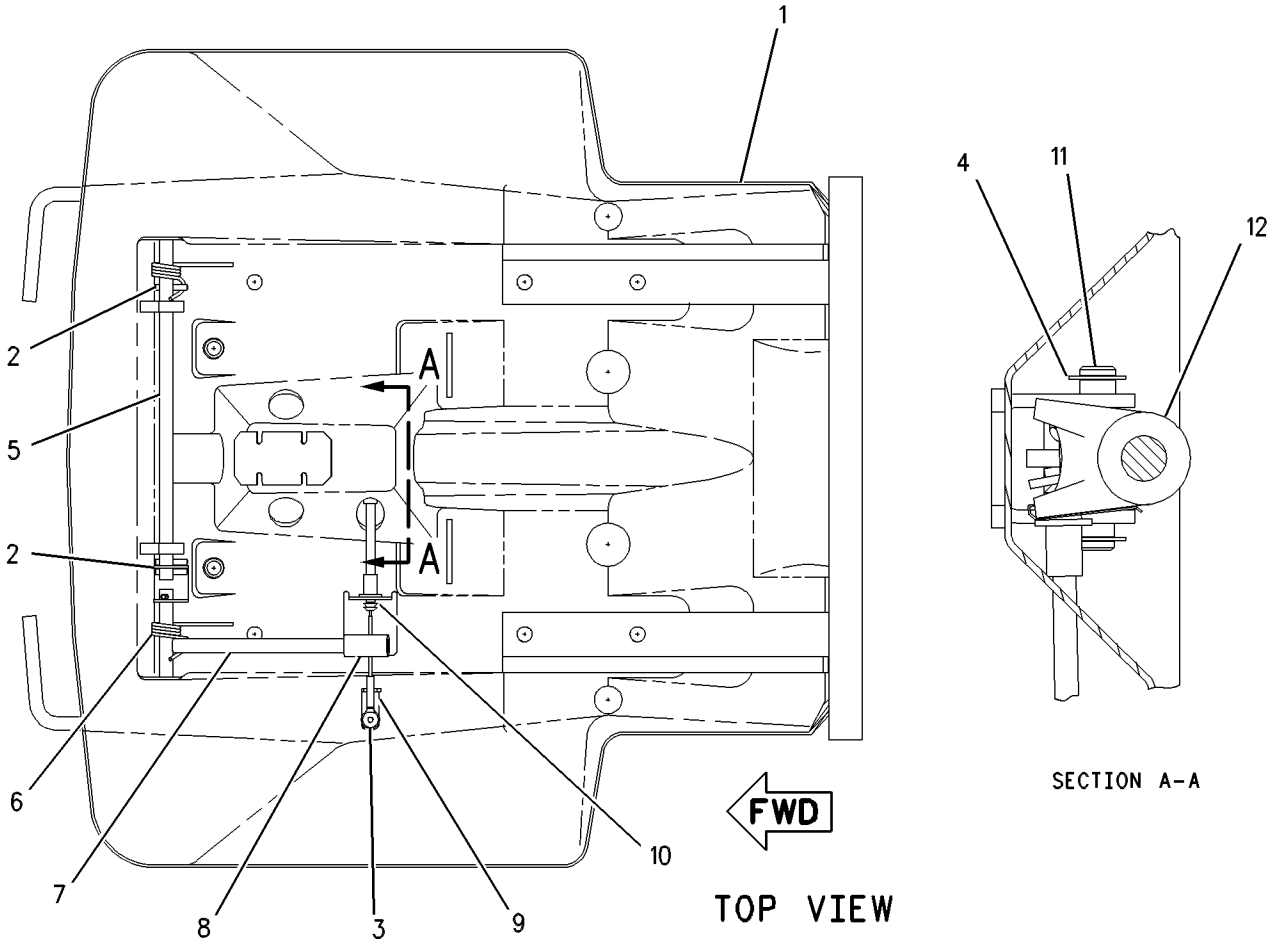

GRAPHIC #1 g00527029

OPERATOR STATION

108-8421 PAN GP-SEAT–BACK

S/N: 7HR1-UP

PART OF 124-7726, 8Y-6882 SEAT GP

SMCS-7312 **i01221111**

NOTE	REF NO	GRAPHIC REF	PART NUMBER	QTY	PART NAME 1 2 3 4 5 6 (PRODUCT LEVEL)	SEE PAGE
	1	1	**9M-5733**	2	RIVET-POP (4.78MM DIA)	
	2	1	**8Y-6006**	1	LID AS	
	3	1	**8Y-6010**	1	LANYARD	
	4	1	**4S-8287**	8	RIVET-POP (6MM DIA)	
	5	1	**8Y-5972**	1	LATCH	
	6	1	**108-8423**	1	SHAFT AS-LUMBAR	
	7	1	**3E-4336**	1	STUD-BALL	
	8	1	**3E-4335**	1	CLIP	
	9	1	**2F-7306**	1	SCREW-MACHINE (6-32X.25IN)	
	10	1	**8F-1462**	1	WASHER-PLATED	
E	11	1	**3E-6575**		SEAL (76CM)	
	12	1	**108-8424**	1	PAN-LUMBAR	
	13	1	**8Y-5903**	2	CAM	
	14	1	**3E-4362**	2	PIN-SPRING	

E-ORDER BY THE CENTIMETER

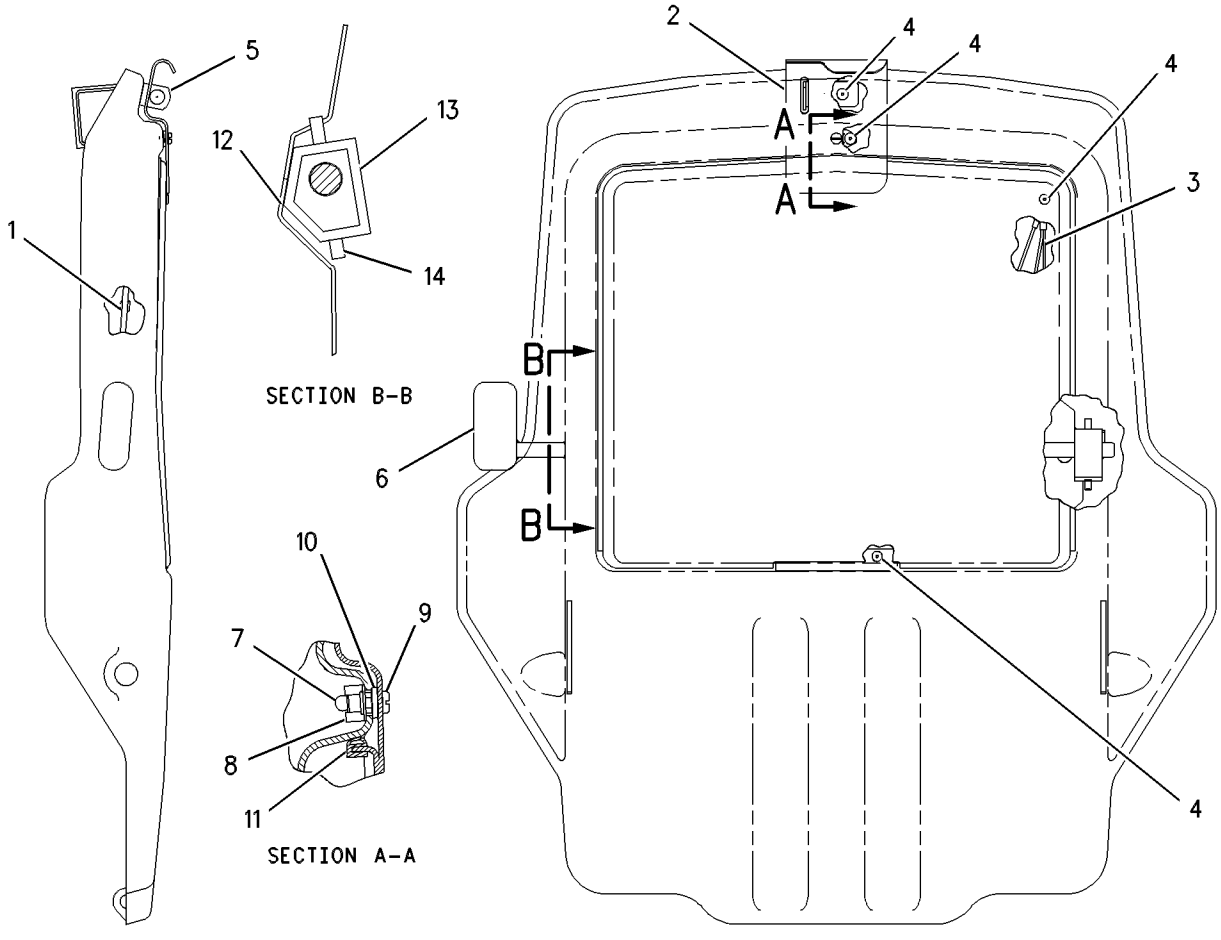

GRAPHIC #1 g00383446

OPERATOR STATION

148-8078 PAN GP-SEAT–BOTTOM

S/N: 7HR1-297

PART OF 124-7726 SEAT GP

SMCS-7312 **i01397298**

NOTE	REF NO	GRAPHIC REF	PART NUMBER	QTY	PART NAME 1 2 3 4 5 6 (PRODUCT LEVEL)	SEE PAGE
	1	1	**148-8076**	1	PAN AS-SEAT (BOTTOM)	
	2	1	**3K-4897**	4	PIN-SPRING	
	3	1	**9M-5733**	1	RIVET-POP (4.78MM DIA)	
	4	1	**6V-2456**	2	RING-RETAINING	
					AVAILABLE REPAIR KIT(S):	
			8Y-5995	1	KIT-SEAT TILT	
					(INCLUDES ROD AS)	
			8Y-5998	1	KIT-BACK TILT	
					(INCLUDES ROD AS, BLOCK, & BUSHING)	
			8Y-5999	1	KIT-ADJUSTER (BOTTOM SEAT PAN)	
					(INCLUDES BRACKET, CABLE AS, PIN, & ADJUSTER AS)	

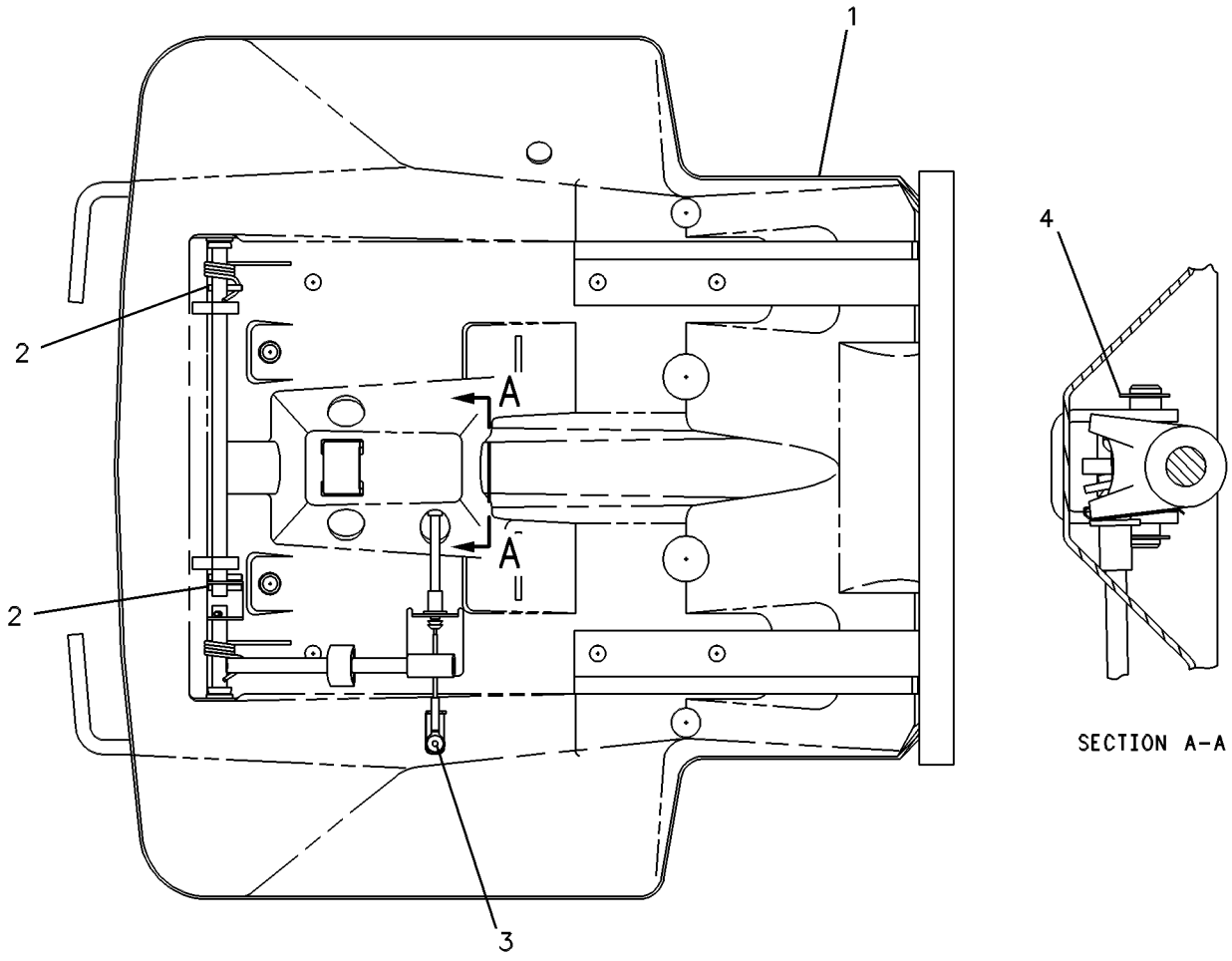

GRAPHIC #1 g00290646

OPERATOR STATION

112-5764 PANEL GP-INSTRUMENT—FRONT

S/N: 7HR1-UP
PART OF 130-6906 CAB AR
TYPE 1

SMCS-7451 **i01539787**

NOTE	REF NO	GRAPHIC REF	PART NUMBER	QTY	PART NAME 1 2 3 4 5 6 (PRODUCT LEVEL)	SEE PAGE
	1	1	**4E-8537**	1	PANEL-INSTRUMENT	
	2	1	**141-8145**	1	PLATE AS	
M	3	1	**7X-3319**	6	SCREW-HEX SOCKET (M4X0.7X6MM)	
Y	4	1	*133-1840*	1	MODULE GP-MESSAGE CENTER	1326
	5	1	**107-1964**	8	SCREW-PAN HEAD (6-19X0.5 IN)	
	6	1	**106-4454**	1	PLATE	
	7	1	**6V-6457**	1	MODULE GP-SPEEDOMETER & TACH	
		1	**102-8805**	1	KIT-RECEPTACLE (6 PIN)	
					(INCLUDES WEDGE)	
		1	**3E-3383**	1	WEDGE-RECEPTACLE LOCK	
		1	**8T-8729**	6	PIN-CONNECTOR	
M	8	1	**9X-2042**	5	SCREW-TRUSS HEAD (M6X1X12MM)	
M	9	1	**9X-2045**	6	SCREW-TRUSS HEAD (M6X1X20MM)	
	10	1	**9X-8256**	3	WASHER (6.6X12X2MM THK)	
Y	11	1	**100-5895**	1	MODULE GP-QUAD GAUGE	1329
M	12	1	**9X-2046**	4	SCREW-TRUSS HEAD (M6X1X35MM)	
M	13	1	**8T-4191**	2	BOLT (M10X1.5X16MM)	
	14	1	**6V-5839**	2	WASHER (11X21X2.5MM THK)	
	15	1	**4E-8940**	1	BRACKET AS	
M		1	**6V-9632**	2	NUT-WELD (M6X1 THD)	
M	16	1	**9X-2044**	3	SCREW-TRUSS HEAD (M6X1X16MM)	
	17	1	**8T-4205**	3	WASHER-HARD (7.2X14.5X2MM THK)	
M	18	1	**5C-2890**	1	NUT (M6X1 THD)	
	19	1	**4E-8937**	1	BRACKET AS	
M		1	**6V-9632**	2	NUT-WELD (M6X1 THD)	
	20	1	**125-0053**	1	FILM-FACE	
	21	1	**141-8144**	1	PLATE AS	
M		1	**6V-9632**	2	NUT-WELD (M6X1 THD)	
	22	1	**125-0054**	1	FILM-FACE	
	23	1	**129-7701**	1	PLATE AS	
M		1	**6V-9632**	2	NUT-WELD (M6X1 THD)	
	24	1	**129-7700**	1	PANEL	
	25	1	**141-8146**	1	PLATE AS	
Y	26	1	**3E-6328**	1	ALARM GP	233
M	27	1	**5C-9553**	2	BOLT (M6X1X16MM)	
	28	1	**100-5568**	1	BEZEL	
M	29	1	**7Y-7256**	4	SCREW-TRUSS HEAD (M4X0.7X35MM)	
	30	1	**123-8681**	1	HARNESS AS-INSTRUMENT PANEL (FRONT)	
	31	1	**6B-4540**	4	NUT (4-40 THD)	
	32	1	**6V-9497**	4	WASHER-HARD (0.5MM THK)	
	33	1	**5S-4245**	4	SCREW-MACHINE (4-40X0.5IN)	
	34	1	**3E-5165**	1	CAP AS-PROTECTION	
	35	1	**141-8143**	1	PANEL	
	36	1	**109-0365**	1	FILM-INSTRUCTION (SERVICE TOOL)	

M-METRIC PART
Y-SEPARATE ILLUSTRATION

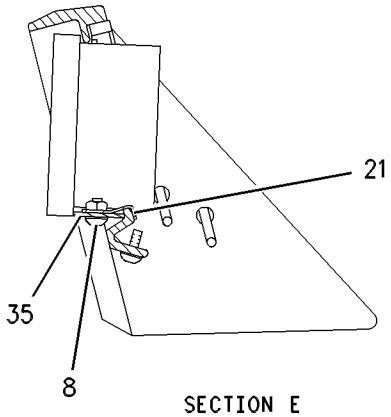

SECTION E

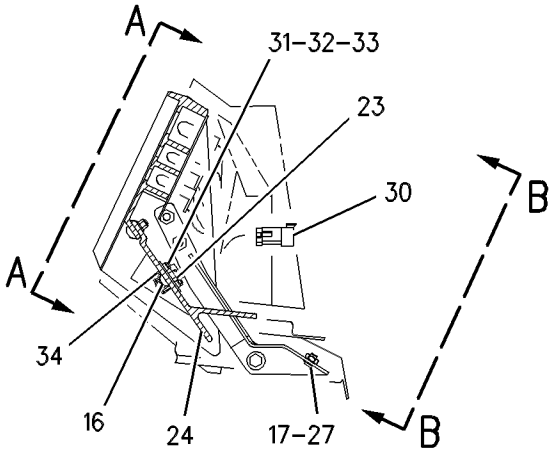

RIGHT SIDE VIEW

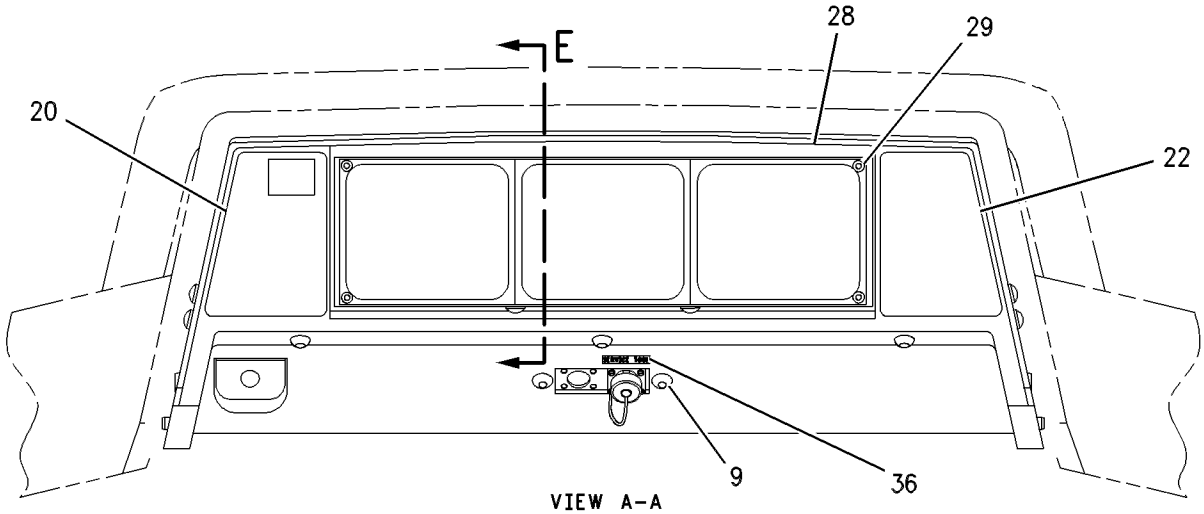

VIEW A-A

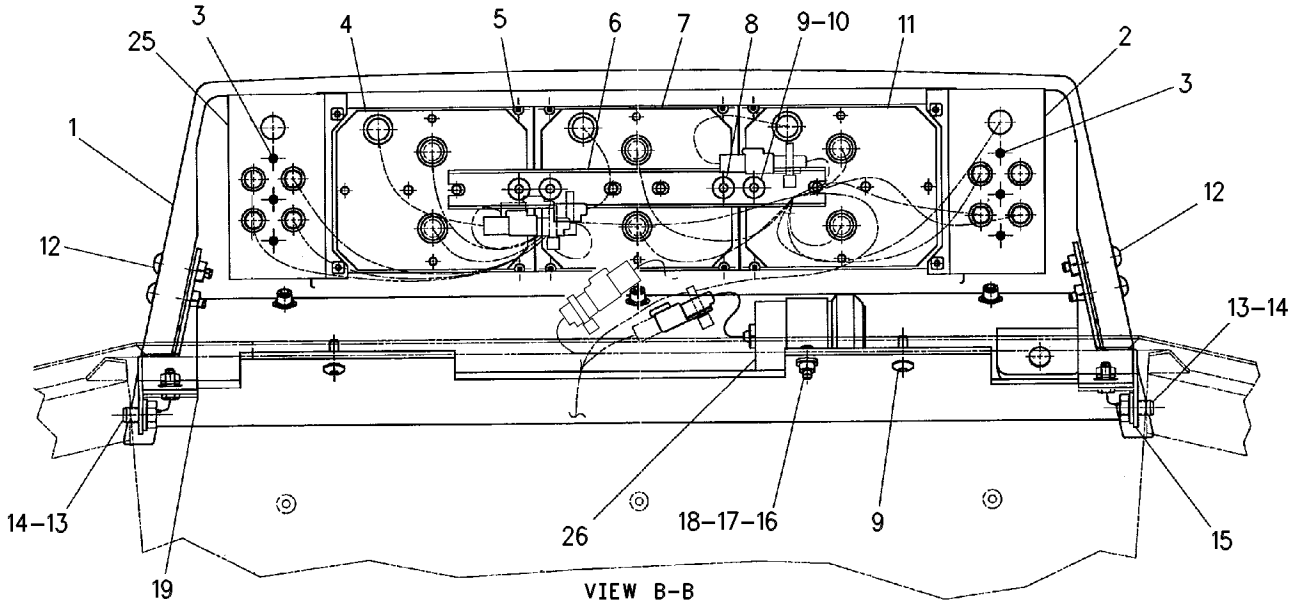

VIEW B-B

GRAPHIC #1 g00290322

OPERATOR STATION

112-5764 PANEL GP-INSTRUMENT—FRONT

S/N: 7HR1-UP
PART OF 130-6906, 171-7047 CAB AR
TYPE 2

SMCS-7451 **i01539878**

NOTE	REF NO	GRAPHIC REF	PART NUMBER	QTY	PART NAME 1 2 3 4 5 6 (PRODUCT LEVEL)	SEE PAGE
	1	1	**4E-8537**	1	PANEL-INSTRUMENT	
	2	1	**141-8145**	1	PLATE AS	
M	3	1	**7X-3319**	6	SCREW-HEX SOCKET (M4X0.7X6MM)	
CY	4	1	**149-2357**	1	MODULE GP-MESSAGE CENTER (VIDS)	1327
	5	1	**107-1964**	8	SCREW-PAN HEAD (6-19X0.5 IN)	
	6	1	**106-4454**	1	PLATE	
	7	1	**6V-6457**	1	MODULE GP-SPEEDOMETER & TACH	
		1	**3E-3383**	1	WEDGE-RECEPTACLE LOCK	
		1	**8T-8729**	6	PIN-CONNECTOR	
		1	**102-8805**	1	KIT-RECEPTACLE (6 PIN)	
					(INCLUDES WEDGE)	
M	8	1	**9X-2042**	5	SCREW-TRUSS HEAD (M6X1X12MM)	
M	9	1	**9X-2045**	6	SCREW-TRUSS HEAD (M6X1X20MM)	
	10	1	**9X-8256**	3	WASHER (6.6X12X2MM THK)	
Y	11	1	**100-5895**	1	MODULE GP-QUAD GAUGE	1329
M	12	1	**9X-2046**	4	SCREW-TRUSS HEAD (M6X1X35MM)	
M	13	1	**8T-4191**	2	BOLT (M10X1.5X16MM)	
	14	1	**6V-5839**	2	WASHER (11X21X2.5MM THK)	
	15	1	**4E-8940**	1	BRACKET AS	
M		1	**6V-9632**	2	NUT-WELD (M6X1 THD)	
M	16	1	**9X-2044**	3	SCREW-TRUSS HEAD (M6X1X16MM)	
	17	1	**8T-4205**	3	WASHER-HARD (7.2X14.5X2MM THK)	
M	18	1	**5C-2890**	1	NUT (M6X1 THD)	
	19	1	**4E-8937**	1	BRACKET AS	
M		1	**6V-9632**	2	NUT-WELD (M6X1 THD)	
	20	1	**125-0053**	1	FILM-FACE	
	21	1	**125-0054**	1	FILM-FACE	
	22	1	**129-7701**	1	PLATE AS	
M		1	**6V-9632**	2	NUT-WELD (M6X1 THD)	
	23	1	**129-7700**	1	PANEL	
	24	1	**141-8146**	1	PLATE AS	
Y	25	1	**3E-6328**	1	ALARM GP (ACTION)	233
M	26	1	**5C-9553**	2	BOLT (M6X1X16MM)	
	27	1	**100-5568**	1	BEZEL	
M	28	1	**7Y-7256**	4	SCREW-TRUSS HEAD (M4X0.7X35MM)	
	29	1	**123-8681**	1	HARNESS AS-INSTRUMENT PANEL (FRONT)	
		1	**102-8803**	1	KIT-RECEPTACLE (3 PIN)	
					(INCLUDES KIT RECEPTACLE & WEDGE)	
		1	**3E-5136**	1	RECEPTACLE AS	
	30	1	**6B-4540**	4	NUT (4-40 THD)	
	31	1	**6V-9497**	4	WASHER-HARD (0.5MM THK)	
	32	1	**5S-4245**	4	SCREW-MACHINE (4-40X0.5IN)	
	34	1	**141-8143**	1	PANEL	
	35	1	**141-8144**	1	PLATE AS	
M		1	**6V-9632**	2	NUT-WELD (M6X1 THD)	
	36	1	**109-0365**	1	FILM-INSTRUCTION (SERVICE TOOL)	

C-CHANGE FROM PREVIOUS TYPE
M-METRIC PART
Y-SEPARATE ILLUSTRATION

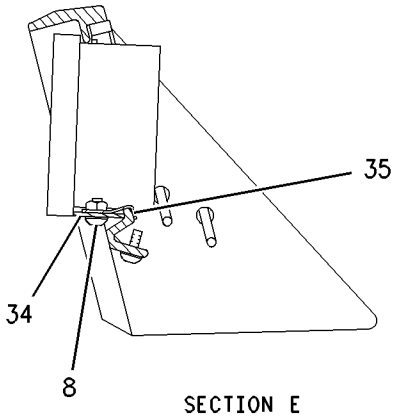

SECTION E

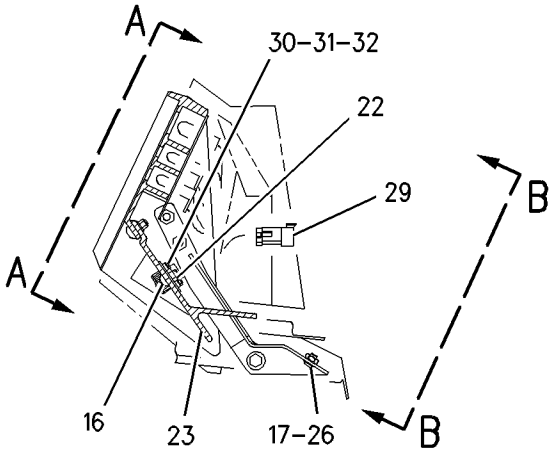

RIGHT SIDE VIEW

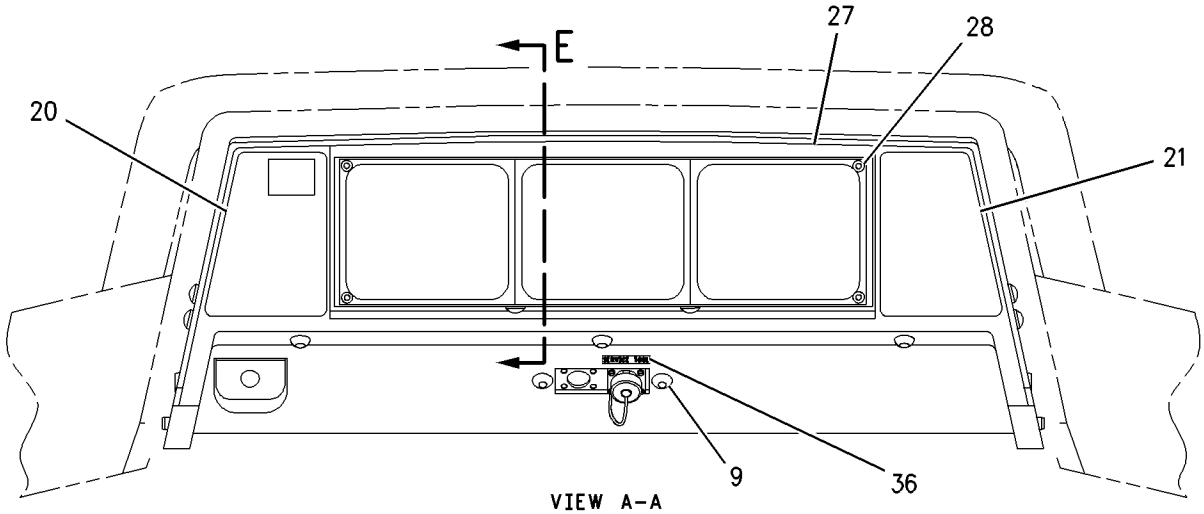

VIEW A-A

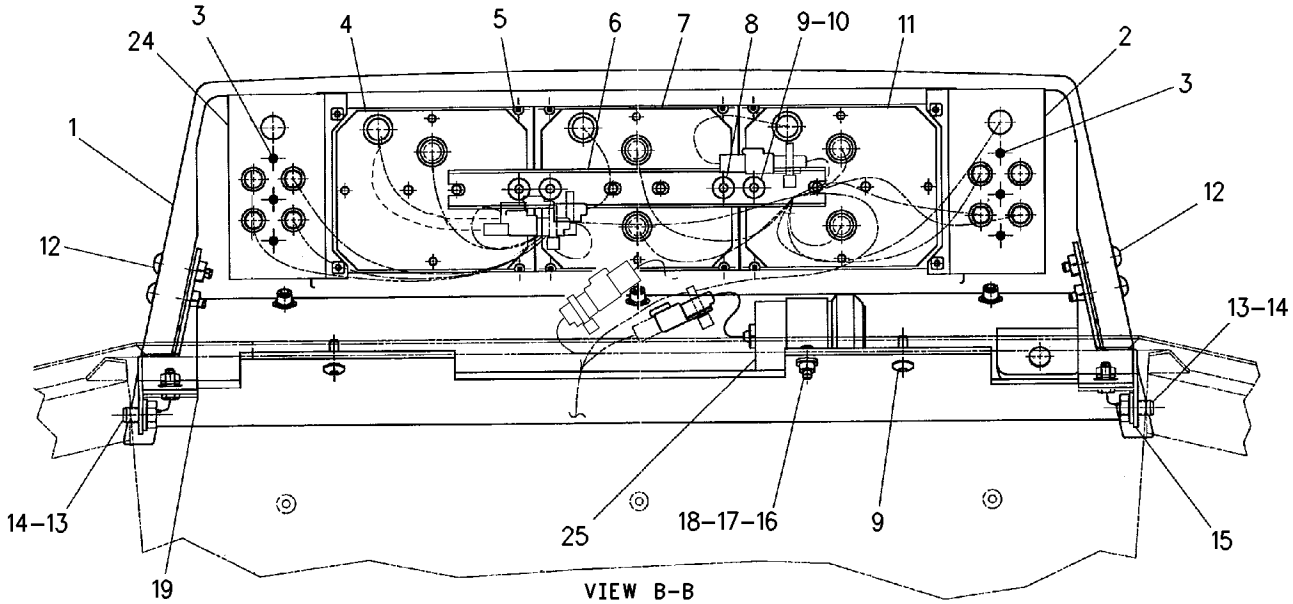

VIEW B-B

GRAPHIC #1 g00634794

OPERATOR STATION

112-5764 PANEL GP-INSTRUMENT—FRONT

S/N: 7HR298-UP

PART OF 171-7047 CAB AR

SMCS-7451 **i01538678**

NOTE	REF NO	GRAPHIC REF	PART NUMBER	QTY	PART NAME 1 2 3 4 5 6 (PRODUCT LEVEL)	SEE PAGE
	1	1	**4E-8537**	1	PANEL-INSTRUMENT	
	2	1	**141-8145**	1	PLATE AS	
M	3	1	**7X-3319**	6	SCREW-HEX SOCKET (M4X0.7X6MM)	
CY	4	1	**149-2357**	1	MODULE GP-MESSAGE CENTER (VIDS)	1327
	5	1	**107-1964**	8	SCREW-PAN HEAD (6-19X0.5 IN)	
	6	1	**106-4454**	1	PLATE	
	7	1	**6V-6457**	1	MODULE GP-SPEEDOMETER & TACH	
		1	**8T-8729**	6	PIN-CONNECTOR	
		1	**3E-3383**	1	WEDGE-RECEPTACLE LOCK	
		1	**102-8805**	1	KIT-RECEPTACLE (6 PIN)	
					(INCLUDES RECEPTACLE AS AND WEDGE)	
M	8	1	**9X-2042**	5	SCREW-TRUSS HEAD (M6X1X12MM)	
M	9	1	**9X-2045**	6	SCREW-TRUSS HEAD (M6X1X20MM)	
	10	1	**9X-8256**	3	WASHER (6.6X12X2MM THK)	
CY	11	1	**166-6928**	1	MODULE GP-QUAD GAUGE	1330
M	12	1	**9X-2046**	4	SCREW-TRUSS HEAD (M6X1X35MM)	
M	13	1	**8T-4191**	2	BOLT (M10X1.5X16MM)	
	14	1	**6V-5839**	2	WASHER (11X21X2.5MM THK)	
	15	1	**4E-8940**	1	BRACKET AS	
M		1	**6V-9632**	2	NUT-WELD (M6X1 THD)	
M	16	1	**9X-2044**	3	SCREW-TRUSS HEAD (M6X1X16MM)	
	17	1	**8T-4205**	3	WASHER-HARD (7.2X14.5X2MM THK)	
M	18	1	**5C-2890**	1	NUT (M6X1 THD)	
	19	1	**4E-8937**	1	BRACKET AS	
M		1	**6V-9632**	2	NUT-WELD (M6X1 THD)	
	20	1	**125-0053**	1	FILM-FACE	
	21	1	**125-0054**	1	FILM-FACE	
	22	1	**129-7701**	1	PLATE AS	
M		1	**6V-9632**	2	NUT-WELD (M6X1 THD)	
	23	1	**129-7700**	1	PANEL	
	24	1	**141-8146**	1	PLATE AS	
Y	25	1	**3E-6328**	1	ALARM GP (ACTION)	233
M	26	1	**5C-9553**	2	BOLT (M6X1X16MM)	
	27	1	**100-5568**	1	BEZEL	
M	28	1	**7Y-7256**	4	SCREW-TRUSS HEAD (M4X0.7X35MM)	
	29	1	**123-8681**	1	HARNESS AS-INSTRUMENT PANEL (FRONT)	
		1	**102-8803**	1	KIT-RECEPTACLE (3 PIN)	
					INCLUDES RECEPTACLE AS & WEDGE	
		1	**3E-5136**	1	RECEPTACLE AS	
	30	1	**6B-4540**	4	NUT (4-40 THD)	
	31	1	**6V-9497**	4	WASHER-HARD (0.5MM THK)	
	32	1	**5S-4245**	4	SCREW-MACHINE (4-40X0.5IN)	
	34	1	**141-8143**	1	PANEL	
	35	1	**141-8144**	1	PLATE AS	
M		1	**6V-9632**	2	NUT-WELD (M6X1 THD)	
	36	1	**109-0365**	1	FILM-INSTRUCTION (SERVICE TOOL)	

C-CHANGE FROM PREVIOUS TYPE
M-METRIC PART
Y-SEPARATE ILLUSTRATION

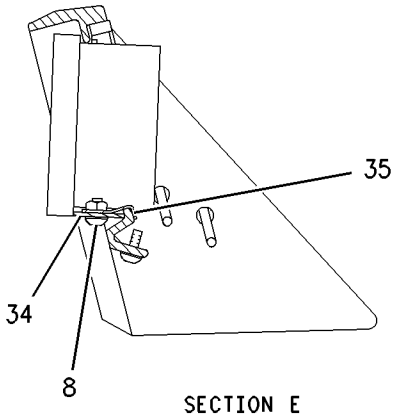

SECTION E

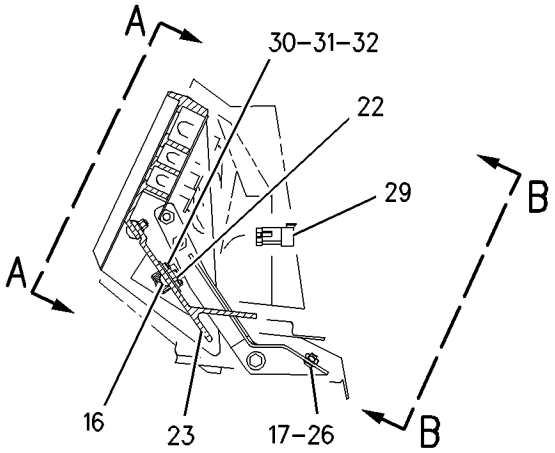

RIGHT SIDE VIEW

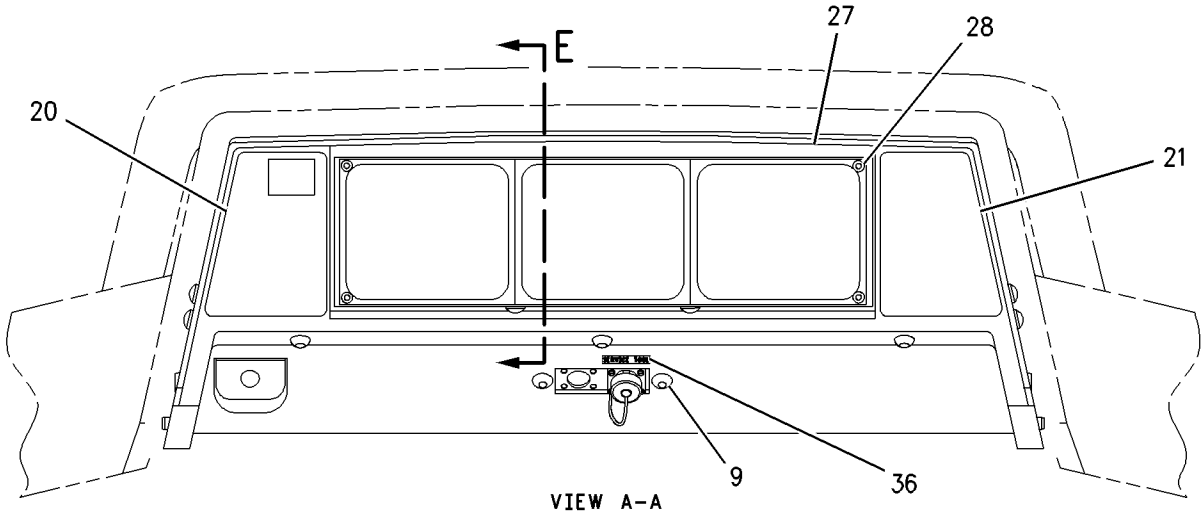

VIEW A-A

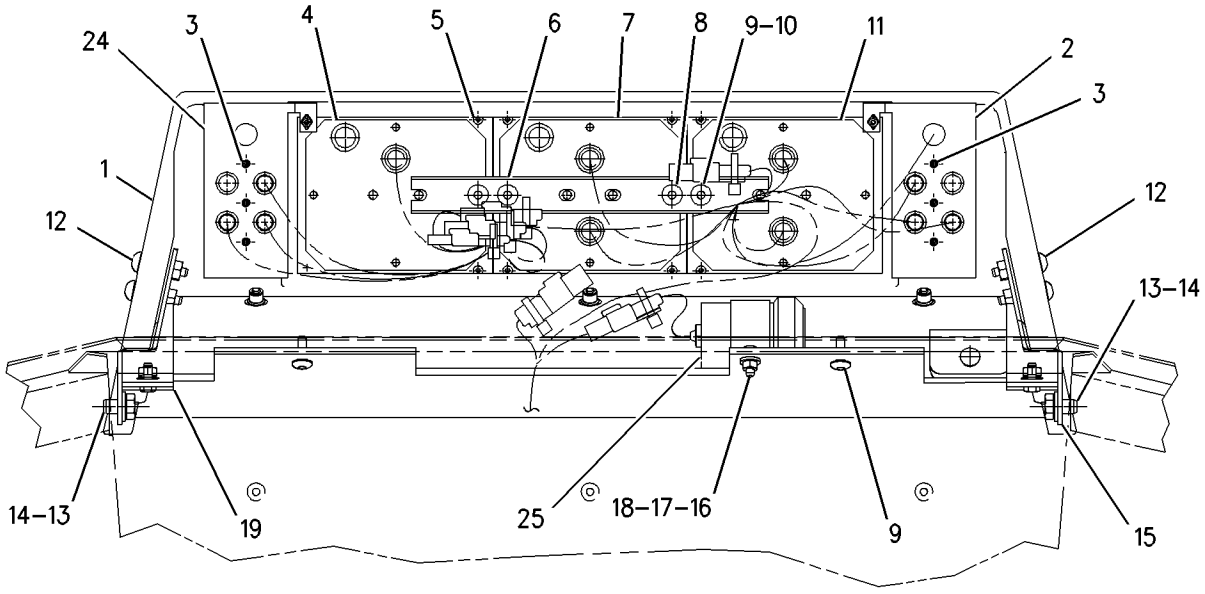

VIEW B-B

GRAPHIC #1 g00671876

OPERATOR STATION

112-5765 PANEL GP-INSTRUMENT

S/N: 7HR1-UP

PART OF 130-6906, 171-7047 CAB AR

SMCS-7451 **i01539889**

NOTE	REF NO	GRAPHIC REF	PART NUMBER	QTY	PART NAME 1 2 3 4 5 6 (PRODUCT LEVEL)	SEE PAGE
	1	1	**4E-9314**	1	SUPPORT AS	
M		1	**6V-9632**	1	NUT-WELD (M6X1 THD)	
	2	1	**4E-9318**	1	SUPPORT AS	
M		1	**6V-9632**	2	NUT-WELD (M6X1 THD)	
M	3	1	**8T-4189**	4	BOLT (M8X1.25X20MM)	
	4	1	**8T-4224**	4	WASHER-HARD (8.8X16X2MM THK)	
	5	1	**6V-2687**	8	SCREW-PAN HEAD (10-24X1IN)	
	6	1	**126-5131**	1	COVER	
	7	1	**4E-9055**	1	GASKET	
M	8	1	**8T-4138**	8	BOLT (M6X1X20MM)	
	9	1	**8T-4205**	8	WASHER-HARD (7.2X14.5X2MM THK)	
	10	1	**113-4802**	1	PANEL AS	
M		1	**6A-7844**	4	NUT-WELD (M4X0.7 THD)	
	11	1	**126-8819**	1	FILM-DASH	
	12	1	**4S-4455**	2	CLIP	
M	13	1	**8T-4137**	2	BOLT (M10X1.5X20MM)	
	14	1	**8T-4121**	2	WASHER-HARD (11X21X2.5MM THK)	
M	15	1	**8T-4133**	2	NUT (M10X1.5 THD)	
M	16	1	**9X-2044**	4	SCREW-TRUSS HEAD (M6X1X16MM)	
Y	17	1	**3E-0155**	1	SWITCH GP-WIPER (24 VOLT)	371
	18	1	**119-4436**	1	SWITCH AS-ROTARY (WIPER/WASHER)(REAR) (REAR WIPER)	
		1	**2H-3920**	1	LOCKWASHER	
		1	**6V-8369**	1	NUT (7/16-28 THD)	
		1	**110-7885**	1	KNOB-WIPER SWITCH	
Y	19	1	**9G-7641**	1	SWITCH GP-START (KEY)	370
	20	1	**2V-0099**	3	KNOB	
	21	1	**3E-0109**	5	PLUG-ROCKER SWITCH	
	22	1	*144-0902*	1	SWITCH AS-ROCKER (TRANSMISSION QUICKSHIFT)	
		1	**127-4979**	1	SWITCH AS-ROCKER	
		1	**3E-8787**	1	ACTUATOR-ROCKER	
		1	**126-1711**	1	KIT-LAMP CONVERSION (24V)	
	23	1	*144-0903*	1	SWITCH AS-ROCKER (FLOODLIGHT)	
		1	**3E-8771**	1	SWITCH AS	
		1	**3E-8782**	1	ACTUATOR-ROCKER	
		1	**126-1711**	1	KIT-LAMP CONVERSION (24V)	
	24	1	*144-0904*	1	SWITCH AS-ROCKER (START AID)	
		1	**3E-8768**	1	SWITCH AS	
		1	**3E-8776**	1	ACTUATOR-ROCKER	
		1	**126-1711**	1	KIT-LAMP CONVERSION (24V)	
	25	1	*144-0905*	1	SWITCH AS-ROCKER (THROTTLE LOCK)	
		1	**127-4982**	1	SWITCH AS	
		1	**126-1711**	1	KIT-LAMP CONVERSION (24V)	
		1	**123-6371**	1	ACTUATOR-ROCKER	
	27	1	*144-0909*	1	SWITCH AS-ROCKER (STAIRWAY ACCESS LAMP)	
		1	**3E-8770**	1	SWITCH AS	
		1	**3E-8782**	1	ACTUATOR-ROCKER	
		1	**126-1711**	1	KIT-LAMP CONVERSION (24V)	
	28	1	*144-0908*	1	SWITCH AS-ROCKER (RUNNING LAMP)	
		1	**3E-8769**	1	SWITCH AS	
		1	**3E-8781**	1	ACTUATOR-ROCKER	
		1	**126-1711**	1	KIT-LAMP CONVERSION (24V)	
Y	29	1	**149-3255**	1	MODULE GP-MONITOR KEYPAD	1328
	30	1	**117-2311**	1	RECEPTACLE AS-POWER (12 VOLT)	
	31	1	**7N-5876**	6	LAMP (24 VOLT)	
	32	1	**6P-3236**	1	SWITCH AS-ROTARY (FAN SPEED)	

112-5765 **PANEL GP-INSTRUMENT** ***(contd.)*** **i01539889**

NOTE	REF NO	GRAPHIC REF	PART NUMBER	QTY	PART NAME 1 2 3 4 5 6 (PRODUCT LEVEL)	SEE PAGE
		1	**6V-8362**	5	SCREW-MACHINE (8-32X0.31 IN)	
		1	**9B-7233**	5	LOCKWASHER	
	33	1	**111-0879**	1	POTENTIOMETER (TEMPERATURE CONTROL)	
	34	1	**2P-4339**	2	NUT-JAM (7/16-20 THD)	
	35	1	**123-6384**	1	SWITCH AS-ROTARY (REDUCED RIMPULL)	
		1	**6V-8362**	3	SCREW-MACHINE (8-32X0.31 IN)	
		1	**9B-7233**	3	LOCKWASHER	
	36	1	**3S-2093**	5	STRAP-CABLE	
M	37	1	**7Y-7256**	8	SCREW-TRUSS HEAD (M4X0.7X35MM)	
	38	1	*144-0907*	1	SWITCH AS-ROCKER (KICKOUT SET)	
		1	**127-4980**	1	SWITCH AS	
		1	**126-1711**	2	KIT-LAMP CONVERSION (24V)	
		1	**123-6386**	1	ACTUATOR-ROCKER	
	39	1	**8C-6354**	1	CAP-RECEPTACLE	
	40	1	**112-5780**	1	HARNESS AS-PANEL (SIDE INSTRUMENT PANEL)	
		1	**155-2265**	2	KIT-CONNECTING PLUG (8 PIN)	
		1	**155-2260**	3	KIT-CONNECTING PLUG (3 PIN)	
		1	**102-8810**	2	KIT-CONNECTING PLUG (6 PINS)	
		1	**155-2255**	2	KIT-CONNECTING PLUG (12 PIN)	
		1	**155-2270**	1	KIT-CONNECTING PLUG (2 PIN)	
		1	**155-2271**	2	KIT-CONNECTING PLUG (4 PIN)	
					(EACH KIT-CONNECTING PLUG INCLUDES PLUG AS & WEDGE)	
		1	**8T-8737**	38	PLUG-SEAL	
		1	**3E-7996**	12	PLUG-CONNECTOR	
		1	**102-8806**	1	KIT-RECEPTACLE (8 PIN)	
		1	**102-8804**	1	KIT-RECEPTACLE (4 PIN)	
		1	**102-8803**	2	KIT-RECEPTACLE (3 PIN)	
		1	**102-8805**	2	KIT-RECEPTACLE (6 PIN)	
					(EACH KIT-RECEPTACLE INCLUDES RECEPTACLE AS & WEDGE)	
		1	**9X-7145**	1	RECEPTACLE AS (24 PIN)	
		1	**9X-7148**	1	RECEPTACLE AS (40 PIN)	
		1	**3T-3158**	7	SOCKET-LAMP	
		1	**3T-3159**	7	SPRING	
		1	**6D-4161**	7	CONTACT	
		1	**3S-2093**	36	STRAP-CABLE	
	41	1	**115-1495**	1	PLATE	
M	42	1	**5C-8312**	4	NUT (M4X0.7 THD)	
	43	1	**5S-4245**	4	SCREW-MACHINE (4-40X0.5IN)	
	44	1	**6B-4540**	4	NUT (4-40 THD)	
	45	1	**6V-9497**	4	WASHER-HARD (0.5MM THK)	
	46	1	**130-8543**	1	HARNESS AS-MONITOR (VIMS)	
		1	**102-8805**	1	KIT-RECEPTACLE (6 PIN)	
					(INCLUDES RECEPTACLE AS & WEDGE)	
		1	**8T-8737**	3	PLUG-SEAL	

M-METRIC PART
Y-SEPARATE ILLUSTRATION

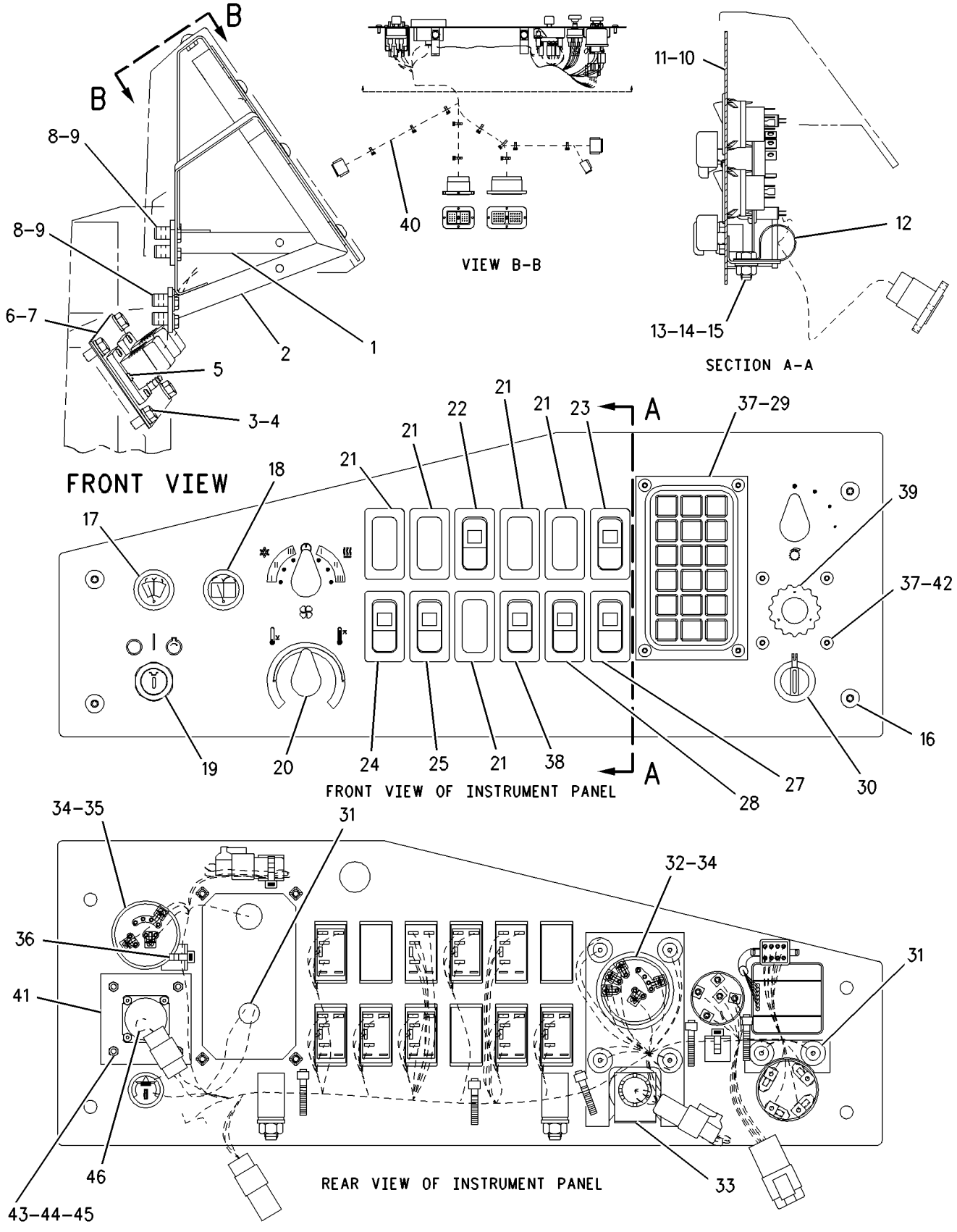

GRAPHIC #1 g00672297

OPERATOR STATION

112-5763 PEDAL GP-GOVERNOR

S/N: 7HR1-UP

PART OF 130-6906, 171-7047 CAB AR

SMCS-1276 **i00970414**

NOTE	REF NO	GRAPHIC REF	PART NUMBER	QTY	PART NAME 1 2 3 4 5 6 (PRODUCT LEVEL)	SEE PAGE
Y	1	1	**113-4799**	1	PEDAL GP-GOVERNOR	1350
M	2	1	**8T-4189**	4	BOLT (M8X1.25X20MM)	
	3	1	**8T-4224**	4	WASHER-HARD (2MM THK)	

M-METRIC PART
Y-SEPARATE ILLUSTRATION

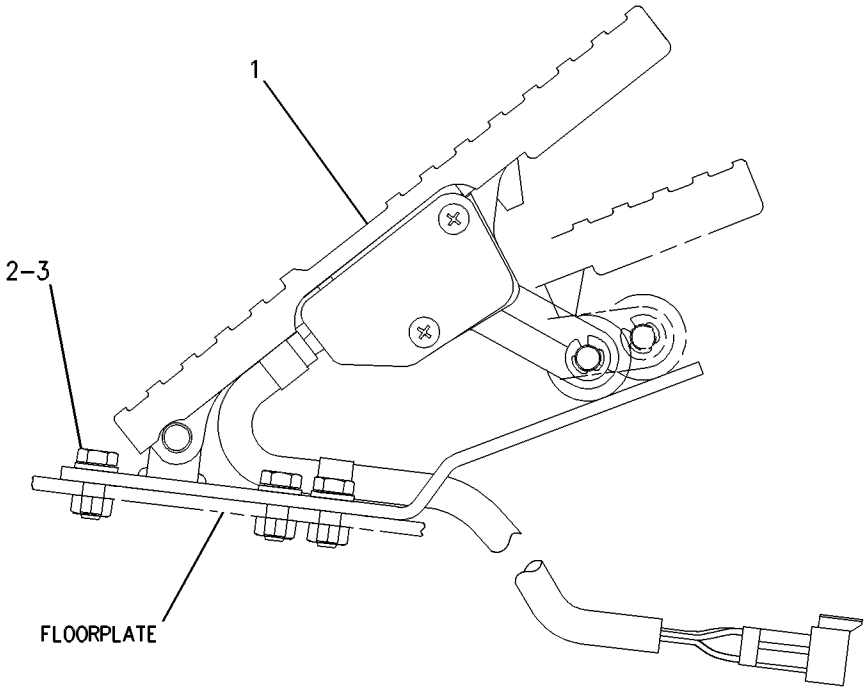

RIGHT SIDE VIEW

GRAPHIC #1 g00523289

OPERATOR STATION

113-4799 PEDAL GP-GOVERNOR

S/N: 7HR1-UP

PART OF 112-5763 PEDAL GP-GOVERNOR

SMCS-1276 **i01225273**

NOTE	REF NO	GRAPHIC REF	PART NUMBER	QTY	PART NAME 1 2 3 4 5 6 (PRODUCT LEVEL)	SEE PAGE
	1	1	**123-9431**	1	COVER	
	2	1	**160-6354**	1	PLATE AS	
CY	3	1	**176-1602**	1	SENSOR GP-POSITION (GOVERNOR PEDAL)	327
	4	1	**140-2961**	1	KIT-ROLLER	
	5	1	**140-2962**	1	KIT-TREADLE PIN	
	6	1	**140-2963**	2	SCREW	
	7	1	**160-6365**	2	SCREW	
	8	1	**160-6366**	2	CLIP	

C-CHANGE FROM PREVIOUS TYPE
Y-SEPARATE ILLUSTRATION

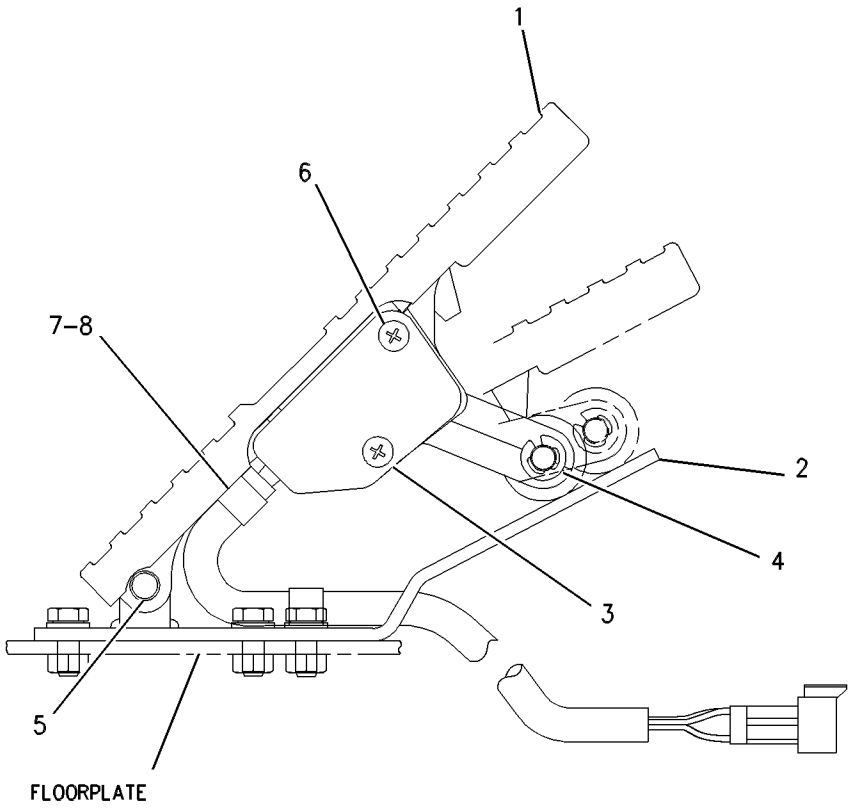

RIGHT SIDE VIEW

GRAPHIC #1 g00527034

OPERATOR STATION

173-1028 PLATE GP-SLIDE

S/N: 7HR398-UP
PART OF 178-7910 SEAT GP
TYPE 1

SMCS-7312 **i01446853**

NOTE	REF NO	GRAPHIC REF	PART NUMBER	QTY	PART NAME 1 2 3 4 5 6 (PRODUCT LEVEL)	SEE PAGE
	1	1	**4V-8256**	4	SPRING	
	2	1	**117-4486**	1	ANCHOR	
	3	1	**117-4492**	1	ROD	
	4	1	**132-0338**	2	WASHER-PLASTIC	
	5	1	**136-1544**	1	LATCH AS-LH	
	6	1	**143-1288**	1	LOCKNUT-FLANGE	
	7	1	**156-5545**	1	LATCH AS-RH	
	8	1	**164-4531**	1	ROD	
	9	1	**9M-1974**	1	WASHER-HARD (8.8X16X2MM THK)	
	10	1	**170-1114**	1	HANDLE (SLIDE ADJUSTMENT)	
	11	1	**170-1115**	1	HANDLE (TILT ADJUSTMENT)	
	12	1	**172-4001**	1	BRACKET	
	13	1	**1D-4675**	1	BOLT-CARRIAGE (3/8-16X0.75 IN)	
	14	1	**2K-4973**	2	LOCKNUT	
	15	1	**7L-8170**	1	NUT-FULL (5/16-18 THD)	
	16	1	**7X-0608**	2	WASHER-HARD (10.2X16X2.0MM THK)	
	17	1	**170-1112**	1	PLATE AS	

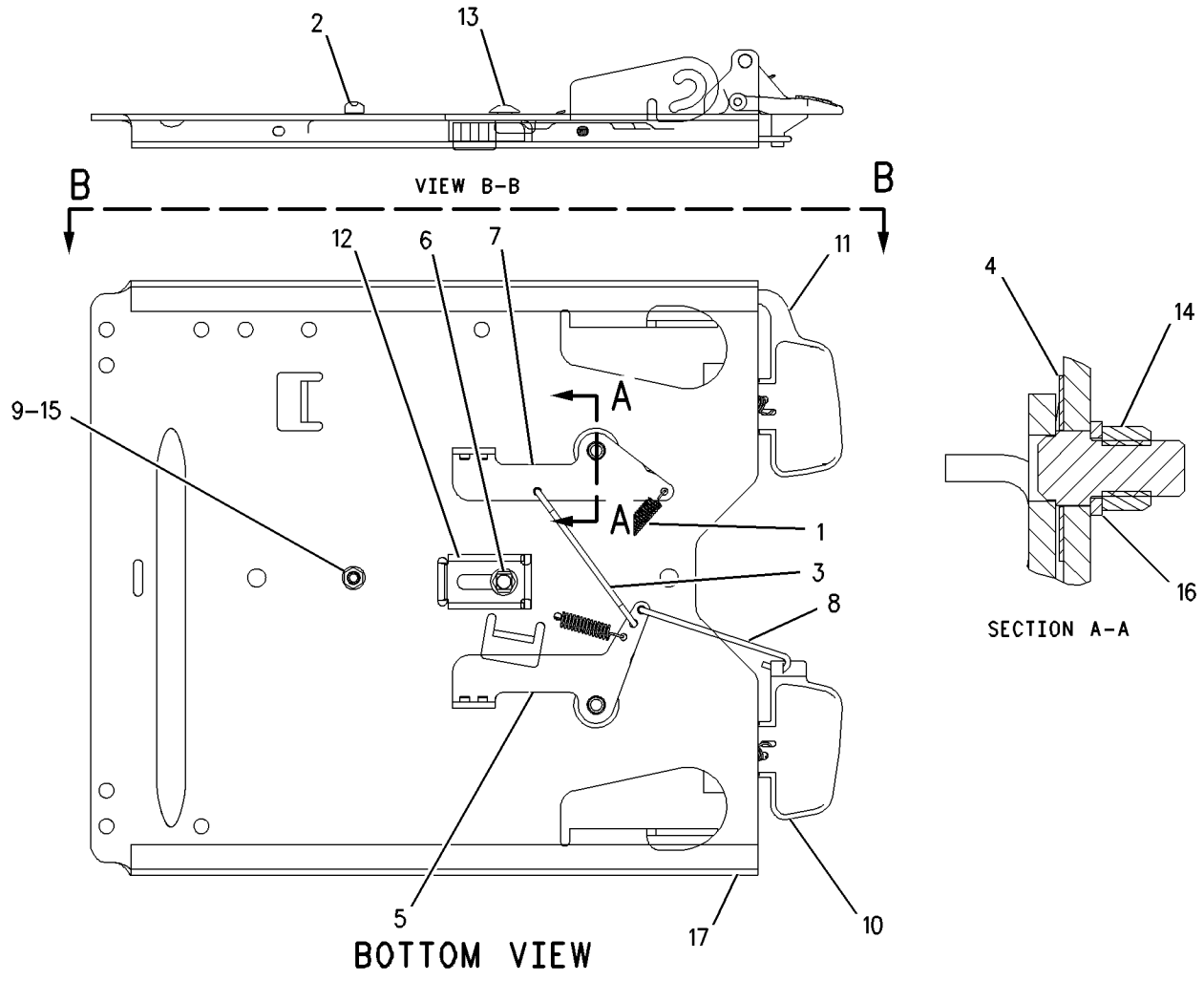

GRAPHIC #1 g00686297

OPERATOR STATION

173-1028 PLATE GP-SLIDE

S/N: 7HR398-UP
PART OF 178-7910 SEAT GP
TYPE 2

SMCS-7312 **i01469457**

NOTE	REF NO	GRAPHIC REF	PART NUMBER	QTY	PART NAME 1 2 3 4 5 6 (PRODUCT LEVEL)	SEE PAGE
	1	1	**4V-8256**	4	SPRING	
	2	1	**170-1112**	1	PLATE AS	
	3	1	**117-4492**	1	ROD	
	4	1	**132-0338**	2	WASHER-PLASTIC	
	5	1	**136-1544**	1	LATCH AS-LH	
	6	1	**143-1288**	1	LOCKNUT-FLANGE	
	7	1	**156-5545**	1	LATCH AS-RH	
	8	1	**164-4531**	1	ROD	
	9	1	**7X-0608**	2	WASHER-HARD (10.2X16X2.0MM THK)	
	10	1	**170-1114**	1	HANDLE (SLIDE ADJUSTMENT)	
	11	1	**170-1115**	1	HANDLE (TILT ADJUSTMENT)	
	12	1	**172-4001**	1	BRACKET	
	13	1	**1D-4675**	1	BOLT-CARRIAGE (3/8-16X0.75 IN)	
	14	1	**2K-4973**	2	LOCKNUT	

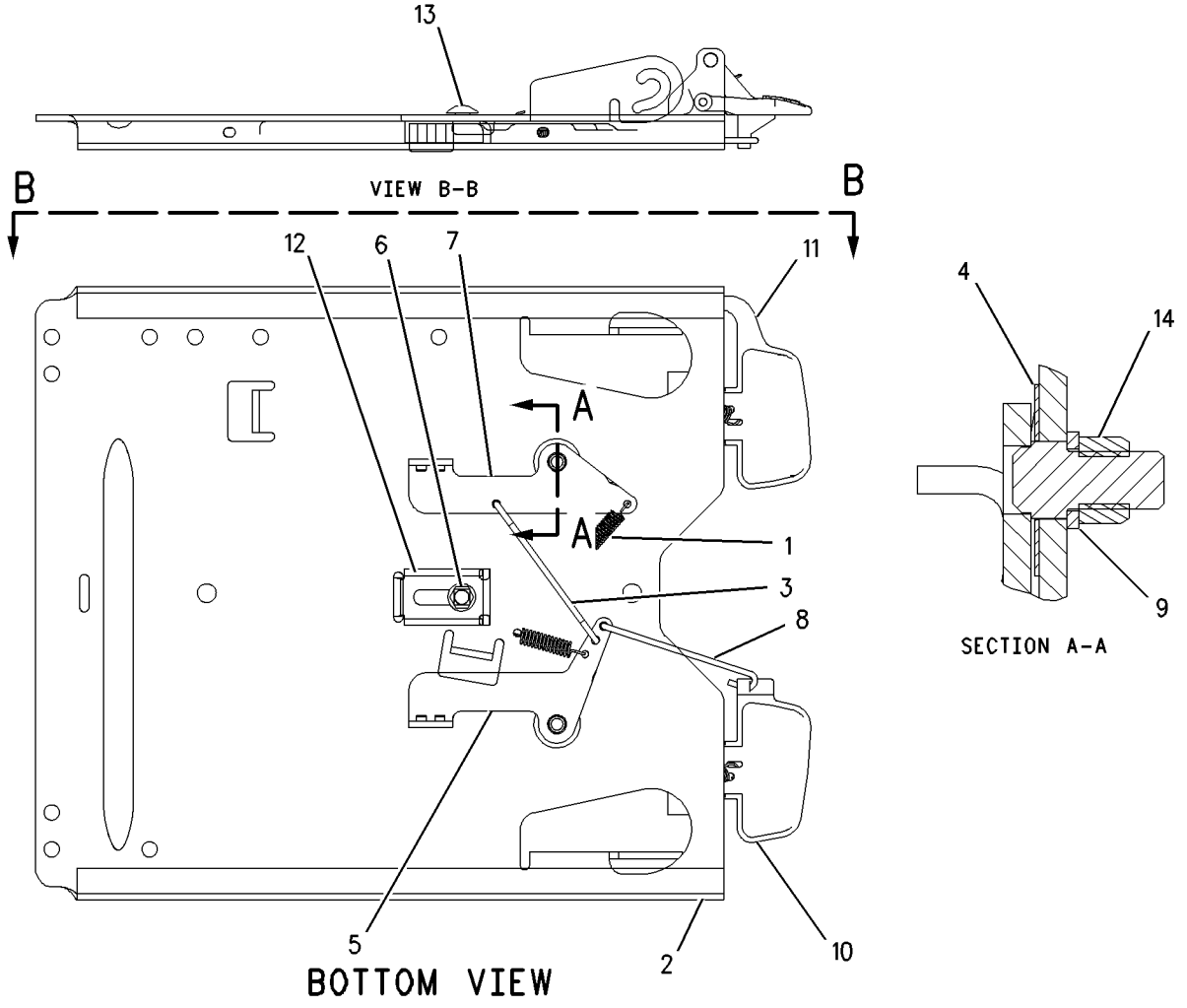

GRAPHIC #1 g00766942

MEMORANDA

OPERATOR STATION

109-6844 PLATFORM GP-OPERATOR

S/N: 7HR1-UP

PART OF 109-6819 CHASSIS AR

SMCS-7253 **i01247138**

NOTE	REF NO	GRAPHIC REF	PART NUMBER	QTY	PART NAME 1 2 3 4 5 6 (PRODUCT LEVEL)	SEE PAGE
	1	2	**1K-8850**	1	SPRING	
	2	2	**3B-4610**	2	COTTER	
	3	2	**9M-5884**	6	BUMPER	
	4	2	**9U-1168**	1	BRACKET	
	5	2	**9U-1169**	1	BRACKET	
Y	6	1	**112-4837**	1	DOOR GP-SIDE	1286
	7	1	**113-6026**	1	COVER AS-RH	
	8	1	**113-6027**	1	COVER AS-LH	
M	9	1,2	**8T-4910**	26	BOLT (M12X1.75X60MM)	
	10	1	**113-6030**	2	PANEL AS	
	11	1	**113-6062**	1	PANEL AS	
M		1	**8T-3597**	4	NUT-WELD (M12X1.75 THD)	
	12	1	**113-6064**	1	PANEL AS	
M		1	**8T-3597**	13	NUT-WELD (M12X1.75 THD)	
	13	1	**113-6304**	1	PANEL AS	
		1	**3R-9322**	1	HINGE	
		1	**4K-8501**	2	CLIP	
M		1	**8T-3490**	9	NUT-WELD (M10X1.5 THD)	
M		1	**8T-3597**	13	NUT-WELD (M12X1.75 THD)	
	14	1	**116-3870**	1	PANEL AS	
	15	2	**186-1654**	16	BRACKET AS	
	16	1	**116-7312**	1	CHANNEL AS	
M		1	**8T-3597**	10	NUT-WELD (M12X1.75 THD)	
	17	2	**116-9520**	1	SUPPORT AS	
M		2	**8T-3490**	4	NUT-WELD (M10X1.5 THD)	
M		2	**8T-3597**	2	NUT-WELD (M12X1.75 THD)	
	18	2	**117-3158**	2	ROD AS	
					(EACH INCLUDES)	
		2	**8T-4121**	3	WASHER-HARD (2.5MM THK)	
	19	1	**117-4729**	1	COVER	
	20	1	**124-3015**	1	PANEL AS-LH	
	22	1	**124-4330**	1	SHEET-LH	
	23	1	**124-4331**	1	SHEET-RH	
	24	1	**124-4834**	2	COVER	
Y	25	1	*130-3589*	1	DOOR GP-SIDE	1290
	26	1,2	**5P-1076**	32	WASHER-HARD (4MM THK)	
	27	1	**7X-0590**	6	WASHER-HARD (6.0MM THK)	
	28	2	**7X-7729**	4	WASHER (3MM THK)	
	29	1,2	**8T-4121**	26	WASHER-HARD (2.5MM THK)	
M	30	1,2	**8T-4136**	28	BOLT (M10X1.50X25MM)	
M	31	1,2	**8T-4139**	40	BOLT (M12X1.75X30MM)	
	32	2	**8T-4223**	32	WASHER-HARD (3MM THK)	
	33	1	**7T-8331**	4	MOUNTING	
M	34	1	**8T-4648**	4	BOLT (M12X1.75X70MM)	
	35	2	**186-1723**	1	BRACKET AS	

M-METRIC PART
Y-SEPARATE ILLUSTRATION

109-6844 PLATFORM GP-OPERATOR *(contd.)* i01247138

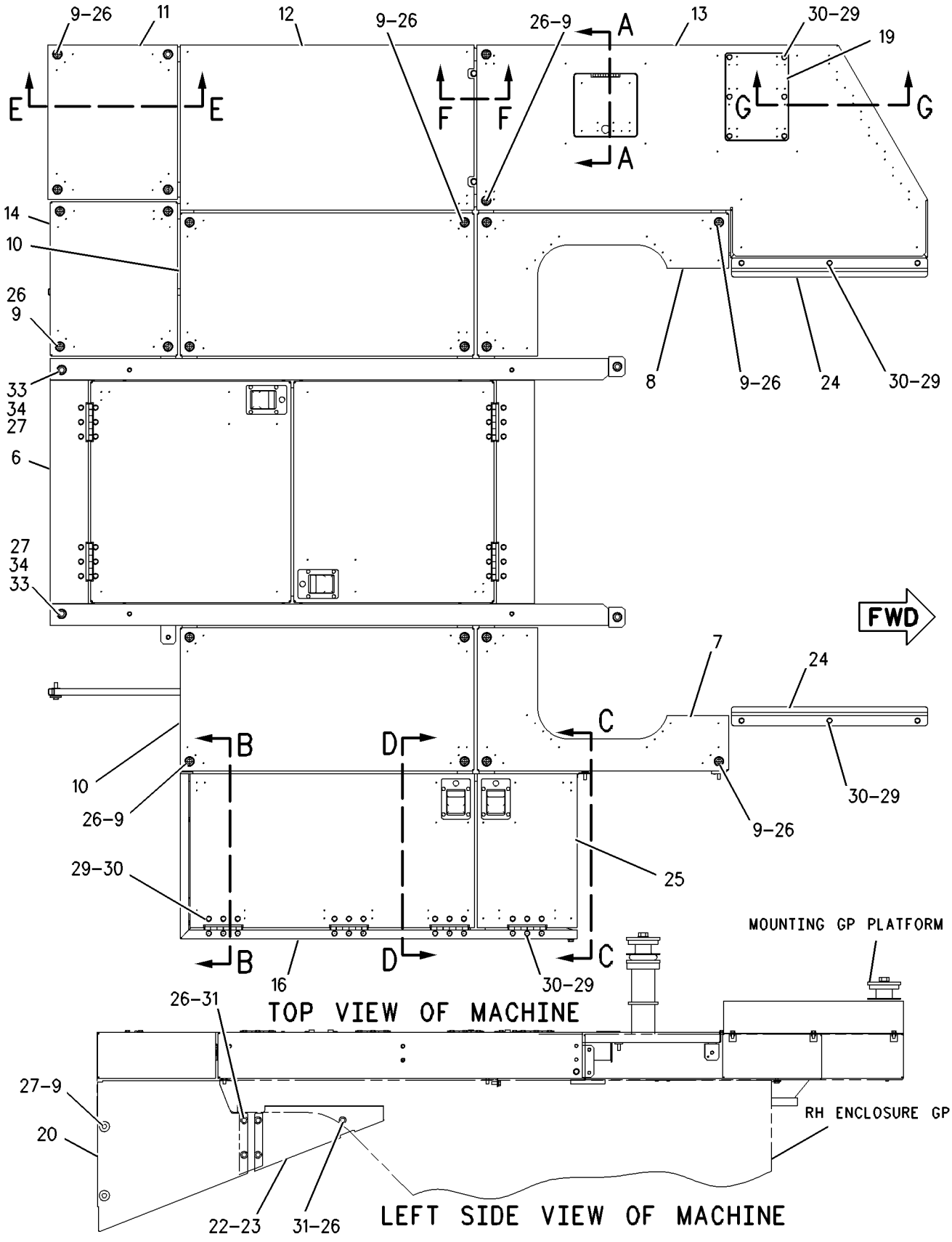

GRAPHIC #1 g00667917

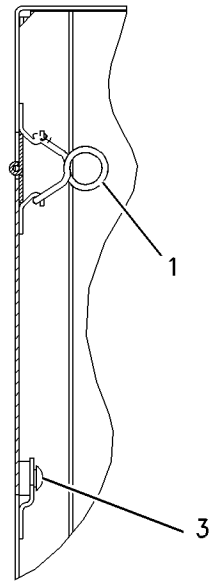

SECTION A-A

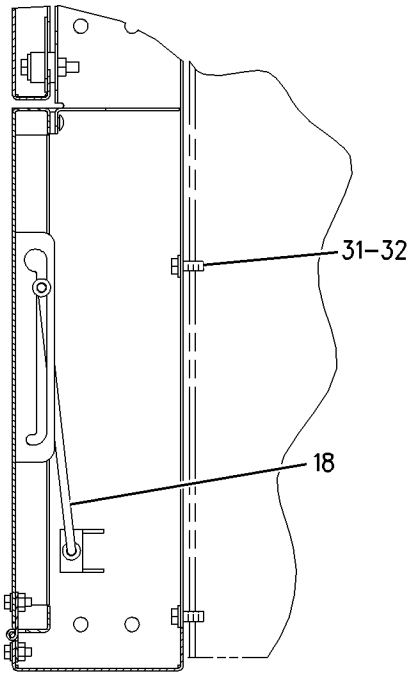

SECTION B-B

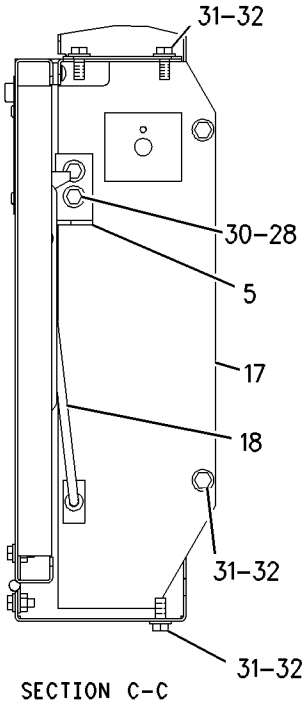

SECTION C-C

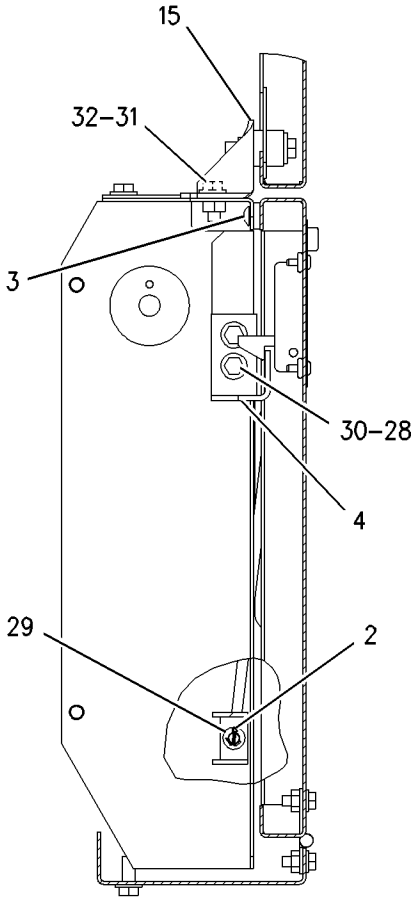

SECTION D-D

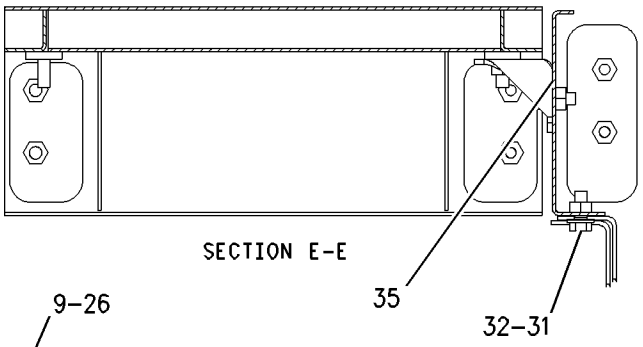

SECTION E-E

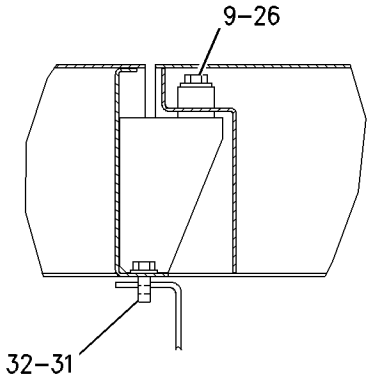

SECTION F-F

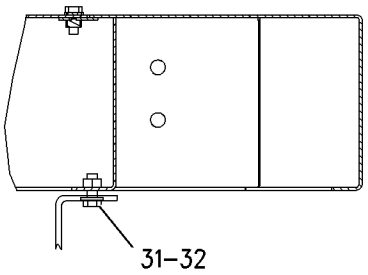

SECTION G-G

GRAPHIC #2

g00667921

OPERATOR STATION

123-7025 PLATFORM GP-OPERATOR

S/N: 7HR1-UP

PART OF 123-7231 CAB & PLATFORM GP

SMCS-7253 **i00190173**

NOTE	REF NO	GRAPHIC REF	PART NUMBER	QTY	PART NAME 1 2 3 4 5 6 (PRODUCT LEVEL)	SEE PAGE
	1	1	**123-7026**	1	PLATFORM AS	
M		1	**8T-3490**	59	NUT-WELD (M10X1.5 THD)	
M		1	**6V-9632**	14	NUT-WELD (M6X1 THD)	
		1	**7T-1099**	16	LINK	
M		1	**8T-3612**	40	NUT-WELD (M8X1.25 THD)	
M		1	**8T-3635**	2	STUD (M12X1.75X34.93MM)	
M		1	**8T-9087**	1	STUD-WELD (M10X1.5X25.1 MM)	
	2	1	**4E-8995**	1	DOOR AS	
		1	**6W-8906**	1	LATCH AS	
		1	**8R-6128**	1	HINGE	
M	3	1	**9X-2042**	2	SCREW-TRUSS HEAD (M6X1.0X12MM)	

M-METRIC PART

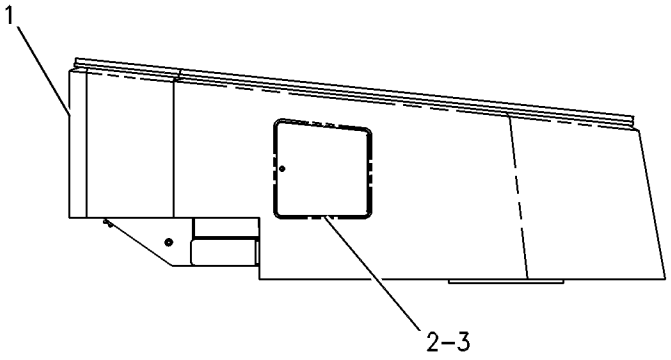

RIGHT SIDE VIEW

GRAPHIC #1 g00121439

OPERATOR STATION

177-4935 RECLINER GP-SEAT

S/N: 7HR398-UP

PART OF 178-7910 SEAT GP

SMCS-7312 **i01345920**

NOTE	REF NO	GRAPHIC REF	PART NUMBER	QTY	PART NAME 1 2 3 4 5 6 (PRODUCT LEVEL)	SEE PAGE
	1	1	**188-2586**	1	LATCH	
	2	1	**164-4146**	1	SPRING	
	3	1	**177-1860**	1	GEAR	
	4	1	**177-1862**	1	BRACKET	
	5	1	**178-0607**	1	SHAFT AS	
	5A	1	**2K-9111**	2	PIN-SPRING	
	5B	1	**9M-6803**	2	DOWEL	
	5C	1	**170-8590**	1	SPRING	
	6	1	**178-0608**	1	BRACKET AS	
	7	1	**178-0609**	1	BRACKET AS	
	8	1	**0S-1614**	1	BOLT (1/4-20X.5 IN)	
	9	1	**101-2867**	1	WASHER-HARD	
	10	1	**4M-6425**	1	BOLT (5/16-18X1 IN)	
	11	1	**5S-7383**	1	BOLT (3/8-16X1.75 IN)	
	12	1	**8T-4224**	1	WASHER-HARD (8.8X16X2MM THK)	

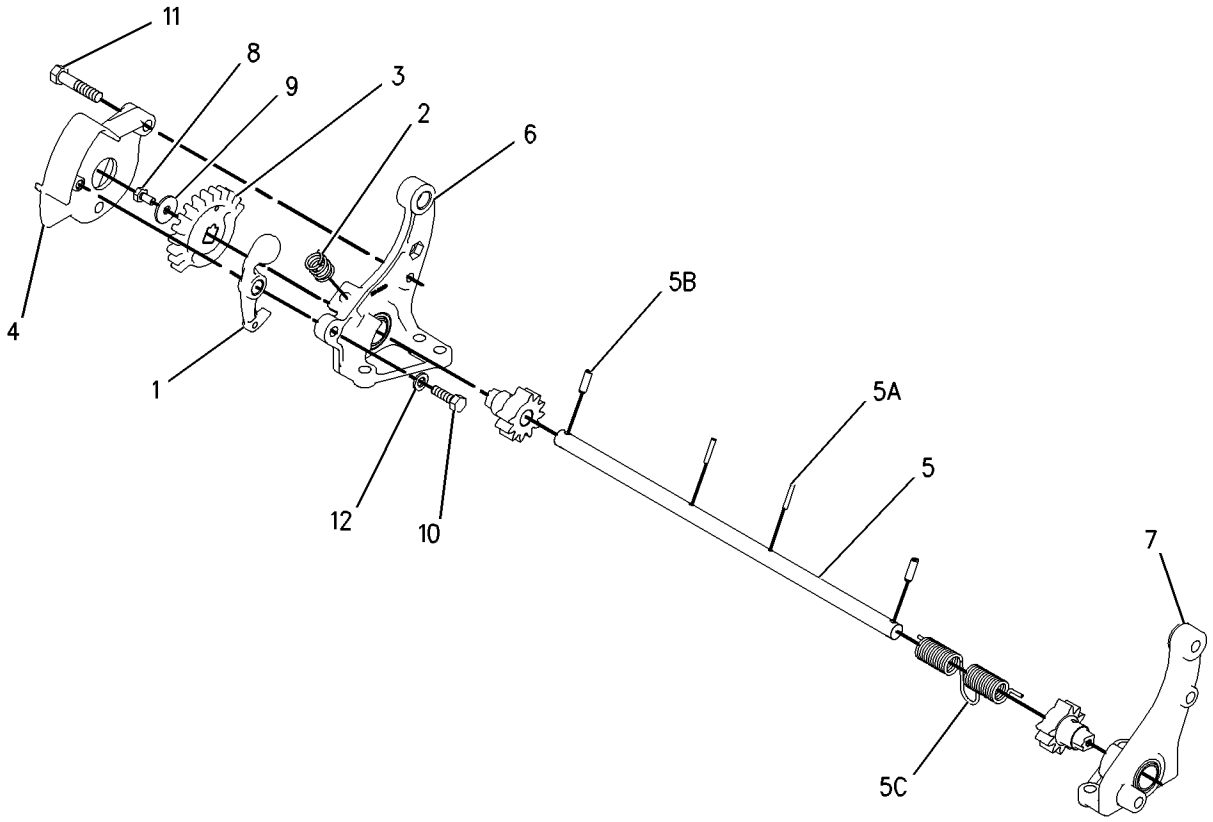

GRAPHIC #1 g00673022

OPERATOR STATION

109-6838 ROPS GP

S/N: 7HR1-UP

PART OF 109-6819 CHASSIS AR

SMCS-7323 **i00738092**

NOTE	REF NO	GRAPHIC REF	PART NUMBER	QTY	PART NAME 1 2 3 4 5 6 (PRODUCT LEVEL)	SEE PAGE
	1	1	**4E-5662**	1	PLATE	
	2	1	**9U-3663**	1	PLATE AS	
M		1	**8T-3490**	5	NUT-WELD (M10X1.5 THD)	
	3	1	**110-9135**	1	CANOPY AS	
M		1	**8T-3490**	2	NUT-WELD (M10X1.5 THD)	
		1	**7T-1099**	19	LINK	
		1	**8X-5147**	1	BLOCK (30 MM X 30 MM)	
		1	**9T-6001**	3	BOSS	
	4	1	**3S-7023**	40	WASHER (6.0MM THK)	
	5	1	**5P-8245**	20	WASHER (3MM THK)	
M	6	1	**6V-3822**	5	BOLT (M10X1.50X35MM)	
	7	1	**6V-5839**	5	WASHER (2.5MM THK)	
M	8	1	**6V-8675**	20	BOLT (M12X1.75X35MM)	
M	9	1	**8C-3236**	40	BOLT (M30X3.5X160MM)	
	10	1	**128-6063**	1	COVER	

M-METRIC PART

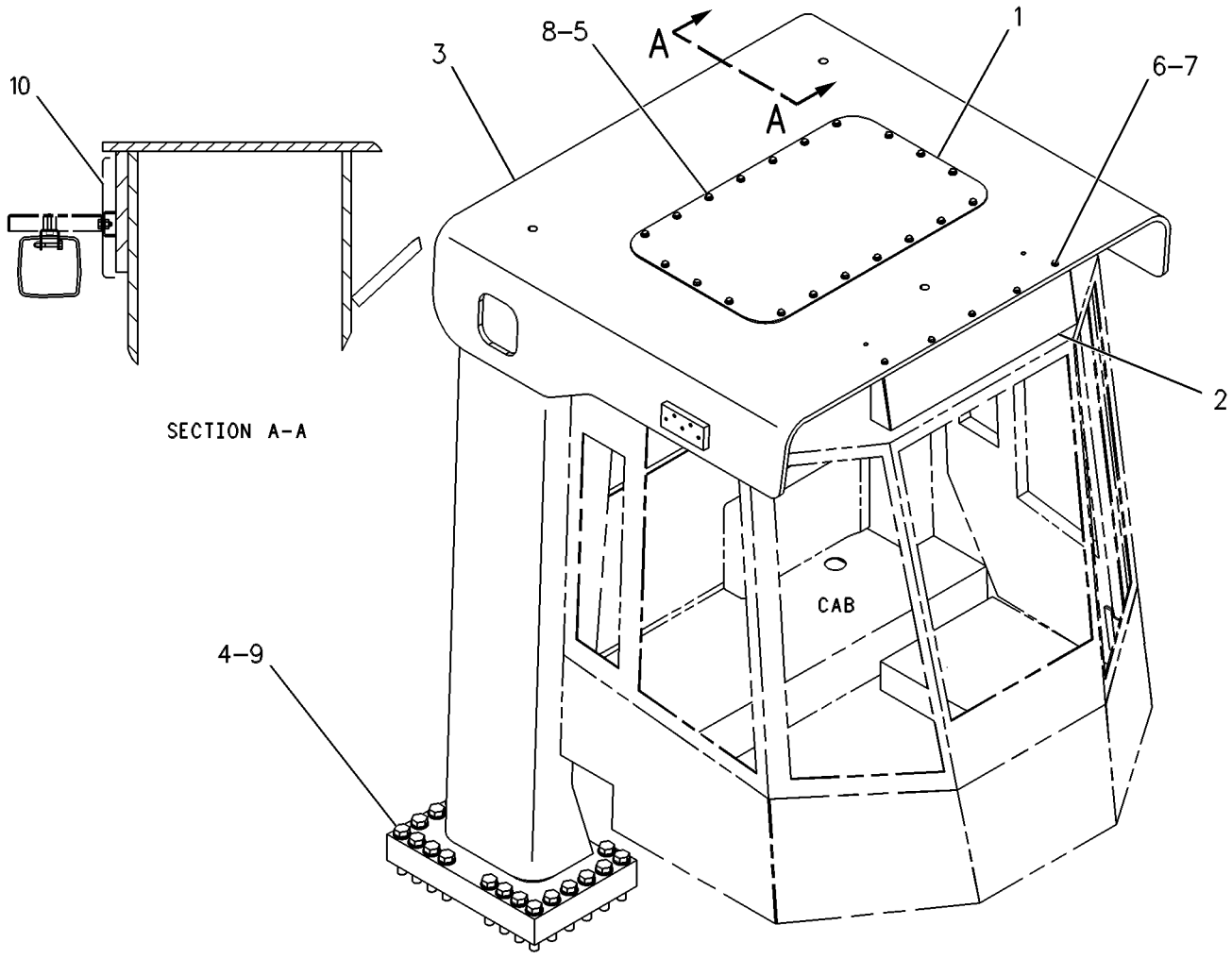

GRAPHIC #1 g00260464

OPERATOR STATION

9U-0684 SCREEN GP-SUN

S/N: 7HR1-UP
AN ATTACHMENT

SMCS-7165 **i01509732**

NOTE	REF NO	GRAPHIC REF	PART NUMBER	QTY	PART NAME 1 2 3 4 5 6 (PRODUCT LEVEL)	SEE PAGE
	1	1	**8Y-6339**	1	SCREEN GP-SUN (FRONT)	
	2	1	**8Y-6340**	1	SCREEN GP-SUN (REAR)	
					(EACH SCREEN GP INCLUDES)	
		1	**109-0652**	1	KNOB	
		1	**109-0651**	1	GUIDE	
	3	1	**8Y-6397**	4	ROD-GUIDE	
	4	1	**144-2900**	2	BAR	
	5	1	**109-0648**	2	BRACKET	
	6	1	**5P-8524**	2	GROMMET	
	7	1	**103-5863**	2	BRACKET-REAR	
M	8	1	**9X-2042**	4	SCREW-TRUSS HEAD (M6X1X12MM)	
M	9	1	**7X-3332**	2	SCREW-HEX FLANGE	
	10	1	**154-3793**	1	GUIDE	

M-METRIC PART

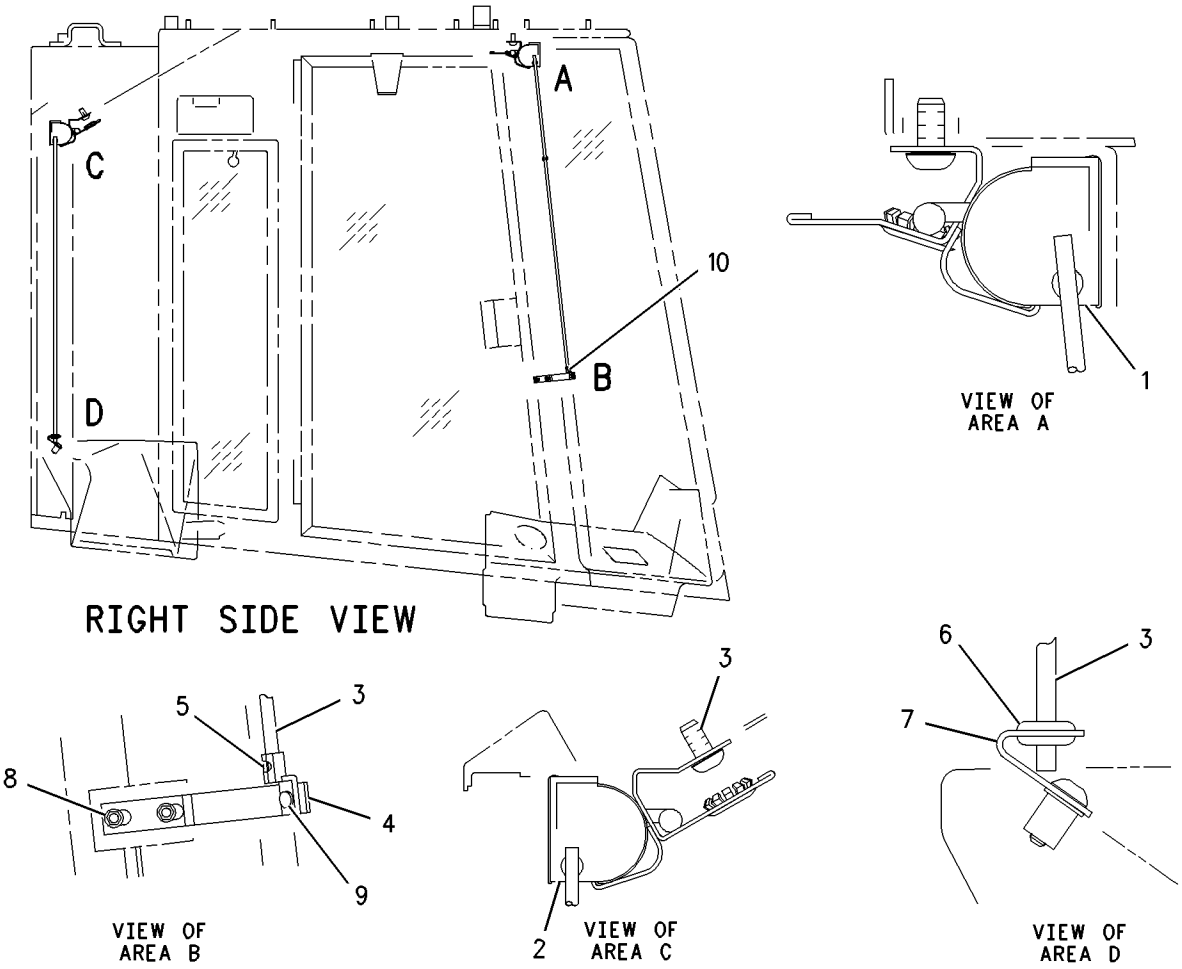

GRAPHIC #1 g00783923

OPERATOR STATION

148-2228 SCREEN GP-SUN

S/N: 7HR1-UP

PART OF 130-6906, 171-7047 CAB AR

SMCS-7165 **i01524519**

NOTE	REF NO	GRAPHIC REF	PART NUMBER	QTY	PART NAME 1 2 3 4 5 6 (PRODUCT LEVEL)	SEE PAGE
	1	1	**8Y-6339**	1	SCREEN GP-SUN (FRONT)	
		1	**109-0651**	1	GUIDE	
		1	**109-0652**	1	KNOB	
	2	1	**109-0648**	2	BRACKET	
	3	1	**8Y-6397**	2	ROD-GUIDE	
	4	1	**144-2900**	2	BAR	
	5	1	**8Y-6340**	1	SCREEN GP-SUN (REAR)	
		1	**109-0651**	1	GUIDE	
		1	**109-0652**	1	KNOB	
M	6	1	**9X-2042**	4	SCREW-TRUSS HEAD (M6X1X12MM)	
M	7	1	**7X-3332**	2	SCREW-HEX FLANGE	
	8	1	**154-3793**	1	GUIDE	

M-METRIC PART

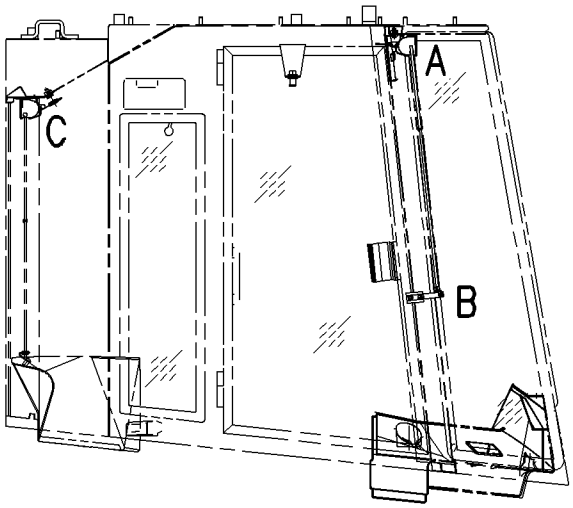

RIGHT SIDE VIEW

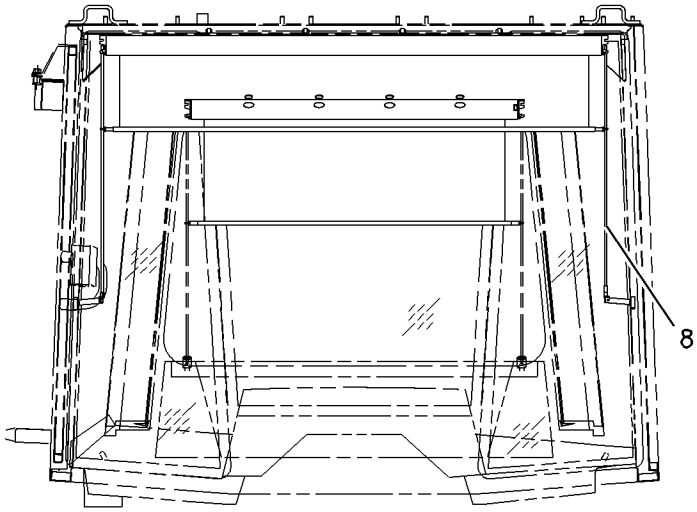

FRONT VIEW

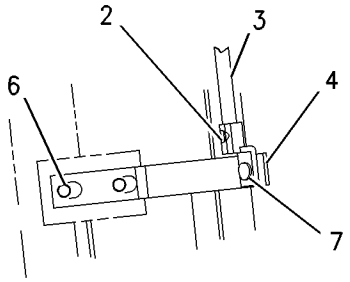

VIEW OF AREA C

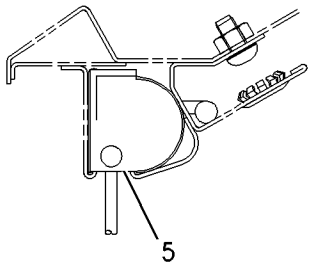

VIEW OF AREA B

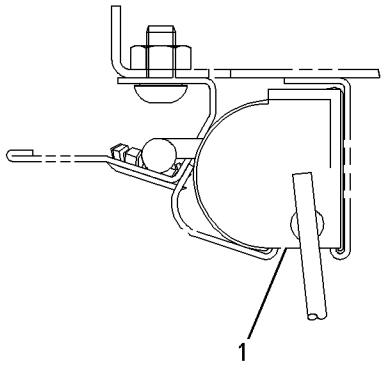

VIEW OF AREA A

GRAPHIC #1 g00791957

OPERATOR STATION

117-1410 SEALING GP-GLASS

S/N: 7HR1-UP

PART OF 130-6906, 171-7047 CAB AR

SMCS-7310, 7340 **i01057779**

NOTE	PART NUMBER	QTY	PART NAME 1 2 3 4 5 6 (PRODUCT LEVEL)	SEE PAGE
	119-0781	1	ADHESIVE	

OPERATOR STATION

122-4617 SEAT BELT GP

S/N: 7HR1-UP

PART OF 124-7725 SEAT GP

SMCS-7327 **i01536400**

NOTE	REF NO	GRAPHIC REF	PART NUMBER	QTY	PART NAME 1 2 3 4 5 6 (PRODUCT LEVEL)	SEE PAGE
	1	1	**4D-6432**	1	LOCKNUT	
	2	1	**8T-5360**	1	WASHER (12X22.5X2.5MM THK)	
	3	1	**8Y-5953**	1	BOLT-HEX (7/16-20X1.5 IN)	
	4	1	**1A-4350**	1	BOLT (7/16-20X1.75 IN)	

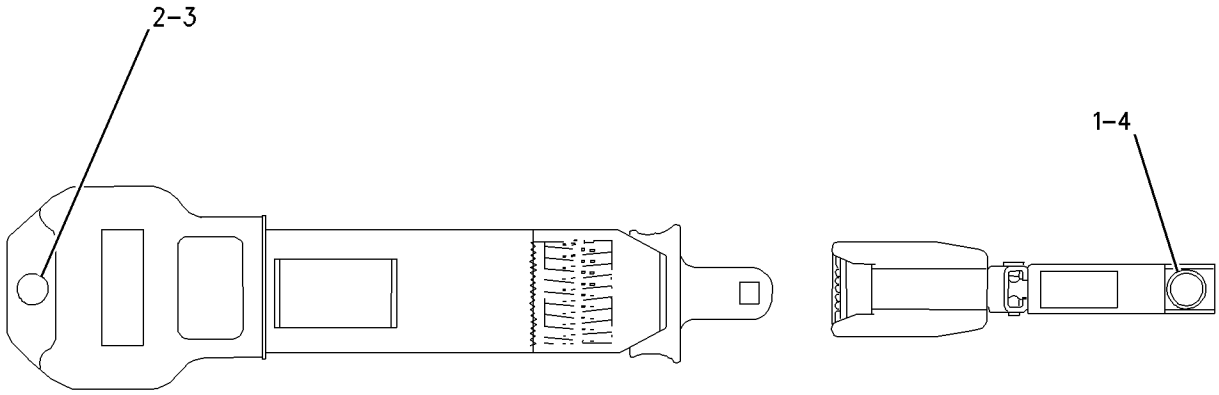

GRAPHIC #1 g00798515

OPERATOR STATION

133-7345 SEAT BELT GP

S/N: 7HR1-UP

PART OF 124-7725 SEAT GP

SMCS-7327 **i00173227**

NOTE	REF NO	GRAPHIC REF	PART NUMBER	QTY	PART NAME 1 2 3 4 5 6 (PRODUCT LEVEL)	SEE PAGE
	1	1	**1A-4350**	1	BOLT (7/16-20X1.75IN)	
	2	1	**4D-6432**	1	LOCKNUT (7/16-20 THD)	
	3	1	**8S-0934**	1	LOCKNUT-FLANGE (7/16-20 THD)	
	4	1	**8T-9381**	1	BOLT (7/16-20X1IN)	
	5	1	**8Y-5953**	1	BOLT-HEX (7/16-20X1.5IN)	
	6	1	**8T-5360**	1	WASHER (2.5MM THK)	

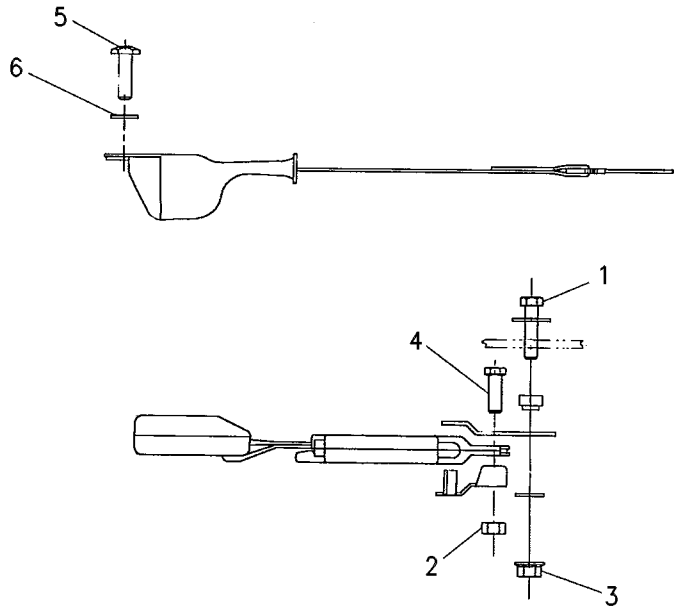

GRAPHIC #1 g00121769

OPERATOR STATION

156-1148 SEAT BELT GP

S/N: 7HR1-UP
RETRACTABLE
PART OF 124-7725, 171-8752 SEAT GP

SMCS-7327 **i01453673**

NOTE	REF NO	GRAPHIC REF	PART NUMBER	QTY	PART NAME 1 2 3 4 5 6 (PRODUCT LEVEL)	SEE PAGE
	1	1	**1L-9080**	1	BOLT (7/16-20X1.5IN)	
	2	1	**8T-5360**	1	WASHER (12X22.5X2.5MM THK)	
	3	1	**1A-4350**	1	BOLT (7/16-20X1.75 IN)	
	4	1	**4D-6432**	1	LOCKNUT	

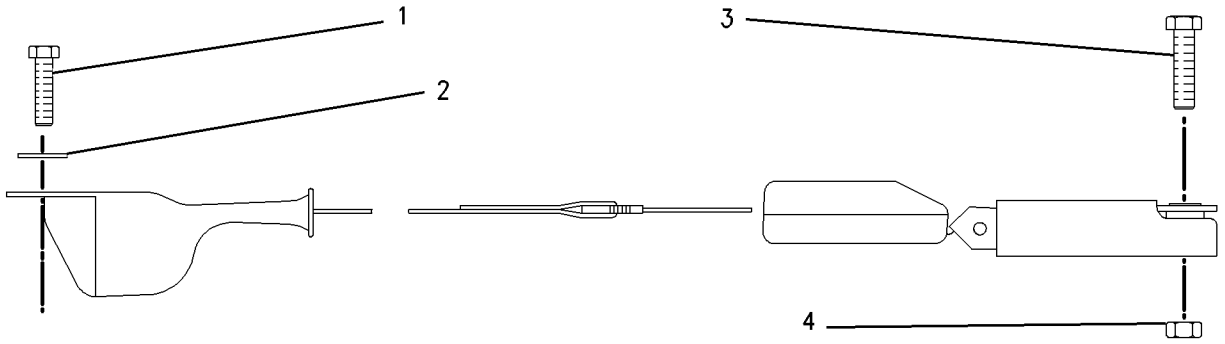

GRAPHIC #1 g00760019

OPERATOR STATION

8Y-6882 SEAT GP—CLOTH

S/N: 7HR298-UP
LUMBAR - GRAY
PART OF 171-8752 SEAT GP

SMCS-7312 **i01395807**

NOTE	REF NO	GRAPHIC REF	PART NUMBER	QTY	PART NAME 1 2 3 4 5 6 (PRODUCT LEVEL)	SEE PAGE
Y	1	1	**108-8421**	1	PAN GP-SEAT (BACK)	1338
	8	1	**8Y-5930**	1	BAR AS-SLIDE	
	9	1	**8Y-5931**	1	BAR AS-LATCH	
	10	1	**8S-7803**	2	RING-RETAINING	
	11	1	**8Y-5932**	1	LATCH AS	
	12	1	**8Y-5936**	1	SPRING	
	13	1	**095-0878**	1	PIN-SPRING	
	14	1	**8Y-6051**	2	SPACER (14.24MM THK)	
	15	1	**7B-7525**	2	BOLT-SOCKET HEAD (7/16-14X1.25 IN)	
	16	1	**8Y-5981**	2	BUSHING-BACKREST	
	17	1	**8Y-5937**	1	BRACKET AS-RH	
	18	1	**8Y-5938**	1	BRACKET AS-LH	
		1	**4D-6432**	1	LOCKNUT	
	19	1	**7U-4898**	6	SCREW (3/8-16X0.75 IN)	
	20	1	**2K-4973**	6	LOCKNUT (3/8-16 THD)	
	21	1	**8Y-5979**	1	PIN	
	22	1	**6V-2456**	2	RING-RETAINING	
	23	1	**8Y-5928**	2	SPRING	
	24	1	**2B-2695**	4	BOLT (5/16-18X.875 IN)	
JS	25	1	**8Y-5947**	4	FASTENER	
	26	1	**8Y-6833**	1	SPRING-RH	
	27	1	**8Y-6834**	1	SPRING-LH	
	28	1	**1C-0569**	2	BOLT (5/16-18X.5 IN)	
Y	29	1	*8Y-5992*	1	PAN GP-SEAT (BOTTOM)	1336
L	30	1	**113-0899**	10	SCREW-FLAT HEAD (6-20X.5 IN)	
	31	1	**119-7127**	1	CUSHION AS	
B	32	1	**061-8803**	4	SHIM (1.52MM THK)	
S	33	1	**9L-7469**	2	LOCKPIN	
	34	1	**8Y-5929**	1	PLATE AS-SLIDE	
		1	**4K-9097**	7	NUT-WELD (5/16-18 THD)	
JZ	35	1		1	CUSHION AS	
LZ	36	1		2	KNOB-SEAT TILT	
LZ	37	1		1	KNOB-SLIDE	
LZ	38	1		1	KNOB-SLIDE	
LZ	39	1		1	KNOB-BACK TILT	
LZ	40	1		1	KNOB-BACK TILT	
LZ	41	1		1	KNOB-SEAT TILT	
SZ	42	1		1	PAN AS	
					AVAILABLE REPAIR KIT(S):	
S			**8Y-6933**	1	KIT-TILT PAN	
L			**112-4577**	1	KIT-SEAT KNOB	
J			**119-7141**	1	KIT-SEAT CUSHION (CLOTH)	
			149-4745	1	KIT-SLIDER BLOCK	
					(INCLUDES BLOCKS AND A BOLT)	

B-USE AS REQUIRED
J-KIT MARKED J INCLUDES PART(S) MARKED J
L-KIT MARKED L INCLUDES PART(S) MARKED L
S-KIT MARKED S INCLUDES PART(S) MARKED S
Y-SEPARATE ILLUSTRATION
Z-NOT SERVICED SEPARATELY

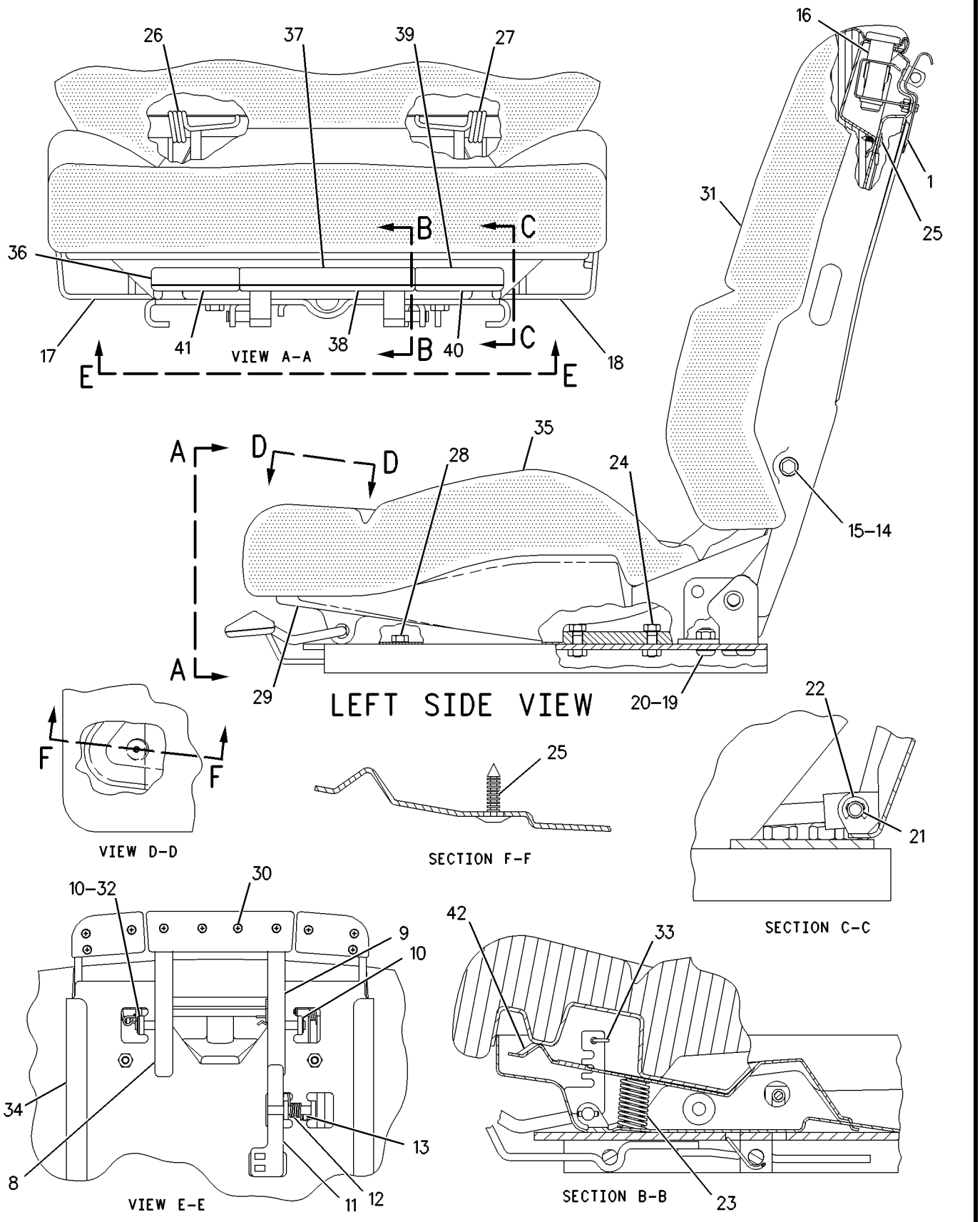

GRAPHIC #1 g00591423

124-7725 SEAT GP–CLOTH

S/N: 7HR1-UP

PART OF 123-8718 SEAT GP-SUSPENSION

TYPE 1

SMCS-7312 **i00837289**

NOTE	REF NO	GRAPHIC REF	PART NUMBER	QTY	PART NAME 1 2 3 4 5 6 (PRODUCT LEVEL)	SEE PAGE
Y	1	1	**124-7726**	1	SEAT GP	1372
Y	2	1	**133-7345**	1	SEAT BELT GP	1364
Y	3	1	**8Y-6883**	1	EXTENSION GP-BACKREST	1296

Y-SEPARATE ILLUSTRATION

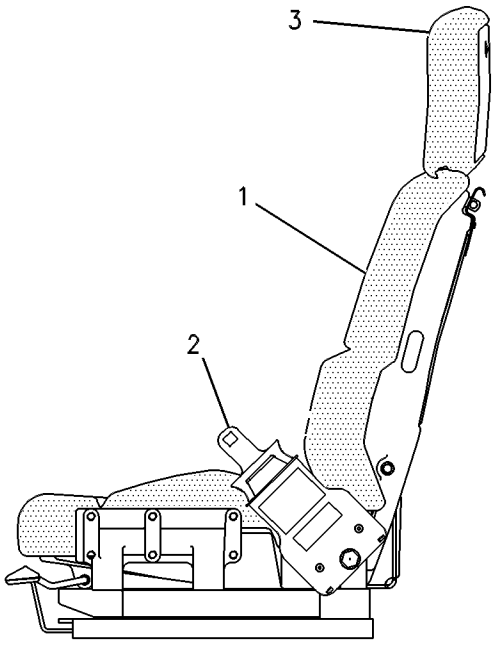

LEFT SIDE VIEW

GRAPHIC #1 g00255451

124-7725 SEAT GP–CLOTH

S/N: 7HR1-UP
PART OF 123-8718 SEAT GP-SUSPENSION
TYPE 2

SMCS-7312 **i01057312**

NOTE	REF NO	GRAPHIC REF	PART NUMBER	QTY	PART NAME 1 2 3 4 5 6 (PRODUCT LEVEL)	SEE PAGE
Y	1	1	**124-7726**	1	SEAT GP	1372
Y	2	1	*122-4617*	1	SEAT BELT GP	1363
Y	3	1	**8Y-6883**	1	EXTENSION GP-BACKREST	1296
	4	1	**130-2321**	1	WASHER	

Y-SEPARATE ILLUSTRATION

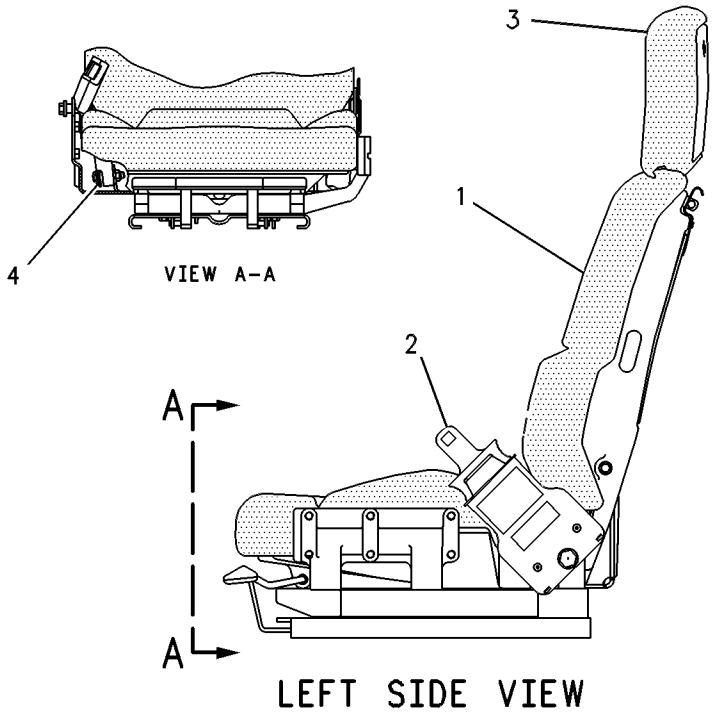

GRAPHIC #1 g00278948

OPERATOR STATION

124-7725 SEAT GP–CLOTH

S/N: 7HR1-297

PART OF 123-8718 SEAT GP-SUSPENSION

SMCS-7312 **i00836707**

NOTE	REF NO	GRAPHIC REF	PART NUMBER	QTY	PART NAME 1 2 3 4 5 6 (PRODUCT LEVEL)	SEE PAGE
Y	1	1	**124-7726**	1	SEAT GP	1372
CY	2	1	**156-1148**	1	SEAT BELT GP	1365
Y	3	1	**8Y-6883**	1	EXTENSION GP-BACKREST	1296
	4	1	**130-2321**	1	WASHER	

C-CHANGE FROM PREVIOUS TYPE
Y-SEPARATE ILLUSTRATION

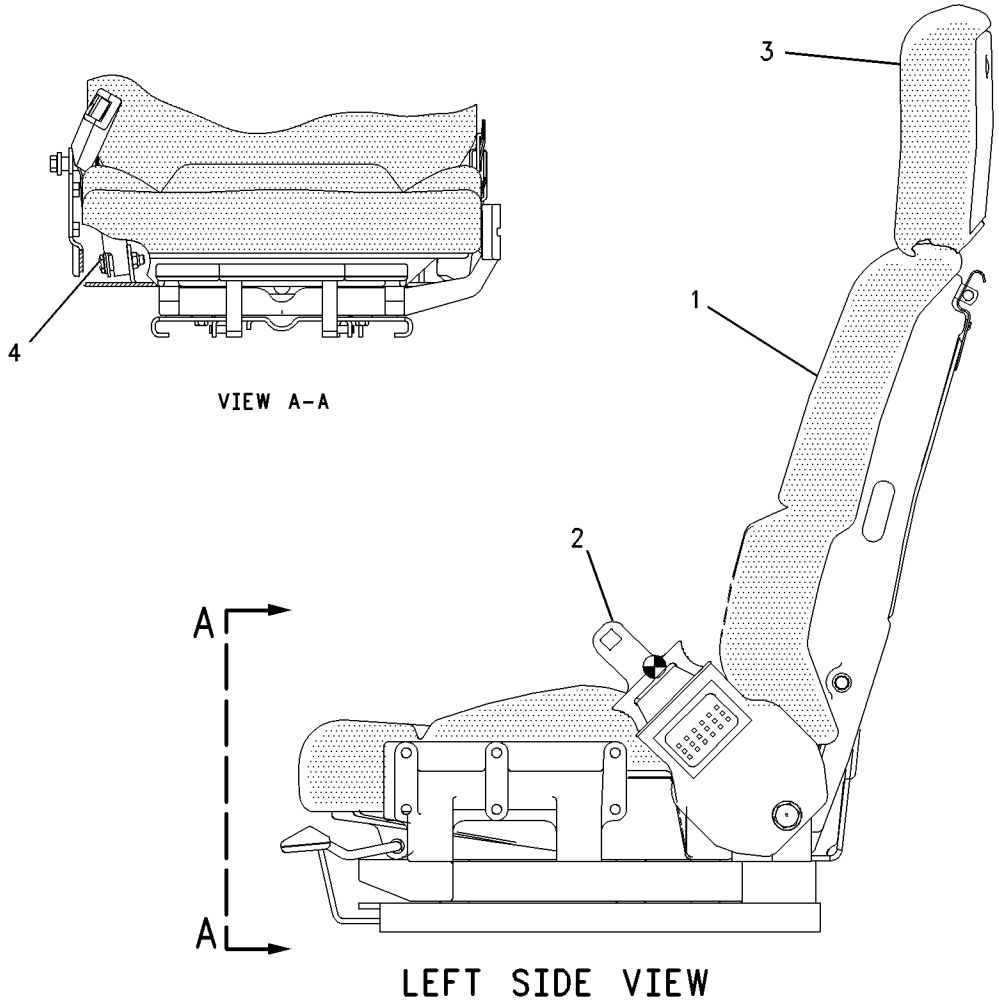

GRAPHIC #1 g00408756

MEMORANDA

OPERATOR STATION

124-7726 SEAT GP–CLOTH

S/N: 7HR1-297
PART OF 124-7725 SEAT GP
TYPE 1

SMCS-7312 **i01191735**

NOTE	REF NO	GRAPHIC REF	PART NUMBER	QTY	PART NAME 1 2 3 4 5 6 (PRODUCT LEVEL)	SEE PAGE
Y	1	1	*8Y-5992*	1	PAN GP-SEAT (BOTTOM)	1336
	2	1	**138-7518**	1	BRACKET	
	3	1	**113-0899**	10	SCREW-FLAT HEAD (6-20X.5IN)	
	4	1	**119-7127**	1	CUSHION AS	
HZ	5	1		1	CUSHION AS	
PZ	6	1		1	KNOB-SEAT TILT (UPPER)	
	7	1	**8Y-5929**	1	PLATE AS-SLIDE	
		1	**4K-9097**	7	NUT-WELD (5/16-18 THD)	
	8	1	**8Y-6991**	1	BAR AS-SLIDE	
	9	1	**8Y-6993**	1	BAR AS-LATCH	
	10	1	**8S-7803**	2	RING-RETAINING	
	11	1	**8Y-5932**	1	LATCH AS	
	12	1	**8Y-5936**	1	SPRING	
	13	1	**095-0878**	1	PIN-SPRING	
PZ	14	1		1	KNOB-SLIDE (UPPER)	
PZ	15	1		1	KNOB-SLIDE (LOWER)	
PZ	16	1		1	KNOB-BACK TILT (UPPER)	
		1	**141-9750**	1	BRACKET AS	
M		1	**8T-3490**	4	NUT-WELD (M10X1.5 THD)	
		1	**9V-7440**	1	NUT-WELD (3/8-16 THD)	
	18	1	**8Y-5938**	1	BRACKET AS-LH	
		1	**4D-6432**	1	LOCKNUT (7/16-20 THD)	
	19	1	**4E-6218**	1	SUPPORT	
		1	**5V-1498**	7	LOCKNUT (3/8-16 THD)	
	21	1	**8Y-5979**	1	PIN	
	22	1	**6V-2456**	2	RING-RETAINING	
PZ	23	1		1	KNOB-BACK TILT (LOWER)	
PZ	24	1		1	KNOB-SEAT TILT (LOWER)	
	25	1	**8Y-5947**	4	FASTENER	
	26	1	**8Y-6833**	1	SPRING-RH	
	27	1	**8Y-6834**	1	SPRING-LH	
	28	1	**2B-2694**	2	BOLT (5/16-18X2IN)	
	29	1	**1D-4539**	4	BOLT (5/16-18X2.5IN)	
LZ	30	1		1	PAN AS	
	31	1	**8Y-5928**	2	SPRING	
	32	1	**8Y-5981**	2	BUSHING-BACKREST	
	33	1	**7B-7525**	1	BOLT-SOCKET HEAD (7/16-14X1.25IN)	
	34	1	**8Y-6051**	1	SPACER (14.24MM THK)	
	35	1	**9L-7469**	2	LOCKPIN	
	36	1	**101-3776**	6	SCREW-HEX SOCKET (3/8-16X2.25IN)	
B	37	1	**061-8803**	4	SHIM (1.52MM THK)	
	38	1	**7X-0321**	1	BOLT	
	39	1	**133-8523**	1	SPACER (22MM THK)	
	40	1	**7X-0589**	1	WASHER-HARD (5.0MM THK)	
	41	1	**7U-4898**	2	SCREW (3/8-16X0.75IN)	
	42	1	**7X-1387**	2	WASHER (1.9MM THK)	
Y	43	1	**108-8421**	1	PAN GP-SEAT (BACK)	1338
					AVAILABLE REPAIR KIT(S):	
H			**119-7141**		KIT-SEAT CUSHION	
P			**112-4577**		KIT-SEAT KNOB	
L			**8Y-6933**		KIT-TILT PAN	
			8Y-5889		KIT-SLIDER BLOCK (INCLS BLOCKS & BOLT)	

B-USE AS REQUIRED
H-KIT MARKED H INCLUDES PART(S) MARKED H
L-KIT MARKED L INCLUDES PART(S) MARKED L
M-METRIC PART
P-KIT MARKED P INCLUDES PARTS MARKED P
Y-SEPARATE ILLUSTRATION
Z-NOT SERVICED SEPARATELY

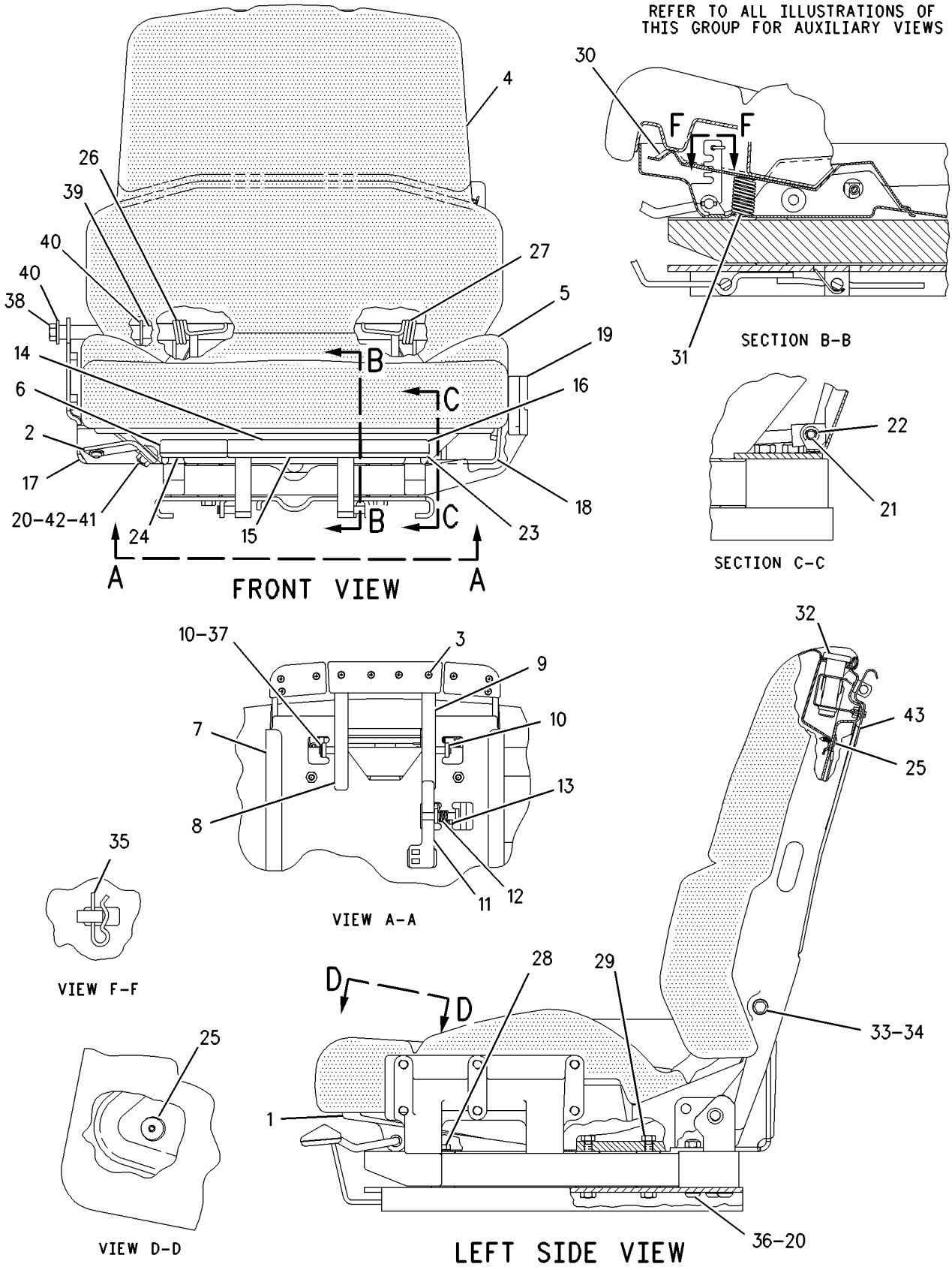

GRAPHIC #1 g00637828

MEMORANDA

OPERATOR STATION

124-7726 SEAT GP–CLOTH

S/N: 7HR1-297
PART OF 124-7725 SEAT GP
TYPE 2

SMCS-7312 **i01191942**

NOTE	REF NO	GRAPHIC REF	PART NUMBER	QTY	PART NAME 1 2 3 4 5 6 (PRODUCT LEVEL)	SEE PAGE
YC	1	1	*148-8078*	1	PAN GP-SEAT (BOTTOM)	1339
	2	1	**138-7518**	1	BRACKET	
	3	1	**113-0899**	10	SCREW-FLAT HEAD (6-20X.5IN)	
	4	1	**119-7127**	1	CUSHION AS	
HZ	5	1		1	CUSHION AS	
PZ	6	1		1	KNOB-SEAT TILT (UPPER)	
	7	1	**8Y-5929**	1	PLATE AS-SLIDE	
		1	**4K-9097**	7	NUT-WELD (5/16-18 THD)	
	8	1	**8Y-6991**	1	BAR AS-SLIDE	
	9	1	**8Y-6993**	1	BAR AS-LATCH	
	10	1	**8S-7803**	2	RING-RETAINING	
	11	1	**8Y-5932**	1	LATCH AS	
	12	1	**8Y-5936**	1	SPRING	
	13	1	**095-0878**	1	PIN-SPRING	
PZ	14	1		1	KNOB-SLIDE (UPPER)	
PZ	15	1		1	KNOB-SLIDE (LOWER)	
PZ	16	1		1	KNOB-BACK TILT (UPPER)	
	17	1	**141-9750**	1	BRACKET AS	
M		1	**8T-3490**	4	NUT-WELD (M10X1.5 THD)	
		1	**9V-7440**	1	NUT-WELD (3/8-16 THD)	
	18	1	**8Y-5938**	1	BRACKET AS-LH	
		1	**4D-6432**	1	LOCKNUT (7/16-20 THD)	
	19	1	**4E-6218**	1	SUPPORT	
	20	1	**5V-1498**	7	LOCKNUT (3/8-16 THD)	
	21	1	**8Y-5979**	1	PIN	
	22	1	**6V-2456**	2	RING-RETAINING	
PZ	23	1		1	KNOB-BACK TILT (LOWER)	
PZ	24	1		1	KNOB-SEAT TILT (LOWER)	
	25	1	**8Y-5947**	4	FASTENER	
	26	1	**8Y-6833**	1	SPRING-RH	
	27	1	**8Y-6834**	1	SPRING-LH	
	28	1	**2B-2694**	2	BOLT (5/16-18X2IN)	
	29	1	**1D-4539**	4	BOLT (5/16-18X2.5IN)	
LZ	30	1		1	PAN AS	
	31	1	**8Y-5928**	2	SPRING	
	32	1	**8Y-5981**	2	BUSHING-BACKREST	
	33	1	**7B-7525**	1	BOLT-SOCKET HEAD (7/16-14X1.25IN)	
	34	1	**8Y-6051**	1	SPACER (14.24MM THK)	
	35	1	**9L-7469**	2	LOCKPIN	
	36	1	**101-3776**	6	SCREW-HEX SOCKET (3/8-16X2.25IN)	
B	37	1	**061-8803**	4	SHIM (1.52MM THK)	
	38	1	**7X-0321**	1	BOLT	
	39	1	**133-8523**	1	SPACER (22MM THK)	
	40	1	**7X-0589**	1	WASHER-HARD (5.0MM THK)	
	41	1	**7U-4898**	2	SCREW (3/8-16X0.75IN)	
	42	1	**7X-1387**	2	WASHER (1.9MM THK)	
Y	43	1	**108-8421**	1	PAN GP-SEAT (BACK)	1338
					AVAILABLE REPAIR KIT(S):	
H			**119-7141**		KIT-SEAT CUSHION	
P			**112-4577**		KIT-SEAT KNOB	
L			**8Y-6933**		KIT-TILT PAN	
			149-4745		KIT-SLIDER BLOCK	

B-USE AS REQUIRED
C-CHANGE FROM PREVIOUS TYPE
H-KIT MARKED H INCLUDES PART(S) MARKED H
L-KIT MARKED L INCLUDES PART(S) MARKED L
M-METRIC PART
P-KIT MARKED P INCLUDES PART(S) MARKED P
Y-SEPARATE ILLUSTRATION
Z-NOT SERVICED SEPARATELY

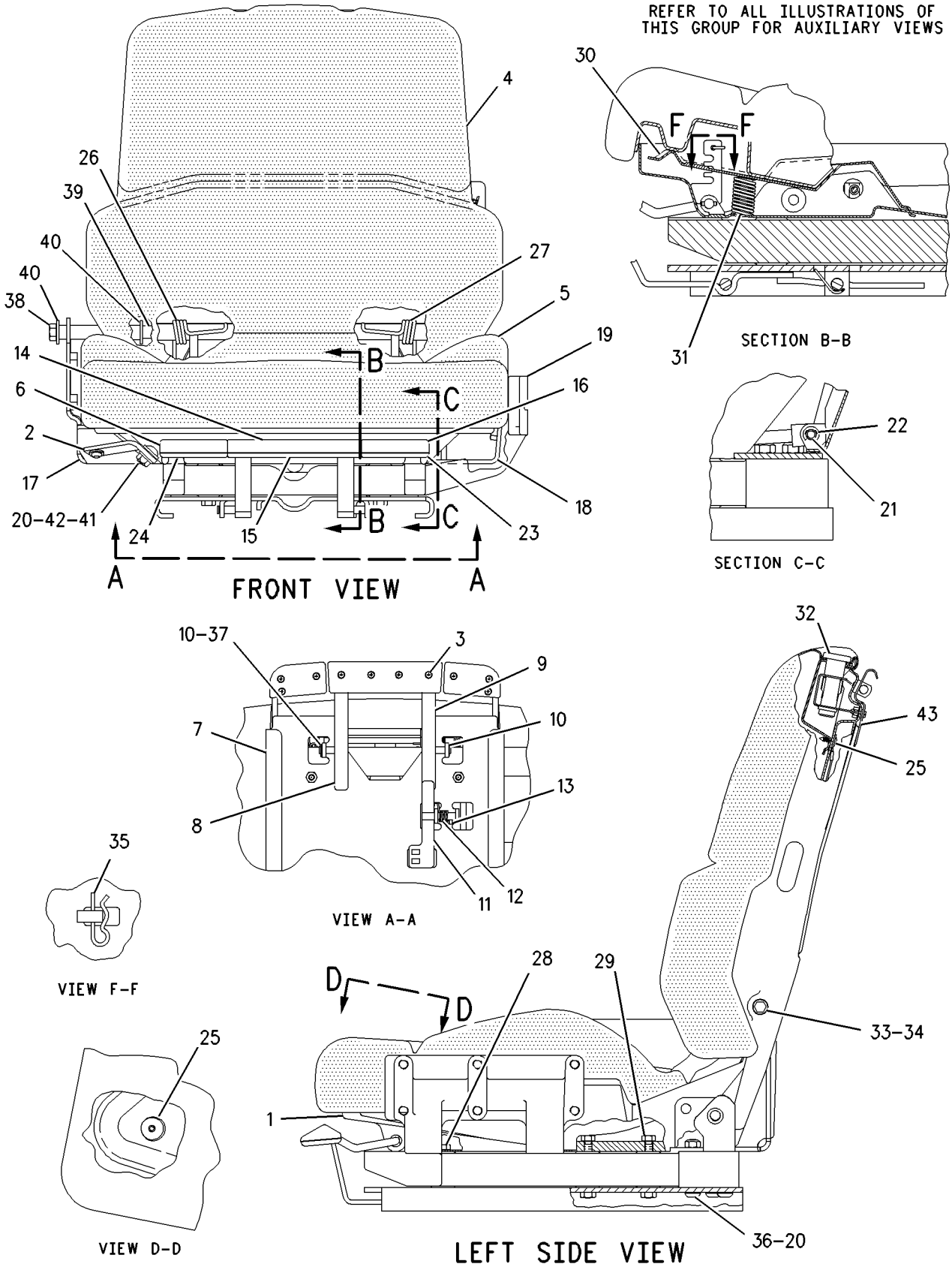

GRAPHIC #1 g00637847

OPERATOR STATION

171-8752 SEAT GP–CLOTH

S/N: 7HR298-UP

PART OF 171-8755 SEAT GP-SUSPENSION

SMCS-7312 **i01241537**

NOTE	PART NUMBER	QTY	PART NAME 1 2 3 4 5 6 (PRODUCT LEVEL)	SEE PAGE
Y	**8Y-6883**	1	EXTENSION GP-BACKREST	1296
Y	**156-1148**	1	SEAT BELT GP (RETRACTABLE)	1365
Y	**8Y-6882**	1	SEAT GP (CLOTH)	1366

Y-SEPARATE ILLUSTRATION

OPERATOR STATION

178-7910 SEAT GP–CLOTH

S/N: 7HR398-UP

PART OF 185-9726 SEAT GP

SMCS-7312 **i01405156**

NOTE	REF NO	GRAPHIC REF	PART NUMBER	QTY	PART NAME 1 2 3 4 5 6 (PRODUCT LEVEL)	SEE PAGE
	1	1	**135-5499**	1	PAN AS	
	1A	1	**6K-3273**	5	RIVET-POP (6.4MM DIA)	
	1B	1	**117-4506**	1	CUSHION AS	
	2	1	**143-1288**	8	LOCKNUT-FLANGE	
	3	1	**171-1230**	6	SCREW-BUTTON HEAD	
	4	1	**171-6682**	1	BAR-RECLINER	
	5	1	**172-2416**	2	PIN	
Y	6	1	*173-1028*	1	PLATE GP-SLIDE	1351
	7	1	**177-1863**	2	BOLT-PIVOT	
Y	8	1	*177-4935*	1	RECLINER GP-SEAT	1358
Y	9	1	*178-7911*	1	PAN GP-BACKREST	1334
	10	1	**184-2298**	1	ROD	
	11	1	**184-2299**	4	WASHER (2.54MM THK)	
	12	1	**095-0843**	2	COTTER	
	14	1	**5V-1496**	2	RETAINER	
	15	1	**6V-7646**	2	WASHER-HARD (7.2X25X2MM THK)	
	16	1	**8T-0328**	1	WASHER-HARD (5.5X10X1MM THK)	
	17	1	**8T-4205**	1	WASHER-HARD (7.2X14.5X2MM THK)	
	18	1	**8Y-6277**	2	SPACER (10.0MM THK)	

Y-SEPARATE ILLUSTRATION

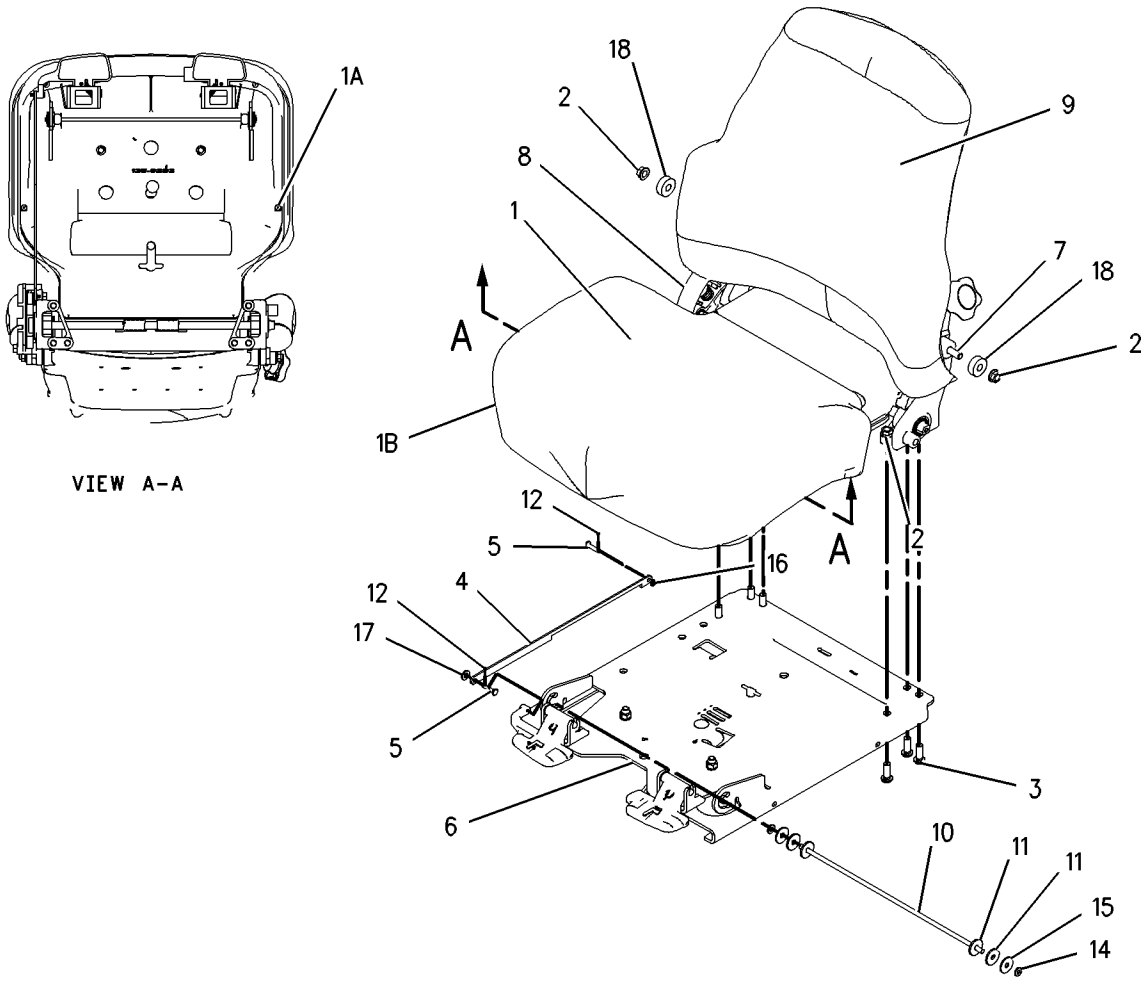

GRAPHIC #1 g00739610

OPERATOR STATION

185-9726 SEAT GP

S/N: 7HR398-UP

PART OF 185-9725 SEAT GP-SUSPENSION

SMCS-7312 **i01510932**

NOTE	REF NO	GRAPHIC REF	PART NUMBER	QTY	PART NAME 1 2 3 4 5 6 (PRODUCT LEVEL)	SEE PAGE
	1	1	**173-3082**	1	EXTENSION GP-BACKREST (FABRIC)	
	1A	1	**117-4491**	1	ROD	
	2	1	**177-4937**	1	SPACER (11.7X19.8X20.3MM THK)	
Y	3	1	**178-7910**	1	SEAT GP	1380
	4	1	**180-5559**	1	SCREW-PAN HEAD (7/16-20X1.75 IN)	
	5	1	**180-5560**	1	SCREW-PAN HEAD (7/16-20X1.25 IN)	
	6	1	**183-3648**	1	SEAT BELT GP	

Y-SEPARATE ILLUSTRATION

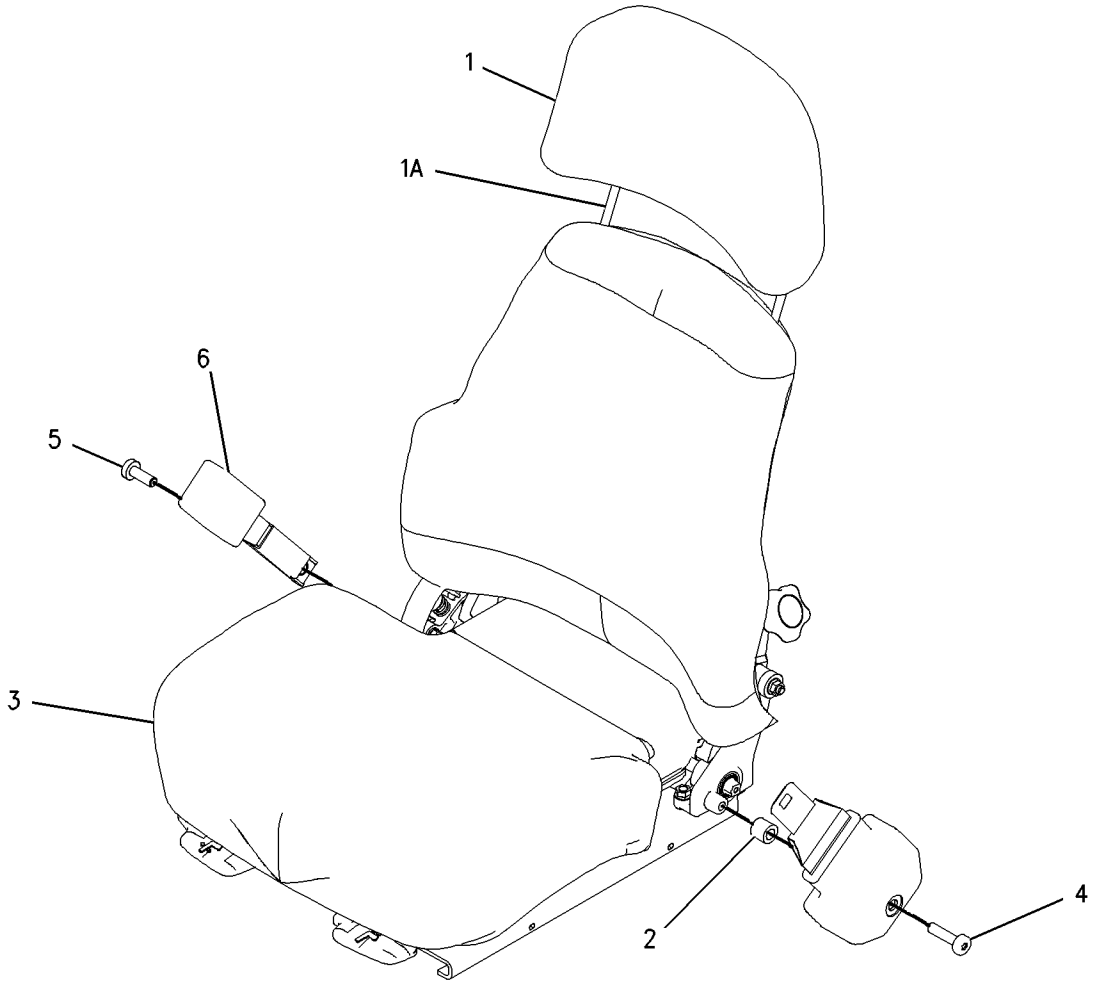

GRAPHIC #1 g00672937

OPERATOR STATION

123-8718 SEAT GP-SUSPENSION

S/N: 7HR1-110

PART OF 130-6906 CAB AR

SMCS-7324, 7336 **i01192652**

NOTE	REF NO	GRAPHIC REF	PART NUMBER	QTY	PART NAME 1 2 3 4 5 6 (PRODUCT LEVEL)	SEE PAGE
Y	1	1	**124-7725**	1	SEAT GP	1368
	2	1	**8Y-5889**	1	KIT-SLIDER BLOCK	
					(INCLUDES BOLT)	
Y	3	1	*117-7607*	1	SUSPENSION GP-SEAT	1410
	4	1	**8T-4121**	4	WASHER (2.5MM THK)	
M	5	1	**8T-0722**	4	BOLT-LOCKING (M10X1.5X30MM)	

M-METRIC PART
Y-SEPARATE ILLUSTRATION

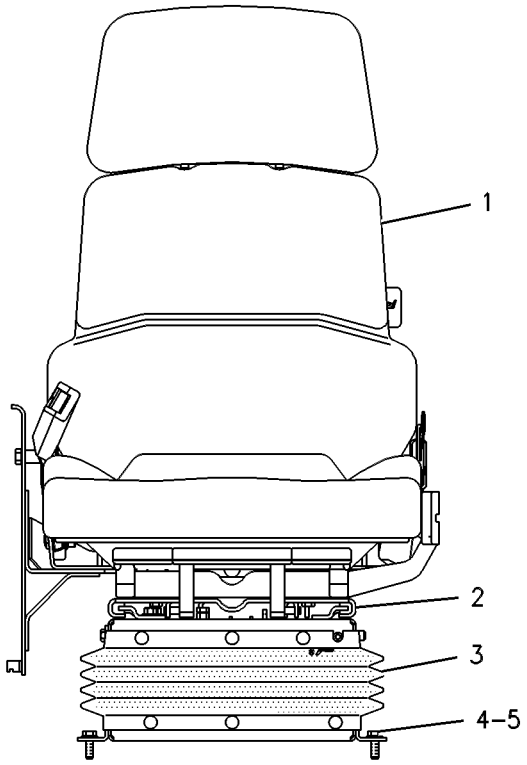

FRONT VIEW

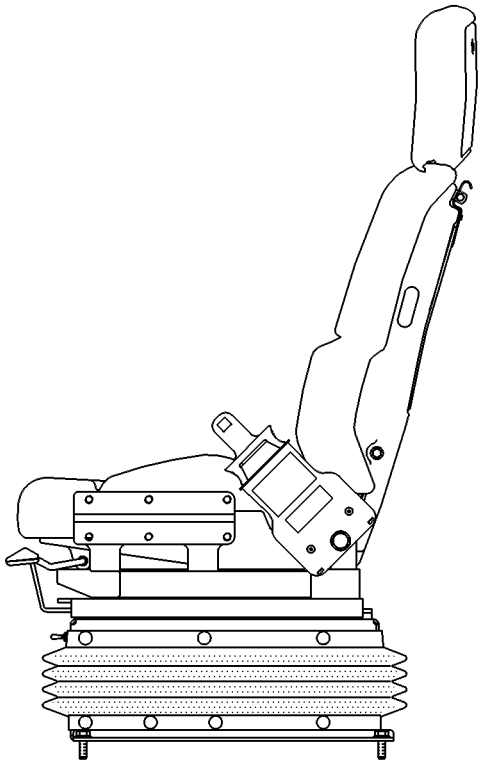

LEFT SIDE VIEW

GRAPHIC #1 g00255433

OPERATOR STATION

123-8718 SEAT GP-SUSPENSION

S/N: 7HR111-297

PART OF 130-6906 CAB AR

SMCS-7324, 7336 **i01192655**

NOTE	REF NO	GRAPHIC REF	PART NUMBER	QTY	PART NAME 1 2 3 4 5 6 (PRODUCT LEVEL)	SEE PAGE
Y	1	1	**124-7725**	1	SEAT GP	1368
C	2	1	**166-7225**	1	KIT-SLIDER BLOCK	
					(INCLUDES BOLT, SLIDER BLOCK, & SOCKET SETSCREW)	
YC	3	1	**149-2404**	1	SUSPENSION GP-SEAT	1414
	4	1	**8T-4121**	4	WASHER (2.5MM THK)	
M	5	1	**8T-0722**	4	BOLT-LOCKING (M10X1.5X30MM)	

C-CHANGE FROM PREVIOUS TYPE
M-METRIC PART
Y-SEPARATE ILLUSTRATION

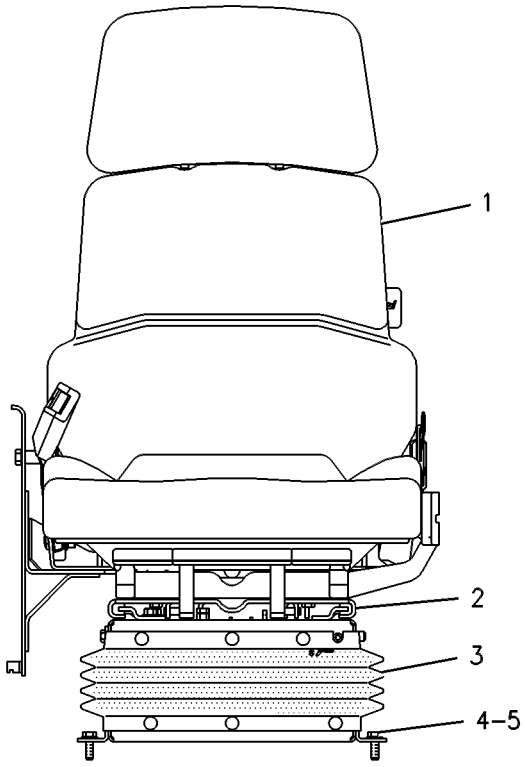

FRONT VIEW

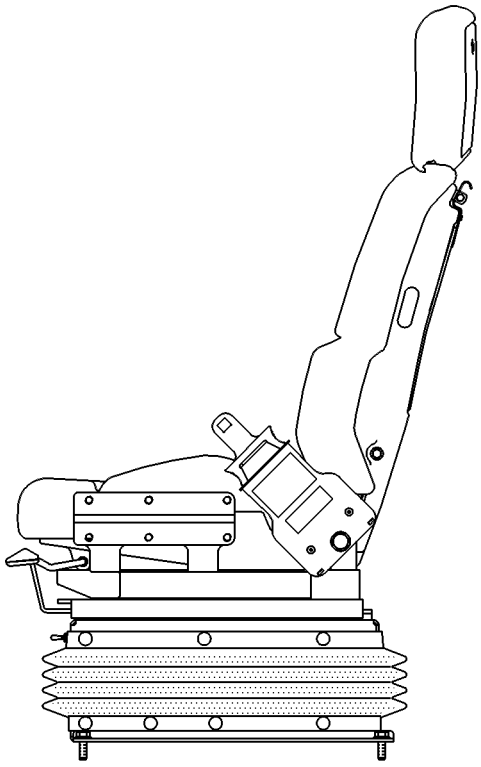

LEFT SIDE VIEW

GRAPHIC #1 g00255433

OPERATOR STATION

171-8755 SEAT GP-SUSPENSION

S/N: 7HR298-397

PART OF 171-7047 CAB AR

SMCS-7324, 7336 **i01252391**

NOTE	PART NUMBER	QTY	PART NAME 1 2 3 4 5 6 (PRODUCT LEVEL)	SEE PAGE
	4F-4879	1	BOLT (3/8-16X.5IN)	
Y	*171-8752*	1	SEAT GP (CLOTH)	1379
Y	**149-2404**	1	SUSPENSION GP-SEAT	1414
			AVAILABLE REPAIR KIT(S):	
	166-7225	1	KIT-SLIDER BLOCK	

Y-SEPARATE ILLUSTRATION

OPERATOR STATION

185-9725 SEAT GP-SUSPENSION

S/N: 7HR398-UP

PART OF 171-7047 CAB AR

SMCS-7324, 7336 **i01268675**

NOTE	REF NO	GRAPHIC REF	PART NUMBER	QTY	PART NAME 1 2 3 4 5 6 (PRODUCT LEVEL)	SEE PAGE
Y	1	1	**161-7539**	1	SUSPENSION GP-SEAT	1418
	2	1	**161-9289**	4	BLOCK-SLIDER	
	3	1	**169-7380**	1	BOLT-SOCKET HEAD	
	4	1	**173-5787**	4	SETSCREW	
Y	5	1	*185-9726*	1	SEAT GP	1382
					AVAILABLE REPAIR KIT(S):	
			173-7035	1	KIT-SLIDER BLOCK	

Y-SEPARATE ILLUSTRATION

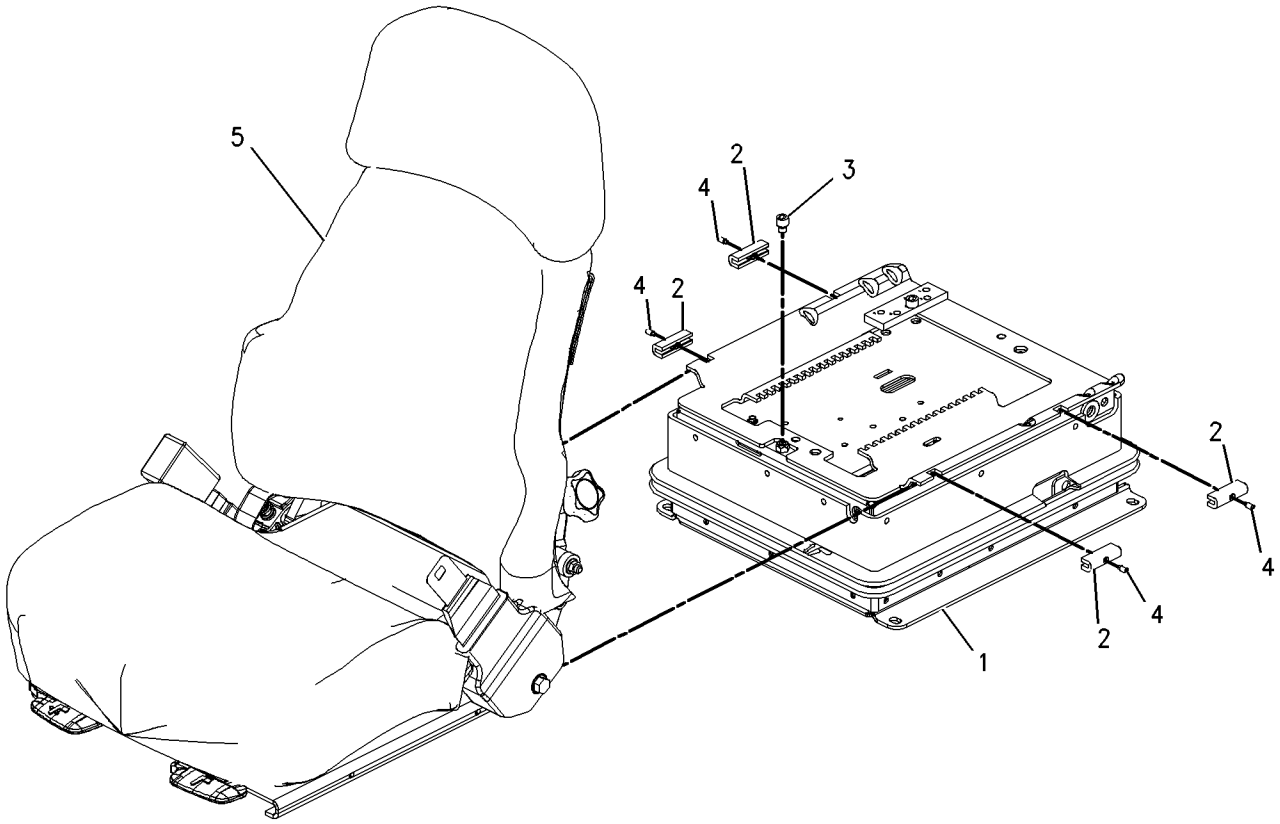

GRAPHIC #1 g00686020

MEMORANDA

OPERATOR STATION

131-0441 SPRING GP-CAB DOOR

S/N: 7HR1-UP

PART OF 130-6906, 171-7047 CAB AR

SMCS-7308 **i01057781**

NOTE	REF NO	GRAPHIC REF	PART NUMBER	QTY	PART NAME 1 2 3 4 5 6 (PRODUCT LEVEL)	SEE PAGE
	1	1	**8T-4205**	1	WASHER-HARD (2MM THK)	
	2	1	**8T-4121**	8	WASHER (2.5MM THK)	
M	3	1	**8T-4136**	5	BOLT (M10X1.50X25MM)	
	4	1	**4E-8340**	1	SPRING	
	5	1	**4E-8338**	1	LEVER AS	
		1	**2K-2140**	1	SPACER	
M	6	1	**8T-4133**	9	NUT (M10X1.50 THD)	
	7	1	**113-9789**	1	ROD	
	8	1	**8T-4766**	2	ROD END	
	9	1	**4E-8320**	1	PIN	
	10	1	**5P-0372**	1	LOCKPIN	
	11	1	**6D-3886**	1	BALL BEARING	
M	12	1	**6V-7357**	1	BOLT (M6X1.0X25MM)	
	13	1	**8T-4224**	2	WASHER-HARD (2MM THK)	
M	14	1	**8T-3647**	1	BOLT (M8X1.25X80MM)	
	15	1	**4H-3820**	1	SPRING-LATCH	
M	16	1	**5C-7261**	3	NUT (M8X1.25 THD)	
	17	1	**4E-8325**	1	CAM AS	
	18	1	**4E-8364**	1	SHEET AS	
M		1	**8T-3612**	1	NUT-WELD (M8X1.25 THD)	
M	19	1	**4E-8317**	1	EYEBOLT	
	20	1	**4D-9128**	1	WASHER	
	21	1	**4E-8329**	1	SPACER	
	22	1	**7P-4937**	1	BOSS	
M	23	1	**8T-4908**	1	BOLT (M8X1.25X25MM)	
	24	1	**8T-4222**	1	WASHER-PLATED (2.5MM THK)	
	25	1	**4E-8319**	1	BRACKET	
	26	1	**4E-8318**	1	BEARING	
	27	1	**9R-5008**	4	SPACER (3/8IN THK)	
	28	1	**2D-9535**	1	GROMMET	

M-METRIC PART

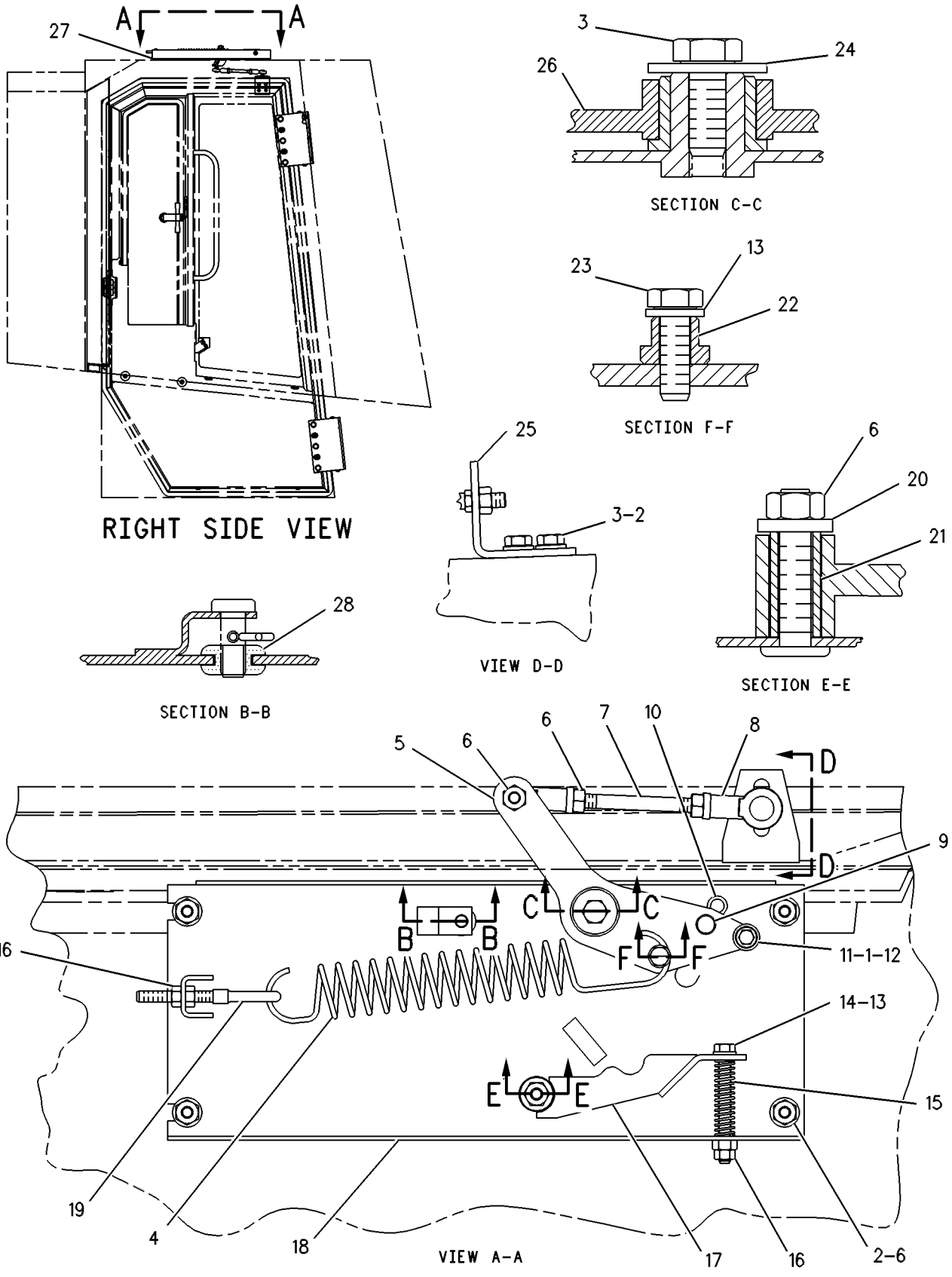

GRAPHIC #1 g00274238

OPERATOR STATION

118-7643 SUPPORT GP-HYDRAULIC CONTROL

S/N: 7HR1-180

PART OF 130-6906 CAB AR

SMCS-5258 **i01543113**

NOTE	REF NO	GRAPHIC REF	PART NUMBER	QTY	PART NAME 1 2 3 4 5 6 (PRODUCT LEVEL)	SEE PAGE
	1	1	**2W-9372**	4	LOCKWASHER	
	2	2	**3B-5470**	1	SPRING	
	3	2	**3K-4897**	1	PIN-SPRING	
M	4	1	**3T-0852**	4	LOCKNUT	
	5	2	**4B-4278**	1	WASHER (10.2X20.5X1.6MM THK)	
	6	2	**8T-4224**	6	WASHER-HARD (8.8X16X2MM THK)	
	7	1	**4E-6331**	1	LEVER	
	8	1	**4E-6332**	1	SHAFT-GOVERNOR CONTROL	
	9	2	**4E-6523**	1	SUPPORT-SLIDE	
	10	1	**4E-6526**	1	CUSHION AS-RH	
M	11	1	**4E-6527**	2	BOLT-PIVOT (M12X1.75X25.4MM)	
	12	1	**4E-8722**	6	NUT	
	13	2	**4E-9173**	2	SHAFT-GOVERNOR CONTROL	
	14	2	**4E-9174**	2	BEARING	
	15	2	**4E-9452**	5	PLUG GP	
	16	2	**4E-9453**	1	BAR	
	17	2	**4E-9454**	1	LEVER	
	18	2	**4E-9455**	1	SUPPORT	
	19	2	**4E-9456**	1	SHAFT-GOVERNOR CONTROL	
	20	2	**4E-9457**	1	ADAPTER	
	21	2	**4E-9757**	1	RACK	
	22	2	**4P-7581**	2	CLIP	
M	23	2	**5C-2890**	2	NUT (M6X1 THD)	
	24	1	**5D-4822**	2	RING-RETAINING	
M	25	2	**6V-9327**	8	SETSCREW-SOCKET	
	26	2	**7K-1181**	2	STRAP-CABLE	
	27	2	**7V-0445**	1	SPRING	
	28	1	**7X-2031**	2	RETAINER	
M	29	2	**8C-7506**	3	SCREW-MACHINE (M8X1.25X40 THD)	
	30	2	**8P-9475**	1	COLLAR	
M	31	2	**8T-2659**	2	LOCKNUT (M4X0.7 THD)	
	32	1	**8Y-5746**	1	ASHTRAY	
	33	1	**9M-9725**	2	SPACER (.19IN THK)	
	34	2	**9U-0952**	1	PIN	
	35	2	**9U-0953**	1	GUIDE	
	36	2	**9U-0954**	1	STUD	
	37	2	**9U-0955**	1	PIN	
	38	2	**9U-0958**	1	SLIDER	
	39	2	**9U-2421**	1	SPACER	
	40	2	**9U-2422**	1	ROD	
	41	2	**9U-3925**	4	RING-RETAINING	
	42	2	**9U-3926**	3	STOP	
	43	2	**9U-3927**	1	BEARING	
	44	1	**9W-0335**	1	LIGHTER AS (CIGAR)(24 VOLT)	
M	45	1,2	**9X-2044**	13	SCREW-TRUSS HEAD (M6X1X16MM)	
M	46	1	**9X-8290**	2	BOLT (M8X1.25X20MM)	
	47	1	**091-9967**	1	SPRING	
M	48	2	**095-0758**	4	SCREW-MACHINE (M6X1X14MM)	
	49	1	**096-2320**	1	KNOB	
	50	2	**108-2994**	1	TRACK-RH	
	51	2	**123-8678**	1	HARNESS AS-HYD ELEK CONTROL	
		2	**155-2255**	2	KIT-CONNECTING PLUG (12 PIN)	
		2	**155-2260**	1	KIT-CONNECTING PLUG (3 PIN)	
		2	**155-2265**	1	KIT-CONNECTING PLUG (8 PIN)	
					(EACH KIT-CONNECTING PLUG INCLUDES PLUG AS & WEDGE)	

118-7643 SUPPORT GP-HYDRAULIC CONTROL *(contd.)* i01543113

NOTE	REF NO	GRAPHIC REF	PART NUMBER	QTY	PART NAME 1 2 3 4 5 6 (PRODUCT LEVEL)	SEE PAGE
		2	**8T-8737**	4	PLUG-SEAL	
		2	**102-8801**	1	KIT-RECEPTACLE (12 PIN)	
		2	**102-8803**	1	KIT-RECEPTACLE (3 PIN)	
		2	**102-8806**	1	KIT-RECEPTACLE (8 PIN)	
E		2	**5P-0765**		HOSE (19.05 MM ID) (100CM)	
		2	**5P-6271**	26	CONNECTOR AS	
		2	**3S-2093**	2	STRAP-CABLE	
	52	2	**126-9578**	1	SUPPORT AS	
M		2	**8T-3612**	5	NUT-WELD (M8X1.25 THD)	
	53	1	**126-9583**	1	STRIP	
	54	1	**126-9594**	1	PLATE AS	
	55	1	**127-0323**	1	LEVER AS	
	56	1	**127-1962**	1	ROD	
	57	1	**127-5478**	1	COVER	
	58	2	**127-5480**	1	BRACKET AS	
M		2	**6V-9632**	1	NUT-WELD (M6X1 THD)	
	59	1	**127-5482**	1	APRON	
	60	2	**128-2477**	1	SPACER	
	61	2	**128-2478**	2	SPACER	
	62	1	**129-2000**	1	COVER-SUPPORT	
M	63	1,2	**5C-7261**	4	NUT (M8X1.25 THD)	
M	64	1	**5C-9553**	4	BOLT (M6X1X16MM)	
M	65	2	**8T-4136**	4	BOLT (M10X1.5X25MM)	
M	66	1,2	**8T-4189**	4	BOLT (M8X1.25X20MM)	
M	67	2	**8T-4200**	2	BOLT (M8X1.25X16MM)	
	68	1,2	**8T-4205**	6	WASHER-HARD (7.2X14.5X2MM THK)	
	69	1	**8T-4223**	2	WASHER-HARD (13.5X25.5X3MM THK)	
M	70	2	**8T-4908**	3	BOLT (M8X1.25X25MM)	
	71	2	**144-5604**	1	SPACER	
	72	1,2	**9X-2038**	13	WASHER (7X19X2MM THK)	
	73	1	**8Y-6333**	1	GASKET-ASH TRAY	
B	74	2	**137-6841**	2	SHIM (0.2MM THK)	

B-USE AS REQUIRED
E-ORDER BY THE CENTIMETER
M-METRIC PART

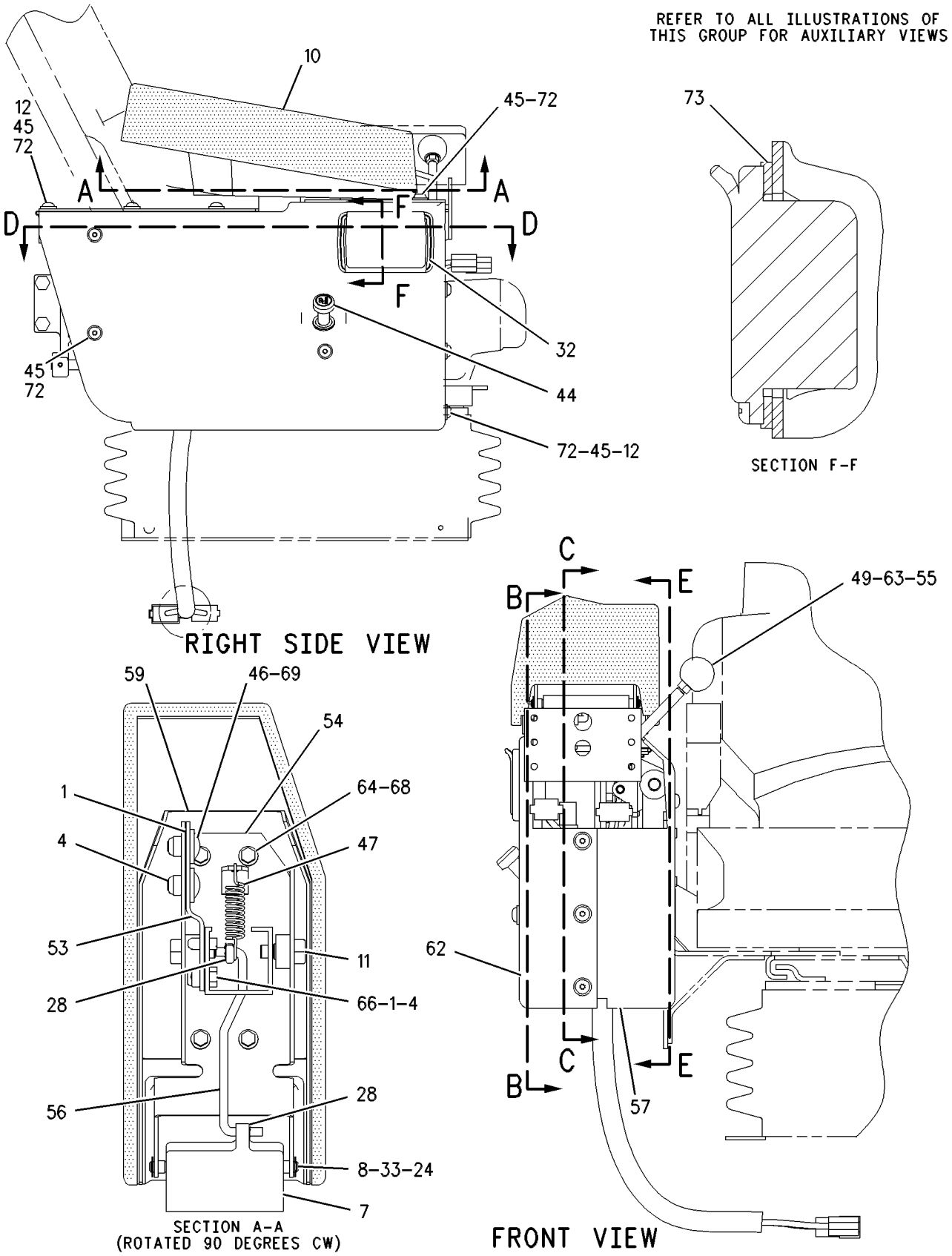

GRAPHIC #1

g00358920

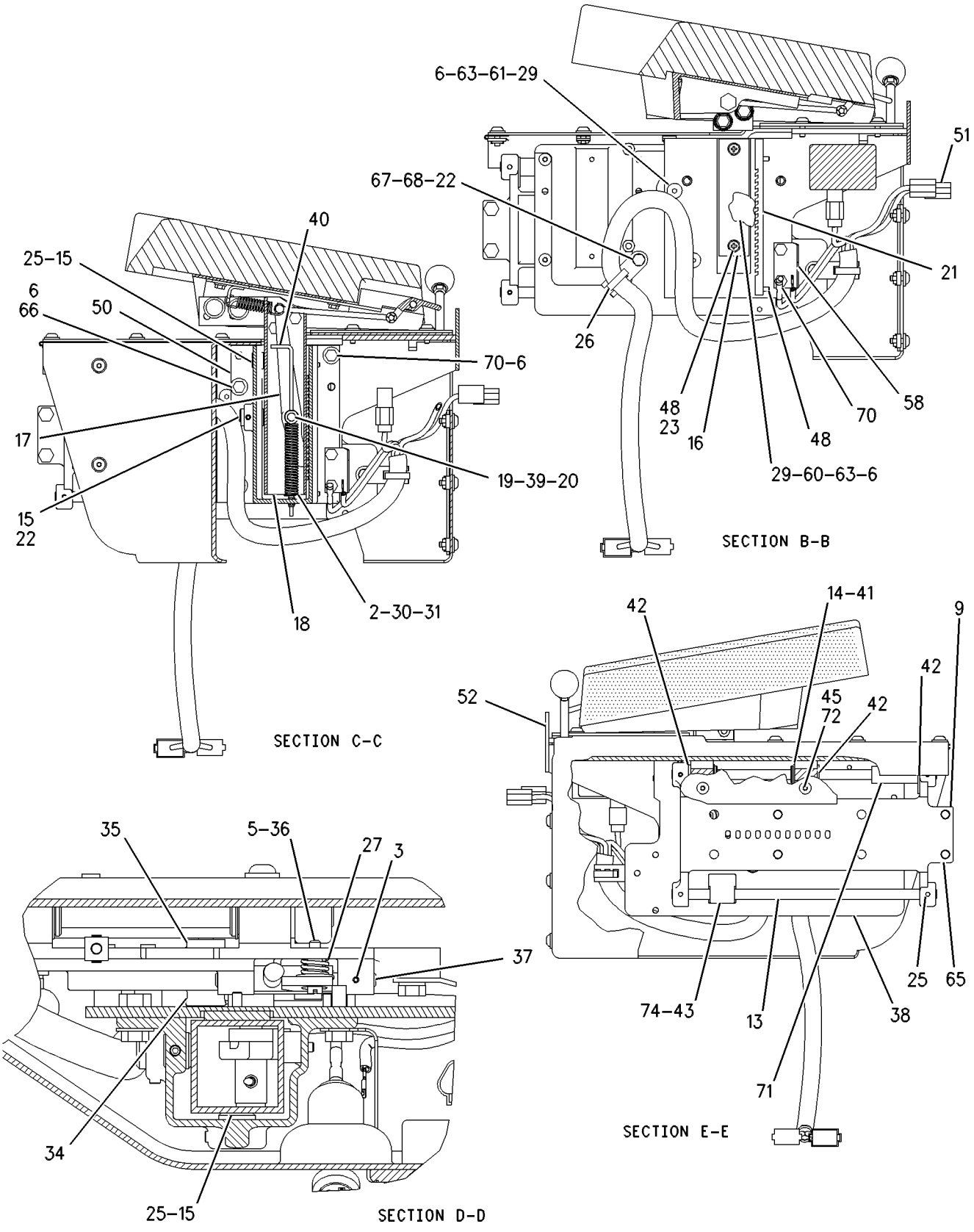

GRAPHIC #2

g00358921

OPERATOR STATION

118-7643 SUPPORT GP-HYDRAULIC CONTROL

S/N: 7HR181-297

PART OF 130-6906 CAB AR

SMCS-5258 **i01543119**

NOTE	REF NO	GRAPHIC REF	PART NUMBER	QTY	PART NAME 1 2 3 4 5 6 (PRODUCT LEVEL)	SEE PAGE
	1	1	**2W-9372**	4	LOCKWASHER	
	2	2	**3B-5470**	1	SPRING	
	3	2	**3K-4897**	1	PIN-SPRING	
M	4	1	**3T-0852**	4	LOCKNUT	
	5	2	**4B-4278**	1	WASHER (10.2X20.5X1.6MM THK)	
	6	2	**8T-4224**	6	WASHER-HARD (8.8X16X2MM THK)	
	7	1	**4E-6331**	1	LEVER	
	8	1	**4E-6332**	1	SHAFT-GOVERNOR CONTROL	
	9	2	**4E-6523**	1	SUPPORT-SLIDE	
	10	1	**4E-6526**	1	CUSHION AS-RH	
M	11	1	**4E-6527**	2	BOLT-PIVOT (M12X1.75X25.4MM)	
	12	1	**4E-8722**	6	NUT	
	13	2	**4E-9173**	2	SHAFT-GOVERNOR CONTROL	
	14	2	**4E-9174**	2	BEARING	
M	15	2	**156-7128**	4	BEARING	
	16	2	**4E-9453**	1	BAR	
	17	2	**4E-9454**	1	LEVER	
	18	2	**4E-9455**	1	SUPPORT	
	19	2	**4E-9456**	1	SHAFT-GOVERNOR CONTROL	
	20	2	**4E-9457**	1	ADAPTER	
	21	2	**4E-9757**	1	RACK	
	22	2	**4P-7581**	2	CLIP	
M	23	2	**5C-2890**	2	NUT (M6X1 THD)	
	24	1	**5D-4822**	2	RING-RETAINING	
M	25	2	**6V-9327**	8	SETSCREW-SOCKET	
	26	2	**7K-1181**	2	STRAP-CABLE	
	27	2	**7V-0445**	1	SPRING	
	28	1	**7X-2031**	2	RETAINER	
M	29	2	**8C-7506**	3	SCREW-MACHINE (M8X1.25X40 THD)	
	30	2	**8P-9475**	1	COLLAR	
M	31	2	**8T-2659**	2	LOCKNUT (M4X0.7 THD)	
	32	1	**8Y-5746**	1	ASHTRAY	
	33	1	**9M-9725**	2	SPACER (.19IN THK)	
	34	2	**9U-0952**	1	PIN	
	35	2	**9U-0953**	1	GUIDE	
	36	2	**9U-0954**	1	STUD	
	37	2	**9U-0955**	1	PIN	
	38	2	**9U-0958**	1	SLIDER	
	39	2	**9U-2421**	1	SPACER	
	40	2	**9U-2422**	1	ROD	
	41	2	**9U-3925**	4	RING-RETAINING	
	42	2	**9U-3926**	3	STOP	
	43	2	**9U-3927**	1	BEARING	
	44	1	**9W-0335**	1	LIGHTER AS (CIGAR)(24 VOLT)	
M	45	1,2	**9X-2044**	13	SCREW-TRUSS HEAD (M6X1X16MM)	
M	46	1	**9X-8290**	2	BOLT (M8X1.25X20MM)	
	47	1	**091-9967**	1	SPRING	
M	48	2	**095-0758**	4	SCREW-MACHINE (M6X1X14MM)	
	49	1	**096-2320**	1	KNOB	
	50	2	**108-2994**	1	TRACK-RH	
	51	2	**123-8678**	1	HARNESS AS-HYD ELEK CONTROL	
		2	**155-2255**	2	KIT-CONNECTING PLUG (12 PIN)	
		2	**155-2260**	1	KIT-CONNECTING PLUG (3 PIN)	
		2	**155-2265**	1	KIT-CONNECTING PLUG (8 PIN)	
					(EACH KIT-CONNECTING PLUG INCLUDES PLUG AS & WEDGE)	

118-7643 **SUPPORT GP-HYDRAULIC CONTROL** *(contd.)* **i01543119**

NOTE	REF NO	GRAPHIC REF	PART NUMBER	QTY	PART NAME 1 2 3 4 5 6 (PRODUCT LEVEL)	SEE PAGE
		2	**8T-8737**	4	PLUG-SEAL	
		2	**102-8801**	1	KIT-RECEPTACLE (12 PIN)	
		2	**102-8803**	1	KIT-RECEPTACLE (3 PIN)	
		2	**102-8806**	1	KIT-RECEPTACLE (8 PIN)	
E		2	**5P-0765**		HOSE (19.05 MM ID) (100CM)	
		2	**5P-6271**	26	CONNECTOR AS	
		2	**3S-2093**	2	STRAP-CABLE	
	52	2	**126-9578**	1	SUPPORT AS	
M		2	**8T-3612**	5	NUT-WELD (M8X1.25 THD)	
	53	1	**126-9583**	1	STRIP	
	54	1	**126-9594**	1	PLATE AS	
	55	1	**127-0323**	1	LEVER AS	
	56	1	**127-1962**	1	ROD	
	57	1	**127-5478**	1	COVER	
	58	2	**127-5480**	1	BRACKET AS	
M		2	**6V-9632**	1	NUT-WELD (M6X1 THD)	
	60	2	**128-2477**	1	SPACER	
	61	2	**128-2478**	2	SPACER	
	62	1	**129-2000**	1	COVER-SUPPORT	
M	63	1,2	**5C-7261**	4	NUT (M8X1.25 THD)	
M	64	1	**5C-9553**	4	BOLT (M6X1X16MM)	
M	65	2	**8T-4136**	4	BOLT (M10X1.5X25MM)	
M	66	1,2	**8T-4189**	4	BOLT (M8X1.25X20MM)	
M	67	2	**8T-4200**	2	BOLT (M8X1.25X16MM)	
	68	1,2	**8T-4205**	6	WASHER-HARD (7.2X14.5X2MM THK)	
	69	1	**8T-4223**	2	WASHER-HARD (13.5X25.5X3MM THK)	
M	70	2	**8T-4908**	3	BOLT (M8X1.25X25MM)	
	71	2	**144-5604**	1	SPACER	
	72	1,2	**9X-2038**	13	WASHER (7X19X2MM THK)	
	73	1	**8Y-6333**	1	GASKET-ASH TRAY	
B	74	2	**137-6841**	2	SHIM (0.2MM THK)	

B-USE AS REQUIRED
E-ORDER BY THE CENTIMETER
M-METRIC PART

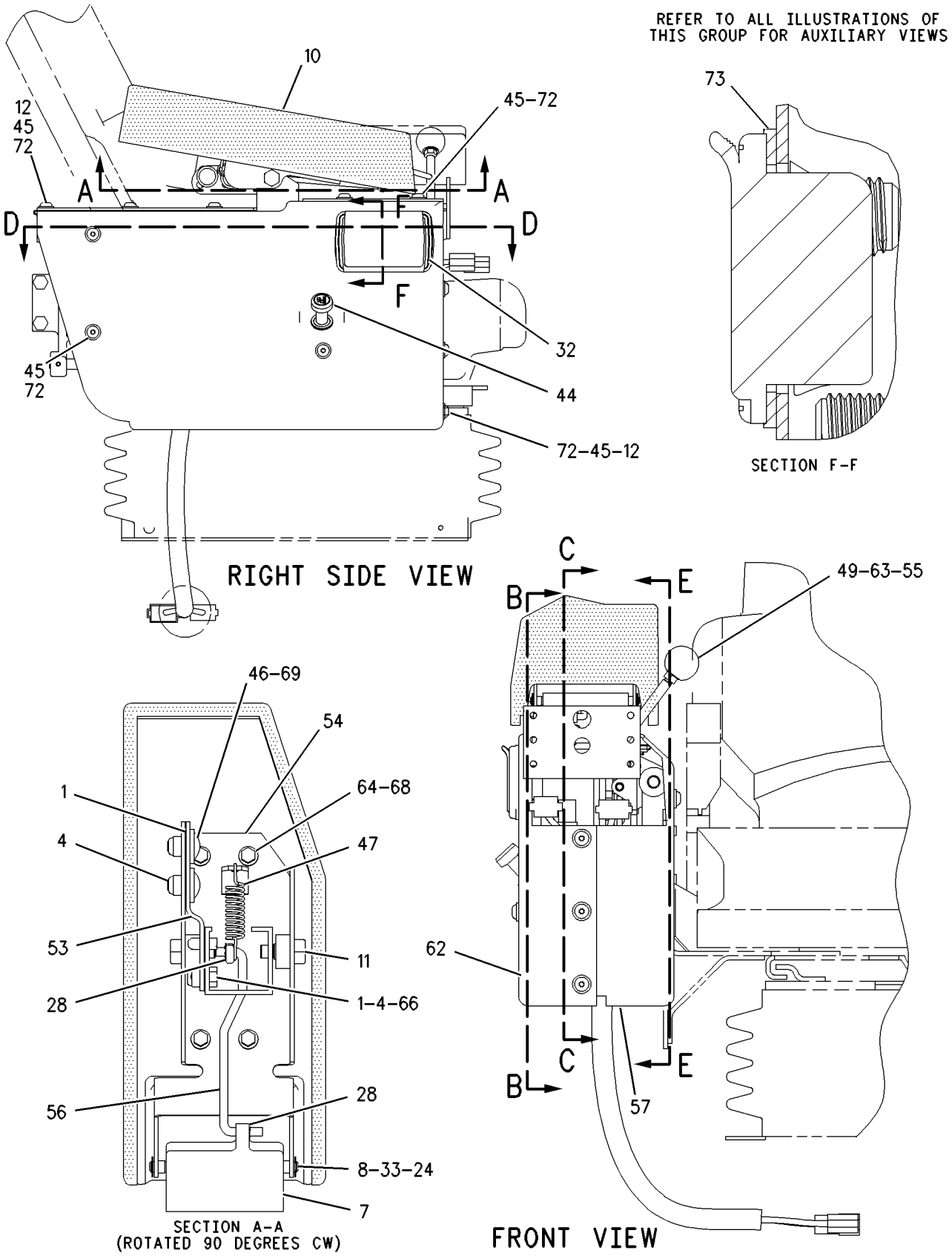

GRAPHIC #1

g00392381

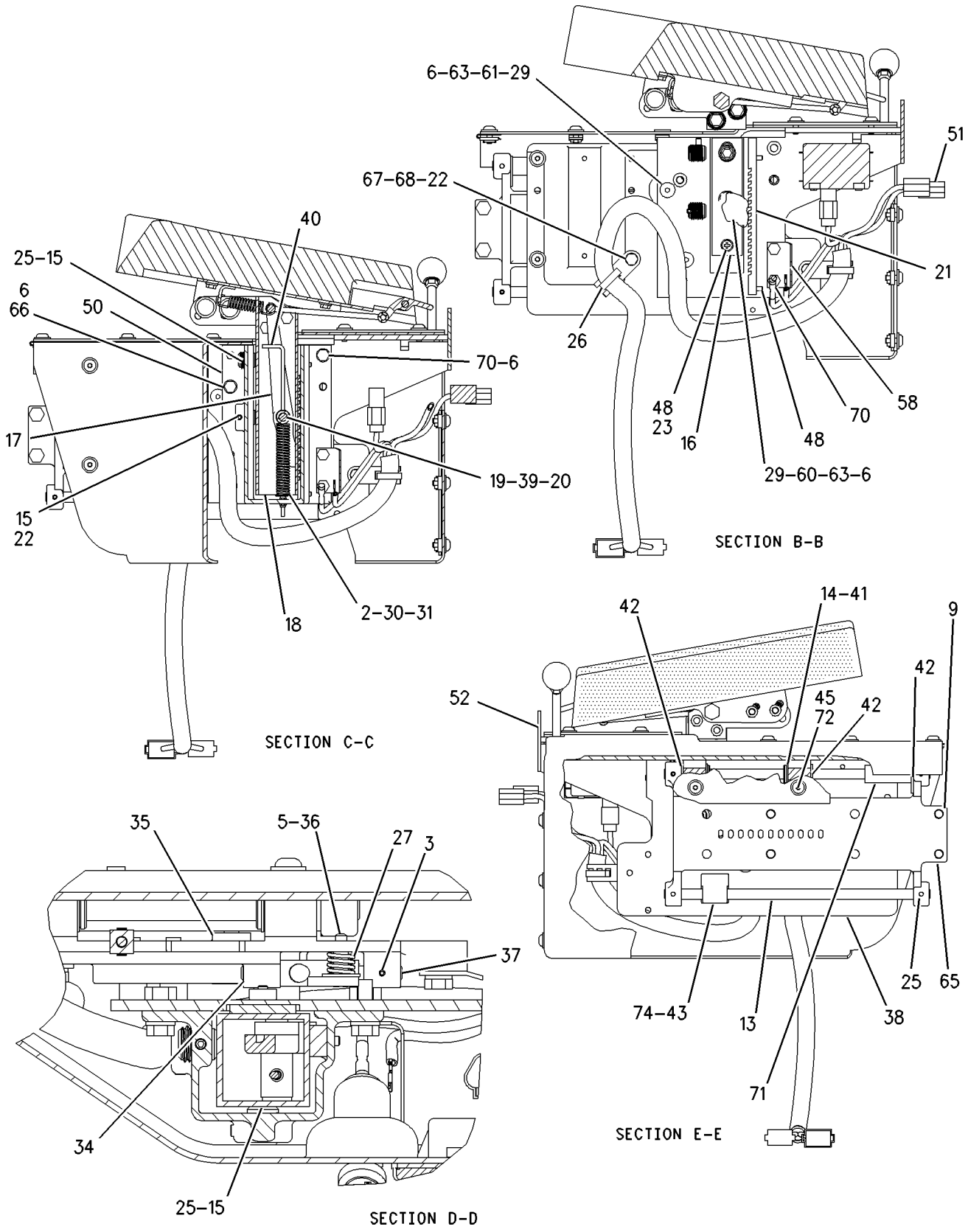

GRAPHIC #2

g00637819

OPERATOR STATION

171-3898 SUPPORT GP-HYDRAULIC CONTROL

S/N: 7HR298-UP

PART OF 171-7047 CAB AR

SMCS-5258 **i01508851**

NOTE	REF NO	GRAPHIC REF	PART NUMBER	QTY	PART NAME 1 2 3 4 5 6 (PRODUCT LEVEL)	SEE PAGE
	1	1	**3K-4897**	1	PIN-SPRING	
	2	1	**4B-4278**	1	WASHER (10.2X20.5X1.6MM THK)	
	3	1	**4E-6523**	1	SUPPORT-SLIDE	
	4	1	**4E-6526**	1	CUSHION AS-RH	
	5	1	**4E-8722**	4	NUT	
	6	1	**4E-9173**	2	SHAFT-GOVERNOR CONTROL	
	7	1	**4E-9174**	2	BEARING	
M	8	1	**6V-9327**	4	SETSCREW-SOCKET	
	9	1	**7K-1181**	1	STRAP-CABLE	
	10	1	**7V-0445**	1	SPRING	
	11	1	**7X-3310**	1	KNOB-BALL	
	12	1	**8Y-5746**	1	ASHTRAY	
	13	1	**8Y-6333**	1	GASKET-ASH TRAY	
	14	1	**9U-0952**	1	PIN	
	15	1	**9U-0953**	1	GUIDE	
	16	1	**9U-0954**	1	STUD	
	17	1	**9U-0955**	1	PIN	
	18	1	**9U-0958**	1	SLIDER	
	19	1	**9U-3925**	4	RING-RETAINING	
	20	1	**9U-3926**	6	STOP	
	21	1	**9U-3927**	1	BEARING	
	22	1	**9W-0335**	1	LIGHTER AS (CIGAR)(24 VOLT)	
	23	1	**9W-1991**	1	SPACER (13.94X17.14X40MM THK)	
	24	1	**127-0323**	1	LEVER AS	
	25	1	**127-5480**	1	BRACKET AS	
M	25A	1	**6V-9632**	1	NUT-WELD (M6X1 THD)	
B	26	1	**137-6841**	2	SHIM (0.2MM THK)	
	27	1	**170-0489**	1	HOUSING	
	28	1	**170-0490**	1	HOUSING	
	29	1	**170-0976**	1	BRACKET AS-RH	
	30	1	**170-0978**	1	BRACKET AS	
M	30A	1	**6V-9632**	1	NUT-WELD (M6X1 THD)	
M	30B	1	**8T-3490**	3	NUT-WELD (M10X1.5 THD)	
M	30C	1	**8T-3612**	2	NUT-WELD (M8X1.25 THD)	
	31	1	**204-3612**	1	HARNESS AS	
		1	**155-2260**	1	KIT-CONNECTING PLUG (3 PIN)	
		1	**155-2265**	1	KIT-CONNECTING PLUG (8 PIN)	
		1	**155-2255**	2	KIT-CONNECTING PLUG (12 PIN)	
					(EACH KIT-CONNECTING INCLUDES PLUG AS & WEDGE)	
		1	**102-8801**	1	KIT-RECEPTACLE (12 PIN)	
		1	**102-8803**	1	KIT-RECEPTACLE (3 PIN)	
		1	**102-8806**	1	KIT-RECEPTACLE (8 PIN)	
					(EACH KIT-RECEPTACLE INCLUDES RECEPTACLE AS & WEDGE)	
		1	**8T-8737**	4	PLUG-SEAL	
		1	**5P-6271**	1	CONNECTOR AS	
	32	1	**170-7473**	3	KNOB AS	
M	33	1	**099-3649**	4	BOLT (M8X1.25X40MM)	
M	34	1	**5C-7261**	4	NUT (M8X1.25 THD)	
	35	1	**4D-7388**	1	CLIP	
	36	1	**7X-0575**	2	WASHER-HARD (10.2X22.5X5MM THK)	
M	37	1	**8T-4138**	4	BOLT (M6X1X20MM)	
M	38	1	**8T-4189**	2	BOLT (M8X1.25X20MM)	
M	39	1	**8T-4195**	4	BOLT (M10X1.5X30MM)	
	40	1	**8T-4205**	4	WASHER-HARD (7.2X14.5X2MM THK)	
	41	1	**8T-4222**	1	WASHER-PLATED (11X32X2.5MM THK)	

171-3898 **SUPPORT GP-HYDRAULIC CONTROL** *(contd.)* **i01508851**

NOTE	REF NO	GRAPHIC REF	PART NUMBER	QTY	PART NAME 1 2 3 4 5 6 (PRODUCT LEVEL)	SEE PAGE
	42	1	**8T-4224**	8	WASHER-HARD (8.8X16X2MM THK)	
M	43	1	**8T-6869**	1	BOLT (M8X1.25X60MM)	
	44	1	**9N-0869**	2	WASHER-HARD (8.8X25.5X2MM THK)	
	45	1	**9X-2038**	8	WASHER (7X19X2MM THK)	
M	46	1	**9X-2044**	8	SCREW-TRUSS HEAD (M6X1X16MM)	
M	47	1	**9X-2616**	2	SCREW-SOCKET (M8X1.25X16MM)	
	48	1	**203-0328**	1	SPACER (16X19X9MM THK)	

B-USE AS REQUIRED
M-METRIC PART

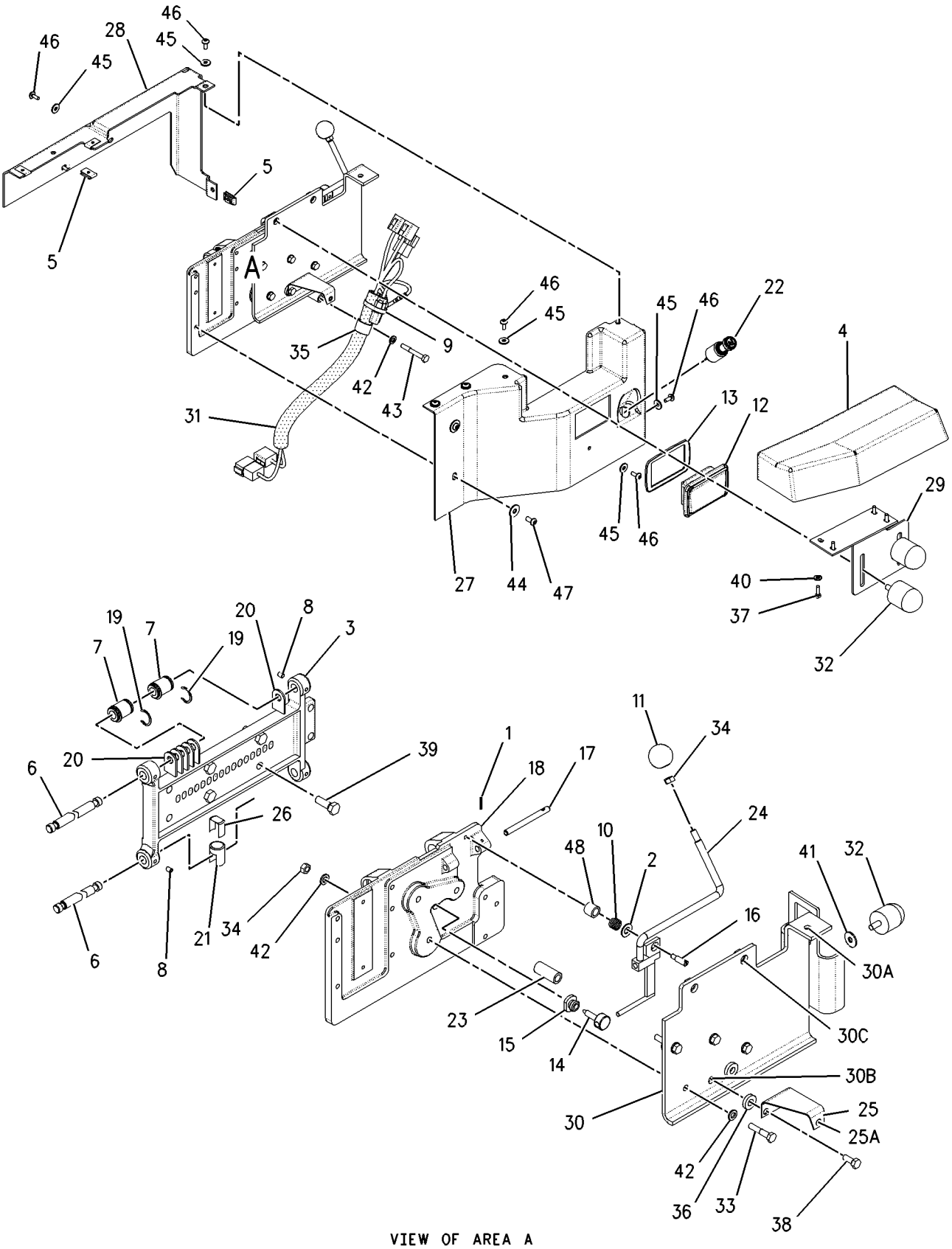

GRAPHIC #1 g00783953

OPERATOR STATION

171-3899 SUPPORT GP-SEAT

S/N: 7HR298-UP

PART OF 171-7047 CAB AR

SMCS-7321 **i01071921**

NOTE	REF NO	GRAPHIC REF	PART NUMBER	QTY	PART NAME 1 2 3 4 5 6 (PRODUCT LEVEL)	SEE PAGE
	1	1	**170-0972**	1	BRACKET AS-RH	
	2	1	**170-0973**	1	BRACKET AS-LH	
M	3	1	**168-4510**	4	BOLT-HEX HEAD	
	4	1	**8T-4121**	4	WASHER (2.5MM THK)	

M-METRIC PART

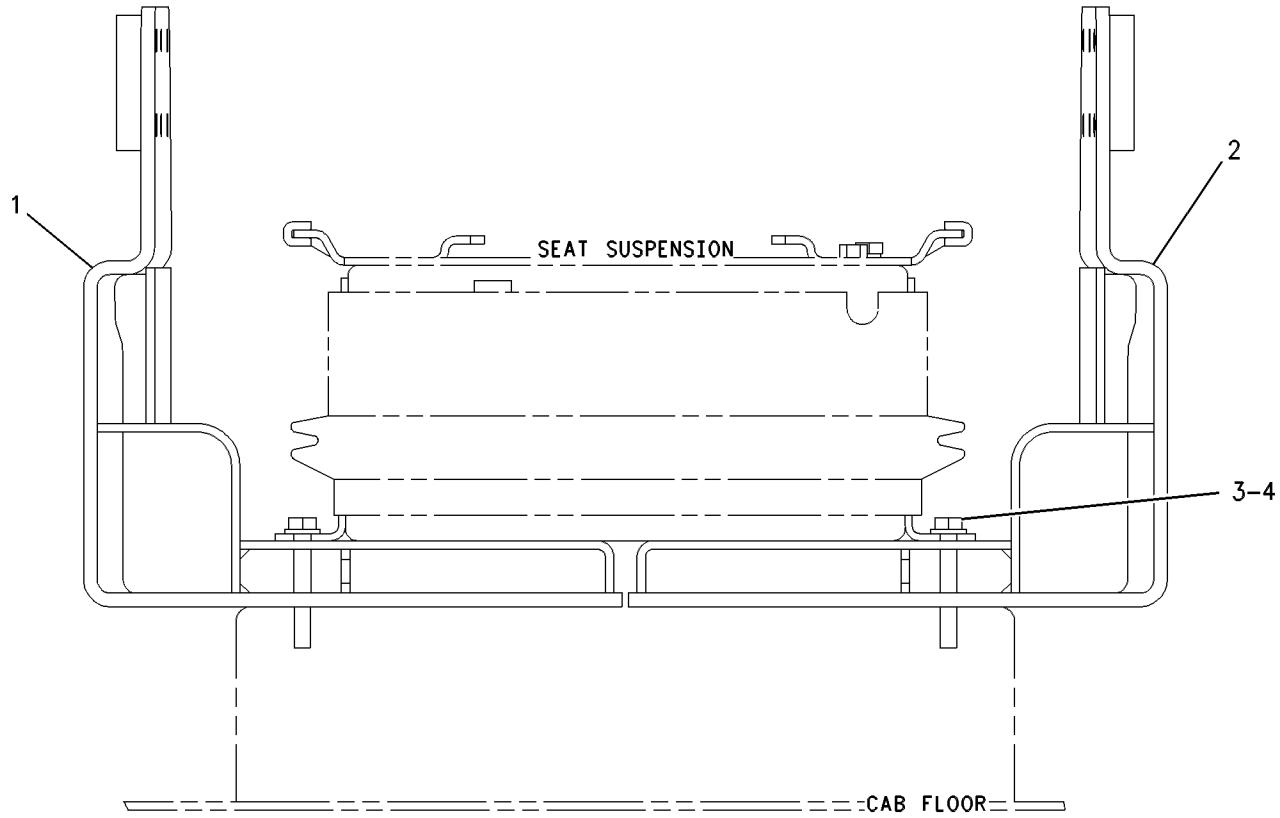

FRONT VIEW

GRAPHIC #1 g00583148

OPERATOR STATION

123-8704 SUPPORT GP-STEERING CONTROL

S/N: 7HR1-297

PART OF 130-6906 CAB AR

SMCS-5258 **i01510934**

NOTE	REF NO	GRAPHIC REF	PART NUMBER	QTY	PART NAME 1 2 3 4 5 6 (PRODUCT LEVEL)	SEE PAGE
	1	2	**135-2723**	1	HOUSING	
	2	2	**135-2722**	1	HOUSING	
	3	2	**4E-6335**	1	CUSHION AS-LH	
M	4	1	**156-7128**	3	BEARING	
	5	2	**4E-6523**	1	SUPPORT-SLIDE	
	6	2	**4E-9173**	2	SHAFT-GOVERNOR CONTROL	
	7	2	**4E-7163**	1	SLIDER	
M	8	2	**9X-2043**	6	SCREW-TRUSS HEAD (M6X1X14MM)	
M	9	1,2	**6V-9327**	8	SETSCREW-SOCKET	
	10	2	**7X-3310**	1	KNOB-BALL	
	11	2	**7X-2031**	2	RETAINER	
	12	2	**9U-3926**	6	STOP	
	13	2	**9U-3927**	1	BEARING	
	14	2	**4E-6439**	1	LEVER AS	
M	15	2	**8T-4244**	1	NUT (M12X1.75 THD)	
	16	2	**4E-6444**	1	ROD	
	17	2	**8C-3442**	1	SPRING-COIL	
M	18	2	**5C-7261**	1	NUT (M8X1.25 THD)	
	19	2	**4E-6446**	1	GUIDE	
M	20	2	**098-5747**	1	NUT-THIN (M16X2 THD)	
	21	2	**013-8502**	1	LOCKWASHER	
	22	2	**1J-5799**	1	PIN-SPRING	
	23	2	**4E-6445**	1	PIN	
M	24	2	**5C-9553**	6	BOLT (M6X1X16MM)	
	25	2	**8T-4205**	2	WASHER-HARD (7.2X14.5X2MM THK)	
M	26	2	**3T-0852**	2	LOCKNUT	
	27	2	**4E-9459**	1	ROD	
	28	2	**4E-6331**	1	LEVER	
	29	2	**4E-6332**	1	SHAFT-GOVERNOR CONTROL	
		2	**9M-9725**	2	SPACER (.19IN THK)	
		2	**5D-4822**	2	RING-RETAINING	
	30	2	**4E-8920**	1	PLATE AS	
M	31	2	**4E-6527**	2	BOLT-PIVOT (M12X1.75X25.4MM)	
	32	2	**4E-8918**	1	PLATE AS	
M		2	**6V-9632**	2	NUT-WELD (M6X1 THD)	
B	33	2	**137-6841**	2	SHIM (0.2MM THK)	
M	34	2	**8T-4189**	2	BOLT (M8X1.25X20MM)	
	35	1	**4E-9454**	1	LEVER	
	36	1	**4E-9440**	1	TRACK	
	37	1	**4E-9757**	1	RACK	
M	38	1	**095-0758**	4	SCREW-MACHINE (M6X1X14MM)	
	39	1	**9U-2422**	1	ROD	
M		1	**8T-2659**	2	LOCKNUT (M4X0.7 THD)	
		1	**8P-9475**	1	COLLAR	
		1	**3B-5470**	1	SPRING	
	40	1	**4E-9453**	1	BAR	
	41	1	**4E-9455**	1	SUPPORT	
	42	1	**4E-9456**	1	SHAFT-GOVERNOR CONTROL	
	43	1	**9U-2421**	1	SPACER	
	44	1	**4E-9457**	1	ADAPTER	
	45	1	**4E-9452**	1	PLUG GP	
	46	2	**2W-9372**	4	LOCKWASHER	
M	47	1	**8T-4195**	6	BOLT (M10X1.5X30MM)	
M	48	1	**8T-4200**	7	BOLT (M8X1.25X16MM)	
M	49	1	**7X-2534**	1	BOLT (M6X1X50MM)	
		1	**4B-4276**	2	WASHER (7X16X1.6MM THK)	

123-8704 SUPPORT GP-STEERING CONTROL *(contd.)* i01510934

NOTE	REF NO	GRAPHIC REF	PART NUMBER	QTY	PART NAME 1 2 3 4 5 6 (PRODUCT LEVEL)	SEE PAGE
		1	**3G-4711**	1	SPRING	
		1	**6E-0923**	1	SPACER (15.2MM THK)	
	50	1	**9U-3925**	4	RING-RETAINING	
	51	1	**4E-9174**	2	BEARING	
	52	1	**4E-8722**	8	NUT	
M	53	1	**9X-2043**	8	SCREW-TRUSS HEAD (M6X1X14MM)	
M	54	1	**8T-4134**	1	NUT (M6X1 THD)	
	55	1	**9X-2038**	8	WASHER (7X19X2MM THK)	

B-USE AS REQUIRED
M-METRIC PART

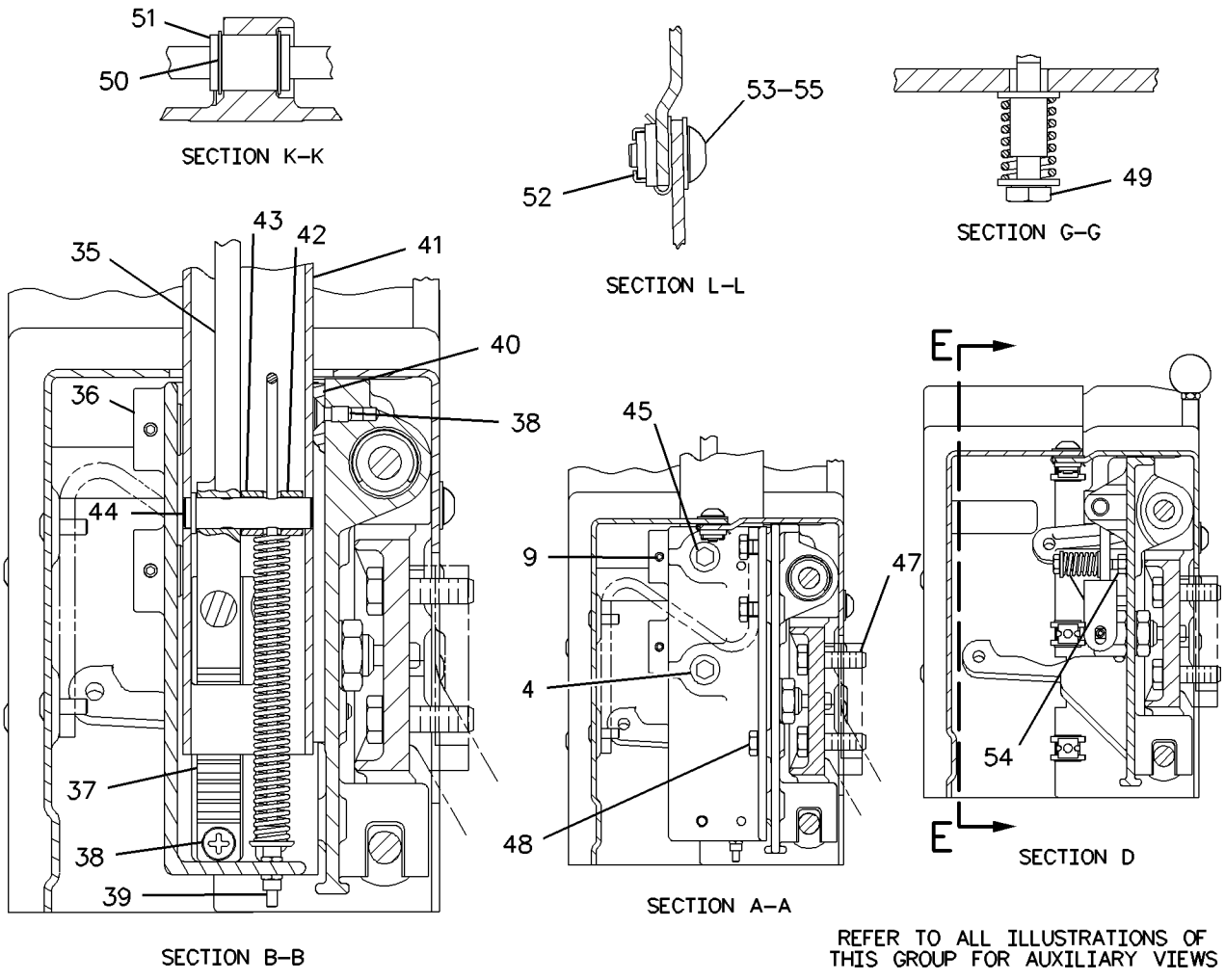

GRAPHIC #1

g00758131

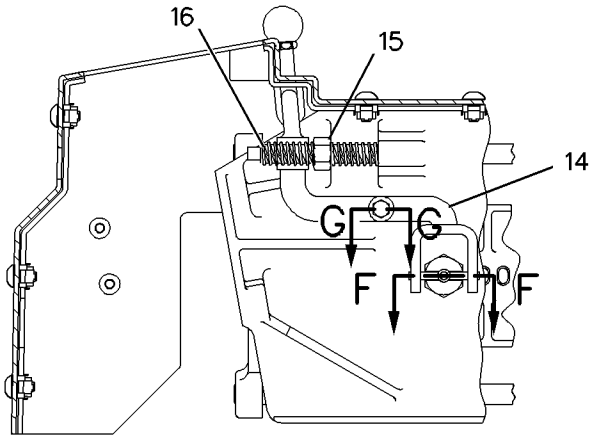

SECTION E-E

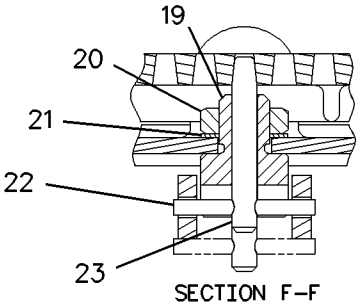

SECTION F-F

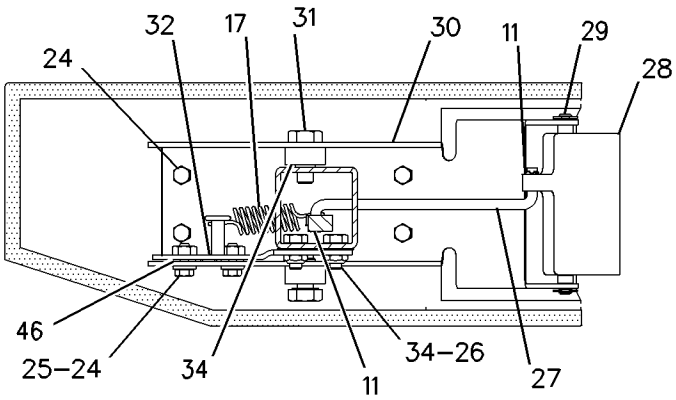

SECTION C

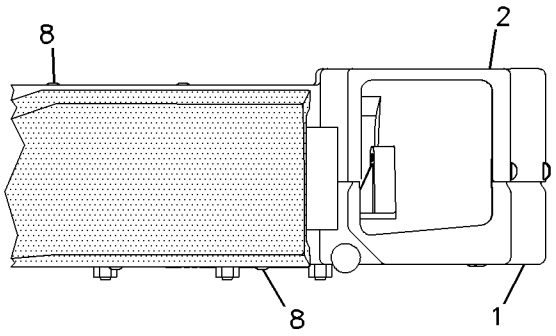

VIEW N-N

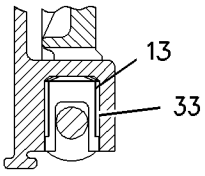

SECTION M

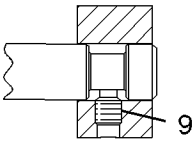

SECTION J-J

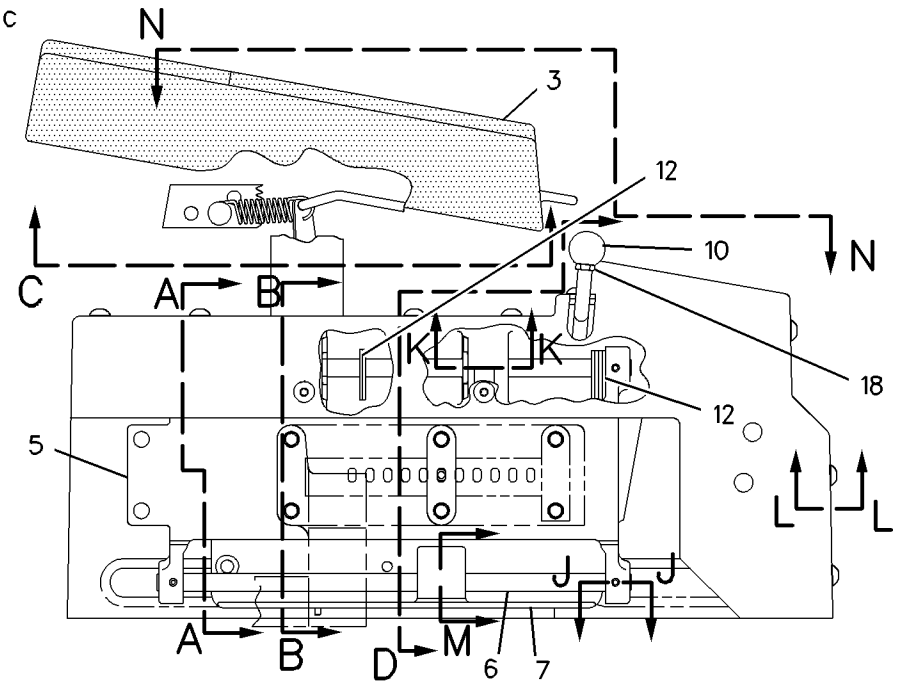

RIGHT SIDE VIEW

REFER TO ALL ILLUSTRATIONS OF THIS GROUP FOR AUXILIARY VIEWS

GRAPHIC #2

g00758132

MEMORANDA

OPERATOR STATION

171-3897 SUPPORT GP-STEERING CONTROL

S/N: 7HR298-UP

PART OF 171-7047 CAB AR

SMCS-5258 **i01411231**

NOTE	REF NO	GRAPHIC REF	PART NUMBER	QTY	PART NAME 1 2 3 4 5 6 (PRODUCT LEVEL)	SEE PAGE
	1	2	**3G-4711**	1	SPRING	
B	2	2	**4B-4276**	8	WASHER (7X16X1.6MM THK)	
	3	1	**4E-6335**	1	CUSHION AS-LH	
	4	2	**4E-6439**	1	LEVER AS	
	5	2	**4E-6444**	1	ROD	
	6	2	**4E-6445**	1	PIN	
	7	2	**4E-6446**	1	GUIDE	
	8	2	**4E-6523**	1	SUPPORT-SLIDE	
	9	2	**4E-7163**	1	SLIDER	
	10	1	**4E-8722**	5	NUT-CAGED	
	11	2	**4E-9173**	2	SHAFT-GOVERNOR CONTROL	
	12	2	**4E-9174**	2	BEARING	
	13	2	**6E-0923**	1	SPACER (15.2MM THK)	
	14	2	**9U-3925**	4	RING-RETAINING	
	15	2	**9U-3926**	6	STOP	
	16	2	**9U-3927**	1	STOP	
B	17	2	**137-6841**	2	SHIM (0.2MM THK)	
	18	1	**166-4731**	1	HOUSING	
	19	1	**166-4732**	1	HOUSING	
	20	1	**170-0696**	1	BRACKET AS	
M	20A	1	**6V-9632**	2	NUT-WELD (M6X1 THD)	
	21	1	**170-0971**	1	CUSHION AS	
	22	1	**170-0977**	1	BRACKET AS-LH	
	23	2	**170-0979**	1	PLATE AS	
M	23A	2	**8T-3490**	2	NUT-WELD (M10X1.5 THD)	
	24	1	**170-7473**	2	KNOB AS	
	25	1	**170-8540**	1	BRACKET AS	
M	25A	1	**6V-9632**	2	NUT-WELD (M6X1 THD)	
	26	2	**013-8502**	1	LOCKWASHER	
M	27	2	**095-0758**	1	SCREW-MACHINE (M6X1X14MM)	
M	28	2	**098-5747**	1	NUT-THIN (M16X2 THD)	
	29	2	**1J-5799**	1	PIN-SPRING	
M	30	1	**5C-7261**	1	NUT (M8X1.25 THD)	
M	31	2	**6V-9327**	4	SETSCREW-SOCKET	
M	32	2	**7X-2535**	1	BOLT (M6X1X60MM)	
	33	1	**7X-3310**	1	KNOB-BALL	
M	34	2	**8T-4134**	1	NUT (M6X1 THD)	
M	35	1	**8T-4138**	4	BOLT (M6X1.0X20MM)	
M	36	1	**8T-4189**	2	BOLT (M8X1.25X20MM)	
M	37	2	**8T-4195**	6	BOLT (M10X1.5X30MM)	
M	38	2	**8T-4200**	2	BOLT (M8X1.25X16MM)	
	39	1	**8T-4205**	4	WASHER-HARD (7.2X14.5X2MM THK)	
	40	1,2	**8T-4224**	4	WASHER-HARD (8.8X16X2MM THK)	
M	41	2	**8T-4244**	1	NUT (M12X1.75 THD)	
	42	1	**9X-2038**	11	WASHER (7X19X2MM THK)	
M	43	1	**9X-2043**	11	SCREW-TRUSS HEAD (M6X1X14MM)	

B-USE AS REQUIRED
M-METRIC PART

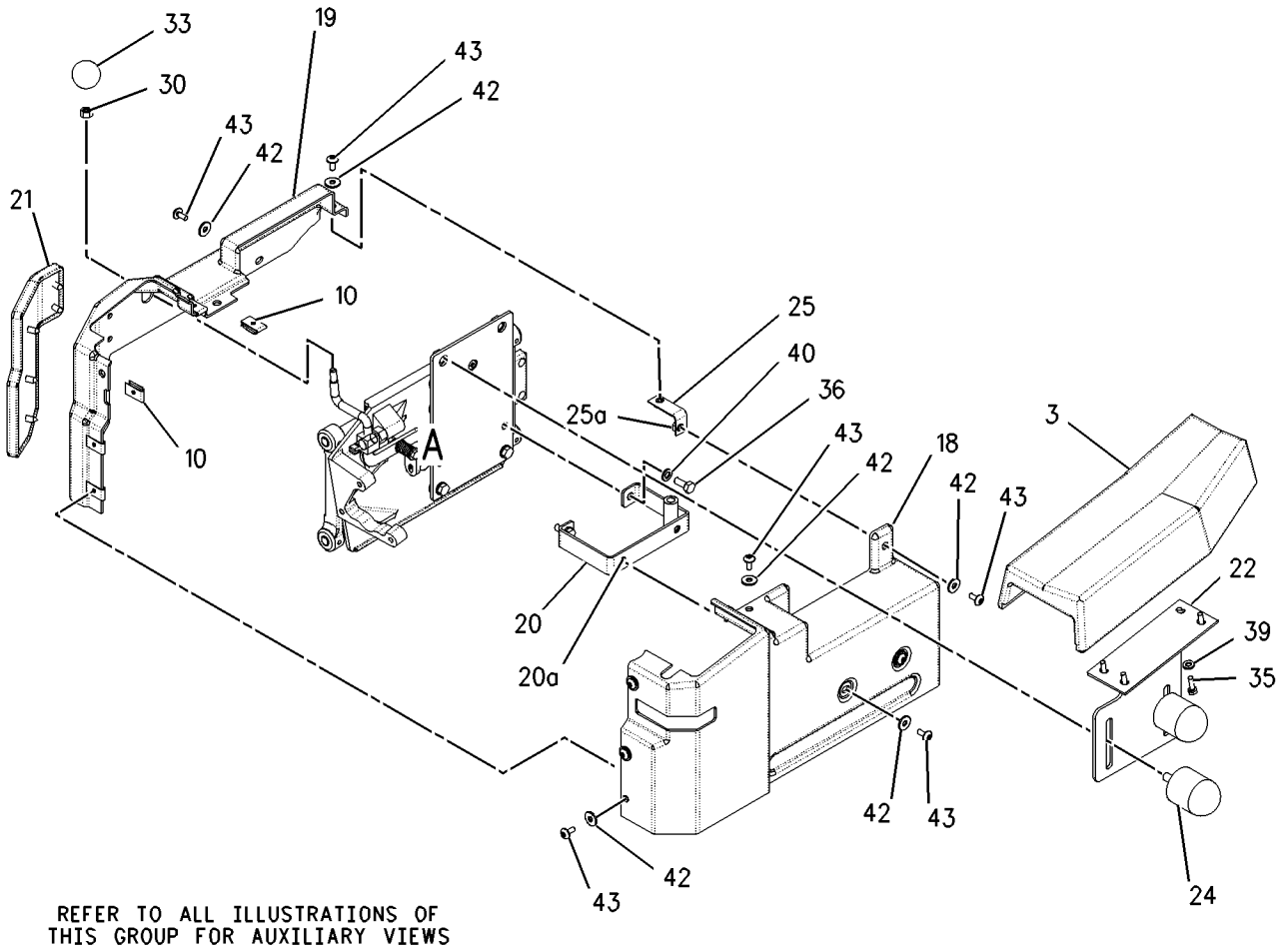

GRAPHIC #1 g00742836

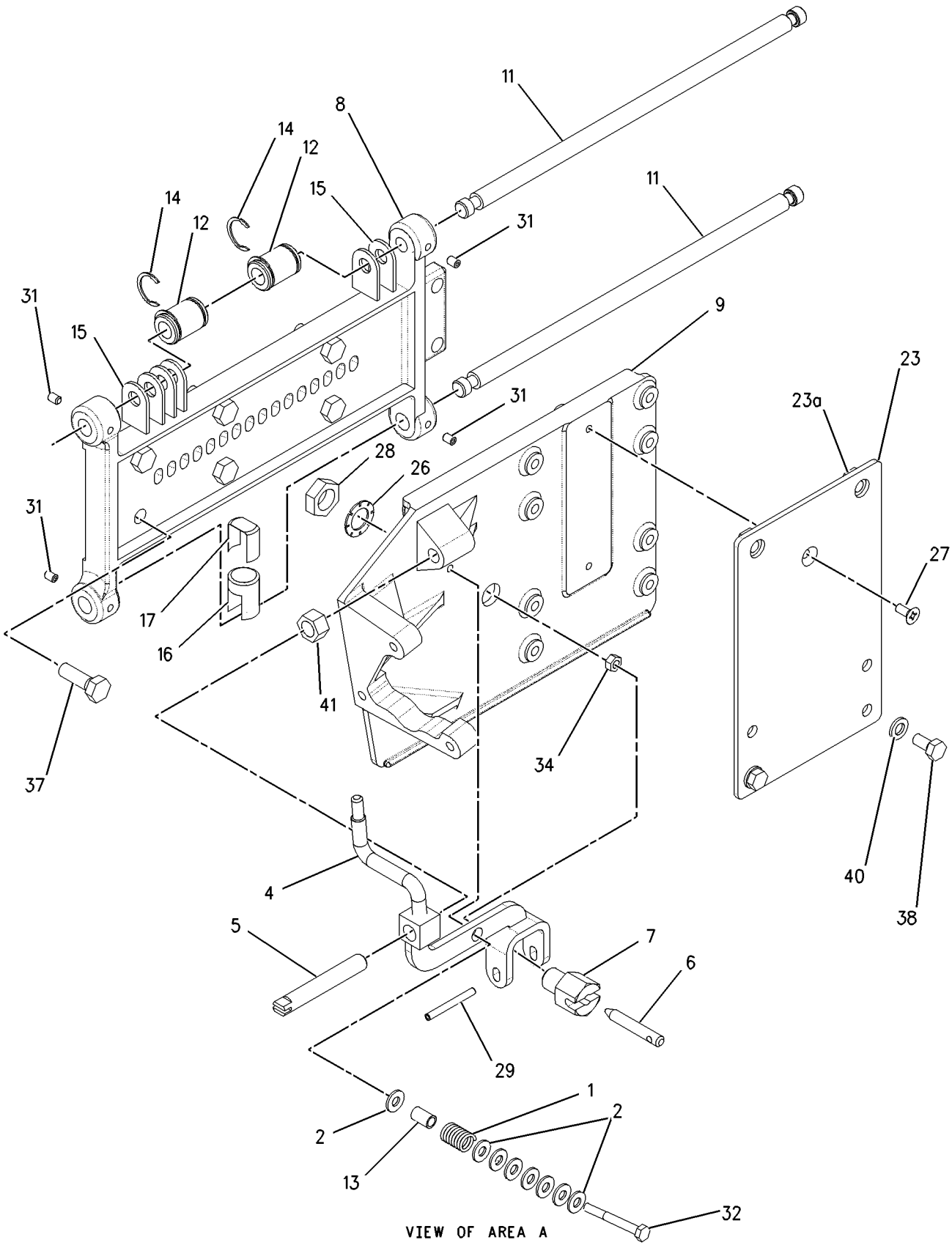

GRAPHIC #2 g00742840

MEMORANDA

OPERATOR STATION

117-7607 SUSPENSION GP-SEAT

S/N: 7HR1-UP

PART OF 123-8718 SEAT GP-SUSPENSION

FIELD REPLACEMENT ORDER 149-2404—PAGE 1414

SMCS-7324 **i01313453**

NOTE	REF NO	GRAPHIC REF	PART NUMBER	QTY	PART NAME 1 2 3 4 5 6 (PRODUCT LEVEL)	SEE PAGE
	1	1	**6K-0806**	1	STRAP-CABLE	
	2	1	**102-6317**	4	BUMPER	
	3	2	**8Y-6917**	1	BOOT	
	4	1,2	**123-8157**	2	SHAFT	
	5	1,2	**2K-4973**	4	LOCKNUT (3/8-16 THD)	
	6	2	**4V-8556**	1	BOLT (3/8-16X2.34IN)	
	7	2	**8Y-6922**	1	HOUSING AS	
	8	1	**5P-8167**	1	BOLT (3/8-16X.625 IN)	
	9	2	**8M-3267**	1	SCREW-HEX SOCKET	
	10	1	**8T-2501**	2	BOLT (3/8-16X2.0 IN)	
	11	1	**3H-5841**	1	BOLT (3/8-16X1.0IN)	
	12	1	**123-9131**	1	ABSORBER-SHOCK	
	13	1,2	**1B-4430**	4	NUT-JAM (1/2-20 THD)	
	14	1,2	**3J-4818**	4	LOCKWASHER (1/2IN)	
	15	1	**4B-4278**	3	WASHER (1.6MM THK)	
	16	1	**4V-7884**	2	BEARING	
	17	1	**5M-3062**	2	BOLT (3/8-16X.75 IN)	
	18	1	**128-0613**	1	KIT-TETHER	
					(INCLUDES 2 TETHERS)	
	19	1	**128-0686**	2	SPACER (27.8MM THK)	
	20	1	**8L-8413**	5	STRAP-CABLE (1.12IN DIA)	
	21	2	**124-7128**	1	BUSHING-RELIEF	
BE	22	2	**5R-7545**		TUBE-NYLON	
	23	1	**148-3749**	1	SCISSORS AS	
	24	1	**9M-0164**	1	CLAMP-HOSE	
	25	2	**102-8802**	1	KIT-RECEPTACLE (2 PIN)	
					(INCLUDES WEDGE & RECEPTACLE AS)	
JZ	26	2		1	SPRING	
JZ	27	2		1	FITTING	
LZ	28	2		1	CLAMP-HOSE	
NZ	29	1		1	HOUSING AS	
NZ	30	1		1	BLOCK-SLIDER	
PZ	31	2		30	CLIP	
QZ	32	1		4	ROLLER	
QZ	33	1		4	BEARING	
SZ	34	2		1	HARNESS	
SZ	35	2		1	LOCKRING	
SZ	36	2		1	LOCKWASHER	
SZ	37	2		1	NUT	
					AVAILABLE REPAIR KIT(S):	
J			**124-6329**	1	KIT-AIR SPRING	
L			**123-9144**	1	KIT-COMPRESSOR	
					(INCLUDES HOSE CLAMP, 2 AIR TUBES, & 2 TIE WRAPS)	
N			**123-8223**	1	KIT-HOUSING	
					(INCLUDES TIE WRAP)	
P			**8Y-6928**	1	KIT-FASTENER	
Q			**123-9128**	1	KIT-ROLLER	
					(INCLUDES TIE WRAP)	
S			**123-8266**	1	KIT-WIRING HARNESS	
					(INCLUDES 5-TIE WRAPS)	

B-USE AS REQUIRED
E-ORDER BY THE CENTIMETER
J-KIT MARKED J INCLUDES PART(S) MARKED J
L-KIT MARKED L INCLUDES PART(S) MARKED L
N-KIT MARKED N INCLUDES PART(S) MARKED N
P-KIT MARKED P INCLUDES PART(S) MARKED P
Q-KIT MARKED Q INCLUDES PART(S) MARKED Q
S-KIT MARKED S INCLUDES PART(S) MARKED S
Z-NOT SERVICED SEPARATELY

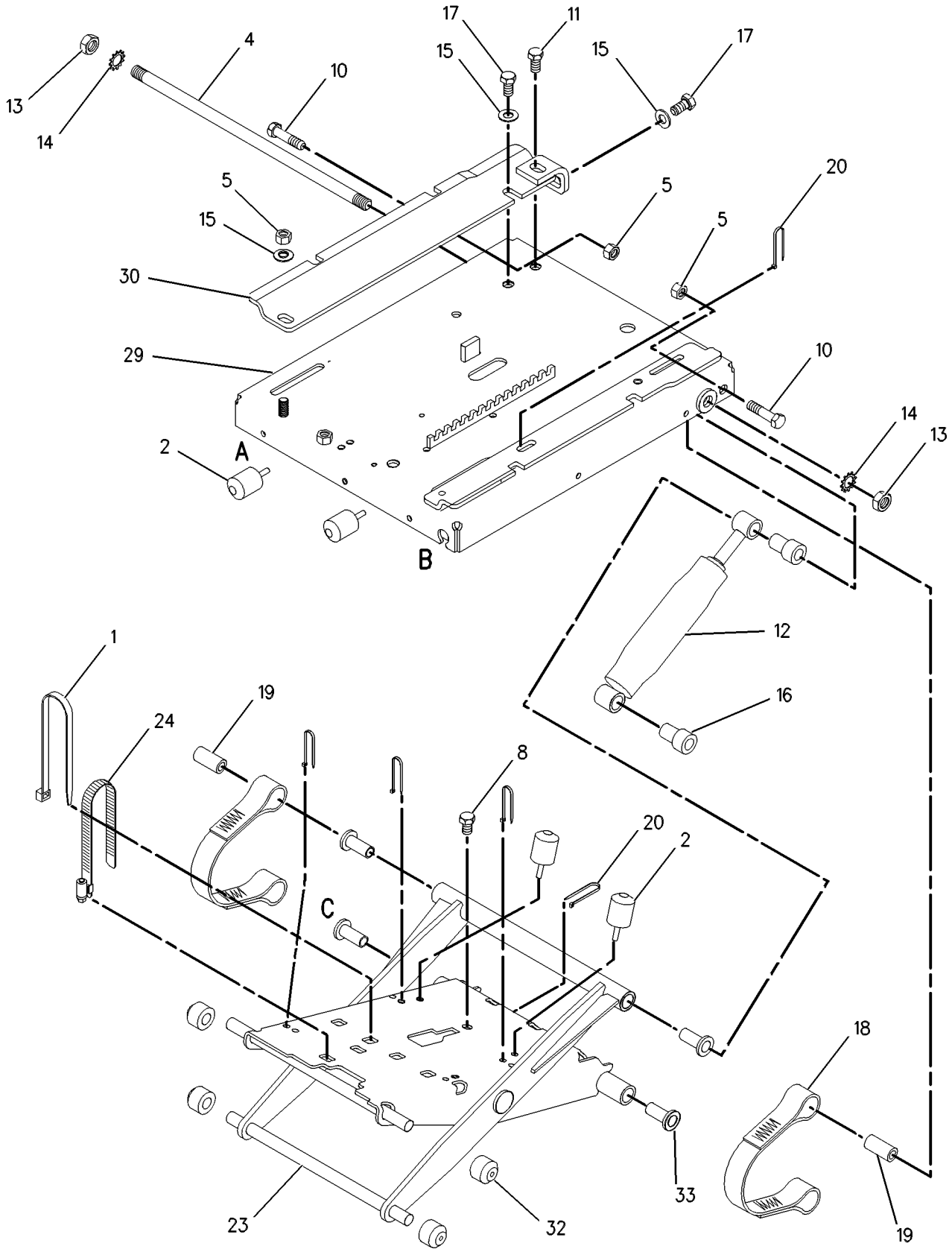

GRAPHIC #1 g00324462

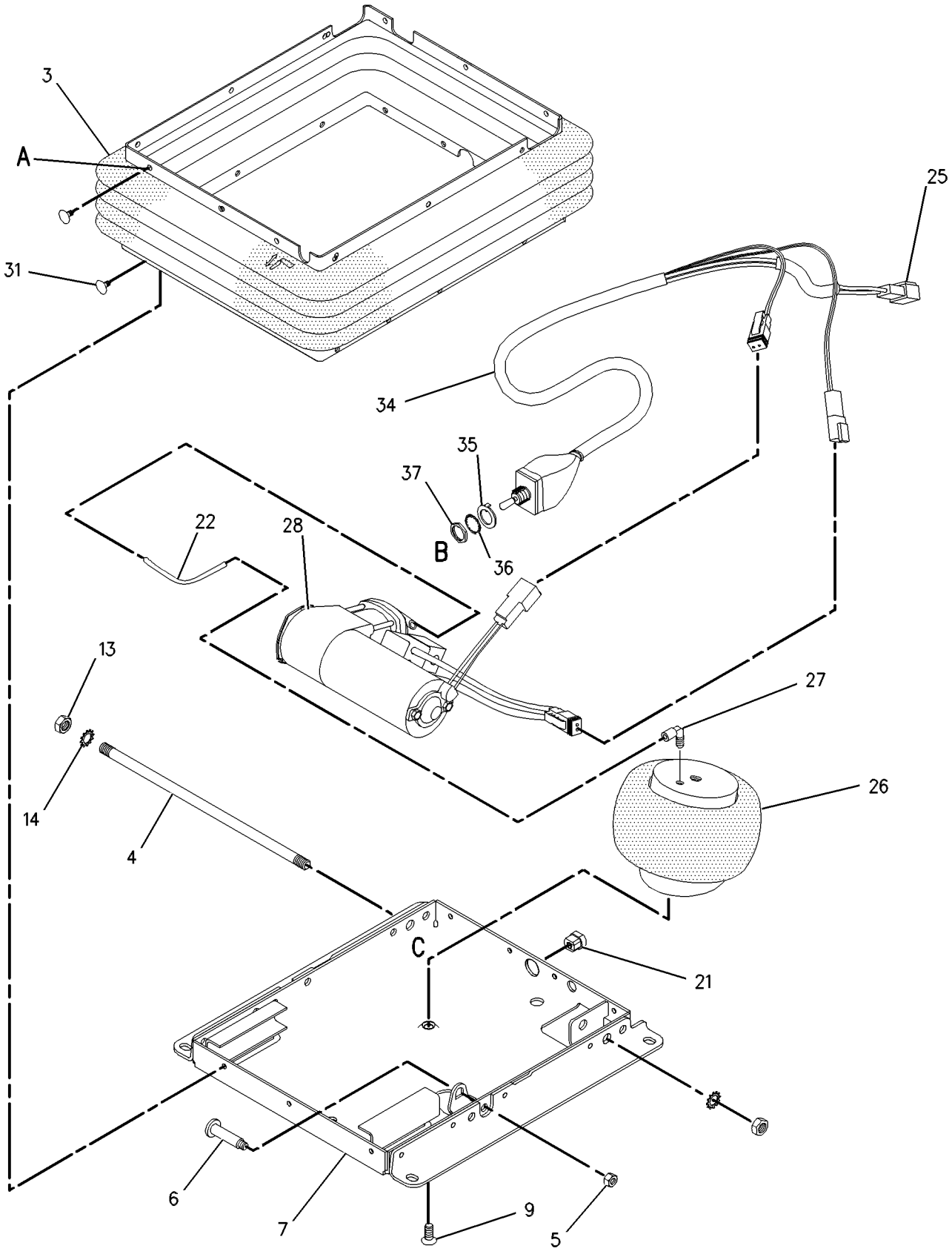

GRAPHIC #2 g00324463

OPERATOR STATION

149-2404 SUSPENSION GP-SEAT—AIR

S/N: 7HR111-UP
24 VOLTS
PART OF 123-8718, 171-8755 SEAT GP-SUSPENSION
FIELD REPLACEMENT FOR 117-7607—PAGE 1410
ALSO FIELD INSTALLATION

SMCS-7324 **i01540032**

NOTE	REF NO	GRAPHIC REF	PART NUMBER	QTY	PART NAME 1 2 3 4 5 6 (PRODUCT LEVEL)	SEE PAGE
	1	1	**6K-0806**	1	STRAP-CABLE	
	2	1	**102-6317**	4	BUMPER	
	3	2	**8Y-6917**	1	BOOT	
	4	1,2	**123-8157**	2	SHAFT	
	5	1,2	**2K-4973**	3	LOCKNUT (3/8-16 THD)	
	6	2	**4V-8556**	1	BOLT (3/8-16X2.34 IN)	
	7	2	**166-7401**	1	HOUSING AS (LOWER)	
M		2	**8T-3490**	4	NUT-WELD (M10X1.5 THD)	
	8	1	**5P-8167**	1	BOLT (3/8-16X0.625 IN)	
	9	2	**8M-3267**	1	SCREW-HEX SOCKET (3/8-16X0.75 IN)	
	10	1	**8T-2501**	2	BOLT (3/8-16X2 IN)	
	11	1	**166-7221**	1	HOUSING AS (UPPER)	
	12	1	**123-9131**	1	ABSORBER-SHOCK	
	13	1,2	**1B-4430**	4	NUT-JAM (1/2-20 THD)	
	14	1,2	**3J-4818**	4	LOCKWASHER	
B	15	1	**160-7765**	1	WASHER (16.26X22.23X1.97MM THK)	
B	16	1	**160-7766**	3	WASHER (16.26X22.23X0.51MM THK)	
B	17	1	**160-7767**	8	WASHER (3.68X12.57X0.51MM THK)	
	18	1	**4V-7884**	2	BEARING	
	19	1	**128-0686**	2	SPACER (9.78X15.88X27.8MM THK)	
	20	1	**8L-8413**	5	STRAP-CABLE	
	21	2	**124-7128**	1	BUSHING-RELIEF	
BE	22	2	**147-6541**		TUBE	
	23	1	**148-3749**	1	SCISSORS AS	
	24	1	**9M-0164**	1	CLAMP-HOSE	
	25	2	**147-6523**	1	COMPRESSOR	
	26	1	**145-0326**	1	FILM-INSTRUCTION (SEAT ADJUSTMENT)	
	27	2	**147-4549**	2	FITTING-ELBOW	
	28	2	**147-6522**	1	SPRING-AIR	
	29	2	**102-8802**	1	KIT-RECEPTACLE (2 PIN)	
					(INCLUDES RECEPTACLE AS & WEDGE)	
PZ	30	1		2	TETHER	
JZ	31	2		30	CLIP	
LZ	32	1		4	ROLLER	
LZ	33	1		4	BEARING	
NZ	34	2		1	HARNESS	
NZ	35	2		1	LOCK RING	
NZ	36	2		1	LOCKWASHER	
NZ	37	2		1	NUT	
					AVAILABLE REPAIR KIT(S):	
J			**8Y-6928**	1	KIT-FASTENER (SEAT SUSPENSION)	
L			**123-9128**	1	KIT-ROLLER	
					(INCLUDES TIE WRAP)	
N			**123-8266**	1	KIT-WIRING HARNESS	
					(INCLUDES 5-TIE WRAPS)	
P			**128-0613**	1	KIT-TETHER	

B-USE AS REQUIRED
E-ORDER BY THE CENTIMETER
J-KIT(S) MARKED J SERVICES PART(S) MARKED J
L-KIT(S) MARKED L SERVICES PART(S) MARKED L
M-METRIC PART
N-KIT(S) MARKED N SERVICES PART(S) MARKED N
P-KIT(S) MARKED P SERVICES PART(S) MARKED P
Z-NOT SERVICED SEPARATELY

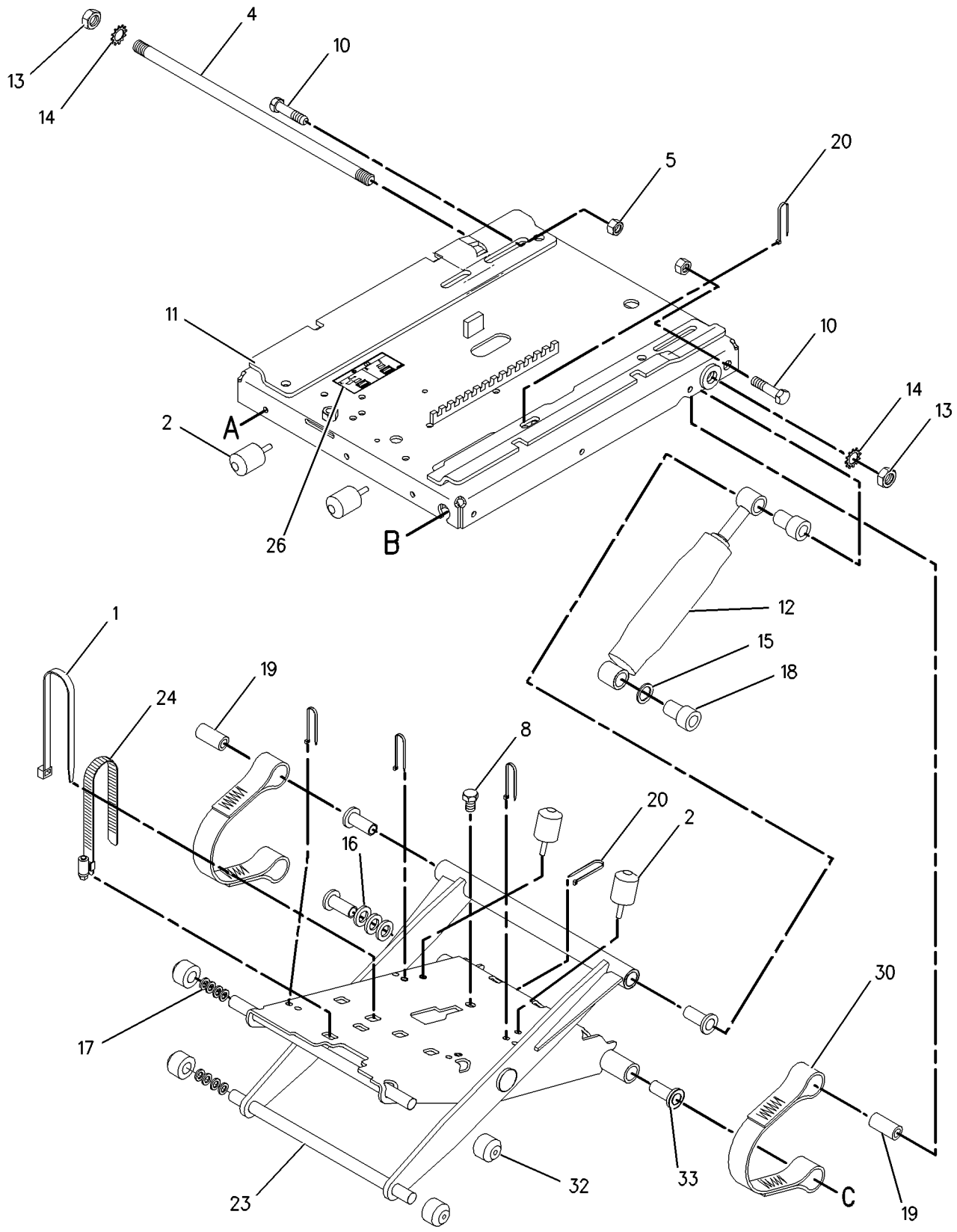

GRAPHIC #1

g00649641

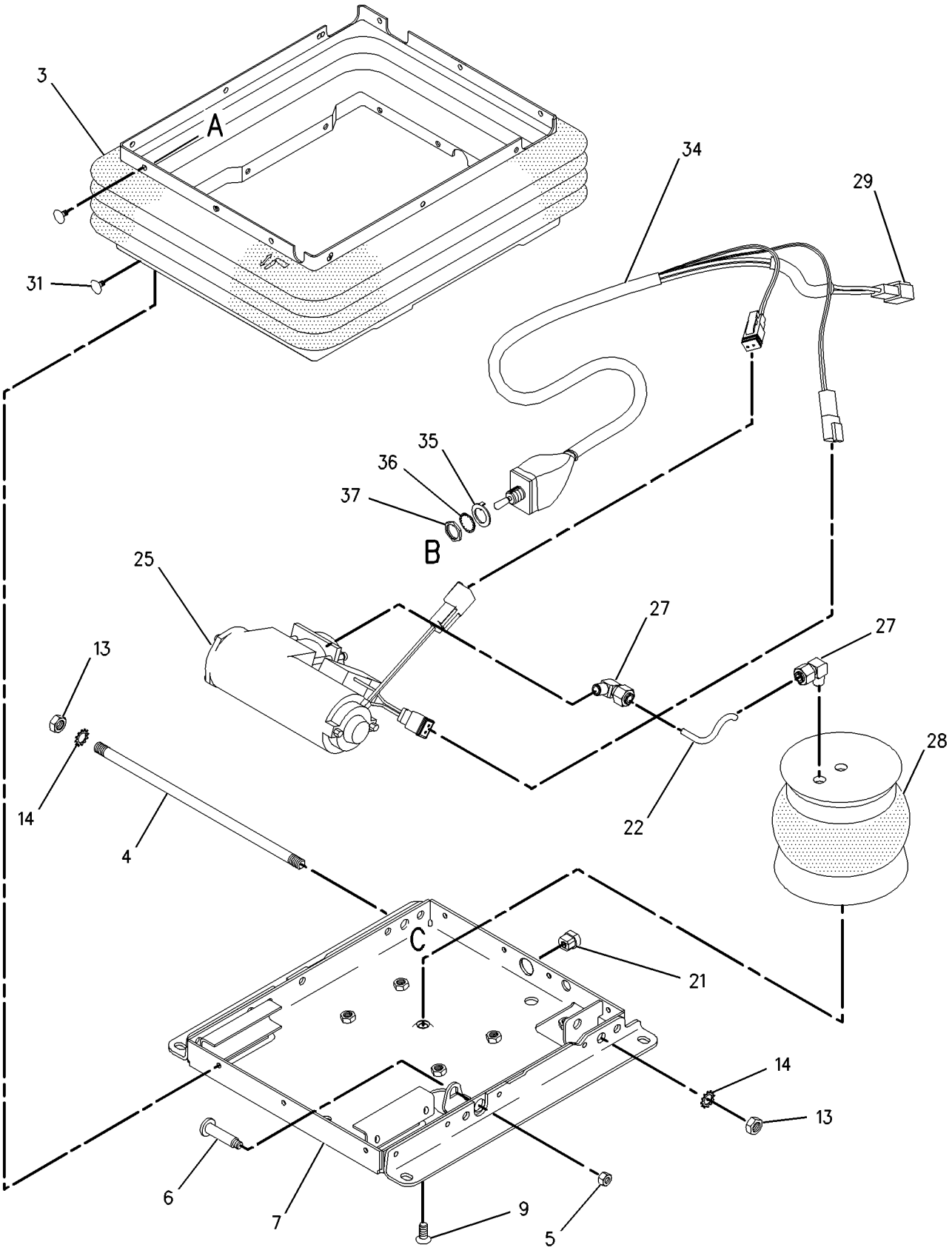

GRAPHIC #2 g00799959

MEMORANDA

OPERATOR STATION

161-7539 SUSPENSION GP-SEAT

S/N: 7HR398-UP
24 VOLT. AIR
PART OF 185-9725 SEAT GP-SUSPENSION

SMCS-7324 **i01493112**

NOTE	REF NO	GRAPHIC REF	PART NUMBER	QTY	PART NAME 1 2 3 4 5 6 (PRODUCT LEVEL)	SEE PAGE
	1	1	**1B-4430**	4	NUT-JAM (1/2-20 THD)	
	2	1	**3J-4818**	4	LOCKWASHER	
	3	1	**4V-7884**	2	BEARING	
	4	1	**4V-8556**	1	BOLT (3/8-16X2.34 IN)	
	5	1	**6K-0806**	1	STRAP-CABLE	
	6	1	**8L-8413**	5	STRAP-CABLE	
	7	1	**8Y-6917**	1	BOOT	
	8	1	**8Y-6922**	1	HOUSING AS	
	9	1	**9M-0164**	1	CLAMP-HOSE	
	10	1	**102-6317**	4	BUMPER	
	11	1	**123-8157**	2	SHAFT	
	12	1	**123-9131**	1	ABSORBER-SHOCK	
	13	1	**124-7128**	1	BUSHING-RELIEF	
	14	1	**128-0686**	2	SPACER (9.78X15.88X27.8MM THK)	
	15	1	**147-4549**	2	FITTING-ELBOW	
	16	1	**147-6522**	1	SPRING-AIR	
	17	1	**147-6523**	1	COMPRESSOR	
	18	1	**148-3749**	1	SCISSORS AS	
	19	1	**160-7765**	1	WASHER (16.26X22.23X1.97MM THK)	
B	20	1	**160-7766**	3	WASHER (16.26X22.23X0.51MM THK)	
B	21	1	**160-7767**	8	WASHER (3.68X12.57X0.51MM THK)	
	22	1	**164-5951**	1	HOUSING AS	
		1	**2K-4973**	1	LOCKNUT (3/8-16 THD)	
	23	1	**2K-4973**	3	LOCKNUT (3/8-16 THD)	
	24	1	**5P-8167**	1	BOLT (3/8-16X0.625 IN)	
	25	1	**8M-3267**	1	SCREW-HEX SOCKET (3/8-16X0.75 IN)	
	26	1	**8T-2501**	2	BOLT (3/8-16X2 IN)	
BE	27	1	**147-6541**		TUBE	
	28	1	**128-0613**	1	KIT-TETHER	
					(INCLUDES 2 TETHERS)	
JZ	29	1		27	CLIP	
LZ	30	1		4	ROLLER	
LZ	31	1		4	BEARING	
PZ	32	1		1	HARNESS	
PZ	33	1		1	NUT	
PZ		1		1	WASHER (0.38X0.88X0.02 IN THK)	
PZ		1		1	WASHER	
					AVAILABLE REPAIR KIT(S):	
J			**8Y-6928**	1	KIT-FASTENER (SEAT SUSPENSION)	
L			**123-9128**	1	KIT-ROLLER	
					(INCLUDES TIE WRAP)	
P			**123-8266**	1	KIT-WIRING HARNESS	
					(INCLUDES TIE WRAPS)	

B-USE AS REQUIRED
E-ORDER BY THE CENTIMETER
J-REPAIR KIT MARKED J INCLUDES PART(S) MARKED J
L-REPAIR KIT MARKED L INCLUDES PART(S) MARKD L
P-REPAIR KIT MARKED P INCLUDES PART(S) MARKD P
Z-NOT SERVICED SEPARATELY

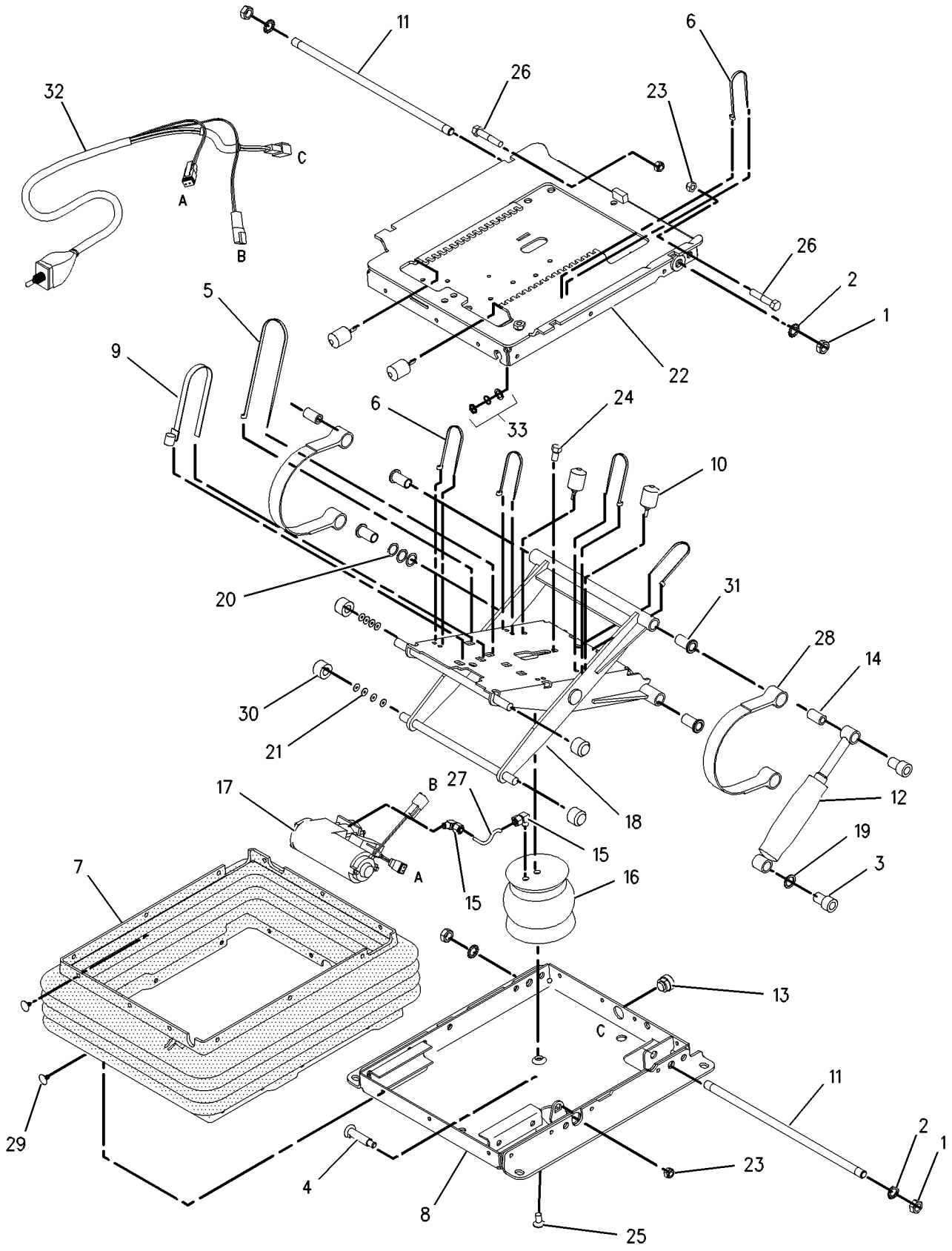

GRAPHIC #1 g00536599

OPERATOR STATION

131-8153 VIDS AR

S/N: 7HR1-UP

AN ATTACHMENT

SMCS-7603 **i01154207**

NOTE	PART NUMBER	QTY	PART NAME 1 2 3 4 5 6 (PRODUCT LEVEL)	SEE PAGE
Y	*132-4824*	1	WIRING GP-SHUTOFF	438
Y	*109-6897*	1	WIRING GP-VIDS MONITOR	440
			S/N: 7HR1-278	
Y	*168-4358*	1	WIRING GP-VIDS MONITOR	446
			S/N: 7HR279-UP	

Y-SEPARATE ILLUSTRATION

OPERATOR STATION

131-8155 VIMS AR

S/N: 7HR1-UP
PART OF 170-8544 LIFT AR-HIGH, 170-8022 LIFT AR-STANDARD
AN ATTACHMENT

SMCS-7601 **i01154218**

NOTE	PART NUMBER	QTY	PART NAME 1 2 3 4 5 6 (PRODUCT LEVEL)	SEE PAGE
Y	*131-8156*	1	WIRING GP-CAB	380
Y	*112-4191*	1	WIRING GP-VIMS	452
Y	*131-4377*	1	WIRING GP-VIMS MONITOR	460
			S/N: 7HR1-283	
Y	*168-4359*	1	WIRING GP-VIMS MONITOR	466
			S/N: 7HR284-UP	

Y-SEPARATE ILLUSTRATION

OPERATOR STATION

9U-0229 WASHER GP-WINDOW

S/N: 7HR1-UP

PART OF 131-0207 WIPER & WASHER GP-WINDOW

AN ATTACHMENT

SMCS-7306 **i01057782**

NOTE	REF NO	GRAPHIC REF	PART NUMBER	QTY	PART NAME 1 2 3 4 5 6 (PRODUCT LEVEL)	SEE PAGE
	1	1	**4E-8177**	1	RESERVOIR	
	2	1	**7T-8890**	2	PUMP AS-WASHER	
	3	1	**8T-5913**	2	FILTER-SCREEN	
	4	1	**8T-5914**	2	GROMMET	

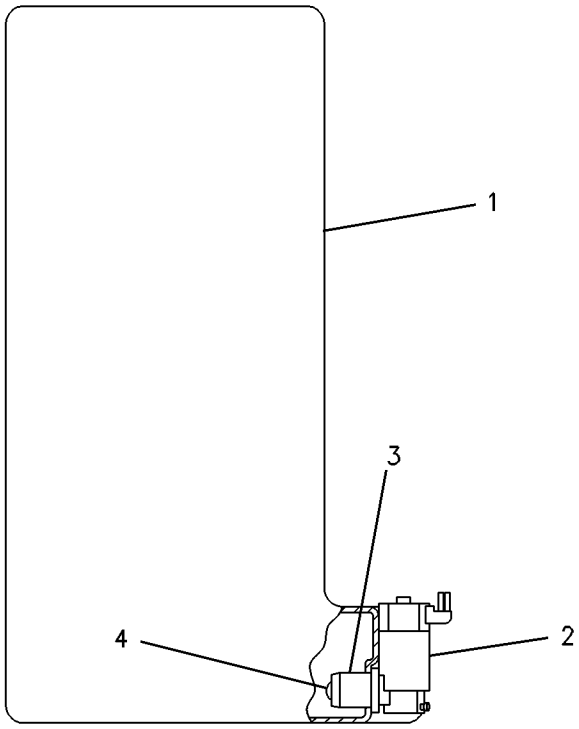

GRAPHIC #1 g00119840

OPERATOR STATION

9U-0351 WASHER GP-WINDOW

S/N: 7HR1-UP

PART OF 8R-5535 WIPER & WASHER GP-WINDOW

SMCS-7306 **i01351139**

NOTE	REF NO	GRAPHIC REF	PART NUMBER	QTY	PART NAME 1 2 3 4 5 6 (PRODUCT LEVEL)	SEE PAGE
	1	1	**4E-8177**	1	RESERVOIR	
	2	1	**9U-0126**	1	CAP	
	3	1	**4E-6999**	1	HARNESS AS	
		1	**155-2271**	1	KIT-CONNECTING PLUG (4 PIN) (WASHER/WIPER)	
	4	1	**7T-8890**	4	PUMP AS-WASHER	
	5	1	**8T-5914**	4	GROMMET	
	6	1	**8T-5913**	4	FILTER-SCREEN	

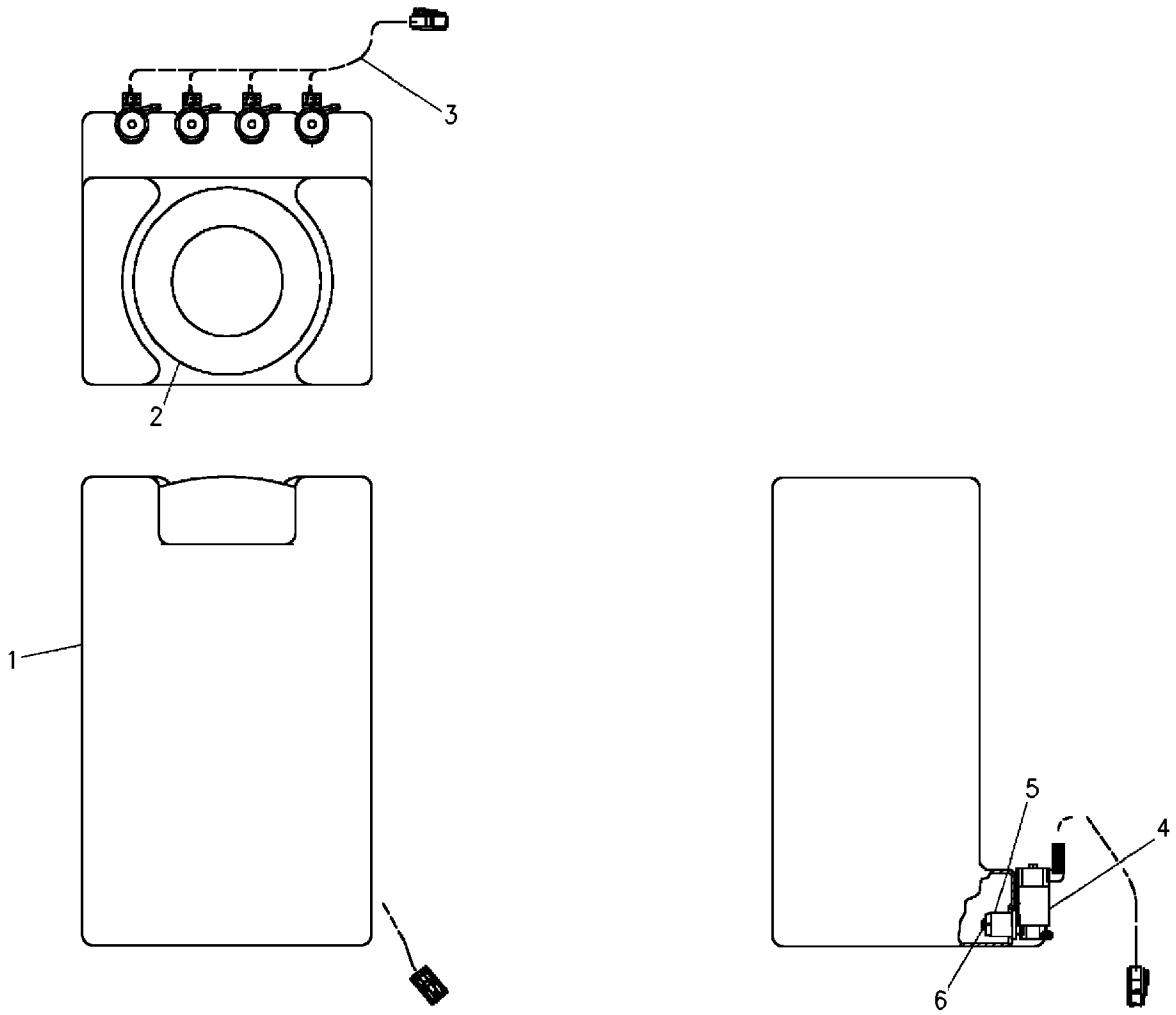

GRAPHIC #1 g00715775

OPERATOR STATION

8R-5535 WIPER & WASHER GP-WINDOW

S/N: 7HR1-397

PART OF 130-6906, 171-7047 CAB AR

SMCS-7305, 7306 **i01241523**

NOTE	REF NO	GRAPHIC REF	PART NUMBER	QTY	PART NAME 1 2 3 4 5 6 (PRODUCT LEVEL)	SEE PAGE
Y	1	1	*9U-0351*	1	WASHER GP-WINDOW	1423
	2	1	**4E-9611**	1	SHEET AS	
M		1	**8T-3490**	1	NUT-WELD (M10X1.5 THD)	
BD	3	1	**5P-5992**		HOSE	
	4	1	**8T-5400**	5	CONNECTOR	
M		1	**6V-6889**	5	NUT (M8X1.25 THD)	
	5	1	**3S-2093**	5	STRAP-CABLE	
	6	1	**8T-4121**	10	WASHER-HARD (2.5MM THK)	
M	7	1	**8T-4191**	4	BOLT (M10X1.50X16MM)	
M	8	1	**7X-2621**	2	BOLT (M10X1.50X12MM)	
	9	1	**7N-3718**	2	CLIP (9.52MM ID)	
	10	1	**9U-0122**	1	ROD	
M	11	1	**8T-4133**	4	NUT (M10X1.50 THD)	
	12	1	**9U-0121**	1	ANGLE AS	
Y	13	1	*6V-6561*	2	WIPER PIVOT GP	1442
	14	1	**0S-1597**	2	BOLT (1/4-28X1IN)	
		1	**9N-1713**	2	WASHER	
	15	1	**6V-5851**	1	BLADE AS-WIPER (REAR)	
	16	1	**6V-3265**	2	CLIP (9.52MM ID) (3/8 HOLE)	
Y	17	1	**3E-9291**	1	WIPER GP-WINDOW (FRONT)	1440
	18	1	**8Y-6341**	1	ARM AS-WIPER (FRONT)	
		1	**6V-6797**	1	NOZZLE AS	
		1	**6V-6798**	3	CLIP-HOSE	
	19	1	**8Y-6342**	1	ARM AS-WIPER (REAR)	
		1	**8T-0789**	1	CLIP-HOSE (6.2MM ID)	
		1	**8T-1119**	1	NOZZLE AS	
	20	1	**9U-0838**	1	MAT	
Y	21	1	**3E-7508**	1	WIPER GP-WINDOW (REAR)	1438
	22	1	**6V-7419**	1	BLADE AS-WIPER (FRONT)	
	23	1	**6V-6943**	1	BRACKET-SADDLE	
M	24	1	**6V-6942**	1	BOLT-SHOULDER (M4X0.7X27 MM)	
	25	1	**4F-2318**	1	LOCKWASHER	
	26	1	**4L-0569**	1	WASHER	
M	27	1	**5C-8312**	1	NUT (M4X0.7 THD)	

B-USE AS REQUIRED
D-ORDER BY THE METER
M-METRIC PART
Y-SEPARATE ILLUSTRATION

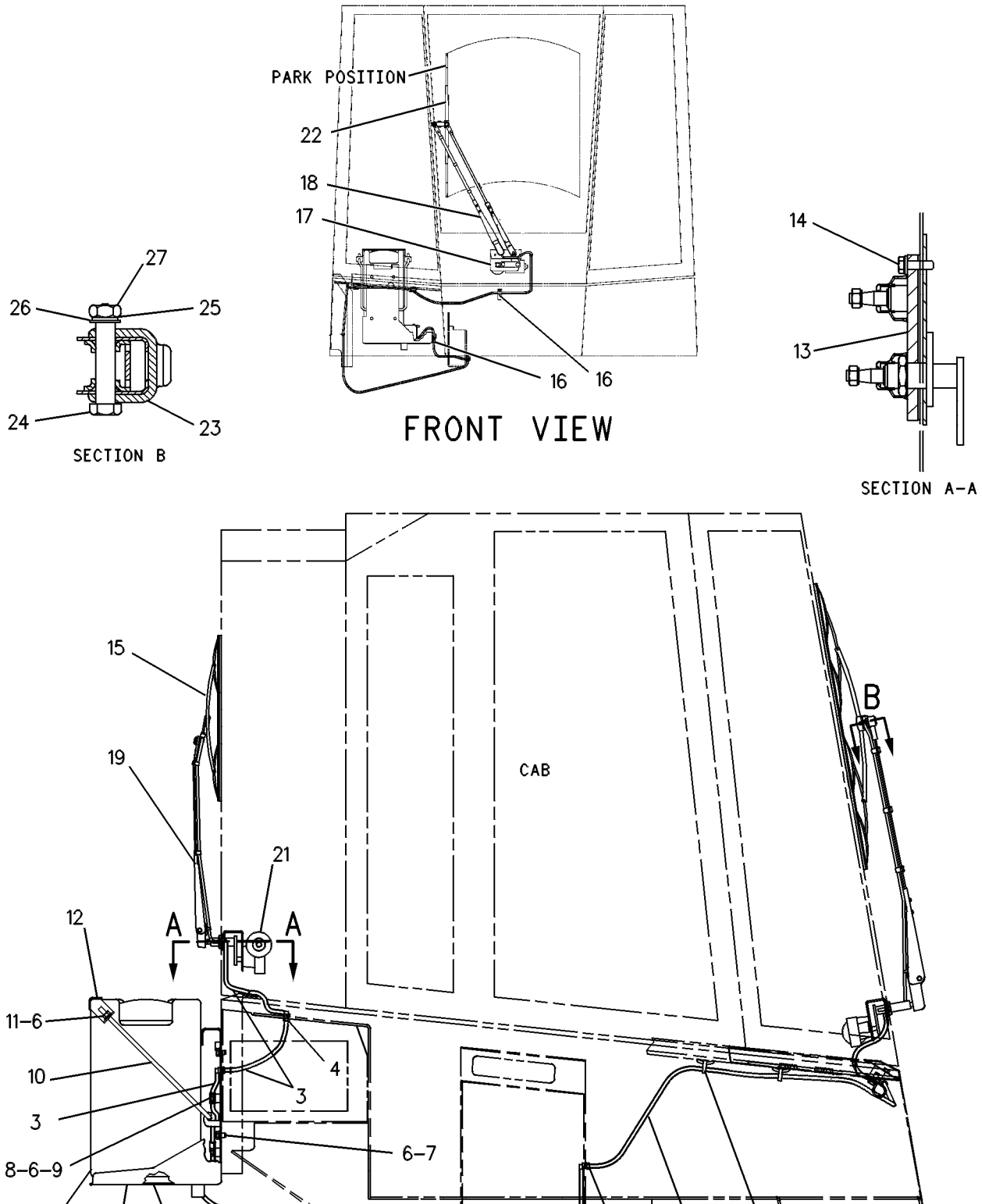

GRAPHIC #1

g00120162

OPERATOR STATION

8R-5535 WIPER & WASHER GP-WINDOW

S/N: 7HR398-UP
PART OF 171-7047 CAB AR
TYPE 1

SMCS-7305, 7306 **i01356990**

NOTE	REF NO	GRAPHIC REF	PART NUMBER	QTY	PART NAME 1 2 3 4 5 6 (PRODUCT LEVEL)	SEE PAGE
Y	1	1	*9U-0351*	1	WASHER GP-WINDOW	1423
	2	1	**4E-9611**	1	SHEET AS	
M		1	**8T-3490**	1	NUT-WELD (M10X1.5 THD)	
D	3	1	**5P-5992**		HOSE (.54M)	
	4	1	**8T-5400**	5	CONNECTOR	
M		1	**6V-6889**	5	NUT (M8X1.25 THD)	
	5	1	**3S-2093**	5	STRAP-CABLE	
	6	1	**8T-4121**	10	WASHER-HARD (2.5MM THK)	
M	7	1	**8T-4191**	4	BOLT (M10X1.50X16MM)	
CM	8	1	**8T-4137**	2	BOLT (M10X1.50X20MM)	
	9	1	**7N-3718**	2	CLIP (9.52MM ID)	
	10	1	**9U-0122**	1	ROD	
M	11	1	**8T-4133**	4	NUT (M10X1.50 THD)	
	12	1	**9U-0121**	1	ANGLE AS	
Y	13	1	*6V-6561*	2	WIPER PIVOT GP	1442
	14	1	**0S-1597**	2	BOLT (1/4-28X1IN)	
		1	**9N-1713**	2	WASHER	
	15	1	**6V-5851**	1	BLADE AS-WIPER (REAR)	
	16	1	**6V-3265**	2	CLIP (3/8 HOLE)	
Y	17	1	**3E-9291**	1	WIPER GP-WINDOW (FRONT)	1440
	18	1	**8Y-6341**	1	ARM AS-WIPER (FRONT)	
		1	**6V-6797**	1	NOZZLE AS	
		1	**6V-6798**	3	CLIP-HOSE	
	19	1	**8Y-6342**	1	ARM AS-WIPER (REAR)	
		1	**8T-0789**	1	CLIP-HOSE (6.2MM ID)	
		1	**8T-1119**	1	NOZZLE AS	
	20	1	**9U-0838**	1	MAT	
Y	21	1	**3E-7508**	1	WIPER GP-WINDOW (REAR)	1438
	22	1	**6V-7419**	1	BLADE AS-WIPER (FRONT)	
	23	1	**6V-6943**	1	BRACKET-SADDLE	
M	24	1	**6V-6942**	1	BOLT-SHOULDER (M4X0.7X27 MM)	
	25	1	**4F-2318**	1	LOCKWASHER	
	26	1	**4L-0569**	1	WASHER	
M	27	1	**5C-8312**	1	NUT (M4X0.7 THD)	

C-CHANGE FROM PREVIOUS TYPE
D-ORDER BY THE METER
M-METRIC PART
Y-SEPARATE ILLUSTRATION

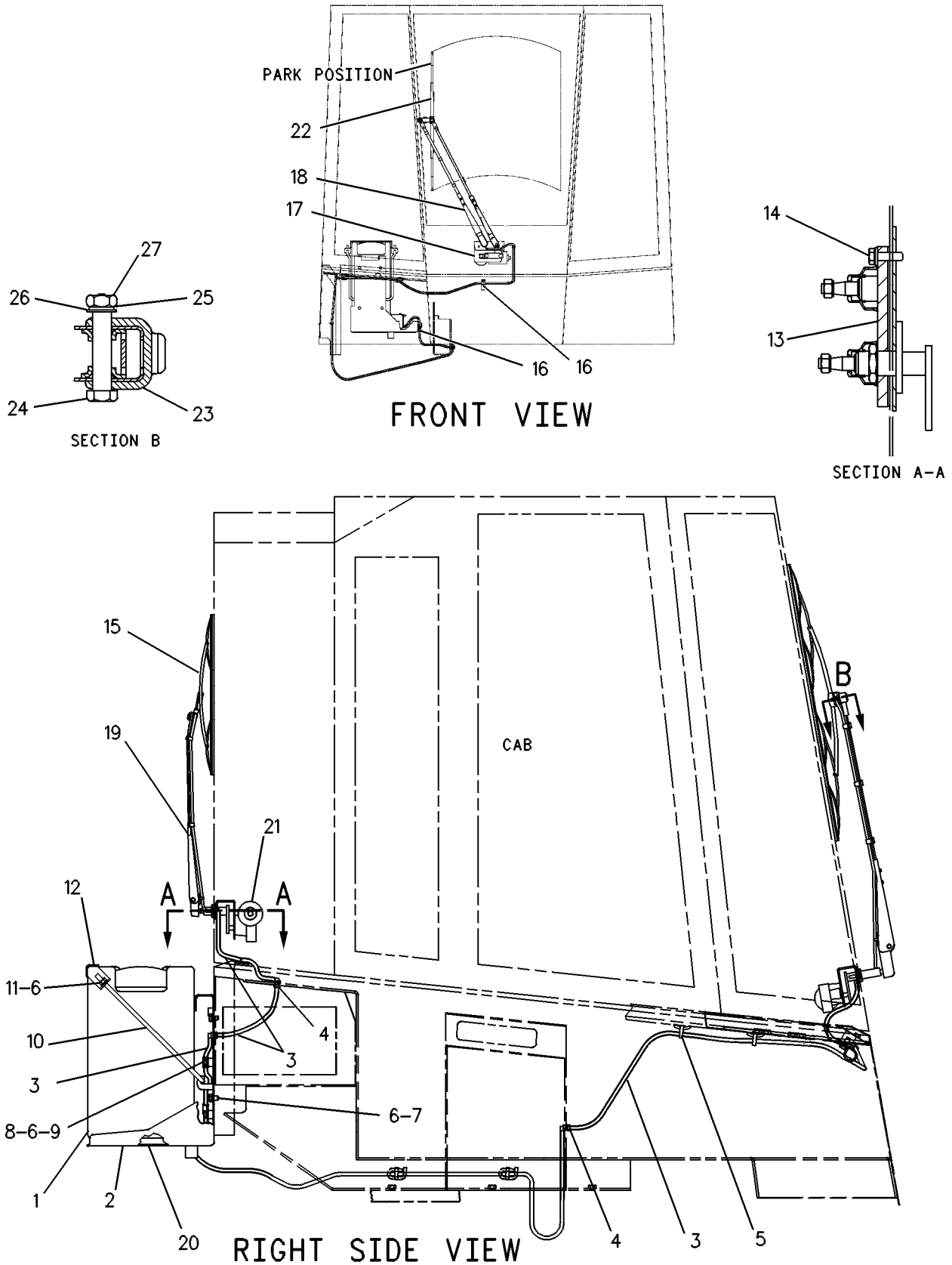

GRAPHIC #1 g00120162

OPERATOR STATION

8R-5535 WIPER & WASHER GP-WINDOW

S/N: 7HR398-UP
PART OF 171-7047 CAB AR
TYPE 2

SMCS-7305, 7306 **i01509628**

NOTE	REF NO	GRAPHIC REF	PART NUMBER	QTY	PART NAME 1 2 3 4 5 6 (PRODUCT LEVEL)	SEE PAGE
Y	1	1	*9U-0351*	1	WASHER GP-WINDOW	1423
	2	1	**4E-9611**	1	SHEET AS	
M		1	**8T-3490**	1	NUT-WELD (M10X1.5 THD)	
D	3	1	**5P-5992**		HOSE (.54M)	
	4	1	**8T-5400**	5	CONNECTOR	
M		1	**6V-6889**	5	NUT (M8X1.25 THD)	
	5	1	**3S-2093**	5	STRAP-CABLE	
	6	1	**8T-4121**	10	WASHER-HARD (11X21X2.5MM THK)	
M	7	1	**8T-4191**	4	BOLT (M10X1.5X16MM)	
M	8	1	**8T-4137**	2	BOLT (M10X1.5X20MM)	
	9	1	**7N-3718**	2	CLIP	
	10	1	**9U-0122**	1	ROD	
M	11	1	**8T-4133**	4	NUT (M10X1.5 THD)	
	12	1	**9U-0121**	1	ANGLE AS	
C	13	1	**155-5779**	2	WIPER PIVOT AS	
M	14	1	**6V-7357**	2	BOLT (M6X1.0X25MM)	
		1	**9N-1713**	2	WASHER	
	15	1	**6V-5851**	1	BLADE AS-WIPER (REAR)	
	16	1	**6V-3265**	2	CLIP (3/8 HOLE)	
C	17	1	**185-2154**	1	MOTOR GP-WINDOW WIPER (FRONT)	
		1	**186-3735**	5	PIN-CONNECTOR	
		1	**102-8805**	1	KIT-RECEPTACLE (6 PIN)	
					(INCLUDES RECEPTACLE AS & WEDGE)	
		1	**8T-8737**	1	PLUG-SEAL	
C	18	1	**155-5787**	1	ARM AS-WIPER (FRONT)	
C	19	1	**185-2155**	1	ARM AS (REAR)	
	20	1	**9U-0838**	1	MAT	
CY	21	1	**155-5784**	1	MOTOR GP-WINDOW WIPER (24 V) (REAR)	1331
	22	1	**6V-7419**	1	BLADE AS-WIPER (FRONT)	
	23	1	**6V-6943**	1	BRACKET-SADDLE	
M	24	1	**6V-6942**	1	BOLT-SHOULDER (M4X0.7X27 MM)	
	25	1	**4F-2318**	1	LOCKWASHER	
	26	1	**4L-0569**	1	WASHER	
M	27	1	**5C-8312**	1	NUT (M4X0.7 THD)	

C-CHANGE FROM PREVIOUS TYPE
D-ORDER BY THE METER
M-METRIC PART
Y-SEPARATE ILLUSTRATION

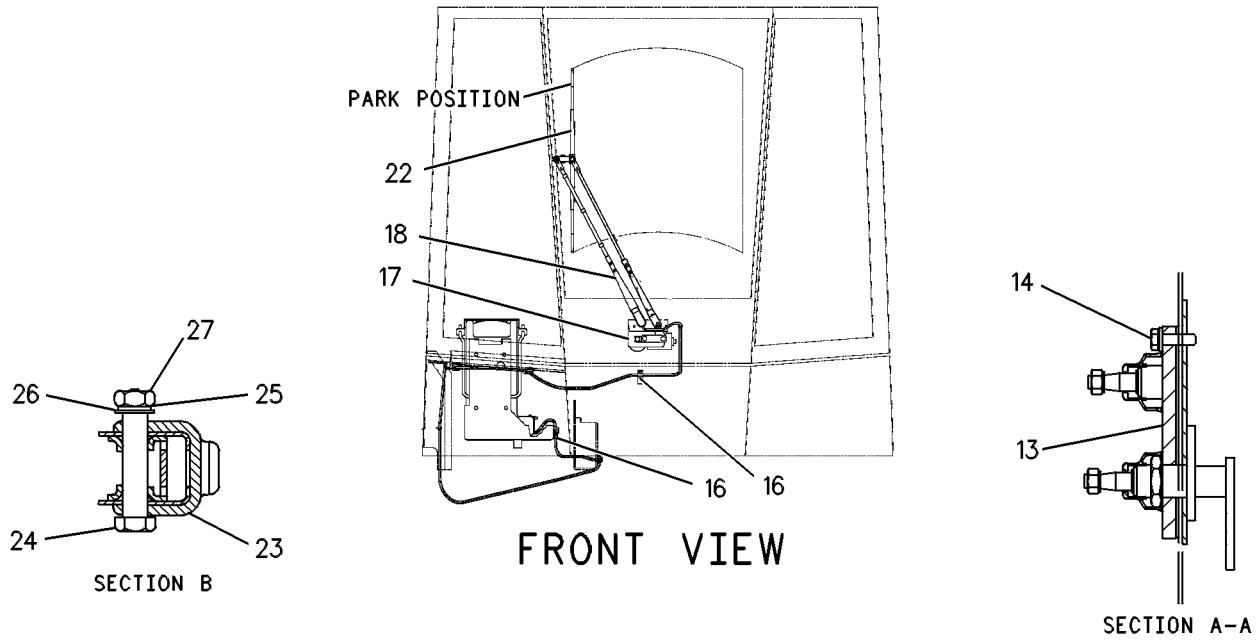

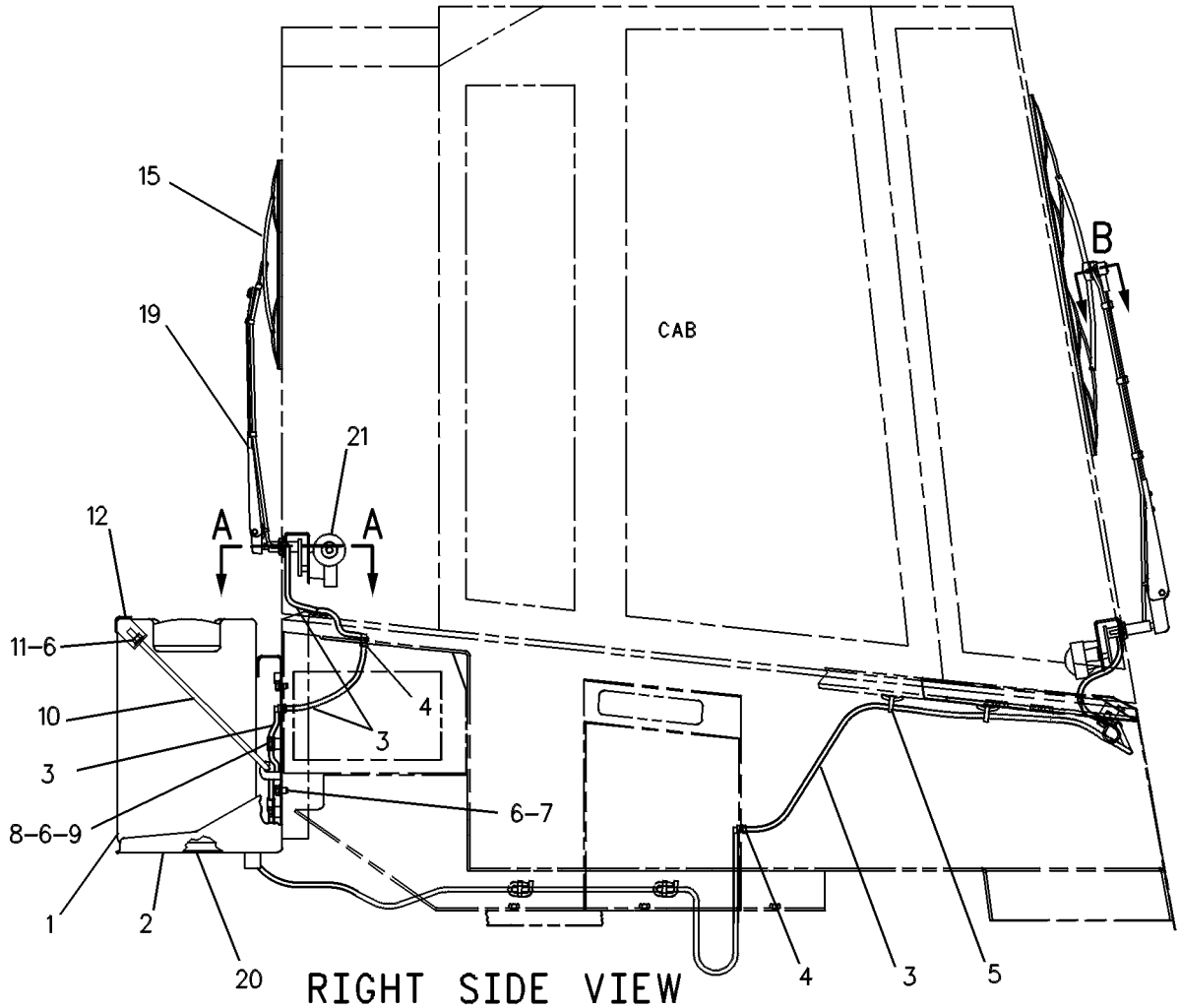

GRAPHIC #1

g00120162

OPERATOR STATION

131-0207 WIPER & WASHER GP-WINDOW

S/N: 7HR1-UP
QUARTER PANEL
AN ATTACHMENT

SMCS-7305, 7306 **i01543121**

NOTE	REF NO	GRAPHIC REF	PART NUMBER	QTY	PART NAME 1 2 3 4 5 6 (PRODUCT LEVEL)	SEE PAGE
	1	1	**8T-4121**	16	WASHER-HARD (11X21X2.5MM THK)	
M	2	1	**8T-4191**	6	BOLT (M10X1.5X16MM)	
	3	1	**4K-8864**	9	CLIP	
	4	1	**9U-0124**	1	CHANNEL	
M	5	1	**8T-4137**	10	BOLT (M10X1.5X20MM)	
	6	1	**6V-3265**	13	CLIP	
	7	1	**033-8248**	2	CLIP	
	8	1	**5P-9297**	3	CLIP	
	9	1	**7N-3718**	4	CLIP	
Y	10	1	*9U-0229*	1	WASHER GP-WINDOW	1422
	11	1	**8Y-8319**	2	ARM AS-WIPER	
	12	1	**6V-7419**	2	BLADE AS-WIPER	
	13	1	**9U-0125**	1	STRIP AS	
M		1	**8T-3490**	3	NUT-WELD (M10X1.5 THD)	
	14	1	**3V-3263**	4	CONNECTOR	
BD	15	1	**5P-5992**		HOSE	
	16	1	**3E-5275**	1	SWITCH AS-ROTARY (WIPER & WASHER) (ON/OFF)	
	18	1	**2V-3216**	2	CLIP	
M	19	1	**9X-2042**	4	SCREW-TRUSS HEAD (M6X1X12MM)	
Y	20	1	*6V-6561*	2	WIPER PIVOT GP	1442
	21	1	**4E-9571**	1	COVER-LH	
Y	22	1	**3E-5330**	1	WIPER GP-WINDOW (LH)	1436
M	23	1	**8T-4133**	4	NUT (M10X1.5 THD)	
	24	1	**5F-9757**	2	GROMMET	
	25	1	**8T-4222**	4	WASHER-PLATED (11X32X2.5MM THK)	
	26	1	**4E-7001**	1	HARNESS AS-WIPER	
		1	**8T-8737**	2	PLUG-SEAL	
		1	**155-2274**	2	KIT-CONNECTING PLUG (6 PIN)	
		1	**102-8811**	1	KIT-CONNECTING PLUG (8 PIN)	
					(EACH KIT-CONNECTING PLUG INCLUDES PLUG AS & WEDGE)	
	27	1	**4E-9570**	1	COVER-RH	
Y	28	1	**3E-5329**	1	WIPER GP-WINDOW (RH)	1434
	29	1	**3S-2093**	2	STRAP-CABLE	
M	30	1	**8T-4138**	2	BOLT (M6X1X20MM)	
	31	1	**9X-8256**	2	WASHER (6.6X12X2MM THK)	
	32	1	**126-8819**	1	FILM-DASH	
	33	1	**110-7889**	1	KNOB	

B-USE AS REQUIRED
D-ORDER BY THE METER
M-METRIC PART
Y-SEPARATE ILLUSTRATION

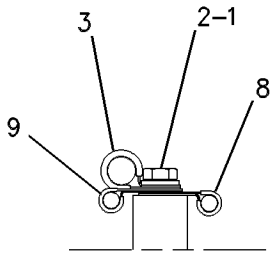

SECTION B-B

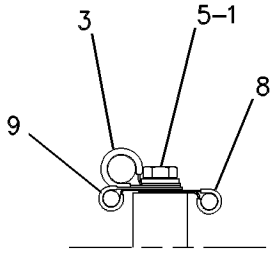

SECTION C-C

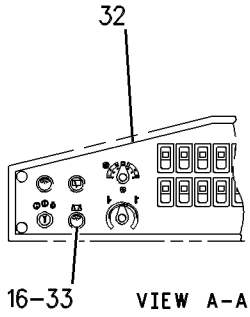

VIEW A-A

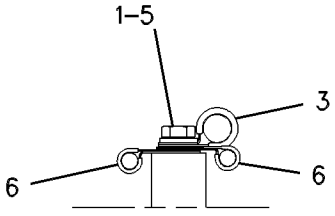

SECTION D-D

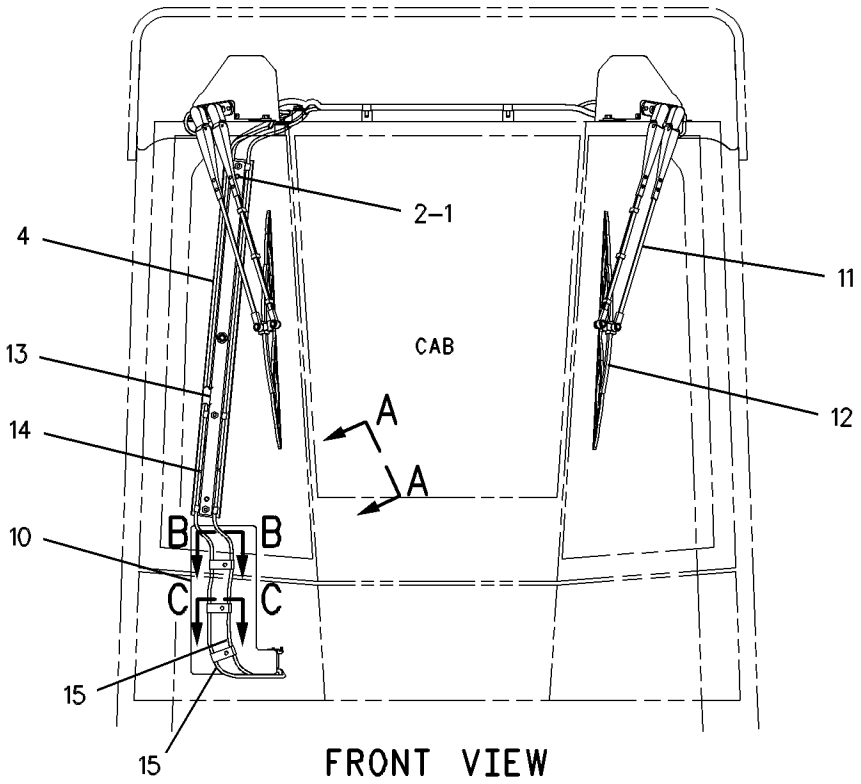

FRONT VIEW

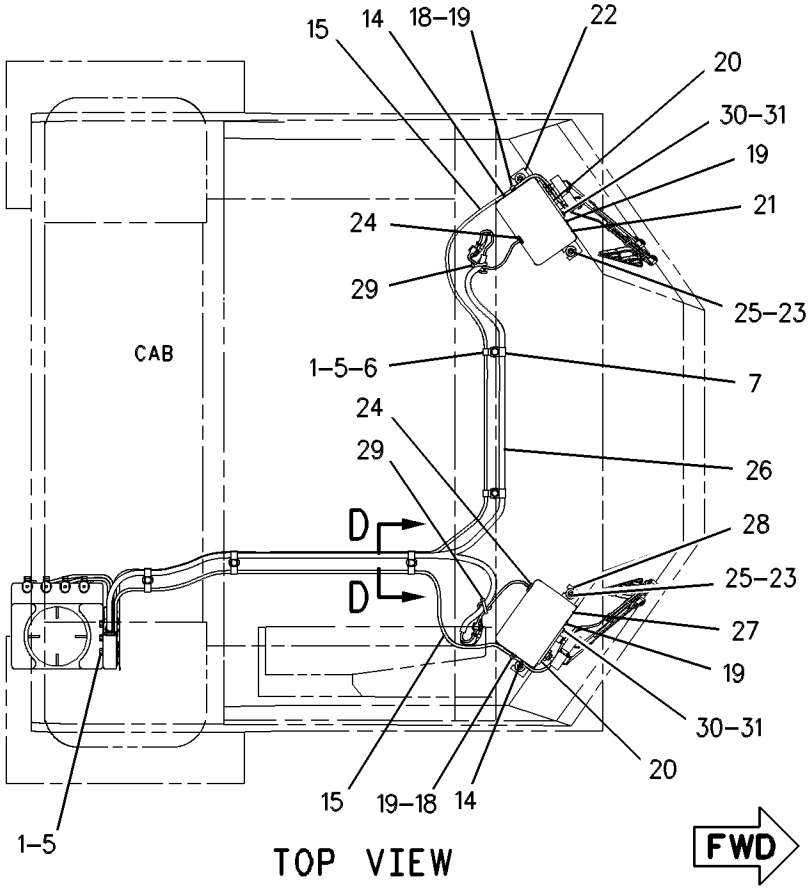

TOP VIEW

GRAPHIC #1

g00566774

OPERATOR STATION

131-0207 WIPER & WASHER GP-WINDOW

S/N: 7HR398-UP
QUARTER PANEL
PART OF 171-7047 CAB AR

SMCS-7305, 7306 **i01543122**

NOTE	REF NO	GRAPHIC REF	PART NUMBER	QTY	PART NAME 1 2 3 4 5 6 (PRODUCT LEVEL)	SEE PAGE
C	1	1	**8T-4121**	14	WASHER-HARD (11X21X2.5MM THK)	
M	2	1	**8T-4191**	6	BOLT (M10X1.5X16MM)	
	3	1	**4K-8864**	9	CLIP	
	4	1	**9U-0124**	1	CHANNEL	
CM	5	1	**8T-4137**	8	BOLT (M10X1.5X20MM)	
	6	1	**6V-3265**	13	CLIP	
	7	1	**033-8248**	2	CLIP	
	8	1	**5P-9297**	3	CLIP	
	9	1	**7N-3718**	4	CLIP	
	11	1	**8Y-8319**	2	ARM AS-WIPER	
	12	1	**6V-7419**	2	BLADE AS-WIPER	
	13	1	**9U-0125**	1	STRIP AS	
M		1	**8T-3490**	3	NUT-WELD (M10X1.5 THD)	
	14	1	**3V-3263**	4	CONNECTOR	
BD	15	1	**5P-5992**		HOSE	
	16	1	**3E-5275**	1	SWITCH AS-ROTARY (WIPER & WASHER) (ON/OFF)	
	18	1	**2V-3216**	2	CLIP	
M	19	1	**9X-2042**	4	SCREW-TRUSS HEAD (M6X1X12MM)	
Y	20	1	*6V-6561*	2	WIPER PIVOT GP	1442
	21	1	**4E-9571**	1	COVER-LH	
Y	22	1	**3E-5330**	1	WIPER GP-WINDOW (LH)	1436
M	23	1	**8T-4133**	4	NUT (M10X1.5 THD)	
	24	1	**5F-9757**	2	GROMMET	
	25	1	**8T-4222**	4	WASHER-PLATED (11X32X2.5MM THK)	
	26	1	**4E-7001**	1	HARNESS AS-WIPER	
		1	**8T-8737**	2	PLUG-SEAL	
		1	**155-2274**	2	KIT-CONNECTING PLUG (6 PIN)	
		1	**102-8811**	1	KIT-CONNECTING PLUG (8 PIN)	
					(EACH KIT-CONNECTING PLUG INCLUDES PLUG AS & WEDGE)	
	27	1	**4E-9570**	1	COVER-RH	
Y	28	1	**3E-5329**	1	WIPER GP-WINDOW (RH)	1434
	29	1	**3S-2093**	2	STRAP-CABLE	
M	30	1	**8T-4138**	2	BOLT (M6X1X20MM)	
	31	1	**9X-8256**	2	WASHER (6.6X12X2MM THK)	
	33	1	**110-7889**	1	KNOB	

B-USE AS REQUIRED
C-CHANGE FROM PREVIOUS TYPE
D-ORDER BY THE METER
M-METRIC PART
Y-SEPARATE ILLUSTRATION

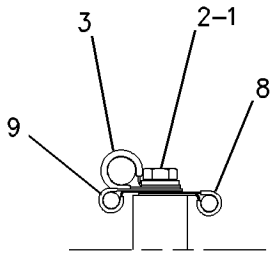

SECTION B-B

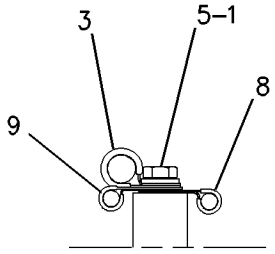

SECTION C-C

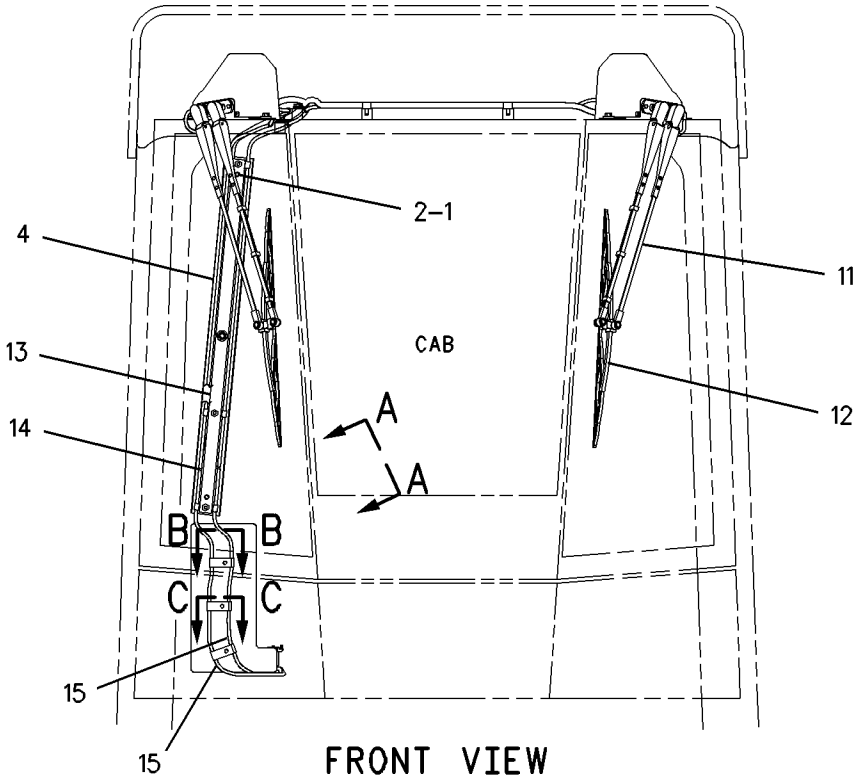

FRONT VIEW

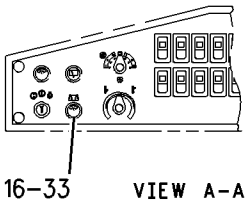

VIEW A-A

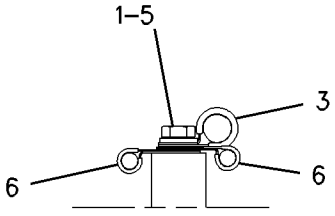

SECTION D-D

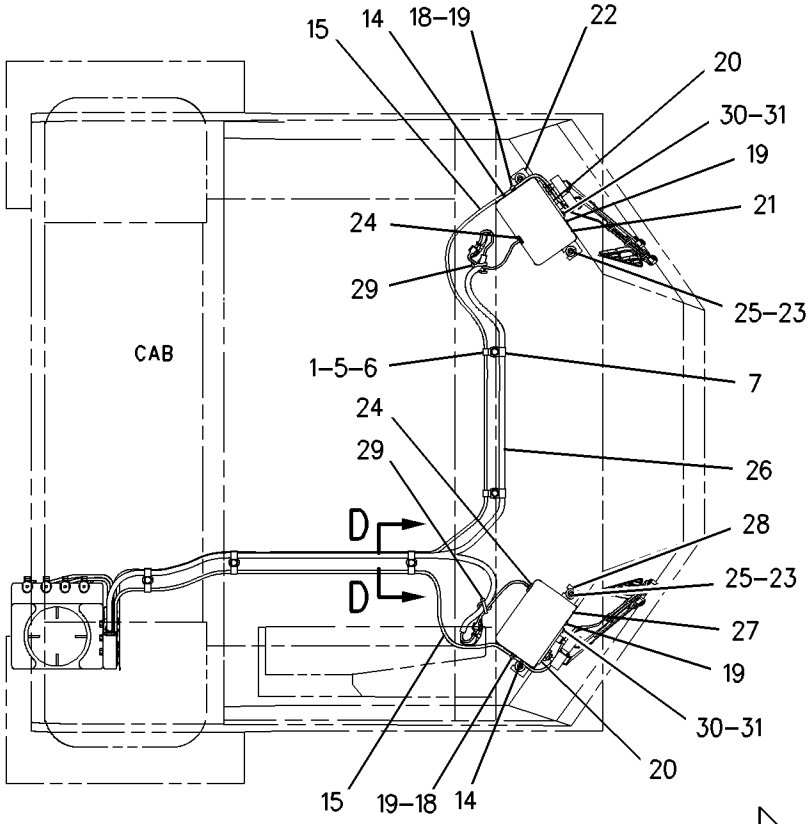

TOP VIEW

FWD

GRAPHIC #1

g00749005

OPERATOR STATION

3E-5329 WIPER GP-WINDOW—RH

S/N: 7HR398-UP
24 VOLT
PART OF 131-0207 WIPER & WASHER GP-WINDOW
ALSO AN ATTACHMENT

SMCS-7305 **i01365672**

NOTE	REF NO	GRAPHIC REF	PART NUMBER	QTY	PART NAME 1 2 3 4 5 6 (PRODUCT LEVEL)	SEE PAGE
	1	1	**4E-9568**	1	BRACKET	
M	2	1	**5C-9553**	3	BOLT (M6X1.0X16MM)	
		1	**5P-0537**	3	WASHER-HARD (2MM THK)	
	3	1	**6A-9718**	1	WASHER (M8.1X12.5X1MM THK)	
	4	1	**3T-7086**	1	CRANK AS	
M	5	1	**6V-6889**	2	NUT (M8X1.25 THD)	
	6	1	**6V-6888**	1	WASHER-SPRING	
	7	1	**8Y-6344**	1	SHAFT AS-DRIVE	
	8	1	**6V-6218**	1	LINK-CONNECTING	
M	9	1	**6V-6213**	1	NUT (M20X1 THD)	
		1	**6V-6214**	1	WASHER (1.0MM THK)	
		1	**6V-6209**	1	CAP	
	10	1	**3E-6388**	1	MOTOR AS-WINDOW WIPER	
	11	1	**102-8805**	1	KIT-RECEPTACLE (6 PIN)	
					(INCLUDES WEDGE AND RECEPTACLE AS)	
		1	**8T-8729**	5	PIN-CONNECTOR	
		1	**3E-3383**	1	WEDGE-RECEPTACLE LOCK	
		1	**8T-8737**	1	PLUG-SEAL	

M-METRIC PART

3E-5329 WIPER GP-WINDOW *(contd.)* **i01365672**

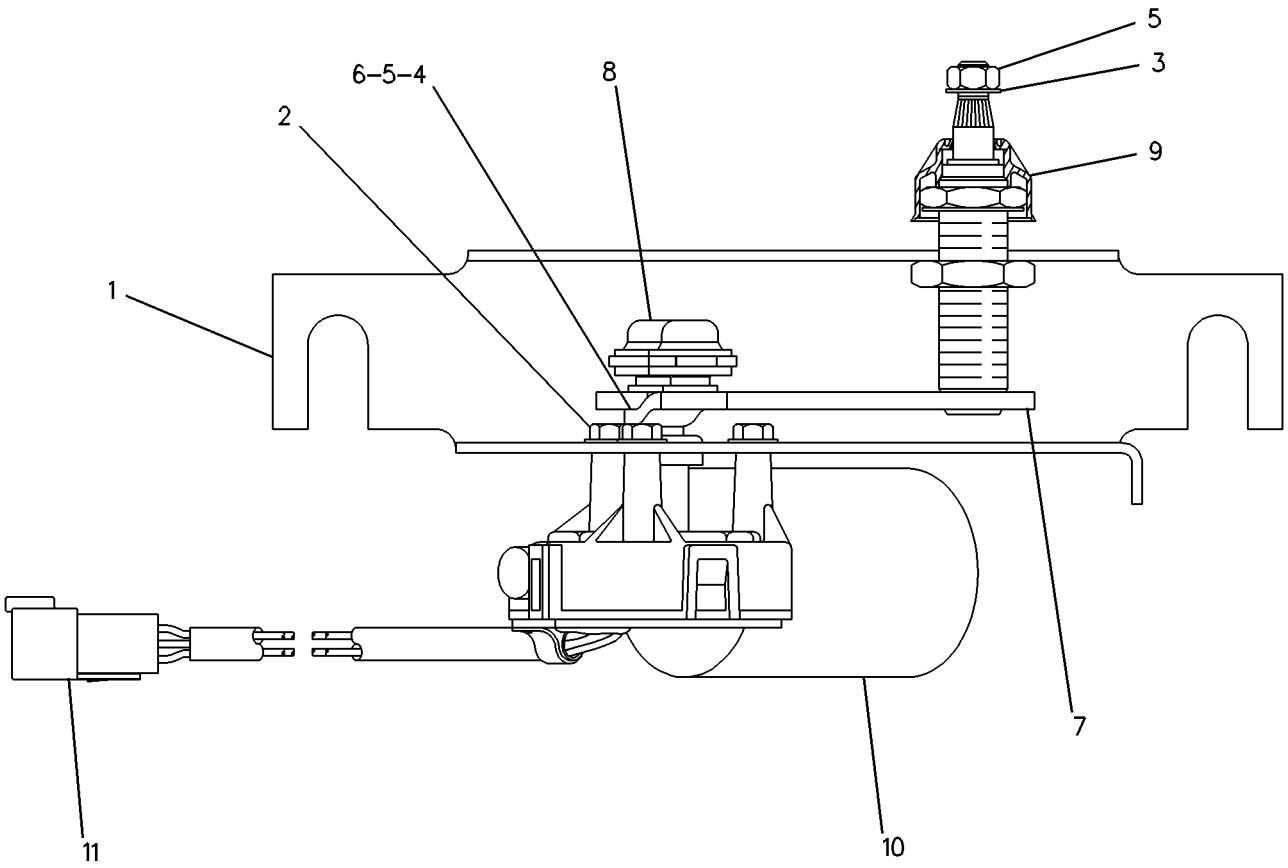

GRAPHIC #1 g00119838

OPERATOR STATION

3E-5330 WIPER GP-WINDOW—LH

S/N: 7HR398-UP
24 VOLT
PART OF 131-0207 WIPER & WASHER GP-WINDOW
ALSO AN ATTACHMENT

SMCS-7305 **i01365675**

NOTE	REF NO	GRAPHIC REF	PART NUMBER	QTY	PART NAME 1 2 3 4 5 6 (PRODUCT LEVEL)	SEE PAGE
	1	1	**4E-9569**	1	BRACKET	
M	2	1	**5C-9553**	3	BOLT (M6X1.0X16MM)	
		1	**5P-0537**	3	WASHER-HARD (2MM THK)	
	3	1	**6A-9718**	1	WASHER (M8.1X12.5X1MM THK)	
	4	1	**3T-7086**	1	CRANK AS	
M	5	1	**6V-6889**	2	NUT (M8X1.25 THD)	
	6	1	**6V-6888**	1	WASHER-SPRING	
	7	1	**8Y-6344**	1	SHAFT AS-DRIVE	
	8	1	**6V-6218**	1	LINK-CONNECTING	
M	9	1	**6V-6213**	1	NUT (M20X1 THD)	
		1	**6V-6214**	1	WASHER (1.0MM THK)	
		1	**6V-6209**	1	CAP	
	10	1	**3E-6388**	1	MOTOR AS-WINDOW WIPER	
	11	1	**102-8805**	1	KIT-RECEPTACLE (6 PIN)	
					(INCLUDES WEDGE AND RECEPTACLE AS)	
		1	**8T-8729**	5	PIN-CONNECTOR	
		1	**3E-3383**	1	WEDGE-RECEPTACLE LOCK	
		1	**8T-8737**	1	PLUG-SEAL	

M-METRIC PART

3E-5330 WIPER GP-WINDOW *(contd.)* **i01365675**

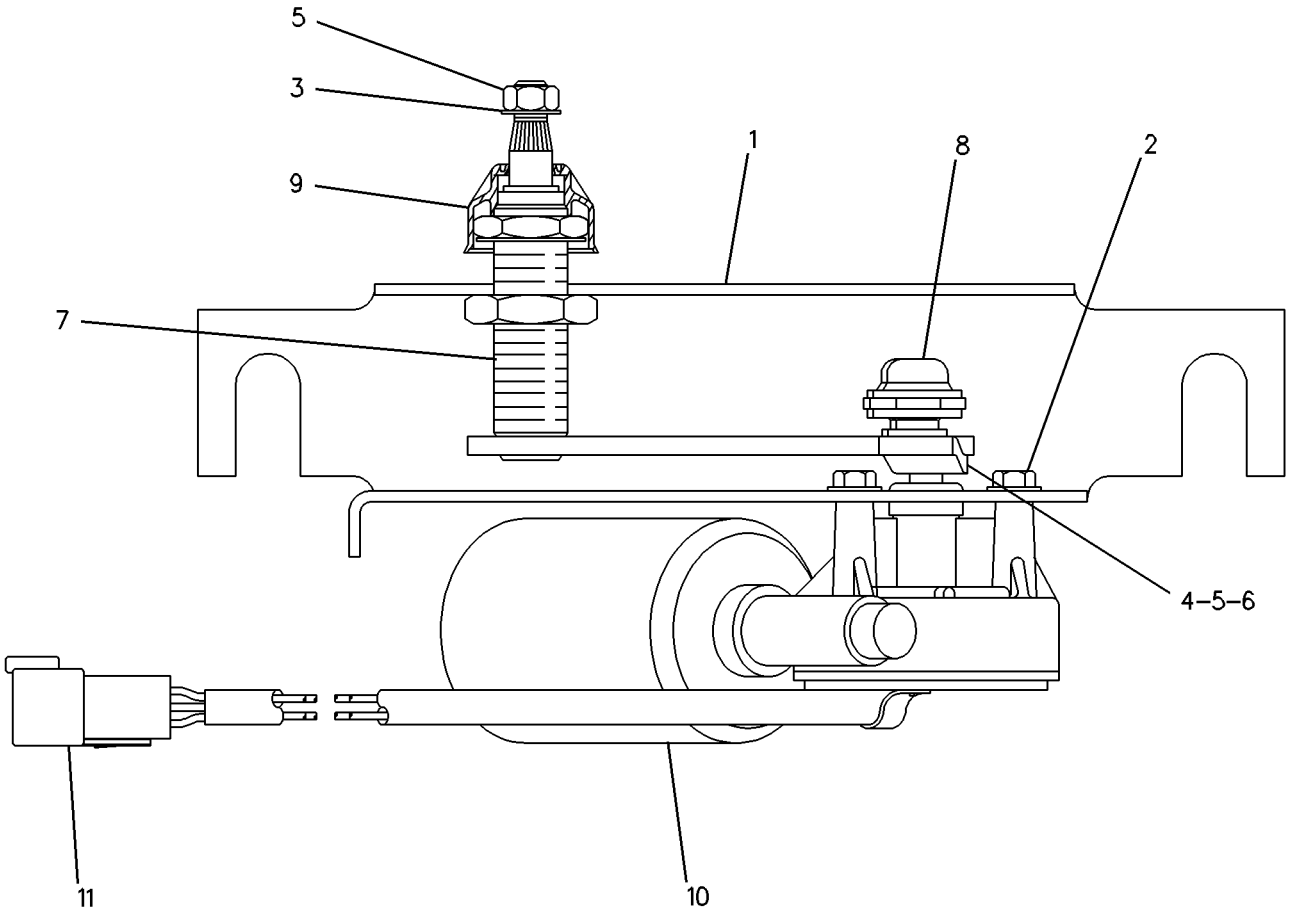

GRAPHIC #1 g00119839

OPERATOR STATION

3E-7508 WIPER GP-WINDOW—REAR

S/N: 7HR1-UP

24 VOLT

PART OF 8R-5535 WIPER & WASHER GP-WINDOW

SMCS-7305 **i01124825**

NOTE	REF NO	GRAPHIC REF	PART NUMBER	QTY	PART NAME 1 2 3 4 5 6 (PRODUCT LEVEL)	SEE PAGE
M	1	1	**5C-9553**	3	BOLT (M6X1.0X16MM)	
		1	**5P-0537**	3	WASHER (2MM THK)	
	2	1	**3T-7059**	1	BRACKET	
	3	1	**3T-7086**	1	CRANK AS	
M	4	1	**6V-6889**	2	NUT (M8X1.25 THD)	
	5	1	**6V-6888**	1	WASHER-SPRING	
	6	1	**6T-2770**	1	SHAFT AS-DRIVE	
M	7	1	**3C-1884**	4	SCREW-MACHINE (M5X0.8 BG THD)	
	8	1	**6V-6219**	1	LINK-CONNECTING	
M	9	1	**6V-6213**	1	NUT (M20X1 THD)	
		1	**6V-6214**	1	WASHER (1.0MM THK)	
		1	**6V-6209**	1	CAP	
	10	1	**6A-9718**	1	WASHER (M8.1X12.5X1MM THK)	
	11	1	**3E-6388**	1	MOTOR AS-WINDOW WIPER	
	12	1	**3E-3383**	1	WEDGE-RECEPTACLE LOCK	
		1	**8T-8729**	5	PIN-CONNECTOR	
		1	**8T-8737**	1	PLUG-SEAL	

M-METRIC PART

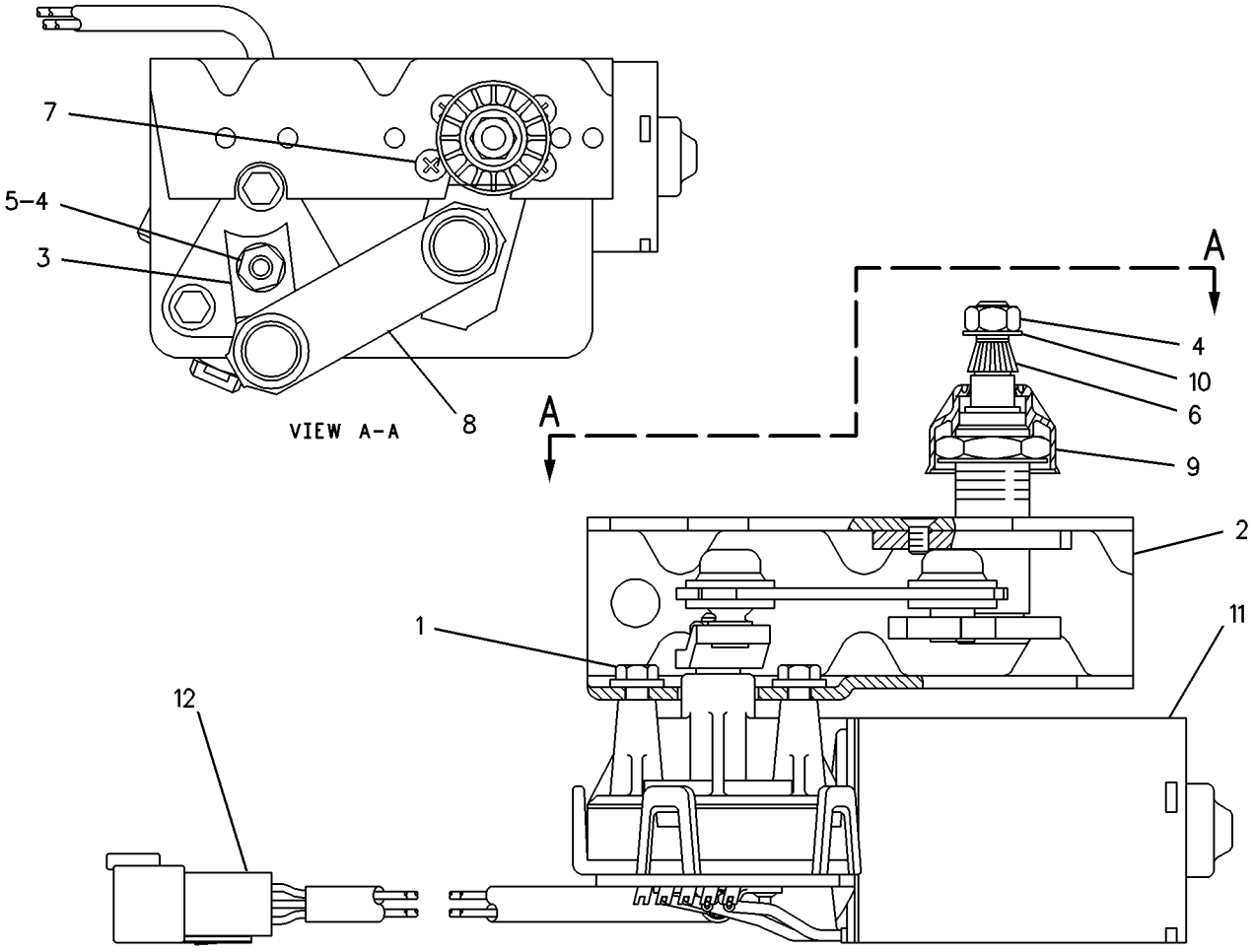

GRAPHIC #1 g00119815

OPERATOR STATION

3E-9291 WIPER GP-WINDOW—FRONT

S/N: 7HR1-UP

24 VOLT

PART OF 8R-5535 WIPER & WASHER GP-WINDOW

SMCS-7305 **i01124832**

NOTE	REF NO	GRAPHIC REF	PART NUMBER	QTY	PART NAME 1 2 3 4 5 6 (PRODUCT LEVEL)	SEE PAGE
M	1	1	**5C-9553**	3	BOLT (M6X1.0X16MM)	
		1	**5P-0537**	3	WASHER (2MM THK)	
	2	1	**6A-9718**	1	WASHER (M8.1X12.5X1MM THK)	
	3	1	**3T-7086**	1	CRANK AS	
M	4	1	**6V-6889**	2	NUT (M8X1.25 THD)	
	5	1	**6V-6888**	1	WASHER-SPRING	
	6	1	**6V-6208**	1	LINK-CONNECTING	
M	7	1	**3C-1884**	4	SCREW-MACHINE (M5X0.8 BG THD)	
	8	1	**6V-6206**	1	SHAFT AS-DRIVE	
M	9	1	**6V-6213**	1	NUT (M20X1 THD)	
		1	**6V-6214**	1	WASHER (1.0MM THK)	
		1	**6V-6209**	1	CAP	
	10	1	**3T-7059**	1	BRACKET	
	11	1	**3E-6388**	1	MOTOR AS-WINDOW WIPER	
	12	1	**3E-3383**	1	WEDGE-RECEPTACLE LOCK	
		1	**8T-8729**	5	PIN-CONNECTOR	
		1	**8T-8737**	1	PLUG-SEAL	

M-METRIC PART

3E-9291 WIPER GP-WINDOW *(contd.)* **i01124832**

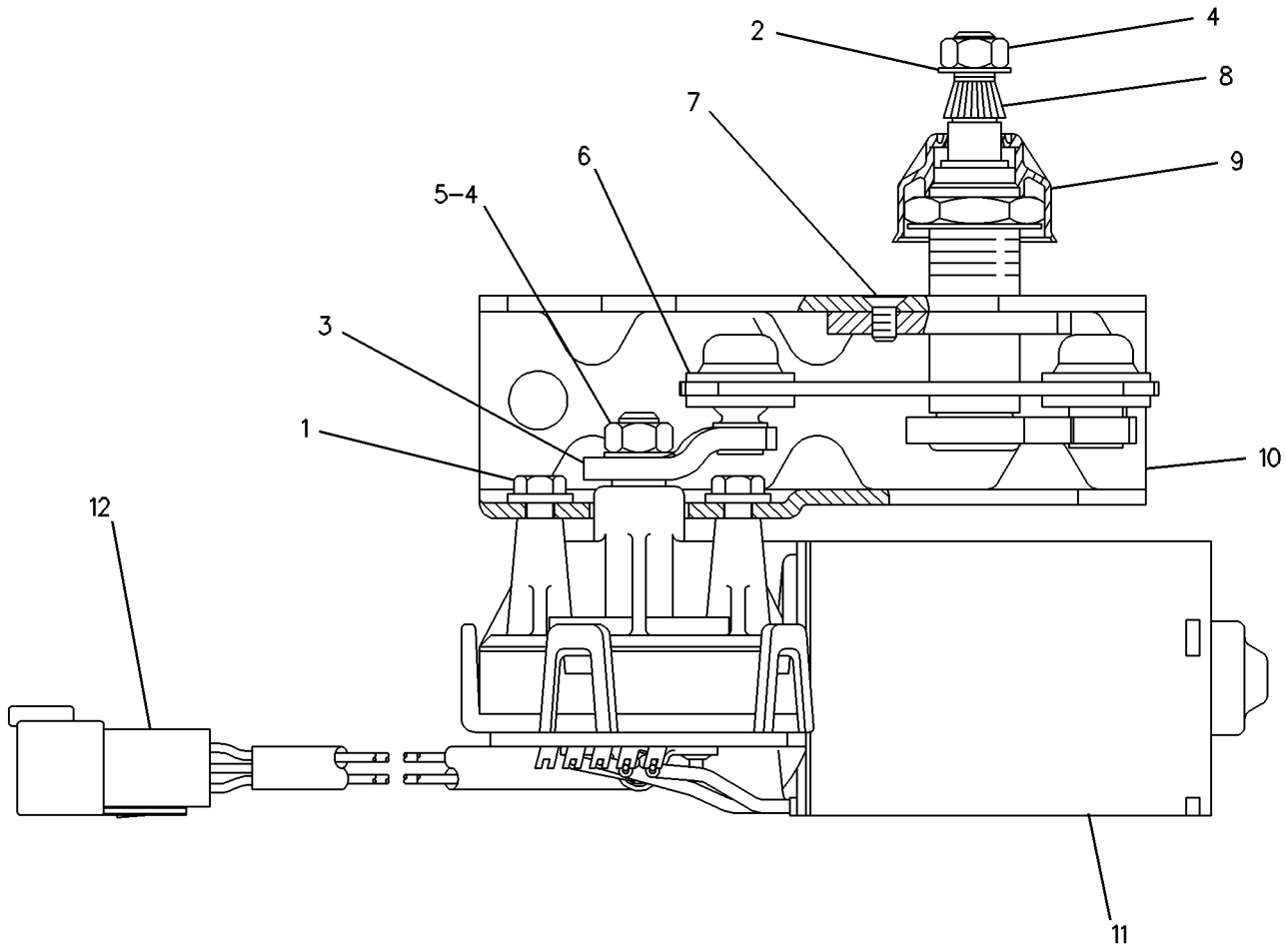

GRAPHIC #1 g00119813

OPERATOR STATION

6V-6561 WIPER PIVOT GP

S/N: 7HR1-UP

PART OF 131-0207, 8R-5535 WIPER & WASHER GP-WINDOW

ALSO AN ATTACHMENT

SMCS-7305 **i01011513**

NOTE	REF NO	GRAPHIC REF	PART NUMBER	QTY	PART NAME 1 2 3 4 5 6 (PRODUCT LEVEL)	SEE PAGE
	1	1	**6V-6207**	1	SHAFT AS-PIVOT	
	2	1	**6V-6209**	1	CAP	
M	3	1	**6V-6889**	1	NUT (M8X1.25 THD)	
	4	1	**6A-9718**	1	WASHER	
	5	1	**6V-6210**	1	GASKET-SHAFT	

M-METRIC PART

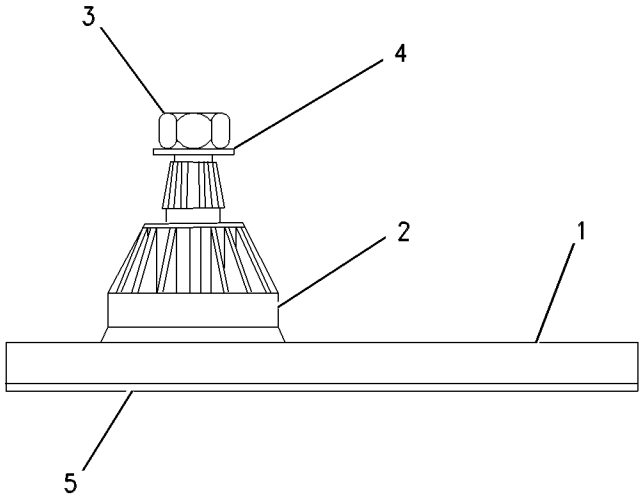

GRAPHIC #1 g00316575

MEMORANDA

SERVICE EQUIPMENT AND SUPPLIES

131-7166 FILM GP

S/N: 7HR1-UP

PART OF 109-6854 PLATE & FILM GP

SMCS-7405, 7557 **i01509554**

NOTE	REF NO	GRAPHIC REF	PART NUMBER	QTY	PART NAME 1 2 3 4 5 6 (PRODUCT LEVEL)	SEE PAGE
	1	1	**3E-6514**	2	FILM-CATERPILLAR	
	2	1	**3E-6516**	1	FILM-CATERPILLAR	
	3	1	**131-7167**	1	FILM-STRIPE	
	4	1	**131-7168**	1	FILM-STRIPE	
	5	1	**131-7169**	2	FILM-CAT	
	6	1	**131-7171**	2	FILM-STRIPE	
	7	1	**131-7172**	1	FILM-992G-LH	
	8	1	**131-7173**	1	FILM-992G-RH	
	9	1	**136-2186**	1	FILM-WINDOW (FRONT)	
	10	1	**205-1774**	1	FILM-WINDOW (REAR)	

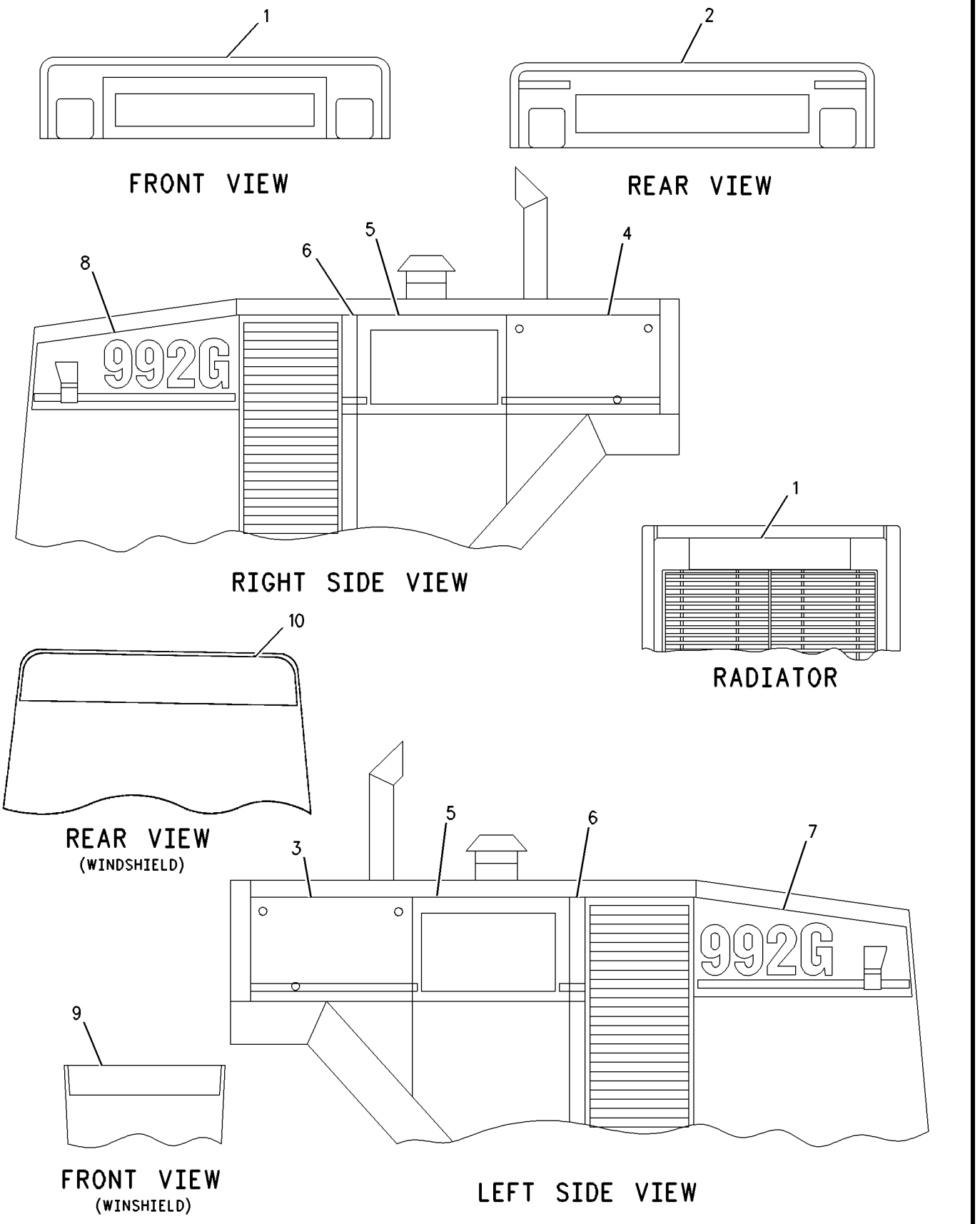

GRAPHIC #1 g00784159

SERVICE EQUIPMENT AND SUPPLIES

109-6854 PLATE & FILM GP

S/N: 7HR1-UP

PART OF 109-6819 CHASSIS AR

SMCS-7405, 7557 **i01241532**

NOTE	PART NUMBER	QTY	PART NAME 1 2 3 4 5 6 (PRODUCT LEVEL)	SEE PAGE
Y	*131-7166*	1	FILM GP	1444
	4V-4018	1	FILM	
			ON FACE OF PARKING RELEASE KNOB	
	130-5161	1	FILM	
			ON VERTICAL SHEET METAL SURFACE ON LH SIDE INSIDE STORAGE BOX	
	8L-9765	1	FILM-FUEL RETURN (EXCESS)	
			ON HAND PRIMING PUMP AT FRONT LH CORNER OF ENGINE	
	130-7920	1	FILM-IDENTIFICATION	
			ON TOP OF HYD CONTROL CONSOLE	
	134-7258	1	FILM-IDENTIFICATION (EXTENDED LIFE COOLANT)	
			NEXT TO RADIATOR FILL CAP	
	7E-5910	1	FILM-INFORMATION (3500 ENGINE MAINTENANCE)	
			ON ENGINE OIL COOLER ON LOWER RH SIDE	
	106-7408	1	FILM-INFORMATION (ENGINE OIL)	
			ON FILLER CAP ON VALVE COVER	
	9X-6341	1	FILM-INSTRUCTION	
			BY SIGHT GAUGE ON FRONT OF HOOD	
	159-3759	1	FILM-INSTRUCTION (DO NOT DRILL/WELD ROPS)	
			ON LH ROPS COLUMN NEAR TOP WHERE COLUMN MEETS HORIZONATAL ROPS MEMBER	
	166-8119	1	FILM-INSTRUCTION	
			ON FRESH AIR INTAKE FILTER DOOR	
	7X-3229	4	FILM-LIFT & TIE DOWN	
			ON FRONT & REAR FRAME	
	2W-9228	1	FILM-ROTATION (STANDARD ROTATION)	
			ON RH SIDE OF REAR CAM GEAR COVER ON FLYWHEEL HOUSING	
	7E-2674	2	FILM-WARNING (ENGINE LIFTING INST)	
			ON #1 & #3 VALVE COVERS	
	7E-2681	2	PLATE-IDENTIFICATION (CATERPILLAR)	
			ON BOTH CAM COVERS	
	128-8007	1	PLATE-IDENTIFICATION	
			ON REAR FRAME ON LEFT SIDE NEXT TO LUB BLOCK	
	128-8008	1	PLATE-IDENTIFICATION	
			ON FRONT RIGHT SIDE NEXT TO LUB BLOCK	
	130-5623	1	PLATE-IDENTIFICATION	
			BY TRANSMISSION FILLER SIGHT GAUGE	
	3N-3790	1	PLATE-SERIAL NUMBER (ENGINE)	
			ON LH SIDE OF BLOCK NEAR REAR FACE ON CAMSHAFT COMPARTMENT, FASTEN WITH DRIVE SCREWS	
	4B-4158	4	SCREW-DRIVE	
	7B-3028	2	SCREW-DRIVE (NO 4X3/16 IN)	
	9X-6562	16	TACK-FASTENER	

Y-SEPARATE ILLUSTRATION

SERVICE EQUIPMENT AND SUPPLIES

132-3285 PLATE & FILM GP

S/N: 7HR1-UP

AN ATTACHMENT

SMCS-7405, 7557 **i01185697**

NOTE	PART NUMBER	QTY	PART NAME 1 2 3 4 5 6 (PRODUCT LEVEL)	SEE PAGE
			(NO SERVICED PARTS)	

1N-4296 PROTECTION GP-VANDALISM

S/N: 7HR1-UP

CAP

PART OF 133-8650, 198-0258 FILLER GP-POWER TRAIN OIL

SMCS-1273, 3005, 3030, 5056, 7315 **i01493122**

NOTE	REF NO	GRAPHIC REF	PART NUMBER	QTY	PART NAME 1 2 3 4 5 6 (PRODUCT LEVEL)	SEE PAGE
	1	1	**5P-8502**	1	PADLOCK GP	
A		1	**5P-8500**	1	KEY	
A		1	**8Y-6364**	1	SLEEVE	
	2	1	**8S-4212**	2	RIVET	
	3	1	**8S-3746**	2	COVER-FILLER CAP	
	4	1	**7W-1484**	1	CAP AS-OIL FILTER	
		1	**6H-0411**	1	WASHER (32.5X50.8X1.6MM THK)	

A-NOT PART OF THIS GROUP

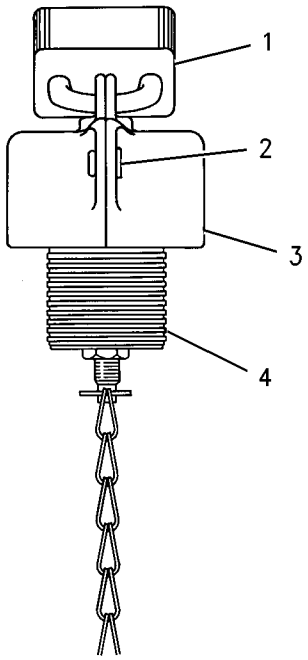

GRAPHIC #1 g00775220

PART NUMBER INDEX

Part	Page
0	
0A-3721	374
	407
	412
	452
	456
0L-1143	83
	84
	88
	118
	130
	132
	204
	208
0L-1351	8
	11
	43
	52
	95
	122
	128
	226
	482
0L-2070	72
	74
	92
	128
	184
	204
	208
0S-0484	98
0S-0509	10
	11
	54
	59
	152
	154
	226
	353
	382
	386
	390
	394
	398
	520
	579
	585
	640
	644
0S-1566	545
0S-1571	60
	78
	80
	84
	88
	124
	184
	1270
	1278
0S-1573	124
0S-1585	97
	124
	544
0S-1587	58
	64
	98
	124
	524
	545
0S-1588	13
	14
	62
	64
	82
	84
	88
	92
	114
	124
	128
	152
	184
	383
	386
	390
	395
	399
	666
	1270
	1278
0S-1589	1268
	1270
0S-1590	50
	72
	74
	95
	97
	100
	124
	152
	154
	579
	585
	1268
	1278
	1280
0S-1591	14
	62
	64
	78
	80
	84
	88
	95
	128
	152
	154
	165
	184
	1270
	1278
0S-1592	46
0S-1594	13
	14
	43
	46
	50
	62
	64
	78
	80
	84
	88
	92
	118
	120
	122
	124
	130
	132
	152
	154
	184
	204
	208
	226
	382
	386
	390
	394
	398
	544
	578
	584
	658
	664
0S-1595	8
	24
	26
	56
	545
	632
	636
	640
	644
	862
	1280
0S-1597	1424
	1426
0S-1608	78
	80
	92
	118
	130
	132
	482
0S-1614	1358
0S-1615	72
	74
0S-1617	130
	132
	226
0S-1618	120
	136
	137
	641
	645
0S-1619	154
	204
	208
	383
	387
	391
	395
	399
	1278
	1280
0S-1620	382
	387
	391
	395
	399
0S-1621	44
	382
	386
	390
	394
	398
0T-0055	14
	46
	50
	92
	184
0T-0065	62
	64
	482
0T-0102	24
	26
	383
	386
	390
	395
	399
0T-0573	44
	154
	204
	208
0V-0375	241
	242
1	
1A-0168	60
1A-1460	56
	60
	84
	88
	124
	476
	544
	545
1A-2029	10
	12
	14
	16
	17
	24
	26
	54
	82
	84
	88
	99
	122
	128
	154
	395
	399

► **PRIMARY REFERENCE**

PART NUMBER INDEX

Part	Page	Part	Page	Part	Page	Part	Page
	492	1D-4572	1036	1H-9696	218	1N-4637	97
	544	1D-4574	56		219	1N-5410	578
	548	1D-4586	60		1054		584
	1268	1D-4593	58		1058	1N-5999	666
	1280	1D-4597	56	1H-9779	182	1P-1367	78
1A-2223	1036		58		192		80
1A-3103	544	1D-4608	476	1J-2919	746	1P-3703	494
1A-4350	1363	1D-4626	476	1J-5799	1402		498
	1364		524		1406		502
	1365	1D-4642	670	1J-9671	755		508
1A-4790	808		671		756		514
1A-5183	100	1D-4647	574		1136		840
	122	1D-4675	1351		1138		846
	124		1352		1140		997
	390	1D-4706	122		1142		1004
	395		124		1146		1073
	399	1D-4717	165		1148		1078
1A-5964	78	1F-0750	226		1152	1P-3704	552
	80		312	1K-6853	476		556
	84		482		601		560
	88	1F-1006	618		602		564
1A-7669	1280		622	1K-6932	702		840
1A-9066	128		626	1K-6985	1036		844
1A-9579	18		628	1K-8850	1354		845
	76	1F-1609	792	1L-3162	658		846
	77	1F-7958	14	1L-3769	184		1008
1B-2524	578		60	1L-5072	959		1014
	584		382		1054		1020
1B-2790	24		386	1L-5081	666		1026
	26		390	1L-5316	137		1028
	213		394	1L-9080	1365		1032
	214		398	1M-3003	618		1072
1B-2886	862		1270		622		1078
1B-3057	499	1G-4312	806		626	1P-3705	840
	503	1G-8878	540		628		844
	509		541	1M-3909	592		845
	515	1H-1023	356	1M-6119	236		846
1B-4218	58		360	1M-6120	236		922
1B-4367	52	1H-2629	356	1M-6298	956		926
1B-4430	1410		360		958		996
	1414	1H-3244	234	1M-6573	524		997
	1418		441	1M-6718	902		1002
1B-4971	1303		447		1097		1008
1B-6577	708		461	1M-8649	959		1014
1B-7182	120		467		1054		1020
	802	1H-3937	1050	1M-9968	356		1026
	804	1H-5728	921		360		1028
1B-7709	548		1072	1M-9971	357		1030
1B-8708	1036		1078		361		1032
1B-8714	591	1H-7339	1058	1N-2914	13		1096
1B-8736	592	1H-8128	840	1N-3193	95	1P-3706	922
1B-9575	241		846	1N-3225	95		926
	242		997	1N-3239	95		1026
	386		1003	1N-3243	95		1028
1C-0569	1366	1H-8171	213	1N-3333	84		1032
1C-2251	128		1073		88	1P-3709	84
1D-4539	204		1078	1N-3873	84		88
	211		1082		88		1032
	212	1H-8278	134	1N-4296	527	1P-3958	550
	1372		135		528		579
	1376		596		▶1448		585
1D-4540	666		598	1N-4478	▶216	1P-4278	106
1D-4566	69	1H-8306	228		218		110
1D-4569	579		230	1N-4636	218		114
	585	1H-9689	1058		219		143

▶ **PRIMARY REFERENCE**

PART NUMBER INDEX

Part	Page
1P-4577	479
	480
	495
	499
	503
	509
	515
	830
	832
	836
1P-4578	552
	556
	560
	564
1P-4579	527
	528
	530
	532
	534
	552
	556
	560
	564
	830
	832
	836
	840
	847
	854
	858
	904
	908
	912
	916
	996
	997
	1003
	1009
	1015
	1021
	1054
	1058
	1072
	1078
1P-4582	552
	556
	560
	564
1P-4584	552
	556
	560
	564
	997
	1003
	1009
	1015
	1021
	1082
1P-4585	552
	556
	560
	564
1P-4693	548
	550
1P-4694	548
	550
1P-4695	545
	550
1P-4696	545
	550
1P-5411	956
	958
1P-5412	956
	958
1P-5764	84
	88
1P-5767	840
	847
	904
	908
	912
	916
	1026
	1028
	1032
1P-6356	1320
1P-7009	1320
1P-7016	840
	847
	997
	1003
1P-7017	840
	847
	997
	1003
1P-7326	570
	572
1P-7404	666
1P-7625	204
	208
1P-7919	94
1P-9699	664
1Q-5317	502
1R-0755	184
1R-1056	1136
	1138
1R-1065	1142
	1148
	1152
1S-0004	94
1S-0724	495
	499
	503
	509
	515
1S-0994	106
	110
	114
	124
	203
	204
	208
	406
	412
	830
	832
	837
	1064
1S-1015	833
	837
1S-1476	495
	499
	503
	509
	515
1S-3730	520
1S-4589	60
1S-4974	101
1S-6420	552
	556
	560
	564
	922
	926
	1009
	1015
	1021
1S-6595	520
1S-7106	78
	80
1S-7251	236
	237
	354
1S-7252	236
1S-7446	356
	360
1S-8560	802
	804
1S-9110	550
	579
	585
1S-9292	1036
	1136
	1138
	1140
	1142
	1146
	1148
	1152
1S-9593	654
	655
	657
	662
	921
	936
	940
	945
	951
	1098
	1099
	1100
	1101
1T-0132	12
	17
	43
	46
	50
1T-0720	46
	62
	64
	152
	154
1T-0766	550
	578
	584
1T-0808	579
	585
1T-0936	904
	908
	912
	916
1T-1209	633
	637
	641
	645
1T-1232	632
	636
	640
	644
1T-1235	641
	645
1T-1244	640
	644
1T-1248	632
	636
	640
	644
1T-1251	641
1T-1253	632
	636
	640
	644
1T-1254	641
	645
1T-1257	641
	645
1T-1259	632
	640
1T-1365	632
	636
	640
	644
1T-1566	632
	636
	640
	644
1T-1643	641
1T-1646	632
	636
	640
	644
1T-1754	641
	645
1T-1821	632
	637
	641
	645
1T-1855	641
	645
1T-1897	640
	644
1T-1898	640
	644
1T-1925	633
	637
	641
	645
1T-2042	633
	637
	641

► **PRIMARY REFERENCE**

PART NUMBER INDEX

Part	Page
	645
1T-2043	633
	637
	641
	645
1T-2044	632
	641
1U-0322	904
	908
	1085
1U-0323	904
	908
	1085
1U-0740	1192
	1209
1U-1655	1036
1U-2827	1054
	1058
1U-8846	524
	668
1V-0061	596
	598
1V-0134	679
1V-2718	524
1V-6137	474
1V-6341	56
	1304
1V-6659	668
1V-6755	180
	190
	446
	460
	466
1V-7750	494
	498
	502
	508
	514
	524
1V-8254	476
1V-8279	758
	760
1V-8443	708
1V-8732	710
	714
	718
	722
	726
1W-0714	4
	▶78
	▶80
1W-0717	4
	▶84
	▶88
1W-1115	162
	163
	164
1W-2247	101
1W-2250	101
1W-2750	78
	80
1W-2976	146
	148
1W-4003	216
	220
1W-4005	216
	220
1W-4006	216
	220
1W-4007	216
	220
1W-4008	216
	220
1W-4009	216
	220
1W-4010	216
	220
1W-4121	216
	220
1W-4655	216
	220
1W-4795	172
1W-4954	14
1W-5040	956
	958
1W-5499	156
	158
	160
1W-6005	97
	98
1W-6363	5
	▶354
1W-6935	216
	220
1W-6936	216
	220
1W-7559	184
1W-7990	92
1W-8129	184
1W-8545	120
1W-9745	146
	148
1W-9747	146
	148
2A-1531	382
	386
	390
	394
	398
2A-3746	579
	585
2A-4429	39
	40
	41
2A-4639	62
	64
	124
	152
	154
2A-5220	58
2A-7227	774
	780
	784
	792
2B-0947	1270
2B-2694	92
2B-2695	46
	62
	64
	77
	78
	80
	226
	383
	386
	391
	395
	399
	659
	660
	666
	1366
2B-9373	592
2D-2508	595
2D-6235	1252
2D-6392	356
	360
	802
	804
	892
	1088
2D-6506	524
2D-6642	548
	664
2D-6648	921
2D-8009	592
2D-9535	1388
2F-0808	172
2F-6678	356
	360
2F-7306	1338
2F-8509	1038
2F-9064	526
2G-6741	677
	678
	748
2H-2255	632
	636
	640
	644
2H-2615	248
	251
2H-2665	758
	760
2H-3429	184
	357
	361
	976
	978
	980
	984
	988
	992
2H-3855	383
	387
	391
	395
	399
2H-3920	371
	1346
2H-3922	365
2H-3924	1252
2H-3925	1252
2H-3932	524
2H-3934	548
2H-3935	866
	868
	870
	1040
	1042
2H-6338	552
	556
	560
	564
2H-6488	1270
2H-9445	550
	579
	585
2H-9524	312
2J-0157	544
2J-2152	708
2J-2668	1072
	1078
2J-2866	1036
2J-3507	474
	476
	575
	1187
	1192
	1202
2J-3961	920
2J-6274	1073
	1078
2J-8163	356
	360
	522
2K-0337	591
2K-2140	1388
2K-4472	536
2K-4821	234
2K-4973	146
	148
	1351
	1352
	1366
	1410
	1414
	1418
2K-8198	184
2K-9062	474
	476
2K-9111	1358
2L-6679	356
	360
2L-6726	976
	978
	980
	984
	988
	992
2L-8075	234
2M-0849	42

2

▶ **PRIMARY REFERENCE**

PART NUMBER INDEX

Part	Page	Part	Page	Part	Page	Part	Page
	204		175		585		598
	208	2N-2766	152	2S-0696	660	2V-2076	544
	476		156	2S-1647	376	2V-2077	596
2M-1538	545		158	2S-2596	904		598
2M-3340	524		171		908	2V-2755	476
	618		174		912	2V-2757	476
	622	2N-3378	106		916	2V-2761	476
	626		110	2S-2760	97	2V-3216	314
	628	2N-5006	70	2S-3440	144		1430
2M-4009	932	2N-5842	72		180		1432
	936		74		182	2V-4387	568
	940	2N-7007	544		190		570
	944		830		192		572
	950		832	2S-4078	407	2V-4869	106
2M-4453	12		836		412		110
	17	2N-8998	552		578	2V-7859	808
	43		556		584	2W-0552	46
	46		560		668	2W-0553	46
2M-5173	146		564		904	2W-0554	46
	148	2P-1278	106		908	2W-0556	46
2M-6102	1320		110		912	2W-0752	13
2M-6835	1302		114		916		92
	1303	2P-1279	106		996	2W-1053	84
2M-7041	664		110		1002		88
2M-9780	64		114		1054	2W-1635	84
	78	2P-1293	773		1072		88
	80		779		1078	2W-1969	84
	192		786		1079		88
	194		794		1085	2W-2288	19
	197		854		1091		20
	198		858		1092	2W-2605	213
	203	2P-1294	520		1093	2W-2662	39
	204	2P-2204	118		1094		40
	208		130		1096	2W-2895	50
	294		132	2S-4872	659	2W-2940	24
	452	2P-2975	1091		660		26
	456		1092	2S-7010	544		28
	551		1093	2S-8924	579	2W-3146	120
	772		1094		585	2W-5285	16
	778	2P-4005	78	2S-9485	106		17
	784		80		110	2W-5331	1008
	785	2P-4304	78		114		1014
	792		80	2S-9750	664	2W-5476	97
	793	2P-4339	1347	2T-1660	830	2W-6571	4
	810	2P-4538	658		832		►100
	898	2P-5616	234		836	2W-6619	97
	900	2P-5711	658	2T-1922	296	2W-6727	98
	901	2P-7216	106	2T-2161	808	2W-7226	84
	1008		110	2T-2171	106		88
	1009	2P-7636	92		110	2W-7777	136
	1014		204		114		137
	1015		208	2T-2428	854	2W-9228	1446
	1020	2P-8130	118		858	2W-9372	1390
	1021		130	2T-3019	374		1394
	1034		132		552		1402
	1035	2P-8421	482		840	2W-9723	136
	1072	2P-8630	202		846		137
	1079	2R-1230	802		922	2W-9724	136
2N-0876	124		804		926		137
2N-0931	122	2R-1948	1266	2U-7345	904		
2N-2765	152	2R-2376	1264		908		
	154		1297	2U-7354	904		
	170		1298		908		
	171	2S-0115	476	2V-0099	1346	3B-0623	29
	174		579	2V-2072	596		31

3

► **PRIMARY REFERENCE**

PART NUMBER INDEX

Part	Page	Part	Page	Part	Page	Part	Page
	33		407		447		345
3B-0645	29		412		461		346
	31		482		467		347
	33		494	3E-0109	1346		382
3B-1915	89		498	3E-0155	▶371		933
	92		502		1346		937
	100		503	3E-0400	1252	3E-3371	240
	118		508	3E-1812	655		300
	122		509	3E-1906	1268		306
	124		514		▶1272		307
	128		515		▶1273		308
	130		536	3E-2310	800		320
	132		578		808		325
	134		584		1062		326
	135		618	3E-2333	144		327
	226		622	3E-3000	1266		331
	1278		626		1284		332
	1280		628	3E-3212	544		333
3B-2225	632		666	3E-3361	936		339
	636		772	3E-3362	240		376
	640		773		662		380
	644		778	3E-3365	233		382
3B-2968	476		779		304		390
3B-4501	1252		785		309		394
3B-4502	766		786		348		398
	768		793		349		655
3B-4607	808		794		364		808
3B-4610	1286		798		366		830
	1288		800		367		832
	1354		826		373		836
3B-5470	1390		827		382		932
	1394		833		394		936
	1402		846		395		940
3B-6491	178		854		398		944
	180		858		399		950
	190		859		446	3E-3377	568
3B-6493	744		904		447		808
3B-6498	182		908		461		944
	192		912		467		950
3B-7255	124		916		654		1328
3B-8453	12		919		657	3E-3383	1326
	17		996		828		1327
	43		1002		921		1329
	46		1009		936		1340
	50		1015		940		1342
	548		1021		945		1344
	580		1051		951		1434
	585		1052		1098		1436
3B-8489	598		1067		1099		1438
	740	3D-2992	520		1100		1440
	742	3D-4603	632		1101	3E-3387	487
	744		636		1252	3E-3389	371
3C-1884	1438		640		1327		487
	1440		644	3E-3368	328		488
3D-0490	14	3D-6678	1054		330		490
3D-2824	62		1058		334	3E-3535	1250
	64	3D-6681	1054		335	3E-3584	1060
	106	3D-8317	660		336	3E-3658	1275
	110		664		337		1276
	115	3D-9799	441		338	3E-4046	520
	136		447		340	3E-4051	1320
	137		461		341	3E-4052	1320
	228		467		342	3E-4053	1320
	230	3E-0075	▶368		343	3E-4054	1320
	363		441		344	3E-4302	1038

▶ **PRIMARY REFERENCE**

PART NUMBER INDEX

Part	Page
3E-4335	1338
3E-4336	1338
3E-4352	130
	132
	226
	387
3E-4362	1338
3E-4371	578
	584
3E-5136	1342
	1344
3E-5165	439
	1340
3E-5169	438
	439
3E-5181	808
3E-5239	440
	446
	460
	466
	932
	936
	940
	944
	950
3E-5275	1430
	1432
3E-5329	1430
	1432
	▶1434
3E-5330	1430
	1432
	▶1436
3E-5464	1252
3E-5520	766
	768
3E-6144	1252
3E-6145	1252
3E-6147	1252
3E-6277	1253
3E-6280	1252
3E-6282	1252
3E-6322	1302
3E-6323	1302
3E-6328	▶233
	1340
	1342
	1344
3E-6367	771
3E-6388	1434
	1436
	1438
	1440
3E-6389	▶300
	1264
3E-6450	830
	832
	836
3E-6467	▶306
	316
3E-6514	1444
3E-6516	1444
3E-6575	1338
3E-6602	1297
	1298
3E-6747	802
	804
3E-6908	570
	572
3E-6924	1304
3E-7252	1252
3E-7253	1252
3E-7255	1252
3E-7256	1252
3E-7257	1252
3E-7258	1252
3E-7294	440
	447
	461
	467
3E-7410	380
	452
	456
	530
	532
	534
	996
	1002
3E-7417	1038
3E-7508	1424
	1426
	▶1438
3E-7768	357
	361
3E-7771	356
	360
3E-7996	944
	950
	1347
3E-8018	170
3E-8025	892
3E-8320	237
3E-8766	1304
3E-8768	1346
3E-8769	1346
3E-8770	1346
3E-8771	1346
3E-8776	1346
3E-8780	930
3E-8781	1346
3E-8782	1346
3E-8785	1304
3E-8787	1346
3E-8848	416
	420
3E-9199	243
	244
	248
3E-9291	1424
	1426
	▶1440
3E-9366	932
3E-9411	980
	984
	988
	992
	996
	1002
	1026
	1028
	1032
3F-0379	356
	360
3F-5792	14
	545
3F-5920	544
3F-6795	56
3F-6808	56
3G-1716	1036
3G-1718	1036
3G-1719	1036
3G-2349	1036
3G-2683	1085
3G-3352	▶1233
3G-3721	802
	804
3G-4005	1082
3G-4711	1403
	1406
3G-4779	1036
3G-5003	1072
	1078
3G-5423	811
3G-5750	1036
3G-7426	802
	804
3G-8175	1100
3H-3243	218
	219
3H-3244	1320
3H-5841	1410
3H-7654	62
	64
	382
	386
	390
	394
	398
3H-8726	956
	958
3H-9675	101
3J-1907	84
	88
	122
	144
	184
	205
	208
	376
	380
	402
	407
	412
	416
	420
	424
	428
	432
	452
	456
	479
	482
	520
	524
	530
	532
	534
	536
	538
	539
	544
	548
	551
	552
	556
	560
	564
	565
	618
	622
	626
	628
	654
	655
	657
	658
	664
	666
	668
	772
	773
	778
	779
	784
	785
	792
	793
	800
	804
	808
	810
	817
	828
	830
	832
	836
	840
	841
	846
	854
	858
	866
	868
	870
	872
	873
	876
	886
	897
	898
	899
	902
	904
	908
	912
	916
	921
	922
	927
	996

▶ **PRIMARY REFERENCE**

PART NUMBER INDEX

Part	Page
	1002
	1003
	1008
	1009
	1014
	1015
	1020
	1040
	1042
	1062
	1064
	1067
	1068
	1069
	1070
	1071
	1072
	1078
	1086
	1088
	1096
	1097
3J-2903	1073
	1078
3J-4818	1410
	1414
	1418
3J-5553	520
3J-6899	824
3J-6933	520
3J-7354	29
	31
	33
	78
	80
	103
	128
	205
	208
	380
	452
	456
	530
	532
	534
	536
	854
	858
	904
	908
	912
	916
	997
	1004
	1072
	1078
3J-8500	1048
3J-9196	72
	74
3K-0360	106
	110
	115
	118
	130
	132
	184
	192
	194
	197
	198
	203
	205
	208
	294
	382
	386
	390
	394
	398
	416
	420
	424
	428
	432
	479
	480
	494
	498
	502
	508
	514
	536
	694
	696
	762
	764
	772
	773
	778
	779
	784
	785
	786
	792
	793
	794
	800
	816
	818
	820
	830
	832
	836
	850
	852
	872
	873
	879
	880
	881
	895
	896
	926
	996
	1003
	1064
	1067
	1082
	1090
	1095
	1110
	1114
	1116
	1126
	1127
	1128
	1130
	1134
	1135
3K-0715	866
	868
	870
	1040
	1042
3K-0835	380
	488
	490
	941
	944
	950
3K-2518	758
	760
3K-2556	758
	760
3K-2559	579
	585
3K-2889	60
3K-4897	1336
	1339
	1390
	1394
	1398
3K-6113	904
	908
	912
	916
3K-6905	382
	386
	390
	394
	398
3K-8460	1136
	1138
	1140
	1142
	1146
	1148
	1152
3K-8782	440
	446
	460
	466
3K-9770	574
	1195
	1196
	1197
	1198
	1199
	1200
	1206
	1207
	1208
3L-1824	632
	636
	640
	644
3L-3380	356
	360
3M-0496	83
3N-3763	357
	361
3N-3790	1446
3N-6118	830
	832
	836
	854
	858
3P-0647	666
	811
3P-0655	84
	88
3P-0657	95
3P-1155	618
	622
	626
	628
	1091
	1092
	1093
	1094
3P-1210	1036
3P-1669	633
	637
	641
	645
3P-1896	17
3P-2404	510
	516
3P-4053	664
3P-7006	578
	584
3P-7149	579
	585
3P-7447	579
	585
3P-7558	578
	584
3P-7563	579
	585
3P-7564	578
	584
3P-7566	578
	584
3P-7570	579
	584
3P-7575	579
	585
3P-7576	579
	585
3P-7584	578
	584
3P-7586	579
	585
3P-7601	579
	585
3P-7612	579
	585
3P-7613	578
	584
3P-7832	578

► **PRIMARY REFERENCE**

PART NUMBER INDEX

Part	Page
	584
3P-8485	660
3P-9497	632
	636
	640
	644
3R-8801	356
	360
3R-9322	1354
3S-0004	482
	592
3S-0036	578
	584
3S-0142	640
	644
3S-1262	758
	760
3S-1282	640
	644
3S-1307	50
	52
3S-2093	310
	314
	351
	374
	376
	402
	406
	407
	412
	416
	420
	424
	428
	432
	436
	568
	570
	572
	771
	818
	820
	830
	922
	926
	932
	936
	940
	944
	950
	1252
	1253
	1264
	1304
	1347
	1391
	1395
	1424
	1426
	1428
	1430
	1432
3S-2708	550
	579
	585
3S-3875	545
3S-7023	1359
3S-8035	550
	579
	585
3S-8652	538
	539
3S-8665	406
	412
3S-9643	103
3T-0203	416
	420
	424
	428
	432
3T-0376	440
	441
	460
3T-0852	1390
	1394
	1402
3T-2662	441
	447
	461
	467
3T-3158	1347
3T-3159	1347
3T-3410	406
3T-3412	406
3T-3418	356
	360
3T-3422	356
	360
3T-3423	356
	360
3T-3424	356
	360
3T-3434	357
	361
3T-4709	356
	360
3T-4710	356
	360
3T-4711	360
3T-6354	234
3T-6774	1252
3T-7059	1438
	1440
3T-7086	1434
	1436
	1438
	1440
3T-9494	356
	357
	360
	361
3T-9524	356
	360
3T-9525	356
	360
3T-9549	407
	412
3V-2695	595
3V-3263	1430
	1432
3V-7689	1256
	1258
	1297
	1298
3W-3465	1297
	1298
3W-6958	854
	858
	1398
	1410
4B-4281	383
	387
	391
	395
	399
4B-4550	476
	551
	708
4B-4863	363
	441
	447
	461
	467
	1253
4B-5167	1036
4B-8407	14
4B-8440	740
4B-9302	772
	773
	778
	779
	786
	794
4B-9782	904
	908
	912
	916
4B-9784	618
	622
	626
	628
4B-9880	660
	664
4D-0514	32
4D-1836	438
	439
4D-2212	592
4D-6432	1363
	1364
	1365
	1366
	1372
	1376
4D-7388	106
	110
	114
	406
	412
	772
	778
	786
	794
	1398
4D-7534	526
4D-7536	526
4D-7735	1320
4D-7794	312
	406
	412
	416
	420
	424
	428
4B-0831	205
	208
4B-1237	441
	447
	461
	467
4B-1240	441
	447
	461
	467
4B-2043	363
4B-2049	357
	361
	440
	447
	461
	467
4B-2363	544
4B-2913	808
4B-3140	14
	84
	88
4B-3388	50
4B-3835	1036
4B-4158	758
	760
	1036
	1073
	1078
	1446
4B-4161	10
4B-4274	440
	446
	460
	466
	766
	768
	976
	978
	980
	984
	988
	992
	1064
	1308
4B-4276	441
	447
	461
	467
	1402
	1406
4B-4278	1390
	1394

4

► **PRIMARY REFERENCE**

PART NUMBER INDEX

Part	Page
	432
	568
	570
	572
	830
	832
	836
4D-8148	578
	579
	584
	585
4D-9128	1388
4D-9517	143
4E-0289	830
	832
	836
4E-0339	1266
4E-0649	766
	768
4E-0718	383
4E-1303	516
4E-1384	1308
4E-1411	1264
4E-2250	976
	978
	980
	984
	988
	992
4E-2453	976
	978
	980
	984
	988
	992
4E-3426	818
4E-3439	818
	820
4E-3441	818
	820
4E-3447	106
	110
	114
	996
	1002
4E-4377	596
	598
4E-4450	1286
	1288
4E-5542	766
4E-5551	810
4E-5609	1136
	1138
	1142
	1148
	1152
4E-5662	1359
4E-5705	1284
4E-5718	1284
4E-5719	1284
4E-5720	1284
4E-5722	1284
4E-5724	1284
4E-5725	1308
4E-5726	1308
4E-6218	1372
	1376
4E-6331	1390
	1394
	1402
4E-6332	1390
	1394
	1402
4E-6335	1402
	1406
4E-6401	▶771
	1261
	1262
4E-6409	1261
	1262
	▶1304
4E-6439	1402
	1406
4E-6444	1402
	1406
4E-6445	1402
	1406
4E-6446	1402
	1406
4E-6500	758
4E-6508	1312
	1316
4E-6509	1312
	1316
4E-6510	1312
	1316
4E-6523	1390
	1394
	1398
	1402
	1406
4E-6526	1390
	1394
	1398
4E-6527	1390
	1394
	1402
4E-6867	818
	820
4E-6997	310
4E-6999	1423
4E-7001	1430
	1432
4E-7163	1402
	1406
4E-7204	1264
4E-7205	1264
4E-7401	1297
4E-7410	1297
	1298
4E-7412	1297
	1298
4E-7414	1297
4E-7449	1284
4E-7450	1284
4E-7451	1308
4E-7497	316
	317
	318
4E-7519	758
4E-7520	484
	485
	486
4E-7627	484
	485
	486
4E-7628	484
	485
	486
4E-7748	1308
4E-7749	1308
4E-7830	1266
4E-7831	1266
4E-7839	1308
4E-8030	1304
4E-8035	1304
4E-8038	1304
4E-8078	699
	700
	824
4E-8079	699
	700
4E-8080	822
4E-8152	708
4E-8153	708
4E-8154	708
4E-8155	708
4E-8156	708
4E-8157	708
4E-8158	708
4E-8160	708
4E-8161	708
4E-8162	708
4E-8177	1422
	1423
4E-8293	1312
	1316
4E-8317	1388
4E-8318	1388
4E-8319	1388
4E-8320	1388
4E-8325	1388
4E-8329	1388
4E-8338	1388
4E-8340	1388
4E-8364	1388
4E-8413	▶484
	▶485
	▶486
	1261
	1262
4E-8537	1340
	1342
	1344
4E-8540	758
	760
4E-8557	568
	570
	572
4E-8560	568
	570
	572
4E-8561	568
	570
	572
4E-8583	758
4E-8593	758
	760
4E-8722	1390
	1394
	1398
	1403
	1406
4E-8829	922
4E-8833	1256
4E-8852	730
4E-8857	1256
4E-8861	1256
4E-8865	1256
4E-8892	730
4E-8917	1304
4E-8918	1402
4E-8920	1402
4E-8937	1340
	1342
	1344
4E-8940	1340
	1342
4E-8952	766
	768
4E-8953	766
	768
4E-8954	766
	768
4E-8955	766
	768
4E-8957	766
	768
4E-8975	316
	317
	318
4E-8976	316
	317
	318
4E-8984	1283
4E-8995	1357
4E-8996	1283
4E-9055	1346
4E-9056	1283
4E-9151	1304
4E-9152	1294
4E-9173	1390
	1394
	1398
	1402
	1406
4E-9174	1390
	1394
	1398
	1403
	1406
4E-9314	1346
4E-9318	1346
4E-9439	1251
	▶1297
	▶1298
4E-9440	1402
4E-9448	1312
	1316

▶ **PRIMARY REFERENCE**

PART NUMBER INDEX

Part	Page	Part	Page	Part	Page	Part	Page
4E-9450	1312		446	4J-0519	830		1058
	1316		460		833	4J-3816	1054
4E-9452	1390		466		837		1058
	1402	4F-2318	1424	4J-0520	494	4J-4606	824
4E-9453	1390		1426		498	4J-5267	772
	1394		1428		502		778
	1402	4F-2926	802		508		784
4E-9454	1390		804		514		792
	1394	4F-3765	83		772	4J-5309	892
	1402	4F-4097	1038		778		1072
4E-9455	1390	4F-4879	1385		784	4J-5477	106
	1394	4F-7388	1036		792		110
	1402	4F-9351	95		830		114
4E-9456	1390	4H-1225	710		833		551
	1394		714		837		830
	1402		718		854		832
4E-9457	1390		722		858		836
	1394		726		922	4J-5573	1009
	1402	4H-3820	1388		926		1015
4E-9459	1402	4H-6112	557		997		1021
4E-9536	1308		561		1004		1072
4E-9537	1308		565	4J-0521	660		1078
4E-9568	1434	4H-9027	186	4J-0522	552	4J-7533	810
4E-9569	1436		188		556		1072
4E-9570	1430		190		560		1078
	1432		192		564		1096
4E-9571	1430		230		896	4J-8224	904
	1432	4H-9105	840		1009		908
4E-9611	1424		846		1015		912
	1426		996		1021		916
	1428		1002		1090	4J-8634	904
4E-9625	310	4I-3144	152		1095		908
4E-9640	1264	4I-5663	892	4J-0523	1072		912
4E-9663	766		1088		1078		916
	768	4I-5956	806	4J-0524	530	4J-8998	1096
4E-9664	766	4I-5957	806		532	4J-9535	892
	768	4I-5968	▶812		534	4K-0367	56
4E-9665	766		892		552		60
	768		1088		556		1268
4E-9667	766	4I-5969	892		560		1270
	768	4I-5984	892		564	4K-0684	524
4E-9668	766	4I-5986	892		830		574
	768	4I-6283	▶883		833	4K-1388	482
4E-9669	766		892		837		773
	768	4I-6289	699		840		779
4E-9716	604	4I-7690	892		846		785
4E-9757	1390		1088		854		793
	1394	4I-7691	892		858	4K-1657	520
	1402		1088		997	4K-5122	440
4E-9767	1256	4I-7693	▶813		1003		446
	1258		866		1009		460
4E-9771	1256		1040		1015		466
	1258		1042		1021	4K-5175	62
4E-9924	316	4I-7696	812		1073		64
	317	4I-7698	812		1078		632
	318	4I-7699	812	4J-0527	552		636
4E-9925	316	4I-7700	812		556		640
	317	4I-7701	812		560		644
	318	4I-7705	886		564	4K-8302	374
4E-9967	766		1103		1054	4K-8501	1354
	768	4I-7707	886		1073	4K-8864	374
4F-0411	134	4I-7708	886		1078		402
	135	4I-7709	886	4J-3754	1054		436
4F-2294	440	4I-7710	886		1058		1430
	441	4I-7711	813	4J-3815	1054		1432

▶ **PRIMARY REFERENCE**

PART NUMBER INDEX

Part	Page
4K-9097	1366
	1372
	1376
4K-9429	1334
4L-0569	1424
	1426
	1428
4L-2729	356
	360
4L-3395	632
	636
	640
	644
4L-4644	134
	135
4L-4986	536
4L-6454	440
	446
	460
	466
4L-6459	495
	499
	503
	509
	515
4L-6944	802
	804
4L-7049	568
4L-7124	441
	447
	461
	467
4L-8606	100
4L-9337	1008
	1014
	1021
4L-9564	544
	596
	598
4M-0061	711
	715
4M-1552	544
4M-1708	578
	584
4M-1827	357
	361
4M-1828	356
	360
4M-1829	356
	360
4M-1831	356
	360
4M-1853	357
	361
4M-1854	357
	361
4M-1896	357
	361
4M-2381	660
	664
4M-3248	97
	98
4M-5016	579
	585
4M-5397	578
	584
4M-6425	1358
4M-6582	1253
4M-8239	658
4N-0683	24
	26
4N-0933	14
4N-1320	124
4N-3841	383
	386
	390
	395
	399
4N-5834	136
	137
4N-8227	299
4N-9467	976
	978
4P-0692	92
	204
	208
4P-0693	92
	204
	208
4P-0707	83
	118
	130
	132
4P-0853	4
	▶43
4P-1654	120
4P-2535	84
	88
4P-3485	204
	208
4P-3486	54
4P-3747	4
	▶54
4P-3896	120
4P-4342	204
	208
4P-4343	204
	208
4P-4460	92
4P-4642	59
4P-4917	95
4P-5211	60
4P-5217	56
4P-5218	56
4P-5426	4
	▶58
4P-5500	95
4P-5752	122
4P-6565	102
4P-7048	204
4P-7428	382
	386
	390
	394
	398
4P-7429	382
	386
	390
	394
	399
4P-7581	382
	386
	390
	394
	398
	452
	456
	1082
	1390
	1394
4P-7582	452
	456
	1082
4P-7680	156
	158
4P-8097	82
4P-8134	382
	386
	390
	394
	398
	440
	446
	460
	466
4P-9030	226
4P-9031	226
4P-9034	226
4P-9035	226
4P-9226	77
4P-9853	62
4S-1962	854
	858
4S-4455	376
	772
	778
	786
	794
	1346
4S-5719	980
	984
4S-5780	1268
	1270
4S-5882	96
4S-5898	152
	154
	548
4S-6137	46
4S-6680	94
4S-8287	1338
4S-8537	550
	578
	584
4S-8541	550
	578
	579
	584
4S-8875	730
	734
	738
4S-9134	591
4T-1701	1096
4T-1860	▶902
	904
	908
	912
	916
4T-1897	802
	804
4T-1901	802
	804
4T-1902	802
	804
4T-1904	802
	804
4T-1905	802
	804
4T-1906	802
	804
4T-1907	802
	804
4T-1908	802
	804
4T-1909	802
	804
	▶811
4T-1910	811
4T-1911	811
4T-1913	811
4T-1914	811
4T-1915	802
	804
4T-1916	802
	804
4T-2770	896
	1090
4T-3122	1036
4T-4702	1226
4T-4704	1176
4T-4705	1176
4T-4706	1176
4T-4709	1235
4T-5070	902
4T-5071	902
	1071
4T-5173	824
4T-5896	▶1071
	1072
4T-6760	1195
	▶1201
4T-6761	1195
	1201
4T-6762	1195
	1201
4T-6763	1182
	1185
	1186
	▶1195
4T-7023	1036
4T-8698	1054
4T-8761	862
4T-9298	862
4T-9380	1036
4V-1074	679
4V-1541	808
4V-1939	980
	984
	988

▶ **PRIMARY REFERENCE**

PART NUMBER INDEX

Part	Page
	992
4V-4018	1446
4V-4884	476
4V-4885	476
4V-7884	1410
	1414
	1418
4V-8256	1351
	1352
4V-8556	1410
	1414
	1418
4V-9803	752
4W-0419	4
	▶101
4W-1510	4
	▶103
4W-1758	800
4W-1807	204
	208
4W-3027	76
4W-3034	76
4W-3100	122
4W-4076	143
4W-4586	52
4W-4813	21
	22
	24
	26
4W-4998	8
4W-5095	124
4W-5461	132
4W-5463	118
	130
	132
4W-5596	84
	88
4W-5597	84
	88
4W-5901	124
4W-6034	124
4W-6035	124
4W-6094	124
4W-6095	124
4W-6662	10
	11
4W-6664	10
	11
4W-9495	124
4W-9571	62
	64
4W-9625	124
4W-9839	124
4W-9977	172
	173
	176
4Y-5301	854
	858
4Y-5812	896
	1090
	1095

5

Part	Page
5B-0213	37
	38
	94
5B-1309	188
	194
	291
	292
5B-2183	808
5B-2638	84
	88
	122
	205
	208
	1280
5B-3254	106
	110
5B-4399	128
5B-5821	10
	11
	1036
5B-6565	1252
5B-7890	36
	37
	38
5B-9192	771
5B-9603	124
	1280
5C-2874	771
	932
	936
	940
	944
	950
5C-2890	306
	309
	316
	317
	318
	441
	447
	461
	467
	771
	808
	933
	937
	941
	945
	951
	976
	978
	980
	984
	988
	992
	1252
	1292
	1308
	1312
	1316
	1340
	1342
	1344

Part	Page
	1390
	1394
5C-7261	310
	312
	314
	351
	568
	570
	572
	766
	768
	771
	1283
	1308
	1388
	1391
	1395
	1398
	1402
	1406
5C-7423	570
	572
5C-8312	1302
	1347
	1424
	1426
	1428
5C-9553	314
	568
	570
	572
	719
	723
	727
	1308
	1312
	1316
	1340
	1342
	1344
	1391
	1395
	1402
	1434
	1436
	1438
	1440
5D-1026	1020
	1294
5D-1901	959
	1054
5D-1902	1054
5D-3954	56
5D-4822	1390
	1394
	1402
5D-5957	154
5D-6428	578
	584
5D-7449	708
5D-9514	56
5E-8771	494
	498
	502
	508

Part	Page
	514
5F-0149	1082
5F-0304	14
5F-1248	708
5F-1678	1078
5F-3106	44
	46
	1009
	1015
	1020
5F-3144	545
	1036
5F-3181	62
	64
5F-3999	544
	618
	622
	626
	628
5F-4899	84
	88
5F-6259	62
	64
5F-9035	919
5F-9144	828
5F-9657	24
	26
	28
5F-9757	1430
	1432
5G-8317	106
	110
	114
5H-1472	1071
5H-2824	633
	637
	641
	645
5H-3252	806
5H-3701	758
	760
	762
	764
5H-4909	817
5H-5672	579
	585
5H-6005	921
	1073
5H-6733	1054
5H-6734	134
	135
	920
5H-8038	184
5H-8853	660
5I-4282	1088
5I-8521	▶884
	892
5I-8522	884
5I-8523	884
5J-3306	1054
5J-3419	904
	908
5J-4776	904
	908
	912

▶ **PRIMARY REFERENCE**

PART NUMBER INDEX

Part	Page
	916
5J-5314	357
	361
5K-1770	846
5K-3294	106
	110
	114
5K-5959	1136
	1138
	1142
	1148
	1152
5K-5962	1126
	1127
5K-6875	1322
5K-7696	668
5K-8451	850
	852
5K-8454	524
5K-9090	494
	498
	502
	503
	508
	509
	514
	515
	772
	773
	778
	779
	784
	785
	792
	793
	854
	859
	882
	922
	926
	927
	996
	1002
	1004
	1008
	1009
	1014
	1015
	1020
	1021
5K-9107	544
5K-9242	740
5K-9243	740
5K-9660	107
	111
	114
	772
	778
	786
	794
	854
	858
5L-1100	802
	804
5L-1761	218
	219
	666
5L-5772	544
	550
5L-5773	544
	550
5L-6766	1264
5M-2057	1054
	1058
5M-2894	10
	11
	12
	13
	14
	16
	17
	24
	26
	37
	38
	44
	46
	50
	54
	72
	74
	83
	84
	85
	88
	89
	92
	95
	97
	114
	118
	120
	122
	124
	128
	130
	132
	152
	154
	156
	158
	160
	184
	205
	208
	353
	382
	386
	390
	394
	398
	482
	492
	524
	544
	548
	579
	585
	658
	664
	666
	1270
	1278
	1280
5M-3034	357
	361
5M-3062	312
	755
	756
	1410
5M-3154	520
5M-3320	592
5M-4454	520
5M-6200	762
	764
5M-6214	101
	601
	602
5M-6755	766
	768
5M-7925	550
	578
	584
5M-9548	658
5M-9622	660
5M-9623	658
	660
5M-9624	658
	660
	664
5N-2126	372
5N-6501	124
5P-0372	1388
5P-0537	72
	74
	213
	214
	1312
	1316
	1434
	1436
	1438
	1440
5P-0597	76
5P-0598	352
5P-0742	178
	180
	182
	190
	192
5P-0747	236
	237
	354
5P-0761	236
	237
5P-0764	104
5P-0765	1391
	1395
5P-0767	1322
5P-0840	24
	26
5P-0960	708
5P-1042	1009
	1015
	1021
5P-1046	854
	858
	1008
	1014
	1020
5P-1075	59
	312
5P-1076	106
	110
	114
	162
	163
	164
	180
	188
	190
	194
	228
	230
	291
	292
	510
	516
	552
	556
	560
	564
	677
	678
	681
	682
	690
	704
	706
	711
	715
	719
	723
	727
	730
	734
	738
	748
	923
	927
	956
	958
	997
	1003
	1021
	1032
	1064
	1282
	1300
	1325
	1354
5P-1255	48
5P-1260	48
5P-1404	84
	88
	551
	1009
	1015
5P-1669	550
	578

► **PRIMARY REFERENCE**

PART NUMBER INDEX

Part	Page
	584
5P-1670	579
	585
5P-2230	48
5P-2369	553
	557
	561
	565
5P-2424	1268
5P-2566	552
	556
	560
	564
5P-2600	237
5P-2645	128
5P-2673	708
5P-2755	156
	158
	160
5P-2861	476
	548
5P-3087	596
	598
5P-3088	596
	598
5P-3345	156
	158
	160
5P-3418	234
5P-3419	234
5P-3603	544
5P-3620	538
	539
5P-3723	618
	622
	626
	628
5P-3928	1252
5P-3929	1250
5P-3931	708
5P-3945	1252
5P-3948	1320
5P-3950	1252
5P-3961	156
	158
	160
5P-4055	632
	636
	640
	644
5P-4115	441
	447
	461
	467
	711
	715
	719
	723
	727
	1253
	1292
5P-4116	351
	711
	715
	1252
5P-4325	165
5P-4484	474
	476
5P-4626	56
5P-4868	76
5P-4869	165
5P-4892	84
	88
5P-4900	92
5P-4904	579
5P-5296	579
	585
5P-5623	446
5P-5672	1252
5P-5677	373
5P-5777	694
	800
5P-5846	84
	88
5P-5874	892
5P-5908	1253
5P-5923	715
	719
	723
	727
	997
	1003
	1004
5P-5926	1252
5P-5931	711
5P-5969	1294
5P-5992	1424
	1426
	1428
	1430
	1432
5P-6008	446
5P-6025	166
	168
5P-6120	818
5P-6129	1294
5P-6261	659
	660
5P-6271	1391
	1395
	1398
5P-6298	356
5P-6313	353
5P-6314	353
5P-6408	632
	636
	641
	645
5P-6414	602
5P-6459	312
5P-6651	579
	585
5P-6670	1252
5P-6724	808
5P-6726	579
	585
5P-6727	550
	579
	585
5P-6879	1323
	1325
5P-6903	1282
5P-7070	1252
5P-7211	142
	711
	715
	719
	723
	727
5P-7213	862
5P-7462	772
	778
	786
	794
	1009
	1015
	1021
5P-7463	772
	778
	786
	794
	1009
	1015
	1021
5P-7464	495
	499
	503
	509
	515
	772
	778
	786
	794
	996
	1065
5P-7465	495
	499
	503
	509
	515
	772
	778
	786
	794
	997
	1065
5P-7466	1009
	1015
	1021
5P-7467	1009
	1015
	1021
5P-7468	772
	778
	786
	794
	854
	858
	922
	926
	1009
	1015
	1021
5P-7469	772
	778
5P-7470	552
	556
	560
	564
	997
	1003
	1009
	1015
	1021
5P-7471	552
	556
	560
	564
	997
	1003
	1009
	1015
	1021
5P-7483	1292
5P-7530	72
	74
5P-7538	653
	655
	656
5P-7701	62
	64
5P-7703	552
	556
	560
	564
	997
	1003
5P-7782	102
5P-7807	234
5P-7812	656
5P-7817	84
	88
5P-7843	524
5P-7854	504
	774
	780
	786
	794
5P-8043	524
5P-8044	524
5P-8068	62
	64
5P-8077	840
	847
	997
	1003
	1026
	1028
	1030
	1032
	1072

► **PRIMARY REFERENCE**

PART NUMBER INDEX

Part	Page	Part	Page	Part	Page	Part	Page
	1078		1268	5P-8874	830		137
	1082		1270		832	5S-3618	544
5P-8086	70	5P-8248	36		836	5S-4245	380
5P-8112	1009		37	5P-8940	152		439
	1015		38		154		441
	1021		52	5P-9035	618		447
5P-8136	1187		482		622		461
5P-8167	1410		544		626		467
	1414	5P-8249	21		628		1340
	1418		22	5P-9085	373		1342
5P-8182	1009		494		402		1344
	1015		498		406		1347
	1021		502		412	5S-4246	488
5P-8210	24		508		417		490
	26		514		421	5S-4437	664
	124		524		425	5S-5880	579
5P-8211	618	5P-8250	42		429		585
	622		70		433	5S-7001	901
	626		575		922	5S-7018	901
	628		1187		926	5S-7349	234
5P-8245	14		1192		980	5S-7379	94
	24		1202		984		146
	26	5P-8356	811		988		148
	46		888		992	5S-7382	146
	50	5P-8361	1207	5P-9119	1054		148
	56	5P-8362	1206		1058		980
	60		1207	5P-9262	363		984
	69		1208	5P-9297	495		988
	84	5P-8439	314		1430		992
	88	5P-8444	772		1432	5S-7383	146
	96		778	5P-9299	111		148
	124		786		114		1268
	241		794		203		1358
	242	5P-8500	182		294	5S-7816	660
	382		194		296	5T-5185	526
	386		228		499	5T-8645	178
	390		292		503		180
	394		718		509		182
	398		722		515		190
	524		726		850		192
	544		748		852	5T-9482	601
	579		959	5P-9609	708		602
	585		1448	5P-9617	530	5T-9797	595
	596	5P-8502	182		532	5T-9866	595
	598		194		534	5V-1496	1380
	632		228	5P-9789	106	5V-1498	1372
	636		292		110		1376
	640		718		114	5V-3854	710
	644		722	5P-9890	92		714
	1036		726	5R-5927	710		718
	1268		748		714		722
	1270		959		718		726
	1280		1448		722	5V-5669	524
	1359	5P-8524	1360		726	5V-5670	524
5P-8247	46	5P-8823	1195	5R-7136	44	5V-6106	178
	56		1196		46		180
	60		1197		50		182
	70		1198	5R-7137	46		190
	520		1199		50		192
	548		1200		56	5V-6152	402
	1136		1206	5R-7545	1410	5V-6153	402
	1138		1207	5S-0003	205	5V-6439	980
	1142		1208		208		984
	1148	5P-8839	49		666		988
	1152		70	5S-0581	136		992

PART NUMBER INDEX

Part	Page
5V-6949	382
	386
	390
5V-7652	758
6	
6A-5591	520
6A-7844	1346
6A-9718	1434
	1436
	1438
	1440
	1442
6B-1557	492
6B-4196	1304
6B-4540	380
	439
	440
	446
	461
	467
	1340
	1342
	1344
	1347
6B-4594	690
6B-5072	84
	88
6B-6205	722
	726
6B-6684	1054
6B-6863	655
6B-8085	730
	734
6B-8129	48
6B-9202	84
	88
6C-3060	228
	230
6C-3680	1256
	1258
6C-5303	708
6D-0692	520
6D-1004	494
	498
	502
	508
	514
	773
	779
	784
	792
6D-1641	1322
6D-2667	1320
6D-3025	976
	978
	980
	984
	988
	992
6D-3479	106
	110
	114
	416
	420
	424
	428
	432
6D-3886	1388
6D-4161	1347
6D-4246	402
	416
	420
	424
	428
	432
	436
	1320
6D-4247	820
6D-4636	840
	847
6D-5256	416
	420
	424
	428
	432
	436
	1320
6D-7690	618
	622
	626
	628
6D-7889	416
	424
	428
	433
	651
	652
	1036
6D-9157	536
6E-0381	880
	881
6E-0763	888
6E-0770	889
6E-0804	692
	694
	696
	824
6E-0923	1403
	1406
6E-1023	▶817
	866
	868
	870
	1040
	1042
6E-1024	870
	▶890
6E-1025	▶814
	868
	870
	1040
6E-1026	▶815
	866
	868
	870
	1040
	1042
6E-1029	866
	868
	870
	1040
6E-1030	866
	868
	870
	1040
	1042
6E-1033	806
6E-1127	896
	1090
	1095
6E-1249	824
6E-1291	1072
6E-1332	1036
6E-1436	1038
6E-1454	854
	882
	1008
	1014
	1020
6E-1574	806
6E-1607	883
	885
	892
	894
	1087
	1103
6E-1682	1034
	1035
6E-1684	1034
6E-1685	1044
6E-1686	1044
6E-1687	1044
	1046
6E-1688	1044
	1046
6E-1690	1044
6E-1691	1044
6E-1692	1044
6E-1693	1044
6E-1696	1044
6E-1698	1044
6E-1699	1044
6E-1701	1044
6E-1702	1044
6E-1703	1044
6E-1704	1044
	1046
6E-1705	1044
	1046
6E-2140	1072
6E-2943	862
	1036
	1038
6E-3078	830
	832
	836
	▶901
6E-3283	866
	868
	870
	1040
	1042
6E-3303	1096
6E-3333	866
	868
	870
	1040
	1042
6E-3334	866
	868
	870
	1040
	1042
6E-3335	866
	868
	870
	1040
	1042
6E-3336	866
	868
	870
	1040
	1042
6E-3583	897
6E-3767	888
6E-3769	888
6E-3775	904
	908
	912
	916
6E-3780	904
	908
6E-3840	806
6E-3841	806
6E-3842	806
6E-3843	806
6E-3844	806
6E-3845	806
6E-3846	806
6E-3847	806
6E-3850	▶885
	890
6E-3851	885
6E-3852	885
6E-3854	885
6E-3855	885
	1103
6E-3856	890
6E-3857	890
	▶894
6E-3858	894
6E-3859	894
6E-3861	894
	1087
6E-3866	817
	892
6E-3867	813
	814
6E-3868	814
6E-3869	813
	814
6E-3870	815
6E-3871	815
6E-3872	815
6E-3873	817
6E-3874	817
6E-3875	817
6E-3985	904

▶ **PRIMARY REFERENCE**

PART NUMBER INDEX

Part	Page
	908
	912
	916
6E-3986	▶895
	904
	908
6E-3993	1079
6E-4185	▶920
	922
6E-4186	920
6E-4188	920
6E-4224	1038
6E-4228	1086
6E-4229	1086
6E-4230	1086
6E-4239	1086
6E-4286	904
	908
	912
	916
	1072
6E-4287	904
	908
	912
	916
	1072
6E-4288	904
	908
	912
	916
6E-4499	904
	908
	912
	916
6E-4500	904
	908
	912
	916
6E-4513	904
	908
	912
	916
6E-4514	904
	908
	912
	916
6E-4576	1008
	▶1034
6E-4729	1054
6E-4753	895
6E-4759	1096
6E-4922	1054
6E-5098	1058
6E-5101	1058
6E-5102	1058
6E-5444	800
6E-5510	896
	1090
	1095
6E-5572	1036
6E-5582	883
	885
	894
	1087
6E-5583	883
6E-5741	1036
6E-5868	920
6E-6138	896
	1090
	1095
6E-6140	1086
6E-6141	1086
6E-6142	1086
6E-6245	920
6E-6293	897
6E-6550	143
	1054
	1058
6F-0155	550
	579
	585
6F-0253	380
	488
	490
	941
	944
	945
	950
	951
6F-0612	811
6F-3930	595
6F-4718	840
	847
	997
	1003
6F-4868	544
6F-6673	660
6F-7035	524
6F-7045	365
6F-7062	62
	64
6F-7172	136
	137
6G-8390	▶959
	1051
6G-8829	1323
6H-0411	1448
6H-1717	124
	205
	209
	382
	386
	390
	394
	398
6H-3956	1292
6H-6698	128
6I-0723	62
	64
6I-0724	62
	64
6I-0804	92
6I-0805	92
6I-0810	92
6I-1418	241
	242
	440
	446
6I-2431	106
	110
	114
6I-2435	106
	110
	114
6I-4950	103
6I-6314	▶1223
	1229
6I-6317	1234
6I-6414	▶1240
	1242
6I-6417	1211
	▶1224
6I-6420	1212
	▶1217
6I-6423	▶1234
6I-6601	1240
6I-6602	1223
6I-6603	1217
6I-6608	1234
6I-6609	1234
6I-6792	892
6I-6979	806
6I-8055	544
6I-8490	482
6I-8491	544
6I-8563	552
	556
	560
	564
	▶664
6I-8564	664
6I-8597	632
	636
	640
	644
6I-8849	548
	550
6I-8860	548
	550
6I-9519	659
	660
6I-9790	544
	578
	584
6J-0368	920
6J-1700	960
	962
	964
	966
6J-2245	72
	74
6J-2386	862
6J-2419	659
6J-2680	128
	552
	556
	560
	564
	997
	1003
	1009
6J-3134	595
6J-4022	1054
6J-4568	919
6K-0806	1410
	1414
	1418
6K-2430	596
	598
6K-3273	1380
6K-3274	1253
6K-3771	46
	50
6K-5535	92
	494
	498
	502
	508
	514
	923
	927
6K-5536	92
	494
	498
	502
	508
	514
	923
	927
6K-6164	95
6K-6167	95
6K-6307	904
	908
	912
	916
6K-8178	294
	312
	552
	1320
6K-8179	372
	383
	1280
6K-8180	690
6K-8420	94
6L-2479	94
	106
	110
	114
	208
6L-3005	170
	171
	174
	175
6L-3616	740
	742
	744
6L-7159	1252
6L-8598	568
	570
	572
6L-8617	143
6M-1622	476
	677
	678

▶ **PRIMARY REFERENCE**

PART NUMBER INDEX

Part	Page	Part	Page	Part	Page	Part	Page
	748		447		534	6V-1574	997
6M-6853	548		461		553		1003
6M-9155	762		467		557	6V-1635	677
	764	6T-3643	441		561		678
6N-0508	710		447		565	6V-1668	1252
	714		461		618		1298
	718		467		622	6V-1722	773
6N-1127	184	6T-3764	299		626		779
6N-1604	298	6T-5545	668		628		786
	299	6T-6505	1253		651		794
6N-1872	234	6T-7061	545		652	6V-1734	574
6N-1944	234	6T-7695	1304		658	6V-1746	668
6N-2656	94	6T-9222	536		664	6V-1820	1054
6N-3279	357	6V-0267	82		772	6V-1867	128
	361	6V-0268	82		778		997
6N-3826	356	6V-0301	786		784		1003
	360		798		792		1009
6N-7818	202		826		800		1015
6N-9590	144		827		830		1022
6P-3236	1346		833		832	6V-1868	128
6P-3313	544	6V-0352	1297		836		997
6P-4213	544		1298		840		1003
6P-4940	660	6V-0387	633		846		1009
6P-4943	660		637		854		1015
6P-4977	492	6V-0397	552		858		1022
6P-4978	660		556		872	6V-1869	128
6P-8855	1252		560		873	6V-1874	1009
6P-9783	660		564		996		1015
6P-9784	660		1009		1002		1022
6P-9785	660		1015		1008	6V-1875	1032
6P-9786	660		1021		1014	6V-1889	94
6S-1061	237	6V-0400	840		1020		382
6S-5693	106		847		1062		386
	110	6V-0439	668		1064		390
	114	6V-0467	694		1067		394
6S-6251	710		696		1068		398
	714	6V-0484	452		1073		406
	718		456	6V-0871	184		412
	722		530	6V-0889	354		504
	726		532		▶360		773
	1282		534	6V-0895	216		779
6S-6646	704		664		220		786
6T-0362	357	6V-0513	▶356	6V-0973	62		794
	361	6V-0675	144		64		800
6T-0363	356	6V-0678	188		152		1320
	360		194	6V-1175	548	6V-1902	806
6T-0371	356		291	6V-1179	248	6V-2313	766
	360		292		251		768
6T-0372	356	6V-0683	772		548		976
	360		778	6V-1193	920		978
6T-0465	236		786	6V-1249	772		980
6T-1698	1051		794		778		984
	1052		1009		786		988
6T-1740	618		1015		794		992
	622		1022		997	6V-2370	178
	626	6V-0852	85		1064		180
	628		89	6V-1322	356		186
6T-2723	124		416		360		190
	383		420	6V-1454	124		440
	386		424	6V-1572	997		446
	391		428		1003		460
	395		432		1032		466
	399		482	6V-1573	997		710
6T-2770	1438		530		1003		711
6T-3642	441		532		1032		714

▶ **PRIMARY REFERENCE**

PART NUMBER INDEX

Part	Page
	715
	1286
	1288
	1290
	1292
6V-2383	407
	412
6V-2406	618
	622
	626
	628
6V-2455	383
	387
	391
	395
	399
6V-2456	1336
	1339
	1366
	1372
	1376
6V-2494	1250
6V-2496	710
	714
	715
	718
	719
	722
	723
	726
	727
6V-2624	524
6V-2686	353
6V-2687	376
	1304
	1312
	1316
	1346
6V-3265	106
	110
	114
	312
	1424
	1426
	1428
	1430
	1432
6V-3303	708
6V-3341	945
	951
6V-3348	24
	26
	28
6V-3378	854
	858
6V-3537	24
	26
6V-3689	101
6V-3774	5
6V-3822	1054
	1058
	1359
6V-3908	84
	88
6V-3917	152
	154
6V-3922	184
	883
	884
	886
	1078
	1088
	1103
6V-3965	416
	420
	424
	428
	432
	482
	530
	532
	534
	553
	557
	561
	565
	618
	622
	626
	628
	654
	655
	657
	658
	664
	666
	772
	778
	784
	792
	800
	830
	832
	836
	846
	854
	858
	872
	873
	996
	1002
	1008
	1014
	1020
	1062
	1064
	1067
	1073
6V-3966	85
	89
6V-4248	1054
	1058
6V-4298	1308
6V-4349	854
	859
	1009
	1015
6V-4356	1250
6V-4357	1250
6V-4589	84
	88
	92
6V-5039	124
6V-5040	124
6V-5048	78
	80
	84
	88
	382
	386
	390
	394
	398
6V-5052	1136
	1138
6V-5066	122
	125
6V-5101	62
	64
	152
	154
6V-5103	1136
	1138
	1140
	1142
	1146
	1148
	1152
6V-5167	62
	64
6V-5192	1048
6V-5195	890
	1088
6V-5215	960
	964
6V-5220	568
	570
	572
6V-5324	1097
6V-5341	802
	804
6V-5555	1096
6V-5586	902
6V-5696	758
	760
6V-5758	889
6V-5759	1072
	1078
6V-5839	1054
	1058
	1340
	1342
	1344
	1359
6V-5844	520
6V-5851	1424
	1426
	1428
6V-6206	1440
6V-6207	1442
6V-6208	1440
6V-6209	1434
	1436
	1438
	1440
	1442
6V-6210	1442
6V-6213	1434
	1436
	1438
	1440
6V-6214	1434
	1436
	1438
	1440
6V-6218	1434
	1436
6V-6219	1438
6V-6228	9
6V-6317	520
6V-6457	1340
	1342
	1344
6V-6458	578
	579
	584
6V-6561	1424
	1426
	1430
	1432
	▶1442
6V-6580	1103
6V-6609	118
	130
	132
6V-6640	476
	545
	758
	760
6V-6703	251
	253
	254
	255
	256
6V-6782	104
	122
	192
6V-6783	104
	122
	192
6V-6797	1424
	1426
6V-6798	1424
	1426
6V-6809	122
6V-6885	1308
6V-6888	1434
	1436
	1438
	1440
6V-6889	1424
	1426
	1428
	1434
	1436
	1438
	1440
	1442
6V-6923	898
	900

▶ **PRIMARY REFERENCE**

PART NUMBER INDEX

Part	Page	Part	Page	Part	Page	Part	Page
6V-6942	1424		596		785		872
	1426		598		786		873
	1428	6V-8185	441		792		922
6V-6943	1424		447		793		926
	1426		461		798		996
	1428		467		816		1002
6V-7351	1044		711		840		1003
	1046		715		841		1064
6V-7357	933	6V-8186	440		846	6V-8455	1054
	937		441		850	6V-8556	774
	941		446		852		780
	945		460		854		786
	951		466		859		794
	1388	6V-8187	234		876	6V-8625	106
	1428		447		879		110
6V-7359	495		467		922		115
	499	6V-8188	237		926		186
	503		356		927		188
	509		360		996		190
	515		679		997		192
6V-7419	1424		1268		1003		194
	1426		1278		1008		197
	1428	6V-8198	526		1009		198
	1430	6V-8210	1266		1014		480
	1432	6V-8237	824		1015		499
6V-7587	485		960		1020		502
	486		962		1062		508
6V-7611	1058		964		1064		514
6V-7636	1308		966		1068		773
6V-7646	1380		968		1069		779
6V-7673	1038		970		1070		785
6V-7681	96	6V-8287	136		1072		793
6V-7687	484		137	6V-8398	106		818
	704	6V-8336	1038		110		820
	711	6V-8337	1038		114		850
	715	6V-8362	370		115		852
	719		1347		125		1064
	723	6V-8365	461		144		1067
	727	6V-8369	371		192	6V-8626	186
	752		1346		194		188
6V-7727	228	6V-8376	447		197		190
	230		461		198		192
6V-7728	1252		467		203		194
6V-7732	1054	6V-8378	440		294		197
6V-7743	766		441		296		198
	768		446		479		773
	933		460		480		779
	937		466		494		785
	941	6V-8397	106		498		793
	945		110		502	6V-8627	830
	951		114		508		832
6V-7744	1032		144		514		836
	1054		452		784	6V-8634	818
	1058		456		785		820
	1292		494		792		879
	1325		542		793	6V-8635	495
6V-7951	866		552		800		499
	868		556		816		503
	870		560		818		509
	1040		564		820		515
	1042		772		830		854
6V-8004	596		773		832		859
	598		778		836		922
6V-8097	1054		779		850		927
6V-8149	544		784		852		1002

► **PRIMARY REFERENCE**

PART NUMBER INDEX

Part	Page
6V-8636	452
	456
	772
	773
	778
	779
	785
	793
	808
	840
	846
	876
	997
	1003
	1062
	1067
	1068
	1069
	1070
6V-8637	228
	230
	772
	773
	778
	779
	785
	793
	800
	846
	1067
6V-8639	294
	479
	816
	818
	820
	830
	832
6V-8641	551
6V-8642	294
	773
	779
	784
	792
6V-8672	766
	768
6V-8675	596
	598
	1359
6V-8714	494
	498
	502
	508
	514
	996
6V-8716	494
	498
	504
	800
	996
	1002
6V-8722	772
	778
	786
	794
6V-8723	495
	850
	852
6V-8724	552
	846
	922
	927
	997
	1003
	1009
	1015
	1069
	1070
6V-8777	826
	827
	833
6V-8781	144
	1064
	1069
	1070
	1073
6V-8782	830
	832
	836
	922
	926
6V-8784	854
	858
6V-8801	94
	312
	1268
6V-8837	1038
	1252
6V-8926	1008
	1014
6V-8928	1264
6V-8936	800
6V-8942	773
	779
	785
	793
6V-8946	494
6V-8988	1064
6V-8997	773
	779
	786
	793
	854
	859
6V-9001	556
	560
	564
	773
	779
	785
	793
	808
	876
	1072
6V-9002	774
	780
	785
	793
	872
	873
	997
	1003
6V-9004	495
	499
	503
	509
	515
	854
	859
6V-9005	997
	1003
6V-9007	228
	230
	495
	499
	800
	854
	859
	1067
6V-9008	502
	508
	514
	774
	780
	785
	793
	800
	854
	859
	1002
	1009
	1015
	1021
6V-9027	120
	145
	1280
6V-9168	542
6V-9169	1064
6V-9170	1252
6V-9182	504
	510
	516
	785
	798
	800
	826
	846
	872
	996
	1002
	1021
6V-9200	1073
6V-9327	1390
	1394
	1398
	1402
	1406
6V-9343	786
	798
6V-9497	380
	439
	440
	447
	461
	467
	488
6V-9505	570
	572
6V-9632	314
	402
	440
	460
	466
	568
	818
	932
	933
	937
	941
	945
	951
	976
	978
	980
	984
	988
	992
	1253
	1256
	1258
	1266
	1297
	1298
	1304
	1308
	1340
	1342
	1344
	1346
	1357
	1391
	1395
	1398
	1402
	1406
6V-9746	228
	230
	494
	498
	503
	504
	509
	515
	516
	772
	773
	778
	779
	784
	785
	786
	792
	793
	794
	798
	800

► **PRIMARY REFERENCE**

PART NUMBER INDEX

Part	Page
	826
	827
	833
	846
	854
	858
	859
	872
	996
	1002
	1008
	1009
	1014
	1015
	1020
	1021
6V-9769	120
6V-9807	553
6V-9809	203
6V-9829	1069
	1070
	1073
6V-9836	816
6V-9837	144
	1064
6V-9839	773
	779
	786
	793
6V-9840	1002
	1009
	1015
	1021
6V-9843	854
	859
6V-9847	996
6V-9850	808
	850
	852
	879
	1073
6V-9851	479
	773
	779
	785
	793
	830
	832
	836
	1064
6V-9853	495
	499
	503
	509
	515
	773
	779
	785
	793
	800
6V-9854	495
	499
	503
	509
	515
	997
	1004
	1008
	1009
	1014
	1015
	1021
6V-9872	1073
6V-9873	144
	479
	1064
6V-9876	816
6W-1140	668
6W-3275	1308
6W-6368	476
6W-6672	382
	386
	390
	394
	398
6W-8259	526
6W-8399	524
6W-8400	524
6W-8401	524
6W-8906	1357
6Y-0311	1187
6Y-0312	1187
6Y-0724	660
6Y-0725	659
	660
6Y-0726	659
	660
6Y-0727	660
6Y-0728	660
6Y-0729	659
6Y-0744	660
6Y-0789	666
6Y-2553	1218
6Y-4280	1038
6Y-5373	▶1225
6Y-5877	579
	585
6Y-6354	▶1226
6Y-6356	▶1235
6Y-6370	632
	636
	641
	645
6Y-6965	589
	▶647
6Y-6966	▶578
	▶584
	647
6Y-6967	▶482
	647
6Y-6968	▶548
	647
6Y-6969	▶544
	647
6Y-7198	632
	636
	640
	644
6Y-7220	579
6Y-7260	578
6Y-7269	578
	584
6Y-8167	632
	636
	640
	644
6Y-9347	591
6Y-9816	592
6Y-9960	70
6Y-9980	604
	7
7B-2742	213
	214
7B-2805	1054
	1058
7B-3028	545
	1446
7B-3039	1054
	1058
7B-3235	42
	60
	579
	585
7B-5684	896
7B-7525	1366
	1372
	1376
7C-0204	72
	74
7C-2318	83
7C-2615	222
	223
	224
	225
7C-2870	216
	220
7C-3258	46
	50
7C-3260	50
7C-3261	46
7C-3565	118
	130
7C-3722	24
	26
7C-4164	43
7C-4165	43
7C-4354	203
	376
7C-6209	19
	20
7C-7677	204
	208
7C-7678	204
	208
7C-7909	152
	154
7C-7910	152
	154
7C-8199	152
	154
7C-8246	50
7C-9217	84
	88
7C-9597	128
7C-9770	146
	148
7D-1553	376
	406
	412
7D-1649	1032
7D-6608	742
	744
7D-6954	84
	88
7D-7233	406
	412
	495
	499
	503
	509
	515
	772
	778
	786
	794
7D-8508	1072
7D-8793	114
7D-9766	60
7E-0275	50
7E-0854	42
7E-1397	162
	163
	164
7E-1815	184
7E-2580	222
	223
	224
	225
7E-2631	62
	64
7E-2674	1446
7E-2681	1446
7E-4227	395
	399
7E-4609	39
	41
7E-4721	69
7E-4722	5
	▶69
7E-4838	60
7E-4839	60
7E-5324	52
7E-5326	382
	386
	390
	394
	398
7E-5335	83
	92
7E-5338	92
7E-5346	213
7E-5639	54
	55
7E-5862	29
7E-5910	1446
7E-6016	99

▶ **PRIMARY REFERENCE**

PART NUMBER INDEX

Part	Page
	128
	382
	386
	390
	394
	398
7E-6017	128
7E-6508	72
	74
7E-6830	372
7E-6872	4
	▶59
7E-8098	5
	▶372
7E-9171	144
7E-9218	5
	▶120
7E-9584	122
7E-9784	14
7F-0560	236
7F-1866	97
7F-2050	118
	130
	132
7F-3425	122
	125
7F-3488	356
	360
7F-3491	356
	360
7F-3525	356
	360
7F-4950	1180
	1182
	1183
	1184
	1185
	1186
	1187
	1188
	1189
	1190
	1191
7F-7621	234
7F-7983	802
	804
7F-8607	618
	622
	626
	628
7F-8698	222
	223
	224
	225
7F-9090	78
	80
	184
7F-9223	710
	714
	718
	722
	751
7G-3467	578
	584
7G-3468	579
	585
7G-3470	579
	585
7G-3833	494
	498
	502
	508
	514
7G-3834	494
	498
	502
	508
	514
7G-4842	660
7G-4998	538
	539
7G-6713	78
	80
7G-7053	402
	980
	984
	988
	992
7G-7741	578
	584
7G-7742	578
7G-7744	579
	585
7G-7745	578
	584
7G-7917	406
	416
	420
	424
	428
	432
7G-7918	406
7G-7919	406
7G-7920	406
7G-8478	136
	137
7G-8839	840
	846
7G-9922	578
7H-1495	520
7H-2444	125
7H-7055	495
7H-9678	184
7I-0008	840
	844
	845
7I-0009	840
	844
	845
7I-3652	441
	447
	461
	467
7I-3722	1323
7I-4078	808
7I-7609	1234
7J-0204	407
	412
	416
	420
	424
	428
	432
	452
	456
	666
	811
7J-0401	520
7J-0402	520
7J-1089	904
	908
	912
	916
7J-2656	1054
7J-2927	904
	908
	912
	916
7J-5225	1054
	1058
7J-5311	920
7J-5544	1054
7J-7423	904
	908
	1085
7J-7852	1072
	1078
7J-8893	1036
7J-8894	1036
7J-8902	354
7J-9017	1036
7J-9108	184
	192
	194
	197
	198
	203
	294
	296
	772
	778
	785
	786
	792
	793
	794
7K-1181	376
	402
	406
	412
	441
	447
	461
	467
	980
	984
	988
	992
	1306
	1390
	1394
	1398
7K-1401	840
	846
7K-1402	840
	846
7K-3176	1252
7K-3262	1264
7K-3377	204
	208
7K-4201	1264
7K-8876	545
	550
7K-8877	545
	550
7K-9204	758
	760
7L-2894	356
	360
7L-3385	633
	637
	641
	645
7L-6326	184
7L-6443	158
	160
7L-6463	854
	858
7L-7524	122
7L-8170	1351
7L-9061	885
	894
	1038
	1087
7M-0324	356
	360
7M-0325	356
	360
7M-0326	356
	360
7M-0327	356
	360
7M-1297	538
	539
7M-1674	753
	754
7M-1808	85
	89
7M-4672	184
7M-5130	550
	578
	584
	904
	908
	912
	916
7M-5839	482
	544
7M-7273	170
7M-8322	551
7M-8480	578
	584
7M-8485	62
	64
	94
	178
	228
	230
	474
	476

▶ **PRIMARY REFERENCE**

PART NUMBER INDEX

Part	Page	Part	Page	Part	Page	Part	Page
	494	7N-0140	352	7N-4928	122	7N-9023	234
	498	7N-0719	237	7N-4930	99	7N-9737	1274
	502		▶365	7N-4939	124	7N-9943	300
	503	7N-1628	184	7N-4940	124	7P-4937	1388
	504	7N-1819	30	7N-4945	13	7S-1201	766
	508	7N-1902	30		124		768
	509		32	7N-4951	12	7S-1801	527
	510		34		17		528
	514		35	7N-4952	12	7S-2962	545
	515		39		17	7S-3997	758
	516		40	7N-5049	97	7S-4001	758
	524		41	7N-5057	97	7S-4002	758
	552	7N-1961	36	7N-5080	152		760
	556		37		154	7S-6369	960
	560		38	7N-5094	92		964
	564	7N-2003	19	7N-5239	50	7S-6892	633
	618		20	7N-5244	43		637
	622	7N-2043	66	7N-5245	50		641
	626		97	7N-5246	50		645
	628	7N-2044	24	7N-5254	8	7S-6997	659
	692		26	7N-5263	50	7S-7018	550
	694	7N-2046	21	7N-5274	236		578
	696	7N-2047	24	7N-5279	46		584
	773		26	7N-5395	62	7S-8491	904
	779		46		64		908
	785		50	7N-5413	84		1085
	786		56		88	7S-8553	901
	793	7N-2049	24	7N-5416	84	7S-8767	124
	798		26		88	7S-8817	165
	800	7N-2256	382	7N-5417	62	7S-8920	552
	826		386		64		556
	827		390	7N-5418	62		560
	833		394		64		564
	846		398	7N-5449	97	7S-8921	552
	854	7N-2326	59	7N-5487	222		556
	858	7N-2328	59		223		560
	859	7N-2405	66		224		564
	866	7N-2597	60		225	7S-9323	184
	868	7N-2867	460	7N-5641	24	7T-0020	300
	870		466		26	7T-0969	1303
	872	7N-3049	58		28	7T-0970	1303
	882	7N-3170	14	7N-5876	376	7T-1099	310
	896	7N-3218	11		1346		690
	922	7N-3297	120	7N-6494	354		710
	927	7N-3298	13	7N-6806	205		714
	996	7N-3368	120		209		718
	1002	7N-3718	406	7N-6983	8		722
	1004		412	7N-7539	46		726
	1008		416	7N-7559	92		1253
	1014		420	7N-7628	118		1266
	1020		424		130		1304
	1021		428		132		1357
	1040		432	7N-7697	85		1359
	1042		1424		89	7T-1159	106
	1072		1426	7N-7779	1274		110
	1078		1428	7N-7780	1274	7T-3264	703
	1082		1430	7N-7878	118	7T-4083	618
	1090		1432		130		622
	1095	7N-4319	14		132		626
7M-8651	356	7N-4320	14	7N-8268	136		628
	360	7N-4758	136	7N-8374	46	7T-4306	1264
7M-8798	773		137	7N-8527	98		1294
	779	7N-4782	72	7N-8715	5	7T-4532	1272
	786		74		▶96		1274
	794	7N-4927	103	7N-9021	234		1275

▶ **PRIMARY REFERENCE**

PART NUMBER INDEX

Part	Page
	1276
7T-6515	94
7T-6799	370
7T-7370	332
7T-8331	106
	110
	114
	730
	734
	738
	840
	846
	1354
7T-8890	1422
	1423
7T-9123	357
	361
7T-9302	371
7T-9755	1038
7U-1903	1323
7U-4898	1366
	1372
	1376
7V-0445	1390
	1394
	1398
7V-0638	228
	230
7V-4250	94
7V-5231	758
	760
7V-8346	762
	764
7V-9275	440
	447
	461
	467
7V-9514	524
7W-0050	97
7W-0051	97
7W-0053	96
	▶97
7W-0059	98
7W-0659	70
7W-1102	43
7W-1484	1448
7W-1855	128
7W-1856	84
	88
7W-1857	128
7W-1928	100
7W-2122	204
	208
7W-2378	4
	▶16
7W-2425	70
7W-2478	162
	163
	164
7W-2947	5
	▶95
7W-3145	154
7W-3541	124
7W-3556	216
	220
7W-3813	5
	▶68
7W-4379	84
	88
7W-5300	296
7W-5780	4
	▶55
7W-5994	62
	64
7W-6492	64
	382
	386
	390
	394
	398
7W-8145	156
	158
	160
7W-8154	▶298
7W-8155	▶299
7X-0294	1320
7X-0321	1372
	1376
7X-0326	545
7X-0334	1268
	1278
7X-0345	1268
7X-0346	576
7X-0349	633
	637
	641
	645
7X-0387	703
7X-0390	494
	498
	502
	508
	514
7X-0448	1268
7X-0490	1252
7X-0515	102
	730
	734
	738
	1300
7X-0517	553
	557
	561
	565
7X-0540	102
7X-0546	1308
7X-0550	956
7X-0562	356
	360
7X-0575	1398
7X-0583	708
7X-0589	1372
	1376
7X-0590	106
	110
	114
	711
	715
	719
	723
	727
	730
	734
	738
	956
	958
	1282
	1300
	1354
7X-0595	702
7X-0608	1351
	1352
7X-0616	677
	678
	748
7X-0618	1180
	1182
	1183
	1184
	1185
	1186
	1187
	1188
	1189
	1190
	1191
	1300
7X-0751	460
	466
7X-0766	1292
7X-0772	417
	421
	425
	429
	433
7X-0794	890
	892
7X-0818	440
	446
	460
	466
	618
	622
	626
	628
7X-1062	352
7X-1078	353
7X-1387	1372
	1376
7X-1548	544
7X-2031	1390
	1394
	1402
7X-2459	1008
	1014
	1020
7X-2465	604
7X-2475	922
	927
7X-2495	618
	622
	626
	628
7X-2497	1308
7X-2533	1312
7X-2534	1316
7X-2535	1402
7X-2546	1406
	592
	1072
	1078
7X-2548	312
7X-2549	552
	556
	560
	564
	758
	1009
	1015
	1022
	1072
	1078
7X-2550	495
	499
	503
	509
	515
7X-2552	1136
	1138
7X-2553	106
	110
	114
	553
	557
	561
	565
	618
	622
	626
	628
	702
	730
	734
	738
	996
	1002
	1032
	1300
7X-2554	923
	927
	1146
7X-2555	1026
	1028
	1140
	1142
	1148
7X-2557	758
7X-2558	760
7X-2563	618
	622
	626
	628
	689
	841
	847
	997
	1004
7X-2564	1051
	1052
7X-2575	680

▶ **PRIMARY REFERENCE**

PART NUMBER INDEX

Part	Page
	681
7X-2576	682
	683
	684
	685
	686
	690
	1152
7X-2578	70
7X-2583	1136
	1138
7X-2607	1082
7X-2619	945
	951
7X-2621	1424
7X-2634	150
7X-2906	817
7X-2910	866
	868
	870
	1040
	1042
7X-3229	1446
7X-3310	1308
	1398
	1402
	1406
7X-3319	1340
	1342
	1344
7X-3332	1360
	1361
7X-3373	357
	361
7X-3392	1008
	1014
	1020
7X-4736	182
	192
7X-4776	895
7X-4780	114
	436
7X-4803	822
7X-4805	24
	26
7X-4810	62
	64
7X-6315	248
	251
	253
	254
	255
	256
7X-7660	704
7X-7729	102
	106
	110
	114
	182
	192
	194
	237
	292
	294
	312
	690
	704
	706
	711
	715
	719
	723
	727
	730
	734
	738
	740
	750
	772
	778
	786
	794
	798
	826
	827
	837
	873
	956
	958
	980
	984
	988
	992
	1002
	1022
	1250
	1286
	1288
	1292
	1325
	1354
7X-7730	84
	88
7X-7731	24
	26
	28
7X-7925	21
	22
7X-7958	178
7Y-0336	703
7Y-0602	1224
7Y-1030	604
7Y-1976	143
7Y-3173	487
	488
	490
	1064
	1304
7Y-4038	922
	926
	1032
7Y-5243	1082
7Y-6371	1051
	1052
7Y-7256	1340
	1342
	1344
	1347

8

Part	Page
	204
8B-0544	208
8B-1419	704
8B-4884	742
8B-6349	604
8B-6375	578
	584
8C-3075	548
8C-3078	252
	257
8C-3085	902
	1071
8C-3089	357
	361
8C-3097	895
8C-3174	494
	498
	502
	508
	514
8C-3205	772
	778
	786
	794
8C-3206	773
	779
	786
	794
	855
	859
	904
	908
	922
	927
	997
	1004
8C-3210	1308
8C-3236	1359
8C-3309	830
	832
	836
8C-3334	374
	446
8C-3338	817
8C-3370	480
8C-3442	568
	570
	572
	1402
8C-3445	78
	80
8C-3446	78
	80
	530
	532
	534
	854
	858
	997
	1004
8C-3447	530
	532
	534
8C-3451	855
	859
	997
	1004
8C-3468	710
	714
	718
	722
	751
8C-4427	710
	714
8C-4428	710
	714
8C-4586	1252
8C-5236	136
	137
8C-5607	976
	978
	980
	984
	988
	992
8C-5608	976
	978
	980
	984
	988
	992
8C-6354	441
	447
	461
	467
	1347
8C-6358	236
8C-6515	996
	1002
8C-6711	1099
8C-6872	124
8C-6873	296
8C-7506	1390
	1394
8C-7508	487
	488
	490
8C-7528	416
	420
	424
	428
	432
8C-7531	766
	768
8C-7562	526
	762
	764
8C-7581	1303
8C-8418	251
8C-8451	976
	978
	980
	989
8C-8478	1032
8C-8988	495
	876
8C-8989	499
	503

► **PRIMARY REFERENCE**

PART NUMBER INDEX

Part	Page	Part	Page	Part	Page	Part	Page
	509		578	8J-1689	824		130
	515		585	8J-2043	1036		132
8C-9006	353	8E-8316	550	8J-2283	363	8M-1013	660
8C-9101	824		579	8J-2928	1192		664
8C-9130	960		585		1202	8M-2031	632
	964	8E-8328	640	8J-3415	312		636
8C-9136	960		644	8J-5914	996		641
	964	8E-9571	668		1002		645
8C-9660	357	8E-9727	552	8J-6273	805	8M-2530	52
	361		556	8J-6815	618	8M-2537	658
	487		560		622	8M-2770	376
	488		564		626		402
	490		▶658		628		406
8C-9987	1100	8E-9733	808	8J-8197	452		412
	1101	8E-9734	1009		456		416
8D-7942	72		1015	8J-8725	199		420
	74		1020		200		424
8D-9059	382	8E-9975	996		201		428
	386		1002		225		432
	390	8F-1434	357	8J-8782	1054	8M-2771	382
	394		361		1058		386
	398		1302	8J-8783	1054		390
8D-9947	182	8F-1462	1338		1058		394
	192	8F-1610	524	8J-9841	▶1241		399
8E-0456	538	8F-3469	1054	8J-9842	▶1227		933
	539		1058	8J-9917	972		937
8E-0985	578	8F-4225	544	8K-2692	548		941
	584	8F-6230	524	8L-2786	92		945
8E-1717	482		578		100		951
8E-3026	660		584		346	8M-2772	374
8E-3095	653	8F-7219	1049		347		452
8E-3759	▶1218	8F-8151	124		382		456
8E-4295	640		1322		386		666
	644	8F-8178	216		390		740
8E-4320	666		220		394		742
8E-4387	666	8F-8513	773		398		744
8E-4928	482		779		632	8M-2773	106
8E-4929	482		786		636		110
8E-5050	544		794		640		237
8E-5051	545	8F-8544	125		644		407
8E-5052	544	8G-0841	710		1098		412
8E-5055	544		714	8L-5008	742		436
8E-5056	544		718		744		850
8E-5061	578		722	8L-5922	492		852
	584		726	8L-6565	1071	8M-3175	62
8E-5070	544	8G-5258	708		1073		64
8E-5117	544	8H-2778	184		1078		83
8E-5641	545	8H-3532	896	8L-8413	932		94
8E-5920	544		1090		936	8M-3267	1410
8E-6255	659		1095		940		1414
8E-6398	▶659	8H-5303	365		944		1418
	666	8H-5306	365		950	8M-4432	492
8E-6433	660	8H-7202	184		1304	8M-4443	552
8E-6678	545	8H-7521	545		1410		557
8E-6830	545	8H-9189	659		1414		561
8E-7003	544	8H-9513	664		1418		565
8E-7184	578	8J-0101	1036	8L-9765	1446	8M-4446	664
	584	8J-0217	1036	8M-0456	440	8M-4986	552
8E-7249	482	8J-0218	1036		446		557
8E-7253	482	8J-0237	1036		460		561
8E-7366	520	8J-0331	896		466		565
8E-7841	666		1090	8M-0505	118		658
8E-7842	666		1095		130	8M-4992	482
8E-7898	579	8J-0412	1036		132	8M-5127	552
8E-8310	550	8J-1688	824	8M-0755	118		557

▶ **PRIMARY REFERENCE**

PART NUMBER INDEX

Part	Page
	561
	565
8M-5249	664
8M-5254	553
	557
	561
	565
8M-5255	12
	17
	43
	46
	50
	56
8M-6393	538
	539
8M-6802	887
8M-7066	144
8M-8157	482
	553
	557
	561
	565
8M-8489	592
8M-8659	544
8M-8948	440
	446
	460
	466
8M-8997	544
8M-9024	84
	88
	1280
8N-0386	124
8N-0788	118
	130
	132
8N-0869	236
	237
8N-0896	49
8N-1513	406
8N-1514	406
8N-1515	406
8N-1517	406
8N-1518	406
8N-1519	406
8N-1520	406
8N-1521	406
8N-1522	406
8N-1535	416
	420
	424
	428
	432
8N-1725	236
8N-2001	78
8N-2802	46
8N-2929	84
	88
8N-3639	122
8N-3640	122
8N-3653	184
8N-4263	4
	►12
8N-4387	9
8N-4524	120
8N-4707	21
8N-6151	5
	►218
	►219
8N-6423	134
	135
8N-7174	4
	►50
8N-7182	4
	►42
8N-7197	72
	74
8N-7294	802
	804
8N-7296	66
8N-7639	120
8N-7641	124
8N-7763	5
	►213
8N-8056	24
	26
8N-8085	5
	►134
	►135
8N-8089	124
8N-8846	143
8N-9164	95
	►98
8N-9528	120
8N-9885	16
	17
	1270
	1278
	1280
8N-9992	13
8N-9993	13
8P-3133	579
	585
8P-3134	579
	585
8P-3251	545
8P-5141	1252
8P-5839	578
	584
8P-6222	579
	585
8P-6225	579
8P-6292	578
	584
8P-6302	579
	585
8P-7242	579
	585
8P-7243	579
	585
8P-7246	578
	584
8P-9296	660
8P-9475	1390
	1394
	1402
8P-9569	579
	584
8R-0126	1294
8R-0739	1266
8R-2014	854
	858
8R-2972	755
	756
8R-5518	589
	►758
8R-5529	258
	►310
8R-5535	1261
	1262
	►1424
	►1426
	►1428
8R-5637	1
	►708
8R-5645	258
	►316
	►317
	►318
8R-5846	354
8R-6128	1357
8R-6359	290
8R-7034	603
8R-7036	601
	602
	►603
8R-7102	314
8R-7723	854
	858
	997
	1004
8R-7858	710
	714
	718
	722
	726
8R-8513	596
	598
8R-9137	152
	165
	1320
8R-9312	544
	596
	598
8R-9768	1256
	1258
8S-0490	758
	760
8S-0617	545
8S-0768	420
	618
	622
8S-0934	1364
8S-0948	552
	557
	561
	564
	772
	773
	778
	779
	786
	794
8S-2225	766
	768
8S-2331	52
8S-2634	236
8S-3746	1448
8S-4212	1448
8S-4710	216
	220
8S-4757	42
8S-5383	60
	1268
	1270
8S-6109	1250
8S-6110	1250
8S-7803	1366
	1372
	1376
8S-8158	248
	251
8S-9089	62
	125
8S-9191	100
8T-0075	1064
	1073
8T-0078	772
	778
	784
	792
8T-0083	854
	858
8T-0099	24
	26
8T-0122	174
8T-0249	800
8T-0267	806
8T-0269	484
	485
	486
8T-0281	600
	648
8T-0288	976
	978
	980
	984
	988
	992
8T-0318	1308
8T-0328	234
	357
	361
	932
	936
	940
	944
	950
	1302
	1380
8T-0337	301
	302
	303
	305
8T-0369	972
8T-0372	1038
8T-0389	237
8T-0667	824
8T-0668	960
	962

► **PRIMARY REFERENCE**

PART NUMBER INDEX

Part	Page
	964
	966
	968
	970
8T-0722	1058
	1383
	1384
8T-0723	484
	485
	486
8T-0741	808
8T-0789	1424
	1426
8T-1119	1424
	1426
8T-1482	686
8T-1674	1020
8T-1685	1002
8T-1686	836
8T-1885	130
	132
8T-1886	130
	132
8T-1919	128
8T-2153	50
8T-2223	904
	908
	912
	916
8T-2225	335
8T-2275	1055
	1058
8T-2501	1410
	1414
	1418
8T-2561	1320
8T-2659	1390
	1394
	1402
8T-2928	21
	22
	24
	26
8T-2929	21
	22
	24
	26
8T-3298	1054
	1058
8T-3312	1008
	1014
	1020
8T-3391	1264
8T-3392	1264
8T-3490	114
	138
	140
	142
	296
	312
	314
	374
	406
	412
	416
	417
	420
	421
	424
	425
	428
	429
	432
	433
	440
	452
	456
	460
	466
	494
	498
	503
	509
	515
	530
	689
	690
	703
	710
	711
	714
	715
	718
	719
	722
	723
	726
	727
	784
	816
	818
	840
	846
	976
	978
	980
	984
	988
	992
	1032
	1062
	1082
	1256
	1258
	1266
	1286
	1288
	1290
	1354
	1357
	1359
	1372
	1376
	1398
	1406
	1414
	1424
	1426
	1428
	1430
	1432
8T-3597	122
	180
	188
	190
	440
	460
	466
	494
	498
	503
	509
	515
	530
	534
	673
	674
	675
	676
	677
	678
	683
	684
	685
	686
	690
	710
	711
	714
	715
	718
	719
	722
	723
	726
	727
	730
	734
	738
	800
	840
	845
	846
	874
	922
	926
	1008
	1009
	1014
	1015
	1286
	1300
	1332
	1354
8T-3612	710
	714
	718
	722
	726
	1308
	1357
	1388
	1391
	1395
	1398
8T-3635	440
	460
	466
	699
	700
	1357
8T-3647	1388
8T-3851	692
	694
	696
	698
	1054
	1128
	1130
8T-4001	70
8T-4121	106
	110
	114
	138
	140
	143
	144
	165
	178
	180
	190
	203
	236
	294
	296
	301
	302
	303
	312
	314
	316
	317
	318
	373
	374
	376
	402
	406
	412
	416
	420
	424
	428
	432
	436
	440
	446
	452
	456
	460
	466
	479
	480
	495
	499
	503
	509
	515
	530
	532

► **PRIMARY REFERENCE**

PART NUMBER INDEX

Part	Page	Part	Page	Part	Page	Part	Page
	534		1290		570		988
	551		1294		572		992
	553		1297		730		1002
	557		1298		734		1022
	561		1304		738		1286
	565		1312		740		1288
	688		1316		750		1290
	690		1320		830		1320
	723		1322		833		1322
	727		1323		837		1325
	730		1346		855		1354
	740		1354		859		1388
	742		1383		1062		1391
	744		1384		1264		1395
	772		1388		1297	8T-4137	106
	773		1401		1298		110
	778		1424		1320		114
	779		1426		1346		143
	786		1428		1388		165
	794		1430		1424		178
	800		1432		1426		180
	816	8T-4122	576		1428		190
	818		708		1430		203
	820		1072		1432		236
	830		1078	8T-4134	452		310
	833		1082		456		312
	837		1268		1403		314
	841	8T-4123	604		1406		373
	844		618	8T-4136	237		374
	847		622		374		376
	850		626		406		402
	852		628		412		406
	855		683		417		412
	859		684		421		416
	904		685		425		420
	908		703		429		424
	923		704		433		428
	927		706		440		432
	956		708		446		436
	958		841		460		440
	976		847		466		446
	978		997		504		452
	980		1004		510		456
	984		1032		516		460
	988		1051		530		466
	992		1052		532		495
	997	8T-4128	551		591		499
	1004	8T-4133	106		690		503
	1009		110		772		509
	1015		114		773		515
	1022		165		778		534
	1032		294		779		551
	1062		296		786		688
	1064		301		794		723
	1073		302		798		727
	1078		303		800		740
	1082		314		820		742
	1250		376		826		744
	1252		436		827		772
	1256		504		837		773
	1258		553		873		774
	1264		557		923		778
	1284		561		927		779
	1286		565		976		780
	1288		568		978		786

► **PRIMARY REFERENCE**

PART NUMBER INDEX

Part	Page
	794
	830
	833
	837
	850
	852
	923
	927
	976
	978
	980
	984
	988
	992
	1064
	1082
	1252
	1256
	1258
	1284
	1294
	1346
	1426
	1428
	1430
	1432
8T-4138	441
	447
	461
	467
	484
	485
	486
	976
	978
	980
	988
	1308
	1346
	1398
	1406
	1430
	1432
8T-4139	104
	162
	163
	164
	192
	290
	495
	499
	503
	509
	515
	534
	553
	557
	561
	565
	680
	681
	682
	683
	684
	685
	686
	690
	711
	715
	719
	723
	727
	730
	734
	738
	758
	760
	772
	774
	778
	780
	786
	794
	841
	847
	850
	852
	855
	859
	923
	927
	997
	1004
	1009
	1015
	1022
	1072
	1078
	1180
	1182
	1183
	1184
	1185
	1186
	1187
	1188
	1189
	1190
	1191
	1300
	1354
8T-4140	841
	847
	997
	1004
	1026
	1028
	1030
	1032
	1072
	1078
	1082
	1332
8T-4141	703
8T-4149	495
	499
	504
	510
	516
	800
8T-4157	1308
8T-4158	1308
8T-4160	1308
8T-4167	70
	604
	680
	681
	682
	683
	684
	685
	686
	690
	1152
	1332
8T-4171	1253
8T-4172	162
	163
	164
	830
	833
	837
	956
	958
	1320
8T-4173	1032
8T-4176	800
8T-4177	568
	570
	572
8T-4178	553
	557
	561
	565
8T-4179	182
	192
	312
	374
	452
	456
	495
	499
	503
	509
	515
	773
	779
	786
8T-4181	1308
8T-4182	980
	984
	997
	1004
8T-4183	162
	163
	164
	290
	495
	499
	503
	509
	515
	527
	528
	530
	532
	534
	553
	557
	561
	565
	677
	678
	727
	730
	734
	738
	748
	774
	780
	786
	794
	855
	859
	904
	908
	912
	916
	923
	927
	997
	1004
	1009
	1015
	1022
	1054
	1058
	1264
	1300
8T-4184	752
	822
	830
	833
	837
	841
	847
	855
	859
	997
	1004
	1009
	1015
	1022
	1026
	1028
	1032
	1072
	1078
	1082
8T-4185	102
	294
	296
	495
	499
	503
	509
	515
	715
	719
	723

► **PRIMARY REFERENCE**

PART NUMBER INDEX

Part	Page
	727
	774
	780
	786
	794
	830
	833
	837
	1062
	1096
	1256
	1258
8T-4186	114
	138
	140
	142
	237
	312
	704
	706
	718
	722
	726
	786
	794
	956
	958
	980
	984
	996
	1003
	1032
	1320
	1323
8T-4189	351
	376
	766
	768
	808
	1252
	1256
	1258
	1264
	1294
	1302
	1346
	1349
	1391
	1395
	1398
	1402
	1406
8T-4191	376
	440
	446
	460
	466
	520
	818
	1264
	1294
	1304
	1312
	1316
	1340
	1342
	1344
	1424
	1426
	1428
	1430
	1432
8T-4192	162
	163
	164
	180
	182
	188
	190
	194
	228
	230
	291
	292
	452
	456
	773
	774
	779
	780
	786
	794
	822
	1009
	1015
	1022
8T-4193	553
	557
	561
	565
	604
	618
	622
	626
	628
	841
	847
	997
	1004
	1008
	1014
	1022
	1064
	1142
	1148
	1152
8T-4194	495
	499
	503
	509
	515
	553
	557
	561
	565
	723
	730
	734
	752
	841
	847
	904
	908
	912
	916
	956
	958
	997
	1003
	1026
	1028
	1032
8T-4195	102
	106
	110
	114
	142
	144
	162
	163
	164
	182
	192
	194
	292
	294
	296
	316
	317
	318
	376
	495
	499
	503
	509
	515
	553
	557
	561
	565
	690
	704
	706
	711
	715
	719
	723
	727
	730
	734
	738
	774
	780
	786
	794
	818
	820
	830
	833
	837
	841
	847
	855
	859
	988
	992
	997
	1004
	1292
	1398
	1402
	1406
8T-4196	479
	480
	495
	499
	503
	509
	516
	553
	557
	561
	565
	772
	773
	778
	779
	786
	794
	830
	833
	837
	844
	904
	908
	923
	927
	1008
	1014
	1022
	1250
	1264
	1284
8T-4198	373
	553
	557
	561
	565
8T-4199	1032
8T-4200	376
	1283
	1391
	1395
	1402
	1406
8T-4205	228
	230
	234
	306
	309
	316
	317
	356
	360
	447
	452
	456
	467
	933
	937

► **PRIMARY REFERENCE**

PART NUMBER INDEX

Part	Page
	941
	1072
	1252
	1284
	1308
	1312
	1316
	1340
	1342
	1344
	1346
	1380
	1388
	1391
	1395
	1398
	1402
	1406
8T-4219	1054
8T-4222	102
	142
	715
	719
	723
	727
	1388
	1398
	1430
	1432
8T-4223	102
	104
	182
	192
	237
	290
	312
	354
	374
	376
	417
	421
	425
	429
	433
	440
	446
	452
	456
	460
	466
	495
	499
	503
	510
	516
	527
	528
	530
	532
	534
	553
	557
	561
	565
	668
	679
	680
	681
	682
	686
	690
	708
	711
	715
	719
	723
	727
	734
	738
	758
	760
	766
	768
	772
	773
	774
	778
	779
	780
	786
	794
	800
	822
	830
	833
	837
	841
	845
	847
	850
	852
	855
	859
	872
	873
	904
	908
	912
	916
	923
	927
	997
	1004
	1008
	1009
	1014
	1015
	1022
	1026
	1028
	1032
	1054
	1058
	1072
	1078
	1082
	1264
	1268
	1278
	1300
	1308
	1354
	1391
	1395
8T-4224	236
	312
	314
	351
	376
	416
	420
	424
	428
	433
	568
	570
	572
	618
	622
	626
	628
	651
	652
	771
	808
	818
	850
	852
	976
	978
	980
	984
	988
	992
	1032
	1256
	1258
	1266
	1283
	1302
	1303
	1346
	1349
	1358
	1388
	1390
	1394
	1399
	1406
8T-4226	711
	715
	718
	722
	726
8T-4244	237
	290
	376
	440
	446
	460
	466
	553
	557
	561
	565
	704
	774
	780
	786
	794
	830
	833
	837
	874
	923
	927
	956
	996
	1002
	1032
	1300
	1402
	1406
8T-4648	106
	110
	114
	495
	499
	503
	509
	515
	530
	532
	534
	923
	927
	1008
	1014
	1022
	1032
	1354
8T-4649	604
	1332
8T-4657	862
8T-4745	1308
8T-4747	1308
8T-4750	1038
8T-4766	1388
8T-4896	94
	146
	148
	440
	446
	460
	632
	636
	641
	645
	668
	1264
	1268
8T-4908	236
	618
	622
	818
	978
	984
	992
	1388

► **PRIMARY REFERENCE**

PART NUMBER INDEX

Part	Page
	1391
	1395
8T-4910	102
	495
	499
	504
	510
	516
	557
	561
	565
	711
	715
	719
	723
	727
	730
	734
	738
	794
	841
	847
	1008
	1014
	1022
	1282
	1300
	1354
8T-4944	866
	868
	870
	1040
	1042
8T-4956	106
	110
	114
	514
	536
	553
	557
	561
	565
	690
	704
	706
	708
	766
	768
	800
	845
	923
	927
	997
	1004
	1008
	1014
	1022
	1032
	1064
	1282
	1325
8T-4970	933
	937
	941
	945
	951
8T-4971	808
	936
	940
	945
	951
	1292
8T-4983	106
	110
	114
	143
8T-4985	104
8T-4986	104
	228
	230
8T-5001	760
8T-5004	710
	714
	718
	722
	751
8T-5005	165
	592
	711
	715
	719
	800
	855
	859
	998
	1004
8T-5027	1264
8T-5039	1038
8T-5041	830
	833
	837
	872
	873
8T-5089	548
	550
8T-5357	237
8T-5360	1363
	1364
	1365
8T-5379	680
	681
	683
	684
	686
8T-5389	1008
	1014
	1021
8T-5400	1424
	1426
	1428
8T-5412	864
8T-5413	1266
8T-5429	106
	110
	115
8T-5436	1073
	1078
8T-5439	689
8T-5460	704
	706
8T-5878	677
	678
	748
8T-5913	1422
	1423
8T-5914	1422
	1423
8T-6338	1064
8T-6376	920
8T-6383	922
	926
8T-6385	758
	760
8T-6411	316
	317
	318
8T-6430	604
	703
	996
	1003
8T-6453	773
	779
	785
	793
8T-6462	1126
	1127
8T-6466	144
	495
	499
	504
	510
	516
	723
	727
	772
	778
	786
	794
	816
	840
	847
	855
	859
	876
	997
	1003
	1072
	1320
8T-6594	1034
8T-6684	774
	780
	785
	793
	1002
	1009
	1015
	1021
8T-6685	855
	859
8T-6693	766
	768
8T-6701	106
	110
8T-6703	178
8T-6749	960
	962
	964
	966
	968
	970
8T-6757	43
	46
	1073
	1078
8T-6758	58
	125
8T-6759	30
	34
	35
	36
	40
	41
	43
	46
8T-6761	13
	62
	64
	125
8T-6762	24
	26
	28
	58
	84
	88
	99
	120
	152
	154
8T-6763	24
	26
	28
	56
8T-6764	152
	154
8T-6765	14
	58
	84
	88
	99
	122
	136
	137
8T-6767	122
	125
	180
	182
	188
	190
	192
	228
	230
	382
	386
	390
	394
	398
8T-6868	228
	230
	711
	715

► **PRIMARY REFERENCE**

PART NUMBER INDEX

Part	Page
	719
	723
	727
	956
	958
	1008
	1014
	1022
8T-6869	416
	420
	424
	428
	433
	651
	652
	850
	852
	980
	984
	988
	992
	1399
8T-6870	1302
	1303
8T-6876	830
	832
	836
8T-6907	854
	858
	1008
	1014
	1020
8T-6912	310
	312
	314
	1303
8T-6974	402
8T-7058	1008
	1014
	1022
8T-7087	923
	927
8T-7338	708
	980
	984
	988
	992
8T-7529	407
	412
	840
	847
8T-7547	766
	768
	976
	980
	988
8T-7566	1334
8T-7876	1008
	1014
	1038
8T-7930	708
8T-8376	824
8T-8390	920
8T-8442	806
8T-8614	568
8T-8667	416
	420
	424
	428
	432
8T-8729	240
	300
	306
	307
	309
	321
	322
	323
	324
	325
	326
	327
	332
	333
	348
	349
	350
	352
	366
	371
	373
	376
	382
	390
	394
	395
	398
	399
	446
	447
	452
	456
	461
	467
	487
	488
	490
	568
	654
	655
	657
	808
	828
	830
	832
	836
	921
	932
	936
	937
	940
	945
	951
	1098
	1099
	1100
	1326
	1327
	1328
	1329
	1330
	1331
	1340
	1342
	1344
	1434
	1436
	1438
	1440
8T-8730	240
	328
	329
	334
	335
	336
	337
	338
	341
	346
	347
	382
	933
	937
8T-8731	402
	406
	407
	416
	420
	424
	428
	432
8T-8732	350
8T-8737	371
	374
	402
	406
	407
	416
	420
	424
	428
	432
	436
	655
	818
	820
	932
	936
	940
	944
	945
	950
	951
	1253
	1304
	1328
	1331
	1347
	1391
	1395
	1398
	1428
	1430
	1432
	1434
	1436
	1438
	1440
8T-8899	774
	780
	786
	794
	800
8T-8902	1073
8T-8908	711
	715
8T-8917	668
8T-9005	1294
8T-9087	1357
8T-9381	1364
8T-9383	62
	64
	354
8T-9522	1091
	1092
	1093
	1094
8T-9527	1034
	1035
8T-9529	1103
8T-9655	241
	242
	440
	446
	460
	466
8T-9658	440
	446
	460
	466
8T-9762	234
8V-1715	703
8V-2671	932
8V-3609	762
	764
8V-7010	1256
	1258
8V-8398	773
	779
8W-0587	70
8W-2948	773
	779
	784
	792
8W-5090	850
	852
8X-0432	603
	649
	650
8X-1091	595
8X-3467	874
8X-4719	700
8X-5147	1359
8X-5271	595
8X-5802	376
8X-6166	520
8X-8340	552
	556
	560
	564

► **PRIMARY REFERENCE**

PART NUMBER INDEX

Part	Page
8X-9227	850
	852
8X-9922	996
	1002
8Y-3966	1292
8Y-3998	1292
8Y-3999	1292
8Y-4501	1308
8Y-5743	718
	722
	726
8Y-5746	1390
	1394
	1398
8Y-5748	1308
8Y-5749	1308
8Y-5877	1296
8Y-5889	1372
	1383
8Y-5892	1336
8Y-5903	1338
8Y-5928	1366
	1372
	1376
8Y-5929	1366
	1372
	1376
8Y-5930	1366
8Y-5931	1366
8Y-5932	1366
	1372
	1376
8Y-5936	1366
	1372
	1376
8Y-5937	1366
8Y-5938	1366
	1372
	1376
8Y-5947	1296
	1366
	1372
	1376
8Y-5953	1363
	1364
8Y-5972	1338
8Y-5979	1366
	1372
	1376
8Y-5981	1366
	1372
	1376
8Y-5992	▶1336
	1366
	1372
8Y-5995	1336
	1339
8Y-5998	1336
	1339
8Y-5999	1336
	1339
8Y-6006	1338
8Y-6010	1338
8Y-6051	1366
	1372
8Y-6277	1376
8Y-6333	1380
	1391
	1395
	1398
8Y-6335	1304
8Y-6336	1256
	1258
8Y-6339	1360
	1361
8Y-6340	1360
	1361
8Y-6341	1424
	1426
8Y-6342	1424
	1426
8Y-6344	1434
	1436
8Y-6352	1264
8Y-6364	182
	194
	228
	292
	718
	722
	726
	748
	959
	1448
8Y-6388	1264
8Y-6397	1360
	1361
8Y-6833	1366
	1372
	1376
8Y-6834	1366
	1372
	1376
8Y-6882	▶1366
	1379
8Y-6883	▶1296
	1368
	1369
	1370
	1379
8Y-6917	1410
	1414
	1418
8Y-6922	1410
	1418
8Y-6928	1410
	1414
	1418
8Y-6933	1366
	1372
	1376
8Y-6991	1372
	1376
8Y-6993	1372
	1376
8Y-8294	1308
8Y-8296	1308
8Y-8318	1308
8Y-8319	1430
	1432
8Y-8320	1308
	1347
9B-7233	234
	370
	447
	461
	467
	1303
	1347
9B-7237	237
	417
	421
	425
	429
	433
	632
	636
	641
	645
	976
	978
	1320
9C-2403	854
	858
9C-4935	700
	1332
9C-5276	524
9C-6809	692
	694
	696
9C-7863	698
	700
9C-8895	818
9D-0630	178
	180
	182
9D-3521	82
9D-3767	376
	1312
	1316
9F-2773	152
	154
9F-5599	356
	360
9F-5644	365
9F-6445	452
	456
9F-6641	887
9F-7707	72
	74
9F-7716	312
9G-0003	236
9G-0004	236
9G-0278	1071
9G-0647	578
	584
9G-1950	1253
9G-4101	356
	360
9G-4360	441
	447
	461
9G-4733	1073
9G-6655	298
9G-7641	▶370
	439
	1346
9G-8451	441
	447
	461
	467
9G-9558	578
	584
9G-9981	188
	194
	291
	292
9H-1031	476
	526
9H-3757	356
	360
9H-5537	578
	585
9H-6832	618
	622
	626
	628
	668
9H-8260	58
9J-1192	1036
9J-7031	1054
	1058
9J-8667	1036
9K-4454	524
9K-6882	1266
9K-7951	595
9L-2295	158
	160
9L-2662	14
9L-4234	14
9L-6533	124
9L-6770	234
9L-6776	234
9L-7028	70
9L-7469	1366
	1372
	1376
9L-7712	72
	74
9L-9132	46
	54
	92
	122
	125
	382
	386
	390
	394
	398
9L-9188	1072
	1078
9M-0164	180
	190
	1410
	1414
	1418

9

▶ **PRIMARY REFERENCE**

PART NUMBER INDEX

Part	Page
9M-1974	18
	24
	26
	46
	50
	62
	64
	76
	77
	78
	80
	120
	136
	137
	205
	209
	213
	214
	241
	242
	383
	386
	391
	395
	399
	666
	1036
	1351
9M-2001	550
	578
	584
9M-2151	134
	135
	146
	148
9M-2342	184
9M-2744	524
9M-2828	474
	476
	574
	670
	671
9M-3695	150
9M-4007	548
9M-4313	658
9M-4584	205
	209
9M-4594	237
9M-5733	1336
	1338
	1339
9M-5884	1286
	1288
	1354
9M-5892	762
	764
9M-6803	1358
9M-7394	959
	1054
9M-7606	356
	360
9M-7609	356
	360
9M-8406	203
	236
	296
	376
	407
	412
	436
	1320
9M-9725	1390
	1394
	1402
9N-0869	77
	92
	205
	211
	212
	241
	242
	440
	446
	460
	466
	1399
9N-0942	234
9N-0943	234
9N-1713	1424
	1426
	1428
9N-1909	382
	386
9N-1995	1264
9N-2038	172
	173
	176
9N-3388	234
9N-4053	204
	208
9N-4552	1225
9N-5253	298
9P-2300	1253
9P-3041	660
9P-4331	520
9P-7121	228
	230
9R-1733	984
	992
9R-2613	164
	532
	534
	673
	674
	675
	676
	677
	678
	690
	692
	694
	696
	699
	700
	718
	722
	726
	996
	1002
9R-2821	1266
9R-3852	310
9R-4638	773
	779
	784
	792
9R-5008	1072
	1078
	1388
9R-5271	710
	714
	718
	719
	722
	723
	726
	727
9R-8538	1292
9S-1018	482
9S-1307	766
	768
9S-1351	524
9S-1354	72
	74
9S-1374	125
9S-2009	234
9S-2013	234
9S-2302	234
9S-2390	234
9S-2544	234
	356
	360
9S-4180	1072
	1078
	1096
9S-4181	62
	64
	474
	476
	553
	557
	561
	565
	618
	622
	626
	628
	692
	694
	696
	1008
	1014
	1021
	1082
9S-4182	78
	80
	84
	88
	103
	120
	145
	205
	209
	530
	532
	534
	536
	1072
	1078
9S-4183	62
	64
	536
9S-4185	100
	184
	632
	636
	640
	644
	1082
	1126
	1127
9S-4190	64
	78
	80
	1008
	1014
	1020
	1021
	1038
9S-4191	24
	26
	28
	84
	88
	122
	184
	205
	209
	520
	536
	538
	539
	544
	548
	618
	622
	626
	628
	773
	779
	785
	793
	804
	897
	898
	899
	904
	908
	912
	916
	1073
	1078
	1086
	1096
9S-6130	1096
9S-8001	656
	810
9S-8002	29
	31
	33
	904

► **PRIMARY REFERENCE**

PART NUMBER INDEX

Part	Page
	908
	912
	916
	1072
9S-8004	524
	800
	810
	817
	866
	868
	870
	921
	1040
	1042
	1072
	1088
9S-8005	184
	536
	762
	764
	1128
	1130
	1134
	1135
9S-8006	810
	1034
	1035
9S-8007	666
	811
9S-8008	536
	578
	584
	633
	637
	641
	645
	904
	908
	912
	916
9S-8010	578
	584
	904
	908
	912
	916
	1054
9S-8752	46
	78
	80
	82
	83
	84
	88
	92
	118
	122
	125
	128
	130
	132
	134
	135
	184
	204
	205
	209
	226
	382
	386
	390
	394
	398
	545
	1270
	1278
	1280
9S-8893	49
9S-9271	78
	80
9S-9272	78
	80
	94
9S-9334	178
	228
	230
	524
	866
	868
	870
	1040
	1042
	1072
	1078
9S-9739	632
	636
	640
	644
9T-0118	1078
9T-1636	1038
9T-1652	1038
9T-1699	1038
9T-1710	1038
9T-1857	1086
9T-2186	1086
9T-3096	840
	846
	854
9T-3368	1044
9T-3745	1044
	1046
9T-3853	892
9T-3931	884
	1088
9T-3940	890
	892
9T-3941	817
9T-4219	802
	804
	▶805
9T-4226	811
9T-4536	805
9T-4537	805
9T-4538	805
9T-4539	805
9T-4540	805
9T-4541	805
9T-4872	1054
9T-5663	699
	700
9T-6001	1359
9T-6005	774
	780
	784
	792
9T-6943	699
	700
	840
	846
9T-7750	1086
9T-7769	1048
9T-7771	1048
9T-7773	1048
9T-9226	1054
9T-9227	1054
	1058
9T-9552	922
	926
	▶1096
9T-9992	1091
	1092
	1093
	1094
9U-0121	1424
	1426
	1428
9U-0122	1424
	1426
	1428
9U-0124	1430
	1432
9U-0125	1430
	1432
9U-0126	1423
9U-0178	771
9U-0200	771
9U-0229	▶1422
	1430
9U-0351	▶1423
	1424
	1426
	1428
9U-0585	692
	694
	696
9U-0684	▶1360
9U-0712	1312
	1316
9U-0830	771
9U-0833	310
9U-0838	1424
	1426
	1428
9U-0853	692
	694
	696
9U-0952	1390
	1394
	1398
9U-0953	1390
	1394
	1398
9U-0954	1390
	1394
	1398
9U-0955	1390
	1394
	1398
9U-0958	1390
	1394
	1398
9U-1168	1354
9U-1169	1286
	1288
	1354
9U-1217	1312
	1316
9U-1301	1264
9U-1381	1008
	1014
	1020
9U-1399	237
9U-1598	236
9U-1734	762
	764
9U-1738	762
	764
9U-1739	762
	764
9U-1741	762
	764
9U-1742	762
	764
9U-1860	1312
	1316
9U-1866	1312
	1316
9U-2176	766
	768
9U-2178	766
	768
9U-2179	766
	768
9U-2277	312
	351
	373
	374
	382
	386
	390
	394
	398
	406
	412
	416
	420
	424
	428
	432
	452
	456
	651
	652
	922
	926
	1082
9U-2289	1072
9U-2327	1304
9U-2328	1304
9U-2329	1304

▶ **PRIMARY REFERENCE**

PART NUMBER INDEX

Part	Page
9U-2330	1264
9U-2331	1264
9U-2332	1264
9U-2334	1306
9U-2421	1390
	1394
	1402
9U-2422	1390
	1394
	1402
9U-2670	1264
9U-2675	1261
	1262
	►1306
9U-3238	544
9U-3295	526
9U-3430	773
	779
9U-3474	1168
	1170
	1174
	1176
	1178
9U-3663	1359
9U-3925	1390
	1394
	1398
	1403
	1406
9U-3926	1390
	1394
	1398
	1402
	1406
9U-3927	1390
	1394
	1398
	1402
	1406
9U-4149	876
9U-4765	568
9U-4979	►568
	1261
9U-4989	376
9U-4990	376
9U-8263	1304
9U-9498	579
	585
9U-9702	1228
9U-9703	1219
9V-1820	568
9V-4373	526
9V-7440	1372
	1376
9V-9116	841
	847
9V-9840	526
9W-0335	1390
	1394
	1398
9W-0844	1253
9W-0852	371
	1252
	1253
	1272
	1273
9W-1461	363
9W-1991	165
	1398
9W-2111	376
9W-4361	312
9W-5531	545
9W-5567	660
9W-5568	660
9W-6825	184
9W-7385	70
	604
	1332
9W-7388	70
	604
	1332
9W-8551	1241
9W-8552	1227
9W-8559	1233
9W-9143	579
	585
9W-9830	660
9W-9941	1332
9X-0261	380
	452
	456
9X-0262	382
	386
	390
	394
	398
	452
	456
9X-0263	382
	386
	390
	394
	398
9X-0352	72
	74
9X-0435	383
	387
	391
	395
	399
9X-1046	1264
9X-1054	932
	936
	940
	944
	950
9X-1386	395
	399
	568
	808
9X-1439	►301
	314
9X-1813	240
	320
	325
	328
	329
	330
	331
	332
	333
	334
	335
	336
	337
	338
	339
	340
	342
	343
	345
	346
	347
	348
	349
	350
	382
	390
	394
	398
	452
	456
	828
9X-2026	932
	936
	940
	944
	950
	976
	978
	980
	984
	989
	992
9X-2038	1391
	1395
	1399
	1403
	1406
9X-2040	1312
	1316
9X-2041	1312
	1316
9X-2042	440
	446
	460
	466
	932
	936
	940
	944
	950
	1264
	1312
	1316
	1340
	1342
	1344
	1357
	1360
	1361
	1430
	1432
9X-2043	1256
	1258
	1297
	1298
	1402
	1403
	1406
9X-2044	945
	951
	1284
	1308
	1312
	1316
	1340
	1342
	1344
	1346
	1390
	1394
	1399
9X-2045	568
	1264
	1283
	1308
	1340
	1342
9X-2046	1340
	1342
	1344
9X-2205	186
9X-2299	710
	711
	714
	715
	1286
	1288
	1290
9X-2349	854
	858
9X-2480	976
	978
	980
	984
	988
	992
9X-2488	854
	858
	1009
	1015
	1252
	1322
9X-2500	234
9X-2546	1308
9X-2616	1258
	1399
9X-3064	306
	307
9X-3401	339
9X-3402	340
	343
9X-3455	301
	302
	303
	305
9X-3463	301
	302

► **PRIMARY REFERENCE**

PART NUMBER INDEX

Part	Page	Part	Page	Part	Page	Part	Page
	303		649	9X-7781	▶363	9X-8258	1136
	304		650		407		1138
	305	9X-6497	1034		412	9X-8259	1136
9X-3495	402		1035	9X-7798	305		1138
	407	9X-6551	363	9X-7803	4		1140
	412	9X-6562	1446		▶234		1142
	416	9X-6574	1044	9X-8071	363		1146
	420		1046	9X-8216	1264		1148
	424	9X-6772	124		1297		1152
	428		373		1298	9X-8290	1390
	432		382	9X-8250	376		1394
9X-4174	301		386		772	9X-8399	972
	302		390		778	9X-8408	503
	303		394		786		509
9X-4243	301		398		794		515
	302		416	9X-8256	314	9X-8480	817
	303		420		402	9X-8482	866
	305		424		441		868
9X-4244	301		428		447		870
	302		432		461		1040
	303		436		467		1042
	305		440		976	9X-8483	866
9X-4492	306		446		978		868
9X-4493	307		452		980		870
	309		456		984		1040
9X-4494	1304		460		988		1042
9X-4519	237		466		992	9X-8600	178
9X-4605	632		833		1340		180
	637		837		1342		182
	641		1082		1344		186
	645	9X-6774	▶302		1430		188
9X-5592	▶321		310		1432		190
	766		312	9X-8257	106	9X-8872	13
9X-6018	960	9X-6775	▶303		110	9X-8873	56
	962		312		114		545
	964		314		553		633
	966	9X-7138	352		557		636
	968	9X-7145	1347		561		640
	970	9X-7148	1347		565		644
	972	9X-7165	▶305		604	9X-8875	545
9X-6153	866		312		618	9X-8876	632
	868	9X-7344	436		622		636
	870	9X-7378	1276		626		640
	1040	9X-7380	1320		628		644
	1042	9X-7381	1252		758	9X-8877	1280
9X-6165	452		1320		760	9X-8879	46
	456	9X-7382	1252		840		50
	976		1320		847	9X-8883	633
	978	9X-7383	1250		922		637
	980		1252		926		641
	984		1320		997		645
	988	9X-7384	1250		1003	9X-8885	482
	992		1252		1009	9X-8887	52
9X-6341	1446	9X-7385	1272		1015	9X-8889	482
9X-6395	896		1274		1022	9X-8896	474
	1090		1275		1026		476
	1095		1276		1028	9X-8898	575
9X-6458	82	9X-7409	1098		1030	9X-8914	1086
	132	9X-7449	374		1032	9X-8917	488
	154	9X-7676	890		1064		490
	226		1088		1140	9X-9120	236
9X-6480	596	9X-7735	199		1142	9X-9365	296
	598		200		1146	9X-9730	236
	601		201		1148	9X-9747	319
	602		225		1332	9X-9825	236

▶ **PRIMARY REFERENCE**

PART NUMBER INDEX

Part	Page
9Y-0047	211
	212
9Y-0635	36
	37
	38
9Y-4090	120
9Y-5814	92
9Y-7668	49
9Y-7669	4
	▶49
9Y-8387	78
	80
9Y-8388	78
	80
9Y-8389	213
	214
9Y-9175	21
	22
0	
001-5600	802
	804
002-1212	1038
003-2143	124
003-8581	204
	208
005-8593	890
	892
	1088
006-2325	143
006-8663	1038
008-3214	862
009-3101	766
	768
013-8502	1402
	1406
014-0816	371
030-7946	383
	386
	390
	395
	399
030-7947	548
030-7948	118
030-7949	204
	208
030-7964	204
	208
030-7972	114
	204
	208
030-7983	106
	110
	114
030-9612	234
030-9613	1304
031-4136	92
031-4155	77
032-1267	124
032-1268	124
032-8707	178
	180
	190
033-5879	1098
033-6027	1038
	1086
033-6031	76
033-6033	898
	900
	1098
033-6036	1038
	1086
033-6042	24
	26
	28
033-7291	1253
033-8248	312
	402
	416
	420
	424
	428
	432
	436
	440
	446
	460
	466
	1430
	1432
034-3557	524
	668
034-4160	668
	1036
036-9821	356
	360
036-9823	356
	360
045-4065	357
	361
053-0558	495
	499
	503
	509
	515
053-4679	98
053-5065	60
061-8248	204
	208
061-8803	1366
	1372
	1376
061-9456	84
	88
061-9593	124
	182
	192
	296
069-2535	755
	756
077-3241	921
077-4639	862
077-4643	862
087-3533	708
087-4772	817
090-2782	106
	110
	114
091-9967	1390
	1394
095-0670	1082
095-0758	1390
	1394
	1402
	1406
095-0843	1380
095-0878	1366
	1372
	1376
095-0888	1038
095-1519	889
095-1750	886
095-2887	440
	460
	466
095-7948	806
096-0008	1082
096-0067	771
096-2320	1390
	1394
096-4883	142
	1323
096-4884	1308
096-5962	490
096-6166	1303
096-8058	866
	868
	870
	1040
	1042
097-6341	976
	978
098-5747	1402
	1406
098-6814	818
	820
099-0169	996
	997
	1002
099-3047	1095
099-3095	864
099-3649	440
	446
	460
	466
	1398
099-5845	886
1	
100-3055	▶350
	402
	407
	412
	416
	420
	424
	428
	432
100-3237	211
	212
100-3402	1038
100-3403	1038
100-3404	1038
100-3405	1038
100-3408	1038
100-3409	1038
100-3410	1048
100-3411	1048
100-3413	1038
100-3415	1038
100-3416	1038
	▶1049
100-3877	72
	74
100-3878	72
	74
100-3879	72
	74
100-3880	72
	74
100-3905	5
	▶72
100-4318	1060
	1099
100-4335	▶896
	904
	908
	912
	916
100-4512	1272
100-4982	702
100-5568	1340
	1342
	1344
100-5588	▶1228
100-5589	▶1219
100-5895	▶1329
	1340
	1342
100-6356	1192
	1202
100-6357	1192
	1202
100-6531	234
100-6532	234
100-6731	1073
100-6732	1072
100-7418	524
100-8051	5
	▶62
100-8075	84
	88
100-8941	808
	▶810
101-0336	4
	▶19
	▶20
101-0827	4
	▶24
	▶26
101-0829	5
	▶66
101-0830	4
	▶36
	▶37
	▶38

▶ **PRIMARY REFERENCE**

PART NUMBER INDEX

Part	Page
101-0831	4
	▶18
101-0833	4
	▶8
101-0834	4
	▶52
101-0838	4
	▶76
101-0852	253
	254
	255
	256
101-1171	▶21
	24
	26
101-1174	36
	▶39
101-1175	▶29
	30
	39
101-1177	39
	40
	41
101-1180	39
	40
	41
101-1198	24
	26
101-1363	52
101-1364	52
101-1365	52
101-1366	52
101-1367	52
101-1368	52
101-1369	52
101-1370	52
101-1372	52
101-1759	1272
	▶1274
101-1785	252
	257
101-2815	494
	498
	502
	508
	514
	552
	556
	560
	564
101-2862	62
	64
101-2867	1358
101-2974	312
101-3083	1183
	1184
	1187
	▶1209
101-3776	1372
	1376
101-4007	830
	832
	836
	▶862
101-4135	204
101-4197	18
101-4199	76
	77
101-7034	810
101-8909	178
	180
	182
101-9012	1008
	1014
	1020
	▶1085
101-9043	8
101-9613	802
	804
101-9759	980
	984
102-0347	1274
102-0496	818
102-0740	806
102-0743	806
102-0746	806
102-0749	892
102-1450	912
	916
102-2061	1048
102-2062	1048
102-2063	1048
102-2064	1038
	▶1048
102-2240	382
	386
	390
	394
	398
102-4087	251
102-4156	1072
	1078
102-4158	1072
	1078
102-4226	773
	▶802
102-6317	1410
	1414
	1418
102-8634	58
102-8801	402
	406
	436
	818
	820
	932
	936
	940
	944
	950
	1304
	1391
	1395
	1398
102-8802	233
	304
	309
	348
	349
	352
	364
	366
	367
	368
	373
	394
	395
	398
	399
	402
	406
	407
	416
	420
	424
	428
	432
	436
	446
	447
	461
	467
	654
	657
	666
	828
	921
	936
	940
	945
	951
	1098
	1099
	1100
	1101
	1252
	1272
	1273
	1276
	1327
	1410
	1414
102-8803	240
	300
	306
	307
	308
	320
	321
	322
	323
	324
	325
	326
	327
	331
	332
	333
	339
	376
	380
	390
	394
	398
	402
102-8804	312
	402
	407
	568
	808
	945
	951
	1328
	1347
102-8805	374
	407
	1253
	1326
	1327
	1329
	1330
	1331
	1340
	1342
	1344
	1347
	1428
	1434
	1436
102-8806	371
	406
	487
	932
	936
	940
	944
	950
	1347
	1391
	1395
	1398
102-8808	328
	334
	346
	932
	933

▶ **PRIMARY REFERENCE**

PART NUMBER INDEX

Part	Page
	936
	937
	940
102-8809	932
	936
	940
102-8810	1253
	1304
	1347
102-8811	932
	936
	940
	1430
	1432
102-8813	328
	330
	334
	335
	338
	342
	345
	346
	347
103-0892	104
	122
	192
103-1303	1032
103-1739	850
	852
103-2554	1308
	1312
	1316
103-3587	808
103-4840	1304
103-5863	1360
103-5914	312
	314
103-6091	382
103-6092	▶328
	383
103-6093	▶329
	382
103-6100	1320
103-6318	889
103-6319	889
103-7407	888
103-7410	888
103-8518	312
104-2091	1264
104-2921	330
104-4255	887
104-4256	887
104-4270	887
104-4271	887
104-4272	887
104-4273	887
104-4274	887
104-4767	14
104-4768	14
104-5060	802
	804
104-5061	802
	804
104-5612	440
	446
	460
	466
104-5887	808
104-5888	808
104-5967	802
	804
104-6728	666
104-6729	492
104-6730	492
104-7006	474
	476
	762
	764
104-7108	773
	779
	784
	792
	996
	1002
104-7376	1085
105-0253	19
105-0254	19
105-0255	19
105-0256	19
105-0257	19
105-1766	976
	978
	980
	984
	988
	992
105-3372	932
	936
	940
	944
	950
105-3763	234
105-3764	234
105-4283	1268
105-4284	1268
	1270
	1278
105-4309	204
	208
105-7426	883
105-8029	487
	488
	490
105-9073	487
	488
	490
105-9639	579
	585
105-9788	579
	585
106-0553	666
106-0554	660
106-0933	648
106-1255	1034
	▶1044
106-1259	1044
106-1522	1098
106-1582	932
	936
	940
	944
	950
106-1583	932
	936
	940
	944
	950
106-1584	932
	936
	940
	944
	950
106-2778	▶22
	28
106-3385	5
106-3923	487
106-3924	487
106-4143	▶1323
	1324
106-4158	980
	984
	988
	992
106-4175	708
106-4437	▶322
	932
	936
106-4454	1340
	1342
	1344
106-4572	106
	110
	114
106-4582	4
	▶10
	▶11
106-6434	730
	734
106-7408	1446
106-7687	234
106-7688	234
106-7689	234
106-7690	234
106-8704	441
	447
	461
	467
106-9295	1256
107-0281	4
	▶145
107-0586	1008
	1014
	1020
107-0687	668
107-0689	668
107-0691	668
107-0692	668
107-0695	668
107-0696	474
	476
107-0698	668
107-0699	472
	▶476
107-0700	471
	▶474
107-0701	▶668
	670
	671
107-0702	▶472
	589
107-0703	▶471
	589
107-0704	668
107-0705	668
107-0765	152
107-0776	226
107-1964	1340
	1342
	1344
107-2283	309
107-2884	862
107-2885	862
107-2886	862
107-2887	862
107-2888	862
107-2889	862
107-2890	862
107-2891	862
107-2892	862
107-2893	862
107-2894	862
107-2895	862
107-3203	802
	804
107-3321	▶1242
107-3345	▶1229
107-3346	1183
	▶1211
107-3378	1218
	1225
	1227
	1233
	1241
107-3529	▶1197
107-3530	1197
107-3531	1197
107-3532	1197
107-3554	1172
107-3555	1172
107-3556	1172
107-3727	440
	446
	460
	466
107-3758	145
107-6293	▶1198
107-6294	1198
107-6295	1198
107-6296	1198
107-6440	866
	868
	▶892
107-6441	886
	1103
107-6442	892
107-6443	892
107-6451	▶886
	892
107-6591	892
107-6592	812

▶ **PRIMARY REFERENCE**

PART NUMBER INDEX

Part	Page
107-6593	883
107-6594	883
	1103
107-6595	883
107-6747	152
	154
107-6763	1170
	1180
107-7330	66
107-7331	66
107-7332	66
107-7333	66
107-7334	66
107-7335	66
107-8558	1183
	1184
	▶1194
107-8559	1192
	1209
	1218
	1225
	1227
	1233
	1241
107-8595	1183
	1184
	▶1205
107-8602	1192
	▶1246
107-8610	▶1212
107-8611	662
107-8719	158
	160
107-8762	2
	▶4
107-8770	226
107-9407	1078
108-0124	960
	962
	964
	966
	968
	970
	972
108-0125	960
	962
	964
	966
108-0129	960
	962
	964
	966
	968
	970
	972
108-1434	92
	204
	208
108-1554	668
108-1615	1266
108-2300	143
108-2994	1390
	1394
108-3566	806
108-3866	901
108-4815	1086
108-7696	441
	447
	460
	466
108-8160	568
108-8421	▶1338
	1366
	1372
	1376
108-8423	1338
108-8424	1338
109-0169	618
	622
	626
	628
109-0170	618
	▶632
109-0171	▶618
	▶622
	630
109-0365	1340
	1342
	1344
109-0366	380
109-0648	1360
	1361
109-0651	1360
	1361
109-0652	1360
	1361
109-1641	864
109-2332	84
	88
	100
109-2670	1183
	1184
	▶1202
109-2674	▶1199
109-2675	1199
109-2676	1199
109-2677	1199
109-2721	632
	636
	640
	644
109-3482	632
	636
	640
	644
109-4367	▶320
	382
	386
109-5702	960
	962
	964
	966
	968
	970
109-5717	960
	962
	964
	966
	968
	970
	972
109-6815	▶2
109-6819	▶1
	2
109-6820	2
	▶974
109-6821	2
	▶258
109-6822	2
	▶589
109-6834	1
	▶699
109-6835	1
	▶692
	▶694
	▶696
	698
109-6837	1
	▶1136
	▶1138
109-6838	1
	▶1359
109-6839	1
	▶746
109-6842	1
	▶710
	▶714
	▶718
	▶722
	▶726
109-6843	1
	▶704
	▶706
109-6844	1
	▶1354
109-6845	1
	▶689
109-6846	1
	▶690
109-6847	1
	▶680
	▶681
	▶682
109-6848	▶677
	1122
	1123
109-6850	1
	▶203
109-6851	1
	▶730
	▶734
109-6852	1
	▶1332
109-6854	1
	▶1446
109-6856	1
	▶703
109-6858	974
	▶1064
109-6859	▶178
	196
	197
109-6860	1
	▶740
109-6861	1
	▶604
109-6862	1
	▶1322
109-6863	1
	▶1320
109-6864	258
	▶374
	673
	674
	675
	676
109-6866	1
	▶1333
109-6867	974
	▶996
	▶1002
109-6868	▶840
	974
109-6869	▶576
	589
109-6870	974
	▶1026
	▶1028
109-6871	974
	▶1032
109-6872	974
	▶1008
	▶1014
	▶1020
109-6873	▶854
	▶858
	974
109-6875	▶772
	▶778
	▶784
	▶792
	974
109-6882	▶822
	974
109-6883	196
	291
	292
	▶294
109-6884	▶850
	▶852
	974
109-6885	1
	▶1325
109-6886	▶631
109-6887	974
	▶1051
109-6888	974
	▶1052
109-6890	▶1104
	▶1105
	▶1106
	▶1108
	▶1110
	1118
	1119
	1120
	1121
109-6893	258
	▶416

▶ **PRIMARY REFERENCE**

PART NUMBER INDEX

Part	Page
	▶420
	▶424
	▶428
	▶432
109-6894	258
	▶402
109-6895	▶236
	258
109-6897	▶440
	1420
109-6898	258
	▶436
109-6899	258
	▶406
	▶412
109-6900	258
	▶312
109-6902	258
	▶314
109-6904	258
	▶373
109-6906	258
	▶1302
109-6907	258
	▶976
	▶978
109-6908	1
	▶683
	▶684
	▶685
	▶686
109-6910	▶552
	▶556
	▶560
	▶564
	589
109-6911	1
	▶351
109-6945	1308
109-7389	548
109-7390	548
109-7411	152
	154
109-8980	618
	622
	626
	628
109-9940	618
	622
	626
	628
110-0045	618
	622
	626
	628
110-0288	618
	622
	626
	628
110-0289	618
	622
	626
	628
110-2023	692
	694
	696
	699
	700
110-2133	633
	637
	641
	645
110-2135	632
	636
	640
	644
110-2136	618
	622
	626
	628
110-2137	618
	622
	626
	628
110-2138	632
	636
	640
	645
110-2140	633
	637
	641
	645
110-2141	633
	637
	641
	645
110-2142	632
	636
	641
	645
110-2144	632
	636
	640
	644
110-2145	632
	636
	640
	644
110-6952	1038
	▶1086
110-6968	70
110-6991	36
	37
	38
110-6994	24
	26
110-7524	1264
110-7885	1346
110-7889	1430
	1432
110-8403	548
110-8684	1
	▶102
110-8685	1
	▶1282
110-8686	1
	▶956
110-8771	158
	160
110-8772	158
	160
110-8839	632
	636
	640
	644
110-8840	633
	641
	645
110-8844	632
	640
110-8847	632
	636
	640
	644
110-8849	632
	636
	640
	644
110-8850	632
	637
	640
	644
110-8852	632
	636
	640
	644
110-8853	633
	637
110-9135	1359
110-9517	152
	154
111-0343	662
	1100
	1101
111-0810	618
	622
	626
	628
111-0879	1347
111-0897	668
111-0898	668
111-1275	632
	636
	640
	644
111-1349	97
111-1503	668
111-3820	84
	88
111-4374	103
111-4376	150
111-4486	618
	622
	626
	628
111-6119	78
	80
111-6261	548
111-7759	668
111-7775	▶878
	879
111-8076	142
111-8411	251
111-9110	755
	756
111-9177	668
111-9265	1044
	1046
111-9266	1034
	1035
111-9758	1126
	1127
	1128
	1130
	1132
	1133
	1134
	1135
111-9913	806
112-0847	232
112-0874	670
	▶762
112-1555	128
112-1756	440
	446
	460
	466
112-1757	440
	446
	460
	466
112-1758	440
	446
	460
	466
112-1760	441
	447
	461
	467
112-1761	441
	447
	461
	467
112-1762	441
	447
	461
	467
112-1817	1064
112-2165	668
112-2166	471
	472
	▶670
112-2232	1082
112-2273	▶766
	▶768
	1261
	1262
112-2276	766
	768
112-2470	670
	671
112-3591	152
	154
112-3596	216
112-3597	216
	220
112-3927	596
	598
112-4189	▶830
	▶832
	▶836

▶ **PRIMARY REFERENCE**

PART NUMBER INDEX

Part	Page
112-4191	▶452
	▶456
	1421
112-4194	▶1182
112-4195	▶1168
	1182
	1189
	1190
112-4196	▶1183
	▶1184
112-4197	▶1170
	1183
	1184
112-4198	▶1185
112-4199	▶1172
	1185
112-4200	▶1186
112-4201	▶1118
112-4202	▶1174
	1186
	1191
112-4206	▶494
	▶498
	▶502
	▶508
	▶514
	974
112-4283	972
112-4291	972
112-4387	241
	242
112-4556	730
112-4558	752
112-4577	1366
	1372
	1376
112-4592	1051
	▶1054
112-4597	830
	832
	836
	▶904
	▶908
112-4811	631
	▶651
	▶652
112-4812	▶922
	▶926
	930
112-4836	690
112-4837	▶1286
	▶1288
	1354
112-4838	1286
112-5282	653
	655
112-5327	1072
	1078
112-5381	996
	1002
	▶1036
112-5382	1036
112-5383	1036
112-5384	1036
112-5449	589
112-5450	600
	▶648
112-5451	648
112-5452	589
	▶596
	▶598
112-5460	596
	598
112-5727	594
	▶595
112-5728	595
112-5763	1261
	1262
	▶1349
112-5764	1261
	1262
	▶1340
	▶1342
	▶1344
112-5765	1261
	1262
	▶1346
112-5766	▶376
	1261
	1262
112-5780	1347
112-5874	921
112-6000	2
	▶7
112-6001	4
	▶82
112-6002	7
	▶70
112-6003	7
	▶162
	▶163
	▶164
112-6004	7
	▶48
112-6005	4
	▶241
	▶242
112-6006	241
	242
112-6008	7
	▶165
112-6009	165
112-6010	4
	▶92
112-6011	92
112-6014	4
	▶99
112-6015	5
	▶170
	▶171
112-6017	204
	208
112-6019	4
	▶14
112-6020	4
	▶122
112-6021	122
112-6022	122
112-6023	204
	706
112-6025	4
	▶184
112-6028	204
	208
112-6030	4
	▶1268
	▶1270
112-6031	1268
112-6032	1268
	1270
	1278
112-6033	4
	▶77
112-6035	4
	▶44
112-6036	44
112-6039	146
	148
112-6041	146
	754
112-6042	146
	753
112-6045	5
	▶382
	▶386
	▶390
	▶394
	▶398
112-6046	383
112-6048	4
	▶124
112-6050	4
	▶204
	▶208
112-6051	14
112-6053	118
	130
	132
112-6054	118
	130
	132
112-6055	1268
112-6058	104
112-6060	4
	▶128
112-6061	128
112-6064	7
	▶104
112-6065	104
112-6067	4
	▶146
	▶148
112-6068	4
	▶152
	▶154
112-6070	4
	▶56
112-6071	56
112-6192	604
112-7057	1332
112-7058	1332
112-7237	704
112-7242	704
	706
112-7243	704
	706
112-7244	704
	706
112-7248	138
112-7249	102
112-7250	102
112-7252	1
	▶142
112-7253	142
112-7254	142
112-7300	730
	734
112-7913	1009
	1015
	1020
	▶1038
112-7915	1054
112-7917	1054
112-8208	822
	▶824
112-8209	▶960
	▶962
	1026
112-8244	1072
	1078
112-8633	548
112-8635	1
	▶106
	▶110
	▶114
112-8637	106
	110
112-8638	143
112-8996	1168
	1172
	1176
112-8998	1168
	1172
	1174
	1178
112-9005	1174
	1178
112-9023	1168
	1170
	1172
	1174
	1176
	1178
112-9024	1168
	1170
	1172
	1174
	1176
	1178
112-9031	1172
112-9486	106
	110
	114
112-9645	548
112-9646	548
112-9779	▶330
	380
112-9781	▶331
	452

▶ **PRIMARY REFERENCE**

PART NUMBER INDEX

Part	Page
	456
112-9823	960
	962
112-9827	960
	962
	964
	966
	968
	970
112-9833	960
	964
113-0899	1366
	1372
	1376
113-1747	474
113-4388	824
113-4391	824
113-4418	1046
113-4655	145
113-4708	1216
	1219
	1226
	1228
	1235
113-4709	1216
	1219
	1226
	1228
	1235
113-4799	1349
	▶1350
113-4802	1346
113-5071	680
113-5115	476
113-5122	476
113-5313	548
113-5945	633
	637
	641
	645
113-6003	1286
	1288
113-6005	690
113-6026	1354
113-6027	1354
113-6029	1300
113-6030	1354
113-6062	738
	1354
113-6063	1290
113-6064	1354
113-6304	1354
113-7428	552
	556
	560
	564
	▶591
113-7765	476
113-8169	118
	130
113-8172	156
	158
	160
113-8188	118
	130
113-8189	156
	158
	160
113-8208	956
113-8263	1072
	1078
113-8432	68
113-8433	68
113-9502	996
	1003
113-9503	996
	1003
113-9504	1062
113-9608	1192
	1194
	1217
	1223
	1224
	1238
	1240
113-9609	1192
	1194
	1217
	1223
	1224
	1238
	1240
113-9789	1388
114-0420	932
	936
	940
114-0867	1290
114-0931	441
	447
	461
	467
114-2399	773
	779
	784
	792
114-2656	170
	▶172
114-2932	854
	858
114-3361	920
114-3469	1276
114-3505	70
114-3676	228
	230
114-4244	932
	936
	940
	944
	950
114-4247	932
	936
	940
	944
	950
114-4416	138
	139
114-4672	854
	858
	▶897
114-4673	897
114-4813	1168
	1170
	1174
	1178
114-5188	258
	▶1303
114-5333	382
	386
	390
	394
	398
114-5477	204
	208
114-6434	690
114-6478	680
	681
	683
	684
114-8170	680
	681
	682
114-9074	840
114-9114	544
115-0549	156
115-0550	5
	▶156
	▶158
	▶160
115-0553	156
	158
	160
115-0554	156
	158
	160
115-0555	156
	158
	160
115-0556	156
	158
	160
115-0557	156
	158
	160
115-0580	124
115-0761	585
115-0762	585
115-0764	585
115-1342	710
	714
	718
	722
	726
115-1343	710
	714
	718
115-1344	710
	714
	718
	722
	726
115-1345	710
	714
	718
	722
	726
115-1346	710
	714
	718
	722
	726
115-1347	710
	714
	718
	722
	726
115-1348	710
	714
	718
115-1349	710
	714
	718
	722
	726
115-1350	710
	714
	718
	722
	726
115-1494	440
	446
	460
	466
115-1495	440
	447
	461
	467
	1347
115-1496	440
	446
	460
	466
115-1510	439
115-1548	1168
	1170
	1172
	1174
	1176
	1178
	1180
115-1549	1168
	1170
	1172
	1174
	1176
	1178
115-1816	545
115-2052	592
115-2053	592
115-2054	591
115-2129	▶828
	854
	858
	996
	1003
115-2516	772

▶ **PRIMARY REFERENCE**

PART NUMBER INDEX

Part	Page	Part	Page	Part	Page	Part	Page
	778	115-5591	236		1020		714
	784	115-5592	236	115-8189	690		718
	792	115-5593	236	115-8388	1266		722
115-3038	440	115-5594	237	115-8389	1266		726
	446	115-5595	236	115-8390	1266	116-0318	710
	460	115-5596	237	115-8391	1266		714
	466	115-5597	237	115-9346	441		718
115-3039	441	115-5598	237		447		722
	461	115-5599	374		461		726
115-3069	402	115-5600	402		467	116-0320	710
	407	115-5601	980	115-9347	441		714
	412		984		447		718
	416		988		461		722
	420		992		467		726
	424	115-5602	416	115-9460	544	116-0324	710
	428		420	115-9544	552		714
	432		424		556	116-0701	996
	452		428		560		1003
	456		432		564	116-0704	996
	830	115-5603	416	115-9776	552		1003
	832		420		556	116-1254	653
	836		424		560		655
115-3070	402		428		564	116-1365	46
115-3071	407		432	115-9777	552	116-1440	1300
	412	115-5604	436		556	116-1459	579
115-3073	374	115-5605	312		560	116-1935	996
	436	115-5606	406	115-9779	552		1003
	1082		412		556	116-2012	482
115-3503	▶28	115-5607	407		560	116-2345	690
115-4552	677		412	115-9780	552	116-2886	840
115-4692	840	115-5608	407		556		846
	846		412		560	116-3253	24
115-4693	840	115-5609	314	115-9781	552		26
	846	115-5610	402		556	116-3797	840
115-4696	840	115-5611	406		560		846
	846		412		564	116-3798	840
115-4789	683	115-5612	830	115-9783	552		846
115-4831	494		832	115-9784	552	116-3799	840
	498		836		556		846
	502	115-5613	439		560	116-3800	830
	508	115-5638	996		564		832
	514		1003	115-9785	552		836
115-4834	996	115-5639	996		556	116-3801	830
	1003		1003		560		832
115-4839	996	115-5658	762		564		836
	1003		764	115-9863	822	116-3802	840
115-4902	996	115-5694	996	115-9926	840		846
	1003		1003		846	116-3870	738
115-4903	996	115-5875	1058	115-9927	494		1354
	1003	115-6329	494		498	116-4084	840
115-4940	854		498		502		846
	858		502		508	116-4086	494
	996		508		514		498
	1003		514	116-0059	730		502
115-5258	1058	115-7077	592	116-0060	730		508
115-5324	1008	115-7778	530	116-0061	730	116-4087	494
	1014	115-7796	1008	116-0312	710		498
	1020		1014		714		502
115-5579	416		1020		718		508
	420	115-8035	800		722	116-4088	494
	424	115-8168	1008		726		498
	428		1014	116-0313	710		502
	432		1020		714		508
115-5586	236	115-8170	1008		718	116-4090	494
115-5590	236		1014	116-0316	710		498

▶ **PRIMARY REFERENCE**

PART NUMBER INDEX

Part	Page	Part	Page	Part	Page	Part	Page
	502		▶225	117-0160	1072		560
	508	116-7312	1354		1078		564
116-4091	772	116-7486	228		▶1091	117-6715	854
	778		230	117-0161	1072		858
	784	116-7534	▶199		▶1092	117-6716	854
	792		223	117-0292	708		858
116-4197	4	116-8137	294	117-0307	679	117-6717	494
	▶259	116-8227	294	117-0775	1091		498
116-4450	1008	116-8716	703		1092		502
	1014	116-8741	1008		1093		508
	1020		1014		1094		514
116-4451	1008		1020	117-0973	1008	117-6719	494
	1014	116-8742	1008		1014		498
	1020		1014		1020		502
116-4453	1008		1020	117-0977	530		508
	1014	116-9330	850		532		514
	1020		852	117-1410	1261	117-6720	854
116-4454	1008	116-9331	773		1262		858
	1014		779		▶1362	117-6721	854
	1020		784	117-1908	1038		858
116-4455	1008		792	117-1909	1038	117-6722	772
	1014		816	117-1910	1038		778
	1020	116-9332	850	117-2311	1346		784
116-4501	932		852	117-2847	296		792
	936	116-9333	876	117-2983	653	117-6723	494
	940	116-9345	772		655		498
116-4503	932		778	117-3158	1354		502
	936		784	117-3330	106		508
	940		792		110		514
116-4681	959	116-9347	772		114	117-6724	494
116-4797	876		778	117-3335	144		498
116-4798	816		784	117-3353	106		502
116-6129	1082		792		110		508
116-6182	854	116-9352	800		114		514
	858	116-9353	773	117-3412	1008	117-6725	772
116-6184	840		779		1014		778
	846		784		1020		784
116-6202	1250		792	117-4080	203		792
116-6750	922	116-9520	1354	117-4486	1351	117-6726	772
	926	116-9604	1008	117-4491	1382		778
116-6759	854		1014	117-4492	1351		784
	858		1020		1352		792
116-6760	840	116-9605	1008	117-4506	1380	117-6727	772
	846		1014	117-4636	296		778
116-6761	494		1020	117-4666	997		784
	498	116-9933	452		1004		792
	502		456	117-4714	1008	117-7118	494
	508	117-0066	13		1014		498
	514	117-0067	382		1020		502
116-6763	772		386	117-4729	1354		508
	778		390	117-5858	▶492		514
	784		394		647	117-7119	494
	792		398	117-5859	492		498
116-6764	772	117-0068	383		▶666		502
	778		386	117-5860	▶660		508
	784		390		666		514
	792		395	117-5980	203	117-7495	1088
116-6765	772		399	117-5981	203	117-7496	▶1087
	778	117-0069	382	117-5992	773		1088
	784		386		779	117-7522	1087
	792		390		784	117-7524	1087
116-7010	5		394		792	117-7525	1103
	▶222		398	117-6172	402	117-7607	1383
	▶223	117-0159	1072	117-6645	552		▶1410
	▶224		▶1090		556	117-7734	854

▶ **PRIMARY REFERENCE**

PART NUMBER INDEX

Part	Page
	858
117-7741	1082
117-7773	828
117-9097	494
	498
	510
	516
117-9308	10
117-9315	72
	74
117-9341	1072
117-9370	494
	498
117-9371	494
117-9372	494
117-9396	710
117-9397	710
117-9398	711
	715
117-9547	494
	498
	502
	508
	514
117-9548	494
	498
117-9549	494
	498
	502
	508
	515
118-0473	690
118-0630	494
	498
	502
	509
	515
118-0631	494
	498
	503
	509
	515
118-0678	494
	498
	503
	509
	515
118-0679	494
	498
	503
	509
	515
118-0683	494
	498
	503
	509
	515
118-1277	236
118-1655	66
118-1710	690
118-2865	980
	984
	988
	992
118-3731	653
	655
118-4728	130
	132
118-5041	772
	778
	784
	792
118-5081	▶921
	1072
	1078
118-5198	494
	498
	503
	509
	515
118-5616	922
	926
118-6534	172
118-7138	1008
	1014
	1020
118-7642	1261
	▶1312
118-7643	1261
	▶1390
	▶1394
118-7644	▶932
	▶936
	▶940
	1261
118-8076	830
118-8182	662
118-8589	1008
	1014
	1020
118-8606	730
	734
118-8693	1054
118-9446	683
	684
	685
	686
118-9447	680
	681
	682
118-9491	29
118-9494	21
118-9704	471
	472
	▶522
118-9732	▶574
	589
119-0781	1362
119-0838	9
119-0839	9
119-0913	1078
119-1151	1286
	1288
	1290
119-1328	172
	173
	176
119-1733	1304
119-4436	1346
119-4604	374
119-5699	996
	1003
119-6019	524
119-6285	4
	▶13
119-6296	62
	64
119-6317	4
	▶83
119-7127	1366
	1372
	1376
119-7130	1296
119-7141	1366
	1372
	1376
119-7330	▶30
119-7837	438
119-7839	407
	412
119-8604	1168
	1174
119-8605	1168
	1174
119-8606	1168
	1174
119-8607	▶1155
119-8608	▶1157
119-8609	▶1160
119-8994	1069
	1070
	▶1102
119-9600	1200
119-9601	1200
119-9602	1200
119-9604	1170
	1180
119-9605	1170
	1180
120-0550	524
	▶526
120-0551	526
120-4339	9
120-4351	382
	386
	390
	394
	398
120-4394	1088
120-7412	9
120-7413	▶9
	72
	74
121-0284	▶323
	976
	980
	988
121-0357	▶653
	654
	657
121-0358	653
121-2028	40
121-4298	651
	▶654
121-5481	72
121-5729	383
	386
	390
	395
	399
121-5736	171
	174
	175
121-5927	1102
121-7848	236
121-7958	1054
	1058
121-9835	40
121-9839	39
	41
122-0503	134
	▶136
122-1671	771
122-2222	452
	456
122-3166	162
122-3167	162
122-3168	162
	163
	164
122-3169	162
122-3173	14
122-3175	152
122-3176	83
122-3177	83
122-4593	142
122-4594	142
122-4597	142
122-4617	▶1363
	1369
122-4973	▶1098
	1102
122-4974	654
	657
	1098
122-5967	730
122-5968	730
	734
	738
122-5970	690
122-6872	144
122-6873	143
122-8450	441
	447
	461
	467
122-8502	1009
	1015
	1020
122-8856	120
122-9799	1044
	1046
122-9870	932
122-9978	633
	637
	641
	645
123-2993	▶367
	452
	456

▶ **PRIMARY REFERENCE**

PART NUMBER INDEX

Part	Page
123-3154	1266
123-4268	66
123-4271	72
	74
123-4392	1187
	▶1200
123-4881	578
123-4934	578
	584
123-5255	632
	636
	640
	644
123-6258	626
	▶640
123-6259	▶626
	▶628
	631
123-6305	186
	188
	190
	192
	194
	291
	292
123-6371	1346
123-6380	932
	936
	940
123-6384	1347
123-6386	1347
123-6449	373
123-6854	146
	148
	▶150
123-6855	150
123-6856	150
123-6918	5
	▶130
123-6928	204
	208
123-6929	204
	208
123-6930	204
	208
123-6931	204
	208
123-6932	204
	208
123-6934	204
	208
123-6935	204
	208
123-6936	184
123-6938	5
	▶226
123-6939	4
	▶46
123-6941	162
123-6942	165
123-6948	184
123-6982	152
	154
123-6983	152
	154
123-7023	▶1264
	1333
123-7024	1260
	▶1266
123-7025	1260
	▶1357
123-7026	1357
123-7030	1266
123-7231	▶1260
	1261
	1262
123-8157	1410
	1414
	1418
123-8223	1410
123-8266	1410
	1414
	1418
123-8576	1251
	▶1252
123-8640	186
123-8678	1390
	1394
123-8681	1340
	1342
	1344
123-8685	1312
	1316
123-8687	1312
	1316
123-8690	1312
	1316
123-8696	1312
	1316
123-8701	1260
	▶1284
123-8702	1312
	1316
123-8703	1312
	1316
123-8704	1261
	▶1402
123-8708	▶1256
	1261
123-8709	1256
123-8714	1251
	▶1294
123-8715	1294
123-8716	1294
123-8717	1294
123-8718	1261
	▶1383
	▶1384
123-8719	1312
123-8721	1264
123-8722	1264
123-8724	1264
123-8725	1264
123-8726	1312
	1316
123-8773	352
123-8853	351
123-9128	1410
	1414
	1418
123-9131	1410
	1414
	1418
123-9144	1410
123-9431	1350
124-0289	382
	386
	390
	394
	398
124-0312	1253
124-0665	542
124-0689	542
124-0792	932
	936
	940
	944
	950
124-1866	800
124-1868	800
124-1870	800
124-1871	800
124-1875	773
	779
	784
	792
124-1880	773
	779
	784
	792
124-2413	542
124-2421	552
	556
124-2444	527
124-2472	773
	779
	784
	792
124-2970	376
124-2971	818
	820
124-3014	690
124-3015	1354
124-3016	1300
124-3039	186
124-3040	186
	677
124-3080	677
	678
	748
124-3238	178
124-3239	178
124-3719	376
124-3720	376
124-3819	746
124-3820	746
124-4330	1354
124-4331	1354
124-4672	▶332
	452
	456
124-4834	1354
124-5142	100
124-5245	136
124-5514	170
	171
	174
	175
124-5811	766
	768
124-6329	1410
124-6348	632
	636
	640
	645
124-6704	440
	446
	460
	466
124-7128	1410
	1414
	1418
124-7649	438
	439
124-7651	439
124-7725	▶1368
	▶1369
	▶1370
	1383
	1384
124-7726	1368
	1369
	1370
	▶1372
	▶1376
124-8098	710
	714
	718
	722
124-8149	482
124-9437	216
	220
124-9820	1032
124-9849	806
124-9913	1046
124-9932	1046
124-9933	1046
124-9934	1046
124-9935	1046
124-9936	1046
124-9937	1046
125-0052	703
125-0053	1340
	1342
	1344
125-0054	1340
	1342
	1344
125-0810	552
	556
	560
	564
125-1071	1032
125-1284	1132
	1133
125-2257	353
125-2258	352
125-2259	353
125-2562	1104
	1105

▶ **PRIMARY REFERENCE**

PART NUMBER INDEX

Part	Page
	1106
	1108
	1110
	1112
	1113
	1114
	1116
125-2563	972
125-2568	1132
	1133
125-2586	972
125-2596	1136
	1138
125-2705	406
	412
125-2706	416
	420
	424
	428
	432
	1082
125-2782	66
125-3295	766
	768
125-3538	494
125-3540	494
125-3541	494
125-3542	495
125-3716	▶1060
	1062
125-4269	840
	846
125-5478	689
125-5479	689
125-5838	495
	498
125-5933	1064
125-5934	1064
125-6365	1113
	1114
	1116
	1132
	1133
125-6530	312
125-6533	356
	360
125-6535	357
	361
125-6536	357
	361
125-6704	1026
	1028
125-6705	1030
125-6706	1026
	1028
125-6707	1026
	1028
125-6708	1026
	1028
125-6709	1026
	1028
125-6710	1026
	1028
125-6781	1026
	1028
125-6782	1030
125-6794	▶309
	452
	456
125-7730	1112
	1113
	1114
	1116
125-8176	710
	714
	718
	722
	751
125-8531	312
125-8532	312
125-8534	416
	420
	424
	428
	433
125-8797	416
	420
	424
	428
	433
125-9349	1073
	▶1093
125-9530	595
125-9541	312
125-9751	52
126-0182	▶240
	374
126-0903	172
126-1112	36
	37
	38
126-1113	36
	37
	38
126-1357	872
	873
	▶912
	▶916
126-1711	369
	932
	936
	940
	1304
	1346
	1347
126-1768	340
126-1817	828
126-2807	922
	926
126-3220	711
	715
	718
	722
	726
126-3221	711
	715
	718
	722
	726
126-3222	711
	715
	719
	722
	726
126-3223	711
	715
	719
	723
	726
126-3654	▶520
	647
126-3711	1320
126-3726	922
	926
126-3727	922
	926
126-3728	922
	926
126-3729	922
	926
126-3730	922
	926
126-3731	922
	926
126-3732	922
	926
126-3733	922
	926
126-3734	922
	926
126-3735	922
	926
126-3736	922
	926
126-3738	922
	926
126-3739	922
	926
126-3740	922
126-3883	618
	622
126-3890	874
126-4270	1104
	1105
	1106
	1108
	1110
126-5131	1346
126-5785	711
	715
	719
	723
	726
126-5786	711
	715
	719
	723
	726
126-5859	668
126-5860	668
126-5939	452
	456
126-7222	1325
126-7574	251
126-7992	▶200
	222
126-8181	524
126-8182	524
126-8456	976
	978
126-8457	980
	988
126-8463	976
	978
	980
	984
	988
	992
126-8819	1346
	1430
126-9173	376
126-9174	376
126-9578	1391
	1395
126-9583	1391
	1395
126-9594	1391
	1395
127-0271	1099
127-0272	1060
	▶1099
127-0323	1391
	1395
	1398
127-1008	▶346
	382
127-1962	1391
	1395
127-2176	120
127-2931	740
127-2932	740
127-2933	740
127-2934	740
127-2935	740
127-2964	▶605
127-2966	▶594
	605
	606
	607
	608
	609
	610
	611
	612
	613
	614
	615
	616
	617
127-2967	▶575
	594
127-4259	830
	832
	836
127-4432	103
127-4470	118
	130
	132
127-4471	165
127-4479	▶94

▶ **PRIMARY REFERENCE**

PART NUMBER INDEX

Part	Page
127-4667	452
	456
	773
	779
	784
	792
127-4979	930
	1346
127-4980	1347
127-4982	1346
127-4983	932
	936
	940
127-4988	766
	768
127-5400	43
	46
	50
127-5404	10
	11
127-5478	1391
	1395
127-5480	1391
	1395
	1398
127-5482	1391
127-6425	1253
127-7474	740
127-7475	740
127-7497	655
127-7499	740
127-7500	740
127-7501	740
127-7502	740
127-7503	740
127-8269	156
	158
	160
127-8537	740
127-9015	1062
127-9323	374
127-9504	668
127-9729	204
	208
127-9730	296
127-9733	203
127-9734	203
127-9799	668
127-9823	122
127-9870	72
	74
128-0150	204
	208
128-0152	203
128-0606	766
	768
128-0607	766
	768
128-0610	766
	768
128-0613	1410
	1414
	1418
128-0686	1410
	1414
	1418
128-1545	1032
128-1663	632
	636
	640
	644
128-1970	773
	779
	784
	792
128-2477	1391
	1395
128-2478	1391
	1395
128-2866	922
	926
128-3762	406
128-3763	237
128-4111	666
128-4845	19
	20
128-4859	850
	852
128-5994	10
128-6063	1359
128-6320	1032
128-6321	1032
128-6757	730
128-6758	730
128-7742	▶550
128-8007	1446
128-8008	1446
129-1999	932
	936
	940
	944
129-2000	1391
	1395
129-2973	932
	936
129-3174	921
129-4162	988
	992
129-4181	72
	74
129-6302	▶655
	656
129-6303	416
	420
	424
	428
	433
	▶656
129-6425	524
129-6628	▶347
	386
	390
	394
	398
129-6793	522
	▶524
129-7673	766
	768
129-7674	766
	768
129-7700	1340
	1342
	1344
129-7701	1340
	1342
	1344
129-8089	452
	456
129-8293	1073
	▶1094
129-9518	165
129-9547	158
	160
130-0920	5
130-1340	932
	937
	941
130-1341	932
	937
	941
130-1342	933
	937
	941
130-1343	933
	937
	941
130-1673	1035
130-2321	1369
	1370
130-2372	596
	598
	▶649
130-2373	650
130-2374	596
	598
	▶650
130-2375	649
130-2607	33
130-2608	33
130-2613	39
130-3304	1253
130-3307	1252
130-3453	▶307
	317
130-3589	▶1290
	1354
130-3590	1252
130-3591	351
	▶352
130-3597	▶1250
	1320
130-3639	633
	637
	641
	645
130-3640	633
	637
	640
	645
130-5131	▶252
	440
	460
130-5161	1446
130-5274	156
	158
130-5623	1446
130-5685	1253
130-6253	380
130-6383	294
	▶296
130-6906	▶1261
	1333
130-6907	▶1283
	1333
130-7239	441
	447
	461
	467
130-7240	441
	447
	461
	467
130-7382	▶980
	▶984
	1118
	1119
	1120
	1121
130-7481	▶248
	249
130-7918	933
	937
	941
130-7919	933
	937
	941
130-7920	1446
130-8157	1009
	1015
	1020
130-8543	1347
131-0167	592
131-0207	1262
	▶1430
	▶1432
131-0420	38
131-0421	38
131-0423	▶31
	34
	41
131-0441	1261
	1262
	▶1388
131-0453	933
	937
131-0722	1306
131-1126	1261
	1262
	▶1308
131-1244	▶186
	▶188
	▶190
	▶192
	▶194
131-1251	▶1112
	▶1113
	▶1114
	▶1116
	1122
	1123

▶ **PRIMARY REFERENCE**

PART NUMBER INDEX

Part	Page
	1124
	1125
131-1255	▶1122
131-1276	▶988
	▶992
	1122
	1123
	1124
	1125
131-1295	762
131-1296	668
131-1571	1134
	1135
131-2949	996
131-4338	▶32
131-4340	31
131-4377	▶460
	1421
131-6085	102
131-6086	102
131-6687	495
	499
	503
	509
	515
131-7166	▶1444
	1446
131-7167	1444
131-7168	1444
131-7169	1444
131-7171	1444
131-7172	1444
131-7173	1444
131-7808	711
	715
	719
	723
	727
	▶750
131-8125	677
	678
	▶679
	748
131-8141	▶196
131-8143	▶872
	▶873
131-8147	▶1030
131-8153	▶1420
131-8155	1121
	1125
	▶1421
131-8156	▶380
	1421
132-0202	▶201
	224
132-0338	1351
	1352
132-0348	522
132-1183	522
	602
132-1491	▶197
	▶198
132-1492	▶291
	▶292
132-2131	▶800
132-3111	675
	676
	678
132-3285	▶1447
132-3301	▶930
132-3612	▶369
	631
132-3613	930
132-3915	766
	768
132-4824	▶438
	673
	675
	1420
132-4825	▶439
	674
	676
132-6260	62
	64
132-6469	72
	74
132-6532	762
	764
132-6597	550
132-6598	550
132-7091	1172
132-8519	441
132-8520	252
	257
	447
	460
	466
132-8574	692
	694
	696
	1104
	1105
	1106
	1108
	1110
	1112
	1113
	1114
	1116
	1132
	1133
	1134
	1135
132-8876	536
	538
	539
132-8900	241
	242
	▶249
	▶250
132-9875	482
132-9876	482
132-9877	482
132-9898	1136
	1138
133-0704	1178
133-0705	1178
133-0706	1178
133-0707	▶1162
133-0708	▶1158
133-0709	▶1163
133-0730	1192
	1205
133-0731	1192
	1205
133-0732	1192
	1205
133-0738	1192
	1209
133-0992	762
	764
133-1276	536
133-1279	538
	539
133-1295	534
	▶536
133-1297	530
	▶538
133-1298	538
133-1299	536
133-1626	258
	▶260
133-1627	258
	▶289
133-1628	▶261
133-1630	▶262
133-1840	▶1326
	1340
133-1963	1051
	1052
133-2198	538
	539
133-2199	536
133-3544	1280
133-3699	773
	779
	784
	792
	▶808
133-3780	578
	584
133-3814	39
	40
	41
133-3917	▶333
	452
133-4079	10
	11
133-4221	1105
	1106
	1108
	1110
	1134
	1135
133-4296	524
133-5931	82
133-5937	156
	158
133-5946	77
133-7104	850
	852
	▶879
133-7105	850
	852
	▶876
133-7106	▶816
	850
	852
133-7107	850
	852
	▶874
133-7215	933
	937
	941
	944
	950
133-7345	▶1364
	1368
133-7455	996
	1003
	▶1067
	▶1068
133-7456	996
	1003
	▶1069
	▶1070
133-7621	494
	498
	502
	508
	514
	▶590
133-8382	120
133-8523	1372
	1376
133-8528	536
133-8649	▶542
	552
	556
	560
	564
133-8650	▶527
	552
	556
133-8651	▶530
	▶532
	552
	556
	560
133-9306	32
	34
	35
	40
	41
134-0317	1009
	1015
	1020
134-1437	106
	110
	114
	▶143
134-1438	106
	110
	114
	▶144
134-2552	752
134-3379	260
	261
	262

▶ **PRIMARY REFERENCE**

PART NUMBER INDEX

Part	Page
	263
	264
	265
	266
	267
	268
	269
	270
	271
	272
	273
	274
	275
	276
	277
	278
	279
	280
	281
	282
	283
	284
	285
	286
	287
	288
	289
134-3997	1273
	▶1275
134-3998	1273
134-5247	▶479
	495
	499
	503
	509
	515
134-5248	▶480
	495
	499
	503
	509
	515
134-5906	1170
134-7258	1446
134-8297	452
	456
135-0175	120
135-0349	919
135-0426	▶308
	318
135-1955	966
135-1995	962
135-2722	1402
135-2723	1402
135-3103	148
	▶753
135-3104	148
	▶754
135-3489	864
135-3490	864
135-5154	752
135-5499	1380
135-5883	▶755
	773
	779
	784
	792
135-7123	755
	756
135-7896	773
	779
	784
	792
135-8640	730
	734
	▶752
135-8868	806
135-9571	1192
	1205
135-9600	1238
135-9700	1216
	▶1248
135-9991	866
	868
	870
	1040
	1042
136-0025	773
	779
	784
	792
136-0026	773
	779
	784
	792
136-0041	1042
	▶1088
136-0047	1088
	▶1103
136-0049	1088
136-0051	1103
136-0052	1103
136-0053	1103
136-0054	1103
136-0853	407
	412
	416
	420
	424
	428
	432
	452
	456
136-0871	▶606
136-0872	▶607
136-0883	▶608
136-1117	202
136-1118	202
136-1120	▶202
136-1153	487
136-1155	484
	▶487
136-1543	1334
136-1544	1351
	1352
136-1953	1252
136-2186	1444
136-3607	818
	820
136-3842	864
136-3965	854
	858
	▶864
	997
	1004
136-4789	752
136-5198	551
136-5709	▶551
	589
136-6202	178
	180
	190
136-6338	5
	▶353
136-7334	▶609
136-7879	964
	966
136-7880	▶964
	▶966
	1026
136-8292	840
	846
136-9630	31
136-9640	72
137-1365	866
	868
	870
	1040
	1042
137-2501	258
	▶290
137-3566	703
137-5109	312
137-6841	1391
	1395
	1398
	1402
	1406
137-6856	40
	41
137-8254	62
	64
137-8258	62
	64
137-9672	▶1230
137-9673	▶1213
137-9674	▶1220
137-9675	▶1243
138-0006	▶1210
138-0030	▶1167
138-0032	▶1203
138-0033	▶1204
138-0443	228
	230
138-0444	228
	230
138-0700	1214
	1215
	1221
	1222
	1231
	1232
	1236
	1237
	1239
	1244
	1245
138-0861	▶1196
138-0862	1196
138-0863	1196
138-0864	▶1196
138-0910	1213
	1214
	1215
	1220
	1221
	1222
	1230
	1231
	1232
	1236
	1237
	1239
	1243
	1244
	1245
138-0911	1213
	1220
	1230
	1243
138-0913	1213
	1220
	1230
	1243
138-2514	1278
138-2986	675
	676
	678
138-3094	341
	344
138-3672	▶366
	383
	386
	391
	395
138-3815	898
	899
138-6342	673
	674
	677
138-6345	▶678
	1118
	1119
138-6430	▶1156
138-6431	▶1161
138-6432	▶1159
138-6433	1230
	▶1247
138-6437	1243
138-6438	1213
138-6439	1220
138-6460	▶1164
138-6461	▶1165
138-6462	▶1166
138-6530	▶1231
138-7518	1372
	1376
138-8507	66
138-8630	1264
138-8698	575

▶ **PRIMARY REFERENCE**

PART NUMBER INDEX

Part	Page	Part	Page	Part	Page	Part	Page
139-0178	440	140-7952	1062		645		1236
	446	140-9597	50	141-8387	632		1237
139-0532	1049	141-0408	632		636		1239
139-1377	932		636		640		1244
139-1378	932		640		644		1245
	936		644	141-8466	492	143-3092	1236
	940	141-0409	632	141-8570	524		▶1249
	944		636	141-8571	524	143-3093	1237
	950		640	141-8572	524	143-3094	1221
139-1501	590		644	141-9481	545	143-3097	1245
139-2287	590	141-0410	632	141-9676	1270	143-3098	1231
139-2763	1052		636		▶1276	143-3189	996
	▶1058		640		1278	143-3604	▶1324
139-2764	1058		644		1280	143-5129	5
139-2810	730	141-1462	996	141-9750	1372		▶64
139-3309	711		1003		1376	143-5250	▶138
139-3310	711		▶1040	142-3363	▶253		▶139
139-3544	898		▶1042		440	143-5251	▶140
139-6029	▶243	141-1463	840		460		▶141
139-6366	1292		846	142-3371	▶254	143-5439	140
140-2802	548		▶866		440	143-7233	632
140-2961	1350		▶868		460		640
140-2962	1350		▶870	142-4286	1095	143-8377	591
140-2963	1350	141-2376	806	142-4985	1032		▶592
140-3540	▶334	141-4776	1127	142-5790	1168	143-8378	592
	416	141-4777	1127		1174	143-8435	1168
	420	141-5950	641	142-6915	1168		1170
	424		645		1170		1172
140-6533	1182	141-6787	1100		1172		1174
	1183		1101		1174		1176
	1185	141-7110	78		1176		1178
	1186		80		1178	143-8912	1078
	1190	141-7115	5	142-6916	1168		▶1095
140-7235	▶263		▶60		1170	143-9176	▶335
140-7236	▶264	141-7116	60		1172		407
140-7237	▶265	141-7136	204		1174		412
140-7238	▶266	141-7137	204		1176		452
140-7239	▶267	141-7138	1270		1178		456
140-7240	▶268	141-7141	44	142-6917	1168	143-9694	▶336
140-7241	▶269	141-7149	76		1170		386
140-7242	▶270	141-7172	168		1172		390
140-7243	▶271	141-7173	168		1174	143-9695	▶337
140-7244	▶272	141-7174	168		1176		387
140-7245	▶273	141-7175	168		1178		391
140-7246	▶274	141-7176	166	142-7073	668	143-9696	▶338
140-7247	▶275	141-7177	166	142-7074	574		386
140-7248	▶276	141-7180	5	142-8114	▶1251		387
140-7249	▶277		▶166		1261		390
140-7250	▶278	141-7185	7		1262		391
140-7251	▶279		▶168	142-8165	840	143-9740	1136
140-7252	▶280	141-8143	1340		846		1138
140-7253	▶281		1342	143-1288	1351		1140
140-7254	▶282		1344		1352		1142
140-7255	▶283	141-8144	1340		1380		1146
140-7256	▶284		1342	143-2529	552		1148
140-7257	▶285		1344	143-2855	818		1152
140-7258	▶286	141-8145	1340		820	144-0178	416
140-7259	▶287		1342		▶887		420
140-7260	▶288		1344	143-2934	552		424
140-7447	544	141-8146	1340	143-3082	1214		428
140-7448	544		1342		1215		432
140-7690	140		1344		1221	144-0720	66
	141	141-8205	632		1222	144-0725	66
140-7770	699		636		1231	144-0838	922
	700		641		1232		926

▶ **PRIMARY REFERENCE**

PART NUMBER INDEX

Part	Page
144-0902	1346
144-0903	1346
144-0904	1346
144-0905	1346
144-0907	1347
144-0908	1346
144-0909	1346
144-2900	1360
	1361
144-3004	592
144-3563	1140
	1142
	1146
	1148
	1152
144-3927	758
144-5604	1391
	1395
144-5611	1280
144-5612	1280
144-5692	24
	26
144-5694	66
144-5695	66
144-6222	▶702
144-7172	▶319
	440
	446
	460
	466
144-7765	568
	570
144-7766	572
144-8122	1280
144-8123	1280
144-8263	50
144-8300	1136
	1138
	1142
	1148
	1152
144-8519	▶756
144-8531	996
	1002
145-0053	922
	926
145-0326	1414
145-2362	▶339
	456
145-2901	1280
145-3203	▶806
	866
	868
	870
	1040
	1042
145-3204	866
	868
	870
	1040
	1042
145-3216	38
	▶40
145-3321	815
145-3322	815
145-3323	815
145-3324	815
145-3377	▶698
	701
145-3872	106
	110
	114
145-4484	1308
145-5007	1136
	1138
	1140
	1142
	1146
	1148
	1152
145-6114	1136
	1138
	1142
	1148
	1152
145-6620	376
145-6621	376
145-7226	702
145-8863	976
	978
145-8951	568
	570
	572
145-8952	568
	570
	572
146-1616	960
	962
	964
	966
	968
	970
	1105
	1106
	1108
	1110
	1113
	1114
	1116
	1132
	1133
	1134
	1135
146-1617	1134
	1135
146-2614	1312
	1316
146-2616	960
	962
	964
	966
	968
	970
146-3095	1312
	1316
146-3096	1312
	1316
146-3493	1088
146-3748	758
	760
146-3769	976
	978
146-3770	976
	978
146-4250	596
	▶601
146-4251	601
	602
146-5067	102
146-5616	876
146-5652	876
146-5664	876
146-5764	▶701
	930
146-7313	▶1176
	1187
146-7383	154
146-7571	876
	▶919
146-7597	1170
	1176
146-7598	1170
	1176
146-7599	1170
	1176
146-7600	1170
	1176
146-7613	1176
146-7639	143
146-8955	1176
146-9827	1176
147-0777	1270
147-0998	178
	180
	182
147-1055	▶630
147-1237	887
	▶888
147-1238	887
	▶889
147-1680	▶324
	768
147-1737	▶818
	1261
147-2001	1136
	1138
	1140
	1142
	1146
	1148
	1152
147-2383	1136
	1138
	1140
	1142
	1146
	1148
	1152
147-2577	936
	940
	944
	950
147-3061	888
147-3104	1032
147-3105	1032
147-3106	1032
147-3107	1032
147-3108	1032
147-3109	1032
147-3110	1032
147-3111	1032
147-3112	1032
147-3745	211
	212
147-4549	1414
	1418
147-5399	▶662
	666
147-6522	1414
	1418
147-6523	1414
	1418
147-6541	1414
	1418
147-6603	1097
147-6604	1097
147-6605	1097
147-6632	1009
	1015
	1020
	▶1062
147-7742	714
	719
	723
	727
147-7743	714
	719
	723
	727
147-9632	▶610
148-0767	1079
148-1900	▶1187
148-1947	1098
148-2228	1261
	▶1361
148-2341	1072
	▶1097
148-3348	504
148-3460	▶611
148-3749	1410
	1414
	1418
148-5348	1168
	1170
	1174
	1176
	1178
148-5652	708
148-6530	568
148-6559	550
	585
148-7168	1136
	▶1140
148-7169	1104
	1112
	▶1142
148-7909	▶1123
148-7910	▶1119
148-8076	1339
148-8078	▶1339

▶ **PRIMARY REFERENCE**

PART NUMBER INDEX

Part	Page	Part	Page	Part	Page	Part	Page
	1376		872		509		1114
148-8163	1112		873		515		1116
	▶1132		1003		785	150-1196	▶244
	▶1133	148-8355	1003		793	150-1280	682
148-8164	1104	148-8357	502	148-8407	785		685
	▶1134		508		793		686
	▶1135		514	148-8410	1021	150-1882	▶612
148-8170	173		785	148-8418	785	150-3028	786
148-8172	171		793		793		798
	▶173		859	148-8428	832	150-3065	534
	174		1002		836	150-3384	520
148-8305	534		1021		926	150-4043	1064
148-8307	832	148-8360	504	148-8429	1002	150-4048	786
	836		510		1021		794
148-8315	294		516	148-8433	816	150-4049	504
	784		785	148-8434	859		510
	792		798	148-8435	1064		516
148-8317	502		840		1070	150-7989	329
	508		846	148-8442	1002		338
	514		872	148-8444	1064	151-0961	440
148-8318	879		1002	148-8449	785	151-1293	261
148-8327	230		1021		793		262
	785	148-8362	785	148-8455	786		263
	793		793		793		264
	841		1002		859		265
	846		1021	148-9643	584		266
148-8329	785	148-8363	816	149-0064	5		267
	793	148-8364	192	149-0067	5		268
148-8335	503		194	149-0068	5		269
	509		197	149-0069	5		270
	515		198	149-0071	5		271
	859		502	149-0073	5		272
	927		508	149-0075	5		273
	1002		514	149-0076	5		274
148-8336	785		785	149-1981	33		275
	793		793	149-1982	35		276
	840		852		40		277
	846		1064	149-2357	▶1327		278
	876	148-8365	832		1342		279
	1003		836		1344		280
	1062	148-8367	852	149-2404	1384		281
	1068		879		1385		282
	1070	148-8368	832		▶1414		283
148-8338	1064		836	149-2610	1082		284
148-8339	504	148-8370	785		▶1100		285
	1002		793	149-2611	1100		286
148-8340	294		832	149-3255	▶1328		287
	816		836		1346		288
	832		1064	149-3949	936	151-6427	568
148-8346	836	148-8371	876		940		570
148-8347	230	148-8374	852		945		572
	859	148-8378	841		951	151-9270	80
148-8352	503		846	149-4745	1366	152-0681	5
	509		927		1376	152-0996	387
	515		1003	149-5628	662		391
	1004		1021	149-6031	20		395
	1021		1070	149-6032	20		399
148-8353	556	148-8380	1064	149-6033	20	152-4262	1176
	560	148-8390	192	149-6034	20	152-6594	130
	564		194	149-6035	20		132
	785		197	149-6518	173	152-7625	19
	793		198		176		20
	876		785	149-8203	1253	152-8277	498
148-8354	785		793	149-8218	1253	152-8278	498
	793	148-8392	503	149-8220	1110	152-8279	498

▶ **PRIMARY REFERENCE**

PART NUMBER INDEX

Part	Page
	503
	509
	515
152-8280	498
	503
	509
	515
152-8338	1101
152-8340	1096
	▶1101
153-1229	544
153-1243	46
153-1853	692
	694
	696
	1104
	1105
	1106
	1108
	1110
	1112
	1113
	1114
153-1854	1104
	1105
	1106
	1108
	1110
	1112
	1113
	1114
	1116
153-1855	1104
	1105
	1106
	1108
	1110
	1112
	1113
	1114
	1116
	1128
	1130
	1132
	1133
	1134
	1135
153-3641	261
153-3642	263
153-3643	264
153-3644	265
153-3645	266
153-3646	267
153-3648	268
153-3650	269
153-3651	270
153-3654	271
153-3655	272
153-3656	273
153-3657	274
153-3658	275
153-3674	262
153-3675	276
153-3676	277
153-3677	278
153-3678	279
153-3679	280
153-3680	281
153-3682	282
153-3685	283
153-3686	284
153-3688	285
153-3689	286
153-3690	287
153-3691	288
153-5620	▶1178
	1188
153-5621	1178
153-6237	503
	509
	515
	859
153-6244	1021
153-6261	858
153-7474	160
153-7485	386
	390
	394
	398
153-7486	5
	▶118
153-7487	241
	242
153-7488	124
153-7489	124
153-9050	1
	▶1300
153-9052	738
153-9056	480
153-9765	681
	682
153-9766	684
	685
154-1612	32
	▶33
	35
	40
154-1618	120
154-1619	120
154-1924	479
154-1980	730
154-3793	1360
	1361
154-4216	▶1188
154-4992	498
	502
	508
	514
154-4993	498
154-5235	730
154-6388	72
	74
154-6389	72
	74
155-0048	980
	984
155-0499	132
155-0511	152
	154
155-0531	166
155-0532	166
155-0533	166
155-0534	166
155-0542	5
	▶132
155-0544	154
155-0545	154
155-0726	59
155-2255	374
	402
	406
	436
	1347
	1390
	1394
	1398
155-2260	329
	336
	337
	338
	340
	341
	342
	343
	344
	345
	347
	374
	402
	406
	416
	420
	424
	428
	432
	436
	766
	768
	941
	944
	950
	980
	984
	988
	992
	1347
	1390
	1394
	1398
155-2265	416
	420
	424
	428
	432
	818
	820
	944
	950
	1347
155-2267	830
	832
	836
155-2270	240
	312
	314
	374
	402
	406
	407
	416
	420
	424
	428
	432
	436
	662
	766
	768
	922
	926
	932
	940
	944
	950
	1253
	1347
155-2271	312
	402
	406
	818
	820
	944
	950
	1253
	1347
	1423
155-2274	374
	1430
	1432
155-2276	941
155-3624	534
155-4604	▶1189
155-4605	▶1190
155-4606	▶1191
155-4816	376
155-5273	37
	▶41
155-5274	▶34
155-5281	772
	778
	784
	792
155-5282	800
155-5283	800
155-5285	738
155-5293	636
	644
155-5294	622
	▶636
155-5295	628
	▶644
155-5715	636
	644
155-5716	636
	644
155-5779	1428
155-5784	▶1331

▶ **PRIMARY REFERENCE**

PART NUMBER INDEX

Part	Page
	1428
155-5787	1428
155-6189	636
	644
155-6747	962
	966
155-8161	972
155-8162	962
	966
	968
	970
156-1041	1008
	1014
156-1148	▶1365
	1370
	1379
156-4253	899
	▶900
156-5545	1351
	1352
156-5923	734
	738
156-5926	▶180
	▶182
	196
	198
156-5929	1
	▶228
	▶230
	673
	674
	675
	676
156-5930	228
	230
	▶232
156-5931	232
156-5932	232
156-6173	654
	657
	1098
156-6182	655
156-6261	154
156-6262	5
	▶174
	▶175
156-6311	178
	180
	190
156-7128	1394
	1402
156-9096	230
156-9097	190
156-9099	230
156-9748	211
	212
156-9749	208
	▶211
156-9750	208
	▶212
156-9830	154
156-9831	154
157-0289	960
	964
157-1681	920
157-2828	163
	164
157-6961	968
	970
	972
157-8957	1127
158-0248	304
158-0252	304
158-2336	926
158-4241	552
	556
	560
159-2789	722
	751
159-2790	722
	726
159-2791	723
	727
159-2792	723
	727
159-2793	723
	727
159-2960	1140
	1146
159-2961	1142
	1148
	1152
159-3549	980
	984
159-3759	1446
159-7166	1014
	1020
	▶1035
159-7532	962
	966
159-8522	1036
159-8661	485
	▶488
159-8662	488
159-8663	488
159-8664	488
	490
159-8665	488
	490
159-8965	723
	727
159-9875	976
	978
	980
	988
160-0290	738
160-0291	▶738
160-1017	730
	734
160-1023	1292
160-1024	750
160-1051	750
160-1052	750
160-1053	1292
160-1054	1292
160-1427	1170
160-1545	719
	723
	727
	▶1292
160-1758	▶255
	446
	466
160-1759	▶256
	446
	466
160-1825	976
	978
	980
	984
	988
	992
160-1828	988
160-1829	980
160-1830	738
160-2243	820
160-2503	704
	706
160-2531	1298
160-3518	488
	490
160-3866	976
	978
	981
	984
	988
	992
160-4001	556
	560
	564
160-5195	▶1192
160-5842	980
	984
	988
	992
160-5875	1148
	1152
160-6328	1292
160-6354	1350
160-6365	1350
160-6366	1350
160-6690	1168
	1170
	1174
	1176
	1178
160-7559	▶1180
	1192
160-7569	734
160-7583	988
	992
160-7765	1414
	1418
160-7766	1414
	1418
160-7767	1414
	1418
160-8254	976
	978
160-8708	858
160-8761	352
160-8765	352
160-9340	182
	192
160-9811	54
	55
160-9824	128
160-9833	163
	164
160-9834	163
	164
161-1609	1126
161-2508	▶35
161-2513	98
161-5808	1126
	1127
	1128
	1130
161-5809	1126
	1127
	1128
	1130
161-5810	1128
	1130
161-5811	972
161-5820	744
161-5821	744
161-5822	744
161-6154	880
	881
161-6826	289
161-7056	976
	978
	981
	988
161-7069	1142
	1148
	1152
161-7396	988
	992
161-7397	980
	984
161-7398	988
	992
161-7539	1386
	▶1418
161-8904	▶325
	978
	984
	992
161-8979	▶326
	940
	945
	951
161-8988	1136
	1138
	1142
	1148
	1152
161-8990	1146
	1148
	1152
161-9289	1386
161-9926	▶340
	394
	398
161-9929	▶341
	394
	398
161-9931	▶342

▶ **PRIMARY REFERENCE**

PART NUMBER INDEX

Part	Page
	394
	398
162-0284	824
162-1522	▶968
	1028
162-1523	▶970
	1028
162-1524	968
162-1525	970
162-1551	1142
162-3294	▶304
162-4053	742
162-4054	742
162-4055	742
162-5372	304
162-7473	13
	18
	76
	77
162-7507	▶742
	1106
	1108
	1110
	1113
	1114
	1116
162-7508	▶744
	1105
162-8122	1136
	1138
162-8809	225
162-9733	758
	760
162-9969	548
163-1472	4
	▶17
163-4583	1020
163-6187	1108
	1110
	▶1126
163-6188	1114
	1116
	▶1127
163-6504	▶844
	▶845
	974
163-6562	▶846
	974
163-6590	188
	230
	291
163-6591	188
	230
	291
163-6592	188
	190
	230
	291
163-6593	188
	190
	230
	291
163-6594	180
	190
163-6595	180
163-7213	▶245
163-7804	1300
163-7882	390
	394
	398
163-8119	936
	940
	945
	951
163-8811	820
163-9374	188
	190
	194
	291
	292
164-0349	1020
164-0351	1020
164-0424	1258
164-0427	1258
164-0428	1258
164-0431	1258
164-0912	764
164-0935	671
	▶764
164-1990	1325
164-1991	1325
164-3077	1126
	1127
	1128
	1130
164-4146	1358
164-4180	692
	694
	696
	1021
164-4531	1351
	1352
164-4883	1334
164-5486	779
	784
	792
	▶804
164-5562	858
164-5567	534
	565
	784
	792
	832
	836
	840
	858
	1002
	1020
	1062
164-5574	858
164-5576	1020
164-5919	734
164-5920	734
164-5951	1418
164-6351	704
164-6352	704
164-6709	540
	541
164-7474	858
165-4026	446
	466
165-4487	452
	456
165-4597	1032
165-5570	1140
	1142
	1146
	1148
165-6171	▶613
165-6175	▶614
165-6974	1044
	1046
165-7237	1192
	1205
165-8079	539
165-8429	532
	▶539
165-8682	▶257
	446
	466
165-9154	5
	▶214
165-9770	556
	560
	564
166-2309	260
166-4374	137
166-4376	137
166-4380	135
	▶137
166-4647	503
	▶540
	784
	798
	826
	827
	1003
	1020
	1021
166-4731	1406
166-4732	1406
166-4804	945
	951
166-4805	945
	951
166-5210	▶820
	1262
166-5211	▶570
	▶572
	1262
166-5944	35
	40
166-5945	33
166-6811	1113
	1114
	1116
	1133
166-6812	1105
	1106
	1108
	1110
	1135
166-6928	▶1330
	1344
166-7209	1292
166-7221	1414
166-7225	1384
	1385
166-7401	1414
166-8119	1446
166-8422	160
167-0033	1192
	1194
167-0034	1192
	1194
167-0729	1126
	1130
167-0730	1126
	1130
167-0731	1126
	1130
167-0732	1127
	1128
167-0733	1127
	1128
167-0734	1127
	1128
167-1413	182
	192
167-1709	▶343
	428
	432
167-1801	1050
167-2154	412
167-2209	824
167-2225	972
167-2233	968
	970
167-2320	824
167-2344	972
167-2352	968
	970
167-2471	824
167-2493	972
167-2500	968
	970
167-7460	1
	▶700
167-7587	1113
	▶1128
167-7588	1105
	1106
	▶1130
167-7996	▶972
	1032
167-7997	972
167-9579	394
	398
168-0393	192
	194
	292
168-1793	681
	682
168-1916	598
	▶602
168-1917	602
168-2466	920
168-2562	1298
168-2579	1138
	▶1146

▶ **PRIMARY REFERENCE**

PART NUMBER INDEX

Part	Page
168-2580	1105
	1106
	1108
	1110
	1113
	1114
	1116
	▶1148
	▶1152
168-4357	447
	467
168-4358	▶446
	1120
	1124
	1420
168-4359	▶466
	1421
168-4510	1401
168-6355	784
	798
	826
	827
	1003
	1021
168-7800	154
	160
	175
169-0410	1250
169-0651	1334
169-2573	175
	▶176
169-2578	176
169-3290	▶1050
169-4670	760
169-4834	13
169-5929	722
	726
169-6898	471
	472
	▶671
169-7055	585
169-7380	1386
169-8366	1258
169-8615	219
	▶220
169-8617	220
169-9053	▶673
	1124
169-9054	▶674
	1125
169-9055	▶675
	1120
169-9056	▶676
	1121
170-0456	570
	572
170-0489	1398
170-0490	1398
170-0494	926
170-0670	570
170-0696	1406
170-0970	945
	951
170-0971	1406
170-0972	1401
170-0973	1401
170-0976	1398
170-0977	1406
170-0978	1398
170-0979	1406
170-0980	945
	951
170-1112	1351
	1352
170-1114	1351
	1352
170-1115	1351
	1352
170-1131	106
170-1135	1278
170-1136	106
	110
	114
170-1137	1278
	1280
170-1138	4
	▶1278
	▶1280
170-1157	124
170-1158	124
170-1219	556
	560
	564
170-1556	▶1258
	1262
170-1609	1258
170-1821	945
	951
170-1870	▶1236
170-1872	▶1237
170-1875	▶1221
170-1931	1
	▶748
170-2472	▶1124
170-4618	589
	▶760
170-4751	▶944
	▶950
	1262
170-4752	1262
	▶1316
170-6687	832
	836
170-6712	760
170-7096	945
	951
170-7297	▶1238
170-7326	▶615
170-7473	1398
	1406
170-8004	▶616
170-8022	▶1125
170-8463	▶1120
170-8540	1406
170-8544	▶1121
170-8590	1358
171-1055	945
	951
171-1147	945
	951
171-1230	1380
171-1391	760
171-1479	844
171-1577	532
171-1650	1232
171-1652	1214
171-1654	1215
171-1655	1244
171-1656	1239
171-1657	1222
171-2007	1003
171-2008	1004
171-2009	1004
171-2010	1021
171-2011	1062
171-2012	1004
171-2013	1004
171-2014	784
	792
171-2015	784
	798
171-2016	840
	846
171-2017	840
	846
171-2564	844
171-2830	854
171-3759	570
	572
171-3897	1262
	▶1406
171-3898	1262
	▶1398
171-3899	1262
	▶1401
171-5349	348
	349
171-5364	508
	514
171-5918	1288
171-5939	1316
171-5995	1046
171-6682	1380
171-6803	522
171-6804	522
171-7047	▶1262
	1333
171-8752	▶1379
	1385
171-8755	1262
	▶1385
172-0844	760
172-2416	1380
172-3511	945
	951
172-4001	1351
	1352
173-0252	110
173-1028	▶1351
	▶1352
	1380
173-3082	1382
173-5350	▶1232
173-5351	▶1244
173-5352	▶1239
173-5355	▶1222
173-5356	▶1214
173-5357	▶1215
173-5787	1386
173-6705	▶1245
173-7035	1386
173-7715	544
173-9720	502
	508
	514
173-9721	502
	508
	514
173-9724	502
	508
	514
173-9725	502
	508
	514
173-9741	502
	508
	514
173-9779	824
174-0114	502
	508
	514
174-0344	968
	970
	972
174-1485	708
174-1494	1252
174-1527	544
	550
174-2415	920
174-3469	556
	560
	564
174-4312	808
174-6050	726
	▶751
174-6381	751
174-7927	1170
	1180
174-8021	▶1206
174-8217	▶826
	873
174-8218	▶827
	836
174-9328	792
	▶798
174-9670	926
175-1296	926
175-2620	584
175-2621	584
175-3184	920
175-3185	920
175-3244	376
175-3318	▶246
175-3589	926
175-6364	476
175-6365	476
176-0394	654
	657
	1098
176-1602	▶327

▶ **PRIMARY REFERENCE**

PART NUMBER INDEX

Part	Page
	1350
176-2446	984
	992
176-2447	984
	992
176-3225	98
176-4162	984
	992
176-5698	1064
176-5751	1064
176-7112	503
	509
	515
176-7263	503
	509
	515
176-7503	250
	▶251
176-7539	503
	509
	515
176-7678	556
	560
	564
176-9369	878
	▶880
176-9371	878
	▶881
177-0316	738
177-0696	114
177-0767	114
177-1483	760
177-1860	1358
177-1862	1358
177-1863	1380
177-2374	490
177-3203	692
	694
	696
177-3537	376
177-3538	376
177-4112	490
177-4113	486
	▶490
177-4930	1334
177-4935	▶1358
	1380
177-4937	1382
177-7542	1064
177-7581	1064
177-7842	1064
177-8785	1146
177-8787	1108
	1114
177-8788	1108
	1114
177-8863	▶1072
	1082
177-8864	▶1078
	1082
177-9108	1064
	▶1082
177-9840	1064
177-9841	1064
177-9851	1064
178-0607	1358
178-0608	1358
178-0609	1358
178-2989	5
178-3995	1046
178-3997	1046
178-3998	1046
178-4005	1035
	▶1046
178-7910	▶1380
	1382
178-7911	▶1334
	1380
178-7912	1334
179-6824	702
179-6921	1087
180-2436	1046
180-2549	369
180-2559	945
	951
180-2562	945
	951
180-5559	1382
180-5560	1382
180-5966	114
180-8905	510
	516
180-9339	331
180-9340	344
	345
183-2047	652
	▶657
183-2823	214
183-3648	1382
183-3862	▶364
	399
183-3872	▶617
183-5011	▶348
	424
	428
183-6194	509
	515
	▶541
184-2298	1380
184-2299	1380
184-2300	1334
184-3229	92
185-2154	1428
185-2155	1428
185-7876	1090
185-9357	858
	▶882
185-9725	1262
	▶1386
185-9726	▶1382
	1386
185-9956	702
186-1654	1300
	1354
186-1723	1354
186-3298	738
186-3715	734
	738
186-3735	233
	304
	308
	320
	364
	367
	380
	808
	941
	944
	950
	1101
	1428
186-3736	342
	941
186-4195	1278
	1280
186-6189	1250
187-0954	▶1216
187-1367	550
	585
187-4599	1280
187-4600	1280
187-4606	128
188-2048	568
	570
	572
188-2586	1358
188-2595	636
	644
188-3983	941
	944
	950
188-3984	380
	940
	944
	950
188-8849	304
189-5178	44
	60
189-5186	1206
	1207
189-5187	1206
	1207
189-5188	1206
	1207
189-5189	▶1207
190-5429	956
	958
190-6404	595
190-7623	1282
190-7624	956
	958
190-7625	956
	958
191-6265	668
192-6145	734
192-6162	734
192-6208	734
192-6257	734
192-6258	734
192-7209	1300
192-8746	74
192-8747	74
193-2550	▶349
	432
193-3286	59
193-3288	42
193-4035	5
193-4246	▶247
194-0569	840
	846
194-0948	706
194-0949	1
	▶958
194-2955	114
194-5329	1320
194-5330	1250
194-5331	1320
194-5332	1320
194-6724	▶344
194-6725	▶345
195-1928	5
	▶74
195-3495	668
195-7094	▶1208
195-7096	1208
195-7097	1208
195-7098	1208
195-8074	534
195-8092	1282
196-1199	534
196-1246	▶534
	564
196-1259	564
196-1311	564
196-1815	845
196-1901	858
196-1940	564
196-2239	1184
	1187
	1188
	1189
	1191
196-2261	564
196-2359	845
196-2393	1184
	1187
	1188
	1189
	1191
196-4225	682
	685
	686
196-4791	72
	74
196-4793	72
	74
196-4797	1062
196-7313	1152
196-9655	682
	685
	686
197-0683	1168
	1170
	1174
	1176
	1178
197-5346	5
197-7701	1101
197-8234	1110
	1116

▶ **PRIMARY REFERENCE**

PART NUMBER INDEX

Part	Page	Part	Page	Part	Page	Part	Page
198-0230	160						
198-0249	528						
198-0258	▶528						
	560						
	564						
198-0318	560						
	564						
198-1092	1206						
	1208						
198-1891	950						
199-5515	694						
	696						
2							
201-1424	760						
201-1425	760						
201-1426	760						
201-4748	688						
201-4750	688						
201-4768	686						
	▶688						
201-4814	768						
201-7313	694						
	696						
201-7924	694						
	696						
201-9093	514						
201-9097	514						
201-9552	514						
201-9788	514						
202-9702	536						
202-9728	534						
203-0328	1399						
203-5537	696						
204-3611	572						
204-3612	1398						
205-1774	1444						
205-3075	1264						
205-3076	1264						

▶ **PRIMARY REFERENCE**

MEMORANDA



© 2001 Caterpillar
All Rights Reserved

Printed in U.S.A.